SPC
Spare Parts Catalogue

TB/8 100V

648021-1000

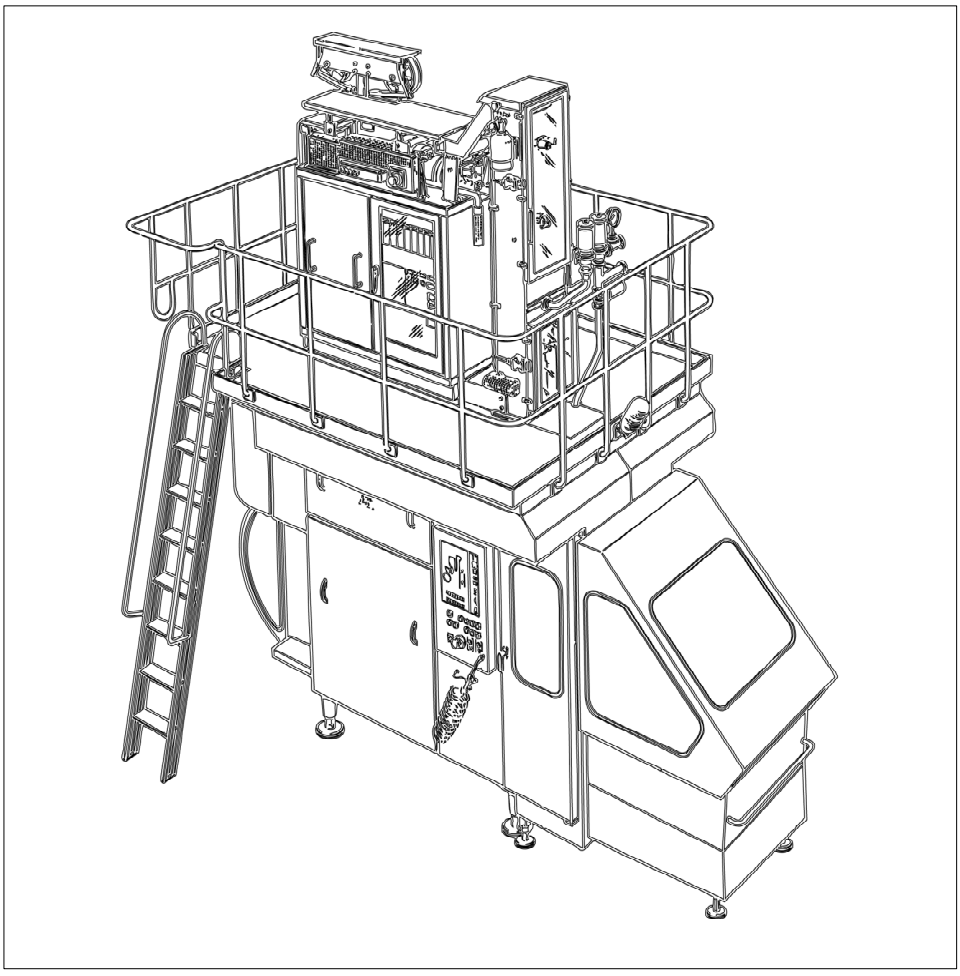

Tetra Pak

Doc. No: SPC-82241-0112

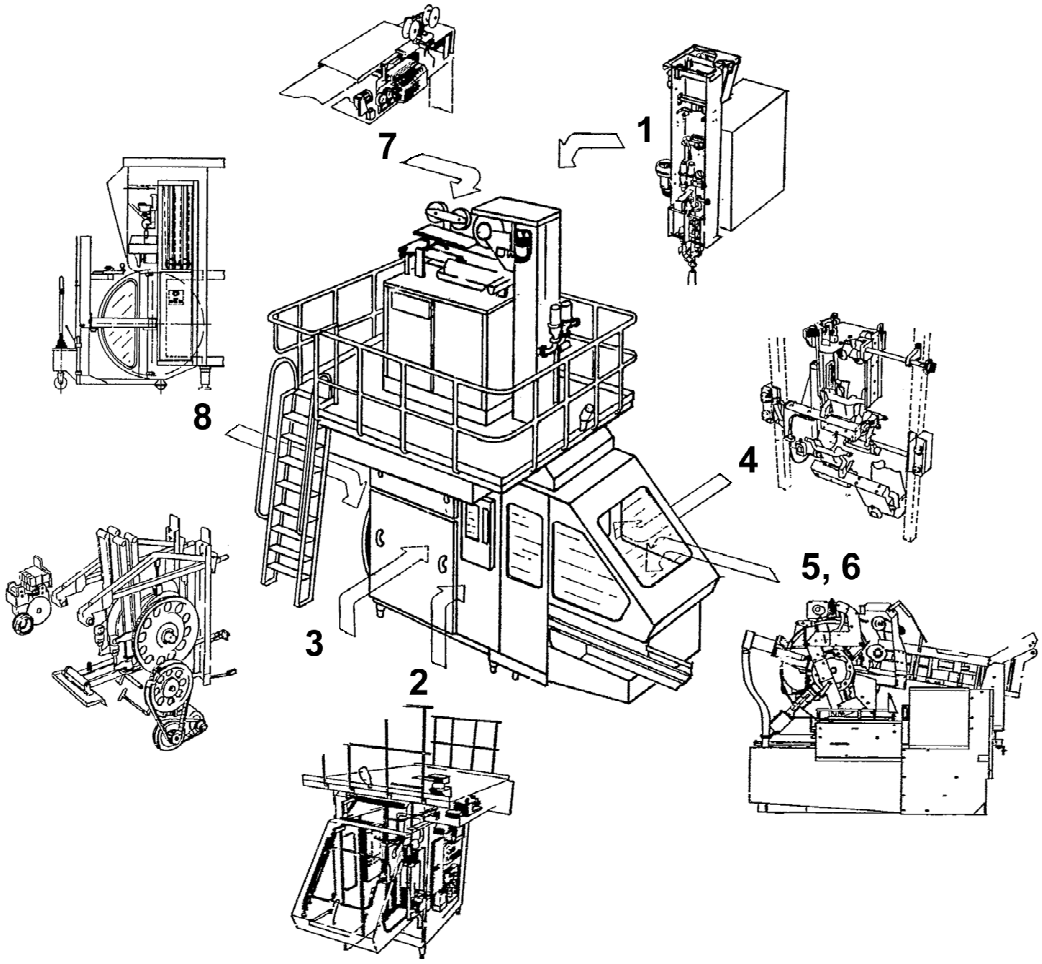

The position numbers in the illustration correspond with the chapter numbers listed on the next page.

Copyright © 2006 Tetra Pak Group

All rights reserved. No part of this document may be reproduced or copied in any form or by any means without written permission from Tetra Pak Carton Chilled AB.

Tetra Pak and all Tetra Pak products are trademarks belonging to the Tetra Pak Group.

The content of this manual is in accordance with the design and construction of the machine or equipment at the time of publishing. Tetra Pak reserves the right to introduce design modifications without prior notice.

This document was produced by:

Tetra Pak Carton Chilled AB
Ruben Rausings gata
SE-22186 LUND
Sweden

This Tetra Pak equipment was manufactured by:

Tetra Pak Carton Chilled AB
Ruben Rausings gata
SE-22186 LUND
Sweden

Additional copies can be ordered from Tetra Pak Technical Service or the nearest Tetra Pak office. When ordering additional copies, always provide the document number. This can be found in the machine specification document. It is also printed on the front cover and in the footer on each page of the manual.

Doc. No. SPC-82241-0112

Issue 2006-11

This document is valid from:

Series No/Machine No Sign.

SPC

Spare Parts Catalogue

TB/8 100V
648021-1000

A list of all optional equipment, optional kits, and rebuilding kits that this catalogue is valid for is found on the next page.

Doc. No: SPC-82241-0112

Issue 2006-11

Tetra Pak

Tetra Pak Carton Chilled AB

BINDER 1

i Introduction

1 Superstructure
B-648001-0800

2 Machine Body
B-648012-0800

3 Drive
B-648003-1000

4 Jaw System
B-648004-0900

5 Final Folder
B-648035-0700

6 Final Folder
B-648045-0100

7 Strip Applicator
B-648007-0400

8 Automatic Splicing Unit
B-648013-0600

BINDER 2

9 Electric Equipment
B-649057-1000

10 Regular Accessories
B-648009-0900

11 Optional Equipment
B-648026-0100

12 Optional Kits
B-648061-1000

13 Rebuilding Kits
B-648071-1000

14 Templates And Tools
B-648081-1000

ii Part Number Index

iii Alphabetical Index

iv Ref. Des. Parts Index

Valid for:

Jumbo Reel Equipment
268931-0100

MKC Air Dryer
597587-0100

MKC Bearing Housing
1338678-0100

MKC DCS2 Plus for TB/8-1002
2529941-0100

MKC Discharge Chute
2505169-0100

MKC Inproved USTS Jaw System
1365570-0100

MKC Knife Holder Spring
1285052-0100

MKC LS Sealing Available
597529-0100

MKC Middle Hydraulic System USTS
597527-0100

MKC New Impulse Transmitter Curve
1362446-0100

MKC Overload Protection Cam Kit
1347400-0100

MKC Simplified Reversed Fin Kit 2
1362445-0100

MKC Spring Holder
597593-0100

MKC Spring Knife 2
2529282-0100

MKC Strip Brake Supervision
2539286-0100

MKC Tube Adapted TPC Bars
1143220-0101

MKC USTS Serrated/Stepped Cutting Rail
2504997-0100

MKC USTS Split Cutting Rail
1366161-0100

MKC USTS Upgrade 1000 Sq
597571-0100

MKC Volume Flap Springs
1143615-0100

MKS Environment Kit
928013-0100

MKS Locking Pin
2727542-0100

OK Potlatch 320 nM (CTMP Freeboard)
2827006-0100

Rebuilding Kit Sharp Edges
594590-0100

Reverse Fin Kit
1285044-0100

RK Counter
2660701-0100

RK Frequency Converter
2660676-0100

RK Knife Spring
927600-0100

RK Paper Trolley
927668-0100

RK Recorder
2660700-0100

RK TPC 1000 Sq to USTS Hydraulic
595142-0100

RK US Drain Valve
592987-0100

RK US Hydraulic
592922-0100

UK Alarm Beacon
2767112-0100

UK Flap Sealing Kit
2505159-0100

UK Hold Down Device
597528-0100

UK Improved Strip Guide
2727709-0100

UK New Thyristor Unit
2504976-0100

UK New Version of Air Dryer
1362511-0100

UK Paper Holder Improvement
1346128-0100

UK Revolving Stand
2727622-0100

UK Simplified Reversed Fin Kit
597600-0100

UK Strip Guide
1347803-0100

UK USTS Cutting Rail
2653890-0100

UK Volume Flap Spring
1282642-0100

USTS Updating (TMCC)
559624-0100

Update Log for Doc. No. SPC-82241-0112

This table shows all changes made to this catalogue, such as kits installed and pages added or removed.

Date	Installed Kit	Added Pages (Doc. No.)	Removed Pages	Signature

Date	Installed Kit	Added Pages (Doc. No.)	Removed Pages	Signature

i Introduction

en About the Introduction Chapter
This chapter contains basic information about this catalogue and related Tetra Pak equipment.

cs Seznámení s úvodní kapitolou
Tato kapitola obsahuje základní informace o tomto katalogu a o příslušném zařízení Tetra Pak.

da Om indledningen
Kapitlet indeholder grundlæggende oplysninger om dette katalog og tilhørende Tetra Pak-udstyr.

de Zur Einleitung
Dieses Kapitel enthält grundlegende Informationen zu diesem Handbuch und der entsprechenden Tetra Pak Ausrüstung.

el Σχετικά με το Κεφάλαιο 'Εισαγωγή'
Αυτό το κεφάλαιο περιέχει βασικές πληροφορίες για τον παρόντα κατάλογο και τον σχετικό εξοπλισμό της Tetra Pak.

es Sobre el Capítulo de Introducción
Este capítulo contiene información básica sobre este manual y el equipo Tetra Pak relacionado.

et Sissejuhatava peatüki kohta
Sellest peatükist leiate põhiinfo kataloogi ja Tetra Pak seadmete kohta.

fi Tietoja Johdanto-luvusta
Tässä luvussa on perustietoja tästä luettelosta ja Tetra Pak -laitteesta.

fr Concernant le chapitre d'Introduction
Le présent chapitre contient les renseignements de base concernant ce manuel et l'équipement Tetra Pak concerné.

hu A Bevezetés fejezetről
Ezen fejezet alapvető információt tartalmaz jelen kézikönyvről és a kapcsolódó Tetra Pak berendezésről.

it Informazioni sulla sezione Introduzione
Questa sezione contiene informazioni generali sul presente catalogo e la relativa macchina Tetra Pak.

lt Apie pristatymo skyrių
Šiame skyriuje yra pagrindinė informacija apie šį katalogą ir su juo susijusią Tetra Pak įrangą.

lv Par Ievada nodaļu
Šī nodaļa satur galveno informāciju par katalogu un par Tetra Pak iekārtām, uz kurām tas attiecas.

mt Dwar il-Kapitlu ta' l-Introduzzjoni
Dan il-kapitlu fih informazzjoni bażika dwar dan il-katalgu u tagħmir relatat ta' Tetra Pak.

nl Omtrent het hoofdstuk Inleiding
Dit hoofdstuk bevat basisinformatie betreffende dit handboek en daarmee verband houdende apparatuur van Tetra Pak.

no Om kapitlet Introduksjon
Dette kapitlet inneholder grunnleggende informasjon om denne katalogen og relatert Tetra Pak-ustyr.

pl Informacje na temat Rozdziału Wprowadzającego
Rozdział ten zawiera podstawowe informacje na temat niniejszego katalogu i związanego z nim wyposażenia Tetra Pak.

pt Sobre o capítulo Introdução
Este capítulo contém informações básicas sobre este catálogo e ao equipamento Tetra Pak relacionado.

sk O úvodnej kapitole
Táto kapitola obsahuje základné informácie o tomto katalógu a príslušnom zariadení Tetra Pak.

sl Informacija o uvodnem poglavju
Poglavje vsebuje osnovne informacije o tem katalogu in opremi Tetra Pak.

sv Om inledningskapitlet
Det här kapitlet innehåller grundläggande information om katalogen och Tetra Pak-utrustningen.

Introduction

Illustrations . . . . . i - 5
English Text . . . . . i - 7

Úvod

Obrázky . . . . . i - 5
Český text . . . . . i - 11

Indledning

Illustrationer . . . . . i - 5
Dansk tekst . . . . . i - 15

Einleitung

Abbildungen . . . . . i - 5
Deutscher Text . . . . . i - 19

Εισαγωγή

Εικόνες . . . . . i - 5
Ελληνικό Κείμενο . . . . . i - 23

Introducción

Ilustraciones . . . . . i - 5
Texto español . . . . . i - 27

Sissejuhatus

Illustratsioonid . . . . . i - 5
Eestikeelne tekst . . . . . i - 31

Johdanto

Kuvat . . . . . i - 5
Suomenkielinen teksti . . . . . i - 35

Introduction

Figures . . . . . i - 5
Texte français . . . . . i - 39

Bevezetés

Ábrák . . . . . i - 5
Magyar szöveg . . . . . i - 43

Introduzione

Figure . . . . . i - 5
Testo in italiano . . . . . i - 47

Įvadas

Iliustracijos . . . . . i - 5
Lietuviškas tekstas . . . . . i - 51

Ievads

Ilustrācijas . . . . . i - 5
Latviešu teksts . . . . . i - 55

Introduzzjoni

Stampi . . . . . i - 5
Test bil-Malti . . . . . i - 59

Inleiding

Illustraties . . . . . i - 5
Nederlands tekst . . . . . i - 63

Introduksjon

Illustrasjoner . . . . . i - 5
Norsk tekst . . . . . i - 67

Wprowadzenie

Ilustracje . . . . . i - 5
Tekst po polsku . . . . . i - 71

Introdução

Ilustrações . . . . . i - 5
Texto em portugese . . . . . i - 75

Úvod

Zobrazenie . . . . . i - 5
Slovenský text . . . . . i - 79

Uvod

Risbe . . . . . i - 5
Slovensko besedilo . . . . . i - 83

Inledning

Bilder . . . . . i - 5
Svensk text . . . . . i - 87

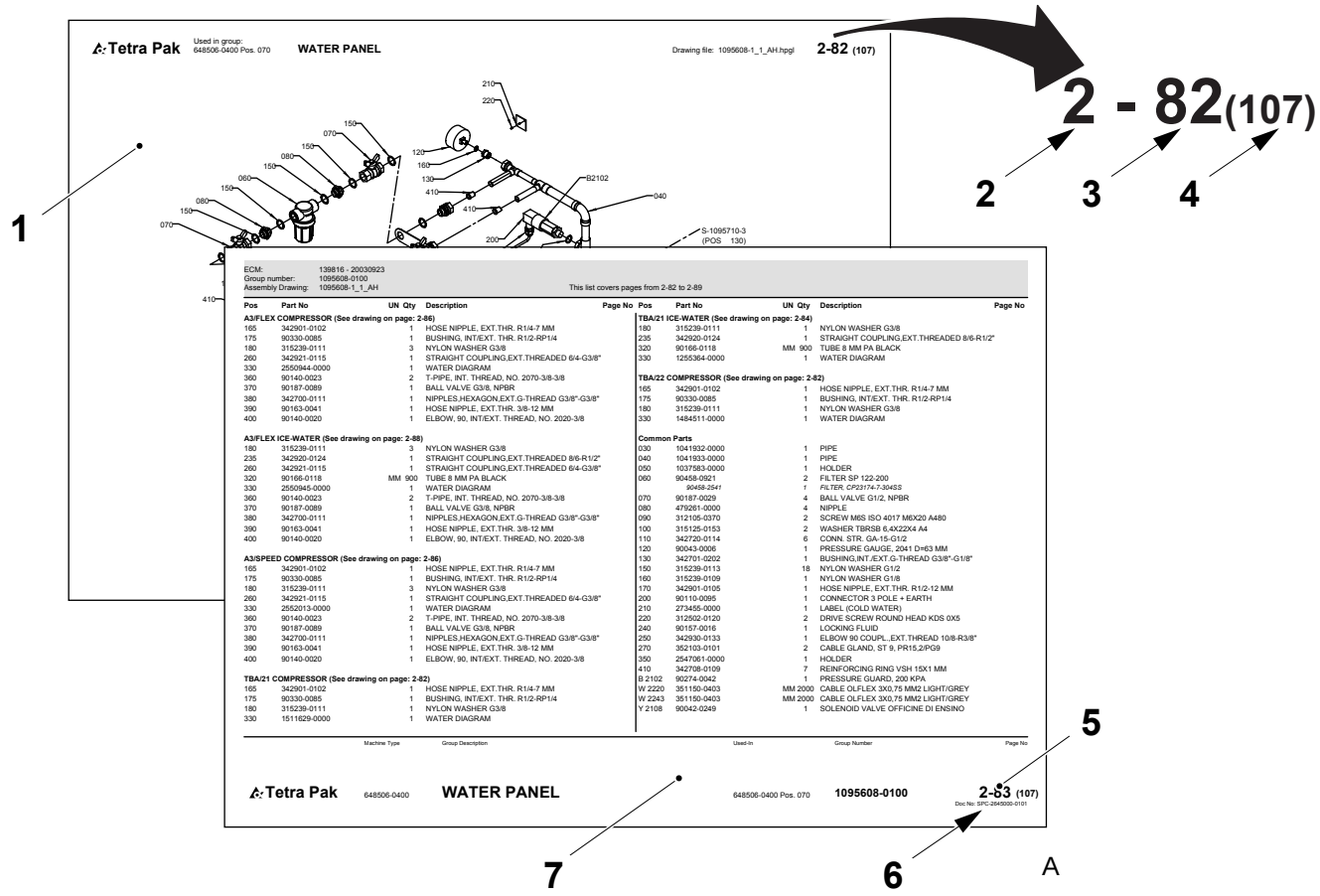
Tetra Pak
Used in group:
648506-0400 Pos. 070
WATER PANEL
Drawing file: 1095608-1_1_AH.hpgl
2-82 (107)
2 - 82(107)
1
2
3
4
5
6
7
A
ECM: 139816 - 20030923
Group number: 1095608-0100
Assembly Drawing: 1095608-1_1_AH
This list covers pages from 2-82 to 2-89
Tetra Pak
648506-0400
WATER PANEL
648506-0400 Pos. 070
1095608-0100
2-83 (107)

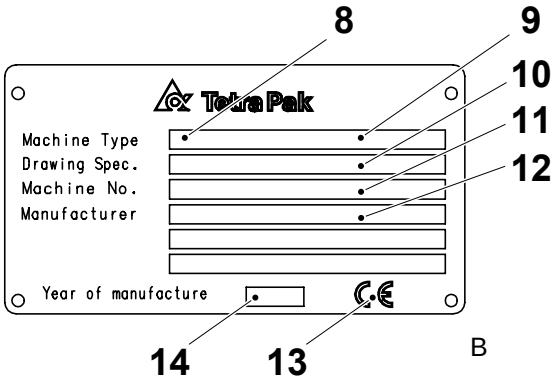
8
9
10
11
12
Tetra Pak
Machine Type
Drawing Spec.
Machine No.
Manufacturer
Year of manufacture
14
13
B

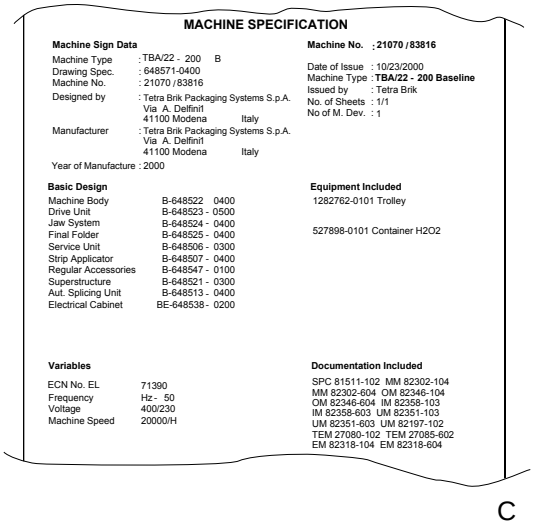
MACHINE SPECIFICATION
Machine Sign Data
Machine Type : TBA/22 - 200 B
Drawing Spec. : 648571-0400
Machine No. : 21070 / 83816
Designed by : Tetra Brik Packaging Systems S.p.A. Via A. Delfini1 41100 Modena Italy
Manufacturer : Tetra Brik Packaging Systems S.p.A. Via A. Delfini1 41100 Modena Italy
Year of Manufacture : 2000
Machine No. : 21070 / 83816
Date of Issue : 10/23/2000
Machine Type : TBA/22 - 200 Baseline
Issued by : Tetra Brik
No. of Sheets : 1/1
No of M. Dev. : 1
Basic Design
Machine Body B-648522 0400
Drive Unit B-648523 - 0500
Jaw System B-648524 - 0400
Final Folder B-648525 - 0400
Service Unit B-648506 - 0300
Strip Applicator B-648507 - 0400
Regular Accessories B-648547 - 0100
Superstructure B-648521 - 0300
Aut. Splicing Unit B-648513 - 0400
Electrical Cabinet BE-648538 - 0200
Equipment Included
1282762-0101 Trolley
527898-0101 Container H2O2
Variables
ECN No. EL 71390
Frequency Hz - 50
Voltage 400/230
Machine Speed 20000/H
Documentation Included
SPC 81511-102 MM 82302-104
MM 82302-604 OM 82346-104
OM 82346-604 IM 82358-103
IM 82358-603 UM 82351-103
UM 82351-603 UM 82197-102
TEM 27080-102 TEM 27085-602
EM 82318-104 EM 82318-604
C

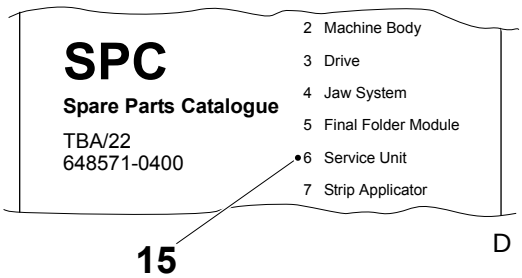
SPC
Spare Parts Catalogue
TBA/22
648571-0400
2 Machine Body
3 Drive
4 Jaw System
5 Final Folder Module
6 Service Unit
7 Strip Applicator
15
D

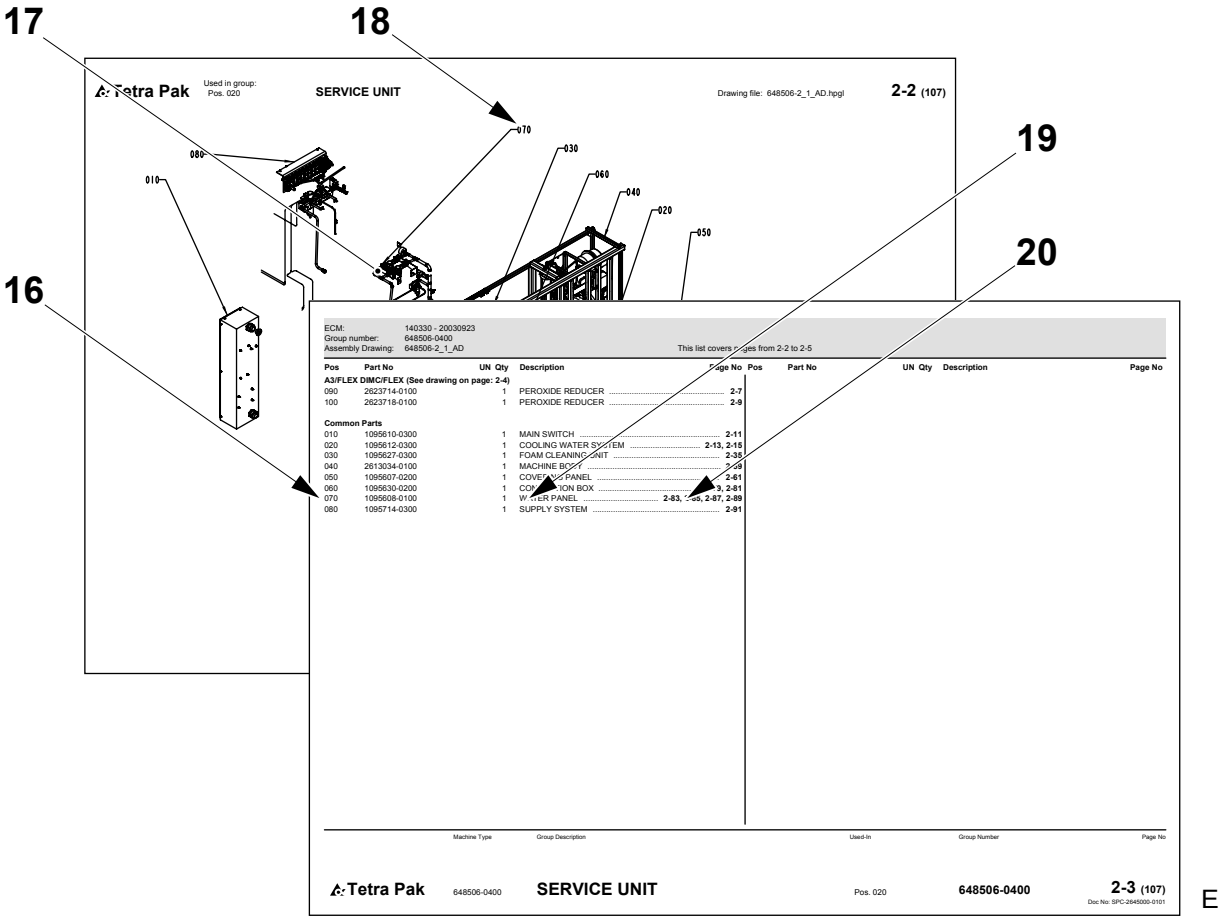
17
18
19
20
16
Tetra Pak
Used in group:
Pos. 020
SERVICE UNIT
Drawing file: 648506-2_1_AD.hpgl
2-2 (107)
070
030
080
060
010
040
020
050
ECM: 140330 - 20030923
Group number: 648506-0400
Assembly Drawing: 648506-2_1_AD
This list covers pages from 2-2 to 2-5
Pos Part No UN Qty Description Page No
A3/FLEX DIMC/FLEX (See drawing on page: 2-4)
090 2623714-0100 1 PEROXIDE REDUCER 2-7
100 2623718-0100 1 PEROXIDE REDUCER 2-9
Common Parts
010 1095610-0300 1 MAIN SWITCH 2-11
020 1095612-0300 1 COOLING WATER SYSTEM 2-13, 2-15
030 1095627-0300 1 FOAM CLEANING UNIT 2-35
040 2613034-0100 1 MACHINE BODY 2-59
050 1095607-0200 1 COVERING PANEL 2-61
060 1095630-0200 1 CONTROL BOX 2-73, 2-81
070 1095608-0100 1 WATER PANEL 2-83, 2-87, 2-89
080 1095714-0300 1 SUPPLY SYSTEM 2-91
Machine Type
Group Description
Used-In
Group Number
Page No
Tetra Pak
648506-0400
SERVICE UNIT
Pos. 020
648506-0400
2-3 (107)
Doc No: SPC-2645000-0101
E

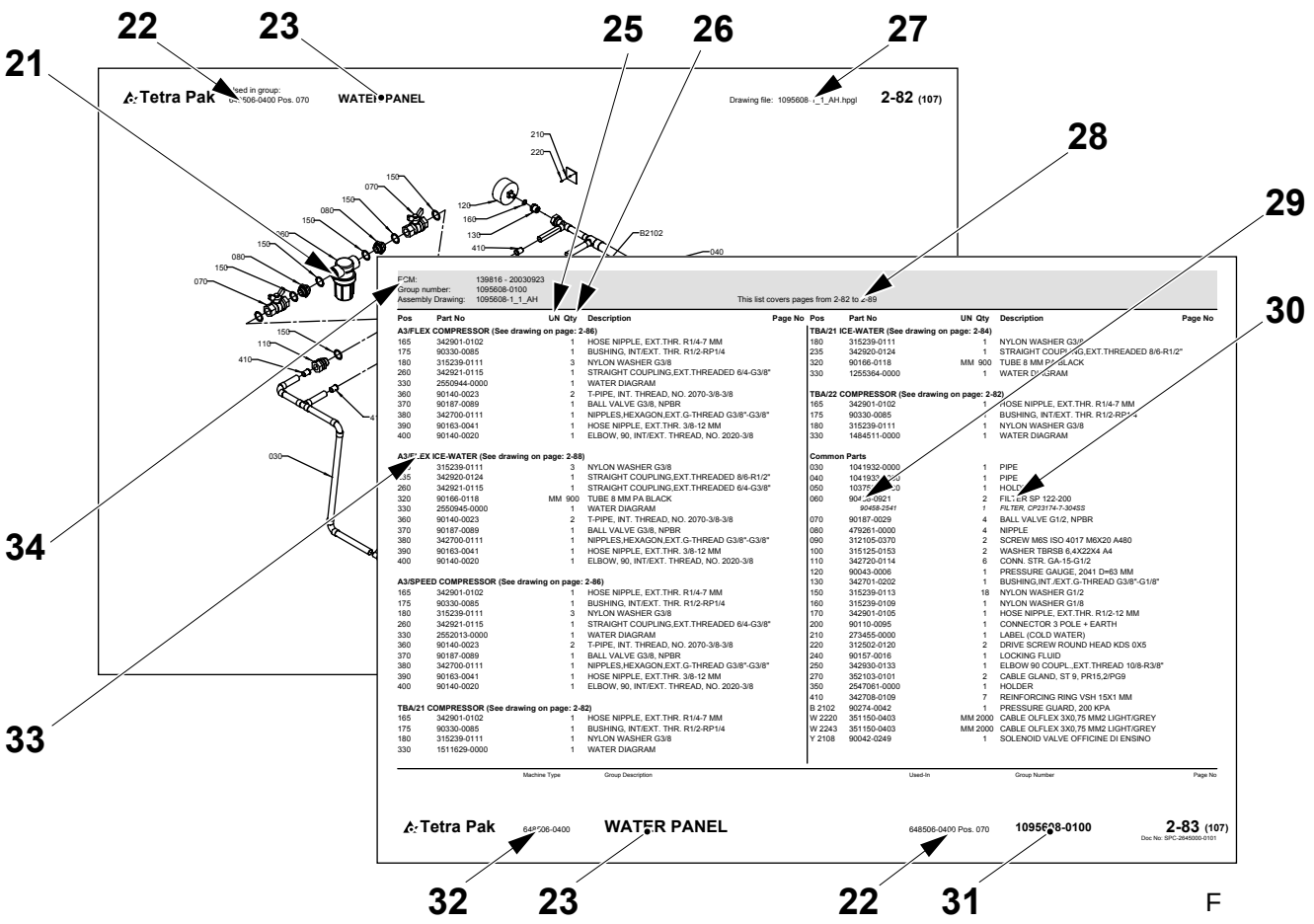
22
23
25
26
27
21
28
29
30
34
33
Tetra Pak
Used in group:
Pos. 070
WATER PANEL
Drawing file: 1095608-1_1_AH.hpgl
2-82 (107)
210
220
150
070
080
120
160
130
410
B2102
040
030
110
ECM: 139816 - 20030923
Group number: 1095608-0100
Assembly Drawing: 1095608-1_1_AH
This list covers pages from 2-82 to 2-89
Pos Part No UN Qty Description Page No
A3/FLEX COMPRESSOR (See drawing on page: 2-86)
165 342901-0102 1 HOSE NIPPLE, EXT.THR. R1/4-7 MM
175 90330-0085 1 BUSHING, INT/EXT. THR. R1/2-RP1/4
180 315239-0111 3 NYLON WASHER G3/8
260 342921-0115 1 STRAIGHT COUPLING,EXT.THREADED 6/4-G3/8"
330 2550944-0000 1 WATER DIAGRAM
360 90140-0023 2 T-PIPE, INT. THREAD, NO. 2070-3/8-3/8
370 90187-0089 1 BALL VALVE G3/8, NPBR
380 342700-0111 1 NIPPLES,HEXAGON,EXT.G-THREAD G3/8"-G3/8"
390 90163-0041 1 HOSE NIPPLE, EXT.THR. 3/8-12 MM
400 90140-0020 1 ELBOW, 90, INT/EXT. THREAD, NO. 2020-3/8
A3/FLEX ICE-WATER (See drawing on page: 2-88)
[illegible] 315239-0111 3 NYLON WASHER G3/8
[illegible] 342920-0124 1 STRAIGHT COUPLING,EXT.THREADED 8/6-R1/2"
260 342921-0115 1 STRAIGHT COUPLING,EXT.THREADED 6/4-G3/8"
320 90166-0118 MM 900 TUBE 8 MM PA BLACK
330 2550945-0000 1 WATER DIAGRAM
360 90140-0023 2 T-PIPE, INT. THREAD, NO. 2070-3/8-3/8
370 90187-0089 1 BALL VALVE G3/8, NPBR
380 342700-0111 1 NIPPLES,HEXAGON,EXT.G-THREAD G3/8"-G3/8"
390 90163-0041 1 HOSE NIPPLE, EXT.THR. 3/8-12 MM
400 90140-0020 1 ELBOW, 90, INT/EXT. THREAD, NO. 2020-3/8
A3/SPEED COMPRESSOR (See drawing on page: 2-86)
165 342901-0102 1 HOSE NIPPLE, EXT.THR. R1/4-7 MM
175 90330-0085 1 BUSHING, INT/EXT. THR. R1/2-RP1/4
180 315239-0111 3 NYLON WASHER G3/8
260 342921-0115 1 STRAIGHT COUPLING,EXT.THREADED 6/4-G3/8"
330 2552013-0000 1 WATER DIAGRAM
360 90140-0023 2 T-PIPE, INT. THREAD, NO. 2070-3/8-3/8
370 90187-0089 1 BALL VALVE G3/8, NPBR
380 342700-0111 1 NIPPLES,HEXAGON,EXT.G-THREAD G3/8"-G3/8"
390 90163-0041 1 HOSE NIPPLE, EXT.THR. 3/8-12 MM
400 90140-0020 1 ELBOW, 90, INT/EXT. THREAD, NO. 2020-3/8
TBA/21 COMPRESSOR (See drawing on page: 2-82)
165 342901-0102 1 HOSE NIPPLE, EXT.THR. R1/4-7 MM
175 90330-0085 1 BUSHING, INT/EXT. THR. R1/2-RP1/4
180 315239-0111 1 NYLON WASHER G3/8
330 1511629-0000 1 WATER DIAGRAM
TBA/21 ICE-WATER (See drawing on page: 2-84)
180 315239-0111 1 NYLON WASHER G3/8
235 342920-0124 1 STRAIGHT COUPLING,EXT.THREADED 8/6-R1/2"
320 90166-0118 MM 900 TUBE 8 MM PA BLACK
330 1255364-0000 1 WATER DIAGRAM
TBA/22 COMPRESSOR (See drawing on page: 2-82)
165 342901-0102 1 HOSE NIPPLE, EXT.THR. R1/4-7 MM
175 90330-0085 1 BUSHING, INT/EXT. THR. R1/2-RP1/4
180 315239-0111 1 NYLON WASHER G3/8
330 1484511-0000 1 WATER DIAGRAM
Common Parts
030 1041932-0000 1 PIPE
040 1041933-0000 1 PIPE
050 1037[illegible]-0000 1 HOLDER
060 904[illegible]-0921 2 FILTER SP 122-200
90458-2541 1 FILTER, CP23174-7-304SS
070 90187-0029 4 BALL VALVE G1/2, NPBR
080 479261-0000 4 NIPPLE
090 312105-0370 2 SCREW M6S ISO 4017 M6X20 A480
100 315125-0153 2 WASHER TBRSB 6,4X22X4 A4
110 342720-0114 6 CONN. STR. GA-15-G1/2
120 90043-0006 1 PRESSURE GAUGE, 2041 D=63 MM
130 342701-0202 1 BUSHING,INT./EXT.G-THREAD G3/8"-G1/8"
150 315239-0113 18 NYLON WASHER G1/2
160 315239-0109 1 NYLON WASHER G1/8
170 342901-0105 1 HOSE NIPPLE, EXT.THR. R1/2-12 MM
200 90110-0095 1 CONNECTOR 3 POLE + EARTH
210 273455-0000 1 LABEL (COLD WATER)
220 312502-0120 2 DRIVE SCREW ROUND HEAD KDS 0X5
240 90157-0016 1 LOCKING FLUID
250 342930-0133 1 ELBOW 90 COUPL.,EXT.THREAD 10/8-R3/8"
270 352103-0101 2 CABLE GLAND, ST 9, PR15,2/PG9
350 2547061-0000 1 HOLDER
410 342708-0109 7 REINFORCING RING VSH 15X1 MM
B 2102 90274-0042 1 PRESSURE GUARD, 200 KPA
W 2220 351150-0403 MM 2000 CABLE OLFLEX 3X0,75 MM2 LIGHT/GREY
W 2243 351150-0403 MM 2000 CABLE OLFLEX 3X0,75 MM2 LIGHT/GREY
Y 2108 90042-0249 1 SOLENOID VALVE OFFICINE DI ENSINO
Machine Type
Group Description
Used-In
Group Number
Page No
Tetra Pak
648506-0400
WATER PANEL
648506-0400 Pos. 070
1095608-0100
2-83 (107)
Doc No: SPC-2648000-0101
32
23
22
31
F

Introduction

Manual Information

Tetra Pak recommends reading all delivered manuals carefully. Make sure that the delivered manuals are available to personnel who operate or maintain the equipment.

It is important to keep this catalogue for the lifetime of the equipment and to pass the catalogue on to any subsequent holder or user.

Tetra Pak will not be held responsible for any damage to the equipment caused by not following the instructions given in the manuals that accompany this equipment.

Delivered Manuals

The manuals delivered with this equipment may include

- Conversion Manual (CM)
  This manual provides technicians with information on converting the equipment between different production modes.
- Electrical Manual (EM)
  This manual provides technicians with information about the equipment's electrical system.
- Installation Manual (IM)
  This manual provides technicians with information required to safely install the equipment.
- Maintenance Manual (MM)
  This manual provides technicians with information on maintaining the equipment.
- Operation Manual (OM)
  This manual provides the operator with information on handling and operating the equipment before, during, and after production.
- Spare Parts Catalogue (SPC)
  This manual provides the information necessary to order spare parts from Tetra Pak.
- Technical Manual (TeM)
  - provides technicians with information required to safely install the equipment
  - provides technicians with information on maintaining the equipment
  - provides technicians with information about the equipment's electrical system
  - provides the information necessary to order spare parts from Tetra Pak

Page Layout

Refer to the illustration (A) on page i-5: The main pages in a Spare Parts Catalogue consist of an illustration page (1) and a corresponding list page (7). The page number (5) is shown in the header of an illustration page and in the footer of a list page. The document number (6) is shown in the footer of a list page.

Page Numbering

Refer to the illustration (A) on page i-5: A page number (5) has three parts:

- chapter number (2)
- consecutive page number within the chapter (3)
- total number of pages in the chapter (4)

Machine Introduction

Manufacturer

For the manufacturer's name and address, see the second page of this catalogue.

Service

To order spare parts for this machine, or to report problems associated with operating this machine, contact the nearest Tetra Pak office.

Contact the Liaison with other inquiries, comments, or suggestions for improvement regarding the equipment and its documentation.

Identification

CE Classification

This equipment complies with the basic health and safety regulations of the European Economic Area (EEA).

Machine Plate

The illustration (B) on page i-5 shows an example of a machine plate. An illustration of the valid machine plate and its location on the equipment is shown in the Introduction chapter of the manuals delivered with this equipment. The machine plate contains the data listed below, needed when contacting Tetra Pak concerning this specific equipment.

- Machine type (8)
- Volume (9)
- Drawing specifications (10)
- Machine serial number (11)
- Manufacturer (12)
- CE mark (13)
- Year of manufacture (14)

The illustration (C) on page i-5 shows an example of a machine specification. Make sure that the equipment data listed in the front pages of this manual corresponds to the machine plate data and the machine specification.

How to Use This Spare Parts Catalogue

Locate a Spare Part Number

a) Refer to the illustration (D) on page i-5: Go to the chapter number (15) indicated beside the main group that contains the part you want to locate.

Items b) and c) refer to the illustration (E) on page i-6.

b) On the main group illustration, look for the machine subgroup (17) that contains the part or subgroup you are looking for. Note the position number (18) and go to the list page that follows the illustration.

c) Look for the position number (16) or the subgroup name (19). Go to the corresponding page number (20) listed in the right-hand column.

Items d) and e) refer to the illustration (F) on page i-6.

d) Locate the part (21) that you are looking for on the subgroup illustration and note the part's position number.

e) The part number (29) and part description (30) are listed beside the position number on the list page.

Information Listed in a Spare Parts Catalogue

The list below refers to the illustration (F) on page i-6. A Spare Parts Catalogue contains the following information about groups, subgroups, and spare parts for the equipment:

- Group structure reference (22). Indicates the next higher group in the equipment list structure.
- Group name (23)
- Unit of measure (25)
- Quantity (26)
- Assembly drawing number (27)
- List page range (28). Included if there are multiple pages in the group illustration or list.
- Part or subgroup number (29)
- Subgroup name or part description (30)
- Group number (31)
- Equipment number (32)
- Group information heading (33). Indicates if the section below the heading is for a specific machine variant or if it is a list of common parts. If a list has more than one variant and each variant has its own assembly drawing, a page reference to the variant's assembly drawing is shown.
- Internal information (34)

Úvod

Informace o příručce

Společnost Tetra Pak doporučuje, abyste se důkladně seznámili se všemi dodanými příručkami. Dodané příručky musí být k dispozici pracovníkům, kteří provádějí obsluhu nebo údržbu zařízení.

Tento katalog je třeba uchovávat po celou dobu životnosti zařízení a předat jej každému dalšímu vlastníkovi nebo uživateli.

Společnost Tetra Pak nezodpovídá za škody na zařízení způsobené nedodržováním pokynů uvedených v příručkách dodaných se zařízením.

Dodané příručky

Mezi příručky dodané se zařízením patří:

- Příručka pro konverzi (CM)
  Tato příručka obsahuje informace pro techniky o konverzi zařízení mezi jednotlivými výrobními režimy.
- Příručka pro elektroinstalaci (EM)
  Tato příručka obsahuje informace pro techniky o elektroinstalaci zařízení.
- Příručka pro instalaci (IM)
  Tato příručka obsahuje informace pro techniky týkající se bezpečné instalace zařízení.
- Příručka pro obsluhu (MM)
  Tato příručka obsahuje informace pro techniky o údržbě zařízení.
- Provozní příručka (OM)
  Tato příručka obsahuje informace pro obsluhu o manipulaci a provozu zařízení před, během a po výrobě.
- Katalog náhradních dílů (SPC)
  Tato příručka obsahuje informace nezbytné pro objednávání náhradních dílů od společnosti Tetra Pak.
- Technická příručka (TeM)
  - obsahuje informace pro techniky týkající se bezpečné instalace zařízení
  - obsahuje informace pro techniky o údržbě zařízení
  - obsahuje informace pro techniky o elektroinstalaci zařízení
  - obsahuje informace nezbytné pro objednávání náhradních dílů od společnosti Tetra Pak

Vzhled stránky

Viz obrázek (A) na stránce i-5: hlavní stránky v katalogu náhradních dílů se skládají ze stránky s obrázkem (1) a z odpovídající katalogové stránky (7). Číslo stránky (5) je uvedeno v záhlaví stránky s obrázkem a v zapatí katalogové stránky. Číslo dokumentu (6) je uvedeno v záhlaví katalogové stránky.

Číslování stránek

Viz obrázek (A) na stránce i-5: číslo stránky (5) se skládá ze tří částí:

- číslo kapitoly (2)
- číslo další stránky (3) v rámci kapitoly
- celkový počet stránek (4) v kapitole

Seznámení se zařízením

Výrobce

Název a adresa výrobce jsou uvedeny na druhé stránce tohoto katalogu.

Servis

Chcete-li objednat náhradní díly pro toto zařízení nebo chcete-li ohlásit potíže spojené s provozem zařízení, obrat'te se na nejbližší pobočku společnosti Tetra Pak.

S ostatními stížnostmi, připomínkami nebo zlepšovacími návrhy v souvislosti se zařízením a dokumentací se obrat'te na zastoupení společnosti.

Označení

Klasifikace CE

Toto zařízení vyhovuje základním zdravotním a bezpečnostním směrnicím EEA (European Economic Area).

Typový štítek

Na obrázku (B) na stránce i-5 je uveden příklad typového štítku zařízení. Příslušné typové štítky a jejich umístění na zařízení jsou uvedeny v kapitole Úvod v příručkách dodaných se zařízením. Typový štítek obsahuje níže uvedené údaje, které je třeba uvést při kontaktování společnosti Tetra Pak ohledně tohoto zařízení.

- typ zařízení (8)
- množství (9)
- označení schémat (10)
- sériové číslo zařízení (11)
- výrobce (12)
- symbol CE (13)
- rok výroby (14)

Na obrázku (C) na stránce i-5 je uveden příklad specifikace zařízení. Údaje o zařízení uvedené na předních stránkách této příručky musí souhlasit s údaji na typovém štítku a se specifikacemi zařízení.

Jak používat tento katalog náhradních dílů

Vyhledání čísla náhradního dílů

a) Viz obrázek (D) na stránce i-5: přejdete na číslo kapitoly (15) uvedené vedle hlavní skupiny, která obsahuje hledaný díl.

Položky b) a c) odkazují na obrázek (E) na stránce i-6.

b) Na obrázku hlavní skupiny vyhledejte podskupinu zařízení (17) která obsahuje hledaný díl nebo podskupinu. Zapamatujte si číslo umístění (18) a přejděte na katalogovou stránku, která následuje obrázek.

c) Vyhledejte číslo umístění (16) nebo název podskupiny (19). Přejděte na příslušné číslo stránky (20) uvedené v pravém sloupci.

Položky d) a e) odkazují na obrázek (F) na stránce i-6.

d) Na obrázku podskupiny vyhledejte požadovaný díl (21) a poznamenejte si číslo jeho umístění.

e) Na katalogové stránce je vedle čísla umístění uvedeno číslo dílu (29) a popis (30).

Informace uvedené v katalogu náhradních dílů

Následující seznam odkazuje na obrázek (F) na stránce i-6. Katalog náhradních dílů obsahuje následující informace o skupinách, podskupinách a náhradních dílech pro toto zařízení:

- Označení struktury skupiny (22). Označuje další vyšší skupinu ve struktuře katalogu zařízení.
- Název skupiny (23)
- Měrné jednotky (25)
- Množství (26)
- Číslo schématu součásti (27)
- Rozsah katalogových stránek (28). Je uvedeno, pokud obrázek skupiny nebo katalog obsahují více stránek.
- Číslo dílu nebo podskupiny (29)
- Název podskupiny nebo popis dílu (30)
- Číslo skupiny (31)
- Číslo zařízení (32)
- Nadpis informací o skupině (33). Označuje, zda se oddíl pod nadpisem vztahuje na konkrétní variantu zařízení nebo představuje katalog běžných dílů. Pokud některý katalog obsahuje více, než jednu variantu, a pokud má každá varianta vlastní schéma součásti, zobrazí se odkaz na stránku se schématem součásti dané varianty.
- Vnitřní informace (34)

Indledning

Information om manualen

Tetra Pak anbefaler, at alle leverede manualer læses omhyggeligt. Sørg for, at de leverede manualer er tilgængelige for medarbejdere, der betjener eller vedligeholder udstyret.

Det er vigtigt at opbevare dette katalog hele udstyrets levetid og give kataloget videre til eventuelt kommende ejere eller brugere.

Tetra Pak kan ikke holdes ansvarlig for eventuel beskadigelse af udstyr, der opstår, fordi instruktionerne i manualerne til dette udstyr ikke følges.

Leverede manualer

De manualer, der leveres sammen med dette udstyr, kan omfatte:

- Konverteringsmanual (CM)
  Denne manual forsyner teknikere med informationer om konvertering af udstyret mellem forskellige produktionstilstande.
- Elektrisk manual (EM)
  Denne manual forsyner teknikere med informationer om udstyrets elektriske system.
- Installationsmanual (IM)
  Denne manual forsyner teknikere med informationer, der er nødvendige for en sikker installation af udstyret.
- Vedligeholdelsesmanual (MM)
  Denne manual forsyner teknikere med informationer om vedligeholdelse af udstyret.
- Betjeningsmanual (OM)
  Denne manual forsyner operatøren med informationer om håndtering og betjening af udstyret før, under og efter produktion.
- Reservedelskatalog (SPC)
  Denne manual indeholder de informationer, der er nødvendige for at kunne bestille reservedele fra Tetra Pak.
- Teknisk manual (TeM)
  - forsyner teknikere med informationer, der er nødvendige for en sikker installation af udstyret.
  - forsyner teknikere med informationer om vedligeholdelse af udstyret.
  - forsyner teknikere med informationer om udstyrets elektriske system.
  - indeholder de informationer, der er nødvendige for at kunne bestille reservedele fra Tetra Pak.

Sidelayout

Se illustrationen (A) på side i-5: Hovedsiderne i et reservedelskatalog består af en illustrationsside (1) og en tilsvarende listeside (7). Sidenummeret (5) vises i sidehovedet på en illlustrationsside og i sidefoden på en listeside. Dokumentnummeret (6) vises i sidefoden på en listeside.

Sidenummerering

Se illustrationen (A) på side i-5: Et sidenummer (5) har tre dele:

- kapitelnummer (2)
- fortløbende sidenummer i kapitlet (3)
- samlet sideantal i kapitlet (4)

Præsentation af maskinen

Producent

Producentens navn og adresse findes på side to i dette katalog.

Service

Kontakt nærmeste Tetra Pak-kontor for at bestille reservedele eller rapportere problemer i forbindelse med betjening af denne maskine.

Kontakt kontaktpersonen med andre forespørgsler, kommentarer eller forslag til forbedringer af udstyret og dets dokumentation.

Identifikation

CE-klassificering

Dette udstyr overholder de grundlæggende sundheds- og sikkerhedsbestemmelser for Det Europæiske Økonomiske Samarbejdsområde (EØS).

Maskinskilt

Illustrationen (B) på side i-5 viser et eksempel på et maskinskilt. En illustration af et gyldigt maskinskilt og dets placering på udstyret er vist i indledningskapitlet i de manualer, der leveres med dette udstyr. Maskinskiltet indeholder nedennævnte data. Disse er nødvendige ved kontakt med Tetra Pak vedrørende dette specifikke udstyr.

- Maskintype (8)
- Volumen (9)
- Tegningsspecifikationer (10)
- Maskinens serienummer (11)
- Producent (12)
- CE-mærke (13)
- Produktionsår (14)

Illustrationen (C) på side i-5 viser et eksempel på en maskinspecifikation. Kontroller, at de udstyrsdata, der er anført på de første sider i denne manual, svarer til maskinskiltsdataene og maskinspecifikationen.

Sådan bruges dette reservedelskatalog

Find et reservedelsnummer

a) Se illustrationen (D) på side i-5: Gå til kapitelnummeret (15), der er angivet ved siden af hovedgruppen, der indeholder den del, der ønskes fundet.

Punkterne b) og c) refererer til illustrationen (E) på side i-6.

b) I hovedgruppeillustrationen skal man se efter maskinundergruppen (17), som indeholder den del eller undergruppe, der søges. Bemærk placeringsnummeret (18), og gå til listesiden, som følger illustrationen.

c) Se efter placeringsnummeret (16) eller undergruppens navn (19). Gå til det tilsvarende sidenummer (20) angivet i den højre kolonne.

Punkterne d) og e) refererer til illustrationen (F) på side i-6.

d) Find den del (21), du søger i undergruppeillustrationen, og notér delens placeringsnummer.

e) Reservedelsnummeret (29) og -beskrivelsen (30) er angivet ved siden af placeringsnummeret på listesiden.

Informationer der er angivet i et reservedelskatalog

Listen nedenfor refererer til illustrationen (F) på side i-6. Et reservedelskatalog indeholder følgende informationer om grupper, undergrupper og reservedele til udstyret:

- Gruppestrukturreference (22). Angiver næste overordnede gruppe i udstyrslistestrukturen.
- Gruppenavn (23)
- Måleenhed (25)
- Antal (26)
- Samletegningsnummer (27)
- Listens sideområde (28). Er angivet, hvis gruppeillustrationen eller -listen inkluderer mange sider.
- Del- eller undergruppenummer (29)
- Undergruppens navn eller delsbeskrivelse (30)
- Gruppenummer (31)
- Udstyrsnummer (32)
- Overskrift for gruppeinformation (33). Angiver om afsnittet under overskriften er for en specifik maskinvariant, eller om det er en liste over fælles dele. Hvis en liste har mere end én variant, og hver variant har sin egen samletegning, vises en sidereference til variantens samletegning.
- Intern information (34)

Einleitung

Handbuch-Informationen

Tetra Pak empfiehlt, alle gelieferten Handbücher sorgfältig zu lesen. Es muss sichergestellt werden, dass die gelieferten Handbücher dem Bediener- oder Wartungspersonal der Ausrüstung verfügbar sind.

Es ist wichtig, dieses Handbuch während der Lebensdauer der Ausrüstung vorzuhalten und es an nachfolgende Halter oder Benutzer weiterzugeben.

Tetra Pak ist nicht verantwortlich für Schäden an der Ausrüstung, die durch die Nichtbefolgung der Anweisungen dieses Handbuchs verursacht werden.

Gelieferte Handbücher

Die mit dieser Ausrüstung gelieferten Handbücher umfassen

- Umbauhandbuch (CM)
  Dieses Handbuch liefert den Technikern Informationen über den Umbau der Ausrüstung zwischen den verschiedenen Produktionsweisen.
- Elektrohandbuch (EM)
  Dieses Handbuch liefert den Technikern Informationen zum Elektrosystem der Ausrüstung.
- Installationshandbuch (IM)
  Dieses Handbuch liefert den Technikern Informationen für die sichere Installation der Ausrüstung.
- Wartungshandbuch (MM)
  Dieses Handbuch liefert den Technikern Informationen über die Wartung der Ausrüstung.
- Betriebshandbuch (OM)
  Dieses Handbuch liefert dem Bediener Informationen über die Handhabung und den Betrieb der Ausrüstung vor, während und nach der Produktion.
- Ersatzteilkatalog (SPC)
  Dieses Handbuch liefert Informationen, wie sie für die Bestellung von Ersatzteilen bei Tetra Pak erforderlich sind.
- Technisches Handbuch (TeM)
  - liefert den Technikern Informationen für die sichere Installation der Ausrüstung
  - liefert den Technikern Informationen über die Wartung der Ausrüstung
  - liefert den Technikern Informationen über das Elektrosystem der Ausrüstung
  - liefert die erforderlichen Informationen für die Bestellung von Ersatzteilen bei Tetra Pak.

Seitenlayout

Bezugnahme Abbildung (A) auf Seite i-5: Die Hauptseiten in einem Ersatzteilkatalog bestehen aus einer Abbildungsseite (1) und einer entsprechenden Listenseite (7). Die Seitennummer (5) ist im Kopf einer Abbilldungsseite und im Fuß einer Listenseite aufgeführt. Die Dokumentennummer (6) ist ist im Fuß einer Listenseite angegeben.

Seitennummerierung

Bezugnahme Abbildung (A) auf Seite i-5: Eine Seitennummer (5) besteht aus drei Teilen:

- Kapitelnummer (2)
- Fortlaufende Seitennummer innerhalb des Kapitels (3)
- Gesamtanzahl der Seiten im Kapitel (4)

Einführung in die Maschine

Hersteller

Für Name und Anschrift des Herstellers, siehe die zweite Seite dieses Kataloges.

Service

Um Ersatzteile für diese Maschine zu bestellen oder um über Probleme beim Betrieb dieser Maschine zu berichten, ist das nächstgelegene Büro von Tetra Pak anzusprechen.

Mit anderen Anfragen. Kommentaren oder Vorschlägen zur Ausrüstung und der Dokumentation ist die Verbindungsstelle anzusprechen.

Identifizierung

CE-Klassifizierung

Diese Ausrüstung entspricht den grundlegenden Gesundheits- und Sicherheitsvorschriften des Europäischen Wirtschaftsraumes (EEA).

Maschinenschild

Die Abbildung (B) auf Seite i-5 zeigt das Beispiel eines Maschinenschildes. Die Abbildung eines gültigen Maschinenschildes und die Lage desselben auf der Ausrüstung befindet sich im Einleitungskapitel der mit der Ausrüstung gelieferten Handbücher. Das Maschinenschild enthält die nachstehend aufgeführten Daten, wie sie erforderlich sind, wenn Tetra Pak wegen dieser spezifischen Ausrüstung anzusprechen ist.

- Maschinentyp (8)
- Volumen (9)
- Zeichnungs-Spezifikationen (10)
- Serien-Nummer der Maschine (11)
- Hersteller (12)
- CE-Markierung (13)
- Baujahr (14)

Die Abbildung (C) auf Seite i-5 zeigt das Beispiel einer Maschinenspezifikation. Es muss sichergestellt sein, dass die in den Frontseiten dieses Handbuchs aufgeführten Ausrüstungsdaten mit den Daten des Maschinenschildes und der Maschinenspezifikation übereinstimmen.

Verwendung dieses Ersatzteilkatalogs

Anordnung einer Ersatzteilnummer

a) Bezugnahme auf Abbildung (D) auf Seite i-5: Weiter zur Kapitelnummer (15), die neben der Hauptgruppe angegeben ist, die das entsprechende Teil enthält.

Die Pos. b) und c) beziehen sich auf die Abbildung (E) auf Seite i-6.

b) Auf der Hauptgruppenabbildung die Maschinen-Untergruppe (17) suchen, die das gesuchte Teil oder die gesuchte Untergruppe enthält. Die Positionsnummer (18) notieren und weiter zur Listenseite gehen, die der Abbildung folgt.

c) Die Positionsnummer (16) oder den Namen der Untergruppe (19) suchen. Dann zur entsprechenden Seitennummer (20) in der rechten Spalte gehen.

Pos. d) und e) beziehen sich auf die Abbildung (F) auf Seite i-6.

d) Suchen Sie Teil (21) auf der Untergruppen-Abbildung und notieren Sie die Positionsnummer des Teils.

e) Die Teilnummer (29) und die Teilebeschreibung (30) finden Sie neben der Positionsnummer auf der Listenseite.

In einem Ersatzteilkatalog enthaltene Information

Die nachstehende Liste bezieht sich auf die Abbildung (F) auf Seite i-6. Ein Ersatzteilkatalog enthält folgende Informationen über Gruppen, Untergruppen und Ersatzteile für die Ausrüstung:

- Gruppenstrukturreferenz (22). Sie gibt die nächst höhere Gruppe in der Ausrüstungslistenstruktur an
- Gruppenname (23)
- Maßeinheit (25)
- Menge (26)
- Nummer der Zusammenbauzeichnung (27)
- Listenseite, Bereich (28). Eingeschlossen, wenn Mehrfachseiten in der Gruppenabbildung oder Liste enthalten sind
- Teile- oder Untergruppennummer (29)
- Untergruppenname oder Teilebeschreibung (30)
- Gruppennummer (31)
- Ausrüstungsnummer (32)
- Gruppeninformationsüberschrift (33). Gibt an, ob der Abschnitt unter der Überschrift sich auf eine spezifische Maschinenvariante bezieht oder eine Liste der allgemeinen Teile ist. Wenn eine Liste sich auf mehr als eine Variante bezieht und jede Variante eine eigene Zusammenbauzeichnung hat, wird eine Seitenreferenz zur Zusammenbauzeichnung der Variante vorgestellt.
- Interne Information (34)

Εισαγωγή

Πληροφορίες για το Εγχειρίδιο

Η Tetra Pak σας συνιστά να διαβάζετε προσεκτικά όλα τα χορηγούμενα εγχειρίδια. Βεβαιωθείτε ότι είναι διαθέσιμα όλα τα χορηγούμενα εγχειρίδια για το προσωπικό που χειρίζεται ή συντηρεί τον εξοπλισμό.

Είναι σημαντικό να διατηρείτε αυτό τον κατάλογο καθ' όλη τη διάρκεια ζωής του εξοπλισμού καθώς και να παραδίδετε τον κατάλογο στον τυχόν επόμενο ιδιοκτήτη ή χρήστη του εξοπλισμού.

Η Tetra Pak δεν πρόκειται να αναλάβει καμία ευθύνη για οποιαδήποτε ζημιά που προκαλείται στον εξοπλισμό λόγω της παράβλεψης των οδηγιών που δίνονται στα εγχειρίδια που συνοδεύουν αυτό τον εξοπλισμό.

Χορηγούμενα Εγχειρίδια

Τα εγχειρίδια που χορηγούνται μ' αυτόν τον εξοπλισμό, μπορεί να περιλαμβάνουν

- Εγχειρίδιο Μετατροπής (CM)
  Αυτό το εγχειρίδιο χορηγεί στους τεχνικούς πληροφορίες για τη μετατροπή του εξοπλισμού στους διαφορετικούς τρόπους παραγωγής.
- Εγχειρίδιο Ηλεκτρικού (EM)
  Αυτό το εγχειρίδιο χορηγεί στους τεχνικούς πληροφορίες για το ηλεκτρικό σύστημα του εξοπλισμού.
- Εγχειρίδιο Εγκατάστασης (IM)
  Αυτό το εγχειρίδιο χορηγεί στους τεχνικούς τις απαιτούμενες πληροφορίες για την ασφαλή εγκατάσταση του εξοπλισμού.
- Εγχειρίδιο Συντήρησης (MM)
  Αυτό το εγχειρίδιο χορηγεί στους τεχνικούς πληροφορίες για τη συντήρηση του εξοπλισμού.
- Εγχειρίδιο Χρήσης (OM)
  Αυτό το εγχειρίδιο χορηγεί στο χειριστή πληροφορίες για τη διακίνηση και το χειρισμό του εξοπλισμού πριν, κατά τη διάρκεια και μετά την παραγωγή.
- Κατάλογος Ανταλλακτικών (SPC)
  Αυτό το εγχειρίδιο χορηγεί τις απαραίτητες πληροφορίες για την παραγγελία ανταλλακτικών από την Tetra Pak.
- Τεχνικό Εγχειρίδιο (TeM)
  - χορηγεί στους τεχνικούς τις απαιτούμενες πληροφορίες για την ασφαλή εγκατάσταση του εξοπλισμού
  - χορηγεί στους τεχνικούς πληροφορίες για τη συντήρηση του εξοπλισμού
  - χορηγεί στους τεχνικούς πληροφορίες για το ηλεκτρικό σύστημα του εξοπλισμού
  - χορηγεί τις απαραίτητες πληροφορίες για την παραγγελία ανταλλακτικών από την Tetra Pak

Σχεδίαση Σελίδας

Ανατρέξτε στην εικόνα (A) της σελίδας i-5: Οι κύριες σελίδες ενός Καταλόγου Ανταλλακτικών αποτελούνται από μία εικονογραφημένη σελίδα (1) και από μία αντίστοιχη σελίδα καταλόγου (7). Ο αριθμός σελίδας (5) φαίνεται στην κεφαλίδα μιας εικονογραφημένης σελίδας και στο υποσέλιδο μιας σελίδας καταλόγου. Ο αριθμός εγγράφου (6) φαίνεται στο υποσέλιδο μιας σελίδας λίστας.

Αρίθμηση Σελίδων

Ανατρέξτε στην εικόνα (A) της σελίδας i-5: Ένας αριθμός σελίδας (5) αποτελείται από τρία μέρη:

- αριθμός κεφαλαίου (2)
- αύξων αριθμός σελίδας του κεφαλαίου (3)
- συνολικός αριθμός σελίδων του κεφαλαίου (4)

Εισαγωγή στη Μηχανή

Κατασκευαστής

Για την επωνυμία και τη διεύθυνση του κατασκευαστή, βλέπετε στη δεύτερη σελίδα αυτού του καταλόγου.

Σέρβις

Για να παραγγείλετε ανταλλακτικά για τη συγκεκριμένη μηχανή, ή για να αναφέρετε προβλήματα που σχετίζονται με το χειρισμό αυτής της μηχανής, επικοινωνήστε με το πλησιέστερο γραφείο της Tetra Pak.

Εάν έχετε άλλου είδους ερωτήσεις, σχόλια ή προτάσεις βελτίωσης όσον αφορά τον εξοπλισμό και την έγγραφη τεκμηρίωσή του, επικοινωνήστε με το Τμήμα Σχέσεων.

Αναγνώριση

Κατάταξη ΕΚ

Αυτός ο εξοπλισμός συμμορφώνεται με τους βασικούς κανονισμούς υγείας και ασφάλειας του Ευρωπαϊκού Οικονομικού Χώρου (ΕΟΧ).

Πινακίδα Μηχανής

Η εικόνα (B) της σελίδας i-5 δείχνει ένα παράδειγμα μιας πινακίδας μηχανής. Μια εικόνα της ενδεδειγμένης μορφής και θέσης της πινακίδας μηχανής στον εξοπλισμό, υποδεικνύεται στο κεφάλαιο 'Εισαγωγή' των εγχειριδίων που χορηγούνται μ' αυτόν τον εξοπλισμό. Η πινακίδα μηχανής περιέχει τα στοιχεία που παρατίθενται παρακάτω, τα οποία χρειάζονται όταν επικοινωνείτε με την Tetra Pak για όσον αφορά αυτό το συγκεκριμένο εξοπλισμό.

- Τύπος μηχανής (8)
- Όγκος (9)
- Προδιαγραφές σχεδίου (10)
- Αριθμός σειράς μηχανής (11)
- Κατασκευαστής (12)
- Σήμα ΕΚ (13)
- Έτος κατασκευής (14)

Η εικόνα (C) της σελίδας i-5 δείχνει ένα παράδειγμα τεχνικών χαρακτηριστικών μηχανής. Βεβαιωθείτε ότι τα στοιχεία εξοπλισμού που παρατίθενται στις πρώτες σελίδες αυτού του εγχειριδίου αντιστοιχούν με τα στοιχεία της πινακίδας μηχανής και τα τεχνικά χαρακτηριστικά μηχανής.

Πώς Χρησιμοποιείται Αυτός ο Κατάλογος Ανταλλακτικών

Εντοπισμός ενός Αριθμού Ανταλλακτικού

a) Ανατρέξτε στην εικόνα (D) της σελίδας i-5: Πηγαίνετε στον αριθμό κεφαλαίου (15) που υποδεικνύεται δίπλα από το κύριο συγκρότημα το οποίο περιλαμβάνει το εξάρτημα που θέλετε να εντοπίσετε.

Τα βήματα b) και c) αναφέρονται στην εικόνα (E) της σελίδας i-6.

b) Στην εικόνα της κύριου συγκροτήματος, αναζητήστε το υποσυγκρότημα μηχανής (17) που περιλαμβάνει το εξάρτημα ή το υποσυγκρότημα που αναζητάτε. Σημειώστε τον αριθμό θέσης (18) και πηγαίνετε στη σελίδα καταλόγου που ακολουθεί την εικόνα.

c) Αναζητήστε τον αριθμό θέσης (16) ή το όνομα υποσυγκροτήματος (19). Πηγαίνετε στον αντίστοιχο αριθμό σελίδας (20) που αναγράφεται στη δεξιά στήλη.

Τα βήματα d) και e) αναφέρονται στην εικόνα (F) της σελίδας i-6.

d) Εντοπίστε το εξάρτημα (21) που αναζητάτε στην εικόνα υποσυγκροτήματος και σημειώστε τον αριθμό θέσης του εξαρτήματος.

e) Ο αριθμός του εξαρτήματος (29) και η περιγραφή του εξαρτήματος (30) παρατίθενται δίπλα στον αριθμό θέσης στη σελίδα καταλόγου.

Πληροφορίες που Περιέχονται σε έναν Κατάλογο Ανταλλακτικών

Ο παρακάτω κατάλογος αναφέρεται στην εικόνα (F) της σελίδας i-6. Ένας Κατάλογος Ανταλλακτικών περιέχει τις ακόλουθες πληροφορίες σχετικά με συγκροτήματα, υποσυγκροτήματα και ανταλλακτικά του εξοπλισμού:

- Αναφορά συγκροτήματος κατασκευής (22). Υποδεικνύει το επόμενο μεγαλύτερο συγκρότημα στον πίνακα εξοπλισμού κατασκευής.
- Όνομα συγκροτήματος (23)
- Μονάδα μέτρησης (25)
- Ποσότητα (26)
- Αριθμός σχεδίου συναρμολόγησης (27)
- Σειρά σελίδων καταλόγου (28). Περιλαμβάνεται εάν υπάρχουν πολλαπλές σελίδες στην εικόνα ή στον κατάλογο συγκροτήματος.
- Αριθμός εξαρτήματος ή υποσυγκροτήματος (29)
- Όνομα υποσυγκροτήματος ή περιγραφή εξαρτήματος (30)
- Αριθμός συγκροτήματος (31)
- Αριθμός εξοπλισμού (32)
- Επικεφαλίδα πληροφοριών συγκροτήματος (33). Υποδεικνύει εάν η ενότητα κάτω από την επικεφαλίδα αφορά μια ειδική παραλλαγή μηχανής ή είναι ένας κατάλογος κοινών εξαρτημάτων. Εάν ένας κατάλογος περιέχει περισσότερες από μία παραλλαγές και κάθε παραλλαγή έχει το δικό της σχέδιο συναρμολόγησης, υποδεικνύεται μια παραπομπή στη σελίδα σχεδίου συναρμολόγησης της παραλλαγής.
- Εσωτερικές πληροφορίες (34)

Introducción

Información del manual

Tetra Pak recomienda que se lean cuidadosamente todos los manuales entregados. Comprobar que todos los manuales entregados estén disponibles para el personal que efectúe la operación o el mantenimiento del equipo.

Es importante conservar este manual durante la vida útil del equipo, así como facilitárselo a cualquier propietario o usuario posterior.

Tetra Pak no se responsabilizará de daños en la máquina o equipo debidos a la inobservancia de las instrucciones dadas en los manuales que acompañan este equipo.

Manuales entregados

Los manuales entregados con este equipo pueden incluir

- Manual de conversión (CM)
  Este manual proporciona a los técnicos información sobre cómo convertir el equipo entre diferentes modos de producción.
- Manual eléctrico (EM)
  Este manual proporciona a los técnicos información acerca del sistema eléctrico del sistema.
- Manual de instalación (IM)
  Este manual proporciona a los técnicos la información necesaria para la instalación segura del equipo.
- Manual de mantenimiento (MM)
  Este manual proporciona a los técnicos la información acerca del mantenimiento del equipo.
- Manual de servicio (OM)
  Este manual proporciona al operador información acerca de la manipulación y operación de la máquina antes, durante y después de la producción.
- Catálogo de piezas de recambio (SPC)
  Este manual proporciona la información necesaria para pedir piezas de recambio a Tetra Pak.
- Manual técnico (TeM)
  - proporciona a los técnicos la información necesaria para la instalación segura del equipo
  - proporciona a los técnicos la información acerca del mantenimiento del equipo
  - proporciona a los técnicos información acerca del sistema eléctrico del sistema
  - proporciona la información necesaria para pedir piezas de recambio a Tetra Pak

Organización de las páginas

Remitirse a la ilustración (A) en la página i-5: Las páginas principales en un Catálogo de piezas de recambio se componen de una página de ilustración (1) y una página de lista correspondiente (7). El número de la página (5) se muestra en el encabezado de una página de ilustración y en el pie de página de una página de lista. El número del documento (6) se muestra en el pie de página de una página de lista.

Numeración de las páginas

Remitirse a la ilustración (A) en la página i-5: Un número de página (5) se compone de tres partes:

- Número de capítulo (2)
- número de página consecutivo (2) dentro del capítulo (3)
- número total de páginas del capítulo (4)

Introducción a la máquina

Fabricante

Para el nombre y la dirección del fabricante, ver la segunda página de este catálogo.

Servicio

Para pedir piezas de recambio para esta máquina o informar problemas asociados con la operación de esta máquina, contactar con la oficina de Tetra Pak más cercana.

Ponerse en contacto con el responsable correspondiente para otras preguntas, comentarios o sugerencias sobre mejoras de la máquina o equipo y su documentación.

Identificación

Clasificación de la CE

Este equipo cumple los requisitos esenciales relativos a la salud y la seguridad del Área Económica Europea (EEA).

Placa de la máquina

La ilustración (B) en la página i-5 muestra un ejemplo de placa de máquina. En la Introducción del capítulo de los manuales entregados con este equipo se muestra una ilustración de la placa de máquina válida y su ubicación en el equipo La placa de máquina contiene los datos listados a continuación requeridos al contactar con Tetra Pak en relaciôn a este equipo específico.

- Tipo de máquina (8)
- Volumen (9)
- Especificaciones de plano (10)
- Número de serie de la máquina (11)
- Fabricante (12)
- Marca de la CE (13)
- Año de fabricación (14)

La ilustración (C) en la página i-5 muestra un ejemplo de especificación máquina. Asegúrese que los datos de equipo listados en las páginas de cubierta de este manual corresponden a los datos de la placa de máquina y la especificación máquinav.

Cómo utilizar este Catálogo de piezas de recambio

Localizar un número de pieza de recambio

a) Remitirse a la ilustración (D) en la página i-5: Ir al número de capítulo (15) indicado detrás el grupo principal que contiene la parte que usted desea localizar.

Los items b) y c) se refieren a la ilustracióni (E) en la página i-6.

b) En la ilustración del grupo principal, buscar el subgrupo máquina (17) que contiene la pieza o subgrupo que usted busca. Anote el número de posición (18) y vaya a la página de lista que sigue la ilustración.

c) Busque el número de posición (16) o el nombre del subgrupo (19). Vaya al número de página correspondiente (20) listado en la columna de la derecha.

Los items d) y e) se refieren a la ilustración (F) en la página i-6.

d) Localizar la pieza (21) que busca en la ilustración del subgrupo y anotar el número de posición de la pieza.

e) El número de pieza (29) y la descripción de pieza (30) están listadas detrás del número de posición en la página de lista.

Información listada en un Catálogo de piezas de recambio

La lista a continuación remite a la ilustración (F) en la página i-6.
Un Catálogo de piezas de recambio contiene la siguiente información sobre grupos, subgrupos y piezas de recambio para el equipo:

- Referencia de estructura de grupo (22). Indica el siguiente grupo más alto en la estructura de lista del equipo.
- Nombre del grupo (23)
- Unidad de medida (25)
- Cantidad (26)
- Número de plano de conjunto (27)
- Gama de página lista (28). Incluida si hay páginas múltiples en la ilustración o lista de grupo.
- Número de pieza o subgrupo (29)
- Nombre, subgrupo o descripción de pieza (30)
- Número de grupo (31)
- Número de equipo (32)
- Encabezado de información grupo (33). Indica si la sección debajo del encabezado es para una variante máquina específica o si es una lista de piezas comunes. Si la lista tiene más de una variante y cada variante tiene su propio plano de conjunto, se muestra una referencia página para el plano de conjunto de la variante.
- Información interna (34)

Sissejuhatus

Kasutusjuhendi teave

Tetra Pak soovitab lugeda hoolega kõiki kaasasolevaid juhendeid. Veenduge, et juhendid on seadmega töötavatele ja neid hooldavatele töötajatele kättesaadavad.

Oluline on hoida kataloog alles kogu seadme eluea jooksul ja anda kataloog kaasa ka järgmisele omanikule või kasutajale.

Tetra Pak ei vastuta seadme kahjustuste eest, mille põhjuseks on seadmega kaasasolevas juhendis toodud juhiste mittejärgimine.

Kaasasolevad juhendid

Seadmega kaasasolevad juhendid võivad sisaldada järgmist:

- Konverteerimisjuhend (ÜJ)
  Juhend annab tehnikutele teavet seadme konverteerimise kohta eri tootmisrežiimide korral.
- Elektrijuhend (EJ)
  Juhend annab tehnikutele teavet seadme elektrisüsteemi kohta.
- Paigaldusjuhend (PJ)
  Juhend annab tehnikutele teavet seadme ohutu paigaldamise kohta.
- Hooldusjuhend (HJ)
  Juhend annab tehnikutele teavet seadme hoolduse kohta.
- Kasutusjuhend (KJ)
  Juhend annab operaatorile teavet seadme käitlemise ja töö kohta enne tootmist, selle ajal ja pärast seda.
- Varuosade kataloog (VOK)
  Juhend annab Tetra Pakilt varuosade tellimiseks vajalikku teavet.
- Tehniline juhend (TJ)
  - annab tehnikutele seadme ohutuks paigaldamiseks vajalikku teavet
  - annab tehnikutele teavet seadme hoolduse kohta
  - annab tehnikutele teavet seadme elektrisüsteemi kohta
  - annab Tetra Pakilt varuosade tellimiseks vajalikku teavet

Küljend

Vt illustratsiooni (A) lk i-5: Varuosade kataloogi põhilehtedeks on illustratsioonilehed (1) ja vastavad loetelulehed (7). Leheküljе number (5) on toodud illustratsioonilehe päises ja loetelulehe jaluses. Dokumendi number (6) on toodud loetelulehe jaluses.

Leheküljenummerdus

Vt illustratsiooni (A) lk i-5: Leheküljе number (5) koosneb kolmest osast:

- peatüki number (2)
- lehekülgede järjestikused numbrid peatüki sees (3)
- lehekülgede koguarv peatükis (4)

Sissejuhatus masina kohta

Tootja

Tootja nimi ja aadress on toodud kataloogi teisel lehel.

Teenindus

Varuosade tellimiseks masinale või selle tööga seotud probleemidest teatamiseks võtke ühendust lähima Tetra Pak kontoriga.

Kui teil on muid küsimusi, märkusi või soovitusi seadmete ja dokumentatsiooni täiustamise kohta, võtke ühendust Tetra Paki kontaktisikuga.

Identifitseerimine

CE-klassifikatsioon

Seade vastab Euroopa Majanduspiirkonna (EMP) põhilistele tervisekaitse ja ohutuse alastele määrustele.

Masina andmeplaat

Illustratsioon (B) leheküljel i-5 kujutab masina andmeplaati.
Masina andmeplaadi pilt ja selle asukoht seadmel on toodud seadmega kaasasolevate juhendite sissejuhatavas peatükis. Masina andmeplaadil on allpool nimetatud andmed, mida vajate antud konkreetse seadmega seoses Tetra Paki poole pöördudes.

- Masina tüüp (8)
- Maht (9)
- Joonisspetsifikatsioonid (10)
- Masina seerianumber (11)
- Tootja (12)
- CE-tähis (13)
- Tootmisaasta (14)

Illustratsioon (C) leheküljel i-5 kujutab masina spetsifikatsiooni. Veenduge, et käesoleva juhendi esimestel lehekülgedel toodud andmed seadme kohta vastavad masina andmesildil olevatele andmetele ja masina spetsifikatsioonile.

Kuidas varuosade kataloogi kasutada

Leidke varuosa number

a) Vt illustratsiooni (D) lk i-5: Leidke peatükk, mille number (15) on toodud selle põhirühma juures, mis sisaldab teie poolt otsitavat varuosa.

Punktid b) ja c) käivad illustratsiooni (E) kohta lk i-6.

b) Põhirühma illustratsioonil leidke masina alarühm (17), mis sisaldab osa või alarühma, mida otsite. Leidke positsiooni number (18) ja avage siis illustratsioonile järgnev loeteluleht.

c) Leidke positsiooni number (16) või alarühma nimetus (19). Leidke vastav leheküljenumber (20) parempoolsest veerust.

Punktid d) ja e) käivad illustratsiooni (F) kohta lk i-6.

d) Leidke otsitav osa (21) alarühma illustratsioonilt ja siis osa positsiooninumber.

e) Osa number (29) ja osa kirjeldus (30) on toodud positsiooninumbri kõrval loetelulehel.

Varuosade kataloogis toodud teave

Allpool toodud loetelu käib illustratsiooni (F) kohta lk i-6. Varuosade kataloogis on järgmine teave seadme rühmade, alarühmade ja varuosade kohta:

- Rühmastruktuuri viide (22). Esitab järgmise kõrgema rühma seadmete loetelu struktuuris.
- Rühma nimetus (23)
- Mõõtühik (25)
- Kogus (26)
- Koostejoonise number (27)
- Loetelu lehekülgede vahemik (28). Märgitud, kui rühma illustratsioonid või loetelu on mitmel lehel.
- Osa või alarühma number (29)
- Alarühma nimetus või osa kirjeldus (30)
- Rühma number (31)
- Seadme number (32)
- Rühma teabe rubriik (33). Näitab, kas rubriigi all toodud jaotis on konkreetse masinavariandi kohta või on tegemist tavaliste varuosade loeteluga. Kui loetelus on üle ühe variandi ja iga variandi jaoks on oma koostejoonis, esitatakse viide selle variandi koostejoonise leheküljele.
- Siseteave (34)

Johdanto

Tietoja käsikirjasta

Tetra Pak suosittelee kaikkien toimitettavien oppaiden lukemista huolellisesti. Varmista, että toimitetut oppaat ovat laitetta käyttävän tai huoltavan henkilökunnan saatavilla.

Tämä luettelo on säilytettävä laitteen käyttöiän ajan ja toimitettava edelleen mahdolliselle seuraavalle omistajalle tai käyttäjälle.

Tetra Pak ei vastaa laitevaurioista, jotka aiheutuvat laitteen mukana tulevissa oppaissa annettujen ohjeiden noudattamatta jättämisestä.

Toimitettavat ohjeet

Tämän laitteen mukana toimitettaviin ohjeisiin kuuluvat:

- Muutoskirja (CM)
  Tässä oppaassa on teknikoille tarkoitettuja ohjeita laitteiston muuttamisesta eti tuotantotiloihin.
- Sähkökirja (EM)
  Tässä oppaassa on teknikoille tarkoitettuja tietoja laitteen sähköjärjestelmästä.
- Asennuskäsikirja (IM)
  Tässä oppaassa on teknikoille tarkoitettuja tietoja, jotka tarvitaan laitteen turvallista asentamista varten.
- Huoltokäsikirja (MM)
  Tässä oppaassa on teknikoille tarkoitettuja tietoja tämän laitteen huoltamisesta.
- Käyttäjän käsikirja (OM)
  Tässä oppaassa on käyttäjälle tarkoitettuja tietoja laitteiston käsittelystä ja käyttämisestä ennen tuotantoa, tuotannon aikana ja sen jälkeen.
- Varaosakuvasto (SPC)
  Tässä oppaassa on tietoja, joita tarvitaan varaosien tilaamiseen Tetra Pakilta.
- Tekninen käsikirja (TeM)
  - sisältää teknikoille tarkoitettuja tietoja, joita tarvitaan laitteen turvallista asentamista varten
  - sisältää teknikoille tarkoitettuja tietoja laitteen huoltamisesta
  - sisältää teknikoille tarkoitettuja tietoja laitteen sähköjärjestelmästä
  - sisältää tietoja, joita tarvitaan varaosien tilaamiseen Tetra Pakilta.

Sivujen asettelu

Katso kuva (A) sivulla i-5: Varaosaluettelon pääsivut koostuvat kuvasivusta (1) ja sitä vastaavasta luettelosivusta (7). Sivunumero (5) näytetään kuvasivun ylätunnisteessa ja luettelosivun alatunnisteessa. Asiakirjan numero (6) näytetään luettelosivun alatunnisteessa.

Sivunumerointi

Katso kuva (A) sivulla i-5: Sivunumerossa (5) on kolme osaa:

- luvun numero (2)
- perättäinen sivunumero (3) luvun sisällä
- luvun kokonaissivumäärä (4).

Koneen esittely

Valmistaja

Valmistajan nimi ja osoite on ilmoitettu tämän luettelon toisella sivulla.

Huolto

Jos haluat tilata tähän koneeseen varaosia tai jos tämän koneen käytössä ilmenee ongelmia, jotka haluat raportoida, ota yhteyttä lähimpään Tetra Pakin toimistoon.

Jos sinulla on muuta kysyttävää, huomautettavaa tai ehdotuksia laitteistoa ja sen asiakirjoja koskevista parannuksista, ota yhteys yhteyshenkilöön.

Tunnistetiedot

CE-luokitus

Tämä laite vastaa Euroopan talousalueen (EEA) perustason terveys- ja turvallisuusvaatimuksia.

Koneen tyyppikilpi

Kuvassa (B) sivulla i-5 on esimerkki koneen tyyppikilvestä. Voimassa olevan tyyppikilven kuva ja sen sijainti koneessa käy ilmi laitteiston mukana tulleiden ohjeiden Johdanto-luvusta. Tyyppikilvessä on tarvitsemasi Tetra Pakin voimassa olevat yhteystiedot, kun on kyseessä tämä nimenomainen laite.

- Konetyyppi (8)
- Tilavuus (9)
- Piirustuserittelyt (10)
- Koneen sarjanumero (11)
- Valmistaja (12)
- CE-merkki (13)
- Valmistusvuosi (14)

Kuvassa (C) sivulla i-5 on esimerkki koneen erittelystä. Varmista, että tämän ohjeen etusivuilla ilmoitetut laitetiedot vastaavat tyyppikilven ja kone-erittelyn tietoja.

Tämän varaosaluettelon käyttäminen

Etsi varaosan numero

a) Katso kuva (D) sivulla i-5: Siirry lukuun (15), joka on ilmoitettu etsittävän osan pääryhmän vieressä.

Kohdat b) ja c) viittaavat kuvaan (E) sivulla i-6.

b) Etsi pääryhmän kuvasta koneen alaryhmä (17), joka sisältää etsimäsi osan tai alaryhmän. Merkitse muistiin paikkanumero (18) ja siirry luettelosivulle, joka seuraa kuvaa.

c) Etsi paikkanumero (16) tai alaryhmän nimi (19). Siirry vastaavalle sivunumerolle (20), joka on ilmoitettu oikeassa sarakkeessa.

Kohdat d) ja e) viittaavat kuvaan (F) sivulla i-6.

d) Hae etsittävä osa (21) alaryhmän kuvasta ja merkitse osan paikkanumero muistiin.

e) Osanumero (29) ja osan kuvaus (30) on annettu paikkanumeron vieressä luettelosivulla.

Varaosaluettelossa olevat tiedot

Alla oleva luettelo viittaa kuvaan (F) sivulla i-6. Varaosaluettelo sisältää seuraavat tiedot ryhmistä, alaryhmistä ja laitteen varaosista:

- Ryhmärakenneviite (22). Osoittaa seuraavaksi ylemmän ryhmän laiteluettelorakenteessa.
- Ryhmän nimi (23)
- Mittayksikkö (25)
- Määrä (26)
- Kokoonpanopiirustuksen numero (27)
- Luettelosivun väli (28). Tämä on mukana, jos ryhmäkuvassa tai luettelossa on useita sivuja.
- Osan tai alaryhmän numero (29)
- Alaryhmän nimi tai osan kuvaus (30)
- Ryhmän numero (31)
- Laitteen numero (32)
- Ryhmätietojen otsikko (33). Osoittaa, koskeeko alla oleva osio tiettyä koneversiota vai onko kyseessä yleisten osien luettelo. Jos luettelolla on useampi kuin yksi versio ja kullakin versiolla on oma kokoonpanopiirustuksensa, näytetään version kokoonpanopiirustuksen sivuviittaus.
- Sisäiset tiedot (34)

Introduction

Information sur le manuel

Tetra Pak recommande de lire attentivement tous les manuels fournis. S'assurer que les manuels fournis soient accessibles au personnel qui s'occupe du fonctionnement ou de la maintenance de l'équipement.

Il est important de conserver ce manuel pendant toute la durée d'utilisation de la machine et de le transmettre à tout détenteur ou utilisateur ultérieur.

Tetra Pak ne sera pas tenu responsable d'un dommage causé à la machine ou à l'équipement par le fait de ne pas avoir respecté les instructions figurant dans le présent manuel.

Manuels fournis

Les manuels fournis avec cette machine comprennent

- Le Manuel de Conversion (CM)
  Ce manuel fournit aux techniciens les informations nécessaires pour convertir la machine en vue des différents modes de production.
- Manuel Electrique (EM)
  Ce manuel fournit aux techniciens les informations sur le système électrique de la machine.
- Manuel de Mise en Place (IM)
  Ce manuel fournit aux techniciens les informations nécessaires pour l'installation de la machine en toute sécurité.
- Manuel de Maintenance (MM)
  Ce manuel fournit aux techniciens les informations pour la maintenance.
- Manuel d'Opérateur (OM)
  Ce manuel fournit aux opérateurs les informations nécessaires pour la manutention et le fonctionnement de la machine avant, pendant et après la production.
- Catalogue de Pièces de Rechange (SPC)
  Ce manuel fournit l'information nécessaire à la commande de pièces de rechange auprès de Tetra Pak
- Manuel Technique (TeM)
  - fournit aux techniciens les informations nécessaires pour l'installation de la machine en toute sécurité
  - fournit aux techniciens les informations pour la maintenance
  - fournit aux techniciens les informations sur le système électrique de la machine
  - fournit l' information nécessaire à la commande de pièces de rechange auprès de Tetra Pak

Présentation d'une page

Se référer à la figure (A) à la page i-5: Les pages principales du Catalogue des Pièces de Rechange sont composées d'une page de figure (1) et d'une page de liste correspondante (7). Le numéro de page (5) est indiqué dans le titre de la page de figure et dans le bas de page d'une page de liste.
Le numéro de document (6) est indiqué dans le bas de page de la page de liste.

Numérotation de page

Se référer (A) à la page i-5: Un numéro de page (5) possède trois parties:

- Numéro de chapitre (2)
- numéro de page consécutif (2) à l'intérieur du chapitre (3)
- nombre total de pages dans le chapitre (4)

Présentation de la machine

Fabricant

Pour le nom et l'adresse du fabricant, voir la deuxième page de ce catalogue.

Assistance technique

Pour commander les pièces de rechange de cette machine ou pour rapporter les problèmes associés au fonctionnement de celle-ci, prendre contact avec le bureau Tetra Pak le plus proche.

Prendre contact avec le responsable de liaison pour les renseignements, commentaires ou suggestions concernant la machine ou l'équipement et sa documentation.

Identification

Certification CE

Cet équipement est conforme aux réglementations essentielles d'hygiène et de sécurité de la Communauté Economique Européenne (CEE).

Plaque signalétique de machine

La figure (B) à la page i-5 montre un exemple d'une plaque signalétique de machine.
Une représentation de la plaque de machine valable et son emplacement sur l'équipement est indiquée au Chapitre Introduction des manuels fournis avec l'équipement. La plaque de machine contient les caractéristiques figurant dans la liste ci-dessous, nécessaires pour prendre contact avec Tetra Pak au sujet de cet équipement spécifique.

- Type de machine (8)
- Volume (9)
- Spécifications du plan (10)
- Numéro de série de la machine (11)
- Fabricant (12)
- Marquage CE (13)
- Année de fabrication (14)

La figure (C) à la page i-5 montre un exemple d'une spécification de machine. S'assurer que les caractéristiques de l'équipement figurant dans la liste des pages de garde de ce manuel correspondent aux caractéristiques de la plaque signalétique de la machine et à ses spécifications.

Comment utiliser ce Catalogue de Pièces de Rechange

Localiser un numéro de pièce de rechange

a) Se référer à la figure (D) à la page i-5: Aller au numéro de chapitre (15) indiqué à côté du groupe principal qui contient la pièce que vous souhaitez localiser.

Les articles b) et c) se réfèrent à la figure (E) à la page i-6.

b) Sur la figure du groupe principal, chercher la sous-groupe de machine (17) qui contient la pièce ou le sous-groupe que vous recherchez. Noter le numéro de repère (18) et aller à la page de liste qui suit la figure.

c) Rechercher le numéro de repère (16) ou le nom de sous-groupe (19). Aller au numéro de page correspondant (20) figurant dans la liste de la colonne de droite.

Les articles d) et e) se réfèrent à la figure (F) à la page i-6.

d) Localiser la pièce (21) que vous recherchez sur la figure de sous-groupe et noter le numéro de repère de la pièce.

e) Le numéro de pièce (29) et la description de la pièce (30) figurent dans la liste à côté du numéro de repère sur la page de liste.

Informations figurant dans la liste dans un Catalogue de Pièces de Rechange

La liste ci-dessous se réfère à la figure (F) à la page i-6. Un Catalogue de Pièces de Rechange contient les renseignements suivants relatifs aux groupes, sous-groupes et pièces de rechange de l'équipement:

- Référence de structure de groupe (22). Indique le groupe supérieur suivant dans la structure de liste d'équipement.
- Nom du groupe (23).
- Unité de mesure (25).
- Quantité (26).
- Numéro de plan de montage (27).
- Gamme de la page de liste (28). Incluse s'il y a des pages multiples dans la figure de groupe ou dans la liste.
- Numéro de pièce ou de sous-groupe (29).
- Nom de sous-groupe ou description de la pièce (30).
- Numéro de groupe (31).
- Numéro de l'équipement (32).
- Titre des informations de groupe (33). Indique si la section sous le titre est pour une variante de machine spécifique ou s'il y a une liste de pièces communes. Si une liste comporte plus d'une variante et que chaque variante possède son propre plan de montage, une référence de page au plan de montage de la variante est alors indiqué.
- Renseignements internes (34).

Bevezetés

Kézikönyv információ

A Tetra Pak az összes rendelkezésre bocsátott kézikönyv figyelmes elolvasását ajánlja. Győződjön meg arról, hogy a rendelkezésre bocsátott kézikönyveket hozzáférhetővé tették a berendezést kezelő és karbantartó személyzet számára.

Föltétlenül őrizzék meg ezen kézikönyvet a berendezés teljes élethossza alatt, és adják át a következő tulajdonosnak vagy felhasználónak.

A Tetra Pak nem vonható felelősségre a berendezést ért olyan károkért, amelyek a kézikönyvben meghatározott utasítások be nem tartásából erednek.

Rendelkezésre bocsátott kézikönyvek

A géppel vagy berendezéssel együtt a következő dokumentumokat szállítjuk

- Karbantartási kézikönyv (CM)
  Ezen kézikönyv a technikusok számára szolgáltat adatokat a berendezés átkapcsolásáról egyik üzemmódból a másikba.
- Elektromos kézikönyv (EM)
  Ezen kézikönyv a villamosmérnökök és szervizelő technikusok számára szolgáltat adatokat a berendezés elektromos hálózatáról.
- Beszerelési kézikönyv (IM)
  Ezen kézikönyv a berendezés biztonságos beszerelésével kapcsolatos adatokat szolgáltat a technikusoknak.
- Karbantartási kézikönyv (MM)
  Ezen kézikönyv a technikusok számára szolgáltat adatokat a berendezés karbantartásáról.
- Kezelési kézikönyv (OM)
  Ezen kézikönyv a berendezés kezelésével és vezérlésével kapcsolatos adatokat szolgáltat a kezelőknek termelés előtt, közben és után.
- Cserealkatrész katalógus (SPC)
  Ezen kézikönyv a cserealkatrészek Tetra Pak cégtől való megrendeléséhez szükséges adatokat tartalmaz.
- Műszaki kézikönyv (TeM)
  - a berendezés biztonságos beszerelésével kapcsolatos adatokat szolgáltat a technikusoknak
  - a technikusok számára szolgáltat adatokat a berendezés karbantartásáról
  - a villamosmérnökök és szervizelő technikusok számára szolgáltat adatokat a berendezés elektromos hálózatáról
  - a cserealkatrészek Tetra Pak cégtől való megrendeléséhez szükséges adatokat tartalmaz

Lap elrendezése

Tekintse meg a i-5 oldalon levő ábrát (A): A Cserealkatrészek katalógusának főoldalai egy rajzoldalból (1) és egy hozzá tartozó listaoldalból (7) állnak. Az oldalszám (5) a rajzoldal fejlécében és a listaoldal láblécében jelenik meg. A dokumentumszám (6) a listaoldal láblécében jelenik meg.

Oldalszámozás

Tekintse meg a i-5 oldalon levő ábrát (A): Az oldalszám (5) három részből áll:

- fejezetszám (2)
- folytonos oldalszám (3) a fejezeten belül
- fejezet oldalszáma (4)

A gép bemutatása

Gyártó

A gyártó neve és címe ezen katalógus, második oldalán található.

Szervizelés

Ezen gép valamely cserealkatrészének megrendelése vagy a gép működésével kapcsolatos üzemzavarok bejelentése végett, forduljon a legközelebbi Tetra Pak képviselethez.

Bármilyen más, a berendezés, illetve dokumentációjának feljavítására irányuló kérdéseivel, megjegyzéseivel vagy javaslataival forduljon kapcsolattartóhoz.

Azonosítás

CE besorolás

Ezen berendezés megfelel az Európai Gazdasági Régió (EEA) alapvető egészségügyi és biztonsági előírásainak.

A gép adattáblája

A i-5 oldalon található ábra (B) a gép adattáblájának egyik példája. A megfelelő gép-adattábla ábrája és helye a berendezésen a berendezéssel szállított kézikönyvek Bevezetés fejezetében található. A gép adattáblája az alább felsorolt adatokat tartalmazza, amelyek ezen berendezésre vonatkoznak, és a Tetra Pak céggel való kapcsolat felvételekor szükségesek.

- Géptípus (8)
- Térfogat (9)
- Tervrajz (10)
- A gép sorozatszáma (11)
- Gyártó (12)
- CE jelzés (13)
- Gyártás éve (14)

A i-5 oldalon található ábra (C) példa a gép műszaki leírására. Győződjön meg arról, hogy ezen kézikönyv előlapjain közölt berendezésadatok megegyeznek a gép adattábláján és a gép műszaki leírásában megjelenő információval.

A Cserealkatrészek katalógus használata

Keresse meg a cserealkatrész számát

a) Tekintse meg a i-5 oldalon levő ábrát (D): Lapozzon a keresett alkatrészt tartalmazó főcsoport mellett feltüntetett számú (15) fejezetre.

A b) és c) elemek a i-6 oldalon levő ábrára vonatkoznak.

b) A főcsoport-ábrán keresse meg azt az alcsoportot (17), amelyik a keresett alkatrészt vagy alcsoportot tartalmazza. Jegyezze le a helyszámot (18), majd lapozzon az ábrát követő listaoldalra.

c) Keresse meg a lejegyzett helyszámot (16) vagy a keresett alcsoport nevét (19). Lapozzon a jobb oldali oszlopban feltüntetett számú (20) oldalra.

A d) és e) elemek a i-6 oldalon levő ábrára (F) vonatkoznak.

d) Az alcsoport ábrán keresse meg a keresett alkatrészt (21), és jegyezze le az alkatrész helyszámát.

e) Az alkatrészek száma (29) és leírása (30) a listaoldalon, a helyszám mellett láthatóak.

A Cserelkatrész katalógusban közölt adatok

Az alábbi lista a i-6 oldalon található ábrára (F) vonatkozik. A Cserealkatrészek katalógus a következő, csoportokra, alcsoportokra és cserealkatrészekre vonatkozó, adatokat tartalmazza:

- Csoportstruktúra hivatkozás (22). A berendezés listás struktúrájában közvetlenül az aktuális csoport fölött álló csoportot jelöli.
- Csoportnév (23)
- Mértékegység (25)
- Menniség (26)
- Szerelvény tervrajza (27)
- Lista oldaltartománya (28). Abban az esetben jelenik meg, ha a csoport ábrája vagy listája többoldalas.
- Alkatrész vagy alcsoport száma (29)
- Alcsoport neve vagy alkatrész leírása (30)
- Csoportszám (31)
- Berendezésszám (32)
- Csoportinformáció fejléc (33). Azt mutatja, hogy a fejléc után következő rész egy bizonyos gépváltozatra vonatkozik vagy az általános cserealkatrészek listája. Ha a listának több változata van, és mindegyikhez más szerelvény-tervrajz tartozik, az illető szerelvény-tervrajz oldalhivatkozása is megjelenik.
- Belső információ (34)

Introduzione

Informazioni sul manuale

Tetra Pak consiglia di leggere con attenzione tutti i manuali forniti in dotazione. Assicurarsi che tutti i manuali in dotazione siano disponibili per il personale addetto al funzionamento e alla manutenzione della macchina.

È importante conservare il presente catalogo per tutta la durata della macchina e consegnarlo al successivo proprietario o utilizzatore.

Tetra Pak non sarà da ritenersi responsabile per eventuali danni alla macchina causati dal mancato rispetto delle istruzioni fornite nei manuali che accompagnano le macchine.

Manuali in dotazione

I manuali consegnati con la presente macchina possono comprendere:

- Manuale di Conversione (CM)
  Questo manuale fornisce ai tecnici le informazioni necessarie per la conversione della macchina da una modalità di produzione a un'altra.
- Manuale Elettrico (EM)
  Questo manuale fornisce ai tecnici informazioni sull'impianto elettrico della macchina.
- Manuale di Installazione (IM)
  Questo manuale fornisce ai tecnici le informazioni necessarie per installare in sicurezza la macchina.
- Manuale di Manutenzione (MM)
  Questo manuale fornisce ai tecnici le informazioni necessarie per la manutenzione della macchina.
- Manuale Operativo (OM)
  Questo manuale fornisce all'operatore le informazioni sull'utilizzo e il funzionamento della macchina prima, durante e dopo la produzione.
- Catalogo Pezzi di Ricambio (SPC)
  Questo manuale fornisce le informazioni necessarie per ordinare a Tetra Pak i pezzi di ricambio.
- Manuale Tecnico (TeM)
  - fornisce ai tecnici le informazioni necessarie per installare in sicurezza la macchina
  - fornisce ai tecnici le informazioni necessarie per la manutenzione della macchina
  - fornisce ai tecnici informazioni sull'impianto elettrico della macchina
  - fornisce le informazioni necessarie per ordinare a Tetra Pak i pezzi di ricambio.

Schema della pagina

Consultare la figura (A) a pagina i-5. Le pagine principali del Catalogo Pezzi di Ricambio consistono in una pagina con la figura (1) e una pagina elenco corrispondente (7). Il numero di pagina (5) è indicato nell'intestazione delle pagine con le figure e nel piè di pagina delle pagine elenco. Il codice del documento (6) è indicato nel piè di pagina delle pagine elenco.

Numerazione delle pagine

Consultare la figura (A) a pagina i-5. Il numero di pagina (5) è suddiviso in tre parti:

- numero della sezione (2)
- numero progressivo di pagina all'interno della sezione (3)
- numero totale di pagine della sezione (4)

Introduzione alla macchina

Fabbricante

Il nome e l'indirizzo del fabbricante sono riportati sulla seconda pagina del presente catalogo.

Assistenza

Per ordinare i pezzi di ricambio per questa macchina oppure per riferire problemi associati con il funzionamento della macchina, contattare il più vicino ufficio Tetra Pak.

Per tutte le altre richieste, commenti o suggerimenti per eventuali miglioramenti da apportare alla macchina e alla relativa documentazione, contattare il responsabile di collegamento.

Identificazione

Marchio CE

La macchina è conforme alle principali norme sanitarie e di sicurezza dell'Area Economica Europea (EEA).

Targhetta della macchina

La figura (B) a pagina i-5 illustra un esempio di targhetta della macchina. La sezione Introduzione di tutti i manuali consegnati con la presente macchina contiene invece la figura della targhetta della macchina valida e l'illustrazione della sua posizione sulla macchina. La targhetta riporta i dati elencati sotto che sono necessari per contattare Tetra Pak in relazione a questa macchina specifica.

- Tipo di macchina (8)
- Volume (9)
- Specifiche disegno (10)
- Numero di matricola della macchina (11)
- Fabbricante (12)
- Marchio CE (13)
- Anno di fabbricazione (14)

La figura (C) a pagina i-5 mostra un esempio delle specifiche di una macchina. Verificare che i dati relativi alla macchina elencati nelle pagine iniziali del manuale corrispondano ai dati riportati sulla targhetta della macchina e nelle specifiche della macchina.

Come usare questo Catalogo Pezzi di Ricambio

Individuare il numero del pezzo di ricambio

f) Vedere la figura (D) a pagina i-5. Andare al numero della sezione (15) indicato accanto al gruppo principale che contiene il pezzo che si desidera individuare.

I punti b) e c) fanno riferimento alla figura (E) a pagina i-6.

g) Nella figura del gruppo principale, identificare il sottogruppo della macchina (17) che contiene il pezzo o il sottogruppo cercato. Annotare il numero di posizione (18) e andare alla pagina elenco che segue la figura.

h) Identificare il numero di posizione (16) o il nome del sottogruppo (19). Andare al numero di pagina corrispondente (20) indicato nella colonna di destra.

I punti d) e e) fanno riferimento alla figura (F) a pagina i-6.

i) Individuare il pezzo (21) cercato sulla figura del sottogruppo e annotare il numero di posizione del pezzo.

j) Il numero del pezzo (29) e la descrizione del pezzo (30) sono indicati accanto al numero di posizione sulla pagina elenco.

Informazioni contenute nel Catalogo Pezzi di Ricambio

L'elenco seguente fa riferimento alla figura (F) a pagina i-6. Il Catalogo Pezzi di Ricambio contiene le seguenti informazioni sui gruppi, i sottogruppi e i pezzi di ricambio della macchina:

- Riferimento struttura gruppo (22). Indica il gruppo superiore più prossimo nella struttura elenco della macchina.
- Nome gruppo (23)
- Unità di misura (25)
- Quantità (26)
- Numero disegno di assemblaggio (27)
- Pagine dell'elenco (28). Questa informazione è presente se la figura o l'elenco relativi al gruppo occupano più di una pagina del manuale.
- Numero pezzo o sottogruppo (29)
- Nome sottogruppo o descrizione pezzo (30)
- Numero gruppo (31)
- Numero macchina (32)
- Titolo informazioni gruppo (33). Indica se la sezione che segue il titolo si riferisce a una variante di macchina specifica oppure se si tratta di un elenco di parti comuni. Se un elenco contiene più di una variante ed esiste un disegno di assemblaggio specifico per ogni variante, viene fornito il riferimento alla pagina in cui è riportato il disegno di assemblaggio relativo alla variante.
- Informazioni interne (34)

Įvadas

Žinyno informacija

Tetra Pak rekomenduoja atidžiai perskaityti visus pateikiamus žinynus. Užtikrinkite, kad pateikti žinynai būtų prieinami darbuotojams, kurie naudoja ar aptarnauja įrangą.

Svarbu išsaugoti šį katalogą visą įrangos naudojimo laiką ir perduoti jį vėlesniems savininkams ar naudotojams.

Tetra Pak neprisiima atsakomybės už bet kokius pažeidimus įrangai, kuriuos sukels nurodymų, pateikiamų žinynuose kartu su įranga, nesilaikymas.

Pateikiami žinynai

Žinynuose, pateikiamuose su šia įranga, gali būti:

- Konversijos žinynas (KŽ)
  Šiame žinyne technikams pateikiama informacija apie įrangos perjungimą skirtingais gamybiniais režimais.
- Elektros žinynas (EŽ)
  Šiame žinyne technikams pateikiama informacija apie įrangos elektros sistemą.
- Montavimo žinynas (MŽ)
  Šiame žinyne technikams pateikiama informacija, reikalinga saugiam įrangos sumontavimui.
- Aptarnavimo žinynas (AŽ)
  Šiame žinyne technikams pateikiama informacija apie įrangos aptarnavimą.
- Naudotojo žinynas (NŽ)
  Šiame žinyne operatoriui pateikiama informacija apie įrangos priežiūrą ir naudojimą prieš gamybos procesą, jo metu ir po jo.
- Atsarginių detalių katalogas (ADK)
  Šiame žinyne pateikiama informacija, reikalinga norint užsakyti atsargines detales iš Tetra Pak.
- Techninis žinynas (TeŽ)
  - pateikia technikams informaciją, reikalingą saugiam įrangos sumontavimui
  - pateikia technikams informaciją, reikalingą įrangos aptarnavimui
  - pateikiama technikams informacija apie įrangos elektros sistemą
  - pateikiama informacija, kaip užsakyti atsargines detales iš Tetra Pak

Puslapio išdėstymas

Remkitės iliustracija (A) puslapyje i-5: Pagrindiniai atsarginių detalių katalogo puslapiai yra sudaryti iš iliustracijos puslapio (1) ir jį atitinkančio sąrašo puslapio (7). Puslapio numeris (5) parodytas iliustracijos puslapio viršutinėje paraštėje ir sąrašo puslapio apatinėje paraštėje. Dokumento numeris (6) yra parodytas apatinėje sąrašo puslapio paraštėje.

Puslapių numeravimas

Vadovaukitės iliustracija (A) puslapyje i-5: A puslapio numeris (5) turi tris dalis:

- skyriaus numerį (2)
- puslapio eilės numerį skyriuje (3)
- bendrą puslapių skaičių skyriuje (4)

Mašinos pristatymas

Gamintojas

Gamintojo pavadinimą ir adresą galite rasti šio katalogo antrajame puslapyje.

Aptarnavimas

Norėdami užsakyti atsargines detales šiai mašinai arba pranešti apie nesklandumus, susijusius su šios mašinos naudojimu, susisiekite su artimiausiu Tetra Pak biuru.

Susisiekite su Liaison dėl kitų komentarų, klausimų ar pasiūlymų, kaip patobulinti įrangą ar jos dokumentaciją.

Identifikacija

CE Klasifikacija

Ši įranga atitinka Europos ekonominės erdvės (EEE) pirminius sveikatos ir saugumo normatyvus.

Mašinos plokštelė

Iliustracijoje (B) puslapyje i-5 parodytas mašinos plokštelės pavyzdys. Mašinos specifikacijos plokštelės iliustracija ir jos vieta prie įrangos parodyta įžanginiame žinynų, pateikiamų su šia įranga, skyriuje. Mašinos plokštelėje yra žemiau išvardinti duomenys, reikalingi kreipiantis į Tetra Pak su šia konkrečia įranga susijusiais klausimais:

- mašinos tipas (8)
- tomas (9)
- brėžinių specifikacijos (10)
- mašinos serijos numeris (11)
- gamintojas (12)
- CE ženklas (13)
- pagaminimo metai (14)

Iliustracija (C) puslapyje i-5 vaizduoja mašinos specifikacijos pavyzdį. Įsitikinkite, kad įrangos duomenys, išdėstyti šio žinyno pirmuosiuose puslapiuose, atitinka duomenis mašinos plokštelėje ir mašinos specifikaciją.

Kaip naudotis šiuo atsarginių detalių katalogu?

Atsarginės detalės numerio nustatymas

a) Remkitės iliustracija (D) puslapyje i-5: eikite į skyrių Nr. (15), nurodytą šalia pagrindinės grupės, kurioje yra jūsų ieškoma detalė.

Elementai b) ir c) nurodo iliustraciją (E) puslapyje i-6.

b) Pagrindinės grupės iliustracijoje suraskite mašinos pogrupį (17), kuriame yra jūsų ieškoma detalė. Įsidėmėkite pozicijos numerį ir pereikite į sąrašo puslapį, kuris atitinka iliustraciją.

c) Ieškokite pozicijos numerio (16) arba pogrupio pavadinimo (19). Pereikite į atitinkamo numerio puslapį (20), kuris nurodytas dešiniajame stulpelyje.

Elementai d) ir e) nurodo iliustraciją (F) puslapyje i-6.

d) Raskite ieškomą detalę (21) pogrupio iliustracijoje ir įsidėmėkite detalės pozicijos numerį.

e) Detalės numeris (29) ir detalės aprašymas (30) pateikiami šalia pozicijos numerio sąrašo puslapyje.

Informacija, pateikiama atsarginių detalių kataloge

Žemiau pateikiamas sąrašas nurodo iliustraciją (F) puslapyje i-6. Atsarginių detalių kataloge yra tokia informacija apie grupes, pogrupius ir atsargines detales įrangai:

- Grupės struktūros nuorodos (22). Nurodo tolimesnę aukštesnę grupę įrangos sąrašo struktūroje.
- Grupės pavadinimas (23)
- Mato vienetas (25)
- Kiekis (26)
- Surinkimo brėžinio numeris (27)
- Sąrašo puslapio diapazonas (28). Įtrauktas, jei egzistuoja daug puslapių grupės iliustracijoje arba sąraše.
- Detalės arba pogrupio numeris (29)
- Pogrupio pavadinimas ar detalės aprašymas (30)
- Grupės numeris (31)
- Įrangos numeris (32)
- Grupės informacinė antraštė (33). Nurodo, ar žemiau antraštės esantis skyrius yra skirtas specifiniam mašinos variantui, ar tai yra įprastinių detalių sąrašas. Jei sąrašas turi daugiau nei vieną variantą ir kiekvienas variantas iliustruojamas surinkimo brėžiniu, pateikiama nuoroda į surinkimo brėžinio puslapį.
- Vidinė informacija (34)

Ievads

Informācija par rokasgrāmatu

Tetra Pak iesaka rūpīgi izlasīt visas piegādātās rokasgrāmatas. Piegādātajām rokasgrāmatām ir jābūt pieejamām personālam, kas apkalpo iekārtas vai veic to apkopi.

Nepieciešams saglabāt šo katalogu visu laiku, kamēr iekārtas tiek izmantotas, un nodot katalogu nākamajam īpašniekam vai lietotājam.

Tetra Pak neatbild par iekārtas bojājumiem, kuri rodas līdz ar iekārtu piegādāto instrukciju neievērošanas rezultātā.

Piegādātās rokasgrāmatas

Līdz ar iekārtu var tikt piegādātas šādas rokasgrāmatas

- Pārslēgšanas rokasgrāmata (CM)
  Šī rokasgrāmata sniedz tehniķiem informāciju par iekārtas pārslēgšanu dažādos atšķirīgos ražošanas režīmos.
- Elektriskās instalācijas rokasgrāmata (EM)
  Šī rokasgrāmata sniedz tehniķiem informāciju par iekārtas elektriskās instalācijas sistēmu.
- Uzstādīšanas rokasgrāmata (IM)
  Šī rokasgrāmata sniedz tehniķiem informāciju, kas nepieciešama drošai iekārtas uzstādīšanai.
- Apkopes rokasgrāmata (MM)
  Šī rokasgrāmata sniedz tehniķiem informāciju par iekārtas apkopi.
- Ekspluatācijas rokasgrāmata (OM)
  Šī rokasgrāmata sniedz apkalpojošajam personālam informāciju par iekārtas apkalpošanu un ekspluatēšanu pirms darba sākuma, darba laikā un pēc darba beigām.
- Rezerves daļu katalogs (SPC)
  Šī rokasgrāmata sniedz informāciju, kas nepieciešama, lai pasūtītu rezerves daļas no Tetra Pak.
- Tehniskā rokasgrāmata (TeM)
  - sniedz tehniķiem informāciju, kas nepieciešama drošai iekārtas uzstādīšanai
  - sniedz tehniķiem informāciju par iekārtas apkopi
  - sniedz tehniķiem informāciju par iekārtas elektrisko instalāciju
  - sniedz informāciju, kas nepieciešama, lai pasūtītu rezerves daļas no Tetra Pak

Lappuses izkārtojums

Skatīt ilustrāciju (A) i-5 lappusē: Galvenās lappuses Rezerves daļu katalogā sastāv no ilustrāciju lapas (1) un atbilstīgās saraksta lapas (7). Lappuses numurs (5) ir norādīts ilustrācijas lapas galvenē un saraksta lapas kājenē. Dokumenta numurs (6) ir norādīts saraksta lapas kājenē.

Lappušu numerācija

Skatīt ilustrāciju (A) lappusē i-5: Lappuses numurs (5) sastāv no trim daļām:

- nodaļas numura (2)
- secīga lappuses numura nodaļas ietvaros (3)
- kopējā lappušu skaita nodaļā (4)

Iepazīstināšana ar iekārtu

Ražotājs

Ražotāja nosaukumu un adresi skatīt šī kataloga otrajā lappusē.

Serviss

Ja nepieciešams pasūtīt rezerves daļas šai mašīnai vai ziņot par problēmām, kas saistītas ar mašīnas ekspluatāciju, tad, lūdzu, sazinieties ar tuvāko Tetra Pak pārstāvniecību.

Ja Jums ir citi jautājumi, piezīmes vai ieteikumi par iekārtas un tās dokumentācijas uzlabošanu, tad lūdzam sazināties ar Sakaru biroju.

Identifikācija

CE klasifikācija

Šī iekārta atbilst galvenajām Eiropas Ekonomiskās Zonas (EEA) regulām, kuras attiecas uz veselību un drošību.

Mašīnas tipa plāksnīte

Ilustrācijā (B) i-5lappusē redzams mašīnas tipa plāksnītes paraugs. Aktuālās mašīnas tipa plāksnīte un tās atrašanās vieta uz iekārtas ir parādīta līdz ar šo iekārtu piegādāto rokasgrāmatu Ievada nodaļā. Mašīnas tipa plāksnīte satur tālāk uzskaitīto informāciju, kura ir nepieciešama, sazinoties ar Tetra Pak par šo iekārtu.

- Mašīnas tips (8)
- Daudzums (9)
- Rasējuma specifikācijas (10)
- Mašīnas sērijas numurs (11)
- Ražotājs (12)
- CE apzīmējums (13)
- Izgatavošanas gads (14)

Ilustrācijā (C) i-5lappusē ir parādīts mašīnas specifikācijas paraugs. Pārliecinieties, ka šīs rokasgrāmatas titullapās minētā informācija par iekārtu atbilst tai, kas norādīta uz mašīnas tipa plāksnītes un mašīnas specifikācijā.

Rezerves daļu kataloga lietošana

Vajadzīgās rezerves daļas numura atrašana

a) Skatiet ilustrāciju (D) i-5lappusē: atrodiet nodaļas numuru (15), kas norādīts līdzās galvenajai grupai, kurā ietilpst Jūsu meklētā rezerves daļa.

Pozīcijas b) un c) skatiet ilustrāciju (E) i-6lappusē.

b) Galvenās grupas ilustrācijā atrodiet mašīnas apakšgrupu (17), kurā ietilpst Jūsu meklētā detaļa vai apakšgrupa. Atzīmējiet pozīcijas numuru (18) un pievērsieties saraksta lappusei, kura seko šai ilustrācijai.

c) Sameklējiet atbilstīgo pozīcijas numuru (16) vai apakšgrupas nosaukumu (19). Pievērsieties atbilstīgajam lappuses numuram (20), kas norādīts ailē pa labi.

Pozīcijas d) un e) skatiet ilustrāciju (E) i-6lappusē.

d) Atrodiet vajadzīgo rezerves daļu (21) apakšgrupas ilustrācijā un atzīmējiet šīs detaļas pozīcijas numuru.

e) Šīs daļas numurs (29) un apraksts (30) atrodas saraksta lapā līdzās pozīcijas numuram.

Rezerves daļu katalogā sniegtā informācija

Šis saraksts attiecas uz ilustrāciju (F) i-6lappusē. Rezerves daļu katalogs satur šādu informāciju par grupām, apakšgrupām un iekārtas rezerves daļām:

- Norādes par grupu struktūru (22). Norāde uz tuvāko augstāko grupu iekārtas saraksta struktūrā.
- Grupas nosaukums (23)
- Mērvienība (25)
- Skaits (26)
- Montāžas rasējuma numurs (27)
- Saraksta lappuses zona (28). Tiek izmantota tad, ja grupas ilustrācija vai saraksts ir uz vairākām lappusēm.
- Daļas vai apakšgrupas numurs (29)
- Apakšgrupas nosaukums vai daļas apraksts (30)
- Grupas numurs (31)
- Iekārtas numurs (32)
- Grupas informācijas iedaļas apzīmējums (33). Norāda, vai iedaļa zem šī apzīmējuma attiecas uz noteiktu mašīnas variantu, vai arī tas ir kopējo rezerves daļu saraksts. Ja sarakstam ir vairāk par vienu variantu un katram variantam ir savs montāžas rasējums, tad tiek dota atsauce uz lappusi, kur atrodams katra varianta montāžas rasējums.
- Iekšējā informācija (34)

Introduzzjoni

Informazzjoni tal-Manwal

Tetra Pak tirrakkomanda li jinqraw bl-attenzjoni l-manwali kkunsinnati kollha. Aċċerta ruħek li l-manwali kkunsinnati kollha huma disponibbli għall-personàl li jħaddem jew li jagħmel manutezjoni fuq it-tagħmir.

Huwa importanti li żżomm dan il-katalgu sakemm idum jaħdem it-tagħmir, u li tgħaddi l-katalgu lil xi sid jew lil xi persuna oħra li tuża dan it-tagħmir fil-futur.

Tetra Pak ma tistax tinżamm responsabbli ta' xi ħsara lit-tagħmir ikkawżata minn nuqqas ta' osservanza ta' l-istruzzjonijiet li jingħataw f'dan il-manwal.

Manwali Kkunsinnati

Il-manwali kkunsinnati ma' dan it-tagħmir jinkludu

- Manwal tal-Konverżjoni (CM)
  Dan il-manwal jipprovdi informazzjoni lit-tekniċi dwar il-konverżjoni tat-tagħmir bejn modi differenti tal-produzzjoni.
- Manwal Elettriku (EM)
  Dan il-manwal jipprovdi informazzjoni lit-tekniċi dwar is-sistema ta' l-elettriku tat-tagħmir.
- Manwal ta' l-Installazzjoni (IM)
  Dan il-manwal jipprovdi lit-tekniċi b'informazzjoni meħtieġa biex jinstallaw it-tagħmir mingħajr periklu.
- Manwal tal-Manutenzjoni (MM)
  Dan il-manwal jipprovdi lit-tekniċi b'informazzjoni fuq kif jagħmlu manutenzjoni fuq it-tagħmir.
- Manwal ta' l-Operazzjoni (OM)
  Dan il-manwal jipprovdi informazzjoni lill-operatur fuq kif jimmaniġġja u jħaddem it-tagħmir, qabel, waqt, u wara l-produzzjoni.
- Katalgu tal-Partijiet Għat-Tibdil (SPC)
  Dan il-manwal jipprovdi l-informazzjoni neċessarja biex jiġu ordnati partijiet għat-tibdil mingħand Tetra Pak.
- Manwal Tekniku (TeM)
  - jipprovdi lit-tekniċi b'informazzjoni meħtieġa biex jinstallaw it-tagħmir mingħajr periklu
  - jipprovdi lit-tekniċi b'informazzjoni fuq kif jagħmlu manutenzjoni fuq it-tagħmir
  - jipprovdi informazzjoni lit-tekniċi dwar is-sistema ta' l-elettriku tat-tagħmir.
  - jipprovdi l-informazzjoni neċessarja biex jiġu ordnati partijiet għat-tibdil mingħand Tetra Pak

Taqsim tal-Paġna

Irreferi għal stampa (A) f'paġna i-5: Il-paġni ewlenin fil-Katalgu tal-Partijiet Għat-Tibdil jikkonsistu f'paġna bl-istampi (1) u paġna b'lista li tikkorrispondi (7). In-numru tal-paġna (5) jintwera fil-header ta' paġna bl-istampi u fil-footer ta' paġna b'lista. In-numru tad-dokument (6) jintwera fil-footer ta' paġna b'lista.

Numru tal-paġna

Irreferi għal stampa (A) f'paġna i-5: In-numru tal-paġna (5) fih tliet partijiet:

- numru tal-kapitlu (2)
- in-numru konsekuttiv tal-paġna fil-kapitlu (3)
- in-numru totali ta' paġni fil-kapitlu (4)

Introduzzjoni tal-Magna

Manifattur

Għall-isem u l-indirizz tal-manifattur, ara t-tieni paġna ta' dan il-katalgu.

Servizz

Biex tordna partijiet għat-tibdil għal din il-magna, jew biex tirrapporta problemi assoċjati mat-thaddim ta' din il-magna, ikkuntattja l-eqreb uffiċċju ta' Tetra Pak.

Ikkuntattja lill-persuna responsabbli mill-komunikazzjoni jekk ikollok xi mistoqsijiet, kummenti, jew suġġerimenti ohrajn biex ittejjeb it-tagħmir u d-dokumentazzjoni tiegħu.

Identifikazzjoni

Klassifikazzjoni CE

Dan it-tagħmir huwa konformi mar-regolamenti bażiċi tas-saħħa u s-sigurtà tal- European Economic Area (EEA).

Pjanċa tal-Magna

L-istampa (B) fuq paġna i-5 turi eżempju ta' pjanċa tal-magna.
Stampa tal-pjanċa valida tal-magna u l-lok tagħha fuq it-tagħmir hi murija fil-kapitlu ta' l-Introduzzjoni tal-manwali kkunsinnati ma' dan it-tagħmir.
Il-pjanċa tat-tagħmir fiha l-informazzjoni elenkata hawn taħt, meħtieġa meta tikkuntattja lil Tetra Pak dwar dan it-tagħmir partikulari.

- Tip ta' magna (8)
- Volum (9)
- Speċifikazzjonijiet tad-Disinn (10)
- Numru tas-serje tal-magna (11)
- Manifattur (12)
- Marka CE (13)
- Sena tal-manifattura (14)

L-istampa (Ċ) fuq paġna i-5 turi eżempju ta' speċifikazzjoni tal-magna.
Aċċerta ruħek li l-informazzjoni tat-tagħmir elenkata fuq il-paġni ta' quddiem ta' dan il-manwal tikkorrispondi għall-informazzjoni tal-pjanċa tal-magna u l-ispeċifikazzjoni tal-magna.

Kif Tuża Dan il-Katalgu tal-Partijiet Għat-Tibdil

Sib Numru ta' Parti Għat-Tibdil

a) Irreferi għal stampa (D) f'paġna i-5: Mur fin-numru tal-kapitlu (15) indikat ħdejn il-grupp prinċipali li fih il-parti li trid issib.

Oġġetti b) u c) irreferi għal stampa (E) f'paġna i-6.

b) Fl-istampa tal-grupp prinċipali, fittex għas-sottogrupp tal-magna (17) li fih il-parti jew sottogrupp li tkun qed tfittex. Innota n-numru tal-pożizzjoni (18) u mur fil-paġna bil-lista li ssegwi l-istampa.

c) Fittex in-numru tal-pożizzjoni (16) jew l-isem tas-sottogrupp (19). Mur fin-numru tal-paġna li jikkorrispondi (20) elenkat fil-kolonna tan-naħa tal-lemin.

Oġġetti d) u e) irreferi għal stampa (F) f'paġna i-6.

d) Sib il-parti (21) li qed tfittex fl-istampa tas-sottogrupp u nnota n-numru tal-pożizzjoni tal-parti.

e) In-numru tal-parti (29) u d-deskrizzjoni tal-parti (30) huma elenkati ħdejn n-numru tal-pożizzjoni fuq il-paġna bil-lista.

Informazzjoni Elenkata fil-Katalgu tal-Partijiet Għat-Tibdil

Il-lista t'hawn taħt tirreferi għal stampa (F) fuq paġna i-6. Il-Katalgu tal-Partijiet Għat-Tibdil fih din l-informazzjoni li ġejja dwar gruppi, sottogruppi, u partijiet għat-tibdil għat-tagħmir:

- Referenza ta' l-istruttura tal-grupp (22). Tindika l-ogħla grupp li jmiss fl-istruttura tal-lista tat-tagħmir.
- Isem tal-grupp (23)
- Unit tal-kejl (25)
- Kwantità (26)
- Numru tad-disinn ta' l-immuntar (27)
- Medda tal-paġni tal-lista (28). Inkluži jekk hemm paġni multipli fil-lista jew fl-istampa tal-grupp.
- Numru tal-parti jew sottogrupp (29)
- Deskrizzjoni ta' l-isem tas-sottogrupp jew parti (30)
- Numru tal-grupp (31)
- Numru tat-tagħmir (32)
- Heading ta' l-informazzjoni tal-grupp (33). Tindika jekk is-sezzjoni ta' taħt il-heading hix għal xi varjant speċifiku tal-magna jew jekk hix lista ta' partijiet komuni. Jekk lista jkun fiha aktar minn varjant wieħed u jekk kull varjant ikollu d-disinn ta' l-immuntar tiegħu, tintwera referenza ta' paġna għad-disinn ta' l-immuntar tal-varjant.
- Informazzjoni interna (34)

Inleiding

Informatie betreffende dit handboek

Tetra Pak raadt aan alle geleverde documentatie zorgvuldig te lezen. Ga na of de geleverde documentatie ter beschikking is van het personeel dat de machine moet bedienen of servicewerkzaamheden moet uitvoeren.

Het is belangrijk deze catalogus voor de duur van de machine te bewaren en de catalogus door te geven aan elke volgende eigenaar of gebruiker.

Tetra Pak aanvaardt geen verantwoordelijkheid voor om het even welke soort beschadiging aan de machine als gevolg van het niet opvolgen van de in dit handboek gegeven instructies.

Bijgeleverde handboeken

De met deze apparatuur geleverde handboeken omvatten

- Conversiehandboek (CM)
  Dit handboek geeft technici informatie over het ombouwen van de apparatuur tussen verschillende productiemodi.
- Handboek Elektriciteit (EM)
  Dit handboek geeft elektriciens en servicetechnici informatie betreffende het elektrisch systeem van de apparatuur.
- Installatiehandboek (IM)
  Dit handboek geeft installatiepersoneel informatie om op veilige wijze de apparatuur te installeren.
- Onderhoudshandboek (MM)
  Dit handboek geeft technici informatie over het onderhoud van de apparatuur.
- Bedieningshandboek (OM)
  Dit handboek geeft de operator informatie betreffende het omgaan met en bedienen van de apparatuur, voor, tijdens en na productie.
- Catalogus reservedelen (SPC).
  Dit handboek geeft de nodige informatie om reserveonderdelen bij Tetra Pak te bestellen.
- Technisch Handboek (TeM)
  - Dit handboek geeft technici informatie, nodig om op veilige wijze de apparatuur te installeren
  - Dit handboek geeft technici informatie over het onderhoud van de apparatuur
  - Dit handboek geeft technici informatie betreffende het elektrisch systeem van de apparatuur
  - geeft de nodige informatie, nodig om reserveonderdelen bij Tetra Pak te bestellen

Pagina lay-out

Refereer naar de illustratie (A) op bladzijde i-5: De belangrijkste bladzijden van een Catalogus Reserveonderdelen bestaan uit een bladzijde met een illustratie (1) en een corresponderende bladzijde met een lijst (7).
Het bladzijdenummer (5) is te vinden in de kop van een illustratiebladzijde en in de voetnoot van de lijstbladzijde. Het documentnummer (6) is te vinden in de voetnoot van een lijstbladzijde.

Bladzijdenummering

Refereer naar de illustratie (A) op bladzijde i-5: een bladzijdenummer (5) bestaat uit drie delen:

- hoofdstuknummer (2)
- opeenvolgende bladzijdenummer in het hoofdstuk (3)
- totaal aantal bladzijden in het hoofdstuk (4)

Introductie van de machine

Fabrikant

Voor naam en adres van de fabrikant, zie de tweede bladzijde van deze catalogus.

Service

Voor het bestellen van reserveonderdelen of om bedieningsproblemen van deze machine te melden, contacteer de dichtst bijzijnde vestiging van Tetra Pak.

Neem contact op met de contactpersoon voor andere informatie, opmerkingen of suggesties ter verbetering van de machine en de bijbehorende documentatie.

Identificatie

CE-classificatie

Deze apparatuur voldoet aan de basiseisen voor gezondheid en veiligheid voor het Europese Economische Gebied (EEA).

Machineplaatje

De illustratie (B) op bladzijde i-5 toont een voorbeeld van een machineplaatje.
Een illustratie van het wettige machineplaatje en de plaatsing ervan wordt getoond in het hoofdstuk Introductie van de handboeken, meegeleverd met deze apparatuur. Het machineplaatje bevat onderstaande gegevens die nodig zijn wanneer Tetra Pak moet worden gecontacteerd betreffende deze apparatuur.

- Machinetype (8)
- Volume (9)
- Tekeningspecificaties (10)
- Serienummer machine (11)
- Fabrikant (12)
- CE-markering (13)
- Fabricagejaar (14)

De illustratie (C) op bladzijde i-5 toont een voorbeeld van een machineplaatje. Controleer of de gegevens betreffende de apparatuur in de voorste bladzijden van dit handboek overeenkomen met de gegevens op het machineplaatje en de machinespecificaties.

Hoe dient deze catalogus reserveonderdelen te worden gebruikt

Lokaliseren van een nummer van een reserveonderdeel

a) Refereer naar de illustratie (D) op bladzijde i-5: ga naar het hoofdstuknummer (15), naast de hoofdgroep die het gewenste deel bevat.

Items b) en c) refereer naar de illustratie (E) op bladzijde i-6.

b) Op de illustratie van de hoofdgroep, zoek de machinesub-groep (17) op die het deel van de gewenste sub-groep bevat. Noteer het positienummer (18) en ga naar de lijstbladzijde die op de illustratie volgt.

c) Op de illustratie van de hoofdgroep, zoek de machinesub-groep (17) op die het deel van de gewenste sub-groep bevat. Noteer het positienummer (18) en ga naar de lijstbladzijde die op de illustratie volgt.

Items d) en e) refereren naar de illustratie (F) op bladzijde i-6.

d) Lokaliseer het gewenste onderdeel (21) in de illustratie van de sub-groep en noteer het positienummer van het onderdeel.

e) Het onderdeelnummer (29) en de beschrijving ervan (30) worden naast het positienummer op de lijstbladzijde weergegeven.

Informatie die in een Catalogus reserveonderdelen wordt gegeven

Onderstaande lijst verwijst naar de illustratie (F) op bladzijde i-6.
Een Catalogus reserveonderdelen bevat de volgende informatie betreffende groepen, sub-groepen en reserveonderdelen voor de apparatuur:

- Referentie groepsstructuur (22). Geeft de volgende hoogste groep in de structuur van de apparatuur aan.
- Groepsnaam(23)
- Meeteenheid (25)
- Hoeveelheid (26)
- Tekeningnummer montage (27)
- Lijst met bladzijdenreeks (28). Inclusief indien er meerdere bladzijden in de groepsillustratie of lijst voorkomen.
- Onderdeel of sub-groepsnummer (29)
- Naam sub-groep of beschrijving onderdeel (30)
- Groepsnummer (31)
- Apparatuurnummer (32)
- Titel groepsinformatie (33). Geeft aan of het deel onder de titel voor een specifieke machine is, voor een variant of een lijst is met algemene onderdelen. Indien een lijst meer dan één variant bevat en elke variant heeft zijn eigen montagetekening, wordt een bladzijdenreferentie naar de montagetekening van de variant gegeven.
- Interne informatie (34)

Introduksjon

Informasjon om håndboken

Tetra Pak anbefaler at du leser nøye gjennom alle leverte håndbøker. Sørg for at håndbøkene er tilgjengelige for alle som betjener eller vedlikeholder utstyret.

Det er viktig at du tar vare på denne katalogen under hele levetiden til utstyret og at du gir den videre til eventuelle nye eiere eller brukere.

Tetra Pak vil ikke være ansvarlig for skader på utstyret som oppstår fordi brukeren ikke følger instruksjonene i håndbøkene som følger med utstyret.

Leverte håndbøker

Håndbøkene som leveres med dette utstyret, kan inkludere

- Konverteringsmanual (CM)
  Denne håndboken gir teknikere informasjon om hvordan de konverterer utstyret mellom ulike produksjonsmodi.
- Electrisk manual (EM)
  Denne håndboken gir teknikere informasjon om utstyrets elektriske system.
- Installasjonsmanual (IM)
  Denne håndboken gir teknikere informasjon som kreves for å kunne installere utstyret på en sikker måte.
- Vedlikeholdsmanual (MM)
  Denne håndboken gir teknikere informasjon om vedlikehold av utstyret.
- Driftsmanual (OM)
  Denne håndboken gir operatøren informasjon om hvordan han håndterer og bruker utstyret før, under og etter produksjon.
- Reservedelskatalog (SPC)
  Denne håndboken inneholder informasjon som du trenger for å bestille reservedeler fra Tetra Pak.
- Teknisk manual (TeM)
  - gir teknikere informasjon om sikker installasjon av utstyret
  - gir teknikere informasjon om vedlikehold av utstyret
  - gir teknikere informasjon om utstyrets elektriske system
  - inneholder informasjon som du trenger for å bestille reservedeler fra Tetra Pak

Sideoppsett

Se illustrasjonen (A) på side i-5: Hovedsidene i reservedelskatalogen består av en illustrasjonsside (1) og en korresponderende listeside (7). Sidenummeret (5) vises i toppteksten på illustrasjonssiden og i bunnteksten listesiden. Dokumentnummeret (6) vises i bunnteksten på listesiden.

Sidenummerering

Se illustrasjonen (A) på side i-5: Et sidenummer (5) består av tre deler:

- kapittelnummer (2)
- etterfølgende sidenummer i kapitlet (3)
- det totale antall sider i kapitlet (4)

Introduksjon av maskinen

Produsent

Hvis du ønsker produsentens navn og adresse, kan du se side to i denne katalogen.

Service

Når du skal bestille reservedeler til denne maskinen eller rapportere problemer forbundet med driften av denne maskinen, må du kontakte ditt nærmeste Tetra Pak-kontor.

Når det gjelder andre forespørsler, kommentarer eller forslag til forbedringer av utstyret og dets dokumentasjon, kan du ta kontakt med din kontaktperson.

Identifisering

CE-klassifisering

Dette utstyret er i overensstemmelse med de grunnleggende helse- og sikkerhetsforskriftene i Det europeiske økonomiske samarbeidsområdet (EØS).

Maskinplate

Illustrasjonen (B) på side i-5 viser et eksempel på en maskinplate. En illustrasjon av en gyldig maskinplate og hvor denne er plassert på utstyret, er vist i introduksjonskapitlet i håndbøkene som følger med dette utstyret. Maskinplaten inneholder nedenstående data, som du trenger når du skal kontakte Tetra Pak angående dette bestemte utstyret.

- Maskintype (8)
- Volum (9)
- Tegningsspesifikasjoner (10)
- Maskin-serienummer (11)
- Produsent (12)
- CE-merke (13)
- Produksjonsår (14)

Illustrasjonen (C) på side i-5 viser et eksempel på en maskinspesifikasjon. Sørg for at utstyrsdataene som står oppført foran i denne håndboken samsvarer med dataene på maskinplaten og maskinspesifikasjonen.

Hvordan bruke denne reservedelskatalogen

Finn et reservedelsnummer

a) Se illustrasjonen (D) på side i-5: Gå til kapittelnummeret (15) som er angitt ved siden av hovedgruppen som inneholder delen du vil finne.

Punkt b) og c) viser til illustrasjonen (E) på side i-6.

b) På hovedgruppeillustrasjonen ser du etter maskinundergruppen (17) som inneholder delen eller undergruppen du ser etter. Merk deg posisjonsnummeret (18), og gå til listesiden som kommer etter illustrasjonen.

c) Se etter posisjonsnummeret (16) eller undergruppenavnet (19). Gå til det korresponderende sidenummeret (20) som står oppført i høyre kolonne.

Punkt d) og e) viser til illustrasjonen (F) på side i-6.

d) Finn delen (21) du ser etter på undergruppeillustrasjonen, og merk deg delens posisjonsnummer.

e) Delenummeret (29) og delebeskrivelsen (30) finner du ved siden av posisjonsnummeret på listesiden.

Informasjon i en reservedelskatalog

Listen nedenfor viser til illustrasjonen (F) på side i-6. En reservedelskatalog inneholder følgende informasjon om grupper, undergrupper og reservedeler for utstyret:

- Gruppeinndelingsreferanse (22). Angir den neste gruppen opp i inndelingen av utstyrslisten.
- Gruppenavn (23)
- Målenhet (25)
- Antall (26)
- Tegningsnummer (27)
- Listesideområde (28). Inkludert hvis det er flere sider i gruppeillustrasjonen eller listen.
- Dele- eller undergruppenummer (29)
- Undergruppenavn eller delebeskrivelse (30)
- Gruppenummer (31)
- Utstyrsnummer (32)
- Gruppeinformasjonsoverskrift (33). Angir om avsnittet under overskriften er for en bestemt maskinvariant eller om det er en liste over vanlige deler. Hvis en liste har flere varianter og hver variant har sin egen sammenstillingstegning, vises det en sidereferanse til variantens sammenstillingstegning.
- Intern informasjon (34)

Wprowadzenie

Informacje o Instrukcji

Tetra Pak zaleca dokładne zapoznanie się ze wszystkimi dostarczonymi instrukcjami obsługi. Upewnij się, że dostarczone instrukcje obsługi są dostępne dla personelu obsługującego lub konserwującego wyposażenie.

Ważne jest, aby niniejszy katalog zachować na cały okres eksploatacji urządzenia i przekazać go każdemu kolejnemu użytkownikowi/ właścicielowi.

Tetra Pak nie ponosi odpowiedzialności za żadne uszkodzenia urządzenia spowodowane nieprzestrzeganiem zaleceń zawartych instrukcjach dołączonych do tego urządzenia.

Dostarczone Instrukcje

Instrukcje dostarczone z tym urządzeniem zawierają

- Instrukcję Konwersji (CM)
  Instrukcja ta dostarcza technikom informacje o sposobie konwersji urządzenia pomiędzy różnymi trybami produkcji.
- Instrukcję Elektryki (EM)
  Instrukcja ta dostarcza technikom informacje o układzie elektrycznym urządzenia.
- Instrukcję Instalacyjną (IM)
  Instrukcja ta dostarcza technikom informacje niezbędne do bezpiecznego zainstalowania urządzenia.
- Instrukcję Konserwacji (MM)
  Instrukcja ta dostarcza technikom informacje o sposobie konserwacji urządzenia.
- Instrukcję Operacyjną (OM)
  Instrukcja ta dostarcza operatorowi informacje o sposobie manipulacji i obsługi urządzenia przed, podczas i po produkcji.
- Katalog Części Zamiennych (SPC)
  Instrukcja ta dostarcza informacje niezbędne do zamawiania części zamiennych z firmy Tetra Pak.
- Instrukcję Techniczną (TeM)
  - dostarcza technikom informacje niezbędne do bezpiecznego zainstalowania urządzenia
  - dostarcza technikom informacje o konserwacji urządzenia
  - dostarcza technikom informacje o układzie elektrycznym urządzenia
  - dostarcza informacje niezbędne do zamawiania części zamiennych z firmy Tetra Pak

Układ Strony

Patrz ilustracja (A) na stronie i-5: Kartki główne Katalogu Części Zamiennych składają się z ze strony z ilustracją (1) oraz odpowiadającej jej strony z listą (7). W nagłówku strony z ilustracją oraz w stopce strony z listą pokazany jest numer strony (5). Numer dokumentu (6)umieszczony jest w stopce strony z listą.

Numeracja stron

Patrz ilustracja (A) na stronie i-5:Numer strony (5) zawiera trzy części:

- numer rozdziału (2)
- kolejny numer strony (3) w ramach rozdziału
- łączna ilość stron (4) w rozdziale

Wprowadzenie do Maszyny

Producent

Nazwę i adres producenta można znaleźć na drugiej stronie niniejszego katalogu.

Serwis

Aby zamówić części zapasowe do tej maszyny lub zgłosić problemy związane z jej pracą należy skontaktować się z najbliższym biurem Tetra Pak.

Prosimy o nawiązanie kontaktu w przypadku jakichkolwiek zapytań, komentarzy, lub sugestii zmierzających do usprawnienia wyposażenia oraz dokumentacji z nimi związanych.

Identyfikacja

Klasyfikacja CE

Urządzenie spełnia wymagania podstawowych przepisów BHP Europejskiego Obszaru Ekonomicznego (EEA).

Płyta znamionowa maszyny

Ilustracja (B) przedstawiona na stronie i-5 pokazuje przykład płyty znamionowej maszyny.
Ilustracja prawidłowej płyty znamionowej oraz jej położenie na urządzeniu pokazana jest w rozdziale Wprowadzenie zawartym w instrukcjach dostarczonych z tym urządzeniem. Płyta znamionowa maszyny zawiera niżej przedstawione dane, potrzebne podczas kontaktowania się z firmą Tetra Pak w sprawach dotyczących tego konkretnego urządzenia.

- Typ maszyny (8)
- Objętość (9)
- Specyfikacje rysunkowe (10)
- Numer seryjny urządzenia (11)
- Producent (12)
- Oznaczenie symbolemCE (13)
- Rok produkcji (14)

Ilustracja (C) zawarta na stronie i-5 pokazuje przykład specyfikacji maszyny. Należy sprawdzić, czy dane wyposażenia przedstawione na pierwszej stronie tej instrukcji odpowiadają danym zawartym na płycie znamionowej maszyny oraz specyfikacji maszyny.

Jak Korzystać z niniejszego Katalogu Części Zamiennych

Należy znaleźć Numer części zamiennej

a) Patrz ilustracja (D) zawarta na stronie i-5: Przejdź do numeru rozdziału (15) pokazanego obok głównej grupy zawierającej część, którą chcesz odszukać.

Pozycje b) i c) odnoszą się do ilustracji (E) zawartej na stronie i-6.

b) Na ilustracji grupy głównej odszukaj podgrupę maszyny (17), która zawiera odpowiednią część lub podgrupę, której szukasz. Zanotuj numer pozycji (18) i przejdź na stronę z listą, umieszczoną za ilustracją.

c) Odszukaj numer pozycji (16) lub nazwę podgrupy (19). Przejdź do odpowiedniego numeru strony (20) pokazanego w kolumnie umieszczonej po prawej stronie.

Pozycje d) i e) odnoszą się do ilustracji (F) zawartej na stronie i-6.

d) Znajdź na ilustracji podgrupy część (21), której szukasz i zanotuj numer pozycji części.

e) Numer części (29) oraz opis części (30) są umieszczone na stronie z listą obok numeru pozycji.

Informacje zawarte w Katalogu Części Zamiennych

Poniższa lista odnosi się do ilustracji (F) zawartej na stronie i-6. Katalog Części Zamiennych zawiera następujące informacje o grupach, podgrupach oraz częściach zamiennych dla urządzenia:

- Struktura referencji grup (22). Wskazuje następną wyższą grupę zawartą w strukturze listy wyposażenia.
- Nazwa grupy (23)
- Jednostka miary(25)
- Ilość (26)
- Numer rysunku montażowego (27)
- Zakres strony z listą (28). Zawarty w przypadku występowania wielu stron dla ilustracji lub listy grupy.
- Numer części lub podgrupy (29)
- Nazwa podgrupy lub opis części (30)
- Numer grupy (31)
- Numer urządzenia (32)
- Nagłówek informacyjny grupy (33). Wskazuje, czy sekcja umieszczona pod nagłówkiem dotyczy określonego wariantu maszyny, czy też jest to lista wspólna dla wszystkich wariantów. Jeśli lista występuje w wielu wariantach i dla każdego z nich dostępny jest własny rysunek montażowy, pokazany jest numer strony odniesienia rysunku montażowego dla danego wariantu.
- Informacje wewnętrzne (34)

Introdução

Informação do Manual

A Tetra Pak recomenda ler cuidadosamente todos os manuais fornecidos. Verificar se os manuais fornecidos estão ao dispor do pessoal que trabalha com o equipamento ou que faz a manutenção do mesmo.

É importante guardar este catálogo durante o tempo útil de vida da máquina ou do equipamento e de entregar o catálogo a qualquer proprietário ou utilizador subsequente.

A Tetra Pak não toma a responsabilidade por quaisquer danos no equipamento causados devido ao facto de que as instruções dadas nos manuais que acompanham este equipamento não foram seguidas.

Manuais fornecidos

Os manuais fornecidos com este equipamento incluem

- Manual de Conversão (CM)
  Este manual fornece aos técnicos as informações sobre a conversão do equipamento entre os diferentes modos de produção.
- Manual Eléctrico (EM)
  Este manual fornece aos técnicos as informações sobre o sistema eléctrico do equipamento.
- Manual de Instalação (IM)
  Este manual fornece aos técnicos as informações necessárias para instalar seguramente o equipamento.
- Manual de Manutenção (MM)
  Este manual fornece aos técnicos as informações para a manutenção do equipamento.
- Manual de Operação (OM)
  Este manual fornece ao operador as informações que ele necessita para manejar e accionar o equipamento antes, durante e depois da produção.
- Catálogo de Peças Sobressalentes (SPC)
  Este manual fornece as informações necessárias para encomendar peças sobressalentes à Tetra Pak.
- Manual Técnico (TeM)
  - fornece aos técnicos as informações necessárias para instalar seguramente o equipamento
  - fornece aos técnicos as informações para a manutenção do equipamento
  - fornece aos técnicos as informações sobre o sistema eléctrico do equipamento
  - fornece as informações necessárias para encomendar peças sobressalentes à Tetra Pak

Disposição da página

Referência à ilustração (A) na página i-5: As páginas principais num Catálogo de Peças Sobressalentes consistem numa página ilustrada (1) e numa página com a lista correspondente (7). O número da página (5) é mostrado no cabeçalho de uma página ilustrada e no rodapé de uma página com lista. O número do documento (6) é mostrado no rodapé de uma página com lista.

Numeração da página

Referência à ilustração (A) na página i-5: Um número de página (5) tem três partes:

- Número do capítulo (2)
- número consecutivo da página dentro do capítulo (3)
- número total de páginas no capítulo (4)

Introdução da máquina

Fabricante

Para o nome e morada do fabricante, ver a segunda página deste catálogo.

Assistência técnica

Para encomendar peças sobressalentes para esta máquina, ou para relatar problemas associados com a operação desta máquina, contactar a companhia Tetra Pak mais próxima.

Contactar a Liaison se tiver quaisquer questões, comentários ou sugestões para o desenvolvimento relacionado com o equipamento e a sua documentação.

Identificação

Classificação CE

Este equipamento está de acordo com os regulamentos de segurança e saúde da Área Económica Europeia (EEA).

Placa da máquina

A ilustração (B) na página i-5 mostra um exemplo de uma placa da máquina. Uma ilustração da placa da máquina válida e a sua localização no equipamento é mostrada no capítulo Introdução dos manuais fornecidos com este equipamento. A placa da máquina contem os dados alistados em baixo, necessários quando se contactar a Tetra Pak relacionando-se a este equipamento em específico.

- Tipo da máquina (8)
- Volume (9)
- Especificações dos desenhos (10)
- Número de série da máquina (11)
- Fabricante (12)
- Marca CE (13)
- Ano de construção (14)

A ilustração (C) na página i-5 mostra um exemplo de uma especificação da máquina. Verificar se os dados do equipamento alistados nas páginas da frente deste manual correspondem aos dados na placa da máquina e à especificação da máquina.

Como usar este Catálogo de Peças Sobressalentes

Localizar um Número da peça sobressalente

f) Referência à ilustração (D) na página i-5: Para o número do capítulo (15) indicado ao lado do grupo principal que contem a peça que quer localizar.

Pos. b) e c) referem-se à ilustração (E) na página i-6.

g) Na ilustração do grupo principal, procurar o subgrupo da máquina (17) que contem a peça ou subgrupo que está à procura. Anotar o número da posição (18) e passar para a página da lista que segue a ilustração.

h) Procurar o número da posição (16) ou o nome do subgrupo (19). Passar para o número da página correspondente (20) alistado na coluna do lado direito.

Pos. d) e e) referem-se à ilustração (F) na página i-6.

i) Localizar a peça (21) que está à procura na ilustração do subgrupo e anotar o número da posição da peça.

j) O número da peça (29) e a descrição da peça (30) estão alistados ao lado do número da posição na página da lista.

Informações indicadas num Catálogo de Peças Sobressalentes

A lista em baixo refere-se à ilustração (F) na página i-6. Um Catálogo de Peças Sobressalentes contem as seguintes informações sobre grupos, subgrupos e peças sobressalentes para o equipamento:

- Referência da estrutura do grupo (22). Indica o grupo a seguir mais elevado na estrutura da lista do equipamento.
- Nome do grupo (23)
- Unidade de medição (25)
- Quantidade (26)
- Número do desenho de montagem (27)
- Gama da página de lista (28). Incluída se houver páginas múltiplas na ilustração do grupo ou lista.
- Número da peça ou do subgrupo (29)
- Nome do subgrupo ou descrição da peça (30)
- Número do grupo (31)
- Número do equipamento (32)
- Título da informação do grupo (33). Indica se a secção abaixo do título é para uma variante de máquina específica ou se é uma lista de peças comuns. Se uma lista tiver mais do que uma variante e cada variante tiver o seu próprio desenho de montagem, é mostrada uma referência para a página do desenho de montagem da variante.
- Informação interna (34)

Úvod

Informácie o príručke

Tetra Pak doporučuje čítat' pozorne všetky dodané príručky. Presvedčte sa, že dodané príručky sú k dispozícii personálu, ktorý vykonáva obsluhu alebo údržbu zariadenia.

Je dôležité ponechat' si tento katalóg počas životnosti zariadenia a odovzdat' katalóg inému majiteľovi alebo užívateľovi.

Tetra Pak nebude zodpovedat' za nijaké zničenie zariadenia spôsobené nedodržaním pokynov uvedených v príručke vzhľadom na toto zariadenie.

Dodané príručky

Príručky dodané s týmto zariadením majú obsahovat'

- Konverznú príručku (CM)
  Táto príručka poskytuje technikom informácie o konvertovaní zariadenia medzi rozličnými režimami výroby.
- Príručku elektriky (EM)
  Táto príručka poskytujetechnikom informácie o zariadeniach elektrickej inštalácie.
- Inštalačnú príručku (IM)
  Táto príručka poskytuje technikom informácie, požadované pre bezpečnú inštaláciu zariadenia.
- Údržbársku príručku (MM)
  Táto príručka poskytujetechnikom informáciu o údržbe zariadenia.
- Návod k použitiu (OM)
  Táto príručka poskytuje obsluhe informáciu o zaobchádzaní a obsluhe zariadenia pred, počas a po výrobe.
- Katalóg náhradných dielov (SPC)
  Táto príručka poskytuje informácie potrebné pre objednávku náhradných dielov Tetra Pak.
- Technická príručka (TeM)
  - poskytuje technikom informácie potrebné pre bezpečnú inštaláciu zariadenia
  - poskytuje technikom informácie o údržbe zariadenia
  - poskytujetechnikom informácie o zariadení elektrickej inštalácie
  - poskytuje informácie potrebné pre objednávku náhradných dielov z Tetra Pak

Formát stránky

Odvoláva sa na zobrazenie (A) na stranei-5: Hlavné stránky v katalógu náhradných dielov pozostávajú zo stránky zobrazenia (1) a stránky príslušného zoznamu (7). Stránka číslo (5) ukazuje v hlavičke stránky zobrazenie a v zápätí stránky zoznam. Číslo dokumentu (6) je zobrazené v zápätí stránky zoznamu.

Číslo stránky

Odvoláva sa na zobrazenie (A) na stranei-5: Číslo stránky (5) má tri časti:

- číslo kapitoly (2)
- nasledujúce číslo stránky v rámci kapitoly (3)
- celkový počet strán v kapitole (4)

Úvod o stroji

Výrobca

Pre názov a adresu výrobcu, viď druhá strana tohoto katalógu.

Servis

Pre objednávku náhradných dielov pre tento stroj, alebo pre hlásenie problémov spojených s obsluhou tohoto stroja, kontaktujte najbližšiu pobočku spoločnosti Tetra Pak.

Kontaktujte styčnú osobu s inými žiadost'ami, poznámkami, alebo zlepšovacími návrhmi týkajúcimi sa zariadenia a jeho dokumentácie.

Označenie

CE klasifikácia

Zariadenie spĺňa základné zdravotné a bezpečnostné predpisy Európskeho hospodárskeho priestoru (EEA).

Prístrojová doska

Zobrazenie (B) na strane i-5 ukazuje príklad prístrojovej dosky. Zobrazenie správnej prístrojovej dosky a jej umiestnenie na zariadení je uvedené v kapitole Úvod príručky dodanej s týmto zariadením. Prístrojová doska obsahuje dole zoznam údajov, potrebných ak kontaktujete spoločnost' Tetra Pak ohľadom tohoto špeciálneho zariadenia.

- Typ stroja (8)
- Kapacita (9)
- Výkres špecifikácie (10)
- Sériové číslo stroja (11)
- Výrobca (12)
- značka CE (13)
- Rok výroby (14)

Zobrazenie (C) na strane i-5 ukazuje príklad špecifikácie stroja. Presvedčte sa, či údaje zariadenia uvedené na prednej strane tejto príručky zodpovedajú údajom prístrojovej dosky a špecifikácii stroja.

Ako používat' tento katalóg náhradných dielov

Vyhľadajte číslo náhradného dielu

a) Odvoláva sa na zobrazenie (D) na strane i-5: Choďte na kapitolu číslo (15) označenú pri halvnej skupine, ktorá obsahuje diel, ktorý chcete vyhľadat'.

Položky b) a c) sa odvolávajú na zobrazenie (E) na strane i-6

b) Na zobrazení hlavnej skupiny, hľadajte pre stroj podskupinu (17) ktorá obsahuje diel alebo podskupinu, ktoré hľadáte. Zaznamenajte pozíciu číslo (18) a choďte na stránku zoznamu, ktorá sleduje zobrazenie.

c) Hľadajte číslo položky (16) alebo názov podskupiny (19). Choďte na zodpovedajúcu stránku číslo (20)uvedenú v stĺpci po pravej ruke.

Položky d) a e) sa odvolávajú na zobrazenie (F) na stranei-6

d) Vyhľadajte diel (21), ktorý hľadáte podľa zobrazenia podskupiny a poznámky čísla položky dielu.

e) Číslo dielu (29) a popis dielu (30) sú uvedené pri čísle položky na zozname stránok.

Informácie uvedené v katalógu náhradných dielov

Zoznam dole sa odvoláva na zobrazenie (F) na strane i-6 Katalóg náhradných dielov obsahuje informácie o skupinách, podskupinách a náhradných dieloch pre zariadenie:

- Odkaz na usporiadanie skupiny (22) Označuje nasledujúcu vyššiu skupinu v štruktúre zoznamu zariadenia.
- Názov skupiny (23)
- Jednotka merania(25)
- Množstvo (26)
- Číslo výkresu montáže (27)
- Zoznam rozsahu stránok (28). Zahrnutý, ak sú to mnohonásobné stránky v zobrazení skupiny alebo zoznam.
- Diel alebo číslo podskupiny (29)
- Názov podskupiny alebo popis dielu (30)
- Číslo skupiny (31)
- Číslo zariadenia (32)
- Základné informácie o skupine (33). Označuje, ak sekcia pod hlavičkou je pre špeciálnu variantu stroja alebo ak je to zoznam všeobecných dielov. Ak zoznam má viac ako jednu variantu a každá varianta má svoj vlastný montážny výkres, tak je zobrazená strana, ktorá odkazuje na varianty montážneho výkresu.
- Interné informácie (34)

Uvod

Informacija o priročnikih

Podjetje Tetra Pak priporoča, da natančno preberete vse priložene priročnike. Osebje, ki upravlja in vzdržuje opremo, mora imeti dostop do priloženih priročnikov.

Katalog hranite v celotnem času uporabe opreme. V primeru, ko opremo pridobi drug uporabnik, mu obenem izročite tudi katalog.

Podjetje Tetra Pak ne prevzema odgovornosti za poškodbe na opremi, ki nastanejo zaradi neupoštevanja navodil iz priročnikov, ki so priloženi opremi.

Priloženi priročniki

Priročniki, ki so priloženi opremi, vključujejo

- Priročnik za zamenjavo (CM)
  V tem priročniku so podatki, ki tehnikom omogočajo izvesti zamenjavo opreme med različnimi načini proizvodnje.
- Električni priročnik (EM)
  Priročnik vsebuje informacije za tehnike o električnem sistemu opreme.
- Priročnik za namestitev (IM)
  Priročnik vsebuje ustrezne tehnične informacije za varno namestitev opreme.
- Priročnik za vzdrževanje (MM)
  Priročnik vsebuje informacije za tehnike o vzdrževanju opreme.
- Priročnik za obratovanje (OM)
  Priročnik je namenjen informiranju za pravilno rokovanje in upravljanje s strojem pred, med in po proizvodnem postopku.
- Katalog rezervnih delov (SPC)
  Priročnik vsebuje potrebne informacije za naročanje rezervnih delov v podjetju Tetra Pak.
- Tehnični priročnik (TeM) vsebuje:
  - ustrezne tehnične informacije za tehnike za varno namestitev opreme
  - informacije za tehnike o vzdrževanju opreme
  - informacije za tehnike o električnem sistemu opreme
  - potrebne informacije za naročanje rezervnih delov v podjetju Tetra Pak

Zgradba strani

Oglejte si risbo (A) na strani i-5: Glavne strani v Katalogu rezervnih delov sestavljata stran z risbo (1) ter ustrezna stran s seznamom (7). Številka strani (5) je v glavi na strani z risbo ter v nogi na strani s seznamom. Številka dokumenta (6) je v nogi na strani s seznamom.

Številčenje strani

Oglejte si risbo (A) na strani i-5: Številko strani (5) sestavljajo trije deli:

- številka poglavja (2)
- zaporedna številka strani v poglavju (3)
- skupno število strani poglavja (4)

Predstavitev stroja

Proizvajalec

Ime in naslov proizvajalca poiščite na drugi strani tega kataloga.

Servis

Za naročanje rezervnih delov za stroj ter za sporočanje motenj pri delovanju stroja se obrnite na najbližjo servisno službo podjetja Tetra Pak.

V primeru drugih zahtev, komentarjev, predlogov za izboljšavo opreme ali dokumentacije se obrnite na odgovorno osebo.

Identifikacijska oznaka

CE klasifikacija

Oprema je izdelana v skladu z osnovnimi zdravstvenimi in varnostnimi predpisi Evropskega gospodarskega prostora (EGP).

Ploščica s podatki

Risba (B) na strani i-5 prikazuje primer ploščice s podatki.
Risba veljavne ploščice s podatki ter mesto njene namestitve na opremi je v uvodnem poglavju posameznih priročnikov, ki so priloženi opremi.
Na ploščici s podatki so zapisani spodaj našteti podatki, ki jih potrebujete pri posvetovanju s podjetjem Tetra Pak.

- Tip stroja (8)
- Prostornina (9)
- Specifikacija risbe (10)
- Serijska številka stroja (11)
- Proizvajalec (12)
- CE oznaka (13)
- Leto izdelave (14)

Risba (C) na strani i-5 prikazuje primer specifikacije strojne opreme. Prepričajte se, da podatki o opremi, ki so zapisani na prvih straneh priročnika, ustrezajo podatkom na ploščici s podatki in specifikaciji strojne opreme.

Uporaba Kataloga rezervnih delov

Določitev številke rezervnega dela

a) Oglejte si risbo (D) na strani i-5: Zatem si oglejte poglavje številka (15), ki je označeno poleg glavne skupine, ki vsebuje želeni del.

Točki b) in c) se nanašata na risbo (E) na strani i-6.

b) Na risbi glavne skupine poiščite podskupino stroja (17), ki vključuje del ali podskupino, ki ga (jo) iščete. Zapomnite si pozicijsko številko (18) in pojdite na stran s seznamom, ki sledi risbi.

c) Poiščite pozicijsko številko (16) ali ime podskupine (19). Pojdite na ustrezno številko strani (20), ki je označena v desnem stolpcu.

Točki d) in e) se nanašata na risbo (F) na strani i-6.

d) Na risbi podskupine poiščite sestavni del (21) in si zapišite njegovo pozicijsko številko.

e) Številka sestavnega dela (29) in opis sestavnega dela (30) se nahajata poleg pozicijske številke na strani s seznamom.

Informacije v Katalogu rezervnih delov

Spodnji seznam se nanaša na risbo (F) na strani i-6. V Katalogu rezervnih delov so naslednje informacije o skupinah, podskupinah in rezervnih delih za opremo:

- Referenca strukture skupine (22). Označuje naslednjo višjo skupino v strukturi seznama opreme.
- Ime skupine (23)
- Merska enota (25)
- Količina (26)
- Številka sestavne risbe (27)
- Število strani seznama (28). Vključeno, kadar risba ali seznam skupine vsebuje več strani.
- Številka dela ali podskupine (29)
- Ime podskupine ali opis dela (30)
- Številka skupine (31)
- Številka opreme (32)
- Naslov skupine informacij (33). Označuje, če se odsek pod naslovom nanaša na specifično izvedbo stroja, ali je seznam skupnih delov. Če ima seznam več izvedb ter ima vsaka izvedba svojo sestavno risbo, je prikazana referenčna stran sestavne risbe za to izvedbo.
- Interna informacija (34)

Inledning

Information om manualerna

Tetra Pak rekommenderar att alla manualer läses noggrant. Se till att manualerna är tillgängliga för personalen som använder eller underhåller utrustningen.

Det är viktigt att denna katalog behålls under utrustningens livslängd, och att den överlämnas till varje efterföljande innehavare eller användare av utrustningen.

Tetra Pak tar inte ansvar för någon skada på utrustningen som orsakats av att instruktionerna i medföljande manualer inte har följts.

Medföljande manualer

Följande manualer kan levereras tillsammans med utrustningen:

- Konverteringsmanual (CM)
  Manualen innehåller information för tekniker om hur utrustningen ska konverteras mellan olika produktionslägen.
- Elektrisk manual (EM)
  Manualen innehåller information för tekniker om utrustningens elektriska system.
- Installationsmanual (IM)
  Manualen innehåller information för tekniker om hur utrustningen installeras på ett säkert sätt.
- Underhållsmanual (MM)
  Manualen innehåller information för tekniker om hur utrustningen ska underhållas.
- Driftsmanual (OM)
  Manualen innehåller information för operatören om hur utrustningen ska hanteras före, under och efter produktion.
- Reservdelskatalog (SPC)
  Manualen innehåller information som behövs för beställning av reservdelar från Tetra Pak.
- Teknisk manual (TeM)
  - innehåller information för tekniker om hur utrustningen installeras på ett säkert sätt.
  - innehåller information för tekniker om hur utrustningen ska underhållas.
  - innehåller information för tekniker om utrustningens elektriska system.
  - innehåller information som behövs för beställning av reservdelar från Tetra Pak.

Sidlayout

Se bilden (A) på sidan i-5: Huvudsidorna i reservdelskatalogen består av en bildsida (1) och en motsvarande listsida (7). Sidnumret (5) visas i sidhuvudet på bildsidan och i sidfoten på listsidan. Dokumentnumret (6) visas i sidfoten på listsidan.

Sidnumrering

Se bilden (A) på sidan i-5: Ett sidnummer (5) består av tre delar:

- kapitelnummer (2)
- löpande sidnummer inom kapitlet (3)
- totalt sidantal i kapitlet (4)

Introduktion till maskinen

Tillverkare

Tillverkarens namn och adress finns på sidan 2 i katalogen.

Service

För att beställa reservdelar till denna maskin eller för att rapportera problem som uppstått i samband med driften kontaktar du närmaste Tetra Pak-kontor.

Har du andra frågor, kommentarer eller förslag som gäller förbättring av maskinen eller utrustningen och dokumentationen vänder du dig till din kontaktperson på Tetra Pak.

Identifiering

CE-klassificering

Denna utrustning överensstämmer med de grundläggande hälso- och säkerhetsbestämmelserna inom den europeiska ekonomiska unionen (EEA).

Maskinskylt

Bilden (B) på sidan i-5 visar ett exempel på en maskinskylt. En bild på giltig maskinskylt och dess placering på utrustningen visas i inledningskapitlet som medföljer utrustningen. Skylten innehåller de uppgifter som listas nedan och som behövs vid kontakt med Tetra Pak angående utrustningen.

- Maskintyp (8)
- Volym (9)
- Ritningsspecifikationer (10)
- Maskinnummer (11)
- Tillverkare (12)
- CE-märkning (13)
- Tillverkningsår (14)

Bilden (C) på sidan i-5 visar ett exempel på en maskinspecifikation. Kontrollera att informationen om utrustningen som listas på manualens framsida motsvarar informationen på maskinskylten och i maskinspecifikationen.

Använda reservdelskatalogen

Hitta ett reservdelsnummer

a) Se bilden (D) på sidan i-5: Gå till kapitelnumret (15) som står vid sidan om huvudgruppen som innehåller den del du vill leta reda på.

Punkt b) och c) hänvisar till bilden (E) på sidan i-6.

b) På huvudgruppsbilden letar du efter den maskinundergrupp (17) som innehåller delen eller undergruppen du letar efter. Notera positionsnumret (18) och gå till listsidan som följer efter bilden.

c) Leta efter positionsnumret (16) eller undergruppsnamnet (19). Gå till motsvarande sidnummer (20) som listas i den högra kolumnen.

Punkt d) och e) hänvisar till bilden (F) på sidan i-6.

d) Leta reda på delen (21) i undergruppsbilden och notera delens positionsnummer.

e) Reservdelsnumret (29) och reservdelsbeskrivningen (30) står bredvid positionsnumret på listsidan.

Information i reservdelskatalogen

Listan nedan hänvisar till bilden (F) på sidan i-6. Reservdelskatalogen innehåller följande information om grupper, undergrupper och reservdelar för utrustningen:

- Gruppstrukturreferens (22). Anger nästa högre grupp i utrustningslistans struktur.
- Gruppnamn (23)
- Måttenhet (25)
- Kvantitet (26)
- Monteringsritningsnummer (27)
- Listsidesintervall (28). Står med om det finns flera sidor i gruppbilden eller listan.
- Reservdels- eller undergruppsnummer (29)
- Undergruppsnamn eller reservdelsbeskrivning (30)
- Gruppnummer (31)
- Utrustningsnummer (32)
- Gruppinformationsrubrik (33). Anger om avsnittet under rubriken gäller en viss maskinvariant eller om det är en lista över allmänna delar. Om en lista har fler än en variant och varje variant har sin egen monteringsritning, visas en sidhänvisning till variantens monteringsritning.
- Intern information (34)

SPC
Spare Parts Catalogue

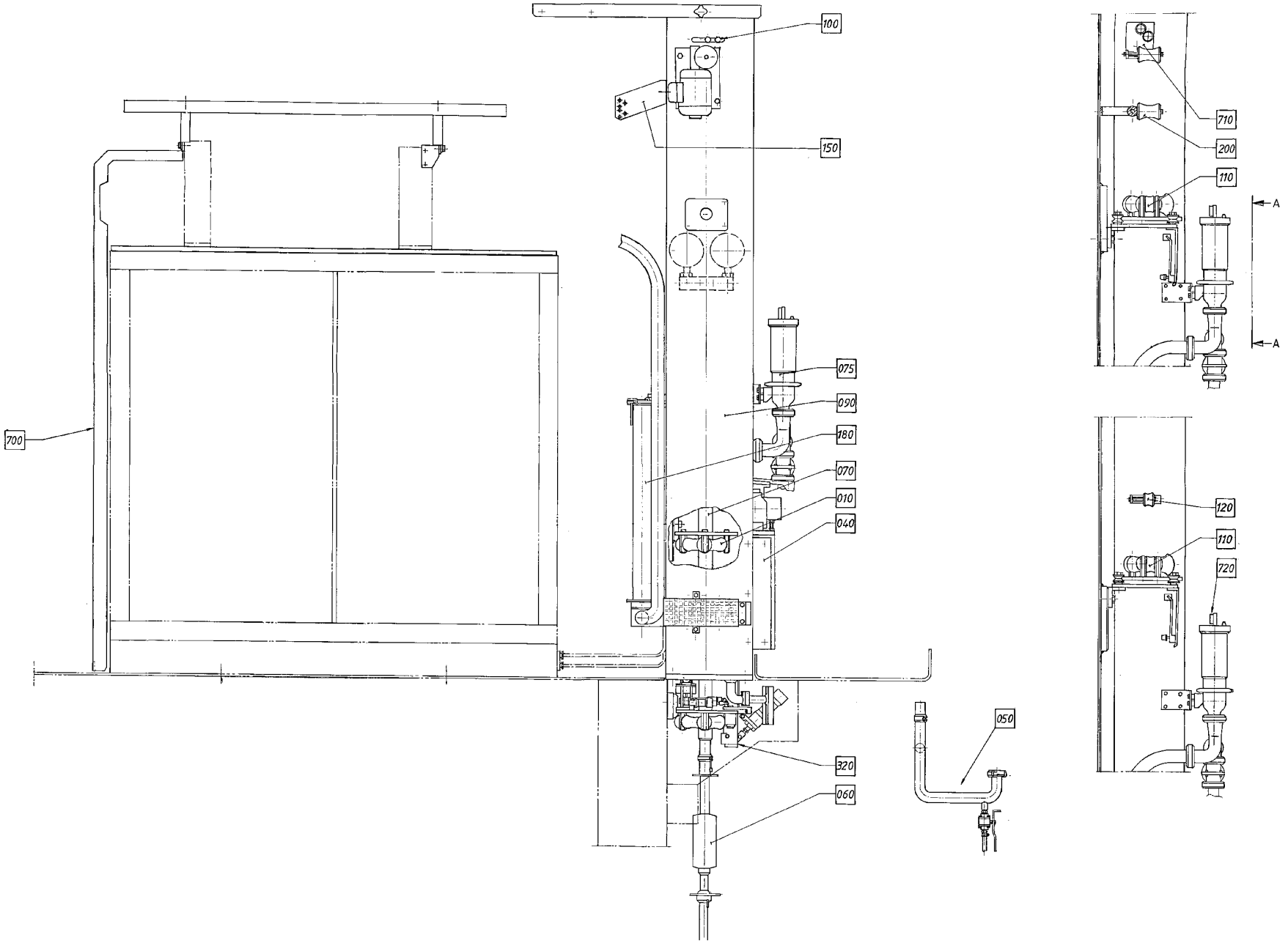
100
150
700
075
090
180
070
010
040
320
060
050
710
200
110
A
A
120
110
720

ECM: 71948 - 19981102
Group number: 648001-0800
Assembly Drawing: 648001-5_1_AA

Pos	Part No	UN	Qty	Description	Page No
TB/8 0300B TPC (See drawing on page: 1-2)					
F710	532726-0100		1	BENDING ROLLERS	**1-5**
F700	266776-0300		1	PAPER GUARD	**1-7, 1-9**
F200	532722-0100		1	SUPPORT ROLLERS	**1-11**
F150	546133-0100		1	SUPPORT ROLLER	**1-13, 1-15**
F060	445567-0200		1	FILLER TUBE	**1-17, 1-19, 1-21**
TB/8 0568SQ US, TB/8 0568B TPC, TB/8 0500SQ TPC, TB/8 0500SQ US, TB/8 1000S TPC, TB/8 1000SQ TPC, TB/8 1000SQ US, TB/8 1000B TPC, TB/8 0500S TPC, TB/8 0500B TPC, TB/8 1136B TPC (See drawing on page: 1-2)					
F700	266776-0300		1	PAPER GUARD	**1-7, 1-9**
F150	546133-0100		1	SUPPORT ROLLER	**1-13, 1-15**
F120	269136-0200		2	EDGE ROLLER	**1-23**
F060	445567-0200		1	FILLER TUBE	**1-17, 1-19, 1-21**
TB/8 1500B US (See drawing on page: 1-2)					
F700	266776-0300		1	PAPER GUARD	**1-7, 1-9**
F150	546133-0100		1	SUPPORT ROLLER	**1-13, 1-15**
F120	269136-0200		2	EDGE ROLLER	**1-23**
F060	929620-0100		1	FILLER TUBE	**1-25**
Common Parts					
F720	499701-0100		1	ATTACHMENT	**1-27, 1-29**
F320	257900-0400		1	LOWER FORMING RING	**1-31, 1-33**
F180	244778-0400		1	HOT AIR ELEMENT LS	**1-35**
F130	243336-0500		1	START-UP KIT	**1-39**
F110	536990-0100		1	MOVABLE FORMING RING	**1-43, 1-45, 1-47**
F100	239715-0200		1	BENDING ROLLER	**1-49, 1-51, 1-53**
F090	436435-0500		1	PILLAR	**1-55**
F075	499872-0200		1	PRODUCT VALVE	**1-59**
F070	266487-0100		1	FILLER TUBE UPPER	**1-65, 1-67, 1-69**
F050	243839-0300		1	CLEANING PIPE	**1-71**
F040	265985-0100		1	BRACKET TO SUPERSTRUCTURE	**1-73**
F010	21394-0700		1	UPPER FORMING RING	**1-75, 1-77, 1-79, 1-81, 1-83**

Pos	Part No	UN	Qty	Description	Page No

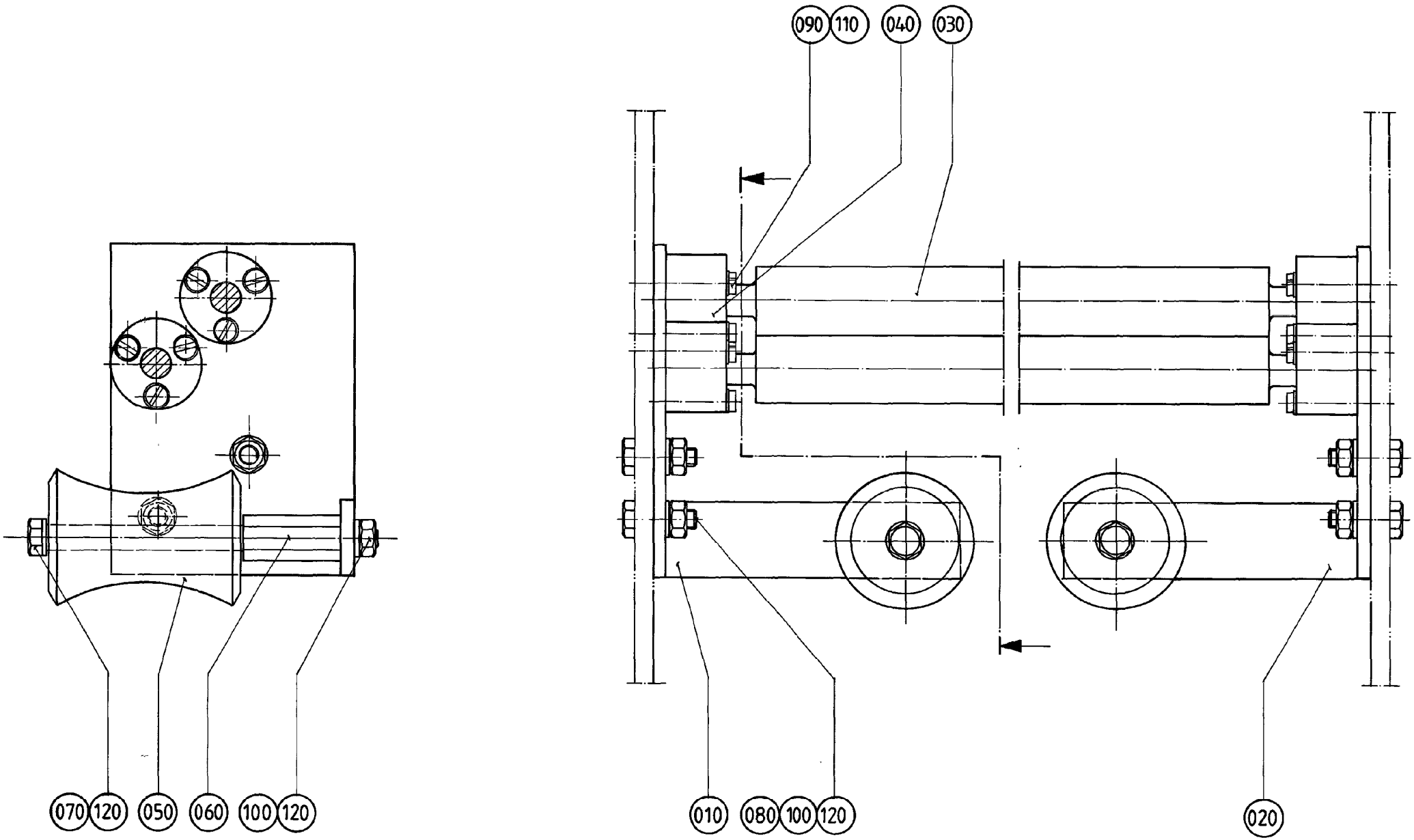
090
110
040
030
070
120
050
060
100
120
010
080
100
120
020

ECM: - -
Group number: 532726-0100
Assembly Drawing: 532726-1_1_AA

Pos	Part No	UN	Qty	Description	Page No
-					
010	532727-0000		1	MOUNTING SHEET	
020	532728-0000		1	MOUNTING SHEET	
030	24200-0000		2	COUNTER ROLLER	
040	24206-0000		4	BEARING	
050	36953-0010		2	ROLL	
060	458791-0000		2	SHAFT	
070	312105-0366		2	SCREW M6S ISO 4017 M6X12 A480	
080	312105-0370		4	SCREW M6S ISO 4017 M6X20 A480	
090	312125-0297		12	SCREW ISO 1207 M4X25 A4	
100	312605-0316		6	HEXAGON NUT, M6M M6 A280	
110	315105-0136		12	WASHER BRB 4,3X9 RFR	
120	315105-0153		8	WASHER BRB 6,4X12 RFR	

Pos	Part No	UN	Qty	Description	Page No

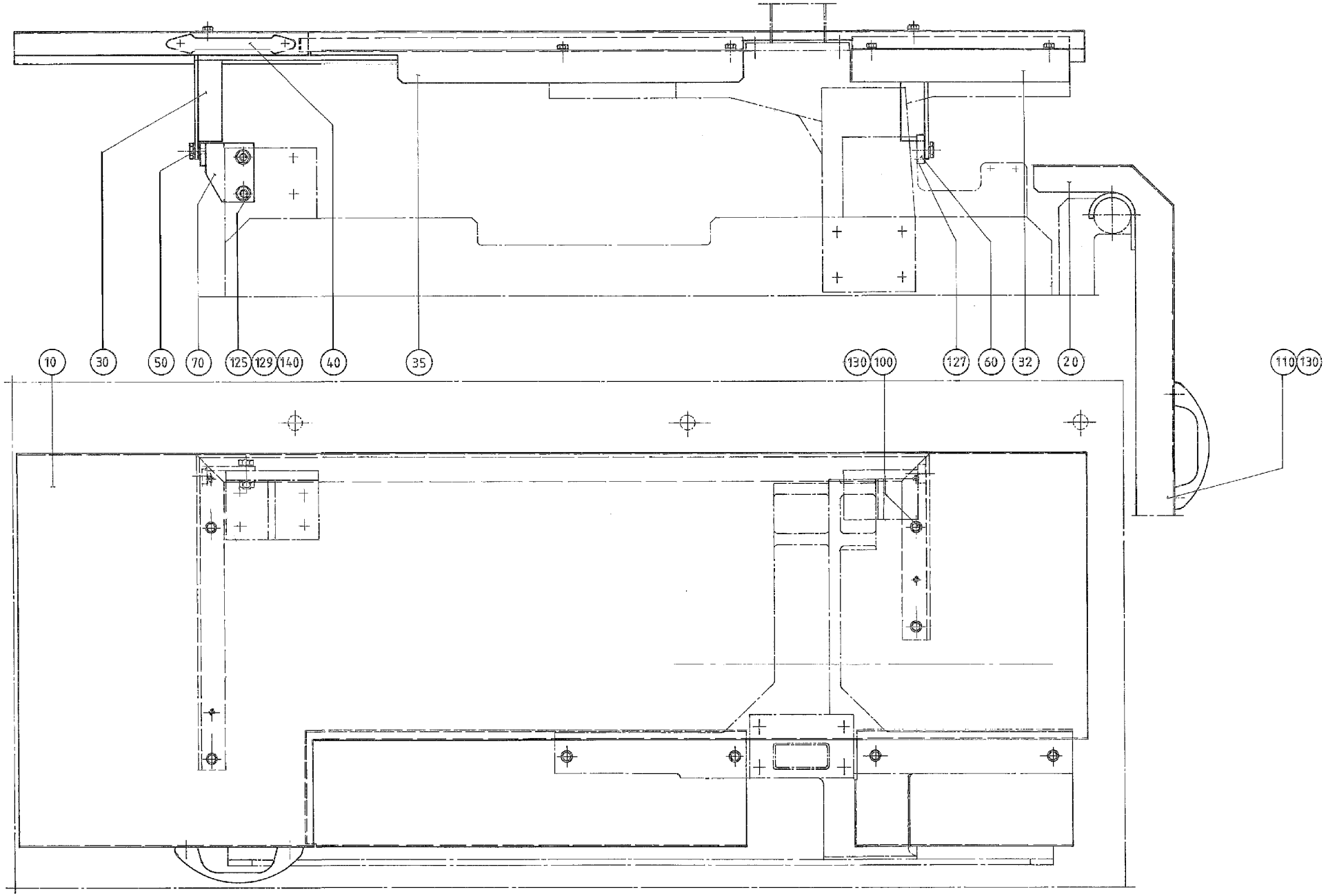
10
30
50
70
125
129
140
40
35
130
100
127
60
32
20
110
130

ECM: 71948 - 19981102
Group number: 266776-0300
Assembly Drawing: 266776-3_1_AA

This list covers pages from 1-6 to 1-9

Pos	Part No	UN	Qty	Description	Page No
0300B (See drawing on page: 1-6)					
010	542853-0002		1	PAPER GUARD	
020	555882-0000		1	PAPER GUARD	
0500B, 1136B, 1000SQ, 0500SQ, 0500S, 1000S, 0568SQ, 0568B, 1000B (See drawing on page: 1-6)					
010	542853-0001		1	PAPER GUARD	
020	555882-0000		1	PAPER GUARD	
1500B (See drawing on page: 1-8)					
010	592600-0000		1	PAPER GUARD	
020	592599-0000		1	PAPER GUARD	
Common Parts					
030	542849-0000		1	CANTILEVER	
032	542850-0000		1	COVERING PLATE	
035	542854-0000		1	COVERING PLATE	
040	7309-0000		3	HANDLE	
050	252972-0000		2	SHOULDER SCREW	
060	449000-0000		1	BRACKET	
070	542855-0000		1	BRACKET	
100	312105-0362		4	SCREW M6S ISO 4017 M6X8 A480	
110	312105-0366		10	SCREW M6S ISO 4017 M6X12 A480	
125	312105-0453		2	SCREW M6S ISO 4017 M8X25 A480	
127	312155-0329		2	SCREW DIN 7991 MF6S M5X16 A4 70	
129	312605-0318		2	HEXAGON NUT, M6M M8 A280	
130	315105-0153		14	WASHER BRB 6,4X12 RFR	
140	315105-0165		4	WASHER BRB 8,4X16 RFR	

Pos	Part No	UN	Qty	Description	Page No

PAPER GUARD

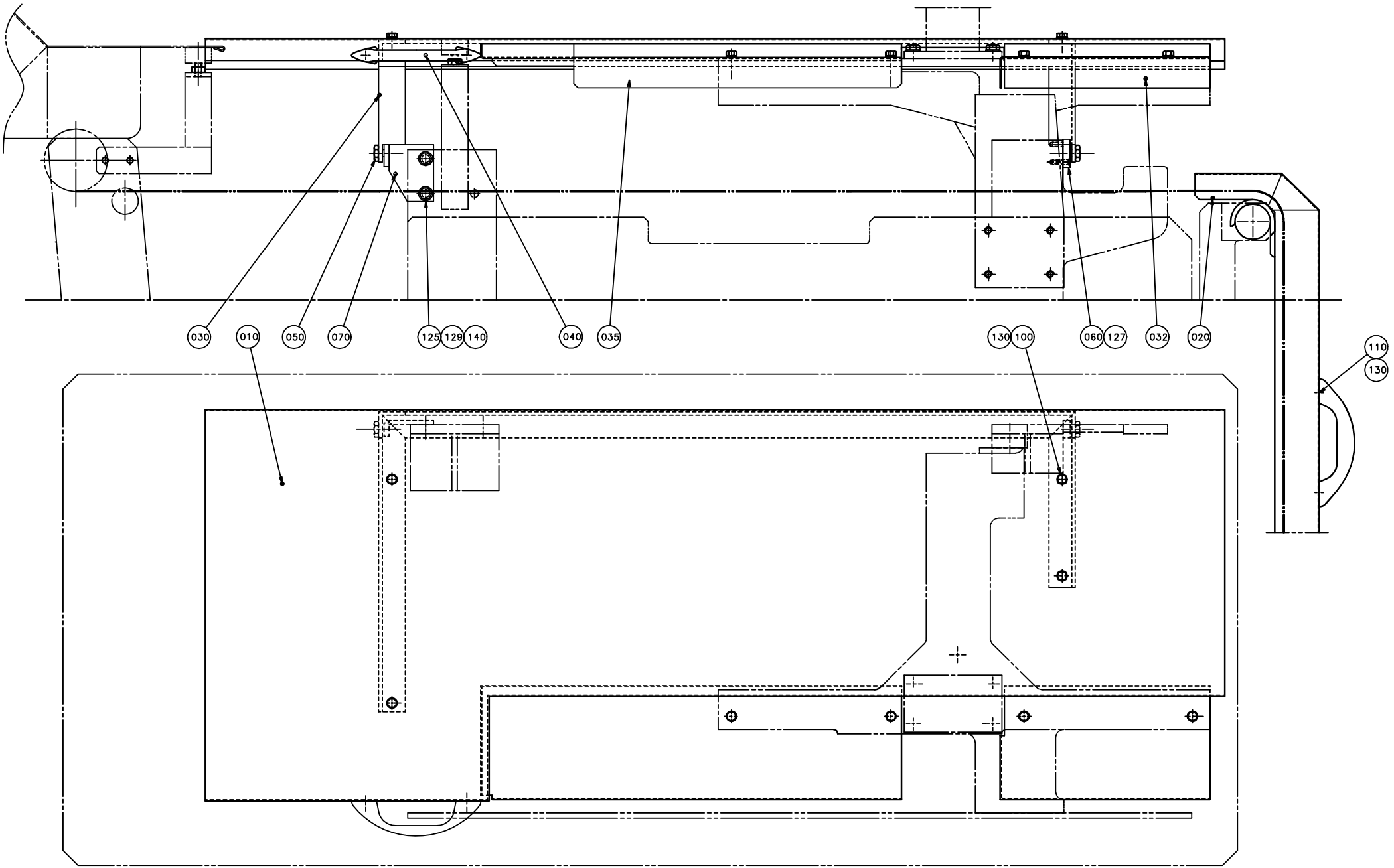
030
010
050
070
125
129
140
040
035
130
100
060
127
032
020
110
130

ECM: 71948 - 19981102
Group number: 266776-0300
Assembly Drawing: 266776-4_1_AA

This list covers pages from 1-6 to 1-9

Pos	Part No	UN	Qty	Description	Page No
0300B (See drawing on page: 1-6)					
010	542853-0002		1	PAPER GUARD	
020	555882-0000		1	PAPER GUARD	
0500B, 1136B, 1000SQ, 0500SQ, 0500S, 1000S, 0568SQ, 0568B, 1000B (See drawing on page: 1-6)					
010	542853-0001		1	PAPER GUARD	
020	555882-0000		1	PAPER GUARD	
1500B (See drawing on page: 1-8)					
010	592600-0000		1	PAPER GUARD	
020	592599-0000		1	PAPER GUARD	
Common Parts					
030	542849-0000		1	CANTILEVER	
032	542850-0000		1	COVERING PLATE	
035	542854-0000		1	COVERING PLATE	
040	7309-0000		3	HANDLE	
050	252972-0000		2	SHOULDER SCREW	
060	449000-0000		1	BRACKET	
070	542855-0000		1	BRACKET	
100	312105-0362		4	SCREW M6S ISO 4017 M6X8 A480	
110	312105-0366		10	SCREW M6S ISO 4017 M6X12 A480	
125	312105-0453		2	SCREW M6S ISO 4017 M8X25 A480	
127	312155-0329		2	SCREW DIN 7991 MF6S M5X16 A4 70	
129	312605-0318		2	HEXAGON NUT, M6M M8 A280	
130	315105-0153		14	WASHER BRB 6,4X12 RFR	
140	315105-0165		4	WASHER BRB 8,4X16 RFR	

Pos	Part No	UN	Qty	Description	Page No

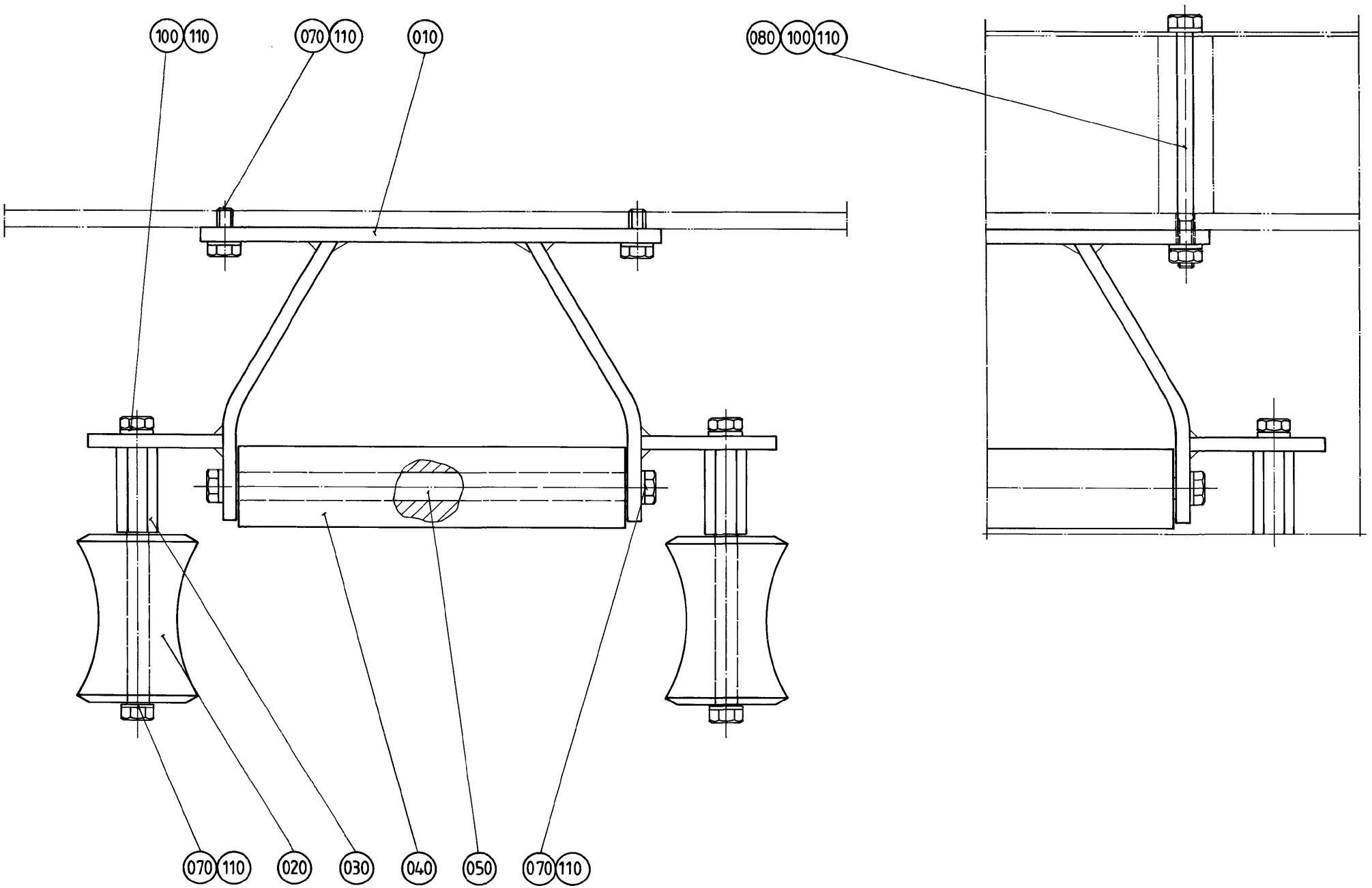
100 110
070 110
010
080 100 110
070 110
020
030
040
050
070 110

ECM: - -
Group number: 532722-0100
Assembly Drawing: 532722-1_1_AA

Pos	Part No	UN	Qty	Description	Page No
-					
010	532723-0000		1	CANTILEVER	
020	36953-0010		2	ROLL	
030	458791-0000		2	SHAFT	
040	532724-0000		1	ROLL	
050	532725-0000		1	SHAFT	
070	312105-0366		6	SCREW M6S ISO 4017 M6X12 A480	
080	312105-0388		2	SCREW M6S ISO 4014 M6X90 A480	
100	312605-0316		4	HEXAGON NUT, M6M M6 A280	
110	315105-0153		8	WASHER BRB 6,4X12 RFR	

Pos	Part No	UN	Qty	Description	Page No

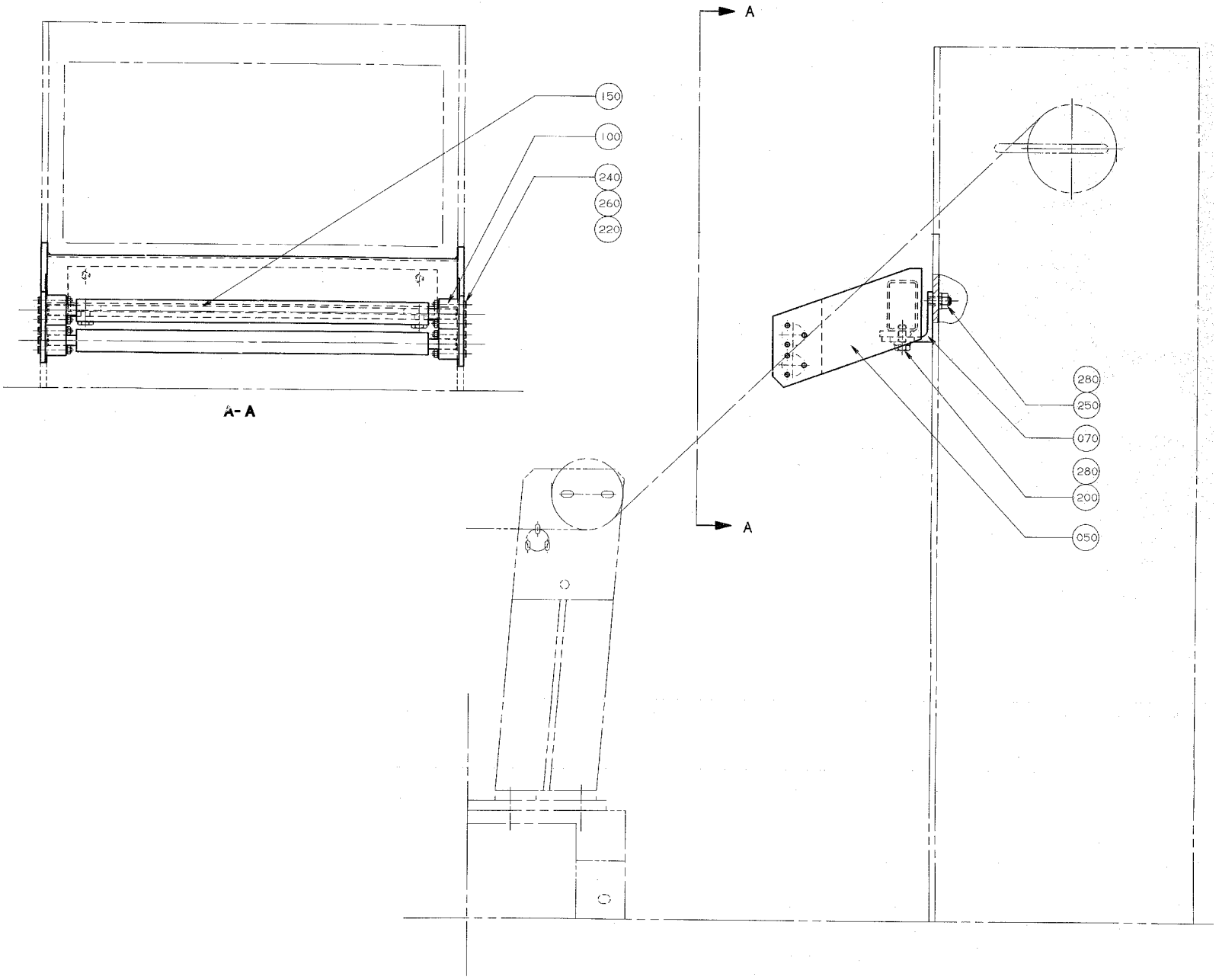
150
100
240
260
220
A- A
A
A
280
250
070
280
200
050

ECM: 71948 - 19981102
Group number: 546133-0100
Assembly Drawing: 546133-1_1_AA

This list covers pages from 1-12 to 1-15

Pos	Part No	UN	Qty	Description	Page No
0500B, 1136B, 1000SQ, 0500SQ, 0500S, 1000S, 0568SQ, 0568B, 0300B, 1000B (See drawing on page: 1-12)					
050	546134-0000		1	CANTILEVER	
150	573666-0000		2	SUPPORT ROLLER	
1500B (See drawing on page: 1-14)					
050	592590-0000		1	CANTILEVER	
150	592589-0000		2	SUPPORT ROLLER	
Common Parts					
070	554393-0000		1	BRACKET	
100	24206-0000		4	BEARING	
200	312105-0451		2	SCREW M6S ISO 4017 M8X20 A480	
220	312125-0299		12	SCREW ISO 1207 M4X30 A4	
240	312605-0312		12	HEXAGON NUT, M6M M4 A280	
250	312605-0318		2	HEXAGON NUT, M6M M8 A280	
260	315105-0136		12	WASHER BRB 4,3X9 RFR	
280	315115-0165		4	WASHER PLAIN, TBRB 8,4/16 H=3	

Pos	Part No	UN	Qty	Description	Page No

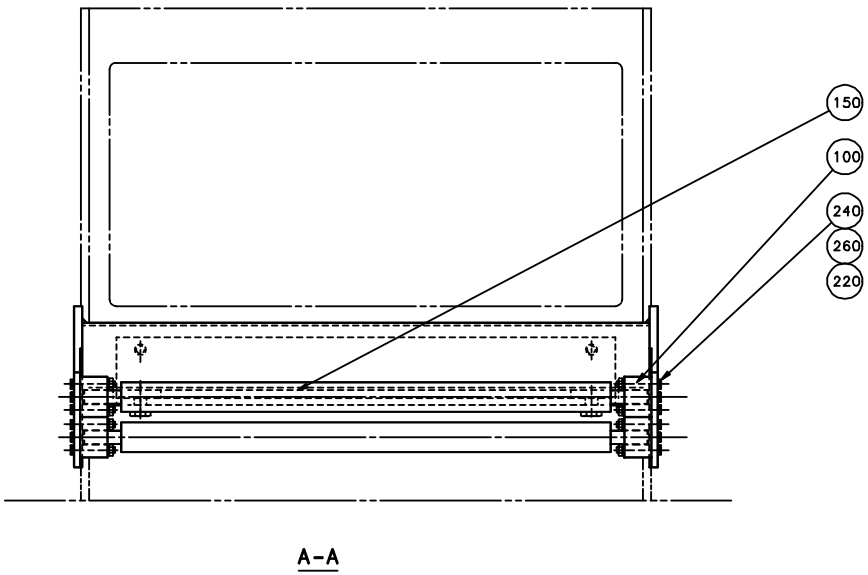

A-A

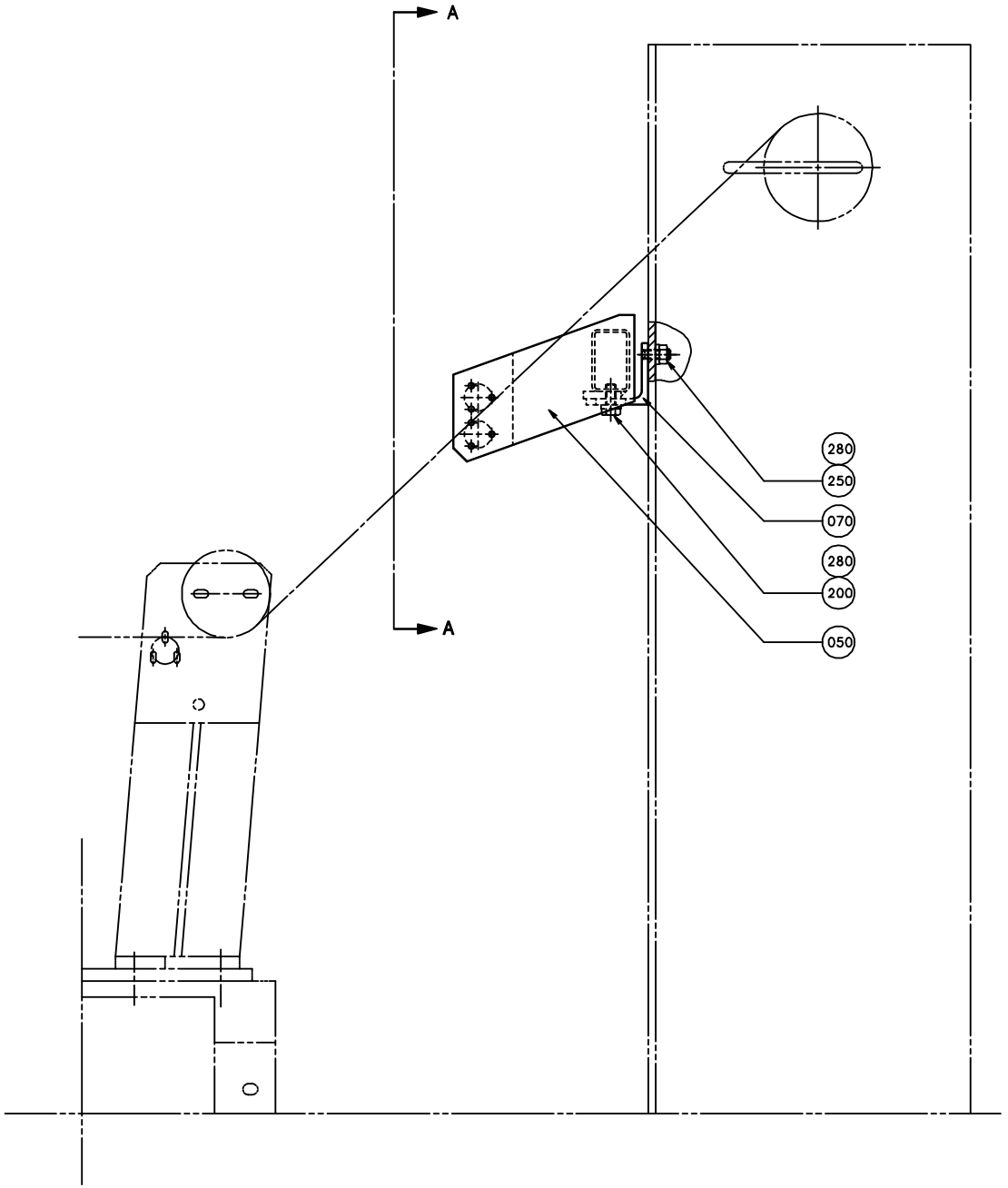

ECM: 71948 - 19981102
Group number: 546133-0100
Assembly Drawing: 546133-2_1_AA

This list covers pages from 1-12 to 1-15

Pos	Part No	UN	Qty	Description	Page No
0500B, 1136B, 1000SQ, 0500SQ, 0500S, 1000S, 0568SQ, 0568B, 0300B, 1000B (See drawing on page: 1-12)					
050	546134-0000		1	CANTILEVER	
150	573666-0000		2	SUPPORT ROLLER	
1500B (See drawing on page: 1-14)					
050	592590-0000		1	CANTILEVER	
150	592589-0000		2	SUPPORT ROLLER	
Common Parts					
070	554393-0000		1	BRACKET	
100	24206-0000		4	BEARING	
200	312105-0451		2	SCREW M6S ISO 4017 M8X20 A480	
220	312125-0299		12	SCREW ISO 1207 M4X30 A4	
240	312605-0312		12	HEXAGON NUT, M6M M4 A280	
250	312605-0318		2	HEXAGON NUT, M6M M8 A280	
260	315105-0136		12	WASHER BRB 4,3X9 RFR	
280	315115-0165		4	WASHER PLAIN, TBRB 8,4/16 H=3	

Pos	Part No	UN	Qty	Description	Page No

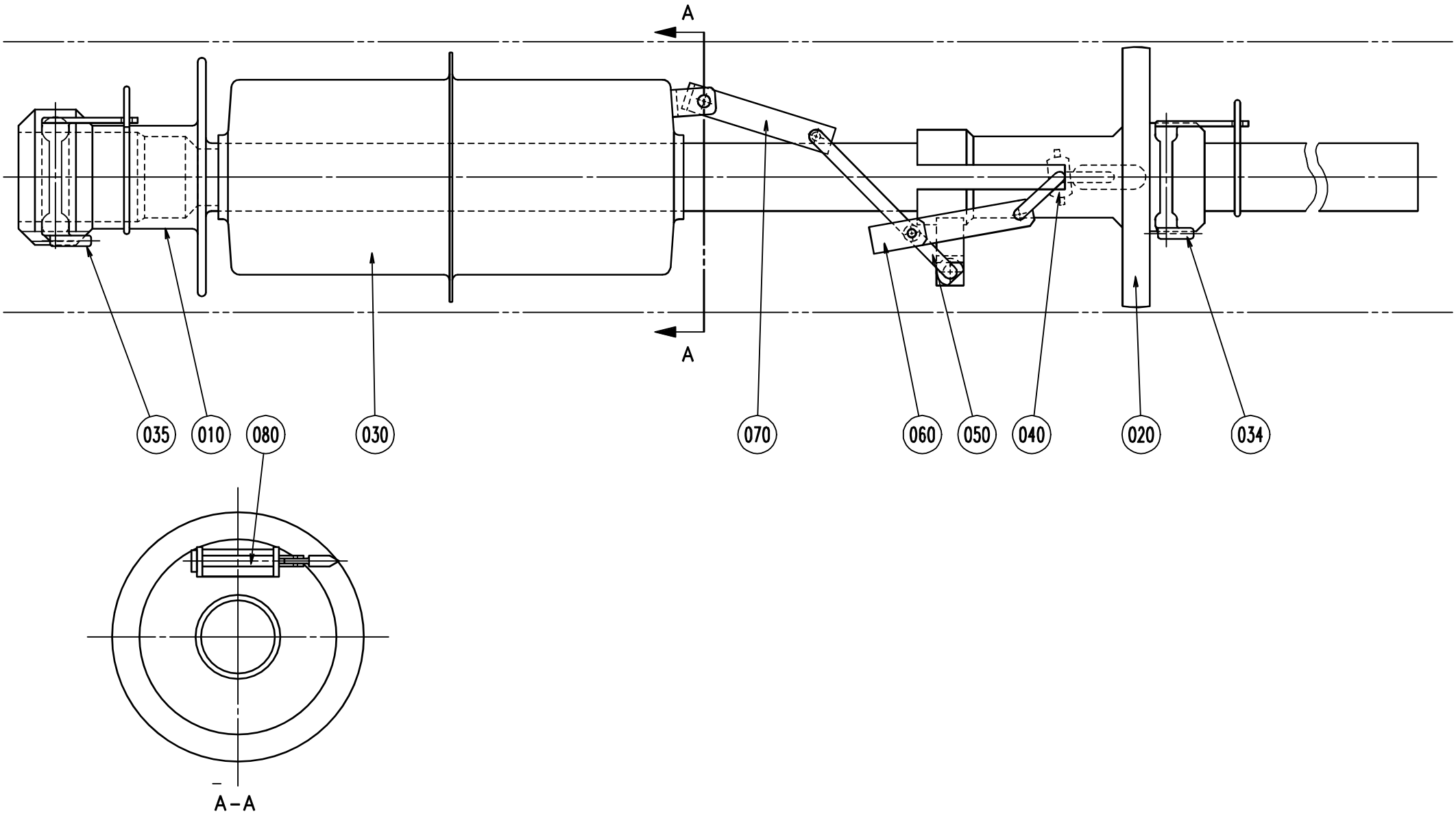
A
A
035
010
080
030
070
060
050
040
020
034
A – A

ECM: 80567 - 20000921
Group number: 445567-0200
Assembly Drawing: 445567-1_1_AB

This list covers pages from 1-16 to 1-21

Pos	Part No	UN	Qty	Description	Page No
0300B (See drawing on page: 1-18)					
010	533446-0000		1	FILLER TUBE	
020	450879-0000		1	PRESSURE FLANGE	
030	259902-0000		1	FLOAT	
034	595112-0000		1	LOCKING PIN LOWER	
035	595111-0000		1	LOCKING PIN UPPER	
040	458480-0000		1	THROTTLE	
050	37296-0000		1	ARM	
060	36816-0000		1	LINK	
070	532720-0000		1	CLAMPING ELEMENT	
0500B, 0568B (See drawing on page: 1-16)					
010	267424-0002		1	FILLER TUBE	
020	267602-0000		1	PRESSURE FLANGE	
030	245190-0000		1	FLOAT	
034	593663-0000		1	LOCKING PIN LOWER	
035	593662-0000		1	LOCKING PIN UPPER	
040	37782-0000		1	THROTTLE	
050	36804-0000		1	ARM	
060	36805-0000		1	LINK	
070	36806-0000		1	CLAMPING ELEMENT	
0500S (See drawing on page: 1-20)					
010	583188-0000		1	LOWER FILLING PIPE	
020	434750-0000		1	PRESSURE FLANGE	
030	434749-0000		1	FLOAT	
034	593663-0000		1	LOCKING PIN LOWER	
035	593662-0000		1	LOCKING PIN UPPER	
040	37782-0000		1	THROTTLE	
050	434751-0000		1	ARM	
060	752587-0000		1	LINK	
070	36817-0000		1	CLAMPING ELEMENT	
0500SQ TPC (See drawing on page: 1-20)					
010	583968-0000		1	FILLER TUBE	
020	574006-0000		1	PRESSURE FLANGE	
030	544295-0000		1	FLOAT	
034	593663-0000		1	LOCKING PIN LOWER	
035	593662-0000		1	LOCKING PIN UPPER	
040	752590-0000		1	THROTTLE	
050	434751-0000		1	ARM	
060	434752-0000		1	LINK	
070	36817-0000		1	CLAMPING ELEMENT	
0500SQ US, 0568SQ US (See drawing on page: 1-20)					
010	583968-0000		1	FILLER TUBE	
020	1362489-0000		1	PRESSURE FLANGE	
030	544295-0000		1	FLOAT	
034	593663-0000		1	LOCKING PIN LOWER	
035	593662-0000		1	LOCKING PIN UPPER	
040	579010-0000		1	THROTTLE	
050	434751-0000		1	ARM	
060	434752-0000		1	LINK	
070	36817-0000		1	CLAMPING ELEMENT	
1000S (See drawing on page: 1-20)					
010	922871-0000		1	FILLER TUBE	
020	583791-0000		1	PRESSURE FLANGE	
030	544295-0000		1	FLOAT	
034	593663-0000		1	LOCKING PIN LOWER	
035	593662-0000		1	LOCKING PIN UPPER	
040	579010-0000		1	THROTTLE	
050	434751-0000		1	ARM	
060	434752-0000		1	LINK	
070	36817-0000		1	CLAMPING ELEMENT	
1000SQ (See drawing on page: 1-20)					
010	922871-0000		1	FILLER TUBE	
020	574006-0000		1	PRESSURE FLANGE	
030	544295-0000		1	FLOAT	
034	593663-0000		1	LOCKING PIN LOWER	
035	593662-0000		1	LOCKING PIN UPPER	
040	752590-0000		1	THROTTLE	
050	434751-0000		1	ARM	
060	434752-0000		1	LINK	
070	36817-0000		1	CLAMPING ELEMENT	
1136B, 1000B (See drawing on page: 1-16)					
010	267424-0003		1	FILLER TUBE	
020	267602-0000		1	PRESSURE FLANGE	
030	245190-0000		1	FLOAT	
034	593663-0000		1	LOCKING PIN LOWER	
035	593662-0000		1	LOCKING PIN UPPER	
040	37782-0000		1	THROTTLE	
050	36804-0000		1	ARM	
060	36805-0000		1	LINK	
070	36806-0000		1	CLAMPING ELEMENT	
Common Parts					
080	1490099-0000		1	PIN	

Machine Type | Group Description | Used-In | Group Number | Page No

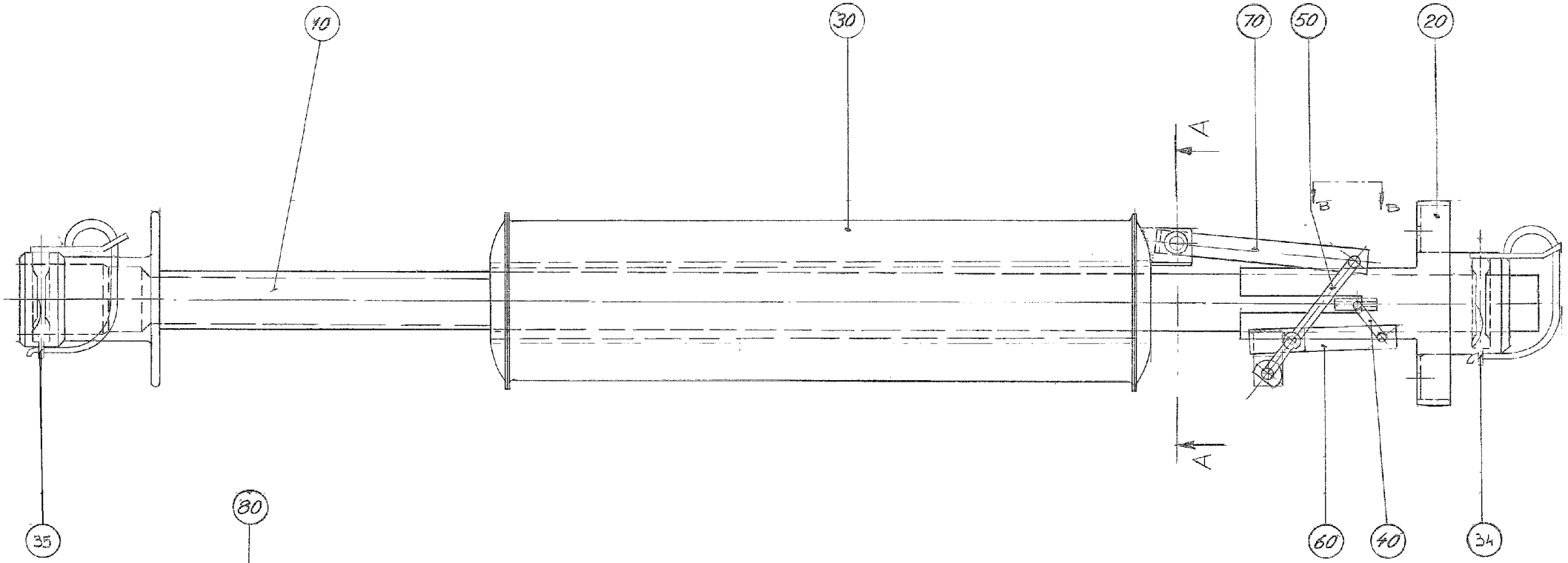

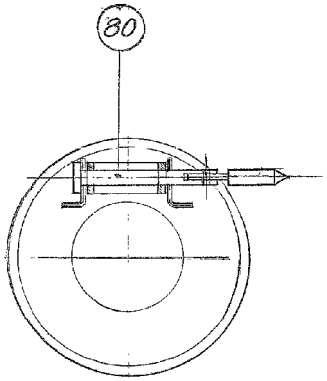

A — A

ECM: 80567 - 20000921
Group number: 445567-0200
Assembly Drawing: 445567-2_1_AA

This list covers pages from 1-16 to 1-21

Pos	Part No	UN	Qty	Description	Page No
0300B (See drawing on page: 1-18)					
010	533446-0000		1	FILLER TUBE	
020	450879-0000		1	PRESSURE FLANGE	
030	259902-0000		1	FLOAT	
034	595112-0000		1	LOCKING PIN LOWER	
035	595111-0000		1	LOCKING PIN UPPER	
040	458480-0000		1	THROTTLE	
050	37296-0000		1	ARM	
060	36816-0000		1	LINK	
070	532720-0000		1	CLAMPING ELEMENT	
0500B, 0568B (See drawing on page: 1-16)					
010	267424-0002		1	FILLER TUBE	
020	267602-0000		1	PRESSURE FLANGE	
030	245190-0000		1	FLOAT	
034	593663-0000		1	LOCKING PIN LOWER	
035	593662-0000		1	LOCKING PIN UPPER	
040	37782-0000		1	THROTTLE	
050	36804-0000		1	ARM	
060	36805-0000		1	LINK	
070	36806-0000		1	CLAMPING ELEMENT	
0500S (See drawing on page: 1-20)					
010	583188-0000		1	LOWER FILLING PIPE	
020	434750-0000		1	PRESSURE FLANGE	
030	434749-0000		1	FLOAT	
034	593663-0000		1	LOCKING PIN LOWER	
035	593662-0000		1	LOCKING PIN UPPER	
040	37782-0000		1	THROTTLE	
050	434751-0000		1	ARM	
060	752587-0000		1	LINK	
070	36817-0000		1	CLAMPING ELEMENT	
0500SQ TPC (See drawing on page: 1-20)					
010	583968-0000		1	FILLER TUBE	
020	574006-0000		1	PRESSURE FLANGE	
030	544295-0000		1	FLOAT	
034	593663-0000		1	LOCKING PIN LOWER	
035	593662-0000		1	LOCKING PIN UPPER	
040	752590-0000		1	THROTTLE	
050	434751-0000		1	ARM	
060	434752-0000		1	LINK	
070	36817-0000		1	CLAMPING ELEMENT	
0500SQ US, 0568SQ US (See drawing on page: 1-20)					
010	583968-0000		1	FILLER TUBE	
020	1362489-0000		1	PRESSURE FLANGE	
030	544295-0000		1	FLOAT	
034	593663-0000		1	LOCKING PIN LOWER	
035	593662-0000		1	LOCKING PIN UPPER	
040	579010-0000		1	THROTTLE	
050	434751-0000		1	ARM	
060	434752-0000		1	LINK	
070	36817-0000		1	CLAMPING ELEMENT	
1000S (See drawing on page: 1-20)					
010	922871-0000		1	FILLER TUBE	
020	583791-0000		1	PRESSURE FLANGE	
030	544295-0000		1	FLOAT	
034	593663-0000		1	LOCKING PIN LOWER	
035	593662-0000		1	LOCKING PIN UPPER	
040	579010-0000		1	THROTTLE	
050	434751-0000		1	ARM	
060	434752-0000		1	LINK	
070	36817-0000		1	CLAMPING ELEMENT	
1000SQ (See drawing on page: 1-20)					
010	922871-0000		1	FILLER TUBE	
020	574006-0000		1	PRESSURE FLANGE	
030	544295-0000		1	FLOAT	
034	593663-0000		1	LOCKING PIN LOWER	
035	593662-0000		1	LOCKING PIN UPPER	
040	752590-0000		1	THROTTLE	
050	434751-0000		1	ARM	
060	434752-0000		1	LINK	
070	36817-0000		1	CLAMPING ELEMENT	
1136B, 1000B (See drawing on page: 1-16)					
010	267424-0003		1	FILLER TUBE	
020	267602-0000		1	PRESSURE FLANGE	
030	245190-0000		1	FLOAT	
034	593663-0000		1	LOCKING PIN LOWER	
035	593662-0000		1	LOCKING PIN UPPER	
040	37782-0000		1	THROTTLE	
050	36804-0000		1	ARM	
060	36805-0000		1	LINK	
070	36806-0000		1	CLAMPING ELEMENT	
Common Parts					
080	1490099-0000		1	PIN	

Machine Type | Group Description | Used-In | Group Number | Page No

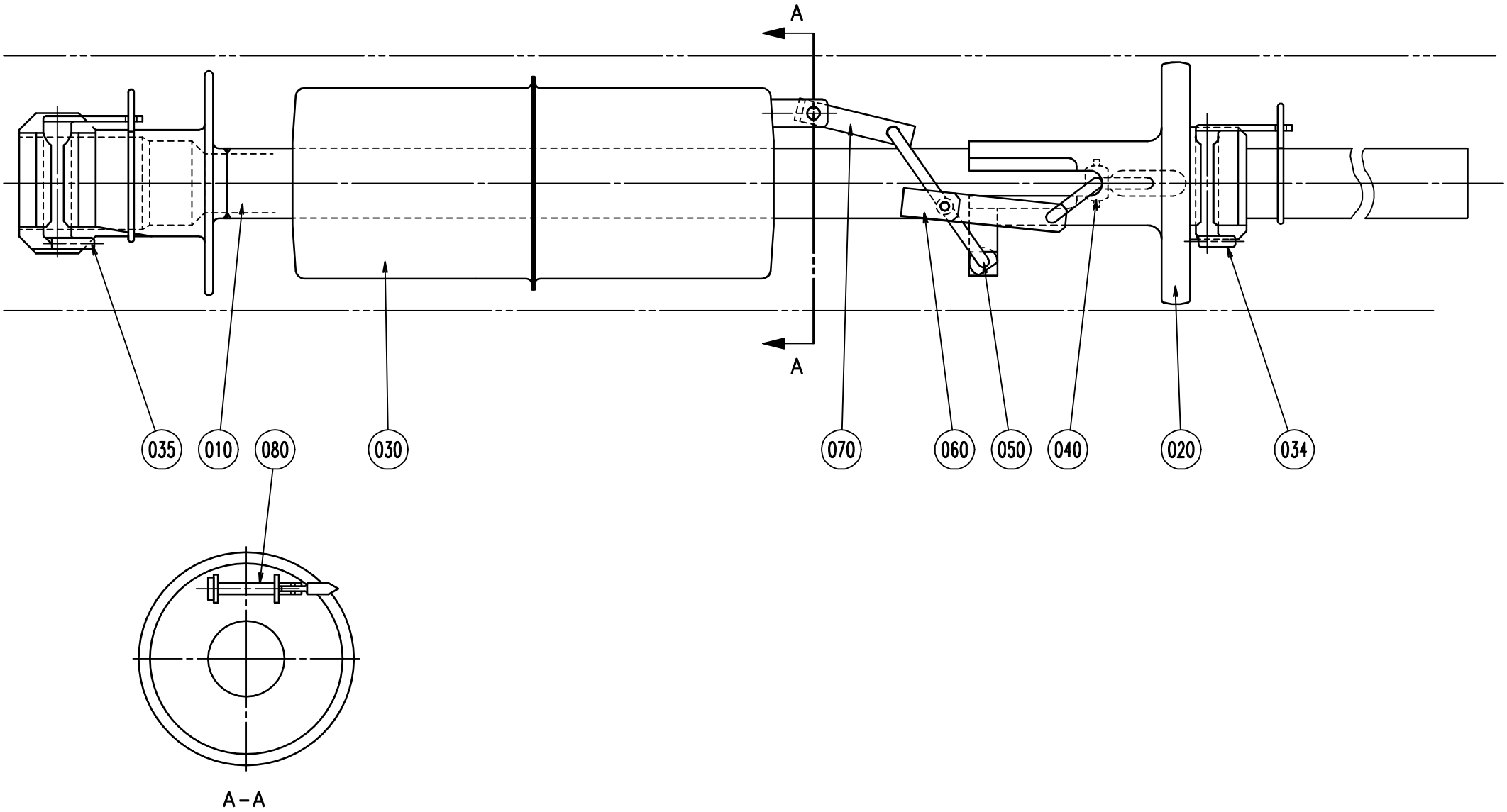
A
A
035
010
080
030
070
060
050
040
020
034
A – A

ECM: 80567 - 20000921
Group number: 445567-0200
Assembly Drawing: 445567-3_1_AC

This list covers pages from 1-16 to 1-21

Pos	Part No	UN	Qty	Description	Page No
0300B (See drawing on page: 1-18)					
010	533446-0000		1	FILLER TUBE	
020	450879-0000		1	PRESSURE FLANGE	
030	259902-0000		1	FLOAT	
034	595112-0000		1	LOCKING PIN LOWER	
035	595111-0000		1	LOCKING PIN UPPER	
040	458480-0000		1	THROTTLE	
050	37296-0000		1	ARM	
060	36816-0000		1	LINK	
070	532720-0000		1	CLAMPING ELEMENT	
0500B, 0568B (See drawing on page: 1-16)					
010	267424-0002		1	FILLER TUBE	
020	267602-0000		1	PRESSURE FLANGE	
030	245190-0000		1	FLOAT	
034	593663-0000		1	LOCKING PIN LOWER	
035	593662-0000		1	LOCKING PIN UPPER	
040	37782-0000		1	THROTTLE	
050	36804-0000		1	ARM	
060	36805-0000		1	LINK	
070	36806-0000		1	CLAMPING ELEMENT	
0500S (See drawing on page: 1-20)					
010	583188-0000		1	LOWER FILLING PIPE	
020	434750-0000		1	PRESSURE FLANGE	
030	434749-0000		1	FLOAT	
034	593663-0000		1	LOCKING PIN LOWER	
035	593662-0000		1	LOCKING PIN UPPER	
040	37782-0000		1	THROTTLE	
050	434751-0000		1	ARM	
060	752587-0000		1	LINK	
070	36817-0000		1	CLAMPING ELEMENT	
0500SQ TPC (See drawing on page: 1-20)					
010	583968-0000		1	FILLER TUBE	
020	574006-0000		1	PRESSURE FLANGE	
030	544295-0000		1	FLOAT	
034	593663-0000		1	LOCKING PIN LOWER	
035	593662-0000		1	LOCKING PIN UPPER	
040	752590-0000		1	THROTTLE	
050	434751-0000		1	ARM	
060	434752-0000		1	LINK	
070	36817-0000		1	CLAMPING ELEMENT	
0500SQ US, 0568SQ US (See drawing on page: 1-20)					
010	583968-0000		1	FILLER TUBE	
020	1362489-0000		1	PRESSURE FLANGE	
030	544295-0000		1	FLOAT	
034	593663-0000		1	LOCKING PIN LOWER	
035	593662-0000		1	LOCKING PIN UPPER	
040	579010-0000		1	THROTTLE	
050	434751-0000		1	ARM	
060	434752-0000		1	LINK	
070	36817-0000		1	CLAMPING ELEMENT	
1000S (See drawing on page: 1-20)					
010	922871-0000		1	FILLER TUBE	
020	583791-0000		1	PRESSURE FLANGE	
030	544295-0000		1	FLOAT	
034	593663-0000		1	LOCKING PIN LOWER	
035	593662-0000		1	LOCKING PIN UPPER	
040	579010-0000		1	THROTTLE	
050	434751-0000		1	ARM	
060	434752-0000		1	LINK	
070	36817-0000		1	CLAMPING ELEMENT	
1000SQ (See drawing on page: 1-20)					
010	922871-0000		1	FILLER TUBE	
020	574006-0000		1	PRESSURE FLANGE	
030	544295-0000		1	FLOAT	
034	593663-0000		1	LOCKING PIN LOWER	
035	593662-0000		1	LOCKING PIN UPPER	
040	752590-0000		1	THROTTLE	
050	434751-0000		1	ARM	
060	434752-0000		1	LINK	
070	36817-0000		1	CLAMPING ELEMENT	
1136B, 1000B (See drawing on page: 1-16)					
010	267424-0003		1	FILLER TUBE	
020	267602-0000		1	PRESSURE FLANGE	
030	245190-0000		1	FLOAT	
034	593663-0000		1	LOCKING PIN LOWER	
035	593662-0000		1	LOCKING PIN UPPER	
040	37782-0000		1	THROTTLE	
050	36804-0000		1	ARM	
060	36805-0000		1	LINK	
070	36806-0000		1	CLAMPING ELEMENT	
Common Parts					
080	1490099-0000		1	PIN	

Machine Type | Group Description | Used-In | Group Number | Page No

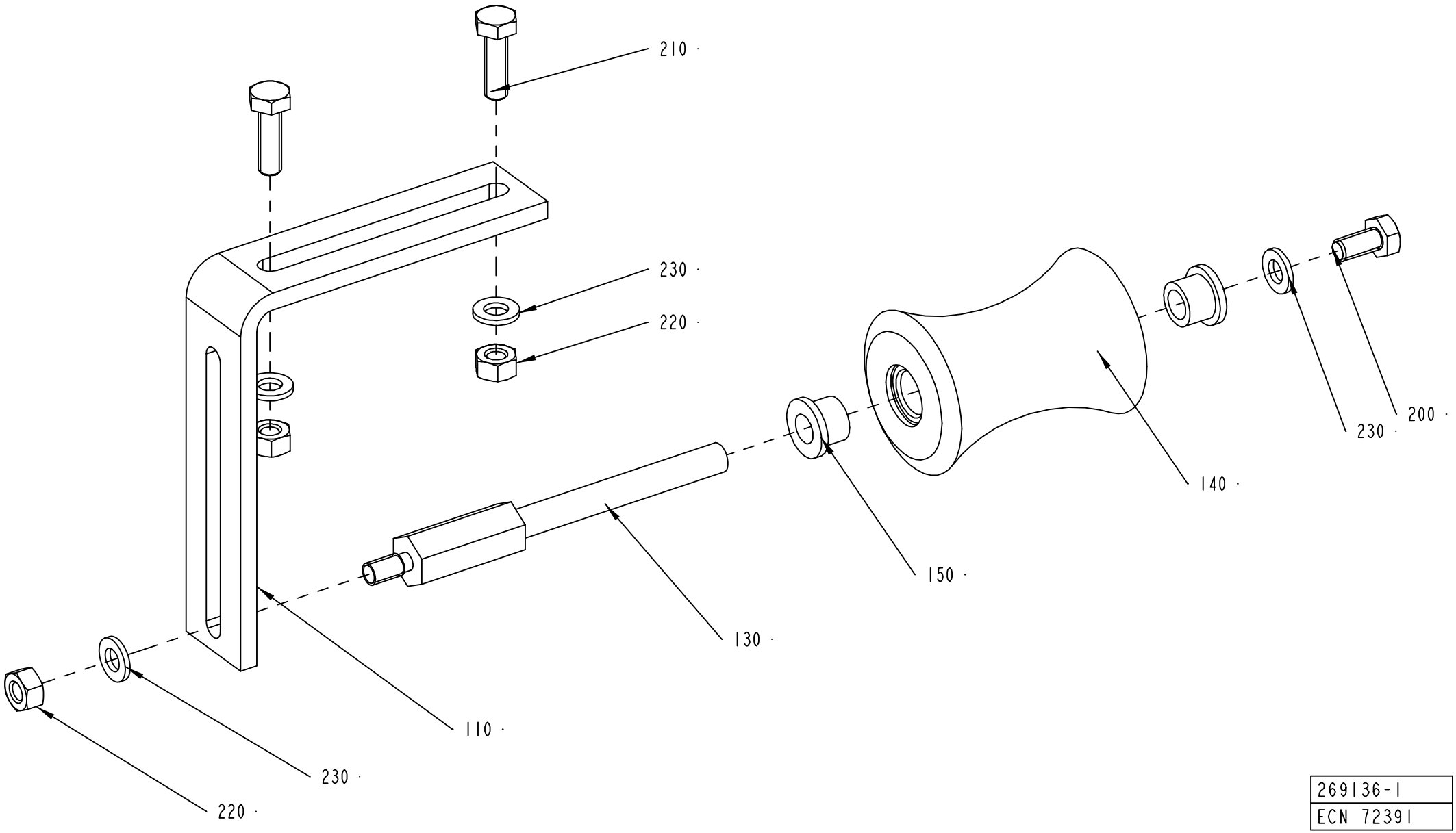

269136-1
ECN 72391

ECM: 83662 - 20000928
Group number: 269136-0200
Assembly Drawing: 269136-1_1_AD

Pos	Part No	UN	Qty	Description	Page No
0500B, 0500S, 0568B, 0300B, 1000B					
140	36953-0010		1	ROLL	
1000SQ, 0500SQ, 1500B, 1000S, 0568SQ					
140	752740-0000		1	ROLLER	
150	90240-0172		2	FLANGE BUSHING, 8X12X10 MM	
Common Parts					
110	208843-0000		1	ANGLE BRACKET	
130	458791-0000		1	SHAFT	
200	312105-0366		1	SCREW M6S ISO 4017 M6X12 A480	
210	312105-0370		2	SCREW M6S ISO 4017 M6X20 A480	
220	312605-0316		3	HEXAGON NUT, M6M M6 A280	
230	315105-0153		4	WASHER BRB 6,4X12 RFR	

Pos	Part No	UN	Qty	Description	Page No

FILLER TUBE

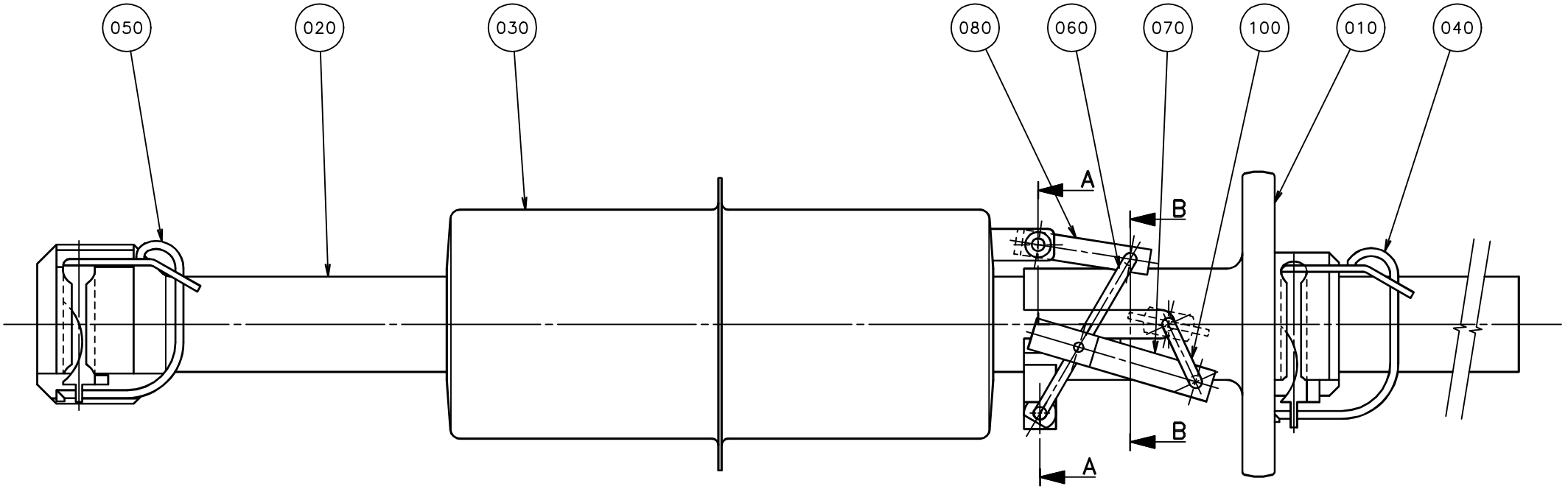

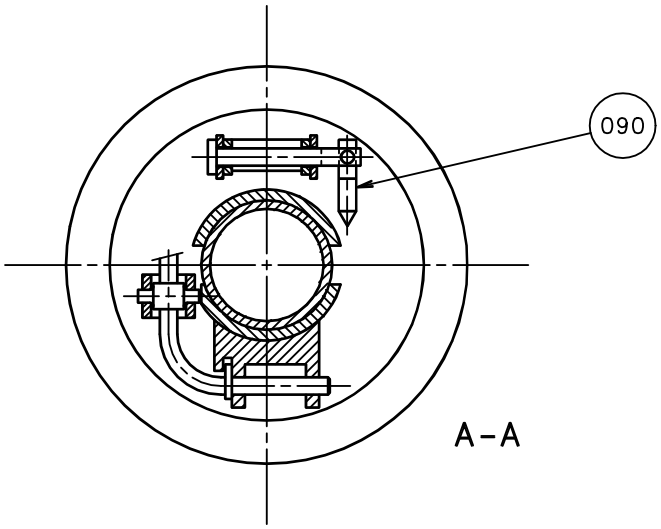

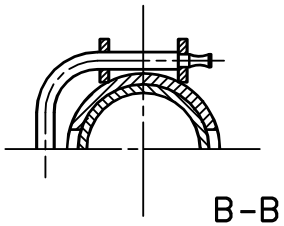

ECM: 240438 - 20051129
Group number: 929620-0100
Assembly Drawing: 929620-1_1_AA

Pos	Part No	UN	Qty	Description	Page No
1500B					
010	593242-0000		1	PRESSURE FLANGE	
020	593244-0000		1	FILLING PIPE	
030	593240-0000		1	FLOAT	
040	595211-0000		1	LOCKING FINGER	
050	593662-0000		1	LOCKING PIN UPPER	
Common Parts					
060	434751-0000		1	ARM	
070	434752-0000		1	LINK	
080	36817-0000		1	CLAMPING ELEMENT	
090	1490099-0000		1	PIN	
100	451042-0000		1	THROTTLE	

Pos	Part No	UN	Qty	Description	Page No

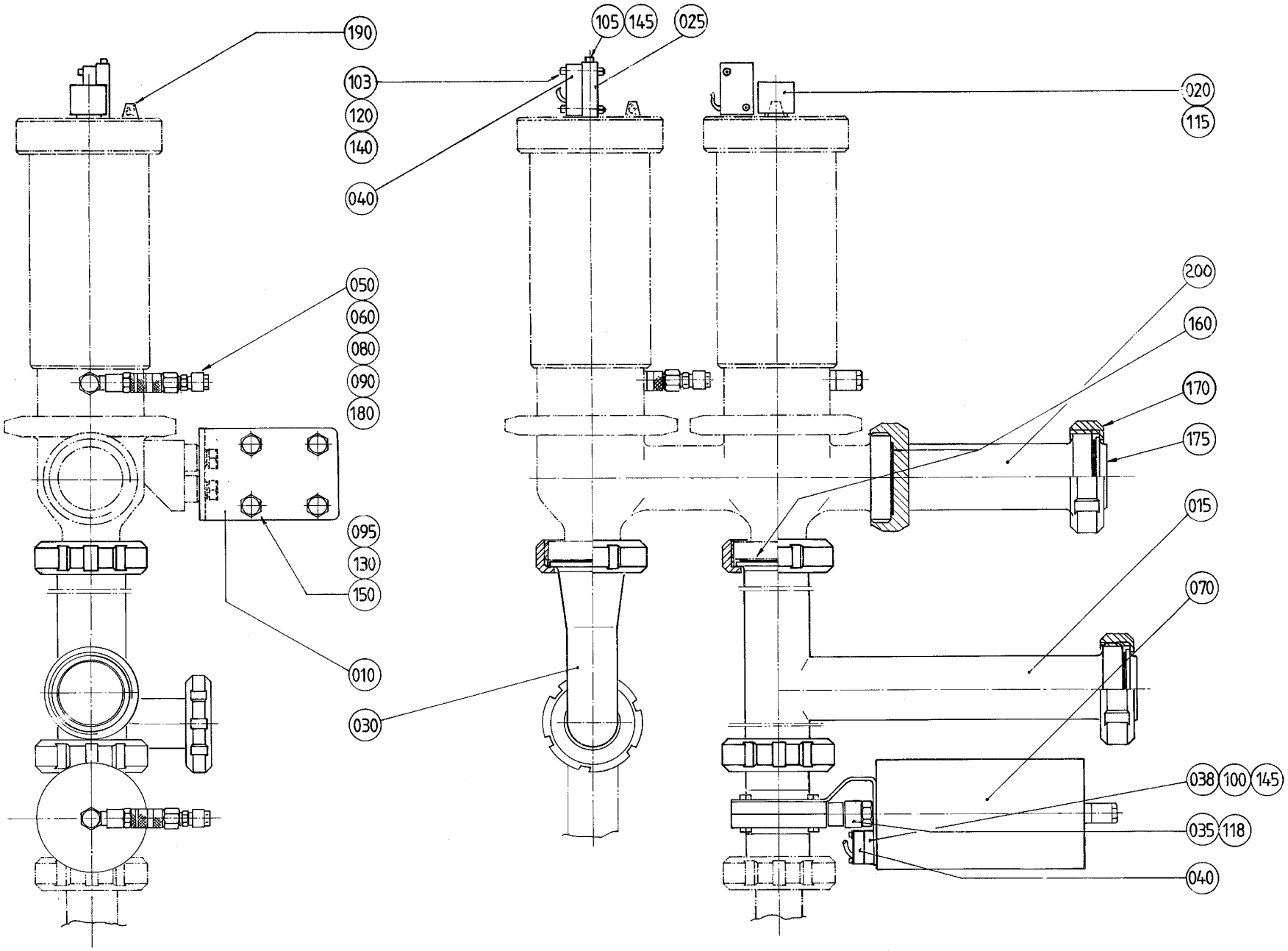
190
103
120
140
040
105
145
025
020
115
050
060
080
090
180
200
160
170
175
095
130
150
015
070
010
030
038
100
145
035
118
040

ECM: 71540 - 19980420
Group number: 499701-0100
Assembly Drawing: 499701-1_1_AA

This list covers pages from 1-26 to 1-29

Pos	Part No	UN	Qty	Description	Page No
TB/8 1500B US (See drawing on page: 1-28)					
010	479383-0000		1	BRACKET, PRODUCT VALVE	
030	479384-0000		1	PIPE BEND	
090	90224-0308		2	CONN. BANJO, ART. NO. 2023-1/8-1/8	
092	90235-0259		1	VALVE	
094	90328-0003		1	SILENCER, 338/110	
095	312105-0453		8	SCREW M6S ISO 4017 M8X25 A480	
096	90330-0032		1	NIPPLES, EXT. THREAD. ISO 7/1 R1/8-R1/8	
180	342980-0303		2	BANJO-HOLLOW BOLT COUPL,EXT.THR.01-G1/8	
TB/8 TPC (See drawing on page: 1-26)					
010	479383-0000		1	BRACKET, PRODUCT VALVE	
030	479384-0000		1	PIPE BEND	
090	90224-0308		3	CONN. BANJO, ART. NO. 2023-1/8-1/8	
095	312105-0453		8	SCREW M6S ISO 4017 M8X25 A480	
180	342980-0303		3	BANJO-HOLLOW BOLT COUPL,EXT.THR.01-G1/8	
Common Parts					
015	484872-0000		1	T-PIPE	
020	440647-0000		2	SLEEVE	
025	440731-0000		2	PLATE	
035	499879-0000		1	RETAINING RING	
038	522000-0000		1	PLATE	
040	90044-0104		3	PROX.SWITCH IFM IN 3002(RP 90044-194)	
050	90163-0057		3	QUICK COUPLING, (M) 5150-1/8	
060	90163-0062		3	QUICK COUPLING, (F) 5053-1/8	
070	90207-0052		1	VALVE, BUTTERFLY, N.C. LKBA-1-SMS-51	
	90207-0474		*1*	*SEAL KIT*	
	90207-0473		*1*	*NEEDLE BEARING*	
080	90224-0307		3	STRAIGHT FITTING, 6MM, 1/8",	
100	312125-0285		2	SCREW ISO 1207 M4X6 A4	
103	312125-0230		4	SCREW ISO 1207 M3X20 A4	
105	312115-0304		4	SCREW ISO4762 M4X45 A4 80	
115	312155-0532		2	SCREW DIN 7991 MF6S M12X20 A4 70	
118	312318-0284		1	SCREW ISO4029 M4X5 A4	
120	312605-0310		4	HEXAGON NUT, M6M M3 A280	
130	312605-0318		4	HEXAGON NUT, M6M M8 A280	
140	315105-0124		10	WASHER BRB 3,2X7 RFR	
145	315105-0136		6	WASHER BRB 4,3X9 RFR	
150	315115-0165		8	WASHER PLAIN, TBRB 8,4/16 H=3	
160	315250-0104		7	GASKET 61X51X5,5 MM	
170	342803-0104		2	UNION NUT, RD 70-6 (SMS 51)	
175	342812-0104		2	FERRULE, SMS 1145, 2333, NO. 190707	
190	346800-0109		2	SILENCER FILTER R1/8"	
200	255368-0000		1	PRESSURE GAUGE TUBE	

Machine Type | Group Description | Used-In | Group Number | Page No

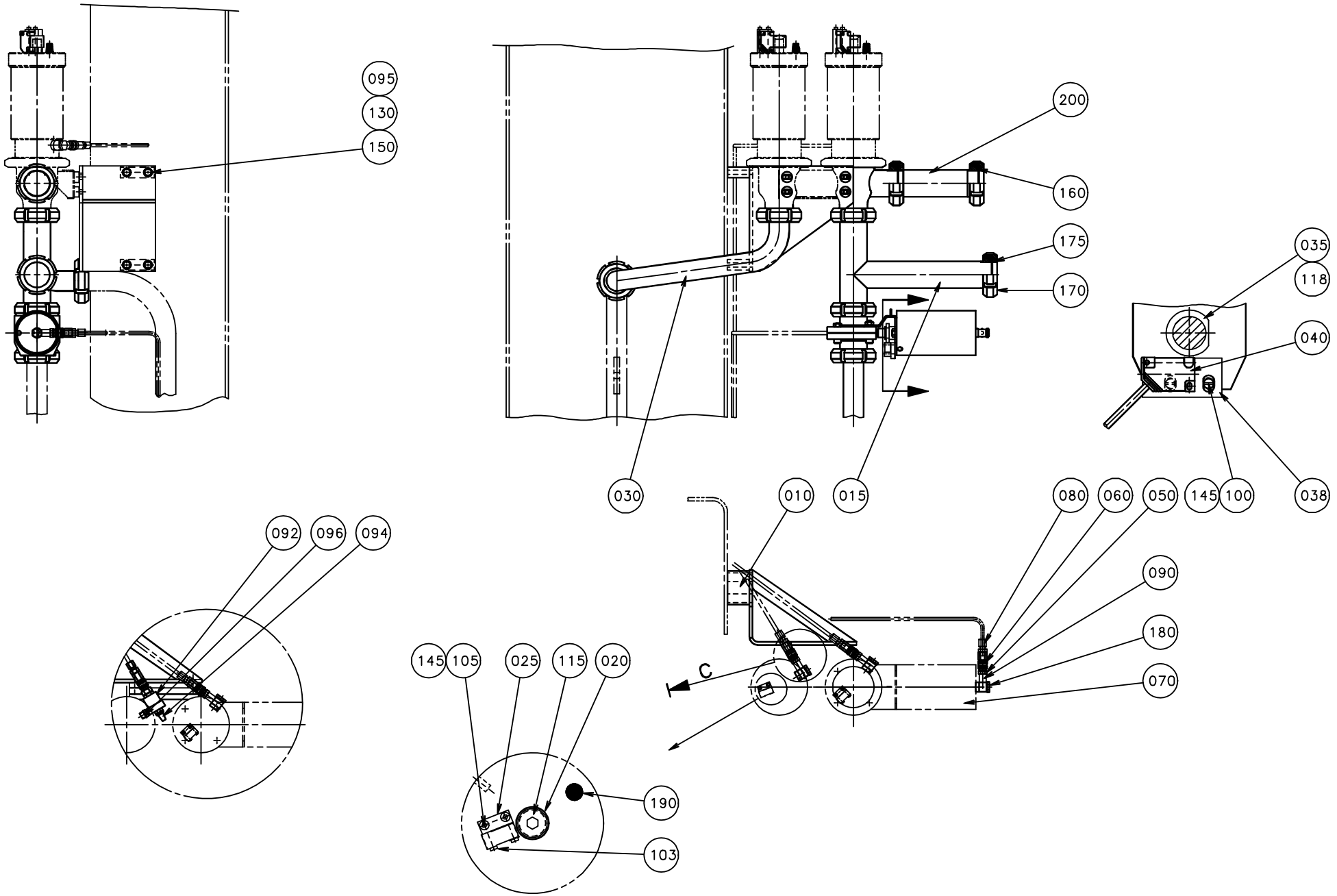
095
130
150
200
160
175
170
035
118
040
030
010
015
080
060
050
145
100
038
090
180
070
092
096
094
145
105
025
115
020
C
190
103

ECM: 71540 - 19980420
Group number: 499701-0100
Assembly Drawing: 499701-2_1_AB

This list covers pages from 1-26 to 1-29

Pos	Part No	UN	Qty	Description	Page No
TB/8 1500B US (See drawing on page: 1-28)					
010	479383-0000		1	BRACKET, PRODUCT VALVE	
030	479384-0000		1	PIPE BEND	
090	90224-0308		2	CONN. BANJO, ART. NO. 2023-1/8-1/8	
092	90235-0259		1	VALVE	
094	90328-0003		1	SILENCER, 338/110	
095	312105-0453		8	SCREW M6S ISO 4017 M8X25 A480	
096	90330-0032		1	NIPPLES, EXT. THREAD. ISO 7/1 R1/8-R1/8	
180	342980-0303		2	BANJO-HOLLOW BOLT COUPL,EXT.THR.01-G1/8	
TB/8 TPC (See drawing on page: 1-26)					
010	479383-0000		1	BRACKET, PRODUCT VALVE	
030	479384-0000		1	PIPE BEND	
090	90224-0308		3	CONN. BANJO, ART. NO. 2023-1/8-1/8	
095	312105-0453		8	SCREW M6S ISO 4017 M8X25 A480	
180	342980-0303		3	BANJO-HOLLOW BOLT COUPL,EXT.THR.01-G1/8	
Common Parts					
015	484872-0000		1	T-PIPE	
020	440647-0000		2	SLEEVE	
025	440731-0000		2	PLATE	
035	499879-0000		1	RETAINING RING	
038	522000-0000		1	PLATE	
040	90044-0104		3	PROX.SWITCH IFM IN 3002(RP 90044-194)	
050	90163-0057		3	QUICK COUPLING, (M) 5150-1/8	
060	90163-0062		3	QUICK COUPLING, (F) 5053-1/8	
070	90207-0052		1	VALVE, BUTTERFLY, N.C. LKBA-1-SMS-51	
	90207-0474		*1*	*SEAL KIT*	
	90207-0473		*1*	*NEEDLE BEARING*	
080	90224-0307		3	STRAIGHT FITTING, 6MM, 1/8",	
100	312125-0285		2	SCREW ISO 1207 M4X6 A4	
103	312125-0230		4	SCREW ISO 1207 M3X20 A4	
105	312115-0304		4	SCREW ISO4762 M4X45 A4 80	
115	312155-0532		2	SCREW DIN 7991 MF6S M12X20 A4 70	
118	312318-0284		1	SCREW ISO4029 M4X5 A4	
120	312605-0310		4	HEXAGON NUT, M6M M3 A280	
130	312605-0318		4	HEXAGON NUT, M6M M8 A280	
140	315105-0124		10	WASHER BRB 3,2X7 RFR	
145	315105-0136		6	WASHER BRB 4,3X9 RFR	
150	315115-0165		8	WASHER PLAIN, TBRB 8,4/16 H=3	
160	315250-0104		7	GASKET 61X51X5,5 MM	
170	342803-0104		2	UNION NUT, RD 70-6 (SMS 51)	
175	342812-0104		2	FERRULE, SMS 1145, 2333, NO. 190707	
190	346800-0109		2	SILENCER FILTER R1/8"	
200	255368-0000		1	PRESSURE GAUGE TUBE	

Machine Type | Group Description | Used-In | Group Number | Page No

LOWER FORMING RING

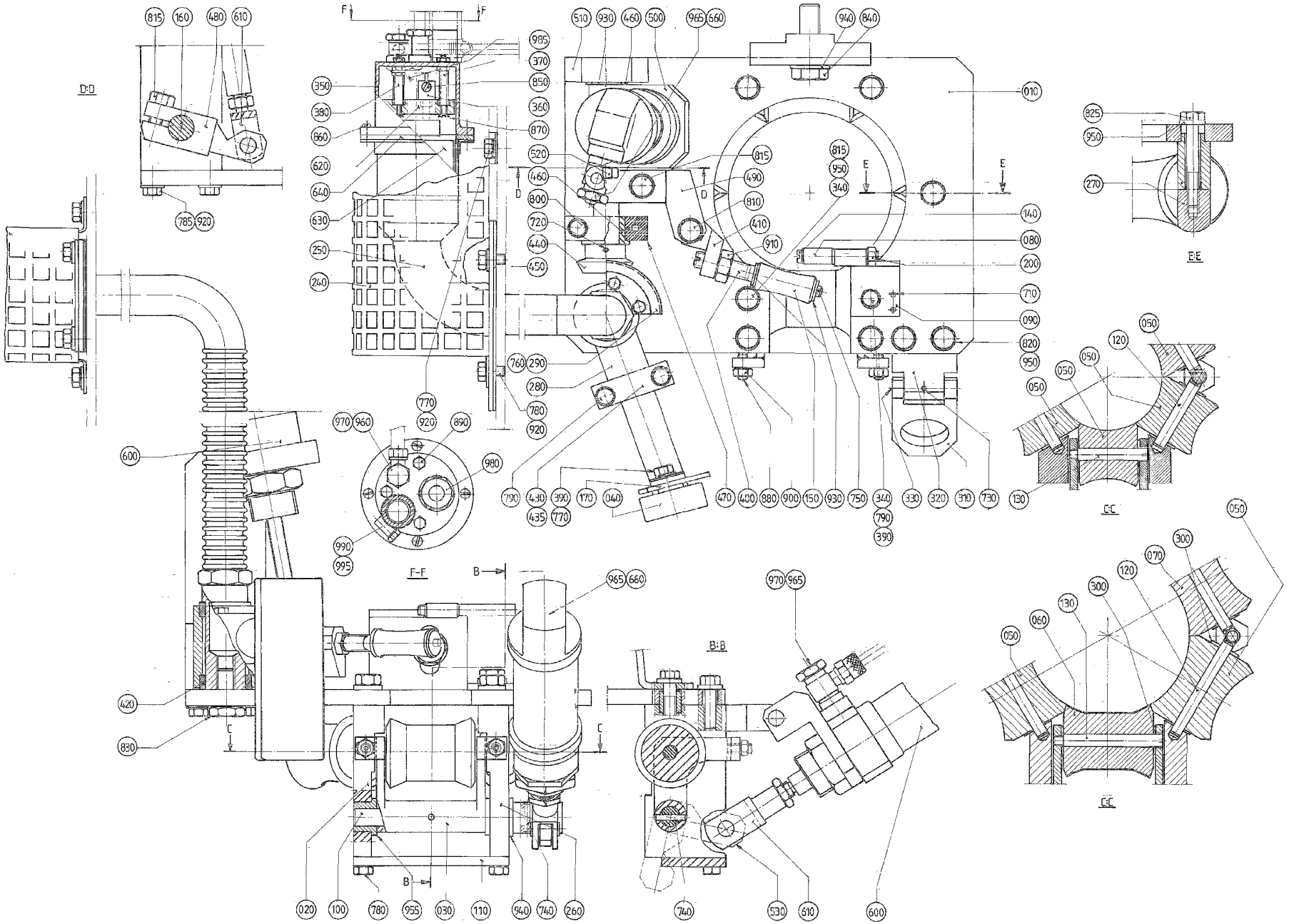

ECM: 88885 - 20030218
Group number: 257900-0400
Assembly Drawing: 257900-3_1_AA

This list covers pages from 1-30 to 1-33

Pos	Part No	UN	Qty	Description	Page No
TB/8 0300B (See drawing on page: 1-30)					
050	36934-0003		6	ROLL	
080	268059-0000		1	ROLL	
120	263655-0006		5	SHAFT	
140	268078-0000		1	SHAFT	
210	315105-0178		1	WASHER BRB 13X24 RFR	
270	257987-0000		4	AXLE SUPPORT	
320	530716-0000		1	CYLINDER BRACKET	
530	522558-0000		1	ROCKER ARM	
880	312318-0368		2	SCREW ISO4029 M6X16 A4	
900	312605-0316		2	HEXAGON NUT, M6M M6 A280	
940	315105-0178		2	WASHER BRB 13X24 RFR	
TB/8 0500S (See drawing on page: 1-32)					
020	255578-0000		1	BEARING HOLDER	
050	583182-0001		5	ROLL	
060	583183-0000		1	COUNTER ROLLER	
080	469464-0000		1	ROLL	
090	569099-0000		1	HOLDER	
120	263655-0025		5	SHAFT	
140	469463-0000		1	SHAFT	
160	522319-0003		1	SHAFT	
200	312605-0312		1	HEXAGON NUT, M6M M4 A280	
270	257987-0000		2	AXLE SUPPORT	
275	927592-0000		2	SUPPORT	
320	927593-0000		1	CYLINDER CONSOLE	
490	522318-0000		1	ROCKER ARM	
530	927594-0000		1	ARM	
670	90143-0050	MM	1000	STRIP	
845	312109-0460		1	SCREW M6S ISO 4017 M8X45 A480	
905	312605-0318		1	HEXAGON NUT, M6M M8 A280	
940	315105-0178		1	WASHER BRB 13X24 RFR	
TB/8 0568SQ, TB/8 1000SQ, TB/8 0500SQ (See drawing on page: 1-30)					
010	1362450-0000		1	FORMING RING	
020	255578-0000		1	BEARING HOLDER	
030	574009-0000		1	FORK	
050	574010-0001		3	ROLL	
060	38630-0005		1	COUNTER ROLLER	
070	574010-0002		2	TRIMMING ROLLER PLUS	
080	469464-0000		1	ROLL	
090	569099-0000		1	HOLDER	
100	255581-0001		1	SHAFT	
110	255582-0003		1	CAP	
120	569100-0000		5	SHAFT	
130	569085-0000		1	SHAFT	
140	469463-0000		1	SHAFT	
160	522319-0003		1	SHAFT	
200	312605-0312		1	HEXAGON NUT, M6M M4 A280	
210	315115-0178		1	WASHER PLAIN, TBRB 13/24 H=4	
270	257987-0000		4	AXLE SUPPORT	
320	530716-0000		1	CYLINDER BRACKET	
490	522318-0000		1	ROCKER ARM	
530	522558-0000		1	ROCKER ARM	
880	312318-0368		2	SCREW ISO4029 M6X16 A4	
900	312605-0316		2	HEXAGON NUT, M6M M6 A280	
940	315105-0178		2	WASHER BRB 13X24 RFR	
TB/8 1000B, TB/8 0568B, TB/8 0500B, TB/8 1136B (See drawing on page: 1-30)					
010	522321-0000		1	FORMING RING	
020	255578-0000		1	BEARING HOLDER	
030	530713-0000		1	FORK	
050	21397-0000		5	ROLL	
060	38630-0001		1	COUNTER ROLLER	
080	279374-0000		1	ROLL	
090	297084-0000		1	HOLDER	
100	255581-0001		1	SHAFT	
110	255582-0001		1	CAP	
120	263655-0009		5	SHAFT	
130	530766-0001		1	SHAFT	
140	269151-0000		1	SHAFT	
160	522319-0001		1	SHAFT	
200	312605-0314		1	HEXAGON NUT, M6M M5 A280	
210	315105-0178		1	WASHER BRB 13X24 RFR	
270	257987-0000		4	AXLE SUPPORT	
320	530716-0000		1	CYLINDER BRACKET	
490	522318-0000		1	ROCKER ARM	
530	522558-0000		1	ROCKER ARM	
880	312318-0368		2	SCREW ISO4029 M6X16 A4	
900	312605-0316		2	HEXAGON NUT, M6M M6 A280	
940	315105-0178		2	WASHER BRB 13X24 RFR	
TB/8 1000S (See drawing on page: 1-30)					
010	1362450-0000		1	FORMING RING	
020	255578-0000		1	BEARING HOLDER	
030	574009-0000		1	FORK	
050	582012-0001		5	ROLL	
060	582013-0000		1	COUNTER ROLLER	

Machine Type | Group Description | Used-In | Group Number | Page No

LOWER FORMING RING

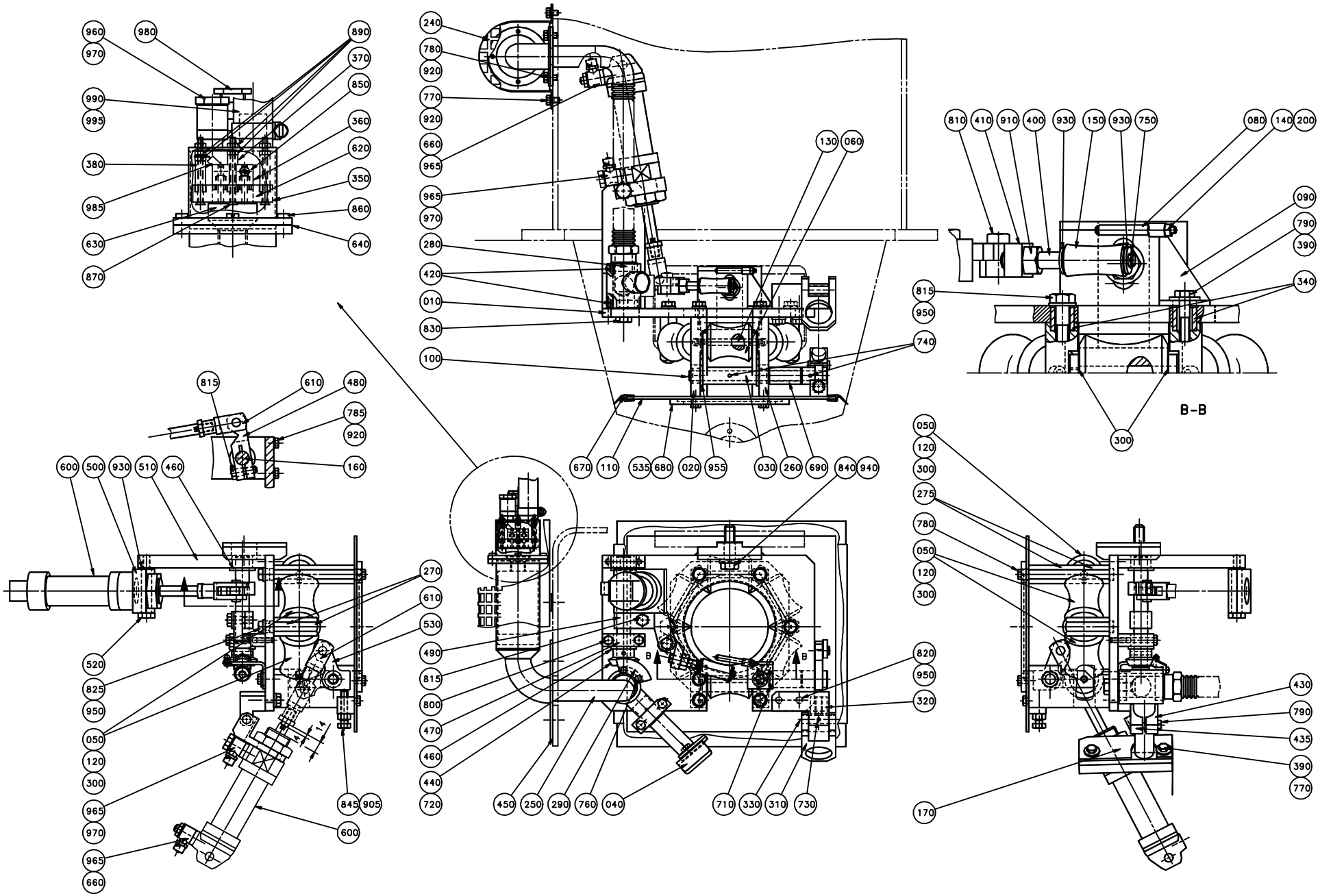

ECM: 88885 - 20030218
Group number: 257900-0400
Assembly Drawing: 257900-4_1_AA

This list covers pages from 1-30 to 1-33

Pos	Part No	UN	Qty	Description	Page No
TB/8 1000S (Cont'd) (See drawing on page: 1-30)					
080	469464-0000		1	ROLL	
090	569099-0000		1	HOLDER	
100	255581-0001		1	SHAFT	
110	255582-0003		1	CAP	
120	569100-0000		5	SHAFT	
130	569085-0000		1	SHAFT	
140	469463-0000		1	SHAFT	
160	522319-0003		1	SHAFT	
200	312605-0312		1	HEXAGON NUT, M6M M4 A280	
210	315115-0178		1	WASHER PLAIN, TBRB 13/24 H=4	
270	257987-0000		4	AXLE SUPPORT	
320	530716-0000		1	CYLINDER BRACKET	
490	522318-0000		1	ROCKER ARM	
530	522558-0000		1	ROCKER ARM	
880	312318-0368		2	SCREW ISO4029 M6X16 A4	
900	312605-0316		2	HEXAGON NUT, M6M M6 A280	
940	315105-0178		2	WASHER BRB 13X24 RFR	
TB/8 1500B (See drawing on page: 1-32)					
010	522321-0000		1	FORMING RING	
020	255578-0000		1	BEARING HOLDER	
030	927586-0000		1	FORK	
050	592936-0001		5	ROLL	
060	592937-0000		1	COUNTER ROLLER	
080	279374-0000		1	ROLL	
090	297084-0000		1	HOLDER	
100	927734-0002		1	SHAFT	
110	595212-0000		1	CAP	
120	263655-0009		5	SHAFT	
130	530766-0001		1	SHAFT	
140	269151-0000		1	SHAFT	
160	522319-0001		1	SHAFT	
200	312605-0314		1	HEXAGON NUT, M6M M5 A280	
270	257987-0000		2	AXLE SUPPORT	
275	927592-0000		2	SUPPORT	
320	927593-0000		1	CYLINDER CONSOLE	
490	522318-0000		1	ROCKER ARM	
530	927594-0000		1	ARM	
535	592938-0000		1	RING	
670	90143-0050	MM	1000	STRIP	
680	595213-0000		1	RING	
690	927735-0001		1	SPACER	
845	312109-0460		1	SCREW M6S ISO 4017 M8X45 A480	
905	312605-0318		1	HEXAGON NUT, M6M M8 A280	
940	315105-0178		1	WASHER BRB 13X24 RFR	
Common Parts					
150	33442-0000		1	ROLL	
170	257904-0000		1	HEAT GUARD	
300	2033-0008		12	WASHER	
420	530718-0000		2	BUSHING	
450	531741-0000		1	GASKET	
460	530719-0000		2	BUSHING	
600	90239-0835		2	DOUBLE ACTING, MINI-ISO, CYL.32-50	
610	90239-0516		2	ROD END, CLEVIS WITH AXLE M10X1,25	
630	90206-0086		1	HEATING CARTRIDGE, 970W 50 OHM	
640	90206-0322		1	GASKET	
660	90235-0274		3	THROTTLE CHECK VALVE, G1/8", SCU-604-1/8	

HOT AIR ELEMENT LS

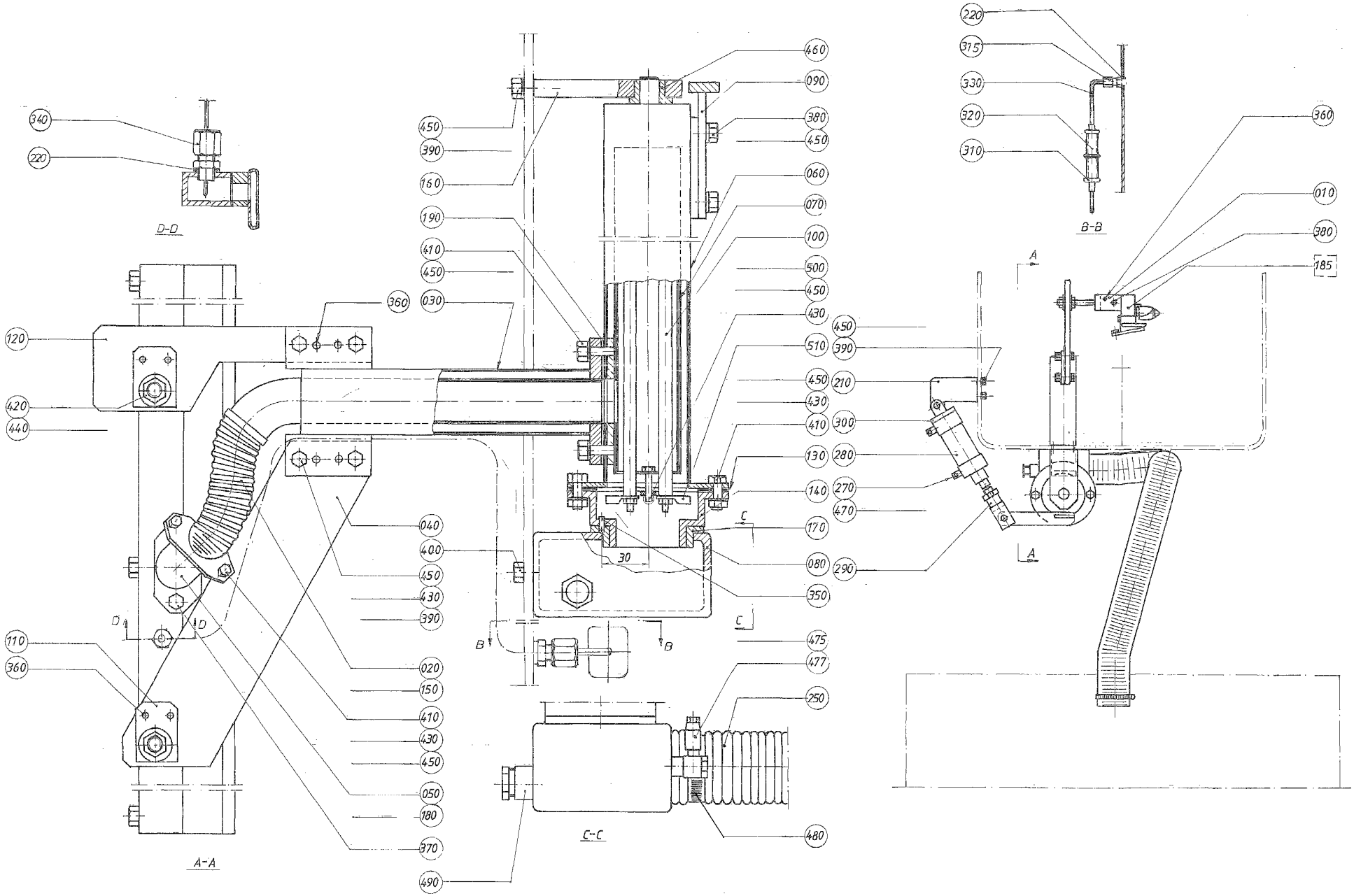

ECM: 71948 - 19981102
Group number: 244778-0400
Assembly Drawing: 244778-3_1_AA

Pos	Part No	UN	Qty	Description	Page No
0300B TPC					
010	265988-0000		2	HOLDER	
100	251279-0000		1	COIL HEATER	
1000SQ TPC, 0500SQ TPC					
010	32215-0000		2	HOLDER	
100	251279-0000		1	COIL HEATER	
1000SQ US, 0500SQ US, 0568SQ US					
010	32215-0000		2	HOLDER	
100	267494-0000		1	COIL HEATER	
1136B TPC, 1000S TPC, 0500S TPC, 0500B TPC, 1000B TPC, 0568B TPC					
010	265987-0000		2	HOLDER	
100	251279-0000		1	COIL HEATER	
1500B US					
010	265987-0000		2	HOLDER	
100	267494-0000		1	COIL HEATER	
Common Parts					
020	32203-0000		1	LEAD	
030	32204-0000		1	HOLDER	
040	32205-0000		1	HOLDER	
050	32206-0000		1	ATTACHMENT	
060	32452-0000		1	MANTLE	
070	32453-0000		1	MANTLE	
080	209839-0000		1	CANTILEVER	
090	243041-0000		1	ARM	
110	32213-0000		2	WASHER	
120	32214-0000		1	HOLDER	
130	531733-0000		1	GASKET	
140	32217-0000		1	BOTTOM SECTION	
150	32219-0000		1	WASHER	
160	32221-0000		1	CANTILEVER	
170	32223-0000		1	BEARING	
180	531734-0000		2	GASKET	
190	531736-0000		1	GASKET	
210	243043-0000		1	CYLINDER CONSOLE	
220	273429-0000		2	WASHER	
250	90152-0014	M	2	HOSE , 1,5" PVC BLACK	
260	90224-0097		1	NIPPLE	
270	90235-0274		2	THROTTLE CHECK VALVE, G1/8", SCU-604-1/8	
280	90450-0066		1	CYLINDER	
290	90239-0357		1	ROD END, CLEVIS WITH AXLE M10X1,25	
300	90239-0368		1	BRACKET	
310	90326-0012		1	PROTECTIVE COVER, T31A4618	
315	90326-0017		1	GLAND 1/8" REPBY 90326-306	
320	90326-0020		1	PLUG, FEMALE YELLOW CR-AL	
330	90326-0048		1	THERMOCOUPLE, 12826-31	
	90326-0304		*1*	*LEAD IN, 9041-15-KS-UB60*	
340	90326-0304		1	LEAD IN, 9041-15-KS-UB60	
350	311102-0232		1	PARALLEL PIN ISO 2338 3M6X8 ST	
360	311102-0267		10	PARALLEL PIN ISO 2338 4M6X10 ST	
370	312101-0325		2	SCREW M6S M5X10 FZB	
380	312101-0366		4	SCREW M6S M6X12 FZB	
390	312101-0370		8	SCREW M6S M6X20 FZB	
400	312101-0447		2	SCREW M6S M8X12 FZB	
410	312105-0368		12	SCREW M6S ISO 4017 M6X16 A480	
420	312601-0320		4	HEXAGON NUT, M10 8 FZB, ISO 4032	
430	312605-0316		13	HEXAGON NUT, M6M M6 A280	
440	315101-0173		2	WASHER PLAIN, BRB, 10,5/22 H=2	
450	315105-0153		25	WASHER BRB 6,4X12 RFR	
460	321101-0173		1	FLANGE BUSHING, 12X18X12 MM	
470	342797-0121		2	CONN. BANJO, RINGPIECE 6-1/8	
475	342797-0122		1	CONN. BANJO, RINGPIECE 6-1/4	
477	342980-0304		1	BANJO-HOLLOW BOLT COUPL,EXT.THR.01-G1/4	
480	342991-0109		2	HOSE CLIP,WORM DRIVE TYPE (48)-50	
490	352100-0106		1	CABLE GLAND NO.18,6-10,5	
500	353101-0134		1	CABLE SHOE 1,5-2,5MM2 M8 BLUE	
510	353104-0130		2	CABLE SHOE, RING UNINS., YAV 025 M 4	
F190	283391-0200		1	AIR NOZZLE LS	**1-37**

Machine Type | Group Description | Used-In | Group Number | Page No

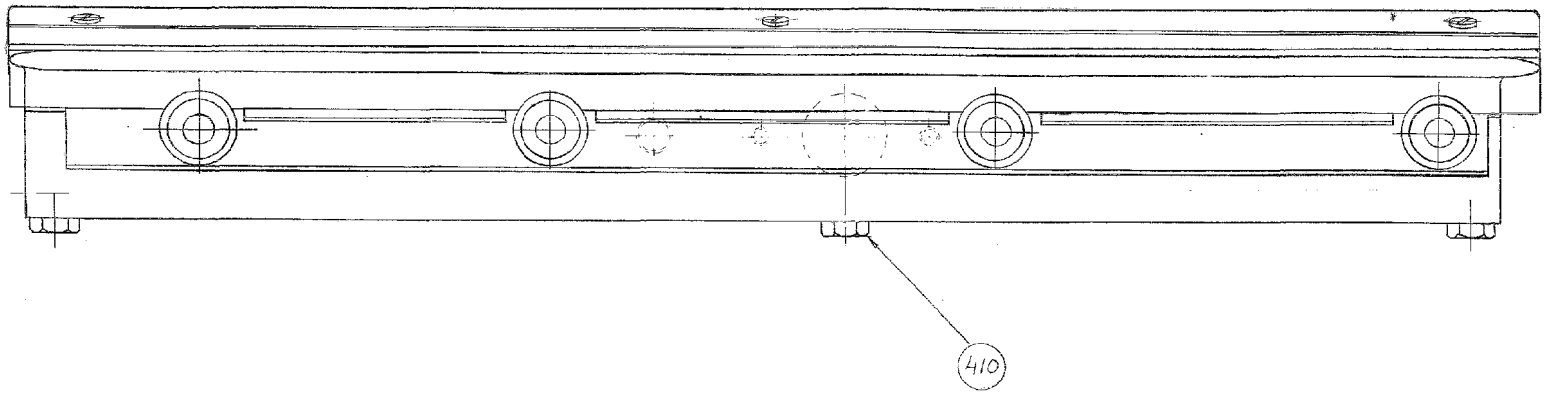
410

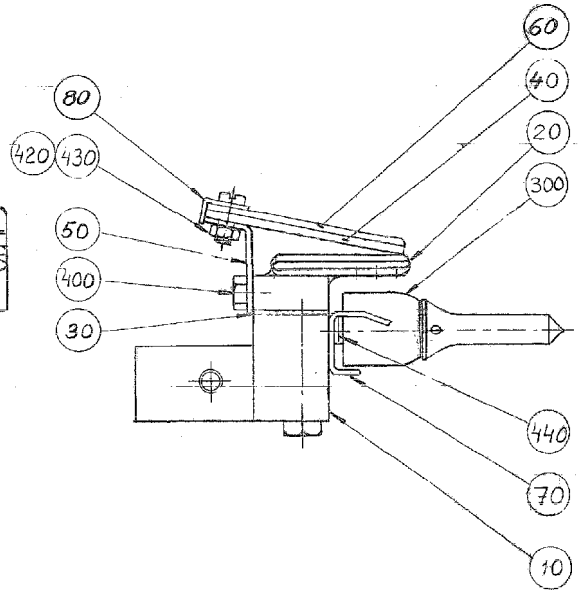
60
40
20
300
80
420
430
50
400
30
440
70
10

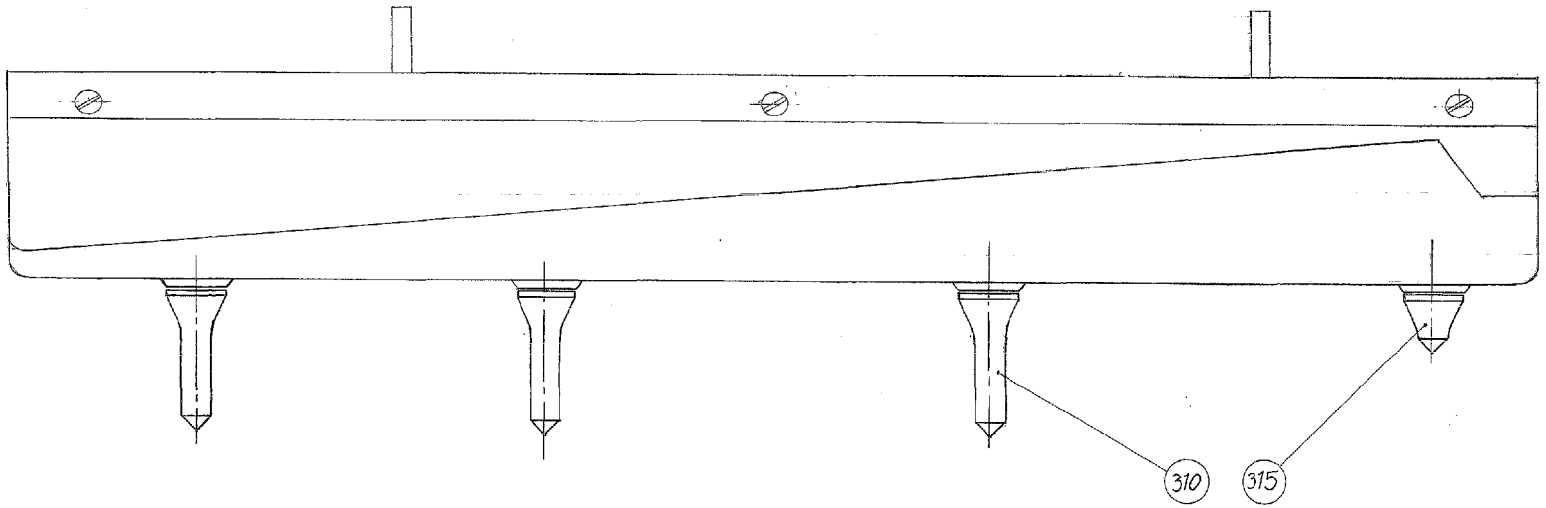
310
315

ECM: 71948 - 19981102
Group number: 283391-0200
Assembly Drawing: 283391-2_1_AA

Pos	Part No	UN	Qty	Description	Page No
0300B					
310	265957-0000		4	SHAFT	
0500B, 1136B, 1000S, 0568B, 1000B					
310	265957-0000		3	SHAFT	
315	35768-0000		1	SHAFT	
1000SQ, 0500SQ, 1500B, 0568SQ					
310	593646-0000		3	SHAFT	
315	35768-0000		1	SHAFT	
Common Parts					
010	553228-0000		1	CONNECTION LS	
020	268568-0000		1	AIR NOZZLE	
030	449922-0000		1	GASKET	
040	259549-0001		1	SUPPORT PLATE	
050	259550-0000		1	MOUNTING SHEET	
060	294110-0001		1	SLIDE PLATE	
070	553227-0000		1	HEAD PLATE	
080	282647-0001		1	RAIL	
300	6161-0000		4	ROLL	
400	312105-0323		3	SCREW M6S ISO 4017 M5X8 A480	
410	312105-0376		3	SCREW M6S ISO 4014 M6X35 A480	
420	312125-0289		3	SCREW ISO 1207 M4X10 A4	
430	312605-0312		3	HEXAGON NUT, M6M M4 A280	
440	315105-0136		4	WASHER BRB 4,3X9 RFR	

Pos	Part No	UN	Qty	Description	Page No

This page is intentionally left blank.

ECM: 71948 - 19981102
Group number: 243336-0500
Assembly Drawing:

Pos	Part No	UN	Qty	Description	Page No
0300B					
030	36934-0003		1	ROLL	
070	263062-0000		2	PRESSURE ROLLER	
100	315202-0214		2	O-RING 17,3X2,4 MM	
0500B, 1136B, 0568B, 1000B					
010	38630-0001		1	COUNTER ROLLER	
030	21397-0000		5	ROLL	
070	232979-0000		2	PRESSURE ROLLER (PAK OF 10)	
110	315202-0217		2	O-RING 24,2X3 MM	
0500S					
010	583183-0000		1	COUNTER ROLLER	
030	583182-0001		5	ROLL	
070	499387-0000		2	PRESSURE ROLLER	
110	315202-0217		2	O-RING 24,2X3 MM	
1000S					
010	582013-0000		1	COUNTER ROLLER	
030	582012-0001		1	ROLL	
070	499387-0000		2	PRESSURE ROLLER	
110	315202-0217		2	O-RING 24,2X3 MM	
1000SQ, 0500SQ, 0568SQ					
010	38630-0005		1	COUNTER ROLLER	
070	499387-0000		2	PRESSURE ROLLER	
110	315202-0217		2	O-RING 24,2X3 MM	
1500B					
010	592937-0000		1	COUNTER ROLLER	
070	232979-0000		2	PRESSURE ROLLER (PAK OF 10)	
110	315202-0217		2	O-RING 24,2X3 MM	
Common Parts					
150	544894-0000		1	SPRING	
170	24928-0000		1	LOCKING RUBBER	
200	90214-0138		2	BALL BEARING, 5X19X6 MM	
F005	541559-0100		1	SEAL KIT	**1-41**

Pos	Part No	UN	Qty	Description	Page No

Machine Type | Group Description | Used-In | Group Number | Page No

This page is intentionally left blank.

ECM: 70748 - 19970404
Group number: 541559-0100
Assembly Drawing:

Pos	Part No	UN	Qty	Description	Page No	Pos	Part No	UN	Qty	Description	Page No
-											
010	530589-0000		2	SEAL RING							
020	533169-0000		2	DIAPHRAGM							

Machine Type	Group Description	Used-In	Group Number	Page No

MOVABLE FORMING RING

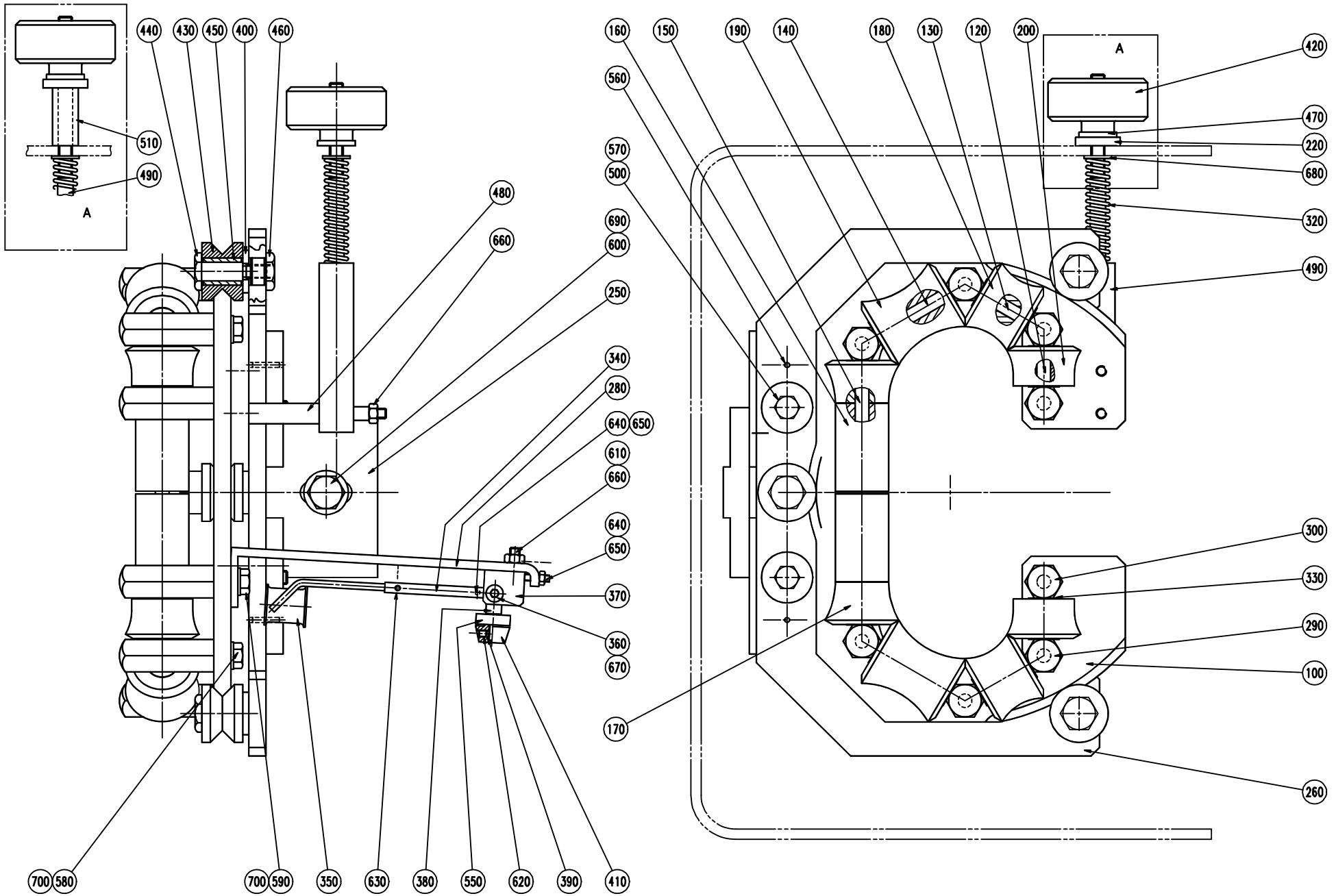

ECM: 71948 - 19981102
Group number: 536990-0100
Assembly Drawing: 536990-1_1_AA

This list covers pages from 1-42 to 1-47

Pos	Part No	UN	Qty	Description	Page No
TB/8 0300B (See drawing on page: 1-42)					
100	537298-0000		1	BOW CLAMP	
120	263655-0001		2	SHAFT	
130	263655-0002		2	SHAFT	
140	263655-0005		2	SHAFT	
150	536988-0002		1	SHAFT	
160	536995-0000		2	ROLL	
170	537297-0000		2	ROLL	
180	36945-0001		2	ROLL	
190	36943-0001		2	ROLL	
200	36944-0001		2	ROLL	
220	315125-0165		1	WASHER TBRSB 8,4X26X5 A4	
260	436405-0000		1	FORK	
490	493886-0000		1	SHAFT	
TB/8 0500S (See drawing on page: 1-44)					
100	583254-0000		1	BOW CLAMP	
120	263655-0001		1	SHAFT	
130	263655-0018		2	SHAFT	
140	263655-0011		2	SHAFT	
150	263655-0026		1	SHAFT	
160	583255-0000		1	ROLL	
180	583256-0000		2	ROLL	
190	583257-0000		2	ROLL	
200	583258-0000		2	ROLL	
230	90240-0172		2	FLANGE BUSHING, 8X12X10 MM	
260	436405-0000		1	FORK	
490	493886-0000		1	SHAFT	
TB/8 0568SQ, TB/8 1000SQ, TB/8 0500SQ (See drawing on page: 1-44)					
100	569096-0000		1	BOW CLAMP	
120	263655-0002		2	SHAFT	
130	569091-0000		2	SHAFT	
140	263655-0012		2	SHAFT	
150	263655-0024		1	SHAFT	
160	573995-0000		1	ROLL	
180	573996-0000		2	ROLL	
190	573997-0000		2	ROLL	
200	573998-0000		2	ROLL	
230	90240-0172		2	FLANGE BUSHING, 8X12X10 MM	
260	436405-0000		1	FORK	
490	493886-0000		1	SHAFT	
TB/8 1000B, TB/8 0568B, TB/8 0500B, TB/8 1136B (See drawing on page: 1-42)					
100	436404-0000		1	BOW CLAMP	
120	263655-0003		2	SHAFT	
130	263655-0004		2	SHAFT	
140	263655-0008		2	SHAFT	
150	536988-0001		1	SHAFT	
160	536989-0000		2	ROLL	
170	536991-0000		2	ROLL	
180	536992-0000		2	ROLL	
190	536993-0000		2	ROLL	
200	536994-0000		2	ROLL	
260	436405-0000		1	FORK	
490	493886-0000		1	SHAFT	
TB/8 1000S (See drawing on page: 1-44)					
100	569096-0000		1	BOW CLAMP	
120	263655-0002		2	SHAFT	
130	569091-0000		2	SHAFT	
140	263655-0012		2	SHAFT	
150	263655-0024		1	SHAFT	
160	582014-0000		1	ROLL	
180	582015-0000		2	ROLL	
190	582016-0000		2	ROLL	
200	582017-0000		2	ROLL	
230	90240-0172		2	FLANGE BUSHING, 8X12X10 MM	
260	436405-0000		1	FORK	
490	493886-0000		1	SHAFT	
TB/8 1500B (See drawing on page: 1-46)					
100	592924-0000		1	BOW CLAMP	
120	263655-0018		2	SHAFT	
130	263655-0005		2	SHAFT	
140	263655-0008		2	SHAFT	
150	592925-0000		1	SHAFT	
160	592926-0000		1	ROLL	
180	592927-0000		2	ROLL	
190	592928-0000		2	ROLL	
200	592929-0000		2	ROLL	
230	90240-0172		2	FLANGE BUSHING, 8X12X10 MM	
260	592930-0000		1	FORK	
490	581352-0000		1	SHAFT	
510	581347-0000		1	SPACER	
Common Parts					
250	436395-0000		1	CANTILEVER	
280	33648-0000		1	HOLDER	
290	257987-0000		6	AXLE SUPPORT	

Machine Type | Group Description | Used-In | Group Number | Page No

MOVABLE FORMING RING

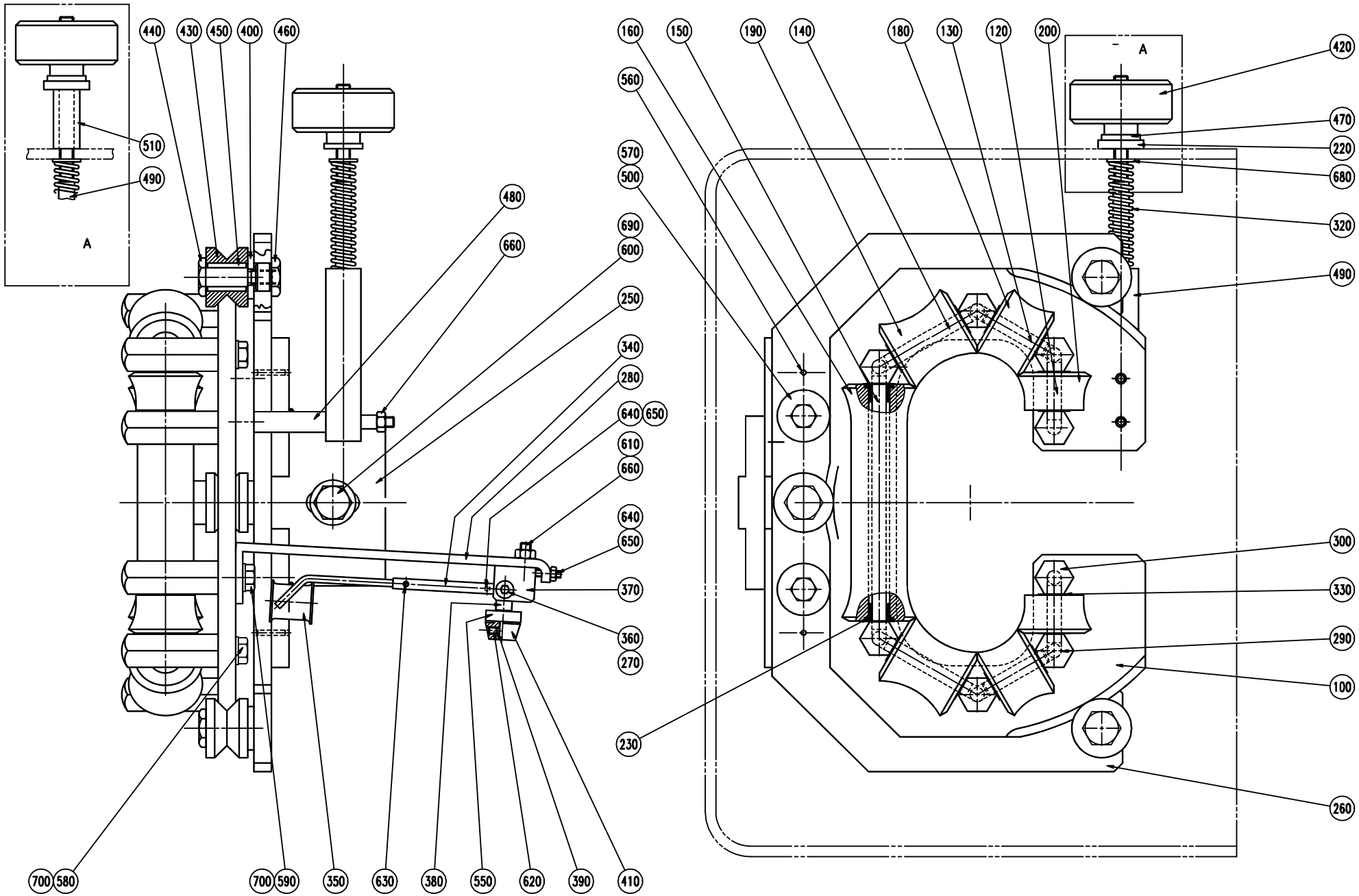

Pos	Part No	UN	Qty	Description	Page No
Common Parts (Cont'd)					
300	257988-0000		2	AXLE SUPPORT	
320	1881-0001		1	COMPRESSION SPRING	
330	2033-0008		14	WASHER	
340	23582-0000		1	HOLDER	
350	23583-0000		1	GUIDE FINGER	
360	23584-0000		2	SCREW	
370	24351-0000		1	BOW CLAMP	
380	24355-0000		2	DOWEL	
390	24356-0000		4	PIECE	
400	28037-0000		3	WASHER	
410	111543-0000		2	GUIDE CONE	
420	257090-0000		1	SHIFTER HANDLE	
430	436302-0000		3	ROLLER	
440	436355-0000		3	REAMED BOLT	
450	436356-0000		3	BUSHING	
460	436357-0000		1	NUT	
470	436403-0000		1	WASHER	
480	493747-0000		1	GUIDE STUD	
500	497720-0000		2	WASHER	
550	90214-0138		2	BALL BEARING, 5X19X6 MM	
560	311103-0236		2	PARALLEL PIN ISO 2338 3M6X16 A1	
570	312105-0451		2	SCREW M6S ISO 4017 M8X20 A480	
580	312105-0462		7	SCREW M6S ISO 4014 M8X55 A480	
590	312105-0463		1	SCREW M6S ISO 4014 M8X60 A480	
600	312105-0540		1	SCREW M6S ISO 4017 M12X40 A480	
610	312115-0366		1	SCREW ISO4762 M6X12 A4 80	
620	312318-0283		4	SCREW ISO4029 M4X4 A4	
630	312318-0285		2	SCREW ISO4029 M4X6 A4	
640	312318-0291		3	SCREW ISO4029 M4X12 A4	
650	312605-0312		3	HEXAGON NUT, M6M M4 A280	
660	312605-0316		2	HEXAGON NUT, M6M M6 A280	
670	315105-0146		2	WASHER BRB 5,3X10 RFR	
680	315105-0165		1	WASHER BRB 8,4X16 RFR	
690	315105-0178		1	WASHER BRB 13X24 RFR	
700	315115-0165		8	WASHER PLAIN, TBRB 8,4/16 H=3	

Pos	Part No	UN	Qty	Description	Page No

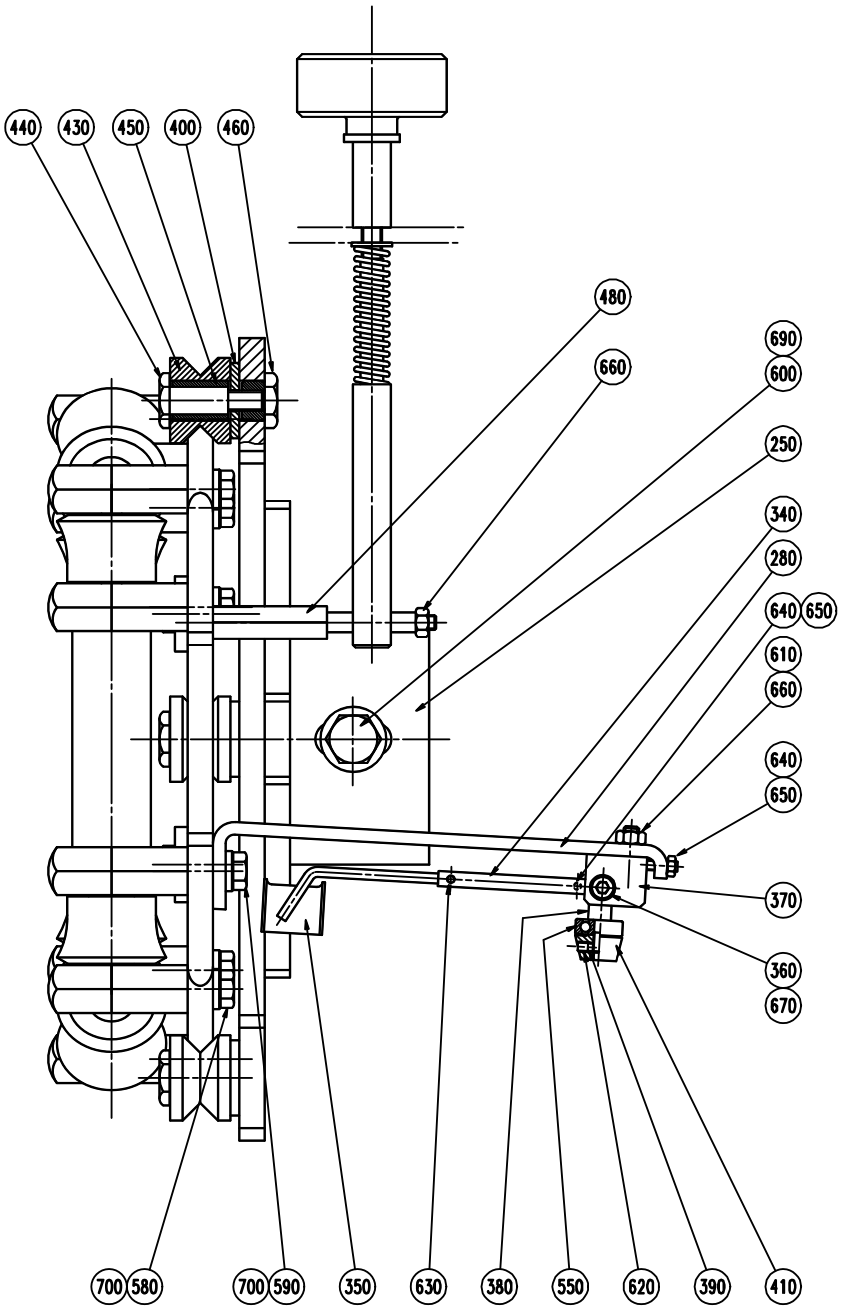
440
430
450
400
460
480
660
690
600
250
340
280
640
650
610
660
640
650
370
360
670
700
580
700
590
350
630
380
550
620
390
410

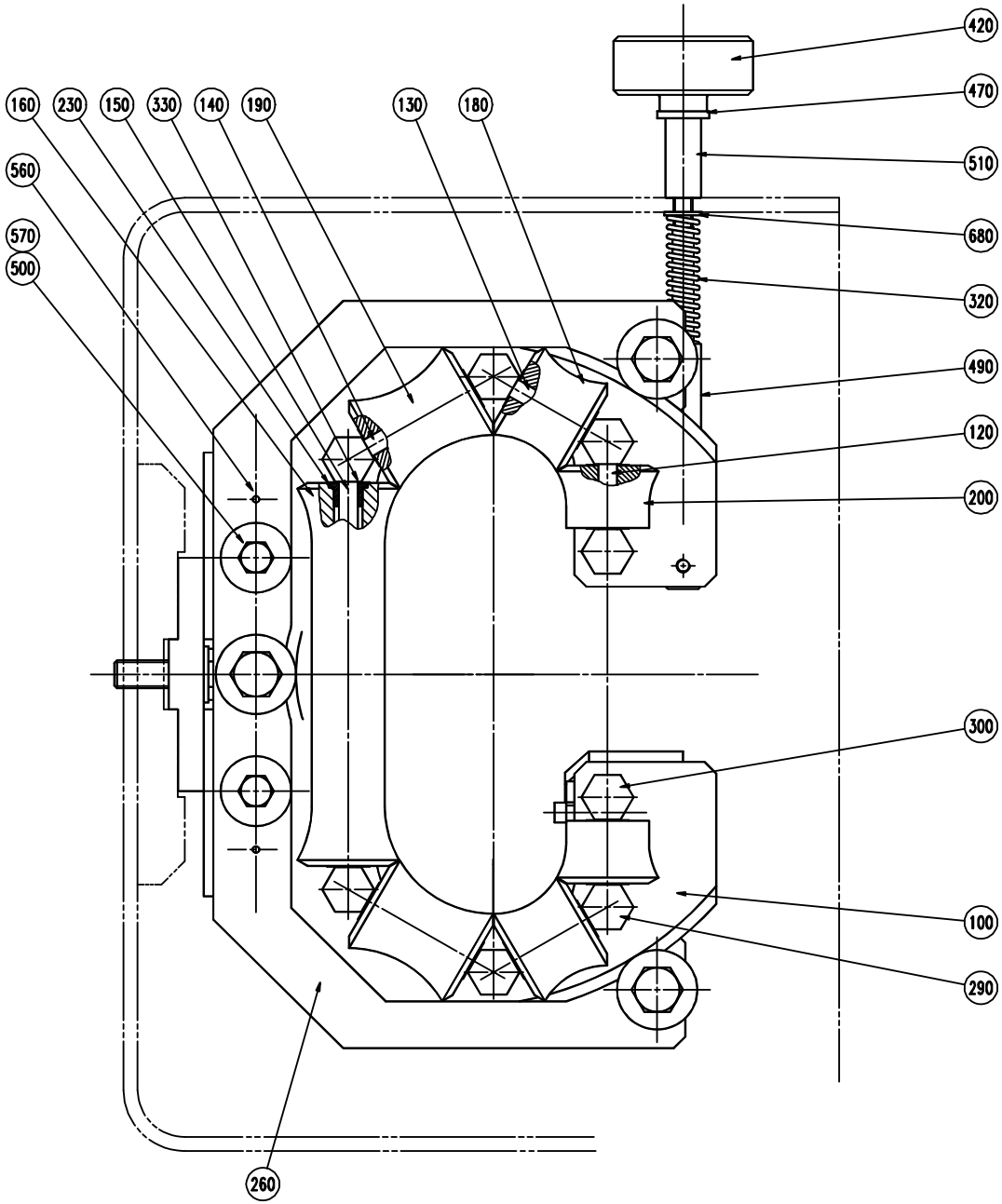
160
230
150
330
140
190
130
180
560
570
500
420
470
510
680
320
490
120
200
300
100
290
260

ECM: 71948 - 19981102
Group number: 536990-0100
Assembly Drawing: 536990-3_1_AA

This list covers pages from 1-42 to 1-47

Pos	Part No	UN	Qty	Description	Page No	Pos	Part No	UN	Qty	Description	Page No

SEE PREVIOUS LISTS PAGES: 1-43, 1-45.

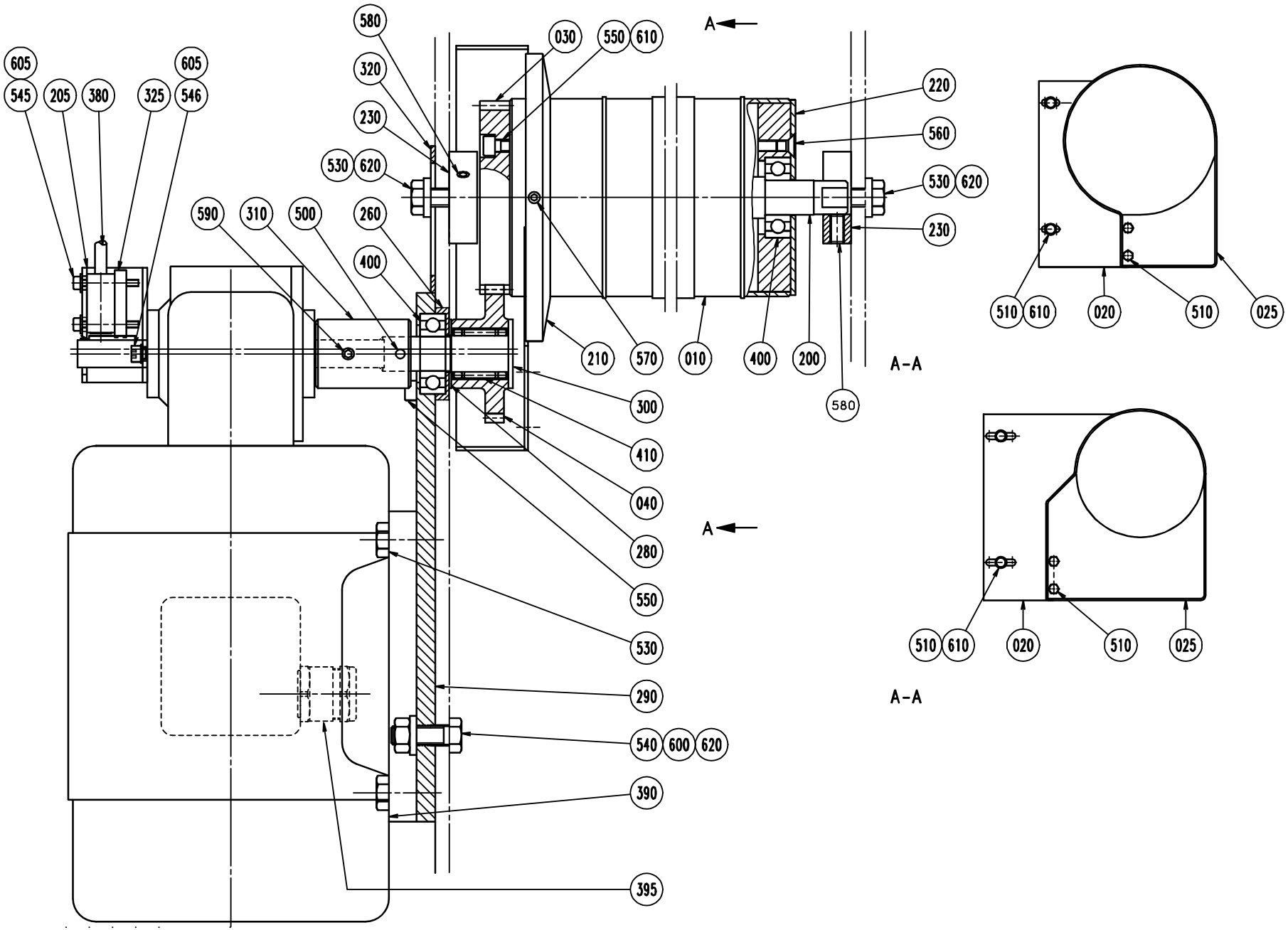
580
030
550
610
320
230
530
620
590
310
500
260
400
605
545
205
380
325
546
605
220
560
530
620
230
210
570
010
400
200
580
300
410
040
280
550
530
290
540
600
620
390
395
A
A
A-A
510
610
020
510
025
A-A
510
610
020
510
025

ECM: 71948 - 19981102
Group number: 239715-0200
Assembly Drawing: 239715-2_1_AA

This list covers pages from 1-48 to 1-53

Pos	Part No	UN	Qty	Description	Page No
TB/8 0300B TPC (See drawing on page: 1-48)					
010	207024-0002		1	BENDING ROLLER	
020	752907-0000		1	PROTECTIVE CASING	
025	752908-0000		1	PROTECTIVE CASING	
030	207019-0003		1	GEAR WHEEL	
040	209331-0009		1	GEAR WHEEL	
200	207016-0000		1	SHAFT	
395	90012-0137		1	GLAND, EXTENDED WITH INSERT, PG11	
510	312105-0323		4	SCREW M6S ISO 4017 M5X8 A480	
540	312105-0453		2	SCREW M6S ISO 4017 M8X25 A480	
580	312318-0366		2	SCREW ISO4029 M6X12 A4	
610	315105-0146		5	WASHER BRB 5,3X10 RFR	
TB/8 0500B TPC (See drawing on page: 1-48)					
010	207024-0001		1	BENDING ROLLER	
020	752700-0000		1	PROTECTIVE CASING	
025	752701-0000		1	PROTECTIVE CASING	
030	207019-0001		1	GEAR WHEEL	
040	209331-0002		1	GEAR WHEEL	
200	207016-0000		1	SHAFT	
395	90012-0137		1	GLAND, EXTENDED WITH INSERT, PG11	
510	312105-0323		4	SCREW M6S ISO 4017 M5X8 A480	
540	312105-0453		2	SCREW M6S ISO 4017 M8X25 A480	
580	312318-0366		2	SCREW ISO4029 M6X12 A4	
610	315105-0146		5	WASHER BRB 5,3X10 RFR	
TB/8 0500S TPC (See drawing on page: 1-48)					
010	589369-0000		1	BENDING ROLLER	
020	579008-0000		1	PROTECTIVE CASING	
025	579009-0000		1	PROTECTIVE CASING	
030	207019-0001		1	GEAR WHEEL	
040	209331-0010		1	GEAR WHEEL	
200	207016-0000		1	SHAFT	
395	90012-0137		1	GLAND, EXTENDED WITH INSERT, PG11	
510	312105-0323		4	SCREW M6S ISO 4017 M5X8 A480	
540	312105-0453		2	SCREW M6S ISO 4017 M8X25 A480	
580	312318-0366		2	SCREW ISO4029 M6X12 A4	
610	315105-0146		5	WASHER BRB 5,3X10 RFR	
TB/8 0500SQ TPC (See drawing on page: 1-48)					
010	207024-0001		1	BENDING ROLLER	
020	579008-0000		1	PROTECTIVE CASING	
025	579009-0000		1	PROTECTIVE CASING	
030	207019-0001		1	GEAR WHEEL	
040	209331-0009		1	GEAR WHEEL	
200	207016-0000		1	SHAFT	
395	90012-0137		1	GLAND, EXTENDED WITH INSERT, PG11	
510	312105-0323		4	SCREW M6S ISO 4017 M5X8 A480	
540	312105-0453		2	SCREW M6S ISO 4017 M8X25 A480	
580	312318-0366		2	SCREW ISO4029 M6X12 A4	
610	315105-0146		5	WASHER BRB 5,3X10 RFR	
TB/8 0500SQ US (See drawing on page: 1-48)					
010	207024-0001		1	BENDING ROLLER	
020	579008-0000		1	PROTECTIVE CASING	
025	579009-0000		1	PROTECTIVE CASING	
030	207019-0001		1	GEAR WHEEL	
040	209331-0010		1	GEAR WHEEL	
200	207016-0000		1	SHAFT	
395	90012-0137		1	GLAND, EXTENDED WITH INSERT, PG11	
510	312105-0323		4	SCREW M6S ISO 4017 M5X8 A480	
540	312105-0453		2	SCREW M6S ISO 4017 M8X25 A480	
580	312318-0366		2	SCREW ISO4029 M6X12 A4	
610	315105-0146		5	WASHER BRB 5,3X10 RFR	
TB/8 0568B TPC (See drawing on page: 1-48)					
010	207024-0001		1	BENDING ROLLER	
020	752700-0000		1	PROTECTIVE CASING	
025	752701-0000		1	PROTECTIVE CASING	
030	207019-0001		1	GEAR WHEEL	
040	209331-0006		1	GEAR WHEEL	
200	207016-0000		1	SHAFT	
395	90012-0137		1	GLAND, EXTENDED WITH INSERT, PG11	
510	312105-0323		4	SCREW M6S ISO 4017 M5X8 A480	
540	312105-0453		2	SCREW M6S ISO 4017 M8X25 A480	
580	312318-0366		2	SCREW ISO4029 M6X12 A4	
610	315105-0146		5	WASHER BRB 5,3X10 RFR	
TB/8 0568SQ US (See drawing on page: 1-48)					
010	207024-0001		1	BENDING ROLLER	
020	579008-0000		1	PROTECTIVE CASING	
025	579009-0000		1	PROTECTIVE CASING	
030	207019-0001		1	GEAR WHEEL	
040	209331-0007		1	GEAR WHEEL	
200	207016-0000		1	SHAFT	
395	90012-0137		1	GLAND, EXTENDED WITH INSERT, PG11	
510	312105-0323		4	SCREW M6S ISO 4017 M5X8 A480	
540	312105-0453		2	SCREW M6S ISO 4017 M8X25 A480	
580	312318-0366		2	SCREW ISO4029 M6X12 A4	
610	315105-0146		5	WASHER BRB 5,3X10 RFR	

Machine Type | Group Description | Used-In | Group Number | Page No

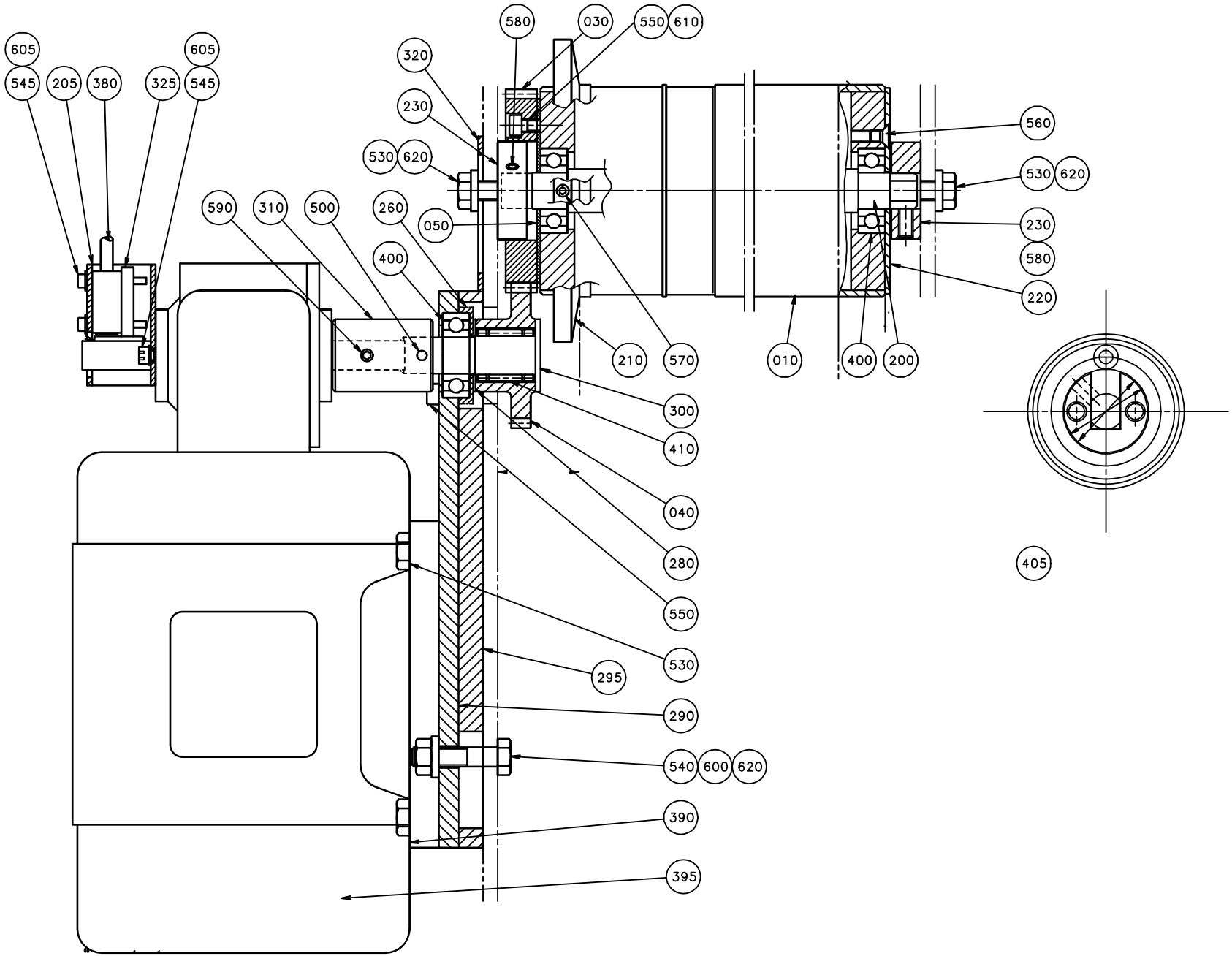
605
545
205
380
325
605
545
580
030
550
610
320
230
530
620
590
310
500
260
050
400
560
530
620
230
580
220
210
570
010
400
200
300
410
040
280
550
530
295
290
540
600
620
390
395
405

ECM: 71948 - 19981102
Group number: 239715-0200
Assembly Drawing: 239715-3_1_AB

This list covers pages from 1-48 to 1-53

Pos	Part No	UN	Qty	Description	Page No
TB/8 1000B TPC (Cont'd) (See drawing on page: 1-48)					
010	207024-0001		1	BENDING ROLLER	
020	752700-0000		1	PROTECTIVE CASING	
025	752701-0000		1	PROTECTIVE CASING	
030	207019-0001		1	GEAR WHEEL	
040	209331-0010		1	GEAR WHEEL	
200	207016-0000		1	SHAFT	
395	90012-0137		1	GLAND, EXTENDED WITH INSERT, PG11	
510	312105-0323		4	SCREW M6S ISO 4017 M5X8 A480	
540	312105-0453		2	SCREW M6S ISO 4017 M8X25 A480	
580	312318-0366		2	SCREW ISO4029 M6X12 A4	
610	315105-0146		5	WASHER BRB 5,3X10 RFR	
TB/8 1000S TPC (See drawing on page: 1-48)					
010	207024-0001		1	BENDING ROLLER	
020	579008-0000		1	PROTECTIVE CASING	
025	579009-0000		1	PROTECTIVE CASING	
030	207019-0001		1	GEAR WHEEL	
040	209331-0013		1	GEAR WHEEL	
200	207016-0000		1	SHAFT	
395	90012-0137		1	GLAND, EXTENDED WITH INSERT, PG11	
510	312105-0323		4	SCREW M6S ISO 4017 M5X8 A480	
540	312105-0453		2	SCREW M6S ISO 4017 M8X25 A480	
580	312318-0366		2	SCREW ISO4029 M6X12 A4	
610	315105-0146		5	WASHER BRB 5,3X10 RFR	
TB/8 1136B TPC (See drawing on page: 1-48)					
010	207024-0001		1	BENDING ROLLER	
020	752700-0000		1	PROTECTIVE CASING	
025	752701-0000		1	PROTECTIVE CASING	
030	207019-0001		1	GEAR WHEEL	
040	209331-0007		1	GEAR WHEEL	
200	207016-0000		1	SHAFT	
395	90012-0137		1	GLAND, EXTENDED WITH INSERT, PG11	
510	312105-0323		4	SCREW M6S ISO 4017 M5X8 A480	
540	312105-0453		2	SCREW M6S ISO 4017 M8X25 A480	
580	312318-0366		2	SCREW ISO4029 M6X12 A4	
610	315105-0146		5	WASHER BRB 5,3X10 RFR	
TB/8 1500B US (See drawing on page: 1-50)					
010	592963-0000		1	BENDING ROLLER	
030	592965-0000		1	GEAR WHEEL	
040	209331-0007		1	GEAR WHEEL	
050	596082-0000		1	WASHER	
200	592962-0000		1	SHAFT	
295	592964-0000		1	SPACER PLATE	
540	312105-0457		2	SCREW M6S ISO 4014 M8X35 A480	
580	312318-0362		1	SCREW ISO4029 M6X8 A4	
580	312318-0360		1	SCREW ISO4029 M6X6 A4	
610	315105-0146		3	WASHER BRB 5,3X10 RFR	
TB/8 1000SQ TPC (See drawing on page: 1-48)					
010	207024-0001		1	BENDING ROLLER	
020	579008-0000		1	PROTECTIVE CASING	
025	579009-0000		1	PROTECTIVE CASING	
030	207019-0001		1	GEAR WHEEL	
040	209331-0012		1	GEAR WHEEL	
200	207016-0000		1	SHAFT	
395	90012-0137		1	GLAND, EXTENDED WITH INSERT, PG11	
510	312105-0323		4	SCREW M6S ISO 4017 M5X8 A480	
540	312105-0453		2	SCREW M6S ISO 4017 M8X25 A480	
580	312318-0366		2	SCREW ISO4029 M6X12 A4	
610	315105-0146		5	WASHER BRB 5,3X10 RFR	
TB/8 1000SQ US (See drawing on page: 1-48)					
010	207024-0001		1	BENDING ROLLER	
020	579008-0000		1	PROTECTIVE CASING	
025	579009-0000		1	PROTECTIVE CASING	
030	207019-0002		1	GEAR WHEEL	
040	209331-0007		1	GEAR WHEEL	
200	207016-0000		1	SHAFT	
395	90012-0137		1	GLAND, EXTENDED WITH INSERT, PG11	
510	312105-0323		4	SCREW M6S ISO 4017 M5X8 A480	
540	312105-0453		2	SCREW M6S ISO 4017 M8X25 A480	
580	312318-0366		2	SCREW ISO4029 M6X12 A4	
610	315105-0146		5	WASHER BRB 5,3X10 RFR	
Common Parts					
205	927258-0000		1	BRACKET	
210	35849-0000		1	FLANGE	
220	207017-0001		1	WASHER	
230	207018-0000		4	SUPPORT	
260	209332-0000		1	BEARING HOLDER	
280	209334-0000		1	WASHER	
290	257721-0000		1	MOUNTING SHEET	
300	257722-0000		1	SHAFT	
310	257723-0000		1	CONNECTION	
320	752699-0000		1	PLATE	
325	795581-0000		1	PLATE	
380	90044-0104		1	PROX.SWITCH IFM IN 3002(RP 90044-194)	

See previous drawings pages: 1-48, 1-50.

Pos	Part No	UN	Qty	Description	Page No
Common Parts (Cont'd)					
390	90069-0278		1	GEARS, WORM MOTOR KM120-80E3	
400	90214-0098		3	BALL BEARING, 15X35X11 MM	
405	90296-0009	L	1	SILICONE GREASE DOW CORNING 150 GR.	
410	90348-0007		1	FREE-WHEEL COUPLING, 15,875X22,225 MM	
500	311111-0260		1	SPRING PIN ISO 8752 4X28-ST	
530	312105-0451		8	SCREW M6S ISO 4017 M8X20 A480	
545	312115-0232		2	SCREW ISO4762 M3X25 A4 80	
546	312115-0295		2	SCREW ISO4762 M4X20 A4 80	
550	312115-0329		5	SCREW ISO4762 M5X16 A4 80	
560	312155-0331		3	SCREW DIN 7991 MF6S M5X20 A4 70	
570	312318-0327		2	SCREW ISO4029 M5X12 A4	
590	312318-0362		1	SCREW ISO4029 M6X8 A4	
600	312605-0318		2	HEXAGON NUT, M6M M8 A280	
605	315105-0136		4	WASHER BRB 4,3X9 RFR	
620	315115-0165		6	WASHER PLAIN, TBRB 8,4/16 H=3	

Pos	Part No	UN	Qty	Description	Page No

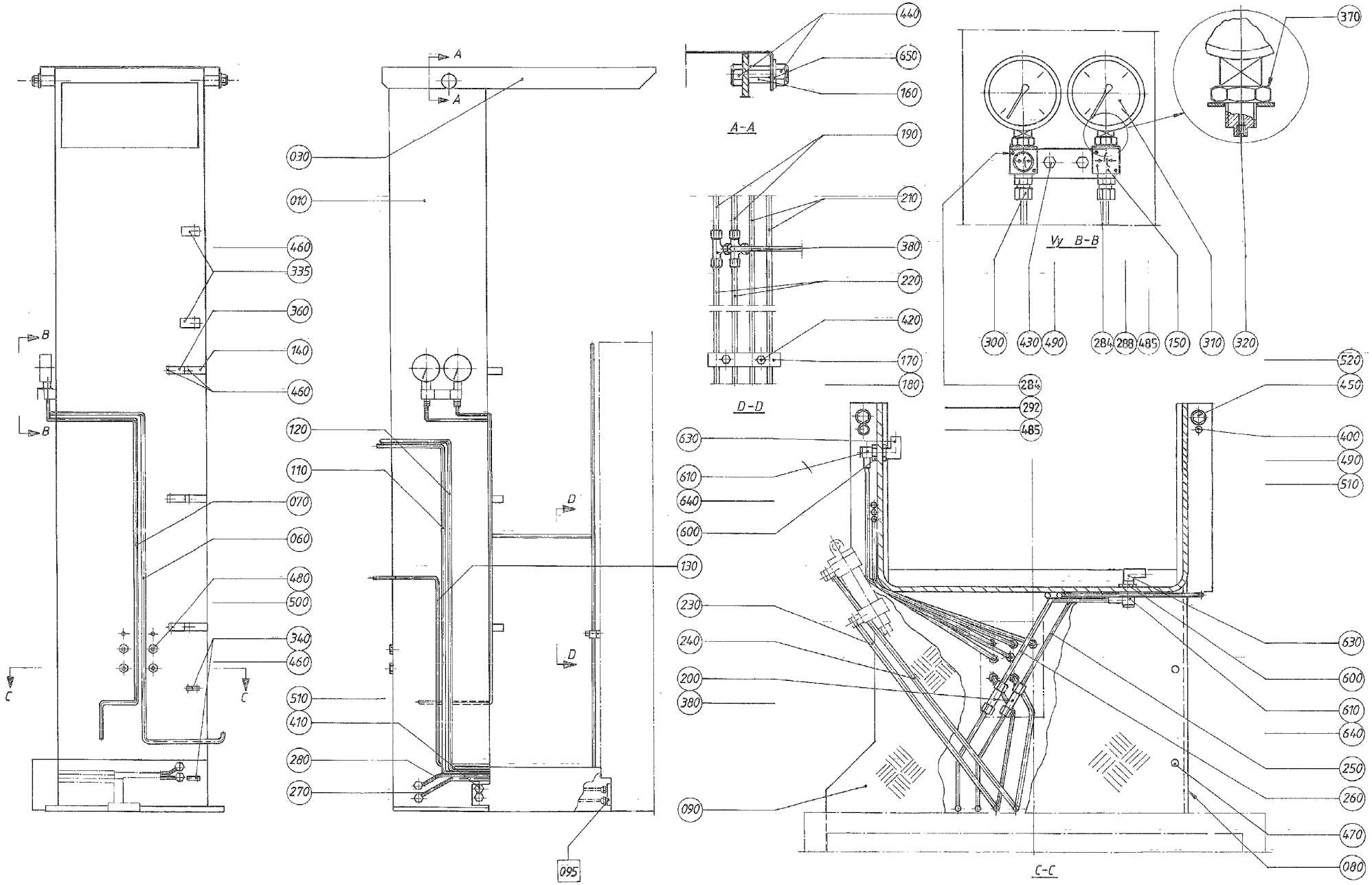
A
A
A-A
B
B
C
C
D
D
D-D
B-B
Vy
C-C
030
010
460
335
360
140
460
120
110
070
060
480
500
340
460
510
410
280
270
095
440
650
160
190
210
380
220
420
170
180
370
300
430
490
284
288
485
150
310
320
284
292
485
520
450
400
490
510
630
610
640
600
130
230
240
200
380
090
630
600
610
640
250
260
470
080

ECM: 70675 - 19970214
Group number: 436435-0500
Assembly Drawing: 436435-4_1_AA

Pos	Part No	UN	Qty	Description	Page No
TB/8					
030	268590-0000		1	PAPER GUARD	
110	532278-0000		1	PIPE	
120	532279-0000		1	PIPE	
130	532280-0000		1	PIPE	
160	35553-0001		2	SPACER	
190	532281-0001		2	PIPE	
210	532282-0000		2	PIPE	
220	532283-0000		2	PIPE	
230	532315-0001		1	PIPE	
240	532315-0002		1	PIPE	
335	90074-0002		2	CABLE CLIPS, D=11 MM	
340	90074-0018		2	CABLE CLIPS, D=2X10 MM	
410	312105-0366		4	SCREW M6S ISO 4017 M6X12 A480	
420	312105-0368		2	SCREW M6S ISO 4017 M6X16 A480	
440	312105-0449		4	SCREW M6S ISO 4017 M8X16 A480	
460-02	312125-0323		12	SCREW ISO 1207 M5X8 A4	
490	312605-0316		4	HEXAGON NUT, M6M M6 A280	
510	315105-0153		8	WASHER BRB 6,4X12 RFR	
650	315105-0165		2	WASHER BRB 8,4X16 RFR	
F095	442413-0200		1	CONTACT FLANGE	**1-57**
Common Parts					
010	530565-0000		1	PILLAR	
060	532276-0000		1	PIPE	
070	532277-0000		1	PIPE	
080	484839-0000		1	CABLE TRENCH	
090	484840-0000		1	CABLE TRENCH	
140	32477-0000		3	CLAMPING PIECE	
150	33577-0000		1	CANTILEVER	
170	434731-0000		1	PIPE HOLDER	
180	434732-0000		1	FASTENING PLATE	
200	532281-0002		2	PIPE	
250	532316-0000		1	PIPE	
260	532317-0000		1	PIPE	
270	434739-0000		1	PIPE	
280	434740-0000		1	PIPE	
284	464173-0000		2	LABEL HOLDER	
288	464174-0000		1	SIGN, LONGITUDINAL SEALING	
292	464175-0000		1	SIGN, LONGITUDINAL SEALING SHORT STOP	
300	90224-0331		2	CONN. STR., 6-R1/4, EXT. THREAD	
310	90043-0034		2	PRESSURE GAUGE	
320	90043-0302		2	SCREW	
360	90074-0023		3	CLIP,SINGLE 22	
370	90330-0105		2	NUT, HEXAGON, R3/8	
380	90224-0310		4	CONNECTION	
400	311211-0299		2	TAPER PIN THREADED ISO 8737 M6X55 SS	
430	312105-0370		2	SCREW M6S ISO 4017 M6X20 A480	
450	312105-0540		4	SCREW M6S ISO 4017 M12X40 A480	
470	312141-0366		2	SCREW ISO 2009 MFS M6X12 4.8 EL.PL	
480	312306-0459		4	SCREW ISO4026 M8X40 FZB	
485	312502-0120		4	DRIVE SCREW ROUND HEAD KDS 0X5	
500	312605-0318		4	HEXAGON NUT, M6M M8 A280	
520	315105-0178		4	WASHER BRB 13X24 RFR	
600	342767-0100		4	CONN. BULKHEAD G1/8	
610	342797-0121		4	CONN. BANJO, RINGPIECE 6-1/8	
630	342930-0113		4	ELBOW 90 COUPL.,EXT.THREAD 6/4-R1/8"	
640	342980-0303		4	BANJO-HOLLOW BOLT COUPL,EXT.THR.01-G1/8	

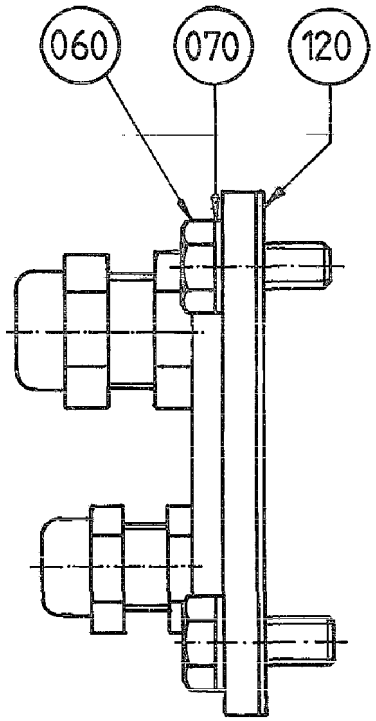
060
070
120

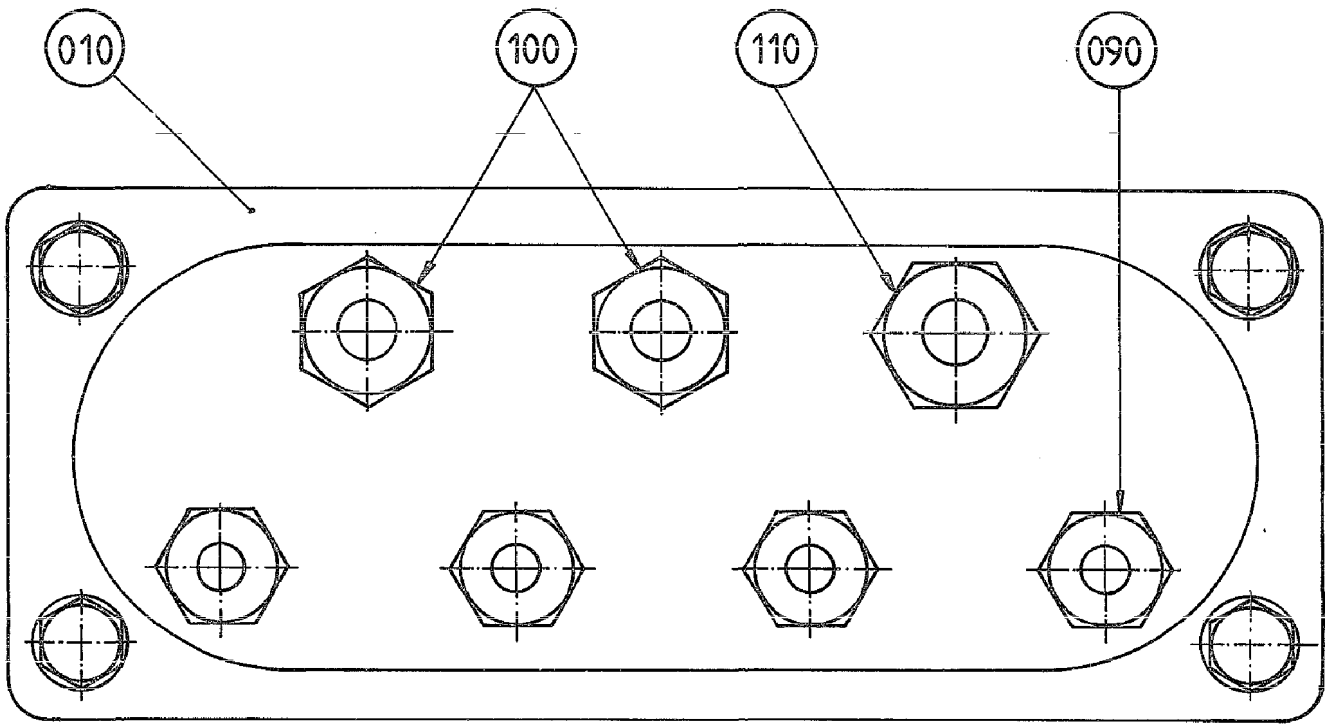
010
100
110
090

ECM: - -
Group number: 442413-0200
Assembly Drawing: 442413-2_1_AA

Pos	Part No	UN	Qty	Description	Page No
-					
010	499890-0000		1	FLANGE	
060	312105-0449		4	SCREW M6S ISO 4017 M8X16 A480	
070	315105-0165		4	WASHER BRB 8,4X16 RFR	
090	352103-0101		4	CABLE GLAND, ST 9, PR15,2/PG9	
100	352103-0106		2	CABLE GLAND, ST 11, PR18,6/PG11	
110	352103-0111		1	CABLE GLAND, ST 16, PR22,5/PG16	
120	352141-0800		1	FLANGE, DGP 21	

Pos	Part No	UN	Qty	Description	Page No

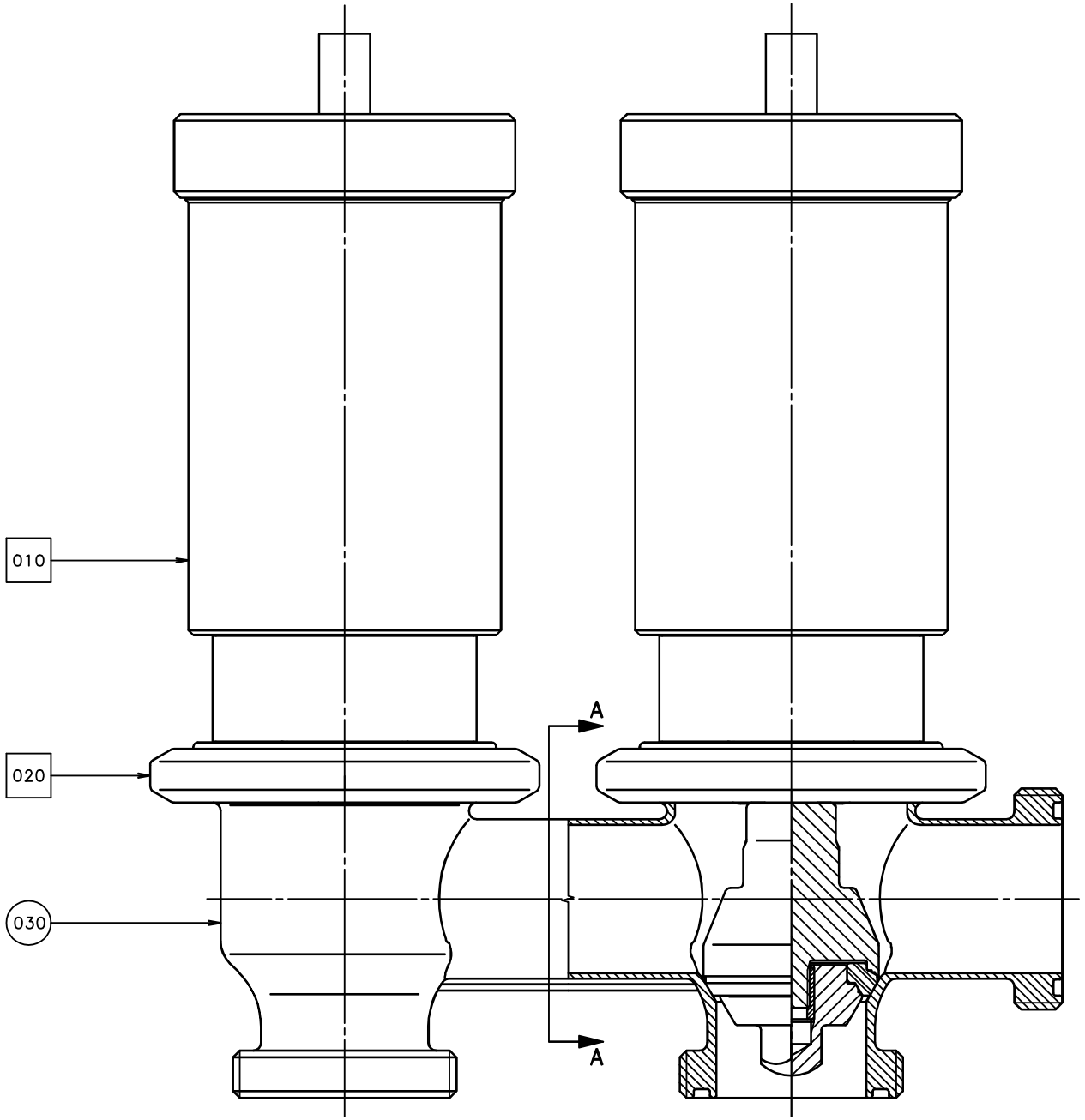
010
020
030
A
A

ECM: 70675 - 19970214
Group number: 499872-0200
Assembly Drawing: 499872-2_1_AA

Pos	Part No	UN	Qty	Description	Page No
-					
030	479741-0000		1	VALVE BODY TB/8	
F020	541163-0100		2	CLAMP RING	**1-61**
F010	539209-0100		2	A-CYLINDER	**1-63**

Pos	Part No	UN	Qty	Description	Page No

CLAMP RING

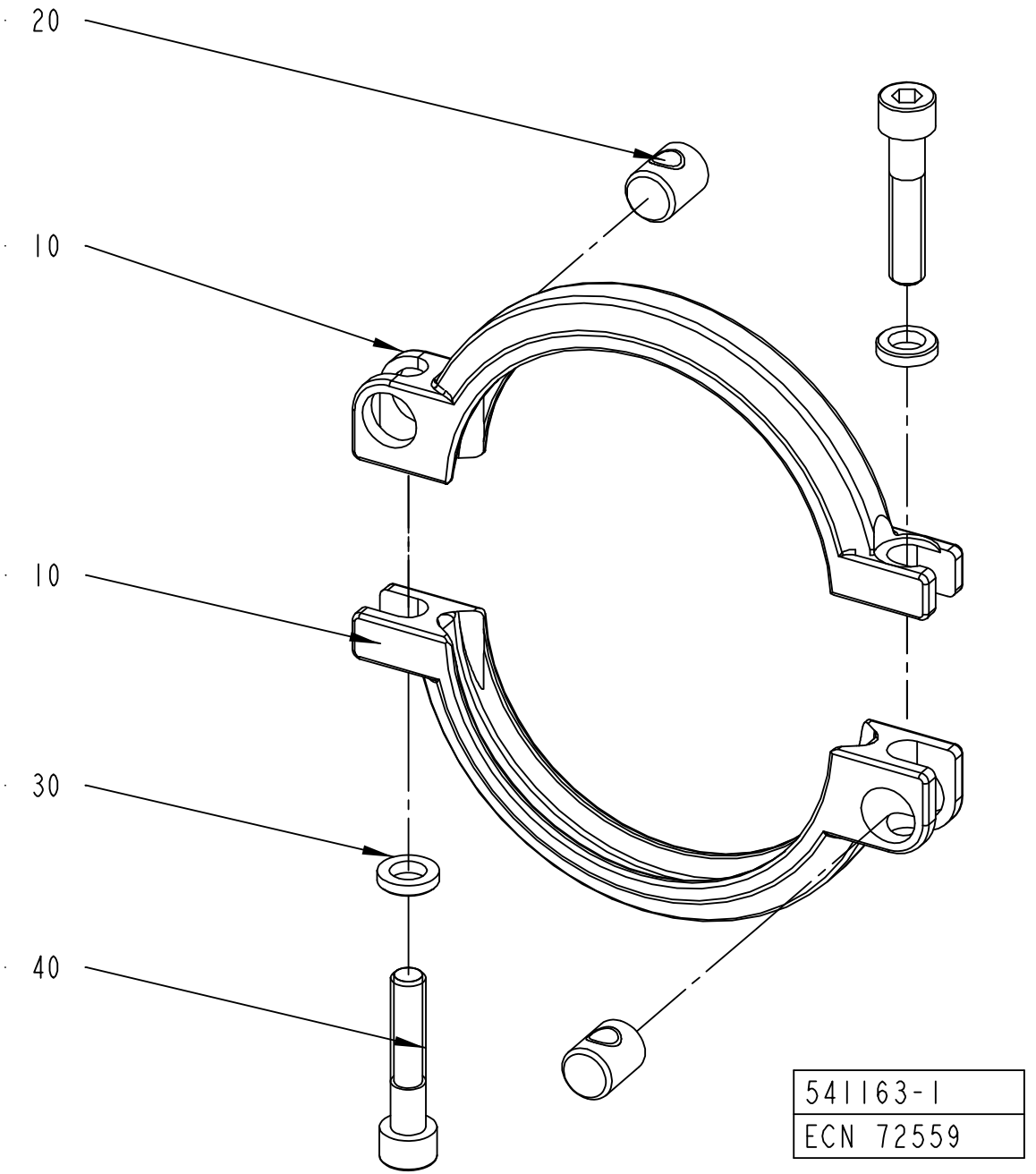

ECM: 105002 - 20020215
Group number: 541163-0100
Assembly Drawing: 541163-1_1_AB

Pos	Part No	UN	Qty	Description	Page No
-					
010	532117-0000		2	CLAMP RING	
020	497748-0000		2	PIN	
030	541165-0000		2	WASHER	
040	312115-0459		2	SCREW ISO4762 M8X40 A4 80	

Pos	Part No	UN	Qty	Description	Page No

Machine Type	Group Description	Used-In	Group Number	Page No

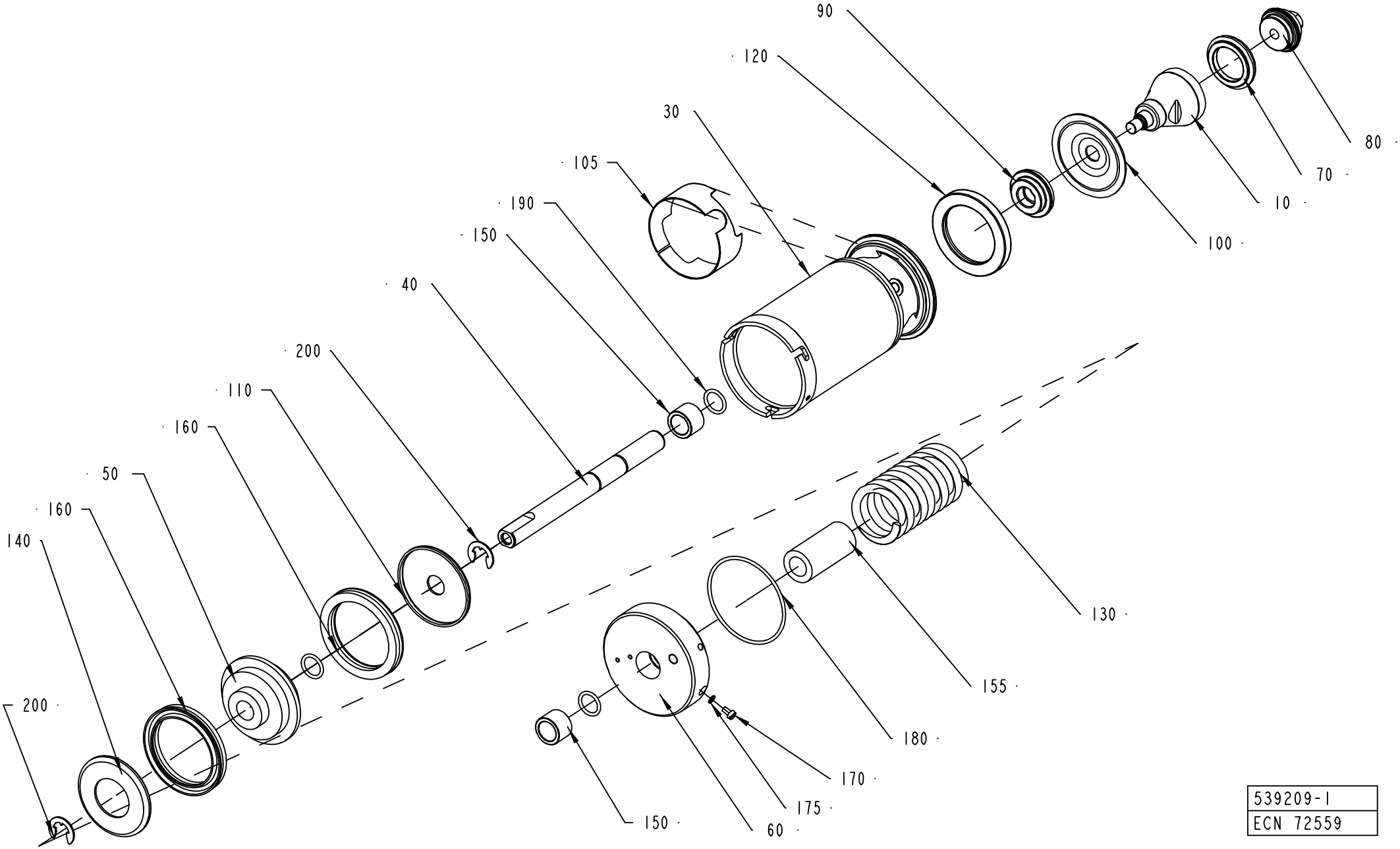

539209-1
ECN 72559

ECM: 102727 - 20020207
Group number: 539209-0100
Assembly Drawing: 539209-1_1_AB

Pos	Part No	UN	Qty	Description	Page No
2"					
010	530592-0000		1	SEAL RING HOLDER	
3"					
010	530595-0000		1	SEAL RING HOLDER	
Common Parts					
030	440632-0000		1	CYLINDER HOUSING	
040	440637-0000		1	PISTON ROD	
050	440638-0000		1	PISTON	
060	484998-0000		1	END SECTION	
070	530589-0000		1	SEAL RING	
080	530590-0000		1	VALVE CONE	
090	541166-0000		1	WASHER	
100	533169-0000		1	DIAPHRAGM	
105	476203-0000		1	PROTECTION	
110	440651-0000		1	WASHER	
120	440655-0000		1	RING	
130	440663-0000		1	COMPRESSION SPRING	
140	484975-0000		1	WASHER	
150	497933-0000		2	BUSHING	
155	541167-0000		1	SPACER SLEEVE	
160	90020-0028		2	SLEEVE	
170	312125-0323		1	SCREW ISO 1207 M5X8 A4	
175	315233-0101		1	WASHER CAPTIVE SEALING M5(NEW315239-101)	
180	315202-0308		1	O-RING 84,5X3 MM	
190	315204-0215		3	O-RING 19,2X3 MM	
200	315754-0113		2	LOCKING WAE 15	

Pos	Part No	UN	Qty	Description	Page No

FILLER TUBE UPPER

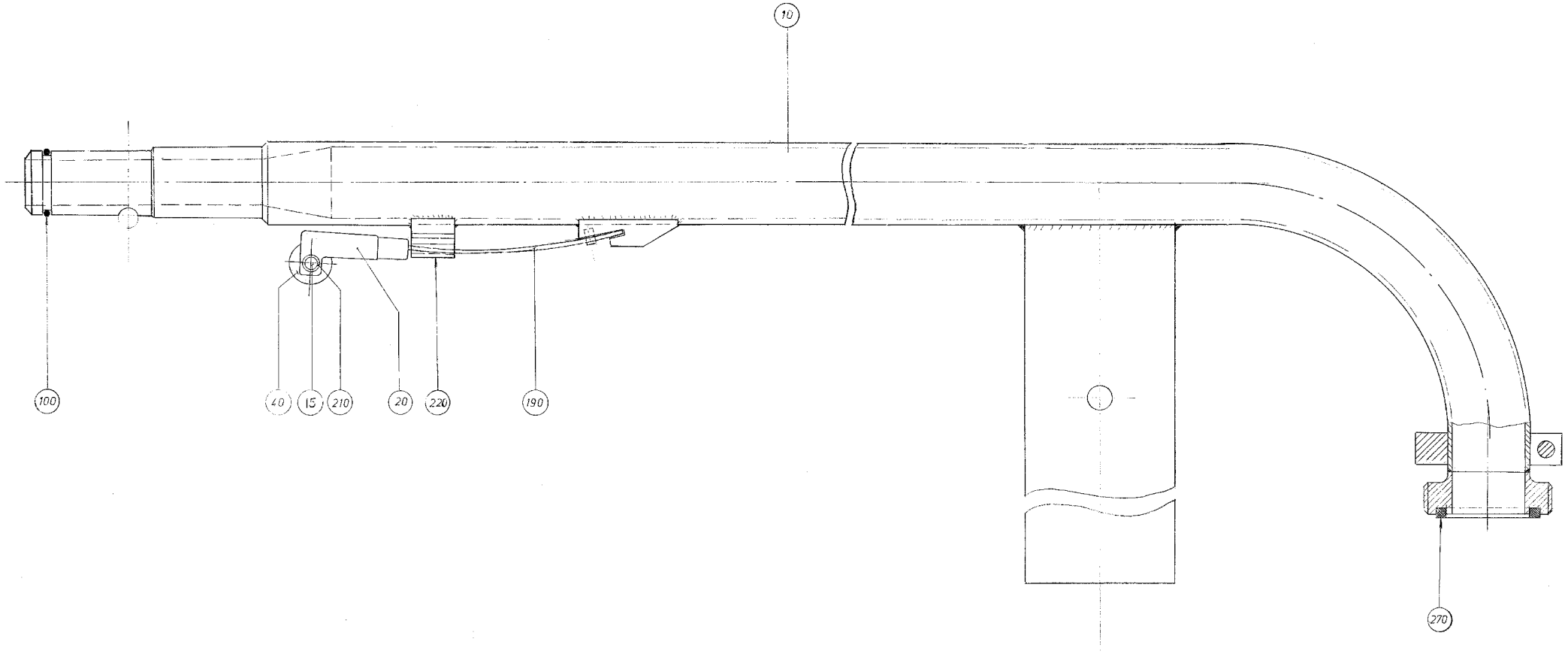

ECM: 71948 - 19981102
Group number: 266487-0100
Assembly Drawing: 266487-1_1_AA

This list covers pages from 1-64 to 1-69

Pos	Part No	UN	Qty	Description	Page No
0300B (See drawing on page: 1-66)					
010	252889-0000		1	FILLER TUBE	
015	259899-0000		1	SHAFT	
020	259881-0000		1	FORK	
040	263062-0000		1	PRESSURE ROLLER	
100	315202-0214		1	O-RING 17,3X2,4 MM	
220	14600-0000		1	HOOD	
0500B, 1000B LOFIN, 0568B (See drawing on page: 1-64)					
010	36860-0000		1	FILLER TUBE	
015	6692-0000		1	SHAFT	
020	263704-0000		1	FORK	
040	232979-0000		1	PRESSURE ROLLER (PAK OF 10)	
100	315202-0217		1	O-RING 24,2X3 MM	
220	14600-0000		1	HOOD	
0500S (See drawing on page: 1-68)					
010	292032-0000		1	FILLER TUBE	
015	499011-0000		1	SHAFT	
020	499016-0000		1	FORK	
040	499387-0000		1	PRESSURE ROLLER	
100	315202-0217		1	O-RING 24,2X3 MM	
220	434665-0000		1	HOOD	
1000S (See drawing on page: 1-68)					
010	582018-0000		1	FILLER TUBE	
015	499011-0000		1	SHAFT	
020	574005-0000		1	FORK	
040	499387-0000		1	PRESSURE ROLLER	
100	315202-0217		1	O-RING 24,2X3 MM	
220	434665-0000		1	HOOD	
1000SQ, 0500SQ, 0568SQ (See drawing on page: 1-68)					
010	292032-0000		1	FILLER TUBE	
015	499011-0000		1	SHAFT	
020	574005-0000		1	FORK	
040	499387-0000		1	PRESSURE ROLLER	
100	315202-0217		1	O-RING 24,2X3 MM	
220	434665-0000		1	HOOD	
1136B, 1000B HIFIN (See drawing on page: 1-64)					
010	292032-0000		1	FILLER TUBE	
015	6692-0000		1	SHAFT	
020	263704-0000		1	FORK	
040	232979-0000		1	PRESSURE ROLLER (PAK OF 10)	
100	315202-0217		1	O-RING 24,2X3 MM	
220	14600-0000		1	HOOD	

Pos	Part No	UN	Qty	Description	Page No
1500B (See drawing on page: 1-68)					
010	928332-0000		1	DOUBLE JACKET FILLINGPIPE	
015	6692-0000		1	SHAFT	
020	263704-0000		1	FORK	
040	232979-0000		1	PRESSURE ROLLER (PAK OF 10)	
100	315202-0217		1	O-RING 24,2X3 MM	
220	14600-0000		1	HOOD	
Common Parts					
190	544894-0000		1	SPRING	
210	24928-0000		1	LOCKING RUBBER	
270	315250-0103		1	GASKET 48X38X5,5 MM	

FILLER TUBE UPPER

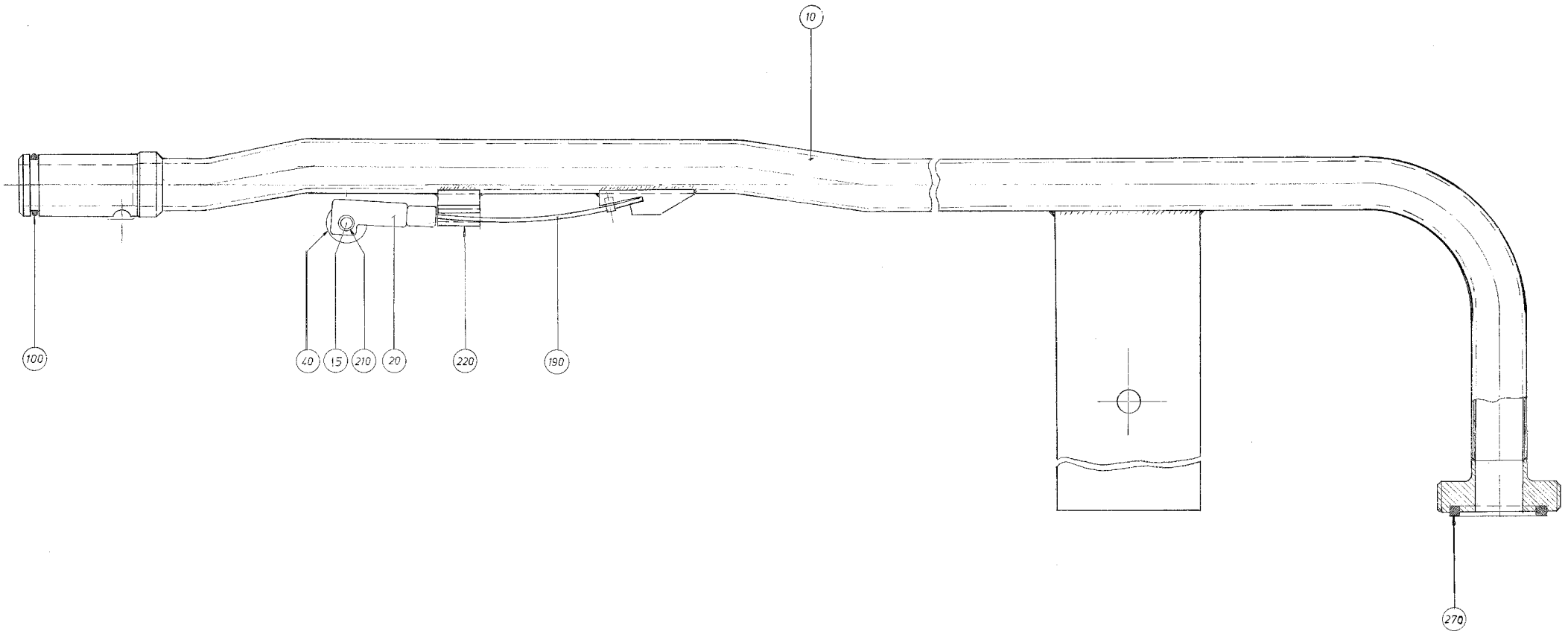

ECM: 71948 - 19981102
Group number: 266487-0100
Assembly Drawing: 266487-3_1_AA

This list covers pages from 1-64 to 1-69

Pos	Part No	UN	Qty	Description	Page No
0300B (See drawing on page: 1-66)					
010	252889-0000		1	FILLER TUBE	
015	259899-0000		1	SHAFT	
020	259881-0000		1	FORK	
040	263062-0000		1	PRESSURE ROLLER	
100	315202-0214		1	O-RING 17,3X2,4 MM	
220	14600-0000		1	HOOD	
0500B, 1000B LOFIN, 0568B (See drawing on page: 1-64)					
010	36860-0000		1	FILLER TUBE	
015	6692-0000		1	SHAFT	
020	263704-0000		1	FORK	
040	232979-0000		1	PRESSURE ROLLER (PAK OF 10)	
100	315202-0217		1	O-RING 24,2X3 MM	
220	14600-0000		1	HOOD	
0500S (See drawing on page: 1-68)					
010	292032-0000		1	FILLER TUBE	
015	499011-0000		1	SHAFT	
020	499016-0000		1	FORK	
040	499387-0000		1	PRESSURE ROLLER	
100	315202-0217		1	O-RING 24,2X3 MM	
220	434665-0000		1	HOOD	
1000S (See drawing on page: 1-68)					
010	582018-0000		1	FILLER TUBE	
015	499011-0000		1	SHAFT	
020	574005-0000		1	FORK	
040	499387-0000		1	PRESSURE ROLLER	
100	315202-0217		1	O-RING 24,2X3 MM	
220	434665-0000		1	HOOD	
1000SQ, 0500SQ, 0568SQ (See drawing on page: 1-68)					
010	292032-0000		1	FILLER TUBE	
015	499011-0000		1	SHAFT	
020	574005-0000		1	FORK	
040	499387-0000		1	PRESSURE ROLLER	
100	315202-0217		1	O-RING 24,2X3 MM	
220	434665-0000		1	HOOD	
1136B, 1000B HIFIN (See drawing on page: 1-64)					
010	292032-0000		1	FILLER TUBE	
015	6692-0000		1	SHAFT	
020	263704-0000		1	FORK	
040	232979-0000		1	PRESSURE ROLLER (PAK OF 10)	
100	315202-0217		1	O-RING 24,2X3 MM	
220	14600-0000		1	HOOD	

Pos	Part No	UN	Qty	Description	Page No
1500B (See drawing on page: 1-68)					
010	928332-0000		1	DOUBLE JACKET FILLINGPIPE	
015	6692-0000		1	SHAFT	
020	263704-0000		1	FORK	
040	232979-0000		1	PRESSURE ROLLER (PAK OF 10)	
100	315202-0217		1	O-RING 24,2X3 MM	
220	14600-0000		1	HOOD	
Common Parts					
190	544894-0000		1	SPRING	
210	24928-0000		1	LOCKING RUBBER	
270	315250-0103		1	GASKET 48X38X5,5 MM	

FILLER TUBE UPPER

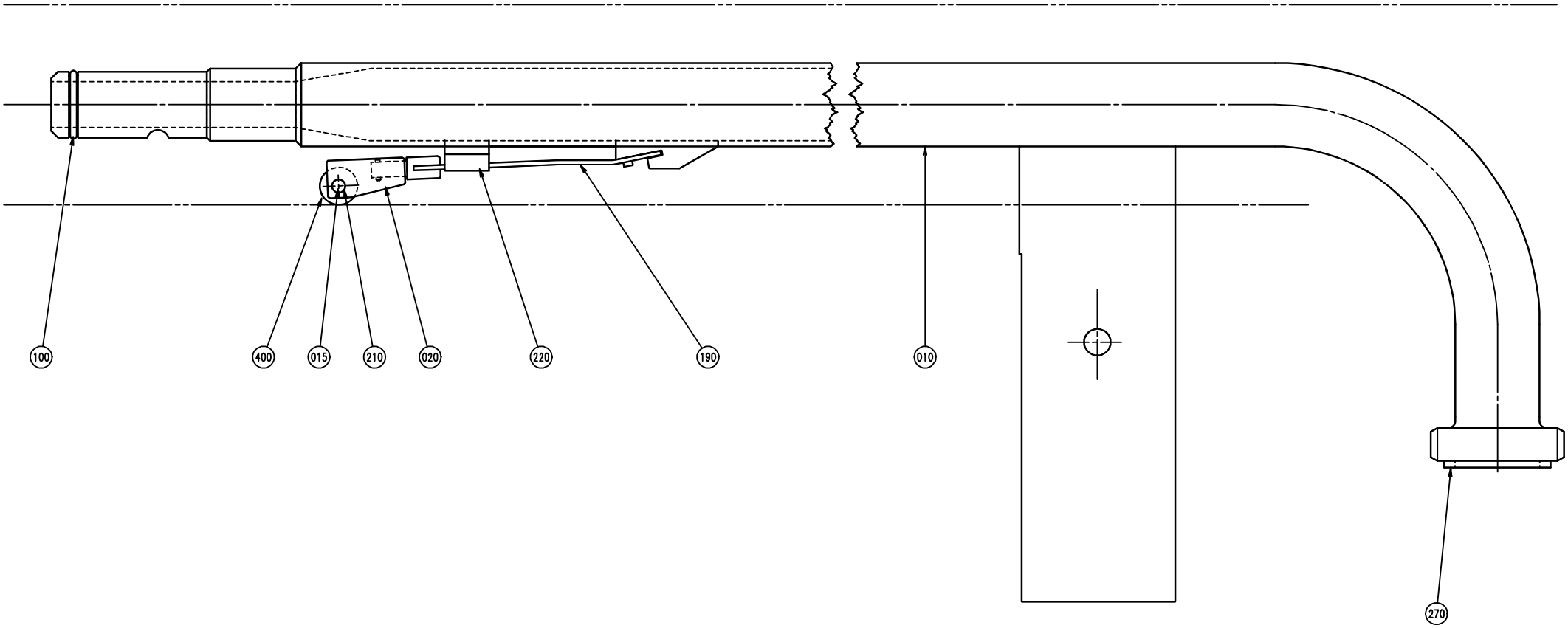

ECM: 71948 - 19981102
Group number: 266487-0100
Assembly Drawing: 266487-4_1_AA

This list covers pages from 1-64 to 1-69

Pos	Part No	UN	Qty	Description	Page No
0300B (See drawing on page: 1-66)					
010	252889-0000		1	FILLER TUBE	
015	259899-0000		1	SHAFT	
020	259881-0000		1	FORK	
040	263062-0000		1	PRESSURE ROLLER	
100	315202-0214		1	O-RING 17,3X2,4 MM	
220	14600-0000		1	HOOD	
0500B, 1000B LOFIN, 0568B (See drawing on page: 1-64)					
010	36860-0000		1	FILLER TUBE	
015	6692-0000		1	SHAFT	
020	263704-0000		1	FORK	
040	232979-0000		1	PRESSURE ROLLER (PAK OF 10)	
100	315202-0217		1	O-RING 24,2X3 MM	
220	14600-0000		1	HOOD	
0500S (See drawing on page: 1-68)					
010	292032-0000		1	FILLER TUBE	
015	499011-0000		1	SHAFT	
020	499016-0000		1	FORK	
040	499387-0000		1	PRESSURE ROLLER	
100	315202-0217		1	O-RING 24,2X3 MM	
220	434665-0000		1	HOOD	
1000S (See drawing on page: 1-68)					
010	582018-0000		1	FILLER TUBE	
015	499011-0000		1	SHAFT	
020	574005-0000		1	FORK	
040	499387-0000		1	PRESSURE ROLLER	
100	315202-0217		1	O-RING 24,2X3 MM	
220	434665-0000		1	HOOD	
1000SQ, 0500SQ, 0568SQ (See drawing on page: 1-68)					
010	292032-0000		1	FILLER TUBE	
015	499011-0000		1	SHAFT	
020	574005-0000		1	FORK	
040	499387-0000		1	PRESSURE ROLLER	
100	315202-0217		1	O-RING 24,2X3 MM	
220	434665-0000		1	HOOD	
1136B, 1000B HIFIN (See drawing on page: 1-64)					
010	292032-0000		1	FILLER TUBE	
015	6692-0000		1	SHAFT	
020	263704-0000		1	FORK	
040	232979-0000		1	PRESSURE ROLLER (PAK OF 10)	
100	315202-0217		1	O-RING 24,2X3 MM	
220	14600-0000		1	HOOD	

Pos	Part No	UN	Qty	Description	Page No
1500B (See drawing on page: 1-68)					
010	928332-0000		1	DOUBLE JACKET FILLINGPIPE	
015	6692-0000		1	SHAFT	
020	263704-0000		1	FORK	
040	232979-0000		1	PRESSURE ROLLER (PAK OF 10)	
100	315202-0217		1	O-RING 24,2X3 MM	
220	14600-0000		1	HOOD	
Common Parts					
190	544894-0000		1	SPRING	
210	24928-0000		1	LOCKING RUBBER	
270	315250-0103		1	GASKET 48X38X5,5 MM	

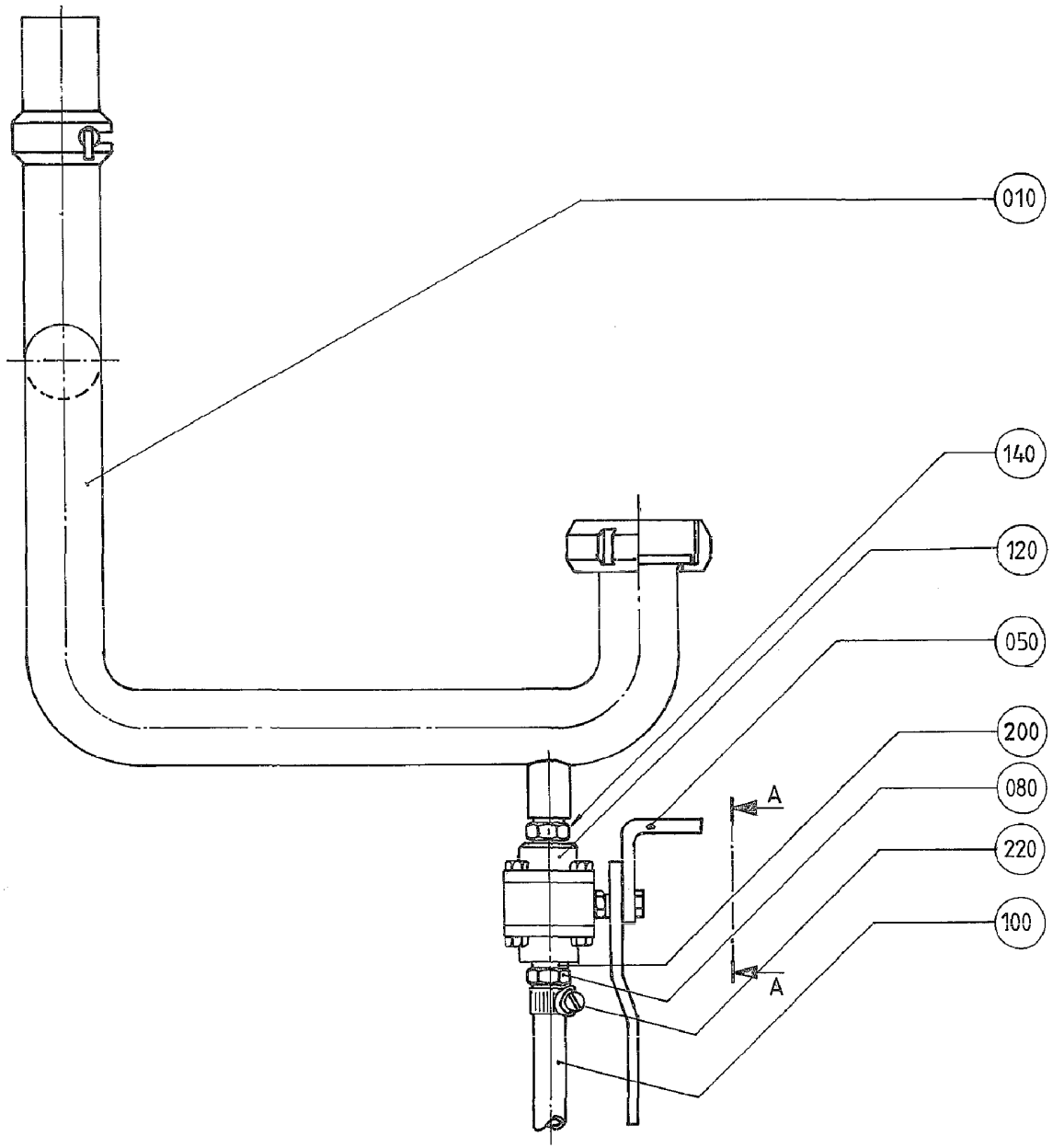
010
140
120
050
200
080
220
100
A
A

ECM: 71948 - 19981102
Group number: 243839-0300
Assembly Drawing: 243839-3_1_AA

Pos	Part No	UN	Qty	Description	Page No
0300B					
010	493084-0000		1	CLEANING PIPE 180-300ML	
0500B, 1000B LOFIN, 0568B					
010	484870-0000		1	CLEANING PIPE 500-1000ML	
1136B, 1000SQ, 0500SQ, 0500S, 1000S, 0568SQ, 1000B HIFIN					
010	499885-0000		1	CLEANING PIPE 1000 HIFIN	
1500B					
010	1195111-0000		1	CLEANING PIPE	
Common Parts					
050	566180-0000		1	BRACKET	
080	90055-0051		1	HOSE NIPPLE, EXT.THR. R3/8X13 MM	
100	90148-0021	MM	2500	HOSE	
120	90187-0073		1	BALL VALVE G3/8	
140	90330-0028		1	NIPPLES, EXT. THREAD. R-207R3/8	
200	315233-0111		1	WASHER CAPTIVE SEALING G3/8	
220	342991-0104		1	HOSE CLIP,WORM DRIVE TYPE (23)-27	

Pos	Part No	UN	Qty	Description	Page No

BRACKET TO SUPERSTRUCTURE

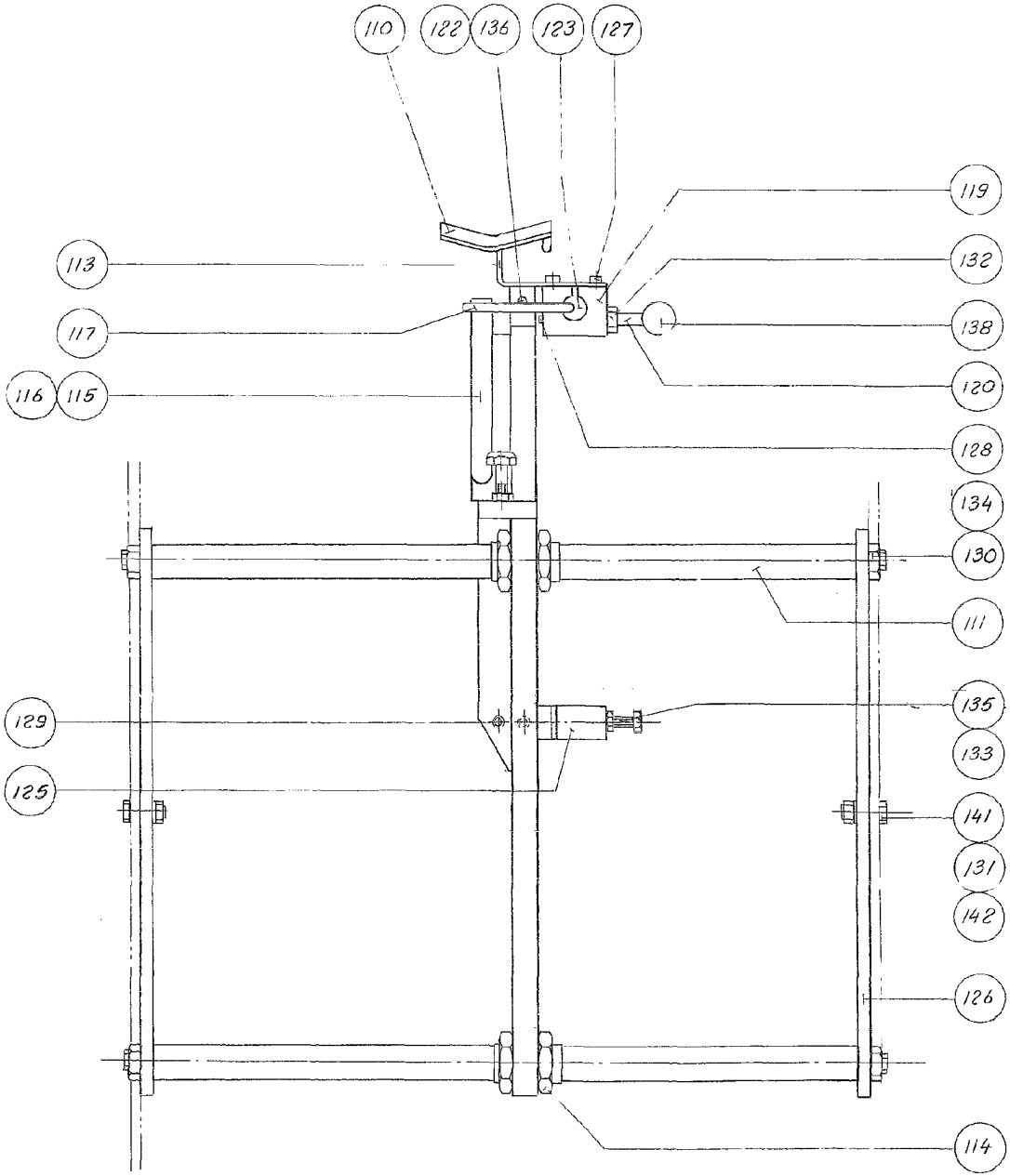

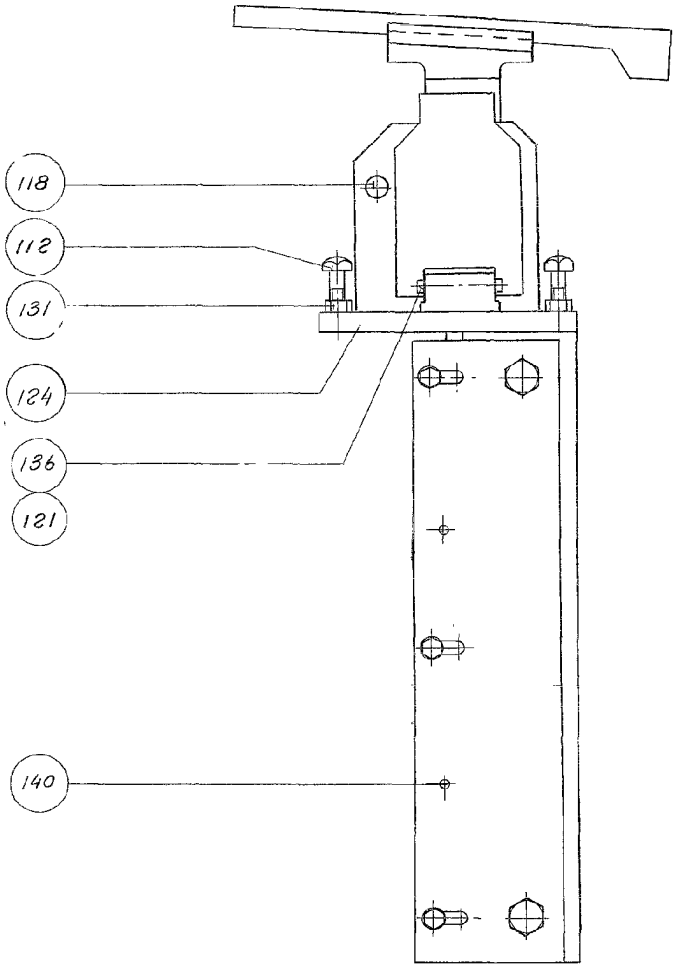

ECM: 70675 - 19970214
Group number: 265985-0100
Assembly Drawing: 265985-1_1_AA

Pos	Part No	UN	Qty	Description	Page No
TB/8					
110	268693-0000		1	DRIP GUARD	
126-02	228642-0000		2	MOUNTING SHEET	
Common Parts					
111	228643-0000		2	SHAFT	
112	20073-0000		2	ADJUSTING SCREW	
113	21944-0000		1	BEARING PANEL	
114	24237-0000		4	NUT	
115	110220-0000		1	FORCE PLATE	
116	110221-0000		1	WASHER	
117	110222-0000		1	BOW CLAMP	
118	110223-0000		1	DOWEL	
119	110224-0000		1	LINK	
120	110225-0000		1	STUD SCREW	
121	110226-0000		1	SHAFT	
122	110227-0000		1	SHAFT	
123	111032-0000		1	SHAFT	
124	228641-0000		1	CANTILEVER	
125	267569-0000		1	STOPPER	
127	312105-0323		4	SCREW M6S ISO 4017 M5X8 A480	
128	312105-0329		1	SCREW M6S ISO 4017 M5X16 A480	
129	312105-0366		2	SCREW M6S ISO 4017 M6X12 A480	
130	312105-0536		4	SCREW M6S ISO 4017 M12X30 A480	
131	312605-0318		8	HEXAGON NUT, M6M M8 A280	
132	312810-0318		1	HEXAGON NUT, NY-LOCK M8 FZB	
133	312605-0316		1	HEXAGON NUT, M6M M6 A280	
134	315402-0178		4	LOCK WASHER FBB 12,2	
135	312105-0370		1	SCREW M6S ISO 4017 M6X20 A480	
136	315750-0103		4	RETAINING RING SHAFT DIN 471 ST 6	
138	318800-0104		1	HANDLE,SPHERICAL KNOB,INT.THRE.,D.30-M8	
140	311102-0268		4	PARALLEL PIN ISO 2338 4M6X12 ST	
141	312105-0451		6	SCREW M6S ISO 4017 M8X20 A480	
142	315105-0165		6	WASHER BRB 8,4X16 RFR	

Pos	Part No	UN	Qty	Description	Page No

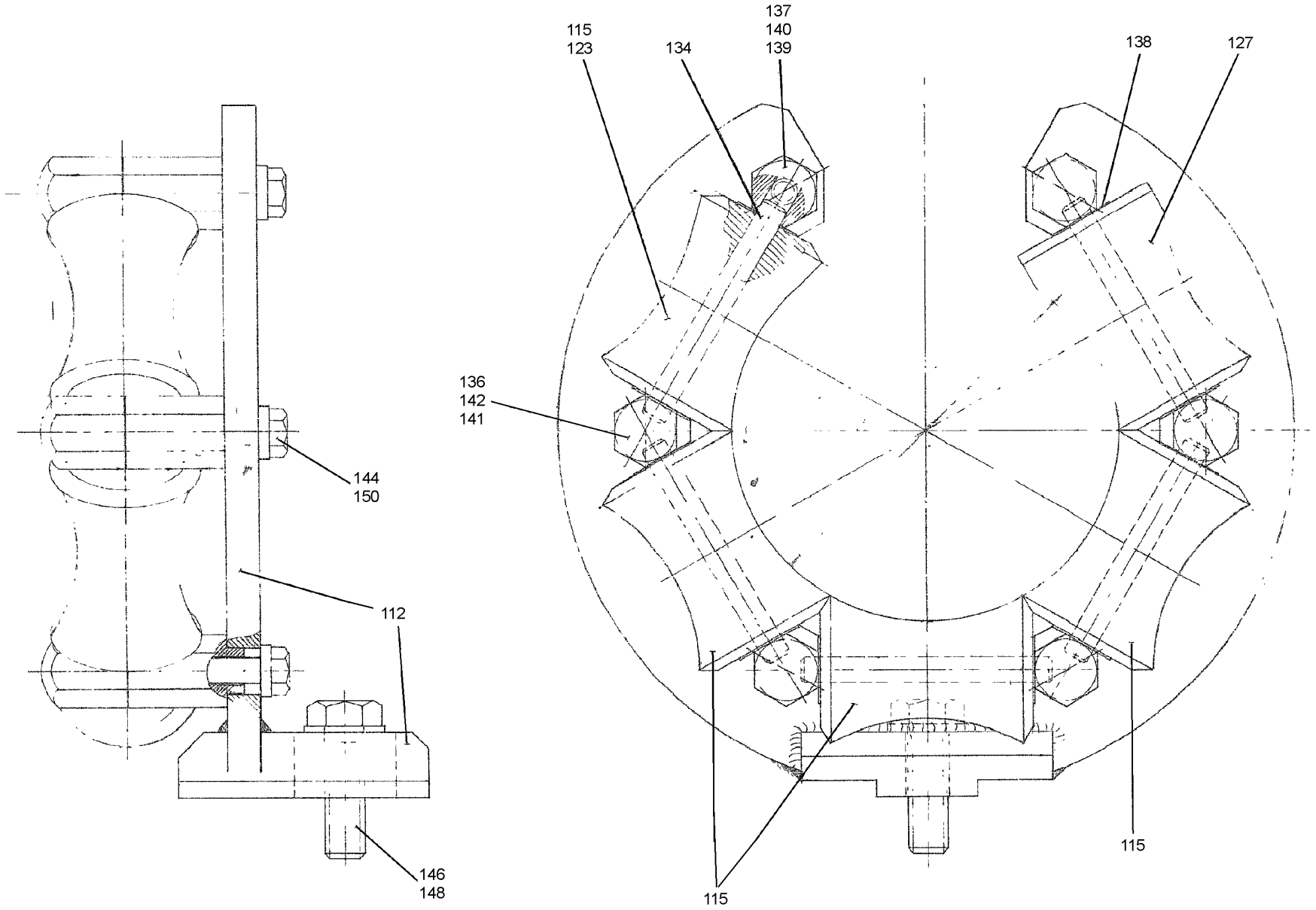
115
123
134
137
140
139
138
127
136
142
141
144
150
112
146
148
115
115

ECM: 73077 - 19991216
Group number: 21394-0700
Assembly Drawing: 21394-1_1_AA

This list covers pages from 1-74 to 1-83

Pos	Part No	UN	Qty	Description	Page No
0300B (See drawing on page: 1-76)					
112	24495-0000		1	FORMING RING	
115	36938-0004		4	ROLL	
124	36939-0004		1	EDGE ROLLER	
134	263655-0007		5	SHAFT	
136	257987-0000		4	AXLE SUPPORT	
137	257988-0000		2	AXLE SUPPORT	
138	2033-0008		10	WASHER	
0500B, 1136B, 0568B, 1000B (See drawing on page: 1-74)					
112	21400-0000		1	FORMING RING	
115	21401-0000		4	ROLL	
127	25961-0000		1	ROLL	
134	263655-0010		5	SHAFT	
136	257987-0000		4	AXLE SUPPORT	
137	257988-0000		2	AXLE SUPPORT	
138	2033-0008		10	WASHER	
0500S (See drawing on page: 1-80)					
112	434493-0000		1	FORMING RING	
113	493948-0000		1	CANTILEVER	
115	583176-0000		4	ROLL	
124	583178-0000		1	EDGE ROLLER	
127	583177-0000		1	EDGE ROLLER	
132	583179-0000		1	ROLL	
134	263655-0008		6	SHAFT	
136-02	257987-0000		6	AXLE SUPPORT	
138-02	2033-0008		13	WASHER	
160	312105-0453		2	SCREW M6S ISO 4017 M8X25 A480	
170	28036-0000		2	WASHER	
180	311103-0235		2	PARALLEL PIN ISO 2338 3M6X14 A1	
1000SQ, 0500SQ, 1000S, 0568SQ (See drawing on page: 1-78)					
112	1362455-0000		1	FORMING RING	
113	493948-0000		1	CANTILEVER	
115	574001-0000		4	ROLL	
124	574002-0000		1	EDGE ROLLER	
127	574003-0000		1	EDGE ROLLER	
132	574004-0000		1	EDGE ROLLER	
134	263655-0009		6	SHAFT	
136-02	257987-0000		6	AXLE SUPPORT	
138-02	2033-0008		13	WASHER	
160	312105-0453		2	SCREW M6S ISO 4017 M8X25 A480	
170	28036-0000		2	WASHER	
180	311103-0235		2	PARALLEL PIN ISO 2338 3M6X14 A1	

Pos	Part No	UN	Qty	Description	Page No
1500B (See drawing on page: 1-82)					
112	592931-0000		1	FORMING RING	
115	592932-0000		4	ROLL	
124	592933-0000		1	ROLL	
127	592934-0000		1	ROLL	
132	592935-0000		1	ROLL	
134-02	263655-0010		6	SHAFT	
136-02	257987-0000		6	AXLE SUPPORT	
138-02	2033-0008		13	WASHER	
Common Parts					
144	312105-0462		6	SCREW M6S ISO 4014 M8X55 A480	
146	312105-0540		1	SCREW M6S ISO 4017 M12X40 A480	
148	315105-0178		1	WASHER BRB 13X24 RFR	
150	315115-0165		6	WASHER PLAIN, TBRB 8,4/16 H=3	

UPPER FORMING RING

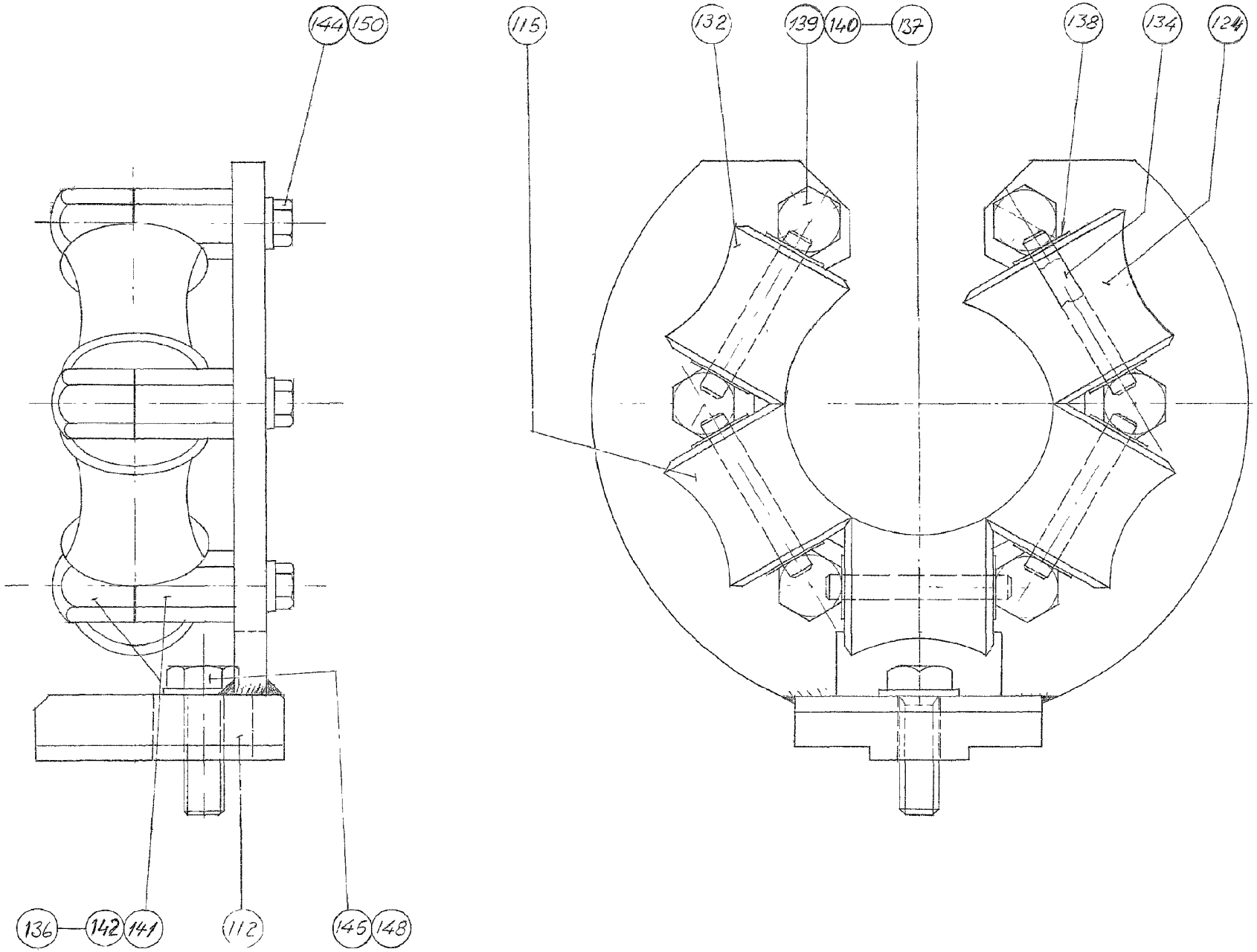

ECM: 73077 - 19991216
Group number: 21394-0700
Assembly Drawing: 21394-2_1_AA

This list covers pages from 1-74 to 1-83

Pos	Part No	UN	Qty	Description	Page No
0300B (See drawing on page: 1-76)					
112	24495-0000		1	FORMING RING	
115	36938-0004		4	ROLL	
124	36939-0004		1	EDGE ROLLER	
134	263655-0007		5	SHAFT	
136	257987-0000		4	AXLE SUPPORT	
137	257988-0000		2	AXLE SUPPORT	
138	2033-0008		10	WASHER	
0500B, 1136B, 0568B, 1000B (See drawing on page: 1-74)					
112	21400-0000		1	FORMING RING	
115	21401-0000		4	ROLL	
127	25961-0000		1	ROLL	
134	263655-0010		5	SHAFT	
136	257987-0000		4	AXLE SUPPORT	
137	257988-0000		2	AXLE SUPPORT	
138	2033-0008		10	WASHER	
0500S (See drawing on page: 1-80)					
112	434493-0000		1	FORMING RING	
113	493948-0000		1	CANTILEVER	
115	583176-0000		4	ROLL	
124	583178-0000		1	EDGE ROLLER	
127	583177-0000		1	EDGE ROLLER	
132	583179-0000		1	ROLL	
134	263655-0008		6	SHAFT	
136-02	257987-0000		6	AXLE SUPPORT	
138-02	2033-0008		13	WASHER	
160	312105-0453		2	SCREW M6S ISO 4017 M8X25 A480	
170	28036-0000		2	WASHER	
180	311103-0235		2	PARALLEL PIN ISO 2338 3M6X14 A1	
1000SQ, 0500SQ, 1000S, 0568SQ (See drawing on page: 1-78)					
112	1362455-0000		1	FORMING RING	
113	493948-0000		1	CANTILEVER	
115	574001-0000		4	ROLL	
124	574002-0000		1	EDGE ROLLER	
127	574003-0000		1	EDGE ROLLER	
132	574004-0000		1	EDGE ROLLER	
134	263655-0009		6	SHAFT	
136-02	257987-0000		6	AXLE SUPPORT	
138-02	2033-0008		13	WASHER	
160	312105-0453		2	SCREW M6S ISO 4017 M8X25 A480	
170	28036-0000		2	WASHER	
180	311103-0235		2	PARALLEL PIN ISO 2338 3M6X14 A1	

Pos	Part No	UN	Qty	Description	Page No
1500B (See drawing on page: 1-82)					
112	592931-0000		1	FORMING RING	
115	592932-0000		4	ROLL	
124	592933-0000		1	ROLL	
127	592934-0000		1	ROLL	
132	592935-0000		1	ROLL	
134-02	263655-0010		6	SHAFT	
136-02	257987-0000		6	AXLE SUPPORT	
138-02	2033-0008		13	WASHER	
Common Parts					
144	312105-0462		6	SCREW M6S ISO 4014 M8X55 A480	
146	312105-0540		1	SCREW M6S ISO 4017 M12X40 A480	
148	315105-0178		1	WASHER BRB 13X24 RFR	
150	315115-0165		6	WASHER PLAIN, TBRB 8,4/16 H=3	

UPPER FORMING RING

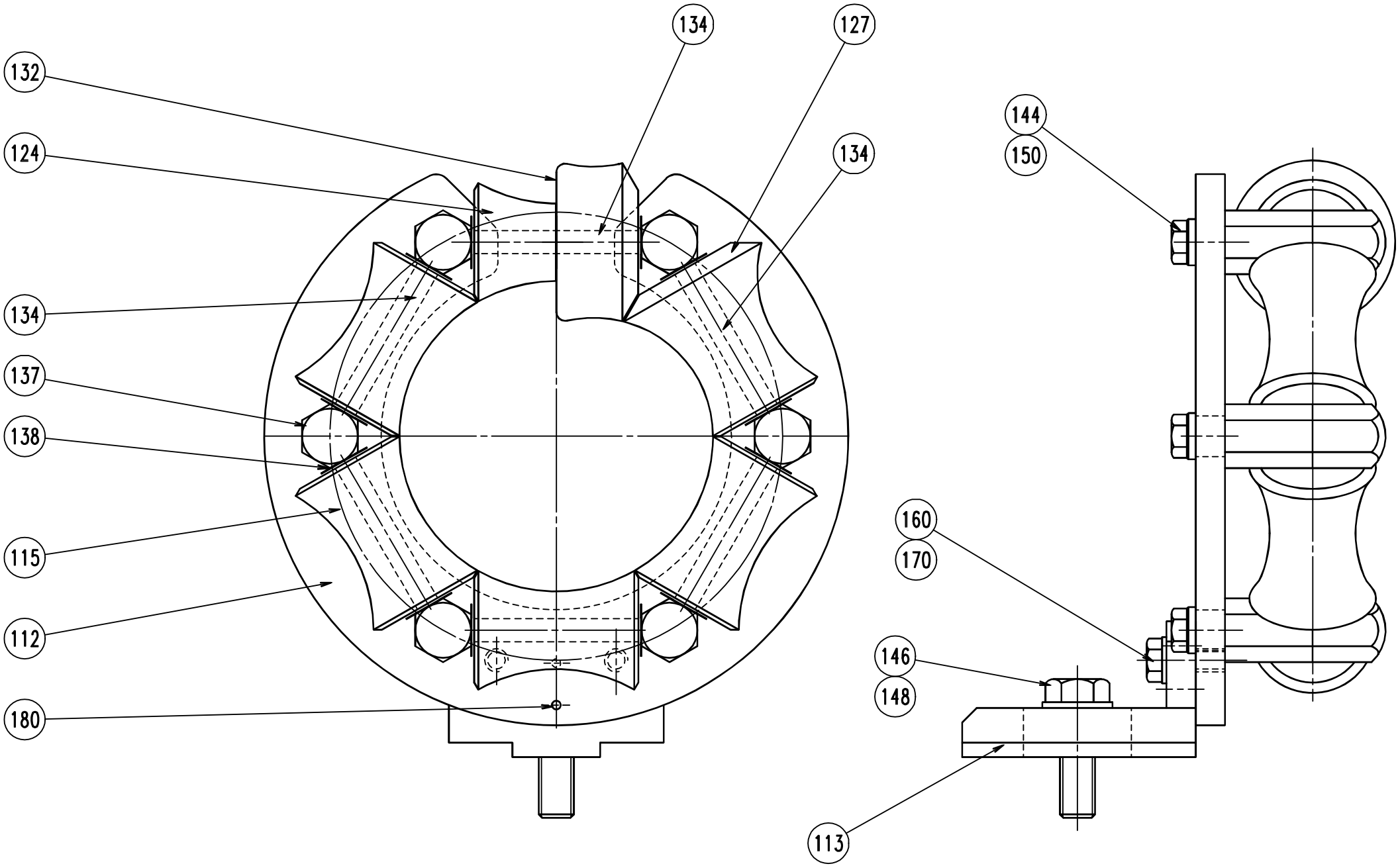

ECM: 73077 - 19991216
Group number: 21394-0700
Assembly Drawing: 21394-3_1_AA

This list covers pages from 1-74 to 1-83

Pos	Part No	UN	Qty	Description	Page No
0300B (See drawing on page: 1-76)					
112	24495-0000		1	FORMING RING	
115	36938-0004		4	ROLL	
124	36939-0004		1	EDGE ROLLER	
134	263655-0007		5	SHAFT	
136	257987-0000		4	AXLE SUPPORT	
137	257988-0000		2	AXLE SUPPORT	
138	2033-0008		10	WASHER	
0500B, 1136B, 0568B, 1000B (See drawing on page: 1-74)					
112	21400-0000		1	FORMING RING	
115	21401-0000		4	ROLL	
127	25961-0000		1	ROLL	
134	263655-0010		5	SHAFT	
136	257987-0000		4	AXLE SUPPORT	
137	257988-0000		2	AXLE SUPPORT	
138	2033-0008		10	WASHER	
0500S (See drawing on page: 1-80)					
112	434493-0000		1	FORMING RING	
113	493948-0000		1	CANTILEVER	
115	583176-0000		4	ROLL	
124	583178-0000		1	EDGE ROLLER	
127	583177-0000		1	EDGE ROLLER	
132	583179-0000		1	ROLL	
134	263655-0008		6	SHAFT	
136-02	257987-0000		6	AXLE SUPPORT	
138-02	2033-0008		13	WASHER	
160	312105-0453		2	SCREW M6S ISO 4017 M8X25 A480	
170	28036-0000		2	WASHER	
180	311103-0235		2	PARALLEL PIN ISO 2338 3M6X14 A1	
1000SQ, 0500SQ, 1000S, 0568SQ (See drawing on page: 1-78)					
112	1362455-0000		1	FORMING RING	
113	493948-0000		1	CANTILEVER	
115	574001-0000		4	ROLL	
124	574002-0000		1	EDGE ROLLER	
127	574003-0000		1	EDGE ROLLER	
132	574004-0000		1	EDGE ROLLER	
134	263655-0009		6	SHAFT	
136-02	257987-0000		6	AXLE SUPPORT	
138-02	2033-0008		13	WASHER	
160	312105-0453		2	SCREW M6S ISO 4017 M8X25 A480	
170	28036-0000		2	WASHER	
180	311103-0235		2	PARALLEL PIN ISO 2338 3M6X14 A1	

Pos	Part No	UN	Qty	Description	Page No
1500B (See drawing on page: 1-82)					
112	592931-0000		1	FORMING RING	
115	592932-0000		4	ROLL	
124	592933-0000		1	ROLL	
127	592934-0000		1	ROLL	
132	592935-0000		1	ROLL	
134-02	263655-0010		6	SHAFT	
136-02	257987-0000		6	AXLE SUPPORT	
138-02	2033-0008		13	WASHER	
Common Parts					
144	312105-0462		6	SCREW M6S ISO 4014 M8X55 A480	
146	312105-0540		1	SCREW M6S ISO 4017 M12X40 A480	
148	315105-0178		1	WASHER BRB 13X24 RFR	
150	315115-0165		6	WASHER PLAIN, TBRB 8,4/16 H=3	

UPPER FORMING RING

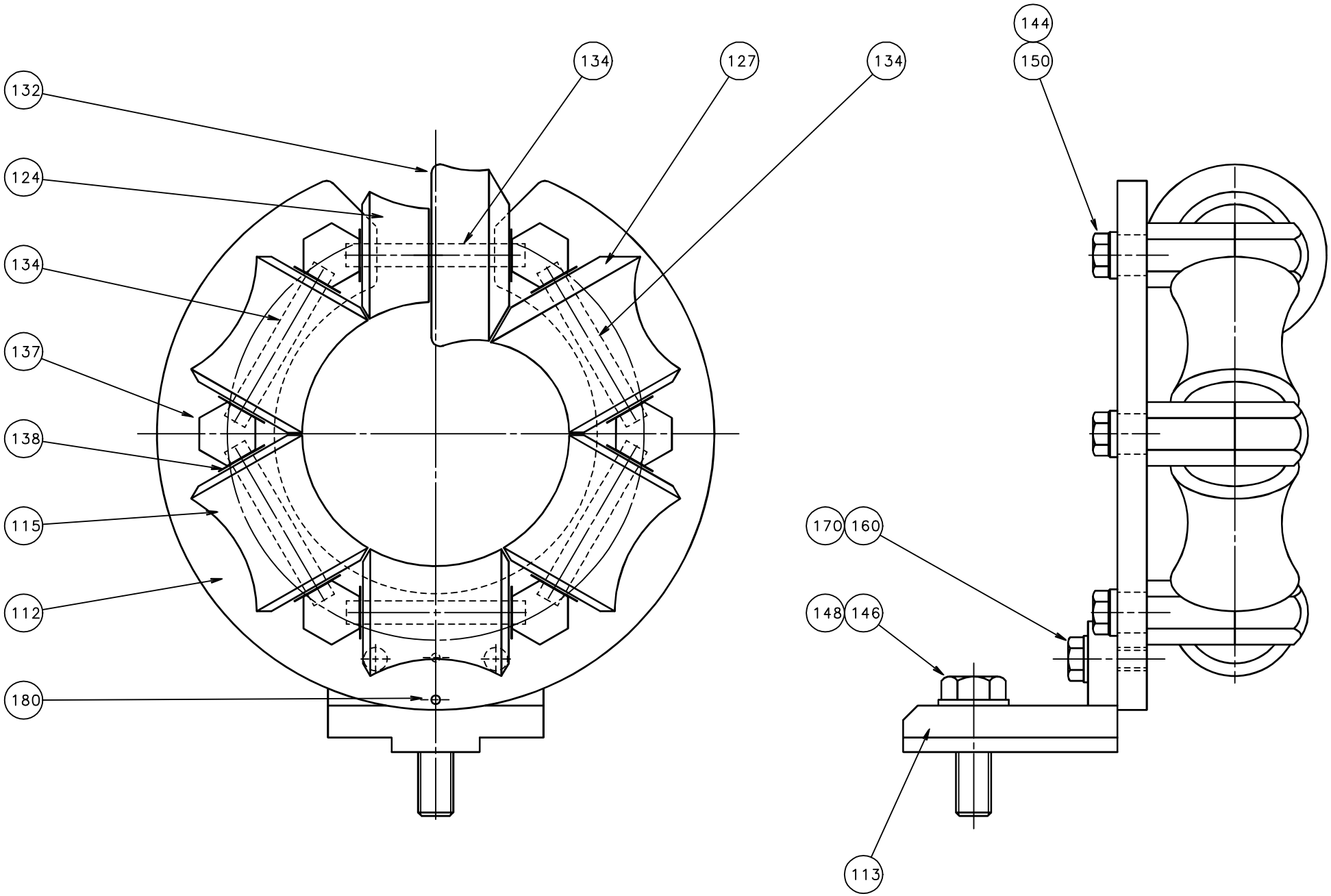

ECM: 73077 - 19991216
Group number: 21394-0700
Assembly Drawing: 21394-4_1_AA

This list covers pages from 1-74 to 1-83

Pos	Part No	UN	Qty	Description	Page No
0300B (See drawing on page: 1-76)					
112	24495-0000		1	FORMING RING	
115	36938-0004		4	ROLL	
124	36939-0004		1	EDGE ROLLER	
134	263655-0007		5	SHAFT	
136	257987-0000		4	AXLE SUPPORT	
137	257988-0000		2	AXLE SUPPORT	
138	2033-0008		10	WASHER	
0500B, 1136B, 0568B, 1000B (See drawing on page: 1-74)					
112	21400-0000		1	FORMING RING	
115	21401-0000		4	ROLL	
127	25961-0000		1	ROLL	
134	263655-0010		5	SHAFT	
136	257987-0000		4	AXLE SUPPORT	
137	257988-0000		2	AXLE SUPPORT	
138	2033-0008		10	WASHER	
0500S (See drawing on page: 1-80)					
112	434493-0000		1	FORMING RING	
113	493948-0000		1	CANTILEVER	
115	583176-0000		4	ROLL	
124	583178-0000		1	EDGE ROLLER	
127	583177-0000		1	EDGE ROLLER	
132	583179-0000		1	ROLL	
134	263655-0008		6	SHAFT	
136-02	257987-0000		6	AXLE SUPPORT	
138-02	2033-0008		13	WASHER	
160	312105-0453		2	SCREW M6S ISO 4017 M8X25 A480	
170	28036-0000		2	WASHER	
180	311103-0235		2	PARALLEL PIN ISO 2338 3M6X14 A1	
1000SQ, 0500SQ, 1000S, 0568SQ (See drawing on page: 1-78)					
112	1362455-0000		1	FORMING RING	
113	493948-0000		1	CANTILEVER	
115	574001-0000		4	ROLL	
124	574002-0000		1	EDGE ROLLER	
127	574003-0000		1	EDGE ROLLER	
132	574004-0000		1	EDGE ROLLER	
134	263655-0009		6	SHAFT	
136-02	257987-0000		6	AXLE SUPPORT	
138-02	2033-0008		13	WASHER	
160	312105-0453		2	SCREW M6S ISO 4017 M8X25 A480	
170	28036-0000		2	WASHER	
180	311103-0235		2	PARALLEL PIN ISO 2338 3M6X14 A1	

Pos	Part No	UN	Qty	Description	Page No
1500B (See drawing on page: 1-82)					
112	592931-0000		1	FORMING RING	
115	592932-0000		4	ROLL	
124	592933-0000		1	ROLL	
127	592934-0000		1	ROLL	
132	592935-0000		1	ROLL	
134-02	263655-0010		6	SHAFT	
136-02	257987-0000		6	AXLE SUPPORT	
138-02	2033-0008		13	WASHER	
Common Parts					
144	312105-0462		6	SCREW M6S ISO 4014 M8X55 A480	
146	312105-0540		1	SCREW M6S ISO 4017 M12X40 A480	
148	315105-0178		1	WASHER BRB 13X24 RFR	
150	315115-0165		6	WASHER PLAIN, TBRB 8,4/16 H=3	

UPPER FORMING RING

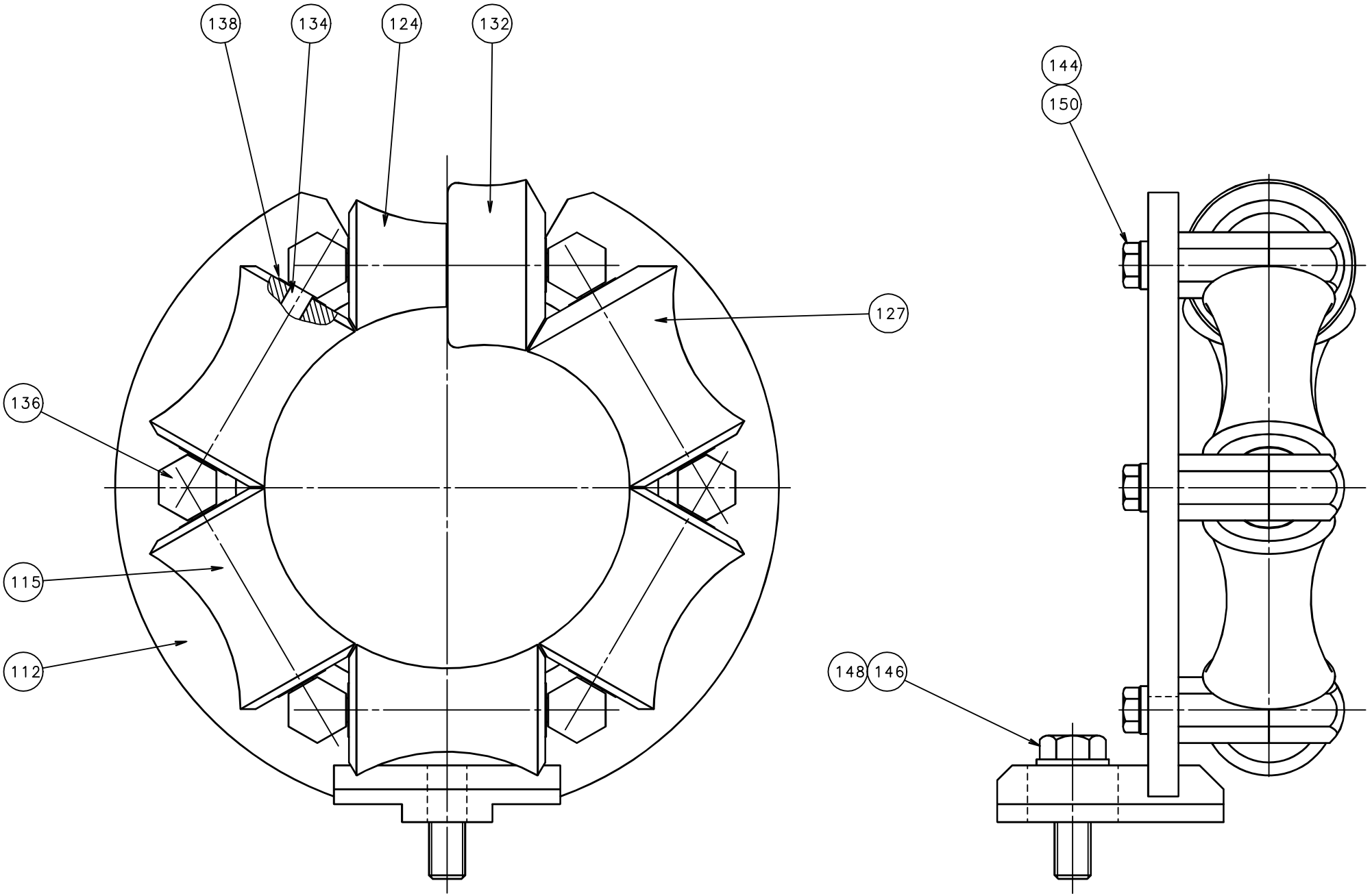

ECM: 73077 - 19991216
Group number: 21394-0700
Assembly Drawing: 21394-5_1_AA

This list covers pages from 1-74 to 1-83

Pos	Part No	UN	Qty	Description	Page No
0300B (See drawing on page: 1-76)					
112	24495-0000		1	FORMING RING	
115	36938-0004		4	ROLL	
124	36939-0004		1	EDGE ROLLER	
134	263655-0007		5	SHAFT	
136	257987-0000		4	AXLE SUPPORT	
137	257988-0000		2	AXLE SUPPORT	
138	2033-0008		10	WASHER	
0500B, 1136B, 0568B, 1000B (See drawing on page: 1-74)					
112	21400-0000		1	FORMING RING	
115	21401-0000		4	ROLL	
127	25961-0000		1	ROLL	
134	263655-0010		5	SHAFT	
136	257987-0000		4	AXLE SUPPORT	
137	257988-0000		2	AXLE SUPPORT	
138	2033-0008		10	WASHER	
0500S (See drawing on page: 1-80)					
112	434493-0000		1	FORMING RING	
113	493948-0000		1	CANTILEVER	
115	583176-0000		4	ROLL	
124	583178-0000		1	EDGE ROLLER	
127	583177-0000		1	EDGE ROLLER	
132	583179-0000		1	ROLL	
134	263655-0008		6	SHAFT	
136-02	257987-0000		6	AXLE SUPPORT	
138-02	2033-0008		13	WASHER	
160	312105-0453		2	SCREW M6S ISO 4017 M8X25 A480	
170	28036-0000		2	WASHER	
180	311103-0235		2	PARALLEL PIN ISO 2338 3M6X14 A1	
1000SQ, 0500SQ, 1000S, 0568SQ (See drawing on page: 1-78)					
112	1362455-0000		1	FORMING RING	
113	493948-0000		1	CANTILEVER	
115	574001-0000		4	ROLL	
124	574002-0000		1	EDGE ROLLER	
127	574003-0000		1	EDGE ROLLER	
132	574004-0000		1	EDGE ROLLER	
134	263655-0009		6	SHAFT	
136-02	257987-0000		6	AXLE SUPPORT	
138-02	2033-0008		13	WASHER	
160	312105-0453		2	SCREW M6S ISO 4017 M8X25 A480	
170	28036-0000		2	WASHER	
180	311103-0235		2	PARALLEL PIN ISO 2338 3M6X14 A1	

Pos	Part No	UN	Qty	Description	Page No
1500B (See drawing on page: 1-82)					
112	592931-0000		1	FORMING RING	
115	592932-0000		4	ROLL	
124	592933-0000		1	ROLL	
127	592934-0000		1	ROLL	
132	592935-0000		1	ROLL	
134-02	263655-0010		6	SHAFT	
136-02	257987-0000		6	AXLE SUPPORT	
138-02	2033-0008		13	WASHER	
Common Parts					
144	312105-0462		6	SCREW M6S ISO 4014 M8X55 A480	
146	312105-0540		1	SCREW M6S ISO 4017 M12X40 A480	
148	315105-0178		1	WASHER BRB 13X24 RFR	
150	315115-0165		6	WASHER PLAIN, TBRB 8,4/16 H=3	

Tetra Pak

SPC
Spare Parts Catalogue

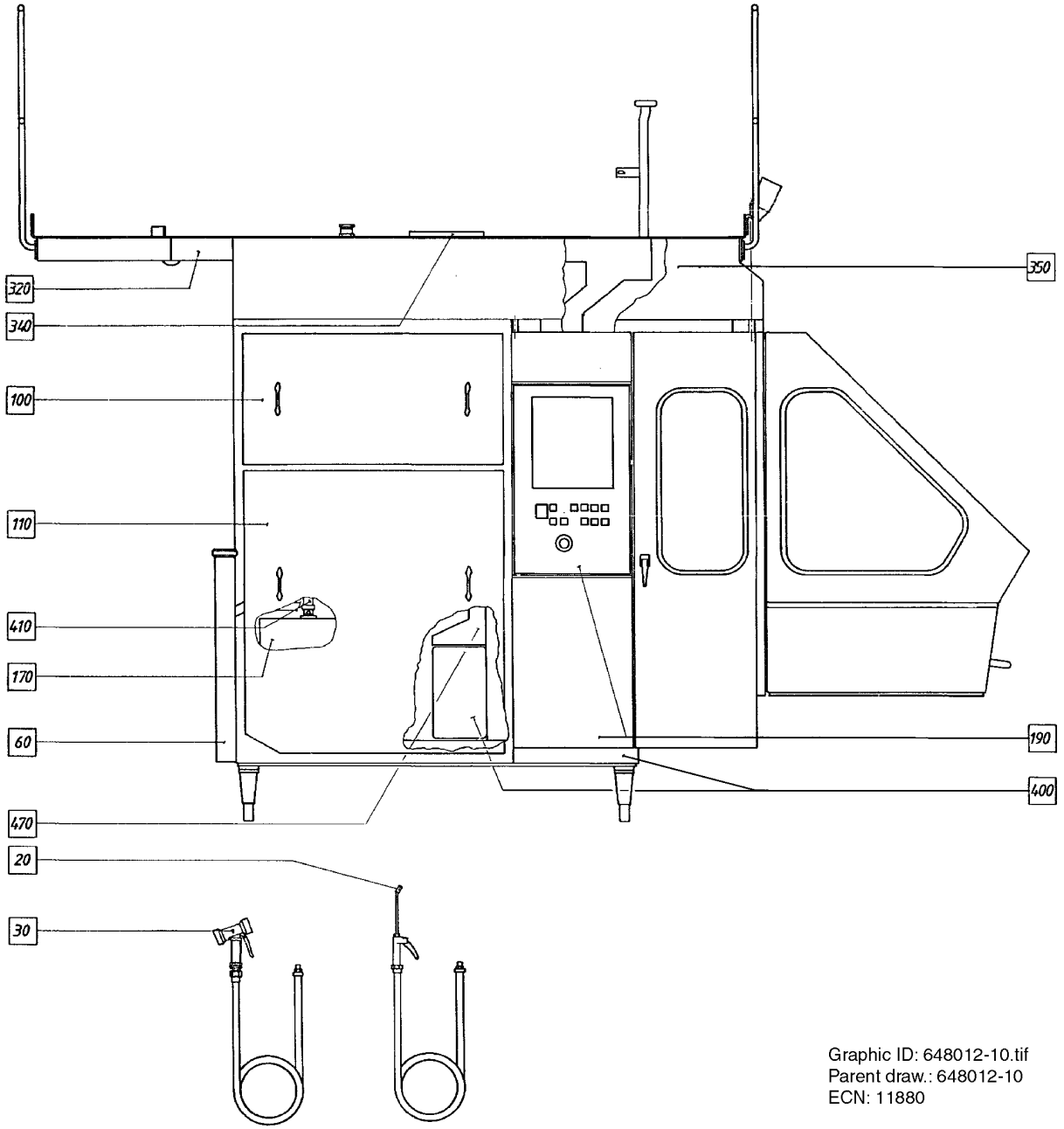

Graphic ID: 648012-10.tif
Parent draw.: 648012-10
ECN: 11880

ECM: 71953 - 19981102
Group number: 648012-0800
Assembly Drawing: 648012-10_1_AA

This list covers pages from 2-2 to 2-5

Pos	Part No	UN	Qty	Description	Page No
TB/8 0568SQ US, TB/8 0500SQ US, TB/8 1000SQ US (See drawing on page: 2-2)					
F580	1143243-0100		1	DRYER	**2-7**
F540	450840-0400		1	LIFTING UNIT	**2-9**
F510	592878-0100		1	PIPE WORK-PNEUMATIC	**2-13, 2-15, 2-17, 2-19, 13-17, 13-19, 13-21, 13-23**
F470	593007-0100		1	CABLE DUCT	**2-21, 13-27**
F455	449168-0300		1	CLEANING SYSTEM	**2-23**
F440	574601-0100		1	VALVE PANEL	**2-27, 2-29, 2-31, 2-33**
F420	592879-0100		1	PIPE WORK-HYDRAULIC	**2-35, 13-15**
F400	440537-0500		1	MACHINE BODY	**2-37, 2-39, 2-41, 2-43**
F330	440415-0200		1	TRANSFORMER	**2-47**
F260	297604-0400		1	HOOD	**2-49, 2-51**
F230	297808-0500		1	CLEANING EQUIPMENT	**2-57**
F210	545100-0200		1	SIDE GUARD, RIGHT	**2-63**
F190	545099-0200		1	SIDE GUARD	**2-65**
F040	243843-0400		1	CLEANING PIPE	**2-67**
TB/8 1500B US (See drawing on page: 2-2)					
F580	1143243-0100		1	DRYER	**2-7**
F540	1144831-0100		1	LIFTING UNIT	**2-69**
F510	595207-0100		1	PIPE WORK-PNEUMATIC	**2-71, 2-73, 2-75**
F470	929661-0100		1	CABLE DUCT	**2-77**
F455	1144281-0100		1	CLEANING SYSTEM	**2-79**
F440	594622-0100		1	VALVE PANEL	**2-81, 2-83**
F420	592879-0100		1	PIPE WORK-HYDRAULIC	**2-35, 13-15**
F400	929659-0100		1	MACHINE BODY	**2-85, 2-87, 2-89**
F260	1144274-0100		1	HOOD	**2-93**
F230	1279438-0100		1	CLEANING EQUIPMENT	**2-95**
F210	929656-0100		1	SIDE GUARD, RIGHT	**2-97**
F190	929655-0100		1	SIDE GUARD, LEFT	**2-99**
F040	243843-0400		1	CLEANING PIPE	**2-67**
TB/8 0568B TPC, TB/8 0500SQ TPC, TB/8 1000S TPC, TB/8 1000SQ TPC, TB/8 1000B TPC, TB/8 0300B TPC, TB/8 0500S TPC, TB/8 0500B TPC, TB/8 1136B TPC (See drawing on page: 2-2)					
F540	450840-0400		1	LIFTING UNIT	**2-9**
F510	450788-0600		1	PIPE WORK-PNEUMATIC	**2-101, 2-103, 2-105, 2-107, 2-109, 2-111, 2-113**
F490	575797-0100		1	FLOWMETER GROUP	**2-115**
F470	450293-0500		1	CABLE DUCT	**2-117, 2-119**
F455	449168-0300		1	CLEANING SYSTEM	**2-23**
F440	574601-0100		1	VALVE PANEL	**2-27, 2-29, 2-31, 2-33**
F420	445537-0200		1	PIPE WORK-HYDRAULIC	**2-121, 2-123**
F400	440537-0500		1	MACHINE BODY	**2-37, 2-39, 2-41, 2-43**
F330	440415-0200		1	TRANSFORMER	**2-47**

Pos	Part No	UN	Qty	Description	Page No
F260	297604-0400		1	HOOD	**2-49, 2-51**
F230	297808-0500		1	CLEANING EQUIPMENT	**2-57**
F210	545100-0200		1	SIDE GUARD, RIGHT	**2-63**
F190	545099-0200		1	SIDE GUARD	**2-65**
F050	265889-0300		1	CATCH SAFETY	**2-125**
F040	243843-0400		1	CLEANING PIPE	**2-67**
Common Parts					
F570	451348-0200		1	CONNECTION BOX	**2-127**
F560	450883-0400		1	PROTECTION	**2-129**
F530	450824-0200		1	DOOR	**2-133**
F520	450792-0100		1	DETERGENT PUMP	**2-135**
F460	449932-0500		1	PIPE WORK-WATER	**2-137, 2-139, 2-141, 2-143, 2-145**
F450	449930-0500		1	CONNECTION BOX	**2-147**
F430	575392-0100		1	VALVE PANEL LOWER	**2-149, 2-151, 2-153, 2-155**
F390	440474-0100		1	TUBE FLUSHING DEVICE	**2-157**
F350	440437-0300		1	BOX LEFT	**2-159, 2-161**
F340	440422-0600		1	BOTTOM PLATE	**2-165**
F320	440384-0500		1	PLATFORM	**2-167**
F280	434707-0300		1	HYDRAULIC SYSTEM	**2-169**
F310	440098-0300		1	CRANK BRACKET	**2-177**
F140	279979-0500		1	CENTRAL LUBRICATION	**2-179**
F110	269324-0400		1	HATCH	**2-181**
F100	269322-0300		1	COVER UPPER	**2-183**
F070	269301-0500		1	SIDE BOX RIGHT	**2-185**
F030	493614-0100		1	SPRAY GUN	**2-187**
F020	230922-0100		1	AIR JET GUN	**2-189**

Machine Type | Group Description | Used-In | Group Number | Page No

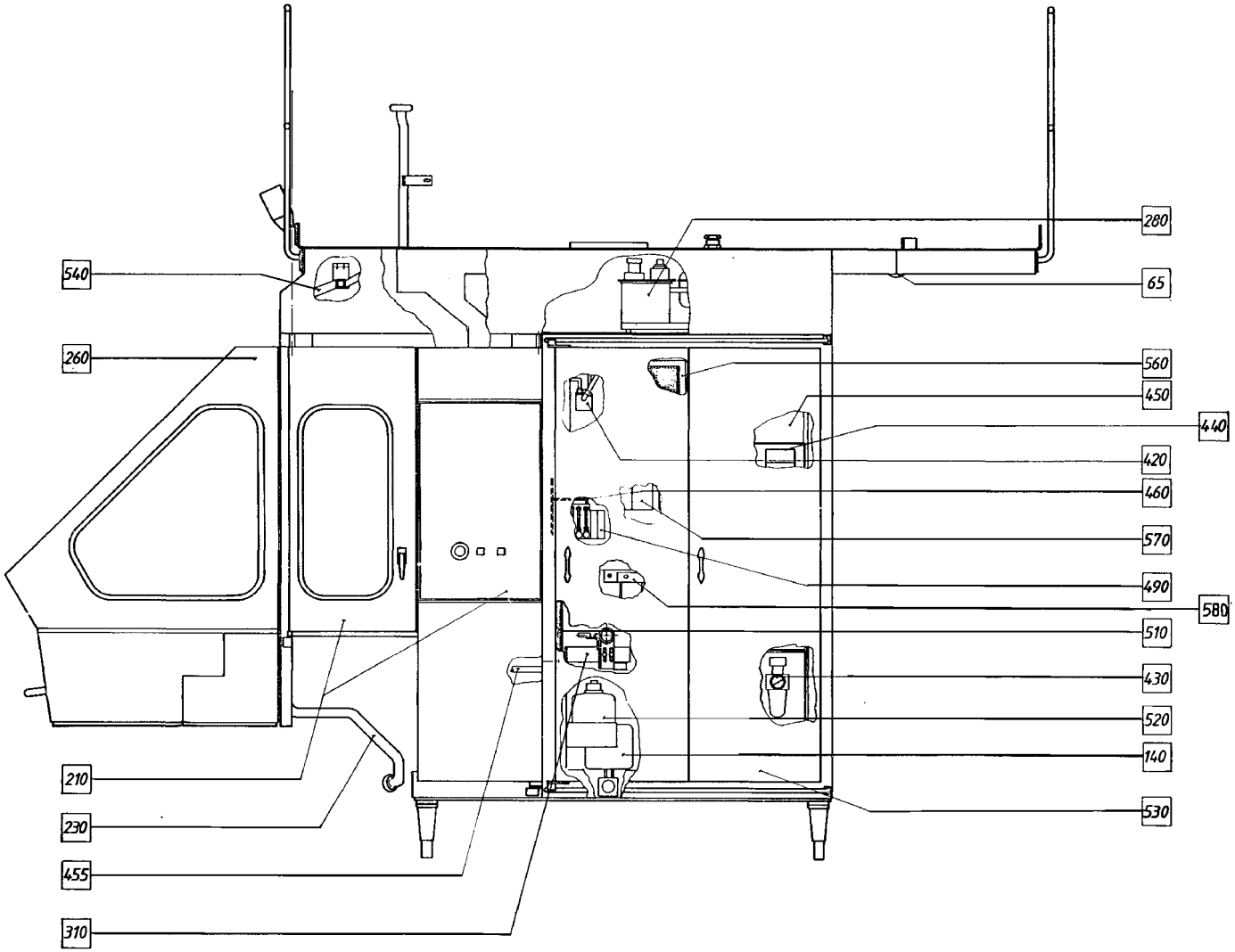

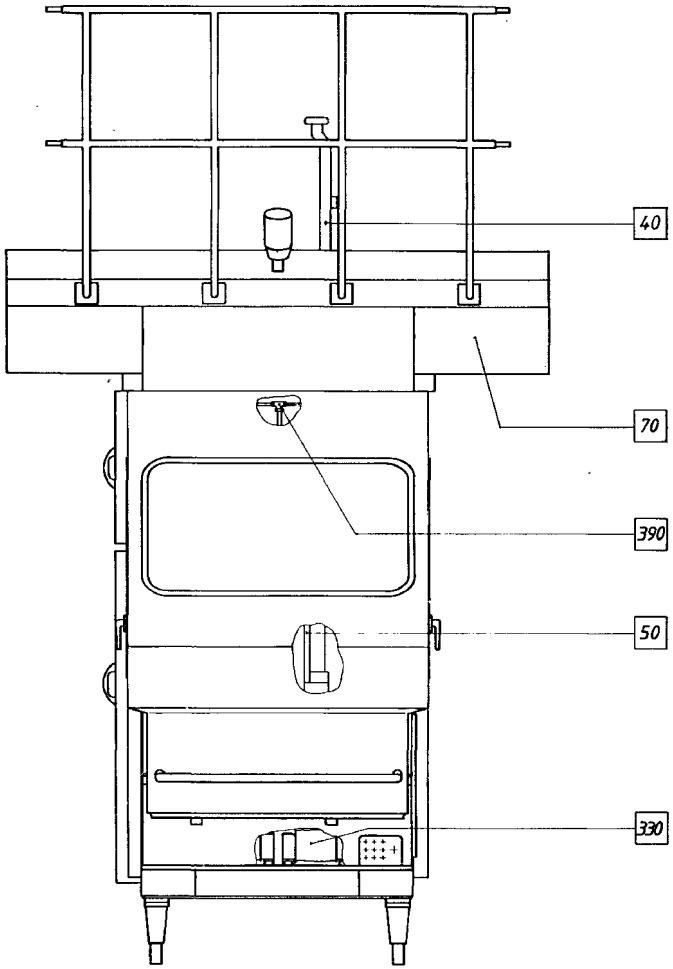

Graphic ID: 648012-12.tif
Parent draw.: 648012-12
ECN: 22773

ECM: 71953 - 19981102
Group number: 648012-0800
Assembly Drawing: 648012-12_1_AA

This list covers pages from 2-2 to 2-5

Pos	Part No	UN	Qty	Description	Page No
TB/8 0568SQ US, TB/8 0500SQ US, TB/8 1000SQ US (See drawing on page: 2-2)					
F580	1143243-0100		1	DRYER	**2-7**
F540	450840-0400		1	LIFTING UNIT	**2-9**
F510	592878-0100		1	PIPE WORK-PNEUMATIC	**2-13, 2-15, 2-17, 2-19, 13-17, 13-19, 13-21, 13-23**
F470	593007-0100		1	CABLE DUCT	**2-21, 13-27**
F455	449168-0300		1	CLEANING SYSTEM	**2-23**
F440	574601-0100		1	VALVE PANEL	**2-27, 2-29, 2-31, 2-33**
F420	592879-0100		1	PIPE WORK-HYDRAULIC	**2-35, 13-15**
F400	440537-0500		1	MACHINE BODY	**2-37, 2-39, 2-41, 2-43**
F330	440415-0200		1	TRANSFORMER	**2-47**
F260	297604-0400		1	HOOD	**2-49, 2-51**
F230	297808-0500		1	CLEANING EQUIPMENT	**2-57**
F210	545100-0200		1	SIDE GUARD, RIGHT	**2-63**
F190	545099-0200		1	SIDE GUARD	**2-65**
F040	243843-0400		1	CLEANING PIPE	**2-67**
TB/8 1500B US (See drawing on page: 2-2)					
F580	1143243-0100		1	DRYER	**2-7**
F540	1144831-0100		1	LIFTING UNIT	**2-69**
F510	595207-0100		1	PIPE WORK-PNEUMATIC	**2-71, 2-73, 2-75**
F470	929661-0100		1	CABLE DUCT	**2-77**
F455	1144281-0100		1	CLEANING SYSTEM	**2-79**
F440	594622-0100		1	VALVE PANEL	**2-81, 2-83**
F420	592879-0100		1	PIPE WORK-HYDRAULIC	**2-35, 13-15**
F400	929659-0100		1	MACHINE BODY	**2-85, 2-87, 2-89**
F260	1144274-0100		1	HOOD	**2-93**
F230	1279438-0100		1	CLEANING EQUIPMENT	**2-95**
F210	929656-0100		1	SIDE GUARD, RIGHT	**2-97**
F190	929655-0100		1	SIDE GUARD, LEFT	**2-99**
F040	243843-0400		1	CLEANING PIPE	**2-67**
TB/8 0568B TPC, TB/8 0500SQ TPC, TB/8 1000S TPC, TB/8 1000SQ TPC, TB/8 1000B TPC, TB/8 0300B TPC, TB/8 0500S TPC, TB/8 0500B TPC, TB/8 1136B TPC (See drawing on page: 2-2)					
F540	450840-0400		1	LIFTING UNIT	**2-9**
F510	450788-0600		1	PIPE WORK-PNEUMATIC	**2-101, 2-103, 2-105, 2-107, 2-109, 2-111, 2-113**
F490	575797-0100		1	FLOWMETER GROUP	**2-115**
F470	450293-0500		1	CABLE DUCT	**2-117, 2-119**
F455	449168-0300		1	CLEANING SYSTEM	**2-23**
F440	574601-0100		1	VALVE PANEL	**2-27, 2-29, 2-31, 2-33**
F420	445537-0200		1	PIPE WORK-HYDRAULIC	**2-121, 2-123**
F400	440537-0500		1	MACHINE BODY	**2-37, 2-39, 2-41, 2-43**
F330	440415-0200		1	TRANSFORMER	**2-47**

Pos	Part No	UN	Qty	Description	Page No
F260	297604-0400		1	HOOD	**2-49, 2-51**
F230	297808-0500		1	CLEANING EQUIPMENT	**2-57**
F210	545100-0200		1	SIDE GUARD, RIGHT	**2-63**
F190	545099-0200		1	SIDE GUARD	**2-65**
F050	265889-0300		1	CATCH SAFETY	**2-125**
F040	243843-0400		1	CLEANING PIPE	**2-67**
Common Parts					
F570	451348-0200		1	CONNECTION BOX	**2-127**
F560	450883-0400		1	PROTECTION	**2-129**
F530	450824-0200		1	DOOR	**2-133**
F520	450792-0100		1	DETERGENT PUMP	**2-135**
F460	449932-0500		1	PIPE WORK-WATER	**2-137, 2-139, 2-141, 2-143, 2-145**
F450	449930-0500		1	CONNECTION BOX	**2-147**
F430	575392-0100		1	VALVE PANEL LOWER	**2-149, 2-151, 2-153, 2-155**
F390	440474-0100		1	TUBE FLUSHING DEVICE	**2-157**
F350	440437-0300		1	BOX LEFT	**2-159, 2-161**
F340	440422-0600		1	BOTTOM PLATE	**2-165**
F320	440384-0500		1	PLATFORM	**2-167**
F280	434707-0300		1	HYDRAULIC SYSTEM	**2-169**
F310	440098-0300		1	CRANK BRACKET	**2-177**
F140	279979-0500		1	CENTRAL LUBRICATION	**2-179**
F110	269324-0400		1	HATCH	**2-181**
F100	269322-0300		1	COVER UPPER	**2-183**
F070	269301-0500		1	SIDE BOX RIGHT	**2-185**
F030	493614-0100		1	SPRAY GUN	**2-187**
F020	230922-0100		1	AIR JET GUN	**2-189**

Machine Type | Group Description | Used-In | Group Number | Page No

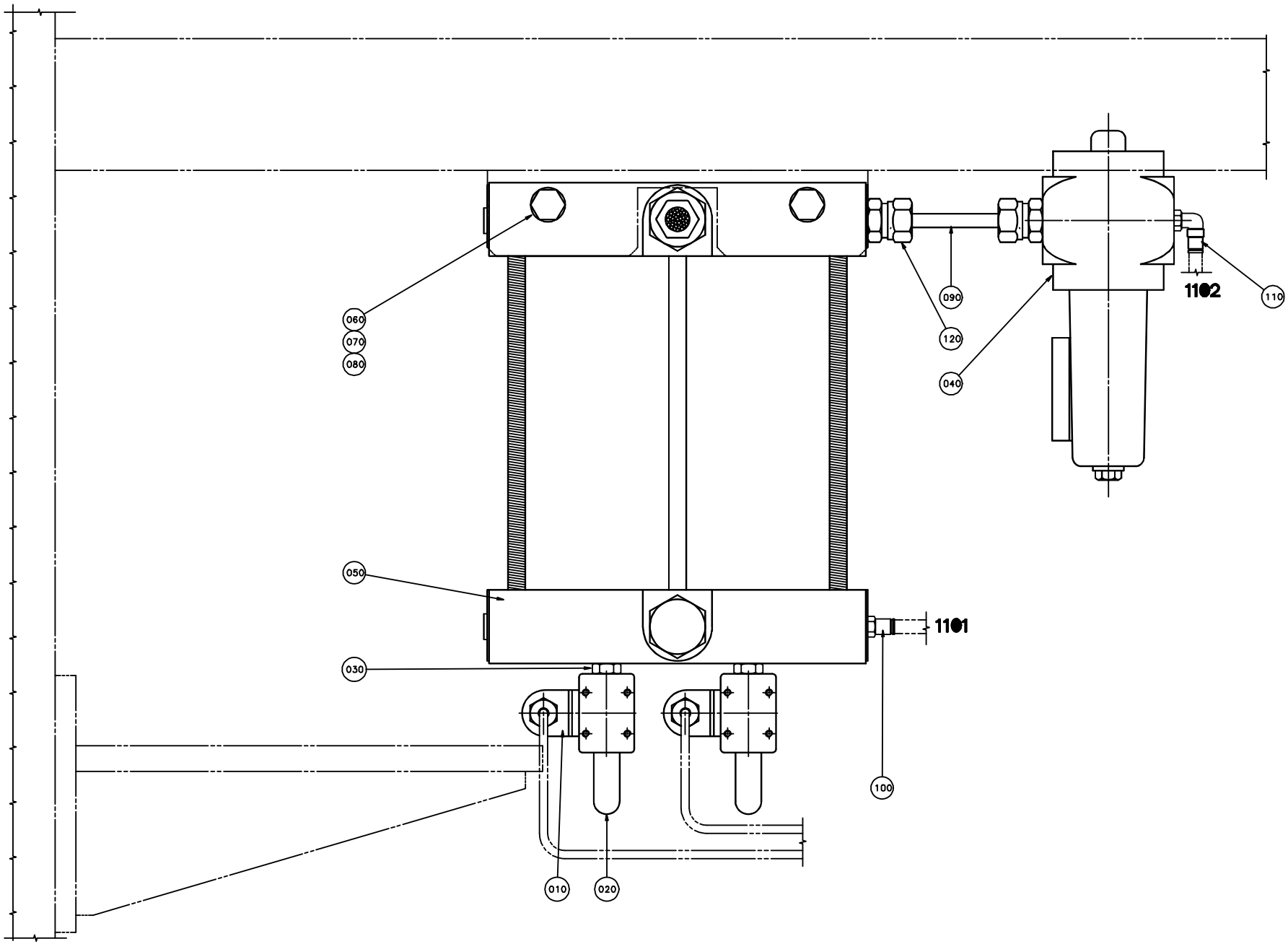
060
070
080
090
120
040
1102
110
050
1101
030
100
010
020

ECM: 71281 - 19980429
Group number: 1143243-0100
Assembly Drawing: 1143243-1_1_AA

Pos	Part No	UN	Qty	Description	Page No
-					
010	90042-0260		2	SOLENOID VALVE BÃ¼RKERT 048 696 F	
020	90328-0026		2	SILENCER G1/4"	
030	90330-0043		2	NIPPLES, EXT. THREAD. R-207R1/4	
040	90415-0063		1	DUSTFILTER / DD6 ART NO 8102 0215 43	
	90415-0356		*1*	*OUTLET FILTER CATRIDGE LFMBP-H*	
050	90415-0064		1	SIMPLIFIED CD2 DRYER	
	90415-0355		*1*	*DRYING AGENT ART NO 1202 8861-01*	
060	312105-0455		2	SCREW M6S ISO 4017 M8X30 A480	
070	312605-0320		2	HEXAGON NUT, M6M M10 A280	
080	315105-0173		4	WASHER BRB 10,5X20 RFR	
090	341001-0148	MM	80	COPPER TUBE	
100	342722-0205		1	STRAIGHT COUPLING D=8-G1/4"	
110	342732-0104		1	ELBOW PIPE JOINT, EXT.THREAD, D=8MM-G1/4	
120	342752-0103		2	CONN. STR. GA-8-G1/4	

Pos	Part No	UN	Qty	Description	Page No

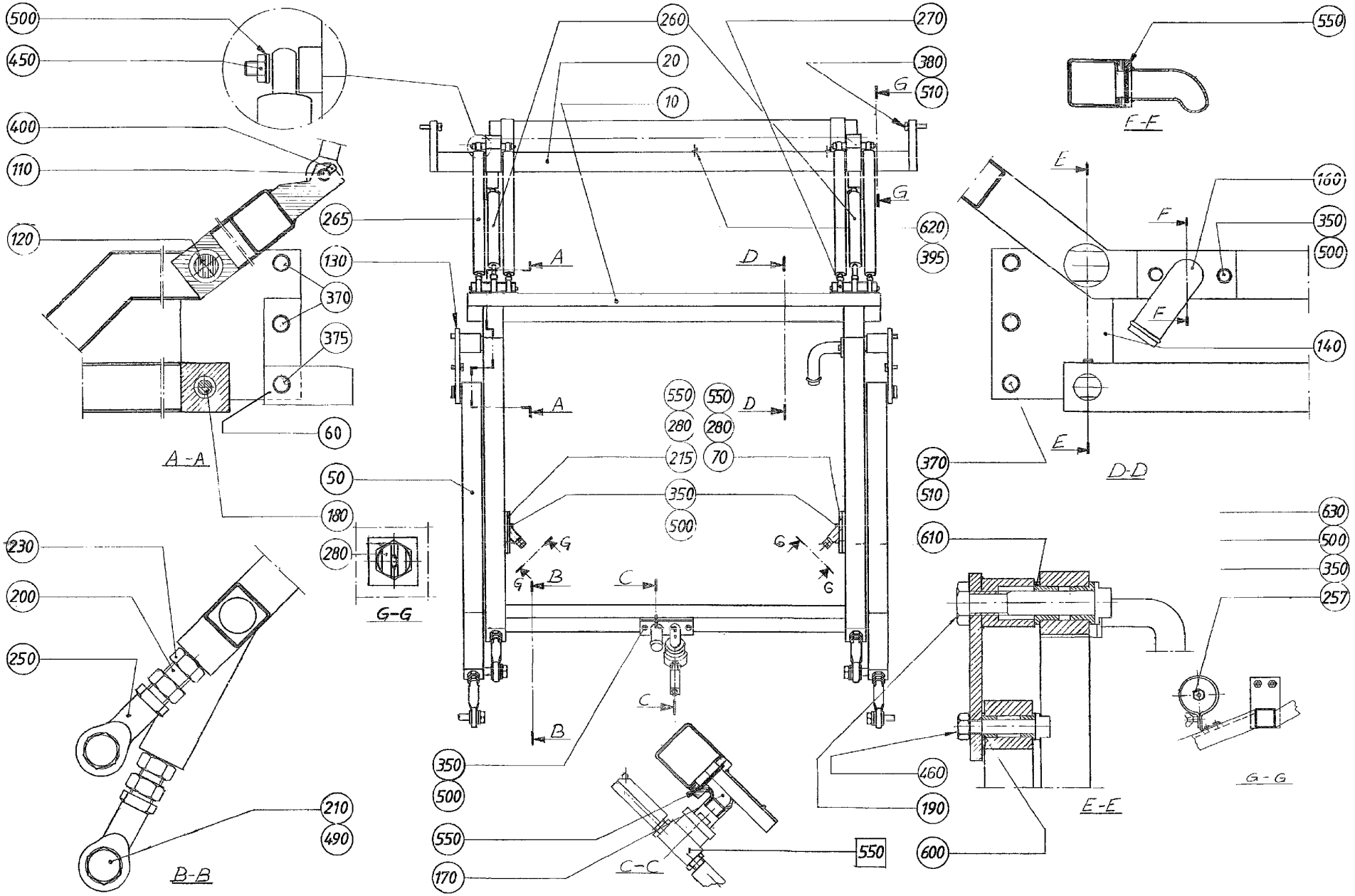
500
450
400
110
120
265
130
370
375
60
A-A
50
180
280
G-G
230
200
250
210
490
B-B
260
20
10
270
380
510
G
620
395
A
D
550
280
215
70
350
500
B
C
350
500
550
170
C-C
460
190
600
550
F-F
E
160
350
500
F
140
D-D
370
510
610
630
500
350
257
E-E
G-G

ECM: 72091 - 19981216
Group number: 450840-0400
Assembly Drawing: 450840-4_1_AA

Pos	Part No	UN	Qty	Description	Page No
-					
010	493021-0000		1	ARM	
020	450841-0000		1	CANTILEVER	
050	493022-0000		2	ARM	
060	532371-0000		1	STOP LUG	
070	534486-0000		1	PIPE HOLDER	
110	285825-0000		2	SHAFT	
120	484219-0000		2	SHAFT	
130	484220-0000		1	BRACKET	
140	484221-0000		1	BRACKET	
160	285979-0000		1	PIPE	
170	476894-0000		1	PIPE HOLDER	
180	484222-0000		2	SHAFT	
190	484223-0000		2	NUT	
200	457354-0000		4	SCREW	
210	297770-0000		4	SCREW	
215	442566-0000		1	BRACKET	
230	457355-0000		4	NUT	
250	90115-0111		4	ROD END, ID=22 MM, M22X1,5 LH	
257	90164-0003		1	LIGHT FIXTURE	
	90297-0002		*1*	*FLUORESCENT TUBE, TLD 18/33*	
260	90347-0036		2	GAS SPRING E0A1-52-195-460--001/900N	
265	90347-0038		4	GAS SPRINGE 0A1-52-195-460--002/1075N	
270	90347-0300		6	ROD END, ID=10 MM, M10 FOR 90347-36;-38	
280	90424-0035		2	SPRAY NOZZLE 95 DEG	
350	312105-0368		12	SCREW M6S ISO 4017 M6X16 A480	
370	312105-0493		5	SCREW M6S ISO 4017 M10X25 A480	
375	312105-0495		1	SCREW M6S ISO 4017 M10X30 A480	
380	312105-0497		2	SCREW M6S ISO 4017 M10X35 A480	
395	312125-0285		4	SCREW ISO 1207 M4X6 A4	
400	312318-0362		2	SCREW ISO4029 M6X8 A4	
450	312605-0316		6	HEXAGON NUT, M6M M6 A280	
460	312605-0322		2	HEXAGON NUT, M6M M12 A280	
490	315103-0195		4	WASHER PLAIN, BRB, 23/40,H=3 NI PL BR	
500	315105-0153		18	WASHER BRB 6,4X12 RFR	
510	315105-0173		10	WASHER BRB 10,5X20 RFR	
550	315202-0216		5	O-RING 22,2X3 MM	
600	321101-0173		4	FLANGE BUSHING, 12X18X12 MM	
610	321101-0233		4	FLANGE BUSHING, 20X28X20 MM	
620	352135-0201		4	CLIP, 12 MM, 913.012	
630	352136-0127		1	GLAND FITTING PR 18,6	
F550	594613-0100		1	CLEANING HEAD	**2-11**

Pos	Part No	UN	Qty	Description	Page No

Machine Type	Group Description	Used-In	Group Number	Page No

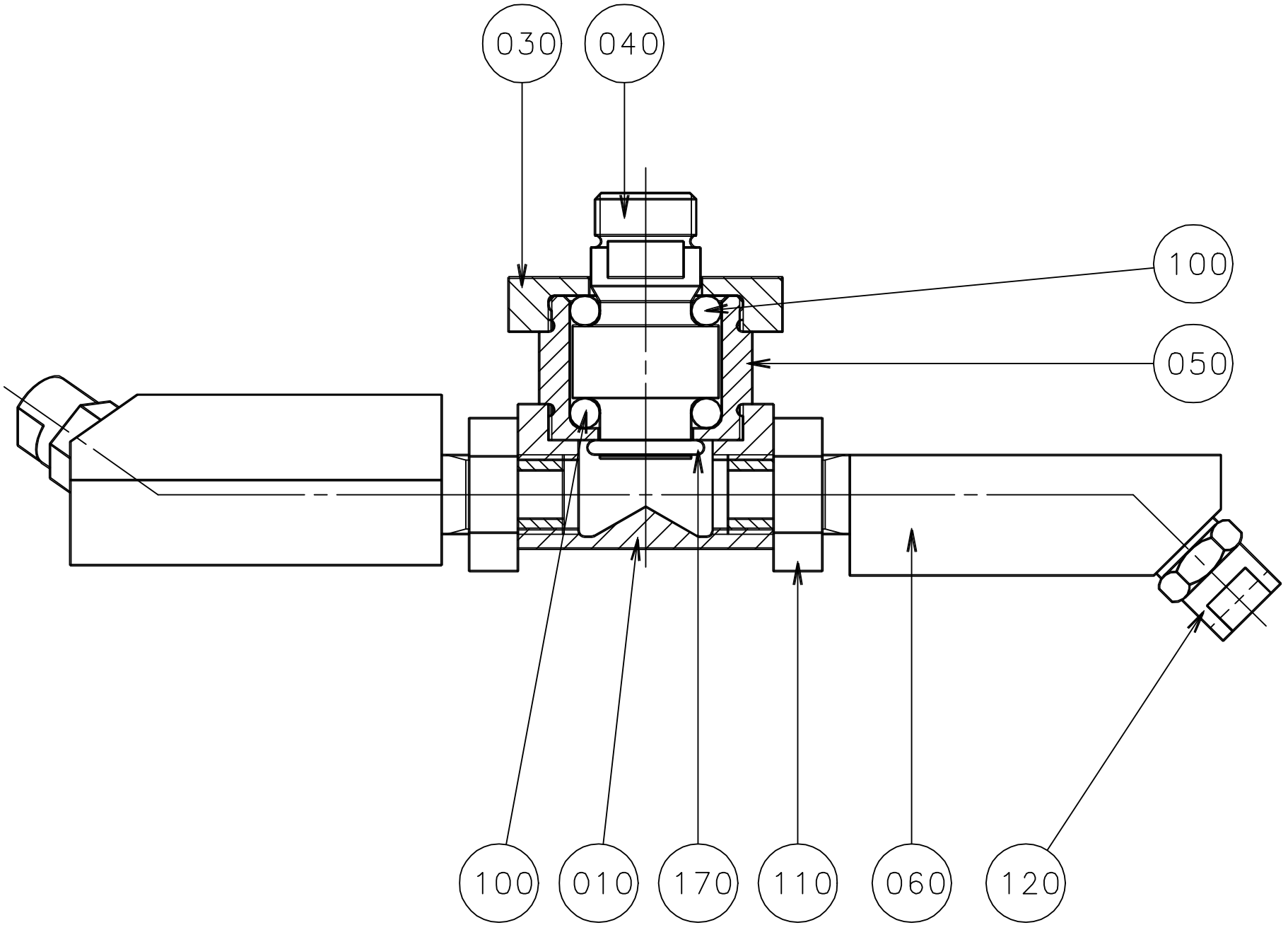
030
040
100
050
100
010
170
110
060
120

ECM: 176841 - 20041018
Group number: 594613-0100
Assembly Drawing: 594613-1_1_AA

Pos	Part No	UN	Qty	Description	Page No
-					
010	440600-0000		1	ROTOR	
030	534880-0000		1	END SECTION	
040	534878-0000		1	SHAFT	
050	534879-0000		1	BEARING HOUSING	
060	440604-0001		2	PIPE	
100	90090-0020		24	BALL, D=5 MM	
110	90330-0034		2	NUT, HEXAGON, G1/4	
120	90424-0026		2	SPRAY NOZZLE 95 DEG	
170	315202-0211		1	O-RING 13,3X2,4 MM	

Pos	Part No	UN	Qty	Description	Page No

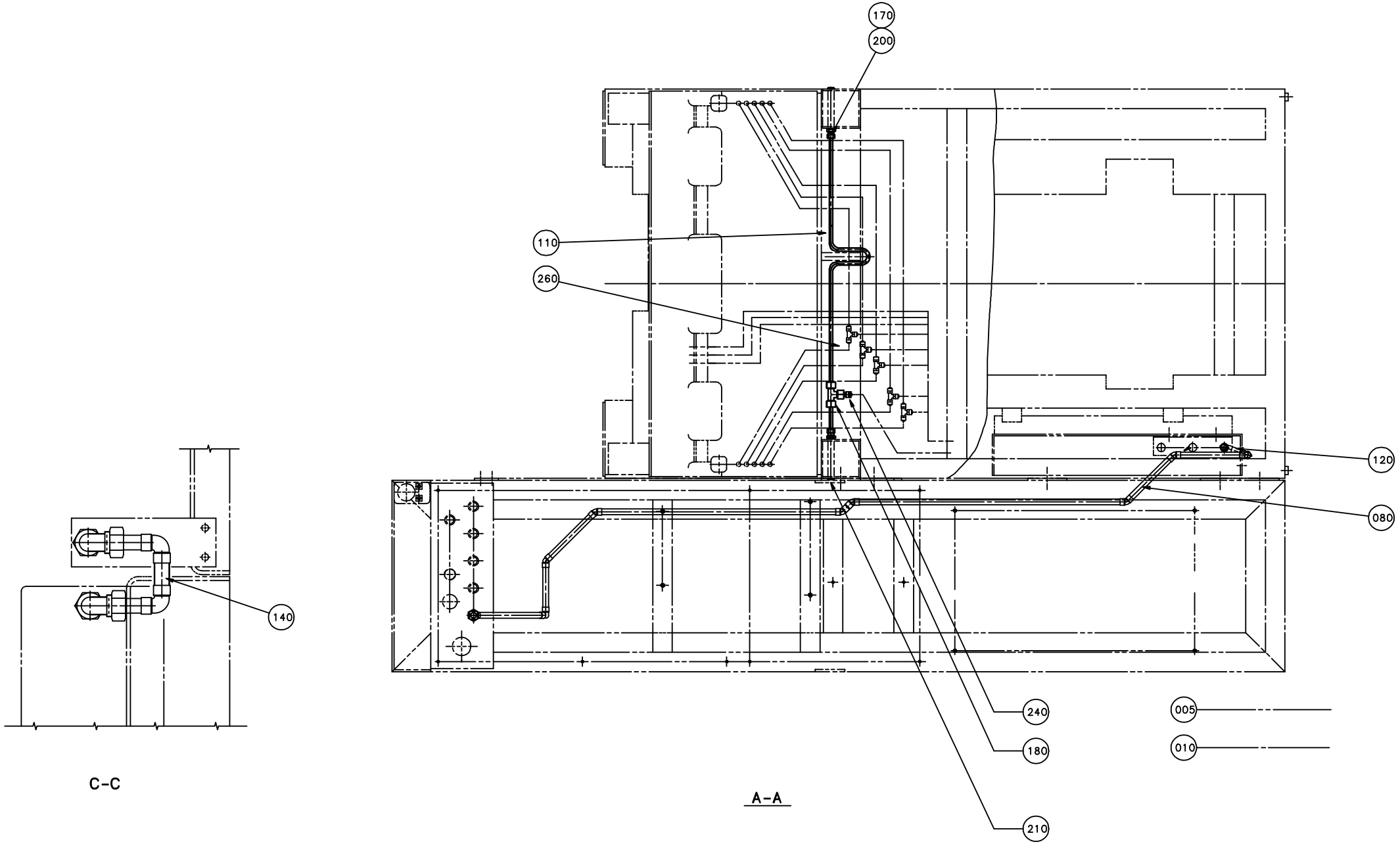
170
200
110
260
120
080
240
180
210
005
010
140
C-C
A-A

ECM: 70670 - 19970220
Group number: 592878-0100
Assembly Drawing: 592878-1_1_AA

This list covers pages from 2-12 to 2-19

Pos	Part No	UN	Qty	Description	Page No
NORMFIN (See drawing on pages: 2-12, 2-14, 13-16, 13-18)					
010	90166-0081	M	77	TUBE 6 MM PA BLUE	
REVFIN (See drawing on pages: 2-16, 2-18, 13-20, 13-22)					
010-02	90166-0081	M	92	TUBE 6 MM PA BLUE	
Common Parts					
005	90166-0013	M	23	TUBE 8 MM PA BLUE	
080	544692-0000		1	PIPE	
110	450736-0000		1	PIPE	
120	544697-0000		1	PIPE	
140	450791-0000		1	PIPE	
170	90224-0319		2	CONN. STR., 8-R1/4, EXT. THREAD	
180	90224-0323		1	CONNECTION	
200	315233-0110		4	WASHER CAPTIVE SEALING G1/4	
205	315233-0113		1	WASHER CAPTIVE SEALING G1/2	
210	342713-0210		1	PLUG,EXT THREAD HEX SOCKET(PAK OF 10 PCS	
220	342720-0114		1	CONN. STR. GA-15-G1/2	
240	342929-0121		1	STRAIGHT COUPLING,SOLDER 8/6-8	
260	342946-0112		5	T-COUPLING,UNION 6/4	
280	342960-0112		10	BULKHEAD COUPLING 6/4	

Pos	Part No	UN	Qty	Description	Page No

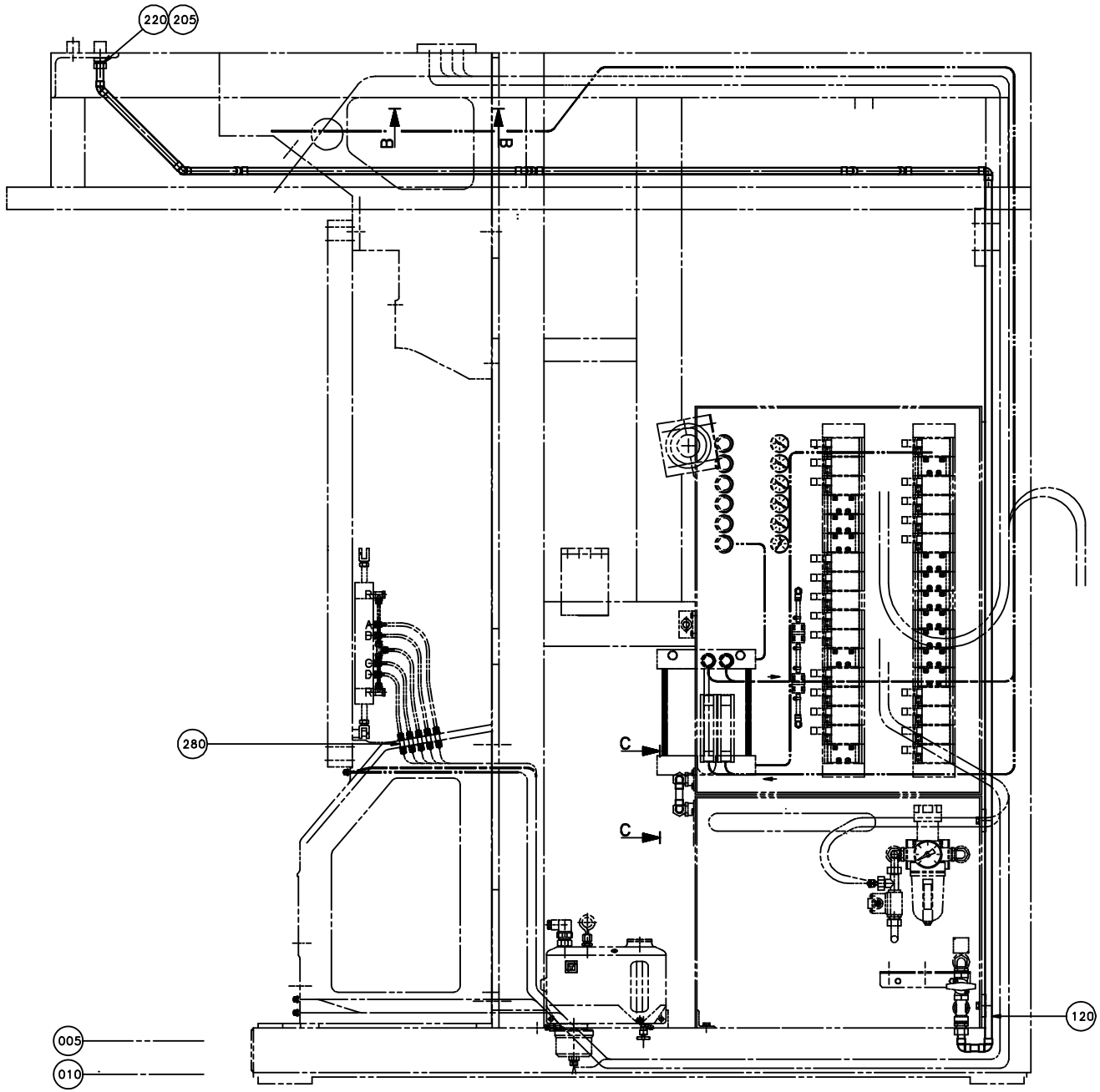
220
205
B
B
280
C
C
120
005
010

ECM: 70670 - 19970220
Group number: 592878-0100
Assembly Drawing: 592878-2_1_AA

This list covers pages from 2-12 to 2-19

Pos	Part No	UN	Qty	Description	Page No
NORMFIN (See drawing on pages: 2-12, 2-14, 13-16, 13-18)					
010	90166-0081	M	77	TUBE 6 MM PA BLUE	
REVFIN (See drawing on pages: 2-16, 2-18, 13-20, 13-22)					
010-02	90166-0081	M	92	TUBE 6 MM PA BLUE	
Common Parts					
005	90166-0013	M	23	TUBE 8 MM PA BLUE	
080	544692-0000		1	PIPE	
110	450736-0000		1	PIPE	
120	544697-0000		1	PIPE	
140	450791-0000		1	PIPE	
170	90224-0319		2	CONN. STR., 8-R1/4, EXT. THREAD	
180	90224-0323		1	CONNECTION	
200	315233-0110		4	WASHER CAPTIVE SEALING G1/4	
205	315233-0113		1	WASHER CAPTIVE SEALING G1/2	
210	342713-0210		1	PLUG,EXT THREAD HEX SOCKET(PAK OF 10 PCS	
220	342720-0114		1	CONN. STR. GA-15-G1/2	
240	342929-0121		1	STRAIGHT COUPLING,SOLDER 8/6-8	
260	342946-0112		5	T-COUPLING,UNION 6/4	
280	342960-0112		10	BULKHEAD COUPLING 6/4	

Pos	Part No	UN	Qty	Description	Page No

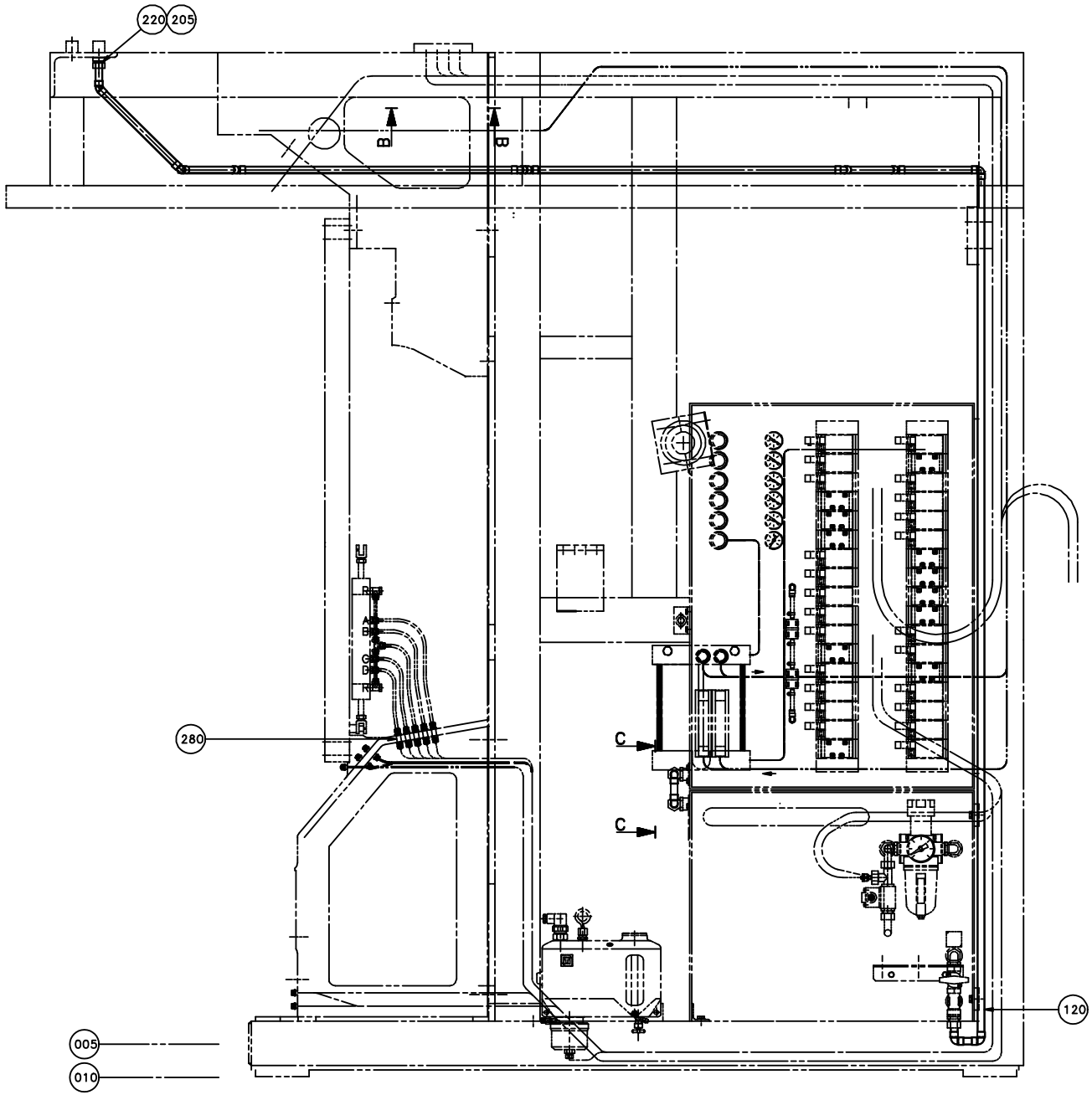
220
205
B
B
280
C
C
120
005
010

ECM: 70670 - 19970220
Group number: 592878-0100
Assembly Drawing: 592878-4_1_AA

This list covers pages from 2-12 to 2-19

Pos	Part No	UN	Qty	Description	Page No
NORMFIN (See drawing on pages: 2-12, 2-14, 13-16, 13-18)					
010	90166-0081	M	77	TUBE 6 MM PA BLUE	
REVFIN (See drawing on pages: 2-16, 2-18, 13-20, 13-22)					
010-02	90166-0081	M	92	TUBE 6 MM PA BLUE	
Common Parts					
005	90166-0013	M	23	TUBE 8 MM PA BLUE	
080	544692-0000		1	PIPE	
110	450736-0000		1	PIPE	
120	544697-0000		1	PIPE	
140	450791-0000		1	PIPE	
170	90224-0319		2	CONN. STR., 8-R1/4, EXT. THREAD	
180	90224-0323		1	CONNECTION	
200	315233-0110		4	WASHER CAPTIVE SEALING G1/4	
205	315233-0113		1	WASHER CAPTIVE SEALING G1/2	
210	342713-0210		1	PLUG,EXT THREAD HEX SOCKET(PAK OF 10 PCS	
220	342720-0114		1	CONN. STR. GA-15-G1/2	
240	342929-0121		1	STRAIGHT COUPLING,SOLDER 8/6-8	
260	342946-0112		5	T-COUPLING,UNION 6/4	
280	342960-0112		10	BULKHEAD COUPLING 6/4	

Pos	Part No	UN	Qty	Description	Page No

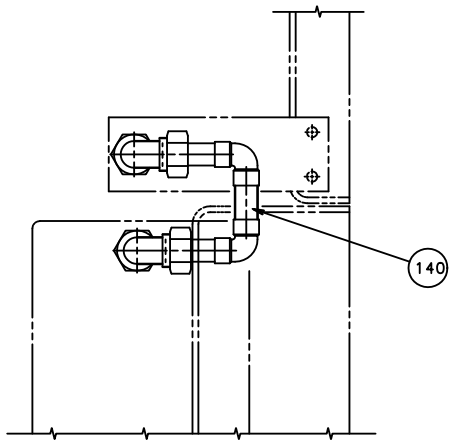

C-C

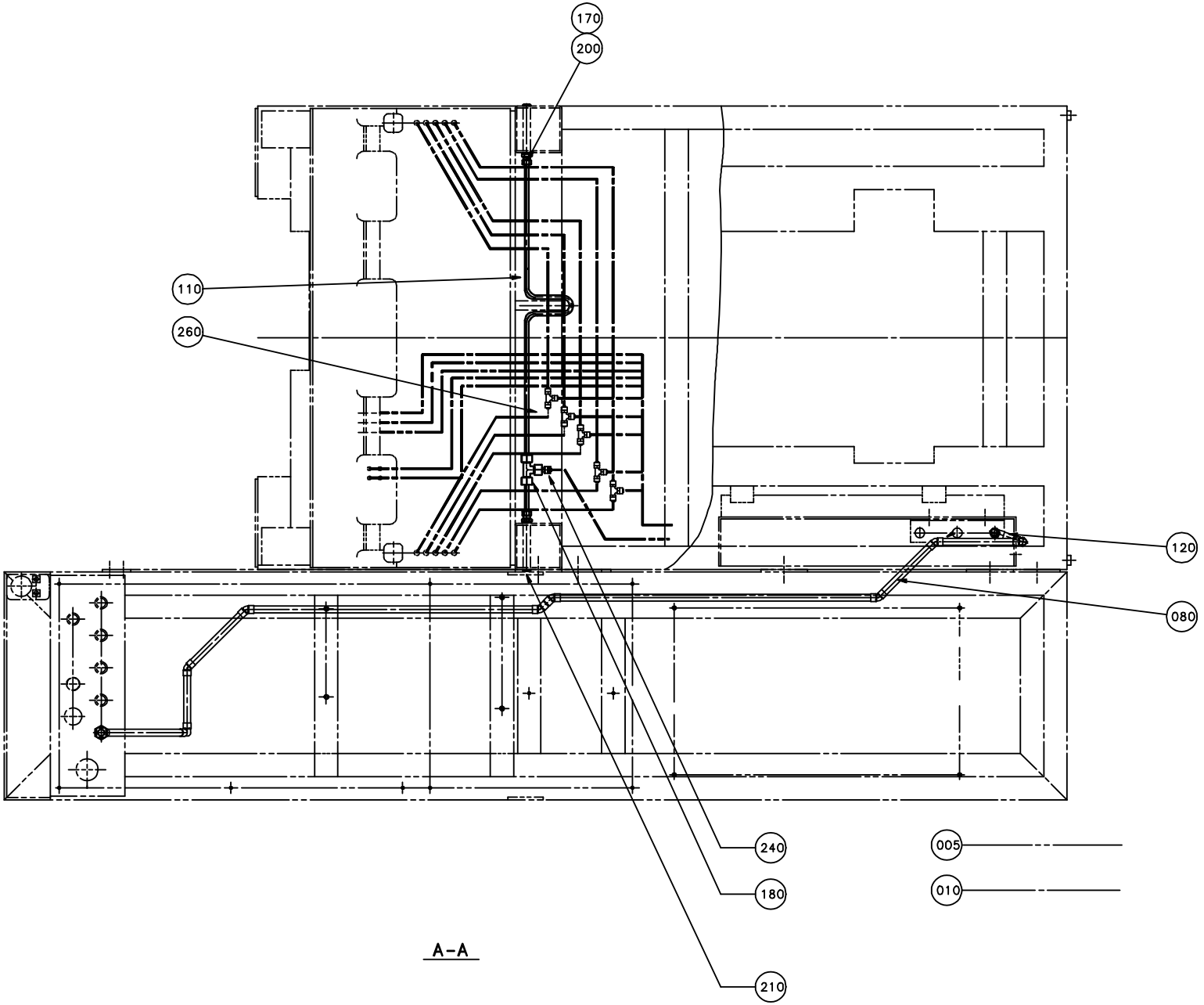

A-A

ECM: 70670 - 19970220
Group number: 592878-0100
Assembly Drawing: 592878-5_1_AA

This list covers pages from 2-12 to 2-19

Pos	Part No	UN	Qty	Description	Page No
NORMFIN (See drawing on pages: 2-12, 2-14, 13-16, 13-18)					
010	90166-0081	M	77	TUBE 6 MM PA BLUE	
REVFIN (See drawing on pages: 2-16, 2-18, 13-20, 13-22)					
010-02	90166-0081	M	92	TUBE 6 MM PA BLUE	
Common Parts					
005	90166-0013	M	23	TUBE 8 MM PA BLUE	
080	544692-0000		1	PIPE	
110	450736-0000		1	PIPE	
120	544697-0000		1	PIPE	
140	450791-0000		1	PIPE	
170	90224-0319		2	CONN. STR., 8-R1/4, EXT. THREAD	
180	90224-0323		1	CONNECTION	
200	315233-0110		4	WASHER CAPTIVE SEALING G1/4	
205	315233-0113		1	WASHER CAPTIVE SEALING G1/2	
210	342713-0210		1	PLUG,EXT THREAD HEX SOCKET(PAK OF 10 PCS	
220	342720-0114		1	CONN. STR. GA-15-G1/2	
240	342929-0121		1	STRAIGHT COUPLING,SOLDER 8/6-8	
260	342946-0112		5	T-COUPLING,UNION 6/4	
280	342960-0112		10	BULKHEAD COUPLING 6/4	

Pos	Part No	UN	Qty	Description	Page No

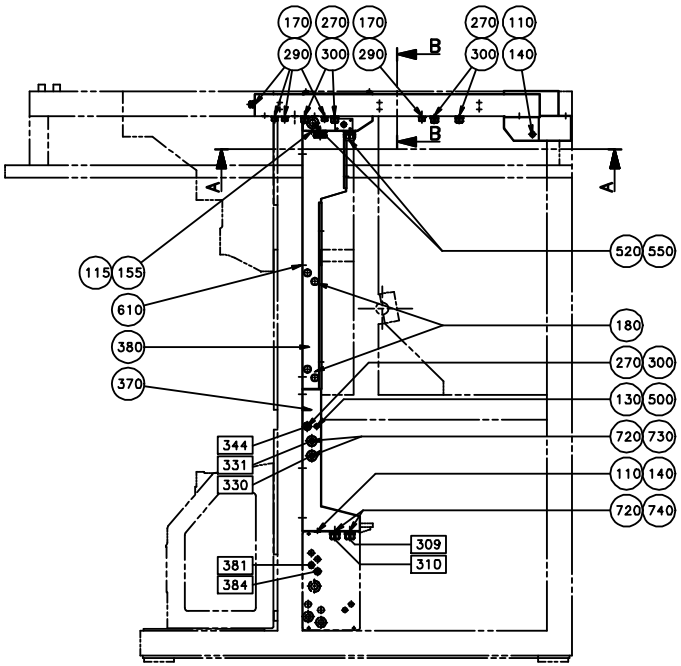
170 270 170 270 110
290 300 290 300 140
B
B
A
A
520 550
115 155
610
180
380
270 300
370
130 500
344
331
330
720 730
110 140
720 740
309
310
381
384

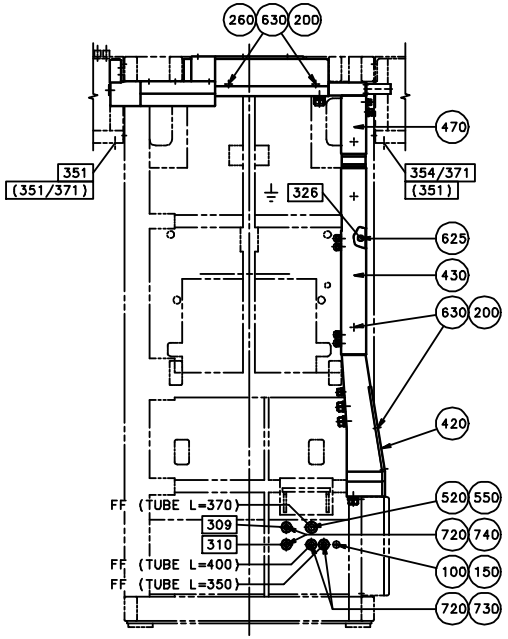
260 630 200
470
351
(351/371)
354/371
(351)
326
625
430
630 200
420
FF (TUBE L=370)
520 550
309
720 740
310
FF (TUBE L=400)
100 150
FF (TUBE L=350)
720 730

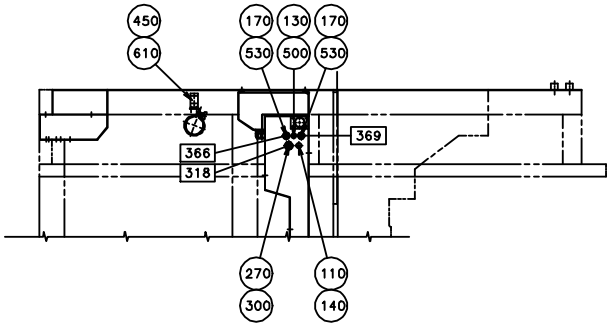
450
610
170 130 170
530 500 530
369
366
318
270 110
300 140

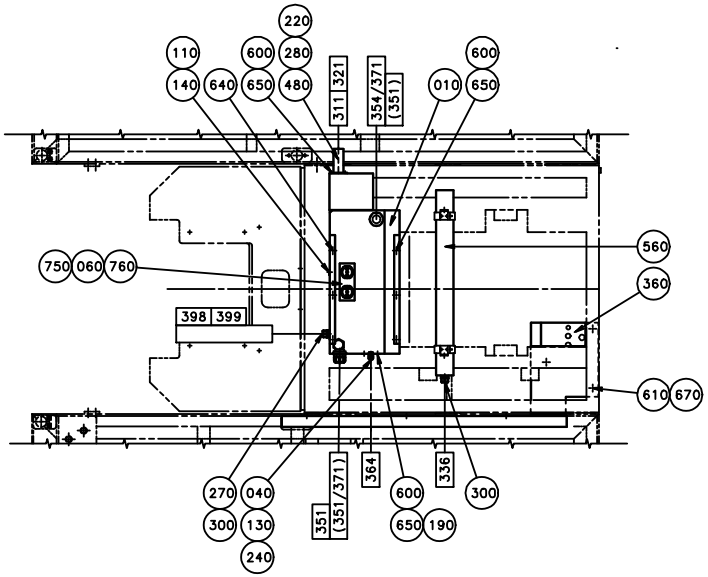
220
110
600 280
140 640 650 480
311 321
354/371
(351)
010 650
600
560
750 060 760
360
398 399
610 670
270 040
300 130
240
351
(351/371)
364
600
650 190
336
300

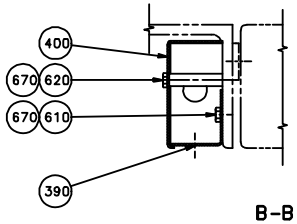
400
670 620
670 610
390

B–B

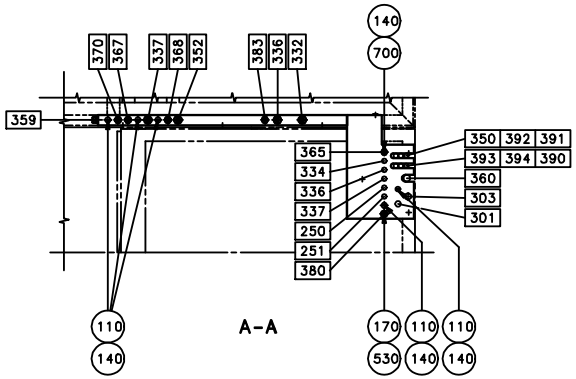
140
700
370 367
337 368 352
383 336 332
359
365
334
336
337
250
251
380
350 392 391
393 394 390
360
303
301
110
140
170 110 110
530 140 140

A–A

ECM: 70455 - 19961129
Group number: 593007-0100
Assembly Drawing: 593007-1_1_AA

Pos	Part No	UN	Qty	Description	Page No
-					
010	1143661-0000		1	CABLE DUCT	
040	464193-0000		1	ATTACHMENT PLATE	
060	1143839-0000		1	NUT PLATE	
100	90002-0004		2	BLANK-OFF PLUG, PR 22,5 SKINDICHT-BLK16	
110	90002-0009		9	BLANK-OFF PLUG, PR 18.6 SKINDICHT-BLK11	
115	90002-0010		1	BLANK-OFF PLUG, PR 37 SKINDICHT-BLK29	
130	90099-0001		3	NUT PG 9/PR 15,2	
140	90099-0002		9	NUT PR 18,6 BRASS	
155	90099-0011		1	NUT PR 37 BRASS	
170	90152-0033	MM	6800	SPIRAL CONDUIT FOR PR 15,2(PG 9)	
180	90261-0019		4	PLUG, BLIND, PLASTIC, TYPEF23	
200	315101-0136		7	WASHER BRB, 4,3/8 H=0,8	
220	342991-0108		1	HOSE CLIP 38-50MMRFR	
240	352103-0101		1	CABLE GLAND, ST 9, PR15,2/PG9	
260	352113-0205		2	ANCHOR PLATES FOR STRIPS, TYPE TM2S8-C10	
270	352135-0106	MM	3200	SPIRAL CONDUIT DI=16 MM	
290	352136-0113		5	GLAND FITTING PR18,6/PG11 DI=12MM	
300	352136-0127		9	GLAND FITTING PR 18,6	
360	575464-0000		1	CABLE DUCT	
370	540721-0000		1	CABLE DUCT	
380	450284-0000		1	CABLE DUCT	
390	450285-0000		1	CABLE DUCT	
400	450286-0000		1	LID	
420	540722-0000		1	LID	
430	450287-0000		1	LID	
450	246374-0000		2	BRACKET	
470	450290-0000		1	LID	
480	450291-0000		1	ATTACHMENT PIPE	
500	90002-0013		2	BLANK-OFF PLUG, PR 15,2 SKINDICHT-BLK9	
520	90012-0061		3	GLAND	
530	90012-0063		4	CABLE GLAND PR 15,2	
550	90152-0031	MM	2270	HOSE	
560	90164-0003		1	LIGHT FIXTURE	
	90297-0002		*1*	*FLUORESCENT TUBE, TLD 18/33*	
600	312101-0325		11	SCREW M6S M5X10 FZB	
610	312101-0364		18	SCREW M6S M6X10 FZB	
620	312101-0380		3	SCREW M6S M6X50 FZB	
625	312101-0447		1	SCREW M6S M8X12 FZB	
630	312121-0287		7	SCREW ISO 1207 M4X8 4.8 - 5.8 Z.PL.	
640	312141-0325		3	SCREW ISO 2009 MFS M5X10 4.8 EL.PL	
650	315101-0146		11	WASHER PLAIN, BRB, 5,3/10 H=1	
670	315101-0153		15	WASHER PLAIN, BRB, 6,4/12 H=1,5	
700	352103-0106		1	CABLE GLAND, ST 11, PR18,6/PG11	
720	352135-0109	MM	3700	HOSE .022	
730	352136-0142		4	GLAND FITTING	
740	352136-0143		4	GLAND FITTING	
750	353246-0001		2	GLAND FITTING, VK156D	
760	353249-0058		2	GLAND,INSERT,E156 3/10	

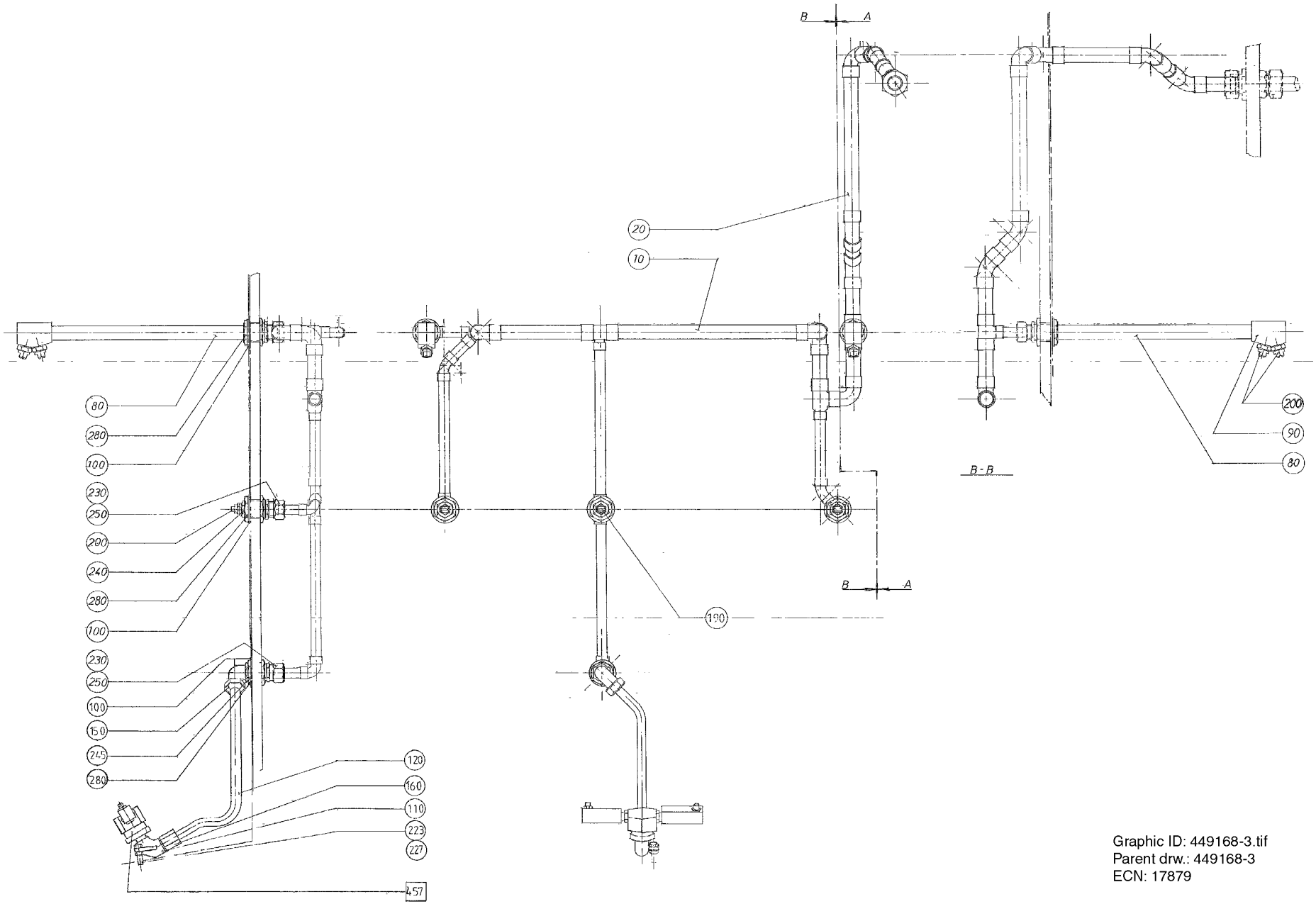

Graphic ID: 449168-3.tif
Parent drw.: 449168-3
ECN: 17879

ECM: 176838 - 20041018
Group number: 449168-0300
Assembly Drawing: 449168-3_1_AA

Pos	Part No	UN	Qty	Description	Page No
TB/8 0568SQ, TB/8 1000B, TB/8 0568B, TB/8 0300B, TB/8 0500SQ, TB/8 0500S, TB/8 0500B					
200	90424-0035		7	SPRAY NOZZLE 95 DEG	
240	342701-0205		3	BUSHING,INT./EXT.G-THREAD G1/2"-G1/4"	
TB/8 1000SQ, TB/8 1000S, TB/8 1136B					
190	571654-0000		1	NOZZLE	
200	90424-0035		6	SPRAY NOZZLE 95 DEG	
240	342701-0205		2	BUSHING,INT./EXT.G-THREAD G1/2"-G1/4"	
Common Parts					
010	530556-0000		1	JUNCTION PIPE UPPER	
020	449170-0000		1	CLEANING PIPE	
080	535016-0000		2	FORCE SPRING	
090	535017-0000		2	BRACKET	
100	246885-0000		6	WASHER	
110	537919-0000		1	PIPE HOLDER	
120	537918-0000		1	PIPE	
150	90030-0115		1	CONN. ELBOW WA 12-R3/8	
160	90030-0187		1	CONN. STR. GA-12-G3/8	
223	312105-0372		1	SCREW M6S ISO 4017 M6X25 A480	
227	312605-0316		2	HEXAGON NUT, M6M M6 A280	
230	315234-0113		6	WASHER PL.RND.CU.21,3//26 H=1,5	
245	342701-0206		1	BUSHING,INT./EXT.G-THREAD G1/2"-G3/8"	
250	342720-0114		6	CONN. STR. GA-15-G1/2	
280	342767-0114		6	CONN. BULKHEAD G1/2	
457	594614-0100		1	CLEANING HEAD	**2-25**

Pos	Part No	UN	Qty	Description	Page No

Machine Type | Group Description | Used-In | Group Number | Page No

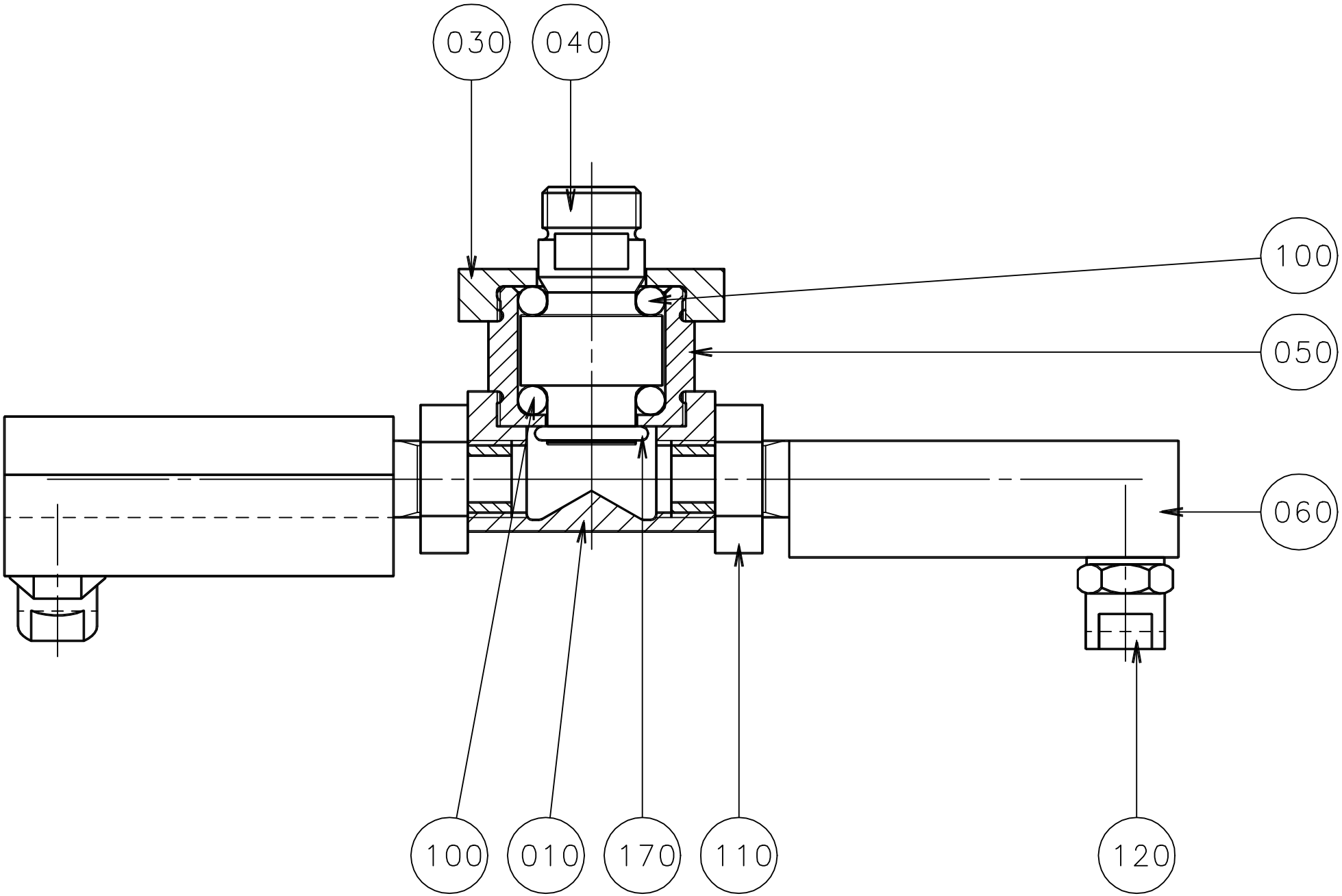
030
040
100
050
060
100
010
170
110
120

ECM: 176839 - 20041018
Group number: 594614-0100
Assembly Drawing: 594614-1_1_AA

Pos	Part No	UN	Qty	Description	Page No
-					
010	440600-0000		1	ROTOR	
030	534880-0000		1	END SECTION	
040	534878-0000		1	SHAFT	
050	534879-0000		1	BEARING HOUSING	
060	440605-0001		2	PIPE	
100	90090-0020		24	BALL, D=5 MM	
110	90330-0034		2	NUT, HEXAGON, G1/4	
120	90424-0026		2	SPRAY NOZZLE 95 DEG	
170	315202-0211		1	O-RING 13,3X2,4 MM	

Pos	Part No	UN	Qty	Description	Page No

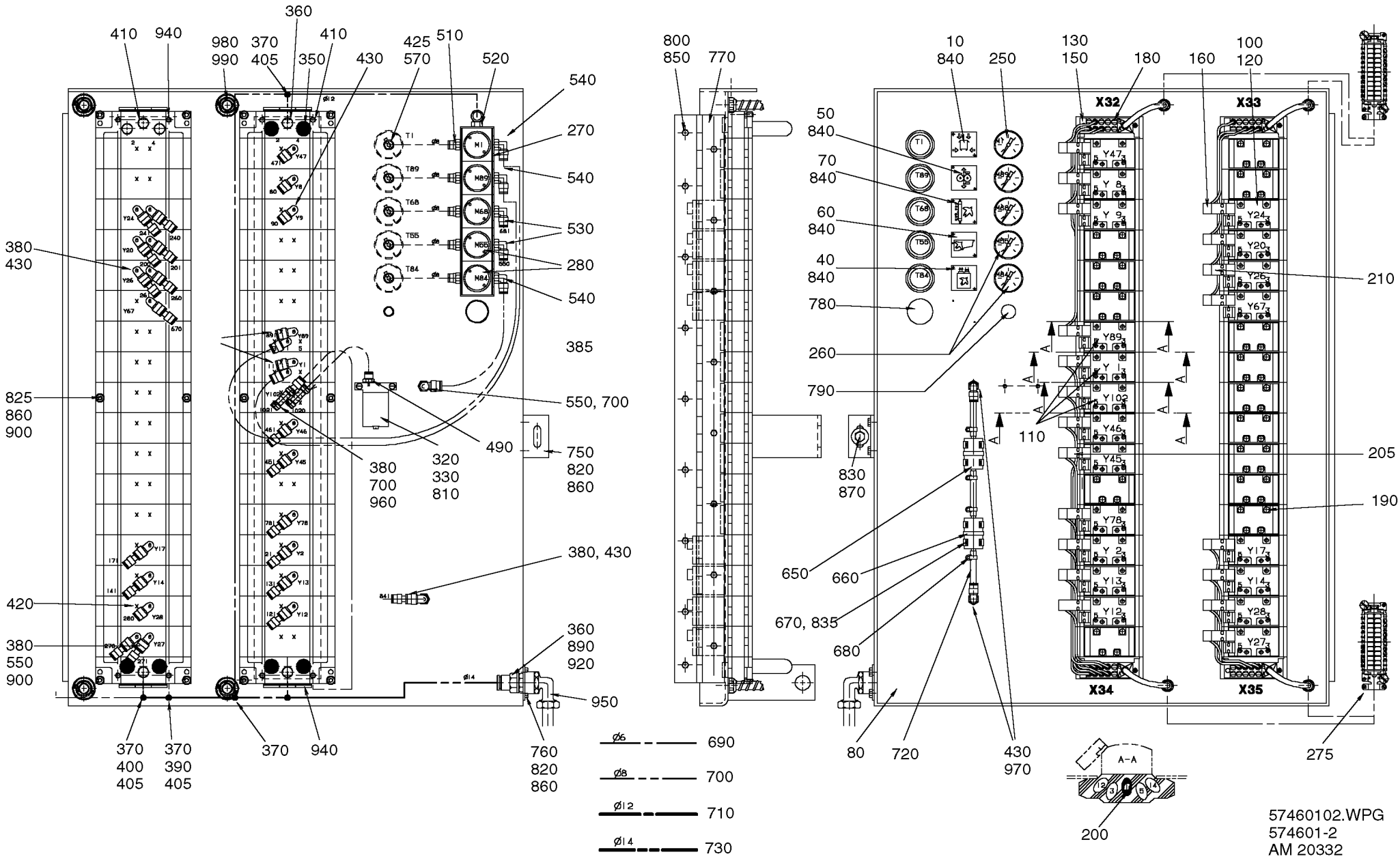
410 940 980 990 370 405 360 350 410 430 425 570 510 520 540 270 540 530 280 540 385 550, 700 490 750 820 860 320 330 810 380 700 960 380, 430 360 890 920 950 760 820 860 380 430 825 860 900 420 380 550 900 370 400 405 370 390 405 370 940
800 850 770
10 840 250 130 150 180 160 100 120
X32 X33 X34 X35
50 840 70 840 60 840 40 840 780 260 790 830 870 110 210 205 190 650 660 670, 835 680 80 720 430 970 275 200
A-A
Ø6 690
Ø8 700
Ø12 710
Ø14 730
57460102.WPG
574601-2
AM 20332

ECM: 72533 - 19990617
Group number: 574601-0100
Assembly Drawing: 574601-2_1_AA

This list covers pages from 2-26 to 2-33

Pos	Part No	UN	Qty	Description	Page No
TB/8 0568SQ REVFIN US, TB/8 0500SQ REVFIN US (See drawing on page: 2-32)					
050	293333-0000		1	SIGN, WEB BRAKE	
090	1143241-0000		1	SIGN	
100	90042-0215		24	VALVE BODY 5/2 UNISTABLE	
110	90042-0520		3	BASE PLATE ISO SIZE 1	
120	90042-0532		31	BASE PLATE ISO SIZE 1	
160	90042-0527		21	SEAL KIT PILOT VALVE	
190	90042-0519		10	BLANK PLATE ISO SIZE 1	
200	90042-0528		5	BLANKING KIT SEALS ISO SIZE 1	
205	90042-0538		8	PILOT VALVE L=500MM	
210	90042-0539		16	PILOT VALVE L=350MM	
250	90043-0043		3	PRESSURE GAUGE 0-10 BAR 1/8"	
255	90043-0056		1	PRESSURE GAUGE, 2041 D=40 MM	
265	90055-0101		1	Y-CONNECTION, 8-8	
267	90055-0105		1	V-JUNCTION COUPLING14MM REPBY 342735-110	
270	90113-0069		3	PRESSURE REGULATOR	
273	90113-0071		1	PRESSURE REGULATOR	
285	90187-0149		2	THROTTLE VALVE, G1/4, G1/4, MALE	
290	90243-0427		2	FLOW METER	
350	90328-0024		8	SILENCER G3/8"	
360	90055-0096		6	STRAIGHT COUPLING	
365	90328-0026		2	SILENCER G1/4"	
370	342748-0110		5	T-CONNECTION 14MM	
380	342716-0203		25	REDUCER 6-8	
385	342713-0210		2	PLUG,EXT THREAD HEX SOCKET(PAK OF 10 PCS	
400	342716-0209		2	REDUCER 8-12	
405	342716-0211		4	REDUCER 12-14	
410	342715-0102		3	BLIND PLUG 6 MM	
420	342715-0103		50	BLIND PLUG 8 MM	
425	90055-0117		7	ELBOW WITH TAILPIECE	
430	90055-0118		32	ELBOW WITH TAILPIECE 8/8 MM	
495	342722-0205		2	STRAIGHT COUPLING D=8-G1/4"	
510	342722-0203		8	STRAIGHT COUPLING	
530	342732-0103		2	ELBOW PIPE JOINT, EXT.THREAD, D=6MM-G1/4	
540	342732-0104		7	ELBOW PIPE JOINT, EXT.THREAD, D=8MM-G1/4	
560	342748-0102		1	T-CONNECTION 6MM	
570	342770-0105		6	STRAIGHT COUPLING INT, D=6 MM - G1/8	
580	90113-0379		6	NUT	
690	90166-0081	M	4	TUBE 6 MM PA BLUE	
700	90166-0013	M	3	TUBE 8 MM PA BLUE	
900	312605-0316		18	HEXAGON NUT, M6M M6 A280	
940	342713-0211		15	PLUG, EXT THREAD HEX SOCKET 8638-00-380	

Pos	Part No	UN	Qty	Description	Page No
TB/8 1000SQ REVFIN US (See drawing on page: 2-30)					
050	293333-0000		1	SIGN, WEB BRAKE	
090	1143241-0000		1	SIGN	
100	90042-0215		23	VALVE BODY 5/2 UNISTABLE	
110	90042-0520		3	BASE PLATE ISO SIZE 1	
120	90042-0532		31	BASE PLATE ISO SIZE 1	
160	90042-0527		21	SEAL KIT PILOT VALVE	
190	90042-0519		11	BLANK PLATE ISO SIZE 1	
200	90042-0528		5	BLANKING KIT SEALS ISO SIZE 1	
205	90042-0538		7	PILOT VALVE L=500MM	
210	90042-0539		16	PILOT VALVE L=350MM	
250	90043-0043		3	PRESSURE GAUGE 0-10 BAR 1/8"	
255	90043-0056		1	PRESSURE GAUGE, 2041 D=40 MM	
265	90055-0101		1	Y-CONNECTION, 8-8	
267	90055-0105		1	V-JUNCTION COUPLING14MM REPBY 342735-110	
270	90113-0069		3	PRESSURE REGULATOR	
273	90113-0071		1	PRESSURE REGULATOR	
285	90187-0149		2	THROTTLE VALVE, G1/4, G1/4, MALE	
290	90243-0427		2	FLOW METER	
350	90328-0024		8	SILENCER G3/8"	
360	90055-0096		6	STRAIGHT COUPLING	
365	90328-0026		2	SILENCER G1/4"	
370	342748-0110		5	T-CONNECTION 14MM	
380	342716-0203		23	REDUCER 6-8	
385	342713-0210		2	PLUG,EXT THREAD HEX SOCKET(PAK OF 10 PCS	
400	342716-0209		2	REDUCER 8-12	
405	342716-0211		4	REDUCER 12-14	
410	342715-0102		3	BLIND PLUG 6 MM	
420	342715-0103		50	BLIND PLUG 8 MM	
425	90055-0117		7	ELBOW WITH TAILPIECE	
430	90055-0118		30	ELBOW WITH TAILPIECE 8/8 MM	
495	342722-0205		2	STRAIGHT COUPLING D=8-G1/4"	
510	342722-0203		8	STRAIGHT COUPLING	
530	342732-0103		2	ELBOW PIPE JOINT, EXT.THREAD, D=6MM-G1/4	
540	342732-0104		7	ELBOW PIPE JOINT, EXT.THREAD, D=8MM-G1/4	
560	342748-0102		1	T-CONNECTION 6MM	
570	342770-0105		6	STRAIGHT COUPLING INT, D=6 MM - G1/8	
580	90113-0379		6	NUT	
690	90166-0081	M	4	TUBE 6 MM PA BLUE	
700	90166-0013	M	3	TUBE 8 MM PA BLUE	
900	312605-0316		16	HEXAGON NUT, M6M M6 A280	
940	342713-0211		14	PLUG, EXT THREAD HEX SOCKET 8638-00-380	

Machine Type | Group Description | Used-In | Group Number | Page No

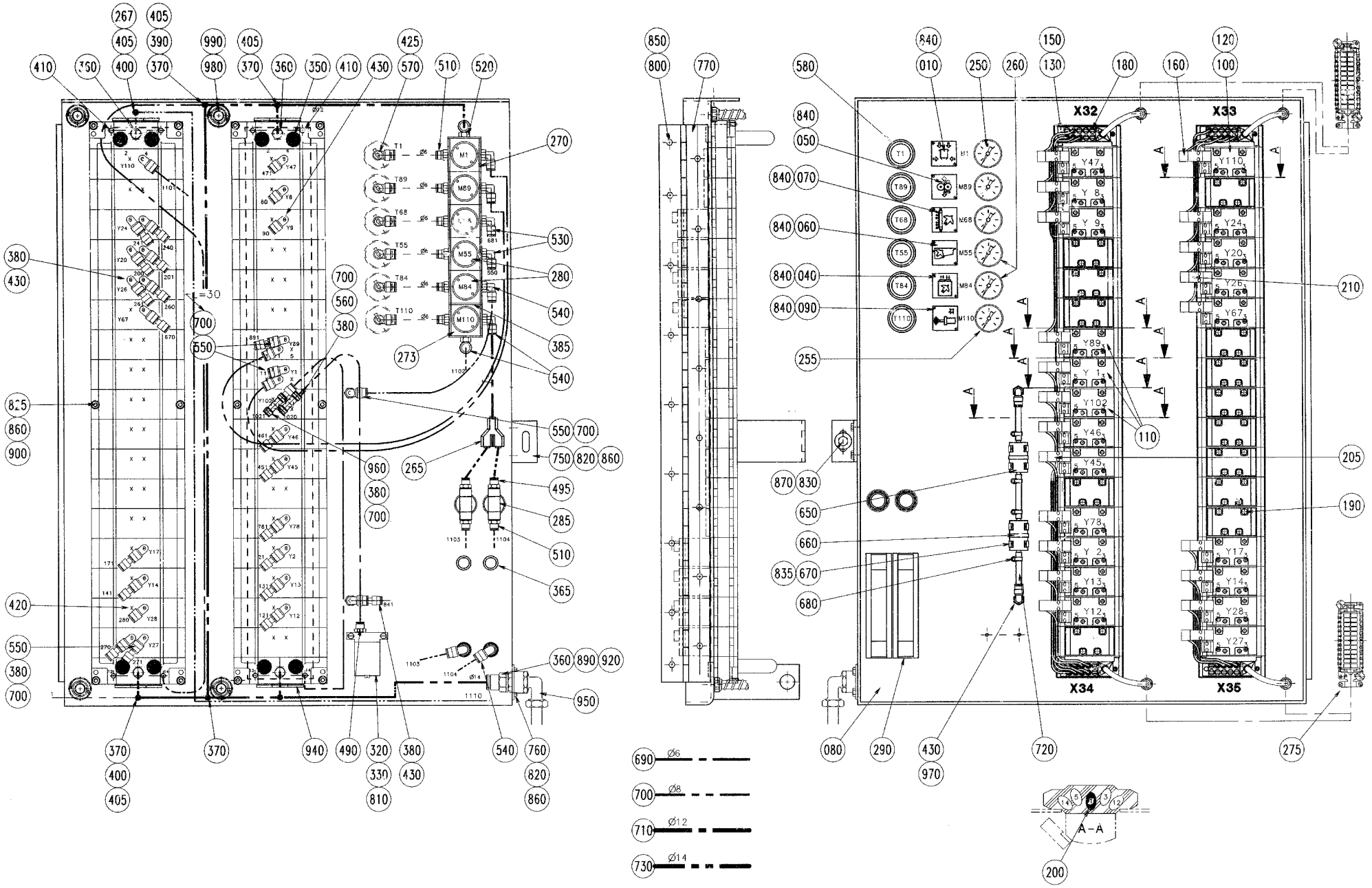
X32
X33
X34
X35
A–A
Ø6
Ø8
Ø12
Ø14

ECM: 72533 - 19990617
Group number: 574601-0100
Assembly Drawing: 574601-3_1_AB

This list covers pages from 2-26 to 2-33

Pos	Part No	UN	Qty	Description	Page No
TB/8 NORMFIN US (Cont'd) (See drawing on page: 2-28)					
050	293333-0000		1	SIGN, WEB BRAKE	
090	1143241-0000		1	SIGN	
100	90042-0215		21	VALVE BODY 5/2 UNISTABLE	
110	90042-0520		3	BASE PLATE ISO SIZE 1	
120	90042-0532		31	BASE PLATE ISO SIZE 1	
160	90042-0527		21	SEAL KIT PILOT VALVE	
190	90042-0519		13	BLANK PLATE ISO SIZE 1	
200	90042-0528		5	BLANKING KIT SEALS ISO SIZE 1	
205	90042-0538		5	PILOT VALVE L=500MM	
210	90042-0539		16	PILOT VALVE L=350MM	
250	90043-0043		3	PRESSURE GAUGE 0-10 BAR 1/8"	
255	90043-0056		1	PRESSURE GAUGE, 2041 D=40 MM	
265	90055-0101		1	Y-CONNECTION, 8-8	
267	90055-0105		1	V-JUNCTION COUPLING14MM REPBY 342735-110	
270	90113-0069		3	PRESSURE REGULATOR	
273	90113-0071		1	PRESSURE REGULATOR	
285	90187-0149		2	THROTTLE VALVE, G1/4, G1/4, MALE	
290	90243-0427		2	FLOW METER	
350	90328-0024		8	SILENCER G3/8"	
360	90055-0096		4	STRAIGHT COUPLING	
365	90328-0026		2	SILENCER G1/4"	
370	342748-0110		5	T-CONNECTION 14MM	
380	342716-0203		22	REDUCER 6-8	
385	342713-0210		2	PLUG,EXT THREAD HEX SOCKET(PAK OF 10 PCS	
400	342716-0209		1	REDUCER 8-12	
405	342716-0211		3	REDUCER 12-14	
410	342715-0102		2	BLIND PLUG 6 MM	
420	342715-0103		50	BLIND PLUG 8 MM	
425	90055-0117		7	ELBOW WITH TAILPIECE	
430	90055-0118		26	ELBOW WITH TAILPIECE 8/8 MM	
495	342722-0205		2	STRAIGHT COUPLING D=8-G1/4"	
510	342722-0203		8	STRAIGHT COUPLING	
530	342732-0103		2	ELBOW PIPE JOINT, EXT.THREAD, D=6MM-G1/4	
540	342732-0104		7	ELBOW PIPE JOINT, EXT.THREAD, D=8MM-G1/4	
560	342748-0102		1	T-CONNECTION 6MM	
570	342770-0105		6	STRAIGHT COUPLING INT, D=6 MM - G1/8	
580	90113-0379		6	NUT	
690	90166-0081	M	4	TUBE 6 MM PA BLUE	
700	90166-0013	M	3	TUBE 8 MM PA BLUE	
900	312605-0316		12	HEXAGON NUT, M6M M6 A280	
940	342713-0211		12	PLUG, EXT THREAD HEX SOCKET 8638-00-380	

Pos	Part No	UN	Qty	Description	Page No
TB/8 TPC (See drawing on page: 2-26)					
050	293333-0000		1	SIGN, WEB BRAKE	
100	90042-0215		20	VALVE BODY 5/2 UNISTABLE	
110	90042-0520		3	BASE PLATE ISO SIZE 1	
120	90042-0532		31	BASE PLATE ISO SIZE 1	
160	90042-0527		20	SEAL KIT PILOT VALVE	
190	90042-0519		14	BLANK PLATE ISO SIZE 1	
200	90042-0528		4	BLANKING KIT SEALS ISO SIZE 1	
205	90042-0538		5	PILOT VALVE L=500MM	
210	90042-0539		15	PILOT VALVE L=350MM	
250	90043-0043		3	PRESSURE GAUGE 0-10 BAR 1/8"	
270	90113-0069		3	PRESSURE REGULATOR	
350	90328-0024		6	SILENCER G3/8"	
360	90055-0096		5	STRAIGHT COUPLING	
370	342748-0110		5	T-CONNECTION 14MM	
380	342716-0203		20	REDUCER 6-8	
385	342713-0210		1	PLUG,EXT THREAD HEX SOCKET(PAK OF 10 PCS	
400	342716-0209		1	REDUCER 8-12	
405	342716-0211		3	REDUCER 12-14	
410	342715-0102		3	BLIND PLUG 6 MM	
420	342715-0103		50	BLIND PLUG 8 MM	
425	90055-0117		5	ELBOW WITH TAILPIECE	
430	90055-0118		26	ELBOW WITH TAILPIECE 8/8 MM	
510	342722-0203		5	STRAIGHT COUPLING	
530	342732-0103		2	ELBOW PIPE JOINT, EXT.THREAD, D=6MM-G1/4	
540	342732-0104		3	ELBOW PIPE JOINT, EXT.THREAD, D=8MM-G1/4	
560	342748-0102		1	T-CONNECTION 6MM	
570	342770-0105		5	STRAIGHT COUPLING INT, D=6 MM - G1/8	
580	90113-0379		5	NUT	
690	90166-0081	M	3	TUBE 6 MM PA BLUE	
700	90166-0013	M	2	TUBE 8 MM PA BLUE	
780	90261-0008		2	PLUG, BLIND, PLASTIC GPN300F26	
790	90261-0013		4	PLUG F-11	
795	90261-0033		4	PLUG, BLIND, PLASTIC GPN300F182	
900	312605-0316		12	HEXAGON NUT, M6M M6 A280	
940	342713-0211		15	PLUG, EXT THREAD HEX SOCKET 8638-00-380	
Common Parts					
010	273449-0000		1	SIGN, FLAP SEALING	
040	978603-0000		1	SIGN	
060	479964-0000		1	SIGN	
070	561595-0000		1	SIGN MULTISTEP 35X35MM	
080	574602-0000		1	VALVE PANEL UPPER	

Machine Type | Group Description | Used-In | Group Number | Page No

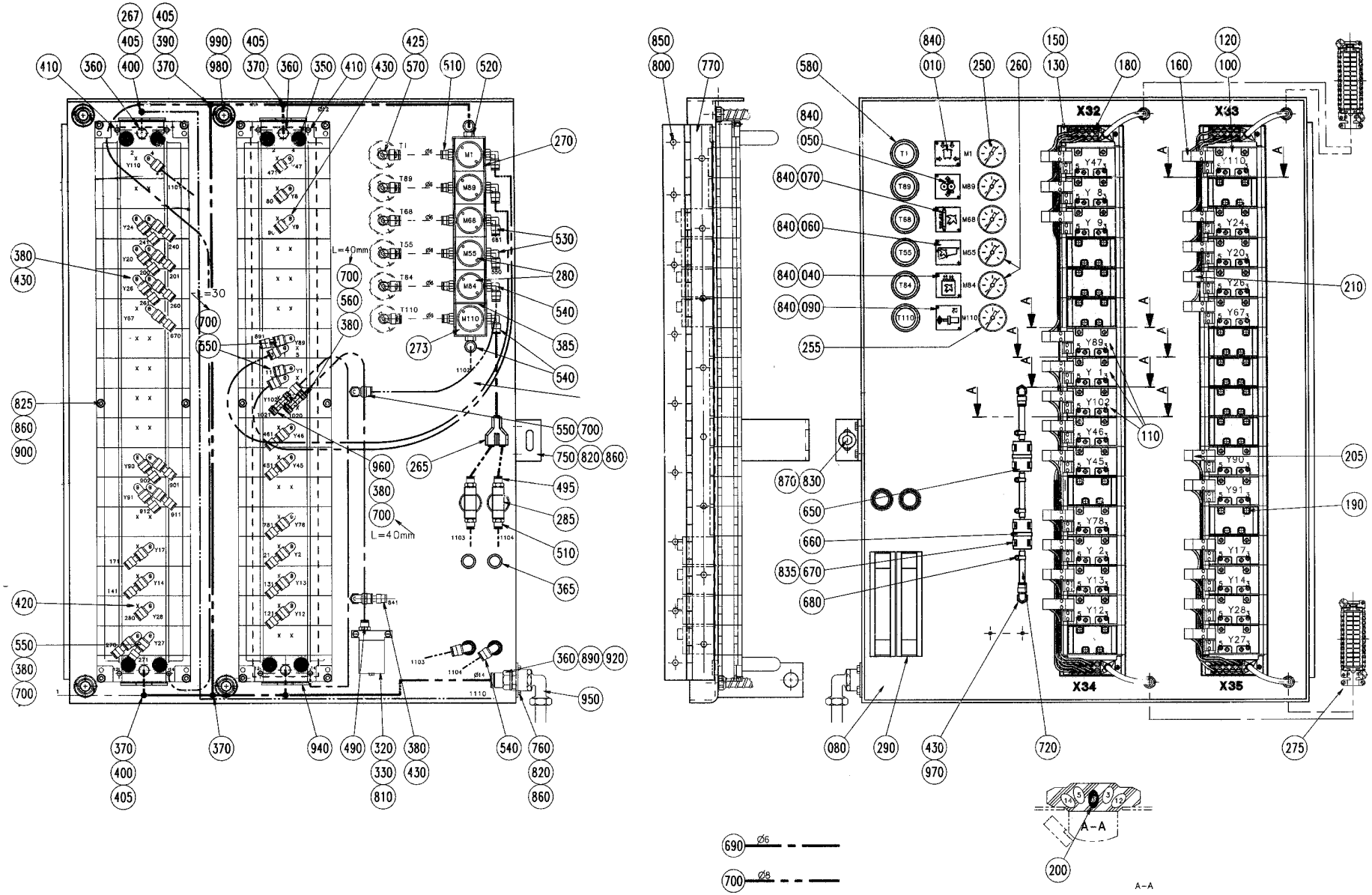

Graphic ID: 574601-4.tif
Parent draw.: 574601-4
ECN: 70473

ECM: 72533 - 19990617
Group number: 574601-0100
Assembly Drawing: 574601-4_1_AB

This list covers pages from 2-26 to 2-33

Pos	Part No	UN	Qty	Description	Page No
Common Parts (Cont'd)					
130	90042-0522		4	PORTED END PIECE ISO SIZE 1	
150	90042-0535		4	TERMINAL BOARD 19 CORDS	
180	90042-0550		2	PROTECTION PLUG FOR UNUSED CONNECTION	
260	90043-0021		2	PRESSURE GAUGE 0-1 BAR 1/8" D=40	
275	90110-0128		2	MALE INSERT HAN 24 E-M 65330242631	
280	90113-0076		2	PRESSURE REGULATOR	
320	90235-0450		1	PLATE	
330	90235-0708		1	VALVE	
390	342716-0210		1	REDUCER 6-12	
490	342722-0202		8	PIPE COUPLING 1/8" D=6MM	
520	342732-0109		1	ELBOW PIPE JOINT, EXT.THREAD, D=1MM-G1/4	
550	342735-0103		4	ELBOW PIPE JOINT	
650	90277-0045		1	FILTER / 9900-05-BK	
660	90277-0046		1	FILTER / 9933-05-101	
670	90074-0026		4	PIPE CLIP FOR TUBE D=24-35 MM	
680	90132-0021		4	HOSE CLIP 6-10MM	
710	90166-0068	MM	400	TUBE 12 MM PA BLUE	
720	90166-0194	MM	500	TUBE 8 MM PUR BLUE	
730	90166-0206	M	2	TUBE 14 MM PUR BLUE	
750	574603-0000		1	BRACKET	
760	574604-0000		1	BRACKET	
770	445736-0000		1	HINGE	
800	312105-0323		17	SCREW M6S ISO 4017 M5X8 A480	
810	312105-0339		2	SCREW M6S ISO 4014 M5X40 A480	
820	312105-0364		4	SCREW M6S ISO 4017 M6X10 A480	
825	312105-0376		12	SCREW M6S ISO 4014 M6X35 A480	
830	312105-0449		1	SCREW M6S ISO 4017 M8X16 A480	
835	312125-0220		4	SCREW ISO 1207 M3X6 A4	
840	312502-0120		12	DRIVE SCREW ROUND HEAD KDS 0X5	
850	315105-0146		17	WASHER BRB 5,3X10 RFR	
860	315105-0153		16	WASHER BRB 6,4X12 RFR	
870	315125-0165		1	WASHER TBRSB 8,4X26X5 A4	
890	315233-0113		1	WASHER CAPTIVE SEALING G1/2	
920	342701-0206		1	BUSHING,INT./EXT.G-THREAD G1/2"-G3/8"	
950	342733-0114		1	CONN. ELBOW WI-15-G1/2	
960	342748-0103		1	T-CONNECTION 8MM	
970	342768-0103		2	BULKHEAD CONNECTOR, 8 MM	
980	352135-0106	M	8	SPIRAL CONDUIT DI=16 MM	
990	352136-0127		8	GLAND FITTING PR 18,6	

Pos	Part No	UN	Qty	Description	Page No

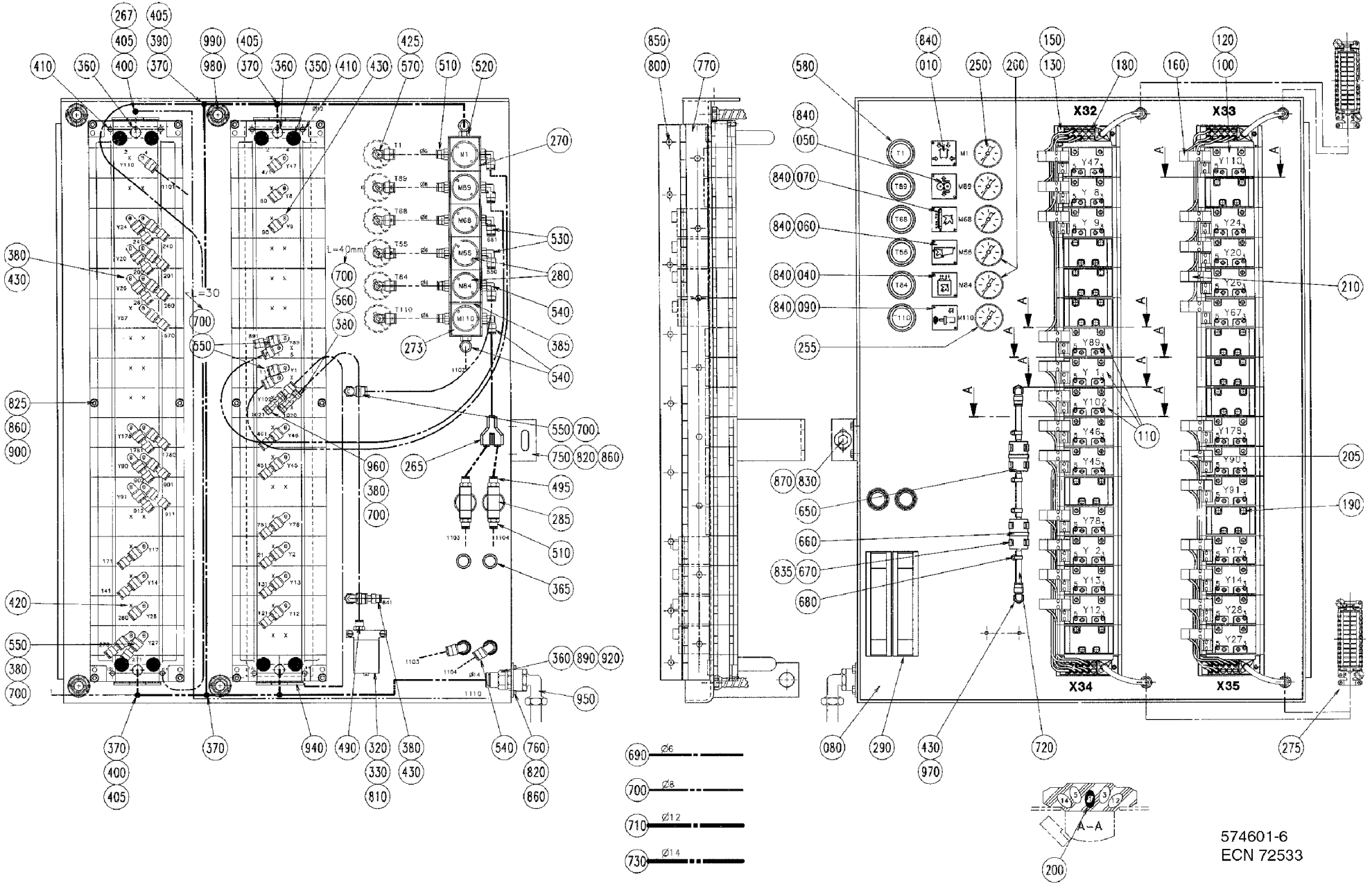
X32
X33
X34
X35
A–A
574601-6
ECN 72533

Pos	Part No	UN	Qty	Description	Page No	Pos	Part No	UN	Qty	Description	Page No

SEE PREVIOUS LISTS PAGES: 2-27, 2-29, 2-31.

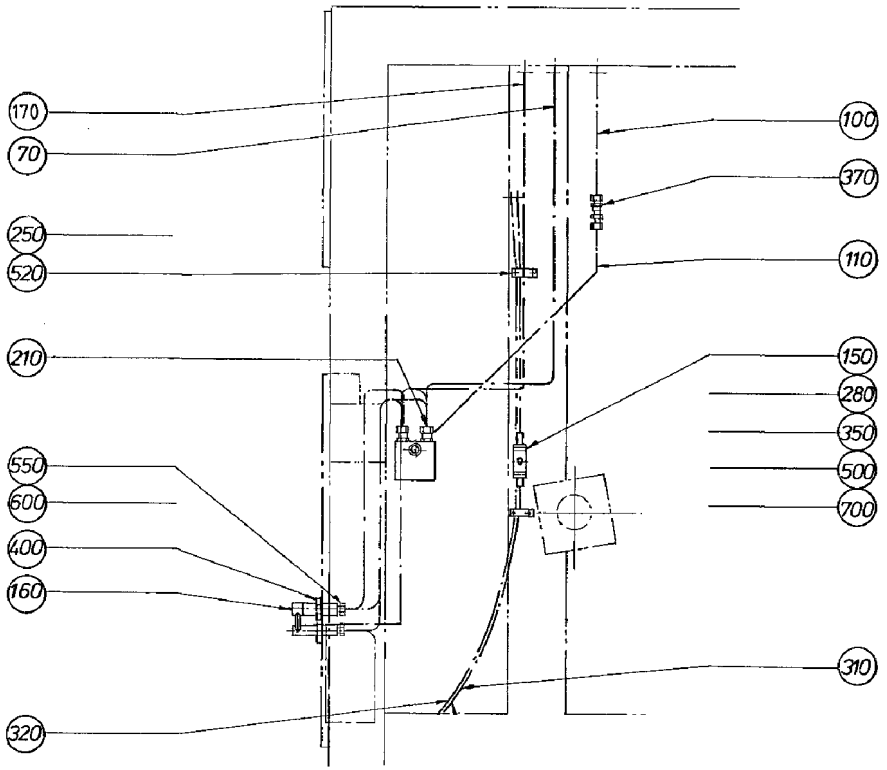

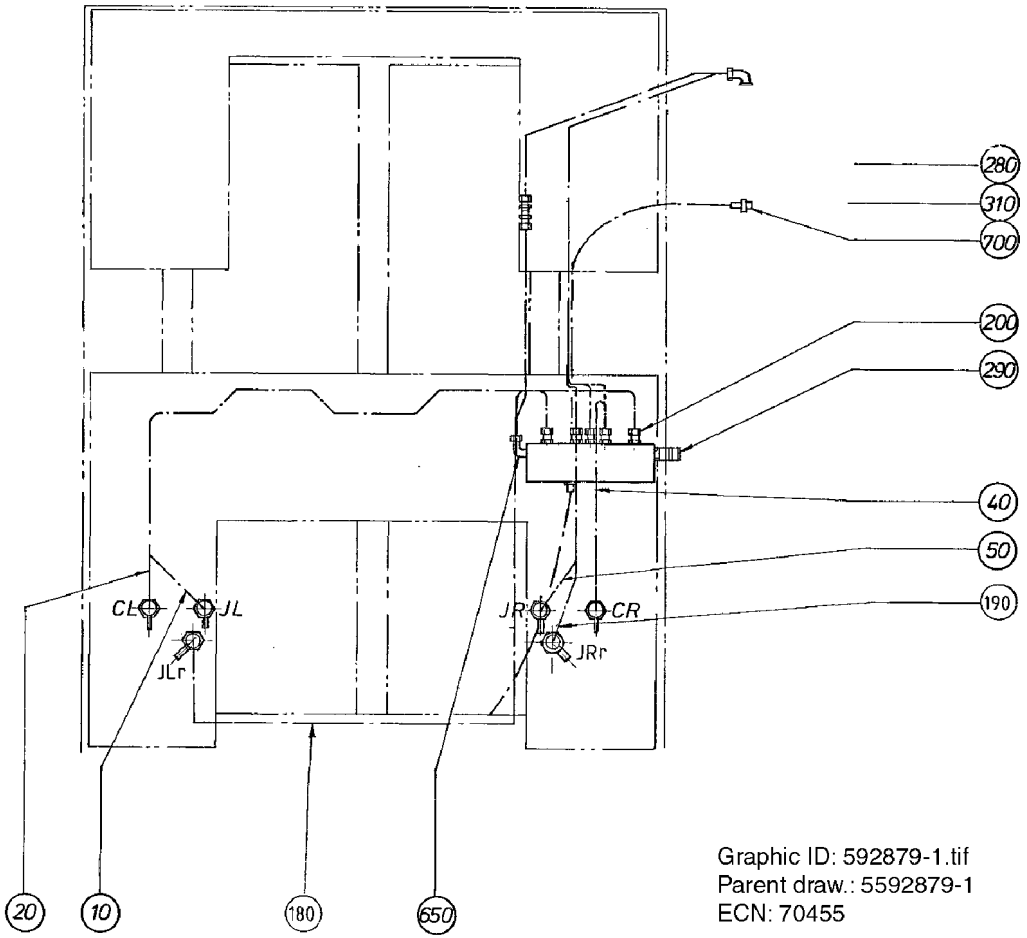

Graphic ID: 592879-1.tif
Parent draw.: 5592879-1
ECN: 70455

ECM: 70706 - 19970404
Group number: 592879-0100
Assembly Drawing: 592879-1_1_AA

Pos	Part No	UN	Qty	Description	Page No
-					
010	294493-0000		1	HYDRAULIC PIPE	
020	294494-0000		1	HYDRAULIC PIPE	
040	294495-0000		1	HYDRAULIC PIPE	
050	294496-0000		1	HYDRAULIC PIPE	
070	445539-0000		1	HYDRAULIC PIPE	
100	445540-0000		1	HYDRAULIC PIPE	
110	445541-0000		1	HYDRAULIC PIPE	
150	255017-0000		1	BRACKET	
160	540718-0000		6	ELBOW PIPE JOINT	
170	592716-0000		1	PIPE	
180	592717-0000		1	PIPE	
190	592718-0000		1	PIPE	
200	90030-0155		6	CONN. STR., 8-R3/8, EXT. THREAD	
210	90030-0157		2	CONN. STR. 10-R3/8, EXT. THREAD	
250	90074-0006		2	CABLE CLIPS, D=2X12 MM	
280	90163-0041		3	HOSE NIPPLE, EXT.THR. 3/8-12 MM	
290	90163-0076		1	QUICK COUPLING, (F) LP-006-0-WR021	
310	90166-0007	MM	2000	HOSE PVC 10/14 TRANSP.	
320	90166-0122	MM	2000	TUBE 8 MM PA,TRANSP.	
350	90187-0054		1	BALL VALVE G3/8	
370	90230-0011		1	NON-RETURN VALVE RHD-115L	
400	90330-0093		6	NUT, HEXAGON, G1/2	
500	312101-0331		2	SCREW M6S M5X20 FZB	
520	312125-0323		4	SCREW ISO 1207 M5X8 A4	
550	342703-0103		6	NUT, PIPES & CONNECTORS,NUT M-8 FE	
600	342705-0103		6	ACCESSORIES, FERRULE 8-LFZB	
650	342731-0114		1	CONN. ELBOW WE 15-LRFZB	
700	342991-0101		3	HOSE CLIP,WORM DRIVE TYPE (13)-16	

Pos	Part No	UN	Qty	Description	Page No

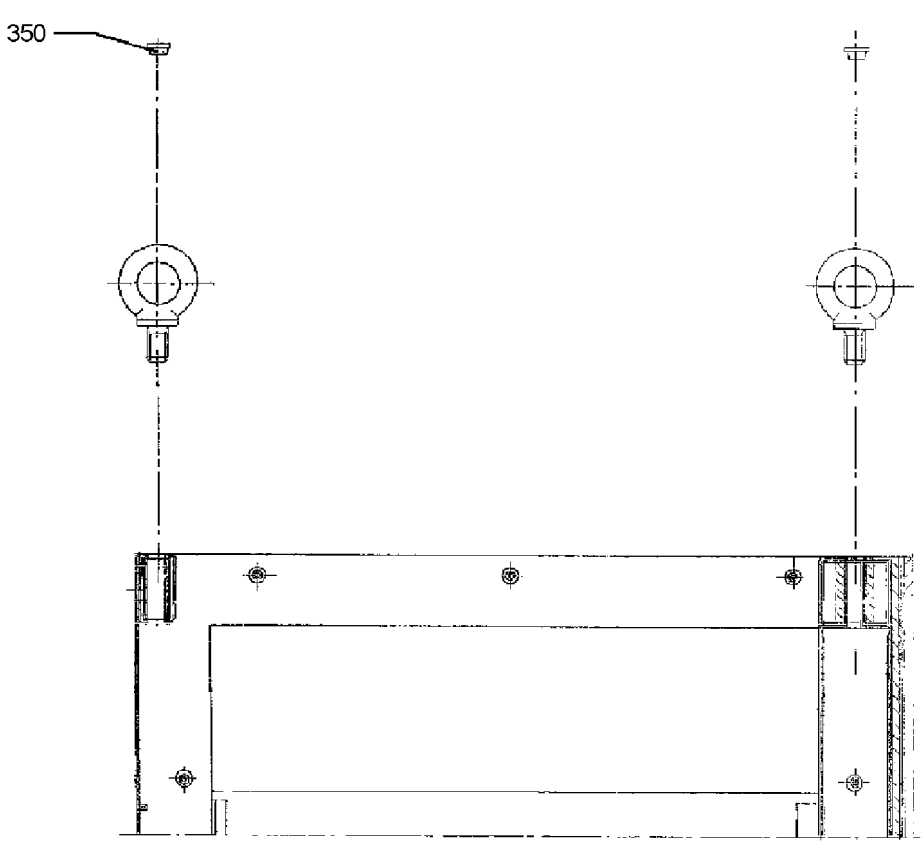
350

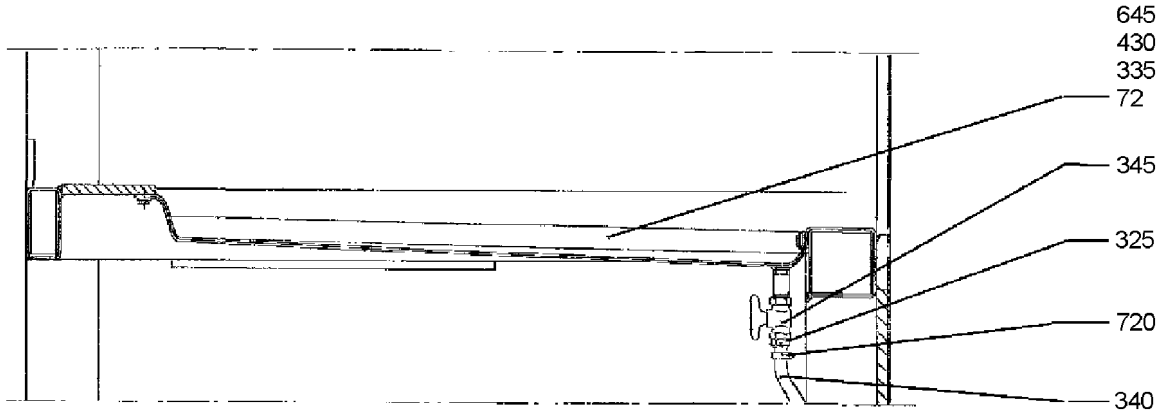
645
430
335
72
345
325
720
340

ECM: 101831 - 20020405
Group number: 440537-0500
Assembly Drawing: 440537-3_1_AA

This list covers pages from 2-36 to 2-43

Pos	Part No	UN	Qty	Description	Page No
TB/8 0568SQ REVFIN US, TB/8 0500SQ REVFIN US (See drawing on page: 2-42)					
005	592720-0000		1	FRONT PLATE	
012	228332-0000		1	FASTENING PLATE	
014	229075-0000		2	LACE	
018	929839-0000		1	COVER PLATE	
019	1143875-0000		1	COVER PLATE	
025	464194-0000		1	COVER DISC	
029	592719-0000		2	SEALING WASHER	
035	90261-0018		2	PLUG, BLIND, PLASTIC GPN300F-183	
037	90074-0006		5	CABLE CLIPS, D=2X12 MM	
038	90165-0174		6	HOSE HOLDER	
039	90261-0033		1	PLUG, BLIND, PLASTIC GPN300F182	
041	90330-0037		2	PLUG, EXT. G-THREAD, G1/2	
042	311103-0357		2	PARALLEL PIN ISO 2338 6M6X30 A1	
043	312101-0323		10	SCREW M6S M5X8 FZB	
045	312105-0364		104	SCREW M6S ISO 4017 M6X10 A480	
046	312105-0493		18	SCREW M6S ISO 4017 M10X25 A480	
047	312125-0287		9	SCREW ISO 1207 M4X8 A4	
048	312125-0327		4	SCREW ISO 1207 M5X12 A4	
049	315105-0173		14	WASHER BRB 10,5X20 RFR	
051	352101-0103		4	LEAD-IN, PR18,6/PG11, E-1457518	
052	352103-0105		3	CABLE GLAND, STR 11, PR 18,6/PG11	
053	352135-0202		2	CLIP, 16 MM, 913.016	
450	312105-0327		16	SCREW M6S ISO 4017 M5X12 A480	
605	315105-0146		8	WASHER BRB 5,3X10 RFR	
692	342732-0102		6	ELBOW PIPE JOINT, EXT.THREAD, D=6MM-G1/8	
695	342920-0113		8	STRAIGHT COUPLING,EXT.THREADED 6/4-R1/8"	
698	312145-0370		8	SCREW ISO 2009 MFS M6X20 A4	
705	90330-0066		1	PLUG, EXT. G-THREAD, G1/8	
TB/8 1000SQ REVFIN US (See drawing on page: 2-42)					
005	592720-0000		1	FRONT PLATE	
012	228332-0000		1	FASTENING PLATE	
014	229075-0000		2	LACE	
018	929839-0000		1	COVER PLATE	
019	1143875-0000		1	COVER PLATE	
025	464194-0000		1	COVER DISC	
029	592719-0000		2	SEALING WASHER	
035	90261-0018		2	PLUG, BLIND, PLASTIC GPN300F-183	
037	90074-0006		5	CABLE CLIPS, D=2X12 MM	
038	90165-0174		6	HOSE HOLDER	
039	90261-0033		1	PLUG, BLIND, PLASTIC GPN300F182	
041	90330-0037		2	PLUG, EXT. G-THREAD, G1/2	
042	311103-0357		2	PARALLEL PIN ISO 2338 6M6X30 A1	
043	312101-0323		10	SCREW M6S M5X8 FZB	
045	312105-0364		104	SCREW M6S ISO 4017 M6X10 A480	
046	312105-0493		18	SCREW M6S ISO 4017 M10X25 A480	
047	312125-0287		9	SCREW ISO 1207 M4X8 A4	
048	312125-0327		4	SCREW ISO 1207 M5X12 A4	
049	315105-0173		14	WASHER BRB 10,5X20 RFR	
051	352101-0103		4	LEAD-IN, PR18,6/PG11, E-1457518	
052	352103-0105		3	CABLE GLAND, STR 11, PR 18,6/PG11	
053	352135-0202		2	CLIP, 16 MM, 913.016	
450	312105-0327		16	SCREW M6S ISO 4017 M5X12 A480	
605	315105-0146		8	WASHER BRB 5,3X10 RFR	
695	342920-0113		2	STRAIGHT COUPLING,EXT.THREADED 6/4-R1/8"	
TB/8 NORMFIN US (See drawing on page: 2-42)					
005	592720-0000		1	FRONT PLATE	
012	228332-0000		1	FASTENING PLATE	
014	229075-0000		2	LACE	
018	929839-0000		1	COVER PLATE	
019	1143875-0000		1	COVER PLATE	
025	464194-0000		1	COVER DISC	
029	592719-0000		2	SEALING WASHER	
035	90261-0018		2	PLUG, BLIND, PLASTIC GPN300F-183	
037	90074-0006		5	CABLE CLIPS, D=2X12 MM	
038	90165-0174		6	HOSE HOLDER	
039	90261-0033		1	PLUG, BLIND, PLASTIC GPN300F182	
041	90330-0037		2	PLUG, EXT. G-THREAD, G1/2	
042	311103-0357		2	PARALLEL PIN ISO 2338 6M6X30 A1	
043	312101-0323		10	SCREW M6S M5X8 FZB	
045	312105-0364		104	SCREW M6S ISO 4017 M6X10 A480	
046	312105-0493		18	SCREW M6S ISO 4017 M10X25 A480	
047	312125-0287		9	SCREW ISO 1207 M4X8 A4	
048	312125-0327		4	SCREW ISO 1207 M5X12 A4	
049	315105-0173		14	WASHER BRB 10,5X20 RFR	
051	352101-0103		4	LEAD-IN, PR18,6/PG11, E-1457518	
052	352103-0105		3	CABLE GLAND, STR 11, PR 18,6/PG11	
053	352135-0202		2	CLIP, 16 MM, 913.016	
450	312105-0327		16	SCREW M6S ISO 4017 M5X12 A480	
605	315105-0146		8	WASHER BRB 5,3X10 RFR	
695	342920-0113		2	STRAIGHT COUPLING,EXT.THREADED 6/4-R1/8"	

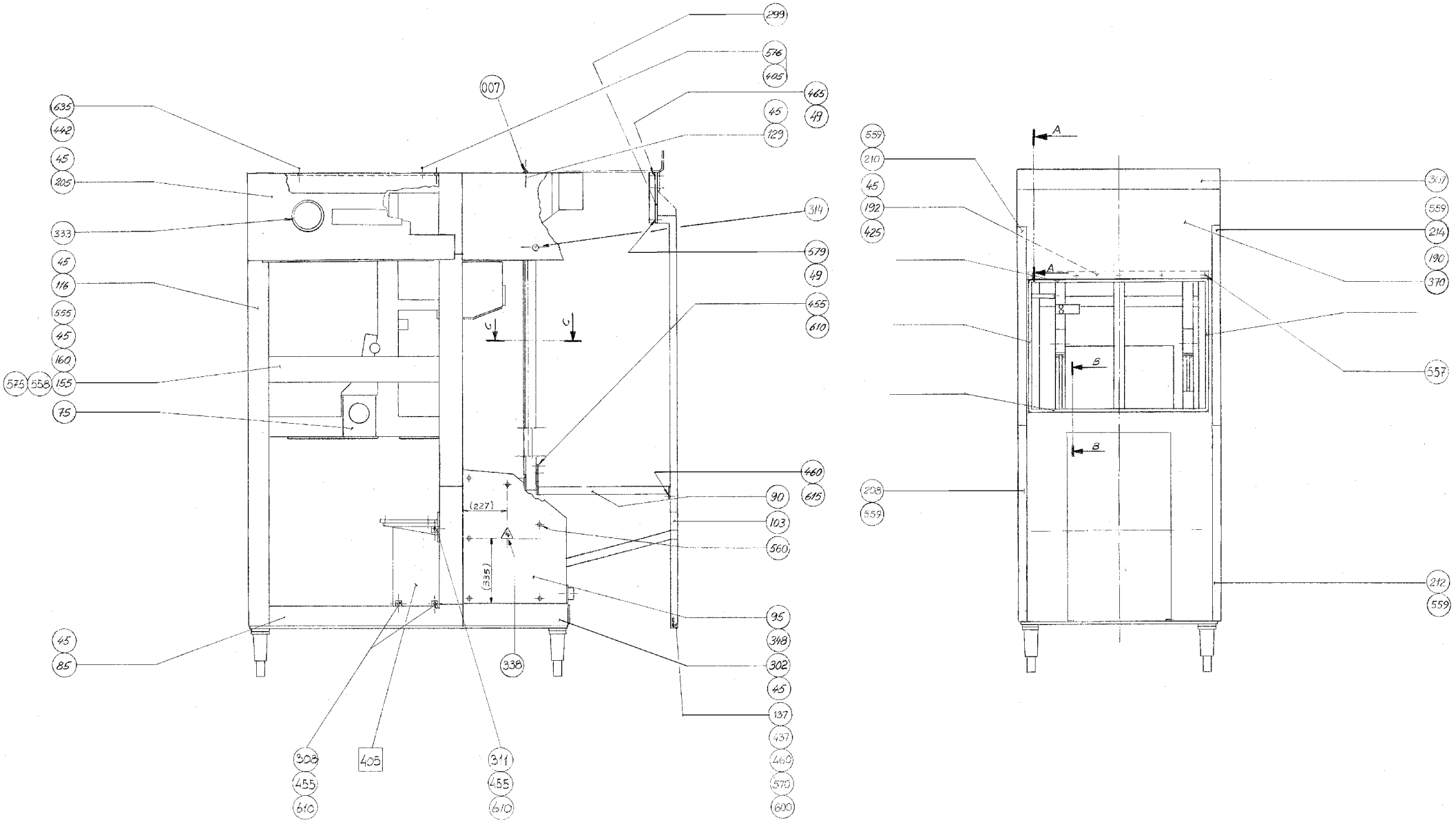
299
576
405
007
465
45
49
129
635
442
45
205
314
333
579
49
45
116
455
610
555
45
160
575
558
155
75
460
615
90
103
560
(227)
(335)
95
348
302
45
137
437
460
570
600
45
85
338
308
455
610
405
311
455
610
559
210
45
192
425
A
A
B
B
307
559
214
190
370
557
208
559
212
559

ECM: 101831 - 20020405
Group number: 440537-0500
Assembly Drawing: 440537-6_1_AC

This list covers pages from 2-36 to 2-43

Pos	Part No	UN	Qty	Description	Page No
TB/8 NORMFIN US (Cont'd) (See drawing on page: 2-42)					
698	312145-0370		8	SCREW ISO 2009 MFS M6X20 A4	
705	90330-0066		7	PLUG, EXT. G-THREAD, G1/8	
TB/8 TPC (See drawing on page: 2-40)					
005	592720-0000		1	FRONT PLATE	
012	228332-0000		1	FASTENING PLATE	
014	229075-0000		2	LACE	
015	544702-0000		2	COVERING PLATE	
025	464194-0000		1	COVER DISC	
035	90261-0018		2	PLUG, BLIND, PLASTIC GPN300F-183	
037	90074-0006		5	CABLE CLIPS, D=2X12 MM	
042	311103-0357		2	PARALLEL PIN ISO 2338 6M6X30 A1	
043	312101-0323		10	SCREW M6S M5X8 FZB	
045	312105-0364		104	SCREW M6S ISO 4017 M6X10 A480	
046	312105-0493		18	SCREW M6S ISO 4017 M10X25 A480	
047	312125-0287		9	SCREW ISO 1207 M4X8 A4	
049	315105-0173		14	WASHER BRB 10,5X20 RFR	
051	352101-0103		4	LEAD-IN, PR18,6/PG11, E-1457518	
052	352103-0105		3	CABLE GLAND, STR 11, PR 18,6/PG11	
053	352135-0202		2	CLIP, 16 MM, 913.016	
450	312105-0327		8	SCREW M6S ISO 4017 M5X12 A480	
695	342920-0113		2	STRAIGHT COUPLING,EXT.THREADED 6/4-R1/8"	
705	90330-0066		7	PLUG, EXT. G-THREAD, G1/8	
Common Parts					
055	543151-0000		1	CANTILEVER	
060	531182-0000		1	CANTILEVER	
070	267835-0000		1	CANTILEVER	
072	283884-0000		1	OIL TROUGH	
075	436776-0000		1	MACHINE BODY	
078	269285-0000		1	PROTECTION PLATE	
080	273751-0000		1	FRONT PLATE	
085	273753-0000		1	PROTECTION PLATE	
090	285801-0000		1	BEAM	
095	293158-0000		1	HATCH	
097	293159-0000		1	HATCH	
100	297576-0000		1	BEAM	
103	297669-0000		1	POST	
105	297670-0000		1	POST	
108	434919-0000		1	COLUMN LEFT	
110	434920-0000		1	COLUMN RIGHT	
114	440023-0000		1	PROTECTION PLATE	
116	440024-0000		1	PROTECTION PLATE	
129	566646-0000		1	SIDE GUARD	
130	566645-0000		1	SIDE GUARD	
137	440702-0000		1	BEAM	
138	540725-0000		1	FRONT PLATE, LOWER	
140	283992-0000		2	RULER	
145	247080-0000		4	BRACKET	
150	269291-0000		1	RULER	
155	269294-0000		1	RULER	
160	269295-0000		1	PROTECTION PLATE	
165	476824-0000		1	COVERING PLATE	
170	279370-0000		2	STEERING	
190	440025-0000		1	PROTECTION PLATE	
192	440026-0000		1	CANTILEVER	
205	440077-0000		1	COVERING PLATE	
208	440203-0000		1	RULER	
210	440204-0000		1	RULER	
212	440205-0000		1	RULER	
214	440206-0000		1	RULER	
216	479374-0000		1	DRIP PLATE	
225	531365-0000		4	BRACKET	
275	243573-0000		2	LACE	
278	538245-0000		2	SHIM	
280	247082-0000		4	LEG	
285	263828-0000		1	JUNCTION RAIL	
287	267462-0000		2	LOCK SHEET	
288	267463-0000		2	LOCK SHEET	
290	269296-0000		1	PROTECTION PLATE	
295	269297-0000		1	PROTECTION PLATE	
298	484212-0000		1	BRACKET	
299	484213-0000		1	BRACKET	
300	293160-0000		1	COVERING PLATE	
302	293161-0000		1	COVERING PLATE	
306	450298-0000		1	COVERING PLATE	
307	450342-0000		1	COVERING PLATE	
308	540726-0000		2	HOOK HOLDER	
309	543152-0000		1	HOSE ATTACHMENT	
310	457357-0000		2	BRACKET	
311	540727-0000		1	FASTENING BRACKET	
312	90015-0010		16	BUSHING	
313	90015-0011		1	BUSHING	
314	90015-0021		1	LEAD-IN, TET10-14, E-1458023	
316	90030-0066		1	CONN. BULKHEAD SV 6-L/SY	

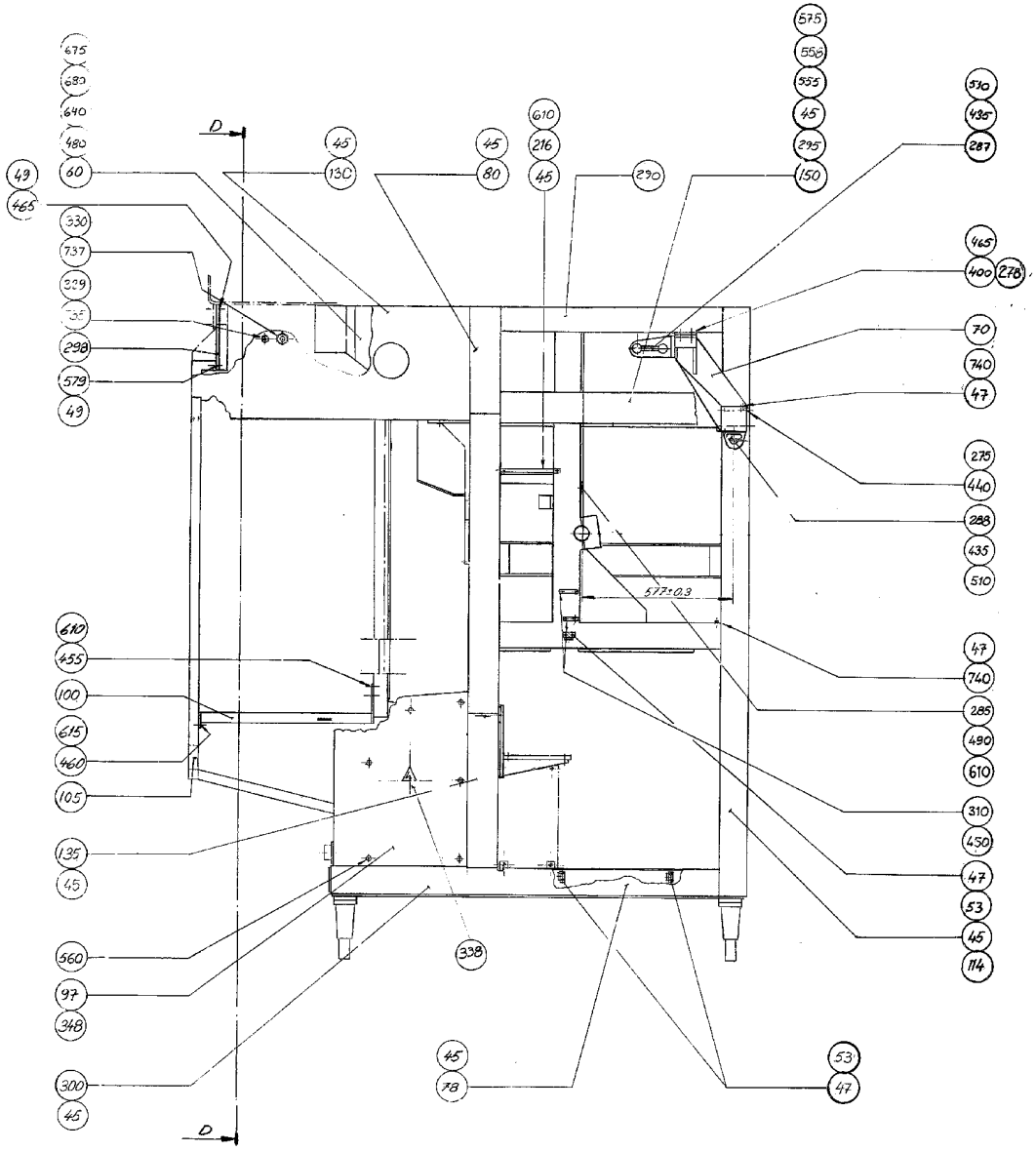

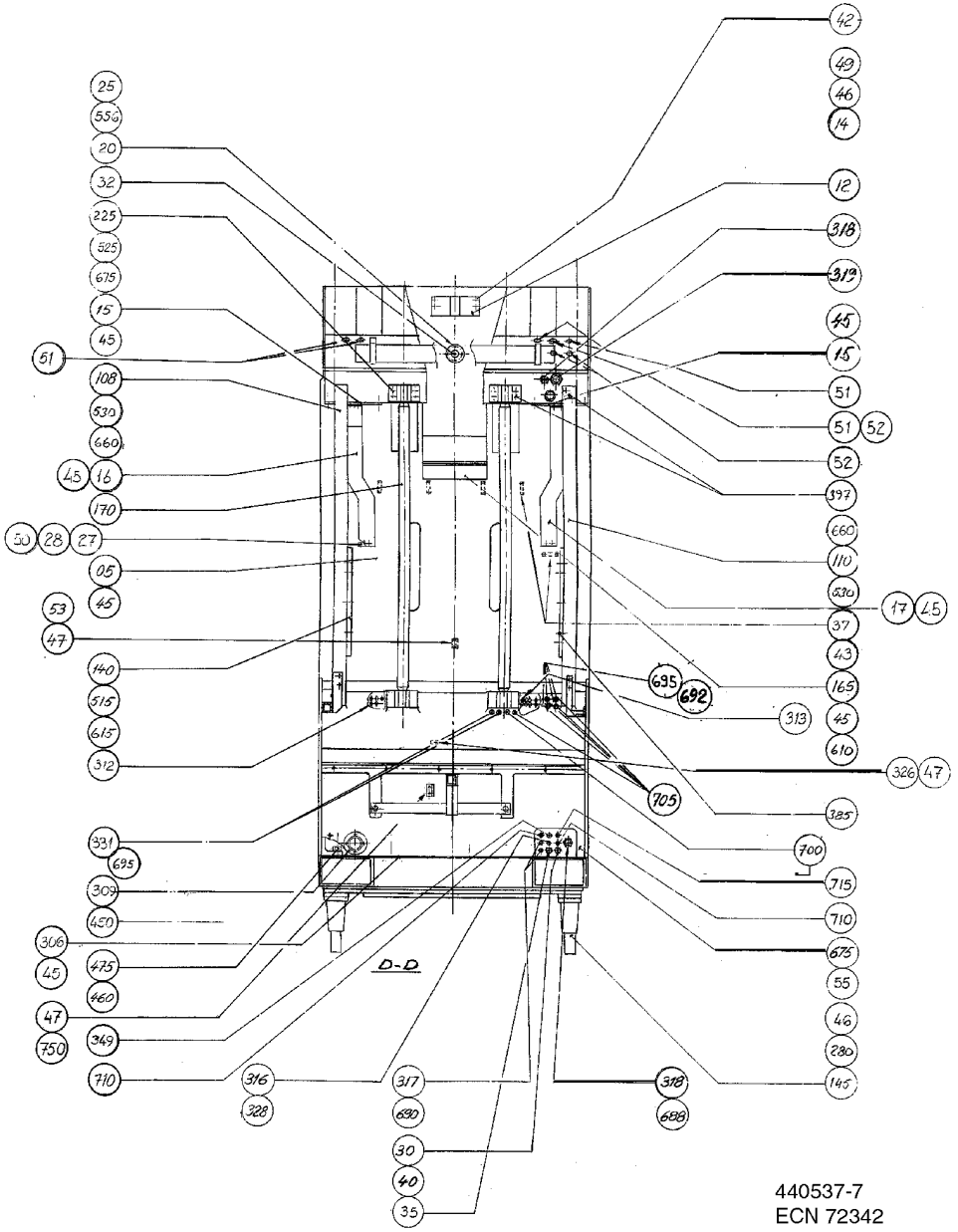

440537-7
ECN 72342

Pos	Part No	UN	Qty	Description	Page No
Common Parts (Cont'd)					
317	90030-0067		2	CONN. BULKHEAD SV 8-L/SY	
318	90030-0159		2	CONN. BULKHEAD SV 15-L/SY	
319	90030-0179		1	CONN. BULKHEAD SV 22-L/SY	
325	90055-0033		1	HOSE NIPPLE, EXT.THR. R1/2-13 MM	
326	90074-0001		1	CABLE CLIPS, D=10 MM	
328	90090-0014		1	BALL, D=7,938 MM	
329	90099-0004		1	NUT	
330	90099-0011		1	NUT PR 37 BRASS	
331	90134-0004		2	PIPE CONNECTION R1/8	
333	90143-0054	MM	500	STRIP	
335	90157-0022	L	1	SEALING COMPOUND, SILICONE	
338	90194-0016		2	WARNING SIGN, RISK OF ELECTRIC SHOCK	
340	90166-0121	MM	1500	HOSE	
345	90187-0029		1	BALL VALVE G1/2, NPBR	
348	90242-0115	MM	3200	O-RING MATERIAL 5,7 MM	
349	90261-0003		1	PLUG, BLIND, PLASTIC GPN300V-10	
350	90261-0011		4	PLUG, BLIND, PLASTIC GPN300F233	
370	90287-0075		6	SCREW SLOT. PAN HEAD LKCS M6X12	
385	311103-0314		4	PARALLEL PIN ISO 2338 5M6X30 A1	
397	311103-0413		16	PARALLEL PIN ISO 2338 8M6X50 A1	
400	311202-0320		2	TAPER PIN EN 22339 A 8X35 SS	
405	311211-0267		2	TAPER PIN THREADED ISO 8737 M5X05 SS	
425	312101-0366		8	SCREW M6S M6X12 FZB	
430	312101-0368		8	SCREW M6S M6X16 FZB	
435	312101-0453		20	SCREW M6S M8X25 FZB	
437	312101-0499		2	SCREW M6S M10X40 FZB	
440	312101-0518		4	SCREW M6S M10X140 FZB	
442	312101-0538		4	SCREW M6S M12X35 FZB	
455	312105-0368		7	SCREW M6S ISO 4017 M6X16 A480	
460	312105-0449		6	SCREW M6S ISO 4017 M8X16 A480	
465	312105-0493		8	SCREW M6S ISO 4017 M10X25 A480	
475	312105-0540		10	SCREW M6S ISO 4017 M12X40 A480	
480	312105-0542		12	SCREW M6S ISO 4014 M12X50 A480	
490	312111-0364		2	SCREW HEX.SOCK.HD.MC6S-TT 6X10 88 FZB	
510	312115-0378		6	SCREW ISO4762 M6X40 A4 80	
515	312115-0451		8	SCREW ISO4762 M8X20 A4 80	
525	312115-0501		7	SCREW ISO4762 M10X50 A4 80	
530	312115-0503		8	SCREW ISO4762 M10X60 A4 80	
555	312151-0366		4	SCREW EN 10642 MF6S M6X12 10.9 EL.PL	
556	312155-0327		4	SCREW DIN 7991 MF6S M5X12 A4 70	
557	312155-0366		5	SCREW DIN 7991 MF6S M6X12 A4 70	
558	312155-0370		4	SCREW DIN 7991 MF6S M6X20 A4 70	
559	312155-0368		15	SCREW DIN 7991 MF6S M6X16 A4 70	
560	312155-0451		12	SCREW DIN 7991 MF6S M8X20 A4 70	
570	312601-0320		2	HEXAGON NUT, M10 8 FZB, ISO 4032	
575	312605-0316		4	HEXAGON NUT, M6M M6 A280	
576	312605-0314		2	HEXAGON NUT, M6M M5 A280	
579	312605-0320		2	HEXAGON NUT, M6M M10 A280	
600	315101-0173		2	WASHER PLAIN, BRB, 10,5/22 H=2	
610	315105-0153		31	WASHER BRB 6,4X12 RFR	
615	315105-0165		14	WASHER BRB 8,4X16 RFR	
635	315111-0178		4	WASHER PLAIN, TBRB 13/24 H=4	
640	315115-0178		22	WASHER PLAIN, TBRB 13/24 H=4	
645	315121-0153		8	WASHER PLAIN, TBRSB 6,4/22 H=4	
660	315402-0173		15	LOCK WASHER FBB 10,2	
675	315701-0330		2	PARALLEL KEY W. ROUND ENDS 12X8X32 MM	
680	315701-0336		3	PARALLEL KEY W. ROUND ENDS 12X8X63 MM	
688	341001-0228	MM	35	COPPER TUBE	
690	342929-0121		2	STRAIGHT COUPLING,SOLDER 8/6-8	
700	342920-0121		2	STRAIGHT COUPLING,EXT.THREADED 8/6-R1/8"	
710	342960-0112		2	BULKHEAD COUPLING 6/4	
715	342960-0122		1	BULKHEAD COUPLING 8/6	
720	342991-0103		1	HOSE CLIP,WORM DRIVE TYPE (19)-23	
735	352103-0116		1	CABLE GLAND, ST 21, PR28,3/PG21	
737	352103-0121		1	CABLE GLAND, ST 29, PR37,0/PG29	
740	352110-0101		2	CABLE CLIPS, D=7-10 MM	
750	352135-0201		1	CLIP, 12 MM, 913.012	
F405	540723-0100		1	CONNECTION BOX	**2-45**

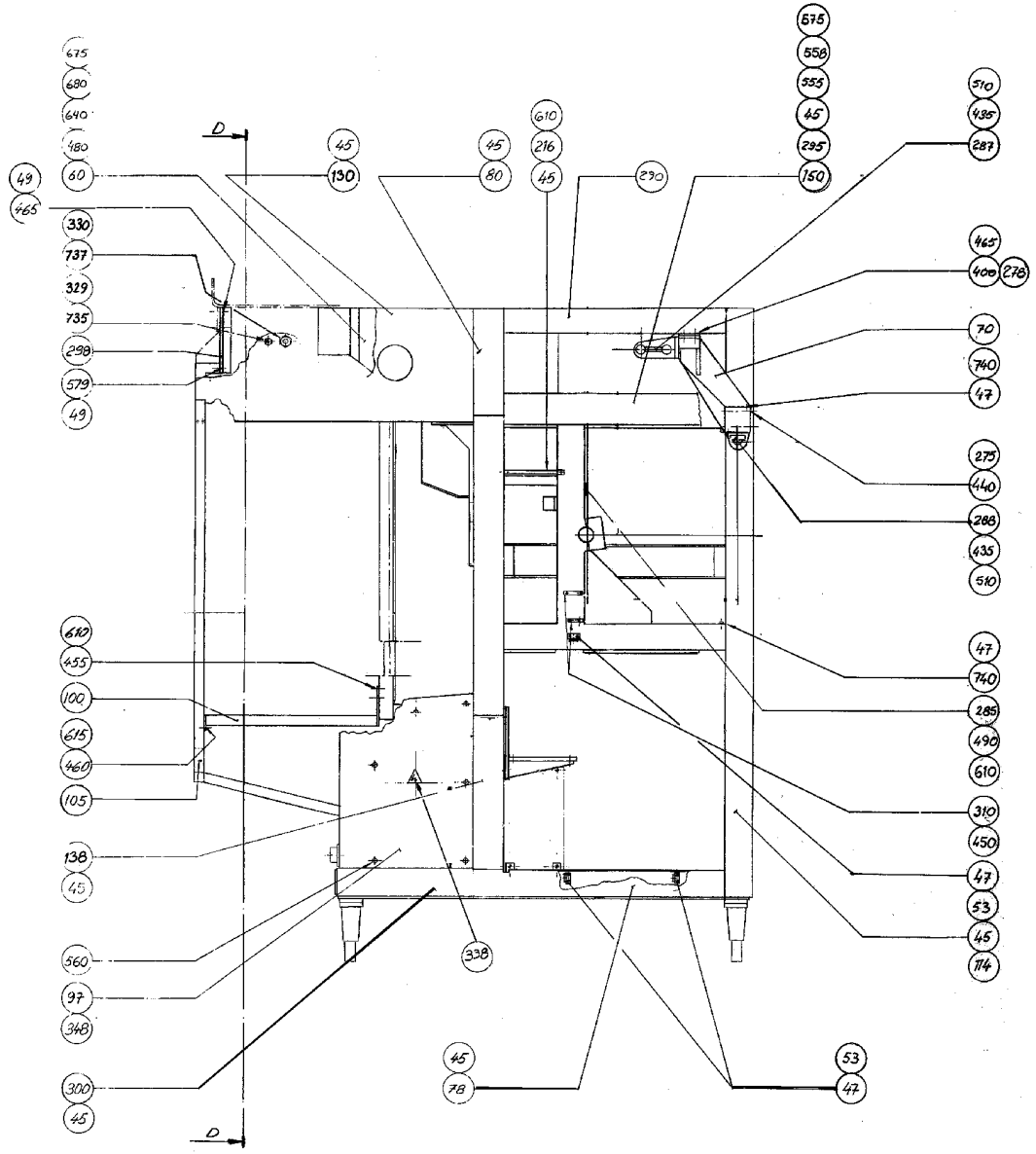

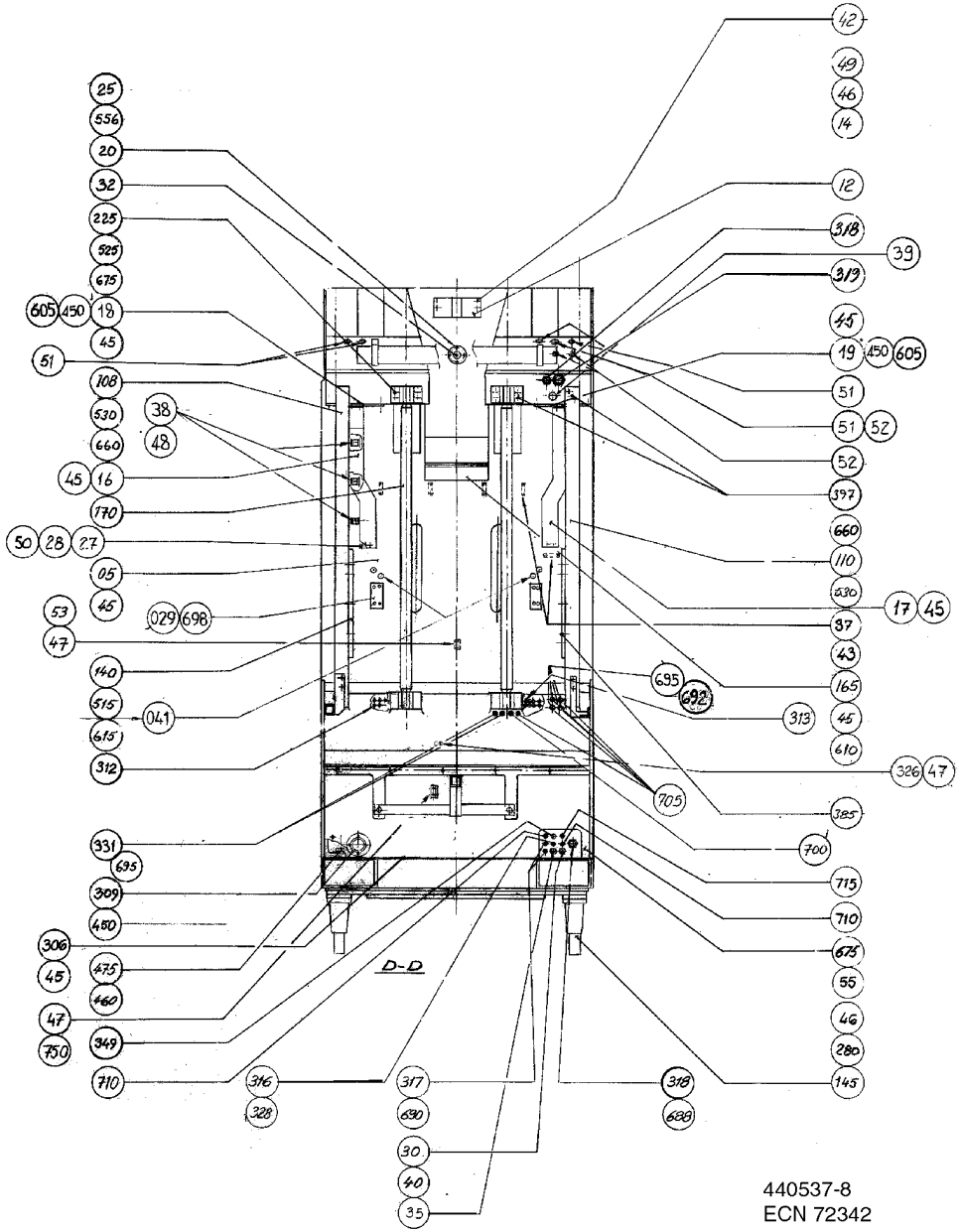

440537-8
ECN 72342

Pos	Part No	UN	Qty	Description	Page No	Pos	Part No	UN	Qty	Description	Page No

SEE PREVIOUS LISTS PAGES: 2-37, 2-39, 2-41.

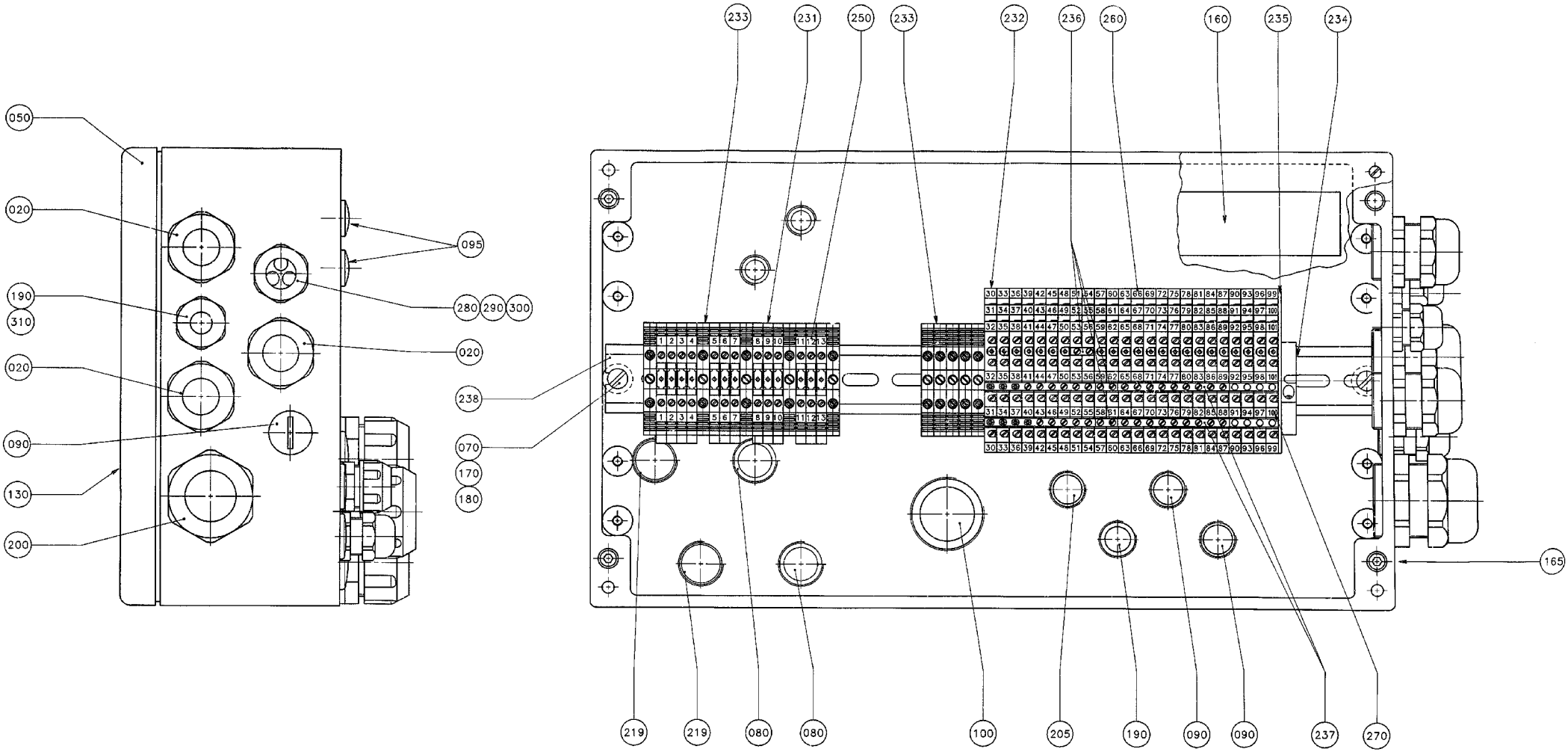
050
020
190
310
020
090
130
200
095
280
290
300
020
238
070
170
180
233
231
250
233
232
236
260
160
235
234
165
219
219
080
080
100
205
190
090
090
237
270

ECM: 73197 - 19991201
Group number: 540723-0100
Assembly Drawing: 540723-1_1_AH

Pos	Part No	UN	Qty	Description	Page No
TB/8					
080	90002-0004		2	BLANK-OFF PLUG, PR 22,5 SKINDICHT-BLK16	
090	90002-0009		3	BLANK-OFF PLUG, PR 18.6 SKINDICHT-BLK11	
095	90002-0013		2	BLANK-OFF PLUG, PR 15,2 SKINDICHT-BLK9	
190	352103-0106		2	CABLE GLAND, ST 11, PR18,6/PG11	
219	352136-0142		2	GLAND FITTING	
231	353021-0212		13	FEED THROUGH TERMINAL, 10200.0	
233	353024-0205		10	EARTH TERMINAL, 1010.1	
236	353034-0401		3	BRIDGE CONNECTOR Q2, 13125.0	
250	359011-0807		2	MARKING PLATES 5-FW 1-50	
Common Parts					
020	352103-0116		3	CABLE GLAND, ST 21, PR28,3/PG21	
050	540724-0000		1	CONNECTION BOX	
070	450899-0001		2	SPACER	
100	90012-0061		1	GLAND	
130	90194-0016		1	WARNING SIGN, RISK OF ELECTRIC SHOCK	
160	90298-0022		1	ZERUST CAPSULE	
165	312115-0372		3	SCREW ISO4762 M6X25 A4 80	
170	312125-0376		2	SCREW ISO 1207 M6X35 A4	
180	315105-0153		2	WASHER BRB 6,4X12 RFR	
200	352103-0120		1	CABLE GLAND, STR 29, PR37,0/PG29	
205	352136-0113		1	GLAND FITTING PR18,6/PG11 DI=12MM	
232	353021-0302		24	TERMINALS,TRIPLE-LEVEL, DLD 2,5/35 PA	
234	353031-0201		1	END BRACKET EW35	
235	353032-0302		1	END PLATE WAP, 13176.6	
237	353034-0404		4	BRIDGE CONNECTOR Q10, 13131.0	
238	353042-0004	MM	385	RAIL TS 35/7,5	
260	359011-0808		2	MARKING PLATES 5-FW 51-100	
270	359011-0809		2	MARKING PLATES 5-FW 101-150	
280	353240-0004		1	GLAND W/O INSERT PG16 NORMAL	
290	353249-0027		1	INSERT, MULTI HOLE, E153M3X7	
300	353249-0306		3	SEALING PIN, 7X25	
310	1487685-0000		1	PLUG	

Pos	Part No	UN	Qty	Description	Page No

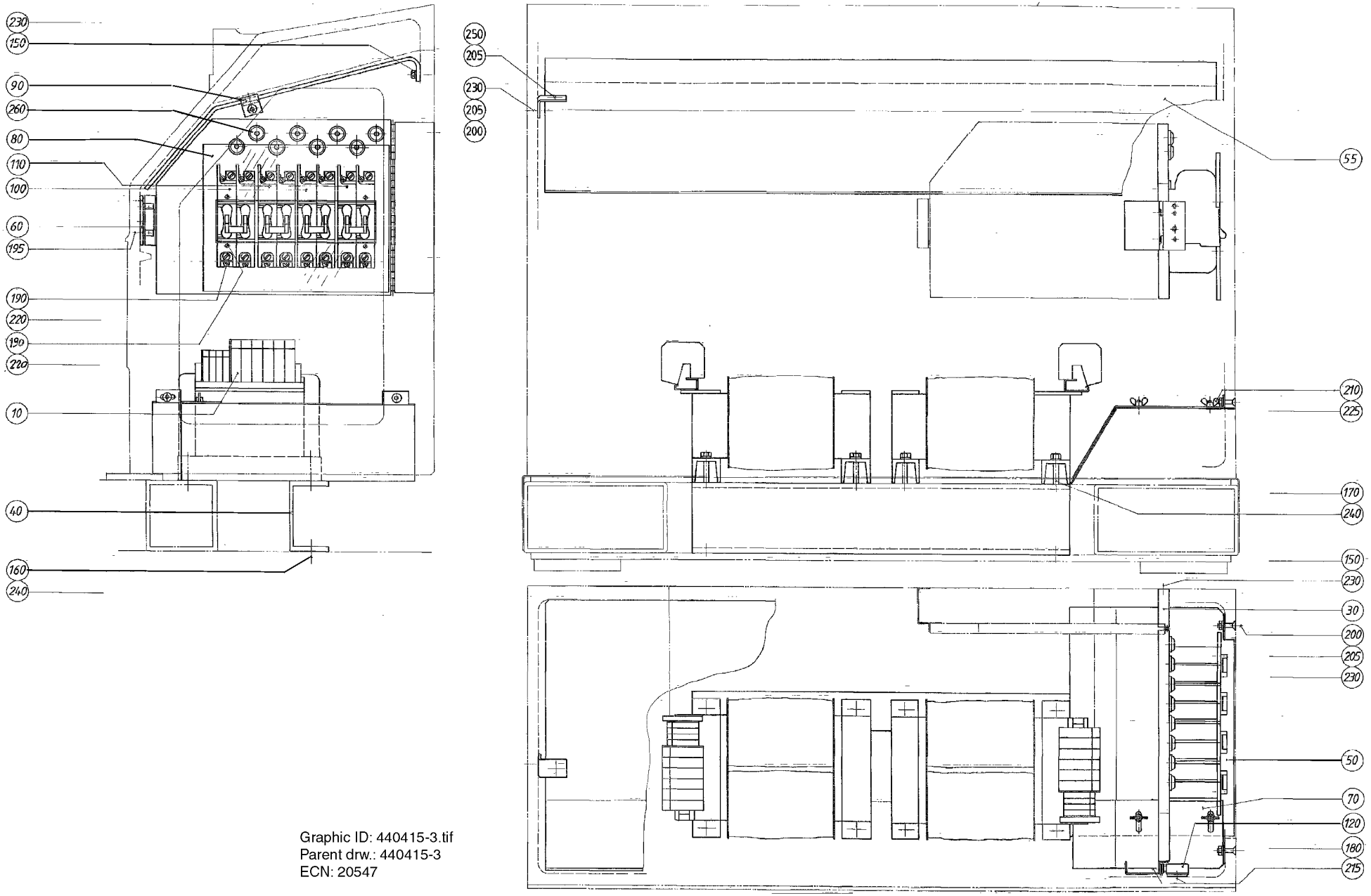

Graphic ID: 440415-3.tif
Parent drw.: 440415-3
ECN: 20547

ECM: 72091 - 19981216
Group number: 440415-0200
Assembly Drawing: 440415-3_1_AA

Pos	Part No	UN	Qty	Description	Page No
-					
010	23127-0101		2	TRANSFORMER	
030	450299-0000		1	SWIVEL PLATE	
040	450300-0000		1	BEAM	
050	450667-0000		1	SPLASH GUARD	
055	451088-0000		1	PROTECTION	
060	450301-0000		1	FASTENING PLATE	
070	450668-0000		1	SPLASH GUARD	
080	450669-0000		1	TOUCH GUARD	
090	451089-0000		2	BRACKET	
100	90007-0100		2	CIRCUIT BREAKER, CF2 Z100-1-90007-100	
110	90007-0101		2	FUSE,	
120	90237-0046		1	MAGNETIC LOCK, 46X33X15 MM	
150	312105-0366		4	SCREW M6S ISO 4017 M6X12 A480	
160	312101-0451		4	SCREW M6S M8X20 FZB	
170	312101-0461		8	SCREW M6S M8X50 FZB	
180	312125-0220		4	SCREW ISO 1207 M3X6 A4	
190	312121-0291		20	SCREW ISO 1207 M4X12 4.8 - 5.8 Z.PL.	
195	312145-0366		2	SCREW ISO 2009 MFS M6X12 A4	
200	312155-0372		4	SCREW DIN 7991 MF6S M6X25A4 70	
205	312605-0316		6	HEXAGON NUT, M6M M6 A280	
210	312715-0114		2	WING NUT DIN 315 A2 MVM-K M5	
215	315105-0124		4	WASHER BRB 3,2X7 RFR	
220	315101-0136		12	WASHER BRB, 4,3/8 H=0,8	
225	315105-0146		2	WASHER BRB 5,3X10 RFR	
230	315105-0153		8	WASHER BRB 6,4X12 RFR	
240	315101-0165		12	WASHER PLAIN, BRB, 8,4/16 H=1,5	
250	315121-0153		2	WASHER PLAIN, TBRSB 6,4/22 H=4	
260	352101-0103		8	LEAD-IN, PR18,6/PG11, E-1457518	

Pos	Part No	UN	Qty	Description	Page No

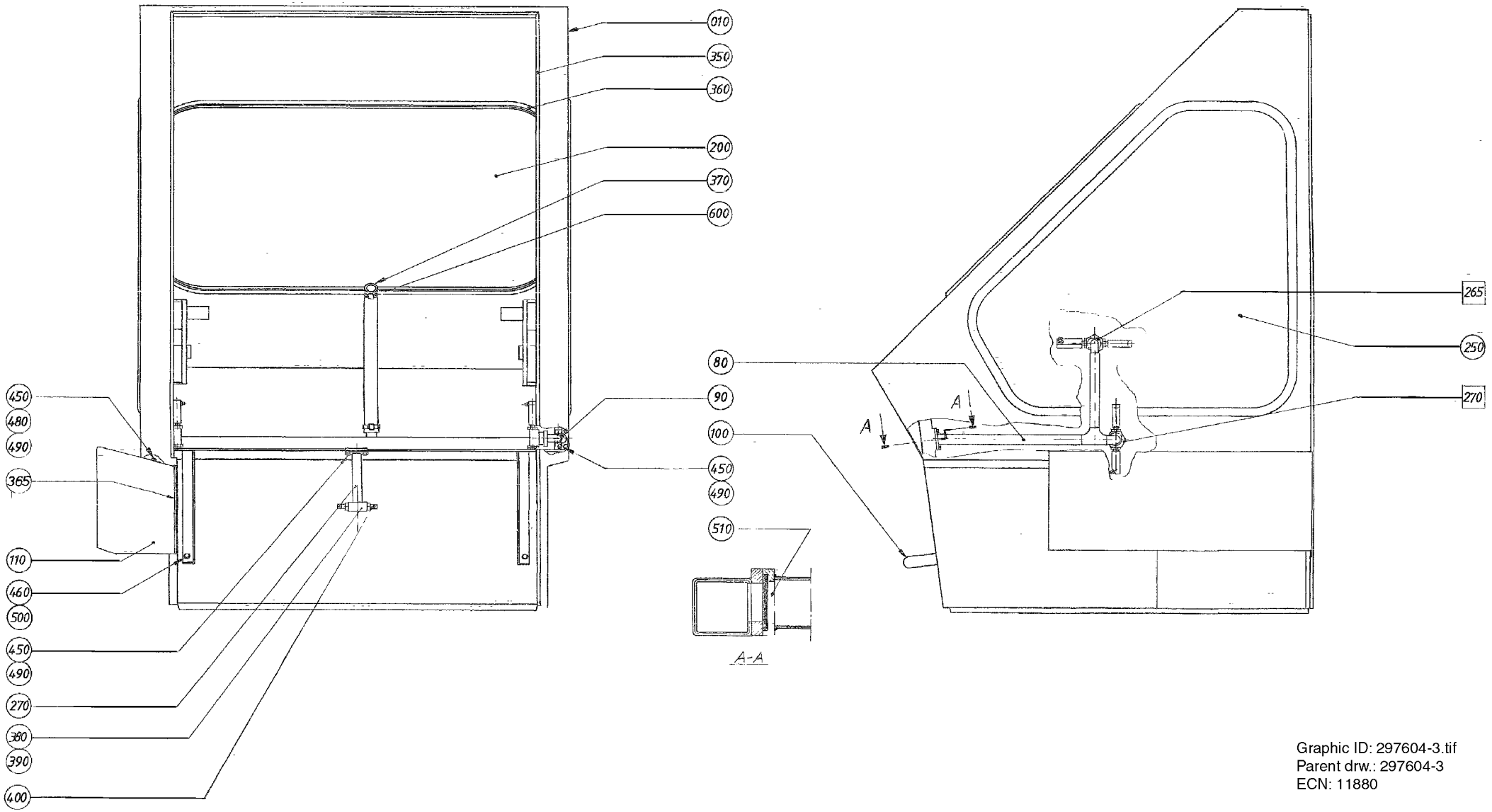

Graphic ID: 297604-3.tif
Parent drw.: 297604-3
ECN: 11880

ECM: 176831 - 20041018
Group number: 297604-0400
Assembly Drawing: 297604-3_1_AA

This list covers pages from 2-48 to 2-51

Pos	Part No	UN	Qty	Description	Page No
LEFT OUT (See drawing on page: 2-50)					
010	594588-0000		1	HOOD	
110	595054-0000		1	PROTECTION	
RIGHT OUT (See drawing on page: 2-48)					
010	543148-0000		1	HOOD	
110	550503-0000		1	PROTECTION	
Common Parts					
080	499833-0000		1	PIPE RIGHT	
090	499834-0000		1	PIPE LEFT	
100	285956-0000		1	HANDLE	
200	262774-0009		1	GLASS PANE	
250	297488-0000		2	GLASS PANE	
270	297679-0000		1	PIPE	
350	90143-0035	MM	4500	STRIP	
360	90143-0039	MM	9500	STRIP	
365	90143-0068	MM	200	RUBBER STRIP EMKA 1011-06	
370	90166-0142	MM	600	HOSE	
380	90330-0024		1	T-PIPE, INT. THREAD, RP1/4	
390	90330-0083		1	NIPPLES, EXT. THREAD. R3/8-R1/4	
400	90424-0025		2	SPRAY NOZZLE 145 DEG	
450	312105-0368		11	SCREW M6S ISO 4017 M6X16 A480	
460	312105-0451		2	SCREW M6S ISO 4017 M8X20 A480	
480	312605-0316		4	HEXAGON NUT, M6M M6 A280	
490	315105-0153		10	WASHER BRB 6,4X12 RFR	
500	315105-0165		2	WASHER BRB 8,4X16 RFR	
510	315202-0216		3	O-RING 22,2X3 MM	
600	342991-0106		2	HOSE CLIP,WORM DRIVE TYPE (30)-36	
F270	476886-0200		2	CLEANING HEAD	**2-53**
F265	476885-0200		2	CLEANING HEAD	**2-55**

Pos	Part No	UN	Qty	Description	Page No

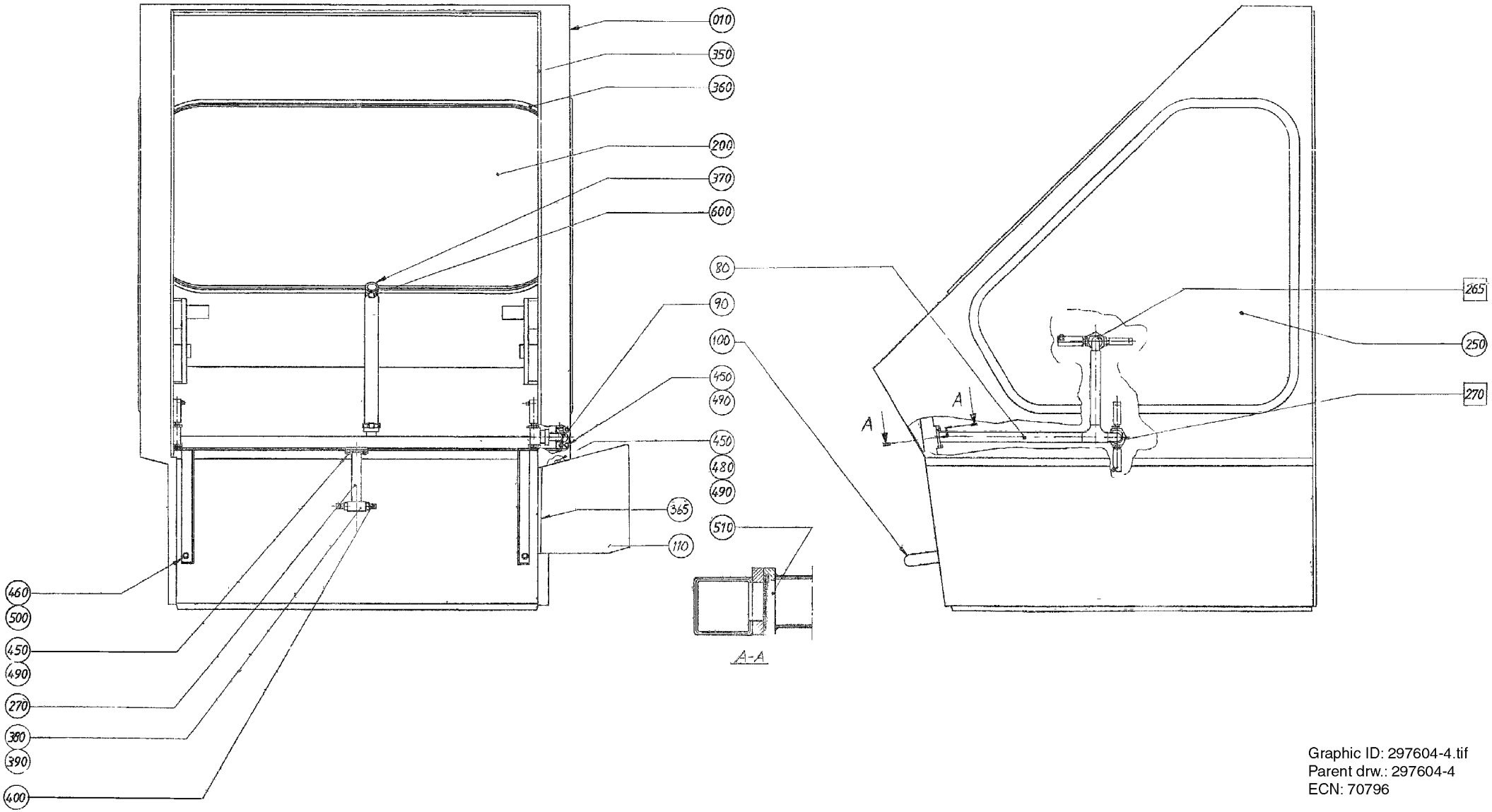

Graphic ID: 297604-4.tif
Parent drw.: 297604-4
ECN: 70796

ECM: 176831 - 20041018
Group number: 297604-0400
Assembly Drawing: 297604-4_1_AA

This list covers pages from 2-48 to 2-51

Pos	Part No	UN	Qty	Description	Page No
LEFT OUT (See drawing on page: 2-50)					
010	594588-0000		1	HOOD	
110	595054-0000		1	PROTECTION	
RIGHT OUT (See drawing on page: 2-48)					
010	543148-0000		1	HOOD	
110	550503-0000		1	PROTECTION	
Common Parts					
080	499833-0000		1	PIPE RIGHT	
090	499834-0000		1	PIPE LEFT	
100	285956-0000		1	HANDLE	
200	262774-0009		1	GLASS PANE	
250	297488-0000		2	GLASS PANE	
270	297679-0000		1	PIPE	
350	90143-0035	MM	4500	STRIP	
360	90143-0039	MM	9500	STRIP	
365	90143-0068	MM	200	RUBBER STRIP EMKA 1011-06	
370	90166-0142	MM	600	HOSE	
380	90330-0024		1	T-PIPE, INT. THREAD, RP1/4	
390	90330-0083		1	NIPPLES, EXT. THREAD. R3/8-R1/4	
400	90424-0025		2	SPRAY NOZZLE 145 DEG	
450	312105-0368		11	SCREW M6S ISO 4017 M6X16 A480	
460	312105-0451		2	SCREW M6S ISO 4017 M8X20 A480	
480	312605-0316		4	HEXAGON NUT, M6M M6 A280	
490	315105-0153		10	WASHER BRB 6,4X12 RFR	
500	315105-0165		2	WASHER BRB 8,4X16 RFR	
510	315202-0216		3	O-RING 22,2X3 MM	
600	342991-0106		2	HOSE CLIP,WORM DRIVE TYPE (30)-36	
F270	476886-0200		2	CLEANING HEAD	**2-53**
F265	476885-0200		2	CLEANING HEAD	**2-55**

Pos	Part No	UN	Qty	Description	Page No

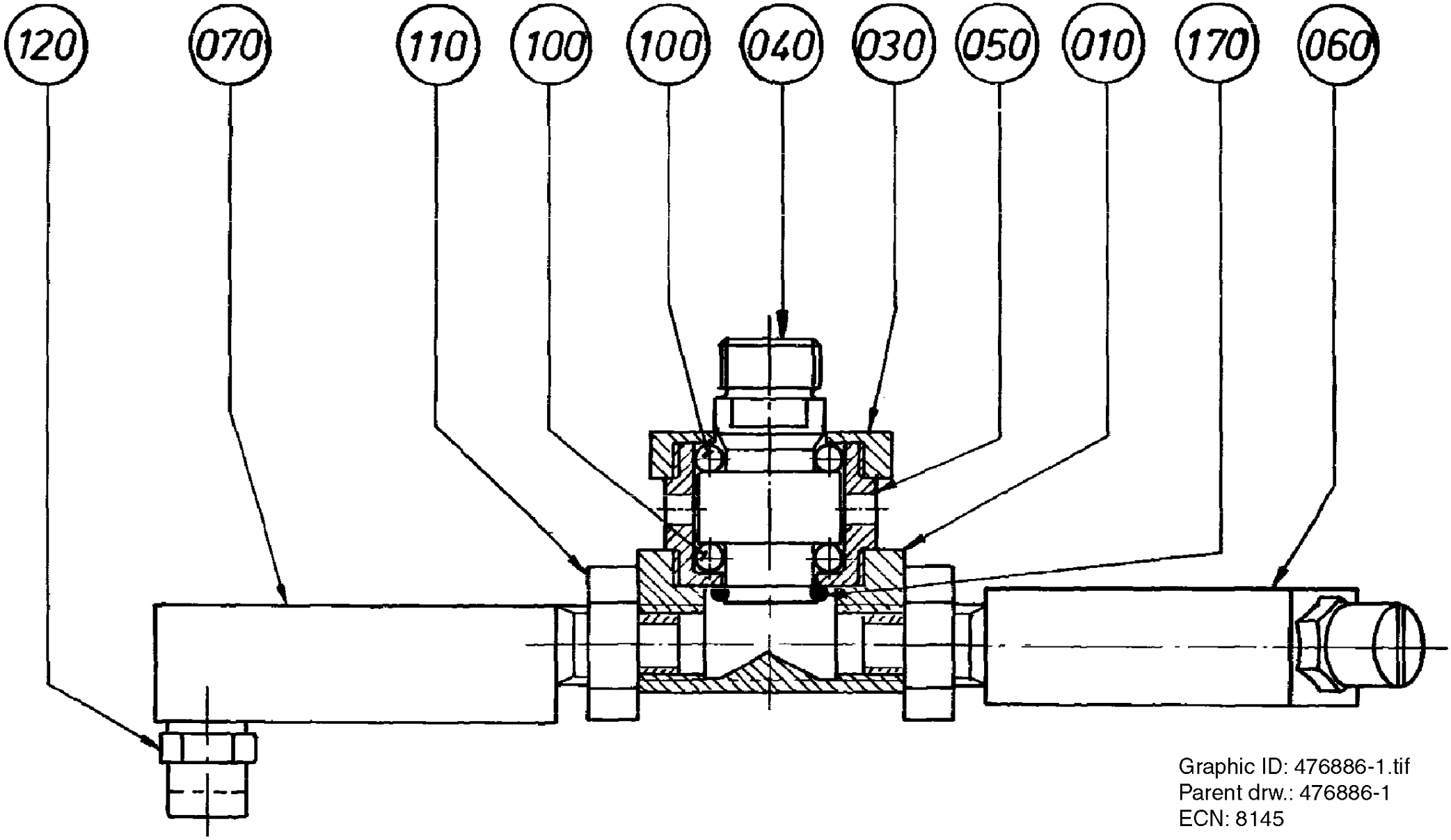

Graphic ID: 476886-1.tif
Parent drw.: 476886-1
ECN: 8145

ECM: 176833 - 20041018
Group number: 476886-0200
Assembly Drawing: 476886-1_1_AA

Pos	Part No	UN	Qty	Description	Page No
-					
010	440600-0000		1	ROTOR	
030	534880-0000		1	END SECTION	
040	534878-0000		1	SHAFT	
050	534879-0000		1	BEARING HOUSING	
060	440604-0001		1	PIPE	
070	440605-0001		1	PIPE	
100	90090-0020		24	BALL, D=5 MM	
110	90330-0034		2	NUT, HEXAGON, G1/4	
120	90424-0026		2	SPRAY NOZZLE 95 DEG	
170	315202-0211		1	O-RING 13,3X2,4 MM	

Pos	Part No	UN	Qty	Description	Page No

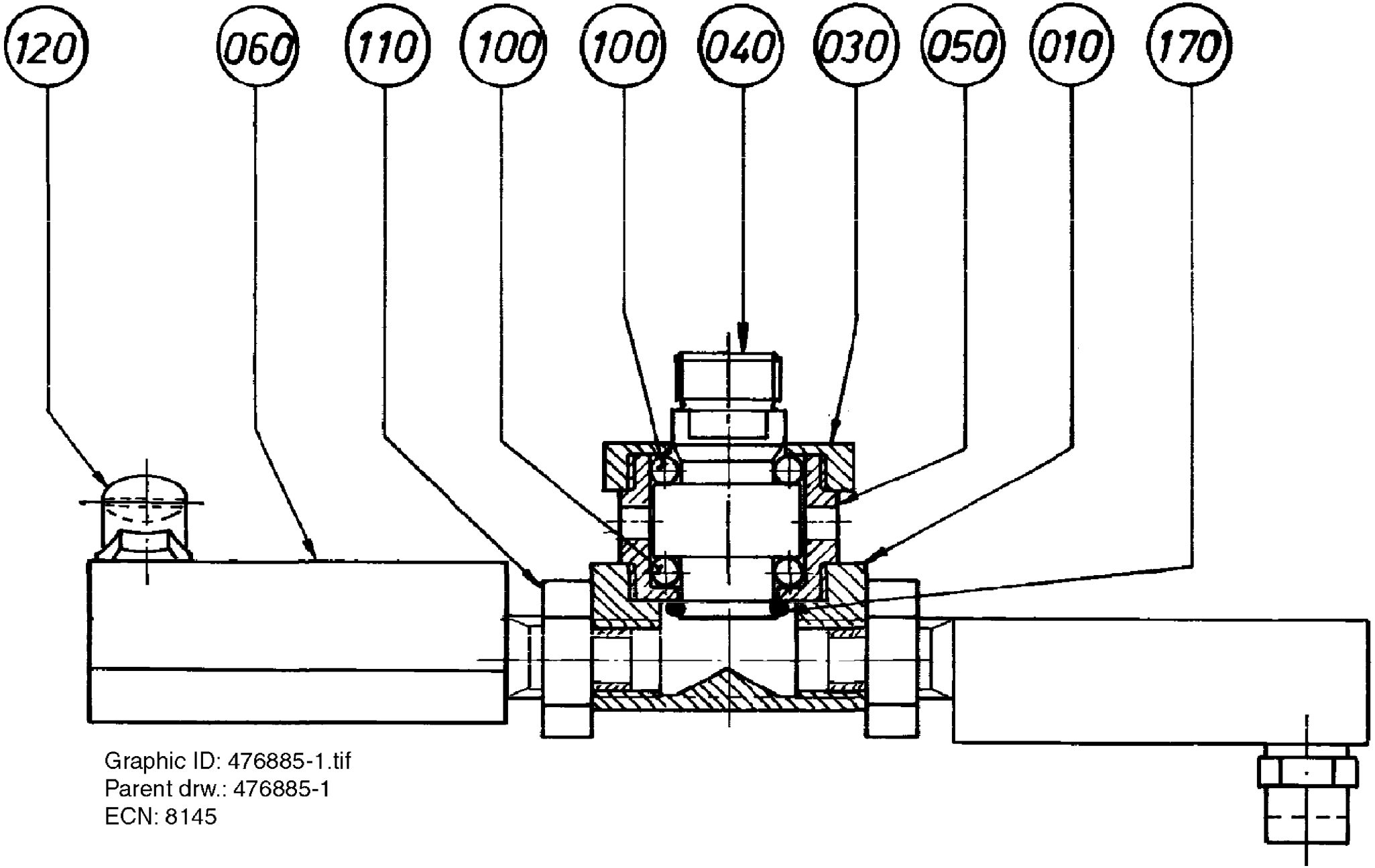

Graphic ID: 476885-1.tif
Parent drw.: 476885-1
ECN: 8145

ECM: 176832 - 20041018
Group number: 476885-0200
Assembly Drawing: 476885-1_1_AA

Pos	Part No	UN	Qty	Description	Page No
-					
010	440600-0000		1	ROTOR	
030	534880-0000		1	END SECTION	
040	534878-0000		1	SHAFT	
050	534879-0000		1	BEARING HOUSING	
060	440605-0001		2	PIPE	
100	90090-0020		24	BALL, D=5 MM	
110	90330-0034		2	NUT, HEXAGON, G1/4	
120	90424-0026		2	SPRAY NOZZLE 95 DEG	
170	315202-0211		1	O-RING 13,3X2,4 MM	

Pos	Part No	UN	Qty	Description	Page No

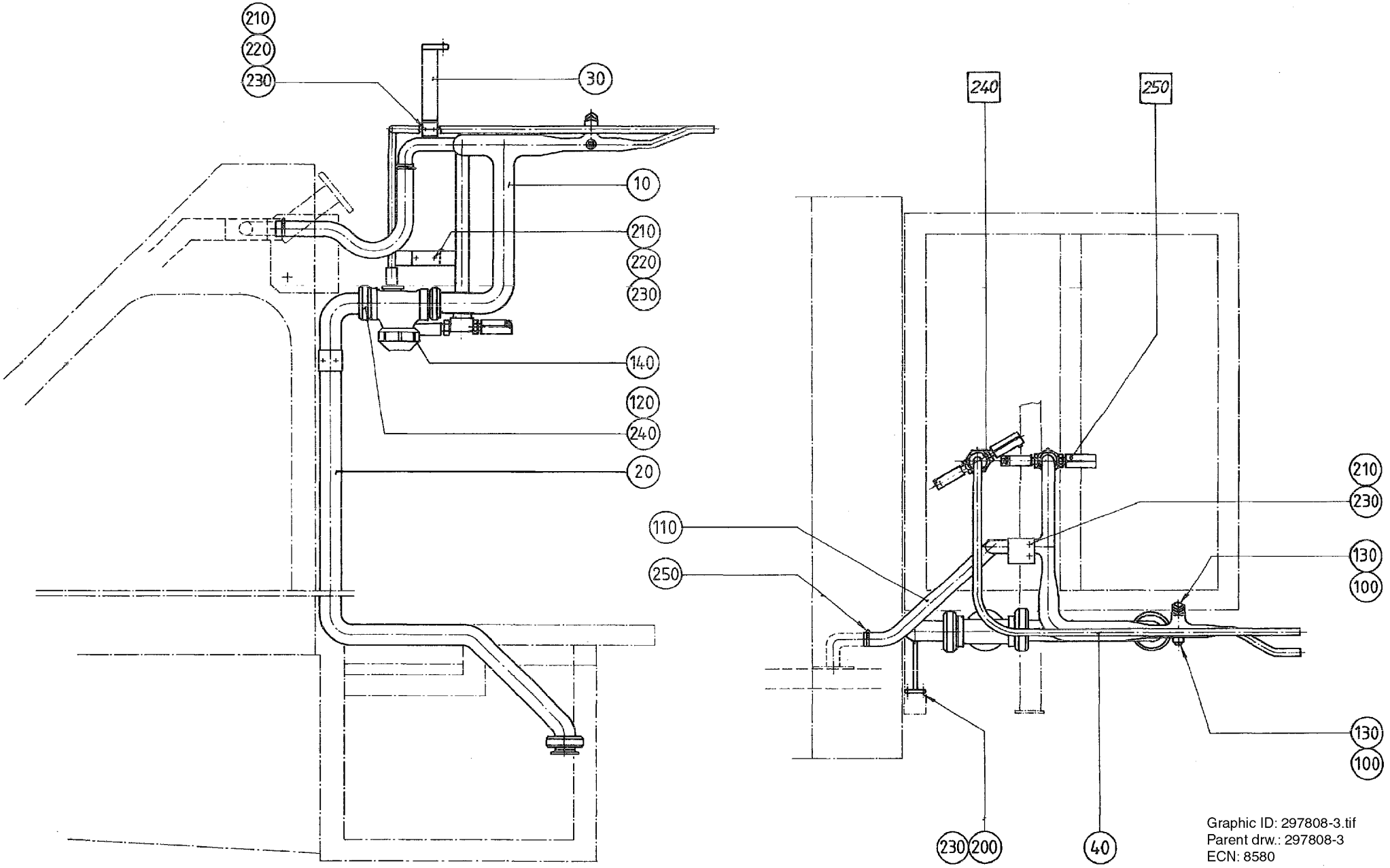

Graphic ID: 297808-3.tif
Parent drw.: 297808-3
ECN: 8580

ECM: 176828 - 20041018
Group number: 297808-0500
Assembly Drawing: 297808-3_1_AA

Pos	Part No	UN	Qty	Description	Page No
-					
010	542706-0000		1	PIPE	
020	297800-0000		1	PIPE	
030	297802-0000		1	BRACKET	
040	297805-0000		1	PIPE	
100	90157-0016	ML	1	LOCKING FLUID LOCTITE 242 50 ML	
110	90166-0142	MM	750	HOSE	
120	90217-0053		2	NIPPLE, RD 60-6 - R1 1/2 M	
130	90330-0026		2	PLUG, EXT. G-THREAD, G1/4	
140	90415-0032		1	FILTER / 3-02-00-1 1/2"	
	90415-0328		*1*	*FILTER INSERT*	
200	312105-0368		2	SCREW M6S ISO 4017 M6X16 A480	
210	312105-0370		6	SCREW M6S ISO 4017 M6X20 A480	
220	312605-0316		4	HEXAGON NUT, M6M M6 A280	
230	315105-0153		10	WASHER BRB 6,4X12 RFR	
240	315250-0103		2	GASKET 48X38X5,5 MM	
250	342991-0106		2	HOSE CLIP,WORM DRIVE TYPE (30)-36	
F250	476884-0200		1	CLEANING HEAD	**2-59**
F240	476887-0200		1	CLEANING HEAD	**2-61**

Pos	Part No	UN	Qty	Description	Page No

Machine Type | Group Description | Used-In | Group Number | Page No

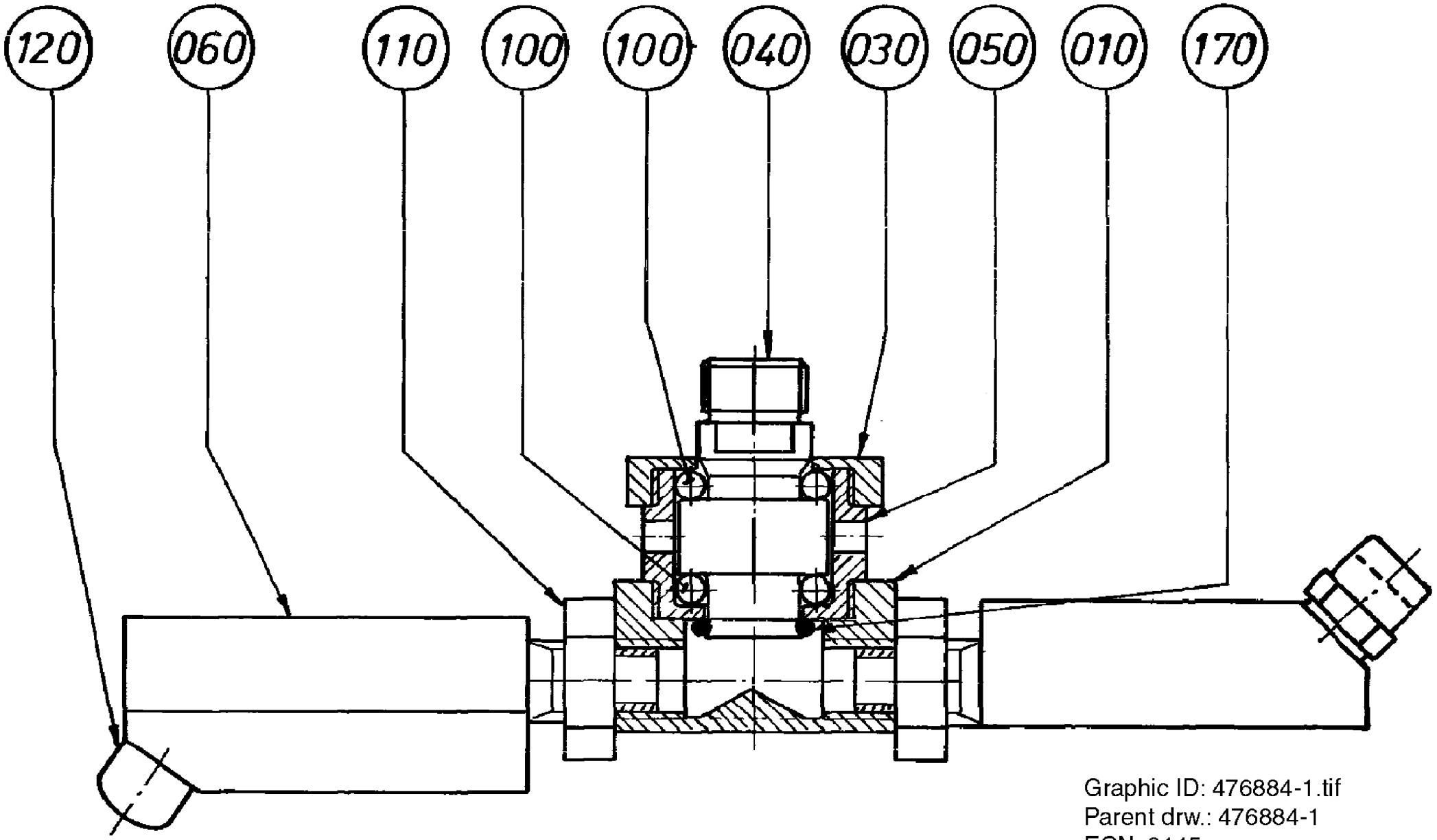

Graphic ID: 476884-1.tif
Parent drw.: 476884-1
ECN: 8145

ECM: 176830 - 20041018
Group number: 476884-0200
Assembly Drawing: 476884-1_1_AA

Pos	Part No	UN	Qty	Description	Page No
-					
010	440600-0000		1	ROTOR	
030	534880-0000		1	END SECTION	
040	534878-0000		1	SHAFT	
050	534879-0000		1	BEARING HOUSING	
060	440604-0001		2	PIPE	
100	90090-0020		24	BALL, D=5 MM	
110	90330-0034		2	NUT, HEXAGON, G1/4	
120	90424-0026		2	SPRAY NOZZLE 95 DEG	
170	315202-0211		1	O-RING 13,3X2,4 MM	

Pos	Part No	UN	Qty	Description	Page No

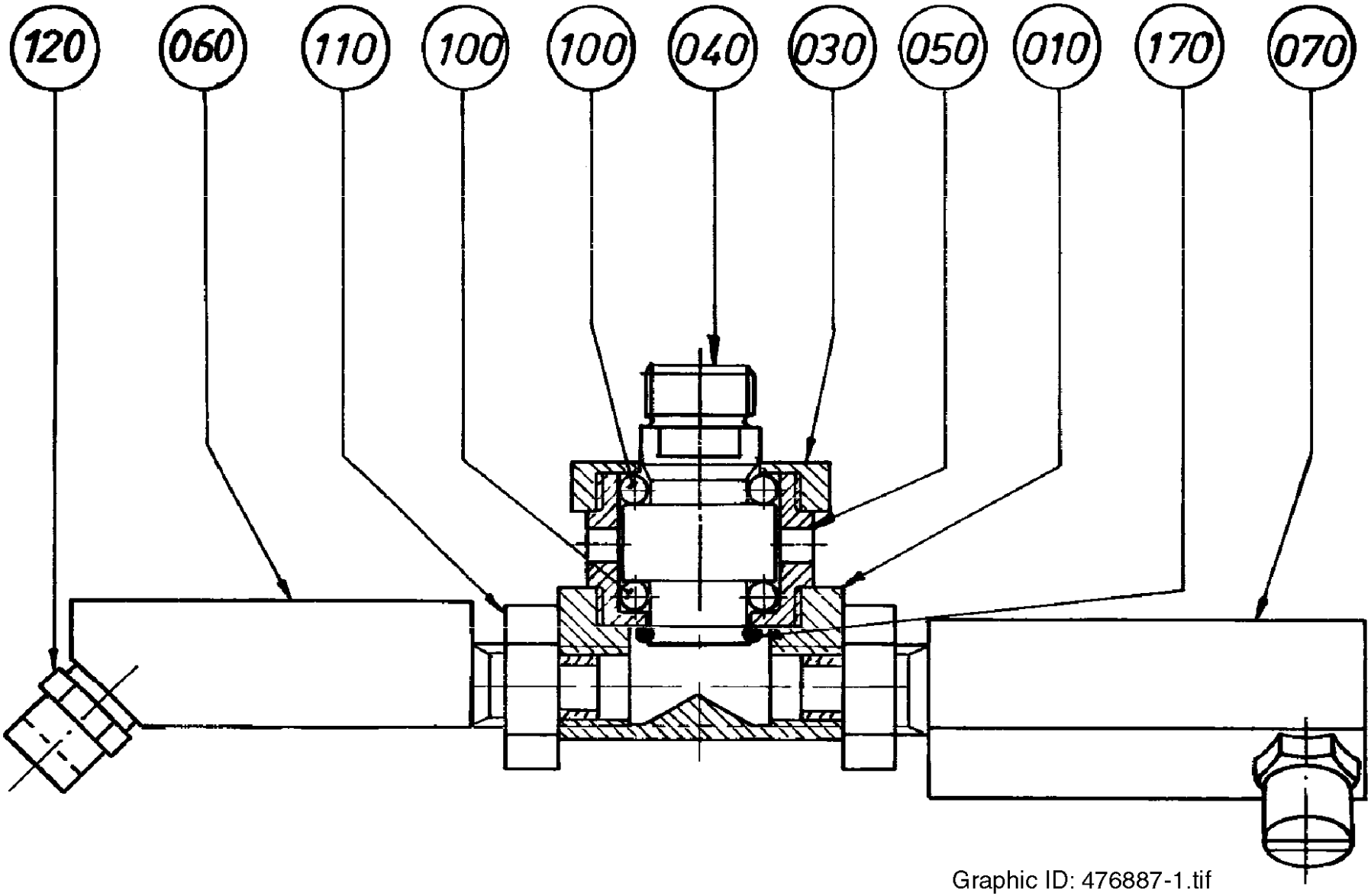

Graphic ID: 476887-1.tif
Parent drw.: 476887-1
ECN: 8330

ECM: 176829 - 20041018
Group number: 476887-0200
Assembly Drawing: 476887-1_1_AA

Pos	Part No	UN	Qty	Description	Page No
-					
010	440600-0000		1	ROTOR	
030	534880-0000		1	END SECTION	
040	534878-0000		1	SHAFT	
050	534879-0000		1	BEARING HOUSING	
060	440604-0001		1	PIPE	
070	440605-0001		1	PIPE	
100	90090-0020		24	BALL, D=5 MM	
110	90330-0034		2	NUT, HEXAGON, G1/4	
120	90424-0026		2	SPRAY NOZZLE 95 DEG	
170	315202-0211		1	O-RING 13,3X2,4 MM	

Pos	Part No	UN	Qty	Description	Page No

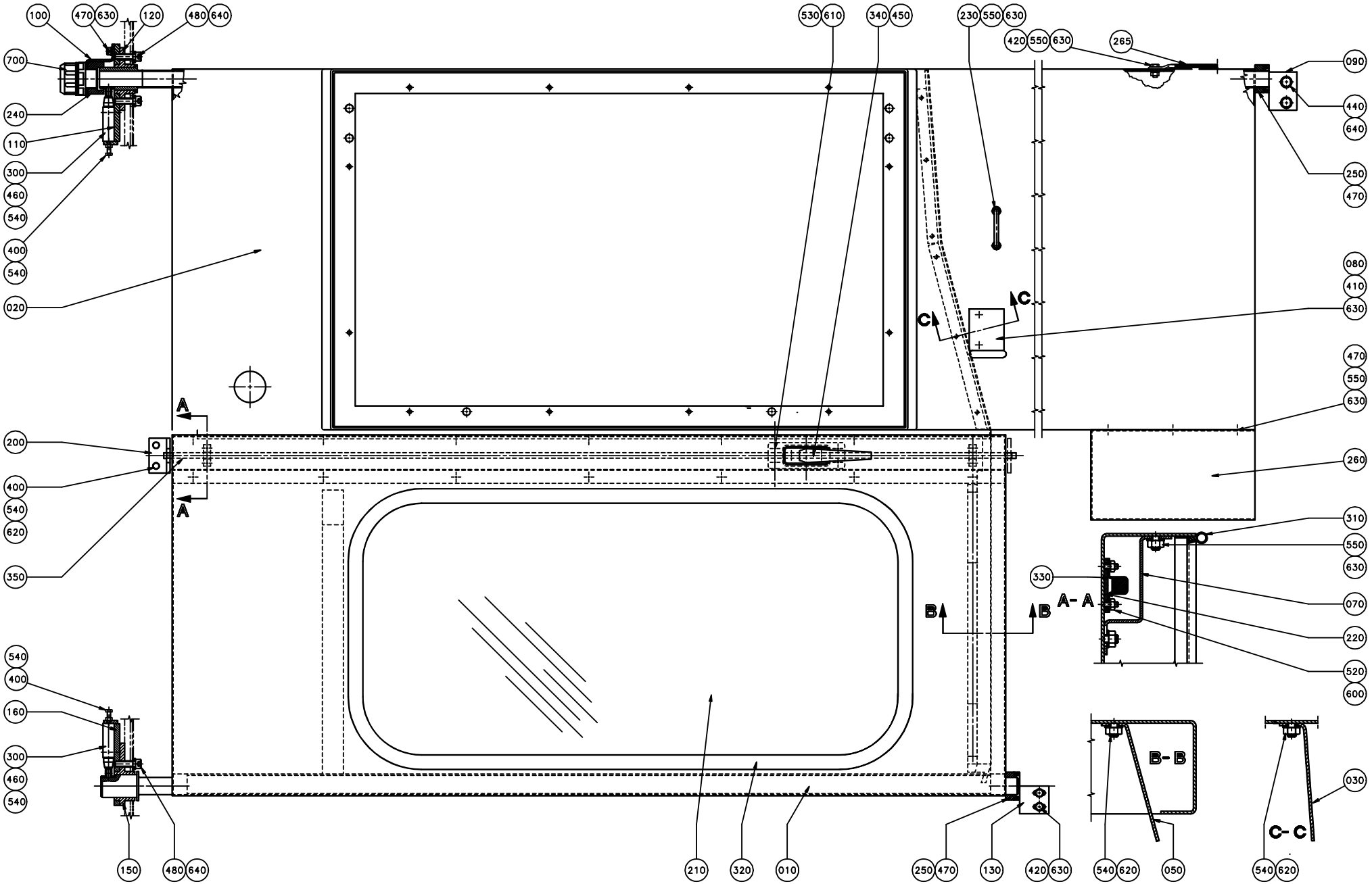
100
470 630
120
480 640
700
240
110
300
460
540
400
540
020
530 610
340 450
230 550 630
420 550 630
265
090
440
640
250
470
080
410
630
C
C
470
550
630
260
A
A
200
400
540
620
350
310
550
630
330
070
A- A
220
520
600
B
B
540
400
160
300
460
540
150
480 640
210
320
010
250 470
130
420 630
B- B
540 620
050
C- C
030
540 620

ECM: 72091 - 19981216
Group number: 545100-0200
Assembly Drawing: 545100-2_1_AA

Pos	Part No	UN	Qty	Description	Page No
-					
010	544680-0000		1	SIDE GUARD R	
020	544900-0000		1	SIDECOVER RIGHT FRONT	
030	545108-0000		1	CHUTE	
050	451128-0000		1	CHUTE, RIGHT FRONT	
070	442194-0000		1	PROTECTIVE CASING	
080	531761-0000		1	HOLDER	
090	544482-0000		1	BRACKET	
100	544484-0000		1	HOLDER	
110	560873-0000		1	PLATE	
120	544486-0000		1	BEARING UNIT	
130	544508-0000		1	BRACKET	
150	560800-0000		1	BEARING UNIT	
160	560872-0000		1	PLATE	
200	293566-0000		1	MOUNTINGS	
210	293598-0000		1	GLASS PANE	
220	434858-0000		2	CUSHION	
230	531616-0000		1	HOLDER	
240	544480-0000		1	NUT	
250	544481-0000		2	PLATE	
260	1143628-0000		1	COVERING PLATE	
265	553164-0000		1	LOW IMPEDANCELITZ L=150MM	
300	90044-0094		2	LIMIT SW. 924 CE31-Y20-X5	
310	90143-0035	MM	4550	STRIP	
320	90143-0039	MM	2400	STRIP	
330	90237-0011		2	BAR CLAMP	
340	90237-0061		1	HANDLE, FIX 0035-0230	
350	90237-0067		1	LOCK, FIX 590, L=1198 MM	
400	312105-0327		6	SCREW M6S ISO 4017 M5X12 A480	
410	312105-0364		2	SCREW M6S ISO 4017 M6X10 A480	
420	312105-0368		3	SCREW M6S ISO 4017 M6X16 A480	
440	312105-0451		2	SCREW M6S ISO 4017 M8X20 A480	
450	312115-0325		2	SCREW ISO4762 M5X10 A4 80	
460	312115-0329		4	SCREW ISO4762 M5X16 A4 80	
470	312115-0366		9	SCREW ISO4762 M6X12 A4 80	
480	312115-0455		4	SCREW ISO4762 M8X30 A4 80	
520	312605-0310		4	HEXAGON NUT, M6M M3 A280	
530	312605-0312		4	HEXAGON NUT, M6M M4 A280	
540	312605-0314		35	HEXAGON NUT, M6M M5 A280	
550	312605-0316		10	HEXAGON NUT, M6M M6 A280	
600	315105-0124		4	WASHER BRB 3,2X7 RFR	
610	315105-0136		4	WASHER BRB 4,3X9 RFR	
620	315105-0146		27	WASHER BRB 5,3X10 RFR	
630	315105-0153		15	WASHER BRB 6,4X12 RFR	
640	315105-0165		6	WASHER BRB 8,4X16 RFR	
700	352136-0152		1	GLAND FITTING	

Machine Type | Group Description | Used-In | Group Number | Page No

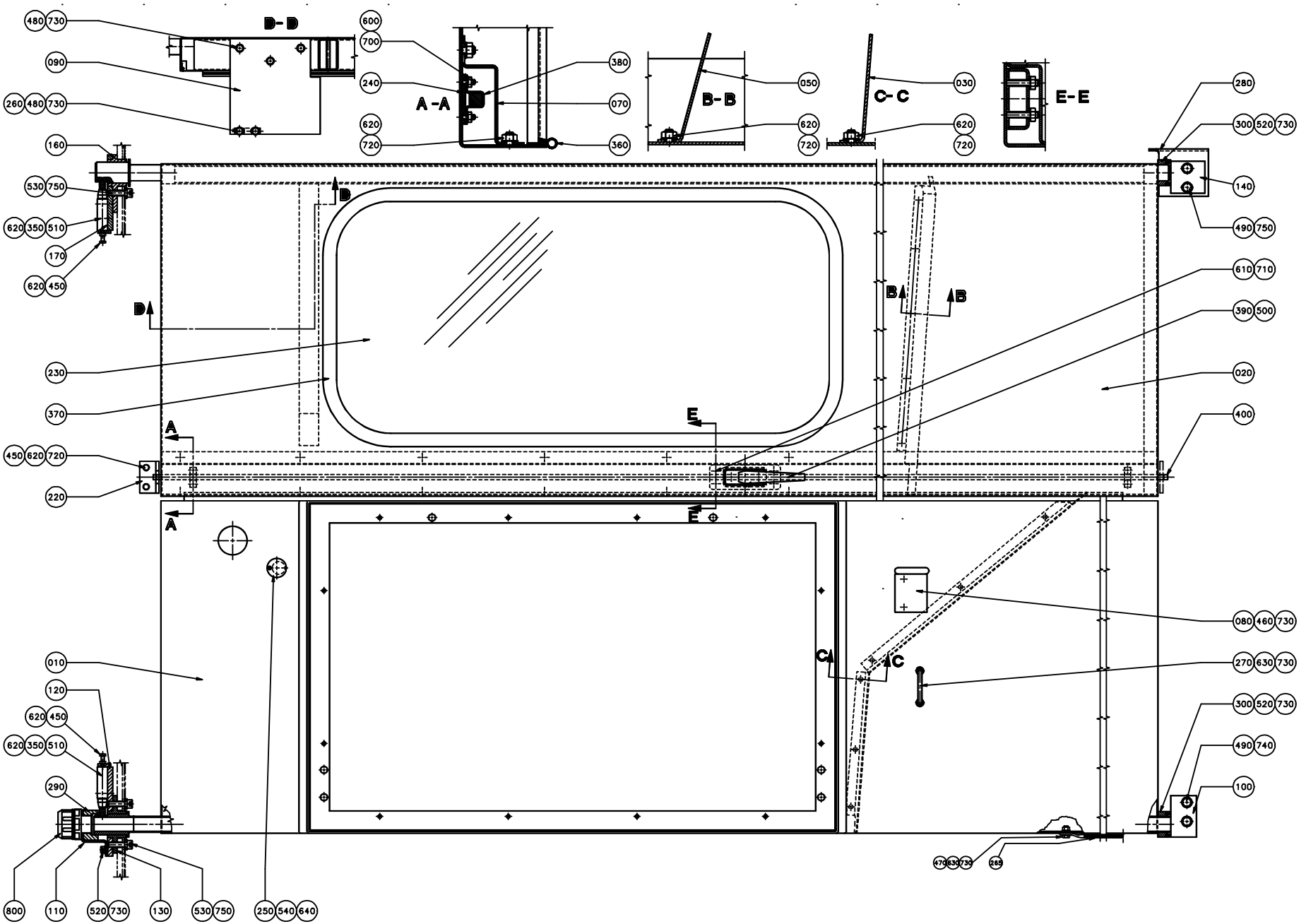
B-B
A-A
B-B
C-C
E-E
480 730
090
260 480 730
600
700
240
620
720
380
070
360
050
620
720
030
620
720
280
300 520 730
140
490 750
610 710
390 500
020
400
160
530 750
620 350 510
170
620 450
230
370
450 620 720
220
080 460 730
270 630 730
300 520 730
490 740
100
010
120
620 450
620 350 510
290
800
110
520 730
130
530 750
250 540 640
470 630 730
265

ECM: 72091 - 19981216
Group number: 545099-0200
Assembly Drawing: 545099-2_1_AA

Pos	Part No	UN	Qty	Description	Page No
-					
010	544681-0000		1	SIDEGUARD L	
020	544899-0000		1	SIDECOVER LEFT FRONT	
030	545107-0000		1	CHUTE LEFT	
050	451127-0000		1	CHUTE, LEFT FRONT	
070	442193-0000		1	PROTECTIVE CASING	
080	469795-0000		1	HOLDER	
090	533426-0000		1	STOP PLATE	
100	544483-0000		1	BRACKET	
110	544484-0000		1	HOLDER	
120	560873-0000		1	PLATE	
130	544486-0000		1	BEARING UNIT	
140	544510-0000		1	BRACKET	
160	560800-0000		1	BEARING UNIT	
170	560872-0000		1	PLATE	
220	293566-0000		1	MOUNTINGS	
230	293598-0000		1	GLASS PANE	
240	434858-0000		2	CUSHION	
250	442195-0000		1	LID	
260	553162-0000		1	STOP PLATE	
265	553164-0000		1	LOW IMPEDANCELITZ L=150MM	
270	531616-0000		1	HOLDER	
280	542860-0000		1	COVER PLATE	
290	544480-0000		1	NUT	
300	544481-0000		2	PLATE	
350	90044-0094		2	LIMIT SW. 924 CE31-Y20-X5	
360	90143-0035	MM	5450	STRIP	
370	90143-0039	MM	2400	STRIP	
380	90237-0011		2	BAR CLAMP	
390	90237-0061		1	HANDLE, FIX 0035-0230	
400	90237-0066		1	LOCK, FIX 590, L=1820 MM	
450	312105-0327		6	SCREW M6S ISO 4017 M5X12 A480	
460	312105-0364		2	SCREW M6S ISO 4017 M6X10 A480	
470	312105-0368		1	SCREW M6S ISO 4017 M6X16 A480	
480	312105-0370		3	SCREW M6S ISO 4017 M6X20 A480	
490	312105-0451		4	SCREW M6S ISO 4017 M8X20 A480	
500	312115-0325		2	SCREW ISO4762 M5X10 A4 80	
510	312115-0329		4	SCREW ISO4762 M5X16 A4 80	
520	312115-0366		6	SCREW ISO4762 M6X12 A4 80	
530	312115-0455		4	SCREW ISO4762 M8X30 A4 80	
540	312125-0222		1	SCREW ISO 1207 M3X8 A4	
600	312605-0310		4	HEXAGON NUT, M6M M3 A280	
610	312605-0312		4	HEXAGON NUT, M6M M4 A280	
620	312605-0314		38	HEXAGON NUT, M6M M5 A280	
630	312605-0316		3	HEXAGON NUT, M6M M6 A280	
640	312810-0310		1	HEXAGON NUT, NY-LOCK M3 FZB	
700	315105-0124		4	WASHER BRB 3,2X7 RFR	
710	315105-0136		4	WASHER BRB 4,3X9 RFR	
720	315105-0146		33	WASHER BRB 5,3X10 RFR	
730	315105-0153		18	WASHER BRB 6,4X12 RFR	
740	315105-0165		2	WASHER BRB 8,4X16 RFR	
750	315115-0165		6	WASHER PLAIN, TBRB 8,4/16 H=3	
800	352136-0152		1	GLAND FITTING	

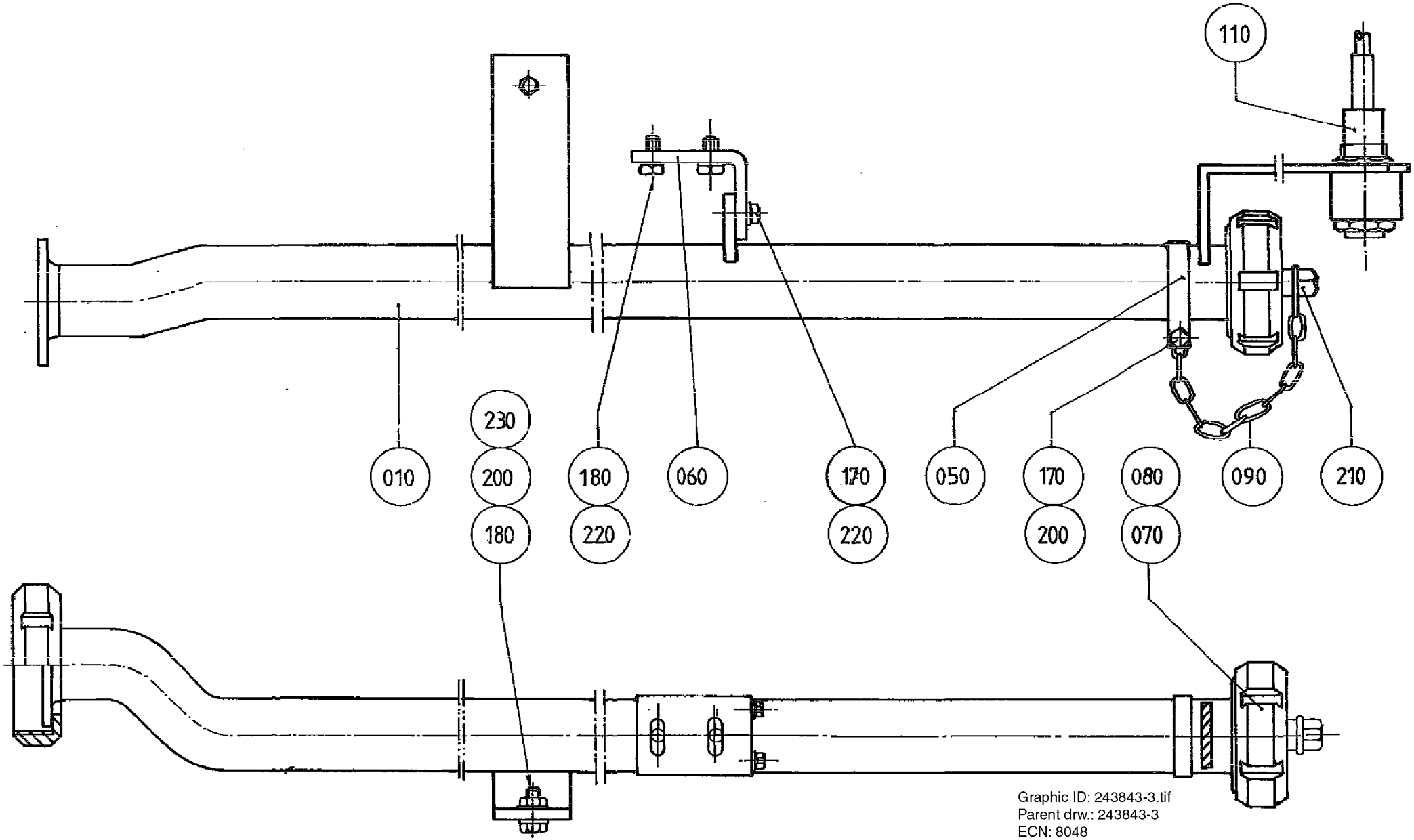

Graphic ID: 243843-3.tif
Parent drw.: 243843-3
ECN: 8048

ECM: 71953 - 19981102
Group number: 243843-0400
Assembly Drawing: 243843-3_1_AA

Pos	Part No	UN	Qty	Description	Page No
TB/8 0568SQ, TB/8 1000B, TB/8 0568B, TB/8 1000SQ, TB/8 1000S, TB/8 0300B, TB/8 0500SQ, TB/8 0500S, TB/8 0500B, TB/8 1136B					
010	484871-0000		1	CLEANING PIPE	
TB/8 1500B					
010	927618-0000		1	CLEANING PIPE	
Common Parts					
050	209182-0000		1	BRACKET	
060	209184-0000		1	BRACKET	
080	293455-0000		1	LID	
090	293456-0000		1	LINK CHAIN	
110	90044-0095		1	PROX.SW. 3010BPKG REPBY 90458-256	
170	312105-0366		3	SCREW M6S ISO 4017 M6X12 A480	
180	312105-0368		3	SCREW M6S ISO 4017 M6X16 A480	
200	312605-0316		2	HEXAGON NUT, M6M M6 A280	
210	312812-0318		1	HEXAGON NUT, NY-LOCK M8 A480	
220	315105-0153		4	WASHER BRB 6,4X12 RFR	
230	315105-0165		2	WASHER BRB 8,4X16 RFR	
250	315250-0103		1	GASKET 48X38X5,5 MM	

Pos	Part No	UN	Qty	Description	Page No

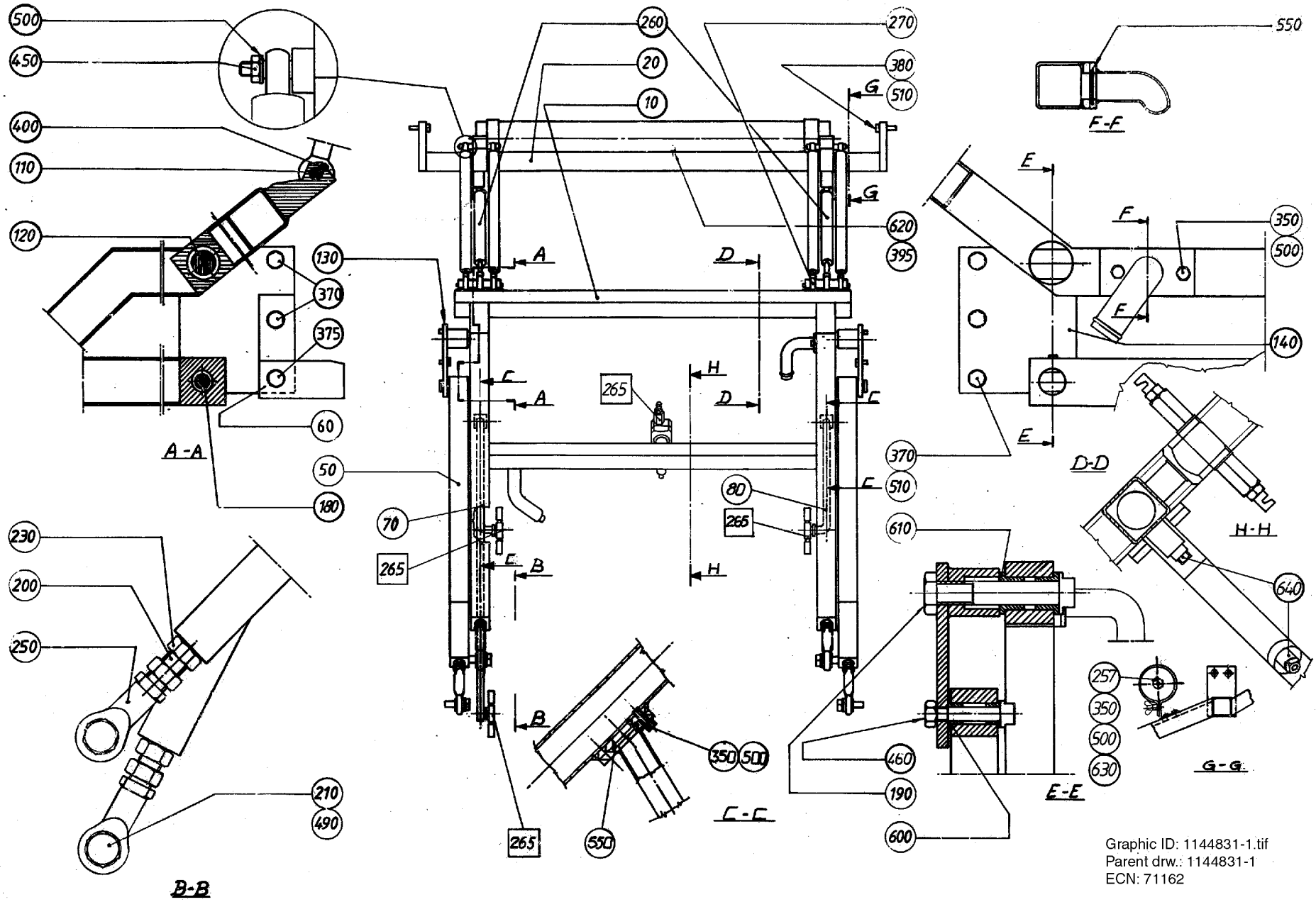
500
450
400
110
120
130
370
375
60
180
50
70
265
230
200
250
210
490
B-B
A-A
260
20
10
270
380
510
G
620
395
A
D
C
H
B
550
F-F
E
F
350
500
140
370
610
640
257
630
460
190
600
D-D
H-H
E-E
G-G
C-C
80
266
Graphic ID: 1144831-1.tif
Parent drw.: 1144831-1
ECN: 71162

ECM: 81786 - 20010206
Group number: 1144831-0100
Assembly Drawing: 1144831-1_1_AA

Pos	Part No	UN	Qty	Description	Page No
-					
010	1144834-0000		1	ARM	
020	450841-0000		1	CANTILEVER	
050	493022-0000		2	ARM	
060	532371-0000		1	STOP LUG	
070	1144833-0000		1	PIPE	
080	1144832-0000		1	PIPE	
110	285825-0000		2	SHAFT	
120	484219-0000		2	SHAFT	
130	484220-0000		1	BRACKET	
140	484221-0000		1	BRACKET	
180	484222-0000		2	SHAFT	
190	484223-0000		2	NUT	
200	457354-0000		4	SCREW	
210	297770-0000		4	SCREW	
230	457355-0000		4	NUT	
250	90115-0111		4	ROD END, ID=22 MM, M22X1,5 LH	
257	90164-0016		1	LIGHT FIXTURE, RL70-118	
	90297-0002		*1*	*FLUORESCENT TUBE, TLD 18/33*	
260	1144838-0000		6	DAMPER	
270	90347-0300		6	ROD END, ID=10 MM, M10 FOR 90347-36;-38	
350	312105-0368		12	SCREW M6S ISO 4017 M6X16 A480	
370	312105-0493		5	SCREW M6S ISO 4017 M10X25 A480	
375	312105-0495		1	SCREW M6S ISO 4017 M10X30 A480	
380	312105-0497		2	SCREW M6S ISO 4017 M10X35 A480	
395	312125-0285		4	SCREW ISO 1207 M4X6 A4	
400	312318-0362		2	SCREW ISO4029 M6X8 A4	
450	312605-0316		6	HEXAGON NUT, M6M M6 A280	
460	312605-0322		2	HEXAGON NUT, M6M M12 A280	
490	315103-0195		4	WASHER PLAIN, BRB, 23/40,H=3 NI PL BR	
500	315105-0153		18	WASHER BRB 6,4X12 RFR	
510	315105-0173		10	WASHER BRB 10,5X20 RFR	
550	315202-0216		2	O-RING 22,2X3 MM	
600	321101-0173		4	FLANGE BUSHING, 12X18X12 MM	
610	321101-0233		4	FLANGE BUSHING, 20X28X20 MM	
620	352135-0201		4	CLIP, 12 MM, 913.012	
630	352136-0127		1	GLAND FITTING PR 18,6	
640	90424-0070		2	SPRAY NOZZLE 61 DEG	

Pos	Part No	UN	Qty	Description	Page No

Machine Type | Group Description | Used-In | Group Number | Page No

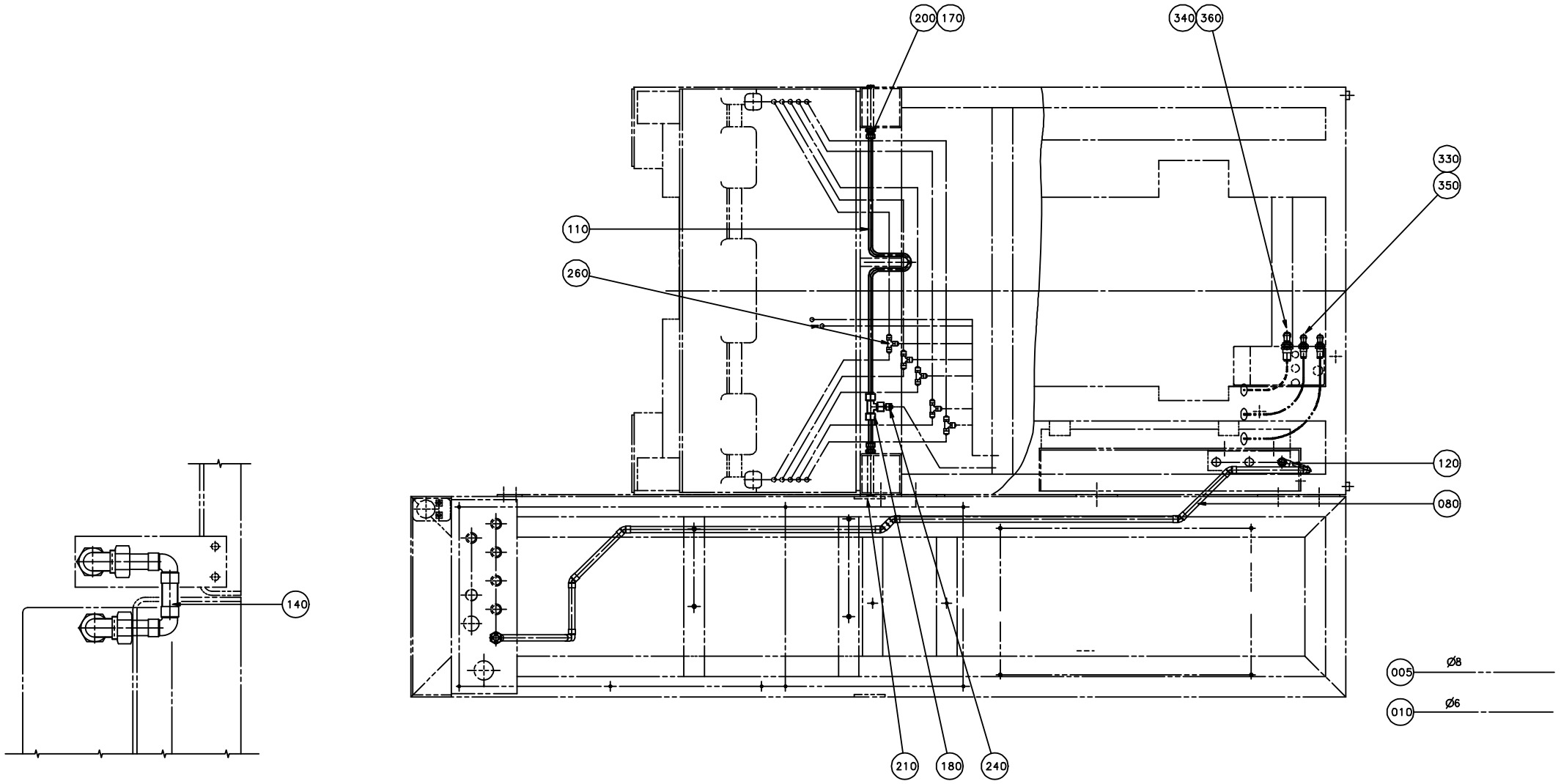
200
170
340
360
330
350
110
260
120
080
140
005
Ø8
010
Ø6
210
180
240
C-C
A-A

ECM: 71496 - 19980403
Group number: 595207-0100
Assembly Drawing: 595207-1_1_AB

This list covers pages from 2-70 to 2-75

Pos	Part No	UN	Qty	Description	Page No
-					
005	90166-0013	M	23	TUBE 8 MM PA BLUE	
010	90166-0081	M	77	TUBE 6 MM PA BLUE	
015	90166-0160	M	10	TUBE 10 MM PA BLUE	
080	544692-0000		1	PIPE	
110	450736-0000		1	PIPE	
120	544697-0000		1	PIPE	
140	450791-0000		1	PIPE	
150	90055-0101		1	Y-CONNECTION, 8-8	
170	90224-0319		2	CONN. STR., 8-R1/4, EXT. THREAD	
180	90224-0323		1	CONNECTION	
200	315233-0110		4	WASHER CAPTIVE SEALING G1/4	
205	315233-0113		1	WASHER CAPTIVE SEALING G1/2	
210	342713-0210		1	PLUG,EXT THREAD HEX SOCKET(PAK OF 10 PCS	
220	342720-0114		1	CONN. STR. GA-15-G1/2	
240	342929-0121		1	STRAIGHT COUPLING,SOLDER 8/6-8	
260	342946-0112		5	T-COUPLING,UNION 6/4	
280	342960-0112		10	BULKHEAD COUPLING 6/4	
330	90055-0118		2	ELBOW WITH TAILPIECE 8/8 MM	
340	1334436-0000		1	ELBOW WITH TAILPIECE	
350	342768-0103		2	BULKHEAD CONNECTOR, 8 MM	
360	342768-0104		1	BULKHEAD CONNECTOR, 10 MM	

Pos	Part No	UN	Qty	Description	Page No

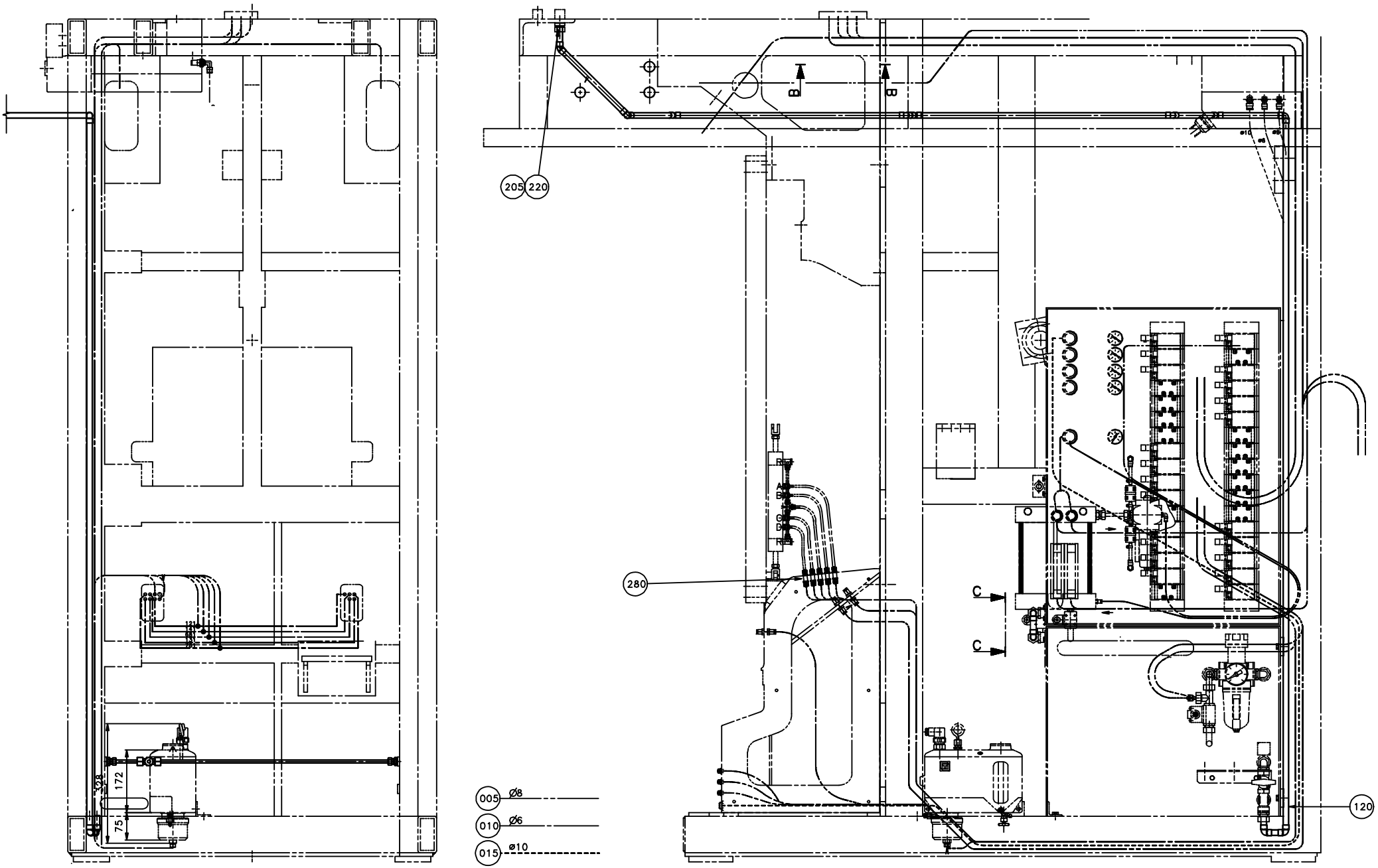
205
220
280
120
B
B
C
C
328
172
75
005 Ø8
010 Ø6
015 ø10

ECM: 71496 - 19980403
Group number: 595207-0100
Assembly Drawing: 595207-2_1_AD

This list covers pages from 2-70 to 2-75

Pos	Part No	UN	Qty	Description	Page No
-					
005	90166-0013	M	23	TUBE 8 MM PA BLUE	
010	90166-0081	M	77	TUBE 6 MM PA BLUE	
015	90166-0160	M	10	TUBE 10 MM PA BLUE	
080	544692-0000		1	PIPE	
110	450736-0000		1	PIPE	
120	544697-0000		1	PIPE	
140	450791-0000		1	PIPE	
150	90055-0101		1	Y-CONNECTION, 8-8	
170	90224-0319		2	CONN. STR., 8-R1/4, EXT. THREAD	
180	90224-0323		1	CONNECTION	
200	315233-0110		4	WASHER CAPTIVE SEALING G1/4	
205	315233-0113		1	WASHER CAPTIVE SEALING G1/2	
210	342713-0210		1	PLUG,EXT THREAD HEX SOCKET(PAK OF 10 PCS	
220	342720-0114		1	CONN. STR. GA-15-G1/2	
240	342929-0121		1	STRAIGHT COUPLING,SOLDER 8/6-8	
260	342946-0112		5	T-COUPLING,UNION 6/4	
280	342960-0112		10	BULKHEAD COUPLING 6/4	
330	90055-0118		2	ELBOW WITH TAILPIECE 8/8 MM	
340	1334436-0000		1	ELBOW WITH TAILPIECE	
350	342768-0103		2	BULKHEAD CONNECTOR, 8 MM	
360	342768-0104		1	BULKHEAD CONNECTOR, 10 MM	

Pos	Part No	UN	Qty	Description	Page No

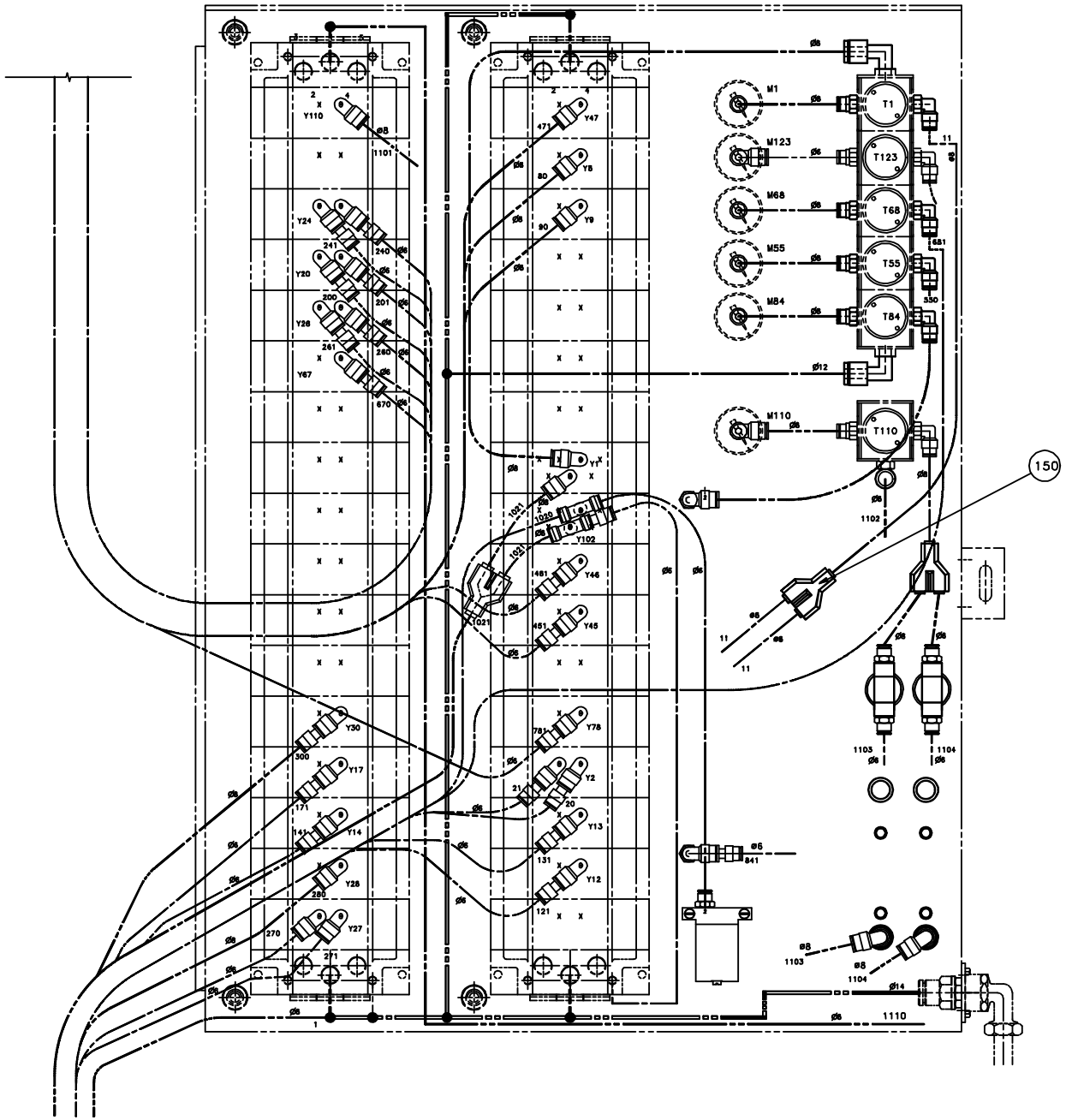
M1
T1
M123
T123
M68
T68
M55
T55
M84
T84
M110
T110
150
Y110
Y47
Y8
Y9
Y24
Y20
Y26
Y67
Y1
Y102
Y46
Y45
Y30
Y17
Y14
Y28
Y27
Y78
Y2
Y13
Y12
1101
1102
1103
1104
1110
841

ECM: 71496 - 19980403
Group number: 595207-0100
Assembly Drawing: 595207-3_1_AD

This list covers pages from 2-70 to 2-75

Pos	Part No	UN	Qty	Description	Page No
-					
005	90166-0013	M	23	TUBE 8 MM PA BLUE	
010	90166-0081	M	77	TUBE 6 MM PA BLUE	
015	90166-0160	M	10	TUBE 10 MM PA BLUE	
080	544692-0000		1	PIPE	
110	450736-0000		1	PIPE	
120	544697-0000		1	PIPE	
140	450791-0000		1	PIPE	
150	90055-0101		1	Y-CONNECTION, 8-8	
170	90224-0319		2	CONN. STR., 8-R1/4, EXT. THREAD	
180	90224-0323		1	CONNECTION	
200	315233-0110		4	WASHER CAPTIVE SEALING G1/4	
205	315233-0113		1	WASHER CAPTIVE SEALING G1/2	
210	342713-0210		1	PLUG,EXT THREAD HEX SOCKET(PAK OF 10 PCS	
220	342720-0114		1	CONN. STR. GA-15-G1/2	
240	342929-0121		1	STRAIGHT COUPLING,SOLDER 8/6-8	
260	342946-0112		5	T-COUPLING,UNION 6/4	
280	342960-0112		10	BULKHEAD COUPLING 6/4	
330	90055-0118		2	ELBOW WITH TAILPIECE 8/8 MM	
340	1334436-0000		1	ELBOW WITH TAILPIECE	
350	342768-0103		2	BULKHEAD CONNECTOR, 8 MM	
360	342768-0104		1	BULKHEAD CONNECTOR, 10 MM	

Pos	Part No	UN	Qty	Description	Page No

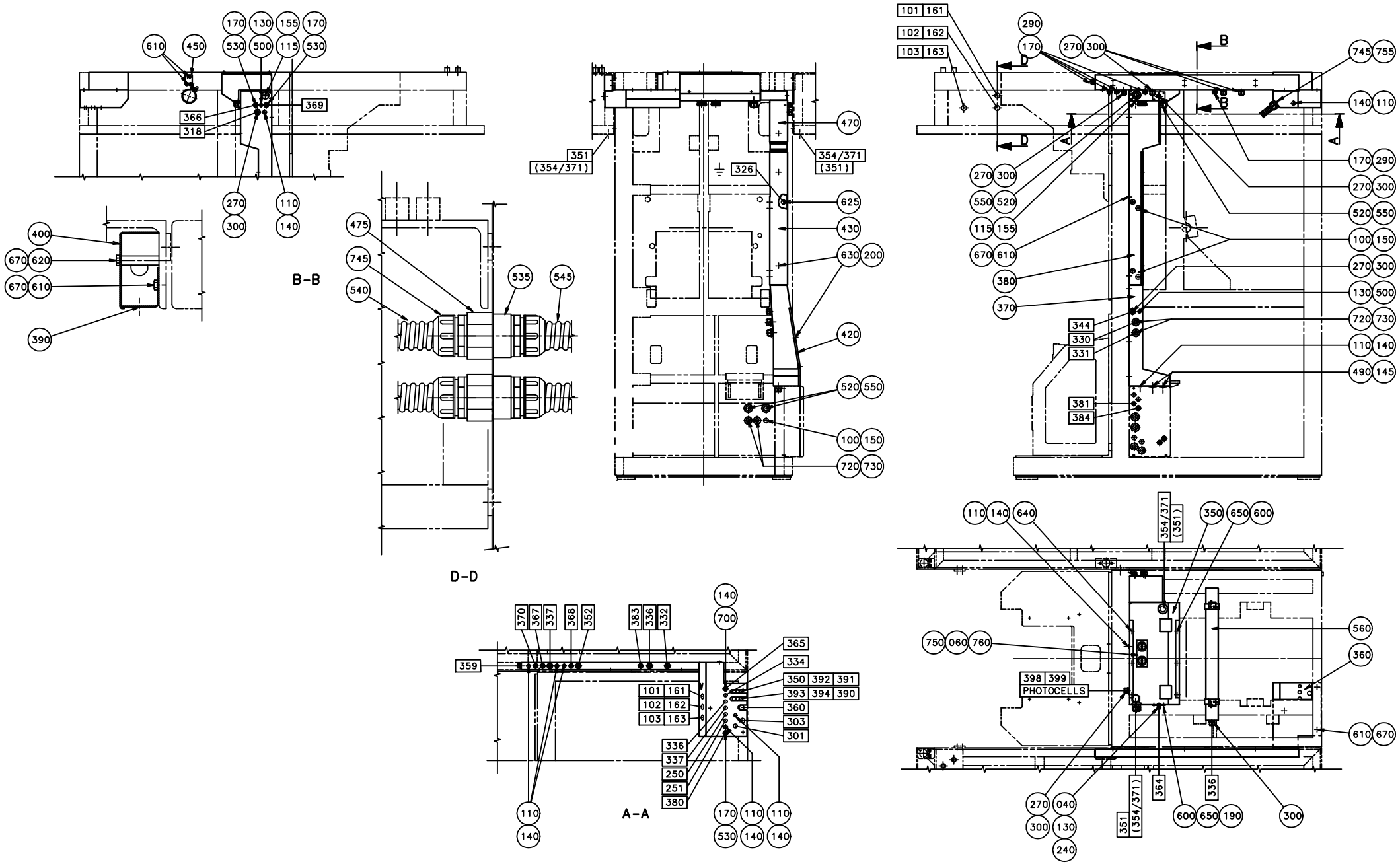
B-B
D-D
A-A
PHOTOCELLS

ECM: 71059 - 19971211
Group number: 929661-0100
Assembly Drawing: 929661-2_1_AC

Pos	Part No	UN	Qty	Description	Page No
1500B					
040	464193-0000		1	ATTACHMENT PLATE	
060	1143839-0000		1	NUT PLATE	
110	90002-0009		9	BLANK-OFF PLUG, PR 18.6 SKINDICHT-BLK11	
115	90002-0010		2	BLANK-OFF PLUG, PR 37 SKINDICHT-BLK29	
130	90099-0001		3	NUT PG 9/PR 15,2	
140	90099-0002		10	NUT PR 18,6 BRASS	
145	90099-0004		2	NUT	
155	90099-0011		2	NUT PR 37 BRASS	
190	312601-0314		4	HEXAGON NUT, DIN 934 M5 8 FZB	
240	352103-0101		1	CABLE GLAND, ST 9, PR15,2/PG9	
270	352135-0106	MM	3200	SPIRAL CONDUIT DI=16 MM	
290	352136-0113		5	GLAND FITTING PR18,6/PG11 DI=12MM	
300	352136-0127		9	GLAND FITTING PR 18,6	
350	593631-0000		1	CABLE DUCT	
360	1285866-0000		1	CABLE DUCT	
475	1285865-0000		3	NUT	
535	353247-0005		3	HOSE GLAND EMC PG21 EXTENDED	
540	90152-0031	MM	8000	HOSE	
545	90152-0070	MM	5000	METAL HOSE, 32,5X26, UL 2621	
600	312101-0325		7	SCREW M6S M5X10 FZB	
630	312121-0287		5	SCREW ISO 1207 M4X8 4.8 - 5.8 Z.PL.	
650	315101-0146		7	WASHER PLAIN, BRB, 5,3/10 H=1	
745	352136-0152		6	GLAND FITTING	
750	353246-0001		2	GLAND FITTING, VK156D	
755	90099-0119		3	NUT, PR 28,3 (PG21)	
760	353249-0058		2	GLAND,INSERT,E156 3/10	
Common Parts					
100	90002-0004		5	BLANK-OFF PLUG, PR 22,5 SKINDICHT-BLK16	
150	90099-0003		6	NUT PR 22,5	
170	90152-0033	MM	6800	SPIRAL CONDUIT FOR PR 15,2(PG 9)	
200	315101-0136		5	WASHER BRB, 4,3/8 H=0,8	
370	540721-0000		1	CABLE DUCT	
380	450284-0000		1	CABLE DUCT	
390	450285-0000		1	CABLE DUCT	
400	450286-0000		1	LID	
420	540722-0000		1	LID	
430	450287-0000		1	LID	
450	928119-0000		2	BRACKET	
470	450290-0000		1	LID	
490	90002-0012		2	BLANK-OFF PLUG, PR 28,3 SKINDICHT-BLK21	
500	90002-0013		2	BLANK-OFF PLUG, PR 15,2 SKINDICHT-BLK9	
520	90012-0061		4	GLAND	
530	90012-0063		4	CABLE GLAND PR 15,2	
550	90152-0031	MM	2270	HOSE	
560	90164-0003		1	LIGHT FIXTURE	
	90297-0002		*1*	*FLUORESCENT TUBE, TLD 18/33*	
610	312101-0364		16	SCREW M6S M6X10 FZB	
620	312101-0380		3	SCREW M6S M6X50 FZB	
625	312101-0447		1	SCREW M6S M8X12 FZB	
640	312141-0325		3	SCREW ISO 2009 MFS M5X10 4.8 EL.PL	
670	315101-0153		15	WASHER PLAIN, BRB, 6,4/12 H=1,5	
700	352103-0106		1	CABLE GLAND, ST 11, PR18,6/PG11	
720	352135-0109	MM	3700	HOSE .022	
730	352136-0142		4	GLAND FITTING	

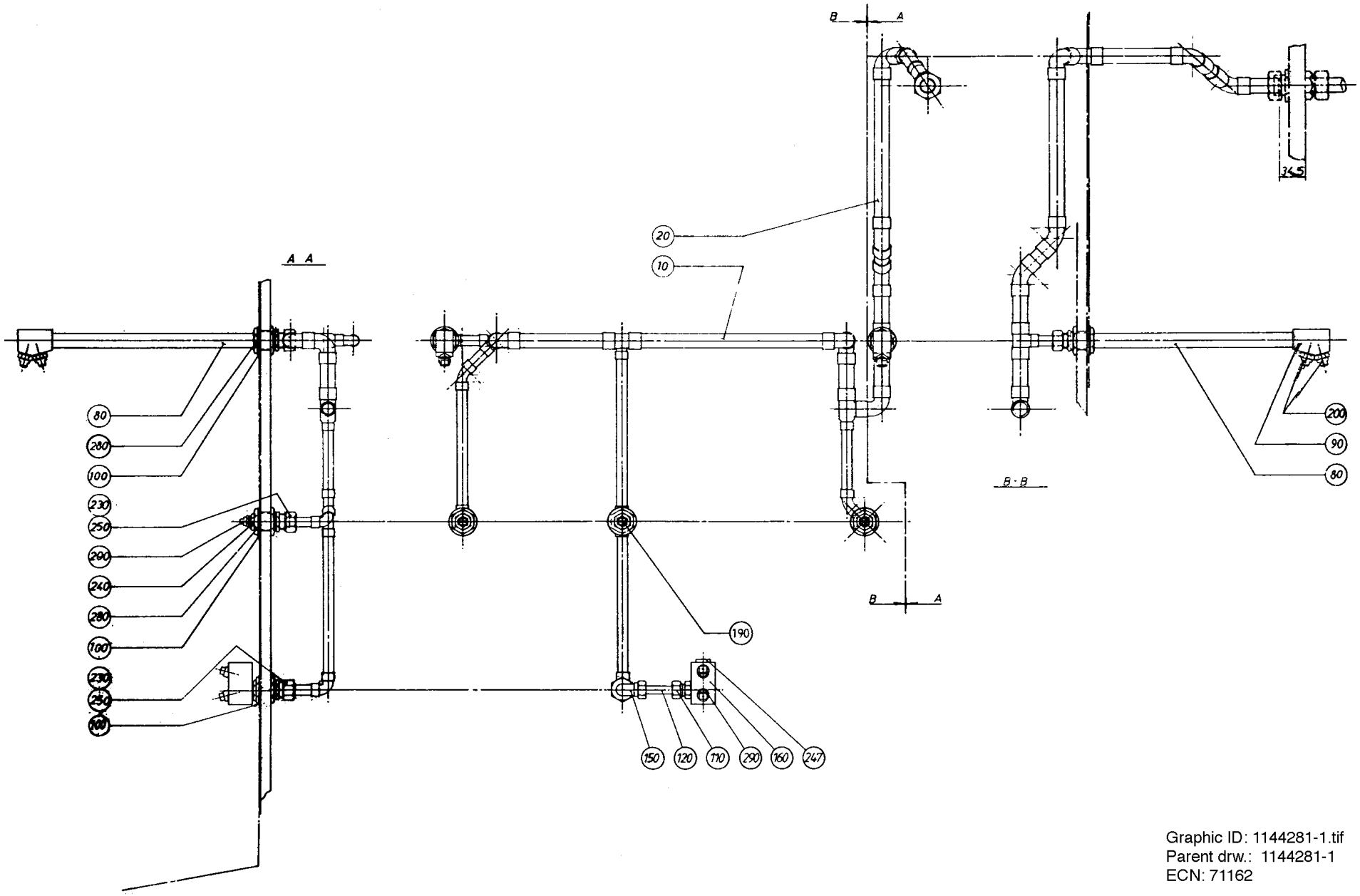

Graphic ID: 1144281-1.tif
Parent drw.: 1144281-1
ECN: 71162

ECM: 71162 - 19980119
Group number: 1144281-0100
Assembly Drawing: 1144281-1_1_AA

Pos	Part No	UN	Qty	Description	Page No
-					
010	530556-0000		1	JUNCTION PIPE UPPER	
020	449170-0000		1	CLEANING PIPE	
080	535016-0000		2	FORCE SPRING	
090	535017-0000		2	BRACKET	
100	246885-0000		6	WASHER	
110	342720-0109		1	CONN. STR. GA-12-G3/8	
120	90266-0174	MM	63	TUBE 12X1 SS 2333-22	
150	90030-0115		1	CONN. ELBOW WA 12-R3/8	
160	979491-0000		1	BLOCK	
190	571654-0000		1	NOZZLE	
200	90424-0035		6	SPRAY NOZZLE 95 DEG	
230	315234-0113		6	WASHER PL.RND.CU.21,3//26 H=1,5	
240	342701-0205		2	BUSHING,INT./EXT.G-THREAD G1/2"-G1/4"	
245	342701-0206		1	BUSHING,INT./EXT.G-THREAD G1/2"-G3/8"	
247	342713-0210		1	PLUG,EXT THREAD HEX SOCKET(PAK OF 10 PCS	
250	342720-0114		6	CONN. STR. GA-15-G1/2	
280	342767-0114		6	CONN. BULKHEAD G1/2	
290	90424-0070		2	SPRAY NOZZLE 61 DEG	

Pos	Part No	UN	Qty	Description	Page No

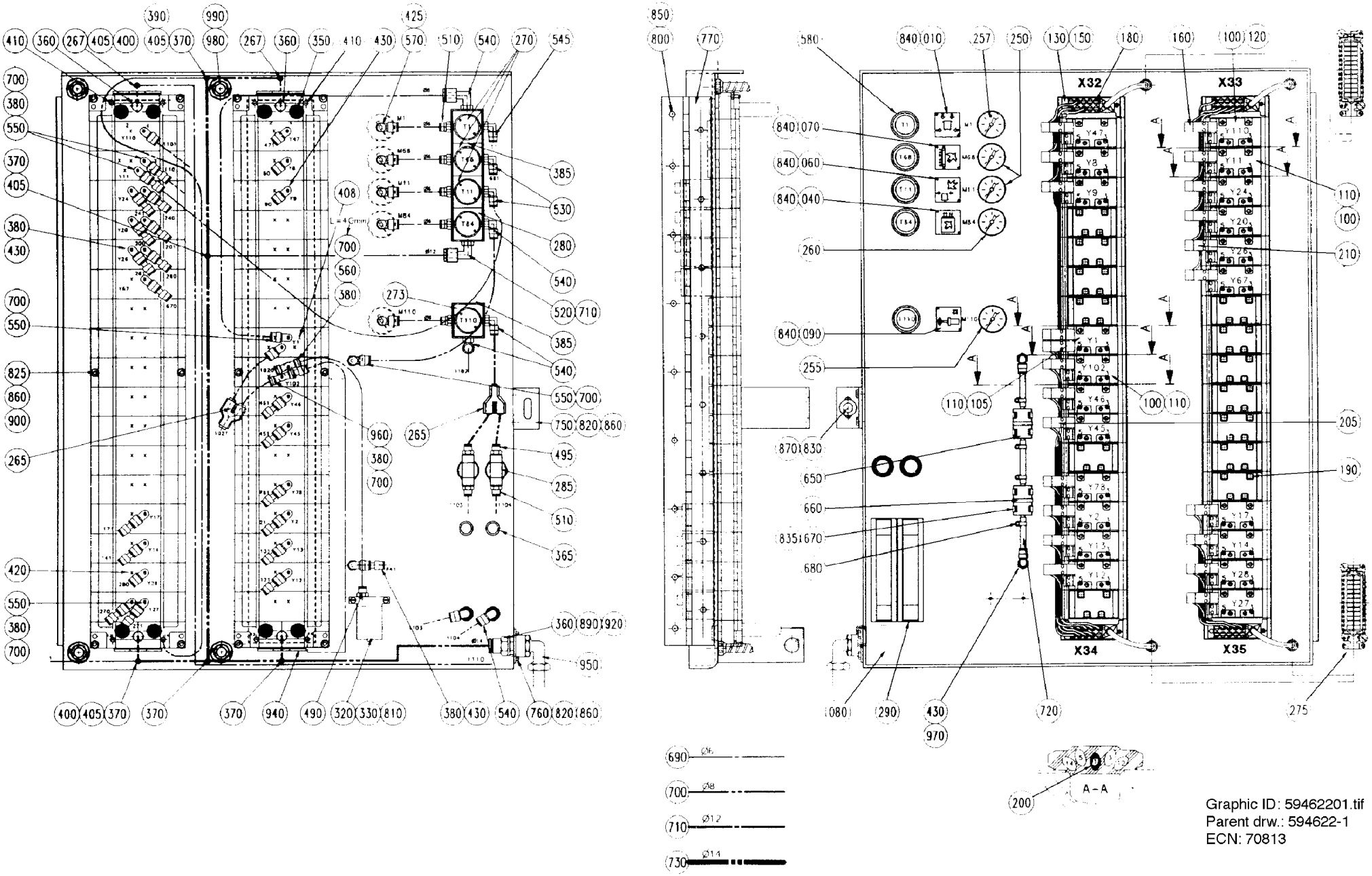

Graphic ID: 59462201.tif
Parent drw.: 594622-1
ECN: 70813

ECM: 71496 - 19980403
Group number: 594622-0100
Assembly Drawing: 594622-1_1_AD

This list covers pages from 2-80 to 2-83

Pos	Part No	UN	Qty	Description	Page No
-					
010	1144606-0000		1	SIGN	
030	1144607-0000		1	SIGN	
040	978603-0000		1	SIGN	
060	479964-0000		1	SIGN	
070	561595-0000		1	SIGN MULTISTEP 35X35MM	
080	593639-0000		1	VALVE PANEL UPPER	
090	1143241-0000		1	SIGN	
100	90042-0215		20	VALVE BODY 5/2 UNISTABLE	
105	90042-0221		1	VALVE BODY 5/2 BISTABLE	
110	90042-0520		2	BASE PLATE ISO SIZE 1	
120	90042-0532		32	BASE PLATE ISO SIZE 1	
130	90042-0522		4	PORTED END PIECE ISO SIZE 1	
150	90042-0535		4	TERMINAL BOARD 19 CORDS	
160	90042-0527		21	SEAL KIT PILOT VALVE	
180	90042-0550		2	PROTECTION PLUG FOR UNUSED CONNECTION	
190	90042-0519		13	BLANK PLATE ISO SIZE 1	
200	90042-0528		3	BLANKING KIT SEALS ISO SIZE 1	
205	90042-0538		5	PILOT VALVE L=500MM	
210	90042-0539		17	PILOT VALVE L=350MM	
250	90043-0043		1	PRESSURE GAUGE 0-10 BAR 1/8"	
255	90043-0056		1	PRESSURE GAUGE, 2041 D=40 MM	
257	90043-0068		2	PRESSURE GAUGE	
260	90043-0021		2	PRESSURE GAUGE 0-1 BAR 1/8" D=40	
265	90055-0101		2	Y-CONNECTION, 8-8	
267	90055-0105		2	V-JUNCTION COUPLING14MM REPBY 342735-110	
270	90113-0069		3	PRESSURE REGULATOR	
273	90113-0071		1	PRESSURE REGULATOR	
275	90110-0128		2	MALE INSERT HAN 24 E-M 65330242631	
280	90113-0076		2	PRESSURE REGULATOR	
285	90187-0149		2	THROTTLE VALVE, G1/4, G1/4, MALE	
290	90243-0427		2	FLOW METER	
320	90235-0450		1	PLATE	
330	90235-0708		1	VALVE	
350	90328-0024		8	SILENCER G3/8"	
360	90055-0096		5	STRAIGHT COUPLING	
365	90328-0026		2	SILENCER G1/4"	
370	342748-0110		5	T-CONNECTION 14MM	
380	342716-0203		18	REDUCER 6-8	
385	342713-0210		2	PLUG,EXT THREAD HEX SOCKET(PAK OF 10 PCS	
390	342716-0210		1	REDUCER 6-12	
400	342716-0209		2	REDUCER 8-12	
405	342716-0211		4	REDUCER 12-14	
408	342715-0100		7	BLIND PLUG 4 MM	
410	342715-0102		2	BLIND PLUG 6 MM	
420	342715-0103		52	BLIND PLUG 8 MM	
425	90055-0117		6	ELBOW WITH TAILPIECE	
430	90055-0118		28	ELBOW WITH TAILPIECE 8/8 MM	
490	342722-0202		1	PIPE COUPLING 1/8" D=6MM	
495	342722-0205		2	STRAIGHT COUPLING D=8-G1/4"	
510	342722-0203		8	STRAIGHT COUPLING	
520	342732-0109		1	ELBOW PIPE JOINT, EXT.THREAD, D=1MM-G1/4	
530	342732-0103		2	ELBOW PIPE JOINT, EXT.THREAD, D=6MM-G1/4	
540	342732-0104		7	ELBOW PIPE JOINT, EXT.THREAD, D=8MM-G1/4	
545	342732-0113		1	ELBOW PIPE JOINT, EXT.THREAD,D=10MM-G1/4	
550	342735-0103		4	ELBOW PIPE JOINT	
560	342748-0102		1	T-CONNECTION 6MM	
570	342770-0105		6	STRAIGHT COUPLING INT, D=6 MM - G1/8	
580	90113-0379		6	NUT	
650	90277-0045		1	FILTER / 9900-05-BK	
660	90277-0046		1	FILTER / 9933-05-101	
670	90074-0026		4	PIPE CLIP FOR TUBE D=24-35 MM	
680	90132-0021		4	HOSE CLIP 6-10MM	
690	90166-0081	M	5	TUBE 6 MM PA BLUE	
700	90166-0013	M	6	TUBE 8 MM PA BLUE	
710	90166-0068	MM	800	TUBE 12 MM PA BLUE	
720	90166-0194	MM	500	TUBE 8 MM PUR BLUE	
730	90166-0206	M	2	TUBE 14 MM PUR BLUE	
750	574603-0000		1	BRACKET	
760	574604-0000		1	BRACKET	
770	445736-0000		1	HINGE	
800	312105-0323		17	SCREW M6S ISO 4017 M5X8 A480	
810	312105-0339		2	SCREW M6S ISO 4014 M5X40 A480	
820	312105-0364		4	SCREW M6S ISO 4017 M6X10 A480	
825	312105-0376		12	SCREW M6S ISO 4014 M6X35 A480	
830	312105-0449		1	SCREW M6S ISO 4017 M8X16 A480	
835	312125-0220		4	SCREW ISO 1207 M3X6 A4	
840	312502-0120		12	DRIVE SCREW ROUND HEAD KDS 0X5	
850	315105-0146		17	WASHER BRB 5,3X10 RFR	
860	315105-0153		16	WASHER BRB 6,4X12 RFR	
870	315125-0165		1	WASHER TBRSB 8,4X26X5 A4	
890	315233-0113		1	WASHER CAPTIVE SEALING G1/2	
900	312605-0316		12	HEXAGON NUT, M6M M6 A280	
920	342701-0206		1	BUSHING,INT./EXT.G-THREAD G1/2"-G3/8"	

Machine Type | Group Description | Used-In | Group Number | Page No

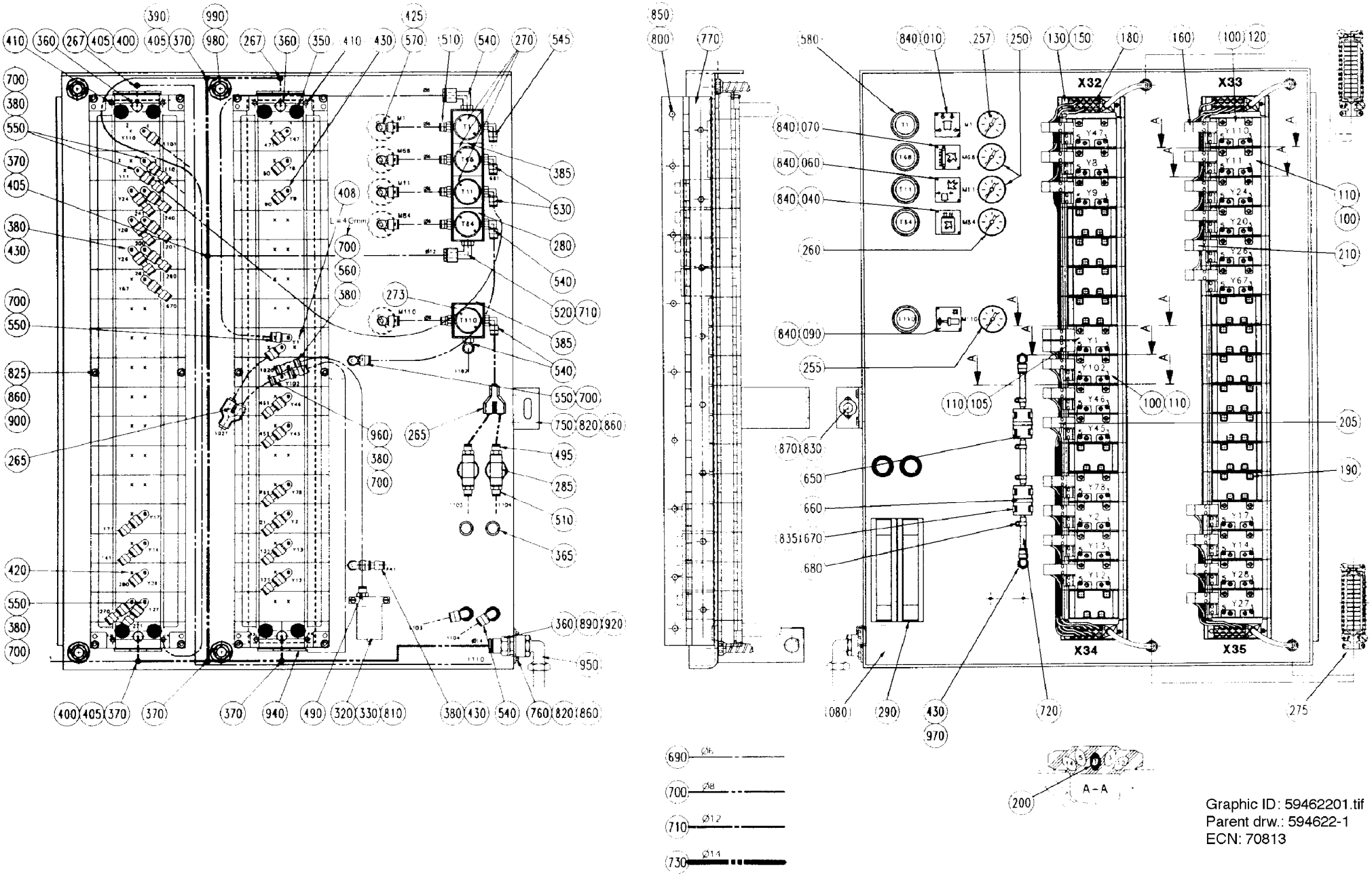

Graphic ID: 59462201.tif
Parent drw.: 594622-1
ECN: 70813

Pos	Part No	UN	Qty	Description	Page No
- (Cont'd)					
940	342713-0211		12	PLUG, EXT THREAD HEX SOCKET 8638-00-380	
950	342733-0114		1	CONN. ELBOW WI-15-G1/2	
960	342748-0103		1	T-CONNECTION 8MM	
970	342768-0103		2	BULKHEAD CONNECTOR, 8 MM	
980	352135-0106	M	8	SPIRAL CONDUIT DI=16 MM	
990	352136-0127		8	GLAND FITTING PR 18,6	

Pos	Part No	UN	Qty	Description	Page No

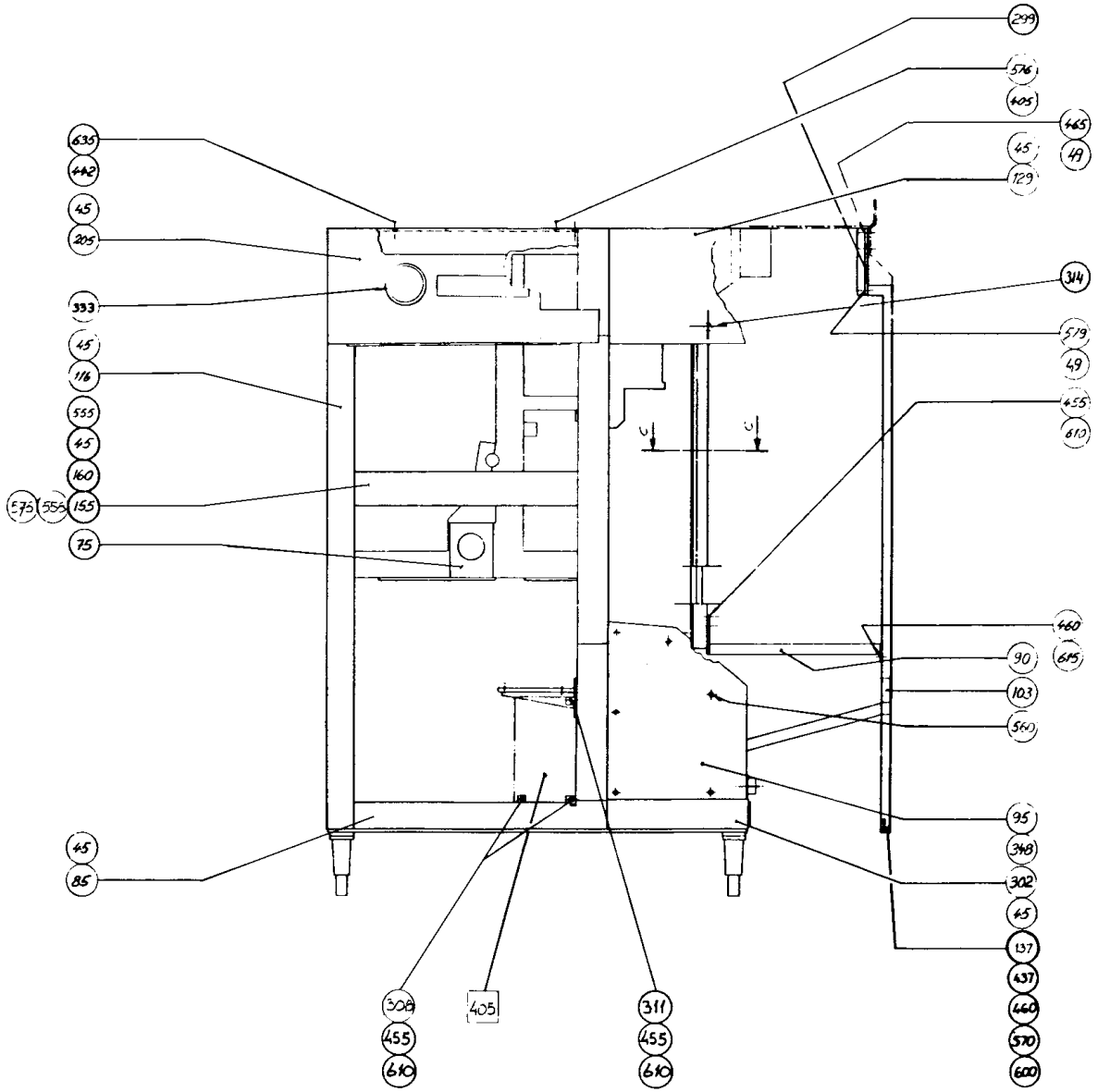

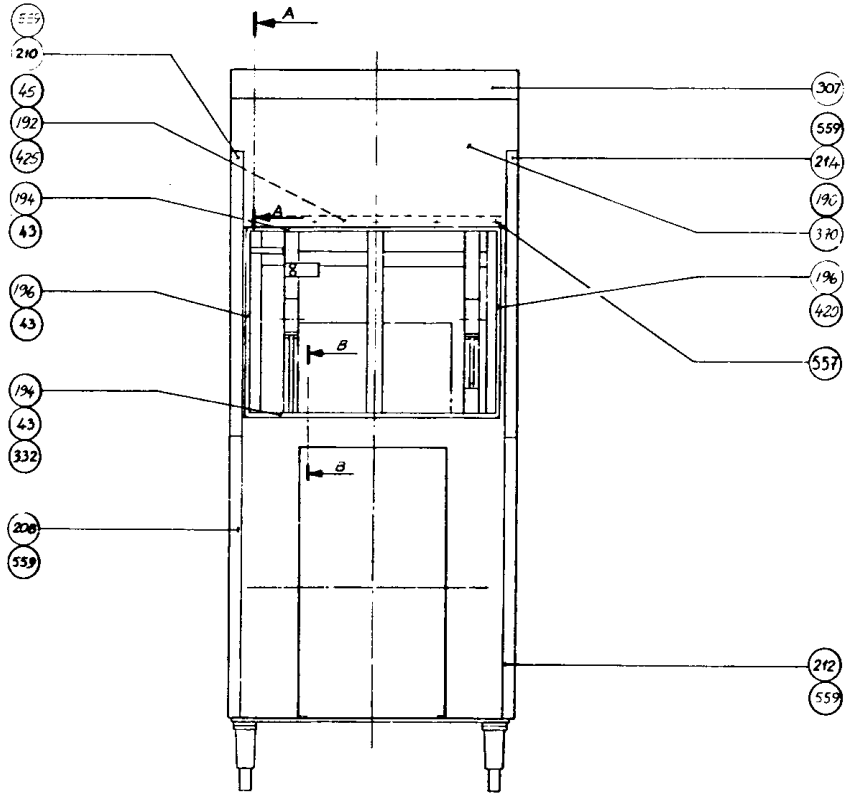

Graphic ID: 92965902.tif
Parent drw.: 929659-2
ECN: 20611

ECM: 71496 - 19980403
Group number: 929659-0100
Assembly Drawing: 929659-2_1_AA

This list covers pages from 2-84 to 2-89

Pos	Part No	UN	Qty	Description	Page No
1500B (See drawing on page: 2-88)					
005	593632-0000		1	FRONT PLATE	
012	228332-0000		1	FASTENING PLATE	
013	598979-0000		1	PIPE	
014	229075-0000		2	LACE	
018	929839-0000		1	COVER PLATE	
019	1143875-0000		1	COVER PLATE	
025	464194-0000		1	COVER DISC	
037	90074-0006		5	CABLE CLIPS, D=2X12 MM	
038	90165-0174		6	HOSE HOLDER	
039	90261-0033		1	PLUG, BLIND, PLASTIC GPN300F182	
042	311103-0357		2	PARALLEL PIN ISO 2338 6M6X30 A1	
048	312125-0327		4	SCREW ISO 1207 M5X12 A4	
055	1144273-0000		1	CANTILEVER	
095	1144279-0000		1	HATCH	
097	1144280-0000		1	HATCH	
130	1285867-0000		1	SIDE GUARD	
137	1144277-0000		1	BEAM	
170	1144278-0000		2	STEERING	
321	90002-0016		1	BLANK-OFF PLUG PR 20.4 SKINDICHT-BLK13,5	
322	90002-0013		1	BLANK-OFF PLUG, PR 15,2 SKINDICHT-BLK9	
360	90261-0042		1	PLUG, BLIND, PLASTIC, F-142	
605	315105-0146		8	WASHER BRB 5,3X10 RFR	
689	342768-0103		2	BULKHEAD CONNECTOR, 8 MM	
700	342732-0104		2	ELBOW PIPE JOINT, EXT.THREAD, D=8MM-G1/4	
710	342960-0112		3	BULKHEAD COUPLING 6/4	
795	342722-0205		2	STRAIGHT COUPLING D=8-G1/4"	
800	342752-0103		1	CONN. STR. GA-8-G1/4	
810	342770-0108		1	STRAIGHT COUPLING INT, D=8 MM - G1/4	
Common Parts					
030	90030-0030		1	CONN. BULKHEAD SV 12-L/SY	
040	90266-0010	MM	35	TUBE	
043	312101-0323		22	SCREW M6S M5X8 FZB	
045	312105-0364		110	SCREW M6S ISO 4017 M6X10 A480	
046	312105-0493		16	SCREW M6S ISO 4017 M10X25 A480	
047	312125-0287		13	SCREW ISO 1207 M4X8 A4	
049	315105-0173		12	WASHER BRB 10,5X20 RFR	
051	352101-0103		5	LEAD-IN, PR18,6/PG11, E-1457518	
052	352103-0105		2	CABLE GLAND, STR 11, PR 18,6/PG11	
053	352135-0202		4	CLIP, 16 MM, 913.016	
060	581808-0000		1	CANTILEVER	
070	267835-0000		1	CANTILEVER	
072	283884-0000		1	OIL TROUGH	
075	929726-0000		1	MACHINE BODY	
078	269285-0000		1	PROTECTION PLATE	
080	273751-0000		1	FRONT PLATE	
085	273753-0000		1	PROTECTION PLATE	
090	285801-0000		1	BEAM	
100	297576-0000		1	BEAM	
103	297669-0000		1	POST	
105	297670-0000		1	POST	
108	929725-0000		1	COLUMN LEFT	
110	929724-0000		1	COLUMN RIGHT	
114	440023-0000		1	PROTECTION PLATE	
116	440024-0000		1	PROTECTION PLATE	
129	566646-0000		1	SIDE GUARD	
138	929740-0000		1	FRONT PLATE	
140	283992-0000		2	RULER	
145	247080-0000		4	BRACKET	
150	269291-0000		1	RULER	
155	269294-0000		1	RULER	
160	269295-0000		1	PROTECTION PLATE	
165	581815-0000		1	COVERING PLATE	
190	440025-0000		1	PROTECTION PLATE	
192	440026-0000		1	CANTILEVER	
194	440027-0000		2	RIM	
196	440028-0000		2	RIM	
205	440077-0000		1	COVERING PLATE	
208	440203-0000		1	RULER	
210	440204-0000		1	RULER	
212	440205-0000		1	RULER	
214	440206-0000		1	RULER	
216	479374-0000		1	DRIP PLATE	
225	531365-0000		4	BRACKET	
275	243573-0000		2	LACE	
278	538245-0000		2	SHIM	
280	247082-0000		4	LEG	
285	263828-0000		1	JUNCTION RAIL	
287	267462-0000		2	LOCK SHEET	
288	267463-0000		2	LOCK SHEET	
290	269296-0000		1	PROTECTION PLATE	
295	269297-0000		1	PROTECTION PLATE	
298	484212-0000		1	BRACKET	
299	484213-0000		1	BRACKET	

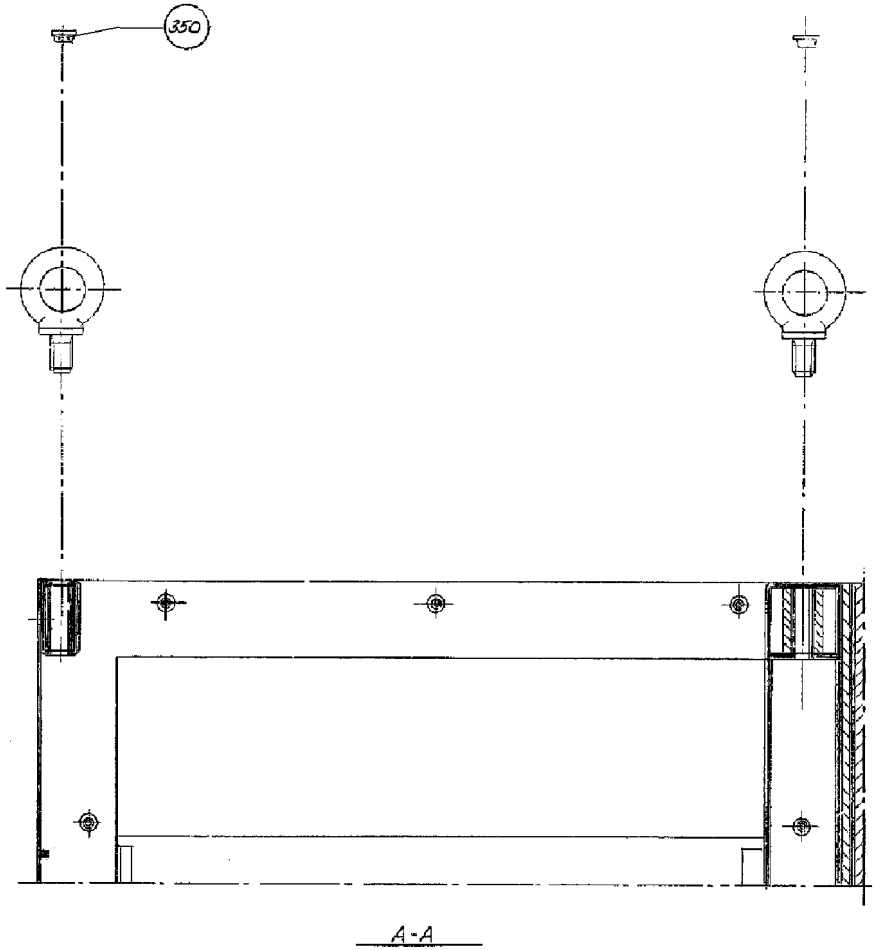

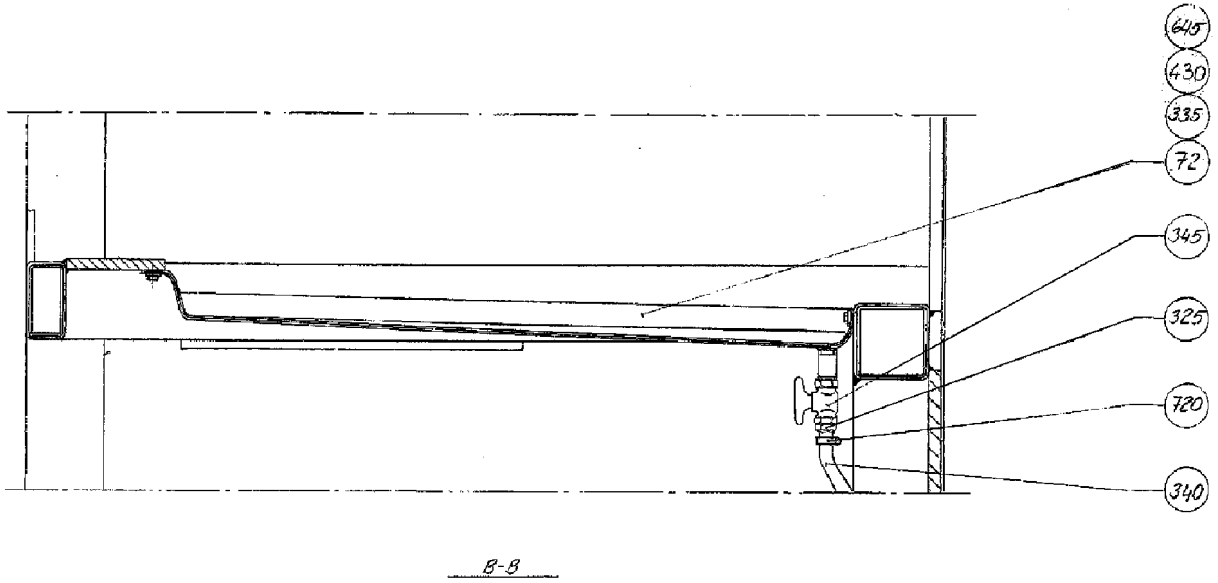

929659-3
ECN 20611

ECM: 71496 - 19980403
Group number: 929659-0100
Assembly Drawing: 929659-3_1_AA

This list covers pages from 2-84 to 2-89

Pos	Part No	UN	Qty	Description	Page No
Common Parts (Cont'd)					
300	293160-0000		1	COVERING PLATE	
302	293161-0000		1	COVERING PLATE	
306	450298-0000		1	COVERING PLATE	
307	450342-0000		1	COVERING PLATE	
308	540726-0000		2	HOOK HOLDER	
310	457357-0000		2	BRACKET	
311	540727-0000		1	FASTENING BRACKET	
312	90015-0010		12	BUSHING	
313	90015-0011		1	BUSHING	
314	90015-0021		1	LEAD-IN, TET10-14, E-1458023	
316	90030-0066		1	CONN. BULKHEAD SV 6-L/SY	
317	90030-0067		2	CONN. BULKHEAD SV 8-L/SY	
318	90030-0159		2	CONN. BULKHEAD SV 15-L/SY	
319	90030-0179		1	CONN. BULKHEAD SV 22-L/SY	
325	90055-0033		1	HOSE NIPPLE, EXT.THR. R1/2-13 MM	
326	90074-0001		1	CABLE CLIPS, D=10 MM	
328	90090-0014		1	BALL, D=7,938 MM	
329	90099-0004		1	NUT	
330	90099-0011		1	NUT PR 37 BRASS	
332	90143-0049	MM	3400	RUBBER STRIP 11X21MM	
333	90143-0054	MM	500	STRIP	
335	90157-0022	L	1	SEALING COMPOUND, SILICONE	
340	90166-0121	MM	1500	HOSE	
345	90187-0029		1	BALL VALVE G1/2, NPBR	
348	90242-0115	MM	3200	O-RING MATERIAL 5,7 MM	
349	90261-0003		2	PLUG, BLIND, PLASTIC GPN300V-10	
350	90261-0011		4	PLUG, BLIND, PLASTIC GPN300F233	
370	90287-0075		6	SCREW SLOT. PAN HEAD LKCS M6X12	
385	311103-0314		4	PARALLEL PIN ISO 2338 5M6X30 A1	
397	311103-0413		16	PARALLEL PIN ISO 2338 8M6X50 A1	
400	311202-0320		2	TAPER PIN EN 22339 A 8X35 SS	
405	311211-0267		2	TAPER PIN THREADED ISO 8737 M5X05 SS	
425	312101-0366		8	SCREW M6S M6X12 FZB	
430	312101-0368		8	SCREW M6S M6X16 FZB	
435	312101-0453		20	SCREW M6S M8X25 FZB	
437	312101-0499		2	SCREW M6S M10X40 FZB	
440	312101-0518		4	SCREW M6S M10X140 FZB	
442	312101-0538		4	SCREW M6S M12X35 FZB	
450	312105-0327		8	SCREW M6S ISO 4017 M5X12 A480	
455	312105-0368		7	SCREW M6S ISO 4017 M6X16 A480	
460	312105-0449		6	SCREW M6S ISO 4017 M8X16 A480	
465	312105-0493		8	SCREW M6S ISO 4017 M10X25 A480	
475	312105-0540		10	SCREW M6S ISO 4017 M12X40 A480	
480	312105-0542		12	SCREW M6S ISO 4014 M12X50 A480	
490	312111-0364		2	SCREW HEX.SOCK.HD.MC6S-TT 6X10 88 FZB	
510	312115-0378		6	SCREW ISO4762 M6X40 A4 80	
515	312115-0451		8	SCREW ISO4762 M8X20 A4 80	
525	312115-0501		7	SCREW ISO4762 M10X50 A4 80	
530	312115-0503		8	SCREW ISO4762 M10X60 A4 80	
555	312151-0366		4	SCREW EN 10642 MF6S M6X12 10.9 EL.PL	
556	312155-0327		4	SCREW DIN 7991 MF6S M5X12 A4 70	
557	312155-0366		5	SCREW DIN 7991 MF6S M6X12 A4 70	
558	312155-0370		4	SCREW DIN 7991 MF6S M6X20 A4 70	
559	312155-0368		15	SCREW DIN 7991 MF6S M6X16 A4 70	
560	312155-0451		12	SCREW DIN 7991 MF6S M8X20 A4 70	
570	312601-0320		2	HEXAGON NUT, M10 8 FZB, ISO 4032	
575	312605-0316		4	HEXAGON NUT, M6M M6 A280	
576	312605-0314		2	HEXAGON NUT, M6M M5 A280	
579	312605-0320		2	HEXAGON NUT, M6M M10 A280	
600	315101-0173		2	WASHER PLAIN, BRB, 10,5/22 H=2	
610	315105-0153		31	WASHER BRB 6,4X12 RFR	
615	315105-0165		14	WASHER BRB 8,4X16 RFR	
635	315111-0178		4	WASHER PLAIN, TBRB 13/24 H=4	
640	315115-0178		22	WASHER PLAIN, TBRB 13/24 H=4	
645	315121-0153		8	WASHER PLAIN, TBRSB 6,4/22 H=4	
660	315402-0173		15	LOCK WASHER FBB 10,2	
675	315701-0330		2	PARALLEL KEY W. ROUND ENDS 12X8X32 MM	
680	315701-0336		3	PARALLEL KEY W. ROUND ENDS 12X8X63 MM	
688	341001-0228	MM	35	COPPER TUBE	
690	342929-0121		2	STRAIGHT COUPLING,SOLDER 8/6-8	
720	342991-0103		1	HOSE CLIP,WORM DRIVE TYPE (19)-23	
735	352103-0116		1	CABLE GLAND, ST 21, PR28,3/PG21	
737	352103-0121		1	CABLE GLAND, ST 29, PR37,0/PG29	
740	352110-0101		2	CABLE CLIPS, D=7-10 MM	
750	352135-0201		1	CLIP, 12 MM, 913.012	
F405	929660-0100		1	CONNECTION BOX	**2-91**

Machine Type | Group Description | Used-In | Group Number | Page No

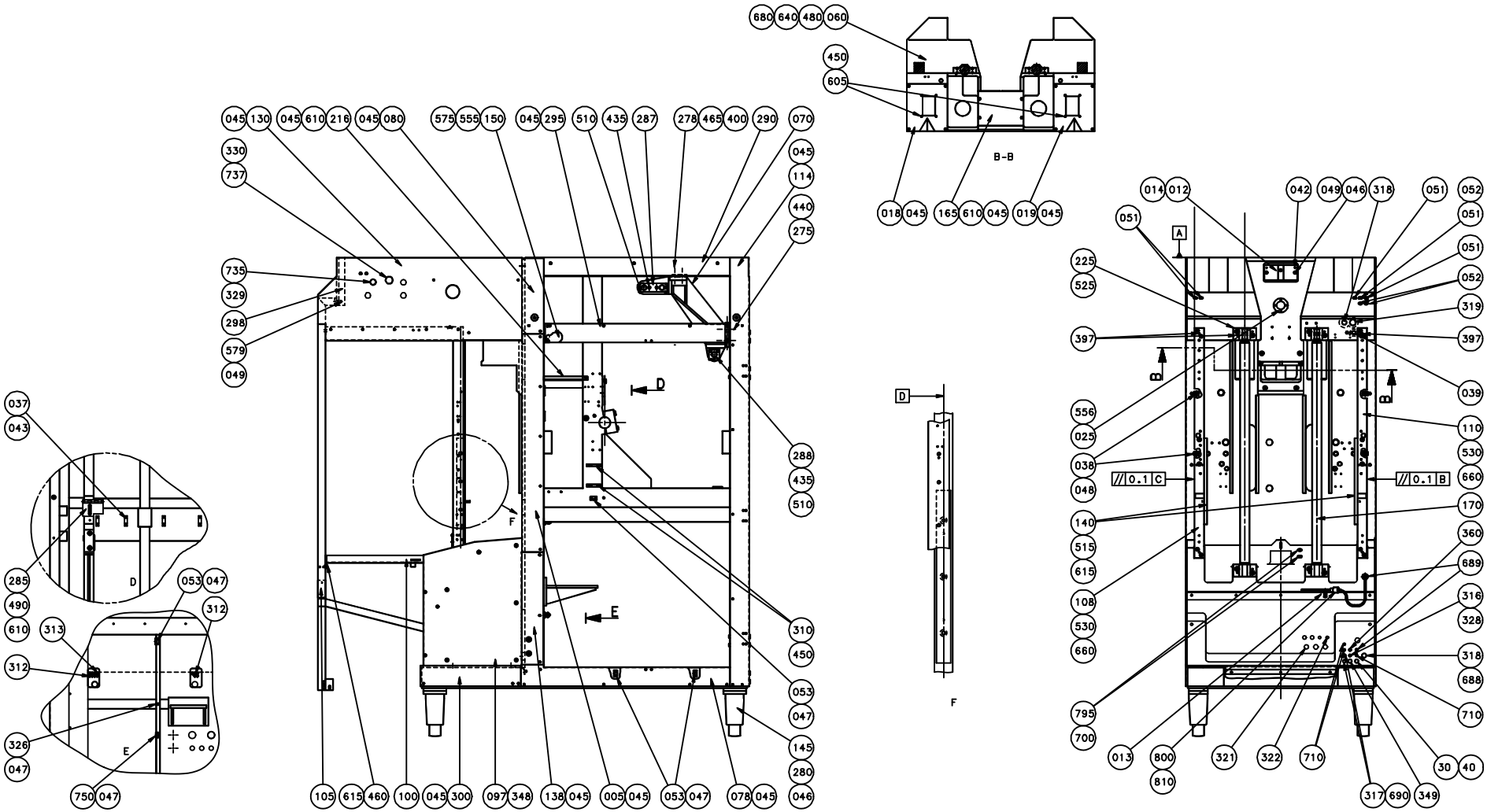
680 640 480 060
450
605
B-B
018 045 165 610 045 019 045
045 130 045 610 216 045 080 575 555 150 045 295 510 435 287 278 465 400 290 070
330
737
735
329
298
579
049
045
114
440
275
288
435
510
310
450
053
047
145
280
046
105 615 460 100 045 300 097 348 138 045 005 045 053 047 078 045
D
E
F
037
043
285
490
610
053 047
312
313
312
326
047
750 047
045
306
055
675
475
640
014 012 042 049 046 318 051 052
051
A
225
525
397
B
556
025
038
048
//0.1 C
140
515
615
108
530
660
795
700
013
800
810
321
322
710
317 690 349
30
40
//0.1 B
110
530
660
170
360
689
316
328
318
688
710

Pos	Part No	UN	Qty	Description	Page No	Pos	Part No	UN	Qty	Description	Page No

SEE PREVIOUS LISTS PAGES: 2-85, 2-87.

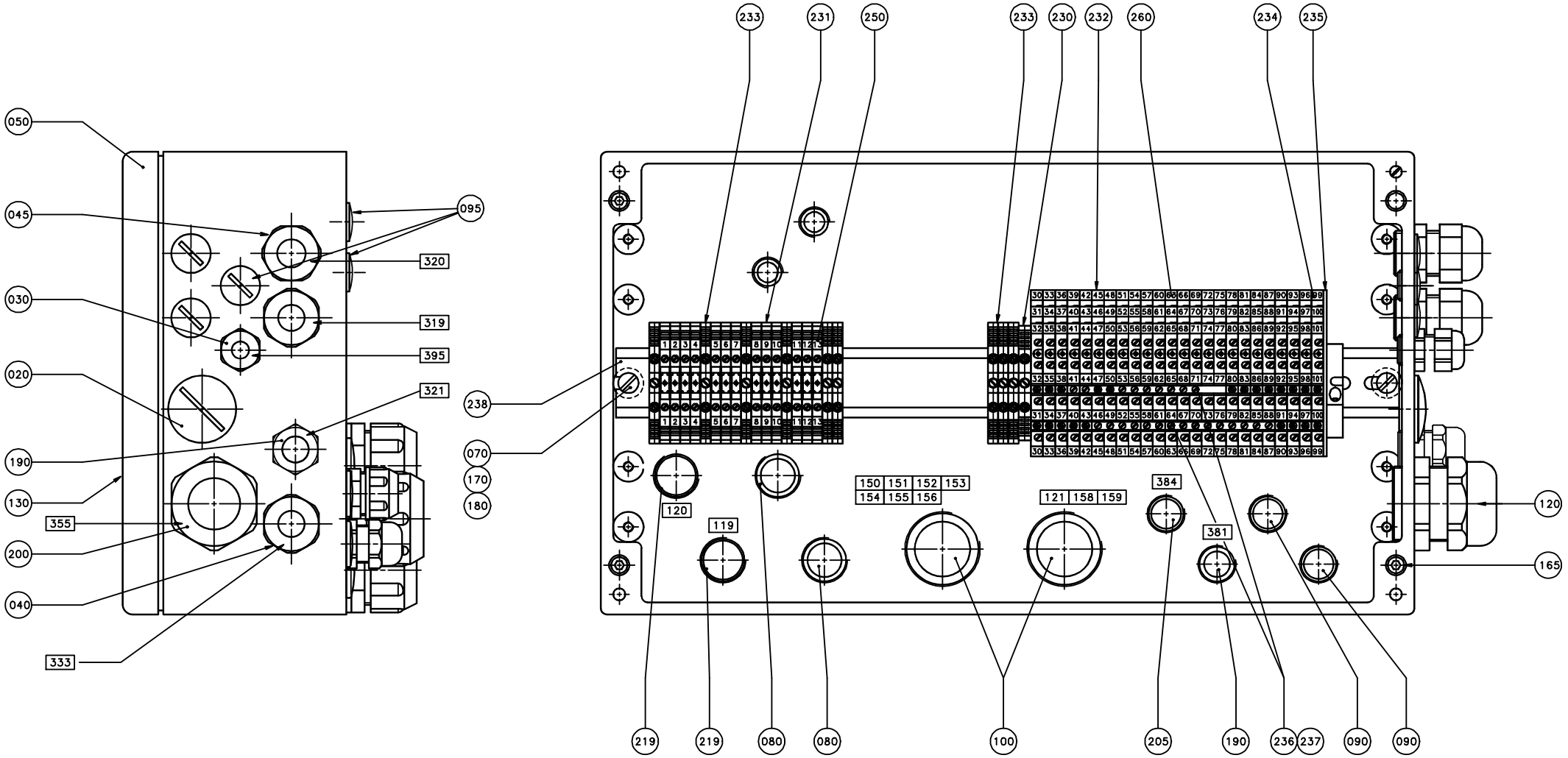
050
045
030
020
190
130
355
200
040
333
095
320
319
395
321
238
070
170
180
233
231
250
233
230
232
260
234
235
120
119
150 151 152 153
154 155 156
121 158 159
384
381
219
219
080
080
100
205
190
236
237
090
090
120
165

ECM: 71496 - 19980403
Group number: 929660-0100
Assembly Drawing: 929660-2_1_AB

Pos	Part No	UN	Qty	Description	Page No
1500B					
020	90002-0012		1	BLANK-OFF PLUG, PR 28,3 SKINDICHT-BLK21	
030	352103-0101		1	CABLE GLAND, ST 9, PR15,2/PG9	
090	90002-0009		2	BLANK-OFF PLUG, PR 18.6 SKINDICHT-BLK11	
095	90002-0013		5	BLANK-OFF PLUG, PR 15,2 SKINDICHT-BLK9	
190	352103-0106		2	CABLE GLAND, ST 11, PR18,6/PG11	
231	353021-0212		13	FEED THROUGH TERMINAL, 10200.0	
233	353024-0204		9	EARTH TERMINAL WPE 2,5	
236	353034-0401		2	BRIDGE CONNECTOR Q2, 13125.0	
237	353034-0404		4	BRIDGE CONNECTOR Q10, 13131.0	
Common Parts					
040	352103-0110		2	CABLE GLAND, STR 16, PR22,5/PG16	
045	352103-0111		1	CABLE GLAND, ST 16, PR22,5/PG16	
050	929739-0000		1	CONNECTION BOX	
070	450899-0001		2	SPACER	
080	90002-0004		2	BLANK-OFF PLUG, PR 22,5 SKINDICHT-BLK16	
100	90012-0061		2	GLAND	
120	90110-0128		2	MALE INSERT HAN 24 E-M 65330242631	
130	90194-0016		1	WARNING SIGN, RISK OF ELECTRIC SHOCK	
165	312115-0372		3	SCREW ISO4762 M6X25 A4 80	
170	312125-0376		2	SCREW ISO 1207 M6X35 A4	
180	315105-0153		2	WASHER BRB 6,4X12 RFR	
200	352103-0121		1	CABLE GLAND, ST 29, PR37,0/PG29	
205	352136-0113		1	GLAND FITTING PR18,6/PG11 DI=12MM	
219	352136-0142		2	GLAND FITTING	
230	353021-0228		1	EARTH TERMINAL WPE 4	
232	353021-0302		24	TERMINALS,TRIPLE-LEVEL, DLD 2,5/35 PA	
234	353031-0201		1	END BRACKET EW35	
235	353032-0302		1	END PLATE WAP, 13176.6	
238	353042-0004	MM	385	RAIL TS 35/7,5	
250	359011-0807		2	MARKING PLATES 5-FW 1-50	
260	359011-0808		2	MARKING PLATES 5-FW 51-100	
270	359011-0809		2	MARKING PLATES 5-FW 101-150	

Pos	Part No	UN	Qty	Description	Page No

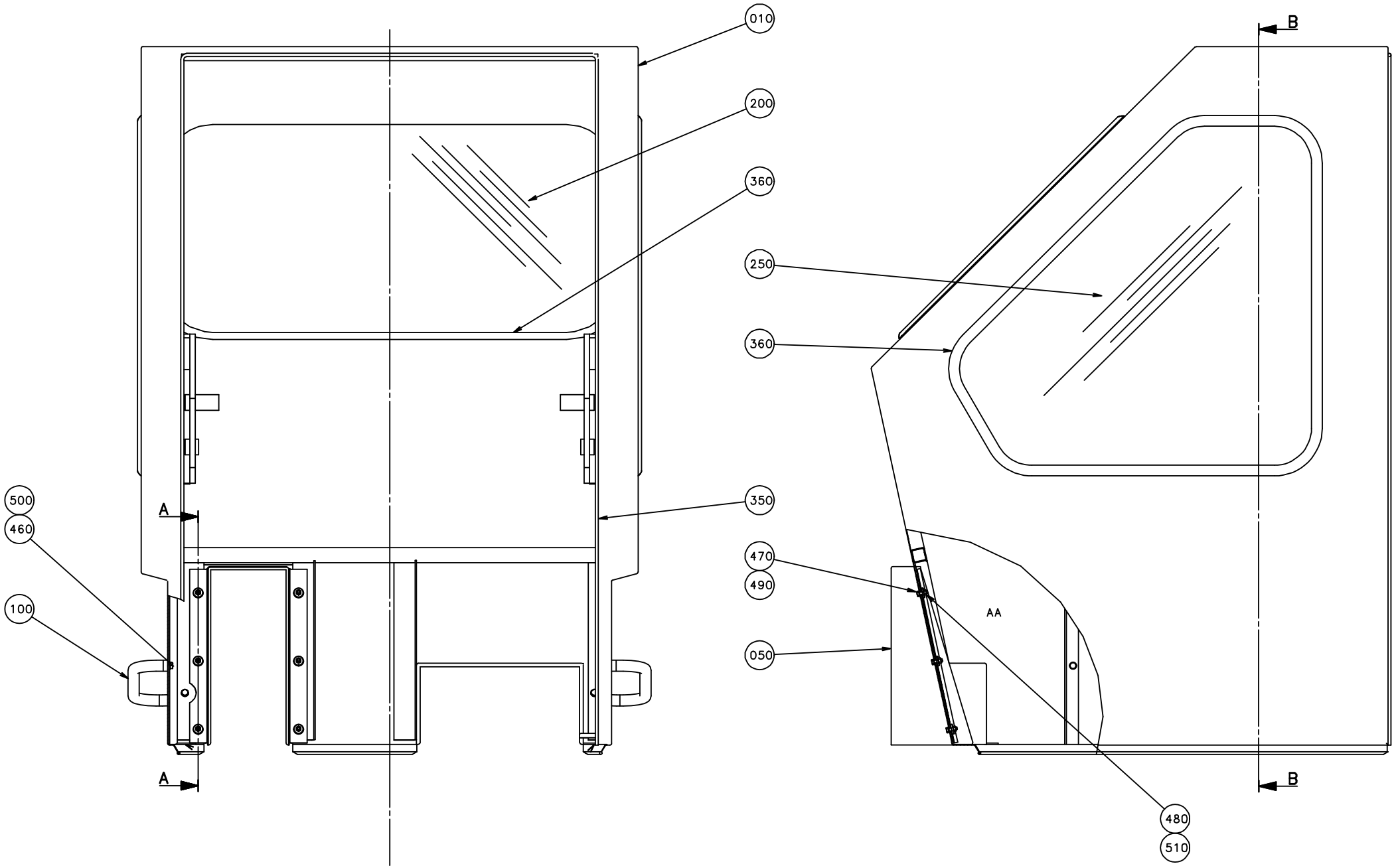
010
200
360
250
360
350
500
460
100
470
490
050
480
510
A
A
B
B
AA

ECM: 71162 - 19980119
Group number: 1144274-0100
Assembly Drawing: 1144274-1_1_AA

Pos	Part No	UN	Qty	Description	Page No
-					
010	1144670-0000		1	COVER	
050	1144671-0000		1	COVER	
100	1144804-0000		2	HANDLE	
200	262774-0009		1	GLASS PANE	
250	297488-0000		2	GLASS PANE	
350	90143-0035	MM	4500	STRIP	
360	90143-0039	MM	9500	STRIP	
460	312105-0451		4	SCREW M6S ISO 4017 M8X20 A480	
470	312105-0370		6	SCREW M6S ISO 4017 M6X20 A480	
480	312605-0316		6	HEXAGON NUT, M6M M6 A280	
490	315105-0153		6	WASHER BRB 6,4X12 RFR	
500	315105-0165		4	WASHER BRB 8,4X16 RFR	
510	315125-0153		6	WASHER TBRSB 6,4X22X4 A4	

Pos	Part No	UN	Qty	Description	Page No

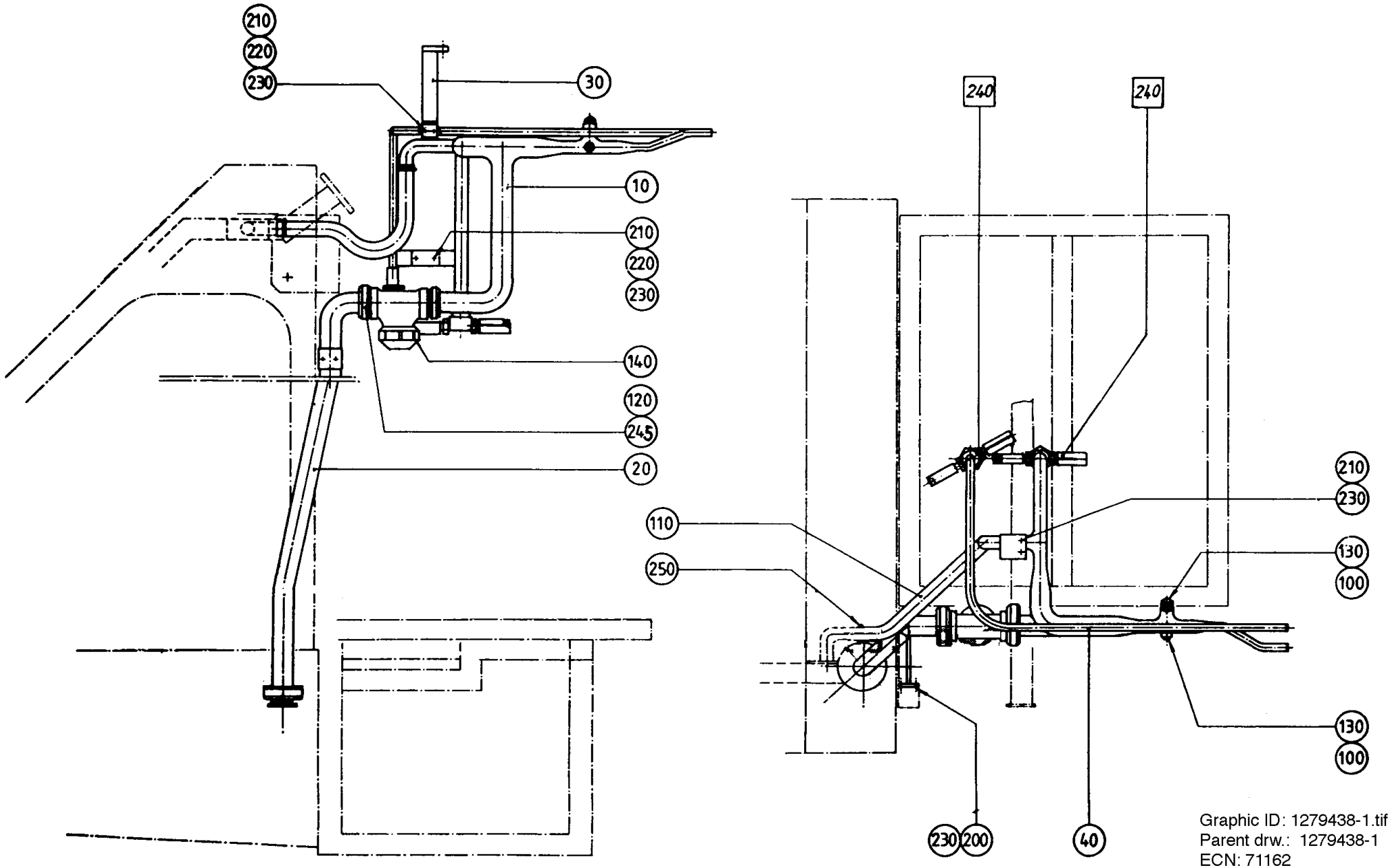

Graphic ID: 1279438-1.tif
Parent drw.: 1279438-1
ECN: 71162

ECM: 81788 - 20010206
Group number: 1279438-0100
Assembly Drawing: 1279438-1_1_AA

Pos	Part No	UN	Qty	Description	Page No
-					
010	542706-0000		1	PIPE	
020	1144282-0000		1	PIPE	
030	297802-0000		1	BRACKET	
040	297805-0000		1	PIPE	
100	90157-0016	ML	1	LOCKING FLUID LOCTITE 242 50 ML	
110	90166-0142	MM	750	HOSE	
120	90217-0053		2	NIPPLE, RD 60-6 - R1 1/2 M	
130	90330-0026		2	PLUG, EXT. G-THREAD, G1/4	
140	90415-0032		1	FILTER / 3-02-00-1 1/2"	
	90415-0328		*1*	*FILTER INSERT*	
200	312105-0368		2	SCREW M6S ISO 4017 M6X16 A480	
210	312105-0370		6	SCREW M6S ISO 4017 M6X20 A480	
220	312605-0316		4	HEXAGON NUT, M6M M6 A280	
230	315105-0153		10	WASHER BRB 6,4X12 RFR	
245	315250-0103		2	GASKET 48X38X5,5 MM	
250	342991-0106		2	HOSE CLIP,WORM DRIVE TYPE (30)-36	

Pos	Part No	UN	Qty	Description	Page No

Machine Type | Group Description | Used-In | Group Number | Page No

SIDE GUARD, RIGHT

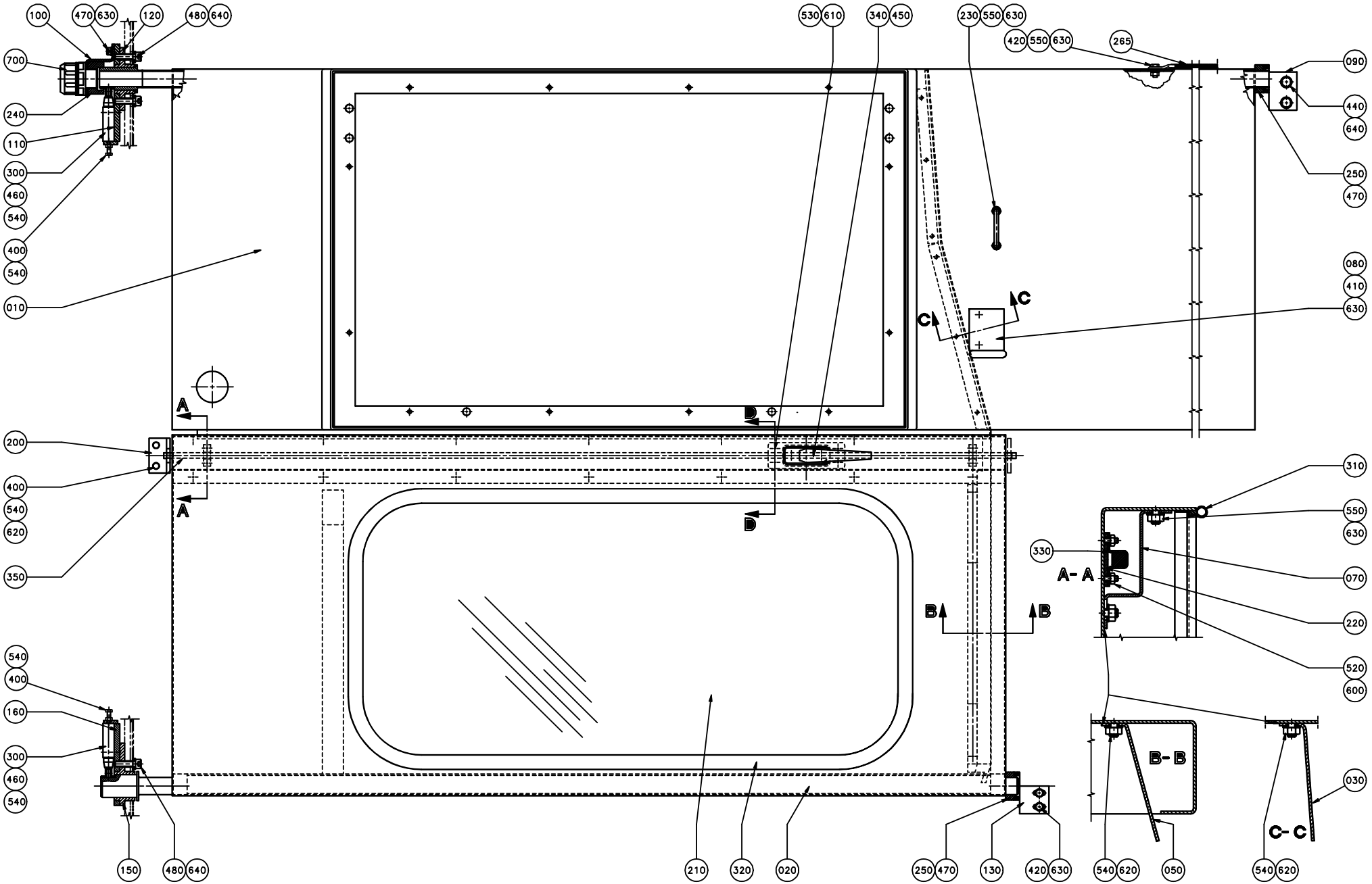

ECM: - -
Group number: 929656-0100
Assembly Drawing: 929656-1_1_AA

Pos	Part No	UN	Qty	Description	Page No
-					
010	928232-0000		1	SIDE GUARD ,R	
020	544900-0000		1	SIDECOVER RIGHT FRONT	
030	545108-0000		1	CHUTE	
050	451128-0000		1	CHUTE, RIGHT FRONT	
070	442194-0000		1	PROTECTIVE CASING	
080	531761-0000		1	HOLDER	
090	544482-0000		1	BRACKET	
100	544484-0000		1	HOLDER	
110	560873-0000		1	PLATE	
120	544486-0000		1	BEARING UNIT	
130	544508-0000		1	BRACKET	
150	560800-0000		1	BEARING UNIT	
160	560872-0000		1	PLATE	
200	293566-0000		1	MOUNTINGS	
210	293598-0000		1	GLASS PANE	
220	434858-0000		2	CUSHION	
230	531616-0000		1	HOLDER	
240	544480-0000		1	NUT	
250	544481-0000		2	PLATE	
265	553164-0000		1	LOW IMPEDANCELITZ L=150MM	
300	90044-0094		2	LIMIT SW. 924 CE31-Y20-X5	
310	90143-0035	MM	4550	STRIP	
320	90143-0039	MM	2400	STRIP	
330	90237-0011		2	BAR CLAMP	
340	90237-0061		1	HANDLE, FIX 0035-0230	
350	90237-0067		1	LOCK, FIX 590, L=1198 MM	
400	312105-0327		6	SCREW M6S ISO 4017 M5X12 A480	
410	312105-0364		2	SCREW M6S ISO 4017 M6X10 A480	
420	312105-0368		3	SCREW M6S ISO 4017 M6X16 A480	
440	312105-0451		2	SCREW M6S ISO 4017 M8X20 A480	
450	312115-0325		2	SCREW ISO4762 M5X10 A4 80	
460	312115-0329		4	SCREW ISO4762 M5X16 A4 80	
470	312115-0366		6	SCREW ISO4762 M6X12 A4 80	
480	312115-0455		4	SCREW ISO4762 M8X30 A4 80	
520	312605-0310		4	HEXAGON NUT, M6M M3 A280	
530	312605-0312		4	HEXAGON NUT, M6M M4 A280	
540	312605-0314		35	HEXAGON NUT, M6M M5 A280	
550	312605-0316		7	HEXAGON NUT, M6M M6 A280	
600	315105-0124		4	WASHER BRB 3,2X7 RFR	
610	315105-0136		4	WASHER BRB 4,3X9 RFR	
620	315105-0146		27	WASHER BRB 5,3X10 RFR	
630	315105-0153		9	WASHER BRB 6,4X12 RFR	
640	315105-0165		6	WASHER BRB 8,4X16 RFR	
700	352136-0152		1	GLAND FITTING	

Machine Type | Group Description | Used-In | Group Number | Page No

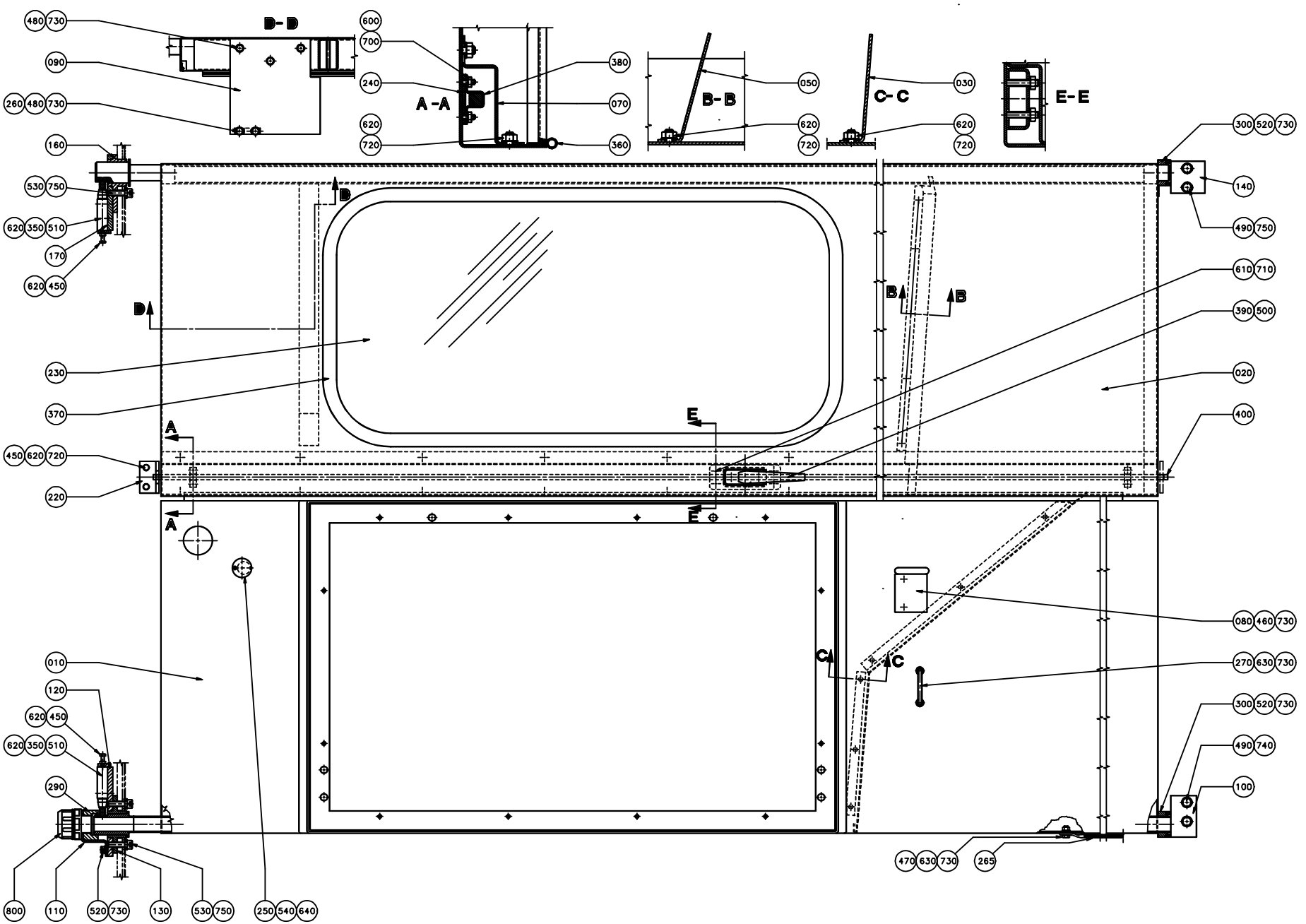
B-B
A-A
B-B
C-C
E-E
480 730
090
260 480 730
600
700
240
620
720
380
070
360
050
620
720
030
620
720
160
530 750
620 350 510
170
620 450
300 520 730
140
490 750
610 710
390 500
020
400
230
370
450 620 720
220
080 460 730
270 630 730
300 520 730
490 740
100
010
120
620 450
620 350 510
290
800
110
520 730
130
530 750
250 540 640
470 630 730
265

ECM: 71059 - 19971211
Group number: 929655-0100
Assembly Drawing: 929655-1_1_AB

Pos	Part No	UN	Qty	Description	Page No
1500B					
140	1144603-0000		1	BRACKET	
Common Parts					
010	928233-0000		1	SIDE GUARD ,L	
020	544899-0000		1	SIDECOVER LEFT FRONT	
030	545107-0000		1	CHUTE LEFT	
050	451127-0000		1	CHUTE, LEFT FRONT	
070	442193-0000		1	PROTECTIVE CASING	
080	469795-0000		1	HOLDER	
090	533426-0000		1	STOP PLATE	
100	544483-0000		1	BRACKET	
110	544484-0000		1	HOLDER	
120	560873-0000		1	PLATE	
130	544486-0000		1	BEARING UNIT	
160	560800-0000		1	BEARING UNIT	
170	560872-0000		1	PLATE	
220	293566-0000		1	MOUNTINGS	
230	293598-0000		1	GLASS PANE	
240	434858-0000		2	CUSHION	
250	442195-0000		1	LID	
260	553162-0000		1	STOP PLATE	
265	553164-0000		1	LOW IMPEDANCELITZ L=150MM	
270	531616-0000		1	HOLDER	
290	544480-0000		1	NUT	
300	544481-0000		2	PLATE	
350	90044-0094		2	LIMIT SW. 924 CE31-Y20-X5	
360	90143-0035	MM	5450	STRIP	
370	90143-0039	MM	2400	STRIP	
380	90237-0011		2	BAR CLAMP	
390	90237-0061		1	HANDLE, FIX 0035-0230	
400	90237-0066		1	LOCK, FIX 590, L=1820 MM	
450	312105-0327		6	SCREW M6S ISO 4017 M5X12 A480	
460	312105-0364		2	SCREW M6S ISO 4017 M6X10 A480	
470	312105-0368		1	SCREW M6S ISO 4017 M6X16 A480	
480	312105-0370		3	SCREW M6S ISO 4017 M6X20 A480	
490	312105-0451		4	SCREW M6S ISO 4017 M8X20 A480	
500	312115-0325		2	SCREW ISO4762 M5X10 A4 80	
510	312115-0329		4	SCREW ISO4762 M5X16 A4 80	
520	312115-0366		6	SCREW ISO4762 M6X12 A4 80	
530	312115-0455		4	SCREW ISO4762 M8X30 A4 80	
540	312125-0222		1	SCREW ISO 1207 M3X8 A4	
600	312605-0310		4	HEXAGON NUT, M6M M3 A280	
610	312605-0312		4	HEXAGON NUT, M6M M4 A280	
620	312605-0314		38	HEXAGON NUT, M6M M5 A280	
630	312605-0316		3	HEXAGON NUT, M6M M6 A280	
640	312810-0310		1	HEXAGON NUT, NY-LOCK M3 FZB	
700	315105-0124		4	WASHER BRB 3,2X7 RFR	
710	315105-0136		4	WASHER BRB 4,3X9 RFR	
720	315105-0146		33	WASHER BRB 5,3X10 RFR	
730	315105-0153		18	WASHER BRB 6,4X12 RFR	
740	315105-0165		2	WASHER BRB 8,4X16 RFR	
750	315115-0165		6	WASHER PLAIN, TBRB 8,4/16 H=3	
800	352136-0152		1	GLAND FITTING	

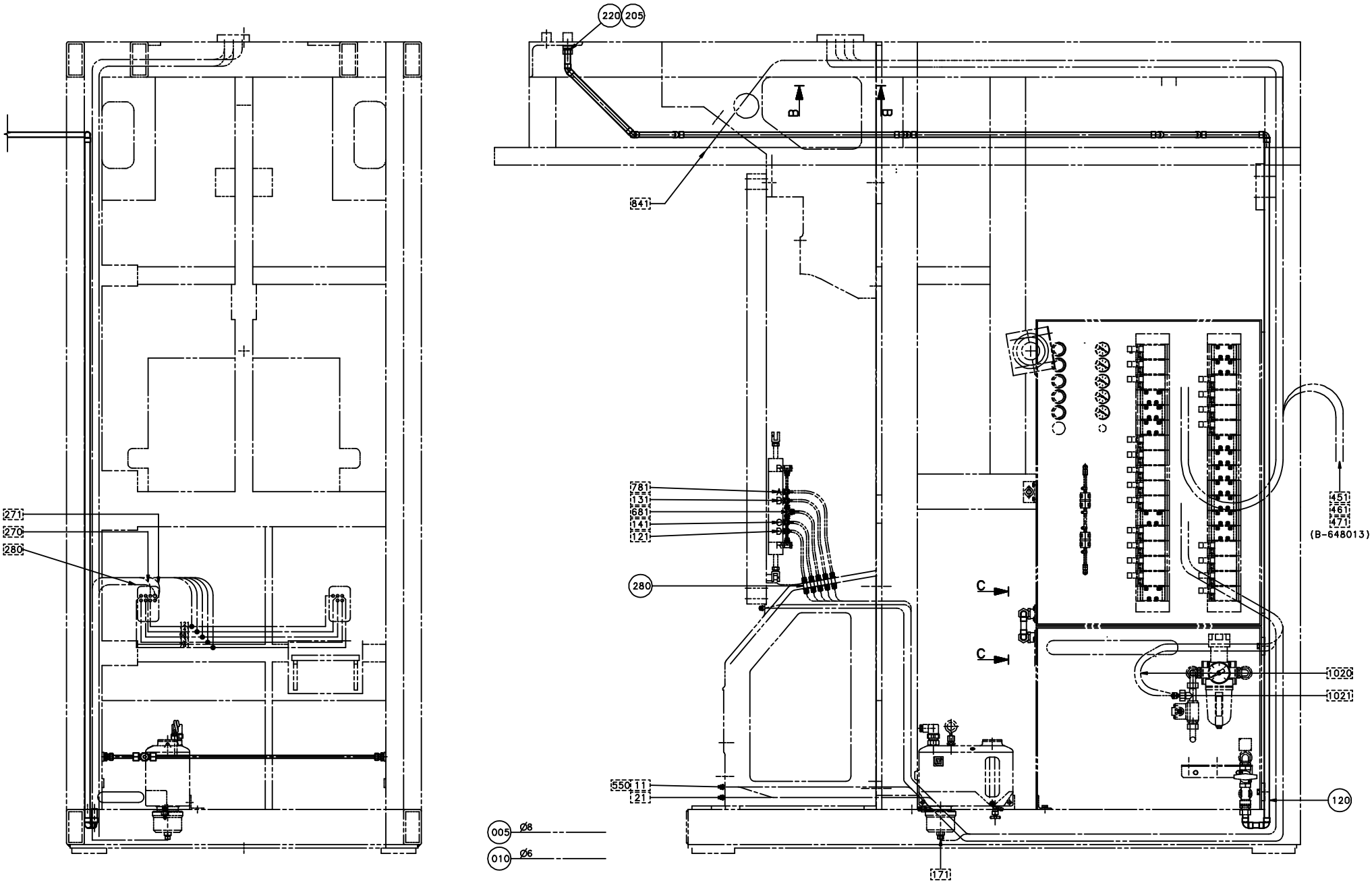
220
205
B
B
841
781
131
681
141
121
280
271
270
280
C
C
451
461
471
(B-648013)
1020
1021
10
120
550
11
21
005
Ø8
010
Ø6
171

ECM: 72533 - 19990617
Group number: 450788-0600
Assembly Drawing: 450788-20_1_AA

This list covers pages from 2-100 to 2-113

Pos	Part No	UN	Qty	Description	Page No
TB/8 0568SQ REVFIN US, TB/8 0500SQ REVFIN US (See drawing on pages: 2-104, 2-106, 2-112)					
005	90166-0013	M	26	TUBE 8 MM PA BLUE	
010	90166-0081	M	100	TUBE 6 MM PA BLUE	
110	450736-0000		1	PIPE	
170	90224-0319		6	CONN. STR., 8-R1/4, EXT. THREAD	
175	342707-0110		2	SLEEVE, INT. THREAD, NO. 2543-1/4	
177	342732-0104		2	ELBOW PIPE JOINT, EXT.THREAD, D=8MM-G1/4	
200	315233-0110		4	WASHER CAPTIVE SEALING G1/4	
295	90055-0101		1	Y-CONNECTION, 8-8	
350	342980-0122		2	BANJO-CONNECTION,RING 8/6-G1/4 INCH	
360	342980-0304		2	BANJO-HOLLOW BOLT COUPL,EXT.THR.01-G1/4	
370	276398-0000		2	HEXAGON NIPPLE	
380	464432-0000		1	PIPE	
390	450747-0000		1	PIPE	
TB/8 1000SQ REVFIN US (See drawing on pages: 2-104, 2-106, 2-108)					
005	90166-0013	M	26	TUBE 8 MM PA BLUE	
010	90166-0081	M	92	TUBE 6 MM PA BLUE	
110	450736-0000		1	PIPE	
170	90224-0319		6	CONN. STR., 8-R1/4, EXT. THREAD	
175	342707-0110		2	SLEEVE, INT. THREAD, NO. 2543-1/4	
177	342732-0104		2	ELBOW PIPE JOINT, EXT.THREAD, D=8MM-G1/4	
200	315233-0110		4	WASHER CAPTIVE SEALING G1/4	
295	90055-0101		1	Y-CONNECTION, 8-8	
350	342980-0122		2	BANJO-CONNECTION,RING 8/6-G1/4 INCH	
360	342980-0304		2	BANJO-HOLLOW BOLT COUPL,EXT.THR.01-G1/4	
370	276398-0000		2	HEXAGON NIPPLE	
380	464432-0000		1	PIPE	
390	450747-0000		1	PIPE	
TB/8 NORMFIN US (See drawing on pages: 2-102, 2-104, 2-110)					
005	90166-0013	M	26	TUBE 8 MM PA BLUE	
010	90166-0081	M	77	TUBE 6 MM PA BLUE	
110	450736-0000		1	PIPE	
170	90224-0319		6	CONN. STR., 8-R1/4, EXT. THREAD	
175	342707-0110		2	SLEEVE, INT. THREAD, NO. 2543-1/4	
177	342732-0104		2	ELBOW PIPE JOINT, EXT.THREAD, D=8MM-G1/4	
200	315233-0110		4	WASHER CAPTIVE SEALING G1/4	
295	90055-0101		1	Y-CONNECTION, 8-8	
350	342980-0122		2	BANJO-CONNECTION,RING 8/6-G1/4 INCH	
360	342980-0304		2	BANJO-HOLLOW BOLT COUPL,EXT.THR.01-G1/4	
370	276398-0000		2	HEXAGON NIPPLE	
380	464432-0000		1	PIPE	
390	450747-0000		1	PIPE	

Pos	Part No	UN	Qty	Description	Page No
TB/8 TPC (See drawing on pages: 2-100, 2-102)					
005	90166-0013	M	17	TUBE 8 MM PA BLUE	
010	90166-0081	M	70	TUBE 6 MM PA BLUE	
110	450736-0000		1	PIPE	
170	90224-0319		2	CONN. STR., 8-R1/4, EXT. THREAD	
200	315233-0110		2	WASHER CAPTIVE SEALING G1/4	
Common Parts					
080	544692-0000		1	PIPE	
120	544697-0000		1	PIPE	
140	450791-0000		1	PIPE	
180	90224-0323		1	CONNECTION	
205	315233-0113		1	WASHER CAPTIVE SEALING G1/2	
210	342713-0210		1	PLUG,EXT THREAD HEX SOCKET(PAK OF 10 PCS	
220	342720-0114		1	CONN. STR. GA-15-G1/2	
240	342929-0121		1	STRAIGHT COUPLING,SOLDER 8/6-8	
260	90055-0100		5	Y-CONNECTION, 6-6	
280	342960-0112		10	BULKHEAD COUPLING 6/4	

Machine Type | Group Description | Used-In | Group Number | Page No

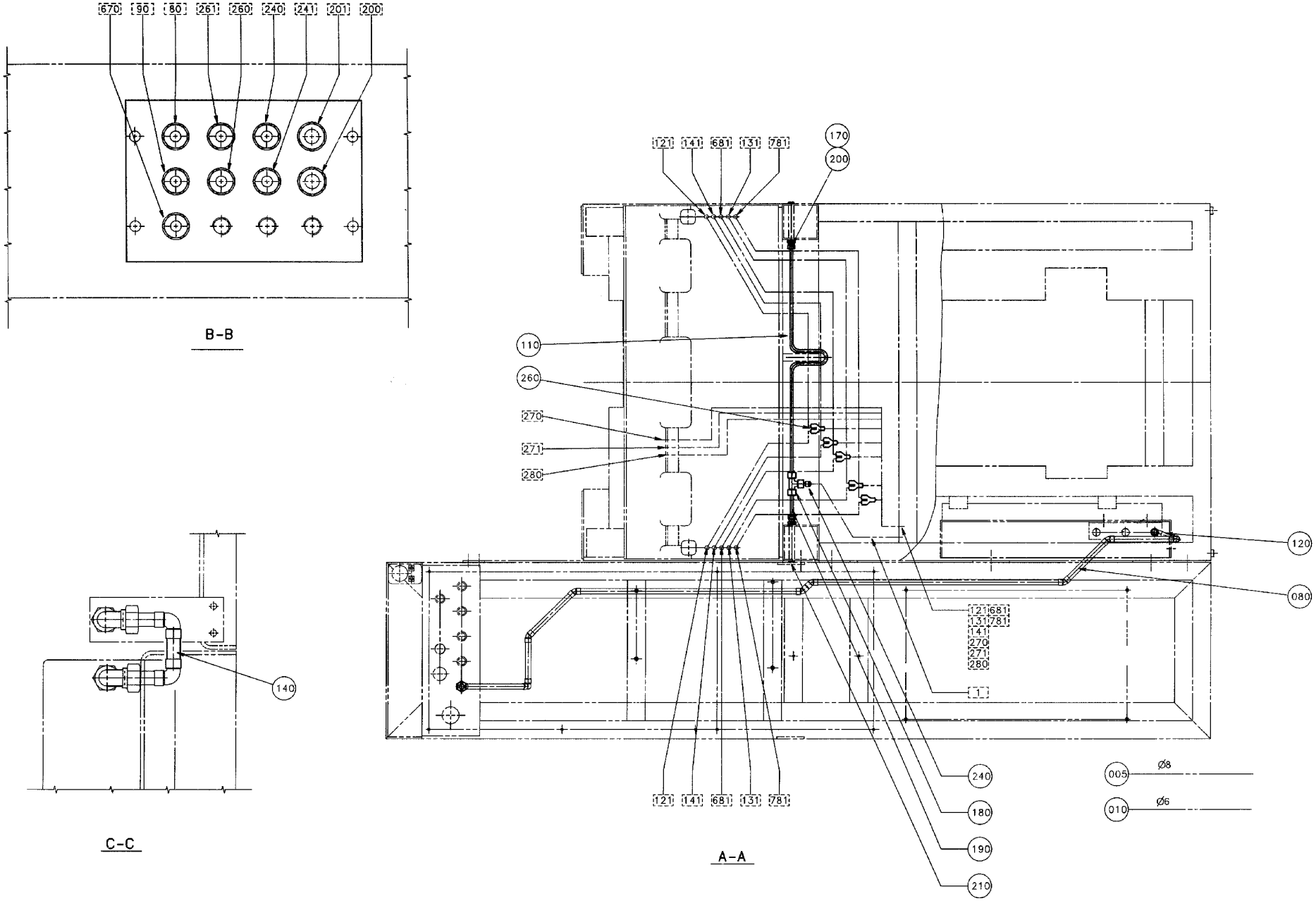
670
90
80
261
260
240
241
201
200
B-B
121
141
681
131
781
170
200
110
260
270
271
280
120
080
140
C-C
240
180
190
210
005
Ø8
010
Ø6
A-A

ECM: 72533 - 19990617
Group number: 450788-0600
Assembly Drawing: 450788-21_1_AA

This list covers pages from 2-100 to 2-113

Pos	Part No	UN	Qty	Description	Page No
TB/8 0568SQ REVFIN US, TB/8 0500SQ REVFIN US (See drawing on pages: 2-104, 2-106, 2-112)					
005	90166-0013	M	26	TUBE 8 MM PA BLUE	
010	90166-0081	M	100	TUBE 6 MM PA BLUE	
110	450736-0000		1	PIPE	
170	90224-0319		6	CONN. STR., 8-R1/4, EXT. THREAD	
175	342707-0110		2	SLEEVE, INT. THREAD, NO. 2543-1/4	
177	342732-0104		2	ELBOW PIPE JOINT, EXT.THREAD, D=8MM-G1/4	
200	315233-0110		4	WASHER CAPTIVE SEALING G1/4	
295	90055-0101		1	Y-CONNECTION, 8-8	
350	342980-0122		2	BANJO-CONNECTION,RING 8/6-G1/4 INCH	
360	342980-0304		2	BANJO-HOLLOW BOLT COUPL,EXT.THR.01-G1/4	
370	276398-0000		2	HEXAGON NIPPLE	
380	464432-0000		1	PIPE	
390	450747-0000		1	PIPE	
TB/8 1000SQ REVFIN US (See drawing on pages: 2-104, 2-106, 2-108)					
005	90166-0013	M	26	TUBE 8 MM PA BLUE	
010	90166-0081	M	92	TUBE 6 MM PA BLUE	
110	450736-0000		1	PIPE	
170	90224-0319		6	CONN. STR., 8-R1/4, EXT. THREAD	
175	342707-0110		2	SLEEVE, INT. THREAD, NO. 2543-1/4	
177	342732-0104		2	ELBOW PIPE JOINT, EXT.THREAD, D=8MM-G1/4	
200	315233-0110		4	WASHER CAPTIVE SEALING G1/4	
295	90055-0101		1	Y-CONNECTION, 8-8	
350	342980-0122		2	BANJO-CONNECTION,RING 8/6-G1/4 INCH	
360	342980-0304		2	BANJO-HOLLOW BOLT COUPL,EXT.THR.01-G1/4	
370	276398-0000		2	HEXAGON NIPPLE	
380	464432-0000		1	PIPE	
390	450747-0000		1	PIPE	
TB/8 NORMFIN US (See drawing on pages: 2-102, 2-104, 2-110)					
005	90166-0013	M	26	TUBE 8 MM PA BLUE	
010	90166-0081	M	77	TUBE 6 MM PA BLUE	
110	450736-0000		1	PIPE	
170	90224-0319		6	CONN. STR., 8-R1/4, EXT. THREAD	
175	342707-0110		2	SLEEVE, INT. THREAD, NO. 2543-1/4	
177	342732-0104		2	ELBOW PIPE JOINT, EXT.THREAD, D=8MM-G1/4	
200	315233-0110		4	WASHER CAPTIVE SEALING G1/4	
295	90055-0101		1	Y-CONNECTION, 8-8	
350	342980-0122		2	BANJO-CONNECTION,RING 8/6-G1/4 INCH	
360	342980-0304		2	BANJO-HOLLOW BOLT COUPL,EXT.THR.01-G1/4	
370	276398-0000		2	HEXAGON NIPPLE	
380	464432-0000		1	PIPE	
390	450747-0000		1	PIPE	

Pos	Part No	UN	Qty	Description	Page No
TB/8 TPC (See drawing on pages: 2-100, 2-102)					
005	90166-0013	M	17	TUBE 8 MM PA BLUE	
010	90166-0081	M	70	TUBE 6 MM PA BLUE	
110	450736-0000		1	PIPE	
170	90224-0319		2	CONN. STR., 8-R1/4, EXT. THREAD	
200	315233-0110		2	WASHER CAPTIVE SEALING G1/4	
Common Parts					
080	544692-0000		1	PIPE	
120	544697-0000		1	PIPE	
140	450791-0000		1	PIPE	
180	90224-0323		1	CONNECTION	
205	315233-0113		1	WASHER CAPTIVE SEALING G1/2	
210	342713-0210		1	PLUG,EXT THREAD HEX SOCKET(PAK OF 10 PCS	
220	342720-0114		1	CONN. STR. GA-15-G1/2	
240	342929-0121		1	STRAIGHT COUPLING,SOLDER 8/6-8	
260	90055-0100		5	Y-CONNECTION, 6-6	
280	342960-0112		10	BULKHEAD COUPLING 6/4	

Machine Type | Group Description | Used-In | Group Number | Page No

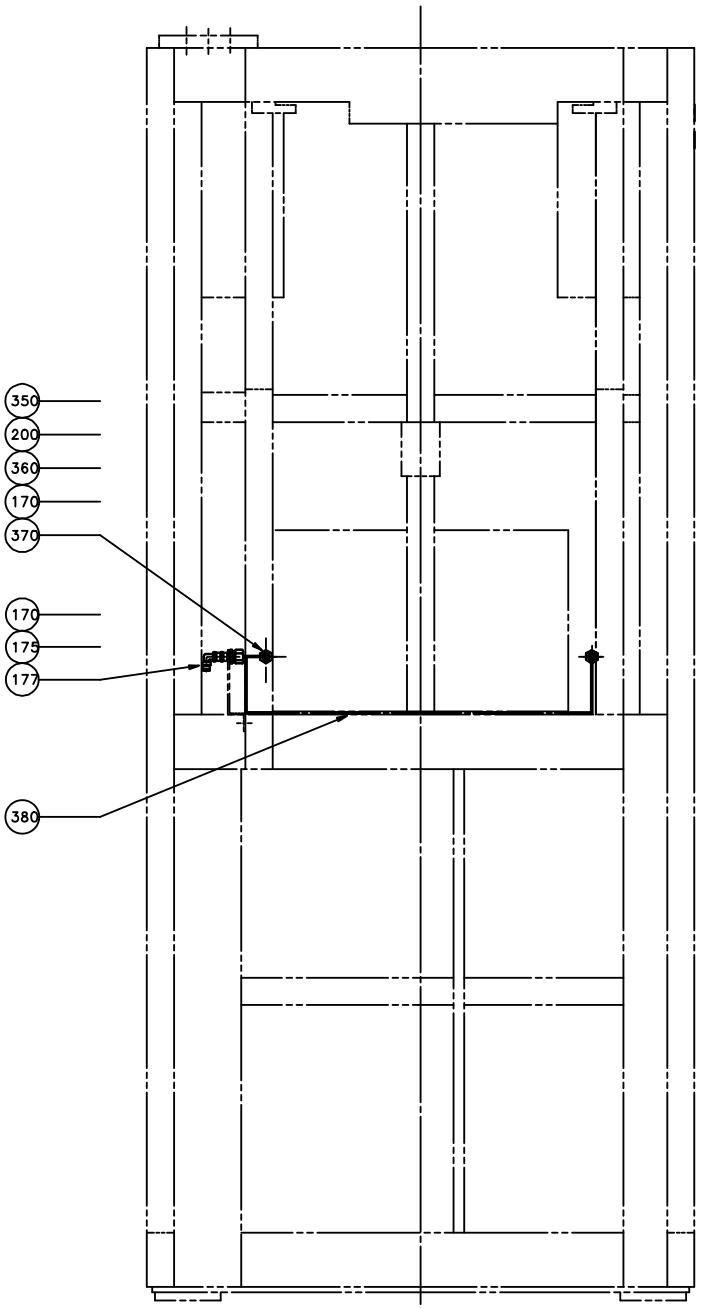
350
200
360
170
370
170
175
177
380

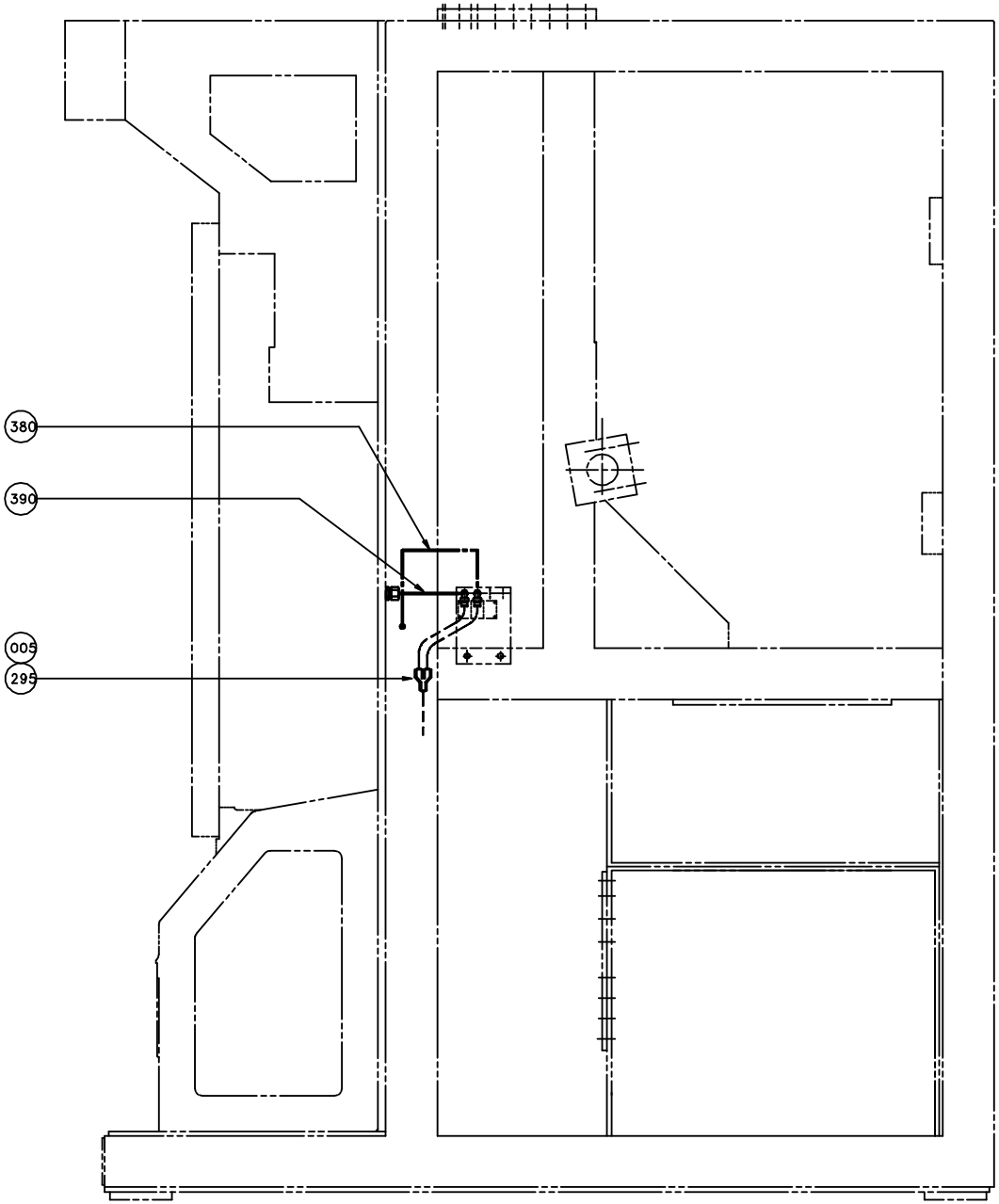
380
390
005
295

ECM: 72533 - 19990617
Group number: 450788-0600
Assembly Drawing: 450788-23_1_AA

This list covers pages from 2-100 to 2-113

Pos	Part No	UN	Qty	Description	Page No
TB/8 0568SQ REVFIN US, TB/8 0500SQ REVFIN US (See drawing on pages: 2-104, 2-106, 2-112)					
005	90166-0013	M	26	TUBE 8 MM PA BLUE	
010	90166-0081	M	100	TUBE 6 MM PA BLUE	
110	450736-0000		1	PIPE	
170	90224-0319		6	CONN. STR., 8-R1/4, EXT. THREAD	
175	342707-0110		2	SLEEVE, INT. THREAD, NO. 2543-1/4	
177	342732-0104		2	ELBOW PIPE JOINT, EXT.THREAD, D=8MM-G1/4	
200	315233-0110		4	WASHER CAPTIVE SEALING G1/4	
295	90055-0101		1	Y-CONNECTION, 8-8	
350	342980-0122		2	BANJO-CONNECTION,RING 8/6-G1/4 INCH	
360	342980-0304		2	BANJO-HOLLOW BOLT COUPL,EXT.THR.01-G1/4	
370	276398-0000		2	HEXAGON NIPPLE	
380	464432-0000		1	PIPE	
390	450747-0000		1	PIPE	
TB/8 1000SQ REVFIN US (See drawing on pages: 2-104, 2-106, 2-108)					
005	90166-0013	M	26	TUBE 8 MM PA BLUE	
010	90166-0081	M	92	TUBE 6 MM PA BLUE	
110	450736-0000		1	PIPE	
170	90224-0319		6	CONN. STR., 8-R1/4, EXT. THREAD	
175	342707-0110		2	SLEEVE, INT. THREAD, NO. 2543-1/4	
177	342732-0104		2	ELBOW PIPE JOINT, EXT.THREAD, D=8MM-G1/4	
200	315233-0110		4	WASHER CAPTIVE SEALING G1/4	
295	90055-0101		1	Y-CONNECTION, 8-8	
350	342980-0122		2	BANJO-CONNECTION,RING 8/6-G1/4 INCH	
360	342980-0304		2	BANJO-HOLLOW BOLT COUPL,EXT.THR.01-G1/4	
370	276398-0000		2	HEXAGON NIPPLE	
380	464432-0000		1	PIPE	
390	450747-0000		1	PIPE	
TB/8 NORMFIN US (See drawing on pages: 2-102, 2-104, 2-110)					
005	90166-0013	M	26	TUBE 8 MM PA BLUE	
010	90166-0081	M	77	TUBE 6 MM PA BLUE	
110	450736-0000		1	PIPE	
170	90224-0319		6	CONN. STR., 8-R1/4, EXT. THREAD	
175	342707-0110		2	SLEEVE, INT. THREAD, NO. 2543-1/4	
177	342732-0104		2	ELBOW PIPE JOINT, EXT.THREAD, D=8MM-G1/4	
200	315233-0110		4	WASHER CAPTIVE SEALING G1/4	
295	90055-0101		1	Y-CONNECTION, 8-8	
350	342980-0122		2	BANJO-CONNECTION,RING 8/6-G1/4 INCH	
360	342980-0304		2	BANJO-HOLLOW BOLT COUPL,EXT.THR.01-G1/4	
370	276398-0000		2	HEXAGON NIPPLE	
380	464432-0000		1	PIPE	
390	450747-0000		1	PIPE	

Pos	Part No	UN	Qty	Description	Page No
TB/8 TPC (See drawing on pages: 2-100, 2-102)					
005	90166-0013	M	17	TUBE 8 MM PA BLUE	
010	90166-0081	M	70	TUBE 6 MM PA BLUE	
110	450736-0000		1	PIPE	
170	90224-0319		2	CONN. STR., 8-R1/4, EXT. THREAD	
200	315233-0110		2	WASHER CAPTIVE SEALING G1/4	
Common Parts					
080	544692-0000		1	PIPE	
120	544697-0000		1	PIPE	
140	450791-0000		1	PIPE	
180	90224-0323		1	CONNECTION	
205	315233-0113		1	WASHER CAPTIVE SEALING G1/2	
210	342713-0210		1	PLUG,EXT THREAD HEX SOCKET(PAK OF 10 PCS	
220	342720-0114		1	CONN. STR. GA-15-G1/2	
240	342929-0121		1	STRAIGHT COUPLING,SOLDER 8/6-8	
260	90055-0100		5	Y-CONNECTION, 6-6	
280	342960-0112		10	BULKHEAD COUPLING 6/4	

Machine Type | Group Description | Used-In | Group Number | Page No

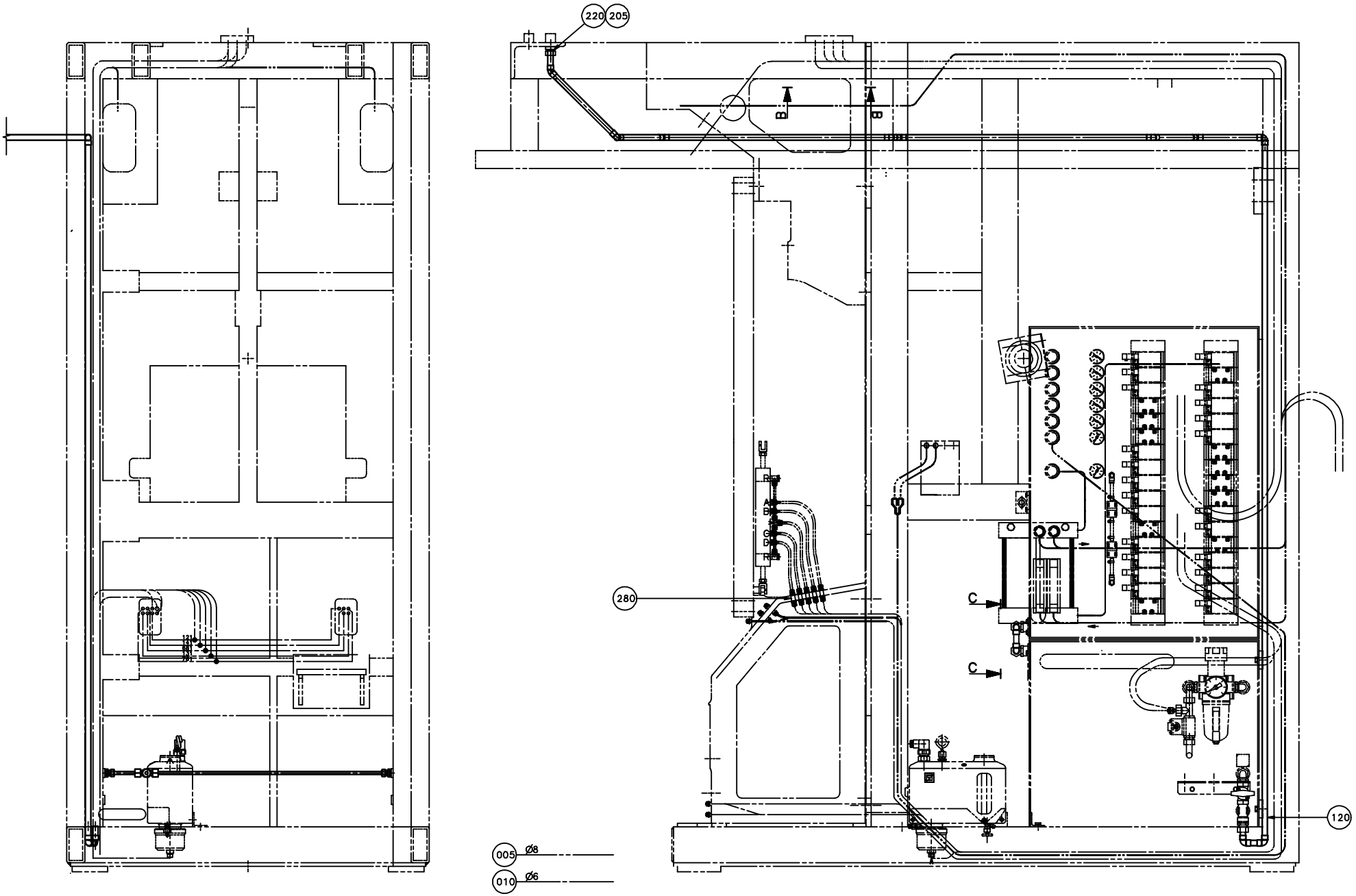
220
205
B
B
280
C
C
120
005
Ø8
010
Ø6

ECM: 72533 - 19990617
Group number: 450788-0600
Assembly Drawing: 450788-24_1_AA

This list covers pages from 2-100 to 2-113

Pos	Part No	UN	Qty	Description	Page No
TB/8 0568SQ REVFIN US, TB/8 0500SQ REVFIN US (See drawing on pages: 2-104, 2-106, 2-112)					
005	90166-0013	M	26	TUBE 8 MM PA BLUE	
010	90166-0081	M	100	TUBE 6 MM PA BLUE	
110	450736-0000		1	PIPE	
170	90224-0319		6	CONN. STR., 8-R1/4, EXT. THREAD	
175	342707-0110		2	SLEEVE, INT. THREAD, NO. 2543-1/4	
177	342732-0104		2	ELBOW PIPE JOINT, EXT.THREAD, D=8MM-G1/4	
200	315233-0110		4	WASHER CAPTIVE SEALING G1/4	
295	90055-0101		1	Y-CONNECTION, 8-8	
350	342980-0122		2	BANJO-CONNECTION,RING 8/6-G1/4 INCH	
360	342980-0304		2	BANJO-HOLLOW BOLT COUPL,EXT.THR.01-G1/4	
370	276398-0000		2	HEXAGON NIPPLE	
380	464432-0000		1	PIPE	
390	450747-0000		1	PIPE	
TB/8 1000SQ REVFIN US (See drawing on pages: 2-104, 2-106, 2-108)					
005	90166-0013	M	26	TUBE 8 MM PA BLUE	
010	90166-0081	M	92	TUBE 6 MM PA BLUE	
110	450736-0000		1	PIPE	
170	90224-0319		6	CONN. STR., 8-R1/4, EXT. THREAD	
175	342707-0110		2	SLEEVE, INT. THREAD, NO. 2543-1/4	
177	342732-0104		2	ELBOW PIPE JOINT, EXT.THREAD, D=8MM-G1/4	
200	315233-0110		4	WASHER CAPTIVE SEALING G1/4	
295	90055-0101		1	Y-CONNECTION, 8-8	
350	342980-0122		2	BANJO-CONNECTION,RING 8/6-G1/4 INCH	
360	342980-0304		2	BANJO-HOLLOW BOLT COUPL,EXT.THR.01-G1/4	
370	276398-0000		2	HEXAGON NIPPLE	
380	464432-0000		1	PIPE	
390	450747-0000		1	PIPE	
TB/8 NORMFIN US (See drawing on pages: 2-102, 2-104, 2-110)					
005	90166-0013	M	26	TUBE 8 MM PA BLUE	
010	90166-0081	M	77	TUBE 6 MM PA BLUE	
110	450736-0000		1	PIPE	
170	90224-0319		6	CONN. STR., 8-R1/4, EXT. THREAD	
175	342707-0110		2	SLEEVE, INT. THREAD, NO. 2543-1/4	
177	342732-0104		2	ELBOW PIPE JOINT, EXT.THREAD, D=8MM-G1/4	
200	315233-0110		4	WASHER CAPTIVE SEALING G1/4	
295	90055-0101		1	Y-CONNECTION, 8-8	
350	342980-0122		2	BANJO-CONNECTION,RING 8/6-G1/4 INCH	
360	342980-0304		2	BANJO-HOLLOW BOLT COUPL,EXT.THR.01-G1/4	
370	276398-0000		2	HEXAGON NIPPLE	
380	464432-0000		1	PIPE	
390	450747-0000		1	PIPE	

Pos	Part No	UN	Qty	Description	Page No
TB/8 TPC (See drawing on pages: 2-100, 2-102)					
005	90166-0013	M	17	TUBE 8 MM PA BLUE	
010	90166-0081	M	70	TUBE 6 MM PA BLUE	
110	450736-0000		1	PIPE	
170	90224-0319		2	CONN. STR., 8-R1/4, EXT. THREAD	
200	315233-0110		2	WASHER CAPTIVE SEALING G1/4	
Common Parts					
080	544692-0000		1	PIPE	
120	544697-0000		1	PIPE	
140	450791-0000		1	PIPE	
180	90224-0323		1	CONNECTION	
205	315233-0113		1	WASHER CAPTIVE SEALING G1/2	
210	342713-0210		1	PLUG,EXT THREAD HEX SOCKET(PAK OF 10 PCS	
220	342720-0114		1	CONN. STR. GA-15-G1/2	
240	342929-0121		1	STRAIGHT COUPLING,SOLDER 8/6-8	
260	90055-0100		5	Y-CONNECTION, 6-6	
280	342960-0112		10	BULKHEAD COUPLING 6/4	

Machine Type | Group Description | Used-In | Group Number | Page No

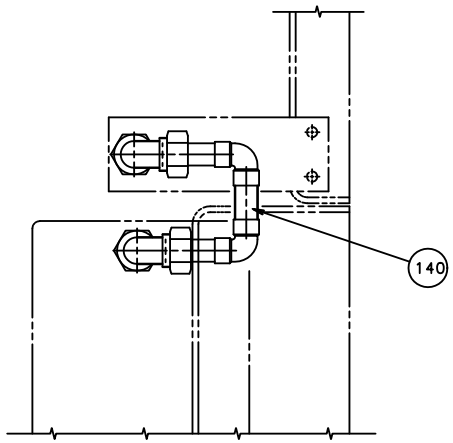

C-C

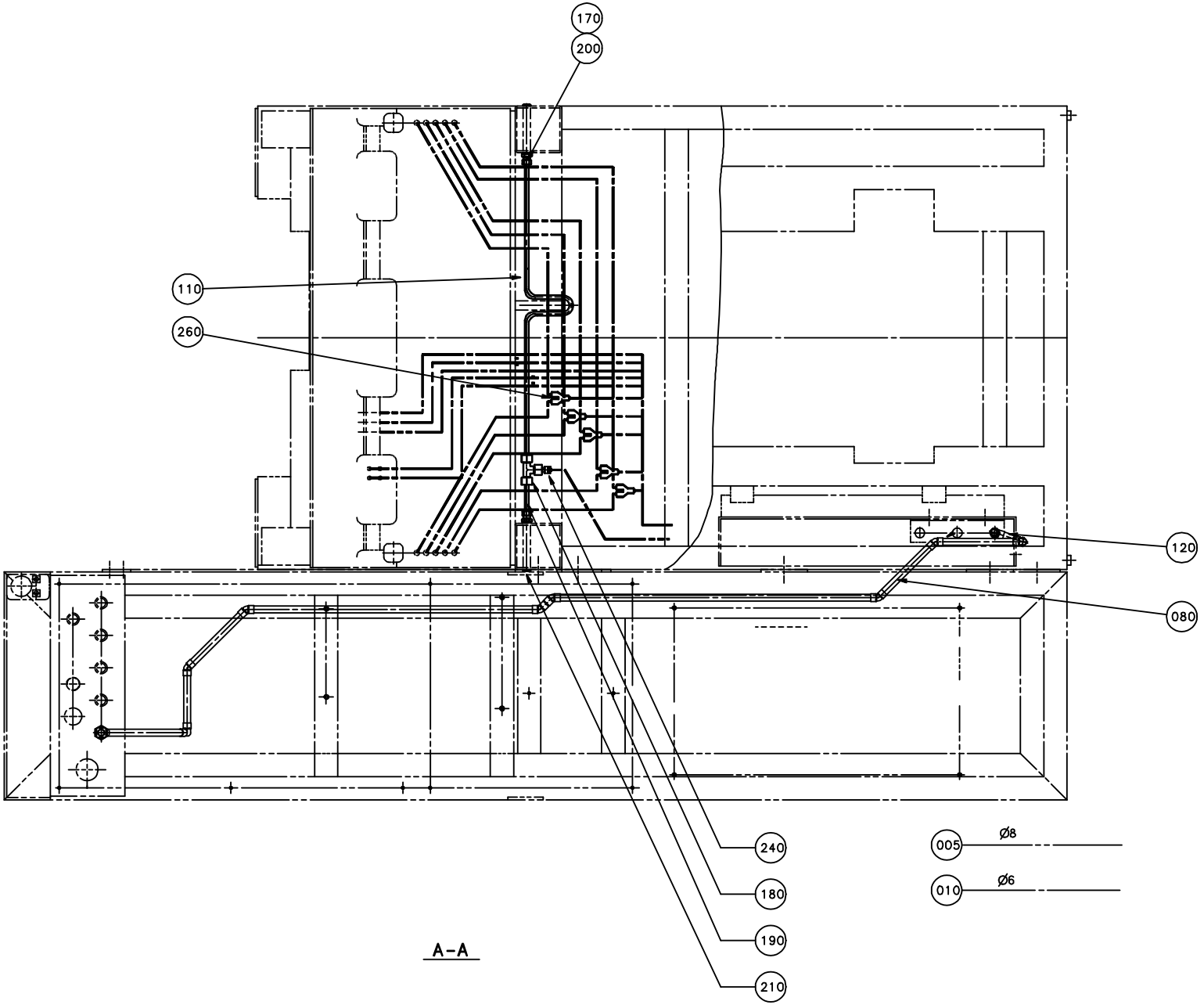

A-A

ECM: 72533 - 19990617
Group number: 450788-0600
Assembly Drawing: 450788-25_1_AA

This list covers pages from 2-100 to 2-113

Pos	Part No	UN	Qty	Description	Page No
TB/8 0568SQ REVFIN US, TB/8 0500SQ REVFIN US (See drawing on pages: 2-104, 2-106, 2-112)					
005	90166-0013	M	26	TUBE 8 MM PA BLUE	
010	90166-0081	M	100	TUBE 6 MM PA BLUE	
110	450736-0000		1	PIPE	
170	90224-0319		6	CONN. STR., 8-R1/4, EXT. THREAD	
175	342707-0110		2	SLEEVE, INT. THREAD, NO. 2543-1/4	
177	342732-0104		2	ELBOW PIPE JOINT, EXT.THREAD, D=8MM-G1/4	
200	315233-0110		4	WASHER CAPTIVE SEALING G1/4	
295	90055-0101		1	Y-CONNECTION, 8-8	
350	342980-0122		2	BANJO-CONNECTION,RING 8/6-G1/4 INCH	
360	342980-0304		2	BANJO-HOLLOW BOLT COUPL,EXT.THR.01-G1/4	
370	276398-0000		2	HEXAGON NIPPLE	
380	464432-0000		1	PIPE	
390	450747-0000		1	PIPE	
TB/8 1000SQ REVFIN US (See drawing on pages: 2-104, 2-106, 2-108)					
005	90166-0013	M	26	TUBE 8 MM PA BLUE	
010	90166-0081	M	92	TUBE 6 MM PA BLUE	
110	450736-0000		1	PIPE	
170	90224-0319		6	CONN. STR., 8-R1/4, EXT. THREAD	
175	342707-0110		2	SLEEVE, INT. THREAD, NO. 2543-1/4	
177	342732-0104		2	ELBOW PIPE JOINT, EXT.THREAD, D=8MM-G1/4	
200	315233-0110		4	WASHER CAPTIVE SEALING G1/4	
295	90055-0101		1	Y-CONNECTION, 8-8	
350	342980-0122		2	BANJO-CONNECTION,RING 8/6-G1/4 INCH	
360	342980-0304		2	BANJO-HOLLOW BOLT COUPL,EXT.THR.01-G1/4	
370	276398-0000		2	HEXAGON NIPPLE	
380	464432-0000		1	PIPE	
390	450747-0000		1	PIPE	
TB/8 NORMFIN US (See drawing on pages: 2-102, 2-104, 2-110)					
005	90166-0013	M	26	TUBE 8 MM PA BLUE	
010	90166-0081	M	77	TUBE 6 MM PA BLUE	
110	450736-0000		1	PIPE	
170	90224-0319		6	CONN. STR., 8-R1/4, EXT. THREAD	
175	342707-0110		2	SLEEVE, INT. THREAD, NO. 2543-1/4	
177	342732-0104		2	ELBOW PIPE JOINT, EXT.THREAD, D=8MM-G1/4	
200	315233-0110		4	WASHER CAPTIVE SEALING G1/4	
295	90055-0101		1	Y-CONNECTION, 8-8	
350	342980-0122		2	BANJO-CONNECTION,RING 8/6-G1/4 INCH	
360	342980-0304		2	BANJO-HOLLOW BOLT COUPL,EXT.THR.01-G1/4	
370	276398-0000		2	HEXAGON NIPPLE	
380	464432-0000		1	PIPE	
390	450747-0000		1	PIPE	

Pos	Part No	UN	Qty	Description	Page No
TB/8 TPC (See drawing on pages: 2-100, 2-102)					
005	90166-0013	M	17	TUBE 8 MM PA BLUE	
010	90166-0081	M	70	TUBE 6 MM PA BLUE	
110	450736-0000		1	PIPE	
170	90224-0319		2	CONN. STR., 8-R1/4, EXT. THREAD	
200	315233-0110		2	WASHER CAPTIVE SEALING G1/4	
Common Parts					
080	544692-0000		1	PIPE	
120	544697-0000		1	PIPE	
140	450791-0000		1	PIPE	
180	90224-0323		1	CONNECTION	
205	315233-0113		1	WASHER CAPTIVE SEALING G1/2	
210	342713-0210		1	PLUG,EXT THREAD HEX SOCKET(PAK OF 10 PCS	
220	342720-0114		1	CONN. STR. GA-15-G1/2	
240	342929-0121		1	STRAIGHT COUPLING,SOLDER 8/6-8	
260	90055-0100		5	Y-CONNECTION, 6-6	
280	342960-0112		10	BULKHEAD COUPLING 6/4	

Machine Type | Group Description | Used-In | Group Number | Page No

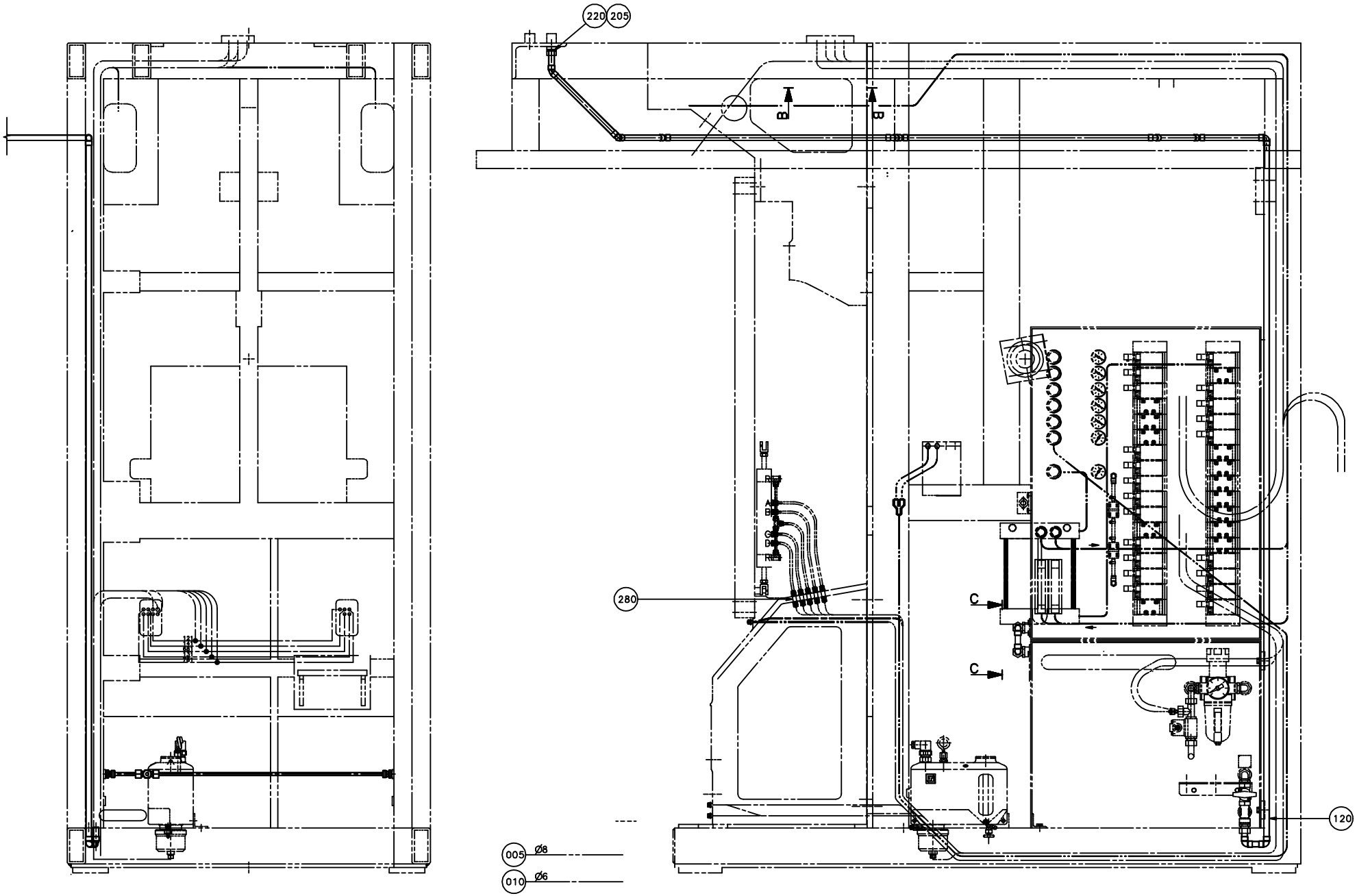
220
205
B
B
280
C
C
120
005
Ø8
010
Ø6

ECM: 72533 - 19990617
Group number: 450788-0600
Assembly Drawing: 450788-27_1_AA

This list covers pages from 2-100 to 2-113

Pos	Part No	UN	Qty	Description	Page No
TB/8 0568SQ REVFIN US, TB/8 0500SQ REVFIN US (See drawing on pages: 2-104, 2-106, 2-112)					
005	90166-0013	M	26	TUBE 8 MM PA BLUE	
010	90166-0081	M	100	TUBE 6 MM PA BLUE	
110	450736-0000		1	PIPE	
170	90224-0319		6	CONN. STR., 8-R1/4, EXT. THREAD	
175	342707-0110		2	SLEEVE, INT. THREAD, NO. 2543-1/4	
177	342732-0104		2	ELBOW PIPE JOINT, EXT.THREAD, D=8MM-G1/4	
200	315233-0110		4	WASHER CAPTIVE SEALING G1/4	
295	90055-0101		1	Y-CONNECTION, 8-8	
350	342980-0122		2	BANJO-CONNECTION,RING 8/6-G1/4 INCH	
360	342980-0304		2	BANJO-HOLLOW BOLT COUPL,EXT.THR.01-G1/4	
370	276398-0000		2	HEXAGON NIPPLE	
380	464432-0000		1	PIPE	
390	450747-0000		1	PIPE	
TB/8 1000SQ REVFIN US (See drawing on pages: 2-104, 2-106, 2-108)					
005	90166-0013	M	26	TUBE 8 MM PA BLUE	
010	90166-0081	M	92	TUBE 6 MM PA BLUE	
110	450736-0000		1	PIPE	
170	90224-0319		6	CONN. STR., 8-R1/4, EXT. THREAD	
175	342707-0110		2	SLEEVE, INT. THREAD, NO. 2543-1/4	
177	342732-0104		2	ELBOW PIPE JOINT, EXT.THREAD, D=8MM-G1/4	
200	315233-0110		4	WASHER CAPTIVE SEALING G1/4	
295	90055-0101		1	Y-CONNECTION, 8-8	
350	342980-0122		2	BANJO-CONNECTION,RING 8/6-G1/4 INCH	
360	342980-0304		2	BANJO-HOLLOW BOLT COUPL,EXT.THR.01-G1/4	
370	276398-0000		2	HEXAGON NIPPLE	
380	464432-0000		1	PIPE	
390	450747-0000		1	PIPE	
TB/8 NORMFIN US (See drawing on pages: 2-102, 2-104, 2-110)					
005	90166-0013	M	26	TUBE 8 MM PA BLUE	
010	90166-0081	M	77	TUBE 6 MM PA BLUE	
110	450736-0000		1	PIPE	
170	90224-0319		6	CONN. STR., 8-R1/4, EXT. THREAD	
175	342707-0110		2	SLEEVE, INT. THREAD, NO. 2543-1/4	
177	342732-0104		2	ELBOW PIPE JOINT, EXT.THREAD, D=8MM-G1/4	
200	315233-0110		4	WASHER CAPTIVE SEALING G1/4	
295	90055-0101		1	Y-CONNECTION, 8-8	
350	342980-0122		2	BANJO-CONNECTION,RING 8/6-G1/4 INCH	
360	342980-0304		2	BANJO-HOLLOW BOLT COUPL,EXT.THR.01-G1/4	
370	276398-0000		2	HEXAGON NIPPLE	
380	464432-0000		1	PIPE	
390	450747-0000		1	PIPE	

Pos	Part No	UN	Qty	Description	Page No
TB/8 TPC (See drawing on pages: 2-100, 2-102)					
005	90166-0013	M	17	TUBE 8 MM PA BLUE	
010	90166-0081	M	70	TUBE 6 MM PA BLUE	
110	450736-0000		1	PIPE	
170	90224-0319		2	CONN. STR., 8-R1/4, EXT. THREAD	
200	315233-0110		2	WASHER CAPTIVE SEALING G1/4	
Common Parts					
080	544692-0000		1	PIPE	
120	544697-0000		1	PIPE	
140	450791-0000		1	PIPE	
180	90224-0323		1	CONNECTION	
205	315233-0113		1	WASHER CAPTIVE SEALING G1/2	
210	342713-0210		1	PLUG,EXT THREAD HEX SOCKET(PAK OF 10 PCS	
220	342720-0114		1	CONN. STR. GA-15-G1/2	
240	342929-0121		1	STRAIGHT COUPLING,SOLDER 8/6-8	
260	90055-0100		5	Y-CONNECTION, 6-6	
280	342960-0112		10	BULKHEAD COUPLING 6/4	

Machine Type | Group Description | Used-In | Group Number | Page No

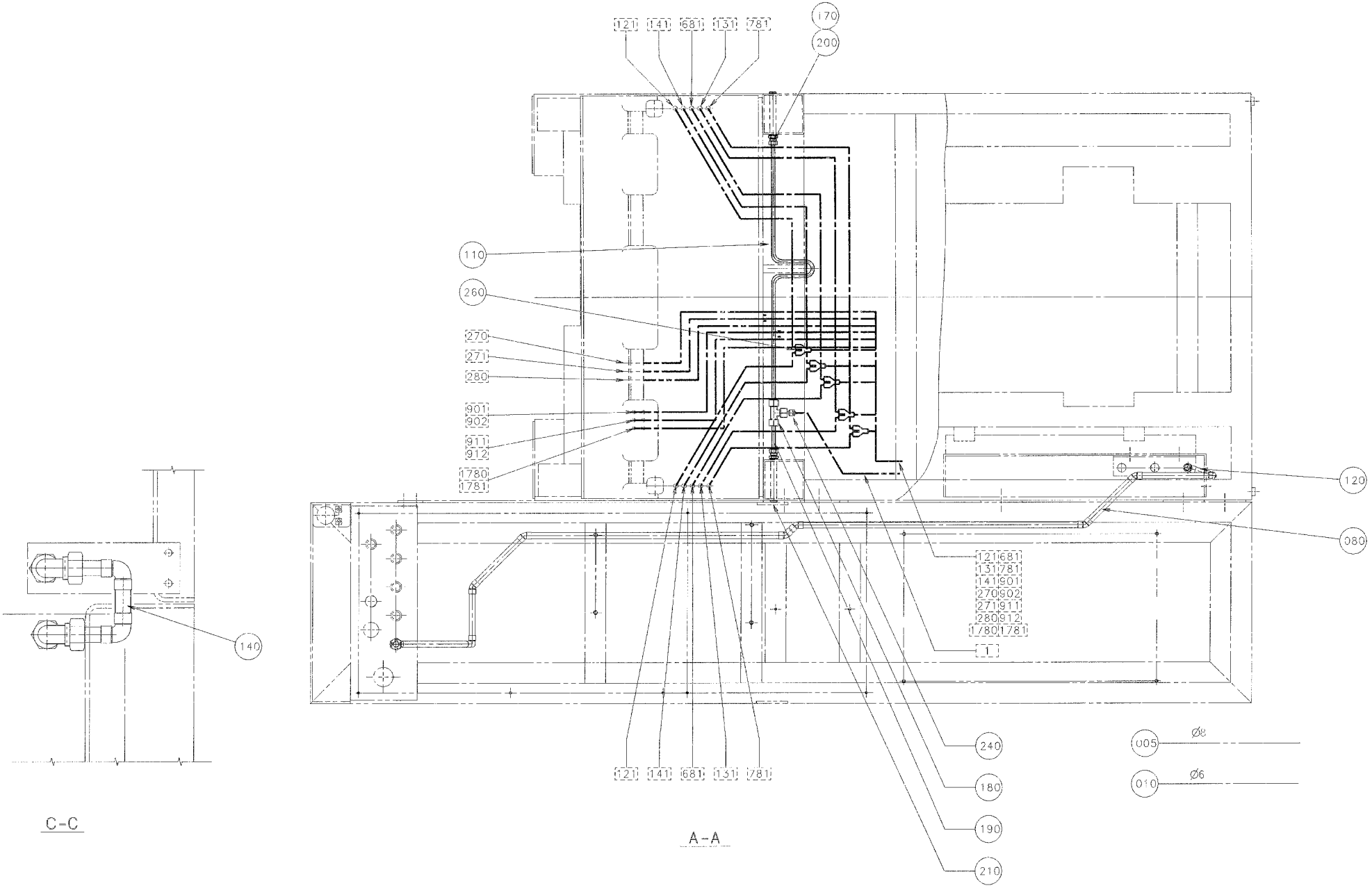
121
141
681
131
781
170
200
110
260
270
271
280
901
902
911
912
1780
1781
120
080
121 681
131 781
141 901
270 902
271 911
280 912
1780 1781
1
240
180
190
210
005
Ø8
010
Ø6
140
C-C
A-A

ECM: 72533 - 19990617
Group number: 450788-0600
Assembly Drawing: 450788-32_1_AA

This list covers pages from 2-100 to 2-113

Pos	Part No	UN	Qty	Description	Page No
TB/8 0568SQ REVFIN US, TB/8 0500SQ REVFIN US (See drawing on pages: 2-104, 2-106, 2-112)					
005	90166-0013	M	26	TUBE 8 MM PA BLUE	
010	90166-0081	M	100	TUBE 6 MM PA BLUE	
110	450736-0000		1	PIPE	
170	90224-0319		6	CONN. STR., 8-R1/4, EXT. THREAD	
175	342707-0110		2	SLEEVE, INT. THREAD, NO. 2543-1/4	
177	342732-0104		2	ELBOW PIPE JOINT, EXT.THREAD, D=8MM-G1/4	
200	315233-0110		4	WASHER CAPTIVE SEALING G1/4	
295	90055-0101		1	Y-CONNECTION, 8-8	
350	342980-0122		2	BANJO-CONNECTION,RING 8/6-G1/4 INCH	
360	342980-0304		2	BANJO-HOLLOW BOLT COUPL,EXT.THR.01-G1/4	
370	276398-0000		2	HEXAGON NIPPLE	
380	464432-0000		1	PIPE	
390	450747-0000		1	PIPE	
TB/8 1000SQ REVFIN US (See drawing on pages: 2-104, 2-106, 2-108)					
005	90166-0013	M	26	TUBE 8 MM PA BLUE	
010	90166-0081	M	92	TUBE 6 MM PA BLUE	
110	450736-0000		1	PIPE	
170	90224-0319		6	CONN. STR., 8-R1/4, EXT. THREAD	
175	342707-0110		2	SLEEVE, INT. THREAD, NO. 2543-1/4	
177	342732-0104		2	ELBOW PIPE JOINT, EXT.THREAD, D=8MM-G1/4	
200	315233-0110		4	WASHER CAPTIVE SEALING G1/4	
295	90055-0101		1	Y-CONNECTION, 8-8	
350	342980-0122		2	BANJO-CONNECTION,RING 8/6-G1/4 INCH	
360	342980-0304		2	BANJO-HOLLOW BOLT COUPL,EXT.THR.01-G1/4	
370	276398-0000		2	HEXAGON NIPPLE	
380	464432-0000		1	PIPE	
390	450747-0000		1	PIPE	
TB/8 NORMFIN US (See drawing on pages: 2-102, 2-104, 2-110)					
005	90166-0013	M	26	TUBE 8 MM PA BLUE	
010	90166-0081	M	77	TUBE 6 MM PA BLUE	
110	450736-0000		1	PIPE	
170	90224-0319		6	CONN. STR., 8-R1/4, EXT. THREAD	
175	342707-0110		2	SLEEVE, INT. THREAD, NO. 2543-1/4	
177	342732-0104		2	ELBOW PIPE JOINT, EXT.THREAD, D=8MM-G1/4	
200	315233-0110		4	WASHER CAPTIVE SEALING G1/4	
295	90055-0101		1	Y-CONNECTION, 8-8	
350	342980-0122		2	BANJO-CONNECTION,RING 8/6-G1/4 INCH	
360	342980-0304		2	BANJO-HOLLOW BOLT COUPL,EXT.THR.01-G1/4	
370	276398-0000		2	HEXAGON NIPPLE	
380	464432-0000		1	PIPE	
390	450747-0000		1	PIPE	

Pos	Part No	UN	Qty	Description	Page No
TB/8 TPC (See drawing on pages: 2-100, 2-102)					
005	90166-0013	M	17	TUBE 8 MM PA BLUE	
010	90166-0081	M	70	TUBE 6 MM PA BLUE	
110	450736-0000		1	PIPE	
170	90224-0319		2	CONN. STR., 8-R1/4, EXT. THREAD	
200	315233-0110		2	WASHER CAPTIVE SEALING G1/4	
Common Parts					
080	544692-0000		1	PIPE	
120	544697-0000		1	PIPE	
140	450791-0000		1	PIPE	
180	90224-0323		1	CONNECTION	
205	315233-0113		1	WASHER CAPTIVE SEALING G1/2	
210	342713-0210		1	PLUG,EXT THREAD HEX SOCKET(PAK OF 10 PCS	
220	342720-0114		1	CONN. STR. GA-15-G1/2	
240	342929-0121		1	STRAIGHT COUPLING,SOLDER 8/6-8	
260	90055-0100		5	Y-CONNECTION, 6-6	
280	342960-0112		10	BULKHEAD COUPLING 6/4	

Machine Type | Group Description | Used-In | Group Number | Page No

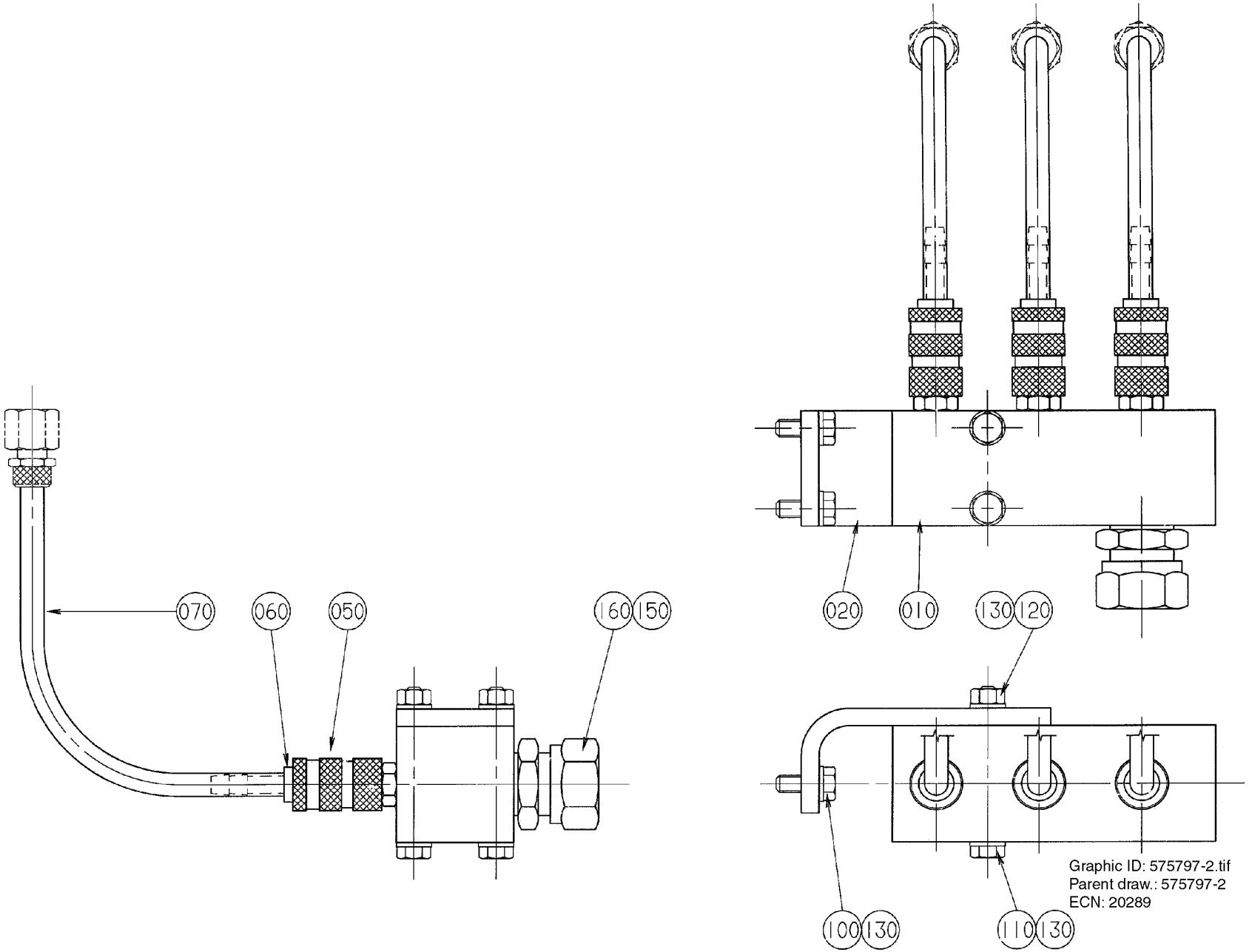
070
060
050
160
150
020
010
130
120
100
130
110
130
Graphic ID: 575797-2.tif
Parent draw.: 575797-2
ECN: 20289

ECM: 72091 - 19981216
Group number: 575797-0100
Assembly Drawing: 575797-2_1_AA

Pos	Part No	UN	Qty	Description	Page No
TB/8					
010	576111-0000		1	JUNCTION BLOCK	
050	90163-0133		3	QUICK COUPLING, (F) LP-004-0-WR013-21-1	
060	90163-0134		3	QUICK COUPLING, LP-004-1-SL006-21	
070	90166-0133	MM	700	TUBE 8 MM PA,TRANSP.	
Common Parts					
020	575792-0000		1	ANGLE STRUT	
100	312105-0368		2	SCREW M6S ISO 4017 M6X16 A480	
110	312105-0381		2	SCREW M6S ISO 4014 M6X55 A480	
120	312605-0316		2	HEXAGON NUT, M6M M6 A280	
130	315105-0153		6	WASHER BRB 6,4X12 RFR	
150	315233-0113		1	WASHER CAPTIVE SEALING G1/2	
160	342720-0114		1	CONN. STR. GA-15-G1/2	

Pos	Part No	UN	Qty	Description	Page No

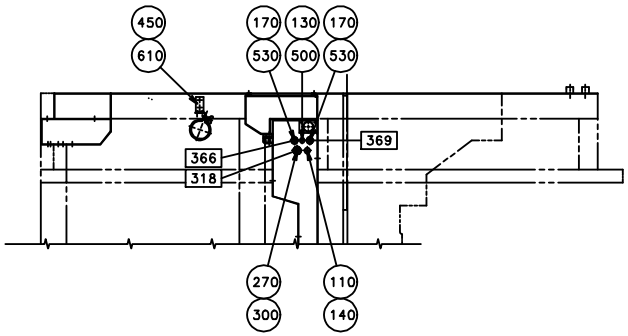
450
610
170
530
130
500
170
530
369
366
318
270
300
110
140

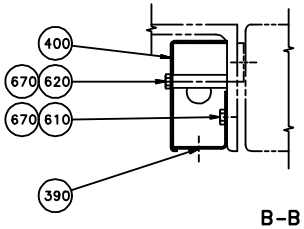
400
670
620
670
610
390

B-B

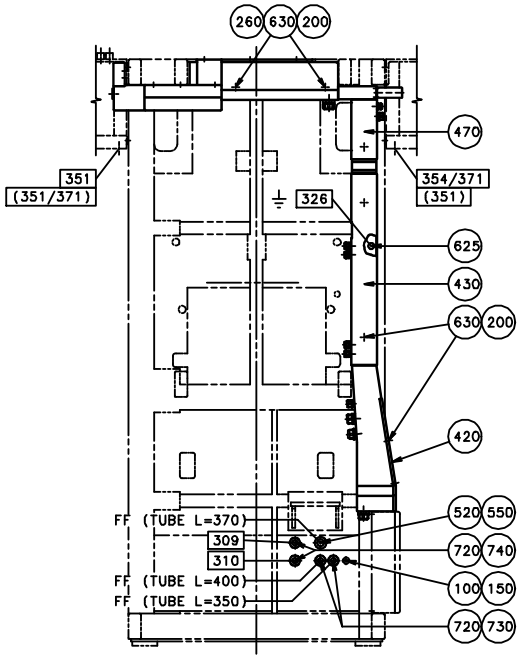
260
630
200
470
351
(351/371)
354/371
(351)
326
625
430
630
200
420
FF (TUBE L=370)
309
310
FF (TUBE L=400)
FF (TUBE L=350)
520
550
720
740
100
150
720
730

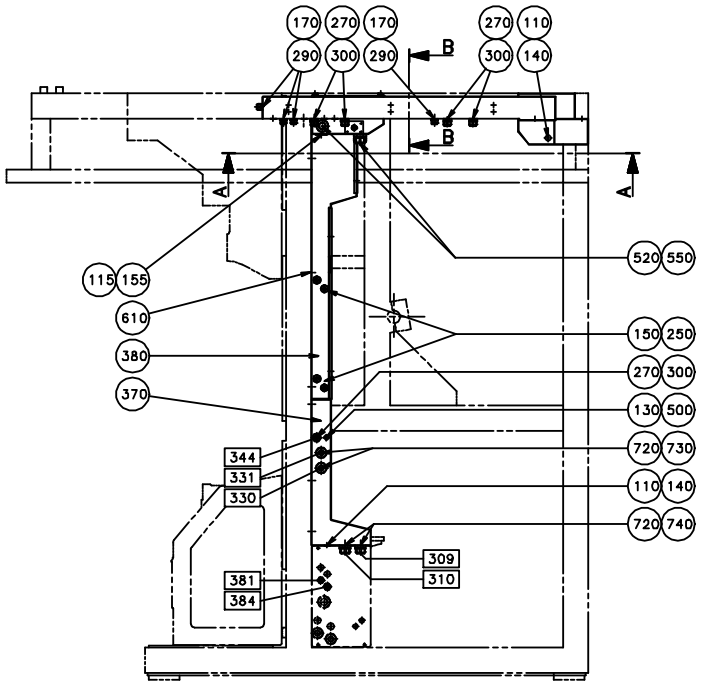
170
290
270
300
170
290
B
270
300
110
140
B
A
A
115
155
610
380
370
520
550
150
250
270
300
130
500
720
730
110
140
720
740
344
331
330
309
310
381
384

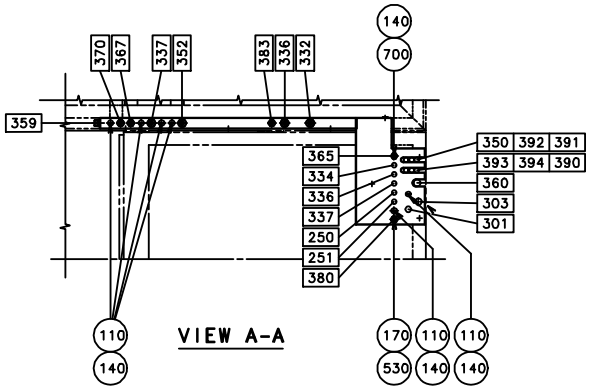
140
700
370
367
337
352
383
336
332
359
365
334
336
337
250
251
380
350
392
391
393
394
390
360
303
301
110
140
VIEW A-A
170
530
110
140
110
140

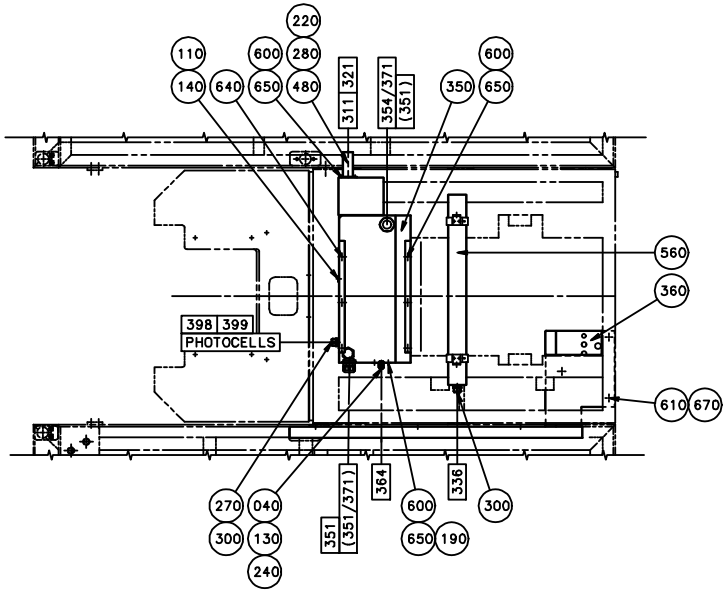
220
110
140
600
280
640
650
480
311
321
354/371
(351)
350
650
600
560
360
398
399
PHOTOCELLS
610
670
270
300
040
130
240
351
(351/371)
364
600
650
190
336
300

ECM: 70670 - 19970220
Group number: 450293-0500
Assembly Drawing: 450293-6_1_AA

This list covers pages from 2-116 to 2-119

Pos	Part No	UN	Qty	Description	Page No
TB/8 TPC (See drawing on page: 2-116)					
040	464193-0000		1	ATTACHMENT PLATE	
100	90002-0004		2	BLANK-OFF PLUG, PR 22,5 SKINDICHT-BLK16	
110-02	90002-0009		10	BLANK-OFF PLUG, PR 18.6 SKINDICHT-BLK11	
130-02	90099-0001		3	NUT PG 9/PR 15,2	
140-02	90099-0002		10	NUT PR 18,6 BRASS	
150-02	90099-0003		6	NUT PR 22,5	
170	90152-0033	MM	6300	SPIRAL CONDUIT FOR PR 15,2(PG 9)	
200-02	315101-0136		7	WASHER BRB, 4,3/8 H=0,8	
220	342991-0108		1	HOSE CLIP 38-50MMRFR	
240	352103-0101		1	CABLE GLAND, ST 9, PR15,2/PG9	
250	352103-0110		4	CABLE GLAND, STR 16, PR22,5/PG16	
260	352113-0202		2	ANCHOR TM2S8-M REPL.BY 352113-205	
270	352135-0106	MM	3200	SPIRAL CONDUIT DI=16 MM	
280	352135-0116	MM	500	FLEXIBLE CONDUIT DIA. 40	
290	352136-0113		3	GLAND FITTING PR18,6/PG11 DI=12MM	
300	352136-0127		9	GLAND FITTING PR 18,6	
350	547220-0000		1	CABLE DUCT	
TB/8 US (See drawing on page: 2-118)					
010	1143661-0000		1	CABLE DUCT	
040	464193-0000		1	ATTACHMENT PLATE	
060	1143839-0000		1	NUT PLATE	
100	90002-0004		2	BLANK-OFF PLUG, PR 22,5 SKINDICHT-BLK16	
110-02	90002-0009		10	BLANK-OFF PLUG, PR 18.6 SKINDICHT-BLK11	
130-02	90099-0001		3	NUT PG 9/PR 15,2	
140-02	90099-0002		10	NUT PR 18,6 BRASS	
150	90099-0003		2	NUT PR 22,5	
170	90152-0033	MM	6300	SPIRAL CONDUIT FOR PR 15,2(PG 9)	
180	90261-0019		4	PLUG, BLIND, PLASTIC, TYPEF23	
200-02	315101-0136		7	WASHER BRB, 4,3/8 H=0,8	
220	342991-0108		1	HOSE CLIP 38-50MMRFR	
240	352103-0101		1	CABLE GLAND, ST 9, PR15,2/PG9	
260	352113-0202		2	ANCHOR TM2S8-M REPL.BY 352113-205	
270	352135-0106	MM	3200	SPIRAL CONDUIT DI=16 MM	
280	352135-0116	MM	500	FLEXIBLE CONDUIT DIA. 40	
290	352136-0113		3	GLAND FITTING PR18,6/PG11 DI=12MM	
300	352136-0127		9	GLAND FITTING PR 18,6	
750	353246-0001		2	GLAND FITTING, VK156D	
760	353249-0058		2	GLAND,INSERT,E156 3/10	
Common Parts					
115	90002-0010		1	BLANK-OFF PLUG, PR 37 SKINDICHT-BLK29	
155	90099-0011		1	NUT PR 37 BRASS	
360	575464-0000		1	CABLE DUCT	
370	540721-0000		1	CABLE DUCT	
380	450284-0000		1	CABLE DUCT	
390	450285-0000		1	CABLE DUCT	
400	450286-0000		1	LID	
420	540722-0000		1	LID	
430	450287-0000		1	LID	
450	246374-0000		2	BRACKET	
470	450290-0000		1	LID	
480	450291-0000		1	ATTACHMENT PIPE	
500	90002-0013		2	BLANK-OFF PLUG, PR 15,2 SKINDICHT-BLK9	
520	90012-0061		3	GLAND	
530	90012-0063		4	CABLE GLAND PR 15,2	
550	90152-0031	MM	2270	HOSE	
560	90164-0003		1	LIGHT FIXTURE	
	90297-0002		*1*	*FLUORESCENT TUBE, TLD 18/33*	
600	312101-0325		11	SCREW M6S M5X10 FZB	
610	312101-0364		18	SCREW M6S M6X10 FZB	
620	312101-0380		3	SCREW M6S M6X50 FZB	
625	312101-0447		1	SCREW M6S M8X12 FZB	
630	312121-0287		7	SCREW ISO 1207 M4X8 4.8 - 5.8 Z.PL.	
640	312141-0325		3	SCREW ISO 2009 MFS M5X10 4.8 EL.PL	
650	315101-0146		11	WASHER PLAIN, BRB, 5,3/10 H=1	
670	315101-0153		15	WASHER PLAIN, BRB, 6,4/12 H=1,5	
700	352103-0106		1	CABLE GLAND, ST 11, PR18,6/PG11	
720	352135-0109	MM	3700	HOSE .022	
730	352136-0142		4	GLAND FITTING	
740	352136-0143		4	GLAND FITTING	

Machine Type	Group Description	Used-In	Group Number	Page No

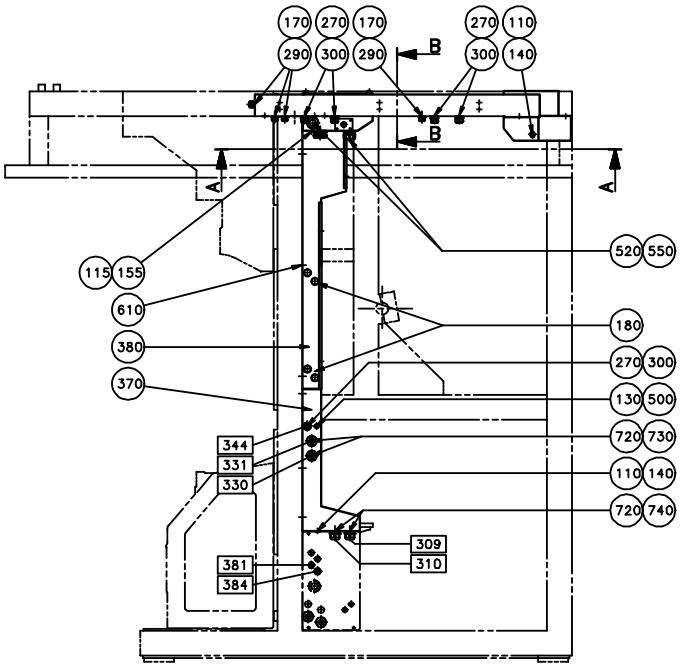
170 270 170 270 110
290 300 290 300 140
B
B
A
A
520 550
115 155
610
180
380
270 300
370
130 500
344
331
330
720 730
110 140
720 740
309
310
381
384

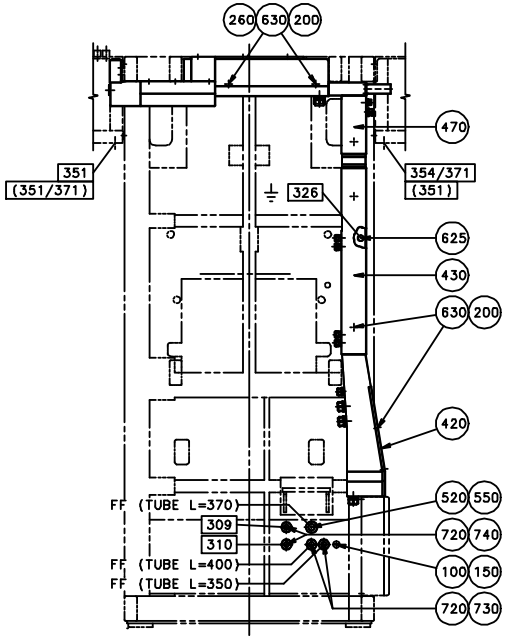
260 630 200
470
351
(351/371)
354/371
(351)
326
625
430
630 200
420
FF (TUBE L=370)
520 550
309
720 740
310
FF (TUBE L=400)
100 150
FF (TUBE L=350)
720 730

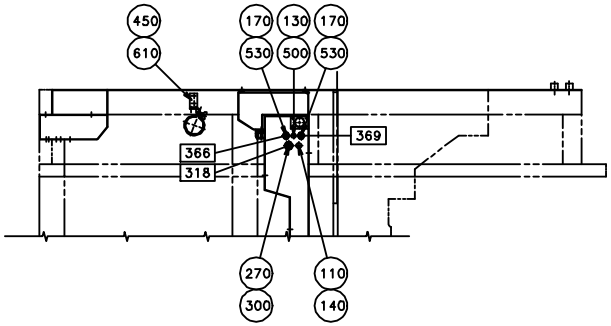
450
610
170 130 170
530 500 530
369
366
318
270 110
300 140

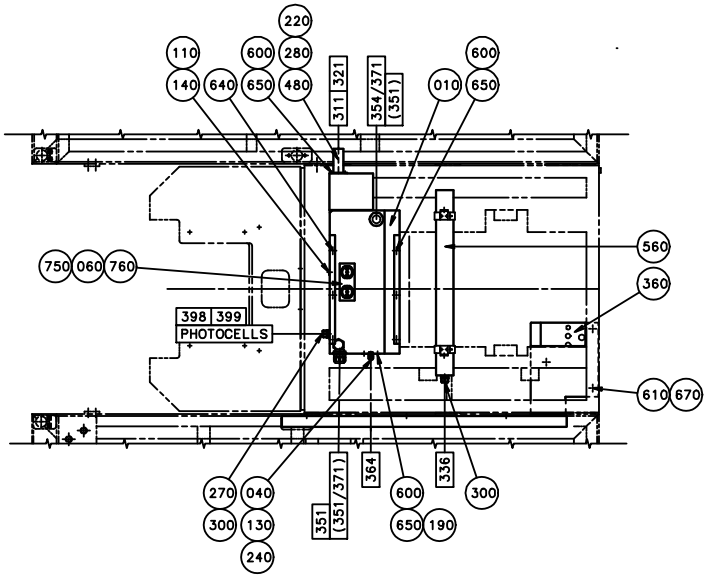
220
110
600 280
140 640 650 480
311 321
354/371
(351)
010 650
600
560
750 060 760
360
398 399
PHOTOCELLS
610 670
270 040
300 130
240
351
(351/371)
364
600
650 190
336
300

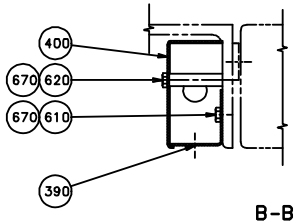
400
670 620
670 610
390

B-B

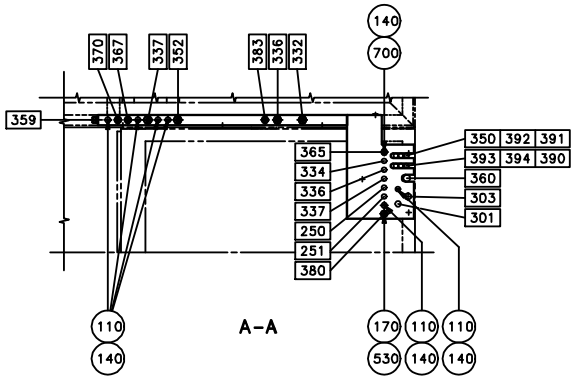
140
700
370 367
337 352
383 336 332
359
350 392 391
365
393 394 390
334
360
336
303
337
301
250
251
380
110
140
A-A
170 110 110
530 140 140

ECM: 70670 - 19970220
Group number: 450293-0500
Assembly Drawing: 450293-7_1_AA

This list covers pages from 2-116 to 2-119

Pos	Part No	UN	Qty	Description	Page No
TB/8 TPC (See drawing on page: 2-116)					
040	464193-0000		1	ATTACHMENT PLATE	
100	90002-0004		2	BLANK-OFF PLUG, PR 22,5 SKINDICHT-BLK16	
110-02	90002-0009		10	BLANK-OFF PLUG, PR 18.6 SKINDICHT-BLK11	
130-02	90099-0001		3	NUT PG 9/PR 15,2	
140-02	90099-0002		10	NUT PR 18,6 BRASS	
150-02	90099-0003		6	NUT PR 22,5	
170	90152-0033	MM	6300	SPIRAL CONDUIT FOR PR 15,2(PG 9)	
200-02	315101-0136		7	WASHER BRB, 4,3/8 H=0,8	
220	342991-0108		1	HOSE CLIP 38-50MMRFR	
240	352103-0101		1	CABLE GLAND, ST 9, PR15,2/PG9	
250	352103-0110		4	CABLE GLAND, STR 16, PR22,5/PG16	
260	352113-0202		2	ANCHOR TM2S8-M REPL.BY 352113-205	
270	352135-0106	MM	3200	SPIRAL CONDUIT DI=16 MM	
280	352135-0116	MM	500	FLEXIBLE CONDUIT DIA. 40	
290	352136-0113		3	GLAND FITTING PR18,6/PG11 DI=12MM	
300	352136-0127		9	GLAND FITTING PR 18,6	
350	547220-0000		1	CABLE DUCT	
TB/8 US (See drawing on page: 2-118)					
010	1143661-0000		1	CABLE DUCT	
040	464193-0000		1	ATTACHMENT PLATE	
060	1143839-0000		1	NUT PLATE	
100	90002-0004		2	BLANK-OFF PLUG, PR 22,5 SKINDICHT-BLK16	
110-02	90002-0009		10	BLANK-OFF PLUG, PR 18.6 SKINDICHT-BLK11	
130-02	90099-0001		3	NUT PG 9/PR 15,2	
140-02	90099-0002		10	NUT PR 18,6 BRASS	
150	90099-0003		2	NUT PR 22,5	
170	90152-0033	MM	6300	SPIRAL CONDUIT FOR PR 15,2(PG 9)	
180	90261-0019		4	PLUG, BLIND, PLASTIC, TYPEF23	
200-02	315101-0136		7	WASHER BRB, 4,3/8 H=0,8	
220	342991-0108		1	HOSE CLIP 38-50MMRFR	
240	352103-0101		1	CABLE GLAND, ST 9, PR15,2/PG9	
260	352113-0202		2	ANCHOR TM2S8-M REPL.BY 352113-205	
270	352135-0106	MM	3200	SPIRAL CONDUIT DI=16 MM	
280	352135-0116	MM	500	FLEXIBLE CONDUIT DIA. 40	
290	352136-0113		3	GLAND FITTING PR18,6/PG11 DI=12MM	
300	352136-0127		9	GLAND FITTING PR 18,6	
750	353246-0001		2	GLAND FITTING, VK156D	
760	353249-0058		2	GLAND,INSERT,E156 3/10	
Common Parts					
115	90002-0010		1	BLANK-OFF PLUG, PR 37 SKINDICHT-BLK29	
155	90099-0011		1	NUT PR 37 BRASS	
360	575464-0000		1	CABLE DUCT	
370	540721-0000		1	CABLE DUCT	
380	450284-0000		1	CABLE DUCT	
390	450285-0000		1	CABLE DUCT	
400	450286-0000		1	LID	
420	540722-0000		1	LID	
430	450287-0000		1	LID	
450	246374-0000		2	BRACKET	
470	450290-0000		1	LID	
480	450291-0000		1	ATTACHMENT PIPE	
500	90002-0013		2	BLANK-OFF PLUG, PR 15,2 SKINDICHT-BLK9	
520	90012-0061		3	GLAND	
530	90012-0063		4	CABLE GLAND PR 15,2	
550	90152-0031	MM	2270	HOSE	
560	90164-0003		1	LIGHT FIXTURE	
	90297-0002		*1*	*FLUORESCENT TUBE, TLD 18/33*	
600	312101-0325		11	SCREW M6S M5X10 FZB	
610	312101-0364		18	SCREW M6S M6X10 FZB	
620	312101-0380		3	SCREW M6S M6X50 FZB	
625	312101-0447		1	SCREW M6S M8X12 FZB	
630	312121-0287		7	SCREW ISO 1207 M4X8 4.8 - 5.8 Z.PL.	
640	312141-0325		3	SCREW ISO 2009 MFS M5X10 4.8 EL.PL	
650	315101-0146		11	WASHER PLAIN, BRB, 5,3/10 H=1	
670	315101-0153		15	WASHER PLAIN, BRB, 6,4/12 H=1,5	
700	352103-0106		1	CABLE GLAND, ST 11, PR18,6/PG11	
720	352135-0109	MM	3700	HOSE .022	
730	352136-0142		4	GLAND FITTING	
740	352136-0143		4	GLAND FITTING	

Machine Type	Group Description	Used-In	Group Number	Page No

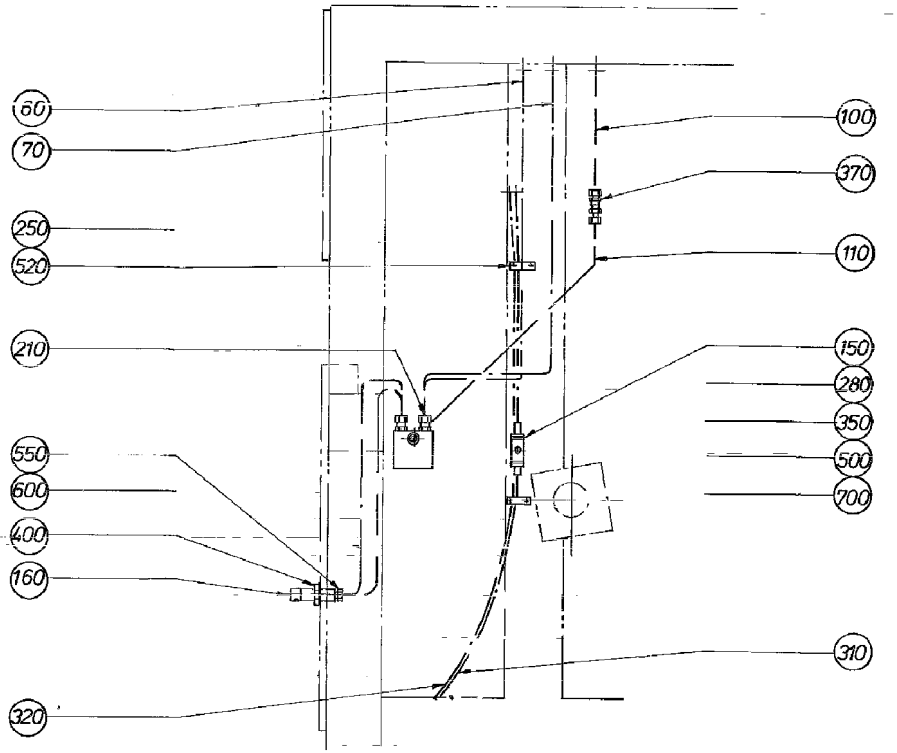

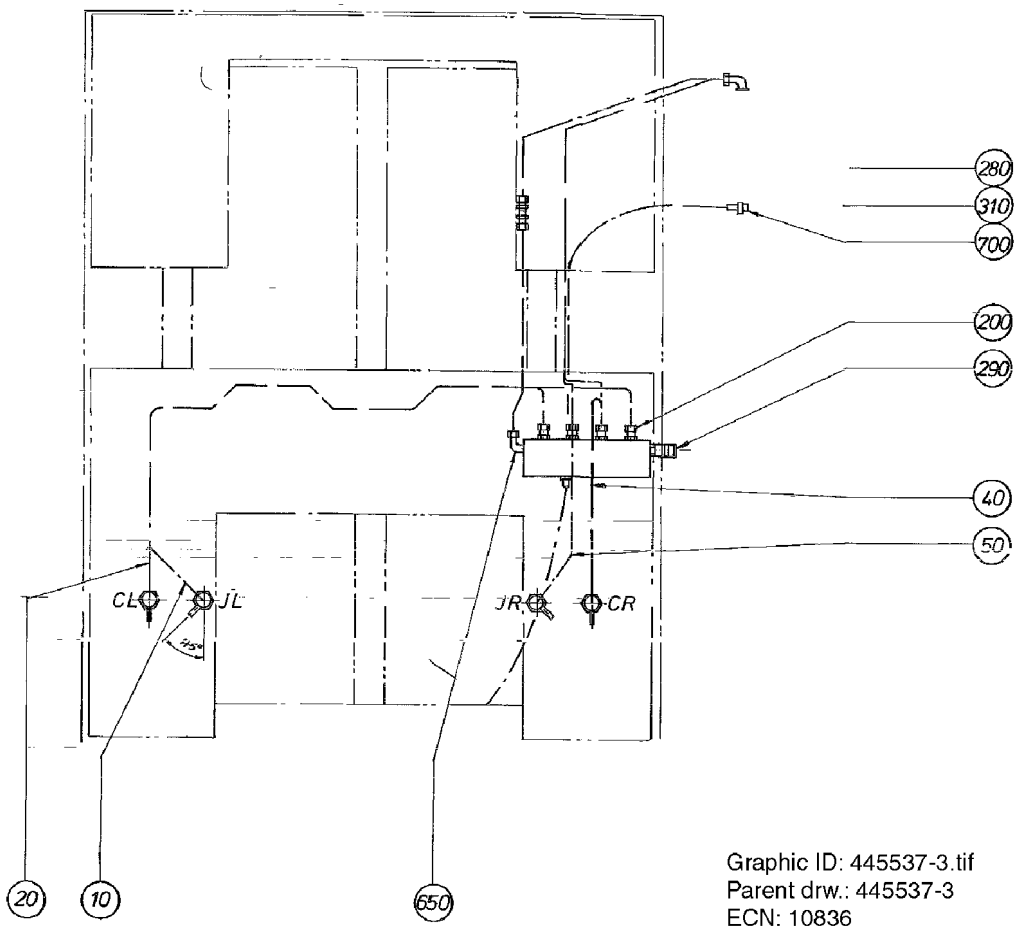

Graphic ID: 445537-3.tif
Parent drw.: 445537-3
ECN: 10836

ECM: 249480 - 20060221
Group number: 445537-0200
Assembly Drawing: 445537-3_1_AA

This list covers pages from 2-120 to 2-123

Pos	Part No	UN	Qty	Description	Page No
TB/8 0300B (See drawing on page: 2-122)					
075	442079-0000		1	PIPE	
080	497172-0000		1	PIPE	
085	497173-0000		1	PIPE	
120	497175-0000		1	PIPE	
125	497176-0000		1	PIPE	
130	497174-0000		1	PIPE	
210	90030-0157		3	CONN. STR. 10-R3/8, EXT. THREAD	
610	342714-0209		1	REDUCTION KOR 15/10-LFZB	
620	342747-0114		1	CONN. T-PIPE T-15	
TB/8 1000B, TB/8 0568B, TB/8 1000SQ, TB/8 1000S, TB/8 0500SQ, TB/8 0500S, TB/8 0500B, TB/8 1136B (See drawing on page: 2-120)					
060	445538-0000		1	HYDRAULIC PIPE	
100	445540-0000		1	HYDRAULIC PIPE	
210	90030-0157		2	CONN. STR. 10-R3/8, EXT. THREAD	
Common Parts					
010	294493-0000		1	HYDRAULIC PIPE	
020	294494-0000		1	HYDRAULIC PIPE	
040	294495-0000		1	HYDRAULIC PIPE	
050	294496-0000		1	HYDRAULIC PIPE	
070	445539-0000		1	HYDRAULIC PIPE	
110	445541-0000		1	HYDRAULIC PIPE	
150	255017-0000		1	BRACKET	
160	2795371-0000		4	ELBOW PIPE JOINT	
200	90030-0155		4	CONN. STR., 8-R3/8, EXT. THREAD	
250	90074-0006		2	CABLE CLIPS, D=2X12 MM	
280	90163-0041		3	HOSE NIPPLE, EXT.THR. 3/8-12 MM	
290	90163-0076		1	QUICK COUPLING, (F) LP-006-0-WR021	
310	90166-0007	MM	2000	HOSE PVC 10/14 TRANSP.	
320	90166-0122	MM	2000	TUBE 8 MM PA,TRANSP.	
350	90187-0054		1	BALL VALVE G3/8	
370	90230-0011		1	NON-RETURN VALVE RHD-115L	
400	90330-0093		4	NUT, HEXAGON, G1/2	
500	312101-0331		2	SCREW M6S M5X20 FZB	
520	312125-0323		4	SCREW ISO 1207 M5X8 A4	
550	342703-0103		4	NUT, PIPES & CONNECTORS,NUT M-8 FE	
600	342705-0103		4	ACCESSORIES, FERRULE 8-LFZB	
650	342731-0114		1	CONN. ELBOW WE 15-LRFZB	
700	342991-0101		3	HOSE CLIP,WORM DRIVE TYPE (13)-16	

Pos	Part No	UN	Qty	Description	Page No

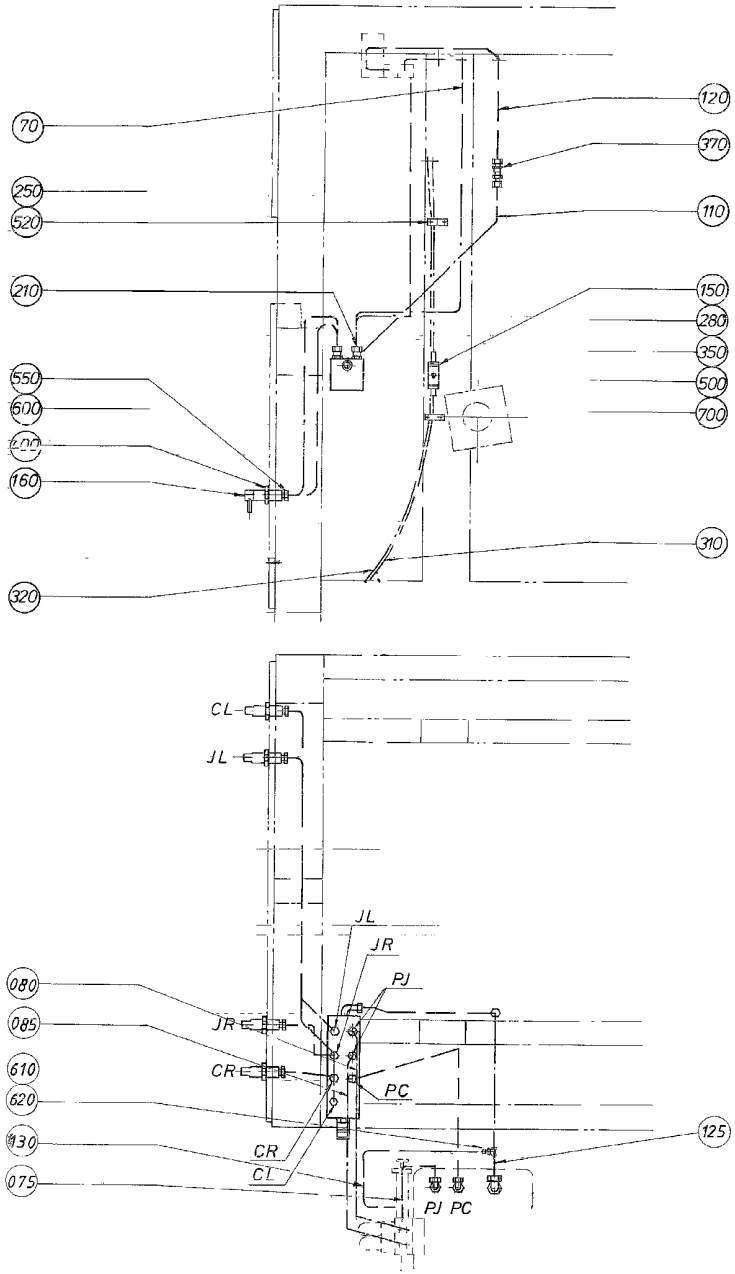
70
120
370
250
520
110
210
150
280
350
500
700
550
600
160
310
320
CL
JL
JL
JR
PJ
080
085
JR
610
CR
620
PC
130
125
CR
075
CL
PJ PC

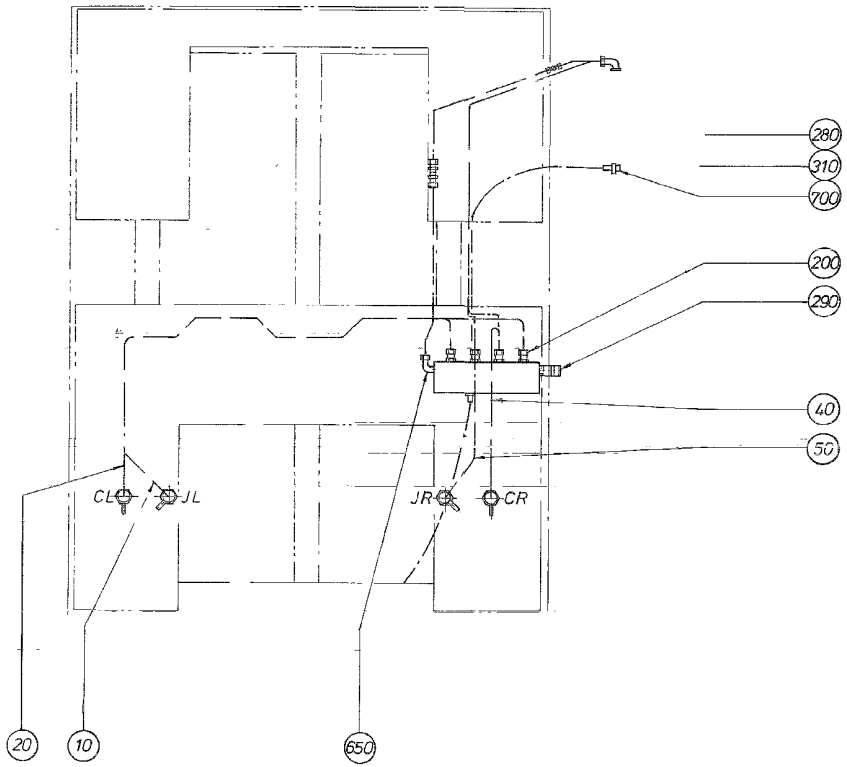
280
310
700
200
290
40
50
CL
JL
JR
CR
20
10
650

ECM: 249480 - 20060221
Group number: 445537-0200
Assembly Drawing: 445537-4_1_AA

This list covers pages from 2-120 to 2-123

Pos	Part No	UN	Qty	Description	Page No
TB/8 0300B (See drawing on page: 2-122)					
075	442079-0000		1	PIPE	
080	497172-0000		1	PIPE	
085	497173-0000		1	PIPE	
120	497175-0000		1	PIPE	
125	497176-0000		1	PIPE	
130	497174-0000		1	PIPE	
210	90030-0157		3	CONN. STR. 10-R3/8, EXT. THREAD	
610	342714-0209		1	REDUCTION KOR 15/10-LFZB	
620	342747-0114		1	CONN. T-PIPE T-15	
TB/8 1000B, TB/8 0568B, TB/8 1000SQ, TB/8 1000S, TB/8 0500SQ, TB/8 0500S, TB/8 0500B, TB/8 1136B (See drawing on page: 2-120)					
060	445538-0000		1	HYDRAULIC PIPE	
100	445540-0000		1	HYDRAULIC PIPE	
210	90030-0157		2	CONN. STR. 10-R3/8, EXT. THREAD	
Common Parts					
010	294493-0000		1	HYDRAULIC PIPE	
020	294494-0000		1	HYDRAULIC PIPE	
040	294495-0000		1	HYDRAULIC PIPE	
050	294496-0000		1	HYDRAULIC PIPE	
070	445539-0000		1	HYDRAULIC PIPE	
110	445541-0000		1	HYDRAULIC PIPE	
150	255017-0000		1	BRACKET	
160	2795371-0000		4	ELBOW PIPE JOINT	
200	90030-0155		4	CONN. STR., 8-R3/8, EXT. THREAD	
250	90074-0006		2	CABLE CLIPS, D=2X12 MM	
280	90163-0041		3	HOSE NIPPLE, EXT.THR. 3/8-12 MM	
290	90163-0076		1	QUICK COUPLING, (F) LP-006-0-WR021	
310	90166-0007	MM	2000	HOSE PVC 10/14 TRANSP.	
320	90166-0122	MM	2000	TUBE 8 MM PA,TRANSP.	
350	90187-0054		1	BALL VALVE G3/8	
370	90230-0011		1	NON-RETURN VALVE RHD-115L	
400	90330-0093		4	NUT, HEXAGON, G1/2	
500	312101-0331		2	SCREW M6S M5X20 FZB	
520	312125-0323		4	SCREW ISO 1207 M5X8 A4	
550	342703-0103		4	NUT, PIPES & CONNECTORS,NUT M-8 FE	
600	342705-0103		4	ACCESSORIES, FERRULE 8-LFZB	
650	342731-0114		1	CONN. ELBOW WE 15-LRFZB	
700	342991-0101		3	HOSE CLIP,WORM DRIVE TYPE (13)-16	

Pos	Part No	UN	Qty	Description	Page No

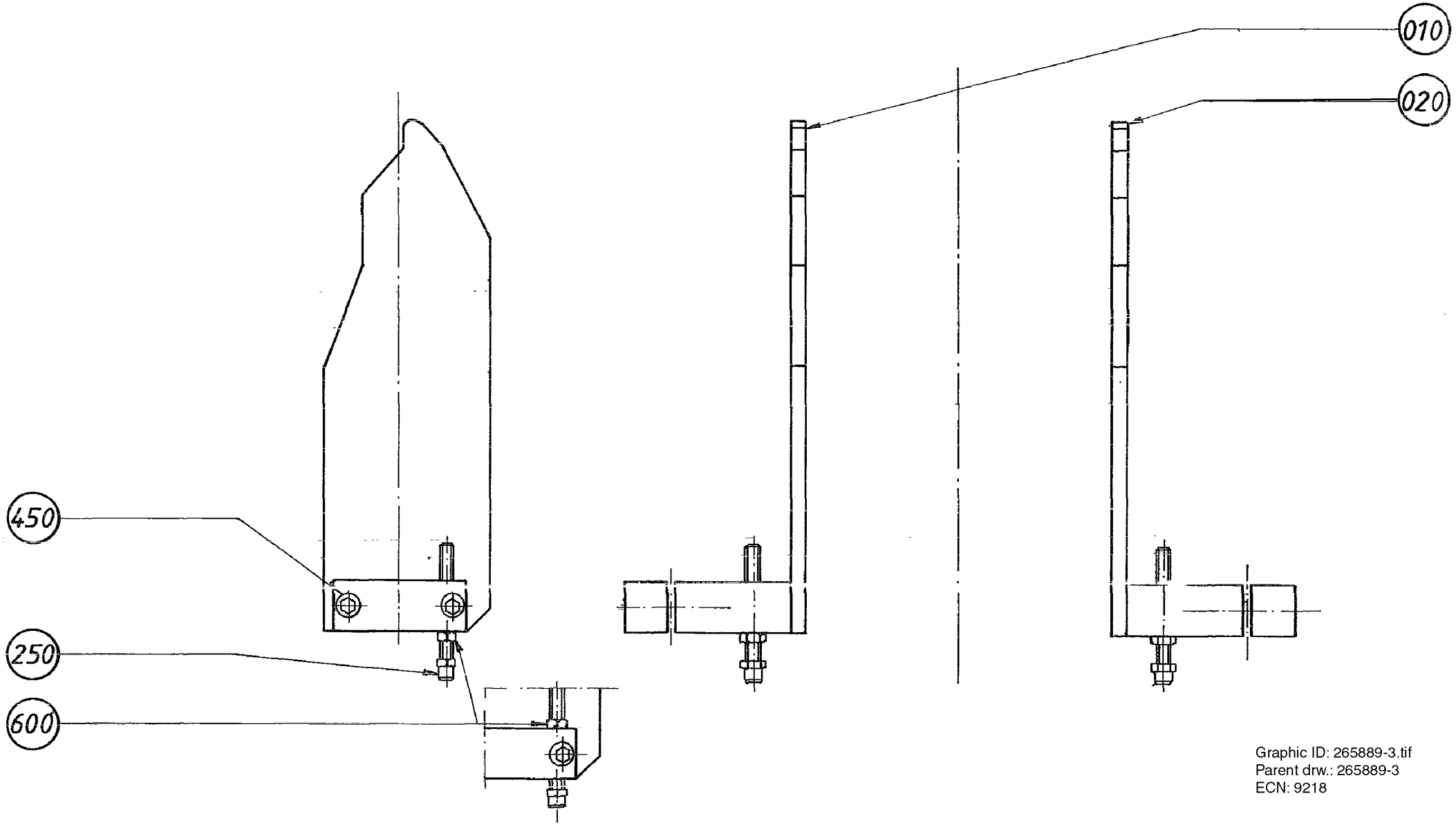

Graphic ID: 265889-3.tif
Parent drw.: 265889-3
ECN: 9218

ECM: - -
Group number: 265889-0300
Assembly Drawing: 265889-3_1_AA

Pos	Part No	UN	Qty	Description	Page No
-					
010	532319-0000		1	CATCH GUARD LEFT	
020	532318-0000		1	CATCH GUARD RIGHT	
250	268746-0000		2	SCREW	
450	312111-0459		4	SCREW HEX.SOCK.HD.MC6S-TT 8X40 88 FZB	
600	312605-0318		2	HEXAGON NUT, M6M M8 A280	

Pos	Part No	UN	Qty	Description	Page No

CONNECTION BOX

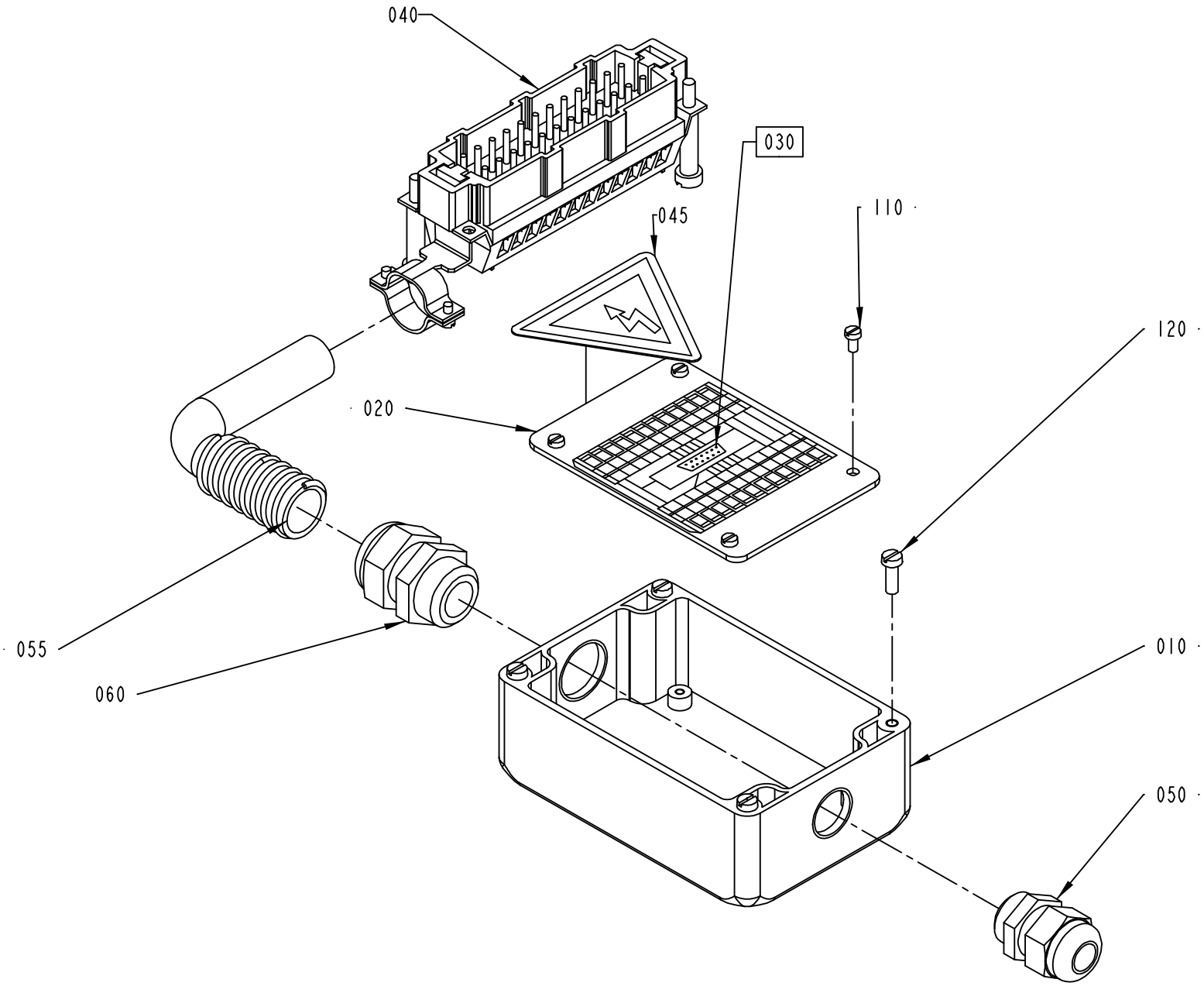

451348-2
ECM 104645

ECM: 110093 - 20020905
Group number: 451348-0200
Assembly Drawing: 451348-2_1_AB

Pos	Part No	UN	Qty	Description	Page No
TB/8					
010	464297-0000		1	CONNECTION BOX	
040	90110-0128		1	MALE INSERT HAN 24 E-M 65330242631	
045	90194-0016		1	WARNING SIGN, RISK OF ELECTRIC SHOCK	
050	352103-0106		1	CABLE GLAND, ST 11, PR18,6/PG11	
055	352135-0106	MM	1400	SPIRAL CONDUIT DI=16 MM	
060	352136-0127		1	GLAND FITTING PR 18,6	
F030	68917-0100		1	ANGLE INDICATOR	
010	*540306-0001*		*1*	*COMPONENTS WITHOUT TP-NO*	
020	*540307-0000*		*1*	*PRINTED CIRCUIT BOARD*	
Common Parts					
020	451423-0000		1	CIRCUIT BOARD	
110	312125-0220		4	SCREW ISO 1207 M3X6 A4	
120	312125-0291		4	SCREW ISO 1207 M4X12 A4	

Pos	Part No	UN	Qty	Description	Page No

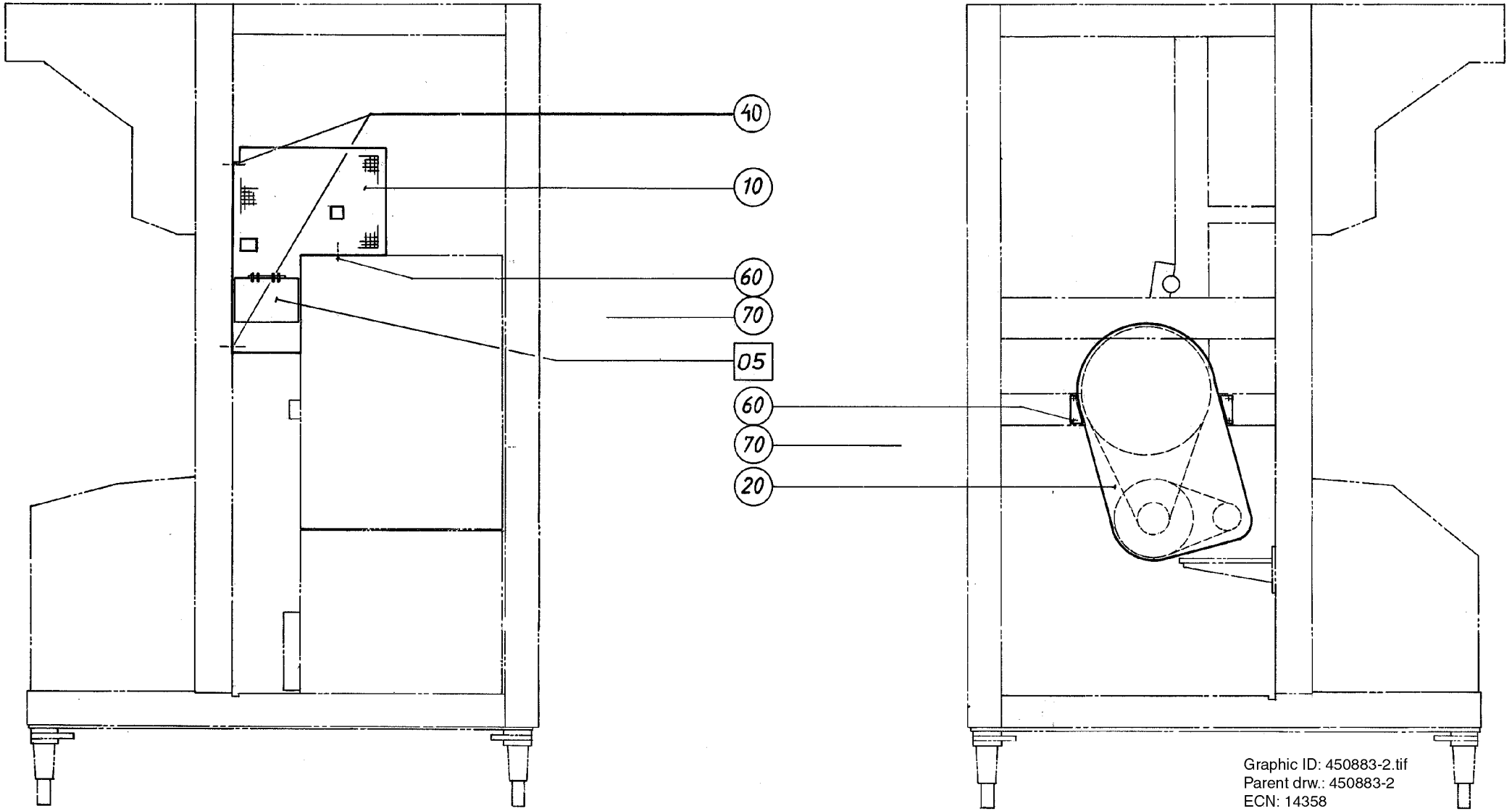

Graphic ID: 450883-2.tif
Parent drw.: 450883-2
ECN: 14358

ECM: 72467 - 19990429
Group number: 450883-0400
Assembly Drawing: 450883-2_1_AA

Pos	Part No	UN	Qty	Description	Page No
TB/8					
F005	543157-0300		1	HOLDER	**2-131**
Common Parts					
010	440482-0000		1	PROTECTION	
020	450884-0000		1	PROTECTION	
040	311211-0292		2	TAPER PIN THREADED ISO 8737 M6X30 SS	
060	312101-0366		6	SCREW M6S M6X12 FZB	
070	315101-0153		6	WASHER PLAIN, BRB, 6,4/12 H=1,5	

Pos	Part No	UN	Qty	Description	Page No

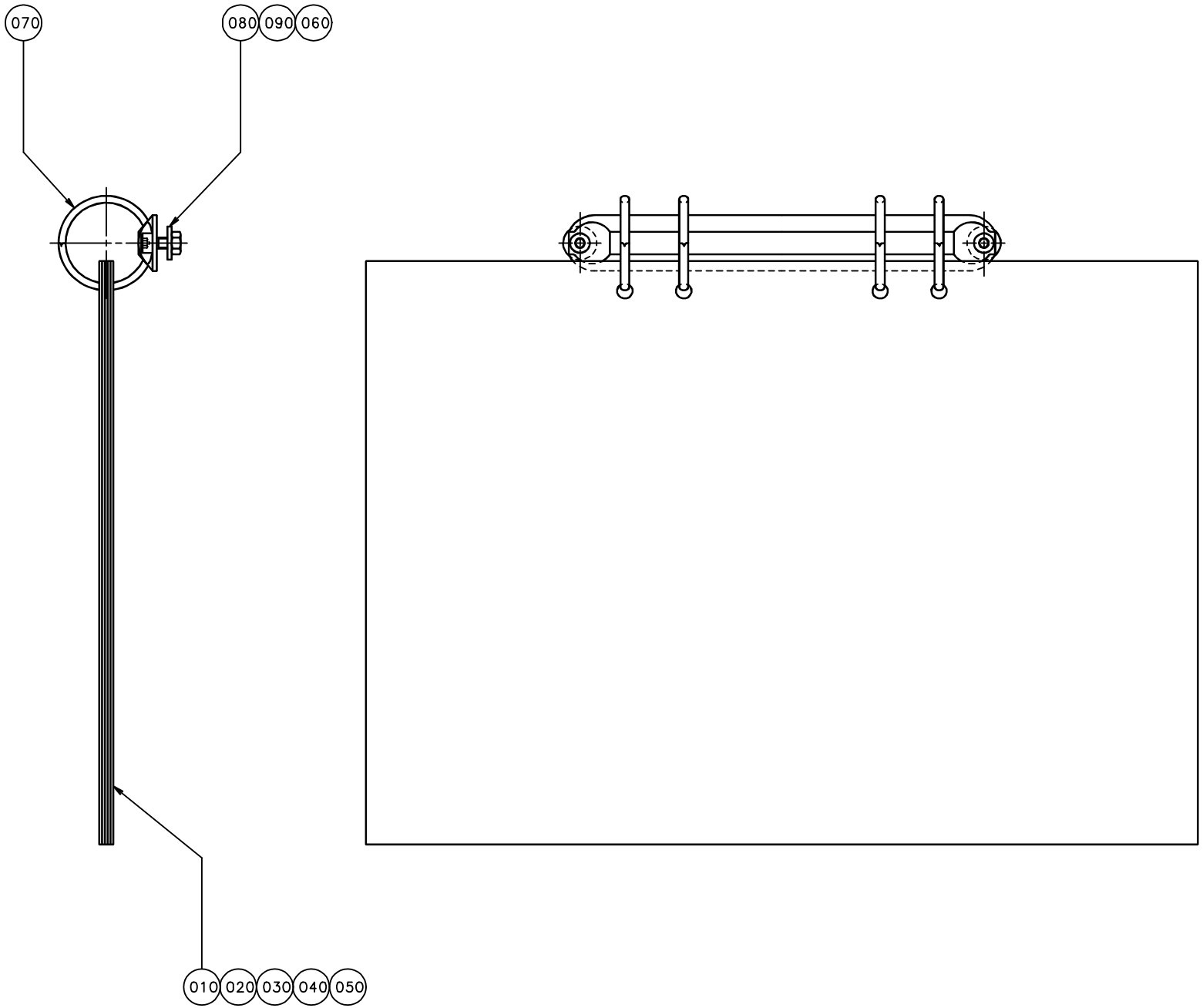
070
080
090
060
010
020
030
040
050

ECM: 71953 - 19981102
Group number: 543157-0300
Assembly Drawing: 543157-2_1_AA

Pos	Part No	UN	Qty	Description	Page No
TB/8 0300B TPC					
010	575449-0000		1	DOCUMENT FOLDER	
020	575450-0000		1	PNEUMATIC DIAGRAM	
030	479859-0000		1	HYDRAULIC DIAGRAM	
040	576731-0000		1	WATER DIAGRAM	
050	561590-0000		1	CENTRAL LUBRIC. DIAGRAM	
TB/8 0568B TPC, TB/8 0500SQ TPC, TB/8 1000S TPC, TB/8 1000SQ TPC, TB/8 1000B TPC, TB/8 0500S TPC, TB/8 0500B TPC, TB/8 1136B TPC					
010	575449-0000		1	DOCUMENT FOLDER	
020	575450-0000		1	PNEUMATIC DIAGRAM	
030	479858-0000		1	HYDRAULIC DIAGRAM	
040	576731-0000		1	WATER DIAGRAM	
050	561590-0000		1	CENTRAL LUBRIC. DIAGRAM	
TB/8 0568SQ US, TB/8 0500SQ US					
010	593672-0000		1	VALVE PANEL	
020	593633-0000		1	PNEUMATIC DIAGRAM	
030	592989-0000		1	HYDRAULIC DIAGRAM	
040	1143132-0000		1	WATER DIAGRAM	
050	1143244-0000		1	CENTRAL LUBRIC. DIAGRAM	
TB/8 1000SQ NORMFIN US					
010	1143135-0000		1	VALVE PANEL	
020	1143140-0000		1	PNEUMATIC DIAGRAM	
030	479858-0000		1	HYDRAULIC DIAGRAM	
040	1143132-0000		1	WATER DIAGRAM	
050	1143244-0000		1	CENTRAL LUBRIC. DIAGRAM	
TB/8 1000SQ REVFIN US					
010	1143444-0000		1	VALVE PANEL	
020	1143445-0000		1	PNEUMATIC DIAGRAM	
030	479858-0000		1	HYDRAULIC DIAGRAM	
040	1143132-0000		1	WATER DIAGRAM	
050	1143244-0000		1	CENTRAL LUBRIC. DIAGRAM	
TB/8 1500B US					
010	593637-0000		1	VALVE PANEL	
020	593636-0000		1	PNEUMATIC DIAGRAM	
030	592989-0000		1	HYDRAULIC DIAGRAM	
040	1143132-0000		1	WATER DIAGRAM	
050	593638-0000		1	CENTRAL LUBRIC. SYSTEM	
Common Parts					
060	38087-0000		2	WASHER	
070	90243-0169		1	BINDER CLIP, DIAM.29 MM, NO. 4670819	
080	312115-0325		2	SCREW ISO4762 M5X10 A4 80	
090	312605-0314		2	HEXAGON NUT, M6M M5 A280	

Pos	Part No	UN	Qty	Description	Page No

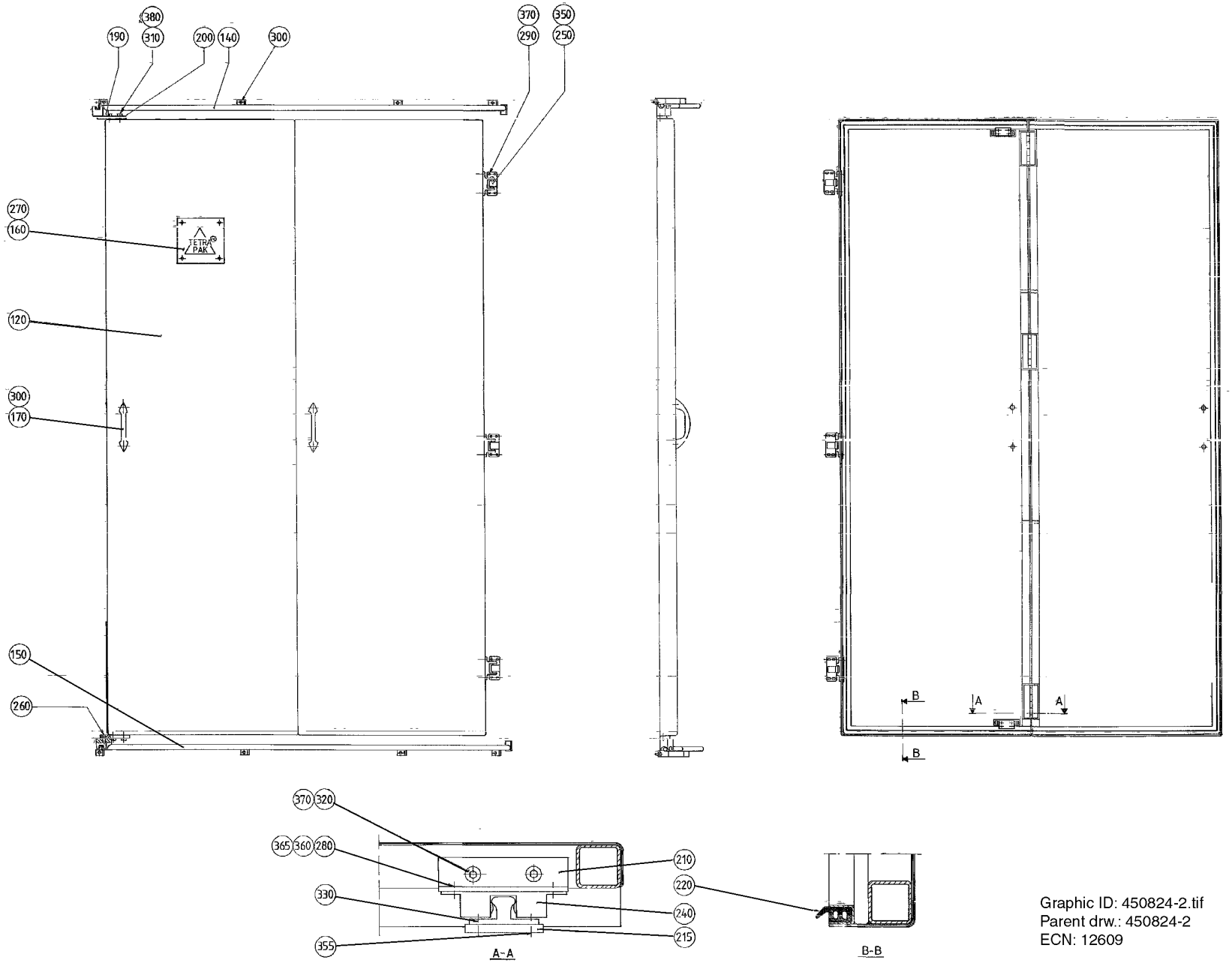

Graphic ID: 450824-2.tif
Parent drw.: 450824-2
ECN: 12609

ECM: 176840 - 20041018
Group number: 450824-0200
Assembly Drawing: 450824-2_1_AA

Pos	Part No	UN	Qty	Description	Page No
-					
120	549044-0000		1	DOOR	
140	269320-0000		1	RAIL	
150	269321-0000		1	RAIL	
160	544539-0000		1	HOUSEMARK REPBY 0574658-0000	
170	7309-0000		2	HANDLE	
190	230226-0000		2	BLOCKING PIECE	
200	246739-0000		2	BRACKET	
210	450826-0000		2	BRACKET	
215	450973-0000		2	BRACKET	
220	90143-0049	MM	6000	RUBBER STRIP 11X21MM	
240	90237-0070		2	SNAP-IN BALL LOCK, 69X19 MM	
250	90248-0013		3	HINGE 3562E STUV	
260	311103-0403		2	PARALLEL PIN ISO 2338 8M6X25 A1	
270	311520-0420		4	RIVET, BLANK 3,2X4	
280	312105-0291		4	SCREW M6S ISO 4017 M4X12 A470	
290	312105-0327		12	SCREW M6S ISO 4017 M5X12 A480	
300	312105-0366		12	SCREW M6S ISO 4017 M6X12 A480	
310	312105-0368		4	SCREW M6S ISO 4017 M6X16 A480	
320	312115-0325		4	SCREW ISO4762 M5X10 A4 80	
330	312145-0285		4	SCREW ISO 2009 MFS M4X6 A4	
350	312145-0325		12	SCREW ISO 2009 MFS M5X10 A4	
355	312145-0327		4	SCREW ISO 2009 MFS M5X12 A4	
360	312605-0312		4	HEXAGON NUT, M6M M4 A280	
365	315105-0136		4	WASHER BRB 4,3X9 RFR	
370	315105-0146		16	WASHER BRB 5,3X10 RFR	
380	315105-0153		4	WASHER BRB 6,4X12 RFR	

Pos	Part No	UN	Qty	Description	Page No

DETERGENT PUMP

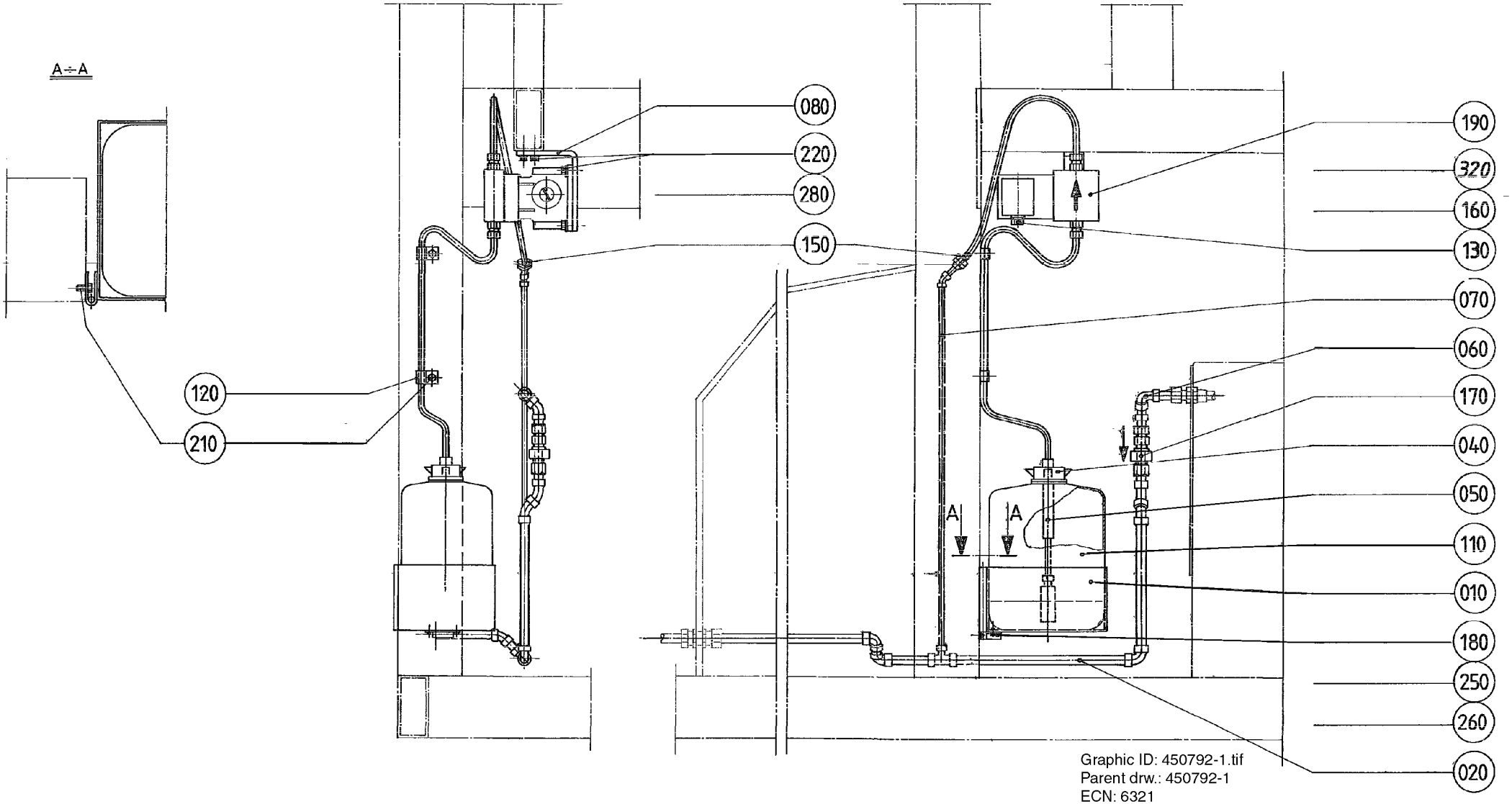

Graphic ID: 450792-1.tif
Parent drw.: 450792-1
ECN: 6321

ECM: 72091 - 19981216
Group number: 450792-0100
Assembly Drawing: 450792-1_1_AA

Pos	Part No	UN	Qty	Description	Page No
-					
010	547906-0000		1	SHELF	
020	450793-0000		1	PIPE	
040	35962-0000		1	LID	
050	259867-0000		1	HOSE CLAMP	
060	450794-0000		1	PIPE	
070	450795-0000		1	PIPE	
080	450796-0000		1	BRACKET	
110	90050-0011		1	BOTTLE	
120	90074-0002		2	CABLE CLIPS, D=11 MM	
130	90099-0003		1	NUT PR 22,5	
150	90131-0004		1	HOSE COUPLING	
160	90195-0020		1	TERMINAL BLOCK, 1977.2	
170	90230-0021		1	NON-RETURN VALVE, NO. RHD-15-L/MS 59	
180	90237-0046		1	MAGNETIC LOCK, 46X33X15 MM	
190	90321-0037		1	PUMP C-6125P EP 220V, 50HZ	
	90321-0396		*1*	*FILTER*	
	90321-0380		*1*	*DIAPHRAGM*	
	90166-0157	*MM*	*1500*	*HOSE*	
210	312105-0323		5	SCREW M6S ISO 4017 M5X8 A480	
220	312105-0368		4	SCREW M6S ISO 4017 M6X16 A480	
250	312125-0220		2	SCREW ISO 1207 M3X6 A4	
260	312605-0310		2	HEXAGON NUT, M6M M3 A280	
280	315105-0153		3	WASHER BRB 6,4X12 RFR	
320	352136-0127		1	GLAND FITTING PR 18,6	

Pos	Part No	UN	Qty	Description	Page No

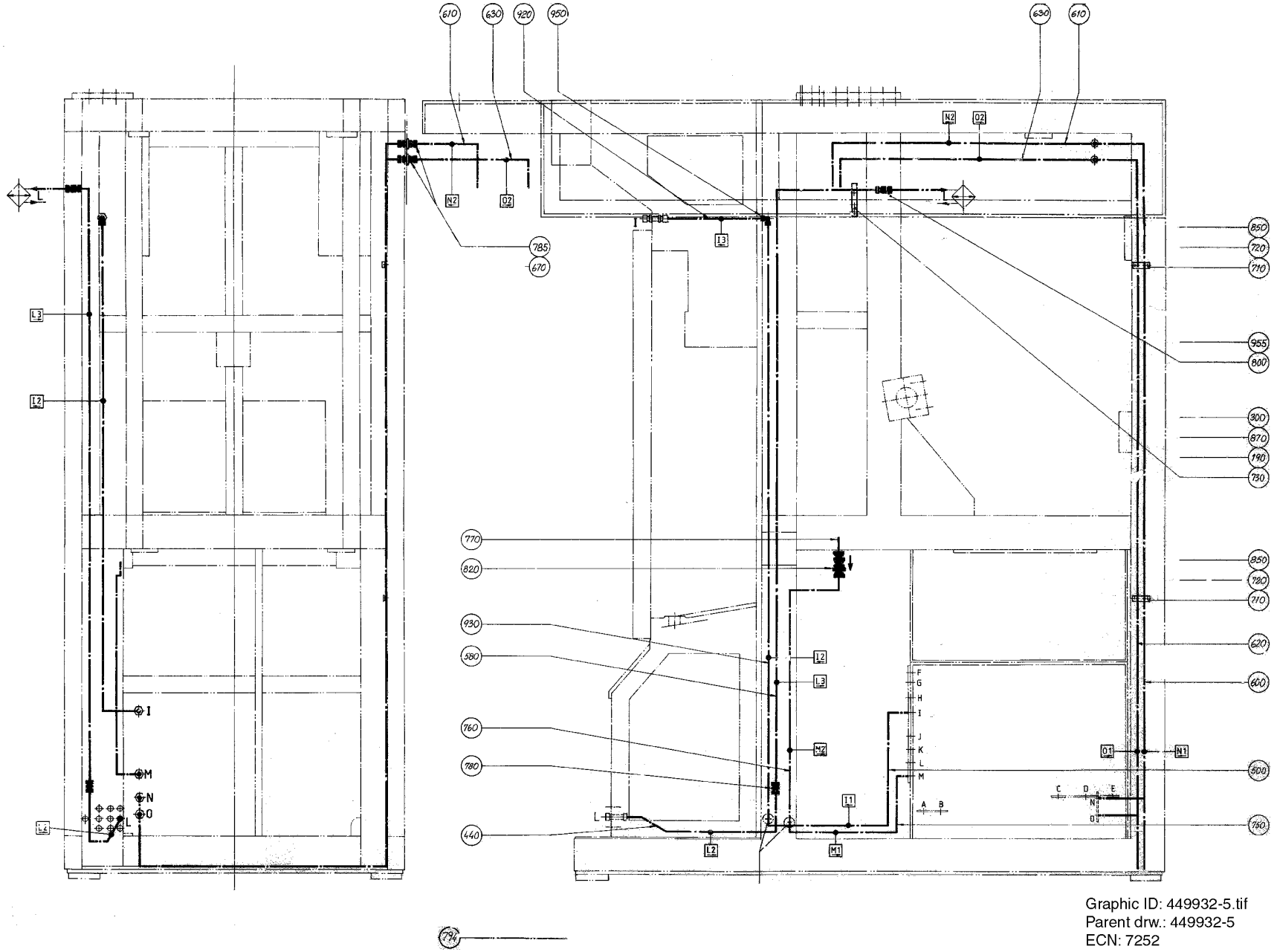

Graphic ID: 449932-5.tif
Parent drw.: 449932-5
ECN: 7252

ECM: 72091 - 19981216
Group number: 449932-0500
Assembly Drawing: 449932-5_1_AA

This list covers pages from 2-136 to 2-145

Pos	Part No	UN	Qty	Description	Page No
TB/8 US (See drawing on pages: 2-138, 2-142, 2-144)					
100	484104-0000		1	PIPE	
156	1143242-0000		1	SIGN	
160	484103-0000		1	PIPE	
205	90224-0316		1	CONNECTION	
325-02	342707-0110		3	SLEEVE, INT. THREAD, NO. 2543-1/4	
335	342923-0114		1	STRAIGHT COUPL.,INT.THREADED 6/4-G1/4"	
340	342930-0114		1	ELBOW 90 COUPL.,EXT.THREAD 6/4-R1/4"	
750	929732-0000		1	PIPE	
760	929717-0000		1	WASTE PIPE	
800	90224-0319		6	CONN. STR., 8-R1/4, EXT. THREAD	
900	315233-0110		2	WASHER CAPTIVE SEALING G1/4	
955	342923-0122		3	STRAIGHT COUPL.,INT.THREADED 8/6-G1/4"	
980	90166-0133	MM	700	TUBE 8 MM PA,TRANSP.	
990	90163-0134		1	QUICK COUPLING, LP-004-1-SL006-21	
992	90163-0133		1	QUICK COUPLING, (F) LP-004-0-WR013-21-1	
995	90230-0007		1	NON-RETURN VALVE	
TB/8 TPC (See drawing on pages: 2-136, 2-138, 2-140)					
100	484104-0000		1	PIPE	
150	464720-0000		1	SIGN	
160	484103-0000		1	PIPE	
205	90224-0316		1	CONNECTION	
230	90224-0320		1	STRAIGHT COUPLING,EXT.THREAD 1051-8-3/8	
325	342707-0110		2	SLEEVE, INT. THREAD, NO. 2543-1/4	
330	342713-0211		1	PLUG, EXT THREAD HEX SOCKET 8638-00-380	
335	342923-0114		1	STRAIGHT COUPL.,INT.THREADED 6/4-G1/4"	
340	342930-0114		1	ELBOW 90 COUPL.,EXT.THREAD 6/4-R1/4"	
510	450731-0000		1	PIPE	
520	464431-0000		1	PIPE	
530	450733-0000		1	PIPE	
540	464432-0000		1	PIPE	
660	276398-0000		4	HEXAGON NIPPLE	
740	450747-0000		1	PIPE	
750	450748-0000		1	PIPE	
760	575795-0000		1	WATER PIPE	
770	341001-0228	MM	80	COPPER TUBE	
800-02	90224-0319		12	CONN. STR., 8-R1/4, EXT. THREAD	
820	90230-0023		1	NON-RETURN VALVE	
825	90235-0295		2	THROTTLE CHECK VALVE,G1/4"	
900-02	315233-0110		6	WASHER CAPTIVE SEALING G1/4	
955-02	342923-0122		5	STRAIGHT COUPL.,INT.THREADED 8/6-G1/4"	
960	342980-0122		4	BANJO-CONNECTION,RING 8/6-G1/4 INCH	
970	342980-0304		2	BANJO-HOLLOW BOLT COUPL,EXT.THR.01-G1/4	
Common Parts					
220	90224-0318		2	CONNECTION	
400	544688-0000		1	PIPE	
410	544689-0000		1	PIPE	
420	544690-0000		1	PIPE	
430	544691-0000		1	PIPE	
440	434171-0000		1	PIPE	
450	450725-0000		1	ATTACHMENT PLATE	
460	544693-0000		1	PIPE	
470	544694-0000		1	PIPE	
480	544695-0000		1	PIPE	
490	544696-0000		1	PIPE	
500	450730-0000		1	PIPE	
560	450736-0000		1	PIPE	
570	450737-0000		1	PIPE	
580	450738-0000		1	PIPE	
590	450739-0000		1	PIPE	
600	450740-0000		1	PIPE	
610	567266-0000		1	TUBE	
620	450742-0000		1	PIPE	
630	567267-0000		1	TUBE	
670	279105-0000		2	WASHER	
680	279526-0000		2	BRACKET	
690	293351-0000		2	CRAMP	
700	293352-0000		2	CRAMP	
705	450724-0000		1	PIPE	
710	450744-0000		2	CRAMP	
720	450745-0000		2	SPACER	
730	450746-0000		1	HOLDER	
780	90030-0091		1	CONN. PIPE G-8	
785	90030-0159		2	CONN. BULKHEAD SV 15-L/SY	
790	90087-0002		1	PIPE PLUG	
792	90165-0007		3	PIPE CLIP FOR TUBE D=8 MM	
794	90166-0122	M	2	TUBE 8 MM PA,TRANSP.	
796	90166-0124	M	2	TUBE 6 MM PA,TRANSP.	
830	90266-0007	MM	63	TUBE	
850	312101-0327		4	SCREW M6S M5X12 FZB	
860	312101-0364		2	SCREW M6S M6X10 FZB	
870	312101-0372		1	SCREW M6S M6X25 FZB	
872	312121-0287		3	SCREW ISO 1207 M4X8 4.8 - 5.8 Z.PL.	
875	312125-0220		4	SCREW ISO 1207 M3X6 A4	

Machine Type | Group Description | Used-In | Group Number | Page No

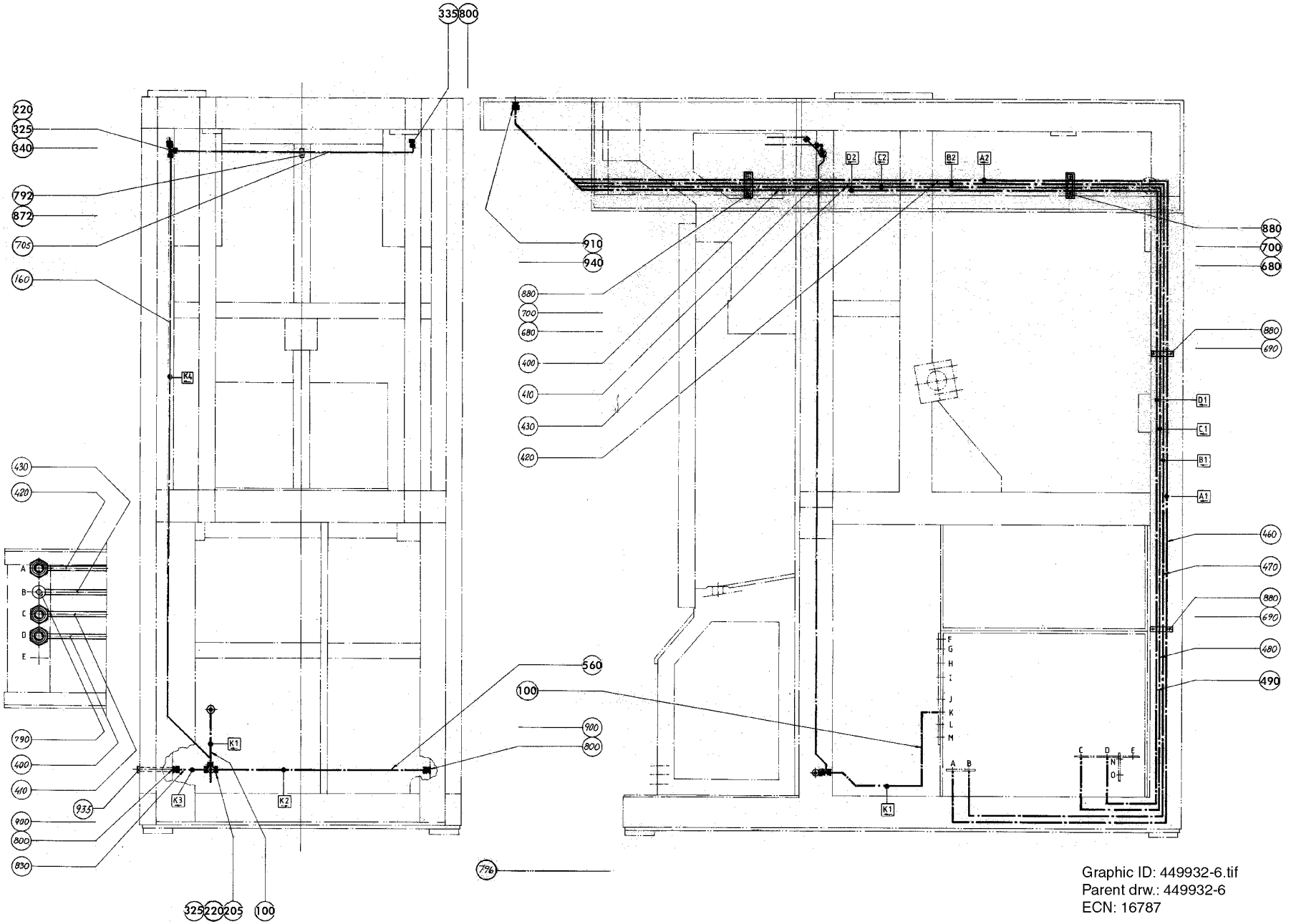

Graphic ID: 449932-6.tif
Parent drw.: 449932-6
ECN: 16787

Pos	Part No	UN	Qty	Description	Page No
Common Parts (Cont'd)					
880	312125-0323		8	SCREW ISO 1207 M5X8 A4	
890	315101-0153		2	WASHER PLAIN, BRB, 6,4/12 H=1,5	
910	315233-0113		4	WASHER CAPTIVE SEALING G1/2	
920	341001-0228	MM	300	COPPER TUBE	
930	341001-0228	MM	1792	COPPER TUBE	
935	342713-0210		1	PLUG,EXT THREAD HEX SOCKET(PAK OF 10 PCS	
940	342720-0114		4	CONN. STR. GA-15-G1/2	
950	342736-0114		1	CONN. ELBOW W-15	

Pos	Part No	UN	Qty	Description	Page No

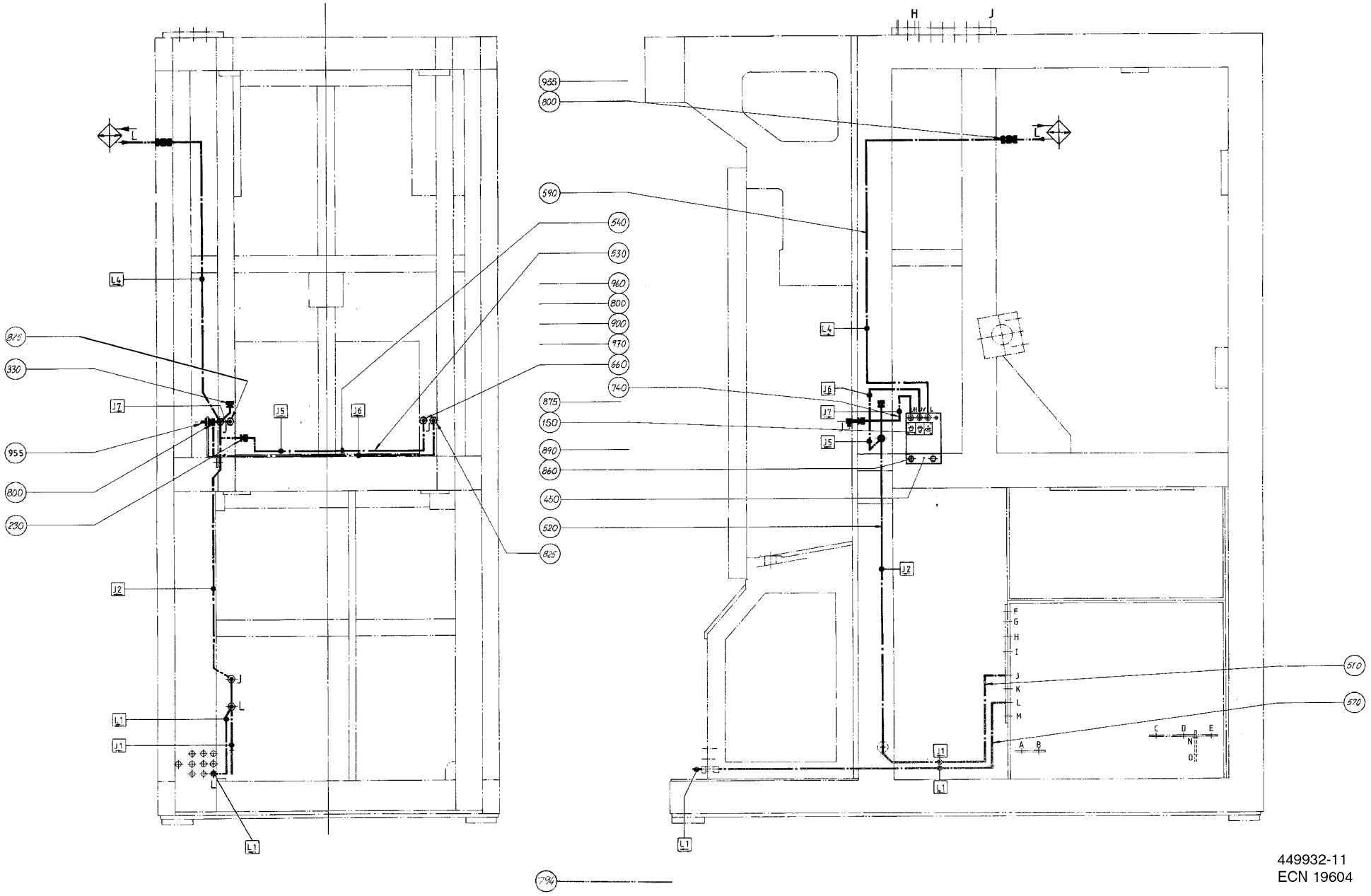

449932-11
ECN 19604

Pos	Part No	UN	Qty	Description	Page No	Pos	Part No	UN	Qty	Description	Page No

SEE PREVIOUS LISTS PAGES: 2-137, 2-139.

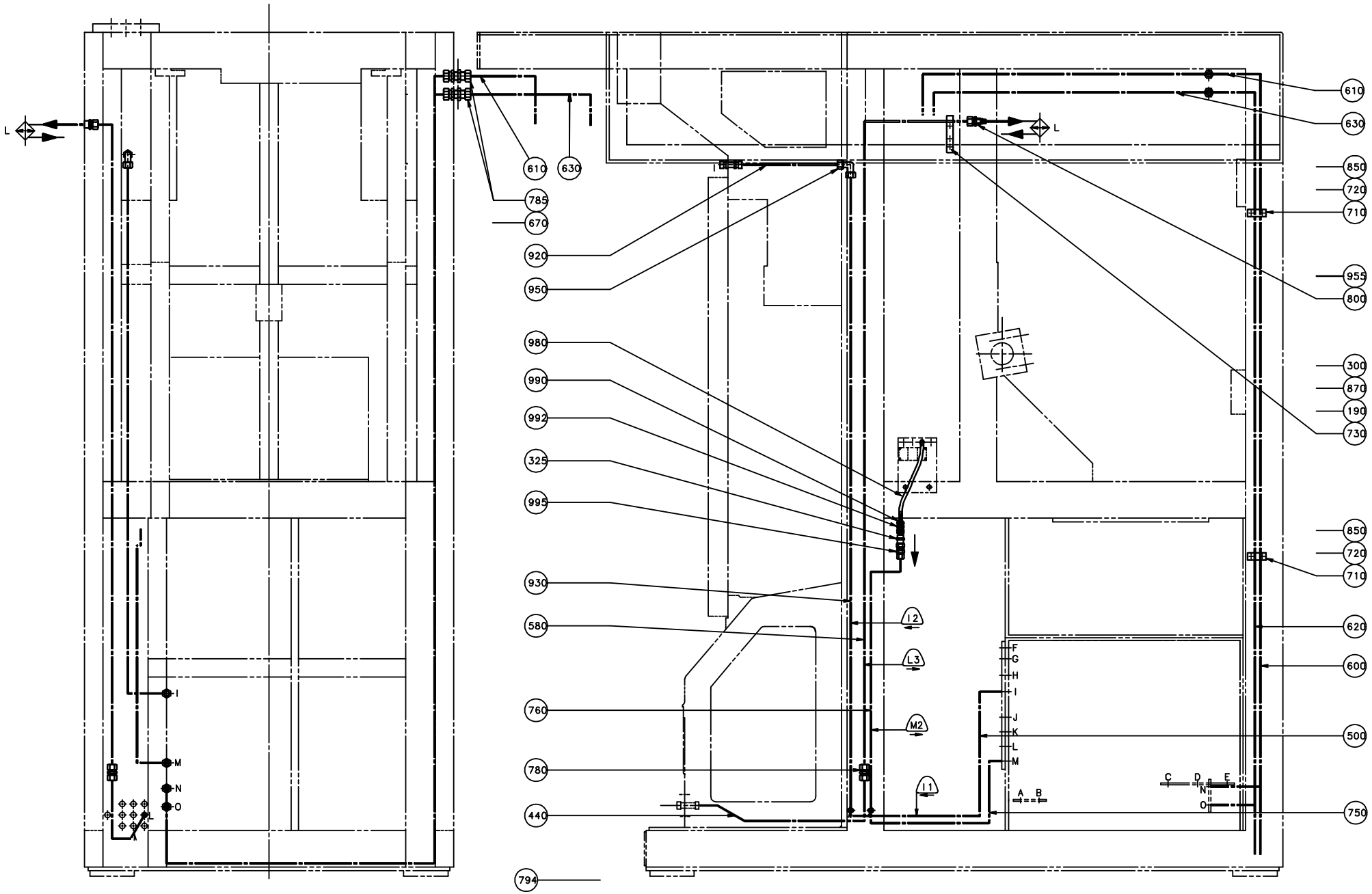
610
630
785
670
920
950
980
990
992
325
995
930
580
760
780
440
794
850
720
710
955
800
300
870
190
730
620
600
500
750
L
I
M
N
O
I2
L3
M2
I1
F
G
H
I
J
K
L
M
A
B
C
D
E
N
O

ECM: 72091 - 19981216
Group number: 449932-0500
Assembly Drawing: 449932-13_1_AA

This list covers pages from 2-136 to 2-145

Pos	Part No	UN	Qty	Description	Page No	Pos	Part No	UN	Qty	Description	Page No

SEE PREVIOUS LISTS PAGES: 2-137, 2-139.

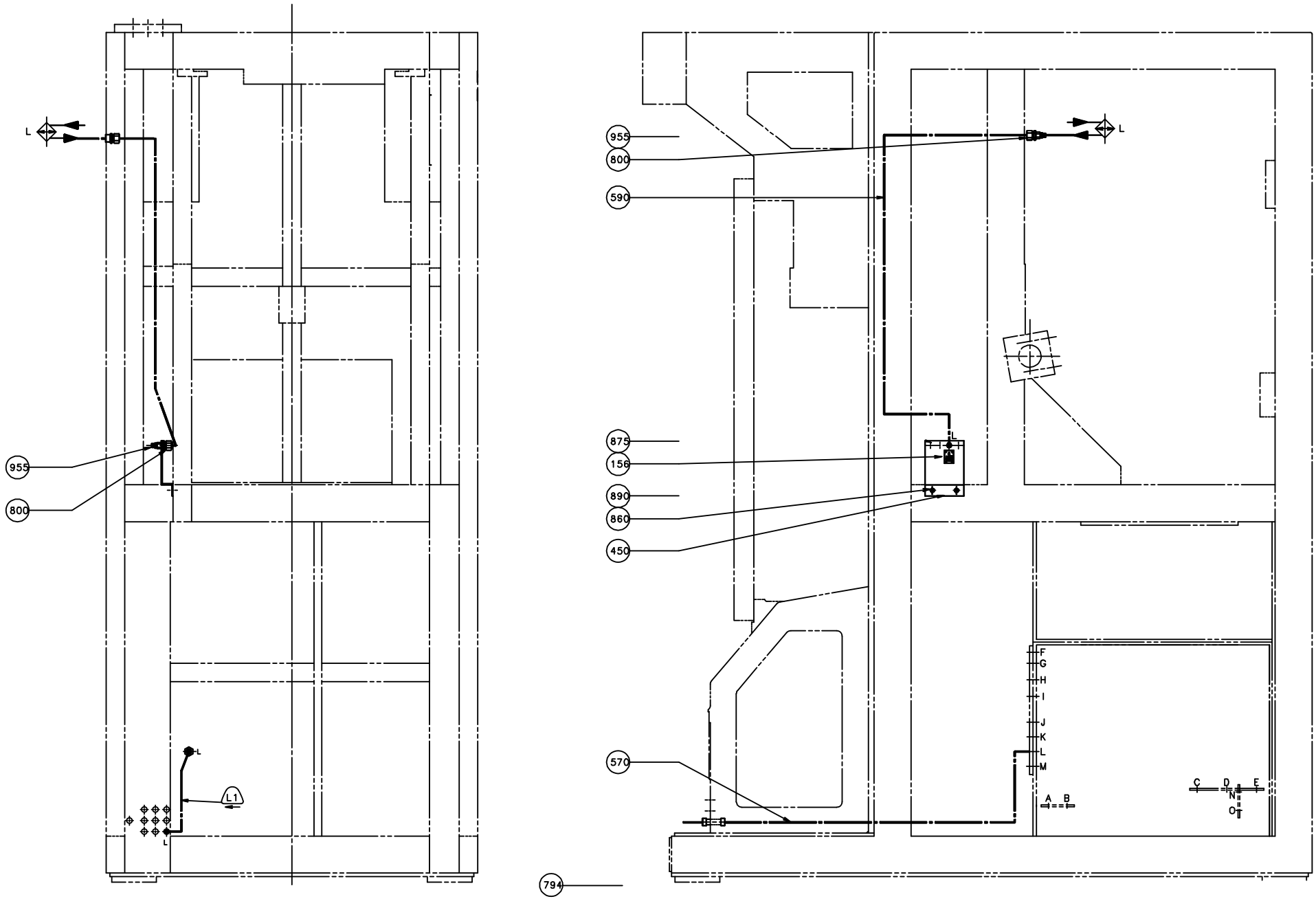
L
955
800
L
L1
L
955
800
590
875
156
890
860
450
570
794
L
L
F
G
H
I
J
K
L
M
A
B
C
D
E
N
O
T

Pos	Part No	UN	Qty	Description	Page No	Pos	Part No	UN	Qty	Description	Page No

SEE PREVIOUS LISTS PAGES: 2-137, 2-139.

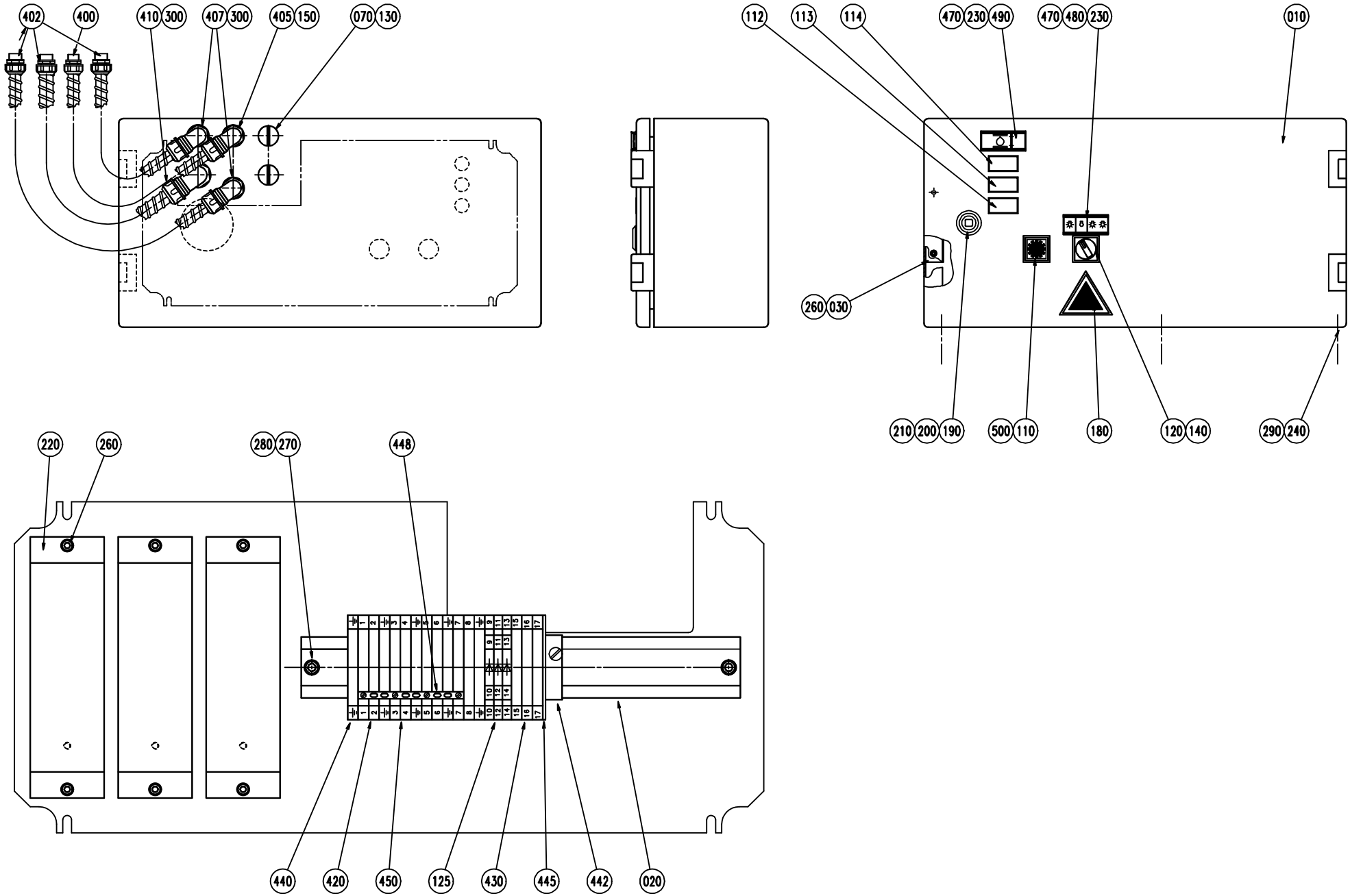
402
400
410
300
407
300
405
150
070
130
112
113
114
470
230
490
470
480
230
010
260
030
210
200
190
500
110
180
120
140
290
240
220
260
280
270
448
440
420
450
125
430
445
442
020

ECM: 72091 - 19981216
Group number: 449930-0500
Assembly Drawing: 449930-5_1_AA

Pos	Part No	UN	Qty	Description	Page No
-					
010	574605-0000		1	CONNECTION BOX	
020	90077-0302	MM	250	RAIL TS/35X7,5	
030	574606-0000		1	SHEET	
070	90002-0009		2	BLANK-OFF PLUG, PR 18.6 SKINDICHT-BLK11	
110	90064-0084		1	PUSH BUTTON, YELLOW	
112	90064-0094		1	PUSH BUTTON, RED	
	90064-0318		*1*	*SIGNAL LAMP LED RED*	
113	90064-0095		1	PUSH BUTTON, YELLOW	
	90064-0319		*1*	*SIGNAL LAMP LED YELLOW*	
114	90064-0096		1	PUSH BUTTON, GREEN	
	90064-0320		*1*	*SIGNAL LAMP LED GREEN*	
120	90064-0317		1	TOUCHGUARD, 704-9645	
125	90077-0115		3	TERMINALS, DISCONNECTABLE	
130	90099-0002		2	NUT PR 18,6 BRASS	
140	90111-0121		1	SWITCH, 3 POS.704.502.0A+2 PCE 704.901.3	
150	90152-0033	M	1	SPIRAL CONDUIT FOR PR 15,2(PG 9)	
180	90194-0016		1	WARNING SIGN, RISK OF ELECTRIC SHOCK	
190	90237-0319		1	LOCK HOUSING, 1000-U134	
200	90237-0320		1	LOCK HOUSING, 1000-U136	
210	90237-0335		1	LOCKING CATCH	
220	90297-0300		3	BALLAST COIL 50HZ	
230	311520-0329		4	RIVET, BLANK 2,4X8	
240	312105-0362		6	SCREW M6S ISO 4017 M6X8 A480	
260	312115-0287		10	SCREW ISO4762 M4X8 A4 80	
270	312121-0323		2	SCREW ISO 1207 M5X8 4.8 - 5.8 Z.PL.	
280	312601-0314		2	HEXAGON NUT, DIN 934 M5 8 FZB	
290	315105-0153		6	WASHER BRB 6,4X12 RFR	
300	352135-0106	M	3	SPIRAL CONDUIT DI=16 MM	
400	352136-0113		1	GLAND FITTING PR18,6/PG11 DI=12MM	
402	352136-0127		3	GLAND FITTING PR 18,6	
405	352137-0113		1	COND.FITTING PR 18,6 DI=12MM	
407	352137-0127		2	COND.FITTING PR 18,6 DI=16MM	
410	352137-0129		1	CABLE GLAND PR22,5(PG16)	
420	353021-0213		8	FEED THROUGH TERMINAL, 10201.0	
430	353021-0217		3	FEED THROUGH TERMINAL, 10201.8	
440	353024-0205		5	EARTH TERMINAL, 1010.1	
442	353031-0201		1	END BRACKET EW35	
445	353032-0005		1	END PLATE WAP 2,5-10 BLUE	
448	353034-0031		1	BRIDGE CONNECTOR, WQV 4/10, 10520.6	
450	359011-0807		2	MARKING PLATES 5-FW 1-50	
470	359240-0100		2	SIGN HOLDER FOR 359240-0001	
480	359241-0127		1	SIGN: " LIGHT JAW SYSTEM & MACHINE BODY"	
490	359241-0158		1	SIGN: " LEVEL IN HYDRAULIC OIL TANK"	
500	359301-0125		1	BUTTON SIGN, LUBRICATION	

Machine Type | Group Description | Used-In | Group Number | Page No

VALVE PANEL LOWER

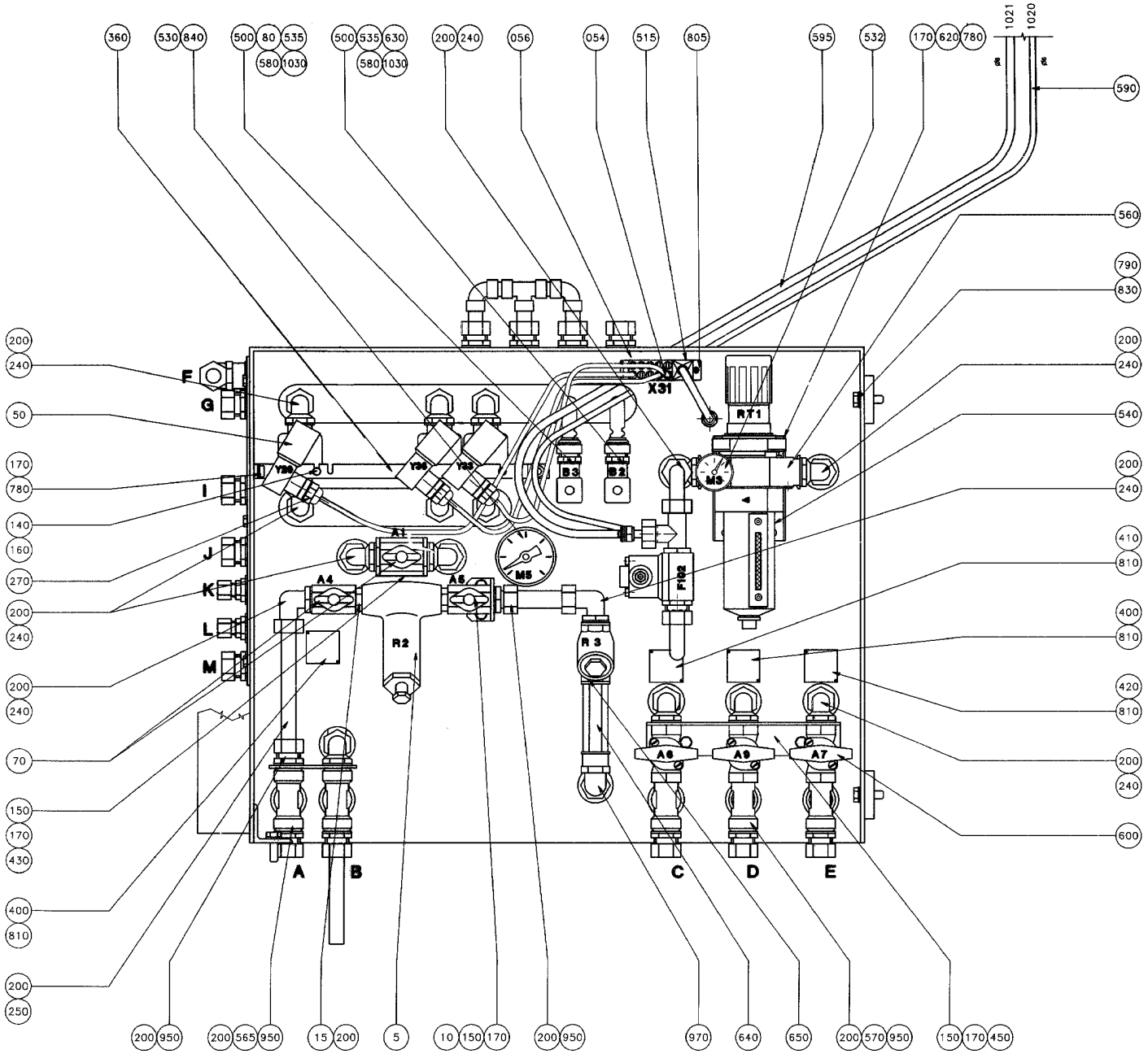

ECM: 148302 - 20031112
Group number: 575392-0100
Assembly Drawing: 575392-3_1_AB

This list covers pages from 2-148 to 2-155

Pos	Part No	UN	Qty	Description	Page No
TB/8 TPC (See drawing on pages: 2-148, 2-150)					
005	90458-0921		1	FILTER SP 122-200	
	90458-2541		*1*	*FILTER, CP23174-7-304SS*	
010	543127-0000		1	BRACKET	
015	479261-0000		2	NIPPLE	
050	90042-0172		3	SOLENOID VALVE 4023/1005/1032 24VDC	
	90042-0467		*1*	*COIL 24VDC GSR*	
056	90042-0536		3	PILOT CABLE MECMAN 440-728-000-1	
	90042-0594		*1*	*ADAPTER 04938-328-08*	
070	90187-0062		3	BALL VALVE G1/2, NPBR	
080	90274-0043		1	PRESSURE GUARD, 300 KPA	
090	90418-0053		24	ELBOW, 90, INT. CONN. NO. 7090-15	
100	90418-0054		6	ELBOW, 45, INT. CONN. NO. 7041-15	
110	90418-0063		12	ADAPTER, INT. CONN. NO. 7272CU/15-G1/2	
140	312115-0333		6	SCREW ISO4762 M5X25 A4 80	
150	312105-0362		9	SCREW M6S ISO 4017 M6X8 A480	
160	312605-0314		12	HEXAGON NUT, M6M M5 A280	
170	315105-0153		27	WASHER BRB 6,4X12 RFR	
200	315233-0113		44	WASHER CAPTIVE SEALING G1/2	
240	342730-0114		16	CONN. ELBOW WA-15-1/2	
260	342750-0114		1	CONN. L-PIPE, EXT. LA-15-G1/2	
270	352103-0100		3	CABLE GLAND, STR 9, PR15,2/PG9	
410	273456-0000		1	SIGN, HOT WATER	
430	543130-0000		1	BRACKET	
440	293201-0000		1	PIPE	
670	90418-0039		3	ELBOW PIPE	
680	90418-0048		3	,T-PIPE, INT. CONN. NO. 7130-15	
720	90418-0058		3	ELBOW, 90, INT/EXT. CONN. NO. 7092-15	
780	312115-0366		8	SCREW ISO4762 M6X12 A4 80	
920	342710-0115		1	REDUCTION RBM 16/8	
930	342711-0115		1	ACCESSORIES, PLUG PL-15 AND 16	
960	342720-0114		20	CONN. STR. GA-15-G1/2	
1030	352136-0113		3	GLAND FITTING PR18,6/PG11 DI=12MM	
TB/8 US (See drawing on pages: 2-152, 2-154)					
005	90458-0921		1	FILTER SP 122-200	
	90458-2541		*1*	*FILTER, CP23174-7-304SS*	
010	543127-0000		1	BRACKET	
015	479261-0000		2	NIPPLE	
050	90042-0172		3	SOLENOID VALVE 4023/1005/1032 24VDC	
	90042-0467		*1*	*COIL 24VDC GSR*	
056	90042-0536		5	PILOT CABLE MECMAN 440-728-000-1	
	90042-0594		*1*	*ADAPTER 04938-328-08*	
058	90055-0101		1	Y-CONNECTION, 8-8	
070	90187-0062		2	BALL VALVE G1/2, NPBR	
080	90274-0043		1	PRESSURE GUARD, 300 KPA	
090	90418-0053		24	ELBOW, 90, INT. CONN. NO. 7090-15	
100	90418-0054		5	ELBOW, 45, INT. CONN. NO. 7041-15	
110	90418-0063		11	ADAPTER, INT. CONN. NO. 7272CU/15-G1/2	
140	312115-0333		6	SCREW ISO4762 M5X25 A4 80	
150	312105-0362		7	SCREW M6S ISO 4017 M6X8 A480	
160	312605-0314		12	HEXAGON NUT, M6M M5 A280	
170	315105-0153		25	WASHER BRB 6,4X12 RFR	
200	315233-0113		41	WASHER CAPTIVE SEALING G1/2	
240	342730-0114		14	CONN. ELBOW WA-15-1/2	
260	342750-0114		1	CONN. L-PIPE, EXT. LA-15-G1/2	
270	352103-0100		3	CABLE GLAND, STR 9, PR15,2/PG9	
410	273456-0000		1	SIGN, HOT WATER	
440	293201-0000		1	PIPE	
670	90418-0039		3	ELBOW PIPE	
680	90418-0048		2	,T-PIPE, INT. CONN. NO. 7130-15	
720	90418-0058		3	ELBOW, 90, INT/EXT. CONN. NO. 7092-15	
780	312115-0366		8	SCREW ISO4762 M6X12 A4 80	
920	342710-0115		2	REDUCTION RBM 16/8	
930	342711-0115		1	ACCESSORIES, PLUG PL-15 AND 16	
960	342720-0114		18	CONN. STR. GA-15-G1/2	
1030	352136-0113		3	GLAND FITTING PR18,6/PG11 DI=12MM	
Common Parts					
054	90042-0550		1	PROTECTION PLUG FOR UNUSED CONNECTION	
300	542700-0000		1	VALVEPANEL LOWER	
330	543134-0000		1	PLATE	
360	543128-0000		1	VALVE BRACKET	
400	273455-0000		2	SIGN, COLD WATER	
420	273458-0000		1	SIGN, AIR	
450	543131-0000		1	BRACKET	
460	573277-0000		1	PIPE	
470	573278-0000		1	PIPE	
500	90012-0063		2	CABLE GLAND PR 15,2	
510	90042-0481		1	CONNECTION TABLE 583-471-000 MECMAN	
515	90042-0535		1	TERMINAL BOARD 19 CORDS	
530	90043-0006		1	PRESSURE GAUGE, 2041 D=63 MM	
532	90043-0043		1	PRESSURE GAUGE 0-10 BAR 1/8"	
535	90110-0095		2	CONNECTOR 3 POLE + EARTH	
538	90110-0128		1	MALE INSERT HAN 24 E-M 65330242631	
540	90113-0114		1	REGULATOR, B64G-NNK-AD1-RMN	

Machine Type	Group Description	Used-In	Group Number	Page No

VALVE PANEL LOWER

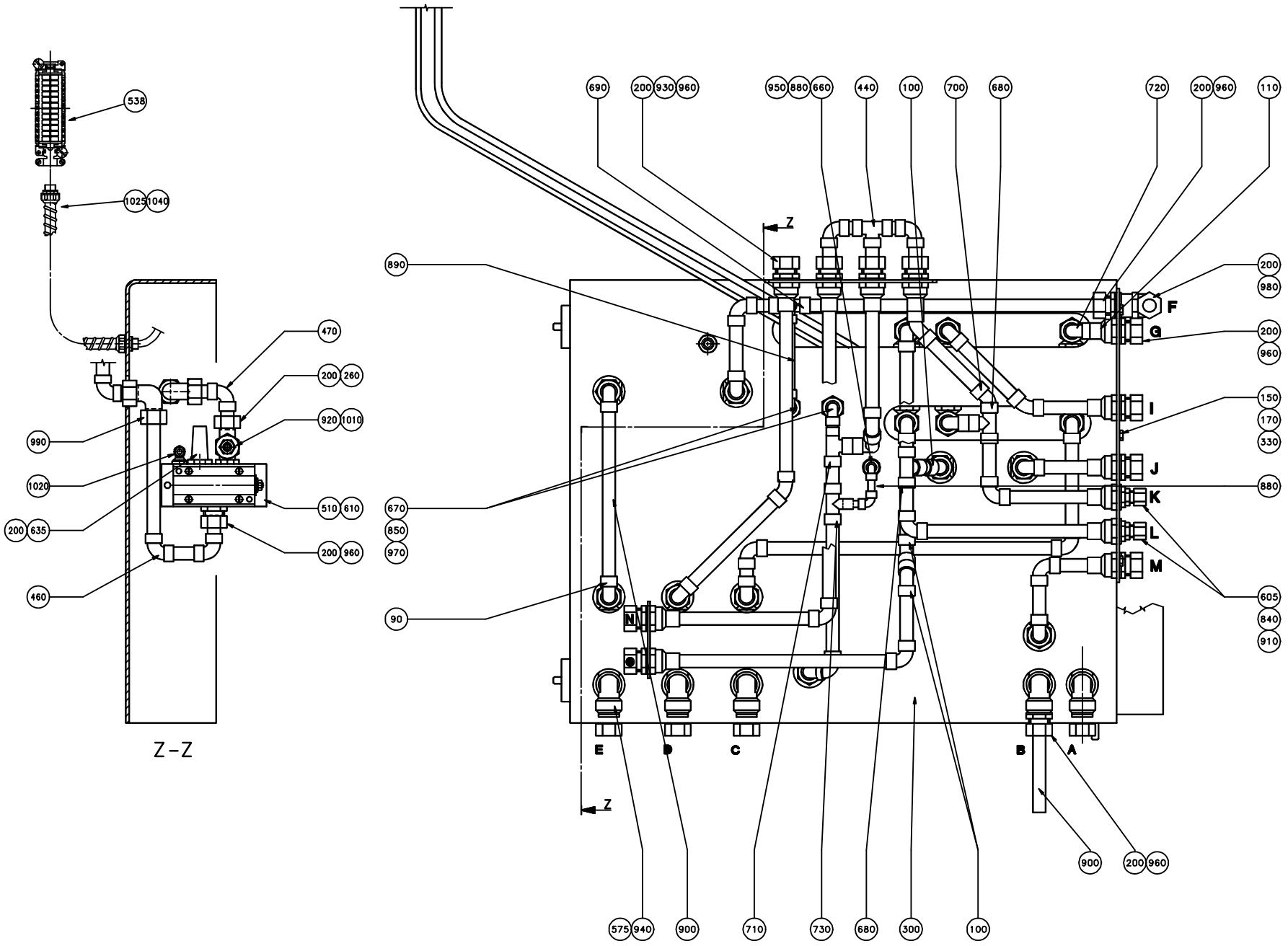

Pos	Part No	UN	Qty	Description	Page No
Common Parts (Cont'd)					
540	90113-0114		1	REGULATOR, B64G-NNK-AD1-RMN	
	90113-0411		*1*	*FILTER ELEMENT 5ÂµM, 4338-01*	
560	90113-0407		1	YOKE SINGLE, Y64A-4GA-N1N	
565	90140-0010		2	T-PIPE, INT. THREAD, 20031/2	
570	90140-0011		3	T-PIPE, INT. THREAD, NO. 2070-1/2-1/2	
575	90140-0012		5	ELBOW, 90 INT/EXT, 2020-1/2-1/2	
580	90152-0033	M	6	SPIRAL CONDUIT FOR PR 15,2(PG 9)	
590	90166-0081	MM	1700	TUBE 6 MM PA BLUE	
595	90166-0013	MM	1700	TUBE 8 MM PA BLUE	
600	90187-0029		3	BALL VALVE G1/2, NPBR	
605	90458-1851		2	CONN. STR., 8-R1/4, EXT. THREAD	
610	90235-0767		1	VALVE	
620	90236-0041		2	BRACKET	
630	90274-0044		1	PRESSURE GUARD, 400 KPA	
635	90328-0001		1	SILENCER, 338/130 B140-00-120	
640	90415-0018		1	FILTER FOR LIME SEPARATING / D MOD.AD	
650	90415-0019		1	FILTER / ART.NO. HH-M15-RG	
660	90418-0014		2	ELBOW PIPE	
690	90418-0050		1	T-PIPE, REDUCTION, INT, NO. 7130-15X12X1	
700	90418-0055		2	ELBOW, 45, INT/EXT. CONN. NO. 7040-15	
710	90418-0056		1	T-PIPE, REDUCTION, INT, NO. 7130-15X15X1	
730	90418-0068		1	T-PIPE, REDUCTION, INT, NO. 7130-15X8X15	
790	312105-0453		3	SCREW M6S ISO 4017 M8X25 A480	
805	312125-0224		2	SCREW ISO 1207 M3X10 A4	
810	312502-0120		8	DRIVE SCREW ROUND HEAD KDS 0X5	
830	315105-0165		3	WASHER BRB 8,4X16 RFR	
840	315239-0110		1	NYLON WASHER G1/4	
850	315239-0111		2	NYLON WASHER G3/8	
880	341001-0148	MM	100	COPPER TUBE	
890	341001-0192	MM	300	COPPER TUBE	
900	341001-0228	MM	5000	COPPER TUBE	
910	342701-0205		2	BUSHING,INT./EXT.G-THREAD G1/2"-G1/4"	
940	342713-0213		4	PLUG, EXT THREAD HEX SOCKET 8638-00-120	
950	342720-0103		1	CONN. STR. GA-8-G1/8	
970	342723-0109		2	CONN. STR. PIPE GI-12-G3/8	
980	342733-0114		2	CONN. ELBOW WI-15-G1/2	
990	342736-0114		1	CONN. ELBOW W-15	
1010	342929-0121		1	STRAIGHT COUPLING,SOLDER 8/6-8	
1020	342930-0113		1	ELBOW 90 COUPL.,EXT.THREAD 6/4-R1/8"	
1025	352135-0106	M	3	SPIRAL CONDUIT DI=16 MM	
1040	352136-0127		2	GLAND FITTING PR 18,6	

Pos	Part No	UN	Qty	Description	Page No

VALVE PANEL LOWER

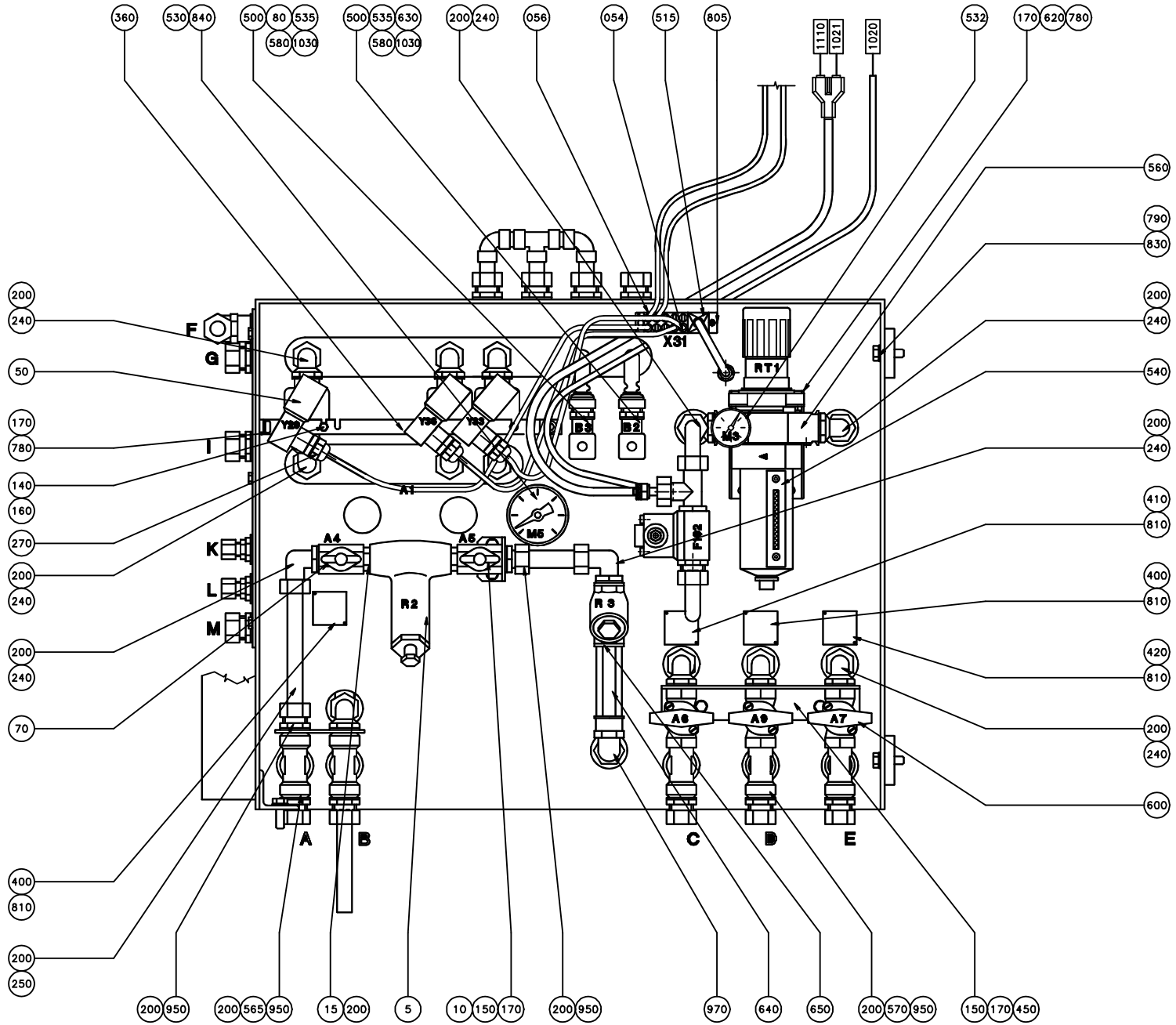

ECM: 148302 - 20031112
Group number: 575392-0100
Assembly Drawing: 575392-5_1_AB

This list covers pages from 2-148 to 2-155

Pos	Part No	UN	Qty	Description	Page No	Pos	Part No	UN	Qty	Description	Page No

SEE PREVIOUS LISTS PAGES: 2-149, 2-151.

Machine Type	Group Description	Used-In	Group Number	Page No

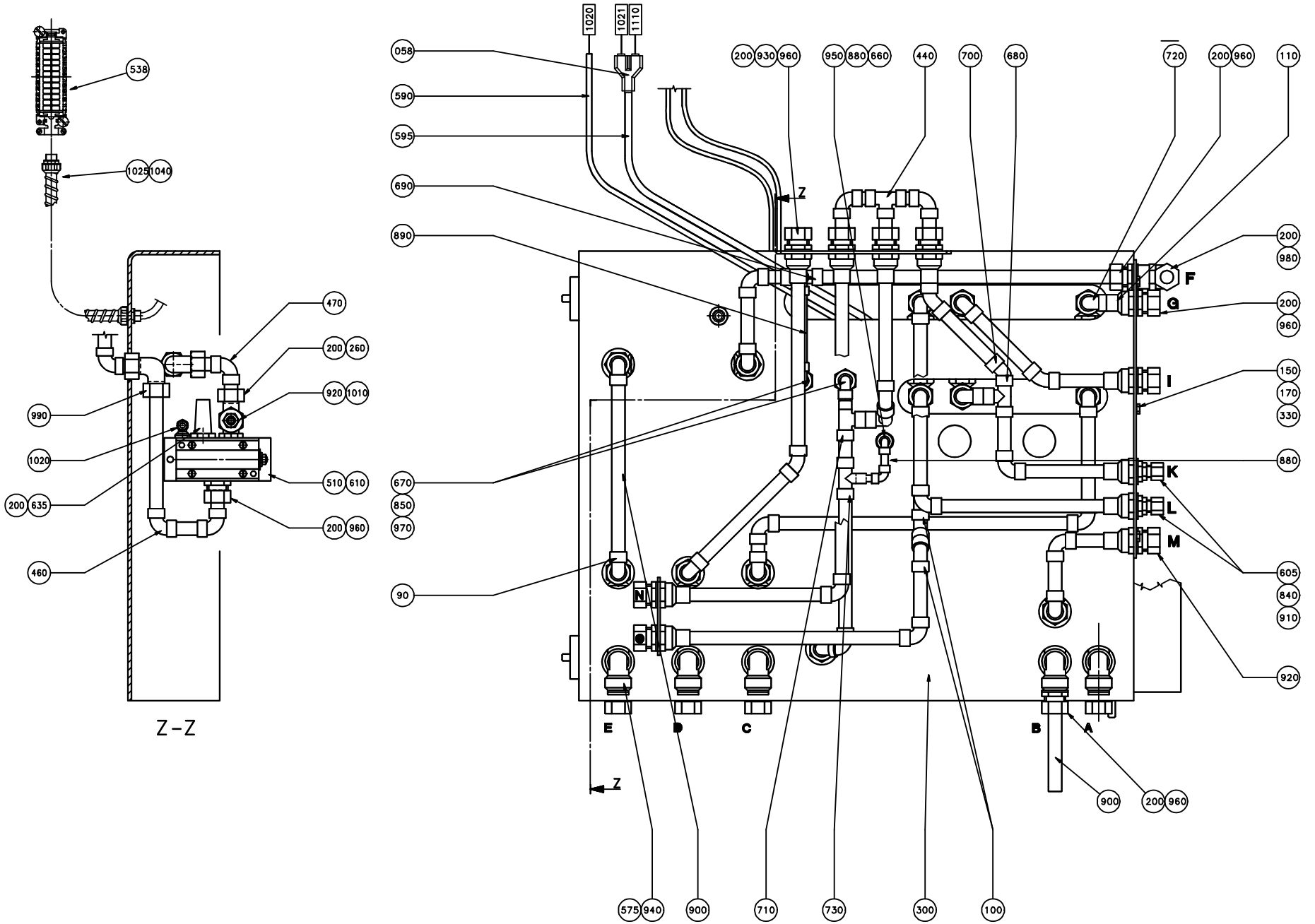
538
1025 1040
470
200 260
920 1010
990
1020
200 635
510 610
200 960
460
Z–Z
1020
1021
1110
058
590
595
690
890
670
850
970
90
200 930 960
950 880 660
440
700
680
720
200 960
110
Z
200
980
F
G
200
960
150
170
330
I
880
K
L
M
605
840
910
920
N
E
D
C
B
A
Z
900
200 960
575 940
900
710
730
300
100

Pos	Part No	UN	Qty	Description	Page No	Pos	Part No	UN	Qty	Description	Page No

SEE PREVIOUS LISTS PAGES: 2-149, 2-151.

TUBE FLUSHING DEVICE

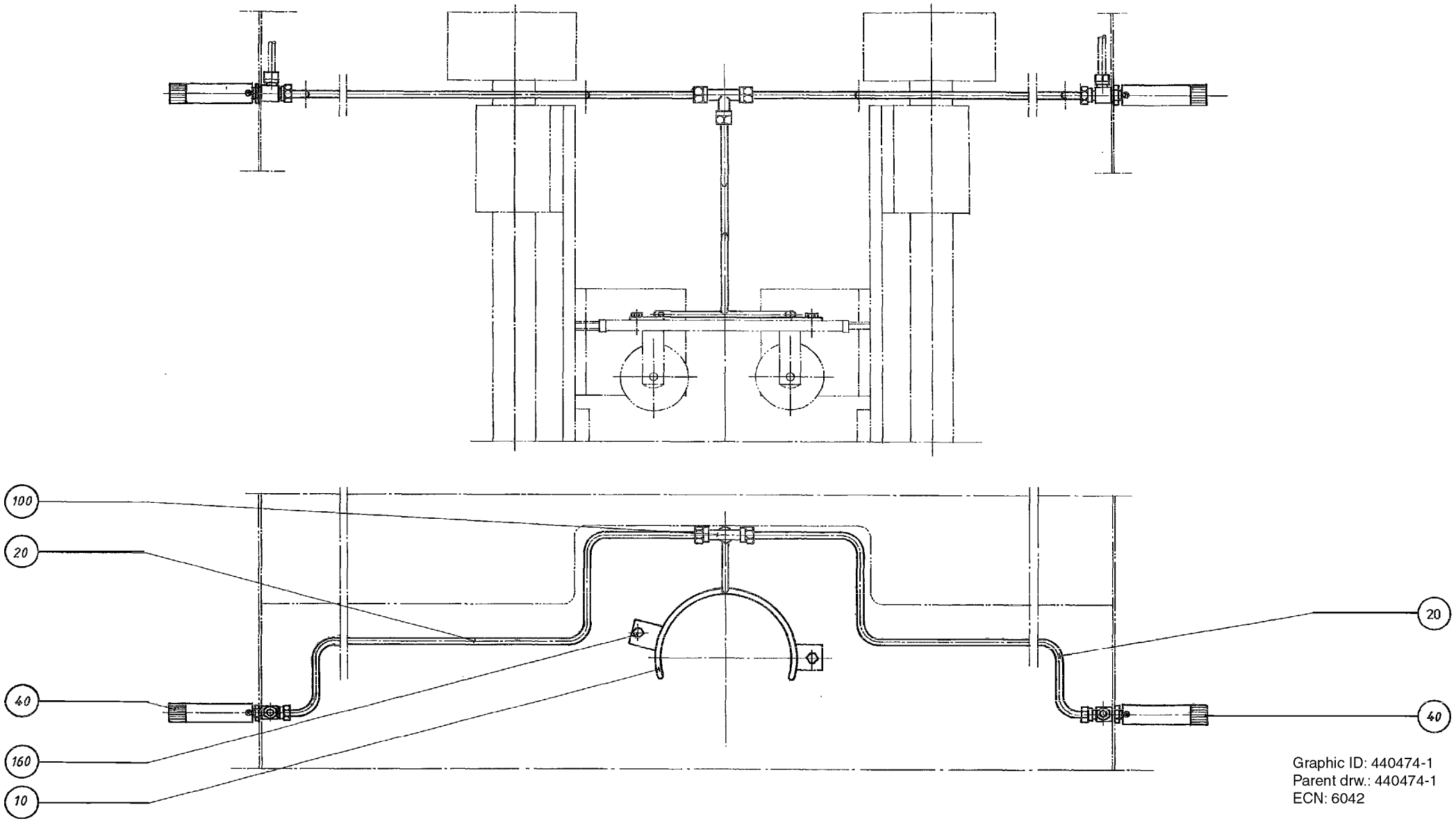

Graphic ID: 440474-1
Parent drw.: 440474-1
ECN: 6042

ECM: 176834 - 20041018
Group number: 440474-0100
Assembly Drawing: 440474-1_1_AA

Pos	Part No	UN	Qty	Description	Page No
0300B					
010	539613-0000		1	SPREADER	
0500B, 1136B, 1000SQ, 0500SQ, 0500S, 1000S, 0568SQ, 0568B, 1000B					
010	1362505-0000		1	SPREADER	
1500B					
010	595208-0000		1	SPREADER	
Common Parts					
020	450340-0000		2	PIPE	
040	445583-0000		2	VALVE	
	315202-0500		*1*	*O-RING 1,42X1,52 MM*	
	315202-0501		*1*	*O-RING 2,90X1,78 MM*	
100	90030-0076		1	CONN. T-PIPE T-6	
160	312105-0325		2	SCREW M6S ISO 4017 M5X10 A480	

Pos	Part No	UN	Qty	Description	Page No

BOX LEFT

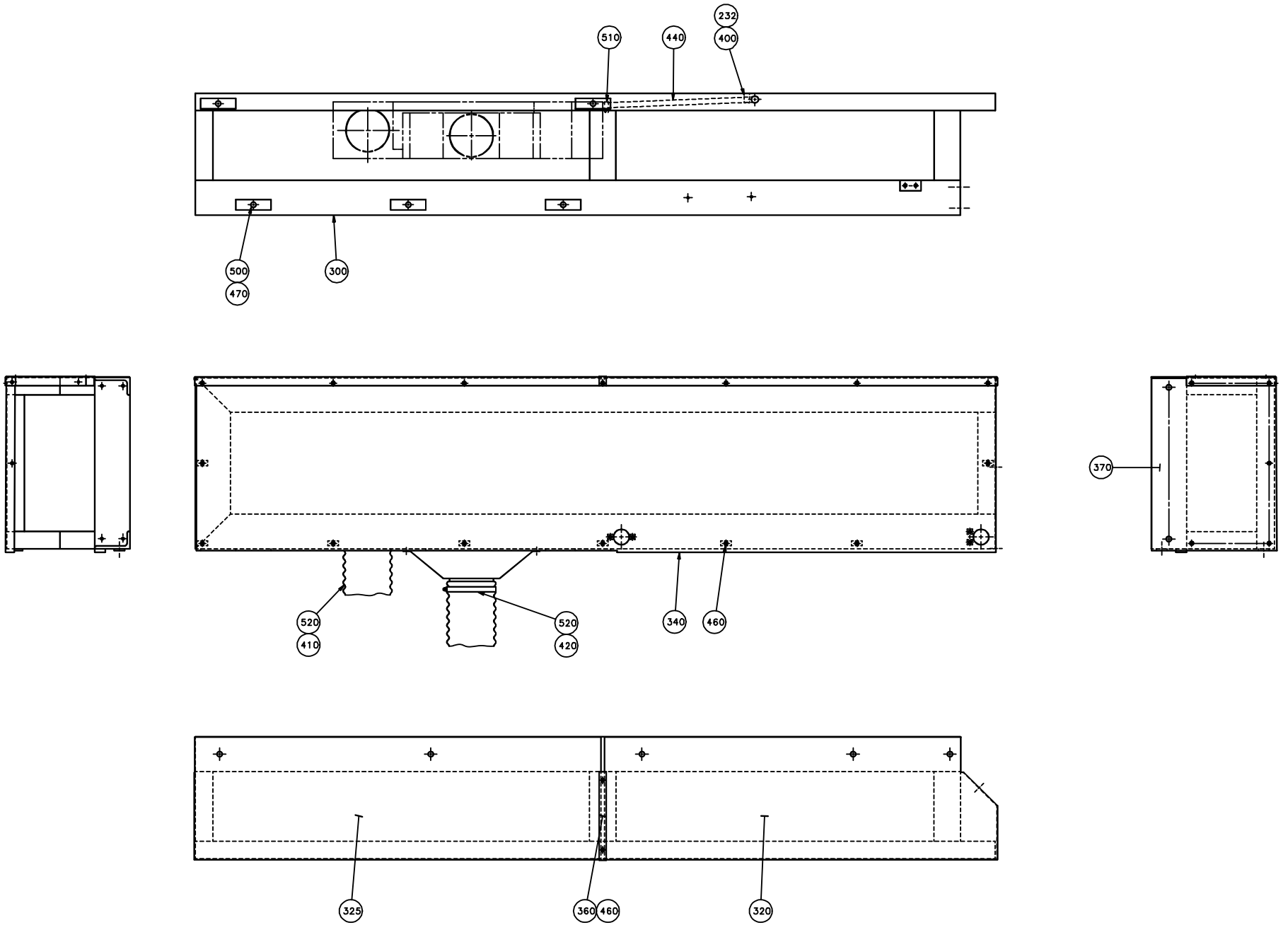
232
510
440
400
500
470
300
370
520
410
520
420
340
460
325
360
460
320

ECM: 71162 - 19980119
Group number: 440437-0300
Assembly Drawing: 440437-5_1_AA

This list covers pages from 2-158 to 2-161

Pos	Part No	UN	Qty	Description	Page No
TB/8 TPC (See drawing on page: 2-160)					
100	23117-0000		2	TRANSFORMER	
105	442217-0000		2	BEAM	
110	464289-0000		1	MOUNTING PLATE	
122	458188-0000		2	HOLDER	
123	458189-0000		1	DRIP GUARD	
124	464004-0000		1	HOLDER	
125	464195-0000		1	DRIP GUARD	
126	464196-0000		2	SLIDE RAIL	
127	464200-0000		1	LOCKING BLOCK	
128	90007-0101		2	FUSE,	
145	90248-0007		2	HINGE, 4002-1 1/4	
205	312101-0364		6	SCREW M6S M6X10 FZB	
215	312101-0368		1	SCREW M6S M6X16 FZB	
220	312101-0449		8	SCREW M6S M8X16 FZB	
230	312101-0461		8	SCREW M6S M8X50 FZB	
232-02	312121-0287		8	SCREW ISO 1207 M4X8 4.8 - 5.8 Z.PL.	
235	312141-0222		8	SCREW ISO 2009 MFS M3X8 4.8 EL.PL	
237	312601-0310		4	HEXAGON NUT, DIN 934 M3 8 FZB	
240	312601-0318		4	HEXAGON NUT, DIN 934 M8 8 FZB	
245	315101-0124		4	WASHER PLAIN, BRB, 3,2/6 H=0,5	
247	315101-0136		8	WASHER BRB, 4,3/8 H=0,8	
260	315101-0153		7	WASHER PLAIN, BRB, 6,4/12 H=1,5	
270	315101-0165		16	WASHER PLAIN, BRB, 8,4/16 H=1,5	
TB/8 US (See drawing on page: 2-158)					
232	312121-0287		1	SCREW ISO 1207 M4X8 4.8 - 5.8 Z.PL.	
Common Parts					
300	560798-0000		1	SIDE PIECE	
320	564519-0000		1	SIDE PLATE	
325	564520-0000		1	SIDE PLATE	
340	548344-0000		1	BOTTOM PANEL	
360	564523-0000		1	RIM	
370	542697-0000		1	COVER PLATE L	
400	90074-0004		1	CABLE CLIPS, D=16 MM	
410	90152-0032	MM	1000	HOSE 5"=127MM	
420	90152-0032	MM	1300	HOSE 5"=127MM	
440	90166-0007	MM	1200	HOSE PVC 10/14 TRANSP.	
460	90287-0075		33	SCREW SLOT. PAN HEAD LKCS M6X12	
470	312101-0540		5	SCREW M6S M12X40 FZB	
500	315101-0178		5	WASHER PLAIN, BRB, 13/24 H=2	
510	342991-0101		1	HOSE CLIP,WORM DRIVE TYPE (13)-16	
520	342991-0115		4	HOSE CLIP,WORM DRIVE TYPE (110)-136	

Pos	Part No	UN	Qty	Description	Page No
F360	566683-0100		1	AIR COOLER	**2-163**

Machine Type | Group Description | Used-In | Group Number | Page No

BOX LEFT

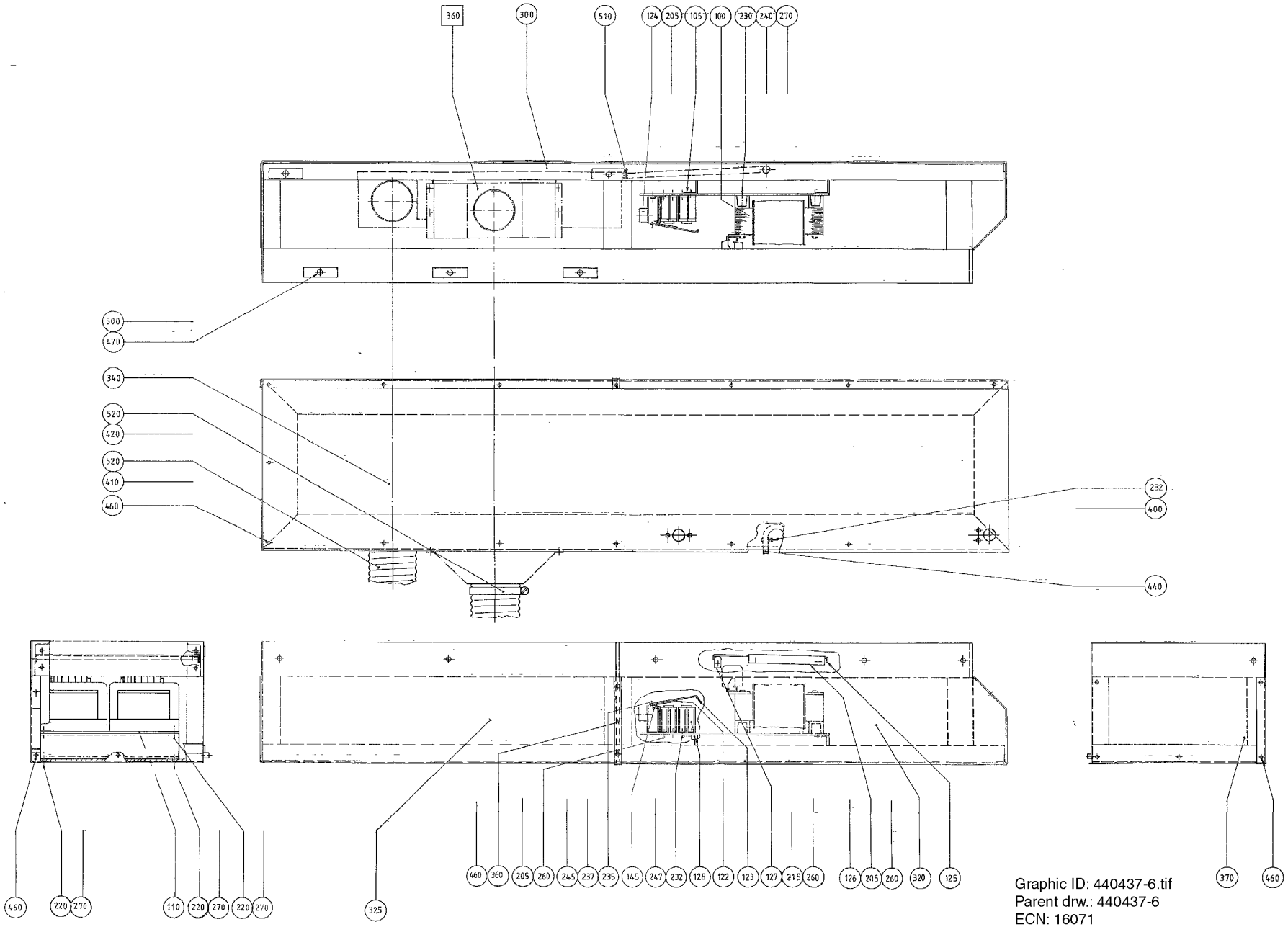

Graphic ID: 440437-6.tif
Parent drw.: 440437-6
ECN: 16071

ECM: 71162 - 19980119
Group number: 440437-0300
Assembly Drawing: 440437-6_1_AA

This list covers pages from 2-158 to 2-161

Pos	Part No	UN	Qty	Description	Page No
TB/8 TPC (See drawing on page: 2-160)					
100	23117-0000		2	TRANSFORMER	
105	442217-0000		2	BEAM	
110	464289-0000		1	MOUNTING PLATE	
122	458188-0000		2	HOLDER	
123	458189-0000		1	DRIP GUARD	
124	464004-0000		1	HOLDER	
125	464195-0000		1	DRIP GUARD	
126	464196-0000		2	SLIDE RAIL	
127	464200-0000		1	LOCKING BLOCK	
128	90007-0101		2	FUSE,	
145	90248-0007		2	HINGE, 4002-1 1/4	
205	312101-0364		6	SCREW M6S M6X10 FZB	
215	312101-0368		1	SCREW M6S M6X16 FZB	
220	312101-0449		8	SCREW M6S M8X16 FZB	
230	312101-0461		8	SCREW M6S M8X50 FZB	
232-02	312121-0287		8	SCREW ISO 1207 M4X8 4.8 - 5.8 Z.PL.	
235	312141-0222		8	SCREW ISO 2009 MFS M3X8 4.8 EL.PL	
237	312601-0310		4	HEXAGON NUT, DIN 934 M3 8 FZB	
240	312601-0318		4	HEXAGON NUT, DIN 934 M8 8 FZB	
245	315101-0124		4	WASHER PLAIN, BRB, 3,2/6 H=0,5	
247	315101-0136		8	WASHER BRB, 4,3/8 H=0,8	
260	315101-0153		7	WASHER PLAIN, BRB, 6,4/12 H=1,5	
270	315101-0165		16	WASHER PLAIN, BRB, 8,4/16 H=1,5	
TB/8 US (See drawing on page: 2-158)					
232	312121-0287		1	SCREW ISO 1207 M4X8 4.8 - 5.8 Z.PL.	
Common Parts					
300	560798-0000		1	SIDE PIECE	
320	564519-0000		1	SIDE PLATE	
325	564520-0000		1	SIDE PLATE	
340	548344-0000		1	BOTTOM PANEL	
360	564523-0000		1	RIM	
370	542697-0000		1	COVER PLATE L	
400	90074-0004		1	CABLE CLIPS, D=16 MM	
410	90152-0032	MM	1000	HOSE 5"=127MM	
420	90152-0032	MM	1300	HOSE 5"=127MM	
440	90166-0007	MM	1200	HOSE PVC 10/14 TRANSP.	
460	90287-0075		33	SCREW SLOT. PAN HEAD LKCS M6X12	
470	312101-0540		5	SCREW M6S M12X40 FZB	
500	315101-0178		5	WASHER PLAIN, BRB, 13/24 H=2	
510	342991-0101		1	HOSE CLIP,WORM DRIVE TYPE (13)-16	
520	342991-0115		4	HOSE CLIP,WORM DRIVE TYPE (110)-136	

Pos	Part No	UN	Qty	Description	Page No
F360	566683-0100		1	AIR COOLER	**2-163**

Machine Type | Group Description | Used-In | Group Number | Page No

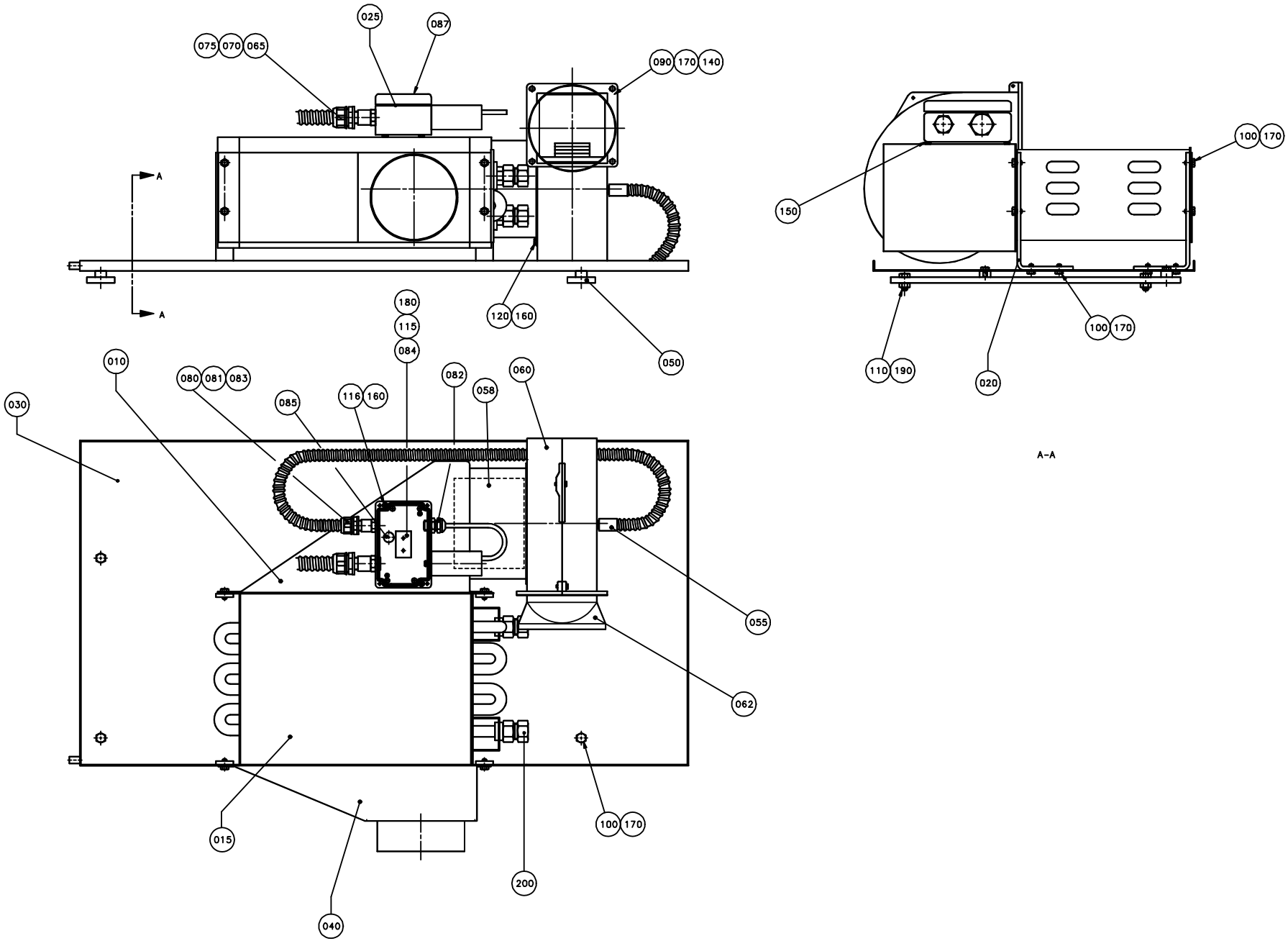
025
087
075
070
065
090
170
140
A
A
180
115
084
120
160
050
010
080
081
083
085
116
160
082
058
060
030
055
062
015
040
200
100
170
150
100
170
110
190
020
A-A

ECM: 72091 - 19981216
Group number: 566683-0100
Assembly Drawing: 566683-1_1_AA

Pos	Part No	UN	Qty	Description	Page No
-					
010	928837-0000		1	AIR DISTRIBUTOR	
015	495201-0000		1	COOLING ELEMENT	
020	566685-0000		4	BRACKET	
025	450495-0000		1	CONNECTION BOX	
030	566686-0000		1	CONDENSATE TRAY	
040	566687-0000		1	NOZZLE	
050	440349-0000		2	FASTENING IRON	
055	456256-0000		1	PROTECTIVE COVER	
058	546929-0000		1	FILTER	
060	90264-0019		1	FAN, G2E160-AY47-80	
	90159-0061		*1*	*CAPACITOR, 6 AEF 400 V*	
062	90264-0344		1	FAN CASING, US 1412	
065	352136-0127		1	GLAND FITTING PR 18,6	
070	352135-0106	MM	800	SPIRAL CONDUIT DI=16 MM	
075	352100-0106		1	CABLE GLAND NO.18,6-10,5	
080	90012-0063		1	CABLE GLAND PR 15,2	
081	352100-0100		1	CABLE GLAND NO.15,2-7,5	
082	352103-0101		1	CABLE GLAND, ST 9, PR15,2/PG9	
083	90152-0033	MM	1000	SPIRAL CONDUIT FOR PR 15,2(PG 9)	
084	90077-0102		1	TERMINAL BLOCK, 1952.2	
085	90002-0013		1	BLANK-OFF PLUG, PR 15,2 SKINDICHT-BLK9	
087	90194-0016		1	WARNING SIGN, RISK OF ELECTRIC SHOCK	
090	312101-0366		4	SCREW M6S M6X12 FZB	
100	312101-0364		20	SCREW M6S M6X10 FZB	
110	312101-0449		2	SCREW M6S M8X16 FZB	
115	312121-0230		2	SCREW ISO 1207 M3X20 4.8 - 5.8 Z.PL.	
116	312121-0293		2	SCREW ISO 1207 M4X16 4.8 - 5.8 Z.PL.	
120	312101-0287		4	SCREW M6S M4X8 FZB	
140	312601-0316		4	HEXAGON NUT, DIN 934 M6 8 FZB	
150	312821-0102		2	HEX. WELD NUT DIN 929 M4 A2	
160	315101-0136		6	WASHER BRB, 4,3/8 H=0,8	
170	315101-0153		24	WASHER PLAIN, BRB, 6,4/12 H=1,5	
180	315101-0124		2	WASHER PLAIN, BRB, 3,2/6 H=0,5	
190	315101-0165		4	WASHER PLAIN, BRB, 8,4/16 H=1,5	
200	342723-0114		2	CONN. STR. PIPE GI-15-G1/2	

Pos	Part No	UN	Qty	Description	Page No

BOTTOM PLATE

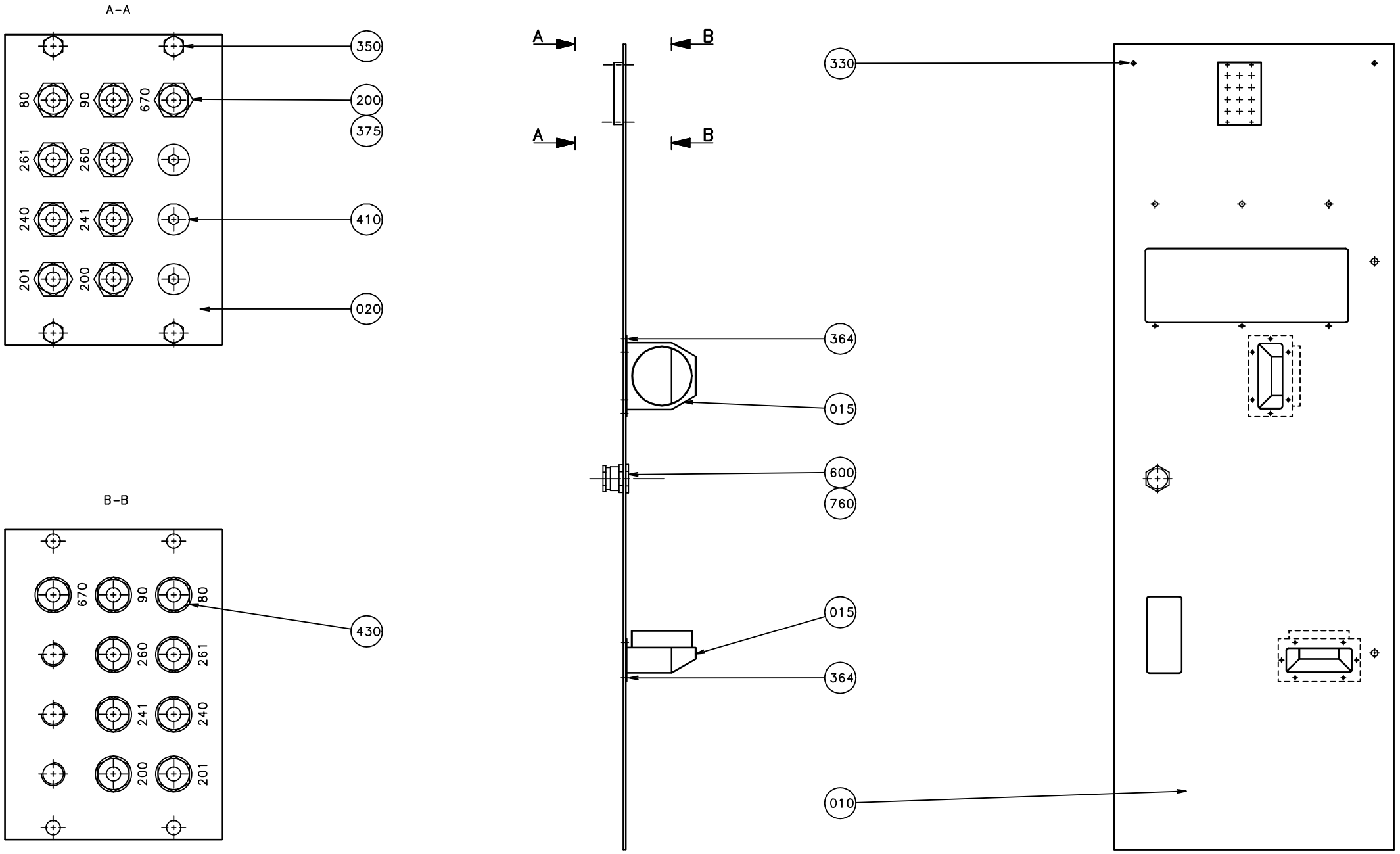

ECM: 70670 - 19970220
Group number: 440422-0600
Assembly Drawing: 440422-10_1_AA

Pos	Part No	UN	Qty	Description	Page No
TB/8					
010	580860-0000		1	BOTTOM PLATE	
020	476165-0000		1	LEAD-IN PLATE	
200	90224-0307		9	STRAIGHT FITTING, 6MM, 1/8",	
330	90287-0075		2	SCREW SLOT. PAN HEAD LKCS M6X12	
350	312101-0333		4	SCREW M6S M5X25 FZB	
375	315233-0109		9	WASHER CAPTIVE SEALING G1/8	
410-02	342713-0209		3	PLUG (QUANT.MINIMA= 10PC).	
430	342722-0202		9	PIPE COUPLING 1/8" D=6MM	
Common Parts					
015	440424-0000		2	DRUM	
364	312121-0321		12	SCREW ISO 1207 M5X6 4.8 - 5.8 Z.PL.	
600	90099-0085		1	NUT	
760	352100-0127		1	CABLE GLAND NO.47-34,5	

Pos	Part No	UN	Qty	Description	Page No

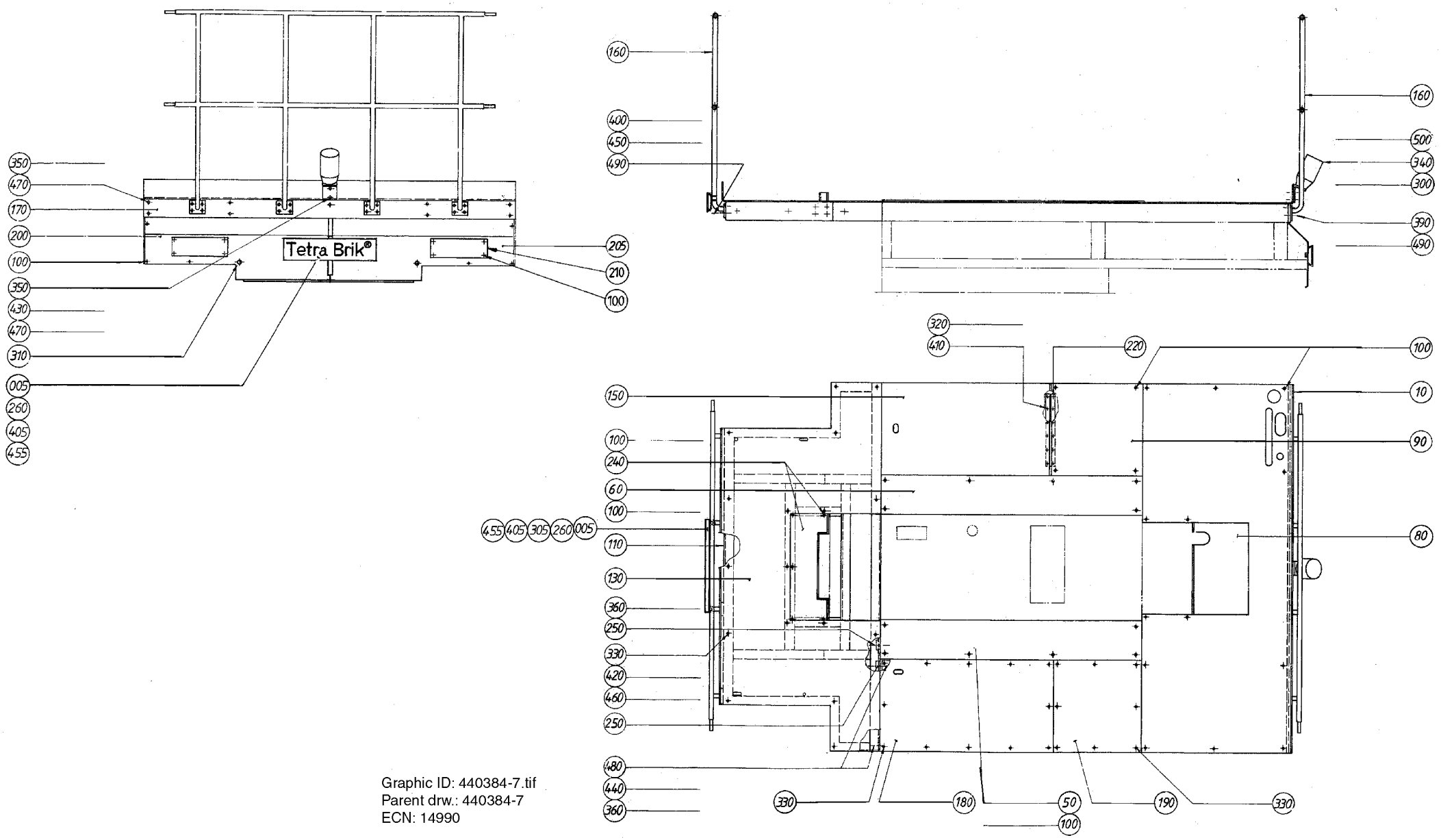

Graphic ID: 440384-7.tif
Parent drw.: 440384-7
ECN: 14990

ECM: 72091 - 19981216
Group number: 440384-0500
Assembly Drawing: 440384-7_1_AA

Pos	Part No	UN	Qty	Description	Page No
TB/8 0568SQ, TB/8 1000B, TB/8 0568B, TB/8 1000SQ, TB/8 1000S, TB/8 0300B, TB/8 0500SQ, TB/8 0500S, TB/8 0500B, TB/8 1136B (See drawing on page: 2-166)					
005	544526-0000		2	MACHINE PLATE TB	
010	440541-0000		1	PLATFORM FRONT	
050	293375-0000		1	PLATE	
060	293376-0000		1	PLATE RIGHT	
080	440542-0000		1	HATCH	
090	576834-0000		1	PLATFORM	
100	90287-0075		54	SCREW SLOT. PAN HEAD LKCS M6X12	
TB/8 1500B (See drawing on page: 2-166)					
005	544526-0000		2	MACHINE PLATE TB	
010	440541-0000		1	PLATFORM FRONT	
050	293375-0000		1	PLATE	
060	293376-0000		1	PLATE RIGHT	
080	581357-0000		1	HATCH	
090	576834-0000		1	PLATFORM	
100	90287-0075		54	SCREW SLOT. PAN HEAD LKCS M6X12	
Common Parts					
110	440385-0000		1	CANTILEVER	
130	440386-0000		1	PLATFORM REAR	
150	576835-0000		1	PLATFORM COVER	
160	263323-0000		2	RAILING	
170	263612-0000		1	RAIL	
180	269274-0000		1	PLATFORM COVER	
190	269275-0000		1	PLATFORM COVER	
200	548346-0000		1	FRONT GUARD	
205	560799-0000		1	FRONT GUARD	
210	548348-0000		2	HATCH	
220	239847-0000		1	HINGE	
240	440389-0000		1	HATCH	
250	445858-0000		4	WASHER	
260	544533-0000		4	PLASTIC PEHD 21172-10	
300	90036-0038		1	LIGHT BULB, E27 24V	
305	90165-0086		2	PIPE CLAMP, RSGU 1.24/15-V4, D=24 MM	
310	90287-0062		2	SCREW M6	
320	90287-0074		12	SCREW SLOT. PAN HEAD LKCS M4X12	
330	90287-0076		38	SCREW SLOT. PAN HEAD LKCS M6X20	
340	90419-0005		1	ALARM BEACON,RED24V	
	90419-0302		*1*	*LENS FOR -304, RED*	
	90036-0038		*1*	*LIGHT BULB, E27 24V*	
350	312101-0453		10	SCREW M6S M8X25 FZB	
360	312101-0540		6	SCREW M6S M12X40 FZB	
390	312105-0491		16	SCREW M6S ISO 4017 M10X20 A480	
400	312105-0493		16	SCREW M6S ISO 4017 M10X25 A480	
405	312155-0370		4	SCREW DIN 7991 MF6S M6X20 A4 70	
410	312601-0312		12	HEXAGON NUT, DIN 934 M4 8 FZB	
420	312601-0316		19	HEXAGON NUT, DIN 934 M6 8 FZB	
430	312601-0318		2	HEXAGON NUT, DIN 934 M8 8 FZB	
440	312601-0322		4	HEXAGON NUT, DIN 934 M12 8 FZB	
450	312605-0320		32	HEXAGON NUT, M6M M10 A280	
455	312812-0316		4	HEXAGON NUT, NY-LOCK M6 A480	
460	315101-0153		19	WASHER PLAIN, BRB, 6,4/12 H=1,5	
470	315101-0165		10	WASHER PLAIN, BRB, 8,4/16 H=1,5	
480	315101-0178		6	WASHER PLAIN, BRB, 13/24 H=2	
490	315105-0173		48	WASHER BRB 10,5X20 RFR	
500	352136-0113		1	GLAND FITTING PR18,6/PG11 DI=12MM	

Machine Type | Group Description | Used-In | Group Number | Page No

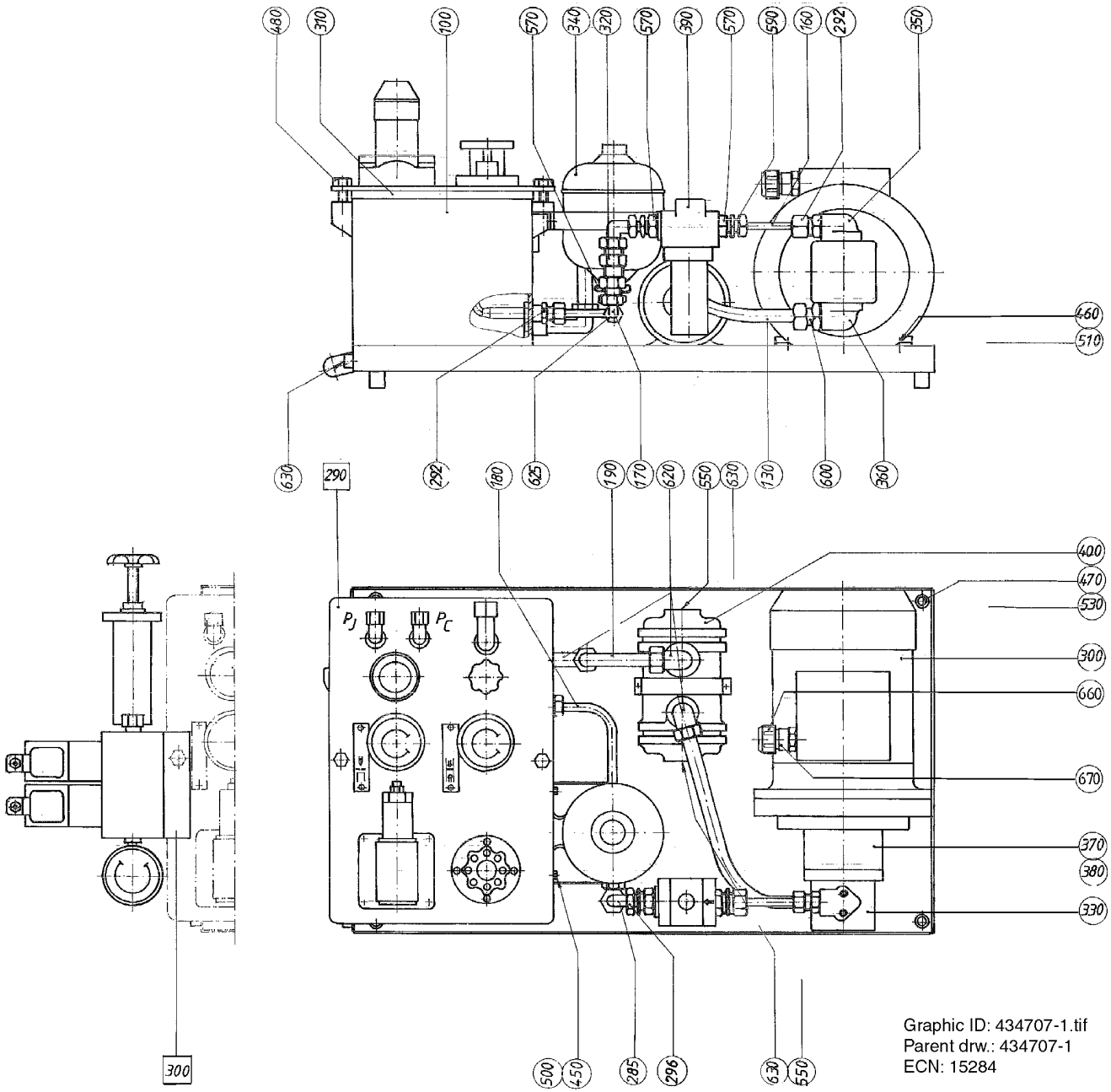

Graphic ID: 434707-1.tif
Parent drw.: 434707-1
ECN: 15284

ECM: 92593 - 20011213
Group number: 434707-0300
Assembly Drawing: 434707-1_1_AA

Pos	Part No	UN	Qty	Description	Page No
TB/8 0300B TPC					
F300	442077-0200		1	DECREASE OF PRESSURE	**2-171**
TB/8 0568SQ US, TB/8 0500SQ US, TB/8 1000SQ US, TB/8 1500B US					
F290	592564-0100		1	LID	**2-173, 13-29**
TB/8 0568B TPC, TB/8 0500SQ TPC, TB/8 1000S TPC, TB/8 1000SQ TPC, TB/8 1000B TPC, TB/8 0500S TPC, TB/8 0500B TPC, TB/8 1136B TPC					
F290	276343-0300		1	LID	**2-175**
Common Parts					
100	252953-0000		1	TANK	
130	434710-0000		1	PIPE	
160	434714-0000		1	PIPE	
170	434717-0000		1	PIPE	
180	434718-0000		1	PIPE	
190	434719-0000		1	PIPE	
285	90030-0121		2	CONN. ELBOW ADJ.,INT 10	
292	90030-0157		3	CONN. STR. 10-R3/8, EXT. THREAD	
296	90030-0178		1	CONN. STR., 10-R1/4, EXT. THREAD	
300	90457-0036		1	3-PHASE MOTOR,FOOT MOUNT.1,1KW,1410 RPM	
310	90091-0159		1	GASKET 330X308X9 MM	
320	90230-0017		1	NON-RETURN VALVE RHD 10-L	
330	90321-0018		1	GEAR PUMP MLPS/T124D	
340	90321-0381		1	HYDRACCU SBO210-0,75E1/112U-210AK75	
350	90321-0382		1	FLANGE, RG 26/12-3/8 FOR 90321-18	
360	90321-0383		1	PUMP CONN. ELBOW FLANGE RG 26/12-1/2	
370	90321-0384		1	DISTANCE PIECE	
380	90321-0385		1	COUPLING	
390	90415-0029		1	PRESSURE FILTER MDF-BNHC-030-LB-010-B1.0	
	90459-6340		*1*	*FILTER INDICATOR, VM-5-B.1-VISUELLINDIKA*	
	90415-0323		*1*	*FILTER INSERT 0030D010BN3HC*	
400	90422-0008		1	COOLER	
	315202-0612		*1*	*O-RING 75,79X3,53 MM*	
450	312101-0368		2	SCREW M6S M6X16 FZB	
460	312101-0453		4	SCREW M6S M8X25 FZB	
470	312101-0463		4	SCREW M6S M8X60 FZB	
480	312101-0495		2	SCREW M6S M10X30 FZB	
500	312601-0316		2	HEXAGON NUT, DIN 934 M6 8 FZB	
510	312601-0318		4	HEXAGON NUT, DIN 934 M8 8 FZB	
530	315111-0165		4	WASHER PLAIN, TBRB 8,4/16 H=3	
550	342701-0208		2	BUSHING, INT/EXT. G-THREAD NO. 3/4-1/4	
570	342712-0205		3	BUSHING, INT/EXT. G-THREAD NO. 1/2X1/4	
590	342721-0108		1	PIPE COUPLGA10-LRFZB REPBY 0342752-0104	
600	342721-0114		1	PIPE COUPLGA15-LRFZB REPBY 0342752-0114	
620	342731-0114		3	CONN. ELBOW WE 15-LRFZB	
625	342741-0108		1	CONN. T-PIPE TA-10-R1/4	
630	342930-0122		3	ELBOW 90 COUPL.,EXT.THREAD 8/6-R1/4"	
660	352136-0128		1	GLAND FITTING	
670	352100-0108		1	CABLE GLAND NO.20,4-12	

Machine Type | Group Description | Used-In | Group Number | Page No

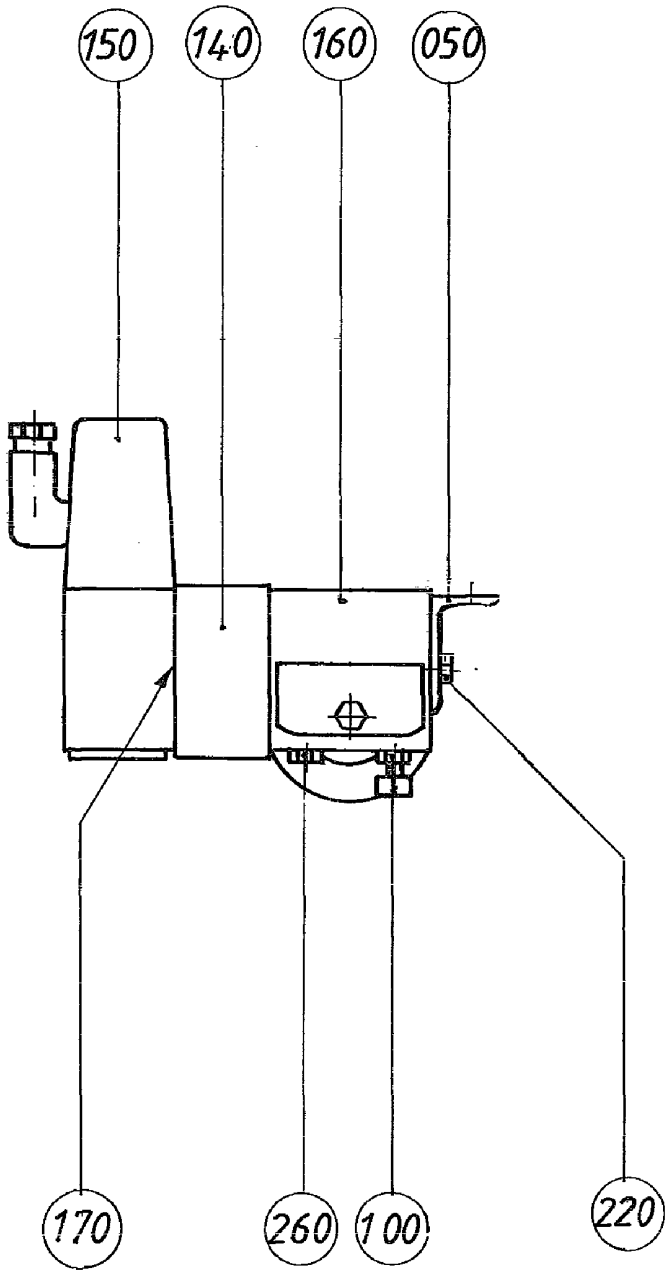

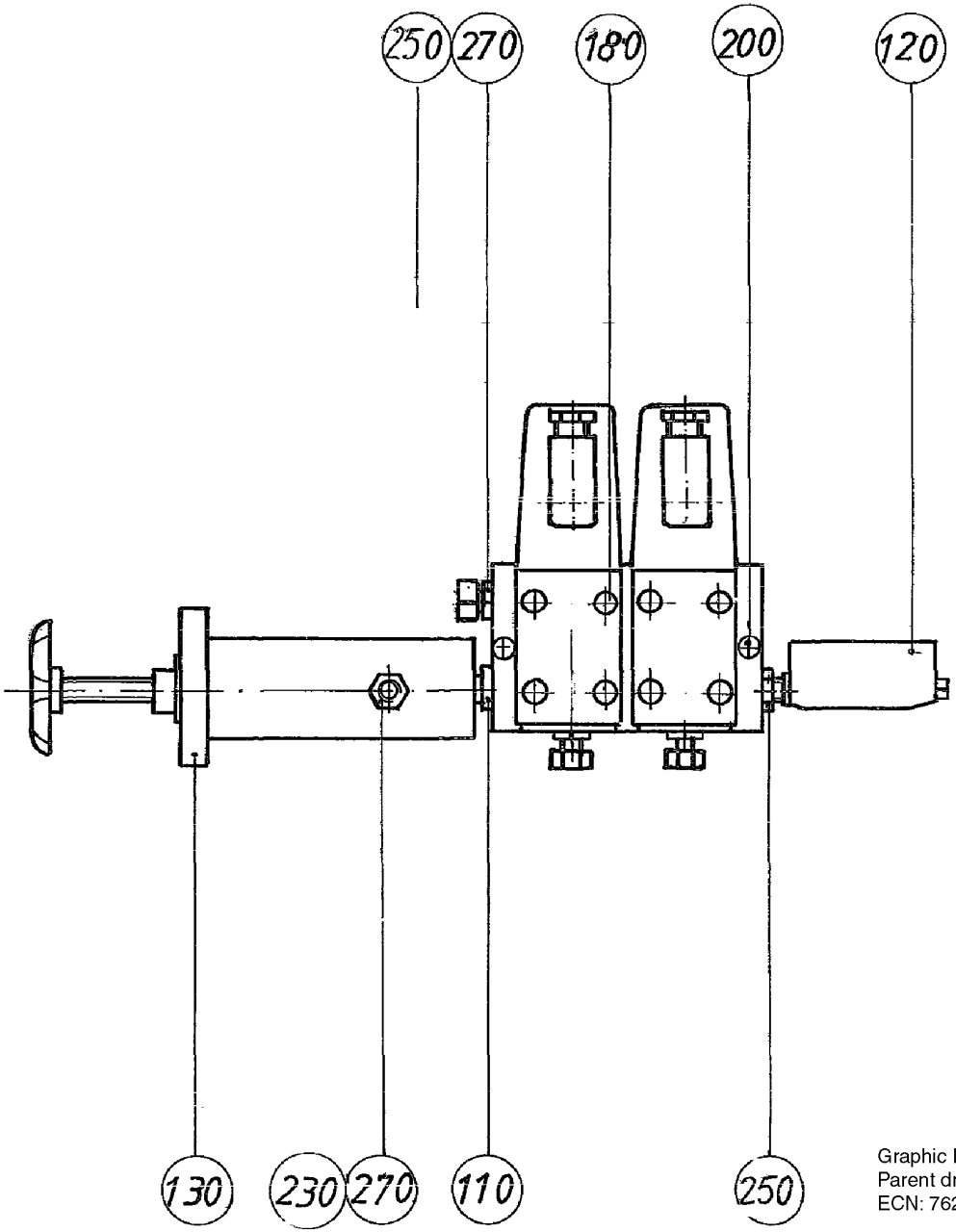

Graphic ID: 442077-1.tif
Parent drw.: 442077-1
ECN: 7623

ECM: - -
Group number: 442077-0200
Assembly Drawing: 442077-1_1_AA

Pos	Part No	UN	Qty	Description	Page No
-					
050	442078-0000		1	CANTILEVER	
100	90030-0157		2	CONN. STR. 10-R3/8, EXT. THREAD	
110	90030-0183		1	NIPPLES, EXT. THREAD, HEXAGON, R1/2XR1/4	
120	90043-0075		1	PRESSURE GAUGE, 2740, D=63 MM, GLYC.	
130	90113-0044		1	PRESSURE REGULATOR	
140	90201-0010		2	DIRECT CHECK VALVE, NO. DGMDC-3-Y-PK-41	
	90201-0300		*1*	*MOUNTING PLATE, NO. A1-89 57B*	
	90201-0301		*1*	*SPRING*	
	90201-0302		*1*	*WASHER*	
	90201-0303		*1*	*SPARE PARTS KIT*	
150	90201-0058		2	SOLENOID VALVE	
	90201-0334		*1*	*SOL. COIL, 24VDC,NO 507848, F.90201-0058*	
160	90201-0309		1	BLANKING, NO. A4-9905	
170	90201-0302		2	WASHER	
180	90201-0303		2	SPARE PARTS KIT	
200	312111-0345		2	SCREW HEX.SOCK.HD.MC6S-TT 5X70 88 FZB	
220	312601-0314		2	HEXAGON NUT, DIN 934 M5 8 FZB	
230	315111-0179		1	WASHER PLAIN, TBRB 13,5/24 H=4	
250	342712-0205		2	BUSHING, INT/EXT. G-THREAD NO. 1/2X1/4	
260	342713-0311		2	PLUG, EXT. THREAD HEX. SOCKET. BPS38	
270	342721-0108		2	PIPE COUPLGA10-LRFZB REPBY 0342752-0104	

Pos	Part No	UN	Qty	Description	Page No

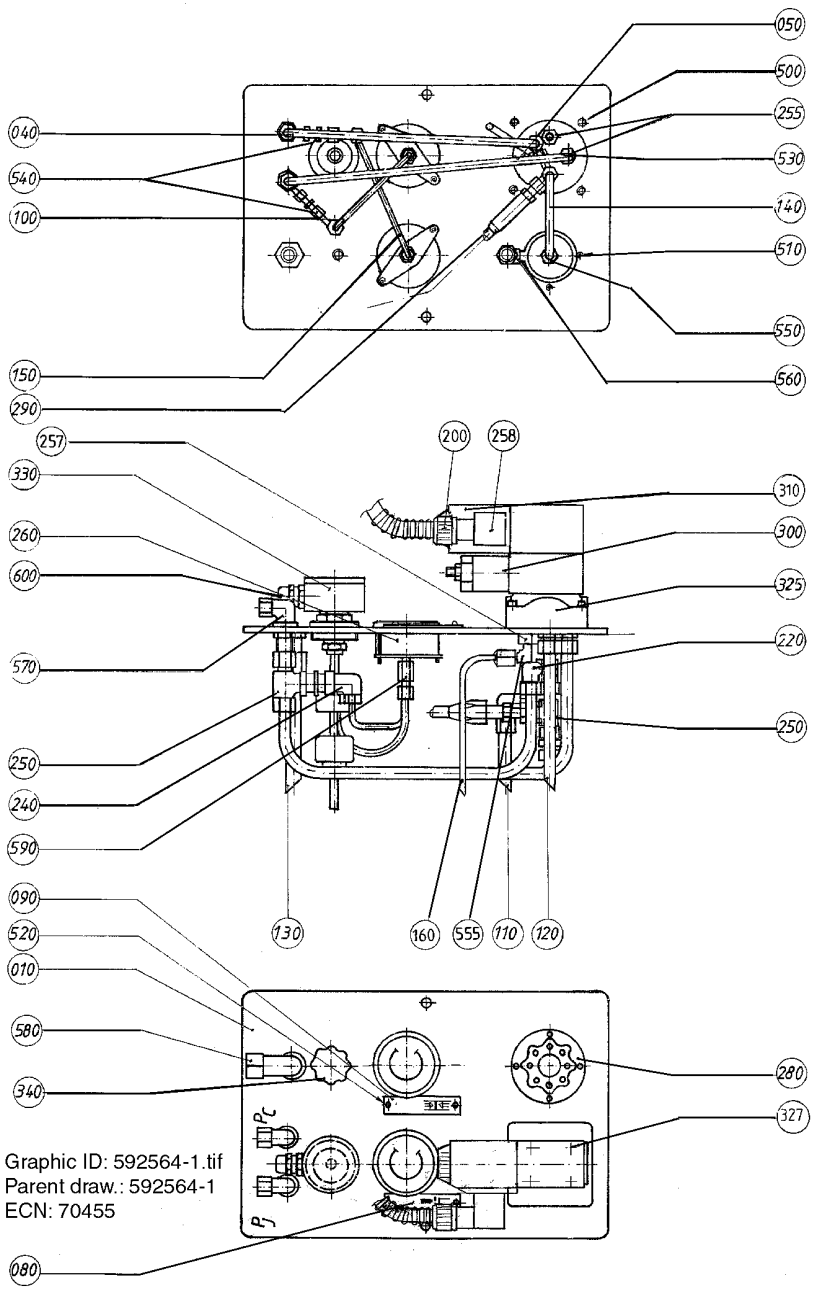
050
500
255
530
040
540
100
140
510
550
150
560
290
257
200
258
330
310
260
300
600
325
220
570
250
250
240
590
090
130
160
555
110
120
520
010
580
280
340
327
Graphic ID: 592564-1.tif
Parent draw.: 592564-1
ECN: 70455
080

ECM: 70455 - 19961129
Group number: 592564-0100
Assembly Drawing: 592564-1_1_AA

Pos	Part No	UN	Qty	Description	Page No	Pos	Part No	UN	Qty	Description	Page No
-											
010	442076-0000		1	LID							
040	434708-0000		1	PIPE							
050	434709-0000		1	PIPE							
080	247385-0000		1	SIGN							
090	247386-0000		1	SIGN							
100	434711-0000		1	PIPE							
110	434712-0001		1	PIPE							
120	434712-0002		1	PIPE							
130	434713-0000		1	PIPE							
140	434715-0000		1	PIPE							
150	434716-0000		1	PIPE							
160	592558-0000		1	TUBE							
200	90012-0063		1	CABLE GLAND PR 15,2							
220	90030-0121		1	CONN. ELBOW ADJ.,INT 10							
240	90030-0146		2	ADJUSTABLE ELBOW CONNECTION,EXT 6-G1/8							
250	90030-0120		4	ADJ. L-PIPE CONNECTION EVL, INT.T-10							
255	90030-0157		3	CONN. STR. 10-R3/8, EXT. THREAD							
257	90030-0594		1	REDUCING ADAPTER							
258	90042-0398		1	CONTACT 3 POLE+EARTH							
260	90043-0062		2	MANOMETER							
280	90113-0044		1	PRESSURE REGULATOR							
290	90148-0036		1	HOSE							
300	90201-0014		1	VALVE							
310	90201-0058		1	SOLENOID VALVE							
	90201-0334		*1*	*SOL. COIL, 24VDC,NO 507848, F.90201-0058*							
325	90201-0308		1	BLANKING, NO. DGVM-3-10-R							
327	90201-0407		1	BOLT KIT							
330	90274-0053		1	LEVEL GUARD, 40VA/250V AC/DC							
340	90277-0041		1	TANK BREATH. FILTER / UC-SAB-3101 UCC							
500	312111-0333		4	SCREW HEX.SOCK.HD.MC6S-TT 5X25 88 FZB							
510	312111-0368		4	SCREW HEX.SOCK.HD.MC6S-TT 6X16 88 FZB							
520	312502-0171		4	DRIVE SCREW ROUND HEAD KDS 2X6							
530	342713-0311		1	PLUG, EXT. THREAD HEX. SOCKET. BPS38							
540	342714-0202		2	REDUCTION KOR 10/6-LFZB							
550	342752-0104		1	CONN. STR. GA-10-G1/4							
555	342731-0102		1	CONN. ELBOW WE 6-LRFZB							
560	342731-0108		1	CONN. ELBOW WE 10-LRFZB							
570	342764-0108		2	CONN. ELBOW BULKHEAD LWSV10-LFZB							
580	342764-0114		1	CONN. ELBOW BULKHEAD LWSV15-LFZB							
590	342790-0102		2	CONN. PRESS. GAUGE MAV6-LRFZB							
600	352136-0113		1	GLAND FITTING PR18,6/PG11 DI=12MM							

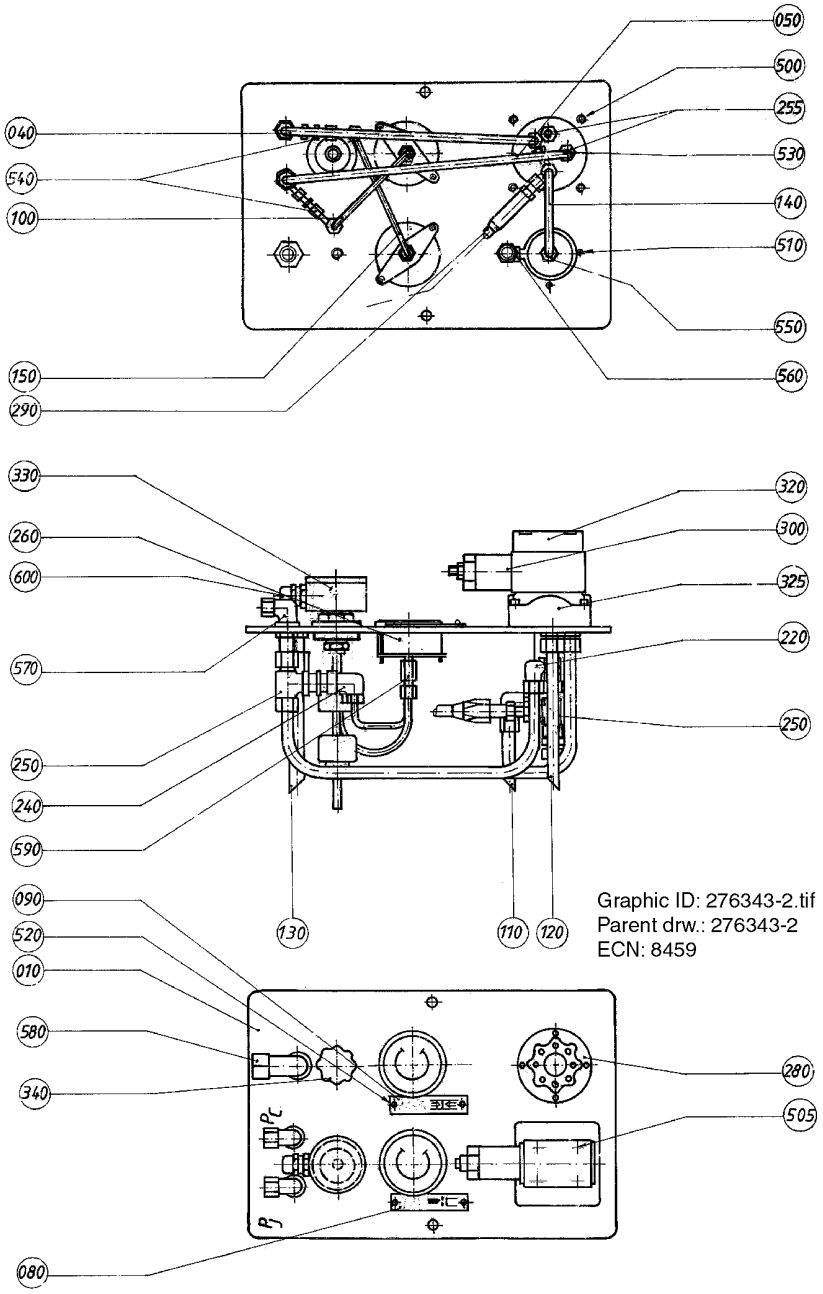
050
500
255
530
140
510
550
560
040
540
100
150
290
330
260
600
570
250
240
590
320
300
325
220
250
130
110
120
090
520
010
580
340
280
505
080
Graphic ID: 276343-2.tif
Parent drw.: 276343-2
ECN: 8459

ECM: 72091 - 19981216
Group number: 276343-0300
Assembly Drawing: 276343-2_1_AA

Pos	Part No	UN	Qty	Description	Page No
-					
010	442076-0000		1	LID	
040	434708-0000		1	PIPE	
050	434709-0000		1	PIPE	
080	247385-0000		1	SIGN	
090	247386-0000		1	SIGN	
100	434711-0000		1	PIPE	
110	434712-0001		1	PIPE	
120	434712-0002		1	PIPE	
130	434713-0000		1	PIPE	
140	434715-0000		1	PIPE	
150	434716-0000		1	PIPE	
220	90030-0121		1	CONN. ELBOW ADJ.,INT 10	
240	90030-0146		2	ADJUSTABLE ELBOW CONNECTION,EXT 6-G1/8	
250	90030-0120		4	ADJ. L-PIPE CONNECTION EVL, INT.T-10	
255	90030-0157		3	CONN. STR. 10-R3/8, EXT. THREAD	
260	90043-0062		2	MANOMETER	
280	90113-0044		1	PRESSURE REGULATOR	
290	90148-0036		1	HOSE	
300	90201-0014		1	VALVE	
320	90201-0307		1	BLANKING, NO. DGMA-3-C1-10	
325	90201-0308		1	BLANKING, NO. DGVM-3-10-R	
330	90274-0053		1	LEVEL GUARD, 40VA/250V AC/DC	
340	90277-0041		1	TANK BREATH. FILTER / UC-SAB-3101 UCC	
500	312111-0333		4	SCREW HEX.SOCK.HD.MC6S-TT 5X25 88 FZB	
505	312111-0343		4	SCREW HEX.SOCK.HD.MC6S-TT 5X60 88 FZB	
510	312111-0368		4	SCREW HEX.SOCK.HD.MC6S-TT 6X16 88 FZB	
520	312502-0171		4	DRIVE SCREW ROUND HEAD KDS 2X6	
530	342713-0311		1	PLUG, EXT. THREAD HEX. SOCKET. BPS38	
540	342714-0202		2	REDUCTION KOR 10/6-LFZB	
550	342721-0108		1	PIPE COUPLGA10-LRFZB REPBY 0342752-0104	
560	342731-0108		1	CONN. ELBOW WE 10-LRFZB	
570	342764-0108		2	CONN. ELBOW BULKHEAD LWSV10-LFZB	
580	342764-0114		1	CONN. ELBOW BULKHEAD LWSV15-LFZB	
590	342790-0102		2	CONN. PRESS. GAUGE MAV6-LRFZB	
600	352136-0113		1	GLAND FITTING PR18,6/PG11 DI=12MM	

Pos	Part No	UN	Qty	Description	Page No

CRANK BRACKET

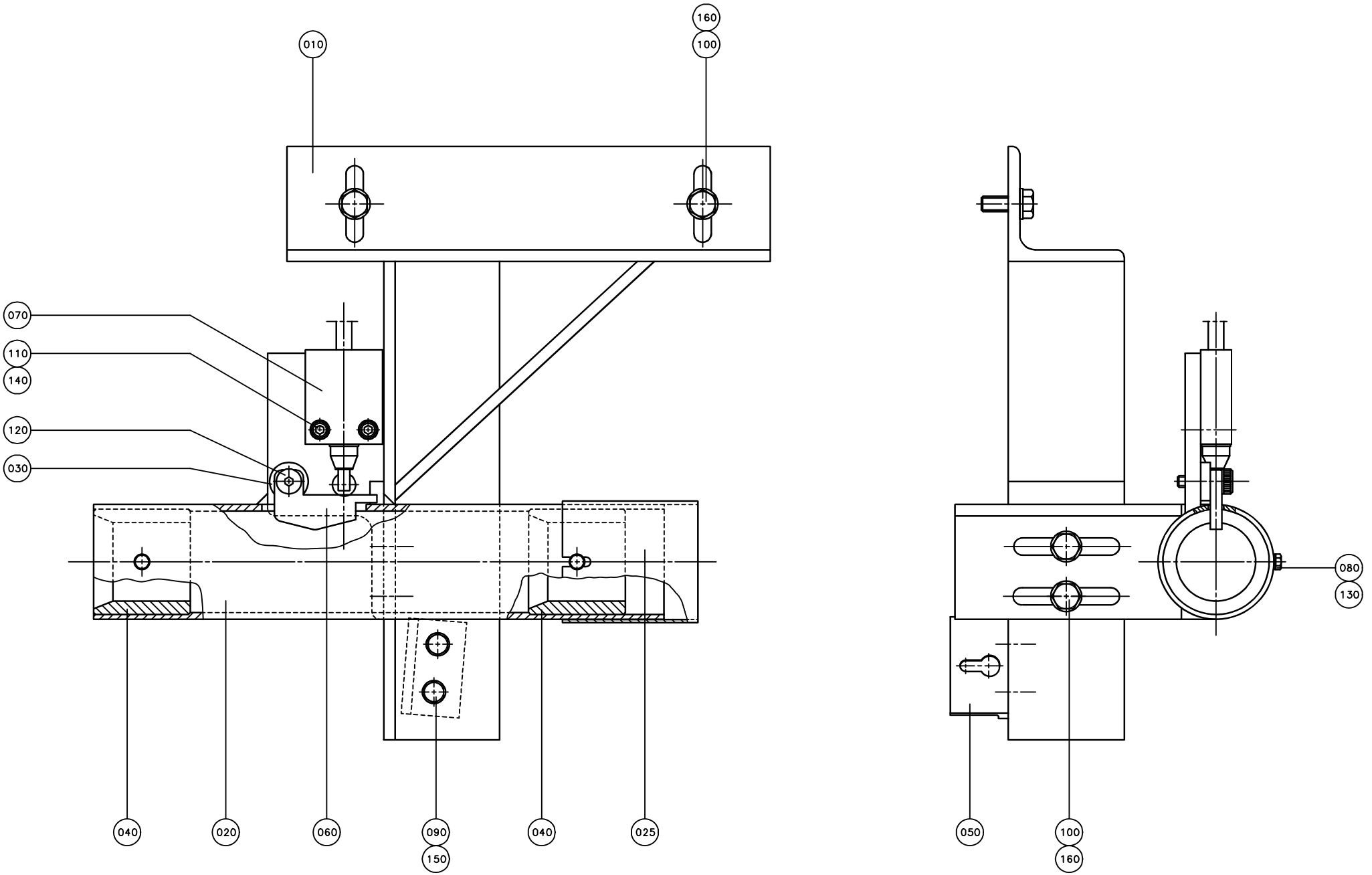

ECM: 72091 - 19981216
Group number: 440098-0300
Assembly Drawing: 440098-3_1_AA

Pos	Part No	UN	Qty	Description	Page No
-					
010	434659-0000		1	CRANK BRACKET	
020	541009-0000		1	CRANK HOLDER	
025	574652-0000		1	PROTECTION	
030	20770-0000		1	WASHER	
040	434661-0000		2	BUSHING	
050	434664-0000		1	BRACKET	
060	569163-0000		1	ARM	
070	90044-0094		1	LIMIT SW. 924 CE31-Y20-X5	
080	312101-0289		2	SCREW M6S M4X10 FZB	
090	312101-0368		2	SCREW M6S M6X16 FZB	
100	312101-0451		4	SCREW M6S M8X20 FZB	
110	312111-0329		2	SCREW HEX.SOCK.HD.MC6S-TT 5X16 88 FZB	
120	312180-0447		1	SCREW ISO7379 H8X12	
130	315101-0136		2	WASHER BRB, 4,3/8 H=0,8	
140	315101-0146		2	WASHER PLAIN, BRB, 5,3/10 H=1	
150	315101-0153		2	WASHER PLAIN, BRB, 6,4/12 H=1,5	
160	315111-0165		4	WASHER PLAIN, TBRB 8,4/16 H=3	

Pos	Part No	UN	Qty	Description	Page No

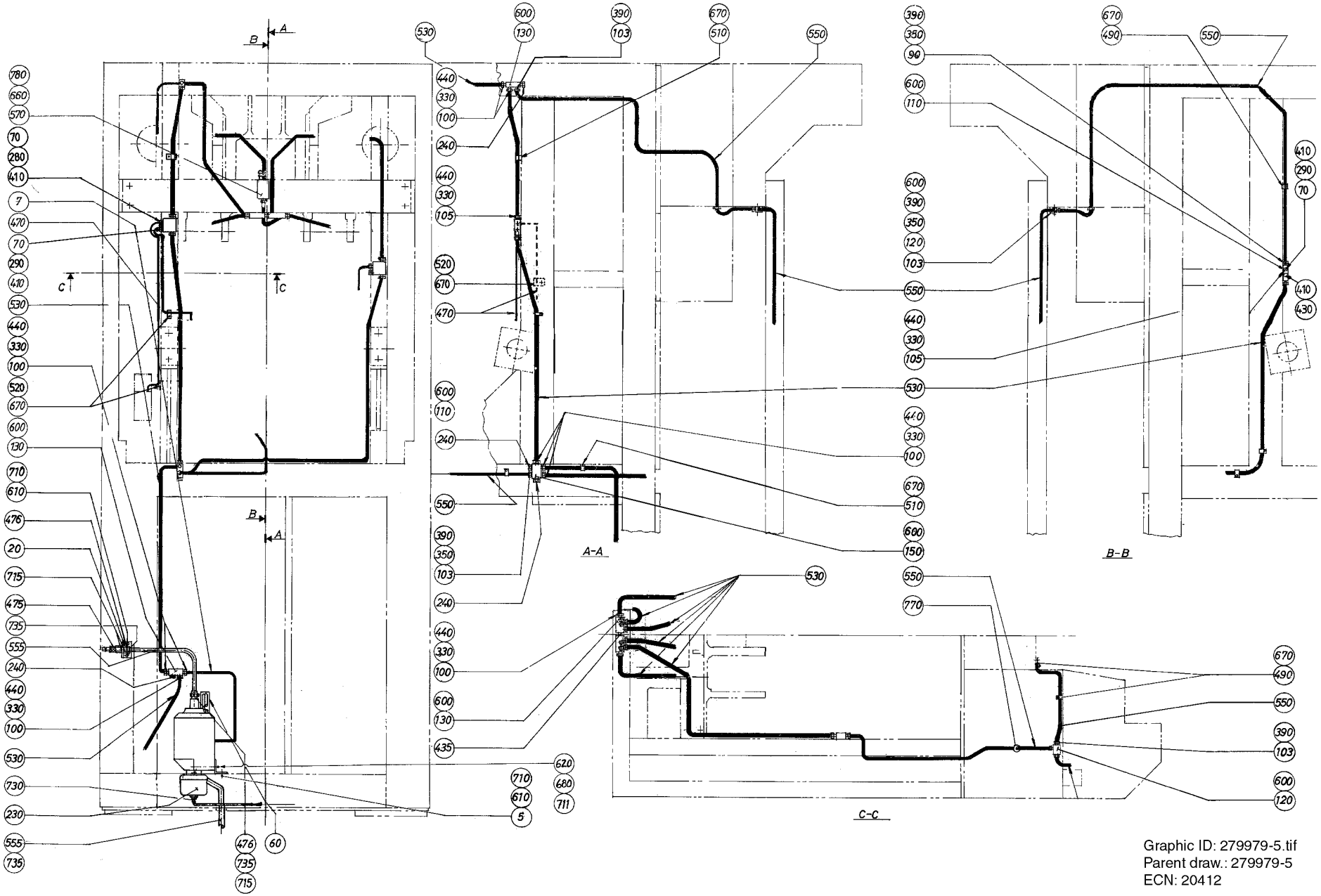
A-A
B-B
C-C
Graphic ID: 279979-5.tif
Parent draw.: 279979-5
ECN: 20412

ECM: 72091 - 19981216
Group number: 279979-0500
Assembly Drawing: 279979-5_1_AA

Pos	Part No	UN	Qty	Description	Page No
-					
005	547902-0000		1	BRACKET	
007	547904-0000		1	TUBE	
020	293198-0002		1	BRACKET	
060	90012-0063		1	CABLE GLAND PR 15,2	
070	90028-0020		3	CONE TUBE 2,5MM	
090	90028-0021		1	CONE TUBE 4 MM	
100	90028-0022		14	CONE TUBE 6 MM	
103	90028-0024		8	CONE TUBE 4 MM	
105	90028-0025		3	CONE TUBE 6 MM	
110	90032-0038		2	BLOCK 2 WAYS	
120	90032-0043		2	DISTRIBUTION BLOCK 3 WAYS	
130	90032-0044		4	DISTRIBUTION BLOCK 4 WAYS	
150	90032-0046		1	DISTRIBUTION BLOCK 6 WAYS	
230	90048-0034		1	OIL PUMP INCL. CONTAINER 4,5 L	
	90274-0052		*1*	*LEVEL GUARD, 10VA/250VDC/0,5A*	
	90048-0450		*1*	*SPARE PARTS KIT*	
240	90087-0019		4	PLUG M10X1 STAINLESS	
280	90092-0052		1	METERING VALVE 10 MM3	
290	90092-0053		2	METERING VALVE 30 MM3	
330	90134-0030		16	SLEEVE FOR PLASTIC TUBE	
350	90134-0031		9	SLEEVE FOR PLASTIC TUBE	
390	90134-0038		9	BUSHING/NUT INLET/OUTLET 4 MM	
410	90134-0039		4	BUSHING VALVE CONNECTION 2,5 MM	
430	90134-0052		1	PLUG DOSING BLOCK	
435	90134-0054		1	BLOCK CONNECTION M10X1	
440	90134-0055		14	BUSHING/NUT INLET/OUTLET 6 MM	
470	90266-0019	MM	800	PIPE	
475	90163-0064		1	QUICK COUPLING, (M) LP-006-2-WR517	
476	90163-0050		2	QUICK COUPLING, (M) 5089 / 9	
490	90165-0003		5	PIPE CLIP FOR TUBE D=4 MM	
510	90165-0005		13	PIPE CLIP FOR TUBE D=6 MM	
520	90165-0022		3	PIPE CLIP, FOR TUBE D=2,5 MM, B-3570	
530	90166-0108	M	6	TUBE 6 MM PA,TRANSP.	
550	90166-0109	M	7	TUBE 4 MM PA,TRANSP.	
555	90166-0113	MM	900	HOSE	
570	90274-0084		1	PRESSURE GUARD, 1800 KPA	
600	312101-0295		18	SCREW M6S M4X20 FZB	
610	312101-0366		6	SCREW M6S M6X12 FZB	
620	312101-0467		2	SCREW M6S M8X80 FZB	
660	312111-0297		2	SCREW HEX.SOCK.HD.MC6S-TT 4X25 88 FZB	
670	312121-0285		20	SCREW ISO 1207 M4X6 4.8 - 5.8 Z.PL.	
680	312601-0318		2	HEXAGON NUT, DIN 934 M8 8 FZB	
710	315101-0153		6	WASHER PLAIN, BRB, 6,4/12 H=1,5	
711	315101-0165		2	WASHER PLAIN, BRB, 8,4/16 H=1,5	
715	315233-0111		2	WASHER CAPTIVE SEALING G3/8	
730	342931-0113		1	ELBOW 90 COUPL.,EXT.THREAD 6/4-G1/8"	
735	342991-0100		3	HOSE CLIP,WORM DRIVE TYPE 10-13	
770	352101-0103		2	LEAD-IN, PR18,6/PG11, E-1457518	

Machine Type | Group Description | Used-In | Group Number | Page No

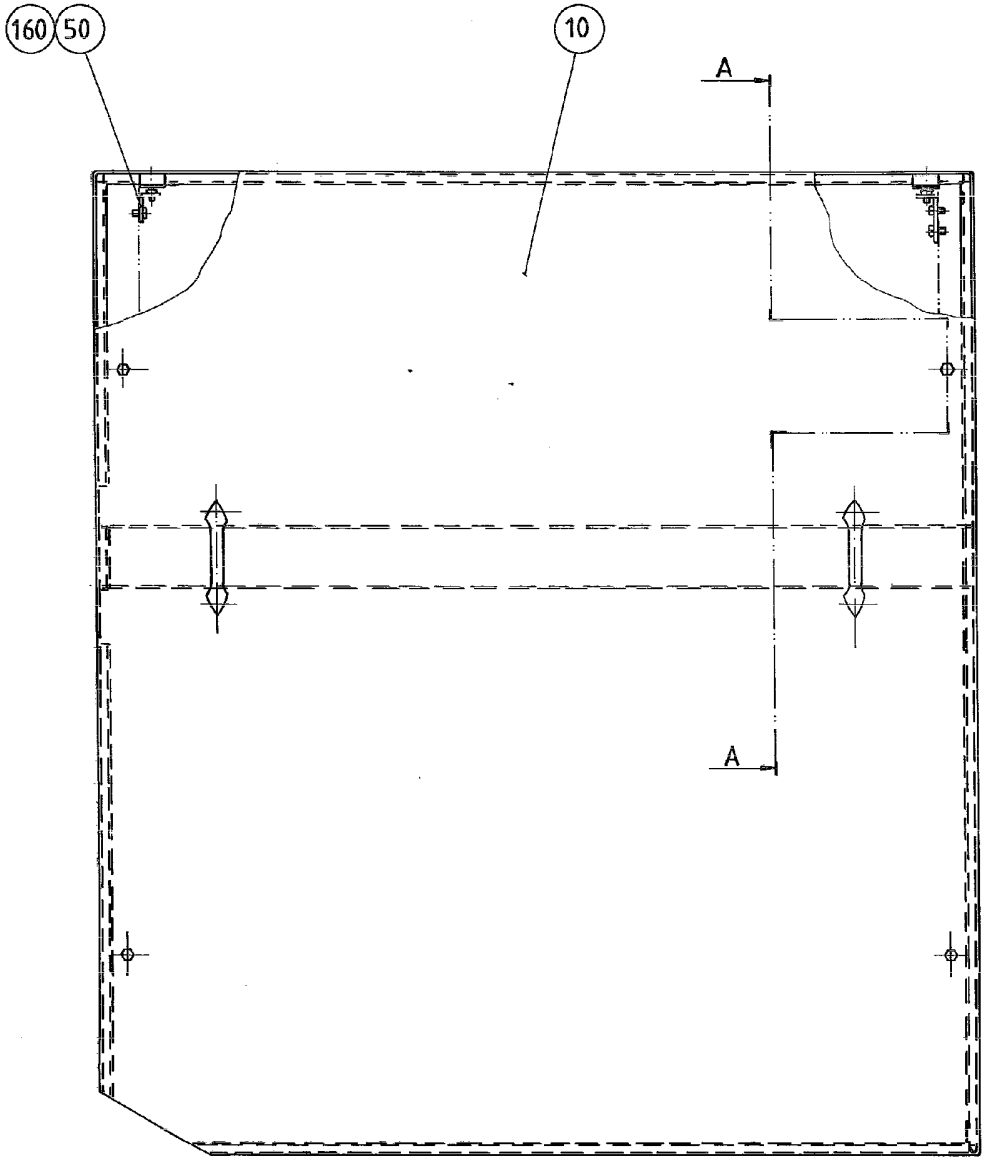

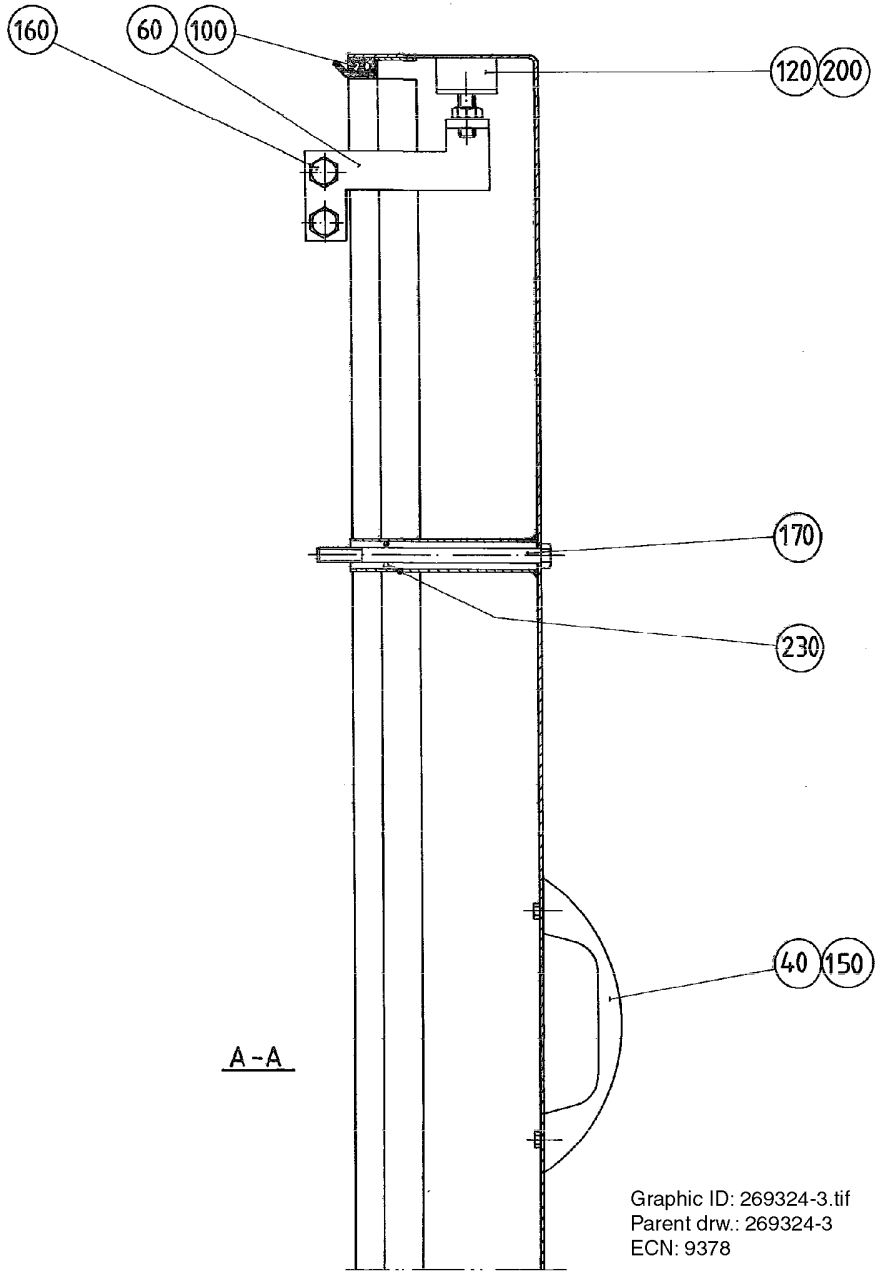

Graphic ID: 269324-3.tif
Parent drw.: 269324-3
ECN: 9378

ECM: 176821 - 20041018
Group number: 269324-0400
Assembly Drawing: 269324-3_1_AA

Pos	Part No	UN	Qty	Description	Page No
TB/8					
010	533428-0000		1	HATCH	
Common Parts					
040	7309-0000		2	HANDLE	
050	282507-0000		1	BRACKET LEFT	
060	450869-0000		1	BRACKET RIGHT	
100	90143-0049	MM	5000	RUBBER STRIP 11X21MM	
120	90347-0004		2	VIBRATION DAMPER D=30 TH=M8 H=17 H2=21MM	
150	312101-0364		4	SCREW M6S M6X10 FZB	
160	312101-0449		4	SCREW M6S M8X16 FZB	
170	312101-0473		4	SCREW M6S M8X110 FZB	
200	312601-0318		2	HEXAGON NUT, DIN 934 M8 8 FZB	
230	315202-0206		4	O-RING 7,3X2,4 MM	

Pos	Part No	UN	Qty	Description	Page No

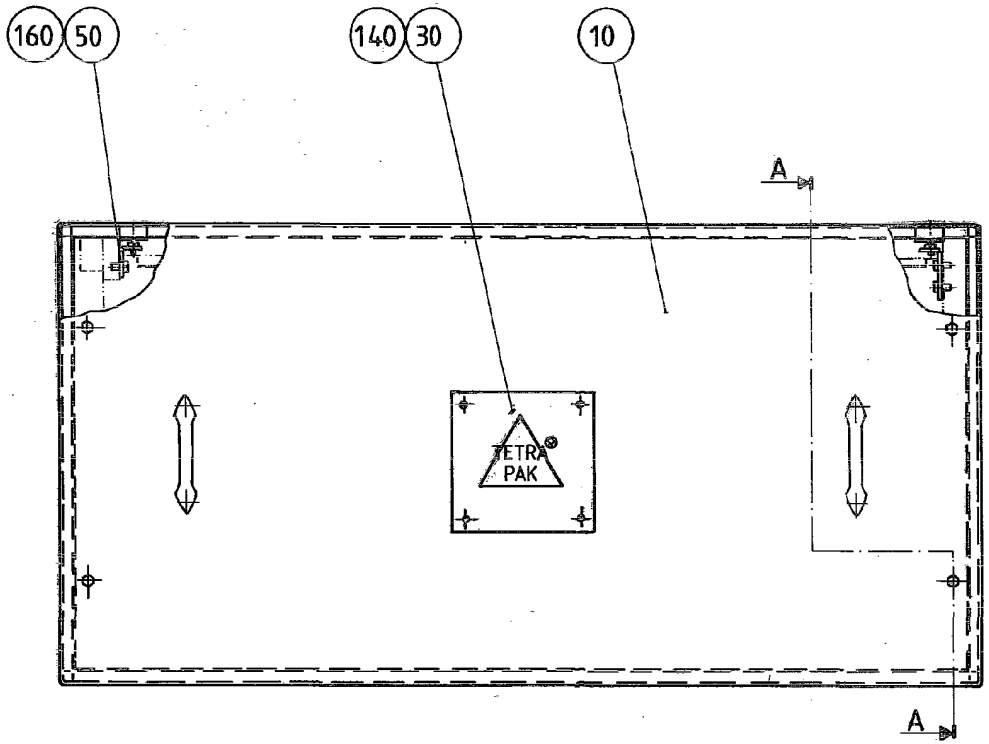

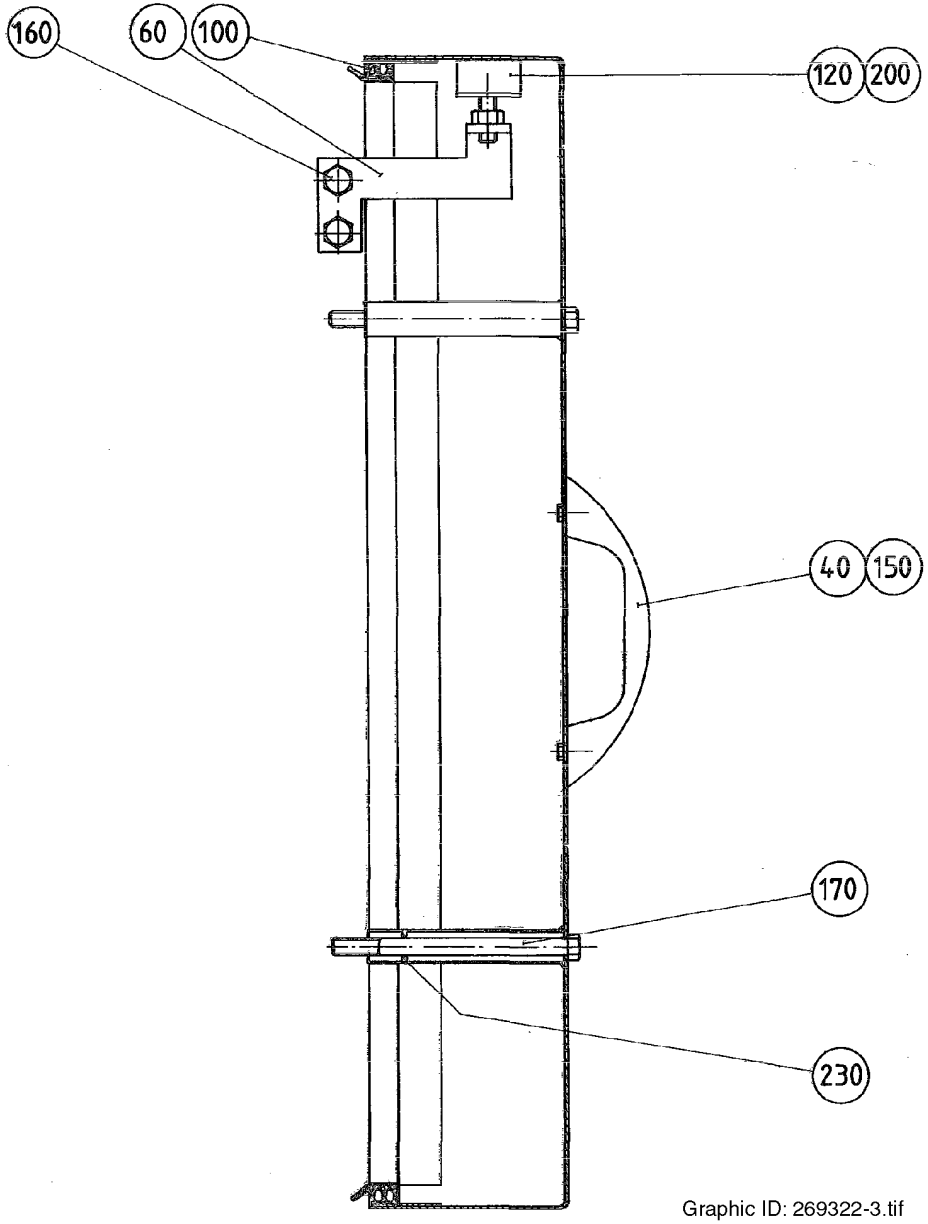

A - A

Graphic ID: 269322-3.tif
Parent drw.: 269322-3
ECN: 9378

ECM: 176820 - 20041018
Group number: 269322-0300
Assembly Drawing: 269322-3_1_AA

Pos	Part No	UN	Qty	Description	Page No
-					
010	549045-0000		1	HATCH	
030	544539-0000		1	HOUSEMARK REPBY 0574658-0000	
040	7309-0000		2	HANDLE	
050	282507-0000		1	BRACKET LEFT	
060	450869-0000		1	BRACKET RIGHT	
100	90143-0049	MM	4000	RUBBER STRIP 11X21MM	
120	90347-0004		2	VIBRATION DAMPER D=30 TH=M8 H=17 H2=21MM	
140	311520-0420		4	RIVET, BLANK 3,2X4	
150	312101-0364		4	SCREW M6S M6X10 FZB	
160	312101-0449		4	SCREW M6S M8X16 FZB	
170	312101-0473		4	SCREW M6S M8X110 FZB	
200	312601-0318		2	HEXAGON NUT, DIN 934 M8 8 FZB	
230	315202-0206		4	O-RING 7,3X2,4 MM	

Pos	Part No	UN	Qty	Description	Page No

SIDE BOX RIGHT

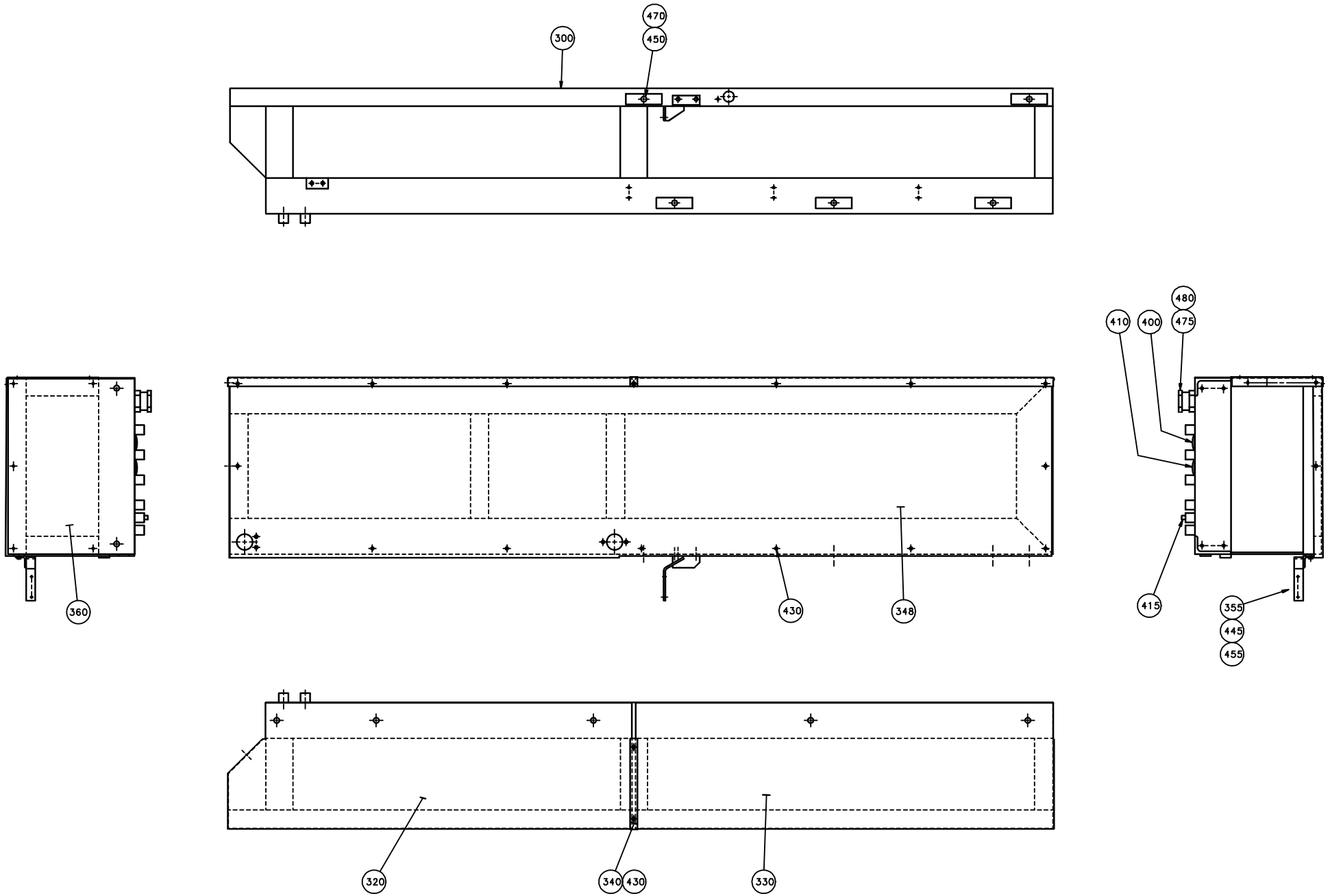

ECM: - -
Group number: 269301-0500
Assembly Drawing: 269301-5_1_AA

Pos	Part No	UN	Qty	Description	Page No
-					
300	560797-0000		1	SIDE PIECE	
320	564521-0000		1	SIDE PLATE	
330	564522-0000		1	SIDE PLATE	
340	564523-0000		1	RIM	
348	548343-0000		1	BOTTOM PANEL	
355	561423-0000		1	BRACKET	
360	542695-0000		1	COVERPLATE R	
400	90002-0010		1	BLANK-OFF PLUG, PR 37 SKINDICHT-BLK29	
410	90002-0012		1	BLANK-OFF PLUG, PR 28,3 SKINDICHT-BLK21	
415	90087-0002		3	PIPE PLUG	
430	90287-0075		33	SCREW SLOT. PAN HEAD LKCS M6X12	
445	312105-0366		2	SCREW M6S ISO 4017 M6X12 A480	
450	312101-0540		5	SCREW M6S M12X40 FZB	
455	315101-0153		2	WASHER PLAIN, BRB, 6,4/12 H=1,5	
470	315101-0178		5	WASHER PLAIN, BRB, 13/24 H=2	
475	352100-0126		1	CABLE GLAND NO.47-32,5	
480	352100-0227		1	CABLE GLAND NO.31-34,5	

Pos	Part No	UN	Qty	Description	Page No

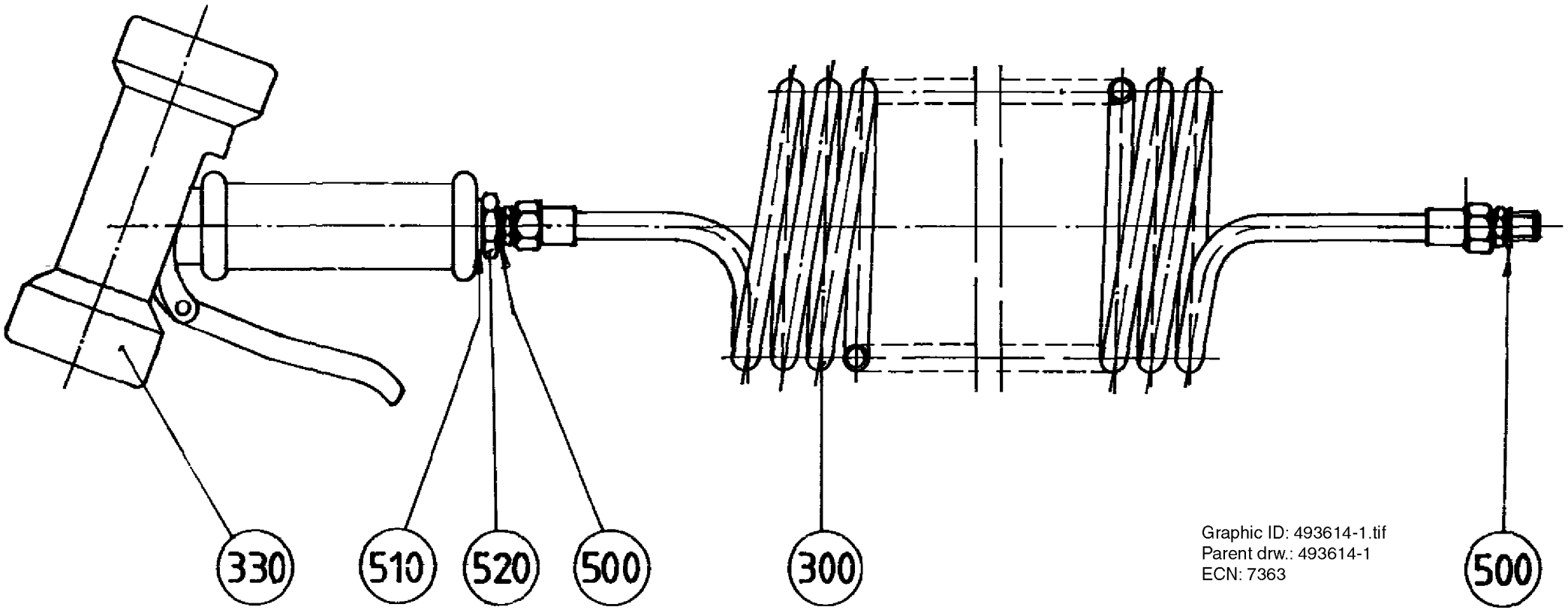

Graphic ID: 493614-1.tif
Parent drw.: 493614-1
ECN: 7363

ECM: 176817 - 20041018
Group number: 493614-0100
Assembly Drawing: 493614-1_1_AA

Pos	Part No	UN	Qty	Description	Page No
-					
300	90152-0017		1	HOSE (SPIRAL)	
330	90426-0003		1	HAND SHOWER	
500	315233-0110		2	WASHER CAPTIVE SEALING G1/4	
510	315233-0113		1	WASHER CAPTIVE SEALING G1/2	
520	342701-0205		1	BUSHING,INT./EXT.G-THREAD G1/2"-G1/4"	

Pos	Part No	UN	Qty	Description	Page No

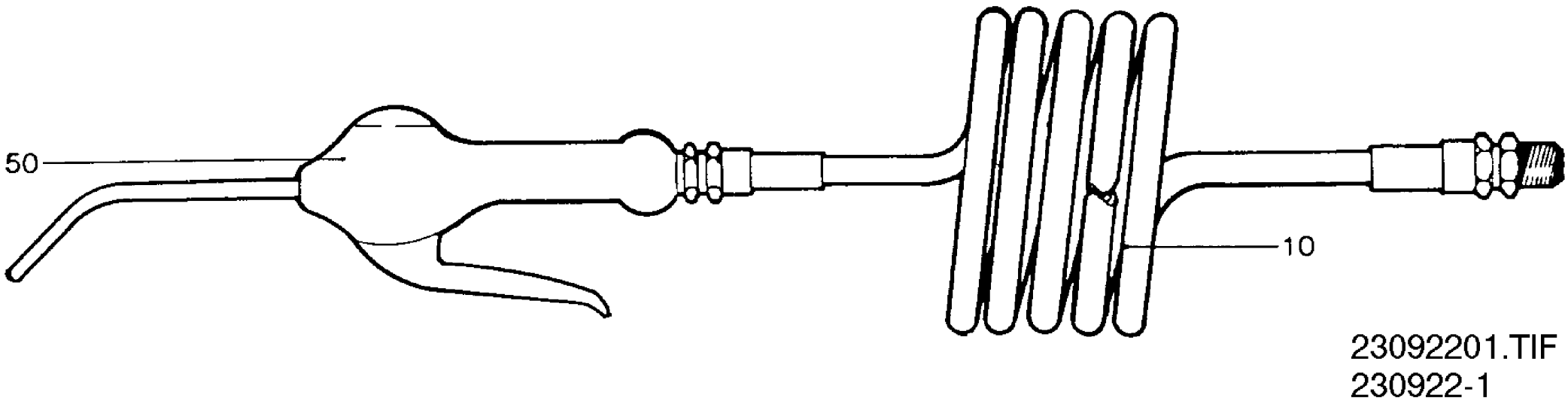
50
10
23092201.TIF
230922-1

ECM: 256287 - 20060407
Group number: 230922-0100
Assembly Drawing: 230922-1_1_AA

Pos	Part No	UN	Qty	Description	Page No
-					
010	90152-0016		1	HOSE (SPIRAL)	
050	90459-0173		1	AIR GUN ASSEMBLY, CEJN SERIE 208	

Pos	Part No	UN	Qty	Description	Page No

Tetra Pak

SPC
Spare Parts Catalogue

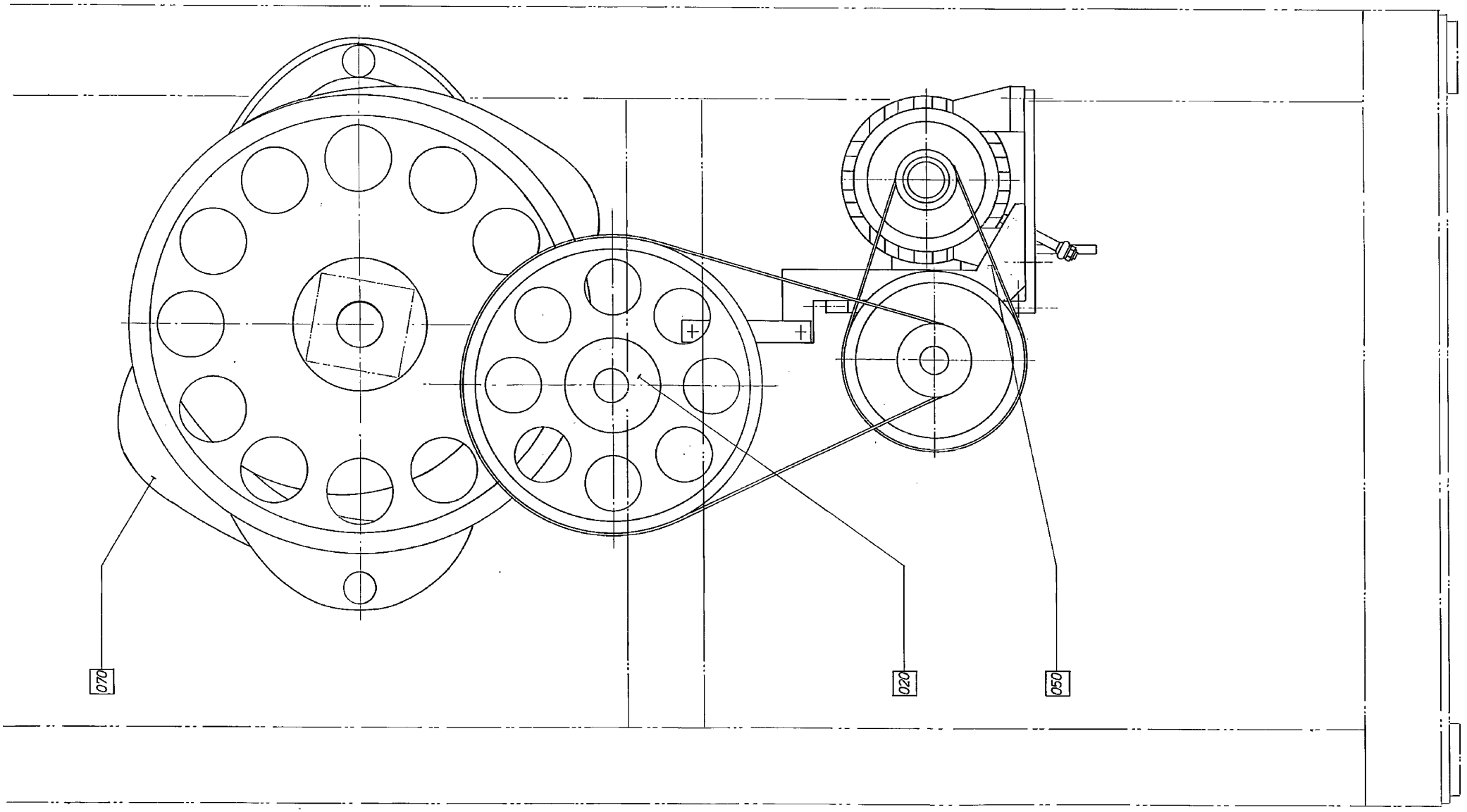

Graphic ID: 648003-1.tif
Parent drw.: S-648003-1
ECN: 6214

ECM: 72072 - 19981201
Group number: 648003-1000
Assembly Drawing: 648003-1_1_AA

This list covers pages from 3-2 to 3-7

Pos	Part No	UN	Qty	Description	Page No
1000SQ US, 0500SQ US, 0568SQ US					
F070	929505-0100		1	CURVE SHAFT ULTRA SONIC	**3-9**
F100	593272-0100		1	IMPULSE TRANSMITTER US	**3-11, 13-11**
F120	292071-0200		1	SPLASH PROTECTION	**3-15**
1500B US					
F070	929505-0100		1	CURVE SHAFT ULTRA SONIC	**3-9**
F100	593272-0100		1	IMPULSE TRANSMITTER US	**3-11, 13-11**
F120	929632-0100		1	SPLASH PROTECTION	**3-17**
TPC					
F070	243776-0300		1	CURVE SHAFT	**3-19**
F100	434669-0400		1	IMPULSE TRANSMITTER	**3-21**
F120	292071-0200		1	SPLASH PROTECTION	**3-15**
Common Parts					
F010	440588-0200		1	CRANK	**3-27**
F020	239890-0300		1	INTERMEDIARY SHAFT	**3-29**
F050	434668-0400		1	DRIVE UNIT	**3-31, 3-33**
F080	243927-0700		2	ARM	**3-35**
F090	476177-0200		1	HOLD-DOWN DEVICE	**3-37, 3-39**
F130	434670-0600		1	LINK SYSTEM	**3-41, 3-43**

Pos	Part No	UN	Qty	Description	Page No

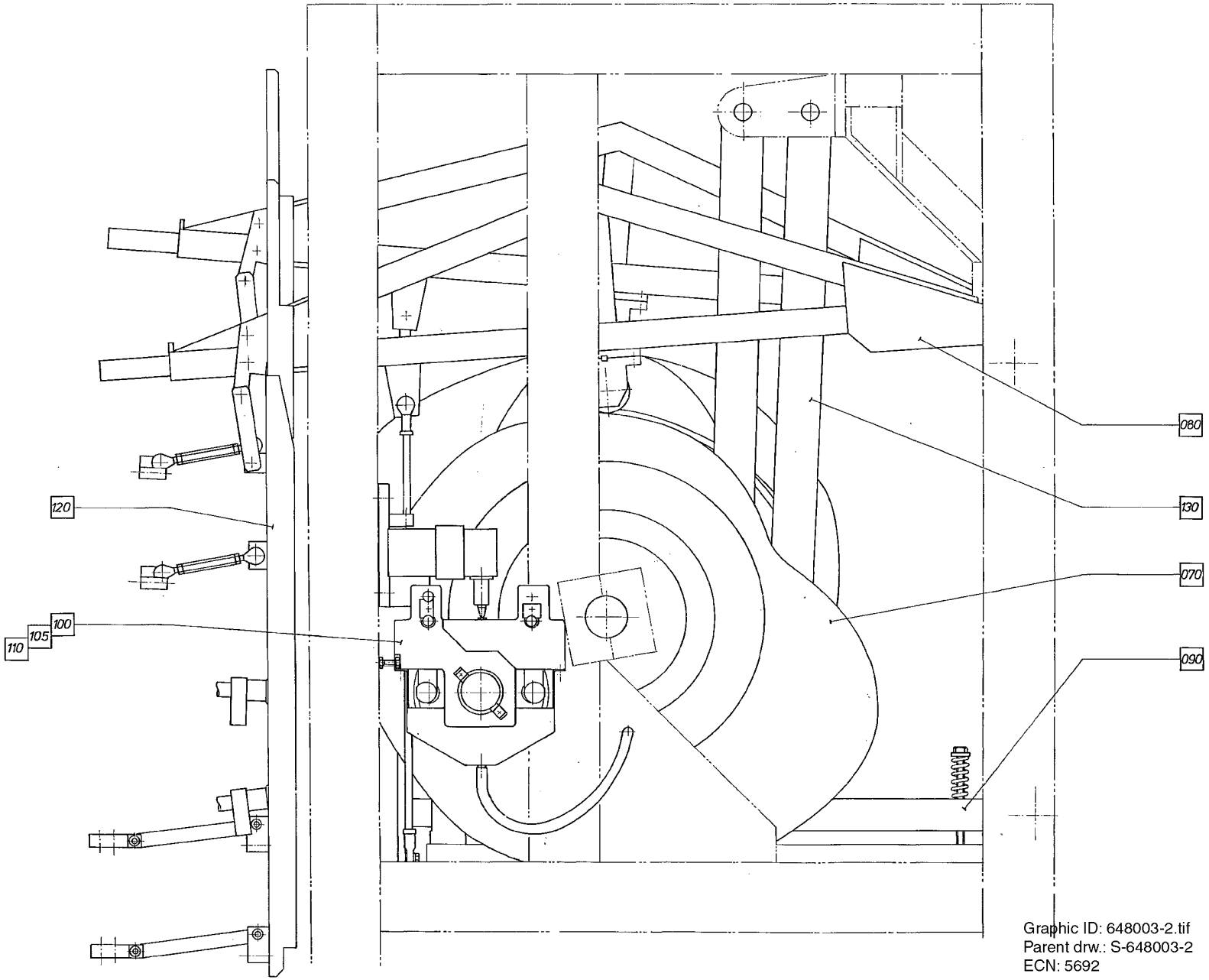

Graphic ID: 648003-2.tif
Parent drw.: S-648003-2
ECN: 5692

ECM: 72072 - 19981201
Group number: 648003-1000
Assembly Drawing: 648003-2_1_AA

This list covers pages from 3-2 to 3-7

Pos	Part No	UN	Qty	Description	Page No
1000SQ US, 0500SQ US, 0568SQ US					
F070	929505-0100		1	CURVE SHAFT ULTRA SONIC	**3-9**
F100	593272-0100		1	IMPULSE TRANSMITTER US	**3-11, 13-11**
F120	292071-0200		1	SPLASH PROTECTION	**3-15**
1500B US					
F070	929505-0100		1	CURVE SHAFT ULTRA SONIC	**3-9**
F100	593272-0100		1	IMPULSE TRANSMITTER US	**3-11, 13-11**
F120	929632-0100		1	SPLASH PROTECTION	**3-17**
TPC					
F070	243776-0300		1	CURVE SHAFT	**3-19**
F100	434669-0400		1	IMPULSE TRANSMITTER	**3-21**
F120	292071-0200		1	SPLASH PROTECTION	**3-15**
Common Parts					
F010	440588-0200		1	CRANK	**3-27**
F020	239890-0300		1	INTERMEDIARY SHAFT	**3-29**
F050	434668-0400		1	DRIVE UNIT	**3-31, 3-33**
F080	243927-0700		2	ARM	**3-35**
F090	476177-0200		1	HOLD-DOWN DEVICE	**3-37, 3-39**
F130	434670-0600		1	LINK SYSTEM	**3-41, 3-43**

Pos	Part No	UN	Qty	Description	Page No

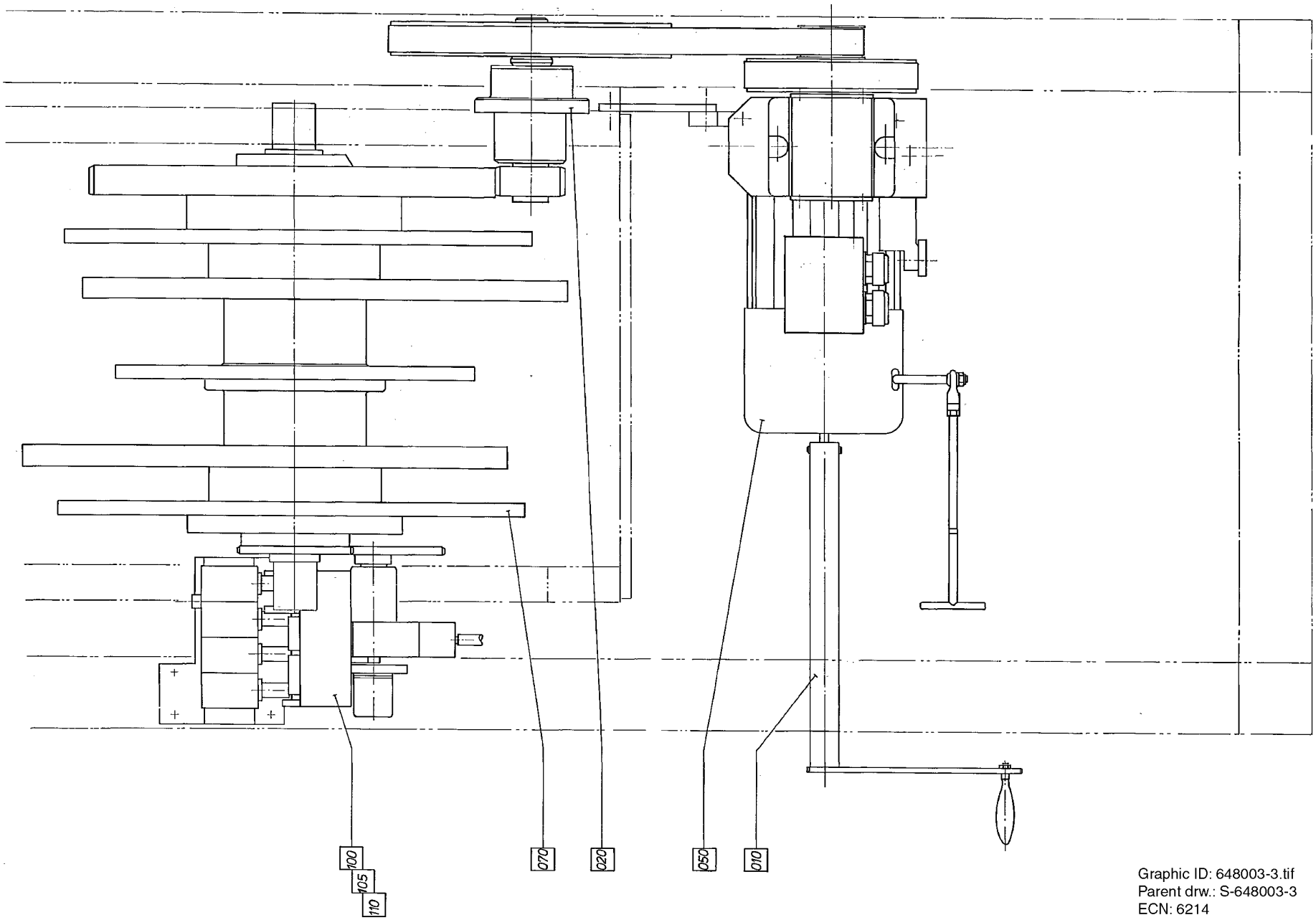

Graphic ID: 648003-3.tif
Parent drw.: S-648003-3
ECN: 6214

ECM: 72072 - 19981201
Group number: 648003-1000
Assembly Drawing: 648003-3_1_AA

This list covers pages from 3-2 to 3-7

Pos	Part No	UN	Qty	Description	Page No
1000SQ US, 0500SQ US, 0568SQ US					
F070	929505-0100		1	CURVE SHAFT ULTRA SONIC	**3-9**
F100	593272-0100		1	IMPULSE TRANSMITTER US	**3-11, 13-11**
F120	292071-0200		1	SPLASH PROTECTION	**3-15**
1500B US					
F070	929505-0100		1	CURVE SHAFT ULTRA SONIC	**3-9**
F100	593272-0100		1	IMPULSE TRANSMITTER US	**3-11, 13-11**
F120	929632-0100		1	SPLASH PROTECTION	**3-17**
TPC					
F070	243776-0300		1	CURVE SHAFT	**3-19**
F100	434669-0400		1	IMPULSE TRANSMITTER	**3-21**
F120	292071-0200		1	SPLASH PROTECTION	**3-15**
Common Parts					
F010	440588-0200		1	CRANK	**3-27**
F020	239890-0300		1	INTERMEDIARY SHAFT	**3-29**
F050	434668-0400		1	DRIVE UNIT	**3-31, 3-33**
F080	243927-0700		2	ARM	**3-35**
F090	476177-0200		1	HOLD-DOWN DEVICE	**3-37, 3-39**
F130	434670-0600		1	LINK SYSTEM	**3-41, 3-43**

Pos	Part No	UN	Qty	Description	Page No

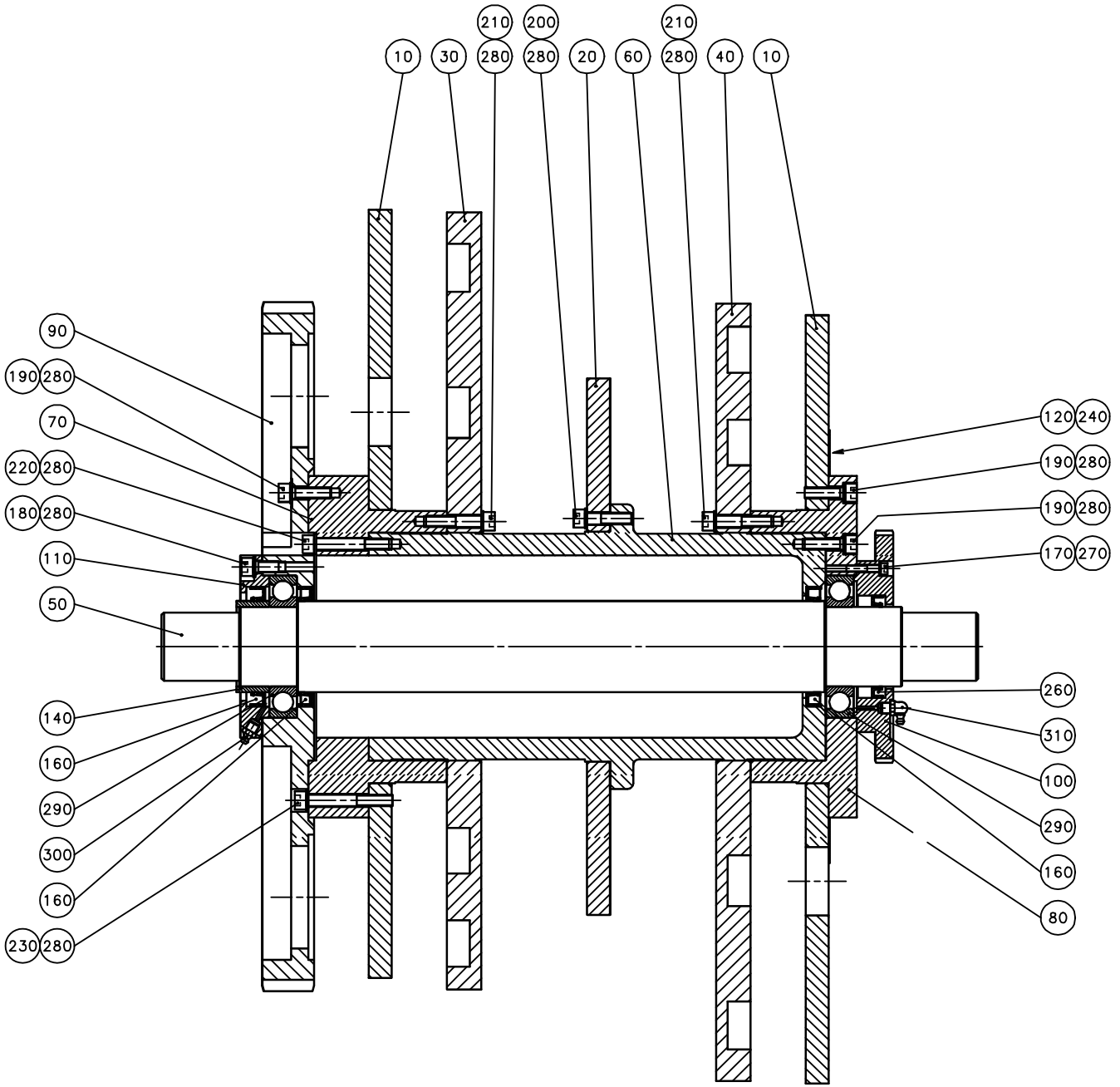
210
200
210
10
30
280
280
20
60
280
40
10
90
190
280
70
220
280
180
280
110
50
140
160
290
300
160
230
280
120
240
190
280
190
280
170
270
260
310
100
290
160
80

ECM: 72495 - 19990924
Group number: 929505-0100
Assembly Drawing: 929505-1_1_AA

Pos	Part No	UN	Qty	Description	Page No
0500SQ US					
010	1364730-0000		2	MAIN CAM	
020	1364733-0000		1	COUNTER CAM	
030	1364731-0000		1	CAM LEFT	
040	1364732-0000		1	CAM RIGHT	
0568SQ US					
010	598646-0000		2	MAIN CAM	
020	598649-0000		1	COUNTER CAM	
030	598647-0000		1	CAM LEFT	
040	598648-0000		1	CAM RIGHT	
1000SQ US					
010	929045-0000		2	MAIN CAM	
020	929046-0000		1	COUNTER CAM	
030	592340-0000		1	CAM LEFT	
040	592341-0000		1	CAM RIGHT	
1500B US					
010	593273-0000		2	MAIN CAM	
020	593274-0000		1	COUNTER CAM	
030	593275-0000		1	CAM LEFT	
040	593276-0000		1	CAM RIGHT	
Common Parts					
050	23458-0000		1	SHAFT	
060	239533-0000		1	DRUM	
070	239534-0000		1	FLANGE	
080	239535-0000		1	FLANGE	
090	239536-0000		1	GEAR WHEEL	
100	243016-0000		1	GEARING	
110	107062-0000		1	LID	
120	246982-0000		1	PROTRACTOR	
140	23462-0000		1	SPACER RING	
160	90091-0029		3	RADIAL SEAL 80X105X13 MM	
170	312111-0374		8	SCREW HEX.SOCK.HD.MC6S-TT 6X30 88 FZB	
180	312111-0492		4	SCREW HEX.SOCK.HD.MC6S-TT 10X22 88 FZ	
190	312111-0497		24	SCREW HEX.SOCK.HD.MC6S-TT 10X35 88 FZ	
200	312111-0499		8	SCREW HEX.SOCK.HD.MC6S-TT 10X40 88 FZ	
210	312111-0501		16	SCREW HEX.SOCK.HD.MC6S-TT 10X50 88 FZ	
220	312111-0504		8	SCREW HEX.SOCK.HD.MC6S-TT 10X65 88 FZ	
230	312111-0506		8	SCREW HEX.SOCK.HD.MC6S-TT 10X75 88 FZ	
240	312121-0285		10	SCREW ISO 1207 M4X6 4.8 - 5.8 Z.PL.	
260	315221-0221		1	RADIAL SEAL 70X90X10 MM	
270	315401-0153		8	WASHER FBH6,1FZB	
280	315401-0173		68	WASHER FBH10,2FZB	
290	321309-0114		2	BALL BEARING, 70X125X24 MM	
300	344502-0026		1	GREASE NIPPLE STRAIGHT R1/8 CON.	
310	344502-0066		1	GREASE NIPPLE 90 DEG. R1/8 CON.	

Machine Type | Group Description | Used-In | Group Number | Page No

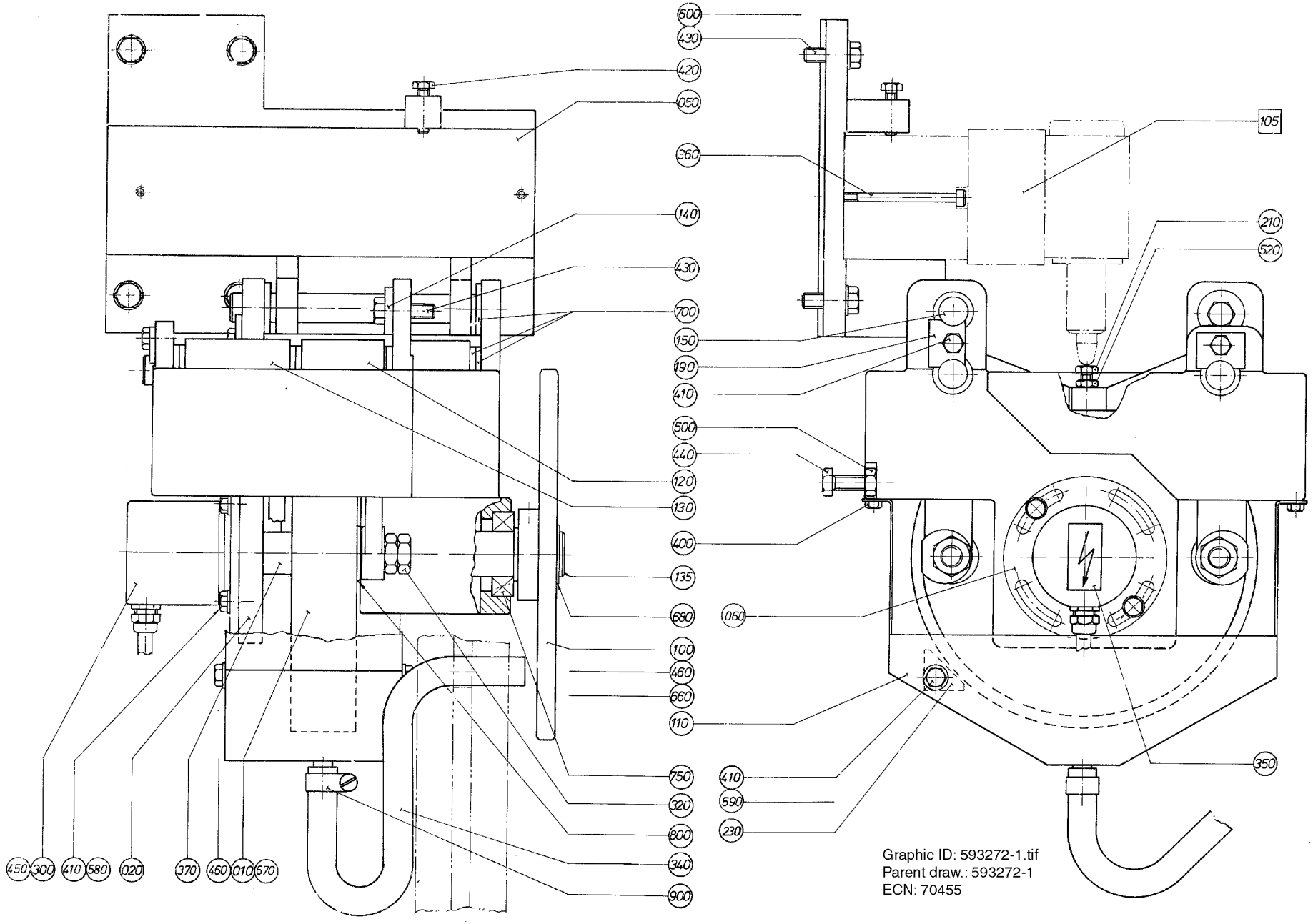
600
430
420
050
360
140
430
700
150
190
410
500
440
120
130
400
135
680
100
460
660
110
750
320
800
340
900
105
210
520
060
410
590
230
350
450
300
410
580
020
370
460
010
670
Graphic ID: 593272-1.tif
Parent draw.: 593272-1
ECN: 70455

ECM: 72495 - 19990924
Group number: 593272-0100
Assembly Drawing: 593272-1_1_AA

Pos	Part No	UN	Qty	Description	Page No
-					
010	556579-0000		1	CURVE	
020	292473-0000		1	CANTILEVER	
050	292472-0000		1	HOLDER	
060	542063-0000		1	FLANGE	
100	243017-0000		1	GEAR WHEEL	
105	592880-0100		1	VALVE GROUP	**3-13, 13-13**
110	543476-0000		1	TROUGH	
120	297091-0000		2	ARM	
130	297092-0000		2	ARM	
135	540949-0000		1	SHAFT	
140	28036-0000		1	WASHER	
150	292477-0000		3	SHAFT	
190	292482-0000		2	WASHER	
210	479354-0000		4	SCREW	
230	479753-0000		1	STRIPPER	
300	90061-0018		1	ANGLE ENC 8BIT GRAY (REPL BY 90061-27)	
320	90099-0015		8	NUT HEX. ML6M, M12X1,5, FE	
340	90166-0113	MM	700	HOSE	
350	90194-0039		1	WARNING SIGN, RISK OF ELECTRIC SHOCK	
360	90287-0073		2	SCREW MC6S M5X70 129	
370	90355-0031		1	TORQUE RIGID COUPLING, 10X10 MM	
400	312101-0325		2	SCREW M6S M5X10 FZB	
410	312101-0366		6	SCREW M6S M6X12 FZB	
420	312101-0372		1	SCREW M6S M6X25 FZB	
430	312101-0453		5	SCREW M6S M8X25 FZB	
440	312104-0460		1	SCREW M6S M8X45H FZB	
450	312155-0289		3	SCREW DIN 7991 MF6S M4X10 A4 70	
460	312318-0360		2	SCREW ISO4029 M6X6 A4	
500	312601-0318		1	HEXAGON NUT, DIN 934 M8 8 FZB	
520	312601-0316		4	HEXAGON NUT, DIN 934 M6 8 FZB	
580	315105-0153		2	WASHER BRB 6,4X12 RFR	
590	315105-0156		2	WASHER BRB 6,7X14 RFR	
600	315101-0165		4	WASHER PLAIN, BRB, 8,4/16 H=1,5	
660	315701-0262		1	PARALLEL KEY W.ROUND ENDS 8X7X18	
670	315701-0263		1	PARALLEL KEY W.ROUND ENDS 8X7X20	
680	315750-0119		2	RETAINING RING SHAFT DIN 471 ST 25	
700	321111-0240		14	FLANGE BUSHING, 16X22X12 MM	
750	321308-0205		2	BALL BEARING, 25X47X12MM	
800	321580-0165		4	CAM ROLLER, 12X30X40 MM	
900	342991-0101		1	HOSE CLIP,WORM DRIVE TYPE (13)-16	

Pos	Part No	UN	Qty	Description	Page No

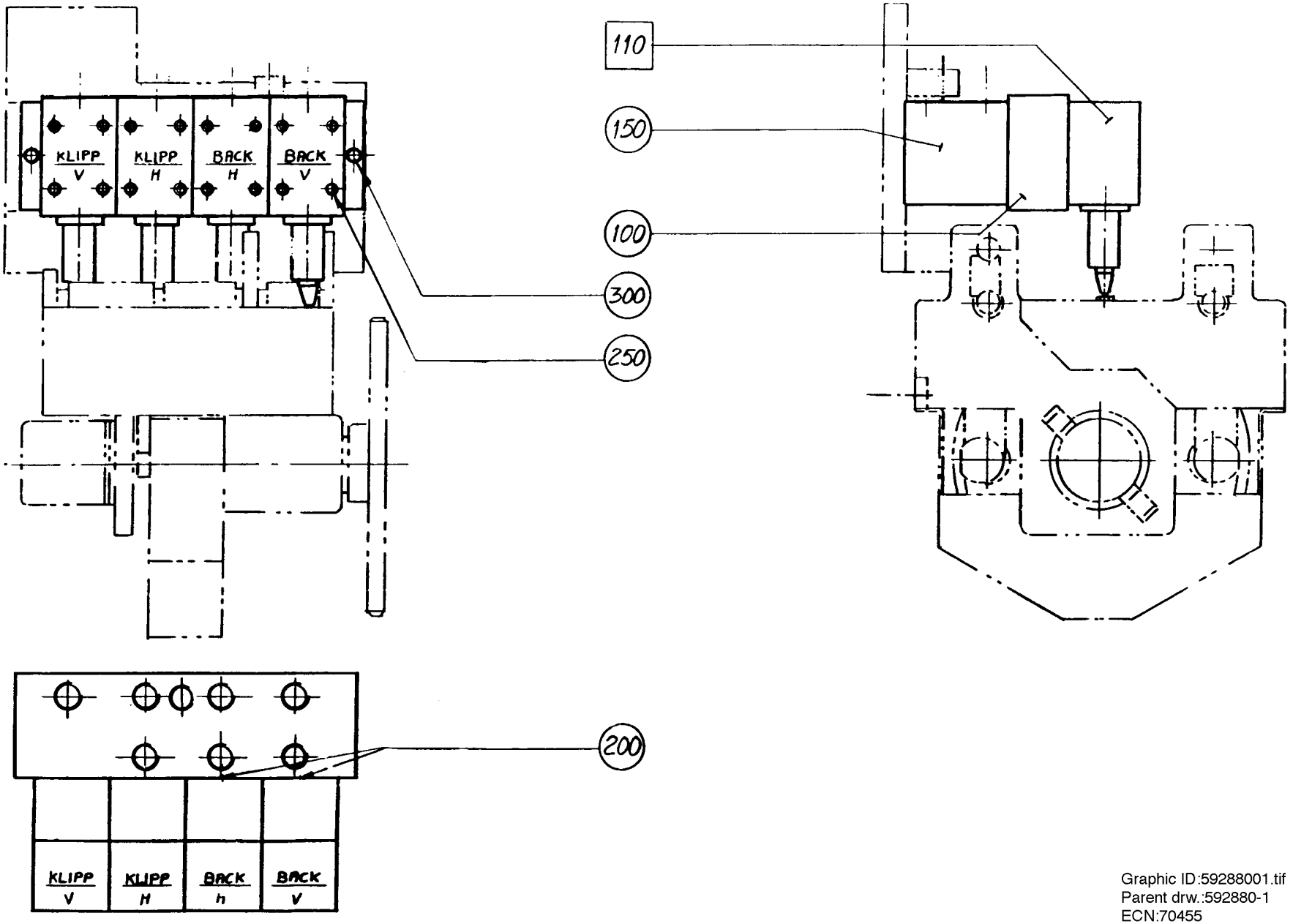

Graphic ID:59288001.tif
Parent drw.:592880-1
ECN:70455

ECM: 70455 - 19961129
Group number: 592880-0100
Assembly Drawing: 592880-1_1_AA

Pos	Part No	UN	Qty	Description	Page No
-					
100	90201-0010		4	DIRECT CHECK VALVE, NO. DGMDC-3-Y-PK-41	
	90201-0300		*1*	*MOUNTING PLATE, NO. A1-89 57B*	
	90201-0301		*1*	*SPRING*	
	90201-0302		*1*	*WASHER*	
	90201-0303		*1*	*SPARE PARTS KIT*	
150	90201-0427		1	BLOCK	
200	295391-0003		2	THROTTLE SCREW	
250	90201-0303		4	SPARE PARTS KIT	
300	90287-0073		2	SCREW MC6S M5X70 129	
F110	90201-0057		4	VALVE	

Pos	Part No	UN	Qty	Description	Page No

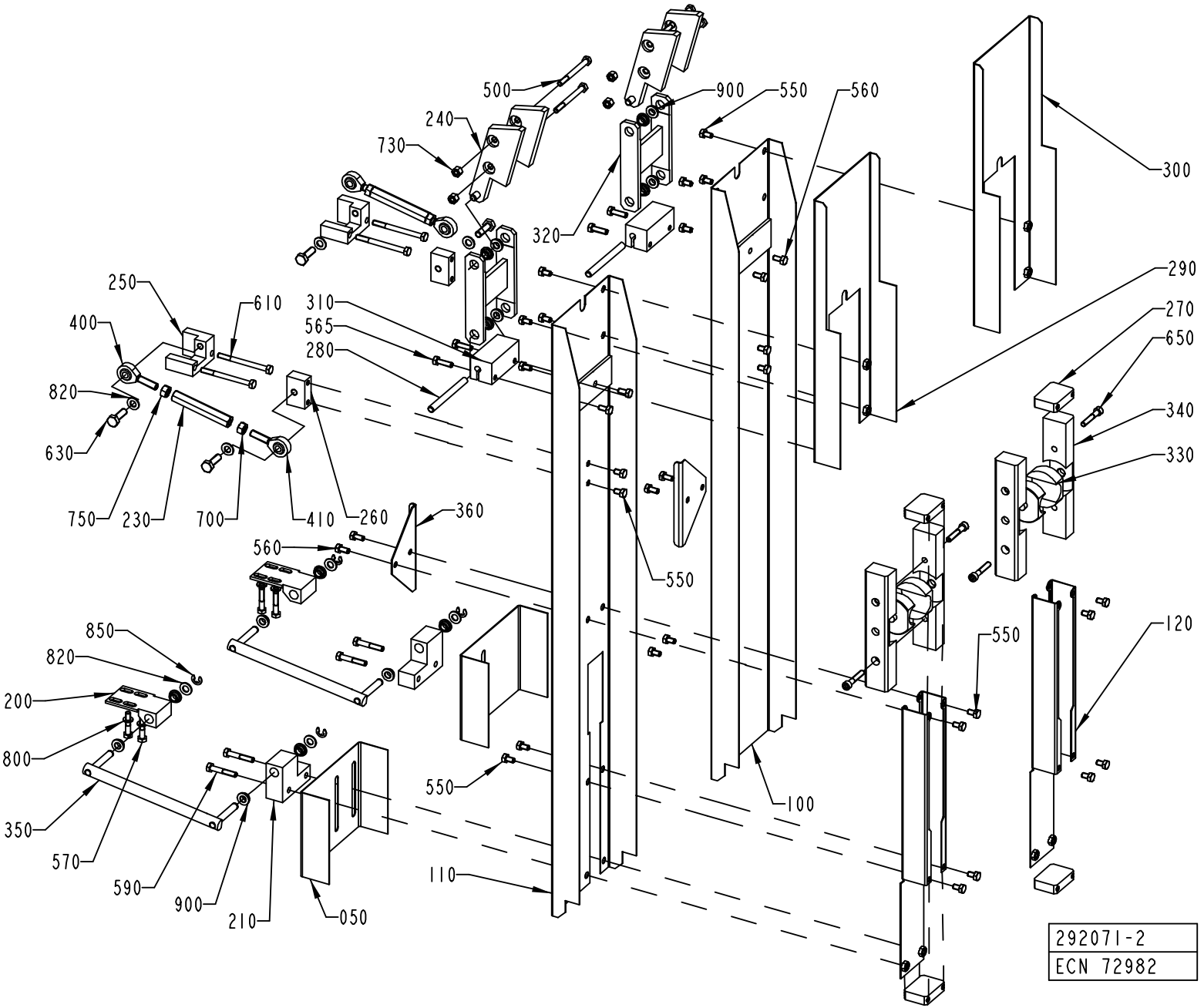
500
240
730
900
550
560
300
320
290
270
650
340
330
250
610
310
565
280
400
820
630
750
230
700
410
260
360
560
550
850
820
200
800
350
570
590
900
210
050
110
550
100
550
120
292071-2
ECN 72982

ECM: 72982 - 20000131
Group number: 292071-0200
Assembly Drawing: 292071-2_1_AB

Pos	Part No	UN	Qty	Description	Page No
TPC					
330	283774-0000		4	BEARING	
Ultra Sonic Heat					
330	928948-0000		4	BEARING	
Common Parts					
100	279983-0000		1	SPLASH PROTECTION	
110	279984-0000		1	SPLASH PROTECTION	
120	279985-0000		2	BRACKET	
200	555888-0000		2	BRACKET	
210	279987-0000		2	BRACKET	
230	279989-0000		2	SPACER	
240	279991-0000		4	BRACKET	
250	279992-0000		2	BRACKET	
260	279993-0000		2	BRACKET	
270	279997-0000		4	BRACKET	
280	279998-0000		2	SHAFT	
290	279999-0000		1	COVERING PLATE	
300	282511-0000		1	COVERING PLATE	
310	282512-0000		2	BRACKET	
320	282513-0000		2	BRACKET	
340	283775-0000		4	SLIDE	
350	436672-0000		2	LINK	
360	574167-0000		2	LIMIT PLATE	
400	90115-0107		2	ROD END, ID=8 MM, M8X1,25 LH	
410	90115-0106		2	ROD END, ID=8 MM, M8X1,25	
500	312101-0383		4	SCREW M6S M6X65 FZB	
550	312105-0364		24	SCREW M6S ISO 4017 M6X10 A480	
560	312105-0366		8	SCREW M6S ISO 4017 M6X12 A480	
565	312105-0370		4	SCREW M6S ISO 4017 M6X20 A480	
570	312105-0374		4	SCREW M6S ISO 4014 M6X30 A480	
590	312105-0376		4	SCREW M6S ISO 4014 M6X35 A480	
610	312105-0384		4	SCREW M6S ISO 4014 M6X70 A480	
630	312105-0453		4	SCREW M6S ISO 4017 M8X25 A480	
650	312115-0376		4	SCREW ISO4762 M6X35 A4 80	
700	312605-0318		2	HEXAGON NUT, M6M M8 A280	
730	312811-0316		4	NUT HEX.LOCK HELI COIL MID GRIP M6 SS	
750	312902-0318		2	NUT HEX. LEFT THREAD, M8 A280	
800	315105-0153		4	WASHER BRB 6,4X12 RFR	
820	315105-0165		8	WASHER BRB 8,4X16 RFR	
850	315755-0109		4	RETAINING RING SHAFT DIN 6799 7 A2	
900	321111-0095		16	FLANGE BUSHING, 8X12X6 MM	

Pos	Part No	UN	Qty	Description	Page No

Machine Type | Group Description | Used-In | Group Number | Page No

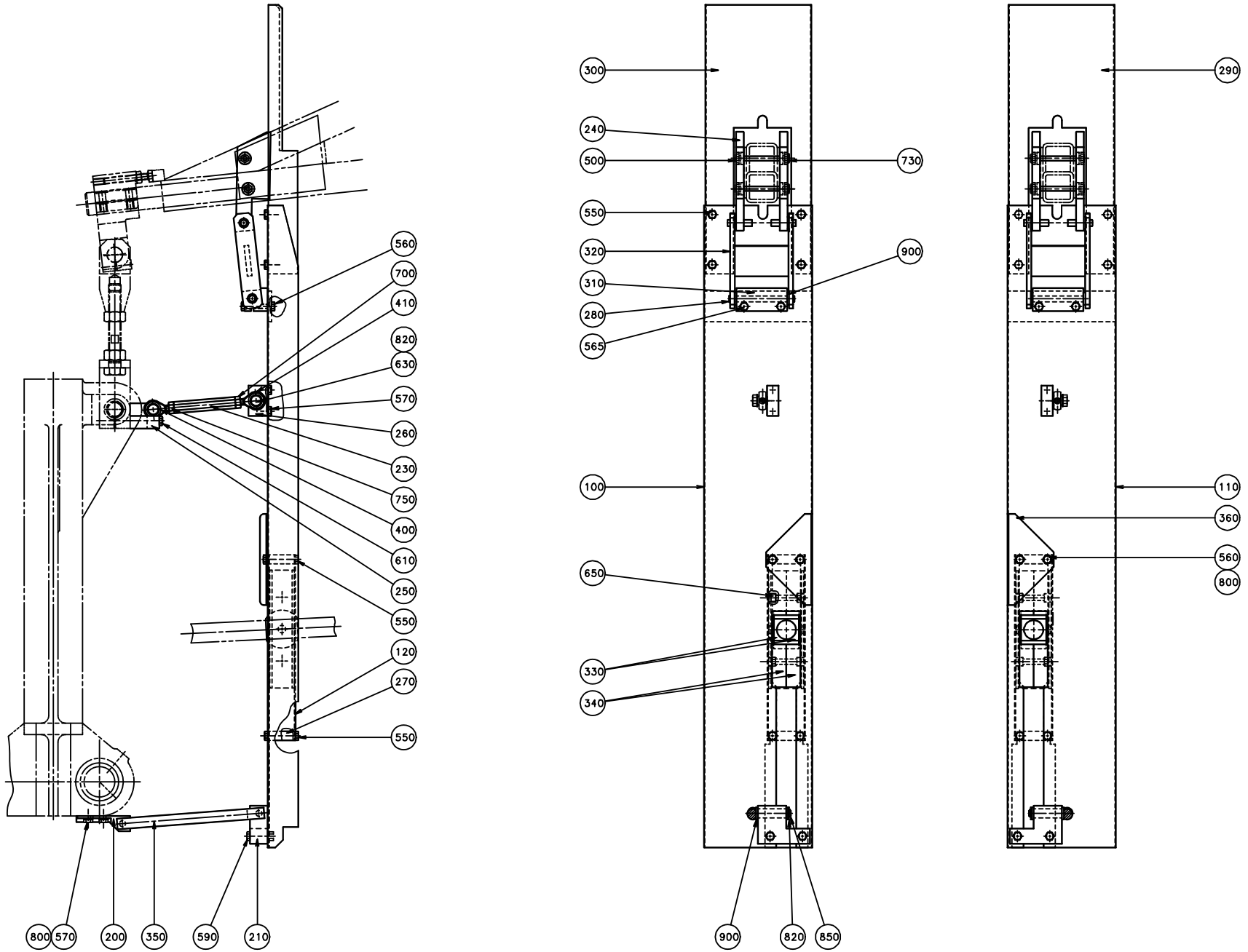
560
700
410
820
630
570
260
230
750
400
610
250
550
120
270
550
800
570
200
350
590
210
300
240
500
550
320
310
280
565
730
900
100
650
330
340
900
820
850
290
110
360
560
800

ECM: 153019 - 20031217
Group number: 929632-0100
Assembly Drawing: 929632-2_1_AA

Pos	Part No	UN	Qty	Description	Page No
1500B					
330	928948-0000		4	BEARING	
360	574167-0000		2	LIMIT PLATE	
Common Parts					
100	1144154-0000		1	SPLASH PROTECTION	
110	1144155-0000		1	SPLASH PROTECTION	
120	1144156-0000		2	BRACKET	
200	555888-0000		2	BRACKET	
210	279987-0000		2	BRACKET	
230	279989-0000		2	SPACER	
240	279991-0000		4	BRACKET	
250	279992-0000		2	BRACKET	
260	279993-0000		2	BRACKET	
270	279997-0000		4	BRACKET	
280	279998-0000		2	SHAFT	
290	928305-0000		1	COVERING PLATE	
300	928306-0000		1	COVERING PLATE	
310	282512-0000		2	BRACKET	
320	282513-0000		2	BRACKET	
340	1144153-0000		4	SLIDE	
350	436672-0000		2	LINK	
400	90115-0107		2	ROD END, ID=8 MM, M8X1,25 LH	
410	90115-0106		2	ROD END, ID=8 MM, M8X1,25	
500	312101-0383		4	SCREW M6S M6X65 FZB	
550	312105-0364		20	SCREW M6S ISO 4017 M6X10 A480	
560	312105-0366		12	SCREW M6S ISO 4017 M6X12 A480	
565	312105-0370		4	SCREW M6S ISO 4017 M6X20 A480	
570	312105-0374		4	SCREW M6S ISO 4014 M6X30 A480	
590	312105-0376		4	SCREW M6S ISO 4014 M6X35 A480	
610	312105-0384		4	SCREW M6S ISO 4014 M6X70 A480	
630	312105-0453		4	SCREW M6S ISO 4017 M8X25 A480	
650	312115-0376		4	SCREW ISO4762 M6X35 A4 80	
700	312605-0318		2	HEXAGON NUT, M6M M8 A280	
730	312811-0316		4	NUT HEX.LOCK HELI COIL MID GRIP M6 SS	
750	312902-0318		2	NUT HEX. LEFT THREAD, M8 A280	
800	315105-0153		12	WASHER BRB 6,4X12 RFR	
820	315105-0165		8	WASHER BRB 8,4X16 RFR	
850	315755-0109		4	RETAINING RING SHAFT DIN 6799 7 A2	
900	321111-0095		16	FLANGE BUSHING, 8X12X6 MM	

Pos	Part No	UN	Qty	Description	Page No

Machine Type | Group Description | Used-In | Group Number | Page No

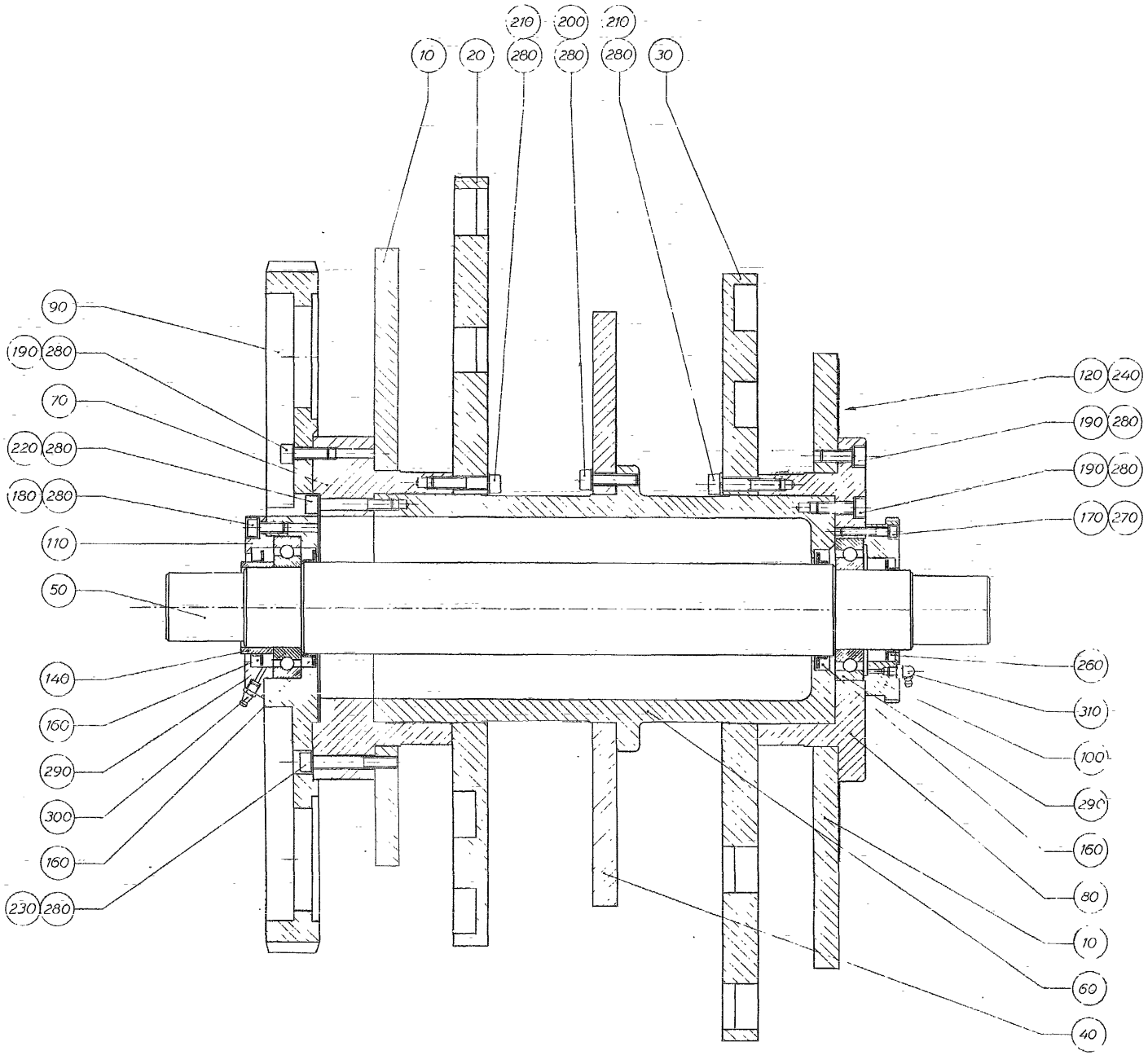
210
200
210
10
20
280
280
280
30
90
190
280
70
220
280
180
280
110
50
140
160
290
300
160
230
280
120
240
190
280
190
280
170
270
260
310
100
290
160
80
10
60
40

ECM: 70671 - 19970212
Group number: 243776-0300
Assembly Drawing: 243776-1_1_AA

Pos	Part No	UN	Qty	Description	Page No
0300B					
010	565190-0000		2	MAIN CAM	
020	565192-0000		1	CAM LEFT	
030	565193-0000		1	CAM RIGHT	
040	565191-0000		1	COUNTER CAM	
0500B					
010	563201-0000		2	MAIN CAM	
020	563203-0000		1	CAM LEFT	
030	563204-0000		1	CAM RIGHT	
040	563202-0000		1	COUNTER CAM	
0500S					
010	583404-0000		2	MAIN CAM	
020	583406-0000		1	CAM LEFT	
030	583407-0000		1	CAM RIGHT	
040	583405-0000		1	COUNTER CAM	
0500SQ					
010	589920-0000		2	MAIN CAM	
020	589922-0000		1	CAM LEFT	
030	589923-0000		1	CAM RIGHT	
040	589921-0000		1	COUNTER CAM	
0568B					
010	565043-0000		2	MAIN CAM	
020	565045-0000		1	CAM LEFT	
030	565046-0000		1	CAM RIGHT	
040	565044-0000		1	COUNTER CAM	
1000B HIFIN					
010	565130-0000		2	MAIN CAM	
020	565132-0000		1	CAM LEFT	
030	565133-0000		1	CAM RIGHT	
040	565131-0000		1	COUNTER CAM	
1000B LOFIN					
010	562974-0000		2	MAIN CAM	
020	562976-0000		1	CAM LEFT	
030	562977-0000		1	CAM RIGHT	
040	562975-0000		1	COUNTER CAM	
1000S					
010	582107-0000		2	MAIN CAM	
020	582109-0000		1	CAM LEFT	
030	582110-0000		1	CAM RIGHT	
040	582108-0000		1	COUNTER CAM	
1000SQ					
010	574115-0000		2	MAIN CAM	
020	574117-0000		1	CAM LEFT	
030	574118-0000		1	CAM RIGHT	
040	574116-0000		1	COUNTER CAM	
1136B					
010	547560-0000		2	MAIN CAM	
020	561575-0000		1	CAM LEFT	
030	561576-0000		1	CAM RIGHT	
040	551826-0000		1	COUNTER CAM	
Common Parts					
050	23458-0000		1	SHAFT	
060	239533-0000		1	DRUM	
070	239534-0000		1	FLANGE	
080	239535-0000		1	FLANGE	
090	239536-0000		1	GEAR WHEEL	
100	243016-0000		1	GEARING	
110	107062-0000		1	LID	
120	246982-0000		1	PROTRACTOR	
140	23462-0000		1	SPACER RING	
160	90091-0029		3	RADIAL SEAL 80X105X13 MM	
170	312111-0374		8	SCREW HEX.SOCK.HD.MC6S-TT 6X30 88 FZB	
180	312111-0492		4	SCREW HEX.SOCK.HD.MC6S-TT 10X22 88 FZ	
190	312111-0497		24	SCREW HEX.SOCK.HD.MC6S-TT 10X35 88 FZ	
200	312111-0499		8	SCREW HEX.SOCK.HD.MC6S-TT 10X40 88 FZ	
210	312111-0501		16	SCREW HEX.SOCK.HD.MC6S-TT 10X50 88 FZ	
220	312111-0504		8	SCREW HEX.SOCK.HD.MC6S-TT 10X65 88 FZ	
230	312111-0506		8	SCREW HEX.SOCK.HD.MC6S-TT 10X75 88 FZ	
240	312121-0285		10	SCREW ISO 1207 M4X6 4.8 - 5.8 Z.PL.	
260	315221-0221		1	RADIAL SEAL 70X90X10 MM	
270	315401-0153		8	WASHER FBH6,1FZB	
280	315401-0173		68	WASHER FBH10,2FZB	
290	321309-0114		2	BALL BEARING, 70X125X24 MM	
300	344502-0026		1	GREASE NIPPLE STRAIGHT R1/8 CON.	
310	344502-0066		1	GREASE NIPPLE 90 DEG. R1/8 CON.	

Machine Type | Group Description | Used-In | Group Number | Page No

IMPULSE TRANSMITTER

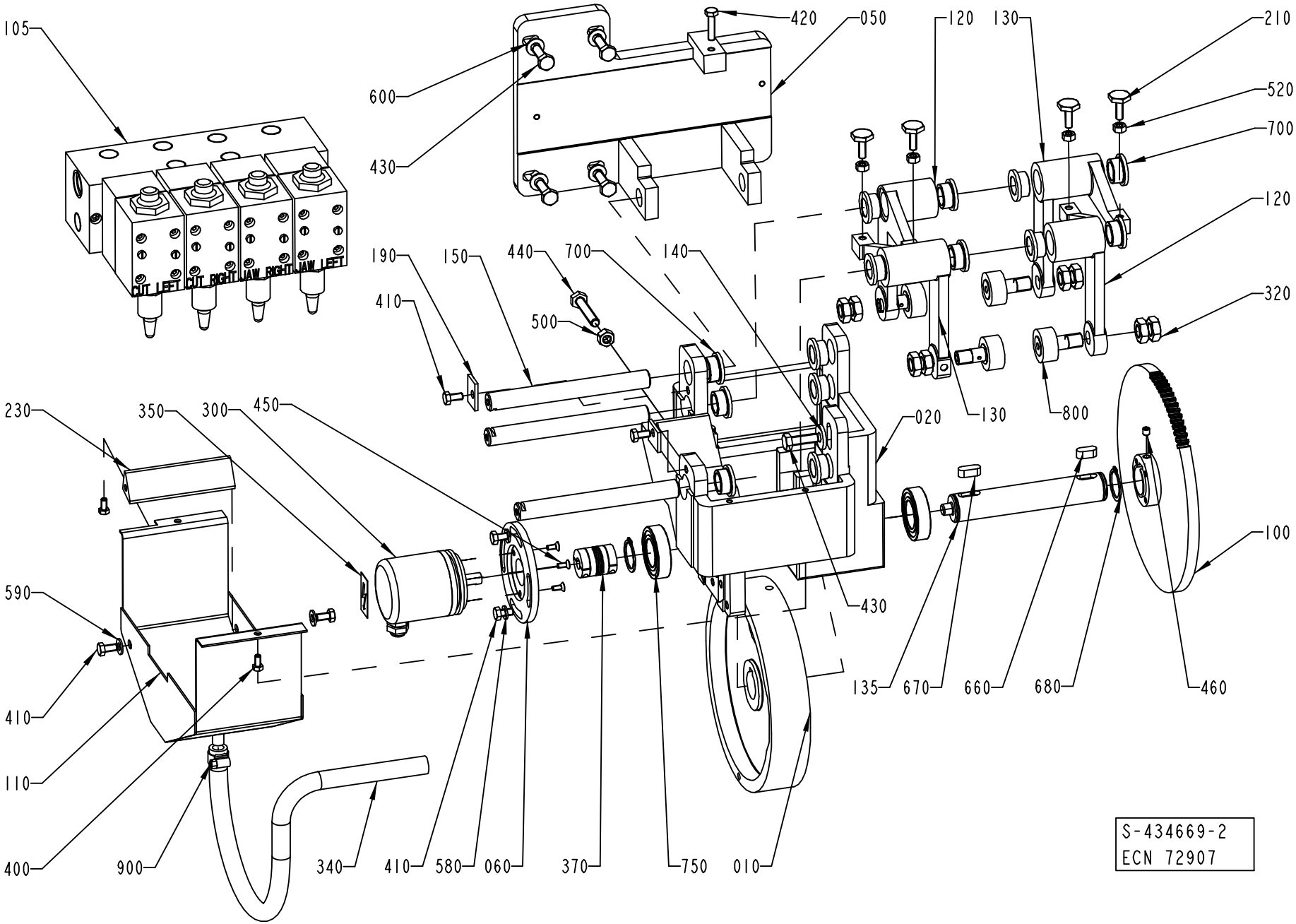

ECM: 72907 - 20000117
Group number: 434669-0400
Assembly Drawing: 434669-2_1_AB

Pos	Part No	UN	Qty	Description	Page No
TPC					
010	573994-0000		1	CURVE	
Common Parts					
020	292473-0000		1	CANTILEVER	
050	292472-0000		1	HOLDER	
060	542063-0000		1	FLANGE	
100	243017-0000		1	GEAR WHEEL	
110	543476-0000		1	TROUGH	
120	297091-0000		2	ARM	
130	297092-0000		2	ARM	
135	540949-0000		1	SHAFT	
140	28036-0000		1	WASHER	
150	292477-0000		3	SHAFT	
190	292482-0000		2	WASHER	
210	479354-0000		4	SCREW	
230	479753-0000		1	STRIPPER	
300	90061-0018		1	ANGLE ENC 8BIT GRAY (REPL BY 90061-27)	
320	90099-0015		8	NUT HEX. ML6M, M12X1,5, FE	
340	90166-0113	MM	700	HOSE	
350	90194-0039		1	WARNING SIGN, RISK OF ELECTRIC SHOCK	
370	90355-0031		1	TORQUE RIGID COUPLING, 10X10 MM	
400	312101-0325		2	SCREW M6S M5X10 FZB	
410	312101-0366		6	SCREW M6S M6X12 FZB	
420	312101-0372		1	SCREW M6S M6X25 FZB	
430	312101-0453		5	SCREW M6S M8X25 FZB	
440	312104-0460		1	SCREW M6S M8X45H FZB	
450	312155-0289		3	SCREW DIN 7991 MF6S M4X10 A4 70	
460	312318-0360		2	SCREW ISO4029 M6X6 A4	
500	312601-0318		1	HEXAGON NUT, DIN 934 M8 8 FZB	
520	312601-0316		4	HEXAGON NUT, DIN 934 M6 8 FZB	
580	315105-0153		2	WASHER BRB 6,4X12 RFR	
590	315105-0156		2	WASHER BRB 6,7X14 RFR	
600	315101-0165		4	WASHER PLAIN, BRB, 8,4/16 H=1,5	
660	315701-0262		1	PARALLEL KEY W.ROUND ENDS 8X7X18	
670	315701-0263		1	PARALLEL KEY W.ROUND ENDS 8X7X20	
680	315750-0119		2	RETAINING RING SHAFT DIN 471 ST 25	
700	321111-0240		14	FLANGE BUSHING, 16X22X12 MM	
750	321308-0205		2	BALL BEARING, 25X47X12MM	
800	321580-0165		4	CAM ROLLER, 12X30X40 MM	
900	342991-0101		1	HOSE CLIP,WORM DRIVE TYPE (13)-16	
F105	273728-0300		1	VALVE GROUP	**3-23, 3-25**

Pos	Part No	UN	Qty	Description	Page No

Machine Type | Group Description | Used-In | Group Number | Page No

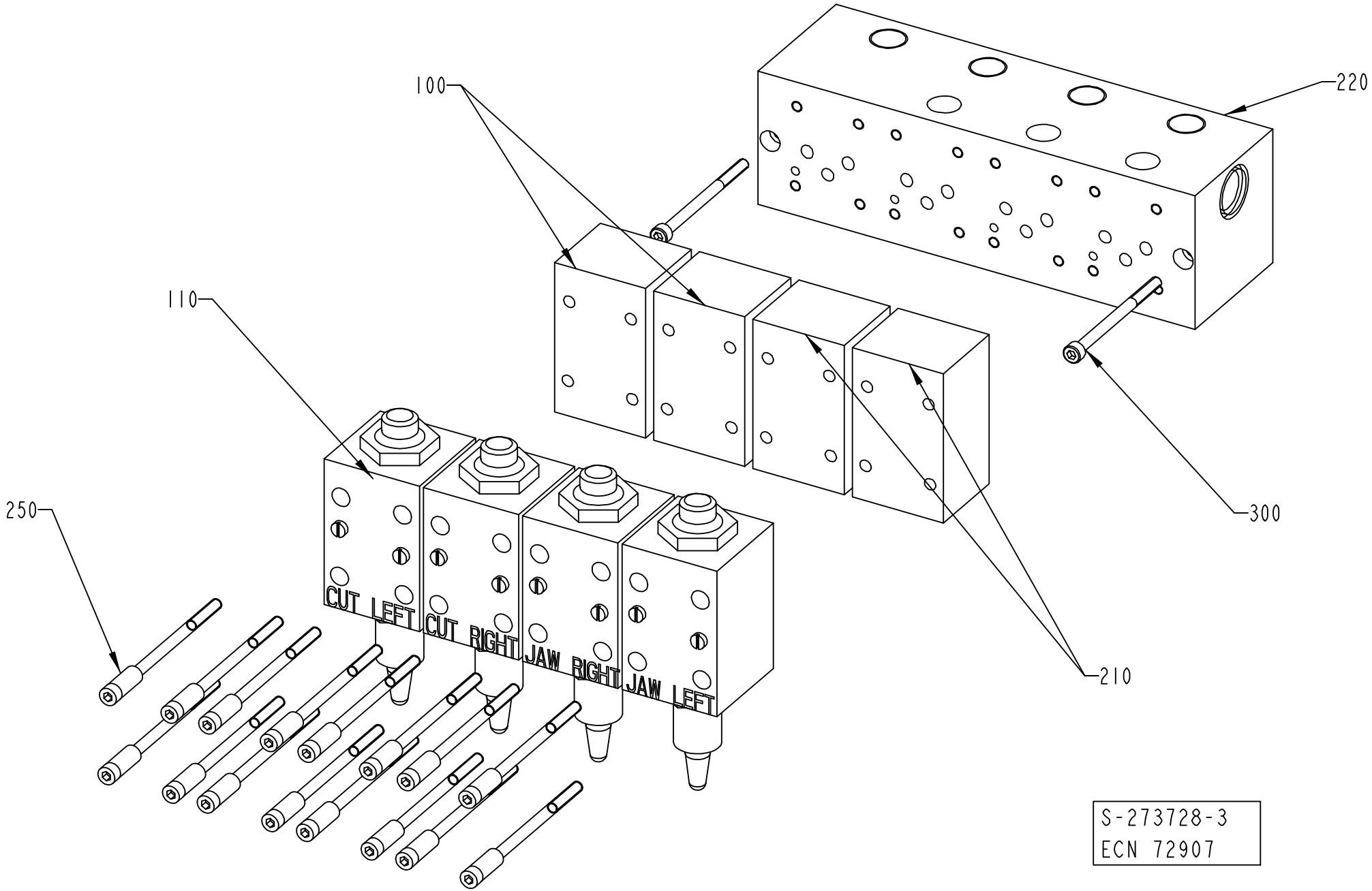
100
220
110
250
300
210
CUT LEFT
CUT RIGHT
JAW RIGHT
JAW LEFT
S-273728-3
ECN 72907

ECM: 72907 - 20000117
Group number: 273728-0300
Assembly Drawing: 273728-3_1_AC

This list covers pages from 3-22 to 3-25

Pos	Part No	UN	Qty	Description	Page No
0300B (See drawing on page: 3-22)					
100	90201-0010		2	DIRECT CHECK VALVE, NO. DGMDC-3-Y-PK-41	
	90201-0300		*1*	*MOUNTING PLATE, NO. A1-89 57B*	
	90201-0301		*1*	*SPRING*	
	90201-0302		*1*	*WASHER*	
	90201-0303		*1*	*SPARE PARTS KIT*	
210	90201-0311		2	BLANKING, NO. A4-9906	
220	90201-0310		1	BLANKING, NO. A1-9904	
0500B, 1136B, 1000SQ, 0500SQ, 1500B, 0500S, 1000S, 0568B, 1000B (See drawing on page: 3-24)					
100	90201-0010		4	DIRECT CHECK VALVE, NO. DGMDC-3-Y-PK-41	
	90201-0300		*1*	*MOUNTING PLATE, NO. A1-89 57B*	
	90201-0301		*1*	*SPRING*	
	90201-0302		*1*	*WASHER*	
	90201-0303		*1*	*SPARE PARTS KIT*	
150	90201-0300		1	MOUNTING PLATE, NO. A1-89 57B	
200	295391-0003		2	THROTTLE SCREW	
Common Parts					
110	90201-0057		4	VALVE	
250	90201-0303		4	SPARE PARTS KIT	
300	90287-0073		2	SCREW MC6S M5X70 129	

Pos	Part No	UN	Qty	Description	Page No

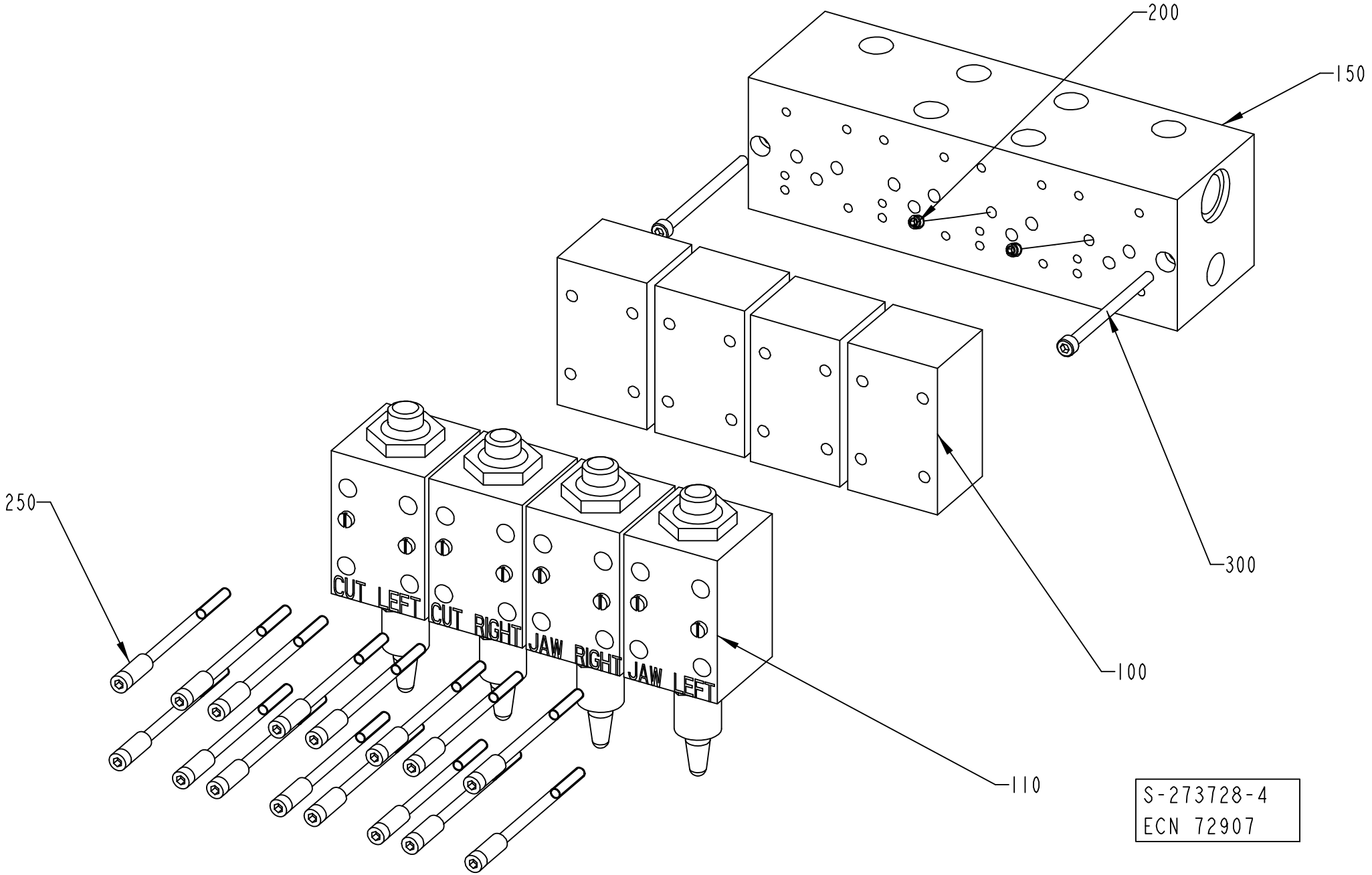
200
150
250
300
100
110
CUT LEFT
CUT RIGHT
JAW RIGHT
JAW LEFT
S-273728-4
ECN 72907

Pos	Part No	UN	Qty	Description	Page No
0300B (See drawing on page: 3-22)					
100	90201-0010		2	DIRECT CHECK VALVE, NO. DGMDC-3-Y-PK-41	
	90201-0300		*1*	*MOUNTING PLATE, NO. A1-89 57B*	
	90201-0301		*1*	*SPRING*	
	90201-0302		*1*	*WASHER*	
	90201-0303		*1*	*SPARE PARTS KIT*	
210	90201-0311		2	BLANKING, NO. A4-9906	
220	90201-0310		1	BLANKING, NO. A1-9904	
0500B, 1136B, 1000SQ, 0500SQ, 1500B, 0500S, 1000S, 0568B, 1000B (See drawing on page: 3-24)					
100	90201-0010		4	DIRECT CHECK VALVE, NO. DGMDC-3-Y-PK-41	
	90201-0300		*1*	*MOUNTING PLATE, NO. A1-89 57B*	
	90201-0301		*1*	*SPRING*	
	90201-0302		*1*	*WASHER*	
	90201-0303		*1*	*SPARE PARTS KIT*	
150	90201-0300		1	MOUNTING PLATE, NO. A1-89 57B	
200	295391-0003		2	THROTTLE SCREW	
Common Parts					
110	90201-0057		4	VALVE	
250	90201-0303		4	SPARE PARTS KIT	
300	90287-0073		2	SCREW MC6S M5X70 129	

Pos	Part No	UN	Qty	Description	Page No

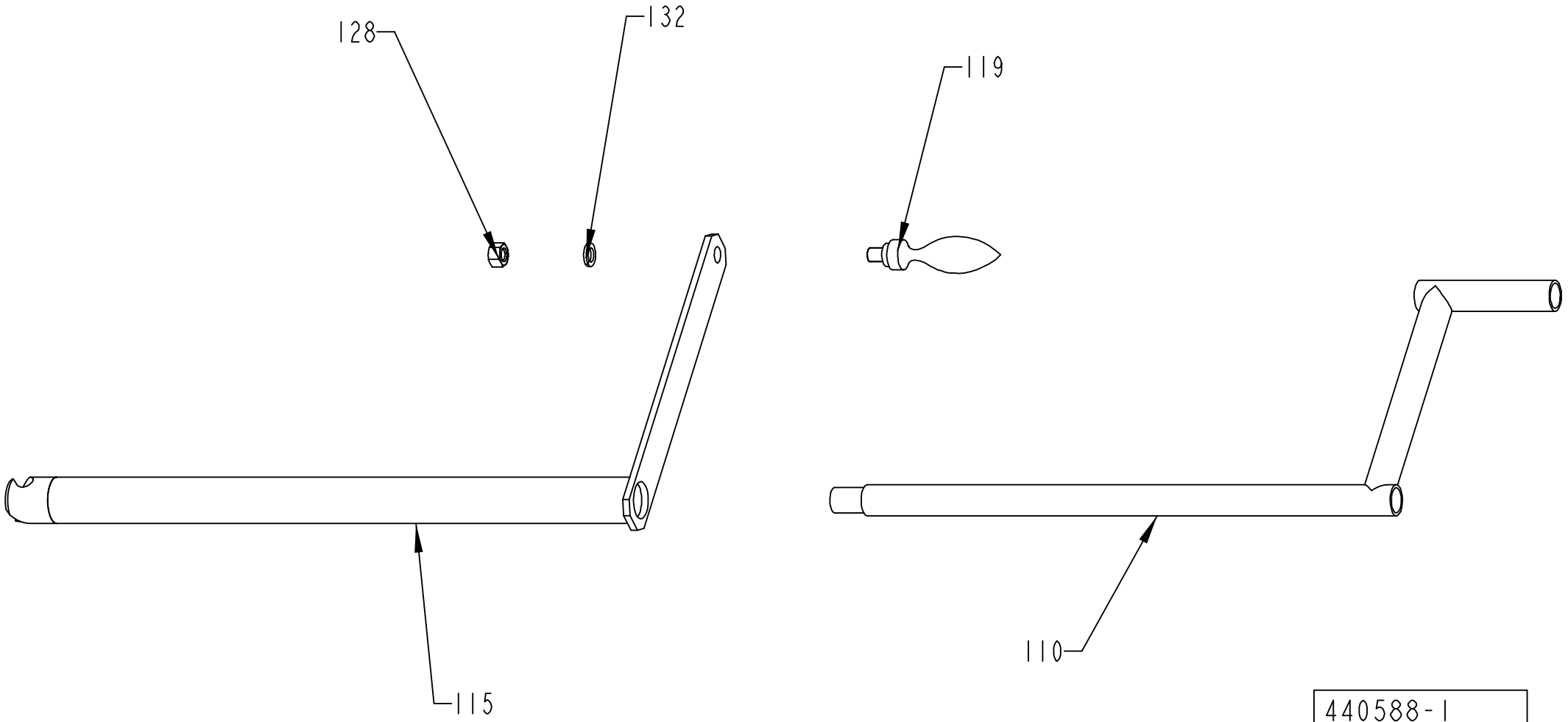

440588-1
ECN 73116

ECM: 73116 - 20000203
Group number: 440588-0200
Assembly Drawing: 440588-1_1_AB

Pos	Part No	UN	Qty	Description	Page No
-					
110	36885-0000		1	CRANK ARM	
115	542262-0000		1	CRANK	
119	90017-0009		1	HANDLE, SWIVWLLING, SIZE32 /M12 THREAD	
128	312601-0322		1	HEXAGON NUT, DIN 934 M12 8 FZB	
132	315401-0178		1	WASHER FBH12,2FZB	

Pos	Part No	UN	Qty	Description	Page No

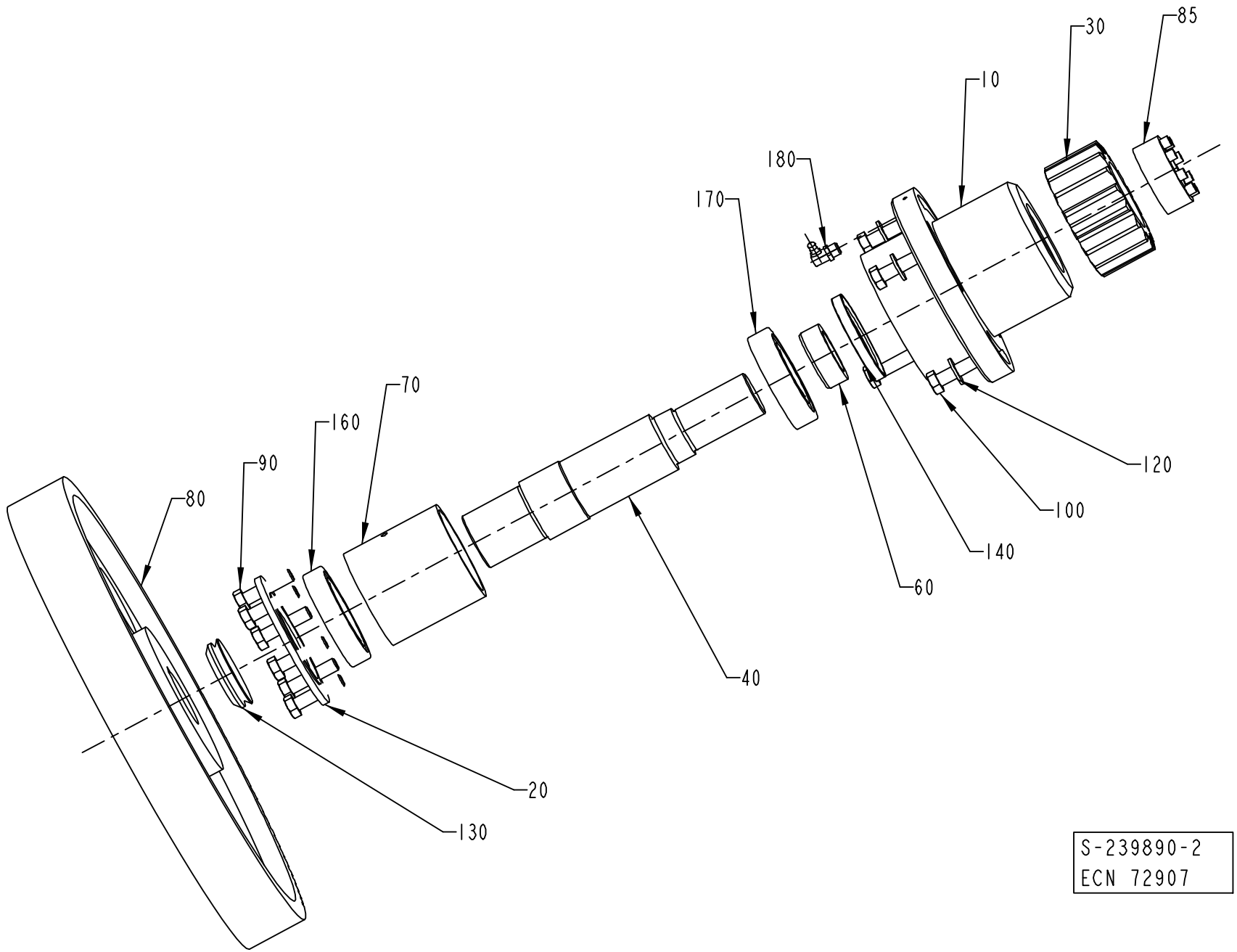
85
30
10
180
170
70
160
90
80
120
100
140
60
40
20
130
S-239890-2
ECN 72907

ECM: 72907 - 20000117
Group number: 239890-0300
Assembly Drawing: 239890-2_1_AB

Pos	Part No	UN	Qty	Description	Page No
-					
010	237725-0000		1	BEARING HOUSING	
020	107095-0000		1	LID	
030	499473-0000		1	GEAR WHEEL	
040	499474-0000		1	SHAFT	
060	111017-0000		1	SPACER RING	
070	239870-0000		1	SPACER SLEEVE	
080	90196-0067		1	PULLEY	
085	90208-0067		1	CLAMPING ELEMENT	
090	312101-0449		6	SCREW M6S M8X16 FZB	
100	312101-0499		4	SCREW M6S M10X40 FZB	
120	315101-0173		4	WASHER PLAIN, BRB, 10,5/22 H=2	
130	315220-0198		1	V-RINGS 45X55X13 MM V-50S	
140	315221-0197		1	RADIAL SEAL 48X72X8 MM	
160	321306-0110		1	BALL BEARING, 50X80X16 MM	
170	321309-0108		1	BALL BEARING, 40X80X18 MM	
180	344502-0066		1	GREASE NIPPLE 90 DEG. R1/8 CON.	

Pos	Part No	UN	Qty	Description	Page No

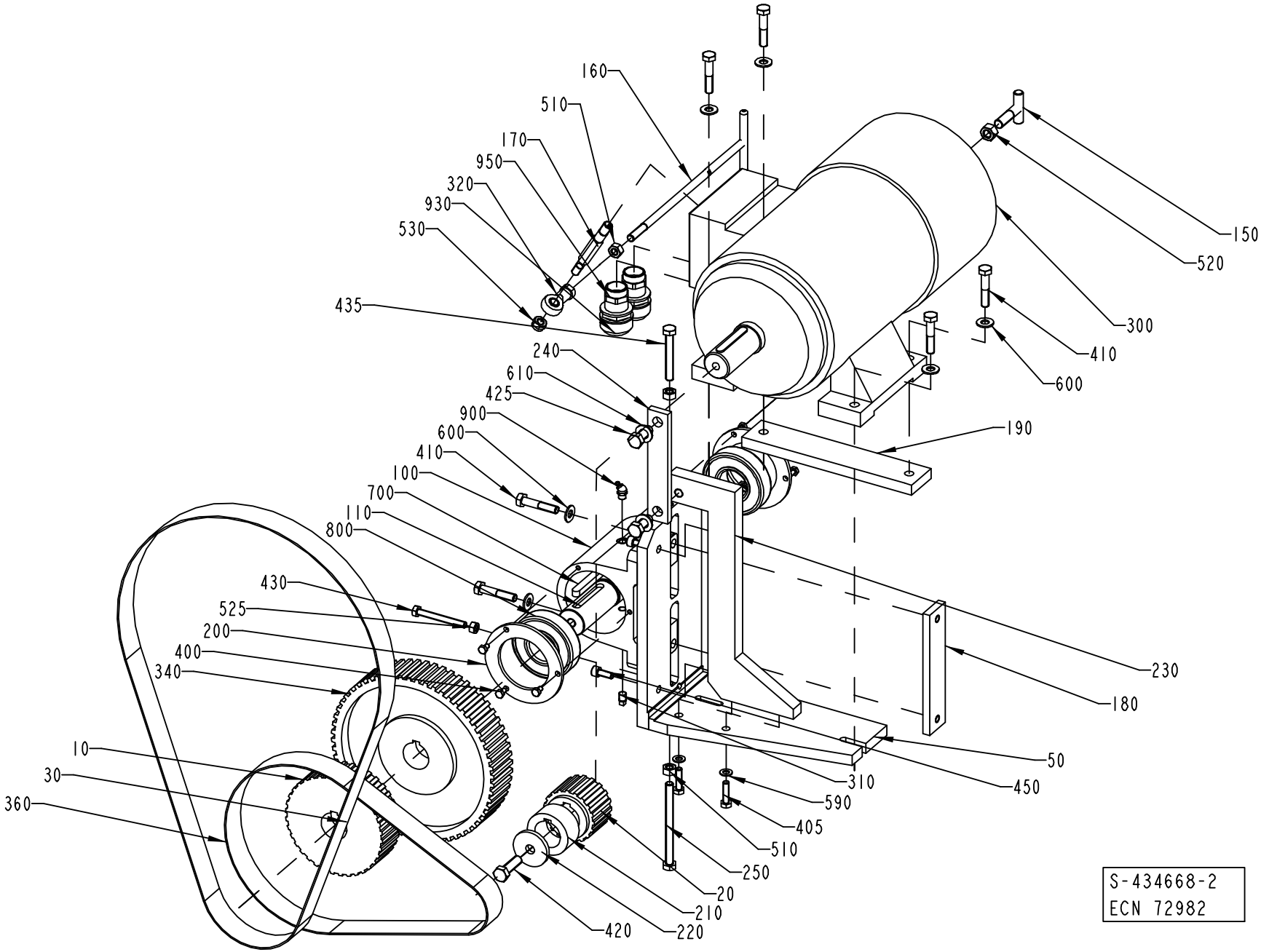
160
510
170
950
320
930
530
435
240
610
425
900
600
410
100
700
110
800
430
525
200
400
340
10
30
360
150
520
300
410
600
190
230
180
50
450
310
590
405
510
250
20
210
220
420
S-434668-2
ECN 72982

ECM: 72982 - 20000131
Group number: 434668-0400
Assembly Drawing: 434668-2_1_AB

This list covers pages from 3-30 to 3-33

Pos	Part No	UN	Qty	Description	Page No
0300B TPC 60HZ, 1136B TPC 60HZ, 0500B TPC 60HZ, 1000B TPC 60HZ, 0568B TPC 60HZ					
010	90196-0063		1	PULLEY	
020	90196-0061		1	PULLEY	
300	90046-0016		1	DRIVE BRAKE MOTOR 60HZ	
	90046-0314		*1*	*BRAKE DISC, 1821695*	
	90046-0313		*1*	*BRAKE COIL*	
	90046-0312		*1*	*RECTIFIER, 1,5A BGE-148/500VAC*	
	90046-0308		*1*	*STATOR*	
1000SQ US 60HZ, 0500SQ US 60HZ, 0568SQ US 60HZ					
010	90196-0065		1	PULLEY	
020	90196-0062		1	PULLEY	
300	90046-0016		1	DRIVE BRAKE MOTOR 60HZ	
	90046-0314		*1*	*BRAKE DISC, 1821695*	
	90046-0313		*1*	*BRAKE COIL*	
	90046-0312		*1*	*RECTIFIER, 1,5A BGE-148/500VAC*	
	90046-0308		*1*	*STATOR*	
1000SQ US 50HZ, 0500SQ US 50HZ, 0568SQ US 50HZ					
010	90196-0055		1	PULLEY	
020	90196-0062		1	PULLEY	
300	90046-0015		1	DRIVE BRAKE MOTOR 50HZ	
	90046-0314		*1*	*BRAKE DISC, 1821695*	
	90046-0313		*1*	*BRAKE COIL*	
	90046-0312		*1*	*RECTIFIER, 1,5A BGE-148/500VAC*	
	90046-0304		*1*	*STATOR*	
1000SQ TPC 50HZ, 1000S TPC 50HZ, 0500S TPC 50HZ, 0500SQ TPC 50HZ					
010	90196-0079		1	TIMING BELT PULLEY	
020	90196-0061		1	PULLEY	
300	90046-0015		1	DRIVE BRAKE MOTOR 50HZ	
	90046-0314		*1*	*BRAKE DISC, 1821695*	
	90046-0313		*1*	*BRAKE COIL*	
	90046-0312		*1*	*RECTIFIER, 1,5A BGE-148/500VAC*	
	90046-0304		*1*	*STATOR*	
1000SQ TPC 60HZ, 1000S TPC 60HZ, 0500S TPC 60HZ, 0500SQ TPC 60HZ					
010	90196-0086		1	TIMING BELT PULLEY	
020	90196-0062		1	PULLEY	
300	90046-0016		1	DRIVE BRAKE MOTOR 60HZ	
	90046-0314		*1*	*BRAKE DISC, 1821695*	
	90046-0313		*1*	*BRAKE COIL*	
	90046-0312		*1*	*RECTIFIER, 1,5A BGE-148/500VAC*	
	90046-0308		*1*	*STATOR*	
1136B TPC 50HZ, 0300B TPC 50HZ, 0500B TPC 50HZ, 1000B TPC 50HZ, 0568B TPC 50HZ					
010	90196-0064		1	PULLEY	
020	90196-0062		1	PULLEY	
300	90046-0015		1	DRIVE BRAKE MOTOR 50HZ	
	90046-0314		*1*	*BRAKE DISC, 1821695*	
	90046-0313		*1*	*BRAKE COIL*	
	90046-0312		*1*	*RECTIFIER, 1,5A BGE-148/500VAC*	
	90046-0304		*1*	*STATOR*	
1500B US 50HZ					
010	90196-0065		1	PULLEY	
020	90196-0062		1	PULLEY	
300	90046-0015		1	DRIVE BRAKE MOTOR 50HZ	
	90046-0314		*1*	*BRAKE DISC, 1821695*	
	90046-0313		*1*	*BRAKE COIL*	
	90046-0312		*1*	*RECTIFIER, 1,5A BGE-148/500VAC*	
	90046-0304		*1*	*STATOR*	
1500B US 60HZ					
010	90196-0086		1	TIMING BELT PULLEY	
020	90196-0061		1	PULLEY	
300	90046-0016		1	DRIVE BRAKE MOTOR 60HZ	
	90046-0314		*1*	*BRAKE DISC, 1821695*	
	90046-0313		*1*	*BRAKE COIL*	
	90046-0312		*1*	*RECTIFIER, 1,5A BGE-148/500VAC*	
	90046-0308		*1*	*STATOR*	
Common Parts					
030	90417-0134		1	TIMING BELT 12,7X1600,2X38,1	
050	530754-0000		1	FASTENING BRACKET	
100	436482-0000		1	BEARING BRACKET	
110	436483-0000		1	SHAFT	
150	37097-0000		1	CARRIER	
160	434379-0000		1	TIE ROD	
170	434380-0000		1	SHAFT	
180	436484-0000		1	BRACKET	
190	436485-0000		1	LACE	
200	436486-0000		2	LID	
210	436487-0000		1	SPACER	
220	436488-0000		1	WASHER	
230	450145-0000		1	STRUT	
240	450146-0000		1	STRUT	
250	530755-0000		1	SCREW	
310	90087-0003		1	PIPE PLUG	
320	90115-0105		1	ROD END, ID=10 MM, M10X1,5	
340	90196-0066		1	PULLEY	
360	90417-0133		1	TIMING BELT 12,7X990,6X38,1	

Machine Type | Group Description | Used-In | Group Number | Page No

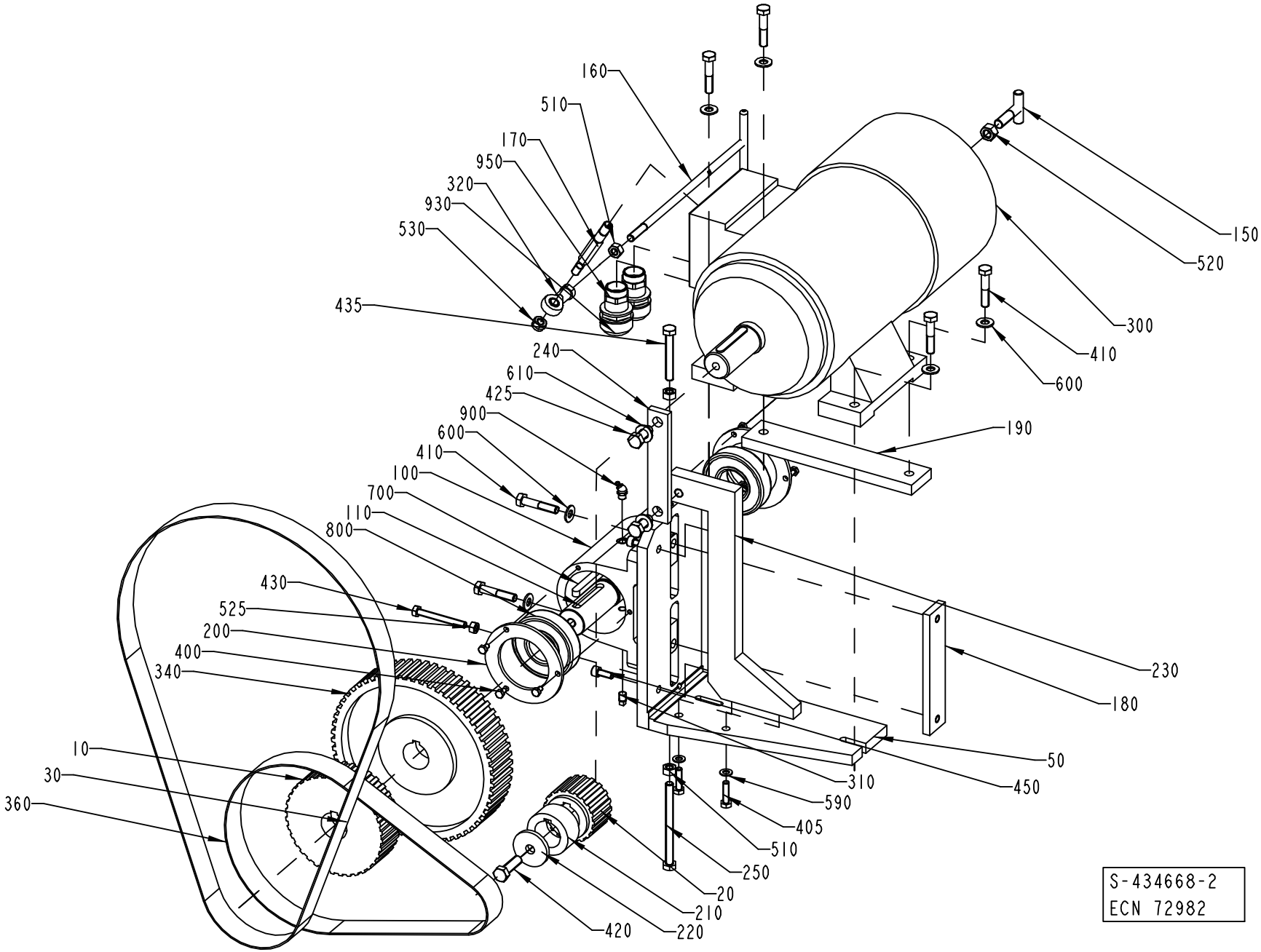
160
510
170
950
320
930
530
435
240
610
425
900
600
410
100
700
110
800
430
525
200
400
340
10
30
360
150
520
300
410
600
190
230
180
50
450
310
590
405
510
250
20
210
220
420
S-434668-2
ECN 72982

ECM: 72982 - 20000131
Group number: 434668-0400
Assembly Drawing: 434668-2_1_AB

This list covers pages from 3-30 to 3-33

Pos	Part No	UN	Qty	Description	Page No
Common Parts (Cont'd)					
340	90196-0066		1	PULLEY	
360	90417-0133		1	TIMING BELT 12,7X990,6X38,1	
400	312101-0364		6	SCREW M6S M6X10 FZB	
405	312101-0455		2	SCREW M6S M8X30 FZB	
410	312101-0501		6	SCREW M6S M10X50 FZB	
420	312101-0540		1	SCREW M6S M12X40 FZB	
425	312101-0536		2	SCREW M6S M12X30 FZB	
430	312104-0465		1	SCREW M6S M8X70H FZB	
435	312104-0505		1	SCREW M6S M10X70H FZB	
450	312111-0451		2	SCREW HEX.SOCK.HD.MC6S-TT 8X20 88 FZB	
510	312601-0320		3	HEXAGON NUT, M10 8 FZB, ISO 4032	
520	312601-0322		1	HEXAGON NUT, DIN 934 M12 8 FZB	
525	312601-0318		1	HEXAGON NUT, DIN 934 M8 8 FZB	
530	312812-0320		1	HEXAGON NUT, NY-LOCK M10 A480	
590	315101-0165		2	WASHER PLAIN, BRB, 8,4/16 H=1,5	
600	315101-0173		6	WASHER PLAIN, BRB, 10,5/22 H=2	
610	315101-0178		2	WASHER PLAIN, BRB, 13/24 H=2	
700	315701-0307		1	PARALLEL KEY W. ROUND ENDS 10X8X70 MM	
800	321316-0108		2	BALL BEARING, 40X90X23 MM	
900	344502-0046		1	GREASE NIPPLE 45 DEG. R1/8 CON.	
930	352136-0143		2	GLAND FITTING	
950	352100-0115		2	CABLE GLAND NO.28,3-15,5	

Pos	Part No	UN	Qty	Description	Page No

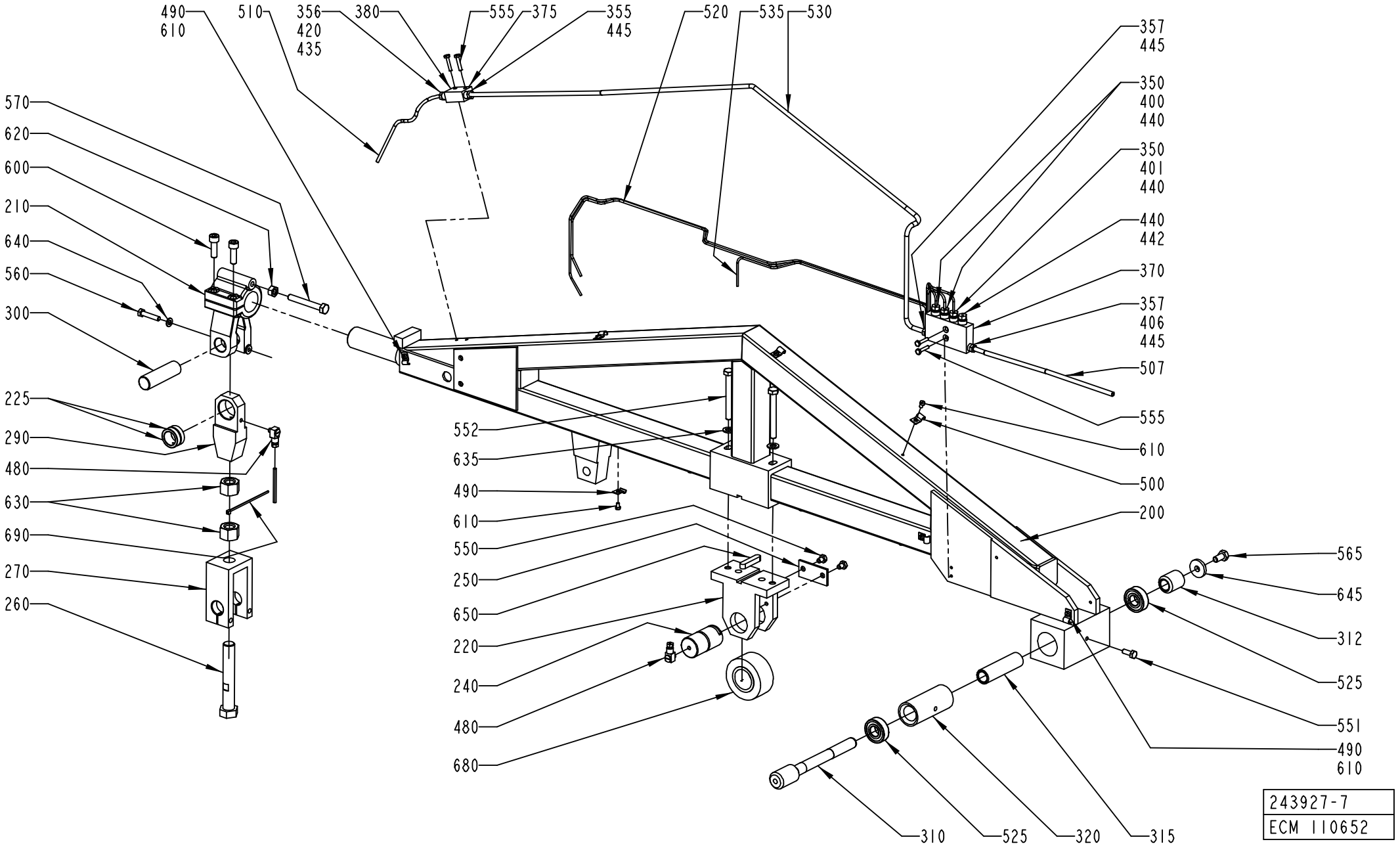

243927-7
ECM 110652

ECM: 110655 - 20020619
Group number: 243927-0700
Assembly Drawing: 243927-7_1_AC

Pos	Part No	UN	Qty	Description	Page No
0500B, 0500SQ, 0500S, 1000B LOFIN, 0568SQ, 0568B, 0300B					
220	243928-0000		1	BRACKET	
1136B, 1000SQ, 1500B, 1000S, 1000B HIFIN					
220	279466-0000		1	BRACKET	
Common Parts					
200	530708-0000		1	ARM	
210	35827-0000		1	BRACKET	
225	23270-0000		1	BUSHING	
240	243930-0000		1	SHAFT	
250	243931-0000		1	SECURING PLATE	
260	246787-0000		1	SCREW	
270	246790-0000		1	LINK	
290	251561-0000		1	LINK	
300	251562-0000		1	SHAFT	
310	570066-0000		1	SHAFT	
312	570067-0000		1	RING	
315	570125-0000		1	SLEEVE	
320	570126-0000		1	SLEEVE	
350	90028-0020		3	CONE TUBE 2,5MM	
355	90028-0022		1	CONE TUBE 6 MM	
356	90028-0024		1	CONE TUBE 4 MM	
357	90028-0025		2	CONE TUBE 6 MM	
370	90032-0039		1	BLOCK 4 WAYS	
375	90032-0043		1	DISTRIBUTION BLOCK 3 WAYS	
380	90087-0019		1	PLUG M10X1 STAINLESS	
400	90092-0053		2	METERING VALVE 30 MM3	
401	90092-0054		1	METERING VALVE 50 MM3	
406	90134-0030		1	SLEEVE FOR PLASTIC TUBE	
420	90134-0031		1	SLEEVE FOR PLASTIC TUBE	
435	90134-0038		1	BUSHING/NUT INLET/OUTLET 4 MM	
440	90134-0039		4	BUSHING VALVE CONNECTION 2,5 MM	
442	90134-0052		1	PLUG DOSING BLOCK	
445	90134-0055		3	BUSHING/NUT INLET/OUTLET 6 MM	
480	90134-0058		2	CONNECTION	
490	90165-0003		4	PIPE CLIP FOR TUBE D=4 MM	
500	90165-0005		6	PIPE CLIP FOR TUBE D=6 MM	
507	90166-0108	MM	2700	TUBE 6 MM PA,TRANSP.	
510	90166-0109	MM	2700	TUBE 4 MM PA,TRANSP.	
520	90166-0143	MM	2000	TUBE 2,5 MM PA,TRANSP.	
525	90214-0169		2	BALL BEARING SOLID OIL 15X35X11 MM	
530	90266-0006	MM	1500	TUBE	
535	90266-0019	MM	1000	PIPE	
550	312101-0362		2	SCREW M6S M6X8 FZB	
551	312101-0368		1	SCREW M6S M6X16 FZB	
552	312101-0465		2	SCREW M6S M8X70 FZB	
555	312101-0295		4	SCREW M6S M4X20 FZB	
560	312105-0374		1	SCREW M6S ISO 4014 M6X30 A480	
565	312105-0449		1	SCREW M6S ISO 4017 M8X16 A480	
570	312109-0463		1	SCREW M6S ISO 4017 M8X60 A480	
600	312115-0453		2	SCREW ISO4762 M8X25 A4 80	
610	312121-0285		10	SCREW ISO 1207 M4X6 4.8 - 5.8 Z.PL.	
620	312605-0318		1	HEXAGON NUT, M6M M8 A280	
630	312811-0324		2	NUT HEX.LOCK HELI COIL MID GRIP M16 SS	
635	315101-0165		2	WASHER PLAIN, BRB, 8,4/16 H=1,5	
640	315105-0153		1	WASHER BRB 6,4X12 RFR	
645	315121-0165		1	WASHER PLAIN, TBRSB 8,4/26 H=5	
650	315701-0270		1	PARALLEL KEY W. ROUND ENDS 8X7X40 MM	
680	321576-0360		1	ROLLER BEARING, 30X62X29 MM	
690	352113-0101		1	CABLE TIE, BLACK 92X2,5 MM	

Machine Type | Group Description | Used-In | Group Number | Page No

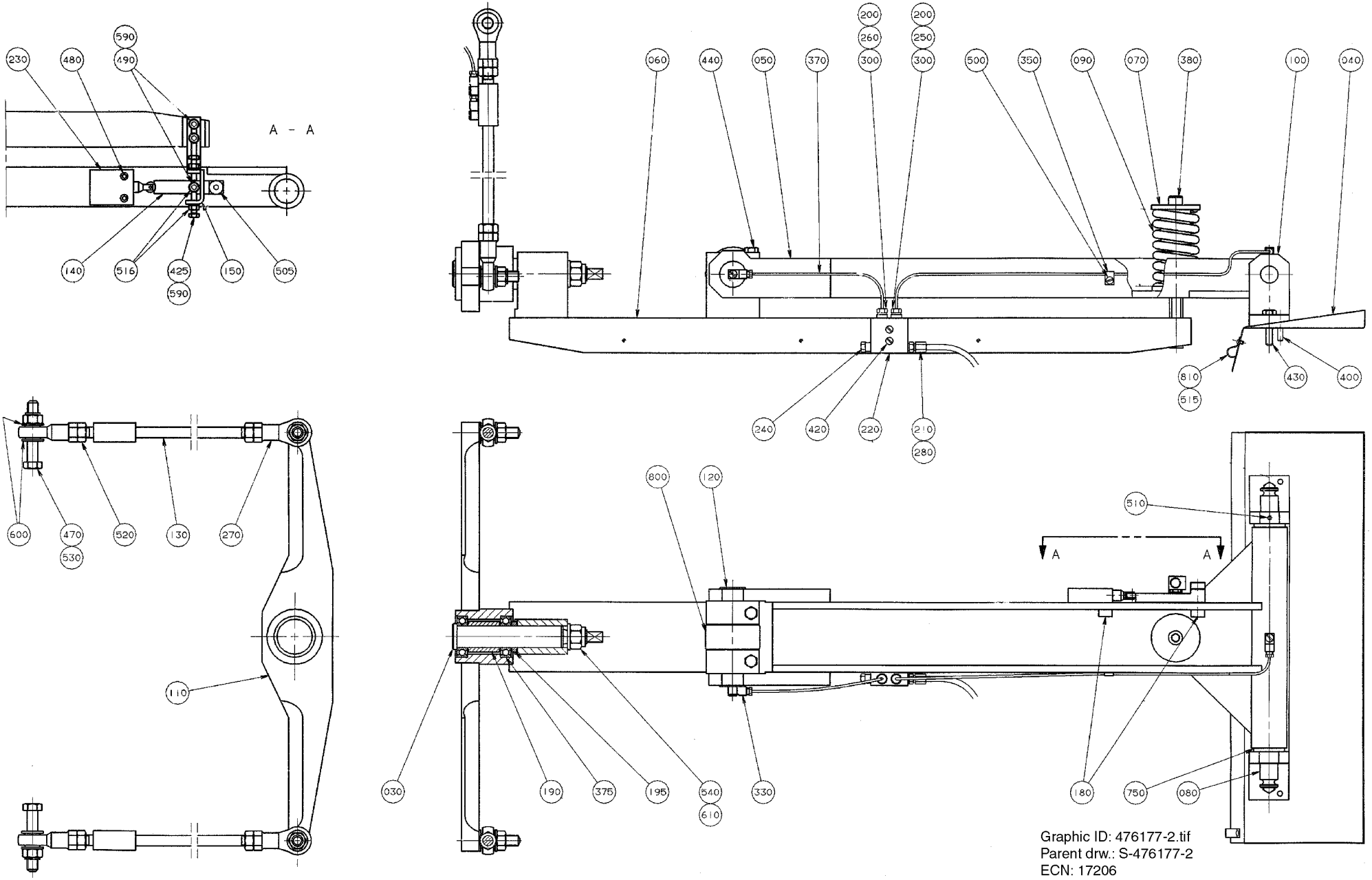
A - A
A
A
Graphic ID: 476177-2.tif
Parent drw.: S-476177-2
ECN: 17206

ECM: 72089 - 19981214
Group number: 476177-0200
Assembly Drawing: 476177-2_1_AA

This list covers pages from 3-36 to 3-39

Pos	Part No	UN	Qty	Description	Page No
1000SQ US, TPC, 0500SQ US, 0568SQ US (See drawing on page: 3-36)					
040	279969-0000		1	DRIP PLATE	
050	450670-0000		1	ARM	
080	563212-0000		1	SHAFT	
110	560417-0000		1	ROCKER ARM	
180	527648-0000		2	WASHER	
195	568287-0000		1	RING	
200	90028-0020		2	CONE TUBE 2,5MM	
250	90092-0052		1	METERING VALVE 10 MM3	
330	90134-0058		6	CONNECTION	
350	90165-0022		1	PIPE CLIP, FOR TUBE D=2,5 MM, B-3570	
375	90214-0163		2	BALL BEARING SOLID OIL 25X47X12 MM	
500	312121-0285		1	SCREW ISO 1207 M4X6 4.8 - 5.8 Z.PL.	
510	312316-0327		1	SCREW HEX.SOCK.SET CUP P.MSK6SS5X12 FZB	
515	312503-0275		2	TAPPING SCREW ISO 7049-ST3,5X6,5-C-Z	
750	321101-0233		2	FLANGE BUSHING, 20X28X20 MM	
810	352110-0101		2	CABLE CLIPS, D=7-10 MM	
1500B US (See drawing on page: 3-38)					
045	591247-0000		1	SLEEVE	
050	591245-0000		1	ARM	
080	591246-0000		1	SHAFT	
110	593868-0000		1	ROCKER ARM	
180	527648-0000		1	WASHER	
195	568287-0000		3	RING	
200	90028-0020		1	CONE TUBE 2,5MM	
310	90134-0052		1	PLUG DOSING BLOCK	
330	90134-0058		5	CONNECTION	
375	90214-0163		4	BALL BEARING SOLID OIL 25X47X12 MM	
475	312109-0463		2	SCREW M6S ISO 4017 M8X60 A480	
Common Parts					
030	560418-0000		1	SHAFT	
060	567033-0000		1	ARM	
070	239383-0000		2	SLEEVE	
090	243971-0000		1	SPRING	
100	246948-0000		1	BRACKET	
120	434062-0000		1	SHAFT	
130	434098-0000		2	STRUT	
140	567702-0000		1	CURVE	
150	567703-0000		1	LINK	
160	576742-0000		1	OIL TROUGH	
190	568286-0000		1	SLEEVE	
210	90134-0038		1	BUSHING/NUT INLET/OUTLET 4 MM	
220	90032-0038		1	BLOCK 2 WAYS	
230	90044-0094		1	LIMIT SW. 924 CE31-Y20-X5	
240	90087-0019		1	PLUG M10X1 STAINLESS	
260	90092-0053		1	METERING VALVE 30 MM3	
270	90115-0133		4	ROD END, ID=12 MM, M12X1,25	
280	90134-0031		1	SLEEVE FOR PLASTIC TUBE	
300	90134-0039		2	BUSHING VALVE CONNECTION 2,5 MM	
370	90166-0143	MM	1000	TUBE 2,5 MM PA,TRANSP.	
380	90287-0136		1	SCREW MC6S M10X150 129	
400	311303-0356		2	SLOTTED PIN RPB 6X30 ZINC COATED	
420	312101-0295		2	SCREW M6S M4X20 FZB	
425	312101-0372		2	SCREW M6S M6X25 FZB	
430	312101-0453		3	SCREW M6S M8X25 FZB	
440	312101-0459		2	SCREW M6S M8X40 FZB	
470	312101-0546		2	SCREW M6S M12X70 FZB	
480	312111-0335		2	SCREW HEX.SOCK.HD.MC6S-TT 5X30 88 FZB	
490	312111-0368		3	SCREW HEX.SOCK.HD.MC6S-TT 6X16 88 FZB	
505	312180-0489		1	SCREW ISO7379 H10X16	
516	312601-0316		3	HEXAGON NUT, DIN 934 M6 8 FZB	
520	312601-0322		4	HEXAGON NUT, DIN 934 M12 8 FZB	
530	312810-0322		4	HEXAGON NUT, NY-LOCK M12 FZB	
540	312810-0324		1	HEXAGON NUT, NY-LOCK M16 FZB	
590	315101-0153		5	WASHER PLAIN, BRB, 6,4/12 H=1,5	
600	315101-0178		8	WASHER PLAIN, BRB, 13/24 H=2	
610	315101-0186		1	WASHER PLAIN, BRB, 17/30 H=3	
800	321576-0360		1	ROLLER BEARING, 30X62X29 MM	

Machine Type | Group Description | Used-In | Group Number | Page No

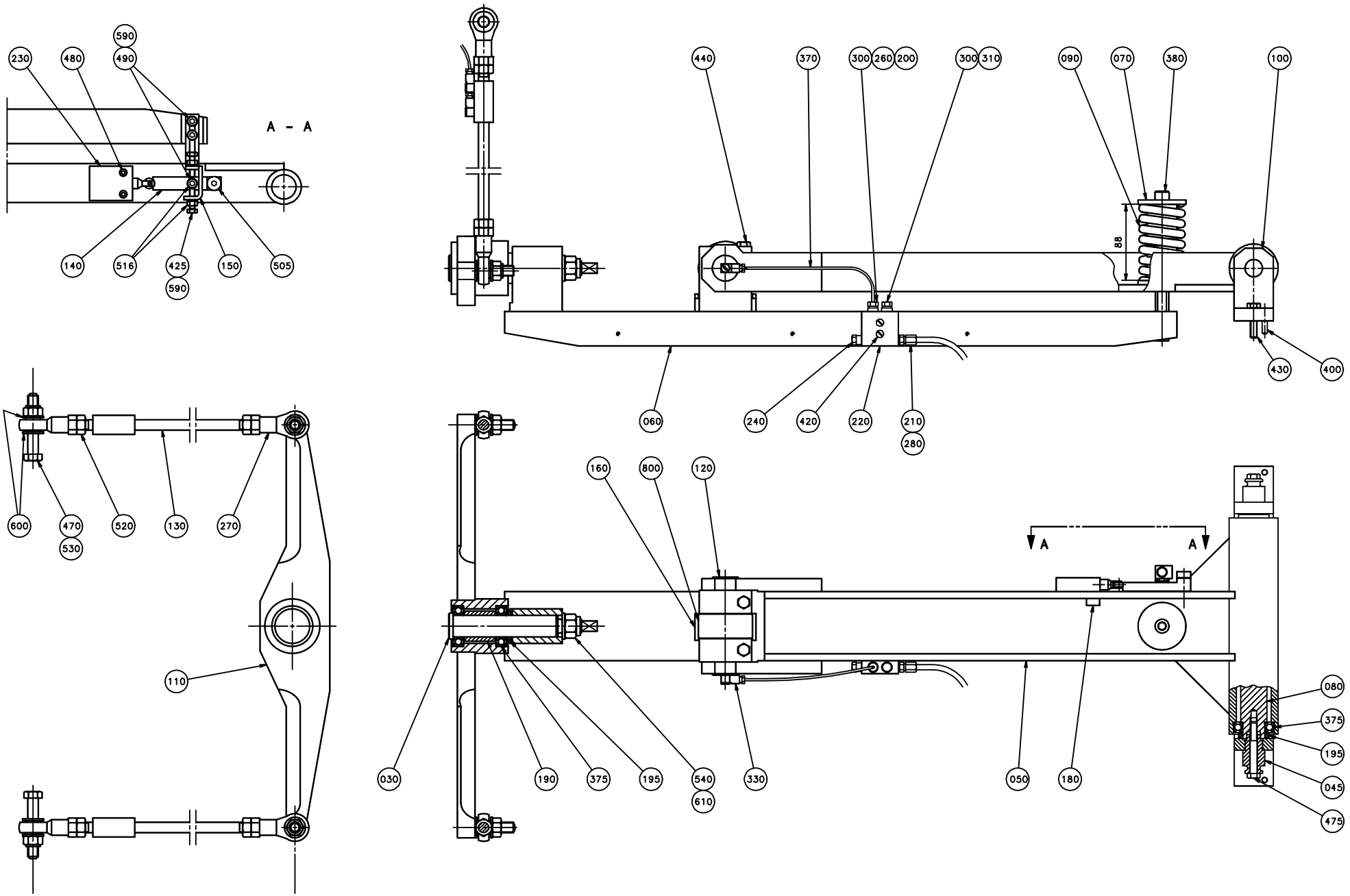
A - A
590
230
480
490
140
516
425
590
150
505
440
370
300
260
200
300
310
090
070
380
100
88
430
400
060
240
420
220
210
280
600
470
530
520
130
270
110
160
800
120
A
A
030
190
375
195
540
610
330
050
180
080
375
195
045
475

ECM: 72089 - 19981214
Group number: 476177-0200
Assembly Drawing: 476177-3_1_AA

This list covers pages from 3-36 to 3-39

Pos	Part No	UN	Qty	Description	Page No
1000SQ US, TPC, 0500SQ US, 0568SQ US (See drawing on page: 3-36)					
040	279969-0000		1	DRIP PLATE	
050	450670-0000		1	ARM	
080	563212-0000		1	SHAFT	
110	560417-0000		1	ROCKER ARM	
180	527648-0000		2	WASHER	
195	568287-0000		1	RING	
200	90028-0020		2	CONE TUBE 2,5MM	
250	90092-0052		1	METERING VALVE 10 MM3	
330	90134-0058		6	CONNECTION	
350	90165-0022		1	PIPE CLIP, FOR TUBE D=2,5 MM, B-3570	
375	90214-0163		2	BALL BEARING SOLID OIL 25X47X12 MM	
500	312121-0285		1	SCREW ISO 1207 M4X6 4.8 - 5.8 Z.PL.	
510	312316-0327		1	SCREW HEX.SOCK.SET CUP P.MSK6SS5X12 FZB	
515	312503-0275		2	TAPPING SCREW ISO 7049-ST3,5X6,5-C-Z	
750	321101-0233		2	FLANGE BUSHING, 20X28X20 MM	
810	352110-0101		2	CABLE CLIPS, D=7-10 MM	
1500B US (See drawing on page: 3-38)					
045	591247-0000		1	SLEEVE	
050	591245-0000		1	ARM	
080	591246-0000		1	SHAFT	
110	593868-0000		1	ROCKER ARM	
180	527648-0000		1	WASHER	
195	568287-0000		3	RING	
200	90028-0020		1	CONE TUBE 2,5MM	
310	90134-0052		1	PLUG DOSING BLOCK	
330	90134-0058		5	CONNECTION	
375	90214-0163		4	BALL BEARING SOLID OIL 25X47X12 MM	
475	312109-0463		2	SCREW M6S ISO 4017 M8X60 A480	
Common Parts					
030	560418-0000		1	SHAFT	
060	567033-0000		1	ARM	
070	239383-0000		2	SLEEVE	
090	243971-0000		1	SPRING	
100	246948-0000		1	BRACKET	
120	434062-0000		1	SHAFT	
130	434098-0000		2	STRUT	
140	567702-0000		1	CURVE	
150	567703-0000		1	LINK	
160	576742-0000		1	OIL TROUGH	
190	568286-0000		1	SLEEVE	
210	90134-0038		1	BUSHING/NUT INLET/OUTLET 4 MM	
220	90032-0038		1	BLOCK 2 WAYS	
230	90044-0094		1	LIMIT SW. 924 CE31-Y20-X5	
240	90087-0019		1	PLUG M10X1 STAINLESS	
260	90092-0053		1	METERING VALVE 30 MM3	
270	90115-0133		4	ROD END, ID=12 MM, M12X1,25	
280	90134-0031		1	SLEEVE FOR PLASTIC TUBE	
300	90134-0039		2	BUSHING VALVE CONNECTION 2,5 MM	
370	90166-0143	MM	1000	TUBE 2,5 MM PA,TRANSP.	
380	90287-0136		1	SCREW MC6S M10X150 129	
400	311303-0356		2	SLOTTED PIN RPB 6X30 ZINC COATED	
420	312101-0295		2	SCREW M6S M4X20 FZB	
425	312101-0372		2	SCREW M6S M6X25 FZB	
430	312101-0453		3	SCREW M6S M8X25 FZB	
440	312101-0459		2	SCREW M6S M8X40 FZB	
470	312101-0546		2	SCREW M6S M12X70 FZB	
480	312111-0335		2	SCREW HEX.SOCK.HD.MC6S-TT 5X30 88 FZB	
490	312111-0368		3	SCREW HEX.SOCK.HD.MC6S-TT 6X16 88 FZB	
505	312180-0489		1	SCREW ISO7379 H10X16	
516	312601-0316		3	HEXAGON NUT, DIN 934 M6 8 FZB	
520	312601-0322		4	HEXAGON NUT, DIN 934 M12 8 FZB	
530	312810-0322		4	HEXAGON NUT, NY-LOCK M12 FZB	
540	312810-0324		1	HEXAGON NUT, NY-LOCK M16 FZB	
590	315101-0153		5	WASHER PLAIN, BRB, 6,4/12 H=1,5	
600	315101-0178		8	WASHER PLAIN, BRB, 13/24 H=2	
610	315101-0186		1	WASHER PLAIN, BRB, 17/30 H=3	
800	321576-0360		1	ROLLER BEARING, 30X62X29 MM	

Machine Type	Group Description	Used-In	Group Number	Page No

LINK SYSTEM

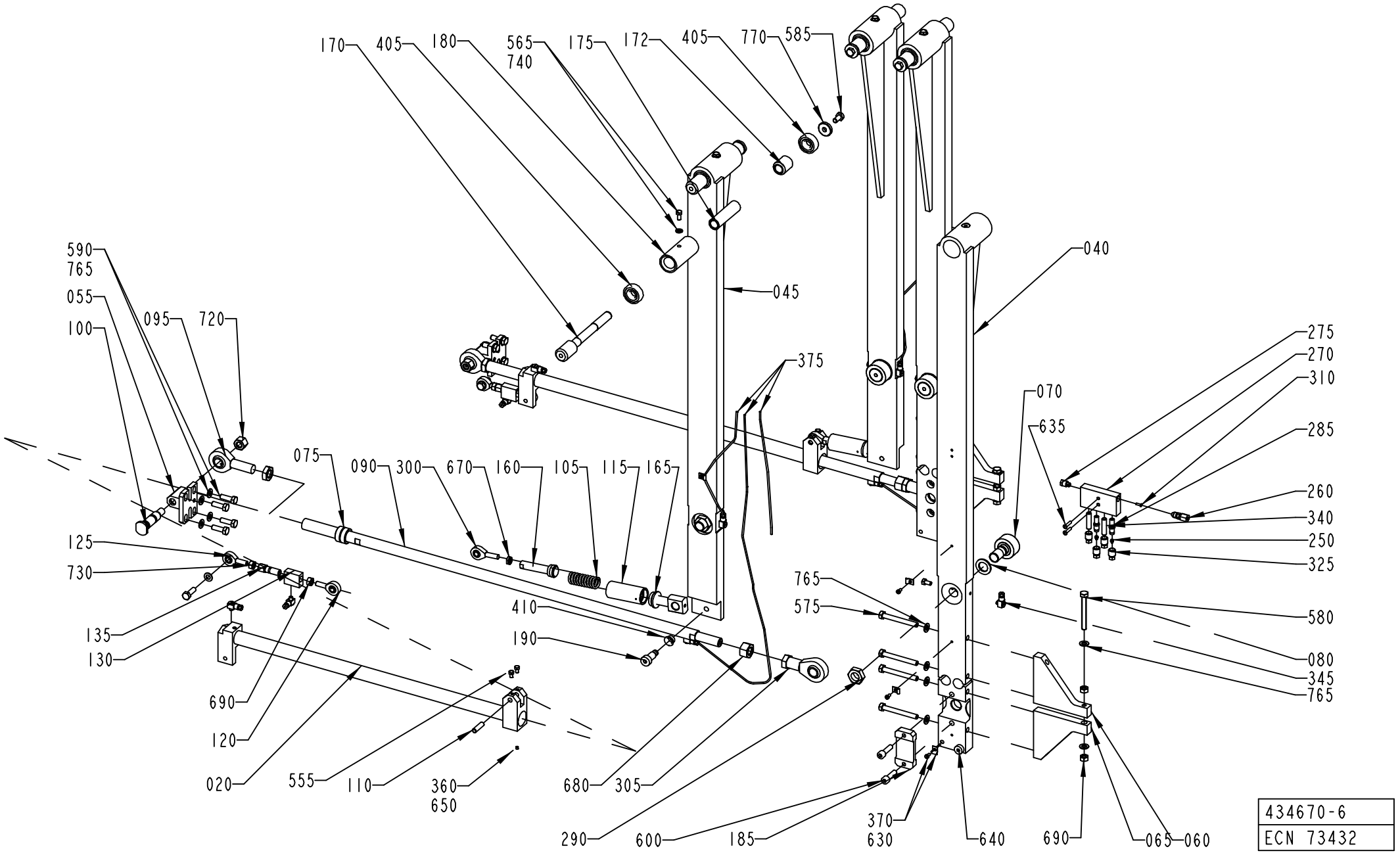

434670-6
ECN 73432

ECM: 111520 - 20020708
Group number: 434670-0600
Assembly Drawing: 434670-6_1_AC

This list covers pages from 3-40 to 3-43

Pos	Part No	UN	Qty	Description	Page No
TPC (See drawing on page: 3-40)					
020	540335-0000		2	LINK	
045	562747-0000		2	ARM	
070	28334-0000		4	CURVE ROLLER	
075	230462-0000		4	BUSHING	
080	239538-0000		4	WASHER	
105	252707-0000		2	SPRING	
110	255335-0000		2	SHAFT	
115	255398-0000		2	SLEEVE	
120	263313-0000		2	LINK HEAD M8 RECHTSGEWINDE	
125	263314-0000		2	LINK HEAD M8 LINKSGEWINDE	
130	263328-0000		2	SPACER	
135	263329-0000		2	NUT	
160	434142-0000		2	PISTON	
165	434143-0000		2	END SECTION	
170	570066-0000		4	SHAFT	
172	570067-0000		4	RING	
175	570125-0000		4	SLEEVE	
180	570126-0000		4	SLEEVE	
190	563061-0000		2	REAMED BOLT	
250	90028-0020		6	CONE TUBE 2,5MM	
285	90092-0053		4	METERING VALVE 30 MM3	
290	90099-0012		8	NUT HEX. M18X1,5, FE	
300	90115-0122		2	ROD END, ID=8 MM, M8X1,25	
340	90134-0052		2	PLUG DOSING BLOCK	
370	90165-0022		8	PIPE CLIP, FOR TUBE D=2,5 MM, B-3570	
405	90214-0169		8	BALL BEARING SOLID OIL 15X35X11 MM	
410	90240-0097		4	FLANGE BUSHING, 12X14X9 MM	
555	312101-0323		4	SCREW M6S M5X8 FZB	
565	312101-0366		8	SCREW M6S M6X12 FZB	
585	312105-0449		4	SCREW M6S ISO 4017 M8X16 A480	
590	312105-0453		12	SCREW M6S ISO 4017 M8X25 A480	
630	312121-0287		8	SCREW ISO 1207 M4X8 4.8 - 5.8 Z.PL.	
650	312316-0283		4	SCREW HEX.SOCK.SET CUP P.MSK6SS4X4 FZB	
670	312621-0318		2	ROD END,NUT M8	
690	312605-0318		6	HEXAGON NUT, M6M M8 A280	
730	312902-0318		2	NUT HEX. LEFT THREAD, M8 A280	
740	315101-0153		4	WASHER PLAIN, BRB, 6,4/12 H=1,5	
765	315105-0165		30	WASHER BRB 8,4X16 RFR	
770	315121-0165		4	WASHER PLAIN, TBRSB 8,4/26 H=5	
Ultra Sonic Heat (See drawing on page: 3-42)					
070	28334-0000		2	CURVE ROLLER	
080	239538-0000		2	WASHER	
170	570066-0000		2	SHAFT	
172	570067-0000		2	RING	
175	570125-0000		2	SLEEVE	
180	570126-0000		2	SLEEVE	
250	90028-0020		4	CONE TUBE 2,5MM	
285	90092-0053		3	METERING VALVE 30 MM3	
290	90099-0012		4	NUT HEX. M18X1,5, FE	
340	90134-0052		4	PLUG DOSING BLOCK	
370	90165-0022		6	PIPE CLIP, FOR TUBE D=2,5 MM, B-3570	
405	90214-0169		4	BALL BEARING SOLID OIL 15X35X11 MM	
565	312101-0366		4	SCREW M6S M6X12 FZB	
585	312105-0449		2	SCREW M6S ISO 4017 M8X16 A480	
590	312105-0453		10	SCREW M6S ISO 4017 M8X25 A480	
630	312121-0287		6	SCREW ISO 1207 M4X8 4.8 - 5.8 Z.PL.	
690	312605-0318		4	HEXAGON NUT, M6M M8 A280	
740	315101-0153		2	WASHER PLAIN, BRB, 6,4/12 H=1,5	
765	315105-0165		26	WASHER BRB 8,4X16 RFR	
770	315121-0165		2	WASHER PLAIN, TBRSB 8,4/26 H=5	
Common Parts					
040	562746-0000		2	ARM	
055	464363-0000		2	HOLDER	
060	562748-0000		2	BRACKET	
065	562749-0000		2	BRACKET	
090	247119-0000		2	ROD	
095	526904-0000		2	LINK HEAD	
100	536703-0000		2	SHAFT	
185	562140-0000		2	CAP	
260	90030-0162		2	CONN. STR. 6-M10X1, EXT. THREAD	
270	90032-0039		2	BLOCK 4 WAYS	
275	90087-0019		2	PLUG M10X1 STAINLESS	
280	90092-0052		2	METERING VALVE 10 MM3	
305	90115-0067		2	ROD END, ID=16 MM, M16X2	
310	90134-0030		2	SLEEVE FOR PLASTIC TUBE	
325	90134-0039		8	BUSHING VALVE CONNECTION 2,5 MM	
345	90134-0058		10	CONNECTION	
360	90157-0016	ML	1	LOCKING FLUID LOCTITE 242 50 ML	
375	90166-0143	MM	2500	TUBE 2,5 MM PA,TRANSP.	
575	312101-0465		8	SCREW M6S M8X70 FZB	
580	312104-0465		2	SCREW M6S M8X70H FZB	
600	312111-0455		4	SCREW HEX.SOCK.HD.MC6S-TT 8X30 88 FZB	
635	312141-0295		4	SCREW ISO 2009 MFS M4X20 4.8 EL.PL	

Machine Type | Group Description | Used-In | Group Number | Page No

LINK SYSTEM

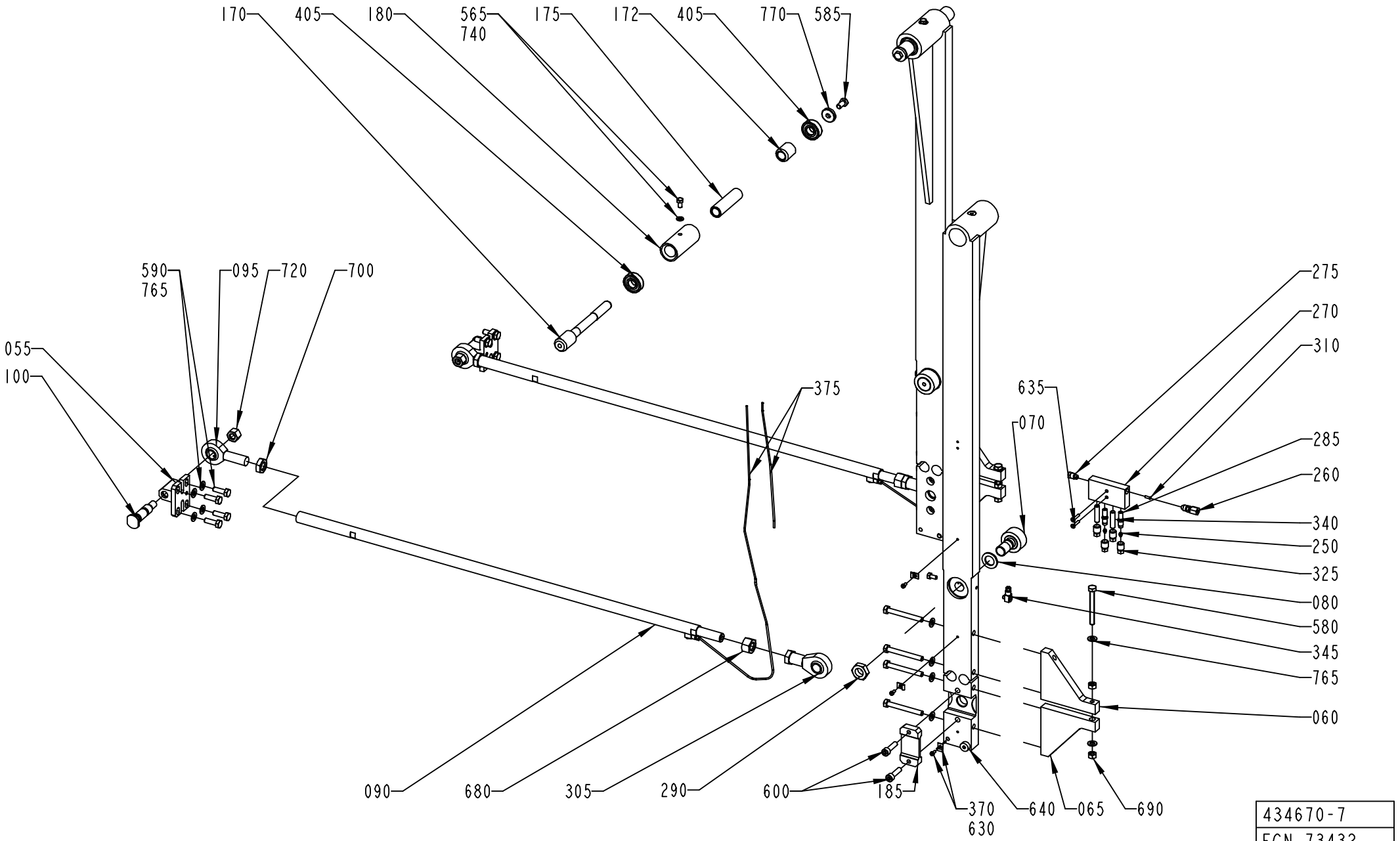

434670-7
ECN 73432

Pos	Part No	UN	Qty	Description	Page No
Common Parts (Cont'd)					
640	312180-0489		2	SCREW ISO7379 H10X16	
680	312601-0324		2	HEXAGON NUT, DIN 934 M16 8 FZB	
700	312621-0324		2	NUT ML6M16FZB	
720	312811-0322		2	NUT HEX.LOCK HELI COIL MID GRIP M12 SS	

Pos	Part No	UN	Qty	Description	Page No

Tetra Pak

SPC
Spare Parts Catalogue

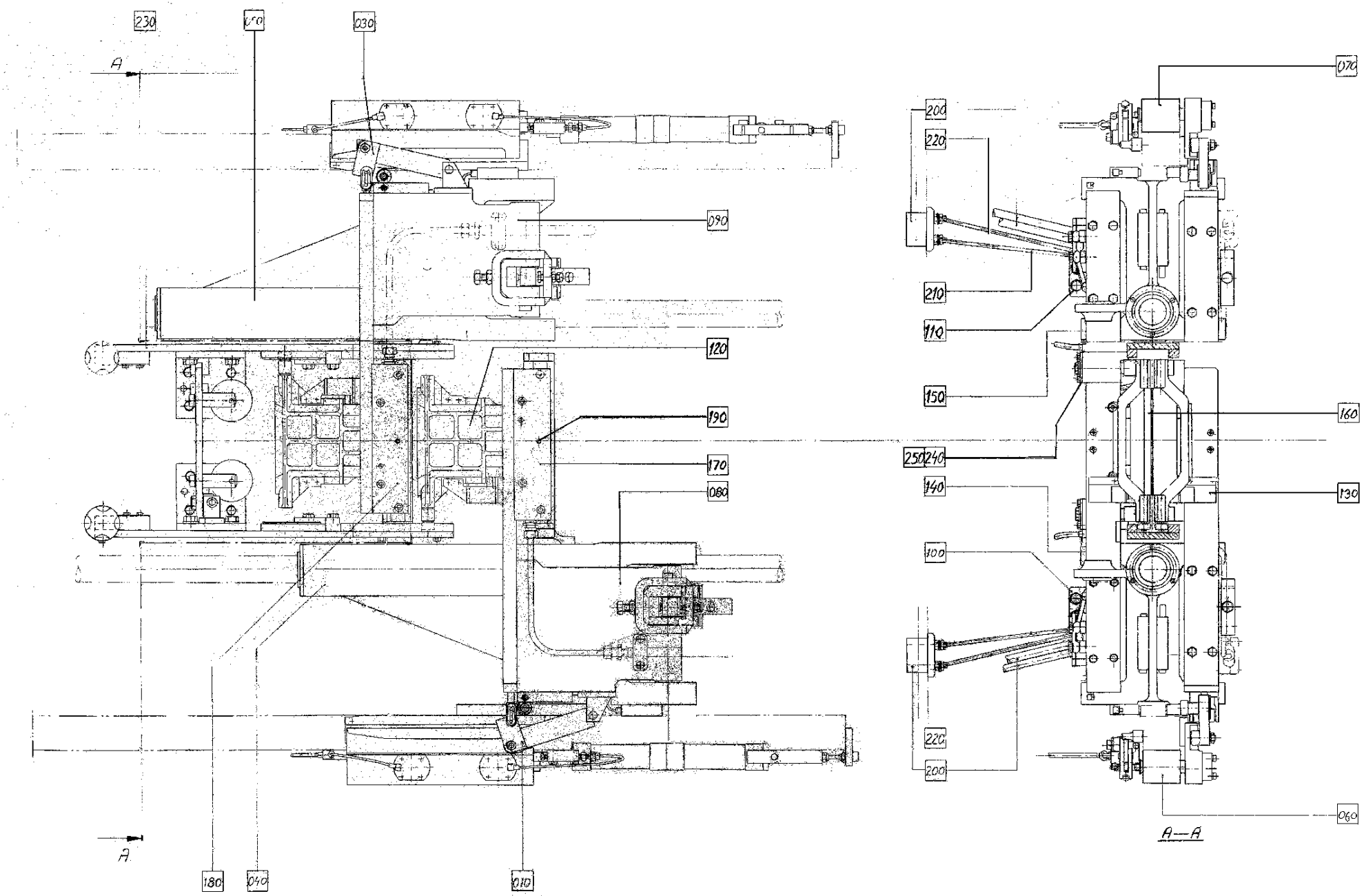
230
070
030
A
090
120
190
170
080
180
040
010
A
070
200
220
210
110
150
160
250
240
140
130
100
220
200
060
A—A

ECM: 103048 - 20020123
Group number: 648004-0900
Assembly Drawing: 648004-2_1_AA

This list covers pages from 4-2 to 4-5

Pos	Part No	UN	Qty	Description	Page No
0500SQ US, 0568SQ US (See drawing on pages: 4-2, 4-4)					
F270	1362439-0100		1	START-UP KIT US	**4-7**
F190	928976-0100		2	KNIFE HOLDER ULTRA SONIC	**4-9, 12-173**
F180	928983-0100		1	CUTTING JAW RIGHT	**4-11, 4-13, 4-15, 12-199, 12-201, 12-203**
F170	928982-0100		1	CUTTING JAW LEFT	**4-17, 4-19, 4-21, 12-193, 12-195, 12-197**
F150	592519-0100		1	PRESSURE JAW LEFT	**4-23, 4-25**
F140	592520-0100		1	PRESSURE JAW RIGHT	**4-27, 4-29**
F120	1338954-0100		1	VOLUME FLAP	**4-31**
F110	595200-0100		1	ARM	**4-33, 4-35, 4-37**
F100	246498-0600		1	ARM	**4-39, 4-41, 4-43**
F070	243435-0500		1	DESIGN CORRECTION DEVICE RIGHT	**4-45, 4-47**
F060	243434-0500		1	DESIGN CORRECTION DEVICE LEFT	**4-49, 4-51**
1000SQ US, 1500B US (See drawing on pages: 4-2, 4-4)					
F270	1362439-0100		1	START-UP KIT US	**4-7**
F190	928976-0100		2	KNIFE HOLDER ULTRA SONIC	**4-9, 12-173**
F180	928983-0100		1	CUTTING JAW RIGHT	**4-11, 4-13, 4-15, 12-199, 12-201, 12-203**
F170	928982-0100		1	CUTTING JAW LEFT	**4-17, 4-19, 4-21, 12-193, 12-195, 12-197**
F150	592519-0100		1	PRESSURE JAW LEFT	**4-23, 4-25**
F140	592520-0100		1	PRESSURE JAW RIGHT	**4-27, 4-29**
F120	246468-0800		4	VOLUME FLAP	**4-53, 4-55, 4-57, 4-59, 12-205, 12-207, 12-209, 12-211**
F110	595200-0100		1	ARM	**4-33, 4-35, 4-37**
F100	246498-0600		1	ARM	**4-39, 4-41, 4-43**
F070	243435-0500		1	DESIGN CORRECTION DEVICE RIGHT	**4-45, 4-47**
F060	243434-0500		1	DESIGN CORRECTION DEVICE LEFT	**4-49, 4-51**
TPC (See drawing on pages: 4-2, 4-4)					
F270	247123-0600		1	START-UP KIT TPC	**4-61, 4-63**
F250	246497-0950		1	PRESSURE JAW RIGHT	**4-65, 4-67**
F240	246497-0900		1	PRESSURE JAW LEFT	**4-69, 4-71**
F200	294056-0200		1	TRANSMISSION	**4-73**
F190	25096-0700		2	KNIFE HOLDER	**4-75**
F180	246338-0500		1	CUTTING JAW RIGHT	**4-77, 4-79, 4-81, 4-83**
F170	246337-0500		1	CUTTING JAW LEFT	**4-85, 4-87, 4-89, 4-91**
F160	273565-0300		2	TPC BAR	
F150	247187-0550		1	CARRIER RIGHT HAND SIDE	**4-93**
F140	247187-0500		1	CARRIER LEFT HAND SIDE	**4-95**
F120	246468-0800		4	VOLUME FLAP	**4-53, 4-55, 4-57, 4-59, 12-205, 12-207, 12-209, 12-211**
F110	595200-0100		1	ARM	**4-33, 4-35, 4-37**
F100	246498-0600		1	ARM	**4-39, 4-41, 4-43**
F070	243435-0500		1	DESIGN CORRECTION DEVICE RIGHT	**4-45, 4-47**
F060	243434-0500		1	DESIGN CORRECTION DEVICE LEFT	**4-49, 4-51**
Common Parts					
F280	541188-0200		1	BAR CODE	**4-97, 4-99**
F230	293605-0500		1	VOLUME CURVE PIECE	**4-101, 4-103, 4-105, 4-107, 4-109, 4-111**
F130	246327-0400		1	SHOCK ABSORBER	**4-113, 4-115, 4-117, 4-119, 4-121, 4-123, 4-125, 4-127, 4-129, 12-175, 12-177, 12-179, 12-181, 12-183, 12-185, 12-187, 12-189, 12-191**
F090	593750-0100		1	ARM WITH AXLE,CUT R	**4-131, 4-133**
F080	246499-0600		1	ARM WITH AXLE,CUT L	**4-135, 4-137**
F050	593749-0100		1	YOKE	**4-139**
F040	243942-0400		1	YOKE	**4-141**
F030	279565-0300		1	FOLDING DEVICE	**4-143**
F010	279564-0300		1	FOLDING DEVICE	**4-147**

Machine Type | Group Description | Used-In | Group Number | Page No

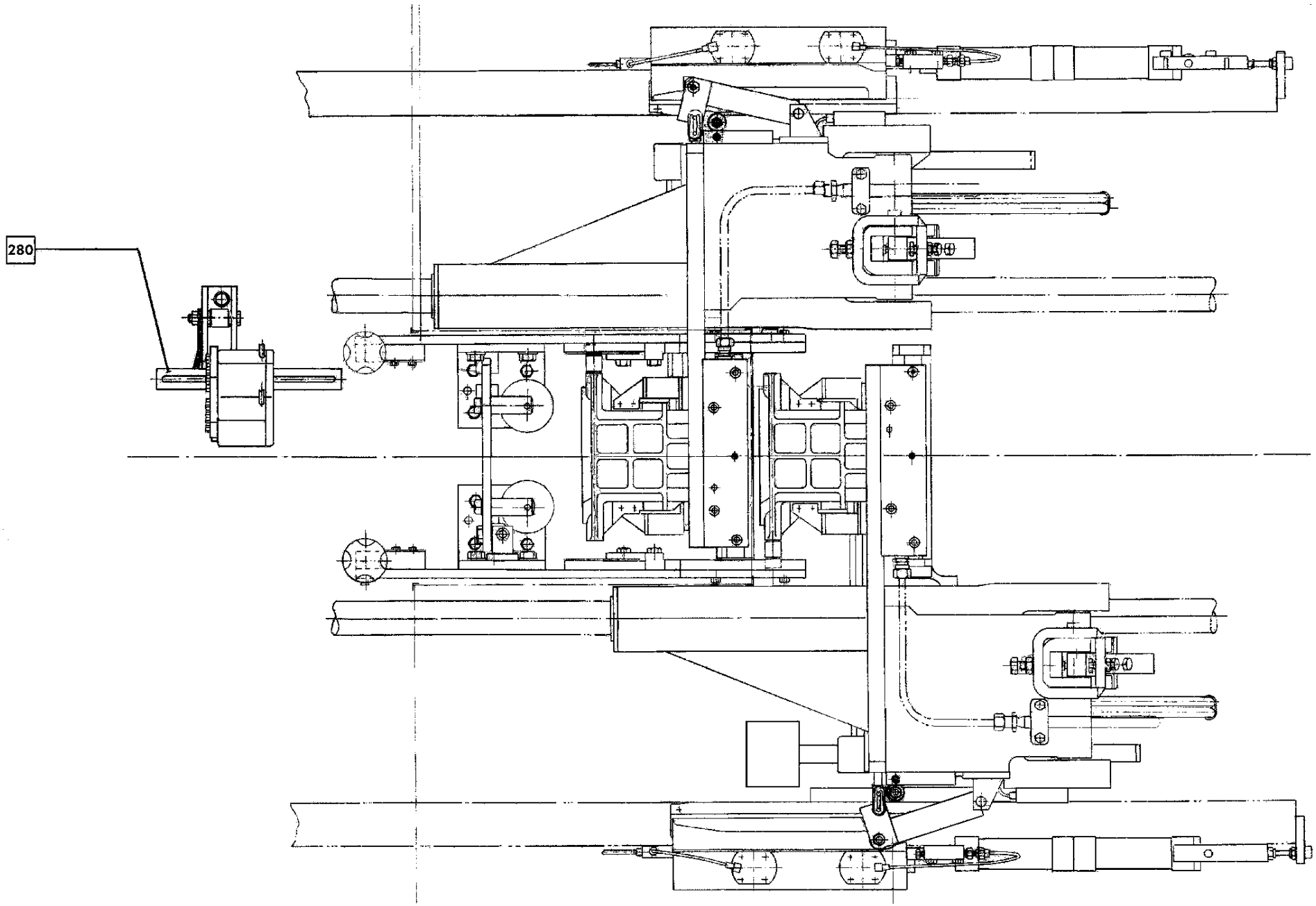
280

ECM: 103048 - 20020123
Group number: 648004-0900
Assembly Drawing: 648004-3_1_AA

This list covers pages from 4-2 to 4-5

Pos	Part No	UN	Qty	Description	Page No
0500SQ US, 0568SQ US (See drawing on pages: 4-2, 4-4)					
F270	1362439-0100		1	START-UP KIT US	**4-7**
F190	928976-0100		2	KNIFE HOLDER ULTRA SONIC	**4-9, 12-173**
F180	928983-0100		1	CUTTING JAW RIGHT	**4-11, 4-13, 4-15, 12-199, 12-201, 12-203**
F170	928982-0100		1	CUTTING JAW LEFT	**4-17, 4-19, 4-21, 12-193, 12-195, 12-197**
F150	592519-0100		1	PRESSURE JAW LEFT	**4-23, 4-25**
F140	592520-0100		1	PRESSURE JAW RIGHT	**4-27, 4-29**
F120	1338954-0100		1	VOLUME FLAP	**4-31**
F110	595200-0100		1	ARM	**4-33, 4-35, 4-37**
F100	246498-0600		1	ARM	**4-39, 4-41, 4-43**
F070	243435-0500		1	DESIGN CORRECTION DEVICE RIGHT	**4-45, 4-47**
F060	243434-0500		1	DESIGN CORRECTION DEVICE LEFT	**4-49, 4-51**
1000SQ US, 1500B US (See drawing on pages: 4-2, 4-4)					
F270	1362439-0100		1	START-UP KIT US	**4-7**
F190	928976-0100		2	KNIFE HOLDER ULTRA SONIC	**4-9, 12-173**
F180	928983-0100		1	CUTTING JAW RIGHT	**4-11, 4-13, 4-15, 12-199, 12-201, 12-203**
F170	928982-0100		1	CUTTING JAW LEFT	**4-17, 4-19, 4-21, 12-193, 12-195, 12-197**
F150	592519-0100		1	PRESSURE JAW LEFT	**4-23, 4-25**
F140	592520-0100		1	PRESSURE JAW RIGHT	**4-27, 4-29**
F120	246468-0800		4	VOLUME FLAP	**4-53, 4-55, 4-57, 4-59, 12-205, 12-207, 12-209, 12-211**
F110	595200-0100		1	ARM	**4-33, 4-35, 4-37**
F100	246498-0600		1	ARM	**4-39, 4-41, 4-43**
F070	243435-0500		1	DESIGN CORRECTION DEVICE RIGHT	**4-45, 4-47**
F060	243434-0500		1	DESIGN CORRECTION DEVICE LEFT	**4-49, 4-51**
TPC (See drawing on pages: 4-2, 4-4)					
F270	247123-0600		1	START-UP KIT TPC	**4-61, 4-63**
F250	246497-0950		1	PRESSURE JAW RIGHT	**4-65, 4-67**
F240	246497-0900		1	PRESSURE JAW LEFT	**4-69, 4-71**
F200	294056-0200		1	TRANSMISSION	**4-73**
F190	25096-0700		2	KNIFE HOLDER	**4-75**
F180	246338-0500		1	CUTTING JAW RIGHT	**4-77, 4-79, 4-81, 4-83**
F170	246337-0500		1	CUTTING JAW LEFT	**4-85, 4-87, 4-89, 4-91**
F160	273565-0300		2	TPC BAR	
F150	247187-0550		1	CARRIER RIGHT HAND SIDE	**4-93**
F140	247187-0500		1	CARRIER LEFT HAND SIDE	**4-95**
F120	246468-0800		4	VOLUME FLAP	**4-53, 4-55, 4-57, 4-59, 12-205, 12-207, 12-209, 12-211**
F110	595200-0100		1	ARM	**4-33, 4-35, 4-37**
F100	246498-0600		1	ARM	**4-39, 4-41, 4-43**
F070	243435-0500		1	DESIGN CORRECTION DEVICE RIGHT	**4-45, 4-47**
F060	243434-0500		1	DESIGN CORRECTION DEVICE LEFT	**4-49, 4-51**
Common Parts					
F280	541188-0200		1	BAR CODE	**4-97, 4-99**
F230	293605-0500		1	VOLUME CURVE PIECE	**4-101, 4-103, 4-105, 4-107, 4-109, 4-111**
F130	246327-0400		1	SHOCK ABSORBER	**4-113, 4-115, 4-117, 4-119, 4-121, 4-123, 4-125, 4-127, 4-129, 12-175, 12-177, 12-179, 12-181, 12-183, 12-185, 12-187, 12-189, 12-191**
F090	593750-0100		1	ARM WITH AXLE,CUT R	**4-131, 4-133**
F080	246499-0600		1	ARM WITH AXLE,CUT L	**4-135, 4-137**
F050	593749-0100		1	YOKE	**4-139**
F040	243942-0400		1	YOKE	**4-141**
F030	279565-0300		1	FOLDING DEVICE	**4-143**
F010	279564-0300		1	FOLDING DEVICE	**4-147**

Machine Type	Group Description	Used-In	Group Number	Page No

This page is intentionally left blank.

ECM: 71960 - 19981209
Group number: 1362439-0100
Assembly Drawing:

Pos	Part No	UN	Qty	Description	Page No
0500SQ US					
020	583827-0000		8	VOLUME SHIM	
0568SQ US					
020	1362433-0000		8	VOLUME SHIM	
1000SQ US					
020	1143050-0000		8	VOLUME SHIM	
1500B US					
020	593501-0000		8	VOLUME SHIM	
Common Parts					
010	456011-0000		4	PIN	
012	927440-0000		1	LINK	
014	927441-0000		1	NUT	
030	315202-0111		4	O-RING 13,1X1,6 MM	
032	315202-0207		4	O-RING 8,3X2,4 MM	
034	315202-0212		4	O-RING 14,3X2,4 MM	
040	315202-0114		4	O-RING 16,1X1,6 MM	
042	315202-0208		4	O-RING 9,3X2,4 MM	
050	591087-0000		10	SHIM	
052	90090-0013		4	BALL, D=4 MM	
054	90091-0362		4	SCRAPER, EXCLUDER2 18X22,8X3,7 MM	
056	90091-0364		4	ROD SEAL, STEPSEAL 18X25,3X3,2 MM	
058	90091-0366		4	WEAR RING 18X23X3,9 MM	
060	90091-0393		4	PISTON SEAL GLIDE RING T17,5X25X3,2	
062	90091-0394		4	WEAR RING 20X25X5,6 MM	
064	315202-0101		4	O-RING 3,1X1,6 MM	
066	315202-0105		8	O-RING 7,1X1,6 MM	
068	315202-0124		8	O-RING 37,1X1,6 MM	
070	315202-0220		4	O-RING 32,2X3 MM	

Pos	Part No	UN	Qty	Description	Page No

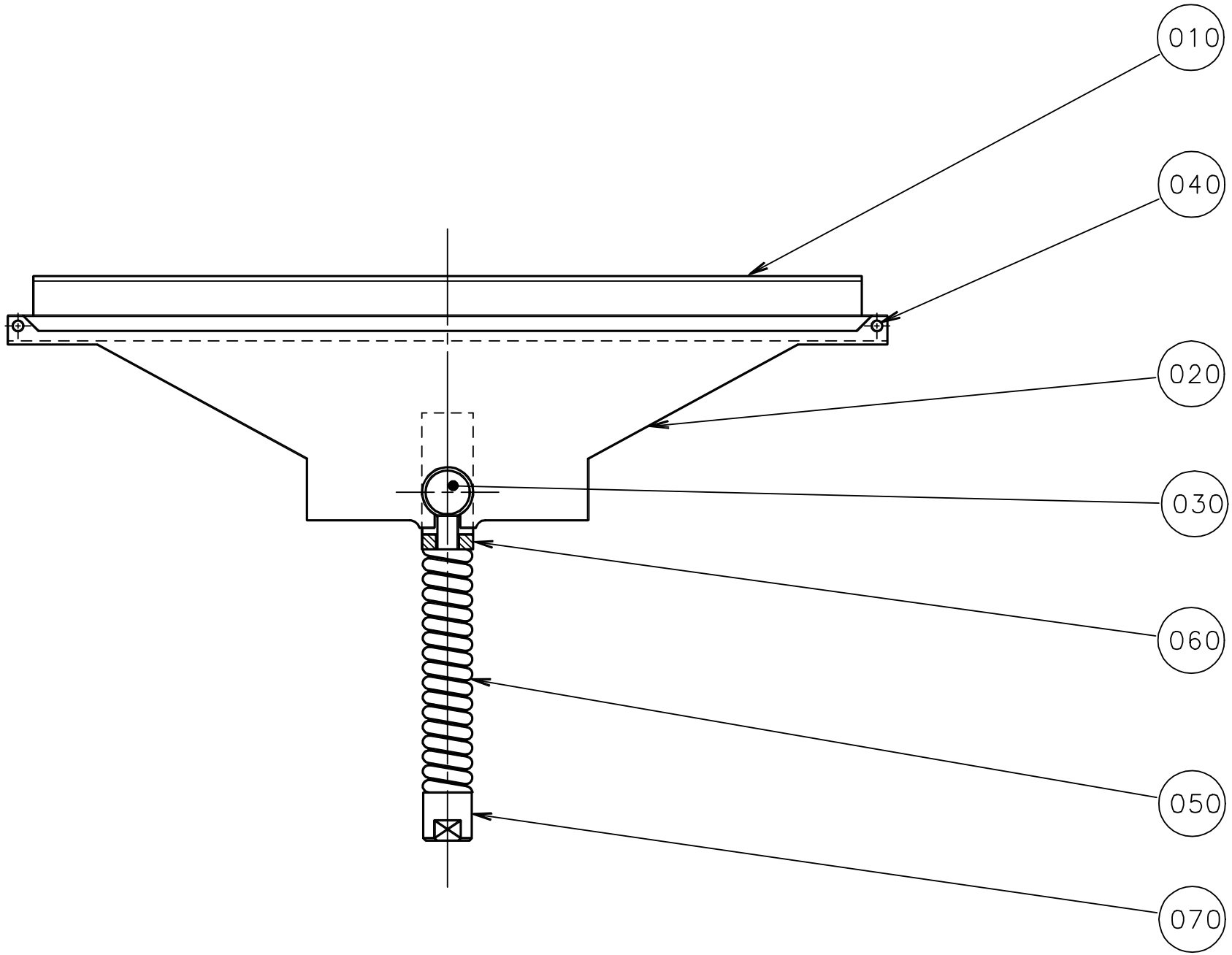
010
040
020
030
060
050
070

ECM: 114925 - 20020909
Group number: 928976-0100
Assembly Drawing: 928976-1_1_AA

Pos	Part No	UN	Qty	Description	Page No
1000SQ, 0500SQ, 0568SQ					
010	1338867-0000		1	KNIFE	
020	1143597-0000		1	KNIFE HOLDER	
1500B					
010	593578-0000		1	KNIFE	
020	593577-0000		1	KNIFE HOLDER	
Common Parts					
030	1285003-0000		1	LINK	
040	456011-0000		2	PIN	
050	1538109-0000		1	COMPRESSION SPRING	
060	1285006-0000		1	SPACER	
070	1285005-0000		1	NUT	

Pos	Part No	UN	Qty	Description	Page No

CUTTING JAW RIGHT

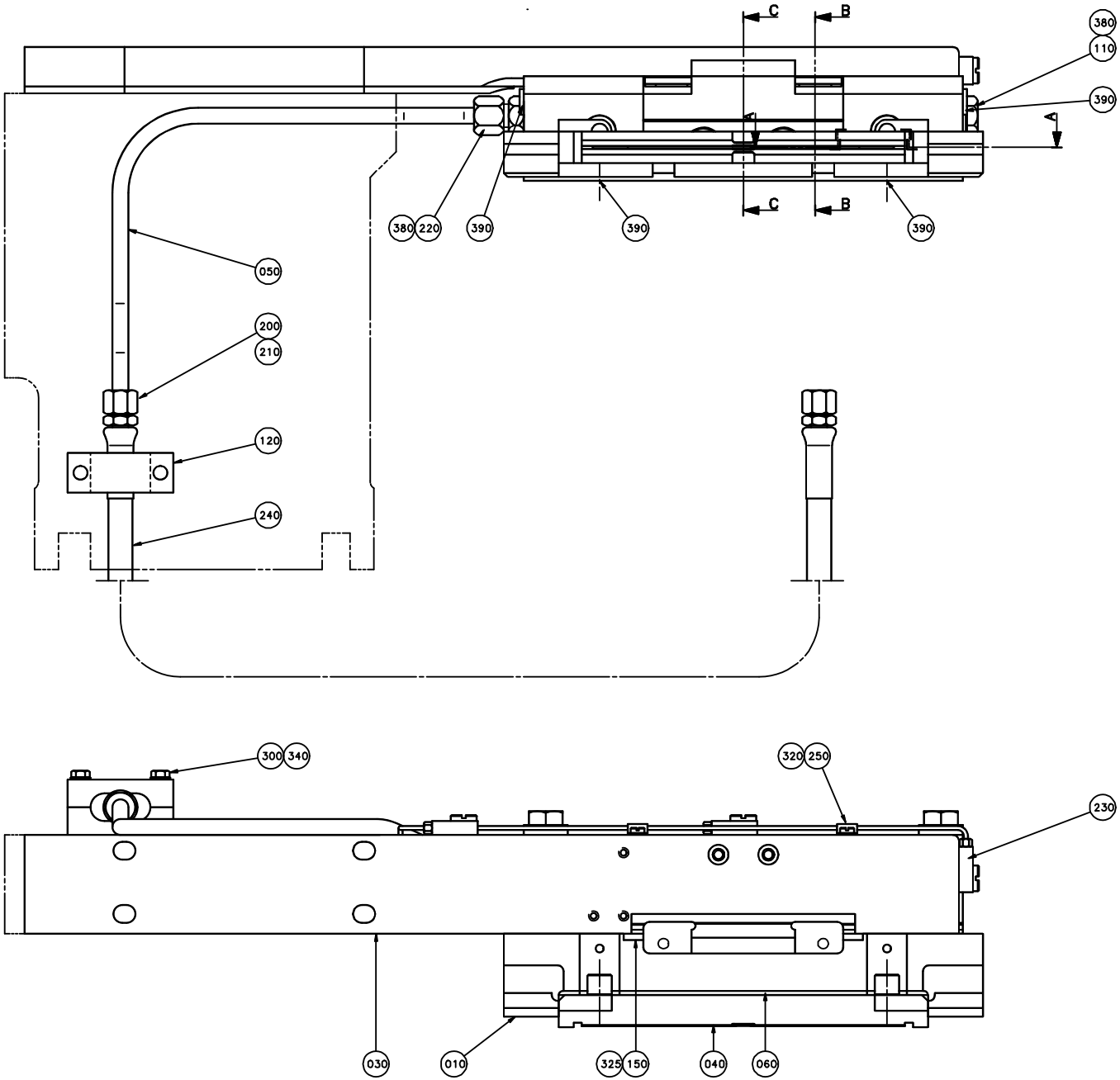

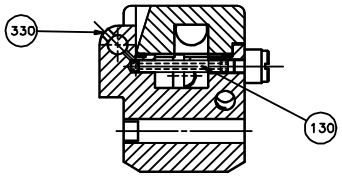

C–C

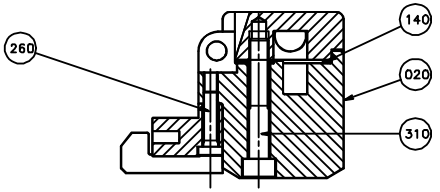

B–B

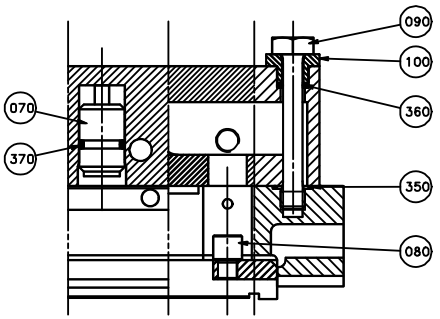

ECM: 262011 - 20060630
Group number: 928983-0100
Assembly Drawing: 928983-1_1_AA

This list covers pages from 4-10 to 4-15

Pos	Part No	UN	Qty	Description	Page No
0568SQ US (See drawing on pages: 4-14, 12-202)					
010	2728743-0000		1	CUTTING JAW	
020	929540-0000		1	BEARING HOUSING	
030	1143902-0000		1	CARRIER, CUT, RIGHT	
040	2826927-0000		1	USTS CUTTING RAIL	
060	928986-0000		1	DAMPER	
090	243143-0000		2	SCREW	
140	573988-0000		1	GASKET	
150	928987-0000		2	DAMPER	
160	2728742-0000		1	VOLUME BULGE	
400	312145-0287		2	SCREW ISO 2009 MFS M4X8 A4	
1000SQ US, 0500SQ US (See drawing on pages: 4-10, 12-198)					
010	929539-0000		1	CUTTING JAW	
020	929540-0000		1	BEARING HOUSING	
030	1143902-0000		1	CARRIER, CUT, RIGHT	
040	2826927-0000		1	USTS CUTTING RAIL	
060	928986-0000		1	DAMPER	
090	243143-0000		2	SCREW	
140	573988-0000		1	GASKET	
150	928987-0000		2	DAMPER	
1500B US (See drawing on pages: 4-12, 12-200)					
010	593571-0000		1	CUTTING JAW	
012	593573-0000		2	CATCH	
020	593570-0000		1	BEARING HOUSING	
030	593584-0000		1	CARRIER, CUT, RIGHT	
040	2505168-0000		1	USTS CUTTING RAIL	
	593579-0000		*2*	*AXLE BOLT*	
	1338572-0000		*1*	*USTS CUTTING RAIL*	
060	593574-0000		1	DAMPER	
080	593579-0000		2	AXLE BOLT	
090	573583-0000		2	SCREW	
140	593576-0000		1	GASKET	
150	593575-0000		2	DAMPER	
Common Parts					
050	22488-0000		1	ELBOW PIPE	
070	28880-0000		2	PLUNGER	
100	243144-0000		2	BUSHING	
110	255278-0000		1	PLUG FINISHER	
120	279103-0000		2	CONNECTION CLAMP	
130	573984-0000		1	SCREW	
200	90030-0098		1	ACCESSORIES, FERRULE 8	
210	90030-0172		1	NUT M8 "REPL.BY 342703-208"	
220	90030-0201		1	CONN. STR., 8-R1/4, EXT. THREAD	
230	90134-0058		3	CONNECTION	
240	90148-0033		1	HOSE	
250	90165-0058		2	PIPE CLIP FOR TUBE D=2,5 MM	
260	90287-0070		2	SCREW MLC6S M6X23	
300	312105-0378		2	SCREW M6S ISO 4014 M6X40 A480	
310	312115-0461		2	SCREW ISO4762 M8X50 A4 80	
320	312125-0287		2	SCREW ISO 1207 M4X8 A4	
325	312145-0236		4	SCREW ISO 2009 MFS M3X35 A4	
330	312318-0283		1	SCREW ISO4029 M4X4 A4	
340	315105-0153		2	WASHER BRB 6,4X12 RFR	
350	315202-0111		2	O-RING 13,1X1,6 MM	
360	315202-0207		2	O-RING 8,3X2,4 MM	
370	315202-0212		2	O-RING 14,3X2,4 MM	
380	315234-0110		2	WASHER,PL.RND.CU.13,5/18 H=1,5	
390	342713-0209		4	PLUG (QUANT.MINIMA= 10PC).	

Machine Type | Group Description | Used-In | Group Number | Page No

CUTTING JAW RIGHT

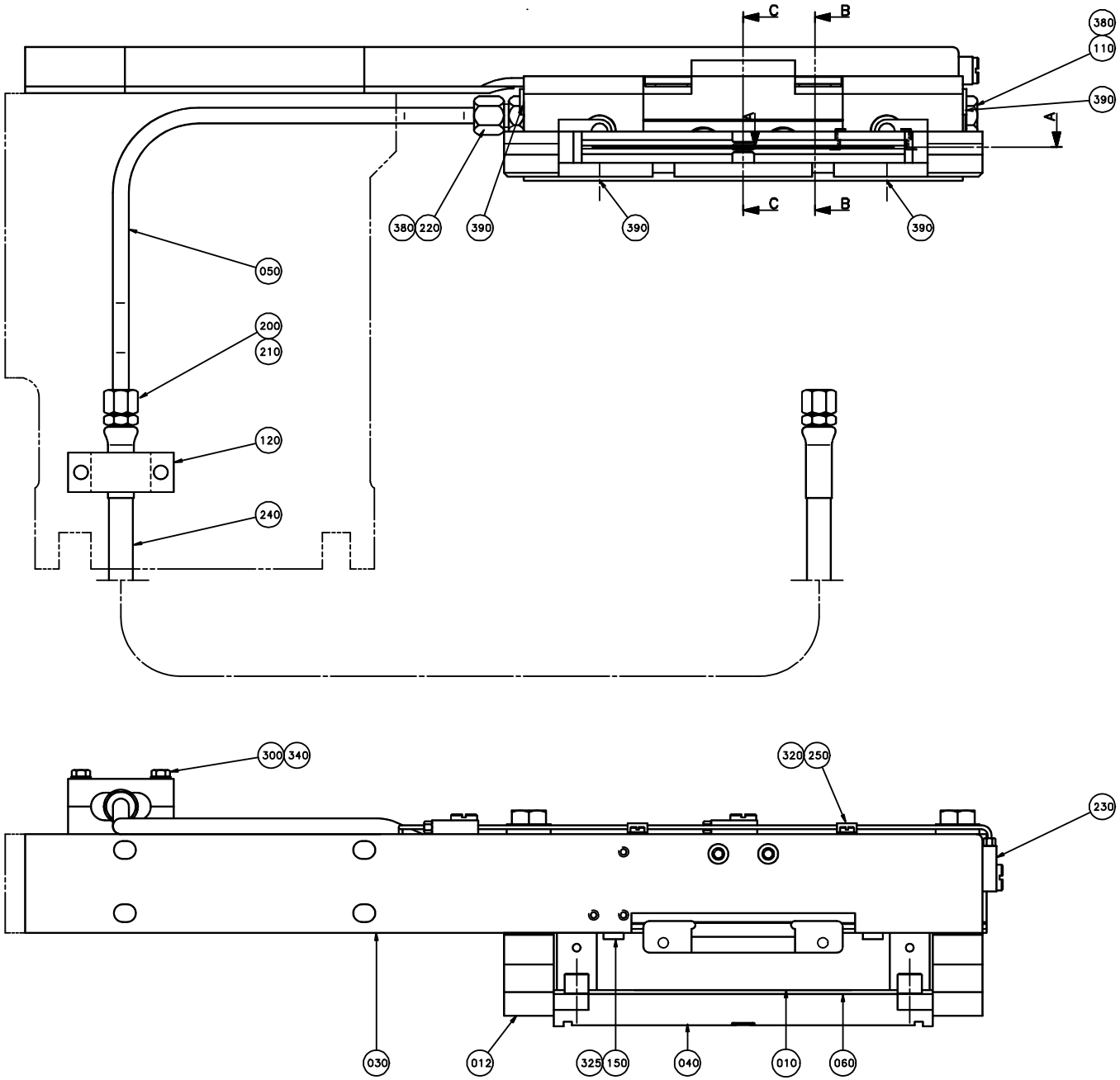

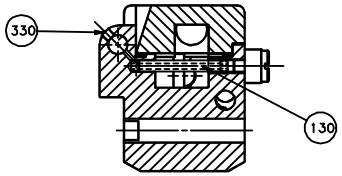

C–C

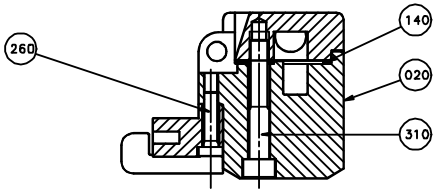

B–B

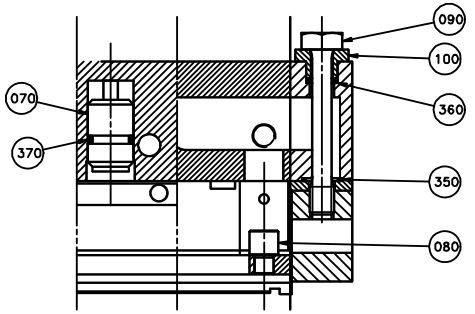

ECM: 262011 - 20060630
Group number: 928983-0100
Assembly Drawing: 928983-2_1_AA

This list covers pages from 4-10 to 4-15

Pos	Part No	UN	Qty	Description	Page No
0568SQ US (See drawing on pages: 4-14, 12-202)					
010	2728743-0000		1	CUTTING JAW	
020	929540-0000		1	BEARING HOUSING	
030	1143902-0000		1	CARRIER, CUT, RIGHT	
040	2826927-0000		1	USTS CUTTING RAIL	
060	928986-0000		1	DAMPER	
090	243143-0000		2	SCREW	
140	573988-0000		1	GASKET	
150	928987-0000		2	DAMPER	
160	2728742-0000		1	VOLUME BULGE	
400	312145-0287		2	SCREW ISO 2009 MFS M4X8 A4	
1000SQ US, 0500SQ US (See drawing on pages: 4-10, 12-198)					
010	929539-0000		1	CUTTING JAW	
020	929540-0000		1	BEARING HOUSING	
030	1143902-0000		1	CARRIER, CUT, RIGHT	
040	2826927-0000		1	USTS CUTTING RAIL	
060	928986-0000		1	DAMPER	
090	243143-0000		2	SCREW	
140	573988-0000		1	GASKET	
150	928987-0000		2	DAMPER	
1500B US (See drawing on pages: 4-12, 12-200)					
010	593571-0000		1	CUTTING JAW	
012	593573-0000		2	CATCH	
020	593570-0000		1	BEARING HOUSING	
030	593584-0000		1	CARRIER, CUT, RIGHT	
040	2505168-0000		1	USTS CUTTING RAIL	
	593579-0000		*2*	*AXLE BOLT*	
	1338572-0000		*1*	*USTS CUTTING RAIL*	
060	593574-0000		1	DAMPER	
080	593579-0000		2	AXLE BOLT	
090	573583-0000		2	SCREW	
140	593576-0000		1	GASKET	
150	593575-0000		2	DAMPER	
Common Parts					
050	22488-0000		1	ELBOW PIPE	
070	28880-0000		2	PLUNGER	
100	243144-0000		2	BUSHING	
110	255278-0000		1	PLUG FINISHER	
120	279103-0000		2	CONNECTION CLAMP	
130	573984-0000		1	SCREW	
200	90030-0098		1	ACCESSORIES, FERRULE 8	
210	90030-0172		1	NUT M8 "REPL.BY 342703-208"	
220	90030-0201		1	CONN. STR., 8-R1/4, EXT. THREAD	
230	90134-0058		3	CONNECTION	
240	90148-0033		1	HOSE	
250	90165-0058		2	PIPE CLIP FOR TUBE D=2,5 MM	
260	90287-0070		2	SCREW MLC6S M6X23	
300	312105-0378		2	SCREW M6S ISO 4014 M6X40 A480	
310	312115-0461		2	SCREW ISO4762 M8X50 A4 80	
320	312125-0287		2	SCREW ISO 1207 M4X8 A4	
325	312145-0236		4	SCREW ISO 2009 MFS M3X35 A4	
330	312318-0283		1	SCREW ISO4029 M4X4 A4	
340	315105-0153		2	WASHER BRB 6,4X12 RFR	
350	315202-0111		2	O-RING 13,1X1,6 MM	
360	315202-0207		2	O-RING 8,3X2,4 MM	
370	315202-0212		2	O-RING 14,3X2,4 MM	
380	315234-0110		2	WASHER,PL.RND.CU.13,5/18 H=1,5	
390	342713-0209		4	PLUG (QUANT.MINIMA= 10PC).	

Machine Type | Group Description | Used-In | Group Number | Page No

CUTTING JAW RIGHT

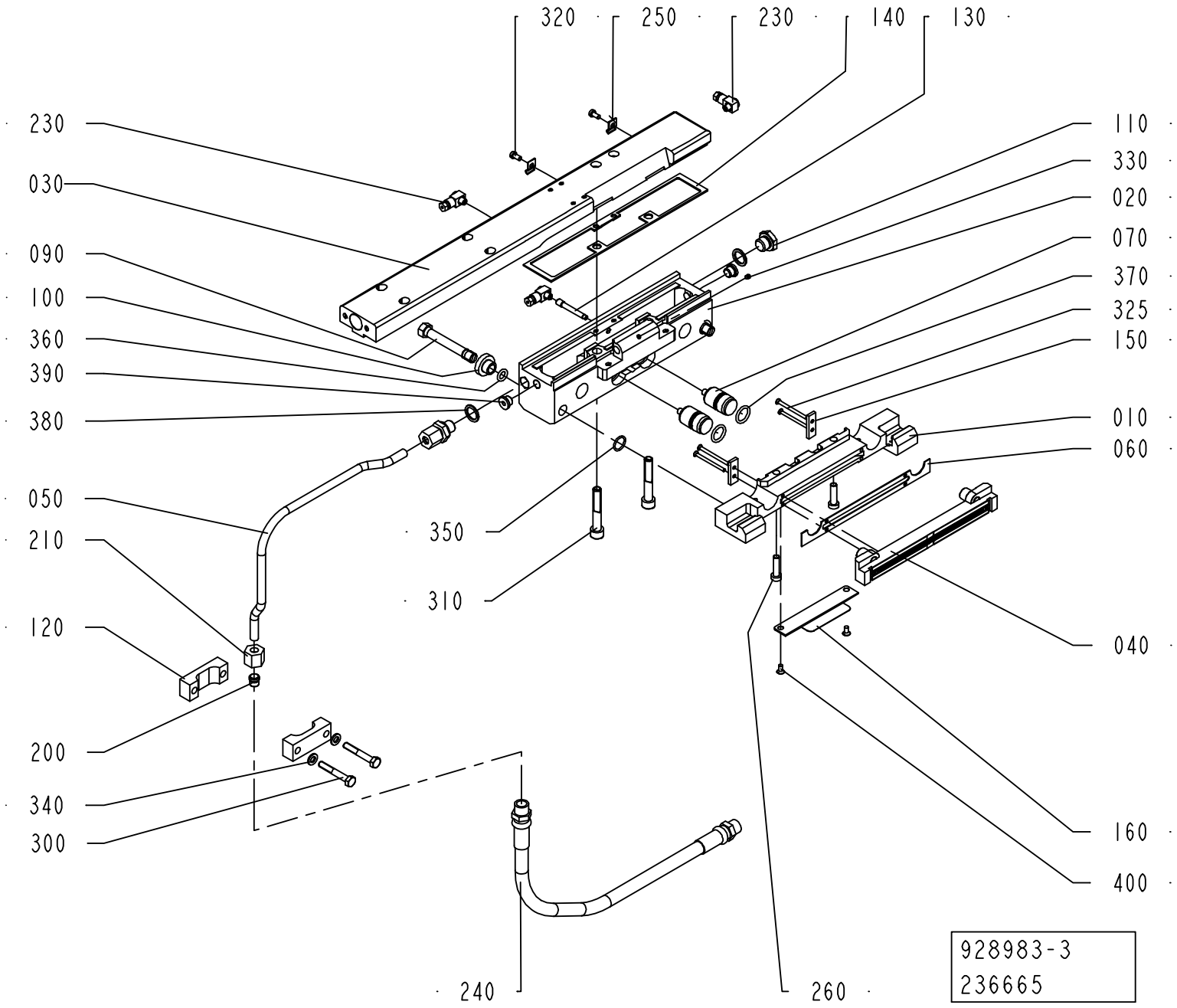

ECM: 262011 - 20060630
Group number: 928983-0100
Assembly Drawing: 928983-3_1_AA

This list covers pages from 4-10 to 4-15

Pos	Part No	UN	Qty	Description	Page No
0568SQ US (See drawing on pages: 4-14, 12-202)					
010	2728743-0000		1	CUTTING JAW	
020	929540-0000		1	BEARING HOUSING	
030	1143902-0000		1	CARRIER, CUT, RIGHT	
040	2826927-0000		1	USTS CUTTING RAIL	
060	928986-0000		1	DAMPER	
090	243143-0000		2	SCREW	
140	573988-0000		1	GASKET	
150	928987-0000		2	DAMPER	
160	2728742-0000		1	VOLUME BULGE	
400	312145-0287		2	SCREW ISO 2009 MFS M4X8 A4	
1000SQ US, 0500SQ US (See drawing on pages: 4-10, 12-198)					
010	929539-0000		1	CUTTING JAW	
020	929540-0000		1	BEARING HOUSING	
030	1143902-0000		1	CARRIER, CUT, RIGHT	
040	2826927-0000		1	USTS CUTTING RAIL	
060	928986-0000		1	DAMPER	
090	243143-0000		2	SCREW	
140	573988-0000		1	GASKET	
150	928987-0000		2	DAMPER	
1500B US (See drawing on pages: 4-12, 12-200)					
010	593571-0000		1	CUTTING JAW	
012	593573-0000		2	CATCH	
020	593570-0000		1	BEARING HOUSING	
030	593584-0000		1	CARRIER, CUT, RIGHT	
040	2505168-0000		1	USTS CUTTING RAIL	
	593579-0000		*2*	*AXLE BOLT*	
	1338572-0000		*1*	*USTS CUTTING RAIL*	
060	593574-0000		1	DAMPER	
080	593579-0000		2	AXLE BOLT	
090	573583-0000		2	SCREW	
140	593576-0000		1	GASKET	
150	593575-0000		2	DAMPER	
Common Parts					
050	22488-0000		1	ELBOW PIPE	
070	28880-0000		2	PLUNGER	
100	243144-0000		2	BUSHING	
110	255278-0000		1	PLUG FINISHER	
120	279103-0000		2	CONNECTION CLAMP	
130	573984-0000		1	SCREW	
200	90030-0098		1	ACCESSORIES, FERRULE 8	
210	90030-0172		1	NUT M8 "REPL.BY 342703-208"	
220	90030-0201		1	CONN. STR., 8-R1/4, EXT. THREAD	
230	90134-0058		3	CONNECTION	
240	90148-0033		1	HOSE	
250	90165-0058		2	PIPE CLIP FOR TUBE D=2,5 MM	
260	90287-0070		2	SCREW MLC6S M6X23	
300	312105-0378		2	SCREW M6S ISO 4014 M6X40 A480	
310	312115-0461		2	SCREW ISO4762 M8X50 A4 80	
320	312125-0287		2	SCREW ISO 1207 M4X8 A4	
325	312145-0236		4	SCREW ISO 2009 MFS M3X35 A4	
330	312318-0283		1	SCREW ISO4029 M4X4 A4	
340	315105-0153		2	WASHER BRB 6,4X12 RFR	
350	315202-0111		2	O-RING 13,1X1,6 MM	
360	315202-0207		2	O-RING 8,3X2,4 MM	
370	315202-0212		2	O-RING 14,3X2,4 MM	
380	315234-0110		2	WASHER,PL.RND.CU.13,5/18 H=1,5	
390	342713-0209		4	PLUG (QUANT.MINIMA= 10PC).	

Machine Type | Group Description | Used-In | Group Number | Page No

CUTTING JAW LEFT

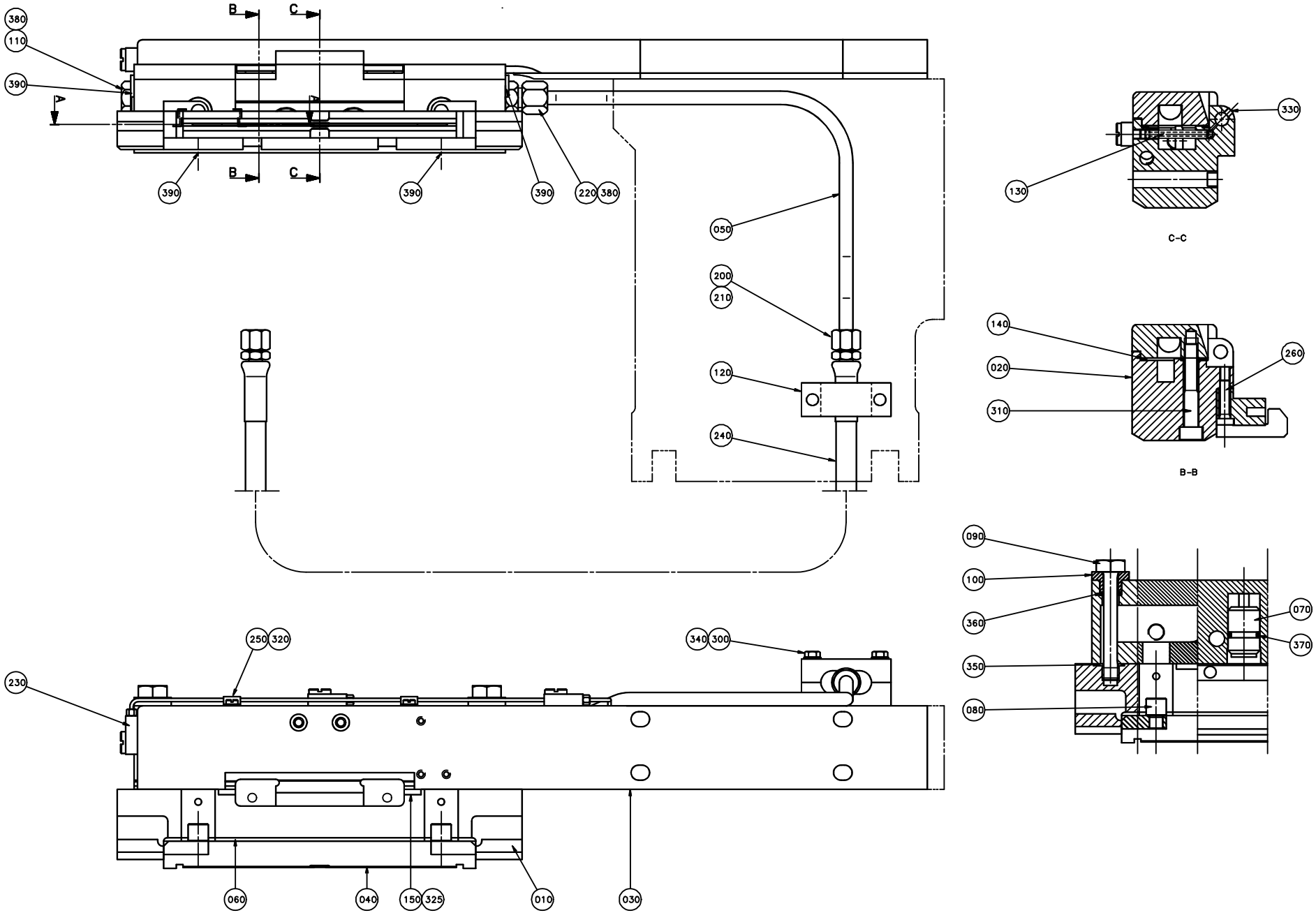

ECM: 262010 - 20060630
Group number: 928982-0100
Assembly Drawing: 928982-1_1_AA

This list covers pages from 4-16 to 4-21

Pos	Part No	UN	Qty	Description	Page No
0568SQ US (See drawing on pages: 4-20, 12-196)					
010	2728743-0000		1	CUTTING JAW	
020	929540-0000		1	BEARING HOUSING	
030	1143901-0000		1	CARRIER, CUT, LEFT	
040	2826927-0000		1	USTS CUTTING RAIL	
060	928986-0000		1	DAMPER	
090	243143-0000		2	SCREW	
140	573988-0000		1	GASKET	
150	928987-0000		2	DAMPER	
160	2728742-0000		1	VOLUME BULGE	
400	312145-0287		2	SCREW ISO 2009 MFS M4X8 A4	
1000SQ US, 0500SQ US (See drawing on pages: 4-16, 12-192)					
010	929539-0000		1	CUTTING JAW	
020	929540-0000		1	BEARING HOUSING	
030	1143901-0000		1	CARRIER, CUT, LEFT	
040	2826927-0000		1	USTS CUTTING RAIL	
060	928986-0000		1	DAMPER	
090	243143-0000		2	SCREW	
140	573988-0000		1	GASKET	
150	928987-0000		2	DAMPER	
1500B US (See drawing on pages: 4-18, 12-194)					
010	593571-0000		1	CUTTING JAW	
012	593573-0000		2	CATCH	
020	593570-0000		1	BEARING HOUSING	
030	593583-0000		1	CARRIER, CUT, LEFT	
040	2505168-0000		1	USTS CUTTING RAIL	
	593579-0000		*2*	*AXLE BOLT*	
	1338572-0000		*1*	*USTS CUTTING RAIL*	
060	593574-0000		1	DAMPER	
080	593579-0000		2	AXLE BOLT	
090	573583-0000		2	SCREW	
140	593576-0000		1	GASKET	
150	593575-0000		2	DAMPER	
Common Parts					
050	22489-0000		1	ELBOW PIPE	
070	28880-0000		2	PLUNGER	
100	243144-0000		2	BUSHING	
110	255278-0000		1	PLUG FINISHER	
120	279103-0000		2	CONNECTION CLAMP	
130	573984-0000		1	SCREW	
200	90030-0098		1	ACCESSORIES, FERRULE 8	
210	90030-0172		1	NUT M8 "REPL.BY 342703-208"	
220	90030-0201		1	CONN. STR., 8-R1/4, EXT. THREAD	
230	90134-0058		3	CONNECTION	
240	90148-0033		1	HOSE	
250	90165-0058		2	PIPE CLIP FOR TUBE D=2,5 MM	
260	90287-0070		2	SCREW MLC6S M6X23	
300	312105-0378		2	SCREW M6S ISO 4014 M6X40 A480	
310	312115-0461		2	SCREW ISO4762 M8X50 A4 80	
320	312125-0287		2	SCREW ISO 1207 M4X8 A4	
325	312145-0236		4	SCREW ISO 2009 MFS M3X35 A4	
330	312318-0283		1	SCREW ISO4029 M4X4 A4	
340	315105-0153		2	WASHER BRB 6,4X12 RFR	
350	315202-0111		2	O-RING 13,1X1,6 MM	
360	315202-0207		2	O-RING 8,3X2,4 MM	
370	315202-0212		2	O-RING 14,3X2,4 MM	
380	315234-0110		2	WASHER,PL.RND.CU.13,5/18 H=1,5	
390	342713-0209		4	PLUG (QUANT.MINIMA= 10PC).	

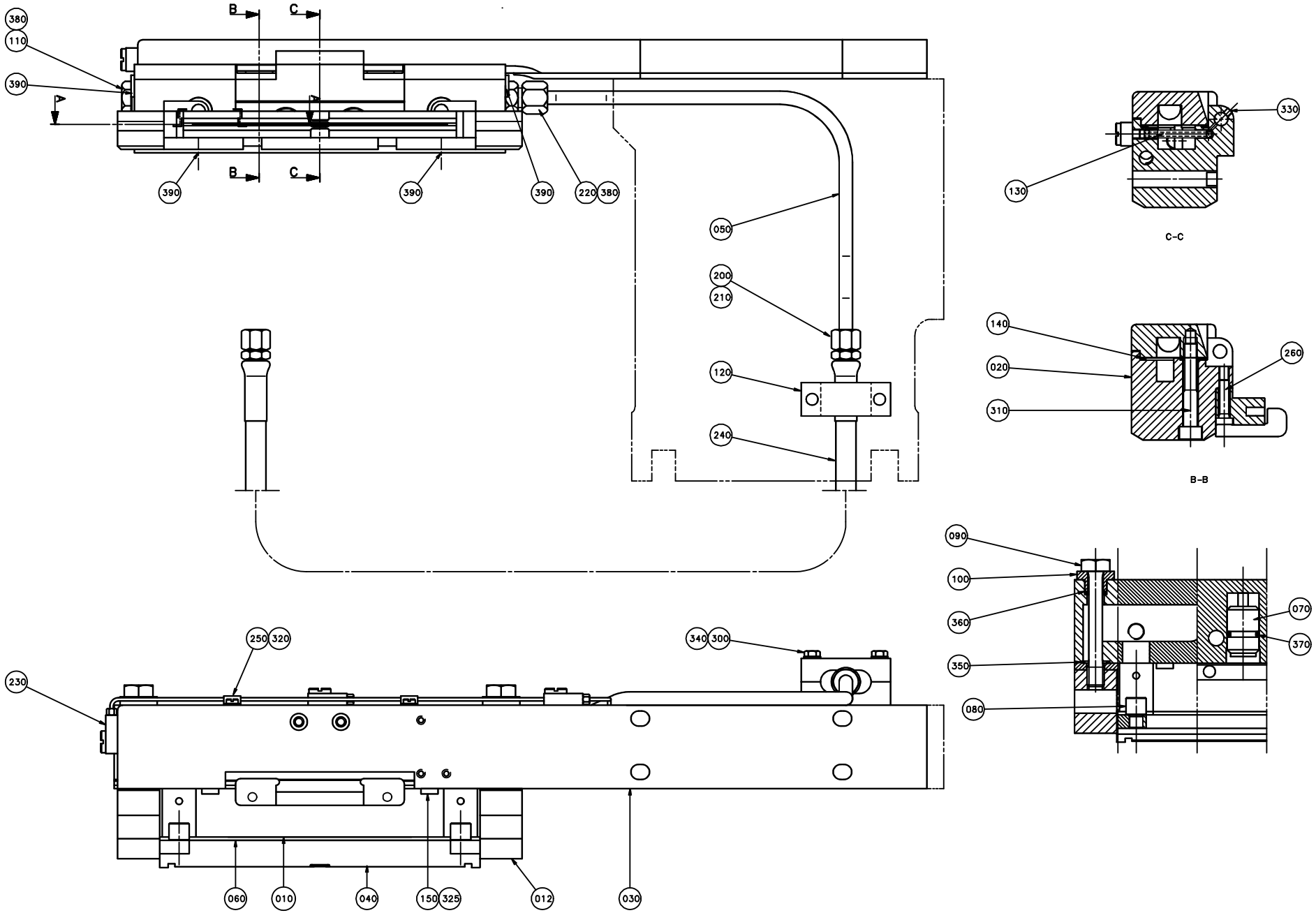
380
110
390
B
C
A
390
390
390
220
380
050
200
210
120
240
330
130
C–C
140
020
310
260
B–B
090
100
360
350
080
070
370
340
300
250
320
230
060
010
040
150
325
012
030

ECM: 262010 - 20060630
Group number: 928982-0100
Assembly Drawing: 928982-2_1_AA

This list covers pages from 4-16 to 4-21

Pos	Part No	UN	Qty	Description	Page No
0568SQ US (See drawing on pages: 4-20, 12-196)					
010	2728743-0000		1	CUTTING JAW	
020	929540-0000		1	BEARING HOUSING	
030	1143901-0000		1	CARRIER, CUT, LEFT	
040	2826927-0000		1	USTS CUTTING RAIL	
060	928986-0000		1	DAMPER	
090	243143-0000		2	SCREW	
140	573988-0000		1	GASKET	
150	928987-0000		2	DAMPER	
160	2728742-0000		1	VOLUME BULGE	
400	312145-0287		2	SCREW ISO 2009 MFS M4X8 A4	
1000SQ US, 0500SQ US (See drawing on pages: 4-16, 12-192)					
010	929539-0000		1	CUTTING JAW	
020	929540-0000		1	BEARING HOUSING	
030	1143901-0000		1	CARRIER, CUT, LEFT	
040	2826927-0000		1	USTS CUTTING RAIL	
060	928986-0000		1	DAMPER	
090	243143-0000		2	SCREW	
140	573988-0000		1	GASKET	
150	928987-0000		2	DAMPER	
1500B US (See drawing on pages: 4-18, 12-194)					
010	593571-0000		1	CUTTING JAW	
012	593573-0000		2	CATCH	
020	593570-0000		1	BEARING HOUSING	
030	593583-0000		1	CARRIER, CUT, LEFT	
040	2505168-0000		1	USTS CUTTING RAIL	
	593579-0000		*2*	*AXLE BOLT*	
	1338572-0000		*1*	*USTS CUTTING RAIL*	
060	593574-0000		1	DAMPER	
080	593579-0000		2	AXLE BOLT	
090	573583-0000		2	SCREW	
140	593576-0000		1	GASKET	
150	593575-0000		2	DAMPER	
Common Parts					
050	22489-0000		1	ELBOW PIPE	
070	28880-0000		2	PLUNGER	
100	243144-0000		2	BUSHING	
110	255278-0000		1	PLUG FINISHER	
120	279103-0000		2	CONNECTION CLAMP	
130	573984-0000		1	SCREW	
200	90030-0098		1	ACCESSORIES, FERRULE 8	
210	90030-0172		1	NUT M8 "REPL.BY 342703-208"	
220	90030-0201		1	CONN. STR., 8-R1/4, EXT. THREAD	
230	90134-0058		3	CONNECTION	
240	90148-0033		1	HOSE	
250	90165-0058		2	PIPE CLIP FOR TUBE D=2,5 MM	
260	90287-0070		2	SCREW MLC6S M6X23	
300	312105-0378		2	SCREW M6S ISO 4014 M6X40 A480	
310	312115-0461		2	SCREW ISO4762 M8X50 A4 80	
320	312125-0287		2	SCREW ISO 1207 M4X8 A4	
325	312145-0236		4	SCREW ISO 2009 MFS M3X35 A4	
330	312318-0283		1	SCREW ISO4029 M4X4 A4	
340	315105-0153		2	WASHER BRB 6,4X12 RFR	
350	315202-0111		2	O-RING 13,1X1,6 MM	
360	315202-0207		2	O-RING 8,3X2,4 MM	
370	315202-0212		2	O-RING 14,3X2,4 MM	
380	315234-0110		2	WASHER,PL.RND.CU.13,5/18 H=1,5	
390	342713-0209		4	PLUG (QUANT.MINIMA= 10PC).	

Machine Type | Group Description | Used-In | Group Number | Page No

CUTTING JAW LEFT

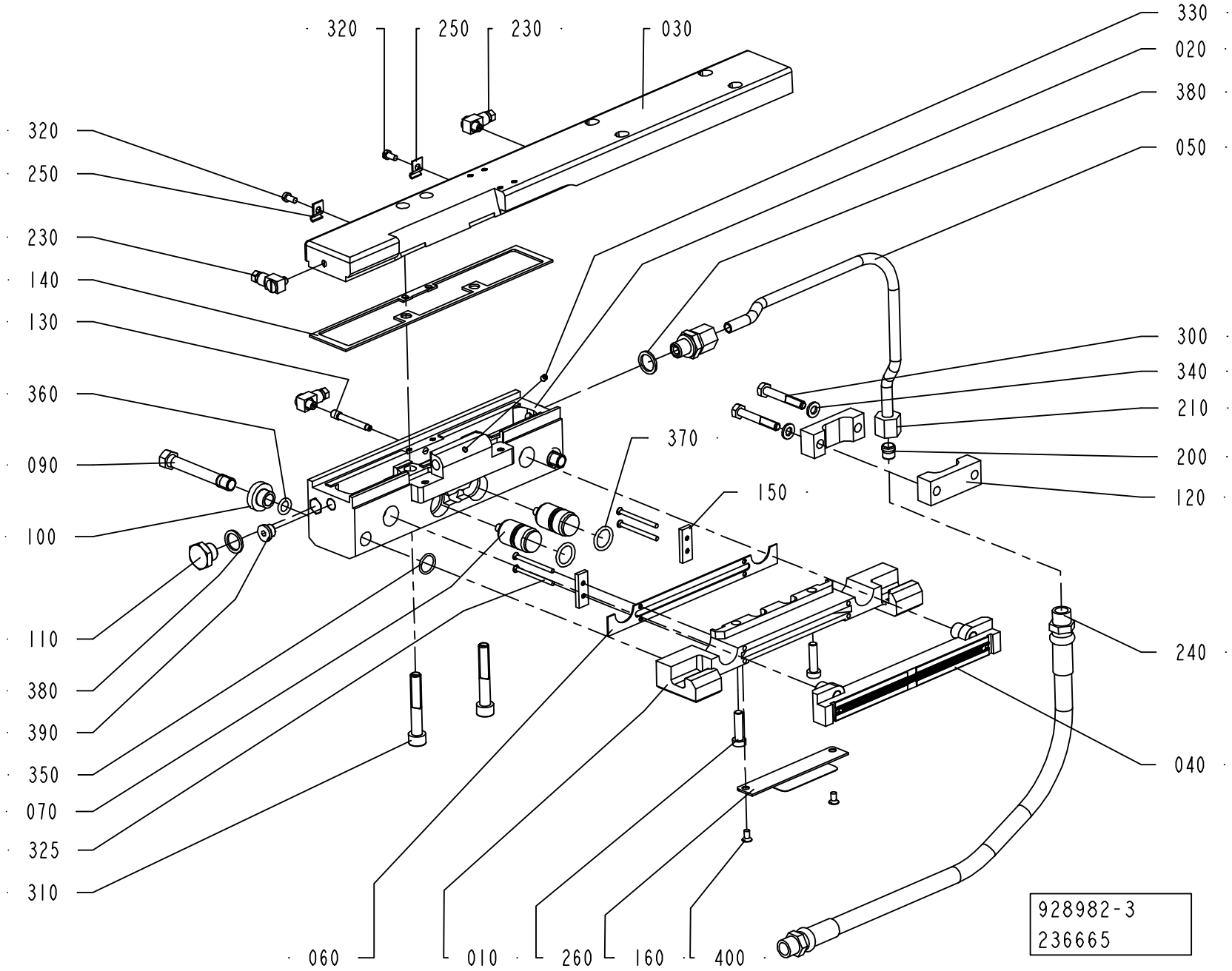

ECM: 262010 - 20060630
Group number: 928982-0100
Assembly Drawing: 928982-3_1_AA

This list covers pages from 4-16 to 4-21

Pos	Part No	UN	Qty	Description	Page No
0568SQ US (See drawing on pages: 4-20, 12-196)					
010	2728743-0000		1	CUTTING JAW	
020	929540-0000		1	BEARING HOUSING	
030	1143901-0000		1	CARRIER, CUT, LEFT	
040	2826927-0000		1	USTS CUTTING RAIL	
060	928986-0000		1	DAMPER	
090	243143-0000		2	SCREW	
140	573988-0000		1	GASKET	
150	928987-0000		2	DAMPER	
160	2728742-0000		1	VOLUME BULGE	
400	312145-0287		2	SCREW ISO 2009 MFS M4X8 A4	
1000SQ US, 0500SQ US (See drawing on pages: 4-16, 12-192)					
010	929539-0000		1	CUTTING JAW	
020	929540-0000		1	BEARING HOUSING	
030	1143901-0000		1	CARRIER, CUT, LEFT	
040	2826927-0000		1	USTS CUTTING RAIL	
060	928986-0000		1	DAMPER	
090	243143-0000		2	SCREW	
140	573988-0000		1	GASKET	
150	928987-0000		2	DAMPER	
1500B US (See drawing on pages: 4-18, 12-194)					
010	593571-0000		1	CUTTING JAW	
012	593573-0000		2	CATCH	
020	593570-0000		1	BEARING HOUSING	
030	593583-0000		1	CARRIER, CUT, LEFT	
040	2505168-0000		1	USTS CUTTING RAIL	
	593579-0000		*2*	*AXLE BOLT*	
	1338572-0000		*1*	*USTS CUTTING RAIL*	
060	593574-0000		1	DAMPER	
080	593579-0000		2	AXLE BOLT	
090	573583-0000		2	SCREW	
140	593576-0000		1	GASKET	
150	593575-0000		2	DAMPER	
Common Parts					
050	22489-0000		1	ELBOW PIPE	
070	28880-0000		2	PLUNGER	
100	243144-0000		2	BUSHING	
110	255278-0000		1	PLUG FINISHER	
120	279103-0000		2	CONNECTION CLAMP	
130	573984-0000		1	SCREW	
200	90030-0098		1	ACCESSORIES, FERRULE 8	
210	90030-0172		1	NUT M8 "REPL.BY 342703-208"	
220	90030-0201		1	CONN. STR., 8-R1/4, EXT. THREAD	
230	90134-0058		3	CONNECTION	
240	90148-0033		1	HOSE	
250	90165-0058		2	PIPE CLIP FOR TUBE D=2,5 MM	
260	90287-0070		2	SCREW MLC6S M6X23	
300	312105-0378		2	SCREW M6S ISO 4014 M6X40 A480	
310	312115-0461		2	SCREW ISO4762 M8X50 A4 80	
320	312125-0287		2	SCREW ISO 1207 M4X8 A4	
325	312145-0236		4	SCREW ISO 2009 MFS M3X35 A4	
330	312318-0283		1	SCREW ISO4029 M4X4 A4	
340	315105-0153		2	WASHER BRB 6,4X12 RFR	
350	315202-0111		2	O-RING 13,1X1,6 MM	
360	315202-0207		2	O-RING 8,3X2,4 MM	
370	315202-0212		2	O-RING 14,3X2,4 MM	
380	315234-0110		2	WASHER,PL.RND.CU.13,5/18 H=1,5	
390	342713-0209		4	PLUG (QUANT.MINIMA= 10PC).	

Machine Type | Group Description | Used-In | Group Number | Page No

PRESSURE JAW LEFT

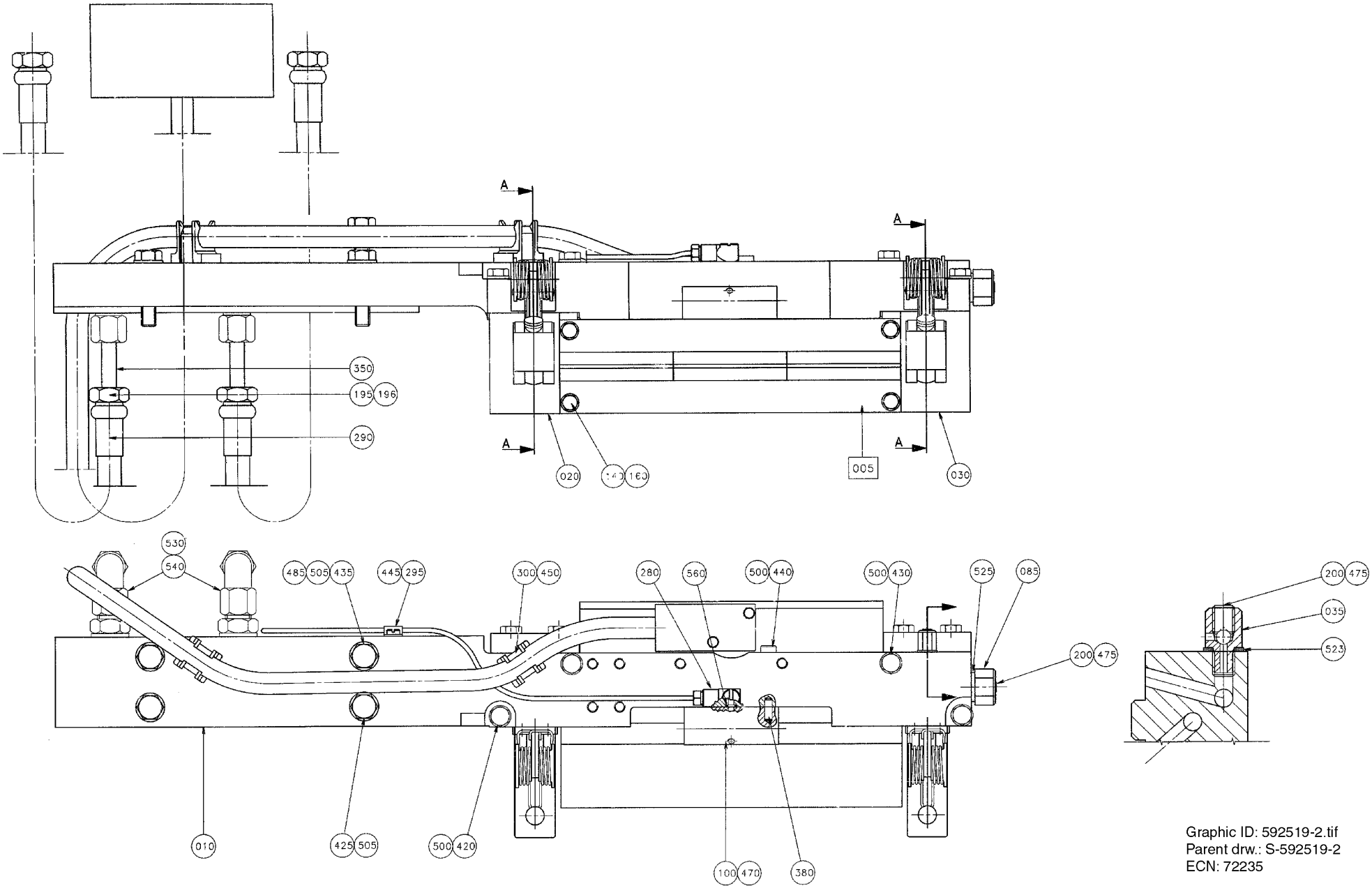

Graphic ID: 592519-2.tif
Parent drw.: S-592519-2
ECN: 72235

ECM: 102904 - 20020123
Group number: 592519-0100
Assembly Drawing: 592519-2_1_AB

This list covers pages from 4-22 to 4-25

Pos	Part No	UN	Qty	Description	Page No
1000SQ, 0500SQ, 0568SQ					
005	1255806-0201		1	COMPACT TRANSDUCER	
060	1362513-0000		2	PISTON	
080	1338675-0000		2	SLEEVE	
100	929551-0000		1	AXLE SUPPORT	
240	90091-0393		2	PISTON SEAL GLIDE RING T17,5X25X3,2	
270	90091-0394		2	WEAR RING 20X25X5,6 MM	
330	315204-0220		2	O-RING 32,2X3 MM	
1500B					
005	1255806-0102		1	COMPACT TRANSDUCER	
060	1338702-0000		2	PISTON	
080	1338703-0000		2	SLEEVE	
100	593582-0000		1	AXLE SUPPORT	
240	90091-0398		2	1PISTON SEAL GLIDE RING T 20,5X28X3,2 MM	
270	90091-0391		2	SEAL SLYDRING	
330	315204-0224		2	O-RING 42,2X3 MM	
Common Parts					
010	598615-0000		1	CARRIER LEFT	
020	1338674-0000		1	BEARING HOUSING	
030	1338673-0000		1	BEARING HOUSING	
035	592921-0000		1	NIPPLE	
040	1338676-0000		2	LID	
050	591410-0000		2	CATCH	
065	590369-0000		2	COMPRESSION SPRING	
070	592715-0000		2	BRACKET	
072	1129552-0000		2	KNOB	
082	1338677-0000		2	WASHER	
085	593647-0000		1	NIPPLE	
110	1129473-0000		2	RESORTE (REEMPLAZADO X 1549378)	
120	950351-0000		2	SHAFT	
130	1038240-0000		2	SPACER	
140	1143885-0000		4	SCREW	
160	591087-0000		1	SHIM	
170	1129833-0000		4	GUIDE ROLLER	
190	315105-0146		4	WASHER BRB 5,3X10 RFR	
195	90030-0098		2	ACCESSORIES, FERRULE 8	
196	342703-0208		2	NUT, PIPES & CONNECTORS,NUT M-8 SS	
200	90090-0013		2	BALL, D=4 MM	
230	90091-0362		2	SCRAPER, EXCLUDER2 18X22,8X3,7 MM	
250	90091-0364		2	ROD SEAL, STEPSEAL 18X25,3X3,2 MM	
260	90091-0366		2	WEAR RING 18X23X3,9 MM	
280	90134-0058		1	CONNECTION	
285	90141-0015		4	RETAINING RING FOR SHAFT DIN 471 8 A2	
290	90148-0033		2	HOSE	
295	90165-0058		1	PIPE CLIP FOR TUBE D=2,5 MM	
300	90165-0174		2	HOSE HOLDER	
350	90266-0167	MM	80	PIPE	
380	311103-0268		2	PARALLEL PIN ISO 2338 4M6X12 A1	
420	312105-0372		2	SCREW M6S ISO 4017 M6X25 A480	
425	312105-0457		3	SCREW M6S ISO 4014 M8X35 A480	
430	312109-0376		2	SCREW M6S ISO 4017 M6X35 A480	
435	312109-0463		1	SCREW M6S ISO 4017 M8X60 A480	
437	312115-0327		4	SCREW ISO4762 M5X12 A4 80	
438	312115-0331		2	SCREW ISO4762 M5X20 A4 80	
439	312105-0370		8	SCREW M6S ISO 4017 M6X20 A480	
440	312115-0374		2	SCREW ISO4762 M6X30 A4 80	
445	312125-0287		1	SCREW ISO 1207 M4X8 A4	
450	312125-0327		2	SCREW ISO 1207 M5X12 A4	
470	312318-0283		1	SCREW ISO4029 M4X4 A4	
475	312318-0362		2	SCREW ISO4029 M6X8 A4	
485	312605-0318		1	HEXAGON NUT, M6M M8 A280	
488	312812-0314		1	HEXAGON NUT, NY-LOCK M5 A480	
500	315105-0153		4	WASHER BRB 6,4X12 RFR	
505	315105-0165		4	WASHER BRB 8,4X16 RFR	
515	90458-1915		2	X-SEAL 34,59X2,62 MM	
516	90458-1916		4	BACK-UP RING 35,5X1,4 MM	
517	90091-0359		2	X-SEAL 36,17X2,62 MM	
518	90091-0360		2	BACK-UP RING 37,5X1,4 MM	
520	315202-0105		4	O-RING 7,1X1,6 MM	
523	315211-0103		1	BONDED SEAL SS/NBR90 M6	
525	315211-0105		1	BONDED SEAL SS/NBR90 G1/8	
530	315211-0108		2	BONDED SEAL SS/NBR90 G1/4	
540	342738-0208		2	ADJUSTABLE ELBOW CONNECTION,EXT 8-G1/4	
560	315202-0101		1	O-RING 3,1X1,6 MM	

Machine Type | Group Description | Used-In | Group Number | Page No

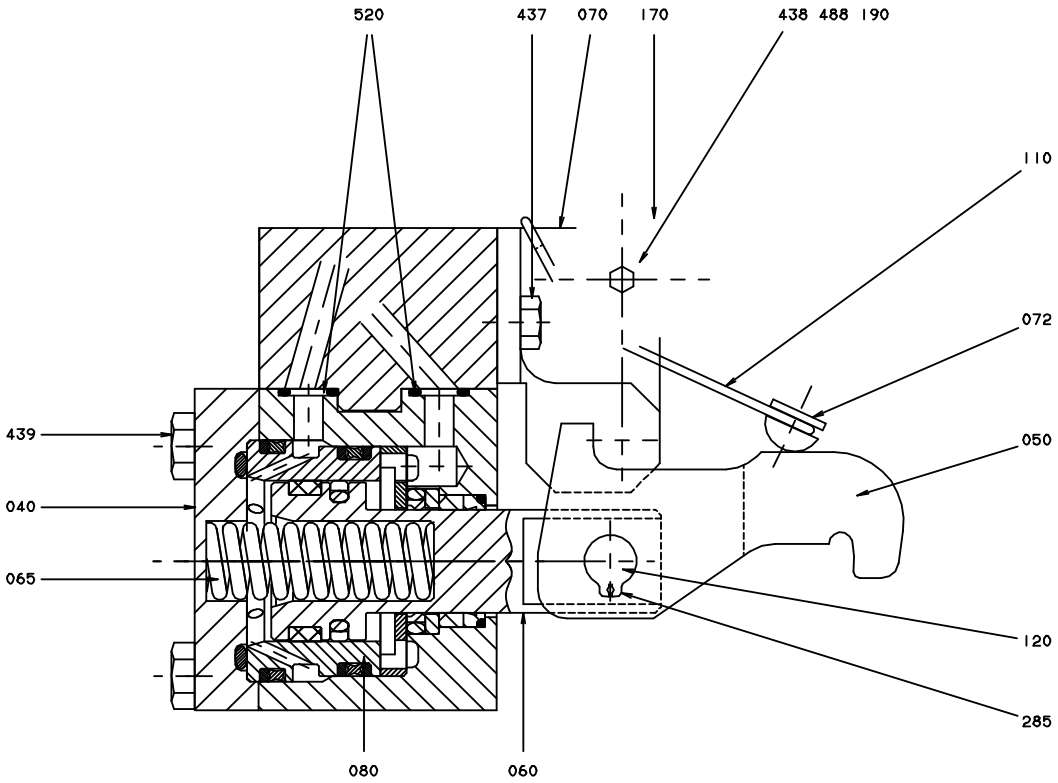
520
437
070
170
438 488 190
110
072
050
439
040
065
120
285
080
060

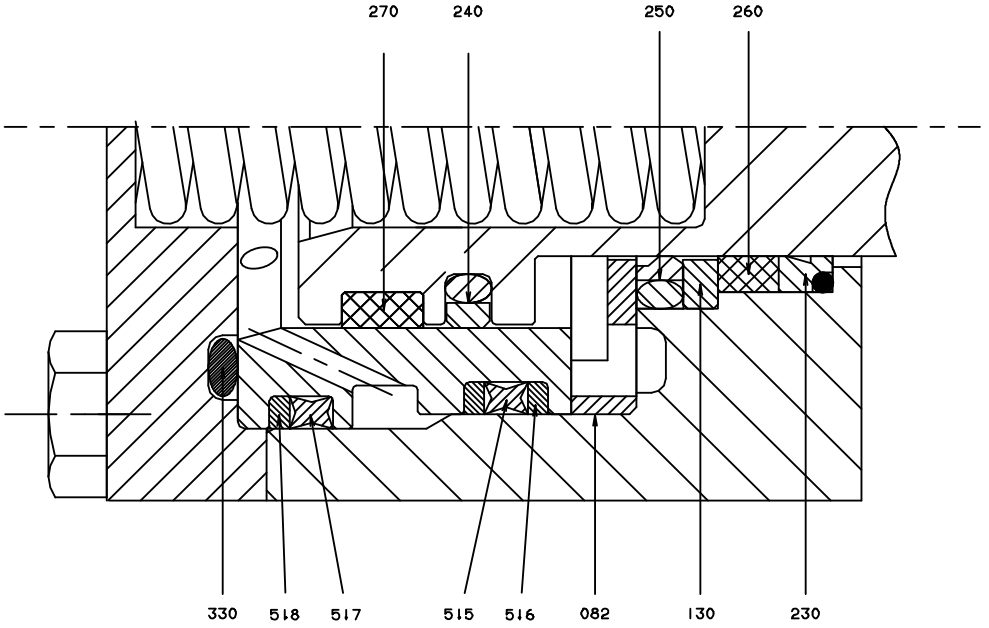
270
240
250
260
330
518
517
515
516
082
130
230

ECM: 102904 - 20020123
Group number: 592519-0100
Assembly Drawing: 592519-3_1_AC

This list covers pages from 4-22 to 4-25

Pos	Part No	UN	Qty	Description	Page No
1000SQ, 0500SQ, 0568SQ					
005	1255806-0201		1	COMPACT TRANSDUCER	
060	1362513-0000		2	PISTON	
080	1338675-0000		2	SLEEVE	
100	929551-0000		1	AXLE SUPPORT	
240	90091-0393		2	PISTON SEAL GLIDE RING T17,5X25X3,2	
270	90091-0394		2	WEAR RING 20X25X5,6 MM	
330	315204-0220		2	O-RING 32,2X3 MM	
1500B					
005	1255806-0102		1	COMPACT TRANSDUCER	
060	1338702-0000		2	PISTON	
080	1338703-0000		2	SLEEVE	
100	593582-0000		1	AXLE SUPPORT	
240	90091-0398		2	1PISTON SEAL GLIDE RING T 20,5X28X3,2 MM	
270	90091-0391		2	SEAL SLYDRING	
330	315204-0224		2	O-RING 42,2X3 MM	
Common Parts					
010	598615-0000		1	CARRIER LEFT	
020	1338674-0000		1	BEARING HOUSING	
030	1338673-0000		1	BEARING HOUSING	
035	592921-0000		1	NIPPLE	
040	1338676-0000		2	LID	
050	591410-0000		2	CATCH	
065	590369-0000		2	COMPRESSION SPRING	
070	592715-0000		2	BRACKET	
072	1129552-0000		2	KNOB	
082	1338677-0000		2	WASHER	
085	593647-0000		1	NIPPLE	
110	1129473-0000		2	RESORTE (REEMPLAZADO X 1549378)	
120	950351-0000		2	SHAFT	
130	1038240-0000		2	SPACER	
140	1143885-0000		4	SCREW	
160	591087-0000		1	SHIM	
170	1129833-0000		4	GUIDE ROLLER	
190	315105-0146		4	WASHER BRB 5,3X10 RFR	
195	90030-0098		2	ACCESSORIES, FERRULE 8	
196	342703-0208		2	NUT, PIPES & CONNECTORS,NUT M-8 SS	
200	90090-0013		2	BALL, D=4 MM	
230	90091-0362		2	SCRAPER, EXCLUDER2 18X22,8X3,7 MM	
250	90091-0364		2	ROD SEAL, STEPSEAL 18X25,3X3,2 MM	
260	90091-0366		2	WEAR RING 18X23X3,9 MM	
280	90134-0058		1	CONNECTION	
285	90141-0015		4	RETAINING RING FOR SHAFT DIN 471 8 A2	
290	90148-0033		2	HOSE	
295	90165-0058		1	PIPE CLIP FOR TUBE D=2,5 MM	
300	90165-0174		2	HOSE HOLDER	
350	90266-0167	MM	80	PIPE	
380	311103-0268		2	PARALLEL PIN ISO 2338 4M6X12 A1	
420	312105-0372		2	SCREW M6S ISO 4017 M6X25 A480	
425	312105-0457		3	SCREW M6S ISO 4014 M8X35 A480	
430	312109-0376		2	SCREW M6S ISO 4017 M6X35 A480	
435	312109-0463		1	SCREW M6S ISO 4017 M8X60 A480	
437	312115-0327		4	SCREW ISO4762 M5X12 A4 80	
438	312115-0331		2	SCREW ISO4762 M5X20 A4 80	
439	312105-0370		8	SCREW M6S ISO 4017 M6X20 A480	
440	312115-0374		2	SCREW ISO4762 M6X30 A4 80	
445	312125-0287		1	SCREW ISO 1207 M4X8 A4	
450	312125-0327		2	SCREW ISO 1207 M5X12 A4	
470	312318-0283		1	SCREW ISO4029 M4X4 A4	
475	312318-0362		2	SCREW ISO4029 M6X8 A4	
485	312605-0318		1	HEXAGON NUT, M6M M8 A280	
488	312812-0314		1	HEXAGON NUT, NY-LOCK M5 A480	
500	315105-0153		4	WASHER BRB 6,4X12 RFR	
505	315105-0165		4	WASHER BRB 8,4X16 RFR	
515	90458-1915		2	X-SEAL 34,59X2,62 MM	
516	90458-1916		4	BACK-UP RING 35,5X1,4 MM	
517	90091-0359		2	X-SEAL 36,17X2,62 MM	
518	90091-0360		2	BACK-UP RING 37,5X1,4 MM	
520	315202-0105		4	O-RING 7,1X1,6 MM	
523	315211-0103		1	BONDED SEAL SS/NBR90 M6	
525	315211-0105		1	BONDED SEAL SS/NBR90 G1/8	
530	315211-0108		2	BONDED SEAL SS/NBR90 G1/4	
540	342738-0208		2	ADJUSTABLE ELBOW CONNECTION,EXT 8-G1/4	
560	315202-0101		1	O-RING 3,1X1,6 MM	

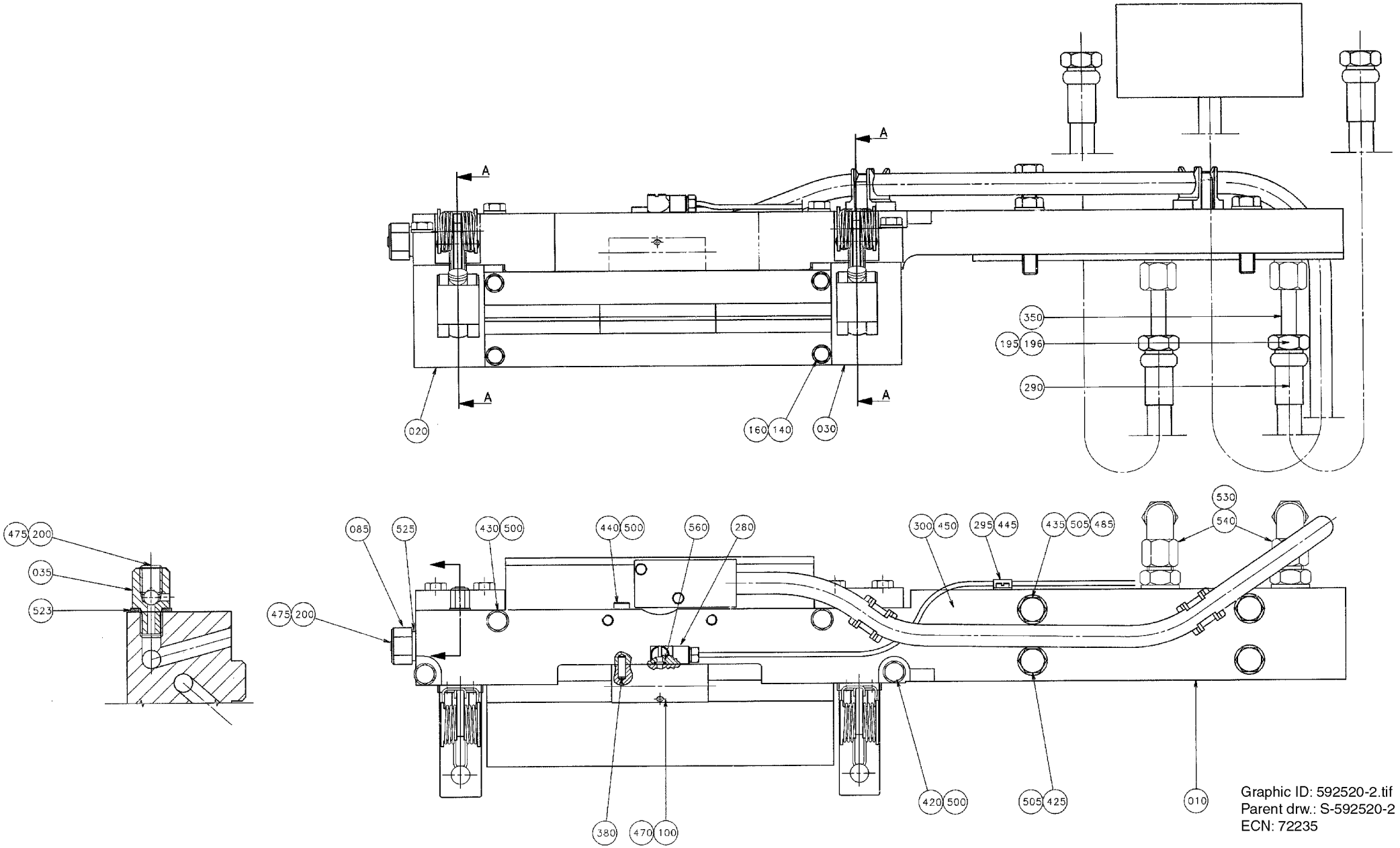

Graphic ID: 592520-2.tif
Parent drw.: S-592520-2
ECN: 72235

ECM: 102905 - 20020123
Group number: 592520-0100
Assembly Drawing: 592520-2_1_AB

This list covers pages from 4-26 to 4-29

Pos	Part No	UN	Qty	Description	Page No
1000SQ, 0500SQ, 0568SQ					
005	1255806-0201		1	COMPACT TRANSDUCER	
060	1362513-0000		2	PISTON	
080	1338675-0000		2	SLEEVE	
100	929551-0000		1	AXLE SUPPORT	
240	90091-0393		2	PISTON SEAL GLIDE RING T17,5X25X3,2	
270	90091-0394		2	WEAR RING 20X25X5,6 MM	
330	315204-0220		2	O-RING 32,2X3 MM	
1500B					
005	1255806-0102		1	COMPACT TRANSDUCER	
060	1338702-0000		2	PISTON	
080	1338703-0000		2	SLEEVE	
100	593582-0000		1	AXLE SUPPORT	
240	90091-0398		2	1PISTON SEAL GLIDE RING T 20,5X28X3,2 MM	
270	90091-0391		2	SEAL SLYDRING	
330	315204-0224		2	O-RING 42,2X3 MM	
Common Parts					
010	598616-0000		1	CARRIER RIGHT	
020	1338674-0000		1	BEARING HOUSING	
030	1338673-0000		1	BEARING HOUSING	
035	592921-0000		1	NIPPLE	
040	1338676-0000		2	LID	
050	591410-0000		2	CATCH	
065	590369-0000		2	COMPRESSION SPRING	
070	592715-0000		2	BRACKET	
072	1129552-0000		2	KNOB	
082	1338677-0000		2	WASHER	
085	593647-0000		1	NIPPLE	
110	1129473-0000		2	RESORTE (REEMPLAZADO X 1549378)	
120	950351-0000		2	SHAFT	
130	1038240-0000		2	SPACER	
140	1143885-0000		4	SCREW	
160	591087-0000		1	SHIM	
170	1129833-0000		4	GUIDE ROLLER	
190	315105-0146		4	WASHER BRB 5,3X10 RFR	
195	90030-0098		2	ACCESSORIES, FERRULE 8	
196	342703-0208		2	NUT, PIPES & CONNECTORS,NUT M-8 SS	
200	90090-0013		2	BALL, D=4 MM	
230	90091-0362		2	SCRAPER, EXCLUDER2 18X22,8X3,7 MM	
250	90091-0364		2	ROD SEAL, STEPSEAL 18X25,3X3,2 MM	
260	90091-0366		2	WEAR RING 18X23X3,9 MM	
280	90134-0058		1	CONNECTION	
285	90141-0015		4	RETAINING RING FOR SHAFT DIN 471 8 A2	
290	90148-0033		2	HOSE	
295	90165-0058		1	PIPE CLIP FOR TUBE D=2,5 MM	
300	90165-0174		2	HOSE HOLDER	
350	90266-0167	MM	80	PIPE	
380	311103-0268		2	PARALLEL PIN ISO 2338 4M6X12 A1	
420	312105-0372		2	SCREW M6S ISO 4017 M6X25 A480	
425	312105-0457		3	SCREW M6S ISO 4014 M8X35 A480	
430	312109-0376		2	SCREW M6S ISO 4017 M6X35 A480	
435	312109-0463		1	SCREW M6S ISO 4017 M8X60 A480	
437	312115-0327		4	SCREW ISO4762 M5X12 A4 80	
438	312115-0331		2	SCREW ISO4762 M5X20 A4 80	
439	312105-0370		8	SCREW M6S ISO 4017 M6X20 A480	
440	312115-0374		2	SCREW ISO4762 M6X30 A4 80	
445	312125-0287		1	SCREW ISO 1207 M4X8 A4	
450	312125-0327		2	SCREW ISO 1207 M5X12 A4	
470	312318-0283		1	SCREW ISO4029 M4X4 A4	
475	312318-0362		2	SCREW ISO4029 M6X8 A4	
485	312605-0318		1	HEXAGON NUT, M6M M8 A280	
488	312812-0314		1	HEXAGON NUT, NY-LOCK M5 A480	
500	315105-0153		4	WASHER BRB 6,4X12 RFR	
505	315105-0165		4	WASHER BRB 8,4X16 RFR	
515	90458-1915		2	X-SEAL 34,59X2,62 MM	
516	90458-1916		4	BACK-UP RING 35,5X1,4 MM	
517	90091-0359		2	X-SEAL 36,17X2,62 MM	
518	90091-0360		2	BACK-UP RING 37,5X1,4 MM	
520	315202-0105		4	O-RING 7,1X1,6 MM	
523	315211-0103		1	BONDED SEAL SS/NBR90 M6	
525	315211-0105		1	BONDED SEAL SS/NBR90 G1/8	
530	315211-0108		2	BONDED SEAL SS/NBR90 G1/4	
540	342738-0208		2	ADJUSTABLE ELBOW CONNECTION,EXT 8-G1/4	
560	315202-0101		1	O-RING 3,1X1,6 MM	

Machine Type | Group Description | Used-In | Group Number | Page No

PRESSURE JAW RIGHT

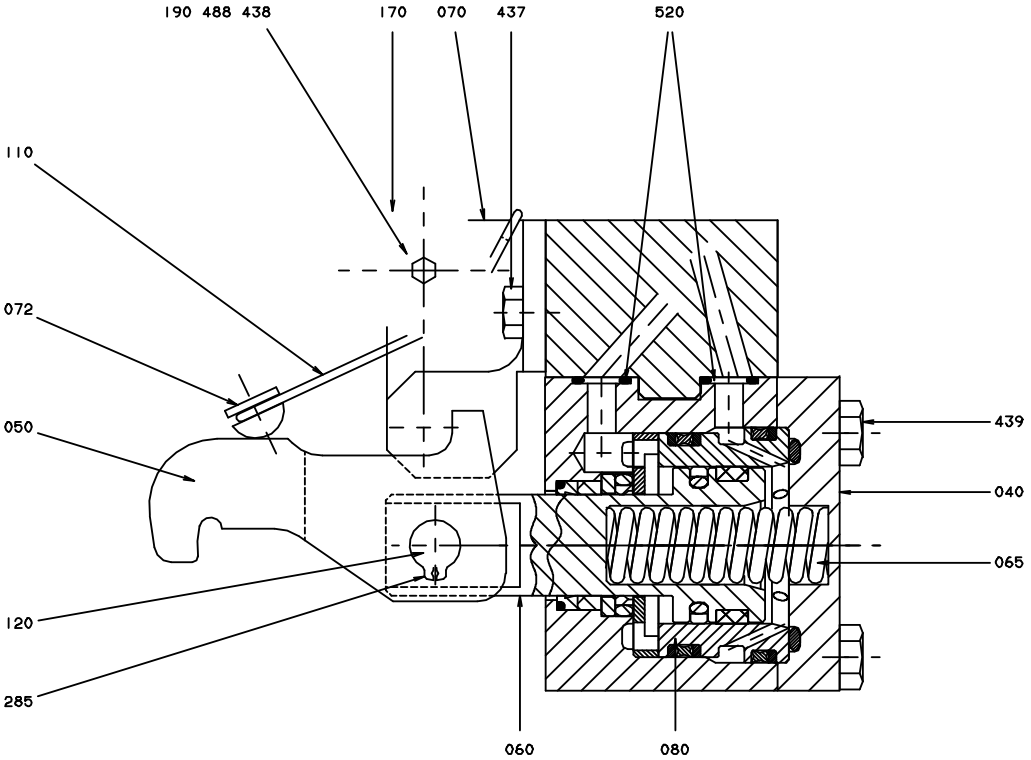

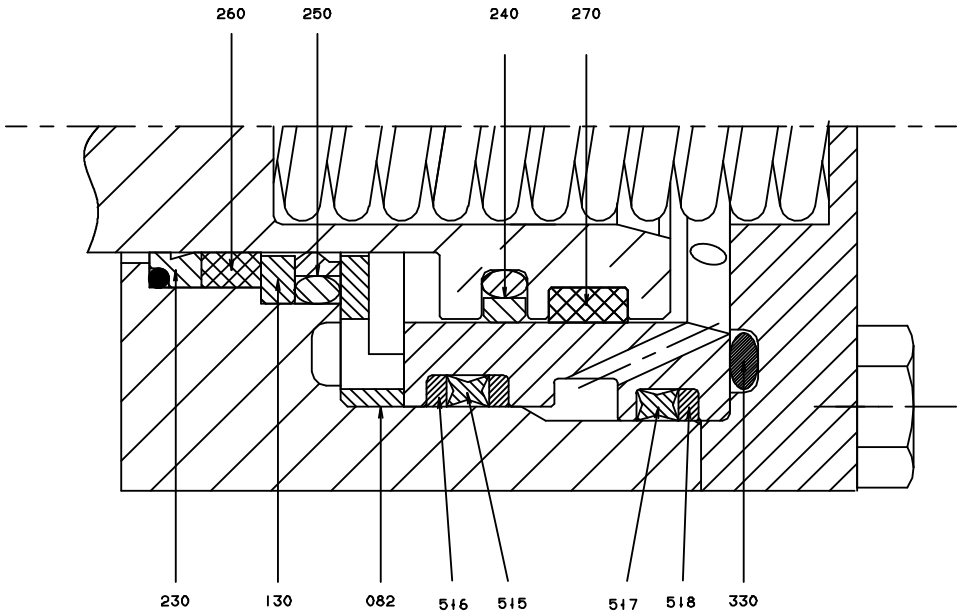

ECM: 102905 - 20020123
Group number: 592520-0100
Assembly Drawing: 592520-3_1_AC

This list covers pages from 4-26 to 4-29

Pos	Part No	UN	Qty	Description	Page No
1000SQ, 0500SQ, 0568SQ					
005	1255806-0201		1	COMPACT TRANSDUCER	
060	1362513-0000		2	PISTON	
080	1338675-0000		2	SLEEVE	
100	929551-0000		1	AXLE SUPPORT	
240	90091-0393		2	PISTON SEAL GLIDE RING T17,5X25X3,2	
270	90091-0394		2	WEAR RING 20X25X5,6 MM	
330	315204-0220		2	O-RING 32,2X3 MM	
1500B					
005	1255806-0102		1	COMPACT TRANSDUCER	
060	1338702-0000		2	PISTON	
080	1338703-0000		2	SLEEVE	
100	593582-0000		1	AXLE SUPPORT	
240	90091-0398		2	1PISTON SEAL GLIDE RING T 20,5X28X3,2 MM	
270	90091-0391		2	SEAL SLYDRING	
330	315204-0224		2	O-RING 42,2X3 MM	
Common Parts					
010	598616-0000		1	CARRIER RIGHT	
020	1338674-0000		1	BEARING HOUSING	
030	1338673-0000		1	BEARING HOUSING	
035	592921-0000		1	NIPPLE	
040	1338676-0000		2	LID	
050	591410-0000		2	CATCH	
065	590369-0000		2	COMPRESSION SPRING	
070	592715-0000		2	BRACKET	
072	1129552-0000		2	KNOB	
082	1338677-0000		2	WASHER	
085	593647-0000		1	NIPPLE	
110	1129473-0000		2	RESORTE (REEMPLAZADO X 1549378)	
120	950351-0000		2	SHAFT	
130	1038240-0000		2	SPACER	
140	1143885-0000		4	SCREW	
160	591087-0000		1	SHIM	
170	1129833-0000		4	GUIDE ROLLER	
190	315105-0146		4	WASHER BRB 5,3X10 RFR	
195	90030-0098		2	ACCESSORIES, FERRULE 8	
196	342703-0208		2	NUT, PIPES & CONNECTORS,NUT M-8 SS	
200	90090-0013		2	BALL, D=4 MM	
230	90091-0362		2	SCRAPER, EXCLUDER2 18X22,8X3,7 MM	
250	90091-0364		2	ROD SEAL, STEPSEAL 18X25,3X3,2 MM	
260	90091-0366		2	WEAR RING 18X23X3,9 MM	
280	90134-0058		1	CONNECTION	
285	90141-0015		4	RETAINING RING FOR SHAFT DIN 471 8 A2	
290	90148-0033		2	HOSE	
295	90165-0058		1	PIPE CLIP FOR TUBE D=2,5 MM	
300	90165-0174		2	HOSE HOLDER	
350	90266-0167	MM	80	PIPE	
380	311103-0268		2	PARALLEL PIN ISO 2338 4M6X12 A1	
420	312105-0372		2	SCREW M6S ISO 4017 M6X25 A480	
425	312105-0457		3	SCREW M6S ISO 4014 M8X35 A480	
430	312109-0376		2	SCREW M6S ISO 4017 M6X35 A480	
435	312109-0463		1	SCREW M6S ISO 4017 M8X60 A480	
437	312115-0327		4	SCREW ISO4762 M5X12 A4 80	
438	312115-0331		2	SCREW ISO4762 M5X20 A4 80	
439	312105-0370		8	SCREW M6S ISO 4017 M6X20 A480	
440	312115-0374		2	SCREW ISO4762 M6X30 A4 80	
445	312125-0287		1	SCREW ISO 1207 M4X8 A4	
450	312125-0327		2	SCREW ISO 1207 M5X12 A4	
470	312318-0283		1	SCREW ISO4029 M4X4 A4	
475	312318-0362		2	SCREW ISO4029 M6X8 A4	
485	312605-0318		1	HEXAGON NUT, M6M M8 A280	
488	312812-0314		1	HEXAGON NUT, NY-LOCK M5 A480	
500	315105-0153		4	WASHER BRB 6,4X12 RFR	
505	315105-0165		4	WASHER BRB 8,4X16 RFR	
515	90458-1915		2	X-SEAL 34,59X2,62 MM	
516	90458-1916		4	BACK-UP RING 35,5X1,4 MM	
517	90091-0359		2	X-SEAL 36,17X2,62 MM	
518	90091-0360		2	BACK-UP RING 37,5X1,4 MM	
520	315202-0105		4	O-RING 7,1X1,6 MM	
523	315211-0103		1	BONDED SEAL SS/NBR90 M6	
525	315211-0105		1	BONDED SEAL SS/NBR90 G1/8	
530	315211-0108		2	BONDED SEAL SS/NBR90 G1/4	
540	342738-0208		2	ADJUSTABLE ELBOW CONNECTION,EXT 8-G1/4	
560	315202-0101		1	O-RING 3,1X1,6 MM	

Machine Type | Group Description | Used-In | Group Number | Page No

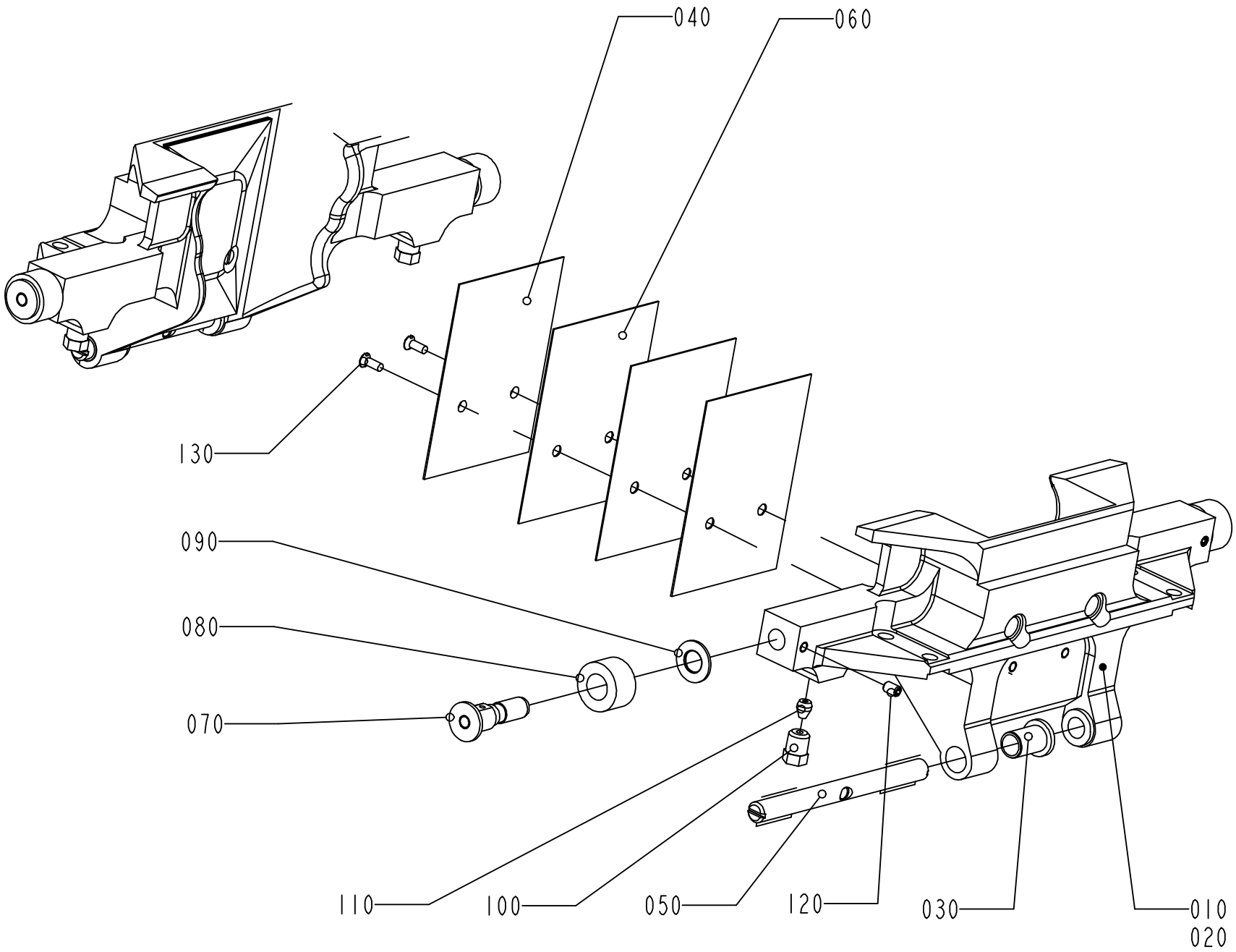
040
060
130
090
080
070
110
100
050
120
030
010
020

ECM: 130909 - 20030409
Group number: 1338954-0100
Assembly Drawing: 1338954-1_1_AA

Pos	Part No	UN	Qty	Description	Page No
0500SQ US					
010	2598856-0000		4	VOLUME FLAP	
040	593655-0000		4	VOLUME BULGE	
060	583827-0000		12	VOLUME SHIM	
0568SQ US					
010	1338691-0000		2	VOLUME FLAP LEFT	
020	1338692-0000		2	VOLUME FLAP RIGHT	
040	1362432-0000		4	VOLUME BULGE	
060	1362433-0000		12	VOLUME SHIM	
Common Parts					
030	1255541-0000		8	BUSHING	
050	1349980-0000		4	SHAFT	
070	434320-0000		8	AXLE PIN	
080	436556-0000		8	CURVE ROLLER	
090	19972-0000		8	WASHER	
100	90134-0063		8	BUSHING/NUT M8X1, D=2,5 MM	
110	90028-0020		8	CONE TUBE 2,5MM	
120	312318-0285		8	SCREW ISO4029 M4X6 A4	
130	312145-0289		8	SCREW ISO 2009 MFS M4X10 A4	

Pos	Part No	UN	Qty	Description	Page No

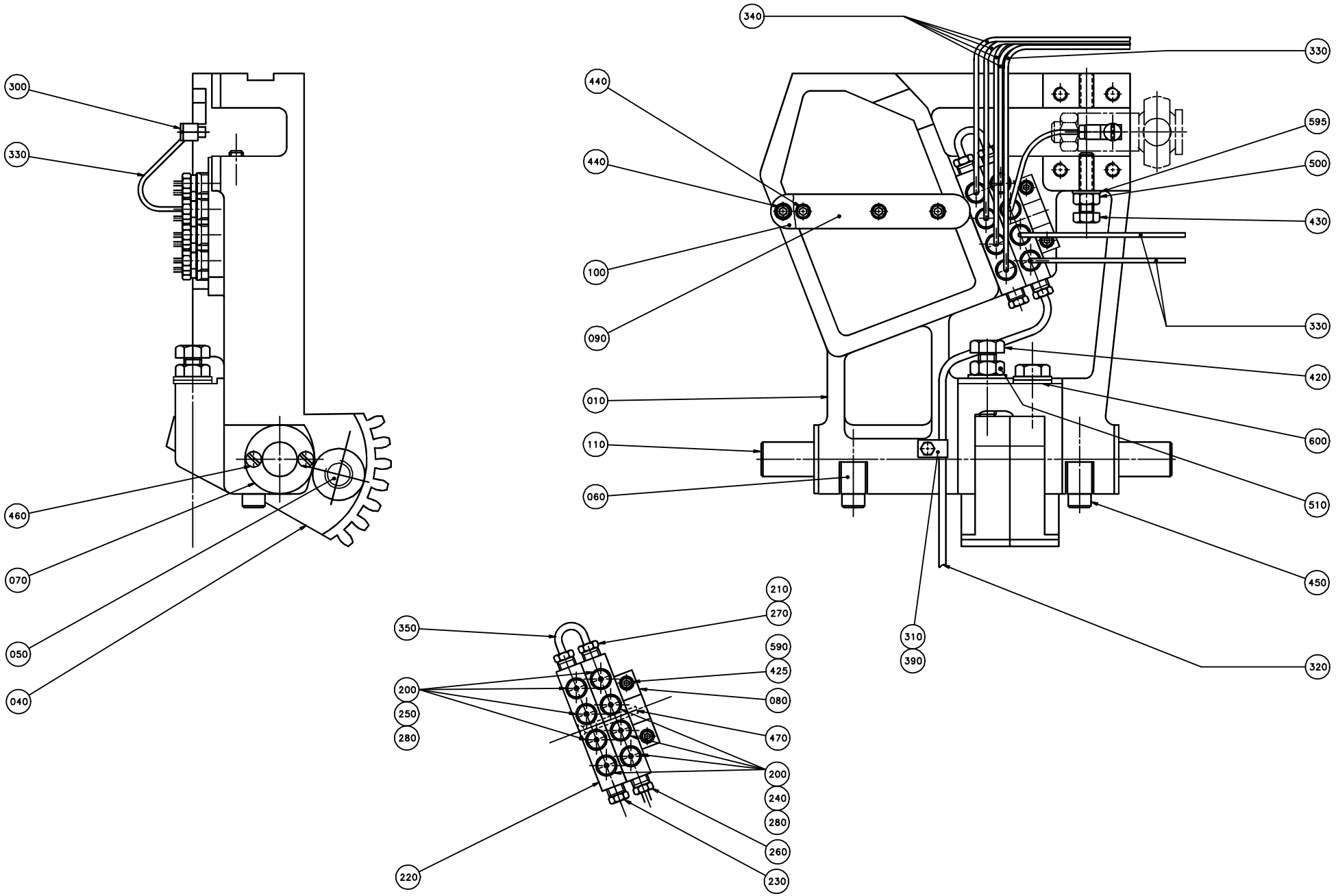
300
330
460
070
050
040
340
330
440
440
595
500
430
100
090
330
420
010
600
110
060
510
450
310
390
320
210
270
590
425
080
470
200
240
280
260
230
350
200
250
280
220

ECM: 80332 - 20000921
Group number: 595200-0100
Assembly Drawing: 595200-1_1_AA

This list covers pages from 4-32 to 4-37

Pos	Part No	UN	Qty	Description	Page No
TB/8 0500SQ US, TB/8 1000SQ US (See drawing on page: 4-34)					
200	90028-0020		3	CONE TUBE 2,5MM	
210	90028-0021		3	CONE TUBE 4 MM	
220	90032-0039		2	BLOCK 4 WAYS	
240	90092-0052		3	METERING VALVE 10 MM3	
270	90134-0038		3	BUSHING/NUT INLET/OUTLET 4 MM	
280	90134-0039		8	BUSHING VALVE CONNECTION 2,5 MM	
290	90134-0052		5	PLUG DOSING BLOCK	
330	90166-0143	MM	2000	TUBE 2,5 MM PA,TRANSP.	
350	90266-0165	MM	100	BRASS PIPE	
470	312155-0301		2	SCREW DIN 7991 MF6S M4X35 A4 70	
TB/8 0568SQ US, TB/8 1500B US (See drawing on page: 4-36)					
200	90028-0020		4	CONE TUBE 2,5MM	
210	90028-0021		1	CONE TUBE 4 MM	
220	90032-0039		1	BLOCK 4 WAYS	
240	90092-0052		4	METERING VALVE 10 MM3	
270	90134-0038		1	BUSHING/NUT INLET/OUTLET 4 MM	
280	90134-0039		4	BUSHING VALVE CONNECTION 2,5 MM	
330	90166-0143	MM	2400	TUBE 2,5 MM PA,TRANSP.	
470	312155-0295		2	SCREW DIN 7991 MF6S M4X20 A4 70	
TB/8 TPC (See drawing on page: 4-32)					
200	90028-0020		8	CONE TUBE 2,5MM	
210	90028-0021		3	CONE TUBE 4 MM	
220	90032-0039		2	BLOCK 4 WAYS	
240	90092-0052		4	METERING VALVE 10 MM3	
250	90092-0053		4	METERING VALVE 30 MM3	
270	90134-0038		3	BUSHING/NUT INLET/OUTLET 4 MM	
280	90134-0039		8	BUSHING VALVE CONNECTION 2,5 MM	
330	90166-0143	MM	1200	TUBE 2,5 MM PA,TRANSP.	
340	90266-0019	MM	2000	PIPE	
350	90266-0165	MM	100	BRASS PIPE	
470	312155-0301		2	SCREW DIN 7991 MF6S M4X35 A4 70	
Common Parts					
010	545409-0000		1	ARM RIGHT	
040	232236-0000		2	TOOTH PART	
050	232237-0000		1	SCREW	
060	533818-0000		2	HOLDER	
070	536704-0000		2	WASHER	
080	536705-0000		1	BRACKET	
090	533886-0000		1	CRAMP	
100	533888-0000		1	CRAMP	
110	538399-0000		1	SHAFT	
230	90087-0019		1	PLUG M10X1 STAINLESS	
260	90134-0031		1	SLEEVE FOR PLASTIC TUBE	
300	90134-0058		1	CONNECTION	
310	90165-0056		1	PIPE CLIP FOR TUBE D=4 MM	
320	90166-0109	MM	800	TUBE 4 MM PA,TRANSP.	
390	312105-0287		1	SCREW M6S ISO 4017 M4X8 A470	
420	312105-0497		2	SCREW M6S ISO 4017 M10X35 A480	
425	312115-0303		2	SCREW ISO4762 M4X40 A4 80	
430	312109-0457		1	SCREW M6S ISO 4017 M8X35 A480	
440	312115-0329		5	SCREW ISO4762 M5X16 A4 80	
450	312115-0455		2	SCREW ISO4762 M8X30 A4 80	
460	312145-0285		4	SCREW ISO 2009 MFS M4X6 A4	
500	312605-0318		1	HEXAGON NUT, M6M M8 A280	
510	312605-0320		1	HEXAGON NUT, M6M M10 A280	
590	315105-0136		2	WASHER BRB 4,3X9 RFR	
595	315105-0165		1	WASHER BRB 8,4X16 RFR	
600	315105-0173		3	WASHER BRB 10,5X20 RFR	

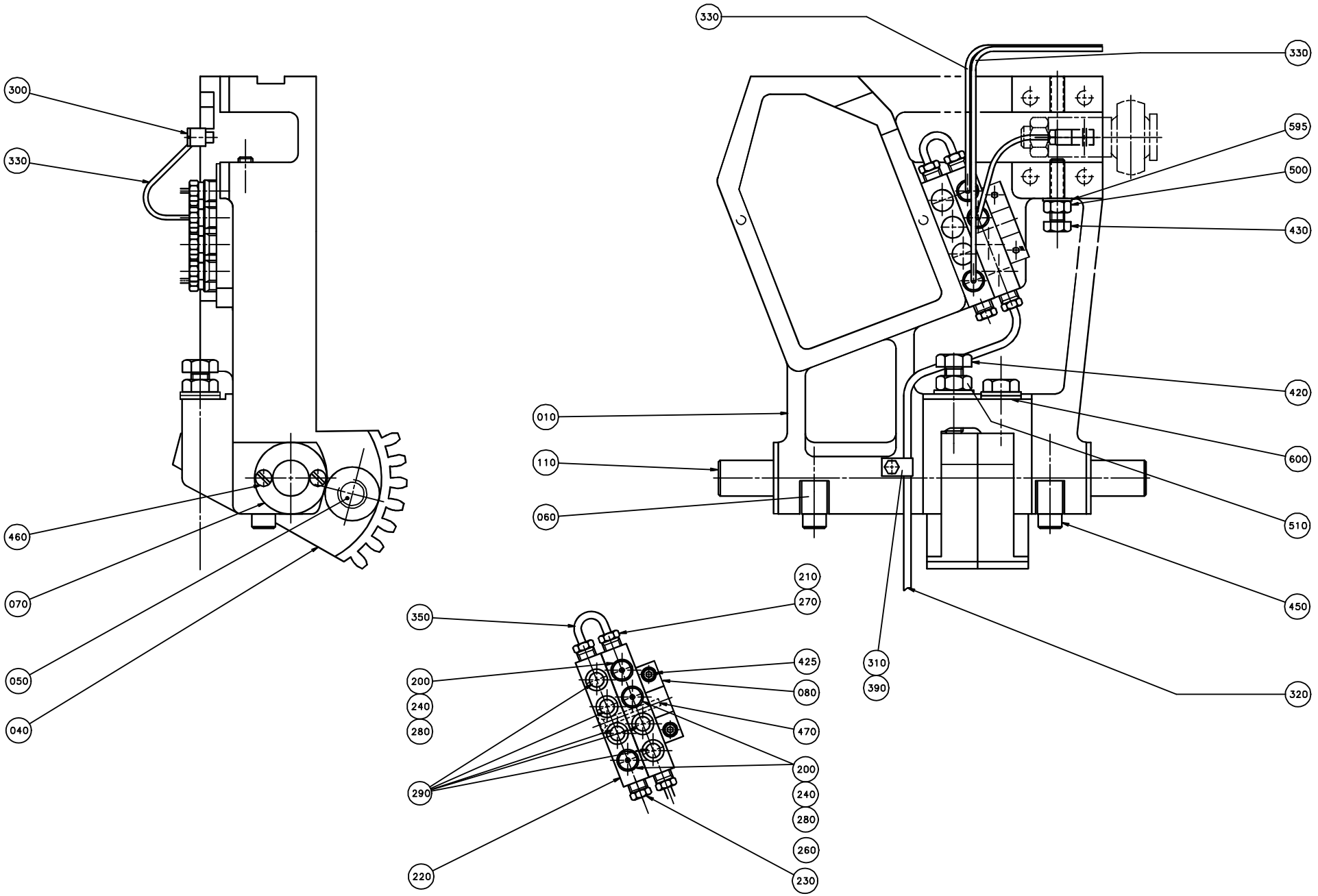
300
330
460
070
050
040
330
330
595
500
430
420
600
510
450
320
010
110
060
210
270
350
425
200
080
240
470
280
200
290
240
280
260
220
230
310
390

ECM: 80332 - 20000921
Group number: 595200-0100
Assembly Drawing: 595200-2_1_AA

This list covers pages from 4-32 to 4-37

Pos	Part No	UN	Qty	Description	Page No
TB/8 0500SQ US, TB/8 1000SQ US (See drawing on page: 4-34)					
200	90028-0020		3	CONE TUBE 2,5MM	
210	90028-0021		3	CONE TUBE 4 MM	
220	90032-0039		2	BLOCK 4 WAYS	
240	90092-0052		3	METERING VALVE 10 MM3	
270	90134-0038		3	BUSHING/NUT INLET/OUTLET 4 MM	
280	90134-0039		8	BUSHING VALVE CONNECTION 2,5 MM	
290	90134-0052		5	PLUG DOSING BLOCK	
330	90166-0143	MM	2000	TUBE 2,5 MM PA,TRANSP.	
350	90266-0165	MM	100	BRASS PIPE	
470	312155-0301		2	SCREW DIN 7991 MF6S M4X35 A4 70	
TB/8 0568SQ US, TB/8 1500B US (See drawing on page: 4-36)					
200	90028-0020		4	CONE TUBE 2,5MM	
210	90028-0021		1	CONE TUBE 4 MM	
220	90032-0039		1	BLOCK 4 WAYS	
240	90092-0052		4	METERING VALVE 10 MM3	
270	90134-0038		1	BUSHING/NUT INLET/OUTLET 4 MM	
280	90134-0039		4	BUSHING VALVE CONNECTION 2,5 MM	
330	90166-0143	MM	2400	TUBE 2,5 MM PA,TRANSP.	
470	312155-0295		2	SCREW DIN 7991 MF6S M4X20 A4 70	
TB/8 TPC (See drawing on page: 4-32)					
200	90028-0020		8	CONE TUBE 2,5MM	
210	90028-0021		3	CONE TUBE 4 MM	
220	90032-0039		2	BLOCK 4 WAYS	
240	90092-0052		4	METERING VALVE 10 MM3	
250	90092-0053		4	METERING VALVE 30 MM3	
270	90134-0038		3	BUSHING/NUT INLET/OUTLET 4 MM	
280	90134-0039		8	BUSHING VALVE CONNECTION 2,5 MM	
330	90166-0143	MM	1200	TUBE 2,5 MM PA,TRANSP.	
340	90266-0019	MM	2000	PIPE	
350	90266-0165	MM	100	BRASS PIPE	
470	312155-0301		2	SCREW DIN 7991 MF6S M4X35 A4 70	
Common Parts					
010	545409-0000		1	ARM RIGHT	
040	232236-0000		2	TOOTH PART	
050	232237-0000		1	SCREW	
060	533818-0000		2	HOLDER	
070	536704-0000		2	WASHER	
080	536705-0000		1	BRACKET	
090	533886-0000		1	CRAMP	
100	533888-0000		1	CRAMP	
110	538399-0000		1	SHAFT	
230	90087-0019		1	PLUG M10X1 STAINLESS	
260	90134-0031		1	SLEEVE FOR PLASTIC TUBE	
300	90134-0058		1	CONNECTION	
310	90165-0056		1	PIPE CLIP FOR TUBE D=4 MM	
320	90166-0109	MM	800	TUBE 4 MM PA,TRANSP.	
390	312105-0287		1	SCREW M6S ISO 4017 M4X8 A470	
420	312105-0497		2	SCREW M6S ISO 4017 M10X35 A480	
425	312115-0303		2	SCREW ISO4762 M4X40 A4 80	
430	312109-0457		1	SCREW M6S ISO 4017 M8X35 A480	
440	312115-0329		5	SCREW ISO4762 M5X16 A4 80	
450	312115-0455		2	SCREW ISO4762 M8X30 A4 80	
460	312145-0285		4	SCREW ISO 2009 MFS M4X6 A4	
500	312605-0318		1	HEXAGON NUT, M6M M8 A280	
510	312605-0320		1	HEXAGON NUT, M6M M10 A280	
590	315105-0136		2	WASHER BRB 4,3X9 RFR	
595	315105-0165		1	WASHER BRB 8,4X16 RFR	
600	315105-0173		3	WASHER BRB 10,5X20 RFR	

Machine Type | Group Description | Used-In | Group Number | Page No

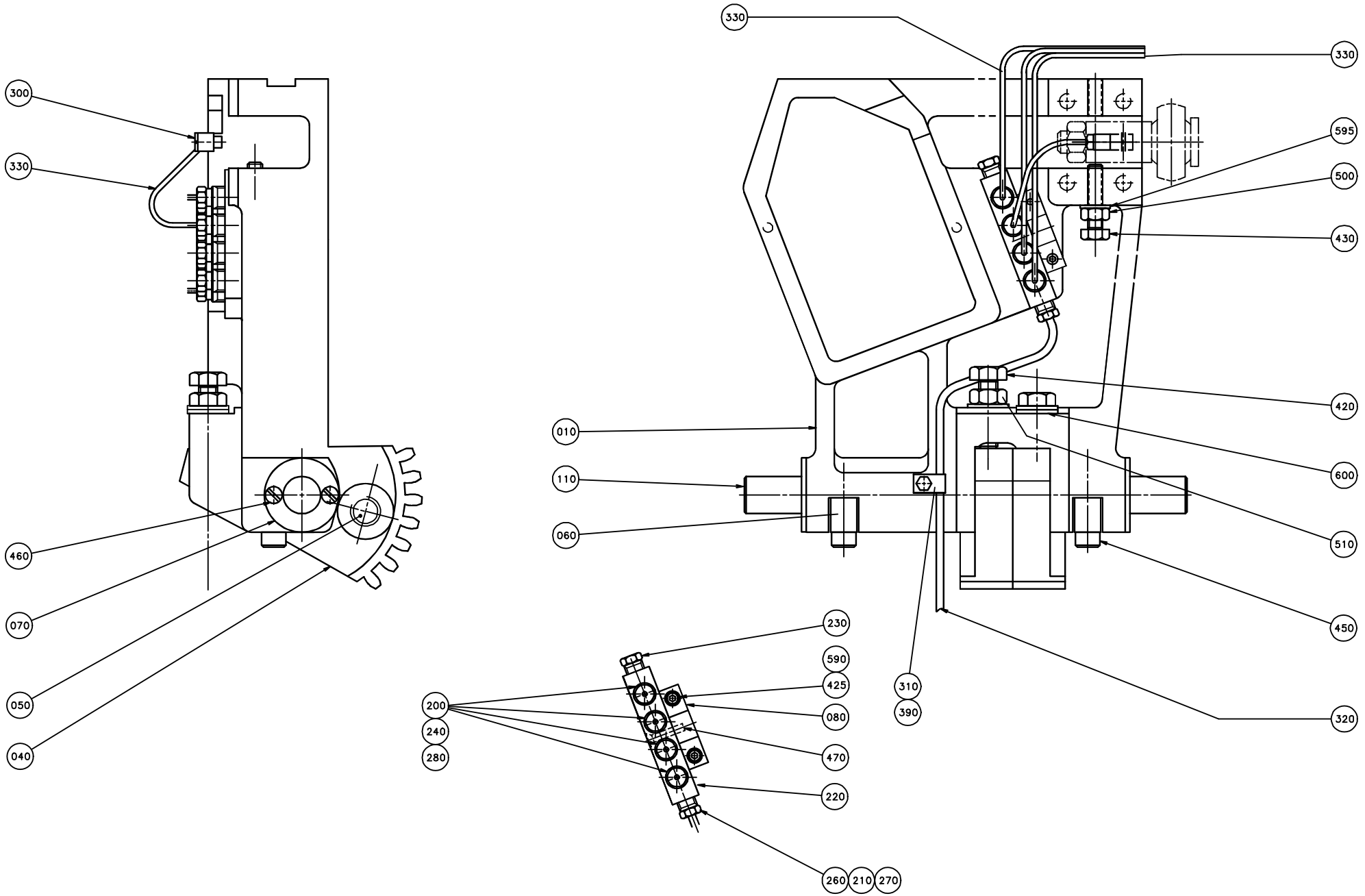
300
330
460
070
050
040
330
330
595
500
430
420
600
510
450
320
010
110
060
310
390
230
590
425
080
470
220
200
240
280
260
210
270

ECM: 80332 - 20000921
Group number: 595200-0100
Assembly Drawing: 595200-3_1_AA

This list covers pages from 4-32 to 4-37

Pos	Part No	UN	Qty	Description	Page No
TB/8 0500SQ US, TB/8 1000SQ US (See drawing on page: 4-34)					
200	90028-0020		3	CONE TUBE 2,5MM	
210	90028-0021		3	CONE TUBE 4 MM	
220	90032-0039		2	BLOCK 4 WAYS	
240	90092-0052		3	METERING VALVE 10 MM3	
270	90134-0038		3	BUSHING/NUT INLET/OUTLET 4 MM	
280	90134-0039		8	BUSHING VALVE CONNECTION 2,5 MM	
290	90134-0052		5	PLUG DOSING BLOCK	
330	90166-0143	MM	2000	TUBE 2,5 MM PA,TRANSP.	
350	90266-0165	MM	100	BRASS PIPE	
470	312155-0301		2	SCREW DIN 7991 MF6S M4X35 A4 70	
TB/8 0568SQ US, TB/8 1500B US (See drawing on page: 4-36)					
200	90028-0020		4	CONE TUBE 2,5MM	
210	90028-0021		1	CONE TUBE 4 MM	
220	90032-0039		1	BLOCK 4 WAYS	
240	90092-0052		4	METERING VALVE 10 MM3	
270	90134-0038		1	BUSHING/NUT INLET/OUTLET 4 MM	
280	90134-0039		4	BUSHING VALVE CONNECTION 2,5 MM	
330	90166-0143	MM	2400	TUBE 2,5 MM PA,TRANSP.	
470	312155-0295		2	SCREW DIN 7991 MF6S M4X20 A4 70	
TB/8 TPC (See drawing on page: 4-32)					
200	90028-0020		8	CONE TUBE 2,5MM	
210	90028-0021		3	CONE TUBE 4 MM	
220	90032-0039		2	BLOCK 4 WAYS	
240	90092-0052		4	METERING VALVE 10 MM3	
250	90092-0053		4	METERING VALVE 30 MM3	
270	90134-0038		3	BUSHING/NUT INLET/OUTLET 4 MM	
280	90134-0039		8	BUSHING VALVE CONNECTION 2,5 MM	
330	90166-0143	MM	1200	TUBE 2,5 MM PA,TRANSP.	
340	90266-0019	MM	2000	PIPE	
350	90266-0165	MM	100	BRASS PIPE	
470	312155-0301		2	SCREW DIN 7991 MF6S M4X35 A4 70	
Common Parts					
010	545409-0000		1	ARM RIGHT	
040	232236-0000		2	TOOTH PART	
050	232237-0000		1	SCREW	
060	533818-0000		2	HOLDER	
070	536704-0000		2	WASHER	
080	536705-0000		1	BRACKET	
090	533886-0000		1	CRAMP	
100	533888-0000		1	CRAMP	
110	538399-0000		1	SHAFT	
230	90087-0019		1	PLUG M10X1 STAINLESS	
260	90134-0031		1	SLEEVE FOR PLASTIC TUBE	
300	90134-0058		1	CONNECTION	
310	90165-0056		1	PIPE CLIP FOR TUBE D=4 MM	
320	90166-0109	MM	800	TUBE 4 MM PA,TRANSP.	
390	312105-0287		1	SCREW M6S ISO 4017 M4X8 A470	
420	312105-0497		2	SCREW M6S ISO 4017 M10X35 A480	
425	312115-0303		2	SCREW ISO4762 M4X40 A4 80	
430	312109-0457		1	SCREW M6S ISO 4017 M8X35 A480	
440	312115-0329		5	SCREW ISO4762 M5X16 A4 80	
450	312115-0455		2	SCREW ISO4762 M8X30 A4 80	
460	312145-0285		4	SCREW ISO 2009 MFS M4X6 A4	
500	312605-0318		1	HEXAGON NUT, M6M M8 A280	
510	312605-0320		1	HEXAGON NUT, M6M M10 A280	
590	315105-0136		2	WASHER BRB 4,3X9 RFR	
595	315105-0165		1	WASHER BRB 8,4X16 RFR	
600	315105-0173		3	WASHER BRB 10,5X20 RFR	

Machine Type | Group Description | Used-In | Group Number | Page No

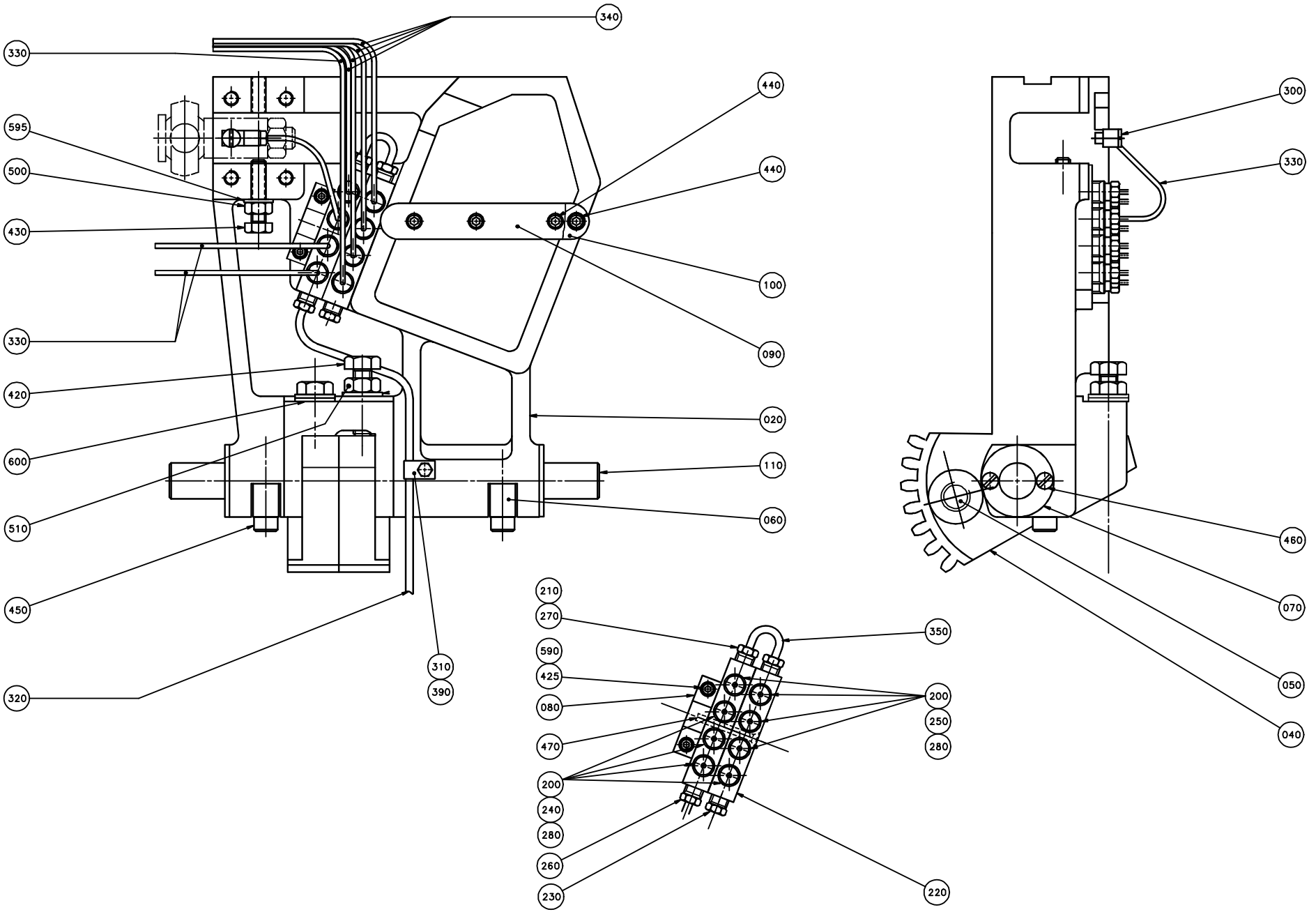
340
330
595
500
430
330
420
600
510
450
320
440
440
100
090
020
110
060
310
390
300
330
460
070
050
040
210
270
590
425
080
470
200
240
280
260
230
350
200
250
280
220

ECM: 71960 - 19981209
Group number: 246498-0600
Assembly Drawing: 246498-4_1_AA

This list covers pages from 4-38 to 4-43

Pos	Part No	UN	Qty	Description	Page No
TB/8 0568SQ US, TB/8 0500SQ US, TB/8 1000SQ US (See drawing on page: 4-40)					
200	90028-0020		3	CONE TUBE 2,5MM	
210	90028-0021		3	CONE TUBE 4 MM	
220	90032-0039		2	BLOCK 4 WAYS	
240	90092-0052		3	METERING VALVE 10 MM3	
270	90134-0038		3	BUSHING/NUT INLET/OUTLET 4 MM	
280	90134-0039		8	BUSHING VALVE CONNECTION 2,5 MM	
290	90134-0052		5	PLUG DOSING BLOCK	
330	90166-0143	MM	2000	TUBE 2,5 MM PA,TRANSP.	
350	90266-0165	MM	100	BRASS PIPE	
470	312155-0301		2	SCREW DIN 7991 MF6S M4X35 A4 70	
TB/8 1500B US (See drawing on page: 4-42)					
200	90028-0020		4	CONE TUBE 2,5MM	
210	90028-0021		1	CONE TUBE 4 MM	
220	90032-0039		1	BLOCK 4 WAYS	
240	90092-0052		4	METERING VALVE 10 MM3	
270	90134-0038		1	BUSHING/NUT INLET/OUTLET 4 MM	
280	90134-0039		4	BUSHING VALVE CONNECTION 2,5 MM	
330	90166-0143	MM	2400	TUBE 2,5 MM PA,TRANSP.	
470	312155-0295		2	SCREW DIN 7991 MF6S M4X20 A4 70	
TB/8 TPC (See drawing on page: 4-38)					
200	90028-0020		8	CONE TUBE 2,5MM	
210	90028-0021		3	CONE TUBE 4 MM	
220	90032-0039		2	BLOCK 4 WAYS	
240	90092-0052		4	METERING VALVE 10 MM3	
250	90092-0053		4	METERING VALVE 30 MM3	
270	90134-0038		3	BUSHING/NUT INLET/OUTLET 4 MM	
280	90134-0039		8	BUSHING VALVE CONNECTION 2,5 MM	
330	90166-0143	MM	1200	TUBE 2,5 MM PA,TRANSP.	
340	90266-0019	MM	2000	PIPE	
350	90266-0165	MM	100	BRASS PIPE	
470	312155-0301		2	SCREW DIN 7991 MF6S M4X35 A4 70	
Common Parts					
020	545410-0000		1	ARM LEFT	
040	232236-0000		2	TOOTH PART	
050	232237-0000		1	SCREW	
060	533818-0000		2	HOLDER	
070	536704-0000		2	WASHER	
080	536705-0000		1	BRACKET	
090	533886-0000		1	CRAMP	
100	533888-0000		1	CRAMP	
110	538399-0000		1	SHAFT	
230	90087-0019		1	PLUG M10X1 STAINLESS	
260	90134-0031		1	SLEEVE FOR PLASTIC TUBE	
300	90134-0058		1	CONNECTION	
310	90165-0056		1	PIPE CLIP FOR TUBE D=4 MM	
320	90166-0109	MM	800	TUBE 4 MM PA,TRANSP.	
390	312105-0287		1	SCREW M6S ISO 4017 M4X8 A470	
420	312105-0497		2	SCREW M6S ISO 4017 M10X35 A480	
425	312115-0303		2	SCREW ISO4762 M4X40 A4 80	
430	312109-0457		1	SCREW M6S ISO 4017 M8X35 A480	
440	312115-0329		5	SCREW ISO4762 M5X16 A4 80	
450	312115-0455		2	SCREW ISO4762 M8X30 A4 80	
460	312145-0285		4	SCREW ISO 2009 MFS M4X6 A4	
500	312605-0318		1	HEXAGON NUT, M6M M8 A280	
510	312605-0320		1	HEXAGON NUT, M6M M10 A280	
590	315105-0136		2	WASHER BRB 4,3X9 RFR	
595	315105-0165		1	WASHER BRB 8,4X16 RFR	
600	315105-0173		3	WASHER BRB 10,5X20 RFR	

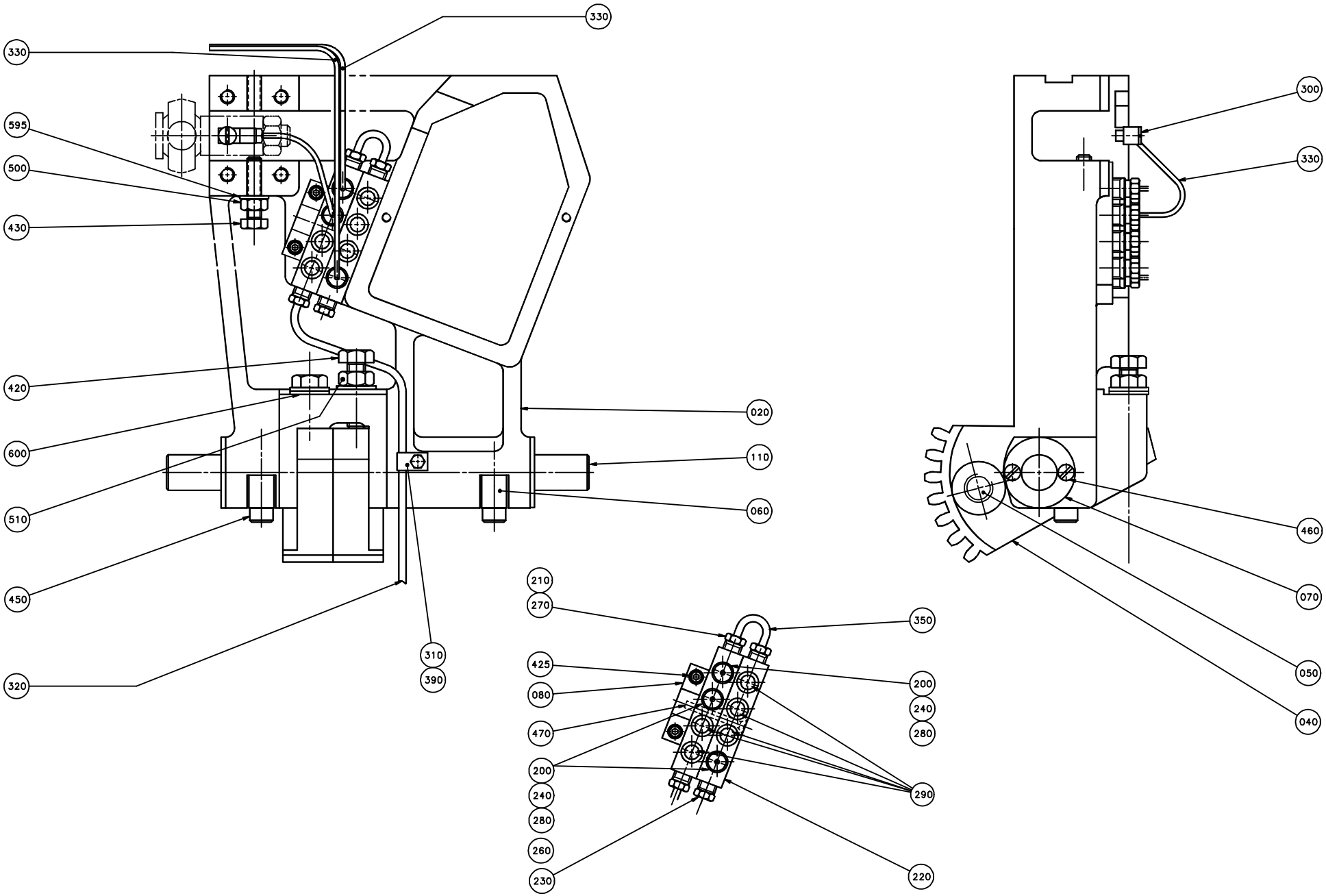
330
330
595
500
430
420
600
510
450
320
310
390
020
110
060
210
270
425
080
470
200
240
280
260
230
350
200
240
280
290
220
300
330
460
070
050
040

ECM: 71960 - 19981209
Group number: 246498-0600
Assembly Drawing: 246498-5_1_AB

This list covers pages from 4-38 to 4-43

Pos	Part No	UN	Qty	Description	Page No
TB/8 0568SQ US, TB/8 0500SQ US, TB/8 1000SQ US (See drawing on page: 4-40)					
200	90028-0020		3	CONE TUBE 2,5MM	
210	90028-0021		3	CONE TUBE 4 MM	
220	90032-0039		2	BLOCK 4 WAYS	
240	90092-0052		3	METERING VALVE 10 MM3	
270	90134-0038		3	BUSHING/NUT INLET/OUTLET 4 MM	
280	90134-0039		8	BUSHING VALVE CONNECTION 2,5 MM	
290	90134-0052		5	PLUG DOSING BLOCK	
330	90166-0143	MM	2000	TUBE 2,5 MM PA,TRANSP.	
350	90266-0165	MM	100	BRASS PIPE	
470	312155-0301		2	SCREW DIN 7991 MF6S M4X35 A4 70	
TB/8 1500B US (See drawing on page: 4-42)					
200	90028-0020		4	CONE TUBE 2,5MM	
210	90028-0021		1	CONE TUBE 4 MM	
220	90032-0039		1	BLOCK 4 WAYS	
240	90092-0052		4	METERING VALVE 10 MM3	
270	90134-0038		1	BUSHING/NUT INLET/OUTLET 4 MM	
280	90134-0039		4	BUSHING VALVE CONNECTION 2,5 MM	
330	90166-0143	MM	2400	TUBE 2,5 MM PA,TRANSP.	
470	312155-0295		2	SCREW DIN 7991 MF6S M4X20 A4 70	
TB/8 TPC (See drawing on page: 4-38)					
200	90028-0020		8	CONE TUBE 2,5MM	
210	90028-0021		3	CONE TUBE 4 MM	
220	90032-0039		2	BLOCK 4 WAYS	
240	90092-0052		4	METERING VALVE 10 MM3	
250	90092-0053		4	METERING VALVE 30 MM3	
270	90134-0038		3	BUSHING/NUT INLET/OUTLET 4 MM	
280	90134-0039		8	BUSHING VALVE CONNECTION 2,5 MM	
330	90166-0143	MM	1200	TUBE 2,5 MM PA,TRANSP.	
340	90266-0019	MM	2000	PIPE	
350	90266-0165	MM	100	BRASS PIPE	
470	312155-0301		2	SCREW DIN 7991 MF6S M4X35 A4 70	
Common Parts					
020	545410-0000		1	ARM LEFT	
040	232236-0000		2	TOOTH PART	
050	232237-0000		1	SCREW	
060	533818-0000		2	HOLDER	
070	536704-0000		2	WASHER	
080	536705-0000		1	BRACKET	
090	533886-0000		1	CRAMP	
100	533888-0000		1	CRAMP	
110	538399-0000		1	SHAFT	

Pos	Part No	UN	Qty	Description	Page No
230	90087-0019		1	PLUG M10X1 STAINLESS	
260	90134-0031		1	SLEEVE FOR PLASTIC TUBE	
300	90134-0058		1	CONNECTION	
310	90165-0056		1	PIPE CLIP FOR TUBE D=4 MM	
320	90166-0109	MM	800	TUBE 4 MM PA,TRANSP.	
390	312105-0287		1	SCREW M6S ISO 4017 M4X8 A470	
420	312105-0497		2	SCREW M6S ISO 4017 M10X35 A480	
425	312115-0303		2	SCREW ISO4762 M4X40 A4 80	
430	312109-0457		1	SCREW M6S ISO 4017 M8X35 A480	
440	312115-0329		5	SCREW ISO4762 M5X16 A4 80	
450	312115-0455		2	SCREW ISO4762 M8X30 A4 80	
460	312145-0285		4	SCREW ISO 2009 MFS M4X6 A4	
500	312605-0318		1	HEXAGON NUT, M6M M8 A280	
510	312605-0320		1	HEXAGON NUT, M6M M10 A280	
590	315105-0136		2	WASHER BRB 4,3X9 RFR	
595	315105-0165		1	WASHER BRB 8,4X16 RFR	
600	315105-0173		3	WASHER BRB 10,5X20 RFR	

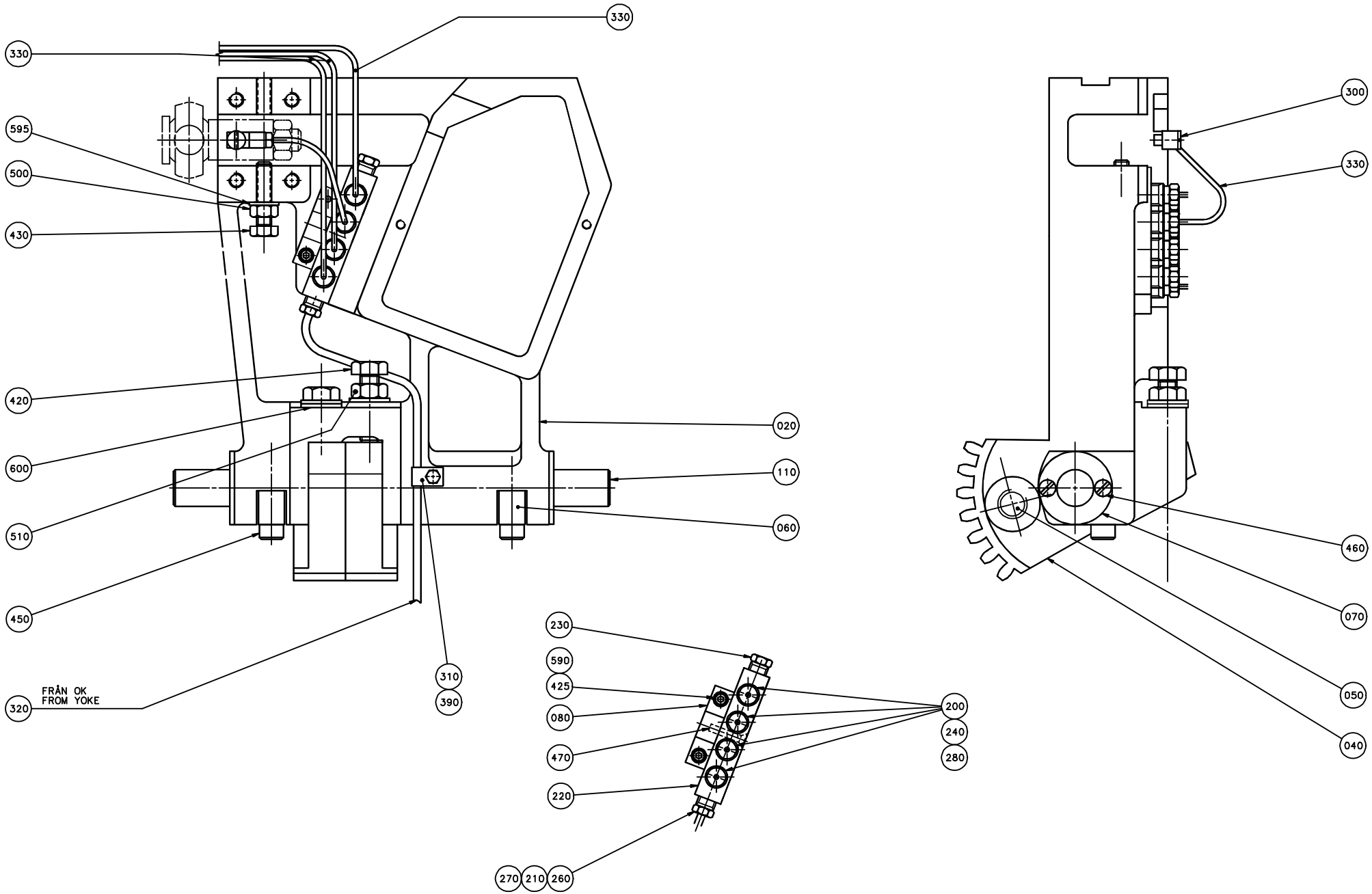
330
330
595
500
430
420
600
510
450
320
FRÅN OK
FROM YOKE
020
110
060
310
390
230
590
425
080
470
220
270
210
260
200
240
280
300
330
460
070
050
040

ECM: 71960 - 19981209
Group number: 246498-0600
Assembly Drawing: 246498-6_1_AA

This list covers pages from 4-38 to 4-43

Pos	Part No	UN	Qty	Description	Page No
TB/8 0568SQ US, TB/8 0500SQ US, TB/8 1000SQ US (See drawing on page: 4-40)					
200	90028-0020		3	CONE TUBE 2,5MM	
210	90028-0021		3	CONE TUBE 4 MM	
220	90032-0039		2	BLOCK 4 WAYS	
240	90092-0052		3	METERING VALVE 10 MM3	
270	90134-0038		3	BUSHING/NUT INLET/OUTLET 4 MM	
280	90134-0039		8	BUSHING VALVE CONNECTION 2,5 MM	
290	90134-0052		5	PLUG DOSING BLOCK	
330	90166-0143	MM	2000	TUBE 2,5 MM PA,TRANSP.	
350	90266-0165	MM	100	BRASS PIPE	
470	312155-0301		2	SCREW DIN 7991 MF6S M4X35 A4 70	
TB/8 1500B US (See drawing on page: 4-42)					
200	90028-0020		4	CONE TUBE 2,5MM	
210	90028-0021		1	CONE TUBE 4 MM	
220	90032-0039		1	BLOCK 4 WAYS	
240	90092-0052		4	METERING VALVE 10 MM3	
270	90134-0038		1	BUSHING/NUT INLET/OUTLET 4 MM	
280	90134-0039		4	BUSHING VALVE CONNECTION 2,5 MM	
330	90166-0143	MM	2400	TUBE 2,5 MM PA,TRANSP.	
470	312155-0295		2	SCREW DIN 7991 MF6S M4X20 A4 70	
TB/8 TPC (See drawing on page: 4-38)					
200	90028-0020		8	CONE TUBE 2,5MM	
210	90028-0021		3	CONE TUBE 4 MM	
220	90032-0039		2	BLOCK 4 WAYS	
240	90092-0052		4	METERING VALVE 10 MM3	
250	90092-0053		4	METERING VALVE 30 MM3	
270	90134-0038		3	BUSHING/NUT INLET/OUTLET 4 MM	
280	90134-0039		8	BUSHING VALVE CONNECTION 2,5 MM	
330	90166-0143	MM	1200	TUBE 2,5 MM PA,TRANSP.	
340	90266-0019	MM	2000	PIPE	
350	90266-0165	MM	100	BRASS PIPE	
470	312155-0301		2	SCREW DIN 7991 MF6S M4X35 A4 70	
Common Parts					
020	545410-0000		1	ARM LEFT	
040	232236-0000		2	TOOTH PART	
050	232237-0000		1	SCREW	
060	533818-0000		2	HOLDER	
070	536704-0000		2	WASHER	
080	536705-0000		1	BRACKET	
090	533886-0000		1	CRAMP	
100	533888-0000		1	CRAMP	
110	538399-0000		1	SHAFT	

Pos	Part No	UN	Qty	Description	Page No
230	90087-0019		1	PLUG M10X1 STAINLESS	
260	90134-0031		1	SLEEVE FOR PLASTIC TUBE	
300	90134-0058		1	CONNECTION	
310	90165-0056		1	PIPE CLIP FOR TUBE D=4 MM	
320	90166-0109	MM	800	TUBE 4 MM PA,TRANSP.	
390	312105-0287		1	SCREW M6S ISO 4017 M4X8 A470	
420	312105-0497		2	SCREW M6S ISO 4017 M10X35 A480	
425	312115-0303		2	SCREW ISO4762 M4X40 A4 80	
430	312109-0457		1	SCREW M6S ISO 4017 M8X35 A480	
440	312115-0329		5	SCREW ISO4762 M5X16 A4 80	
450	312115-0455		2	SCREW ISO4762 M8X30 A4 80	
460	312145-0285		4	SCREW ISO 2009 MFS M4X6 A4	
500	312605-0318		1	HEXAGON NUT, M6M M8 A280	
510	312605-0320		1	HEXAGON NUT, M6M M10 A280	
590	315105-0136		2	WASHER BRB 4,3X9 RFR	
595	315105-0165		1	WASHER BRB 8,4X16 RFR	
600	315105-0173		3	WASHER BRB 10,5X20 RFR	

DESIGN CORRECTION DEVICE RIGHT

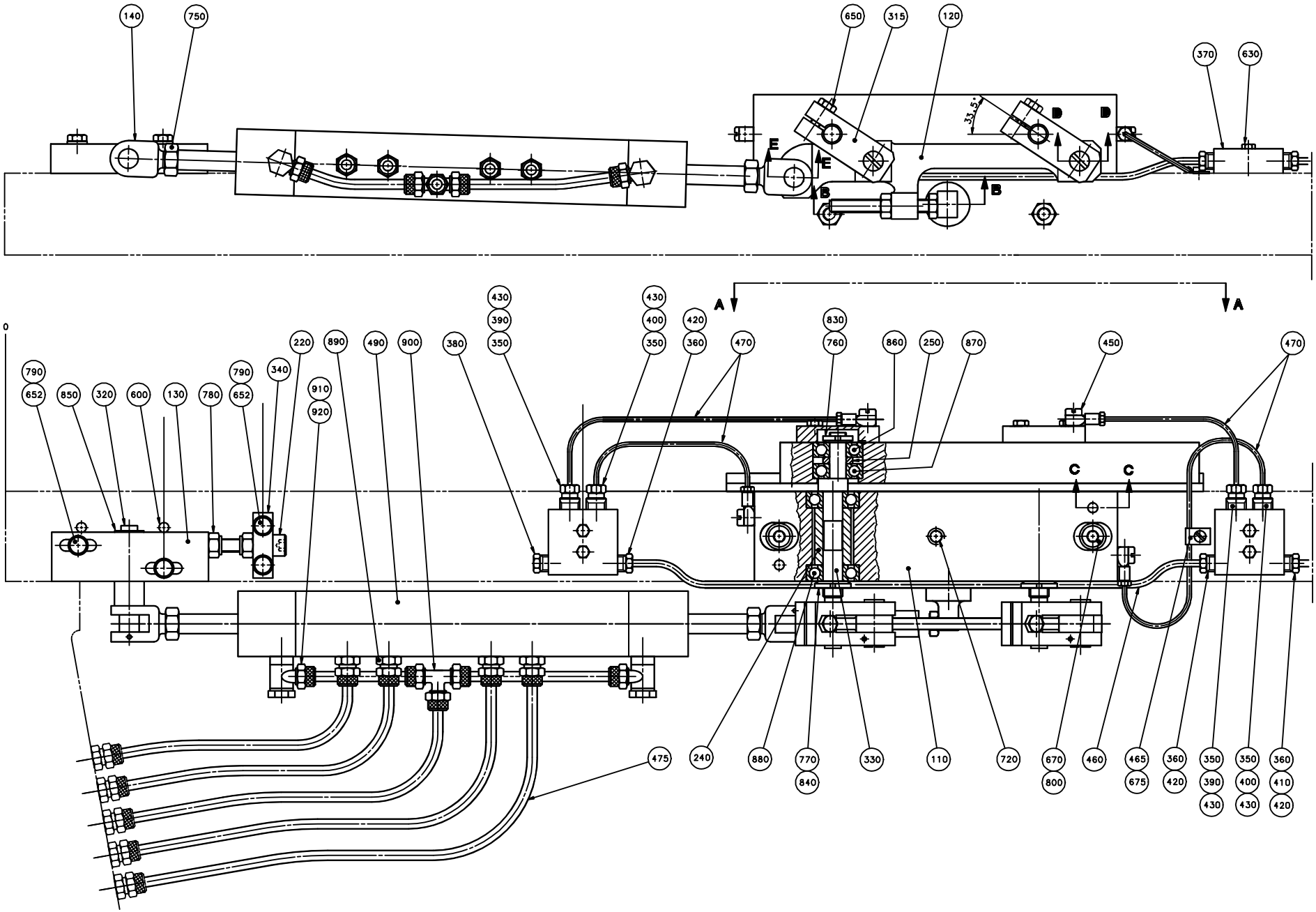

ECM: 83372 - 20000921
Group number: 243435-0500
Assembly Drawing: 243435-4_1_AA

This list covers pages from 4-44 to 4-47

Pos	Part No	UN	Qty	Description	Page No
0300B TPC, 0568B TPC					
010	564629-0000		1	FOLDING FLAP CAM	
020	252654-0002		1	COUNTER CAM	
0500B TPC					
010	563207-0000		1	FOLDING FLAP CAM	
020	26373-0000		1	COUNTER CAM	
0500S TPC					
010	551286-0000		1	FOLDING FLAP CAM	
020	440931-0000		1	COUNTER CAM	
0500SQ TPC					
010	583829-0000		1	FOLDING FLAP CAM	
020	252654-0002		1	COUNTER CAM	
0500SQ US					
010	1364785-0000		1	FOLDING FLAP CAM	
020	252654-0002		1	COUNTER CAM	
0568SQ US					
010	1362526-0000		1	FOLDING FLAP CAM	
020	598653-0000		1	COUNTER CAM R	
1000B LOFIN TPC					
010	563065-0000		1	FOLDING FLAP CAM	
020	269060-0000		1	COUNTER CAM	
1000SQ TPC, 1000S TPC					
010	574000-0000		1	FOLDING FLAP CAM	
020	269060-0000		1	COUNTER CAM	
1000SQ US, 1000B HIFIN TPC					
010	565189-0000		1	FOLDING FLAP CAM	
020	269060-0000		1	COUNTER CAM	
1136B TPC					
010	549108-0000		1	FOLDING FLAP CAM	
020	549110-0000		1	COUNTER CAM	
1500B US					
010	593278-0000		1	FOLDING FLAP CAM	
020	476667-0000		1	COUNTER CAM	
Common Parts					
050	312306-0459		2	SCREW ISO4026 M8X40 FZB	
070	312605-0318		2	HEXAGON NUT, M6M M8 A280	
110	23292-0000		1	BEARING HOUSING	
120	436740-0000		1	LINK	
130	20718-0000		1	BEARING	
140	22483-0000		2	FORK	
150	22485-0000		1	DOWEL	
160	22486-0000		2	DOWEL	
170	22504-0000		1	STOP LUG	
180	23291-0000		2	BEARING COVER	
200	23312-0000		3	BUSHING	
210	26426-0000		5	LACE	
220	33409-0000		1	SCREW	
240	107334-0000		2	SPACER SLEEVE	
250	107335-0000		2	SPACER RING	
260	107339-0000		2	DOWEL	
315	434387-0000		2	BRACKET	
320	434388-0000		1	SHAFT	
330	436671-0000		2	ECCENTRIC SHAFT	
340	561416-0000		1	BRACKET	
350	90028-0020		4	CONE TUBE 2,5MM	
360	90028-0021		3	CONE TUBE 4 MM	
370	90032-0038		2	BLOCK 2 WAYS	
380	90087-0019		1	PLUG M10X1 STAINLESS	
390	90092-0052		2	METERING VALVE 10 MM3	
400	90092-0054		2	METERING VALVE 50 MM3	
410	90134-0031		1	SLEEVE FOR PLASTIC TUBE	
420	90134-0038		3	BUSHING/NUT INLET/OUTLET 4 MM	
430	90134-0039		4	BUSHING VALVE CONNECTION 2,5 MM	
450	90134-0058		4	CONNECTION	
460	90151-0001	MM	400	BRASS PIPE DI=2,6 MM	
465	90165-0058		1	PIPE CLIP FOR TUBE D=2,5 MM	
470	90166-0143	MM	700	TUBE 2,5 MM PA,TRANSP.	
475	90166-0124	MM	1600	TUBE 6 MM PA,TRANSP.	
490	90450-0105		1	5 STEPS CYLINDER MECMAN	
	90450-0634		*1*	*OVERHAUL KIT*	
500	90261-0036		2	PIPE PLUG "REPL.BY 90261-71"	
600	311103-0357		4	PARALLEL PIN ISO 2338 6M6X30 A1	
610	311103-0310		2	PARALLEL PIN ISO 2338 5M6X20 A1	
620	311112-0192		4	SPRING PIN, ISO 8752 2,5X24-C	
630	312105-0295		4	SCREW M6S ISO 4017 M4X20 A470	
640	312105-0329		8	SCREW M6S ISO 4017 M5X16 A480	
650	312105-0370		2	SCREW M6S ISO 4017 M6X20 A480	
652	312105-0372		4	SCREW M6S ISO 4017 M6X25 A480	
655	312109-0463		1	SCREW M6S ISO 4017 M8X60 A480	
670	312115-0461		2	SCREW ISO4762 M8X50 A4 80	
675	312125-0285		1	SCREW ISO 1207 M4X6 A4	
690	312155-0382		4	SCREW DIN 7991 MF6S M6X60 A4 70	
720	312318-0499		1	SCREW ISO4029 M10X40 A4	
750	312635-0320		2	NUT M6M 10X1 STAINLESS A2 80	

Machine Type | Group Description | Used-In | Group Number | Page No

DESIGN CORRECTION DEVICE RIGHT

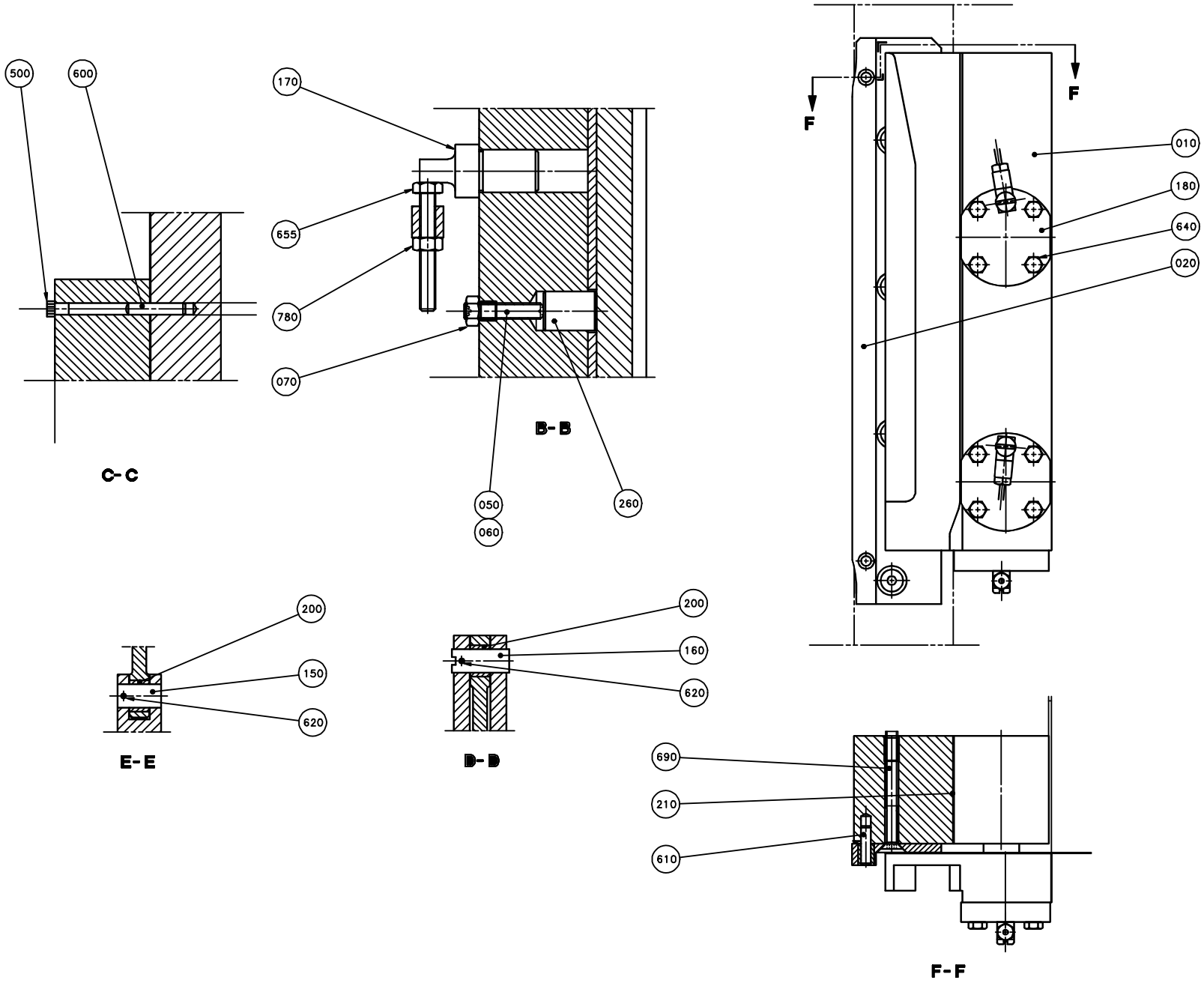

Pos	Part No	UN	Qty	Description	Page No
Common Parts (Cont'd)					
760	312805-0100		2	NUT ROUND WITH SLOTS M10X0,75 FE	
770	312805-0101		2	NUT ROUND WITH SLOTS M12X1 FE	
780	312811-0318		3	NUT HEX.LOCK HELI COIL M8 SS	
790	315105-0153		4	WASHER BRB 6,4X12 RFR	
800	315105-0165		2	WASHER BRB 8,4X16 RFR	
830	315410-0100		2	LOCK WASHER MB 0 D=10 H=1	
840	315410-0101		2	LOCK WASHER MB 1 D=12 H=1	
850	315750-0107		1	RETAINING RING SHAFT DIN 471 ST 10	
860	321309-0100		2	BALL BEARING, 10X30X9 MM	
870	321312-0100		2	BALL BEARING, 10X30X9 MM	
880	321312-0101		4	BALL BEARING, 12X32X10 MM	
890	342920-0113		4	STRAIGHT COUPLING,EXT.THREADED 6/4-R1/8"	
900	342946-0112		1	T-COUPLING,UNION 6/4	
910	342980-0113		2	BANJO-CONNECTION,RING 6/4-G1/8 INCH	
920	342980-0303		2	BANJO-HOLLOW BOLT COUPL,EXT.THR.01-G1/8	

Pos	Part No	UN	Qty	Description	Page No

DESIGN CORRECTION DEVICE LEFT

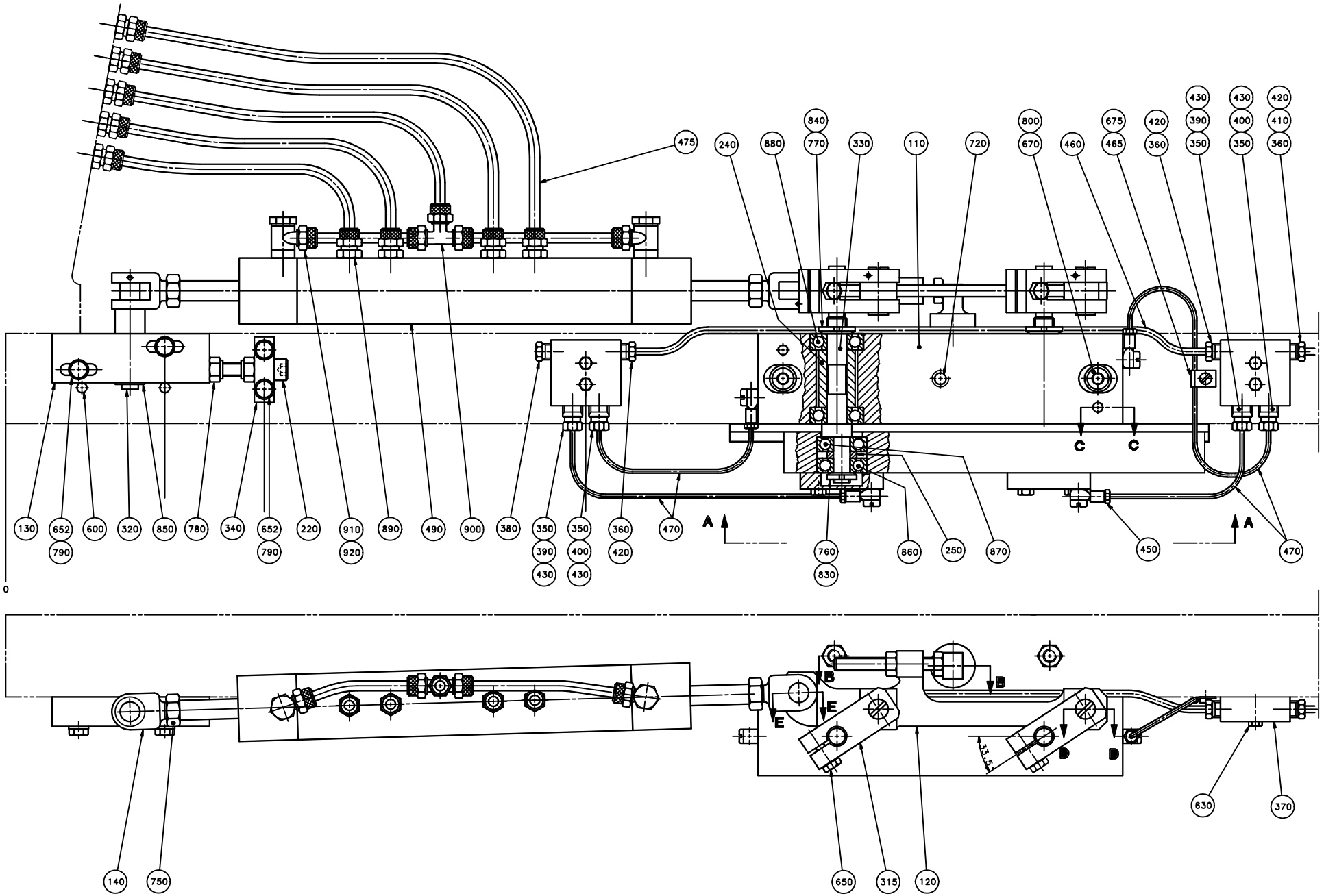

ECM: 83371 - 20000921
Group number: 243434-0500
Assembly Drawing: 243434-4_1_AA

This list covers pages from 4-48 to 4-51

Pos	Part No	UN	Qty	Description	Page No
0300B TPC, 0568B TPC					
010	564628-0000		1	FOLDING FLAP CAM	
020	252653-0002		1	COUNTER CAM	
0500B TPC					
010	563206-0000		1	FOLDING FLAP CAM	
020	26372-0000		1	COUNTER CAM	
0500S TPC					
010	551285-0000		1	FOLDING FLAP CAM	
020	440930-0000		1	COUNTER CAM	
0500SQ TPC					
010	583828-0000		1	FOLDING FLAP CAM	
020	252653-0002		1	COUNTER CAM	
0500SQ US					
010	1364784-0000		1	FOLDING FLAP CAM	
020	252653-0002		1	COUNTER CAM	
0568SQ US					
010	1362525-0000		1	FOLDING FLAP CAM	
020	598652-0000		1	COUNTER CAM L	
1000B LOFIN TPC					
010	563064-0000		1	FOLDING FLAP CAM	
020	269059-0000		1	COUNTER CAM	
1000SQ TPC, 1000S TPC					
010	573999-0000		1	FOLDING FLAP CAM	
020	269059-0000		1	COUNTER CAM	
1000SQ US, 1000B HIFIN TPC					
010	565188-0000		1	FOLDING FLAP CAM	
020	269059-0000		1	COUNTER CAM	
1136B TPC					
010	549107-0000		1	FOLDING FLAP CAM	
020	549109-0000		1	COUNTER CAM	
1500B US					
010	593277-0000		1	FOLDING FLAP CAM	
020	476668-0000		1	COUNTER CAM	
Common Parts					
050	312306-0459		2	SCREW ISO4026 M8X40 FZB	
070	312605-0318		2	HEXAGON NUT, M6M M8 A280	
110	23292-0000		1	BEARING HOUSING	
120	436740-0000		1	LINK	
130	20718-0000		1	BEARING	
140	22483-0000		2	FORK	
150	22485-0000		1	DOWEL	
160	22486-0000		2	DOWEL	
170	22504-0000		1	STOP LUG	
180	23291-0000		2	BEARING COVER	
200	23312-0000		3	BUSHING	
210	26426-0000		5	LACE	
220	33409-0000		1	SCREW	
240	107334-0000		2	SPACER SLEEVE	
250	107335-0000		2	SPACER RING	
260	107339-0000		2	DOWEL	
315	434387-0000		2	BRACKET	
320	434388-0000		1	SHAFT	
330	436671-0000		2	ECCENTRIC SHAFT	
340	561416-0000		1	BRACKET	
350	90028-0020		4	CONE TUBE 2,5MM	
360	90028-0021		3	CONE TUBE 4 MM	
370	90032-0038		2	BLOCK 2 WAYS	
380	90087-0019		1	PLUG M10X1 STAINLESS	
390	90092-0052		2	METERING VALVE 10 MM3	
400	90092-0054		2	METERING VALVE 50 MM3	
410	90134-0031		1	SLEEVE FOR PLASTIC TUBE	
420	90134-0038		3	BUSHING/NUT INLET/OUTLET 4 MM	
430	90134-0039		4	BUSHING VALVE CONNECTION 2,5 MM	
450	90134-0058		4	CONNECTION	
460	90151-0001	MM	400	BRASS PIPE DI=2,6 MM	
465	90165-0058		1	PIPE CLIP FOR TUBE D=2,5 MM	
470	90166-0143	MM	700	TUBE 2,5 MM PA,TRANSP.	
475	90166-0124	MM	1600	TUBE 6 MM PA,TRANSP.	
490	90450-0105		1	5 STEPS CYLINDER MECMAN	
	90450-0634		*1*	*OVERHAUL KIT*	
500	90261-0036		2	PIPE PLUG "REPL.BY 90261-71"	
600	311103-0357		4	PARALLEL PIN ISO 2338 6M6X30 A1	
610	311103-0310		2	PARALLEL PIN ISO 2338 5M6X20 A1	
620	311112-0192		4	SPRING PIN, ISO 8752 2,5X24-C	
630	312105-0295		4	SCREW M6S ISO 4017 M4X20 A470	
640	312105-0329		8	SCREW M6S ISO 4017 M5X16 A480	
650	312105-0370		2	SCREW M6S ISO 4017 M6X20 A480	
652	312105-0372		4	SCREW M6S ISO 4017 M6X25 A480	
655	312109-0463		1	SCREW M6S ISO 4017 M8X60 A480	
670	312115-0461		2	SCREW ISO4762 M8X50 A4 80	
675	312125-0285		1	SCREW ISO 1207 M4X6 A4	
690	312155-0382		4	SCREW DIN 7991 MF6S M6X60 A4 70	
720	312318-0499		1	SCREW ISO4029 M10X40 A4	
750	312635-0320		2	NUT M6M 10X1 STAINLESS A2 80	

Machine Type | Group Description | Used-In | Group Number | Page No

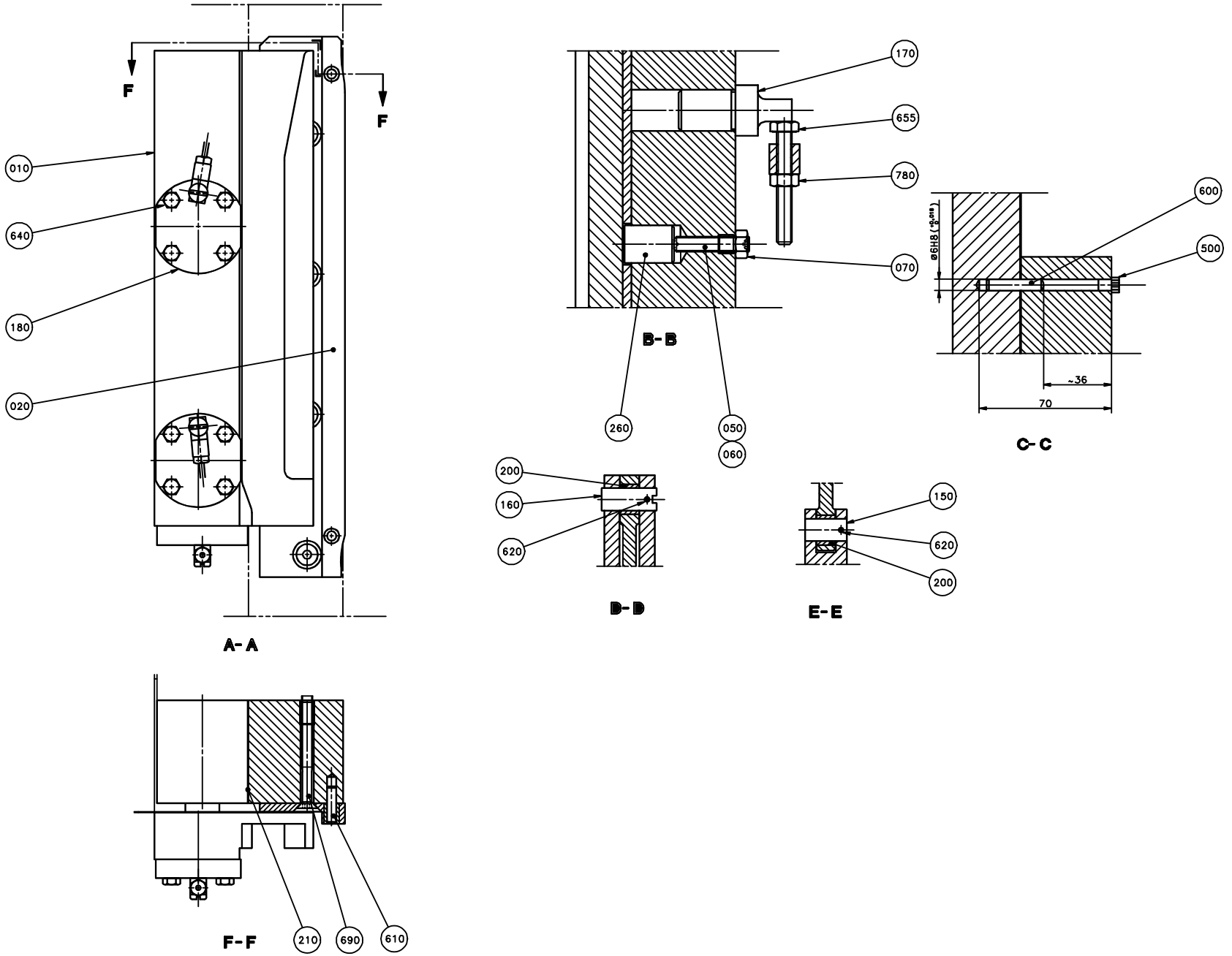
F
F
010
640
180
020
A-A
170
655
780
070
B-B
600
500
Ø6H8 (+0,018)
~36
70
C-C
260
050
060
200
160
620
D-D
150
620
200
E-E
F-F
210
690
610

Pos	Part No	UN	Qty	Description	Page No
Common Parts (Cont'd)					
760	312805-0100		2	NUT ROUND WITH SLOTS M10X0,75 FE	
770	312805-0101		2	NUT ROUND WITH SLOTS M12X1 FE	
780	312811-0318		3	NUT HEX.LOCK HELI COIL M8 SS	
790	315105-0153		4	WASHER BRB 6,4X12 RFR	
800	315105-0165		2	WASHER BRB 8,4X16 RFR	
830	315410-0100		2	LOCK WASHER MB 0 D=10 H=1	
840	315410-0101		2	LOCK WASHER MB 1 D=12 H=1	
850	315750-0107		1	RETAINING RING SHAFT DIN 471 ST 10	
860	321309-0100		2	BALL BEARING, 10X30X9 MM	
870	321312-0100		2	BALL BEARING, 10X30X9 MM	
880	321312-0101		4	BALL BEARING, 12X32X10 MM	
890	342920-0113		4	STRAIGHT COUPLING,EXT.THREADED 6/4-R1/8"	
900	342946-0112		1	T-COUPLING,UNION 6/4	
910	342980-0113		2	BANJO-CONNECTION,RING 6/4-G1/8 INCH	
920	342980-0303		2	BANJO-HOLLOW BOLT COUPL,EXT.THR.01-G1/8	

Pos	Part No	UN	Qty	Description	Page No

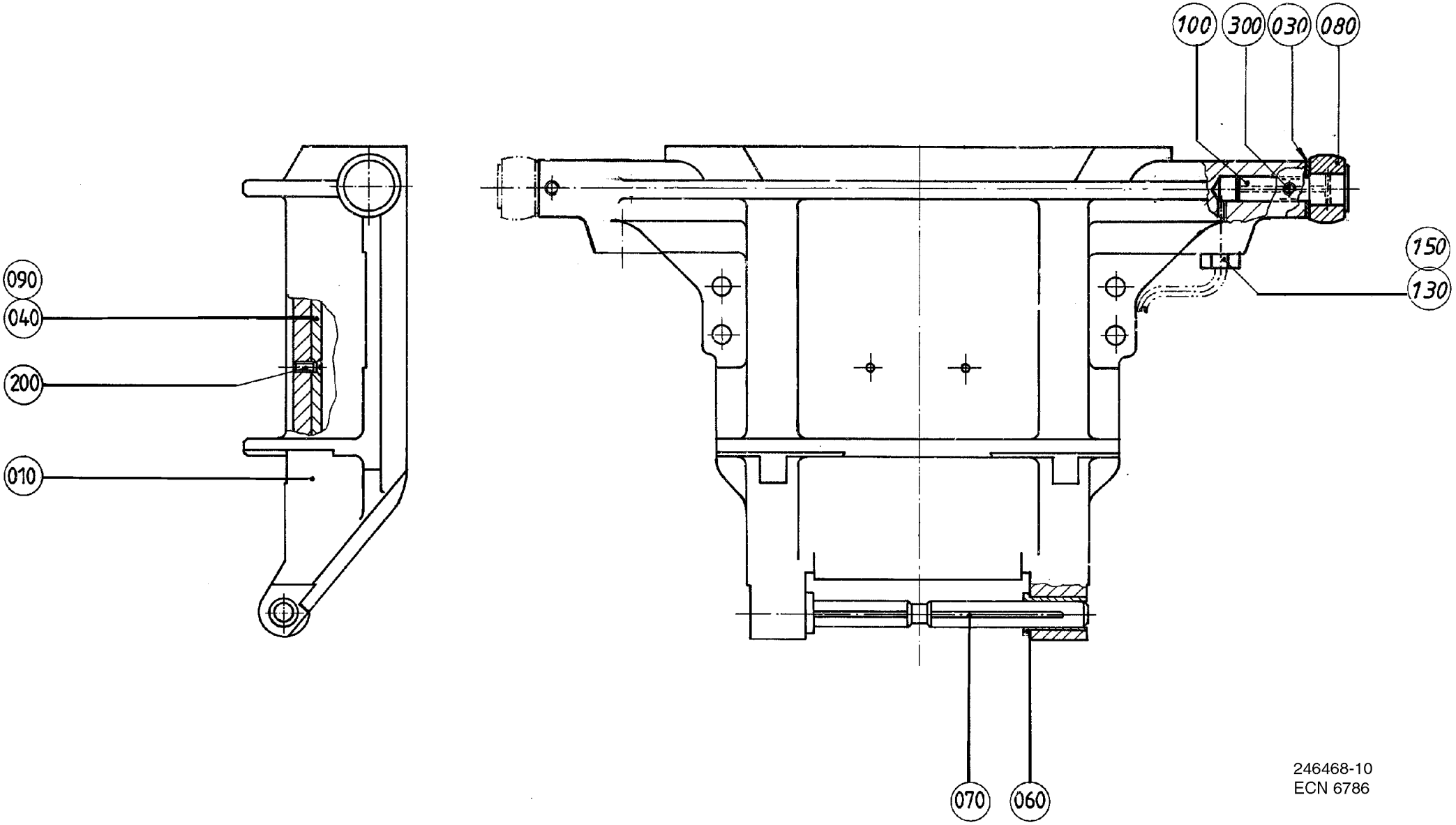
100
300
030
080
150
130
090
040
200
010
070
060
246468-10
ECN 6786

ECM: 146884 - 20031028
Group number: 246468-0800
Assembly Drawing: 246468-10_1_AA

This list covers pages from 4-52 to 4-59

Pos	Part No	UN	Qty	Description	Page No
TB/8 1000S TPC (See drawing on pages: 4-52, 12-204)					
010	1260781-0000		1	VOLUME FLAP	
030	19972-0000		1	WASHER	
040	569055-0000		1	VOLUME BULGE	
060	36133-0000		2	BUSHING	
070	458164-0000		1	SHAFT	
080	434321-0000		1	CURVE ROLLER	
090	569056-0000		3	VOLUME SHIM	
100	434320-0000		1	AXLE PIN	
130	90028-0020		1	CONE TUBE 2,5MM	
150	90134-0063		1	BUSHING/NUT M8X1, D=2,5 MM	
210	312145-0289		2	SCREW ISO 2009 MFS M4X10 A4	
300	312318-0285		1	SCREW ISO4029 M4X6 A4	
TB/8 1000SQ TPC (See drawing on pages: 4-52, 12-204)					
010	1195070-0000		1	VOLUME FLAP	
030	19972-0000		1	WASHER	
040	1143049-0000		1	VOLUME BULGE	
060	36133-0000		2	BUSHING	
070	544292-0000		1	SHAFT	
080	434321-0000		1	CURVE ROLLER	
090	1143050-0000		3	VOLUME SHIM	
100	434320-0000		1	AXLE PIN	
130	90028-0020		1	CONE TUBE 2,5MM	
150	90134-0063		1	BUSHING/NUT M8X1, D=2,5 MM	
210	312145-0289		2	SCREW ISO 2009 MFS M4X10 A4	
300	312318-0285		1	SCREW ISO4029 M4X6 A4	
TB/8 0300B TPC (See drawing on pages: 4-54, 12-206)					
010	582911-0000		1	VOLUME FLAP	
020	449908-0000		2	BUSHING	
030	19972-0000		1	WASHER	
040	449584-0000		1	VOLUME BULGE	
070	458165-0000		1	SHAFT	
080	436556-0000		1	CURVE ROLLER	
090	450302-0000		3	VOLUME SHIM	
100	434320-0000		1	AXLE PIN	
130	90028-0020		1	CONE TUBE 2,5MM	
150	90134-0063		1	BUSHING/NUT M8X1, D=2,5 MM	
210	312145-0289		2	SCREW ISO 2009 MFS M4X10 A4	
300	312318-0285		1	SCREW ISO4029 M4X6 A4	
TB/8 0500B TPC (See drawing on pages: 4-54, 12-206)					
010	563609-0000		1	VOLUME FLAP	
030	19972-0000		1	WASHER	
040	458467-0000		1	VOLUME BULGE	
060	36133-0000		2	BUSHING	
070	458164-0000		1	SHAFT	
080	436556-0000		1	CURVE ROLLER	
090	479245-0000		3	VOLUME SHIM	
100	434320-0000		1	AXLE PIN	
130	90028-0020		1	CONE TUBE 2,5MM	
150	90134-0063		1	BUSHING/NUT M8X1, D=2,5 MM	
210	312145-0289		2	SCREW ISO 2009 MFS M4X10 A4	
300	312318-0285		1	SCREW ISO4029 M4X6 A4	
TB/8 0500S TPC (See drawing on pages: 4-56, 12-208)					
010	592923-0000		1	VOLUME FLAP	
020	449908-0000		2	BUSHING	
030	19972-0000		1	WASHER	
040	464314-0000		1	VOLUME BULGE	
070	458165-0000		1	SHAFT	
080	434321-0000		1	CURVE ROLLER	
090	464315-0000		3	VOLUME SHIM	
100	434320-0000		1	AXLE PIN	
130	90028-0020		1	CONE TUBE 2,5MM	
150	90134-0063		1	BUSHING/NUT M8X1, D=2,5 MM	
200	312145-0222		2	SCREW ISO 2009 MFS M3X8 A4	
300	312318-0285		1	SCREW ISO4029 M4X6 A4	
TB/8 0568B TPC (See drawing on pages: 4-54, 12-206)					
010	533441-0000		1	VOLUME FLAP	
030	19972-0000		1	WASHER	
040	541204-0000		1	VOLUME BULGE	
060	36133-0000		2	BUSHING	
070	458164-0000		1	SHAFT	
080	436556-0000		1	CURVE ROLLER	
090	479246-0000		3	VOLUME SHIM	
100	434320-0000		1	AXLE PIN	
130	90028-0020		1	CONE TUBE 2,5MM	
150	90134-0063		1	BUSHING/NUT M8X1, D=2,5 MM	
210	312145-0289		2	SCREW ISO 2009 MFS M4X10 A4	
300	312318-0285		1	SCREW ISO4029 M4X6 A4	
TB/8 1000SQ US (See drawing on pages: 4-52, 12-204)					
010	929541-0000		1	VOLUME FLAP	
030	19972-0000		1	WASHER	
040	1143049-0000		1	VOLUME BULGE	
060	36133-0000		2	BUSHING	
070	544292-0000		1	SHAFT	

Machine Type | Group Description | Used-In | Group Number | Page No

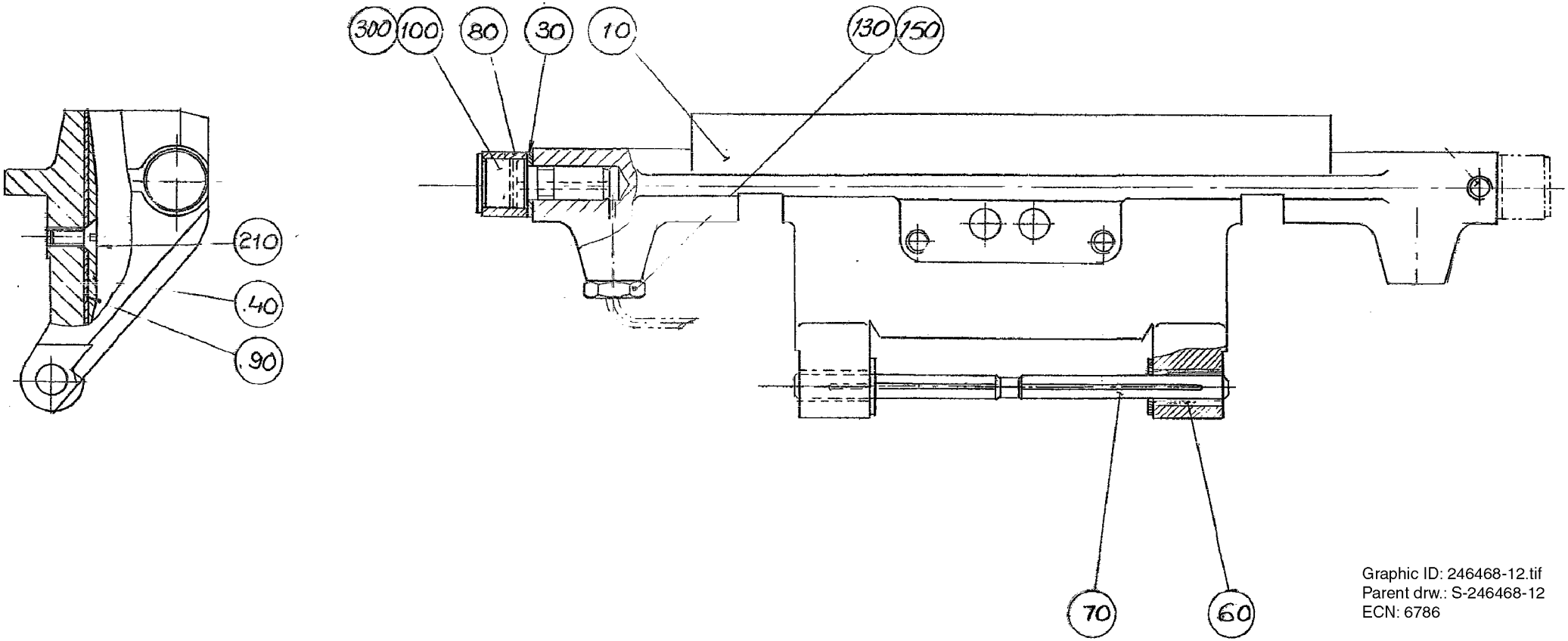

Graphic ID: 246468-12.tif
Parent drw.: S-246468-12
ECN: 6786

Pos	Part No	UN	Qty	Description	Page No
TB/8 1000SQ US (Cont'd) (See drawing on pages: 4-52, 12-204)					
080	434321-0000		1	CURVE ROLLER	
090	1143050-0000		3	VOLUME SHIM	
100	434320-0000		1	AXLE PIN	
130	90028-0020		1	CONE TUBE 2,5MM	
150	90134-0063		1	BUSHING/NUT M8X1, D=2,5 MM	
210	312145-0289		2	SCREW ISO 2009 MFS M4X10 A4	
300	312318-0285		1	SCREW ISO4029 M4X6 A4	
TB/8 1136B TPC (See drawing on pages: 4-52, 12-204)					
010	544344-0000		1	VOLUME FLAP	
030	19972-0000		1	WASHER	
040	544345-0000		1	VOLUME BULGE	
060	36133-0000		2	BUSHING	
070	458164-0000		1	SHAFT	
080	434321-0000		1	CURVE ROLLER	
090	544346-0000		3	VOLUME SHIM	
100	434320-0000		1	AXLE PIN	
130	90028-0020		1	CONE TUBE 2,5MM	
150	90134-0063		1	BUSHING/NUT M8X1, D=2,5 MM	
200	312145-0222		2	SCREW ISO 2009 MFS M3X8 A4	
300	312318-0285		1	SCREW ISO4029 M4X6 A4	
TB/8 1500B US (See drawing on pages: 4-58, 12-210)					
010	593280-0000		1	VOLUME FLAP	
030	19972-0000		2	WASHER	
040	596085-0000		1	VOLUME BULGE	
060	36133-0000		2	BUSHING	
070	458164-0000		1	SHAFT	
080	434321-0000		2	CURVE ROLLER	
090	1143050-0000		3	VOLUME SHIM	
100	434320-0000		2	AXLE PIN	
130	90028-0020		2	CONE TUBE 2,5MM	
150	90134-0063		2	BUSHING/NUT M8X1, D=2,5 MM	
210	312145-0289		2	SCREW ISO 2009 MFS M4X10 A4	
300	312318-0285		2	SCREW ISO4029 M4X6 A4	
TB/8 0500SQ TPC (See drawing on pages: 4-52, 12-204)					
010	1361917-0000		1	VOLUME FLAP	
030	19972-0000		1	WASHER	
040	589925-0000		1	VOLUME BULGE	
060	36133-0000		2	BUSHING	
070	544292-0000		1	SHAFT	
080	436556-0000		1	CURVE ROLLER	
090	589926-0000		3	VOLUME SHIM	
100	434320-0000		1	AXLE PIN	
130	90028-0020		1	CONE TUBE 2,5MM	
150	90134-0063		1	BUSHING/NUT M8X1, D=2,5 MM	
210	312145-0289		2	SCREW ISO 2009 MFS M4X10 A4	
300	312318-0285		1	SCREW ISO4029 M4X6 A4	
TB/8 1000B LOFIN TPC, TB/8 1000B HIFIN TPC (See drawing on pages: 4-52, 12-204)					
010	532718-0000		1	VOLUMEN FLAP	
030	19972-0000		1	WASHER	
040	26075-0000		1	VOLUME BULGE	
060	36133-0000		2	BUSHING	
070	458164-0000		1	SHAFT	
080	434321-0000		1	CURVE ROLLER	
090	208709-0000		3	VOLUME SHIM	
100	434320-0000		1	AXLE PIN	
130	90028-0020		1	CONE TUBE 2,5MM	
150	90134-0063		1	BUSHING/NUT M8X1, D=2,5 MM	
200	312145-0222		2	SCREW ISO 2009 MFS M3X8 A4	
300	312318-0285		1	SCREW ISO4029 M4X6 A4	

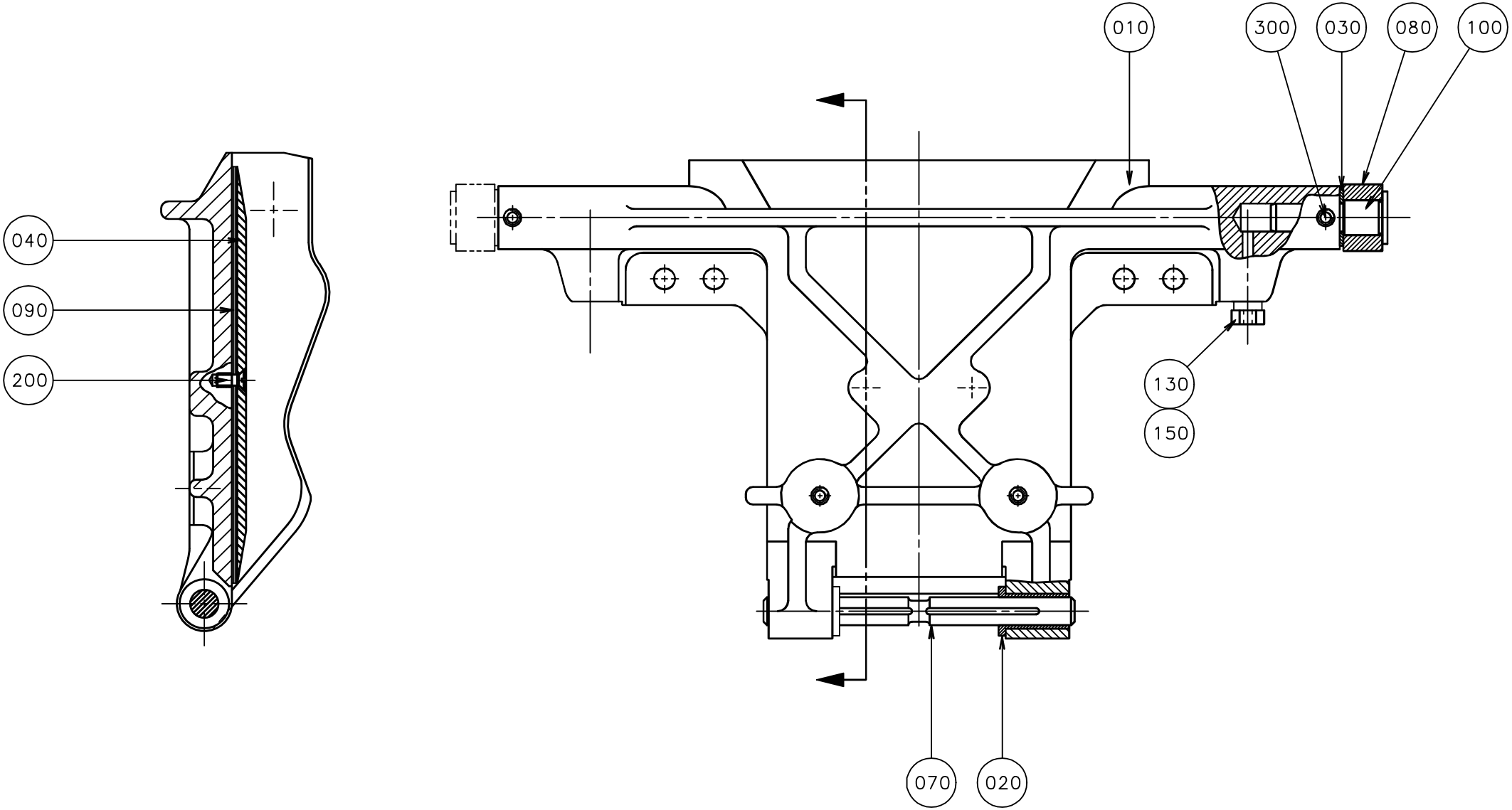
010
300
030
080
100
040
090
200
130
150
070
020

Pos	Part No	UN	Qty	Description	Page No	Pos	Part No	UN	Qty	Description	Page No

SEE PREVIOUS LISTS PAGES: 4-53, 4-55.

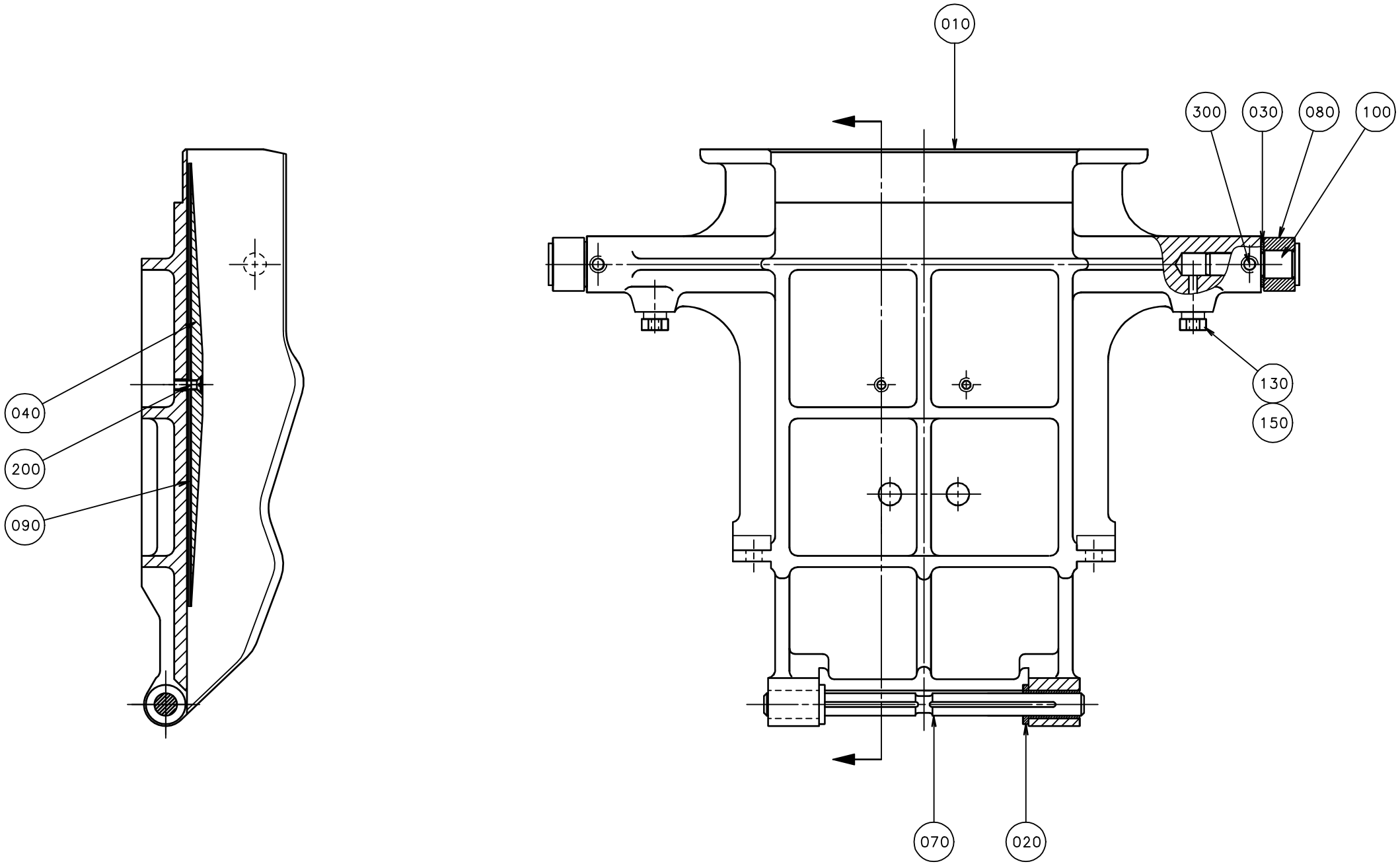
010
300
030
080
100
130
150
040
200
090
070
020

Pos	Part No	UN	Qty	Description	Page No	Pos	Part No	UN	Qty	Description	Page No

SEE PREVIOUS LISTS PAGES: 4-53, 4-55.

This page is intentionally left blank.

ECM: 71978 - 19981117
Group number: 247123-0600
Assembly Drawing:

This list covers pages from 4-60 to 4-63

Pos	Part No	UN	Qty	Description	Page No
0300B TPC					
100	450302-0000		8	VOLUME SHIM	
320	315202-0213		4	O-RING 15,3X2,4 MM	
510	90091-0078		4	ROD SEAL, O-RING 18X25X3 MM	
520	90091-0079		4	PISTON SEAL GLIDE RING 27X35X3,5MM	
610	312115-0299		8	SCREW ISO4762 M4X30 A4 80	
630	315202-0104		4	O-RING 6,1X1,6 MM	
640	315202-0105		12	O-RING 7,1X1,6 MM	
0500B TPC					
100	479245-0000		8	VOLUME SHIM	
160	273565-0300		4	TPC BAR	
300	315202-0111		4	O-RING 13,1X1,6 MM	
310	315202-0207		4	O-RING 8,3X2,4 MM	
330	315202-0212		4	O-RING 14,3X2,4 MM	
510	90091-0078		4	ROD SEAL, O-RING 18X25X3 MM	
520	90091-0079		4	PISTON SEAL GLIDE RING 27X35X3,5MM	
610	312115-0299		8	SCREW ISO4762 M4X30 A4 80	
630	315202-0104		4	O-RING 6,1X1,6 MM	
640	315202-0105		12	O-RING 7,1X1,6 MM	
0500S TPC					
160	273565-0300		4	TPC BAR	
300	315202-0111		4	O-RING 13,1X1,6 MM	
310	315202-0207		4	O-RING 8,3X2,4 MM	
330	315202-0212		4	O-RING 14,3X2,4 MM	
510	90091-0078		4	ROD SEAL, O-RING 18X25X3 MM	
520	90091-0079		4	PISTON SEAL GLIDE RING 27X35X3,5MM	
610	312115-0299		8	SCREW ISO4762 M4X30 A4 80	
630	315202-0104		4	O-RING 6,1X1,6 MM	
640	315202-0105		12	O-RING 7,1X1,6 MM	
0500SQ TPC					
100	589926-0000		8	VOLUME SHIM	
160	1143222-0100		4	TPC-BAR	
300	315202-0111		4	O-RING 13,1X1,6 MM	
310	315202-0207		4	O-RING 8,3X2,4 MM	
330	315202-0212		4	O-RING 14,3X2,4 MM	
510	90091-0078		4	ROD SEAL, O-RING 18X25X3 MM	
520	90091-0079		4	PISTON SEAL GLIDE RING 27X35X3,5MM	
610	312115-0299		8	SCREW ISO4762 M4X30 A4 80	
630	315202-0104		4	O-RING 6,1X1,6 MM	
640	315202-0105		12	O-RING 7,1X1,6 MM	
0568B TPC					
100	479246-0000		8	VOLUME SHIM	
160	273565-0300		4	TPC BAR	
300	315202-0111		4	O-RING 13,1X1,6 MM	
310	315202-0207		4	O-RING 8,3X2,4 MM	
330	315202-0212		4	O-RING 14,3X2,4 MM	
510	90091-0078		4	ROD SEAL, O-RING 18X25X3 MM	
520	90091-0079		4	PISTON SEAL GLIDE RING 27X35X3,5MM	
610	312115-0299		8	SCREW ISO4762 M4X30 A4 80	
630	315202-0104		4	O-RING 6,1X1,6 MM	
640	315202-0105		12	O-RING 7,1X1,6 MM	
1000B TPC					
100	208709-0000		8	VOLUME SHIM	
160	273565-0300		4	TPC BAR	
300	315202-0111		4	O-RING 13,1X1,6 MM	
310	315202-0207		4	O-RING 8,3X2,4 MM	
330	315202-0212		4	O-RING 14,3X2,4 MM	
510	90091-0078		4	ROD SEAL, O-RING 18X25X3 MM	
520	90091-0079		4	PISTON SEAL GLIDE RING 27X35X3,5MM	
610	312115-0299		8	SCREW ISO4762 M4X30 A4 80	
630	315202-0104		4	O-RING 6,1X1,6 MM	
640	315202-0105		12	O-RING 7,1X1,6 MM	
1000S TPC					
100	569056-0000		8	VOLUME SHIM	
160	595116-0100		4	TPC-BAR	
300	315202-0111		4	O-RING 13,1X1,6 MM	
310	315202-0207		4	O-RING 8,3X2,4 MM	
330	315202-0212		4	O-RING 14,3X2,4 MM	
510	90091-0078		4	ROD SEAL, O-RING 18X25X3 MM	
520	90091-0079		4	PISTON SEAL GLIDE RING 27X35X3,5MM	
610	312115-0299		8	SCREW ISO4762 M4X30 A4 80	
630	315202-0104		4	O-RING 6,1X1,6 MM	
640	315202-0105		12	O-RING 7,1X1,6 MM	
1000SQ TPC					
100	1143050-0000		8	VOLUME SHIM	
160	1143222-0100		4	TPC-BAR	
300	315202-0111		4	O-RING 13,1X1,6 MM	
310	315202-0207		4	O-RING 8,3X2,4 MM	
330	315202-0212		4	O-RING 14,3X2,4 MM	
510	90091-0078		4	ROD SEAL, O-RING 18X25X3 MM	
520	90091-0079		4	PISTON SEAL GLIDE RING 27X35X3,5MM	
610	312115-0299		8	SCREW ISO4762 M4X30 A4 80	
630	315202-0104		4	O-RING 6,1X1,6 MM	
640	315202-0105		12	O-RING 7,1X1,6 MM	

Machine Type | Group Description | Used-In | Group Number | Page No

This page is intentionally left blank.

ECM: 71978 - 19981117
Group number: 247123-0600
Assembly Drawing:

This list covers pages from 4-60 to 4-63

Pos	Part No	UN	Qty	Description	Page No
1136B TPC (Cont'd)					
100	544346-0000		8	VOLUME SHIM	
160	273565-0300		4	TPC BAR	
300	315202-0111		4	O-RING 13,1X1,6 MM	
310	315202-0207		4	O-RING 8,3X2,4 MM	
330	315202-0212		4	O-RING 14,3X2,4 MM	
510	90091-0078		4	ROD SEAL, O-RING 18X25X3 MM	
520	90091-0079		4	PISTON SEAL GLIDE RING 27X35X3,5MM	
610	312115-0299		8	SCREW ISO4762 M4X30 A4 80	
630	315202-0104		4	O-RING 6,1X1,6 MM	
640	315202-0105		12	O-RING 7,1X1,6 MM	
Common Parts					
400	927440-0000		1	LINK	
410	927441-0000		1	NUT	
500	90090-0013		10	BALL, D=4 MM	
600	456011-0000		10	PIN	
650	315202-0114		4	O-RING 16,1X1,6 MM	
660	315202-0208		4	O-RING 9,3X2,4 MM	

Pos	Part No	UN	Qty	Description	Page No

PRESSURE JAW RIGHT

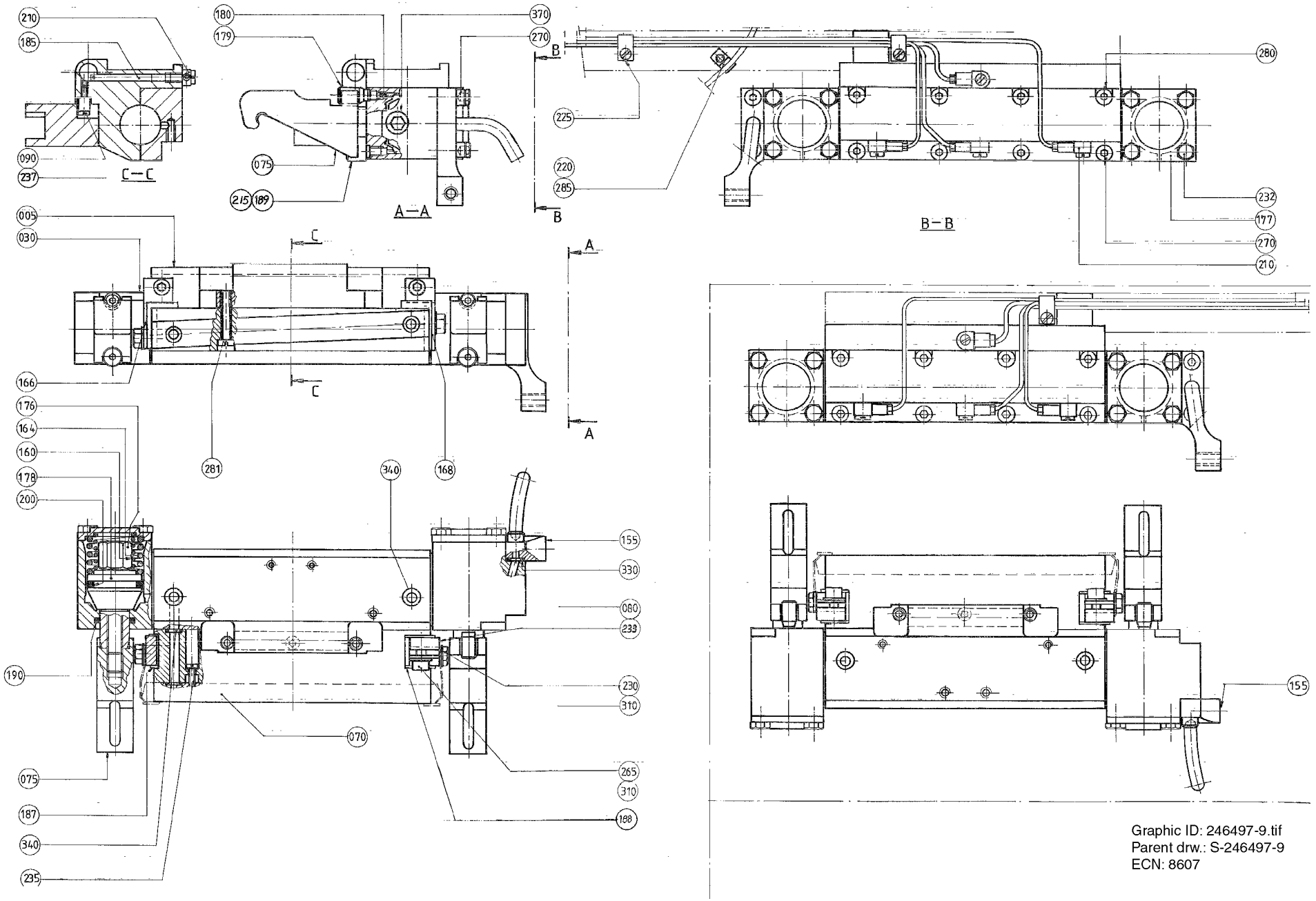

Graphic ID: 246497-9.tif
Parent drw.: S-246497-9
ECN: 8607

ECM: 71058 - 19971007
Group number: 246497-0950
Assembly Drawing: 246497-9_1_AA

This list covers pages from 4-64 to 4-67

Pos	Part No	UN	Qty	Description	Page No
0300B (See drawing on pages: 4-66, 4-70)					
005	458020-0000		1	BEARING HOUSING	
070	561411-0000		1	RAIL	
090	107426-0000		4	GUIDE SLEEVE	
170	268642-0000		2	CONTACT PIECE	
171	268643-0000		4	BUSHING	
172	268644-0000		2	WASHER	
175	273428-0000		2	WASHER	
185	1296886-0000		1	SCREW	
238	312115-0295		2	SCREW ISO4762 M4X20 A4 80	
260	312115-0367		2	SCREW ISO4762 M6X14 A4 80	
282	312115-0333		2	SCREW ISO4762 M5X25 A4 80	
287	312145-0323		2	SCREW ISO 2009 MFS M5X8 A4	
0500B, 1136B, 1000B LOFIN, 0568B (See drawing on pages: 4-66, 4-70)					
005	450504-0000		1	BEARING HOUSING	
070	561411-0000		1	RAIL	
071	561412-0000		1	PUSHER PLATE	
090	107426-0000		4	GUIDE SLEEVE	
170	268642-0000		2	CONTACT PIECE	
171	268643-0000		4	BUSHING	
172	268644-0000		2	WASHER	
175	273428-0000		2	WASHER	
185	1296982-0000		1	SCREW	
191	561413-0000		3	SCREW	
192	562134-0000		3	COMPRESSION SPRING	
240	312115-0299		2	SCREW ISO4762 M4X30 A4 80	
260	312115-0367		2	SCREW ISO4762 M6X14 A4 80	
282	312115-0333		2	SCREW ISO4762 M5X25 A4 80	
287	312145-0323		2	SCREW ISO 2009 MFS M5X8 A4	
320	159720-0002		3	WASHER	
0500S (See drawing on pages: 4-66, 4-70)					
005	583261-0000		1	BEARING HOUSING	
070	583259-0000		1	RAIL	
090	107426-0000		4	GUIDE SLEEVE	
170	268642-0000		2	CONTACT PIECE	
171	268643-0000		4	BUSHING	
172	268644-0000		2	WASHER	
175	273428-0000		2	WASHER	
185	1296886-0000		1	SCREW	
238	312115-0295		2	SCREW ISO4762 M4X20 A4 80	
260	312115-0367		2	SCREW ISO4762 M6X14 A4 80	
282	312115-0333		2	SCREW ISO4762 M5X25 A4 80	
287	312145-0323		2	SCREW ISO 2009 MFS M5X8 A4	
0500SQ (See drawing on pages: 4-66, 4-70)					
005	573983-0000		1	BEARING HOUSING	
070	1143144-0000		1	RAIL	
071	561412-0000		1	PUSHER PLATE	
090	107426-0000		4	GUIDE SLEEVE	
170	268642-0000		2	CONTACT PIECE	
171	268643-0000		4	BUSHING	
172	268644-0000		2	WASHER	
175	273428-0000		2	WASHER	
185	1296981-0000		1	SCREW	
191	561413-0000		3	SCREW	
192	562134-0000		3	COMPRESSION SPRING	
238	312115-0295		2	SCREW ISO4762 M4X20 A4 80	
260	312115-0367		2	SCREW ISO4762 M6X14 A4 80	
282	312115-0333		2	SCREW ISO4762 M5X25 A4 80	
287	312145-0323		2	SCREW ISO 2009 MFS M5X8 A4	
320	159720-0002		3	WASHER	
1000B HIFIN (See drawing on pages: 4-64, 4-68)					
005	279027-0000		1	HOUSING	
070	279029-0000		1	RAIL	
080	497916-0000		2	WASHER	
090	107426-0000		1	GUIDE SLEEVE	
166	497912-0000		1	CONTACT PIECE	
168	497913-0000		1	CONTACT PIECE	
185	1296982-0000		1	SCREW	
187	497914-0000		1	INSULATING PLATE	
188	497915-0000		1	INSULATING PLATE	
230	312105-0362		2	SCREW M6S ISO 4017 M6X8 A480	
233	312115-0287		2	SCREW ISO4762 M4X8 A4 80	
237	312115-0293		1	SCREW ISO4762 M4X16 A4 80	
265	312115-0368		2	SCREW ISO4762 M6X16 A4 80	
281	312115-0374		2	SCREW ISO4762 M6X30 A4 80	
310	315105-0153		4	WASHER BRB 6,4X12 RFR	
1000S (See drawing on pages: 4-66, 4-70)					
005	582105-0000		1	BEARING HOUSING	
070	561411-0000		1	RAIL	
071	561412-0000		1	PUSHER PLATE	
090	107426-0000		4	GUIDE SLEEVE	
170	268642-0000		2	CONTACT PIECE	
171	268643-0000		4	BUSHING	
172	268644-0000		2	WASHER	

Machine Type | Group Description | Used-In | Group Number | Page No

PRESSURE JAW RIGHT

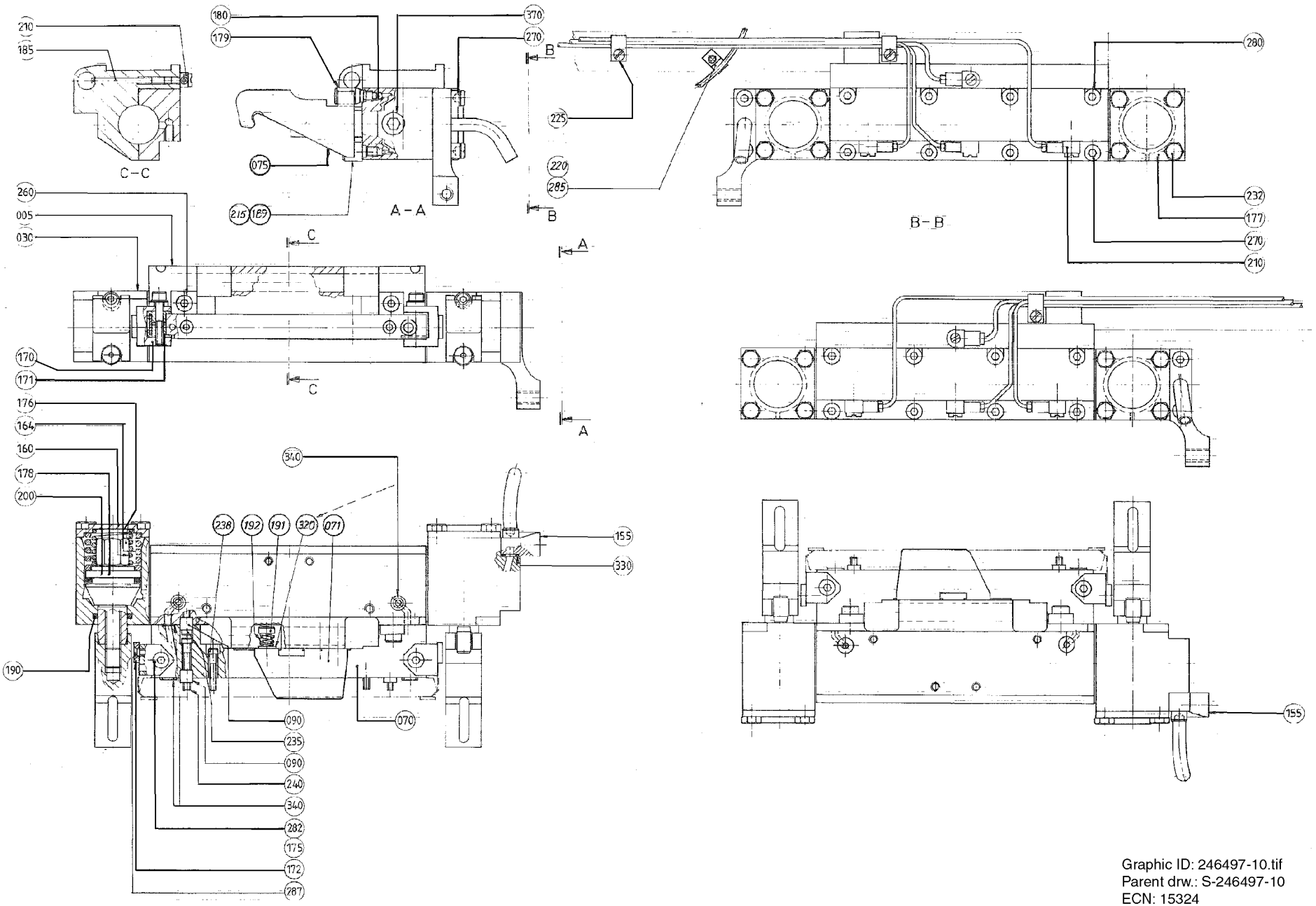

Graphic ID: 246497-10.tif
Parent drw.: S-246497-10
ECN: 15324

ECM: 71058 - 19971007
Group number: 246497-0950
Assembly Drawing: 246497-10_1_AA

This list covers pages from 4-64 to 4-67

Pos	Part No	UN	Qty	Description	Page No
1000S (Cont'd) (See drawing on pages: 4-66, 4-70)					
175	273428-0000		2	WASHER	
185	1296884-0000		1	SCREW	
191	561413-0000		3	SCREW	
192	562134-0000		3	COMPRESSION SPRING	
240	312115-0299		2	SCREW ISO4762 M4X30 A4 80	
260	312115-0367		2	SCREW ISO4762 M6X14 A4 80	
282	312115-0333		2	SCREW ISO4762 M5X25 A4 80	
287	312145-0323		2	SCREW ISO 2009 MFS M5X8 A4	
320	159720-0002		3	WASHER	
1000SQ (See drawing on pages: 4-66, 4-70)					
005	573983-0000		1	BEARING HOUSING	
070	561411-0000		1	RAIL	
071	561412-0000		1	PUSHER PLATE	
090	107426-0000		4	GUIDE SLEEVE	
170	268642-0000		2	CONTACT PIECE	
171	268643-0000		4	BUSHING	
172	268644-0000		2	WASHER	
175	273428-0000		2	WASHER	
185	1296981-0000		1	SCREW	
191	561413-0000		3	SCREW	
192	562134-0000		3	COMPRESSION SPRING	
240	312115-0299		2	SCREW ISO4762 M4X30 A4 80	
260	312115-0367		2	SCREW ISO4762 M6X14 A4 80	
282	312115-0333		2	SCREW ISO4762 M5X25 A4 80	
287	312145-0323		2	SCREW ISO 2009 MFS M5X8 A4	
320	159720-0002		3	WASHER	
Common Parts					
030	440565-0000		1	CYLINDER	
075	541697-0000		2	CATCH	
155	246495-0000		1	ATTACHMENT	
160	479744-0000		2	COMPRESSION SPRING	
164	479743-0000		2	COMPRESSION SPRING	
176	553851-0000		2	SCREW	
177	284833-0000		2	LID	
178	292367-0000		2	PISTON	
179	440491-0000		2	NIPPLE	
180	90090-0013		2	BALL, D=4 MM	
189	497040-0000		2	STEERING	
190	90091-0078		2	ROD SEAL, O-RING 18X25X3 MM	
200	90091-0079		2	PISTON SEAL GLIDE RING 27X35X3,5MM	
210	90134-0058		4	CONNECTION	
215	90157-0016	ML	1	LOCKING FLUID LOCTITE 242 50 ML	
220	90165-0058		1	PIPE CLIP FOR TUBE D=2,5 MM	
225	316810-0106		2	PIPE CLIP FOR TUBE D=8 MM	
232	312105-0372		8	SCREW M6S ISO 4017 M6X25 A480	
235	312115-0291		2	SCREW ISO4762 M4X12 A4 80	
270	312115-0370		6	SCREW ISO4762 M6X20 A4 80	
280	312115-0372		4	SCREW ISO4762 M6X25 A4 80	
285	312125-0285		1	SCREW ISO 1207 M4X6 A4	
330	315202-0104		1	O-RING 6,1X1,6 MM	
340	315202-0105		6	O-RING 7,1X1,6 MM	
370	342713-0209		1	PLUG (QUANT.MINIMA= 10PC).	

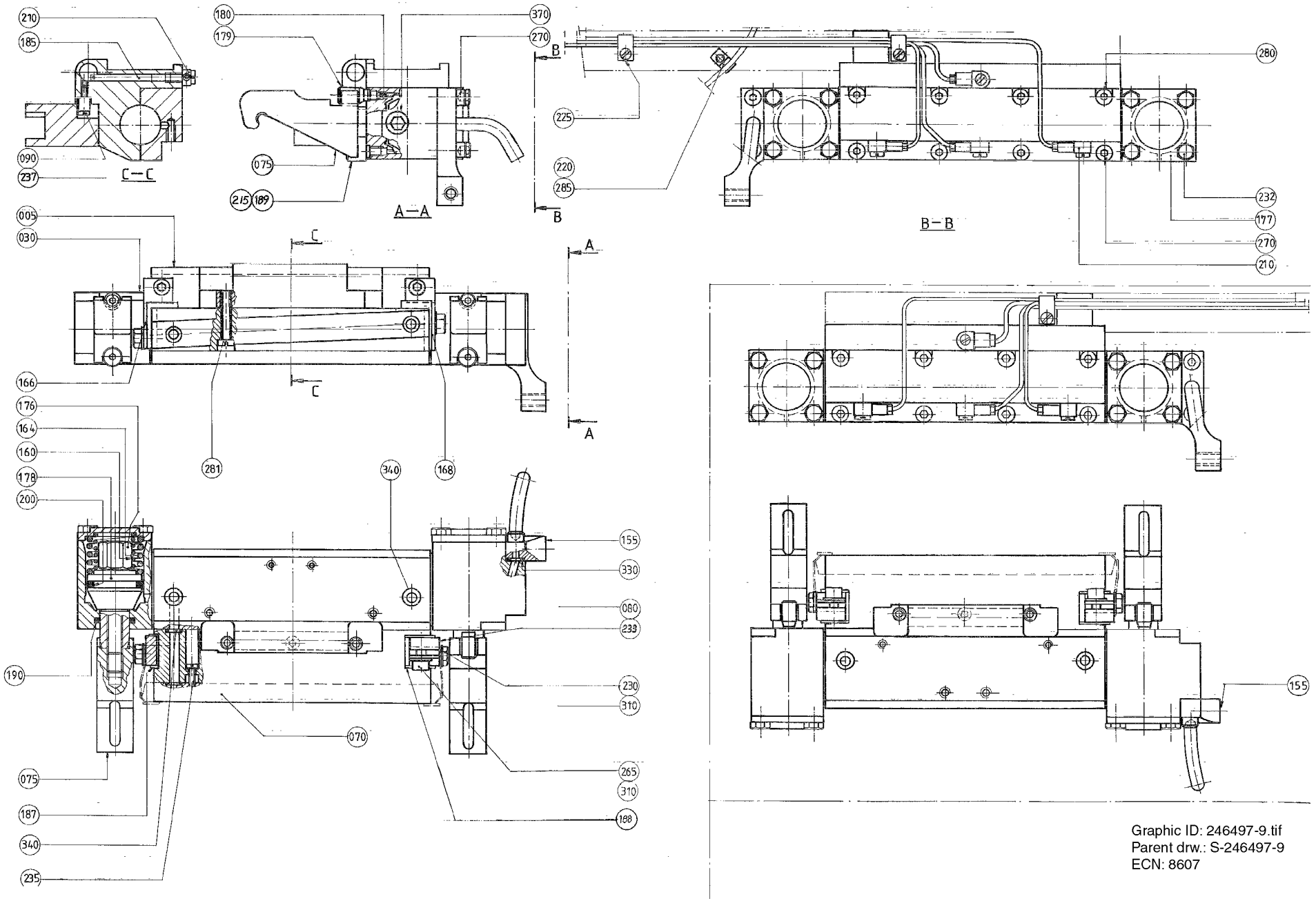

Graphic ID: 246497-9.tif
Parent drw.: S-246497-9
ECN: 8607

ECM: 71058 - 19971007
Group number: 246497-0900
Assembly Drawing: 246497-9_1_AA

This list covers pages from 4-68 to 4-71

Pos	Part No	UN	Qty	Description	Page No
0300B (See drawing on pages: 4-66, 4-70)					
005	458020-0000		1	BEARING HOUSING	
070	561411-0000		1	RAIL	
090	107426-0000		4	GUIDE SLEEVE	
170	268642-0000		2	CONTACT PIECE	
171	268643-0000		4	BUSHING	
172	268644-0000		2	WASHER	
175	273428-0000		2	WASHER	
185	1296886-0000		1	SCREW	
238	312115-0295		2	SCREW ISO4762 M4X20 A4 80	
260	312115-0367		2	SCREW ISO4762 M6X14 A4 80	
282	312115-0333		2	SCREW ISO4762 M5X25 A4 80	
287	312145-0323		2	SCREW ISO 2009 MFS M5X8 A4	
0500B, 1136B, 1000B LOFIN, 0568B (See drawing on pages: 4-66, 4-70)					
005	450504-0000		1	BEARING HOUSING	
070	561411-0000		1	RAIL	
071	561412-0000		1	PUSHER PLATE	
090	107426-0000		4	GUIDE SLEEVE	
170	268642-0000		2	CONTACT PIECE	
171	268643-0000		4	BUSHING	
172	268644-0000		2	WASHER	
175	273428-0000		2	WASHER	
185	1296982-0000		1	SCREW	
191	561413-0000		3	SCREW	
192	562134-0000		3	COMPRESSION SPRING	
240	312115-0299		2	SCREW ISO4762 M4X30 A4 80	
260	312115-0367		2	SCREW ISO4762 M6X14 A4 80	
282	312115-0333		2	SCREW ISO4762 M5X25 A4 80	
287	312145-0323		2	SCREW ISO 2009 MFS M5X8 A4	
320	159720-0002		3	WASHER	
0500S (See drawing on pages: 4-66, 4-70)					
005	583261-0000		1	BEARING HOUSING	
070	583259-0000		1	RAIL	
090	107426-0000		4	GUIDE SLEEVE	
170	268642-0000		2	CONTACT PIECE	
171	268643-0000		4	BUSHING	
172	268644-0000		2	WASHER	
175	273428-0000		2	WASHER	
185	1296886-0000		1	SCREW	
238	312115-0295		2	SCREW ISO4762 M4X20 A4 80	
260	312115-0367		2	SCREW ISO4762 M6X14 A4 80	
282	312115-0333		2	SCREW ISO4762 M5X25 A4 80	
287	312145-0323		2	SCREW ISO 2009 MFS M5X8 A4	
0500SQ (See drawing on pages: 4-66, 4-70)					
005	573983-0000		1	BEARING HOUSING	
070	1143144-0000		1	RAIL	
071	561412-0000		1	PUSHER PLATE	
090	107426-0000		4	GUIDE SLEEVE	
170	268642-0000		2	CONTACT PIECE	
171	268643-0000		4	BUSHING	
172	268644-0000		2	WASHER	
175	273428-0000		2	WASHER	
185	1296981-0000		1	SCREW	
191	561413-0000		3	SCREW	
192	562134-0000		3	COMPRESSION SPRING	
238	312115-0295		2	SCREW ISO4762 M4X20 A4 80	
260	312115-0367		2	SCREW ISO4762 M6X14 A4 80	
282	312115-0333		2	SCREW ISO4762 M5X25 A4 80	
287	312145-0323		2	SCREW ISO 2009 MFS M5X8 A4	
320	159720-0002		3	WASHER	
1000B HIFIN (See drawing on pages: 4-64, 4-68)					
005	279027-0000		1	HOUSING	
070	279029-0000		1	RAIL	
080	497916-0000		2	WASHER	
090	107426-0000		1	GUIDE SLEEVE	
166	497912-0000		1	CONTACT PIECE	
168	497913-0000		1	CONTACT PIECE	
185	1296982-0000		1	SCREW	
187	497914-0000		1	INSULATING PLATE	
188	497915-0000		1	INSULATING PLATE	
230	312105-0362		2	SCREW M6S ISO 4017 M6X8 A480	
233	312115-0287		2	SCREW ISO4762 M4X8 A4 80	
237	312115-0293		1	SCREW ISO4762 M4X16 A4 80	
265	312115-0368		2	SCREW ISO4762 M6X16 A4 80	
281	312115-0374		2	SCREW ISO4762 M6X30 A4 80	
310	315105-0153		4	WASHER BRB 6,4X12 RFR	
1000S (See drawing on pages: 4-66, 4-70)					
005	582105-0000		1	BEARING HOUSING	
070	561411-0000		1	RAIL	
071	561412-0000		1	PUSHER PLATE	
090	107426-0000		4	GUIDE SLEEVE	
170	268642-0000		2	CONTACT PIECE	
171	268643-0000		4	BUSHING	
172	268644-0000		2	WASHER	

Machine Type | Group Description | Used-In | Group Number | Page No

PRESSURE JAW LEFT

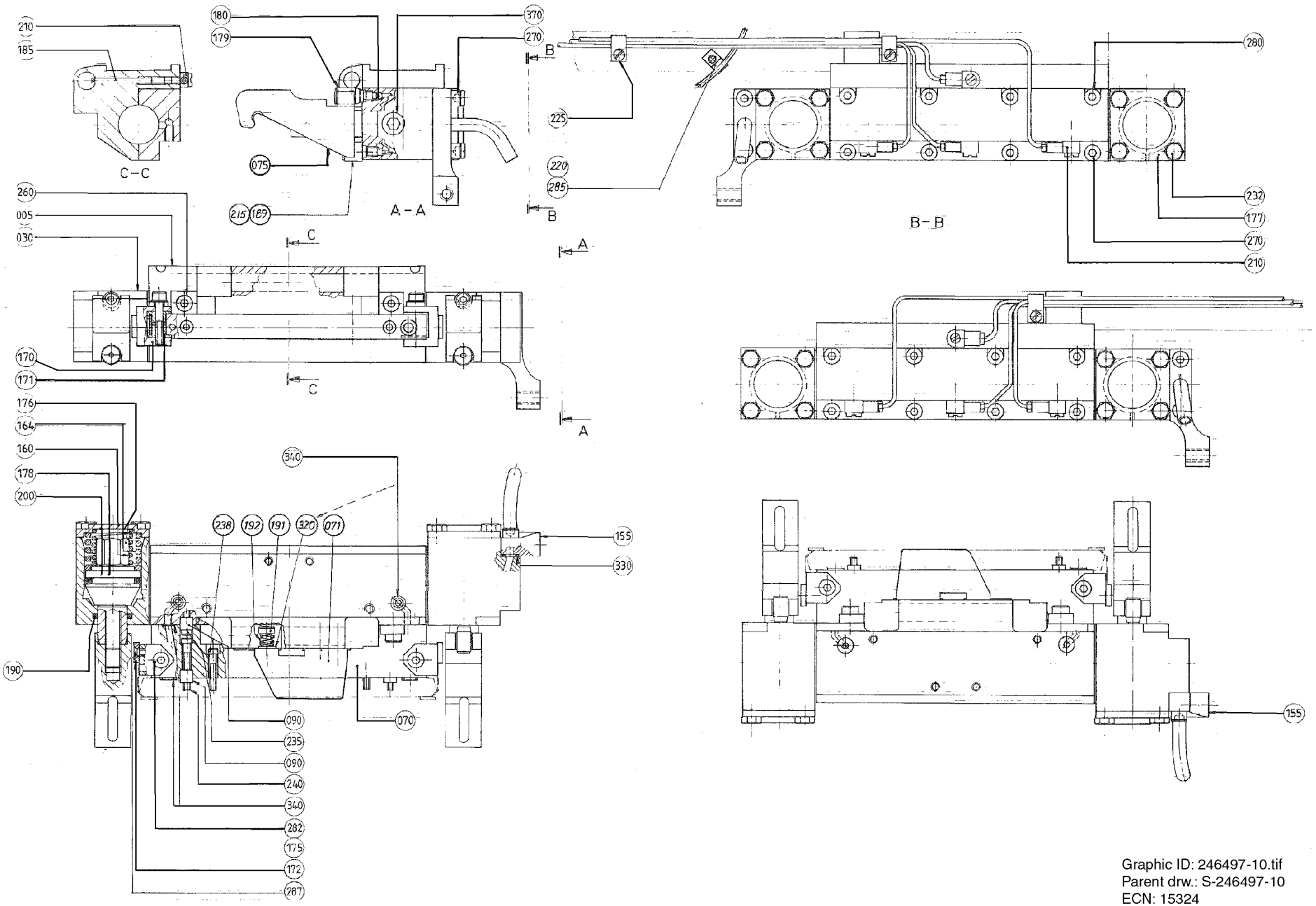

Graphic ID: 246497-10.tif
Parent drw.: S-246497-10
ECN: 15324

ECM: 71058 - 19971007
Group number: 246497-0900
Assembly Drawing: 246497-10_1_AA

This list covers pages from 4-68 to 4-71

Pos	Part No	UN	Qty	Description	Page No
1000S (Cont'd) (See drawing on pages: 4-66, 4-70)					
175	273428-0000		2	WASHER	
185	1296884-0000		1	SCREW	
191	561413-0000		3	SCREW	
192	562134-0000		3	COMPRESSION SPRING	
240	312115-0299		2	SCREW ISO4762 M4X30 A4 80	
260	312115-0367		2	SCREW ISO4762 M6X14 A4 80	
282	312115-0333		2	SCREW ISO4762 M5X25 A4 80	
287	312145-0323		2	SCREW ISO 2009 MFS M5X8 A4	
320	159720-0002		3	WASHER	
1000SQ (See drawing on pages: 4-66, 4-70)					
005	573983-0000		1	BEARING HOUSING	
070	561411-0000		1	RAIL	
071	561412-0000		1	PUSHER PLATE	
090	107426-0000		4	GUIDE SLEEVE	
170	268642-0000		2	CONTACT PIECE	
171	268643-0000		4	BUSHING	
172	268644-0000		2	WASHER	
175	273428-0000		2	WASHER	
185	1296981-0000		1	SCREW	
191	561413-0000		3	SCREW	
192	562134-0000		3	COMPRESSION SPRING	
240	312115-0299		2	SCREW ISO4762 M4X30 A4 80	
260	312115-0367		2	SCREW ISO4762 M6X14 A4 80	
282	312115-0333		2	SCREW ISO4762 M5X25 A4 80	
287	312145-0323		2	SCREW ISO 2009 MFS M5X8 A4	
320	159720-0002		3	WASHER	
Common Parts					
030	440565-0000		1	CYLINDER	
075	541697-0000		2	CATCH	
155	246494-0000		1	ATTACHMENT	
160	479744-0000		2	COMPRESSION SPRING	
164	479743-0000		2	COMPRESSION SPRING	
176	553851-0000		2	SCREW	
177	284833-0000		2	LID	
178	292367-0000		2	PISTON	
179	440491-0000		2	NIPPLE	
180	90090-0013		2	BALL, D=4 MM	
189	497040-0000		2	STEERING	
190	90091-0078		2	ROD SEAL, O-RING 18X25X3 MM	
200	90091-0079		2	PISTON SEAL GLIDE RING 27X35X3,5MM	
210	90134-0058		4	CONNECTION	
215	90157-0016	ML	1	LOCKING FLUID LOCTITE 242 50 ML	
220	90165-0058		1	PIPE CLIP FOR TUBE D=2,5 MM	
225	316810-0106		2	PIPE CLIP FOR TUBE D=8 MM	
232	312105-0372		8	SCREW M6S ISO 4017 M6X25 A480	
235	312115-0291		2	SCREW ISO4762 M4X12 A4 80	
270	312115-0370		6	SCREW ISO4762 M6X20 A4 80	
280	312115-0372		4	SCREW ISO4762 M6X25 A4 80	
285	312125-0285		1	SCREW ISO 1207 M4X6 A4	
330	315202-0104		1	O-RING 6,1X1,6 MM	
340	315202-0105		6	O-RING 7,1X1,6 MM	
370	342713-0209		1	PLUG (QUANT.MINIMA= 10PC).	

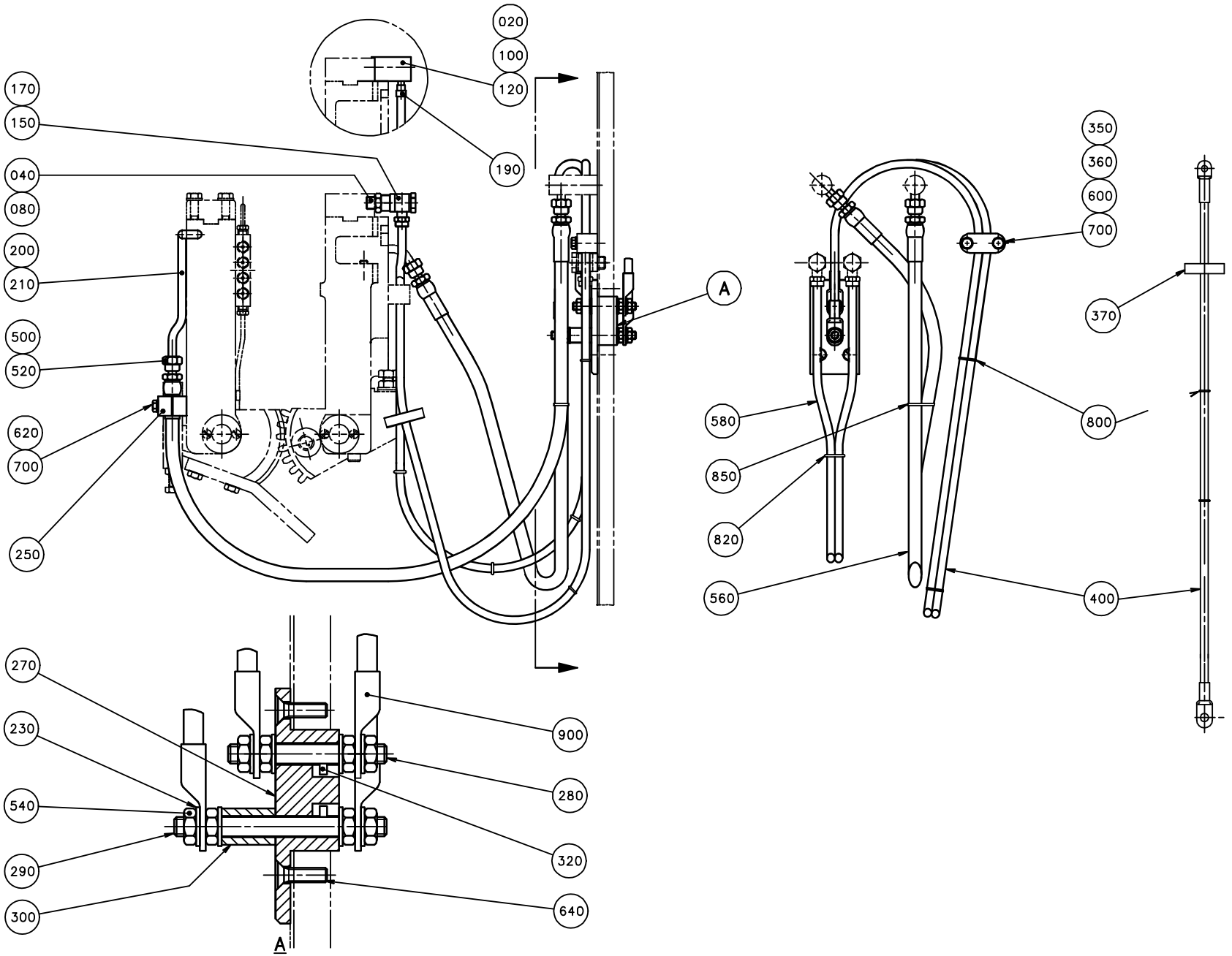
020
100
120
190
170
150
040
080
200
210
500
520
620
700
250
A
350
360
600
700
370
580
850
820
560
800
400
270
230
540
290
300
900
280
320
640
A

ECM: 70500 - 19970408
Group number: 294056-0200
Assembly Drawing: 294056-2_1_AA

Pos	Part No	UN	Qty	Description	Page No
HIFIN					
020	533896-0000		2	JUNCTION BLOCK	
100	312115-0453		2	SCREW ISO4762 M8X25 A4 80	
120	315202-0212		4	O-RING 14,3X2,4 MM	
190	342995-0101		4	HOSE CLIP 7-9MMFZB	
LOFIN					
040	464370-0000		4	SPACER	
080	315233-0110		4	WASHER CAPTIVE SEALING G1/4	
150	342980-0122		4	BANJO-CONNECTION,RING 8/6-G1/4 INCH	
170	342980-0304		4	BANJO-HOLLOW BOLT COUPL,EXT.THR.01-G1/4	
Common Parts					
200	22488-0000		1	ELBOW PIPE	
210	22489-0000		1	ELBOW PIPE	
230	27171-0000		16	WASHER	
250	279103-0000		4	CONNECTION CLAMP	
270	294057-0000		2	CONNECTION SOCKET	
280	294058-0001		2	STUD SCREW	
290	294058-0002		2	STUD SCREW	
300	294059-0000		2	SPACER	
320	440352-0000		4	PIN	
350	540331-0000		1	CLAMP RIGHT	
350	545392-0000		1	CLAMP LEFT	
360	540332-0000		2	CRAMP	
370	540334-0000		2	RUBBER RING	
400	541152-0000		4	CABLE	
500	90030-0098		8	ACCESSORIES, FERRULE 8	
520	90030-0172		8	NUT M8 "REPL.BY 342703-208"	
540	90099-0010		16	HEXAGON NUT, LB6LM, M8, SIS 5170-4	
560	90148-0033		4	HOSE	
580	90166-0123	MM	2100	HOSE	
600	312105-0372		4	SCREW M6S ISO 4017 M6X25 A480	
620	312105-0378		4	SCREW M6S ISO 4014 M6X40 A480	
640	312145-0370		8	SCREW ISO 2009 MFS M6X20 A4	
700	315105-0153		8	WASHER BRB 6,4X12 RFR	
800	315202-0212		4	O-RING 14,3X2,4 MM	
820	315202-0265		8	O-RING 12,3X2,4 MM	
850	352113-0101		2	CABLE TIE, BLACK 92X2,5 MM	
900	353104-0183		4	CABLE SHOE, RING UNINS., YAV 35 M 8	

Pos	Part No	UN	Qty	Description	Page No

Machine Type | Group Description | Used-In | Group Number | Page No

KNIFE HOLDER

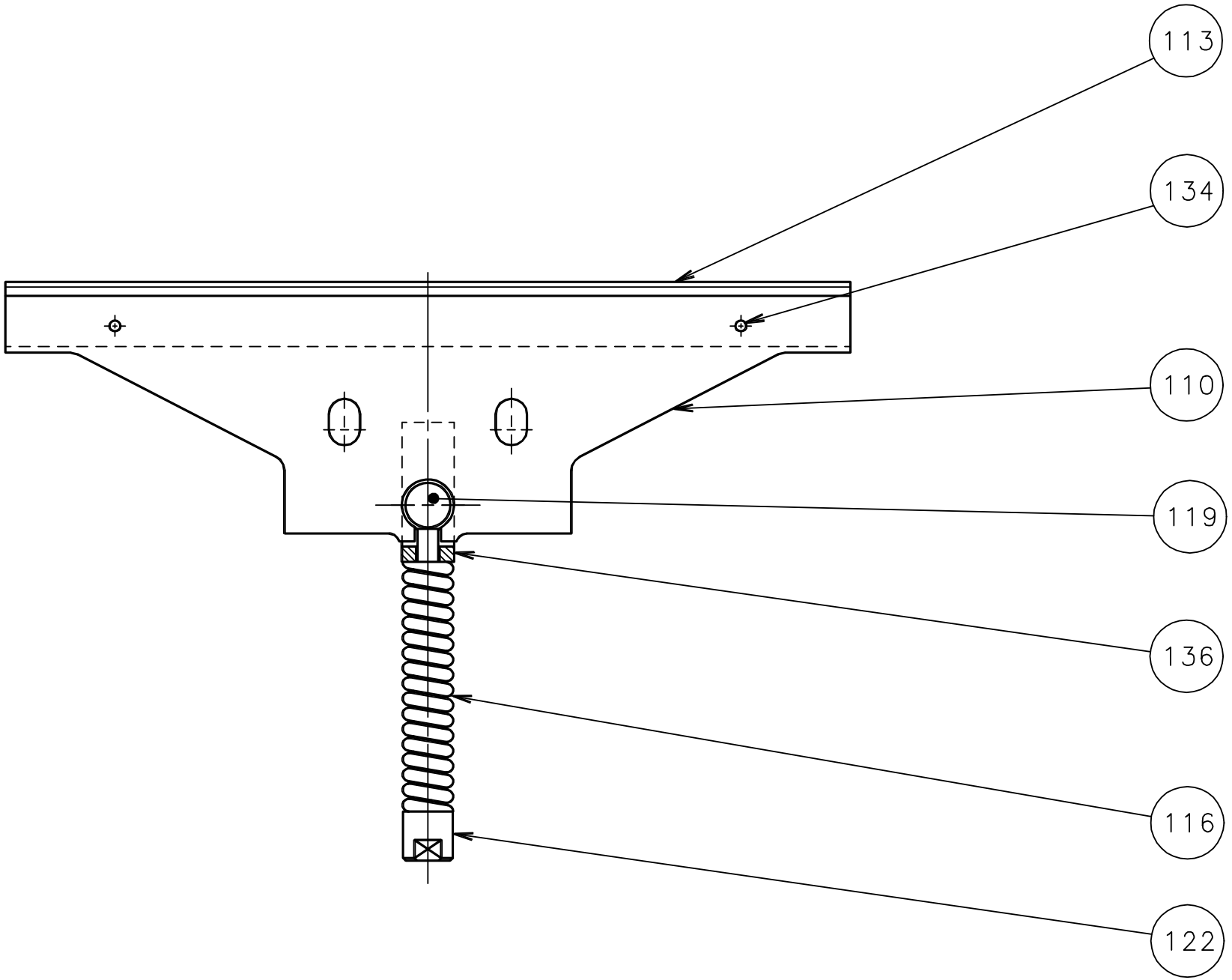

ECM: 114924 - 20020909
Group number: 25096-0700
Assembly Drawing: 25096-9_1_AA

Pos	Part No	UN	Qty	Description	Page No
0300B					
110	560856-0000		1	KNIFE HOLDER	
113	230143-0004		1	KNIFE	
0500B, 1136B, 1000SQ, 0568B, 1000B					
110	573987-0000		1	KNIFE HOLDER	
113	230143-0001		1	KNIFE	
0500S					
110	583264-0000		1	KNIFE HOLDER	
113	230143-0002		1	KNIFE	
0500SQ					
110	1143142-0000		1	KNIFE HOLDER	
113	927753-0000		1	KNIFE	
1000S					
110	597547-0000		1	KNIFE HOLDER	
113	597548-0000		1	KNIFE	
Common Parts					
116	1538109-0000		1	COMPRESSION SPRING	
119	1285003-0000		1	LINK	
122	1285005-0000		1	NUT	
134	456011-0000		2	PIN	
136	1285006-0000		1	SPACER	

Pos	Part No	UN	Qty	Description	Page No

CUTTING JAW RIGHT

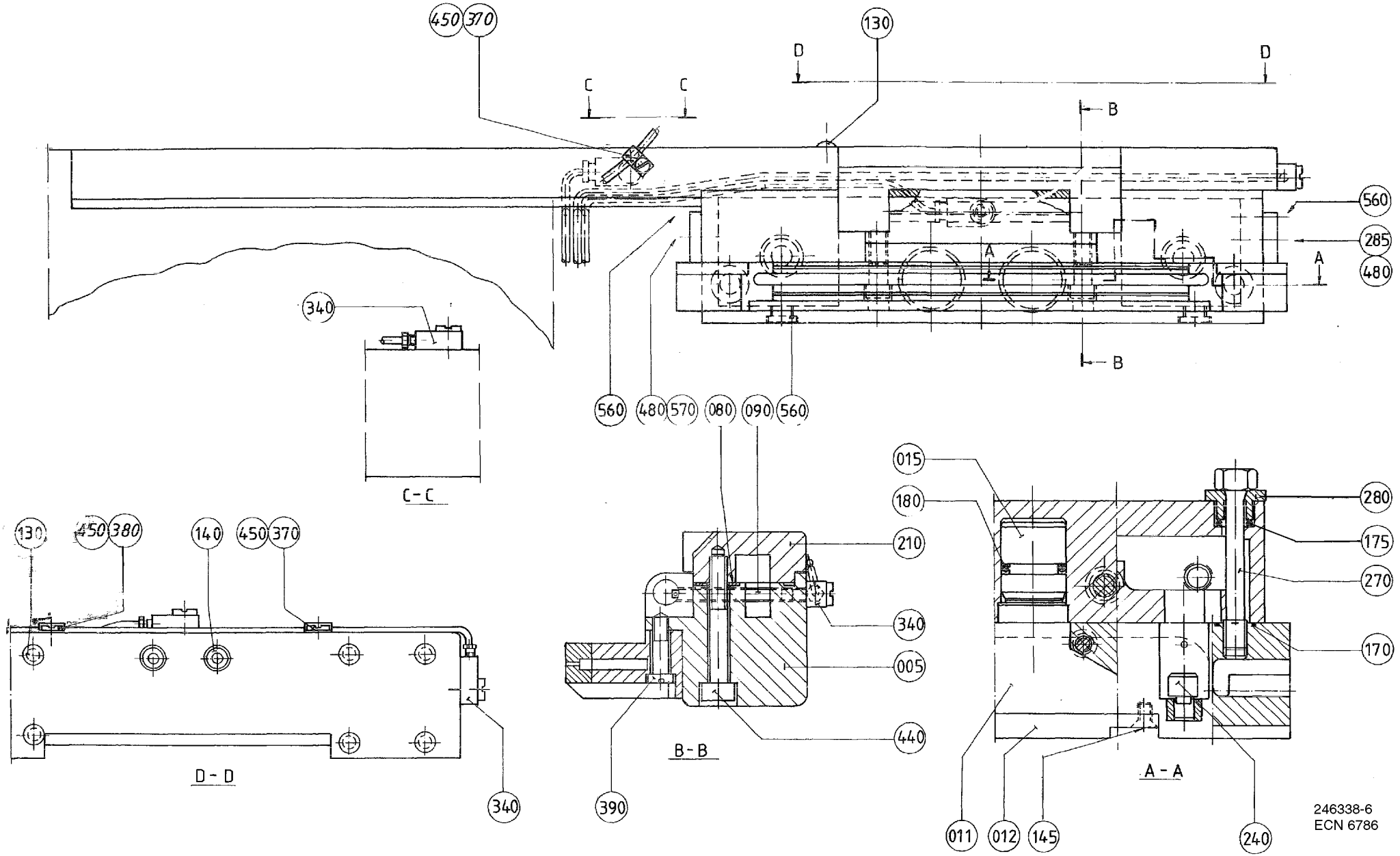

ECM: 71302 - 19980505
Group number: 246338-0500
Assembly Drawing: 246338-6_1_AA

This list covers pages from 4-76 to 4-83

Pos	Part No	UN	Qty	Description	Page No
0300B (See drawing on page: 4-76)					
005	458021-0000		1	BEARING HOUSING	
011	450105-0000		1	CUTTING JAW	
012	464758-0000		1	CUTTING JAW	
015	23972-0000		2	PLUNGER	
080	245272-0000		1	GASKET	
090	1296886-0000		1	SCREW	
130	311508-0416		3	RIVET, ROUND HEAD, KN, 4X10	
145	312145-0325		2	SCREW ISO 2009 MFS M5X10 A4	
180	315202-0213		2	O-RING 15,3X2,4 MM	
240	464697-0000		2	SHAFT	
270	243143-0000		2	SCREW	
390	90287-0070		2	SCREW MLC6S M6X23	
0500B, 0568B (See drawing on page: 4-78)					
005	450503-0000		1	BEARING HOUSING	
010	536978-0000		1	CUTTING JAW	
015	28880-0000		2	PLUNGER	
080	245271-0000		1	GASKET	
090	1296982-0000		1	SCREW	
100	536980-0000		2	SCREW	
170	315202-0111		2	O-RING 13,1X1,6 MM	
175	315202-0207		2	O-RING 8,3X2,4 MM	
180	315202-0212		2	O-RING 14,3X2,4 MM	
240	32464-0000		2	SHAFT	
270	243143-0000		2	SCREW	
390	90287-0070		2	SCREW MLC6S M6X23	
0500S (See drawing on page: 4-82)					
005	583260-0000		1	BEARING HOUSING	
010	583262-0000		1	CUTTING JAW	
015	28880-0000		2	PLUNGER	
080	573988-0000		1	GASKET	
090	1296886-0000		1	SCREW	
100	536980-0000		2	SCREW	
170	315202-0111		2	O-RING 13,1X1,6 MM	
175	315202-0207		2	O-RING 8,3X2,4 MM	
180	315202-0212		2	O-RING 14,3X2,4 MM	
240	32464-0000		2	SHAFT	
250	591981-0000		1	CATCH	
255	591982-0000		1	CATCH	
270	573583-0000		2	SCREW	
390	90287-0070		2	SCREW MLC6S M6X23	
0500SQ (See drawing on page: 4-78)					
005	573985-0000		1	BEARING HOUSING	
010	1143143-0000		1	CUTTING JAW	
015	28880-0000		2	PLUNGER	
080	573988-0000		1	GASKET	
090	1296981-0000		1	SCREW	
100	536980-0000		2	SCREW	
170	315202-0111		2	O-RING 13,1X1,6 MM	
175	315202-0207		2	O-RING 8,3X2,4 MM	
180	315202-0212		2	O-RING 14,3X2,4 MM	
240	32464-0000		2	SHAFT	
270	243143-0000		2	SCREW	
390	90287-0070		2	SCREW MLC6S M6X23	
1000B HIFIN (See drawing on page: 4-80)					
005	497572-0000		1	BEARING HOUSING	
010	536979-0000		1	CUTTING JAW	
015	28880-0000		2	PLUNGER	
080	245271-0000		1	GASKET	
090	1296982-0000		1	SCREW	
100	536980-0000		2	SCREW	
130	311508-0416		1	RIVET, ROUND HEAD, KN, 4X10	
140	312115-0331		2	SCREW ISO4762 M5X20 A4 80	
150	312318-0321		1	SCREW ISO4029 M5X6 A4	
170	315202-0111		2	O-RING 13,1X1,6 MM	
175	315202-0207		2	O-RING 8,3X2,4 MM	
180	315202-0212		2	O-RING 14,3X2,4 MM	
240	32464-0000		2	SHAFT	
270	243143-0000		2	SCREW	
390	312115-0374		2	SCREW ISO4762 M6X30 A4 80	
1000S (See drawing on page: 4-82)					
005	569057-0000		1	BEARING HOUSING	
010	597549-0000		1	CUTTING JAW	
015	28880-0000		2	PLUNGER	
080	245271-0000		1	GASKET	
090	1296884-0000		1	SCREW	
100	536980-0000		2	SCREW	
170	315202-0111		2	O-RING 13,1X1,6 MM	
175	315202-0207		2	O-RING 8,3X2,4 MM	
180	315202-0212		2	O-RING 14,3X2,4 MM	
240	32464-0000		2	SHAFT	
250	591981-0000		1	CATCH	
255	591982-0000		1	CATCH	
270	573583-0000		2	SCREW	

Machine Type | Group Description | Used-In | Group Number | Page No

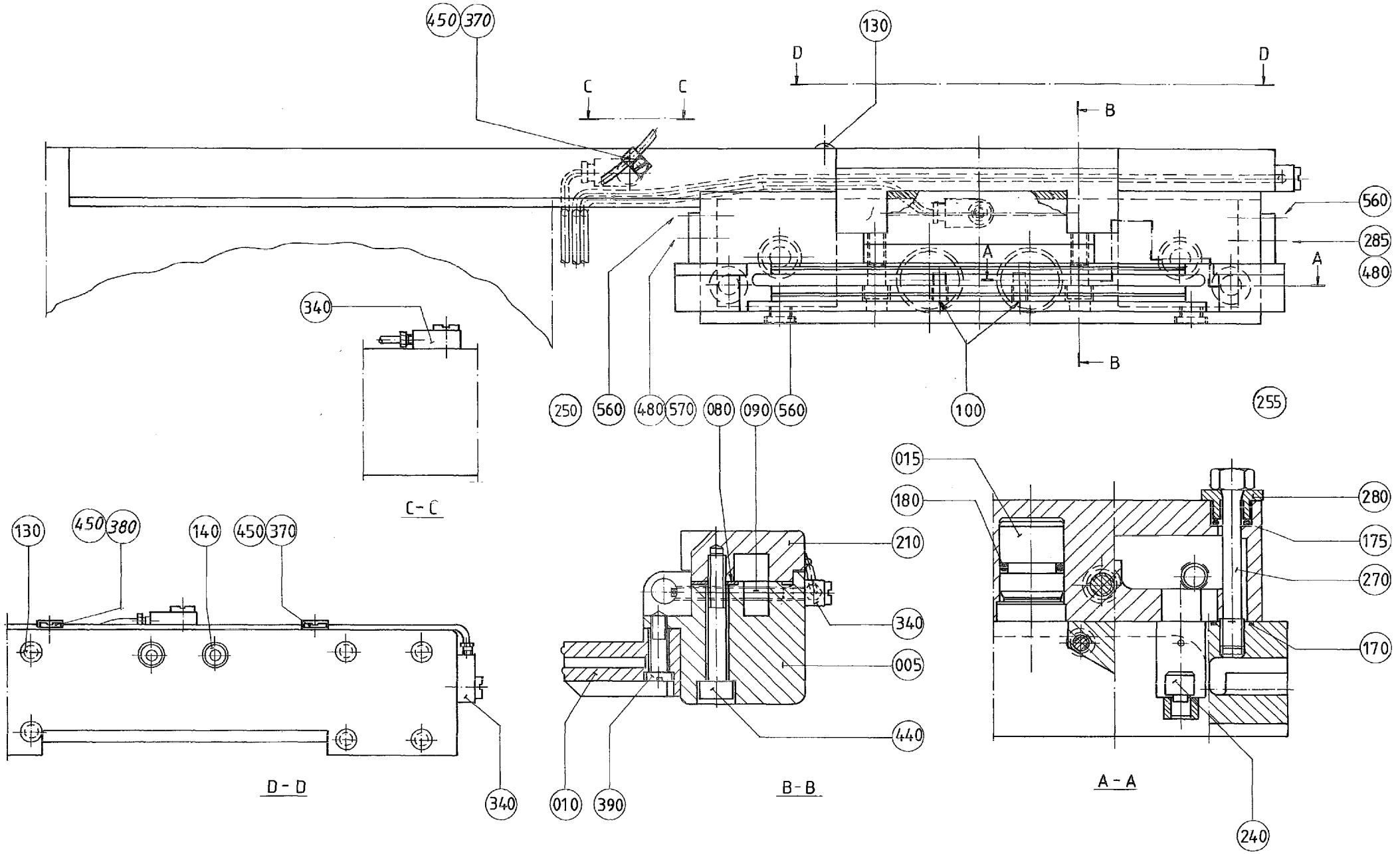
450
370
130
D
D
C
C
B
B
560
285
480
A
A
340
250
560
480
570
080
090
560
100
255
C - C
015
180
210
340
005
440
280
175
270
170
240
130
450
380
140
450
370
340
010
390
D - D
B - B
A - A

Pos	Part No	UN	Qty	Description	Page No
1000S (Cont'd) (See drawing on page: 4-82)					
390	90287-0070		2	SCREW MLC6S M6X23	
1000SQ (See drawing on page: 4-78)					
005	573985-0000		1	BEARING HOUSING	
010	573986-0000		1	CUTTING JAW	
015	28880-0000		2	PLUNGER	
080	573988-0000		1	GASKET	
090	1296981-0000		1	SCREW	
100	536980-0000		2	SCREW	
170	315202-0111		2	O-RING 13,1X1,6 MM	
175	315202-0207		2	O-RING 8,3X2,4 MM	
180	315202-0212		2	O-RING 14,3X2,4 MM	
240	32464-0000		2	SHAFT	
270	243143-0000		2	SCREW	
390	90287-0070		2	SCREW MLC6S M6X23	
1136B, 1000B LOFIN (See drawing on page: 4-78)					
005	450503-0000		1	BEARING HOUSING	
010	536421-0000		1	CUTTING JAW	
015	28880-0000		2	PLUNGER	
080	245271-0000		1	GASKET	
090	1296982-0000		1	SCREW	
100	536980-0000		2	SCREW	
140	312115-0331		2	SCREW ISO4762 M5X20 A4 80	
170	315202-0111		2	O-RING 13,1X1,6 MM	
175	315202-0207		2	O-RING 8,3X2,4 MM	
180	315202-0212		2	O-RING 14,3X2,4 MM	
240	32464-0000		2	SHAFT	
270	243143-0000		2	SCREW	
390	90287-0070		2	SCREW MLC6S M6X23	
Common Parts					
210	1143902-0000		1	CARRIER, CUT, RIGHT	
280	243144-0000		2	BUSHING	
285	255278-0000		1	PLUG FINISHER	
340	90134-0058		3	CONNECTION	
370	90165-0058		2	PIPE CLIP FOR TUBE D=2,5 MM	
380	90165-0060		1	PIPE CLIP FOR TUBE D=5 MM	
440	312115-0461		2	SCREW ISO4762 M8X50 A4 80	
450	312125-0287		3	SCREW ISO 1207 M4X8 A4	
480	315234-0110		2	WASHER,PL.RND.CU.13,5/18 H=1,5	
560	342713-0209		4	PLUG (QUANT.MINIMA= 10PC).	
570	90030-0201		1	CONN. STR., 8-R1/4, EXT. THREAD	

Pos	Part No	UN	Qty	Description	Page No

CUTTING JAW RIGHT

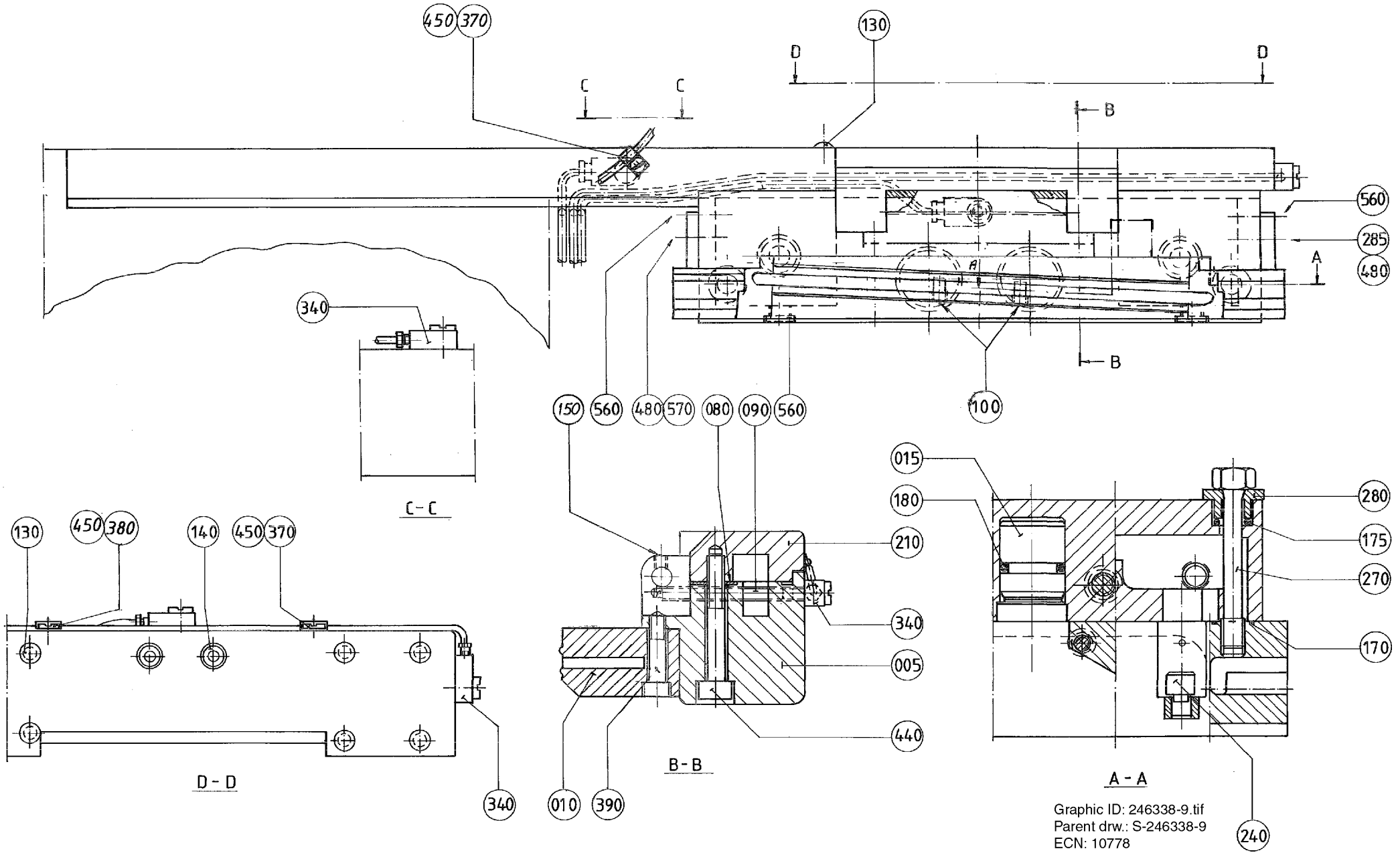

ECM: 71302 - 19980505
Group number: 246338-0500
Assembly Drawing: 246338-9_1_AA

This list covers pages from 4-76 to 4-83

Pos	Part No	UN	Qty	Description	Page No
SEE PREVIOUS LISTS PAGES: 4-77, 4-79.					

Pos	Part No	UN	Qty	Description	Page No

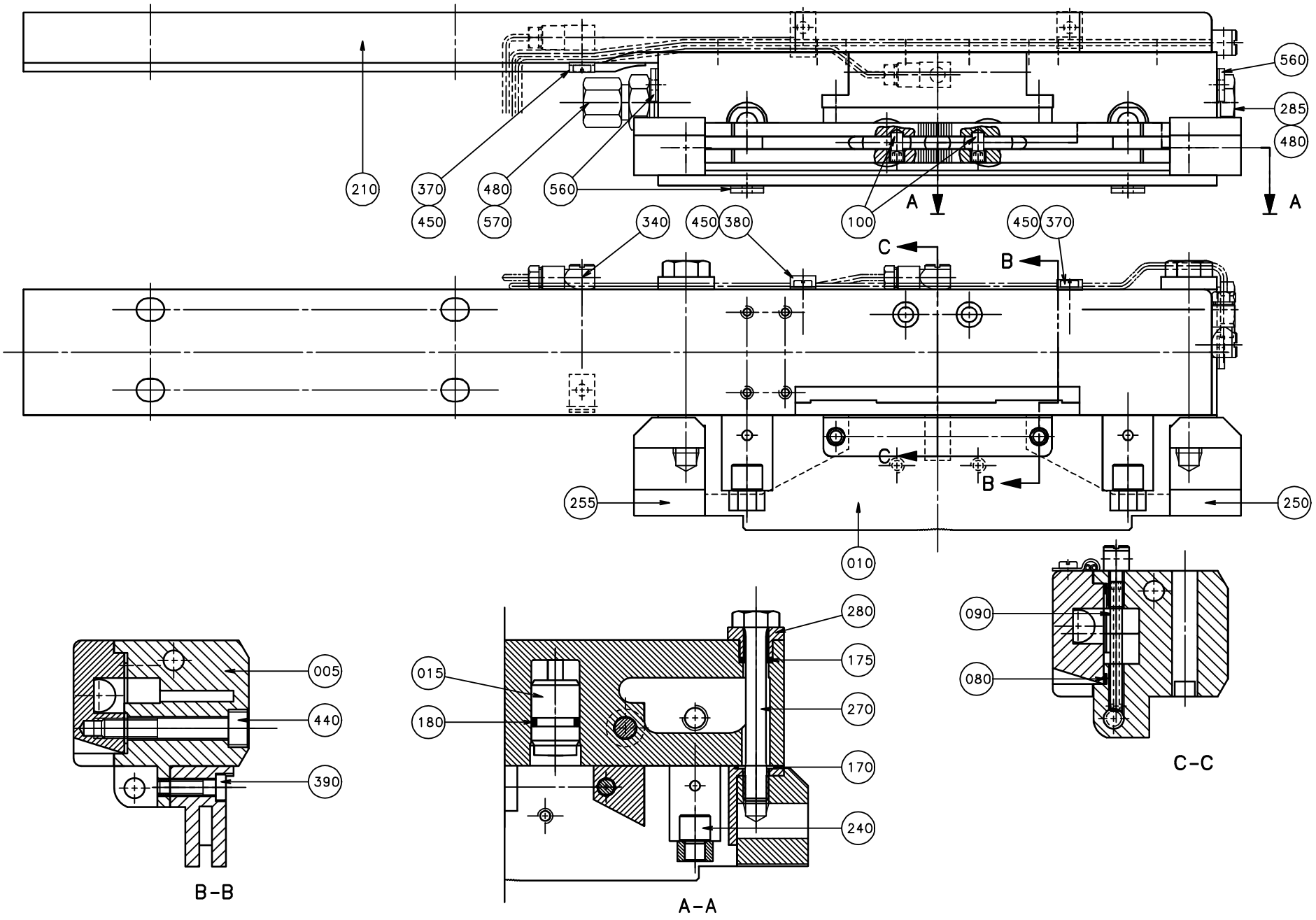
210
370
450
480
570
560
340
450
380
100
450
370
560
285
480
A
A
C
B
C
B
255
250
010
005
440
390
B-B
015
180
280
175
270
170
240
A-A
090
080
C-C

ECM: 71302 - 19980505
Group number: 246338-0500
Assembly Drawing: 246338-10_1_AA

This list covers pages from 4-76 to 4-83

Pos	Part No	UN	Qty	Description	Page No	Pos	Part No	UN	Qty	Description	Page No

SEE PREVIOUS LISTS PAGES: 4-77, 4-79.

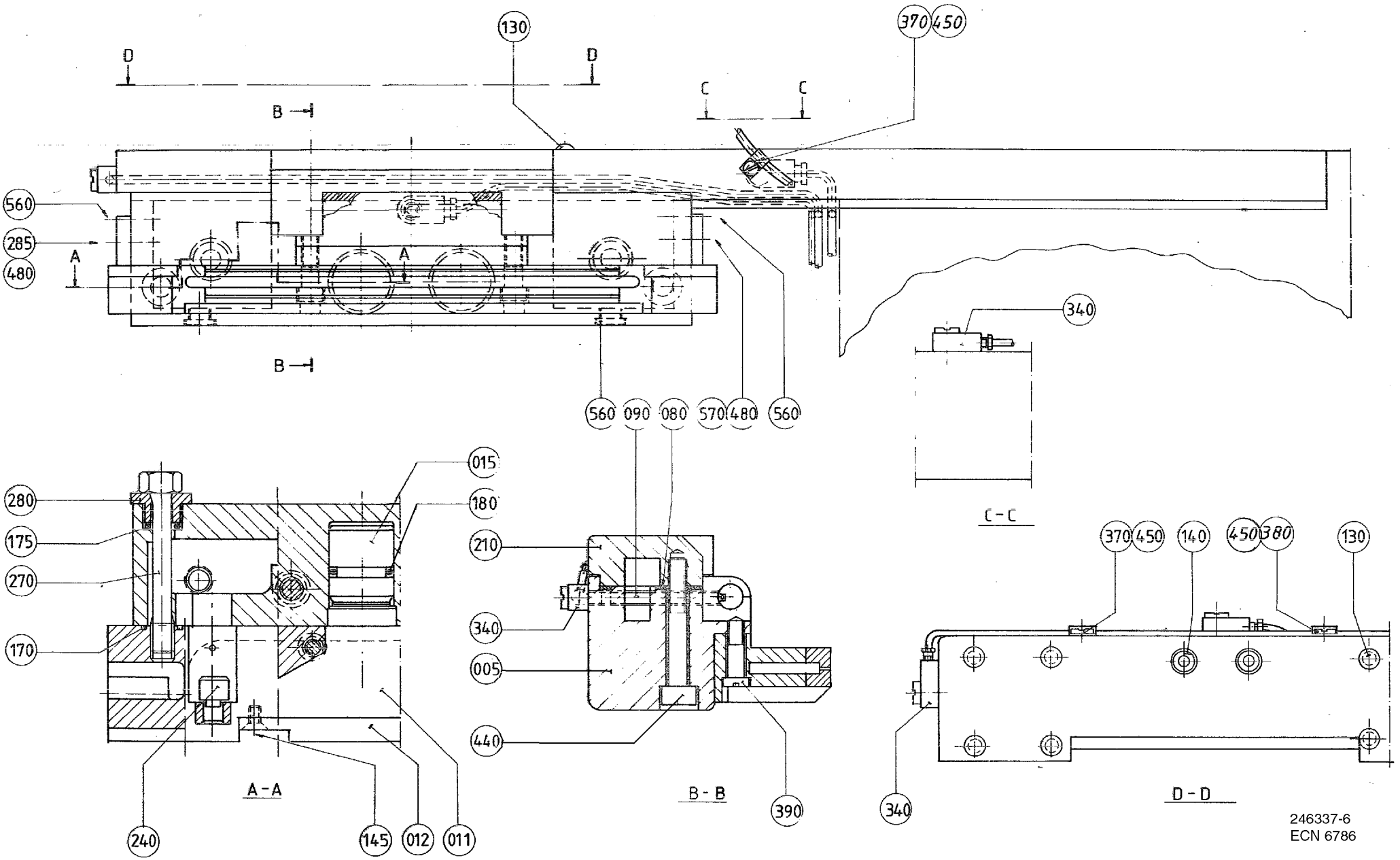
130
370 450
D
D
C
C
B
B
560
285
480
A
A
340
560 090 080 570 480 560
015
180
210
280
175
270
170
340
005
440
390
240
145
012
011
A - A
B - B
C - C
370 450 140 450 380 130
340
D - D
246337-6
ECN 6786

ECM: 71302 - 19980505
Group number: 246337-0500
Assembly Drawing: 246337-6_1_AA

This list covers pages from 4-84 to 4-91

Pos	Part No	UN	Qty	Description	Page No
0300B (See drawing on page: 4-84)					
005	458021-0000		1	BEARING HOUSING	
011	450105-0000		1	CUTTING JAW	
012	464758-0000		1	CUTTING JAW	
015	23972-0000		2	PLUNGER	
080	245272-0000		1	GASKET	
090	1296886-0000		1	SCREW	
130	311508-0416		3	RIVET, ROUND HEAD, KN, 4X10	
145	312145-0325		2	SCREW ISO 2009 MFS M5X10 A4	
180	315202-0213		2	O-RING 15,3X2,4 MM	
240	464697-0000		2	SHAFT	
270	243143-0000		2	SCREW	
390	90287-0070		2	SCREW MLC6S M6X23	
0500B, 0568B (See drawing on page: 4-86)					
005	450503-0000		1	BEARING HOUSING	
010	536978-0000		1	CUTTING JAW	
015	28880-0000		2	PLUNGER	
080	245271-0000		1	GASKET	
090	1296982-0000		1	SCREW	
100	536980-0000		2	SCREW	
170	315202-0111		2	O-RING 13,1X1,6 MM	
175	315202-0207		2	O-RING 8,3X2,4 MM	
180	315202-0212		2	O-RING 14,3X2,4 MM	
240	32464-0000		2	SHAFT	
270	243143-0000		2	SCREW	
390	90287-0070		2	SCREW MLC6S M6X23	
0500S (See drawing on page: 4-90)					
005	583260-0000		1	BEARING HOUSING	
010	583262-0000		1	CUTTING JAW	
015	28880-0000		2	PLUNGER	
080	573988-0000		1	GASKET	
090	1296886-0000		1	SCREW	
100	536980-0000		2	SCREW	
170	315202-0111		2	O-RING 13,1X1,6 MM	
175	315202-0207		2	O-RING 8,3X2,4 MM	
180	315202-0212		2	O-RING 14,3X2,4 MM	
240	32464-0000		2	SHAFT	
250	591981-0000		1	CATCH	
255	591982-0000		1	CATCH	
270	573583-0000		2	SCREW	
390	90287-0070		2	SCREW MLC6S M6X23	
0500SQ (See drawing on page: 4-86)					
005	573985-0000		1	BEARING HOUSING	
010	1143143-0000		1	CUTTING JAW	
015	28880-0000		2	PLUNGER	
080	573988-0000		1	GASKET	
090	1296981-0000		1	SCREW	
100	536980-0000		2	SCREW	
170	315202-0111		2	O-RING 13,1X1,6 MM	
175	315202-0207		2	O-RING 8,3X2,4 MM	
180	315202-0212		2	O-RING 14,3X2,4 MM	
240	32464-0000		2	SHAFT	
270	243143-0000		2	SCREW	
390	90287-0070		2	SCREW MLC6S M6X23	
1000B HIFIN (See drawing on page: 4-88)					
005	497572-0000		1	BEARING HOUSING	
010	536979-0000		1	CUTTING JAW	
015	28880-0000		2	PLUNGER	
080	245271-0000		1	GASKET	
090	1296982-0000		1	SCREW	
100	536980-0000		2	SCREW	
130	311508-0416		1	RIVET, ROUND HEAD, KN, 4X10	
140	312115-0331		2	SCREW ISO4762 M5X20 A4 80	
150	312318-0321		1	SCREW ISO4029 M5X6 A4	
170	315202-0111		2	O-RING 13,1X1,6 MM	
175	315202-0207		2	O-RING 8,3X2,4 MM	
180	315202-0212		2	O-RING 14,3X2,4 MM	
240	32464-0000		2	SHAFT	
270	243143-0000		2	SCREW	
390	312115-0374		2	SCREW ISO4762 M6X30 A4 80	
1000S (See drawing on page: 4-90)					
005	569057-0000		1	BEARING HOUSING	
010	597549-0000		1	CUTTING JAW	
015	28880-0000		2	PLUNGER	
080	245271-0000		1	GASKET	
090	1296884-0000		1	SCREW	
100	536980-0000		2	SCREW	
170	315202-0111		2	O-RING 13,1X1,6 MM	
175	315202-0207		2	O-RING 8,3X2,4 MM	
180	315202-0212		2	O-RING 14,3X2,4 MM	
240	32464-0000		2	SHAFT	
250	591981-0000		1	CATCH	
255	591982-0000		1	CATCH	
270	573583-0000		2	SCREW	

CUTTING JAW LEFT

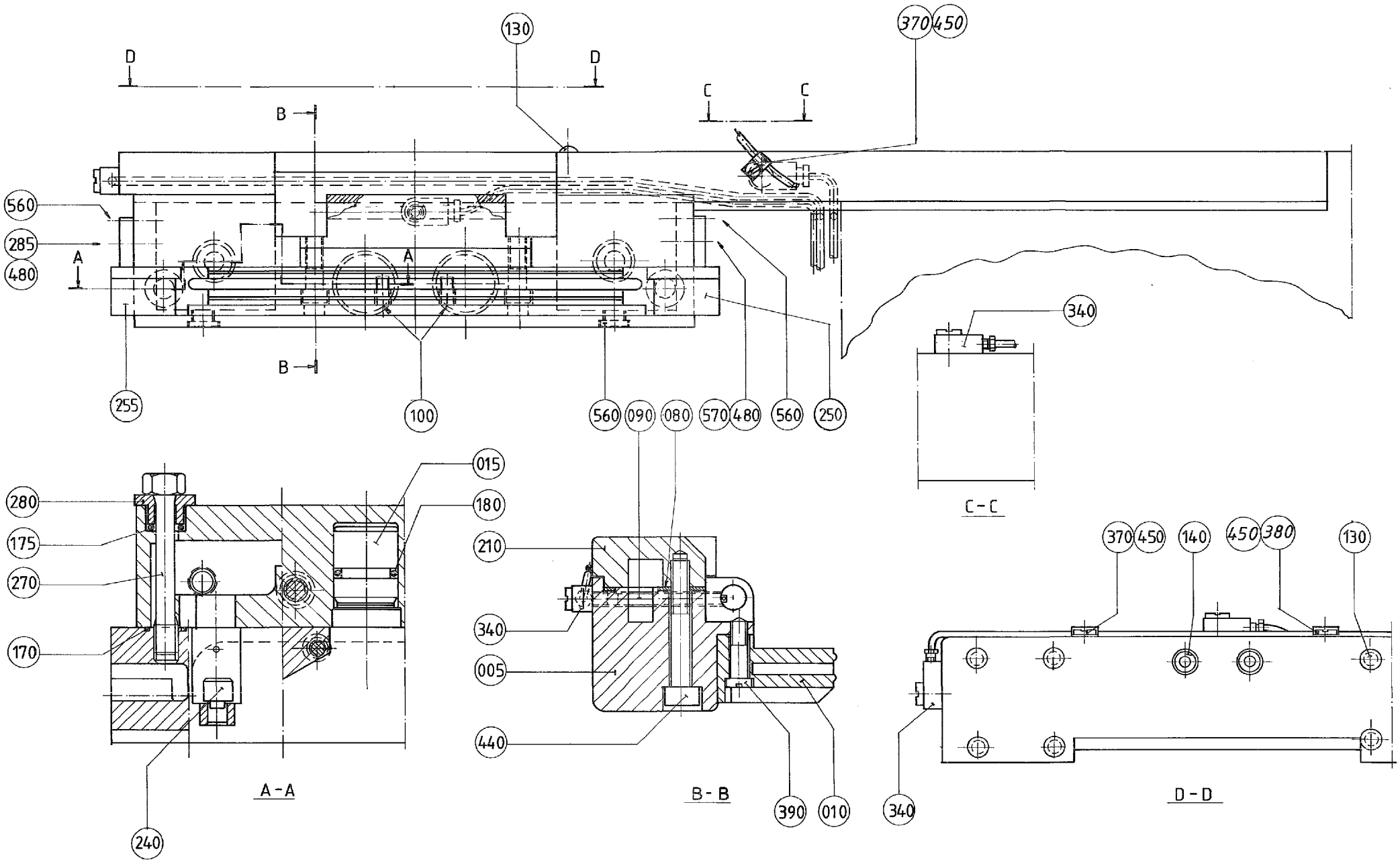

Pos	Part No	UN	Qty	Description	Page No
1000S (Cont'd) (See drawing on page: 4-90)					
390	90287-0070		2	SCREW MLC6S M6X23	
1000SQ (See drawing on page: 4-86)					
005	573985-0000		1	BEARING HOUSING	
010	573986-0000		1	CUTTING JAW	
015	28880-0000		2	PLUNGER	
080	573988-0000		1	GASKET	
090	1296981-0000		1	SCREW	
100	536980-0000		2	SCREW	
170	315202-0111		2	O-RING 13,1X1,6 MM	
175	315202-0207		2	O-RING 8,3X2,4 MM	
180	315202-0212		2	O-RING 14,3X2,4 MM	
240	32464-0000		2	SHAFT	
270	243143-0000		2	SCREW	
390	90287-0070		2	SCREW MLC6S M6X23	
1136B, 1000B LOFIN (See drawing on page: 4-86)					
005	450503-0000		1	BEARING HOUSING	
010	536421-0000		1	CUTTING JAW	
015	28880-0000		2	PLUNGER	
080	245271-0000		1	GASKET	
090	1296982-0000		1	SCREW	
100	536980-0000		2	SCREW	
140	312115-0331		2	SCREW ISO4762 M5X20 A4 80	
170	315202-0111		2	O-RING 13,1X1,6 MM	
175	315202-0207		2	O-RING 8,3X2,4 MM	
180	315202-0212		2	O-RING 14,3X2,4 MM	
240	32464-0000		2	SHAFT	
270	243143-0000		2	SCREW	
390	90287-0070		2	SCREW MLC6S M6X23	
Common Parts					
210	1143901-0000		1	CARRIER, CUT, LEFT	
280	243144-0000		2	BUSHING	
285	255278-0000		1	PLUG FINISHER	
340	90134-0058		3	CONNECTION	
370	90165-0058		2	PIPE CLIP FOR TUBE D=2,5 MM	
380	90165-0060		1	PIPE CLIP FOR TUBE D=5 MM	
440	312115-0461		2	SCREW ISO4762 M8X50 A4 80	
450	312125-0287		3	SCREW ISO 1207 M4X8 A4	
480	315234-0110		2	WASHER,PL.RND.CU.13,5/18 H=1,5	
560	342713-0209		4	PLUG (QUANT.MINIMA= 10PC).	
570	90030-0201		1	CONN. STR., 8-R1/4, EXT. THREAD	

Pos	Part No	UN	Qty	Description	Page No

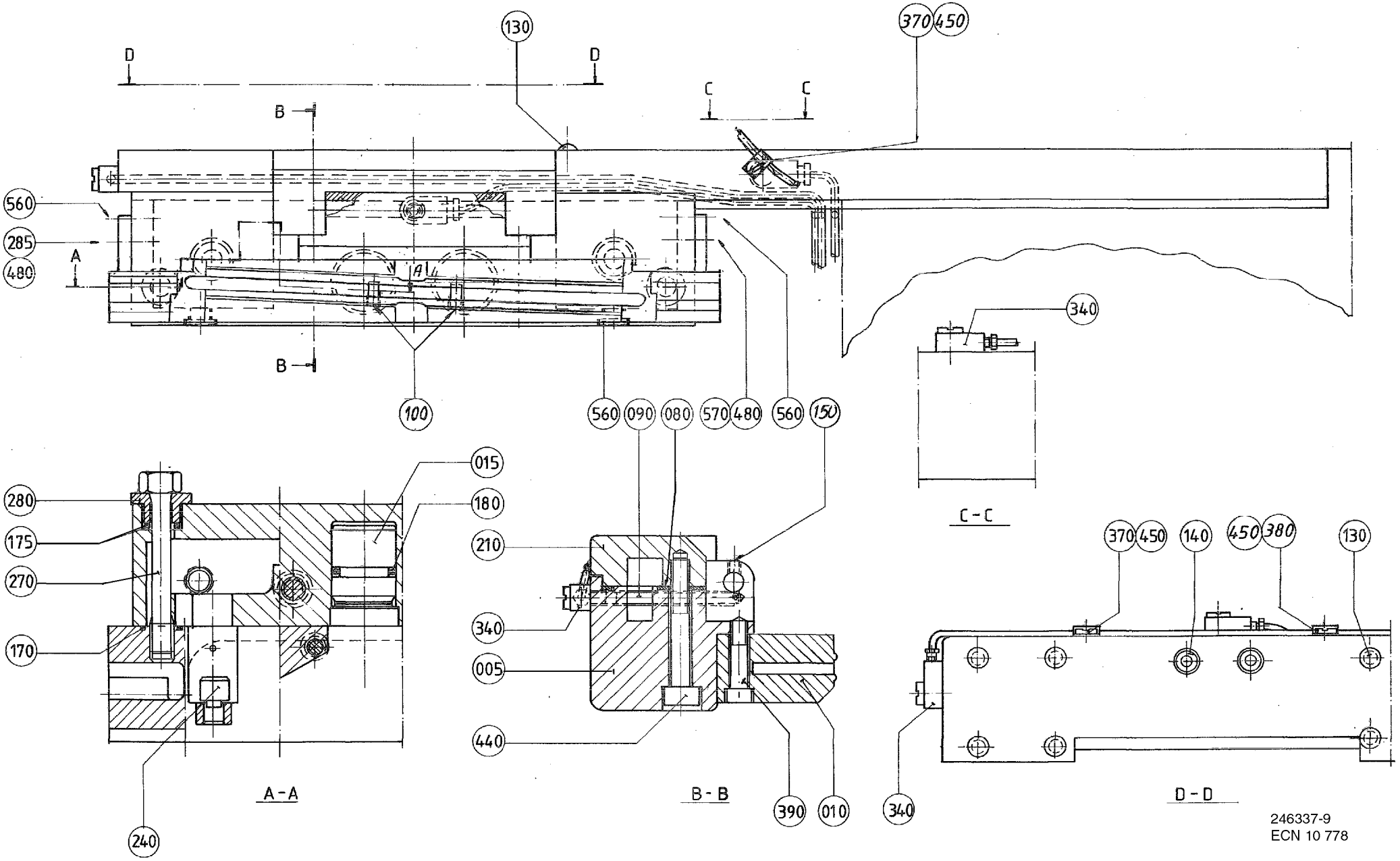
130
370
450
D
D
C
C
B
B
560
285
480
A
A
100
560
090
080
570
480
560
150
340
015
180
210
280
175
270
170
340
005
440
240
390
010
340
C - C
370
450
140
450
380
130
A - A
B - B
D - D
246337-9
ECN 10 778

Pos	Part No	UN	Qty	Description	Page No	Pos	Part No	UN	Qty	Description	Page No

SEE PREVIOUS LISTS PAGES: 4-85, 4-87.

CUTTING JAW LEFT

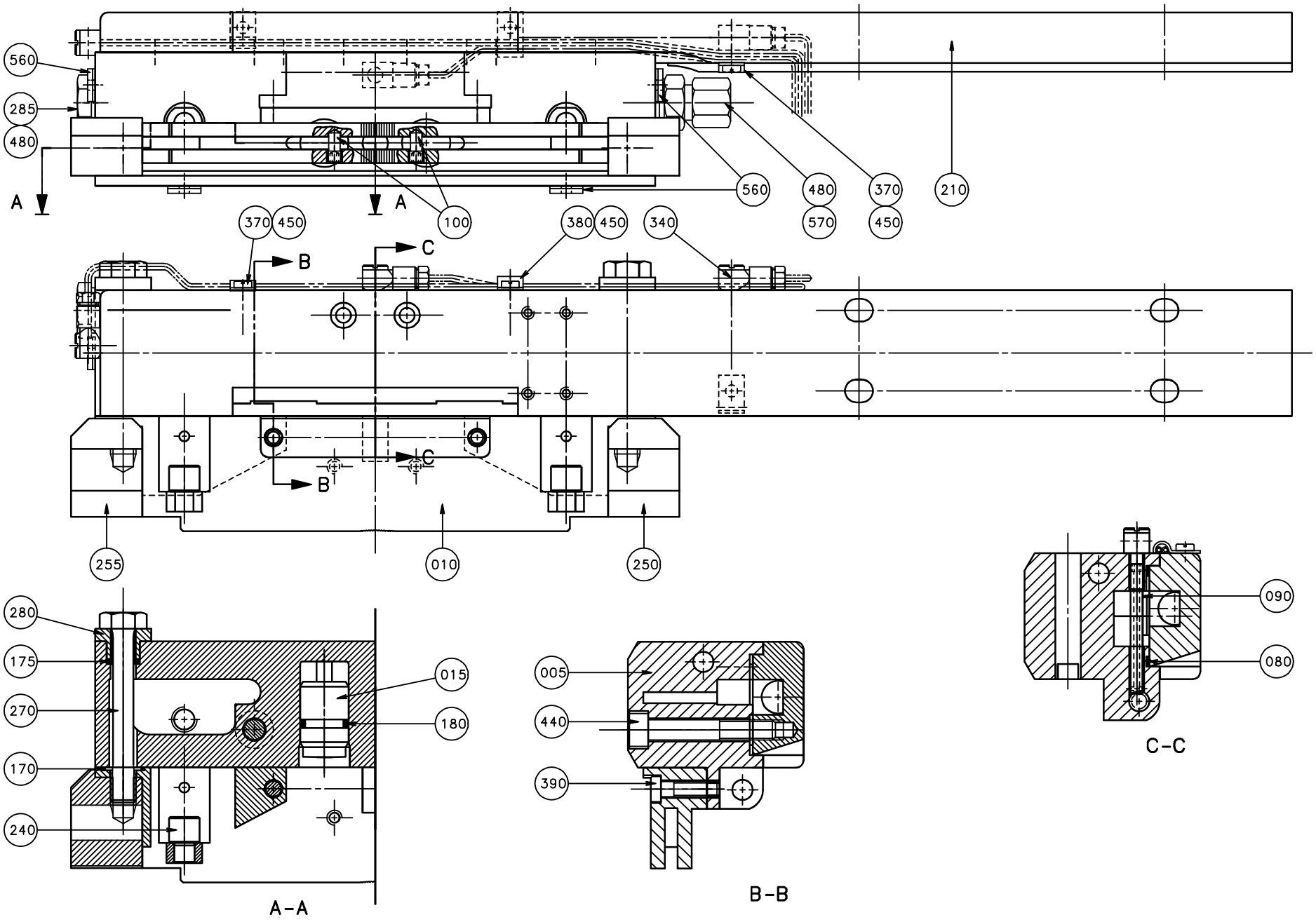

ECM: 71302 - 19980505
Group number: 246337-0500
Assembly Drawing: 246337-10_1_AA

This list covers pages from 4-84 to 4-91

Pos	Part No	UN	Qty	Description	Page No	Pos	Part No	UN	Qty	Description	Page No

SEE PREVIOUS LISTS PAGES: 4-85, 4-87.

Machine Type	Group Description	Used-In	Group Number	Page No

CARRIER RIGHT HAND SIDE

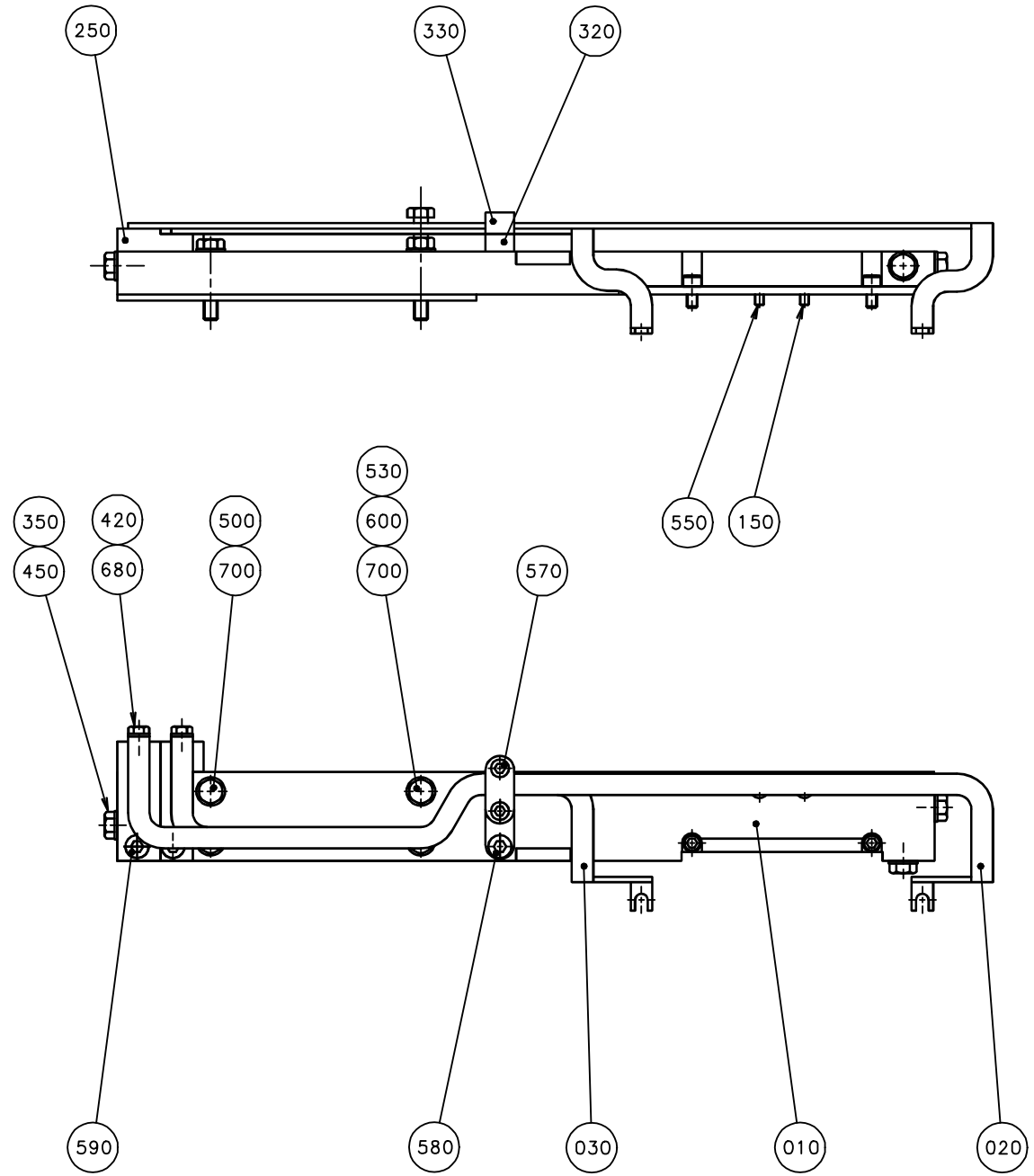

ECM: 71058 - 19971007
Group number: 247187-0550
Assembly Drawing: 247187-3_1_AA

Pos	Part No	UN	Qty	Description	Page No
0500B, 0568B, 0300B					
010	527803-0000		1	CARRIER	
020	542550-0000		1	BUSBAR	
030	542552-0000		1	BUSBAR	
0500SQ					
010	527803-0000		1	CARRIER	
020	589877-0000		1	BUSBAR	
030	589879-0000		1	BUSBAR	
150	312115-0331		2	SCREW ISO4762 M5X20 A4 80	
1000B HIFIN					
010	533894-0000		1	CARRIER	
020	542554-0000		1	BUSBAR	
030	542556-0000		1	BUSBAR	
150	312115-0331		2	SCREW ISO4762 M5X20 A4 80	
1136B, 1000SQ, 0500S, 1000B LOFIN, 1000S					
010	527803-0000		1	CARRIER	
020	542546-0000		1	BUSBAR	
030	542548-0000		1	BUSBAR	
150	312115-0331		2	SCREW ISO4762 M5X20 A4 80	
Common Parts					
250	542558-0000		1	BRACKET	
320	542560-0000		1	CRAMP	
330	542561-0000		1	CRAMP	
350	90005-0007		3	BONDED SEAL SS/NBR M8	
420	312105-0366		2	SCREW M6S ISO 4017 M6X12 A480	
450	312105-0447		3	SCREW M6S ISO 4017 M8X12 A480	
500	312105-0457		3	SCREW M6S ISO 4014 M8X35 A480	
530	312109-0463		1	SCREW M6S ISO 4017 M8X60 A480	
550	312115-0366		2	SCREW ISO4762 M6X12 A4 80	
570	312155-0329		2	SCREW DIN 7991 MF6S M5X16 A4 70	
580	312155-0370		3	SCREW DIN 7991 MF6S M6X20 A4 70	
590	312155-0372		1	SCREW DIN 7991 MF6S M6X25A4 70	
600	312605-0318		1	HEXAGON NUT, M6M M8 A280	
680	315105-0153		2	WASHER BRB 6,4X12 RFR	
700	315105-0165		4	WASHER BRB 8,4X16 RFR	

Pos	Part No	UN	Qty	Description	Page No

CARRIER LEFT HAND SIDE

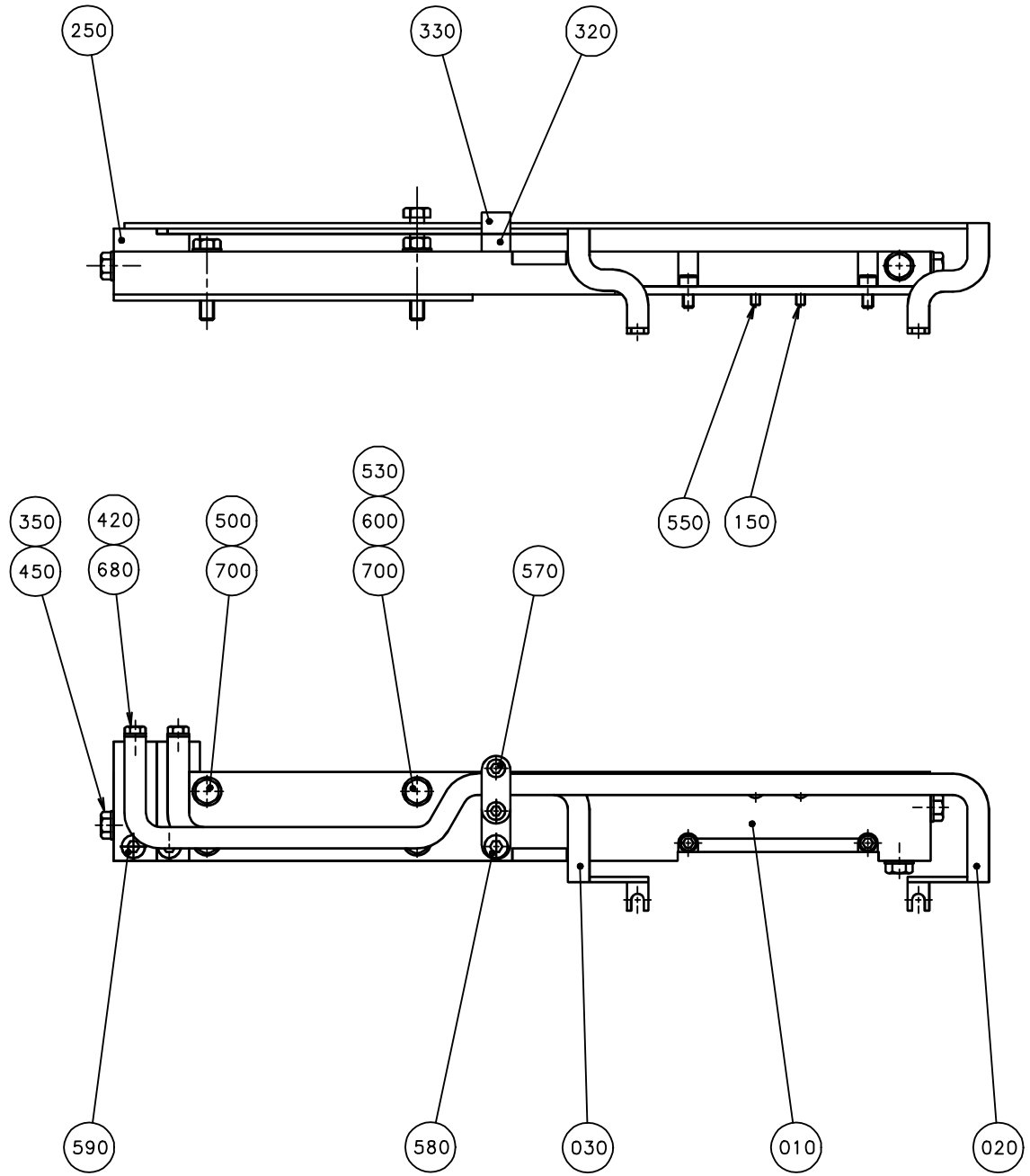

ECM: 70722 - 19970313
Group number: 247187-0500
Assembly Drawing: 247187-3_1_AA

Pos	Part No	UN	Qty	Description	Page No
0500B, 0568B, 0300B					
010	527804-0000		1	CARRIER	
020	542551-0000		1	BUSBAR	
030	542553-0000		1	BUSBAR	
0500SQ					
010	527804-0000		1	CARRIER	
020	589876-0000		1	BUSBAR	
030	589878-0000		1	BUSBAR	
150	312115-0331		2	SCREW ISO4762 M5X20 A4 80	
1000B HIFIN					
010	533895-0000		1	CARRIER	
020	542555-0000		1	BUSBAR	
030	542557-0000		1	BUSBAR	
150	312115-0331		2	SCREW ISO4762 M5X20 A4 80	
1136B, 1000SQ, 0500S, 1000B LOFIN, 1000S					
010	527804-0000		1	CARRIER	
020	542547-0000		1	BUSBAR	
030	542549-0000		1	BUSBAR	
150	312115-0331		2	SCREW ISO4762 M5X20 A4 80	
Common Parts					
250	542559-0000		1	BRACKET	
320	542560-0000		1	CRAMP	
330	542561-0000		1	CRAMP	
350	90005-0007		3	BONDED SEAL SS/NBR M8	
420	312105-0366		2	SCREW M6S ISO 4017 M6X12 A480	
450	312105-0447		3	SCREW M6S ISO 4017 M8X12 A480	
500	312105-0457		3	SCREW M6S ISO 4014 M8X35 A480	
530	312109-0463		1	SCREW M6S ISO 4017 M8X60 A480	
550	312115-0366		2	SCREW ISO4762 M6X12 A4 80	
570	312155-0329		2	SCREW DIN 7991 MF6S M5X16 A4 70	
580	312155-0370		3	SCREW DIN 7991 MF6S M6X20 A4 70	
590	312155-0372		1	SCREW DIN 7991 MF6S M6X25A4 70	
600	312605-0318		1	HEXAGON NUT, M6M M8 A280	
680	315105-0153		2	WASHER BRB 6,4X12 RFR	
700	315105-0165		4	WASHER BRB 8,4X16 RFR	

Pos	Part No	UN	Qty	Description	Page No

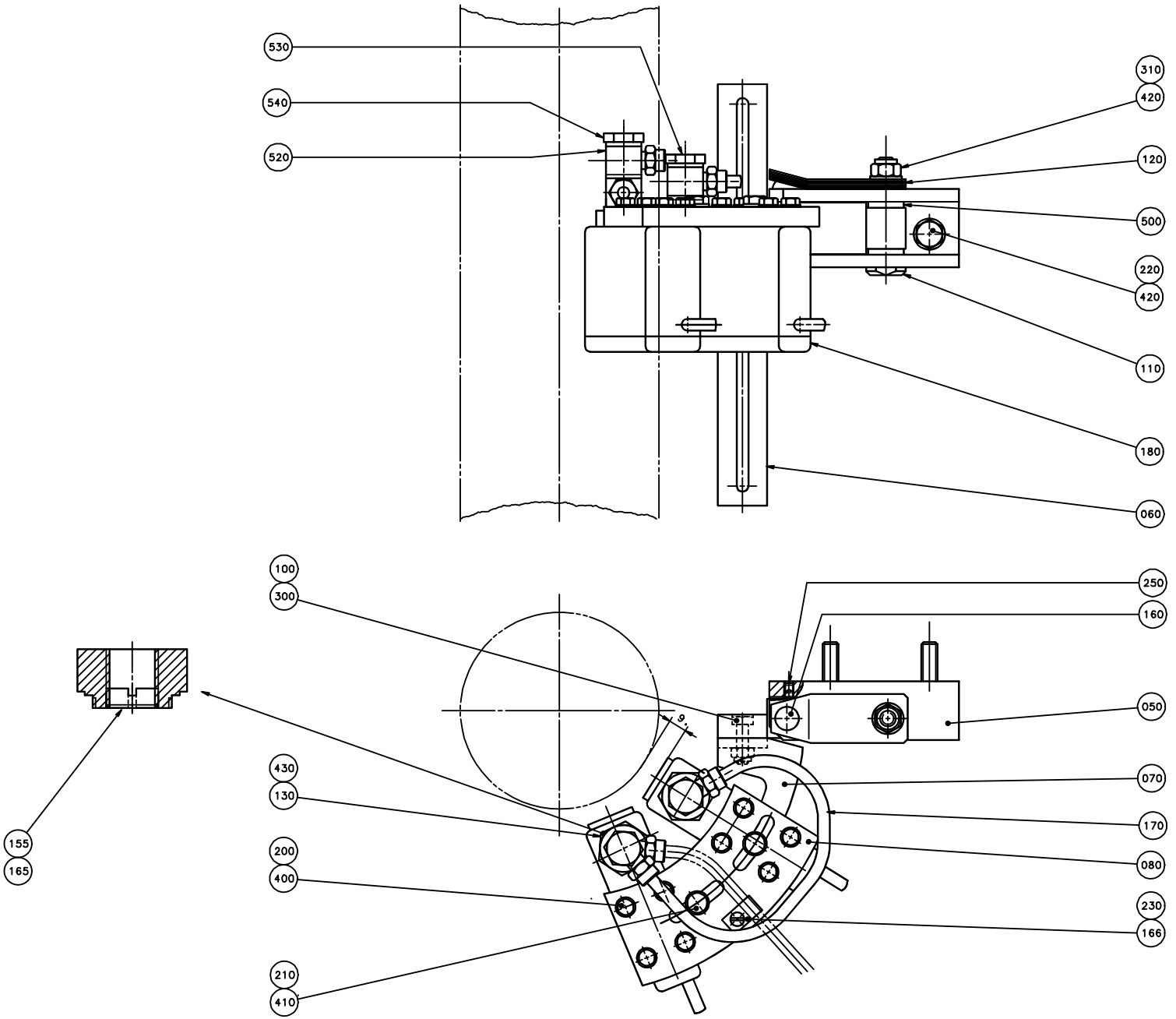
530
540
520
310
420
120
500
220
420
110
180
060
100
300
250
160
050
070
170
080
230
166
430
130
200
400
210
410
155
165

ECM: 72090 - 19981214
Group number: 541188-0200
Assembly Drawing: 541188-3_1_AA

This list covers pages from 4-96 to 4-99

Pos	Part No	UN	Qty	Description	Page No
0300B ST-R (See drawing on page: 4-98)					
050	486790-0000		1	BRACKET	
060	486794-0000		1	HOLDER	
070	526949-0000		1	CANTILEVER	
080	457365-0000		1	PLATE LEFT	
0500S ST-ER (See drawing on page: 4-96)					
050	457359-0000		1	BRACKET	
060	545789-0000		1	HOLDER	
070	526677-0000		1	CANTILEVER	
080	457364-0000		1	PLATE RIGHT	
0300B ST-ER (See drawing on page: 4-96)					
050	457359-0000		1	BRACKET	
060	545789-0000		1	HOLDER	
070	562971-0000		1	CANTILEVER	
080	457364-0000		1	PLATE RIGHT	
1000SQ ST-ER, 1000S ST-ER, 0500SQ ST-ER, 0568SQ ST-ER (See drawing on page: 4-96)					
050	457359-0000		1	BRACKET	
060	535200-0000		1	HOLDER	
070	544343-0000		1	CANTILEVER	
080	457364-0000		1	PLATE RIGHT	
1136B ST-ER, 0500B ST-ER, 1000B ST-ER, 0568B ST-ER (See drawing on page: 4-96)					
050	457359-0000		1	BRACKET	
060	545789-0000		1	HOLDER	
070	457361-0000		1	CANTILEVER	
080	457364-0000		1	PLATE RIGHT	
1500B ST-ER (See drawing on page: 4-96)					
050	457359-0000		1	BRACKET	
060	929753-0000		1	HOLDER	
070	457361-0000		1	CANTILEVER	
080	457364-0000		1	PLATE RIGHT	
Common Parts					
100	312105-0370		2	SCREW M6S ISO 4017 M6X20 A480	
110	457367-0000		1	SHAFT	
120	457368-0000		5	SPRING	
130	548337-0000		2	BUSHING	
155	548336-0000		2	WASHER	
160	90090-0016		1	BALL, D=15 MM	
165	90157-0016		1	LOCKING FLUID LOCTITE 242 50 ML	
166	90165-0057		1	PIPE CLIP FOR TUBE D=6 MM	
170	90166-0124	MM	200	TUBE 6 MM PA,TRANSP.	
180	90232-0075		2	PH.CELL NT6-14900S12	
200	312105-0329		8	SCREW M6S ISO 4017 M5X16 A480	
210	312105-0364		2	SCREW M6S ISO 4017 M6X10 A480	
220	312105-0455		2	SCREW M6S ISO 4017 M8X30 A480	
230	312125-0285		1	SCREW ISO 1207 M4X6 A4	
250	312318-0323		1	SCREW ISO4029 M5X8 A4	
300	312812-0316		2	HEXAGON NUT, NY-LOCK M6 A480	
310	312812-0318		1	HEXAGON NUT, NY-LOCK M8 A480	
400	315105-0146		8	WASHER BRB 5,3X10 RFR	
410	315105-0153		2	WASHER BRB 6,4X12 RFR	
420	315105-0165		3	WASHER BRB 8,4X16 RFR	
430	315204-0116		2	O-RING 18,1X1,6 MM	
500	321101-0143		2	FLANGE BUSHING, 8X14X8 MM	
520	342980-0114		3	BANJO-CONNECTION,RING 6/4-G1/4"	
530	90030-0265		1	HOLLOW SCREW, 1631-01-1/4 OR 2661-1/4	
540	90030-0266		1	HOLLOW SCREW, 1631-02-1/4 OR 2651-1/4	

Machine Type | Group Description | Used-In | Group Number | Page No

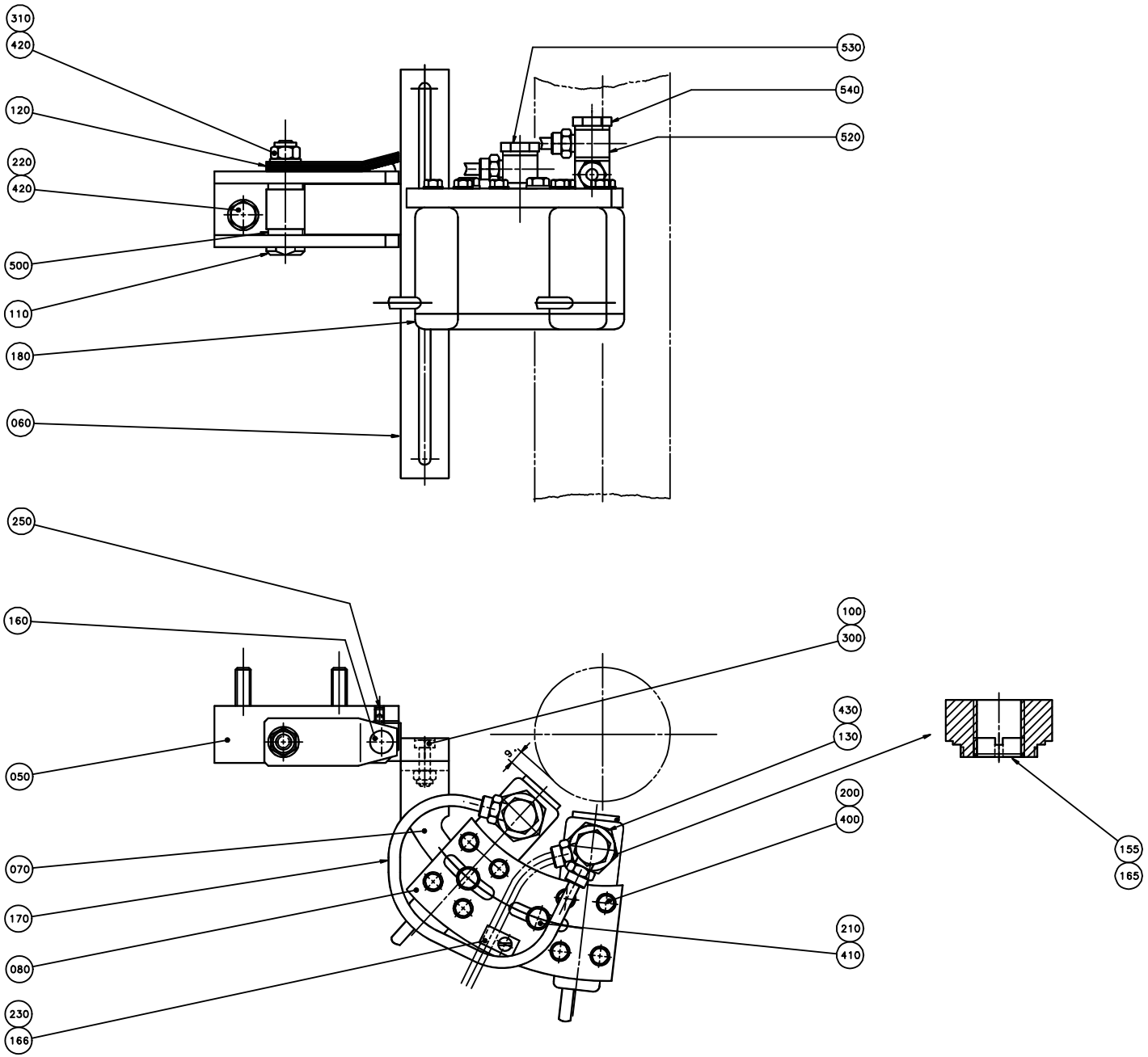
310
420
120
220
420
500
110
180
060
530
540
520
250
160
050
070
170
080
230
166
100
300
430
130
200
400
210
410
155
165

ECM: 72090 - 19981214
Group number: 541188-0200
Assembly Drawing: 541188-4_1_AA

This list covers pages from 4-96 to 4-99

Pos	Part No	UN	Qty	Description	Page No
0300B ST-R (See drawing on page: 4-98)					
050	486790-0000		1	BRACKET	
060	486794-0000		1	HOLDER	
070	526949-0000		1	CANTILEVER	
080	457365-0000		1	PLATE LEFT	
0500S ST-ER (See drawing on page: 4-96)					
050	457359-0000		1	BRACKET	
060	545789-0000		1	HOLDER	
070	526677-0000		1	CANTILEVER	
080	457364-0000		1	PLATE RIGHT	
0300B ST-ER (See drawing on page: 4-96)					
050	457359-0000		1	BRACKET	
060	545789-0000		1	HOLDER	
070	562971-0000		1	CANTILEVER	
080	457364-0000		1	PLATE RIGHT	
1000SQ ST-ER, 1000S ST-ER, 0500SQ ST-ER, 0568SQ ST-ER (See drawing on page: 4-96)					
050	457359-0000		1	BRACKET	
060	535200-0000		1	HOLDER	
070	544343-0000		1	CANTILEVER	
080	457364-0000		1	PLATE RIGHT	
1136B ST-ER, 0500B ST-ER, 1000B ST-ER, 0568B ST-ER (See drawing on page: 4-96)					
050	457359-0000		1	BRACKET	
060	545789-0000		1	HOLDER	
070	457361-0000		1	CANTILEVER	
080	457364-0000		1	PLATE RIGHT	
1500B ST-ER (See drawing on page: 4-96)					
050	457359-0000		1	BRACKET	
060	929753-0000		1	HOLDER	
070	457361-0000		1	CANTILEVER	
080	457364-0000		1	PLATE RIGHT	
Common Parts					
100	312105-0370		2	SCREW M6S ISO 4017 M6X20 A480	
110	457367-0000		1	SHAFT	
120	457368-0000		5	SPRING	
130	548337-0000		2	BUSHING	
155	548336-0000		2	WASHER	
160	90090-0016		1	BALL, D=15 MM	
165	90157-0016		1	LOCKING FLUID LOCTITE 242 50 ML	
166	90165-0057		1	PIPE CLIP FOR TUBE D=6 MM	
170	90166-0124	MM	200	TUBE 6 MM PA,TRANSP.	
180	90232-0075		2	PH.CELL NT6-14900S12	
200	312105-0329		8	SCREW M6S ISO 4017 M5X16 A480	
210	312105-0364		2	SCREW M6S ISO 4017 M6X10 A480	
220	312105-0455		2	SCREW M6S ISO 4017 M8X30 A480	
230	312125-0285		1	SCREW ISO 1207 M4X6 A4	
250	312318-0323		1	SCREW ISO4029 M5X8 A4	
300	312812-0316		2	HEXAGON NUT, NY-LOCK M6 A480	
310	312812-0318		1	HEXAGON NUT, NY-LOCK M8 A480	
400	315105-0146		8	WASHER BRB 5,3X10 RFR	
410	315105-0153		2	WASHER BRB 6,4X12 RFR	
420	315105-0165		3	WASHER BRB 8,4X16 RFR	
430	315204-0116		2	O-RING 18,1X1,6 MM	
500	321101-0143		2	FLANGE BUSHING, 8X14X8 MM	
520	342980-0114		3	BANJO-CONNECTION,RING 6/4-G1/4"	
530	90030-0265		1	HOLLOW SCREW, 1631-01-1/4 OR 2661-1/4	
540	90030-0266		1	HOLLOW SCREW, 1631-02-1/4 OR 2651-1/4	

Machine Type | Group Description | Used-In | Group Number | Page No

VOLUME CURVE PIECE

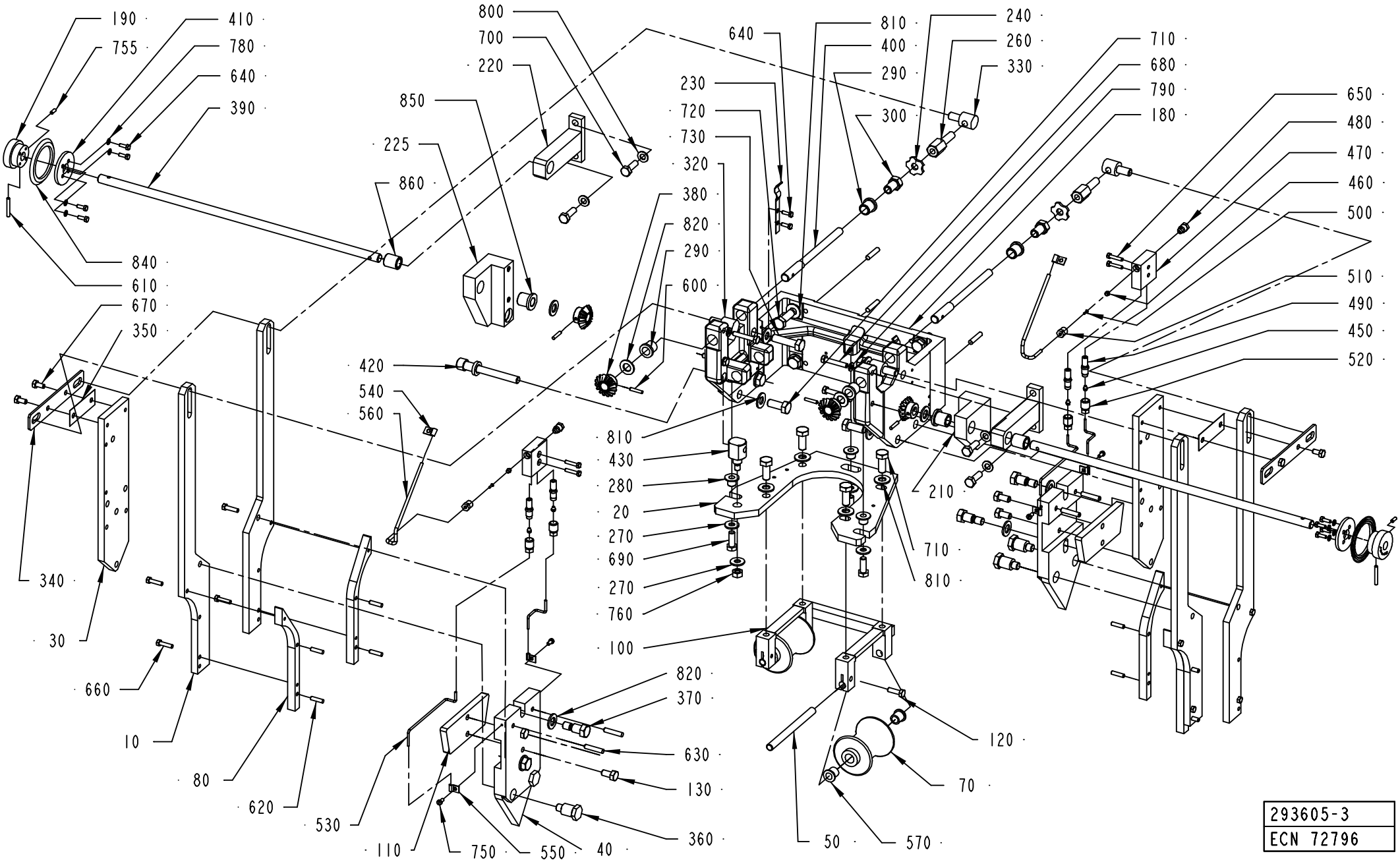

293605-3
ECN 72796

ECM: 148207 - 20031028
Group number: 293605-0500
Assembly Drawing: 293605-3_1_AF

This list covers pages from 4-100 to 4-111

Pos	Part No	UN	Qty	Description	Page No
1000SQ TPC (See drawing on page: 4-108)					
010	531110-0000		4	RAIL BRACKET	
020	1362460-0000		1	ADJUSTING PLATE	
030	279621-0000		2	FASTENING PLATE	
040	574129-0000		2	CURVE	
050	561547-0000		2	SHAFT	
070	573976-0000		2	SUPPORT ROLLER	
080	551626-0000		4	VOLUME CAM	
100	1362458-0000		1	HOLDER	
110	574130-0000		2	DAMPER	
120	312105-0370		2	SCREW M6S ISO 4017 M6X20 A480	
130	312105-0449		4	SCREW M6S ISO 4017 M8X16 A480	
180	252768-0000		1	CANTILEVER	
190	293606-0000		2	SHIFTER HANDLE	
340	252793-0000		2	SUPPORT	
390	293611-0000		2	SHAFT	
710	312105-0493		8	SCREW M6S ISO 4017 M10X25 A480	
720	312105-0495		8	SCREW M6S ISO 4017 M10X30 A480	
730	312105-0499		2	SCREW M6S ISO 4014 M10X40 A480	
1000SQ US (See drawing on page: 4-108)					
010	531110-0000		4	RAIL BRACKET	
020	1362460-0000		1	ADJUSTING PLATE	
030	279621-0000		2	FASTENING PLATE	
040	574129-0000		2	CURVE	
050	561547-0000		2	SHAFT	
070	573976-0000		2	SUPPORT ROLLER	
080	551626-0000		4	VOLUME CAM	
100	1362458-0000		1	HOLDER	
110	574130-0000		2	DAMPER	
115	311112-0204		2	SPRING PIN, ISO 8752 3X8-C	
120	312105-0370		2	SCREW M6S ISO 4017 M6X20 A480	
130	312105-0449		4	SCREW M6S ISO 4017 M8X16 A480	
180	252768-0000		1	CANTILEVER	
190	293606-0000		2	SHIFTER HANDLE	
340	591086-0000		2	SUPPORT	
390	293611-0000		2	SHAFT	
710	312105-0493		8	SCREW M6S ISO 4017 M10X25 A480	
720	312105-0495		8	SCREW M6S ISO 4017 M10X30 A480	
730	312105-0499		2	SCREW M6S ISO 4014 M10X40 A480	
1136B TPC (See drawing on page: 4-108)					
010	531110-0000		4	RAIL BRACKET	
020	297998-0000		1	ADJUSTMENT PLATE	
030	279621-0000		2	FASTENING PLATE	
040	574129-0000		2	CURVE	
050	561547-0000		2	SHAFT	
070	573976-0000		2	SUPPORT ROLLER	
080	551626-0000		4	VOLUME CAM	
100	1362458-0000		1	HOLDER	
110	574130-0000		2	DAMPER	
120	312105-0370		2	SCREW M6S ISO 4017 M6X20 A480	
130	312105-0449		4	SCREW M6S ISO 4017 M8X16 A480	
180	252768-0000		1	CANTILEVER	
190	293606-0000		2	SHIFTER HANDLE	
340	252793-0000		2	SUPPORT	
390	293611-0000		2	SHAFT	
710	312105-0493		8	SCREW M6S ISO 4017 M10X25 A480	
720	312105-0495		8	SCREW M6S ISO 4017 M10X30 A480	
730	312105-0499		2	SCREW M6S ISO 4014 M10X40 A480	
1500B US (See drawing on page: 4-110)					
010	581823-0000		4	RAIL BRACKET	
020	297998-0000		1	ADJUSTMENT PLATE	
030	279621-0000		2	FASTENING PLATE	
040	595209-0000		2	CURVE	
050	561547-0000		2	SHAFT	
070	593585-0000		2	SUPPORT ROLLER	
080	593279-0000		4	VOLUME CAM	
100	284124-0000		1	HOLDER	
110	581826-0000		2	DAMPER	
115	311112-0204		2	SPRING PIN, ISO 8752 3X8-C	
120	312105-0370		2	SCREW M6S ISO 4017 M6X20 A480	
130	312105-0449		4	SCREW M6S ISO 4017 M8X16 A480	
180	581807-0000		1	CANTILEVER	
185	581814-0000		2	SPACER	
190	293606-0000		1	SHIFTER HANDLE	
195	598975-0000		1	SHIFTER HANDLE	
340	591086-0000		2	SUPPORT	
390	598976-0000		1	SHAFT	
710	312105-0493		8	SCREW M6S ISO 4017 M10X25 A480	
720	312105-0495		6	SCREW M6S ISO 4017 M10X30 A480	
730	312105-0499		4	SCREW M6S ISO 4014 M10X40 A480	
0300B TPC (See drawing on page: 4-108)					
010	252770-0000		4	RAIL BRACKET	
020	297999-0000		1	ADJUSTMENT PLATE	
030	252774-0000		2	FASTENING PLATE	

Machine Type | Group Description | Used-In | Group Number | Page No

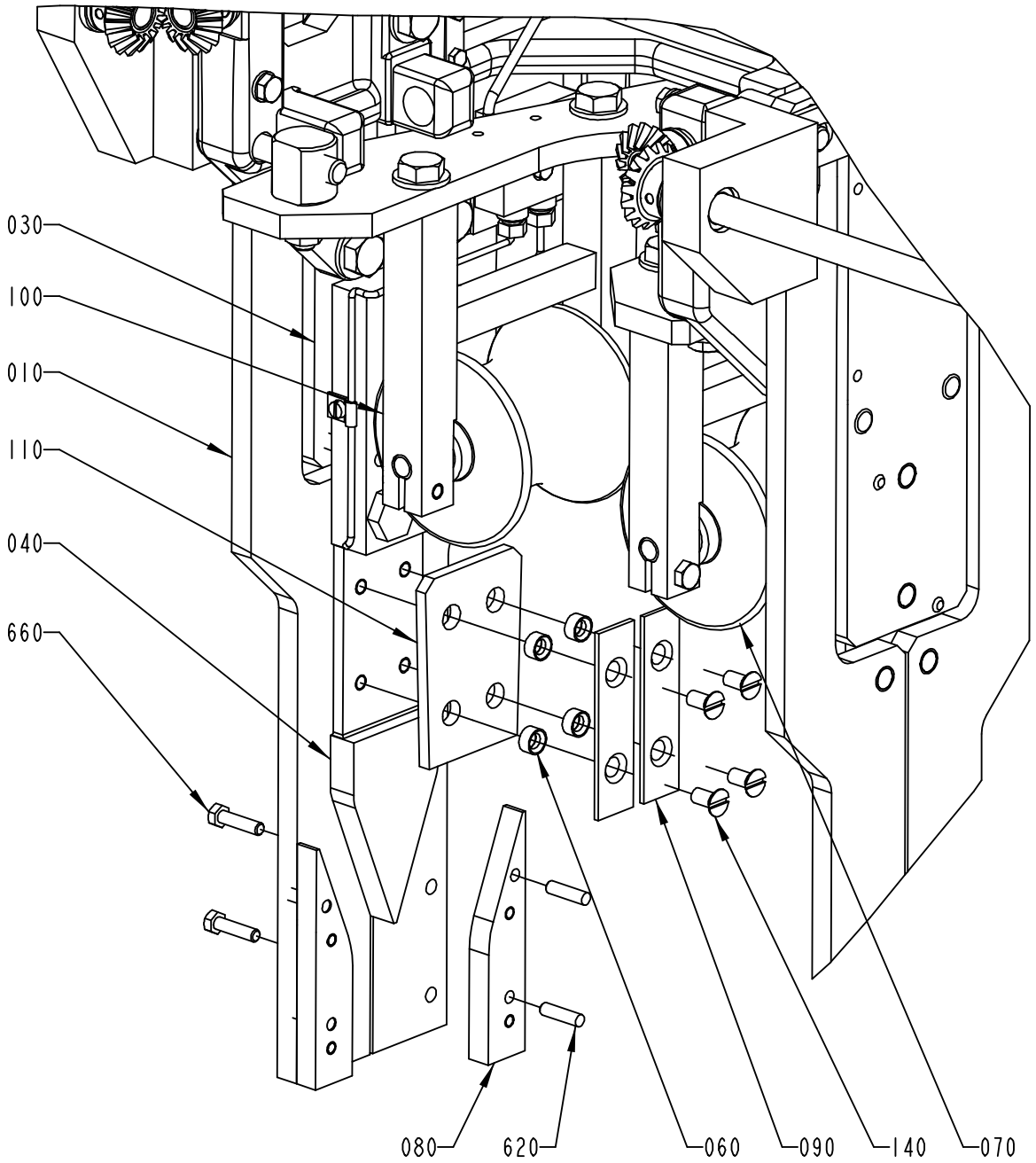
030
100
010
110
040
660
080
620
060
090
140
070

Pos	Part No	UN	Qty	Description	Page No
0300B TPC (Cont'd) (See drawing on page: 4-108)					
040	252775-0000		2	CURVE	
050	561545-0000		2	SHAFT	
060	38603-0002		8	SPACER	
070	561542-0000		2	SUPPORT ROLLER	
080	252776-0000		4	VOLUME CAM	
090	252780-0000		4	RULER	
100	450315-0000		1	HOLDER	
110	276189-0000		2	DAMPER	
120	312105-0370		2	SCREW M6S ISO 4017 M6X20 A480	
140	312145-0366		8	SCREW ISO 2009 MFS M6X12 A4	
180	252768-0000		1	CANTILEVER	
190	293606-0000		2	SHIFTER HANDLE	
340	252793-0000		2	SUPPORT	
390	293611-0000		2	SHAFT	
710	312105-0493		8	SCREW M6S ISO 4017 M10X25 A480	
720	312105-0495		8	SCREW M6S ISO 4017 M10X30 A480	
730	312105-0499		2	SCREW M6S ISO 4014 M10X40 A480	
0500B TPC, 0568B TPC (See drawing on page: 4-108)					
010	563205-0000		4	RAIL BRACKET	
020	297998-0000		1	ADJUSTMENT PLATE	
030	252774-0000		2	FASTENING PLATE	
040	252775-0000		2	CURVE	
050	561547-0000		2	SHAFT	
060	38603-0002		8	SPACER	
070	560122-0000		2	SUPPORT ROLLER	
080	252776-0000		4	VOLUME CAM	
090	252780-0000		4	RULER	
100	267327-0000		1	HOLDER	
110	276189-0000		2	DAMPER	
120	312105-0370		2	SCREW M6S ISO 4017 M6X20 A480	
140	312145-0366		8	SCREW ISO 2009 MFS M6X12 A4	
180	252768-0000		1	CANTILEVER	
190	293606-0000		2	SHIFTER HANDLE	
340	252793-0000		2	SUPPORT	
390	293611-0000		2	SHAFT	
710	312105-0493		8	SCREW M6S ISO 4017 M10X25 A480	
720	312105-0495		8	SCREW M6S ISO 4017 M10X30 A480	
730	312105-0499		2	SCREW M6S ISO 4014 M10X40 A480	
0500S TPC (See drawing on page: 4-108)					
010	551281-0000		4	RAIL BRACKET	
020	297998-0000		1	ADJUSTMENT PLATE	
030	551282-0000		2	FASTENING PLATE	
040	551283-0000		2	CURVE	
050	561547-0000		2	SHAFT	
060	38603-0002		8	SPACER	
070	561543-0000		2	SUPPORT ROLLER	
080	551284-0000		4	VOLUME CAM	
090	252780-0000		4	RULER	
100	449926-0000		1	HOLDER	
110	276189-0000		2	DAMPER	
120	312105-0370		2	SCREW M6S ISO 4017 M6X20 A480	
140	312145-0366		8	SCREW ISO 2009 MFS M6X12 A4	
180	252768-0000		1	CANTILEVER	
190	293606-0000		2	SHIFTER HANDLE	
340	252793-0000		2	SUPPORT	
390	293611-0000		2	SHAFT	
710	312105-0493		8	SCREW M6S ISO 4017 M10X25 A480	
720	312105-0495		8	SCREW M6S ISO 4017 M10X30 A480	
730	312105-0499		2	SCREW M6S ISO 4014 M10X40 A480	
0500SQ TPC (See drawing on page: 4-108)					
010	252770-0000		4	RAIL BRACKET	
020	1362460-0000		1	ADJUSTING PLATE	
030	252774-0000		2	FASTENING PLATE	
040	252775-0000		2	CURVE	
050	561547-0000		2	SHAFT	
060	38603-0002		8	SPACER	
070	573976-0000		2	SUPPORT ROLLER	
080	252776-0000		4	VOLUME CAM	
090	252780-0000		4	RULER	
100	1362500-0000		1	HOLDER	
110	276189-0000		2	DAMPER	
120	312105-0370		2	SCREW M6S ISO 4017 M6X20 A480	
140	312145-0366		8	SCREW ISO 2009 MFS M6X12 A4	
180	252768-0000		1	CANTILEVER	
190	293606-0000		2	SHIFTER HANDLE	
340	252793-0000		2	SUPPORT	
390	293611-0000		2	SHAFT	
710	312105-0493		8	SCREW M6S ISO 4017 M10X25 A480	
720	312105-0495		8	SCREW M6S ISO 4017 M10X30 A480	
730	312105-0499		2	SCREW M6S ISO 4014 M10X40 A480	
0500SQ US (See drawing on page: 4-110)					
010	252770-0000		4	RAIL BRACKET	
020	1362460-0000		1	ADJUSTING PLATE	

VOLUME CURVE PIECE

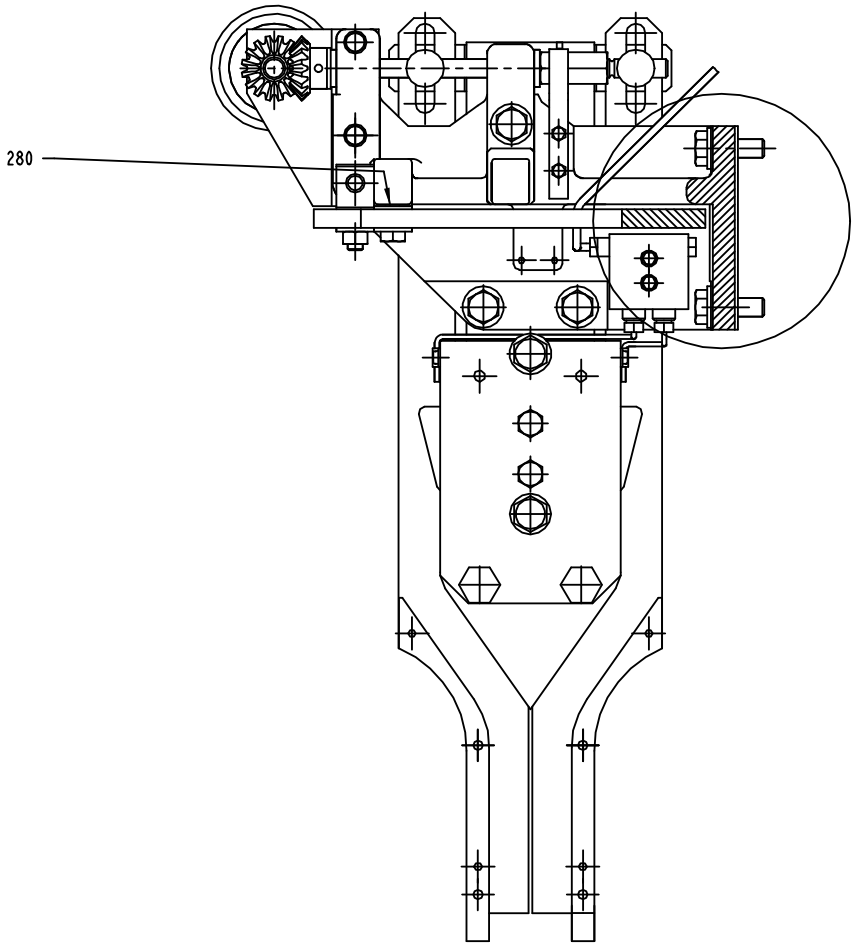

D-D

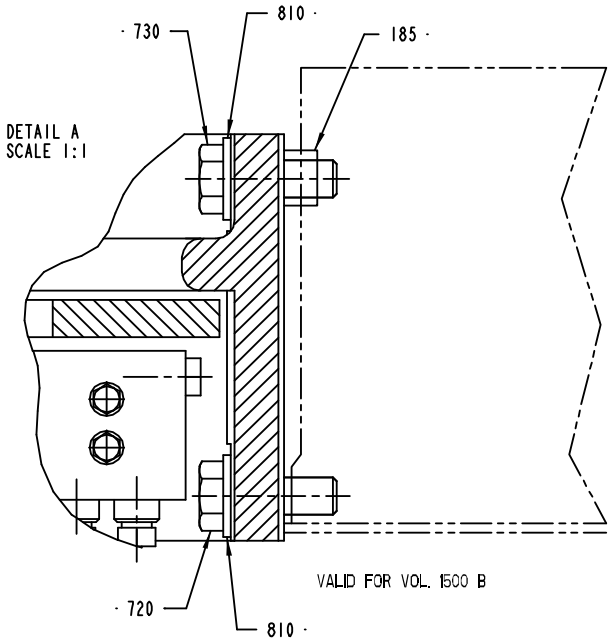

ECM: 148207 - 20031028
Group number: 293605-0500
Assembly Drawing: 293605-3_3_AF

This list covers pages from 4-100 to 4-111

Pos	Part No	UN	Qty	Description	Page No
0500SQ US (Cont'd) (See drawing on page: 4-110)					
030	252774-0000		2	FASTENING PLATE	
040	252775-0000		2	CURVE	
050	561547-0000		2	SHAFT	
060	38603-0002		8	SPACER	
070	573976-0000		2	SUPPORT ROLLER	
080	252776-0000		4	VOLUME CAM	
090	252780-0000		4	RULER	
100	2505147-0000		1	HOLDER	
110	276189-0000		2	DAMPER	
120	312105-0370		2	SCREW M6S ISO 4017 M6X20 A480	
140	312145-0366		8	SCREW ISO 2009 MFS M6X12 A4	
180	252768-0000		1	CANTILEVER	
190	293606-0000		1	SHIFTER HANDLE	
195	598975-0000		1	SHIFTER HANDLE	
340	591086-0000		2	SUPPORT	
390	598976-0000		1	SHAFT	
710	312105-0493		8	SCREW M6S ISO 4017 M10X25 A480	
720	312105-0495		8	SCREW M6S ISO 4017 M10X30 A480	
730	312105-0499		2	SCREW M6S ISO 4014 M10X40 A480	
0568SQ US (See drawing on page: 4-110)					
010	252770-0000		4	RAIL BRACKET	
020	1362460-0000		1	ADJUSTING PLATE	
030	252774-0000		2	FASTENING PLATE	
040	252775-0000		2	CURVE	
050	561547-0000		2	SHAFT	
060	38603-0002		8	SPACER	
070	573976-0000		2	SUPPORT ROLLER	
080	252776-0000		4	VOLUME CAM	
090	252780-0000		4	RULER	
100	1362500-0000		1	HOLDER	
110	276189-0000		2	DAMPER	
120	312105-0370		2	SCREW M6S ISO 4017 M6X20 A480	
140	312145-0366		8	SCREW ISO 2009 MFS M6X12 A4	
180	252768-0000		1	CANTILEVER	
190	293606-0000		1	SHIFTER HANDLE	
195	598975-0000		1	SHIFTER HANDLE	
340	591086-0000		2	SUPPORT	
390	598976-0000		1	SHAFT	
710	312105-0493		8	SCREW M6S ISO 4017 M10X25 A480	
720	312105-0495		8	SCREW M6S ISO 4017 M10X30 A480	
730	312105-0499		2	SCREW M6S ISO 4014 M10X40 A480	
1000B LOFIN TPC, 1000B HIFIN TPC (See drawing on page: 4-108)					
010	544342-0000		4	RAIL BRACKET	
020	297998-0000		1	ADJUSTMENT PLATE	
030	252773-0000		2	FASTENING PLATE	
040	533955-0000		2	CURVE	
050	561547-0000		2	SHAFT	
070	560122-0000		2	SUPPORT ROLLER	
080	531109-0000		4	VOLUME CAM	
100	267676-0000		1	HOLDER	
110	269792-0000		2	DAMPER	
120	312105-0370		2	SCREW M6S ISO 4017 M6X20 A480	
130	312105-0449		4	SCREW M6S ISO 4017 M8X16 A480	
180	252768-0000		1	CANTILEVER	
190	293606-0000		2	SHIFTER HANDLE	
340	252793-0000		2	SUPPORT	
390	293611-0000		2	SHAFT	
710	312105-0493		8	SCREW M6S ISO 4017 M10X25 A480	
720	312105-0495		8	SCREW M6S ISO 4017 M10X30 A480	
730	312105-0499		2	SCREW M6S ISO 4014 M10X40 A480	
1000S TPC (See drawing on page: 4-108)					
010	531110-0000		4	RAIL BRACKET	
020	297998-0000		1	ADJUSTMENT PLATE	
030	279621-0000		2	FASTENING PLATE	
040	533955-0000		2	CURVE	
050	561547-0000		2	SHAFT	
070	569058-0000		2	SUPPORT ROLLER	
080	551626-0000		4	VOLUME CAM	
100	284124-0000		1	HOLDER	
110	269792-0000		2	DAMPER	
120	312105-0370		2	SCREW M6S ISO 4017 M6X20 A480	
130	312105-0449		4	SCREW M6S ISO 4017 M8X16 A480	
180	252768-0000		1	CANTILEVER	
190	293606-0000		2	SHIFTER HANDLE	
340	252793-0000		2	SUPPORT	
390	293611-0000		2	SHAFT	
710	312105-0493		8	SCREW M6S ISO 4017 M10X25 A480	
720	312105-0495		8	SCREW M6S ISO 4017 M10X30 A480	
730	312105-0499		2	SCREW M6S ISO 4014 M10X40 A480	
Common Parts					
210	293608-0000		1	BEARING CONSOLE	
220	293609-0000		2	BEARING CONSOLE	
225	434020-0000		1	BEARING CONSOLE	

VOLUME CURVE PIECE

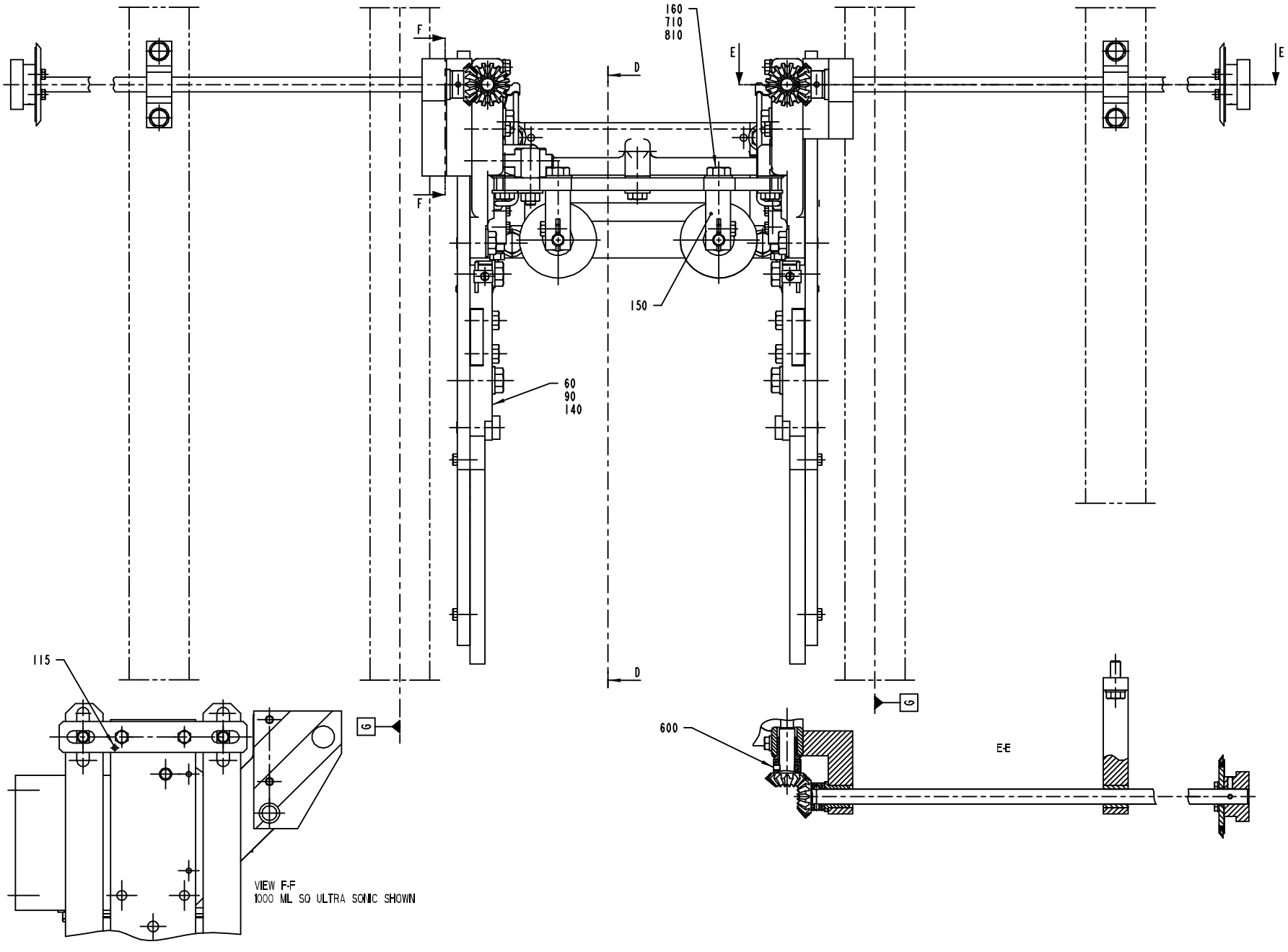

Pos	Part No	UN	Qty	Description	Page No
Common Parts (Cont'd)					
230	37070-0000		2	SPRING	
240	37071-0000		2	WASHER	
260	252785-0000		2	SCREW	
270	252786-0000		4	WASHER	
280	252787-0000		3	BUSHING	
290	252788-0000		4	BUSHING	
300	252789-0000		2	NUT	
320	252791-0000		2	NUT	
330	252792-0000		2	NUT	
350	252794-0000		2	LACE	
360	252930-0000		4	SPACER SCREW	
370	268195-0000		4	SCREW	
380	293610-0000		4	GEAR WHEEL	
400	293612-0000		2	SCREW	
410	294042-0000		2	SEALING WASHER	
420	434021-0000		1	SCREW	
430	434073-0000		1	NUT	
450	90028-0020		4	CONE TUBE 2,5MM	
460	90028-0021		2	CONE TUBE 4 MM	
470	90032-0038		2	BLOCK 2 WAYS	
480	90087-0019		2	PLUG M10X1 STAINLESS	
490	90092-0053		4	METERING VALVE 30 MM3	
500	90134-0031		2	SLEEVE FOR PLASTIC TUBE	
510	90134-0038		2	BUSHING/NUT INLET/OUTLET 4 MM	
520	90134-0039		4	BUSHING VALVE CONNECTION 2,5 MM	
530	90266-0019	MM	800	PIPE	
540	90165-0056		2	PIPE CLIP FOR TUBE D=4 MM	
550	90165-0058		4	PIPE CLIP FOR TUBE D=2,5 MM	
560	90166-0109	MM	700	TUBE 4 MM PA,TRANSP.	
570	90240-0180		4	FLANGE BUSHING 10X14X15MM	
600	311103-0272		4	PARALLEL PIN ISO 2338 4M6X20 A1	
610	311103-0276		2	PARALLEL PIN ISO 2338 4M6X30 A1	
620	311103-0310		8	PARALLEL PIN ISO 2338 5M6X20 A1	
630	311103-0357		12	PARALLEL PIN ISO 2338 6M6X30 A1	
640	312105-0291		12	SCREW M6S ISO 4017 M4X12 A470	
650	312105-0295		4	SCREW M6S ISO 4017 M4X20 A470	
660	312105-0331		8	SCREW M6S ISO 4017 M5X20 A480	
670	312105-0366		4	SCREW M6S ISO 4017 M6X12 A480	
680	312105-0376		4	SCREW M6S ISO 4014 M6X35 A480	
690	312105-0452		3	SCREW M6S ISO 4017 M8X22 A4 80	
700	312105-0453		4	SCREW M6S ISO 4017 M8X25 A480	
750	312125-0287		4	SCREW ISO 1207 M4X8 A4	
755	312318-0289		2	SCREW ISO4029 M4X10 A4	
760	312605-0318		1	HEXAGON NUT, M6M M8 A280	
780	315105-0136		8	WASHER BRB 4,3X9 RFR	
790	315105-0153		4	WASHER BRB 6,4X12 RFR	
800	315105-0165		4	WASHER BRB 8,4X16 RFR	
810	315105-0173		14	WASHER BRB 10,5X20 RFR	
820	315105-0176		8	WASHER BRB 12X22 RFR	
840	315226-0196		2	AXIAL SEAL WITH STEEL COVER 48X65X4,5 MM	
850	321111-0163		2	FLANGE BUSHING, 12X18X20 MM	
860	321116-0163		2	BEARING BUSH W/O FLANGE, 12X18X20 MM	

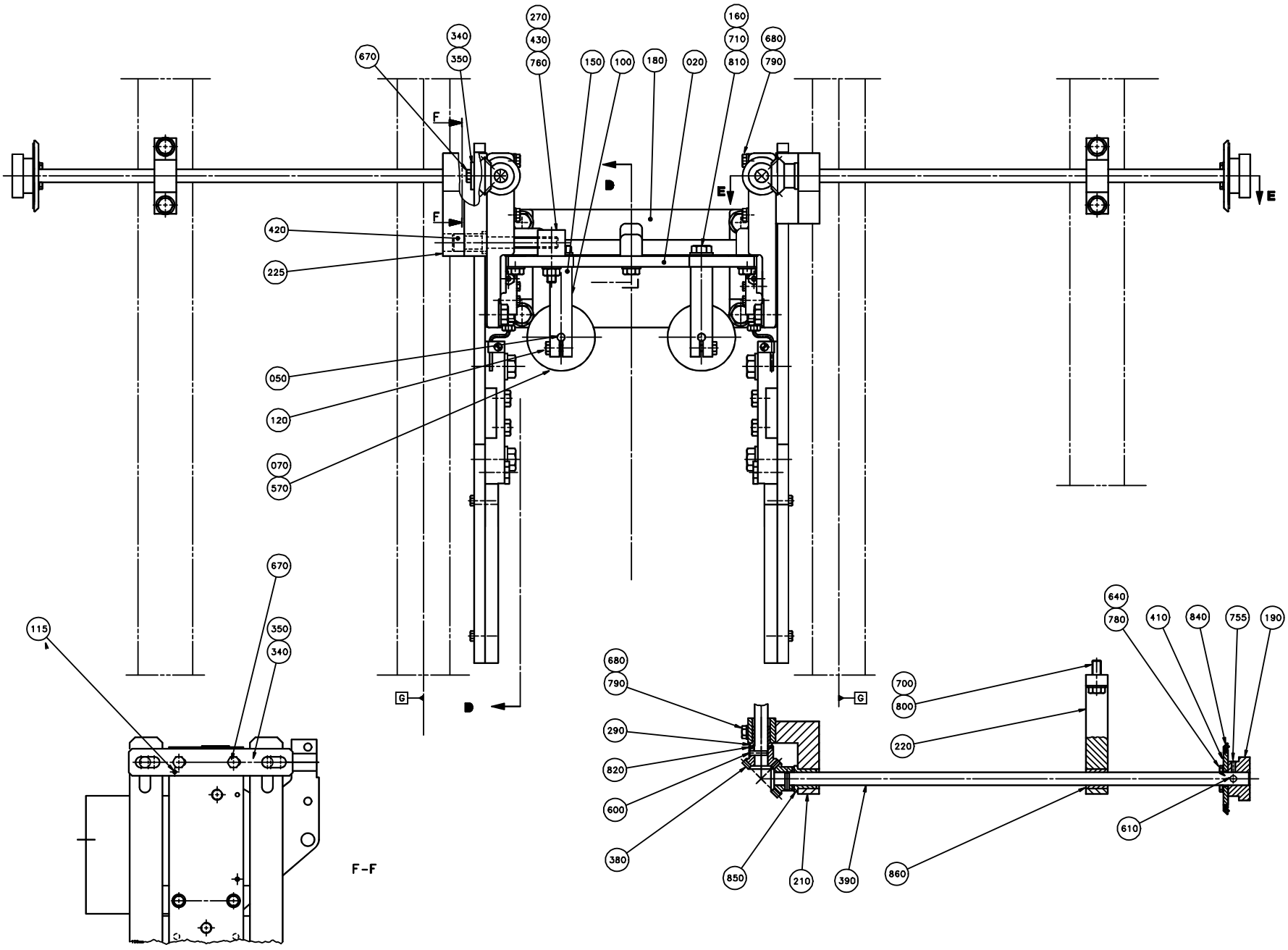
270
430
760
340
350
670
150
100
180
020
160
710
810
680
790
F
D
E
420
225
050
120
070
570
G
115
340
F-F
640
780
410
840
755
190
700
800
220
610
290
820
600
380
850
210
390
860

ECM: 148207 - 20031028
Group number: 293605-0500
Assembly Drawing: 293605-4_1_AA

This list covers pages from 4-100 to 4-111

Pos	Part No	UN	Qty	Description	Page No	Pos	Part No	UN	Qty	Description	Page No

SEE PREVIOUS LISTS PAGES: 4-101, 4-103, 4-105, 4-107.

VOLUME CURVE PIECE

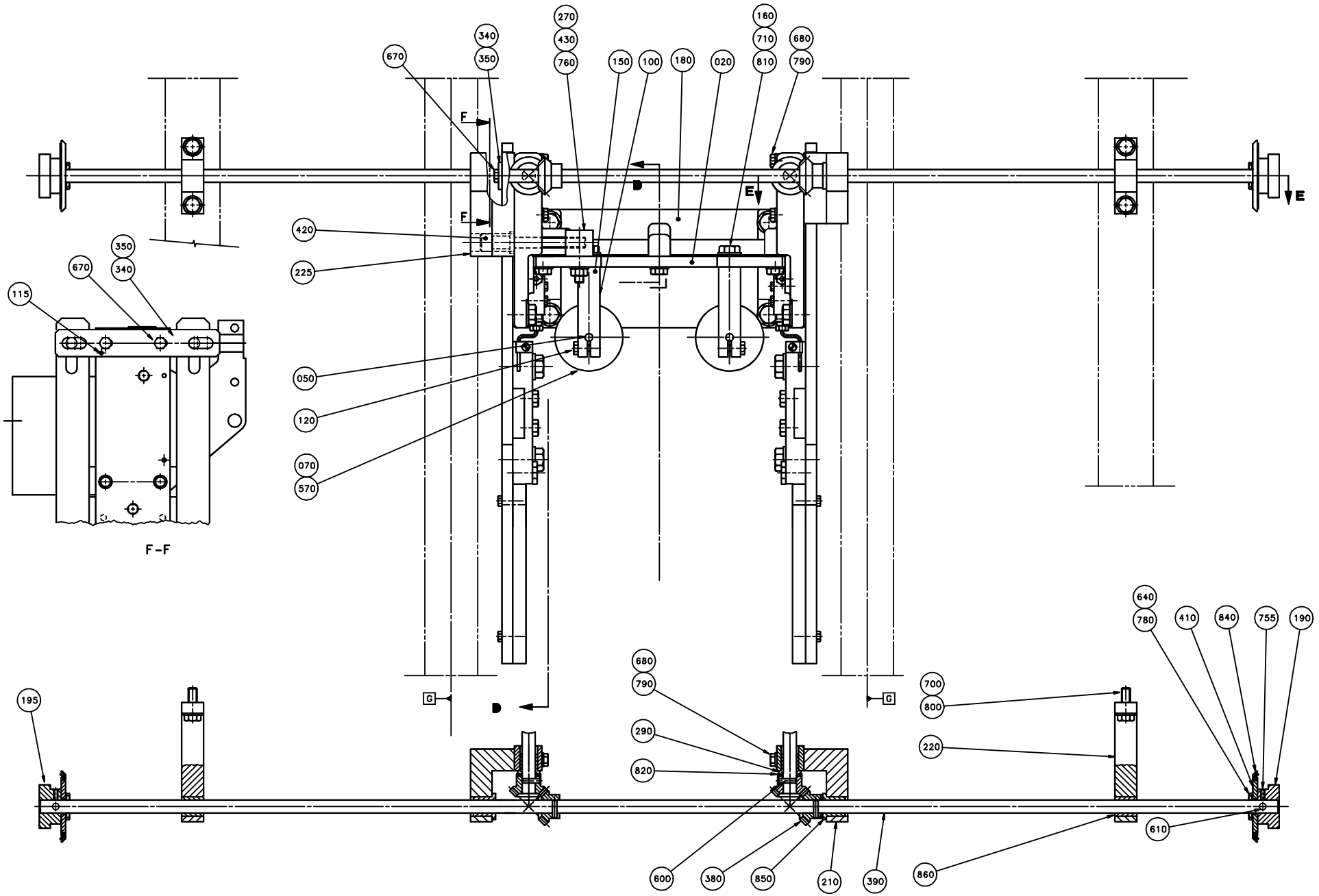

ECM: 148207 - 20031028
Group number: 293605-0500
Assembly Drawing: 293605-5_1_AA

This list covers pages from 4-100 to 4-111

Pos	Part No	UN	Qty	Description	Page No	Pos	Part No	UN	Qty	Description	Page No

SEE PREVIOUS LISTS PAGES: 4-101, 4-103, 4-105, 4-107.

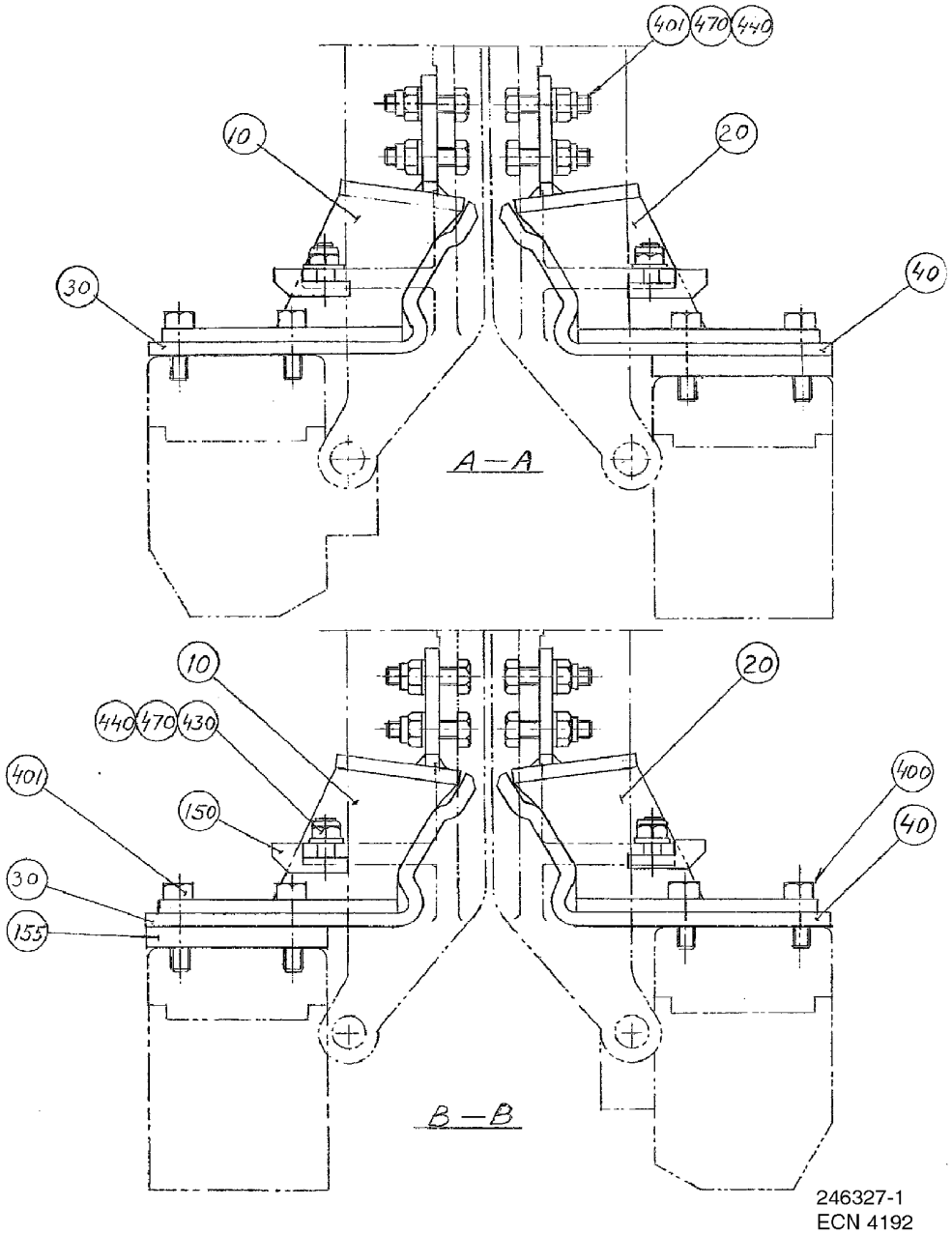

246327-1
ECN 4192

ECM: 72090 - 19981214
Group number: 246327-0400
Assembly Drawing: 246327-1_1_AA

This list covers pages from 4-112 to 4-129

Pos	Part No	UN	Qty	Description	Page No
TB/8 1000SQ TPC (See drawing on pages: 4-120, 12-182)					
140	545651-0000		8	GUIDE STUD	
150	33152-0000		4	STOPPER	
180	1143216-0000		4	SPRING	
190	1143215-0000		4	SPRING	
205	593270-0000		2	CATCH	
212	597574-0000		4	SPRING BRACKET	
220	571298-0000		2	LACE	
230	571297-0000		2	LACE	
240	263684-0000		4	SPACER	
250	593271-0000		2	CATCH	
401	312105-0331		8	SCREW M6S ISO 4017 M5X20 A480	
402	312115-0327		4	SCREW ISO4762 M5X12 A4 80	
412	312115-0340		8	SCREW ISO4762 M5X45 A4 80	
420	312105-0325		8	SCREW M6S ISO 4017 M5X10 A480	
470	315105-0146		16	WASHER BRB 5,3X10 RFR	
TB/8 0300B TPC (See drawing on pages: 4-118, 12-180)					
140	545651-0000		8	GUIDE STUD	
150	545125-0000		2	STOPPER	
152	545126-0000		2	STOPPER	
180	38467-0000		4	SPRING	
190	251530-0000		4	SPRING	
205	545127-0000		2	CATCH	
210	247262-0000		2	SPRING BRACKET	
212	545128-0000		2	SPRING BRACKET	
215	247263-0000		8	SPACER	
220	247271-0000		2	LACE	
240	263684-0000		4	SPACER	
250	545136-0000		2	CATCH	
401	312105-0331		8	SCREW M6S ISO 4017 M5X20 A480	
410	312105-0340		8	SCREW M6S ISO 4014 M5X45 A480	
420	312105-0325		8	SCREW M6S ISO 4017 M5X10 A480	
470	315105-0146		24	WASHER BRB 5,3X10 RFR	
TB/8 0568B TPC, TB/8 0500B TPC (See drawing on pages: 4-118, 12-180)					
140	33150-0000		8	GUIDE STUD	
150	33152-0000		4	STOPPER	
180	246328-0000		4	SPRING	
190	246329-0000		4	SPRING	
205	246332-0000		2	CATCH	
210	247262-0000		2	SPRING BRACKET	
212	545128-0000		2	SPRING BRACKET	
215	247263-0000		8	SPACER	
220	247271-0000		2	LACE	
240	263684-0000		4	SPACER	
250	263693-0000		2	CATCH	
401	312105-0331		8	SCREW M6S ISO 4017 M5X20 A480	
410	312105-0340		8	SCREW M6S ISO 4014 M5X45 A480	
420	312145-0325		8	SCREW ISO 2009 MFS M5X10 A4	
470	315105-0146		16	WASHER BRB 5,3X10 RFR	
TB/8 0568SQ US, TB/8 0500SQ US (See drawing on pages: 4-128, 12-190)					
140	545651-0000		8	GUIDE STUD	
150	33152-0000		8	STOPPER	
180	1037767-0000		4	SPRING RIGHT	
190	1037768-0000		4	SPRING LEFT	
205	593612-0000		2	CATCH	
210	593681-0000		2	SPRING BRACKET	
212	591080-0000		2	SPRING BRACKET	
220	593680-0000		2	LACE	
220	591078-0000		2	LACE	
230	593679-0000		2	LACE	
250	593271-0000		2	CATCH	
401	312105-0331		8	SCREW M6S ISO 4017 M5X20 A480	
402	312105-0333		4	SCREW M6S ISO 4017 M5X25 A480	
405	312105-0327		4	SCREW M6S ISO 4017 M5X12 A480	
412	312115-0337		4	SCREW ISO4762 M5X35 A4 80	
420	312105-0325		8	SCREW M6S ISO 4017 M5X10 A480	
421	312105-0370		4	SCREW M6S ISO 4017 M6X20 A480	
470	315105-0146		18	WASHER BRB 5,3X10 RFR	
480	315105-0153		4	WASHER BRB 6,4X12 RFR	
TB/8 1000B HIFIN TPC (See drawing on pages: 4-116, 12-178)					
010	252808-0000		2	DAMPER LEFT	
020	252809-0000		2	DAMPER RIGHT	
030	255473-0000		2	STOP	
040	255474-0000		2	STOP	
150	251598-0000		4	STOPPER	
155	251597-0000		6	LACE	
401	312105-0331		12	SCREW M6S ISO 4017 M5X20 A480	
402	312105-0333		4	SCREW M6S ISO 4017 M5X25 A480	
430	312155-0329		8	SCREW DIN 7991 MF6S M5X16 A4 70	
440	312812-0314		16	HEXAGON NUT, NY-LOCK M5 A480	
470	315105-0146		16	WASHER BRB 5,3X10 RFR	
TB/8 1000B LOFIN TPC, TB/8 1136B TPC (See drawing on pages: 4-112, 12-174)					
010	252808-0000		2	DAMPER LEFT	
020	252809-0000		2	DAMPER RIGHT	

Machine Type | Group Description | Used-In | Group Number | Page No

SHOCK ABSORBER

Drawing file: 246327-8_1_AA.tif

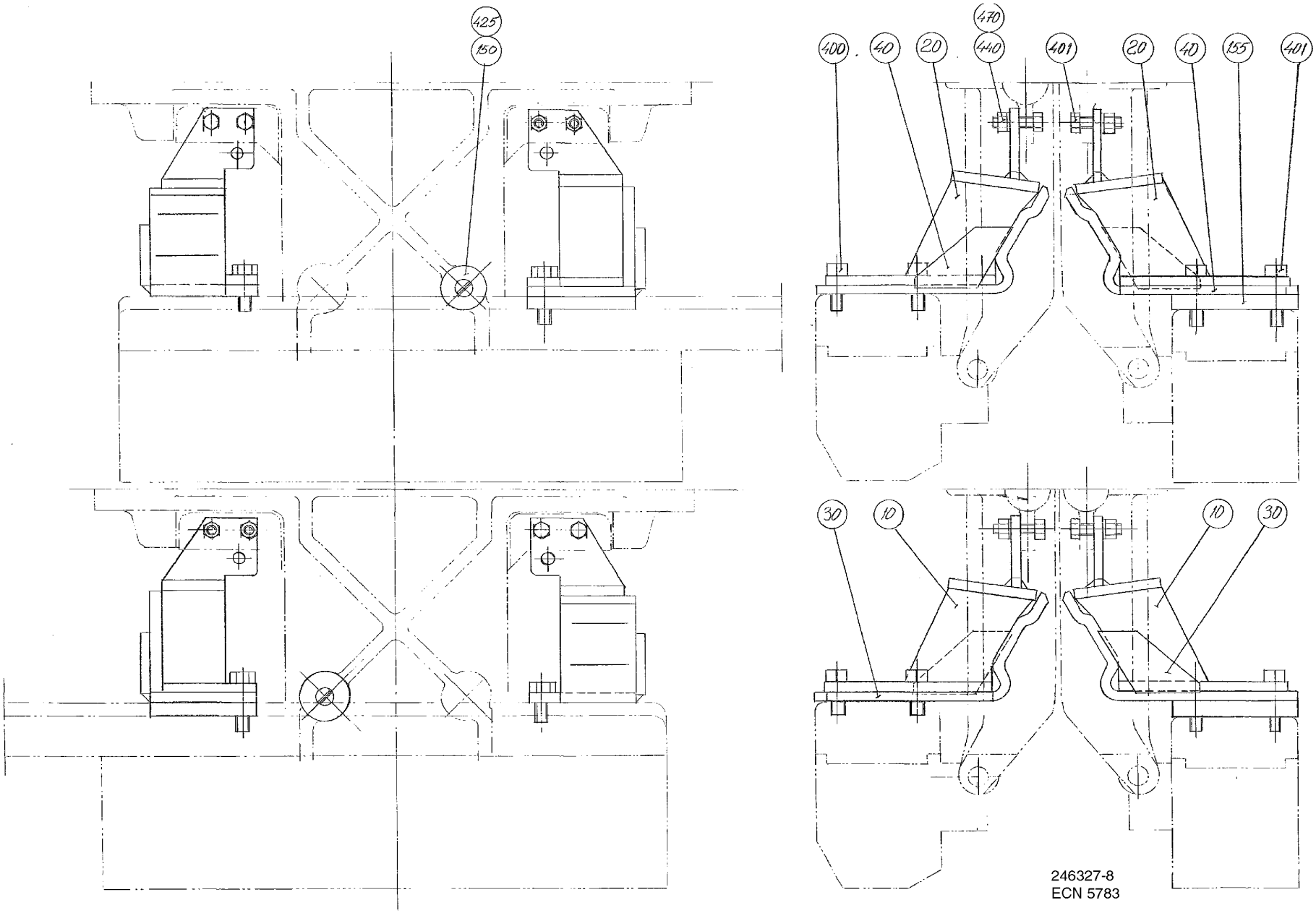

Pos	Part No	UN	Qty	Description	Page No
TB/8 1000B LOFIN TPC, TB/8 1136B TPC (Cont'd) (See drawing on pages: 4-112, 12-174)					
030	255473-0000		2	STOP	
040	255474-0000		2	STOP	
150	251598-0000		4	STOPPER	
155	251597-0000		2	LACE	
400	312105-0329		4	SCREW M6S ISO 4017 M5X16 A480	
401	312105-0331		12	SCREW M6S ISO 4017 M5X20 A480	
430	312155-0329		8	SCREW DIN 7991 MF6S M5X16 A4 70	
440	312812-0314		16	HEXAGON NUT, NY-LOCK M5 A480	
470	315105-0146		16	WASHER BRB 5,3X10 RFR	
TB/8 1000S TPC (See drawing on pages: 4-122, 12-184)					
140	545651-0000		8	GUIDE STUD	
150	1255207-0000		2	STOPPER	
152	1255208-0000		2	STOPPER	
180	1143216-0000		4	SPRING	
190	1143215-0000		4	SPRING	
205	593270-0000		2	CATCH	
212	573993-0000		4	SPRING BRACKET	
220	571298-0000		2	LACE	
230	571297-0000		2	LACE	
240	263684-0000		4	SPACER	
250	593271-0000		2	CATCH	
401	312105-0331		8	SCREW M6S ISO 4017 M5X20 A480	
402	312105-0335		4	SCREW M6S ISO 4014 M5X30 A480	
412	312115-0340		8	SCREW ISO4762 M5X45 A4 80	
420	312105-0325		12	SCREW M6S ISO 4017 M5X10 A480	
470	315105-0146		24	WASHER BRB 5,3X10 RFR	
TB/8 1000SQ US, TB/8 1500B US (See drawing on pages: 4-124, 12-186)					
140	545651-0000		8	GUIDE STUD	
150	33152-0000		4	STOPPER	
180	1143216-0000		4	SPRING	
190	1143215-0000		4	SPRING	
205	594653-0000		2	CATCH	
212	929813-0000		4	SPRING BRACKET	
220	929550-0000		2	LACE	
230	929548-0000		2	LACE	
250	594654-0000		2	CATCH	
401	312105-0331		8	SCREW M6S ISO 4017 M5X20 A480	
402	312105-0335		4	SCREW M6S ISO 4014 M5X30 A480	
412	312115-0341		4	SCREW ISO4762 M5X50 A4 80	
420	312105-0325		8	SCREW M6S ISO 4017 M5X10 A480	
422	312105-0374		4	SCREW M6S ISO 4014 M6X30 A480	
470	315105-0146		20	WASHER BRB 5,3X10 RFR	
480	315105-0153		4	WASHER BRB 6,4X12 RFR	
TB/8 0500S TPC (See drawing on pages: 4-114, 12-176)					
010	499397-0000		2	DAMPER LEFT	
020	499398-0000		2	DAMPER RIGHT	
030	499125-0000		2	STOP	
040	499124-0000		2	STOP	
150	445770-0000		4	STOPPER	
155	251597-0000		2	LACE	
400	312105-0329		4	SCREW M6S ISO 4017 M5X16 A480	
401	312105-0331		12	SCREW M6S ISO 4017 M5X20 A480	
425	312145-0289		4	SCREW ISO 2009 MFS M4X10 A4	
440	312812-0314		8	HEXAGON NUT, NY-LOCK M5 A480	
470	315105-0146		8	WASHER BRB 5,3X10 RFR	
TB/8 0500SQ TPC (See drawing on pages: 4-126, 12-188)					
140	545651-0000		8	GUIDE STUD	
150	33152-0000		4	STOPPER	
180	1037767-0000		4	SPRING RIGHT	
190	1037768-0000		4	SPRING LEFT	
205	593270-0000		2	CATCH	
212	591080-0000		4	SPRING BRACKET	
220	591078-0000		2	LACE	
230	571297-0000		2	LACE	
250	593271-0000		2	CATCH	
401	312105-0331		8	SCREW M6S ISO 4017 M5X20 A480	
402	312105-0335		4	SCREW M6S ISO 4014 M5X30 A480	
405	312105-0327		4	SCREW M6S ISO 4017 M5X12 A480	
412	312115-0337		8	SCREW ISO4762 M5X35 A4 80	
420	312105-0325		8	SCREW M6S ISO 4017 M5X10 A480	
470	315105-0146		20	WASHER BRB 5,3X10 RFR	

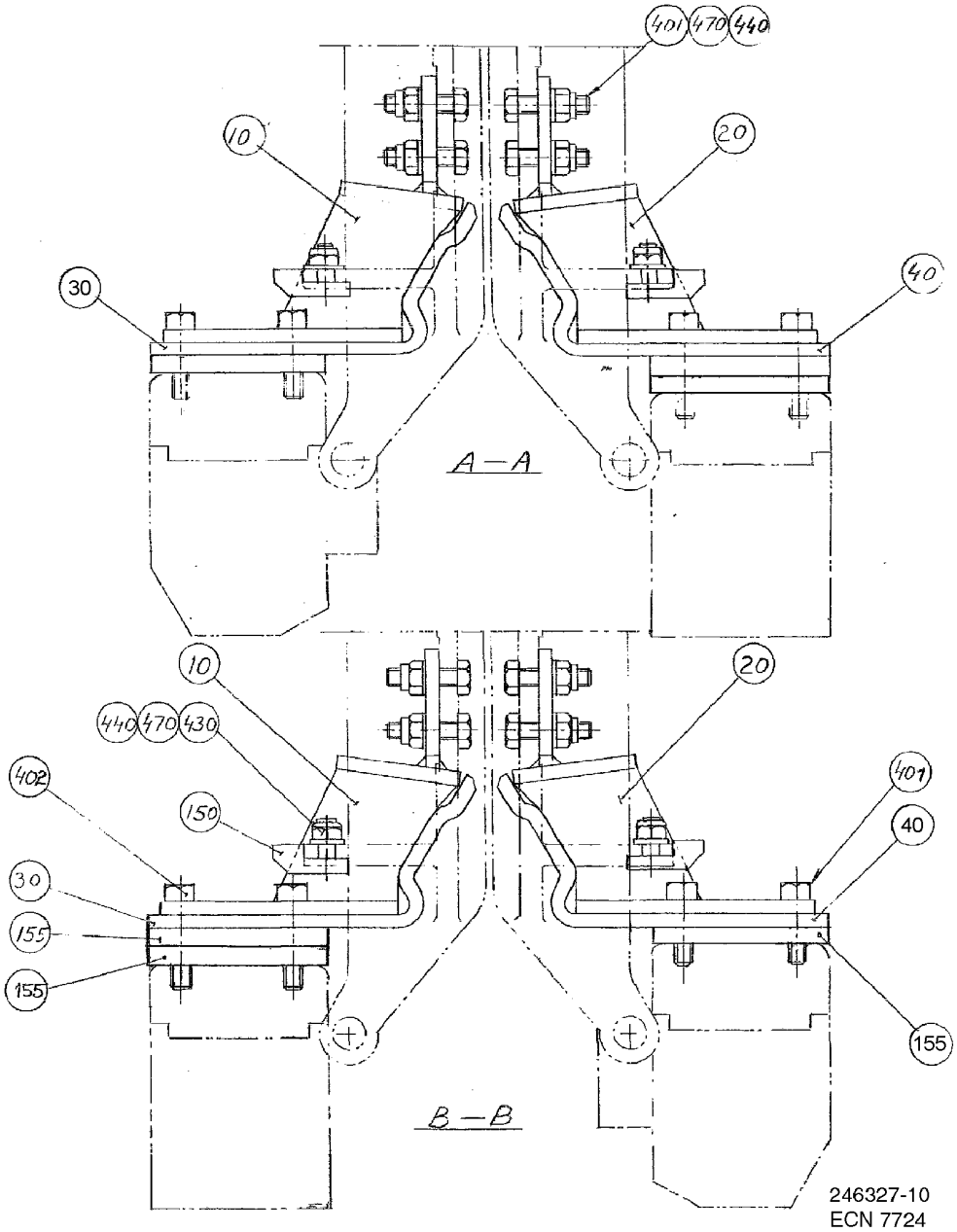
401
470
440
10
20
30
40
A—A
10
20
440
470
430
402
150
401
40
30
155
155
155
B—B
246327-10
ECN 7724

ECM: 72090 - 19981214
Group number: 246327-0400
Assembly Drawing: 246327-10_1_AA

This list covers pages from 4-112 to 4-129

Pos	Part No	UN	Qty	Description	Page No	Pos	Part No	UN	Qty	Description	Page No

SEE PREVIOUS LISTS PAGES: 4-113, 4-115.

Machine Type	Group Description	Used-In	Group Number	Page No

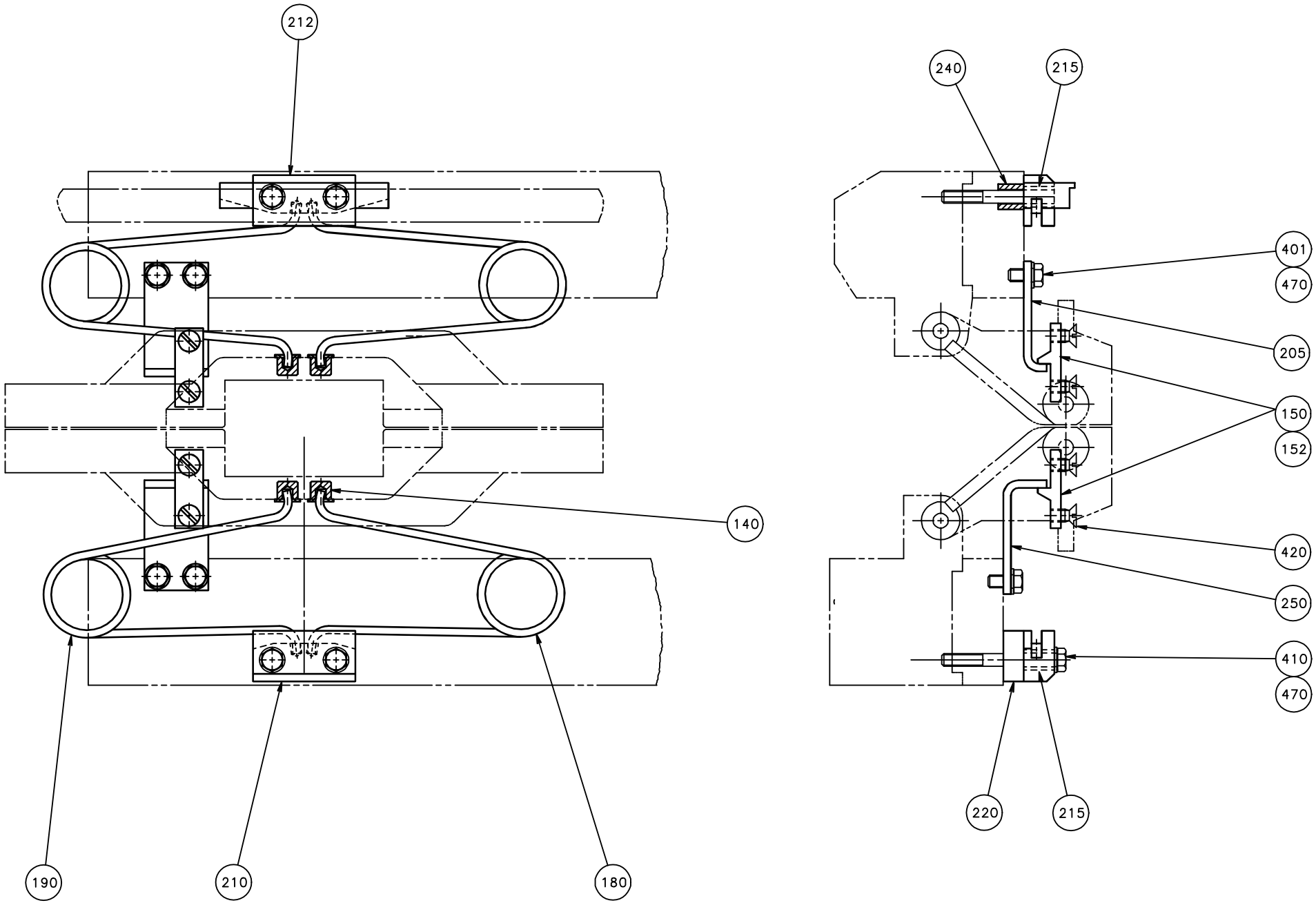
212
140
190
210
180
240
215
401
470
205
150
152
420
250
410
470
220
215

ECM: 72090 - 19981214
Group number: 246327-0400
Assembly Drawing: 246327-11_1_AA

This list covers pages from 4-112 to 4-129

Pos	Part No	UN	Qty	Description	Page No	Pos	Part No	UN	Qty	Description	Page No

SEE PREVIOUS LISTS PAGES: 4-113, 4-115.

Machine Type	Group Description	Used-In	Group Number	Page No

SHOCK ABSORBER

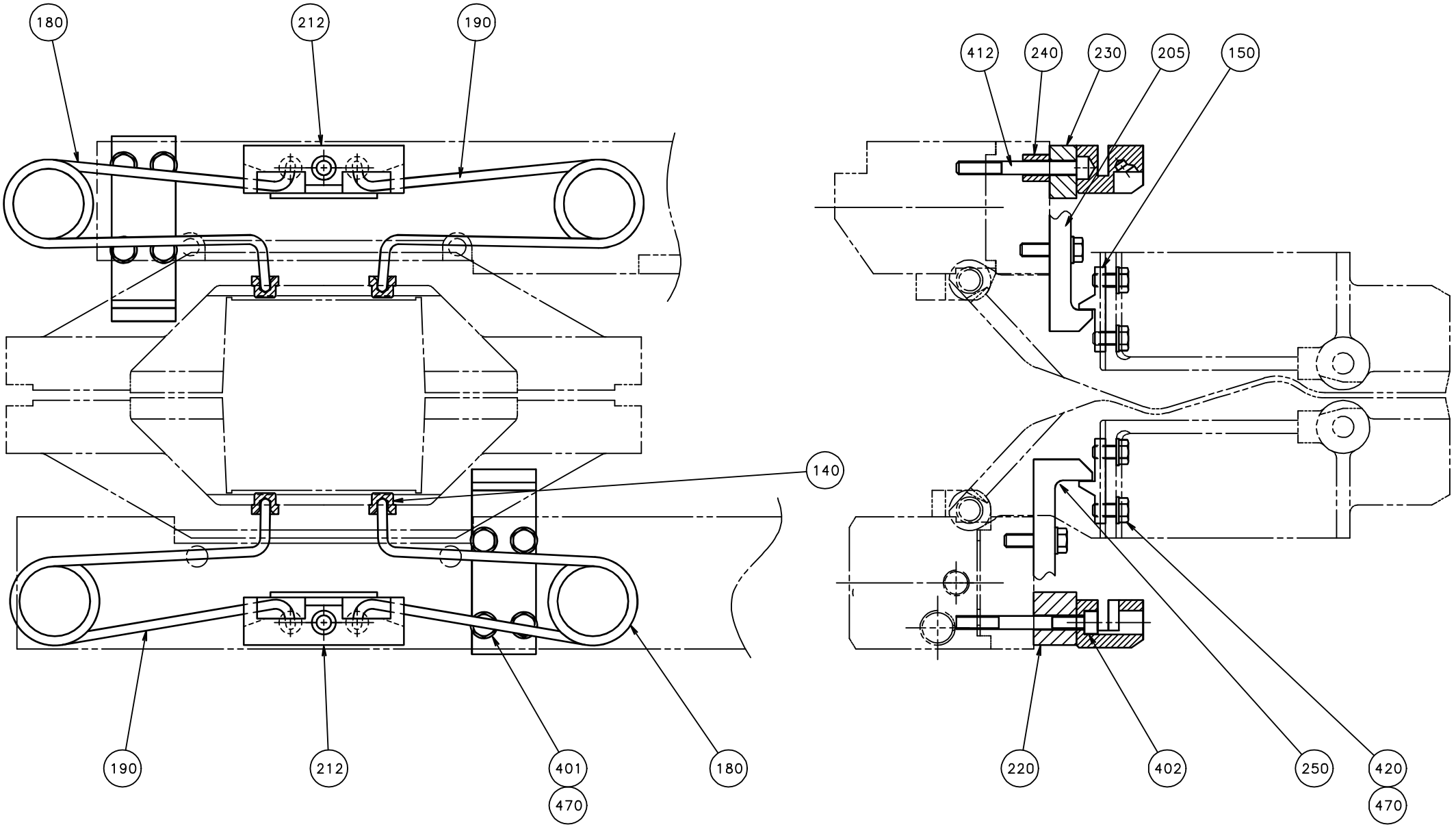

ECM: 72090 - 19981214
Group number: 246327-0400
Assembly Drawing: 246327-16_1_AE

This list covers pages from 4-112 to 4-129

Pos	Part No	UN	Qty	Description	Page No	Pos	Part No	UN	Qty	Description	Page No

SEE PREVIOUS LISTS PAGES: 4-113, 4-115.

Machine Type	Group Description	Used-In	Group Number	Page No

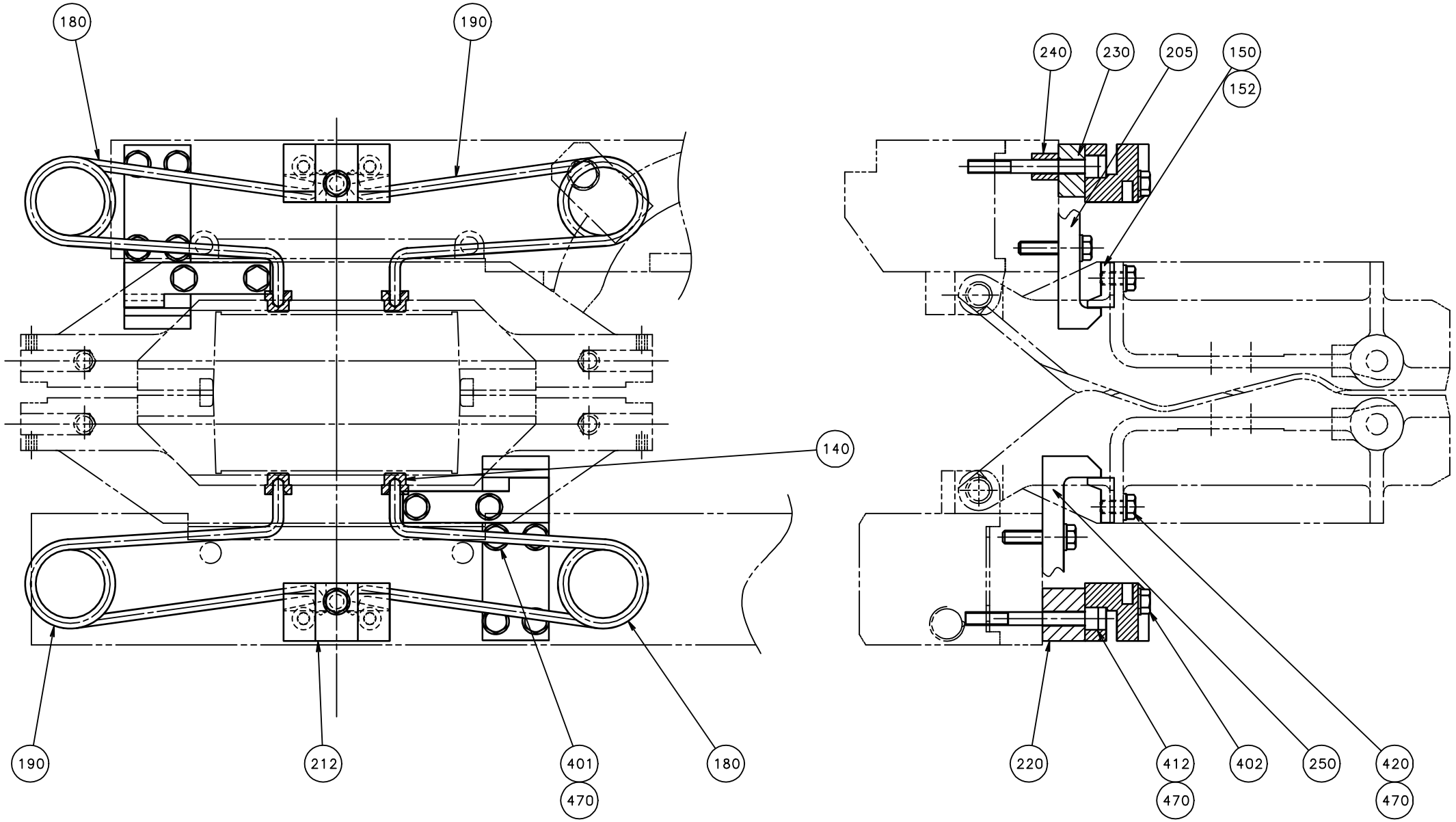
180
190
140
190
212
401
470
180
240
230
205
150
152
220
412
470
402
250
420
470

ECM: 72090 - 19981214
Group number: 246327-0400
Assembly Drawing: 246327-18_1_AA

This list covers pages from 4-112 to 4-129

Pos	Part No	UN	Qty	Description	Page No	Pos	Part No	UN	Qty	Description	Page No

SEE PREVIOUS LISTS PAGES: 4-113, 4-115.

Machine Type	Group Description	Used-In	Group Number	Page No

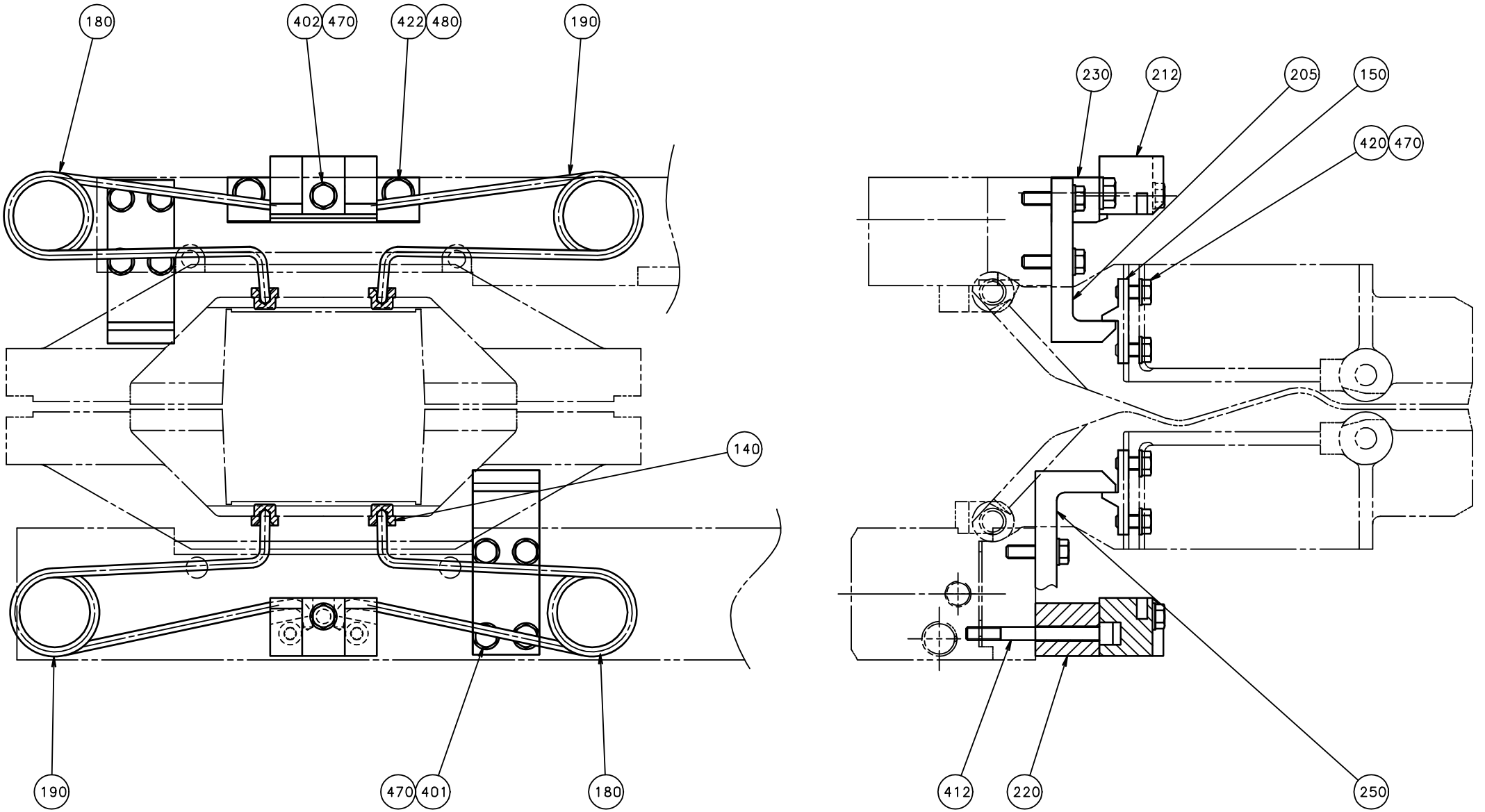
180
402
470
422
480
190
140
190
470
401
180
230
212
205
150
420
470
412
220
250

ECM: 72090 - 19981214
Group number: 246327-0400
Assembly Drawing: 246327-19_1_AC

This list covers pages from 4-112 to 4-129

Pos	Part No	UN	Qty	Description	Page No	Pos	Part No	UN	Qty	Description	Page No

SEE PREVIOUS LISTS PAGES: 4-113, 4-115.

SHOCK ABSORBER

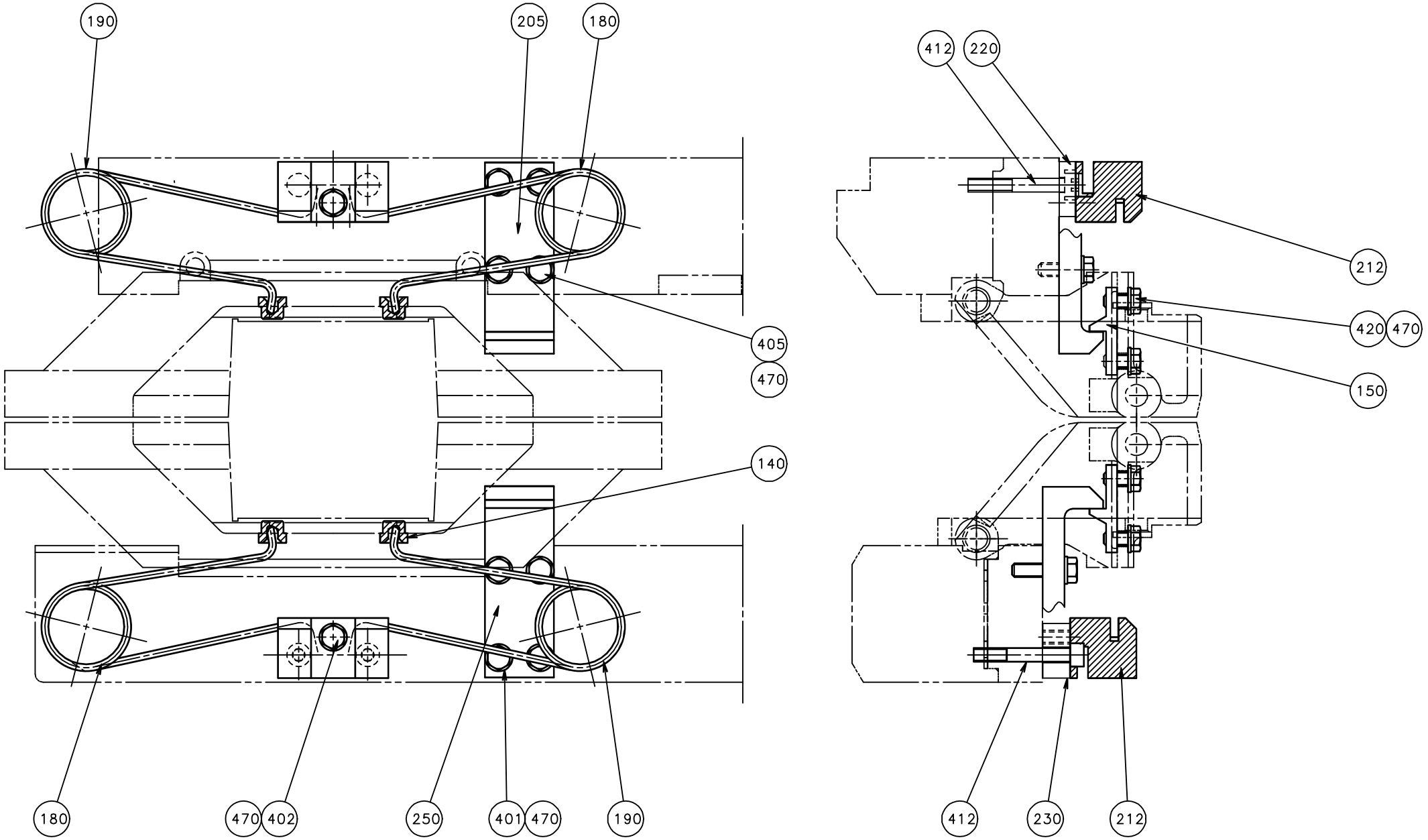

Pos	Part No	UN	Qty	Description	Page No	Pos	Part No	UN	Qty	Description	Page No

SEE PREVIOUS LISTS PAGES: 4-113, 4-115.

SHOCK ABSORBER

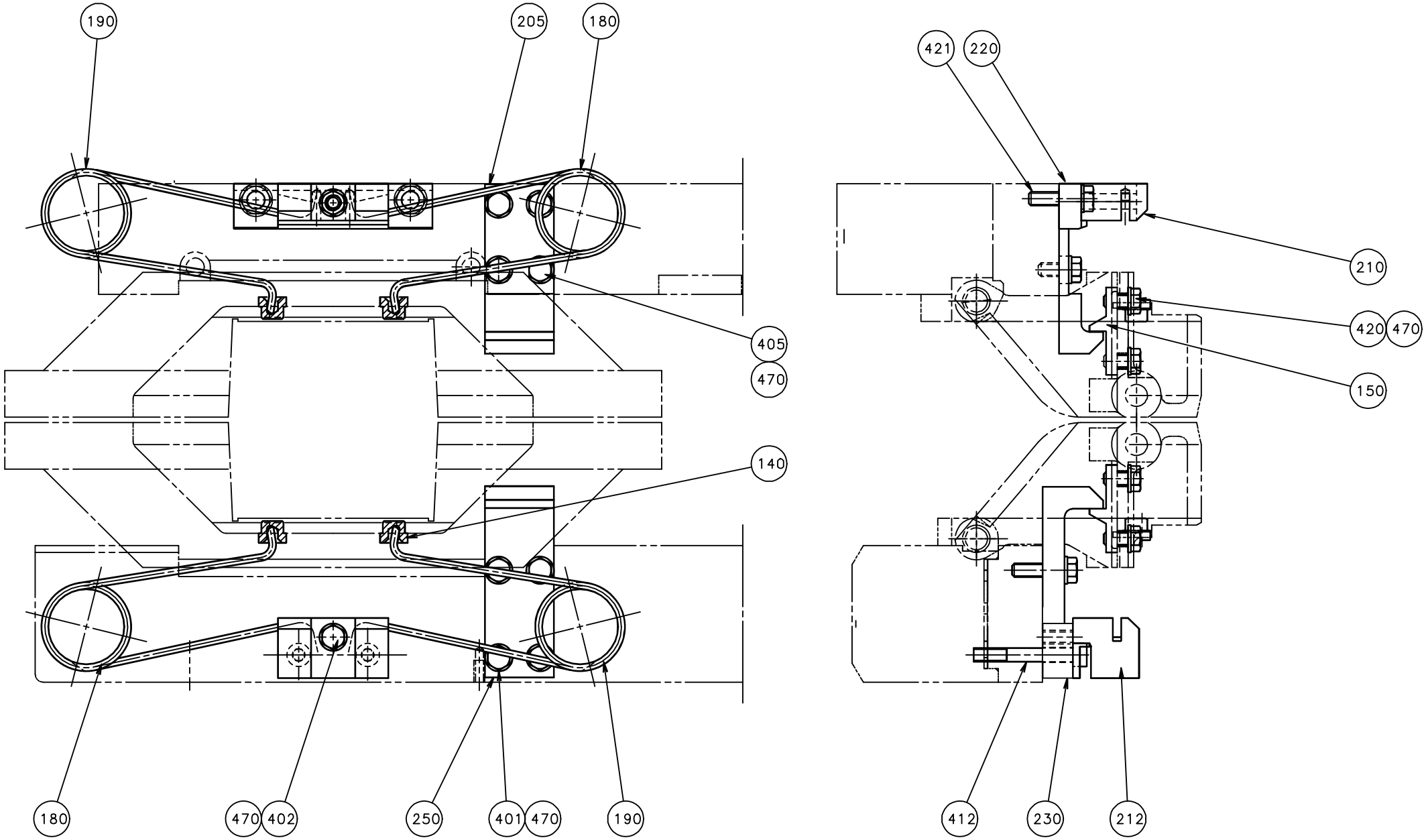

Pos	Part No	UN	Qty	Description	Page No	Pos	Part No	UN	Qty	Description	Page No

SEE PREVIOUS LISTS PAGES: 4-113, 4-115.

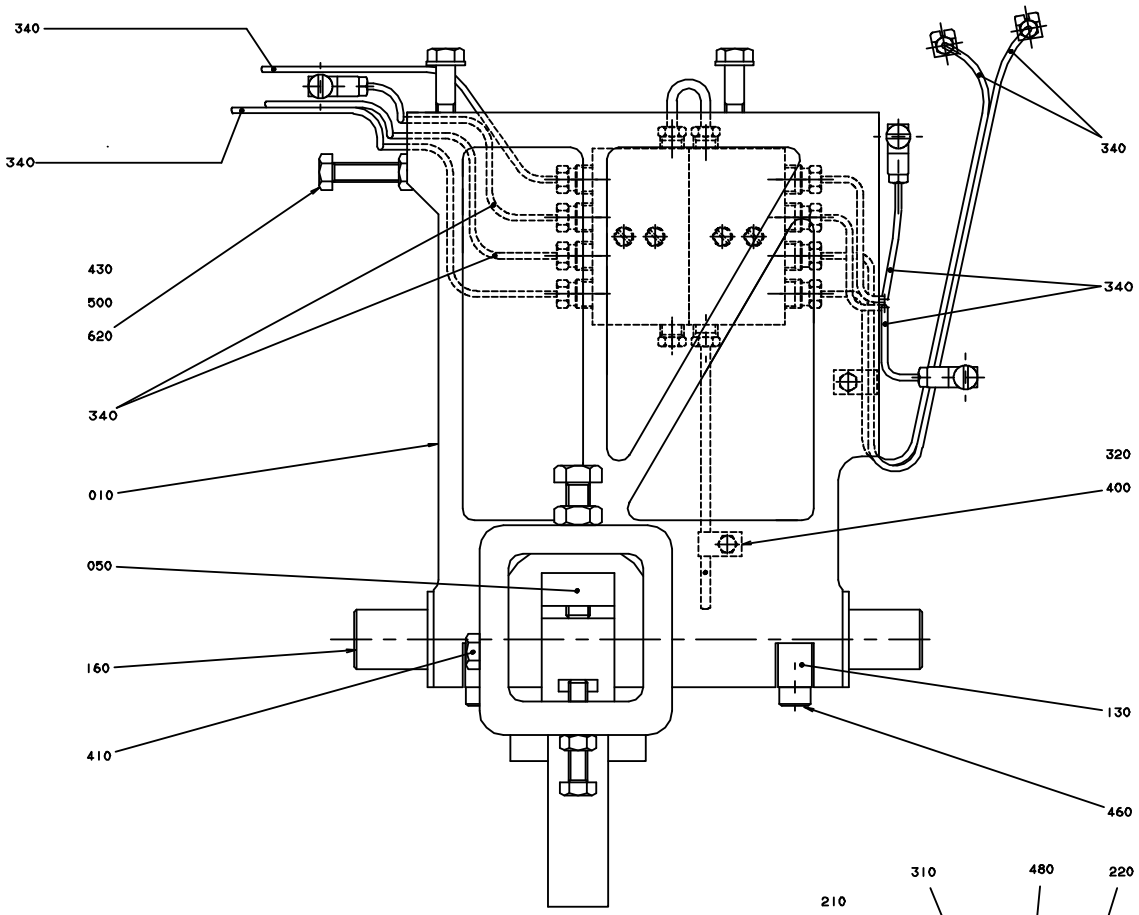
340
340
340
430
500
620
340
340
010
320
400
050
160
410
130
460

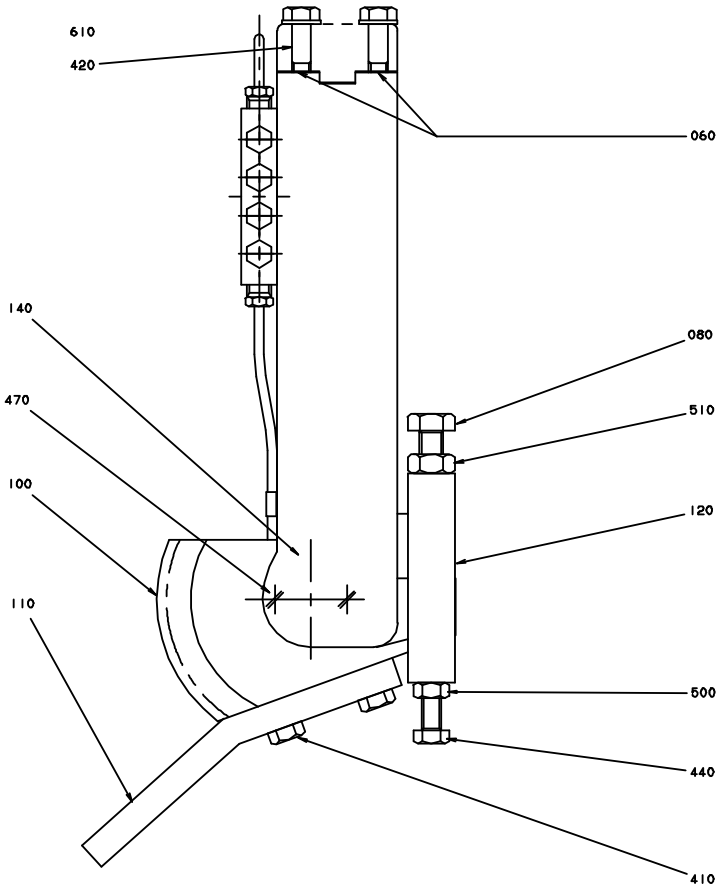
610
420
060
140
080
470
510
100
120
110
500
440
410

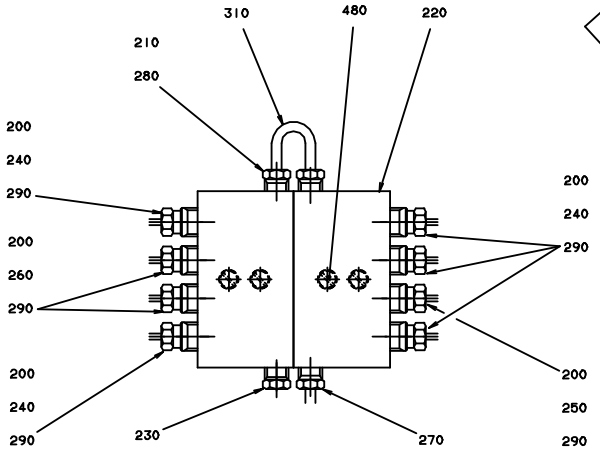
310
480
220
210
280
200
240
290
200
260
290
200
240
290
200
240
290
200
250
290
230
270

ECM: 86998 - 20001215
Group number: 593750-0100
Assembly Drawing: 593750-1_1_AB

This list covers pages from 4-130 to 4-133

Pos	Part No	UN	Qty	Description	Page No
1000SQ US, TPC, 0500SQ US (See drawing on page: 4-130)					
200	90028-0020		8	CONE TUBE 2,5MM	
220	90032-0039		2	BLOCK 4 WAYS	
240	90092-0052		5	METERING VALVE 10 MM3	
290	90134-0039		8	BUSHING VALVE CONNECTION 2,5 MM	
1500B US, 0568SQ US (See drawing on page: 4-132)					
200	90028-0020		9	CONE TUBE 2,5MM	
220	90032-0039		1	BLOCK 4 WAYS	
225	90032-0040		1	BLOCK 6 WAYS	
240	90092-0052		6	METERING VALVE 10 MM3	
290	90134-0039		10	BUSHING VALVE CONNECTION 2,5 MM	
295	90134-0052		1	PLUG DOSING BLOCK	
Common Parts					
010	538401-0000		1	ARM RIGHT	
050	14729-0000		1	NUT	
060	26425-0000		6	LACE	
080	32957-0000		1	SCREW	
100	232238-0000		1	TOOTH PART	
110	239476-0000		1	ROD	
120	267754-0000		1	BOW CLAMP	
130	533818-0000		2	HOLDER	
140	536704-0000		2	WASHER	
160	538399-0000		1	SHAFT	
210	90028-0021		3	CONE TUBE 4 MM	
230	90087-0019		1	PLUG M10X1 STAINLESS	
250	90092-0053		1	METERING VALVE 30 MM3	
260	90092-0054		2	METERING VALVE 50 MM3	
270	90134-0031		1	SLEEVE FOR PLASTIC TUBE	
280	90134-0038		3	BUSHING/NUT INLET/OUTLET 4 MM	
310	90266-0165	MM	100	BRASS PIPE	
320	90165-0056		2	PIPE CLIP FOR TUBE D=4 MM	
330	90166-0109	MM	400	TUBE 4 MM PA,TRANSP.	
340	90166-0143	MM	2500	TUBE 2,5 MM PA,TRANSP.	
400	312105-0287		2	SCREW M6S ISO 4017 M4X8 A470	
410	312105-0453		3	SCREW M6S ISO 4017 M8X25 A480	
420	312105-0457		1	SCREW M6S ISO 4014 M8X35 A480	
430	312105-0466		1	SCREW M6S ISO 4014 M8X75 A480	
440	312109-0459		1	SCREW M6S ISO 4017 M8X40 A480	
450	312115-0289		2	SCREW ISO4762 M4X10 A4 80	
460	312115-0455		2	SCREW ISO4762 M8X30 A4 80	
470	312145-0285		4	SCREW ISO 2009 MFS M4X6 A4	
480	312145-0297		4	SCREW ISO 2009 MFS M4X25 A4	
500	312605-0318		2	HEXAGON NUT, M6M M8 A280	
510	312635-0320		1	NUT M6M 10X1 STAINLESS A2 80	
600	315105-0136		2	WASHER BRB 4,3X9 RFR	
610	315105-0165		4	WASHER BRB 8,4X16 RFR	
620	315115-0165		1	WASHER PLAIN, TBRB 8,4/16 H=3	

Machine Type | Group Description | Used-In | Group Number | Page No

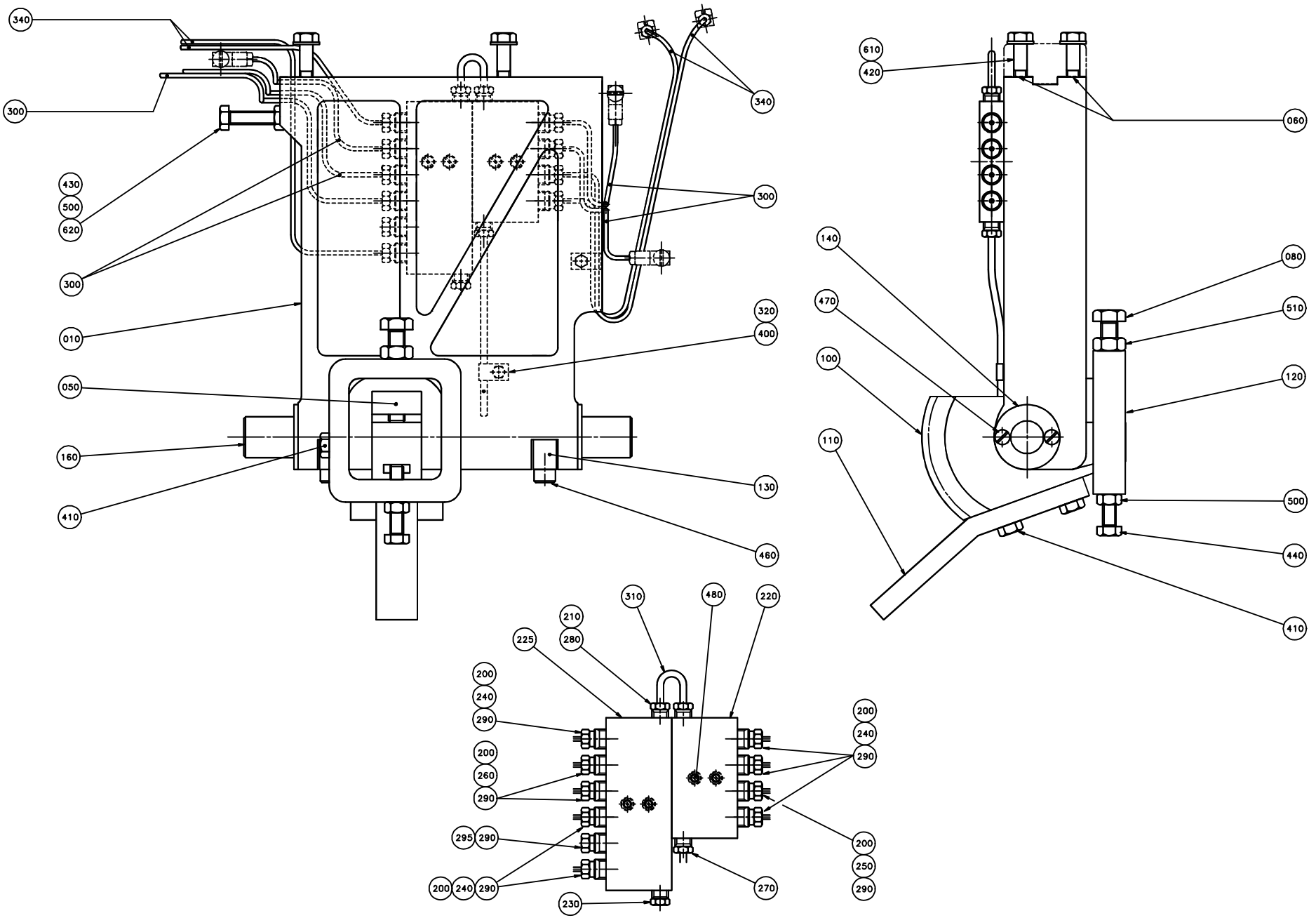
340
300
430
500
620
300
010
050
160
410
340
300
320
400
130
460
610
420
060
140
470
100
110
080
510
120
500
440
410
310
480
220
210
280
225
200
240
290
200
260
290
295
290
200
240
290
200
240
290
200
250
290
270
230

ECM: 86998 - 20001215
Group number: 593750-0100
Assembly Drawing: 593750-2_1_AA

This list covers pages from 4-130 to 4-133

Pos	Part No	UN	Qty	Description	Page No
1000SQ US, TPC, 0500SQ US (See drawing on page: 4-130)					
200	90028-0020		8	CONE TUBE 2,5MM	
220	90032-0039		2	BLOCK 4 WAYS	
240	90092-0052		5	METERING VALVE 10 MM3	
290	90134-0039		8	BUSHING VALVE CONNECTION 2,5 MM	
1500B US, 0568SQ US (See drawing on page: 4-132)					
200	90028-0020		9	CONE TUBE 2,5MM	
220	90032-0039		1	BLOCK 4 WAYS	
225	90032-0040		1	BLOCK 6 WAYS	
240	90092-0052		6	METERING VALVE 10 MM3	
290	90134-0039		10	BUSHING VALVE CONNECTION 2,5 MM	
295	90134-0052		1	PLUG DOSING BLOCK	
Common Parts					
010	538401-0000		1	ARM RIGHT	
050	14729-0000		1	NUT	
060	26425-0000		6	LACE	
080	32957-0000		1	SCREW	
100	232238-0000		1	TOOTH PART	
110	239476-0000		1	ROD	
120	267754-0000		1	BOW CLAMP	
130	533818-0000		2	HOLDER	
140	536704-0000		2	WASHER	
160	538399-0000		1	SHAFT	
210	90028-0021		3	CONE TUBE 4 MM	
230	90087-0019		1	PLUG M10X1 STAINLESS	
250	90092-0053		1	METERING VALVE 30 MM3	
260	90092-0054		2	METERING VALVE 50 MM3	
270	90134-0031		1	SLEEVE FOR PLASTIC TUBE	
280	90134-0038		3	BUSHING/NUT INLET/OUTLET 4 MM	
310	90266-0165	MM	100	BRASS PIPE	
320	90165-0056		2	PIPE CLIP FOR TUBE D=4 MM	
330	90166-0109	MM	400	TUBE 4 MM PA,TRANSP.	
340	90166-0143	MM	2500	TUBE 2,5 MM PA,TRANSP.	
400	312105-0287		2	SCREW M6S ISO 4017 M4X8 A470	
410	312105-0453		3	SCREW M6S ISO 4017 M8X25 A480	
420	312105-0457		1	SCREW M6S ISO 4014 M8X35 A480	
430	312105-0466		1	SCREW M6S ISO 4014 M8X75 A480	
440	312109-0459		1	SCREW M6S ISO 4017 M8X40 A480	
450	312115-0289		2	SCREW ISO4762 M4X10 A4 80	
460	312115-0455		2	SCREW ISO4762 M8X30 A4 80	
470	312145-0285		4	SCREW ISO 2009 MFS M4X6 A4	
480	312145-0297		4	SCREW ISO 2009 MFS M4X25 A4	
500	312605-0318		2	HEXAGON NUT, M6M M8 A280	
510	312635-0320		1	NUT M6M 10X1 STAINLESS A2 80	
600	315105-0136		2	WASHER BRB 4,3X9 RFR	
610	315105-0165		4	WASHER BRB 8,4X16 RFR	
620	315115-0165		1	WASHER PLAIN, TBRB 8,4/16 H=3	

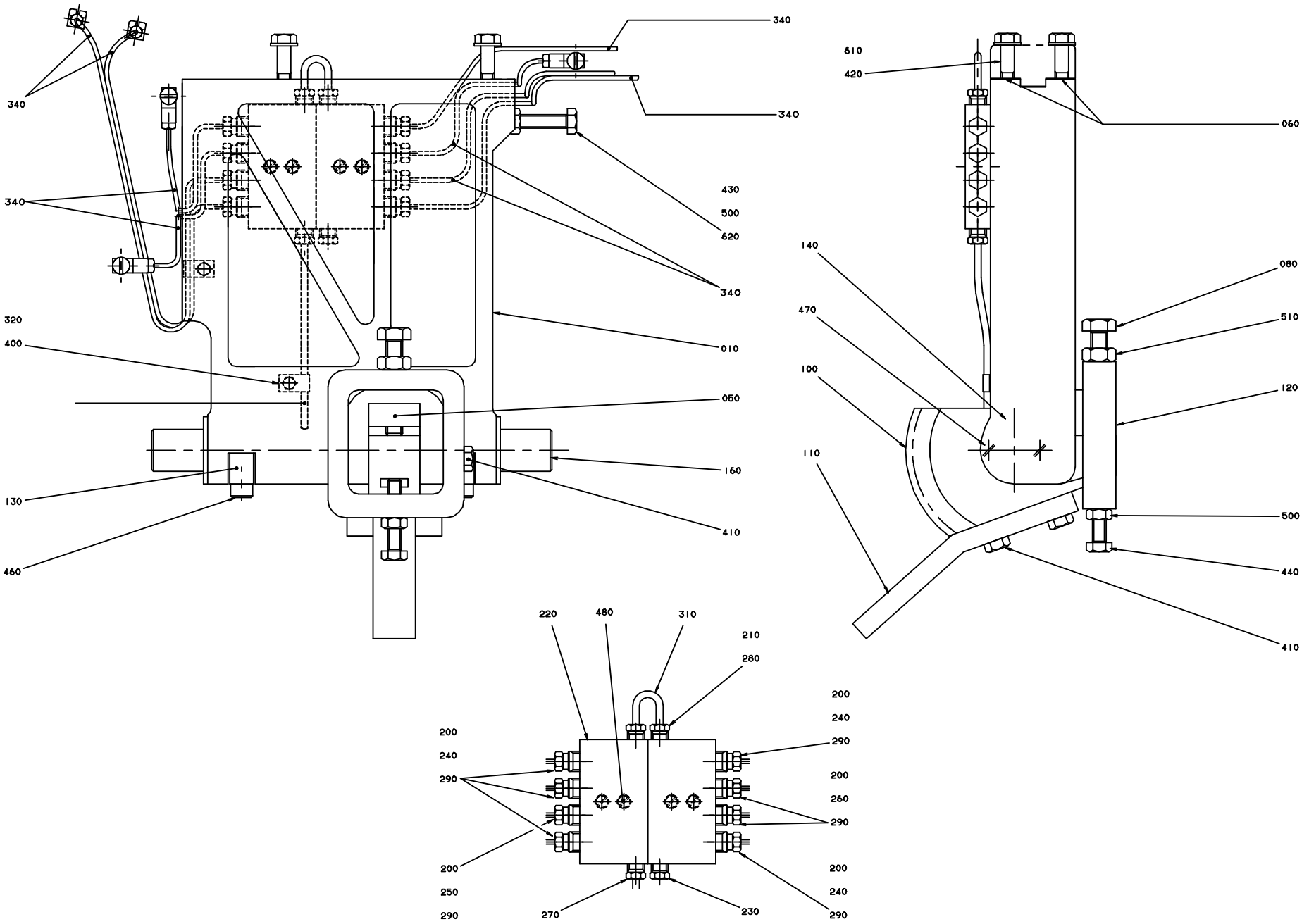
340
340
340
340
430
500
620
340
320
400
010
050
160
130
410
460
610
420
060
140
080
470
510
100
120
110
500
440
410
220
480
310
210
280
200
240
290
200
260
290
200
240
290
200
250
290
270
230
200
240
290

ECM: 86995 - 20001215
Group number: 246499-0600
Assembly Drawing: 246499-5_1_AC

This list covers pages from 4-134 to 4-137

Pos	Part No	UN	Qty	Description	Page No
1000SQ US, TPC, 0500SQ US, 0568SQ US (See drawing on page: 4-134)					
200	90028-0020		8	CONE TUBE 2,5MM	
220	90032-0039		2	BLOCK 4 WAYS	
240	90092-0052		5	METERING VALVE 10 MM3	
290	90134-0039		8	BUSHING VALVE CONNECTION 2,5 MM	
1500B US (See drawing on page: 4-136)					
200	90028-0020		9	CONE TUBE 2,5MM	
220	90032-0039		1	BLOCK 4 WAYS	
225	90032-0040		1	BLOCK 6 WAYS	
240	90092-0052		6	METERING VALVE 10 MM3	
290	90134-0039		10	BUSHING VALVE CONNECTION 2,5 MM	
295	90134-0052		1	PLUG DOSING BLOCK	
Common Parts					
010	538400-0000		1	ARM LEFT	
050	14729-0000		1	NUT	
060	26425-0000		6	LACE	
080	32957-0000		1	SCREW	
100	232238-0000		1	TOOTH PART	
110	239476-0000		1	ROD	
120	267754-0000		1	BOW CLAMP	
130	533818-0000		2	HOLDER	
140	536704-0000		2	WASHER	
160	538399-0000		1	SHAFT	
210	90028-0021		3	CONE TUBE 4 MM	
230	90087-0019		1	PLUG M10X1 STAINLESS	
250	90092-0053		1	METERING VALVE 30 MM3	
260	90092-0054		2	METERING VALVE 50 MM3	
270	90134-0031		1	SLEEVE FOR PLASTIC TUBE	
280	90134-0038		3	BUSHING/NUT INLET/OUTLET 4 MM	
310	90266-0165	MM	100	BRASS PIPE	
320	90165-0056		2	PIPE CLIP FOR TUBE D=4 MM	
330	90166-0109	MM	400	TUBE 4 MM PA,TRANSP.	
340	90166-0143	MM	2500	TUBE 2,5 MM PA,TRANSP.	
400	312105-0287		2	SCREW M6S ISO 4017 M4X8 A470	
410	312105-0453		3	SCREW M6S ISO 4017 M8X25 A480	
420	312105-0457		1	SCREW M6S ISO 4014 M8X35 A480	
430	312105-0466		1	SCREW M6S ISO 4014 M8X75 A480	
440	312109-0459		1	SCREW M6S ISO 4017 M8X40 A480	
450	312115-0289		2	SCREW ISO4762 M4X10 A4 80	
460	312115-0455		2	SCREW ISO4762 M8X30 A4 80	
470	312145-0285		4	SCREW ISO 2009 MFS M4X6 A4	
480	312145-0297		4	SCREW ISO 2009 MFS M4X25 A4	
500	312605-0318		2	HEXAGON NUT, M6M M8 A280	
510	312635-0320		1	NUT M6M 10X1 STAINLESS A2 80	
600	315105-0136		2	WASHER BRB 4,3X9 RFR	
610	315105-0165		4	WASHER BRB 8,4X16 RFR	
620	315115-0165		1	WASHER PLAIN, TBRB 8,4/16 H=3	

Machine Type | Group Description | Used-In | Group Number | Page No

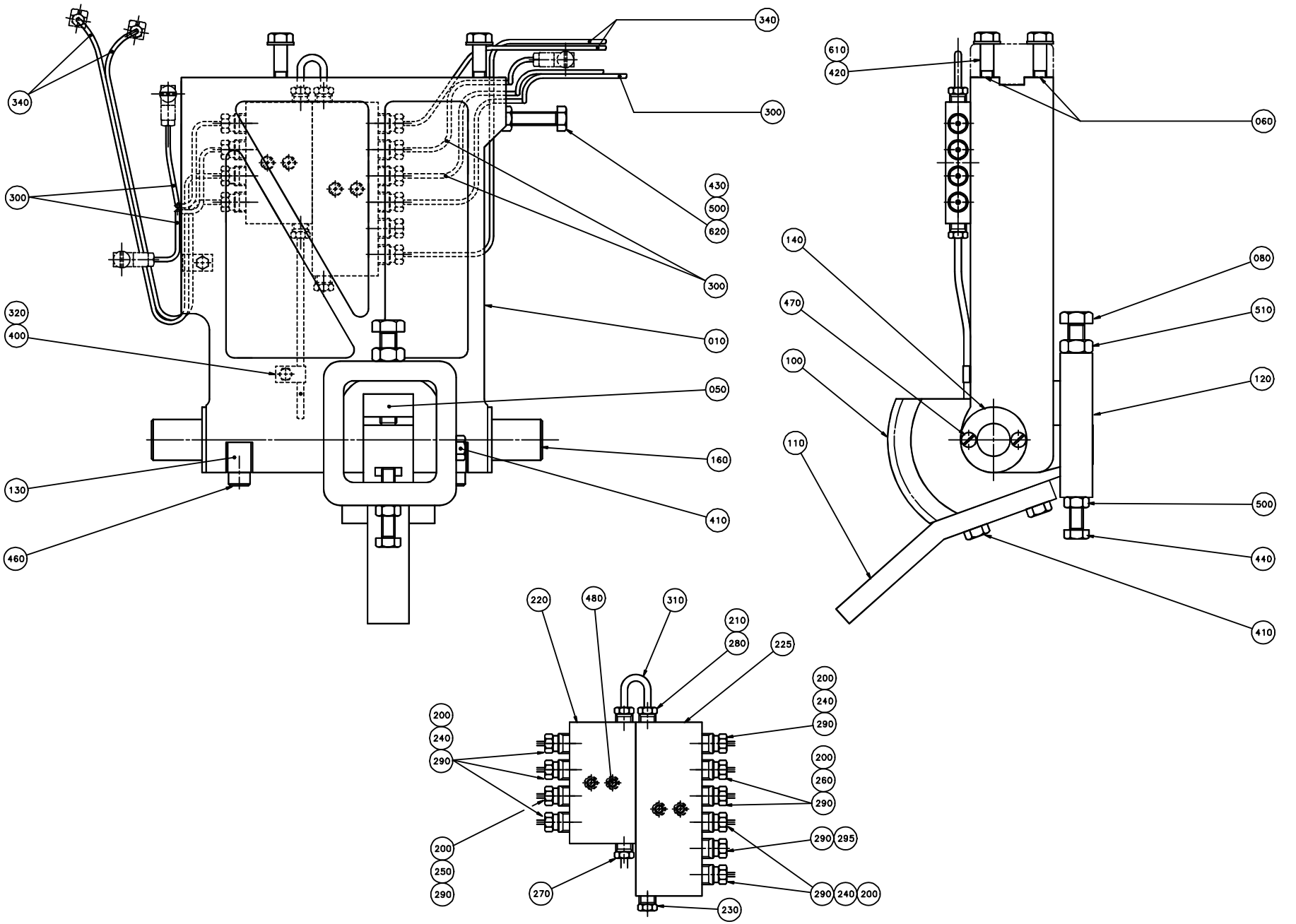
340
340
300
300
430
500
620
300
320
400
010
050
160
130
410
460
610
420
060
140
080
470
510
100
120
110
500
440
410
220
480
310
210
280
225
200
240
290
200
260
290
290
295
290
240
200
200
240
290
200
250
290
270
230

ECM: 86995 - 20001215
Group number: 246499-0600
Assembly Drawing: 246499-6_1_AA

This list covers pages from 4-134 to 4-137

Pos	Part No	UN	Qty	Description	Page No
1000SQ US, TPC, 0500SQ US, 0568SQ US (See drawing on page: 4-134)					
200	90028-0020		8	CONE TUBE 2,5MM	
220	90032-0039		2	BLOCK 4 WAYS	
240	90092-0052		5	METERING VALVE 10 MM3	
290	90134-0039		8	BUSHING VALVE CONNECTION 2,5 MM	
1500B US (See drawing on page: 4-136)					
200	90028-0020		9	CONE TUBE 2,5MM	
220	90032-0039		1	BLOCK 4 WAYS	
225	90032-0040		1	BLOCK 6 WAYS	
240	90092-0052		6	METERING VALVE 10 MM3	
290	90134-0039		10	BUSHING VALVE CONNECTION 2,5 MM	
295	90134-0052		1	PLUG DOSING BLOCK	
Common Parts					
010	538400-0000		1	ARM LEFT	
050	14729-0000		1	NUT	
060	26425-0000		6	LACE	
080	32957-0000		1	SCREW	
100	232238-0000		1	TOOTH PART	
110	239476-0000		1	ROD	
120	267754-0000		1	BOW CLAMP	
130	533818-0000		2	HOLDER	
140	536704-0000		2	WASHER	
160	538399-0000		1	SHAFT	
210	90028-0021		3	CONE TUBE 4 MM	
230	90087-0019		1	PLUG M10X1 STAINLESS	
250	90092-0053		1	METERING VALVE 30 MM3	
260	90092-0054		2	METERING VALVE 50 MM3	
270	90134-0031		1	SLEEVE FOR PLASTIC TUBE	
280	90134-0038		3	BUSHING/NUT INLET/OUTLET 4 MM	
310	90266-0165	MM	100	BRASS PIPE	
320	90165-0056		2	PIPE CLIP FOR TUBE D=4 MM	
330	90166-0109	MM	400	TUBE 4 MM PA,TRANSP.	
340	90166-0143	MM	2500	TUBE 2,5 MM PA,TRANSP.	
400	312105-0287		2	SCREW M6S ISO 4017 M4X8 A470	
410	312105-0453		3	SCREW M6S ISO 4017 M8X25 A480	
420	312105-0457		1	SCREW M6S ISO 4014 M8X35 A480	
430	312105-0466		1	SCREW M6S ISO 4014 M8X75 A480	
440	312109-0459		1	SCREW M6S ISO 4017 M8X40 A480	
450	312115-0289		2	SCREW ISO4762 M4X10 A4 80	
460	312115-0455		2	SCREW ISO4762 M8X30 A4 80	
470	312145-0285		4	SCREW ISO 2009 MFS M4X6 A4	
480	312145-0297		4	SCREW ISO 2009 MFS M4X25 A4	
500	312605-0318		2	HEXAGON NUT, M6M M8 A280	
510	312635-0320		1	NUT M6M 10X1 STAINLESS A2 80	
600	315105-0136		2	WASHER BRB 4,3X9 RFR	
610	315105-0165		4	WASHER BRB 8,4X16 RFR	
620	315115-0165		1	WASHER PLAIN, TBRB 8,4/16 H=3	

Machine Type | Group Description | Used-In | Group Number | Page No

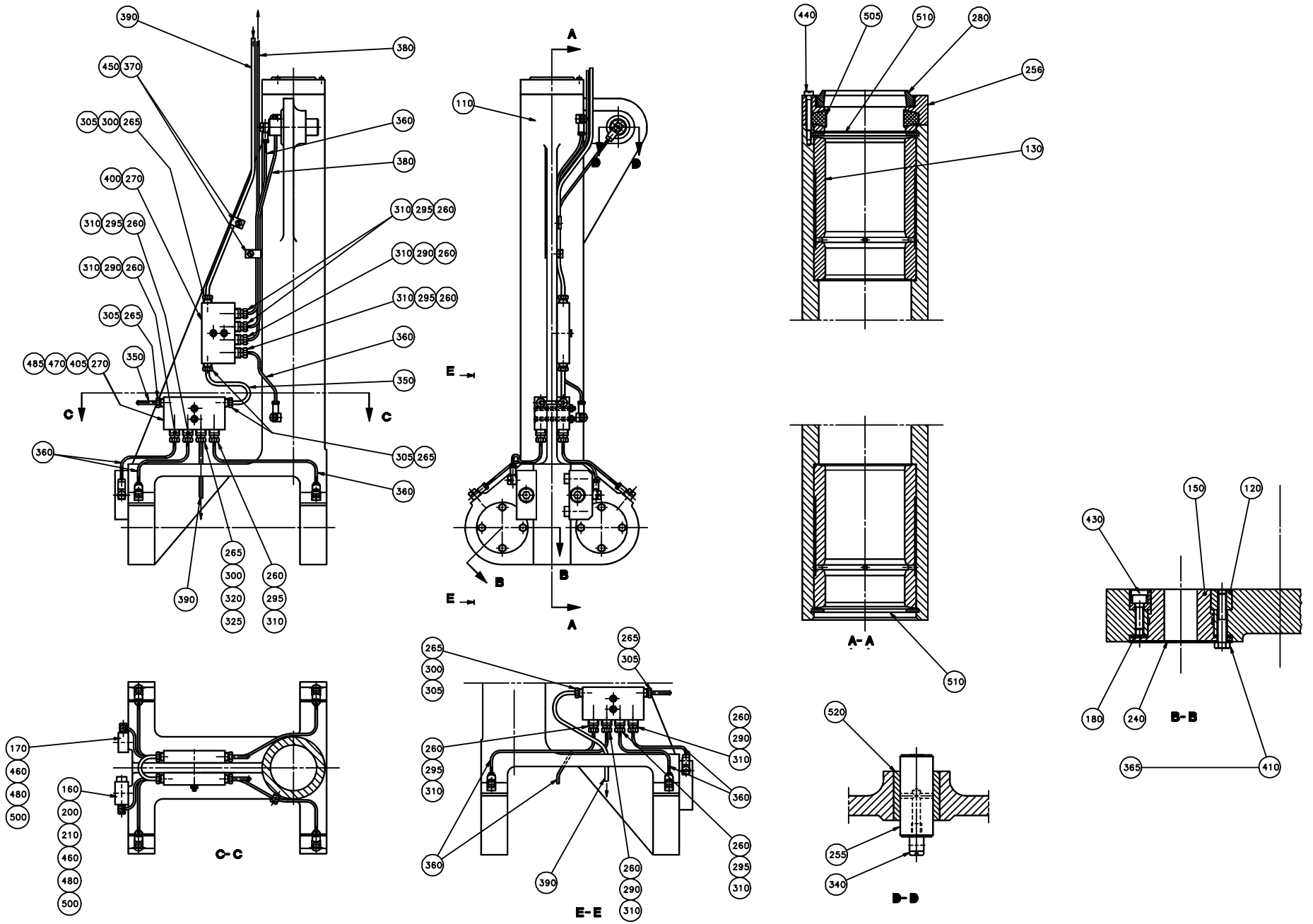
390
380
450
370
305
300
265
360
380
400
270
310
295
260
310
290
260
310
295
260
310
290
260
305
265
360
485
470
405
270
350
350
C
C
360
305
265
360
265
300
320
325
390
260
295
310
A
110
B
B
E
E
B
A
440
505
510
280
256
130
A-A
510
150
120
430
180
240
B-B
365
410
520
255
340
D-D
170
460
480
500
160
200
210
460
480
500
C-C
265
300
305
265
305
260
290
310
360
260
295
310
360
390
260
290
310
260
295
310
E-E

ECM: 191138 - 20041104
Group number: 593749-0100
Assembly Drawing: 593749-1_1_AA

Pos	Part No	UN	Qty	Description	Page No
-					
110	243951-0000		1	YOKE	
120	36753-0000		4	RING	
130	243943-0000		2	BUSHING	
150	246513-0000		4	BEARING	
160	20494-0000		2	COMPRESSION SPRING	
170	26760-0000		1	LOCATING PIECE	
180	29886-0000		4	LACE	
200	31837-0000		1	SPRING HOUSING	
210	31838-0000		2	PLUNGER	
240	239874-0000		4	WASHER	
255	247112-0000		1	SHAFT	
256	263509-0000		1	LID	
260	90028-0020		11	CONE TUBE 2,5MM	
265	90028-0021		7	CONE TUBE 4 MM	
270	90032-0039		3	BLOCK 4 WAYS	
280	90091-0080		1	SCRAPER 48X60X10 MM	
290	90092-0052		4	METERING VALVE 10 MM3	
295	90092-0053		7	METERING VALVE 30 MM3	
300	90134-0031		3	SLEEVE FOR PLASTIC TUBE	
305	90134-0038		6	BUSHING/NUT INLET/OUTLET 4 MM	
310	90134-0039		11	BUSHING VALVE CONNECTION 2,5 MM	
320	90134-0040		1	BUSHING VALVE CONNECTION 4 MM	
325	90134-0051		1	SPACING COLLAR DOSING BLOCK	
340	90134-0058		9	CONNECTION	
350	90151-0001	MM	200	BRASS PIPE DI=2,6 MM	
360	90266-0019	MM	1400	PIPE	
365	90157-0016	ML	1	LOCKING FLUID LOCTITE 242 50 ML	
370	90165-0060		4	PIPE CLIP FOR TUBE D=5 MM	
380	90166-0143	MM	900	TUBE 2,5 MM PA,TRANSP.	
390	90166-0109	MM	500	TUBE 4 MM PA,TRANSP.	
395	312105-0287		2	SCREW M6S ISO 4017 M4X8 A470	
400	312105-0295		2	SCREW M6S ISO 4017 M4X20 A470	
405	312145-0305		2	SCREW ISO 2009 MFS M4X50 A4	
410	312105-0335		16	SCREW M6S ISO 4014 M5X30 A480	
430	312115-0329		4	SCREW ISO4762 M5X16 A4 80	
440	312125-0232		3	SCREW ISO 1207 M3X25 A4	
450	312125-0285		2	SCREW ISO 1207 M4X6 A4	
460	312180-0499		2	SCREW ISO7379 H10X40	
470	312605-0312		2	HEXAGON NUT, M6M M4 A280	
480	312811-0318		2	NUT HEX.LOCK HELI COIL M8 SS	
485	315105-0136		4	WASHER BRB 4,3X9 RFR	
500	315115-0173		2	WASHER PLAIN, TBRB 10,5/22 H=4	
505	315259-0103		1	FELT SEAL 47-67 MM	
510	315752-0136		4	RETAINING RING FOR BORE DIN 472 62 ST	
520	321105-0234		1	BEARING BUSH W/O FLANGE, 20X28X30 MM	

Machine Type	Group Description	Used-In	Group Number	Page No

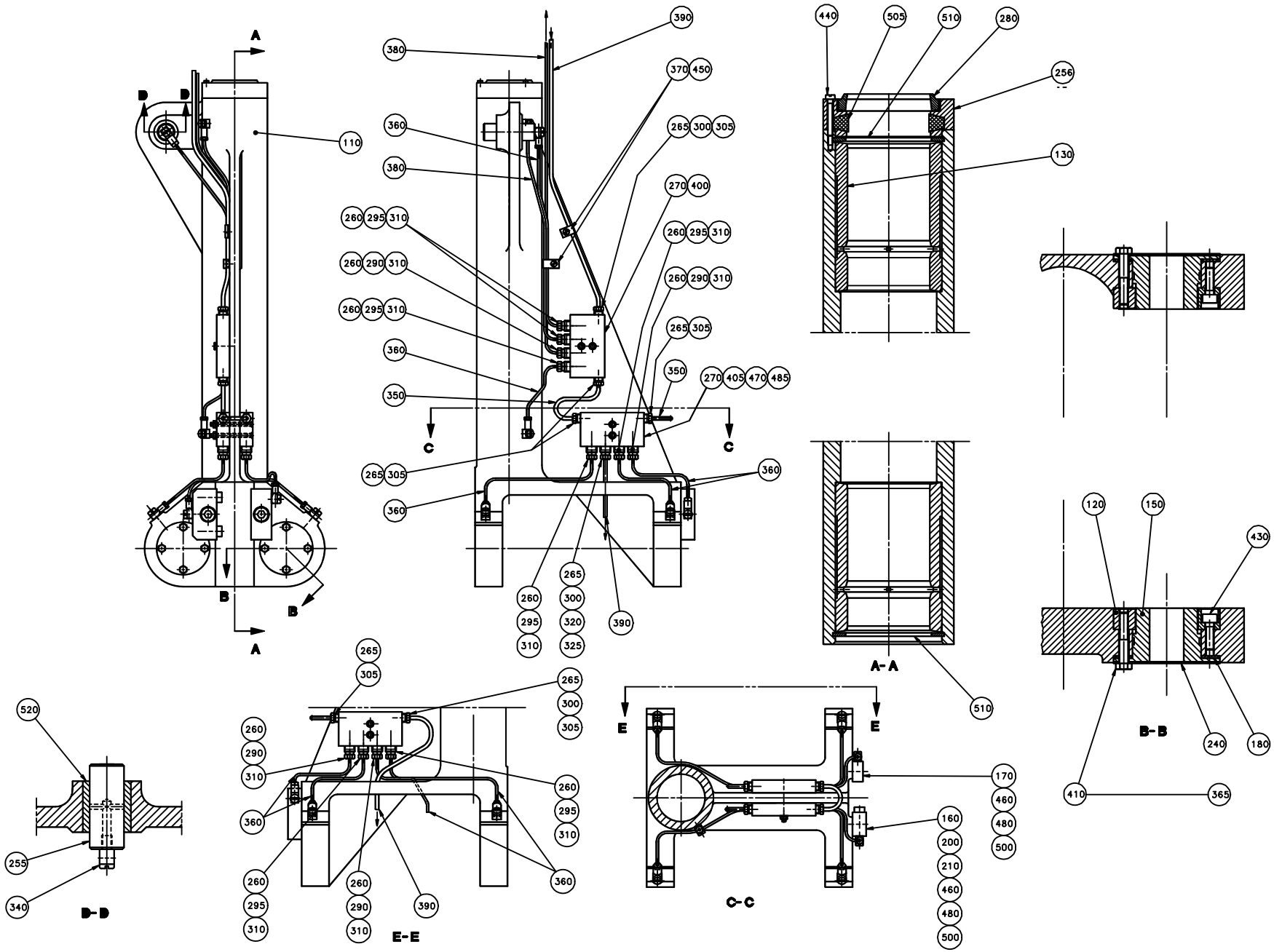
A
B
B
A
C
C
D
D
B-B
A-A
B-D
E-E
C-C
E
E

ECM: 191137 - 20041104
Group number: 243942-0400
Assembly Drawing: 243942-2_1_AA

Pos	Part No	UN	Qty	Description	Page No
-					
110	243952-0000		1	YOKE	
120	36753-0000		4	RING	
130	243943-0000		2	BUSHING	
150	246513-0000		4	BEARING	
160	20494-0000		2	COMPRESSION SPRING	
170	26760-0000		1	LOCATING PIECE	
180	29886-0000		4	LACE	
200	31837-0000		1	SPRING HOUSING	
210	31838-0000		2	PLUNGER	
240	239874-0000		4	WASHER	
255	247112-0000		1	SHAFT	
256	263509-0000		1	LID	
260	90028-0020		11	CONE TUBE 2,5MM	
265	90028-0021		7	CONE TUBE 4 MM	
270	90032-0039		3	BLOCK 4 WAYS	
280	90091-0080		1	SCRAPER 48X60X10 MM	
290	90092-0052		4	METERING VALVE 10 MM3	
295	90092-0053		7	METERING VALVE 30 MM3	
300	90134-0031		3	SLEEVE FOR PLASTIC TUBE	
305	90134-0038		6	BUSHING/NUT INLET/OUTLET 4 MM	
310	90134-0039		11	BUSHING VALVE CONNECTION 2,5 MM	
320	90134-0040		1	BUSHING VALVE CONNECTION 4 MM	
325	90134-0051		1	SPACING COLLAR DOSING BLOCK	
340	90134-0058		9	CONNECTION	
350	90151-0001	MM	200	BRASS PIPE DI=2,6 MM	
360	90266-0019	MM	1400	PIPE	
365	90157-0016	ML	1	LOCKING FLUID LOCTITE 242 50 ML	
370	90165-0060		4	PIPE CLIP FOR TUBE D=5 MM	
380	90166-0143	MM	900	TUBE 2,5 MM PA,TRANSP.	
390	90166-0109	MM	500	TUBE 4 MM PA,TRANSP.	
395	312105-0287		2	SCREW M6S ISO 4017 M4X8 A470	
400	312105-0295		2	SCREW M6S ISO 4017 M4X20 A470	
405	312145-0305		2	SCREW ISO 2009 MFS M4X50 A4	
410	312105-0335		16	SCREW M6S ISO 4014 M5X30 A480	
430	312115-0329		4	SCREW ISO4762 M5X16 A4 80	
440	312125-0232		3	SCREW ISO 1207 M3X25 A4	
450	312125-0285		2	SCREW ISO 1207 M4X6 A4	
460	312180-0499		2	SCREW ISO7379 H10X40	
470	312605-0312		2	HEXAGON NUT, M6M M4 A280	
480	312811-0318		2	NUT HEX.LOCK HELI COIL M8 SS	
485	315105-0136		4	WASHER BRB 4,3X9 RFR	
500	315115-0173		2	WASHER PLAIN, TBRB 10,5/22 H=4	
505	315259-0103		1	FELT SEAL 47-67 MM	
510	315752-0136		4	RETAINING RING FOR BORE DIN 472 62 ST	
520	321105-0234		1	BEARING BUSH W/O FLANGE, 20X28X30 MM	

Machine Type	Group Description	Used-In	Group Number	Page No

FOLDING DEVICE

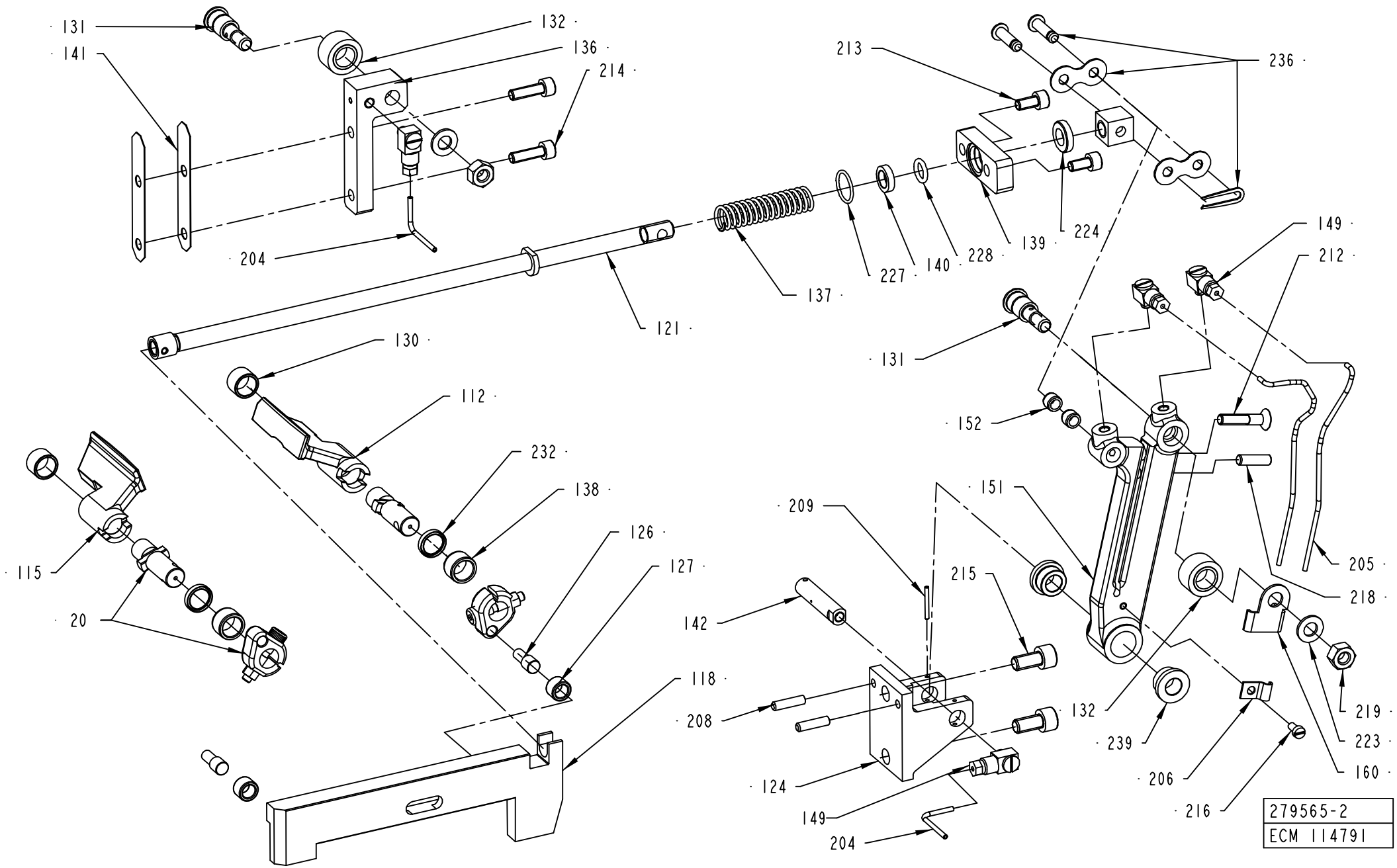

ECM: 114817 - 20021004
Group number: 279565-0300
Assembly Drawing: 279565-2_1_AC

Pos	Part No	UN	Qty	Description	Page No
0300B					
112	493711-0000		1	FOLDING FLAP	
115	493710-0000		1	FOLDING FLAP	
118	458039-0000		1	CARRIER RULER	
121	32494-0000		1	OPERATING ROD	
0500S					
112	493711-0000		1	FOLDING FLAP	
115	493710-0000		1	FOLDING FLAP	
118	458031-0000		1	CARRIER RULER	
121	32494-0000		1	OPERATING ROD	
0500B, 1136B, 0568B, 1000B					
112	464311-0000		1	FOLDING FLAP	
115	464310-0000		1	FOLDING FLAP	
118	450506-0000		1	CARRIER RULER	
121	32468-0000		1	OPERATING ROD	
1000S					
112	569061-0000		1	FOLDING FLAP	
115	569060-0000		1	FOLDING FLAP	
118	569063-0000		1	CARRIER RULER	
121	32468-0000		1	OPERATING ROD	
1000SQ, 0500SQ, 0568SQ					
112	1317809-0000		1	FOLDING FLAP	
115	1317808-0000		1	FOLDING FLAP	
118	573980-0000		1	CARRIER RULER	
121	32468-0000		1	OPERATING ROD	
1500B					
112	1317809-0000		1	FOLDING FLAP	
115	1317808-0000		1	FOLDING FLAP	
118	593581-0000		1	CARRIER RULER	
121	32468-0000		1	OPERATING ROD	
Common Parts					
020	26642-0200		2	CARRIER	**4-145, 12-225**
124	23229-0000		1	BRACKET	
126	22462-0000		2	SHAFT	
127	22463-0000		2	ROLL	
130	32463-0000		2	BEARING	
131	276172-0000		2	AXLE PIN	
132	276173-0000		2	CURVE ROLLER	
136	23361-0000		1	ROLLER BRACKET	
137	2525463-0000		1	COMPRESSION SPRING	
138	33408-0000		2	BEARING	
139	113653-0000		1	BEARING PLATE	
140	113654-0000		1	RING	
141	26423-0000		2	LACE	
142	269366-0000		1	DOWEL	
149	90134-0058		4	CONNECTION	
151	927448-0000		1	LINK	
152	37258-0000		2	BUSHING	
160	927450-0000		1	SECURITY PLATE RIGHT	
204	90266-0019	MM	400	PIPE	
205	90166-0143	MM	800	TUBE 2,5 MM PA,TRANSP.	
206	90165-0056		1	PIPE CLIP FOR TUBE D=4 MM	
208	311103-0310		2	PARALLEL PIN ISO 2338 5M6X20 A1	
209	90258-0001		1	PIN, STRAIGHT SLOTTED SPRING FRP 2X20	
212	312155-0374		1	SCREW DIN 7991 MF6S M6X30 A4 70	
213	312115-0366		2	SCREW ISO4762 M6X12 A4 80	
214	312115-0370		2	SCREW ISO4762 M6X20 A4 80	
215	312115-0449		2	SCREW ISO4762 M8X16 A4 80	
216	312125-0287		1	SCREW ISO 1207 M4X8 A4	
218	312318-0370		1	SCREW ISO4029 M6X20 A4	
219	312605-0318		2	HEXAGON NUT, M6M M8 A280	
223	315105-0165		2	WASHER BRB 8,4X16 RFR	
224	315115-0171		1	WASHER PLAIN, TBRB 10/18 H=4	
227	315202-0114		1	O-RING 16,1X1,6 MM	
228	315202-0208		1	O-RING 9,3X2,4 MM	
232	315230-0157		2	BEARING SEAL 12X16X3 MM	
236	90288-0305		1	CONNECTING LINK SINGLE 3/4",SS	
239	321101-0163		2	FLANGE BUSHING, 10X16X10 MM	

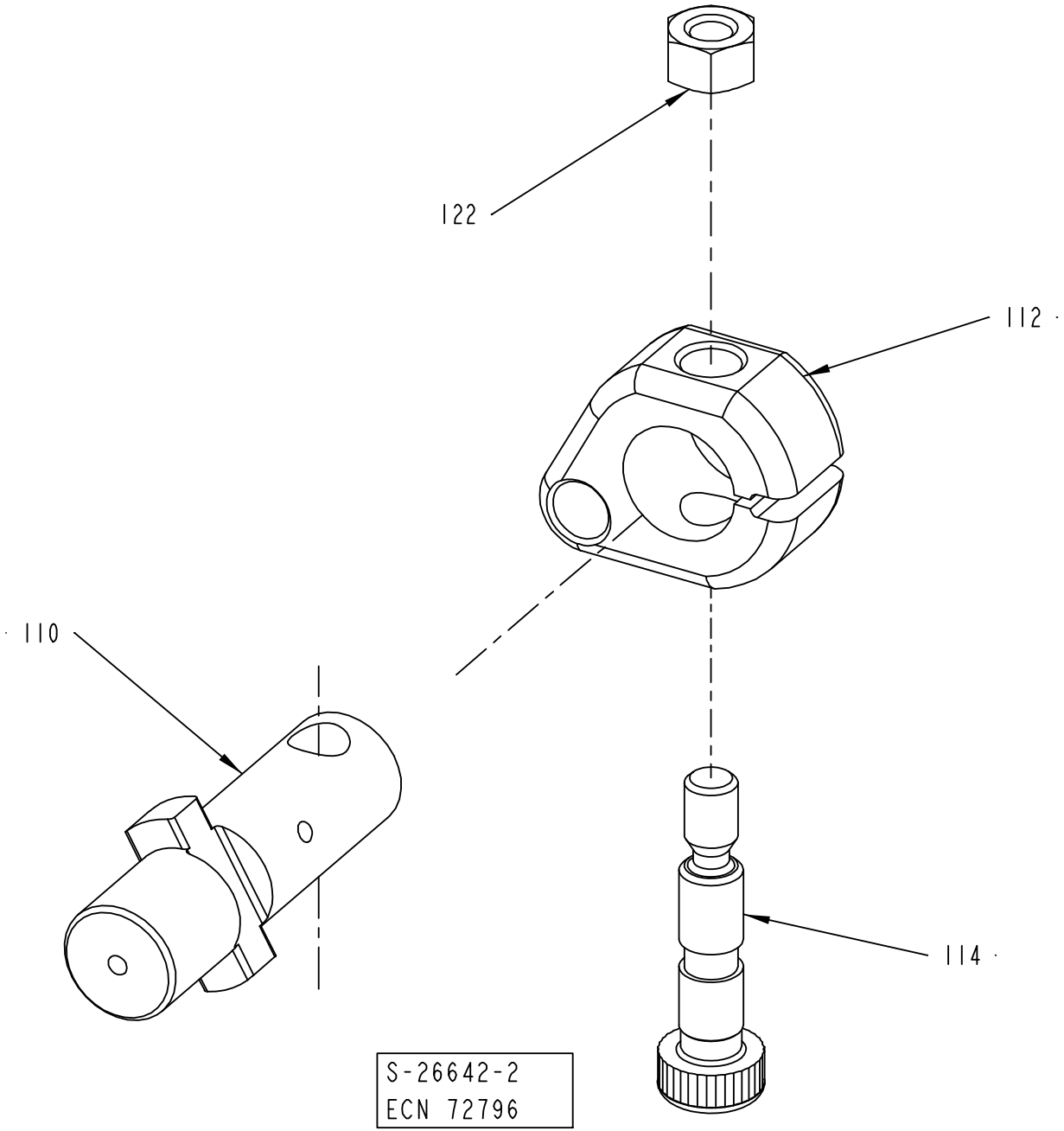
122
112
110
114
S-26642-2
ECN 72796

ECM: 189547 - 20041104
Group number: 26642-0200
Assembly Drawing: 26642-2_1_AA

Pos	Part No	UN	Qty	Description	Page No
-					
110	32462-0000		1	SHAFT	
112	25640-0000		1	CARRIER	
114	25641-0000		1	REAMED BOLT	
122	312605-0314		1	HEXAGON NUT, M6M M5 A280	

Pos	Part No	UN	Qty	Description	Page No

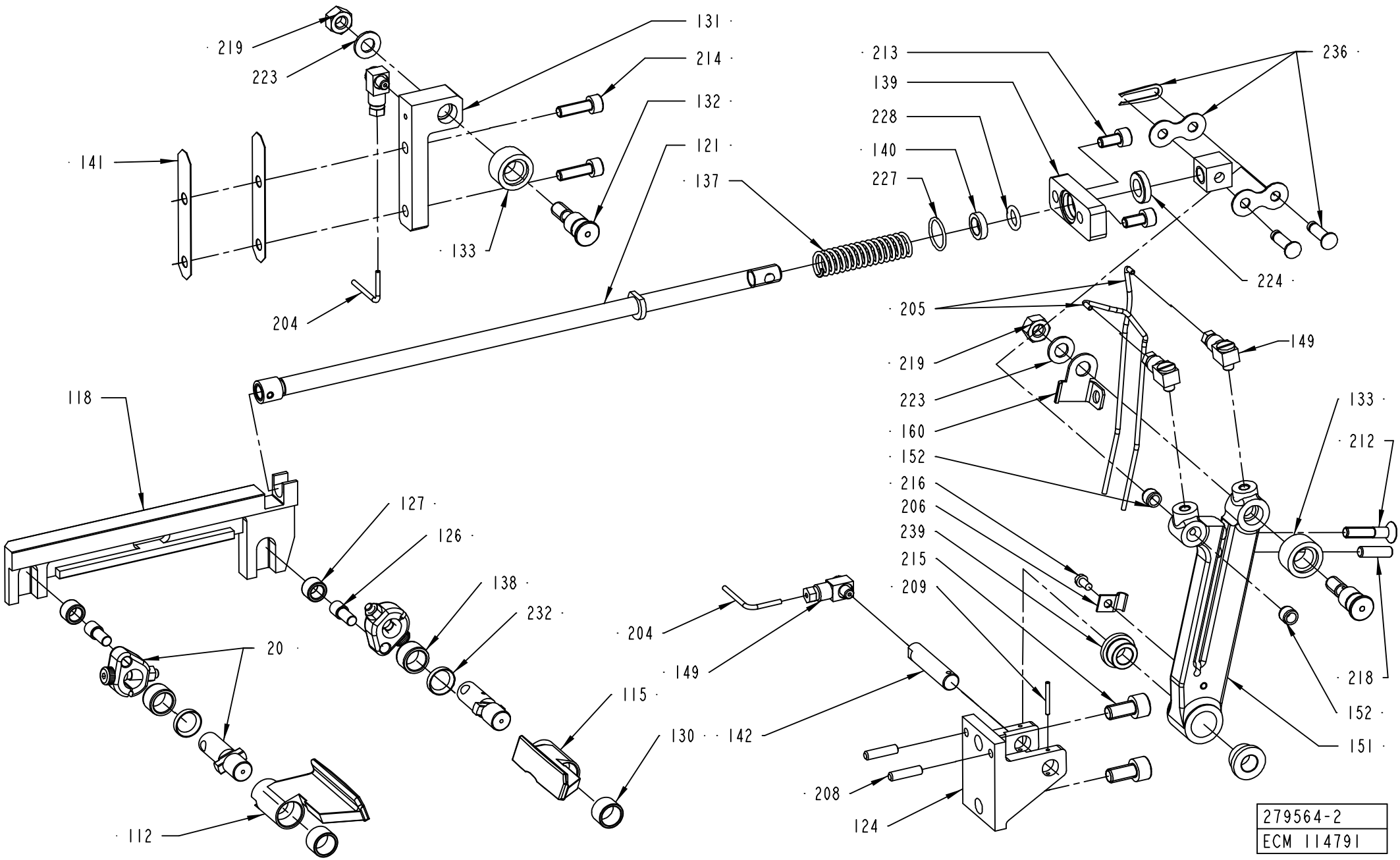
219
223
131
214
132
121
141
137
133
204
213
139
228
140
227
236
224
205
219
223
160
152
216
206
239
215
209
149
133
212
218
152
151
118
127
126
138
232
20
112
204
149
115
130
142
208
124
279564-2
ECM 114791

ECM: 114816 - 20021004
Group number: 279564-0300
Assembly Drawing: 279564-2_1_AD

Pos	Part No	UN	Qty	Description	Page No
0300B					
112	493711-0000		1	FOLDING FLAP	
115	493710-0000		1	FOLDING FLAP	
118	458038-0000		1	CARRIER RULER	
121	32494-0000		1	OPERATING ROD	
0500S					
112	493711-0000		1	FOLDING FLAP	
115	493710-0000		1	FOLDING FLAP	
118	458030-0000		1	CARRIER RULER	
121	32494-0000		1	OPERATING ROD	
0500B, 1136B, 0568B, 1000B					
112	464311-0000		1	FOLDING FLAP	
115	464310-0000		1	FOLDING FLAP	
118	450505-0000		1	CARRIER RULER LEFT	
121	32468-0000		1	OPERATING ROD	
1000S					
112	569061-0000		1	FOLDING FLAP	
115	569060-0000		1	FOLDING FLAP	
118	569062-0000		1	CARRIER RULER	
121	32468-0000		1	OPERATING ROD	
1000SQ, 0500SQ, 0568SQ					
112	1317809-0000		1	FOLDING FLAP	
115	1317808-0000		1	FOLDING FLAP	
118	573979-0000		1	CARRIER RULER	
121	32468-0000		1	OPERATING ROD	
1500B					
112	1317809-0000		1	FOLDING FLAP	
115	1317808-0000		1	FOLDING FLAP	
118	593580-0000		1	CARRIER RULER	
121	32468-0000		1	OPERATING ROD	
Common Parts					
020	26642-0200		2	CARRIER	**4-145, 12-225**
124	23229-0000		1	BRACKET	
126	22462-0000		2	SHAFT	
127	22463-0000		2	ROLL	
130	32463-0000		2	BEARING	
131	22473-0000		1	ROLLER BRACKET	
132	276172-0000		2	AXLE PIN	
133	276173-0000		2	CURVE ROLLER	
137	2525463-0000		1	COMPRESSION SPRING	
138	33408-0000		2	BEARING	
139	113653-0000		1	BEARING PLATE	
140	113654-0000		1	RING	
141	26423-0000		2	LACE	
142	269366-0000		1	DOWEL	
149	90134-0058		4	CONNECTION	
151	927448-0000		1	LINK	
152	37258-0000		2	BUSHING	
160	927449-0000		1	SECURITY PLATE LEFT	
204	90266-0019	MM	400	PIPE	
205	90166-0143	MM	800	TUBE 2,5 MM PA,TRANSP.	
206	90165-0056		1	PIPE CLIP FOR TUBE D=4 MM	
208	311103-0310		2	PARALLEL PIN ISO 2338 5M6X20 A1	
209	90258-0001		1	PIN, STRAIGHT SLOTTED SPRING FRP 2X20	
212	312155-0374		1	SCREW DIN 7991 MF6S M6X30 A4 70	
213	312115-0366		2	SCREW ISO4762 M6X12 A4 80	
214	312115-0370		2	SCREW ISO4762 M6X20 A4 80	
215	312115-0449		2	SCREW ISO4762 M8X16 A4 80	
216	312125-0287		1	SCREW ISO 1207 M4X8 A4	
218	312318-0370		1	SCREW ISO4029 M6X20 A4	
219	312605-0318		2	HEXAGON NUT, M6M M8 A280	
223	315105-0165		2	WASHER BRB 8,4X16 RFR	
224	315115-0171		1	WASHER PLAIN, TBRB 10/18 H=4	
227	315202-0114		1	O-RING 16,1X1,6 MM	
228	315202-0208		1	O-RING 9,3X2,4 MM	
232	315230-0157		2	BEARING SEAL 12X16X3 MM	
236	90288-0305		1	CONNECTING LINK SINGLE 3/4",SS	
239	321101-0163		2	FLANGE BUSHING, 10X16X10 MM	

Machine Type | Group Description | Used-In | Group Number | Page No

Tetra Pak

SPC
Spare Parts Catalogue

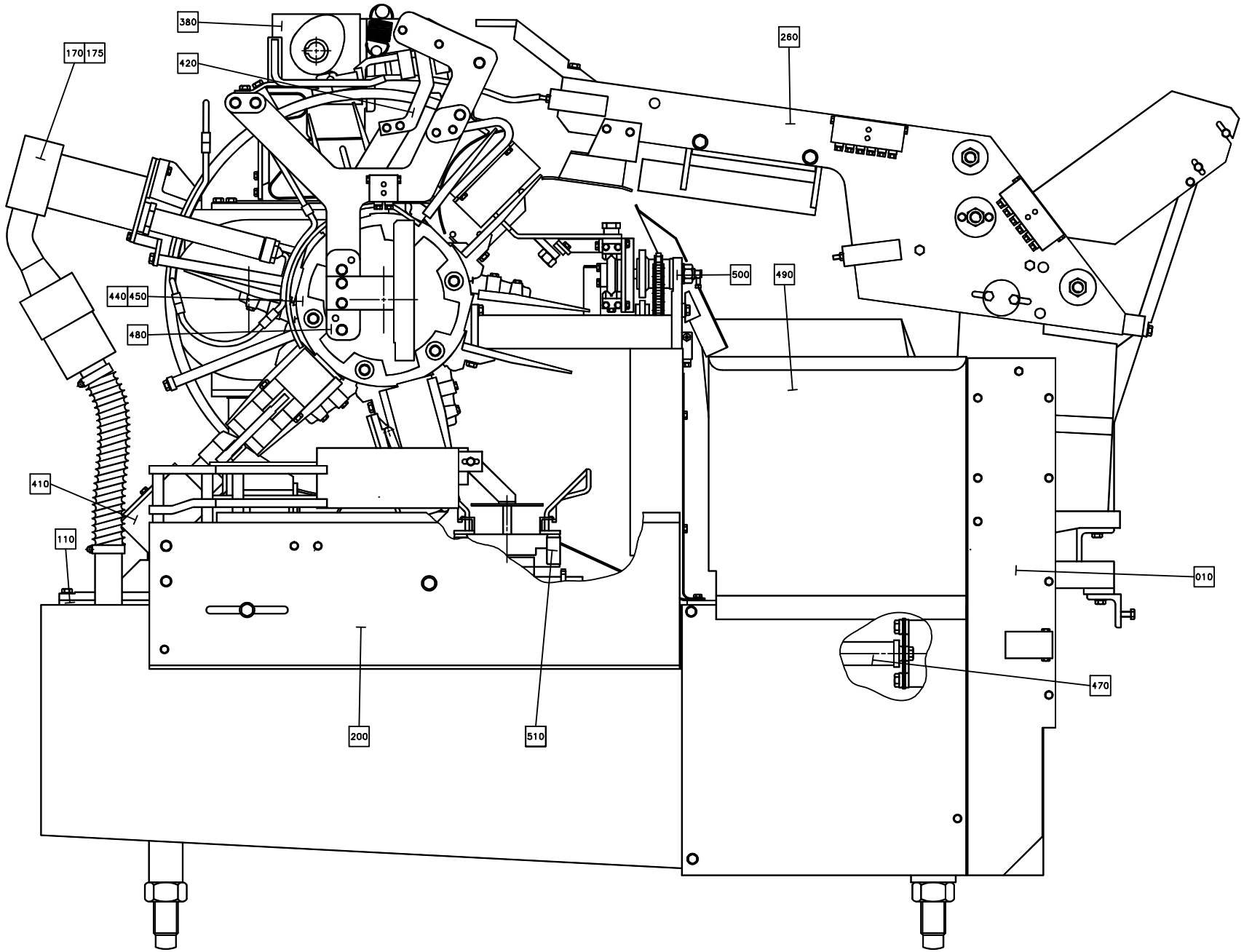
380
420
170 175
260
500
490
440 450
480
410
110
010
470
200
510

ECM: 72018 - 19981130
Group number: 648035-0700
Assembly Drawing: 648035-4_1_AA

This list covers pages from 5-2 to 5-5

Pos	Part No	UN	Qty	Description	Page No
LEFT OUT (See drawing on page: 5-4)					
010	595086-0100		1	MACHINE BODY	**5-7, 5-9**
200	595087-0100		1	STATION	**5-23**
480	595088-0100		1	FOLDING PART LEFT OUT	**5-25, 5-27**
500	595089-0100		1	INFEEDER	**5-29**
510	595090-0100		1	DISCHARGER	**5-33**
RIGHT OUT (See drawing on page: 5-2)					
010	285592-0600		1	MACHINE BODY	**5-35, 5-37**
200	285591-0400		1	STATION	**5-39**
480	525000-0200		1	FOLDING PART RIGHT OUT	**5-41, 5-43, 5-45, 5-47**
500	525213-0200		1	INFEEDER	**5-49, 5-51**
510	525325-0200		1	DISCHARGER	**5-53, 5-55**
Common Parts					
110	285303-0400		1	LOWER SECTION	**5-57**
170	525129-0100		1	ELEMENT	**5-69, 5-71**
175	525128-0100		1	FF-ELEMENT R	**5-77, 5-79**
260	525085-0200		1	LUBRICATING SYSTEM	**5-81, 5-83, 5-85, 5-87**
380	285479-0500		1	SUPERSTRUCTURE	**5-121**
410	285456-0300		2	PRESSURE DEVICE	**5-133, 5-135**
420	285736-0300		1	PULL-DOWN DEVICE	**5-137, 5-139, 5-141, 5-143**
440	297681-0300		1	WHEEL	**5-145, 5-147, 5-149**
450	297682-0300		1	WHEEL	**5-151, 5-153, 5-155**
470	443173-0100		1	DRIVE SHAFT	**5-157**
490	442537-0500		1	WASTE CHUTE	**5-159**

Pos	Part No	UN	Qty	Description	Page No

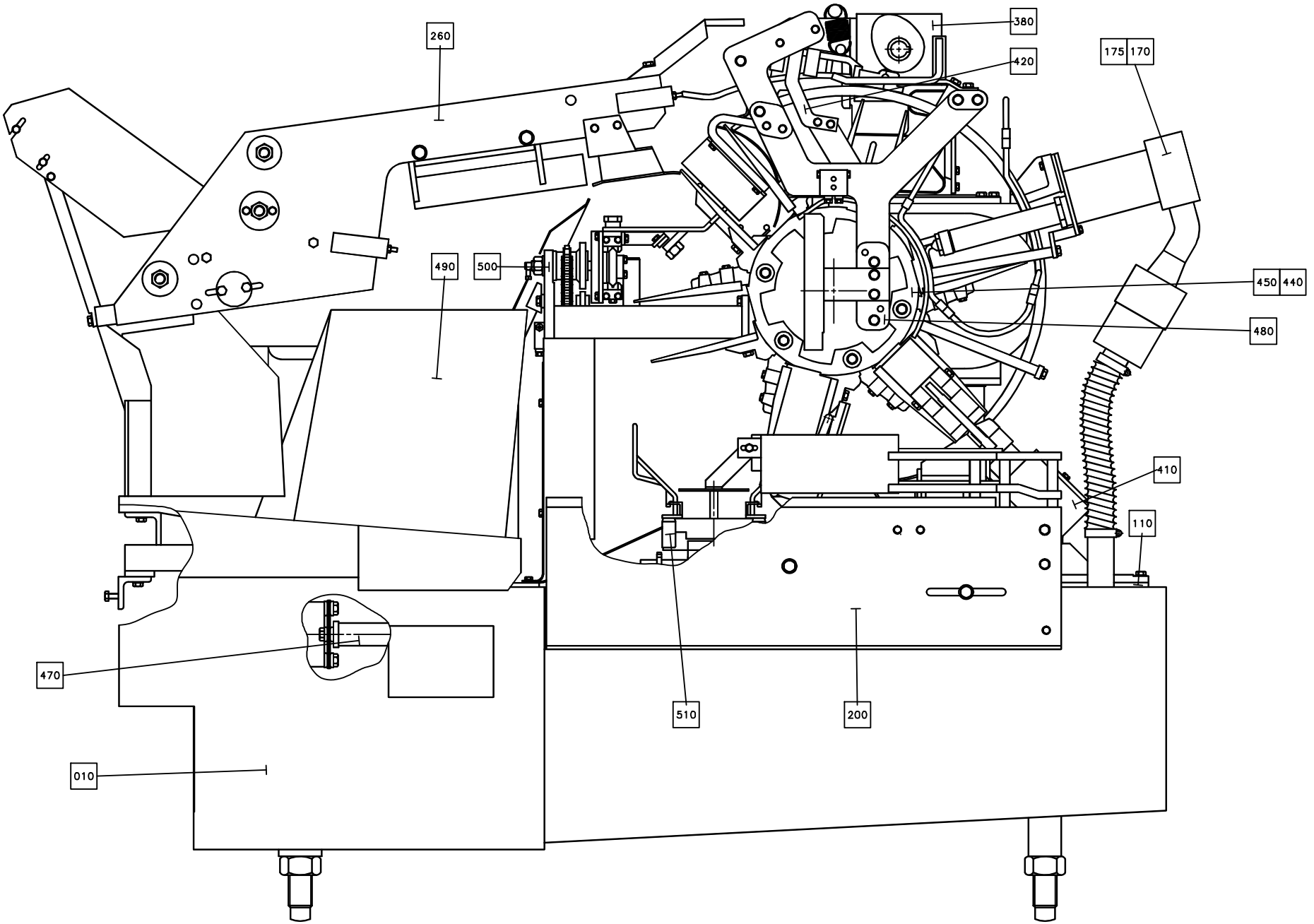
260
380
420
175
170
490
500
450
440
480
410
110
470
510
200
010

ECM: 72018 - 19981130
Group number: 648035-0700
Assembly Drawing: 648035-5_1_AA

This list covers pages from 5-2 to 5-5

Pos	Part No	UN	Qty	Description	Page No
LEFT OUT (See drawing on page: 5-4)					
010	595086-0100		1	MACHINE BODY	**5-7, 5-9**
200	595087-0100		1	STATION	**5-23**
480	595088-0100		1	FOLDING PART LEFT OUT	**5-25, 5-27**
500	595089-0100		1	INFEEDER	**5-29**
510	595090-0100		1	DISCHARGER	**5-33**
RIGHT OUT (See drawing on page: 5-2)					
010	285592-0600		1	MACHINE BODY	**5-35, 5-37**
200	285591-0400		1	STATION	**5-39**
480	525000-0200		1	FOLDING PART RIGHT OUT	**5-41, 5-43, 5-45, 5-47**
500	525213-0200		1	INFEEDER	**5-49, 5-51**
510	525325-0200		1	DISCHARGER	**5-53, 5-55**
Common Parts					
110	285303-0400		1	LOWER SECTION	**5-57**
170	525129-0100		1	ELEMENT	**5-69, 5-71**
175	525128-0100		1	FF-ELEMENT R	**5-77, 5-79**
260	525085-0200		1	LUBRICATING SYSTEM	**5-81, 5-83, 5-85, 5-87**
380	285479-0500		1	SUPERSTRUCTURE	**5-121**
410	285456-0300		2	PRESSURE DEVICE	**5-133, 5-135**
420	285736-0300		1	PULL-DOWN DEVICE	**5-137, 5-139, 5-141, 5-143**
440	297681-0300		1	WHEEL	**5-145, 5-147, 5-149**
450	297682-0300		1	WHEEL	**5-151, 5-153, 5-155**
470	443173-0100		1	DRIVE SHAFT	**5-157**
490	442537-0500		1	WASTE CHUTE	**5-159**

Pos	Part No	UN	Qty	Description	Page No

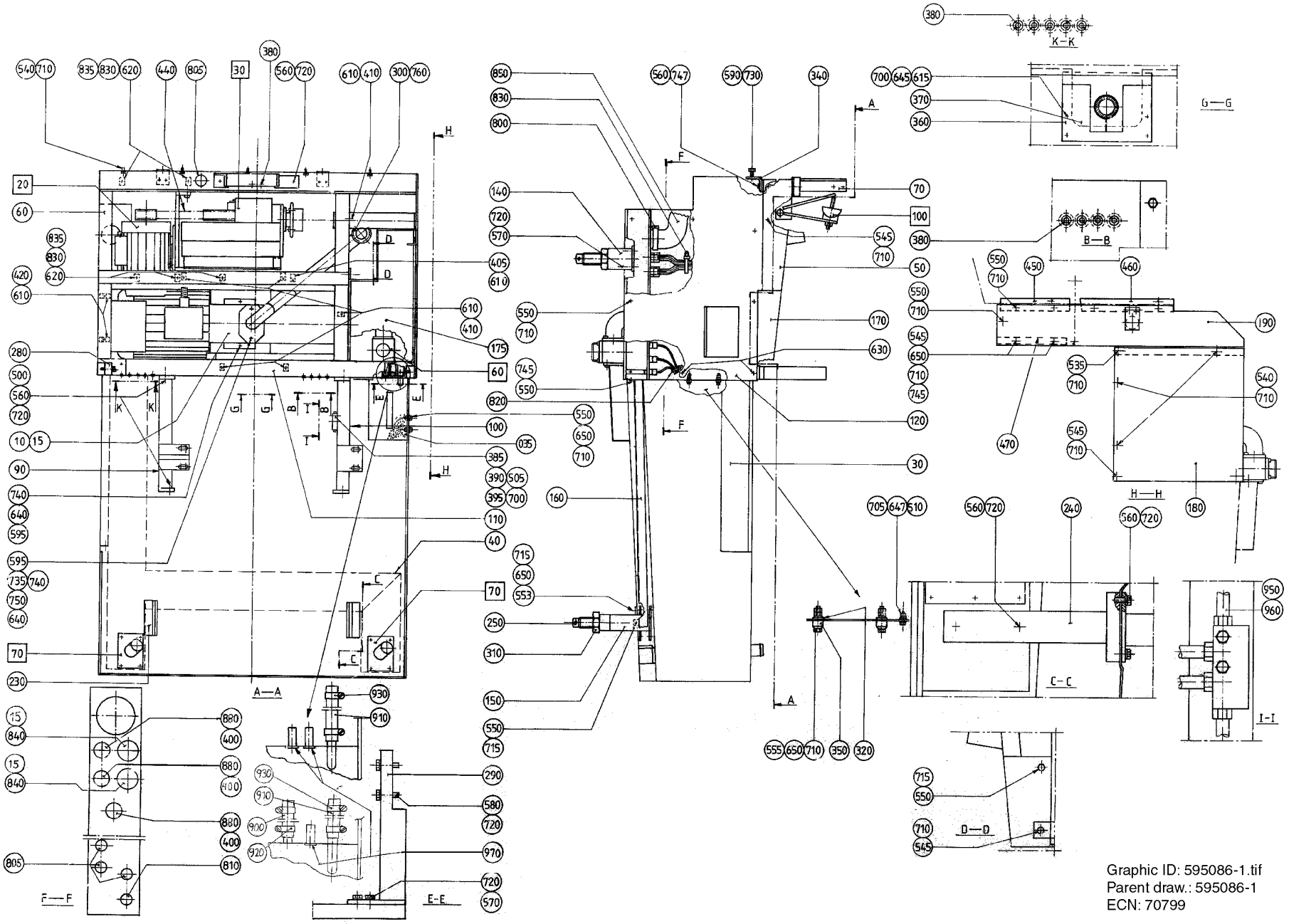

Graphic ID: 595086-1.tif
Parent draw.: 595086-1
ECN: 70799

ECM: 72197 - 19990215
Group number: 595086-0100
Assembly Drawing: 595086-1_1_AA

This list covers pages from 5-6 to 5-9

Pos	Part No	UN	Qty	Description	Page No
TB/8 50HZ					
010	90321-0015		1	PUMP 502 CFX 7ETV 302 50HZ IP55	
	90321-0466		*1*	*SPARE PART KIT*	
	90321-0481		*1*	*GASKET*	
	90459-5038		*1*	*IMPELLER 502CFX, 1284210500*	
970-02	90261-0004		2	PIPE PLUG R 1/8"	
TB/8 60HZ					
010	90321-0034		1	PUMP 502 CFX 5ETV 362 60HZ IP55	
	90459-5038		*1*	*IMPELLER 502CFX, 1284210500*	
	90321-0481		*1*	*GASKET*	
	90321-0466		*1*	*SPARE PART KIT*	
970-02	90261-0004		2	PIPE PLUG R 1/8"	
Common Parts					
015	90012-0072		3	GLAND FITTING	
030	594589-0000		1	CLEANING TROUGH	
035	531119-0000		1	STRAINER	
040	525132-0000		1	CABLE TRENCH	
050	525262-0000		1	COVERING PLATE	
060	525274-0000		1	FINISH FRAME	
070	285330-0000		1	HOLDER	
090	525272-0000		1	STRUT	
100	525273-0000		1	STRUT	
110	525275-0000		1	COVERING PLATE	
120	525346-0000		1	SIDE PLATE	
140	525268-0000		2	LEG	
150	525130-0000		1	LEG	
160	525277-0000		1	CABLE TRENCH	
170	595066-0000		1	COVERING PLATE	
175	443186-0000		1	CHUTE	
180	443187-0000		1	SHEET	
190	442545-0000		1	SHEET	
230	525266-0000		1	LEG	
240	525267-0000		1	LEG	
250	285923-0000		4	SCREW	
280	297663-0000		1	POST HOLDER1	
290	297664-0000		1	POST HOLDER	
300	525271-0000		1	ELBOW PIPE	
310	285994-0000		4	NUT	
320	295435-0000		2	WASHER	
340	297814-0000		2	BRACKET	
350	297860-0000		2	BUSHING	
360	525280-0000		1	SHEET	
370	525281-0000		1	GASKET	
380	90015-0020		11	LEAD-IN, TET5-7, E-1458016	
385	90028-0022		4	CONE TUBE 6 MM	
390	90032-0044		1	DISTRIBUTION BLOCK 4 WAYS	
395	90134-0055		4	BUSHING/NUT INLET/OUTLET 6 MM	
400	90152-0050	MM	2500	SPIRAL CONDUIT, 20X13, UL 1313	
405	90165-0060		1	PIPE CLIP FOR TUBE D=5 MM	
410	316810-0106		7	PIPE CLIP FOR TUBE D=8 MM	
420	90165-0057		4	PIPE CLIP FOR TUBE D=6 MM	
440	90417-0180		1	TIMING BELT T10X920X40 POLYURETHANE	
450	525174-0000		1	BRACKET	
460	525175-0000		1	BRACKET	
470	297551-0000		1	SHEET	
500	311103-0399		8	PARALLEL PIN ISO 2338 8M6X16 A1	
505	312105-0295		2	SCREW M6S ISO 4017 M4X20 A470	
510	312105-0329		1	SCREW M6S ISO 4017 M5X16 A480	
535	312105-0362		1	SCREW M6S ISO 4017 M6X8 A480	
540	312105-0364		8	SCREW M6S ISO 4017 M6X10 A480	
545	312105-0368		6	SCREW M6S ISO 4017 M6X16 A480	
550	312105-0367		15	SCREW M6S ISO 4017 M6X14 A480	
553	312105-0370		1	SCREW M6S ISO 4017 M6X20 A480	
555	312105-0376		2	SCREW M6S ISO 4014 M6X35 A480	
560	312105-0451		23	SCREW M6S ISO 4017 M8X20 A480	
570	312105-0453		8	SCREW M6S ISO 4017 M8X25 A480	
580	312105-0455		4	SCREW M6S ISO 4017 M8X30 A480	
590	312105-0495		2	SCREW M6S ISO 4017 M10X30 A480	
595	312105-0542		4	SCREW M6S ISO 4014 M12X50 A480	
610	312125-0287		9	SCREW ISO 1207 M4X8 A4	
615	312125-0291		4	SCREW ISO 1207 M4X12 A4	
620	312125-0323		5	SCREW ISO 1207 M5X8 A4	
630	312155-0366		2	SCREW DIN 7991 MF6S M6X12 A4 70	
640	312605-0322		4	HEXAGON NUT, M6M M12 A280	
645	312605-0312		4	HEXAGON NUT, M6M M4 A280	
647	312605-0314		2	HEXAGON NUT, M6M M5 A280	
650	312605-0316		7	HEXAGON NUT, M6M M6 A280	
700	315105-0136		11	WASHER BRB 4,3X9 RFR	
705	315105-0146		2	WASHER BRB 5,3X10 RFR	
710	315105-0153		31	WASHER BRB 6,4X12 RFR	
715	6278-0000		3	WASHER	
720	315105-0165		31	WASHER BRB 8,4X16 RFR	
730	315105-0173		2	WASHER BRB 10,5X20 RFR	
735	315105-0178		2	WASHER BRB 13X24 RFR	

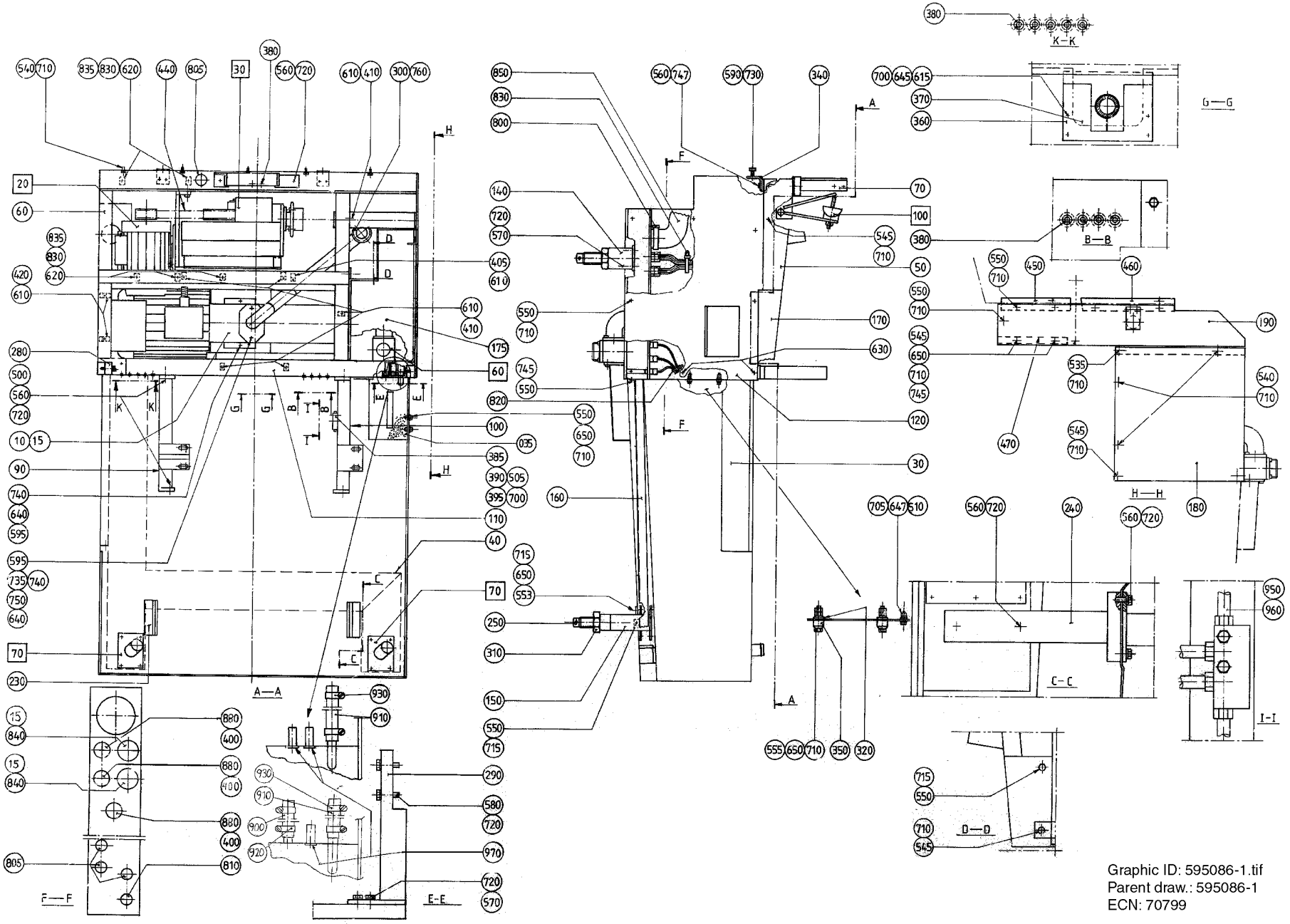

Graphic ID: 595086-1.tif
Parent draw.: 595086-1
ECN: 70799

ECM: 72197 - 19990215
Group number: 595086-0100
Assembly Drawing: 595086-1_1_AA

This list covers pages from 5-6 to 5-9

Pos	Part No	UN	Qty	Description	Page No
Common Parts (Cont'd)					
740	315115-0178		6	WASHER PLAIN, TBRB 13/24 H=4	
745	315115-0153		3	WASHER PLAIN, TBRB 6,4/12 H=3	
747	315115-0165		4	WASHER PLAIN, TBRB 8,4/16 H=3	
750	315202-0229		1	O-RING 59,2X5,7 MM	
760	315250-0103		1	GASKET 48X38X5,5 MM	
800	342991-0112		2	HOSE CLIP,WORM DRIVE TYPE (73)-83	
805	352103-0100		4	CABLE GLAND, STR 9, PR15,2/PG9	
810	352103-0101		1	CABLE GLAND, ST 9, PR15,2/PG9	
820	352113-0101		3	CABLE TIE, BLACK 92X2,5 MM	
830	352113-0102		6	CABLE TIE, BLACK 188X4,8 MM	
835	352113-0204		5	ANCHOR PLATES FOR STRIPS, TYPE TM3S25-M	
840	90152-0051	MM	1000	SPIRAL CONDUIT, 25X18, UL 1816	
850	90152-0044	MM	350	FLEXIBLE CONDUIT 3641-0070	
880	90012-0071		3	GLAND FITTING	
910	90166-0087	MM	630	HOSE 15/23 REINF.PVC TRANSP.	
930	342991-0103		2	HOSE CLIP,WORM DRIVE TYPE (19)-23	
950	90134-0030		1	SLEEVE FOR PLASTIC TUBE	
960	90166-0108	MM	870	TUBE 6 MM PA,TRANSP.	
F100	297638-0200		1	CHAIN TENSIONER	**5-11**
F070	525110-0100		1	CABLE CONDUIT	**5-13**
F060	525143-0200		1	BOTTOM VALVE	**5-15**
F030	285861-0500		1	GEAR REDUCTION	**5-17**
F020	285287-0500		1	DRIVE UNIT	**5-21**

Pos	Part No	UN	Qty	Description	Page No

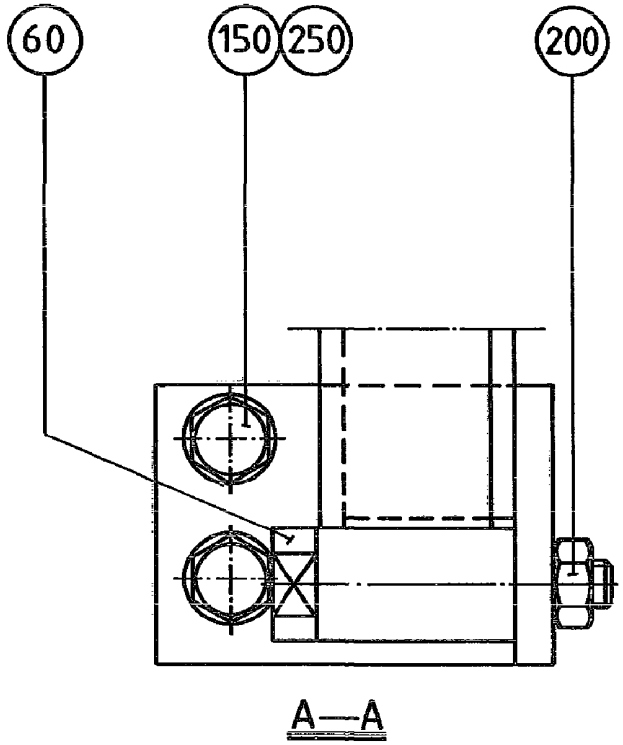

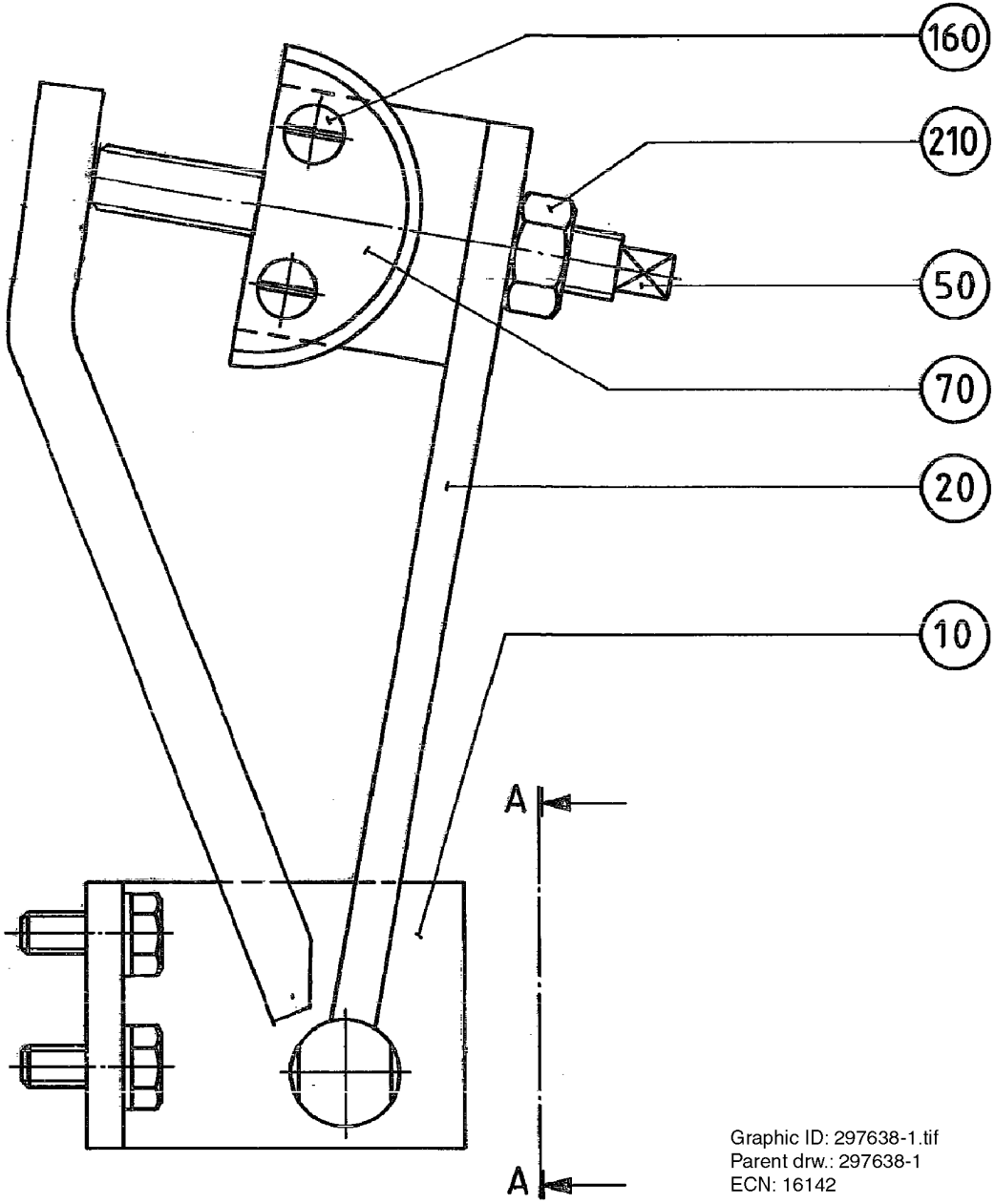

Graphic ID: 297638-1.tif
Parent drw.: 297638-1
ECN: 16142

ECM: 188321 - 20041105
Group number: 297638-0200
Assembly Drawing: 297638-1_1_AA

Pos	Part No	UN	Qty	Description	Page No
0500B, 1136B, 0500S, 1000S, 0568B, 0300B, 1000B					
070	443367-0000		1	PROFILE	
1000SQ, 0500SQ, 0568SQ					
070	574093-0000		1	PROFILE	
Common Parts					
010	297608-0000		1	BRACKET	
020	297609-0000		1	ARM	
050	297610-0000		1	SCREW	
060	297611-0000		1	SHAFT	
150	312105-0451		2	SCREW M6S ISO 4017 M8X20 A480	
160	312145-0378		2	SCREW ISO 2009 MFS M6X40 A4	
200	312605-0318		1	HEXAGON NUT, M6M M8 A280	
210	312605-0322		1	HEXAGON NUT, M6M M12 A280	
250	315105-0165		2	WASHER BRB 8,4X16 RFR	

Pos	Part No	UN	Qty	Description	Page No

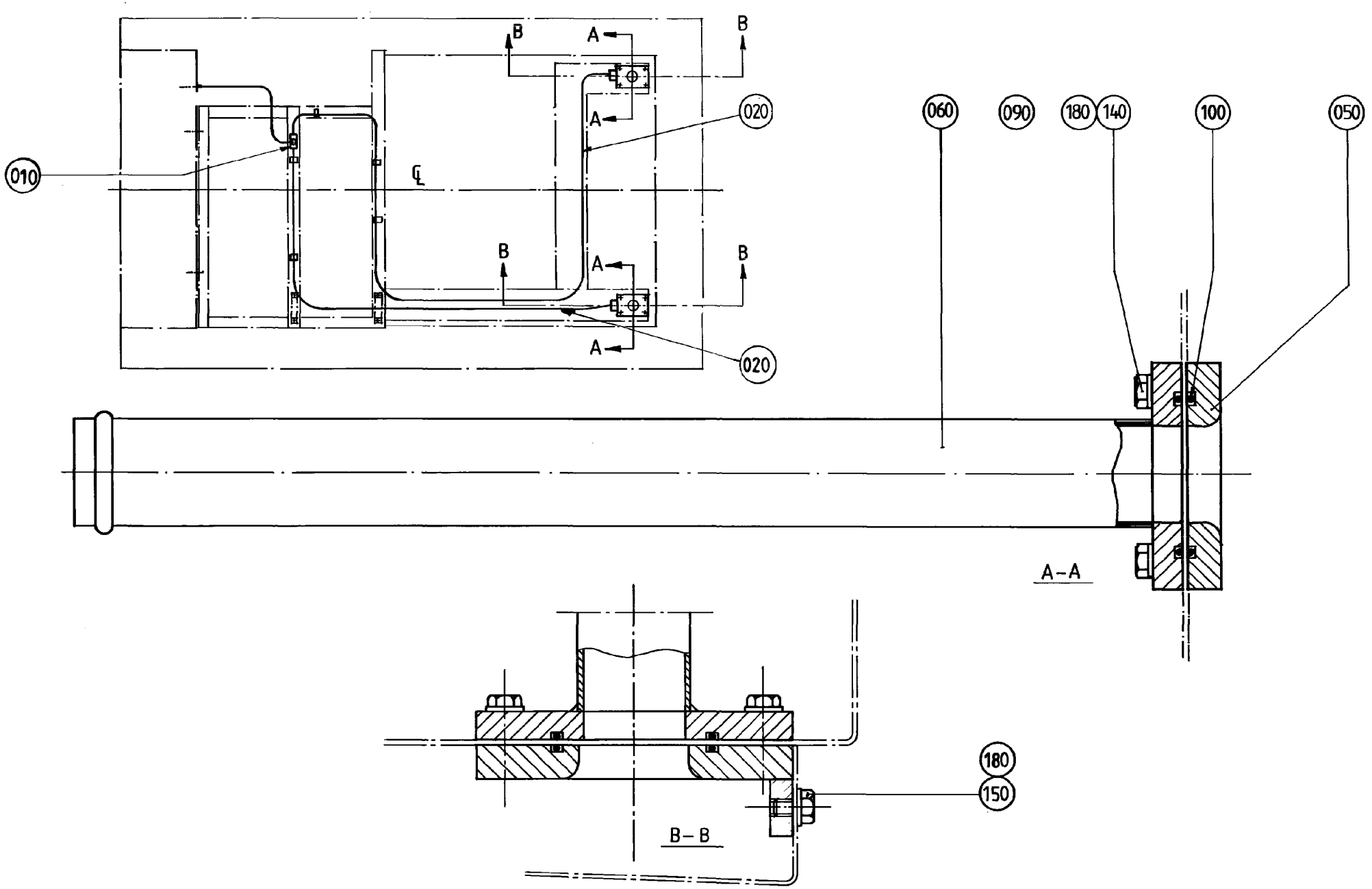
B
A
B
A
020
010
060
090
180
140
100
050
B
A
B
A
020
A–A
180
150
B–B

ECM: 188322 - 20041105
Group number: 525110-0100
Assembly Drawing: 525110-1_1_AA

Pos	Part No	UN	Qty	Description	Page No
-					
010	342946-0122		1	T-COUPLING,UNION 8/6	
020	90166-0122	MM	6750	TUBE 8 MM PA,TRANSP.	
050	525135-0000		2	PLATE	
060	297413-0000		2	PIPE	
090	90296-0009	L	1	SILICONE GREASE DOW CORNING 150 GR.	
100	315202-0301		4	O-RING 49,5X3 MM	
140	312105-0370		8	SCREW M6S ISO 4017 M6X20 A480	
150	312105-0364		2	SCREW M6S ISO 4017 M6X10 A480	
180	315105-0153		10	WASHER BRB 6,4X12 RFR	

Pos	Part No	UN	Qty	Description	Page No

BOTTOM VALVE

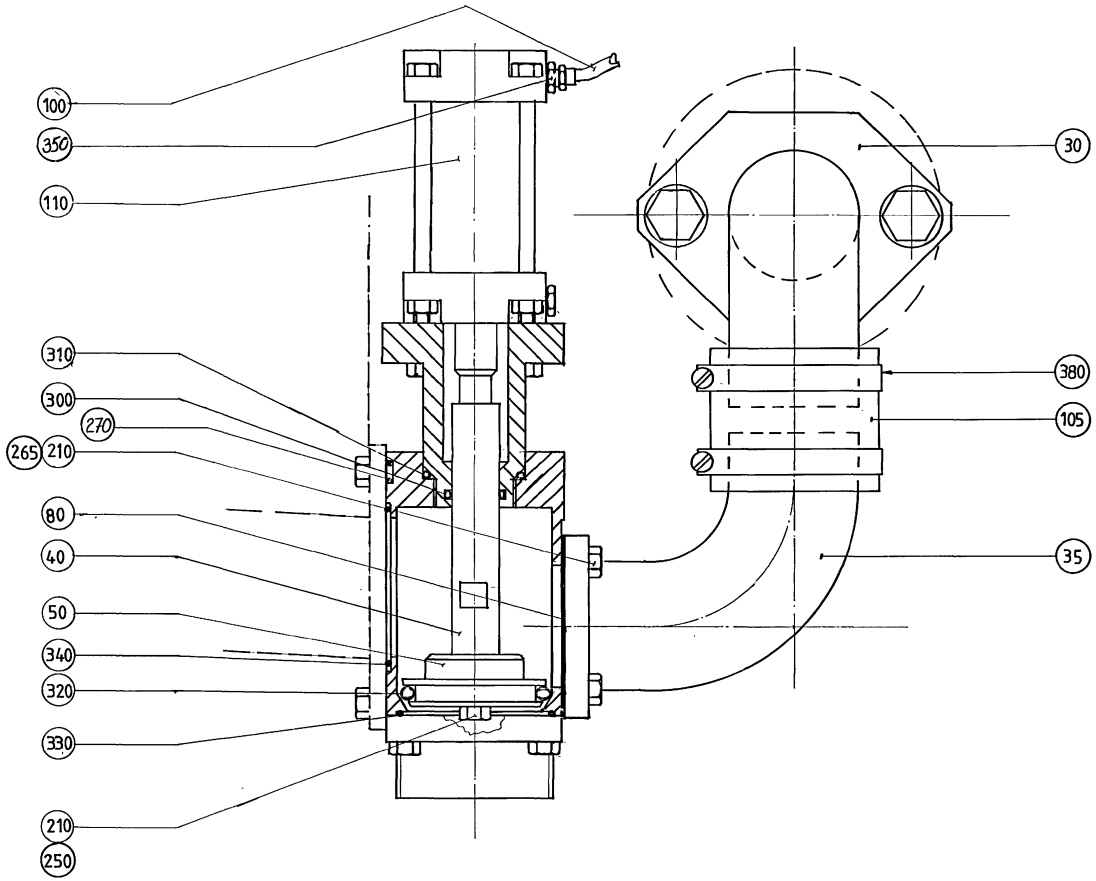

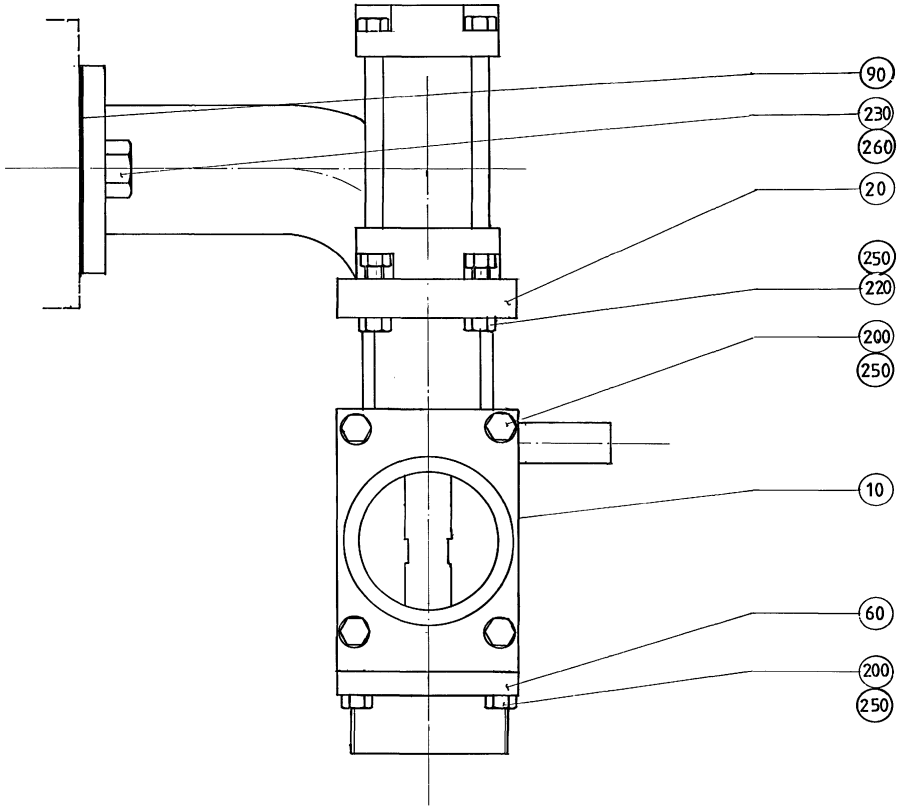

ECM: 188323 - 20041105
Group number: 525143-0200
Assembly Drawing: 525143-2_1_AA

Pos	Part No	UN	Qty	Description	Page No
-					
010	443122-0000		1	HOUSE	
020	443123-0000		1	HOUSE	
030	525269-0000		1	PIPE	
035	525270-0000		1	PIPE	
040	442851-0000		1	SHAFT	
050	442852-0000		1	VALVE	
060	442853-0000		1	ATTACHMENT PIPE	
080	531116-0000		1	GASKET	
090	531189-0000		1	GASKET	
100	90166-0132	MM	650	TUBE 6 MM PA,TRANSP.	
105	90166-0199	MM	80	RUBBER HOSE	
110	90239-0960		1	CYLINDER	
200	312105-0368		8	SCREW M6S ISO 4017 M6X16 A480	
210	312105-0370		5	SCREW M6S ISO 4017 M6X20 A480	
220	312105-0374		4	SCREW M6S ISO 4014 M6X30 A480	
230	312105-0534		2	SCREW M6S ISO 4017 M12X25 A480	
250	315105-0153		13	WASHER BRB 6,4X12 RFR	
260	315105-0178		2	WASHER BRB 13X24 RFR	
265	315115-0153		4	WASHER PLAIN, TBRB 6,4/12 H=3	
270	315202-0106		2	O-RING 8,1X1,6 MM	
300	315202-0214		1	O-RING 17,3X2,4 MM	
310	315202-0220		1	O-RING 32,2X3 MM	
320	315202-0226		1	O-RING 44,2X5,7 MM	
330	315202-0302		1	O-RING 54,5X3 MM	
340	315202-0303		1	O-RING 59,5X3 MM	
350	342920-0113		1	STRAIGHT COUPLING,EXT.THREADED 6/4-R1/8"	
380	342991-0111		2	HOSE CLIP,WORM DRIVE TYPE (63)-73	

Pos	Part No	UN	Qty	Description	Page No

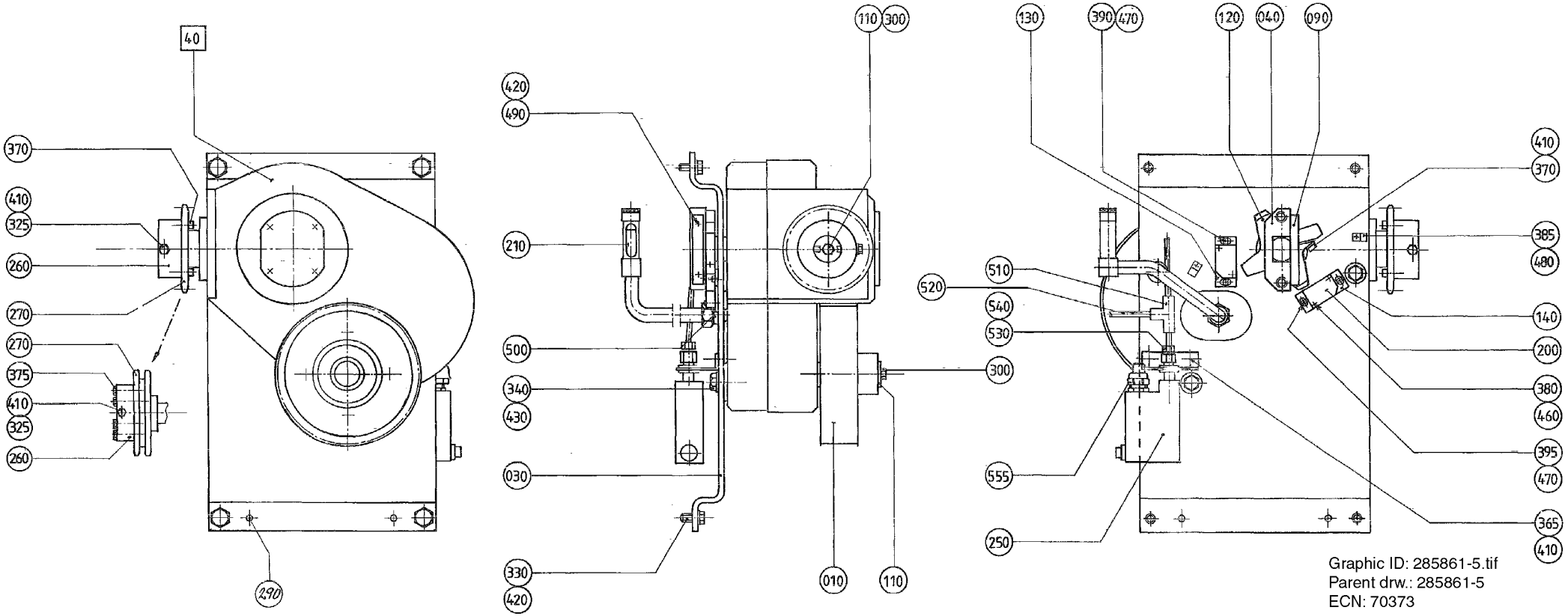

Graphic ID: 285861-5.tif
Parent drw.: 285861-5
ECN: 70373

ECM: 72437 - 19990426
Group number: 285861-0500
Assembly Drawing: 285861-5_1_AB

Pos	Part No	UN	Qty	Description	Page No
0500B, 1136B, 0500S, 1000S, 0568B, 0300B, 1000B					
260	525216-0000		1	SLEEVE	
270	442500-0000		1	SPROCKET	
370	312115-0370		7	SCREW ISO4762 M6X20 A4 80	
1000SQ, 0500SQ, 0568SQ					
260	574081-0000		1	SLEEVE	
270	574088-0000		1	SPROCKET	
370	312115-0370		1	SCREW ISO4762 M6X20 A4 80	
375	312109-0374		6	SCREW M6S ISO 4017 M6X30 A480	
Common Parts					
010	525215-0006		1	TIMING BELT PULLEY	
030	525109-0000		1	BRACKET	
040	927332-0000		1	BRACKET	
090	927333-0000		1	BAR CLAMP	
110	285403-0000		2	WASHER	
120	566775-0000		1	CARRIER	
130	525337-0000		1	BRACKET	
140	525232-0000		1	BRACKET	
200	90044-0104		2	PROX.SWITCH IFM IN 3002(RP 90044-194)	
210	443248-0000		1	OIL PIPE	
250	90274-0002		1	PRESSURE SWITCH XMJ, REPBY 90458-0844	
	90274-0300		*1*	*CONTACT HOUSING*	
290	311112-0341		2	SPRING PIN, ISO 8752 6X24-C	
300	312105-0370		2	SCREW M6S ISO 4017 M6X20 A480	
325	312105-0384		1	SCREW M6S ISO 4014 M6X70 A480	
330	312105-0451		4	SCREW M6S ISO 4017 M8X20 A480	
340	312105-0493		3	SCREW M6S ISO 4017 M10X25 A480	
365	312105-0364		2	SCREW M6S ISO 4017 M6X10 A480	
380	312125-0228		2	SCREW ISO 1207 M3X16 A4	
385	312125-0287		2	SCREW ISO 1207 M4X8 A4	
390	312115-0295		2	SCREW ISO4762 M4X20 A4 80	
395	312115-0291		2	SCREW ISO4762 M4X12 A4 80	
410	315105-0153		4	WASHER BRB 6,4X12 RFR	
420	315105-0165		6	WASHER BRB 8,4X16 RFR	
430	315105-0173		3	WASHER BRB 10,5X20 RFR	
460	315105-0124		2	WASHER BRB 3,2X7 RFR	
470	315105-0136		4	WASHER BRB 4,3X9 RFR	
480	90165-0056		2	PIPE CLIP FOR TUBE D=4 MM	
490	312105-0455		2	SCREW M6S ISO 4017 M8X30 A480	
500	342720-0115		1	CONN. STR. GA-16-G1/2	
510	342946-0112		1	T-COUPLING,UNION 6/4	
520	90166-0011	MM	3000	TUBE 6 MM PA,TRANSP.	
530	342706-0130		1	ACCESSORIES, INSERT SLEEVE 6 MM	
540	342790-0202		1	CONN. PRESS. GAUGE MAV6-S/R3/8FZB	
555	90012-0073		1	GLAND FITTING	
F040	442582-0100		1	DRIVE GEAR	**5-19**

Machine Type | Group Description | Used-In | Group Number | Page No

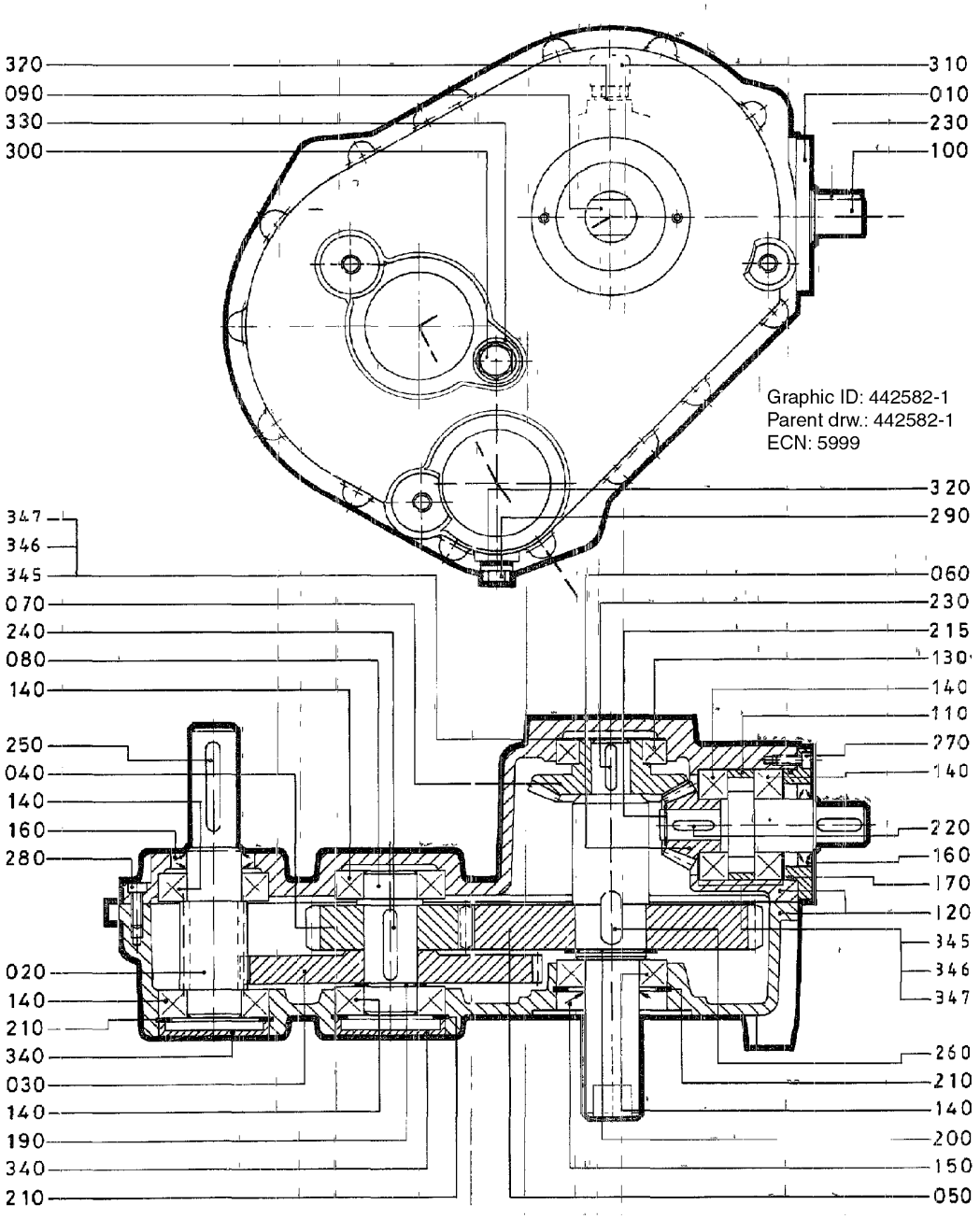
370
090
330
300
310
010
230
100
Graphic ID: 442582-1
Parent drw.: 442582-1
ECN: 5999
320
290
347
346
345
070
240
080
140
060
230
215
130
140
110
270
140
250
040
140
160
280
220
160
170
120
345
346
347
020
140
210
340
030
140
190
340
210
260
210
140
200
150
050

ECM: 188320 - 20041105
Group number: 442582-0100
Assembly Drawing: 442582-1_1_AA

Pos	Part No	UN	Qty	Description	Page No
-					
010	567345-0000		1	BEARING COVER	
020	442554-0000		1	GEARING	
030	442555-0000		1	GEAR WHEEL	
040	442556-0000		1	GEAR WHEEL	
050	442557-0000		1	GEAR WHEEL	
060	442558-0000		1	GEAR WHEEL	
070	442559-0000		1	GEAR WHEEL	
080	567347-0000		1	SHAFT	
090	567348-0000		1	SHAFT	
100	525136-0000		1	SHAFT	
110	567349-0000		1	SPACER	
120	567373-0000		1	GEAR HOUSING	
130	321306-0107		1	BALL BEARING, 35X62X14 MM	
140	321309-0106		7	BALL BEARING, 30X62X16 MM	
150	90091-0145		1	RADIAL SEAL 30X62X10 MM	
160	90091-0054		2	RADIAL SEAL 30X47X8 MM DUST LIP	
170	90242-0116		1	O-RING 55X2,5 MM	
190	315750-0122		1	RETAINING RING SHAFT DIN 471 ST 30	
200	315750-0127		1	RETAINING RING SHAFT DIN 471 ST 40	
210	315752-0136		3	RETAINING RING FOR BORE DIN 472 62 ST	
215	90141-0012		1	RETAINING RING FOR SHAFT, 17X1,5MM	
220	315701-0202		1	PARALLEL KEY W. ROUND ENDS 5X5X22 MM	
230	315701-0234		3	PARALLEL KEY W. ROUND ENDS 6X6X25 MM	
240	315701-0270		2	PARALLEL KEY W. ROUND ENDS 8X7X40 MM	
250	315701-0272		1	PARALLEL KEY W. ROUND ENDS 8X7X50 MM	
260	567350-0000		2	WEDGE	
270	312111-0329		4	SCREW HEX.SOCK.HD.MC6S-TT 5X16 88 FZB	
280	312111-0370		12	SCREW HEX.SOCK.HD.MC6S-TT 6X20 88 FZB	
290	90330-0026		1	PLUG, EXT. G-THREAD, G1/4	
300	90330-0037		1	PLUG, EXT. G-THREAD, G1/2	
310	442841-0000		1	AIR SCREW	
320	315234-0110		2	WASHER,PL.RND.CU.13,5/18 H=1,5	
330	315234-0113		1	WASHER PL.RND.CU.21,3//26 H=1,5	
340	90214-0310		2	SEALING LID, 62X8 MM	
345	442903-0000		1	SHIM	
346	442904-0000		1	SHIM	
347	442905-0000		1	SHIM	
390	90296-0075	ML	2400	SHELL OMALA OIL 320, DRUM 208 LITRES	

Pos	Part No	UN	Qty	Description	Page No

Machine Type | Group Description | Used-In | Group Number | Page No

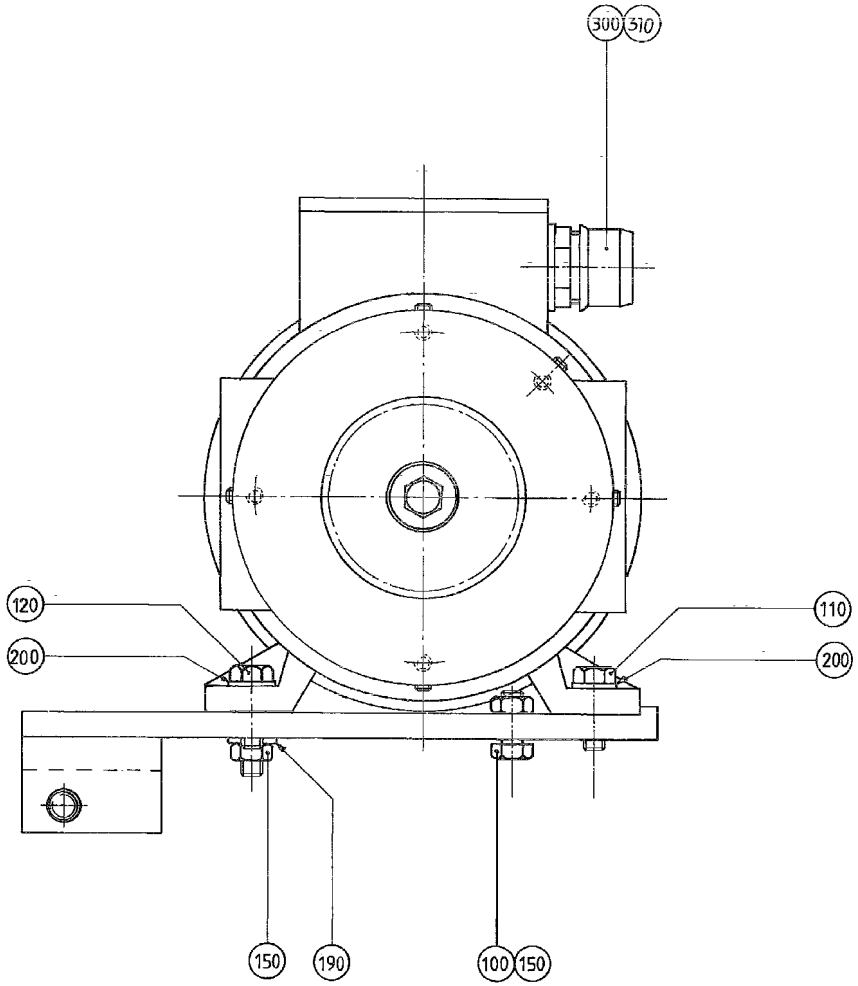

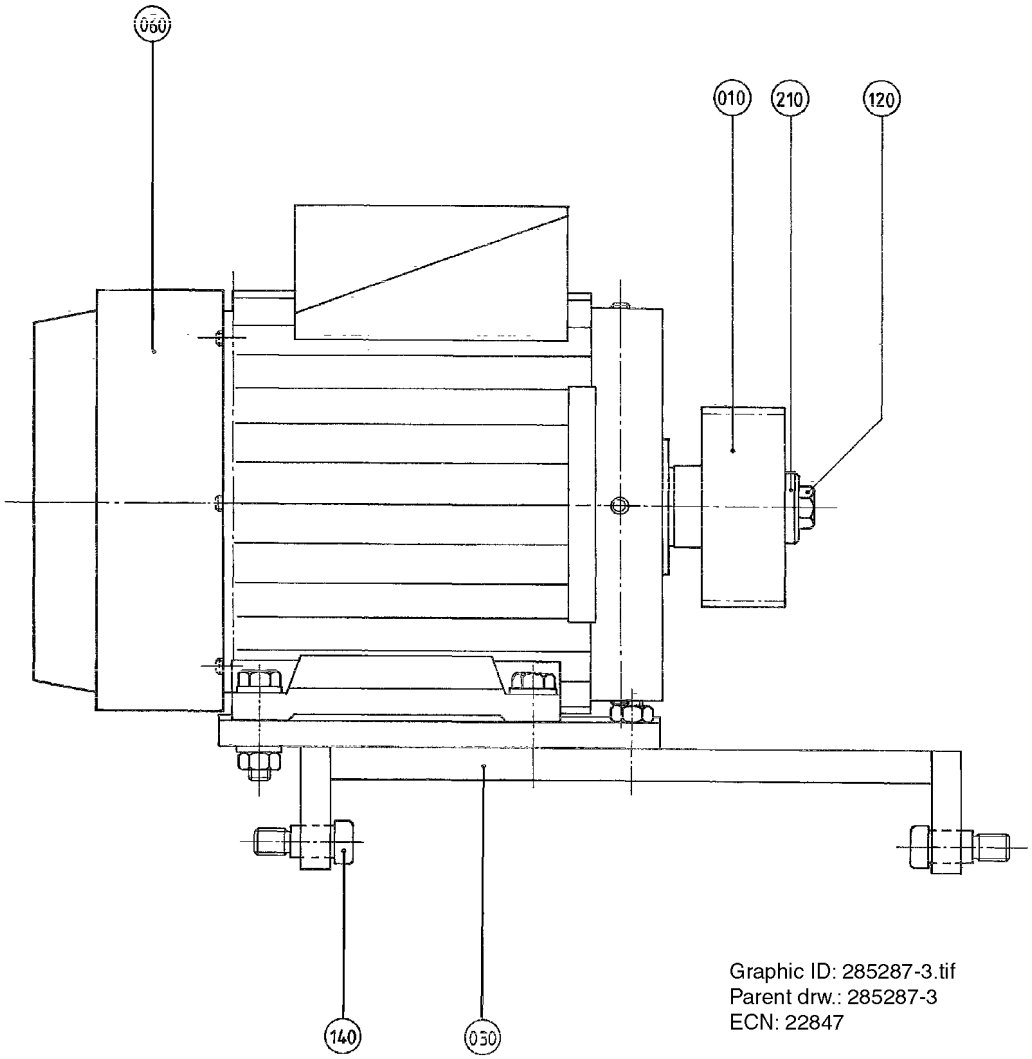

Graphic ID: 285287-3.tif
Parent drw.: 285287-3
ECN: 22847

ECM: 72437 - 19990426
Group number: 285287-0500
Assembly Drawing: 285287-3_1_AA

Pos	Part No	UN	Qty	Description	Page No
-					
010	443336-0008		1	TIMING BELT PULLEY	
030	525166-0000		1	MOTOR CRADLE	
060	90045-0049		1	MOTOR 3GAA 082002-ASA	
100	312105-0451		1	SCREW M6S ISO 4017 M8X20 A480	
110	312105-0453		3	SCREW M6S ISO 4017 M8X25 A480	
120	312105-0457		2	SCREW M6S ISO 4014 M8X35 A480	
140	312180-0530		2	SCREW ISO7379 H10X16	
150	312605-0318		2	HEXAGON NUT, M6M M8 A280	
190	315105-0165		1	WASHER BRB 8,4X16 RFR	
200	315115-0165		4	WASHER PLAIN, TBRB 8,4/16 H=3	
210	315125-0165		1	WASHER TBRSB 8,4X26X5 A4	
300	353245-0005		1	GLAND, EXTENDED WITH INSERT, PG16/PR 22,	
310	90099-0178		1	GLAND, LOCK NUT, PG 16	

Pos	Part No	UN	Qty	Description	Page No

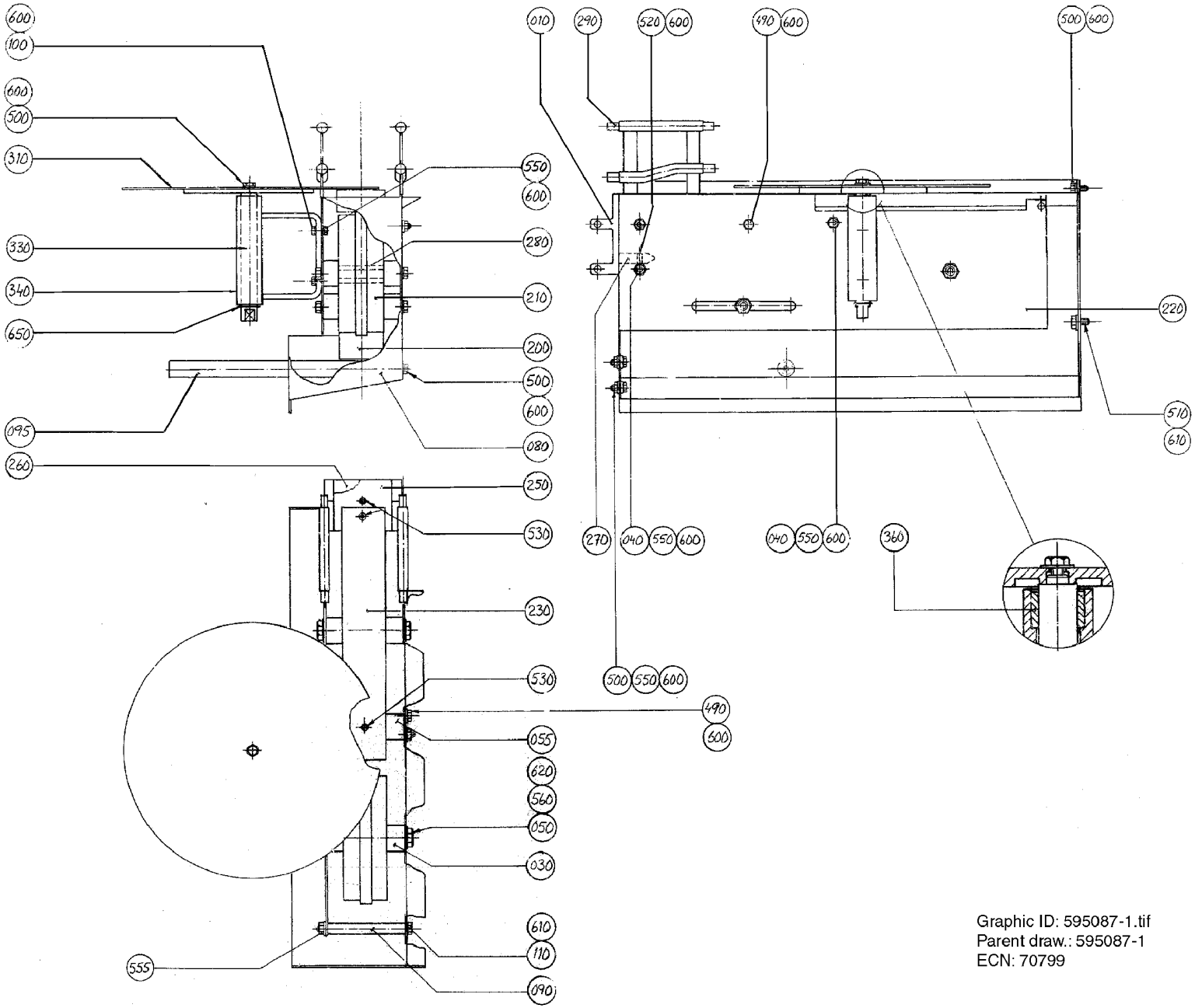

Graphic ID: 595087-1.tif
Parent draw.: 595087-1
ECN: 70799

ECM: 188325 - 20041105
Group number: 595087-0100
Assembly Drawing: 595087-1_1_AA

Pos	Part No	UN	Qty	Description	Page No
-					
010	228843-0001		2	SPACER	
030	229201-0002		4	SPACER	
040	229508-0029		5	STUD SCREW	
050	229760-0013		2	STUD SCREW	
055	237082-0002		1	MOUNTING BLOCK	
080	594632-0000		1	SIDE PLATE	
090	297574-0002		1	SPACER	
095	525171-0001		1	BRACKET	
100	312105-0368		2	SCREW M6S ISO 4017 M6X16 A480	
110	312105-0471		1	SCREW M6S ISO 4014 M8X100 A480	
200	476975-0000		1	WHEEL	
210	245039-0000		1	GUIDE WHEEL	
220	297569-0000		1	SIDE PLATE	
230	442776-0000		1	SLIDE RAIL	
250	228845-0000		1	MOUNTING BLOCK	
260	229202-0000		1	MOUNTING BLOCK	
270	229206-0000		1	LOCATING PIECE	
280	229207-0000		2	BEARING SLEEVE	
290	229516-0000		8	PIN	
310	525053-0000		1	PLATE (CIRCULAR)	
330	285132-0000		1	SHAFT	
340	285133-0000		1	CANTILEVER	
360	525252-0000		2	BEARING	
490	312105-0362		2	SCREW M6S ISO 4017 M6X8 A480	
500	312105-0367		5	SCREW M6S ISO 4017 M6X14 A480	
510	312105-0449		1	SCREW M6S ISO 4017 M8X16 A480	
520	312115-0368		1	SCREW ISO4762 M6X16 A4 80	
530	312155-0370		3	SCREW DIN 7991 MF6S M6X20 A4 70	
550-02	312605-0316		14	HEXAGON NUT, M6M M6 A280	
555	312605-0318		1	HEXAGON NUT, M6M M8 A280	
560	312605-0320		4	HEXAGON NUT, M6M M10 A280	
600	315105-0153		19	WASHER BRB 6,4X12 RFR	
610	315105-0165		3	WASHER BRB 8,4X16 RFR	
620	315105-0173		4	WASHER BRB 10,5X20 RFR	
650	315755-0113		1	RETAINING RING SHAFT DIN 6799 15 A2	

Pos	Part No	UN	Qty	Description	Page No

Machine Type | Group Description | Used-In | Group Number | Page No

FOLDING PART LEFT OUT

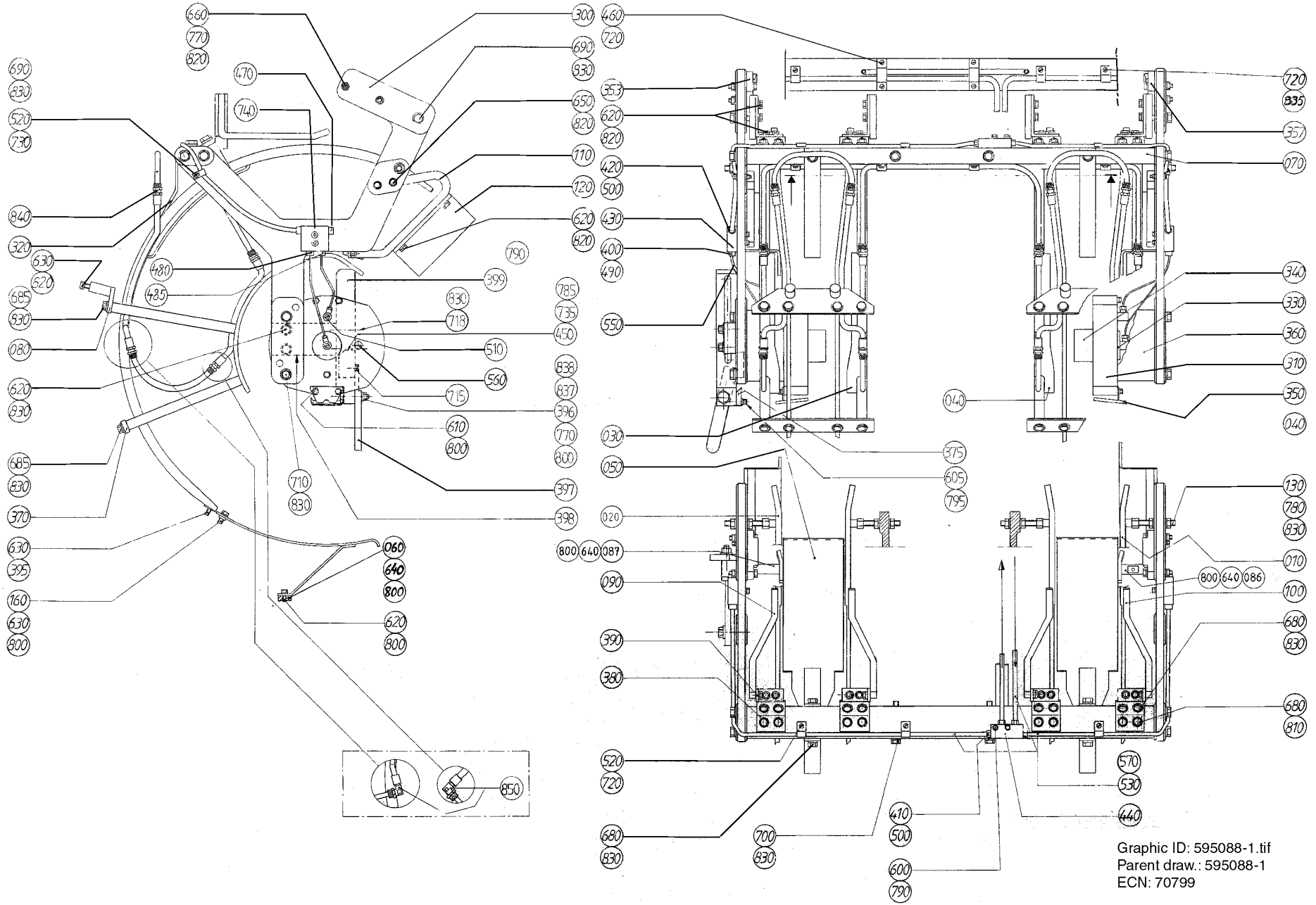

ECM: 72392 - 19990617
Group number: 595088-0100
Assembly Drawing: 595088-1_1_AA

This list covers pages from 5-24 to 5-27

Pos	Part No	UN	Qty	Description	Page No
0500SQ NORMFIN					
030	583453-0000		1	FOLDING BAR	
040	583458-0000		1	FOLDING BAR	
060	591085-0000		2	SPACER	
110	583456-0000		2	BRACKET	
120	583457-0000		2	COUNTER PLATE	
397	525295-0000		1	ARM	
399	1361912-0000		1	BRACKET	
640	312105-0370		4	SCREW M6S ISO 4017 M6X20 A480	
840	342920-0121		8	STRAIGHT COUPLING,EXT.THREADED 8/6-R1/8"	
850	342930-0121		8	ELBOW 90 COUPL.,EXT.THREAD 8/6-R1/8"	
0500SQ REVFIN					
030	1361910-0000		2	FOLDING BAR	
040	1361911-0000		2	FOLDING BAR	
060	591085-0000		2	SPACER	
110	583456-0000		2	BRACKET	
120	583457-0000		2	COUNTER PLATE	
397	525295-0000		1	ARM	
399	1361912-0000		1	BRACKET	
640	312105-0370		4	SCREW M6S ISO 4017 M6X20 A480	
840	342920-0121		8	STRAIGHT COUPLING,EXT.THREADED 8/6-R1/8"	
850	342930-0121		8	ELBOW 90 COUPL.,EXT.THREAD 8/6-R1/8"	
0568SQ NORMFIN					
030	597610-0000		2	FOLDING BAR	
040	597611-0000		2	FOLDING BAR	
060	591085-0000		2	SPACER	
110	597613-0000		2	BRACKET	
120	597612-0000		2	COUNTER PLATE	
397	525295-0000		1	ARM	
399	1361912-0000		1	BRACKET	
640	312105-0370		4	SCREW M6S ISO 4017 M6X20 A480	
840	342920-0121		8	STRAIGHT COUPLING,EXT.THREADED 8/6-R1/8"	
850	342930-0121		8	ELBOW 90 COUPL.,EXT.THREAD 8/6-R1/8"	
0568SQ REVFIN					
030	1362435-0000		2	FOLDING BAR	
040	1362434-0000		2	FOLDING BAR	
060	591085-0000		2	SPACER	
110	597613-0000		2	BRACKET	
120	597612-0000		2	COUNTER PLATE	
397	525295-0000		1	ARM	
399	1361912-0000		1	BRACKET	
640	312105-0370		4	SCREW M6S ISO 4017 M6X20 A480	
840	342920-0121		8	STRAIGHT COUPLING,EXT.THREADED 8/6-R1/8"	
850	342930-0121		8	ELBOW 90 COUPL.,EXT.THREAD 8/6-R1/8"	
1000SQ NORMFIN					
030	574045-0000		2	FOLDING BAR	
040	574046-0000		2	FOLDING BAR	
086	574097-0000		1	STEERING	
087	574098-0000		1	STEERING	
110	574048-0000		2	BRACKET	
120	574049-0000		2	COUNTER PLATE	
397	550359-0000		1	ARM	
399	595055-0000		1	BRACKET	
640	312105-0370		2	SCREW M6S ISO 4017 M6X20 A480	
840	342920-0121		16	STRAIGHT COUPLING,EXT.THREADED 8/6-R1/8"	
1000SQ REVFIN					
030	1143020-0000		2	FOLDING BAR	
040	1143021-0000		2	FOLDING BAR	
086	574097-0000		1	STEERING	
087	574098-0000		1	STEERING	
110	574048-0000		2	BRACKET	
120	574049-0000		2	COUNTER PLATE	
397	550359-0000		1	ARM	
399	595055-0000		1	BRACKET	
640	312105-0370		2	SCREW M6S ISO 4017 M6X20 A480	
840	342920-0121		16	STRAIGHT COUPLING,EXT.THREADED 8/6-R1/8"	
Common Parts					
010	525001-0000		2	FOLDING BAR	
020	525003-0000		2	FOLDING BAR	
050	574047-0000		2	LEAD RAIL	
070	525007-0002		1	CANTILEVER	
080	525008-0001		2	BRACKET	
090	569122-0000		2	FOLDING ARM	
100	569123-0000		2	FOLDING ARM	
130	525015-0002		4	SCREW	
300	525016-0000		2	FASTENING PLATE	
310	574050-0000		2	CURVE	
320	525017-0000		2	STEERING GUIDE	
330	285168-0000		2	BUSHING	
340	285851-0000		2	BEARING	
350	443240-0000		2	DRIP PLATE	
353	442564-0000		1	CURVE	
357	442565-0000		1	CURVE	
360	525018-0000		2	51SPACER	

FOLDING PART LEFT OUT

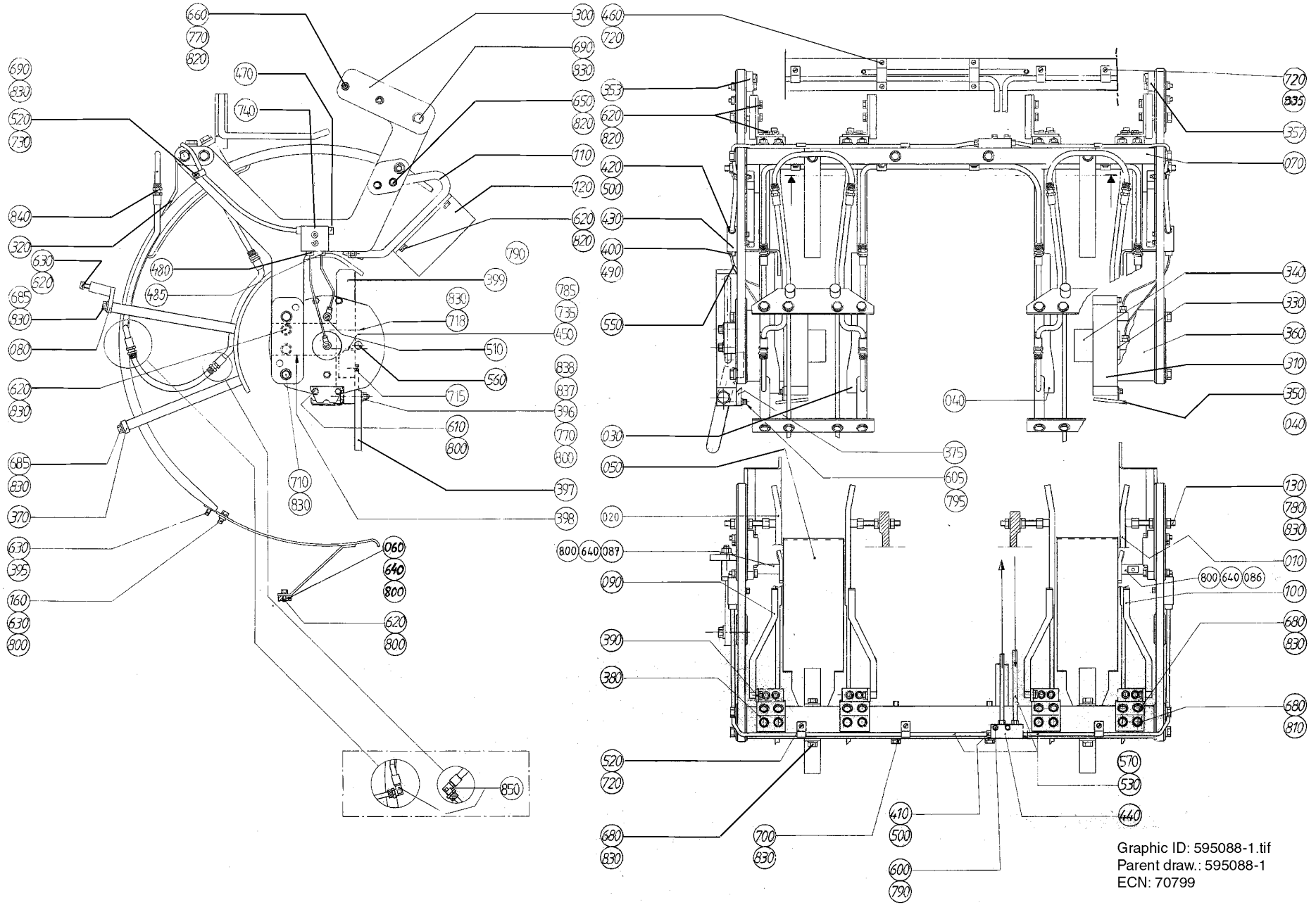

Graphic ID: 595088-1.tif
Parent draw.: 595088-1
ECN: 70799

ECM: 72392 - 19990617
Group number: 595088-0100
Assembly Drawing: 595088-1_1_AA

This list covers pages from 5-24 to 5-27

Pos	Part No	UN	Qty	Description	Page No
Common Parts (Cont'd)					
370	525019-0000		2	BRACKET	
375	595057-0000		1	BRACKET	
380	525340-0000		4	BRACKET	
390	525178-0000		4	BRACKET	
395	525181-0000		2	WASHER	
396	525321-0000		1	SCREW	
398	525296-0000		1	BRACKET	
400	90028-0020		4	CONE TUBE 2,5MM	
410	90028-0022		4	CONE TUBE 6 MM	
420	90028-0025		2	CONE TUBE 6 MM	
430	90032-0038		2	BLOCK 2 WAYS	
440	90032-0044		1	DISTRIBUTION BLOCK 4 WAYS	
450	90044-0104		1	PROX.SWITCH IFM IN 3002(RP 90044-194)	
460	90074-0018		2	CABLE CLIPS, D=2X10 MM	
470	90087-0019		2	PLUG M10X1 STAINLESS	
480	90092-0052		2	METERING VALVE 10 MM3	
485	90092-0053		2	METERING VALVE 30 MM3	
490	90134-0039		4	BUSHING VALVE CONNECTION 2,5 MM	
500	90134-0055		6	BUSHING/NUT INLET/OUTLET 6 MM	
510	90134-0058		4	CONNECTION	
520	90165-0057		5	PIPE CLIP FOR TUBE D=6 MM	
530	90166-0108	MM	5200	TUBE 6 MM PA,TRANSP.	
540	90166-0122	MM	6000	TUBE 8 MM PA,TRANSP.	
550	90166-0143	MM	2000	TUBE 2,5 MM PA,TRANSP.	
560	90261-0032		4	PLUG, BLIND, PLASTIC, NO. 1073	
570	90134-0030		6	SLEEVE FOR PLASTIC TUBE	
600	312105-0295		2	SCREW M6S ISO 4017 M4X20 A470	
605	312105-0327		2	SCREW M6S ISO 4017 M5X12 A480	
610	312105-0364		10	SCREW M6S ISO 4017 M6X10 A480	
620	312105-0366		24	SCREW M6S ISO 4017 M6X12 A480	
630	312105-0368		10	SCREW M6S ISO 4017 M6X16 A480	
650	312105-0374		4	SCREW M6S ISO 4014 M6X30 A480	
660	312105-0378		4	SCREW M6S ISO 4014 M6X40 A480	
680	312105-0449		20	SCREW M6S ISO 4017 M8X16 A480	
685	312105-0451		16	SCREW M6S ISO 4017 M8X20 A480	
690	312105-0455		8	SCREW M6S ISO 4017 M8X30 A480	
700	312105-0464		2	SCREW M6S ISO 4014 M8X65 A480	
710	312105-0469		4	SCREW M6S ISO 4014 M8X90 A480	
715	312115-0323		1	SCREW ISO4762 M5X8 A4 80	
718	312115-0455		2	SCREW ISO4762 M8X30 A4 80	
720	312125-0287		10	SCREW ISO 1207 M4X8 A4	
730	312125-0291		2	SCREW ISO 1207 M4X12 A4	
735	312125-0230		2	SCREW ISO 1207 M3X20 A4	
740	312155-0297		4	SCREW DIN 7991 MF6S M4X25 A4 70	
770	312605-0316		5	HEXAGON NUT, M6M M6 A280	
780	312605-0318		8	HEXAGON NUT, M6M M8 A280	
785	315105-0124		2	WASHER BRB 3,2X7 RFR	
790	315105-0136		2	WASHER BRB 4,3X9 RFR	
795	315105-0146		2	WASHER BRB 5,3X10 RFR	
800	315105-0153		19	WASHER BRB 6,4X12 RFR	
810	315105-0165		8	WASHER BRB 8,4X16 RFR	
820	315115-0153		40	WASHER PLAIN, TBRB 6,4/12 H=3	
830	315115-0165		52	WASHER PLAIN, TBRB 8,4/16 H=3	
835	316810-0106		3	PIPE CLIP FOR TUBE D=8 MM	
837	321116-0127		1	BEARING BUSH W/O FLANGE, 10X14X10 MM	
838	321116-0128		1	BEARING BUSH W/O FLANGE, 10X14X16 MM	

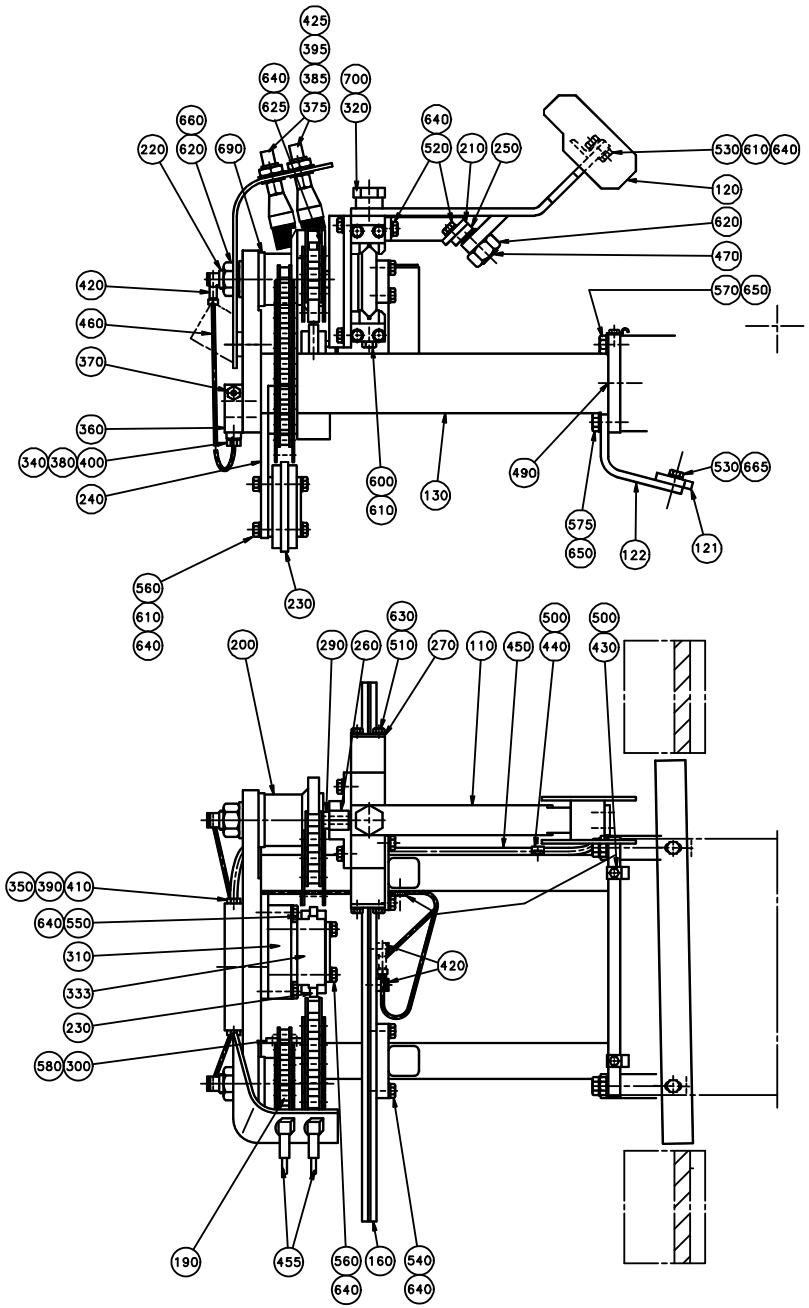
425
395
640
385
700
625
375
320
660
640
220
620
690
520
210
250
530
610
640
120
620
470
420
570
650
460
370
360
340
380
400
240
600
610
130
490
530
665
575
650
122
121
560
610
640
230
630
500
500
200
290
260
510
270
110
450
440
430
350
390
410
640
550
310
333
230
580
300
420
190
455
560
640
160
540
640

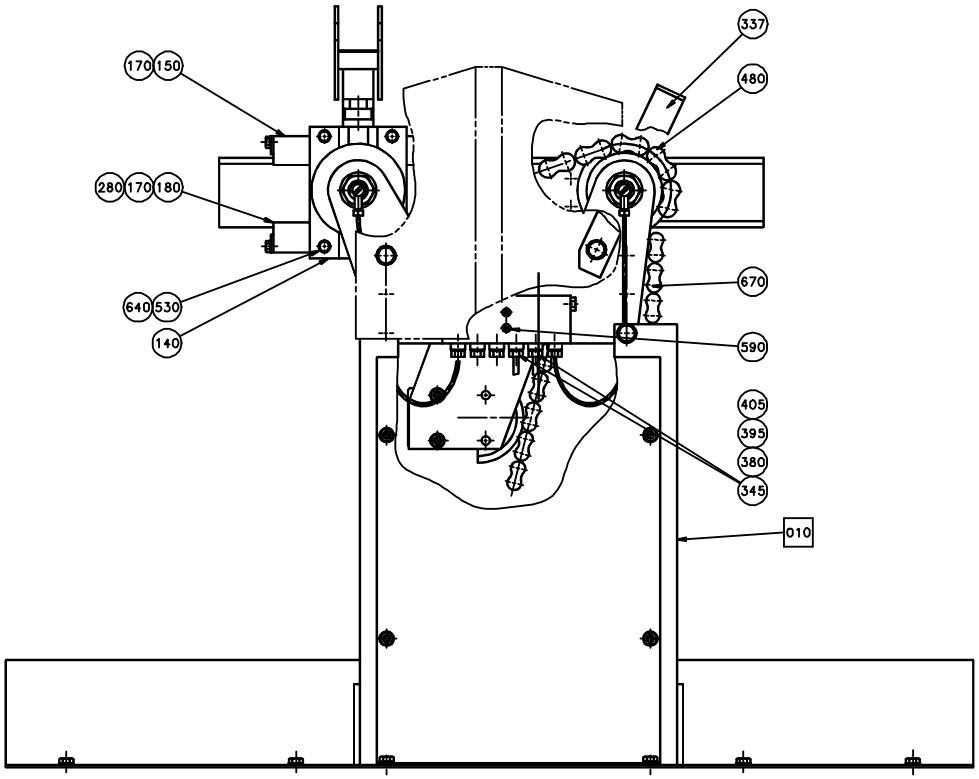
337
480
170
150
280
170
180
640
530
140
670
590
405
395
380
345
010

ECM: 188327 - 20041105
Group number: 595089-0100
Assembly Drawing: 595089-1_1_AA

Pos	Part No	UN	Qty	Description	Page No
0500SQ, 0568SQ					
110	525304-0000		1	ARM	
120	583630-0000		1	DISTRIBUTOR	
530	312105-0368		6	SCREW M6S ISO 4017 M6X16 A480	
570	312105-0453		4	SCREW M6S ISO 4017 M8X25 A480	
1000SQ					
110	525301-0000		1	ARM	
120	574056-0000		1	DISTRIBUTOR	
121	595068-0000		1	STEERING	
122	574058-0000		2	HOLDER	
530	312105-0368		8	SCREW M6S ISO 4017 M6X16 A480	
570	312105-0453		2	SCREW M6S ISO 4017 M8X25 A480	
575	312105-0455		2	SCREW M6S ISO 4017 M8X30 A480	
665	315115-0153		2	WASHER PLAIN, TBRB 6,4/12 H=3	
Common Parts					
010	525320-0100		1	CHAIN GUARD	**5-31**
130	525310-0000		1	BRACKET	
140	443229-0000		1	BRACKET	
150	525140-0000		1	HOLDER	
160	1478881-0000		1	GUIDE	
170	442931-0000		2	SLIDE RAIL	
180	443232-0000		1	HOLDER	
190	443235-0000		1	SPROCKET	
200	525194-0000		1	SPROCKET	
210	525200-0000		1	BRACKET	
220	525312-0000		2	SHAFT	
230	90344-0049		2	CHAIN TENSIONER	
240	566533-0000		1	BRACKET	
250	597564-0000		1	PLATE	
260	443237-0000		1	SLIDER	
270	443239-0000		4	WASHER	
280	525138-0000		1	SHEET	
290	525195-0000		1	WASHER	
300	525315-0000		1	SLIDER	
310	566312-0000		1	BRACKET	
320	525317-0000		1	FITTING BOLT	
333	566311-0000		1	PROFILE	
337	566315-0000		1	HOLDER	
340	90028-0020		4	CONE TUBE 2,5MM	
345	90028-0021		2	CONE TUBE 4 MM	
350	90028-0025		1	CONE TUBE 6 MM	
360	90032-0040		1	BLOCK 6 WAYS	
370	90087-0019		1	PLUG M10X1 STAINLESS	
375	90092-0048		2	OIL BRUSH, FLAT, 5/16-24 UNF	
380	90092-0052		6	METERING VALVE 10 MM3	
385	90134-0002		2	CONNECTOR R1/8, D=4 MM	
390	90134-0030		2	SLEEVE FOR PLASTIC TUBE	
395	342706-0114		4	ACCESSORIES, INSERT SLEEVE 4 MM	
400	90134-0039		4	BUSHING VALVE CONNECTION 2,5 MM	
405	90134-0040		2	BUSHING VALVE CONNECTION 4 MM	
410	90134-0055		1	BUSHING/NUT INLET/OUTLET 6 MM	
420	90134-0058		4	CONNECTION	
425	90137-0002		2	BANJO CONN. 1/8 - 5/16-24UNF	
430	90165-0056		3	PIPE CLIP FOR TUBE D=4 MM	
440	90165-0057		2	PIPE CLIP FOR TUBE D=6 MM	
450	90166-0108	MM	1400	TUBE 6 MM PA,TRANSP.	
455	90166-0051	MM	600	TUBE PA,TRANSP.	
460	90166-0143	MM	1200	TUBE 2,5 MM PA,TRANSP.	
470	90287-0109		1	SCREW SPRINGLOAD. SLOTTED HEAD M16X24	
480	90288-0055		1	ROLLER CHAIN, SINGLE 5/8 -42	
	90288-0317		*1*	*CONNECTING LINK SINGLE 5/8",SS*	
	90288-0324		*1*	*CARRIER*	
490	311103-0399		2	PARALLEL PIN ISO 2338 8M6X16 A1	
500	312105-0287		5	SCREW M6S ISO 4017 M4X8 A470	
510	312105-0325		8	SCREW M6S ISO 4017 M5X10 A480	
520	312105-0366		4	SCREW M6S ISO 4017 M6X12 A480	
540	312105-0370		8	SCREW M6S ISO 4017 M6X20 A480	
550	312105-0376		2	SCREW M6S ISO 4014 M6X35 A480	
560	312105-0379		4	SCREW M6S ISO 4014 M6X45 A480	
580	312155-0291		4	SCREW DIN 7991 MF6S M4X12 A4 70	
590	312155-0297		2	SCREW DIN 7991 MF6S M4X25 A4 70	
600	312318-0368		2	SCREW ISO4029 M6X16 A4	
610	312605-0316		4	HEXAGON NUT, M6M M6 A280	
620	312605-0324		3	HEXAGON NUT, M6M M16 A280	
625	312812-0316		2	HEXAGON NUT, NY-LOCK M6 A480	
630	315105-0146		8	WASHER BRB 5,3X10 RFR	
640	315105-0153		28	WASHER BRB 6,4X12 RFR	
650	315105-0165		4	WASHER BRB 8,4X16 RFR	
660	315105-0186		2	WASHER BRB 17X30 RFR	
670	318212-0119		1	ROLLER CHAIN, SINGLE 1/2 -119,SS	
690	321101-0252		4	FLANGE BUSHING, 25X35X16 MM	
700	321120-0122		1	BEARING BUSH W/O FLANGE, 15X17X15 MM	

Machine Type | Group Description | Used-In | Group Number | Page No

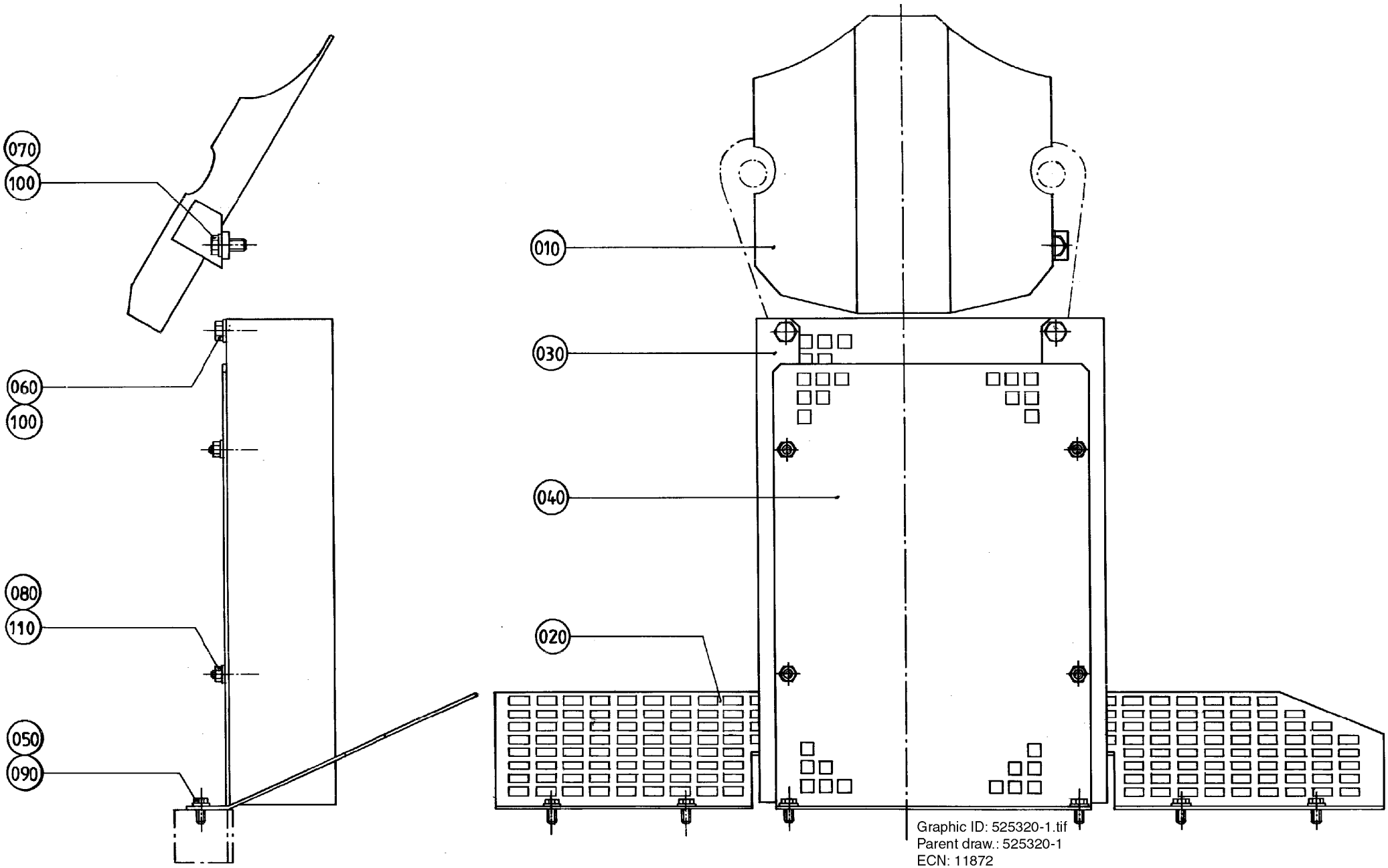
070
100
060
100
080
110
050
090
010
030
040
020
Graphic ID: 525320-1.tif
Parent draw.: 525320-1
ECN: 11872

ECM: 71939 - 19981102
Group number: 525320-0100
Assembly Drawing: 525320-1_1_AA

Pos	Part No	UN	Qty	Description	Page No
0300B					
010	525265-0003		1	LEAD PLATE	
0500B, 0568B					
010	525265-0004		1	LEAD PLATE	
0500S					
010	525265-0002		1	LEAD PLATE	
1000SQ, 0500SQ, 0568SQ					
010	574131-0000		1	LEAD PLATE	
1136B, 1000S, 1000B					
010	525265-0001		1	LEAD PLATE	
Common Parts					
020	525326-0000		1	CHAIN GUARD	
030	525327-0000		1	CHAIN GUARD	
040	525328-0000		1	CHAIN GUARD	
050	312105-0368		6	SCREW M6S ISO 4017 M6X16 A480	
060	312105-0449		2	SCREW M6S ISO 4017 M8X16 A480	
070	312105-0451		2	SCREW M6S ISO 4017 M8X20 A480	
080	312605-0316		4	HEXAGON NUT, M6M M6 A280	
090	315105-0153		6	WASHER BRB 6,4X12 RFR	
100	315105-0165		4	WASHER BRB 8,4X16 RFR	
110	315115-0153		4	WASHER PLAIN, TBRB 6,4/12 H=3	

Pos	Part No	UN	Qty	Description	Page No

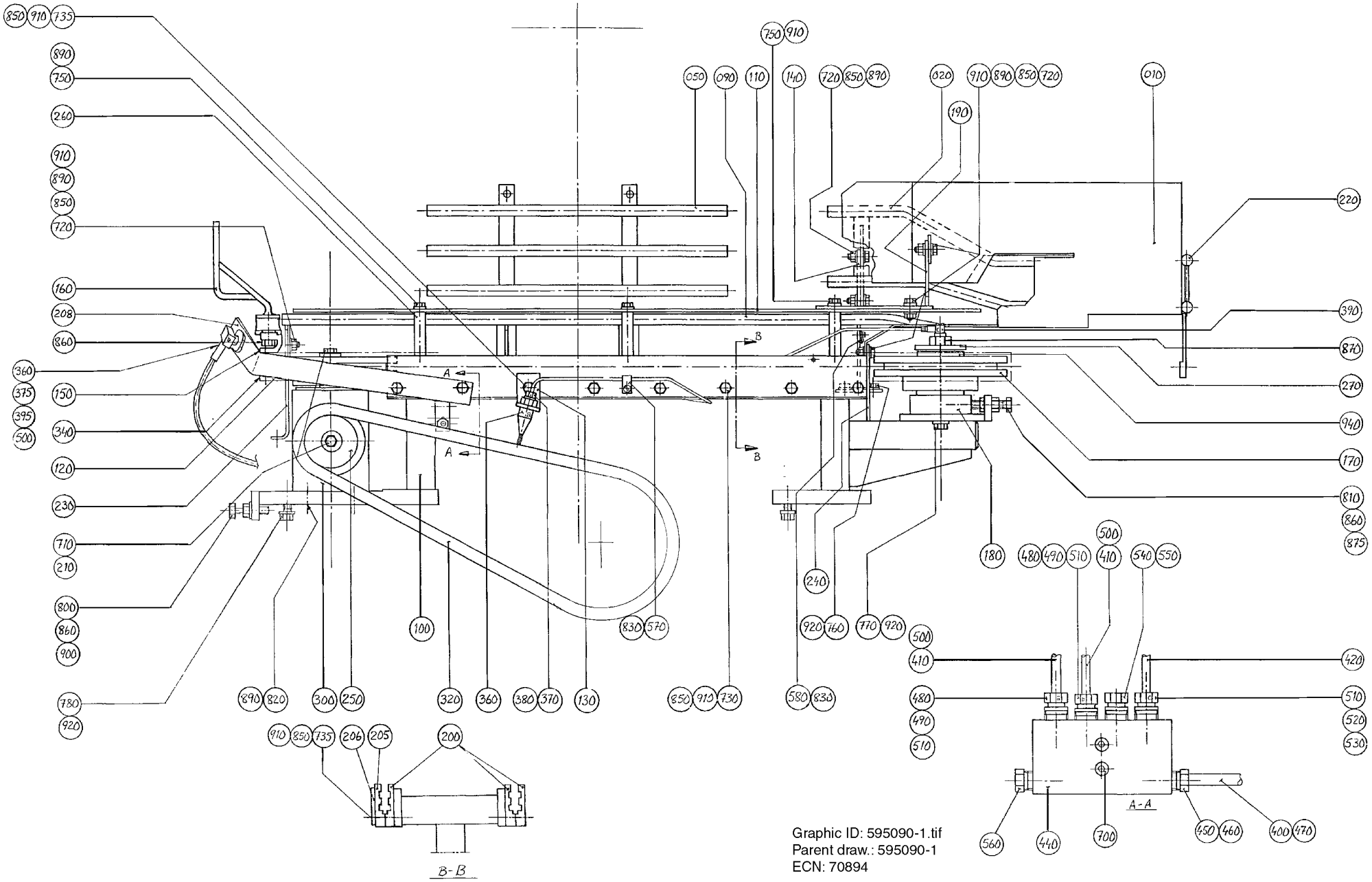
B-B
A-A
Graphic ID: 595090-1.tif
Parent draw.: 595090-1
ECN: 70894

ECM: 188329 - 20041105
Group number: 595090-0100
Assembly Drawing: 595090-1_1_AB

Pos	Part No	UN	Qty	Description	Page No
0500SQ, 0568SQ					
020	1361252-0000		1	ARCH	
050	1361909-0000		1	LEAD RAIL	
140	583629-0000		1	BRACKET	
160	525374-0000		4	CARRIER	
1000SQ					
020	595048-0000		1	ARCH	
050	595060-0000		1	LEAD RAIL	
140	443217-0000		1	BRACKET	
160	595046-0000		4	CARRIER	
Common Parts					
010	595052-0000		1	ARCH	
090	594644-0000		1	LEAD RAIL	
100	595044-0000		1	MACHINE BODY	
110	443210-0000		1	PLATE STAINLESS	
120	443081-0000		1	SPROCKET	
130	443213-0000		1	BRACKET	
150	2549933-0000		4	LINK	
170	525298-0000		1	SPROCKET	
180	525299-0000		1	SHAFT	
190	595053-0000		1	BRACKET	
200	525324-0000		3	PROFILE	
205	525411-0000		1	PROFILE	
206	525412-0000		1	RULER	
208	595061-0000		1	HOLDER	
210	6278-0000		2	WASHER	
220	229516-0000		4	PIN	
230	595056-0000		1	BRACKET	
240	442830-0000		1	BRACKET	
250	442836-0000		1	SPROCKET	
260	443215-0000		3	SPACER	
270	443295-0000		1	WASHER	
300	90056-0147		1	GEARS, BEVEL ALU-00	
320	318212-0074		1	ROLLER CHAIN, SINGLE 1/2 -74,SS	
340	318242-0034		4	ROLLER CHAIN DUPLEX 1/2"-34,SS	
360	90092-0048		2	OIL BRUSH, FLAT, 5/16-24 UNF	
370	90028-0001		1	CONE 5/32"	
375	90134-0002		1	CONNECTOR R1/8, D=4 MM	
380	90134-0003		1	BUSHING	
390	90134-0058		1	CONNECTION	
395	90137-0002		1	BANJO CONN. 1/8 - 5/16-24UNF	
400	90166-0108	MM	1300	TUBE 6 MM PA,TRANSP.	
410	90166-0051	MM	700	TUBE PA,TRANSP.	
420	90166-0143	MM	500	TUBE 2,5 MM PA,TRANSP.	
440	90032-0039		1	BLOCK 4 WAYS	
450	90028-0025		1	CONE TUBE 6 MM	
460	90134-0055		1	BUSHING/NUT INLET/OUTLET 6 MM	
470	90134-0030		2	SLEEVE FOR PLASTIC TUBE	
480	90028-0021		2	CONE TUBE 4 MM	
490	90134-0040		2	BUSHING VALVE CONNECTION 4 MM	
500	342706-0114		4	ACCESSORIES, INSERT SLEEVE 4 MM	
510	90092-0052		3	METERING VALVE 10 MM3	
520	90028-0020		1	CONE TUBE 2,5MM	
530	90134-0039		1	BUSHING VALVE CONNECTION 2,5 MM	
540	90134-0045		1	PLUG M12X1	
550	90134-0052		1	PLUG DOSING BLOCK	
560	90087-0019		1	PLUG M10X1 STAINLESS	
570	90165-0056		1	PIPE CLIP FOR TUBE D=4 MM	
580	90165-0060		1	PIPE CLIP FOR TUBE D=5 MM	
700	312155-0295		2	SCREW DIN 7991 MF6S M4X20 A4 70	
710	312105-0366		2	SCREW M6S ISO 4017 M6X12 A480	
720	312105-0368		6	SCREW M6S ISO 4017 M6X16 A480	
730	312105-0376		7	SCREW M6S ISO 4014 M6X35 A480	
735	312105-0378		9	SCREW M6S ISO 4014 M6X40 A480	
750	312105-0386		3	SCREW M6S ISO 4014 M6X80 A480	
760	312105-0449		2	SCREW M6S ISO 4017 M8X16 A480	
770	312105-0451		2	SCREW M6S ISO 4017 M8X20 A480	
780	312105-0453		4	SCREW M6S ISO 4017 M8X25 A480	
800	312109-0457		1	SCREW M6S ISO 4017 M8X35 A480	
810	312109-0461		1	SCREW M6S ISO 4017 M8X50 A480	
820	312115-0368		4	SCREW ISO4762 M6X16 A4 80	
830	312125-0285		2	SCREW ISO 1207 M4X6 A4	
840	312125-0289		1	SCREW ISO 1207 M4X10 A4	
850	312605-0316		22	HEXAGON NUT, M6M M6 A280	
860	312605-0318		6	HEXAGON NUT, M6M M8 A280	
870	312605-0322		1	HEXAGON NUT, M6M M12 A280	
875	312625-0318		1	HEXAGON THIN NUT, EN 24035 ML6M M8 A4	
890	315105-0153		14	WASHER BRB 6,4X12 RFR	
900	315105-0165		1	WASHER BRB 8,4X16 RFR	
910	315115-0153		21	WASHER PLAIN, TBRB 6,4/12 H=3	
920	315115-0165		8	WASHER PLAIN, TBRB 8,4/16 H=3	
940	321101-0272		2	FLANGE BUSHING, 30X40X20 MM	

Machine Type | Group Description | Used-In | Group Number | Page No

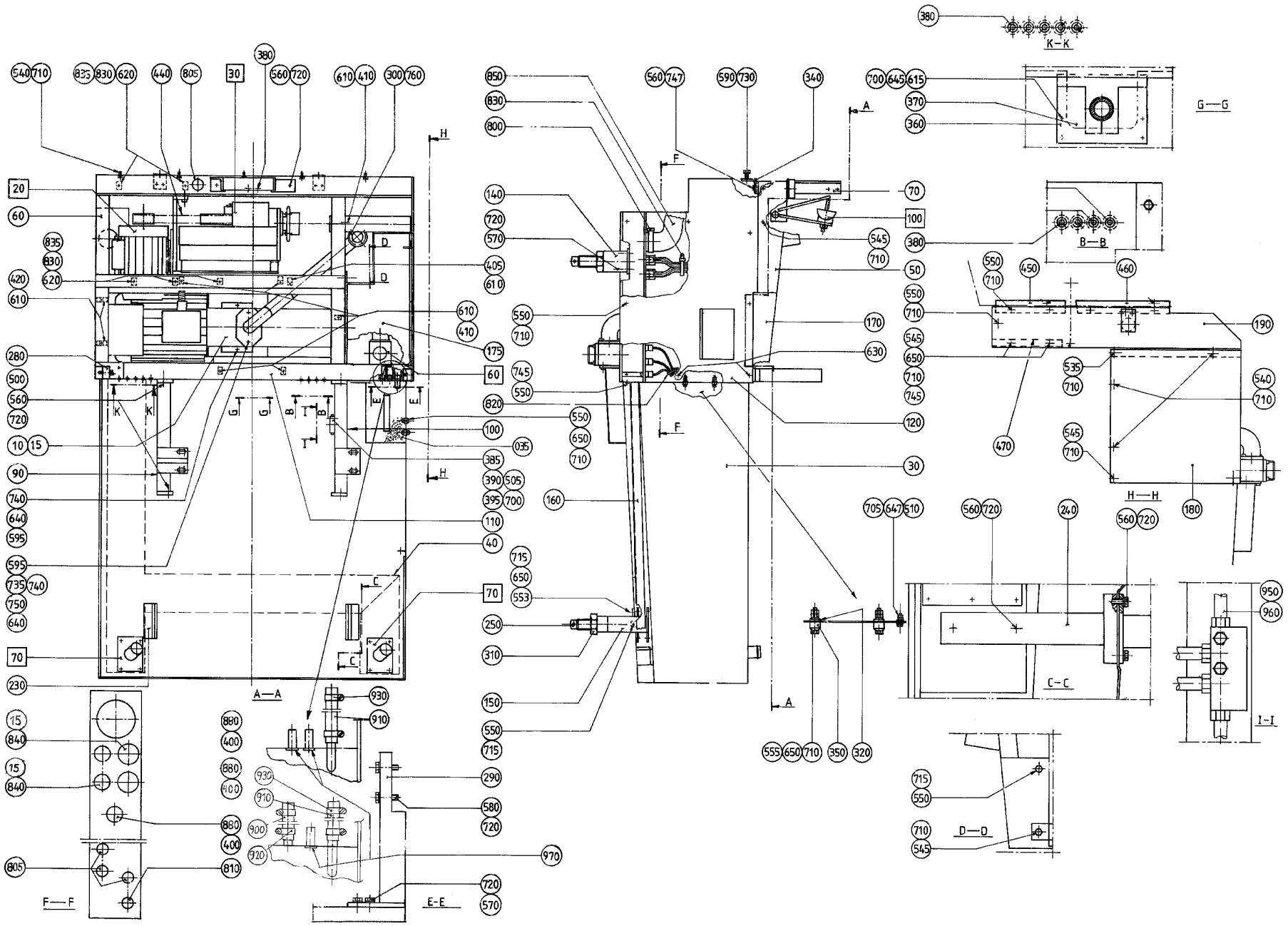
A—A
B—B
C—C
D—D
E-E
F—F
G—G
H—H
I-I
K—K

ECM: 72197 - 19990215
Group number: 285592-0600
Assembly Drawing: 285592-6_1_AA

This list covers pages from 5-34 to 5-37

Pos	Part No	UN	Qty	Description	Page No
TB/8 50HZ					
010	90321-0015		1	PUMP 502 CFX 7ETV 302 50HZ IP55	
	90321-0466		*1*	*SPARE PART KIT*	
	90321-0481		*1*	*GASKET*	
	90459-5038		*1*	*IMPELLER 502CFX, 1284210500*	
970-02	90261-0004		2	PIPE PLUG R 1/8"	
TB/8 60HZ					
010	90321-0034		1	PUMP 502 CFX 5ETV 362 60HZ IP55	
	90459-5038		*1*	*IMPELLER 502CFX, 1284210500*	
	90321-0481		*1*	*GASKET*	
	90321-0466		*1*	*SPARE PART KIT*	
970-02	90261-0004		2	PIPE PLUG R 1/8"	
Common Parts					
015	90012-0072		3	GLAND FITTING	
030	525278-0000		1	CLEANING TROUGH	
035	531119-0000		1	STRAINER	
040	525132-0000		1	CABLE TRENCH	
050	525262-0000		1	COVERING PLATE	
060	525274-0000		1	FINISH FRAME	
070	285330-0000		1	HOLDER	
090	525272-0000		1	STRUT	
100	525273-0000		1	STRUT	
110	525275-0000		1	COVERING PLATE	
120	525346-0000		1	SIDE PLATE	
140	525268-0000		2	LEG	
150	525130-0000		1	LEG	
160	525277-0000		1	CABLE TRENCH	
170	529331-0000		1	COVERING PLATE	
175	443186-0000		1	CHUTE	
180	443187-0000		1	SHEET	
190	442545-0000		1	SHEET	
230	525266-0000		1	LEG	
240	525267-0000		1	LEG	
250	285923-0000		4	SCREW	
280	297663-0000		1	POST HOLDER1	
290	297664-0000		1	POST HOLDER	
300	525271-0000		1	ELBOW PIPE	
310	285994-0000		4	NUT	
320	295435-0000		2	WASHER	
340	297814-0000		2	BRACKET	
350	297860-0000		2	BUSHING	
360	525280-0000		1	SHEET	
370	525281-0000		1	GASKET	
380	90015-0020		11	LEAD-IN, TET5-7, E-1458016	
385	90028-0022		4	CONE TUBE 6 MM	
390	90032-0044		1	DISTRIBUTION BLOCK 4 WAYS	
395	90134-0055		4	BUSHING/NUT INLET/OUTLET 6 MM	
400	90152-0050	MM	2500	SPIRAL CONDUIT, 20X13, UL 1313	
405	90165-0060		1	PIPE CLIP FOR TUBE D=5 MM	
410	316810-0106		7	PIPE CLIP FOR TUBE D=8 MM	
420	90165-0057		4	PIPE CLIP FOR TUBE D=6 MM	
440	90417-0180		1	TIMING BELT T10X920X40 POLYURETHANE	
450	525174-0000		1	BRACKET	
460	525175-0000		1	BRACKET	
470	297551-0000		1	SHEET	
500	311103-0399		8	PARALLEL PIN ISO 2338 8M6X16 A1	
505	312105-0295		2	SCREW M6S ISO 4017 M4X20 A470	
510	312105-0329		1	SCREW M6S ISO 4017 M5X16 A480	
535	312105-0362		1	SCREW M6S ISO 4017 M6X8 A480	
540	312105-0364		8	SCREW M6S ISO 4017 M6X10 A480	
545	312105-0368		6	SCREW M6S ISO 4017 M6X16 A480	
550	312105-0367		15	SCREW M6S ISO 4017 M6X14 A480	
553	312105-0370		1	SCREW M6S ISO 4017 M6X20 A480	
555	312105-0376		2	SCREW M6S ISO 4014 M6X35 A480	
560	312105-0451		23	SCREW M6S ISO 4017 M8X20 A480	
570	312105-0453		8	SCREW M6S ISO 4017 M8X25 A480	
580	312105-0455		4	SCREW M6S ISO 4017 M8X30 A480	
590	312105-0495		2	SCREW M6S ISO 4017 M10X30 A480	
595	312105-0542		4	SCREW M6S ISO 4014 M12X50 A480	
610	312125-0287		9	SCREW ISO 1207 M4X8 A4	
615	312125-0291		4	SCREW ISO 1207 M4X12 A4	
620	312125-0323		5	SCREW ISO 1207 M5X8 A4	
630	312155-0366		2	SCREW DIN 7991 MF6S M6X12 A4 70	
640	312605-0322		4	HEXAGON NUT, M6M M12 A280	
645	312605-0312		4	HEXAGON NUT, M6M M4 A280	
647	312605-0314		2	HEXAGON NUT, M6M M5 A280	
650	312605-0316		7	HEXAGON NUT, M6M M6 A280	
700	315105-0136		11	WASHER BRB 4,3X9 RFR	
705	315105-0146		2	WASHER BRB 5,3X10 RFR	
710	315105-0153		31	WASHER BRB 6,4X12 RFR	
715	6278-0000		3	WASHER	
720	315105-0165		31	WASHER BRB 8,4X16 RFR	
730	315105-0173		2	WASHER BRB 10,5X20 RFR	
735	315105-0178		2	WASHER BRB 13X24 RFR	

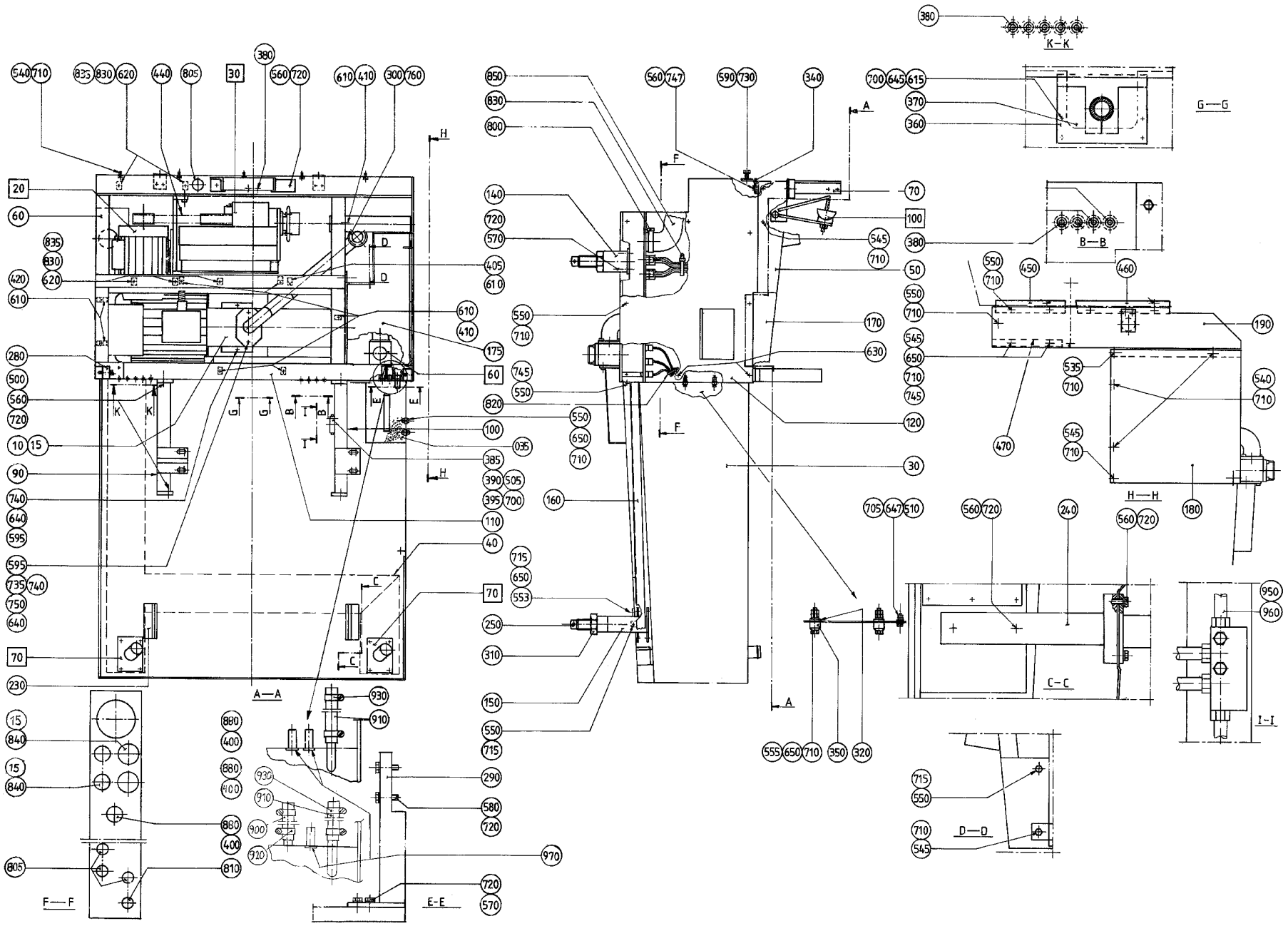
A—A
B—B
C—C
D—D
E-E
F—F
G—G
H—H
I-I
K—K

Pos	Part No	UN	Qty	Description	Page No
Common Parts (Cont'd)					
740	315115-0178		6	WASHER PLAIN, TBRB 13/24 H=4	
745	315115-0153		3	WASHER PLAIN, TBRB 6,4/12 H=3	
747	315115-0165		4	WASHER PLAIN, TBRB 8,4/16 H=3	
750	315202-0229		1	O-RING 59,2X5,7 MM	
760	315250-0103		1	GASKET 48X38X5,5 MM	
800	342991-0112		2	HOSE CLIP,WORM DRIVE TYPE (73)-83	
805	352103-0100		4	CABLE GLAND, STR 9, PR15,2/PG9	
810	352103-0101		1	CABLE GLAND, ST 9, PR15,2/PG9	
820	352113-0101		3	CABLE TIE, BLACK 92X2,5 MM	
830	352113-0102		6	CABLE TIE, BLACK 188X4,8 MM	
835	352113-0204		5	ANCHOR PLATES FOR STRIPS, TYPE TM3S25-M	
840	90152-0051	MM	1000	SPIRAL CONDUIT, 25X18, UL 1816	
850	90152-0044	MM	350	FLEXIBLE CONDUIT 3641-0070	
880	90012-0071		3	GLAND FITTING	
910	90166-0087	MM	630	HOSE 15/23 REINF.PVC TRANSP.	
930	342991-0103		2	HOSE CLIP,WORM DRIVE TYPE (19)-23	
950	90134-0030		1	SLEEVE FOR PLASTIC TUBE	
960	90166-0108	MM	870	TUBE 6 MM PA,TRANSP.	
F100	297638-0200		1	CHAIN TENSIONER	**5-11**
F070	525110-0100		1	CABLE CONDUIT	**5-13**
F060	525143-0200		1	BOTTOM VALVE	**5-15**
F030	285861-0500		1	GEAR REDUCTION	**5-17**
F020	285287-0500		1	DRIVE UNIT	**5-21**

Pos	Part No	UN	Qty	Description	Page No

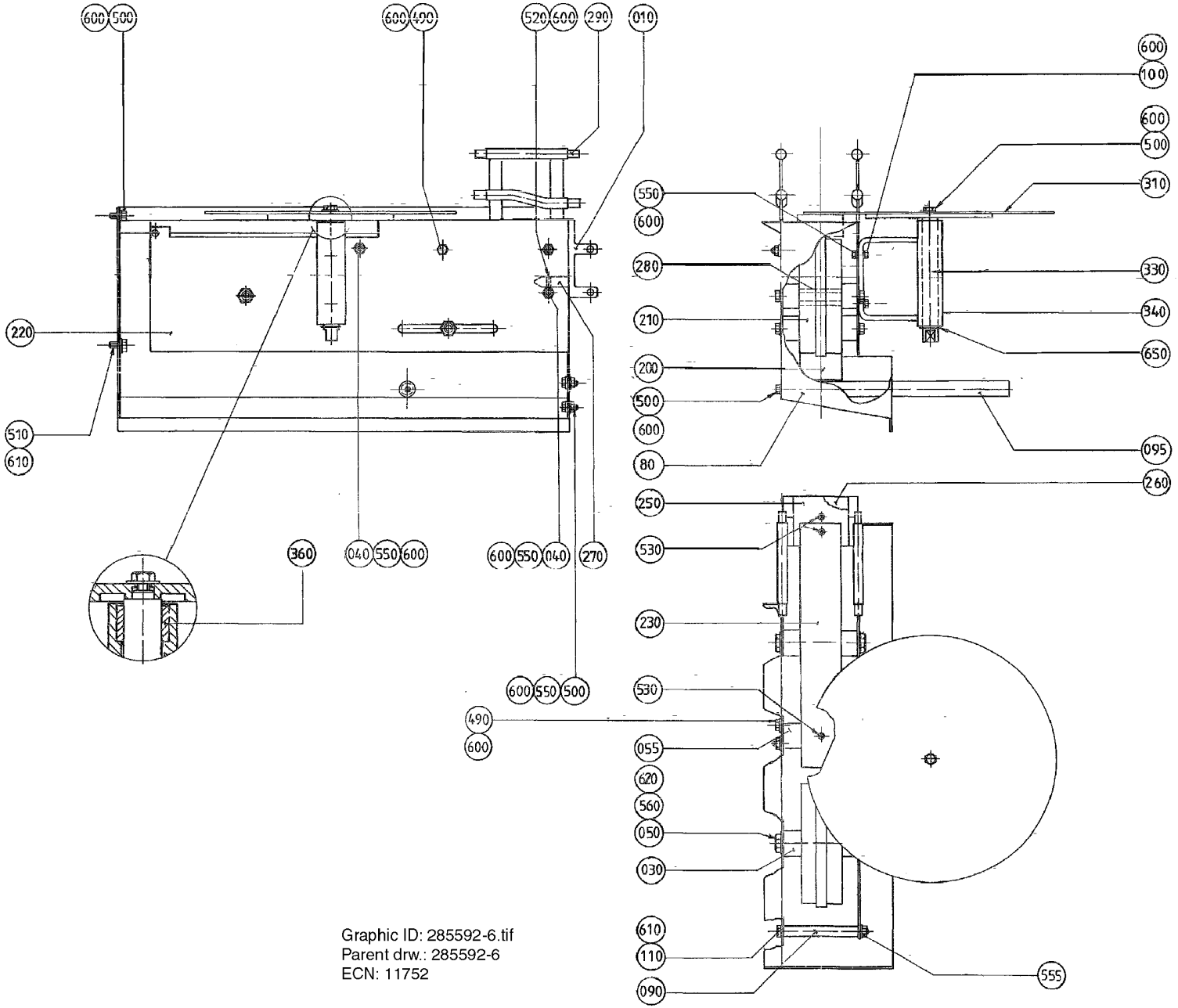

Graphic ID: 285592-6.tif
Parent drw.: 285592-6
ECN: 11752

ECM: 188324 - 20041105
Group number: 285591-0400
Assembly Drawing: 285591-4_1_AA

Pos	Part No	UN	Qty	Description	Page No
0500S, 0300B					
030	229201-0001		4	SPACER	
040	229508-0031		5	STUD SCREW	
050	229760-0012		2	STUD SCREW	
055	237082-0001		1	MOUNTING BLOCK	
080	525170-0000		1	SIDE PLATE	
090	297574-0001		1	SPACER	
095	525171-0002		1	BRACKET	
110	312105-0469		1	SCREW M6S ISO 4014 M8X90 A480	
220	525054-0000		1	SIDE PLATE	
550	312605-0316		12	HEXAGON NUT, M6M M6 A280	
0500B, 1136B, 1000SQ, 0500SQ, 1000S, 0568SQ, 0568B, 1000B					
010	228843-0001		2	SPACER	
030	229201-0002		4	SPACER	
040	229508-0029		5	STUD SCREW	
050	229760-0013		2	STUD SCREW	
055	237082-0002		1	MOUNTING BLOCK	
080	525169-0000		1	SIDE PLATE	
090	297574-0002		1	SPACER	
095	525171-0001		1	BRACKET	
110	312105-0471		1	SCREW M6S ISO 4014 M8X100 A480	
220	297569-0000		1	SIDE PLATE	
550	312605-0316		14	HEXAGON NUT, M6M M6 A280	
Common Parts					
100	312105-0368		2	SCREW M6S ISO 4017 M6X16 A480	
200	476975-0000		1	WHEEL	
210	245039-0000		1	GUIDE WHEEL	
230	442776-0000		1	SLIDE RAIL	
250	228845-0000		1	MOUNTING BLOCK	
260	229202-0000		1	MOUNTING BLOCK	
270	229206-0000		1	LOCATING PIECE	
280	229207-0000		2	BEARING SLEEVE	
290	229516-0000		8	PIN	
310	525053-0000		1	PLATE (CIRCULAR)	
330	285132-0000		1	SHAFT	
340	285133-0000		1	CANTILEVER	
360	525252-0000		2	BEARING	
490	312105-0362		2	SCREW M6S ISO 4017 M6X8 A480	
500	312105-0367		5	SCREW M6S ISO 4017 M6X14 A480	
510	312105-0449		1	SCREW M6S ISO 4017 M8X16 A480	
520	312115-0368		1	SCREW ISO4762 M6X16 A4 80	
530	312155-0370		3	SCREW DIN 7991 MF6S M6X20 A4 70	
555	312605-0318		1	HEXAGON NUT, M6M M8 A280	
560	312605-0320		4	HEXAGON NUT, M6M M10 A280	
600	315105-0153		19	WASHER BRB 6,4X12 RFR	
610	315105-0165		3	WASHER BRB 8,4X16 RFR	
620	315105-0173		4	WASHER BRB 10,5X20 RFR	
650	315755-0113		1	RETAINING RING SHAFT DIN 6799 15 A2	

FOLDING PART RIGHT OUT

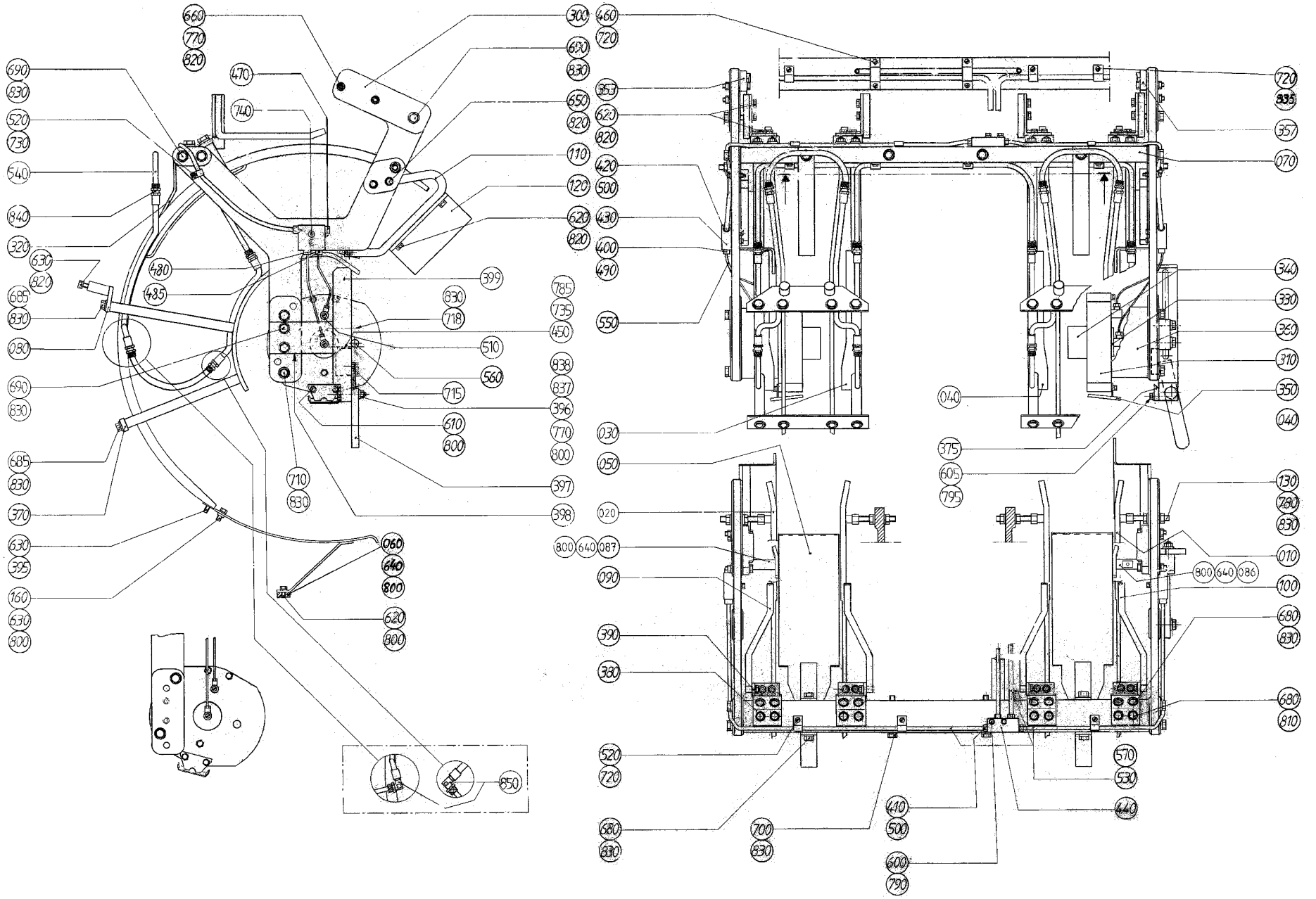

ECM: 72392 - 19990617
Group number: 525000-0200
Assembly Drawing: 525000-2_1_AA

This list covers pages from 5-40 to 5-47

Pos	Part No	UN	Qty	Description	Page No
1000SQ REVFIN					
010	525001-0000		2	FOLDING BAR	
020	525003-0000		2	FOLDING BAR	
030	1143020-0000		2	FOLDING BAR	
040	1143021-0000		2	FOLDING BAR	
050	574047-0000		2	LEAD RAIL	
070	525007-0002		1	CANTILEVER	
080	525008-0001		2	BRACKET	
086	574097-0000		1	STEERING	
087	574098-0000		1	STEERING	
090	569122-0000		2	FOLDING ARM	
100	569123-0000		2	FOLDING ARM	
110	574048-0000		2	BRACKET	
120	574049-0000		2	COUNTER PLATE	
130	525015-0002		4	SCREW	
397	550359-0000		1	ARM	
399	574125-0000		1	BRACKET	
640	312105-0370		2	SCREW M6S ISO 4017 M6X20 A480	
800	315105-0153		19	WASHER BRB 6,4X12 RFR	
840	342920-0121		16	STRAIGHT COUPLING,EXT.THREADED 8/6-R1/8"	
1136B					
010	525001-0000		2	FOLDING BAR	
020	525003-0000		2	FOLDING BAR	
030	548397-0000		2	FOLDING BAR	
040	548398-0000		2	FOLDING BAR	
050	525410-0000		2	LEAD RAIL	
070	525007-0001		1	CANTILEVER	
080	525008-0001		2	BRACKET	
090	525180-0001		2	FOLDING ARM	
100	525179-0001		2	FOLDING ARM	
110	525011-0001		2	BRACKET	
120	525012-0001		2	COUNTER PLATE	
130	525015-0001		4	SCREW	
397	550359-0000		1	ARM	
399	525297-0000		1	BRACKET	
800	315105-0153		17	WASHER BRB 6,4X12 RFR	
840	342920-0121		16	STRAIGHT COUPLING,EXT.THREADED 8/6-R1/8"	
0300B					
010	525002-0000		2	FOLDING BAR	
020	525004-0000		2	FOLDING BAR	
030	525005-0008		2	FOLDING BAR	
040	525006-0008		2	FOLDING BAR	
050	525341-0002		2	LEAD RAIL	
070	525007-0003		1	CANTILEVER	
080	525008-0002		2	BRACKET	
090	525180-0002		2	FOLDING ARM	
100	525179-0002		2	FOLDING ARM	
110	525011-0008		2	BRACKET	
120	525014-0002		2	COUNTER PLATE	
130	525015-0003		4	SCREW	
160	315115-0153		2	WASHER PLAIN, TBRB 6,4/12 H=3	
397	525295-0000		1	ARM	
399	525297-0000		1	BRACKET	
800	315105-0153		17	WASHER BRB 6,4X12 RFR	
840	342920-0121		8	STRAIGHT COUPLING,EXT.THREADED 8/6-R1/8"	
850	342930-0121		8	ELBOW 90 COUPL.,EXT.THREAD 8/6-R1/8"	
0500B					
010	525001-0000		2	FOLDING BAR	
020	525003-0000		2	FOLDING BAR	
030	525005-0005		2	FOLDING BAR	
040	525006-0005		2	FOLDING BAR	
050	525341-0001		2	LEAD RAIL	
070	525007-0001		1	CANTILEVER	
080	525008-0003		2	BRACKET	
090	525180-0001		2	FOLDING ARM	
100	525179-0001		2	FOLDING ARM	
110	525011-0005		2	BRACKET	
120	525012-0005		2	COUNTER PLATE	
130	525015-0001		4	SCREW	
397	525295-0000		1	ARM	
399	525297-0000		1	BRACKET	
800	315105-0153		17	WASHER BRB 6,4X12 RFR	
840	342920-0121		8	STRAIGHT COUPLING,EXT.THREADED 8/6-R1/8"	
850	342930-0121		8	ELBOW 90 COUPL.,EXT.THREAD 8/6-R1/8"	
0500S					
010	525002-0000		2	FOLDING BAR	
020	525004-0000		2	FOLDING BAR	
030	525005-0006		2	FOLDING BAR	
040	525006-0006		2	FOLDING BAR	
050	525341-0002		2	LEAD RAIL	
070	525007-0002		1	CANTILEVER	
080	525008-0002		2	BRACKET	
090	525180-0002		2	FOLDING ARM	
100	525179-0002		2	FOLDING ARM	

Machine Type | Group Description | Used-In | Group Number | Page No

FOLDING PART RIGHT OUT

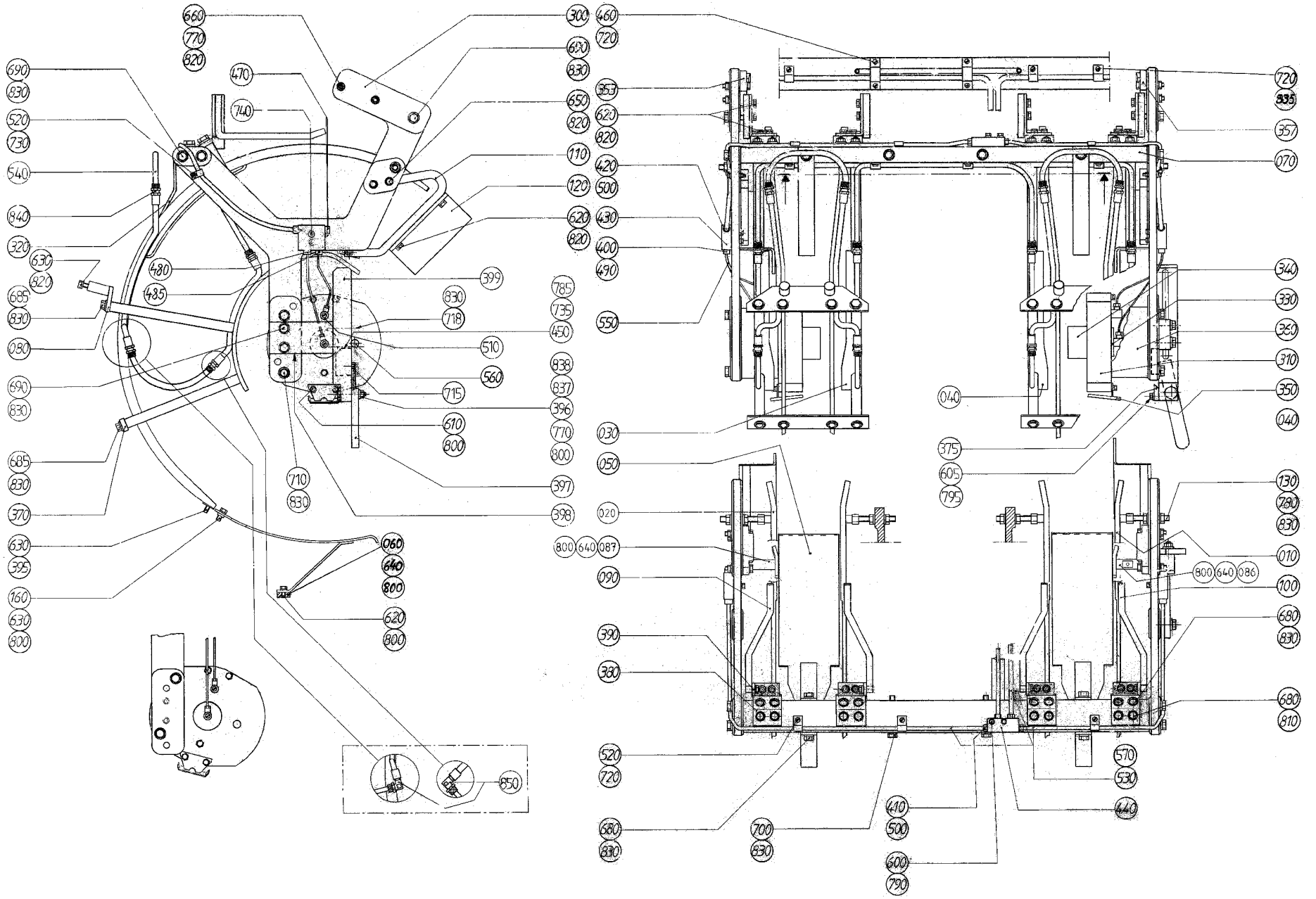

ECM: 72392 - 19990617
Group number: 525000-0200
Assembly Drawing: 525000-2_1_AA

This list covers pages from 5-40 to 5-47

Pos	Part No	UN	Qty	Description	Page No
0500S (Cont'd)					
110	525011-0006		2	BRACKET	
120	525182-0001		2	COUNTER PLATE	
130	525015-0002		4	SCREW	
160	315115-0153		2	WASHER PLAIN, TBRB 6,4/12 H=3	
397	525295-0000		1	ARM	
399	525297-0000		1	BRACKET	
800	315105-0153		17	WASHER BRB 6,4X12 RFR	
840	342920-0121		16	STRAIGHT COUPLING,EXT.THREADED 8/6-R1/8"	
0500SQ NORMFIN					
010	525001-0000		2	FOLDING BAR	
020	525003-0000		2	FOLDING BAR	
030	583453-0000		2	FOLDING BAR	
040	583458-0000		2	FOLDING BAR	
050	574047-0000		2	LEAD RAIL	
060	591085-0000		2	SPACER	
070	525007-0002		1	CANTILEVER	
080	525008-0001		2	BRACKET	
090	569122-0000		2	FOLDING ARM	
100	569123-0000		2	FOLDING ARM	
110	583456-0000		2	BRACKET	
120	583457-0000		2	COUNTER PLATE	
130	525015-0002		4	SCREW	
397	525295-0000		1	ARM	
399	525297-0000		1	BRACKET	
640	312105-0370		4	SCREW M6S ISO 4017 M6X20 A480	
800	315105-0153		19	WASHER BRB 6,4X12 RFR	
840	342920-0121		8	STRAIGHT COUPLING,EXT.THREADED 8/6-R1/8"	
850	342930-0121		8	ELBOW 90 COUPL.,EXT.THREAD 8/6-R1/8"	
0500SQ REVFIN					
010	525001-0000		2	FOLDING BAR	
020	525003-0000		2	FOLDING BAR	
030	1361910-0000		2	FOLDING BAR	
040	1361911-0000		2	FOLDING BAR	
050	574047-0000		2	LEAD RAIL	
060	591085-0000		2	SPACER	
070	525007-0002		1	CANTILEVER	
080	525008-0001		2	BRACKET	
090	569122-0000		2	FOLDING ARM	
100	569123-0000		2	FOLDING ARM	
110	583456-0000		2	BRACKET	
120	583457-0000		2	COUNTER PLATE	
130	525015-0002		4	SCREW	
397	525295-0000		1	ARM	
399	525297-0000		1	BRACKET	
640	312105-0370		4	SCREW M6S ISO 4017 M6X20 A480	
800	315105-0153		19	WASHER BRB 6,4X12 RFR	
840	342920-0121		8	STRAIGHT COUPLING,EXT.THREADED 8/6-R1/8"	
850	342930-0121		8	ELBOW 90 COUPL.,EXT.THREAD 8/6-R1/8"	
0568B					
010	525001-0000		2	FOLDING BAR	
020	525003-0000		2	FOLDING BAR	
030	525005-0004		2	FOLDING BAR	
040	525006-0004		2	FOLDING BAR	
050	525341-0001		2	LEAD RAIL	
070	525007-0001		1	CANTILEVER	
080	525008-0002		2	BRACKET	
090	525180-0001		2	FOLDING ARM	
100	525179-0001		2	FOLDING ARM	
110	525011-0004		2	BRACKET	
120	525012-0004		2	COUNTER PLATE	
130	525015-0001		4	SCREW	
397	525295-0000		1	ARM	
399	525297-0000		1	BRACKET	
800	315105-0153		17	WASHER BRB 6,4X12 RFR	
840	342920-0121		8	STRAIGHT COUPLING,EXT.THREADED 8/6-R1/8"	
850	342930-0121		8	ELBOW 90 COUPL.,EXT.THREAD 8/6-R1/8"	
0568SQ NORMFIN					
010	525001-0000		2	FOLDING BAR	
020	525003-0000		2	FOLDING BAR	
030	597610-0000		2	FOLDING BAR	
040	597611-0000		2	FOLDING BAR	
050	574047-0000		2	LEAD RAIL	
060	591085-0000		2	SPACER	
070	525007-0002		1	CANTILEVER	
080	525008-0001		2	BRACKET	
090	569122-0000		2	FOLDING ARM	
100	569123-0000		2	FOLDING ARM	
110	597613-0000		2	BRACKET	
120	597612-0000		2	COUNTER PLATE	
130	525015-0002		4	SCREW	
397	525295-0000		1	ARM	
399	525297-0000		1	BRACKET	
640	312105-0370		4	SCREW M6S ISO 4017 M6X20 A480	

Machine Type | Group Description | Used-In | Group Number | Page No

FOLDING PART RIGHT OUT

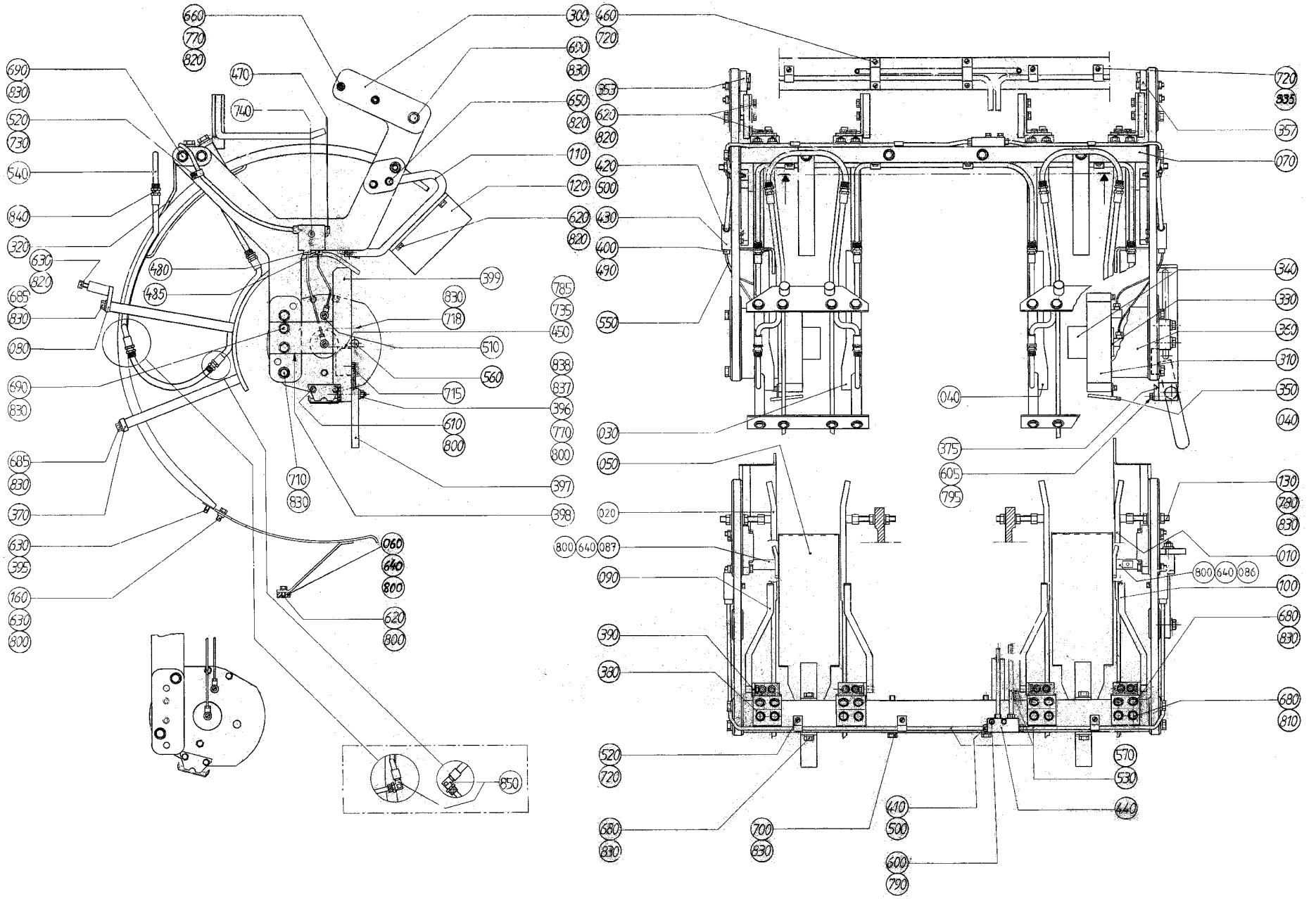

ECM: 72392 - 19990617
Group number: 525000-0200
Assembly Drawing: 525000-2_1_AA

This list covers pages from 5-40 to 5-47

Pos	Part No	UN	Qty	Description	Page No
0568SQ NORMFIN (Cont'd)					
800	315105-0153		19	WASHER BRB 6,4X12 RFR	
840	342920-0121		8	STRAIGHT COUPLING,EXT.THREADED 8/6-R1/8"	
850	342930-0121		8	ELBOW 90 COUPL.,EXT.THREAD 8/6-R1/8"	
0568SQ REVFIN					
010	525001-0000		2	FOLDING BAR	
020	525003-0000		2	FOLDING BAR	
030	1362435-0000		2	FOLDING BAR	
040	1362434-0000		2	FOLDING BAR	
050	574047-0000		2	LEAD RAIL	
060	591085-0000		2	SPACER	
070	525007-0002		1	CANTILEVER	
080	525008-0001		2	BRACKET	
090	569122-0000		2	FOLDING ARM	
100	569123-0000		2	FOLDING ARM	
110	597613-0000		2	BRACKET	
120	597612-0000		2	COUNTER PLATE	
130	525015-0002		4	SCREW	
397	525295-0000		1	ARM	
399	525297-0000		1	BRACKET	
640	312105-0370		4	SCREW M6S ISO 4017 M6X20 A480	
800	315105-0153		19	WASHER BRB 6,4X12 RFR	
840	342920-0121		8	STRAIGHT COUPLING,EXT.THREADED 8/6-R1/8"	
850	342930-0121		8	ELBOW 90 COUPL.,EXT.THREAD 8/6-R1/8"	
1000B					
010	525001-0000		2	FOLDING BAR	
020	525003-0000		2	FOLDING BAR	
030	525005-0002		2	FOLDING BAR	
040	525006-0002		2	FOLDING BAR	
050	525341-0001		2	LEAD RAIL	
070	525007-0001		1	CANTILEVER	
080	525008-0001		2	BRACKET	
090	525180-0001		2	FOLDING ARM	
100	525179-0001		2	FOLDING ARM	
110	525011-0002		2	BRACKET	
120	525012-0002		2	COUNTER PLATE	
130	525015-0001		4	SCREW	
397	525295-0000		1	ARM	
399	525297-0000		1	BRACKET	
800	315105-0153		17	WASHER BRB 6,4X12 RFR	
840	342920-0121		16	STRAIGHT COUPLING,EXT.THREADED 8/6-R1/8"	
1000S					
010	525001-0000		2	FOLDING BAR	
020	525003-0000		2	FOLDING BAR	
030	569120-0000		2	FOLDING BAR	
040	569121-0000		2	FOLDING BAR	
050	525410-0000		2	LEAD RAIL	
070	525007-0001		1	CANTILEVER	
080	525008-0001		2	BRACKET	
086	573486-0000		1	STEERING	
087	573487-0000		1	STEERING	
090	569122-0000		2	FOLDING ARM	
100	569123-0000		2	FOLDING ARM	
110	573485-0000		2	BRACKET	
120	525012-0001		2	COUNTER PLATE	
130	525015-0001		4	SCREW	
397	550359-0000		1	ARM	
399	525297-0000		1	BRACKET	
640	312105-0370		2	SCREW M6S ISO 4017 M6X20 A480	
800	315105-0153		19	WASHER BRB 6,4X12 RFR	
840	342920-0121		16	STRAIGHT COUPLING,EXT.THREADED 8/6-R1/8"	
1000SQ NORMFIN					
010	525001-0000		2	FOLDING BAR	
020	525003-0000		2	FOLDING BAR	
030	574045-0000		2	FOLDING BAR	
040	574046-0000		2	FOLDING BAR	
050	574047-0000		2	LEAD RAIL	
070	525007-0002		1	CANTILEVER	
080	525008-0001		2	BRACKET	
086	574097-0000		1	STEERING	
087	574098-0000		1	STEERING	
090	569122-0000		2	FOLDING ARM	
100	569123-0000		2	FOLDING ARM	
110	574048-0000		2	BRACKET	
120	574049-0000		2	COUNTER PLATE	
130	525015-0002		4	SCREW	
397	550359-0000		1	ARM	
399	574125-0000		1	BRACKET	
640	312105-0370		2	SCREW M6S ISO 4017 M6X20 A480	
800	315105-0153		19	WASHER BRB 6,4X12 RFR	
840	342920-0121		16	STRAIGHT COUPLING,EXT.THREADED 8/6-R1/8"	
Common Parts					
300	525016-0000		2	FASTENING PLATE	
310	574050-0000		2	CURVE	

Machine Type | Group Description | Used-In | Group Number | Page No

FOLDING PART RIGHT OUT

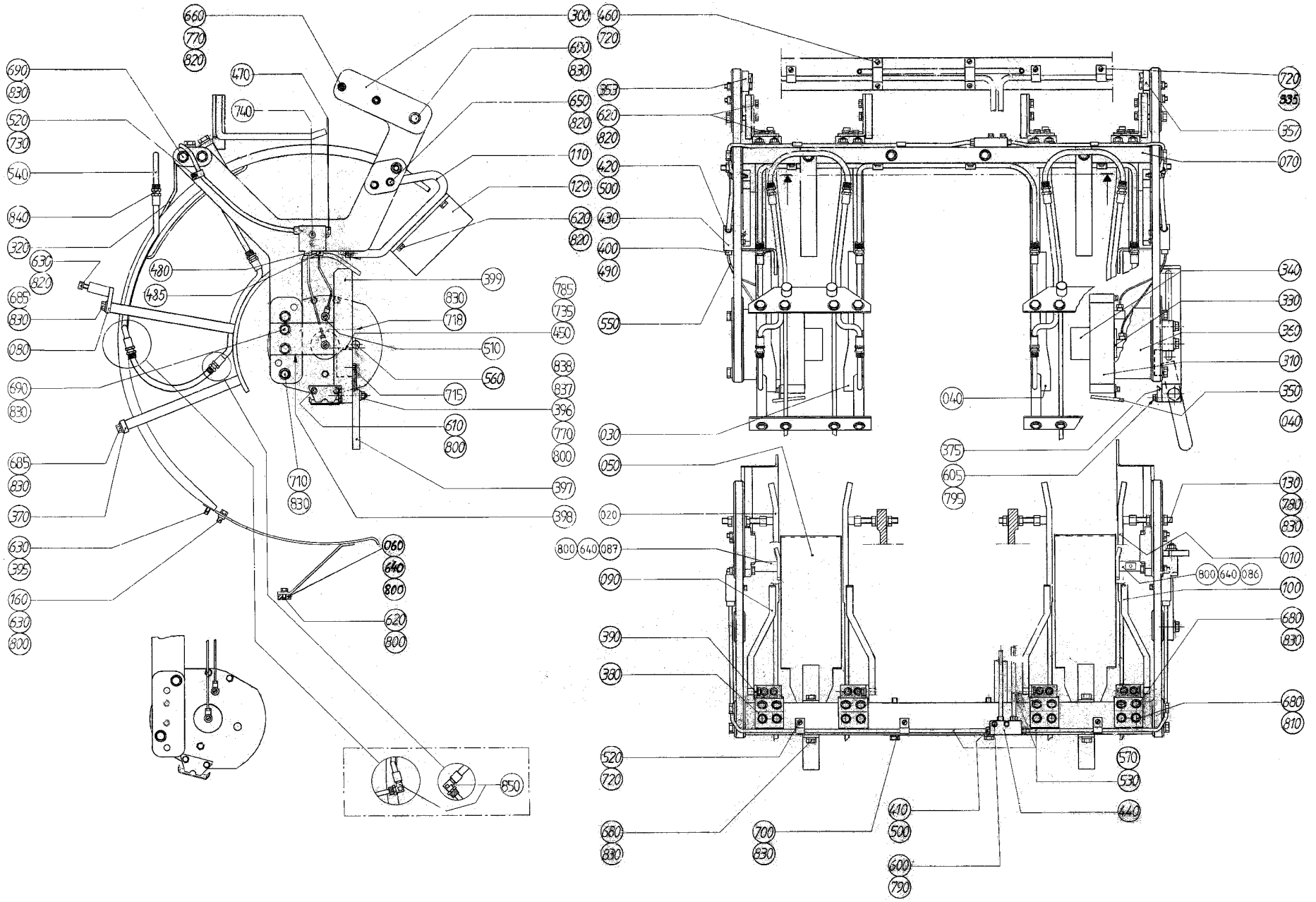

Pos	Part No	UN	Qty	Description	Page No
Common Parts (Cont'd)					
320	525017-0000		2	STEERING GUIDE	
330	285168-0000		2	BUSHING	
340	285851-0000		2	BEARING	
350	443240-0000		2	DRIP PLATE	
353	442564-0000		1	CURVE	
357	442565-0000		1	CURVE	
360	525018-0000		2	51SPACER	
370	525019-0000		2	BRACKET	
375	525360-0000		1	BRACKET	
380	525340-0000		4	BRACKET	
390	525178-0000		4	BRACKET	
395	525181-0000		2	WASHER	
396	525321-0000		1	SCREW	
398	525296-0000		1	BRACKET	
400	90028-0020		4	CONE TUBE 2,5MM	
410	90028-0022		4	CONE TUBE 6 MM	
420	90028-0025		2	CONE TUBE 6 MM	
430	90032-0038		2	BLOCK 2 WAYS	
440	90032-0044		1	DISTRIBUTION BLOCK 4 WAYS	
450	90044-0104		1	PROX.SWITCH IFM IN 3002(RP 90044-194)	
460	90074-0018		2	CABLE CLIPS, D=2X10 MM	
470	90087-0019		2	PLUG M10X1 STAINLESS	
480	90092-0052		2	METERING VALVE 10 MM3	
485	90092-0053		2	METERING VALVE 30 MM3	
490	90134-0039		4	BUSHING VALVE CONNECTION 2,5 MM	
500	90134-0055		6	BUSHING/NUT INLET/OUTLET 6 MM	
510	90134-0058		4	CONNECTION	
520	90165-0057		5	PIPE CLIP FOR TUBE D=6 MM	
530	90166-0108	MM	5200	TUBE 6 MM PA,TRANSP.	
540	90166-0122	MM	6000	TUBE 8 MM PA,TRANSP.	
550	90166-0143	MM	2000	TUBE 2,5 MM PA,TRANSP.	
560	90261-0032		4	PLUG, BLIND, PLASTIC, NO. 1073	
570	90134-0030		6	SLEEVE FOR PLASTIC TUBE	
600	312105-0295		2	SCREW M6S ISO 4017 M4X20 A470	
605	312105-0327		2	SCREW M6S ISO 4017 M5X12 A480	
610	312105-0364		10	SCREW M6S ISO 4017 M6X10 A480	
620	312105-0366		24	SCREW M6S ISO 4017 M6X12 A480	
630	312105-0368		10	SCREW M6S ISO 4017 M6X16 A480	
650	312105-0374		4	SCREW M6S ISO 4014 M6X30 A480	
660	312105-0378		4	SCREW M6S ISO 4014 M6X40 A480	
680	312105-0449		20	SCREW M6S ISO 4017 M8X16 A480	
685	312105-0451		16	SCREW M6S ISO 4017 M8X20 A480	
690	312105-0455		8	SCREW M6S ISO 4017 M8X30 A480	
700	312105-0464		2	SCREW M6S ISO 4014 M8X65 A480	
710	312105-0469		4	SCREW M6S ISO 4014 M8X90 A480	
715	312115-0323		1	SCREW ISO4762 M5X8 A4 80	
718	312115-0455		2	SCREW ISO4762 M8X30 A4 80	
720	312125-0287		10	SCREW ISO 1207 M4X8 A4	
730	312125-0291		2	SCREW ISO 1207 M4X12 A4	
735	312125-0230		2	SCREW ISO 1207 M3X20 A4	
740	312155-0297		4	SCREW DIN 7991 MF6S M4X25 A4 70	
770	312605-0316		5	HEXAGON NUT, M6M M6 A280	
780	312605-0318		8	HEXAGON NUT, M6M M8 A280	
785	315105-0124		2	WASHER BRB 3,2X7 RFR	
790	315105-0136		2	WASHER BRB 4,3X9 RFR	
795	315105-0146		2	WASHER BRB 5,3X10 RFR	
810	315105-0165		8	WASHER BRB 8,4X16 RFR	
820	315115-0153		40	WASHER PLAIN, TBRB 6,4/12 H=3	
830	315115-0165		52	WASHER PLAIN, TBRB 8,4/16 H=3	
835	316810-0106		3	PIPE CLIP FOR TUBE D=8 MM	
837	321116-0127		1	BEARING BUSH W/O FLANGE, 10X14X10 MM	
838	321116-0128		1	BEARING BUSH W/O FLANGE, 10X14X16 MM	

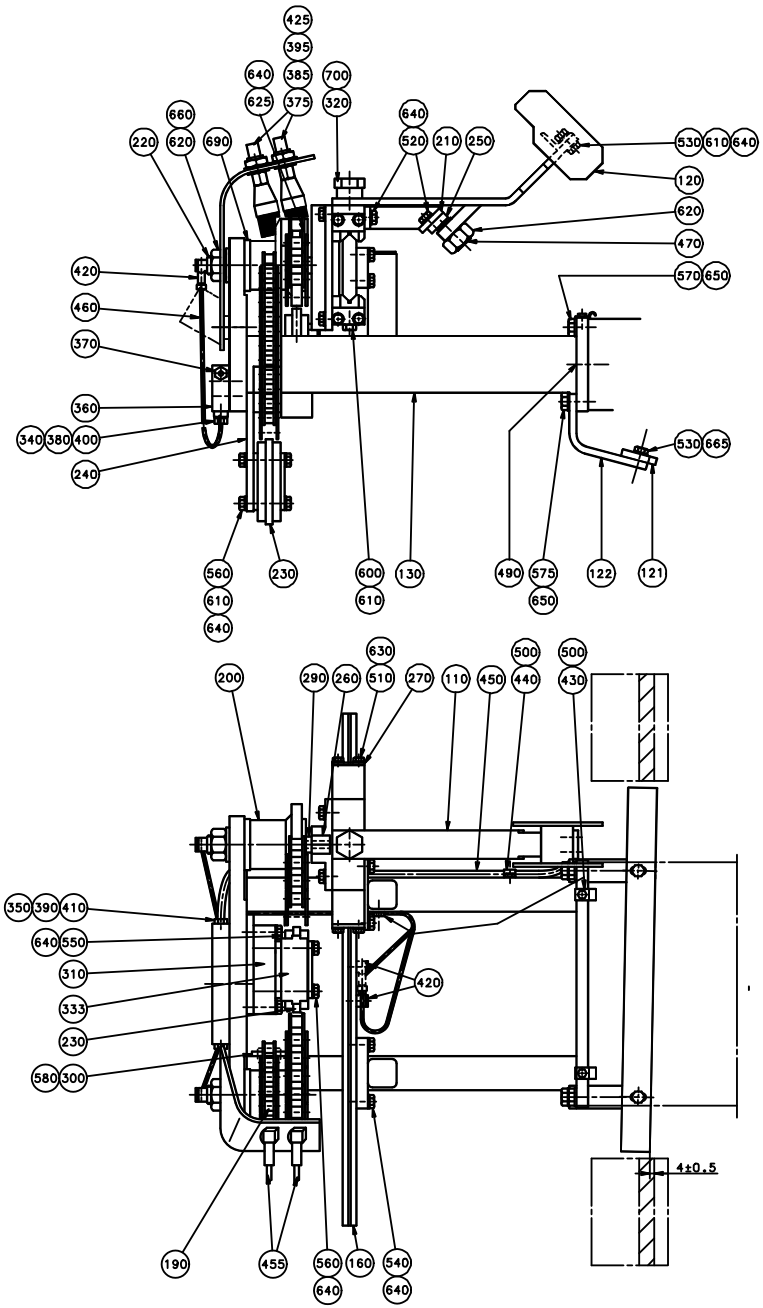
425
395
640
385
700
625
375
320
660
640
220
620
690
520
210
250
530
610
640
120
620
470
420
570
650
460
370
360
530
665
340
380
400
240
560
610
640
230
600
610
130
490
575
650
122
121
200
290
260
630
510
270
110
450
500
440
500
430
350
390
410
640
550
310
333
230
580
300
420
4±0.5
190
455
560
640
160
540
640

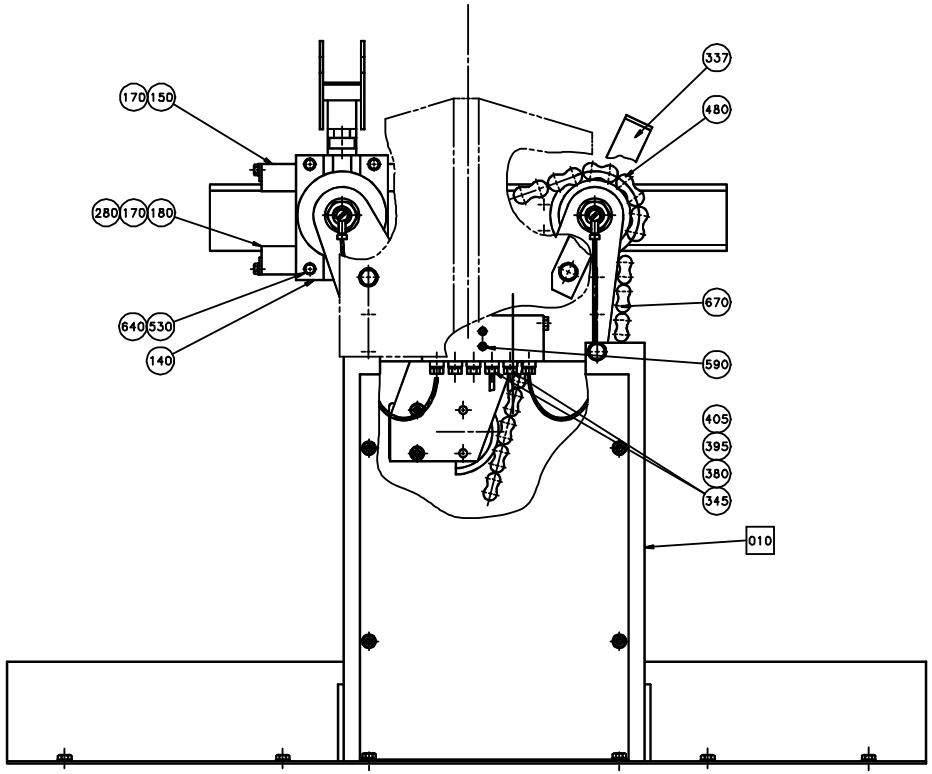
337
480
170
150
280
170
180
640
530
140
670
590
405
395
380
345
010

ECM: 188326 - 20041105
Group number: 525213-0200
Assembly Drawing: 525213-2_1_AA

This list covers pages from 5-48 to 5-51

Pos	Part No	UN	Qty	Description	Page No
0300B					
110	525304-0000		1	ARM	
120	525309-0000		1	DISTRIBUTOR	
530	312105-0368		6	SCREW M6S ISO 4017 M6X16 A480	
570	312105-0453		4	SCREW M6S ISO 4017 M8X25 A480	
0500B, 0568B					
110	525303-0000		1	ARM	
120	525307-0000		1	DISTRIBUTOR	
530	312105-0368		6	SCREW M6S ISO 4017 M6X16 A480	
570	312105-0453		4	SCREW M6S ISO 4017 M8X25 A480	
0500S					
110	525304-0000		1	ARM	
110	525302-0000		1	ARM	
120	525308-0000		1	DISTRIBUTOR	
530	312105-0368		6	SCREW M6S ISO 4017 M6X16 A480	
570	312105-0453		4	SCREW M6S ISO 4017 M8X25 A480	
0500SQ, 0568SQ					
110	525304-0000		1	ARM	
120	583630-0000		1	DISTRIBUTOR	
530	312105-0368		6	SCREW M6S ISO 4017 M6X16 A480	
570	312105-0453		4	SCREW M6S ISO 4017 M8X25 A480	
1000S					
110	525301-0000		1	ARM	
120	569129-0000		1	DISTRIBUTOR	
121	525417-0000		1	STEERING	
122	525418-0000		2	HOLDER	
530	312105-0368		8	SCREW M6S ISO 4017 M6X16 A480	
570	312105-0453		2	SCREW M6S ISO 4017 M8X25 A480	
575	312105-0455		2	SCREW M6S ISO 4017 M8X30 A480	
665	315115-0153		2	WASHER PLAIN, TBRB 6,4/12 H=3	
1000SQ					
110	525301-0000		1	ARM	
120	574056-0000		1	DISTRIBUTOR	
121	574099-0000		1	STEERING	
122	574058-0000		2	HOLDER	
530	312105-0368		8	SCREW M6S ISO 4017 M6X16 A480	
570	312105-0453		2	SCREW M6S ISO 4017 M8X25 A480	
575	312105-0455		2	SCREW M6S ISO 4017 M8X30 A480	
665	315115-0153		2	WASHER PLAIN, TBRB 6,4/12 H=3	
1000B					
110	525301-0000		1	ARM	
120	525305-0000		1	DISTRIBUTOR	
530	312105-0368		6	SCREW M6S ISO 4017 M6X16 A480	
570	312105-0453		4	SCREW M6S ISO 4017 M8X25 A480	
1136B					
110	525301-0000		1	ARM	
120	525305-0000		1	DISTRIBUTOR	
121	525417-0000		1	STEERING	
122	525418-0000		2	HOLDER	
530	312105-0368		8	SCREW M6S ISO 4017 M6X16 A480	
570	312105-0453		2	SCREW M6S ISO 4017 M8X25 A480	
575	312105-0455		2	SCREW M6S ISO 4017 M8X30 A480	
665	315115-0153		2	WASHER PLAIN, TBRB 6,4/12 H=3	
Common Parts					
010	525320-0100		1	CHAIN GUARD	**5-31**
130	525310-0000		1	BRACKET	
140	443229-0000		1	BRACKET	
150	525140-0000		1	HOLDER	
160	1478881-0000		1	GUIDE	
170	442931-0000		2	SLIDE RAIL	
180	443232-0000		1	HOLDER	
190	443235-0000		1	SPROCKET	
200	525194-0000		1	SPROCKET	
210	525200-0000		1	BRACKET	
220	525312-0000		2	SHAFT	
230	90344-0049		2	CHAIN TENSIONER	
240	566533-0000		1	BRACKET	
250	597564-0000		1	PLATE	
260	443237-0000		1	SLIDER	
270	443239-0000		4	WASHER	
280	525138-0000		1	SHEET	
290	525195-0000		1	WASHER	
300	525315-0000		1	SLIDER	
310	566312-0000		1	BRACKET	
320	525317-0000		1	FITTING BOLT	
333	566311-0000		1	PROFILE	
337	566315-0000		1	HOLDER	
340	90028-0020		4	CONE TUBE 2,5MM	
345	90028-0021		2	CONE TUBE 4 MM	
350	90028-0025		1	CONE TUBE 6 MM	
360	90032-0040		1	BLOCK 6 WAYS	
370	90087-0019		1	PLUG M10X1 STAINLESS	
375	90092-0048		2	OIL BRUSH, FLAT, 5/16-24 UNF	
380	90092-0052		6	METERING VALVE 10 MM3	

Machine Type | Group Description | Used-In | Group Number | Page No

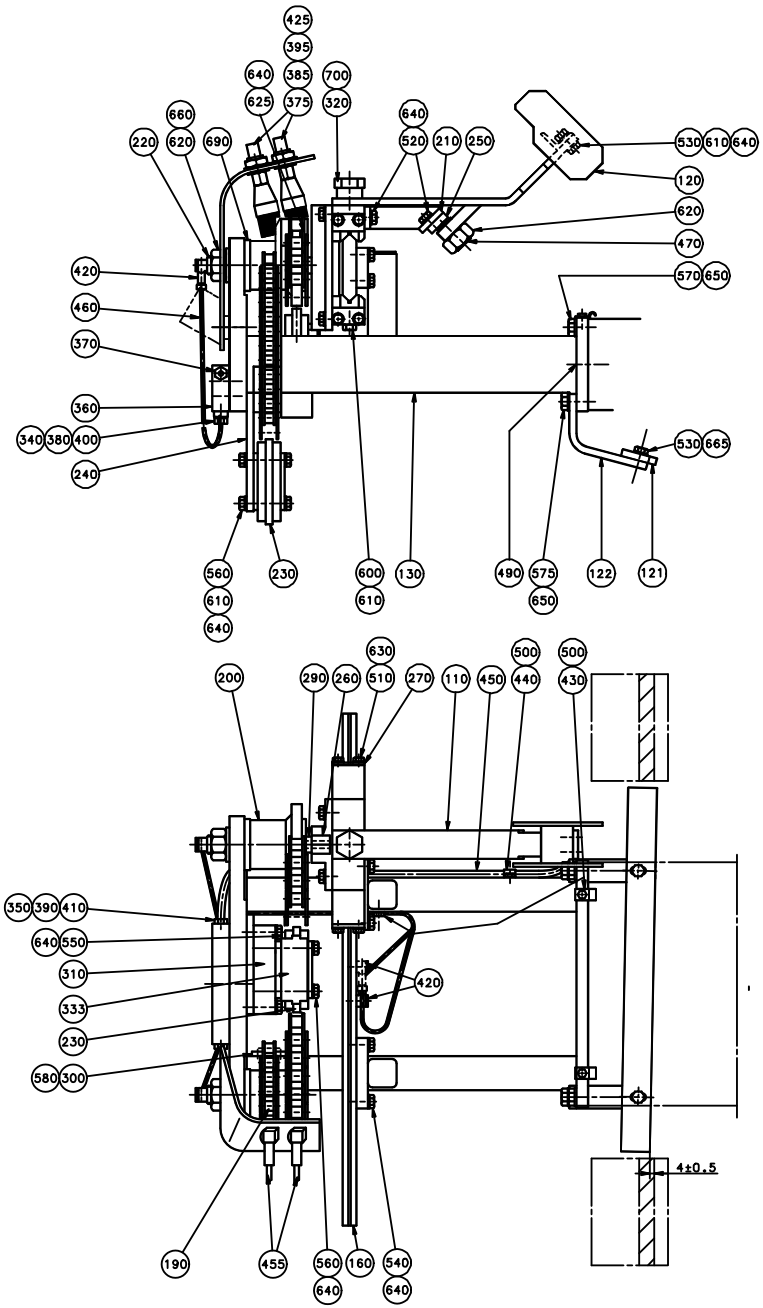
425
395
640
385
700
625
375
320
660
640
220
620
690
520
210
250
530
610
640
120
620
470
420
570
650
460
370
360
530
665
340
380
400
240
560
610
640
230
600
610
130
490
575
650
122
121
200
290
260
630
510
270
110
450
500
440
500
430
350
390
410
640
550
310
333
230
580
300
420
4±0.5
190
455
560
640
160
540
640

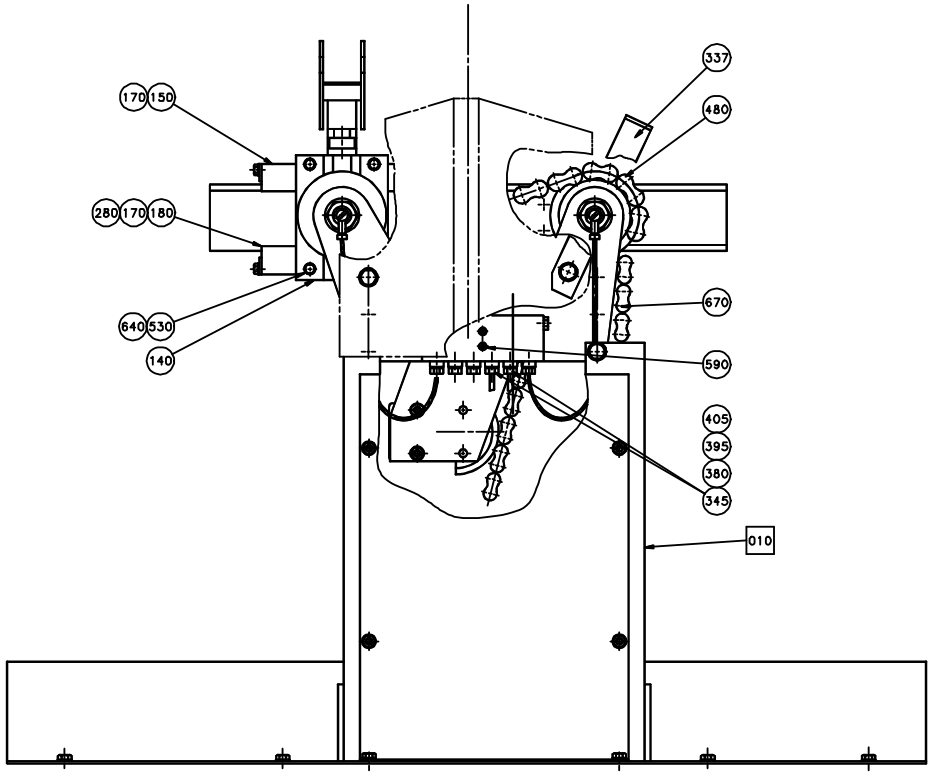
337
480
170
150
280
170
180
640
530
140
670
590
405
395
380
345
010

Pos	Part No	UN	Qty	Description	Page No
Common Parts (Cont'd)					
385	90134-0002		2	CONNECTOR R1/8, D=4 MM	
390	90134-0030		2	SLEEVE FOR PLASTIC TUBE	
395	342706-0114		4	ACCESSORIES, INSERT SLEEVE 4 MM	
400	90134-0039		4	BUSHING VALVE CONNECTION 2,5 MM	
405	90134-0040		2	BUSHING VALVE CONNECTION 4 MM	
410	90134-0055		1	BUSHING/NUT INLET/OUTLET 6 MM	
420	90134-0058		4	CONNECTION	
425	90137-0002		2	BANJO CONN. 1/8 - 5/16-24UNF	
430	90165-0056		3	PIPE CLIP FOR TUBE D=4 MM	
440	90165-0057		2	PIPE CLIP FOR TUBE D=6 MM	
450	90166-0108	MM	1400	TUBE 6 MM PA,TRANSP.	
455	90166-0051	MM	600	TUBE PA,TRANSP.	
460	90166-0143	MM	1200	TUBE 2,5 MM PA,TRANSP.	
470	90287-0109		1	SCREW SPRINGLOAD. SLOTTED HEAD M16X24	
480	90288-0055		1	ROLLER CHAIN, SINGLE 5/8 -42	
	90288-0317		*1*	*CONNECTING LINK SINGLE 5/8",SS*	
	90288-0324		*1*	*CARRIER*	
490	311103-0399		2	PARALLEL PIN ISO 2338 8M6X16 A1	
500	312105-0287		5	SCREW M6S ISO 4017 M4X8 A470	
510	312105-0325		8	SCREW M6S ISO 4017 M5X10 A480	
520	312105-0366		4	SCREW M6S ISO 4017 M6X12 A480	
540	312105-0370		8	SCREW M6S ISO 4017 M6X20 A480	
550	312105-0376		2	SCREW M6S ISO 4014 M6X35 A480	
560	312105-0379		4	SCREW M6S ISO 4014 M6X45 A480	
580	312155-0291		4	SCREW DIN 7991 MF6S M4X12 A4 70	
590	312155-0297		2	SCREW DIN 7991 MF6S M4X25 A4 70	
600	312318-0368		2	SCREW ISO4029 M6X16 A4	
610	312605-0316		4	HEXAGON NUT, M6M M6 A280	
620	312605-0324		3	HEXAGON NUT, M6M M16 A280	
625	312812-0316		2	HEXAGON NUT, NY-LOCK M6 A480	
630	315105-0146		8	WASHER BRB 5,3X10 RFR	
640	315105-0153		28	WASHER BRB 6,4X12 RFR	
650	315105-0165		4	WASHER BRB 8,4X16 RFR	
660	315105-0186		2	WASHER BRB 17X30 RFR	
670	318212-0119		1	ROLLER CHAIN, SINGLE 1/2 -119,SS	
690	321101-0252		4	FLANGE BUSHING, 25X35X16 MM	
700	321120-0122		1	BEARING BUSH W/O FLANGE, 15X17X15 MM	

Pos	Part No	UN	Qty	Description	Page No

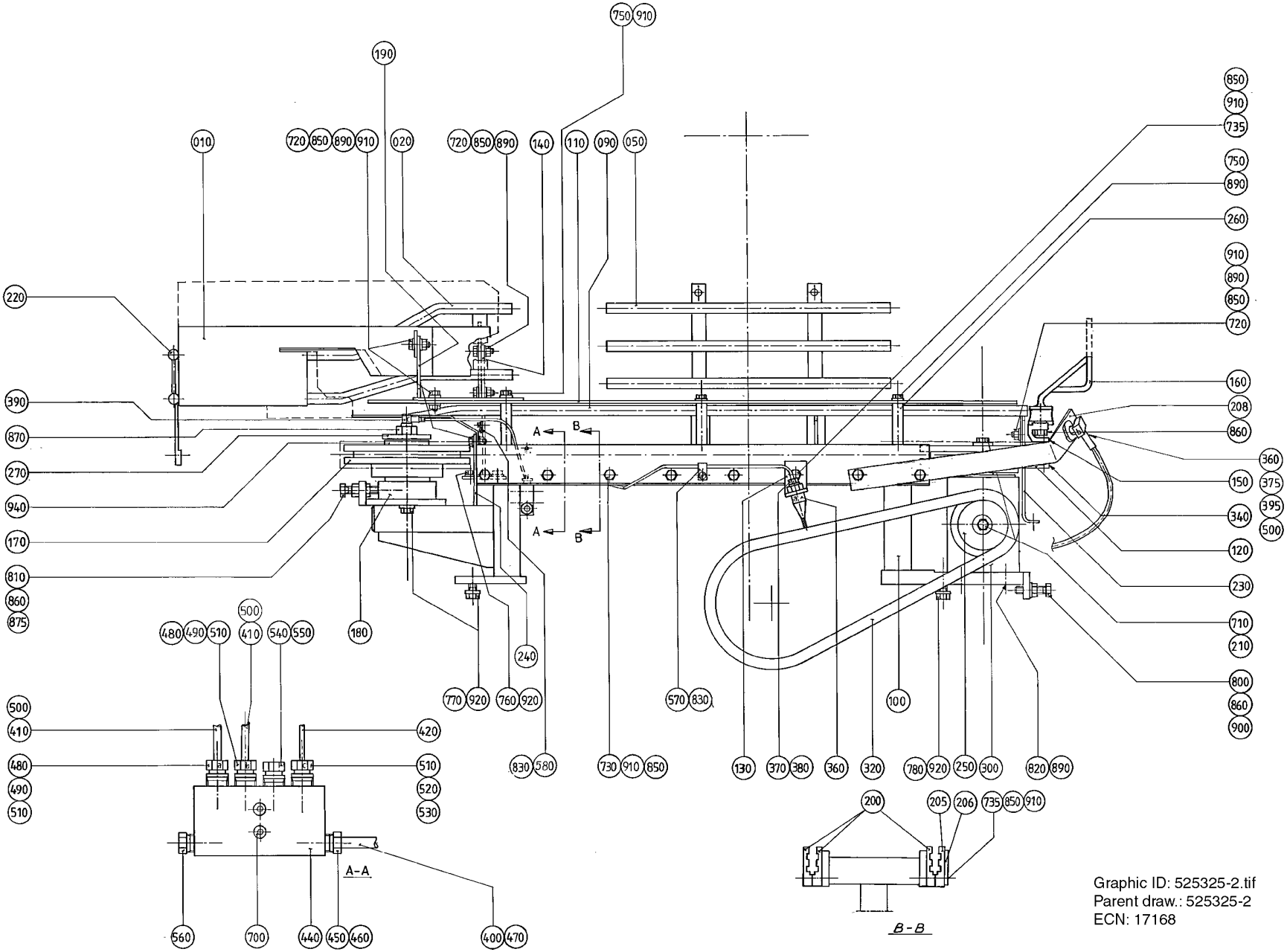
750 910
190
010
720 850 890 910
020
720 850 890
140
110
090
050
850
910
735
750
890
260
910
890
850
720
160
208
860
360
150
375
395
340
500
120
230
710
210
800
860
900
220
390
870
270
940
170
810
860
875
A
B
A
B
500
480 490 510
410
540 550
180
240
770 920
760 920
570 830
100
500
410
480
490
510
420
510
520
530
830 580
730 910 850
130
370 380
360
320
780 920
250 300
820 890
200
205 206 735 850 910
A-A
560
700
440 450 460
400 470
B-B
Graphic ID: 525325-2.tif
Parent draw.: 525325-2
ECN: 17168

ECM: 188328 - 20041105
Group number: 525325-0200
Assembly Drawing: 525325-2_1_AA

This list covers pages from 5-52 to 5-55

Pos	Part No	UN	Qty	Description	Page No
0300B					
010	442811-0002		1	ARCH	
020	443207-0003		1	ARCH	
050	525322-0003		1	LEAD RAIL	
140	443217-0000		1	BRACKET	
160	525374-0000		4	CARRIER	
0500B, 0568B					
010	442811-0001		1	ARCH	
020	443207-0001		1	ARCH	
050	525322-0001		1	LEAD RAIL	
140	443217-0000		1	BRACKET	
160	525374-0000		4	CARRIER	
0500S					
010	525466-0000		1	ARCH	
020	443206-0002		1	ARCH	
050	525322-0002		1	LEAD RAIL	
140	443217-0000		1	BRACKET	
160	525414-0000		4	CARRIER	
0500SQ, 0568SQ					
010	525437-0000		1	ARCH	
020	583628-0000		1	ARCH	
050	583452-0000		1	LEAD RAIL	
140	583629-0000		1	BRACKET	
160	525374-0000		4	CARRIER	
1000S					
010	525437-0000		1	ARCH	
020	443206-0001		1	ARCH	
050	569130-0000		1	LEAD RAIL	
140	443217-0000		1	BRACKET	
160	525414-0000		4	CARRIER	
1000SQ					
010	525437-0000		1	ARCH	
020	574055-0000		1	ARCH	
050	574057-0000		1	LEAD RAIL	
140	443217-0000		1	BRACKET	
160	525414-0000		4	CARRIER	
1000B					
010	525437-0000		1	ARCH	
020	443206-0001		1	ARCH	
050	525322-0001		1	LEAD RAIL	
140	443217-0000		1	BRACKET	
160	525414-0000		4	CARRIER	
1136B					
010	525437-0000		1	ARCH	
020	443206-0001		1	ARCH	
050	525413-0000		1	LEAD RAIL	
140	443217-0000		1	BRACKET	
160	525414-0000		4	CARRIER	
Common Parts					
090	442809-0000		1	LEAD RAIL	
100	525300-0000		1	MACHINE BODY	
110	443210-0000		1	PLATE STAINLESS	
120	443081-0000		1	SPROCKET	
130	443213-0000		1	BRACKET	
150	2549933-0000		4	LINK	
170	525298-0000		1	SPROCKET	
180	525299-0000		1	SHAFT	
190	525323-0000		1	BRACKET	
200	525324-0000		3	PROFILE	
205	525411-0000		1	PROFILE	
206	525412-0000		1	RULER	
208	566314-0000		1	HOLDER	
210	6278-0000		2	WASHER	
220	229516-0000		4	PIN	
230	442829-0000		1	BRACKET	
240	442830-0000		1	BRACKET	
250	442836-0000		1	SPROCKET	
260	443215-0000		3	SPACER	
270	443295-0000		1	WASHER	
300	90056-0099		1	GEARS, BEVEL ALU-00	
320	318212-0066		1	ROLLER CHAIN, SINGLE 1/2 -66,SS	
340	318242-0034		4	ROLLER CHAIN DUPLEX 1/2"-34,SS	
360	90092-0048		2	OIL BRUSH, FLAT, 5/16-24 UNF	
370	90028-0001		1	CONE 5/32"	
375	90134-0002		1	CONNECTOR R1/8, D=4 MM	
380	90134-0003		1	BUSHING	
390	90134-0058		1	CONNECTION	
395	90137-0002		1	BANJO CONN. 1/8 - 5/16-24UNF	
400	90166-0108	MM	1300	TUBE 6 MM PA,TRANSP.	
410	90166-0051	MM	1100	TUBE PA,TRANSP.	
420	90166-0143	MM	200	TUBE 2,5 MM PA,TRANSP.	
440	90032-0039		1	BLOCK 4 WAYS	
450	90028-0025		1	CONE TUBE 6 MM	
460	90134-0055		1	BUSHING/NUT INLET/OUTLET 6 MM	

Machine Type | Group Description | Used-In | Group Number | Page No

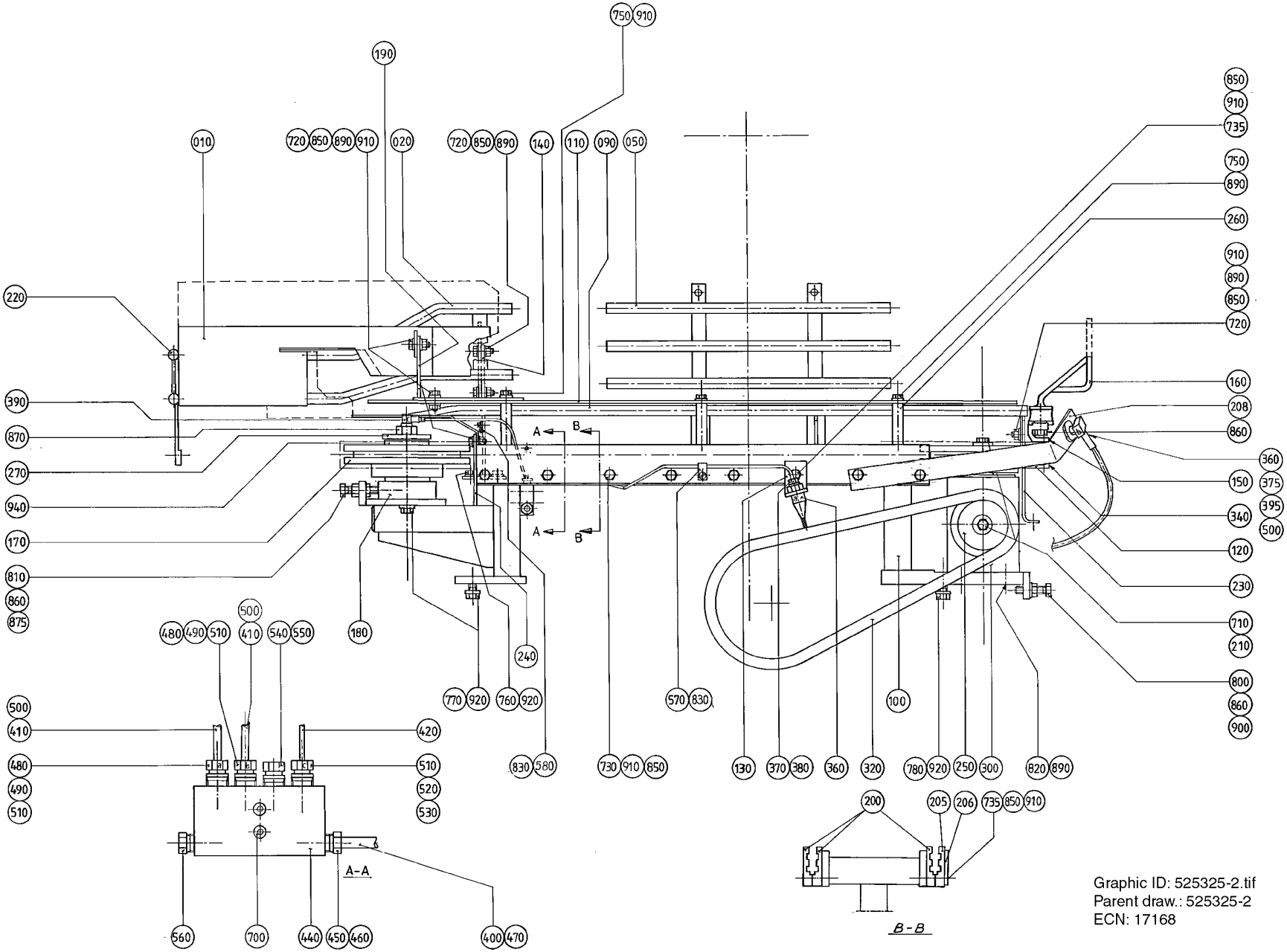
750 910
190
010
720 850 890 910
020
720 850 890
140
110
090
050
850
910
735
750
890
260
910
890
850
720
160
208
860
360
150
375
395
340
500
120
230
710
210
800
860
900
220
390
870
270
940
170
810
860
875
A
B
A
B
500
480 490 510
410
540 550
180
240
770 920
760 920
570 830
100
500
410
480
490
510
420
510
520
530
830 580
730 910 850
130
370 380
360
320
780 920
250 300
820 890
200
205 206 735 850 910
A-A
560
700
440 450 460
400 470
B-B
Graphic ID: 525325-2.tif
Parent draw.: 525325-2
ECN: 17168

Pos	Part No	UN	Qty	Description	Page No
Common Parts (Cont'd)					
470	90134-0030		2	SLEEVE FOR PLASTIC TUBE	
480	90028-0021		2	CONE TUBE 4 MM	
490	90134-0040		2	BUSHING VALVE CONNECTION 4 MM	
500	342706-0114		4	ACCESSORIES, INSERT SLEEVE 4 MM	
510	90092-0052		3	METERING VALVE 10 MM3	
520	90028-0020		1	CONE TUBE 2,5MM	
530	90134-0039		1	BUSHING VALVE CONNECTION 2,5 MM	
540	90134-0045		1	PLUG M12X1	
550	90134-0052		1	PLUG DOSING BLOCK	
560	90087-0019		1	PLUG M10X1 STAINLESS	
570	90165-0056		1	PIPE CLIP FOR TUBE D=4 MM	
580	90165-0060		1	PIPE CLIP FOR TUBE D=5 MM	
700	312155-0295		2	SCREW DIN 7991 MF6S M4X20 A4 70	
710	312105-0366		2	SCREW M6S ISO 4017 M6X12 A480	
720	312105-0368		6	SCREW M6S ISO 4017 M6X16 A480	
730	312105-0376		7	SCREW M6S ISO 4014 M6X35 A480	
735	312105-0378		9	SCREW M6S ISO 4014 M6X40 A480	
750	312105-0386		3	SCREW M6S ISO 4014 M6X80 A480	
760	312105-0449		2	SCREW M6S ISO 4017 M8X16 A480	
770	312105-0451		4	SCREW M6S ISO 4017 M8X20 A480	
780	312105-0453		2	SCREW M6S ISO 4017 M8X25 A480	
800	312109-0457		1	SCREW M6S ISO 4017 M8X35 A480	
810	312109-0461		1	SCREW M6S ISO 4017 M8X50 A480	
820	312115-0368		4	SCREW ISO4762 M6X16 A4 80	
830	312125-0285		2	SCREW ISO 1207 M4X6 A4	
840	312125-0289		1	SCREW ISO 1207 M4X10 A4	
850	312605-0316		22	HEXAGON NUT, M6M M6 A280	
860	312605-0318		6	HEXAGON NUT, M6M M8 A280	
870	312605-0322		1	HEXAGON NUT, M6M M12 A280	
875	312625-0318		1	HEXAGON THIN NUT, EN 24035 ML6M M8 A4	
890	315105-0153		14	WASHER BRB 6,4X12 RFR	
900	315105-0165		1	WASHER BRB 8,4X16 RFR	
910	315115-0153		21	WASHER PLAIN, TBRB 6,4/12 H=3	
920	315115-0165		8	WASHER PLAIN, TBRB 8,4/16 H=3	
940	321101-0272		2	FLANGE BUSHING, 30X40X20 MM	

Pos	Part No	UN	Qty	Description	Page No

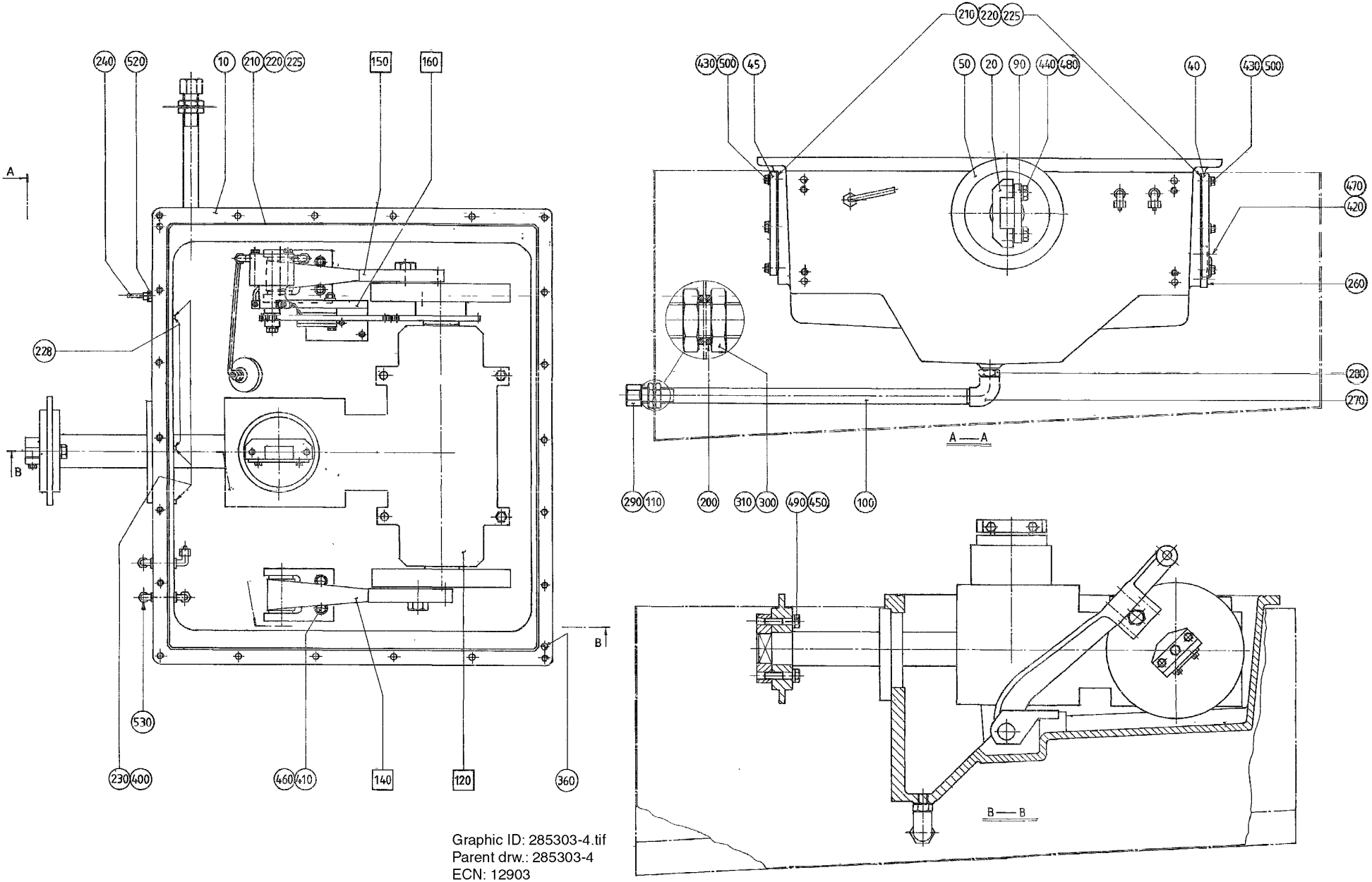

Graphic ID: 285303-4.tif
Parent drw.: 285303-4
ECN: 12903

ECM: 188330 - 20041105
Group number: 285303-0400
Assembly Drawing: 285303-4_1_AA

Pos	Part No	UN	Qty	Description	Page No
-					
010	525276-0000		1	HOUSE	
020	262274-0005		1	BRACKET	
040	525185-0000		1	HATCH	
045	525377-0000		1	HATCH	
050	443176-0000		1	SPROCKET	
090	262275-0003		1	CAP	
100	443126-0000		1	CONNECTION PIPE	
110	525047-0000		2	GASKET	
120	285291-0400		1	BEVEL GEAR	**5-59**
140	285299-0100		1	PRESSURE ARM	**5-63**
150	594621-0100		1	PRESSURE ARM	**5-65**
160	525102-0200		1	LUBRICATING SYSTEM	**5-67**
200	525046-0000		2	GASKET	
210	90296-0009	L	1	SILICONE GREASE DOW CORNING 150 GR.	
220	90161-0001	MM	3900	O-RING MATERIAL 3 MM	
225	90153-0043	KG	1	ADHESIVE, LOCTITE 495 20G	
228	90165-0056		2	PIPE CLIP FOR TUBE D=4 MM	
230	90165-0057		3	PIPE CLIP FOR TUBE D=6 MM	
240	90166-0132	MM	1500	TUBE 6 MM PA,TRANSP.	
260	90199-0004		1	LEVEL GLASS, ST60	
270	90330-0020		1	ELBOW, 90 INT. THREAD, R-2221/2	
280	90330-0021		1	NIPPLES, EXT. THREAD. R-207R1/2	
290	90330-0086		1	PLUG, INT. THREAD, NO. R-231-R1/2	
300	90330-0093		2	NUT, HEXAGON, G1/2	
310	90157-0034	L	1	THREAD SEALANT LOCTITE 572 50 ML	
360	311103-0399		2	PARALLEL PIN ISO 2338 8M6X16 A1	
400	312105-0287		3	SCREW M6S ISO 4017 M4X8 A470	
410	312105-0453		4	SCREW M6S ISO 4017 M8X25 A480	
420	312105-0293		4	SCREW M6S ISO 4017 M4X16 A470	
430	312105-0370		20	SCREW M6S ISO 4017 M6X20 A480	
440	90287-0165		2	SCREW M6S M8X20 A480 NY-LOCK	
450	312105-0493		2	SCREW M6S ISO 4017 M10X25 A480	
460	315105-0165		4	WASHER BRB 8,4X16 RFR	
470	315105-0136		4	WASHER BRB 4,3X9 RFR	
480	315105-0165		2	WASHER BRB 8,4X16 RFR	
490	315105-0173		2	WASHER BRB 10,5X20 RFR	
500	315115-0153		20	WASHER PLAIN, TBRB 6,4/12 H=3	
520	342920-0113		1	STRAIGHT COUPLING,EXT.THREADED 6/4-R1/8"	
530	342930-0113		4	ELBOW 90 COUPL.,EXT.THREAD 6/4-R1/8"	

Pos	Part No	UN	Qty	Description	Page No

Machine Type | Group Description | Used-In | Group Number | Page No

BEVEL GEAR

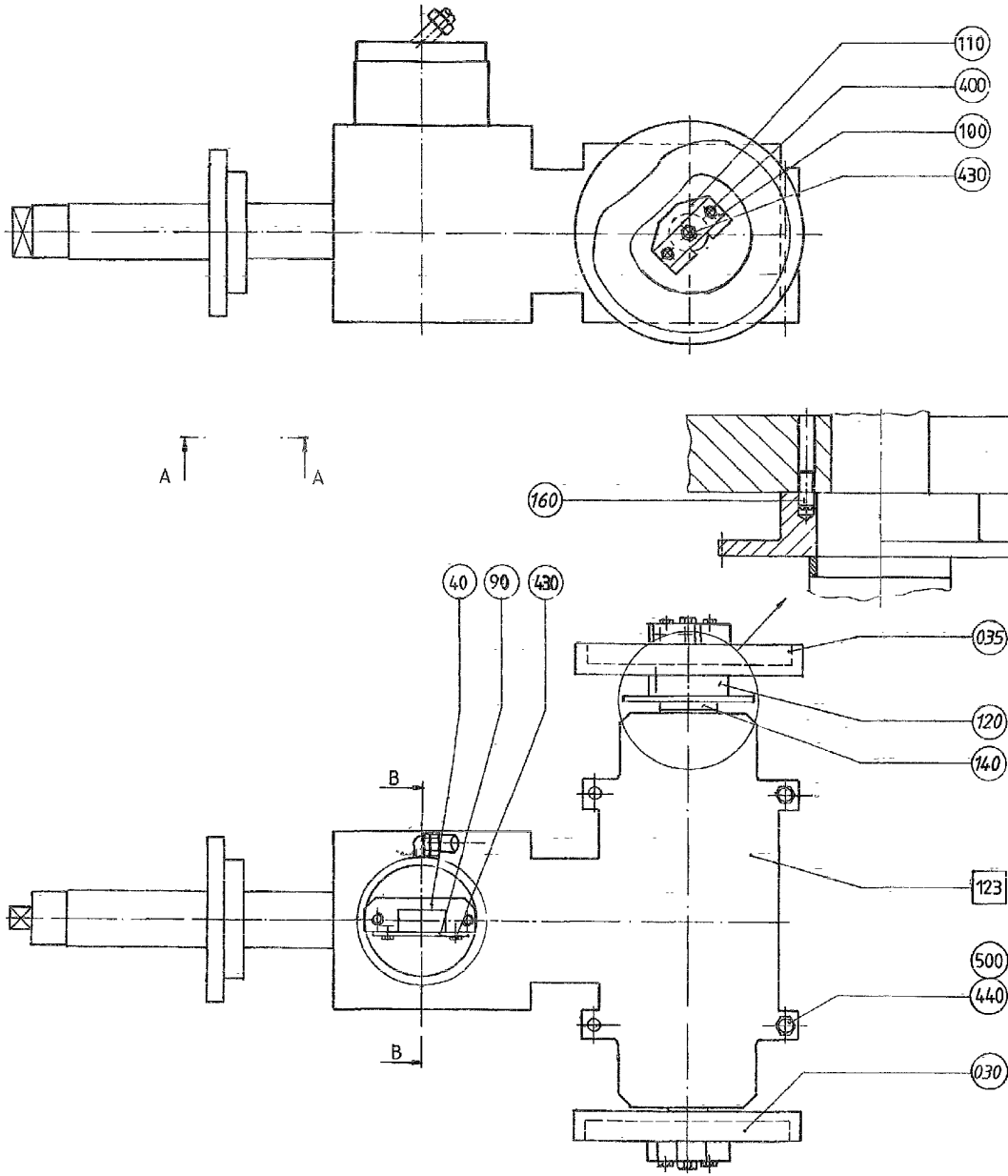

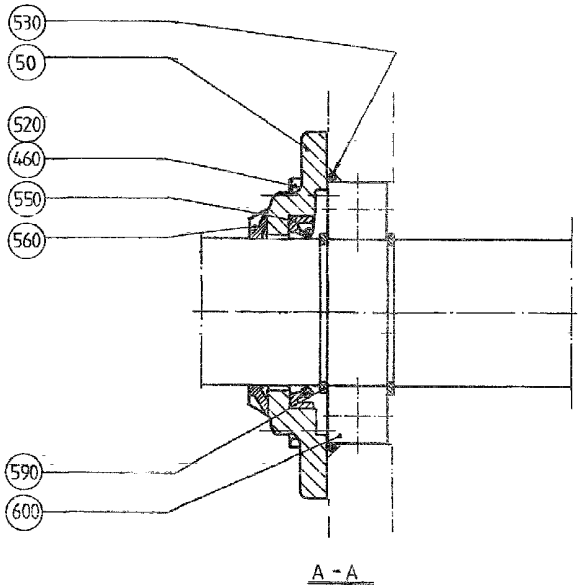

A - A

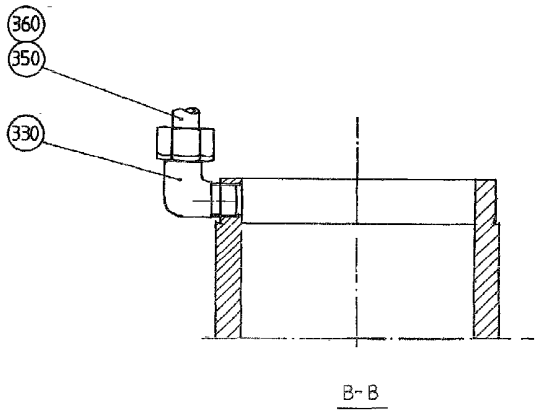

B - B

Graphic ID: 285291-4.tif
Parent drw.: 285291-4
ECN: 11736

ECM: 188331 - 20041105
Group number: 285291-0400
Assembly Drawing: 285291-4_1_AA

Pos	Part No	UN	Qty	Description	Page No
-					
030	285054-0000		1	CURVE	
035	285055-0000		1	CURVE	
040	262274-0002		1	BRACKET	
050	276613-0000		1	LID	
090	262275-0002		1	CAP	
100	276636-0000		2	WASHER	
110	285027-0000		2	CARRIER	
120	443047-0000		1	SPROCKET	
123	442644-0300		1	DOUBLE GEAR	**5-61**
140	443052-0000		1	SPACER RING	
160	443149-0000		1	STUD SCREW	
330	342731-0102		1	CONN. ELBOW WE 6-LRFZB	
350	90166-0108	MM	400	TUBE 6 MM PA,TRANSP.	
360	90134-0030		2	SLEEVE FOR PLASTIC TUBE	
400	312101-0374		4	SCREW M6S M6X30 FZB	
430	312101-0451		4	SCREW M6S M8X20 FZB	
440	312101-0453		2	SCREW M6S M8X25 FZB	
460	312105-0371		4	SCREW M6S ISO 4017 M6X22 A480	
500	315101-0165		2	WASHER PLAIN, BRB, 8,4/16 H=1,5	
520	315115-0153		4	WASHER PLAIN, TBRB 6,4/12 H=3	
530	315202-0309		1	O-RING 89,5X3 MM	
550	315221-0200		1	RADIAL SEAL 50X72X8 MM	
560	315226-0200		1	AXIAL SEAL WITH STEEL COVER 50X70X4,5 MM	
590	315750-0131		2	RETAINING RING SHAFT DIN 471 ST 50	
600	321309-0110		1	BALL BEARING, 50X90X20 MM	

Pos	Part No	UN	Qty	Description	Page No

Machine Type | Group Description | Used-In | Group Number | Page No

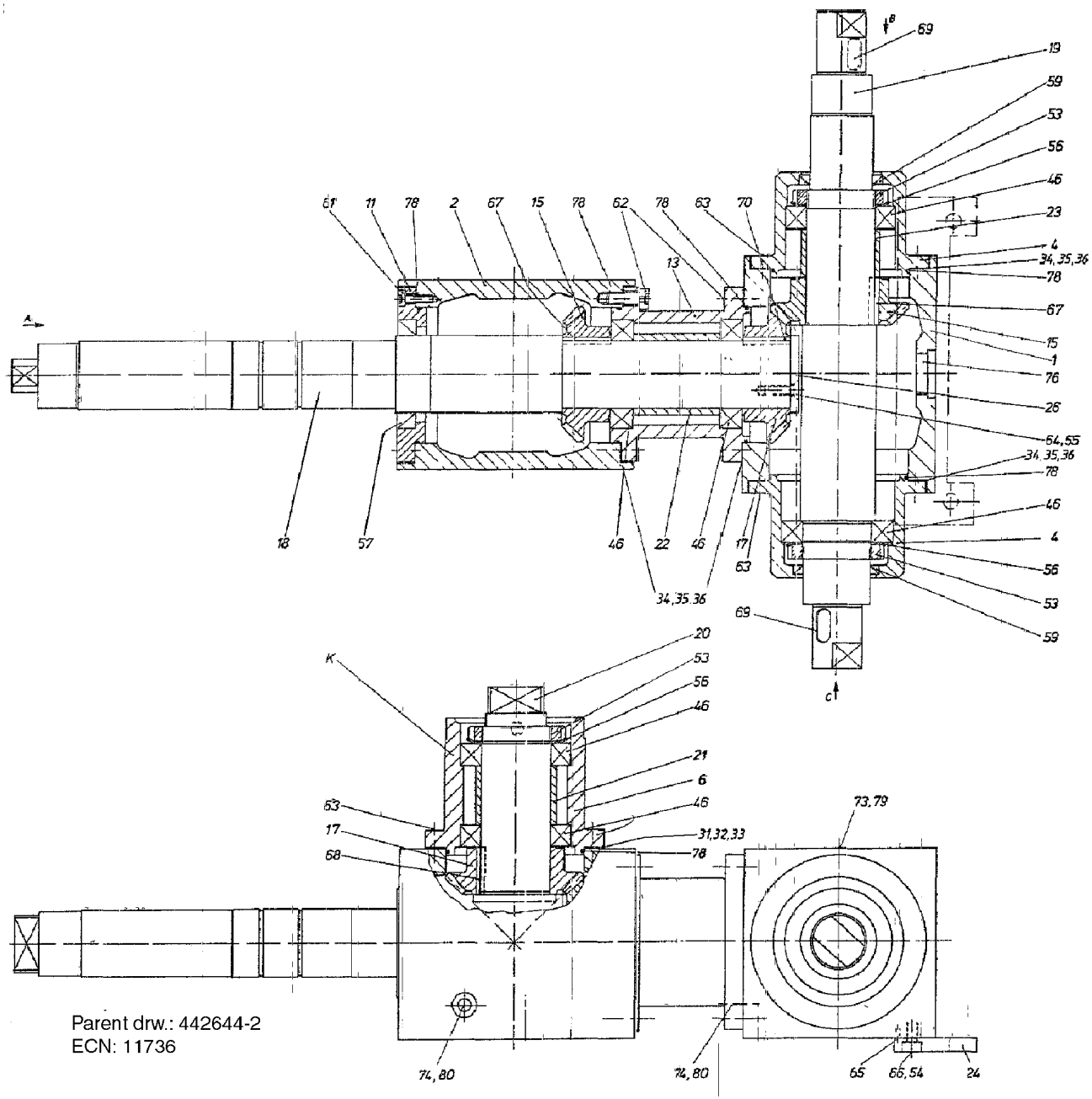

Parent drw.: 442644-2
ECN: 11736

ECM: 188332 - 20041105
Group number: 442644-0300
Assembly Drawing: 442644-2_1_AA

Pos	Part No	UN	Qty	Description	Page No	Pos	Part No	UN	Qty	Description	Page No
-											
001	568151-0000		1	GEAR HOUSING							
002	568152-0000		1	GEAR HOUSING							
004	568153-0000		2	BEARING SEAT							
006	568154-0000		1	BEARING SEAT							
011	568155-0000		1	BEARING COVER							
013	568156-0000		1	FLANGE							
015	442613-0000		2	GEAR WHEEL							
017	442614-0000		2	GEAR WHEEL							
018	568157-0000		1	SHAFT							
019	568158-0000		1	SHAFT							
020	568159-0000		1	SHAFT							
021	442615-0000		1	SPACER							
022	442616-0000		1	SPACER							
023	442617-0000		1	SPACER							
024	568160-0000		1	FASTENING PLATE							
026	568161-0000		1	WASHER							
031	525331-0000		1	SHIM							
032	443055-0000		1	SHIM							
033	443056-0000		1	SHIM							
034	525332-0000		4	SHIM							
035	443057-0000		4	SHIM							
036	443058-0000		4	SHIM							
046	321306-0110		6	BALL BEARING, 50X80X16 MM							
053	312805-0110		3	NUT ROUND WITH SLOTS M50X1,5 FE							
054	315402-0173		2	LOCK WASHER FBB 10,2							
056	315410-0110		3	LOCK WASHER MB 10 D=50 H=1,25							
057	90091-0202		1	RADIAL SEAL 58X80X13 MM DUST LIP							
059	90091-0143		2	RADIAL SEAL 47X62X6 MM							
061	312111-0370		4	SCREW HEX.SOCK.HD.MC6S-TT 6X20 88 FZB							
062	312111-0453		8	SCREW HEX.SOCK.HD.MC6S-TT 8X25 88 FZB							
063	312111-0451		12	SCREW HEX.SOCK.HD.MC6S-TT 8X20 88 FZB							
064	312151-0451		2	SCREW EN 10642 MF6S M8X20 10.9 EL.PL							
065	311111-0305		2	SPRING PIN ISO 8752 5X14-ST							
066	312111-0491		2	SCREW HEX.SOCK.HD.MC6S-TT 10X20 88 FZ							
067	315701-0363		2	PARALLEL KEY W. ROUND ENDS 14X9X40 MM							
068	568162-0000		1	WEDGE							
069	315701-0296		2	PARALLEL KEY W. ROUND ENDS 10X8X25 MM							
070	315701-0363		1	PARALLEL KEY W. ROUND ENDS 14X9X40 MM							
078	90242-0118		6	O-RING 90X2 MM							
079	90242-0120		1	O-RING 28X3,5 MM							
080	90242-0121		2	O-RING 11X2,5 MM							

Machine Type	Group Description	Used-In	Group Number	Page No

PRESSURE ARM

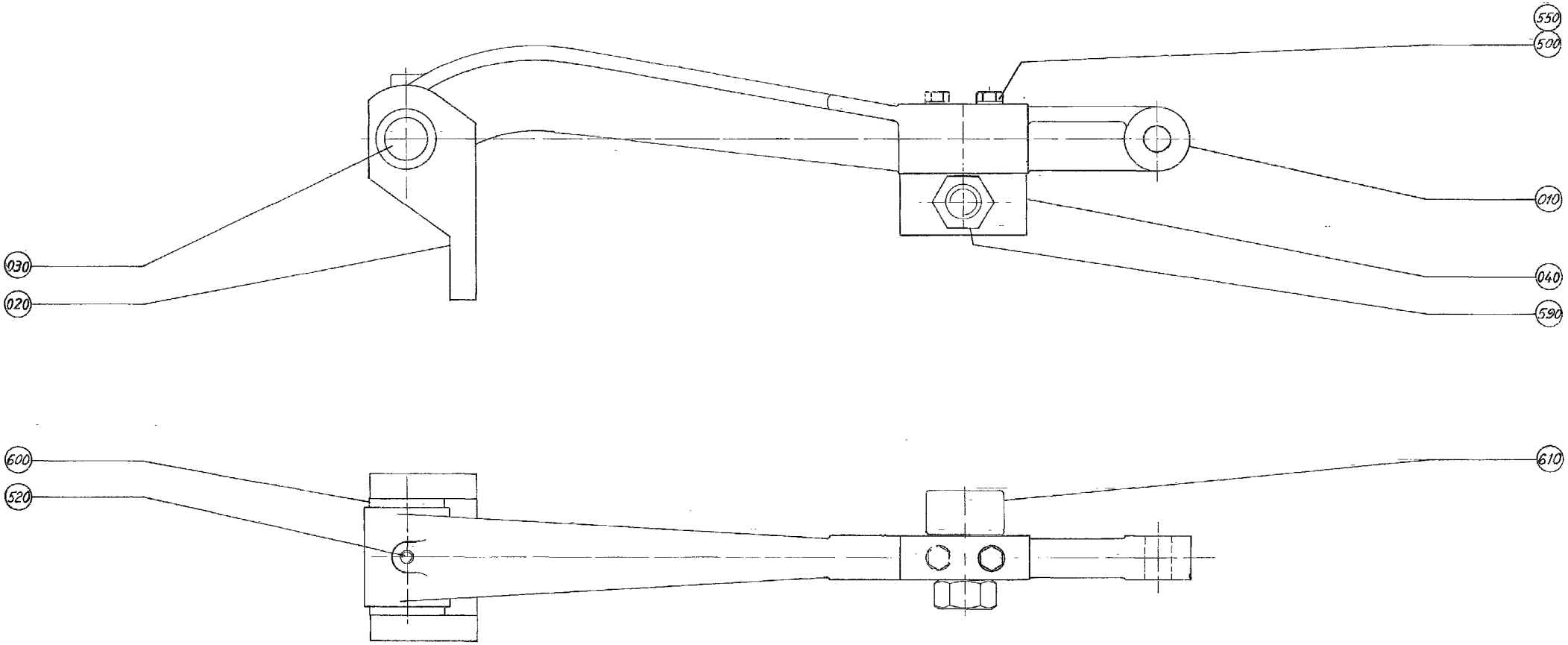

ECM: 188333 - 20041105
Group number: 285299-0100
Assembly Drawing: 285299-1_1_AA

Pos	Part No	UN	Qty	Description	Page No
-					
010	442524-0000		1	ARM	
020	285300-0000		1	BRACKET	
030	262261-0000		1	SHAFT	
040	442523-0000		1	HOLDER	
500	312105-0379		2	SCREW M6S ISO 4014 M6X45 A480	
520	312311-0370		1	SCREW ISO4028 M6X20 FZB	
550	315105-0153		2	WASHER BRB 6,4X12 RFR	
590	312631-0324		1	HEX.NUT FINE, EN 24032 M6M M16X1,5 FZB8	
600	321101-0232		2	FLANGE BUSHING, 20X28X16 MM	
610	321582-0212		1	CAM ROLLER, 16X35X52 MM	

Pos	Part No	UN	Qty	Description	Page No

PRESSURE ARM

Drawing file: 594621-1_1_AA.hpgl

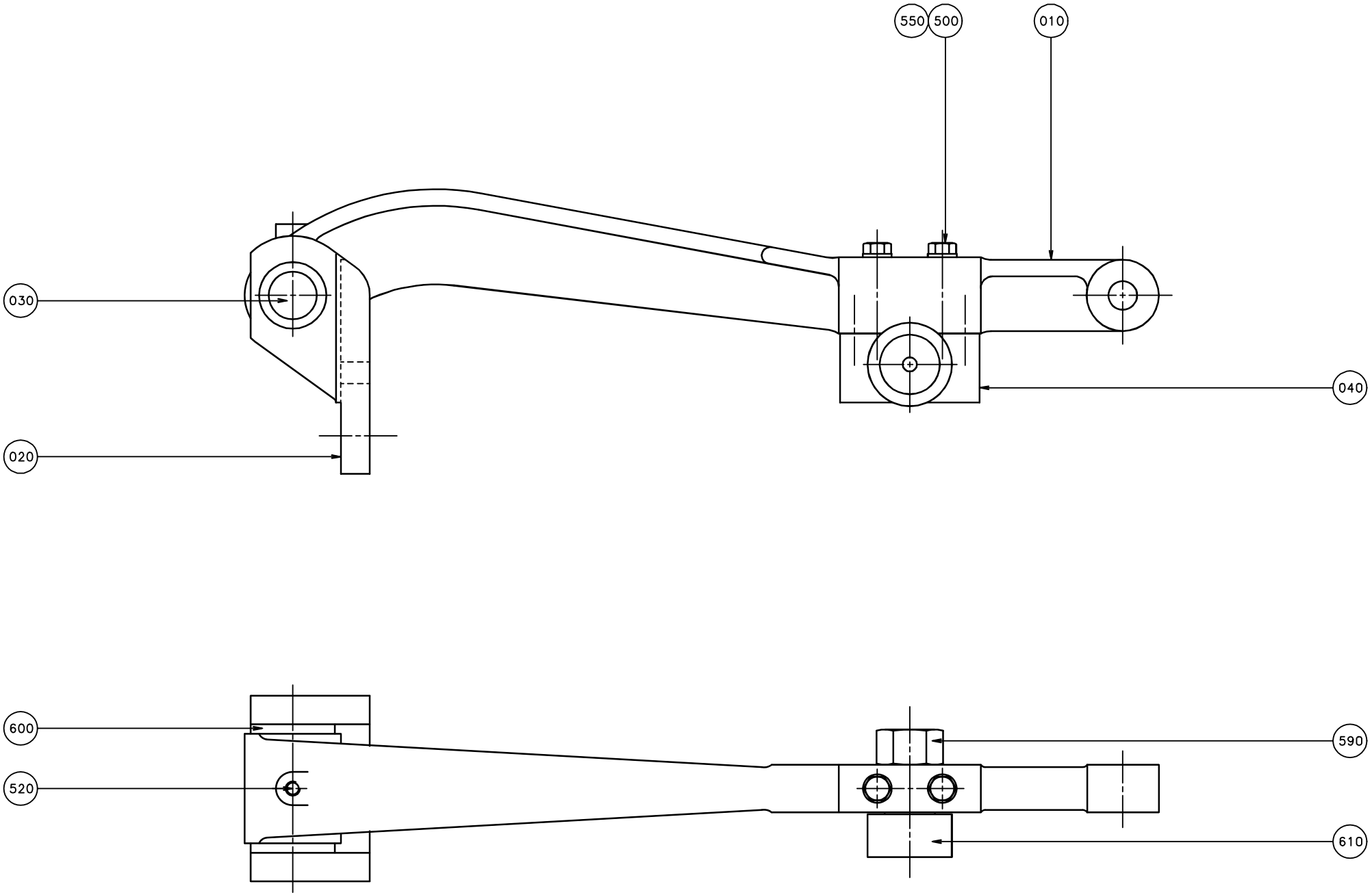

ECM: 188334 - 20041105
Group number: 594621-0100
Assembly Drawing: 594621-1_1_AA

Pos	Part No	UN	Qty	Description	Page No
-					
010	442524-0000		1	ARM	
020	285300-0000		1	BRACKET	
030	262261-0000		1	SHAFT	
040	442523-0000		1	HOLDER	
500	312105-0379		2	SCREW M6S ISO 4014 M6X45 A480	
520	312311-0370		1	SCREW ISO4028 M6X20 FZB	
550	315105-0153		2	WASHER BRB 6,4X12 RFR	
590	312631-0324		1	HEX.NUT FINE, EN 24032 M6M M16X1,5 FZB8	
600	321101-0232		2	FLANGE BUSHING, 20X28X16 MM	
610	321582-0212		1	CAM ROLLER, 16X35X52 MM	

Pos	Part No	UN	Qty	Description	Page No

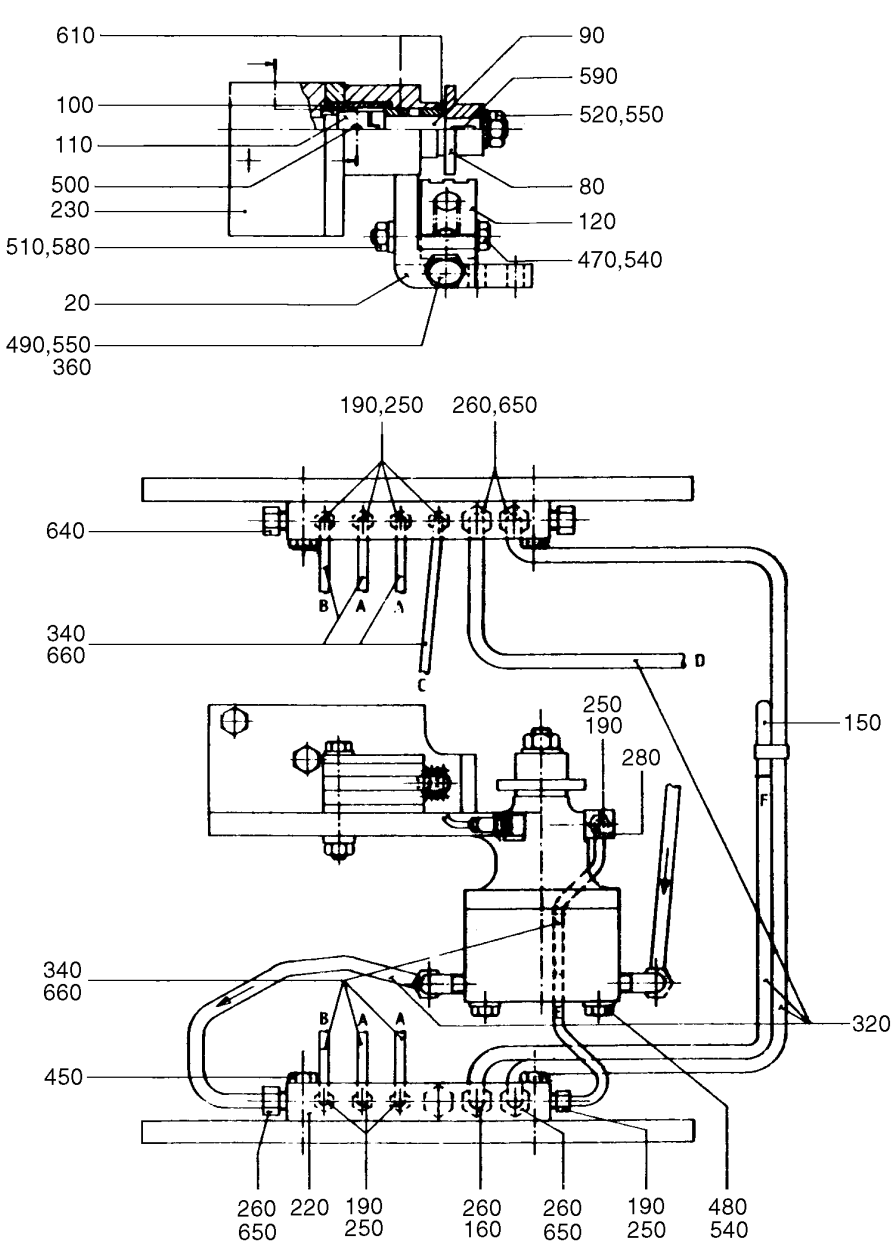

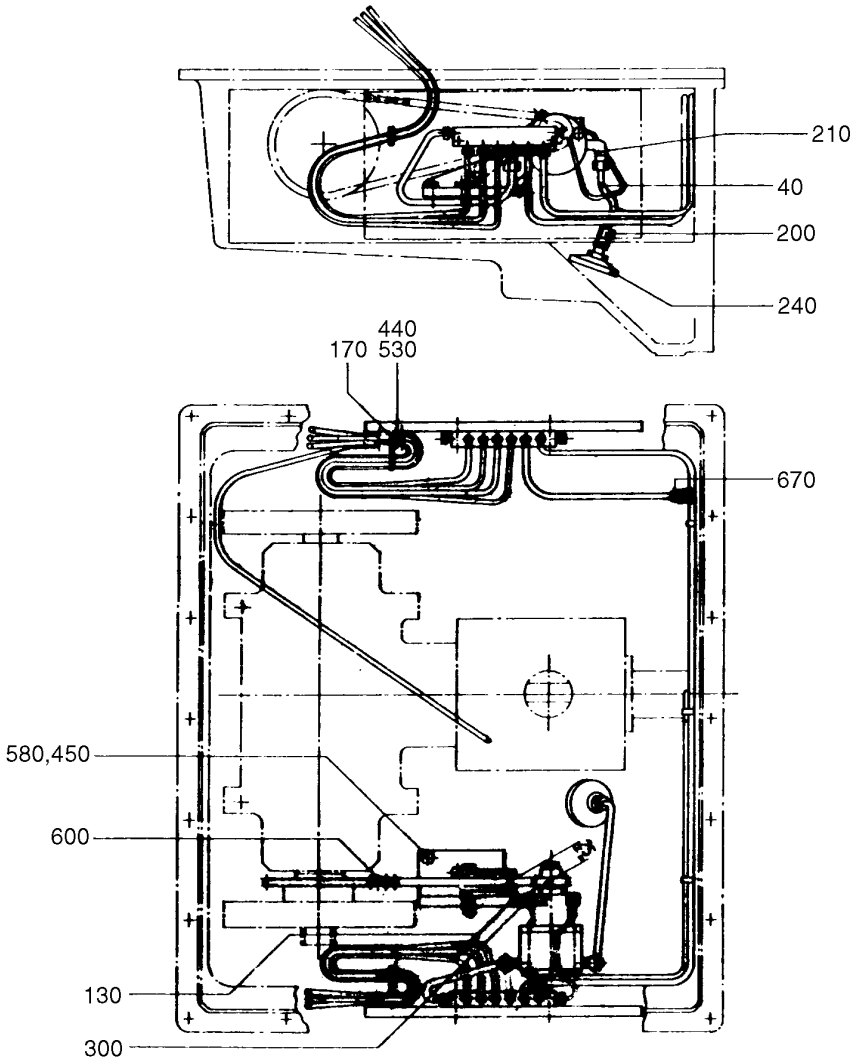

52510202.TIF
525102-2

ECM: 188335 - 20041105
Group number: 525102-0200
Assembly Drawing: 525102-2_1_AA

Pos	Part No	UN	Qty	Description	Page No
-					
020	525173-0000		1	CANTILEVER	
040	443150-0000		1	SUCTION TUBE	
080	443048-0000		1	SPROCKET	
090	443049-0000		1	SHAFT	
100	443050-0000		1	GUIDE SLEEVE	
110	443051-0000		1	CONNECTION	
120	443053-0000		1	CHAIN GUIDE	
130	443151-0000		1	PIPE	
150	525375-0000		1	OIL PIPE	
170	525358-0000		2	BRACKET	
180	525376-0000		2	BOW CLAMP	
190	90028-0001		1	CONE 5/32"	
200	90030-0107		1	CONN. STR. 6-1/8 NPT, EXT. TAPPERED	
210	90030-0222		2	CONN. ELBOW, 6-1/8 NPT, EXT.THREAD	
220	90032-0035		2	DISTR. BLOCK & DIST.5/16-24UNF X8	
230	90048-0033		1	GEAR PUMP, C 2347	
240	90048-0420		1	FILTER	
250	90134-0003		1	BUSHING	
260	90134-0034		3	NIPPLE	
	90030-0101		*1*	*TAPER*	
270	90092-0038		4	METERING VALVE, CJB 1, 5/16-24 UNF	
275	90092-0081		5	MET.VALVE CONT. LUBR., 5/16-24 UNF	
280	90137-0005		1	BANJO CONN. M6, 5/16-24UNF	
300	90137-0010		1	BANJO CONN. M6, D=2,5 MM	
320	90166-0108	MM	1500	TUBE 6 MM PA,TRANSP.	
340	90166-0051	MM	4500	TUBE PA,TRANSP.	
350	90230-0031		1	NON-RETURN VALVE B5146	
360	90335-0012		1	SPRING	
370	90415-0033		1	OIL FILTER REFILLING UC-HP-1229-25	
	90415-0330		*1*	*FILTER INSERT ART.NO. HR-1229-25UCC*	
440	312105-0327		2	SCREW M6S ISO 4017 M5X12 A480	
450	312105-0370		6	SCREW M6S ISO 4017 M6X20 A480	
470	312105-0379		1	SCREW M6S ISO 4014 M6X45 A480	
480	312105-0380		2	SCREW M6S ISO 4014 M6X50 A480	
490	312105-0451		1	SCREW M6S ISO 4017 M8X20 A480	
495	312105-0388		2	SCREW M6S ISO 4014 M6X90 A480	
500	312318-0283		1	SCREW ISO4029 M4X4 A4	
510	312605-0316		1	HEXAGON NUT, M6M M6 A280	
520	312605-0318		1	HEXAGON NUT, M6M M8 A280	
530	315105-0146		2	WASHER BRB 5,3X10 RFR	
540	315105-0153		3	WASHER BRB 6,4X12 RFR	
550	315105-0165		2	WASHER BRB 8,4X16 RFR	
580	315115-0153		5	WASHER PLAIN, TBRB 6,4/12 H=3	
583	315239-0109		2	NYLON WASHER G1/8	
585	315239-0110		2	NYLON WASHER G1/4	
590	315701-0134		1	PARALLEL KEY W. ROUND ENDS 3X3X10 MM	
600	318201-0076		1	ROLLER CHAIN, SINGLE 3/8 -76	
610	321101-0172		2	FLANGE BUSHING, 12X18X10 MM	
640	90136-0002		3	PLUG 5/16"24	
650	342706-0130		3	ACCESSORIES, INSERT SLEEVE 6 MM	
660	342706-0114		16	ACCESSORIES, INSERT SLEEVE 4 MM	
680	342921-0114		2	STRAIGHT COUPLING,EXT.THREADED 6/4-G1/4"	
690	342960-0112		2	BULKHEAD COUPLING 6/4	

Machine Type | Group Description | Used-In | Group Number | Page No

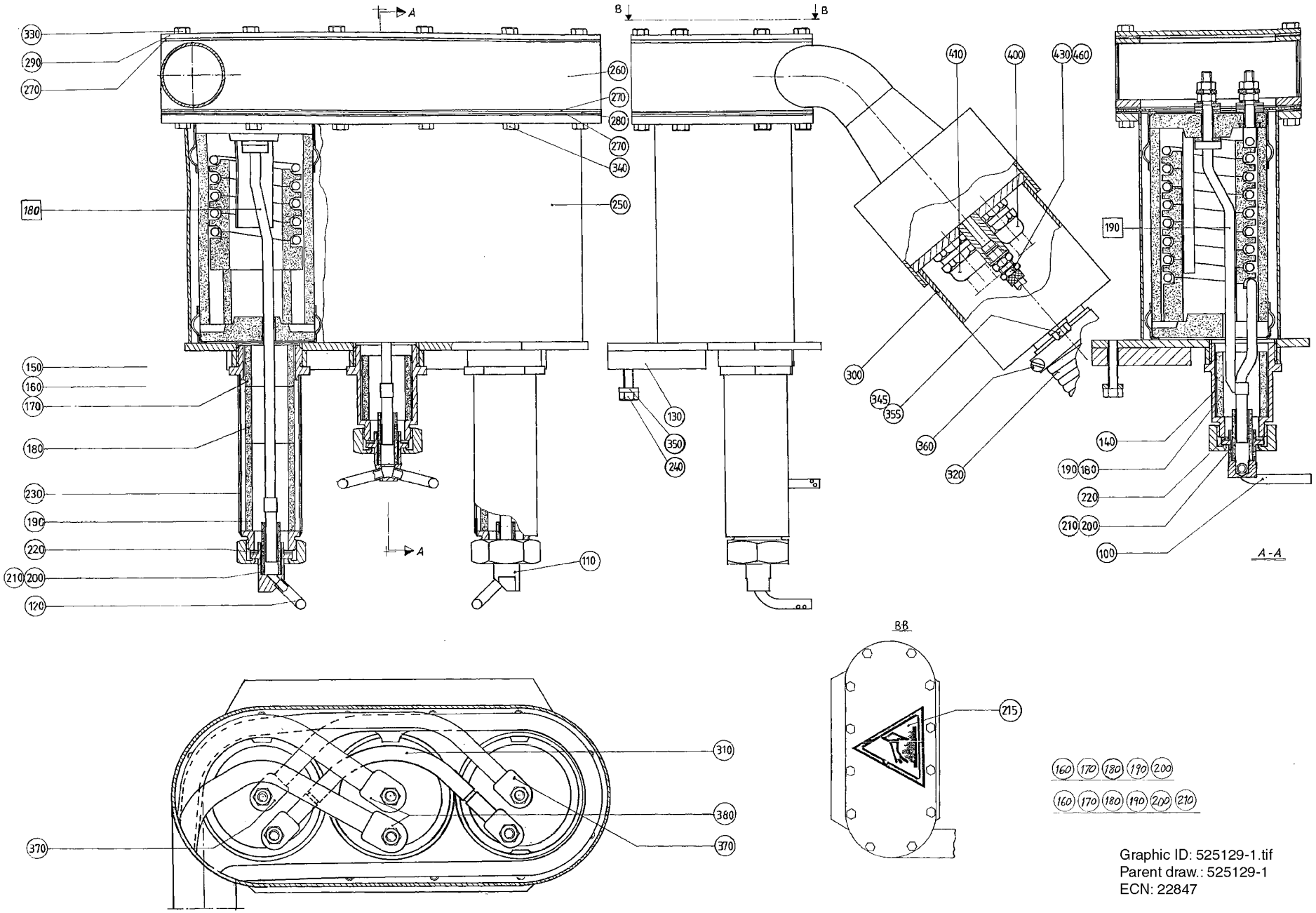

Graphic ID: 525129-1.tif
Parent draw.: 525129-1
ECN: 22847

ECM: 72197 - 19990215
Group number: 525129-0100
Assembly Drawing: 525129-1_1_AA

This list covers pages from 5-68 to 5-71

Pos	Part No	UN	Qty	Description	Page No
0300B					
100	247227-0002		1	AIR NOZZLE	
	20704-0000		*1*	*NUT*	
110	285507-0002		1	AIR NOZZLE	
	20704-0000		*1*	*NUT*	
120	285508-0002		1	AIR NOZZLE	
	20704-0000		*1*	*NUT*	
140	23763-0010		1	SPACER PIPE	
160	23765-0002		2	INSULATING PIPE	
190	23765-0005		1	INSULATING PIPE	
200	252766-0001		2	INSULATING PIPE	
210	252766-0002		1	INSULATING PIPE	
230	297499-0002		2	SIDE PIPE	
240	312105-0372		3	SCREW M6S ISO 4017 M6X25 A480	
0500B					
100	247227-0003		1	AIR NOZZLE	
110	525197-0000		1	BLOW-OFF NOZZLE TR	
120	525198-0000		1	BLOW-OFF NOZZLE TL	
130	262290-0002		1	LACE	
140	23763-0003		1	SPACER PIPE	
160	23765-0002		2	INSULATING PIPE	
180	23765-0004		1	INSULATING PIPE	
200	252766-0001		3	INSULATING PIPE	
230	297499-0002		2	SIDE PIPE	
240	312105-0376		3	SCREW M6S ISO 4014 M6X35 A480	
0500S					
100	442867-0000		1	AIR NOZZLE	
110	285676-0000		1	AIR NOZZLE	
120	285677-0000		1	AIR NOZZLE	
140	23763-0006		1	SPACER PIPE	
170	23765-0003		2	INSULATING PIPE	
180	23765-0004		2	INSULATING PIPE	
190	23765-0005		3	INSULATING PIPE	
200	252766-0001		4	INSULATING PIPE	
210	252766-0002		1	INSULATING PIPE	
230	297499-0003		2	SIDE PIPE	
240	312105-0372		3	SCREW M6S ISO 4017 M6X25 A480	
0500SQ					
100	574032-0000		1	BLOWING NOZZLE B	
110	574033-0000		1	BLOWING NOZZLE TH	
120	574034-0000		1	BLOWING NOZZLE TV	
130	262290-0001		1	LACE	
140	23763-0006		1	SPACER PIPE	
170	23765-0003		2	INSULATING PIPE	
180	23765-0004		2	INSULATING PIPE	
190	23765-0005		1	INSULATING PIPE	
200	252766-0001		1	INSULATING PIPE	
210	252766-0002		2	INSULATING PIPE	
230	583448-0000		2	SIDE PIPE	
240	312105-0374		3	SCREW M6S ISO 4014 M6X30 A480	
0568B					
100	247227-0003		1	AIR NOZZLE	
110	525197-0000		1	BLOW-OFF NOZZLE TR	
120	525198-0000		1	BLOW-OFF NOZZLE TL	
140	23763-0005		1	SPACER PIPE	
160	23765-0002		2	INSULATING PIPE	
190	23765-0005		1	INSULATING PIPE	
200	252766-0001		2	INSULATING PIPE	
210	252766-0002		1	INSULATING PIPE	
230	297499-0002		2	SIDE PIPE	
240	312105-0372		3	SCREW M6S ISO 4017 M6X25 A480	
0568SQ					
100	574032-0000		1	BLOWING NOZZLE B	
110	574033-0000		1	BLOWING NOZZLE TH	
120	574034-0000		1	BLOWING NOZZLE TV	
130	262290-0001		1	LACE	
140	23763-0006		1	SPACER PIPE	
170	23765-0003		4	INSULATING PIPE	
180	23765-0004		2	INSULATING PIPE	
190	23765-0005		1	INSULATING PIPE	
200	252766-0001		1	INSULATING PIPE	
210	252766-0002		2	INSULATING PIPE	
230	597609-0000		2	SIDE PIPE	
240	312105-0374		3	SCREW M6S ISO 4014 M6X30 A480	
1000B					
100	247227-0003		1	AIR NOZZLE	
110	525197-0000		1	BLOW-OFF NOZZLE TR	
120	525198-0000		1	BLOW-OFF NOZZLE TL	
130	262290-0001		1	LACE	
140	23763-0004		1	SPACER PIPE	
150	23765-0001		2	INSULATING PIPE	
180	23765-0004		1	INSULATING PIPE	
200	252766-0001		3	INSULATING PIPE	
230	297499-0001		2	SIDE PIPE	

Machine Type | Group Description | Used-In | Group Number | Page No

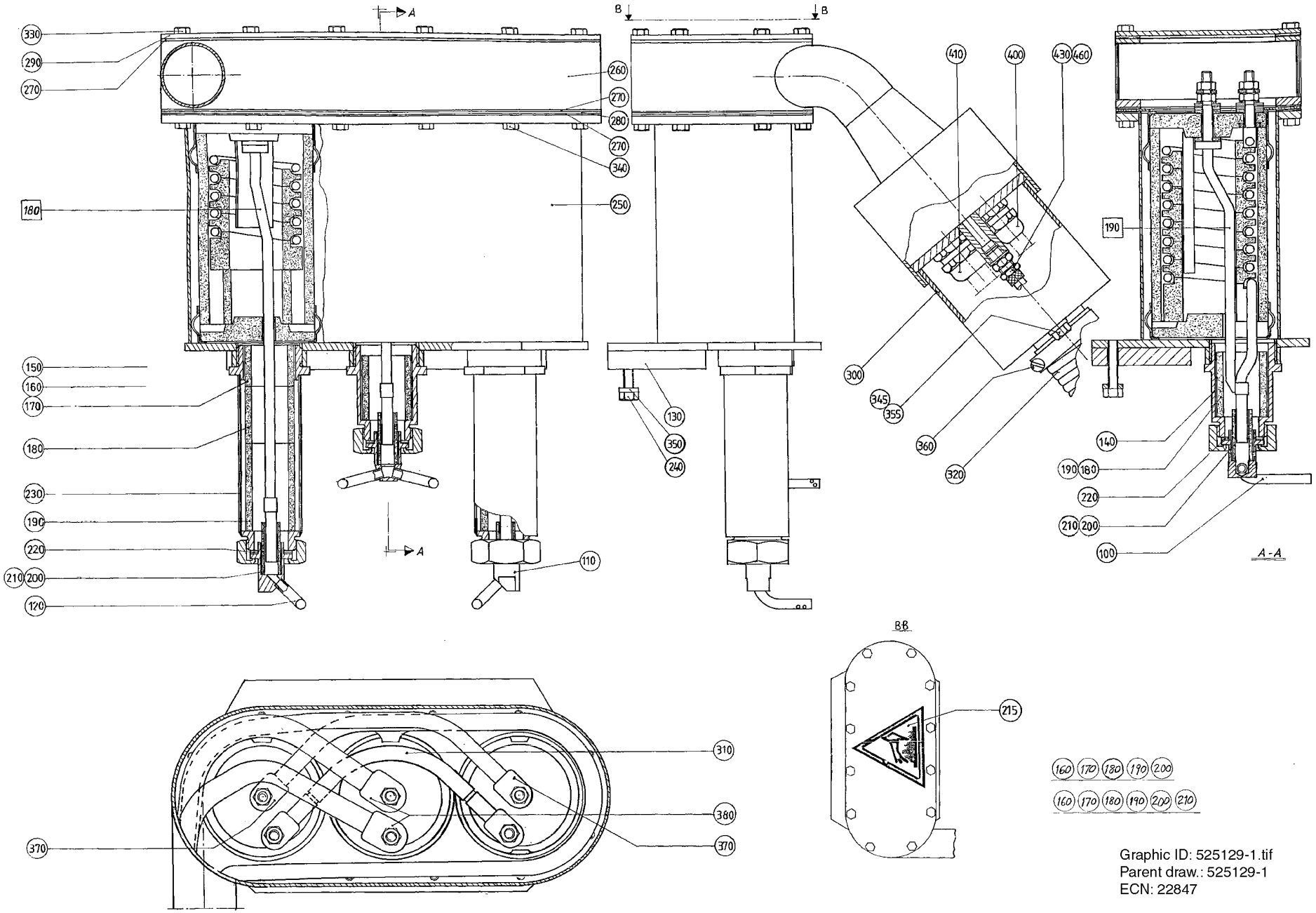

Graphic ID: 525129-1.tif
Parent draw.: 525129-1
ECN: 22847

ECM: 72197 - 19990215
Group number: 525129-0100
Assembly Drawing: 525129-1_1_AA

This list covers pages from 5-68 to 5-71

Pos	Part No	UN	Qty	Description	Page No
1000B (Cont'd)					
240	312105-0374		3	SCREW M6S ISO 4014 M6X30 A480	
1000S					
100	569124-0000		1	AIR NOZZLE	
110	569125-0000		1	AIR NOZZLE	
120	569126-0000		1	AIR NOZZLE	
130	262290-0001		1	LACE	
140	23763-0004		1	SPACER PIPE	
160	23765-0002		2	INSULATING PIPE	
170	23765-0003		2	INSULATING PIPE	
180	23765-0004		3	INSULATING PIPE	
200	252766-0001		1	INSULATING PIPE	
210	252766-0002		2	INSULATING PIPE	
230	548402-0000		2	SIDE PIPE	
240	312105-0374		3	SCREW M6S ISO 4014 M6X30 A480	
1000SQ					
100	574032-0000		1	BLOWING NOZZLE B	
110	574033-0000		1	BLOWING NOZZLE TH	
120	574034-0000		1	BLOWING NOZZLE TV	
130	262290-0001		1	LACE	
140	23763-0006		1	SPACER PIPE	
160	23765-0002		2	INSULATING PIPE	
180	23765-0004		4	INSULATING PIPE	
190	23765-0005		1	INSULATING PIPE	
200	252766-0001		3	INSULATING PIPE	
230	443158-0000		2	SIDE PIPE	
240	312105-0374		3	SCREW M6S ISO 4014 M6X30 A480	
1136B					
100	247227-0003		1	AIR NOZZLE	
110	525197-0000		1	BLOW-OFF NOZZLE TR	
120	525198-0000		1	BLOW-OFF NOZZLE TL	
130	262290-0001		1	LACE	
140	23763-0004		1	SPACER PIPE	
160	23765-0002		2	INSULATING PIPE	
170	23765-0003		2	INSULATING PIPE	
180	23765-0004		3	INSULATING PIPE	
200	252766-0001		1	INSULATING PIPE	
210	252766-0002		2	INSULATING PIPE	
230	548402-0000		2	SIDE PIPE	
240	312105-0374		3	SCREW M6S ISO 4014 M6X30 A480	
Common Parts					
215	359710-0002		1	WARNING SIGN ISO, HOT SURFACE	
220	263673-0000		6	GASKET	
250	262272-0000		1	HEATING CHAMBER	
260	525071-0000		1	SPACER PIECE	
270	531730-0000		3	FLANGE SEAL	
280	23769-0000		1	STOP PLATE	
290	262288-0000		1	LID	
300	525073-0000		1	COVER	
310	525070-0000		1	ELECTRICAL CONNECTION	
	353104-0168		*2*	*CABLE SHOE, RING UNINS., YAV 16 M 6*	
	351121-0200	*MM*	*165*	*CABLE RADOX 155 1X16 MMÂ² BLACK*	
320	352135-0116	MM	500	FLEXIBLE CONDUIT DIA. 40	
330	312105-0325		12	SCREW M6S ISO 4017 M5X10 A480	
340	312105-0328		12	SCREW M6S ISO 4017 M5X14 A480	
345	312105-0388		2	SCREW M6S ISO 4014 M6X90 A480	
350	315115-0153		3	WASHER PLAIN, TBRB 6,4/12 H=3	
355	315105-0153		2	WASHER BRB 6,4X12 RFR	
360	342991-0109		2	HOSE CLIP,WORM DRIVE TYPE (48)-50	
370	353104-0168		2	CABLE SHOE, RING UNINS., YAV 16 M 6	
380	353104-0182		2	CABLE SHOE, RING UNINS., YAV 35 M 6	
400	352103-0106		2	CABLE GLAND, ST 11, PR18,6/PG11	
410	352103-0111		2	CABLE GLAND, ST 16, PR22,5/PG16	
430	342921-0121		1	STRAIGHT CPLNG,EXT.THREADED 8/6-G1/8INCH	
460	315234-0109		1	WASHER,PL.RND.CU.10,3/13,5 H=1,0	
F180	31390-0100		2	FF-ELEMENT TOP	**5-73**
F190	31390-0110		1	FF-ELEMENT BOTTOM	**5-75**

Machine Type | Group Description | Used-In | Group Number | Page No

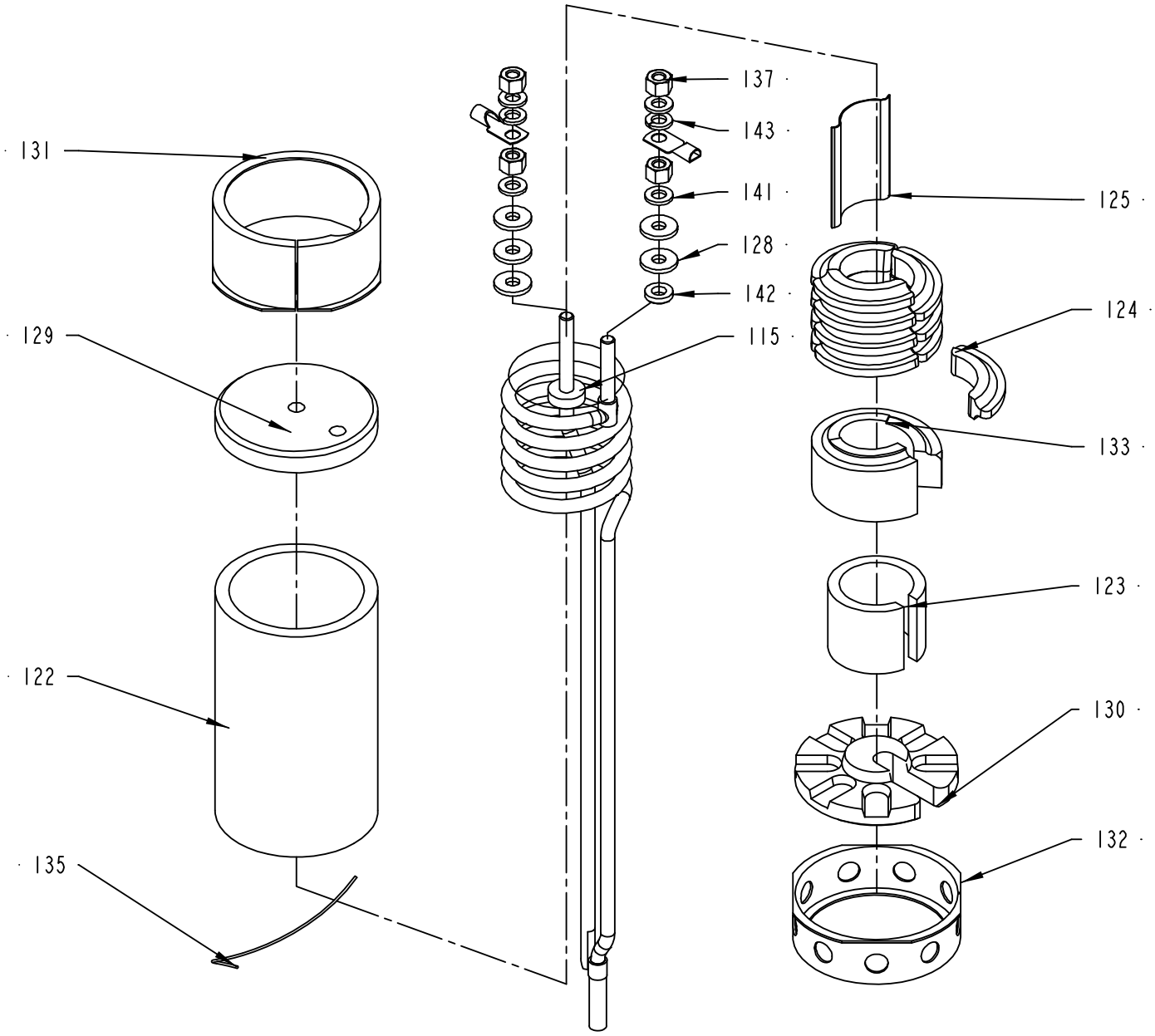

31390-1
ECN 94512

ECM: 188337 - 20041105
Group number: 31390-0100
Assembly Drawing: 31390-1_1_AC

Pos	Part No	UN	Qty	Description	Page No
0568SQ 648035, 0500SQ 648035					
115	30310-0003		1	FF HEATING ELEMENT TOP	
0300B 648035, 0500B 648035, 0500S 648035, 0568B 648035					
115	30310-0002		1	FF HEATING ELEMENT TOP	
1136B 648035, 1000SQ 648035, 1000S 648035, 1000B 648035					
115	30310-0001		1	FF HEATING ELEMENT TOP	
Common Parts					
122	20705-0001		1	INSULATING PIPE	
123	29411-0000		1	SPACER PIPE	
124	29413-0000		12	LACE	
125	31653-0001		1	SHEET	
128	525233-0000		5	GASKET 16X2X6MM	
129	20772-0000		1	INSULATOR BODY 70X70X15MM	
130	37536-0000		1	INSULATOR BODY LOWER 70X70X15MM	
131	23771-0000		1	SPACER RING 4X78X1MM	
132	37537-0000		1	SPACER RING LOWER 72X78X1MM	
133	37535-0000		1	SUPPORTING PART 56X56X31,5MM	
135	90145-0005	M	1	WIRE	
137	312811-0316		4	NUT HEX.LOCK HELI COIL MID GRIP M6 SS	
141	315105-0153		4	WASHER BRB 6,4X12 RFR	
142	315115-0153		1	WASHER PLAIN, TBRB 6,4/12 H=3	
143	315402-0156		2	LOCK WASHER FBB 6,5	

Pos	Part No	UN	Qty	Description	Page No

FF-ELEMENT BOTTOM

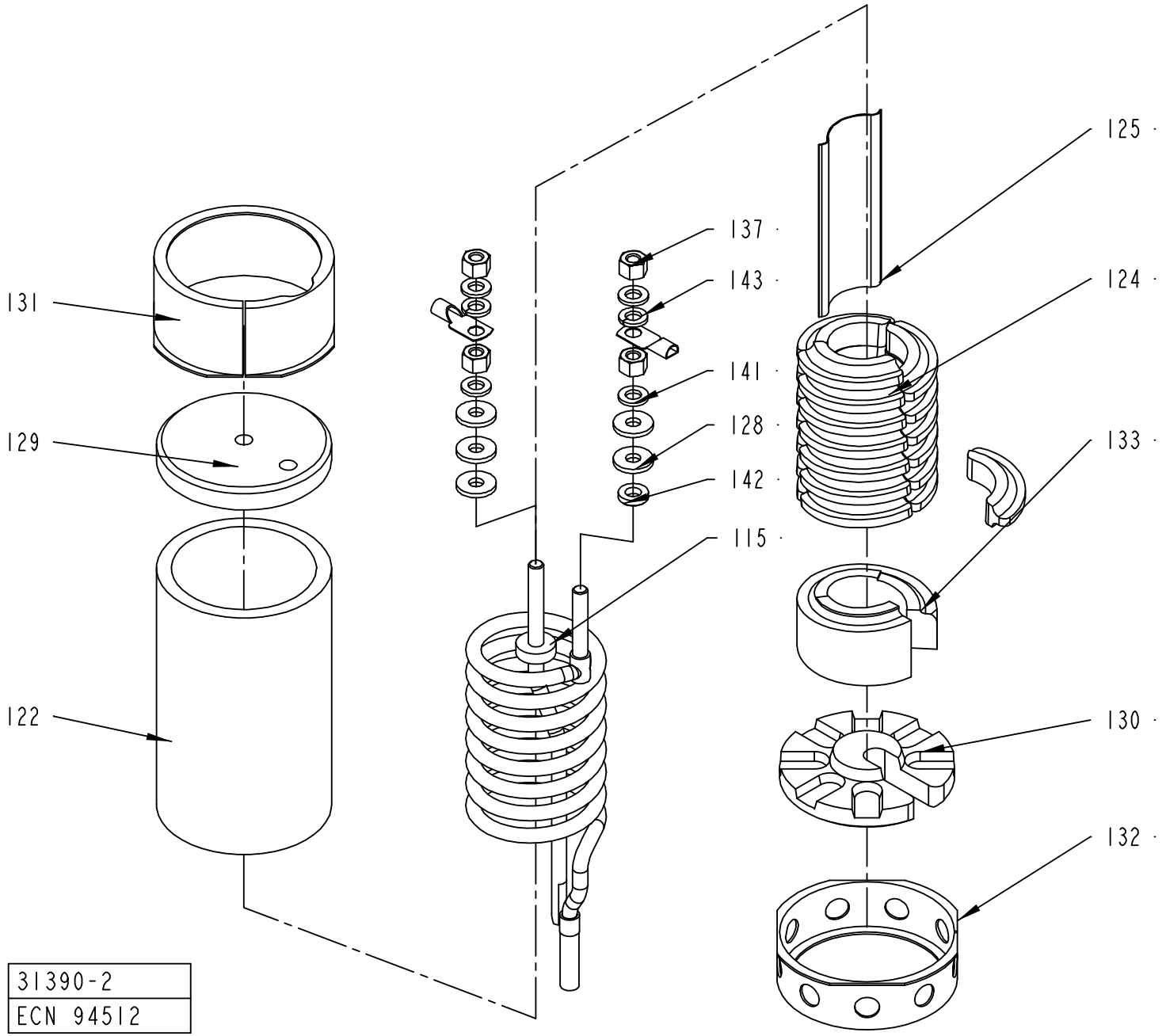

ECM: 188338 - 20041105
Group number: 31390-0110
Assembly Drawing: 31390-2_1_AA

Pos	Part No	UN	Qty	Description	Page No
0300B 648035, 1000SQ 648035, 0500S 648035, 0568SQ 648035, 0568B 648035, 0500SQ 648035					
115	30311-0001		1	FF HEATINGELEMENT BUTTOM KANTHAL 2333-02	
1136B 648035, 0500B 648035, 1000S 648035, 1000B 648035					
115	30311-0002		1	FF HEATINGELEMENT BUTTOM KANTHAL 2333-02	
Common Parts					
122	20705-0001		1	INSULATING PIPE	
124	29413-0000		21	LACE	
125	31653-0002		1	FIX PLATE 39X85X0,5MM	
128	525233-0000		5	GASKET 16X2X6MM	
129	20772-0000		1	INSULATOR BODY 70X70X15MM	
130	37536-0000		1	INSULATOR BODY LOWER 70X70X15MM	
131	23771-0000		1	SPACER RING 4X78X1MM	
132	37537-0000		1	SPACER RING LOWER 72X78X1MM	
133	37535-0000		1	SUPPORTING PART 56X56X31,5MM	
137	312811-0316		4	NUT HEX.LOCK HELI COIL MID GRIP M6 SS	
141	315105-0153		4	WASHER BRB 6,4X12 RFR	
142	315115-0153		1	WASHER PLAIN, TBRB 6,4/12 H=3	
143	315402-0156		2	LOCK WASHER FBB 6,5	

Pos	Part No	UN	Qty	Description	Page No

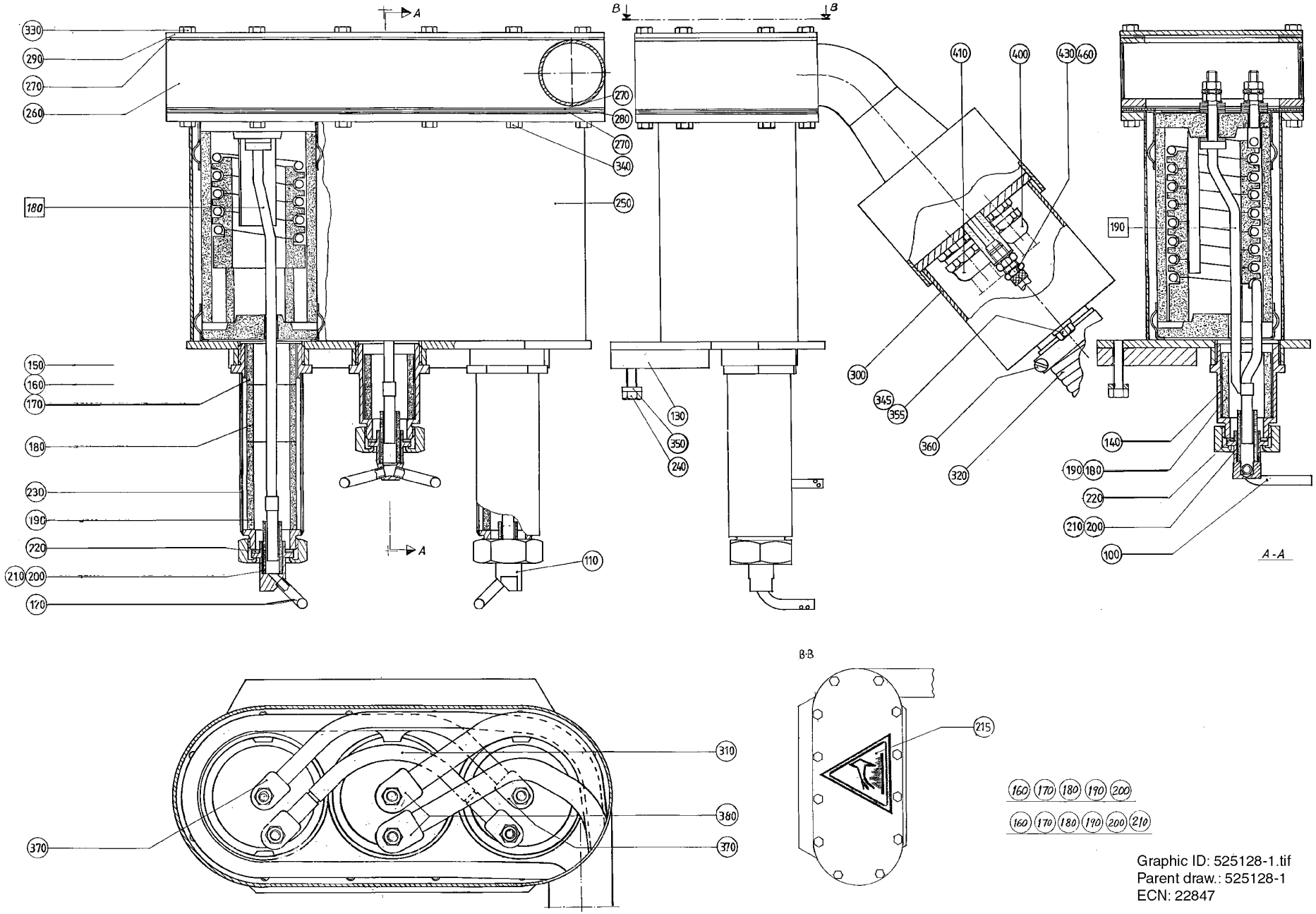

Graphic ID: 525128-1.tif
Parent draw.: 525128-1
ECN: 22847

ECM: 72197 - 19990215
Group number: 525128-0100
Assembly Drawing: 525128-1_1_AA

This list covers pages from 5-76 to 5-79

Pos	Part No	UN	Qty	Description	Page No
0300B					
100	247227-0002		1	AIR NOZZLE	
	20704-0000		*1*	*NUT*	
110	285507-0002		1	AIR NOZZLE	
	20704-0000		*1*	*NUT*	
120	285508-0002		1	AIR NOZZLE	
	20704-0000		*1*	*NUT*	
140	23763-0010		1	SPACER PIPE	
160	23765-0002		2	INSULATING PIPE	
190	23765-0005		1	INSULATING PIPE	
200	252766-0001		2	INSULATING PIPE	
210	252766-0002		1	INSULATING PIPE	
230	297499-0002		2	SIDE PIPE	
240	312105-0372		3	SCREW M6S ISO 4017 M6X25 A480	
0500B					
100	247227-0003		1	AIR NOZZLE	
110	525197-0000		1	BLOW-OFF NOZZLE TR	
120	525198-0000		1	BLOW-OFF NOZZLE TL	
130	262290-0002		1	LACE	
140	23763-0003		1	SPACER PIPE	
160	23765-0002		2	INSULATING PIPE	
180	23765-0004		1	INSULATING PIPE	
200	252766-0001		3	INSULATING PIPE	
230	297499-0002		2	SIDE PIPE	
240	312105-0376		3	SCREW M6S ISO 4014 M6X35 A480	
0500S					
100	442867-0000		1	AIR NOZZLE	
110	285676-0000		1	AIR NOZZLE	
120	285677-0000		1	AIR NOZZLE	
140	23763-0006		1	SPACER PIPE	
170	23765-0003		2	INSULATING PIPE	
180	23765-0004		2	INSULATING PIPE	
190	23765-0005		3	INSULATING PIPE	
200	252766-0001		4	INSULATING PIPE	
210	252766-0002		1	INSULATING PIPE	
230	297499-0003		2	SIDE PIPE	
240	312105-0372		3	SCREW M6S ISO 4017 M6X25 A480	
0500SQ					
100	574032-0000		1	BLOWING NOZZLE B	
110	574033-0000		1	BLOWING NOZZLE TH	
120	574034-0000		1	BLOWING NOZZLE TV	
130	262290-0001		1	LACE	
140	23763-0006		1	SPACER PIPE	
170	23765-0003		2	INSULATING PIPE	
180	23765-0004		2	INSULATING PIPE	
190	23765-0005		1	INSULATING PIPE	
200	252766-0001		1	INSULATING PIPE	
210	252766-0002		2	INSULATING PIPE	
230	583448-0000		2	SIDE PIPE	
240	312105-0374		3	SCREW M6S ISO 4014 M6X30 A480	
0568B					
100	247227-0003		1	AIR NOZZLE	
110	525197-0000		1	BLOW-OFF NOZZLE TR	
120	525198-0000		1	BLOW-OFF NOZZLE TL	
140	23763-0005		1	SPACER PIPE	
160	23765-0002		2	INSULATING PIPE	
190	23765-0005		1	INSULATING PIPE	
200	252766-0001		2	INSULATING PIPE	
210	252766-0002		1	INSULATING PIPE	
230	297499-0002		2	SIDE PIPE	
240	312105-0372		3	SCREW M6S ISO 4017 M6X25 A480	
0568SQ					
100	574032-0000		1	BLOWING NOZZLE B	
110	574033-0000		1	BLOWING NOZZLE TH	
120	574034-0000		1	BLOWING NOZZLE TV	
130	262290-0001		1	LACE	
140	23763-0006		1	SPACER PIPE	
170	23765-0003		4	INSULATING PIPE	
180	23765-0004		2	INSULATING PIPE	
190	23765-0005		1	INSULATING PIPE	
200	252766-0001		1	INSULATING PIPE	
210	252766-0002		2	INSULATING PIPE	
230	597609-0000		2	SIDE PIPE	
240	312105-0374		3	SCREW M6S ISO 4014 M6X30 A480	
1000B					
100	247227-0003		1	AIR NOZZLE	
110	525197-0000		1	BLOW-OFF NOZZLE TR	
120	525198-0000		1	BLOW-OFF NOZZLE TL	
130	262290-0001		1	LACE	
140	23763-0004		1	SPACER PIPE	
150	23765-0001		2	INSULATING PIPE	
180	23765-0004		1	INSULATING PIPE	
200	252766-0001		3	INSULATING PIPE	
230	297499-0001		2	SIDE PIPE	

Machine Type | Group Description | Used-In | Group Number | Page No

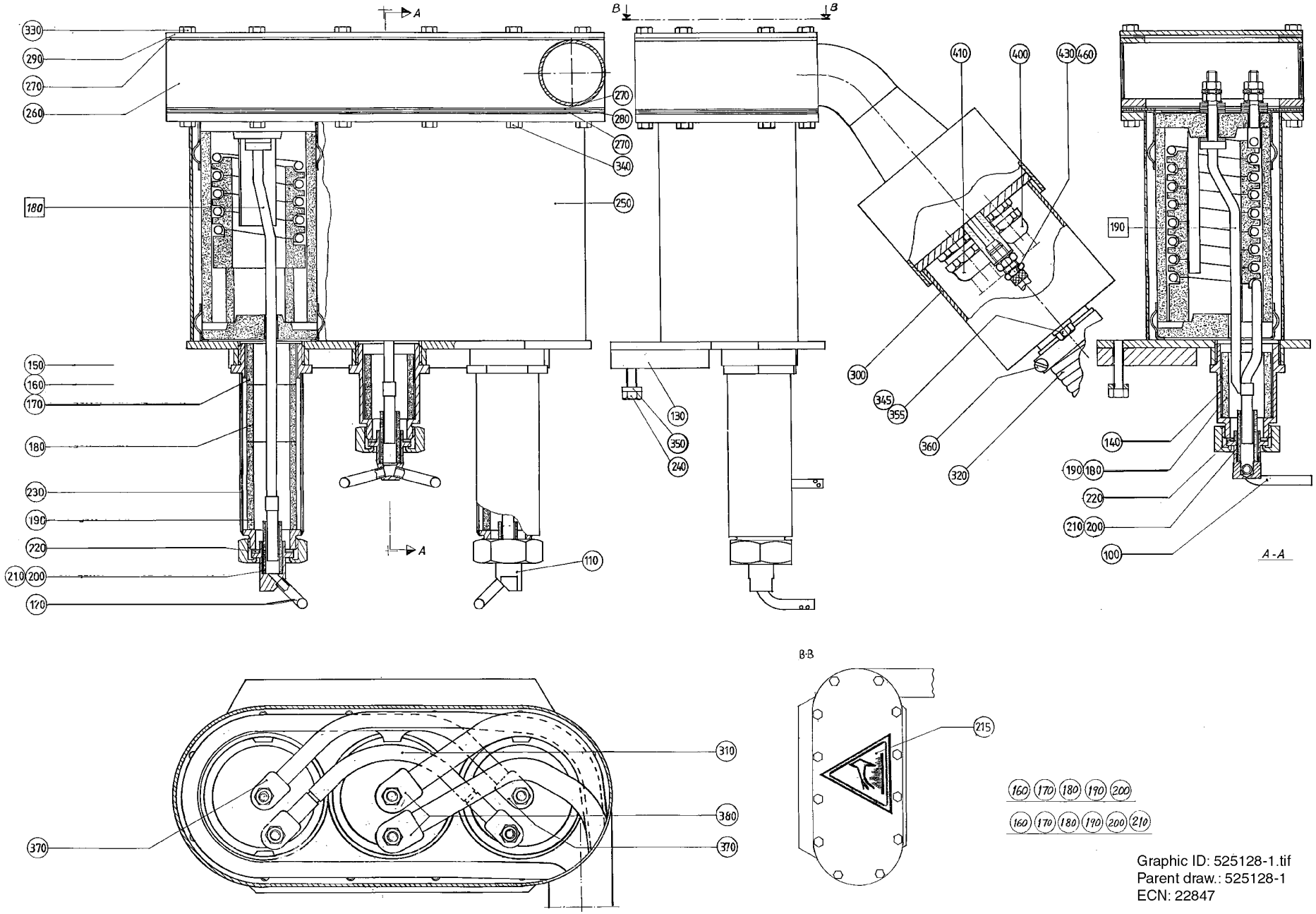

Graphic ID: 525128-1.tif
Parent draw.: 525128-1
ECN: 22847

Pos	Part No	UN	Qty	Description	Page No
1000B (Cont'd)					
240	312105-0374		3	SCREW M6S ISO 4014 M6X30 A480	
1000S					
100	569124-0000		1	AIR NOZZLE	
110	569125-0000		1	AIR NOZZLE	
120	569126-0000		1	AIR NOZZLE	
130	262290-0001		1	LACE	
140	23763-0004		1	SPACER PIPE	
160	23765-0002		2	INSULATING PIPE	
170	23765-0003		2	INSULATING PIPE	
180	23765-0004		3	INSULATING PIPE	
200	252766-0001		1	INSULATING PIPE	
210	252766-0002		2	INSULATING PIPE	
230	548402-0000		2	SIDE PIPE	
240	312105-0374		3	SCREW M6S ISO 4014 M6X30 A480	
1000SQ					
100	574032-0000		1	BLOWING NOZZLE B	
110	574033-0000		1	BLOWING NOZZLE TH	
120	574034-0000		1	BLOWING NOZZLE TV	
130	262290-0001		1	LACE	
140	23763-0006		1	SPACER PIPE	
160	23765-0002		2	INSULATING PIPE	
180	23765-0004		4	INSULATING PIPE	
190	23765-0005		1	INSULATING PIPE	
200	252766-0001		3	INSULATING PIPE	
230	443158-0000		2	SIDE PIPE	
240	312105-0374		3	SCREW M6S ISO 4014 M6X30 A480	
1136B					
100	247227-0003		1	AIR NOZZLE	
110	525197-0000		1	BLOW-OFF NOZZLE TR	
120	525198-0000		1	BLOW-OFF NOZZLE TL	
130	262290-0001		1	LACE	
140	23763-0004		1	SPACER PIPE	
160	23765-0002		2	INSULATING PIPE	
170	23765-0003		2	INSULATING PIPE	
180	23765-0004		3	INSULATING PIPE	
200	252766-0001		1	INSULATING PIPE	
210	252766-0002		2	INSULATING PIPE	
230	548402-0000		2	SIDE PIPE	
240	312105-0374		3	SCREW M6S ISO 4014 M6X30 A480	
Common Parts					
215	359710-0002		1	WARNING SIGN ISO, HOT SURFACE	
220	263673-0000		6	GASKET	
250	262272-0000		1	HEATING CHAMBER	
260	525134-0000		1	SPACER PIECE	
270	531730-0000		3	FLANGE SEAL	
280	23769-0000		1	STOP PLATE	
290	262288-0000		1	LID	
300	525073-0000		1	COVER	
310	525070-0000		1	ELECTRICAL CONNECTION	
	353104-0168		*2*	*CABLE SHOE, RING UNINS., YAV 16 M 6*	
	351121-0200	*MM*	*165*	*CABLE RADOX 155 1X16 MMÂ² BLACK*	
320	352135-0116	MM	500	FLEXIBLE CONDUIT DIA. 40	
330	312105-0325		12	SCREW M6S ISO 4017 M5X10 A480	
340	312105-0328		12	SCREW M6S ISO 4017 M5X14 A480	
345	312105-0388		2	SCREW M6S ISO 4014 M6X90 A480	
350	315115-0153		3	WASHER PLAIN, TBRB 6,4/12 H=3	
355	315105-0153		2	WASHER BRB 6,4X12 RFR	
360	342991-0109		2	HOSE CLIP,WORM DRIVE TYPE (48)-50	
370	353104-0168		2	CABLE SHOE, RING UNINS., YAV 16 M 6	
380	353104-0182		2	CABLE SHOE, RING UNINS., YAV 35 M 6	
400	352103-0106		2	CABLE GLAND, ST 11, PR18,6/PG11	
410	352103-0111		2	CABLE GLAND, ST 16, PR22,5/PG16	
430	342921-0121		1	STRAIGHT CPLNG,EXT.THREADED 8/6-G1/8INCH	
460	315234-0109		1	WASHER,PL.RND.CU.10,3/13,5 H=1,0	
F180	31390-0100		2	FF-ELEMENT TOP	**5-73**
F190	31390-0110		1	FF-ELEMENT BOTTOM	**5-75**

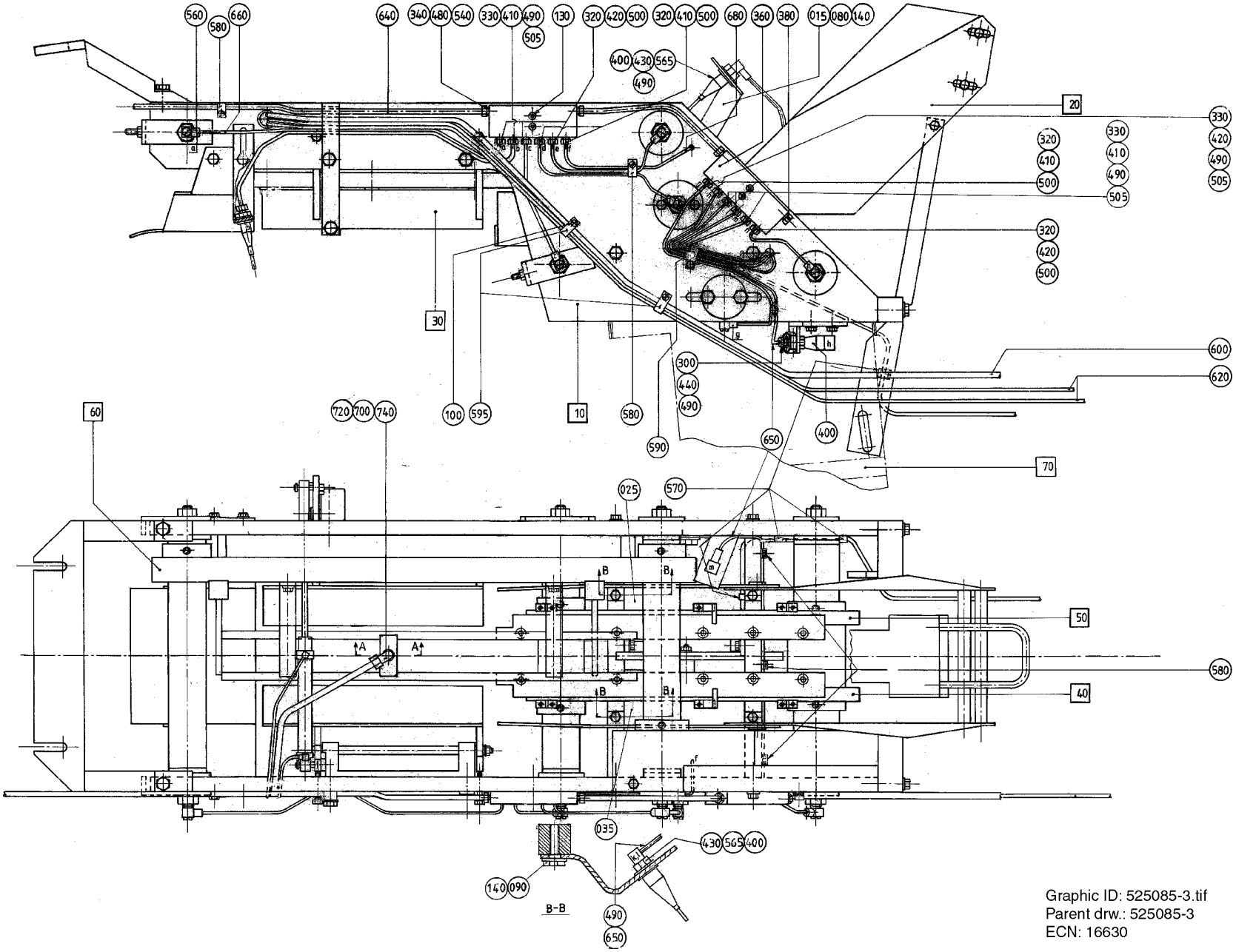

Graphic ID: 525085-3.tif
Parent drw.: 525085-3
ECN: 16630

ECM: 72392 - 19990617
Group number: 525085-0200
Assembly Drawing: 525085-3_1_AA

This list covers pages from 5-80 to 5-87

Pos	Part No	UN	Qty	Description	Page No
TB/8 0568SQ REVFIN, TB/8 0500SQ REVFIN (See drawing on page: 5-86)					
010	574323-0100		1	CONVEYING EQUIPMENT	**5-89, 5-91**
036	1143001-0000		1	ATTACHMENT PLATE	
037	1143002-0000		2	BRACKET	
038	597584-0000		2	BRACKET	
039	1143000-0000		2	PUSHER	
070	576247-0100		1	PROTECTION	**5-99**
100	312125-0287		6	SCREW ISO 1207 M4X8 A4	
300	90028-0001		1	CONE 5/32"	
320	90028-0020		8	CONE TUBE 2,5MM	
330	90028-0021		2	CONE TUBE 4 MM	
350	90032-0039		1	BLOCK 4 WAYS	
360	90032-0040		1	BLOCK 6 WAYS	
400	90092-0048		2	OIL BRUSH, FLAT, 5/16-24 UNF	
410	90092-0052		4	METERING VALVE 10 MM3	
420	90092-0053		6	METERING VALVE 30 MM3	
430	90134-0002		1	CONNECTOR R1/8, D=4 MM	
440	90134-0003		1	BUSHING	
480	90134-0030		3	SLEEVE FOR PLASTIC TUBE	
490	342706-0114		4	ACCESSORIES, INSERT SLEEVE 4 MM	
500	90134-0039		8	BUSHING VALVE CONNECTION 2,5 MM	
505	90134-0040		2	BUSHING VALVE CONNECTION 4 MM	
560	90134-0058		7	CONNECTION	
565	90137-0002		1	BANJO CONN. 1/8 - 5/16-24UNF	
570	90165-0056		1	PIPE CLIP FOR TUBE D=4 MM	
580	90165-0057		1	PIPE CLIP FOR TUBE D=6 MM	
590	316810-0106		3	PIPE CLIP FOR TUBE D=8 MM	
591	90450-0495		2	CYLINDER	
592	342732-0102		4	ELBOW PIPE JOINT, EXT.THREAD, D=6MM-G1/8	
593	90166-0124	MM	7000	TUBE 6 MM PA,TRANSP.	
594	312631-0321		2	HEX.NUT FINE, EN 24032 M6M M10X1,25 FZB8	
595	90074-0002		4	CABLE CLIPS, D=11 MM	
596	312105-0372		10	SCREW M6S ISO 4017 M6X25 A480	
597	315101-0153		10	WASHER PLAIN, BRB, 6,4/12 H=1,5	
598	352113-0101		3	CABLE TIE, BLACK 92X2,5 MM	
599	312105-0362		1	SCREW M6S ISO 4017 M6X8 A480	
750	312105-0368		4	SCREW M6S ISO 4017 M6X16 A480	
TB/8 1000SQ REVFIN (See drawing on page: 5-84)					
010	574323-0100		1	CONVEYING EQUIPMENT	**5-89, 5-91**
036	1143001-0000		1	ATTACHMENT PLATE	
037	1143002-0000		2	BRACKET	
038	1143004-0000		2	CYLINDER BRACKET	
039	1143000-0000		2	PUSHER	
070	576247-0100		1	PROTECTION	**5-99**
100	312125-0287		6	SCREW ISO 1207 M4X8 A4	
300	90028-0001		1	CONE 5/32"	
320	90028-0020		8	CONE TUBE 2,5MM	
330	90028-0021		2	CONE TUBE 4 MM	
350	90032-0039		1	BLOCK 4 WAYS	
360	90032-0040		1	BLOCK 6 WAYS	
400	90092-0048		2	OIL BRUSH, FLAT, 5/16-24 UNF	
410	90092-0052		4	METERING VALVE 10 MM3	
420	90092-0053		6	METERING VALVE 30 MM3	
430	90134-0002		1	CONNECTOR R1/8, D=4 MM	
440	90134-0003		1	BUSHING	
480	90134-0030		3	SLEEVE FOR PLASTIC TUBE	
490	342706-0114		4	ACCESSORIES, INSERT SLEEVE 4 MM	
500	90134-0039		8	BUSHING VALVE CONNECTION 2,5 MM	
505	90134-0040		2	BUSHING VALVE CONNECTION 4 MM	
560	90134-0058		7	CONNECTION	
565	90137-0002		1	BANJO CONN. 1/8 - 5/16-24UNF	
570	90165-0056		1	PIPE CLIP FOR TUBE D=4 MM	
580	90165-0057		1	PIPE CLIP FOR TUBE D=6 MM	
590	316810-0106		3	PIPE CLIP FOR TUBE D=8 MM	
591	90450-0377		2	CYLINDER	
592	342732-0102		4	ELBOW PIPE JOINT, EXT.THREAD, D=6MM-G1/8	
593	90166-0124	MM	7000	TUBE 6 MM PA,TRANSP.	
594	312631-0321		2	HEX.NUT FINE, EN 24032 M6M M10X1,25 FZB8	
595	90074-0002		4	CABLE CLIPS, D=11 MM	
596	312105-0372		10	SCREW M6S ISO 4017 M6X25 A480	
597	315101-0153		10	WASHER PLAIN, BRB, 6,4/12 H=1,5	
598	352113-0101		3	CABLE TIE, BLACK 92X2,5 MM	
599	312105-0362		1	SCREW M6S ISO 4017 M6X8 A480	
TB/8 1000B, TB/8 0568B, TB/8 1000S, TB/8 0300B, TB/8 0500S, TB/8 0500B, TB/8 1136B (See drawing on page: 5-80)					
010	525086-0200		1	CONVEYING EQUIPMENT	**5-101, 5-103**
015	566313-0000		1	HOLDER	
025	566316-0000		1	HOLDER	
035	566317-0000		1	HOLDER	
040	525089-0100		1	CHAIN RIGHT	**5-105, 5-107**
050	525090-0100		1	CHAIN LINKS	**5-109, 5-111**
060	525091-0100		1	CHAIN	**5-113**
070	525092-0100		1	CHAIN GUARD	**5-115**
080	312105-0368		2	SCREW M6S ISO 4017 M6X16 A480	

Machine Type | Group Description | Used-In | Group Number | Page No

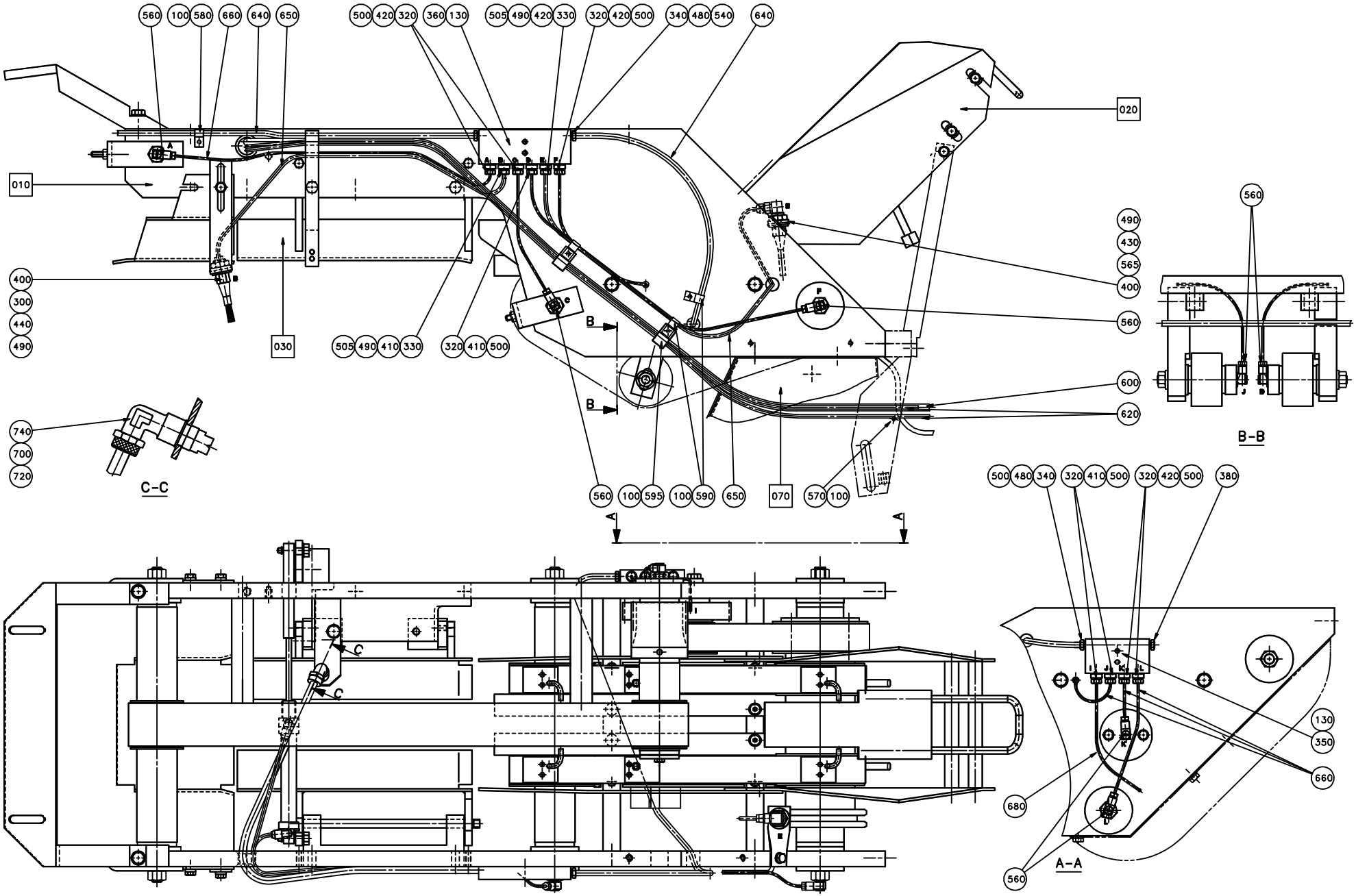
560 100 580 660 640 650
500 420 320 360 130
505 490 420 330
320 420 500
340 480 540
640
020
010
400 300 440 490
030
505 490 410 330
320 410 500
490 430 565 400
560
600
620
740 700 720
C-C
560 100 595 100 590 650
070
570 100
B-B
500 480 340 320 410 500 320 420 500 380
130
350
660
680
560
A-A

Pos	Part No	UN	Qty	Description	Page No
TB/8 1000B, TB/8 0568B, TB/8 1000S, TB/8 0300B, TB/8 0500S, TB/8 0500B, TB/8 1136B (Cont'd) (See drawing on page: 5-80)					
080	312105-0368		2	SCREW M6S ISO 4017 M6X16 A480	
090	312105-0366		4	SCREW M6S ISO 4017 M6X12 A480	
100	312125-0287		11	SCREW ISO 1207 M4X8 A4	
140	315115-0153		6	WASHER PLAIN, TBRB 6,4/12 H=3	
300	90028-0001		2	CONE 5/32"	
320	90028-0020		7	CONE TUBE 2,5MM	
330	90028-0021		5	CONE TUBE 4 MM	
360	90032-0040		2	BLOCK 6 WAYS	
400	90092-0048		5	OIL BRUSH, FLAT, 5/16-24 UNF	
410	90092-0052		7	METERING VALVE 10 MM3	
420	90092-0053		5	METERING VALVE 30 MM3	
430	90134-0002		3	CONNECTOR R1/8, D=4 MM	
440	90134-0003		2	BUSHING	
480	90134-0030		4	SLEEVE FOR PLASTIC TUBE	
490	342706-0114		10	ACCESSORIES, INSERT SLEEVE 4 MM	
500	90134-0039		7	BUSHING VALVE CONNECTION 2,5 MM	
505	90134-0040		5	BUSHING VALVE CONNECTION 4 MM	
560	90134-0058		6	CONNECTION	
565	90137-0002		3	BANJO CONN. 1/8 - 5/16-24UNF	
570	90165-0056		4	PIPE CLIP FOR TUBE D=4 MM	
580	90165-0057		5	PIPE CLIP FOR TUBE D=6 MM	
590	316810-0106		1	PIPE CLIP FOR TUBE D=8 MM	
595	90074-0002		2	CABLE CLIPS, D=11 MM	
TB/8 0568SQ NORMFIN, TB/8 1000SQ NORMFIN, TB/8 0500SQ NORMFIN (See drawing on page: 5-82)					
010	574323-0100		1	CONVEYING EQUIPMENT **5-89, 5-91**	
070	576247-0100		1	PROTECTION **5-99**	
100	312125-0287		4	SCREW ISO 1207 M4X8 A4	
300	90028-0001		1	CONE 5/32"	
320	90028-0020		8	CONE TUBE 2,5MM	
330	90028-0021		2	CONE TUBE 4 MM	
350	90032-0039		1	BLOCK 4 WAYS	
360	90032-0040		1	BLOCK 6 WAYS	
400	90092-0048		2	OIL BRUSH, FLAT, 5/16-24 UNF	
410	90092-0052		4	METERING VALVE 10 MM3	
420	90092-0053		6	METERING VALVE 30 MM3	
430	90134-0002		1	CONNECTOR R1/8, D=4 MM	
440	90134-0003		1	BUSHING	
480	90134-0030		3	SLEEVE FOR PLASTIC TUBE	
490	342706-0114		4	ACCESSORIES, INSERT SLEEVE 4 MM	
500	90134-0039		8	BUSHING VALVE CONNECTION 2,5 MM	
505	90134-0040		2	BUSHING VALVE CONNECTION 4 MM	
560	90134-0058		7	CONNECTION	
565	90137-0002		1	BANJO CONN. 1/8 - 5/16-24UNF	
570	90165-0056		1	PIPE CLIP FOR TUBE D=4 MM	
580	90165-0057		1	PIPE CLIP FOR TUBE D=6 MM	
590	316810-0106		3	PIPE CLIP FOR TUBE D=8 MM	
595	90074-0002		2	CABLE CLIPS, D=11 MM	
Common Parts					
020	525087-0100		1	DROP **5-117**	
030	525088-0200		1	DISCHARGE CHUTE **5-119**	
130	312155-0295		4	SCREW DIN 7991 MF6S M4X20 A4 70	
340	90028-0025		3	CONE TUBE 6 MM	
380	90087-0019		1	PLUG M10X1 STAINLESS	
540	90134-0055		3	BUSHING/NUT INLET/OUTLET 6 MM	
600	90166-0122	MM	1300	TUBE 8 MM PA,TRANSP.	
620	90166-0095	MM	3000	TUBE 4 MM PA BLUE (50M)	
640	90166-0108	MM	1300	TUBE 6 MM PA,TRANSP.	
650	90166-0051	MM	2600	TUBE PA,TRANSP.	
660	90166-0143	MM	2500	TUBE 2,5 MM PA,TRANSP.	
680	90266-0019	MM	300	PIPE	
700	90424-0035		1	SPRAY NOZZLE 95 DEG	
720	315233-0110		1	WASHER CAPTIVE SEALING G1/4	
740	342933-0122		1	ELBOW 90 COUPL.,INT.THREAD 8/6-G1/4	

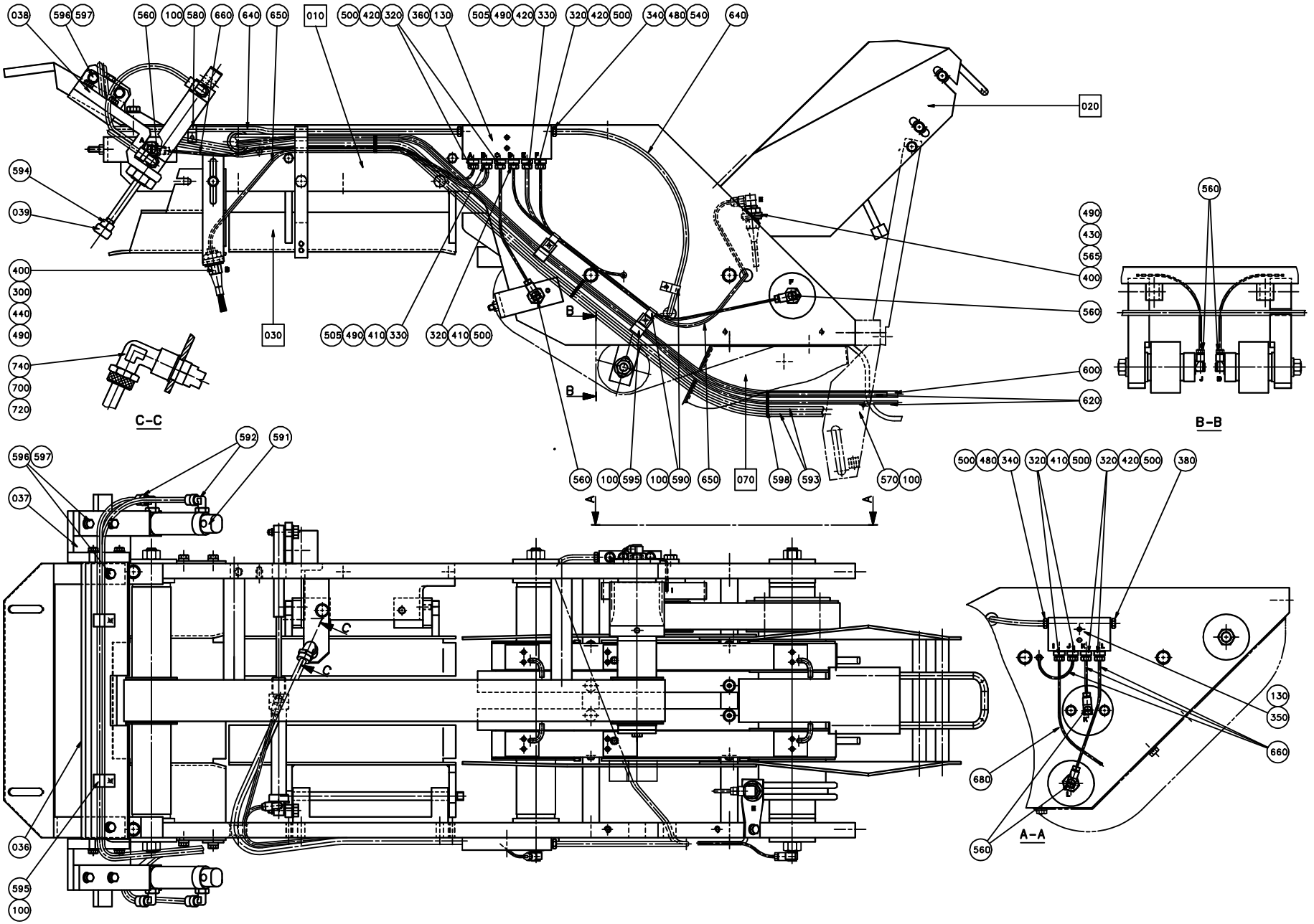
038
596
597
560
100
580
660
640
650
010
500
420
320
360
130
505
490
420
330
320
420
500
340
480
540
640
020
594
039
400
300
440
490
740
700
720
030
505
490
410
330
320
410
500
560
490
430
565
400
560
600
620
B-B
C-C
592
591
596
597
037
560
100
595
100
590
650
070
598
593
570
100
500
480
340
320
410
500
320
420
500
380
130
350
660
680
560
A-A
036
595
100

Pos	Part No	UN	Qty	Description	Page No	Pos	Part No	UN	Qty	Description	Page No

SEE PREVIOUS LISTS PAGES: 5-81, 5-83.

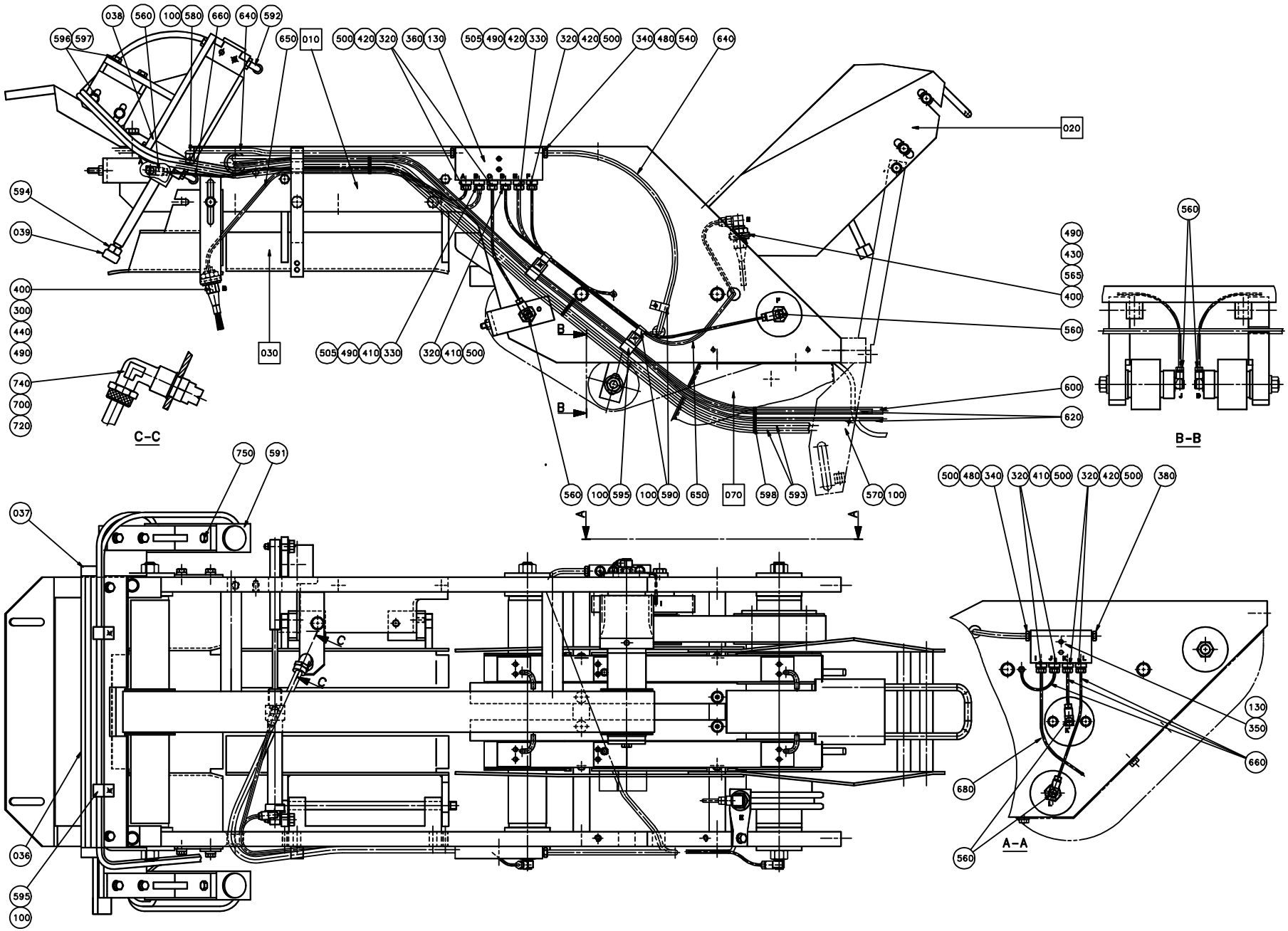
038 560 100 580 660 640 592
596 597
650 010
500 420 320 360 130
505 490 420 330
320 420 500
340 480 540
640
020
594
039
400
300
440
490
740
700
720
030
505 490 410 330
320 410 500
C-C
560
490
430
565
400
560
600
620
B-B
750 591
037
560 100 595 100 590 650 070 598 593 570 100
500 480 340 320 410 500 320 420 500 380
130
350
660
680
560
A-A
036
595
100

Pos	Part No	UN	Qty	Description	Page No	Pos	Part No	UN	Qty	Description	Page No

SEE PREVIOUS LISTS PAGES: 5-81, 5-83.

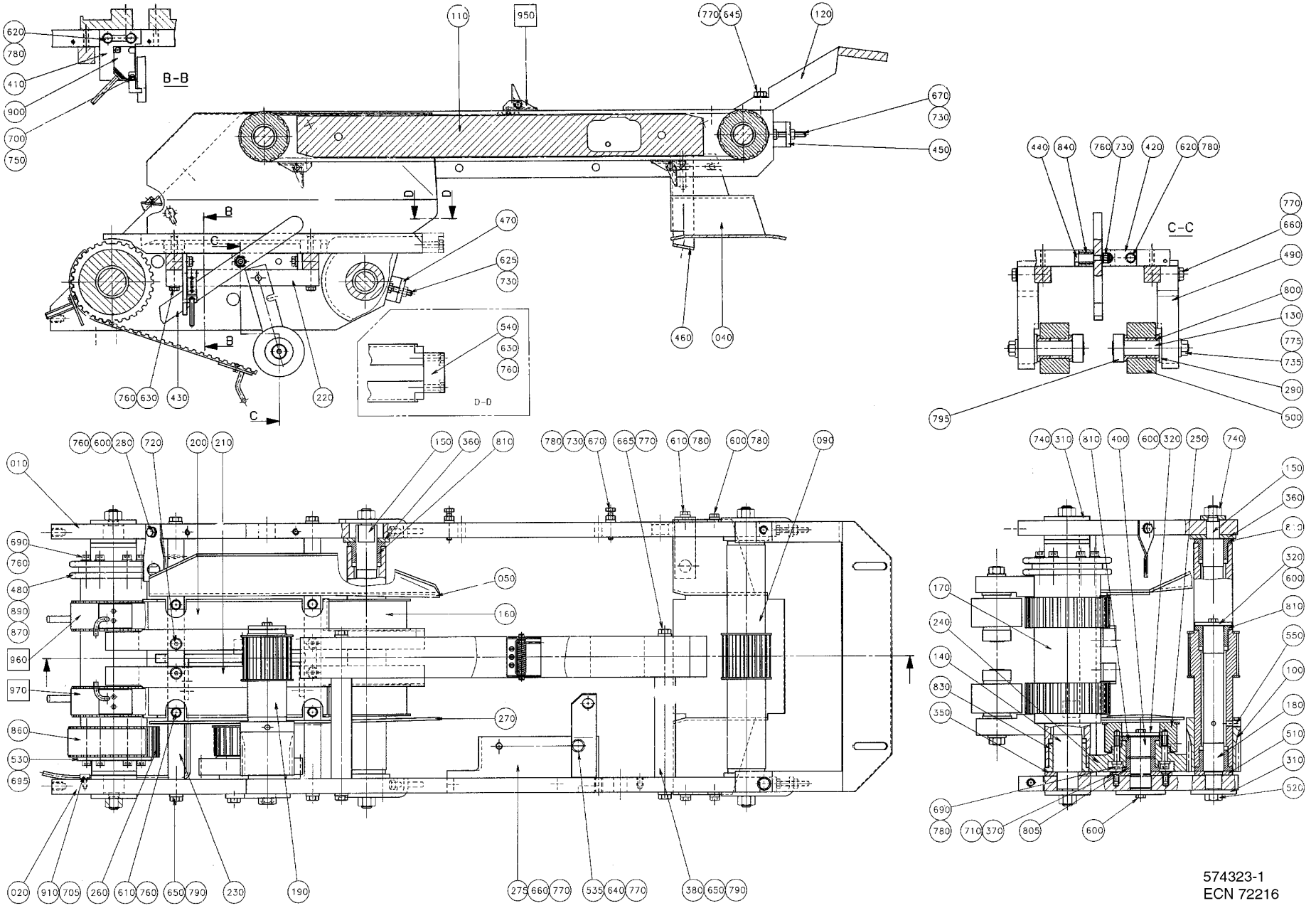

574323-1
ECN 72216

ECM: 72392 - 19990617
Group number: 574323-0100
Assembly Drawing: 574323-1_1_AC

This list covers pages from 5-88 to 5-91

Pos	Part No	UN	Qty	Description	Page No
0500SQ NORMFIN, 0568SQ NORMFIN					
120	443293-0000		1	BRACKET	
540	591084-0000		1	GUIDE LUG	
630	312105-0374		6	SCREW M6S ISO 4014 M6X30 A480	
760	315105-0153		18	WASHER BRB 6,4X12 RFR	
0500SQ REVFIN, 0568SQ REVFIN					
120	1143003-0000		1	BRACKET	
540	591084-0000		1	GUIDE LUG	
630	312105-0374		6	SCREW M6S ISO 4014 M6X30 A480	
760	315105-0153		18	WASHER BRB 6,4X12 RFR	
1000SQ NORMFIN					
120	443293-0000		1	BRACKET	
630	312105-0374		4	SCREW M6S ISO 4014 M6X30 A480	
760	315105-0153		16	WASHER BRB 6,4X12 RFR	
1000SQ REVFIN					
120	1143003-0000		1	BRACKET	
630	312105-0374		4	SCREW M6S ISO 4014 M6X30 A480	
760	315105-0153		16	WASHER BRB 6,4X12 RFR	
Common Parts					
010	574065-0000		1	SIDE PLATE	
020	574066-0000		1	SIDE PLATE	
040	574094-0000		1	HEAD PLATE	
050	574119-0000		1	HEAD PLATE	
090	443289-0000		1	TOOTHED PULLY	
100	443290-0000		1	GEAR WHEEL	
110	443292-0000		1	STEERING	
130	525363-0002		2	SHAFT	
140	525400-0000		1	SHAFT	
150	525402-0000		2	SHAFT	
160	574067-0000		1	TIMING BELT SHAFT	
170	574068-0000		1	TIMING BELT SHAFT	
180	574069-0000		1	AXLE PIN	
190	574070-0000		1	TIMING BELT SHAFT	
200	574071-0000		1	PROFILE	
210	574072-0000		1	PROFILE	
220	574073-0000		2	BRACKET	
230	574076-0000		2	BRACKET	
240	574082-0000		1	GEAR WHEEL	
250	574085-0000		1	TIMING BELT PULLEY	
260	574086-0000		1	TIMING BELT PULLEY	
270	574120-0000		1	HEAD PLATE	
275	574121-0000		1	BRACKET	
280	574122-0000		1	BRACKET	
290	285363-0000		2	WASHER	
310	443295-0000		3	WASHER	
320	443296-0000		2	WASHER	
350	443299-0000		2	WASHER	
360	443300-0000		4	WASHER	
370	443301-0000		1	WASHER	
380	443312-0000		2	SPACER	
400	443307-0000		1	SHAFT	
410	443482-0000		1	BRACKET	
420	443483-0000		1	BRACKET	
430	443484-0000		1	ARM	
440	443485-0000		1	SCREW	
450	443489-0000		2	BRACKET	
460	525334-0000		1	BRACKET	
470	556886-0000		2	BRACKET	
480	573353-0000		1	SPROCKET	
490	574074-0000		2	ROLLER BRACKET	
500	574075-0000		2	ROLL	
510	574083-0000		1	WASHER	
520	574084-0000		1	SCREW	
530	574087-0000		1	WASHER	
535	574123-0000		1	BRACKET	
550	90287-0161		2	SCREW, SOCK.SET DOGPOINT M8X12	
600	312105-0366		7	SCREW M6S ISO 4017 M6X12 A480	
610	312105-0368		5	SCREW M6S ISO 4017 M6X16 A480	
620	312105-0370		4	SCREW M6S ISO 4017 M6X20 A480	
625	312105-0372		2	SCREW M6S ISO 4017 M6X25 A480	
640	312105-0447		1	SCREW M6S ISO 4017 M8X12 A480	
645	312105-0453		2	SCREW M6S ISO 4017 M8X25 A480	
650	312105-0455		4	SCREW M6S ISO 4017 M8X30 A480	
660	312105-0457		2	SCREW M6S ISO 4014 M8X35 A480	
665	312105-0463		2	SCREW M6S ISO 4014 M8X60 A480	
670	312109-0376		4	SCREW M6S ISO 4017 M6X35 A480	
690	312115-0374		10	SCREW ISO4762 M6X30 A4 80	
695	312115-0380		6	SCREW ISO4762 M6X50 A4 80	
700	312125-0230		2	SCREW ISO 1207 M3X20 A4	
705	312125-0287		2	SCREW ISO 1207 M4X8 A4	
710	312155-0366		2	SCREW DIN 7991 MF6S M6X12 A4 70	
720	312155-0376		4	SCREW DIN 7991 MF6S M6X35 A4 70	
730	312605-0316		7	HEXAGON NUT, M6M M6 A280	
735	312605-0320		2	HEXAGON NUT, M6M M10 A280	

Machine Type | Group Description | Used-In | Group Number | Page No

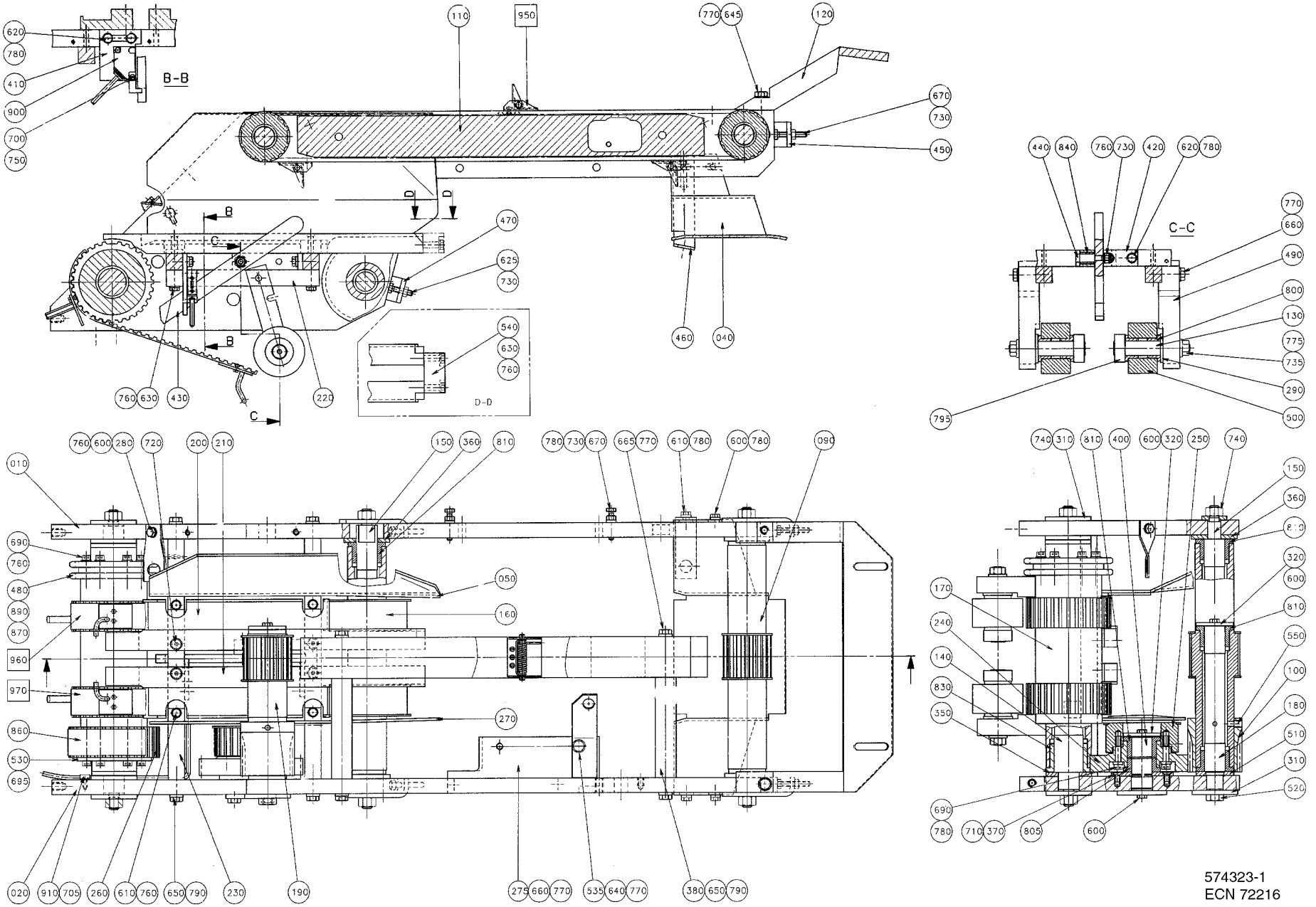
B-B
C-C
D-D
574323-1
ECN 72216

Pos	Part No	UN	Qty	Description	Page No
Common Parts (Cont'd)					
740	312605-0322		6	HEXAGON NUT, M6M M12 A280	
750	315105-0124		2	WASHER BRB 3,2X7 RFR	
770	315105-0165		9	WASHER BRB 8,4X16 RFR	
775	315105-0173		2	WASHER BRB 10,5X20 RFR	
780	315115-0153		14	WASHER PLAIN, TBRB 6,4/12 H=3	
790	315115-0165		6	WASHER PLAIN, TBRB 8,4/16 H=3	
795	315742-0114		2	RETAINING RING 18 SMS 199 RFR	
800	321101-0223		4	FLANGE BUSHING, 18X25X16	
805	321101-0252		1	FLANGE BUSHING, 25X35X16 MM	
810	321101-0253		7	FLANGE BUSHING, 25X35X25 MM	
830	321101-0283		2	FLANGE BUSHING, 35X45X35 MM	
840	321116-0128		1	BEARING BUSH W/O FLANGE, 10X14X16 MM	
860	90417-0345		1	TIMING BELT T10X690X32 POLYURETHANE	
870	318219-0487		1	CONNECTING LINK, DUPLEX 1/2", SS	
890	318242-0108		1	ROLLER CHAIN, DUPLEX 1/2"-108, SS	
900	90044-0104		1	PROX.SWITCH IFM IN 3002(RP 90044-194)	
910	90165-0056		2	PIPE CLIP FOR TUBE D=4 MM	
F970	576246-0100		1	BELT LEFT	**5-93**
F960	576245-0100		1	BELT RIGHT	**5-95**
F950	574332-0100		1	BELT	**5-97**

Pos	Part No	UN	Qty	Description	Page No

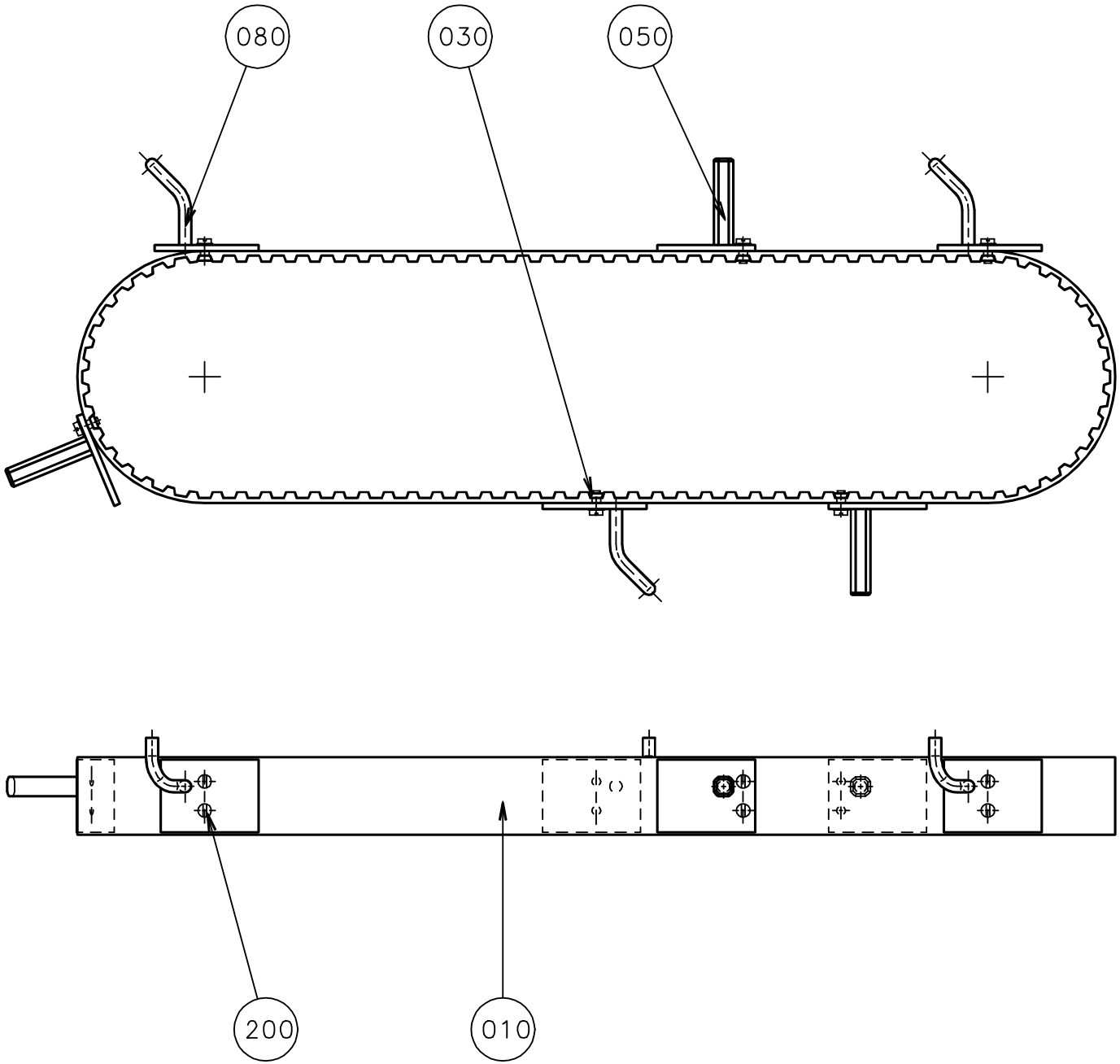
080
030
050
200
010

ECM: 188349 - 20041105
Group number: 576246-0100
Assembly Drawing: 576246-1_1_AA

Pos	Part No	UN	Qty	Description	Page No
-					
010	90417-0329		1	TIMING BELT T10X960X32 POLYURETHANE	
030	285380-0002		6	WEDGE	
050	574089-0000		3	CARRIER	
080	574092-0000		3	CARRIER	
200	312125-0220		12	SCREW ISO 1207 M3X6 A4	

Pos	Part No	UN	Qty	Description	Page No

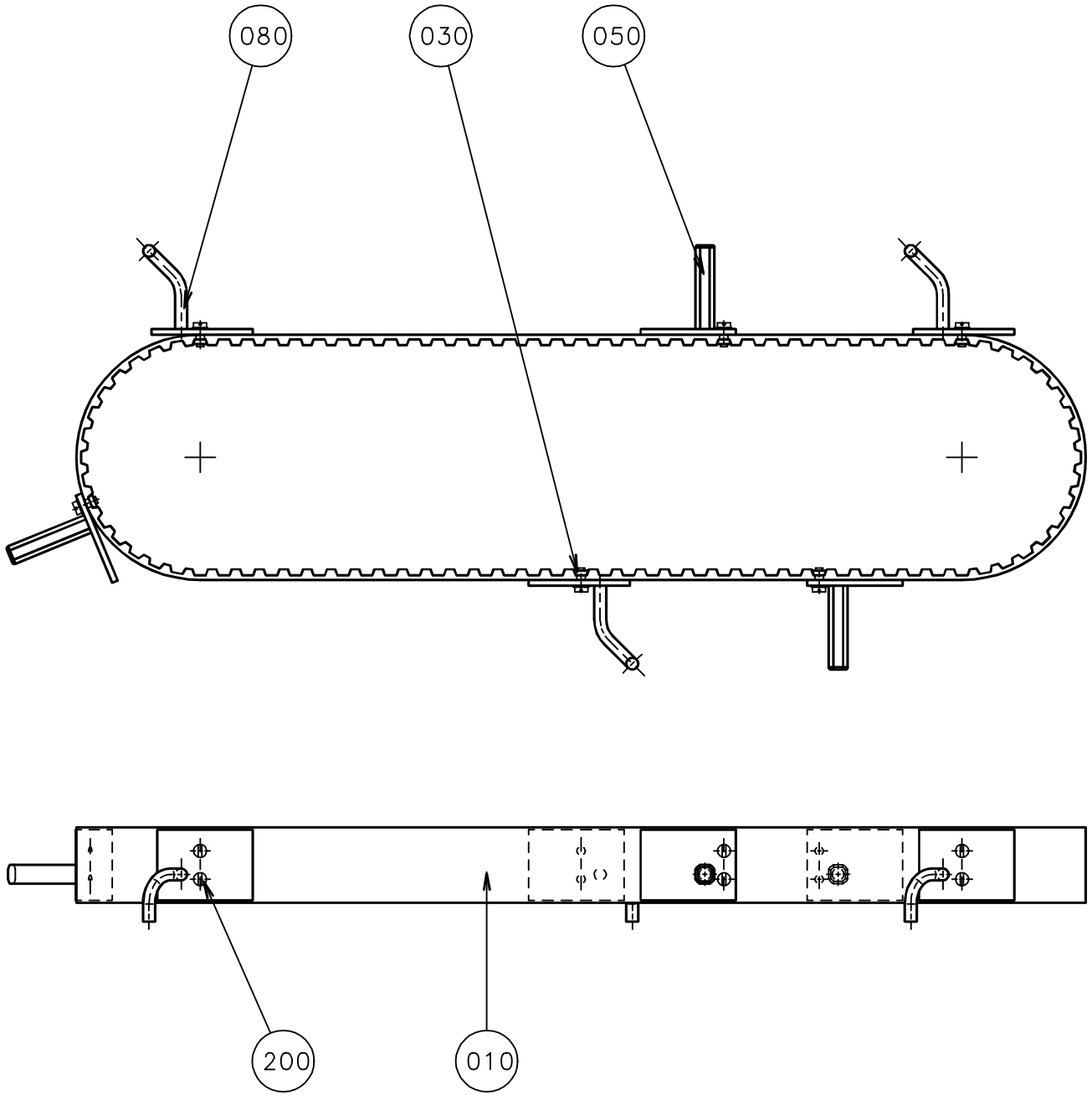
080
030
050
200
010

ECM: 188348 - 20041105
Group number: 576245-0100
Assembly Drawing: 576245-1_1_AA

Pos	Part No	UN	Qty	Description	Page No	Pos	Part No	UN	Qty	Description	Page No
-											
010	90417-0329		1	TIMING BELT T10X960X32 POLYURETHANE							
030	285380-0002		6	WEDGE							
050	574090-0000		3	CARRIER							
080	574091-0000		3	CARRIER							
200	312125-0220		12	SCREW ISO 1207 M3X6 A4							

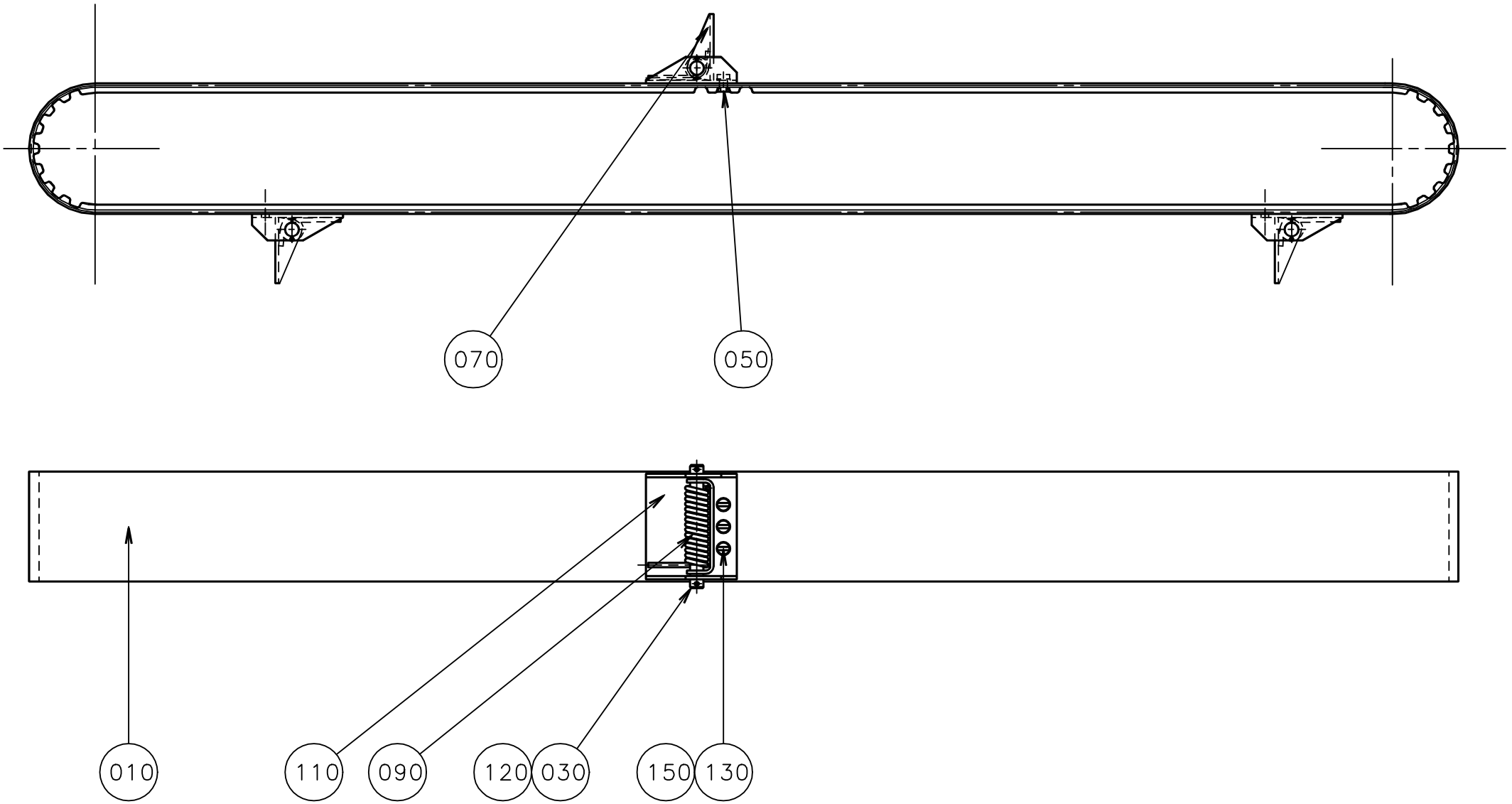
070
050
010
110
090
120
030
150
130

ECM: 188347 - 20041105
Group number: 574332-0100
Assembly Drawing: 574332-1_1_AA

Pos	Part No	UN	Qty	Description	Page No
-					
010	90417-0330		1	TIMING BELT T10X1350X50 POLYURETHANE	
030	297751-0000		3	SHAFT	
050	297755-0000		3	WEDGE	
070	297794-0000		3	SHEET	
090	297795-0000		3	SPRING	
110	525055-0000		3	BRACKET	
120	311411-0127		6	SPLIT PIN SP1,2X12RFR	
130	312125-0220		9	SCREW ISO 1207 M3X6 A4	
150	315105-0124		9	WASHER BRB 3,2X7 RFR	

Pos	Part No	UN	Qty	Description	Page No

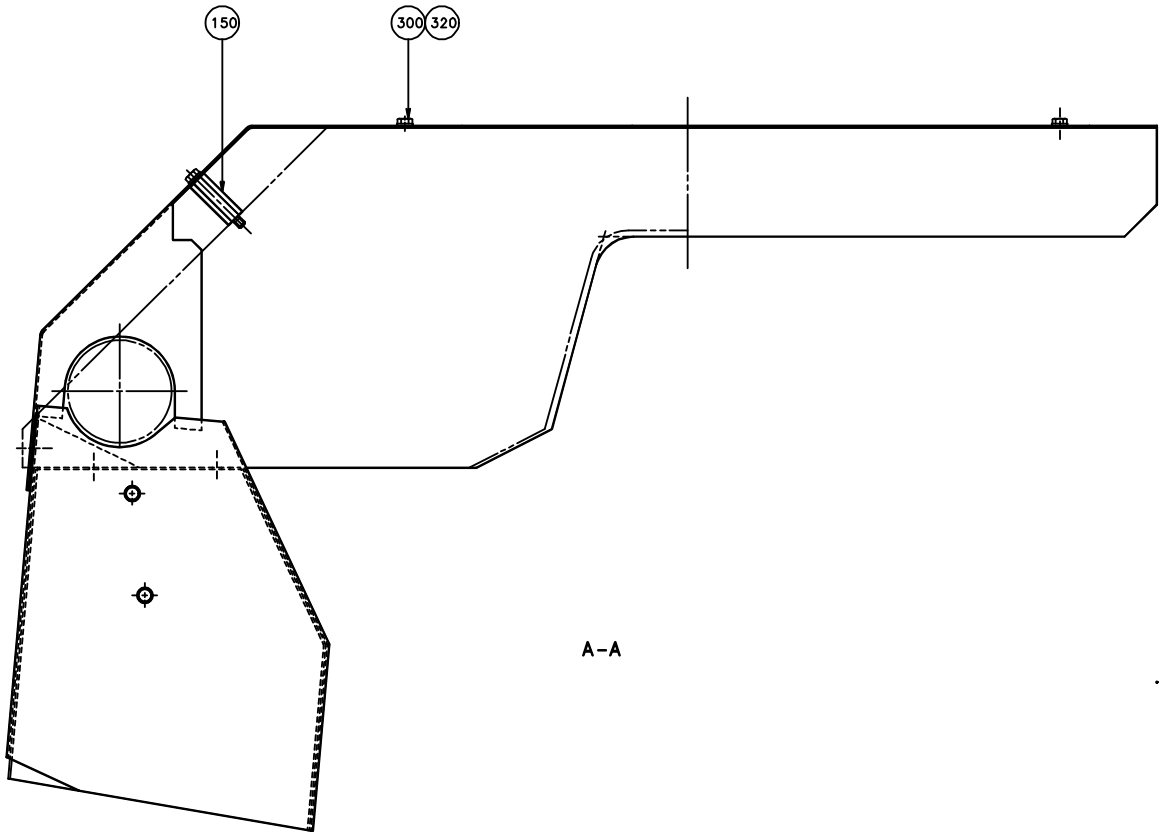
150
300
320
A–A

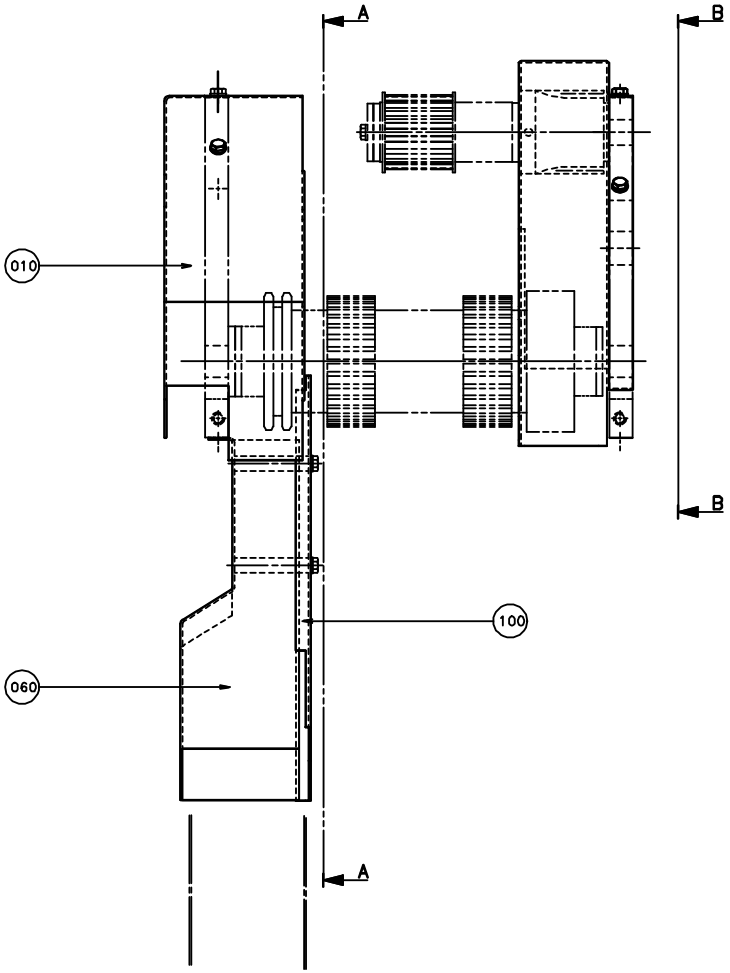
A
B
010
100
060
B
A

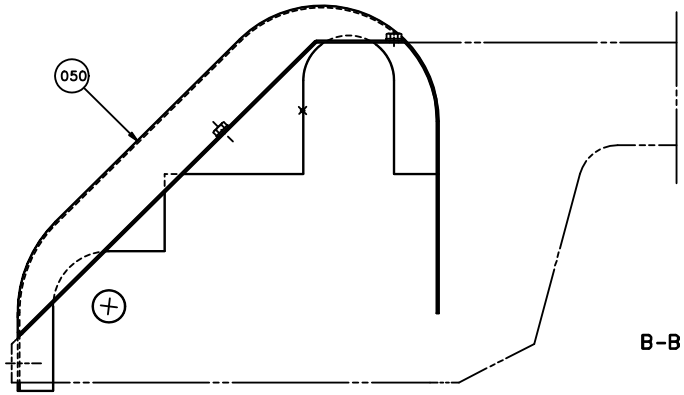
050
B–B

ECM: 71765 - 19980710
Group number: 576247-0100
Assembly Drawing: 576247-1_1_AA

Pos	Part No	UN	Qty	Description	Page No
TB/8					
010	574096-0000		1	PROTECTION PLATE	
050	574095-0000		1	PROTECTIVE COVER	
060	574112-0000		1	PROTECTION PLATE	
100	574113-0000		1	PROTECTION PLATE	
Common Parts					
150	525338-0000		1	SPACER	
300	312105-0364		9	SCREW M6S ISO 4017 M6X10 A480	
320	315105-0153		9	WASHER BRB 6,4X12 RFR	

Pos	Part No	UN	Qty	Description	Page No

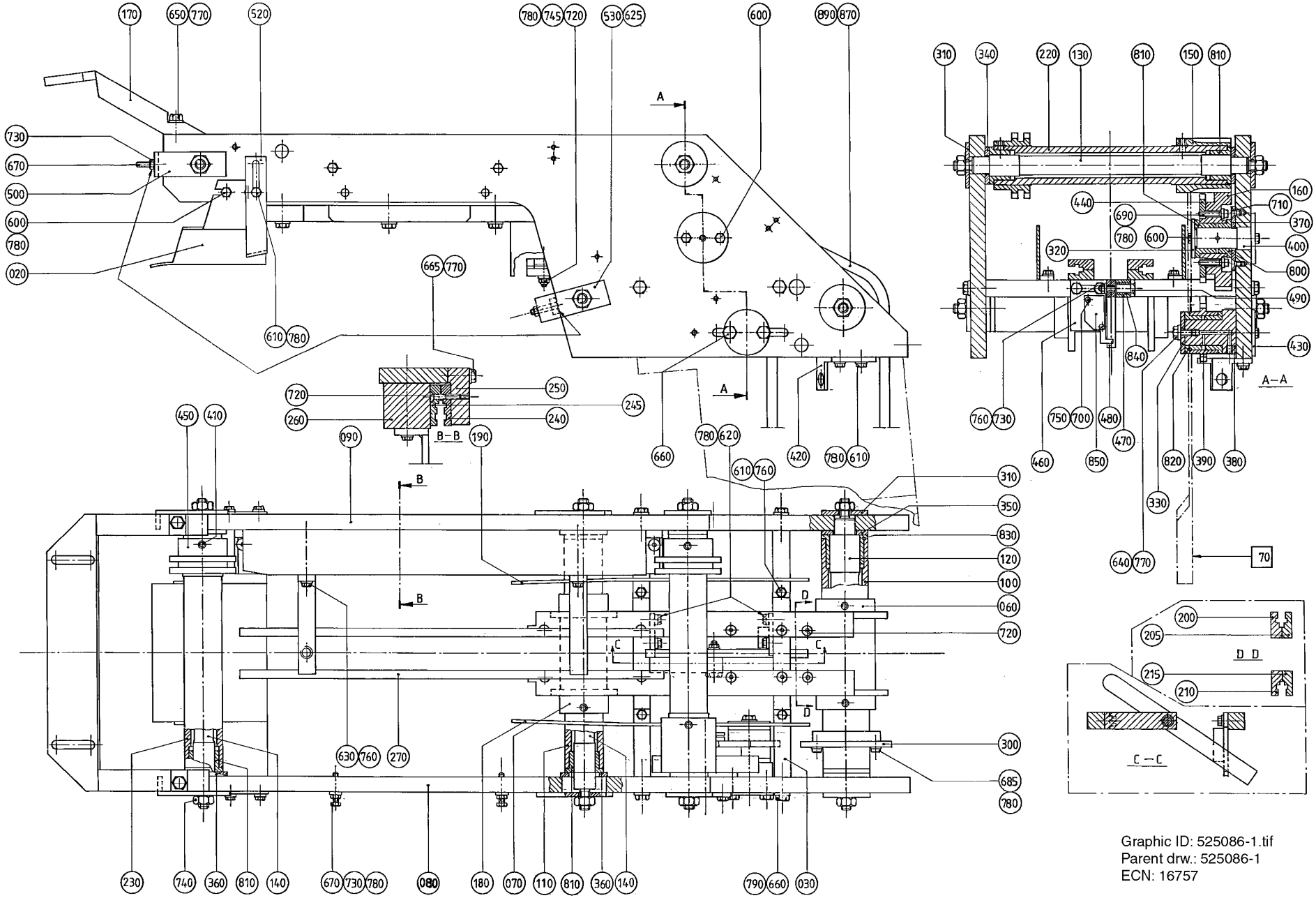

Graphic ID: 525086-1.tif
Parent drw.: 525086-1
ECN: 16757

ECM: 72197 - 19990215
Group number: 525086-0200
Assembly Drawing: 525086-1_1_AA

This list covers pages from 5-100 to 5-103

Pos	Part No	UN	Qty	Description	Page No
0300B					
200	525425-0000		1	PROFILE	
205	525426-0000		1	PROFILE	
210	525427-0000		1	PROFILE	
215	525428-0000		1	PROFILE	
0500B, 0568B					
020	443387-0000		1	HEAD PLATE	
030	443454-0000		2	BRACKET	
060	443478-0001		1	SPROCKET	
070	443479-0001		1	SPROCKET	
200	525425-0000		1	PROFILE	
205	525426-0000		1	PROFILE	
210	525427-0000		1	PROFILE	
215	525428-0000		1	PROFILE	
0500S					
020	443388-0001		1	HEAD PLATE	
030	443480-0000		2	BRACKET	
060	443478-0002		1	SPROCKET	
070	443479-0002		1	SPROCKET	
200	525245-0000		1	PROFILE	
205	525246-0000		1	PROFILE	
210	525247-0000		1	PROFILE	
215	525248-0000		1	PROFILE	
1000S					
020	569132-0000		1	HEAD PLATE	
030	569133-0000		2	BRACKET	
060	443478-0004		1	SPROCKET	
070	443479-0004		1	SPROCKET	
200	525403-0000		1	PROFILE	
205	525404-0000		1	PROFILE	
210	525405-0000		1	PROFILE	
215	525406-0000		1	PROFILE	
1000B					
020	443387-0000		1	HEAD PLATE	
030	443454-0000		2	BRACKET	
060	443478-0001		1	SPROCKET	
070	443479-0001		1	SPROCKET	
200	525245-0000		1	PROFILE	
205	525246-0000		1	PROFILE	
210	525247-0000		1	PROFILE	
215	525248-0000		1	PROFILE	
1136B					
020	443387-0000		1	HEAD PLATE	
030	443454-0000		2	BRACKET	
060	443478-0001		1	SPROCKET	
070	443479-0001		1	SPROCKET	
200	525403-0000		1	PROFILE	
205	525404-0000		1	PROFILE	
210	525405-0000		1	PROFILE	
215	525406-0000		1	PROFILE	
Common Parts					
080	443445-0000		1	SIDE PLATE	
090	443446-0000		1	SIDE PLATE	
100	443455-0000		1	SHAFT	
110	443456-0000		1	SHAFT	
120	525400-0000		1	SHAFT	
130	525401-0000		1	SHAFT	
140	525402-0000		2	SHAFT	
150	443290-0000		1	GEAR WHEEL	
160	443291-0000		1	GEAR WHEEL	
170	443293-0000		1	BRACKET	
180	443450-0000		1	HEAD PLATE	
190	443451-0000		1	HEAD PLATE	
220	443457-0000		1	SHAFT	
230	443458-0000		1	SHAFT	
240	525243-0000		1	PROFILE	
245	525244-0000		1	PROFILE	
250	525242-0000		1	BRACKET	
260	443486-0000		1	GUIDE	
270	525419-0000		1	LEAD RAIL	
300	297899-0000		1	SPROCKET	
310	443295-0000		4	WASHER	
320	443296-0000		1	WASHER	
330	443297-0000		1	WASHER	
340	443298-0000		2	WASHER	
350	443299-0000		2	WASHER	
360	443300-0000		4	WASHER	
370	443301-0000		1	WASHER	
380	443305-0000		1	SHAFT	
390	443306-0000		1	SPROCKET	
400	443307-0000		1	SHAFT	
410	90287-0161		10	SCREW, SOCK.SET DOGPOINT M8X12	
420	443350-0000		1	BRACKET	
430	443414-0000		1	WASHER	

Machine Type | Group Description | Used-In | Group Number | Page No

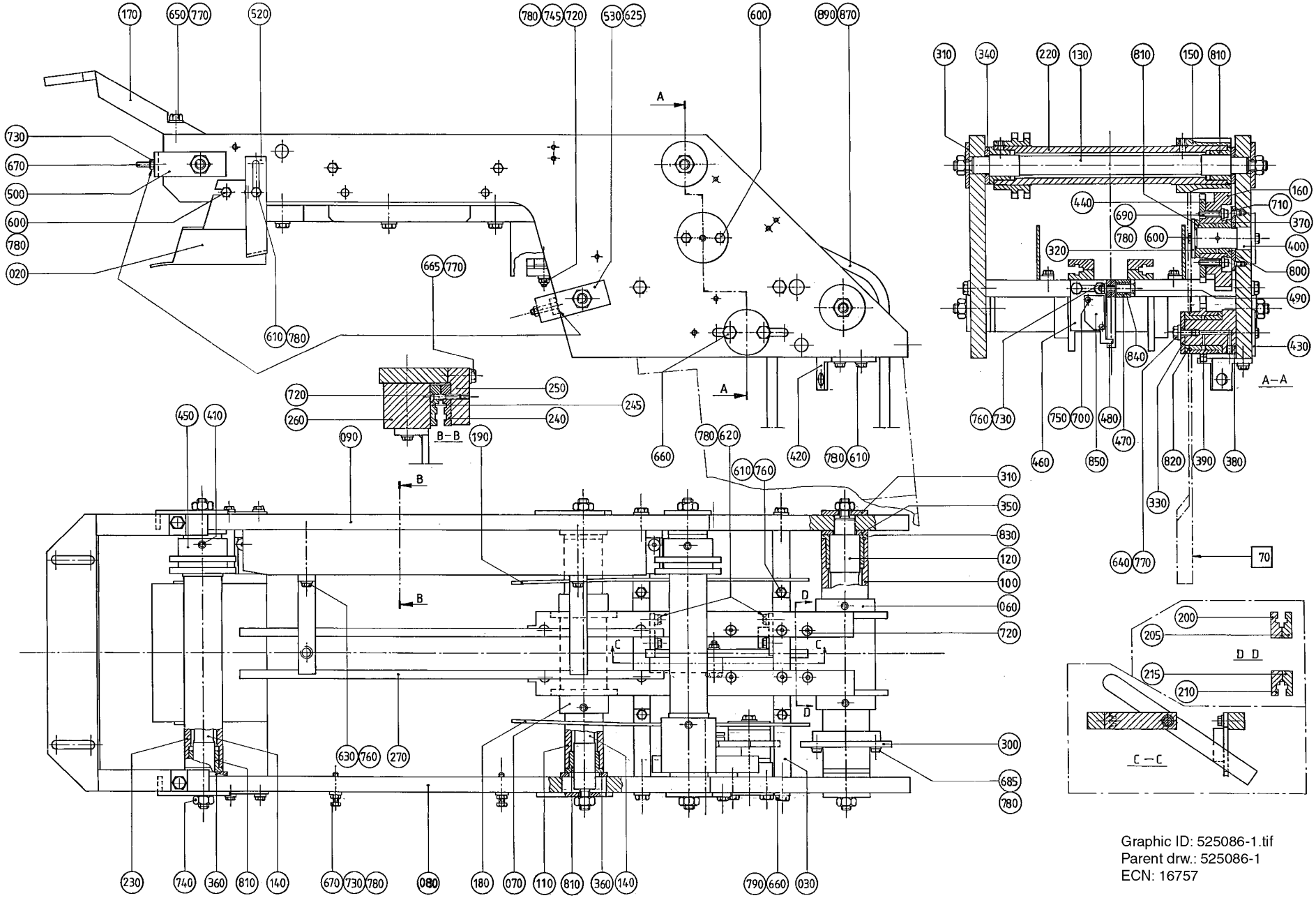

Graphic ID: 525086-1.tif
Parent drw.: 525086-1
ECN: 16757

Pos	Part No	UN	Qty	Description	Page No	Pos	Part No	UN	Qty	Description	Page No
Common Parts (Cont'd)											
440	443464-0000		1	SPROCKET							
450	443467-0000		2	SPROCKET							
460	443482-0000		1	BRACKET							
470	443483-0000		1	BRACKET							
480	443484-0000		1	ARM							
490	443485-0000		1	SCREW							
500	443489-0000		2	BRACKET							
520	525334-0000		1	BRACKET							
530	556886-0000		2	BRACKET							
600	312105-0366		6	SCREW M6S ISO 4017 M6X12 A480							
610	312105-0368		7	SCREW M6S ISO 4017 M6X16 A480							
620	312105-0370		4	SCREW M6S ISO 4017 M6X20 A480							
625	312105-0372		2	SCREW M6S ISO 4017 M6X25 A480							
630	312105-0384		2	SCREW M6S ISO 4014 M6X70 A480							
640	312105-0449		1	SCREW M6S ISO 4017 M8X16 A480							
650	312105-0453		2	SCREW M6S ISO 4017 M8X25 A480							
660	312105-0455		6	SCREW M6S ISO 4017 M8X30 A480							
665	312105-0457		3	SCREW M6S ISO 4014 M8X35 A480							
670	312109-0376		4	SCREW M6S ISO 4017 M6X35 A480							
685	312115-0370		6	SCREW ISO4762 M6X20 A4 80							
690	312115-0374		4	SCREW ISO4762 M6X30 A4 80							
700	312125-0230		2	SCREW ISO 1207 M3X20 A4							
710	312155-0366		2	SCREW DIN 7991 MF6S M6X12 A4 70							
720	312155-0376		16	SCREW DIN 7991 MF6S M6X35 A4 70							
730	312605-0316		7	HEXAGON NUT, M6M M6 A280							
740	312605-0322		8	HEXAGON NUT, M6M M12 A280							
745	312812-0316		6	HEXAGON NUT, NY-LOCK M6 A480							
750	315105-0124		2	WASHER BRB 3,2X7 RFR							
760	315105-0153		7	WASHER BRB 6,4X12 RFR							
770	315105-0165		6	WASHER BRB 8,4X16 RFR							
780	315115-0153		28	WASHER PLAIN, TBRB 6,4/12 H=3							
790	315115-0165		4	WASHER PLAIN, TBRB 8,4/16 H=3							
800	321101-0252		1	FLANGE BUSHING, 25X35X16 MM							
810	321101-0253		7	FLANGE BUSHING, 25X35X25 MM							
820	321101-0272		2	FLANGE BUSHING, 30X40X20 MM							
830	321101-0283		2	FLANGE BUSHING, 35X45X35 MM							
840	321116-0128		1	BEARING BUSH W/O FLANGE, 10X14X16 MM							
850	90044-0104		1	PROX.SWITCH IFM IN 3002(RP 90044-194)							
870	318212-0150		1	ROLLER CHAIN, SINGLE 1/2 -150,SS							
890	318219-0187		1	CONNECTING LINK SINGLE 1/2",SS							

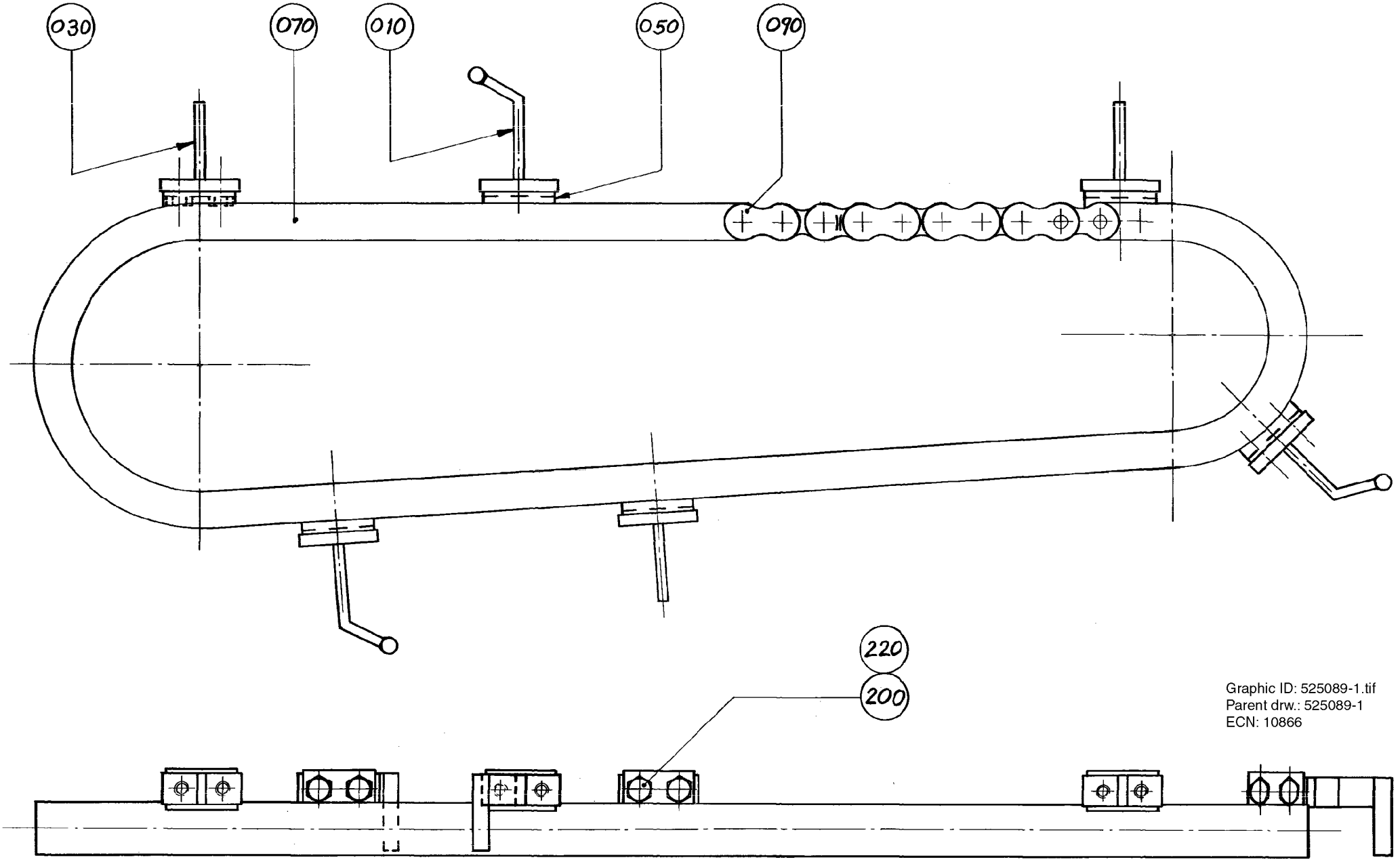

Graphic ID: 525089-1.tif
Parent drw.: 525089-1
ECN: 10866

ECM: 188352 - 20041105
Group number: 525089-0100
Assembly Drawing: 525089-1_1_AA

This list covers pages from 5-104 to 5-107

Pos	Part No	UN	Qty	Description	Page No
0500S, 0300B (See drawing on page: 5-104)					
010	443469-0000		3	ARRIER	
070	318212-0008		3	ROLLER CHAIN, SINGLE 1/2 -8,SS	
090	90288-0053		3	ROLLER CHAIN, SINGLE 1/2 -14	
0500B, 0568B, 1000B (See drawing on page: 5-104)					
010	525431-0000		3	CARRIER	
070	318212-0008		3	ROLLER CHAIN, SINGLE 1/2 -8,SS	
090	90288-0053		3	ROLLER CHAIN, SINGLE 1/2 -14	
1136B, 1000S (See drawing on page: 5-106)					
010	525431-0000		3	CARRIER	
070	318212-0006		3	ROLLER CHAIN, SINGLE 1/2 -6	
090	90288-0057		3	ROLLER CHAIN, SINGLE 1/2 -16	
Common Parts					
030	443468-0000		3	CARRIER	
050	90288-0311		6	LINK	
200	312105-0287		12	SCREW M6S ISO 4017 M4X8 A470	
220	315105-0136		12	WASHER BRB 4,3X9 RFR	

Pos	Part No	UN	Qty	Description	Page No

CHAIN RIGHT

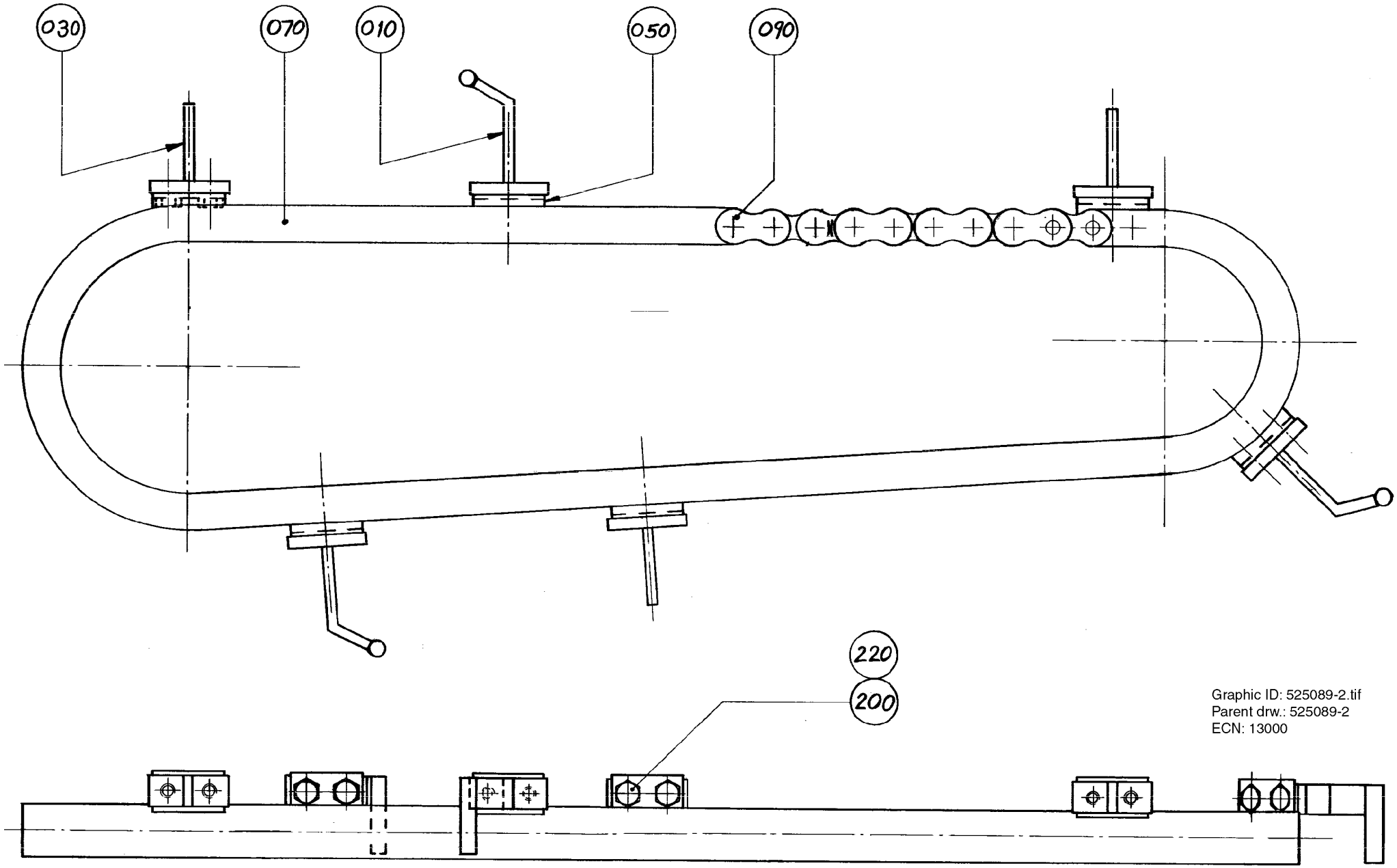

Graphic ID: 525089-2.tif
Parent drw.: 525089-2
ECN: 13000

ECM: 188352 - 20041105
Group number: 525089-0100
Assembly Drawing: 525089-2_1_AA

This list covers pages from 5-104 to 5-107

Pos	Part No	UN	Qty	Description	Page No
0500S, 0300B (See drawing on page: 5-104)					
010	443469-0000		3	ARRIER	
070	318212-0008		3	ROLLER CHAIN, SINGLE 1/2 -8,SS	
090	90288-0053		3	ROLLER CHAIN, SINGLE 1/2 -14	
0500B, 0568B, 1000B (See drawing on page: 5-104)					
010	525431-0000		3	CARRIER	
070	318212-0008		3	ROLLER CHAIN, SINGLE 1/2 -8,SS	
090	90288-0053		3	ROLLER CHAIN, SINGLE 1/2 -14	
1136B, 1000S (See drawing on page: 5-106)					
010	525431-0000		3	CARRIER	
070	318212-0006		3	ROLLER CHAIN, SINGLE 1/2 -6	
090	90288-0057		3	ROLLER CHAIN, SINGLE 1/2 -16	
Common Parts					
030	443468-0000		3	CARRIER	
050	90288-0311		6	LINK	
200	312105-0287		12	SCREW M6S ISO 4017 M4X8 A470	
220	315105-0136		12	WASHER BRB 4,3X9 RFR	

Pos	Part No	UN	Qty	Description	Page No

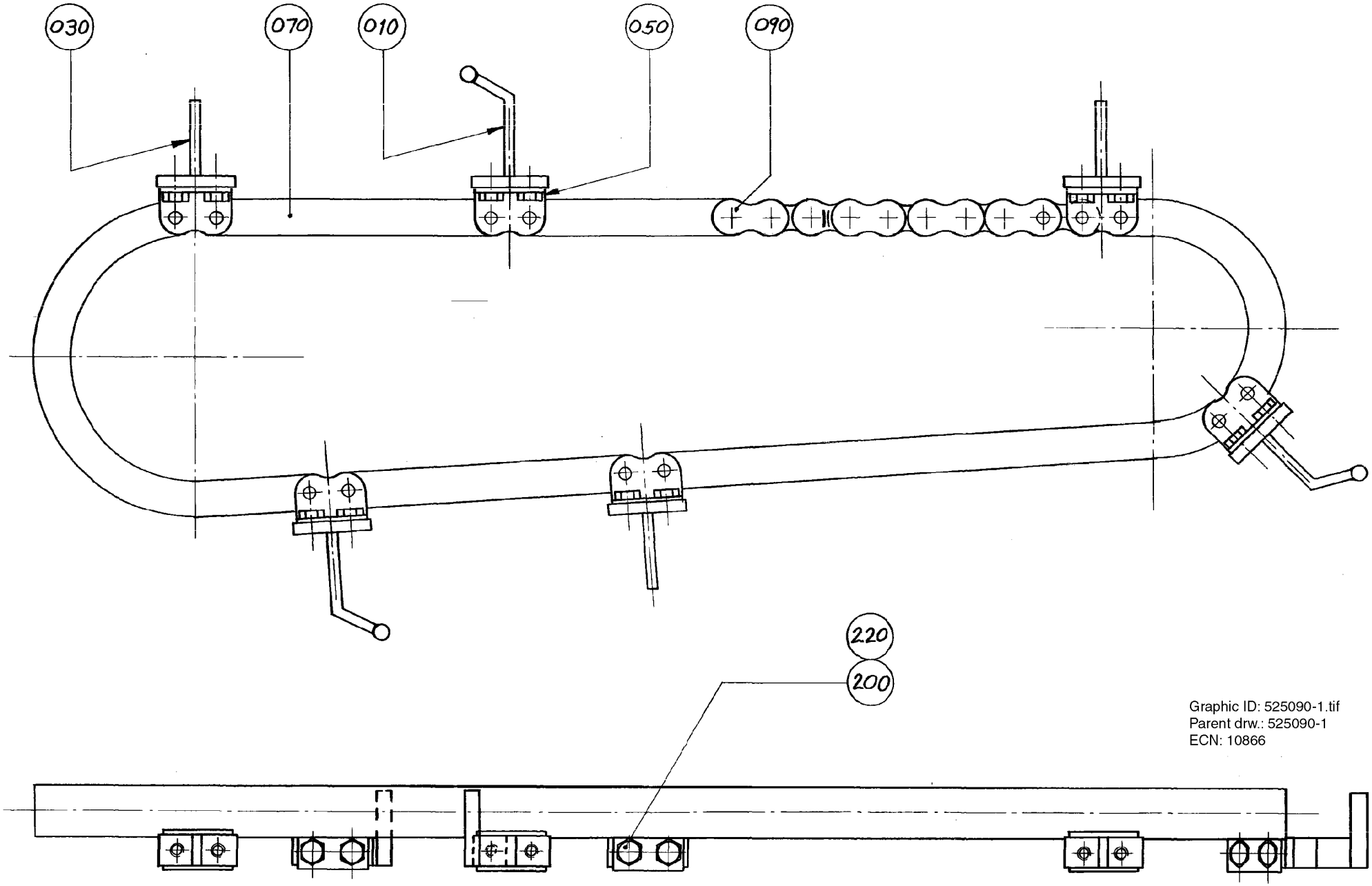

Graphic ID: 525090-1.tif
Parent drw.: 525090-1
ECN: 10866

ECM: 188353 - 20041105
Group number: 525090-0100
Assembly Drawing: 525090-1_1_AA

This list covers pages from 5-108 to 5-111

Pos	Part No	UN	Qty	Description	Page No
0500S, 0300B (See drawing on page: 5-108)					
010	443470-0000		3	CARRIER	
070	318212-0008		3	ROLLER CHAIN, SINGLE 1/2 -8,SS	
090	90288-0053		3	ROLLER CHAIN, SINGLE 1/2 -14	
0500B, 0568B, 1000B (See drawing on page: 5-108)					
010	525432-0000		3	CARRIER	
070	318212-0008		3	ROLLER CHAIN, SINGLE 1/2 -8,SS	
090	90288-0053		3	ROLLER CHAIN, SINGLE 1/2 -14	
1136B, 1000S (See drawing on page: 5-110)					
010	525432-0000		3	CARRIER	
070	318212-0006		3	ROLLER CHAIN, SINGLE 1/2 -6	
090	90288-0057		3	ROLLER CHAIN, SINGLE 1/2 -16	
Common Parts					
030	443468-0000		3	CARRIER	
050	90288-0311		6	LINK	
200	312105-0287		12	SCREW M6S ISO 4017 M4X8 A470	
220	315105-0136		12	WASHER BRB 4,3X9 RFR	

Pos	Part No	UN	Qty	Description	Page No

CHAIN LINKS

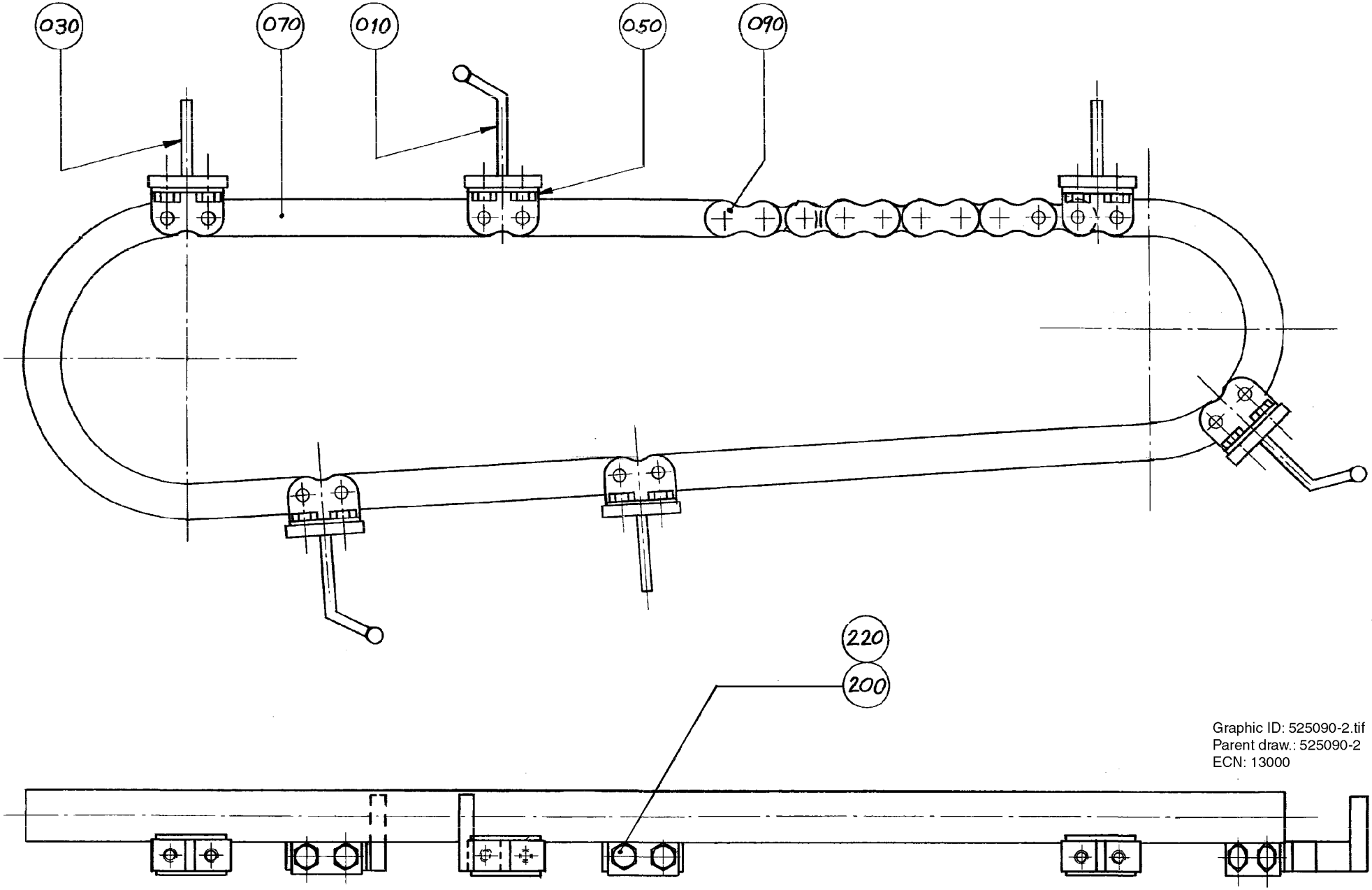

Graphic ID: 525090-2.tif
Parent draw.: 525090-2
ECN: 13000

ECM: 188353 - 20041105
Group number: 525090-0100
Assembly Drawing: 525090-2_1_AA

This list covers pages from 5-108 to 5-111

Pos	Part No	UN	Qty	Description	Page No
0500S, 0300B (See drawing on page: 5-108)					
010	443470-0000		3	CARRIER	
070	318212-0008		3	ROLLER CHAIN, SINGLE 1/2 -8,SS	
090	90288-0053		3	ROLLER CHAIN, SINGLE 1/2 -14	
0500B, 0568B, 1000B (See drawing on page: 5-108)					
010	525432-0000		3	CARRIER	
070	318212-0008		3	ROLLER CHAIN, SINGLE 1/2 -8,SS	
090	90288-0053		3	ROLLER CHAIN, SINGLE 1/2 -14	
1136B, 1000S (See drawing on page: 5-110)					
010	525432-0000		3	CARRIER	
070	318212-0006		3	ROLLER CHAIN, SINGLE 1/2 -6	
090	90288-0057		3	ROLLER CHAIN, SINGLE 1/2 -16	
Common Parts					
030	443468-0000		3	CARRIER	
050	90288-0311		6	LINK	
200	312105-0287		12	SCREW M6S ISO 4017 M4X8 A470	
220	315105-0136		12	WASHER BRB 4,3X9 RFR	

Pos	Part No	UN	Qty	Description	Page No

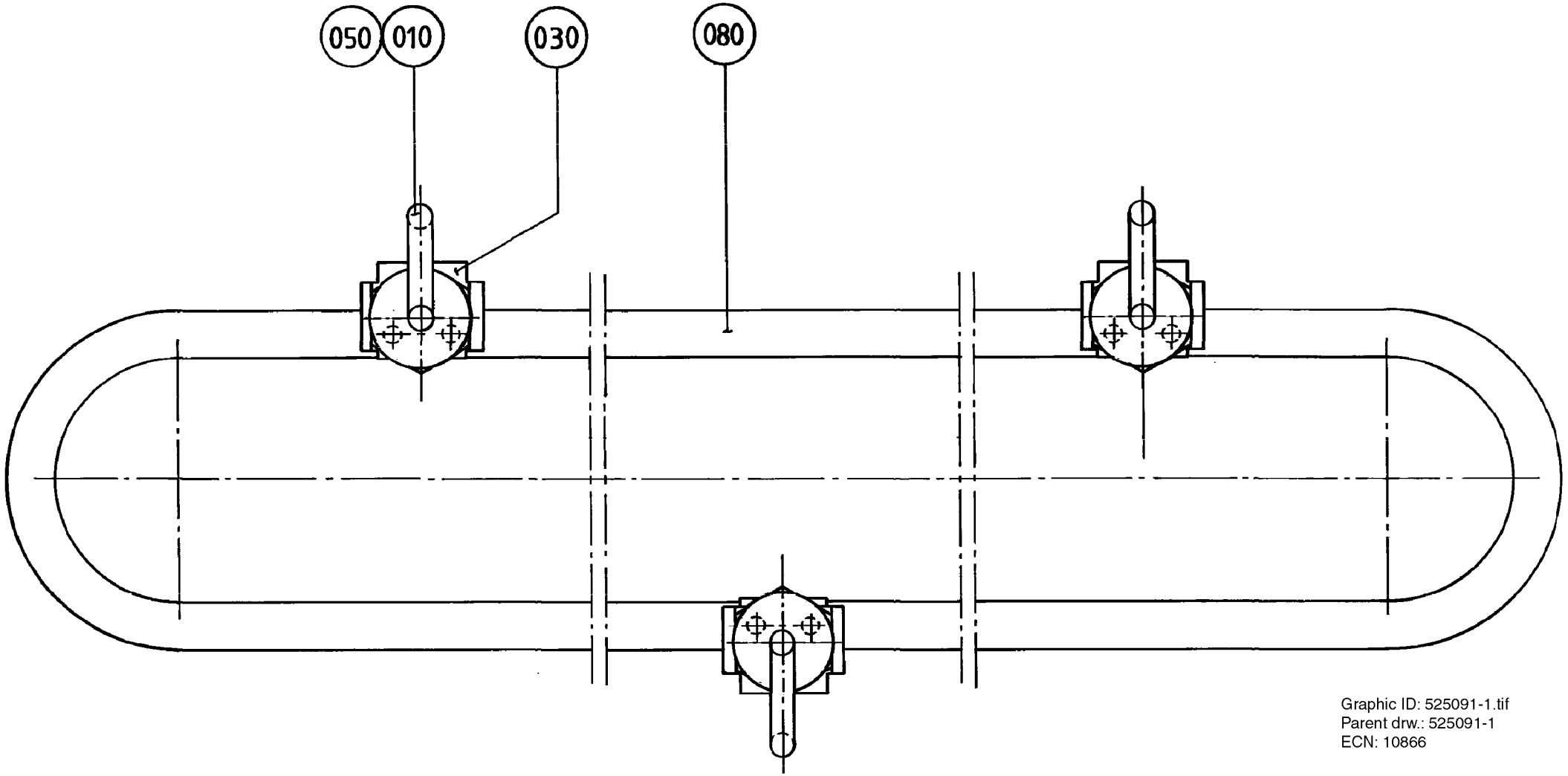

Graphic ID: 525091-1.tif
Parent drw.: 525091-1
ECN: 10866

ECM: 188354 - 20041105
Group number: 525091-0100
Assembly Drawing: 525091-1_1_AA

Pos	Part No	UN	Qty	Description	Page No
0500S, 0300B					
010	525208-0002		3	CARRIER	
0500B, 1136B, 0568B, 1000B					
010	525208-0001		3	CARRIER	
1000S					
010	525208-0003		3	CARRIER	
Common Parts					
030	2549933-0000		3	LINK	
050	312605-0318		3	HEXAGON NUT, M6M M8 A280	
080	318242-0036		3	ROLLER CHAIN DUPLEX 1/2"-36SS	

Pos	Part No	UN	Qty	Description	Page No

CHAIN GUARD

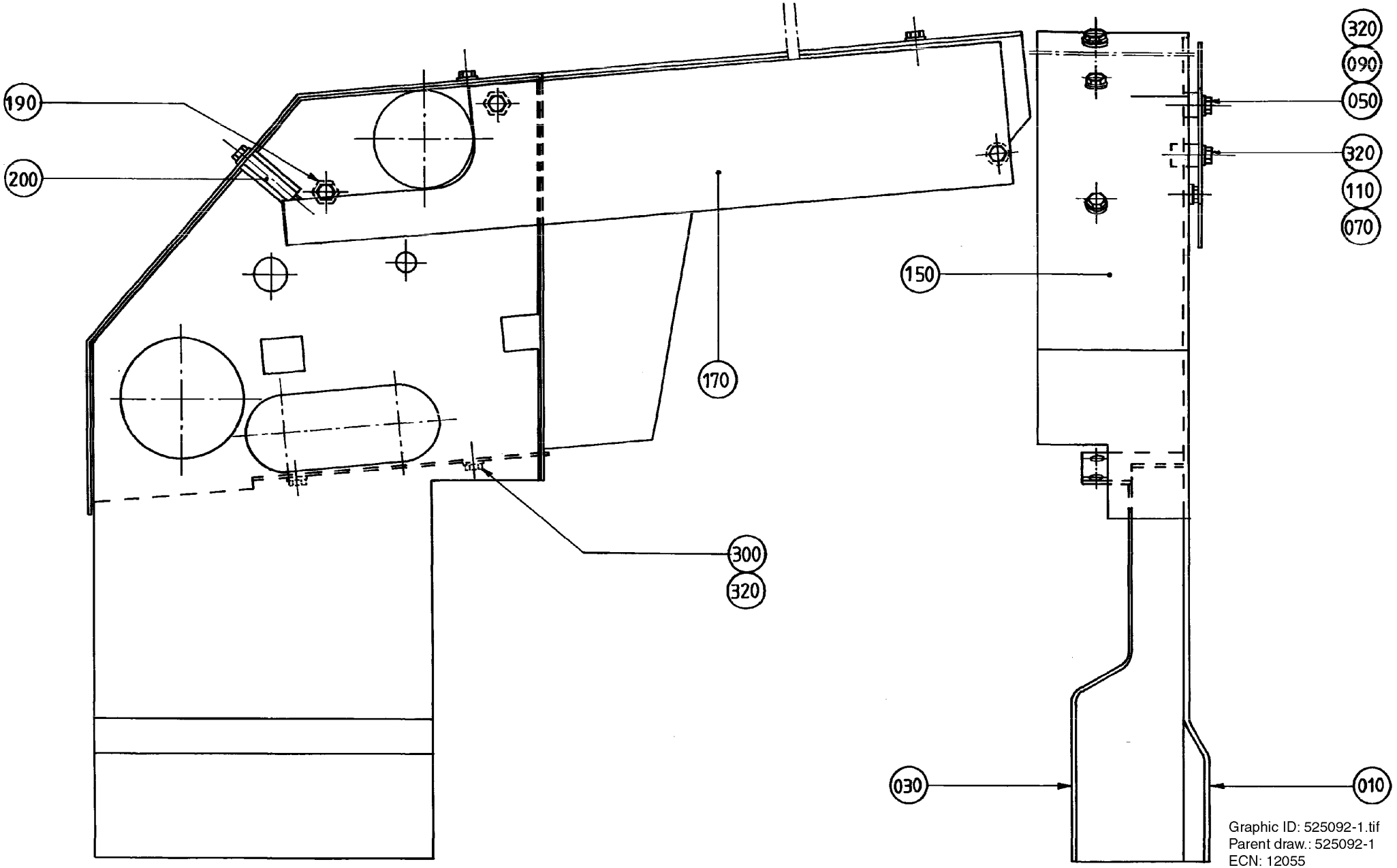

Graphic ID: 525092-1.tif
Parent draw.: 525092-1
ECN: 12055

ECM: 70725 - 19970320
Group number: 525092-0100
Assembly Drawing: 525092-1_1_AA

Pos	Part No	UN	Qty	Description	Page No
0300B					
010	525038-0000		1	GABLE PLATE	
030	525039-0000		1	GABLE PLATE	
050	525052-0005		1	SPACER	
070	525052-0006		1	SPACER	
090	312105-0378		1	SCREW M6S ISO 4014 M6X40 A480	
110	312105-0381		1	SCREW M6S ISO 4014 M6X55 A480	
150	928901-0000		1	COVERING PLATE	
0500B, 0568B					
010	525150-0000		1	GABLE PLATE	
030	525151-0000		1	GABLE PLATE	
050	525052-0001		1	SPACER	
070	525052-0002		1	SPACER	
090	312105-0370		1	SCREW M6S ISO 4017 M6X20 A480	
110	312105-0374		1	SCREW M6S ISO 4014 M6X30 A480	
150	525339-0000		1	COVERING PLATE	
200	525338-0000		1	SPACER	
0500S					
010	525038-0000		1	GABLE PLATE	
030	525039-0000		1	GABLE PLATE	
050	525052-0003		1	SPACER	
070	525052-0004		1	SPACER	
090	312105-0376		1	SCREW M6S ISO 4014 M6X35 A480	
110	312105-0380		1	SCREW M6S ISO 4014 M6X50 A480	
150	566416-0000		1	COVERING PLATE	
200	525338-0000		1	SPACER	
1136B, 1000S, 1000B					
010	443476-0000		1	GABLE PLATE	
030	443477-0000		1	GABLE PLATE	
050	525052-0001		1	SPACER	
070	525052-0002		1	SPACER	
090	312105-0370		1	SCREW M6S ISO 4017 M6X20 A480	
110	312105-0374		1	SCREW M6S ISO 4014 M6X30 A480	
150	525339-0000		1	COVERING PLATE	
200	525338-0000		1	SPACER	
Common Parts					
170	525051-0000		1	HEAD PLATE	
190	443419-0000		2	SPACER	
300	312105-0364		6	SCREW M6S ISO 4017 M6X10 A480	
320	315105-0153		8	WASHER BRB 6,4X12 RFR	

Pos	Part No	UN	Qty	Description	Page No

Machine Type | Group Description | Used-In | Group Number | Page No

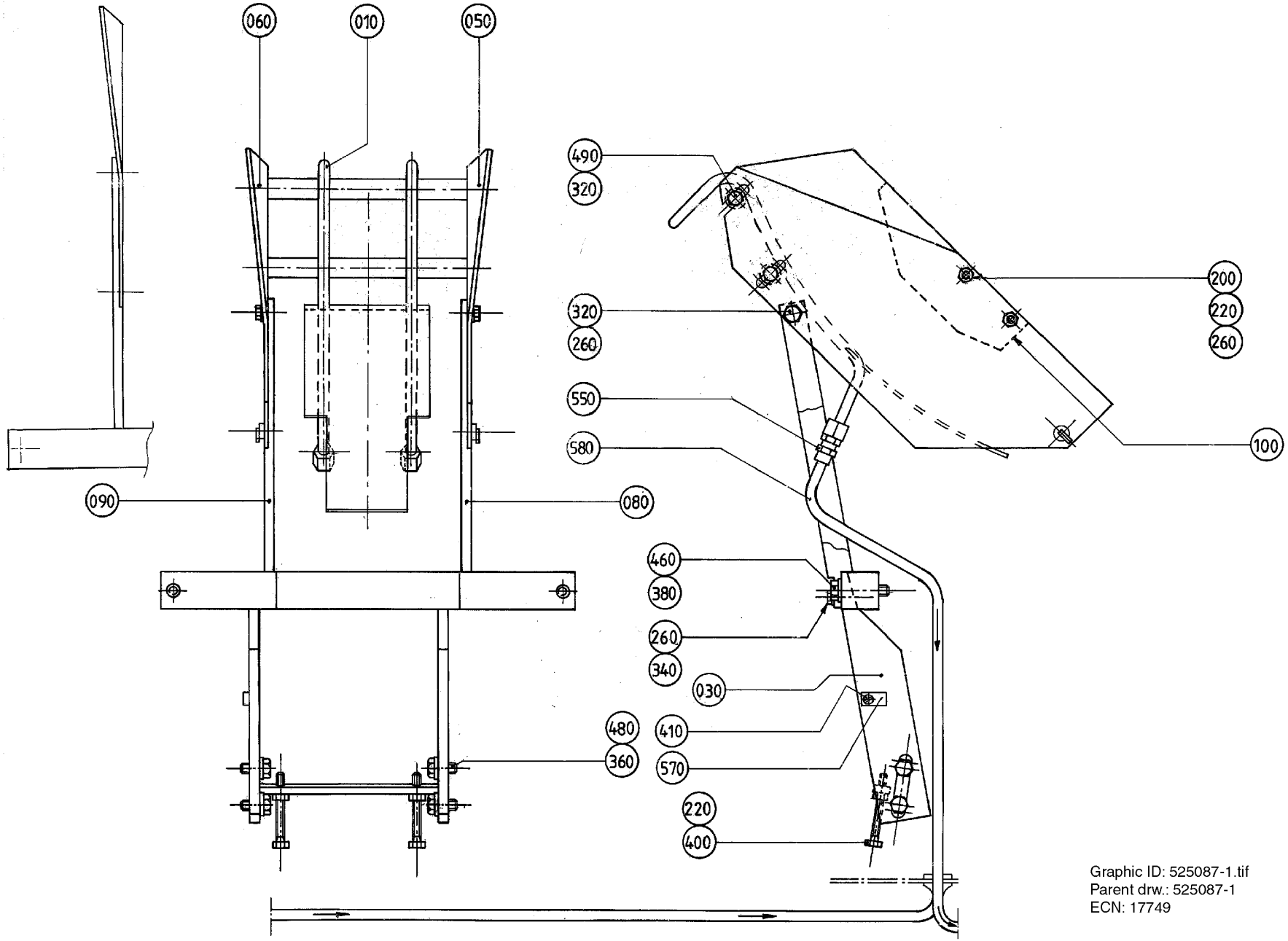

Graphic ID: 525087-1.tif
Parent drw.: 525087-1
ECN: 17749

ECM: 188350 - 20041105
Group number: 525087-0100
Assembly Drawing: 525087-1_1_AA

Pos	Part No	UN	Qty	Description	Page No
TB/8 0568B, TB/8 0500B					
010	544229-0001		1	DROP WING	
030	525147-0000		1	BRACKET	
050	443273-0000		1	HEAD PLATE	
060	443274-0000		1	HEAD PLATE	
080	443497-0000		1	SUPPORT	
090	443498-0000		1	SUPPORT	
100	525164-0000		2	STEERING	
200	312155-0372		4	SCREW DIN 7991 MF6S M6X25A4 70	
220	312605-0316		6	HEXAGON NUT, M6M M6 A280	
260	315105-0153		8	WASHER BRB 6,4X12 RFR	
TB/8 0300B					
010	544229-0003		1	DROP WING	
030	443492-0000		1	BRACKET	
050	443273-0000		1	HEAD PLATE	
060	443274-0000		1	HEAD PLATE	
080	443497-0000		1	SUPPORT	
090	443498-0000		1	SUPPORT	
220	312605-0316		2	HEXAGON NUT, M6M M6 A280	
260	315105-0153		4	WASHER BRB 6,4X12 RFR	
TB/8 0500S					
010	544229-0002		1	DROP WING	
030	443491-0000		1	BRACKET	
050	443271-0000		1	HEAD PLATE	
060	443272-0000		1	HEAD PLATE	
080	443497-0000		1	SUPPORT	
090	443498-0000		1	SUPPORT	
220	312605-0316		2	HEXAGON NUT, M6M M6 A280	
260	315105-0153		4	WASHER BRB 6,4X12 RFR	
TB/8 0500SQ					
010	574166-0000		1	DROP WING	
030	574080-0000		1	BRACKET	
050	583459-0000		1	HEAD PLATE	
060	583460-0000		1	HEAD PLATE	
080	443462-0000		1	SUPPORT	
090	443463-0000		1	SUPPORT	
220	312605-0316		2	HEXAGON NUT, M6M M6 A280	
260	315105-0153		4	WASHER BRB 6,4X12 RFR	
TB/8 1000B, TB/8 1136B					
010	544229-0001		1	DROP WING	
030	443447-0000		1	BRACKET	
050	525255-0000		1	HEAD PLATE	
060	525256-0000		1	HEAD PLATE	
080	443462-0000		1	SUPPORT	
090	443463-0000		1	SUPPORT	
220	312605-0316		2	HEXAGON NUT, M6M M6 A280	
260	315105-0153		4	WASHER BRB 6,4X12 RFR	
TB/8 1000S					
010	544229-0005		1	DROP WING	
030	569131-0000		1	BRACKET	
050	525255-0000		1	HEAD PLATE	
060	525256-0000		1	HEAD PLATE	
080	443462-0000		1	SUPPORT	
090	443463-0000		1	SUPPORT	
220	312605-0316		2	HEXAGON NUT, M6M M6 A280	
260	315105-0153		4	WASHER BRB 6,4X12 RFR	
TB/8 1000SQ					
010	574166-0000		1	DROP WING	
030	574080-0000		1	BRACKET	
050	525255-0000		1	HEAD PLATE	
060	525256-0000		1	HEAD PLATE	
080	443462-0000		1	SUPPORT	
090	443463-0000		1	SUPPORT	
220	312605-0316		2	HEXAGON NUT, M6M M6 A280	
260	315105-0153		4	WASHER BRB 6,4X12 RFR	
Common Parts					
320	312105-0366		6	SCREW M6S ISO 4017 M6X12 A480	
340	312105-0368		2	SCREW M6S ISO 4017 M6X16 A480	
360	312105-0449		4	SCREW M6S ISO 4017 M8X16 A480	
380	312105-0459		2	SCREW M6S ISO 4014 M8X40 A480	
400	312109-0381		2	SCREW M6S ISO 4017 M6X55 A480	
410	312125-0287		1	SCREW ISO 1207 M4X8 A4	
460	315105-0165		2	WASHER BRB 8,4X16 RFR	
480	315115-0165		4	WASHER PLAIN, TBRB 8,4/16 H=3	
490	315125-0153		4	WASHER TBRSB 6,4X22X4 A4	
550	342920-0121		2	STRAIGHT COUPLING,EXT.THREADED 8/6-R1/8"	
570	90165-0056		1	PIPE CLIP FOR TUBE D=4 MM	
580	90166-0122	MM	1500	TUBE 8 MM PA,TRANSP.	

Machine Type	Group Description	Used-In	Group Number	Page No

DISCHARGE CHUTE

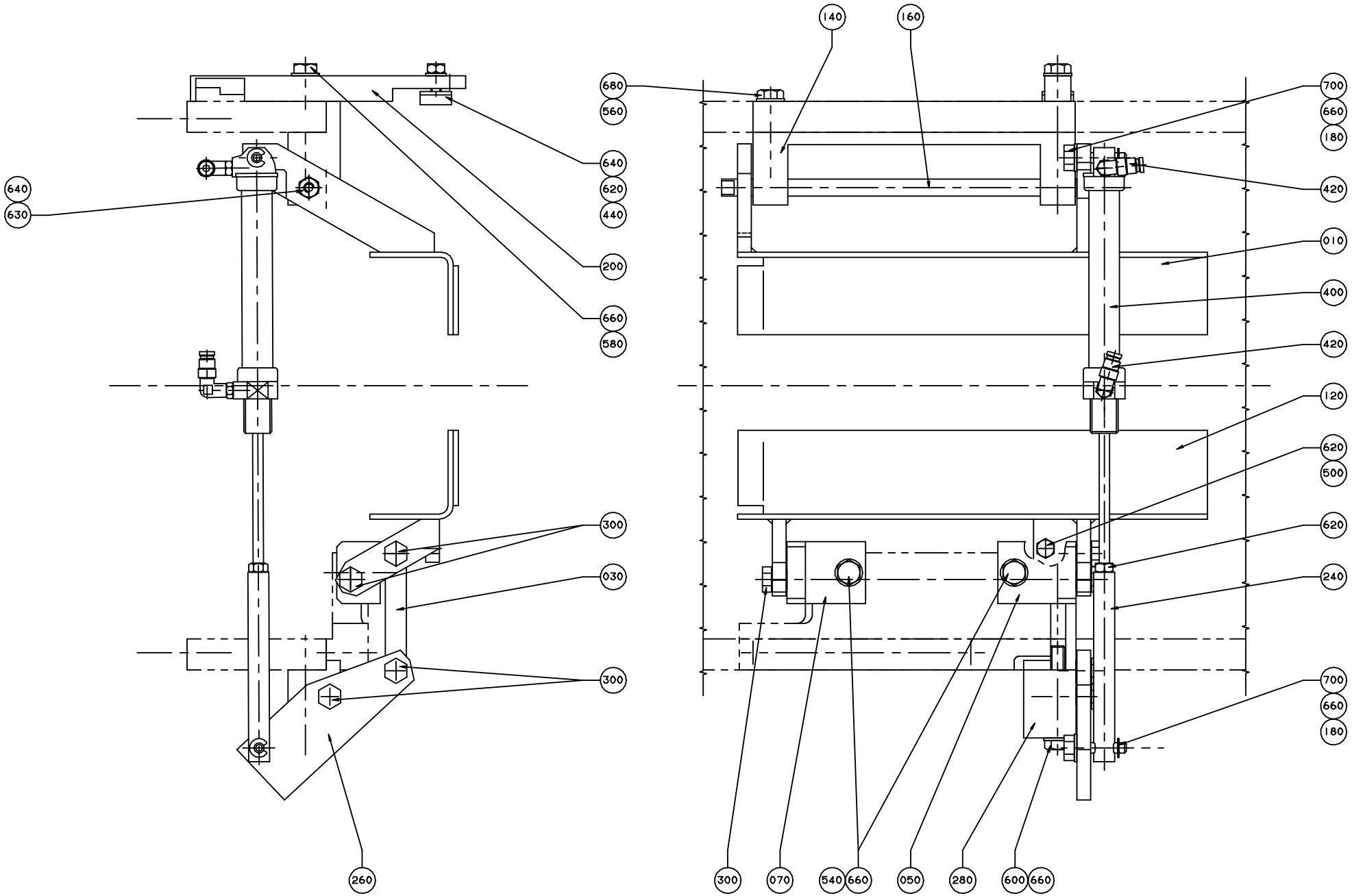

ECM: 188351 - 20041105
Group number: 525088-0200
Assembly Drawing: 525088-3_1_AB

Pos	Part No	UN	Qty	Description	Page No
0300B					
010	443495-0000		1	HEAD PLATE	
030	525075-0003		1	LINK	
050	525082-0000		1	BRACKET	
070	525083-0000		1	BRACKET	
120	525084-0000		1	HEAD PLATE	
200	525416-0000		1	STOP	
0500S					
010	443493-0000		1	HEAD PLATE	
030	525075-0002		1	LINK	
050	525080-0000		1	BRACKET	
070	525081-0000		1	BRACKET	
120	525084-0000		1	HEAD PLATE	
200	525416-0000		1	STOP	
0500B, 1136B, 0568B, 1000B					
010	443448-0000		1	HEAD PLATE	
030	525075-0001		1	LINK	
050	525078-0000		1	BRACKET	
070	525079-0000		1	BRACKET	
120	525084-0000		1	HEAD PLATE	
200	525416-0000		1	STOP	
1000S					
010	569134-0000		1	HEAD PLATE	
030	525075-0005		1	LINK	
050	569135-0000		1	BRACKET	
070	569136-0000		1	BRACKET	
120	525084-0000		1	HEAD PLATE	
200	525416-0000		1	STOP	
1000SQ NORMFIN, 0500SQ					
010	574077-0000		1	HEAD PLATE	
030	525075-0006		1	LINK	
050	574078-0000		1	BRACKET	
070	574079-0000		1	BRACKET	
120	574126-0000		1	HEAD PLATE	
200	525416-0000		1	STOP	
1000SQ REVFIN					
010	574077-0000		1	HEAD PLATE	
030	525075-0006		1	LINK	
050	574078-0000		1	BRACKET	
070	574079-0000		1	BRACKET	
120	574126-0000		1	HEAD PLATE	
200	1195333-0000		1	STOP	

Pos	Part No	UN	Qty	Description	Page No
Common Parts					
140	443365-0000		1	BRACKET	
160	443309-0000		1	SHAFT	
180	443310-0000		2	AXLE PIN	
240	443474-0000		1	BRACKET	
260	525074-0000		1	ARM	
280	525465-0000		1	BRACKET	
300	525077-0000		5	AXLE PIN	
400	90239-0818		1	DOUBLE ACTING, MINI-ISO, CYL.16-80	
420	90458-2954		2	ELBOW PIPE JOINT, EXT.THREAD, D=4MM M5	
440	90347-0007		1	VIBRATION DAMPER	
500	312105-0374		1	SCREW M6S ISO 4014 M6X30 A480	
540	312105-0451		2	SCREW M6S ISO 4017 M8X20 A480	
560	312105-0455		1	SCREW M6S ISO 4017 M8X30 A480	
580	312105-0460		1	SCREW M6S ISO 4014 M8X45 A480	
600	312105-0462		1	SCREW M6S ISO 4014 M8X55 A480	
620	312605-0316		3	HEXAGON NUT, M6M M6 A280	
630	312812-0316		1	HEXAGON NUT, NY-LOCK M6 A480	
640	315105-0153		2	WASHER BRB 6,4X12 RFR	
660	315105-0165		6	WASHER BRB 8,4X16 RFR	
680	315115-0165		1	WASHER PLAIN, TBRB 8,4/16 H=3	
700	315755-0107		2	RETAINING RING SHAFT DIN 6799 5 A2	

Machine Type | Group Description | Used-In | Group Number | Page No

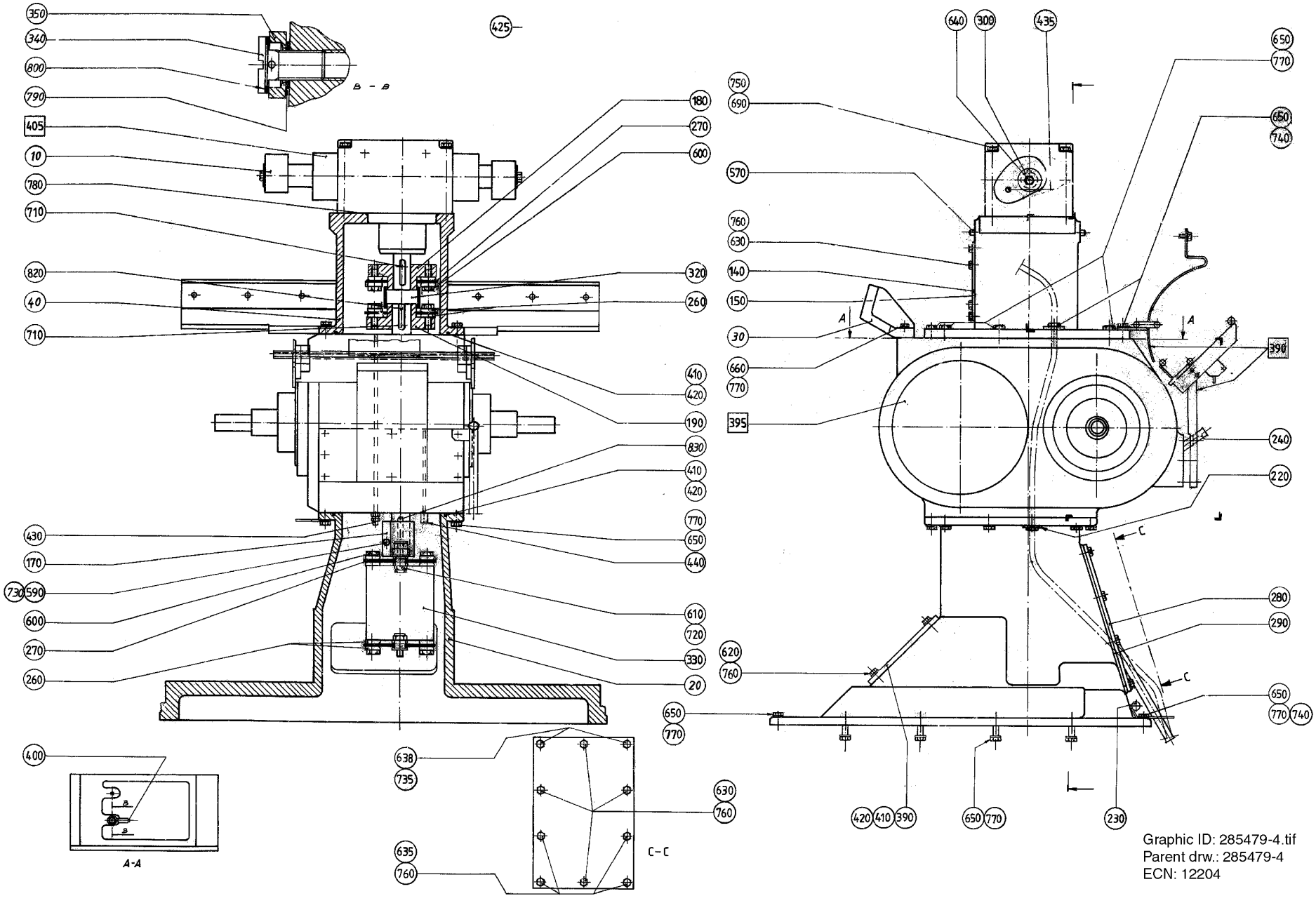
350
340
800
790
405
10
780
710
820
40
710
425
180
270
600
320
260
410
420
190
830
410
420
770
650
440
610
720
330
20
430
170
730
590
600
270
260
400
A-A
638
735
635
760
630
760
C-C
640
300
435
650
770
750
690
650
740
570
760
630
140
150
30
660
770
395
390
240
220
280
290
620
760
650
770
650
770
740
420
410
390
650
770
230
A
C
Graphic ID: 285479-4.tif
Parent drw.: 285479-4
ECN: 12204

ECM: 72437 - 19990426
Group number: 285479-0500
Assembly Drawing: 285479-4_1_AA

Pos	Part No	UN	Qty	Description	Page No
0500S, 0300B					
010	525235-0000		2	CURVE	
0500B, 1136B, 1000SQ, 0500SQ, 1000S, 0568SQ, 0568B, 1000B					
010	443362-0000		2	CURVE	
Common Parts					
020	443218-0000		1	INTERMEDIARY SECTION	
030	262264-0000		1	CANTILEVER	
040	262922-0000		1	HOUSE	
140	262932-0000		1	HATCH	
150	262933-0000		1	GASKET	
170	285141-0003		1	CLAMPING SLEEVE	
180	285142-0002		1	SLEEVE	
190	285142-0003		1	SLEEVE	
220	525292-0000		3	BRACKET	
230	525293-0000		1	PIPE	
240	525294-0000		1	PIPE	
260	31553-0002		32	WASHER	
270	33261-0000		32	SPRING PLATE	
280	262252-0000		1	HATCH	
290	262253-0000		1	GASKET	
300	276659-0000		2	WASHER	
320	285145-0002		1	INTERMEDIARY SECTION	
330	285147-0000		1	INTERMEDIARY SECTION	
340	285891-0000		1	SCREW	
350	285892-0000		1	CONNECTION	
390	525279-0000		1	HATCH	
400	90092-0077		1	METERING VALVE, FKD3, G1/8	
410	90143-0052	MM	2450	STRAP	
420	90153-0043	KG	1	ADHESIVE, LOCTITE 495 20G	
425	90296-0009	L	1	SILICONE GREASE DOW CORNING 150 GR.	
430	90224-0066		1	CONN. STRAIGHT, 160Â•SSA	
435	90261-0032		4	PLUG, BLIND, PLASTIC, NO. 1073	
440	342720-0102		1	CONN. STR. GA-6-G1/8	
570	311103-0399		10	PARALLEL PIN ISO 2338 8M6X16 A1	
590	312105-0455		1	SCREW M6S ISO 4017 M8X30 A480	
600	90287-0155		14	SCREW M6S M10X25 88 NY-LOCK	
610	312105-0497		2	SCREW M6S ISO 4017 M10X35 A480	
620	312105-0367		6	SCREW M6S ISO 4017 M6X14 A480	
630	312105-0368		12	SCREW M6S ISO 4017 M6X16 A480	
635	312105-0370		4	SCREW M6S ISO 4017 M6X20 A480	
638	312105-0372		2	SCREW M6S ISO 4017 M6X25 A480	
640	312105-0451		2	SCREW M6S ISO 4017 M8X20 A480	
650	312105-0453		50	SCREW M6S ISO 4017 M8X25 A480	
660	312105-0455		2	SCREW M6S ISO 4017 M8X30 A480	
690	312105-0517		4	SCREW M6S ISO 4014 M10X130 A480	
710	312318-0362		2	SCREW ISO4029 M6X8 A4	
720	312812-0320		2	HEXAGON NUT, NY-LOCK M10 A480	
730	315105-0165		1	WASHER BRB 8,4X16 RFR	
735	315105-0153		2	WASHER BRB 6,4X12 RFR	
740	315105-0165		10	WASHER BRB 8,4X16 RFR	
750	315115-0173		4	WASHER PLAIN, TBRB 10,5/22 H=4	
760	315115-0153		22	WASHER PLAIN, TBRB 6,4/12 H=3	
770	315115-0165		42	WASHER PLAIN, TBRB 8,4/16 H=3	
780	315202-0311		1	O-RING 99,5X3 MM	
790	315233-0109		1	WASHER CAPTIVE SEALING G1/8	
800	315233-0110		1	WASHER CAPTIVE SEALING G1/4	
820	315701-0270		1	PARALLEL KEY W. ROUND ENDS 8X7X40 MM	
830	315701-0274		1	PARALLEL KEY W. ROUND ENDS 8X7X60 MM	
F405	442646-0200		1	TOP GEAR	**5-123**
F395	525117-0300		1	INDEXING GEAR	**5-125, 5-127**
F390	285853-0200		1	STEERING RAIL	**5-129, 5-131**

Machine Type	Group Description	Used-In	Group Number	Page No

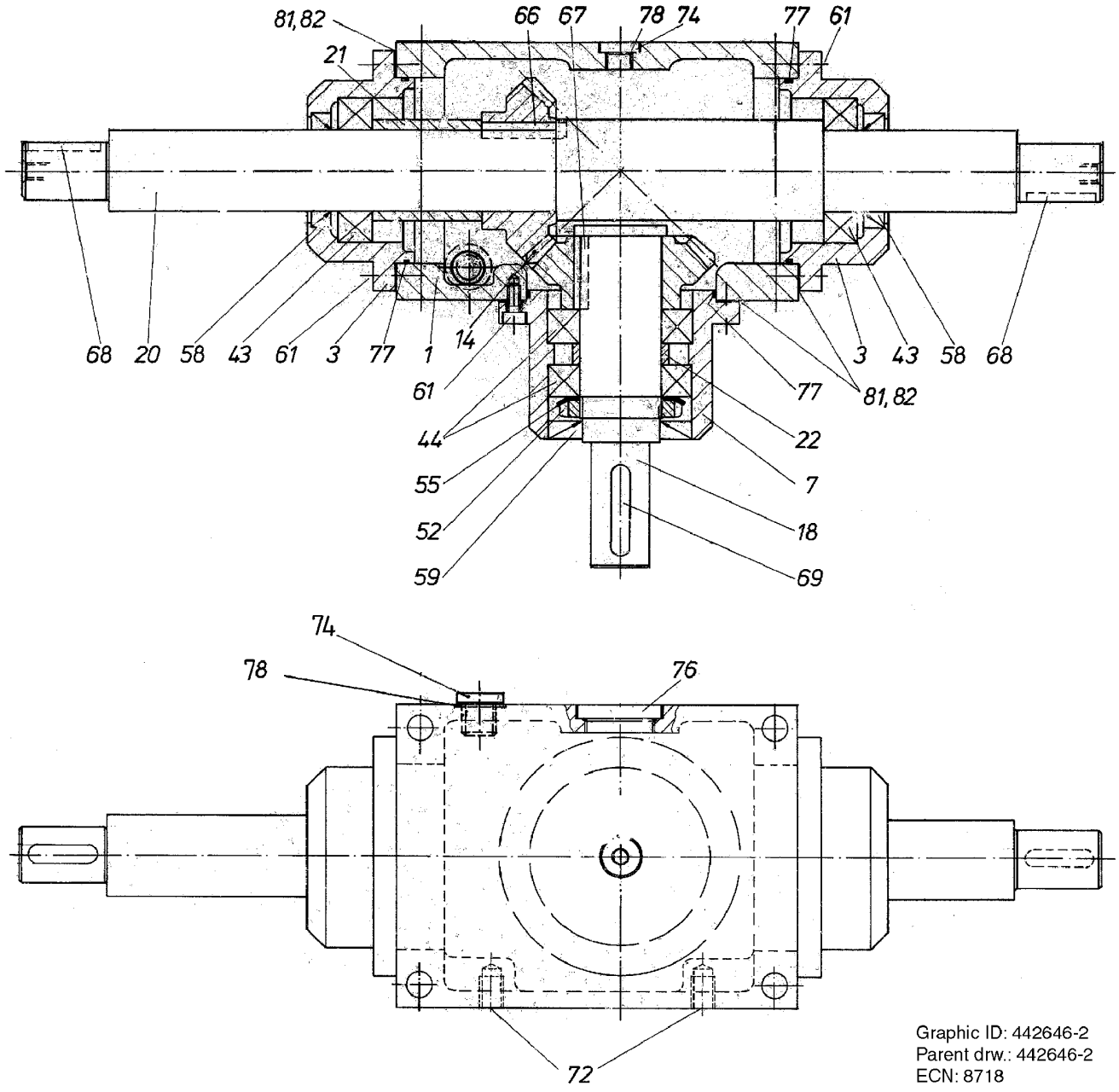

Graphic ID: 442646-2
Parent drw.: 442646-2
ECN: 8718

ECM: 188356 - 20041105
Group number: 442646-0200
Assembly Drawing: 442646-2_1_AA

Pos	Part No	UN	Qty	Description	Page No
-					
001	568070-0000		1	GEAR HOUSING	
003	568071-0000		2	BEARING SEAT	
007	568072-0000		1	BEARING SEAT	
014	443188-0000		1	GEAR WHEEL	
018	568073-0000		1	SHAFT	
020	568074-0000		1	SHAFT	
021	442621-0000		1	SPACER	
022	442622-0000		1	SPACER	
043	321306-0107		2	BALL BEARING, 35X62X14 MM	
044	321306-0107		2	BALL BEARING, 35X62X14 MM	
052	312805-0107		1	NUT ROUND WITH SLOTS M35X1,5 FE	
055	315410-0107		1	LOCK WASHER MB 7 D=35 H=1,25	
058	90091-0142		2	RADIAL SEAL 35X50X9 MM	
059	315221-0171		1	RADIAL SEAL 30X62X7 MM	
061	312111-0368		12	SCREW HEX.SOCK.HD.MC6S-TT 6X16 88 FZB	
066	315701-0802		1	PARALLEL KEY W. ROUND ENDS 10X8X36 MM	
067	315701-0299		1	PARALLEL KEY W. ROUND ENDS 10X8X32 MM	
068	315701-0268		2	PARALLEL KEY W. ROUND ENDS 8X7X32 MM	
069	315701-0270		1	PARALLEL KEY W. ROUND ENDS 8X7X40 MM	
072	312910-0126		2	THREADED INSERT, FREE RUNNING M8X1,5D	
077	90242-0117		3	O-RING 70X2 MM	
078	90242-0121		2	O-RING 11X2,5 MM	
081	443193-0000		3	SHIM	
082	443194-0000		3	SHIM	

Pos	Part No	UN	Qty	Description	Page No

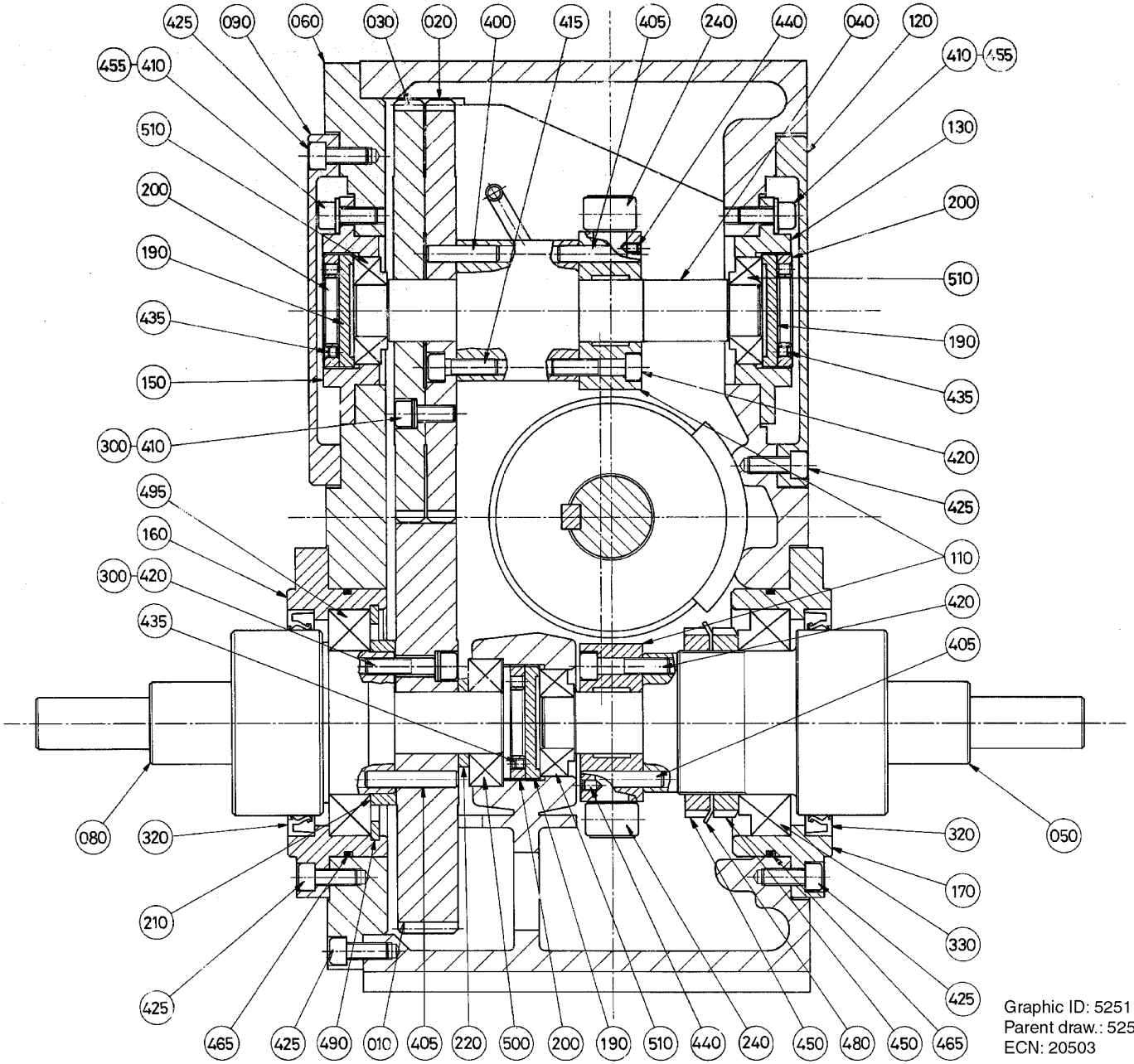

Graphic ID: 525117-3.tif
Parent draw.: 525117-3
ECN: 20503

ECM: 188355 - 20041105
Group number: 525117-0300
Assembly Drawing: 525117-3_1_AA

This list covers pages from 5-124 to 5-127

Pos	Part No	UN	Qty	Description	Page No
-					
010	543705-0000		1	GEAR WHEEL WIDE	
020	543706-0000		1	GEAR WHEEL SLIM, INNER	
030	543707-0000		1	GEAR WHEEL SLIM, OUTER	
040	565322-0000		1	INTERMEDIARY SHAFT	
050	565323-0000		1	OUTPUT SHAFT, LONG	
060	565324-0000		1	LID	
070	565325-0000		1	INPUT SHAFT	
080	565336-0000		1	OUTPUT SHAFT SHORT	
090	565338-0000		1	GEAR HOUSING	
100	927314-0000		1	CAM	
110	927315-0000		2	TURRET	
120	565326-0000		2	LID	
130	565331-0000		1	BEARING HOLDER	
140	565332-0000		2	BEARING HOLDER	
150	565333-0000		1	BEARING HOLDER	
160	565334-0000		1	BEARING HOLDER	
170	565335-0000		1	BEARING HOLDER	
180	565339-0000		1	OIL PIPE	
190	565327-0000		3	RING NUT	
200	565328-0000		3	SCREW RING	
210	565329-0000		1	SPACER	
220	565330-0000		1	SPACER	
230	565340-0000		1	OIL LEVEL TUBE	
240	927318-0000		12	ROLLER	
300	90062-0049		18	LOCK WASHER NORD-LOCK,8,7/13,5, T=2,2	
310	90087-0015		1	PLUG, EXT. THREAD HEX. SOCKET VSTI 1/4-E	
320	90091-0130		2	RADIAL SEAL 90X110X12 MM DUST LIP	
330	90214-0087		1	TAPER ROLLER BEARING, 70X110X25 MM	
400	311103-0407		3	PARALLEL PIN ISO 2338 8M6X35 A1	
405	311103-0411		9	PARALLEL PIN ISO 2338 8M6X45 A1	
410	312111-0451		12	SCREW HEX.SOCK.HD.MC6S-TT 8X20 88 FZB	
415	312111-0453		3	SCREW HEX.SOCK.HD.MC6S-TT 8X25 88 FZB	
420	312111-0457		9	SCREW HEX.SOCK.HD.MC6S-TT 8X35 88 FZB	
425	312115-0451		40	SCREW ISO4762 M8X20 A4 80	
430	312115-0453		12	SCREW ISO4762 M8X25 A4 80	
435	312316-0320		3	SCREW HEX.SOCK.SET CUP P.MSK6SS5X5 FZB	
440	312316-0323		12	SCREW HEX.SOCK.SET CUP P.MSK6SS5X8 FZB	
445	312805-0108		4	NUT ROUND WITH SLOTS M40X1,5 FE	
450	312805-0114		2	NUT ROUND WITH SLOTS M70X20 FE	
455	315101-0165		8	WASHER PLAIN, BRB, 8,4/16 H=1,5	
460	315105-0165		12	WASHER BRB 8,4X16 RFR	
465	315202-0316		2	O-RING 124,5X3 MM	
470	315221-0171		1	RADIAL SEAL 30X62X7 MM	
475	315410-0108		2	LOCK WASHER MB 8 D=40 H=1,25	
480	315410-0114		1	LOCK WASHER MB 14 D=70 H=1,5	
485	315701-0338		1	PARALLEL KEY W. ROUND ENDS 12X8X70 MM	
490	315752-0149		1	RETAINING RING FOR BORE DIN 472 110 ST	
495	321306-0114		1	BALL BEARING, 70X110X20 MM	
500	321309-0106		1	BALL BEARING, 30X62X16 MM	
505	321364-0106		2	TAPER ROLLER BEARING, 30X72X19 MM	
510	321361-0105		3	TAPER ROLLER BEARING, 25X52X16,25 MM	
515	342720-0104		1	CONN. STR. GA-8-G1/4	
520	342730-0104		2	CONN. ELBOW WA-8-1/4	

Machine Type	Group Description	Used-In	Group Number	Page No

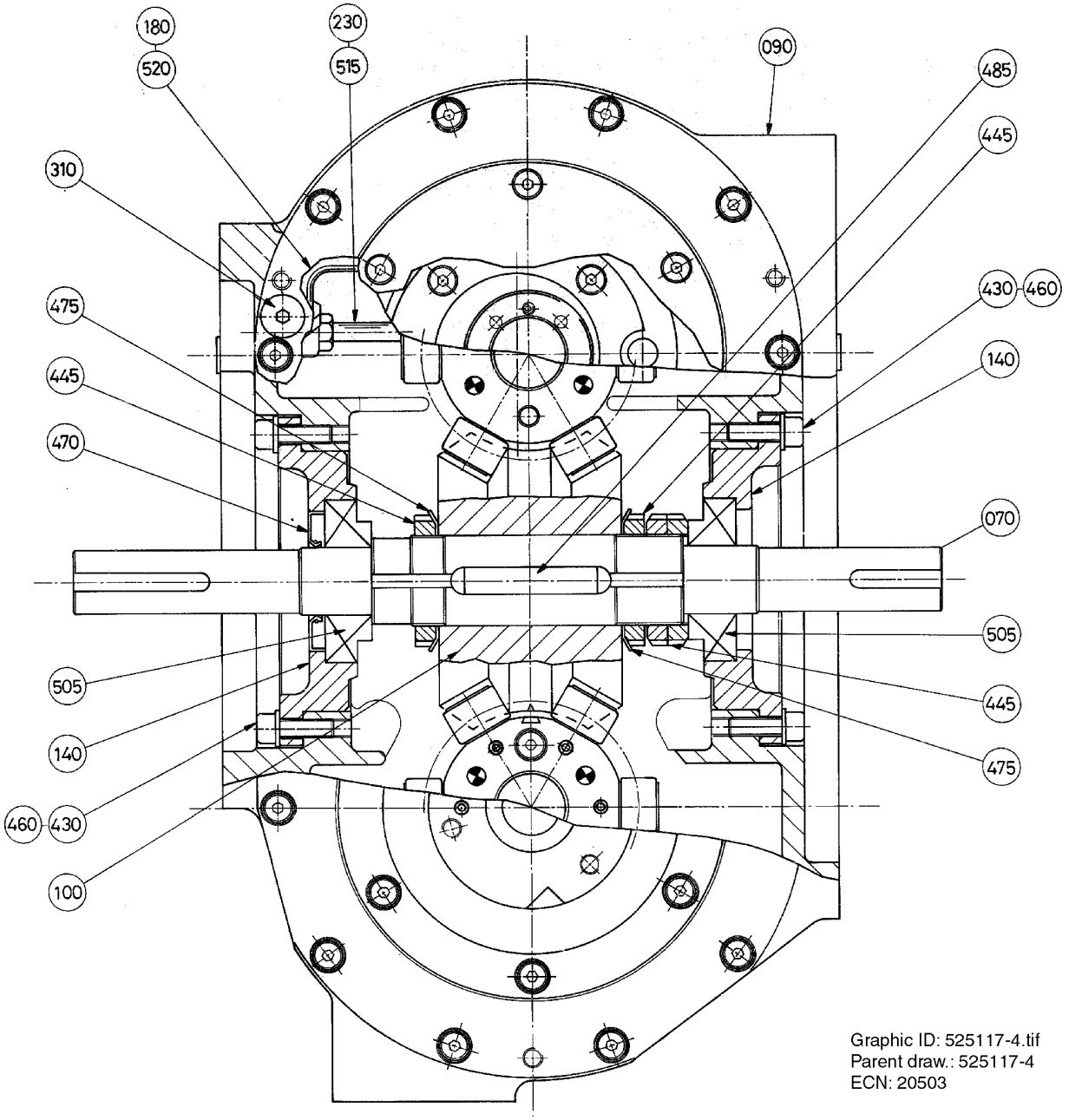

Graphic ID: 525117-4.tif
Parent draw.: 525117-4
ECN: 20503

ECM: 188355 - 20041105
Group number: 525117-0300
Assembly Drawing: 525117-4_1_AA

This list covers pages from 5-124 to 5-127

Pos	Part No	UN	Qty	Description	Page No
-					
010	543705-0000		1	GEAR WHEEL WIDE	
020	543706-0000		1	GEAR WHEEL SLIM, INNER	
030	543707-0000		1	GEAR WHEEL SLIM, OUTER	
040	565322-0000		1	INTERMEDIARY SHAFT	
050	565323-0000		1	OUTPUT SHAFT, LONG	
060	565324-0000		1	LID	
070	565325-0000		1	INPUT SHAFT	
080	565336-0000		1	OUTPUT SHAFT SHORT	
090	565338-0000		1	GEAR HOUSING	
100	927314-0000		1	CAM	
110	927315-0000		2	TURRET	
120	565326-0000		2	LID	
130	565331-0000		1	BEARING HOLDER	
140	565332-0000		2	BEARING HOLDER	
150	565333-0000		1	BEARING HOLDER	
160	565334-0000		1	BEARING HOLDER	
170	565335-0000		1	BEARING HOLDER	
180	565339-0000		1	OIL PIPE	
190	565327-0000		3	RING NUT	
200	565328-0000		3	SCREW RING	
210	565329-0000		1	SPACER	
220	565330-0000		1	SPACER	
230	565340-0000		1	OIL LEVEL TUBE	
240	927318-0000		12	ROLLER	
300	90062-0049		18	LOCK WASHER NORD-LOCK,8,7/13,5, T=2,2	
310	90087-0015		1	PLUG, EXT. THREAD HEX. SOCKET VSTI 1/4-E	
320	90091-0130		2	RADIAL SEAL 90X110X12 MM DUST LIP	
330	90214-0087		1	TAPER ROLLER BEARING, 70X110X25 MM	
400	311103-0407		3	PARALLEL PIN ISO 2338 8M6X35 A1	
405	311103-0411		9	PARALLEL PIN ISO 2338 8M6X45 A1	
410	312111-0451		12	SCREW HEX.SOCK.HD.MC6S-TT 8X20 88 FZB	
415	312111-0453		3	SCREW HEX.SOCK.HD.MC6S-TT 8X25 88 FZB	
420	312111-0457		9	SCREW HEX.SOCK.HD.MC6S-TT 8X35 88 FZB	
425	312115-0451		40	SCREW ISO4762 M8X20 A4 80	
430	312115-0453		12	SCREW ISO4762 M8X25 A4 80	
435	312316-0320		3	SCREW HEX.SOCK.SET CUP P.MSK6SS5X5 FZB	
440	312316-0323		12	SCREW HEX.SOCK.SET CUP P.MSK6SS5X8 FZB	
445	312805-0108		4	NUT ROUND WITH SLOTS M40X1,5 FE	
450	312805-0114		2	NUT ROUND WITH SLOTS M70X20 FE	
455	315101-0165		8	WASHER PLAIN, BRB, 8,4/16 H=1,5	
460	315105-0165		12	WASHER BRB 8,4X16 RFR	
465	315202-0316		2	O-RING 124,5X3 MM	
470	315221-0171		1	RADIAL SEAL 30X62X7 MM	
475	315410-0108		2	LOCK WASHER MB 8 D=40 H=1,25	
480	315410-0114		1	LOCK WASHER MB 14 D=70 H=1,5	
485	315701-0338		1	PARALLEL KEY W. ROUND ENDS 12X8X70 MM	
490	315752-0149		1	RETAINING RING FOR BORE DIN 472 110 ST	
495	321306-0114		1	BALL BEARING, 70X110X20 MM	
500	321309-0106		1	BALL BEARING, 30X62X16 MM	
505	321364-0106		2	TAPER ROLLER BEARING, 30X72X19 MM	
510	321361-0105		3	TAPER ROLLER BEARING, 25X52X16,25 MM	
515	342720-0104		1	CONN. STR. GA-8-G1/4	
520	342730-0104		2	CONN. ELBOW WA-8-1/4	

Machine Type	Group Description	Used-In	Group Number	Page No

STEERING RAIL

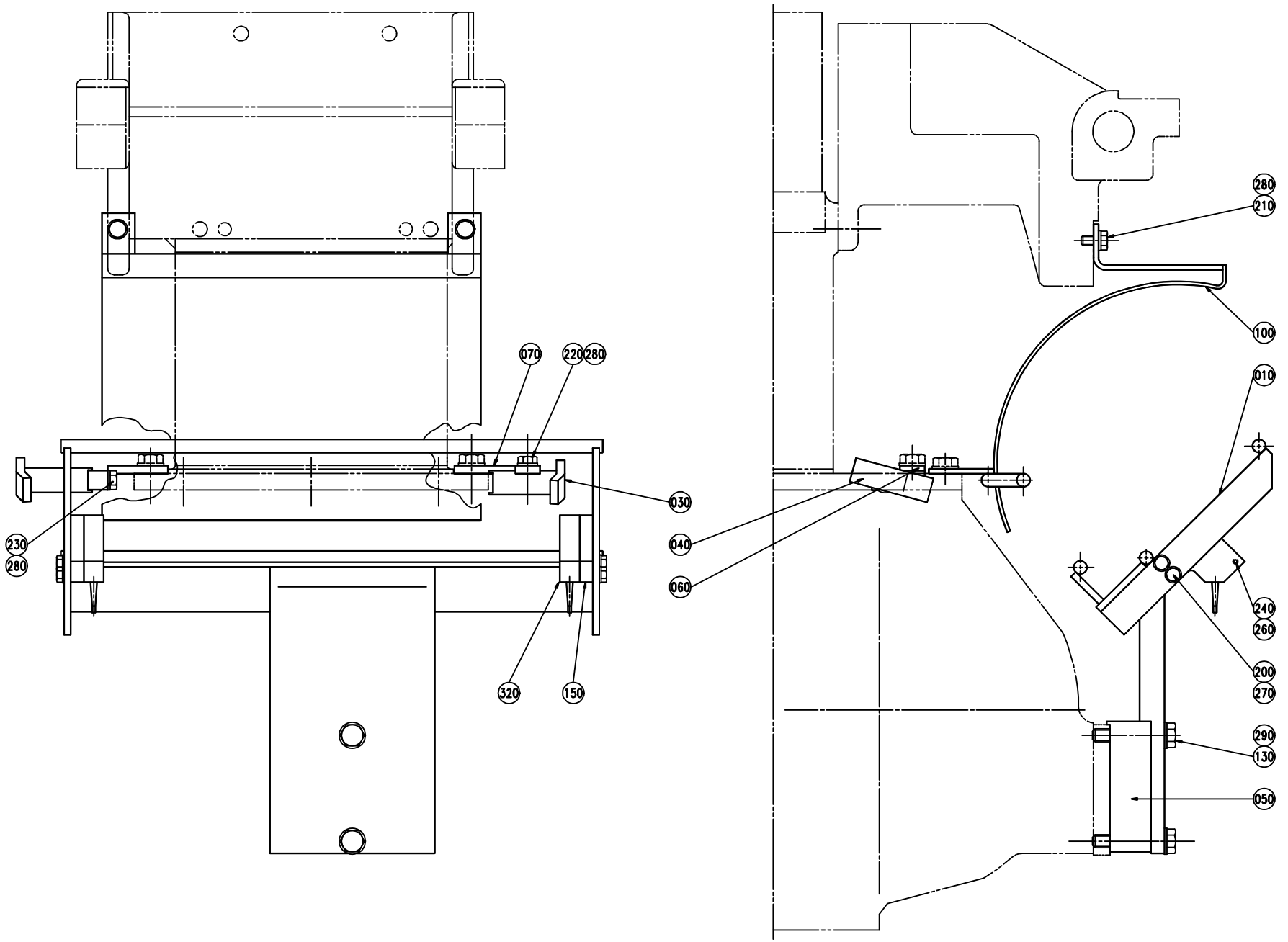

ECM: 72392 - 19990617
Group number: 285853-0200
Assembly Drawing: 285853-3_1_AA

This list covers pages from 5-128 to 5-131

Pos	Part No	UN	Qty	Description	Page No
1000SQ NORMFIN (See drawing on page: 5-128)					
010	574053-0000		1	SLIDE RAIL	
030	574097-0000		1	STEERING	
040	574098-0000		1	STEERING	
060	573488-0000		1	BRACKET	
070	573489-0000		1	BRACKET	
100	574054-0000		1	HEAD PLATE	
130	312105-0451		2	SCREW M6S ISO 4017 M8X20 A480	
220	312105-0368		1	SCREW M6S ISO 4017 M6X16 A480	
230	312105-0371		1	SCREW M6S ISO 4017 M6X22 A480	
280	315105-0153		4	WASHER BRB 6,4X12 RFR	
1000SQ REVFIN (See drawing on page: 5-128)					
010	574053-0000		1	SLIDE RAIL	
030	1143007-0000		1	STEERING	
040	1143006-0000		1	STEERING	
060	1143008-0000		1	BRACKET	
070	1143009-0000		1	BRACKET	
100	574054-0000		1	HEAD PLATE	
130	312105-0451		2	SCREW M6S ISO 4017 M8X20 A480	
220	312105-0368		1	SCREW M6S ISO 4017 M6X16 A480	
230	312105-0371		1	SCREW M6S ISO 4017 M6X22 A480	
280	315105-0153		4	WASHER BRB 6,4X12 RFR	
1136B (See drawing on page: 5-128)					
010	525347-0000		1	SLIDE RAIL	
100	525408-0000		1	HEAD PLATE	
130	312105-0451		2	SCREW M6S ISO 4017 M8X20 A480	
280	315105-0153		2	WASHER BRB 6,4X12 RFR	
0300B (See drawing on page: 5-128)					
010	525356-0000		1	SLIDE RAIL	
100	529478-0000		1	HEAD PLATE	
130	312105-0451		2	SCREW M6S ISO 4017 M8X20 A480	
280	315105-0153		2	WASHER BRB 6,4X12 RFR	
0500B (See drawing on page: 5-128)					
010	525352-0000		1	SLIDE RAIL	
050	525357-0000		1	SPACER	
100	525424-0000		1	HEAD PLATE	
130	312105-0460		2	SCREW M6S ISO 4014 M8X45 A480	
280	315105-0153		2	WASHER BRB 6,4X12 RFR	
0500S (See drawing on page: 5-128)					
010	525353-0000		1	SLIDE RAIL	
100	531312-0000		1	HEAD PLATE	
130	312105-0451		2	SCREW M6S ISO 4017 M8X20 A480	
280	315105-0153		2	WASHER BRB 6,4X12 RFR	
0500SQ NORMFIN (See drawing on page: 5-128)					
010	583446-0000		1	SLIDE RAIL	
050	525357-0000		1	SPACER	
100	1362483-0000		1	HEAD PLATE	
130	312105-0460		2	SCREW M6S ISO 4014 M8X45 A480	
280	315105-0153		2	WASHER BRB 6,4X12 RFR	
0500SQ REVFIN (See drawing on page: 5-130)					
010	1361908-0000		1	SLIDE RAIL	
020	1361916-0000		1	RAIL REV.FIN	
050	525357-0000		1	SPACER	
100	1362483-0000		1	HEAD PLATE	
130	312105-0460		2	SCREW M6S ISO 4014 M8X45 A480	
280	315105-0153		2	WASHER BRB 6,4X12 RFR	
300	312105-0366		2	SCREW M6S ISO 4017 M6X12 A480	
0568B (See drawing on page: 5-128)					
010	525351-0000		1	SLIDE RAIL	
050	525357-0000		1	SPACER	
100	531310-0000		1	HEAD PLATE	
130	312105-0460		2	SCREW M6S ISO 4014 M8X45 A480	
280	315105-0153		2	WASHER BRB 6,4X12 RFR	
0568SQ NORMFIN (See drawing on page: 5-128)					
010	597614-0000		1	SLIDE RAIL	
050	525357-0000		1	SPACER	
100	1362484-0000		1	HEAD PLATE	
130	312105-0460		2	SCREW M6S ISO 4014 M8X45 A480	
280	315105-0153		2	WASHER BRB 6,4X12 RFR	
0568SQ REVFIN (See drawing on page: 5-130)					
010	1362436-0000		1	SLIDE RAIL	
020	1361916-0000		1	RAIL REV.FIN	
050	525357-0000		1	SPACER	
100	1362484-0000		1	HEAD PLATE	
130	312105-0460		2	SCREW M6S ISO 4014 M8X45 A480	
280	315105-0153		2	WASHER BRB 6,4X12 RFR	
300	312105-0366		2	SCREW M6S ISO 4017 M6X12 A480	
1000B HIFIN (See drawing on page: 5-128)					
010	525349-0000		1	SLIDE RAIL	
100	529312-0000		1	HEAD PLATE	
130	312105-0451		2	SCREW M6S ISO 4017 M8X20 A480	
280	315105-0153		2	WASHER BRB 6,4X12 RFR	
1000B LOFIN (See drawing on page: 5-128)					
010	525348-0000		1	SLIDE RAIL	

Machine Type | Group Description | Used-In | Group Number | Page No

STEERING RAIL

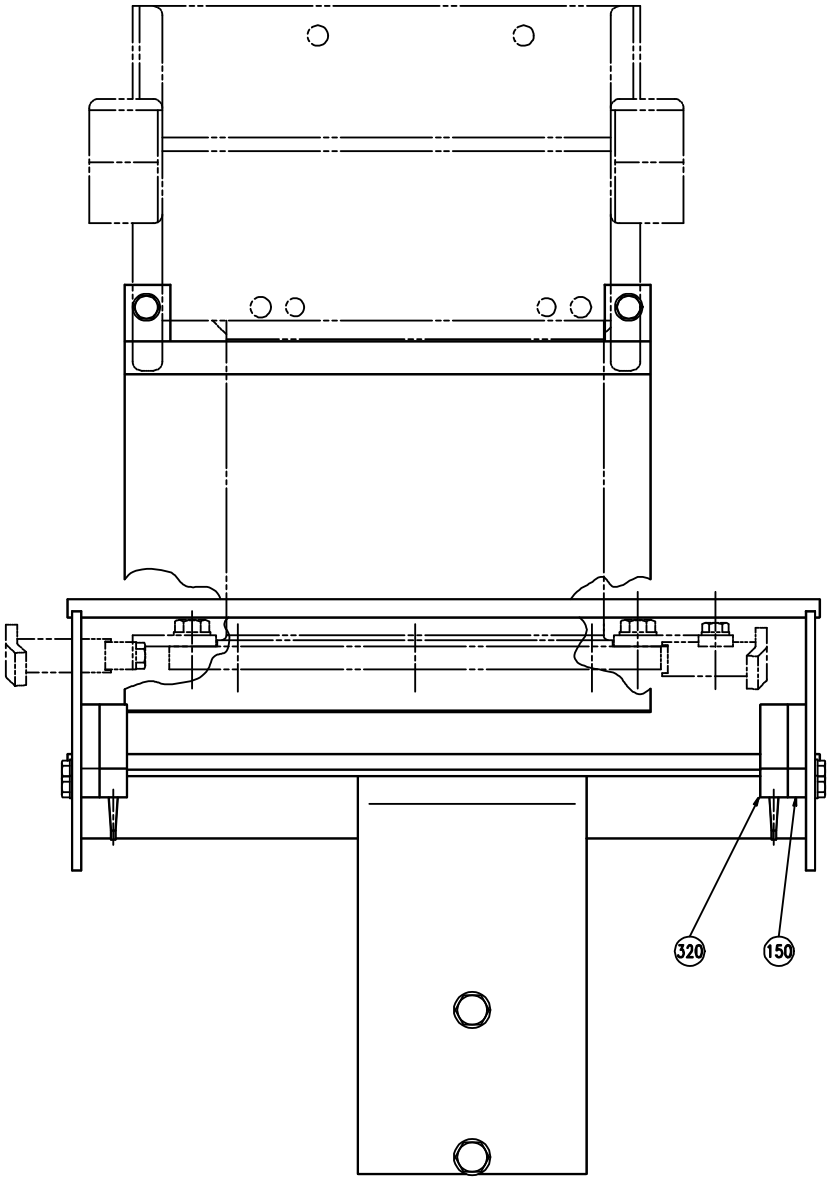

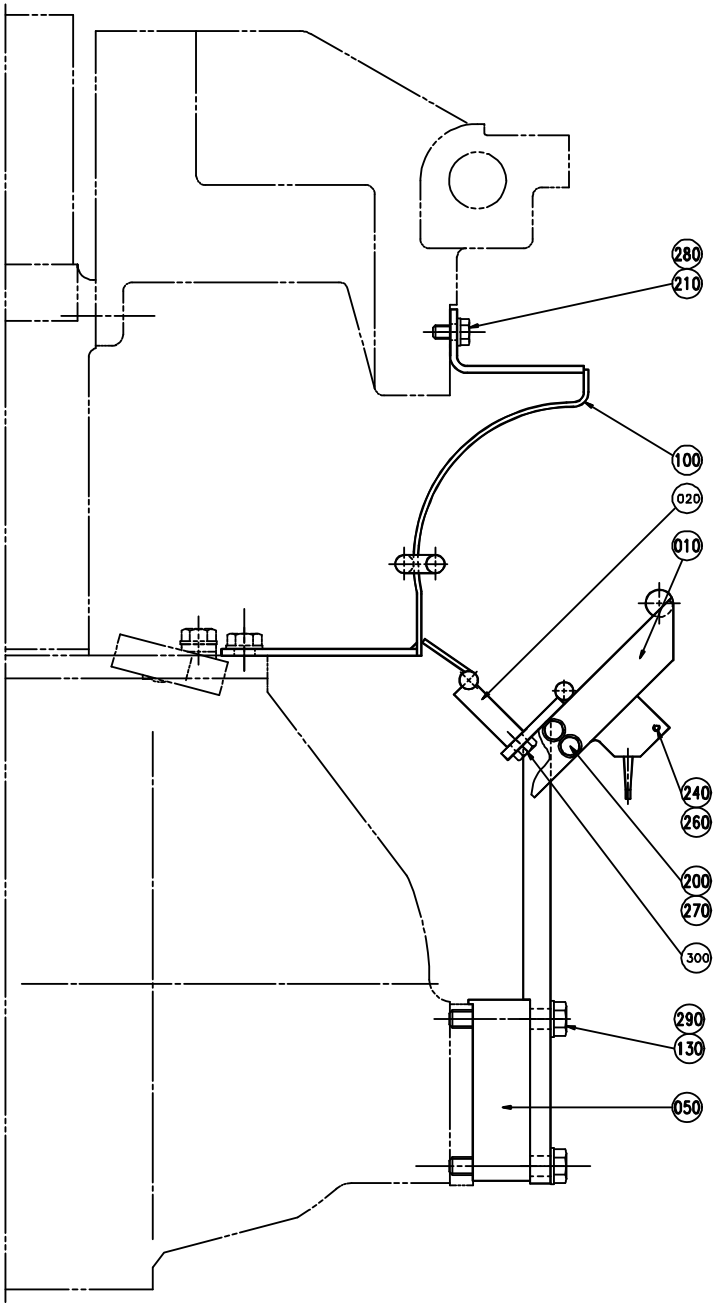

Pos	Part No	UN	Qty	Description	Page No
1000B LOFIN (Cont'd) (See drawing on page: 5-128)					
100	529312-0000		1	HEAD PLATE	
130	312105-0451		2	SCREW M6S ISO 4017 M8X20 A480	
280	315105-0153		2	WASHER BRB 6,4X12 RFR	
1000S (See drawing on page: 5-128)					
010	569127-0000		1	SLIDE RAIL	
030	573486-0000		1	STEERING	
040	573487-0000		1	STEERING	
060	573488-0000		1	BRACKET	
070	573489-0000		1	BRACKET	
100	569128-0000		1	HEAD PLATE	
130	312105-0451		2	SCREW M6S ISO 4017 M8X20 A480	
220	312105-0368		1	SCREW M6S ISO 4017 M6X16 A480	
230	312105-0371		1	SCREW M6S ISO 4017 M6X22 A480	
280	315105-0153		4	WASHER BRB 6,4X12 RFR	
Common Parts					
150	525172-0000		2	SPACER	
200	312105-0328		4	SCREW M6S ISO 4017 M5X14 A480	
210	312105-0366		2	SCREW M6S ISO 4017 M6X12 A480	
240	312125-0230		4	SCREW ISO 1207 M3X20 A4	
260	315105-0124		4	WASHER BRB 3,2X7 RFR	
270	315105-0146		4	WASHER BRB 5,3X10 RFR	
290	315105-0165		2	WASHER BRB 8,4X16 RFR	
320	90044-0104		2	PROX.SWITCH IFM IN 3002(RP 90044-194)	

Pos	Part No	UN	Qty	Description	Page No

PRESSURE DEVICE

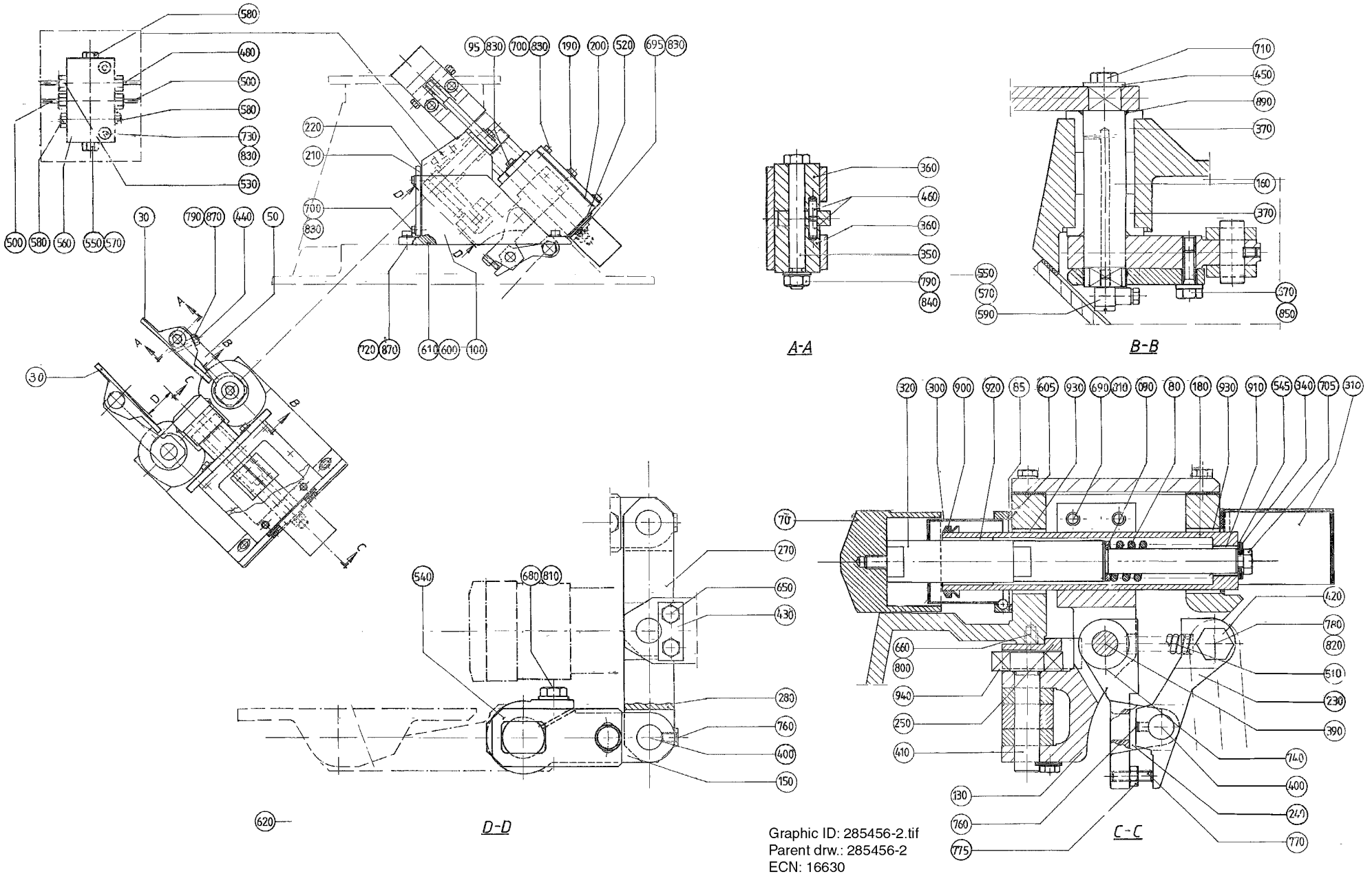

Graphic ID: 285456-2.tif
Parent drw.: 285456-2
ECN: 16630

ECM: 188357 - 20041105
Group number: 285456-0300
Assembly Drawing: 285456-2_1_AA

This list covers pages from 5-132 to 5-135

Pos	Part No	UN	Qty	Description	Page No
0300B					
030	443351-0000		2	FLAP	
050	285449-0000		2	ARM	
070	525101-0002		1	BLOCKING PIECE	
080	268830-0000		1	COMPRESSION SPRING	
095	312105-0370		2	SCREW M6S ISO 4017 M6X20 A480	
440	262350-0001		4	PIN	
0500B					
030	442886-0000		2	FLAP	
050	262907-0000		2	ARM	
070	525100-0000		1	BLOCKING PIECE	
080	525379-0000		1	COMPRESSION SPRING	
085	297496-0000		1	LACE	
095	312105-0372		2	SCREW M6S ISO 4017 M6X25 A480	
440	262350-0001		4	PIN	
0500S					
030	443038-0000		2	FLAP	
050	262906-0000		2	ARM	
070	525101-0001		1	BLOCKING PIECE	
080	268830-0000		1	COMPRESSION SPRING	
095	312105-0370		2	SCREW M6S ISO 4017 M6X20 A480	
440	525125-0000		4	PIN	
0500SQ					
030	583451-0000		2	FLAP	
050	285449-0000		2	ARM	
070	574036-0000		1	BLOCKING PIECE	
080	268830-0000		1	COMPRESSION SPRING	
085	297496-0000		1	LACE	
095	312105-0372		2	SCREW M6S ISO 4017 M6X25 A480	
440	262350-0001		4	PIN	
0568B					
030	442885-0000		2	FLAP	
050	262907-0000		2	ARM	
070	525100-0000		1	BLOCKING PIECE	
080	525379-0000		1	COMPRESSION SPRING	
085	297496-0000		1	LACE	
095	312105-0372		2	SCREW M6S ISO 4017 M6X25 A480	
440	262350-0001		4	PIN	
0568SQ					
030	597616-0000		2	FLAP	
050	285449-0000		2	ARM	
070	574036-0000		1	BLOCKING PIECE	
080	268830-0000		1	COMPRESSION SPRING	
085	297496-0000		1	LACE	
095	312105-0372		2	SCREW M6S ISO 4017 M6X25 A480	
440	262350-0001		4	PIN	
1000B					
030	443182-0000		2	FLAP	
050	262906-0000		2	ARM	
070	525100-0000		1	BLOCKING PIECE	
080	525379-0000		1	COMPRESSION SPRING	
085	297496-0000		1	LACE	
095	312105-0372		2	SCREW M6S ISO 4017 M6X25 A480	
440	262350-0001		4	PIN	
1000S					
030	569111-0000		2	FLAP	
050	262906-0000		2	ARM	
070	569112-0000		1	BLOCKING PIECE	
080	268830-0000		1	COMPRESSION SPRING	
085	297496-0000		1	LACE	
095	312105-0372		2	SCREW M6S ISO 4017 M6X25 A480	
440	262350-0001		4	PIN	
1000SQ					
030	574035-0000		2	FLAP	
050	262906-0000		2	ARM	
070	574036-0000		1	BLOCKING PIECE	
080	268830-0000		1	COMPRESSION SPRING	
085	297496-0000		1	LACE	
095	312105-0372		2	SCREW M6S ISO 4017 M6X25 A480	
440	262350-0001		4	PIN	
1136B					
030	548406-0000		2	FLAP	
050	262906-0000		2	ARM	
070	525100-0000		1	BLOCKING PIECE	
080	525379-0000		1	COMPRESSION SPRING	
085	297496-0000		1	LACE	
095	312105-0372		2	SCREW M6S ISO 4017 M6X25 A480	
440	262350-0001		4	PIN	
Common Parts					
090	442883-0000		2	SPACING WASHER	
100	525335-0000		1	HOUSE	
130	262234-0000		1	BRACKET	
150	262235-0000		2	ARM	
160	262266-0000		2	SHAFT	

Machine Type | Group Description | Used-In | Group Number | Page No

PRESSURE DEVICE

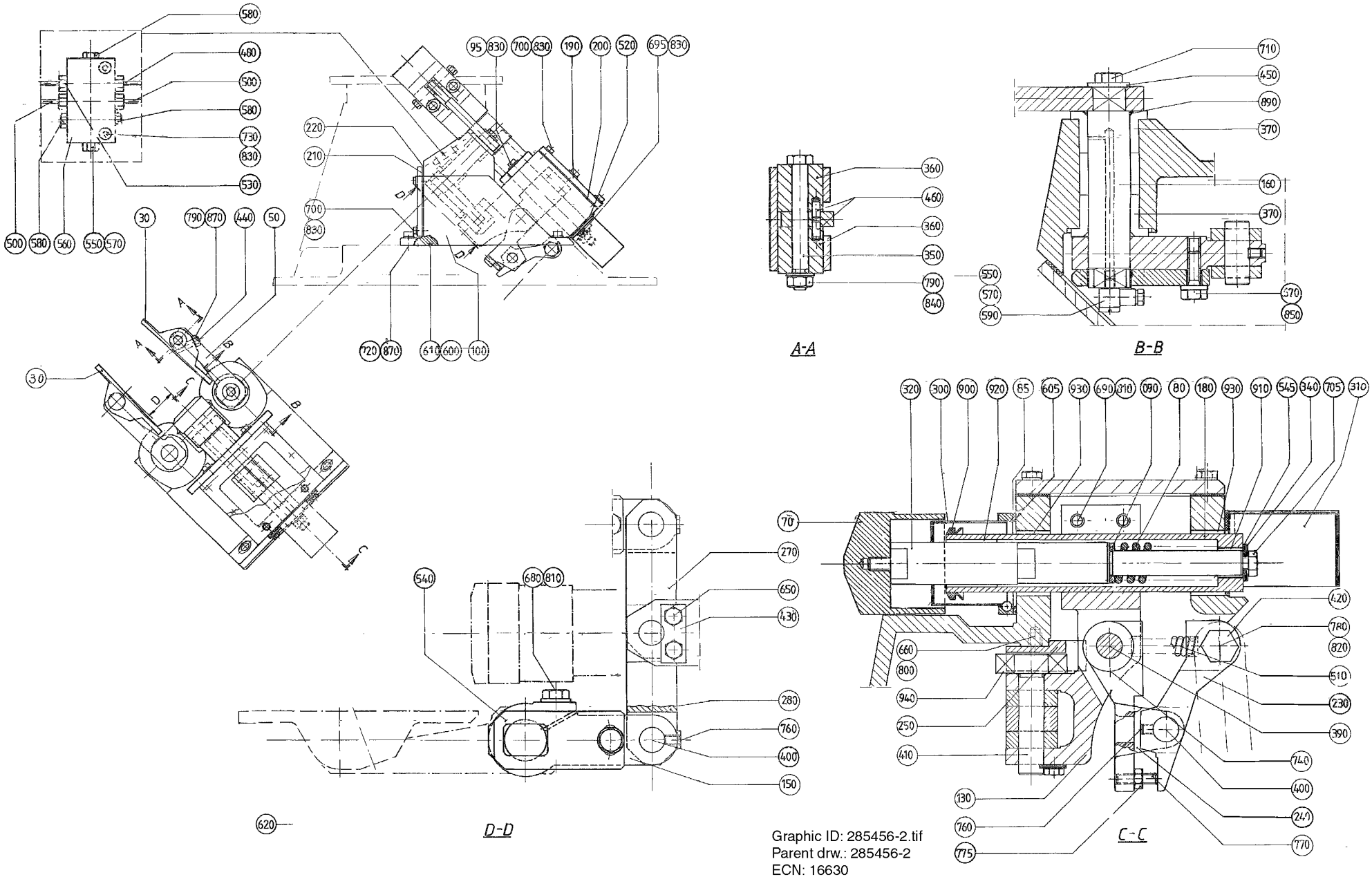

Graphic ID: 285456-2.tif
Parent drw.: 285456-2
ECN: 16630

ECM: 188357 - 20041105
Group number: 285456-0300
Assembly Drawing: 285456-2_1_AA

This list covers pages from 5-132 to 5-135

Pos	Part No	UN	Qty	Description	Page No
Common Parts (Cont'd)					
180	262309-0000		1	SLEEVE	
190	262313-0000		1	LID	
200	262314-0000		1	RUBBER GASKET	
210	262315-0000		1	LID	
220	262316-0000		1	RUBBER GASKET	
230	262415-0000		1	LINK	
240	262610-0000		1	LINK	
250	262720-0000		1	STEERING	
270	285157-0000		1	LINK	
280	285158-0000		1	LINK	
300	285448-0000		1	PROTECTIVE CASING	
310	442532-0000		1	COVER	
320	442882-0000		1	SPINDLE	
340	28037-0000		1	WASHER	
350	262028-0011		2	FITTING BOLT	
360	525367-0000		4	SLEEVE	
370	262267-0000		4	BUSHING	
390	262322-0000		1	SHAFT	
400	262323-0000		3	SHAFT	
410	262324-0000		1	SHAFT	
420	262325-0000		1	SHAFT	
430	262343-0000		1	SECURING PLATE	
450	276659-0000		2	WASHER	
460	311103-0306		4	PARALLEL PIN ISO 2338 5M6X12 A1	
480	285162-0000		1	LUBRICATING PIPE	
500	285164-0000		2	LUBRICATING PIPE	
510	285970-0000		1	COMPRESSION SPRING	
520	442533-0000		1	RUBBER GASKET	
530	442560-0000		1	LUBR.OIL PIPE	
540	442884-0000		2	LOCK PLATE	
545	566016-0000		1	WASHER	
550	90028-0001		3	CONE 5/32"	
560	90032-0034		1	DISTR. BLOCK & DIST.5/16-24UNF X8	
570	90134-0003		3	BUSHING	
580	90136-0002		3	PLUG 5/16"24	
590	90137-0005		2	BANJO CONN. M6, 5/16-24UNF	
600	90153-0043	KG	1	ADHESIVE, LOCTITE 495 20G	
605	90157-0022	L	1	SEALING COMPOUND, SILICONE	
610	90161-0001	MM	900	O-RING MATERIAL 3 MM	
620	90296-0009	L	1	SILICONE GREASE DOW CORNING 150 GR.	
650	312105-0362		2	SCREW M6S ISO 4017 M6X8 A480	
660	312105-0372		2	SCREW M6S ISO 4017 M6X25 A480	
670	312105-0453		2	SCREW M6S ISO 4017 M8X25 A480	
680	312105-0457		2	SCREW M6S ISO 4014 M8X35 A480	
690	312105-0459		2	SCREW M6S ISO 4014 M8X40 A480	
695	312105-0368		2	SCREW M6S ISO 4017 M6X16 A480	
700	312105-0368		14	SCREW M6S ISO 4017 M6X16 A480	
705	312105-0447		1	SCREW M6S ISO 4017 M8X12 A480	
710	312105-0449		2	SCREW M6S ISO 4017 M8X16 A480	
720	312105-0453		3	SCREW M6S ISO 4017 M8X25 A480	
730	312115-0293		2	SCREW ISO4762 M4X16 A4 80	
740	312318-0287		1	SCREW ISO4029 M4X8 A4	
760	312318-0362		3	SCREW ISO4029 M6X8 A4	
770	312318-0372		1	SCREW ISO4029 M6X25 A4	
775	312605-0316		1	HEXAGON NUT, M6M M6 A280	
780	312605-0322		1	HEXAGON NUT, M6M M12 A280	
790	312605-0318		6	HEXAGON NUT, M6M M8 A280	
800	315105-0153		2	WASHER BRB 6,4X12 RFR	
810	315105-0165		4	WASHER BRB 8,4X16 RFR	
820	315105-0178		1	WASHER BRB 13X24 RFR	
830	315105-0153		20	WASHER BRB 6,4X12 RFR	
840	315105-0165		2	WASHER BRB 8,4X16 RFR	
850	315115-0165		2	WASHER PLAIN, TBRB 8,4/16 H=3	
870	315115-0165		7	WASHER PLAIN, TBRB 8,4/16 H=3	
890	315202-0217		2	O-RING 24,2X3 MM	
900	315220-0175		1	V-RINGS 31X39X10,5 MM V-35S	
910	321120-0122		1	BEARING BUSH W/O FLANGE, 15X17X15 MM	
920	321141-0305		1	BEARING BUSH W/O FLANGE, 25X28X30 MM	
930	321120-0183		2	BEARING BUSH W/O FLANGE, 35X39X20 MM	
940	321306-0104		1	BALL BEARING, 20X42X12 MM	

Machine Type | Group Description | Used-In | Group Number | Page No

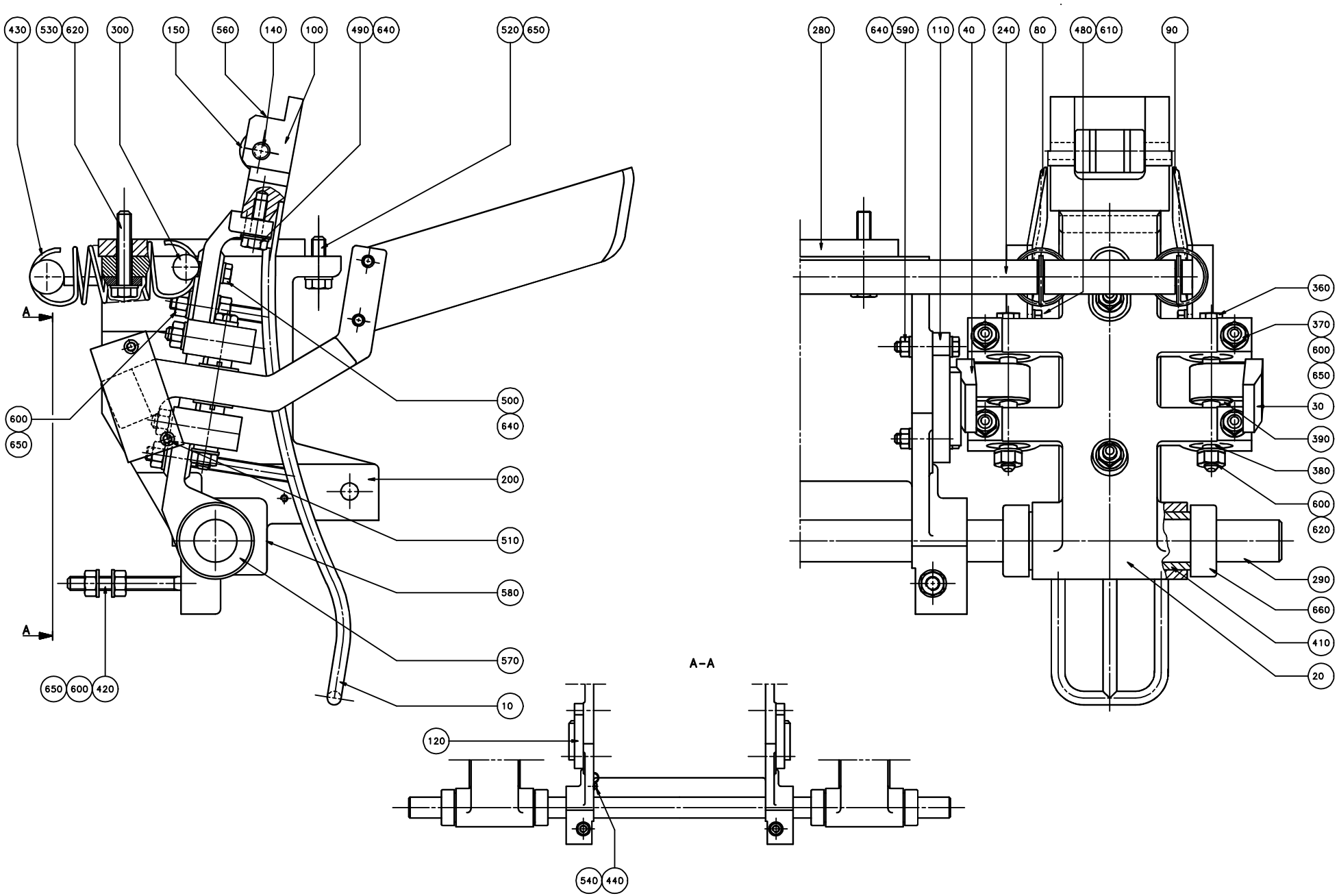
430
530
620
300
150
560
140
100
490
640
520
650
A
600
650
500
640
200
510
580
570
10
650
600
420
280
640
590
110
40
240
80
480
610
90
360
370
600
650
30
390
380
600
620
290
660
410
20
A–A
120
540
440

ECM: 72392 - 19990617
Group number: 285736-0300
Assembly Drawing: 285736-2_1_AB

This list covers pages from 5-136 to 5-143

Pos	Part No	UN	Qty	Description	Page No
1000SQ NORMFIN (See drawing on page: 5-136)					
010	574039-0000		2	RAIL	
020	285723-0000		2	ARM	
030	285660-0000		2	ARM	
040	285661-0000		2	ARM	
080	574040-0000		2	SHEET	
090	574041-0000		2	SHEET	
100	574042-0000		2	PLATE	
140	262427-0008		2	SHAFT	
300	297644-0000		2	SHAFT	
410	285729-0000		2	BUSHING	
600	312605-0318		24	HEXAGON NUT, M6M M8 A280	
610	315105-0153		8	WASHER BRB 6,4X12 RFR	
660	315742-0119		4	RETAINING RING 25 SMS 199 RFR	
1000SQ REVFIN (See drawing on page: 5-138)					
010	574039-0000		2	RAIL	
020	285723-0000		2	ARM	
030	285660-0000		2	ARM	
040	285661-0000		2	ARM	
080	574040-0000		2	SHEET	
090	574041-0000		2	SHEET	
100	574042-0000		2	PLATE	
140	262427-0008		2	SHAFT	
150	443487-0000		2	ROLL	
	90242-0054		*2*	*O-RING 20X3 MM*	
160	1255161-0000		4	ARM	
170	1255162-0000		2	ROCKER ARM	
180	1255163-0000		2	ROCKER ARM	
185	1255160-0000		4	THREADED INSERT	
190	1143015-0000		4	BUSHING	
300	1143016-0000		2	AXLE PIN	
410	285729-0000		2	BUSHING	
600	312605-0318		32	HEXAGON NUT, M6M M8 A280	
605	312902-0318		4	NUT HEX. LEFT THREAD, M8 A280	
610	315105-0153		12	WASHER BRB 6,4X12 RFR	
615	1143223-0000		4	WASHER	
616	315105-0146		4	WASHER BRB 5,3X10 RFR	
617	312105-0323		4	SCREW M6S ISO 4017 M5X8 A480	
660	315742-0119		4	RETAINING RING 25 SMS 199 RFR	
670	312105-0370		4	SCREW M6S ISO 4017 M6X20 A480	
680	312105-0362		4	SCREW M6S ISO 4017 M6X8 A480	
690	90115-0139		8	ROD END, ID=8 MM, M8X1,25	

Pos	Part No	UN	Qty	Description	Page No
1136B (See drawing on page: 5-136)					
010	262970-0000		2	RAIL	
020	285655-0000		2	ARM	
030	285656-0000		2	ARM	
040	285657-0000		2	ARM	
080	543701-0000		2	SHEET	
090	543702-0000		2	SHEET	
100	525211-0000		2	PLATE	
140	262427-0001		2	SHAFT	
150	443487-0000		2	ROLL	
	90242-0054		*2*	*O-RING 20X3 MM*	
300	297644-0000		2	SHAFT	
410	285729-0000		2	BUSHING	
600	312605-0318		24	HEXAGON NUT, M6M M8 A280	
610	315105-0153		8	WASHER BRB 6,4X12 RFR	
660	315742-0119		4	RETAINING RING 25 SMS 199 RFR	
0300B (See drawing on page: 5-136)					
010	285724-0002		2	RAIL	
020	285723-0000		2	ARM	
030	285660-0000		2	ARM	
040	285661-0000		2	ARM	
080	525068-0000		2	SHEET	
090	525069-0000		2	SHEET	
100	525234-0002		2	PLATE	
140	262427-0002		2	SHAFT	
150	443488-0000		2	ROLL	
	90242-0054		*2*	*O-RING 20X3 MM*	
300	297644-0000		2	SHAFT	
410	285729-0000		2	BUSHING	
600	312605-0318		24	HEXAGON NUT, M6M M8 A280	
610	315105-0153		8	WASHER BRB 6,4X12 RFR	
660	315742-0119		4	RETAINING RING 25 SMS 199 RFR	
0500B (See drawing on page: 5-136)					
010	262970-0000		2	RAIL	
020	285655-0000		2	ARM	
030	285656-0000		2	ARM	
040	285657-0000		2	ARM	
080	525066-0000		2	SHEET	
090	525067-0000		2	SHEET	
100	525429-0000		2	PLATE	
140	262427-0001		2	SHAFT	
150	443487-0000		2	ROLL	

Machine Type | Group Description | Used-In | Group Number | Page No

PULL-DOWN DEVICE

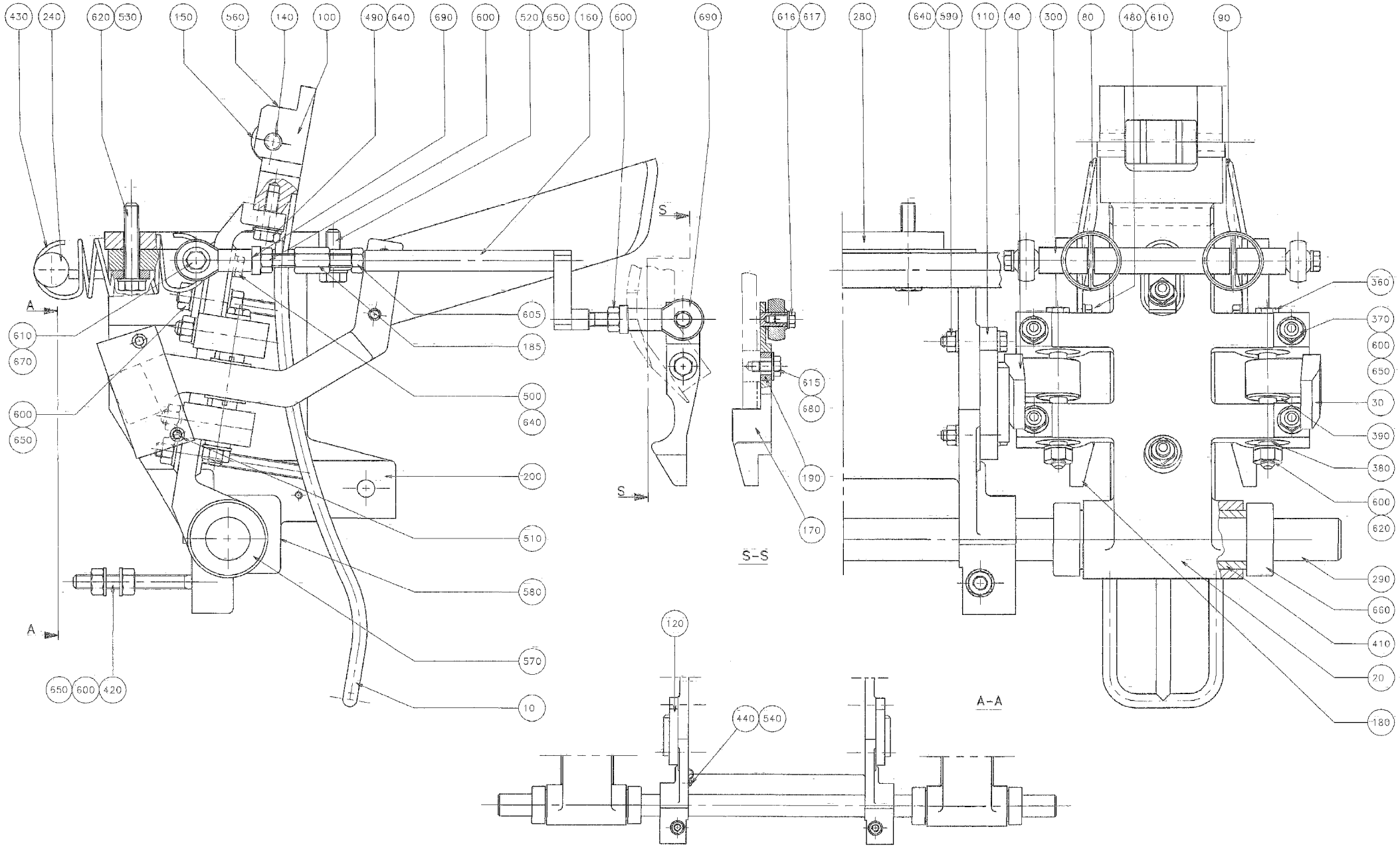

Pos	Part No	UN	Qty	Description	Page No
0500B (Cont'd) (See drawing on page: 5-136)					
150	443487-0000		2	ROLL	
	90242-0054		*2*	*O-RING 20X3 MM*	
300	297644-0000		2	SHAFT	
410	285729-0000		2	BUSHING	
600	312605-0318		24	HEXAGON NUT, M6M M8 A280	
610	315105-0153		8	WASHER BRB 6,4X12 RFR	
660	315742-0119		4	RETAINING RING 25 SMS 199 RFR	
0500S (See drawing on page: 5-136)					
010	285712-0000		2	RAIL	
020	285723-0000		2	ARM	
030	285656-0000		2	ARM	
040	285657-0000		2	ARM	
080	443023-0000		2	SHEET	
090	443024-0000		2	SHEET	
100	525212-0000		2	PLATE	
140	262427-0005		2	SHAFT	
150	443487-0000		2	ROLL	
	90242-0054		*2*	*O-RING 20X3 MM*	
300	297644-0000		2	SHAFT	
410	285729-0000		2	BUSHING	
600	312605-0318		24	HEXAGON NUT, M6M M8 A280	
610	315105-0153		8	WASHER BRB 6,4X12 RFR	
660	315742-0119		4	RETAINING RING 25 SMS 199 RFR	
0500SQ NORMFIN (See drawing on page: 5-136)					
010	574039-0000		2	RAIL	
020	285723-0000		2	ARM	
030	285660-0000		2	ARM	
040	285661-0000		2	ARM	
080	583447-0000		2	SHEET	
090	583455-0000		2	SHEET	
100	574042-0000		2	PLATE	
140	262427-0008		2	SHAFT	
150	443487-0000		2	ROLL	
	90242-0054		*2*	*O-RING 20X3 MM*	
300	297644-0000		2	SHAFT	
410	285729-0000		2	BUSHING	
600	312605-0318		24	HEXAGON NUT, M6M M8 A280	
610	315105-0153		8	WASHER BRB 6,4X12 RFR	
660	315742-0119		4	RETAINING RING 25 SMS 199 RFR	
0500SQ REVFIN (See drawing on pages: 5-140, 5-142)					
010	574039-0000		2	RAIL	
020	285723-0000		2	ARM	
030	285660-0000		2	ARM	
040	285661-0000		2	ARM	
050	1362485-0000		1	ARM	
060	1362486-0000		1	PUSHER	
070	1362487-0000		1	HOLDER	
080	583447-0000		2	SHEET	
090	583455-0000		2	SHEET	
100	574042-0000		2	PLATE	
130	751143-0000		1	CYLINDER BRACKET	
140	262427-0008		2	SHAFT	
150	443487-0000		2	ROLL	
	90242-0054		*2*	*O-RING 20X3 MM*	
300	297644-0000		2	SHAFT	
410	285729-0000		3	BUSHING	
600	312605-0318		26	HEXAGON NUT, M6M M8 A280	
603	312625-0316		1	HEXAGON THIN NUT, EN 24035 ML6M M6 A4	
610	315105-0153		8	WASHER BRB 6,4X12 RFR	
630	312105-0451		2	SCREW M6S ISO 4017 M8X20 A480	
660	315742-0119		6	RETAINING RING 25 SMS 199 RFR	
693	90239-0828		1	DOUBLE ACTING, MINI-ISO, CYL.25-25	
694	90239-0516		1	ROD END, CLEVIS WITH AXLE M10X1,25	
695	90347-0034		1	VIBRATION DAMPER	
696	90240-0088		1	BEARING BUSHING W/O FL, 10X12X10 MM	
0568B (See drawing on page: 5-136)					
010	262970-0000		2	RAIL	
020	285655-0000		2	ARM	
030	285656-0000		2	ARM	
040	285657-0000		2	ARM	
080	442909-0001		2	SHEET	
090	442910-0001		2	SHEET	
100	525429-0000		2	PLATE	
140	262427-0001		2	SHAFT	
150	443487-0000		2	ROLL	
	90242-0054		*2*	*O-RING 20X3 MM*	
300	297644-0000		2	SHAFT	
410	285729-0000		2	BUSHING	
600	312605-0318		24	HEXAGON NUT, M6M M8 A280	
610	315105-0153		8	WASHER BRB 6,4X12 RFR	
660	315742-0119		4	RETAINING RING 25 SMS 199 RFR	
0568SQ NORMFIN (See drawing on page: 5-136)					
010	574039-0000		2	RAIL	
020	285723-0000		2	ARM	
030	285660-0000		2	ARM	
040	285661-0000		2	ARM	
050	1362485-0000		1	ARM	
060	1362486-0000		1	PUSHER	
070	1362487-0000		1	HOLDER	
080	583447-0000		2	SHEET	
090	583455-0000		2	SHEET	
100	574042-0000		2	PLATE	
130	751143-0000		1	CYLINDER BRACKET	
140	262427-0008		2	SHAFT	
150	443487-0000		2	ROLL	
	90242-0054		*2*	*O-RING 20X3 MM*	
300	297644-0000		2	SHAFT	
410	285729-0000		3	BUSHING	
600	312605-0318		26	HEXAGON NUT, M6M M8 A280	
603	312625-0316		1	HEXAGON THIN NUT, EN 24035 ML6M M6 A4	
610	315105-0153		8	WASHER BRB 6,4X12 RFR	
630	312105-0451		2	SCREW M6S ISO 4017 M8X20 A480	
660	315742-0119		6	RETAINING RING 25 SMS 199 RFR	
693	90239-0828		1	DOUBLE ACTING, MINI-ISO, CYL.25-25	
694	90239-0516		1	ROD END, CLEVIS WITH AXLE M10X1,25	
695	90347-0034		1	VIBRATION DAMPER	
696	90240-0088		1	BEARING BUSHING W/O FL, 10X12X10 MM	

PULL-DOWN DEVICE

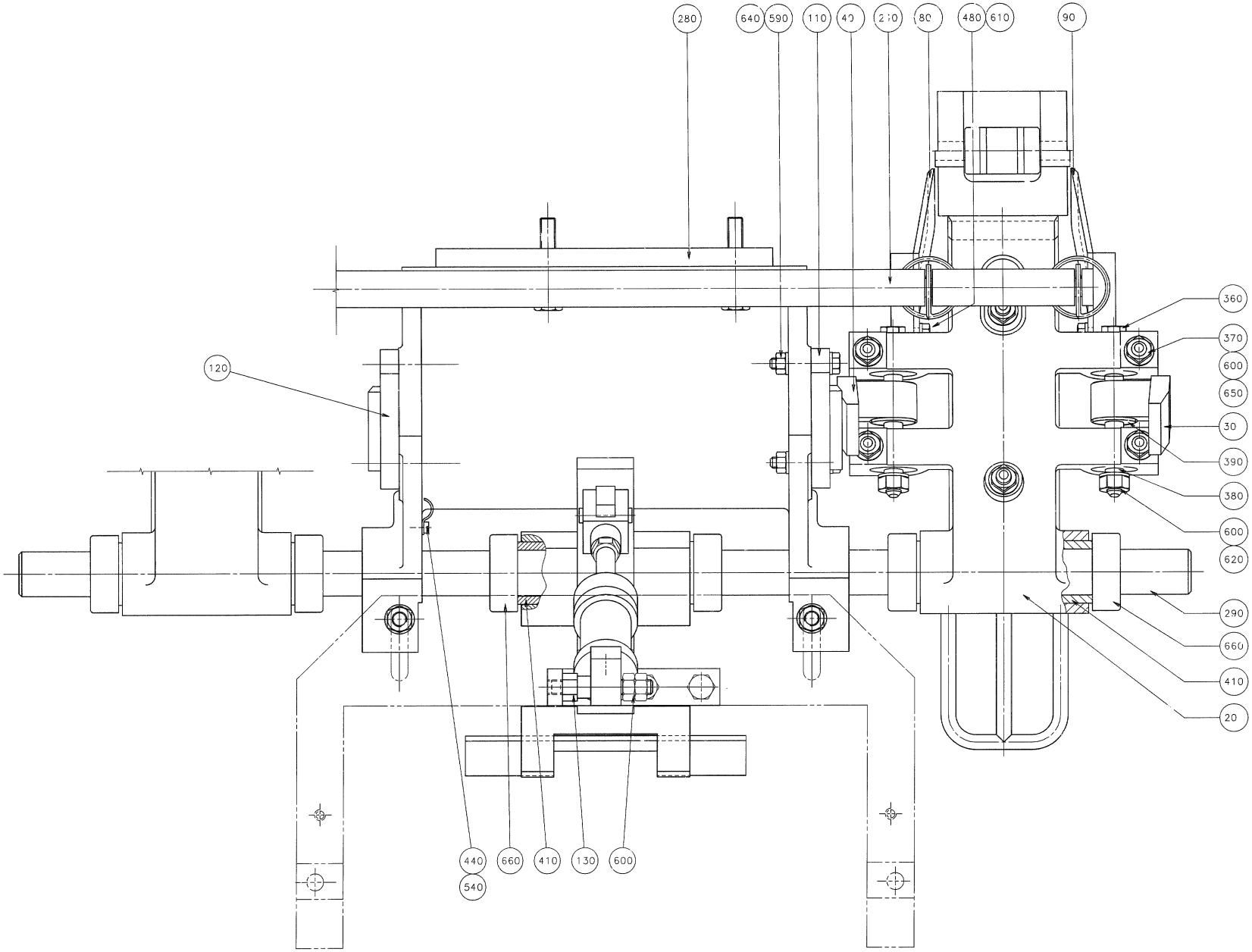

Pos	Part No	UN	Qty	Description	Page No
0568SQ NORMFIN (Cont'd) (See drawing on page: 5-136)					
040	285661-0000		2	ARM	
080	597618-0000		2	SHEET	
090	597617-0000		2	SHEET	
100	574042-0000		2	PLATE	
140	262427-0008		2	SHAFT	
150	443487-0000		2	ROLL	
	90242-0054		*2*	*O-RING 20X3 MM*	
300	297644-0000		2	SHAFT	
410	285729-0000		2	BUSHING	
600	312605-0318		24	HEXAGON NUT, M6M M8 A280	
610	315105-0153		8	WASHER BRB 6,4X12 RFR	
660	315742-0119		4	RETAINING RING 25 SMS 199 RFR	
0568SQ REVFIN (See drawing on pages: 5-140, 5-142)					
010	574039-0000		2	RAIL	
020	285723-0000		2	ARM	
030	285660-0000		2	ARM	
040	285661-0000		2	ARM	
050	1362485-0000		1	ARM	
060	1362486-0000		1	PUSHER	
070	1362487-0000		1	HOLDER	
080	597618-0000		2	SHEET	
090	597617-0000		2	SHEET	
100	574042-0000		2	PLATE	
130	751143-0000		1	CYLINDER BRACKET	
140	262427-0008		2	SHAFT	
150	443487-0000		2	ROLL	
	90242-0054		*2*	*O-RING 20X3 MM*	
300	297644-0000		2	SHAFT	
410	285729-0000		3	BUSHING	
600	312605-0318		26	HEXAGON NUT, M6M M8 A280	
603	312625-0316		1	HEXAGON THIN NUT, EN 24035 ML6M M6 A4	
610	315105-0153		8	WASHER BRB 6,4X12 RFR	
630	312105-0451		2	SCREW M6S ISO 4017 M8X20 A480	
660	315742-0119		6	RETAINING RING 25 SMS 199 RFR	
693	90239-0828		1	DOUBLE ACTING, MINI-ISO, CYL.25-25	
694	90239-0516		1	ROD END, CLEVIS WITH AXLE M10X1,25	
695	90347-0034		1	VIBRATION DAMPER	
696	90240-0088		1	BEARING BUSHING W/O FL, 10X12X10 MM	
1000B HIFIN (See drawing on page: 5-136)					
010	262970-0000		2	RAIL	
020	285655-0000		2	ARM	
030	285656-0000		2	ARM	
040	285657-0000		2	ARM	
080	443021-0000		2	SHEET	
090	443022-0000		2	SHEET	
100	443348-0000		2	PLATE	
140	262427-0001		2	SHAFT	
150	443487-0000		2	ROLL	
	90242-0054		*2*	*O-RING 20X3 MM*	
300	297644-0000		2	SHAFT	
410	285729-0000		2	BUSHING	
600	312605-0318		24	HEXAGON NUT, M6M M8 A280	
610	315105-0153		8	WASHER BRB 6,4X12 RFR	
660	315742-0119		4	RETAINING RING 25 SMS 199 RFR	
1000B LOFIN (See drawing on page: 5-136)					
010	262970-0000		2	RAIL	
020	285655-0000		2	ARM	
030	285656-0000		2	ARM	
040	285657-0000		2	ARM	
080	443021-0000		2	SHEET	
090	443022-0000		2	SHEET	
100	525211-0000		2	PLATE	
140	262427-0001		2	SHAFT	
150	443487-0000		2	ROLL	
	90242-0054		*2*	*O-RING 20X3 MM*	
300	297644-0000		2	SHAFT	
410	285729-0000		2	BUSHING	
600	312605-0318		24	HEXAGON NUT, M6M M8 A280	
610	315105-0153		8	WASHER BRB 6,4X12 RFR	
660	315742-0119		4	RETAINING RING 25 SMS 199 RFR	
1000S (See drawing on page: 5-136)					
010	544290-0000		2	RAIL	
020	285723-0000		2	ARM	
030	285656-0000		2	ARM	
040	285657-0000		2	ARM	
080	569115-0000		2	SHEET	
090	569116-0000		2	SHEET	
100	569114-0000		2	PLATE	
140	262427-0007		2	SHAFT	
150	443487-0000		2	ROLL	
	90242-0054		*2*	*O-RING 20X3 MM*	
300	297644-0000		2	SHAFT	
410	285729-0000		2	BUSHING	

PULL-DOWN DEVICE

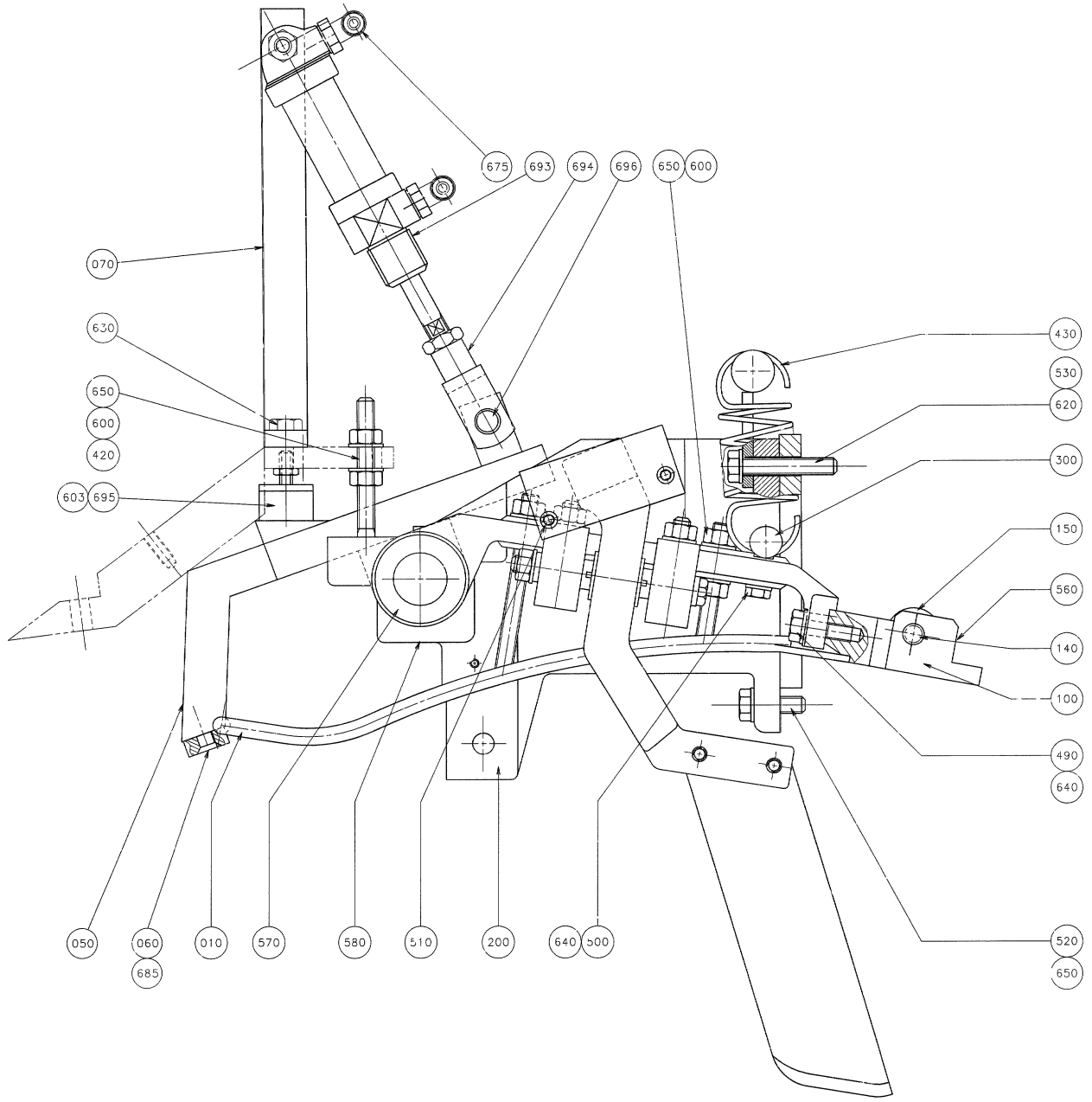

Pos	Part No	UN	Qty	Description	Page No
1000S (Cont'd) (See drawing on page: 5-136)					
600	312605-0318		24	HEXAGON NUT, M6M M8 A280	
610	315105-0153		8	WASHER BRB 6,4X12 RFR	
660	315742-0119		4	RETAINING RING 25 SMS 199 RFR	
Common Parts					
110	442564-0000		1	CURVE	
120	442565-0000		1	CURVE	
200	262924-0000		1	CANTILEVER	
240	297643-0000		1	BRACKET	
280	285444-0000		1	SPACER	
290	285664-0000		1	SHAFT	
360	262028-0002		4	FITTING BOLT	
370	262179-0001		8	PIN	
380	262183-0000		8	BUSHING	
390	276664-0000		8	WASHER	
420	443313-0000		2	STUD SCREW	
430	297567-0000		4	TENSION SPRING	
440	90165-0057		1	PIPE CLIP FOR TUBE D=6 MM	
480	312105-0366		8	SCREW M6S ISO 4017 M6X12 A480	
490	312105-0372		4	SCREW M6S ISO 4017 M6X25 A480	
500	312105-0374		2	SCREW M6S ISO 4014 M6X30 A480	
510	312105-0376		4	SCREW M6S ISO 4014 M6X35 A480	
520	312105-0453		2	SCREW M6S ISO 4017 M8X25 A480	
530	312105-0460		2	SCREW M6S ISO 4014 M8X45 A480	
540	312125-0291		1	SCREW ISO 1207 M4X12 A4	
560	312318-0370		2	SCREW ISO4029 M6X20 A4	
570	312318-0443		4	SCREW ISO4029 M8X8 A4	
580	312318-0449		2	SCREW ISO4029 M8X16 A4	
590	312605-0316		4	HEXAGON NUT, M6M M6 A280	
620	315105-0165		6	WASHER BRB 8,4X16 RFR	
640	315115-0153		14	WASHER PLAIN, TBRB 6,4/12 H=3	
650	315115-0165		22	WASHER PLAIN, TBRB 8,4/16 H=3	
675	342732-0102		2	ELBOW PIPE JOINT, EXT.THREAD, D=6MM-G1/8	
685	312155-0368		2	SCREW DIN 7991 MF6S M6X16 A4 70	

Pos	Part No	UN	Qty	Description	Page No

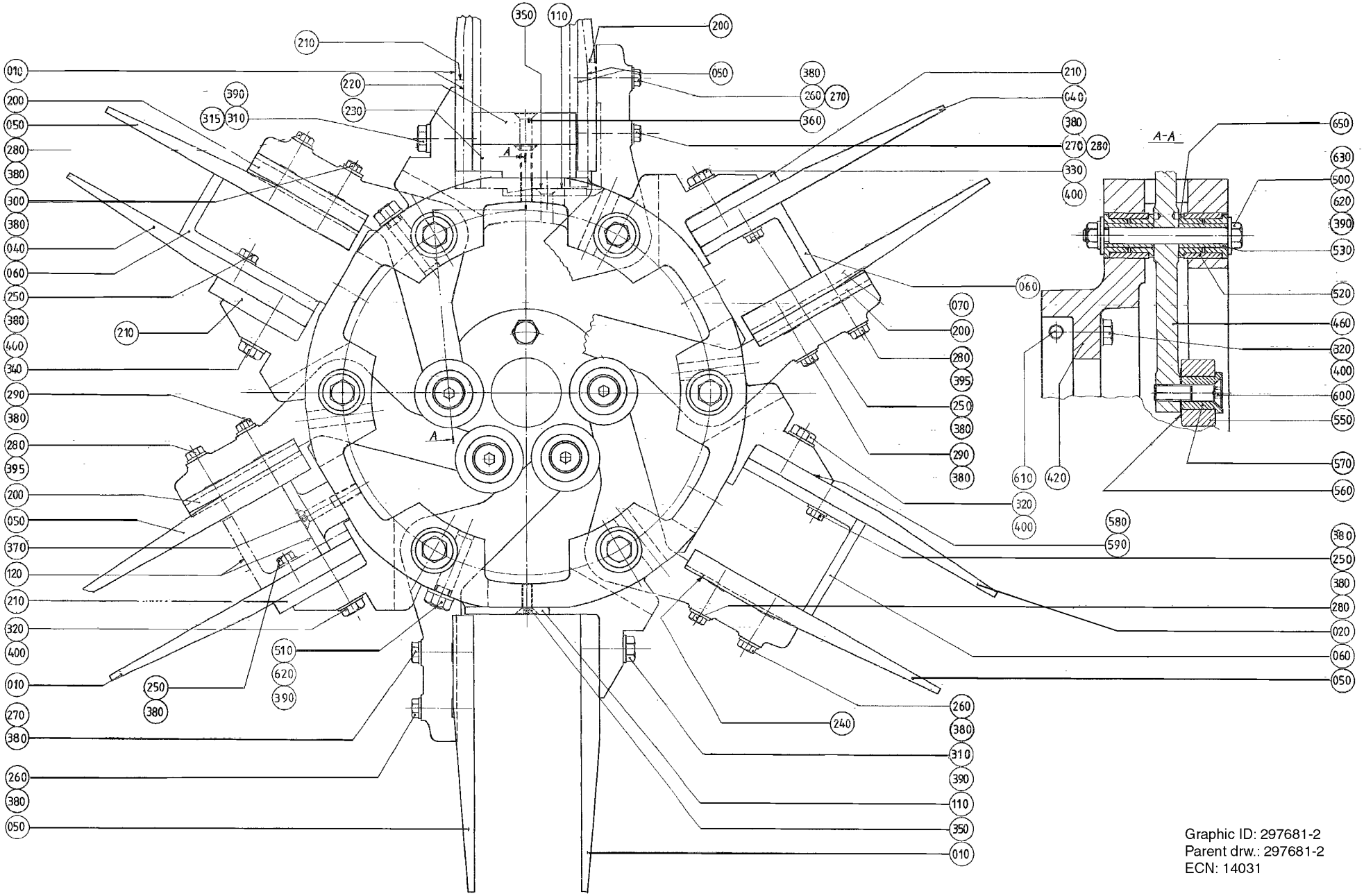

Graphic ID: 297681-2
Parent drw.: 297681-2
ECN: 14031

ECM: 72197 - 19990215
Group number: 297681-0300
Assembly Drawing: 297681-2_1_AA

This list covers pages from 5-144 to 5-149

Pos	Part No	UN	Qty	Description	Page No
1136B (See drawing on page: 5-144)					
010	525451-0000		6	FLAP	
050	550149-0000		6	FLAP	
110	550235-0000		6	BOTTOM	
260	312105-0374		6	SCREW M6S ISO 4014 M6X30 A480	
270	312105-0376		6	SCREW M6S ISO 4014 M6X35 A480	
310	312105-0453		6	SCREW M6S ISO 4017 M8X25 A480	
320	312105-0457		3	SCREW M6S ISO 4014 M8X35 A480	
350	312155-0368		6	SCREW DIN 7991 MF6S M6X16 A4 70	
380	315105-0153		12	WASHER BRB 6,4X12 RFR	
390	315105-0165		30	WASHER BRB 8,4X16 RFR	
400	315115-0165		3	WASHER PLAIN, TBRB 8,4/16 H=3	
420	525446-0000		1	HUB	
460	565967-0000		6	ARM	
510	262179-0001		12	PIN	
520	525329-0000		12	SLEEVE	
610	312109-0459		2	SCREW M6S ISO 4017 M8X40 A480	
620	312605-0318		18	HEXAGON NUT, M6M M8 A280	
650	321111-0185		24	FLANGE BUSHING, 14X20X14 MM	
0300B (See drawing on page: 5-144)					
040	525459-0000		6	FLAP	
060	525373-0000		6	BOTTOM	
070	297646-0000		6	FLAP	
200	285316-0002		6	SPACER PIECE	
210	525461-0000		6	SPACER PIECE	
250	312105-0368		6	SCREW M6S ISO 4017 M6X16 A480	
280	312105-0378		6	SCREW M6S ISO 4014 M6X40 A480	
290	312105-0379		6	SCREW M6S ISO 4014 M6X45 A480	
320	312105-0457		3	SCREW M6S ISO 4014 M8X35 A480	
330	312105-0459		6	SCREW M6S ISO 4014 M8X40 A480	
380	315105-0153		12	WASHER BRB 6,4X12 RFR	
390	315105-0165		24	WASHER BRB 8,4X16 RFR	
395	315115-0153		6	WASHER PLAIN, TBRB 6,4/12 H=3	
400	315115-0165		9	WASHER PLAIN, TBRB 8,4/16 H=3	
420	525450-0000		1	HUB	
460	565967-0000		6	ARM	
510	262179-0001		12	PIN	
520	525329-0000		12	SLEEVE	
610	312109-0459		2	SCREW M6S ISO 4017 M8X40 A480	
620	312605-0318		18	HEXAGON NUT, M6M M8 A280	
650	321111-0185		24	FLANGE BUSHING, 14X20X14 MM	
0500B (See drawing on page: 5-144)					
020	525455-0000		6	FLAP	
050	285310-0001		6	FLAP	
	312910-0118		*1*	*THREADED INSERT, FREE RUNNING M6X1,5D*	
060	525369-0000		6	BOTTOM	
240	442981-0000		6	SHIM	
250	312105-0368		6	SCREW M6S ISO 4017 M6X16 A480	
260	312105-0374		6	SCREW M6S ISO 4014 M6X30 A480	
280	312105-0378		6	SCREW M6S ISO 4014 M6X40 A480	
320	312105-0457		9	SCREW M6S ISO 4014 M8X35 A480	
380	315105-0153		18	WASHER BRB 6,4X12 RFR	
390	315105-0165		24	WASHER BRB 8,4X16 RFR	
400	315115-0165		9	WASHER PLAIN, TBRB 8,4/16 H=3	
420	525450-0000		1	HUB	
460	565967-0000		6	ARM	
510	262179-0001		12	PIN	
520	525329-0000		12	SLEEVE	
610	312109-0459		2	SCREW M6S ISO 4017 M8X40 A480	
620	312605-0318		18	HEXAGON NUT, M6M M8 A280	
650	321111-0185		24	FLANGE BUSHING, 14X20X14 MM	
0500S (See drawing on page: 5-144)					
010	525456-0000		6	FLAP	
050	285310-0002		6	FLAP	
	312910-0118		*1*	*THREADED INSERT, FREE RUNNING M6X1,5D*	
120	525370-0000		6	BOTTOM	
200	285316-0002		6	SPACER PIECE	
210	525461-0000		6	SPACER PIECE	
280	312105-0378		6	SCREW M6S ISO 4014 M6X40 A480	
290	312105-0379		6	SCREW M6S ISO 4014 M6X45 A480	
320	312105-0457		9	SCREW M6S ISO 4014 M8X35 A480	
370	312155-0378		6	SCREW DIN 7991 MF6S M6X40 A4 70	
380	315105-0153		12	WASHER BRB 6,4X12 RFR	
390	315105-0165		24	WASHER BRB 8,4X16 RFR	
395	315115-0153		6	WASHER PLAIN, TBRB 6,4/12 H=3	
400	315115-0165		9	WASHER PLAIN, TBRB 8,4/16 H=3	
420	525450-0000		1	HUB	
460	565967-0000		6	ARM	
510	262179-0001		12	PIN	
520	525329-0000		12	SLEEVE	
610	312109-0459		2	SCREW M6S ISO 4017 M8X40 A480	
620	312605-0318		18	HEXAGON NUT, M6M M8 A280	
650	321111-0185		24	FLANGE BUSHING, 14X20X14 MM	
0500SQ (See drawing on page: 5-148)					

Machine Type | Group Description | Used-In | Group Number | Page No

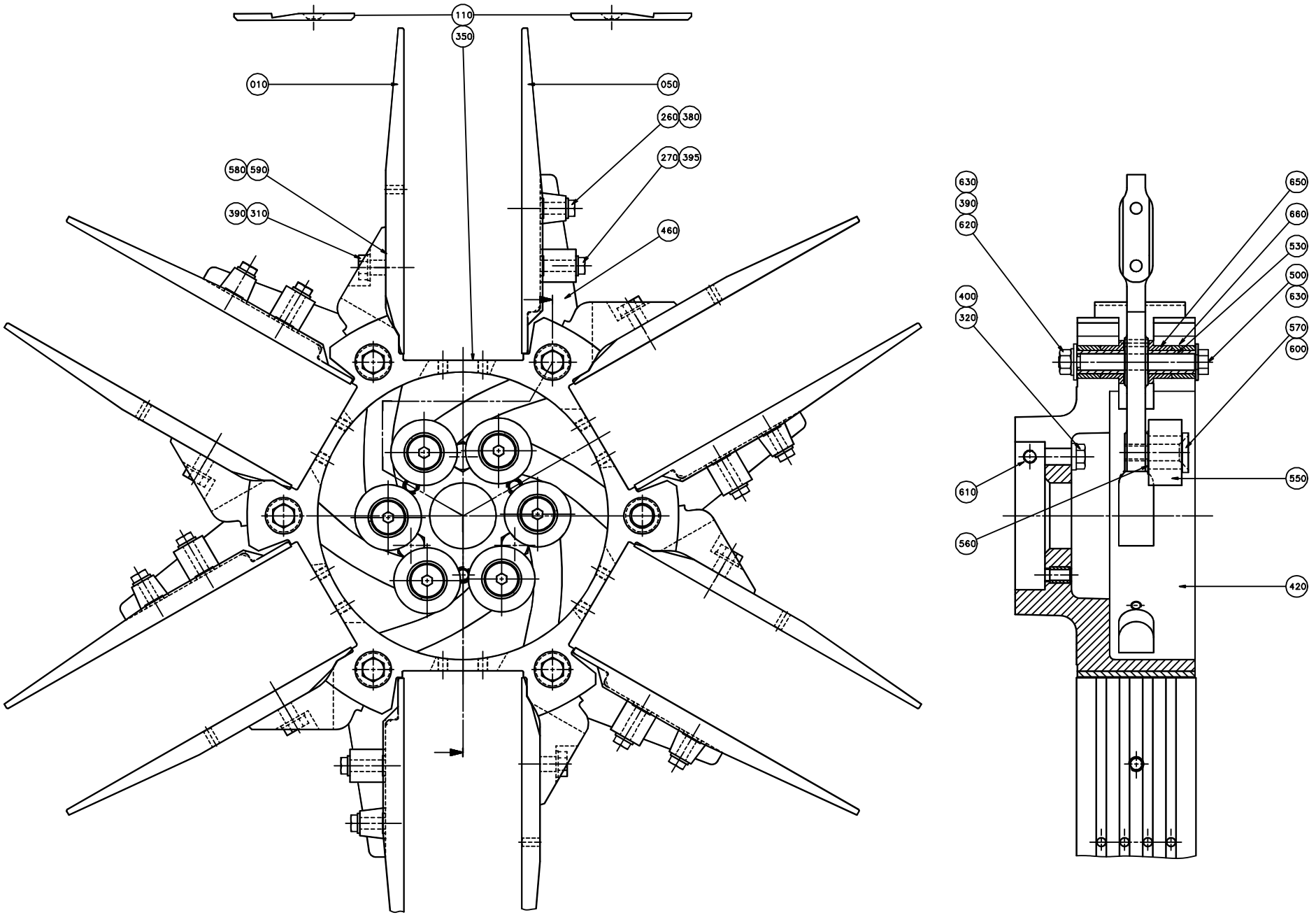
110
350
010
050
260
380
270
395
580
590
390
310
460
630
390
620
400
320
610
560
650
660
530
500
630
570
600
550
420

ECM: 72197 - 19990215
Group number: 297681-0300
Assembly Drawing: 297681-3_1_AA

This list covers pages from 5-144 to 5-149

Pos	Part No	UN	Qty	Description	Page No
0500SQ (Cont'd) (See drawing on page: 5-148)					
010	574029-0000		6	FLAP	
050	574030-0000		6	FLAP	
060	583449-0000		6	BOTTOM	
130	583454-0000		6	SUPPORT	
140	583631-0000		6	BOTTOM PANEL	
260	312105-0372		6	SCREW M6S ISO 4017 M6X25 A480	
350	312155-0368		6	SCREW DIN 7991 MF6S M6X16 A4 70	
380	315105-0153		6	WASHER BRB 6,4X12 RFR	
390	315105-0165		18	WASHER BRB 8,4X16 RFR	
395	315115-0153		6	WASHER PLAIN, TBRB 6,4/12 H=3	
400	315115-0165		3	WASHER PLAIN, TBRB 8,4/16 H=3	
420	574026-0000		1	HUB	
460	574028-0000		6	ARM	
610	312109-0459		8	SCREW M6S ISO 4017 M8X40 A480	
620	312605-0318		12	HEXAGON NUT, M6M M8 A280	
650	321111-0185		12	FLANGE BUSHING, 14X20X14 MM	
660	90240-0233		12	BEAR. BUSH. WITHOUT FL, 14X20X14 MM	
0568B (See drawing on page: 5-144)					
020	525455-0000		6	FLAP	
050	285310-0001		6	FLAP	
	312910-0118		*1*	*THREADED INSERT, FREE RUNNING M6X1,5D*	
060	525368-0000		6	BOTTOM	
240	442981-0000		6	SHIM	
250	312105-0368		6	SCREW M6S ISO 4017 M6X16 A480	
260	312105-0374		6	SCREW M6S ISO 4014 M6X30 A480	
280	312105-0378		6	SCREW M6S ISO 4014 M6X40 A480	
320	312105-0457		9	SCREW M6S ISO 4014 M8X35 A480	
380	315105-0153		18	WASHER BRB 6,4X12 RFR	
390	315105-0165		24	WASHER BRB 8,4X16 RFR	
400	315115-0165		9	WASHER PLAIN, TBRB 8,4/16 H=3	
420	525450-0000		1	HUB	
460	565967-0000		6	ARM	
510	262179-0001		12	PIN	
520	525329-0000		12	SLEEVE	
610	312109-0459		2	SCREW M6S ISO 4017 M8X40 A480	
620	312605-0318		18	HEXAGON NUT, M6M M8 A280	
650	321111-0185		24	FLANGE BUSHING, 14X20X14 MM	
0568SQ (See drawing on page: 5-148)					
010	574029-0000		6	FLAP	
050	574030-0000		6	FLAP	
060	597620-0000		6	BOTTOM	
130	597619-0000		6	SUPPORT	
140	583631-0000		6	BOTTOM PANEL	
260	312105-0372		6	SCREW M6S ISO 4017 M6X25 A480	
350	312155-0368		6	SCREW DIN 7991 MF6S M6X16 A4 70	
380	315105-0153		6	WASHER BRB 6,4X12 RFR	
390	315105-0165		18	WASHER BRB 8,4X16 RFR	
395	315115-0153		6	WASHER PLAIN, TBRB 6,4/12 H=3	
400	315115-0165		3	WASHER PLAIN, TBRB 8,4/16 H=3	
420	574026-0000		1	HUB	
460	574028-0000		6	ARM	
610	312109-0459		8	SCREW M6S ISO 4017 M8X40 A480	
620	312605-0318		12	HEXAGON NUT, M6M M8 A280	
650	321111-0185		12	FLANGE BUSHING, 14X20X14 MM	
660	90240-0233		12	BEAR. BUSH. WITHOUT FL, 14X20X14 MM	
1000B HIFIN (See drawing on page: 5-144)					
010	525453-0000		6	FLAP	
050	285310-0001		6	FLAP	
	312910-0118		*1*	*THREADED INSERT, FREE RUNNING M6X1,5D*	
110	525063-0000		6	BOTTOM	
260	312105-0374		6	SCREW M6S ISO 4014 M6X30 A480	
270	312105-0376		6	SCREW M6S ISO 4014 M6X35 A480	
310	312105-0453		6	SCREW M6S ISO 4017 M8X25 A480	
320	312105-0457		3	SCREW M6S ISO 4014 M8X35 A480	
350	312155-0368		6	SCREW DIN 7991 MF6S M6X16 A4 70	
380	315105-0153		12	WASHER BRB 6,4X12 RFR	
390	315105-0165		30	WASHER BRB 8,4X16 RFR	
400	315115-0165		3	WASHER PLAIN, TBRB 8,4/16 H=3	
420	525450-0000		1	HUB	
460	565967-0000		6	ARM	
510	262179-0001		12	PIN	
520	525329-0000		12	SLEEVE	
610	312109-0459		2	SCREW M6S ISO 4017 M8X40 A480	
620	312605-0318		18	HEXAGON NUT, M6M M8 A280	
650	321111-0185		24	FLANGE BUSHING, 14X20X14 MM	
1000B LOFIN (See drawing on page: 5-144)					
010	525453-0000		6	FLAP	
050	285310-0001		6	FLAP	
	312910-0118		*1*	*THREADED INSERT, FREE RUNNING M6X1,5D*	
110	443076-0000		6	BOTTOM	
260	312105-0374		6	SCREW M6S ISO 4014 M6X30 A480	
270	312105-0376		6	SCREW M6S ISO 4014 M6X35 A480	
310	312105-0453		6	SCREW M6S ISO 4017 M8X25 A480	

Machine Type | Group Description | Used-In | Group Number | Page No

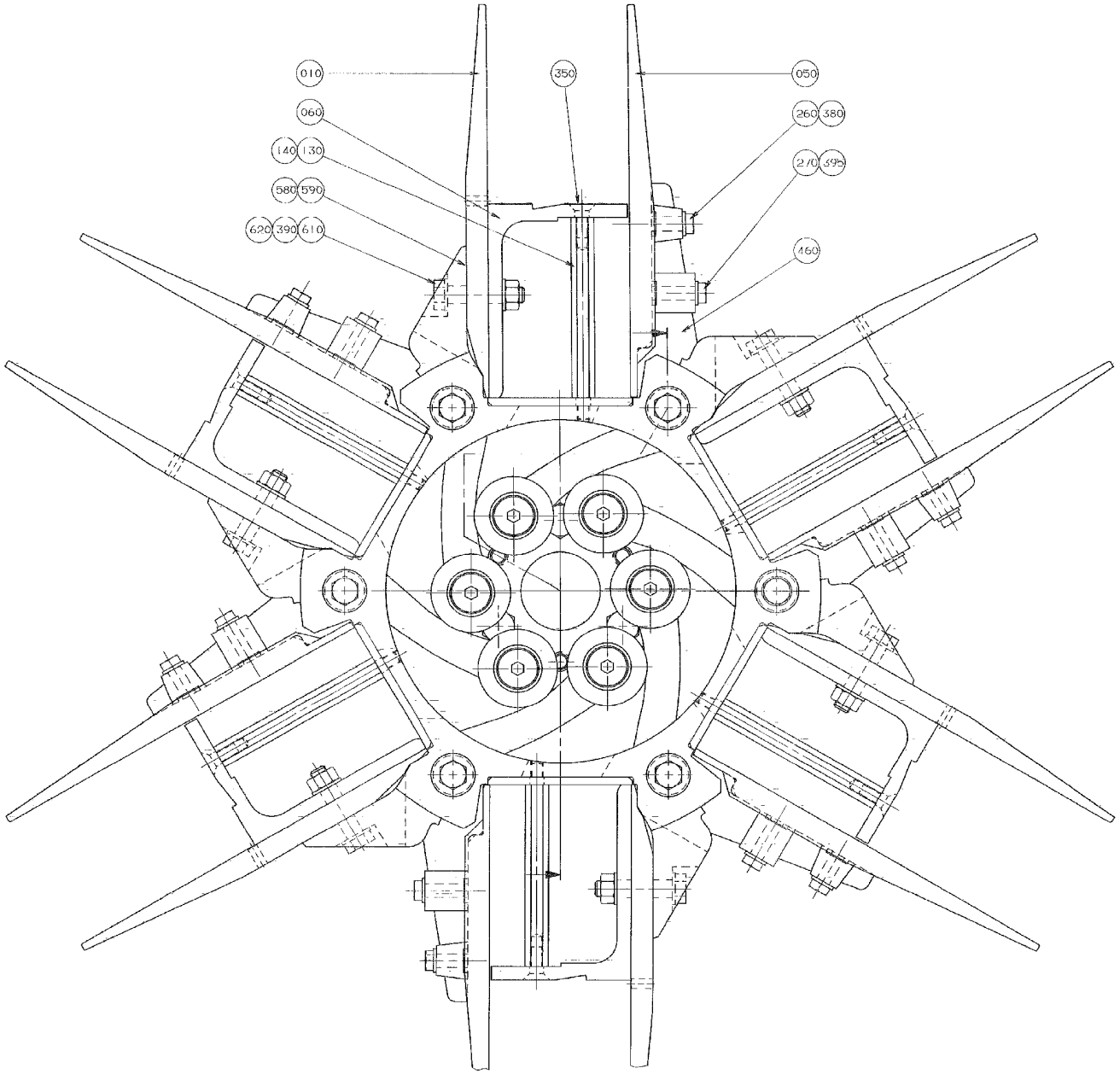

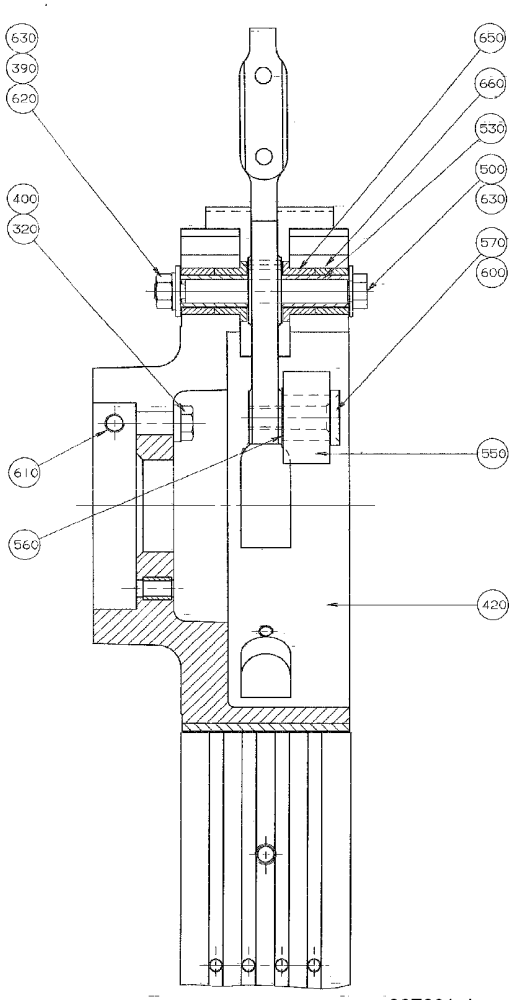

297681-4
ECN 22722

ECM: 72197 - 19990215
Group number: 297681-0300
Assembly Drawing: 297681-4_1_AA

This list covers pages from 5-144 to 5-149

Pos	Part No	UN	Qty	Description	Page No
1000B LOFIN (Cont'd) (See drawing on page: 5-144)					
320	312105-0457		3	SCREW M6S ISO 4014 M8X35 A480	
350	312155-0368		6	SCREW DIN 7991 MF6S M6X16 A4 70	
380	315105-0153		12	WASHER BRB 6,4X12 RFR	
390	315105-0165		30	WASHER BRB 8,4X16 RFR	
400	315115-0165		3	WASHER PLAIN, TBRB 8,4/16 H=3	
420	525450-0000		1	HUB	
460	565967-0000		6	ARM	
510	262179-0001		12	PIN	
520	525329-0000		12	SLEEVE	
610	312109-0459		2	SCREW M6S ISO 4017 M8X40 A480	
620	312605-0318		18	HEXAGON NUT, M6M M8 A280	
650	321111-0185		24	FLANGE BUSHING, 14X20X14 MM	
1000S (See drawing on page: 5-144)					
010	569117-0000		6	FLAP	
050	569118-0000		6	FLAP	
110	569119-0000		6	BOTTOM	
270	312105-0376		6	SCREW M6S ISO 4014 M6X35 A480	
280	312105-0378		6	SCREW M6S ISO 4014 M6X40 A480	
310	312105-0453		6	SCREW M6S ISO 4017 M8X25 A480	
350	312155-0368		6	SCREW DIN 7991 MF6S M6X16 A4 70	
390	315105-0165		30	WASHER BRB 8,4X16 RFR	
395	315115-0153		12	WASHER PLAIN, TBRB 6,4/12 H=3	
420	525446-0000		1	HUB	
460	565967-0000		6	ARM	
510	262179-0001		12	PIN	
520	525329-0000		12	SLEEVE	
610	312109-0459		2	SCREW M6S ISO 4017 M8X40 A480	
620	312605-0318		18	HEXAGON NUT, M6M M8 A280	
650	321111-0185		24	FLANGE BUSHING, 14X20X14 MM	
1000SQ NORMFIN (See drawing on page: 5-146)					
010	574029-0000		6	FLAP	
050	574030-0000		6	FLAP	
110	574031-0000		6	BOTTOM	
260	312105-0372		6	SCREW M6S ISO 4017 M6X25 A480	
270	312105-0376		6	SCREW M6S ISO 4014 M6X35 A480	
310	312105-0451		6	SCREW M6S ISO 4017 M8X20 A480	
320	312105-0457		3	SCREW M6S ISO 4014 M8X35 A480	
350	312155-0364		6	SCREW DIN 7991 MF6S M6X10 A4 70	
380	315105-0153		6	WASHER BRB 6,4X12 RFR	
390	315105-0165		12	WASHER BRB 8,4X16 RFR	
395	315115-0153		6	WASHER PLAIN, TBRB 6,4/12 H=3	
400	315115-0165		3	WASHER PLAIN, TBRB 8,4/16 H=3	
420	574026-0000		1	HUB	
460	574028-0000		6	ARM	
610	312109-0459		2	SCREW M6S ISO 4017 M8X40 A480	
620	312605-0318		6	HEXAGON NUT, M6M M8 A280	
650	321111-0185		12	FLANGE BUSHING, 14X20X14 MM	
660	90240-0233		12	BEAR. BUSH. WITHOUT FL, 14X20X14 MM	
1000SQ REVFIN (See drawing on page: 5-146)					
010	574029-0000		6	FLAP	
050	574030-0000		6	FLAP	
110	574031-0000		6	BOTTOM	
260	312105-0372		6	SCREW M6S ISO 4017 M6X25 A480	
270	312105-0376		6	SCREW M6S ISO 4014 M6X35 A480	
310	312105-0451		6	SCREW M6S ISO 4017 M8X20 A480	
320	312105-0457		3	SCREW M6S ISO 4014 M8X35 A480	
350	312155-0364		6	SCREW DIN 7991 MF6S M6X10 A4 70	
380	315105-0153		6	WASHER BRB 6,4X12 RFR	
390	315105-0165		12	WASHER BRB 8,4X16 RFR	
395	315115-0153		6	WASHER PLAIN, TBRB 6,4/12 H=3	
400	315115-0165		3	WASHER PLAIN, TBRB 8,4/16 H=3	
420	574026-0000		1	HUB	
460	574028-0000		6	ARM	
610	312318-0455		2	SCREW ISO4029 M8X30 A4	
620	312605-0318		6	HEXAGON NUT, M6M M8 A280	
650	321111-0185		12	FLANGE BUSHING, 14X20X14 MM	
660	90240-0233		12	BEAR. BUSH. WITHOUT FL, 14X20X14 MM	
Common Parts					
500	262028-0001		6	FITTING BOLT	
530	525330-0000		12	SHAFT	
550	285321-0000		6	ROLL	
560	285322-0000		6	WASHER	
570	442563-0000		6	AXLE PIN	
580	442894-0000		1	SHIM	
590	442939-0000		1	SHIM	
600	312155-0499		6	SCREW DIN 7991 MF6S M10X40 A4 70	
630	315105-0173		12	WASHER BRB 10,5X20 RFR	

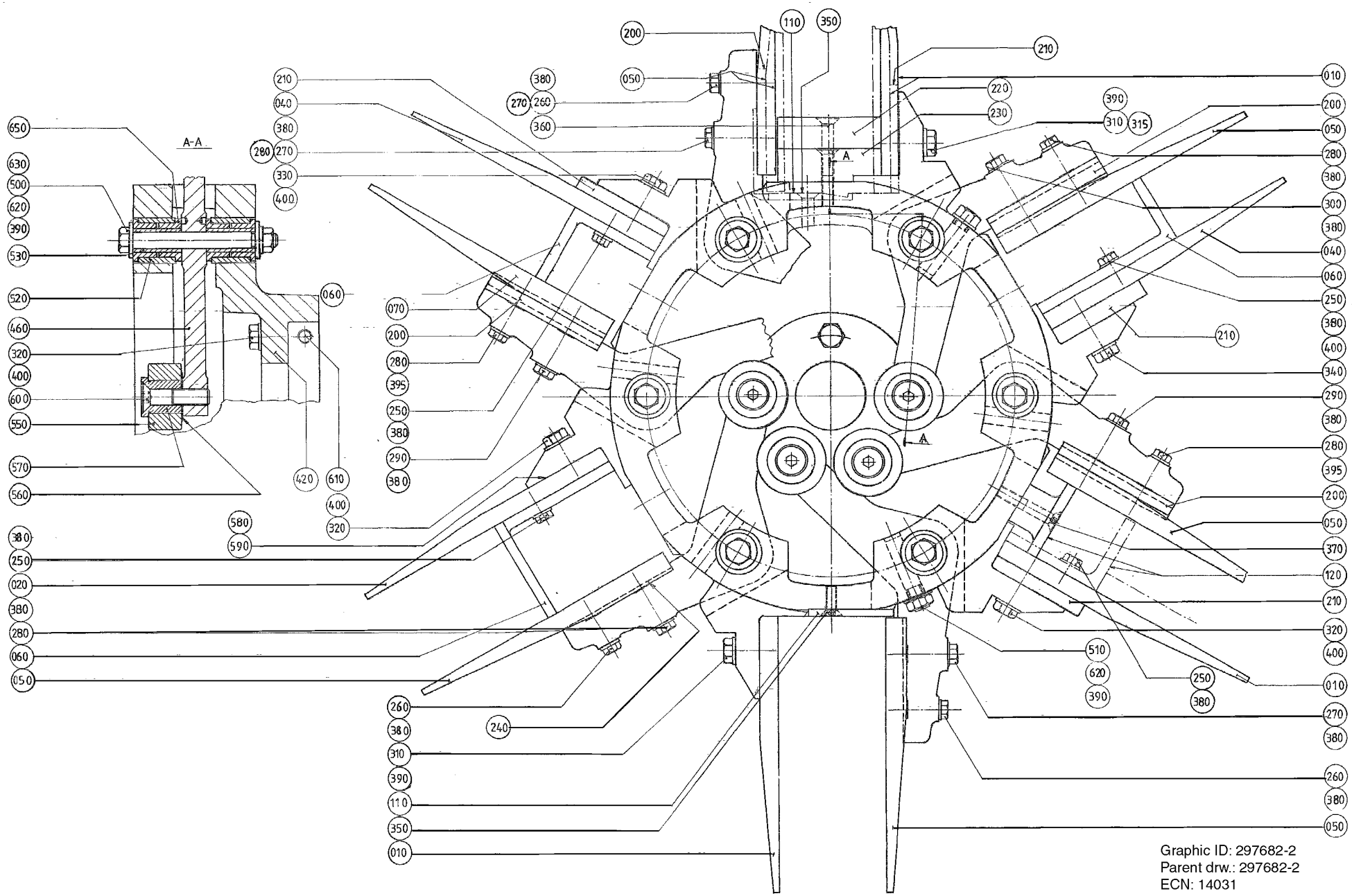
A-A
A
Graphic ID: 297682-2
Parent drw.: 297682-2
ECN: 14031

ECM: 72197 - 19990215
Group number: 297682-0300
Assembly Drawing: 297682-2_1_AA

This list covers pages from 5-150 to 5-155

Pos	Part No	UN	Qty	Description	Page No
1136B (See drawing on page: 5-150)					
010	525451-0000		6	FLAP	
050	550149-0000		6	FLAP	
110	550235-0000		6	BOTTOM	
260	312105-0374		6	SCREW M6S ISO 4014 M6X30 A480	
270	312105-0376		6	SCREW M6S ISO 4014 M6X35 A480	
310	312105-0453		6	SCREW M6S ISO 4017 M8X25 A480	
320	312105-0457		3	SCREW M6S ISO 4014 M8X35 A480	
350	312155-0368		6	SCREW DIN 7991 MF6S M6X16 A4 70	
380	315105-0153		12	WASHER BRB 6,4X12 RFR	
390	315105-0165		30	WASHER BRB 8,4X16 RFR	
400	315115-0165		3	WASHER PLAIN, TBRB 8,4/16 H=3	
420	525445-0000		1	HUB	
460	565967-0000		6	ARM	
510	262179-0001		12	PIN	
520	525329-0000		12	SLEEVE	
610	312109-0459		2	SCREW M6S ISO 4017 M8X40 A480	
620	312605-0318		18	HEXAGON NUT, M6M M8 A280	
650	321111-0185		24	FLANGE BUSHING, 14X20X14 MM	
0300B (See drawing on page: 5-150)					
040	525459-0000		6	FLAP	
060	525373-0000		6	BOTTOM	
070	297646-0000		6	FLAP	
200	285316-0002		6	SPACER PIECE	
210	525461-0000		6	SPACER PIECE	
250	312105-0368		6	SCREW M6S ISO 4017 M6X16 A480	
280	312105-0378		6	SCREW M6S ISO 4014 M6X40 A480	
290	312105-0379		6	SCREW M6S ISO 4014 M6X45 A480	
320	312105-0457		3	SCREW M6S ISO 4014 M8X35 A480	
330	312105-0459		6	SCREW M6S ISO 4014 M8X40 A480	
380	315105-0153		12	WASHER BRB 6,4X12 RFR	
390	315105-0165		24	WASHER BRB 8,4X16 RFR	
395	315115-0153		6	WASHER PLAIN, TBRB 6,4/12 H=3	
400	315115-0165		9	WASHER PLAIN, TBRB 8,4/16 H=3	
420	525449-0000		1	HUB	
460	565967-0000		6	ARM	
510	262179-0001		12	PIN	
520	525329-0000		12	SLEEVE	
610	312109-0459		2	SCREW M6S ISO 4017 M8X40 A480	
620	312605-0318		18	HEXAGON NUT, M6M M8 A280	
650	321111-0185		24	FLANGE BUSHING, 14X20X14 MM	
0500B (See drawing on page: 5-150)					
020	525455-0000		6	FLAP	
050	285310-0001		6	FLAP	
	312910-0118		*1*	*THREADED INSERT, FREE RUNNING M6X1,5D*	
060	525369-0000		6	BOTTOM	
240	442981-0000		6	SHIM	
250	312105-0368		6	SCREW M6S ISO 4017 M6X16 A480	
260	312105-0374		6	SCREW M6S ISO 4014 M6X30 A480	
280	312105-0378		6	SCREW M6S ISO 4014 M6X40 A480	
320	312105-0457		9	SCREW M6S ISO 4014 M8X35 A480	
380	315105-0153		18	WASHER BRB 6,4X12 RFR	
390	315105-0165		24	WASHER BRB 8,4X16 RFR	
400	315115-0165		9	WASHER PLAIN, TBRB 8,4/16 H=3	
420	525449-0000		1	HUB	
460	565967-0000		6	ARM	
510	262179-0001		12	PIN	
520	525329-0000		12	SLEEVE	
610	312109-0459		2	SCREW M6S ISO 4017 M8X40 A480	
620	312605-0318		18	HEXAGON NUT, M6M M8 A280	
650	321111-0185		24	FLANGE BUSHING, 14X20X14 MM	
0500S (See drawing on page: 5-150)					
010	525456-0000		6	FLAP	
050	285310-0002		6	FLAP	
	312910-0118		*1*	*THREADED INSERT, FREE RUNNING M6X1,5D*	
120	525370-0000		6	BOTTOM	
200	285316-0002		6	SPACER PIECE	
210	525461-0000		6	SPACER PIECE	
280	312105-0378		6	SCREW M6S ISO 4014 M6X40 A480	
290	312105-0379		6	SCREW M6S ISO 4014 M6X45 A480	
320	312105-0457		9	SCREW M6S ISO 4014 M8X35 A480	
370	312155-0378		6	SCREW DIN 7991 MF6S M6X40 A4 70	
380	315105-0153		12	WASHER BRB 6,4X12 RFR	
390	315105-0165		24	WASHER BRB 8,4X16 RFR	
395	315115-0153		6	WASHER PLAIN, TBRB 6,4/12 H=3	
400	315115-0165		9	WASHER PLAIN, TBRB 8,4/16 H=3	
420	525449-0000		1	HUB	
460	565967-0000		6	ARM	
510	262179-0001		12	PIN	
520	525329-0000		12	SLEEVE	
610	312109-0459		2	SCREW M6S ISO 4017 M8X40 A480	
620	312605-0318		18	HEXAGON NUT, M6M M8 A280	
650	321111-0185		24	FLANGE BUSHING, 14X20X14 MM	
0500SQ (See drawing on page: 5-154)					

Machine Type | Group Description | Used-In | Group Number | Page No

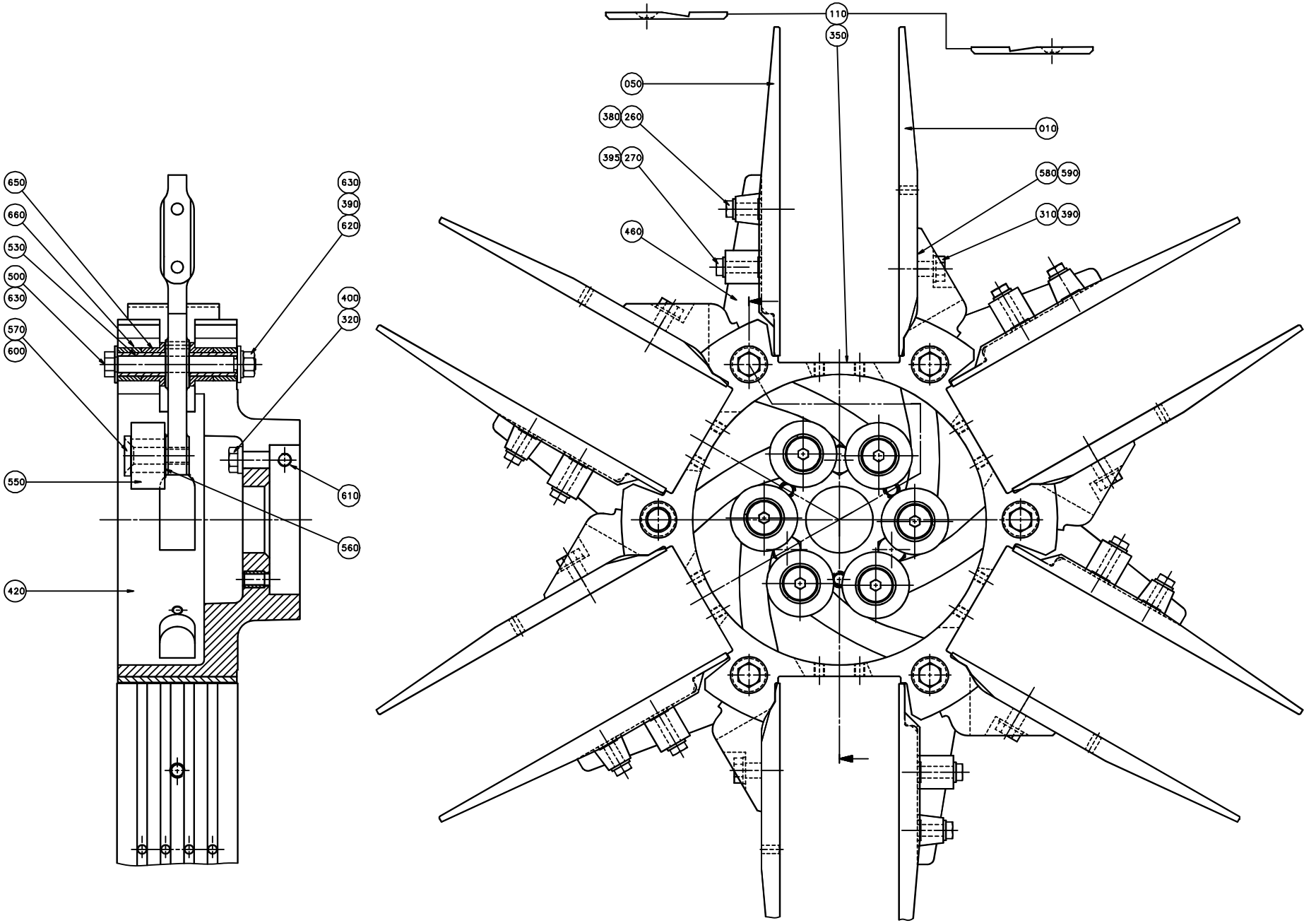
650
660
530
500
630
570
600
550
420
630
390
620
400
320
610
560
110
350
050
380
260
395
270
460
010
580
590
310
390

ECM: 72197 - 19990215
Group number: 297682-0300
Assembly Drawing: 297682-3_1_AA

This list covers pages from 5-150 to 5-155

Pos	Part No	UN	Qty	Description	Page No
0500SQ (Cont'd) (See drawing on page: 5-154)					
010	574029-0000		6	FLAP	
050	574030-0000		6	FLAP	
060	583449-0000		6	BOTTOM	
130	583454-0000		6	SUPPORT	
140	583631-0000		6	BOTTOM PANEL	
260	312105-0372		6	SCREW M6S ISO 4017 M6X25 A480	
350	312155-0368		6	SCREW DIN 7991 MF6S M6X16 A4 70	
380	315105-0153		6	WASHER BRB 6,4X12 RFR	
390	315105-0165		18	WASHER BRB 8,4X16 RFR	
395	315115-0153		6	WASHER PLAIN, TBRB 6,4/12 H=3	
400	315115-0165		3	WASHER PLAIN, TBRB 8,4/16 H=3	
420	574027-0000		1	HUB	
460	574028-0000		6	ARM	
610	312109-0459		8	SCREW M6S ISO 4017 M8X40 A480	
620	312605-0318		12	HEXAGON NUT, M6M M8 A280	
650	321111-0185		12	FLANGE BUSHING, 14X20X14 MM	
660	90240-0233		12	BEAR. BUSH. WITHOUT FL, 14X20X14 MM	
0568B (See drawing on page: 5-150)					
020	525455-0000		6	FLAP	
050	285310-0001		6	FLAP	
	312910-0118		*1*	*THREADED INSERT, FREE RUNNING M6X1,5D*	
060	525368-0000		6	BOTTOM	
240	442981-0000		6	SHIM	
250	312105-0368		6	SCREW M6S ISO 4017 M6X16 A480	
260	312105-0374		6	SCREW M6S ISO 4014 M6X30 A480	
280	312105-0378		6	SCREW M6S ISO 4014 M6X40 A480	
320	312105-0457		9	SCREW M6S ISO 4014 M8X35 A480	
380	315105-0153		18	WASHER BRB 6,4X12 RFR	
390	315105-0165		24	WASHER BRB 8,4X16 RFR	
400	315115-0165		9	WASHER PLAIN, TBRB 8,4/16 H=3	
420	525449-0000		1	HUB	
460	565967-0000		6	ARM	
510	262179-0001		12	PIN	
520	525329-0000		12	SLEEVE	
610	312109-0459		2	SCREW M6S ISO 4017 M8X40 A480	
620	312605-0318		18	HEXAGON NUT, M6M M8 A280	
650	321111-0185		24	FLANGE BUSHING, 14X20X14 MM	
0568SQ (See drawing on page: 5-154)					
010	574029-0000		6	FLAP	
050	574030-0000		6	FLAP	
060	597620-0000		6	BOTTOM	
130	597619-0000		6	SUPPORT	
140	583631-0000		6	BOTTOM PANEL	
260	312105-0372		6	SCREW M6S ISO 4017 M6X25 A480	
350	312155-0368		6	SCREW DIN 7991 MF6S M6X16 A4 70	
380	315105-0153		6	WASHER BRB 6,4X12 RFR	
390	315105-0165		18	WASHER BRB 8,4X16 RFR	
395	315115-0153		6	WASHER PLAIN, TBRB 6,4/12 H=3	
400	315115-0165		3	WASHER PLAIN, TBRB 8,4/16 H=3	
420	574027-0000		1	HUB	
460	574028-0000		6	ARM	
610	312109-0459		8	SCREW M6S ISO 4017 M8X40 A480	
620	312605-0318		12	HEXAGON NUT, M6M M8 A280	
650	321111-0185		12	FLANGE BUSHING, 14X20X14 MM	
660	90240-0233		12	BEAR. BUSH. WITHOUT FL, 14X20X14 MM	
1000B HIFIN (See drawing on page: 5-150)					
010	525453-0000		6	FLAP	
050	285310-0001		6	FLAP	
	312910-0118		*1*	*THREADED INSERT, FREE RUNNING M6X1,5D*	
110	525063-0000		6	BOTTOM	
260	312105-0374		6	SCREW M6S ISO 4014 M6X30 A480	
270	312105-0376		6	SCREW M6S ISO 4014 M6X35 A480	
310	312105-0453		6	SCREW M6S ISO 4017 M8X25 A480	
320	312105-0457		3	SCREW M6S ISO 4014 M8X35 A480	
350	312155-0368		6	SCREW DIN 7991 MF6S M6X16 A4 70	
380	315105-0153		12	WASHER BRB 6,4X12 RFR	
390	315105-0165		30	WASHER BRB 8,4X16 RFR	
400	315115-0165		3	WASHER PLAIN, TBRB 8,4/16 H=3	
420	525449-0000		1	HUB	
460	565967-0000		6	ARM	
510	262179-0001		12	PIN	
520	525329-0000		12	SLEEVE	
610	312109-0459		2	SCREW M6S ISO 4017 M8X40 A480	
620	312605-0318		18	HEXAGON NUT, M6M M8 A280	
650	321111-0185		24	FLANGE BUSHING, 14X20X14 MM	
1000B LOFIN (See drawing on page: 5-150)					
010	525453-0000		6	FLAP	
050	285310-0001		6	FLAP	
	312910-0118		*1*	*THREADED INSERT, FREE RUNNING M6X1,5D*	
110	443076-0000		6	BOTTOM	
260	312105-0374		6	SCREW M6S ISO 4014 M6X30 A480	
270	312105-0376		6	SCREW M6S ISO 4014 M6X35 A480	
310	312105-0453		6	SCREW M6S ISO 4017 M8X25 A480	

Machine Type | Group Description | Used-In | Group Number | Page No

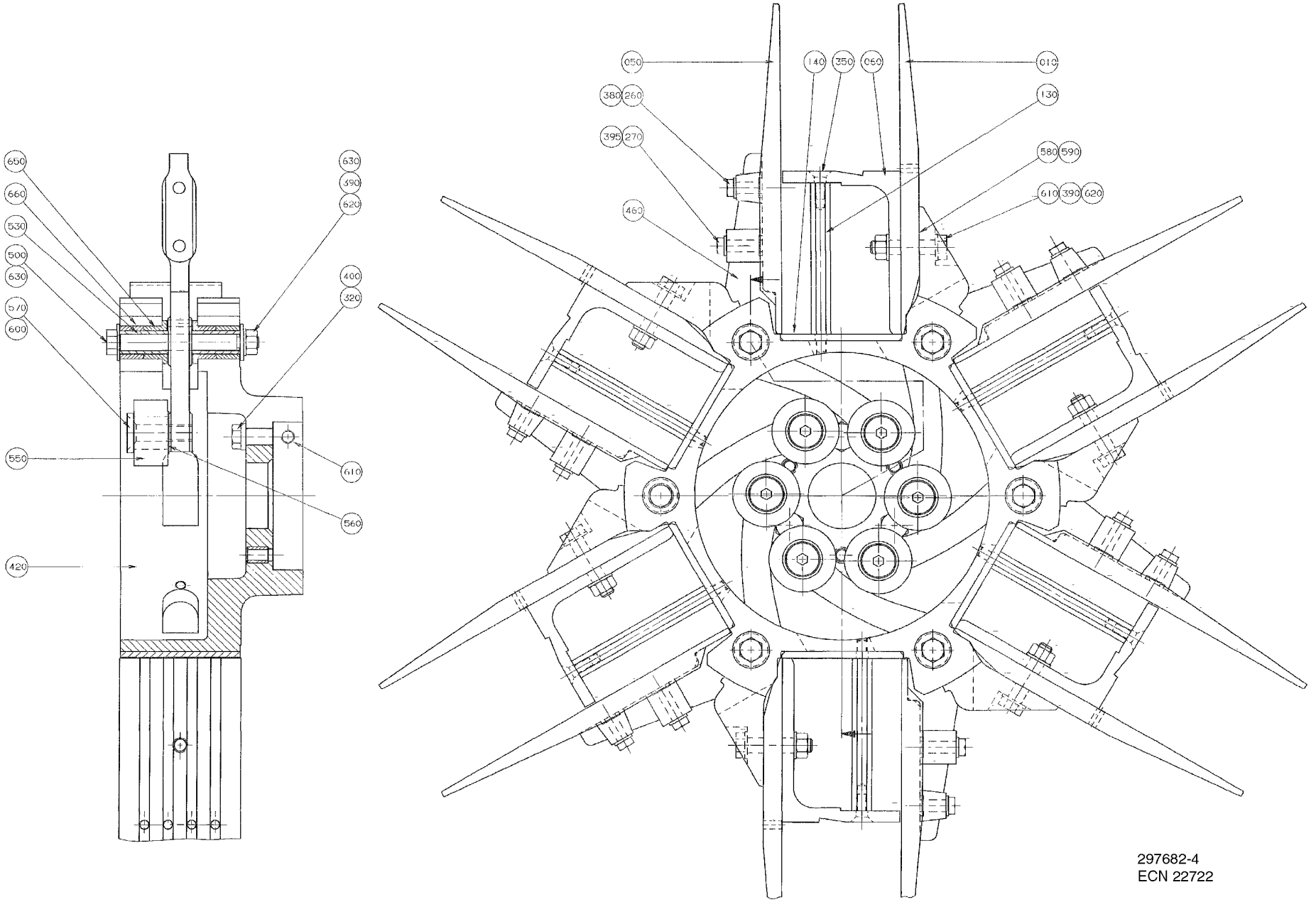

297682-4
ECN 22722

ECM: 72197 - 19990215
Group number: 297682-0300
Assembly Drawing: 297682-4_1_AA

This list covers pages from 5-150 to 5-155

Pos	Part No	UN	Qty	Description	Page No
1000B LOFIN (Cont'd) (See drawing on page: 5-150)					
320	312105-0457		3	SCREW M6S ISO 4014 M8X35 A480	
350	312155-0368		6	SCREW DIN 7991 MF6S M6X16 A4 70	
380	315105-0153		12	WASHER BRB 6,4X12 RFR	
390	315105-0165		30	WASHER BRB 8,4X16 RFR	
400	315115-0165		3	WASHER PLAIN, TBRB 8,4/16 H=3	
420	525449-0000		1	HUB	
460	565967-0000		6	ARM	
510	262179-0001		12	PIN	
520	525329-0000		12	SLEEVE	
610	312109-0459		2	SCREW M6S ISO 4017 M8X40 A480	
620	312605-0318		18	HEXAGON NUT, M6M M8 A280	
650	321111-0185		24	FLANGE BUSHING, 14X20X14 MM	
1000S (See drawing on page: 5-150)					
010	569117-0000		6	FLAP	
050	569118-0000		6	FLAP	
110	569119-0000		6	BOTTOM	
270	312105-0376		6	SCREW M6S ISO 4014 M6X35 A480	
280	312105-0378		6	SCREW M6S ISO 4014 M6X40 A480	
310	312105-0453		6	SCREW M6S ISO 4017 M8X25 A480	
390	315105-0165		30	WASHER BRB 8,4X16 RFR	
395	315115-0153		12	WASHER PLAIN, TBRB 6,4/12 H=3	
420	525445-0000		1	HUB	
460	565967-0000		6	ARM	
510	262179-0001		12	PIN	
520	525329-0000		12	SLEEVE	
610	312109-0459		2	SCREW M6S ISO 4017 M8X40 A480	
620	312605-0318		18	HEXAGON NUT, M6M M8 A280	
650	321111-0185		24	FLANGE BUSHING, 14X20X14 MM	
1000SQ NORMFIN (See drawing on page: 5-152)					
010	574029-0000		6	FLAP	
050	574030-0000		6	FLAP	
110	574031-0000		6	BOTTOM	
260	312105-0372		6	SCREW M6S ISO 4017 M6X25 A480	
270	312105-0376		6	SCREW M6S ISO 4014 M6X35 A480	
310	312105-0451		6	SCREW M6S ISO 4017 M8X20 A480	
350	312155-0364		6	SCREW DIN 7991 MF6S M6X10 A4 70	
380	315105-0153		6	WASHER BRB 6,4X12 RFR	
390	315105-0165		12	WASHER BRB 8,4X16 RFR	
395	315115-0153		6	WASHER PLAIN, TBRB 6,4/12 H=3	
400	315115-0165		3	WASHER PLAIN, TBRB 8,4/16 H=3	
420	574027-0000		1	HUB	
460	574028-0000		6	ARM	
610	312109-0459		2	SCREW M6S ISO 4017 M8X40 A480	
620	312605-0318		6	HEXAGON NUT, M6M M8 A280	
650	321111-0185		12	FLANGE BUSHING, 14X20X14 MM	
660	90240-0233		12	BEAR. BUSH. WITHOUT FL, 14X20X14 MM	
1000SQ REVFIN (See drawing on page: 5-152)					
010	574029-0000		6	FLAP	
050	574030-0000		6	FLAP	
110	574031-0000		6	BOTTOM	
260	312105-0372		6	SCREW M6S ISO 4017 M6X25 A480	
270	312105-0376		6	SCREW M6S ISO 4014 M6X35 A480	
310	312105-0451		6	SCREW M6S ISO 4017 M8X20 A480	
350	312155-0364		6	SCREW DIN 7991 MF6S M6X10 A4 70	
380	315105-0153		6	WASHER BRB 6,4X12 RFR	
390	315105-0165		12	WASHER BRB 8,4X16 RFR	
395	315115-0153		6	WASHER PLAIN, TBRB 6,4/12 H=3	
400	315115-0165		3	WASHER PLAIN, TBRB 8,4/16 H=3	
420	574027-0000		1	HUB	
460	574028-0000		6	ARM	
610	312318-0455		2	SCREW ISO4029 M8X30 A4	
620	312605-0318		6	HEXAGON NUT, M6M M8 A280	
650	321111-0185		12	FLANGE BUSHING, 14X20X14 MM	
660	90240-0233		12	BEAR. BUSH. WITHOUT FL, 14X20X14 MM	
Common Parts					
500	262028-0001		6	FITTING BOLT	
530	525330-0000		12	SHAFT	
550	285321-0000		6	ROLL	
560	285322-0000		6	WASHER	
570	442563-0000		6	AXLE PIN	
580	442894-0000		1	SHIM	
590	442939-0000		1	SHIM	
600	312155-0499		6	SCREW DIN 7991 MF6S M10X40 A4 70	
630	315105-0173		12	WASHER BRB 10,5X20 RFR	

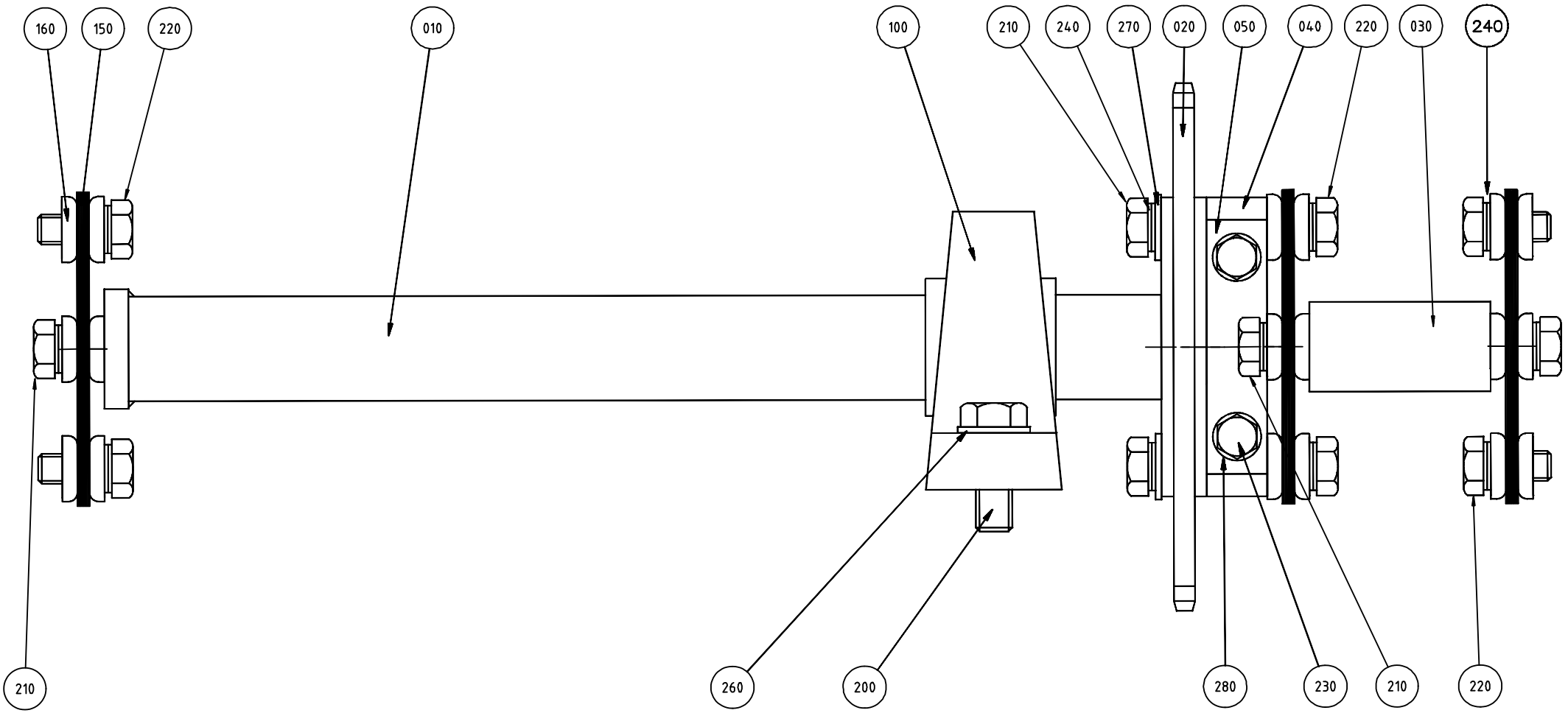
160
150
220
010
100
210
240
270
020
050
040
220
030
240
210
260
200
280
230
210
220

ECM: 205905 - 20050411
Group number: 443173-0100
Assembly Drawing: 443173-1_1_AC

Pos	Part No	UN	Qty	Description	Page No
-					
010	443175-0000		1	SHAFT	
020	443177-0000		1	SPROCKET	
030	443179-0000		1	SPACER	
040	443178-0000		1	BRACKET	
050	262275-0003		1	CAP	
100	90345-0038		1	STANDING BEARING, TYPE SY 35 TF	
150	33261-0000		24	SPRING PLATE	
160	31553-0002		24	WASHER	
200	312105-0538		2	SCREW M6S ISO 4017 M12X35 A480	
210	312105-0495		8	SCREW M6S ISO 4017 M10X30 A480	
220	312105-0493		6	SCREW M6S ISO 4017 M10X25 A480	
230	90287-0165		2	SCREW M6S M8X20 A480 NY-LOCK	
240	90062-0070		14	LOCK WASHER NORD-LOCK,10,3/16 T=2,2	
260	315105-0178		2	WASHER BRB 13X24 RFR	
270	315105-0173		4	WASHER BRB 10,5X20 RFR	
280	315105-0165		2	WASHER BRB 8,4X16 RFR	

Pos	Part No	UN	Qty	Description	Page No

WASTE CHUTE

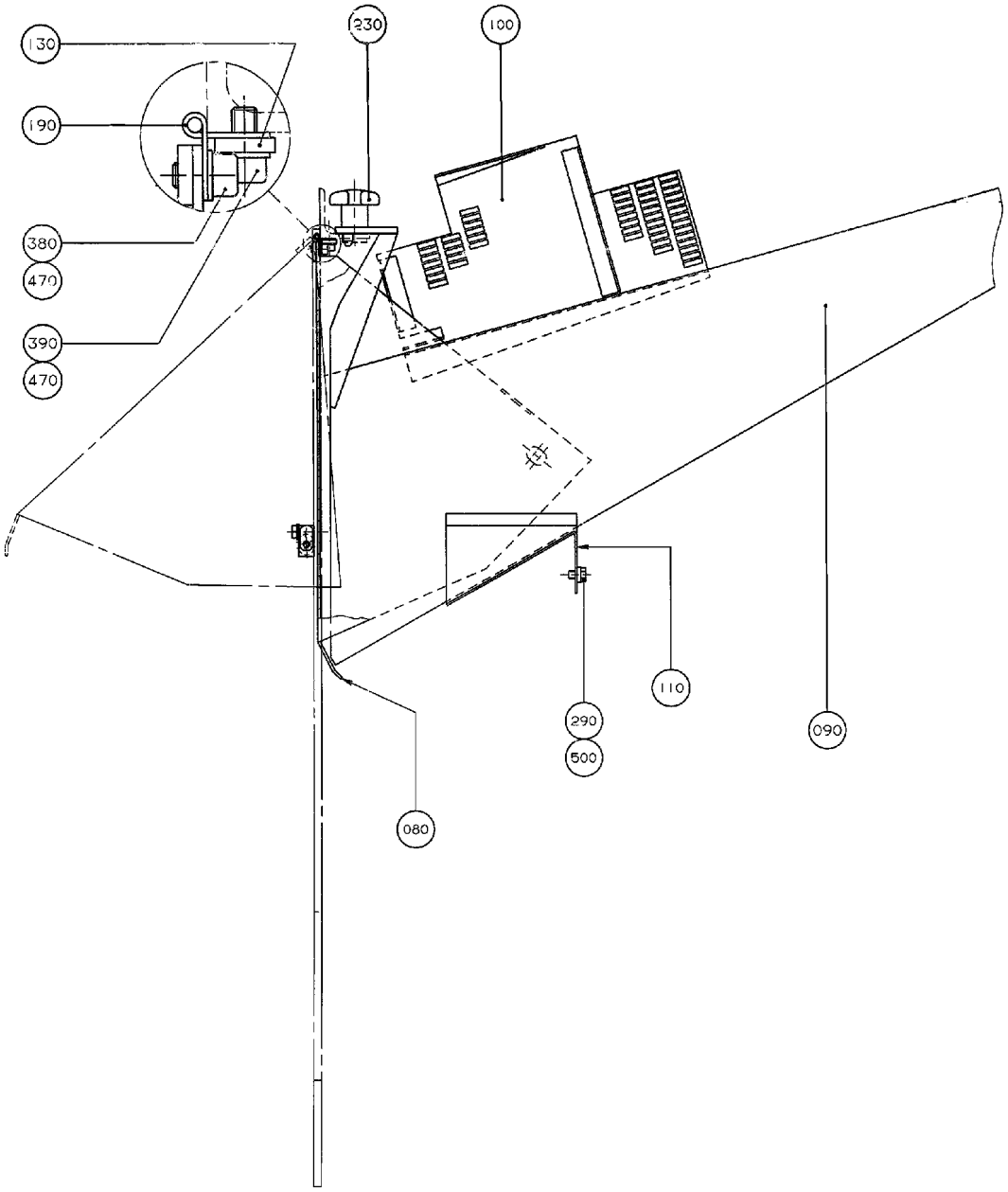

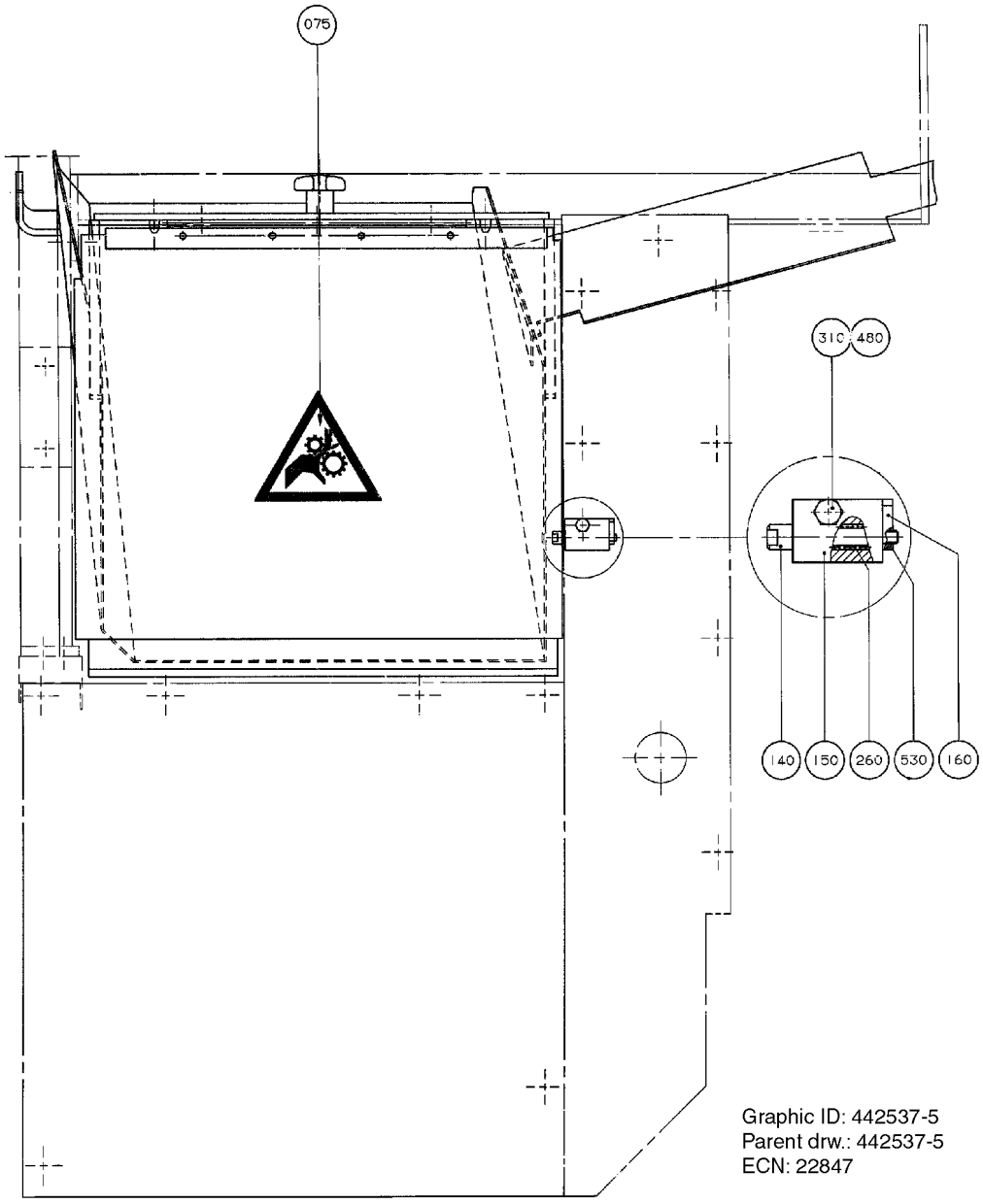

Graphic ID: 442537-5
Parent drw.: 442537-5
ECN: 22847

ECM: 188362 - 20041105
Group number: 442537-0500
Assembly Drawing: 442537-5_1_AA

Pos	Part No	UN	Qty	Description	Page No
0500B, 1136B, 0500S, 1000S, 0568B, 0300B, 1000B					
090	525409-0000		1	WASTE CHUTE	
1000SQ, 0500SQ, 0568SQ					
090	574124-0000		1	WASTE CHUTE	
Common Parts					
075	359705-0002		1	WARNING SIGN ISO, ENTAGLEMENT	
080	525380-0000		1	HATCH	
100	525423-0000		1	COVERING PLATE	
110	525439-0000		1	DRIP PLATE	
130	525381-0000		1	BRACKET	
140	525382-0000		1	SHAFT	
150	525383-0000		1	BRACKET	
160	525384-0000		1	DOWEL	
190	525394-0000		1	HINGE	
230	90051-0025		1	KNOB, EXTERNAL THREAD. NO. 8306-0200	
260	90335-0005		1	SPRING	
290	312105-0364		1	SCREW M6S ISO 4017 M6X10 A480	
310	312105-0372		1	SCREW M6S ISO 4017 M6X25 A480	
380	312115-0323		4	SCREW ISO4762 M5X8 A4 80	
390	312115-0325		3	SCREW ISO4762 M5X10 A4 80	
470	315105-0146		7	WASHER BRB 5,3X10 RFR	
480	315105-0153		1	WASHER BRB 6,4X12 RFR	
500	315115-0153		1	WASHER PLAIN, TBRB 6,4/12 H=3	
530	90157-0002		1	SEALING COMPOUND, COLLEXIN	

Pos	Part No	UN	Qty	Description	Page No

Tetra Pak

SPC
Spare Parts Catalogue

This page is intentionally left blank.

ECM: 71516 - 19990709
Group number: 648045-0100
Assembly Drawing:

Pos	Part No	UN	Qty	Description	Page No
TB 1500B					
130	1362492-0100		1	WHEEL	**6-5**
160	1296200-0100		1	INFEEDING COVER	**6-7**
Common Parts					
010	1144318-0100		1	DRIVE UNIT	**6-9**
020	1144319-0100		1	CRANK	**6-11**
030	1144320-0100		1	INDEXING GEAR	**6-13**
040	1144321-0100		1	DROP CHUTE	**6-17**
050	1144745-0100		1	FLAP HEATER	**6-19**
060	1285012-0100		1	FOLDING PART	**6-27**
070	1144324-0100		1	FRAMEWORK	**6-29**
080	1144325-0100		1	CONVEYOR	**6-33**
090	1144326-0100		1	FRAME	**6-35**
100	1144327-0100		1	PACKAGE OUTFEED	**6-37, 6-39**
110	1144328-0100		1	CONVEYOR BELT	**6-55**
120	1144329-0100		1	PULL DOWN DEVICE	**6-57**
140	1144331-0100		1	PRESSURE DEVICE	**6-59, 6-61**
150	1144848-0100		1	BOTTOM VALVE	**6-63**
180	1296148-0100		1	PROTECTION	**6-65**
190	1334451-0100		1	CABLE DUCT	**6-67**

Pos	Part No	UN	Qty	Description	Page No

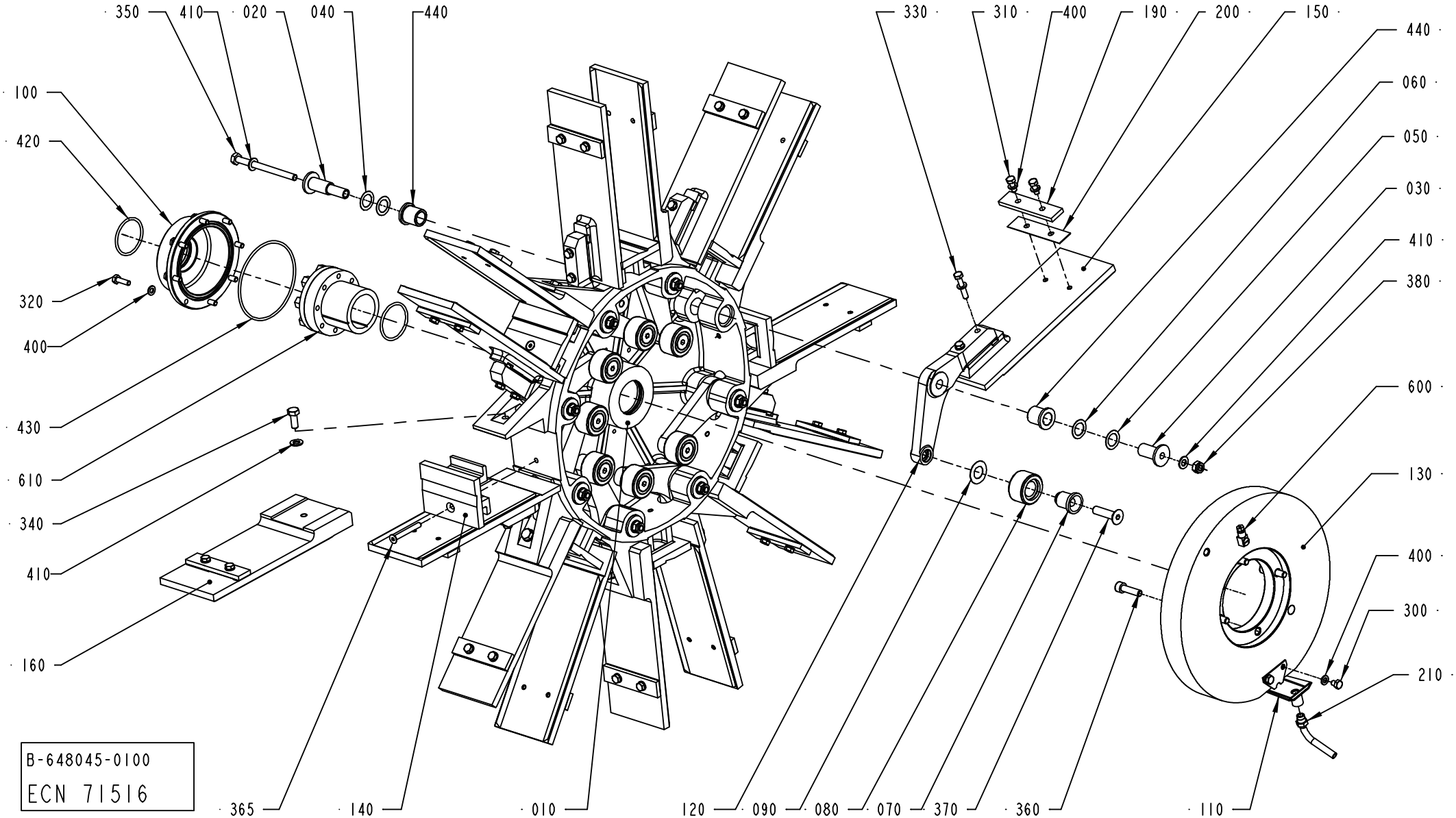
350
410
020
040
440
100
420
320
400
430
610
340
410
160
365
140
010
330
310
400
190
200
150
440
060
050
030
410
380
600
130
400
300
210
120
090
080
070
370
360
110
B-648045-0100
ECN 71516

ECM: 71516 - 19990709
Group number: 1362492-0100
Assembly Drawing: 1362492-1_1_AA

Pos	Part No	UN	Qty	Description	Page No
-					
010	598561-0000		1	HUB	
020	598562-0000		8	PIN	
030	598564-0000		8	SLEEVE	
040	598565-0000		8	SHIM	
050	598566-0000		16	SHIM	
060	598567-0000		8	SHIM	
070	1144312-0000		8	AXLE PIN	
080	1144335-0000		8	ROLLER	
090	1144354-0000		8	WASHER	
100	1144356-0000		1	COVER	
110	1144415-0000		1	DRIP PLATE	
120	1279559-0000		8	ARM	
130	1296149-0000		1	CAM	
140	596108-0000		8	BOTTOM	
150	596088-0000		8	FLAP	
160	596089-0000		8	FLAP	
190	598575-0000		16	BLOCK	
200	598578-0000		16	SHIM	
210	1347461-0000		1	PIPE	
300	312105-0362		2	SCREW M6S ISO 4017 M6X8 A480	
310	312105-0368		32	SCREW M6S ISO 4017 M6X16 A480	
320	312105-0370		8	SCREW M6S ISO 4017 M6X20 A480	
330	312105-0376		16	SCREW M6S ISO 4014 M6X35 A480	
340	312105-0451		8	SCREW M6S ISO 4017 M8X20 A480	
350	312105-0471		8	SCREW M6S ISO 4014 M8X100 A480	
360	312115-0455		4	SCREW ISO4762 M8X30 A4 80	
365	312155-0380		8	SCREW DIN 7991 MF6S M6X50 A4 70	
370	312155-0499		8	SCREW DIN 7991 MF6S M10X40 A4 70	
380	312812-0318		8	HEXAGON NUT, NY-LOCK M8 A480	
400	315105-0153		58	WASHER BRB 6,4X12 RFR	
410	315105-0165		24	WASHER BRB 8,4X16 RFR	
420	315202-0225		2	O-RING 44,2X3 MM	
430	315202-0311		1	O-RING 99,5X3 MM	
440	321111-0243		16	FLANGE BUSHING, 16X22X25 MM	
600	90134-0058		1	CONNECTION	
610	90208-0087		1	CLAMPING ELEMENT WITH SLEEVE, 45X59 MM	

Pos	Part No	UN	Qty	Description	Page No

Machine Type	Group Description	Used-In	Group Number	Page No

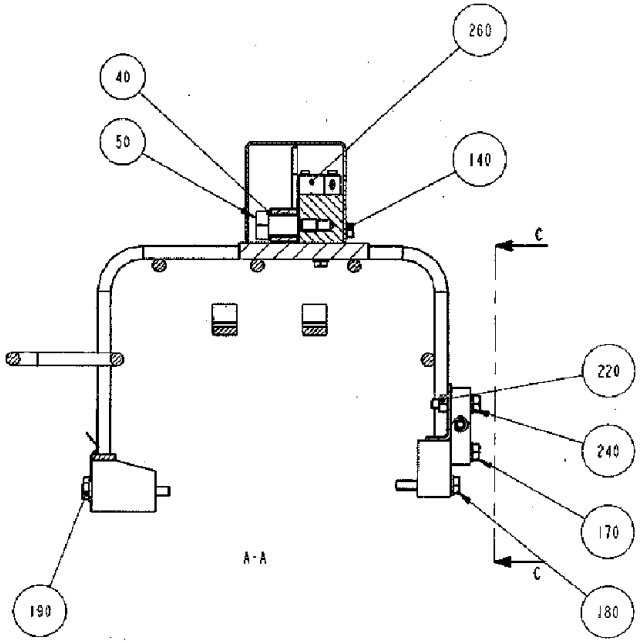

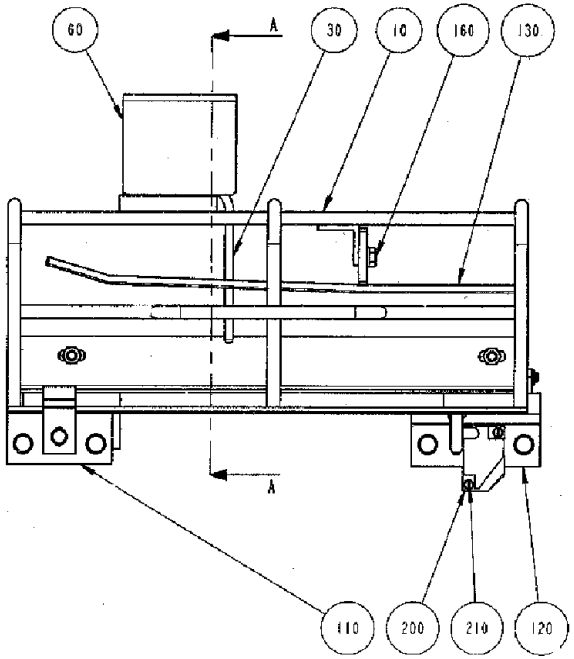

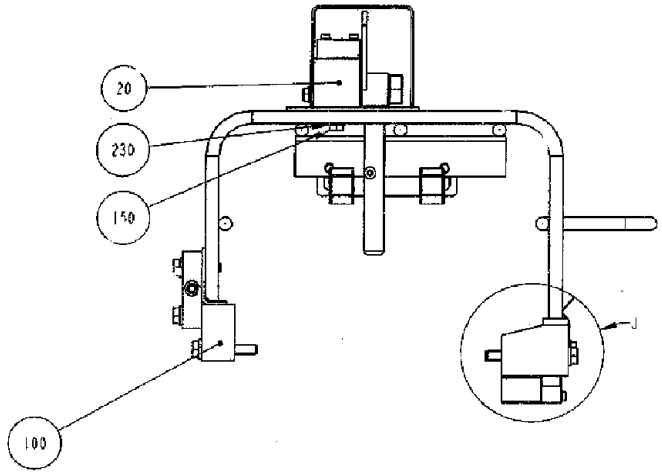

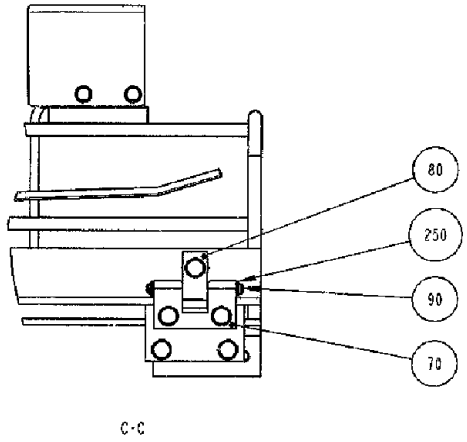

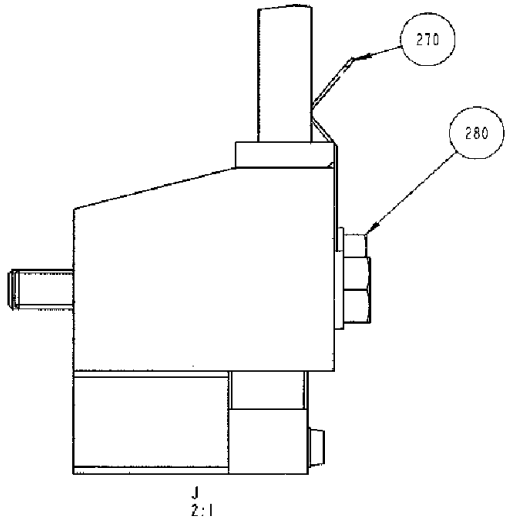

1296200-1
ECN 71474

ECM: 72194 - 19990216
Group number: 1296200-0100
Assembly Drawing: 1296200-1_1_AB

Pos	Part No	UN	Qty	Description	Page No
-					
010	1144646-0000		1	PROTECTION	
020	1144648-0000		1	BLOCK	
030	1144661-0000		1	LEVER	
040	90240-0316		2	FLANGE BUSHING, 12X14X8 MM	
050	1285885-0000		1	SCREW	
060	1144666-0000		1	GUARD PLATE	
070	1144667-0000		2	HINGE	
080	1144668-0000		2	HINGE	
090	1144669-0000		2	PIN	
100	1144673-0000		2	PLATE	
110	1144704-0000		1	BLOCK	
120	1144705-0000		1	BLOCK	
130	1317049-0000		1	GUIDE	
140	312105-0323		2	SCREW M6S ISO 4017 M5X8 A480	
150	312105-0331		2	SCREW M6S ISO 4017 M5X20 A480	
170	312105-0372		6	SCREW M6S ISO 4017 M6X25 A480	
180	312105-0376		6	SCREW M6S ISO 4014 M6X35 A480	
190	312105-0380		4	SCREW M6S ISO 4014 M6X50 A480	
200	315105-0124		4	WASHER BRB 3,2X7 RFR	
210	312125-0228		4	SCREW ISO 1207 M3X16 A4	
220	312605-0316		2	HEXAGON NUT, M6M M6 A280	
230	315105-0146		5	WASHER BRB 5,3X10 RFR	
240	315105-0153		16	WASHER BRB 6,4X12 RFR	
250	315755-0106		4	RETAINING RING SHAFT DIN 6799 4 A2	
260	90044-0104		2	PROX.SWITCH IFM IN 3002(RP 90044-194)	
270	1346952-0000		1	SPRING	
280	312105-0327		1	SCREW M6S ISO 4017 M5X12 A480	

Pos	Part No	UN	Qty	Description	Page No

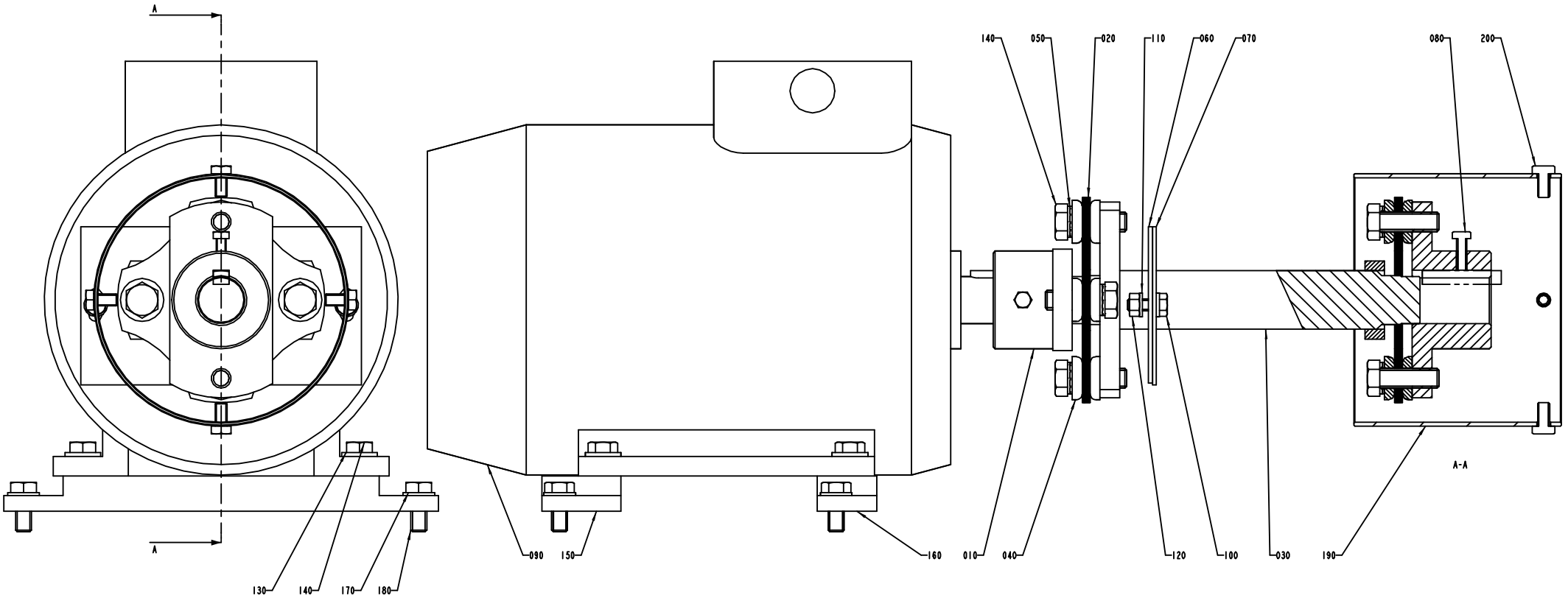
A
A
130
140
170
180
090
150
160
140
050
020
110
060
070
080
200
010
040
120
100
030
190
A-A

ECM: 73094 - 19991104
Group number: 1144318-0100
Assembly Drawing: 1144318-1_1_AA

Pos	Part No	UN	Qty	Description	Page No
-					
010	928736-0000		2	FLANGE	
020	33261-0000		16	SPRING PLATE	
030	1144237-0000		1	JOINT	
040	31553-0002		16	WASHER	
050	90062-0070		8	LOCK WASHER NORD-LOCK,10,3/16 T=2,2	
060	1144347-0000		1	GASKET	
070	1144348-0000		1	SHEET	
080	312105-0329		2	SCREW M6S ISO 4017 M5X16 A480	
090	1144084-0000		1	MOTOR	
110	312105-0368		2	SCREW M6S ISO 4017 M6X16 A480	
120	315105-0153		4	WASHER BRB 6,4X12 RFR	
130	312605-0316		2	HEXAGON NUT, M6M M6 A280	
140	312105-0495		8	SCREW M6S ISO 4017 M10X30 A480	
150	315105-0171		4	WASHER BRB 10X18 RFR	
160	312105-0455		4	SCREW M6S ISO 4017 M8X30 A480	
170	1144890-0000		1	PLATE	
180	1144891-0000		1	PLATE	
190	315105-0165		4	WASHER BRB 8,4X16 RFR	
200	312105-0451		4	SCREW M6S ISO 4017 M8X20 A480	
210	1144189-0000		1	SLEEVE	
220	312105-0366		4	SCREW M6S ISO 4017 M6X12 A480	

Pos	Part No	UN	Qty	Description	Page No

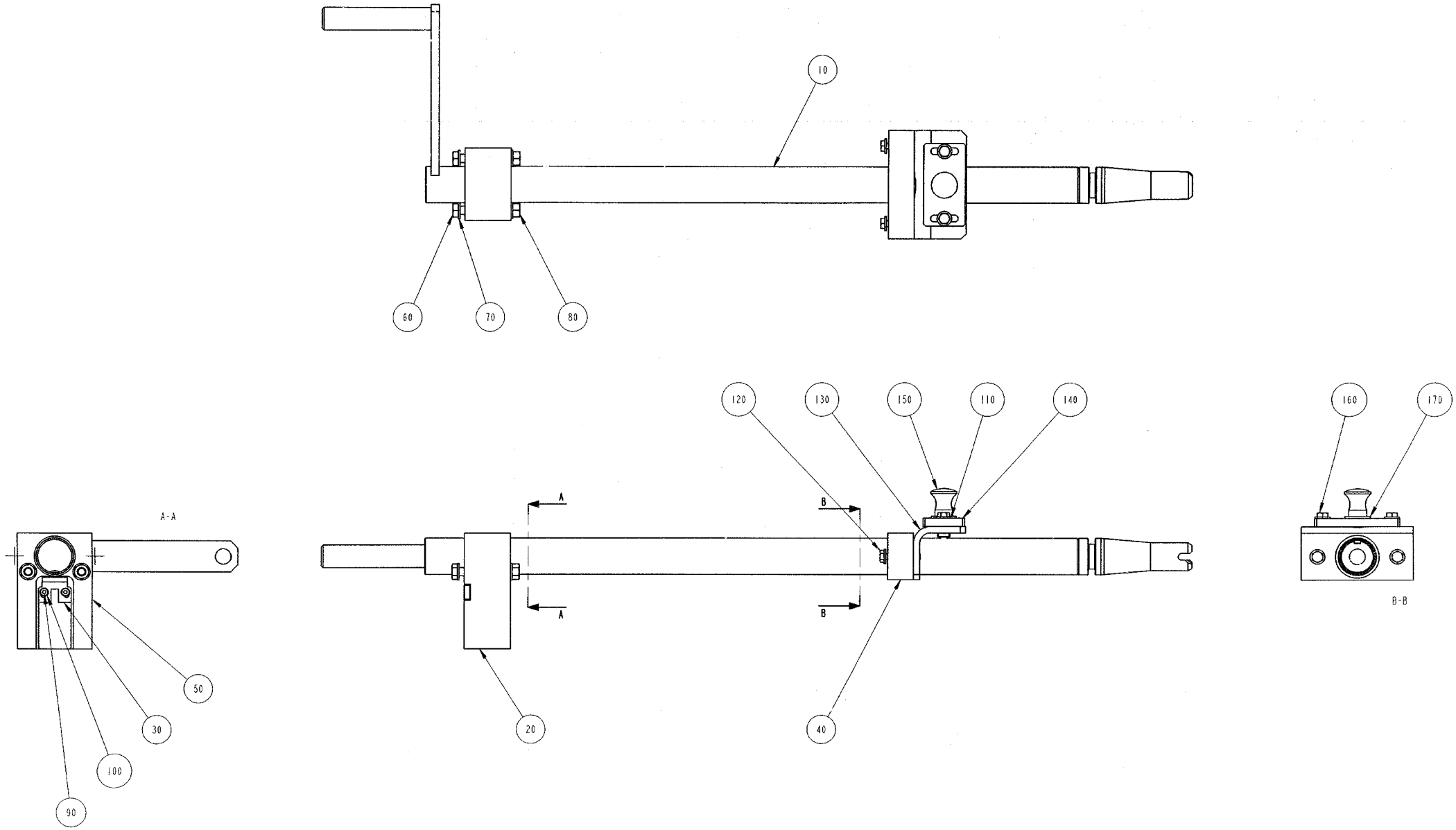
10
60
70
80
120
130
150
110
140
160
170
A-A
A
A
B
B
50
30
100
90
20
40
B-B

ECM: 72194 - 19990216
Group number: 1144319-0100
Assembly Drawing: 1144319-1_1_AA

Pos	Part No	UN	Qty	Description	Page No
-					
010	1144635-0000		1	CRANK	
020	1144546-0000		1	SUPPORT	
030	1144653-0000		1	SWITCH	
040	1144548-0000		1	SUPPORT	
050	1144547-0000		1	FLAT KEY	
060	312105-0463		2	SCREW M6S ISO 4014 M8X60 A480	
070	315105-0165		4	WASHER BRB 8,4X16 RFR	
080	312605-0318		2	HEXAGON NUT, M6M M8 A280	
090	312115-0303		2	SCREW ISO4762 M4X40 A4 80	
100	315105-0136		2	WASHER BRB 4,3X9 RFR	
110	315105-0156		4	WASHER BRB 6,7X14 RFR	
120	312109-0376		2	SCREW M6S ISO 4017 M6X35 A480	
130	1279509-0000		1	SUPPORT	
140	1279510-0000		1	SUPPORT	
150	90051-0125		1	LOCK KNOB, NO. GN 617-6-A-N1	
160	312105-0368		2	SCREW M6S ISO 4017 M6X16 A480	
170	315105-0178		2	WASHER BRB 13X24 RFR	

Pos	Part No	UN	Qty	Description	Page No

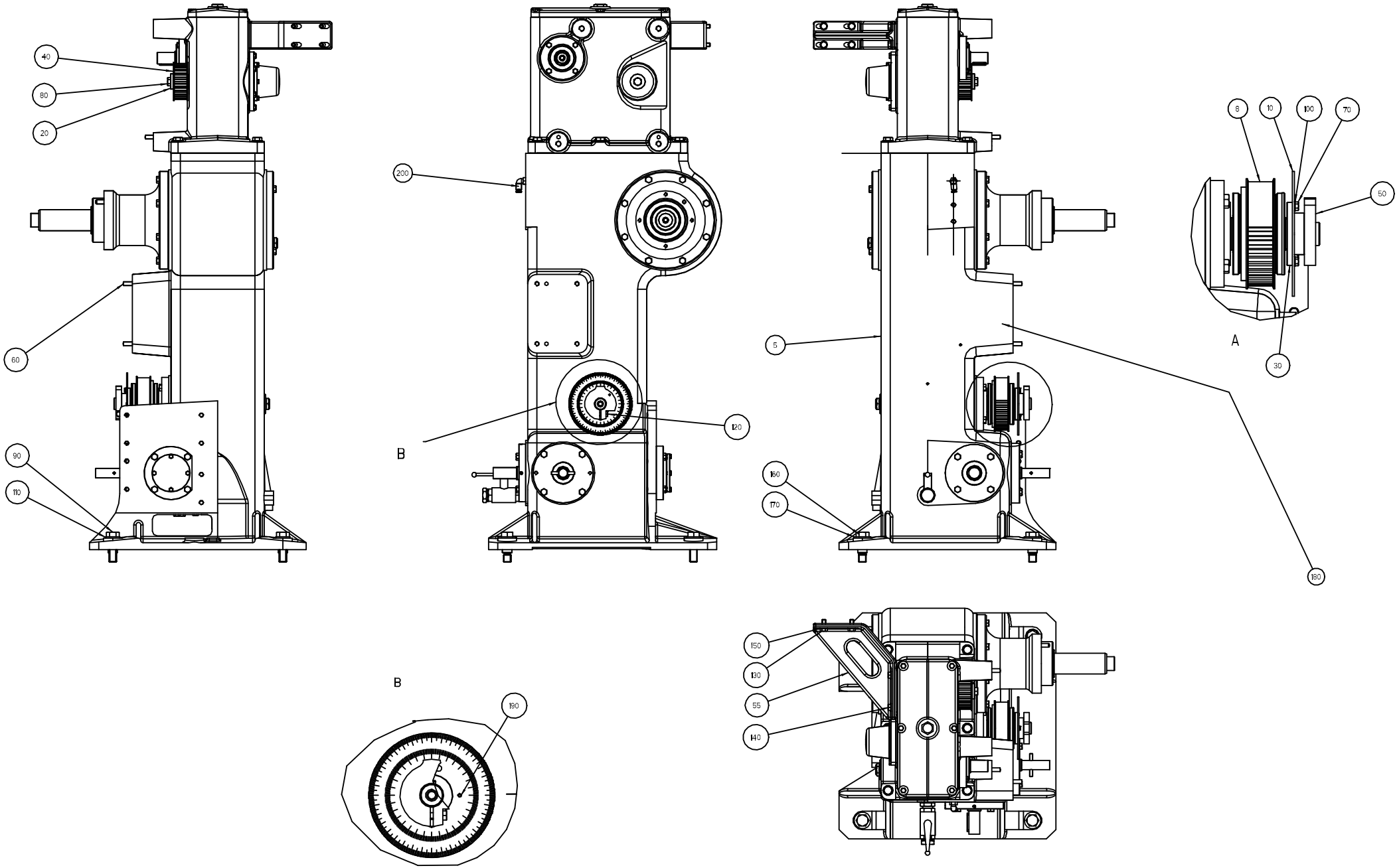
40
80
20
60
90
110
200
B
120
5
160
170
180
8
10
100
70
50
A
30
B
190
150
130
55
140

ECM: 72237 - 19990709
Group number: 1144320-0100
Assembly Drawing: 1144320-1_1_AD

Pos	Part No	UN	Qty	Description	Page No
TB/8					
040	1361246-0000		1	TIMING BELT PULLEY	
080	312105-0501		1	SCREW M6S ISO 4014 M10X50 A480	
090	312105-0631		2	SCREW M6S ISO 4014 M16X55 A480	
110	315105-0186		2	WASHER BRB 17X30 RFR	
160	1317094-0000		2	SCREW	
170	315105-0192		2	WASHER BRB 21X37 RFR	
Common Parts					
005	1285861-0100		1	INDEXING GEAR	
008	1285862-0100		1	FRICTION WHEEL	**6-15**
010	1144657-0000		1	PROTRACTOR	
020	1144681-0000		1	WASHER	
030	1144718-0000		1	FLANGE	
050	1144849-0000		1	SWITCH	
060	311103-0407		4	PARALLEL PIN ISO 2338 8M6X35 A1	
070	312105-0323		2	SCREW M6S ISO 4017 M5X8 A480	
100	315105-0146		2	WASHER BRB 5,3X10 RFR	
120	312105-0372		1	SCREW M6S ISO 4017 M6X25 A480	
190	311112-0251		1	SPRING PIN, ISO 8752 4X10-C	
200	342732-0102		1	ELBOW PIPE JOINT, EXT.THREAD, D=6MM-G1/8	

Pos	Part No	UN	Qty	Description	Page No

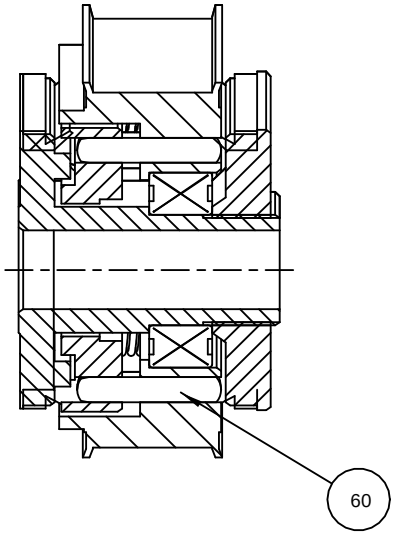
B-B
60

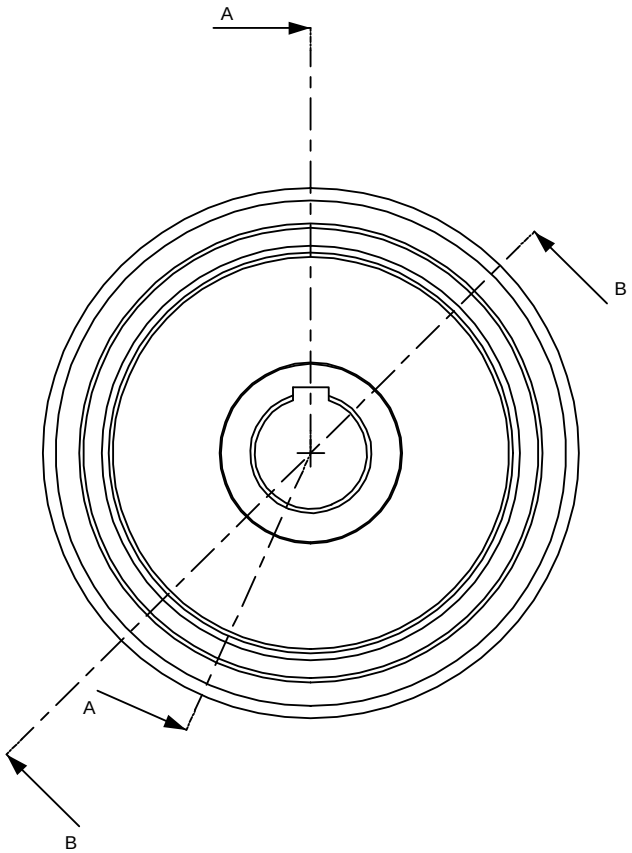
A
B
A
B

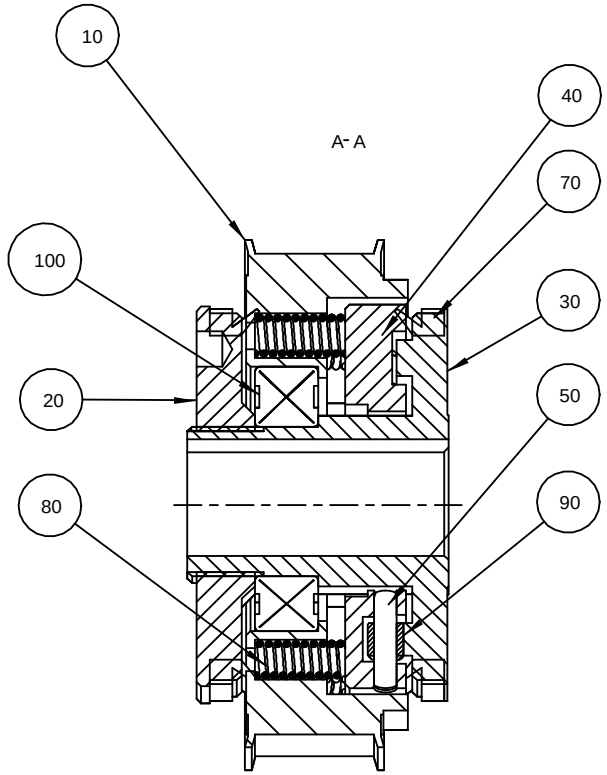
A- A
10
40
70
100
30
20
50
80
90

ECM: 71809 - 19980807
Group number: 1285862-0100
Assembly Drawing: 1285862-1_1_AA

Pos	Part No	UN	Qty	Description	Page No
-					
010	1144571-0000		1	PULLEY	
020	1144694-0000		1	NUT	
030	1282325-0000		1	HUB	
040	1282326-0000		1	RING	
050	1285888-0000		6	AXLE PIN	
060	1285889-0000		4	AXLE PIN	
070	1285890-0000		2	SEAL RING	
080	1285891-0000		12	SPRING	
090	1285892-0000		6	SPACER RING	
100	321306-0107		1	BALL BEARING, 35X62X14 MM	

Pos	Part No	UN	Qty	Description	Page No

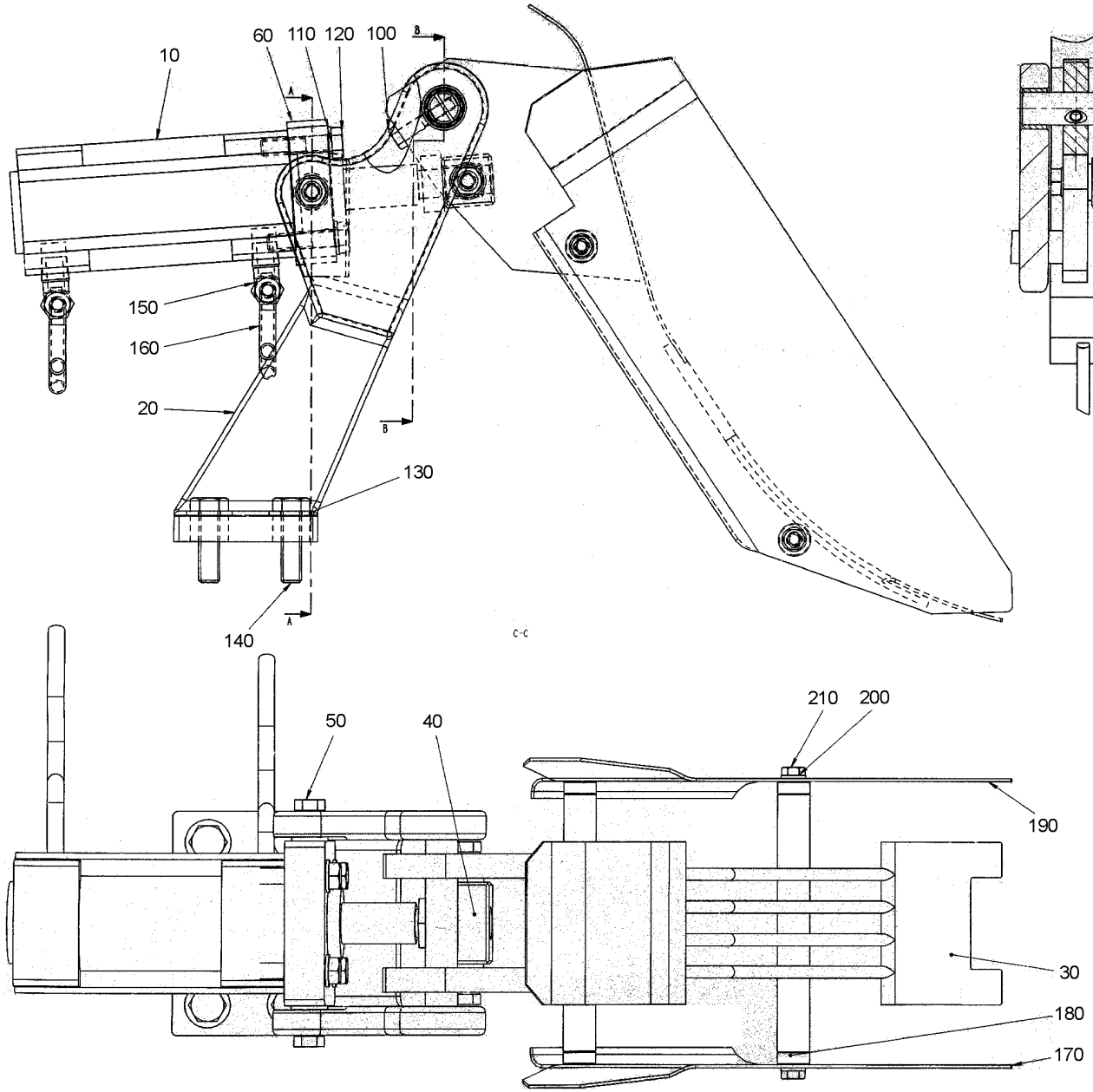
10
60
110
120
100
150
160
20
130
140
C-C
50
40
210
200
190
30
180
170

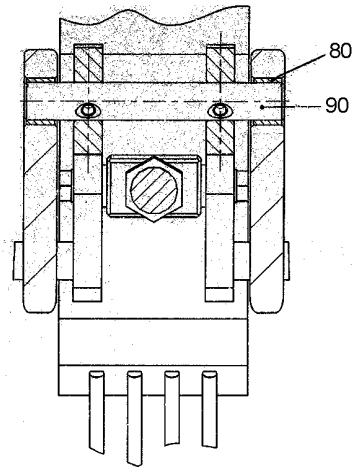
80
90
B-B

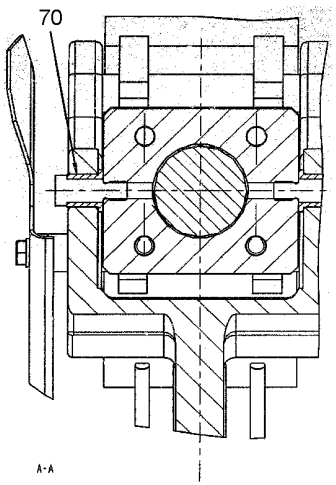
70
A-A

ECM: 72350 - 20000425
Group number: 1144321-0100
Assembly Drawing: 1144321-1_1_AB

Pos	Part No	UN	Qty	Description	Page No
TB 1500B					
030	1260945-0000		1	CRADLE	
180	596101-0000		4	SPACER	
210	312109-0374		4	SCREW M6S ISO 4017 M6X30 A480	
Common Parts					
010	90450-0504		1	DOUBLE ACTING, PROFILE, CYL 50-25	
020	1144578-0000		1	BRACKET	
040	1144577-0000		1	BLOCK	
050	449190-0000		4	SHAFT	
060	1144535-0000		1	PLATE	
070	1478928-0000		4	BUSHING	
080	321116-0234		2	BEARING BUSH W/O FLANGE, 16X20X12 MM	
090	1144579-0000		1	AXLE	
100	312105-0374		2	SCREW M6S ISO 4014 M6X30 A480	
110	315105-0165		4	WASHER BRB 8,4X16 RFR	
120	312105-0457		4	SCREW M6S ISO 4014 M8X35 A480	
130	315105-0173		4	WASHER BRB 10,5X20 RFR	
140	312105-0497		4	SCREW M6S ISO 4017 M10X35 A480	
150	342930-0122		2	ELBOW 90 COUPL.,EXT.THREAD 8/6-R1/4"	
160	90166-0013	M	1	TUBE 8 MM PA BLUE	
170	1260949-0000		1	PLATE LEFT	
190	1279411-0000		1	PLATE RIGHT	
200	315105-0153		4	WASHER BRB 6,4X12 RFR	

Pos	Part No	UN	Qty	Description	Page No

FLAP HEATER

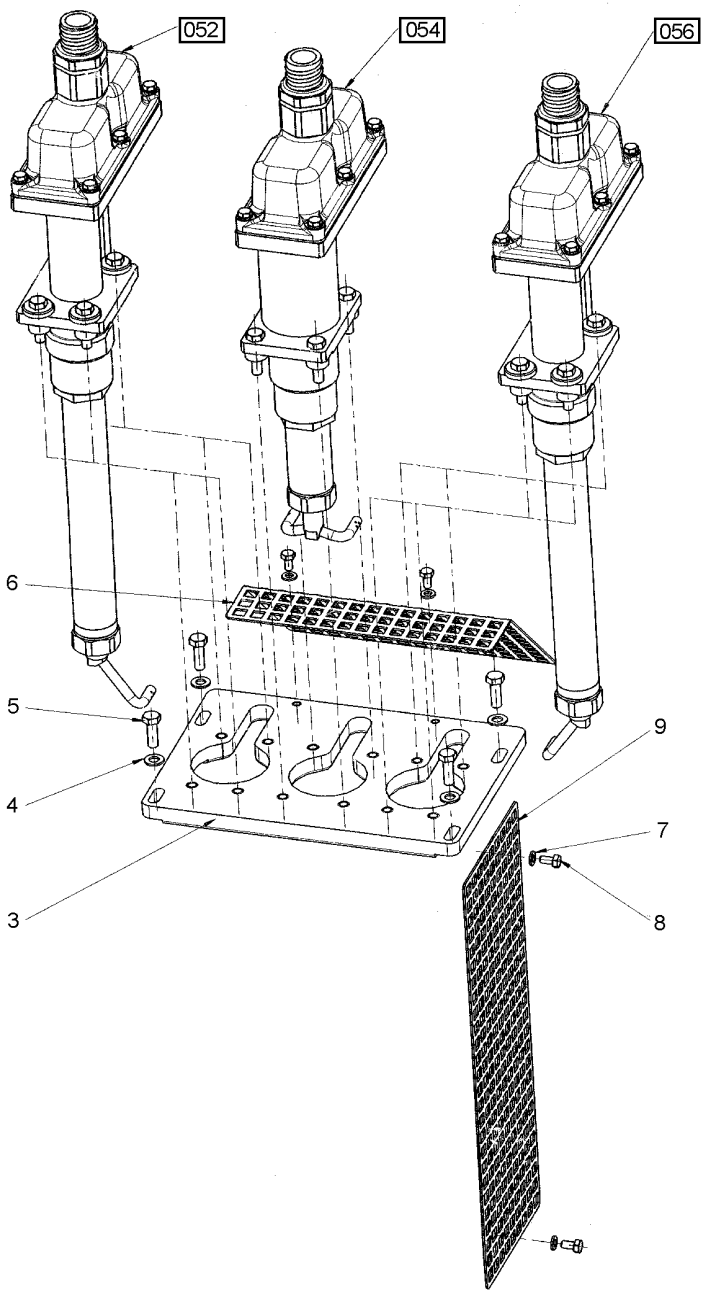

ECM: 72474 - 19990928
Group number: 1144745-0100
Assembly Drawing: 1144745-1_1_AB

Pos	Part No	UN	Qty	Description	Page No
-					
010	1285291-0000		1	PLATE	
050	312105-0453		4	SCREW M6S ISO 4017 M8X25 A480	
052	1296966-0100		1	HEATING ELEMENT	**6-21**
054	1296967-0100		1	HEATING ELEMENT	**6-23**
056	1296968-0100		1	HEATING ELEMENT	**6-25**
070	315105-0165		4	WASHER BRB 8,4X16 RFR	

Pos	Part No	UN	Qty	Description	Page No

HEATING ELEMENT

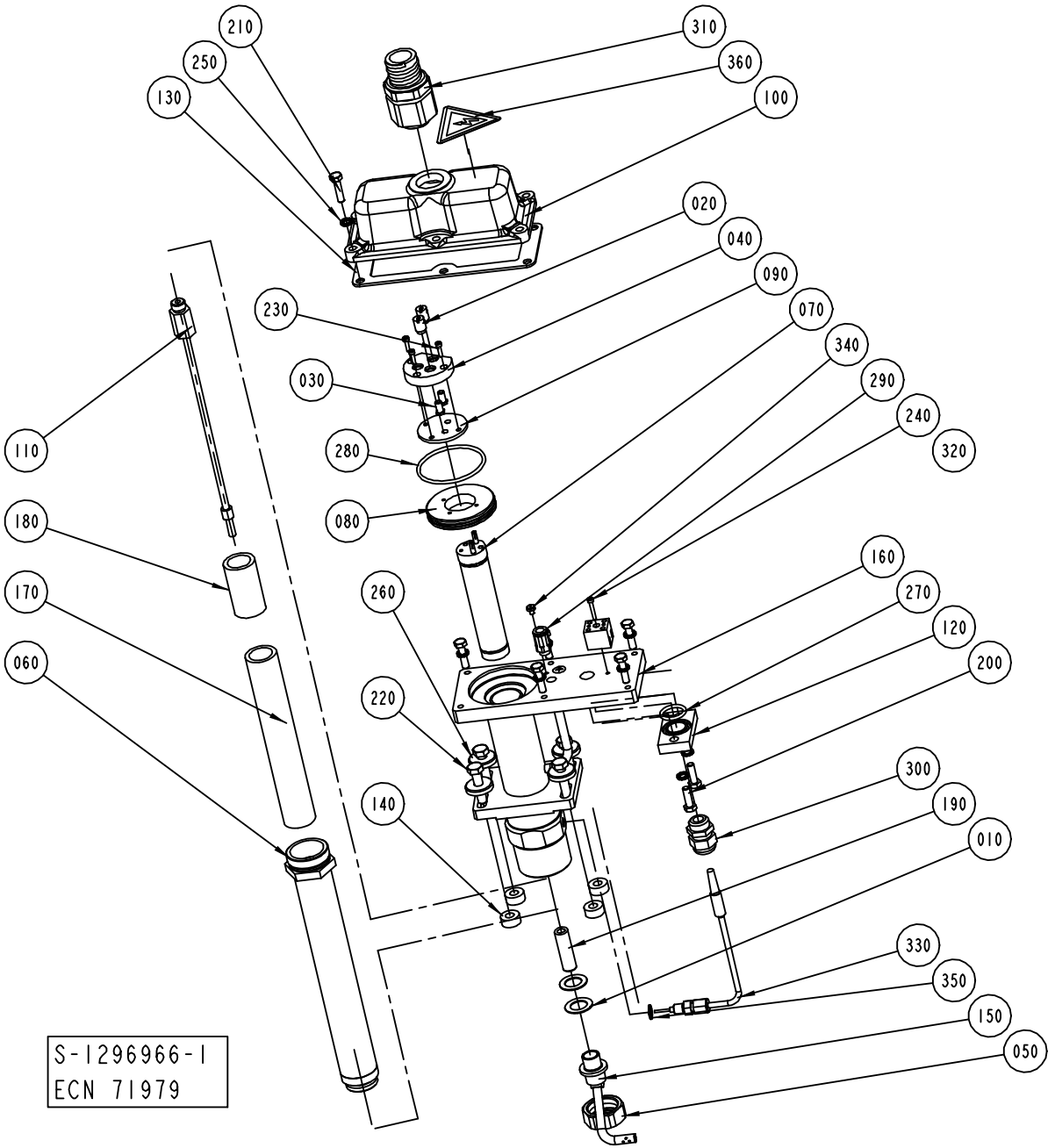

ECM: 73014 - 20000408
Group number: 1296966-0100
Assembly Drawing: 1296966-1_1_AB

Pos	Part No	UN	Qty	Description	Page No
TB 1500B					
010	263673-0000		2	GASKET	
050	1317085-0000		1	NUT	
060	1285288-0000		1	SPACER	
070	90206-0131		1	HEATING ELEMENT 1200W 220V	
110	1285310-0000		1	EXTENSION	
140	596128-0000		2	SPACER	
150	596125-0000		1	AIR NOZZLE	
170	23765-0001		1	INSULATING PIPE	
190	252766-0002		1	INSULATING PIPE	
220	312105-0466		4	SCREW M6S ISO 4014 M8X75 A480	
Common Parts					
020	266739-0000		2	CABLE GLAND	
030	270927-0000		2	SCREW	
040	294464-0000		1	BASE PLATE	
080	1285307-0000		1	SPACER	
090	1285308-0000		1	GASKET	
100	1285309-0000		1	COVER	
120	1285311-0000		1	PLATE	
130	1285312-0000		1	GASKET	
160	1296070-0000		1	HEATING PIPE	
180	23765-0003		1	INSULATING PIPE	
200	312105-0368		2	SCREW M6S ISO 4017 M6X16 A480	
210	312105-0372		6	SCREW M6S ISO 4017 M6X25 A480	
230	312115-0226		3	SCREW ISO4762 M3X12 A4 80	
240	312115-0230		1	SCREW ISO4762 M3X20 A4 80	
250	90062-0015		8	LOCK WASHER SERRAT.EXT.GEAR,6,4/11 H=0,7	
260	315125-0165		4	WASHER TBRSB 8,4X26X5 A4	
270	315204-0215		1	O-RING 19,2X3 MM	
280	315204-0303		1	O-RING 59,5X3 MM	
290	342722-0204		1	PIPE COUPLING	
300	352103-0106		1	CABLE GLAND, ST 11, PR18,6/PG11	
310	353247-0005		1	HOSE GLAND EMC PG21 EXTENDED	
320	90195-0020		1	TERMINAL BLOCK, 1977.2	
330	90326-0081		1	THERMOCOUPLE, ISA TYPE K.	
340	312132-0284		1	SCREW SLOT. PAN HEAD MSCS M4X5	
350	315234-0109		1	WASHER,PL.RND.CU.10,3/13,5 H=1,0	
360	359705-0015		1	WARNING SIGN ISO, RISK OF ELECTRIC SHOCK	

Pos	Part No	UN	Qty	Description	Page No

Machine Type | Group Description | Used-In | Group Number | Page No

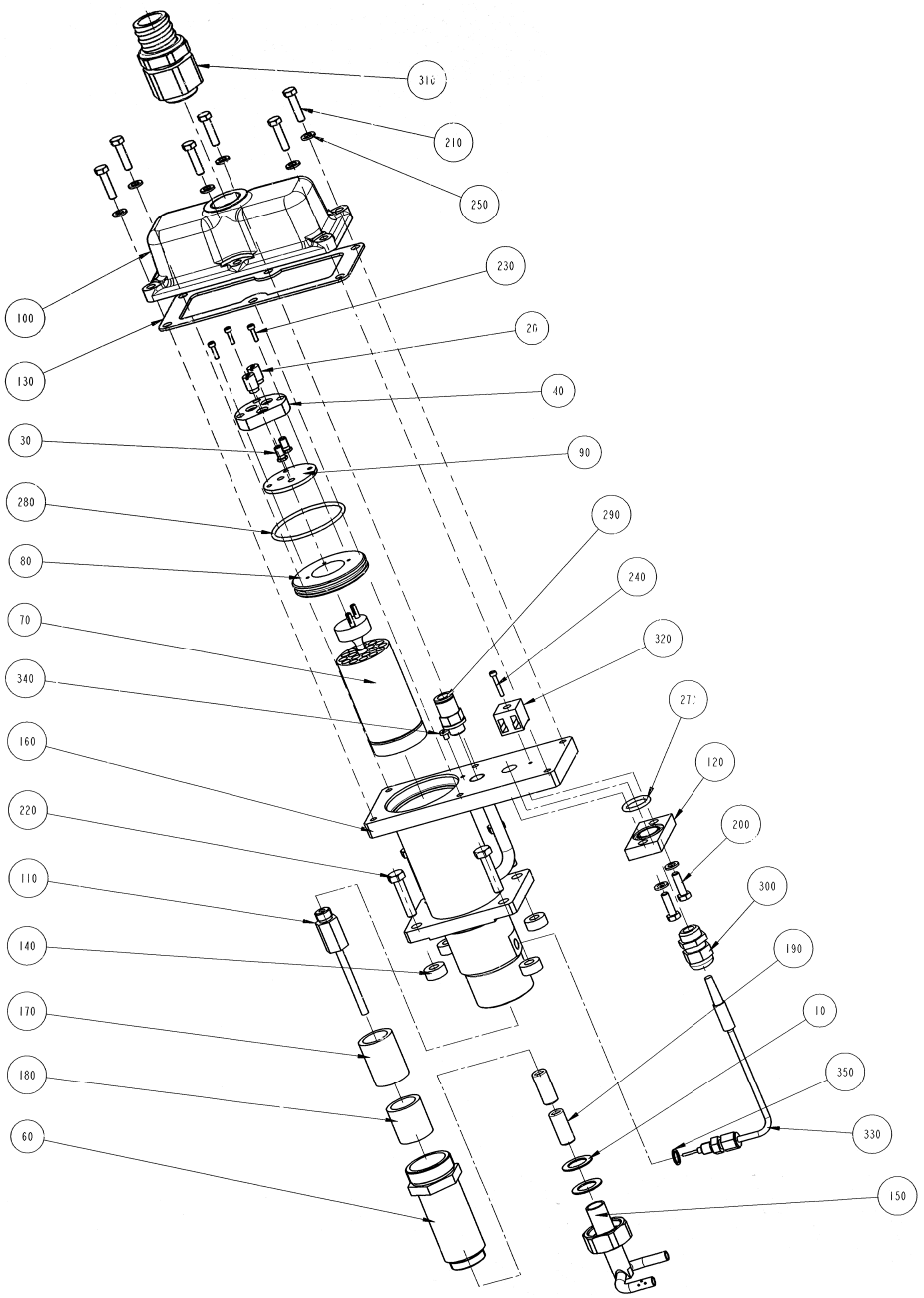
310
210
250
230
100
20
130
40
30
90
280
290
80
240
70
320
340
270
160
120
220
200
110
300
140
190
170
10
180
350
60
330
150

ECM: 72704 - 19991007
Group number: 1296967-0100
Assembly Drawing: 1296967-1_1_AA

Pos	Part No	UN	Qty	Description	Page No
TB 1500B					
010	263673-0000		2	GASKET	
060	1285869-0000		1	SPACER	
110	1285870-0000		1	EXTENSION	
140	1285874-0000		4	SPACER	
150	596127-0000		1	AIR NOZZLE	
190	252766-0001		1	INSULATING PIPE	
220	312109-0457		4	SCREW M6S ISO 4017 M8X35 A480	
Common Parts					
020	266739-0000		2	CABLE GLAND	
030	270927-0000		2	SCREW	
040	294464-0000		1	BASE PLATE	
070	90206-0030		1	HEATING ELEMENT 3000W, 220V	
080	1285307-0000		1	SPACER	
090	1285308-0000		1	GASKET	
100	1285309-0000		1	COVER	
120	1285311-0000		1	PLATE	
130	1285312-0000		1	GASKET	
160	1285293-0000		1	HEATING PIPE	
180	23765-0005		1	INSULATING PIPE	
200	312105-0368		2	SCREW M6S ISO 4017 M6X16 A480	
210	312105-0372		6	SCREW M6S ISO 4017 M6X25 A480	
230	312115-0226		3	SCREW ISO4762 M3X12 A4 80	
240	312115-0230		1	SCREW ISO4762 M3X20 A4 80	
250	90062-0015		8	LOCK WASHER SERRAT.EXT.GEAR,6,4/11 H=0,7	
270	315204-0215		1	O-RING 19,2X3 MM	
280	315204-0303		1	O-RING 59,5X3 MM	
290	342722-0211		1	STRAIGHT COUPLING D=10-G1/4"	
300	352103-0106		1	CABLE GLAND, ST 11, PR18,6/PG11	
310	353247-0005		1	HOSE GLAND EMC PG21 EXTENDED	
320	90195-0020		1	TERMINAL BLOCK, 1977.2	
330	90326-0081		1	THERMOCOUPLE, ISA TYPE K.	
340	312132-0284		1	SCREW SLOT. PAN HEAD MSCS M4X5	
350	315234-0109		1	WASHER,PL.RND.CU.10,3/13,5 H=1,0	
360	359705-0015		1	WARNING SIGN ISO, RISK OF ELECTRIC SHOCK	

Pos	Part No	UN	Qty	Description	Page No

HEATING ELEMENT

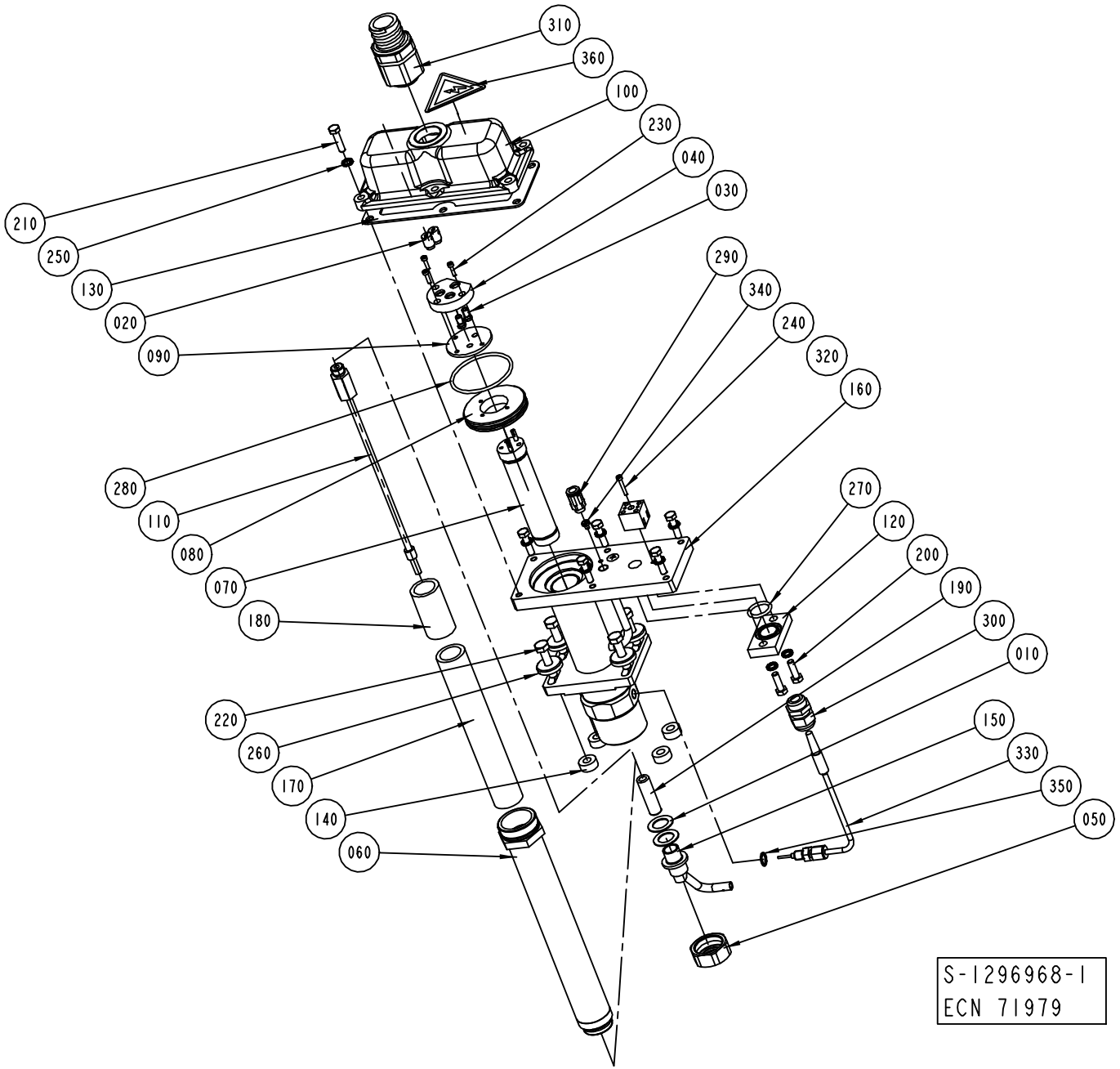

ECM: 73014 - 20000408
Group number: 1296968-0100
Assembly Drawing: 1296968-1_1_AB

Pos	Part No	UN	Qty	Description	Page No
TB 1500B					
010	263673-0000		2	GASKET	
050	1317085-0000		1	NUT	
060	1285288-0000		1	SPACER	
070	90206-0131		1	HEATING ELEMENT 1200W 220V	
110	1285310-0000		1	EXTENSION	
140	596128-0000		2	SPACER	
150	596126-0000		1	AIR NOZZLE	
170	23765-0001		1	INSULATING PIPE	
190	252766-0002		1	INSULATING PIPE	
220	312105-0466		4	SCREW M6S ISO 4014 M8X75 A480	
Common Parts					
020	266739-0000		2	CABLE GLAND	
030	270927-0000		2	SCREW	
040	294464-0000		1	BASE PLATE	
080	1285307-0000		1	SPACER	
090	1285308-0000		1	GASKET	
100	1285309-0000		1	COVER	
120	1285311-0000		1	PLATE	
130	1285312-0000		1	GASKET	
160	1296070-0000		1	HEATING PIPE	
180	23765-0003		1	INSULATING PIPE	
200	312105-0368		2	SCREW M6S ISO 4017 M6X16 A480	
210	312105-0372		6	SCREW M6S ISO 4017 M6X25 A480	
230	312115-0226		3	SCREW ISO4762 M3X12 A4 80	
240	312115-0230		1	SCREW ISO4762 M3X20 A4 80	
250	90062-0015		8	LOCK WASHER SERRAT.EXT.GEAR,6,4/11 H=0,7	
260	315125-0165		4	WASHER TBRSB 8,4X26X5 A4	
270	315204-0215		1	O-RING 19,2X3 MM	
280	315204-0303		1	O-RING 59,5X3 MM	
290	342722-0204		1	PIPE COUPLING	
300	352103-0106		1	CABLE GLAND, ST 11, PR18,6/PG11	
310	353247-0005		1	HOSE GLAND EMC PG21 EXTENDED	
320	90195-0020		1	TERMINAL BLOCK, 1977.2	
330	90326-0081		1	THERMOCOUPLE, ISA TYPE K.	
340	312132-0284		1	SCREW SLOT. PAN HEAD MSCS M4X5	
350	315234-0109		1	WASHER,PL.RND.CU.10,3/13,5 H=1,0	
360	359705-0015		1	WARNING SIGN ISO, RISK OF ELECTRIC SHOCK	

Pos	Part No	UN	Qty	Description	Page No

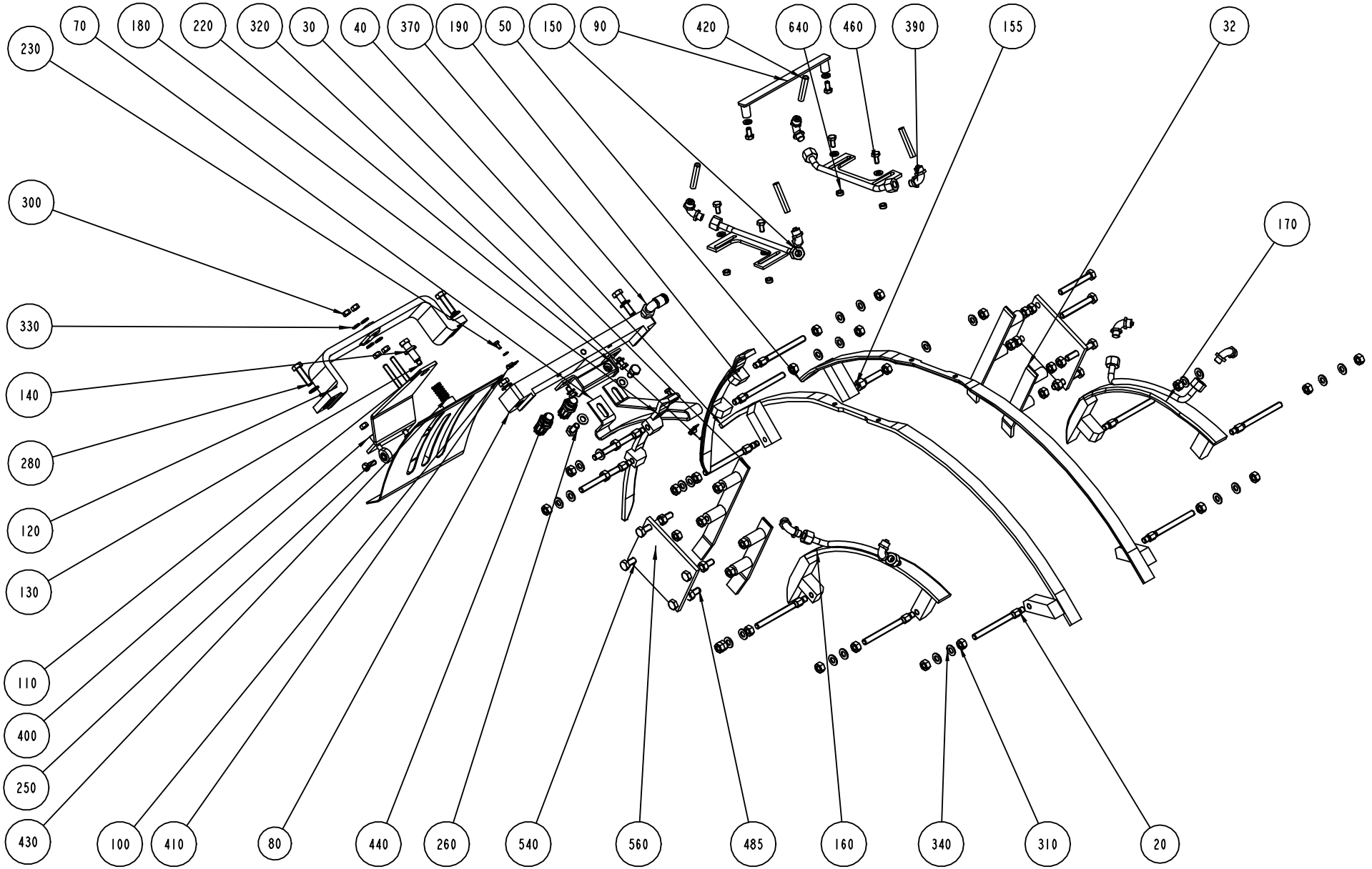

1285012-9
ECM 116881

ECM: 116885 - 20040120
Group number: 1285012-0100
Assembly Drawing: 1285012-9_1_AC

Pos	Part No	UN	Qty	Description	Page No
TB/8 TB 1500B					
020	1144555-0000		11	STUD SCREW	
030	1362933-0000		2	RAIL	
032	1362934-0000		2	RAIL	
040	1350424-0000		1	GUIDE RIGHT	
050	1350425-0000		1	GUIDE LEFT	
070	1347057-0000		1	GUIDE	
080	2564735-0000		1	SUPPORT	
090	1285267-0000		1	SUPPORT	
100	1144941-0000		1	COVERING PLATE	
110	1144974-0000		1	ADJUSTING PLATE	
120	1285299-0000		1	BRACKET	
155	1282843-0000		1	SUPPORT	
160	596116-0000		1	FOLDING BAR	
170	596105-0000		1	FOLDING BAR	
180	1279532-0000		1	GUIDE UPPER L	
190	1282711-0000		1	GUIDE UPPER R	
220	596124-0000		1	DISTRIBUTOR	
230	312105-0287		4	SCREW M6S ISO 4017 M4X8 A470	
240	312105-0364		4	SCREW M6S ISO 4017 M6X10 A480	
250	312105-0368		2	SCREW M6S ISO 4017 M6X16 A480	
260	312105-0449		2	SCREW M6S ISO 4017 M8X16 A480	
270	312105-0453		2	SCREW M6S ISO 4017 M8X25 A480	
280	312105-0457		4	SCREW M6S ISO 4014 M8X35 A480	
310	312605-0318		40	HEXAGON NUT, M6M M8 A280	
320	315105-0136		4	WASHER BRB 4,3X9 RFR	
330	315105-0153		12	WASHER BRB 6,4X12 RFR	
340	315105-0165		30	WASHER BRB 8,4X16 RFR	
350	315105-0173		1	WASHER BRB 10,5X20 RFR	
370	342732-0104		1	ELBOW PIPE JOINT, EXT.THREAD, D=8MM-G1/4	
390	342931-0121		8	ELBOW 90 COUPL.,EXT.THREAD 8/6-G1/8"	
410	316810-0106		4	PIPE CLIP FOR TUBE D=8 MM	
430	90335-0036		1	COMP. SPRING 22450, 1,6X14,1X24	
440	90424-0068		2	AIR NOZZLE, G1/4, MOD. 216 BSP	
460	312105-0366		4	SCREW M6S ISO 4017 M6X12 A480	
485	312109-0461		4	SCREW M6S ISO 4017 M8X50 A480	
540	1362932-0000		2	SUPPORT	
640	1282705-0000		4	SUPPORT	
Common Parts					
130	1144976-0000		1	STOP SCREW	
140	1144979-0000		1	WASHER	
150	1350423-0000		2	FOLDING BAR	
300	312605-0316		8	HEXAGON NUT, M6M M6 A280	
400	90115-0137		2	ROD END, ID=6 MM, M6X1	
420	90166-0118	MM	1500	TUBE 8 MM PA BLACK	
700	352113-0102		10	CABLE TIE, BLACK 188X4,8 MM	

Machine Type	Group Description	Used-In	Group Number	Page No

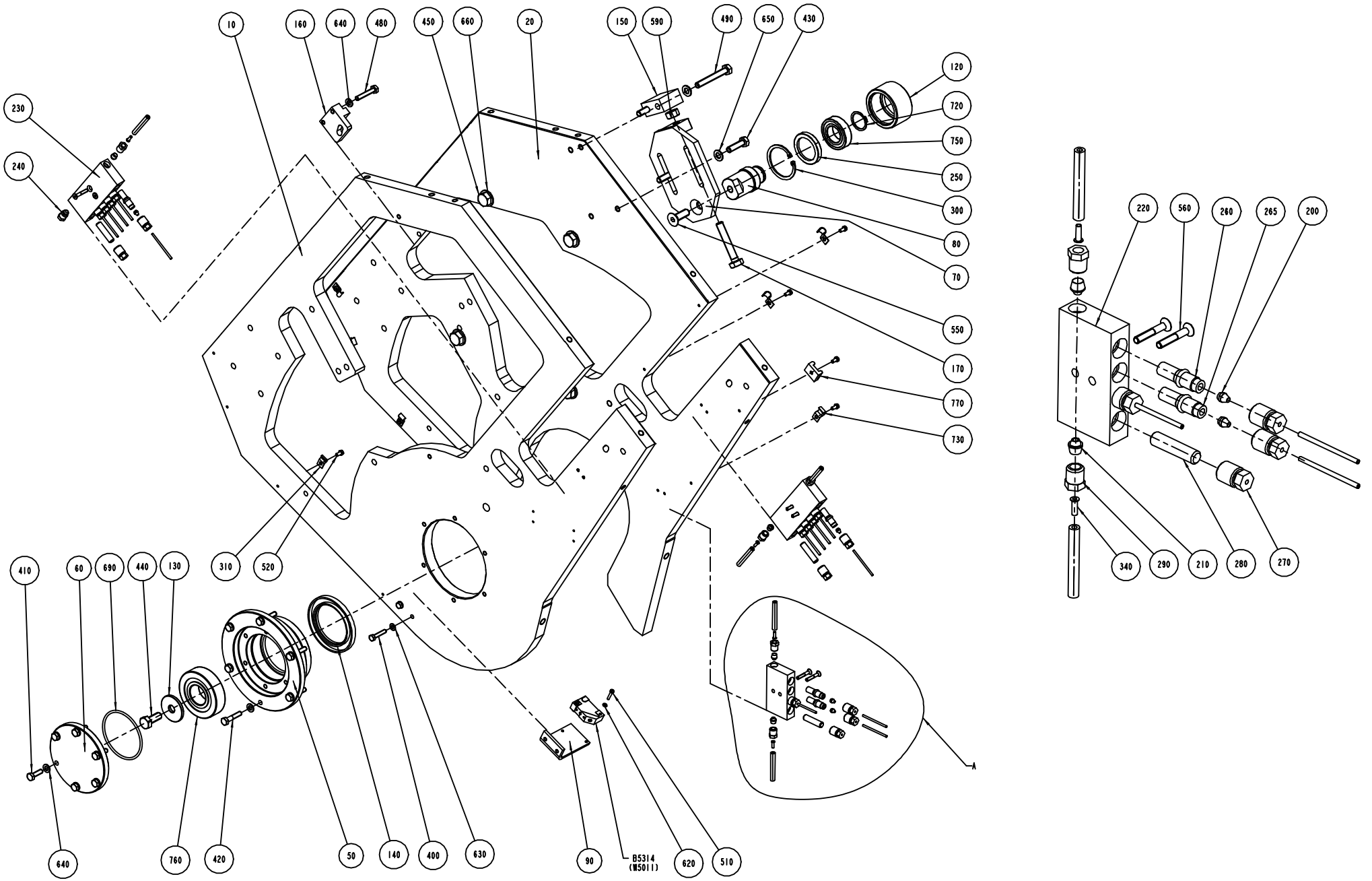
10
160
640
480
450
660
20
150
590
490
650
430
120
720
750
250
300
80
70
550
170
770
730
230
240
220
560
260
265
200
340
290
210
280
270
410
60
690
440
130
310
520
640
760
420
50
140
400
630
90
B5314
(W5011)
620
510

ECM: 72862 - 20000310
Group number: 1144324-0100
Assembly Drawing: 1144324-1_2_AC

Pos	Part No	UN	Qty	Description	Page No
TB/8 TB 1500B					
010	1347227-0000		1	PLATE	
020	1144632-0000		1	PLATE	
050	598101-0000		1	BEARING HOUSING	
075	1362936-0100		1	BELT TIGHTENER	**6-31**
160	1282844-0000		1	SUPPORT	
200	90028-0020		13	CONE TUBE 2,5MM	
260	90092-0052		12	METERING VALVE 10 MM3	
280	90134-0052		3	PLUG DOSING BLOCK	
400	312105-0333		2	SCREW M6S ISO 4017 M5X25 A480	
Common Parts					
060	1144618-0000		1	FLANGE	
070	1144797-0000		1	SUPPORT	
090	1144851-0000		1	SUPPORT	
130	1144620-0000		1	WASHER	
140	1144665-0000		1	SEAL RING	
150	1144839-0000		1	BLOCK	
170	1260931-0000		1	SCREW	
210	90028-0025		5	CONE TUBE 6 MM	
220	90032-0039		1	BLOCK 4 WAYS	
230	90032-0040		2	BLOCK 6 WAYS	
240	90087-0019		1	PLUG M10X1 STAINLESS	
265	90092-0053		1	METERING VALVE 30 MM3	
270	90134-0039		16	BUSHING VALVE CONNECTION 2,5 MM	
290	90134-0055		5	BUSHING/NUT INLET/OUTLET 6 MM	
310	90165-0056		8	PIPE CLIP FOR TUBE D=4 MM	
320	90166-0108	M	4	TUBE 6 MM PA,TRANSP.	
330	90166-0143	M	4	TUBE 2,5 MM PA,TRANSP.	
340	90134-0030		5	SLEEVE FOR PLASTIC TUBE	
410	312105-0370		6	SCREW M6S ISO 4017 M6X20 A480	
420	312105-0374		6	SCREW M6S ISO 4014 M6X30 A480	
430	312105-0455		2	SCREW M6S ISO 4017 M8X30 A480	
440	312105-0493		1	SCREW M6S ISO 4017 M10X25 A480	
450	312105-0540		4	SCREW M6S ISO 4017 M12X40 A480	
480	312109-0376		2	SCREW M6S ISO 4017 M6X35 A480	
490	312109-0463		2	SCREW M6S ISO 4017 M8X60 A480	
510	312125-0228		2	SCREW ISO 1207 M3X16 A4	
520	312125-0287		12	SCREW ISO 1207 M4X8 A4	
550	312155-0495		1	SCREW DIN 7991 MF6S M10X30 A4 70	
560	312155-0297		6	SCREW DIN 7991 MF6S M4X25 A4 70	
590	312605-0320		1	HEXAGON NUT, M6M M10 A280	
620	315105-0124		2	WASHER BRB 3,2X7 RFR	
630	315105-0146		2	WASHER BRB 5,3X10 RFR	
640	315105-0153		14	WASHER BRB 6,4X12 RFR	
650	315105-0165		4	WASHER BRB 8,4X16 RFR	
660	315105-0178		4	WASHER BRB 13X24 RFR	
690	315202-0305		1	O-RING 69,5X3 MM	
730	316810-0106		3	PIPE CLIP FOR TUBE D=8 MM	
760	321316-0206		1	BALL BEARING, 30X72X19 MM	
770	352113-0203		1	ANCHOR PLATES FOR STRIPS, TYPE TM3S8-M0	
780	352113-0102		3	CABLE TIE, BLACK 188X4,8 MM	
790	352113-0101		7	CABLE TIE, BLACK 92X2,5 MM	
B5314	90044-0104		1	PROX.SWITCH IFM IN 3002(RP 90044-194)	

Machine Type | Group Description | Used-In | Group Number | Page No

BELT TIGHTENER

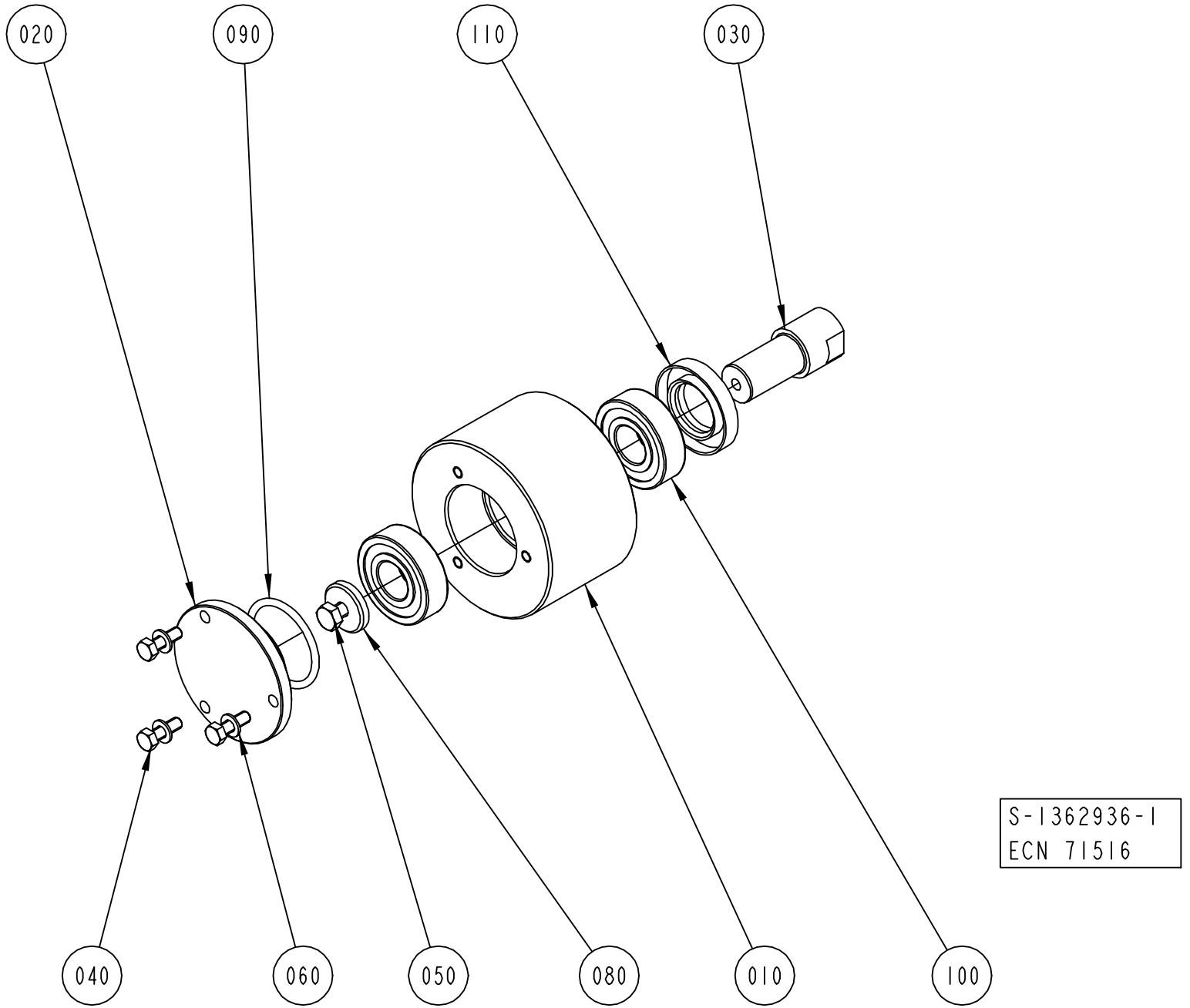

ECM: 71516 - 19990709
Group number: 1362936-0100
Assembly Drawing: 1362936-1_1_AA

Pos	Part No	UN	Qty	Description	Page No
-					
010	1144594-0000		1	ROLLER	
020	1144596-0000		1	PLUG	
030	1361249-0000		1	AXLE PIN	
040	312105-0329		3	SCREW M6S ISO 4017 M5X16 A480	
050	312105-0366		1	SCREW M6S ISO 4017 M6X12 A480	
060	315105-0146		3	WASHER BRB 5,3X10 RFR	
080	315125-0153		1	WASHER TBRSB 6,4X22X4 A4	
090	315202-0221		1	O-RING 34,2X3 MM	
100	321313-0103		2	BALL BEARING, 17X40X12MM	
110	90091-0404		1	RADIAL SEAL 22X40X7 MM DUST LIP	

Pos	Part No	UN	Qty	Description	Page No

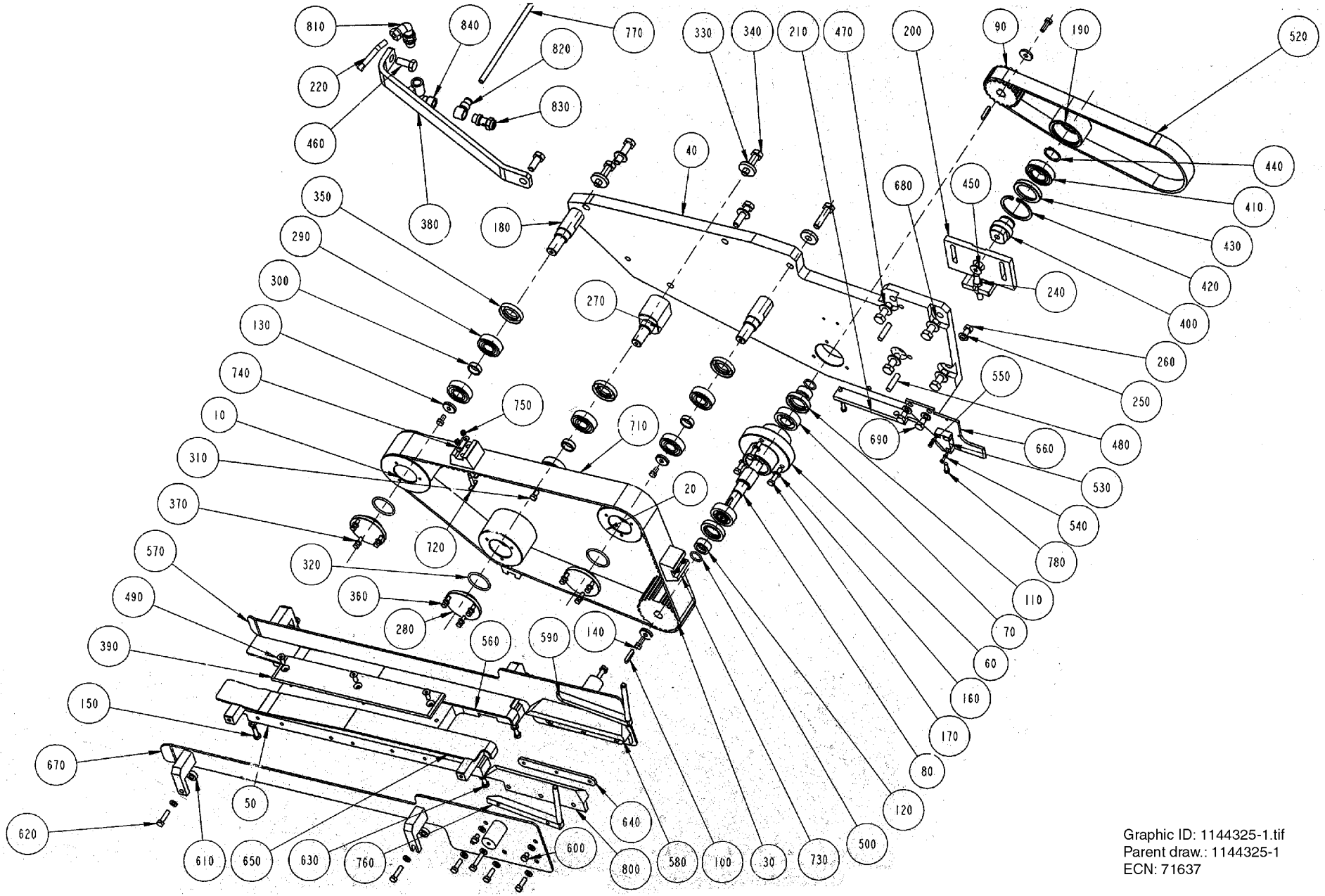

Graphic ID: 1144325-1.tif
Parent draw.: 1144325-1
ECN: 71637

ECM: 71637 - 19990709
Group number: 1144325-0100
Assembly Drawing: 1144325-1_1_AA

Pos	Part No	UN	Qty	Description	Page No
TB 1500B					
040	1282390-0000		1	PLATE	
050	1282701-0000		1	BRACKET	
090	1282681-0000		1	TOOTHED PULLEY	
150	312105-0370		9	SCREW M6S ISO 4017 M6X20 A480	
170	312109-0374		5	SCREW M6S ISO 4017 M6X30 A480	
190	1282402-0000		1	ROLLER	
390	1282702-0000		1	SLIDE	
520	1282382-0000		1	TIMING BELT	
560	1282703-0000		1	SLIDE	
570	596137-0000		1	GEJD	
580	596103-0000		1	SLIDE	
610	596101-0000		4	SPACER	
620	312109-0378		2	SCREW M6S ISO 4017 M6X40 A480	
630	312109-0376		2	SCREW M6S ISO 4017 M6X35 A480	
640	596104-0000		2	PLATE	
650	1282704-0000		1	SLIDE	
660	1334457-0000		1	PLATE	
670	596110-0000		1	GUIDE	
710	1346587-0000		1	TIMING BELT	
720	1346471-0000		8	WEDGE	
730	1144919-0000		4	CARRIER	
740	1144918-0000		4	PLATE	
750	312812-0312		8	HEXAGON NUT, NY-LOCK M4 A480	
800	596102-0000		1	SLIDE	
Common Parts					
010	1144614-0000		1	ROLLER	
020	1144594-0000		2	ROLLER	
030	927859-0000		1	TOOTHED PULLY	
060	1144468-0000		1	BEARING HOUSING	
070	90214-0219		2	CYL.ROLLER BEARING, 17X40X12 MM	
080	1144470-0000		1	SHAFT	
100	315705-0202		2	PARALLEL KEY W ROUND ENDS 5X5X25MM	
110	90091-0406		2	RADIAL SEAL 25X40X7 MM DUST LIP	
120	1144625-0000		2	SPACER	
130	315125-0153		5	WASHER TBRSB 6,4X22X4 A4	
140	312105-0368		1	SCREW M6S ISO 4017 M6X16 A480	
160	315105-0153		19	WASHER BRB 6,4X12 RFR	
180	1144598-0000		2	SHAFT	
200	1144588-0000		1	SUPPORT	
210	1334456-0000		1	PLATE	
220	1346615-0000		1	PIPE	
240	312605-0318		2	HEXAGON NUT, M6M M8 A280	
250	315105-0165		4	WASHER BRB 8,4X16 RFR	
260	312105-0451		2	SCREW M6S ISO 4017 M8X20 A480	
270	1144595-0000		1	ECCENTRIC SHAFT	
280	1144596-0000		3	PLUG	
290	321313-0103		6	BALL BEARING, 17X40X12MM	
300	1144597-0000		3	SPACER	
310	312105-0366		3	SCREW M6S ISO 4017 M6X12 A480	
320	315202-0221		3	O-RING 34,2X3 MM	
330	315125-0173		3	WASHER TBRSB 10,5X28X6 A4	
340	312109-0499		5	SCREW M6S ISO 4017 M10X40 A480	
350	90091-0404		3	RADIAL SEAL 22X40X7 MM DUST LIP	
360	312105-0329		9	SCREW M6S ISO 4017 M5X16 A480	
370	315105-0146		9	WASHER BRB 5,3X10 RFR	
380	1144840-0000		1	BRACKET	
400	1144619-0000		1	SHAFT	
410	321308-0205		1	BALL BEARING, 25X47X12MM	
420	315753-0132		1	RETAINING RING FOR BORE DIN 472 52 A2	
430	90091-0297		1	RADIAL SEAL 35X47X7 MM DUST LIP	
440	315751-0119		1	RETAINING RING FOR SHAFT DIN 471 25 A2	
450	312155-0495		1	SCREW DIN 7991 MF6S M10X30 A4 70	
460	312105-0493		2	SCREW M6S ISO 4017 M10X25 A480	
470	315105-0173		6	WASHER BRB 10,5X20 RFR	
480	311103-0407		2	PARALLEL PIN ISO 2338 8M6X35 A1	
490	312155-0368		3	SCREW DIN 7991 MF6S M6X16 A4 70	
500	315202-0267		2	O-RING 16,3X2,4 MM	
530	90044-0104		1	PROX.SWITCH IFM IN 3002(RP 90044-194)	
540	315105-0124		2	WASHER BRB 3,2X7 RFR	
550	312125-0228		2	SCREW ISO 1207 M3X16 A4	
680	312105-0495		4	SCREW M6S ISO 4017 M10X30 A480	
690	312105-0447		2	SCREW M6S ISO 4017 M8X12 A480	
770	90166-0123	MM	400	HOSE	
780	312125-0329		2	SCREW ISO 1207 M5X16 A4	
810	342738-0208		1	ADJUSTABLE ELBOW CONNECTION,EXT 8-G1/4	
820	342981-0122		1	BANJO CONNEC,RING,FOR PLAST.TUBE 8-G1/4"	
830	90235-0731		1	THROTTLE CHECK VALVE, G1/4", SCO-606-1/4	
840	90140-0013		1	ELBOW, 90 INT/EXT, 2020-1/4-1/4	

Machine Type	Group Description	Used-In	Group Number	Page No

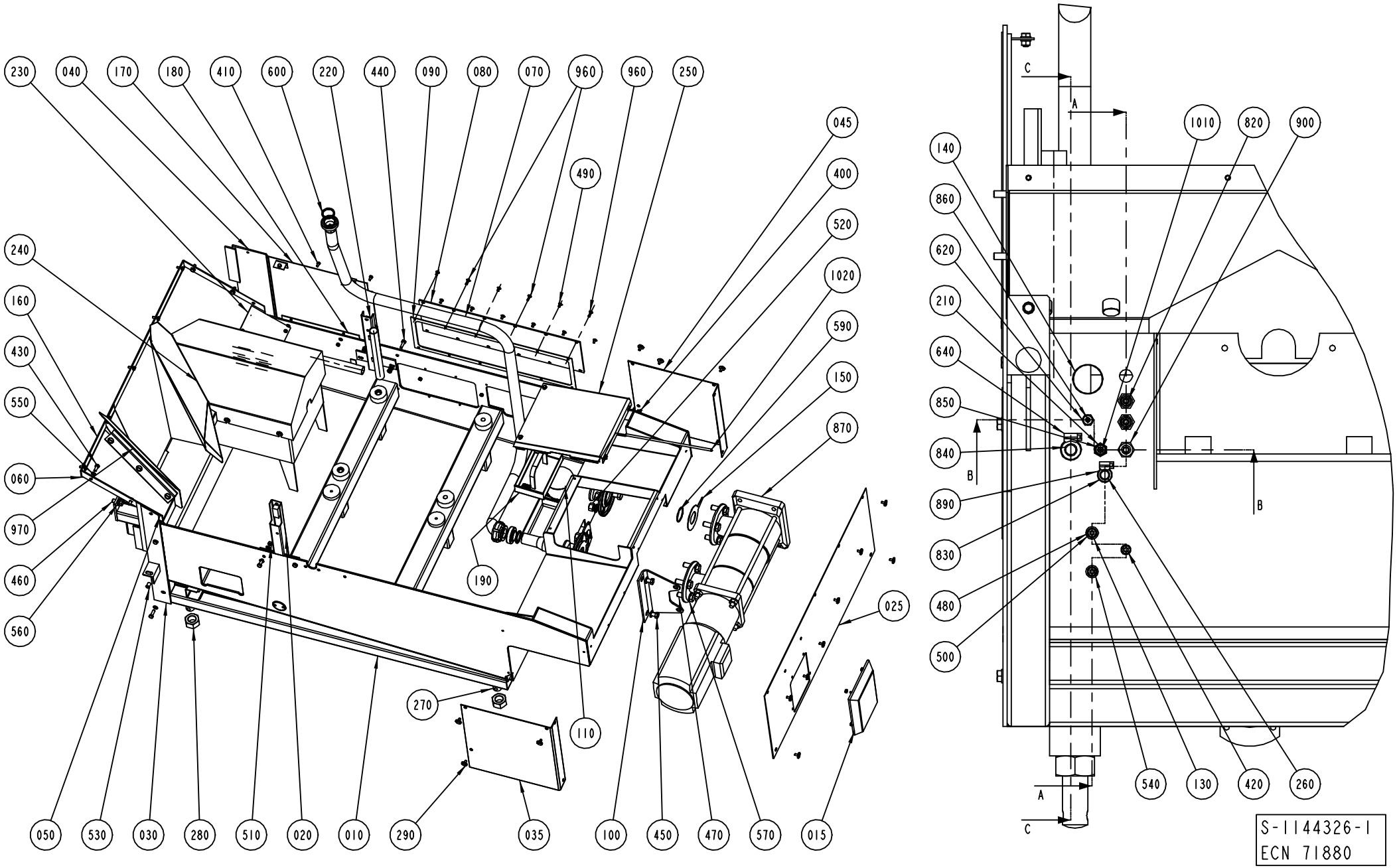
230
040
170
180
410
600
220
440
090
080
070
960
960
250
045
400
490
520
1020
590
150
870
240
160
430
550
060
970
460
560
190
025
270
110
050
530
030
280
510
020
010
290
035
100
450
470
570
015
140
860
620
210
640
850
840
890
830
480
500
1010
820
900
540
130
420
260
C
A
B
S-1144326-1
ECN 71880

ECM: 73716 - 20010206
Group number: 1144326-0100
Assembly Drawing: 1144326-1_1_AA

Pos	Part No	UN	Qty	Description	Page No
TB 1500B 50HZ (See drawing on page: 6-34)					
240	596139-0000		1	SLIDE	
830	90166-0059	MM	300	HOSE PVC 12/16MM TRANSP.	
870	90321-0112		1	PUMP LOWARA SV806R30T 50HZ	
890	342991-0101		2	HOSE CLIP,WORM DRIVE TYPE (13)-16	
970	596141-0000		1	SLIDE	
TB 1500B 60HZ (See drawing on page: 6-34)					
240	596139-0000		1	SLIDE	
830	90166-0059	MM	300	HOSE PVC 12/16MM TRANSP.	
870	90321-0111		1	PUMP LOWARA SV806R406T 60HZ	
890	342991-0101		2	HOSE CLIP,WORM DRIVE TYPE (13)-16	
970	596141-0000		1	SLIDE	
Common Parts					
010	1143968-0000		1	FRAME	
015	1347244-0000		1	COVER	
020	1144158-0000		1	BRACKET	
025	1347219-0000		1	PLATE	
030	1144255-0000		1	PLATE	
035	1347220-0000		1	PLATE	
040	1144256-0000		1	PLATE	
045	1347221-0000		1	PLATE	
050	1144261-0000		2	GASKET	
060	1144262-0000		1	GASKET	
070	1144315-0000		1	PIPE	
080	1144345-0000		1	PLATE	
090	1144346-0000		1	GASKET	
100	1144536-0000		1	BRACKET	
110	1144539-0000		1	PIPE	
130	1144542-0000		2	BUSHING	
140	1144758-0000		1	SLEEVE	
150	1144803-0000		2	GASKET	
160	1144845-0000		1	COVER	
170	1144909-0000		1	COVER	
180	1144910-0000		1	PLATE	
190	1478563-0000		1	STRAINER	
210	90055-0252		1	BULKHEAD LEAD-IN	
220	1279578-0000		1	BRACKET	
230	1285242-0000		1	PLATE	
250	1348234-0000		1	COVER	
260	295435-0000		2	WASHER	
270	469096-0000		4	LEG	
280	735738-0000		4	NUT	
290	979707-0000		24	SCREW	
400	312105-0362		4	SCREW M6S ISO 4017 M6X8 A480	
410	312105-0366		6	SCREW M6S ISO 4017 M6X12 A480	
420	312105-0370		6	SCREW M6S ISO 4017 M6X20 A480	
430	312105-0451		4	SCREW M6S ISO 4017 M8X20 A480	
440	312105-0453		8	SCREW M6S ISO 4017 M8X25 A480	
450	312105-0532		2	SCREW M6S ISO 4017 M12X20 A480	
460	312105-0536		2	SCREW M6S ISO 4017 M12X30 A480	
470	312105-0630		8	SCREW M6S ISO 4017 M16X50 A480	
480	312109-0376		2	SCREW M6S ISO 4017 M6X35 A480	
490	312155-0366		9	SCREW DIN 7991 MF6S M6X12 A4 70	
500	312605-0316		17	HEXAGON NUT, M6M M6 A280	
510	312605-0318		4	HEXAGON NUT, M6M M8 A280	
520	312605-0324		8	HEXAGON NUT, M6M M16 A280	
530	312923-0149		4	RIVET NUT M8, CLAMP. LENGTH 1,5 - 3,0	
540	315105-0153		21	WASHER BRB 6,4X12 RFR	
550	315105-0165		16	WASHER BRB 8,4X16 RFR	
560	315105-0178		4	WASHER BRB 13X24 RFR	
570	315105-0186		19	WASHER BRB 17X30 RFR	
580	315202-0225		1	O-RING 44,2X3 MM	
590	315204-0301		1	O-RING 49,5X3 MM	
600	315229-0104		2	GASKETS, 35,8X42,8X3,7 MM 1"1/2 FD	
620	342960-0112		1	BULKHEAD COUPLING 6/4	
630	342960-0122		2	BULKHEAD COUPLING 8/6	
640	342991-0103		2	HOSE CLIP,WORM DRIVE TYPE (19)-23	
820	90166-0122	M	3	TUBE 8 MM PA,TRANSP.	
840	90166-0087	MM	300	HOSE 15/23 REINF.PVC TRANSP.	
850	90166-0108	M	3	TUBE 6 MM PA,TRANSP.	
860	90166-0132	M	6	TUBE 6 MM PA,TRANSP.	
900	342768-0103		1	BULKHEAD CONNECTOR, 8 MM	
960	312155-0370		3	SCREW DIN 7991 MF6S M6X20 A4 70	
1010	90134-0030		3	SLEEVE FOR PLASTIC TUBE	
1020	90143-0035	MM	350	STRIP	

Machine Type | Group Description | Used-In | Group Number | Page No

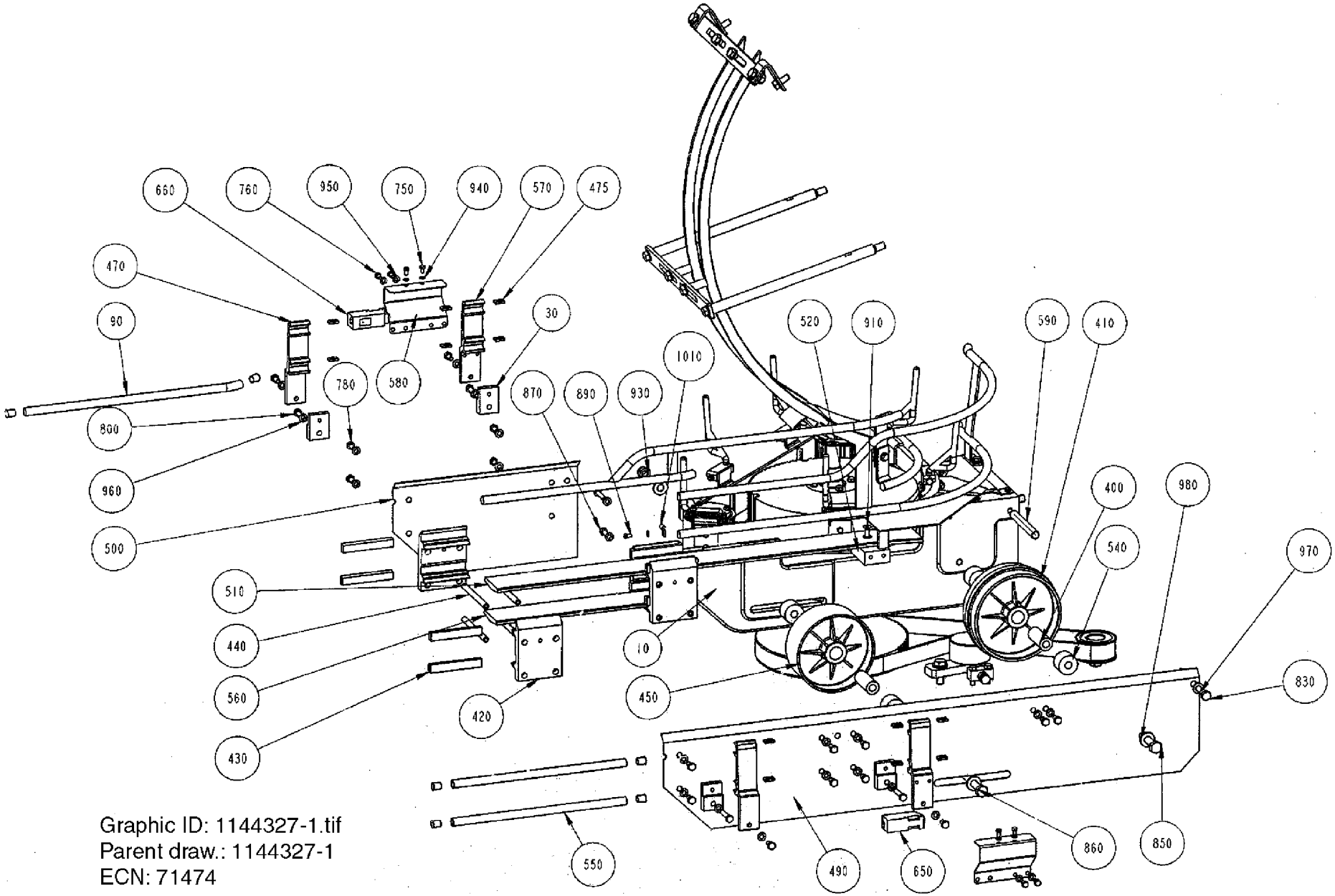

Graphic ID: 1144327-1.tif
Parent draw.: 1144327-1
ECN: 71474

ECM: 118516 - 20010910
Group number: 1144327-0100
Assembly Drawing: 1144327-1_1_AA

This list covers pages from 6-36 to 6-39

Pos	Part No	UN	Qty	Description	Page No
TB 1500B (See drawing on page: 6-38)					
0020	1144537-0000		6	PLATE	
0030	596121-0000		4	SPACER	
0040	596122-0000		1	RAIL	
0050	596120-0000		1	RAIL	
0052	596142-0000		1	BRACKET	
0060	1144931-0000		1	RAIL	
0070	1144972-0000		6	SUPPORT	
0080	1144973-0000		6	CARRIER	
0090	1144980-0000		1	RAIL	
0100	1144989-0000		12	SCREW	
0110	1279507-0000		1	TIMING BELT	
0120	1346517-0000		6	PIN	
0130	297795-0000		6	SPRING	
0140	1282410-0000		2	RAIL	
0150	1282403-0000		2	SPACER	
0160	1282409-0000		2	SUPPORT	
0170	1317082-0000		1	SUPPORT	
0250	312812-0314		6	HEXAGON NUT, NY-LOCK M5 A480	
0530	1144929-0000		1	RAIL	
0600	596138-0000		1	GUIDE	
0602	596140-0000		1	GUIDE	
0780	312105-0366		21	SCREW M6S ISO 4017 M6X12 A480	
0790	312105-0370		5	SCREW M6S ISO 4017 M6X20 A480	
0810	312105-0449		6	SCREW M6S ISO 4017 M8X16 A480	
0820	312105-0451		8	SCREW M6S ISO 4017 M8X20 A480	
0898	312155-0325		1	SCREW DIN 7991 MF6S M5X10 A4 70	
0960	315105-0153		29	WASHER BRB 6,4X12 RFR	
0980	315105-0173		4	WASHER BRB 10,5X20 RFR	
1020	312625-0318		1	HEXAGON THIN NUT, EN 24035 ML6M M8 A4	
1030	1346073-0000		1	AXLE	
1040	1346074-0000		1	HOLDER	
1050	1346212-0000		1	GUIDE	
1060	312155-0366		1	SCREW DIN 7991 MF6S M6X12 A4 70	
1070	312105-0368		1	SCREW M6S ISO 4017 M6X16 A480	
1080	312105-0489		1	SCREW M6S ISO 4017 M10X16 A480	
Common Parts					
0010	1334432-0100		1	DRIVE UNIT (OUTFEED) **6-41**	
0400	229207-0000		2	BEARING SLEEVE	
0410	245039-0000		1	GUIDE WHEEL	
0420	457696-0001		4	JOINT PIECE	
0430	466074-0002		8	SLIDER	
0440	476220-0000		8	SPACER	
0450	476975-0000		1	WHEEL	
0460	484701-0000		17	SHUTTER	
0470	1020142-0002		2	RAIL HOLDER, B55 WIDTH 30 MM	
0475	1020146-0000		12	LOCKING BLOCK REPL BY 1020290-101	
0480	1144552-0000		2	PLATE	
0490	1144920-0000		1	SIDE PLATE	
0500	1144921-0000		1	SIDE PLATE	
0510	1144922-0000		1	SLIDE RAIL UPPER	
0520	1144925-0000		1	SUPPORT	
0540	1144943-0000		4	SPACER	
0550	1144981-0000		2	RAIL	
0560	1279415-0000		1	SLIDE RAIL LOWER	
0570	1285009-0000		2	HOLDER	
0580	1285010-0000		2	HOLDER	
0590	1285306-0000		1	SPACER	
0650	90232-0103		1	PH.CELL E3S-CT61-L-5M	
0660	90232-0104		1	PH.CELL E3S-CT61-D-5M	
0750	312105-0287		5	SCREW M6S ISO 4017 M4X8 A470	
0760	312105-0323		4	SCREW M6S ISO 4017 M5X8 A480	
0800	312105-0374		4	SCREW M6S ISO 4014 M6X30 A480	
0830	312105-0473		1	SCREW M6S ISO 4014 M8X110 A480	
0850	312105-0513		1	SCREW M6S ISO 4014 M10X110 A480	
0860	312105-0517		1	SCREW M6S ISO 4014 M10X130 A480	
0870	312109-0374		2	SCREW M6S ISO 4017 M6X30 A480	
0890	312125-0287		1	SCREW ISO 1207 M4X8 A4	
0900	312155-0291		1	SCREW DIN 7991 MF6S M4X12 A4 70	
0910	312155-0368		1	SCREW DIN 7991 MF6S M6X16 A4 70	
0920	312605-0318		2	HEXAGON NUT, M6M M8 A280	
0930	312812-0320		1	HEXAGON NUT, NY-LOCK M10 A480	
0940	315105-0136		6	WASHER BRB 4,3X9 RFR	
0950	315105-0146		4	WASHER BRB 5,3X10 RFR	
0970	315105-0165		21	WASHER BRB 8,4X16 RFR	
1010	352110-0100		1	CABLE CLIPS, D=5-7 MM	

Machine Type | Group Description | Used-In | Group Number | Page No

PACKAGE OUTFEED

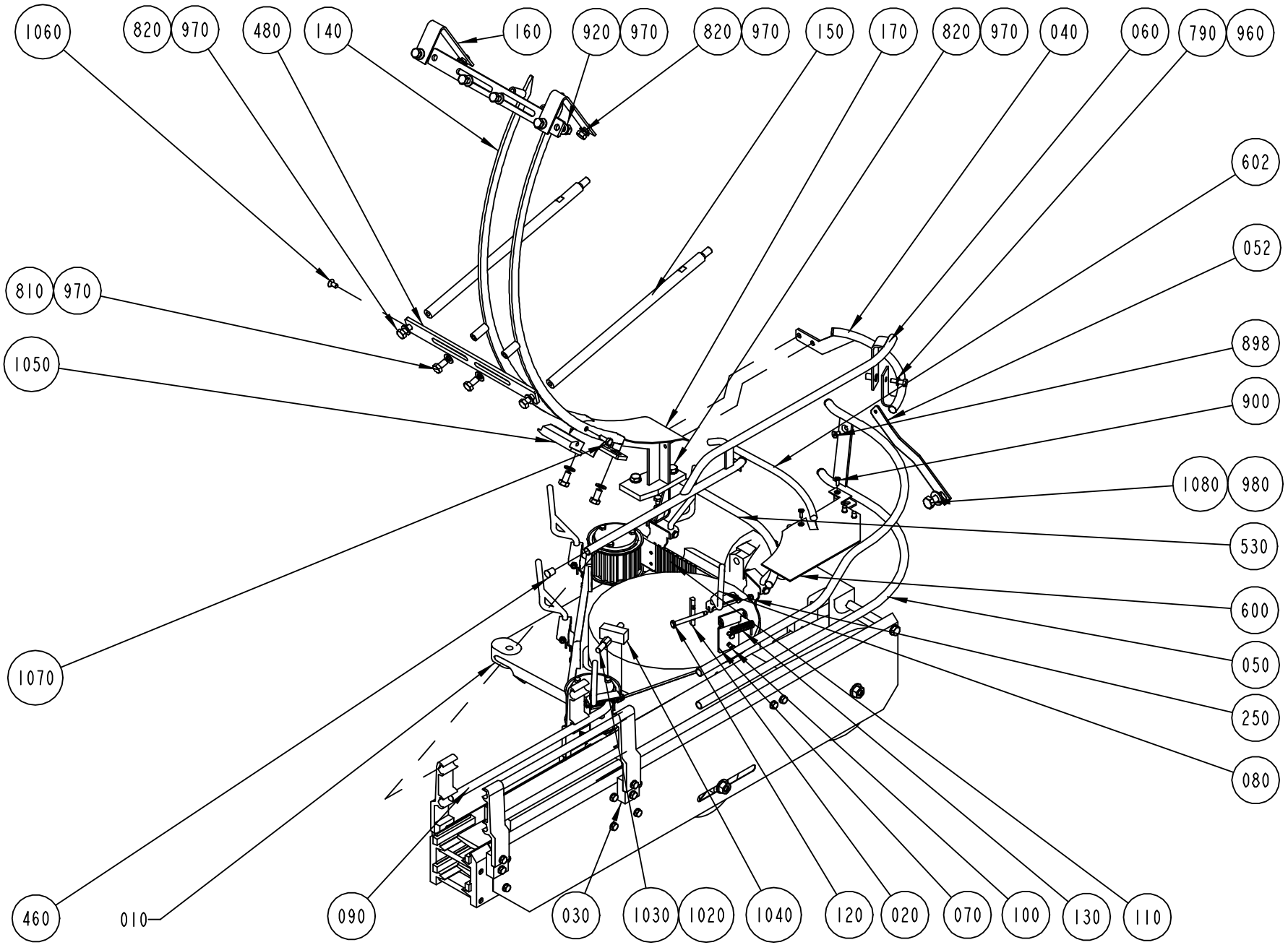

S-1144327-9
ECN 71516

ECM: 118516 - 20010910
Group number: 1144327-0100
Assembly Drawing: 1144327-9_1_AA

This list covers pages from 6-36 to 6-39

Pos	Part No	UN	Qty	Description	Page No
TB 1500B (See drawing on page: 6-38)					
0020	1144537-0000		6	PLATE	
0030	596121-0000		4	SPACER	
0040	596122-0000		1	RAIL	
0050	596120-0000		1	RAIL	
0052	596142-0000		1	BRACKET	
0060	1144931-0000		1	RAIL	
0070	1144972-0000		6	SUPPORT	
0080	1144973-0000		6	CARRIER	
0090	1144980-0000		1	RAIL	
0100	1144989-0000		12	SCREW	
0110	1279507-0000		1	TIMING BELT	
0120	1346517-0000		6	PIN	
0130	297795-0000		6	SPRING	
0140	1282410-0000		2	RAIL	
0150	1282403-0000		2	SPACER	
0160	1282409-0000		2	SUPPORT	
0170	1317082-0000		1	SUPPORT	
0250	312812-0314		6	HEXAGON NUT, NY-LOCK M5 A480	
0530	1144929-0000		1	RAIL	
0600	596138-0000		1	GUIDE	
0602	596140-0000		1	GUIDE	
0780	312105-0366		21	SCREW M6S ISO 4017 M6X12 A480	
0790	312105-0370		5	SCREW M6S ISO 4017 M6X20 A480	
0810	312105-0449		6	SCREW M6S ISO 4017 M8X16 A480	
0820	312105-0451		8	SCREW M6S ISO 4017 M8X20 A480	
0898	312155-0325		1	SCREW DIN 7991 MF6S M5X10 A4 70	
0960	315105-0153		29	WASHER BRB 6,4X12 RFR	
0980	315105-0173		4	WASHER BRB 10,5X20 RFR	
1020	312625-0318		1	HEXAGON THIN NUT, EN 24035 ML6M M8 A4	
1030	1346073-0000		1	AXLE	
1040	1346074-0000		1	HOLDER	
1050	1346212-0000		1	GUIDE	
1060	312155-0366		1	SCREW DIN 7991 MF6S M6X12 A4 70	
1070	312105-0368		1	SCREW M6S ISO 4017 M6X16 A480	
1080	312105-0489		1	SCREW M6S ISO 4017 M10X16 A480	
Common Parts					
0010	1334432-0100		1	DRIVE UNIT (OUTFEED)	**6-41**
0400	229207-0000		2	BEARING SLEEVE	
0410	245039-0000		1	GUIDE WHEEL	
0420	457696-0001		4	JOINT PIECE	
0430	466074-0002		8	SLIDER	
0440	476220-0000		8	SPACER	
0450	476975-0000		1	WHEEL	
0460	484701-0000		17	SHUTTER	
0470	1020142-0002		2	RAIL HOLDER, B55 WIDTH 30 MM	
0475	1020146-0000		12	LOCKING BLOCK REPL BY 1020290-101	
0480	1144552-0000		2	PLATE	
0490	1144920-0000		1	SIDE PLATE	
0500	1144921-0000		1	SIDE PLATE	
0510	1144922-0000		1	SLIDE RAIL UPPER	
0520	1144925-0000		1	SUPPORT	
0540	1144943-0000		4	SPACER	
0550	1144981-0000		2	RAIL	
0560	1279415-0000		1	SLIDE RAIL LOWER	
0570	1285009-0000		2	HOLDER	
0580	1285010-0000		2	HOLDER	
0590	1285306-0000		1	SPACER	
0650	90232-0103		1	PH.CELL E3S-CT61-L-5M	
0660	90232-0104		1	PH.CELL E3S-CT61-D-5M	
0750	312105-0287		5	SCREW M6S ISO 4017 M4X8 A470	
0760	312105-0323		4	SCREW M6S ISO 4017 M5X8 A480	
0800	312105-0374		4	SCREW M6S ISO 4014 M6X30 A480	
0830	312105-0473		1	SCREW M6S ISO 4014 M8X110 A480	
0850	312105-0513		1	SCREW M6S ISO 4014 M10X110 A480	
0860	312105-0517		1	SCREW M6S ISO 4014 M10X130 A480	
0870	312109-0374		2	SCREW M6S ISO 4017 M6X30 A480	
0890	312125-0287		1	SCREW ISO 1207 M4X8 A4	
0900	312155-0291		1	SCREW DIN 7991 MF6S M4X12 A4 70	
0910	312155-0368		1	SCREW DIN 7991 MF6S M6X16 A4 70	
0920	312605-0318		2	HEXAGON NUT, M6M M8 A280	
0930	312812-0320		1	HEXAGON NUT, NY-LOCK M10 A480	
0940	315105-0136		6	WASHER BRB 4,3X9 RFR	
0950	315105-0146		4	WASHER BRB 5,3X10 RFR	
0970	315105-0165		21	WASHER BRB 8,4X16 RFR	
1010	352110-0100		1	CABLE CLIPS, D=5-7 MM	

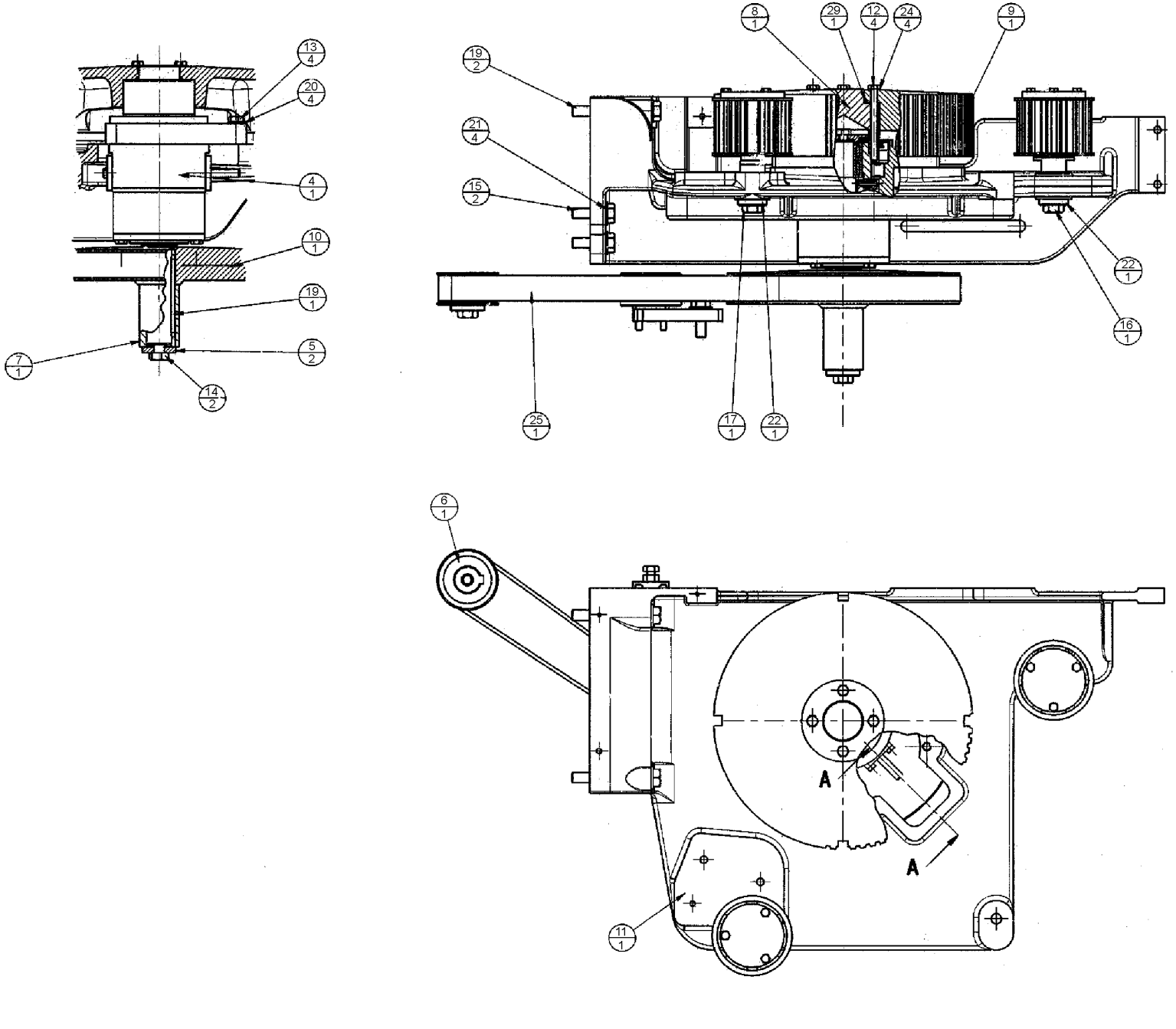
13/4
20/4
4/1
10/1
19/1
5/2
7/1
14/2
8/1
29/1
12/4
24/4
9/1
19/2
21/4
15/2
22/1
16/1
25/1
17/1
22/1
6/1
A
A
11/1

ECM: 72033 - 19990908
Group number: 1334432-0100
Assembly Drawing: 1334432-3_1_AB

Pos	Part No	UN	Qty	Description	Page No
TB 1500B					
090	1144572-0000		1	PULLEY	
250	1282855-0000		1	TIMING BELT	
Common Parts					
010	1334434-0100		1	SHAFT, PULLEY	**6-43**
020	1334435-0100		1	BELT TENSIONER	**6-45**
030	1285875-0100		1	BELT TENSIONER	**6-47**
040	1334433-0100		1	MAIN SHAFT	**6-49**
050	1144681-0000		2	WASHER	
060	1260837-0000		1	TOOTHED PULLEY	
070	1144697-0000		1	SPACER	
080	1282344-0000		1	HUB	
100	1144570-0000		1	PULLEY	
110	1317053-0000		1	BRACKET	
120	312105-0384		4	SCREW M6S ISO 4014 M6X70 A480	
130	312105-0457		4	SCREW M6S ISO 4014 M8X35 A480	
140	312105-0495		3	SCREW M6S ISO 4017 M10X30 A480	
150	312105-0497		2	SCREW M6S ISO 4017 M10X35 A480	
160	312109-0500		1	SCREW M6S ISO 4017 M10X45 A480	
170	312105-0501		1	SCREW M6S ISO 4014 M10X50 A480	
180	312105-0507		2	SCREW M6S ISO 4014 M10X80 A480	
190	315705-0277		1	PARALLEL KEY W. ROUND ENDS 8X7X80 MM	
200	315105-0165		4	WASHER BRB 8,4X16 RFR	
210	315105-0173		5	WASHER BRB 10,5X20 RFR	
220	315125-0173		2	WASHER TBRSB 10,5X28X6 A4	
230	315202-0223		1	O-RING 39,2X3 MM	
240	315211-0103		4	BONDED SEAL SS/NBR90 M6	

Pos	Part No	UN	Qty	Description	Page No

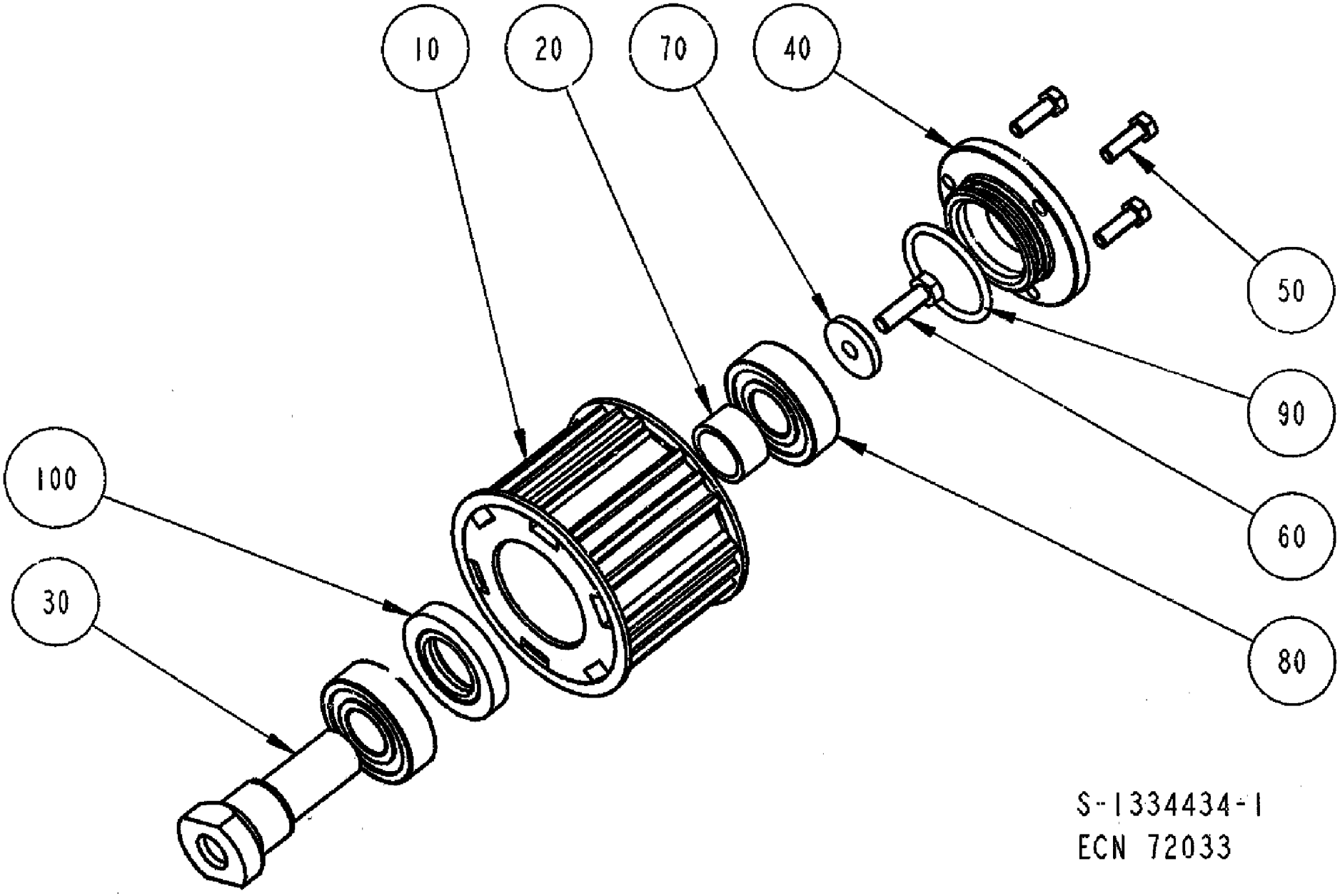
10
20
70
40
50
90
60
80
100
30
S-1334434-1
ECN 72033

ECM: 72033 - 19990908
Group number: 1334434-0100
Assembly Drawing: 1334434-1_1_AB

Pos	Part No	UN	Qty	Description	Page No
-					
010	1334453-0000		1	PULLEY	
020	1144677-0000		1	SPACER	
030	1144676-0000		1	AXLE PIN	
040	1144596-0000		1	PLUG	
050	312105-0329		3	SCREW M6S ISO 4017 M5X16 A480	
060	312105-0370		1	SCREW M6S ISO 4017 M6X20 A480	
070	315125-0153		1	WASHER TBRSB 6,4X22X4 A4	
080	321313-0103		2	BALL BEARING, 17X40X12MM	
090	315202-0220		1	O-RING 32,2X3 MM	
100	90091-0404		1	RADIAL SEAL 22X40X7 MM DUST LIP	

Pos	Part No	UN	Qty	Description	Page No

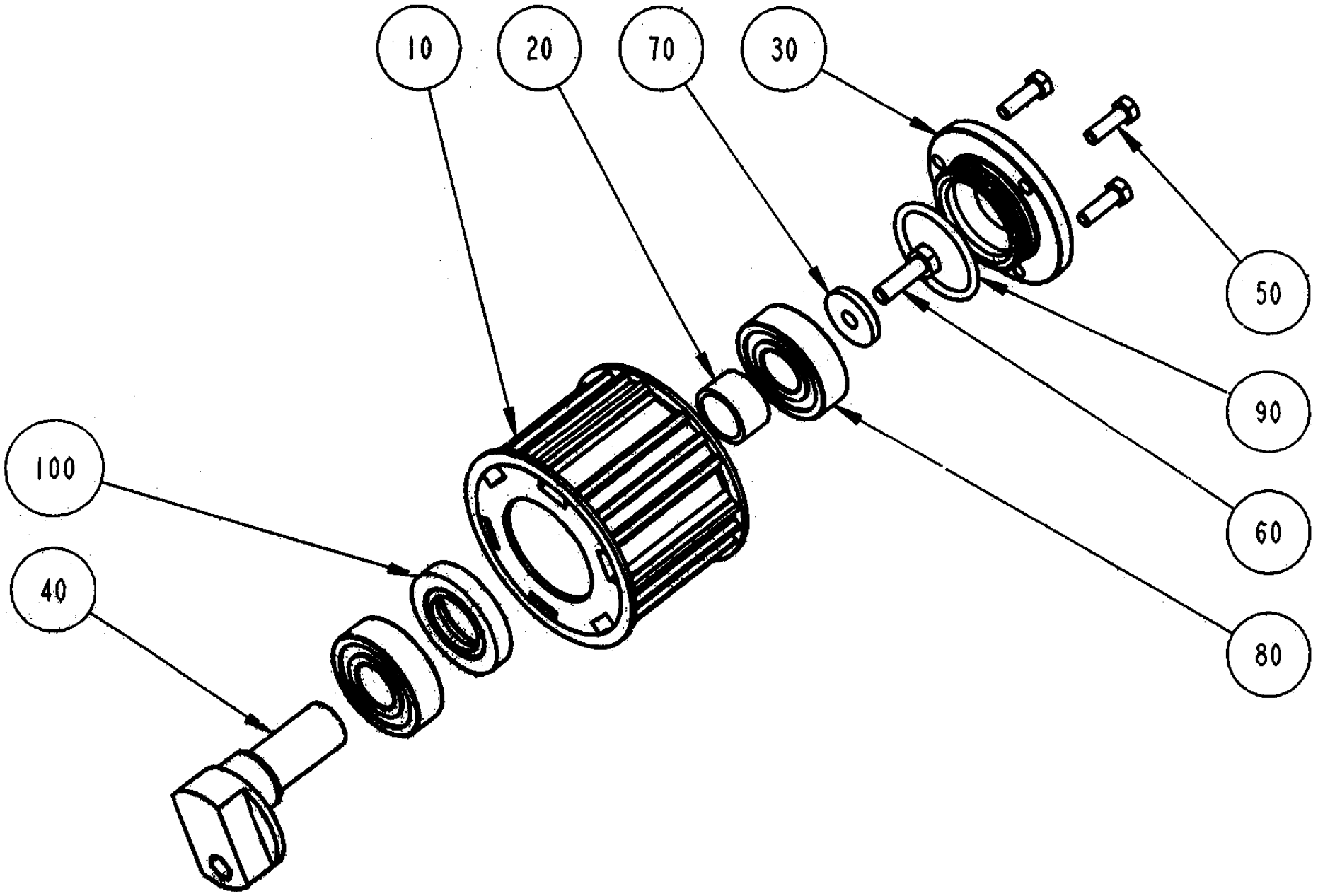
10
20
70
30
50
90
60
80
100
40

ECM: 72033 - 19990908
Group number: 1334435-0100
Assembly Drawing: 1334435-1_1_AB

Pos	Part No	UN	Qty	Description	Page No
-					
010	1334453-0000		1	PULLEY	
020	1144677-0000		1	SPACER	
030	1144596-0000		1	PLUG	
040	1144674-0000		1	AXLE PIN	
050	312105-0329		3	SCREW M6S ISO 4017 M5X16 A480	
060	312105-0370		1	SCREW M6S ISO 4017 M6X20 A480	
070	315125-0153		1	WASHER TBRSB 6,4X22X4 A4	
080	321313-0103		2	BALL BEARING, 17X40X12MM	
090	315202-0220		1	O-RING 32,2X3 MM	
100	90091-0404		1	RADIAL SEAL 22X40X7 MM DUST LIP	

Pos	Part No	UN	Qty	Description	Page No

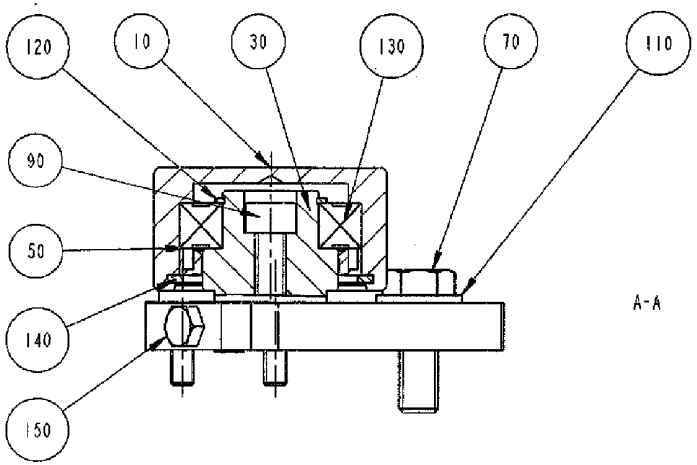

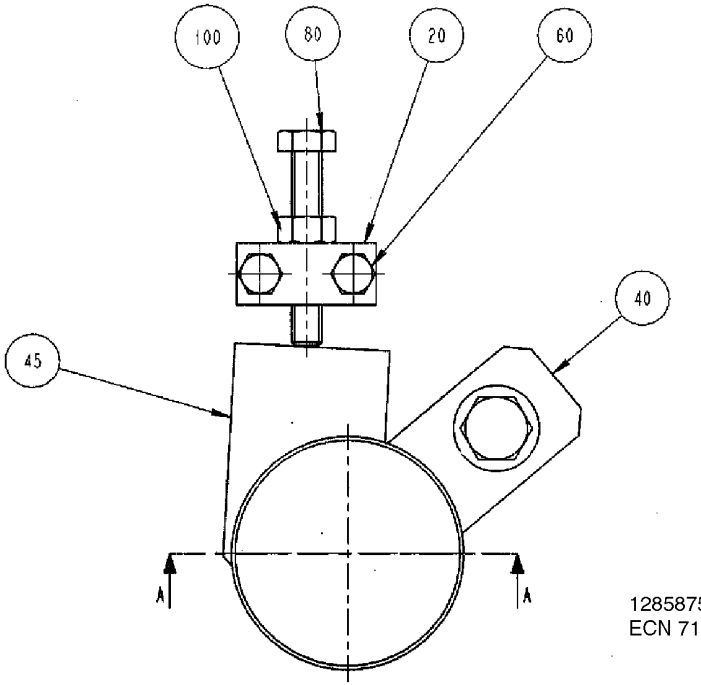

1285875-1
ECN 71489

ECM: 72033 - 19990908
Group number: 1285875-0100
Assembly Drawing: 1285875-1_1_AC

Pos	Part No	UN	Qty	Description	Page No
-					
010	1144581-0000		1	ROLLER	
020	1260836-0000		1	BLOCK	
030	1260838-0000		1	AXLE BOLT	
040	1282327-0000		1	PLATE	
050	1350305-0000		1	SEALING RING	
060	312105-0372		2	SCREW M6S ISO 4017 M6X25 A480	
070	312105-0495		1	SCREW M6S ISO 4017 M10X30 A480	
080	312109-0461		1	SCREW M6S ISO 4017 M8X50 A480	
090	312115-0455		1	SCREW ISO4762 M8X30 A4 80	
100	312605-0318		1	HEXAGON NUT, M6M M8 A280	
110	315105-0173		1	WASHER BRB 10,5X20 RFR	
120	315751-0119		1	RETAINING RING FOR SHAFT DIN 471 25 A2	
130	321308-0205		1	BALL BEARING, 25X47X12MM	
140	90141-0019		1	RETAINING RING FOR BORE DIN 472 50 A2	

Pos	Part No	UN	Qty	Description	Page No

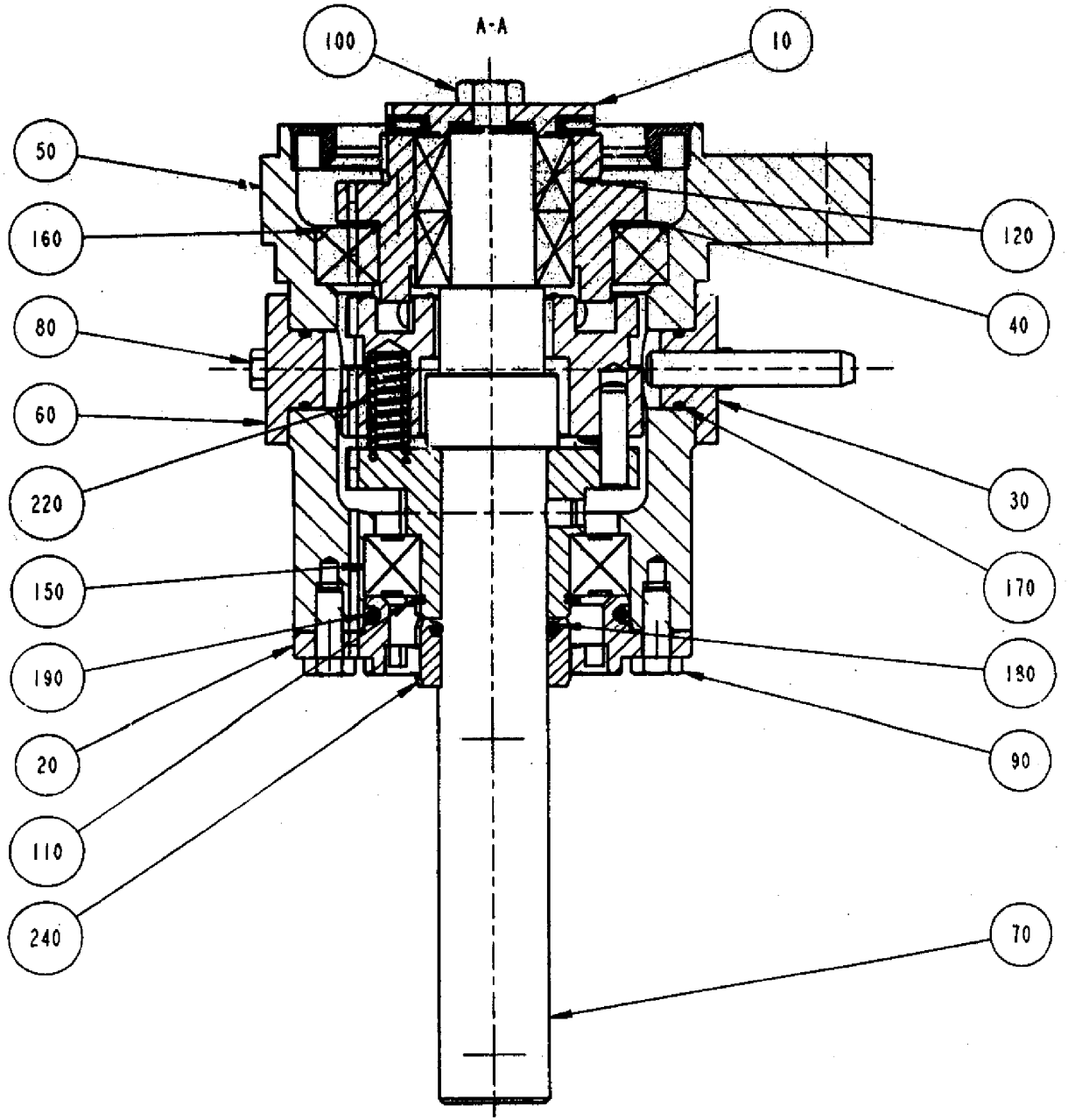
A-A
100
10
50
160
80
60
220
150
190
20
110
240
120
40
30
170
180
90
70

ECM: 72033 - 19990908
Group number: 1334433-0100
Assembly Drawing: 1334433-1_1_AB

Pos	Part No	UN	Qty	Description	Page No
TB 1500B					
220	1282345-0000		10	SPRING	
Common Parts					
010	1260832-0000		1	WASHER	
020	1260833-0000		1	FLANGE	
030	1260834-0000		1	FLANGE	
040	1350564-0000		1	CLAMP HUB	
050	1317054-0000		1	FLANGE	
060	1317055-0000		1	FLANGE	
070	1317056-0100		1	SHAFT	**6-51**
080	312105-0325		4	SCREW M6S ISO 4017 M5X10 A480	
090	312105-0368		4	SCREW M6S ISO 4017 M6X16 A480	
100	312105-0453		1	SCREW M6S ISO 4017 M8X25 A480	
110	315751-0124		1	RETAINING RING FOR SHAFT DIN 471 35 A2	
120	1484448-0000		2	ROLLER BEARING	
130	90083-0052		1	NEEDLE ROLLER THRUST BEARING, 30X47X2 MM	
140	90083-0053		2	SHAFT LOCATING WASHER, 30X47X1MM	
150	321308-0207		1	BALL BEARING, 35X62X14 MM	
160	1484447-0000		1	BALL BEARING	
170	315202-0113		2	O-RING 15,1X1,6 MM	
180	315202-0217		1	O-RING 24,2X3 MM	
190	315202-0302		1	O-RING 54,5X3 MM	
200	90091-0415		1	RADIAL SEAL 35X52X7 MM DUST LIP	
210	90091-0416		1	RADIAL SEAL 70X90X10 MM DUST LIP	
230	90044-0117		1	PROX.SW. IX 0208	
240	1260825-0000		1	SPACER	

Pos	Part No	UN	Qty	Description	Page No

Machine Type | Group Description | Used-In | Group Number | Page No

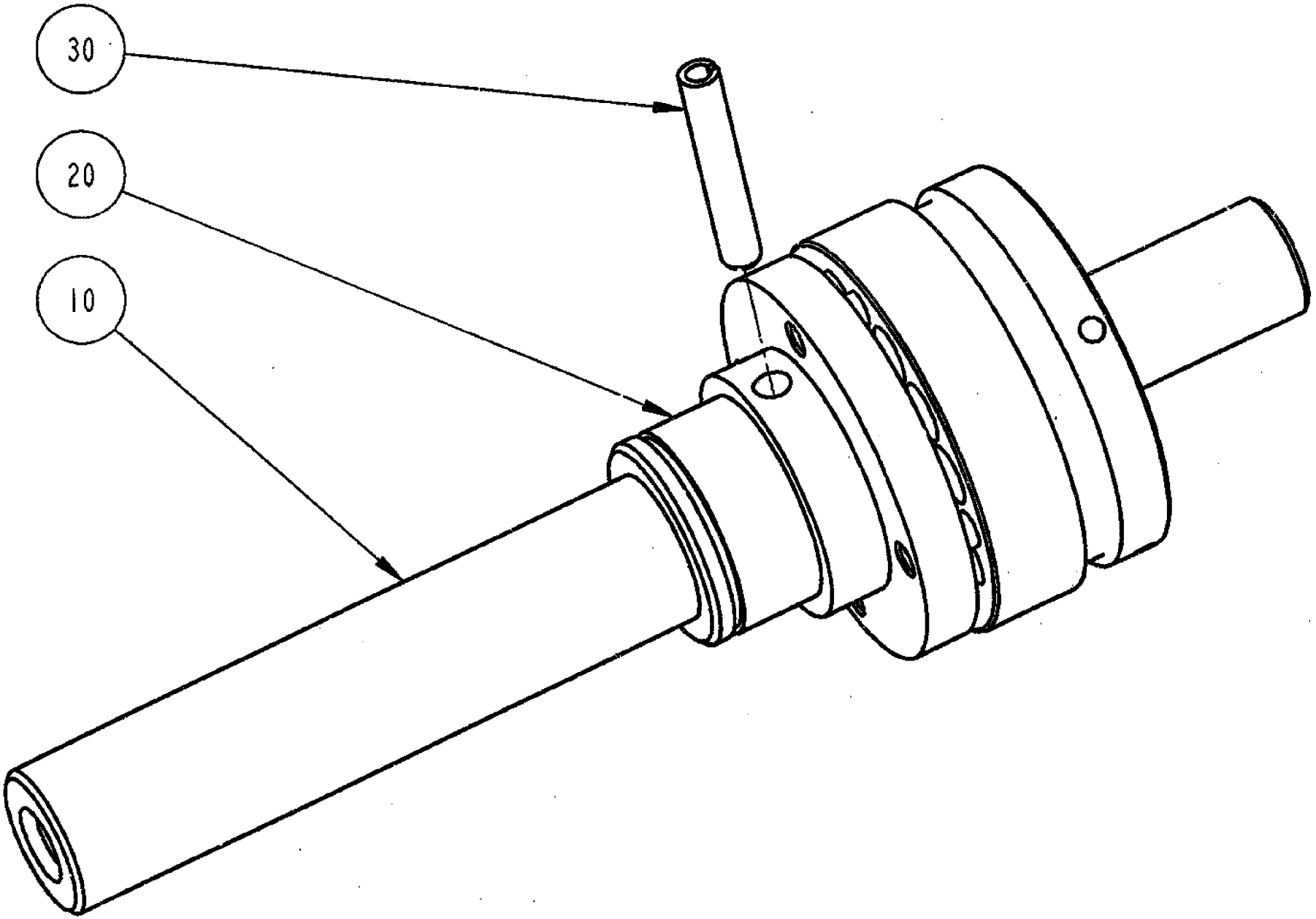
30
20
10

ECM: 72033 - 19990908
Group number: 1317056-0100
Assembly Drawing: 1317056-1_1_AA

Pos	Part No	UN	Qty	Description	Page No
-					
10	1317084-0000		1	SHAFT	
20	1348394-0100		1	MOMENT RESTRICTOR	6-53
30	311112-0347		1	SPRING PIN, ISO 8752 6X40-C	

Pos	Part No	UN	Qty	Description	Page No

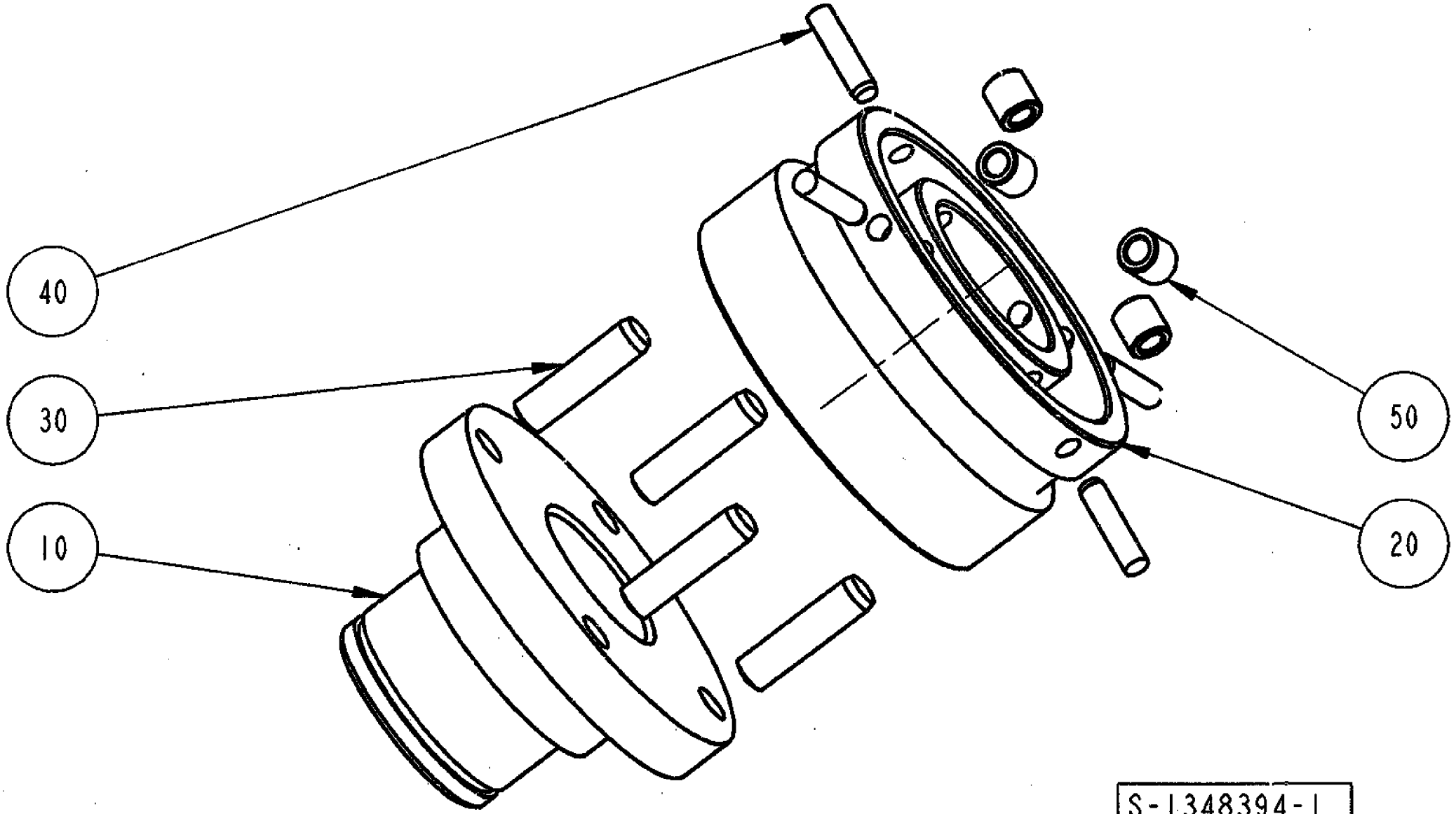
40
30
10
50
20
S-1348394-1
ECN 72033

ECM: 72033 - 19990908
Group number: 1348394-0100
Assembly Drawing: 1348394-1_1_AA

Pos	Part No	UN	Qty	Description	Page No
-					
010	1317083-0000		1	DISC	
020	1282331-0000		1	BUSHING	
030	1348392-0000		4	AXLE PIN	
040	1348393-0000		4	AXLE PIN	
050	1317577-0000		4	BUSHING	

Pos	Part No	UN	Qty	Description	Page No

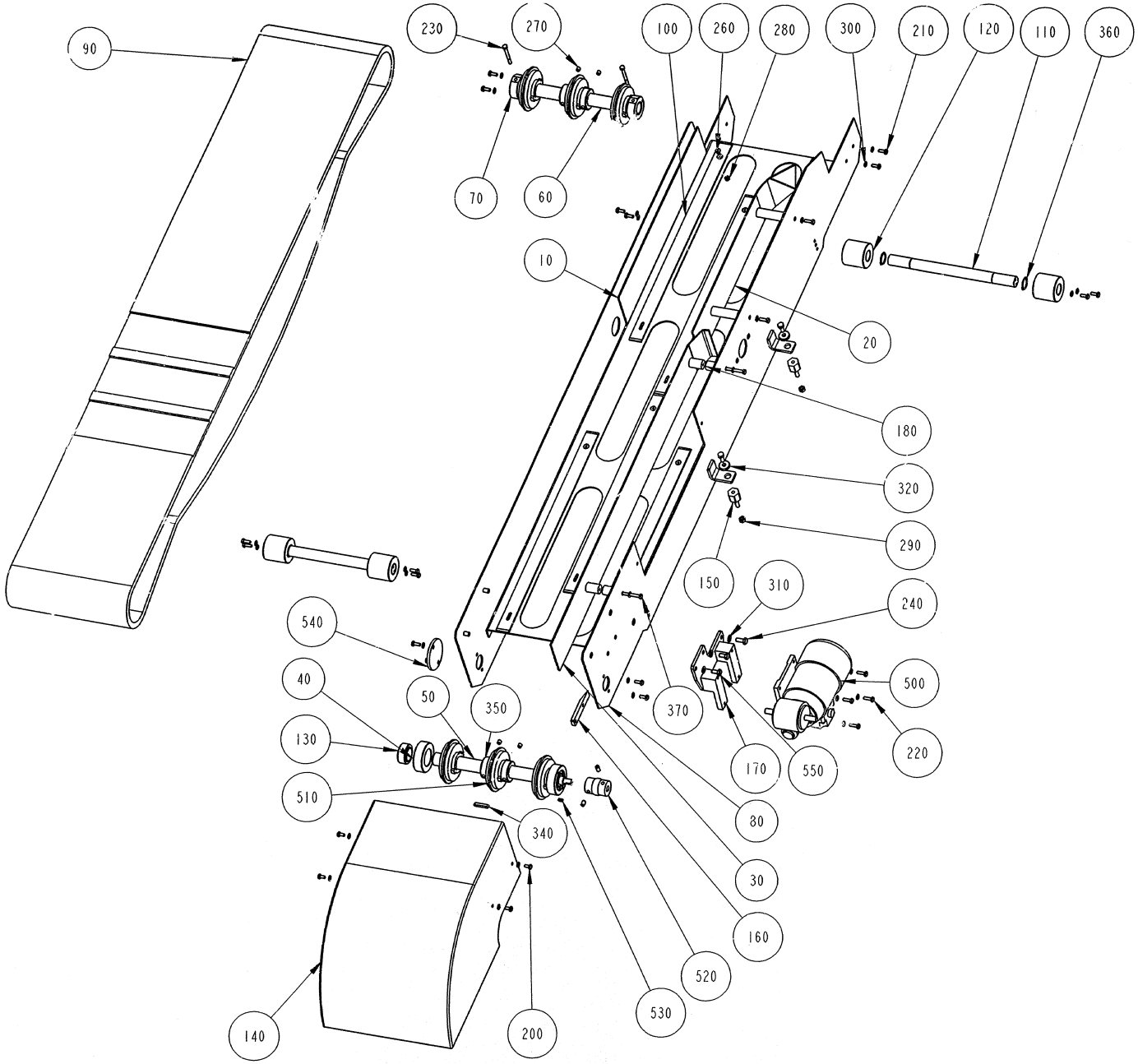
90
230
270
100
260
280
300
210
120
110
360
70
60
10
20
180
320
290
150
310
240
540
40
50
350
370
500
130
510
340
80
170
550
220
30
160
520
530
140
200

ECM: 71516 - 19990709
Group number: 1144328-0100
Assembly Drawing: 1144328-1_1_AB

Pos	Part No	UN	Qty	Description	Page No
TB 1500B					
030	596143-0000		1	GUIDE	
210	312105-0368		18	SCREW M6S ISO 4017 M6X16 A480	
220	312105-0362		1	SCREW M6S ISO 4017 M6X8 A480	
280	312605-0316		6	HEXAGON NUT, M6M M6 A280	
300	315105-0153		36	WASHER BRB 6,4X12 RFR	
370	312105-0367		1	SCREW M6S ISO 4017 M6X14 A480	
Common Parts					
040	1348386-0000		2	BEARING HOUSING	
050	1348923-0000		1	SHAFT	
060	1144242-0000		1	SHAFT	
070	1144243-0000		2	FLANGE	
080	1349422-0000		1	FRAME	
090	1144252-0000		1	BELT	
100	1144253-0000		6	RAIL	
110	1144254-0000		2	SHAFT	
120	1144257-0000		4	ROLLER	
130	90240-0315		2	SPHER. BEARING, 30X47X22 PLASTIC MM	
140	1144711-0000		1	COVER PLATE	
150	1144853-0000		4	SCREW	
160	1296156-0000		1	PLATE	
170	1349161-0000		1	BRACKET	
200	312105-0366		4	SCREW M6S ISO 4017 M6X12 A480	
230	312105-0382		2	SCREW M6S ISO 4014 M6X60 A480	
240	312105-0451		5	SCREW M6S ISO 4017 M8X20 A480	
250	312115-0287		2	SCREW ISO4762 M4X8 A4 80	
260	312155-0366		6	SCREW DIN 7991 MF6S M6X12 A4 70	
270	312318-0443		4	SCREW ISO4029 M8X8 A4	
280	312605-0316		8	HEXAGON NUT, M6M M6 A280	
290	312605-0318		4	HEXAGON NUT, M6M M8 A280	
310	315105-0165		3	WASHER BRB 8,4X16 RFR	
320	315125-0165		4	WASHER TBRSB 8,4X26X5 A4	
340	315705-0238		3	PARALLEL KEY W. ROUND ENDS 6X6X36 MM	
350	315742-0122		4	RETAINING RING 30 SMS 199	
360	315751-0119		4	RETAINING RING FOR SHAFT DIN 471 25 A2	
500	1349000-0000		1	WORM GEAR MOTOR	
510	90344-0073		6	TOOTHED WHEEL	
520	445848-0000		1	ELASTIC COUPLING	
530	315705-0166		1	PARALLEL KEY W. ROUND ENDS 4X4X12 MM	
540	1349146-0000		1	FLANGE	
550	312105-0449		2	SCREW M6S ISO 4017 M8X16 A480	

Pos	Part No	UN	Qty	Description	Page No

PULL DOWN DEVICE

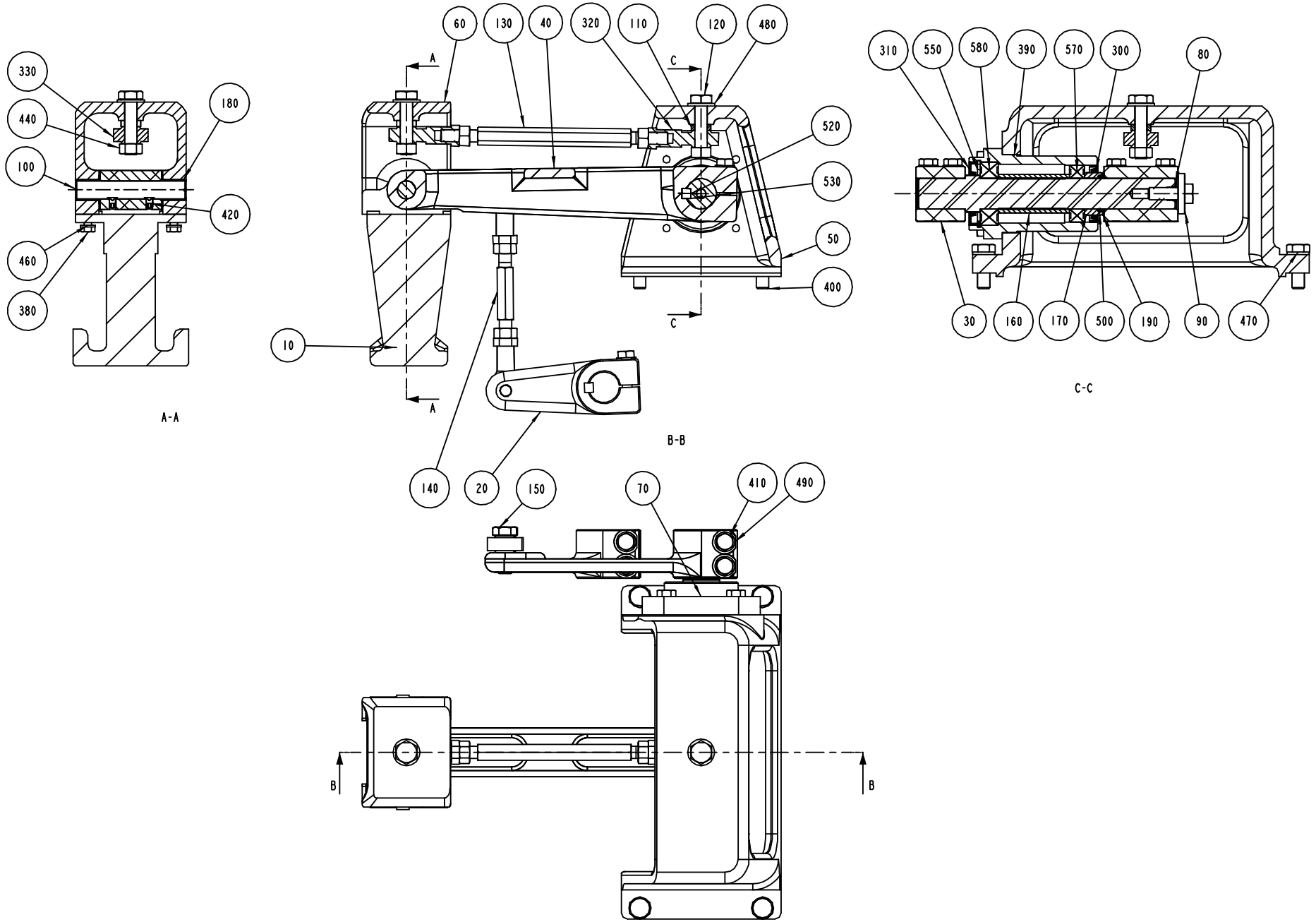

ECM: 72474 - 19990928
Group number: 1144329-0100
Assembly Drawing: 1144329-1_1_AB

Pos	Part No	UN	Qty	Description	Page No
TB 1500B					
010	596111-0000		1	BLOCK	
Common Parts					
020	1144472-0000		1	LEVER	
030	1144473-0000		1	LEVER	
040	1144474-0000		1	LEVER	
050	1144475-0000		1	BRACKET	
060	1144476-0000		1	BRACKET	
070	1144566-0000		1	FLANGE	
080	1144678-0000		1	SHAFT	
090	1144681-0000		1	WASHER	
100	1144683-0000		1	AXLE PIN	
110	1144684-0000		2	SPACER	
120	1144685-0000		2	SCREW	
130	1144686-0000		1	TIE ROD	
140	1144687-0000		1	TIE ROD	
150	1144688-0000		2	SCREW	
160	1260824-0000		1	SPACER RING	
170	1334328-0000		1	SPACER	
180	1260944-0000		2	BUSHING	
190	1334018-0000		4	SHIM	
300	90091-0297		1	RADIAL SEAL 35X47X7 MM DUST LIP	
310	90091-0299		1	RADIAL SEAL 30X52X7 MM DUST LIP	
320	90115-0181		2	ROD END, ID=10 MM M10X1,5	
330	90115-0182		2	ROD END, ID=10 MM M10X1,5LH	
380	312105-0368		4	SCREW M6S ISO 4017 M6X16 A480	
390	312105-0453		4	SCREW M6S ISO 4017 M8X25 A480	
400	312105-0495		5	SCREW M6S ISO 4017 M10X30 A480	
410	312109-0460		6	SCREW M6S ISO 4017 M8X45 A480	
420	312318-0362		2	SCREW ISO4029 M6X8 A4	
440	312605-0320		6	HEXAGON NUT, M6M M10 A280	
460	315105-0153		4	WASHER BRB 6,4X12 RFR	
470	315105-0171		4	WASHER BRB 10X18 RFR	
480	315105-0173		2	WASHER BRB 10,5X20 RFR	
490	315105-0165		6	WASHER BRB 8,4X16 RFR	
500	315202-0217		1	O-RING 24,2X3 MM	
520	315705-0267		1	PARALLEL KEY W. ROUND ENDS 8X7X30 MM	
530	315705-0270		1	PARALLEL KEY W. ROUND ENDS 8X7X40 MM	
550	315753-0132		1	RETAINING RING FOR BORE DIN 472 52 A2	
570	321308-0205		1	BALL BEARING, 25X47X12MM	
580	321313-0105		1	BALL BEARING, 25X52X15MM	

Pos	Part No	UN	Qty	Description	Page No

Machine Type | Group Description | Used-In | Group Number | Page No

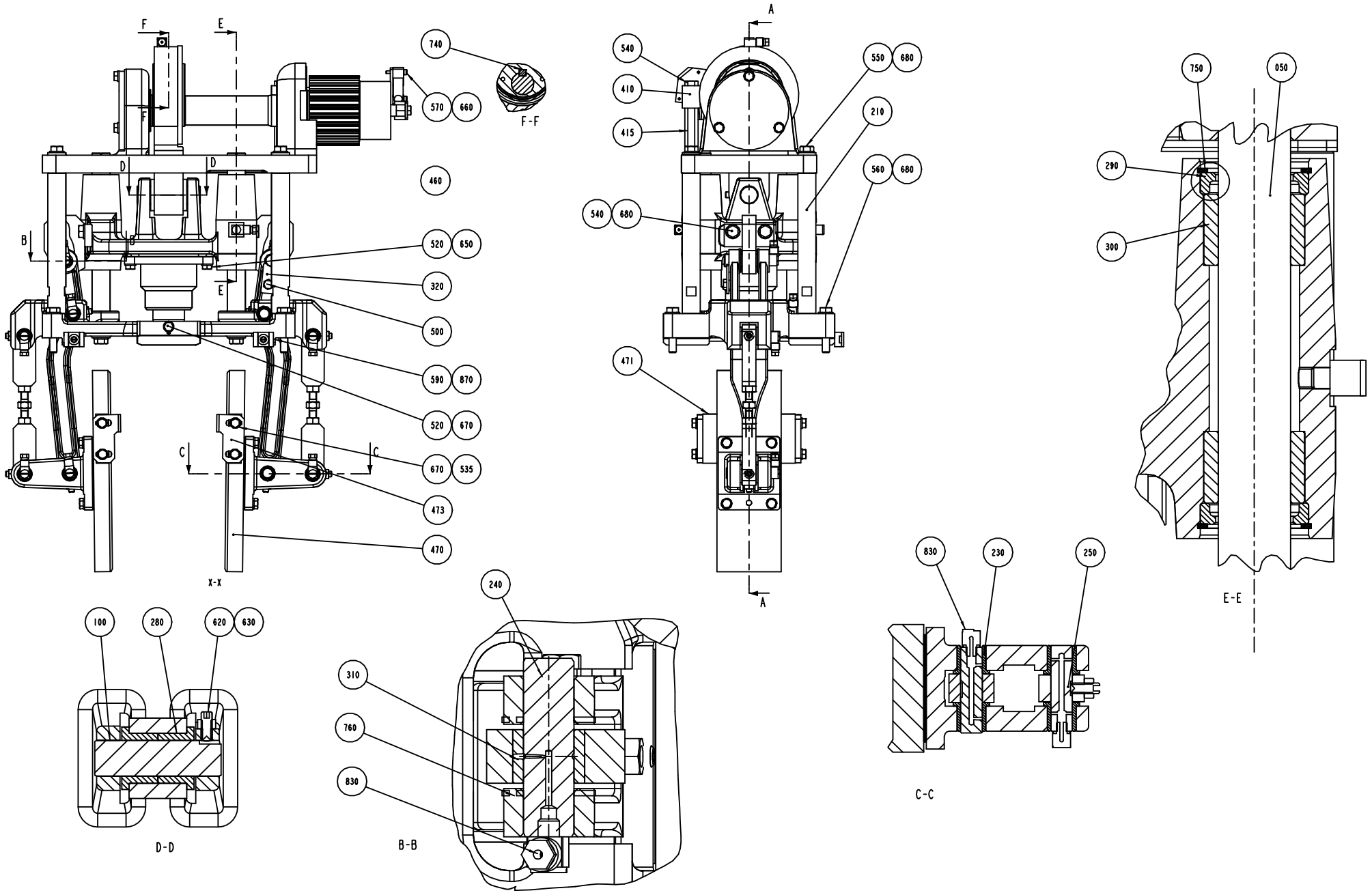
F
E
740
570
660
F-F
460
B
520
650
320
500
590
870
520
670
C
670
535
473
470
X-X
540
410
415
540
680
A
550
680
210
560
680
471
A
750
050
290
300
E-E
100
280
620
630
D-D
240
310
760
830
B-B
830
230
250
C-C

ECM: 73014 - 20000408
Group number: 1144331-0100
Assembly Drawing: 1144331-5_1_AA

This list covers pages from 6-58 to 6-61

Pos	Part No	UN	Qty	Description	Page No
TB 1500B (See drawing on pages: 6-58, 6-60)					
080	1144492-0000		1	SPRING	
160	1361245-0000		1	SUPPORT	
330	1361248-0000		1	BEARING COVER	
340	1361247-0000		1	TIMING BELT PULLEY	
410	1361243-0000		1	BRACKET	
415	1361244-0000		1	SPACER ROD	
450	1144978-0000		2	CAM	
460	90417-0415		1	TIMING BELT	
465	1361250-0000		1	SPACER	
470	596090-0000		2	PUSHER	
471	596091-0000		4	GAUGE BLOCK	
473	598572-0000		4	SUPPORT	
480	596113-0000		1	PLATE	
520	312105-0370		6	SCREW M6S ISO 4017 M6X20 A480	
530	312105-0372		8	SCREW M6S ISO 4017 M6X25 A480	
535	312105-0376		8	SCREW M6S ISO 4014 M6X35 A480	
540	312105-0451		5	SCREW M6S ISO 4017 M8X20 A480	
550	312105-0457		5	SCREW M6S ISO 4014 M8X35 A480	
605	312155-0370		3	SCREW DIN 7991 MF6S M6X20 A4 70	
630	312605-0316		9	HEXAGON NUT, M6M M6 A280	
650	315103-0153		3	WASHER, BRB, 6,4/12,H=1,5 NIPL BR	
825	90091-0444		1	VARISEAL ROTO HICLEAN 35X47X4,8 MM	
830	90134-0058		13	CONNECTION	
Common Parts					
010	1144482-0000		2	SUPPORT	
020	1144483-0000		1	PLATE	
030	1144485-0000		1	SUPPORT	
040	1144487-0000		1	PLUG	
050	1144488-0000		2	COLUMN	
060	1144489-0000		1	FLANGE	
070	1144490-0000		1	SUPPORT	
090	1144493-0000		1	WASHER	
100	1144494-0000		1	AXLE PIN	
110	1144495-0000		1	ECCENTRIC	
120	1144496-0000		1	ECCENTRIC	
130	1144497-0000		1	CONNECTING ROD	
140	1144498-0000		1	FLANGE	
150	90091-0408		2	BEARING SEAL 70X78X5 MM	
170	1144501-0000		1	SPACER	
180	1144502-0000		1	WASHER	
190	1144503-0000		1	FLANGE	
200	1144504-0000		1	SHAFT	
210	1144505-0000		4	COLUMN	
220	1144506-0000		2	LEVER	
230	1144507-0000		16	BUSHING	
240	1144508-0000		2	AXLE PIN	
250	1317362-0000		6	SHAFT	
260	1144511-0000		6	SHIM	
270	1317363-0000		2	SHAFT	
280	1144514-0000		2	BUSHING	
290	1144515-0000		4	INSERT	
300	1144517-0000		4	BUSHING	
310	1144520-0000		2	ROLLER	
320	1144521-0000		2	CLAMP	
350	1144527-0000		1	FLAG	
360	1144529-0000		1	BUSHING	
370	90214-0229		1	BALL BEARING, 65X85X10 MM	
380	90242-0271		1	O-RING 63,22X1,78 MM	
390	90242-0270		1	O-RING 82,27X1,78 MM	
400	90208-0080		1	CLAMPING ELEMENT WITH SLEEVE, 25X34 MM	
420	1144914-0000		2	LEVER	
430	1144915-0000		2	LEVER	
440	1144916-0000		2	ADJUSTING SCREW	
490	311103-0355		1	PARALLEL PIN ISO 2338 6M6X25 A1	
500	312105-0366		5	SCREW M6S ISO 4017 M6X12 A480	
510	312105-0368		3	SCREW M6S ISO 4017 M6X16 A480	
560	312109-0460		4	SCREW M6S ISO 4017 M8X45 A480	
570	312115-0230		2	SCREW ISO4762 M3X20 A4 80	
580	312115-0370		1	SCREW ISO4762 M6X20 A4 80	
590	312125-0287		3	SCREW ISO 1207 M4X8 A4	
600	312155-0327		6	SCREW DIN 7991 MF6S M5X12 A4 70	
610	312155-0453		1	SCREW DIN 7991 MF6S M8X25 A4 70	
620	312318-0368		9	SCREW ISO4029 M6X16 A4	
640	312605-0318		2	HEXAGON NUT, M6M M8 A280	
660	315105-0124		2	WASHER BRB 3,2X7 RFR	
670	315105-0153		17	WASHER BRB 6,4X12 RFR	
680	315105-0165		14	WASHER BRB 8,4X16 RFR	
690	315202-0217		1	O-RING 24,2X3 MM	
700	315202-0225		1	O-RING 44,2X3 MM	
710	315202-0302		1	O-RING 54,5X3 MM	
720	315202-0303		1	O-RING 59,5X3 MM	
740	315705-0267		1	PARALLEL KEY W. ROUND ENDS 8X7X30 MM	
750	315753-0122		4	RETAINING RING FOR BORE DIN 472 30 A2	

Machine Type | Group Description | Used-In | Group Number | Page No

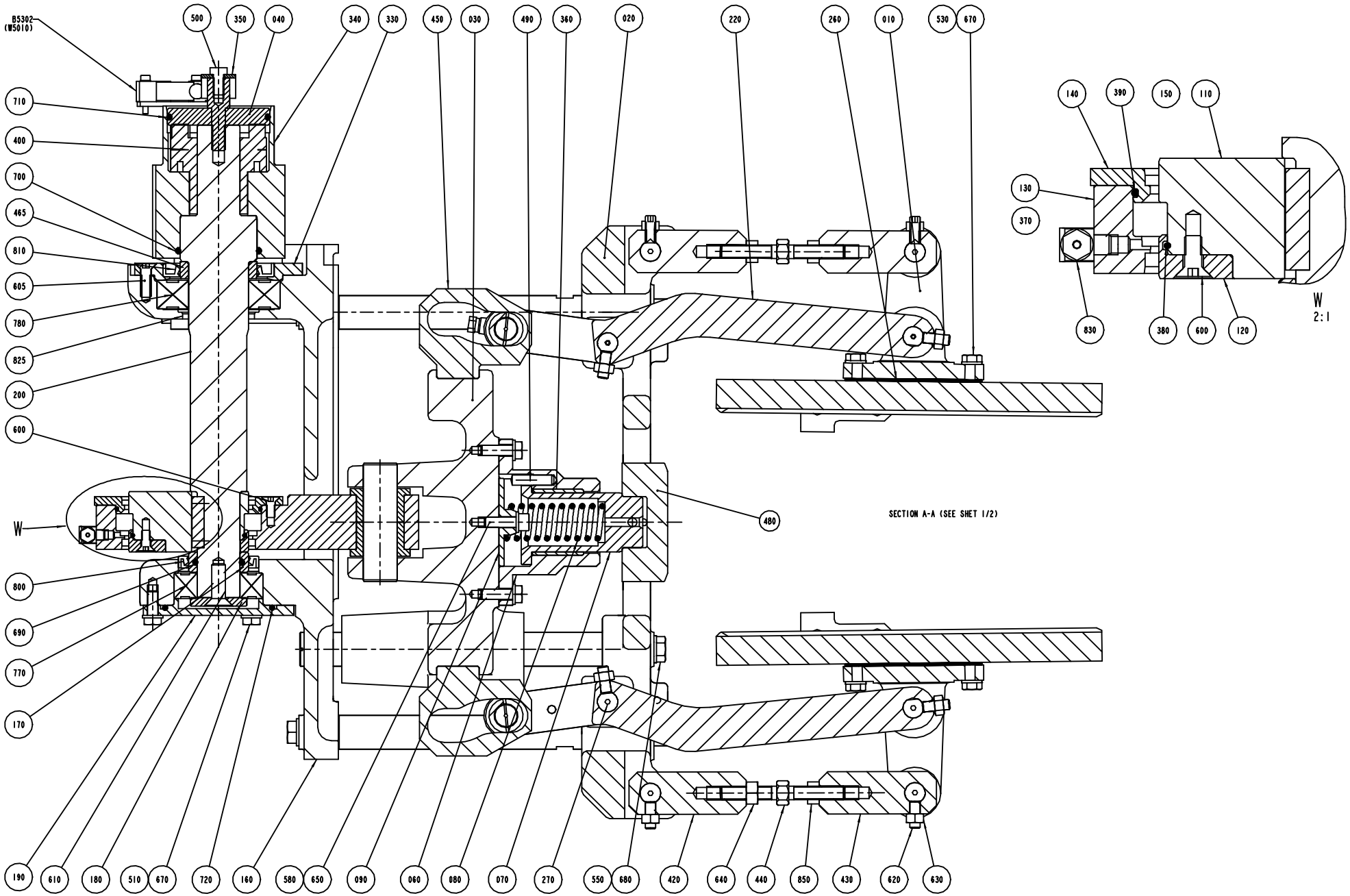
B5302
(W5010)
500
350
040
340
330
450
030
490
360
020
220
260
010
530
670
710
400
700
465
810
605
780
825
200
600
W
800
690
770
170
480
SECTION A-A (SEE SHET 1/2)
140
390
150
110
130
370
830
380
600
120
W
2:1
190
610
180
510
670
720
160
580
650
090
060
080
070
270
550
680
420
640
440
850
430
620
630

Pos	Part No	UN	Qty	Description	Page No
Common Parts (Cont'd)					
760	321129-0110		4	THRUST WASHER, 14X26X1,5 MM	
770	321313-0105		1	BALL BEARING, 25X52X15MM	
780	321313-0107		1	BALL BEARING, 35X72X17MM	
800	90091-0297		2	RADIAL SEAL 35X47X7 MM DUST LIP	
810	90091-0298		1	RADIAL SEAL 45X65X8 MM DUST LIP	
820	90091-0380		4	SCRAPER, EXCLUDER 20X24,8X3,7 MM	
850	312902-0318		2	NUT HEX. LEFT THREAD, M8 A280	
870	352113-0203		2	ANCHOR PLATES FOR STRIPS, TYPE TM3S8-M0	
880	352113-0102		5	CABLE TIE, BLACK 188X4,8 MM	
890	352113-0101		8	CABLE TIE, BLACK 92X2,5 MM	
B5302	90044-0104		1	PROX.SWITCH IFM IN 3002(RP 90044-194)	

Pos	Part No	UN	Qty	Description	Page No

BOTTOM VALVE

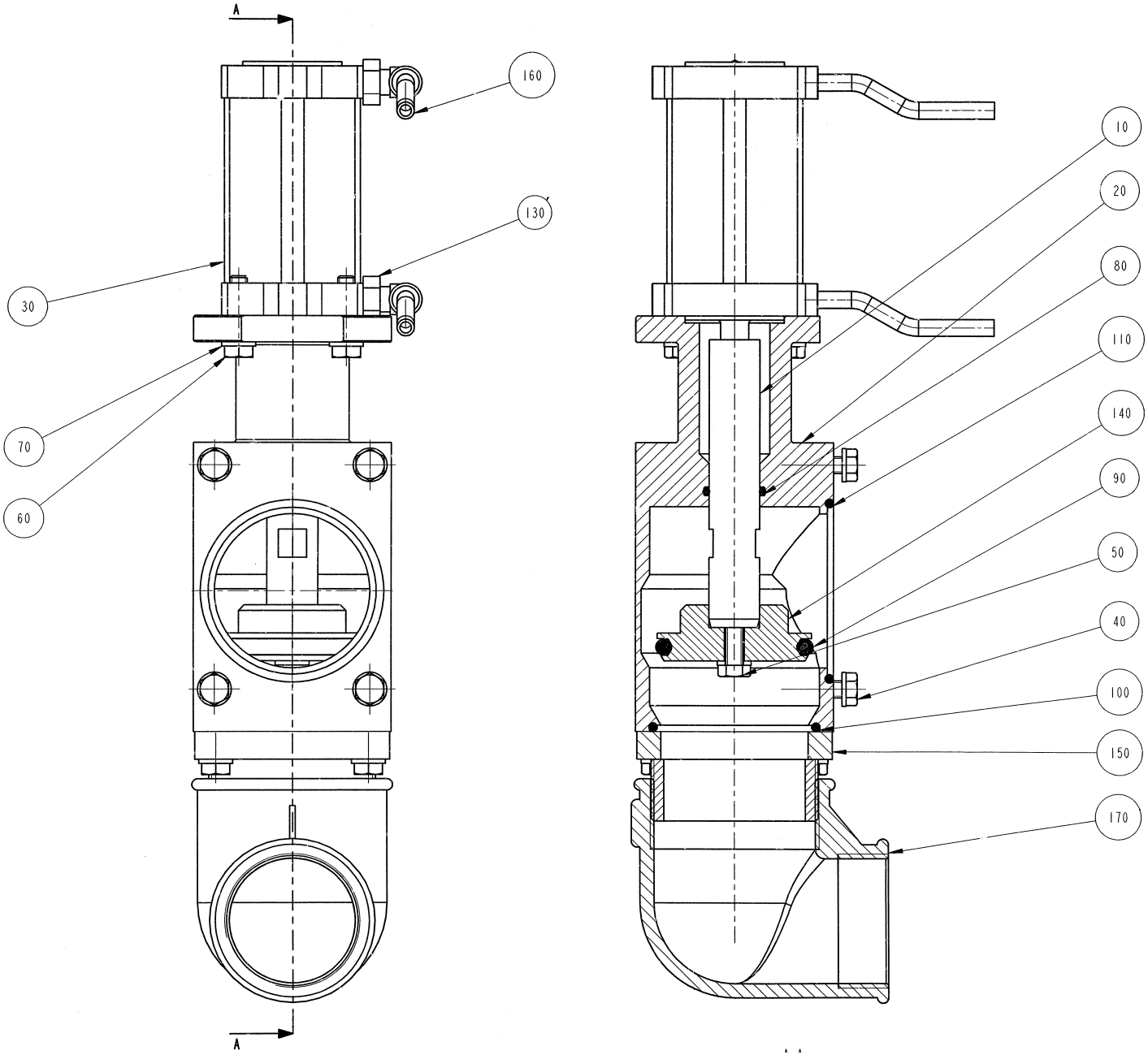

ECM: 71886 - 19990607
Group number: 1144848-0100
Assembly Drawing: 1144848-1_1_AA

Pos	Part No	UN	Qty	Description	Page No
-					
010	1144850-0000		1	SHAFT	
020	1144854-0000		1	HOUSE	
030	90450-0500		1	PNEUMATIC CYLINDER	
040	312105-0368		8	SCREW M6S ISO 4017 M6X16 A480	
050	312105-0370		1	SCREW M6S ISO 4017 M6X20 A480	
060	312105-0374		4	SCREW M6S ISO 4014 M6X30 A480	
070	315105-0153		13	WASHER BRB 6,4X12 RFR	
080	315202-0214		1	O-RING 17,3X2,4 MM	
090	315202-0226		1	O-RING 44,2X5,7 MM	
100	315202-0302		1	O-RING 54,5X3 MM	
110	315202-0303		1	O-RING 59,5X3 MM	
130	342732-0102		2	ELBOW PIPE JOINT, EXT.THREAD, D=6MM-G1/8	
140	442852-0000		1	VALVE	
150	442853-0000		1	ATTACHMENT PIPE	
160	90166-0124	MM	3500	TUBE 6 MM PA,TRANSP.	
170	1484444-0000		1	ELBOW PIPE	

Pos	Part No	UN	Qty	Description	Page No

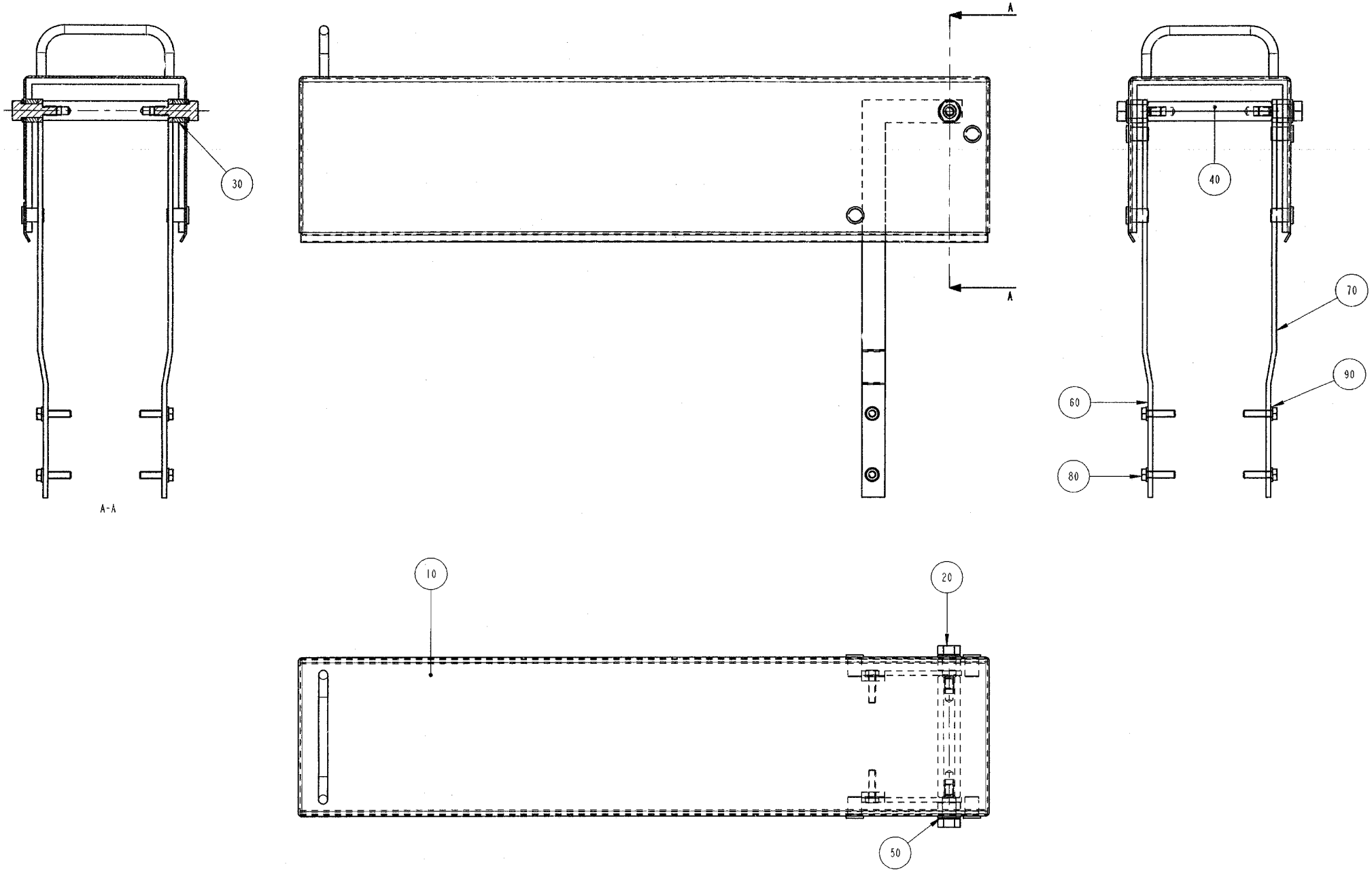
30
A-A
A
A
40
70
90
60
80
10
20
50

ECM: 71061 - 19980116
Group number: 1296148-0100
Assembly Drawing: 1296148-1_1_AA

Pos	Part No	UN	Qty	Description	Page No
TB 1500B					
060	1296085-0000		1	SUPPORT	
070	1285858-0000		1	SUPPORT	
Common Parts					
010	1285877-0000		1	COVER	
020	1285885-0000		2	SCREW	
030	1285893-0000		2	SPACER	
040	1285894-0000		1	SHAFT	
050	1285898-0000		2	WASHER	
080	312105-0372		4	SCREW M6S ISO 4017 M6X25 A480	
090	315105-0153		4	WASHER BRB 6,4X12 RFR	

Pos	Part No	UN	Qty	Description	Page No

This page is intentionally left blank.

ECM: 71880 - 19990309
Group number: 1334451-0100
Assembly Drawing:

Pos	Part No	UN	Qty	Description	Page No
-					
010	353243-0003		3	HOSE GLAND W/O INSERT PG11 EXTENDED	
020	90152-0050	M	4	SPIRAL CONDUIT, 20X13, UL 1313	
030	353249-0011		3	INSERT, SINGEL HOLE, EK 153/11	
040	90012-0049		1	CABLE GLAND, STR13,5, PR20,4/PG13,5	
050	90002-0013		2	BLANK-OFF PLUG, PR 15,2 SKINDICHT-BLK9	
060	353243-0005		1	HOSE GLAND W/O INSERT PG16 EXTENDED	
070	90152-0051	M	3	SPIRAL CONDUIT, 25X18, UL 1816	
080	353247-0004		1	HOSE GLAND EMC PG16 EXTENDED	
090	90099-0003		1	NUT PR 22,5	
100	90012-0079		1	GLAND FITTING	
110	90012-0072		1	GLAND FITTING	
120	90012-0148		1	SPACER	
130	90012-0071		1	GLAND FITTING	
140	90012-0061		2	GLAND	
150	90152-0031	MM	140	HOSE	
160	1144758-0000		1	SLEEVE	
170	1279568-0000		1	GLAND FITTING	
180	353243-0009		1	HOSE GLAND W/O INSERT PG13,5 EXTENDED	
190	353249-0011		1	INSERT, SINGEL HOLE, EK 153/11	
200	1334440-0000		1	PIPE	

Pos	Part No	UN	Qty	Description	Page No

Machine Type | Group Description | Used-In | Group Number | Page No

Tetra Pak

SPC
Spare Parts Catalogue

STRIP APPLICATOR

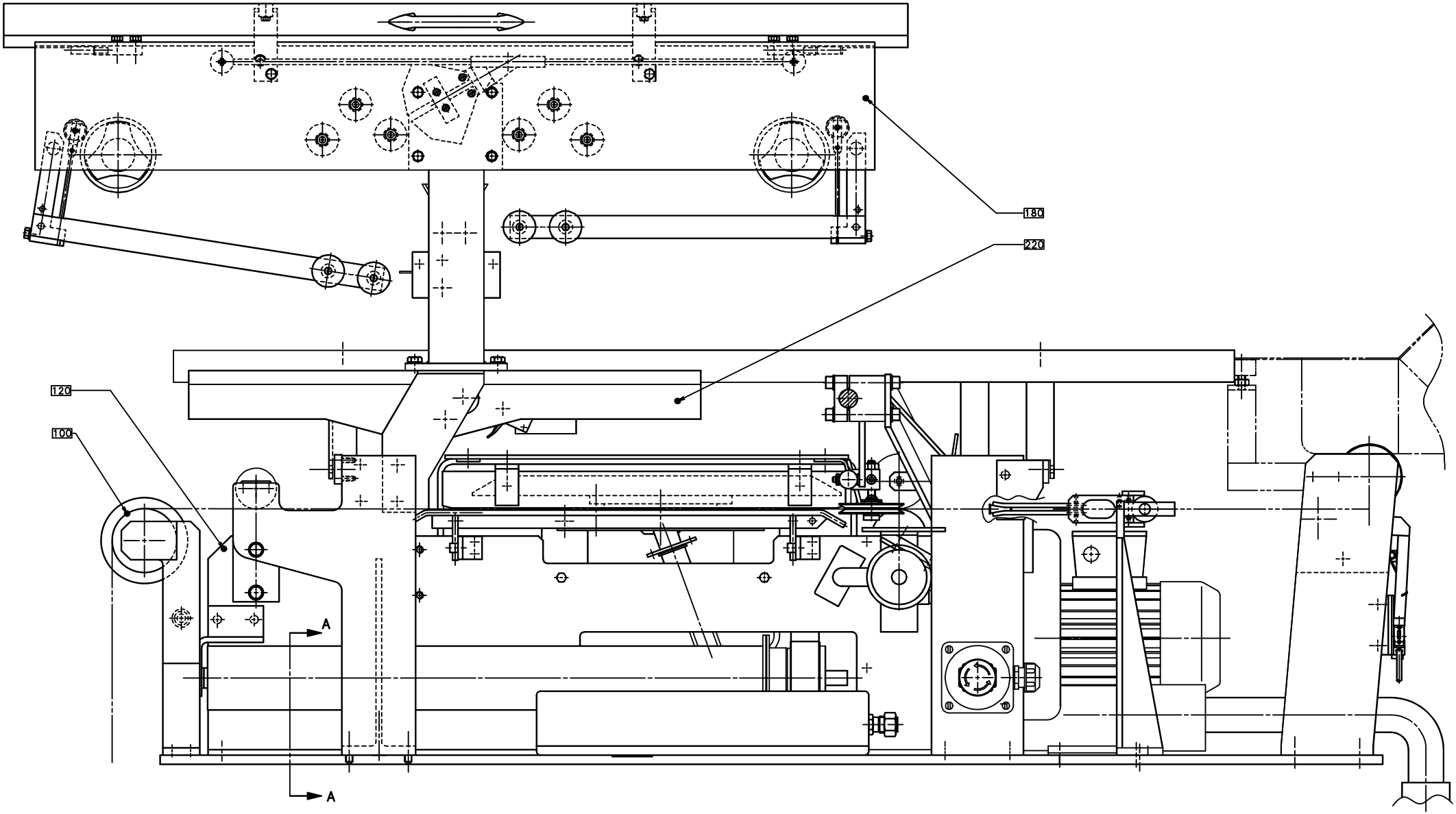

ECM: 70649 - 19970211
Group number: 648007-0400
Assembly Drawing: 648007-7_1_AB

This list covers pages from 7-2 to 7-5

Pos	Part No	UN	Qty	Description	Page No
TB/8 (See drawing on pages: 7-2, 7-4)					
F090	526934-0200		1	HOSE & PIPE ASSEMBLY TB/8	**7-7**
F080	526933-0400		1	BOTTOM PLATE TB/8	**7-9**
F070	283026-0400		1	CONNECTION BOX	**7-11**
F040	546179-0100		1	BENDING ROLLER	**7-13**
Common Parts					
F220	544973-0100		1	PILLAR	**7-15**
F180	543823-0100		1	STRIP MAGAZINE	**7-17**
F170	526954-0100		1	START-UP KIT	**7-27**
F160	546180-0100		1	SPLICE DETECTOR	**7-29**
F135	282634-0300		1	STRIP GUIDE	**7-31, 7-33**
F130	282528-0200		1	PRESSURE ROLLER	**7-35**
F120	269112-0600		1	STRIP APPLICATOR	**7-37, 7-39**
F110	266726-0300		1	PRESSURE ROLLER	**7-41**
F100	265565-0200		1	BENDING ROLLER BRACKET	**7-43**
F095	279210-0100		1	PAPER GUIDE	**7-45**
F065	573663-0100		1	SUPPORT ROLLER	**7-47**

Pos	Part No	UN	Qty	Description	Page No

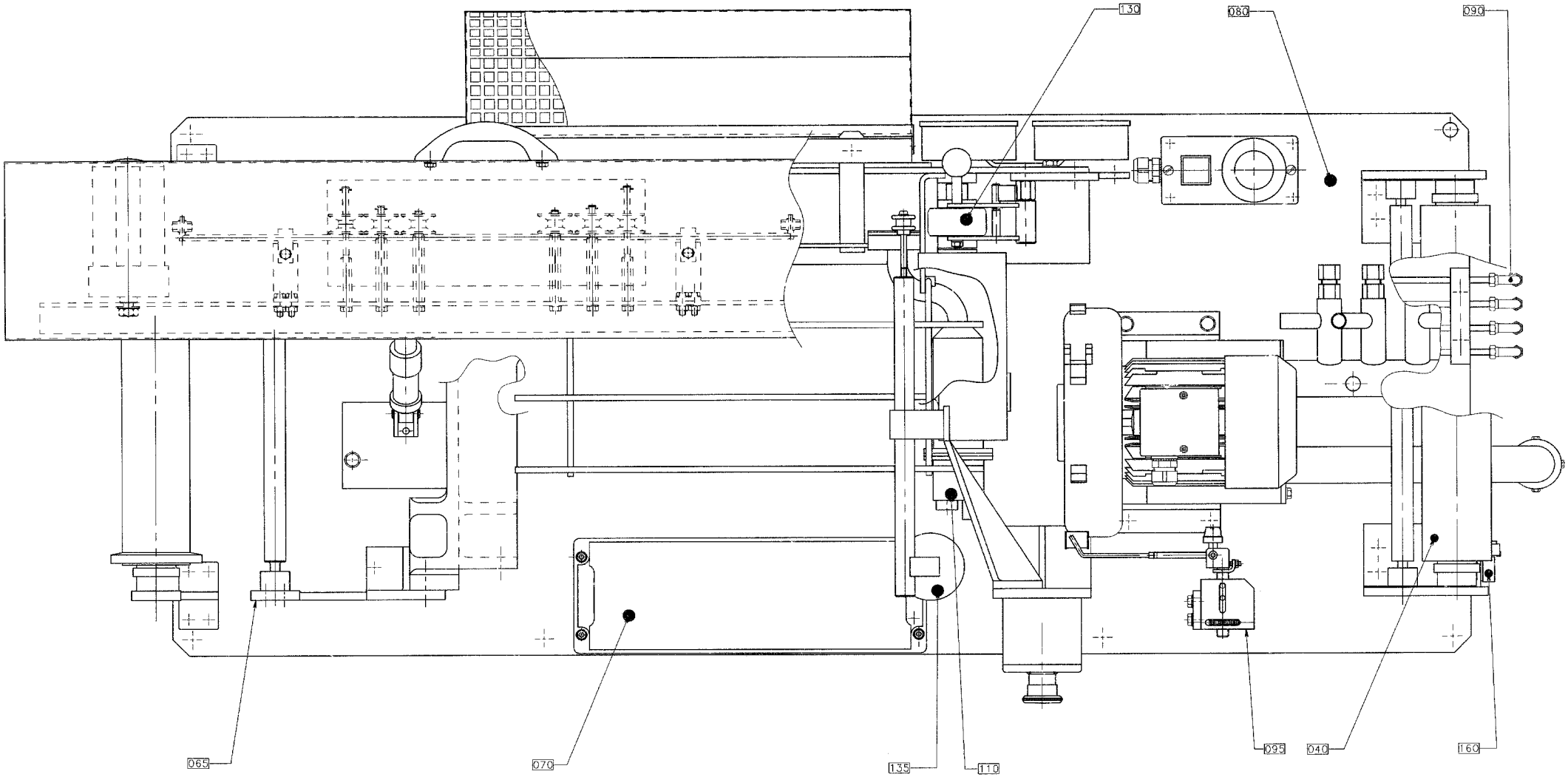
130
080
090
065
070
135
110
095
040
160

ECM: 70649 - 19970211
Group number: 648007-0400
Assembly Drawing: 648007-8_1_AD

This list covers pages from 7-2 to 7-5

Pos	Part No	UN	Qty	Description	Page No
TB/8 (See drawing on pages: 7-2, 7-4)					
F090	526934-0200		1	HOSE & PIPE ASSEMBLY TB/8	**7-7**
F080	526933-0400		1	BOTTOM PLATE TB/8	**7-9**
F070	283026-0400		1	CONNECTION BOX	**7-11**
F040	546179-0100		1	BENDING ROLLER	**7-13**
Common Parts					
F220	544973-0100		1	PILLAR	**7-15**
F180	543823-0100		1	STRIP MAGAZINE	**7-17**
F170	526954-0100		1	START-UP KIT	**7-27**
F160	546180-0100		1	SPLICE DETECTOR	**7-29**
F135	282634-0300		1	STRIP GUIDE	**7-31, 7-33**
F130	282528-0200		1	PRESSURE ROLLER	**7-35**
F120	269112-0600		1	STRIP APPLICATOR	**7-37, 7-39**
F110	266726-0300		1	PRESSURE ROLLER	**7-41**
F100	265565-0200		1	BENDING ROLLER BRACKET	**7-43**
F095	279210-0100		1	PAPER GUIDE	**7-45**
F065	573663-0100		1	SUPPORT ROLLER	**7-47**

Pos	Part No	UN	Qty	Description	Page No

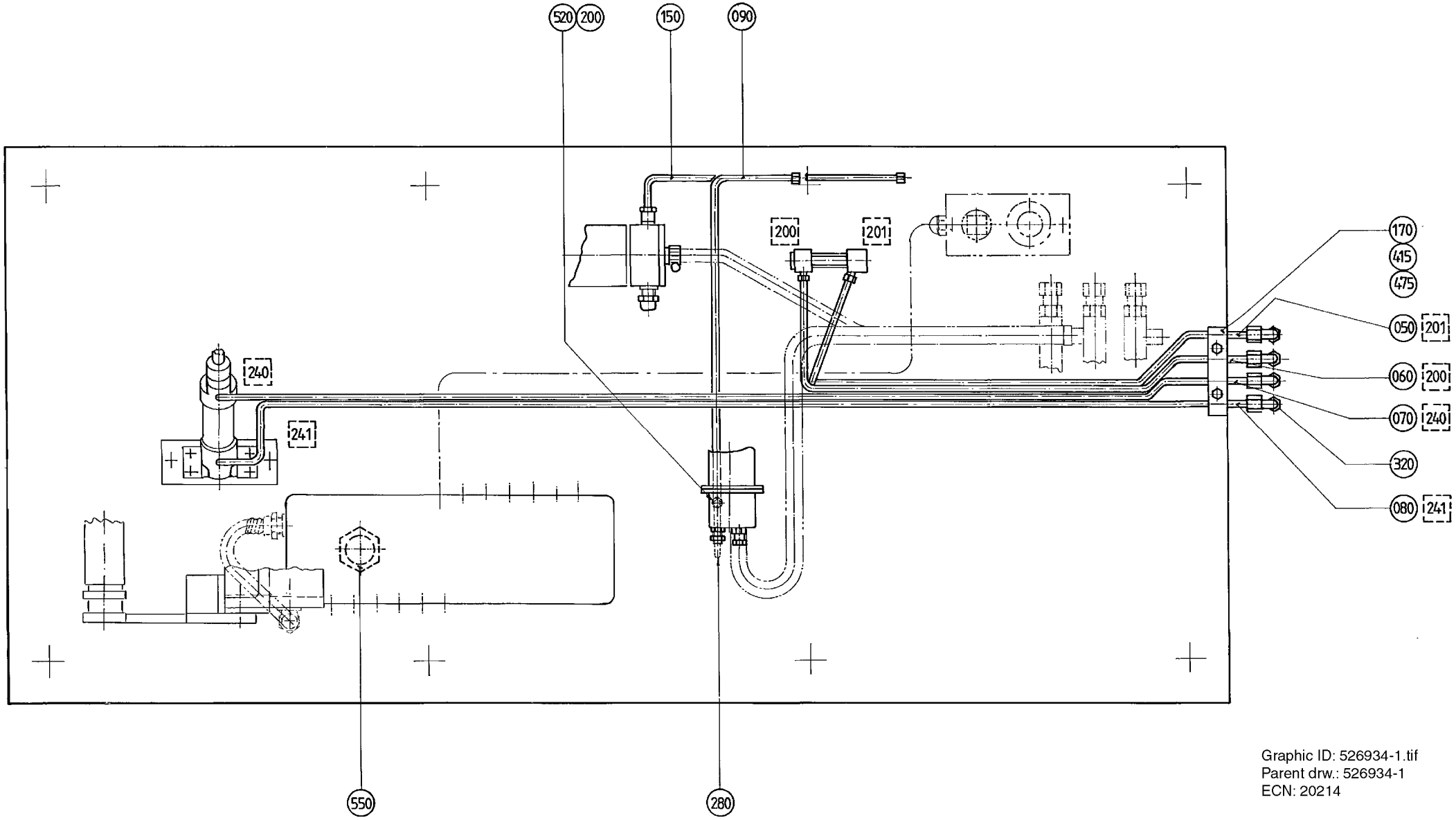

Graphic ID: 526934-1.tif
Parent drw.: 526934-1
ECN: 20214

ECM: 71955 - 19981102
Group number: 526934-0200
Assembly Drawing: 526934-1_1_AA

Pos	Part No	UN	Qty	Description	Page No
0300B					
050	556561-0002		1	PIPE	
060	556562-0002		1	PIPE	
070	556563-0002		1	PIPE	
080	556564-0002		1	PIPE	
0500B, 1136B, 1500B, 1000S, 0568B, 1000B					
050	556561-0001		1	PIPE	
060	556562-0001		1	PIPE	
070	556563-0001		1	PIPE	
080	556564-0001		1	PIPE	
0500S					
050	556561-0004		1	PIPE	
060	556562-0004		1	PIPE	
070	556563-0003		1	PIPE	
080	556564-0003		1	PIPE	
1000SQ, 0500SQ, 0568SQ					
050	556561-0003		1	PIPE	
060	556562-0003		1	PIPE	
070	556563-0001		1	PIPE	
080	556564-0001		1	PIPE	
Common Parts					
090	526974-0000		1	PIPE	
150	282802-0000		1	PIPE	
170	434731-0000		1	PIPE HOLDER	
200	90224-0304		1	CONNECTION	
280	90166-0124	MM	200	TUBE 6 MM PA,TRANSP.	
320	342737-0204		4	CONN. ELBOW W-6 LRFR	
415	312105-0370		2	SCREW M6S ISO 4017 M6X20 A480	
475	315105-0153		2	WASHER BRB 6,4X12 RFR	
520	342706-0130		1	ACCESSORIES, INSERT SLEEVE 6 MM	
550	352101-0107		1	LEAD-IN, PR37/PG29, E-1457537	

Pos	Part No	UN	Qty	Description	Page No

Machine Type | Group Description | Used-In | Group Number | Page No

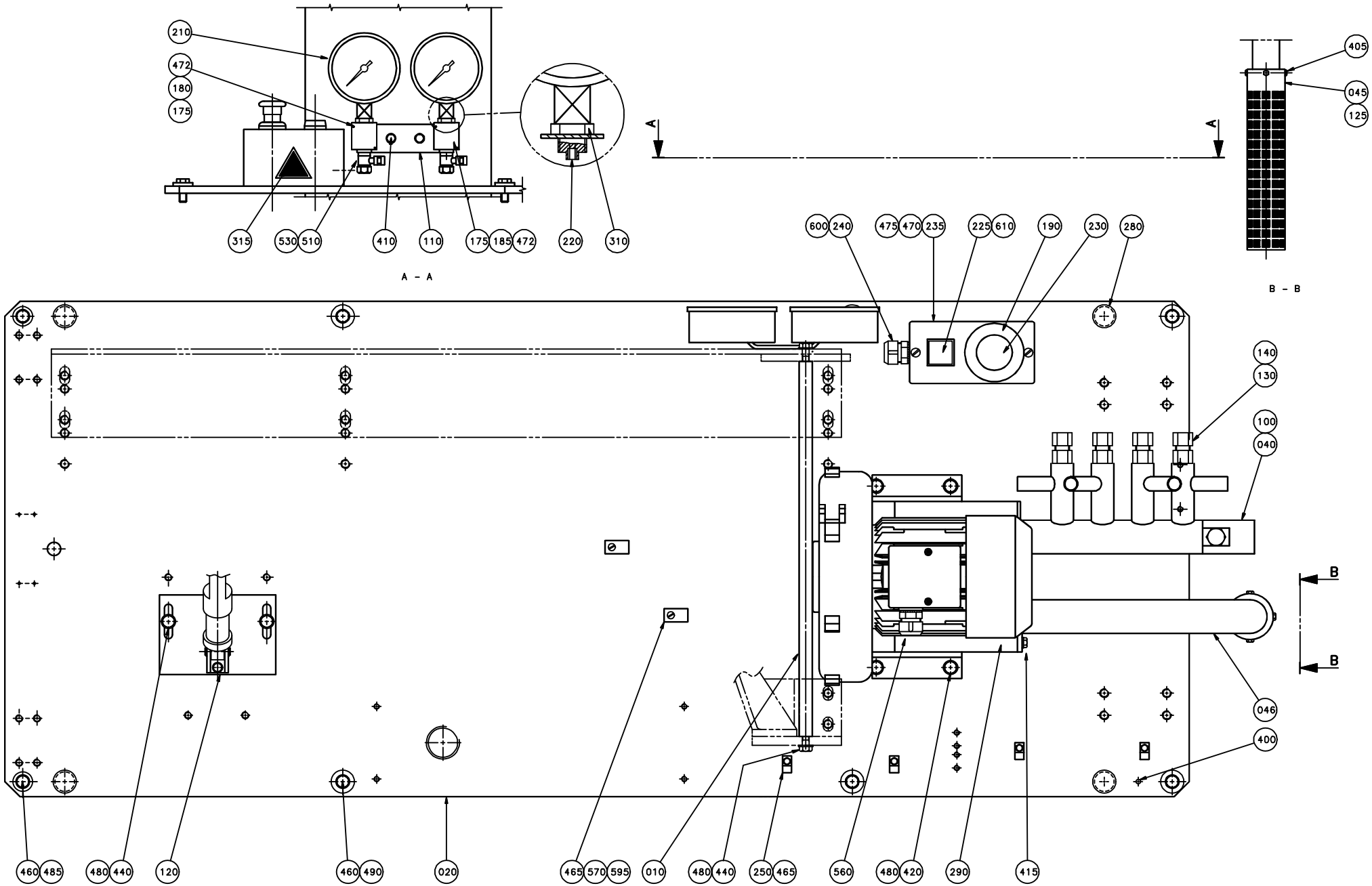
210
472
180
175
315
530
510
410
110
175
185
472
220
310
A - A
A
A
405
045
125
B - B
600
240
475
470
235
225
610
190
230
280
140
130
100
040
B
B
046
400
460
485
480
440
120
460
490
020
465
570
595
010
480
440
250
465
560
480
420
290
415

ECM: 71955 - 19981102
Group number: 526933-0400
Assembly Drawing: 526933-4_1_AC

Pos	Part No	UN	Qty	Description	Page No
0300B					
010	265569-0002		1	STRUT	
020	579681-0000		1	SHEET	
490	315121-0173		8	WASHER PLAIN, TBRSB 10,5/28 H=6	
0500B, 1136B, 0568B, 1000B					
010	265569-0001		1	STRUT	
020	579681-0000		1	SHEET	
490	315121-0173		8	WASHER PLAIN, TBRSB 10,5/28 H=6	
0500S					
010	265569-0003		1	STRUT	
020	583187-0000		1	SHEET	
490	315121-0173		8	WASHER PLAIN, TBRSB 10,5/28 H=6	
1000S					
010	265569-0001		1	STRUT	
020	582020-0000		1	SHEET	
490	315121-0173		8	WASHER PLAIN, TBRSB 10,5/28 H=6	
1000SQ, 0500SQ, 0568SQ					
010	265569-0006		1	STRUT	
020	579681-0000		1	SHEET	
490	315121-0173		8	WASHER PLAIN, TBRSB 10,5/28 H=6	
1500B					
010	265569-0007		1	STRUT	
020	592596-0000		1	SHEET	
485	315115-0173		2	WASHER PLAIN, TBRB 10,5/22 H=4	
490	315121-0173		6	WASHER PLAIN, TBRSB 10,5/28 H=6	
Common Parts					
040	535623-0000		1	BRANCH PIPE	
045	450882-0000		1	OUTER PIPE	
046	535624-0000		1	INNER PIPE	
100	535608-0000		1	GASKET	
110	33577-0000		1	CANTILEVER	
120	556548-0000		1	FASTENING PLATE	
125	526582-0000		1	NET	
130	293363-0000		5	BARRIER NUT	
140	293364-0000		5	THROTTLE SCREW	
175	464173-0000		2	LABEL HOLDER	
180	464176-0000		1	SIGN, STRIP APPLICATOR	
185	464177-0000		1	SIGN, STRIP APPLICATOR SHORT STOP	
190	486826-0001		1	SIGN "EMERGENCY STOP"	
210	90043-0034		2	PRESSURE GAUGE	
220	90043-0302		2	SCREW	
225	90064-0084		1	PUSH BUTTON, YELLOW	
230	90064-0124		1	SWITCH, EM. STOP, ZB2-BS844+ZB2-BZ1045	
235	90066-0029		1	PUSH BUTTON BOX XB2-SLS12	
240	90152-0033	M	1	SPIRAL CONDUIT FOR PR 15,2(PG 9)	
250	90165-0060		4	PIPE CLIP FOR TUBE D=5 MM	
280	90261-0011		4	PLUG, BLIND, PLASTIC GPN300F233	
290	90264-0042		1	FAN SIEMENS 2BH1 300-1AH	
	90264-0306		*1*	*SILENCER*	
310	90330-0105		2	NUT, HEXAGON, R3/8	
315	90194-0016		1	WARNING SIGN, RISK OF ELECTRIC SHOCK	
400	311305-0308		2	LOTTED PIRPC5X16FZB	
405	312105-0287		4	SCREW M6S ISO 4017 M4X8 A470	
410	312105-0366		2	SCREW M6S ISO 4017 M6X12 A480	
415	312105-0368		4	SCREW M6S ISO 4017 M6X16 A480	
420	312105-0447		4	SCREW M6S ISO 4017 M8X12 A480	
440	312105-0451		4	SCREW M6S ISO 4017 M8X20 A480	
460	312105-0493		8	SCREW M6S ISO 4017 M10X25 A480	
465	312125-0287		6	SCREW ISO 1207 M4X8 A4	
470	312125-0289		4	SCREW ISO 1207 M4X10 A4	
472	312502-0120		4	DRIVE SCREW ROUND HEAD KDS 0X5	
475	315105-0136		4	WASHER BRB 4,3X9 RFR	
480	315115-0165		8	WASHER PLAIN, TBRB 8,4/16 H=3	
510	342797-0122		2	CONN. BANJO, RINGPIECE 6-1/4	
530	342980-0304		2	BANJO-HOLLOW BOLT COUPL,EXT.THR.01-G1/4	
560	352103-0110		1	CABLE GLAND, STR 16, PR22,5/PG16	
570	352113-0102		2	CABLE TIE, BLACK 188X4,8 MM	
595	352113-0203		2	ANCHOR PLATES FOR STRIPS, TYPE TM3S8-M0	
600	352136-0113		1	GLAND FITTING PR18,6/PG11 DI=12MM	
610	359301-0051		1	BUTTON SIGN, EJECTION AT SPLICING	

Machine Type | Group Description | Used-In | Group Number | Page No

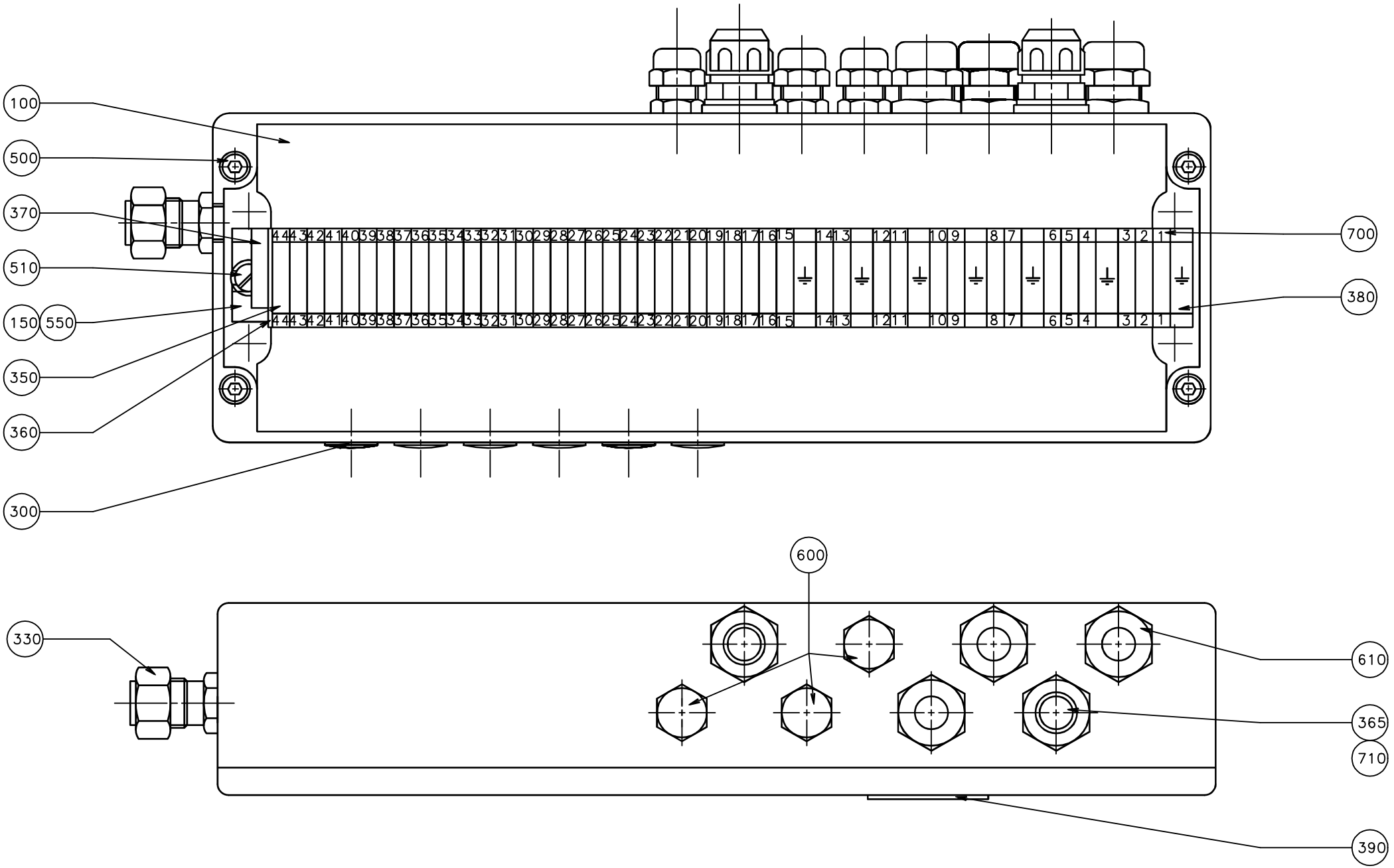
100
500
370
510
150
550
350
360
300
700
380
600
330
610
365
710
390

ECM: 70024 - 19960528
Group number: 283026-0400
Assembly Drawing: 283026-4_1_AA

Pos	Part No	UN	Qty	Description	Page No
-					
100	283027-0000		1	APPLIANCE BOX	
150	282549-0000		1	MOUNTING RAIL	
300	90002-0013		7	BLANK-OFF PLUG, PR 15,2 SKINDICHT-BLK9	
330	352136-0127		1	GLAND FITTING PR 18,6	
350	90077-0064		44	TERMINAL SAK2,5 PA FOR TS32	
360	90077-0300		1	END PLATE AP2,5	
365	90089-0013		2	REDUCING SLEEVE, PR20,4/PR18,6	
370	90094-0004		1	END SUPPORT EWK 2061.6 WM	
380	90135-0022		7	EARTH TERMINAL EK 2,5N	
390	90194-0016		1	WARNING SIGN, RISK OF ELECTRIC SHOCK	
500	312111-0372		4	SCREW HEX.SOCK.HD.MC6S-TT 6X25 88 FZB	
510	312141-0364		2	SCREW ISO 2009 MFS M6X10 4.8 EL.PL	
550	315115-0165		2	WASHER PLAIN, TBRB 8,4/16 H=3	
600	352103-0100		2	CABLE GLAND, STR 9, PR15,2/PG9	
610	352103-0108		3	CABLE GLAND, ST 13,5 , PR20,4/PG13,5	
700	359011-0801		2	SIGN BOARD BSFW 1-50	
710	352136-0113		2	GLAND FITTING PR18,6/PG11 DI=12MM	

Pos	Part No	UN	Qty	Description	Page No

BENDING ROLLER

Drawing file: 546179-1_1_AB.hpgl

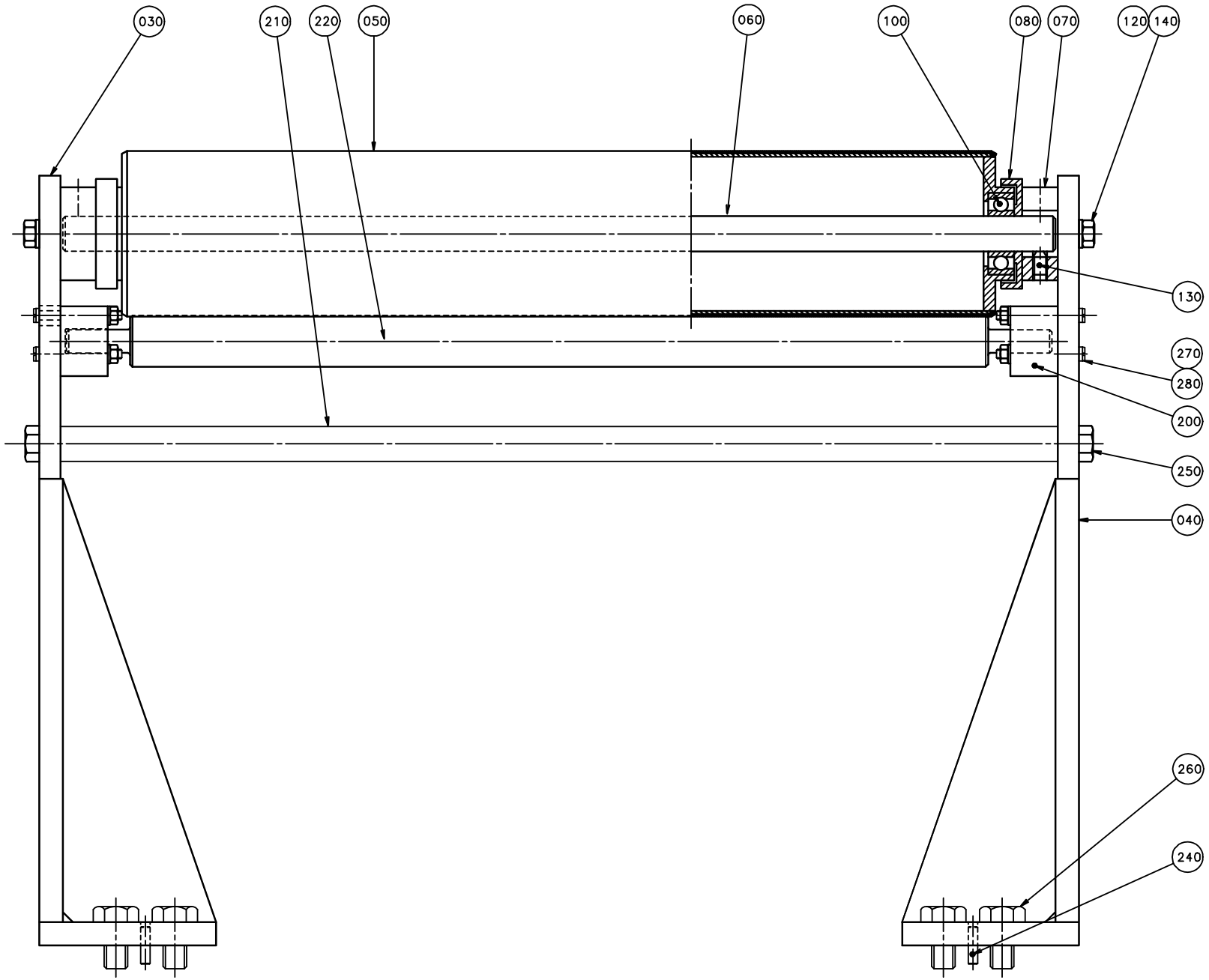

ECM: 71955 - 19981102
Group number: 546179-0100
Assembly Drawing: 546179-1_1_AB

Pos	Part No	UN	Qty	Description	Page No
TB/8 0568SQ, TB/8 1000B, TB/8 0568B, TB/8 1000SQ, TB/8 1000S, TB/8 0300B, TB/8 0500SQ, TB/8 0500S, TB/8 0500B, TB/8 1136B					
050	449843-0001		1	BENDING ROLLER	
060	265566-0001		1	SHAFT	
210	265569-0001		1	STRUT	
220	573666-0000		1	SUPPORT ROLLER	
TB/8 1500B					
050	449843-0005		1	BENDING ROLLER	
060	265566-0006		1	SHAFT	
210	265569-0007		1	STRUT	
220	592597-0000		1	SUPPORT ROLLER	
Common Parts					
030	294108-0000		1	CANTILEVER	
040	294109-0000		1	CANTILEVER	
070	265567-0000		2	BEARING UNIT	
080	265568-0000		2	DUST COVER	
100	90214-0098		2	BALL BEARING, 15X35X11 MM	
120	312105-0370		4	SCREW M6S ISO 4017 M6X20 A480	
130	312318-0364		4	SCREW ISO4029 M6X10 A4	
140	315105-0153		4	WASHER BRB 6,4X12 RFR	
200	24206-0000		2	BEARING	
240	311305-0308		2	LOTTED PIRPC5X16FZB	
250	312105-0451		2	SCREW M6S ISO 4017 M8X20 A480	
260	312105-0491		4	SCREW M6S ISO 4017 M10X20 A480	
270	312125-0301		6	SCREW ISO 1207 M4X35 A4	
280	312605-0312		6	HEXAGON NUT, M6M M4 A280	

Pos	Part No	UN	Qty	Description	Page No

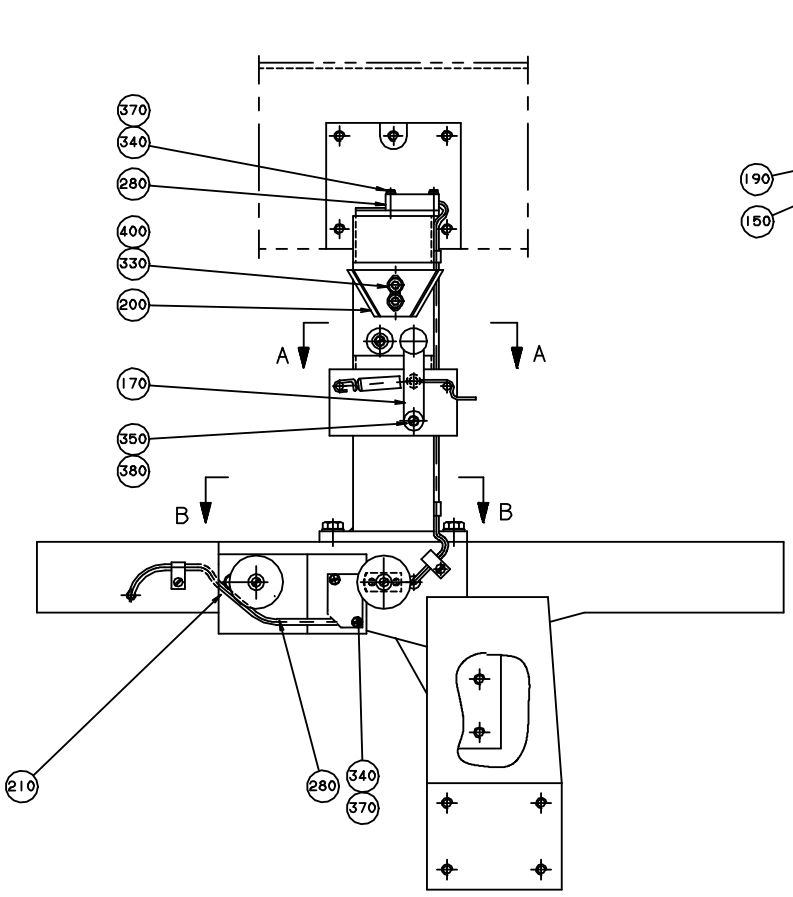
370
340
280
400
330
200
A
A
170
350
380
B
B
210
280
340
370

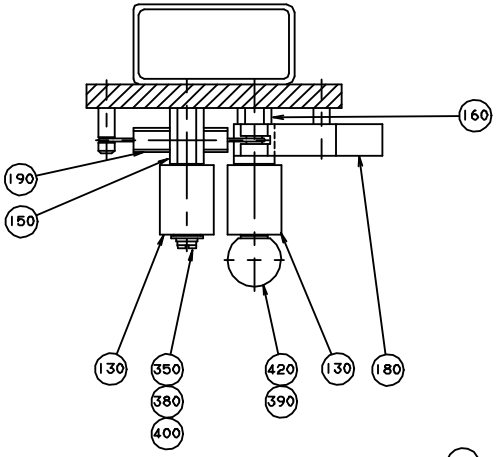
160
190
150
130
350
380
400
420
390
130
180

A - A

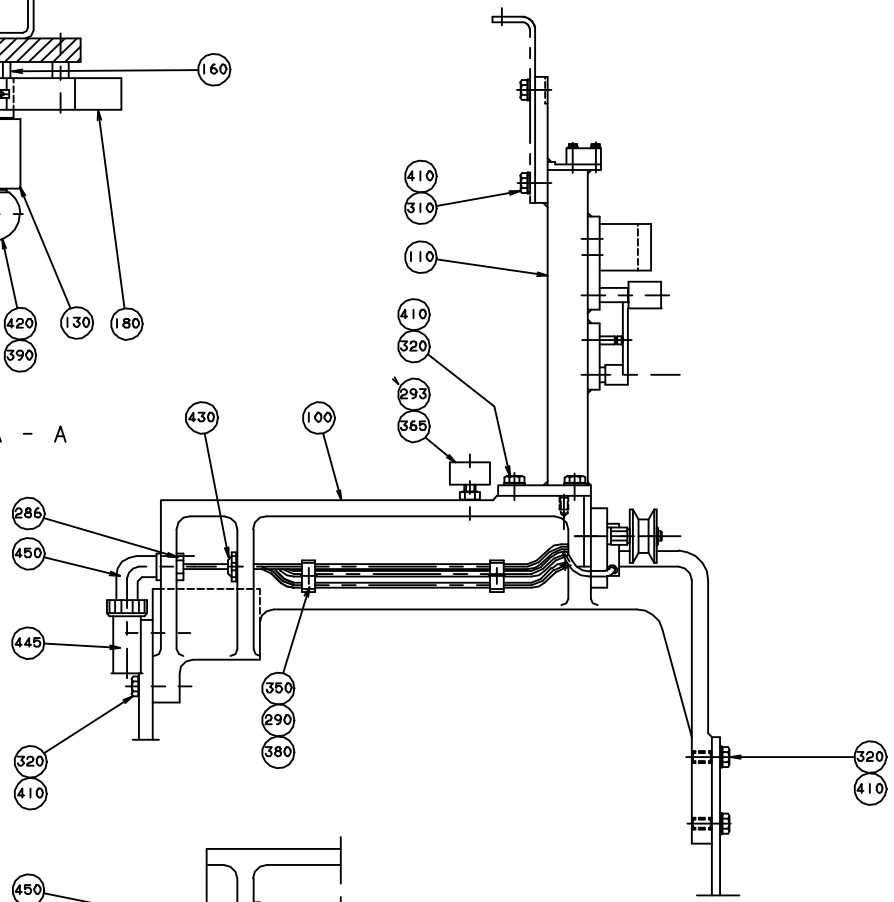
410
310
110
410
320
293
365
430
100
286
450
445
350
290
380
320
410
320
410

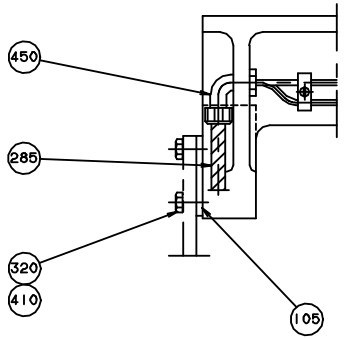
450
285
320
410
105

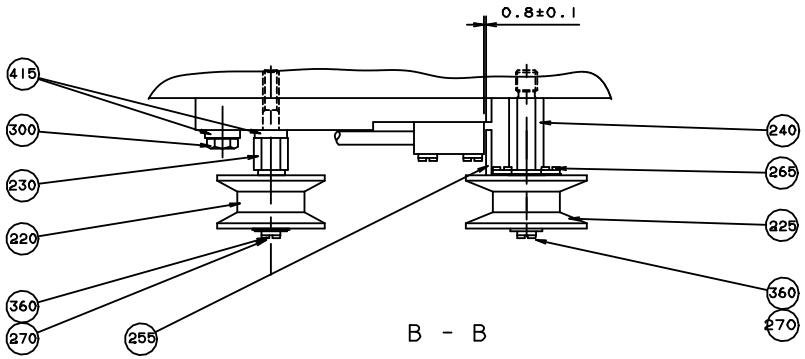
0.8±0.1
415
300
230
220
360
270
255
240
265
225
360
270

B - B

ECM: 129683 - 20030328
Group number: 544973-0100
Assembly Drawing: 544973-3_1_AA

Pos	Part No	UN	Qty	Description	Page No
TB/8 0300B (See drawing on page: 7-14)					
100	546030-0002		1	CANTILEVER	
210	2529313-0000		1	PLATE	
220	544730-0000		1	ROLL	
225	590409-0000		1	ROLL	
240	2529312-0000		1	AXLE PIN	
255	590410-0000		1	SHEET	
265	312125-0224		2	SCREW ISO 1207 M3X10 A4	
350	312125-0285		10	SCREW ISO 1207 M4X6 A4	
380	315105-0136		10	WASHER BRB 4,3X9 RFR	
TB/8 0500S (See drawing on page: 7-14)					
100	546030-0001		1	CANTILEVER	
210	2529313-0000		1	PLATE	
220	544730-0000		1	ROLL	
225	590409-0000		1	ROLL	
240	2529312-0000		1	AXLE PIN	
255	590410-0000		1	SHEET	
265	312125-0224		2	SCREW ISO 1207 M3X10 A4	
350	312125-0285		10	SCREW ISO 1207 M4X6 A4	
380	315105-0136		10	WASHER BRB 4,3X9 RFR	
TB/8 0568SQ, TB/8 1000SQ, TB/8 0500SQ (See drawing on page: 7-14)					
100	546030-0002		1	CANTILEVER	
105	574037-0000		1	SPACER	
210	2529313-0000		1	PLATE	
220	544730-0000		1	ROLL	
225	590409-0000		1	ROLL	
240	2529312-0000		1	AXLE PIN	
255	590410-0000		1	SHEET	
265	312125-0224		2	SCREW ISO 1207 M3X10 A4	
350	312125-0285		10	SCREW ISO 1207 M4X6 A4	
380	315105-0136		10	WASHER BRB 4,3X9 RFR	
TB/8 1000B, TB/8 0568B, TB/8 1000S, TB/8 0500B, TB/8 1136B (See drawing on page: 7-14)					
100	545138-0000		1	CANTILEVER	
210	2529313-0000		1	PLATE	
220	544730-0000		1	ROLL	
225	590409-0000		1	ROLL	
240	2529312-0000		1	AXLE PIN	
255	590410-0000		1	SHEET	
265	312125-0224		2	SCREW ISO 1207 M3X10 A4	
350	312125-0285		10	SCREW ISO 1207 M4X6 A4	
380	315105-0136		10	WASHER BRB 4,3X9 RFR	
430	352101-0103		1	LEAD-IN, PR18,6/PG11, E-1457518	

Pos	Part No	UN	Qty	Description	Page No
TB/8 1500B (See drawing on page: 7-14)					
100	545138-0000		1	CANTILEVER	
105	592588-0000		1	SPACER	
210	2529313-0000		1	PLATE	
220	544730-0000		1	ROLL	
225	590409-0000		1	ROLL	
240	2529312-0000		1	AXLE PIN	
255	590410-0000		1	SHEET	
265	312125-0224		2	SCREW ISO 1207 M3X10 A4	
350	312125-0285		10	SCREW ISO 1207 M4X6 A4	
380	315105-0136		10	WASHER BRB 4,3X9 RFR	
430	352101-0103		1	LEAD-IN, PR18,6/PG11, E-1457518	
Common Parts					
110	544974-0000		1	PILLAR	
130	232979-0000		2	PRESSURE ROLLER (PAK OF 10)	
150	269053-0001		1	SHAFT	
160	269053-0003		1	SHAFT	
170	269054-0000		1	ARM	
180	269056-0000		1	CATCH	
190	269057-0000		1	TENSION SPRING	
200	279480-0000		1	STEERING RAIL	
230	547924-0000		1	AXLE PIN	
270	90005-0082		2	WASHER PLAIN ROUND 4,3(M4)/12,H=1	
280	90044-0104		2	PROX.SWITCH IFM IN 3002(RP 90044-194)	
286	90099-0002		1	NUT PR 18,6 BRASS	
290	90165-0060		11	PIPE CLIP FOR TUBE D=5 MM	
293	90347-0004		1	VIBRATION DAMPER D=30 TH=M8 H=17 H2=21MM	
300	312105-0372		1	SCREW M6S ISO 4017 M6X25 A480	
310	312105-0449		4	SCREW M6S ISO 4017 M8X16 A480	
320	312105-0452		10	SCREW M6S ISO 4017 M8X22 A4 80	
330	312115-0366		2	SCREW ISO4762 M6X12 A4 80	
340	312125-0228		4	SCREW ISO 1207 M3X16 A4	
360	312125-0287		2	SCREW ISO 1207 M4X8 A4	
365	312605-0318		1	HEXAGON NUT, M6M M8 A280	
370	315105-0124		4	WASHER BRB 3,2X7 RFR	
390	315105-0146		1	WASHER BRB 5,3X10 RFR	
400	315105-0153		3	WASHER BRB 6,4X12 RFR	
410	315105-0165		14	WASHER BRB 8,4X16 RFR	
415	315115-0153		2	WASHER PLAIN, TBRB 6,4/12 H=3	
420	318800-0102		1	HANDLES,SPHERICAL KNOB,INT.THRE.,D.20-M5	
445	352135-0106	MM	430	SPIRAL CONDUIT DI=16 MM	
450	352137-0127		1	COND.FITTING PR 18,6 DI=16MM	

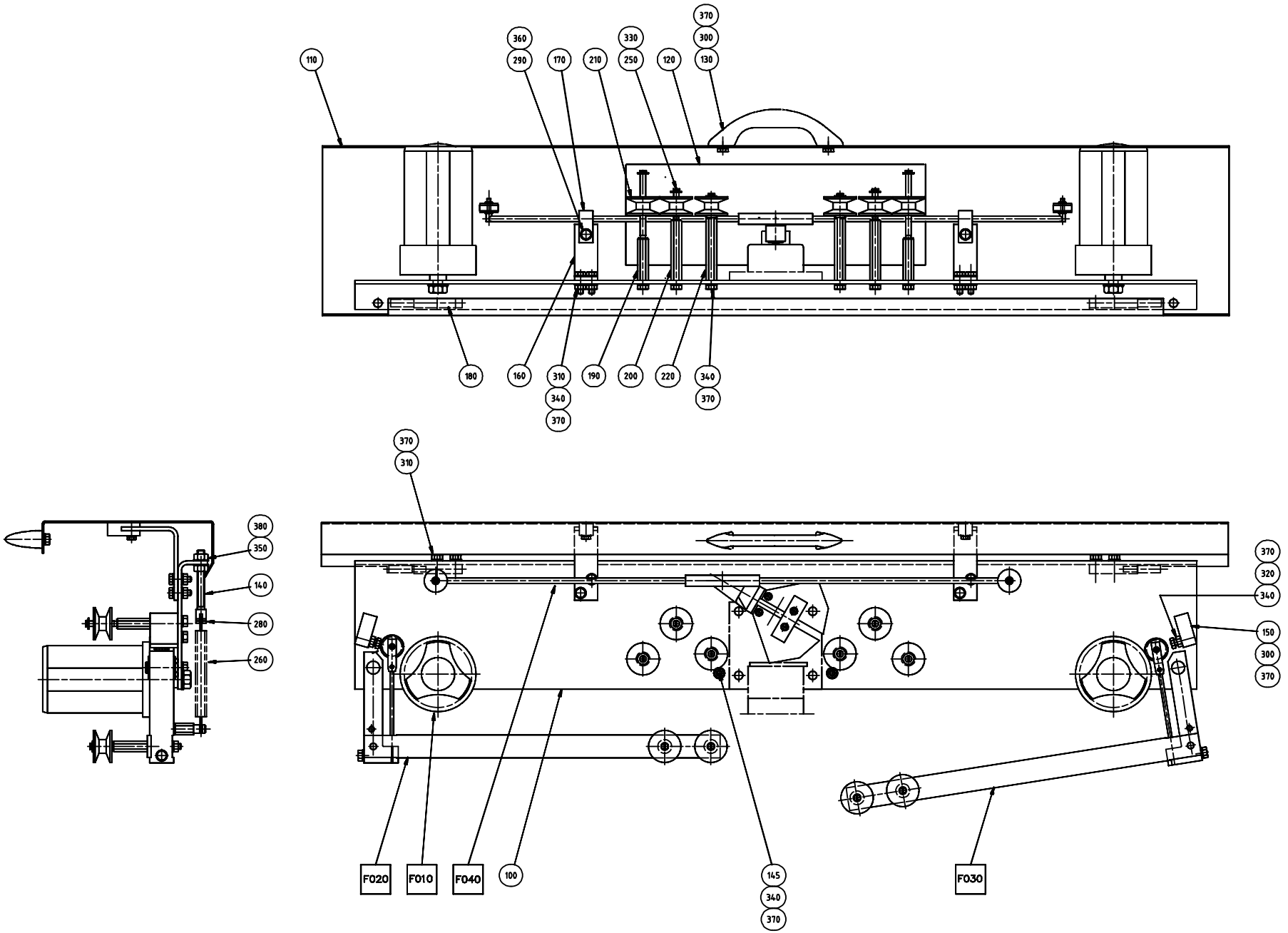
110
360
290
170
210
330
250
120
370
300
130
180
160
310
340
370
190
200
220
340
370
370
310
380
350
140
280
260
370
320
340
150
300
370
F020
F010
F040
100
145
340
370
F030

ECM: 208603 - 20050413
Group number: 543823-0100
Assembly Drawing: 543823-1_1_AC

Pos	Part No	UN	Qty	Description	Page No
-					
100	540869-0000		1	SHEET	
110	543818-0000		1	PROTECTION PLATE	
120	545113-0000		1	SIGN STRIP MAGAZINE	
130	7309-0000		1	HANDLE	
140	541068-0000		2	SPRING HOLDER	
145	541172-0000		2	SET SCREW	
150	541173-0000		2	STOP	
160	543125-0000		2	ANGLE	
170	543126-0000		2	STOP LUG	
180	543819-0000		2	HINGE	
190	544725-0000		2	AXLE PIN	
200	544727-0000		2	AXLE PIN	
210	544730-0000		6	ROLL	
220	536916-0000		2	AXLE PIN	
250	90005-0082		6	WASHER PLAIN ROUND 4,3(M4)/12,H=1	
260	90335-0015		2	TENSION SPRING 42360, 2X14X98	
280	311112-0205		2	SPRING PIN, ISO 8752 3X10-C	
290	312105-0327		2	SCREW M6S ISO 4017 M5X12 A480	
300	312105-0366		6	SCREW M6S ISO 4017 M6X12 A480	
310	312105-0368		8	SCREW M6S ISO 4017 M6X16 A480	
320	312109-0374		2	SCREW M6S ISO 4017 M6X30 A480	
330	312125-0287		6	SCREW ISO 1207 M4X8 A4	
340	312605-0316		14	HEXAGON NUT, M6M M6 A280	
350	312605-0318		4	HEXAGON NUT, M6M M8 A280	
360	315105-0146		2	WASHER BRB 5,3X10 RFR	
370	315105-0153		24	WASHER BRB 6,4X12 RFR	
380	315105-0165		4	WASHER BRB 8,4X16 RFR	
F040	543821-0100		1	LEVEL PROBE	**7-19**
F030	594620-0100		1	BRAKE ARM	**7-21**
F020	543822-0100		1	BRAKE ARM	**7-23**
F010	537329-0100		2	HUB JUMBO	**7-25**

Pos	Part No	UN	Qty	Description	Page No

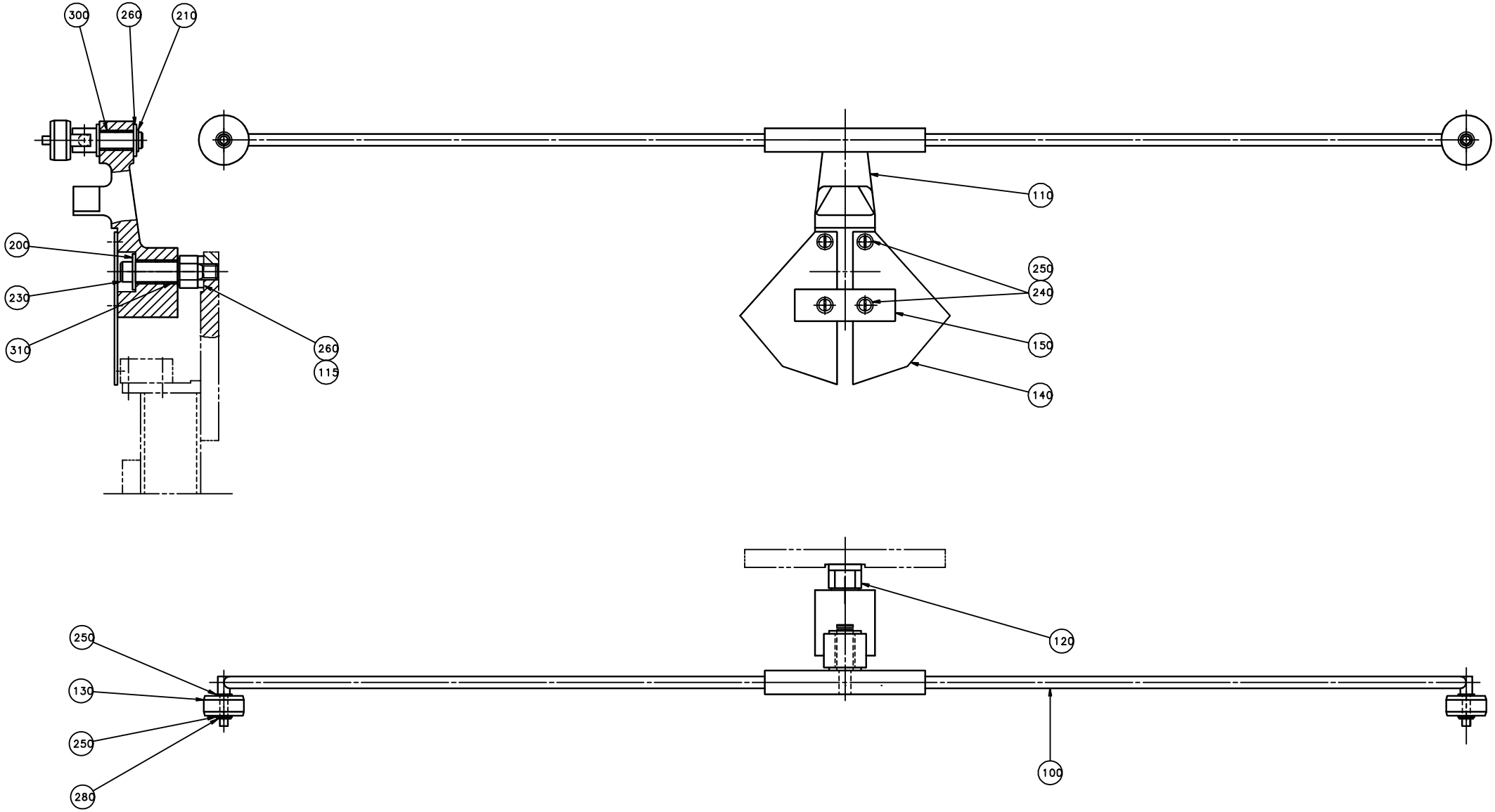
300
260
210
200
230
310
260
115
110
250
240
150
140
250
130
250
280
120
100

ECM: 185144 - 20041018
Group number: 543821-0100
Assembly Drawing: 543821-1_1_AA

Pos	Part No	UN	Qty	Description	Page No
-					
100	542781-0000		1	ARM	
110	542784-0000		1	LINK ARM	
115	2033-0008		3	WASHER	
120	542782-0000		1	AXLE PIN	
130	542785-0000		2	ROLL	
140	542786-0000		2	FLAG	
150	543575-0000		1	LOCK SHEET	
200	90005-0060		1	WASHER PLAIN, RBS 6,4/M6)/18,H=1,5	
210	90141-0015		1	RETAINING RING FOR SHAFT DIN 471 8 A2	
230	312115-0366		1	SCREW ISO4762 M6X12 A4 80	
240	312125-0287		4	SCREW ISO 1207 M4X8 A4	
250	315105-0136		8	WASHER BRB 4,3X9 RFR	
260	315105-0165		3	WASHER BRB 8,4X16 RFR	
280	315755-0105		2	RETAINING RING SHAFT DIN 6799 3,2 A2	
300	321141-0100		2	BEARING BUSH W/O FLANGE, 8X10X8 MM	
310	321141-0140		2	BEARING BUSH W/O FLANGE, 10X12X10 MM	

Pos	Part No	UN	Qty	Description	Page No

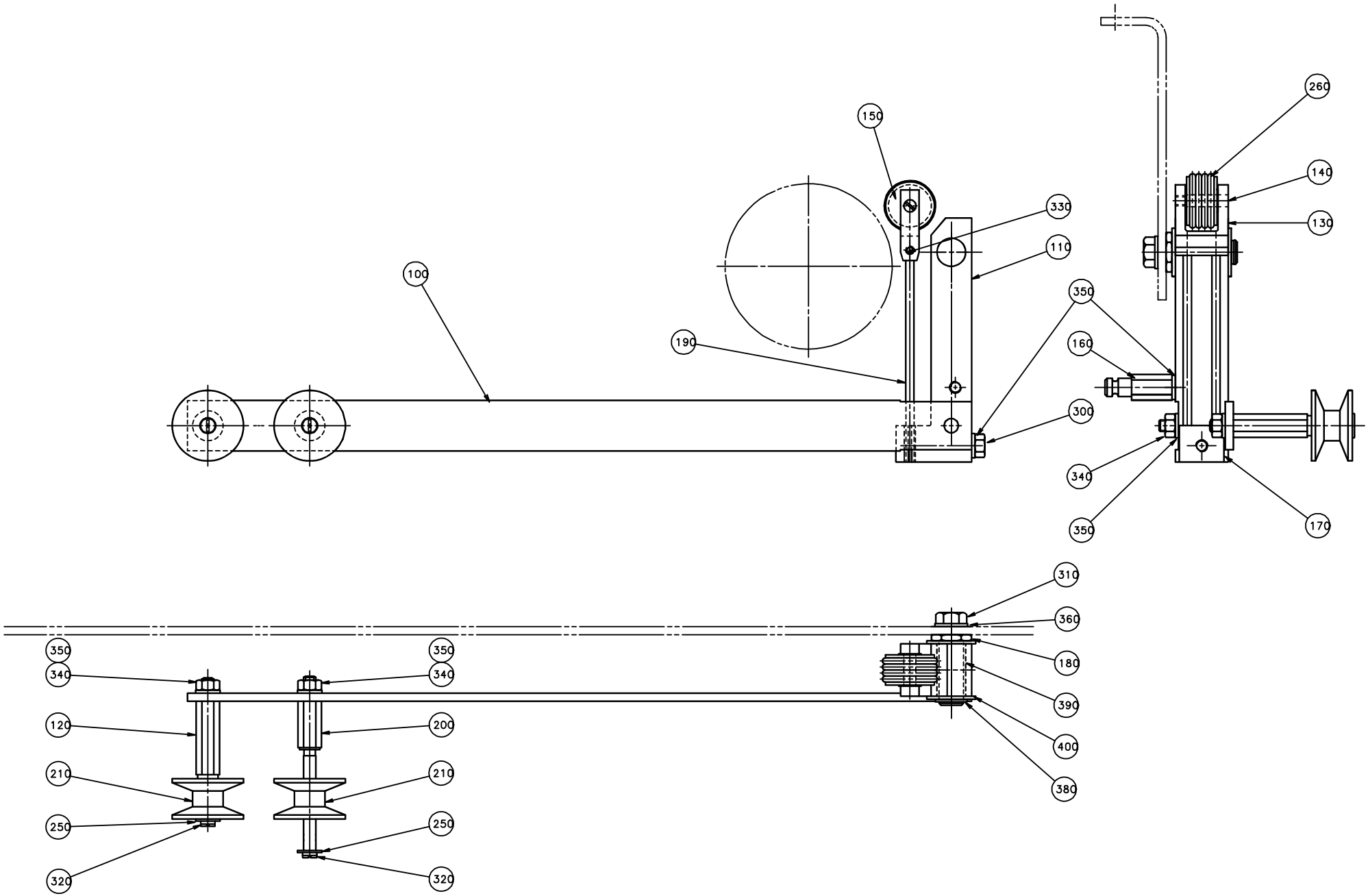
260
150
140
330
130
110
100
350
190
160
300
340
350
170
310
360
350
340
350
340
180
120
200
390
210
210
400
250
250
380
320
320

ECM: 185143 - 20041018
Group number: 594620-0100
Assembly Drawing: 594620-1_1_AA

Pos	Part No	UN	Qty	Description	Page No
-					
100	540870-0000		1	ARM	
110	541057-0000		1	ARM	
120	536917-0000		1	AXLE PIN	
130	541064-0000		1	FORK	
140	541065-0000		1	SHAFT	
150	541066-0000		1	ROLL	
160	541067-0000		1	SPRING BRACKET	
170	541069-0000		1	SPRING BRACKET	
180	541070-0000		1	SHAFT	
190	543820-0000		2	SPRING	
200	544726-0000		1	AXLE PIN	
210	544730-0000		2	ROLL	
250	90005-0082		2	WASHER PLAIN ROUND 4,3(M4)/12,H=1	
260	90242-0148		4	O-RING 19,2X3 MM	
300	312105-0378		1	SCREW M6S ISO 4014 M6X40 A480	
310	312105-0449		1	SCREW M6S ISO 4017 M8X16 A480	
320	312125-0287		2	SCREW ISO 1207 M4X8 A4	
330	312318-0283		2	SCREW ISO4029 M4X4 A4	
340	312605-0316		3	HEXAGON NUT, M6M M6 A280	
350	315105-0153		5	WASHER BRB 6,4X12 RFR	
360	315105-0165		1	WASHER BRB 8,4X16 RFR	
380	315751-0109		1	RETAINING RING FOR SHAFT DIN 471 12 A2	
390	321141-0193		1	BEARING BUSH W/O FLANGE, 12X14X25 MM	
400	321130-0180		1	THRUST WASHER, 12X24X1,5 MM	

Pos	Part No	UN	Qty	Description	Page No

BRAKE ARM

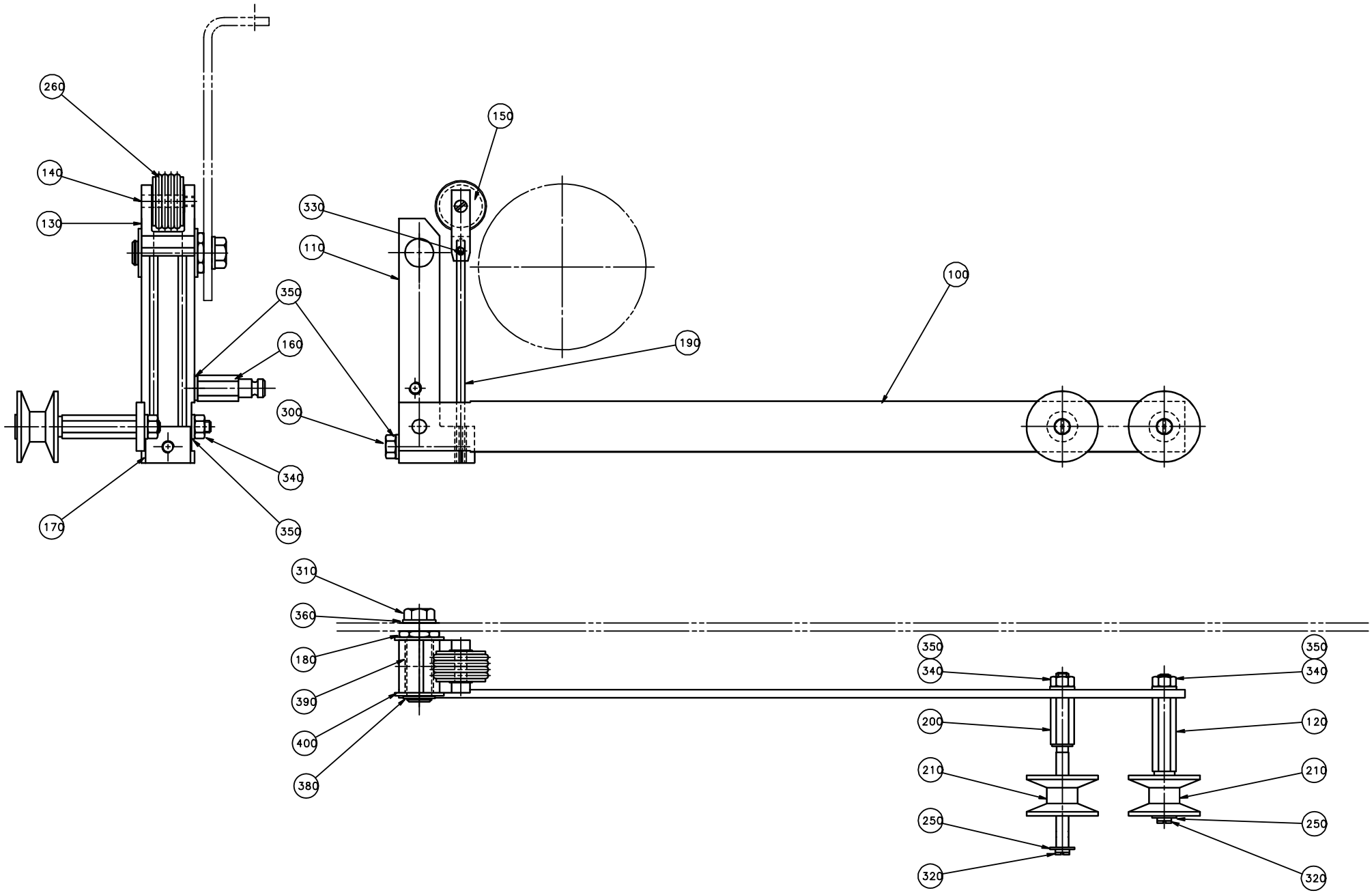
260
140
130
150
330
110
100
350
160
190
300
340
170
350
310
360
180
390
400
380
350
340
200
210
250
320
350
340
120
210
250
320

ECM: 185142 - 20041018
Group number: 543822-0100
Assembly Drawing: 543822-1_1_AA

Pos	Part No	UN	Qty	Description	Page No
-					
100	540870-0000		1	ARM	
110	541057-0000		1	ARM	
120	536917-0000		1	AXLE PIN	
130	541064-0000		1	FORK	
140	541065-0000		1	SHAFT	
150	541066-0000		1	ROLL	
160	541067-0000		1	SPRING BRACKET	
170	541069-0000		1	SPRING BRACKET	
180	541070-0000		1	SHAFT	
190	543820-0000		2	SPRING	
200	544726-0000		1	AXLE PIN	
210	544730-0000		2	ROLL	
250	90005-0082		2	WASHER PLAIN ROUND 4,3(M4)/12,H=1	
260	90242-0148		4	O-RING 19,2X3 MM	
300	312105-0378		1	SCREW M6S ISO 4014 M6X40 A480	
310	312105-0449		1	SCREW M6S ISO 4017 M8X16 A480	
320	312125-0287		2	SCREW ISO 1207 M4X8 A4	
330	312318-0283		2	SCREW ISO4029 M4X4 A4	
340	312605-0316		3	HEXAGON NUT, M6M M6 A280	
350	315105-0153		5	WASHER BRB 6,4X12 RFR	
360	315105-0165		1	WASHER BRB 8,4X16 RFR	
380	315751-0109		1	RETAINING RING FOR SHAFT DIN 471 12 A2	
390	321141-0193		1	BEARING BUSH W/O FLANGE, 12X14X25 MM	
400	321130-0180		1	THRUST WASHER, 12X24X1,5 MM	

Pos	Part No	UN	Qty	Description	Page No

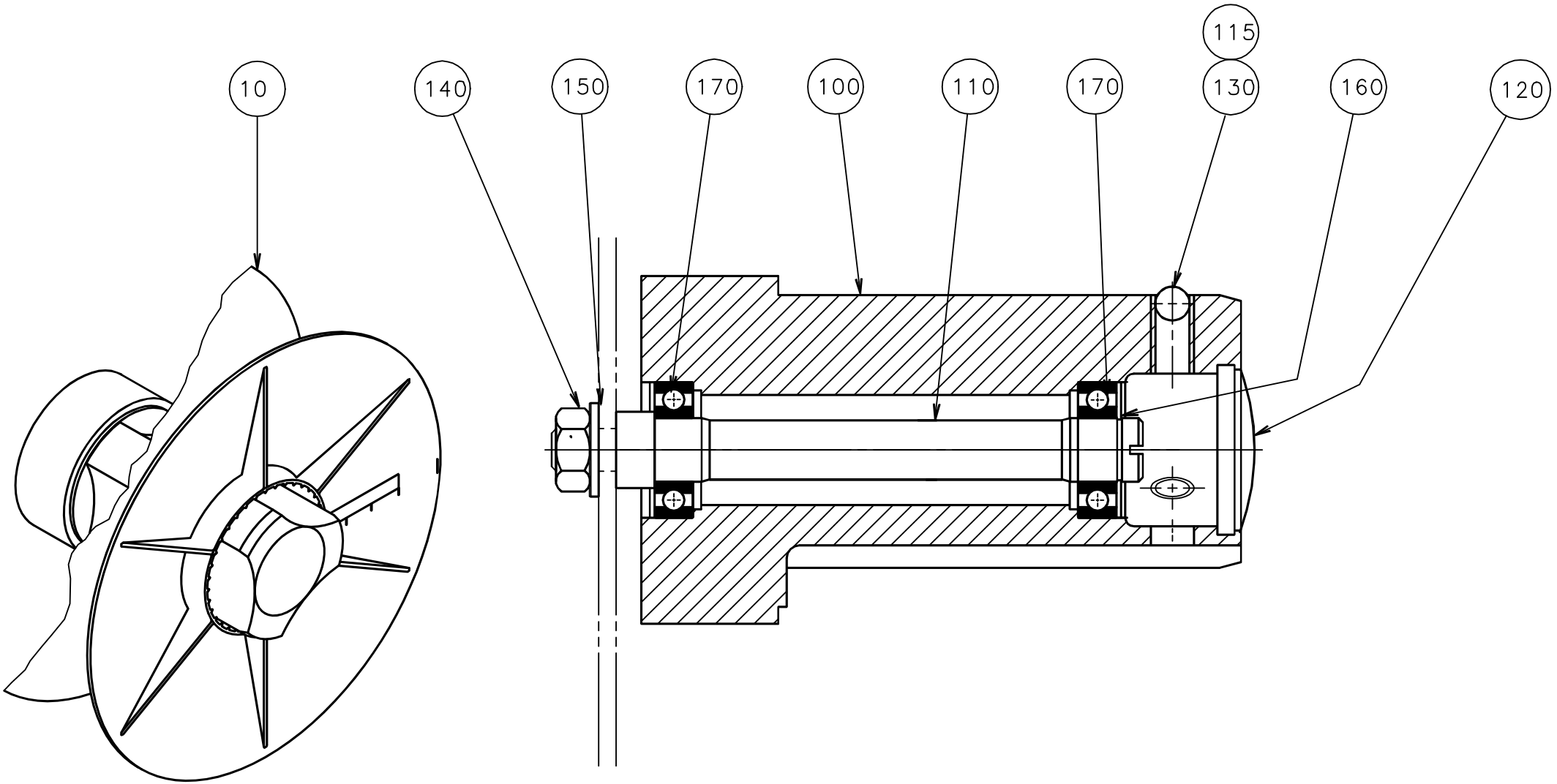
10
140
150
170
100
110
170
115
130
160
120

ECM: 185141 - 20041018
Group number: 537329-0100
Assembly Drawing: 537329-1_1_AA

Pos	Part No	UN	Qty	Description	Page No
-					
010	541751-0000		1	CONICAL BOBBIN	
100	536913-0000		1	HUB	
110	537327-0000		1	SHAFT	
115	90157-0016		1	LOCKING FLUID LOCTITE 242 50 ML	
120	90261-0049		1	PLUG, BLIND, PLASTIC, NO. SR1750	
130	90287-0106		3	SCREW SPRINGLOAD. SLOTTED HEAD M10X21	
140	312605-0320		1	HEXAGON NUT, M6M M10 A280	
150	315105-0173		1	WASHER BRB 10,5X20 RFR	
160	315751-0112		1	RETAINING RING FOR SHAFT DIN 471 15 A2	
170	90214-0207		2	BALL BEARING, 15X32X9 MM	

Pos	Part No	UN	Qty	Description	Page No

This page is intentionally left blank.

ECM: 71166 - 19980121
Group number: 526954-0100
Assembly Drawing:

Pos	Part No	UN	Qty	Description	Page No
TB/8 TPC					
010	251279-0000		1	COIL HEATER	
TB/8 US					
010	267494-0000		1	COIL HEATER	
Common Parts					
020	21903-0000		1	ROLL	
	90166-0056	*M*		*SHRINKABLE HOSE (2,5")*	
030	531733-0000		1	GASKET	
040	531734-0000		2	GASKET	
050	531735-0000		1	GASKET	
060	531736-0000		1	GASKET	

Pos	Part No	UN	Qty	Description	Page No

SPLICE DETECTOR

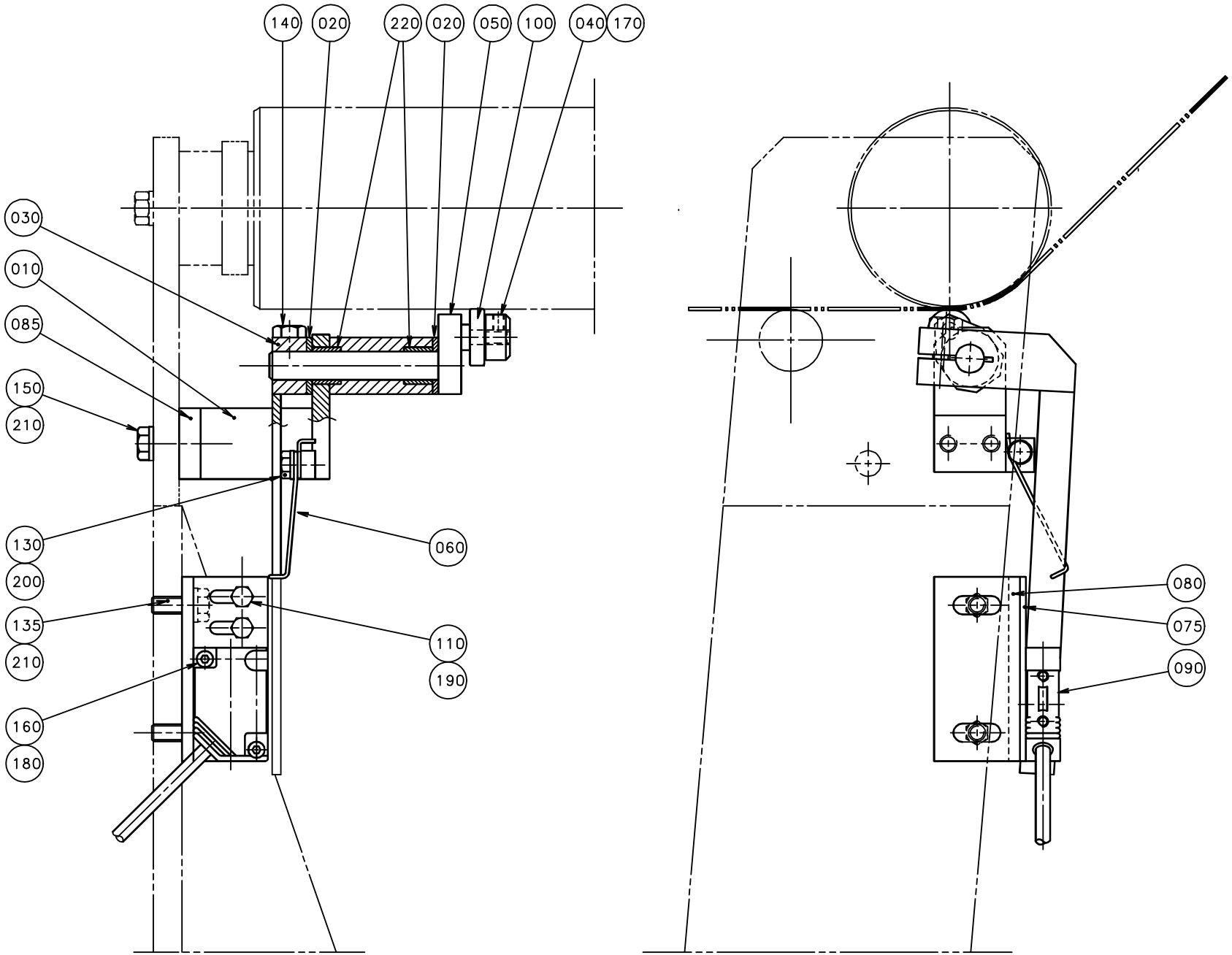

ECM: 153510 - 20031217
Group number: 546180-0100
Assembly Drawing: 546180-2_1_AB

Pos	Part No	UN	Qty	Description	Page No
TB/8					
060	529401-0000		1	SPRING	
075	479714-0000		1	FASTENING PLATE	
080	479715-0000		1	ANGLE BRACKET	
085	542269-0000		1	SPACER	
135	312105-0368		2	SCREW M6S ISO 4017 M6X16 A480	
210	315105-0153		4	WASHER BRB 6,4X12 RFR	
Common Parts					
010	450116-0000		1	CANTILEVER	
020	271211-0000		2	WASHER	
030	271653-0000		1	ARM	
040	271654-0000		1	RETAINING RING	
050	271655-0000		1	HOLDER	
090	90044-0104		1	PROX.SWITCH IFM IN 3002(RP 90044-194)	
100	90214-0138		1	BALL BEARING, 5X19X6 MM	
110	312105-0287		2	SCREW M6S ISO 4017 M4X8 A470	
130	312115-0327		1	SCREW ISO4762 M5X12 A4 80	
140	312105-0370		1	SCREW M6S ISO 4017 M6X20 A480	
150	312105-0372		2	SCREW M6S ISO 4017 M6X25 A480	
160	312115-0228		2	SCREW ISO4762 M3X16 A4 80	
170	312318-0283		1	SCREW ISO4029 M4X4 A4	
180	315105-0124		2	WASHER BRB 3,2X7 RFR	
190	315105-0136		2	WASHER BRB 4,3X9 RFR	
200	315105-0146		1	WASHER BRB 5,3X10 RFR	
220	321127-0100		2	BEARING BUSH W/O FLANGE, 10X13X10 MM	

Pos	Part No	UN	Qty	Description	Page No

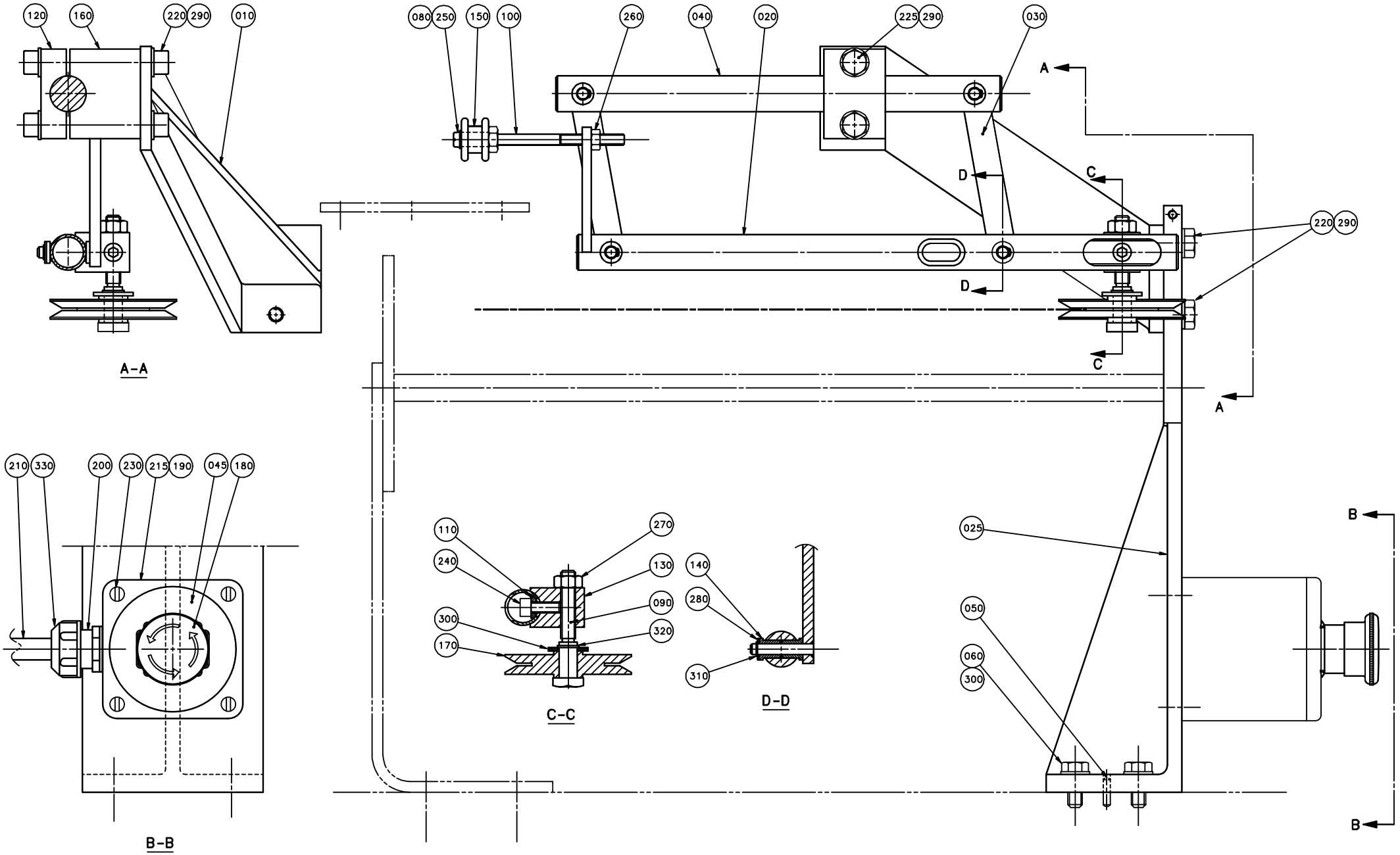
120
160
220
290
010
A-A
080
250
150
100
260
040
020
225
290
030
A
D
C
220
290
D
C
A
210
330
200
230
215
190
045
180
B-B
110
240
270
130
090
320
300
170
C-C
140
280
310
D-D
025
050
060
300
B
B

ECM: 72191 - 19990215
Group number: 282634-0300
Assembly Drawing: 282634-3_1_AC

This list covers pages from 7-30 to 7-33

Pos	Part No	UN	Qty	Description	Page No
TB/8 0300B (See drawing on pages: 7-30, 7-32)					
020	450460-0002		1	GUIDE SHAFT	
025	266758-0000		1	CANTILEVER	
040	450461-0000		1	SHAFT	
045	486826-0001		1	SIGN "EMERGENCY STOP"	
050	311305-0308		2	LOTTED PIRPC5X16FZB	
060	312105-0491		4	SCREW M6S ISO 4017 M10X20 A480	
180	90064-0124		1	SWITCH, EM. STOP, ZB2-BS844+ZB2-BZ1045	
190	90066-0021		1	PUSH BUTTON BOX XAP-M1501	
200	90089-0003		1	REDUCING SLEEVE, PR22,5/PR18,6	
210	90152-0033	M	1	SPIRAL CONDUIT FOR PR 15,2(PG 9)	
230	312125-0333		2	SCREW ISO 1207 M5X25 A4	
300	315105-0173		5	WASHER BRB 10,5X20 RFR	
330	352136-0113		1	GLAND FITTING PR18,6/PG11 DI=12MM	
TB/8 0500S (See drawing on pages: 7-30, 7-32)					
020	450460-0001		1	GUIDE SHAFT	
025	266758-0000		1	CANTILEVER	
040	450461-0000		1	SHAFT	
045	486826-0001		1	SIGN "EMERGENCY STOP"	
050	311305-0308		2	LOTTED PIRPC5X16FZB	
060	312105-0491		4	SCREW M6S ISO 4017 M10X20 A480	
180	90064-0124		1	SWITCH, EM. STOP, ZB2-BS844+ZB2-BZ1045	
190	90066-0021		1	PUSH BUTTON BOX XAP-M1501	
200	90089-0003		1	REDUCING SLEEVE, PR22,5/PR18,6	
210	90152-0033	M	1	SPIRAL CONDUIT FOR PR 15,2(PG 9)	
230	312125-0333		2	SCREW ISO 1207 M5X25 A4	
300	315105-0173		5	WASHER BRB 10,5X20 RFR	
330	352136-0113		1	GLAND FITTING PR18,6/PG11 DI=12MM	
TB/8 0568SQ, TB/8 1000SQ, TB/8 0500SQ (See drawing on pages: 7-30, 7-32)					
020	450460-0003		1	GUIDE SHAFT	
025	266758-0000		1	CANTILEVER	
040	450461-0000		1	SHAFT	
045	486826-0001		1	SIGN "EMERGENCY STOP"	
050	311305-0308		2	LOTTED PIRPC5X16FZB	
060	312105-0491		4	SCREW M6S ISO 4017 M10X20 A480	
180	90064-0124		1	SWITCH, EM. STOP, ZB2-BS844+ZB2-BZ1045	
190	90066-0021		1	PUSH BUTTON BOX XAP-M1501	
200	90089-0003		1	REDUCING SLEEVE, PR22,5/PR18,6	
210	90152-0033	M	1	SPIRAL CONDUIT FOR PR 15,2(PG 9)	
230	312125-0333		2	SCREW ISO 1207 M5X25 A4	
300	315105-0173		5	WASHER BRB 10,5X20 RFR	
330	352136-0113		1	GLAND FITTING PR18,6/PG11 DI=12MM	

Pos	Part No	UN	Qty	Description	Page No
TB/8 1000B, TB/8 0568B, TB/8 1000S, TB/8 0500B, TB/8 1136B (See drawing on pages: 7-30, 7-32)					
020	239665-0000		1	GUIDE SHAFT	
025	266758-0000		1	CANTILEVER	
040	243151-0000		1	SHAFT	
045	486826-0001		1	SIGN "EMERGENCY STOP"	
050	311305-0308		2	LOTTED PIRPC5X16FZB	
060	312105-0491		4	SCREW M6S ISO 4017 M10X20 A480	
180	90064-0124		1	SWITCH, EM. STOP, ZB2-BS844+ZB2-BZ1045	
190	90066-0021		1	PUSH BUTTON BOX XAP-M1501	
200	90089-0003		1	REDUCING SLEEVE, PR22,5/PR18,6	
210	90152-0033	M	1	SPIRAL CONDUIT FOR PR 15,2(PG 9)	
230	312125-0333		2	SCREW ISO 1207 M5X25 A4	
300	315105-0173		5	WASHER BRB 10,5X20 RFR	
330	352136-0113		1	GLAND FITTING PR18,6/PG11 DI=12MM	
TB/8 1500B (See drawing on pages: 7-30, 7-32)					
020	592593-0000		1	GUIDE SHAFT	
040	243151-0000		1	SHAFT	
040	592592-0000		1	SHAFT	
045	486826-0001		1	SIGN "EMERGENCY STOP"	
050	311305-0308		2	LOTTED PIRPC5X16FZB	
060	312105-0491		4	SCREW M6S ISO 4017 M10X20 A480	
180	90064-0124		1	SWITCH, EM. STOP, ZB2-BS844+ZB2-BZ1045	
190	90066-0021		1	PUSH BUTTON BOX XAP-M1501	
200	90089-0003		1	REDUCING SLEEVE, PR22,5/PR18,6	
210	90152-0033	M	1	SPIRAL CONDUIT FOR PR 15,2(PG 9)	
230	312125-0333		2	SCREW ISO 1207 M5X25 A4	
300	315105-0173		5	WASHER BRB 10,5X20 RFR	
330	352136-0113		1	GLAND FITTING PR18,6/PG11 DI=12MM	
Common Parts					
010	243218-0000		1	CANTILEVER	
030	31417-0000		2	LINK	
080	19262-0000		1	WASHER	
090	31418-0000		1	SHAFT	
100	31419-0000		1	SHAFT	
110	31420-0000		1	WASHER	
120	31423-0000		1	MOUNTING LUG	
130	31424-0000		1	ROLLER BRACKET	
140	255064-0000		8	BUSHING	
150	257923-0000		1	GUIDE WHEEL	
160	266761-0000		1	MOUNTING LUG	
170	282635-0000		1	GUIDE WHEEL	
215	90194-0016		1	WARNING SIGN, RISK OF ELECTRIC SHOCK	

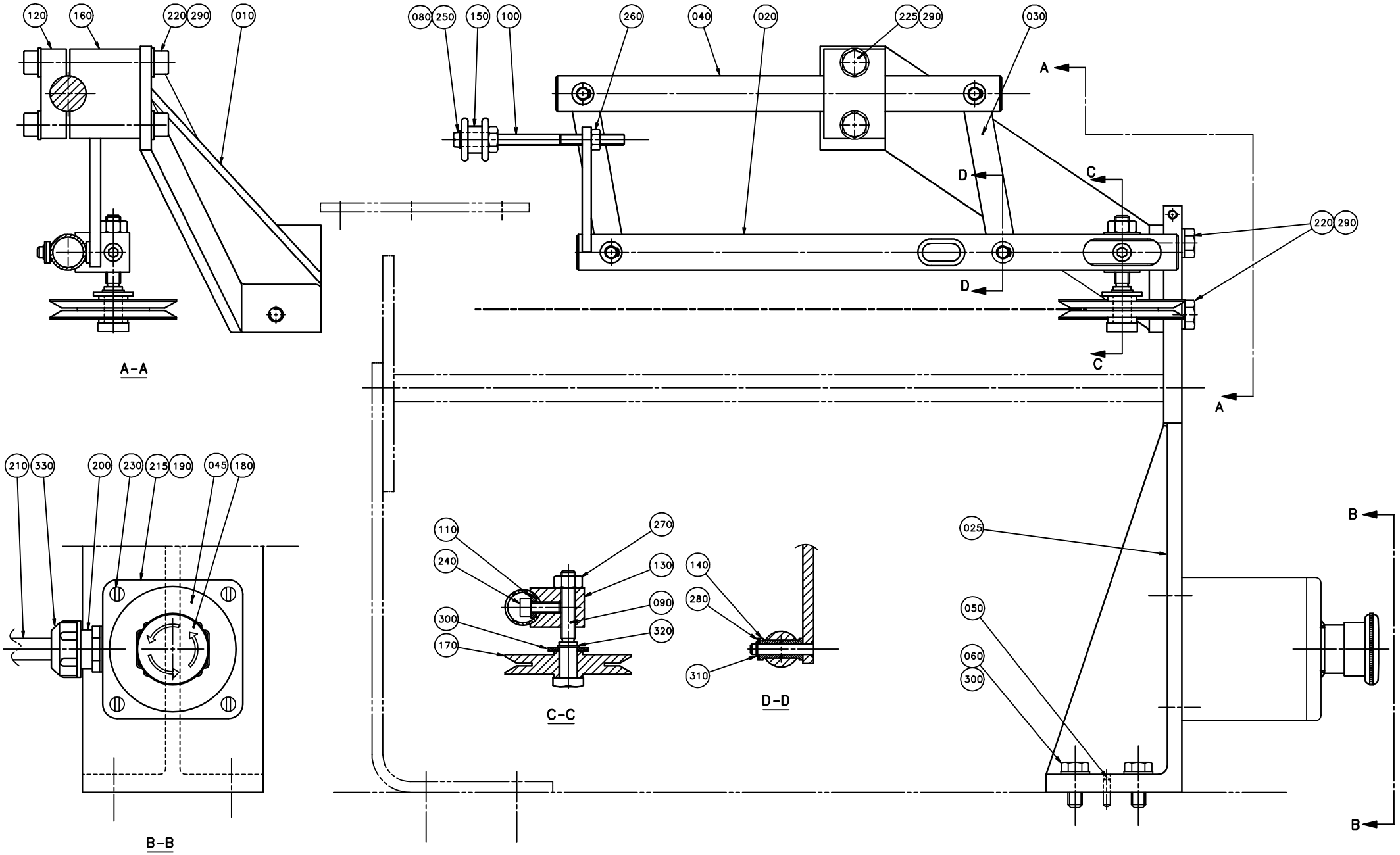
120
160
220
290
010
A-A
080
250
150
100
260
040
020
225
290
030
A
D
C
220
290
D
C
A
210
330
200
230
215
190
045
180
B-B
110
240
270
130
090
320
300
170
C-C
140
280
310
D-D
025
050
060
300
B
B

ECM: 72191 - 19990215
Group number: 282634-0300
Assembly Drawing: 282634-3_1_AC

This list covers pages from 7-30 to 7-33

Pos	Part No	UN	Qty	Description	Page No
Common Parts (Cont'd)					
220	312105-0451		4	SCREW M6S ISO 4017 M8X20 A480	
225	312105-0455		2	SCREW M6S ISO 4017 M8X30 A480	
240	312115-0368		1	SCREW ISO4762 M6X16 A4 80	
250	312125-0323		1	SCREW ISO 1207 M5X8 A4	
260	312605-0316		1	HEXAGON NUT, M6M M6 A280	
270	312605-0318		1	HEXAGON NUT, M6M M8 A280	
280	315105-0153		4	WASHER BRB 6,4X12 RFR	
290	315105-0165		6	WASHER BRB 8,4X16 RFR	
310	315754-0107		4	LOCKING WAE 5	
320	315754-0110		1	LOCKING WAE 9	

Pos	Part No	UN	Qty	Description	Page No

PRESSURE ROLLER

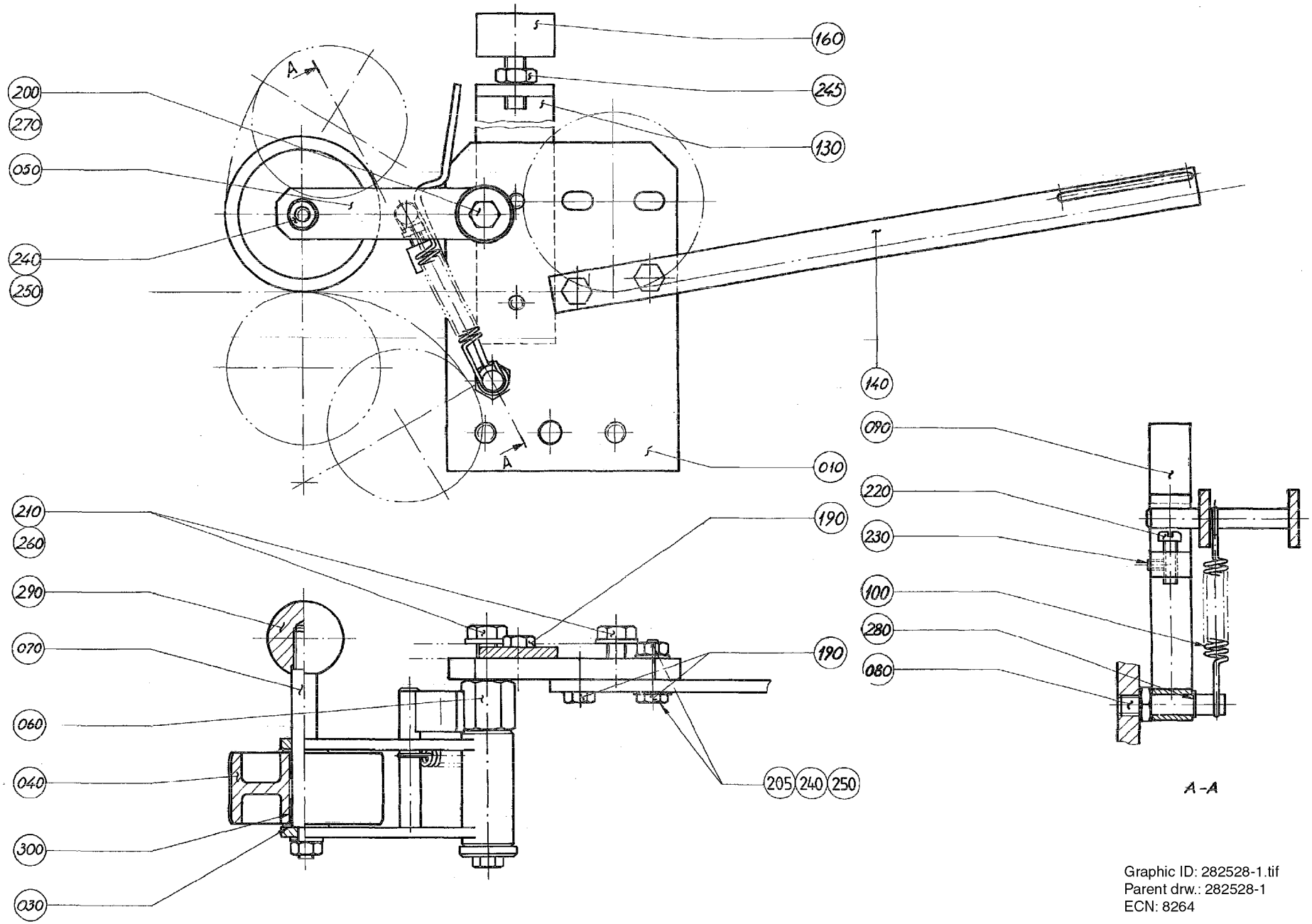

Graphic ID: 282528-1.tif
Parent drw.: 282528-1
ECN: 8264

ECM: 205138 - 20050413
Group number: 282528-0200
Assembly Drawing: 282528-1_1_AA

Pos	Part No	UN	Qty	Description	Page No
TB/8					
190	312105-0366		2	SCREW M6S ISO 4017 M6X12 A480	
240	312605-0316		1	HEXAGON NUT, M6M M6 A280	
250	315105-0153		1	WASHER BRB 6,4X12 RFR	
Common Parts					
010	526947-0000		1	MOUNTING SHEET	
030	2033-0009		2	WASHER	
040	21903-0000		1	ROLL	
	90166-0056	*M*		*SHRINKABLE HOSE (2,5")*	
050	251493-0000		1	FORK	
060	251494-0000		1	SHAFT	
070	251495-0000		1	SHAFT	
080	251496-0000		1	SHAFT	
090	251498-0000		1	BARRIER	
100	279074-0000		1	TENSION SPRING	
130	282596-0000		1	SUPPORT	
160	90347-0004		1	VIBRATION DAMPER D=30 TH=M8 H=17 H2=21MM	
200	312105-0368		1	SCREW M6S ISO 4017 M6X16 A480	
210	312105-0449		2	SCREW M6S ISO 4017 M8X16 A480	
220	312125-0329		1	SCREW ISO 1207 M5X16 A4	
230	312318-0285		1	SCREW ISO4029 M4X6 A4	
245	312605-0318		1	HEXAGON NUT, M6M M8 A280	
260	315105-0165		2	WASHER BRB 8,4X16 RFR	
270	315121-0153		1	WASHER PLAIN, TBRSB 6,4/22 H=4	
280	315750-0105		1	RETAINING RING SHAFT DIN 471 ST 8	
290	318800-0104		1	HANDLE,SPHERICAL KNOB,INT.THRE.,D.30-M8	
300	321120-0104		2	BEARING BUSH W/O FLANGE, 10X12X10 MM	

Pos	Part No	UN	Qty	Description	Page No

Machine Type | Group Description | Used-In | Group Number | Page No

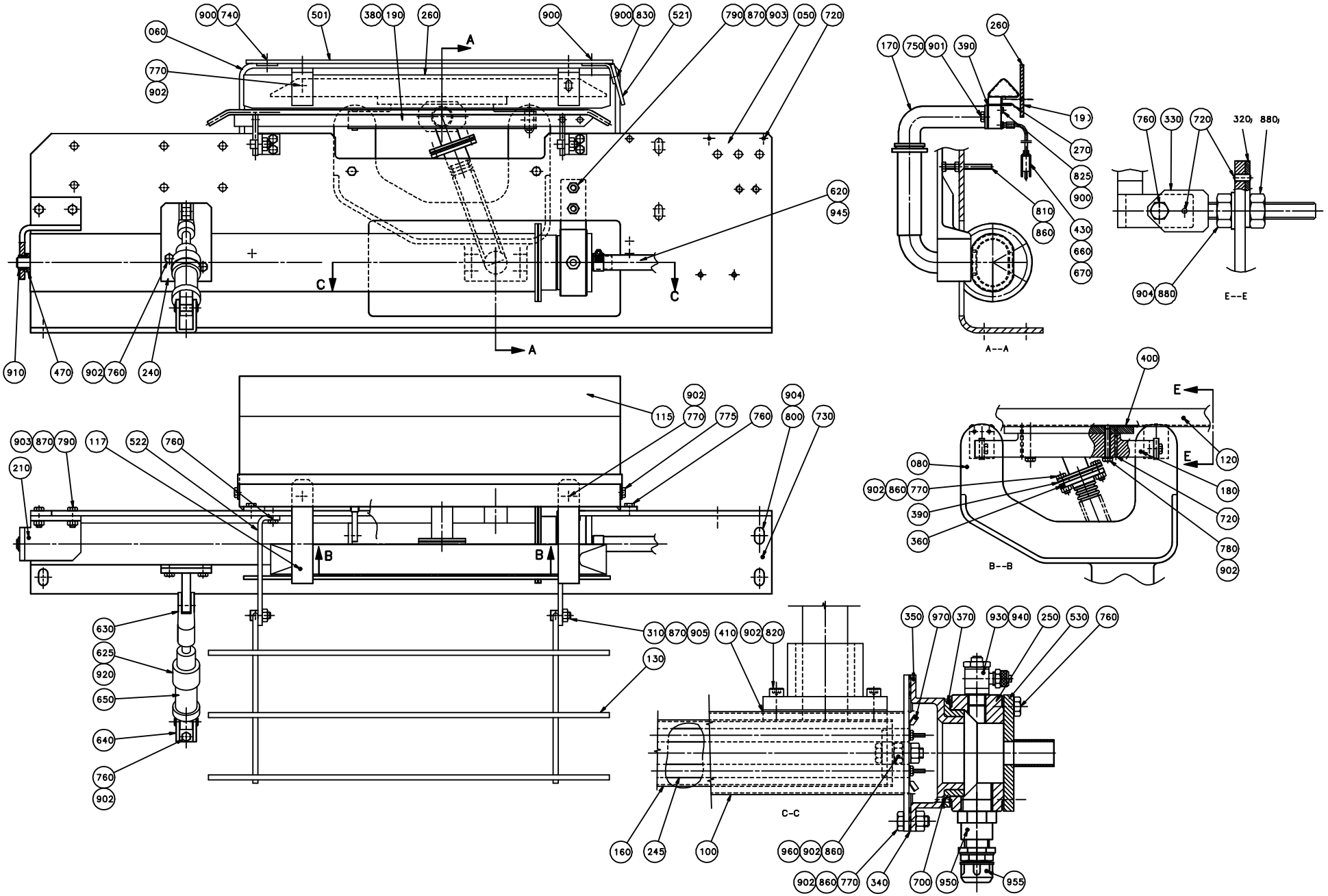
A
B
C
A--A
E--E
B--B
C-C

ECM: 73078 - 19991216
Group number: 269112-0600
Assembly Drawing: 269112-5_1_AA

This list covers pages from 7-36 to 7-39

Pos	Part No	UN	Qty	Description	Page No
TB 0300B TPC					
130	1143677-0000		1	PAPER SUPPORT	
245	251279-0000		1	COIL HEATER	
501	246344-0000		1	HEAT GUARD	
TB 0500S TPC					
130	1296003-0000		1	PAPER SUPPORT	
245	251279-0000		1	COIL HEATER	
501	246344-0000		1	HEAT GUARD	
TB 1000SQ TPC, TB 0500SQ TPC					
130	1362501-0000		1	PAPER SUPPORT	
245	251279-0000		1	COIL HEATER	
501	246344-0000		1	HEAT GUARD	
TB 1000SQ US, TB 0568SQ US, TB 0500SQ US					
130	1362501-0000		1	PAPER SUPPORT	
245	267494-0000		1	COIL HEATER	
501	246344-0000		1	HEAT GUARD	
TB 1136B TPC, TB 1000S TPC, TB 0500B TPC					
130	22560-0000		1	PAPER SUPPORT	
245	251279-0000		1	COIL HEATER	
501	246344-0000		1	HEAT GUARD	
TB 1500B US					
130	22560-0000		1	PAPER SUPPORT	
245	267494-0000		1	COIL HEATER	
501	246344-0000		1	HEAT GUARD	
Common Parts					
050	526948-0000		1	MOUNTING SHEET	
060	442480-0000		1	BOW CLAMP	
080	32668-0000		1	ARM	
100	36749-0000		1	MANTLE	
115	571428-0000		1	TOUCH GUARD	
117	445669-0000		1	HOLDER	
120	283361-0000		1	AIR NOZZLE	
150	32451-0000		1	AIR DUCT	
160	32453-0000		1	MANTLE	
170	32474-0000		1	ATTACHMENT	
180	245189-0001		1	ATTACHMENT	
190	246342-0000		1	PAPER SUPPORT	
210	251490-0000		1	FASTENING BRACKET	
240	556550-0000		1	BRACKET	
250	283172-0000		1	BEARING HOUSING	
260	445670-0000		1	PAPER SUPPORT	
270	445688-0000		1	AIR GUIDE	
310	22559-0000		4	GRUB SCREW	
320	32213-0000		2	WASHER	
330	32215-0000		2	HOLDER	
340	531733-0000		1	GASKET	
350	32217-0000		1	BOTTOM SECTION	
360	32219-0000		1	WASHER	
370	32223-0000		1	BEARING	
380	32400-0000		2	HOLDER	
390	531734-0000		2	GASKET	
400	531735-0000		1	GASKET	
410	531736-0000		1	GASKET	
430	37768-0000		1	THERMOCOUPLE CR-AL	
470	230107-0000		1	WASHER	
521	251502-0000		1	HEAT GUARD	
522	592586-0000		2	HOLDER	
530	279672-0000		1	ATTACHMENT	
620	90166-0087	MM	600	HOSE 15/23 REINF.PVC TRANSP.	
625	90235-0274		2	THROTTLE CHECK VALVE, G1/8", SCU-604-1/8	
630	90239-0516		1	ROD END, CLEVIS WITH AXLE M10X1,25	
640	90239-0487		1	REAR,CLEVIS,MINI-ISO 20-25	
650	90239-0829		1	DOUBLE ACTING, MINI-ISO, CYL.25-50	
660	90326-0012		1	PROTECTIVE COVER, T31A4618	
670	90326-0020		1	PLUG, FEMALE YELLOW CR-AL	
700	311103-0232		1	PARALLEL PIN ISO 2338 3M6X8 A1	
720	311103-0267		10	PARALLEL PIN ISO 2338 4M6X10 A1	
730	311305-0308		2	LOTTED PIRPC5X16FZB	
740	312105-0291		4	SCREW M6S ISO 4017 M4X12 A470	
750	312105-0325		2	SCREW M6S ISO 4017 M5X10 A480	
755	312105-0364		4	SCREW M6S ISO 4017 M6X10 A480	
760	312105-0366		18	SCREW M6S ISO 4017 M6X12 A480	
770	312105-0368		16	SCREW M6S ISO 4017 M6X16 A480	
780	312105-0378		2	SCREW M6S ISO 4014 M6X40 A480	
790	312105-0451		4	SCREW M6S ISO 4017 M8X20 A480	
800	312105-0489		6	SCREW M6S ISO 4017 M10X16 A480	
810	312109-0381		2	SCREW M6S ISO 4017 M6X55 A480	
820	312115-0368		4	SCREW ISO4762 M6X16 A4 80	
825	312125-0285		1	SCREW ISO 1207 M4X6 A4	
830	312125-0287		2	SCREW ISO 1207 M4X8 A4	
860	312605-0316		12	HEXAGON NUT, M6M M6 A280	
870	312605-0318		8	HEXAGON NUT, M6M M8 A280	
880	312605-0320		4	HEXAGON NUT, M6M M10 A280	
900	315105-0136		7	WASHER BRB 4,3X9 RFR	

Machine Type | Group Description | Used-In | Group Number | Page No

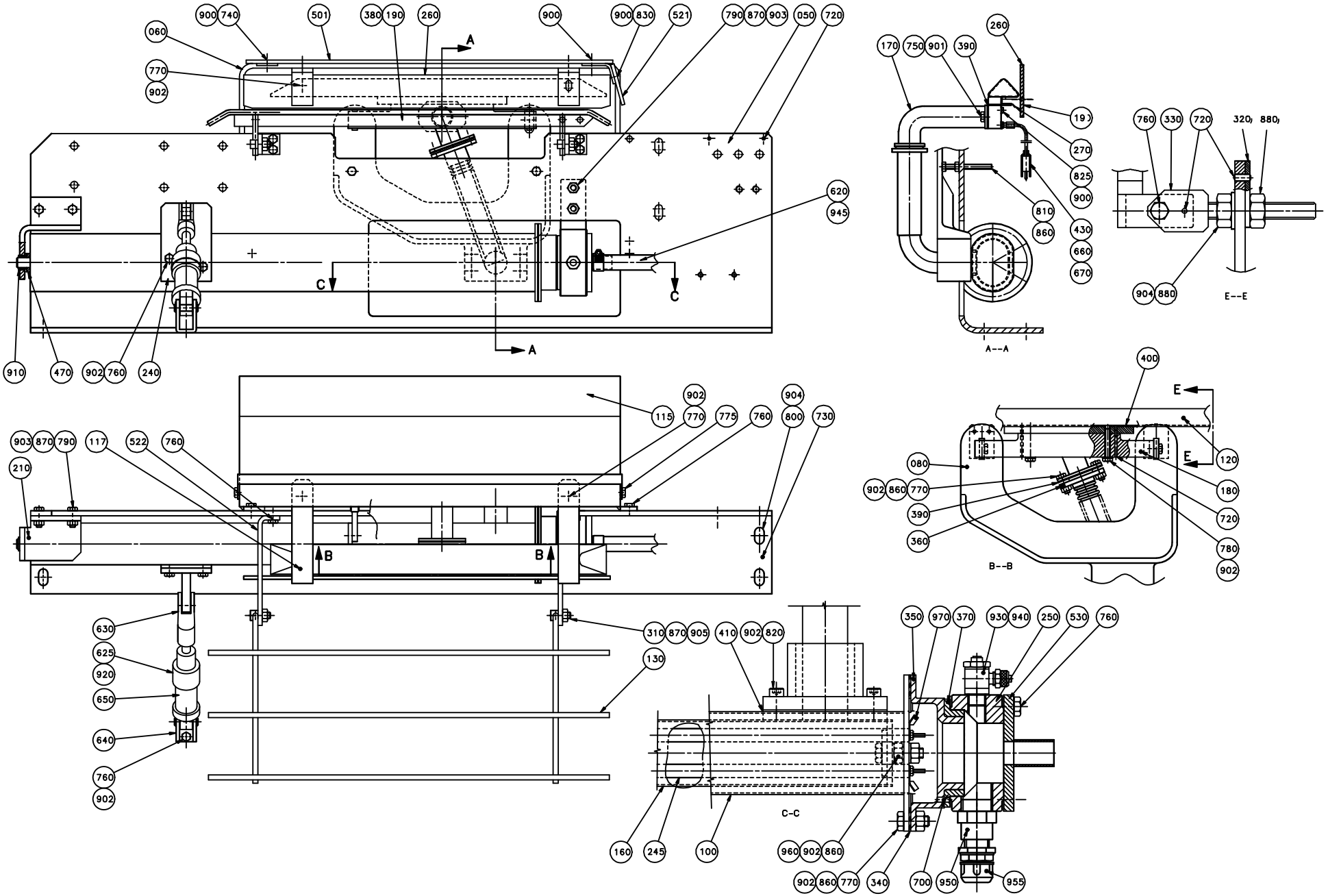
A
B
C
A--A
E--E
B--B
C-C

Pos	Part No	UN	Qty	Description	Page No
Common Parts (Cont'd)					
900	315105-0136		7	WASHER BRB 4,3X9 RFR	
901	315105-0146		2	WASHER BRB 5,3X10 RFR	
902	315105-0153		27	WASHER BRB 6,4X12 RFR	
903	315105-0165		4	WASHER BRB 8,4X16 RFR	
904	315105-0173		6	WASHER BRB 10,5X20 RFR	
905	315121-0165		4	WASHER PLAIN, TBRSB 8,4/26 H=5	
910	321101-0173		1	FLANGE BUSHING, 12X18X12 MM	
920	342797-0121		2	CONN. BANJO, RINGPIECE 6-1/8	
930	342797-0122		2	CONN. BANJO, RINGPIECE 6-1/4	
940	342980-0304		1	BANJO-HOLLOW BOLT COUPL,EXT.THR.01-G1/4	
945	342991-0103		2	HOSE CLIP,WORM DRIVE TYPE (19)-23	
950	352100-0106		1	CABLE GLAND NO.18,6-10,5	
955	352136-0113		1	GLAND FITTING PR18,6/PG11 DI=12MM	
960	353101-0134		1	CABLE SHOE 1,5-2,5MM2 M8 BLUE	
970	353104-0130		2	CABLE SHOE, RING UNINS., YAV 025 M 4	

Pos	Part No	UN	Qty	Description	Page No

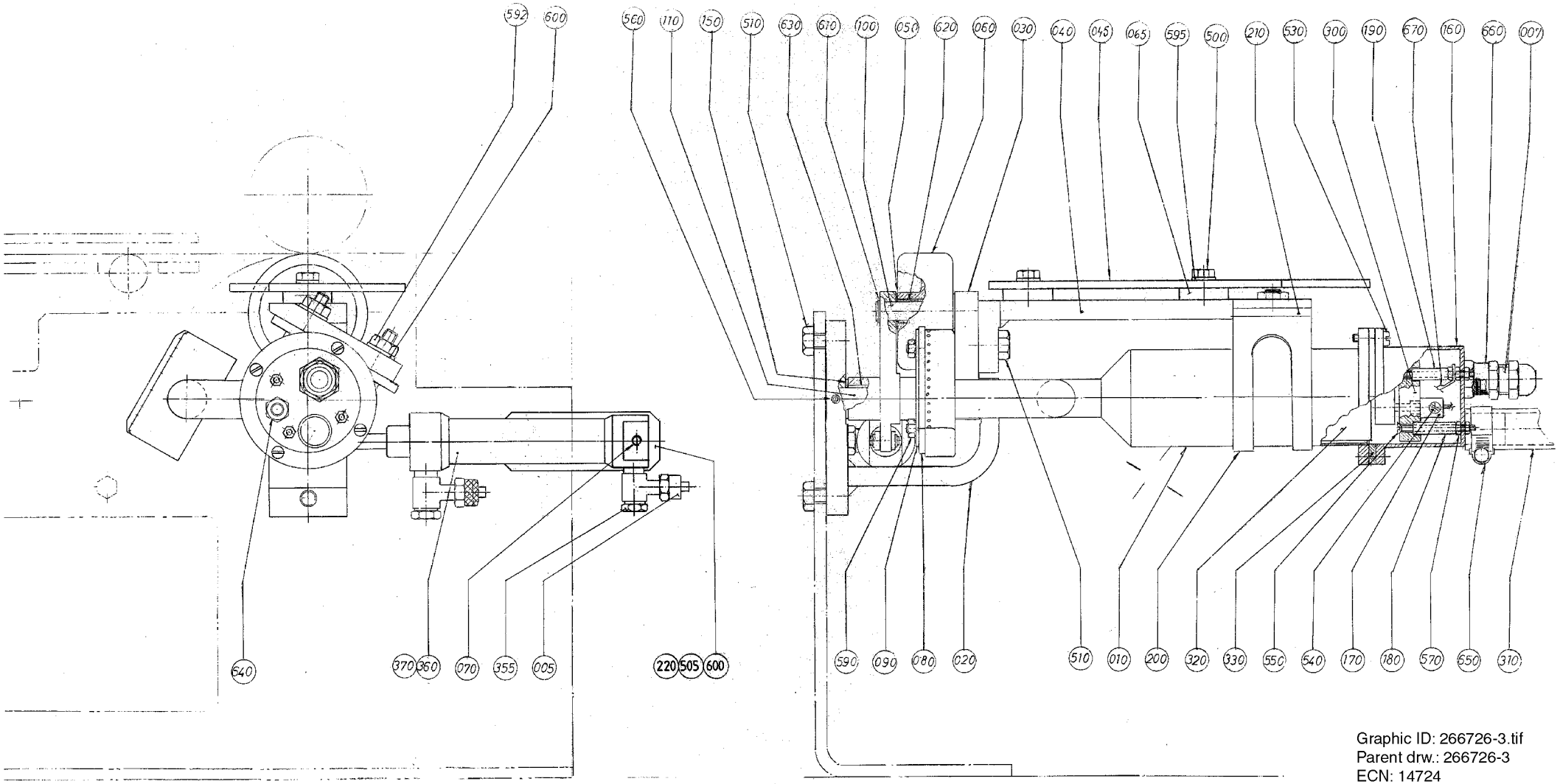

Graphic ID: 266726-3.tif
Parent drw.: 266726-3
ECN: 14724

ECM: 72191 - 19990215
Group number: 266726-0300
Assembly Drawing: 266726-3_1_AA

Pos	Part No	UN	Qty	Description	Page No
-					
005	342797-0121		2	CONN. BANJO, RINGPIECE 6-1/8	
007	352136-0113		1	GLAND FITTING PR18,6/PG11 DI=12MM	
010	464197-0000		1	AIR NOZZLE	
020	266728-0000		1	CANTILEVER	
030	556565-0000		1	ROCKER ARM	
040	266730-0000		1	HOLDER	
045	542090-0000		1	HEAT GUARD	
050	2033-0009		2	WASHER	
060	21903-0000		1	ROLL	
	90166-0056	*M*		*SHRINKABLE HOSE (2,5")*	
065	242954-0000		2	WASHER	
070	556551-0000		1	CYLINDER BRACKET	
080	466412-0000		1	PLATE	
090	255417-0000		1	WASHER	
100	266731-0000		1	SHAFT	
110	266732-0000		1	SHAFT	
150	266737-0000		2	WASHER	
160	266738-0000		1	COVER	
170	266739-0000		3	CABLE GLAND	
180	266740-0001		2	SPACER	
190	266740-0002		1	SPACER	
200	450887-0000		1	CRAMP	
210	450888-0000		1	INSULATING PLATE	
220	556552-0000		1	BRACKET	
300	90125-0020		1	PLATE COMPLETE	
	294464-0000		*1*	*BASE PLATE*	
	270927-0000		*3*	*SCREW*	
	270926-0000		*6*	*NUT*	
310	90166-0087	MM	600	HOSE 15/23 REINF.PVC TRANSP.	
320	90206-0085		1	HEATING CARTRIDGE 460W 105 OHM	
330	90206-0322		1	GASKET	
355	90235-0274		2	THROTTLE CHECK VALVE, G1/8", SCU-604-1/8	
360	90239-0821		1	DOUBLE ACTING, MINI-ISO, CYL.20-25	
370	90239-0532		1	ROD END, CLEVIS WITH AXLE M8X1,25	
500	312105-0370		2	SCREW M6S ISO 4017 M6X20 A480	
505	312105-0447		2	SCREW M6S ISO 4017 M8X12 A480	
510	312105-0451		4	SCREW M6S ISO 4017 M8X20 A480	
530	312125-0291		4	SCREW ISO 1207 M4X12 A4	
540	312125-0220		3	SCREW ISO 1207 M3X6 A4	
550	312145-0238		3	SCREW ISO 2009 MFS M3X40 A4	
560	312311-0292		1	SCREW ISO4028 M4X14 FZB	
570	312605-0310		7	HEXAGON NUT, M6M M3 A280	
590	312605-0314		2	HEXAGON NUT, M6M M5 A280	
592	312605-0318		2	HEXAGON NUT, M6M M8 A280	
595	315105-0153		2	WASHER BRB 6,4X12 RFR	
600	315105-0165		4	WASHER BRB 8,4X16 RFR	
610	315750-0107		2	RETAINING RING SHAFT DIN 471 ST 10	
620	321120-0104		2	BEARING BUSH W/O FLANGE, 10X12X10 MM	
630	321120-0110		2	BEARING BUSH W/O FLANGE, 12X14X12 MM	
640	342921-0113		1	STRAIGHT COUPLING,EXT.THREADED 6/4-G1/8"	
650	342991-0103		2	HOSE CLIP,WORM DRIVE TYPE (19)-23	
660	352100-0106		1	CABLE GLAND NO.18,6-10,5	
670	353101-0130		1	CABLE SHOE 1,5-2,5MM2 M4 BLUE	

Machine Type | Group Description | Used-In | Group Number | Page No

BENDING ROLLER BRACKET

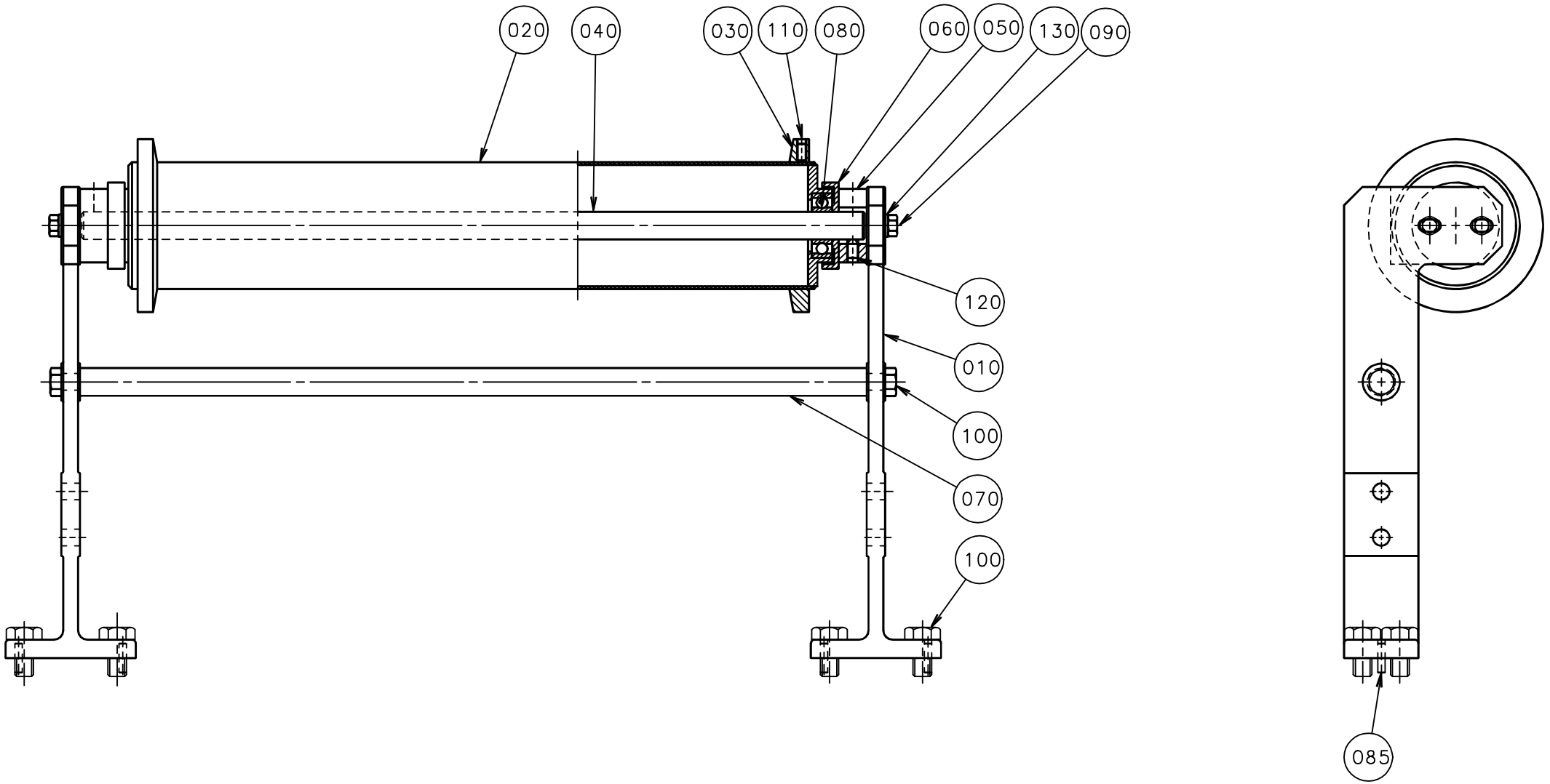

ECM: 73078 - 19991216
Group number: 265565-0200
Assembly Drawing: 265565-1_1_AB

Pos	Part No	UN	Qty	Description	Page No
TB/8 0300B					
040	265566-0001		1	SHAFT	
070	265569-0001		1	STRUT	
TB/8 0568SQ, TB/8 1000SQ, TB/8 0500SQ					
020	1362499-0000		1	ROLLER	
040	265566-0001		1	SHAFT	
070	265569-0001		1	STRUT	
TB/8 1500B					
020	592594-0000		1	BENDING ROLLER	
040	265566-0006		1	SHAFT	
070	265569-0007		1	STRUT	
TB/8 1000B, TB/8 0568B, TB/8 1000S, TB/8 0500S, TB/8 0500B, TB/8 1136B					
020	265564-0000		1	BENDING ROLLER	
040	265566-0001		1	SHAFT	
070	265569-0001		1	STRUT	
Common Parts					
010	546116-0000		2	CANTILEVER	
030	250588-0000		2	FLANGE	
050	265567-0000		2	BEARING UNIT	
060	265568-0000		2	DUST COVER	
080	90214-0098		2	BALL BEARING, 15X35X11 MM	
085	311305-0308		4	LOTTED PIRPC5X16FZB	
090	312105-0370		4	SCREW M6S ISO 4017 M6X20 A480	
100	312105-0451		10	SCREW M6S ISO 4017 M8X20 A480	
110	312318-0289		4	SCREW ISO4029 M4X10 A4	
120	312318-0364		4	SCREW ISO4029 M6X10 A4	
130	315105-0153		4	WASHER BRB 6,4X12 RFR	

Pos	Part No	UN	Qty	Description	Page No

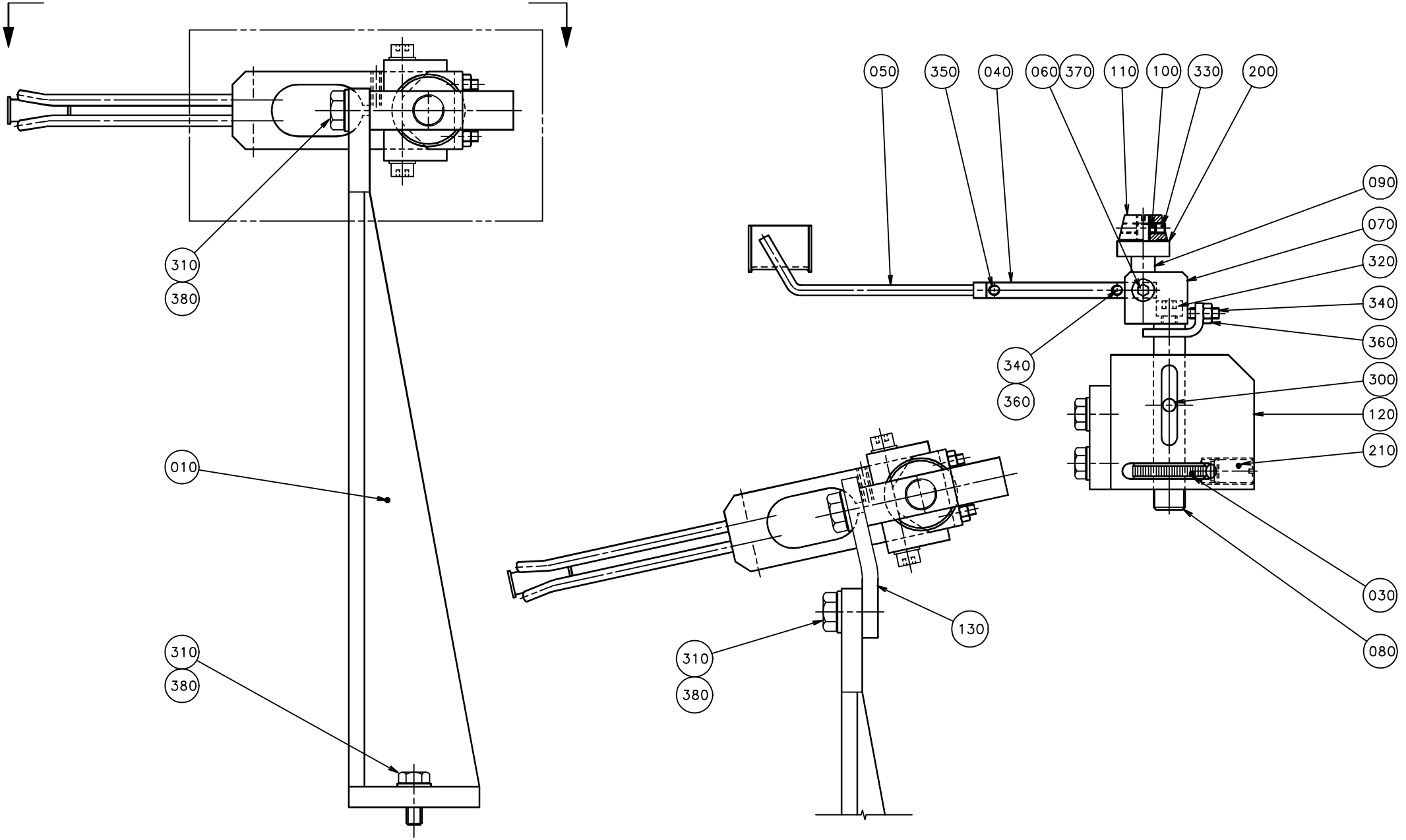
050
350
040
060
370
110
100
330
200
090
070
320
340
360
340
360
300
120
210
030
080
310
380
010
310
380
130
310
380

ECM: 72191 - 19990215
Group number: 279210-0100
Assembly Drawing: 279210-1_1_AC

Pos	Part No	UN	Qty	Description	Page No
TB/8					
010	267316-0000		1	CANTILEVER	
310	312105-0368		4	SCREW M6S ISO 4017 M6X16 A480	
Common Parts					
030	23580-0000		1	SHIFTER HANDLE	
040	23582-0000		1	HOLDER	
050	23583-0000		1	GUIDE FINGER	
060	23584-0000		2	SCREW	
070	24351-0000		1	BOW CLAMP	
080	24352-0000		1	SHAFT	
090	24355-0000		2	DOWEL	
100	24356-0000		4	PIECE	
110	111543-0000		2	GUIDE CONE	
120	245210-0000		1	BODY	
200	90214-0138		2	BALL BEARING, 5X19X6 MM	
210	90287-0009		1	SPRING-LOADED SCREW M10X19	
300	311103-0350		1	PARALLEL PIN ISO 2338 6M6X14 A1	
320	312115-0366		1	SCREW ISO4762 M6X12 A4 80	
330	312316-0283		4	SCREW HEX.SOCK.SET CUP P.MSK6SS4X4 FZB	
340	312316-0291		3	SCREW HEX.SOCK.SET CUP P.MSK6SS4X12 FZB	
350	312318-0285		2	SCREW ISO4029 M4X6 A4	
360	312605-0312		3	HEXAGON NUT, M6M M4 A280	
370	315105-0146		2	WASHER BRB 5,3X10 RFR	
380	315105-0153		4	WASHER BRB 6,4X12 RFR	

Pos	Part No	UN	Qty	Description	Page No

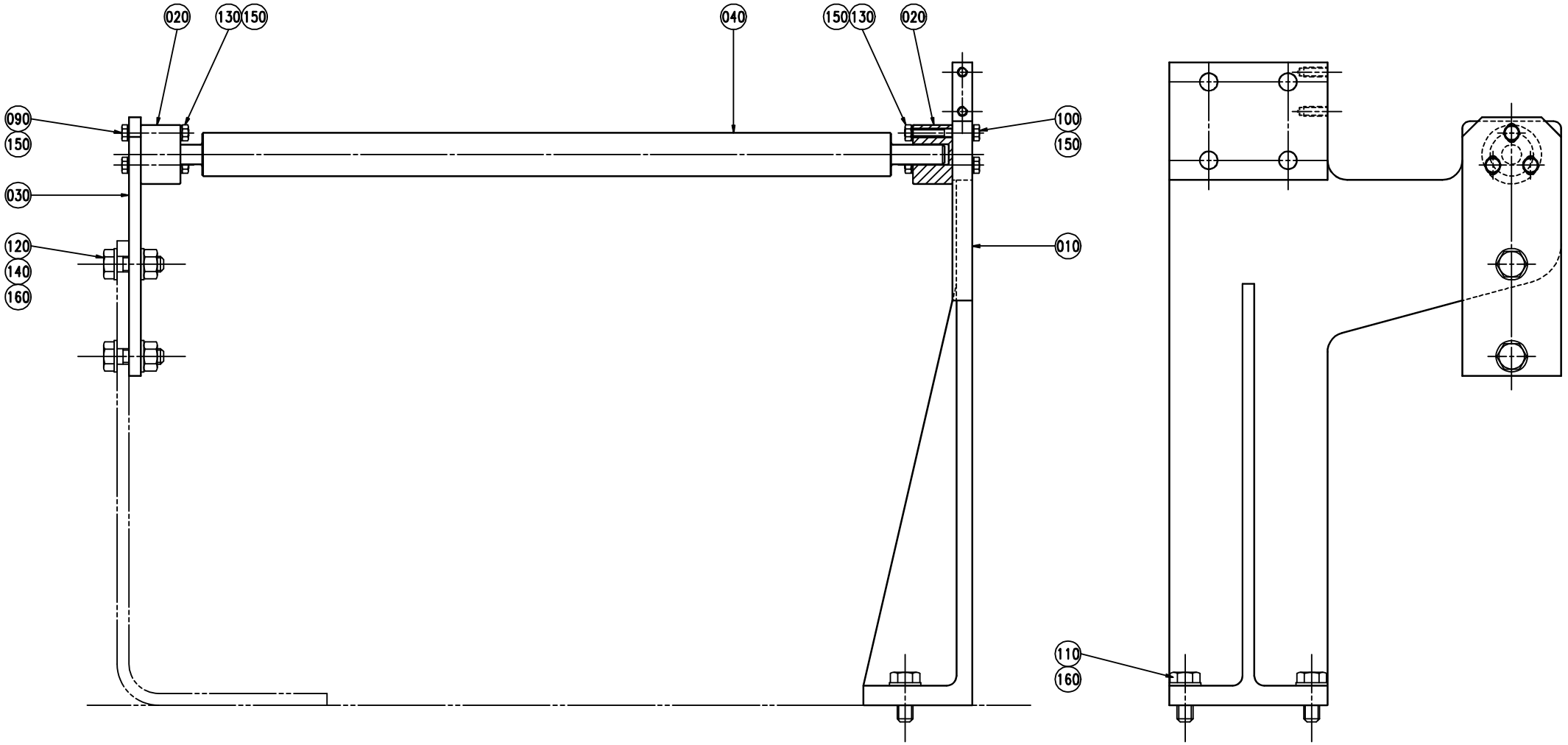
020
130
150
040
150
130
020
090
150
030
120
140
160
100
150
010
110
160

ECM: 72191 - 19990215
Group number: 573663-0100
Assembly Drawing: 573663-1_1_AA

Pos	Part No	UN	Qty	Description	Page No
TB 1500B					
040	592597-0000		1	SUPPORT ROLLER	
TB 1136B, TB 0568B, TB 1000B, TB 1000S, TB 0500B					
040	573666-0000		1	SUPPORT ROLLER	
TB 0500S, TB 0300B					
040	573667-0000		1	SUPPORT ROLLER	
TB 0568SQ, TB 0500SQ, TB 1000SQ					
040	574038-0000		1	SUPPORT ROLLER	
Common Parts					
010	573664-0000		1	CANTILEVER	
020	24206-0000		2	BEARING	
030	573665-0000		1	FASTENING PLATE	
090	312105-0299		3	SCREW M6S ISO 4017 M4X30 A470	
100	312105-0301		3	SCREW M6S ISO 4017 M4X35 A470	
110	312105-0451		2	SCREW M6S ISO 4017 M8X20 A480	
120	312105-0453		2	SCREW M6S ISO 4017 M8X25 A480	
130	312605-0312		6	HEXAGON NUT, M6M M4 A280	
140	312605-0318		2	HEXAGON NUT, M6M M8 A280	
150	315105-0136		12	WASHER BRB 4,3X9 RFR	
160	315105-0165		6	WASHER BRB 8,4X16 RFR	

Pos	Part No	UN	Qty	Description	Page No

Tetra Pak

SPC
Spare Parts Catalogue

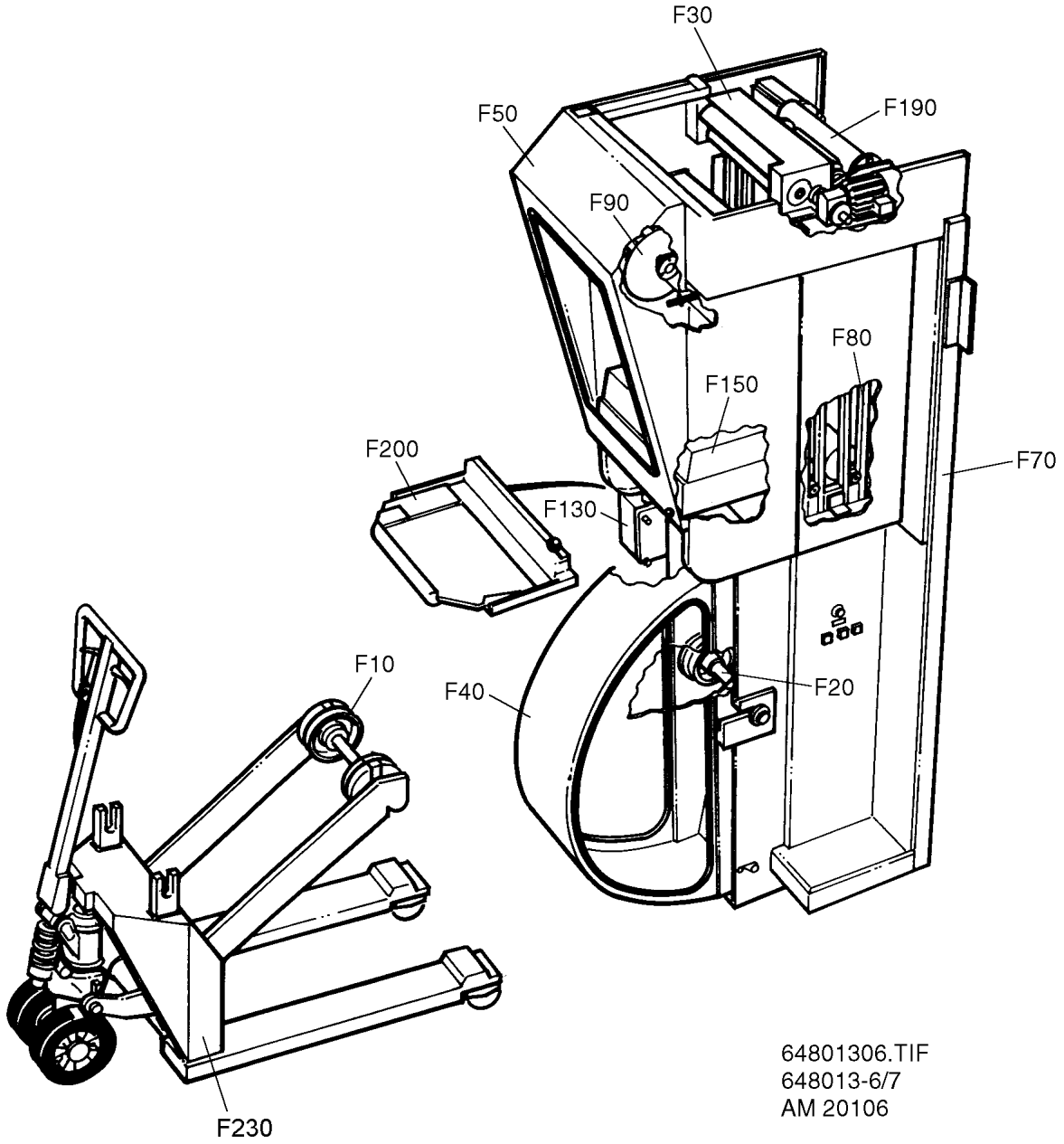
F30
F50
F190
F90
F80
F150
F200
F70
F130
F10
F40
F20
F230
64801306.TIF
648013-6/7
AM 20106

ECM: 71959 - 19981102
Group number: 648013-0600
Assembly Drawing: 648013-6_1_AA

Pos	Part No	UN	Qty	Description	Page No
TB/8 0300B ST-R					
F090	538248-0200		1	DATING UNIT	**8-5, 8-7**
F250	542902-0100		1	DRIVE BRAKE	**8-17**
TB/8 0568SQ ST-ER, TB/8 0568B ST-ER, TB/8 0500SQ ST-ER, TB/8 1000SQ ST-ER, TB/8 1000S ST-ER, TB/8 1000B ST-ER, TB/8 0300B ST-ER, TB/8 0500B ST-ER, TB/8 0500S ST-ER, TB/8 1136B ST-ER					
F090	486958-0200		1	DATING UNIT	**8-21, 8-23, 8-25, 8-27, 8-29, 8-31, 8-33**
F250	542902-0100		1	DRIVE BRAKE	**8-17**
TB/8 1500B ST-ER					
F030	445840-0100		1	DRIVE UNIT	**8-41**
F090	486958-0200		1	DATING UNIT	**8-21, 8-23, 8-25, 8-27, 8-29, 8-31, 8-33**
F190	593555-0100		1	BENDING UNIT	**8-43**
Common Parts					
F020	440285-0100		2	PAPER REEL HOLDER	**8-45, 8-47**
F040	556875-0100		1	COVER	**8-49**
F050	530745-0400		1	SIDE GUARD	**8-51, 8-53**
F070	440133-0400		1	MACHINE BODY	**8-55**
F080	440210-0200		1	ROLL	**8-57, 8-59**
F130	445920-0600		1	EL-PNEUMATIC EQUIPMENT	**8-61, 8-63, 8-65**
F150	445880-0600		1	SPLICING DEVICE	**8-69, 8-71, 8-73**
F200	522121-0200		1	CUTTING TABLE	**8-85, 8-87**
F220	440132-0200		1	START-UP KIT	**8-89**
F230	576739-0200		1	(PAPER)REEL TROLLEY	**8-91**

Pos	Part No	UN	Qty	Description	Page No

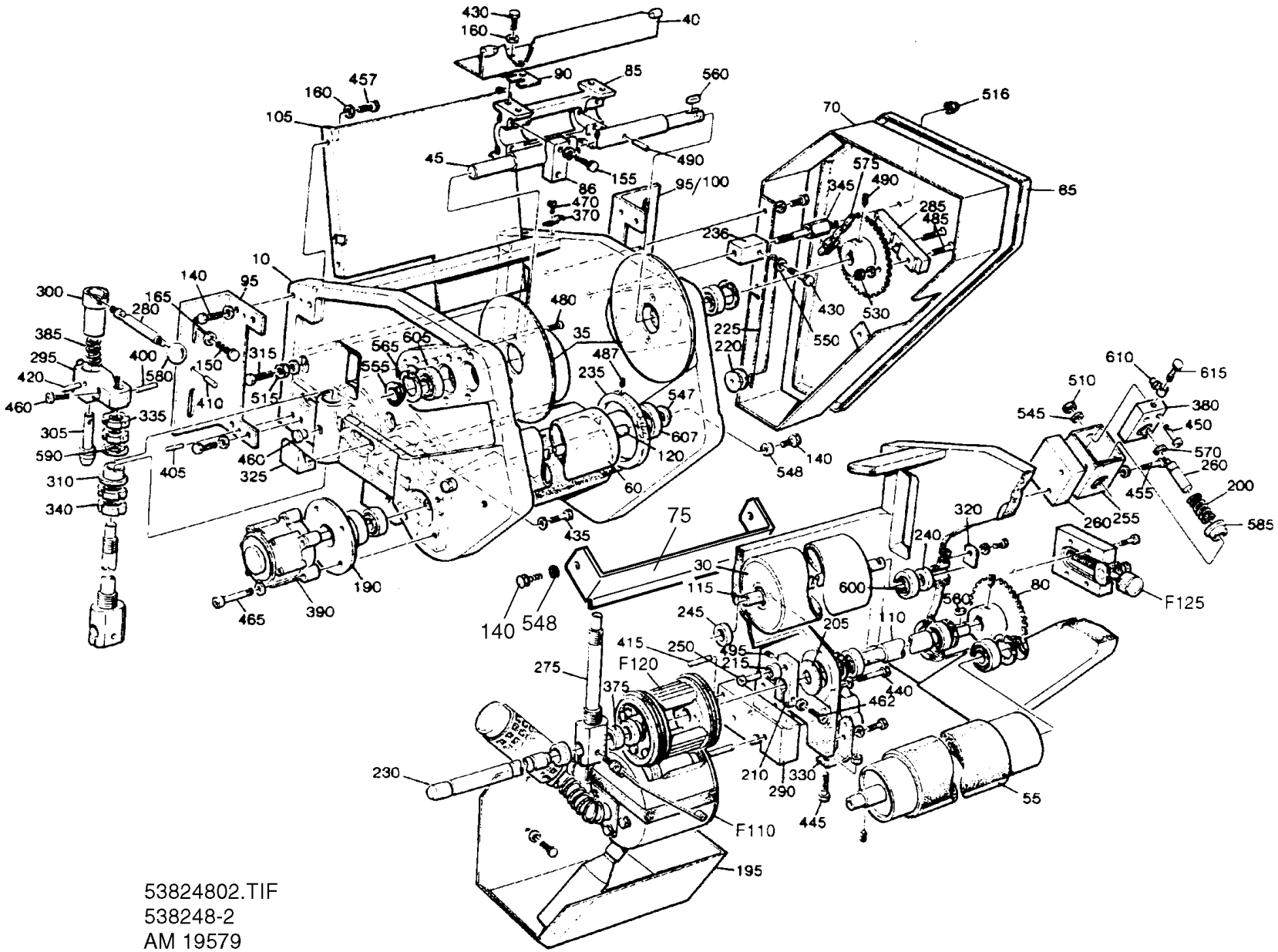
53824802.TIF
538248-2
AM 19579

ECM: 72192 - 19990218
Group number: 538248-0200
Assembly Drawing: 538248-2_1_AA

This list covers pages from 8-4 to 8-7

Pos	Part No	UN	Qty	Description	Page No
-					
010	538236-0002		1	MACHINE BODY	
025	359705-0001		1	WARNING SIGN ISO, ENTANGLEMENT	
030	293621-0002		1	BENDING ROLLER	
035	293624-0002		2	PROTECTION PLATE	
040	458107-0000		2	CREASE FORMER	
045	486960-0002		1	SHAFT	
055	532719-0002		1	FEEDING ROLLER	
060	533449-0002		1	BENDING ROLLER	
065	538237-0001		1	LID	
070	538238-0000		1	FRAME	
075	576220-0000		1	PAPER SUPPORT	
080	32630-0000		2	SPROCKET	
085	543139-0000		1	SPACER	
086	539338-0000		2	CAP	
090	458194-0001		4	WASHER	
090	458194-0002		4	WASHER	
090	458194-0003		4	WASHER	
095	486962-0003		2	FASTENING BRACKET	
105	538239-0000		1	HEAD PLATE	
110	486966-0002		1	SHAFT FOR CARRIER	
115	486968-0002		1	SHAFT FOR BENDINGROLLER	
120	533457-0002		1	SHAFT	
130	572243-0000		1	PROTECTION	
140	312105-0368		12	SCREW M6S ISO 4017 M6X16 A480	
150	312105-0451		4	SCREW M6S ISO 4017 M8X20 A480	
155	312105-0372		8	SCREW M6S ISO 4017 M6X25 A480	
160	315105-0153		42	WASHER BRB 6,4X12 RFR	
165	315105-0165		5	WASHER BRB 8,4X16 RFR	
190	522408-0000		1	BEARING HOUSING	
195	544380-0000		1	WASTE CHUTE	
200	10258-0000		1	COMPRESSION SPRING	
205	533458-0000		1	WASHER	
210	32925-0000		1	CARRIER	
215	32926-0000		1	ROLL	
220	33182-0000		1	ROLL	
225	33183-0000		1	SPRING	
230	228653-0000		1	SHAFT	
235	544706-0000		2	FLANGE	
236	293645-0000		1	BRACKET	
240	293646-0001		1	WASHER	
245	293646-0002		1	WASHER	
250	293674-0000		1	DOWEL	
255	436939-0000		1	CYLINDER BRACKET	
260	436940-0000		1	SHAFT	
265	440277-0000		1	LACE	
275	450497-0000		1	SHAFT	
280	450500-0000		1	DOWEL	
285	457430-0000		1	BEATER	
290	292047-0000		1	CANTILEVER	
295	464010-0000		1	ARM	
300	464012-0000		1	CURVE	
305	464011-0000		1	LOCK STUD	
310	466430-0000		1	BUSHING	
315	476377-0000		2	SCREW	
320	486967-0000		1	SHEET	
325	486969-0000		2	GUIDE LUG	
330	486971-0000		1	ANGLE	
335	532082-0000		2	ROUND NUT	
340	532083-0000		2	ROUND NUT	
345	533459-0000		1	SCREW	
370	90165-0057		2	PIPE CLIP FOR TUBE D=6 MM	
375	90166-0059	MM	18	HOSE PVC 12/16MM TRANSP.	
380	90239-0259		1	CYLINDER	
385	90335-0064		1	COMP. SPRING 22270, 1,25X13,75X62,5	
390	90347-0054		1	DAMPER	
395	311103-0273		1	PARALLEL PIN ISO 2338 4M6X22 A1	
400	311103-0274		1	PARALLEL PIN ISO 2338 4M6X25 A1	
405	311103-0310		4	PARALLEL PIN ISO 2338 5M6X20 A1	
410	311103-0353		2	PARALLEL PIN ISO 2338 6M6X20 A1	
415	311103-0357		1	PARALLEL PIN ISO 2338 6M6X30 A1	
420	311202-0241		1	TAPER PIN EN 22339 A 4X25 SS	
430	312105-0366		16	SCREW M6S ISO 4017 M6X12 A480	
435	312105-0370		4	SCREW M6S ISO 4017 M6X20 A480	
440	312105-0457		1	SCREW M6S ISO 4014 M8X35 A480	
445	312109-0374		1	SCREW M6S ISO 4017 M6X30 A480	
450	312111-0333		2	SCREW HEX.SOCK.HD.MC6S-TT 5X25 88 FZB	
455	312111-0335		2	SCREW HEX.SOCK.HD.MC6S-TT 5X30 88 FZB	
457	312111-0364		3	SCREW HEX.SOCK.HD.MC6S-TT 6X10 88 FZB	
460	312115-0370		2	SCREW ISO4762 M6X20 A4 80	
462	312115-0372		1	SCREW ISO4762 M6X25 A4 80	
465	312115-0376		4	SCREW ISO4762 M6X35 A4 80	
470	312125-0285		2	SCREW ISO 1207 M4X6 A4	
480	312155-0329		4	SCREW DIN 7991 MF6S M5X16 A4 70	

Machine Type | Group Description | Used-In | Group Number | Page No

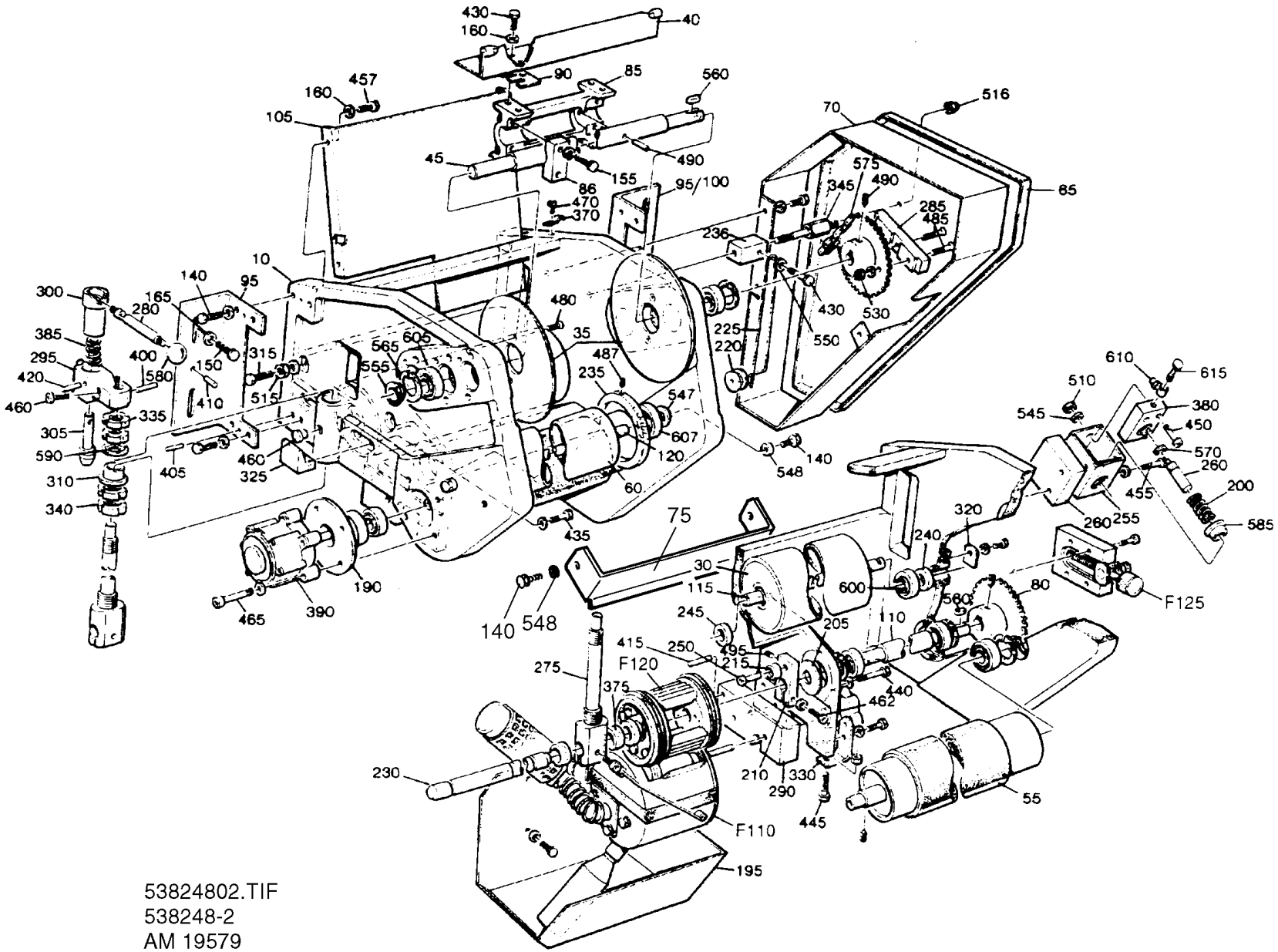
53824802.TIF
538248-2
AM 19579

Pos	Part No	UN	Qty	Description	Page No
- (Cont'd)					
485	312155-0333		3	SCREW DIN 7991 MF6S M5X25 A4 70	
490	312318-0323		8	SCREW ISO4029 M5X8 A4	
495	312318-0362		1	SCREW ISO4029 M6X8 A4	
510	312605-0314		2	HEXAGON NUT, M6M M5 A280	
515	312605-0316		3	HEXAGON NUT, M6M M6 A280	
516	312705-0316		1	NUT HEX. DOMED CAP MHM-6 M6 A280	
530	312812-0314		2	HEXAGON NUT, NY-LOCK M5 A480	
545	315105-0146		6	WASHER BRB 5,3X10 RFR	
547	315105-0173		2	WASHER BRB 10,5X20 RFR	
548	315115-0153		2	WASHER PLAIN, TBRB 6,4/12 H=3	
550	315121-0153		1	WASHER PLAIN, TBRSB 6,4/22 H=4	
555	315220-0121		1	V-RINGS 12,5X18,5X7,7 MM V-14S	
560	315701-0201		2	PARALLEL KEY W. ROUND ENDS 5X5X20 MM	
565	315752-0123		5	RETAINING RING FOR BORE DIN 472 32 ST	
570	315755-0801		1	RETAINING RING SHAFT DIN 6799 8 A2	
575	318207-0168		1	ROLLER CHAIN, SINGLE 6MM-168	
580	318800-0103		1	HANDLES,SPHERICAL KNOB,INT.THRE.,D.25-M6	
585	321111-0135		1	FLANGE BUSHING, 10X16X10 MM	
590	321111-0212		1	FLANGE BUSHING, 15X21X15 MM	
600	321308-0101		2	BALL BEARING, 12X28X8 MM	
605	321308-0202		6	BALL BEARING, 15X32X9 MM	
607	321316-0200		2	BALL BEARING, 10X35X11 MM	
610	342980-0113		1	BANJO-CONNECTION,RING 6/4-G1/8 INCH	
615	342980-0303		1	BANJO-HOLLOW BOLT COUPL,EXT.THR.01-G1/8	
F110	458192-0300		1	INK UNIT SS	**8-9**
F120	293685-0200		2	PRINTING WHEEL SS	**8-11, 12-59**
F125	543143-0100		1	ADJUSTMENT DEVICE	**8-13, 8-15**

Pos	Part No	UN	Qty	Description	Page No

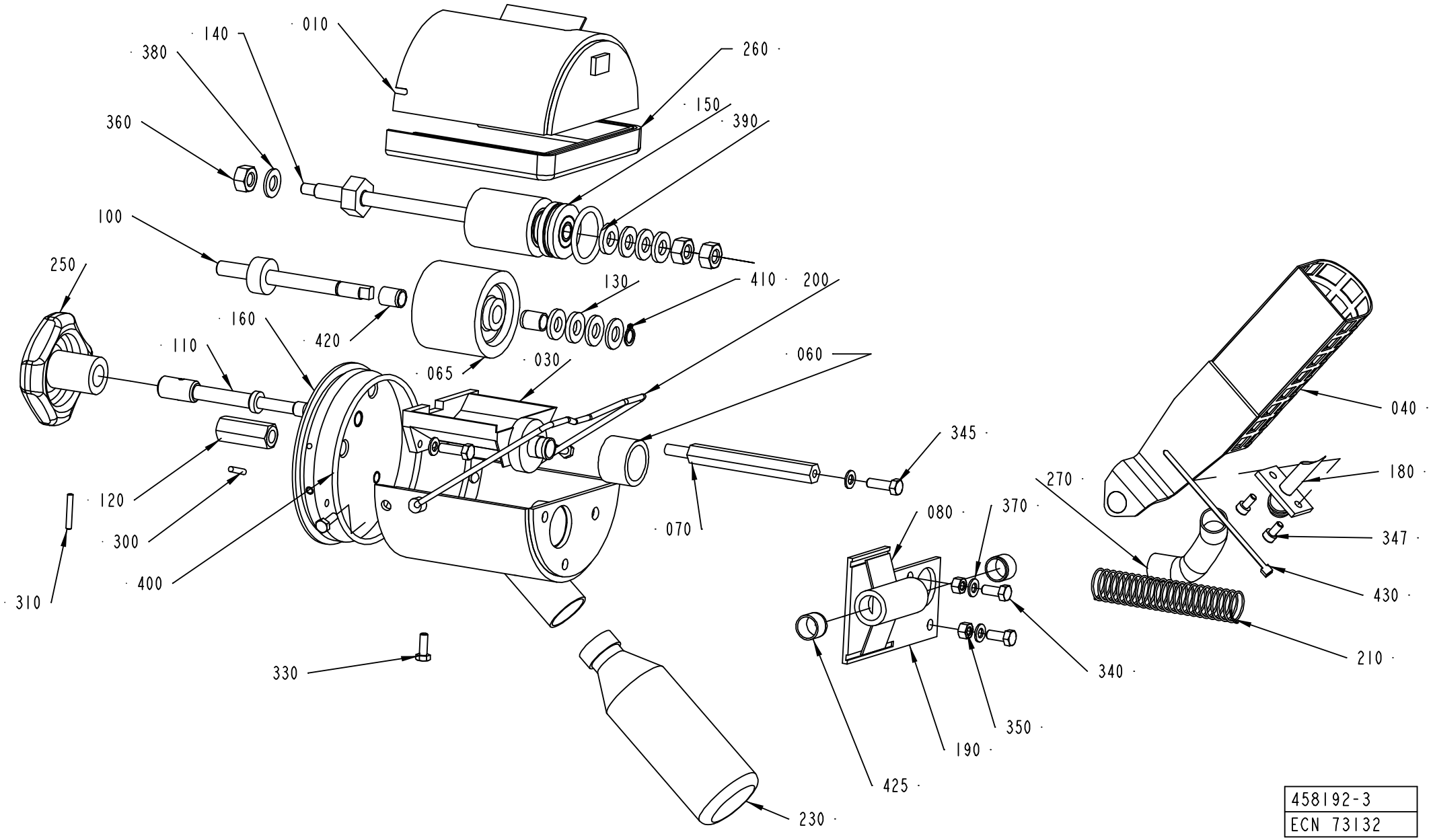

458192-3
ECN 73132

ECM: 227529 - 20051011
Group number: 458192-0300
Assembly Drawing: 458192-3_1_AB

Pos	Part No	UN	Qty	Description	Page No
TB/8					
230	90050-0008		1	BOTTLE	
Common Parts					
010	458364-0000		1	COVER	
030	297210-0000		1	INK WELL	
040	476356-0000		1	HOLDER FOR INK BOTTLE	
060	445542-0000		1	MANTEL RUBBER	
065	450355-0000		1	INK ROLLER	
070	33010-0000		1	SCREW	
080	35547-0000		1	SPRING	
100	292044-0000		1	SHAFT	
110	293667-0000		1	DOWEL	
120	436927-0000		1	NUT	
130	293669-0004		2	WASHER	
130	293669-0003		2	WASHER	
130	293669-0002		2	WASHER	
130	293669-0001		4	WASHER	
140	293670-0000		1	SHAFT	
150	543135-0000		1	INK TRANSFER ROLLER	
	90153-0050		*1*	*ADHESIVE, 3M TYPE SCOTCH-WELD 2216 B/A*	
	321120-0100		*1*	*BEARING BUSH W/O FLANGE, 8X10X12 MM*	
160	297213-0000		1	END SECTION	
180	476355-0000		1	CANNULAR TUBE	
190	456772-0000		1	PIVOT BRACKET	
200	434747-0000		1	BOW CLAMP	
210	537308-0000		1	SPRING	
250	90051-0077		1	HANDLE	
260	90143-0029	MM	295	STRIP	
270	90166-0138	MM	100	HOSE	
280	90299-0072		48	INK	
300	311103-0236		2	PARALLEL PIN ISO 2338 3M6X16 A1	
310	311103-0238		1	PARALLEL PIN ISO 2338 3M6X20 A1	
320	311103-0270		1	PARALLEL PIN ISO 2338 4M6X16 A1	
330	312105-0291		3	SCREW M6S ISO 4017 M4X12 A470	
340	312105-0327		2	SCREW M6S ISO 4017 M5X12 A480	
345	312105-0329		1	SCREW M6S ISO 4017 M5X16 A480	
347	312115-0287		2	SCREW ISO4762 M4X8 A4 80	
350	312605-0314		2	HEXAGON NUT, M6M M5 A280	
360	312605-0318		3	HEXAGON NUT, M6M M8 A280	
370	315105-0146		3	WASHER BRB 5,3X10 RFR	
380	315105-0165		2	WASHER BRB 8,4X16 RFR	
390	315202-0218		1	O-RING 26,2X3 MM	
400	315202-0309		1	O-RING 89,5X3 MM	
410	315750-0105		1	RETAINING RING SHAFT DIN 471 ST 8	
420	321120-0100		2	BEARING BUSH W/O FLANGE, 8X10X12 MM	
425	321120-0109		2	BEARING BUSH W/O FLANGE, 12X14X10 MM	
430	352113-0101		1	CABLE TIE, BLACK 92X2,5 MM	

Machine Type | Group Description | Used-In | Group Number | Page No

PRINTING WHEEL SS

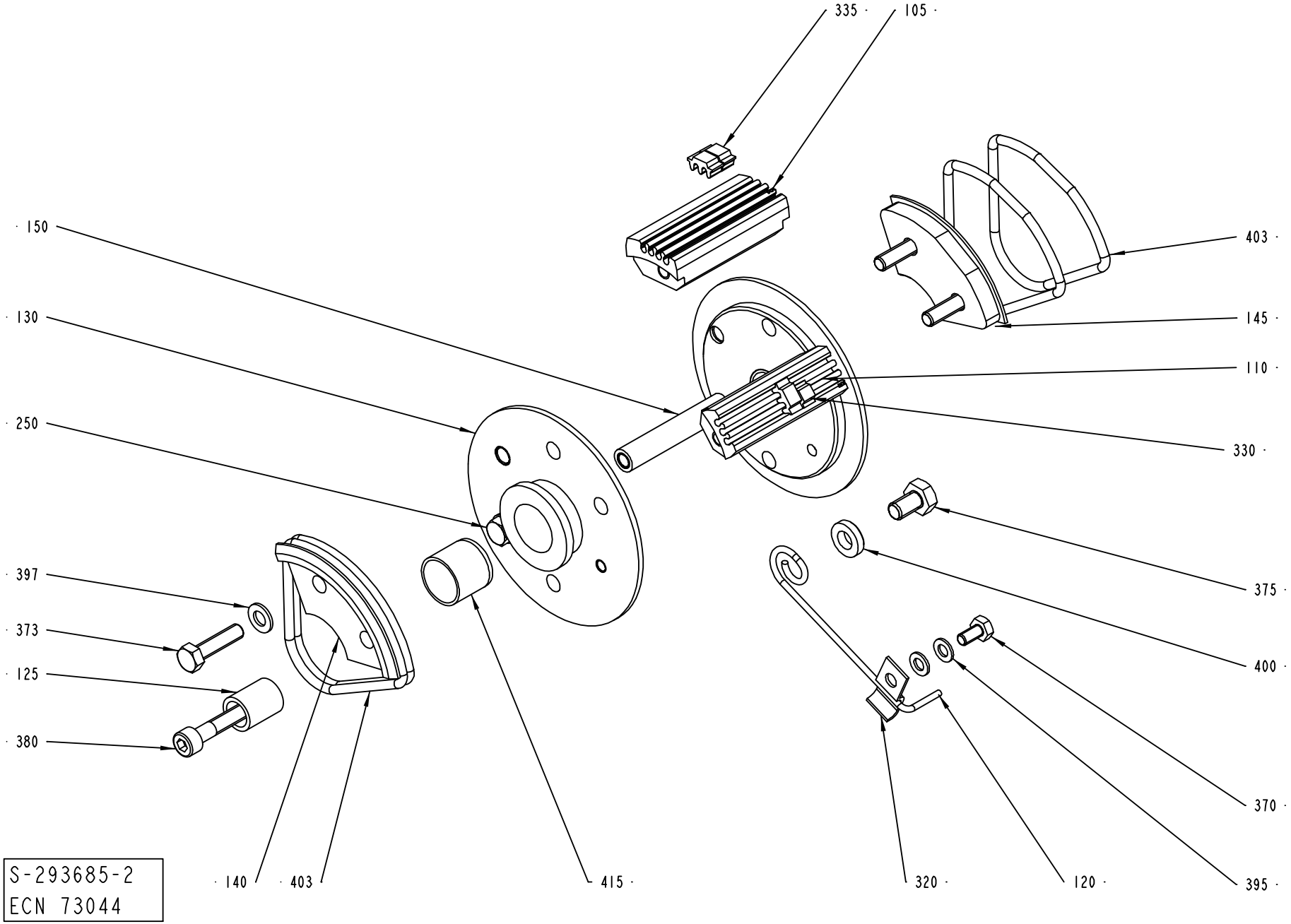

ECM: 180719 - 20040910
Group number: 293685-0200
Assembly Drawing: 293685-2_1_AB

Pos	Part No	UN	Qty	Description	Page No
0300B					
105-02	293395-0002		2	TYPE HOLDER	
110-02	293395-0001		2	TYPE HOLDER	
130	292412-0000		1	END SECTION	
135	292413-0000		1	END SECTION	
140	292414-0000		1	CARRIER	
373-02	312101-0331		7	SCREW M6S M5X20 FZB	
397-02	315101-0146		7	WASHER PLAIN, BRB, 5,3/10 H=1	
405	315202-0304		2	O-RING 64,5X3 MM	
410	315202-0305		2	O-RING 69,5X3 MM	
Common Parts					
120	32691-0000		1	LOCK SPRING	
125	33011-0000		1	SLEEVE	
320	90165-0010		1	CLIP	
330	90413-0043		1	CODE INSERT SET	
330	90413-0033		1	CODE INSERT SET C 2/16	
335	90413-0047		1	CODE INSERT SET A 2/16	
335	90413-0044		1	CODE INSERT SET	
370	312101-0287		1	SCREW M6S M4X8 FZB	
375	312101-0364		1	SCREW M6S M6X10 FZB	
380	312111-0335		1	SCREW HEX.SOCK.HD.MC6S-TT 5X30 88 FZB	
395	315101-0136		1	WASHER BRB, 4,3/8 H=0,8	
400	315111-0153		1	WASHER PLAIN, TBRB 6,4/12 H=3	
415	321120-0122		2	BEARING BUSH W/O FLANGE, 15X17X15 MM	

Pos	Part No	UN	Qty	Description	Page No

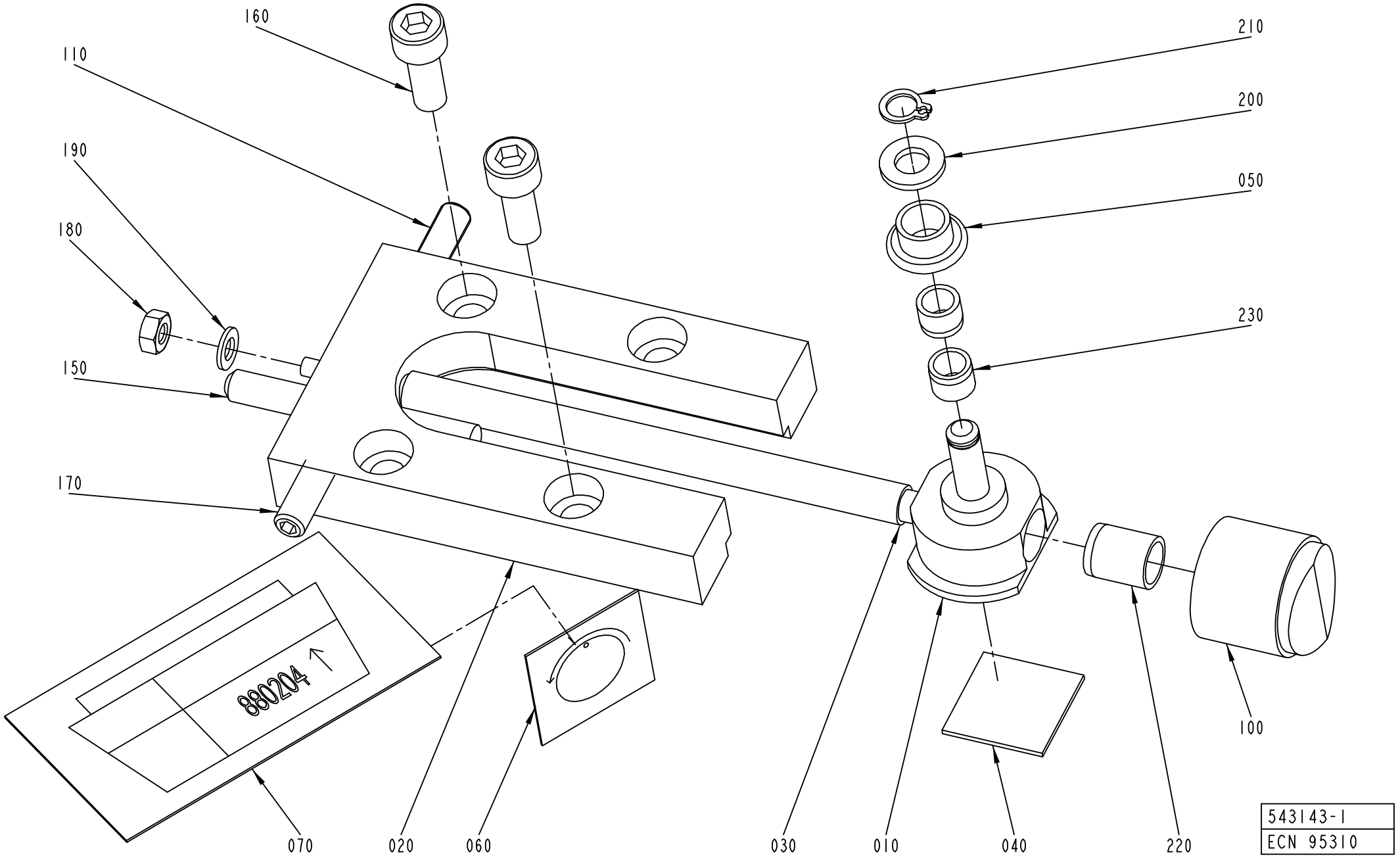
160
110
190
180
150
170
210
200
050
230
100
070
020
060
030
010
040
220
880204
543143-1
ECN 95310

ECM: 180496 - 20040910
Group number: 543143-0100
Assembly Drawing: 543143-1_1_AC

This list covers pages from 8-12 to 8-15

Pos	Part No	UN	Qty	Description	Page No
-					
010	526984-0000		1	SADDLE	
020	526985-0000		1	PLATE	
030	526986-0001		1	SHAFT	
040	527649-0000		1	DISTANCE RUBBER	
050	529362-0000		1	SPROCKET	
060	543141-0000		1	SIGN	
070	543142-0000		1	SIGN	
100	90051-0089		1	SHIFTER HANDLE	
110	90287-0167		1	SCREW SPRINGLOAD. SOCK. HEX HEAD M6X20	
150	311103-0365		1	PARALLEL PIN ISO 2338 6M6X50 A1	
160	312115-0368		2	SCREW ISO4762 M6X16 A4 80	
170	312318-0368		1	SCREW ISO4029 M6X16 A4	
180	312605-0312		1	HEXAGON NUT, M6M M4 A280	
190	315105-0136		1	WASHER BRB 4,3X9 RFR	
200	315105-0153		1	WASHER BRB 6,4X12 RFR	
210	315751-0103		1	RETAINING RING FOR SHAFT DIN 471 6 A2	
220	321120-0100		1	BEARING BUSH W/O FLANGE, 8X10X12 MM	
230	321120-0101		2	BEARING BUSH W/O FLANGE, 6X8X6 MM	

Pos	Part No	UN	Qty	Description	Page No

ADJUSTMENT DEVICE

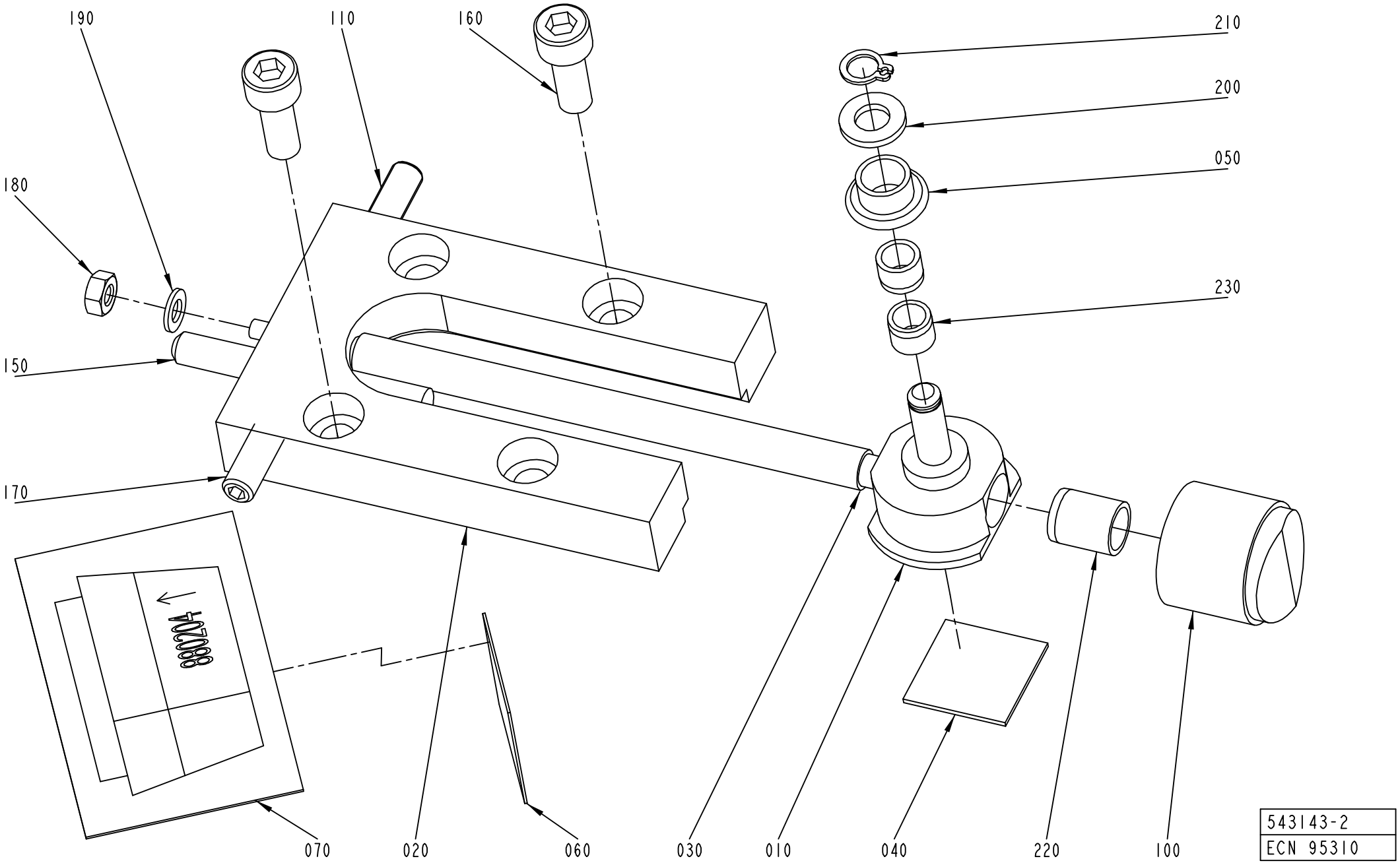

ECM: 180496 - 20040910
Group number: 543143-0100
Assembly Drawing: 543143-2_1_AB

This list covers pages from 8-12 to 8-15

Pos	Part No	UN	Qty	Description	Page No
-					
010	526984-0000		1	SADDLE	
020	526985-0000		1	PLATE	
030	526986-0001		1	SHAFT	
040	527649-0000		1	DISTANCE RUBBER	
050	529362-0000		1	SPROCKET	
060	543141-0000		1	SIGN	
070	543142-0000		1	SIGN	
100	90051-0089		1	SHIFTER HANDLE	
110	90287-0167		1	SCREW SPRINGLOAD. SOCK. HEX HEAD M6X20	
150	311103-0365		1	PARALLEL PIN ISO 2338 6M6X50 A1	
160	312115-0368		2	SCREW ISO4762 M6X16 A4 80	
170	312318-0368		1	SCREW ISO4029 M6X16 A4	
180	312605-0312		1	HEXAGON NUT, M6M M4 A280	
190	315105-0136		1	WASHER BRB 4,3X9 RFR	
200	315105-0153		1	WASHER BRB 6,4X12 RFR	
210	315751-0103		1	RETAINING RING FOR SHAFT DIN 471 6 A2	
220	321120-0100		1	BEARING BUSH W/O FLANGE, 8X10X12 MM	
230	321120-0101		2	BEARING BUSH W/O FLANGE, 6X8X6 MM	

Pos	Part No	UN	Qty	Description	Page No

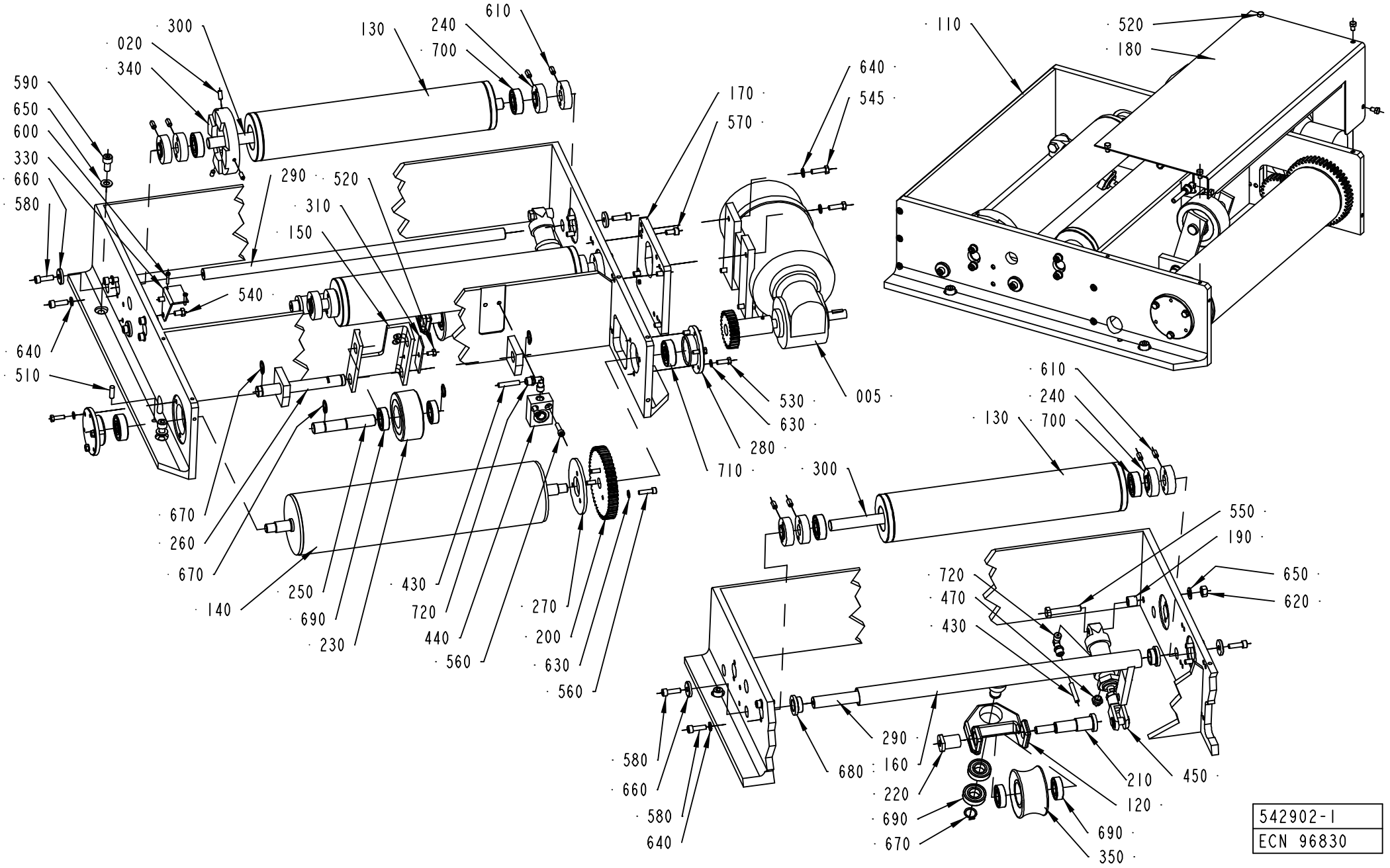

542902-1
ECN 96830

ECM: 96832 - 20021101
Group number: 542902-0100
Assembly Drawing: 542902-1_1_AC

Pos	Part No	UN	Qty	Description	Page No
-					
020	312318-0327		3	SCREW ISO4029 M5X12 A4	
110	539180-0000		1	CANTILEVER	
120	263150-0000		1	BRACKET	
130	440136-0001		2	ROLL	
140	445845-0000		1	DRIVE ROLLER	
150	537388-0000		1	HOLDER	
160	539181-0000		1	PIPE	
170	539182-0000		1	PLATE	
180	539183-0000		1	PROTECTION PLATE	
190	2487-0000		1	SPACER ELEMENT	
200	207019-0003		1	GEAR WHEEL	
210	263152-0000		1	SHAFT	
220	263153-0000		1	NUT	
230	266710-0000		1	WHEEL	
240	440138-0000		8	LOCKING CIRCLIP	
250	445838-0000		1	SHAFT	
260	445847-0000		1	SHAFT	
270	445849-0000		1	SPACER DISC	
280	445852-0000		2	LID	
290	537383-0000		2	SHAFT	
300	537384-0000		2	SHAFT	
310	537389-0000		1	SECURING PLATE	
330	539185-0000		1	HOLDER	
340	539186-0000		1	RING	
350	540719-0000		1	WHEEL	
430	90166-0081	MM	3600	TUBE 6 MM PA BLUE	
440	90239-0259		1	CYLINDER	
450	90239-0357		1	ROD END, CLEVIS WITH AXLE M10X1,25	
460	90239-0852		1	DOUBLE ACTING, MINI-ISO, CYL.25-25	
470	90257-0003		1	FILTER PLUG ART.NO.8145-00-180 TYPE F18	
510	311102-0353		2	PARALLEL PIN ISO 2338 6M6X20 ST	
520	312101-0323		7	SCREW M6S M5X8 FZB	
530	312101-0329		6	SCREW M6S M5X16 FZB	
540	312101-0364		2	SCREW M6S M6X10 FZB	
545	312101-0370		4	SCREW M6S M6X20 FZB	
550	312101-0460		1	SCREW M6S M8X45 FZB	
560	312111-0331		5	SCREW HEX.SOCK.HD.MC6S-TT 5X20 88 FZB	
570	312111-0366		4	SCREW HEX.SOCK.HD.MC6S-TT 6X12 88 FZB	
580	312111-0370		12	SCREW HEX.SOCK.HD.MC6S-TT 6X20 88 FZB	
590	312111-0449		4	SCREW HEX.SOCK.HD.MC6S-TT 8X16 88 FZB	
600	312125-0228		2	SCREW ISO 1207 M3X16 A4	
610	312306-0366		8	SCREW ISO4026 M6X12 FZB	
620	312601-0318		1	HEXAGON NUT, DIN 934 M8 8 FZB	
630	315101-0146		9	WASHER PLAIN, BRB, 5,3/10 H=1	
640	315101-0153		12	WASHER PLAIN, BRB, 6,4/12 H=1,5	
650	315101-0165		5	WASHER PLAIN, BRB, 8,4/16 H=1,5	
660	315121-0153		4	WASHER PLAIN, TBRSB 6,4/22 H=4	
670	315750-0112		5	RETAINING RING SHAFT DIN 471 ST 15	
680	321101-0202		2	FLANGE BUSHING, 16X22X12 MM	
690	321308-0202		6	BALL BEARING, 15X32X9 MM	
700	321313-0102		4	BALL BEARING, 15X35X11 MM	
710	321316-0201		2	BALL BEARING, 12X37X12 MM	
720	342930-0113		2	ELBOW 90 COUPL.,EXT.THREAD 6/4-R1/8"	
F005	542904-0100		1	WORM GEAR MOTOR	**8-19**

Machine Type	Group Description	Used-In	Group Number	Page No

WORM GEAR MOTOR

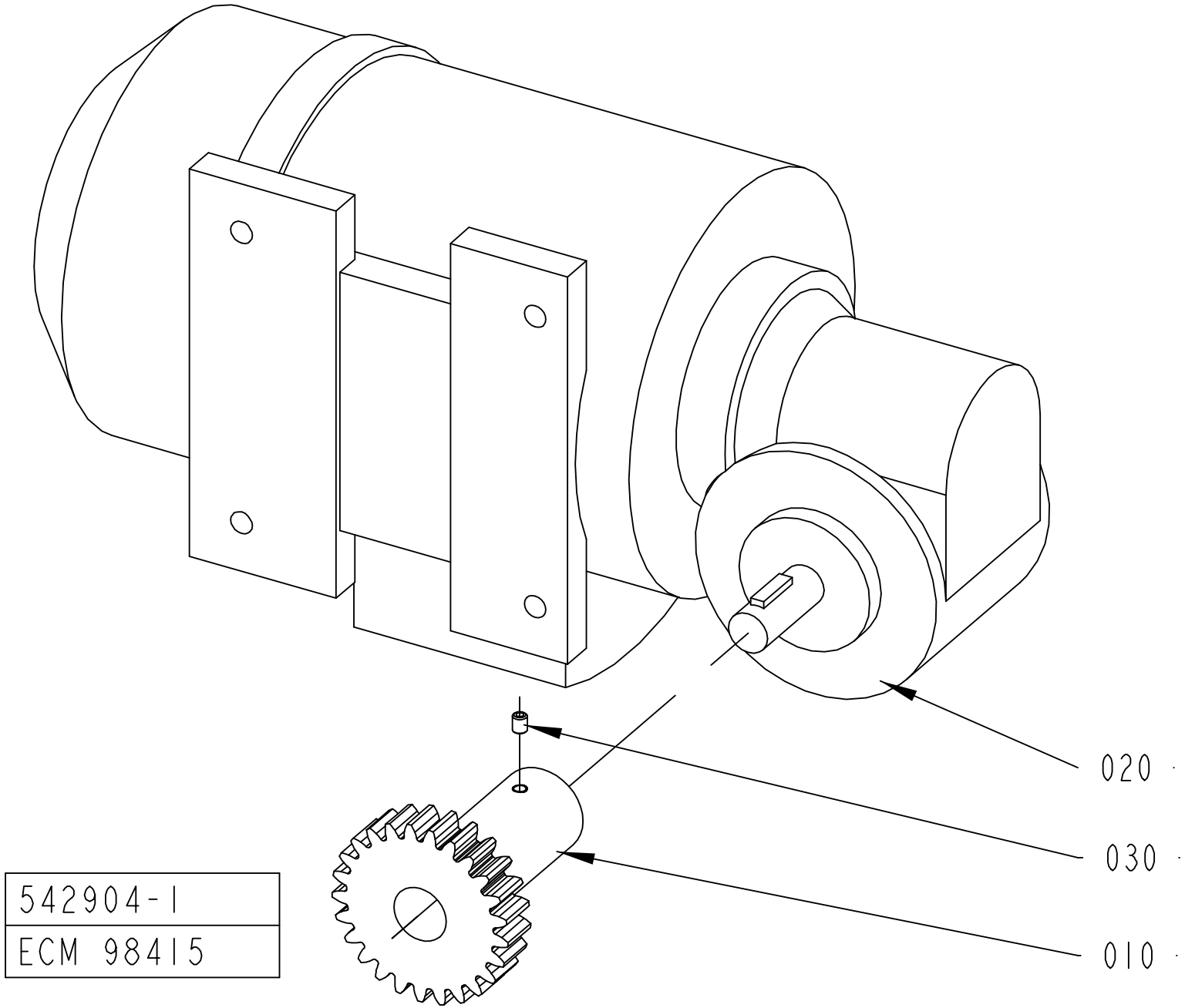

ECM: 98418 - 20021112
Group number: 542904-0100
Assembly Drawing: 542904-1_1_AB

Pos	Part No	UN	Qty	Description	Page No
0500B, 0500SQ, 0500S, 0568SQ, 0568B, 0300B					
010	539187-0002		1	GEAR WHEEL	
1136B, 1000SQ, 1000S, 1000B					
010	539187-0001		1	GEAR WHEEL	
Common Parts					
020	90069-0116		1	GEARS, WORM MOTOR REPBY 90069-0281	
	90056-0096		*1*	*WORM GEAR E3*	
	90069-0364		*1*	*CARBON BRUSH*	
	90069-0365		*1*	*CARBON BRUSH*	
030	312318-0284		1	SCREW ISO4029 M4X5 A4	

Pos	Part No	UN	Qty	Description	Page No

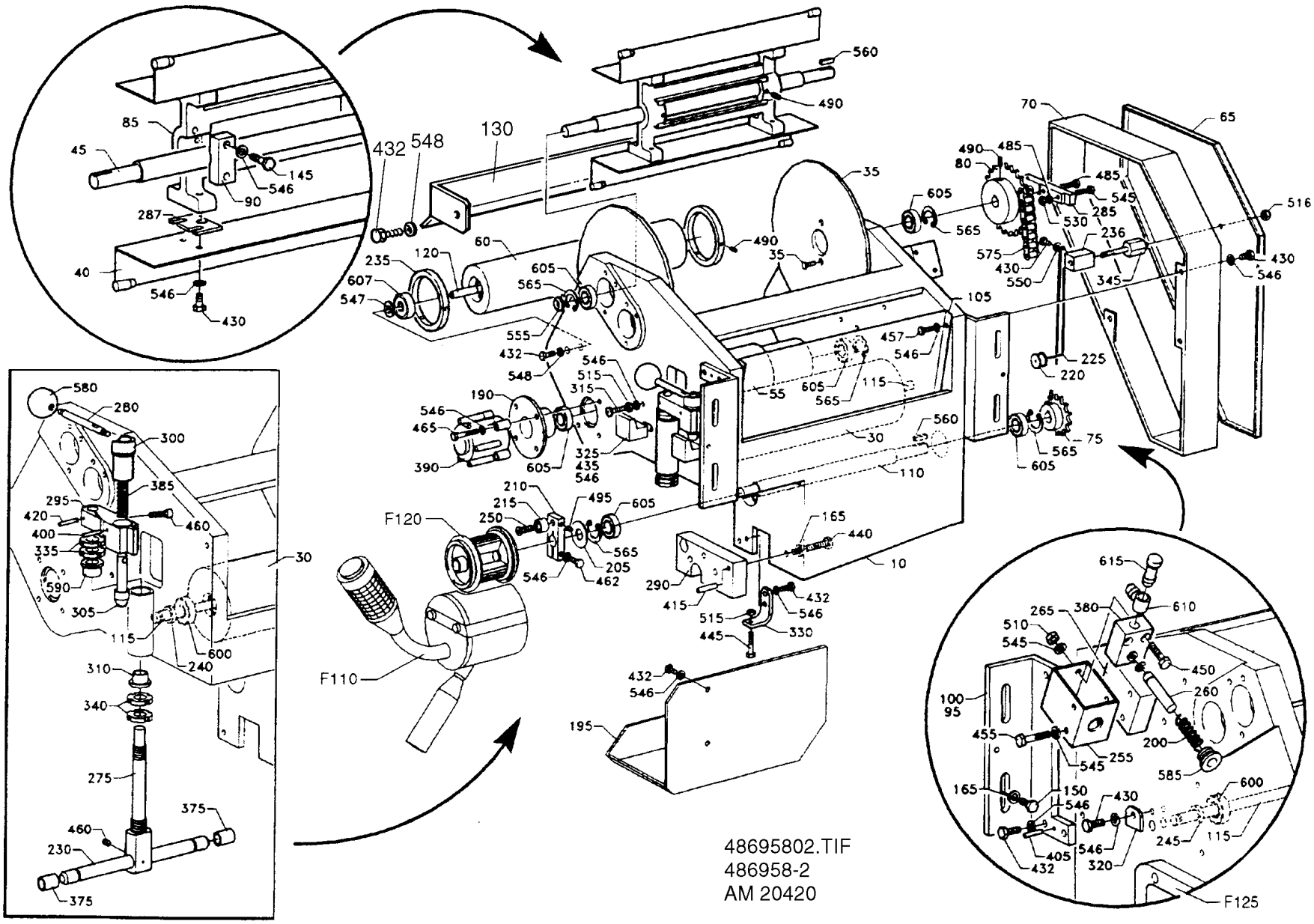
48695802.TIF
486958-2
AM 20420

ECM: 72192 - 19990218
Group number: 486958-0200
Assembly Drawing: 486958-2_1_AG

This list covers pages from 8-20 to 8-33

Pos	Part No	UN	Qty	Description	Page No
1500B					
010	593590-0000		1	FRAME	
020	927830-0000		1	PROTECTION	
030	293621-0005		1	BENDING ROLLER	
035	927745-0000		2	PROTECTION PLATE	
040	593556-0000		2	CREASE FORMER	
045	486960-0001		1	SHAFT	
055	532719-0001		1	FEEDING ROLLER	
060	927743-0000		1	BENDING ROLLER	
065	533453-0000		1	LID	
070	533454-0000		1	FRAME	
075	32629-0000		1	SPROCKET	
080	32630-0000		1	SPROCKET	
085	593586-0000		1	SPACER	
090	539338-0000		2	CAP	
095	486962-0001		2	FASTENING BRACKET	
105	486964-0000		1	HEAD PLATE	
110	486966-0001		1	SHAFT	
115	486968-0001		1	SHAFT FOR BENDINGROLLER	
120	533457-0001		1	SHAFT	
130	575786-0000		1	PAPER SUPPORT	
150	312105-0451		4	SCREW M6S ISO 4017 M8X20 A480	
165	315105-0165		5	WASHER BRB 8,4X16 RFR	
200	90335-0037		1	COMP. SPRING 22900, 2,2X15X20	
215	593589-0000		1	ROLL	
230	593587-0000		1	SHAFT	
248	293646-0003		2	WASHER	
250	593588-0000		1	DOWEL	
255	595204-0000		1	CYLINDER BRACKET	
260	595202-0000		1	SHAFT	
265	595203-0000		1	LACE	
290	593746-0000		1	CANTILEVER	
380	90450-0454		1	CYLINDER	
435	312155-0370		4	SCREW DIN 7991 MF6S M6X20 A4 70	
450	312111-0337		2	SCREW HEX.SOCK.HD.MC6S-TT 5X35 88 FZB	
490	312318-0323		6	SCREW ISO4029 M5X8 A4	
546	315105-0153		42	WASHER BRB 6,4X12 RFR	
552	315125-0153		4	WASHER TBRSB 6,4X22X4 A4	
0500B					
010	484848-0003		1	MACHINE BODY	
020	573827-0003		1	PROTECTION	
030	293621-0001		1	BNDING ROLLER	
035	293624-0002		2	PROTECTION PLATE	
040	458106-0000		2	CREASE FORMER	
045	544367-0000		1	SHAFT	
055	532719-0001		1	FEEDING ROLLER	
060	533449-0001		1	BENDING ROLLER	
065	533453-0000		1	LID	
070	533454-0000		1	FRAME	
080-02	32630-0000		2	SPROCKET	
085	440282-0004		2	SPACER	
095	486962-0001		2	FASTENING BRACKET	
105	486964-0000		1	HEAD PLATE	
110	486966-0001		1	SHAFT	
115	486968-0001		1	SHAFT FOR BENDINGROLLER	
120	533457-0001		1	SHAFT	
130	576217-0000		1	PAPER SUPPORT	
150	312105-0451		4	SCREW M6S ISO 4017 M8X20 A480	
165	315105-0165		5	WASHER BRB 8,4X16 RFR	
200	10258-0000		1	COMPRESSION SPRING	
215	32926-0000		1	ROLL	
230	228653-0000		1	SHAFT	
235	544706-0000		2	FLANGE	
240	293646-0001		1	WASHER	
245	293646-0002		1	WASHER	
250	293674-0000		1	DOWEL	
255	436939-0000		1	CYLINDER BRACKET	
260	436940-0000		1	SHAFT	
265	440277-0000		1	LACE	
290	458489-0000		1	CANTILEVER	
380	90239-0259		1	CYLINDER	
435	312105-0370		4	SCREW M6S ISO 4017 M6X20 A480	
450	312111-0333		2	SCREW HEX.SOCK.HD.MC6S-TT 5X25 88 FZB	
490	312318-0323		6	SCREW ISO4029 M5X8 A4	
546	315105-0153		42	WASHER BRB 6,4X12 RFR	
0500S					
010	484848-0002		1	MACHINE BODY	
020	573827-0002		1	PROTECTION	
030	293621-0001		1	BNDING ROLLER	
035	293624-0001		2	PROTECTION PLATE	
040	458108-0000		2	CREASE FORMER	
045	486960-0001		1	SHAFT	
050	486961-0000		1	PLATE	
055	532719-0001		1	FEEDING ROLLER	

Machine Type | Group Description | Used-In | Group Number | Page No

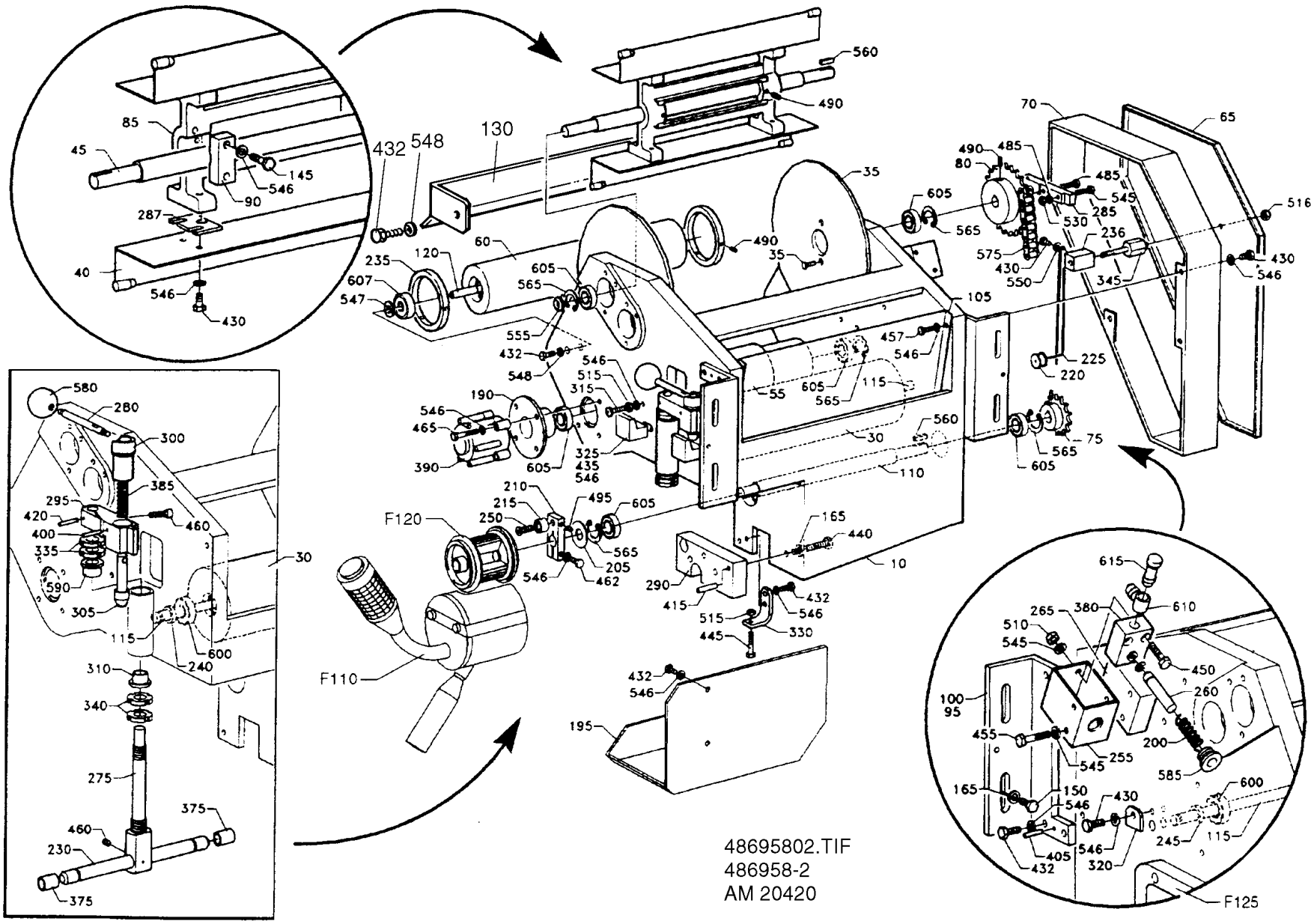
48695802.TIF
486958-2
AM 20420
F110
F120
F125

ECM: 72192 - 19990218
Group number: 486958-0200
Assembly Drawing: 486958-2_1_AG

This list covers pages from 8-20 to 8-33

Pos	Part No	UN	Qty	Description	Page No
0500S (Cont'd)					
060	533449-0001		1	BENDING ROLLER	
065	533453-0000		1	LID	
070	533454-0000		1	FRAME	
075	32629-0000		1	SPROCKET	
080	32630-0000		1	SPROCKET	
085	538241-0004		1	SPACER	
090	539338-0000		2	CAP	
095	486962-0002		1	FASTENING BRACKET	
100	486962-0004		1	FASTENING BRACKET	
105	486964-0000		1	HEAD PLATE	
110	486966-0001		1	SHAFT	
115	486968-0001		1	SHAFT FOR BENDINGROLLER	
120	533457-0001		1	SHAFT	
130	575786-0000		1	PAPER SUPPORT	
150	312105-0451		6	SCREW M6S ISO 4017 M8X20 A480	
165	315105-0165		7	WASHER BRB 8,4X16 RFR	
200	10258-0000		1	COMPRESSION SPRING	
215	32926-0000		1	ROLL	
230	228653-0000		1	SHAFT	
235	544706-0000		2	FLANGE	
240	293646-0001		1	WASHER	
245	293646-0002		1	WASHER	
250	293674-0000		1	DOWEL	
255	436939-0000		1	CYLINDER BRACKET	
260	436940-0000		1	SHAFT	
265	440277-0000		1	LACE	
290	458489-0000		1	CANTILEVER	
380	90239-0259		1	CYLINDER	
435	312105-0370		4	SCREW M6S ISO 4017 M6X20 A480	
450	312111-0333		2	SCREW HEX.SOCK.HD.MC6S-TT 5X25 88 FZB	
490	312318-0323		8	SCREW ISO4029 M5X8 A4	
546	315105-0153		42	WASHER BRB 6,4X12 RFR	
0500SQ					
010	484848-0001		1	MACHINE BODY	
020	573827-0001		1	PROTECTION	
030	293621-0001		1	BNDING ROLLER	
035	293624-0001		2	PROTECTION PLATE	
040	574043-0000		2	CREASE FORMER	
045	486960-0001		1	SHAFT	
055	532719-0001		1	FEEDING ROLLER	
060	533449-0001		1	BENDING ROLLER	
065	533453-0000		1	LID	
070	533454-0000		1	FRAME	
075	32629-0000		1	SPROCKET	
080	32630-0000		1	SPROCKET	
085	543137-0002		1	SPACER	
090	539338-0000		2	CAP	
095	486962-0011		1	FASTENING BRACKET	
100	574044-0000		1	FASTENING BRACKET	
105	486964-0000		1	HEAD PLATE	
110	486966-0001		1	SHAFT	
115	486968-0001		1	SHAFT FOR BENDINGROLLER	
120	533457-0001		1	SHAFT	
130	575786-0000		1	PAPER SUPPORT	
150	312105-0451		4	SCREW M6S ISO 4017 M8X20 A480	
165	315105-0165		5	WASHER BRB 8,4X16 RFR	
200	10258-0000		1	COMPRESSION SPRING	
215	32926-0000		1	ROLL	
230	228653-0000		1	SHAFT	
235	544706-0000		2	FLANGE	
240	293646-0001		1	WASHER	
245	293646-0002		1	WASHER	
250	293674-0000		1	DOWEL	
255	436939-0000		1	CYLINDER BRACKET	
260	436940-0000		1	SHAFT	
265	440277-0000		1	LACE	
290	458489-0000		1	CANTILEVER	
380	90239-0259		1	CYLINDER	
435	312105-0370		4	SCREW M6S ISO 4017 M6X20 A480	
450	312111-0333		2	SCREW HEX.SOCK.HD.MC6S-TT 5X25 88 FZB	
490	312318-0323		8	SCREW ISO4029 M5X8 A4	
546	315105-0153		42	WASHER BRB 6,4X12 RFR	
0568B					
010	484848-0003		1	MACHINE BODY	
020	573827-0003		1	PROTECTION	
030	293621-0001		1	BNDING ROLLER	
035	293624-0002		2	PROTECTION PLATE	
040	458106-0000		2	CREASE FORMER	
045	544367-0000		1	SHAFT	
055	532719-0001		1	FEEDING ROLLER	
060	533449-0001		1	BENDING ROLLER	
065	533453-0000		1	LID	
070	533454-0000		1	FRAME	

Machine Type | Group Description | Used-In | Group Number | Page No

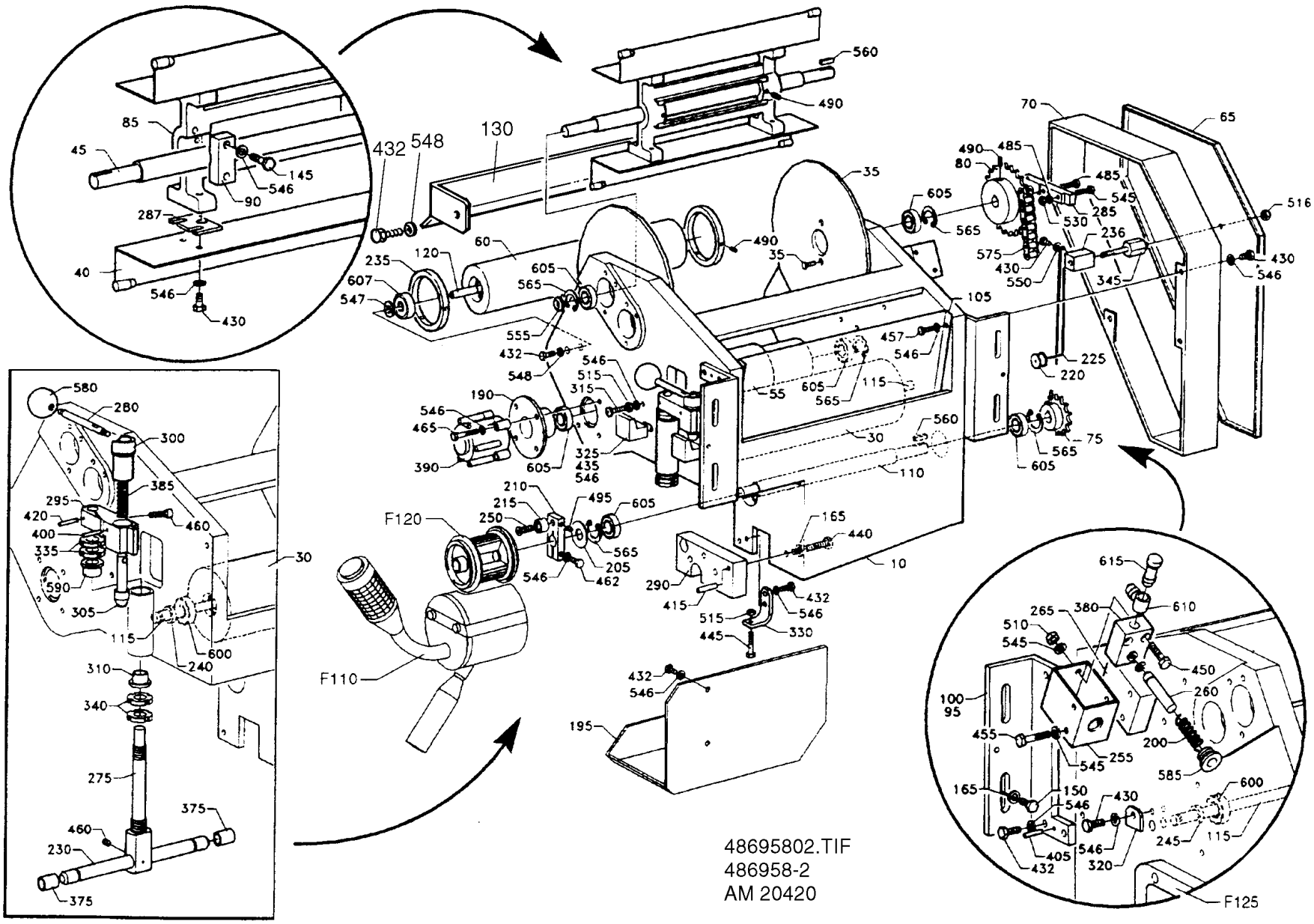
48695802.TIF
486958-2
AM 20420

ECM: 72192 - 19990218
Group number: 486958-0200
Assembly Drawing: 486958-2_1_AG

This list covers pages from 8-20 to 8-33

Pos	Part No	UN	Qty	Description	Page No
0568B (Cont'd)					
080-02	32630-0000		2	SPROCKET	
085	440282-0003		2	SPACER	
095	486962-0001		2	FASTENING BRACKET	
105	486964-0000		1	HEAD PLATE	
110	486966-0001		1	SHAFT	
115	486968-0001		1	SHAFT FOR BENDINGROLLER	
120	533457-0001		1	SHAFT	
130	576217-0000		1	PAPER SUPPORT	
150	312105-0451		4	SCREW M6S ISO 4017 M8X20 A480	
165	315105-0165		5	WASHER BRB 8,4X16 RFR	
200	10258-0000		1	COMPRESSION SPRING	
215	32926-0000		1	ROLL	
230	228653-0000		1	SHAFT	
235	544706-0000		2	FLANGE	
240	293646-0001		1	WASHER	
245	293646-0002		1	WASHER	
250	293674-0000		1	DOWEL	
255	436939-0000		1	CYLINDER BRACKET	
260	436940-0000		1	SHAFT	
265	440277-0000		1	LACE	
290	458489-0000		1	CANTILEVER	
380	90239-0259		1	CYLINDER	
435	312105-0370		4	SCREW M6S ISO 4017 M6X20 A480	
450	312111-0333		2	SCREW HEX.SOCK.HD.MC6S-TT 5X25 88 FZB	
490	312318-0323		6	SCREW ISO4029 M5X8 A4	
546	315105-0153		42	WASHER BRB 6,4X12 RFR	
0568SQ					
010	484848-0001		1	MACHINE BODY	
020	573827-0001		1	PROTECTION	
030	293621-0001		1	BNDING ROLLER	
035	293624-0001		2	PROTECTION PLATE	
040	574043-0000		2	CREASE FORMER	
045	486960-0001		1	SHAFT	
055	532719-0001		1	FEEDING ROLLER	
060	533449-0001		1	BENDING ROLLER	
065	533453-0000		1	LID	
070	533454-0000		1	FRAME	
075	32629-0000		1	SPROCKET	
080	32630-0000		1	SPROCKET	
085	543137-0003		1	SPACER	
090	539338-0000		2	CAP	
095	486962-0011		1	FASTENING BRACKET	
100	574044-0000		1	FASTENING BRACKET	
105	486964-0000		1	HEAD PLATE	
110	486966-0001		1	SHAFT	
115	486968-0001		1	SHAFT FOR BENDINGROLLER	
120	533457-0001		1	SHAFT	
130	575786-0000		1	PAPER SUPPORT	
150	312105-0451		4	SCREW M6S ISO 4017 M8X20 A480	
165	315105-0165		5	WASHER BRB 8,4X16 RFR	
200	10258-0000		1	COMPRESSION SPRING	
215	32926-0000		1	ROLL	
230	228653-0000		1	SHAFT	
235	544706-0000		2	FLANGE	
240	293646-0001		1	WASHER	
245	293646-0002		1	WASHER	
250	293674-0000		1	DOWEL	
255	436939-0000		1	CYLINDER BRACKET	
260	436940-0000		1	SHAFT	
265	440277-0000		1	LACE	
290	458489-0000		1	CANTILEVER	
380	90239-0259		1	CYLINDER	
435	312105-0370		4	SCREW M6S ISO 4017 M6X20 A480	
450	312111-0333		2	SCREW HEX.SOCK.HD.MC6S-TT 5X25 88 FZB	
490	312318-0323		8	SCREW ISO4029 M5X8 A4	
546	315105-0153		42	WASHER BRB 6,4X12 RFR	
1000B HIFIN					
010	484848-0001		1	MACHINE BODY	
020	573827-0001		1	PROTECTION	
030	293621-0001		1	BNDING ROLLER	
035	293624-0001		2	PROTECTION PLATE	
040	458104-0000		2	CREASE FORMER	
045	486960-0001		1	SHAFT	
055	532719-0001		1	FEEDING ROLLER	
060	533449-0001		1	BENDING ROLLER	
065	533453-0000		1	LID	
070	533454-0000		1	FRAME	
075	32629-0000		1	SPROCKET	
080	32630-0000		1	SPROCKET	
085	538241-0003		1	SPACER	
090	539338-0000		2	CAP	
095	486962-0001		2	FASTENING BRACKET	
105	486964-0000		1	HEAD PLATE	

Machine Type | Group Description | Used-In | Group Number | Page No

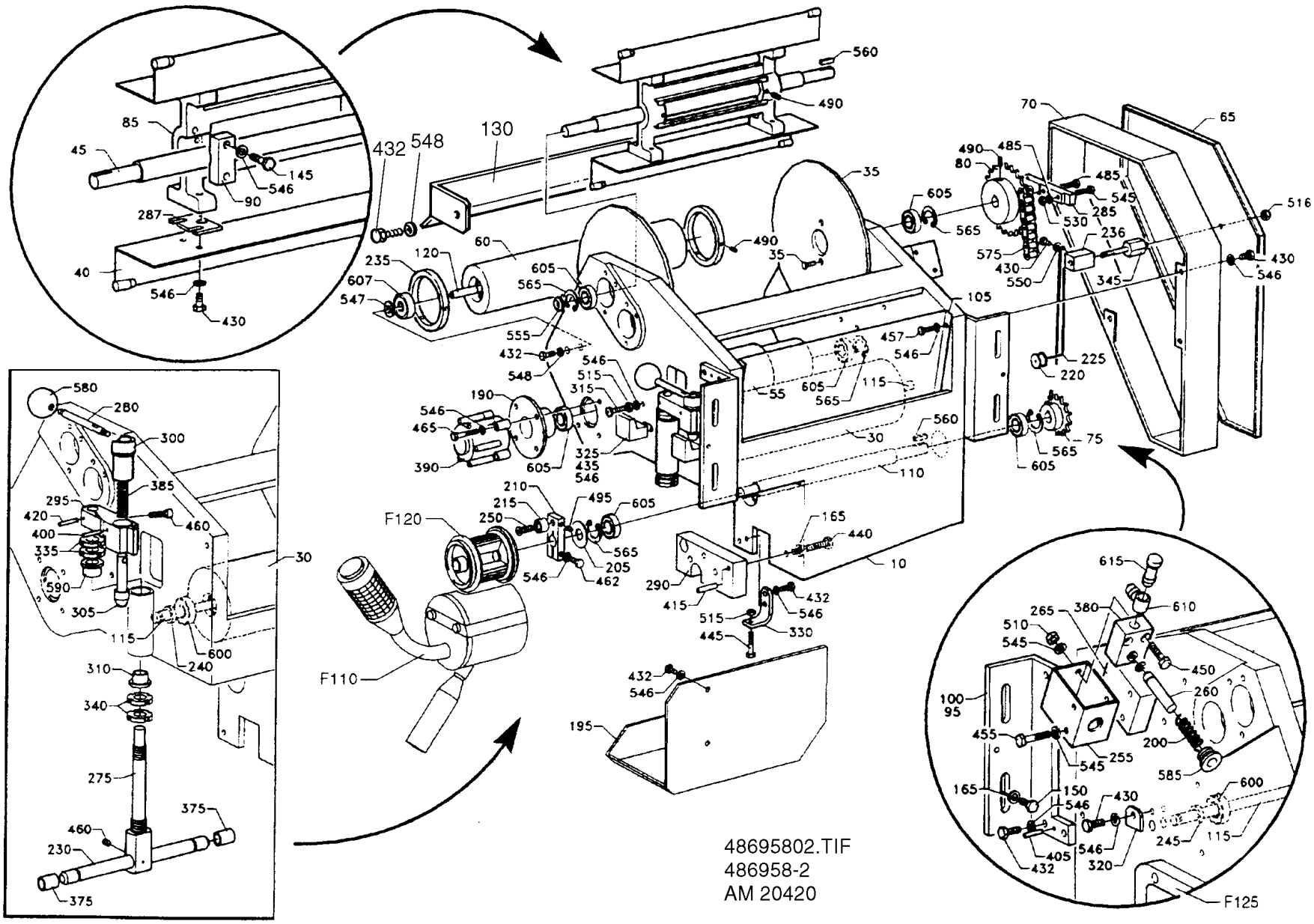
48695802.TIF
486958-2
AM 20420

ECM: 72192 - 19990218
Group number: 486958-0200
Assembly Drawing: 486958-2_1_AG

This list covers pages from 8-20 to 8-33

Pos	Part No	UN	Qty	Description	Page No
1000B HIFIN (Cont'd)					
110	486966-0001		1	SHAFT	
115	486968-0001		1	SHAFT FOR BENDINGROLLER	
120	533457-0001		1	SHAFT	
130	575786-0000		1	PAPER SUPPORT	
150	312105-0451		4	SCREW M6S ISO 4017 M8X20 A480	
165	315105-0165		5	WASHER BRB 8,4X16 RFR	
200	10258-0000		1	COMPRESSION SPRING	
215	32926-0000		1	ROLL	
230	228653-0000		1	SHAFT	
235	544706-0000		2	FLANGE	
240	293646-0001		1	WASHER	
245	293646-0002		1	WASHER	
250	293674-0000		1	DOWEL	
255	436939-0000		1	CYLINDER BRACKET	
260	436940-0000		1	SHAFT	
265	440277-0000		1	LACE	
290	458489-0000		1	CANTILEVER	
380	90239-0259		1	CYLINDER	
435	312105-0370		4	SCREW M6S ISO 4017 M6X20 A480	
450	312111-0333		2	SCREW HEX.SOCK.HD.MC6S-TT 5X25 88 FZB	
490	312318-0323		8	SCREW ISO4029 M5X8 A4	
546	315105-0153		42	WASHER BRB 6,4X12 RFR	
1000B LOFIN					
010	484848-0001		1	MACHINE BODY	
020	573827-0001		1	PROTECTION	
030	293621-0001		1	BNDING ROLLER	
035	293624-0001		2	PROTECTION PLATE	
040	458105-0000		2	CREASE FORMER	
045	486960-0001		1	SHAFT	
055	532719-0001		1	FEEDING ROLLER	
060	533449-0001		1	BENDING ROLLER	
065	533453-0000		1	LID	
070	533454-0000		1	FRAME	
075	32629-0000		1	SPROCKET	
080	32630-0000		1	SPROCKET	
085	538241-0002		1	SPACER	
090	539338-0000		2	CAP	
095	486962-0001		2	FASTENING BRACKET	
105	486964-0000		1	HEAD PLATE	
110	486966-0001		1	SHAFT	
115	486968-0001		1	SHAFT FOR BENDINGROLLER	
120	533457-0001		1	SHAFT	
130	575786-0000		1	PAPER SUPPORT	
150	312105-0451		4	SCREW M6S ISO 4017 M8X20 A480	
165	315105-0165		5	WASHER BRB 8,4X16 RFR	
200	10258-0000		1	COMPRESSION SPRING	
215	32926-0000		1	ROLL	
230	228653-0000		1	SHAFT	
235	544706-0000		2	FLANGE	
240	293646-0001		1	WASHER	
245	293646-0002		1	WASHER	
250	293674-0000		1	DOWEL	
255	436939-0000		1	CYLINDER BRACKET	
260	436940-0000		1	SHAFT	
265	440277-0000		1	LACE	
290	458489-0000		1	CANTILEVER	
380	90239-0259		1	CYLINDER	
435	312105-0370		4	SCREW M6S ISO 4017 M6X20 A480	
450	312111-0333		2	SCREW HEX.SOCK.HD.MC6S-TT 5X25 88 FZB	
490	312318-0323		8	SCREW ISO4029 M5X8 A4	
546	315105-0153		42	WASHER BRB 6,4X12 RFR	
1000S					
010	484848-0001		1	MACHINE BODY	
020	573827-0001		1	PROTECTION	
030	293621-0001		1	BNDING ROLLER	
035	293624-0001		2	PROTECTION PLATE	
040	569651-0000		2	CREASE FORMER	
045	486960-0001		1	SHAFT	
055	532719-0001		1	FEEDING ROLLER	
060	533449-0001		1	BENDING ROLLER	
065	533453-0000		1	LID	
070	533454-0000		1	FRAME	
075	32629-0000		1	SPROCKET	
080	32630-0000		1	SPROCKET	
085	569652-0002		1	SPACER	
090	539338-0000		2	CAP	
095	486962-0009		1	FASTENING BRACKET	
100	486962-0010		1	FASTENING BRACKET	
105	486964-0000		1	HEAD PLATE	
110	486966-0001		1	SHAFT	
115	486968-0001		1	SHAFT FOR BENDINGROLLER	
120	533457-0001		1	SHAFT	
130	575786-0000		1	PAPER SUPPORT	

Machine Type | Group Description | Used-In | Group Number | Page No

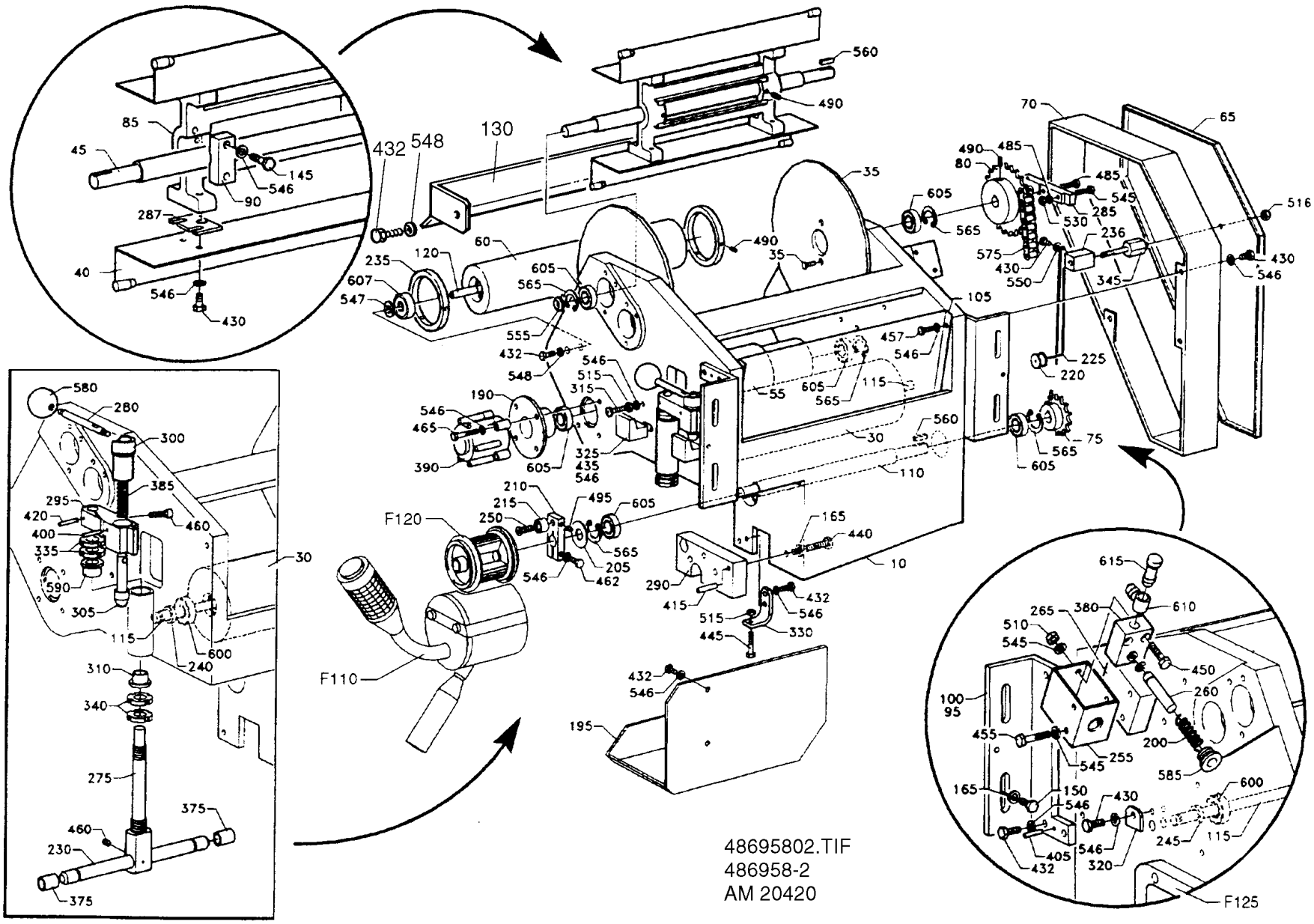
48695802.TIF
486958-2
AM 20420

ECM: 72192 - 19990218
Group number: 486958-0200
Assembly Drawing: 486958-2_1_AG

This list covers pages from 8-20 to 8-33

Pos	Part No	UN	Qty	Description	Page No
1000S (Cont'd)					
150	312105-0451		4	SCREW M6S ISO 4017 M8X20 A480	
165	315105-0165		5	WASHER BRB 8,4X16 RFR	
200	10258-0000		1	COMPRESSION SPRING	
215	32926-0000		1	ROLL	
230	228653-0000		1	SHAFT	
235	544706-0000		2	FLANGE	
240	293646-0001		1	WASHER	
245	293646-0002		1	WASHER	
250	293674-0000		1	DOWEL	
255	436939-0000		1	CYLINDER BRACKET	
260	436940-0000		1	SHAFT	
265	440277-0000		1	LACE	
290	458489-0000		1	CANTILEVER	
380	90239-0259		1	CYLINDER	
435	312105-0370		4	SCREW M6S ISO 4017 M6X20 A480	
450	312111-0333		2	SCREW HEX.SOCK.HD.MC6S-TT 5X25 88 FZB	
490	312318-0323		8	SCREW ISO4029 M5X8 A4	
546	315105-0153		42	WASHER BRB 6,4X12 RFR	
1000SQ					
010	484848-0001		1	MACHINE BODY	
020	573827-0001		1	PROTECTION	
030	293621-0001		1	BNDING ROLLER	
035	293624-0001		2	PROTECTION PLATE	
040	574043-0000		2	CREASE FORMER	
045	486960-0001		1	SHAFT	
055	532719-0001		1	FEEDING ROLLER	
060	533449-0001		1	BENDING ROLLER	
065	533453-0000		1	LID	
070	533454-0000		1	FRAME	
075	32629-0000		1	SPROCKET	
080	32630-0000		1	SPROCKET	
085	569652-0003		1	SPACER	
090	539338-0000		2	CAP	
095	486962-0011		1	FASTENING BRACKET	
100	574044-0000		1	FASTENING BRACKET	
105	486964-0000		1	HEAD PLATE	
110	486966-0001		1	SHAFT	
115	486968-0001		1	SHAFT FOR BENDINGROLLER	
120	533457-0001		1	SHAFT	
130	575786-0000		1	PAPER SUPPORT	
150	312105-0451		4	SCREW M6S ISO 4017 M8X20 A480	
165	315105-0165		5	WASHER BRB 8,4X16 RFR	
200	10258-0000		1	COMPRESSION SPRING	
215	32926-0000		1	ROLL	
230	228653-0000		1	SHAFT	
235	544706-0000		2	FLANGE	
240	293646-0001		1	WASHER	
245	293646-0002		1	WASHER	
250	293674-0000		1	DOWEL	
255	436939-0000		1	CYLINDER BRACKET	
260	436940-0000		1	SHAFT	
265	440277-0000		1	LACE	
290	458489-0000		1	CANTILEVER	
380	90239-0259		1	CYLINDER	
435	312105-0370		4	SCREW M6S ISO 4017 M6X20 A480	
450	312111-0333		2	SCREW HEX.SOCK.HD.MC6S-TT 5X25 88 FZB	
490	312318-0323		8	SCREW ISO4029 M5X8 A4	
546	315105-0153		42	WASHER BRB 6,4X12 RFR	
1136B					
010	484848-0001		1	MACHINE BODY	
020	573827-0001		1	PROTECTION	
030	293621-0001		1	BNDING ROLLER	
035	293624-0001		2	PROTECTION PLATE	
040	458105-0000		2	CREASE FORMER	
045	486960-0001		1	SHAFT	
055	532719-0001		1	FEEDING ROLLER	
060	533449-0001		1	BENDING ROLLER	
065	533453-0000		1	LID	
070	533454-0000		1	FRAME	
075	32629-0000		1	SPROCKET	
080	32630-0000		1	SPROCKET	
085	569652-0001		1	SPACER	
090	539338-0000		2	CAP	
095	486962-0001		2	FASTENING BRACKET	
105	486964-0000		1	HEAD PLATE	
110	486966-0001		1	SHAFT	
115	486968-0001		1	SHAFT FOR BENDINGROLLER	
120	533457-0001		1	SHAFT	
130	575786-0000		1	PAPER SUPPORT	
150	312105-0451		4	SCREW M6S ISO 4017 M8X20 A480	
165	315105-0165		5	WASHER BRB 8,4X16 RFR	
200	10258-0000		1	COMPRESSION SPRING	
215	32926-0000		1	ROLL	

Machine Type | Group Description | Used-In | Group Number | Page No

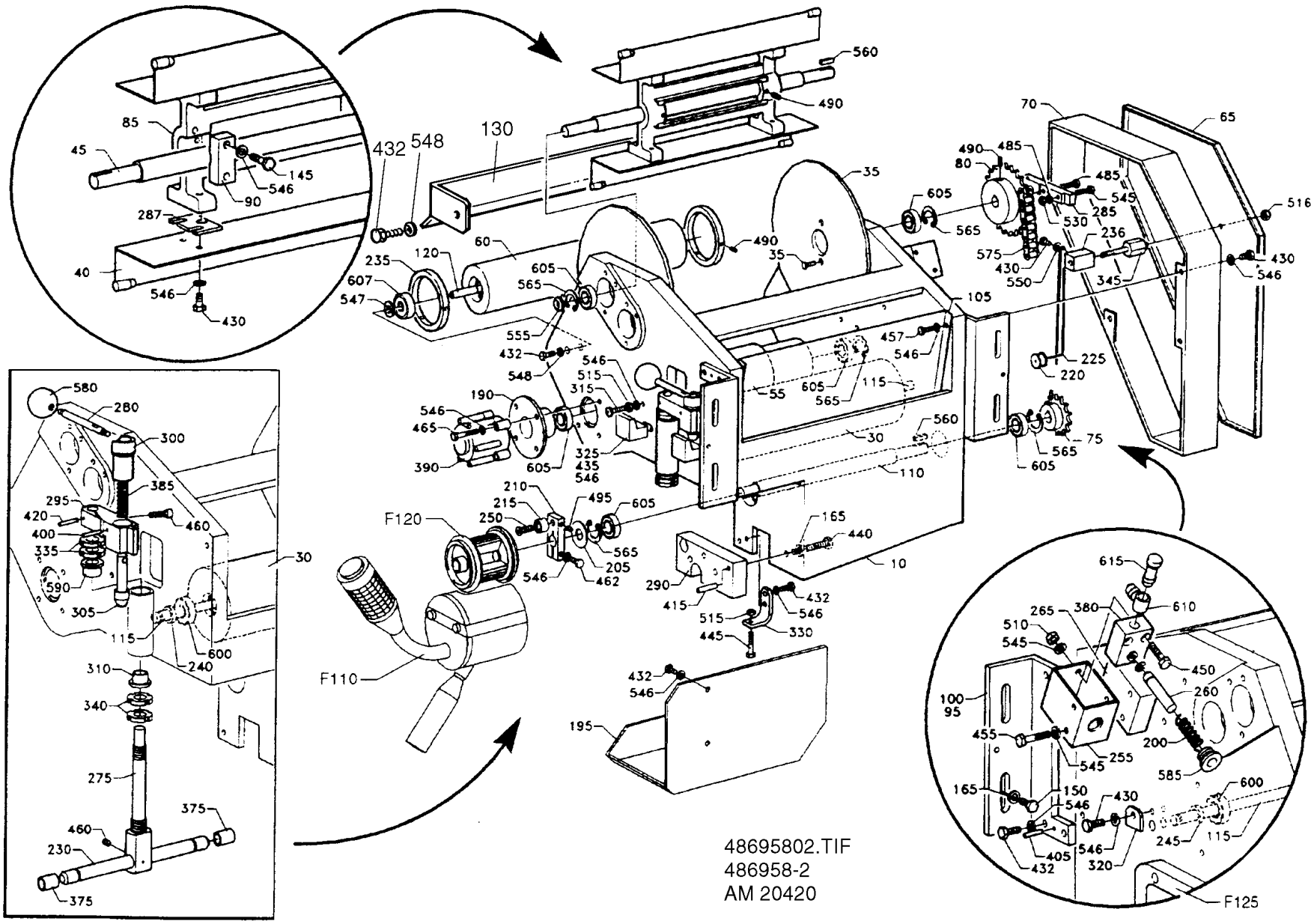
48695802.TIF
486958-2
AM 20420

ECM: 72192 - 19990218
Group number: 486958-0200
Assembly Drawing: 486958-2_1_AG

This list covers pages from 8-20 to 8-33

Pos	Part No	UN	Qty	Description	Page No
1136B (Cont'd)					
230	228653-0000		1	SHAFT	
235	544706-0000		2	FLANGE	
240	293646-0001		1	WASHER	
245	293646-0002		1	WASHER	
250	293674-0000		1	DOWEL	
255	436939-0000		1	CYLINDER BRACKET	
260	436940-0000		1	SHAFT	
265	440277-0000		1	LACE	
290	458489-0000		1	CANTILEVER	
380	90239-0259		1	CYLINDER	
435	312105-0370		4	SCREW M6S ISO 4017 M6X20 A480	
450	312111-0333		2	SCREW HEX.SOCK.HD.MC6S-TT 5X25 88 FZB	
490	312318-0323		8	SCREW ISO4029 M5X8 A4	
546	315105-0153		42	WASHER BRB 6,4X12 RFR	
Common Parts					
145	312105-0372		4	SCREW M6S ISO 4017 M6X25 A480	
185	359705-0001		1	WARNING SIGN ISO, ENTANGLEMENT	
190	522408-0000		1	BEARING HOUSING	
195	549832-0000		1	WASTE CHUTE	
205	533458-0000		1	WASHER	
210	32925-0000		1	CARRIER	
220	33182-0000		1	ROLL	
225	33183-0000		1	SPRING	
236	293645-0000		1	BRACKET	
275	450497-0000		1	SHAFT	
280	450500-0000		1	DOWEL	
285	457430-0000		1	BEATER	
287	458193-0002		4	WASHER	
287	458193-0001		4	WASHER	
287	458193-0003		4	WASHER	
295	464010-0000		1	ARM	
300	464012-0000		1	CURVE	
305	464011-0000		1	LOCK STUD	
310	466430-0000		1	BUSHING	
315	476377-0000		2	SCREW	
320	486967-0000		1	SHEET	
325	486969-0000		2	GUIDE LUG	
330	486971-0000		1	ANGLE	
335	532082-0000		2	ROUND NUT	
340	532083-0000		2	ROUND NUT	
345	533459-0000		1	SCREW	
370	90165-0057		2	PIPE CLIP FOR TUBE D=6 MM	
375	90166-0059	MM	18	HOSE PVC 12/16MM TRANSP.	
385	90335-0064		1	COMP. SPRING 22270, 1,25X13,75X62,5	
390	90347-0054		1	DAMPER	
395	311103-0273		1	PARALLEL PIN ISO 2338 4M6X22 A1	
400	311103-0274		1	PARALLEL PIN ISO 2338 4M6X25 A1	
405	311103-0310		4	PARALLEL PIN ISO 2338 5M6X20 A1	
410	311103-0353		2	PARALLEL PIN ISO 2338 6M6X20 A1	
415	311103-0357		1	PARALLEL PIN ISO 2338 6M6X30 A1	
420	311202-0241		1	TAPER PIN EN 22339 A 4X25 SS	
430	312105-0366		15	SCREW M6S ISO 4017 M6X12 A480	
432	312105-0368		14	SCREW M6S ISO 4017 M6X16 A480	
440	312105-0457		1	SCREW M6S ISO 4014 M8X35 A480	
445	312109-0374		1	SCREW M6S ISO 4017 M6X30 A480	
455	312111-0335		2	SCREW HEX.SOCK.HD.MC6S-TT 5X30 88 FZB	
457	312111-0364		3	SCREW HEX.SOCK.HD.MC6S-TT 6X10 88 FZB	
460	312115-0370		2	SCREW ISO4762 M6X20 A4 80	
462	312115-0372		1	SCREW ISO4762 M6X25 A4 80	
465	312115-0376		4	SCREW ISO4762 M6X35 A4 80	
470	312125-0285		2	SCREW ISO 1207 M4X6 A4	
480	312155-0329		4	SCREW DIN 7991 MF6S M5X16 A4 70	
485	312155-0333		3	SCREW DIN 7991 MF6S M5X25 A4 70	
495	312318-0362		1	SCREW ISO4029 M6X8 A4	
510	312605-0314		2	HEXAGON NUT, M6M M5 A280	
515	312605-0316		3	HEXAGON NUT, M6M M6 A280	
516	312705-0316		1	NUT HEX. DOMED CAP MHM-6 M6 A280	
530	312812-0314		2	HEXAGON NUT, NY-LOCK M5 A480	
545	315105-0146		10	WASHER BRB 5,3X10 RFR	
547	315105-0173		2	WASHER BRB 10,5X20 RFR	
548	315115-0153		4	WASHER PLAIN, TBRB 6,4/12 H=3	
550	315121-0153		1	WASHER PLAIN, TBRSB 6,4/22 H=4	
555	315220-0121		1	V-RINGS 12,5X18,5X7,7 MM V-14S	
560	315701-0201		2	PARALLEL KEY W. ROUND ENDS 5X5X20 MM	
565	315752-0123		5	RETAINING RING FOR BORE DIN 472 32 ST	
570	315755-0801		1	RETAINING RING SHAFT DIN 6799 8 A2	
575	318207-0168		1	ROLLER CHAIN, SINGLE 6MM-168	
580	318800-0103		1	HANDLES,SPHERICAL KNOB,INT.THRE.,D.25-M6	
585	321111-0135		1	FLANGE BUSHING, 10X16X10 MM	
590	321111-0212		1	FLANGE BUSHING, 15X21X15 MM	
600	321308-0101		2	BALL BEARING, 12X28X8 MM	
605	321308-0202		6	BALL BEARING, 15X32X9 MM	
607	321316-0200		2	BALL BEARING, 10X35X11 MM	

Machine Type | Group Description | Used-In | Group Number | Page No

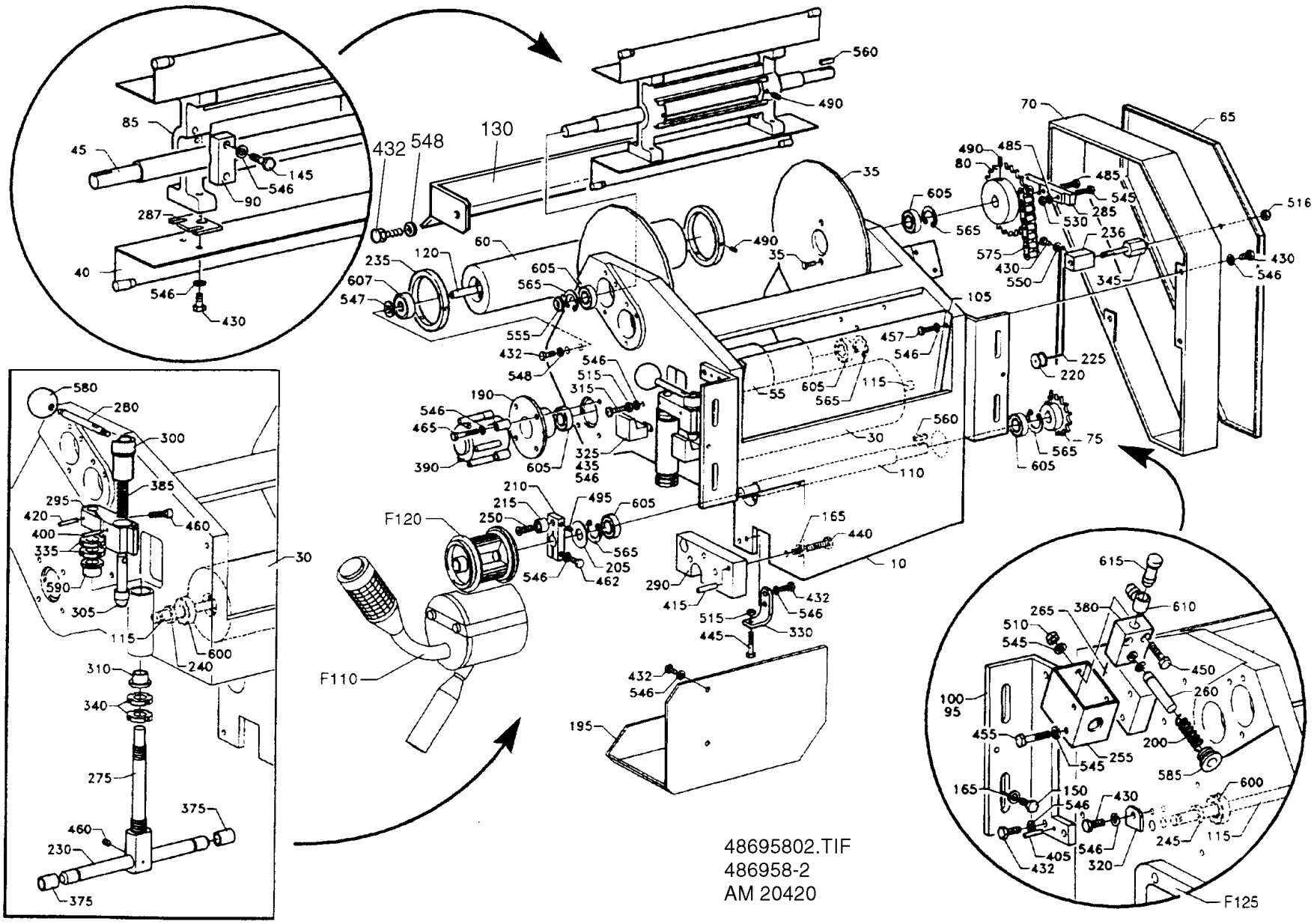
48695802.TIF
486958-2
AM 20420

Pos	Part No	UN	Qty	Description	Page No
Common Parts (Cont'd)					
610	342980-0113		1	BANJO-CONNECTION,RING 6/4-G1/8 INCH	
615	342980-0303		1	BANJO-HOLLOW BOLT COUPL,EXT.THR.01-G1/8	
F125	543143-0100		1	ADJUSTMENT DEVICE	**8-13, 8-15**
F120	293684-0200		2	PRINTING WHEEL NSS	**8-35, 8-37, 12-77, 12-79**
F110	440286-0300		1	INK UNIT NSS	**8-39**

Pos	Part No	UN	Qty	Description	Page No

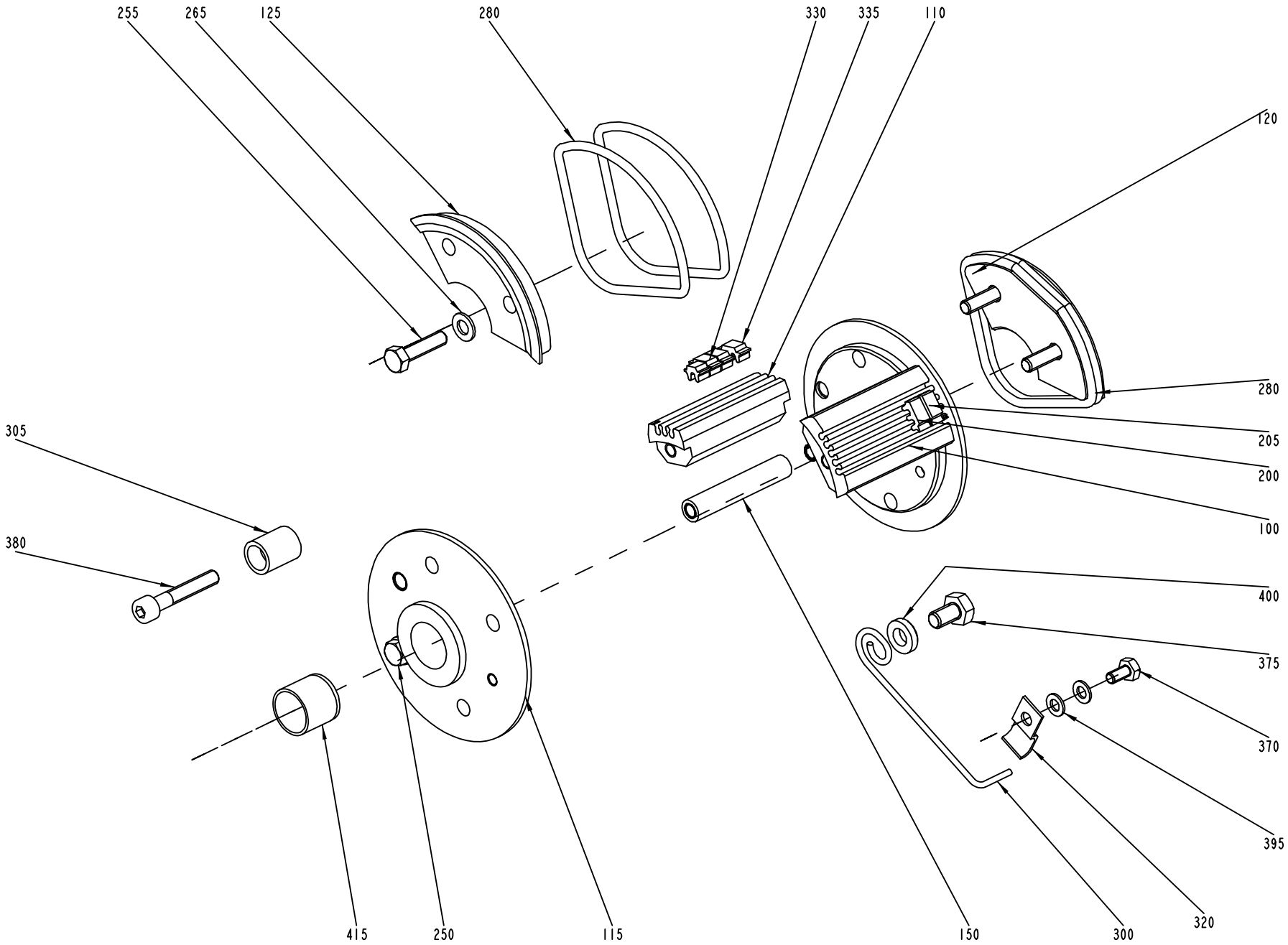
255
265
125
280
330
335
110
120
280
205
200
100
305
380
400
375
370
395
320
300
150
115
250
415

Pos	Part No	UN	Qty	Description	Page No
TB 0300B (See drawing on pages: 8-36, 12-78)					
105	293395-0002		2	TYPE HOLDER	
110	293395-0001		2	TYPE HOLDER	
130	292412-0000		1	END SECTION	
135	292413-0000		1	END SECTION	
145	293659-0000		1	CARRIER	
255	312101-0331		7	SCREW M6S M5X20 FZB	
265	315101-0146		7	WASHER PLAIN, BRB, 5,3/10 H=1	
285	315202-0304		2	O-RING 64,5X3 MM	
410	315202-0305		2	O-RING 69,5X3 MM	
TB 0568B, TB 0500B (See drawing on pages: 8-34, 12-76)					
100	293395-0003		2	TYPE HOLDER	
110	293395-0001		2	TYPE HOLDER	
115	434787-0000		1	END SECTION	
120	292410-0000		1	END SECTION	
155	293676-0000		1	CARRIER	
200	90413-0048		1	CODE INSERT SET A 9/28	
205	90413-0049		1	CODE INSERT SET C 9/28	
255	312101-0331		7	SCREW M6S M5X20 FZB	
265	315101-0146		7	WASHER PLAIN, BRB, 5,3/10 H=1	
285	315202-0304		2	O-RING 64,5X3 MM	
410	315202-0305		2	O-RING 69,5X3 MM	
TB 0500S (See drawing on pages: 8-36, 12-78)					
105	293395-0002		1	TYPE HOLDER	
110	293395-0001		1	TYPE HOLDER	
125	479237-0000		1	CARRIER	
140	479236-0000		2	END SECTION	
145	479238-0000		1	CARRIER	
150	293671-0000		1	SPACER	
250	312101-0329		2	SCREW M6S M5X16 FZB	
255	312101-0331		3	SCREW M6S M5X20 FZB	
265	315101-0146		5	WASHER PLAIN, BRB, 5,3/10 H=1	
275	315202-0224		4	O-RING 42,2X3 MM	
TB 1136B, TB 1500B, TB 0568SQ, TB 0500SQ, TB 1000SQ, TB 1000S, TB 1000B LOFIN (See drawing on pages: 8-34, 12-76)					
100	293395-0003		1	TYPE HOLDER	
110	293395-0001		1	TYPE HOLDER	
115	292409-0000		2	END SECTION	
120	442072-0000		1	CARRIER	
125	292411-0000		1	CARRIER	
150	293671-0000		1	SPACER	
200	90413-0048		1	CODE INSERT SET A 9/28	
205	90413-0049		1	CODE INSERT SET C 9/28	
250	312101-0329		2	SCREW M6S M5X16 FZB	
255	312101-0331		3	SCREW M6S M5X20 FZB	
265	315101-0146		5	WASHER PLAIN, BRB, 5,3/10 H=1	
280	315202-0301		4	O-RING 49,5X3 MM	
TB 1000B HIFIN (See drawing on pages: 8-34, 12-76)					
100	293395-0003		1	TYPE HOLDER	
110	293395-0001		1	TYPE HOLDER	
115	293690-0000		2	END SECTION	
120	442431-0000		1	CARRIER	
125	293688-0000		1	CARRIER	
150	293671-0000		1	SPACER	
200	90413-0048		1	CODE INSERT SET A 9/28	
205	90413-0049		1	CODE INSERT SET C 9/28	
250	312101-0329		2	SCREW M6S M5X16 FZB	
255	312101-0331		3	SCREW M6S M5X20 FZB	
265	315101-0146		5	WASHER PLAIN, BRB, 5,3/10 H=1	
280	315202-0301		4	O-RING 49,5X3 MM	
Common Parts					
300	32691-0000		1	LOCK SPRING	
305	33011-0000		1	SLEEVE	
320	1511572-0000		1	CLIP	
330	90413-0043		1	CODE INSERT SET	
330	90413-0033		1	CODE INSERT SET C 2/16	
335	90413-0044		1	CODE INSERT SET	
335	90413-0047		1	CODE INSERT SET A 2/16	
370	312101-0287		1	SCREW M6S M4X8 FZB	
375	312101-0364		1	SCREW M6S M6X10 FZB	
380	312111-0335		1	SCREW HEX.SOCK.HD.MC6S-TT 5X30 88 FZB	
395	315101-0136		2	WASHER BRB, 4,3/8 H=0,8	
400	315111-0153		1	WASHER PLAIN, TBRB 6,4/12 H=3	
415	321120-0122		2	BEARING BUSH W/O FLANGE, 15X17X15 MM	

PRINTING WHEEL NSS

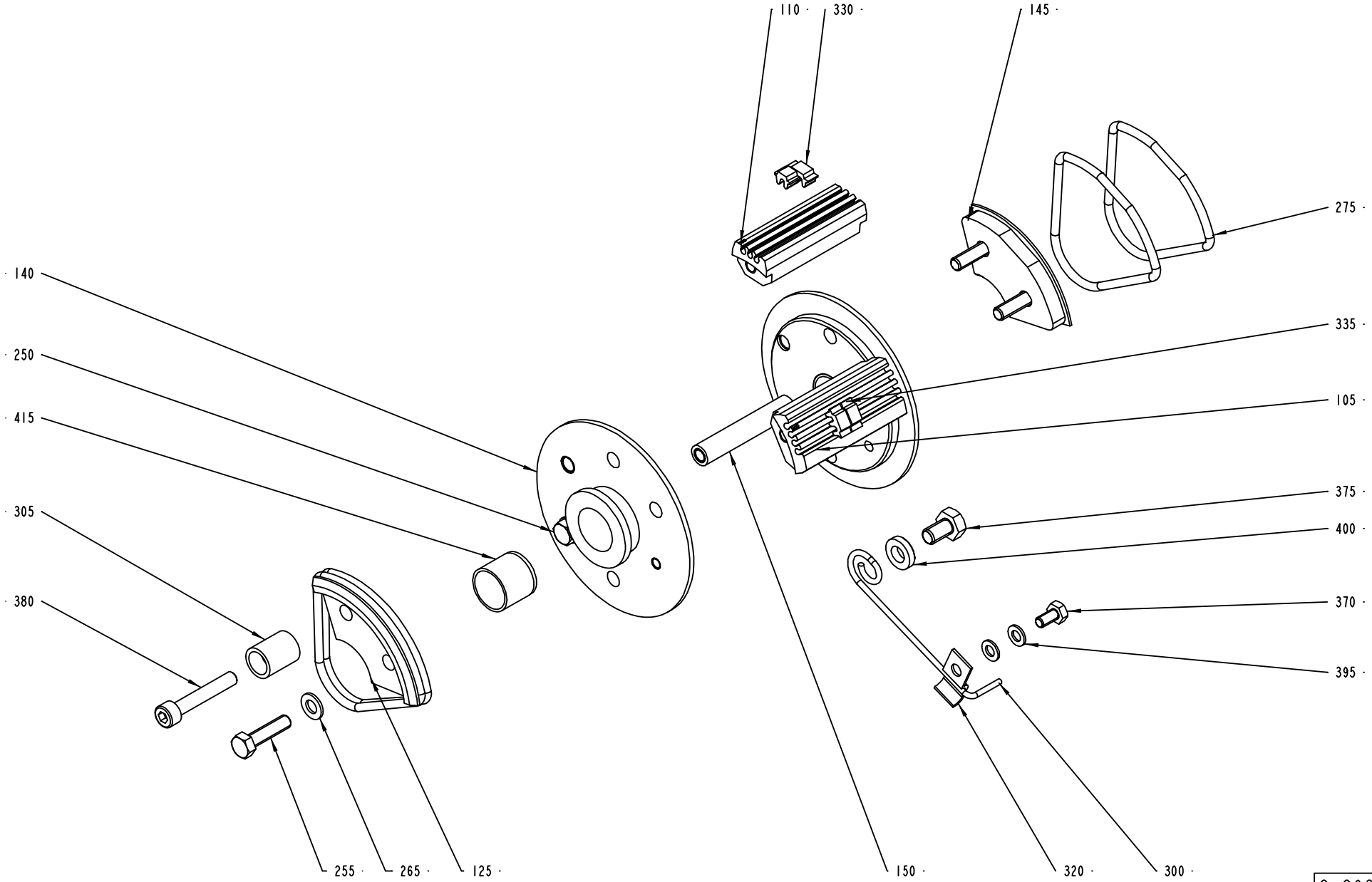

S-293684-4
ECN 73044

ECM: 227528 - 20051011
Group number: 293684-0200
Assembly Drawing: 293684-4_1_AB

This list covers pages from 8-34 to 8-37

Pos	Part No	UN	Qty	Description	Page No
TB 0300B (See drawing on pages: 8-36, 12-78)					
105	293395-0002		2	TYPE HOLDER	
110	293395-0001		2	TYPE HOLDER	
130	292412-0000		1	END SECTION	
135	292413-0000		1	END SECTION	
145	293659-0000		1	CARRIER	
255	312101-0331		7	SCREW M6S M5X20 FZB	
265	315101-0146		7	WASHER PLAIN, BRB, 5,3/10 H=1	
285	315202-0304		2	O-RING 64,5X3 MM	
410	315202-0305		2	O-RING 69,5X3 MM	
TB 0568B, TB 0500B (See drawing on pages: 8-34, 12-76)					
100	293395-0003		2	TYPE HOLDER	
110	293395-0001		2	TYPE HOLDER	
115	434787-0000		1	END SECTION	
120	292410-0000		1	END SECTION	
155	293676-0000		1	CARRIER	
200	90413-0048		1	CODE INSERT SET A 9/28	
205	90413-0049		1	CODE INSERT SET C 9/28	
255	312101-0331		7	SCREW M6S M5X20 FZB	
265	315101-0146		7	WASHER PLAIN, BRB, 5,3/10 H=1	
285	315202-0304		2	O-RING 64,5X3 MM	
410	315202-0305		2	O-RING 69,5X3 MM	
TB 0500S (See drawing on pages: 8-36, 12-78)					
105	293395-0002		1	TYPE HOLDER	
110	293395-0001		1	TYPE HOLDER	
125	479237-0000		1	CARRIER	
140	479236-0000		2	END SECTION	
145	479238-0000		1	CARRIER	
150	293671-0000		1	SPACER	
250	312101-0329		2	SCREW M6S M5X16 FZB	
255	312101-0331		3	SCREW M6S M5X20 FZB	
265	315101-0146		5	WASHER PLAIN, BRB, 5,3/10 H=1	
275	315202-0224		4	O-RING 42,2X3 MM	
TB 1136B, TB 1500B, TB 0568SQ, TB 0500SQ, TB 1000SQ, TB 1000S, TB 1000B LOFIN (See drawing on pages: 8-34, 12-76)					
100	293395-0003		1	TYPE HOLDER	
110	293395-0001		1	TYPE HOLDER	
115	292409-0000		2	END SECTION	
120	442072-0000		1	CARRIER	
125	292411-0000		1	CARRIER	
150	293671-0000		1	SPACER	
200	90413-0048		1	CODE INSERT SET A 9/28	
205	90413-0049		1	CODE INSERT SET C 9/28	
250	312101-0329		2	SCREW M6S M5X16 FZB	
255	312101-0331		3	SCREW M6S M5X20 FZB	
265	315101-0146		5	WASHER PLAIN, BRB, 5,3/10 H=1	
280	315202-0301		4	O-RING 49,5X3 MM	
TB 1000B HIFIN (See drawing on pages: 8-34, 12-76)					
100	293395-0003		1	TYPE HOLDER	
110	293395-0001		1	TYPE HOLDER	
115	293690-0000		2	END SECTION	
120	442431-0000		1	CARRIER	
125	293688-0000		1	CARRIER	
150	293671-0000		1	SPACER	
200	90413-0048		1	CODE INSERT SET A 9/28	
205	90413-0049		1	CODE INSERT SET C 9/28	
250	312101-0329		2	SCREW M6S M5X16 FZB	
255	312101-0331		3	SCREW M6S M5X20 FZB	
265	315101-0146		5	WASHER PLAIN, BRB, 5,3/10 H=1	
280	315202-0301		4	O-RING 49,5X3 MM	
Common Parts					
300	32691-0000		1	LOCK SPRING	
305	33011-0000		1	SLEEVE	
320	1511572-0000		1	CLIP	
330	90413-0043		1	CODE INSERT SET	
330	90413-0033		1	CODE INSERT SET C 2/16	
335	90413-0044		1	CODE INSERT SET	
335	90413-0047		1	CODE INSERT SET A 2/16	
370	312101-0287		1	SCREW M6S M4X8 FZB	
375	312101-0364		1	SCREW M6S M6X10 FZB	
380	312111-0335		1	SCREW HEX.SOCK.HD.MC6S-TT 5X30 88 FZB	
395	315101-0136		2	WASHER BRB, 4,3/8 H=0,8	
400	315111-0153		1	WASHER PLAIN, TBRB 6,4/12 H=3	
415	321120-0122		2	BEARING BUSH W/O FLANGE, 15X17X15 MM	

Machine Type | Group Description | Used-In | Group Number | Page No

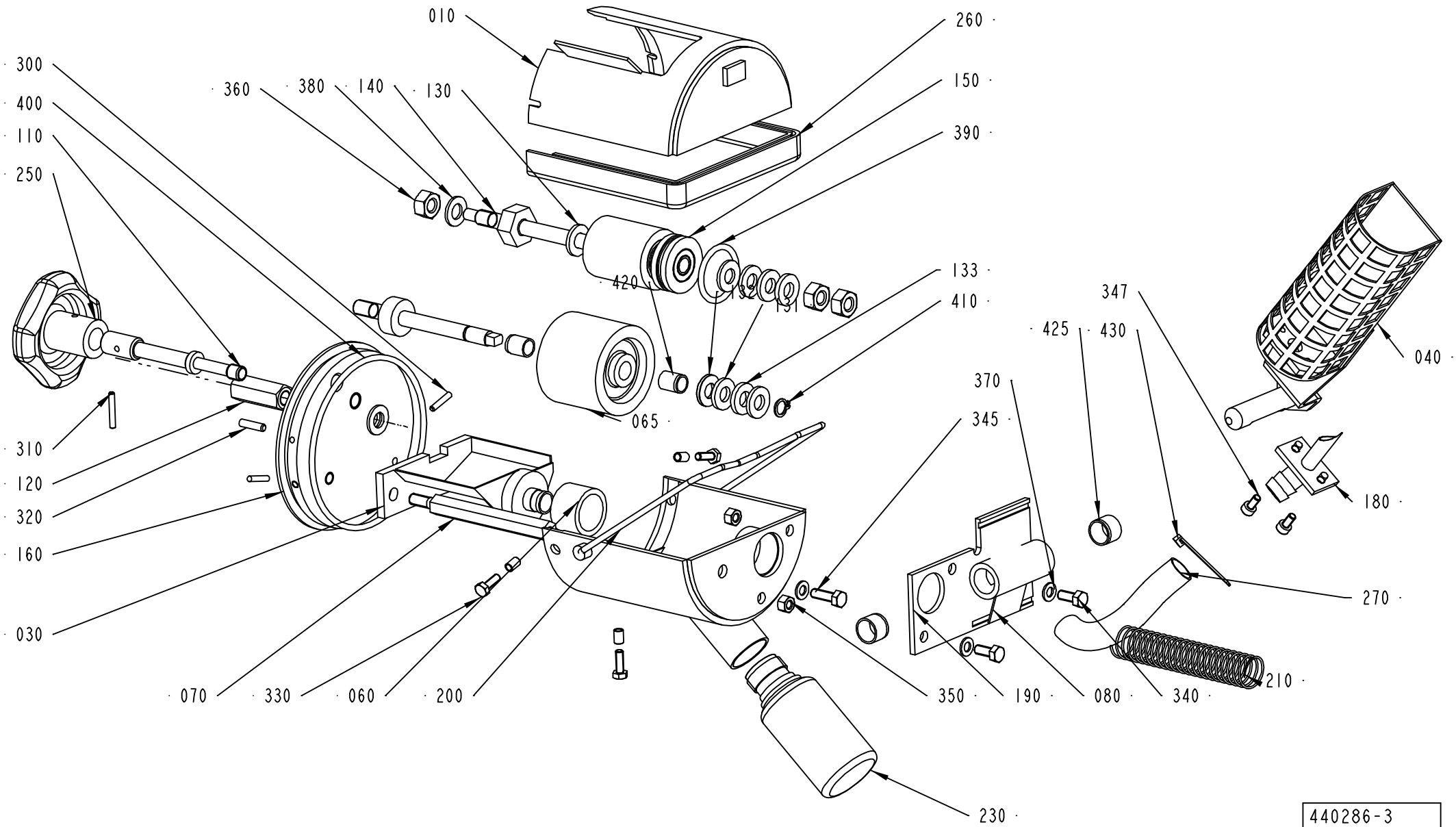

440286-3
ECN 95310

ECM: 180721 - 20040910
Group number: 440286-0300
Assembly Drawing: 440286-3_1_AC

Pos	Part No	UN	Qty	Description	Page No
TB/8					
230	90050-0008		1	BOTTLE	
Common Parts					
010	440287-0000		1	COVER	
030	297211-0000		1	INK WELL	
040	476356-0000		1	HOLDER FOR INK BOTTLE	
060	445542-0000		1	MANTEL RUBBER	
065	450355-0000		1	INK ROLLER	
070	33010-0000		1	SCREW	
080	35547-0000		1	SPRING	
100	292044-0000		1	SHAFT	
110	293667-0000		1	DOWEL	
120	436927-0000		1	NUT	
130	293669-0001		4	WASHER	
131	293669-0002		2	WASHER	
132	293669-0003		2	WASHER	
133	293669-0004		2	WASHER	
140	293670-0000		1	SHAFT	
150	543135-0000		1	INK TRANSFER ROLLER	
	90153-0050		*1*	*ADHESIVE, 3M TYPE SCOTCH-WELD 2216 B/A*	
	321120-0100		*1*	*BEARING BUSH W/O FLANGE, 8X10X12 MM*	
160	293697-0000		1	END SECTION	
180	476354-0000		1	CANNULAR TUBE	
190	456773-0000		1	PIVOT BRACKET	
200	434747-0000		1	BOW CLAMP	
210	537308-0000		1	SPRING	
250	90051-0077		1	HANDLE	
260	90143-0029	MM	295	STRIP	
270	90166-0138	MM	100	HOSE	
280	90299-0072		48	INK	
300	311103-0236		2	PARALLEL PIN ISO 2338 3M6X16 A1	
310	311103-0238		1	PARALLEL PIN ISO 2338 3M6X20 A1	
320	311103-0270		1	PARALLEL PIN ISO 2338 4M6X16 A1	
330	312105-0291		3	SCREW M6S ISO 4017 M4X12 A470	
340	312105-0327		2	SCREW M6S ISO 4017 M5X12 A480	
345	312105-0329		1	SCREW M6S ISO 4017 M5X16 A480	
347	312115-0287		2	SCREW ISO4762 M4X8 A4 80	
350	312605-0314		2	HEXAGON NUT, M6M M5 A280	
360	312605-0318		3	HEXAGON NUT, M6M M8 A280	
370	315105-0146		3	WASHER BRB 5,3X10 RFR	
380	315105-0165		2	WASHER BRB 8,4X16 RFR	
390	315202-0218		1	O-RING 26,2X3 MM	
400	315202-0309		1	O-RING 89,5X3 MM	
410	315750-0105		1	RETAINING RING SHAFT DIN 471 ST 8	
420	321120-0100		2	BEARING BUSH W/O FLANGE, 8X10X12 MM	
425	321120-0109		2	BEARING BUSH W/O FLANGE, 12X14X10 MM	
430	352113-0101		1	CABLE TIE, BLACK 92X2,5 MM	

Machine Type | Group Description | Used-In | Group Number | Page No

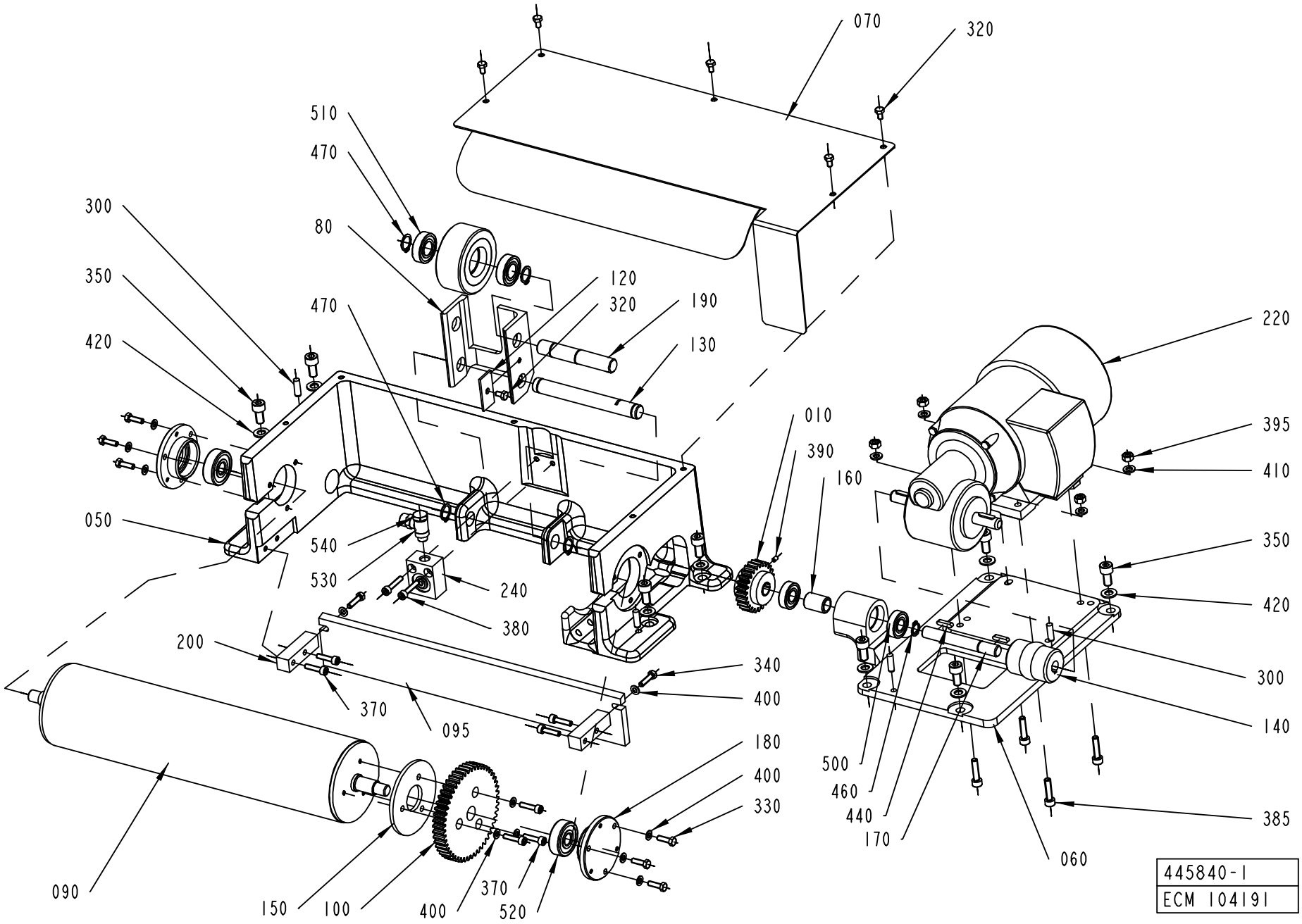
070
320
510
470
300
80
350
120
320
190
470
420
130
220
010
390
395
160
410
050
540
530
240
380
350
420
200
340
400
300
370
095
140
180
400
330
500
460
440
170
385
060
090
150
100
400
370
520
445840-1
ECM 104191

ECM: 128601 - 20060317
Group number: 445840-0100
Assembly Drawing: 445840-1_1_AC

Pos	Part No	UN	Qty	Description	Page No
TB/8 0568B, TB/8 0300B, TB/8 0500B					
010	445854-0001		1	GEAR WHEEL	
050	445841-0000		1	CANTILEVER	
070	450363-0000		1	LID	
TB/8 1500B					
010	445854-0002		1	GEAR WHEEL	
050	593641-0000		1	CANTILEVER	
070	595214-0000		1	LID	
TB/8 1000B, TB/8 1136B					
010	445854-0002		1	GEAR WHEEL	
050	445841-0000		1	CANTILEVER	
070	450363-0000		1	LID	
Common Parts					
060	445842-0000		1	MOTOR PLATE	
080	445837-0000		1	CANTILEVER	
090	445845-0000		1	DRIVE ROLLER	
095	526680-0000		1	FENDER WALING	
100	207019-0003		1	GEAR WHEEL	
110	266710-0000		1	WHEEL	
120	445839-0000		1	SECURING PLATE	
130	445847-0000		1	SHAFT	
140	445848-0000		1	ELASTIC COUPLING	
150	445849-0000		1	SPACER DISC	
160	445850-0000		1	SPACER SLEEVE	
170	445851-0000		1	SHAFT	
180	445852-0000		2	LID	
190	445838-0000		1	SHAFT	
200	476503-0000		2	BRACKET	
220	90069-0116		1	GEARS, WORM MOTOR REPBY 90069-0281	
	90056-0096		*1*	*WORM GEAR E3*	
	90069-0364		*1*	*CARBON BRUSH*	
	90069-0365		*1*	*CARBON BRUSH*	
240	90239-0259		1	CYLINDER	
300	311102-0353		4	PARALLEL PIN ISO 2338 6M6X20 ST	
320	312101-0323		6	SCREW M6S M5X8 FZB	
330	312101-0329		6	SCREW M6S M5X16 FZB	
340	312105-0331		2	SCREW M6S ISO 4017 M5X20 A480	
350	312111-0449		8	SCREW HEX.SOCK.HD.MC6S-TT 8X16 88 FZB	
370	312111-0331		7	SCREW HEX.SOCK.HD.MC6S-TT 5X20 88 FZB	
380	312111-0333		2	SCREW HEX.SOCK.HD.MC6S-TT 5X25 88 FZB	
385	312111-0371		4	SCREW HEX.SOCK.HD.MC6S-TT 6X22 88 FZB	
390	312316-0285		1	SCREW HEX.SOCK.SET CUP P.MSK6SS4X6 FZB	
395	312601-0316		4	HEXAGON NUT, DIN 934 M6 8 FZB	
400	315101-0146		11	WASHER PLAIN, BRB, 5,3/10 H=1	
410	315101-0153		4	WASHER PLAIN, BRB, 6,4/12 H=1,5	
420	315101-0165		8	WASHER PLAIN, BRB, 8,4/16 H=1,5	
440	315701-0169		2	PARALLEL KEY W. ROUND ENDS 4X4X18 MM	
460	315750-0109		1	RETAINING RING SHAFT DIN 471 ST 12	
470	315750-0112		4	RETAINING RING SHAFT DIN 471 ST 15	
500	321308-0201		2	BALL BEARING, 12X28X8 MM	
510	321308-0202		2	BALL BEARING, 15X32X9 MM	
520	321316-0201		2	BALL BEARING, 12X37X12 MM	
530	342980-0113		1	BANJO-CONNECTION,RING 6/4-G1/8 INCH	
540	342980-0303		1	BANJO-HOLLOW BOLT COUPL,EXT.THR.01-G1/8	

Machine Type | Group Description | Used-In | Group Number | Page No

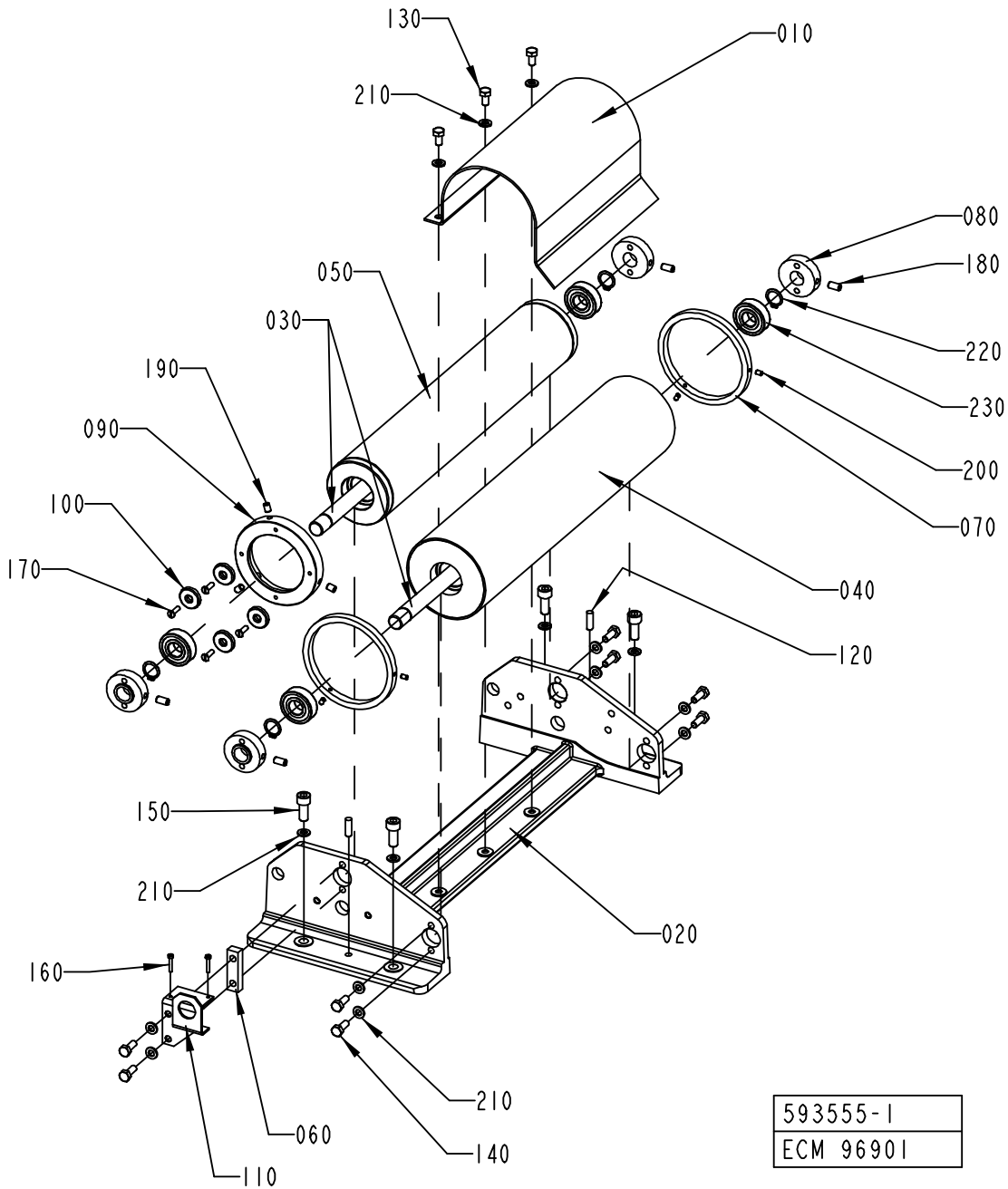
130
010
210
080
180
050
030
220
190
230
090
200
100
070
170
040
120
150
210
020
160
210
060
140
110
593555-1
ECM 96901

ECM: 96903 - 20021112
Group number: 593555-0100
Assembly Drawing: 593555-1_1_AB

Pos	Part No	UN	Qty	Description	Page No
-					
010	927849-0000		1	HEAD PLATE	
020	927850-0000		1	CANTILEVER	
030	593552-0000		2	SHAFT	
040	593553-0000		1	BENDING ROLLER	
050	440136-0009		1	ROLL	
060	593554-0000		1	SPACER	
070	927744-0000		2	FLANGE	
080	440138-0000		4	LOCKING CIRCLIP	
090	440157-0000		1	MAGNET BRACKET	
100	440180-0000		4	WASHER	
110	466469-0000		1	HOLDER	
120	311102-0353		2	PARALLEL PIN ISO 2338 6M6X20 ST	
130	312105-0366		3	SCREW M6S ISO 4017 M6X12 A480	
140	312105-0368		8	SCREW M6S ISO 4017 M6X16 A480	
150	312115-0451		4	SCREW ISO4762 M8X20 A4 80	
160	312125-0228		2	SCREW ISO 1207 M3X16 A4	
170	312145-0292		4	SCREW ISO 2009 MFS M4X14 A4	
180	312306-0366		4	SCREW ISO4026 M6X12 FZB	
190	312316-0362		3	SCREW HEX.SOCK.SET CUP P.MSK6SS6X8 FZB	
200	312318-0285		4	SCREW ISO4029 M4X6 A4	
210	315105-0153		15	WASHER BRB 6,4X12 RFR	
220	315751-0112		4	RETAINING RING FOR SHAFT DIN 471 15 A2	
230	321313-0102		4	BALL BEARING, 15X35X11 MM	

Pos	Part No	UN	Qty	Description	Page No

PAPER REEL HOLDER

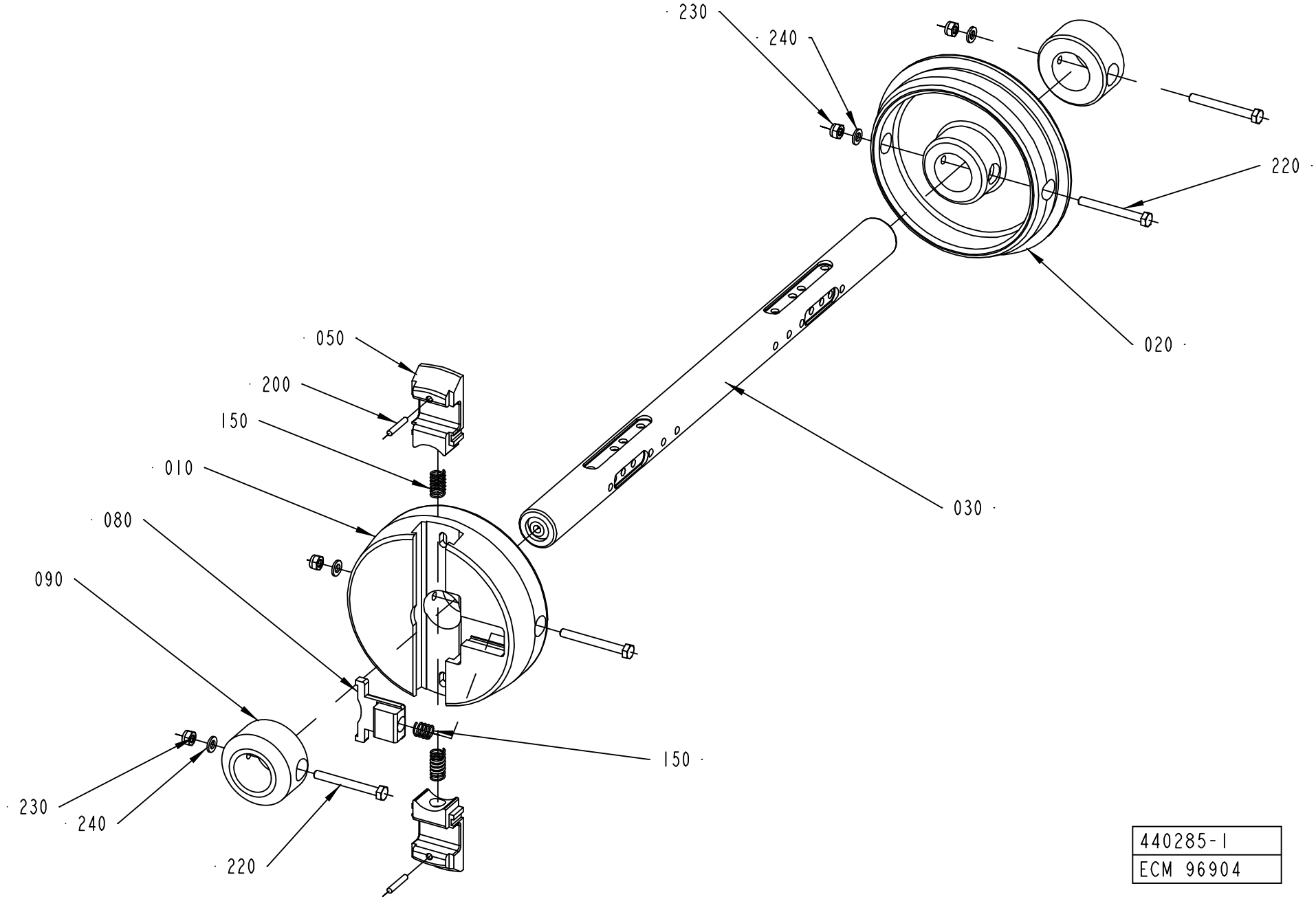

440285-1
ECM 96904

ECM: 197051 - 20041220
Group number: 440285-0100
Assembly Drawing: 440285-1_1_AB

This list covers pages from 8-44 to 8-47

Pos	Part No	UN	Qty	Description	Page No
TB 1500B (See drawing on page: 8-44)					
010	272814-0000		1	SLEEVE	
020	593560-0000		1	SLEEVE	
050	593561-0000		2	PLUNGER	
220	312101-0381		2	SCREW M6S M6X55 FZB	
230	312812-0316		2	HEXAGON NUT, NY-LOCK M6 A480	
240	315101-0153		2	WASHER PLAIN, BRB, 6,4/12 H=1,5	
TB 1136B, TB 0568B, TB 1000B, TB 0500B (See drawing on page: 8-44)					
010	272814-0000		1	SLEEVE	
020	272815-0001		1	SLEEVE	
050	575002-0000		2	PLUNGER	
220	312101-0381		2	SCREW M6S M6X55 FZB	
230	312812-0316		2	HEXAGON NUT, NY-LOCK M6 A480	
240	315101-0153		2	WASHER PLAIN, BRB, 6,4/12 H=1,5	
TB 0500S, TB 0300B (See drawing on page: 8-44)					
010	272814-0000		1	SLEEVE	
020	272815-0001		1	SLEEVE	
050	575002-0000		2	PLUNGER	
090	440259-0000		2	RETAINING RING	
220	312101-0381		4	SCREW M6S M6X55 FZB	
230	312812-0316		4	HEXAGON NUT, NY-LOCK M6 A480	
240	315101-0153		4	WASHER PLAIN, BRB, 6,4/12 H=1,5	
TB 0568SQ, TB 0500SQ, TB 1000SQ (See drawing on page: 8-46)					
010	272814-0000		1	SLEEVE	
020	272815-0001		1	SLEEVE	
050	575002-0000		2	PLUNGER	
090	574051-0000		2	RETAINING RING	
210	311112-0350		2	SPRING PIN, ISO 8752 6X55-C	
220	312101-0381		2	SCREW M6S M6X55 FZB	
230	312812-0316		2	HEXAGON NUT, NY-LOCK M6 A480	
240	315101-0153		2	WASHER PLAIN, BRB, 6,4/12 H=1,5	
TB 1000S (See drawing on page: 8-46)					
010	569944-0000		1	SLEEVE	
020	569945-0000		1	SLEEVE	
050	575003-0000		2	PLUNGER	
220	312101-0381		2	SCREW M6S M6X55 FZB	
230	312812-0316		2	HEXAGON NUT, NY-LOCK M6 A480	
240	315101-0153		2	WASHER PLAIN, BRB, 6,4/12 H=1,5	
Common Parts					
030	440260-0000		1	SHAFT	
080	272728-0000		1	BARRIER	
150	90335-0025		3	COMP. SPRING 22010, 1X11X26	
200	311103-1274		2	PARALLEL PIN ISO 2338 4M6X24 A1	

Machine Type	Group Description	Used-In	Group Number	Page No

PAPER REEL HOLDER

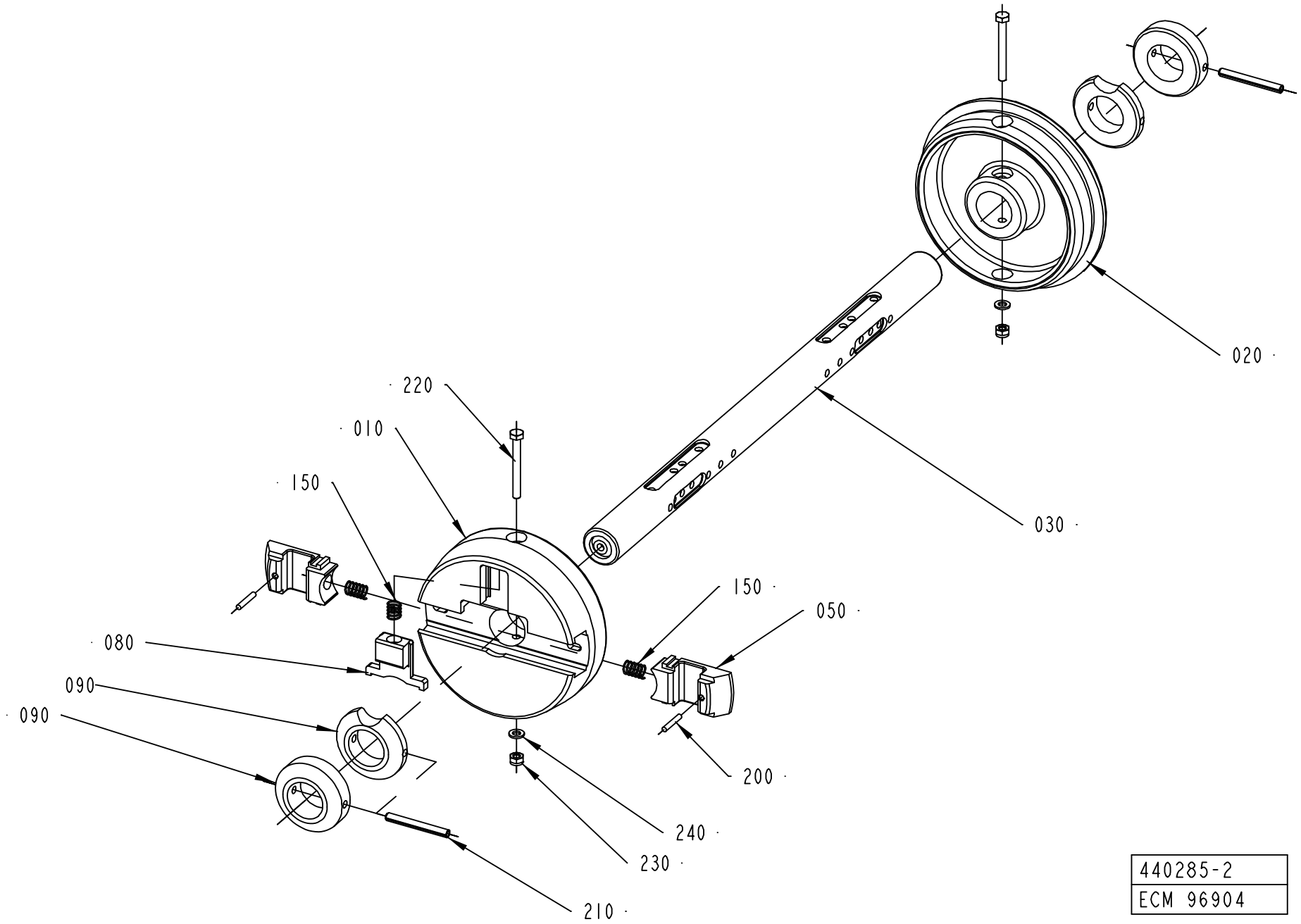

440285-2
ECM 96904

ECM: 197051 - 20041220
Group number: 440285-0100
Assembly Drawing: 440285-2_1_AB

This list covers pages from 8-44 to 8-47

Pos	Part No	UN	Qty	Description	Page No
TB 1500B (See drawing on page: 8-44)					
010	272814-0000		1	SLEEVE	
020	593560-0000		1	SLEEVE	
050	593561-0000		2	PLUNGER	
220	312101-0381		2	SCREW M6S M6X55 FZB	
230	312812-0316		2	HEXAGON NUT, NY-LOCK M6 A480	
240	315101-0153		2	WASHER PLAIN, BRB, 6,4/12 H=1,5	
TB 1136B, TB 0568B, TB 1000B, TB 0500B (See drawing on page: 8-44)					
010	272814-0000		1	SLEEVE	
020	272815-0001		1	SLEEVE	
050	575002-0000		2	PLUNGER	
220	312101-0381		2	SCREW M6S M6X55 FZB	
230	312812-0316		2	HEXAGON NUT, NY-LOCK M6 A480	
240	315101-0153		2	WASHER PLAIN, BRB, 6,4/12 H=1,5	
TB 0500S, TB 0300B (See drawing on page: 8-44)					
010	272814-0000		1	SLEEVE	
020	272815-0001		1	SLEEVE	
050	575002-0000		2	PLUNGER	
090	440259-0000		2	RETAINING RING	
220	312101-0381		4	SCREW M6S M6X55 FZB	
230	312812-0316		4	HEXAGON NUT, NY-LOCK M6 A480	
240	315101-0153		4	WASHER PLAIN, BRB, 6,4/12 H=1,5	
TB 0568SQ, TB 0500SQ, TB 1000SQ (See drawing on page: 8-46)					
010	272814-0000		1	SLEEVE	
020	272815-0001		1	SLEEVE	
050	575002-0000		2	PLUNGER	
090	574051-0000		2	RETAINING RING	
210	311112-0350		2	SPRING PIN, ISO 8752 6X55-C	
220	312101-0381		2	SCREW M6S M6X55 FZB	
230	312812-0316		2	HEXAGON NUT, NY-LOCK M6 A480	
240	315101-0153		2	WASHER PLAIN, BRB, 6,4/12 H=1,5	
TB 1000S (See drawing on page: 8-46)					
010	569944-0000		1	SLEEVE	
020	569945-0000		1	SLEEVE	
050	575003-0000		2	PLUNGER	
220	312101-0381		2	SCREW M6S M6X55 FZB	
230	312812-0316		2	HEXAGON NUT, NY-LOCK M6 A480	
240	315101-0153		2	WASHER PLAIN, BRB, 6,4/12 H=1,5	
Common Parts					
030	440260-0000		1	SHAFT	
080	272728-0000		1	BARRIER	
150	90335-0025		3	COMP. SPRING 22010, 1X11X26	
200	311103-1274		2	PARALLEL PIN ISO 2338 4M6X24 A1	

Machine Type | Group Description | Used-In | Group Number | Page No

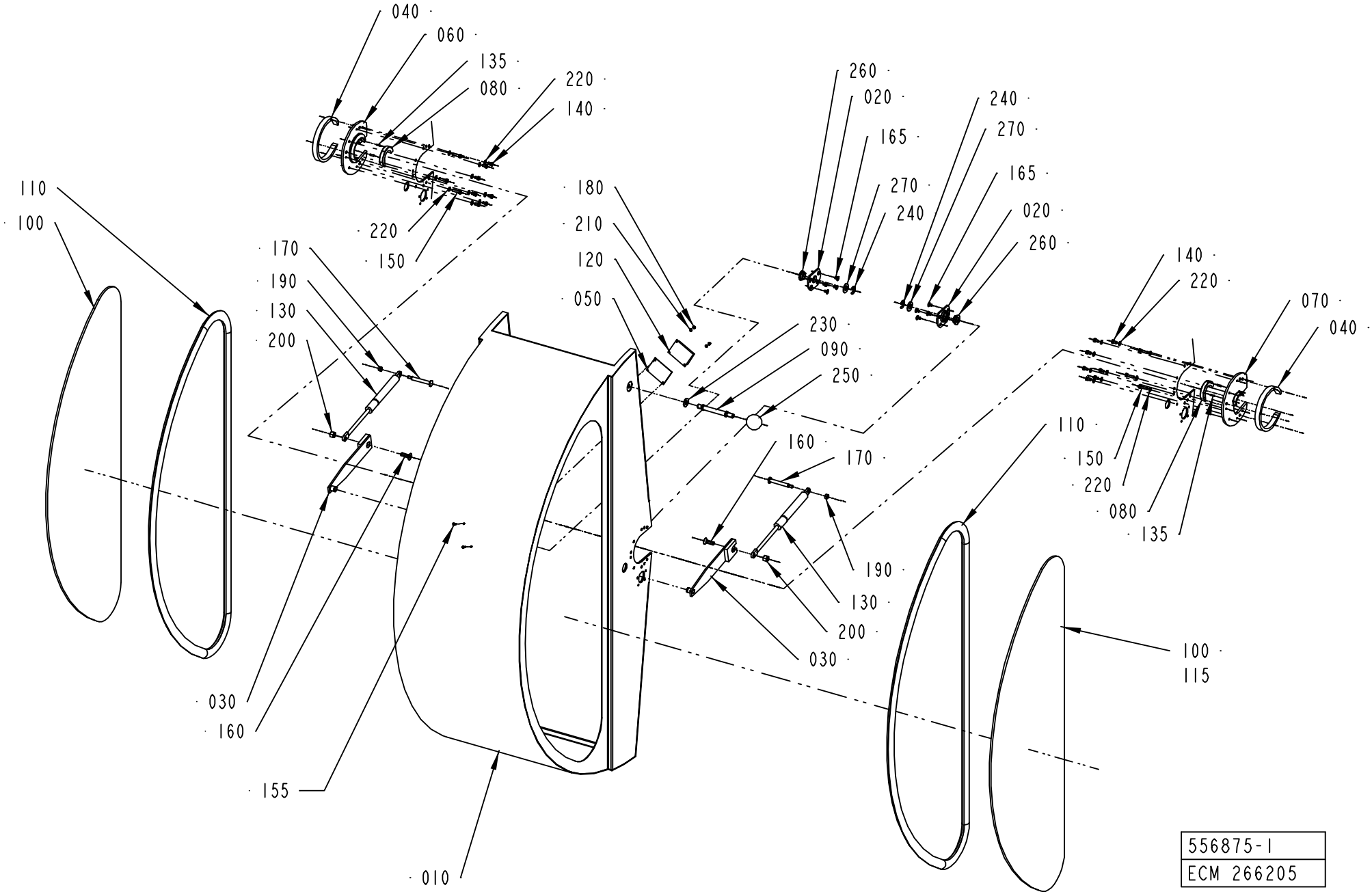
040
060
135
080
220
140
220
150
260
020
165
270
240
270
240
165
020
260
110
100
180
210
120
050
170
190
130
200
230
090
250
140
220
070
040
160
170
110
150
220
080
135
190
130
200
030
030
160
155
010
100
115
556875-1
ECM 266205

ECM: 267467 - 20060614
Group number: 556875-0100
Assembly Drawing: 556875-1_1_AG

Pos	Part No	UN	Qty	Description	Page No
TB 1500B					
010	593564-0000		1	COVER	
100	593565-0000		2	GLASS PANE	
115	90157-0041		1	SEALING COMPOUND, RHODORSEAL 5651	
TB 1136B, TB 0568B, TB 0568SQ, TB 1000B, TB 0500SQ, TB 1000SQ, TB 1000S, TB 0500B, TB 0500S, TB 0300B					
010	556879-0000		1	COVER	
100	440251-0000		2	GLASS PANE	
110	90143-0039	MM	5200	STRIP	
Common Parts					
020	556872-0000		2	BEARING UNIT	
030	556873-0000		2	EXTENSION PIECE	
040	556874-0000		2	BLOCKING RING	
050	1143605-0000		1	SPACER	
060	440247-0000		1	HOLDER	
070	440248-0000		1	HOLDER	
080	440249-0000		2	SLIDE BELT	
090	440250-0000		1	AXLE PIN	
120	90232-0333		1	REFLECTOR E39-R1	
130	90347-0108		2	GAS SPRING NO. 03-08-100-084174	
135	311103-0233		4	PARALLEL PIN ISO 2338 3M6X10 A1	
140	312105-0323		14	SCREW M6S ISO 4017 M5X8 A480	
150	312105-0331		6	SCREW M6S ISO 4017 M5X20 A480	
155	312125-0224		2	SCREW ISO 1207 M3X10 A4	
160	312155-0453		2	SCREW DIN 7991 MF6S M8X25 A4 70	
165	312155-0323		8	SCREW DIN 7991 MF6S M5X8 A4 70	
170	568166-0000		2	REAMED BOLT	
180	312605-0310		2	HEXAGON NUT, M6M M3 A280	
190	312605-0316		2	HEXAGON NUT, M6M M6 A280	
200	312811-0318		2	NUT HEX.LOCK HELI COIL M8 SS	
210	315105-0124		2	WASHER BRB 3,2X7 RFR	
220	315105-0146		20	WASHER BRB 5,3X10 RFR	
230	315105-0173		1	WASHER BRB 10,5X20 RFR	
240	315755-0111		2	RETAINING RING SHAFT DIN 6799 10 A2	
250	318800-0106		1	HANDLE,SPHERICAL KNOB,INT.THRE,D.40-M10	
260	321111-0157		2	FLANGE BUSHING, 12X18X8 MM	
270	321130-0180		2	THRUST WASHER, 12X24X1,5 MM	

Pos	Part No	UN	Qty	Description	Page No

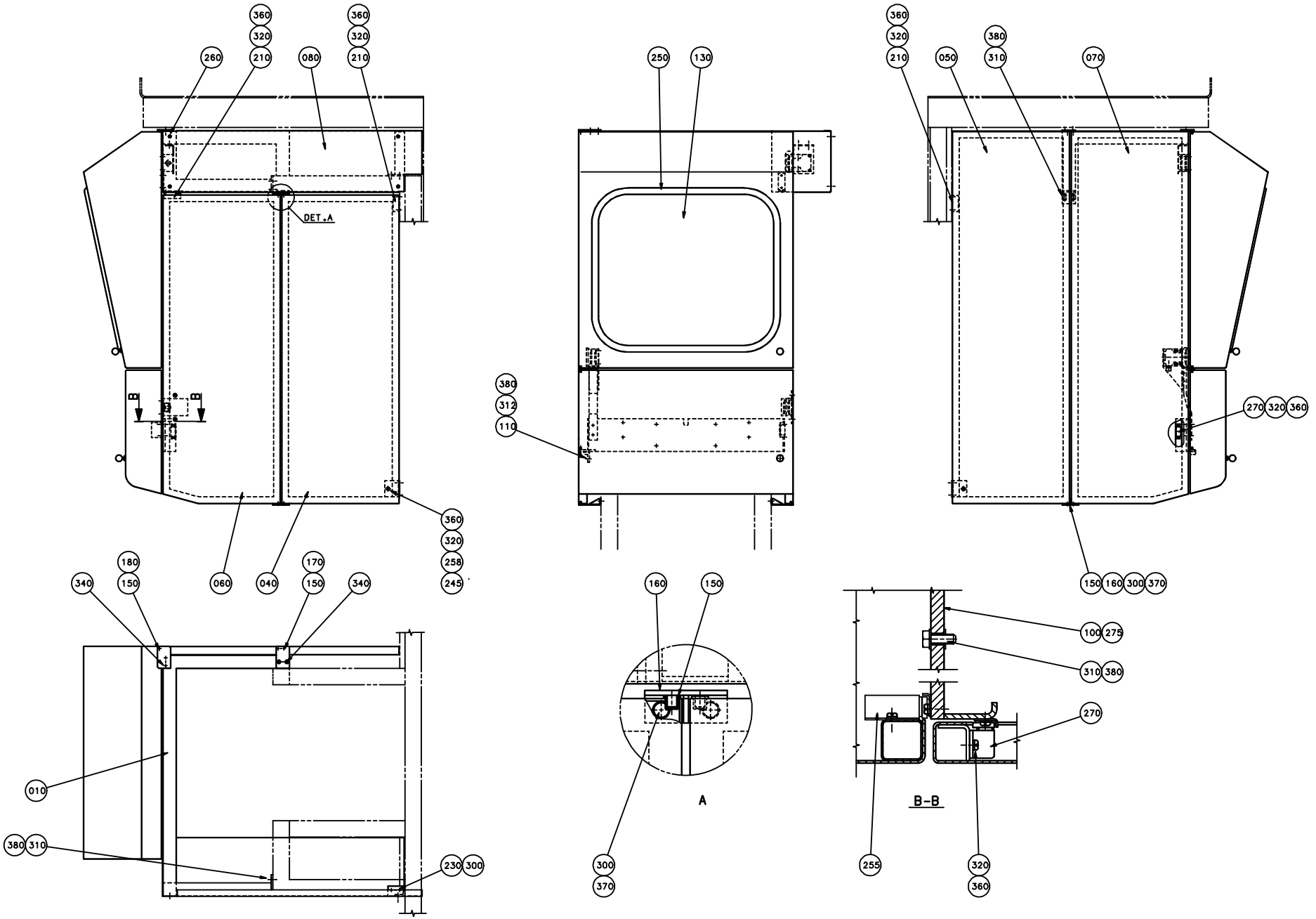
360
320
210
260
080
360
320
210
DET.A
B
B
360
320
258
245
060
040
180
150
170
150
340
340
010
380
310
230
300
250
130
380
312
110
160
150
300
370
A
360
320
210
050
380
310
070
270
320
360
150
160
300
370
100
275
310
380
270
B-B
255
320
360

ECM: 72192 - 19990218
Group number: 530745-0400
Assembly Drawing: 530745-4_1_AA

This list covers pages from 8-50 to 8-53

Pos	Part No	UN	Qty	Description	Page No
-					
010	445861-0000		1	FRAME	
020	571418-0000		1	HOOD	
030	571419-0000		1	HOOD	
040	445863-0000		1	PROTECTION	
050	529498-0000		1	SIDE GUARD RIGHT	
060	573507-0000		1	SIDE GUARD	
070	529476-0000		1	SIDE GUARD	
080	571421-0000		1	COVER	
100	573508-0000		1	MOUNTING BAR	
110	556868-0000		1	ANGLE	
115	571424-0000		1	HINGE	
120	571425-0000		1	BRACKET	
125	572246-0000		1	BRACKET	
130	571423-0000		1	GLASS PANE	
135	576410-0000		1	BRACKET	
150	436991-0000		10	BEARING	
160	445872-0000		3	HINGE	
170	445873-0000		1	HINGE	
180	445874-0000		1	HINGE	
210	445877-0000		3	SUPPORT	
230	445879-0000		1	SUPPORT	
245	525385-0000		2	BRACKET	
247	90044-0103		2	KEY SAFETY SWITCH AZ 15 ZVR-2254	
	90044-0310		*1*	*KEY FOR SAFETY SWITCH AZ 15/16 B1*	
248	90044-0139		1	KEY SAF.SW. AZ16-02 ZVR K-2254 USE 90459	
250	90143-0039	MM	2000	STRIP	
255	90237-0046		2	MAGNETIC LOCK, 46X33X15 MM	
258	90237-0075		2	FAST LOCK, SK-M8	
260	90287-0075		6	SCREW SLOT. PAN HEAD LKCS M6X12	
265	90287-0076		2	SCREW SLOT. PAN HEAD LKCS M6X20	
270	90339-0011		2	MAGNETIC LOCK, 40X18X14 MM	
275	311102-0350		2	PARALLEL PIN ISO 2338 6M6X14 ST	
278	311103-0270		2	PARALLEL PIN ISO 2338 4M6X16 A1	
300	312105-0327		12	SCREW M6S ISO 4017 M5X12 A480	
310	312105-0368		10	SCREW M6S ISO 4017 M6X16 A480	
312	312105-0370		1	SCREW M6S ISO 4017 M6X20 A480	
315	312105-0455		2	SCREW M6S ISO 4017 M8X30 A480	
320	312125-0222		28	SCREW ISO 1207 M3X8 A4	
330	312125-0329		6	SCREW ISO 1207 M5X16 A4	
335	312145-0323		6	SCREW ISO 2009 MFS M5X8 A4	
340	312155-0327		4	SCREW DIN 7991 MF6S M5X12 A4 70	
345	312605-0314		4	HEXAGON NUT, M6M M5 A280	
355	312605-0318		2	HEXAGON NUT, M6M M8 A280	
358	312812-0316		2	HEXAGON NUT, NY-LOCK M6 A480	
360	315105-0124		28	WASHER BRB 3,2X7 RFR	
370	315105-0146		18	WASHER BRB 5,3X10 RFR	
380	315105-0153		17	WASHER BRB 6,4X12 RFR	
390	318800-0104		2	HANDLE,SPHERICAL KNOB,INT.THRE.,D.30-M8	

Machine Type | Group Description | Used-In | Group Number | Page No

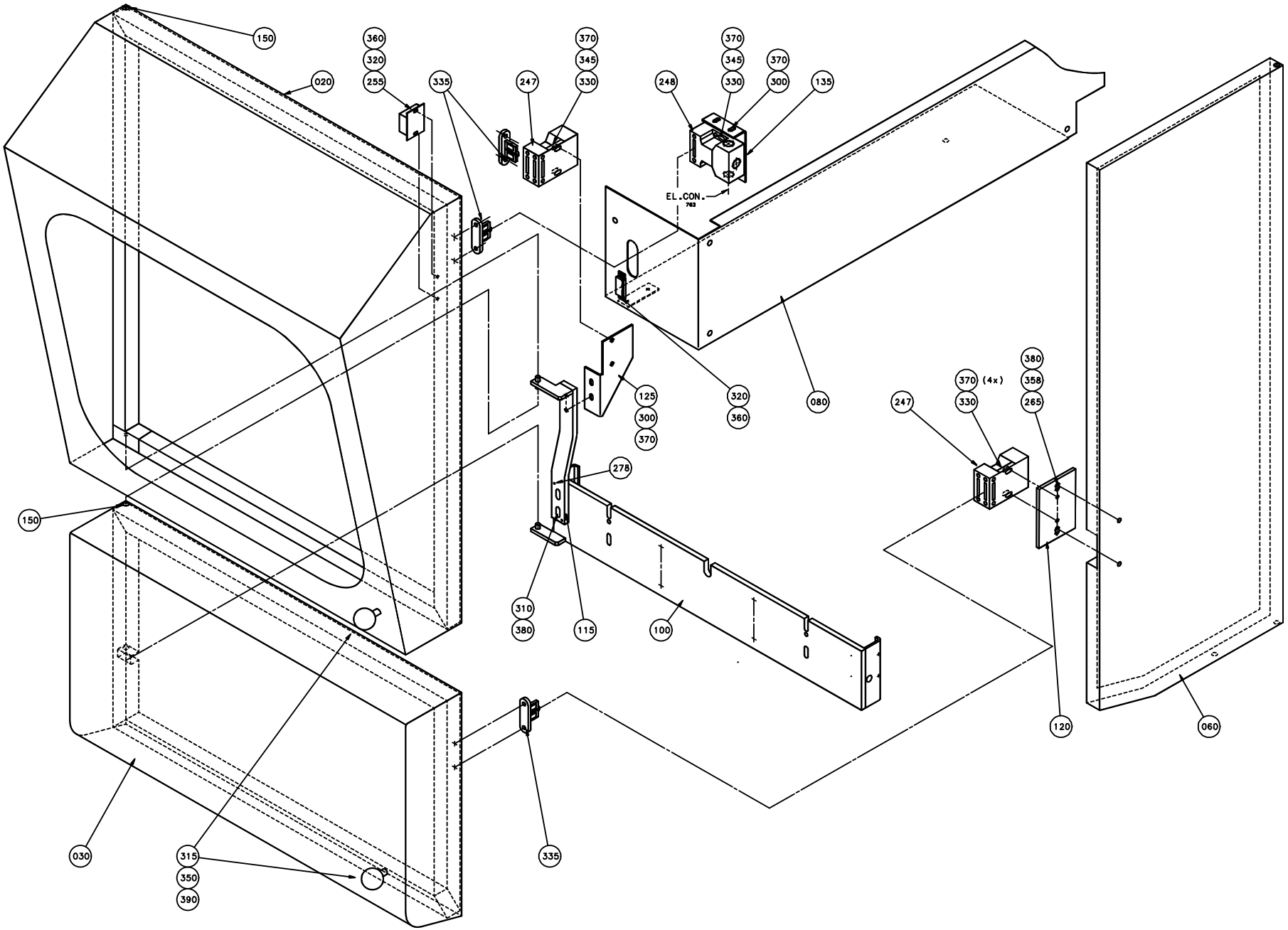
150
020
360
320
255
335
247
370
345
330
248
370
345
330
370
300
135
EL.CON.
080
320
360
125
300
370
278
310
380
115
100
370 (4x)
330
247
380
358
265
120
060
150
030
315
350
390
335

ECM: 72192 - 19990218
Group number: 530745-0400
Assembly Drawing: 530745-5_1_AA

This list covers pages from 8-50 to 8-53

Pos	Part No	UN	Qty	Description	Page No
-					
010	445861-0000		1	FRAME	
020	571418-0000		1	HOOD	
030	571419-0000		1	HOOD	
040	445863-0000		1	PROTECTION	
050	529498-0000		1	SIDE GUARD RIGHT	
060	573507-0000		1	SIDE GUARD	
070	529476-0000		1	SIDE GUARD	
080	571421-0000		1	COVER	
100	573508-0000		1	MOUNTING BAR	
110	556868-0000		1	ANGLE	
115	571424-0000		1	HINGE	
120	571425-0000		1	BRACKET	
125	572246-0000		1	BRACKET	
130	571423-0000		1	GLASS PANE	
135	576410-0000		1	BRACKET	
150	436991-0000		10	BEARING	
160	445872-0000		3	HINGE	
170	445873-0000		1	HINGE	
180	445874-0000		1	HINGE	
210	445877-0000		3	SUPPORT	
230	445879-0000		1	SUPPORT	
245	525385-0000		2	BRACKET	
247	90044-0103		2	KEY SAFETY SWITCH AZ 15 ZVR-2254	
	90044-0310		*1*	*KEY FOR SAFETY SWITCH AZ 15/16 B1*	
248	90044-0139		1	KEY SAF.SW. AZ16-02 ZVR K-2254 USE 90459	
250	90143-0039	MM	2000	STRIP	
255	90237-0046		2	MAGNETIC LOCK, 46X33X15 MM	
258	90237-0075		2	FAST LOCK, SK-M8	
260	90287-0075		6	SCREW SLOT. PAN HEAD LKCS M6X12	
265	90287-0076		2	SCREW SLOT. PAN HEAD LKCS M6X20	
270	90339-0011		2	MAGNETIC LOCK, 40X18X14 MM	
275	311102-0350		2	PARALLEL PIN ISO 2338 6M6X14 ST	
278	311103-0270		2	PARALLEL PIN ISO 2338 4M6X16 A1	
300	312105-0327		12	SCREW M6S ISO 4017 M5X12 A480	
310	312105-0368		10	SCREW M6S ISO 4017 M6X16 A480	
312	312105-0370		1	SCREW M6S ISO 4017 M6X20 A480	
315	312105-0455		2	SCREW M6S ISO 4017 M8X30 A480	
320	312125-0222		28	SCREW ISO 1207 M3X8 A4	
330	312125-0329		6	SCREW ISO 1207 M5X16 A4	
335	312145-0323		6	SCREW ISO 2009 MFS M5X8 A4	
340	312155-0327		4	SCREW DIN 7991 MF6S M5X12 A4 70	
345	312605-0314		4	HEXAGON NUT, M6M M5 A280	
355	312605-0318		2	HEXAGON NUT, M6M M8 A280	
358	312812-0316		2	HEXAGON NUT, NY-LOCK M6 A480	
360	315105-0124		28	WASHER BRB 3,2X7 RFR	
370	315105-0146		18	WASHER BRB 5,3X10 RFR	
380	315105-0153		17	WASHER BRB 6,4X12 RFR	
390	318800-0104		2	HANDLE,SPHERICAL KNOB,INT.THRE.,D.30-M8	

Machine Type | Group Description | Used-In | Group Number | Page No

MACHINE BODY

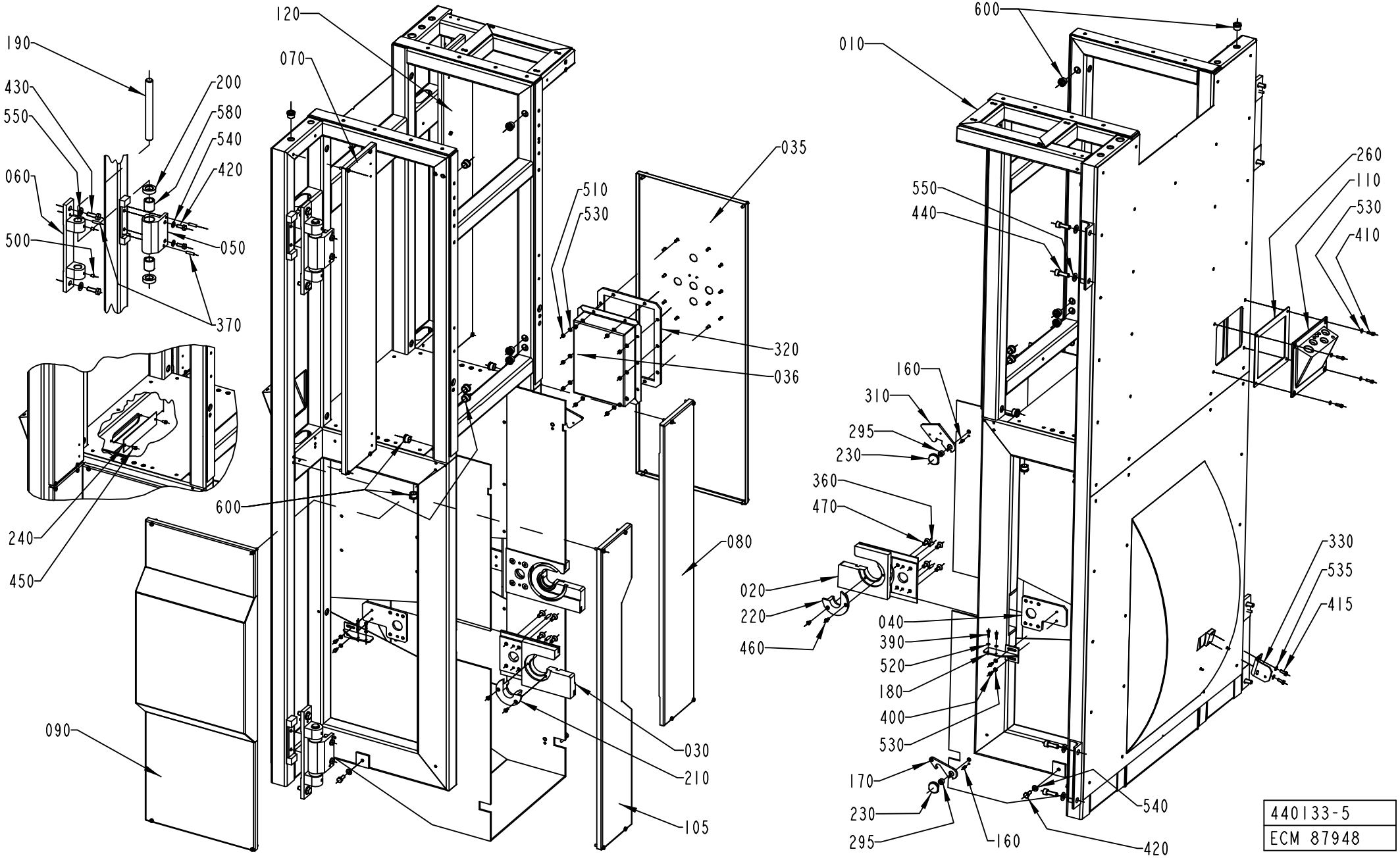

ECM: 104557 - 20021112
Group number: 440133-0400
Assembly Drawing: 440133-5_1_AE

Pos	Part No	UN	Qty	Description	Page No
-					
010	531337-0000		1	MACHINE BODY	
020	440185-0000		1	HOLDER	
030	440186-0000		1	HOLDER	
035	549830-0000		1	PROTECTION PLATE	
036	532026-0000		1	SEAL COVER	
040	440192-0000		2	BRACKET	
050	440195-0000		2	JOINT	
060	440196-0000		2	HANGER	
070	440199-0000		1	PROTECTION PLATE	
080	440200-0000		1	PROTECTION PLATE	
090	440202-0000		1	PROTECTION PLATE	
105	445857-0000		1	PROTECTION PLATE	
110	464141-0000		1	LEAD-IN PLATE	
120	445935-0000		1	PROTECTION PLATE	
160	1013-0000		2	SHAFT	
170	476117-0000		1	CATCH	
180	440193-0000		2	HOLDER	
190	440197-0000		2	SHAFT	
200	440198-0000		4	WASHER	
210	440252-0000		1	SLEEVE	
220	440253-0000		1	SLEEVE	
230	440271-0000		2	SCREW	
240	445934-0000		1	LID	
260	445929-0000		1	GASKET	
295	457358-0000		2	SLEEVE	
310	568167-0000		1	CATCH	
320	532024-0000		1	GASKET	
330	1195094-0000		1	BRACKET	
360	311103-0353		4	PARALLEL PIN ISO 2338 6M6X20 A1	
370	311103-0355		6	PARALLEL PIN ISO 2338 6M6X25 A1	
390	312105-0293		4	SCREW M6S ISO 4017 M4X16 A470	
400	312105-0325		4	SCREW M6S ISO 4017 M5X10 A480	
410	312105-0329		4	SCREW M6S ISO 4017 M5X16 A480	
415	312105-0368		2	SCREW M6S ISO 4017 M6X16 A480	
420	312105-0451		6	SCREW M6S ISO 4017 M8X20 A480	
430	312105-0495		4	SCREW M6S ISO 4017 M10X30 A480	
440	312115-0495		4	SCREW ISO4762 M10X30 A4 80	
450	312125-0323		2	SCREW ISO 1207 M5X8 A4	
460	312155-0327		4	SCREW DIN 7991 MF6S M5X12 A4 70	
470	312155-0451		8	SCREW DIN 7991 MF6S M8X20 A4 70	
500	312318-0362		4	SCREW ISO4029 M6X8 A4	
510	312605-0314		10	HEXAGON NUT, M6M M5 A280	
520	315105-0136		4	WASHER BRB 4,3X9 RFR	
530	315105-0146		18	WASHER BRB 5,3X10 RFR	
535	315105-0153		2	WASHER BRB 6,4X12 RFR	
540	315105-0165		6	WASHER BRB 8,4X16 RFR	
550	315105-0173		8	WASHER BRB 10,5X20 RFR	
580	321105-0234		4	BEARING BUSH W/O FLANGE, 20X28X30 MM	
600	352101-0103		18	LEAD-IN, PR18,6/PG11, E-1457518	

Machine Type | Group Description | Used-In | Group Number | Page No

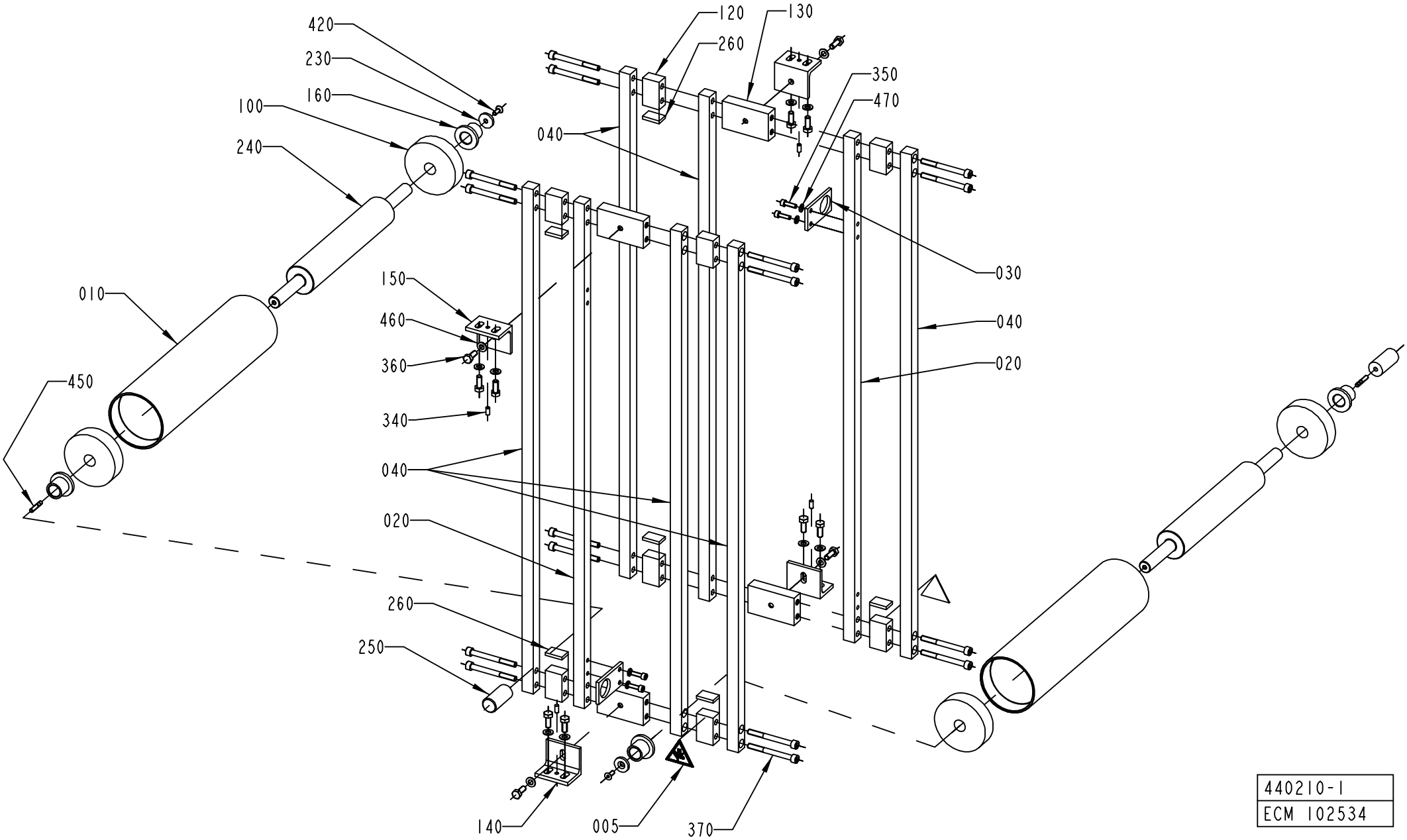

440210-1
ECM 102534

ECM: 197053 - 20041220
Group number: 440210-0200
Assembly Drawing: 440210-1_1_AE

This list covers pages from 8-56 to 8-59

Pos	Part No	UN	Qty	Description	Page No
TB/8 1500B (See drawing on page: 8-56)					
130	440213-0000		4	LUG	
240	476401-0000		2	SHAFT	
460	315105-0165		12	WASHER BRB 8,4X16 RFR	
TB/8 0568SQ, TB/8 1000B, TB/8 0568B, TB/8 1000SQ, TB/8 1000S, TB/8 0300B, TB/8 0500SQ, TB/8 0500S, TB/8 0500B, TB/8 1136B (See drawing on page: 8-58)					
015	265564-0000		1	BENDING ROLLER	
050	548696-0000		2	SHAFT	
060	549827-0000		2	LUG	
130	440213-0000		2	LUG	
270	548699-0000		1	SHAFT	
280	549826-0000		2	WASHER	
290	549828-0000		2	CAP	
365	312105-0466		4	SCREW M6S ISO 4014 M8X75 A480	
460	315105-0165		16	WASHER BRB 8,4X16 RFR	
480	321313-0102		2	BALL BEARING, 15X35X11 MM	
Common Parts					
005	359705-0005		2	WARNING SIGN ISO, MOVING PART	
010	226097-0002		2	BENDING ROLLER	
020	440211-0000		2	GUIDE	
030	2554286-0000		2	HOLDER	
040	476556-0000		6	GUIDE	
100	226098-0000		4	BEARING	
120	440212-0000		8	LUG	
140	440214-0000		2	HOLDER	
150	440215-0000		2	HOLDER	
160	440217-0000		4	BUSHING	
230	445926-0000		2	WASHER	
250	476015-0000		2	DOWEL	
260	476016-0000		6	RUBBER	
340	311103-0350		4	PARALLEL PIN ISO 2338 6M6X14 A1	
350	312115-0370		4	SCREW ISO4762 M6X20 A4 80	
360	312105-0451		12	SCREW M6S ISO 4017 M8X20 A480	
370	312111-0467		16	SCREW HEX.SOCK.HD.MC6S-TT 8X80 88 FZB	
420	312155-0368		2	SCREW DIN 7991 MF6S M6X16 A4 70	
450	312303-0374		2	SCREW DIN 938 PS M6X25 A4 80	
470	315105-0153		4	WASHER BRB 6,4X12 RFR	

Pos	Part No	UN	Qty	Description	Page No

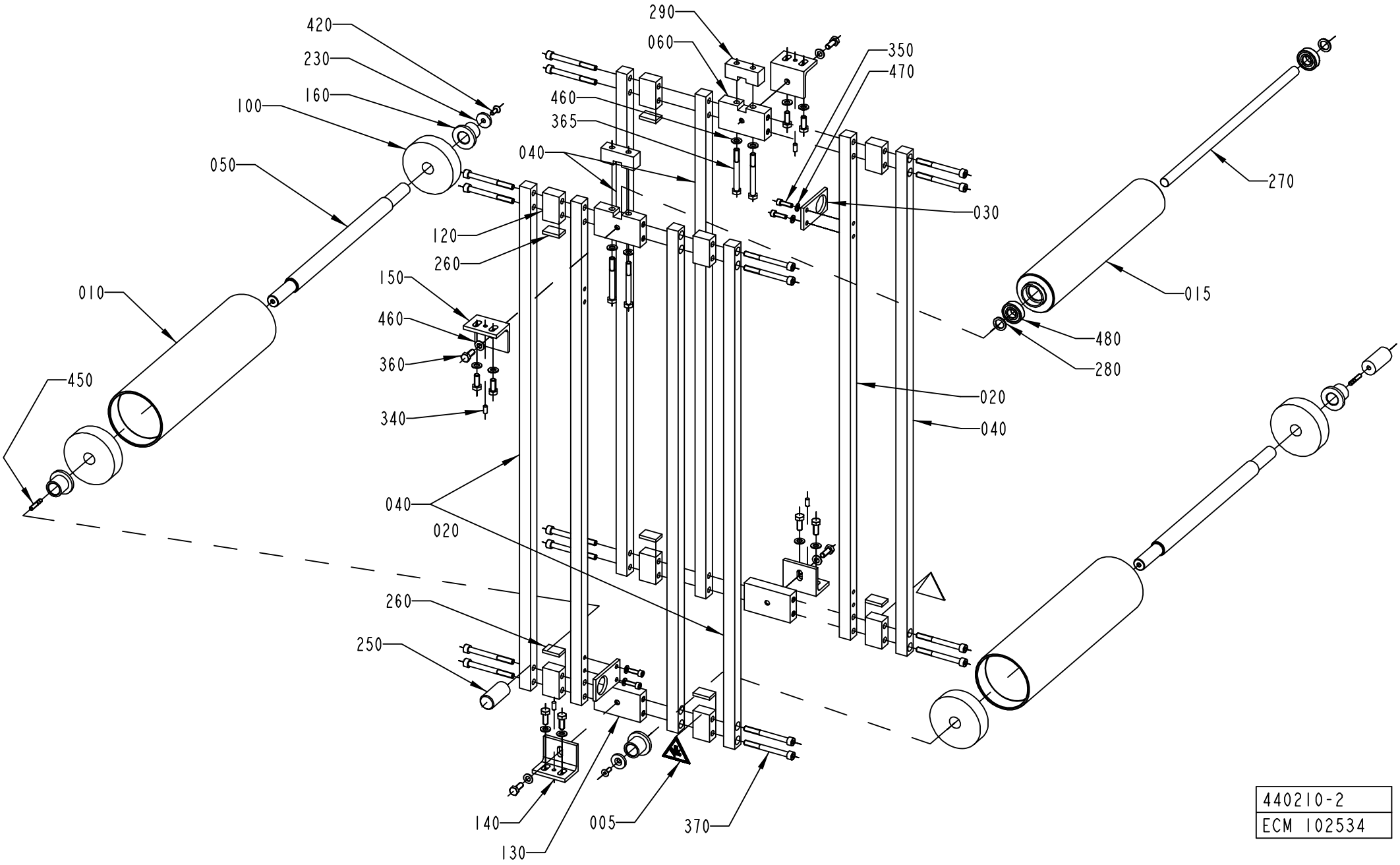

440210-2
ECM 102534

ECM: 197053 - 20041220
Group number: 440210-0200
Assembly Drawing: 440210-2_1_AE

This list covers pages from 8-56 to 8-59

Pos	Part No	UN	Qty	Description	Page No
TB/8 1500B (See drawing on page: 8-56)					
130	440213-0000		4	LUG	
240	476401-0000		2	SHAFT	
460	315105-0165		12	WASHER BRB 8,4X16 RFR	
TB/8 0568SQ, TB/8 1000B, TB/8 0568B, TB/8 1000SQ, TB/8 1000S, TB/8 0300B, TB/8 0500SQ, TB/8 0500S, TB/8 0500B, TB/8 1136B (See drawing on page: 8-58)					
015	265564-0000		1	BENDING ROLLER	
050	548696-0000		2	SHAFT	
060	549827-0000		2	LUG	
130	440213-0000		2	LUG	
270	548699-0000		1	SHAFT	
280	549826-0000		2	WASHER	
290	549828-0000		2	CAP	
365	312105-0466		4	SCREW M6S ISO 4014 M8X75 A480	
460	315105-0165		16	WASHER BRB 8,4X16 RFR	
480	321313-0102		2	BALL BEARING, 15X35X11 MM	
Common Parts					
005	359705-0005		2	WARNING SIGN ISO, MOVING PART	
010	226097-0002		2	BENDING ROLLER	
020	440211-0000		2	GUIDE	
030	2554286-0000		2	HOLDER	
040	476556-0000		6	GUIDE	
100	226098-0000		4	BEARING	
120	440212-0000		8	LUG	
140	440214-0000		2	HOLDER	
150	440215-0000		2	HOLDER	
160	440217-0000		4	BUSHING	
230	445926-0000		2	WASHER	
250	476015-0000		2	DOWEL	
260	476016-0000		6	RUBBER	
340	311103-0350		4	PARALLEL PIN ISO 2338 6M6X14 A1	
350	312115-0370		4	SCREW ISO4762 M6X20 A4 80	
360	312105-0451		12	SCREW M6S ISO 4017 M8X20 A480	
370	312111-0467		16	SCREW HEX.SOCK.HD.MC6S-TT 8X80 88 FZB	
420	312155-0368		2	SCREW DIN 7991 MF6S M6X16 A4 70	
450	312303-0374		2	SCREW DIN 938 PS M6X25 A4 80	
470	315105-0153		4	WASHER BRB 6,4X12 RFR	

Pos	Part No	UN	Qty	Description	Page No

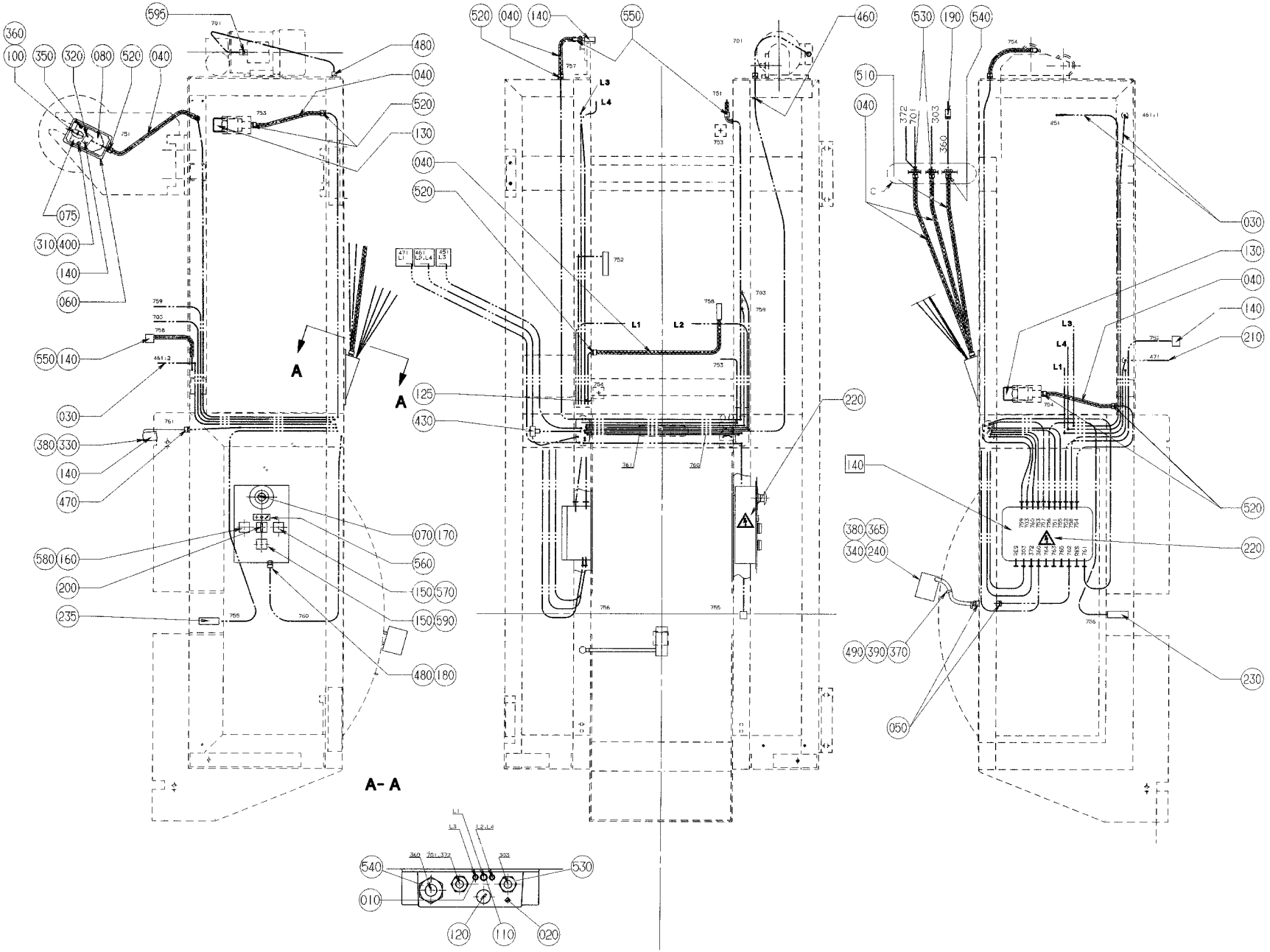
595
360
100
350
320
080
520
040
480
040
520
130
040
520
075
310
400
140
060
550
140
030
380
330
140
470
580
160
200
235
070
170
560
150
570
150
590
480
180
A
A
125
430
520
040
140
550
460
L3
L4
L1
L2
530
190
540
510
040
372
701
303
360
030
130
040
140
210
220
140
380
365
340
240
490
390
370
050
230
A- A
540
530
010
120
110
020

ECM: 72192 - 19990218
Group number: 445920-0600
Assembly Drawing: 445920-14_1_AB

This list covers pages from 8-60 to 8-65

Pos	Part No	UN	Qty	Description	Page No
TB/8 1500B (See drawing on page: 8-60)					
010	445844-0000		2	SLEEVE	
020	458362-0000		1	PLUG	
050	352101-0103		4	LEAD-IN, PR18,6/PG11, E-1457518	
TB/8 0568SQ, TB/8 1000B, TB/8 0568B, TB/8 1000SQ, TB/8 1000S, TB/8 0300B, TB/8 0500SQ, TB/8 0500S, TB/8 0500B, TB/8 1136B (See drawing on page: 8-62)					
010	445844-0000		3	SLEEVE	
050	352101-0103		8	LEAD-IN, PR18,6/PG11, E-1457518	
Common Parts					
030	90166-0081	MM	7800	TUBE 6 MM PA BLUE	
040	352135-0106	MM	4100	SPIRAL CONDUIT DI=16 MM	
060	466337-0000		1	CONNECTION BOX	
070	486826-0001		1	SIGN "EMERGENCY STOP"	
075	529456-0000		1	PLATE	
080	529455-0000		1	PLATE	
100	440256-0000		1	ARM	
110	445846-0000		1	SLEEVE	
120	90002-0004		1	BLANK-OFF PLUG, PR 22,5 SKINDICHT-BLK16	
125	90002-0009		1	BLANK-OFF PLUG, PR 18.6 SKINDICHT-BLK11	
130	90044-0122		2	PROX.SW. 922AA4XM-A9P-050-LZ-87	
140	90044-0104		5	PROX.SWITCH IFM IN 3002(RP 90044-194)	
140	532151-0300		1	CONNECTION BOX	**8-67**
150	90064-0084		2	PUSH BUTTON, YELLOW	
160	90064-0085		1	PUSH BUTTON, RED	
170	90064-0124		1	SWITCH, EM. STOP, ZB2-BS844+ZB2-BZ1045	
180	90099-0003		1	NUT PR 22,5	
190	90110-0128		1	MALE INSERT HAN 24 E-M 65330242631	
200	90111-0150		1	SWITCH GEAR, 704.502 .0+704.901.3	
205	90152-0033	DM	30	SPIRAL CONDUIT FOR PR 15,2(PG 9)	
210	90166-0013	DM	25	TUBE 8 MM PA BLUE	
220	90194-0016		2	WARNING SIGN, RISK OF ELECTRIC SHOCK	
230	90232-0103		1	PH.CELL E3S-CT61-L-5M	
235	90232-0104		1	PH.CELL E3S-CT61-D-5M	
240	90232-0106		1	PH.CELL E3S-CR11-5M	
310	312111-0323		2	SCREW HEX.SOCK.HD.MC6S-TT 5X8 88 FZB	
320	312121-0228		2	SCREW ISO 1207 M3X16 4.8 - 5.8 Z.PL.	
330	312125-0228		2	SCREW ISO 1207 M3X16 A4	
340	312125-0234		2	SCREW ISO 1207 M3X30 A4	
345	312125-0323		2	SCREW ISO 1207 M5X8 A4	
350	312155-0329		3	SCREW DIN 7991 MF6S M5X16 A4 70	
360	312316-0360		1	SCREW HEX.SOCK.SET CUP P.MSK6SS6X6 FZB	
365	312605-0310		2	HEXAGON NUT, M6M M3 A280	
370	312605-0312		3	HEXAGON NUT, M6M M4 A280	
380	315105-0124		6	WASHER BRB 3,2X7 RFR	
390	315101-0136		2	WASHER BRB, 4,3/8 H=0,8	
400	315105-0146		2	WASHER BRB 5,3X10 RFR	
430	342946-0112		1	T-COUPLING,UNION 6/4	
460	352101-0105		1	LEAD-IN, PR22,5/PG16, E-1457522	
470	352103-0100		1	CABLE GLAND, STR 9, PR15,2/PG9	
480	352103-0111		2	CABLE GLAND, ST 16, PR22,5/PG16	
490	352110-0099		3	CABLE CLIPS, D=3-5 MM	
500	352113-0204		2	ANCHOR PLATES FOR STRIPS, TYPE TM3S25-M	
510	352135-0109	DM	10	HOSE .022	
515	352136-0113		5	GLAND FITTING PR18,6/PG11 DI=12MM	
520	352136-0127		7	GLAND FITTING PR 18,6	
530	352136-0129		4	GLAND FITTING PR22,5/PG16 DI=16MM	
540	352136-0143		2	GLAND FITTING	
545	352137-0113		1	COND.FITTING PR 18,6 DI=12MM	
550	352137-0127		3	COND.FITTING PR 18,6 DI=16MM	
560	359241-0269		1	SIGN: " SMALL ROLL LARGE ROLL LOW FOR...	
570	359301-0100		1	BUTTON SIGN, SPLICING	
580	359301-0110		1	BUTTON SIGN, SHORT STOP	
590	359301-0335		1	BUTTON SIGN, ROLL FEED	
595	90012-0137		1	GLAND, EXTENDED WITH INSERT, PG11	

Machine Type | Group Description | Used-In | Group Number | Page No

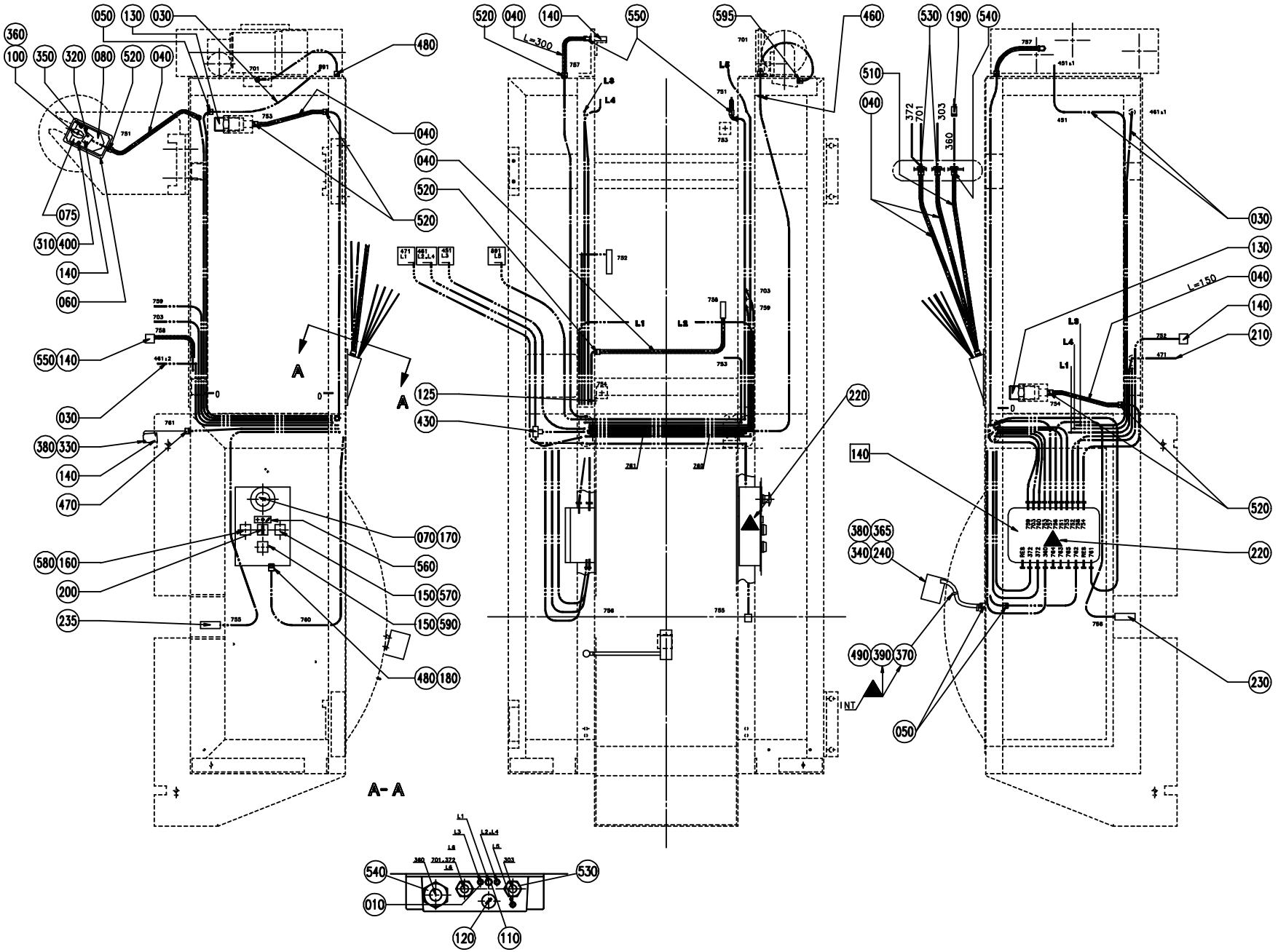
A
A
A- A
L=300
L=150
NT

ECM: 72192 - 19990218
Group number: 445920-0600
Assembly Drawing: 445920-15_1_AB

This list covers pages from 8-60 to 8-65

Pos	Part No	UN	Qty	Description	Page No
TB/8 1500B (See drawing on page: 8-60)					
010	445844-0000		2	SLEEVE	
020	458362-0000		1	PLUG	
050	352101-0103		4	LEAD-IN, PR18,6/PG11, E-1457518	
TB/8 0568SQ, TB/8 1000B, TB/8 0568B, TB/8 1000SQ, TB/8 1000S, TB/8 0300B, TB/8 0500SQ, TB/8 0500S, TB/8 0500B, TB/8 1136B (See drawing on page: 8-62)					
010	445844-0000		3	SLEEVE	
050	352101-0103		8	LEAD-IN, PR18,6/PG11, E-1457518	
Common Parts					
030	90166-0081	MM	7800	TUBE 6 MM PA BLUE	
040	352135-0106	MM	4100	SPIRAL CONDUIT DI=16 MM	
060	466337-0000		1	CONNECTION BOX	
070	486826-0001		1	SIGN "EMERGENCY STOP"	
075	529456-0000		1	PLATE	
080	529455-0000		1	PLATE	
100	440256-0000		1	ARM	
110	445846-0000		1	SLEEVE	
120	90002-0004		1	BLANK-OFF PLUG, PR 22,5 SKINDICHT-BLK16	
125	90002-0009		1	BLANK-OFF PLUG, PR 18.6 SKINDICHT-BLK11	
130	90044-0122		2	PROX.SW. 922AA4XM-A9P-050-LZ-87	
140	90044-0104		5	PROX.SWITCH IFM IN 3002(RP 90044-194)	
140	532151-0300		1	CONNECTION BOX	**8-67**
150	90064-0084		2	PUSH BUTTON, YELLOW	
160	90064-0085		1	PUSH BUTTON, RED	
170	90064-0124		1	SWITCH, EM. STOP, ZB2-BS844+ZB2-BZ1045	
180	90099-0003		1	NUT PR 22,5	
190	90110-0128		1	MALE INSERT HAN 24 E-M 65330242631	
200	90111-0150		1	SWITCH GEAR, 704.502 .0+704.901.3	
205	90152-0033	DM	30	SPIRAL CONDUIT FOR PR 15,2(PG 9)	
210	90166-0013	DM	25	TUBE 8 MM PA BLUE	
220	90194-0016		2	WARNING SIGN, RISK OF ELECTRIC SHOCK	
230	90232-0103		1	PH.CELL E3S-CT61-L-5M	
235	90232-0104		1	PH.CELL E3S-CT61-D-5M	
240	90232-0106		1	PH.CELL E3S-CR11-5M	
310	312111-0323		2	SCREW HEX.SOCK.HD.MC6S-TT 5X8 88 FZB	
320	312121-0228		2	SCREW ISO 1207 M3X16 4.8 - 5.8 Z.PL.	
330	312125-0228		2	SCREW ISO 1207 M3X16 A4	
340	312125-0234		2	SCREW ISO 1207 M3X30 A4	
345	312125-0323		2	SCREW ISO 1207 M5X8 A4	
350	312155-0329		3	SCREW DIN 7991 MF6S M5X16 A4 70	
360	312316-0360		1	SCREW HEX.SOCK.SET CUP P.MSK6SS6X6 FZB	
365	312605-0310		2	HEXAGON NUT, M6M M3 A280	
370	312605-0312		3	HEXAGON NUT, M6M M4 A280	
380	315105-0124		6	WASHER BRB 3,2X7 RFR	
390	315101-0136		2	WASHER BRB, 4,3/8 H=0,8	
400	315105-0146		2	WASHER BRB 5,3X10 RFR	
430	342946-0112		1	T-COUPLING,UNION 6/4	
460	352101-0105		1	LEAD-IN, PR22,5/PG16, E-1457522	
470	352103-0100		1	CABLE GLAND, STR 9, PR15,2/PG9	
480	352103-0111		2	CABLE GLAND, ST 16, PR22,5/PG16	
490	352110-0099		3	CABLE CLIPS, D=3-5 MM	
500	352113-0204		2	ANCHOR PLATES FOR STRIPS, TYPE TM3S25-M	
510	352135-0109	DM	10	HOSE .022	
515	352136-0113		5	GLAND FITTING PR18,6/PG11 DI=12MM	
520	352136-0127		7	GLAND FITTING PR 18,6	
530	352136-0129		4	GLAND FITTING PR22,5/PG16 DI=16MM	
540	352136-0143		2	GLAND FITTING	
545	352137-0113		1	COND.FITTING PR 18,6 DI=12MM	
550	352137-0127		3	COND.FITTING PR 18,6 DI=16MM	
560	359241-0269		1	SIGN: " SMALL ROLL LARGE ROLL LOW FOR...	
570	359301-0100		1	BUTTON SIGN, SPLICING	
580	359301-0110		1	BUTTON SIGN, SHORT STOP	
590	359301-0335		1	BUTTON SIGN, ROLL FEED	
595	90012-0137		1	GLAND, EXTENDED WITH INSERT, PG11	

Machine Type | Group Description | Used-In | Group Number | Page No

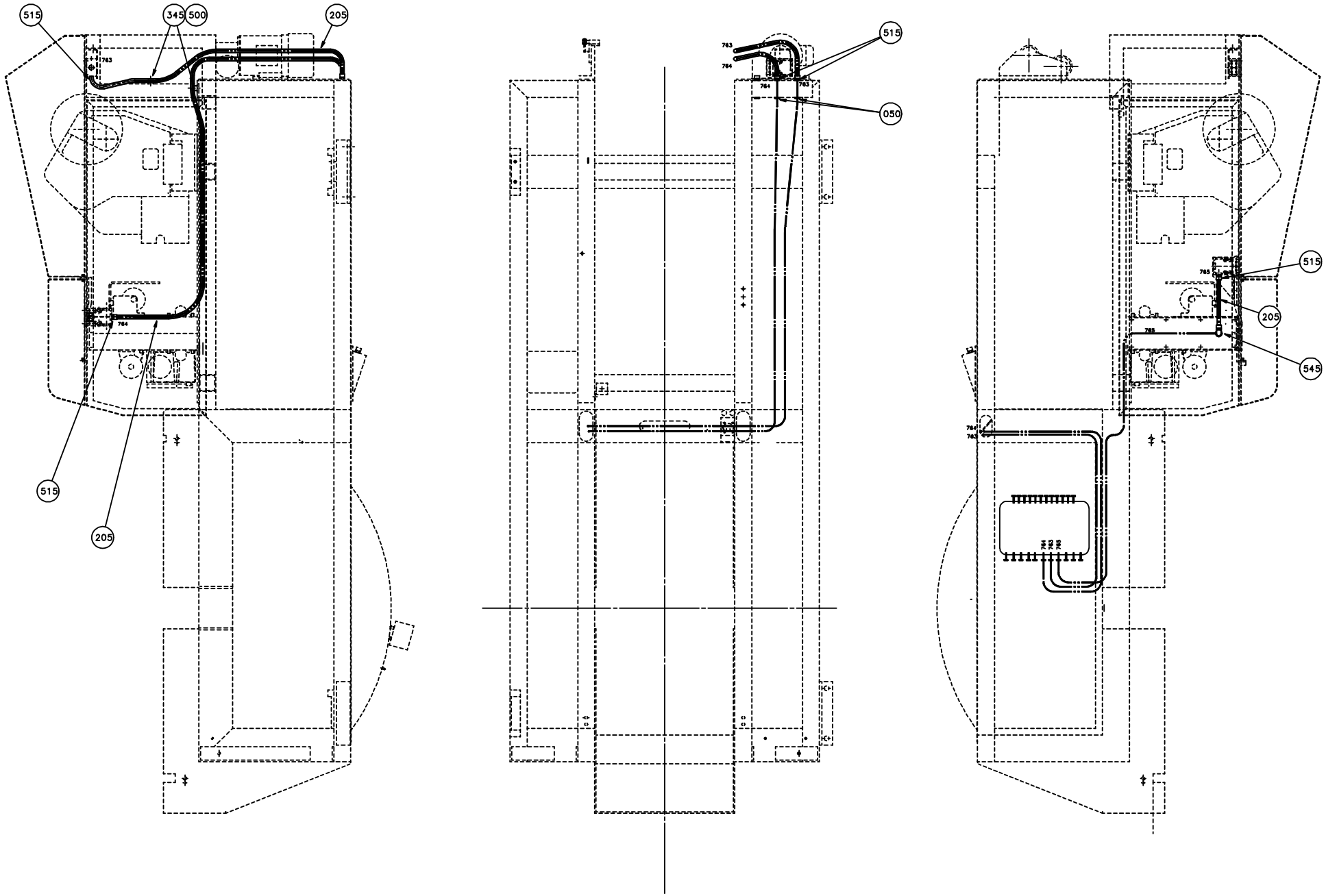
515
345
500
205
763
764
515
205
515
050
763
764
764
763
515
785
205
785
545
764
763

ECM: 72192 - 19990218
Group number: 445920-0600
Assembly Drawing: 445920-16_1_AA

This list covers pages from 8-60 to 8-65

Pos	Part No	UN	Qty	Description	Page No
TB/8 1500B (See drawing on page: 8-60)					
010	445844-0000		2	SLEEVE	
020	458362-0000		1	PLUG	
050	352101-0103		4	LEAD-IN, PR18,6/PG11, E-1457518	
TB/8 0568SQ, TB/8 1000B, TB/8 0568B, TB/8 1000SQ, TB/8 1000S, TB/8 0300B, TB/8 0500SQ, TB/8 0500S, TB/8 0500B, TB/8 1136B (See drawing on page: 8-62)					
010	445844-0000		3	SLEEVE	
050	352101-0103		8	LEAD-IN, PR18,6/PG11, E-1457518	
Common Parts					
030	90166-0081	MM	7800	TUBE 6 MM PA BLUE	
040	352135-0106	MM	4100	SPIRAL CONDUIT DI=16 MM	
060	466337-0000		1	CONNECTION BOX	
070	486826-0001		1	SIGN "EMERGENCY STOP"	
075	529456-0000		1	PLATE	
080	529455-0000		1	PLATE	
100	440256-0000		1	ARM	
110	445846-0000		1	SLEEVE	
120	90002-0004		1	BLANK-OFF PLUG, PR 22,5 SKINDICHT-BLK16	
125	90002-0009		1	BLANK-OFF PLUG, PR 18.6 SKINDICHT-BLK11	
130	90044-0122		2	PROX.SW. 922AA4XM-A9P-050-LZ-87	
140	90044-0104		5	PROX.SWITCH IFM IN 3002(RP 90044-194)	
140	532151-0300		1	CONNECTION BOX	**8-67**
150	90064-0084		2	PUSH BUTTON, YELLOW	
160	90064-0085		1	PUSH BUTTON, RED	
170	90064-0124		1	SWITCH, EM. STOP, ZB2-BS844+ZB2-BZ1045	
180	90099-0003		1	NUT PR 22,5	
190	90110-0128		1	MALE INSERT HAN 24 E-M 65330242631	
200	90111-0150		1	SWITCH GEAR, 704.502 .0+704.901.3	
205	90152-0033	DM	30	SPIRAL CONDUIT FOR PR 15,2(PG 9)	
210	90166-0013	DM	25	TUBE 8 MM PA BLUE	
220	90194-0016		2	WARNING SIGN, RISK OF ELECTRIC SHOCK	
230	90232-0103		1	PH.CELL E3S-CT61-L-5M	
235	90232-0104		1	PH.CELL E3S-CT61-D-5M	
240	90232-0106		1	PH.CELL E3S-CR11-5M	
310	312111-0323		2	SCREW HEX.SOCK.HD.MC6S-TT 5X8 88 FZB	
320	312121-0228		2	SCREW ISO 1207 M3X16 4.8 - 5.8 Z.PL.	
330	312125-0228		2	SCREW ISO 1207 M3X16 A4	
340	312125-0234		2	SCREW ISO 1207 M3X30 A4	
345	312125-0323		2	SCREW ISO 1207 M5X8 A4	
350	312155-0329		3	SCREW DIN 7991 MF6S M5X16 A4 70	
360	312316-0360		1	SCREW HEX.SOCK.SET CUP P.MSK6SS6X6 FZB	
365	312605-0310		2	HEXAGON NUT, M6M M3 A280	
370	312605-0312		3	HEXAGON NUT, M6M M4 A280	
380	315105-0124		6	WASHER BRB 3,2X7 RFR	
390	315101-0136		2	WASHER BRB, 4,3/8 H=0,8	
400	315105-0146		2	WASHER BRB 5,3X10 RFR	
430	342946-0112		1	T-COUPLING,UNION 6/4	
460	352101-0105		1	LEAD-IN, PR22,5/PG16, E-1457522	
470	352103-0100		1	CABLE GLAND, STR 9, PR15,2/PG9	
480	352103-0111		2	CABLE GLAND, ST 16, PR22,5/PG16	
490	352110-0099		3	CABLE CLIPS, D=3-5 MM	
500	352113-0204		2	ANCHOR PLATES FOR STRIPS, TYPE TM3S25-M	
510	352135-0109	DM	10	HOSE .022	
515	352136-0113		5	GLAND FITTING PR18,6/PG11 DI=12MM	
520	352136-0127		7	GLAND FITTING PR 18,6	
530	352136-0129		4	GLAND FITTING PR22,5/PG16 DI=16MM	
540	352136-0143		2	GLAND FITTING	
545	352137-0113		1	COND.FITTING PR 18,6 DI=12MM	
550	352137-0127		3	COND.FITTING PR 18,6 DI=16MM	
560	359241-0269		1	SIGN: " SMALL ROLL LARGE ROLL LOW FOR...	
570	359301-0100		1	BUTTON SIGN, SPLICING	
580	359301-0110		1	BUTTON SIGN, SHORT STOP	
590	359301-0335		1	BUTTON SIGN, ROLL FEED	
595	90012-0137		1	GLAND, EXTENDED WITH INSERT, PG11	

Machine Type | Group Description | Used-In | Group Number | Page No

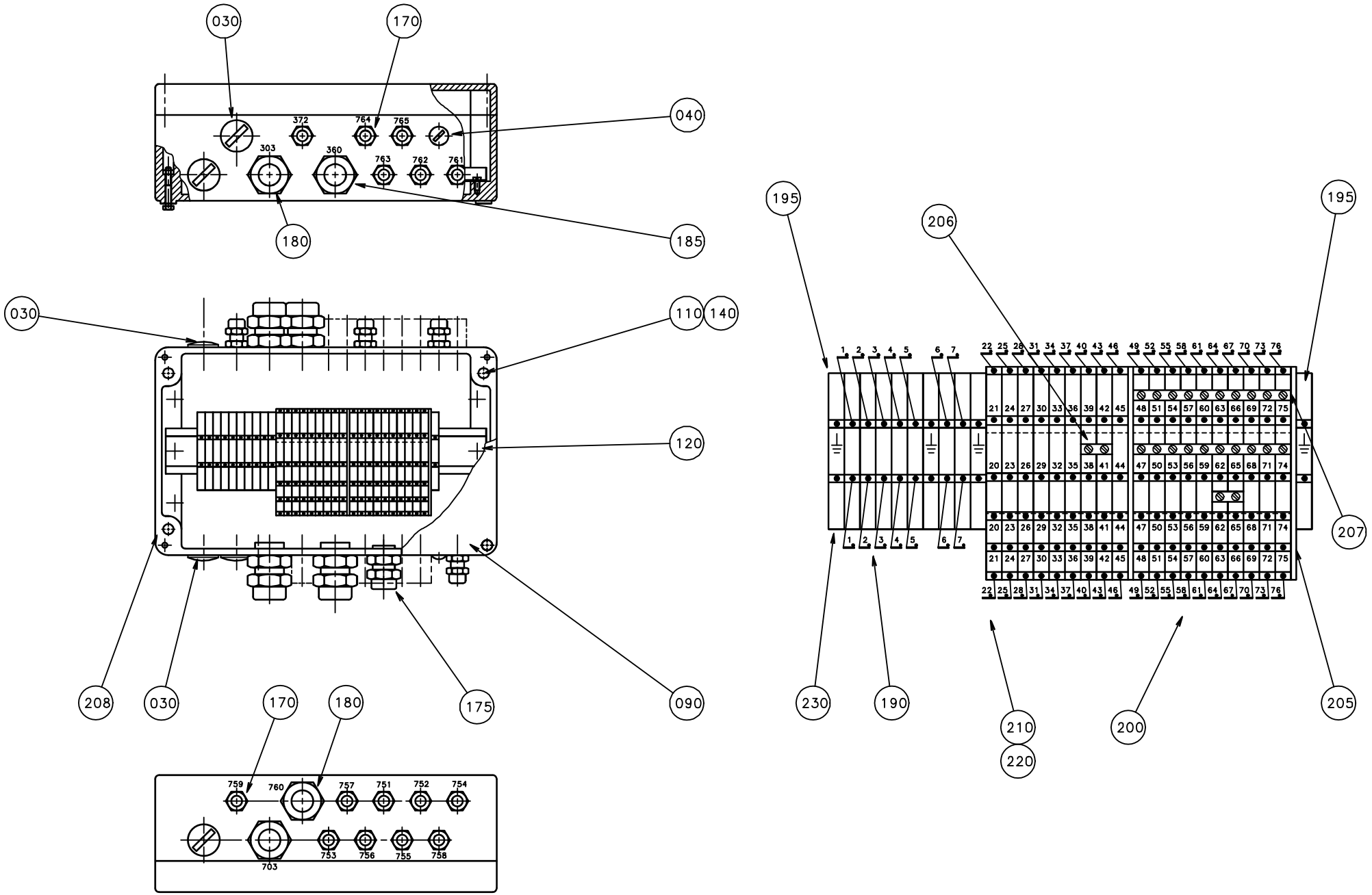
030
170
040
372
764
765
303
360
763
762
761
180
185
030
110
140
120
208
030
170
180
175
090
759
760
757
751
752
754
753
756
755
758
703
195
206
195
207
230
190
210
220
200
205

ECM: 72176 - 19990208
Group number: 532151-0300
Assembly Drawing: 532151-3_1_AE

Pos	Part No	UN	Qty	Description	Page No
-					
030	90002-0012		3	BLANK-OFF PLUG, PR 28,3 SKINDICHT-BLK21	
040	90002-0013		1	BLANK-OFF PLUG, PR 15,2 SKINDICHT-BLK9	
090	90265-0081		1	CONNECTION BOX 01 1626 09	
110	312111-0372		4	SCREW HEX.SOCK.HD.MC6S-TT 6X25 88 FZB	
120	312121-0364		2	SCREW ISO 1207 M6X10 4.8 - 5.8 Z.PL.	
140	312601-0316		4	HEXAGON NUT, DIN 934 M6 8 FZB	
170	352103-0101		14	CABLE GLAND, ST 9, PR15,2/PG9	
175	352103-0106		1	CABLE GLAND, ST 11, PR18,6/PG11	
180	352103-0115		3	CABLE GLAND, STR 21, PR28,3/PG21	
185	352103-0116		1	CABLE GLAND, ST 21, PR28,3/PG21	
190	353021-0213		7	FEED THROUGH TERMINAL, 10201.0	
195	353024-0205		4	EARTH TERMINAL, 1010.1	
200	353021-0302		19	TERMINALS,TRIPLE-LEVEL, DLD 2,5/35 PA	
205	353032-0302		2	END PLATE WAP, 13176.6	
206	353034-0401		2	BRIDGE CONNECTOR Q2, 13125.0	
207	353034-0404		2	BRIDGE CONNECTOR Q10, 13131.0	
208	353042-0005	MM	240	RAIL TS 35/7.5	
210	359011-0807		2	MARKING PLATES 5-FW 1-50	
220	359011-0808		2	MARKING PLATES 5-FW 51-100	
230	359011-0819		1	MARKING PLATES 5-GW (EARTH)	

Pos	Part No	UN	Qty	Description	Page No

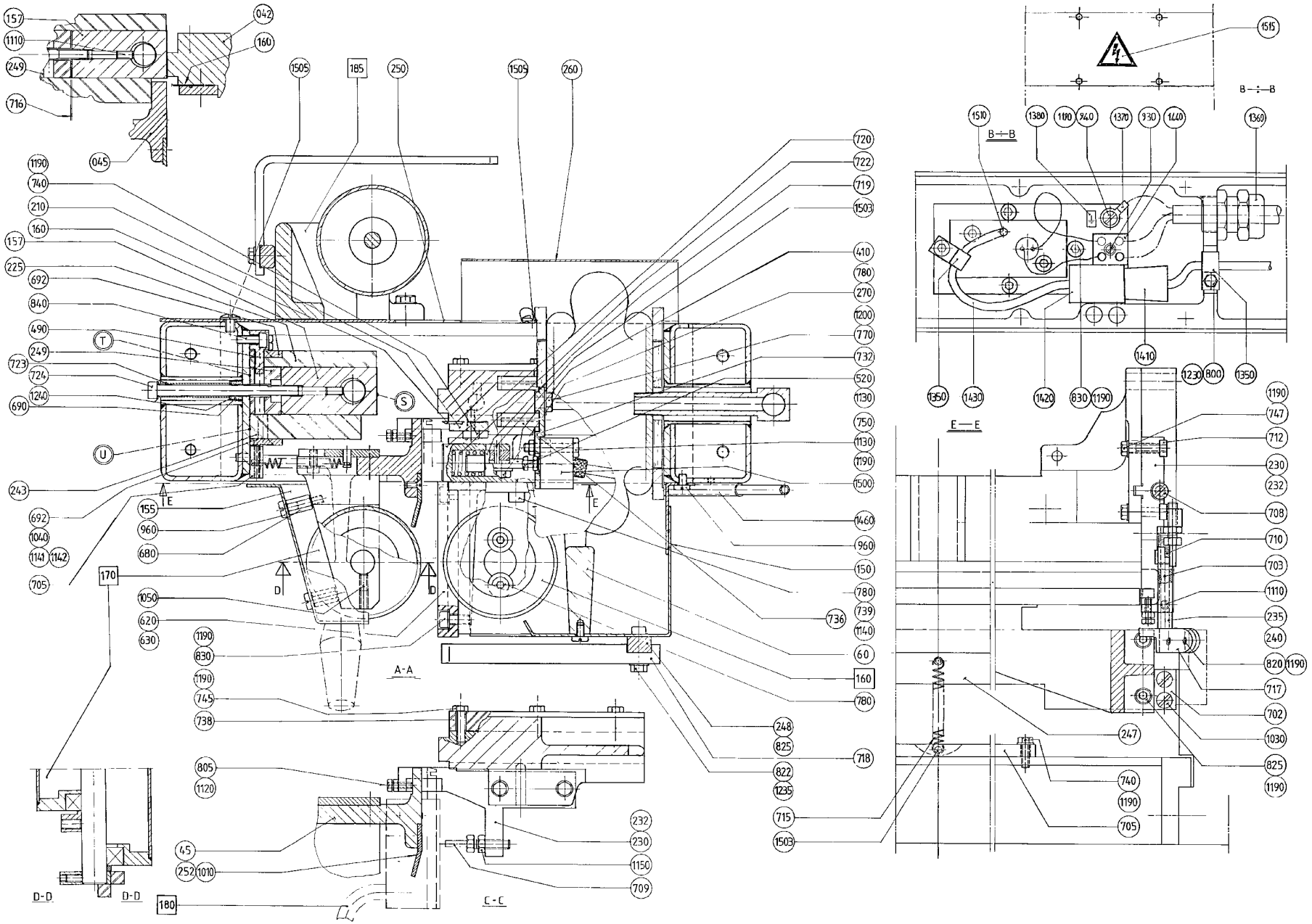
A-A
B—B
C-C
D-D
D-D
E—E

ECM: 72192 - 19990218
Group number: 445880-0600
Assembly Drawing: 445880-8_1_AA

This list covers pages from 8-68 to 8-73

Pos	Part No	UN	Qty	Description	Page No
0300B					
010	445881-0000		1	BRACKET LEFT	
020	445882-0000		1	BRACKET RIGHT	
042	553770-0002		1	PRESSURE JAW	
230	458908-0000		1	BRACKET	
232	458909-0000		1	BRACKET	
252	484895-0003		1	SHEET	
0500S					
010	445881-0000		1	BRACKET LEFT	
020	445882-0000		1	BRACKET RIGHT	
042	553770-0002		1	PRESSURE JAW	
230	458908-0000		1	BRACKET	
232	458909-0000		1	BRACKET	
252	484895-0002		1	SHEET	
0500B, 1136B, 0568B, 1000B					
010	445881-0000		1	BRACKET LEFT	
020	445882-0000		1	BRACKET RIGHT	
042	553770-0001		1	PRESSURE JAW	
230	458908-0000		1	BRACKET	
232	458909-0000		1	BRACKET	
252	484895-0001		1	SHEET	
1000S					
010	445881-0000		1	BRACKET LEFT	
020	445882-0000		1	BRACKET RIGHT	
042	553770-0001		1	PRESSURE JAW	
230	458908-0000		1	BRACKET	
232	458909-0000		1	BRACKET	
252	484895-0006		1	SHEET	
1000SQ, 0500SQ, 0568SQ					
010	445881-0000		1	BRACKET LEFT	
020	445882-0000		1	BRACKET RIGHT	
042	553770-0001		1	PRESSURE JAW	
230	458908-0000		1	BRACKET	
232	458909-0000		1	BRACKET	
252	484895-0007		1	SHEET	
1500B					
010	593656-0000		1	BRACKET LEFT	
020	593657-0000		1	BRACKET RIGHT	
042	553770-0001		1	PRESSURE JAW	
230	593652-0000		1	BRACKET	
232	593651-0000		1	BRACKET	
252	484895-0001		1	SHEET	

Pos	Part No	UN	Qty	Description	Page No
Common Parts					
045	457627-0000		1	DOLLY	
060	445911-0000		1	CANTILEVER	
080	445885-0000		1	BEAM	
090	445886-0000		1	BEAM	
150	449751-0000		1	PROTECTION	
155	450853-0000		1	PROTECTION	
157	548794-0000		1	HEATING JAW	
160	294009-0000		2	KNIFE	
210	539052-0000		1	KNIFE HOLDER	
225	449770-0000		1	INSULATION	
235	466618-0000		1	CATCH	
240	466619-0000		1	CATCH	
243	457658-0000		1	INSULATION	
247	458912-0000		1	BRACKET	
248	479223-0000		1	RAIL	
249	484844-0000		1	INSULATION	
250	531886-0000		1	PROTECTION PLATE	
260	531887-0000		1	PROTECTION PLATE	
265	573828-0000		1	COVERING PLATE	
270	32079-0000		1	WASHER	
330	445894-0000		1	SEAL	
340	556316-0000		1	INSULATION	
350	556317-0000		1	INSULATION	
370	445898-0000		2	NUT	
390	556318-0000		1	INSULATION	
400	445901-0000		1	FRAME	
410	445902-0000		1	ARM	
420	445903-0000		2	ECCENTRIC SHAFT	
430	445904-0000		2	SHAFT	
450	445907-0000		2	SCREW	
460	458062-0000		2	TENSION SPRING	
470	445909-0000		1	NIPPLE	
490	445915-0000		1	STEERING	
520	445918-0000		1	SCREW	
620	449623-0000		1	STEERING	
630	449624-0000		1	STEERING	
640	927428-0000		1	COVERING PLATE	
650	449626-0000		2	SEAL	
660	449629-0000		1	BRACKET	
680	449753-0000		4	SCREW	
690	449761-0000		1	WASHER	

Machine Type | Group Description | Used-In | Group Number | Page No

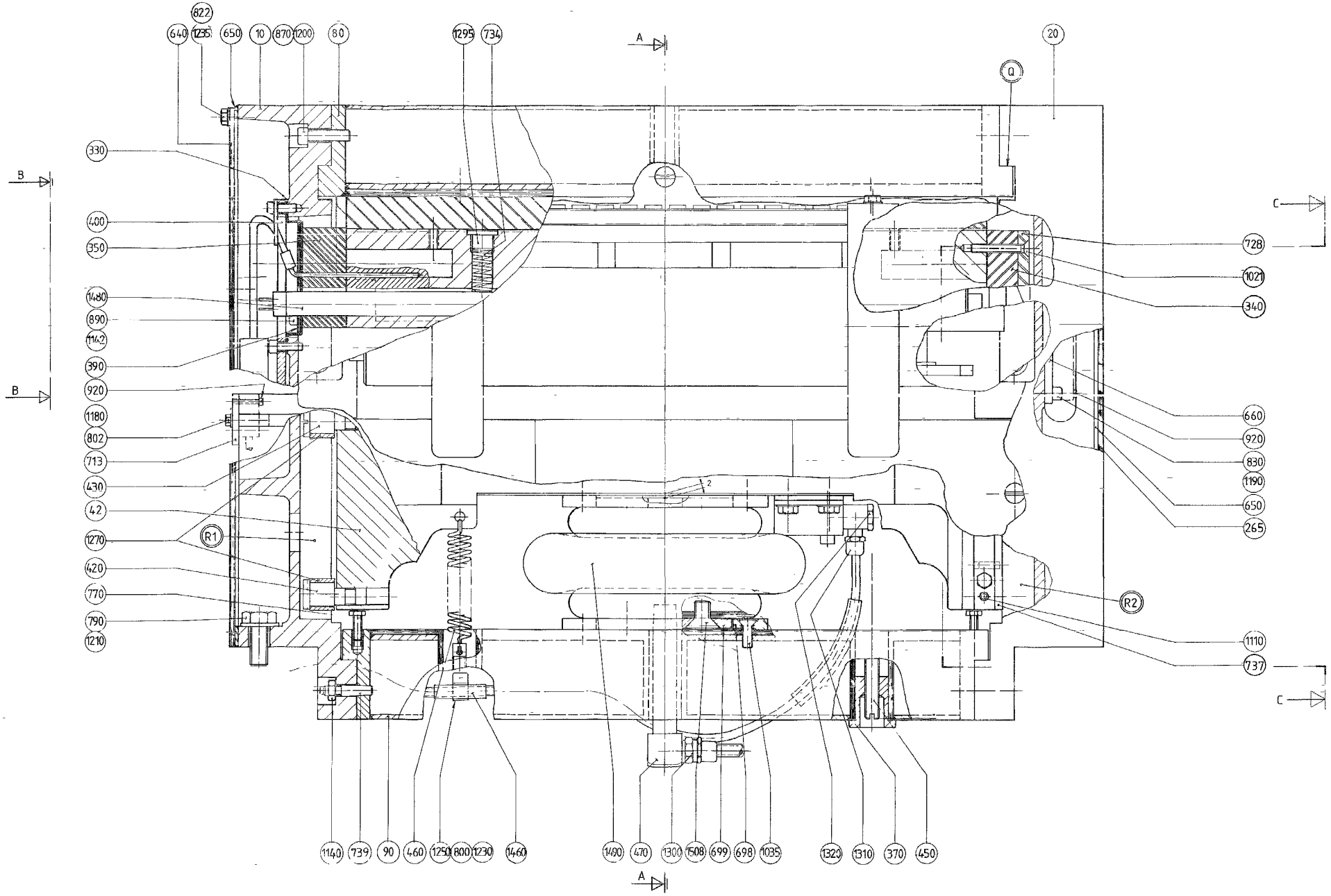
822
640
1235
650
10
870
1200
80
1295
734
A
20
Q
330
B
400
350
1480
890
1142
390
920
1180
802
713
430
42
1270
420
770
790
1210
R1
728
1021
340
660
920
830
1190
650
265
R2
1110
737
C
1140
739
90
460
1250
800
1230
1460
1490
470
1300
508
699
698
1035
1320
1310
370
450

ECM: 72192 - 19990218
Group number: 445880-0600
Assembly Drawing: 445880-9_1_AA

This list covers pages from 8-68 to 8-73

Pos	Part No	UN	Qty	Description	Page No
Common Parts (Cont'd)					
692	450017-0000		2	PLATE	
698	451412-0000		2	WASHER	
699	451413-0000		2	WASHER	
702	458915-0000		2	HEAD RAIL	
703	458916-0000		2	SHAFT	
705	458917-0000		1	SUPPORT	
708	553763-0000		2	ADJUSTING SCREW	
709	464983-0000		2	SCREW	
710	458929-0000		2	TURN SPRING	
712	464547-0000		4	NUT	
713	464548-0000		1	BRACKET	
715	464854-0000		1	TENSION SPRING	
716	561426-0000		1	LACE	
717	466446-0000		2	HANDLE	
718	479224-0000		2	STEERING	
719	466620-0000		1	PISTON	
720	466621-0000		1	PISTON	
722	466623-0000		1	COMPRESSION SPRING	
723	476288-0000		1	PIPE	
724	476289-0000		1	SCREW	
728	479188-0000		1	INSULATION	
732	484529-0000		1	CYLINDER BRACKET	
734	484682-0000		2	COMPRESSION SPRING	
736	484783-0000		2	RAIL	
737	484877-0000		2	STEERING	
738	484878-0000		2	HOLDER	
739	311211-0292		6	TAPER PIN THREADED ISO 8737 M6X30 SS	
740	312101-0329		8	SCREW M6S M5X16 FZB	
745	312101-0331		6	SCREW M6S M5X20 FZB	
747	312101-0333		4	SCREW M6S M5X25 FZB	
750	312101-0335		2	SCREW M6S M5X30 FZB	
770	312101-0366		4	SCREW M6S M6X12 FZB	
780	312101-0368		9	SCREW M6S M6X16 FZB	
790	312101-0493		2	SCREW M6S M10X25 FZB	
800	312105-0287		2	SCREW M6S ISO 4017 M4X8 A470	
802	312101-0289		2	SCREW M6S M4X10 FZB	
805	312101-0291		2	SCREW M6S M4X12 FZB	
820	312101-0323		4	SCREW M6S M5X8 FZB	
822	312105-0329		10	SCREW M6S ISO 4017 M5X16 A480	
825	312111-0325		6	SCREW HEX.SOCK.HD.MC6S-TT 5X10 88 FZB	
830	312111-0327		10	SCREW HEX.SOCK.HD.MC6S-TT 5X12 88 FZB	
840	312111-0329		2	SCREW HEX.SOCK.HD.MC6S-TT 5X16 88 FZB	
870	312111-0372		8	SCREW HEX.SOCK.HD.MC6S-TT 6X25 88 FZB	
890	312115-0340		2	SCREW ISO4762 M5X45 A4 80	
920	312121-0228		4	SCREW ISO 1207 M3X16 4.8 - 5.8 Z.PL.	
930	312121-0230		1	SCREW ISO 1207 M3X20 4.8 - 5.8 Z.PL.	
940	312121-0321		1	SCREW ISO 1207 M5X6 4.8 - 5.8 Z.PL.	
960	312132-0323		8	SCREW SLOT. PAN HEAD MSCS M5X8	
1010	312145-0289		7	SCREW ISO 2009 MFS M4X10 A4	
1020	312145-0327		8	SCREW ISO 2009 MFS M5X12 A4	
1021	312145-0335		2	SCREW ISO 2009 MFS M5X30 A4	
1030	312145-0329		4	SCREW ISO 2009 MFS M5X16 A4	
1035	312151-0368		4	SCREW EN 10642 MF6S M6X16 10.9 EL.PL	
1040	312151-0384		6	SCREW EN 10642 MF6S M6X70 10.9 EL.PL	
1050	312306-0287		2	SCREW ISO4026 M4X8 FZB	
1110	312318-0321		7	SCREW ISO4029 M5X6 A4	
1120	312601-0312		2	HEXAGON NUT, DIN 934 M4 8 FZB	
1130	312601-0314		3	HEXAGON NUT, DIN 934 M5 8 FZB	
1140	312601-0316		6	HEXAGON NUT, DIN 934 M6 8 FZB	
1141	312811-0316		6	NUT HEX.LOCK HELI COIL MID GRIP M6 SS	
1142	319030-0125		40	DISC SPRING, CONICAL 12,5X6,2X0,5 MM	
1150	312605-0316		2	HEXAGON NUT, M6M M6 A280	
1180	315101-0136		2	WASHER BRB, 4,3/8 H=0,8	
1190	315101-0146		43	WASHER PLAIN, BRB, 5,3/10 H=1	
1200	315101-0153		16	WASHER PLAIN, BRB, 6,4/12 H=1,5	
1210	315101-0173		2	WASHER PLAIN, BRB, 10,5/22 H=2	
1230	315105-0136		2	WASHER BRB 4,3X9 RFR	
1235	315105-0146		10	WASHER BRB 5,3X10 RFR	
1240	315105-0153		2	WASHER BRB 6,4X12 RFR	
1250	316810-0106		1	PIPE CLIP FOR TUBE D=8 MM	
1270	321116-0179		4	BEARING BUSH W/O FLANGE, 14X18X14 MM	
1295	342713-0210		2	PLUG,EXT THREAD HEX SOCKET(PAK OF 10 PCS	
1300	342722-0205		1	STRAIGHT COUPLING D=8-G1/4"	
1310	342980-0113		1	BANJO-CONNECTION,RING 6/4-G1/8 INCH	
1320	342980-0303		1	BANJO-HOLLOW BOLT COUPL,EXT.THR.01-G1/8	
1350	352110-0099		2	CABLE CLIPS, D=3-5 MM	
1360	352103-0108		1	CABLE GLAND, ST 13,5 , PR20,4/PG13,5	
1370	353101-0132		1	CABLE SHOE 1,5-2,5MM2 M5 BLUE	
1380	359020-0012		1	SIGN "EARTHSYMBOL" 4X6MM	
1410	90326-0020		1	PLUG, FEMALE YELLOW CR-AL	
1420	90326-0022		1	PLUG, MALE YELLOW CR-AL	
1430	90326-0060		1	THERMOCOUPLE, CR-AL	
1440	90195-0020		1	TERMINAL BLOCK, 1977.2	

Machine Type | Group Description | Used-In | Group Number | Page No

See previous drawings pages: 8-68, 8-70.

Pos	Part No	UN	Qty	Description	Page No
Common Parts (Cont'd)					
1460	90166-0122	MM	100	TUBE 8 MM PA,TRANSP.	
1480	90206-0097		1	HEATING CARTRIDGE 500W 220V	
1490	90239-0231		1	BELLOWS	
1500	90239-0259		1	CYLINDER	
1503	90258-0031		2	PIN, STRAIGHT SLOTTED SPRING FRP 3X20	
1505	90287-0075		3	SCREW SLOT. PAN HEAD LKCS M6X12	
1508	312155-0449		4	SCREW DIN 7991 MF6S M8X16 A4 70	
1510	90296-0051	KG	1	PASTE	
1515	90194-0016		1	WARNING SIGN, RISK OF ELECTRIC SHOCK	
F185	522410-0200		1	BENDING ROLLER	**8-75**
F180	449630-0300		1	PAPER HOLDER	**8-77, 8-79**
F170	440184-0100		1	BENDING ROLLER	**8-81**
F160	440135-0100		1	BENDING ROLLER	**8-83**

Pos	Part No	UN	Qty	Description	Page No

BENDING ROLLER

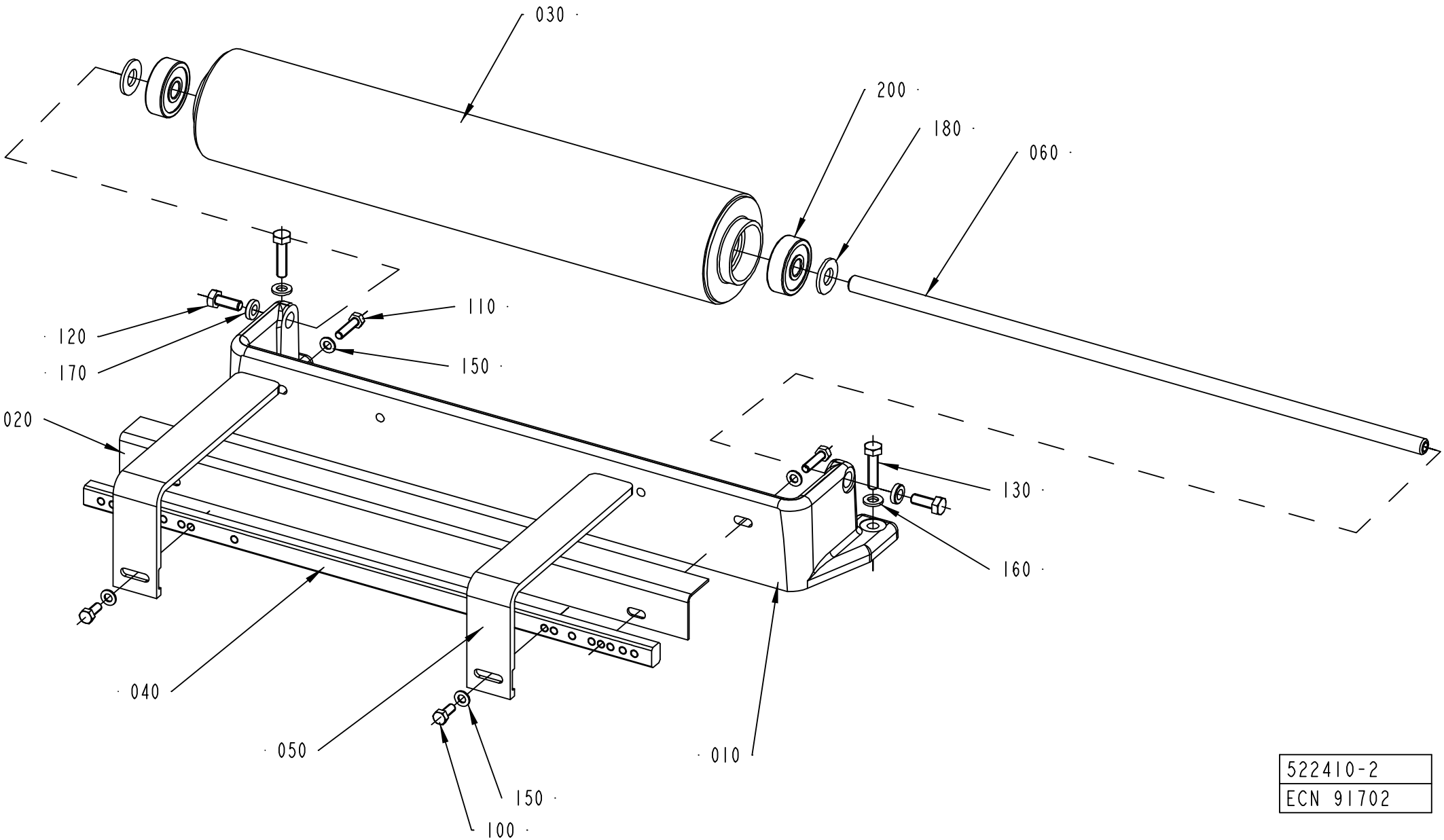

522410-2
ECN 91702

ECM: 178012 - 20041220
Group number: 522410-0200
Assembly Drawing: 522410-2_1_AB

Pos	Part No	UN	Qty	Description	Page No
-					
010	522173-0000		1	CANTILEVER	
020	574651-0000		1	SHEET	
030	265564-0000		1	BENDING ROLLER	
040	479223-0000		1	RAIL	
050	531885-0000		2	STEERING	
060	499132-0002		1	SHAFT	
100	312105-0327		2	SCREW M6S ISO 4017 M5X12 A480	
110	312105-0331		2	SCREW M6S ISO 4017 M5X20 A480	
120	312105-0368		2	SCREW M6S ISO 4017 M6X16 A480	
130	312105-0372		2	SCREW M6S ISO 4017 M6X25 A480	
150	315105-0146		4	WASHER BRB 5,3X10 RFR	
160	315105-0153		2	WASHER BRB 6,4X12 RFR	
170	315115-0153		2	WASHER PLAIN, TBRB 6,4/12 H=3	
180	315105-0173		2	WASHER BRB 10,5X20 RFR	
200	321316-0200		2	BALL BEARING, 10X35X11 MM	

Pos	Part No	UN	Qty	Description	Page No

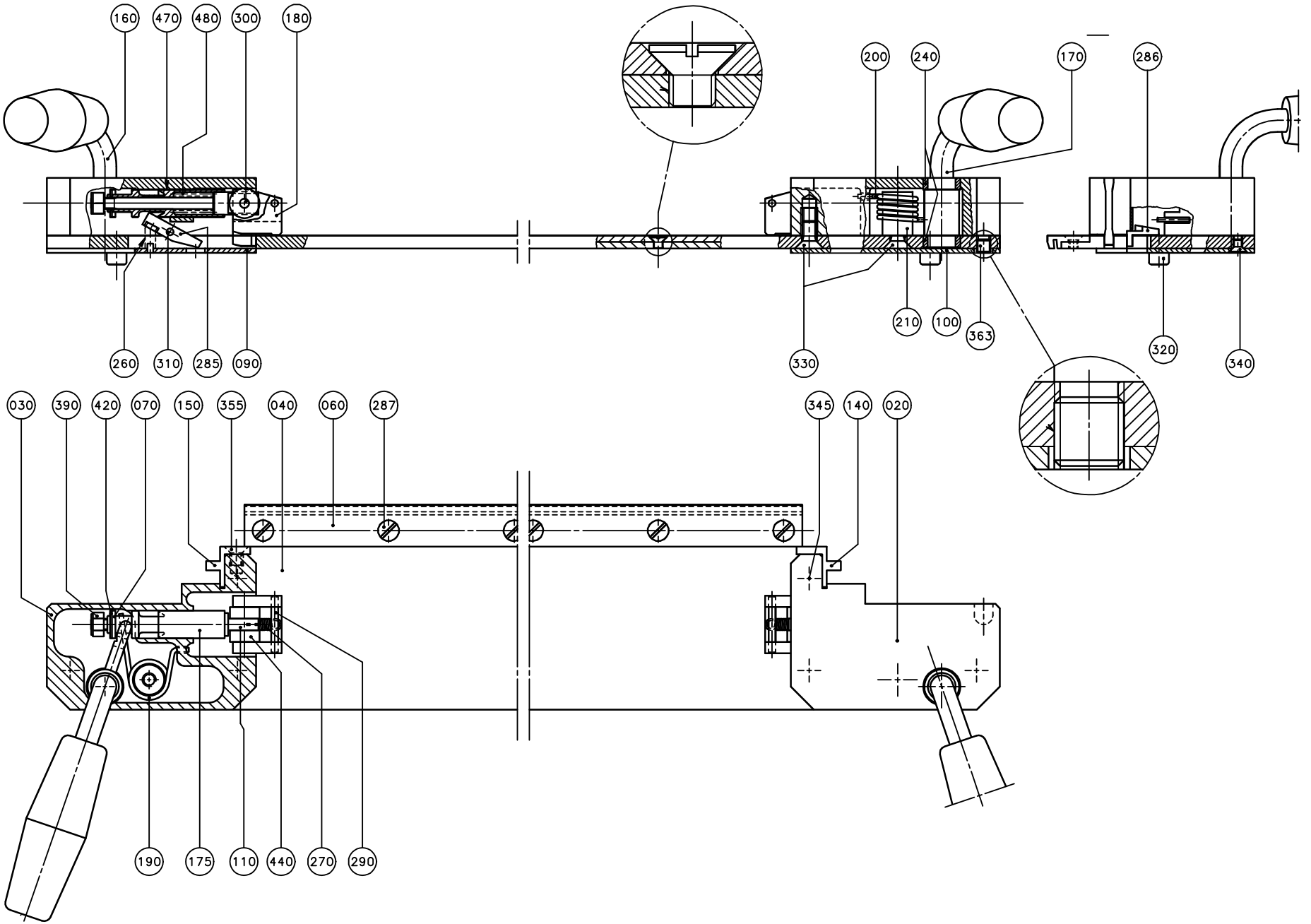
160
470
480
300
180
200
240
170
286
260
310
285
090
330
210
100
363
320
340
030
390
420
070
150
355
040
060
287
345
140
020
190
175
110
440
270
290

ECM: 72192 - 19990218
Group number: 449630-0300
Assembly Drawing: 449630-3_1_AA

This list covers pages from 8-76 to 8-79

Pos	Part No	UN	Qty	Description	Page No
TB 1500B					
020	593566-0000		1	BEARING HOUSING	
030	593567-0000		1	BEARING HOUSING	
040	593568-0000		1	CUTTING RAIL	
090	593569-0000		1	COVERING PLATE	
100	593648-0000		1	COVERING PLATE	
110	556322-0000		2	SHAFT	
140	593649-0000		1	BLOCK LEFT	
150	593650-0000		1	BLOCK RIGHT	
330	312141-0366		6	SCREW ISO 2009 MFS M6X12 4.8 EL.PL	
345	312145-0291		2	SCREW ISO 2009 MFS M4X12 A4	
355	312145-0287		4	SCREW ISO 2009 MFS M4X8 A4	
TB 0300B					
020	457487-0000		1	BEARING HOUSING	
030	457489-0000		1	BEARING HOUSING	
040	556395-0000		1	CUTTING RAIL	
090	457493-0000		1	COVERING PLATE	
100	457495-0000		1	COVERING PLATE	
110	556325-0000		2	SHAFT	
140	522474-0000		1	BLOCK L	
150	522475-0000		1	BLOCK R	
330	312141-0366		8	SCREW ISO 2009 MFS M6X12 4.8 EL.PL	
355	312145-0323		4	SCREW ISO 2009 MFS M5X8 A4	
TB 1136B, TB 0568B, TB 1000B, TB 0500B					
020	449631-0000		1	BEARING HOUSING	
030	449632-0000		1	BEARING HOUSING	
040	549834-0000		1	CUTTING RAIL	
090	449634-0000		1	COVERING PLATE	
100	449635-0000		1	COVERING PLATE	
110	556322-0000		2	SHAFT	
140	522474-0000		1	BLOCK L	
150	522475-0000		1	BLOCK R	
330	312141-0366		8	SCREW ISO 2009 MFS M6X12 4.8 EL.PL	
355	312145-0323		4	SCREW ISO 2009 MFS M5X8 A4	
TB 0500S					
020	457486-0000		1	BEARING HOUSING	
030	457488-0000		1	BEARING HOUSING	
040	556394-0000		1	CUTTING RAIL	
090	457492-0000		1	COVERING PLATE	
100	457494-0000		1	COVERING PLATE	
110	556324-0000		2	SHAFT	
140	522474-0000		1	BLOCK L	
150	522475-0000		1	BLOCK R	
330	312141-0366		8	SCREW ISO 2009 MFS M6X12 4.8 EL.PL	
355	312145-0323		4	SCREW ISO 2009 MFS M5X8 A4	
TB 0568SQ, TB 0500SQ, TB 1000SQ					
020	574059-0000		1	BEARING HOUSING	
030	574060-0000		1	BEARING HOUSING	
040	574061-0000		1	CUTTING RAIL	
090	574062-0000		1	COVERING PLATE	
100	574063-0000		1	COVERING PLATE	
110	574064-0000		2	SHAFT	
140	522474-0000		1	BLOCK L	
150	522475-0000		1	BLOCK R	
330	312141-0366		8	SCREW ISO 2009 MFS M6X12 4.8 EL.PL	
355	312145-0323		4	SCREW ISO 2009 MFS M5X8 A4	
TB 1000S					
020	569921-0000		1	BEARING HOUSING LEFT	
030	569922-0000		1	BEARING HOUSING RIGHT	
040	569923-0000		1	CUTTING RAIL	
090	569919-0000		1	COVER PLATE R.	
100	569918-0000		1	COVER PLATE L.	
110	569920-0000		2	SHAFT	
140	522474-0000		1	BLOCK L	
150	522475-0000		1	BLOCK R	
330	312141-0366		8	SCREW ISO 2009 MFS M6X12 4.8 EL.PL	
355	312145-0323		4	SCREW ISO 2009 MFS M5X8 A4	
Common Parts					
060	549835-0000		1	CUTTING RAIL	
070	556319-0000		2	WASHER	
160	556391-0000		1	HANDLE	
170	556392-0000		1	HANDLE	
175	556320-0000		2	SLEEVE	
180	556321-0000		2	CLAMPING PIECE	
190	449744-0000		1	TURN SPRING	
200	449745-0000		1	TURN SPRING	
210	449746-0000		2	STEERING	
240	449748-0000		4	BEARING	
260	458041-0000		2	COMPRESSION SPRING	
270	458042-0000		2	SPRING	
285	457370-0000		2	CATCH	
286	457586-0000		1	SLIDE	
287	90287-0206		7	SLOTTED SCREW	
290	90258-0030		2	PIN, STRAIGHT SLOTTED SPRING FRP 3X24	

Machine Type | Group Description | Used-In | Group Number | Page No

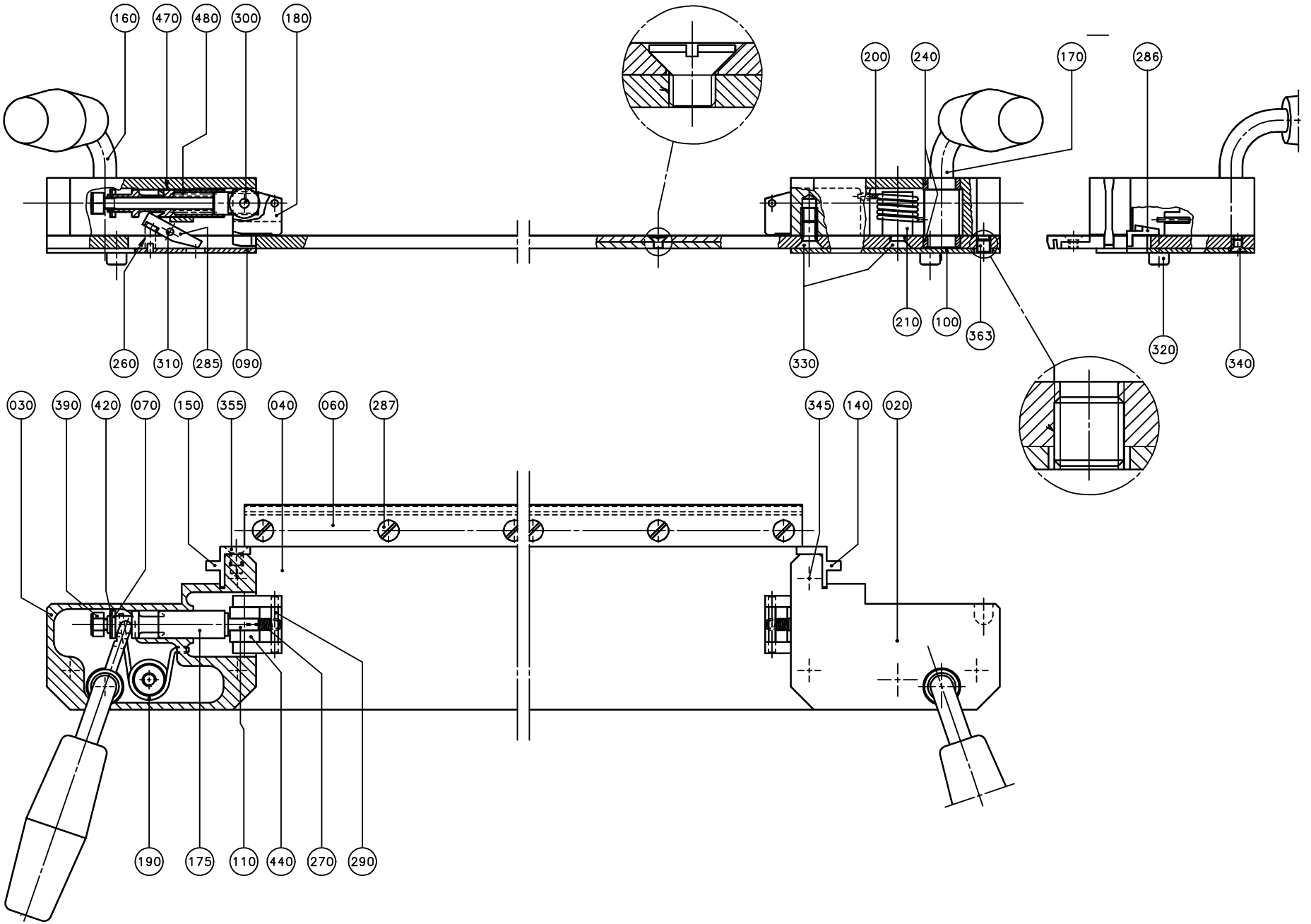
160
470
480
300
180
200
240
170
286
260
310
285
090
330
210
100
363
320
340
030
390
420
070
150
355
040
060
287
345
140
020
190
175
110
440
270
290

Pos	Part No	UN	Qty	Description	Page No
Common Parts (Cont'd)					
300	311101-0274		2	PARALLEL PIN ISO 2338 4H6X25 ST	
310	311102-0236		2	PARALLEL PIN ISO 2338 3M6X16 ST	
320	312115-0323		2	SCREW ISO4762 M5X8 A4 80	
340	312145-0285		6	SCREW ISO 2009 MFS M4X6 A4	
363	312306-0360		1	SCREW ISO4026 M6X6 FZB	
390	312812-0314		2	HEXAGON NUT, NY-LOCK M5 A480	
420	315755-0108		2	RETAINING RING SHAFT DIN 6799 6 A2	
440	321300-0094		4	BALL BEARING, 4X13X5 MM	
470	90296-0009	ML	2	SILICONE GREASE DOW CORNING 150 GR.	
480	90335-0027		2	COMP. SPRING 22170, 1,25X9,25X33	

Pos	Part No	UN	Qty	Description	Page No

BENDING ROLLER

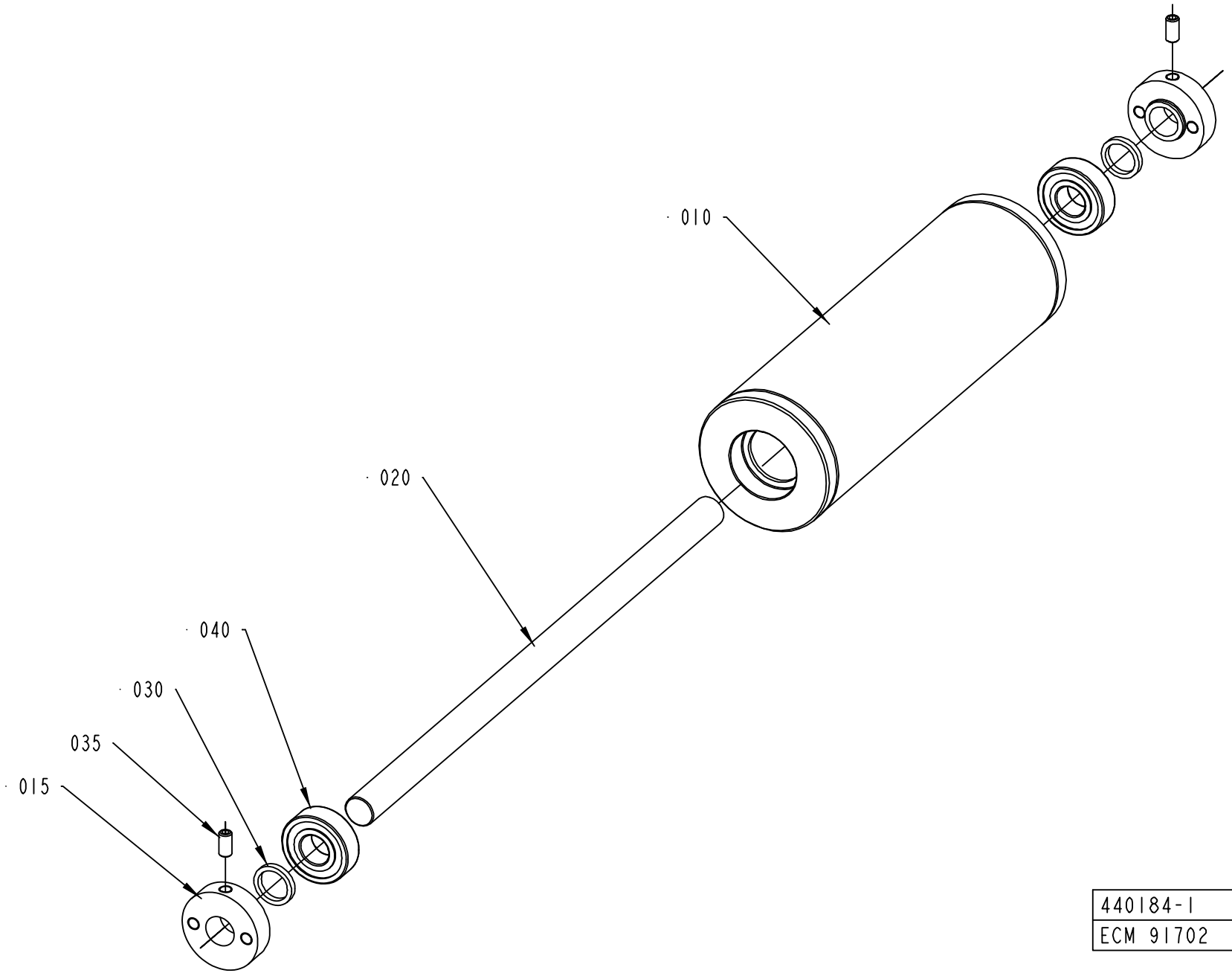

440184-1
ECM 91702

ECM: 197055 - 20041220
Group number: 440184-0100
Assembly Drawing: 440184-1_1_AB

Pos	Part No	UN	Qty	Description	Page No
TB 0300B					
010	440136-0004		1	ROLL	
015	440138-0000		2	LOCKING CIRCLIP	
035	312306-0366		2	SCREW ISO4026 M6X12 FZB	
TB 1136B, TB 1500B, TB 0568B, TB 1000B, TB 0500B					
010	440136-0002		1	ROLL	
030	440194-0000		2	WASHER	
TB 0500S					
010	440136-0003		1	ROLL	
015	440138-0000		2	LOCKING CIRCLIP	
035	312306-0366		2	SCREW ISO4026 M6X12 FZB	
TB 0568SQ, TB 0500SQ, TB 1000SQ					
010	440136-0008		1	ROLL	
015	440138-0000		2	LOCKING CIRCLIP	
035	312306-0366		2	SCREW ISO4026 M6X12 FZB	
TB 1000S					
010	440136-0007		1	ROLL	
015	569917-0000		2	LOCKING CIRCLIP	
035	312306-0366		2	SCREW ISO4026 M6X12 FZB	
Common Parts					
020	440137-0002		1	SHAFT	
040	321313-0102		2	BALL BEARING, 15X35X11 MM	

Pos	Part No	UN	Qty	Description	Page No

BENDING ROLLER

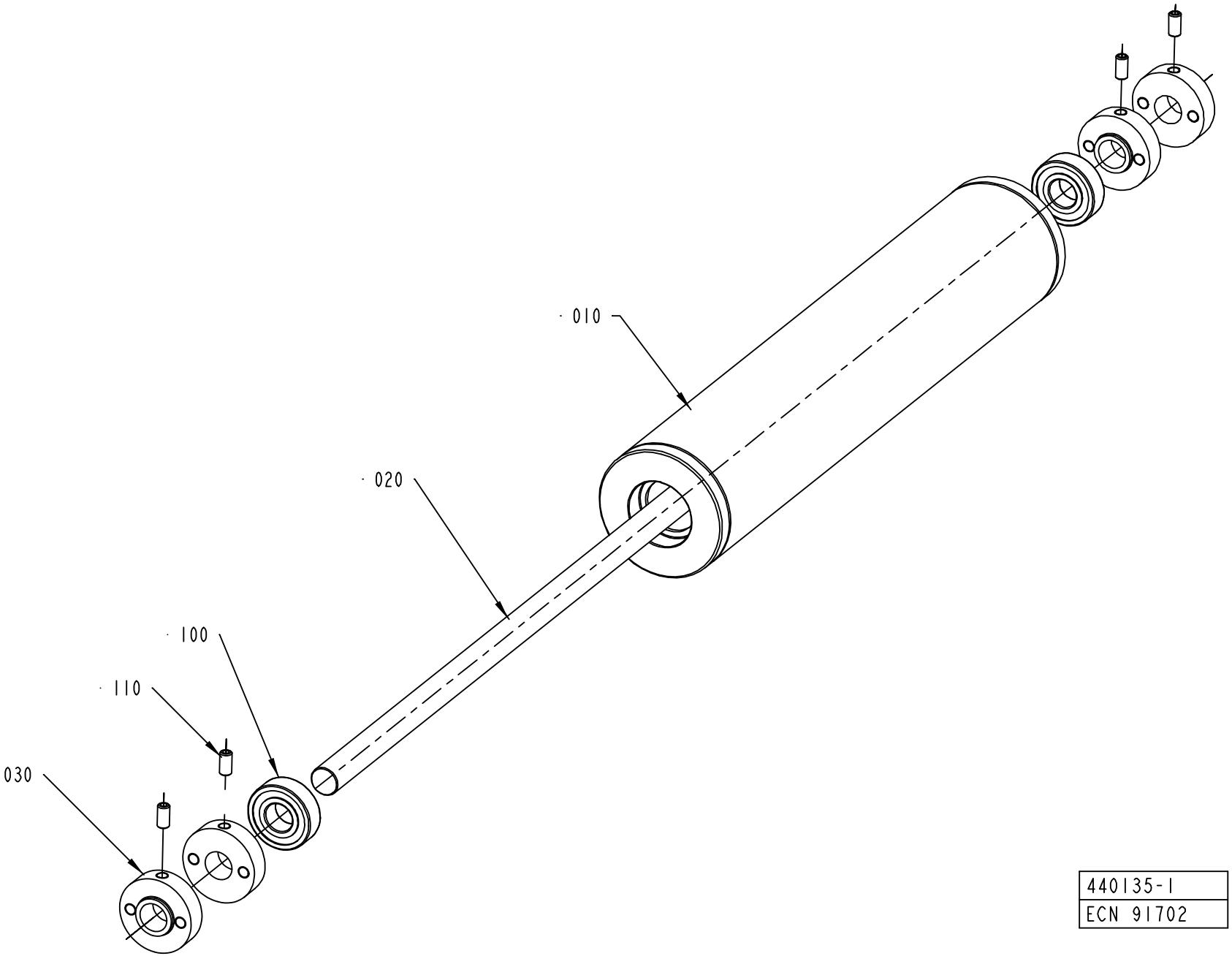

440135-1
ECN 91702

ECM: 178011 - 20041220
Group number: 440135-0100
Assembly Drawing: 440135-1_1_AB

Pos	Part No	UN	Qty	Description	Page No	Pos	Part No	UN	Qty	Description	Page No
-											
010	440136-0001		1	ROLL							
020	440137-0001		1	SHAFT							
030	440138-0000		4	LOCKING CIRCLIP							
100	321313-0102		2	BALL BEARING, 15X35X11 MM							
110	312306-0366		4	SCREW ISO4026 M6X12 FZB							

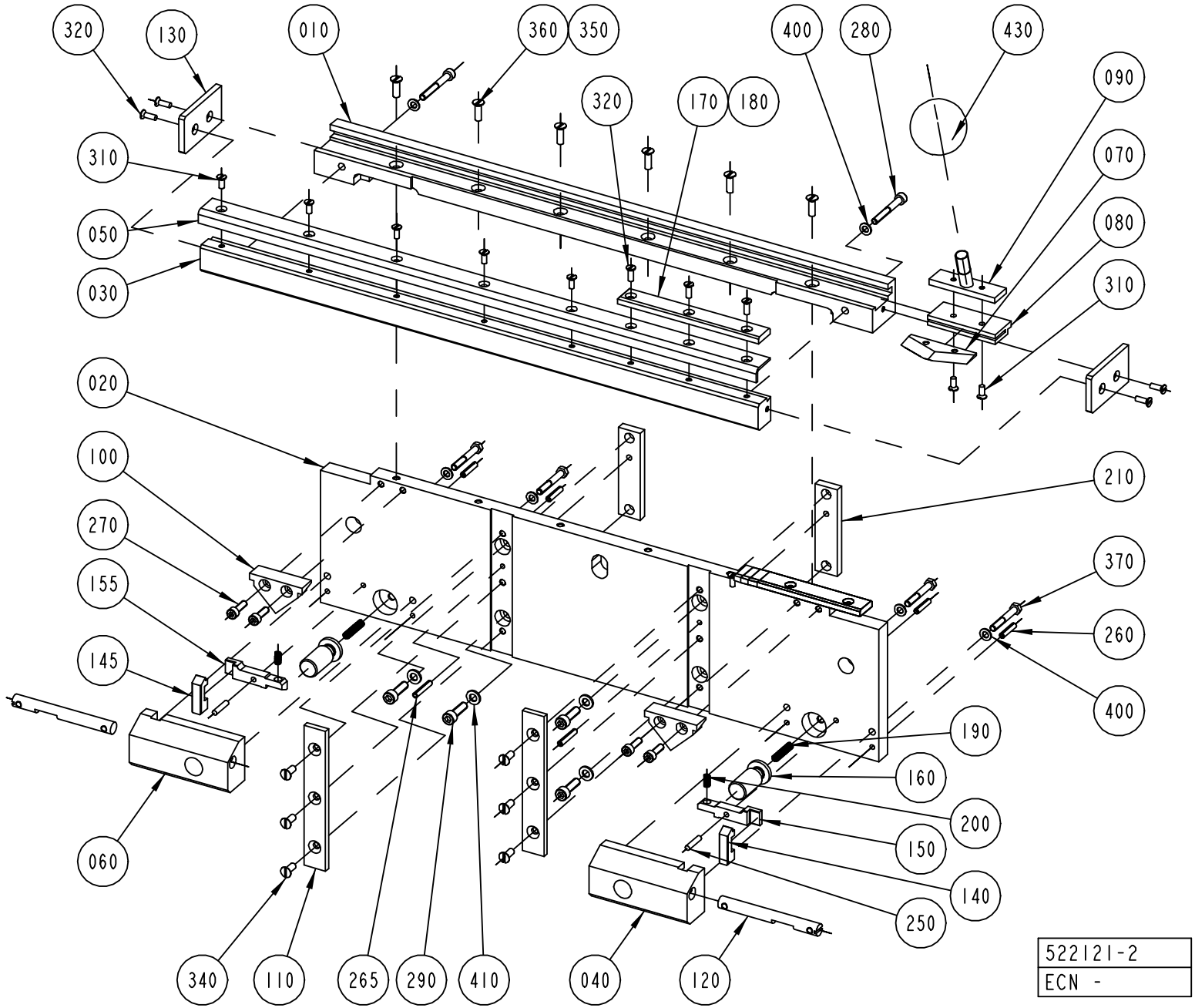
320
130
010
360
350
400
280
430
090
320
170
180
070
310
080
050
030
310
020
100
210
270
370
155
260
145
400
190
160
200
150
140
250
060
340
110
265
290
410
040
120
522121-2
ECN -

ECM: 197058 - 20041220
Group number: 522121-0200
Assembly Drawing: 522121-2_1_AB

This list covers pages from 8-84 to 8-87

Pos	Part No	UN	Qty	Description	Page No
TB 1500B (See drawing on page: 8-86)					
010	593642-0000		1	RAIL	
020	593643-0000		1	PLATE	
030	593644-0000		1	RULER	
100	593645-0000		2	STEERING	
180	593653-0000		1	STOPPER	
185	593654-0000		2	SCREW SET	
330	312605-0316		2	HEXAGON NUT, M6M M6 A280	
360	312145-0331		6	SCREW ISO 2009 MFS M5X20 A4	
TB 0300B (See drawing on page: 8-84)					
010	522122-0002		1	RAIL	
020	522123-0000		1	PLATE	
030	522124-0000		1	RULER	
100	522131-0000		2	STEERING	
180	522139-0002		1	STOPPER	
350	312145-0329		6	SCREW ISO 2009 MFS M5X16 A4	
TB 1136B, TB 0568B, TB 1000B, TB 0500B (See drawing on page: 8-84)					
010	522122-0001		1	RAIL	
020	522123-0000		1	PLATE	
030	522124-0000		1	RULER	
100	522131-0000		2	STEERING	
170	522138-0000		1	STOPPER	
360	312145-0331		6	SCREW ISO 2009 MFS M5X20 A4	
TB 0500S (See drawing on page: 8-84)					
010	522122-0002		1	RAIL	
020	522123-0000		1	PLATE	
030	522124-0000		1	RULER	
100	522131-0000		2	STEERING	
180	522139-0001		1	STOPPER	
350	312145-0329		6	SCREW ISO 2009 MFS M5X16 A4	
TB 0568SQ, TB 0500SQ, TB 1000SQ (See drawing on page: 8-84)					
010	522122-0001		1	RAIL	
020	522123-0000		1	PLATE	
030	522124-0000		1	RULER	
100	522131-0000		2	STEERING	
170	574052-0000		1	STOPPER	
360	312145-0331		6	SCREW ISO 2009 MFS M5X20 A4	
TB 1000S (See drawing on page: 8-84)					
010	522122-0001		1	RAIL	
020	522123-0000		1	PLATE	
030	522124-0000		1	RULER	
100	522131-0000		2	STEERING	
170	569924-0000		1	STOPPER	
360	312145-0331		6	SCREW ISO 2009 MFS M5X20 A4	
Common Parts					
040	522125-0000		1	BEARING HOUSING	
050	522126-0000		1	SHEET	
060	556443-0000		1	BEARING HOUSING	
070	522128-0000		1	KNIFE	
080	522129-0000		1	KNIFE HOLDER	
090	522130-0000		1	HANDLE	
110	522132-0000		2	SLIDE BELT	
120	522133-0000		2	SHAFT	
130	522134-0000		2	END PLATE	
140	556439-0000		1	BARRIER	
145	556440-0000		1	BARRIER	
150	556441-0000		1	ARM	
155	556442-0000		1	ARM	
160	522137-0000		2	PUSH BUTTON	
190	522158-0000		2	COMPRESSION SPRING	
200	458041-0000		2	COMPRESSION SPRING	
210	530778-0000		2	LACE	
250	311103-0272		2	PARALLEL PIN ISO 2338 4M6X20 A1	
260	311112-0256		4	SPRING PIN, ISO 8752 4X20-C	
265	311112-0258		2	SPRING PIN, ISO 8752 4X24-C	
270	312115-0329		4	SCREW ISO4762 M5X16 A4 80	
280	312115-0339		2	SCREW ISO4762 M5X40 A4 80	
290	312115-0370		4	SCREW ISO4762 M6X20 A4 80	
310	312145-0289		8	SCREW ISO 2009 MFS M4X10 A4	
320	312145-0291		6	SCREW ISO 2009 MFS M4X12 A4	
340	312145-0327		6	SCREW ISO 2009 MFS M5X12 A4	
370	312105-0337		4	SCREW M6S ISO 4014 M5X35 A480	
400	315105-0146		6	WASHER BRB 5,3X10 RFR	
410	315105-0153		4	WASHER BRB 6,4X12 RFR	
430	318800-0107		1	HANDLE,SPHERICAL KNOB,INT.THRE.,D45-M10	

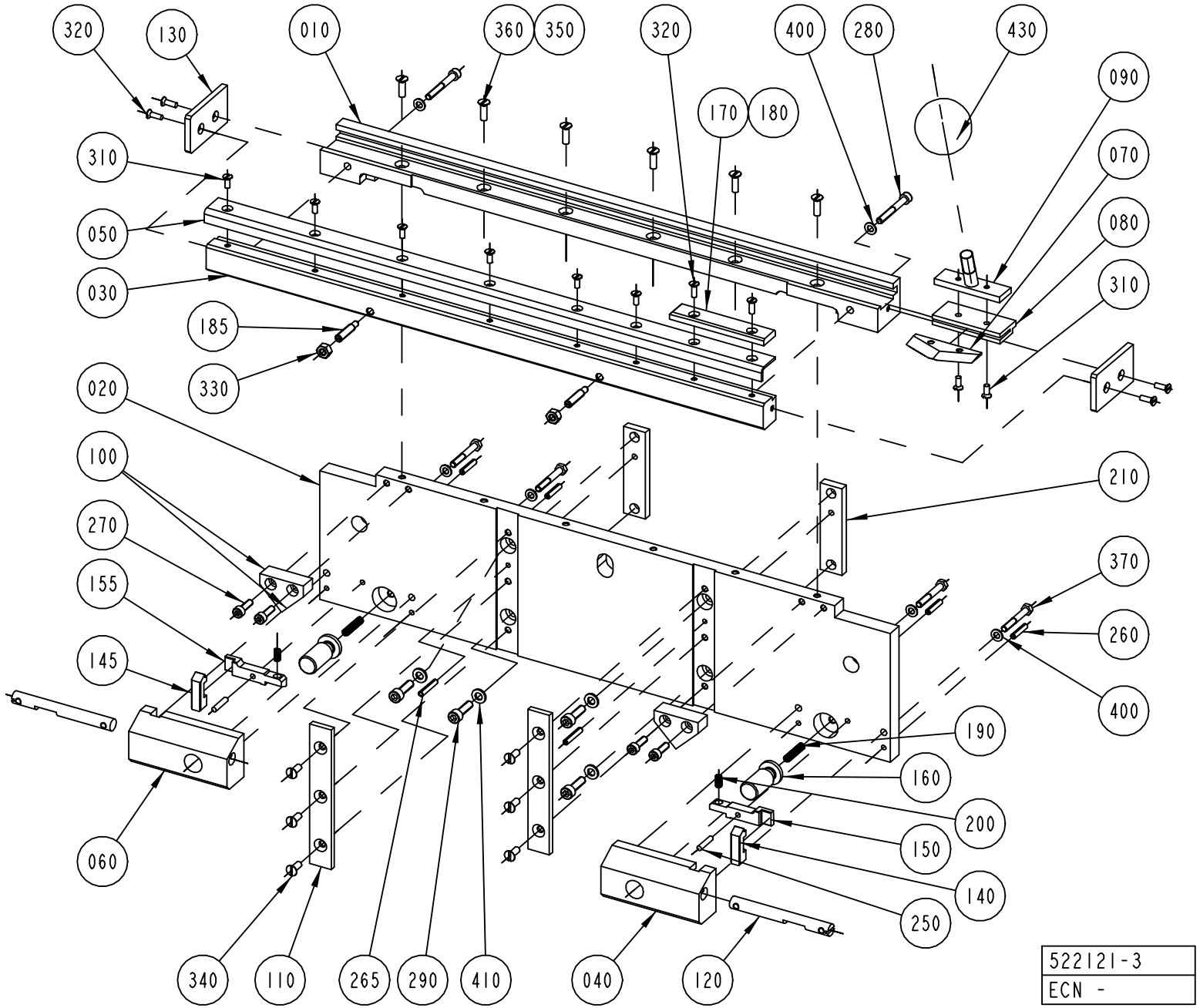
320
130
010
360
350
320
400
280
430
090
170
180
070
310
080
050
310
030
185
330
020
100
210
270
370
155
260
145
400
190
160
200
150
140
250
060
340
110
265
290
410
040
120
522121-3
ECN -

ECM: 197058 - 20041220
Group number: 522121-0200
Assembly Drawing: 522121-3_1_AB

This list covers pages from 8-84 to 8-87

Pos	Part No	UN	Qty	Description	Page No
TB 1500B (See drawing on page: 8-86)					
010	593642-0000		1	RAIL	
020	593643-0000		1	PLATE	
030	593644-0000		1	RULER	
100	593645-0000		2	STEERING	
180	593653-0000		1	STOPPER	
185	593654-0000		2	SCREW SET	
330	312605-0316		2	HEXAGON NUT, M6M M6 A280	
360	312145-0331		6	SCREW ISO 2009 MFS M5X20 A4	
TB 0300B (See drawing on page: 8-84)					
010	522122-0002		1	RAIL	
020	522123-0000		1	PLATE	
030	522124-0000		1	RULER	
100	522131-0000		2	STEERING	
180	522139-0002		1	STOPPER	
350	312145-0329		6	SCREW ISO 2009 MFS M5X16 A4	
TB 1136B, TB 0568B, TB 1000B, TB 0500B (See drawing on page: 8-84)					
010	522122-0001		1	RAIL	
020	522123-0000		1	PLATE	
030	522124-0000		1	RULER	
100	522131-0000		2	STEERING	
170	522138-0000		1	STOPPER	
360	312145-0331		6	SCREW ISO 2009 MFS M5X20 A4	
TB 0500S (See drawing on page: 8-84)					
010	522122-0002		1	RAIL	
020	522123-0000		1	PLATE	
030	522124-0000		1	RULER	
100	522131-0000		2	STEERING	
180	522139-0001		1	STOPPER	
350	312145-0329		6	SCREW ISO 2009 MFS M5X16 A4	
TB 0568SQ, TB 0500SQ, TB 1000SQ (See drawing on page: 8-84)					
010	522122-0001		1	RAIL	
020	522123-0000		1	PLATE	
030	522124-0000		1	RULER	
100	522131-0000		2	STEERING	
170	574052-0000		1	STOPPER	
360	312145-0331		6	SCREW ISO 2009 MFS M5X20 A4	
TB 1000S (See drawing on page: 8-84)					
010	522122-0001		1	RAIL	
020	522123-0000		1	PLATE	
030	522124-0000		1	RULER	
100	522131-0000		2	STEERING	
170	569924-0000		1	STOPPER	
360	312145-0331		6	SCREW ISO 2009 MFS M5X20 A4	
Common Parts					
040	522125-0000		1	BEARING HOUSING	
050	522126-0000		1	SHEET	
060	556443-0000		1	BEARING HOUSING	
070	522128-0000		1	KNIFE	
080	522129-0000		1	KNIFE HOLDER	
090	522130-0000		1	HANDLE	
110	522132-0000		2	SLIDE BELT	
120	522133-0000		2	SHAFT	
130	522134-0000		2	END PLATE	
140	556439-0000		1	BARRIER	
145	556440-0000		1	BARRIER	
150	556441-0000		1	ARM	
155	556442-0000		1	ARM	
160	522137-0000		2	PUSH BUTTON	
190	522158-0000		2	COMPRESSION SPRING	
200	458041-0000		2	COMPRESSION SPRING	
210	530778-0000		2	LACE	
250	311103-0272		2	PARALLEL PIN ISO 2338 4M6X20 A1	
260	311112-0256		4	SPRING PIN, ISO 8752 4X20-C	
265	311112-0258		2	SPRING PIN, ISO 8752 4X24-C	
270	312115-0329		4	SCREW ISO4762 M5X16 A4 80	
280	312115-0339		2	SCREW ISO4762 M5X40 A4 80	
290	312115-0370		4	SCREW ISO4762 M6X20 A4 80	
310	312145-0289		8	SCREW ISO 2009 MFS M4X10 A4	
320	312145-0291		6	SCREW ISO 2009 MFS M4X12 A4	
340	312145-0327		6	SCREW ISO 2009 MFS M5X12 A4	
370	312105-0337		4	SCREW M6S ISO 4014 M5X35 A480	
400	315105-0146		6	WASHER BRB 5,3X10 RFR	
410	315105-0153		4	WASHER BRB 6,4X12 RFR	
430	318800-0107		1	HANDLE,SPHERICAL KNOB,INT.THRE.,D45-M10	

This page is intentionally left blank.

ECM: - -
Group number: 440132-0200
Assembly Drawing:

Pos	Part No	UN	Qty	Description	Page No	Pos	Part No	UN	Qty	Description	Page No
-											
030	294009-0000		2	KNIFE							

Machine Type	Group Description	Used-In	Group Number	Page No

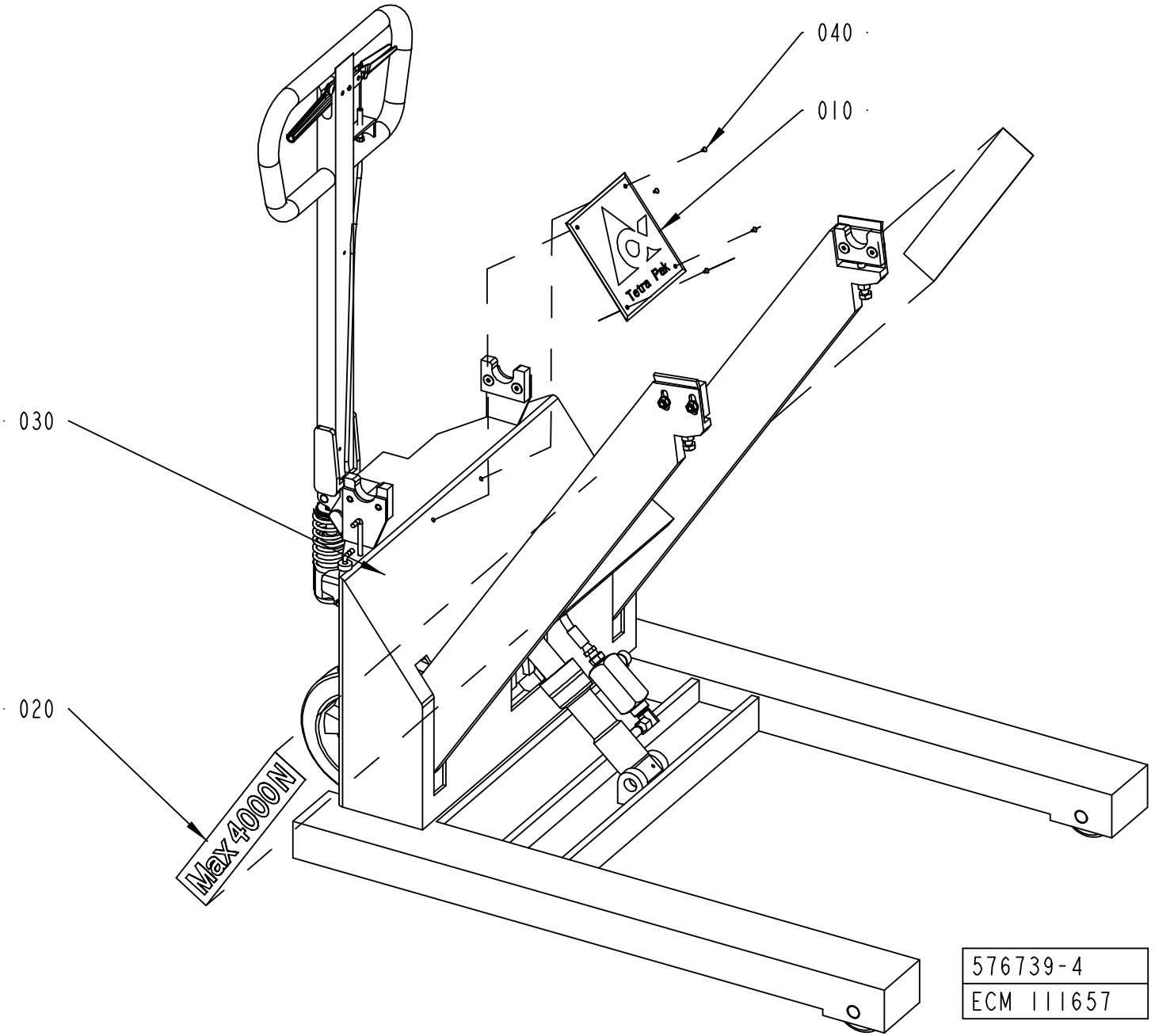
040
010
030
020
Max 400N
Tetra Pak
576739-4
ECM 111657

ECM: 178014 - 20041220
Group number: 576739-0200
Assembly Drawing: 576739-4_1_AB

Pos	Part No	UN	Qty	Description	Page No
-					
010	574658-0000		1	LOGOTYPE TP	
020	522308-0000		2	SIGN	
030	90067-0021		1	CARRIAGE 32 04 129 5	
100	*90067-0301*		*1*	*BRAKE WIRE, 32 82 138 1*	
110	*90067-0302*		*2*	*TORSION SPRING*	
120	*90067-0317*		*2*	*BRAKE LINING*	
130	*90067-0320*		*1*	*COTTER FOR 90067-301*	
140	*90067-0334*		*1*	*AXIAL BEARING KIT, 32 14 174 9*	
150	*90067-0336*		*1*	*GUIDE SHAFT UNIT, 32 82 123 3*	
160	*90067-0337*		*2*	*BRAKE DRUM*	
170	*90067-0338*		*2*	*GUIDE ROLLER 32 44 117 2*	
180	*90067-0370*		*2*	*WHEEL, 32 04 176 6*	
190	*90067-0371*		*4*	*SLEEVE, 32 04 175 8*	
200	*90067-0372*		*2*	*SHAFT, 32 04 174 1*	
210	*90067-0342*		*4*	*TENSION SPRING*	
220	*90067-0346*		*1*	*PISTON ROD*	
230	*90067-0347*		*1*	*CYLINDER SHELL*	
240	*90067-0348*		*1*	*REPAIR KIT*	
250	*90067-0349*		*1*	*ROLLER KIT, 34 73 050 7*	
260	*90067-0350*		*1*	*AXLE PIN*	
270	*90067-0351*		*1*	*SEAL KIT*	
280	*90067-0352*		*1*	*SINK VALVE COMPL.*	
290	*90067-0353*		*1*	*PUMP HOUSING, 34 73 522 5*	
300	*90067-0354*		*1*	*PUMP PISTON*	
310	*90067-0355*		*1*	*COMPRESSION SPRING*	
320	*90067-0356*		*1*	*TOP WASHER*	
330	*90067-0357*		*1*	*REPAIR KIT*	
340	*90067-0358*		*1*	*SINK HANDLE*	
350	*90067-0359*		*1*	*SINK ROD, 34 74 021 7*	
360	*90067-0360*		*1*	*MOUNTING KIT, 34 74 022 5*	
370	*90067-0361*		*1*	*TIE ROD*	
380	*90067-0362*		*1*	*CIRCLIP*	
390	*90067-0363*		*4*	*SLIDER, 32 04 160 1*	
400	*90067-0364*		*1*	*BRAKE HANDLE*	
410	*90067-0365*		*1*	*HYDRAULIC HOSE, 32 04 169 1*	
420	*90067-0366*		*1*	*INDICATOR L=278MM;D=6MM*	
430	*90067-0367*		*1*	*INDICATOR L=83MM;D=6MM*	
440	*90067-0368*		*1*	*YOKE*	
450	*90067-0369*		*1*	*VALVE ARM*	
500	*90055-0042*		*1*	*NIPPLES, EXT. THREAD, HEXAGON, NO. 6835-*	
510	*90055-0145*		*1*	*ELBOW ADAPTOR-R1/4*	
550	*90091-0106*		*1*	*SCRAPER 30X40X10 MM*	
570	*90201-0098*		*1*	*ADJ. FLOW CON. VALVE, NO. 9 PCCM 400SF*	
600	*311111-0251*		*1*	*SPRING PIN ISO 8752 4X10-ST*	
610	*311111-0345*		*1*	*SPRING PIN ISO 8752 6X32-ST*	
620	*311103-0271*		*2*	*PARALLEL PIN ISO 2338 4M6X18 A1*	
650	*312101-0678*		*2*	*SCREW M6S M20X70 FZB*	
670	*312104-0501*		*2*	*SCREW M6S M10X50H FZB*	
680	*312151-0451*		*4*	*SCREW EN 10642 MF6S M8X20 10.9 EL.PL*	
690	*312151-0455*		*4*	*SCREW EN 10642 MF6S M8X30 10.9 EL.PL*	
750	*312601-0318*		*4*	*HEXAGON NUT, DIN 934 M8 8 FZB*	
760	*312601-0320*		*2*	*HEXAGON NUT, M10 8 FZB, ISO 4032*	
800	*315101-0165*		*4*	*WASHER PLAIN, BRB, 8,4/16 H=1,5*	
840	*315234-0110*		*2*	*WASHER,PL.RND.CU.13,5/18 H=1,5*	
850	*315750-0119*		*4*	*RETAINING RING SHAFT DIN 471 ST 25*	
860	*315750-0131*		*1*	*RETAINING RING SHAFT DIN 471 ST 50*	
900	*321120-0137*		*2*	*BEARING BUSH W/O FLANGE, 20X23X15 MM*	
040	311521-0143		4	BLANK RIVET 3,2X8	

Machine Type	Group Description	Used-In	Group Number	Page No

Tetra Pak

SPC
Spare Parts Catalogue

TB/8 100V

648021-1000

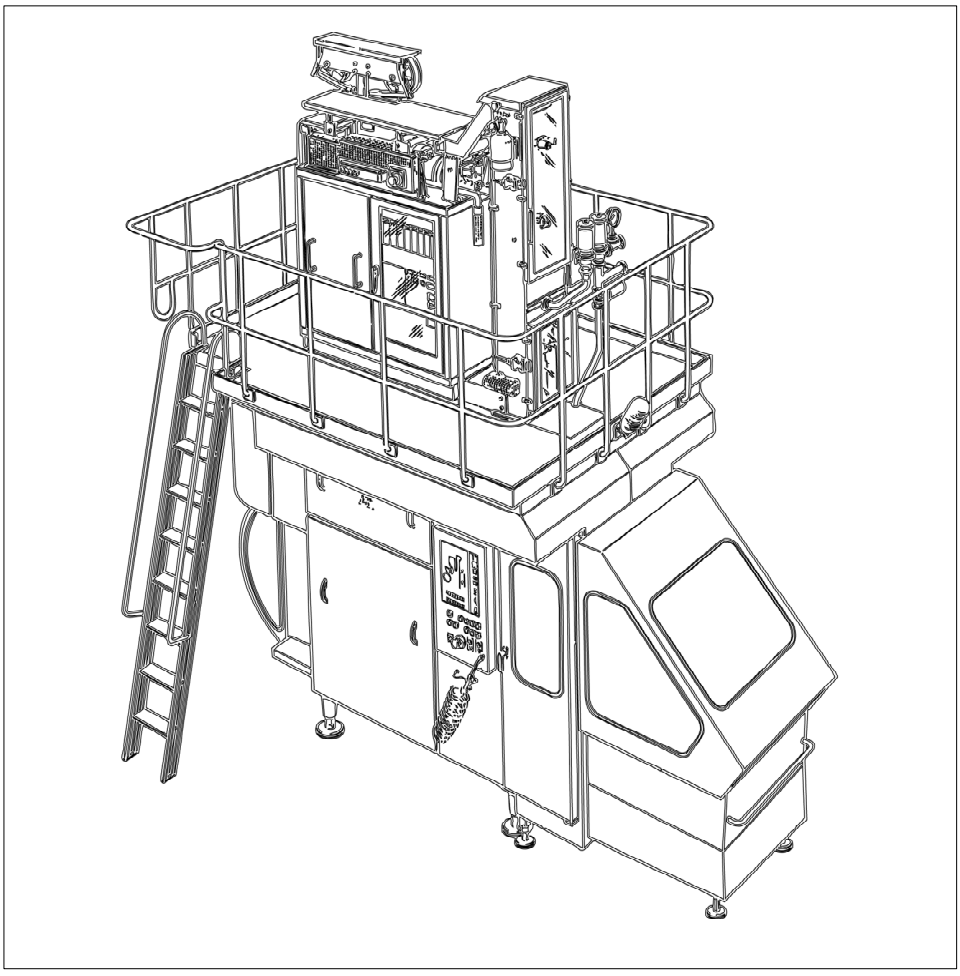

Tetra Pak

Doc. No: SPC-82241-0112

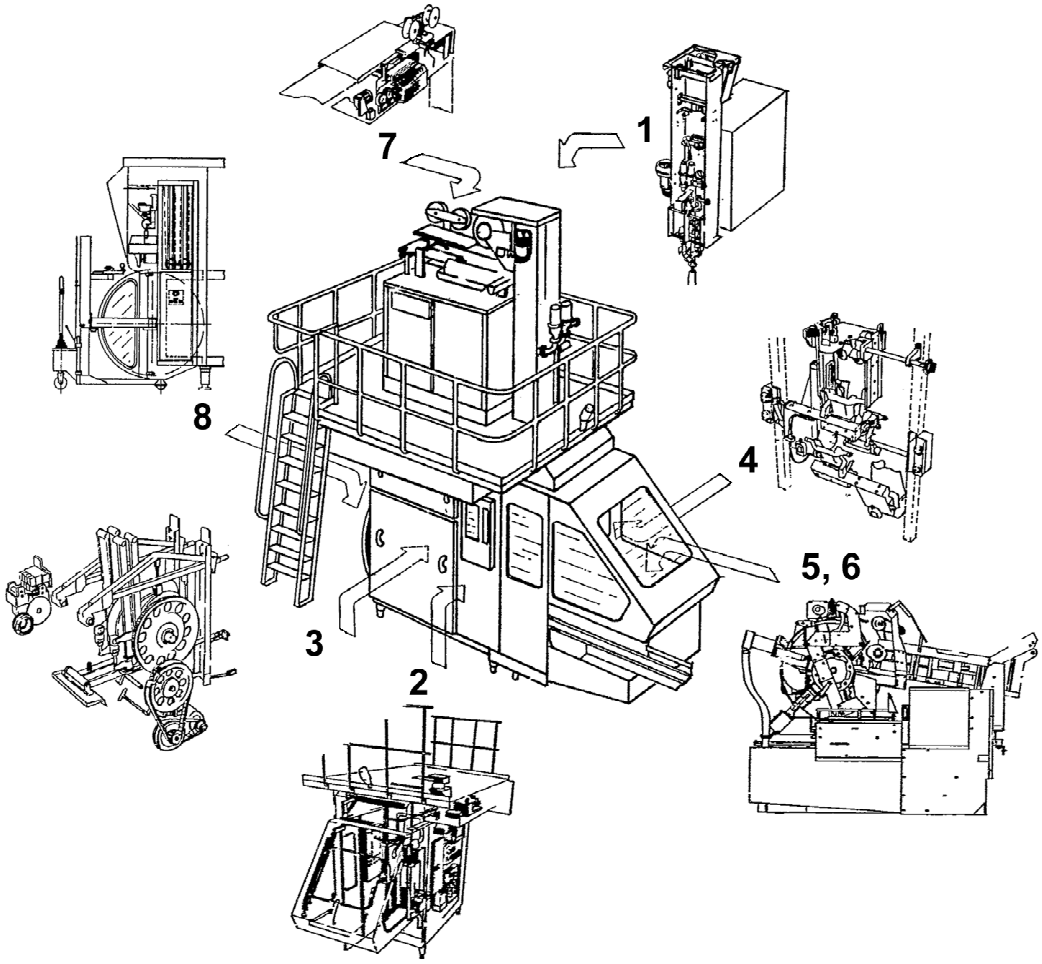

The position numbers in the illustration correspond with the chapter numbers listed on the next page.

Copyright © 2006 Tetra Pak Group

All rights reserved. No part of this document may be reproduced or copied in any form or by any means without written permission from Tetra Pak Carton Chilled AB.

Tetra Pak and all Tetra Pak products are trademarks belonging to the Tetra Pak Group.

The content of this manual is in accordance with the design and construction of the machine or equipment at the time of publishing. Tetra Pak reserves the right to introduce design modifications without prior notice.

This document was produced by:

Tetra Pak Carton Chilled AB
Ruben Rausings gata
SE-22186 LUND
Sweden

This Tetra Pak equipment was manufactured by:

Tetra Pak Carton Chilled AB
Ruben Rausings gata
SE-22186 LUND
Sweden

Additional copies can be ordered from Tetra Pak Technical Service or the nearest Tetra Pak office. When ordering additional copies, always provide the document number. This can be found in the machine specification document. It is also printed on the front cover and in the footer on each page of the manual.

Doc. No. SPC-82241-0112

Issue 2006-11

This document is valid from:

Series No/Machine No Sign.

SPC

Spare Parts Catalogue

TB/8 100V
648021-1000

A list of all optional equipment, optional kits, and rebuilding kits that this catalogue is valid for is found on the next page.

Doc. No: SPC-82241-0112

Issue 2006-11

Tetra Pak

Tetra Pak Carton Chilled AB

BINDER 1

i Introduction

1 Superstructure
B-648001-0800

2 Machine Body
B-648012-0800

3 Drive
B-648003-1000

4 Jaw System
B-648004-0900

5 Final Folder
B-648035-0700

6 Final Folder
B-648045-0100

7 Strip Applicator
B-648007-0400

8 Automatic Splicing Unit
B-648013-0600

BINDER 2

9 Electric Equipment
B-649057-1000

10 Regular Accessories
B-648009-0900

11 Optional Equipment
B-648026-0100

12 Optional Kits
B-648061-1000

13 Rebuilding Kits
B-648071-1000

14 Templates And Tools
B-648081-1000

ii Part Number Index

iii Alphabetical Index

iv Ref. Des. Parts Index

Valid for:

Jumbo Reel Equipment
268931-0100

MKC Air Dryer
597587-0100

MKC Bearing Housing
1338678-0100

MKC DCS2 Plus for TB/8-1002
2529941-0100

MKC Discharge Chute
2505169-0100

MKC Inproved USTS Jaw System
1365570-0100

MKC Knife Holder Spring
1285052-0100

MKC LS Sealing Available
597529-0100

MKC Middle Hydraulic System USTS
597527-0100

MKC New Impulse Transmitter Curve
1362446-0100

MKC Overload Protection Cam Kit
1347400-0100

MKC Simplified Reversed Fin Kit 2
1362445-0100

MKC Spring Holder
597593-0100

MKC Spring Knife 2
2529282-0100

MKC Strip Brake Supervision
2539286-0100

MKC Tube Adapted TPC Bars
1143220-0101

MKC USTS Serrated/Stepped Cutting Rail
2504997-0100

MKC USTS Split Cutting Rail
1366161-0100

MKC USTS Upgrade 1000 Sq
597571-0100

MKC Volume Flap Springs
1143615-0100

MKS Environment Kit
928013-0100

MKS Locking Pin
2727542-0100

OK Potlatch 320 nM (CTMP Freeboard)
2827006-0100

Rebuilding Kit Sharp Edges
594590-0100

Reverse Fin Kit
1285044-0100

RK Counter
2660701-0100

RK Frequency Converter
2660676-0100

RK Knife Spring
927600-0100

RK Paper Trolley
927668-0100

RK Recorder
2660700-0100

RK TPC 1000 Sq to USTS Hydraulic
595142-0100

RK US Drain Valve
592987-0100

RK US Hydraulic
592922-0100

UK Alarm Beacon
2767112-0100

UK Flap Sealing Kit
2505159-0100

UK Hold Down Device
597528-0100

UK Improved Strip Guide
2727709-0100

UK New Thyristor Unit
2504976-0100

UK New Version of Air Dryer
1362511-0100

UK Paper Holder Improvement
1346128-0100

UK Revolving Stand
2727622-0100

UK Simplified Reversed Fin Kit
597600-0100

UK Strip Guide
1347803-0100

UK USTS Cutting Rail
2653890-0100

UK Volume Flap Spring
1282642-0100

USTS Updating (TMCC)
559624-0100

SPC
Spare Parts Catalogue

This page is intentionally left blank.

ECM: 25561 - 19970904
Group number: 649057-1000
Assembly Drawing:

Pos	Part No	UN	Qty	Description	Page No
1500B					
0170	42869-1000		1	EL CABINET, TB/8-1003.	**9-5, 9-7, 9-9, 9-11, 9-13, 9-15**
0180	42870-1000		1	MACHINE, TB/8-1003.	**9-17**
0190	42871-1000		1	ELECTRICAL DOCUMENT, TB/8-1003.	
0200	42872-1000		1	SOFTWARE, TB/8-1003.	
0010	*48184-0002*		*1*	*SOFTWARE PLC*	
0210	42873-1000		1	EXTRA EQUIPMENT, TB/8-1003.	
0010	*90245-0023*		*1*	*MATCHING TRANSF. 37KVA*	
0010	*90245-0023*		*1*	*MATCHING TRANSF. 37KVA*	
0220	42874-1000		1	SPARE PARTS, TB/8-1003.	**9-19**
0230	42875-1000		1	CONTROL PANEL, TB/8-1003.	**9-21**
0240	42876-1000		1	SIDE PROTECTION, TB/8-1003.	**9-23**
TPC					
0010	67267-1000		1	EL CABINET, TB/8-1001.	**9-25, 9-27, 9-29, 9-31, 9-33**
0020	67268-1000		1	MACHINE, TB/8-1001.	**9-35, 9-37**
0030	67269-1000		1	ELECTRICAL DOCUMENT, TB/8-1001.	
0040	67270-1000		1	SOFTWARE, TB/8-1001.	
0010	*47744-0001*		*1*	*SOFTWARE, PLC PROGRAM FOR TB/8-1001*	
0050	67271-1000		1	EXTRA EQUIPMENT, TB/8-1001.	
0010	*90245-0023*		*1*	*MATCHING TRANSF. 37KVA*	
0010	*90245-0023*		*1*	*MATCHING TRANSF. 37KVA*	
0060	67520-1000		1	SPARE PARTS, TB/8-1001.	**9-39**
0070	68378-1000		1	CONTROL PANEL, TB/8-1001.	**9-41**
0080	68910-1000		1	SIDE PROTECTION, TB/8-1001.	**9-43**
Ultra Sonic Heat					
0090	42504-1000		1	EL CABINET, TB/8-1002. ..	**9-45, 9-47, 9-49, 9-51, 9-53, 9-55**
0100	42505-1000		1	MACHINE, TB/8-1002.	**9-57**
0110	42506-1000		1	ELECTRICAL DOCUMENT, TB/8-1002.	
0120	42507-1000		1	SOFTWARE, TB/8-1002.	
0010	*48050-0001*		*1*	*SOFTWARE, PLC PROGRAM FOR TB/8-1002*	
0130	42508-1000		1	EXTRA EQUIPMENT, TB/8-1002.	
0010	*90245-0023*		*1*	*MATCHING TRANSF. 37KVA*	
0010	*90245-0023*		*1*	*MATCHING TRANSF. 37KVA*	
0140	42509-1000		1	SPARE PARTS, TB/8-1002.	**9-59**
0150	42510-1000		1	CONTROL PANEL, TB/8-1002.	**9-61**
0160	42511-1000		1	SIDE PROTECTION, TB/8-1002.	**9-63**

Pos	Part No	UN	Qty	Description	Page No

Machine Type | Group Description | Used-In | Group Number | Page No

This page is intentionally left blank.

ECM: 72136 - 20000327
Group number: 42869-1000
Assembly Drawing:

This list covers pages from 9-4 to 9-15

Pos	Part No	UN	Qty	Description	Page No
50HZ					
L001	90297-0306		1	BALLAST COIL 50/60 HZ	
P001	90332-0007		1	RECORDER, ZSN 005/D 220V,50HZ	
	90333-0004		*1*	*GRAPH PAPER 24 HOURS*	
	90332-0308		*1*	*SPARE KEY FOR 90332-7, -8*	
Q101:5	359241-0297		1	SIGN: " 50 HZ"	
60HZ					
P001	90332-0008		1	RECORDER, ZSN 005/D 220V;60HZ	
	90333-0004		*1*	*GRAPH PAPER 24 HOURS*	
	90332-0308		*1*	*SPARE KEY FOR 90332-7, -8*	
Q101:6	359241-0298		1	SIGN: " 60 HZ"	
Common Parts					
0001	971373-0102		1	ELECTRICAL CABINET	
0005	90194-0133		1	SIGN "DELIVERED DESIGN"	
0010	90194-0016		7	WARNING SIGN, RISK OF ELECTRIC SHOCK	
0020	90194-0080		1	SIGN, IDENTIFICATION OF WIRING	
0030	67369-0102		1	RACK WALLMOUNTED 84TE	
030 2	*540282-0002*		*1*	*COMPONENTS WITHOUT TP-NO*	
0030:1	90220-0302		2	CLAMP FOR SCR.CABLE, 16MM, 55-016-89	
0030:2	90220-0304		2	CLAMP FOR SCR.CABLE, 24MM,	
0030:3	90062-0058		4	LOCK WASHER SERRAT.EXT.GEAR,3,2/6 H=0,4	
0030:4	312125-0232		4	SCREW ISO 1207 M3X25 A4	
0030:5	312605-0310		8	HEXAGON NUT, M6M M3 A280	
0030:6	315105-0124		8	WASHER BRB 3,2X7 RFR	
0060	596099-0001		1	FUSE PANEL LABEL	
0070	596099-0002		1	FUSE PANEL LABEL	
1000	351175-0109	M	1	CABLE AWM 1X16 MM2 YELLOW-GREEN	
1005	351175-0107	M	1	CABLE AWM 1X6 MM2 YELLOW-GREEN	
1010	351175-0106	M	1	CABLE AWM 1X4 MM2 YELLOW-GREEN	
1015	351175-0105	M	1	CABLE AWM 1X2,5 MM2 YELLOW-GREEN	
1020	351175-0104	M	1	KABEL AWM 1X15 MM2 YELLOW-GREEN	
1025	351175-0102	M	1	CABLE AWM 1X 075 MM2 YELLOW-GREEN	
1030	351179-0110	M	1	CABLE AWM 1X25 MM2 BLACK	
1035	351179-0107	M	1	CABLE AWM 1X6 MM2 BLACK	
1040	351179-0106	M	1	CABLE AWM 1X4 MM2 BLACK	
1045	351179-0105	M	1	CABLE AWM 1X2,5 MM2 BLACK	
1047	351179-0104	M	1	CABLE AWM 1X15 MM2 BLACK	
1050	351173-0110	M	1	CABLE AWM 1X25 MM2 LIGHTBLUE	
1055	351173-0104	M	1	CABLE AWM LIGHTBLUE 1,5MM2	
1060	351172-0106	M	1	CABLE AWM 1X4 MM2 DARKBLUE	
1065	351172-0102	M	1	CABLE AWM 1X 0,75 MM2 DARKBLUE	
1070	351176-0106	M	1	CABLE AWM 1X4 MM2 RED	
1075	351176-0104	M	1	CABLE AWM 1X15 MM2 RED	
1080	351180-0102	M	1	CABLE AWM 1X075 MM2 ORANGE	
A002:1	67372-0101		1	BACKPLANE 8TE(32 POLE)	
0010	*543336-0001*		*1*	*COMPONENTS WITHOUT TP-NO*	
0020	*543319-0000*		*1*	*PRINTED CIRCUIT BOARD*	
0030	*543337-0000*		*1*	*TERMINAL LABELS 1-4*	
A003:1	67372-0101		1	BACKPLANE 8TE(32 POLE)	
0010	*543336-0001*		*1*	*COMPONENTS WITHOUT TP-NO*	
0020	*543319-0000*		*1*	*PRINTED CIRCUIT BOARD*	
0030	*543337-0000*		*1*	*TERMINAL LABELS 1-4*	
A004	558230-0101		1	TMCC CONTROLLER	
100	*558370-0101*		*1*	*TMCC, MAIN PCB*	
100	*576100-0000*		*1*	*COMPONENTS WITHOUT TP-NO*	
110	*573131-0000*		*1*	*PRINTED CIRCUIT BOARD*	
120	*576101-0000*		*1*	*COOLING BLOCK*	
110	*576102-0000*		*1*	*COMPONENTS WITHOUT TP-NO*	
120	*576103-0000*		*1*	*CASING*	
130	*576104-0000*		*1*	*FRONT PLATE*	
140	*542036-0000*		*1*	*LABEL "PART NO" 84X140MM*	
A004:1	47832-0101		1	DCS8,DESIGN CONTR.PROG.	
100	*579804-0000*		*1*	*COMPONENTS WITHOUT TP-NO*	
110	*542036-0000*		*1*	*LABEL "PART NO" 84X140MM*	
A004:2	67372-0101		1	BACKPLANE 8TE(32 POLE)	
0010	*543336-0001*		*1*	*COMPONENTS WITHOUT TP-NO*	
0020	*543319-0000*		*1*	*PRINTED CIRCUIT BOARD*	
0030	*543337-0000*		*1*	*TERMINAL LABELS 1-4*	
A005	558230-0101		1	TMCC CONTROLLER	
100	*558370-0101*		*1*	*TMCC, MAIN PCB*	
100	*576100-0000*		*1*	*COMPONENTS WITHOUT TP-NO*	
110	*573131-0000*		*1*	*PRINTED CIRCUIT BOARD*	
120	*576101-0000*		*1*	*COOLING BLOCK*	
110	*576102-0000*		*1*	*COMPONENTS WITHOUT TP-NO*	
120	*576103-0000*		*1*	*CASING*	
130	*576104-0000*		*1*	*FRONT PLATE*	
140	*542036-0000*		*1*	*LABEL "PART NO" 84X140MM*	
A005:2	67372-0101		1	BACKPLANE 8TE(32 POLE)	
0010	*543336-0001*		*1*	*COMPONENTS WITHOUT TP-NO*	
0020	*543319-0000*		*1*	*PRINTED CIRCUIT BOARD*	
0030	*543337-0000*		*1*	*TERMINAL LABELS 1-4*	
A006	558230-0101		1	TMCC CONTROLLER	
100	*558370-0101*		*1*	*TMCC, MAIN PCB*	
100	*576100-0000*		*1*	*COMPONENTS WITHOUT TP-NO*	

Machine Type | Group Description | Used-In | Group Number | Page No

This page is intentionally left blank.

Pos	Part No	UN	Qty	Description	Page No
Common Parts (Cont'd)					
A006	558230-0101		1	TMCC CONTROLLER	
100	*558370-0101*		*1*	*TMCC, MAIN PCB*	
100	*576100-0000*		*1*	*COMPONENTS WITHOUT TP-NO*	
110	*573131-0000*		*1*	*PRINTED CIRCUIT BOARD*	
120	*576101-0000*		*1*	*COOLING BLOCK*	
110	*576102-0000*		*1*	*COMPONENTS WITHOUT TP-NO*	
120	*576103-0000*		*1*	*CASING*	
130	*576104-0000*		*1*	*FRONT PLATE*	
140	*542036-0000*		*1*	*LABEL "PART NO" 84X140MM*	
A006:2	67372-0101		1	BACKPLANE 8TE(32 POLE)	
0010	*543336-0001*		*1*	*COMPONENTS WITHOUT TP-NO*	
0020	*543319-0000*		*1*	*PRINTED CIRCUIT BOARD*	
0030	*543337-0000*		*1*	*TERMINAL LABELS 1-4*	
A007	558230-0101		1	TMCC CONTROLLER	
100	*558370-0101*		*1*	*TMCC, MAIN PCB*	
100	*576100-0000*		*1*	*COMPONENTS WITHOUT TP-NO*	
110	*573131-0000*		*1*	*PRINTED CIRCUIT BOARD*	
120	*576101-0000*		*1*	*COOLING BLOCK*	
110	*576102-0000*		*1*	*COMPONENTS WITHOUT TP-NO*	
120	*576103-0000*		*1*	*CASING*	
130	*576104-0000*		*1*	*FRONT PLATE*	
140	*542036-0000*		*1*	*LABEL "PART NO" 84X140MM*	
A007:2	67372-0101		1	BACKPLANE 8TE(32 POLE)	
0010	*543336-0001*		*1*	*COMPONENTS WITHOUT TP-NO*	
0020	*543319-0000*		*1*	*PRINTED CIRCUIT BOARD*	
0030	*543337-0000*		*1*	*TERMINAL LABELS 1-4*	
A008	558390-0104		1	UNIVERSAL THUMBWHEEL UNIT	
110	*577454-0000*		*1*	*CIRCUIT BOARD*	
120	*577455-0000*		*1*	*CASING*	
134	*581847-0000*		*1*	*FRONT PLATE*	
140	*542036-0000*		*1*	*LABEL "PART NO" 84X140MM*	
A002	90430-0037		1	MOTOR DRIVE CONTR.PME 1802. REPL.BY -67	
	352550-0136		*1*	*FINE-WIRE, 3,15 A*	
A002:2	352551-0136		1	FINE-WIRE FUSE 3,15 A SLOW	
A003	90430-0037		1	MOTOR DRIVE CONTR.PME 1802. REPL.BY -67	
	352550-0136		*1*	*FINE-WIRE, 3,15 A*	
A003:2	352551-0136		1	FINE-WIRE FUSE 3,15 A SLOW	
A005:1	47836-0101		1	TUBUS ENER.& POW.CONTROL	
A005:3	589361-0000		1	LABEL	
A006:1	47836-0101		1	TUBUS ENER.& POW.CONTROL	
A006:3	589361-0000		1	LABEL	
A007:1	47836-0101		1	TUBUS ENER.& POW.CONTROL	
A007:3	589361-0000		1	LABEL	
A012	90119-0072		1	SAFETY RELAY, JSBR4	
A013	90119-0080		1	SAFETY RELAY JSBR3	
A101	90025-0016		1	ENCODER MODULE TPMC	
A101:1	90025-0025		1	TERMINAL BLOCK ENCODER TPMC	
A102	90025-0017		1	INPUT MODULE TPMC	
A102:1	90025-0024		1	TERMINAL BLOCK, 491168307	
A103	90025-0017		1	INPUT MODULE TPMC	
A103:1	90025-0024		1	TERMINAL BLOCK, 491168307	
A104	90025-0017		1	INPUT MODULE TPMC	
A104:1	90025-0024		1	TERMINAL BLOCK, 491168307	
A105	90025-0017		1	INPUT MODULE TPMC	
A105:1	90025-0024		1	TERMINAL BLOCK, 491168307	
A106	90025-0017		1	INPUT MODULE TPMC	
A106:1	90025-0024		1	TERMINAL BLOCK, 491168307	
A108	90025-0052		1	MAIN RACK COMPAKT (MCR)	
A112	90025-0053		1	OUTPUT MODULE TPMC OM16	
A112:1	90025-0054		1	KUPPL.SOCKEL MSTB 2,5-5,08 FÃ¼R 90025-53	
A113	90025-0053		1	OUTPUT MODULE TPMC OM16	
A113:1	90025-0054		1	KUPPL.SOCKEL MSTB 2,5-5,08 FÃ¼R 90025-53	
A114	90025-0053		1	OUTPUT MODULE TPMC OM16	
A114:1	90025-0054		1	KUPPL.SOCKEL MSTB 2,5-5,08 FÃ¼R 90025-53	
A115	90025-0053		1	OUTPUT MODULE TPMC OM16	
A115:1	90025-0054		1	KUPPL.SOCKEL MSTB 2,5-5,08 FÃ¼R 90025-53	
A116	90025-0053		1	OUTPUT MODULE TPMC OM16	
A116:1	90025-0054		1	KUPPL.SOCKEL MSTB 2,5-5,08 FÃ¼R 90025-53	
A117	90025-0053		1	OUTPUT MODULE TPMC OM16	
A117:1	90025-0054		1	KUPPL.SOCKEL MSTB 2,5-5,08 FÃ¼R 90025-53	
A118	90025-0058		1	EXPANSIONS RACK COMPACT-8	
A118:1	90025-0022		1	RACK TERMINATION TPMC	
A205	90410-0051		1	TEMPERATURE CONTROLLER, KS 40	
A205:1	359241-0132		1	SIGN: " TEMP. SA"	
A205:2	359240-0100		1	SIGN HOLDER FOR 359240-0001	
A206	90410-0051		1	TEMPERATURE CONTROLLER, KS 40	
A206:1	359241-0131		1	SIGN: " TEMP. LS"	
A206:2	359240-0100		1	SIGN HOLDER FOR 359240-0001	
A208	90410-0051		1	TEMPERATURE CONTROLLER, KS 40	
A208:1	359241-0251		1	SIGN: " TEMP.-SPLICING"	
A208:2	359240-0100		1	SIGN HOLDER FOR 359240-0001	
A209:1	359240-0001		1	SIGN, NOT ENGRAVED	
A209:2	359240-0100		1	SIGN HOLDER FOR 359240-0001	

This page is intentionally left blank.

ECM: 72136 - 20000327
Group number: 42869-1000
Assembly Drawing:

This list covers pages from 9-4 to 9-15

Pos	Part No	UN	Qty	Description	Page No
Common Parts (Cont'd)					
A301	90314-0021		1	LEVELRELAY0,5-10KOHM REPLACED BY90314-38	
A450	90119-0077		1	CURRENT RELAY SYRELEC DIRT2 230	
A451	90119-0077		1	CURRENT RELAY SYRELEC DIRT2 230	
A500	90172-0031		1	GENERATOR	
A500:1	352551-0141		1	FINE-WIRE 10 A	
A500:2	352551-0141		1	FINE-WIRE 10 A	
A500:3	352551-0141		1	FINE-WIRE 10 A	
A500:4	352551-0137		1	FINE-WIRE 4 A	
A501	90172-0032		1	SWITCH, 911 758 001 SB-3-6R	
A501:1	352551-0134		1	FINE-WIRE FUSE 2 A SLOW,5X20MM	
D108	90025-0070		1	PROCESSOR TPMC CPU 64.1	
	90334-0006		*1*	*BATTERY 3,6V SIZE AA*	
	90025-0046		*1*	*BATTERY CARRIER TPMC 971-009-002*	
D108:1	90025-0094		1	TERMINAL BLOCK 4-POLE	
D108:2	90334-0006		1	BATTERY 3,6V SIZE AA	
	90025-0046		*1*	*BATTERY CARRIER TPMC 971-009-002*	
E001	90297-0006		1	FLUORESCENT TUBE, PL9	
E001:1	90164-0301		1	HOLDING FIXTURE	
E002	90297-0006		1	FLUORESCENT TUBE, PL9	
E002:1	90164-0301		1	HOLDING FIXTURE	
F000	90135-0038		12	CABLE CLAMP K&M K*12 5-1	
F000:1	90135-0031		8	BUSBAR HOLDER K&M SHO165/2	
F000:2	353021-0214		30	FEED THROUGH TERMINAL, 10202.0	
F000:3	353032-0004		10	END PLATE WAP 2,5-10 BEIGE	
F000:4	353031-0201		20	END BRACKET EW35	
F005	90233-0027		1	TUBE FUSE, 16A	
	90233-0305		*1*	*INDICATOR*	
F005:1	90233-0303		1	FUSE HOLDER, ST 10 1-POLE	
F006	90233-0027		1	TUBE FUSE, 16A	
	90233-0305		*1*	*INDICATOR*	
F006:1	90233-0303		1	FUSE HOLDER, ST 10 1-POLE	
F008	90233-0028		1	TUBE FUSE, 10A	
F008:1	90233-0303		1	FUSE HOLDER, ST 10 1-POLE	
F020	90007-0147		1	CIRCUIT BREAKER, 3P 10 A K	
F022	90007-0129		1	CIRCUIT BREAKER, 1P 10 A K	
F023	90007-0129		1	CIRCUIT BREAKER, 1P 10 A K	
F025	90007-0129		1	CIRCUIT BREAKER, 1P 10 A K	
F026	90233-0028		1	TUBE FUSE, 10A	
F026:1	90233-0303		1	FUSE HOLDER, ST 10 1-POLE	
F027	90007-0131		1	CIRCUIT BREAKER, 1P 16 A K	
F028	90007-0129		1	CIRCUIT BREAKER, 1P 10 A K	
F029	90233-0027		1	TUBE FUSE, 16A	
	90233-0305		*1*	*INDICATOR*	
F029:1	90233-0303		1	FUSE HOLDER, ST 10 1-POLE	
F034	90007-0147		1	CIRCUIT BREAKER, 3P 10 A K	
F050	352550-0133		1	FINE-WIRE, 1.6 A	
F050:1	353023-0102		1	FUSE TERMINAL, 10110.0	
G001	90430-0038		1	FREQ.INVERTER 1PH 2,2KW	
G001:1	352550-0120		1	FINE-WIRE 315 MA	
G100	90025-0055		1	POWER SUPPLY UNIT TPMC PS32	
	352551-0136		*1*	*FINE-WIRE FUSE 3,15 A SLOW*	
G100:1	352551-0136		1	FINE-WIRE FUSE 3,15 A SLOW	
K001	90075-0125		1	CONTACTOR, 7,5KW 24VDC	
	90075-0313		*1*	*AUXILIARY CONTACT K&M 22 DILM.2NO,2NC*	
K002	90075-0125		1	CONTACTOR, 7,5KW 24VDC	
	90075-0313		*1*	*AUXILIARY CONTACT K&M 22 DILM.2NO,2NC*	
K004	90075-0125		1	CONTACTOR, 7,5KW 24VDC	
	90075-0313		*1*	*AUXILIARY CONTACT K&M 22 DILM.2NO,2NC*	
K005	90075-0125		1	CONTACTOR, 7,5KW 24VDC	
	90075-0313		*1*	*AUXILIARY CONTACT K&M 22 DILM.2NO,2NC*	
K006	90075-0125		1	CONTACTOR, 7,5KW 24VDC	
	90075-0313		*1*	*AUXILIARY CONTACT K&M 22 DILM.2NO,2NC*	
K007	90075-0125		1	CONTACTOR, 7,5KW 24VDC	
	90075-0313		*1*	*AUXILIARY CONTACT K&M 22 DILM.2NO,2NC*	
K008	90075-0125		1	CONTACTOR, 7,5KW 24VDC	
	90075-0313		*1*	*AUXILIARY CONTACT K&M 22 DILM.2NO,2NC*	
K009	90075-0125		1	CONTACTOR, 7,5KW 24VDC	
	90075-0313		*1*	*AUXILIARY CONTACT K&M 22 DILM.2NO,2NC*	
K012	90075-0125		1	CONTACTOR, 7,5KW 24VDC	
	90075-0313		*1*	*AUXILIARY CONTACT K&M 22 DILM.2NO,2NC*	
K013	90075-0125		1	CONTACTOR, 7,5KW 24VDC	
	90075-0313		*1*	*AUXILIARY CONTACT K&M 22 DILM.2NO,2NC*	
K014	90075-0125		1	CONTACTOR, 7,5KW 24VDC	
	90075-0313		*1*	*AUXILIARY CONTACT K&M 22 DILM.2NO,2NC*	
K015	90075-0125		1	CONTACTOR, 7,5KW 24VDC	
	90075-0313		*1*	*AUXILIARY CONTACT K&M 22 DILM.2NO,2NC*	
K016	90075-0125		1	CONTACTOR, 7,5KW 24VDC	
	90075-0313		*1*	*AUXILIARY CONTACT K&M 22 DILM.2NO,2NC*	
K020	90075-0125		1	CONTACTOR, 7,5KW 24VDC	
	90075-0313		*1*	*AUXILIARY CONTACT K&M 22 DILM.2NO,2NC*	
K021	90075-0125		1	CONTACTOR, 7,5KW 24VDC	
	90075-0313		*1*	*AUXILIARY CONTACT K&M 22 DILM.2NO,2NC*	
K022	90075-0125		1	CONTACTOR, 7,5KW 24VDC	

This page is intentionally left blank.

ECM: 72136 - 20000327
Group number: 42869-1000
Assembly Drawing:

This list covers pages from 9-4 to 9-15

Pos	Part No	UN	Qty	Description	Page No
Common Parts (Cont'd)					
K022	90075-0125		1	CONTACTOR, 7,5KW 24VDC	
	90075-0313		*1*	*AUXILIARY CONTACT K&M 22 DILM.2NO,2NC*	
K023	90075-0125		1	CONTACTOR, 7,5KW 24VDC	
	90075-0313		*1*	*AUXILIARY CONTACT K&M 22 DILM.2NO,2NC*	
K030	90075-0126		1	CONTACTOR, 22KW 24VDC	
	90075-0313		*1*	*AUXILIARY CONTACT K&M 22 DILM.2NO,2NC*	
K050	90119-0063		1	OPTO-RELAY, DC/DC AMMS-10-1/30VDC	
K051	90119-0063		1	OPTO-RELAY, DC/DC AMMS-10-1/30VDC	
K101	90119-0056		1	RELAY, AUXILIARY MK3P5-S 24VDC	
K101:1	90129-0006		1	BASE, S3-B	
K102	90119-0056		1	RELAY, AUXILIARY MK3P5-S 24VDC	
K102:1	90129-0006		1	BASE, S3-B	
K110	90119-0056		1	RELAY, AUXILIARY MK3P5-S 24VDC	
K110:1	90129-0006		1	BASE, S3-B	
K111	90119-0056		1	RELAY, AUXILIARY MK3P5-S 24VDC	
K111:1	90129-0006		1	BASE, S3-B	
K112	90119-0056		1	RELAY, AUXILIARY MK3P5-S 24VDC	
K112:1	90129-0006		1	BASE, S3-B	
K113	90119-0056		1	RELAY, AUXILIARY MK3P5-S 24VDC	
K113:1	90129-0006		1	BASE, S3-B	
K120	90119-0056		1	RELAY, AUXILIARY MK3P5-S 24VDC	
K120:1	90129-0006		1	BASE, S3-B	
K121	90119-0056		1	RELAY, AUXILIARY MK3P5-S 24VDC	
K121:1	90129-0006		1	BASE, S3-B	
K124	90119-0056		1	RELAY, AUXILIARY MK3P5-S 24VDC	
K124:1	90129-0006		1	BASE, S3-B	
K125	90119-0056		1	RELAY, AUXILIARY MK3P5-S 24VDC	
K125:1	90129-0006		1	BASE, S3-B	
K126	90119-0056		1	RELAY, AUXILIARY MK3P5-S 24VDC	
K126:1	90129-0006		1	BASE, S3-B	
K127	90119-0056		1	RELAY, AUXILIARY MK3P5-S 24VDC	
K127:1	90129-0006		1	BASE, S3-B	
K128	90119-0056		1	RELAY, AUXILIARY MK3P5-S 24VDC	
K128:1	90129-0006		1	BASE, S3-B	
K202	90119-0043		1	OPTO-RELAY, 22DC 60S-3/32VDC	
K203	90119-0067		1	SOLID-STATE RELAY, H12WD4850	
K204	90119-0067		1	SOLID-STATE RELAY, H12WD4850	
K211	90119-0067		1	SOLID-STATE RELAY, H12WD4850	
K212	90119-0067		1	SOLID-STATE RELAY, H12WD4850	
K213	90119-0067		1	SOLID-STATE RELAY, H12WD4850	
K214	90119-0067		1	SOLID-STATE RELAY, H12WD4850	
P003	90053-0028		1	3 DIGIT COUNTER KOYO KCX-3-DM-V	
P003:1	90053-0309		1	BASE	
P004	90053-0031		1	HOUR COUNTER, B 609.10 10-50VDC	
P005	90053-0032		1	COUNTER, F524.650DA3B 24VDC	
P006	90053-0029		1	COUNTER, F524.800FA3C 24VDC	
Q000	90259-0312		2	ADAPTER PLATE K&M SP PKZ SOND C	
Q000:1	90259-0310		22	ADAPTER PLATE, K&M SP PKZ M	
Q001	90095-0075		1	OVERLOAD PROTECTION, PKZM 4 A	
Q001:1	90259-0313		1	AUX. CONTACT K&M NHI21-PKZM0	
Q002	90095-0076		1	OVERLOAD PROTECTION, PKZM 6,3 A	
Q002:1	90259-0313		1	AUX. CONTACT K&M NHI21-PKZM0	
Q003	90095-0074		1	OVERLOAD PROTECTION, PKZM 2,5 A	
Q003:1	90259-0313		1	AUX. CONTACT K&M NHI21-PKZM0	
Q009	90095-0075		1	OVERLOAD PROTECTION, PKZM 4 A	
Q009:1	90259-0313		1	AUX. CONTACT K&M NHI21-PKZM0	
Q012	90095-0077		1	OVERLOAD PROTECTION, PKZM 6-10 A	
Q012:1	90259-0313		1	AUX. CONTACT K&M NHI21-PKZM0	
Q013	90095-0073		1	OVERLOAD PROTECTION, PKZM 1,6 A	
Q013:1	90259-0313		1	AUX. CONTACT K&M NHI21-PKZM0	
Q014	90095-0073		1	OVERLOAD PROTECTION, PKZM 1,6 A	
Q014:1	90259-0313		1	AUX. CONTACT K&M NHI21-PKZM0	
Q021	90095-0072		1	OVERLOAD PROTECTION, PKZM 1,0 A	
Q021:1	90259-0313		1	AUX. CONTACT K&M NHI21-PKZM0	
Q030	90095-0080		1	OVERLOAD PROTECTION, PKZM 25 A	
Q030:1	90259-0313		1	AUX. CONTACT K&M NHI21-PKZM0	
Q101	90111-0131		1	MAIN SWITCH P3-100/V/SVB-SW/N/HI11/H-P3	
	90111-0332		*1*	*NEUTRAL CONTACT, N-P3Z*	
Q101:1	90111-0332		1	NEUTRAL CONTACT, N-P3Z	
Q101:2	359241-0124		1	SIGN: " MAIN SWITCH"	
Q101:3	359240-0100		2	SIGN HOLDER FOR 359240-0001	
Q101:4	779910-0101		1	PADLOCK	
Q102	90259-0031		1	OVERLOAD RELAY, 25-40 A	
R108	90121-0116		1	RESISTANCE FIXED, 0,15 KOHM, 0,25 W	
R202	68444-0101		1	SHUNT RESISTOR FOR SSR	
S003	90064-0085		1	PUSH BUTTON, RED	
S003:1	359301-0110		1	BUTTON SIGN, SHORT STOP	
S006	90111-0142		1	SWITCH GEAR, NO.OF DIGIT: 4	
S006:1	359320-0003		1	SIGN, THUMB WHEEL UNIT FILLING ON	
S006:2	359240-0100		1	SIGN HOLDER FOR 359240-0001	
S008	90002-0014		1	BLIND PLUG D=22,5MM	
S008:1	359240-0001		1	SIGN, NOT ENGRAVED	
S008:2	359240-0100		1	SIGN HOLDER FOR 359240-0001	

This page is intentionally left blank.

ECM: 72136 - 20000327
Group number: 42869-1000
Assembly Drawing:

This list covers pages from 9-4 to 9-15

Pos	Part No	UN	Qty	Description	Page No
Common Parts (Cont'd)					
S009:2	359240-0100		1	SIGN HOLDER FOR 359240-0001	
S015	90111-0120		1	SWITCH, 2 POS.704.510 .0A+704.901.5/A	
S015:1	359241-0324		1	SIGN: " PREPERATIONS"	
S015:2	359240-0100		1	SIGN HOLDER FOR 359240-0001	
T001	90245-0019		1	TRANSF. 3-PH.750VA SEC.23A	
T003	23139-0000		1	TRANSFORMER 1PH. AUTO 2,1 KVA	
V001	90038-0024		1	RECTIFIER, 10/22A SKD 50/04A3	
W005	1140660-0001		1	ANALOGUE CABLE	
0010	*90220-0093*	*MM*	*2500*	*PAIR TWISTED CABLE 4X2X0,25MM2*	
0020	*90110-0143*		*1*	*CONTACT UNIT, DB25P064TX*	
0030	*90110-0146*		*1*	*COVER*	
0040	*90166-0171*	*MM*	*30*	*SHRINKABLE HOSE (12,7MM) BLACK*	
0050	*90166-0111*	*MM*	*350*	*SHRINKABLE HOSE 6.4 MM(1/4")BLACK*	
0060	*353101-0132*		*1*	*CABLE SHOE 1,5-2,5MM2 M5 BLUE*	
0070	*353001-0116*		*7*	*END SLEEVE H0.5/14 ORANGE*	
W001	90220-0059	M	1	THERMOCOUPLE CABLE K/PVC/20AWG 2X0,5MM2	
W002	90220-0059	M	1	THERMOCOUPLE CABLE K/PVC/20AWG 2X0,5MM2	
W003	90220-0040	M	1	SCR. CABLE 2X0,75 MM2 BLACK	
W004	90220-0059	M	1	THERMOCOUPLE CABLE K/PVC/20AWG 2X0,5MM2	
W006	90172-0318		1	HF-CABLE 450MM, TELSONIC 514 210 004	
W007	90172-0318		1	HF-CABLE 450MM, TELSONIC 514 210 004	
W008	90172-0318		1	HF-CABLE 450MM, TELSONIC 514 210 004	
W010	90220-0105	MM	1	SCR. CABLE 4X2,5MM2	
W011	90220-0105	MM	1	SCR. CABLE 4X2,5MM2	
W012	90220-0108	MM	1	SCR. CABLE 5X1,5MM2	
W013	90220-0108	MM	1	SCR. CABLE 5X1,5MM2	
W015	90220-0059	M	1	THERMOCOUPLE CABLE K/PVC/20AWG 2X0,5MM2	
W016	90220-0059	M	1	THERMOCOUPLE CABLE K/PVC/20AWG 2X0,5MM2	
W017	90220-0059	M	1	THERMOCOUPLE CABLE K/PVC/20AWG 2X0,5MM2	
W020	1143884-0000		1	COPPER BRAID	
W021	1143884-0000		1	COPPER BRAID	
W022	1143884-0000		1	COPPER BRAID	
W024	1143884-0000		1	COPPER BRAID	
W025	1143884-0000		1	COPPER BRAID	
W026	1143884-0000		1	COPPER BRAID	
XL:1	596737-0000		1	DISTR. TERMINAL, 220V	
0001	*353042-0005*	*MM*	*300*	*RAIL TS 35/7.5*	
0002	*353031-0201*		*2*	*END BRACKET EW35*	
0003	*353021-0213*		*22*	*FEED THROUGH TERMINAL, 10201.0*	
0004	*353034-0014*		*1*	*BRIDGE CONN.Q10(SAK 2,5)*	
0005	*353034-0031*		*2*	*BRIDGE CONNECTOR, WQV 4/10, 10520.6*	
0006	*353032-0004*		*3*	*END PLATE WAP 2,5-10 BEIGE*	
0007	*359011-0802*		*3*	*SIGN BOARD BSFW 11-20*	
XL:2	596740-0000		1	DISTR. TERMINAL, DIODES	
0001	*353042-0005*	*MM*	*370*	*RAIL TS 35/7.5*	
0002	*353031-0201*		*2*	*END BRACKET EW35*	
0003	*353021-0217*		*44*	*FEED THROUGH TERMINAL, 10201.8*	
0004	*353021-0122*		*6*	*TERMINAL DISCONNECTBLE, WTR 2,5 D*	
0005	*353034-0014*		*1*	*BRIDGE CONN.Q10(SAK 2,5)*	
0006	*353034-0031*		*5*	*BRIDGE CONNECTOR, WQV 4/10, 10520.6*	
0007	*353032-0004*		*1*	*END PLATE WAP 2,5-10 BEIGE*	
0008	*353032-0005*		*4*	*END PLATE WAP 2,5-10 BLUE*	
0009	*359011-0802*		*5*	*SIGN BOARD BSFW 11-20*	
0010	*359011-0801*		*1*	*SIGN BOARD BSFW 1-50*	
0011	*353023-0102*		*1*	*FUSE TERMINAL, 10110.0*	
0012	*352550-0133*		*1*	*FINE-WIRE, 1.6 A*	
X001:1	596098-0000		1	CONTROL TERMINAL X1:1	
0001	*353042-0005*	*MM*	*350*	*RAIL TS 35/7.5*	
0002	*353024-0205*		*1*	*EARTH TERMINAL, 1010.1*	
0003	*359011-0202*		*6*	*SIGN BOARD(GROUND)*	
0004	*353021-0217*		*28*	*FEED THROUGH TERMINAL, 10201.8*	
0005	*359012-0350*		*2*	*MARKING LABEL, WHITE, BSGW, 350*	
0006	*359011-0814*		*2*	*SET OF SIGNS 5-FW 350-400*	
0007	*353032-0005*		*1*	*END PLATE WAP 2,5-10 BLUE*	
0008	*353031-0201*		*1*	*END BRACKET EW35*	
X001:2	596743-0000		1	TERMINAL BLOCK X1:2	
0001	*353042-0005*	*MM*	*580*	*RAIL TS 35/7.5*	
0002	*353024-0205*		*20*	*EARTH TERMINAL, 1010.1*	
0003	*353021-0213*		*54*	*FEED THROUGH TERMINAL, 10201.0*	
0004	*353021-0214*		*4*	*FEED THROUGH TERMINAL, 10202.0*	
0005	*353032-0004*		*1*	*END PLATE WAP 2,5-10 BEIGE*	
0006	*353031-0201*		*1*	*END BRACKET EW35*	
0007	*359011-0806*		*2*	*SET OF SIGNS, 5-FW 1-200*	
0008	*359011-0202*		*40*	*SIGN BOARD(GROUND)*	
X001:3	596739-0000		1	CONTROL TERMINAL X1:3	
0001	*353042-0005*	*MM*	*530*	*RAIL TS 35/7.5*	
0002	*353024-0205*		*10*	*EARTH TERMINAL, 1010.1*	
0003	*359011-0202*		*20*	*SIGN BOARD(GROUND)*	
0004	*353021-0217*		*59*	*FEED THROUGH TERMINAL, 10201.8*	
0005	*359011-0806*		*2*	*SET OF SIGNS, 5-FW 1-200*	
0006	*90119-0063*		*2*	*OPTO-RELAY, DC/DC AMMS-10-1/30VDC*	
0007	*353031-0201*		*1*	*END BRACKET EW35*	
X002	596738-0000		1	GROUND AND NEUTRAL TERM.	

Machine Type | Group Description | Used-In | Group Number | Page No

This page is intentionally left blank.

ECM: 72136 - 20000327
Group number: 42869-1000
Assembly Drawing:

This list covers pages from 9-4 to 9-15

Pos	Part No	UN	Qty	Description	Page No
Common Parts (Cont'd)					
X002	596738-0000		1	GROUND AND NEUTRAL TERM.	
0001	*353042-0005*	*MM*	*530*	*RAIL TS 35/7.5*	
0002	*353024-0208*		*7*	*EARTH TERMINAL, 1010.4*	
0003	*353024-0205*		*18*	*EARTH TERMINAL, 1010.1*	
0004	*359011-0800*		*1*	*MARKING PLATES BSFW 51-100*	
0005	*353031-0201*		*3*	*END BRACKET EW35*	
0006	*353033-0104*		*5*	*END PLATE, 10502.8*	
0007	*353022-0002*		*20*	*NEUTRAL TERMINAL, 10107.8*	
0008	*353041-0001*	*MM*	*160*	*BUS BAR RAIL 10X3MM SSCH*	
0009	*353041-0106*		*1*	*HOLDER ZB35 K 5026.8*	
0010	*359010-0613*		*2*	*SIGN BOARD BSG 1/2 "N"*	
0011	*359011-0805*		*1*	*SIGN BOARDATS 1-15*	
X010	596741-0000		1	TERMINAL BLOCK X10	
0001	*353042-0005*	*MM*	*280*	*RAIL TS 35/7.5*	
0002	*90082-0010*		*1*	*OVERVOLT.PROT.PU4R230V3PH*	
	90082-0300		*1*	*OVERVOLT.PROT.PU1 230 VAC*	
0003	*359011-0807*		*1*	*MARKING PLATES 5-FW 1-50*	
0004	*353021-0219*		*10*	*FEED THROUGH TERMINAL, 10205.0*	
0005	*353034-0031*		*5*	*BRIDGE CONNECTOR, WQV 4/10, 10520.6*	
0006	*359011-0819*		*1*	*MARKING PLATES 5-GW (EARTH)*	
0007	*353031-0201*		*2*	*END BRACKET EW35*	
0008	*353033-0105*		*1*	*PARTITITION, 10501.0*	
X012	596742-0000		1	TERMINAL BLOCK X012	
0001	*353021-0213*		*1*	*FEED THROUGH TERMINAL, 10201.0*	
0002	*353024-0205*		*1*	*EARTH TERMINAL, 1010.1*	
0003	*359011-0202*		*1*	*SIGN BOARD(GROUND)*	
0004	*359011-0807*		*2*	*MARKING PLATES 5-FW 1-50*	
X004	90172-0319		1	CONNECTION 372 640 001	
X005	90172-0321		1	TERMINAL BLOCK, 373 593 000	
X006	90172-0320		1	TERMINAL BLOCK	
X007	90077-0102		1	TERMINAL BLOCK, 1952.2	
X008	90110-0029		1	CONTACT UNIT, ATE 57-30140	
X009	90110-0028		1	CONTACT UNIT 4-POLEADAPTER	
X011	90001-0028		1	WALL SOCKET OUTLET REPL.BY 90001-33	
X100	90110-0057		1	FEMALE INSERT HAN 24 E 09 33 002 4201	
X100	90110-0334		4	SCHRAUBE HARTING	
X101	90110-0057		1	FEMALE INSERT HAN 24 E 09 33 002 4201	
X101	90110-0334		4	SCHRAUBE HARTING	
X102	90110-0334		1	SCHRAUBE HARTING	
X102	90110-0057		1	FEMALE INSERT HAN 24 E 09 33 002 4201	
X103	90110-0334		4	SCHRAUBE HARTING	
X103	90110-0057		1	FEMALE INSERT HAN 24 E 09 33 002 4201	
X104	90110-0057		1	FEMALE INSERT HAN 24 E 09 33 002 4201	
X104	90110-0334		4	SCHRAUBE HARTING	
X107	90110-0334		4	SCHRAUBE HARTING	
X107	90110-0057		1	FEMALE INSERT HAN 24 E 09 33 002 4201	
X108	90110-0057		1	FEMALE INSERT HAN 24 E 09 33 002 4201	
X108	90110-0334		4	SCHRAUBE HARTING	
X109	90110-0057		1	FEMALE INSERT HAN 24 E 09 33 002 4201	
X109	90110-0334		4	SCHRAUBE HARTING	
X111	90110-0334		4	SCHRAUBE HARTING	
X111	90110-0057		1	FEMALE INSERT HAN 24 E 09 33 002 4201	
Z100	90024-0031		1	POWER LINE FILTER, 75 A 230/400 VAC	
Z101	90082-0010		1	OVERVOLT.PROT.PU4R230V3PH	
	90082-0300		*1*	*OVERVOLT.PROT.PU1 230 VAC*	
Z102	90024-0036		1	FILTERED TERMINAL BLOCK	

This page is intentionally left blank.

ECM: 71341 - 19980514
Group number: 42870-1000
Assembly Drawing:

Pos	Part No	UN	Qty	Description	Page No
-					
0101	351120-0144	MM	8000	CABLE SILFLEX SIHF 3X1,5 0046014	
0102	351120-0144	MM	8000	CABLE SILFLEX SIHF 3X1,5 0046014	
0103	351120-0145	MM	8000	CABLE SILFLEX SIHF 3X2,5 0046020	
0119	351150-0418	MM	5500	CABLE OLFLEX 4X2,5 MM2 LIGHT/GREY	
0120	90220-0105	MM	3500	SCR. CABLE 4X2,5MM2	
0121	351150-0413	MM	5000	CABLE OLFLEX 4X1,5 MM2 LIGHT/GREY	
0158	351150-0403	MM	3500	CABLE OLFLEX 3X0,75 MM2 LIGHT/GREY	
0159	351150-0404	MM	2600	CABLE OLFLEX 4X0,75 MM2 LIGHT/GREY	
0161	90220-0059	MM	8000	THERMOCOUPLE CABLE K/PVC/20AWG 2X0,5MM2	
0162	90220-0059	MM	8000	THERMOCOUPLE CABLE K/PVC/20AWG 2X0,5MM2	
0163	90220-0059	MM	8000	THERMOCOUPLE CABLE K/PVC/20AWG 2X0,5MM2	
0169	351150-0122	MM	4000	CABLE	
0250	351150-0122	MM	4000	CABLE	
0251	351150-0122	MM	4000	CABLE	
0303	351150-0417	MM	5000	CABLE OLFLEX 3X2,5 MM2 LIGHT/GREY	
0311	90172-0317		1	HF-CABLE 4000 MM	
0312	90172-0317		1	HF-CABLE 4000 MM	
0313	90172-0317		1	HF-CABLE 4000 MM	
0314	90172-0317		1	HF-CABLE 4000 MM	
0315	90172-0317		1	HF-CABLE 4000 MM	
0316	90172-0317		1	HF-CABLE 4000 MM	
0318	351150-0417	MM	3200	CABLE OLFLEX 3X2,5 MM2 LIGHT/GREY	
0319	351150-0418	MM	4400	CABLE OLFLEX 4X2,5 MM2 LIGHT/GREY	
0320	90220-0105	MM	4500	SCR. CABLE 4X2,5MM2	
0321	351150-0413	MM	5000	CABLE OLFLEX 4X1,5 MM2 LIGHT/GREY	
0326	351175-0109	MM	3600	CABLE AWM 1X16 MM2 YELLOW-GREEN	
0330	351150-0420	MM	4900	CABLE OLFLEX 7X2,5 MM2 LIGHT/GREY	
0331	351150-0419	MM	4900	CABLE OLFLEX 5X2,5 MM2 LIGHT/GREY	
0332	351150-0418	MM	2700	CABLE OLFLEX 4X2,5 MM2 LIGHT/GREY	
0333	351150-0418	MM	4500	CABLE OLFLEX 4X2,5 MM2 LIGHT/GREY	
0334	351150-0412	MM	3200	CABLE OLFLEX 3X1,5 MM2 LIGHT/GREY	
0336	351150-0412	MM	2300	CABLE OLFLEX 3X1,5 MM2 LIGHT/GREY	
0337	351150-0412	MM	3800	CABLE OLFLEX 3X1,5 MM2 LIGHT/GREY	
0338	351150-0412	MM	4000	CABLE OLFLEX 3X1,5 MM2 LIGHT/GREY	
0344	351150-0417	MM	4300	CABLE OLFLEX 3X2,5 MM2 LIGHT/GREY	
0350	351150-0406	MM	3100	CABLE OLFLEX 7X0,75 MM2 LIGHT/GREY	
0351	351150-0407	MM	3900	CABLE OLFLEX 12X0,75 MM2 LIGHT/GREY	
0352	351150-0407	MM	4600	CABLE OLFLEX 12X0,75 MM2 LIGHT/GREY	
0354	351150-0407	MM	4900	CABLE OLFLEX 12X0,75 MM2 LIGHT/GREY	
0355	351150-0410	MM	4000	CABLE OLFLEX 36X0,75MM2	
0359	351150-0122	MM	5000	CABLE	
0360	351150-0425	MM	4400	CABLE OLFLEX 25X0,75 MM2 LIGHT/GREY	
0368	351150-0122	MM	3500	CABLE	
0371	90220-0082	MM	6300	CABLE PAIR TWISTED 2X0,75 MM2 LIGHT/GREY	
0372	90220-0034	MM	6000	THERMOCABLE TEX/SITW-20F-KX 2X0,5MM2	
0380	351150-0122	MM	2200	CABLE	
0383	351150-0405	MM	3200	CABLE OLFLEX 5X0,75 MM2 LIGHT/GREY	
0384	351150-0404	MM	900	CABLE OLFLEX 4X0,75 MM2 LIGHT/GREY	
0385	351150-0122	MM	1500	CABLE	
0395	351175-0106	MM	6000	CABLE AWM 1X4 MM2 YELLOW-GREEN	
0400	90220-0108	MM	3900	SCR. CABLE 5X1,5MM2	
0401	351120-0145	MM	2400	CABLE SILFLEX SIHF 3X2,5 0046020	
0402	351120-0145	MM	2000	CABLE SILFLEX SIHF 3X2,5 0046020	
0450	90220-0034	MM	1400	THERMOCABLE TEX/SITW-20F-KX 2X0,5MM2	
0495	351150-0122	MM	3000	CABLE	
0496	351150-0122	MM	4000	CABLE	
0501	351150-0418	MM	1500	CABLE OLFLEX 4X2,5 MM2 LIGHT/GREY	
0502	351120-0145	MM	600	CABLE SILFLEX SIHF 3X2,5 0046020	
0503	351120-0145	MM	1000	CABLE SILFLEX SIHF 3X2,5 0046020	
0556	90220-0034	MM	500	THERMOCABLE TEX/SITW-20F-KX 2X0,5MM2	
0557	351150-0406	MM	1000	CABLE OLFLEX 7X0,75 MM2 LIGHT/GREY	
0559	351150-0405	MM	1000	CABLE OLFLEX 5X0,75 MM2 LIGHT/GREY	
0701	90220-0108	MM	7000	SCR. CABLE 5X1,5MM2	
0703	351150-0417	MM	2500	CABLE OLFLEX 3X2,5 MM2 LIGHT/GREY	
0759	90220-0034	MM	3000	THERMOCABLE TEX/SITW-20F-KX 2X0,5MM2	
0760	351150-0408	MM	3000	CABLE OILFLEX 16X0,75MM2	
0763	351150-0405	MM	5000	CABLE OLFLEX 5X0,75 MM2 LIGHT/GREY	
0764	351150-0122	MM	5000	CABLE	
0765	351150-0122	MM	5000	CABLE	

This page is intentionally left blank.

ECM: 25561 - 19970904
Group number: 42874-1000
Assembly Drawing:

Pos	Part No	UN	Qty	Description	Page No
-					
0010	90036-0057		10	LIGHT BULB, BA9S 28V	
0020	90077-0341		2	DIODE HOLDER, WSD 2,5, 10584.6	
0040	90064-0084		1	PUSH BUTTON, YELLOW	
0050	90119-0056		1	RELAY, AUXILIARY MK3P5-S 24VDC	
0060	90119-0067		1	SOLID-STATE RELAY, H12WD4850	
0070	90233-0028		2	TUBE FUSE, 10A	
0080	352550-0120		2	FINE-WIRE 315 MA	
0090	352551-0136		4	FINE-WIRE FUSE 3,15 A SLOW	
0100	90098-0020		2	DIODE FUSE, 55ET	
0110	352550-0136		2	FINE-WIRE, 3,15 A	
0130	352551-0138		2	FINE-WIRE 5 A	
0140	352551-0139		2	FINE-WIRE 6,3 A	
0150	90082-0300		1	OVERVOLT.PROT.PU1 230 VAC	
0170	90064-0315		1	LAMP REMOVER, NO:700	
0200	90333-0004		5	GRAPH PAPER 24 HOURS	
0210	90121-0116		1	RESISTANCE FIXED, 0,15 KOHM, 0,25 W	
0250	352551-0134		1	FINE-WIRE FUSE 2 A SLOW,5X20MM	
0260	352551-0141		3	FINE-WIRE 10 A	
0270	352551-0137		1	FINE-WIRE 4 A	

Pos	Part No	UN	Qty	Description	Page No

Machine Type	Group Description	Used-In	Group Number	Page No

This page is intentionally left blank.

ECM: 71341 - 19980514
Group number: 42875-1000
Assembly Drawing:

Pos	Part No	UN	Qty	Description	Page No
-					
0001	971410-0102		1	CONTROL PANEL	
0120	90194-0133		1	SIGN "DELIVERED DESIGN"	
0130	90194-0016		1	WARNING SIGN, RISK OF ELECTRIC SHOCK	
0140	90203-0009	MM	200	CU LITZ CABLE 15X2 MM	
A004:1	558389-0101		1	MULTI PURPOSE POTENTIOM.	
100	*578265-0000*		*1*	*COMPONENTS WITHOUT TP-NO*	
110	*578266-0000*		*1*	*CIRCUIT BOARD*	
120	*578267-0000*		*1*	*CASING*	
A004:2	551922-0000		1	LABEL,POTENTIOMETER DESIGN CORR.	
A100	90025-0088		1	PANEL INTERFACE CU64.1	
A110	598205-0000		1	CIRCUIT BOARD	
A110:1	599593-0000		1	ALARM DISPLAY	
S02H	90064-0093		1	PUSH BUTTON, GREEN	
	90036-0057		*1*	*LIGHT BULB, BA9S 28V*	
S02H:1	359301-0090		1	BUTTON SIGN, INCHING	
S09H	90064-0093		1	PUSH BUTTON, GREEN	
	90036-0057		*1*	*LIGHT BULB, BA9S 28V*	
S09H:1	359301-0091		1	BUTTON SIGN, INCHING FINAL FOLDER	
S30H	90064-0093		1	PUSH BUTTON, GREEN	
	90036-0057		*1*	*LIGHT BULB, BA9S 28V*	
S30H:1	359301-0001		1	BUTTON SIGN, UP	
S31H	90064-0082		1	PUSH BUTTON, WHITE	
	90036-0057		*1*	*LIGHT BULB, BA9S 28V*	
S31H:1	359301-0005		1	BUTTON SIGN, DOWN	
S32H	90064-0085		1	PUSH BUTTON, RED	
S32H:1	359301-0110		1	BUTTON SIGN, SHORT STOP	
S33H	90064-0082		1	PUSH BUTTON, WHITE	
	90036-0057		*1*	*LIGHT BULB, BA9S 28V*	
S33H:1	359301-0105		1	BUTTON SIGN, ALARM STOP	
S34H	90064-0088		1	PUSH BUTTON, YELLOW	
S34H:1	359301-0215		1	BUTTON SIGN, WASH PRODUCT VALVE	
R100	90121-0116		1	RESISTANCE FIXED, 0,15 KOHM, 0,25 W	
S001	90064-0124		1	SWITCH, EM. STOP, ZB2-BS844+ZB2-BZ1045	
S001:1	486826-0001		1	SIGN "EMERGENCY STOP"	
S005	90064-0084		1	PUSH BUTTON, YELLOW	
S005:1	359301-0160		1	BUTTON SIGN, DRAINAGE OF PRODUCT TUBE	
S007	90111-0120		1	SWITCH, 2 POS.704.510 .0A+704.901.5/A	
S012	90064-0082		1	PUSH BUTTON, WHITE	
	90036-0057		*1*	*LIGHT BULB, BA9S 28V*	
S012:1	359301-0130		1	BUTTON SIGN, LAMP TEST	
S019	90064-0093		1	PUSH BUTTON, GREEN	
	90036-0057		*1*	*LIGHT BULB, BA9S 28V*	
S019:1	359301-0050		1	BUTTON SIGN, DROP CHUTE BRIK	
S020	90064-0093		1	PUSH BUTTON, GREEN	
	90036-0057		*1*	*LIGHT BULB, BA9S 28V*	
S020:1	359301-0170		1	BUTTON SIGN, SPOOLING OF FINAL FOLDER	
X003	90195-0020		1	TERMINAL BLOCK, 1977.2	
X107	90110-0128		1	MALE INSERT HAN 24 E-M 65330242631	

Machine Type | Group Description | Used-In | Group Number | Page No

This page is intentionally left blank.

ECM: 25561 - 19970904
Group number: 42876-1000
Assembly Drawing:

Pos	Part No	UN	Qty	Description	Page No
-					
0001	971444-0101		1	SIDE PANEL	
0150	90194-0133		1	SIGN "DELIVERED DESIGN"	
0160	90194-0016		1	WARNING SIGN, RISK OF ELECTRIC SHOCK	
S019:1	359301-0050		1	BUTTON SIGN, DROP CHUTE BRIK	
S019	90064-0093		1	PUSH BUTTON, GREEN	
	90036-0057		*1*	*LIGHT BULB, BA9S 28V*	
S002:1	359301-0110		1	BUTTON SIGN, SHORT STOP	
S002	90064-0085		1	PUSH BUTTON, RED	
S001:1	486826-0001		1	SIGN "EMERGENCY STOP"	
S001	90064-0124		1	SWITCH, EM. STOP, ZB2-BS844+ZB2-BZ1045	
X111	90110-0128		1	MALE INSERT HAN 24 E-M 65330242631	

Pos	Part No	UN	Qty	Description	Page No

This page is intentionally left blank.

ECM: 193643 - 20050831
Group number: 67267-1000
Assembly Drawing: This list covers pages from 9-24 to 9-33

Pos	Part No	UN	Qty	Description	Page No
50HZ					
L001	90297-0306		1	BALLAST COIL 50/60 HZ	
Q101:5	359241-0297		1	SIGN: " 50 HZ"	
60HZ					
Q101:6	359241-0298		1	SIGN: " 60 HZ"	
Common Parts					
0001	971373-0101		1	ELECTRICAL CABINET	
0005	90194-0133		1	SIGN "DELIVERED DESIGN"	
0010	90194-0016		7	WARNING SIGN, RISK OF ELECTRIC SHOCK	
0020	90194-0080		1	SIGN, IDENTIFICATION OF WIRING	
0030	67369-0102		1	RACK WALLMOUNTED 84TE	
030 2	*540282-0002*		*1*	*COMPONENTS WITHOUT TP-NO*	
0030:1	90220-0302		2	CLAMP FOR SCR.CABLE, 16MM, 55-016-89	
0030:2	90220-0304		2	CLAMP FOR SCR.CABLE, 24MM,	
0030:3	90062-0058		4	LOCK WASHER SERRAT.EXT.GEAR,3,2/6 H=0,4	
0030:4	312125-0232		4	SCREW ISO 1207 M3X25 A4	
0030:5	315105-0124		8	WASHER BRB 3,2X7 RFR	
0030:6	312605-0310		8	HEXAGON NUT, M6M M3 A280	
0060	594502-0001		1	FUSE PANEL SIGN	
0070	594502-0002		1	FUSE PANEL SIGN	
1000	351175-0109	M	1	CABLE AWM 1X16 MM2 YELLOW-GREEN	
1005	351175-0107	M	1	CABLE AWM 1X6 MM2 YELLOW-GREEN	
1010	351175-0106	M	1	CABLE AWM 1X4 MM2 YELLOW-GREEN	
1015	351175-0105	M	1	CABLE AWM 1X2,5 MM2 YELLOW-GREEN	
1020	351175-0104	M	1	KABEL AWM 1X15 MM2 YELLOW-GREEN	
1025	351175-0102	M	1	CABLE AWM 1X 075 MM2 YELLOW-GREEN	
1030	351179-0110	M	1	CABLE AWM 1X25 MM2 BLACK	
1035	351179-0107	M	1	CABLE AWM 1X6 MM2 BLACK	
1040	351179-0106	M	1	CABLE AWM 1X4 MM2 BLACK	
1045	351179-0105	M	1	CABLE AWM 1X2,5 MM2 BLACK	
1047	351179-0104	M	1	CABLE AWM 1X15 MM2 BLACK	
1050	351173-0110	M	1	CABLE AWM 1X25 MM2 LIGHTBLUE	
1055	351173-0105	M	1	CABLE AWM 1X25 MM2 LIGHTBLUE	
1060	351172-0106	M	1	CABLE AWM 1X4 MM2 DARKBLUE	
1065	351172-0102	M	1	CABLE AWM 1X 0,75 MM2 DARKBLUE	
1070	351176-0106	M	1	CABLE AWM 1X4 MM2 RED	
1075	351176-0104	M	1	CABLE AWM 1X15 MM2 RED	
1080	351180-0102	M	1	CABLE AWM 1X075 MM2 ORANGE	
A002:1	67372-0101		1	BACKPLANE 8TE(32 POLE)	
0010	*543336-0001*		*1*	*COMPONENTS WITHOUT TP-NO*	
0020	*543319-0000*		*1*	*PRINTED CIRCUIT BOARD*	
0030	*543337-0000*		*1*	*TERMINAL LABELS 1-4*	

Pos	Part No	UN	Qty	Description	Page No
A003:1	67372-0101		1	BACKPLANE 8TE(32 POLE)	
0010	*543336-0001*		*1*	*COMPONENTS WITHOUT TP-NO*	
0020	*543319-0000*		*1*	*PRINTED CIRCUIT BOARD*	
0030	*543337-0000*		*1*	*TERMINAL LABELS 1-4*	
A004	558230-0101		1	TMCC CONTROLLER	
100	*558370-0101*		*1*	*TMCC, MAIN PCB*	
100	*576100-0000*		*1*	*COMPONENTS WITHOUT TP-NO*	
110	*573131-0000*		*1*	*PRINTED CIRCUIT BOARD*	
120	*576101-0000*		*1*	*COOLING BLOCK*	
110	*576102-0000*		*1*	*COMPONENTS WITHOUT TP-NO*	
120	*576103-0000*		*1*	*CASING*	
130	*576104-0000*		*1*	*FRONT PLATE*	
140	*542036-0000*		*1*	*LABEL "PART NO" 84X140MM*	
A004:1	47832-0101		1	DCS8,DESIGN CONTR.PROG.	
100	*579804-0000*		*1*	*COMPONENTS WITHOUT TP-NO*	
110	*542036-0000*		*1*	*LABEL "PART NO" 84X140MM*	
A004:2	67372-0101		1	BACKPLANE 8TE(32 POLE)	
0010	*543336-0001*		*1*	*COMPONENTS WITHOUT TP-NO*	
0020	*543319-0000*		*1*	*PRINTED CIRCUIT BOARD*	
0030	*543337-0000*		*1*	*TERMINAL LABELS 1-4*	
A002	90430-0037		1	MOTOR DRIVE CONTR.PME 1802. REPL.BY -67	
	352550-0136		*1*	*FINE-WIRE, 3,15 A*	
A002:2	352551-0136		1	FINE-WIRE FUSE 3,15 A SLOW	
A003	90430-0037		1	MOTOR DRIVE CONTR.PME 1802. REPL.BY -67	
	352550-0136		*1*	*FINE-WIRE, 3,15 A*	
A003:2	352551-0136		1	FINE-WIRE FUSE 3,15 A SLOW	
A012	90119-0072		1	SAFETY RELAY, JSBR4	
A013	90119-0080		1	SAFETY RELAY JSBR3	
A101	90025-0016		1	ENCODER MODULE TPMC	
A101:1	90025-0025		1	TERMINAL BLOCK ENCODER TPMC	
A102	90025-0017		1	INPUT MODULE TPMC	
A102:1	90025-0024		1	TERMINAL BLOCK, 491168307	
A103	90025-0017		1	INPUT MODULE TPMC	
A103:1	90025-0024		1	TERMINAL BLOCK, 491168307	
A104	90025-0017		1	INPUT MODULE TPMC	
A104:1	90025-0024		1	TERMINAL BLOCK, 491168307	
A105	90025-0017		1	INPUT MODULE TPMC	
A105:1	90025-0024		1	TERMINAL BLOCK, 491168307	
A108	90025-0052		1	MAIN RACK COMPAKT (MCR)	
A112	90025-0053		1	OUTPUT MODULE TPMC OM16	
A112:1	90025-0054		1	KUPPL.SOCKEL MSTB 2,5-5,08 FÃ¼R 90025-53	
A113	90025-0053		1	OUTPUT MODULE TPMC OM16	

Machine Type | Group Description | Used-In | Group Number | Page No

This page is intentionally left blank.

ECM: 193643 - 20050831
Group number: 67267-1000
Assembly Drawing:

This list covers pages from 9-24 to 9-33

Pos	Part No	UN	Qty	Description	Page No
Common Parts (Cont'd)					
A113:1	90025-0054		1	KUPPL.SOCKEL MSTB 2,5-5,08 FÃ¼R 90025-53	
A114	90025-0053		1	OUTPUT MODULE TPMC OM16	
A114:1	90025-0054		1	KUPPL.SOCKEL MSTB 2,5-5,08 FÃ¼R 90025-53	
A115	90025-0053		1	OUTPUT MODULE TPMC OM16	
A115:1	90025-0054		1	KUPPL.SOCKEL MSTB 2,5-5,08 FÃ¼R 90025-53	
A116	90025-0053		1	OUTPUT MODULE TPMC OM16	
A116:1	90025-0054		1	KUPPL.SOCKEL MSTB 2,5-5,08 FÃ¼R 90025-53	
A117	90025-0053		1	OUTPUT MODULE TPMC OM16	
A117:1	90025-0054		1	KUPPL.SOCKEL MSTB 2,5-5,08 FÃ¼R 90025-53	
A118	90025-0058		1	EXPANSIONS RACK COMPACT-8	
A118:1	90025-0022		1	RACK TERMINATION TPMC	
A205	90410-0044		1	TEMP.REG.PHILIPS KS 40" REPL.BY 90410-51	
A205:1	359241-0132		1	SIGN: " TEMP. SA"	
A205:2	359240-0100		1	SIGN HOLDER FOR 359240-0001	
A206	90410-0044		1	TEMP.REG.PHILIPS KS 40" REPL.BY 90410-51	
A206:1	359241-0131		1	SIGN: " TEMP. LS"	
A206:2	359240-0100		1	SIGN HOLDER FOR 359240-0001	
A208	90410-0044		1	TEMP.REG.PHILIPS KS 40" REPL.BY 90410-51	
A208:1	359241-0251		1	SIGN: " TEMP.-SPLICING"	
A208:2	359240-0100		1	SIGN HOLDER FOR 359240-0001	
A209:1	359240-0001		5	SIGN, NOT ENGRAVED	
A209:2	359240-0100		5	SIGN HOLDER FOR 359240-0001	
A301	90314-0021		1	LEVELRELAY0,5-10KOHM REPLACED BY90314-38	
A450	90119-0077		1	CURRENT RELAY SYRELEC DIRT2 230	
A451	90119-0077		1	CURRENT RELAY SYRELEC DIRT2 230	
D108	90025-0070		1	PROCESSOR TPMC CPU 64.1	
	90334-0006		*1*	*BATTERY 3,6V SIZE AA*	
	90025-0046		*1*	*BATTERY CARRIER TPMC 971-009-002*	
D108:1	90025-0094		1	TERMINAL BLOCK 4-POLE	
D108:2	90334-0006		1	BATTERY 3,6V SIZE AA	
	90025-0046		*1*	*BATTERY CARRIER TPMC 971-009-002*	
E001	90297-0006		1	FLUORESCENT TUBE, PL9	
E001:1	90164-0301		1	HOLDING FIXTURE	
E002	90297-0006		1	FLUORESCENT TUBE, PL9	
E002:1	90164-0301		1	HOLDING FIXTURE	
F000	90135-0038		12	CABLE CLAMP K&M K*12 5-1	
F000:1	90135-0031		8	BUSBAR HOLDER K&M SHO165/2	
F000:2	353021-0214		30	FEED THROUGH TERMINAL, 10202.0	
F000:3	353032-0004		10	END PLATE WAP 2,5-10 BEIGE	
F000:4	353031-0201		20	END BRACKET EW35	
F005	90233-0028		1	TUBE FUSE, 10A	
F005:1	90077-0112		1	FUSE HOLDER FERRAZ PST REPL.BY 90233-303	
F006	90233-0028		1	TUBE FUSE, 10A	
F006:1	90077-0112		1	FUSE HOLDER FERRAZ PST REPL.BY 90233-303	
F008	90233-0028		1	TUBE FUSE, 10A	
F008:1	90077-0112		1	FUSE HOLDER FERRAZ PST REPL.BY 90233-303	
F020	90007-0147		1	CIRCUIT BREAKER, 3P 10 A K	
F022	90007-0129		1	CIRCUIT BREAKER, 1P 10 A K	
F023	90007-0129		1	CIRCUIT BREAKER, 1P 10 A K	
F025	90007-0129		1	CIRCUIT BREAKER, 1P 10 A K	
F026	90007-0131		1	CIRCUIT BREAKER, 1P 16 A K	
F027	90007-0129		1	CIRCUIT BREAKER, 1P 10 A K	
F028	90007-0129		1	CIRCUIT BREAKER, 1P 10 A K	
F029	90007-0131		1	CIRCUIT BREAKER, 1P 16 A K	
F032	90007-0131		1	CIRCUIT BREAKER, 1P 16 A K	
F033	90007-0131		1	CIRCUIT BREAKER, 1P 16 A K	
F050	352550-0133		1	FINE-WIRE, 1.6 A	
F050:1	353023-0102		1	FUSE TERMINAL, 10110.0	
G001	90430-0036		1	MOTOR DRIVE CONTROL SCANDIALOGIC VPM SL	
	352550-0120		*1*	*FINE-WIRE 315 MA*	
G001:1	352550-0120		1	FINE-WIRE 315 MA	
G100	90025-0055		1	POWER SUPPLY UNIT TPMC PS32	
	352551-0136		*1*	*FINE-WIRE FUSE 3,15 A SLOW*	
G100:1	352551-0136		1	FINE-WIRE FUSE 3,15 A SLOW	
K001	90075-0125		1	CONTACTOR, 7,5KW 24VDC	
	90075-0313		*1*	*AUXILIARY CONTACT K&M 22 DILM.2NO,2NC*	
K002	90075-0125		1	CONTACTOR, 7,5KW 24VDC	
	90075-0313		*1*	*AUXILIARY CONTACT K&M 22 DILM.2NO,2NC*	
K004	90075-0125		1	CONTACTOR, 7,5KW 24VDC	
	90075-0313		*1*	*AUXILIARY CONTACT K&M 22 DILM.2NO,2NC*	
K005	90075-0125		1	CONTACTOR, 7,5KW 24VDC	
	90075-0313		*1*	*AUXILIARY CONTACT K&M 22 DILM.2NO,2NC*	
K006	90075-0125		1	CONTACTOR, 7,5KW 24VDC	
	90075-0313		*1*	*AUXILIARY CONTACT K&M 22 DILM.2NO,2NC*	
K007	90075-0125		1	CONTACTOR, 7,5KW 24VDC	
	90075-0313		*1*	*AUXILIARY CONTACT K&M 22 DILM.2NO,2NC*	
K008	90075-0125		1	CONTACTOR, 7,5KW 24VDC	
	90075-0313		*1*	*AUXILIARY CONTACT K&M 22 DILM.2NO,2NC*	
K009	90075-0125		1	CONTACTOR, 7,5KW 24VDC	
	90075-0313		*1*	*AUXILIARY CONTACT K&M 22 DILM.2NO,2NC*	
K012	90075-0125		1	CONTACTOR, 7,5KW 24VDC	
	90075-0313		*1*	*AUXILIARY CONTACT K&M 22 DILM.2NO,2NC*	
K013	90075-0125		1	CONTACTOR, 7,5KW 24VDC	

Machine Type | Group Description | Used-In | Group Number | Page No

This page is intentionally left blank.

Pos	Part No	UN	Qty	Description	Page No
Common Parts (Cont'd)					
K013	90075-0125		1	CONTACTOR, 7,5KW 24VDC	
	90075-0313		*1*	*AUXILIARY CONTACT K&M 22 DILM.2NO,2NC*	
K014	90075-0125		1	CONTACTOR, 7,5KW 24VDC	
	90075-0313		*1*	*AUXILIARY CONTACT K&M 22 DILM.2NO,2NC*	
K015	90075-0125		1	CONTACTOR, 7,5KW 24VDC	
	90075-0313		*1*	*AUXILIARY CONTACT K&M 22 DILM.2NO,2NC*	
K016	90075-0125		1	CONTACTOR, 7,5KW 24VDC	
	90075-0313		*1*	*AUXILIARY CONTACT K&M 22 DILM.2NO,2NC*	
K020	90075-0125		1	CONTACTOR, 7,5KW 24VDC	
	90075-0313		*1*	*AUXILIARY CONTACT K&M 22 DILM.2NO,2NC*	
K022	90075-0125		1	CONTACTOR, 7,5KW 24VDC	
	90075-0313		*1*	*AUXILIARY CONTACT K&M 22 DILM.2NO,2NC*	
K023	90075-0125		1	CONTACTOR, 7,5KW 24VDC	
	90075-0313		*1*	*AUXILIARY CONTACT K&M 22 DILM.2NO,2NC*	
K030	90075-0126		1	CONTACTOR, 22KW 24VDC	
	90075-0313		*1*	*AUXILIARY CONTACT K&M 22 DILM.2NO,2NC*	
K050	90119-0063		1	OPTO-RELAY, DC/DC AMMS-10-1/30VDC	
K051	90119-0063		1	OPTO-RELAY, DC/DC AMMS-10-1/30VDC	
K101	90119-0086		1	RELAY, AUXILIARY MY4IN4 24VDC	
K101:1	90119-0309		1	BASE UNIT, TYPE PYF 14AE	
K101:2	90119-0310		1	CLAMP, TYPE PYC-A1	
K102	90119-0056		1	RELAY, AUXILIARY MK3P5-S 24VDC	
K102:1	90129-0006		1	BASE, S3-B	
K110	90119-0056		1	RELAY, AUXILIARY MK3P5-S 24VDC	
K110:1	90129-0006		1	BASE, S3-B	
K111	90119-0056		1	RELAY, AUXILIARY MK3P5-S 24VDC	
K111:1	90129-0006		1	BASE, S3-B	
K112	90119-0056		1	RELAY, AUXILIARY MK3P5-S 24VDC	
K112:1	90129-0006		1	BASE, S3-B	
K113	90119-0056		1	RELAY, AUXILIARY MK3P5-S 24VDC	
K113:1	90129-0006		1	BASE, S3-B	
K120	90119-0056		1	RELAY, AUXILIARY MK3P5-S 24VDC	
K120:1	90129-0006		1	BASE, S3-B	
K121	90119-0056		1	RELAY, AUXILIARY MK3P5-S 24VDC	
K121:1	90129-0006		1	BASE, S3-B	
K124	90119-0056		1	RELAY, AUXILIARY MK3P5-S 24VDC	
K124:1	90129-0006		1	BASE, S3-B	
K125	90119-0056		1	RELAY, AUXILIARY MK3P5-S 24VDC	
K125:1	90129-0006		1	BASE, S3-B	
K126	90119-0056		1	RELAY, AUXILIARY MK3P5-S 24VDC	
K126:1	90129-0006		1	BASE, S3-B	
K127	90119-0056		1	RELAY, AUXILIARY MK3P5-S 24VDC	
K127:1	90129-0006		1	BASE, S3-B	
K128	90119-0056		1	RELAY, AUXILIARY MK3P5-S 24VDC	
K128:1	90129-0006		1	BASE, S3-B	
K202	90119-0043		1	OPTO-RELAY, 22DC 60S-3/32VDC	
K203	90119-0067		1	SOLID-STATE RELAY, H12WD4850	
K204	90119-0067		1	SOLID-STATE RELAY, H12WD4850	
K211	90119-0067		1	SOLID-STATE RELAY, H12WD4850	
P001	90332-0019		1	RECORDER HONEYWELL 1 CH.	
	90332-0322		*1*	*PEN*	
	90332-0323		*1*	*RECORDER CHARTS*	
P003	90053-0028		1	3 DIGIT COUNTER KOYO KCX-3-DM-V	
P003:1	90053-0309		1	BASE	
P004	90053-0031		1	HOUR COUNTER, B 609.10 10-50VDC	
P005	90053-0032		1	COUNTER, F524.650DA3B 24VDC	
P006	90053-0029		1	COUNTER, F524.800FA3C 24VDC	
Q000	90259-0310		22	ADAPTER PLATE, K&M SP PKZ M	
Q000:1	90259-0312		2	ADAPTER PLATE K&M SP PKZ SOND C	
Q001	90095-0075		1	OVERLOAD PROTECTION, PKZM 4 A	
Q001:1	90259-0313		1	AUX. CONTACT K&M NHI21-PKZM0	
Q002	90095-0076		1	OVERLOAD PROTECTION, PKZM 6,3 A	
Q002:1	90259-0313		1	AUX. CONTACT K&M NHI21-PKZM0	
Q003	90095-0074		1	OVERLOAD PROTECTION, PKZM 2,5 A	
Q003:1	90259-0313		1	AUX. CONTACT K&M NHI21-PKZM0	
Q009	90095-0075		1	OVERLOAD PROTECTION, PKZM 4 A	
Q009:1	90259-0313		1	AUX. CONTACT K&M NHI21-PKZM0	
Q012	90095-0077		1	OVERLOAD PROTECTION, PKZM 6-10 A	
Q012:1	90259-0313		1	AUX. CONTACT K&M NHI21-PKZM0	
Q013	90095-0073		1	OVERLOAD PROTECTION, PKZM 1,6 A	
Q013:1	90259-0313		1	AUX. CONTACT K&M NHI21-PKZM0	
Q014	90095-0073		1	OVERLOAD PROTECTION, PKZM 1,6 A	
Q014:1	90259-0313		1	AUX. CONTACT K&M NHI21-PKZM0	
Q030	90095-0080		1	OVERLOAD PROTECTION, PKZM 25 A	
Q030:1	90259-0313		1	AUX. CONTACT K&M NHI21-PKZM0	
Q101	90111-0131		1	MAIN SWITCH P3-100/V/SVB-SW/N/HI11/H-P3	
	90111-0332		*1*	*NEUTRAL CONTACT, N-P3Z*	
Q101:1	90111-0332		1	NEUTRAL CONTACT, N-P3Z	
Q101:2	359241-0124		1	SIGN: " MAIN SWITCH"	
Q101:3	359240-0100		2	SIGN HOLDER FOR 359240-0001	
Q101:4	779910-0101		1	PADLOCK	
Q102	90259-0031		1	OVERLOAD RELAY, 25-40 A	
R108	90121-0116		1	RESISTANCE FIXED, 0,15 KOHM, 0,25 W	

This page is intentionally left blank.

ECM: 193643 - 20050831
Group number: 67267-1000
Assembly Drawing:

This list covers pages from 9-24 to 9-33

Pos	Part No	UN	Qty	Description	Page No
Common Parts (Cont'd)					
S003:1	359301-0110		1	BUTTON SIGN, SHORT STOP	
S006	90111-0142		1	SWITCH GEAR, NO.OF DIGIT: 4	
S006:1	359320-0003		1	SIGN, THUMB WHEEL UNIT FILLING ON	
S006:2	359240-0100		1	SIGN HOLDER FOR 359240-0001	
S008	90002-0014		1	BLIND PLUG D=22,5MM	
S008:1	359240-0001		1	SIGN, NOT ENGRAVED	
S008:2	359240-0100		1	SIGN HOLDER FOR 359240-0001	
S009	90002-0014		1	BLIND PLUG D=22,5MM	
S009:1	359240-0001		1	SIGN, NOT ENGRAVED	
S009:2	359240-0100		1	SIGN HOLDER FOR 359240-0001	
S015	90111-0120		1	SWITCH, 2 POS.704.510 .0A+704.901.5/A	
S015:1	359241-0324		1	SIGN: " PREPERATIONS"	
S015:2	359240-0100		1	SIGN HOLDER FOR 359240-0001	
T001	90245-0019		1	TRANSF. 3-PH.750VA SEC.23A	
T003	23139-0000		1	TRANSFORMER 1PH. AUTO 2,1 KVA	
V001	90038-0024		1	RECTIFIER, 10/22A SKD 50/04A3	
V003	90430-0013		1	THYRISTOR UNIT TELEMETRIC 5THU1,50A/220V	
V003:2	90098-0020		1	DIODE FUSE, 55ET	
V004	90430-0013		1	THYRISTOR UNIT TELEMETRIC 5THU1,50A/220V	
V004:2	90098-0020		1	DIODE FUSE, 55ET	
W001	90220-0059	M	1	THERMOCOUPLE CABLE K/PVC/20AWG 2X0,5MM2	
W002	90220-0059	M	1	THERMOCOUPLE CABLE K/PVC/20AWG 2X0,5MM2	
W003	90220-0040	M	1	SCR. CABLE 2X0,75 MM2 BLACK	
W004	90220-0059	M	1	THERMOCOUPLE CABLE K/PVC/20AWG 2X0,5MM2	
W010	90220-0105	MM	1	SCR. CABLE 4X2,5MM2	
W011	90220-0105	MM	1	SCR. CABLE 4X2,5MM2	
W012	90220-0108	MM	1	SCR. CABLE 5X1,5MM2	
W013	90220-0108	MM	1	SCR. CABLE 5X1,5MM2	
W020	1143884-0000		1	COPPER BRAID	
W021	1143884-0000		1	COPPER BRAID	
W022	1143884-0000		1	COPPER BRAID	
XL:1	573371-0000		1	DISTR.TERM.	
0001	*353042-0005*	*MM*	*300*	*RAIL TS 35/7.5*	
0002	*353031-0201*		*2*	*END BRACKET EW35*	
0003	*353021-0213*		*22*	*FEED THROUGH TERMINAL, 10201.0*	
0004	*353034-0014*		*1*	*BRIDGE CONN.Q10(SAK 2,5)*	
0005	*353034-0031*		*2*	*BRIDGE CONNECTOR, WQV 4/10, 10520.6*	
0006	*353032-0004*		*3*	*END PLATE WAP 2,5-10 BEIGE*	
0007	*359011-0802*		*3*	*SIGN BOARD BSFW 11-20*	
XL:2	578046-0000		1	DISTR.TERM,DIODE TERM	
0001	*353042-0005*	*MM*	*370*	*RAIL TS 35/7.5*	
0002	*353031-0201*		*2*	*END BRACKET EW35*	
0003	*353021-0217*		*44*	*FEED THROUGH TERMINAL, 10201.8*	
0004	*353021-0122*		*6*	*TERMINAL DISCONNECTBLE, WTR 2,5 D*	
0005	*353034-0014*		*1*	*BRIDGE CONN.Q10(SAK 2,5)*	
0006	*353034-0031*		*5*	*BRIDGE CONNECTOR, WQV 4/10, 10520.6*	
0007	*353032-0004*		*1*	*END PLATE WAP 2,5-10 BEIGE*	
0008	*353032-0005*		*4*	*END PLATE WAP 2,5-10 BLUE*	
0009	*359011-0807*		*2*	*MARKING PLATES 5-FW 1-50*	
0010	*359011-0821*		*4*	*SET OF SIGNS 6-FW 1-50*	
0011	*353023-0102*		*1*	*FUSE TERMINAL, 10110.0*	
0012	*352550-0133*		*1*	*FINE-WIRE, 1.6 A*	
X001:1	573373-0000		1	CONTROL TERMINALX1:1	
0001	*353042-0005*	*MM*	*350*	*RAIL TS 35/7.5*	
0002	*353024-0205*		*3*	*EARTH TERMINAL, 1010.1*	
0003	*359011-0202*		*6*	*SIGN BOARD(GROUND)*	
0004	*353021-0217*		*24*	*FEED THROUGH TERMINAL, 10201.8*	
0005	*359012-0350*		*2*	*MARKING LABEL, WHITE, BSGW, 350*	
0006	*359011-0814*		*2*	*SET OF SIGNS 5-FW 350-400*	
0007	*353032-0005*		*1*	*END PLATE WAP 2,5-10 BLUE*	
0008	*353031-0201*		*1*	*END BRACKET EW35*	
X001:2	1143775-0000		1	TERMINAL BLOCK X001:2	
0001	*353042-0005*	*MM*	*530*	*RAIL TS 35/7.5*	
0002	*353024-0205*		*20*	*EARTH TERMINAL, 1010.1*	
0003	*353021-0213*		*54*	*FEED THROUGH TERMINAL, 10201.0*	
0004	*353021-0214*		*6*	*FEED THROUGH TERMINAL, 10202.0*	
0005	*353032-0004*		*1*	*END PLATE WAP 2,5-10 BEIGE*	
0006	*353031-0201*		*1*	*END BRACKET EW35*	
0007	*359011-0806*		*2*	*SET OF SIGNS, 5-FW 1-200*	
0008	*359011-0202*		*40*	*SIGN BOARD(GROUND)*	
X001:3	594501-0000		1	CONTROL TERMINAL X1:3	
0001	*353042-0005*	*MM*	*530*	*RAIL TS 35/7.5*	
0002	*353024-0205*		*10*	*EARTH TERMINAL, 1010.1*	
0003	*359011-0202*		*20*	*SIGN BOARD(GROUND)*	
0004	*353021-0217*		*59*	*FEED THROUGH TERMINAL, 10201.8*	
0005	*359011-0806*		*2*	*SET OF SIGNS, 5-FW 1-200*	
0006	*90119-0063*		*2*	*OPTO-RELAY, DC/DC AMMS-10-1/30VDC*	
0007	*353031-0201*		*1*	*END BRACKET EW35*	
X002-3	573374-0000		1	GRND.TERM.X2,NEUT.TERM.X3	
0001	*353042-0005*	*MM*	*530*	*RAIL TS 35/7.5*	
0002	*353024-0208*		*7*	*EARTH TERMINAL, 1010.4*	
0003	*353024-0205*		*18*	*EARTH TERMINAL, 1010.1*	
0004	*359011-0800*		*1*	*MARKING PLATES BSFW 51-100*	

Machine Type | Group Description | Used-In | Group Number | Page No

This page is intentionally left blank.

ECM: 193643 - 20050831
Group number: 67267-1000
Assembly Drawing:

This list covers pages from 9-24 to 9-33

Pos	Part No	UN	Qty	Description	Page No
Common Parts (Cont'd)					
X002-3	573374-0000		1	GRND.TERM.X2,NEUT.TERM.X3	
0001	*353042-0005*	*MM*	*530*	*RAIL TS 35/7.5*	
0002	*353024-0208*		*7*	*EARTH TERMINAL, 1010.4*	
0003	*353024-0205*		*18*	*EARTH TERMINAL, 1010.1*	
0004	*359011-0800*		*1*	*MARKING PLATES BSFW 51-100*	
0005	*353031-0201*		*3*	*END BRACKET EW35*	
0006	*353033-0104*		*5*	*END PLATE, 10502.8*	
0007	*353022-0002*		*20*	*NEUTRAL TERMINAL, 10107.8*	
0008	*353041-0001*	*MM*	*160*	*BUS BAR RAIL 10X3MM SSCH*	
0009	*353041-0106*		*1*	*HOLDER ZB35 K 5026.8*	
0010	*359010-0613*		*2*	*SIGN BOARD BSG 1/2 "N"*	
0011	*359011-0806*		*1*	*SET OF SIGNS, 5-FW 1-200*	
X006	1143954-0000		1	TERMINAL BLOCK X006	
0001	*353021-0213*		*1*	*FEED THROUGH TERMINAL, 10201.0*	
0002	*353024-0205*		*1*	*EARTH TERMINAL, 1010.1*	
0003	*359011-0202*		*1*	*SIGN BOARD(GROUND)*	
0004	*359011-0807*		*2*	*MARKING PLATES 5-FW 1-50*	
X010	927279-0000		1	TERMINAL BLOCK X010.	
0001	*353042-0005*	*MM*	*280*	*RAIL TS 35/7.5*	
0002	*90082-0010*		*1*	*OVERVOLT.PROT.PU4R230V3PH*	
	90082-0300		*1*	*OVERVOLT.PROT.PU1 230 VAC*	
0003	*359011-0807*		*1*	*MARKING PLATES 5-FW 1-50*	
0004	*353021-0219*		*10*	*FEED THROUGH TERMINAL, 10205.0*	
0005	*353034-0031*		*5*	*BRIDGE CONNECTOR, WQV 4/10, 10520.6*	
0006	*359011-0819*		*1*	*MARKING PLATES 5-GW (EARTH)*	
0007	*353031-0201*		*2*	*END BRACKET EW35*	
0008	*353033-0105*		*1*	*PARTITITION, 10501.0*	
X004	90001-0028		1	WALL SOCKET OUTLET REPL.BY 90001-33	
X007	90077-0102		1	TERMINAL BLOCK, 1952.2	
X008	90110-0029		1	CONTACT UNIT, ATE 57-30140	
X009	90110-0028		1	CONTACT UNIT 4-POLEADAPTER	
X100	90110-0057		1	FEMALE INSERT HAN 24 E 09 33 002 4201	
X100:1	90110-0334		4	SCHRAUBE HARTING	
X101	90110-0057		1	FEMALE INSERT HAN 24 E 09 33 002 4201	
X101:1	90110-0334		4	SCHRAUBE HARTING	
X102	90110-0057		1	FEMALE INSERT HAN 24 E 09 33 002 4201	
X102:1	90110-0334		1	SCHRAUBE HARTING	
X103	90110-0057		1	FEMALE INSERT HAN 24 E 09 33 002 4201	
X103:1	90110-0334		4	SCHRAUBE HARTING	
X104	90110-0057		1	FEMALE INSERT HAN 24 E 09 33 002 4201	
X104:1	90110-0334		4	SCHRAUBE HARTING	
X107	90110-0057		1	FEMALE INSERT HAN 24 E 09 33 002 4201	
X107:1	90110-0334		4	SCHRAUBE HARTING	
X108	90110-0057		1	FEMALE INSERT HAN 24 E 09 33 002 4201	
X108:1	90110-0334		4	SCHRAUBE HARTING	
X109	90110-0057		1	FEMALE INSERT HAN 24 E 09 33 002 4201	
X109:1	90110-0334		4	SCHRAUBE HARTING	
X111	90110-0057		1	FEMALE INSERT HAN 24 E 09 33 002 4201	
X111:1	90110-0334		4	SCHRAUBE HARTING	
Z100	90024-0031		1	POWER LINE FILTER, 75 A 230/400 VAC	
Z101	90082-0010		1	OVERVOLT.PROT.PU4R230V3PH	
	90082-0300		*1*	*OVERVOLT.PROT.PU1 230 VAC*	
Z102	90024-0036		1	FILTERED TERMINAL BLOCK	

This page is intentionally left blank.

ECM: 71123 - 19971204
Group number: 67268-1000
Assembly Drawing:

This list covers pages from 9-34 to 9-37

Pos	Part No	UN	Qty	Description	Page No
-					
0101	351121-0200	MM	5000	CABLE RADOX 155 1X16 MMÂ² BLACK	
0102	351121-0200	MM	5000	CABLE RADOX 155 1X16 MMÂ² BLACK	
0103	351121-0201	MM	5000	CABLE RADOX 155 1X35 MMÂ² BLACK	
0104	351121-0201	MM	5000	CABLE RADOX 155 1X35 MMÂ² BLACK	
0105	351121-0200	MM	5800	CABLE RADOX 155 1X16 MMÂ² BLACK	
0106	351121-0200	MM	5800	CABLE RADOX 155 1X16 MMÂ² BLACK	
0107	351121-0201	MM	5800	CABLE RADOX 155 1X35 MMÂ² BLACK	
0108	351121-0201	MM	5800	CABLE RADOX 155 1X35 MMÂ² BLACK	
0111	351179-0109	MM	2100	CABLE AWM 1X16 MM2 BLACK	
0112	351179-0109	MM	2100	CABLE AWM 1X16 MM2 BLACK	
0113	351179-0111	MM	2100	CABLE AWM 1X35 MM2 BLACK	
0114	351179-0111	MM	2100	CABLE AWM 1X35 MM2 BLACK	
0115	351179-0109	MM	2100	CABLE AWM 1X16 MM2 BLACK	
0116	351179-0109	MM	2100	CABLE AWM 1X16 MM2 BLACK	
0117	351179-0111	MM	2100	CABLE AWM 1X35 MM2 BLACK	
0118	351179-0111	MM	2100	CABLE AWM 1X35 MM2 BLACK	
0119	351150-0418	MM	2700	CABLE OLFLEX 4X2,5 MM2 LIGHT/GREY	
0120	90220-0105	MM	2700	SCR. CABLE 4X2,5MM2	
0158	351150-0122	MM	2700	CABLE	
0159	351150-0404	MM	2600	CABLE OLFLEX 4X0,75 MM2 LIGHT/GREY	
0169	351150-0122	MM	4000	CABLE	
0250	351150-0122	MM	4000	CABLE	
0251	351150-0122	MM	4000	CABLE	
0303	351150-0417	MM	5000	CABLE OLFLEX 3X2,5 MM2 LIGHT/GREY	
0309	351150-0422	MM	5800	CABLE OLFLEX 3X4 MM2 LIGHT/GREY	
0310	351150-0422	MM	5900	CABLE OLFLEX 3X4 MM2 LIGHT/GREY	
0311	351150-0417	MM	3600	CABLE OLFLEX 3X2,5 MM2 LIGHT/GREY	
0312	351179-0111	MM	700	CABLE AWM 1X35 MM2 BLACK	
0313	351179-0111	MM	700	CABLE AWM 1X35 MM2 BLACK	
0314	351179-0111	MM	2300	CABLE AWM 1X35 MM2 BLACK	
0315	351179-0111	MM	2300	CABLE AWM 1X35 MM2 BLACK	
0318	351150-0417	MM	3200	CABLE OLFLEX 3X2,5 MM2 LIGHT/GREY	
0319	351150-0418	MM	4400	CABLE OLFLEX 4X2,5 MM2 LIGHT/GREY	
0320	90220-0105	MM	4500	SCR. CABLE 4X2,5MM2	
0321	351150-0417	MM	3800	CABLE OLFLEX 3X2,5 MM2 LIGHT/GREY	
0322	351179-0111	MM	500	CABLE AWM 1X35 MM2 BLACK	
0323	351179-0111	MM	500	CABLE AWM 1X35 MM2 BLACK	
0324	351179-0111	MM	3000	CABLE AWM 1X35 MM2 BLACK	
0325	351179-0111	MM	3000	CABLE AWM 1X35 MM2 BLACK	
0326	351175-0109	MM	3600	CABLE AWM 1X16 MM2 YELLOW-GREEN	
0330	351150-0420	MM	4900	CABLE OLFLEX 7X2,5 MM2 LIGHT/GREY	
0331	351150-0419	MM	4900	CABLE OLFLEX 5X2,5 MM2 LIGHT/GREY	
0332	351150-0418	MM	2700	CABLE OLFLEX 4X2,5 MM2 LIGHT/GREY	
0333	351150-0418	MM	4500	CABLE OLFLEX 4X2,5 MM2 LIGHT/GREY	
0334	351150-0412	MM	3200	CABLE OLFLEX 3X1,5 MM2 LIGHT/GREY	
0336	351150-0412	MM	2300	CABLE OLFLEX 3X1,5 MM2 LIGHT/GREY	
0337	351150-0412	MM	3800	CABLE OLFLEX 3X1,5 MM2 LIGHT/GREY	
0338	351150-0412	MM	4000	CABLE OLFLEX 3X1,5 MM2 LIGHT/GREY	
0344	351150-0417	MM	4300	CABLE OLFLEX 3X2,5 MM2 LIGHT/GREY	
0350	351150-0406	MM	3100	CABLE OLFLEX 7X0,75 MM2 LIGHT/GREY	
0351	351150-0407	MM	3900	CABLE OLFLEX 12X0,75 MM2 LIGHT/GREY	
0352	351150-0407	MM	4600	CABLE OLFLEX 12X0,75 MM2 LIGHT/GREY	
0354	351150-0407	MM	4900	CABLE OLFLEX 12X0,75 MM2 LIGHT/GREY	
0355	351150-0410	MM	4000	CABLE OLFLEX 36X0,75MM2	
0358	351172-0102	MM	4600	CABLE AWM 1X 0,75 MM2 DARKBLUE	
0359	351150-0122	MM	5000	CABLE	
0360	351150-0425	MM	4400	CABLE OLFLEX 25X0,75 MM2 LIGHT/GREY	
0361	351172-0102	MM	4600	CABLE AWM 1X 0,75 MM2 DARKBLUE	
0362	351172-0102	MM	4600	CABLE AWM 1X 0,75 MM2 DARKBLUE	
0363	351172-0102	MM	4600	CABLE AWM 1X 0,75 MM2 DARKBLUE	
0368	351172-0102	MM	4600	CABLE AWM 1X 0,75 MM2 DARKBLUE	
0371	90220-0082	MM	6300	CABLE PAIR TWISTED 2X0,75 MM2 LIGHT/GREY	
0372	90220-0034	MM	6000	THERMOCABLE TEX/SITW-20F-KX 2X0,5MM2	
0373	351172-0102	MM	4600	CABLE AWM 1X 0,75 MM2 DARKBLUE	
0374	351172-0102	MM	4600	CABLE AWM 1X 0,75 MM2 DARKBLUE	
0375	351172-0102	MM	4600	CABLE AWM 1X 0,75 MM2 DARKBLUE	
0376	351172-0102	MM	4600	CABLE AWM 1X 0,75 MM2 DARKBLUE	
0380	351150-0122	MM	2200	CABLE	
0382	351172-0102	MM	4600	CABLE AWM 1X 0,75 MM2 DARKBLUE	
0383	351150-0405	MM	3200	CABLE OLFLEX 5X0,75 MM2 LIGHT/GREY	
0384	351150-0404	MM	900	CABLE OLFLEX 4X0,75 MM2 LIGHT/GREY	
0385	351150-0122	MM	1500	CABLE	
0388	351150-0122	MM	2000	CABLE	
0389	351150-0122	MM	2000	CABLE	
0400	90220-0108	MM	3900	SCR. CABLE 5X1,5MM2	
0401	351120-0145	MM	2400	CABLE SILFLEX SIHF 3X2,5 0046020	
0402	351120-0145	MM	2000	CABLE SILFLEX SIHF 3X2,5 0046020	
0450	90220-0034	MM	1400	THERMOCABLE TEX/SITW-20F-KX 2X0,5MM2	
0495	351150-0122	MM	3000	CABLE	
0496	351150-0122	MM	4000	CABLE	
0501	351150-0418	MM	1500	CABLE OLFLEX 4X2,5 MM2 LIGHT/GREY	
0502	351120-0145	MM	600	CABLE SILFLEX SIHF 3X2,5 0046020	
0503	351120-0145	MM	1000	CABLE SILFLEX SIHF 3X2,5 0046020	

Machine Type | Group Description | Used-In | Group Number | Page No

This page is intentionally left blank.

ECM: 71123 - 19971204
Group number: 67268-1000
Assembly Drawing:

This list covers pages from 9-34 to 9-37

Pos	Part No	UN	Qty	Description	Page No
- (Cont'd)					
0556	90220-0034	MM	500	THERMOCABLE TEX/SITW-20F-KX 2X0,5MM2	
0557	351150-0406	MM	1000	CABLE OLFLEX 7X0,75 MM2 LIGHT/GREY	
0559	351150-0405	MM	1000	CABLE OLFLEX 5X0,75 MM2 LIGHT/GREY	
0701	90220-0108	MM	7000	SCR. CABLE 5X1,5MM2	
0703	351150-0417	MM	2500	CABLE OLFLEX 3X2,5 MM2 LIGHT/GREY	
0759	90220-0034	MM	3000	THERMOCABLE TEX/SITW-20F-KX 2X0,5MM2	
0760	351150-0408	MM	3000	CABLE OILFLEX 16X0,75MM2	
0763	351150-0405	MM	5000	CABLE OLFLEX 5X0,75 MM2 LIGHT/GREY	
0764	351150-0122	MM	5000	CABLE	
0765	351150-0122	MM	5000	CABLE	

Pos	Part No	UN	Qty	Description	Page No

This page is intentionally left blank.

ECM: 24481 - 19970401
Group number: 67520-1000
Assembly Drawing:

Pos	Part No	UN	Qty	Description	Page No
-					
0010	90036-0057		10	LIGHT BULB, BA9S 28V	
0020	90077-0341		2	DIODE HOLDER, WSD 2,5, 10584.6	
0040	90064-0084		1	PUSH BUTTON, YELLOW	
0050	90119-0056		1	RELAY, AUXILIARY MK3P5-S 24VDC	
0060	90119-0067		1	SOLID-STATE RELAY, H12WD4850	
0070	90233-0028		2	TUBE FUSE, 10A	
0080	352550-0120		2	FINE-WIRE 315 MA	
0090	352551-0136		4	FINE-WIRE FUSE 3,15 A SLOW	
0100	90098-0020		2	DIODE FUSE, 55ET	
0110	352550-0136		2	FINE-WIRE, 3,15 A	
0130	352551-0138		2	FINE-WIRE 5 A	
0140	352551-0139		2	FINE-WIRE 6,3 A	
0150	90259-0037		1	OVERVOLT PROT.PU1 230VREPBY 0090082-0300	
0170	90064-0315		1	LAMP REMOVER, NO:700	
0200	90333-0004		5	GRAPH PAPER 24 HOURS	
0210	90121-0116		1	RESISTANCE FIXED, 0,15 KOHM, 0,25 W	
0230	779910-0101		1	PADLOCK	

Pos	Part No	UN	Qty	Description	Page No

This page is intentionally left blank.

ECM: 70900 - 19970625
Group number: 68378-1000
Assembly Drawing:

Pos	Part No	UN	Qty	Description	Page No
-					
0001	971410-0101		1	CONTROL PANEL	
0120	90194-0112		1	SIGN"WHITE CARD EL.EQ."REPL.BY 90194-133	
0130	90194-0016		1	WARNING SIGN, RISK OF ELECTRIC SHOCK	
0140	90203-0009	MM	200	CU LITZ CABLE 15X2 MM	
A004:1	558389-0101		1	MULTI PURPOSE POTENTIOM.	
100	*578265-0000*		*1*	*COMPONENTS WITHOUT TP-NO*	
110	*578266-0000*		*1*	*CIRCUIT BOARD*	
120	*578267-0000*		*1*	*CASING*	
A004:2	551922-0000		1	LABEL,POTENTIOMETER DESIGN CORR.	
A100	90025-0088		1	PANEL INTERFACE CU64.1	
A110	577796-0001		1	CIRCUIT BOARD, COMPONENTS	
A110:1	581953-0000		1	ALARM DISPLAY	
S02H	90064-0093		1	PUSH BUTTON, GREEN	
	90036-0057		*1*	*LIGHT BULB, BA9S 28V*	
S02H:1	359301-0090		1	BUTTON SIGN, INCHING	
S09H	90064-0093		1	PUSH BUTTON, GREEN	
	90036-0057		*1*	*LIGHT BULB, BA9S 28V*	
S09H:1	359301-0091		1	BUTTON SIGN, INCHING FINAL FOLDER	
S30H	90064-0093		1	PUSH BUTTON, GREEN	
	90036-0057		*1*	*LIGHT BULB, BA9S 28V*	
S30H:1	359301-0001		1	BUTTON SIGN, UP	
S31H	90064-0082		1	PUSH BUTTON, WHITE	
	90036-0057		*1*	*LIGHT BULB, BA9S 28V*	
S31H:1	359301-0005		1	BUTTON SIGN, DOWN	
S32H	90064-0085		1	PUSH BUTTON, RED	
S32H:1	359301-0110		1	BUTTON SIGN, SHORT STOP	
S33H	90064-0082		1	PUSH BUTTON, WHITE	
	90036-0057		*1*	*LIGHT BULB, BA9S 28V*	
S33H:1	359301-0105		1	BUTTON SIGN, ALARM STOP	
S34H	90064-0088		1	PUSH BUTTON, YELLOW	
S34H:1	359301-0215		1	BUTTON SIGN, WASH PRODUCT VALVE	
R100	90121-0116		1	RESISTANCE FIXED, 0,15 KOHM, 0,25 W	
S001	90064-0105		1	EMERGENCY STOP BUTTON REPL.BY 90064-124	
S001:1	486826-0001		1	SIGN "EMERGENCY STOP"	
S005	90064-0084		1	PUSH BUTTON, YELLOW	
S005:1	359301-0160		1	BUTTON SIGN, DRAINAGE OF PRODUCT TUBE	
S007	90111-0120		1	SWITCH, 2 POS.704.510 .0A+704.901.5/A	
S012	90064-0082		1	PUSH BUTTON, WHITE	
	90036-0057		*1*	*LIGHT BULB, BA9S 28V*	
S012:1	359301-0130		1	BUTTON SIGN, LAMP TEST	
S019	90064-0093		1	PUSH BUTTON, GREEN	
	90036-0057		*1*	*LIGHT BULB, BA9S 28V*	
S019:1	359301-0050		1	BUTTON SIGN, DROP CHUTE BRIK	
S020	90064-0093		1	PUSH BUTTON, GREEN	
	90036-0057		*1*	*LIGHT BULB, BA9S 28V*	
S020:1	359301-0170		1	BUTTON SIGN, SPOOLING OF FINAL FOLDER	
V003	90430-0304		1	SET POINT UNIT TELEMETRIC 2SPU1	
V004	90430-0304		1	SET POINT UNIT TELEMETRIC 2SPU1	
X003	90195-0020		1	TERMINAL BLOCK, 1977.2	
X107	90110-0128		1	MALE INSERT HAN 24 E-M 65330242631	

Machine Type | Group Description | Used-In | Group Number | Page No

This page is intentionally left blank.

ECM: 70900 - 19970625
Group number: 68910-1000
Assembly Drawing:

Pos	Part No	UN	Qty	Description	Page No
-					
0001	971444-0101		1	SIDE PANEL	
0150	90194-0112		1	SIGN"WHITE CARD EL.EQ."REPL.BY 90194-133	
0160	90194-0016		1	WARNING SIGN, RISK OF ELECTRIC SHOCK	
S019:1	359301-0050		1	BUTTON SIGN, DROP CHUTE BRIK	
S019	90064-0093		1	PUSH BUTTON, GREEN	
	90036-0057		*1*	*LIGHT BULB, BA9S 28V*	
S002:1	359301-0110		1	BUTTON SIGN, SHORT STOP	
S002	90064-0085		1	PUSH BUTTON, RED	
S001:1	486826-0001		1	SIGN "EMERGENCY STOP"	
S001	90064-0105		1	EMERGENCY STOP BUTTON REPL.BY 90064-124	
X111	90110-0128		1	MALE INSERT HAN 24 E-M 65330242631	

Pos	Part No	UN	Qty	Description	Page No

This page is intentionally left blank.

ECM: 192418 - 20050831
Group number: 42504-1000
Assembly Drawing:

This list covers pages from 9-44 to 9-55

Pos	Part No	UN	Qty	Description	Page No
50HZ					
L001	90297-0306		1	BALLAST COIL 50/60 HZ	
Q101:5	359241-0297		1	SIGN: " 50 HZ"	
60HZ					
Q101:6	359241-0298		1	SIGN: " 60 HZ"	
Common Parts					
0001	971373-0102		1	ELECTRICAL CABINET	
0005	90194-0133		1	SIGN "DELIVERED DESIGN"	
0010	90194-0016		7	WARNING SIGN, RISK OF ELECTRIC SHOCK	
0020	90194-0080		1	SIGN, IDENTIFICATION OF WIRING	
0030	67369-0102		1	RACK WALLMOUNTED 84TE	
030 2	*540282-0002*		*1*	*COMPONENTS WITHOUT TP-NO*	
0030:1	90220-0302		2	CLAMP FOR SCR.CABLE, 16MM, 55-016-89	
0030:2	90220-0304		2	CLAMP FOR SCR.CABLE, 24MM,	
0030:3	90062-0058		4	LOCK WASHER SERRAT.EXT.GEAR,3,2/6 H=0,4	
0030:4	312125-0232		4	SCREW ISO 1207 M3X25 A4	
0030:5	312605-0310		8	HEXAGON NUT, M6M M3 A280	
0030:6	315105-0124		8	WASHER BRB 3,2X7 RFR	
0060	1143419-0001		1	FUSE PANEL LABEL	
0070	1143419-0002		1	FUSE PANEL LABEL	
1000	351175-0109	M	1	CABLE AWM 1X16 MM2 YELLOW-GREEN	
1005	351175-0107	M	1	CABLE AWM 1X6 MM2 YELLOW-GREEN	
1010	351175-0106	M	1	CABLE AWM 1X4 MM2 YELLOW-GREEN	
1015	351175-0105	M	1	CABLE AWM 1X2,5 MM2 YELLOW-GREEN	
1020	351175-0104	M	1	KABEL AWM 1X15 MM2 YELLOW-GREEN	
1025	351175-0102	M	1	CABLE AWM 1X 075 MM2 YELLOW-GREEN	
1030	351179-0110	M	1	CABLE AWM 1X25 MM2 BLACK	
1035	351179-0107	M	1	CABLE AWM 1X6 MM2 BLACK	
1040	351179-0106	M	1	CABLE AWM 1X4 MM2 BLACK	
1045	351179-0105	M	1	CABLE AWM 1X2,5 MM2 BLACK	
1047	351179-0104	M	1	CABLE AWM 1X15 MM2 BLACK	
1050	351173-0110	M	1	CABLE AWM 1X25 MM2 LIGHTBLUE	
1055	351173-0104	M	1	CABLE AWM LIGHTBLUE 1,5MM2	
1060	351172-0106	M	1	CABLE AWM 1X4 MM2 DARKBLUE	
1065	351172-0102	M	1	CABLE AWM 1X 0,75 MM2 DARKBLUE	
1070	351176-0106	M	1	CABLE AWM 1X4 MM2 RED	
1075	351176-0104	M	1	CABLE AWM 1X15 MM2 RED	
1080	351180-0102	M	1	CABLE AWM 1X075 MM2 ORANGE	
A002:1	67372-0101		1	BACKPLANE 8TE(32 POLE)	
0010	*543336-0001*		*1*	*COMPONENTS WITHOUT TP-NO*	
0020	*543319-0000*		*1*	*PRINTED CIRCUIT BOARD*	
0030	*543337-0000*		*1*	*TERMINAL LABELS 1-4*	
A003:1	67372-0101		1	BACKPLANE 8TE(32 POLE)	
0010	*543336-0001*		*1*	*COMPONENTS WITHOUT TP-NO*	
0020	*543319-0000*		*1*	*PRINTED CIRCUIT BOARD*	
0030	*543337-0000*		*1*	*TERMINAL LABELS 1-4*	
A004	558230-0101		1	TMCC CONTROLLER	
100	*558370-0101*		*1*	*TMCC, MAIN PCB*	
100	*576100-0000*		*1*	*COMPONENTS WITHOUT TP-NO*	
110	*573131-0000*		*1*	*PRINTED CIRCUIT BOARD*	
120	*576101-0000*		*1*	*COOLING BLOCK*	
110	*576102-0000*		*1*	*COMPONENTS WITHOUT TP-NO*	
120	*576103-0000*		*1*	*CASING*	
130	*576104-0000*		*1*	*FRONT PLATE*	
140	*542036-0000*		*1*	*LABEL "PART NO" 84X140MM*	
A004:1	47832-0101		1	DCS8,DESIGN CONTR.PROG.	
100	*579804-0000*		*1*	*COMPONENTS WITHOUT TP-NO*	
110	*542036-0000*		*1*	*LABEL "PART NO" 84X140MM*	
A004:2	67372-0101		1	BACKPLANE 8TE(32 POLE)	
0010	*543336-0001*		*1*	*COMPONENTS WITHOUT TP-NO*	
0020	*543319-0000*		*1*	*PRINTED CIRCUIT BOARD*	
0030	*543337-0000*		*1*	*TERMINAL LABELS 1-4*	
A005	558230-0101		1	TMCC CONTROLLER	
100	*558370-0101*		*1*	*TMCC, MAIN PCB*	
100	*576100-0000*		*1*	*COMPONENTS WITHOUT TP-NO*	
110	*573131-0000*		*1*	*PRINTED CIRCUIT BOARD*	
120	*576101-0000*		*1*	*COOLING BLOCK*	
110	*576102-0000*		*1*	*COMPONENTS WITHOUT TP-NO*	
120	*576103-0000*		*1*	*CASING*	
130	*576104-0000*		*1*	*FRONT PLATE*	
140	*542036-0000*		*1*	*LABEL "PART NO" 84X140MM*	
A005:2	67372-0101		1	BACKPLANE 8TE(32 POLE)	
0010	*543336-0001*		*1*	*COMPONENTS WITHOUT TP-NO*	
0020	*543319-0000*		*1*	*PRINTED CIRCUIT BOARD*	
0030	*543337-0000*		*1*	*TERMINAL LABELS 1-4*	
A006	558230-0101		1	TMCC CONTROLLER	
100	*558370-0101*		*1*	*TMCC, MAIN PCB*	
100	*576100-0000*		*1*	*COMPONENTS WITHOUT TP-NO*	
110	*573131-0000*		*1*	*PRINTED CIRCUIT BOARD*	
120	*576101-0000*		*1*	*COOLING BLOCK*	
110	*576102-0000*		*1*	*COMPONENTS WITHOUT TP-NO*	
120	*576103-0000*		*1*	*CASING*	
130	*576104-0000*		*1*	*FRONT PLATE*	
140	*542036-0000*		*1*	*LABEL "PART NO" 84X140MM*	

Machine Type | Group Description | Used-In | Group Number | Page No

This page is intentionally left blank.

Pos	Part No	UN	Qty	Description	Page No
Common Parts (Cont'd)					
A006:1	47836-0201		1	TEPC, TUBUS ENERGY AND POWER CONTROL	
A006:2	67372-0101		1	BACKPLANE 8TE(32 POLE)	
0010	*543336-0001*		*1*	*COMPONENTS WITHOUT TP-NO*	
0020	*543319-0000*		*1*	*PRINTED CIRCUIT BOARD*	
0030	*543337-0000*		*1*	*TERMINAL LABELS 1-4*	
A007	558230-0101		1	TMCC CONTROLLER	
100	*558370-0101*		*1*	*TMCC, MAIN PCB*	
100	*576100-0000*		*1*	*COMPONENTS WITHOUT TP-NO*	
110	*573131-0000*		*1*	*PRINTED CIRCUIT BOARD*	
120	*576101-0000*		*1*	*COOLING BLOCK*	
110	*576102-0000*		*1*	*COMPONENTS WITHOUT TP-NO*	
120	*576103-0000*		*1*	*CASING*	
130	*576104-0000*		*1*	*FRONT PLATE*	
140	*542036-0000*		*1*	*LABEL "PART NO" 84X140MM*	
A007:1	47836-0201		1	TEPC, TUBUS ENERGY AND POWER CONTROL	
A007:2	67372-0101		1	BACKPLANE 8TE(32 POLE)	
0010	*543336-0001*		*1*	*COMPONENTS WITHOUT TP-NO*	
0020	*543319-0000*		*1*	*PRINTED CIRCUIT BOARD*	
0030	*543337-0000*		*1*	*TERMINAL LABELS 1-4*	
A008	558390-0104		1	UNIVERSAL THUMBWHEEL UNIT	
110	*577454-0000*		*1*	*CIRCUIT BOARD*	
120	*577455-0000*		*1*	*CASING*	
134	*581847-0000*		*1*	*FRONT PLATE*	
140	*542036-0000*		*1*	*LABEL "PART NO" 84X140MM*	
A005:1	47836-0201		1	TEPC, TUBUS ENERGY AND POWER CONTROL	
A002	90430-0037		1	MOTOR DRIVE CONTR.PME 1802. REPL.BY -67	
	352550-0136		*1*	*FINE-WIRE, 3,15 A*	
A002:2	352551-0136		1	FINE-WIRE FUSE 3,15 A SLOW	
A003	90430-0037		1	MOTOR DRIVE CONTR.PME 1802. REPL.BY -67	
	352550-0136		*1*	*FINE-WIRE, 3,15 A*	
A003:2	352551-0136		1	FINE-WIRE FUSE 3,15 A SLOW	
A005:3	589361-0000		1	LABEL	
A006:3	589361-0000		1	LABEL	
A007:3	589361-0000		1	LABEL	
A012	90119-0072		1	SAFETY RELAY, JSBR4	
A013	90119-0080		1	SAFETY RELAY JSBR3	
A101	90025-0016		1	ENCODER MODULE TPMC	
A101:1	90025-0025		1	TERMINAL BLOCK ENCODER TPMC	
A102	90025-0017		1	INPUT MODULE TPMC	
A102:1	90025-0024		1	TERMINAL BLOCK, 491168307	
A103	90025-0017		1	INPUT MODULE TPMC	
A103:1	90025-0024		1	TERMINAL BLOCK, 491168307	
A104	90025-0017		1	INPUT MODULE TPMC	
A104:1	90025-0024		1	TERMINAL BLOCK, 491168307	
A105	90025-0017		1	INPUT MODULE TPMC	
A105:1	90025-0024		1	TERMINAL BLOCK, 491168307	
A106	90025-0017		1	INPUT MODULE TPMC	
A106:1	90025-0024		1	TERMINAL BLOCK, 491168307	
A108	90025-0052		1	MAIN RACK COMPAKT (MCR)	
A112	90025-0053		1	OUTPUT MODULE TPMC OM16	
A112:1	90025-0054		1	KUPPL.SOCKEL MSTB 2,5-5,08 FÃ¼R 90025-53	
A113	90025-0053		1	OUTPUT MODULE TPMC OM16	
A113:1	90025-0054		1	KUPPL.SOCKEL MSTB 2,5-5,08 FÃ¼R 90025-53	
A114	90025-0053		1	OUTPUT MODULE TPMC OM16	
A114:1	90025-0054		1	KUPPL.SOCKEL MSTB 2,5-5,08 FÃ¼R 90025-53	
A115	90025-0053		1	OUTPUT MODULE TPMC OM16	
A115:1	90025-0054		1	KUPPL.SOCKEL MSTB 2,5-5,08 FÃ¼R 90025-53	
A116	90025-0053		1	OUTPUT MODULE TPMC OM16	
A116:1	90025-0054		1	KUPPL.SOCKEL MSTB 2,5-5,08 FÃ¼R 90025-53	
A117	90025-0053		1	OUTPUT MODULE TPMC OM16	
A117:1	90025-0054		1	KUPPL.SOCKEL MSTB 2,5-5,08 FÃ¼R 90025-53	
A118	90025-0058		1	EXPANSIONS RACK COMPACT-8	
A118:1	90025-0022		1	RACK TERMINATION TPMC	
A205	90410-0051		1	TEMPERATURE CONTROLLER, KS 40	
A205:1	359241-0132		1	SIGN: " TEMP. SA"	
A205:2	359240-0100		1	SIGN HOLDER FOR 359240-0001	
A206	90410-0051		1	TEMPERATURE CONTROLLER, KS 40	
A206:1	359241-0131		1	SIGN: " TEMP. LS"	
A206:2	359240-0100		1	SIGN HOLDER FOR 359240-0001	
A208	90410-0051		1	TEMPERATURE CONTROLLER, KS 40	
A208:1	359241-0251		1	SIGN: " TEMP.-SPLICING"	
A208:2	359240-0100		1	SIGN HOLDER FOR 359240-0001	
A209:1	359240-0001		5	SIGN, NOT ENGRAVED	
A209:2	359240-0100		5	SIGN HOLDER FOR 359240-0001	
A301	90314-0021		1	LEVELRELAY0,5-10KOHM REPLACED BY90314-38	
A450	90119-0077		1	CURRENT RELAY SYRELEC DIRT2 230	
A451	90119-0077		1	CURRENT RELAY SYRELEC DIRT2 230	
A500	90172-0031		1	GENERATOR	
A500:1	352551-0141		1	FINE-WIRE 10 A	
A500:2	352551-0141		1	FINE-WIRE 10 A	
A500:3	352551-0141		1	FINE-WIRE 10 A	
A500:4	352551-0137		1	FINE-WIRE 4 A	
A501	90459-2525		1	TRIPLE SWITCH, SB-3-6-R1	

Machine Type | Group Description | Used-In | Group Number | Page No

This page is intentionally left blank.

ECM: 192418 - 20050831
Group number: 42504-1000
Assembly Drawing:

This list covers pages from 9-44 to 9-55

Pos	Part No	UN	Qty	Description	Page No
Common Parts (Cont'd)					
A501:1	352551-0134		1	FINE-WIRE FUSE 2 A SLOW,5X20MM	
D108	90025-0070		1	PROCESSOR TPMC CPU 64.1	
	90334-0006		*1*	*BATTERY 3,6V SIZE AA*	
	90025-0046		*1*	*BATTERY CARRIER TPMC 971-009-002*	
D108:1	90025-0094		1	TERMINAL BLOCK 4-POLE	
D108:2	90334-0006		1	BATTERY 3,6V SIZE AA	
	90025-0046		*1*	*BATTERY CARRIER TPMC 971-009-002*	
E001	90297-0006		1	FLUORESCENT TUBE, PL9	
E001:1	90164-0301		1	HOLDING FIXTURE	
E002	90297-0006		1	FLUORESCENT TUBE, PL9	
E002:1	90164-0301		1	HOLDING FIXTURE	
F000	90135-0038		12	CABLE CLAMP K&M K*12 5-1	
F000:1	90135-0031		8	BUSBAR HOLDER K&M SHO165/2	
F000:2	353021-0214		30	FEED THROUGH TERMINAL, 10202.0	
F000:3	353032-0004		10	END PLATE WAP 2,5-10 BEIGE	
F000:4	353031-0201		20	END BRACKET EW35	
F005	90233-0027		1	TUBE FUSE, 16A	
	90233-0305		*1*	*INDICATOR*	
F005:1	90077-0112		1	FUSE HOLDER FERRAZ PST REPL.BY 90233-303	
F006	90233-0027		1	TUBE FUSE, 16A	
	90233-0305		*1*	*INDICATOR*	
F006:1	90077-0112		1	FUSE HOLDER FERRAZ PST REPL.BY 90233-303	
F008	90233-0028		1	TUBE FUSE, 10A	
F008:1	90077-0112		1	FUSE HOLDER FERRAZ PST REPL.BY 90233-303	
F020	90007-0147		1	CIRCUIT BREAKER, 3P 10 A K	
F022	90007-0129		1	CIRCUIT BREAKER, 1P 10 A K	
F023	90007-0129		1	CIRCUIT BREAKER, 1P 10 A K	
F025	90007-0129		1	CIRCUIT BREAKER, 1P 10 A K	
F026	90007-0131		1	CIRCUIT BREAKER, 1P 16 A K	
F027	90007-0129		1	CIRCUIT BREAKER, 1P 10 A K	
F028	90007-0129		1	CIRCUIT BREAKER, 1P 10 A K	
F029	90007-0131		1	CIRCUIT BREAKER, 1P 16 A K	
F034	90007-0147		1	CIRCUIT BREAKER, 3P 10 A K	
F050	352550-0133		1	FINE-WIRE, 1.6 A	
F050:1	353023-0102		1	FUSE TERMINAL, 10110.0	
G001	90430-0036		1	MOTOR DRIVE CONTROL SCANDIALOGIC VPM SL	
	352550-0120		*1*	*FINE-WIRE 315 MA*	
G001:1	352550-0120		1	FINE-WIRE 315 MA	
G100	90025-0055		1	POWER SUPPLY UNIT TPMC PS32	
	352551-0136		*1*	*FINE-WIRE FUSE 3,15 A SLOW*	
G100:1	352551-0136		1	FINE-WIRE FUSE 3,15 A SLOW	
K001	90075-0125		1	CONTACTOR, 7,5KW 24VDC	
	90075-0313		*1*	*AUXILIARY CONTACT K&M 22 DILM.2NO,2NC*	
K002	90075-0125		1	CONTACTOR, 7,5KW 24VDC	
	90075-0313		*1*	*AUXILIARY CONTACT K&M 22 DILM.2NO,2NC*	
K004	90075-0125		1	CONTACTOR, 7,5KW 24VDC	
	90075-0313		*1*	*AUXILIARY CONTACT K&M 22 DILM.2NO,2NC*	
K005	90075-0125		1	CONTACTOR, 7,5KW 24VDC	
	90075-0313		*1*	*AUXILIARY CONTACT K&M 22 DILM.2NO,2NC*	
K006	90075-0125		1	CONTACTOR, 7,5KW 24VDC	
	90075-0313		*1*	*AUXILIARY CONTACT K&M 22 DILM.2NO,2NC*	
K007	90075-0125		1	CONTACTOR, 7,5KW 24VDC	
	90075-0313		*1*	*AUXILIARY CONTACT K&M 22 DILM.2NO,2NC*	
K008	90075-0125		1	CONTACTOR, 7,5KW 24VDC	
	90075-0313		*1*	*AUXILIARY CONTACT K&M 22 DILM.2NO,2NC*	
K009	90075-0125		1	CONTACTOR, 7,5KW 24VDC	
	90075-0313		*1*	*AUXILIARY CONTACT K&M 22 DILM.2NO,2NC*	
K012	90075-0125		1	CONTACTOR, 7,5KW 24VDC	
	90075-0313		*1*	*AUXILIARY CONTACT K&M 22 DILM.2NO,2NC*	
K013	90075-0125		1	CONTACTOR, 7,5KW 24VDC	
	90075-0313		*1*	*AUXILIARY CONTACT K&M 22 DILM.2NO,2NC*	
K014	90075-0125		1	CONTACTOR, 7,5KW 24VDC	
	90075-0313		*1*	*AUXILIARY CONTACT K&M 22 DILM.2NO,2NC*	
K015	90075-0125		1	CONTACTOR, 7,5KW 24VDC	
	90075-0313		*1*	*AUXILIARY CONTACT K&M 22 DILM.2NO,2NC*	
K016	90075-0125		1	CONTACTOR, 7,5KW 24VDC	
	90075-0313		*1*	*AUXILIARY CONTACT K&M 22 DILM.2NO,2NC*	
K020	90075-0125		1	CONTACTOR, 7,5KW 24VDC	
	90075-0313		*1*	*AUXILIARY CONTACT K&M 22 DILM.2NO,2NC*	
K022	90075-0125		1	CONTACTOR, 7,5KW 24VDC	
	90075-0313		*1*	*AUXILIARY CONTACT K&M 22 DILM.2NO,2NC*	
K023	90075-0125		1	CONTACTOR, 7,5KW 24VDC	
	90075-0313		*1*	*AUXILIARY CONTACT K&M 22 DILM.2NO,2NC*	
K030	90075-0126		1	CONTACTOR, 22KW 24VDC	
	90075-0313		*1*	*AUXILIARY CONTACT K&M 22 DILM.2NO,2NC*	
K050	90119-0063		1	OPTO-RELAY, DC/DC AMMS-10-1/30VDC	
K051	90119-0063		1	OPTO-RELAY, DC/DC AMMS-10-1/30VDC	
K101	90119-0086		1	RELAY, AUXILIARY MY4IN4 24VDC	
K101:1	90119-0309		1	BASE UNIT, TYPE PYF 14AE	
K101:2	90119-0310		1	CLAMP, TYPE PYC-A1	
K102	90119-0056		1	RELAY, AUXILIARY MK3P5-S 24VDC	
K102:1	90129-0006		1	BASE, S3-B	
K110	90119-0056		1	RELAY, AUXILIARY MK3P5-S 24VDC	

This page is intentionally left blank.

ECM: 192418 - 20050831
Group number: 42504-1000
Assembly Drawing:

This list covers pages from 9-44 to 9-55

Pos	Part No	UN	Qty	Description	Page No
Common Parts (Cont'd)					
K110:1	90129-0006		1	BASE, S3-B	
K111	90119-0056		1	RELAY, AUXILIARY MK3P5-S 24VDC	
K111:1	90129-0006		1	BASE, S3-B	
K112	90119-0056		1	RELAY, AUXILIARY MK3P5-S 24VDC	
K112:1	90129-0006		1	BASE, S3-B	
K113	90119-0056		1	RELAY, AUXILIARY MK3P5-S 24VDC	
K113:1	90129-0006		1	BASE, S3-B	
K120	90119-0056		1	RELAY, AUXILIARY MK3P5-S 24VDC	
K120:1	90129-0006		1	BASE, S3-B	
K121	90119-0056		1	RELAY, AUXILIARY MK3P5-S 24VDC	
K121:1	90129-0006		1	BASE, S3-B	
K124	90119-0056		1	RELAY, AUXILIARY MK3P5-S 24VDC	
K124:1	90129-0006		1	BASE, S3-B	
K125	90119-0056		1	RELAY, AUXILIARY MK3P5-S 24VDC	
K125:1	90129-0006		1	BASE, S3-B	
K126	90119-0056		1	RELAY, AUXILIARY MK3P5-S 24VDC	
K126:1	90129-0006		1	BASE, S3-B	
K127	90119-0056		1	RELAY, AUXILIARY MK3P5-S 24VDC	
K127:1	90129-0006		1	BASE, S3-B	
K128	90119-0056		1	RELAY, AUXILIARY MK3P5-S 24VDC	
K128:1	90129-0006		1	BASE, S3-B	
K202	90119-0043		1	OPTO-RELAY, 22DC 60S-3/32VDC	
K203	90119-0067		1	SOLID-STATE RELAY, H12WD4850	
K204	90119-0067		1	SOLID-STATE RELAY, H12WD4850	
K211	90119-0067		1	SOLID-STATE RELAY, H12WD4850	
P001	90332-0019		1	RECORDER HONEYWELL 1 CH.	
	90332-0322		*1*	*PEN*	
	90332-0323		*1*	*RECORDER CHARTS*	
P003	90053-0028		1	3 DIGIT COUNTER KOYO KCX-3-DM-V	
P003:1	90053-0309		1	BASE	
P004	90053-0031		1	HOUR COUNTER, B 609.10 10-50VDC	
P005	90053-0032		1	COUNTER, F524.650DA3B 24VDC	
P006	90053-0029		1	COUNTER, F524.800FA3C 24VDC	
Q000	90259-0310		22	ADAPTER PLATE, K&M SP PKZ M	
Q000:1	90259-0312		2	ADAPTER PLATE K&M SP PKZ SOND C	
Q001	90095-0075		1	OVERLOAD PROTECTION, PKZM 4 A	
Q001:1	90259-0313		1	AUX. CONTACT K&M NHI21-PKZM0	
Q002	90095-0076		1	OVERLOAD PROTECTION, PKZM 6,3 A	
Q002:1	90259-0313		1	AUX. CONTACT K&M NHI21-PKZM0	
Q003	90095-0074		1	OVERLOAD PROTECTION, PKZM 2,5 A	
Q003:1	90259-0313		1	AUX. CONTACT K&M NHI21-PKZM0	
Q009	90095-0075		1	OVERLOAD PROTECTION, PKZM 4 A	
Q009:1	90259-0313		1	AUX. CONTACT K&M NHI21-PKZM0	
Q012	90095-0077		1	OVERLOAD PROTECTION, PKZM 6-10 A	
Q012:1	90259-0313		1	AUX. CONTACT K&M NHI21-PKZM0	
Q013	90095-0073		1	OVERLOAD PROTECTION, PKZM 1,6 A	
Q013:1	90259-0313		1	AUX. CONTACT K&M NHI21-PKZM0	
Q014	90095-0073		1	OVERLOAD PROTECTION, PKZM 1,6 A	
Q014:1	90259-0313		1	AUX. CONTACT K&M NHI21-PKZM0	
Q030	90095-0080		1	OVERLOAD PROTECTION, PKZM 25 A	
Q030:1	90259-0313		1	AUX. CONTACT K&M NHI21-PKZM0	
Q101	90111-0131		1	MAIN SWITCH P3-100/V/SVB-SW/N/HI11/H-P3	
	90111-0332		*1*	*NEUTRAL CONTACT, N-P3Z*	
Q101:2	359241-0124		1	SIGN: " MAIN SWITCH"	
Q101:3	359240-0100		2	SIGN HOLDER FOR 359240-0001	
Q101:4	779910-0101		1	PADLOCK	
Q102	90259-0031		1	OVERLOAD RELAY, 25-40 A	
R108	90121-0116		1	RESISTANCE FIXED, 0,15 KOHM, 0,25 W	
R202	68444-0101		1	SHUNT RESISTOR FOR SSR	
S003	90064-0085		1	PUSH BUTTON, RED	
S003:1	359301-0110		1	BUTTON SIGN, SHORT STOP	
S006	90111-0142		1	SWITCH GEAR, NO.OF DIGIT: 4	
S006:1	359320-0003		1	SIGN, THUMB WHEEL UNIT FILLING ON	
S006:2	359240-0100		1	SIGN HOLDER FOR 359240-0001	
S008	90002-0014		1	BLIND PLUG D=22,5MM	
S008:1	359240-0001		1	SIGN, NOT ENGRAVED	
S008:2	359240-0100		1	SIGN HOLDER FOR 359240-0001	
S009	90002-0014		1	BLIND PLUG D=22,5MM	
S009:1	359240-0001		1	SIGN, NOT ENGRAVED	
S009:2	359240-0100		1	SIGN HOLDER FOR 359240-0001	
S015	90111-0120		1	SWITCH, 2 POS.704.510 .0A+704.901.5/A	
S015:1	359241-0324		1	SIGN: " PREPERATIONS"	
S015:2	359240-0100		1	SIGN HOLDER FOR 359240-0001	
T001	90245-0019		1	TRANSF. 3-PH.750VA SEC.23A	
T003	23139-0000		1	TRANSFORMER 1PH. AUTO 2,1 KVA	
V001	90038-0024		1	RECTIFIER, 10/22A SKD 50/04A3	
W005	1140660-0001		1	ANALOGUE CABLE	
0010	*90220-0093*	*MM*	*2500*	*PAIR TWISTED CABLE 4X2X0,25MM2*	
0020	*90110-0143*		*1*	*CONTACT UNIT, DB25P064TX*	
0030	*90110-0146*		*1*	*COVER*	
0040	*90166-0171*	*MM*	*30*	*SHRINKABLE HOSE (12,7MM) BLACK*	
0050	*90166-0111*	*MM*	*350*	*SHRINKABLE HOSE 6.4 MM(1/4")BLACK*	
0060	*353101-0132*		*1*	*CABLE SHOE 1,5-2,5MM2 M5 BLUE*	

Machine Type | Group Description | Used-In | Group Number | Page No

This page is intentionally left blank.

ECM: 192418 - 20050831
Group number: 42504-1000
Assembly Drawing:

This list covers pages from 9-44 to 9-55

Pos	Part No	UN	Qty	Description	Page No
Common Parts (Cont'd)					
W005	1140660-0001		1	ANALOGUE CABLE	
0010	*90220-0093*	*MM*	*2500*	*PAIR TWISTED CABLE 4X2X0,25MM2*	
0020	*90110-0143*		*1*	*CONTACT UNIT, DB25P064TX*	
0030	*90110-0146*		*1*	*COVER*	
0040	*90166-0171*	*MM*	*30*	*SHRINKABLE HOSE (12,7MM) BLACK*	
0050	*90166-0111*	*MM*	*350*	*SHRINKABLE HOSE 6.4 MM(1/4")BLACK*	
0060	*353101-0132*		*1*	*CABLE SHOE 1,5-2,5MM2 M5 BLUE*	
0070	*353001-0116*		*7*	*END SLEEVE H0.5/14 ORANGE*	
W001	90220-0059	M	1	THERMOCOUPLE CABLE K/PVC/20AWG 2X0,5MM2	
W002	90220-0059	M	1	THERMOCOUPLE CABLE K/PVC/20AWG 2X0,5MM2	
W003	90220-0040	M	1	SCR. CABLE 2X0,75 MM2 BLACK	
W004	90220-0059	M	1	THERMOCOUPLE CABLE K/PVC/20AWG 2X0,5MM2	
W006	90172-0318		1	HF-CABLE 450MM, TELSONIC 514 210 004	
W007	90172-0318		1	HF-CABLE 450MM, TELSONIC 514 210 004	
W008	90172-0318		1	HF-CABLE 450MM, TELSONIC 514 210 004	
W010	90220-0105	MM	1	SCR. CABLE 4X2,5MM2	
W011	90220-0105	MM	1	SCR. CABLE 4X2,5MM2	
W012	90220-0108	MM	1	SCR. CABLE 5X1,5MM2	
W013	90220-0108	MM	1	SCR. CABLE 5X1,5MM2	
W020	1143884-0000		1	COPPER BRAID	
W021	1143884-0000		1	COPPER BRAID	
W022	1143884-0000		1	COPPER BRAID	
XL:1	1143668-0000		1	DISTR. TERMINAL, 220V	
0001	*353042-0005*	*MM*	*300*	*RAIL TS 35/7.5*	
0002	*353031-0201*		*2*	*END BRACKET EW35*	
0003	*353021-0213*		*22*	*FEED THROUGH TERMINAL, 10201.0*	
0004	*353034-0014*		*1*	*BRIDGE CONN.Q10(SAK 2,5)*	
0005	*353034-0031*		*2*	*BRIDGE CONNECTOR, WQV 4/10, 10520.6*	
0006	*353032-0004*		*3*	*END PLATE WAP 2,5-10 BEIGE*	
0007	*359011-0802*		*3*	*SIGN BOARD BSFW 11-20*	
XL:2	1143673-0000		1	DISTR. TERMINAL, DIODES	
0001	*353042-0005*	*MM*	*370*	*RAIL TS 35/7.5*	
0002	*353031-0201*		*2*	*END BRACKET EW35*	
0003	*353021-0217*		*44*	*FEED THROUGH TERMINAL, 10201.8*	
0004	*353021-0122*		*6*	*TERMINAL DISCONNECTBLE, WTR 2,5 D*	
0005	*353034-0014*		*1*	*BRIDGE CONN.Q10(SAK 2,5)*	
0006	*353034-0031*		*5*	*BRIDGE CONNECTOR, WQV 4/10, 10520.6*	
0007	*353032-0004*		*1*	*END PLATE WAP 2,5-10 BEIGE*	
0008	*353032-0005*		*4*	*END PLATE WAP 2,5-10 BLUE*	
0009	*359011-0802*		*5*	*SIGN BOARD BSFW 11-20*	
0010	*359011-0801*		*1*	*SIGN BOARD BSFW 1-50*	
0011	*353023-0102*		*1*	*FUSE TERMINAL, 10110.0*	
0012	*352550-0133*		*1*	*FINE-WIRE, 1.6 A*	
X001:1	1143670-0000		1	CONTROL TERMINAL X1:1	
0001	*353042-0005*	*MM*	*350*	*RAIL TS 35/7.5*	
0002	*353024-0205*		*3*	*EARTH TERMINAL, 1010.1*	
0003	*359011-0202*		*6*	*SIGN BOARD(GROUND)*	
0004	*353021-0217*		*24*	*FEED THROUGH TERMINAL, 10201.8*	
0005	*359012-0350*		*2*	*MARKING LABEL, WHITE, BSGW, 350*	
0006	*359011-0814*		*2*	*SET OF SIGNS 5-FW 350-400*	
0007	*353032-0005*		*1*	*END PLATE WAP 2,5-10 BLUE*	
0008	*353031-0201*		*1*	*END BRACKET EW35*	
X001:2	1143963-0000		1	TERMINAL BLOCK X1:2	
0001	*353042-0005*	*MM*	*580*	*RAIL TS 35/7.5*	
0002	*353024-0205*		*20*	*EARTH TERMINAL, 1010.1*	
0003	*353021-0213*		*54*	*FEED THROUGH TERMINAL, 10201.0*	
0004	*353021-0214*		*4*	*FEED THROUGH TERMINAL, 10202.0*	
0005	*353032-0004*		*1*	*END PLATE WAP 2,5-10 BEIGE*	
0006	*353031-0201*		*1*	*END BRACKET EW35*	
0007	*359011-0806*		*2*	*SET OF SIGNS, 5-FW 1-200*	
0008	*359011-0202*		*40*	*SIGN BOARD(GROUND)*	
X001:3	1143672-0000		1	CONTROL TERMINAL X1:3	
0001	*353042-0005*	*MM*	*530*	*RAIL TS 35/7.5*	
0002	*353024-0205*		*10*	*EARTH TERMINAL, 1010.1*	
0003	*359011-0202*		*20*	*SIGN BOARD(GROUND)*	
0004	*353021-0217*		*59*	*FEED THROUGH TERMINAL, 10201.8*	
0005	*359011-0806*		*2*	*SET OF SIGNS, 5-FW 1-200*	
0006	*90119-0063*		*2*	*OPTO-RELAY, DC/DC AMMS-10-1/30VDC*	
0007	*353031-0201*		*1*	*END BRACKET EW35*	
X002-3	1143671-0000		1	GROUND AND NEUTRAL TERM.	
0001	*353042-0005*	*MM*	*530*	*RAIL TS 35/7.5*	
0002	*353024-0208*		*7*	*EARTH TERMINAL, 1010.4*	
0003	*353024-0205*		*18*	*EARTH TERMINAL, 1010.1*	
0004	*359011-0800*		*1*	*MARKING PLATES BSFW 51-100*	
0005	*353031-0201*		*3*	*END BRACKET EW35*	
0006	*353033-0104*		*5*	*END PLATE, 10502.8*	
0007	*353022-0002*		*20*	*NEUTRAL TERMINAL, 10107.8*	
0008	*353041-0001*	*MM*	*160*	*BUS BAR RAIL 10X3MM SSCH*	
0009	*353041-0106*		*1*	*HOLDER ZB35 K 5026.8*	
0010	*359010-0613*		*2*	*SIGN BOARD BSG 1/2 "N"*	
0011	*359011-0805*		*1*	*SIGN BOARDATS 1-15*	
X012	1143959-0000		1	TERMINAL BLOCK X012	
0001	*353021-0213*		*1*	*FEED THROUGH TERMINAL, 10201.0*	

This page is intentionally left blank.

Pos	Part No	UN	Qty	Description	Page No
Common Parts (Cont'd)					
X010	1143674-0000		1	TERMINAL BLOCK X10	
0001	*353042-0005*	*MM*	*280*	*RAIL TS 35/7.5*	
0002	*90082-0010*		*1*	*OVERVOLT.PROT.PU4R230V3PH*	
	90082-0300		*1*	*OVERVOLT.PROT.PU1 230 VAC*	
0003	*359011-0807*		*1*	*MARKING PLATES 5-FW 1-50*	
0004	*353021-0219*		*10*	*FEED THROUGH TERMINAL, 10205.0*	
0005	*353034-0031*		*5*	*BRIDGE CONNECTOR, WQV 4/10, 10520.6*	
0006	*359011-0819*		*1*	*MARKING PLATES 5-GW (EARTH)*	
0007	*353031-0201*		*2*	*END BRACKET EW35*	
0008	*353033-0105*		*1*	*PARTITITION, 10501.0*	
X004	90172-0319		1	CONNECTION 372 640 001	
X005	90172-0321		1	TERMINAL BLOCK, 373 593 000	
X006	90172-0320		1	TERMINAL BLOCK	
X007	90077-0102		1	TERMINAL BLOCK, 1952.2	
X011	90001-0028		1	WALL SOCKET OUTLET REPL.BY 90001-33	
X100	90110-0057		1	FEMALE INSERT HAN 24 E 09 33 002 4201	
X100:1	90110-0334		4	SCHRAUBE HARTING	
X101	90110-0057		1	FEMALE INSERT HAN 24 E 09 33 002 4201	
X101:1	90110-0334		4	SCHRAUBE HARTING	
X102	90110-0057		1	FEMALE INSERT HAN 24 E 09 33 002 4201	
X102:1	90110-0334		1	SCHRAUBE HARTING	
X103	90110-0057		1	FEMALE INSERT HAN 24 E 09 33 002 4201	
X103:1	90110-0334		4	SCHRAUBE HARTING	
X104	90110-0057		1	FEMALE INSERT HAN 24 E 09 33 002 4201	
X104:1	90110-0334		4	SCHRAUBE HARTING	
X107	90110-0057		1	FEMALE INSERT HAN 24 E 09 33 002 4201	
X107:1	90110-0334		4	SCHRAUBE HARTING	
X108	90110-0057		1	FEMALE INSERT HAN 24 E 09 33 002 4201	
X108:1	90110-0334		4	SCHRAUBE HARTING	
X109	90110-0057		1	FEMALE INSERT HAN 24 E 09 33 002 4201	
X109:1	90110-0334		4	SCHRAUBE HARTING	
X111	90110-0057		1	FEMALE INSERT HAN 24 E 09 33 002 4201	
X111:1	90110-0334		4	SCHRAUBE HARTING	
Z100	90024-0031		1	POWER LINE FILTER, 75 A 230/400 VAC	
Z101	90082-0010		1	OVERVOLT.PROT.PU4R230V3PH	
	90082-0300		*1*	*OVERVOLT.PROT.PU1 230 VAC*	
Z102	90024-0036		1	FILTERED TERMINAL BLOCK	

Pos	Part No	UN	Qty	Description	Page No

This page is intentionally left blank.

ECM: 71097 - 19971204
Group number: 42505-1000
Assembly Drawing:

Pos	Part No	UN	Qty	Description	Page No
-					
0101	351121-0200	MM	5000	CABLE RADOX 155 1X16 MMÂ² BLACK	
0102	351121-0200	MM	5000	CABLE RADOX 155 1X16 MMÂ² BLACK	
0103	351121-0201	MM	5000	CABLE RADOX 155 1X35 MMÂ² BLACK	
0104	351121-0201	MM	5000	CABLE RADOX 155 1X35 MMÂ² BLACK	
0105	351121-0200	MM	5800	CABLE RADOX 155 1X16 MMÂ² BLACK	
0106	351121-0200	MM	5800	CABLE RADOX 155 1X16 MMÂ² BLACK	
0107	351121-0201	MM	5800	CABLE RADOX 155 1X35 MMÂ² BLACK	
0108	351121-0201	MM	5800	CABLE RADOX 155 1X35 MMÂ² BLACK	
0111	351179-0109	MM	2100	CABLE AWM 1X16 MM2 BLACK	
0112	351179-0109	MM	2100	CABLE AWM 1X16 MM2 BLACK	
0113	351179-0111	MM	2100	CABLE AWM 1X35 MM2 BLACK	
0114	351179-0111	MM	2100	CABLE AWM 1X35 MM2 BLACK	
0115	351179-0109	MM	2100	CABLE AWM 1X16 MM2 BLACK	
0116	351179-0109	MM	2100	CABLE AWM 1X16 MM2 BLACK	
0117	351179-0111	MM	2100	CABLE AWM 1X35 MM2 BLACK	
0118	351179-0111	MM	2100	CABLE AWM 1X35 MM2 BLACK	
0119	351150-0418	MM	2700	CABLE OLFLEX 4X2,5 MM2 LIGHT/GREY	
0120	90220-0105	MM	2700	SCR. CABLE 4X2,5MM2	
0158	351150-0122	MM	2700	CABLE	
0159	351150-0404	MM	2600	CABLE OLFLEX 4X0,75 MM2 LIGHT/GREY	
0169	351150-0122	MM	4000	CABLE	
0250	351150-0122	MM	4000	CABLE	
0251	351150-0122	MM	4000	CABLE	
0303	351150-0417	MM	5000	CABLE OLFLEX 3X2,5 MM2 LIGHT/GREY	
0309	351150-0422	MM	5800	CABLE OLFLEX 3X4 MM2 LIGHT/GREY	
0310	351150-0422	MM	5900	CABLE OLFLEX 3X4 MM2 LIGHT/GREY	
0311	90172-0317		1	HF-CABLE 4000 MM	
0312	90172-0317		1	HF-CABLE 4000 MM	
0313	90172-0317		1	HF-CABLE 4000 MM	
0314	90172-0317		1	HF-CABLE 4000 MM	
0315	90172-0317		1	HF-CABLE 4000 MM	
0316	90172-0317		1	HF-CABLE 4000 MM	
0318	351150-0417	MM	3200	CABLE OLFLEX 3X2,5 MM2 LIGHT/GREY	
0319	351150-0418	MM	4400	CABLE OLFLEX 4X2,5 MM2 LIGHT/GREY	
0320	90220-0105	MM	4500	SCR. CABLE 4X2,5MM2	
0326	351175-0109	MM	3600	CABLE AWM 1X16 MM2 YELLOW-GREEN	
0330	351150-0420	MM	4900	CABLE OLFLEX 7X2,5 MM2 LIGHT/GREY	
0331	351150-0419	MM	4900	CABLE OLFLEX 5X2,5 MM2 LIGHT/GREY	
0332	351150-0418	MM	2700	CABLE OLFLEX 4X2,5 MM2 LIGHT/GREY	
0333	351150-0418	MM	4500	CABLE OLFLEX 4X2,5 MM2 LIGHT/GREY	
0334	351150-0412	MM	3200	CABLE OLFLEX 3X1,5 MM2 LIGHT/GREY	
0336	351150-0412	MM	2300	CABLE OLFLEX 3X1,5 MM2 LIGHT/GREY	
0337	351150-0412	MM	3800	CABLE OLFLEX 3X1,5 MM2 LIGHT/GREY	
0338	351150-0412	MM	4000	CABLE OLFLEX 3X1,5 MM2 LIGHT/GREY	
0344	351150-0417	MM	4300	CABLE OLFLEX 3X2,5 MM2 LIGHT/GREY	
0350	351150-0406	MM	3100	CABLE OLFLEX 7X0,75 MM2 LIGHT/GREY	
0351	351150-0407	MM	3900	CABLE OLFLEX 12X0,75 MM2 LIGHT/GREY	
0352	351150-0407	MM	4600	CABLE OLFLEX 12X0,75 MM2 LIGHT/GREY	
0354	351150-0407	MM	4900	CABLE OLFLEX 12X0,75 MM2 LIGHT/GREY	
0355	351150-0410	MM	4000	CABLE OLFLEX 36X0,75MM2	
0359	351150-0122	MM	5000	CABLE	
0360	351150-0425	MM	4400	CABLE OLFLEX 25X0,75 MM2 LIGHT/GREY	
0368	351150-0122	MM	5000	CABLE	
0371	90220-0082	MM	6300	CABLE PAIR TWISTED 2X0,75 MM2 LIGHT/GREY	
0372	90220-0034	MM	6000	THERMOCABLE TEX/SITW-20F-KX 2X0,5MM2	
0380	351150-0122	MM	2200	CABLE	
0383	351150-0405	MM	3200	CABLE OLFLEX 5X0,75 MM2 LIGHT/GREY	
0384	351150-0404	MM	900	CABLE OLFLEX 4X0,75 MM2 LIGHT/GREY	
0385	351150-0122	MM	1500	CABLE	
0400	90220-0108	MM	3900	SCR. CABLE 5X1,5MM2	
0401	351120-0145	MM	2400	CABLE SILFLEX SIHF 3X2,5 0046020	
0402	351120-0145	MM	2000	CABLE SILFLEX SIHF 3X2,5 0046020	
0450	90220-0034	MM	1400	THERMOCABLE TEX/SITW-20F-KX 2X0,5MM2	
0495	351150-0122	MM	3000	CABLE	
0496	351150-0122	MM	4000	CABLE	
0501	351150-0418	MM	1500	CABLE OLFLEX 4X2,5 MM2 LIGHT/GREY	
0502	351120-0145	MM	600	CABLE SILFLEX SIHF 3X2,5 0046020	
0503	351120-0145	MM	1000	CABLE SILFLEX SIHF 3X2,5 0046020	
0556	90220-0034	MM	500	THERMOCABLE TEX/SITW-20F-KX 2X0,5MM2	
0557	351150-0406	MM	1000	CABLE OLFLEX 7X0,75 MM2 LIGHT/GREY	
0559	351150-0405	MM	1000	CABLE OLFLEX 5X0,75 MM2 LIGHT/GREY	
0701	90220-0108	MM	7000	SCR. CABLE 5X1,5MM2	
0703	351150-0417	MM	2500	CABLE OLFLEX 3X2,5 MM2 LIGHT/GREY	
0759	90220-0034	MM	3000	THERMOCABLE TEX/SITW-20F-KX 2X0,5MM2	
0760	351150-0408	MM	3000	CABLE OILFLEX 16X0,75MM2	
0763	351150-0405	MM	5000	CABLE OLFLEX 5X0,75 MM2 LIGHT/GREY	
0764	351150-0122	MM	5000	CABLE	
0765	351150-0122	MM	5000	CABLE	

Machine Type	Group Description	Used-In	Group Number	Page No

This page is intentionally left blank.

ECM: 71271 - 19990430
Group number: 42509-1000
Assembly Drawing:

Pos	Part No	UN	Qty	Description	Page No
-					
0010	90036-0057		10	LIGHT BULB, BA9S 28V	
0020	90077-0341		2	DIODE HOLDER, WSD 2,5, 10584.6	
0040	90064-0084		1	PUSH BUTTON, YELLOW	
0050	90119-0056		1	RELAY, AUXILIARY MK3P5-S 24VDC	
0060	90119-0067		1	SOLID-STATE RELAY, H12WD4850	
0070	90233-0028		2	TUBE FUSE, 10A	
0080	352550-0120		2	FINE-WIRE 315 MA	
0090	352551-0136		4	FINE-WIRE FUSE 3,15 A SLOW	
0100	90098-0020		2	DIODE FUSE, 55ET	
0110	352550-0136		2	FINE-WIRE, 3,15 A	
0130	352551-0138		2	FINE-WIRE 5 A	
0140	352551-0139		2	FINE-WIRE 6,3 A	
0150	90259-0037		1	OVERVOLT PROT.PU1 230VREPBY 0090082-0300	
0160	90332-0322		5	PEN	
0165	90332-0323		5	RECORDER CHARTS	
0170	90064-0315		1	LAMP REMOVER, NO:700	
0210	90121-0116		1	RESISTANCE FIXED, 0,15 KOHM, 0,25 W	
0250	352551-0134		1	FINE-WIRE FUSE 2 A SLOW,5X20MM	
0260	352551-0141		3	FINE-WIRE 10 A	
0270	352551-0137		1	FINE-WIRE 4 A	

Pos	Part No	UN	Qty	Description	Page No

Machine Type | Group Description | Used-In | Group Number | Page No

This page is intentionally left blank.

ECM: 70900 - 19970625
Group number: 42510-1000
Assembly Drawing:

Pos	Part No	UN	Qty	Description	Page No
-					
0001	971410-0102		1	CONTROL PANEL	
0120	90194-0112		1	SIGN"WHITE CARD EL.EQ."REPL.BY 90194-133	
0130	90194-0016		1	WARNING SIGN, RISK OF ELECTRIC SHOCK	
0140	90203-0009	MM	200	CU LITZ CABLE 15X2 MM	
A004:1	558389-0101		1	MULTI PURPOSE POTENTIOM.	
100	*578265-0000*		*1*	*COMPONENTS WITHOUT TP-NO*	
110	*578266-0000*		*1*	*CIRCUIT BOARD*	
120	*578267-0000*		*1*	*CASING*	
A004:2	551922-0000		1	LABEL,POTENTIOMETER DESIGN CORR.	
A100	90025-0088		1	PANEL INTERFACE CU64.1	
A110	577796-0001		1	CIRCUIT BOARD, COMPONENTS	
A110:1	581953-0000		1	ALARM DISPLAY	
S02H	90064-0093		1	PUSH BUTTON, GREEN	
	90036-0057		*1*	*LIGHT BULB, BA9S 28V*	
S02H:1	359301-0090		1	BUTTON SIGN, INCHING	
S09H	90064-0093		1	PUSH BUTTON, GREEN	
	90036-0057		*1*	*LIGHT BULB, BA9S 28V*	
S09H:1	359301-0091		1	BUTTON SIGN, INCHING FINAL FOLDER	
S30H	90064-0093		1	PUSH BUTTON, GREEN	
	90036-0057		*1*	*LIGHT BULB, BA9S 28V*	
S30H:1	359301-0001		1	BUTTON SIGN, UP	
S31H	90064-0082		1	PUSH BUTTON, WHITE	
	90036-0057		*1*	*LIGHT BULB, BA9S 28V*	
S31H:1	359301-0005		1	BUTTON SIGN, DOWN	
S32H	90064-0085		1	PUSH BUTTON, RED	
S32H:1	359301-0110		1	BUTTON SIGN, SHORT STOP	
S33H	90064-0082		1	PUSH BUTTON, WHITE	
	90036-0057		*1*	*LIGHT BULB, BA9S 28V*	
S33H:1	359301-0105		1	BUTTON SIGN, ALARM STOP	
S34H	90064-0088		1	PUSH BUTTON, YELLOW	
S34H:1	359301-0215		1	BUTTON SIGN, WASH PRODUCT VALVE	
R100	90121-0116		1	RESISTANCE FIXED, 0,15 KOHM, 0,25 W	
S001	90064-0105		1	EMERGENCY STOP BUTTON REPL.BY 90064-124	
S001:1	486826-0001		1	SIGN "EMERGENCY STOP"	
S005	90064-0084		1	PUSH BUTTON, YELLOW	
S005:1	359301-0160		1	BUTTON SIGN, DRAINAGE OF PRODUCT TUBE	
S007	90111-0120		1	SWITCH, 2 POS.704.510 .0A+704.901.5/A	
S012	90064-0082		1	PUSH BUTTON, WHITE	
	90036-0057		*1*	*LIGHT BULB, BA9S 28V*	
S012:1	359301-0130		1	BUTTON SIGN, LAMP TEST	
S019	90064-0093		1	PUSH BUTTON, GREEN	
	90036-0057		*1*	*LIGHT BULB, BA9S 28V*	
S019:1	359301-0050		1	BUTTON SIGN, DROP CHUTE BRIK	
S020	90064-0093		1	PUSH BUTTON, GREEN	
	90036-0057		*1*	*LIGHT BULB, BA9S 28V*	
S020:1	359301-0170		1	BUTTON SIGN, SPOOLING OF FINAL FOLDER	
X003	90195-0020		1	TERMINAL BLOCK, 1977.2	
X107	90110-0128		1	MALE INSERT HAN 24 E-M 65330242631	

Machine Type | Group Description | Used-In | Group Number | Page No

This page is intentionally left blank.

ECM: 70900 - 19970625
Group number: 42511-1000
Assembly Drawing:

Pos	Part No	UN	Qty	Description	Page No
-					
0001	971444-0101		1	SIDE PANEL	
0150	90194-0112		1	SIGN"WHITE CARD EL.EQ."REPL.BY 90194-133	
0160	90194-0016		1	WARNING SIGN, RISK OF ELECTRIC SHOCK	
S019:1	359301-0050		1	BUTTON SIGN, DROP CHUTE BRIK	
S019	90064-0093		1	PUSH BUTTON, GREEN	
	90036-0057		*1*	*LIGHT BULB, BA9S 28V*	
S002:1	359301-0110		1	BUTTON SIGN, SHORT STOP	
S002	90064-0085		1	PUSH BUTTON, RED	
S001:1	486826-0001		1	SIGN "EMERGENCY STOP"	
S001	90064-0105		1	EMERGENCY STOP BUTTON REPL.BY 90064-124	
X111	90110-0128		1	MALE INSERT HAN 24 E-M 65330242631	

Pos	Part No	UN	Qty	Description	Page No

Tetra Pak

SPC
Spare Parts Catalogue

This page is intentionally left blank.

ECM: 73357 - 20000121
Group number: 648009-0900
Assembly Drawing:

Pos	Part No	UN	Qty	Description	Page No
TB/8 0300B, TB/8 0500S					
350	78073-0100		1	SPLICE TEST PLIERS	**10-5**
360	531345-0200		1	PERSONAL PROTECT. EQ H2O2	**10-7**
540	436512-0000		1	PIPE	
550	436471-0000		1	PIPE	
560	499082-0403		1	ADAPTER, TYPE 1	
TB/8 0568SQ, TB/8 1000B, TB/8 0568B, TB/8 1000SQ, TB/8 0500SQ, TB/8 0500B, TB/8 1136B					
350	78073-0100		1	SPLICE TEST PLIERS	**10-5**
360	531345-0200		1	PERSONAL PROTECT. EQ H2O2	**10-7**
540	436512-0000		1	PIPE	
550	436471-0000		1	PIPE	
560	499082-0404		1	ADAPTER, TYPE 1	
TB/8 1000S					
350	78073-0100		1	SPLICE TEST PLIERS	**10-5**
360	531345-0200		1	PERSONAL PROTECT. EQ H2O2	**10-7**
540	436512-0000		1	PIPE	
550	436471-0000		1	PIPE	
560	499082-0407		1	ADAPTER, TYPE 1	
TB/8 1500B					
	594615-0002		1	INSTALLATION DRAWING	
	594615-0001		1	INSTALLATION DRAWING	
350	78073-0100		1	SPLICE TEST PLIERS	**10-5**
360	531345-0200		1	PERSONAL PROTECT. EQ H2O2	**10-7**
540	436512-0000		1	PIPE	
550	436471-0000		1	PIPE	
560	499082-0404		1	ADAPTER, TYPE 1	
Common Parts					
240	250610-0200		1	TOOL KIT	**10-9**
300	554171-0300		1	PLATFORM ADDITION	**10-13**
370	551997-0100		1	LIFTING UNIT	**10-23**
480	593634-0200		1	DIAGRAM	
490	90243-0133		1	CONTAINER	
500	90347-0111		4	MACHINE SHOE TFE 1201 SS	
502	90347-0110		4	MACHINE SHOE TFE 601 SS	
600	598878-0000		1	MACHINE SIGN 2 ADR. EEA	

Pos	Part No	UN	Qty	Description	Page No

Machine Type | Group Description | Used-In | Group Number | Page No

SPLICE TEST PLIERS

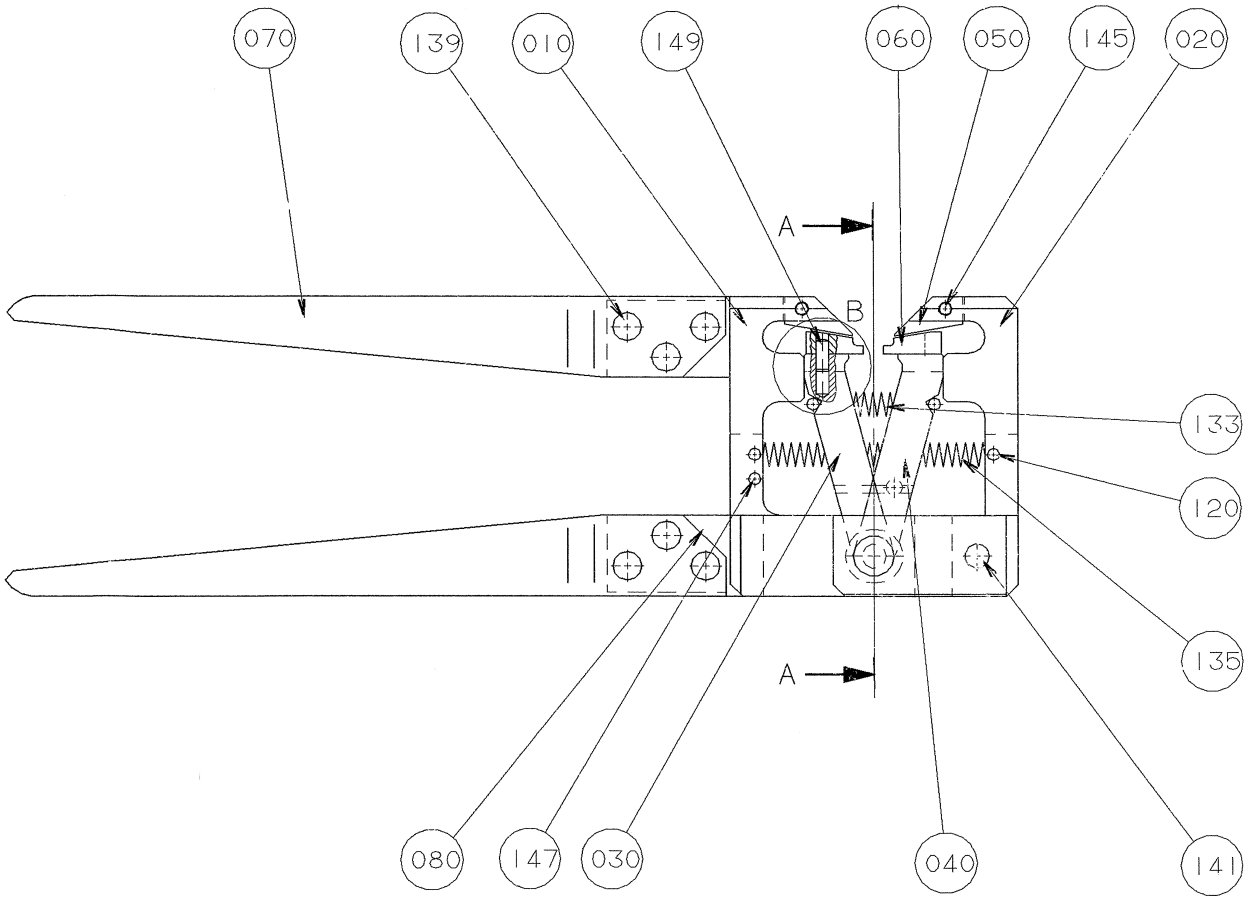

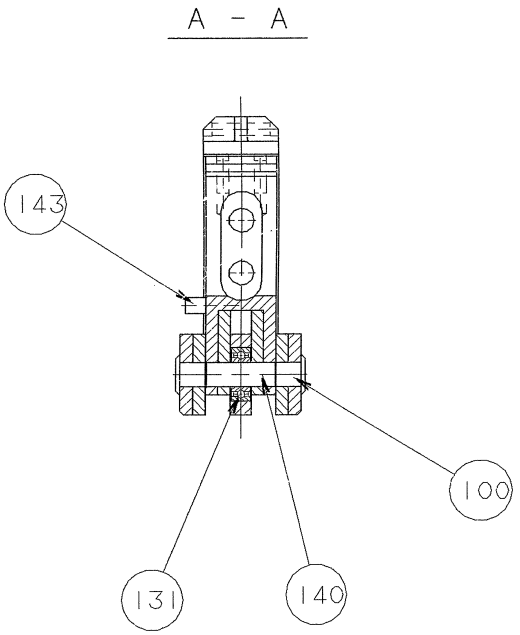

ECM: 89874 - 20031017
Group number: 78073-0100
Assembly Drawing: 78073-1_1_AA

Pos	Part No	UN	Qty	Description	Page No
-					
010	78074-0000		1	OUTER JAW,LEFT	
020	78075-0000		1	OUTER JAW,RIGHT	
030	78076-0000		1	INNER JAW,LEFT	
040	78077-0000		1	INNER JAW,RIGHT	
050	78078-0000		2	UPPER GRIP	
060	78079-0000		2	LOWER GRIP	
070	78080-0000		2	HANDLE	
080	78081-0000		1	BRACKET	
100	78083-0000		2	CENTER PIN	
120	78085-0000		4	SPRING HOLD PIN	
131	566771-0000		1	BALL BEARING	
133	566772-0000		1	TENSION SPRING	
135	566773-0000		1	TENSION SPRING	
139	566774-0000		6	RIVET	
140	311103-0350		1	PARALLEL PIN ISO 2338 6M6X14 A1	
141	311103-0357		1	PARALLEL PIN ISO 2338 6M6X30 A1	
143	311103-0267		1	PARALLEL PIN ISO 2338 4M6X10 A1	
145	311103-0235		2	PARALLEL PIN ISO 2338 3M6X14 A1	
147	311103-0237		1	PARALLEL PIN ISO 2338 3M6X18 A1	
149	311103-0232		4	PARALLEL PIN ISO 2338 3M6X8 A1	

Pos	Part No	UN	Qty	Description	Page No

This page is intentionally left blank.

ECM: 72190 - 19990628
Group number: 531345-0200
Assembly Drawing:

Pos	Part No	UN	Qty	Description	Page No	Pos	Part No	UN	Qty	Description	Page No
-											
	90303-0013		1	APRON							
	90303-0012		1	PROTECTIVE GLOVES							
	90303-0011		1	PROTECTIVE GOGGLES							

Machine Type	Group Description	Used-In	Group Number	Page No

This page is intentionally left blank.

ECM: 126857 - 20030410
Group number: 250610-0200
Assembly Drawing:

Pos	Part No	UN	Qty	Description	Page No
TPC					
015	283084-0000		1	GUIDE SHAFT	
020	2594032-0100		1	ASSEMBLY TOOL	**10-11**
Ultra Sonic Heat					
035	590444-0000		1	MOUNTING TOOL	
Common Parts					
040	72947-0000		1	HOOK SPANNER	
045	74387-0000		1	HOOK SPANNER	
070	76138-0000		1	LOCKING LOOP	
075	434841-0000		1	GAUGE	
130	318301-0130		4	LIFTING EYE BOLT, TYPE, LT, M30	
150	776422-0101		2	BRASS WIRESTE	
320	777200-0101		1	PIPE WRENCH	
330	777510-0101		1	SCISSORS	

Pos	Part No	UN	Qty	Description	Page No

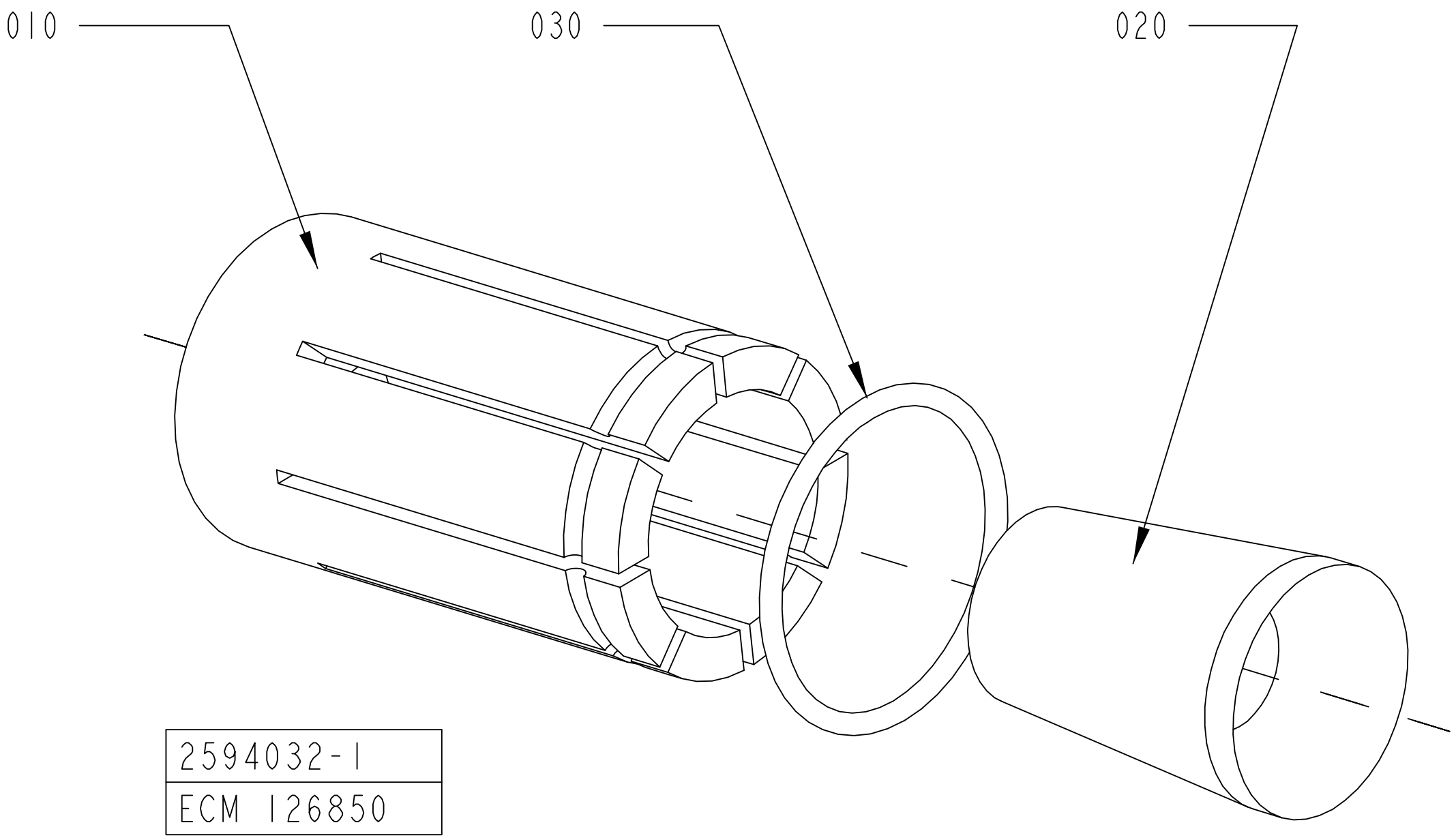

2594032-1
ECM 126850

ECM: 126856 - 20030410
Group number: 2594032-0100
Assembly Drawing: 2594032-1_1_AA

Pos	Part No	UN	Qty	Description	Page No
-					
010	283085-0000		1	SLEEVE	
020	245165-0000		1	ASSEMBLY CONE	
030	315202-0224		1	O-RING 42,2X3 MM	

Pos	Part No	UN	Qty	Description	Page No

This page is intentionally left blank.

ECM: 70726 - 19970304
Group number: 554171-0300
Assembly Drawing:

Pos	Part No	UN	Qty	Description	Page No
PFV14, PFV13, PFV11, PFV12					
F020	266756-0500		1	PLATFORM	**10-15, 10-17**
PFV2, PFV3, PFV1					
F010	266755-0200		1	PLATFORM	**10-21**

Pos	Part No	UN	Qty	Description	Page No

VARIANT 11

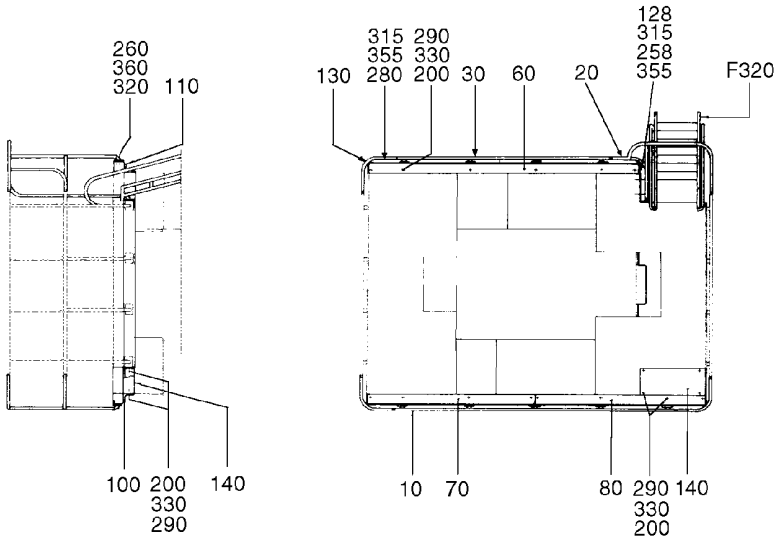

VARIANT 12

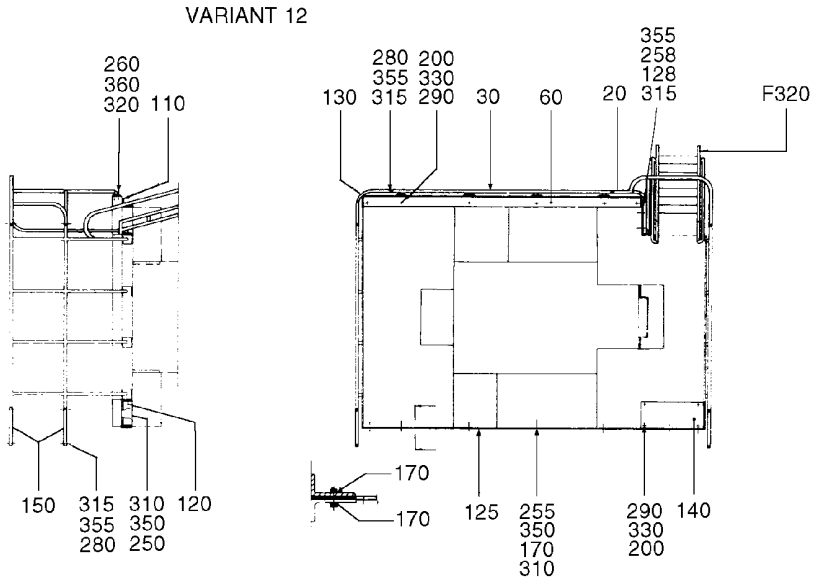

VARIANT 13

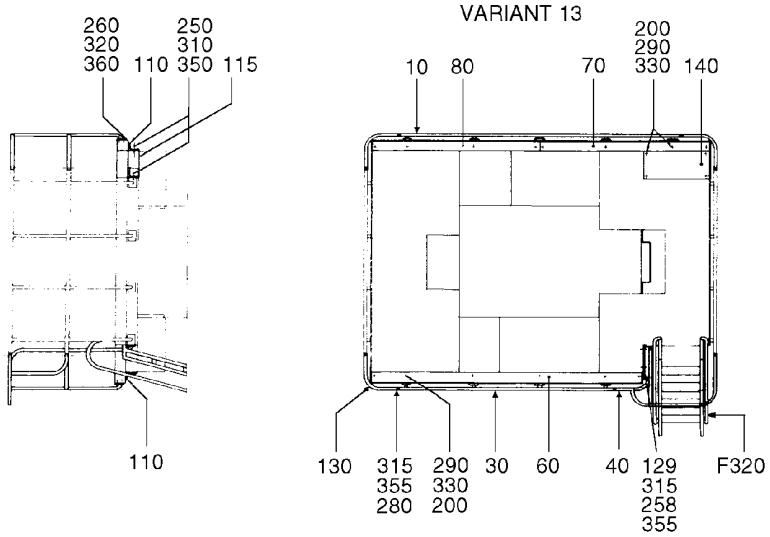

VARIANT 14

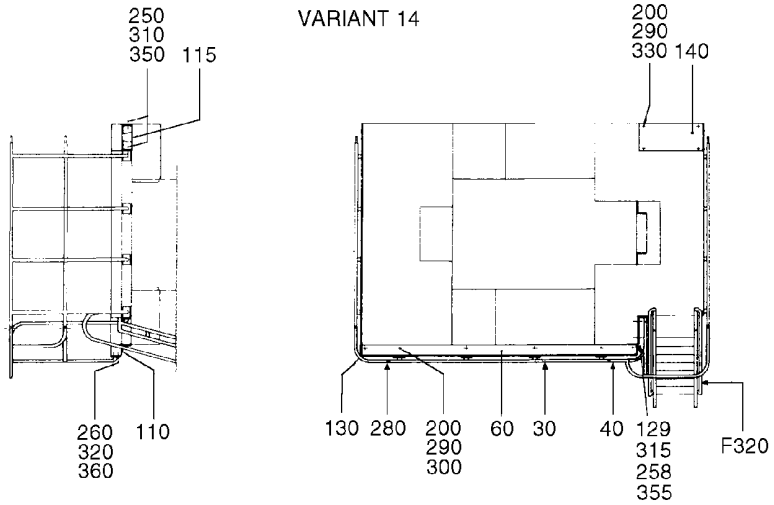

26675604.TIF
266756-4
AM 19452

ECM: 70726 - 19970304
Group number: 266756-0500
Assembly Drawing: 266756-4_1_AA

This list covers pages from 10-14 to 10-17

Pos	Part No	UN	Qty	Description	Page No
PFV11					
010	257845-0000		1	RAILING	
020	257846-0000		1	RAILING	
070	247146-0000		1	PLATFORM	
080	257852-0000		1	PLATFORM	
100	257854-0000		1	CANTILEVER	
120	269340-0000		1	CANTILEVER	
128	551903-0000		1	KICKPLATE,LEFT	
130-02	257859-0000		6	RAILING	
200-02	90287-0076		18	SCREW SLOT. PAN HEAD LKCS M6X20	
250-02	312101-0495		16	SCREW M6S M10X30 FZB	
260-02	312105-0493		40	SCREW M6S ISO 4017 M10X25 A480	
280-02	312115-0453		16	SCREW ISO4762 M8X25 A4 80	
290-02	312601-0316		18	HEXAGON NUT, DIN 934 M6 8 FZB	
310-02	312601-0320		10	HEXAGON NUT, M10 8 FZB, ISO 4032	
315-02	312605-0318		18	HEXAGON NUT, M6M M8 A280	
320-02	312605-0320		40	HEXAGON NUT, M6M M10 A280	
330-02	315101-0153		18	WASHER PLAIN, BRB, 6,4/12 H=1,5	
350-02	315101-0173		26	WASHER PLAIN, BRB, 10,5/22 H=2	
355-02	315105-0165		20	WASHER BRB 8,4X16 RFR	
360-02	315105-0173		40	WASHER BRB 10,5X20 RFR	
PFV12					
020	257846-0000		1	RAILING	
120	269340-0000		1	CANTILEVER	
125	451406-0000		1	VIBRATION DAMPER	
128	551903-0000		1	KICKPLATE,LEFT	
130	257859-0000		2	RAILING	
150	451407-0000		4	RAILING	
170	451408-0000		8	BUFFER RING	
200	90287-0076		10	SCREW SLOT. PAN HEAD LKCS M6X20	
250	312101-0495		9	SCREW M6S M10X30 FZB	
255	312101-0500		7	SCREW M6S M10X45 FZB	
260	312105-0493		20	SCREW M6S ISO 4017 M10X25 A480	
280-02	312115-0453		16	SCREW ISO4762 M8X25 A4 80	
290	312601-0316		10	HEXAGON NUT, DIN 934 M6 8 FZB	
310-03	312601-0320		13	HEXAGON NUT, M10 8 FZB, ISO 4032	
315-02	312605-0318		18	HEXAGON NUT, M6M M8 A280	
320	312605-0320		20	HEXAGON NUT, M6M M10 A280	
330	315101-0153		10	WASHER PLAIN, BRB, 6,4/12 H=1,5	
350-03	315101-0173		29	WASHER PLAIN, BRB, 10,5/22 H=2	
355-02	315105-0165		20	WASHER BRB 8,4X16 RFR	
360	315105-0173		20	WASHER BRB 10,5X20 RFR	

Pos	Part No	UN	Qty	Description	Page No
PFV13					
010	257845-0000		1	RAILING	
040	263619-0000		1	RAILING	
070	247146-0000		1	PLATFORM	
080	257852-0000		1	PLATFORM	
100	257854-0000		1	CANTILEVER	
115	269339-0000		1	CANTILEVER	
129	565961-0000		1	KICKPLATE,RIGHT	
130-02	257859-0000		6	RAILING	
200-02	90287-0076		18	SCREW SLOT. PAN HEAD LKCS M6X20	
250-02	312101-0495		16	SCREW M6S M10X30 FZB	
260-02	312105-0493		40	SCREW M6S ISO 4017 M10X25 A480	
280-02	312115-0453		16	SCREW ISO4762 M8X25 A4 80	
290-02	312601-0316		18	HEXAGON NUT, DIN 934 M6 8 FZB	
310-02	312601-0320		10	HEXAGON NUT, M10 8 FZB, ISO 4032	
315-02	312605-0318		18	HEXAGON NUT, M6M M8 A280	
320-02	312605-0320		40	HEXAGON NUT, M6M M10 A280	
330-02	315101-0153		18	WASHER PLAIN, BRB, 6,4/12 H=1,5	
350-02	315101-0173		26	WASHER PLAIN, BRB, 10,5/22 H=2	
355-02	315105-0165		20	WASHER BRB 8,4X16 RFR	
360-02	315105-0173		40	WASHER BRB 10,5X20 RFR	
PFV14					
040	263619-0000		1	RAILING	
115	269339-0000		1	CANTILEVER	
129	565961-0000		1	KICKPLATE,RIGHT	
130	257859-0000		2	RAILING	
200	90287-0076		10	SCREW SLOT. PAN HEAD LKCS M6X20	
250	312101-0495		9	SCREW M6S M10X30 FZB	
260	312105-0493		20	SCREW M6S ISO 4017 M10X25 A480	
280	312115-0453		8	SCREW ISO4762 M8X25 A4 80	
290	312601-0316		10	HEXAGON NUT, DIN 934 M6 8 FZB	
310	312601-0320		6	HEXAGON NUT, M10 8 FZB, ISO 4032	
315	312605-0318		10	HEXAGON NUT, M6M M8 A280	
320	312605-0320		20	HEXAGON NUT, M6M M10 A280	
330	315101-0153		10	WASHER PLAIN, BRB, 6,4/12 H=1,5	
350	315101-0173		15	WASHER PLAIN, BRB, 10,5/22 H=2	
355	315105-0165		12	WASHER BRB 8,4X16 RFR	
360	315105-0173		20	WASHER BRB 10,5X20 RFR	
Common Parts					
030	263322-0000		1	RAILING	
060	247145-0000		1	PLATAFORM	
110	257855-0000		1	CANTILEVER	

Machine Type	Group Description	Used-In	Group Number	Page No

VARIANT 11

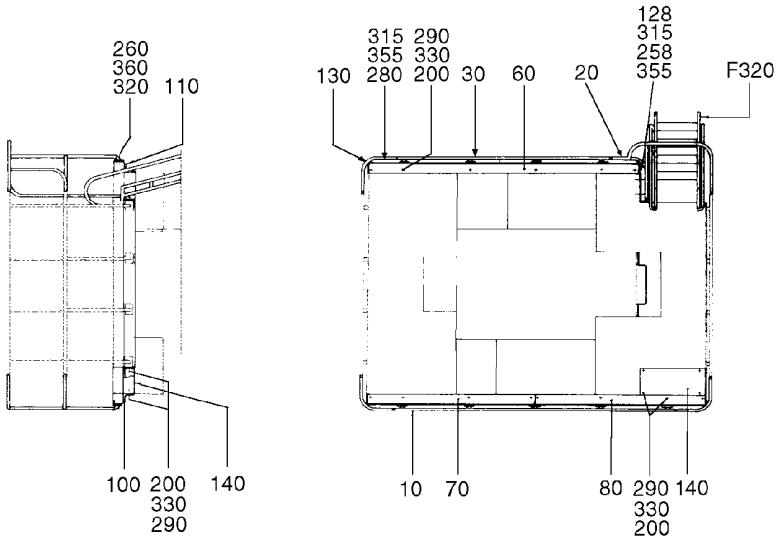

VARIANT 12

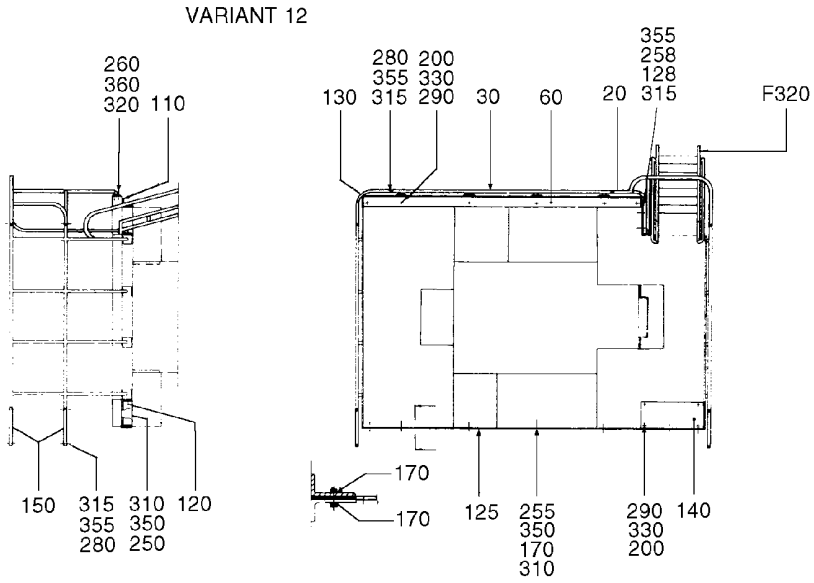

VARIANT 13

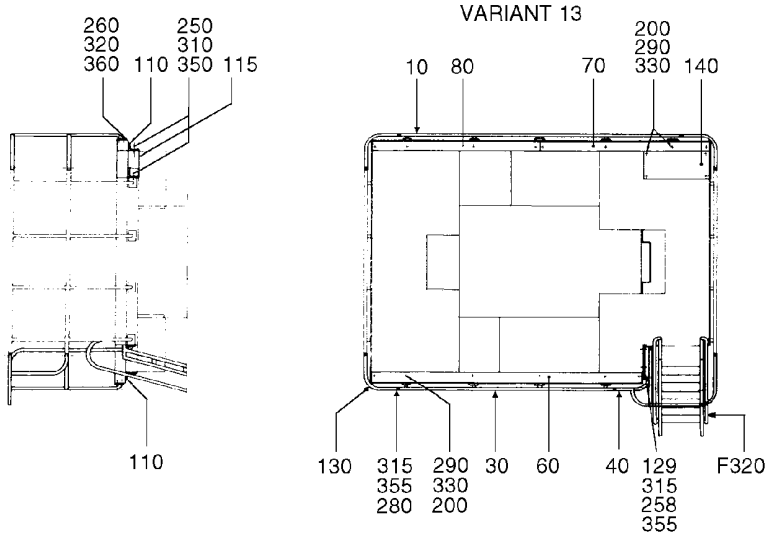

VARIANT 14

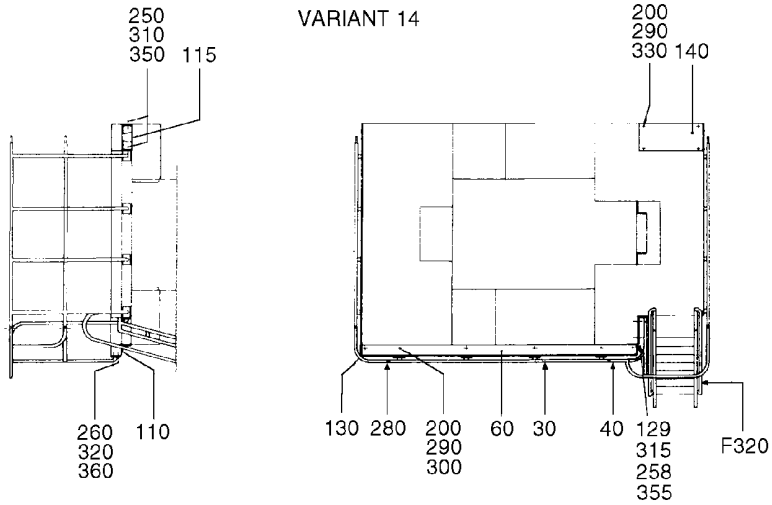

26675604.TIF
266756-4
AM 19452

Pos	Part No	UN	Qty	Description	Page No
Common Parts (Cont'd)					
140	257862-0000		1	PLATFORM	
258	312105-0453		2	SCREW M6S ISO 4017 M8X25 A480	
F320	243171-0200		1	LADDER	**10-19**

Pos	Part No	UN	Qty	Description	Page No

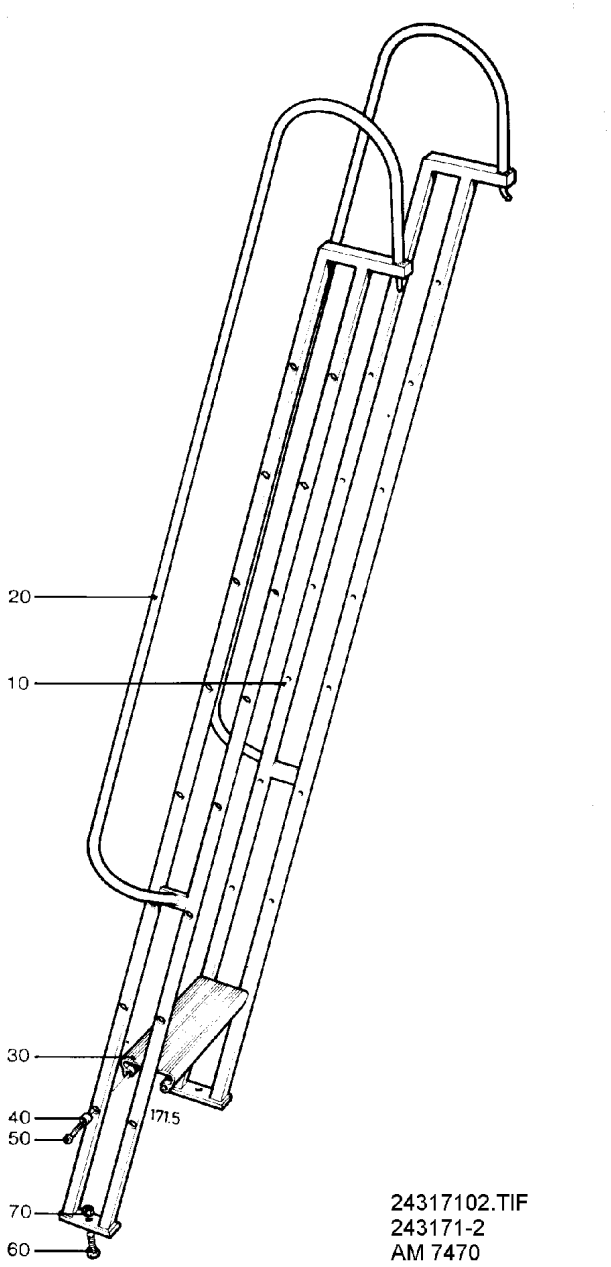
20
10
30
40
50
70
60
1715
24317102.TIF
243171-2
AM 7470

ECM: - -
Group number: 243171-0200
Assembly Drawing: 243171-2_1_AA

Pos	Part No	UN	Qty	Description	Page No
-					
010	243172-0001		1	SIDE PIECE	
020	243172-0002		1	SIDE PIECE	
030	208361-0001		8	STAIR	
040	208658-0001		32	SPACER	
050	90287-0056		32	SCREW MC6S-TT M8X40	
060	312101-0495		2	SCREW M6S M10X30 FZB	
070	312601-0320		2	HEXAGON NUT, M10 8 FZB, ISO 4032	

Pos	Part No	UN	Qty	Description	Page No

VARIANT 01

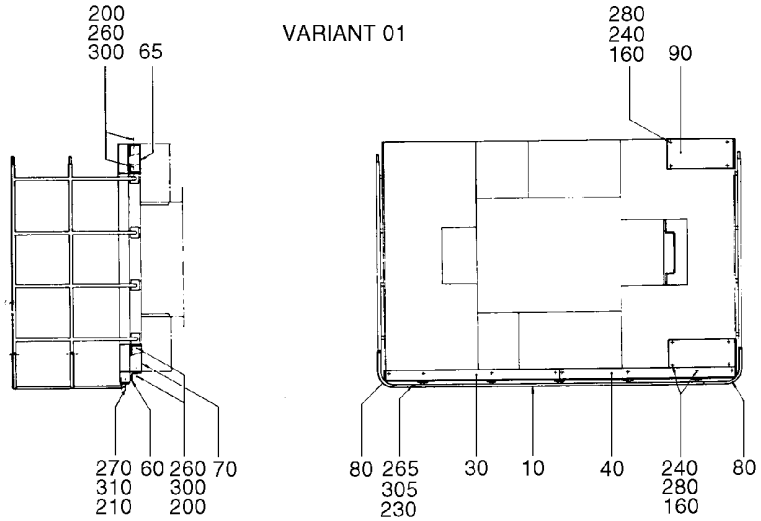

VARIANT 02

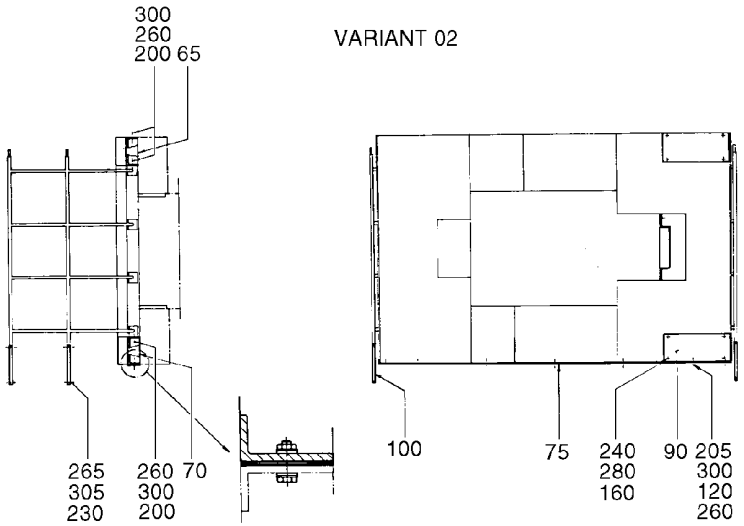

VARIANT 03

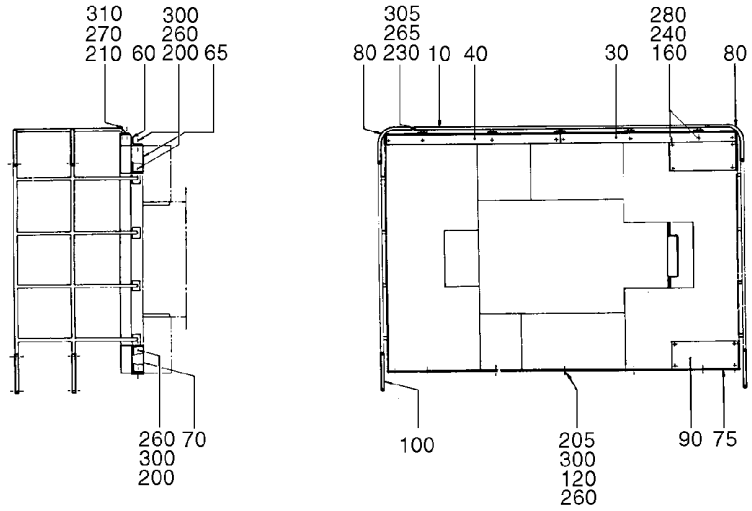

26675502.TIF
266755-2
AM

ECM: - -
Group number: 266755-0200
Assembly Drawing: 266755-2_1_AA

Pos	Part No	UN	Qty	Description	Page No
PFV1					
010	257845-0000		1	RAILING	
030	247146-0000		1	PLATFORM	
040	257852-0000		1	PLATFORM	
060	257854-0000		1	CANTILEVER	
080	257859-0000		4	RAILING	
160-02	90287-0076		16	SCREW SLOT. PAN HEAD LKCS M6X20	
200	312101-0495		13	SCREW M6S M10X30 FZB	
210	312105-0493		20	SCREW M6S ISO 4017 M10X25 A480	
230	312115-0453		8	SCREW ISO4762 M8X25 A4 80	
240-02	312601-0316		16	HEXAGON NUT, DIN 934 M6 8 FZB	
260	312601-0320		10	HEXAGON NUT, M10 8 FZB, ISO 4032	
265	312605-0318		8	HEXAGON NUT, M6M M8 A280	
270	312605-0320		20	HEXAGON NUT, M6M M10 A280	
280-02	315101-0153		16	WASHER PLAIN, BRB, 6,4/12 H=1,5	
300	315101-0173		23	WASHER PLAIN, BRB, 10,5/22 H=2	
305	315105-0165		8	WASHER BRB 8,4X16 RFR	
310	315105-0173		20	WASHER BRB 10,5X20 RFR	
PFV2					
075	451406-0000		1	VIBRATION DAMPER	
100	451407-0000		4	RAILING	
120	451408-0000		14	BUFFER RING	
160	90287-0076		8	SCREW SLOT. PAN HEAD LKCS M6X20	
205	312101-0500		7	SCREW M6S M10X45 FZB	
230	312115-0453		8	SCREW ISO4762 M8X25 A4 80	
240	312601-0316		8	HEXAGON NUT, DIN 934 M6 8 FZB	
260-02	312601-0320		13	HEXAGON NUT, M10 8 FZB, ISO 4032	
265	312605-0318		8	HEXAGON NUT, M6M M8 A280	
280	315101-0153		8	WASHER PLAIN, BRB, 6,4/12 H=1,5	
300-02	315101-0173		26	WASHER PLAIN, BRB, 10,5/22 H=2	
305	315105-0165		8	WASHER BRB 8,4X16 RFR	
PFV3					
010	257845-0000		1	RAILING	
030	247146-0000		1	PLATFORM	
040	257852-0000		1	PLATFORM	
060	257854-0000		1	CANTILEVER	
075	451406-0000		1	VIBRATION DAMPER	
080	257859-0000		4	RAILING	
100	451407-0000		4	RAILING	
120	451408-0000		14	BUFFER RING	
160-02	90287-0076		16	SCREW SLOT. PAN HEAD LKCS M6X20	
200	312101-0495		13	SCREW M6S M10X30 FZB	
205	312101-0500		7	SCREW M6S M10X45 FZB	
210	312105-0493		20	SCREW M6S ISO 4017 M10X25 A480	
230-02	312115-0453		16	SCREW ISO4762 M8X25 A4 80	
240-02	312601-0316		16	HEXAGON NUT, DIN 934 M6 8 FZB	
260-03	312601-0320		17	HEXAGON NUT, M10 8 FZB, ISO 4032	
265-02	312605-0318		16	HEXAGON NUT, M6M M8 A280	
270	312605-0320		20	HEXAGON NUT, M6M M10 A280	
280-02	315101-0153		16	WASHER PLAIN, BRB, 6,4/12 H=1,5	
300-03	315101-0173		37	WASHER PLAIN, BRB, 10,5/22 H=2	
305-02	315105-0165		16	WASHER BRB 8,4X16 RFR	
310	315105-0173		20	WASHER BRB 10,5X20 RFR	
Common Parts					
065	269339-0000		1	CANTILEVER	
070	269340-0000		1	CANTILEVER	
090	257862-0000		2	PLATFORM	

Machine Type	Group Description	Used-In	Group Number	Page No

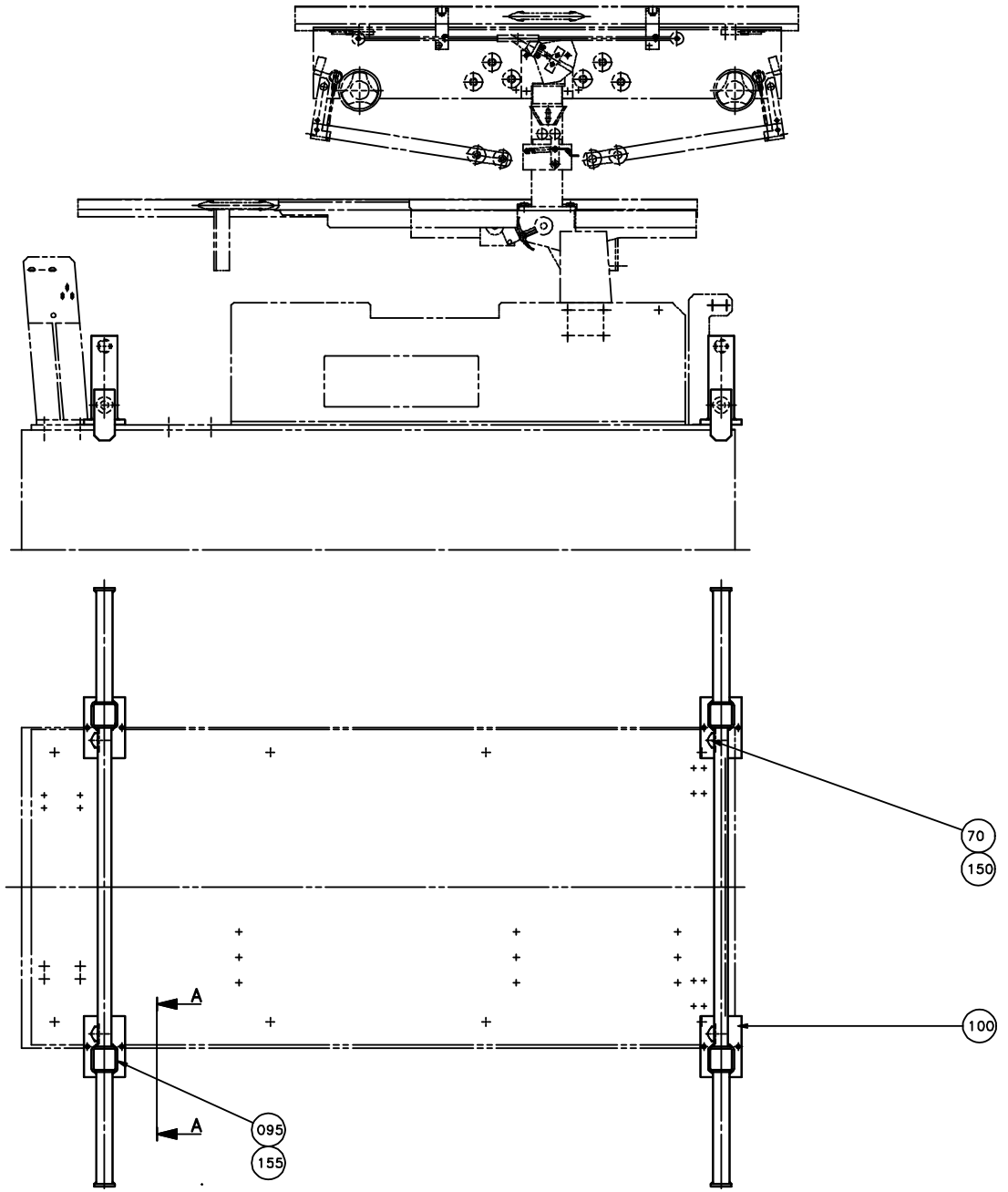
70
150
100
A
A
095
155

ECM: 71167 - 19980122
Group number: 551997-0100
Assembly Drawing: 551997-1_1_AA

Pos	Part No	UN	Qty	Description	Page No
TB/8					
070	312101-0674		4	SCREW M6S M20X50 FZB	
Common Parts					
095	1143456-0000		1	MACHINE SIGN CE	
100	548778-0000		2	LIFTING UNIT	
150	315102-0192		4	WASHER PLAIN, BRFB 21/36 H=3	
155	311521-0144		4	BLANK RIVET 3,2X10	

Pos	Part No	UN	Qty	Description	Page No

Tetra Pak

SPC
Spare Parts Catalogue

This page is intentionally left blank.

ECM: 136800 - 20030613
Group number: 648026-0100
Assembly Drawing:

Pos	Part No	UN	Qty	Description	Page No
SHARP EDGES					
	594590-0100		1	REB.KIT SHARP EDGES	**11-5**
Common Parts					
	1346491-0100		1	KIT ASU IN SEPARATE ROOM FOR PT/8	

Pos	Part No	UN	Qty	Description	Page No

Machine Type	Group Description	Used-In	Group Number	Page No

This page is intentionally left blank.

ECM: 70668 - 19970505
Group number: 594590-0100
Assembly Drawing:

Pos	Part No	UN	Qty	Description	Page No
-					
000	593000-0000		1	DOCUMENT FOLDER	
F010	594591-0100		1	FINAL FOLDER SHARP EDGES	**11-7**

Pos	Part No	UN	Qty	Description	Page No

FINAL FOLDER SHARP EDGES

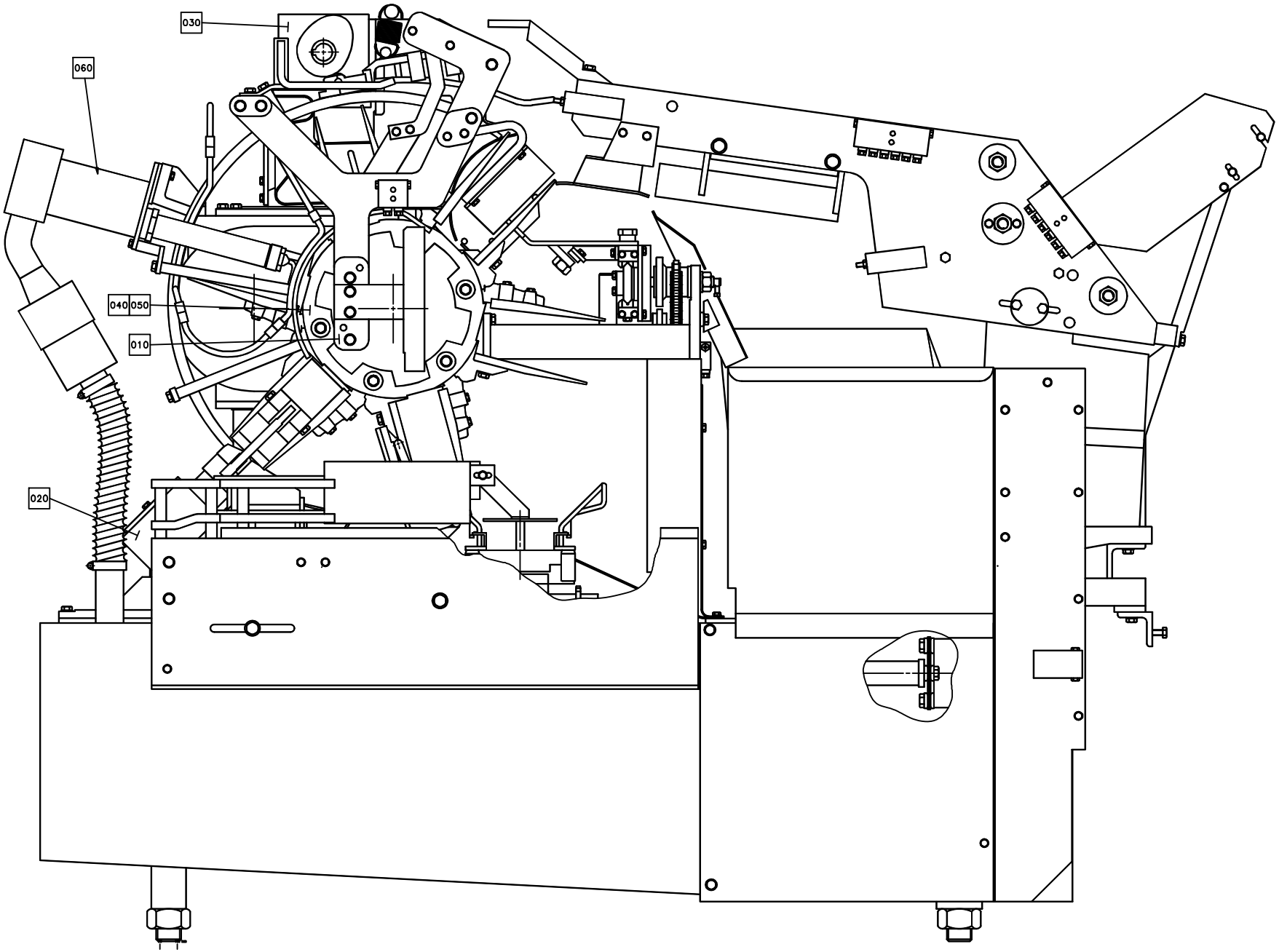

ECM: 71558 - 19980430
Group number: 594591-0100
Assembly Drawing: 594591-1_1_AA

Pos	Part No	UN	Qty	Description	Page No
0500SQ					
F050	593866-0100		1	WHEEL RIGHT	**11-9, 11-11**
F040	593865-0100		1	WHEEL LEFT	**11-13, 11-15**
F030	593864-0100		1	SUPERSTRUCTURE	**11-17**
F020	593863-0100		2	PRESSURE DEVICE	**11-19**
1000B					
F060	594593-0100		1	ELEMENT	**11-21**
F050	593866-0100		1	WHEEL RIGHT	**11-9, 11-11**
F040	593865-0100		1	WHEEL LEFT	**11-13, 11-15**
F030	593864-0100		1	SUPERSTRUCTURE	**11-17**
F020	593863-0100		2	PRESSURE DEVICE	**11-19**
F010	593862-0100		1	FOLDING PART	**11-23**
1000SQ REVFIN, 1000SQ NORMFIN, 1000S					
F050	593866-0100		1	WHEEL RIGHT	**11-9, 11-11**
F040	593865-0100		1	WHEEL LEFT	**11-13, 11-15**
F030	593864-0100		1	SUPERSTRUCTURE	**11-17**
F020	593863-0100		2	PRESSURE DEVICE	**11-19**
F010	593862-0100		1	FOLDING PART	**11-23**

Pos	Part No	UN	Qty	Description	Page No

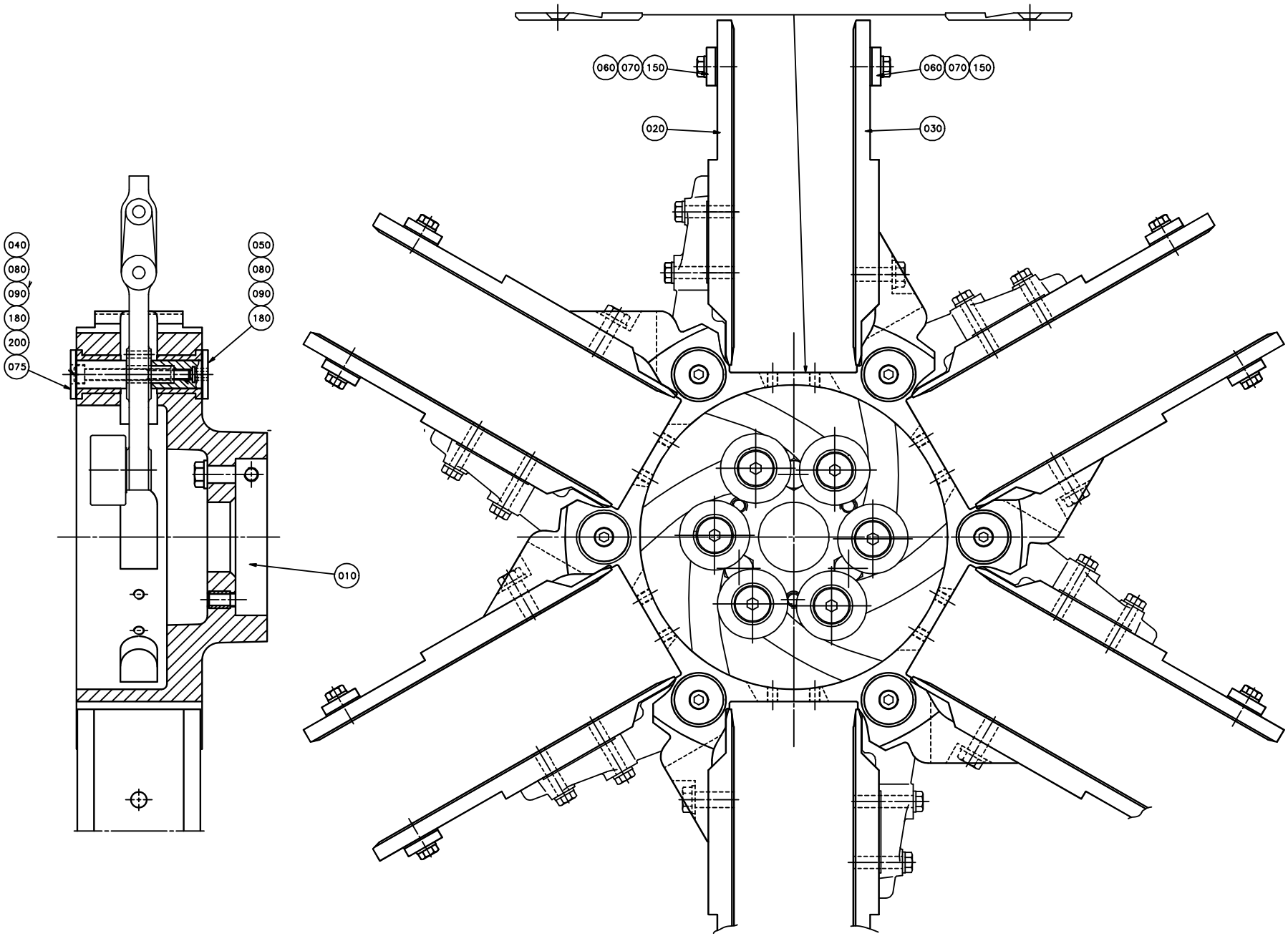
060
070
150
060
070
150
020
030
040
080
090
180
200
075
050
080
090
180
010

ECM: 71558 - 19980430
Group number: 593866-0100
Assembly Drawing: 593866-1_1_AB

This list covers pages from 11-8 to 11-11

Pos	Part No	UN	Qty	Description	Page No
TB/8 0500SQ					
010	593857-0000		1	HUB RIGHT	
020	593213-0000		6	FLAP	
030	593214-0000		6	FLAP	
060	593218-0000		12	SHIM	
070	593219-0000		12	BLOCK	
100	593861-0000		6	BOTTOM	
TB/8 1000B (See drawing on page: 11-8)					
010	593859-0000		1	HUB RIGHT	
020	593236-0000		6	FLAP	
030	593237-0000		6	FLAP	
060	593853-0000		12	SHIM	
070	1350488-0000		12	BLOCK	
TB/8 1000SQ (See drawing on pages: 11-8, 11-10)					
010	593857-0000		1	HUB RIGHT	
020	593213-0000		6	FLAP	
030	593214-0000		6	FLAP	
060	593218-0000		12	SHIM	
070	593219-0000		12	BLOCK	
Common Parts					
040	596259-0000		6	PIN	
050	596260-0000		6	SLEEVE	
075	596254-0000		6	SHIM	
080	593221-0000		18	SHIM	
090	593222-0000		18	SHIM	
150	312105-0366		24	SCREW M6S ISO 4017 M6X12 A480	
180	321111-0243		12	FLANGE BUSHING, 16X22X25 MM	
200	312155-0382		6	SCREW DIN 7991 MF6S M6X60 A4 70	

Pos	Part No	UN	Qty	Description	Page No

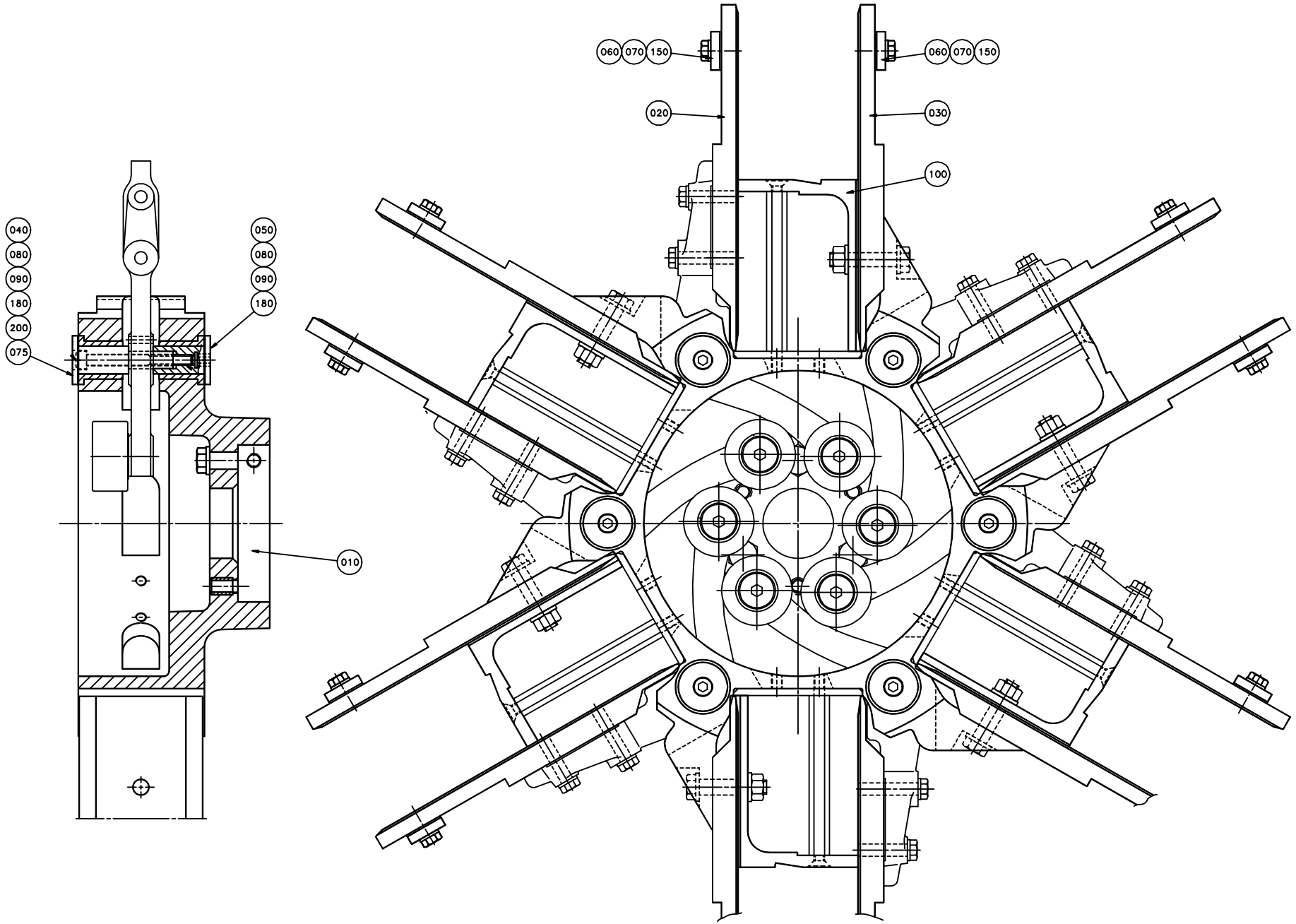
060
070
150
060
070
150
020
030
100
040
080
090
180
200
075
050
080
090
180
010

ECM: 71558 - 19980430
Group number: 593866-0100
Assembly Drawing: 593866-2_1_AB

This list covers pages from 11-8 to 11-11

Pos	Part No	UN	Qty	Description	Page No
TB/8 0500SQ					
010	593857-0000		1	HUB RIGHT	
020	593213-0000		6	FLAP	
030	593214-0000		6	FLAP	
060	593218-0000		12	SHIM	
070	593219-0000		12	BLOCK	
100	593861-0000		6	BOTTOM	
TB/8 1000B (See drawing on page: 11-8)					
010	593859-0000		1	HUB RIGHT	
020	593236-0000		6	FLAP	
030	593237-0000		6	FLAP	
060	593853-0000		12	SHIM	
070	1350488-0000		12	BLOCK	
TB/8 1000SQ (See drawing on pages: 11-8, 11-10)					
010	593857-0000		1	HUB RIGHT	
020	593213-0000		6	FLAP	
030	593214-0000		6	FLAP	
060	593218-0000		12	SHIM	
070	593219-0000		12	BLOCK	
Common Parts					
040	596259-0000		6	PIN	
050	596260-0000		6	SLEEVE	
075	596254-0000		6	SHIM	
080	593221-0000		18	SHIM	
090	593222-0000		18	SHIM	
150	312105-0366		24	SCREW M6S ISO 4017 M6X12 A480	
180	321111-0243		12	FLANGE BUSHING, 16X22X25 MM	
200	312155-0382		6	SCREW DIN 7991 MF6S M6X60 A4 70	

Pos	Part No	UN	Qty	Description	Page No

WHEEL LEFT

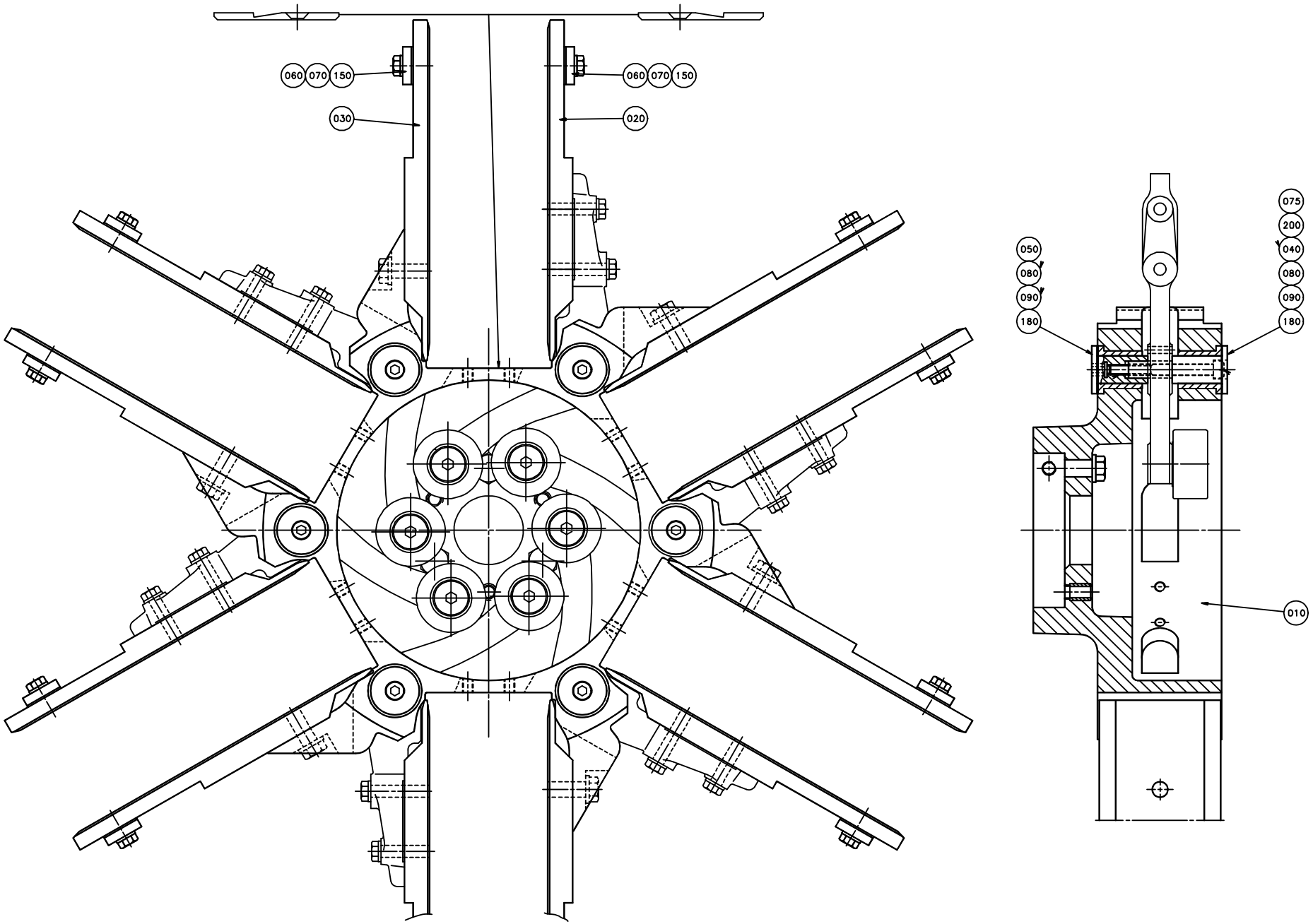
060
070
150
030
060
070
150
020
050
080
090
180
075
200
040
080
090
180
010

ECM: 71558 - 19980430
Group number: 593865-0100
Assembly Drawing: 593865-1_1_AB

This list covers pages from 11-12 to 11-15

Pos	Part No	UN	Qty	Description	Page No
TB/8 0500SQ (See drawing on page: 11-14)					
010	593856-0000		1	HUB LEFT	
020	593213-0000		6	FLAP	
030	593214-0000		6	FLAP	
060	593218-0000		12	SHIM	
070	593219-0000		12	BLOCK	
100	593861-0000		6	BOTTOM	
TB/8 1000B (See drawing on page: 11-12)					
010	593858-0000		1	HUB LEFT	
020	593236-0000		6	FLAP	
030	593237-0000		6	FLAP	
060	593853-0000		12	SHIM	
070	1350488-0000		12	BLOCK	
TB/8 1000SQ (See drawing on page: 11-12)					
010	593856-0000		1	HUB LEFT	
020	593213-0000		6	FLAP	
030	593214-0000		6	FLAP	
060	593218-0000		12	SHIM	
070	593219-0000		12	BLOCK	
Common Parts					
040	596259-0000		6	PIN	
050	596260-0000		6	SLEEVE	
075	596254-0000		6	SHIM	
080	593221-0000		18	SHIM	
090	593222-0000		18	SHIM	
150	312105-0366		24	SCREW M6S ISO 4017 M6X12 A480	
180	321111-0243		12	FLANGE BUSHING, 16X22X25 MM	
200	312115-0382		6	SCREW ISO4762 M6X60 A4 80	

Pos	Part No	UN	Qty	Description	Page No

WHEEL LEFT

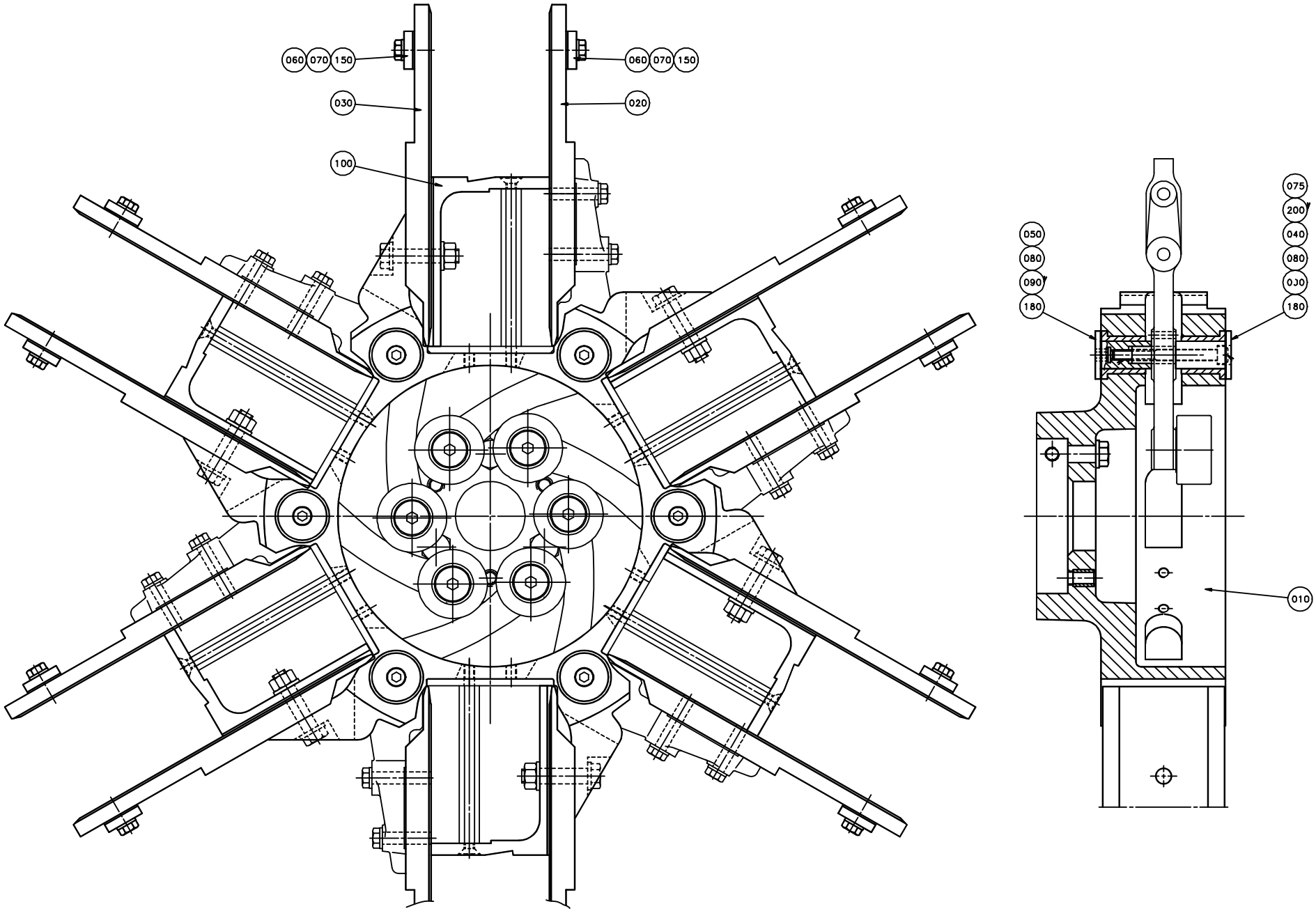
060
070
150
060
070
150
030
020
100
050
080
090
180
075
200
040
080
030
180
010

ECM: 71558 - 19980430
Group number: 593865-0100
Assembly Drawing: 593865-2_1_AB

This list covers pages from 11-12 to 11-15

Pos	Part No	UN	Qty	Description	Page No
TB/8 0500SQ (See drawing on page: 11-14)					
010	593856-0000		1	HUB LEFT	
020	593213-0000		6	FLAP	
030	593214-0000		6	FLAP	
060	593218-0000		12	SHIM	
070	593219-0000		12	BLOCK	
100	593861-0000		6	BOTTOM	
TB/8 1000B (See drawing on page: 11-12)					
010	593858-0000		1	HUB LEFT	
020	593236-0000		6	FLAP	
030	593237-0000		6	FLAP	
060	593853-0000		12	SHIM	
070	1350488-0000		12	BLOCK	
TB/8 1000SQ (See drawing on page: 11-12)					
010	593856-0000		1	HUB LEFT	
020	593213-0000		6	FLAP	
030	593214-0000		6	FLAP	
060	593218-0000		12	SHIM	
070	593219-0000		12	BLOCK	
Common Parts					
040	596259-0000		6	PIN	
050	596260-0000		6	SLEEVE	
075	596254-0000		6	SHIM	
080	593221-0000		18	SHIM	
090	593222-0000		18	SHIM	
150	312105-0366		24	SCREW M6S ISO 4017 M6X12 A480	
180	321111-0243		12	FLANGE BUSHING, 16X22X25 MM	
200	312115-0382		6	SCREW ISO4762 M6X60 A4 80	

Pos	Part No	UN	Qty	Description	Page No

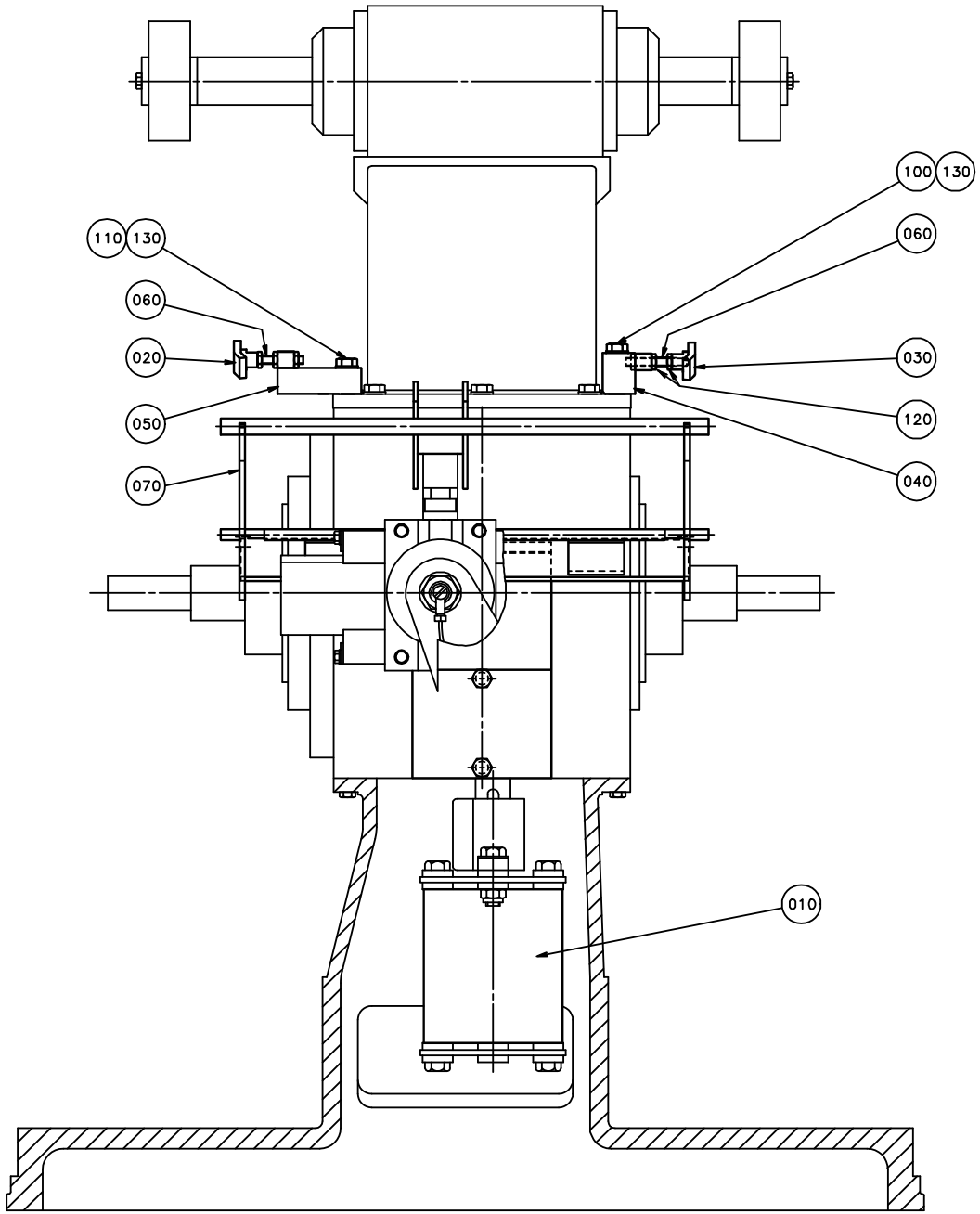
100
130
110
130
060
060
020
030
050
120
070
040
010

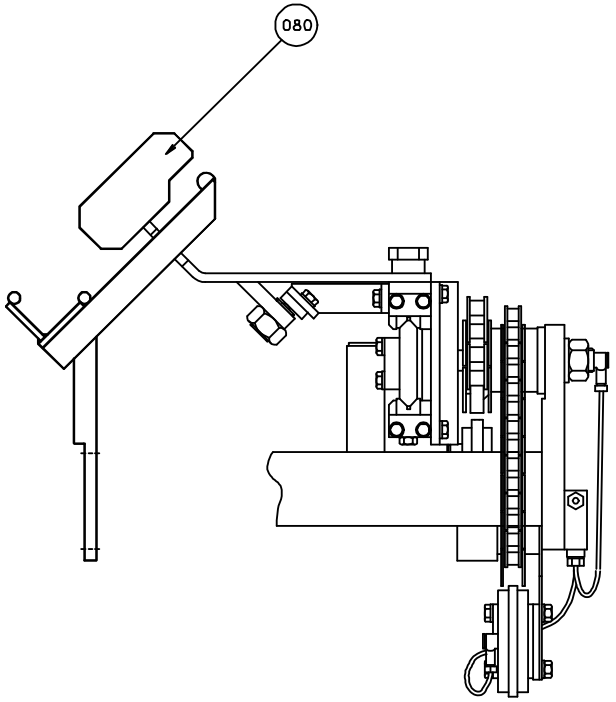
080

ECM: 71558 - 19980430
Group number: 593864-0100
Assembly Drawing: 593864-1_1_AC

Pos	Part No	UN	Qty	Description	Page No
0500SQ					
010	593239-0000		1	INTERMEDIARY SECTION	
1000S, 1000B					
010	593239-0000		1	INTERMEDIARY SECTION	
020	592214-0000		1	GUIDE RIGHT	
030	592215-0000		1	GUIDE LEFT	
040	592216-0000		1	BRACKET	
050	592217-0000		1	BRACKET	
060	1347007-0000		2	STUD BOLT	
080	544318-0000		1	DISTRIBUTOR	
100	312105-0462		1	SCREW M6S ISO 4014 M8X55 A480	
110	312109-0460		1	SCREW M6S ISO 4017 M8X45 A480	
120	312605-0316		6	HEXAGON NUT, M6M M6 A280	
130	315111-0165		2	WASHER PLAIN, TBRB 8,4/16 H=3	
1000SQ					
010	593239-0000		1	INTERMEDIARY SECTION	
020	592214-0000		1	GUIDE RIGHT	
030	592215-0000		1	GUIDE LEFT	
040	592216-0000		1	BRACKET	
050	592217-0000		1	BRACKET	
060	1347007-0000		2	STUD BOLT	
070	596295-0000		1	SLIDE RAIL	
080	574056-0000		1	DISTRIBUTOR	
100	312105-0462		1	SCREW M6S ISO 4014 M8X55 A480	
110	312109-0460		1	SCREW M6S ISO 4017 M8X45 A480	
120	312605-0316		6	HEXAGON NUT, M6M M6 A280	
130	315111-0165		2	WASHER PLAIN, TBRB 8,4/16 H=3	

Pos	Part No	UN	Qty	Description	Page No

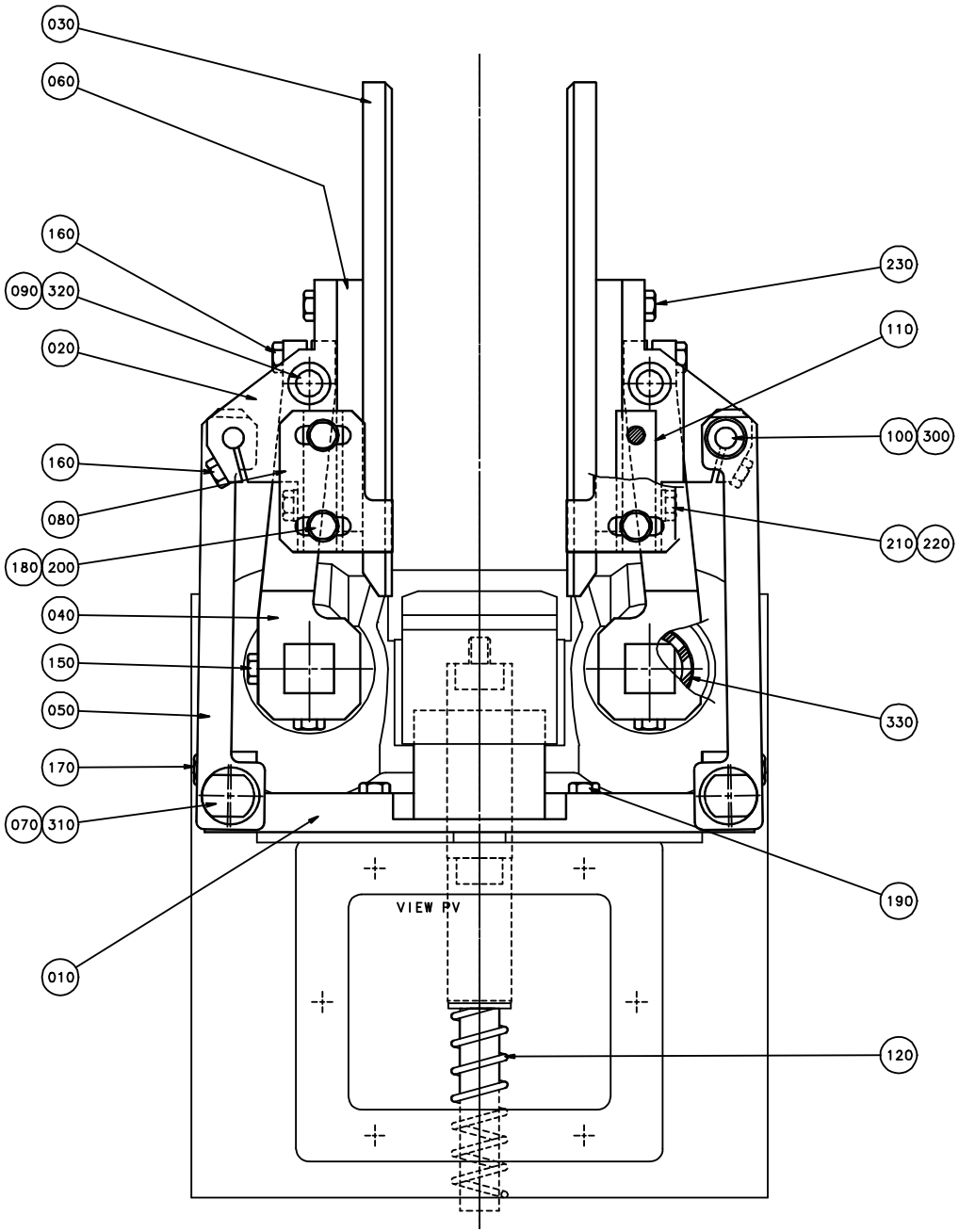
030
060
160
090
320
020
160
080
180
200
040
150
050
170
070
310
010
230
110
100
300
210
220
330
190
120
VIEW PV

ECM: 71558 - 19980430
Group number: 593863-0100
Assembly Drawing: 593863-1_1_AA

Pos	Part No	UN	Qty	Description	Page No
TB/8 0500SQ					
030	593235-0000		2	FORMING PLATE	
060	593211-0000		4	SHIM	
110	593850-0000		4	GAUGE BLOCK	
180	312109-0378		8	SCREW M6S ISO 4017 M6X40 A480	
210	312109-0376		4	SCREW M6S ISO 4017 M6X35 A480	
220	315115-0153		4	WASHER PLAIN, TBRB 6,4/12 H=3	
230	312105-0372		4	SCREW M6S ISO 4017 M6X25 A480	
TB/8 1000B					
030	593234-0000		2	FORMING PLATE	
110	593851-0000		4	GAUGE BLOCK	
120	268830-0000		1	COMPRESSION SPRING	
180	312109-0376		8	SCREW M6S ISO 4017 M6X35 A480	
210	312105-0371		4	SCREW M6S ISO 4017 M6X22 A480	
230	312105-0368		4	SCREW M6S ISO 4017 M6X16 A480	
TB/8 1000SQ					
030	592230-0000		2	FORMING PLATE	
060	593211-0000		4	SHIM	
110	593850-0000		4	GAUGE BLOCK	
180	312109-0378		8	SCREW M6S ISO 4017 M6X40 A480	
210	312109-0376		4	SCREW M6S ISO 4017 M6X35 A480	
220	315115-0153		4	WASHER PLAIN, TBRB 6,4/12 H=3	
230	312105-0372		4	SCREW M6S ISO 4017 M6X25 A480	
Common Parts					
010	592223-0000		1	MOUNTING PLATE	
020	592224-0000		2	BRACKET	
040	592225-0000		2	ARM	
050	592226-0000		2	PENDULUM ARM	
070	593238-0000		2	ECCENTRIC BOLT	
080	593848-0000		4	SUPPORT	
090	592221-0000		2	AXLE PIN	
100	592227-0000		2	PIN	
150	312105-0366		4	SCREW M6S ISO 4017 M6X12 A480	
160	312105-0368		4	SCREW M6S ISO 4017 M6X16 A480	
170	312105-0370		2	SCREW M6S ISO 4017 M6X20 A480	
190	312105-0372		2	SCREW M6S ISO 4017 M6X25 A480	
200	315115-0153		8	WASHER PLAIN, TBRB 6,4/12 H=3	
300	321111-0097		4	FLANGE BUSHING, 8X12X12 MM	
310	321111-0135		4	FLANGE BUSHING, 10X16X10 MM	
320	321111-0136		4	FLANGE BUSHING, 10X16X16 MM	
330	315202-0518		2	O-RING 23,39X3,53 MM	

Pos	Part No	UN	Qty	Description	Page No

Machine Type | Group Description | Used-In | Group Number | Page No

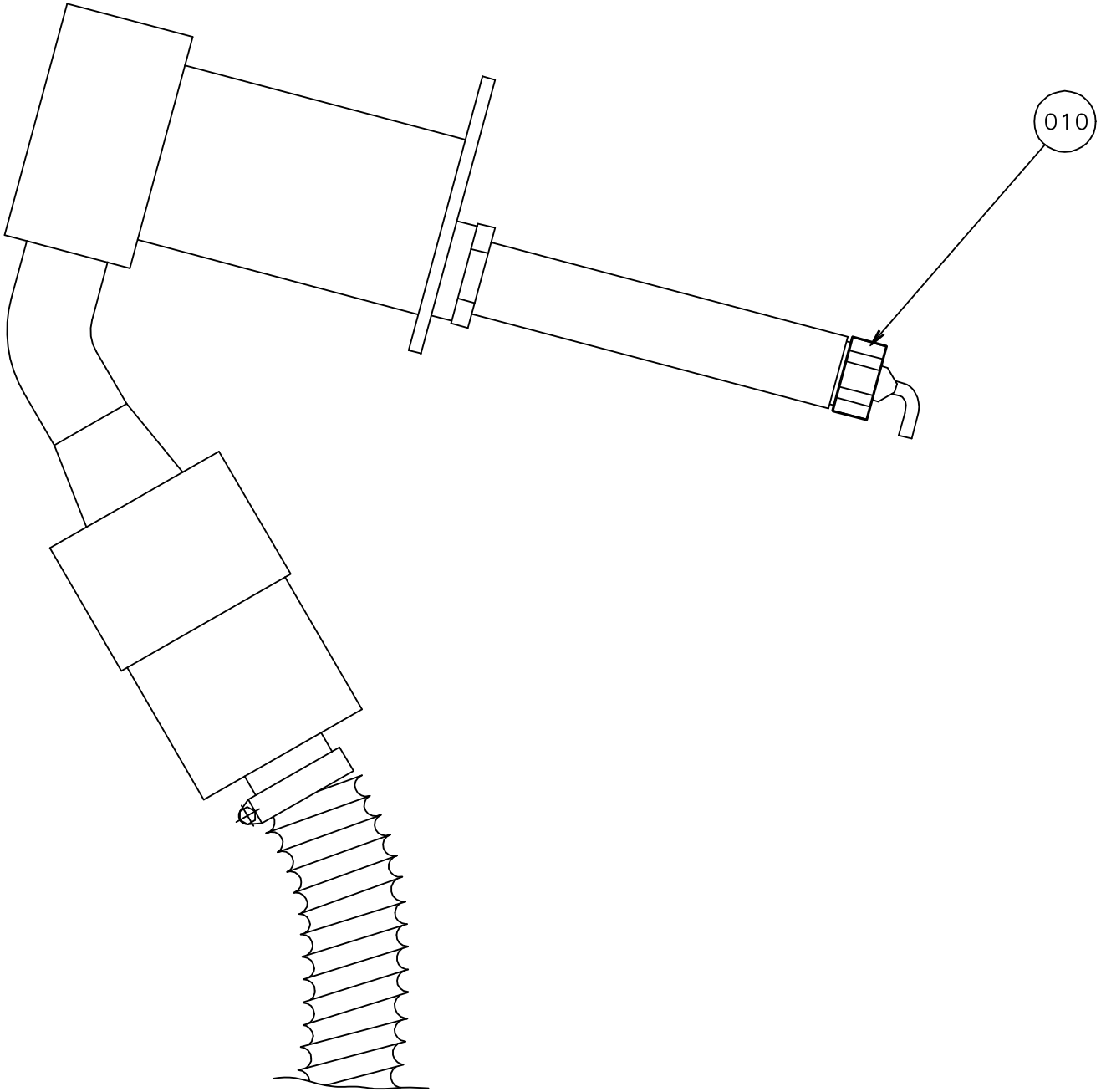
010

ECM: 70668 - 19970505
Group number: 594593-0100
Assembly Drawing: 594593-1_1_AA

Pos	Part No	UN	Qty	Description	Page No	Pos	Part No	UN	Qty	Description	Page No
-											
010	590591-0000		4	NUT							

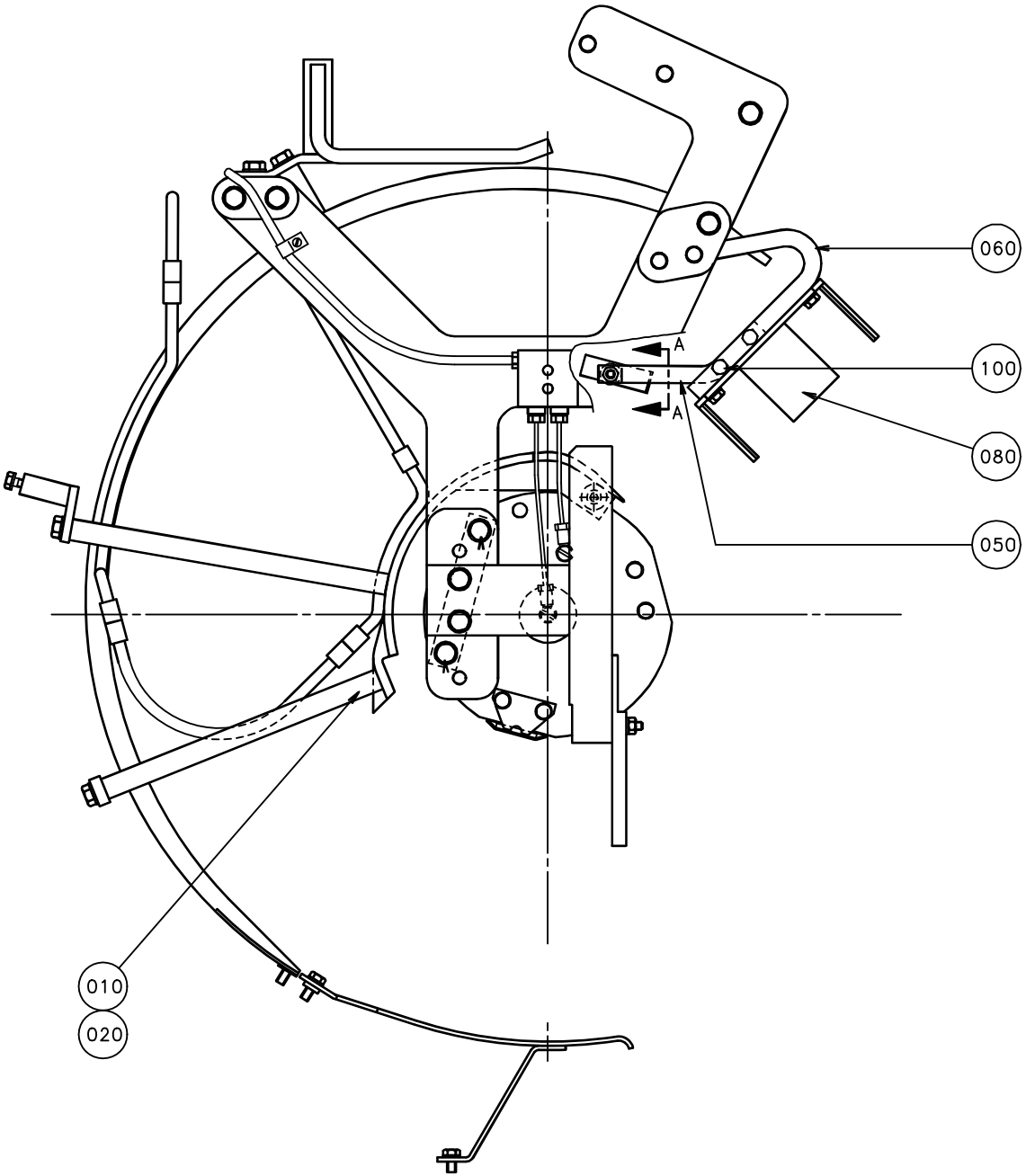
060
100
080
050
010
020
A
A

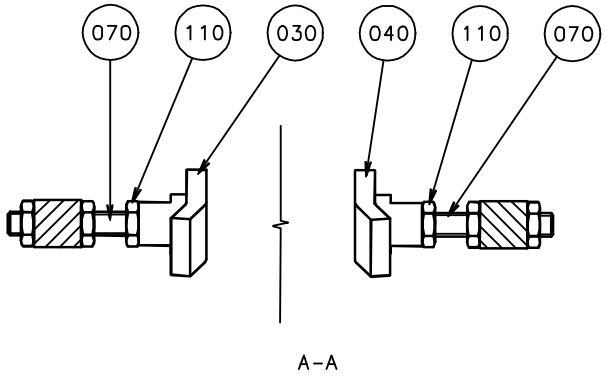
070
110
030
040
110
070
A–A

ECM: 71558 - 19980430
Group number: 593862-0100
Assembly Drawing: 593862-1_1_AB

Pos	Part No	UN	Qty	Description	Page No
1000B					
030	592214-0000		1	GUIDE RIGHT	
040	592215-0000		1	GUIDE LEFT	
050	592218-0000		2	BRACKET	
060	592219-0000		2	BRACKET	
070	1347007-0000		2	STUD BOLT	
080	1317573-0000		2	COUNTER PLATE	
100	312105-0371		4	SCREW M6S ISO 4017 M6X22 A480	
110	312605-0316		6	HEXAGON NUT, M6M M6 A280	
1000S					
030	592214-0000		1	GUIDE RIGHT	
040	592215-0000		1	GUIDE LEFT	
070	1347007-0000		2	STUD BOLT	
080	1334785-0000		2	COUNTER PLATE	
100	312105-0371		4	SCREW M6S ISO 4017 M6X22 A480	
110	312605-0316		6	HEXAGON NUT, M6M M6 A280	
1000SQ					
030	592214-0000		1	GUIDE RIGHT	
040	592215-0000		1	GUIDE LEFT	
070	1347007-0000		2	STUD BOLT	
100	312105-0371		4	SCREW M6S ISO 4017 M6X22 A480	
110	312605-0316		6	HEXAGON NUT, M6M M6 A280	
1000SQ REVFIN					
010	593854-0000		2	FOLDING BAR RIGHT	
020	593855-0000		2	FOLDING BAR LEFT	
030	592214-0000		1	GUIDE RIGHT	
040	592215-0000		1	GUIDE LEFT	
070	1347007-0000		2	STUD BOLT	
100	312105-0371		4	SCREW M6S ISO 4017 M6X22 A480	
110	312605-0316		6	HEXAGON NUT, M6M M6 A280	

Pos	Part No	UN	Qty	Description	Page No

Tetra Pak

SPC
Spare Parts Catalogue

This page is intentionally left blank.

ECM: 998011 - 20060926
Group number: 648061-1000
Assembly Drawing:

Pos	Part No	UN	Qty	Description	Page No
-					
	244828-0303		1	DISTANCE PIECE-PLATF. 600 MM WITH LADDER	**12-5**
	244828-0304		1	DISTANCE PIECE-PLATF. 600 MM NO LADDER	**12-9**
	266215-0100		1	PRODUCT LINE MANOMETER	**12-11**
	268794-0200		1	LIGHT FIXTURE MULTI INSTALLATION	**12-13**
	268931-0800		1	JUMBO REEL EQUIPMENT	**12-15**
	434446-0100		1	TABLE	**12-93**
	440258-0100		1	PAPER REEL HOLDER SMALL	**12-95**
	464100-0200		1	PAPER REEL TROLLEY	**12-97, 12-99**
	497243-0200		1	INDUCTIVE SWITCH	**12-113**
	499390-0100		1	SERVICE TABLE B8 ST-R	**12-115**
	530619-0100		1	LS STRIP SMALL HUB	**12-117**
	533003-0100		1	TIGHTNESS TESTER	**12-119**
	554603-0300		1	AUTOMATIC SPLICING UNIT IN SEPARATE ROOM	**12-127**
	564541-0200		1	POWER LINE FILTER.	
	564542-0200		1	ATTACHED LS-STRIP.	
	595142-0100		1	REB.KIT TPC 1000 SQ TO USTS HYDRAULIC	**12-151**
	595106-0100		1	LOW LEVEL FILLING HL TB/8	
	597557-0100		1	TRIMMING ROLLERS TB/8	**12-243**
	597558-0100		1	CODE INSERT SETS TB/8	
	90413-0187		*1*	*CODE INSERT SET*	
	90413-0188		*1*	*CODE INSERT SET 0-9 (ARABIC 8MM)*	
	90413-0189		*1*	*CODE INSERT SET 0-9 (ARABIC 4MM)*	
	90413-0190		*1*	*CODE INSERT SET (ARABIC 4MM)*	
	90413-0195		*1*	*CODE INSERT SET 1-31 3MM(SWE-ARABIC)*	
	90413-0196		*1*	*CODE INSERT SET 1-12 3MM (SWE-ARABIC)*	
	1145400-0100		1	PULLTAB UNIT PT8	
	1195097-0100		1	DOUBLE JACKET FILLING PIPE	
	1285044-0100		1	REVERSE FIN KIT	**12-245**
	1362445-0100		1	MKC SIMPLIFIED REVERSED FIN KIT 2	**12-265**
	1282100-0400		1	DIMC UNIT	
	1528700-0100		1	DIMC MULTI APPLICATOR	
	2660686-0100		1	ROT. UNIT PARTS	**12-275**
	2827006-0100		1	OK POTLATCH 320 mN (CTMP FREEBOARD)	**12-281**
	90048-0022		1	MANUAL PUMP INCL. BARROW 50-60 L	
	90048-0448		*1*	*REPAIR KIT*	
	90226-0004		1	CABINET	

Pos	Part No	UN	Qty	Description	Page No

Machine Type	Group Description	Used-In	Group Number	Page No

DISTANCE PIECE-PLATF. 600 MM WITH LADDER

Drawing file: 244828-5_1_AA.tif

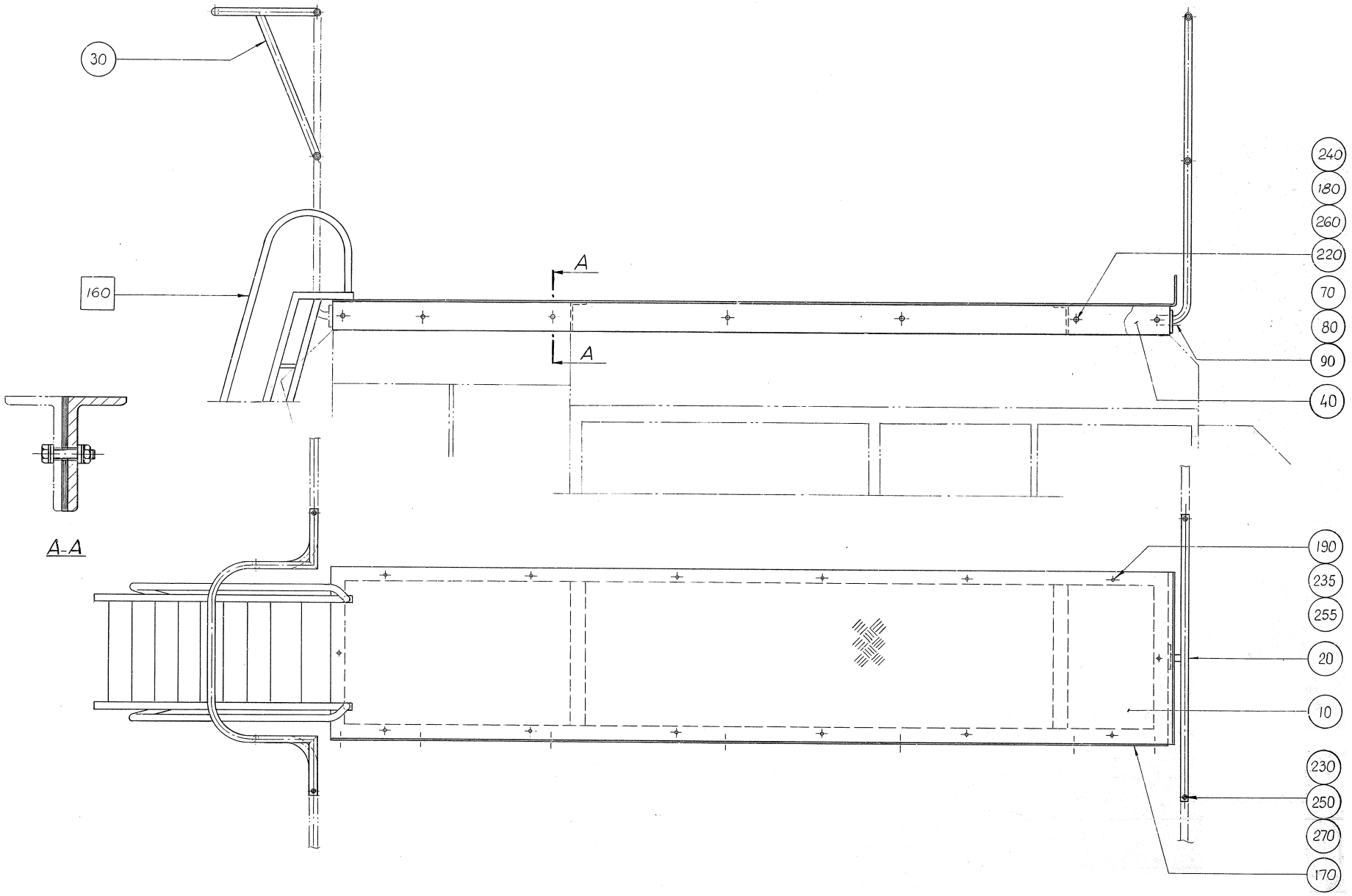

ECM: 71011 - 19970811
Group number: 244828-0303
Assembly Drawing: 244828-5_1_AA

Pos	Part No	UN	Qty	Description	Page No
-					
010 3	263621-0000		1	PLATFORM	
020	451426-0000		1	RAILING	
030	451427-0000		1	BOW CLAMP	
040	268139-0000		1	DISTANCE PIECE	
070	312105-0493		4	SCREW M6S ISO 4017 M10X25 A480	
080	312605-0320		4	HEXAGON NUT, M6M M10 A280	
090	315105-0173		4	WASHER BRB 10,5X20 RFR	
170	451406-0000		1	VIBRATION DAMPER	
180	451408-0000		14	BUFFER RING	
190	90287-0076		14	SCREW SLOT. PAN HEAD LKCS M6X20	
220	312101-0499		7	SCREW M6S M10X40 FZB	
230	312115-0453		8	SCREW ISO4762 M8X25 A4 80	
235	312601-0316		14	HEXAGON NUT, DIN 934 M6 8 FZB	
240	312601-0320		7	HEXAGON NUT, M10 8 FZB, ISO 4032	
250	312605-0318		8	HEXAGON NUT, M6M M8 A280	
255	315101-0153		14	WASHER PLAIN, BRB, 6,4/12 H=1,5	
260	315101-0173		14	WASHER PLAIN, BRB, 10,5/22 H=2	
270	315105-0165		8	WASHER BRB 8,4X16 RFR	
F295	243171-0100		1	LADDER	**12-7**

Pos	Part No	UN	Qty	Description	Page No

Machine Type | Group Description | Used-In | Group Number | Page No

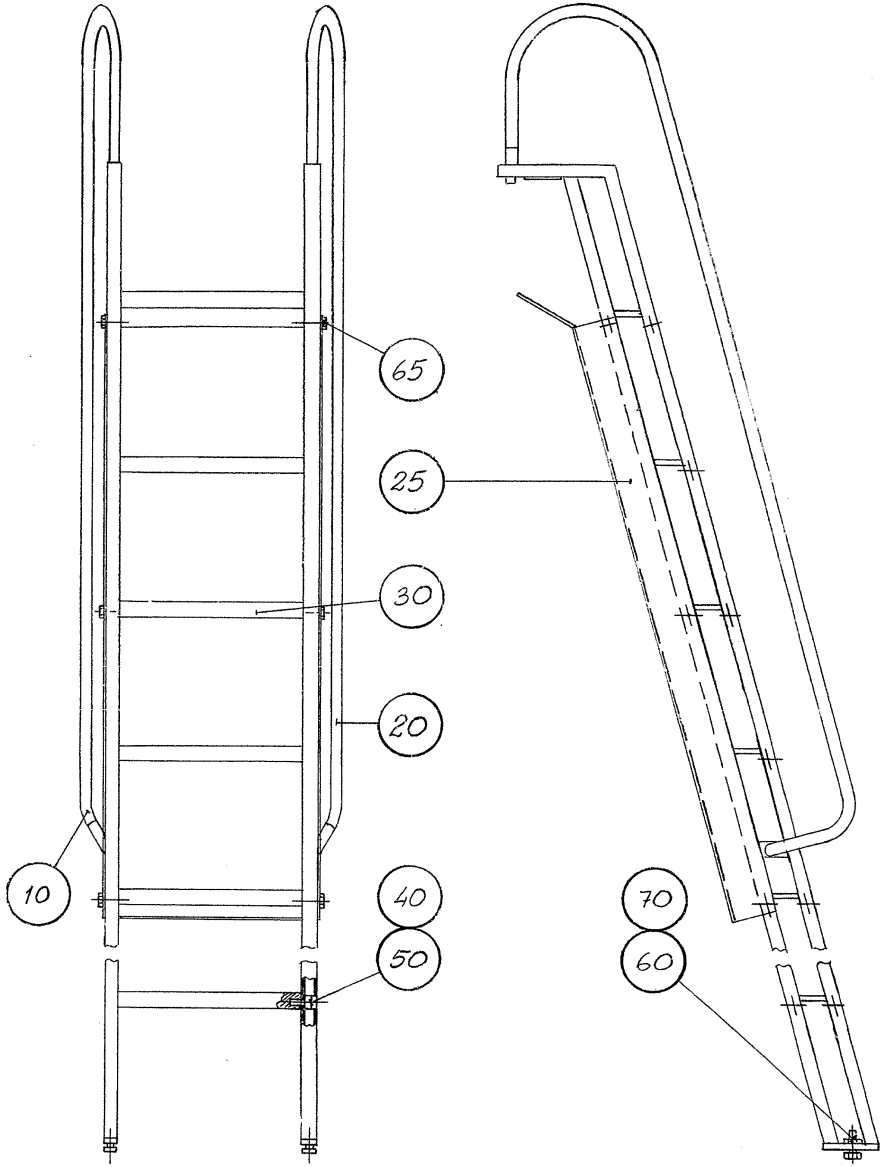
65
25
30
20
10
40
50
70
60

ECM: - -
Group number: 243171-0100
Assembly Drawing: 243171-1_1_AA

Pos	Part No	UN	Qty	Description	Page No
-					
010	243172-0001		1	SIDE PIECE	
020	243172-0002		1	SIDE PIECE	
025	265706-0000		1	PROTECTION PLATE	
030	208361-0001		8	STAIR	
040	208658-0001		26	SPACER	
050	90287-0056		26	SCREW MC6S-TT M8X40	
060	312101-0495		2	SCREW M6S M10X30 FZB	
065	312105-0462		6	SCREW M6S ISO 4014 M8X55 A480	
070	312601-0320		2	HEXAGON NUT, M10 8 FZB, ISO 4032	

Pos	Part No	UN	Qty	Description	Page No

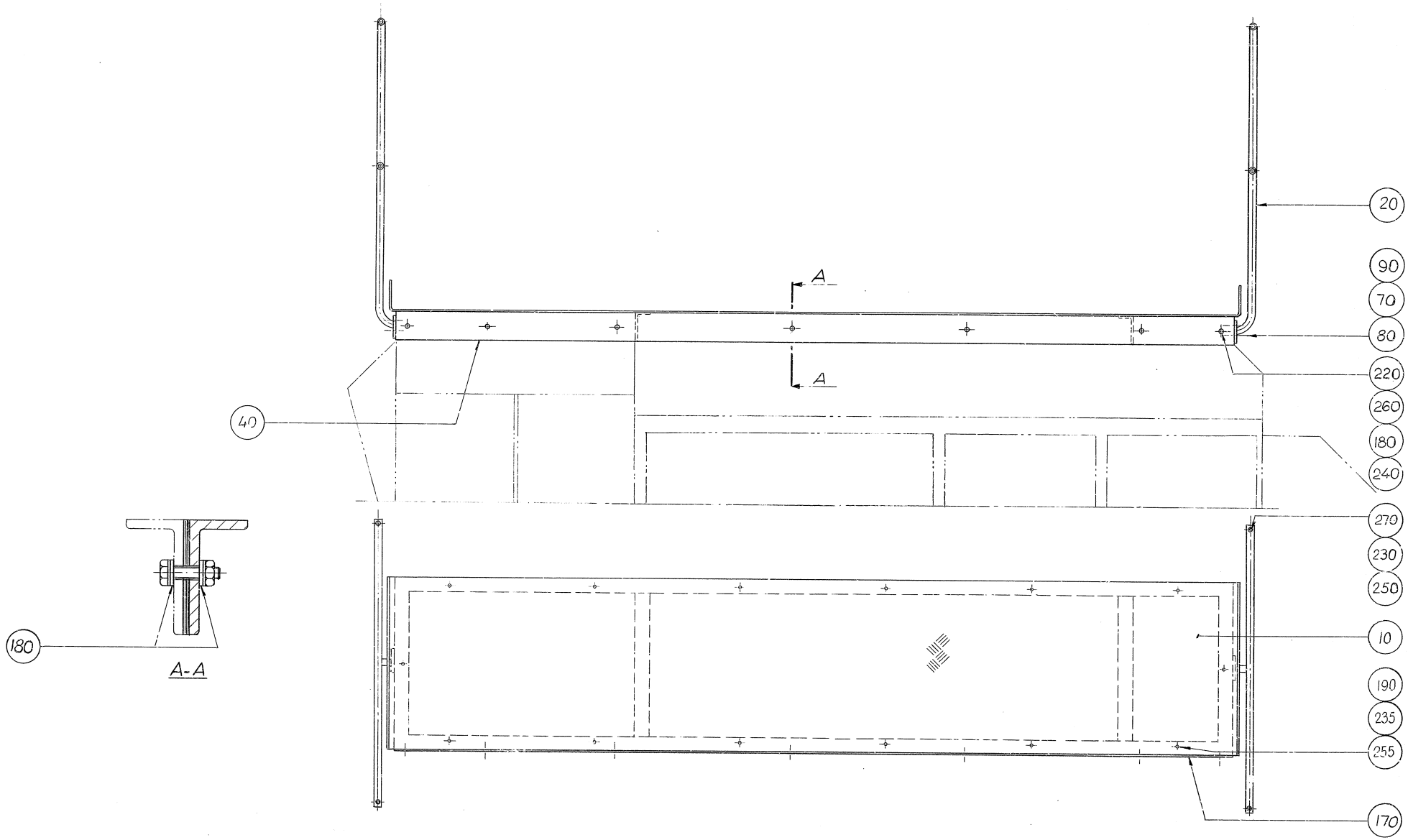
A
A
40
180
A-A
20
90
70
80
220
260
180
240
270
230
250
10
190
235
255
170

ECM: 71011 - 19970811
Group number: 244828-0304
Assembly Drawing: 244828-6_1_AA

Pos	Part No	UN	Qty	Description	Page No
-					
010 4	276460-0000		1	PLATFORM	
020	451426-0000		2	RAILING	
040	268139-0000		1	DISTANCE PIECE	
070	312105-0493		8	SCREW M6S ISO 4017 M10X25 A480	
080	312605-0320		8	HEXAGON NUT, M6M M10 A280	
090	315105-0173		8	WASHER BRB 10,5X20 RFR	
170	451406-0000		1	VIBRATION DAMPER	
180	451408-0000		14	BUFFER RING	
190	90287-0076		14	SCREW SLOT. PAN HEAD LKCS M6X20	
220	312101-0499		7	SCREW M6S M10X40 FZB	
230	312115-0453		8	SCREW ISO4762 M8X25 A4 80	
235	312601-0316		14	HEXAGON NUT, DIN 934 M6 8 FZB	
240	312601-0320		7	HEXAGON NUT, M10 8 FZB, ISO 4032	
250	312605-0318		8	HEXAGON NUT, M6M M8 A280	
255	315101-0153		14	WASHER PLAIN, BRB, 6,4/12 H=1,5	
260	315101-0173		14	WASHER PLAIN, BRB, 10,5/22 H=2	
270	315105-0165		8	WASHER BRB 8,4X16 RFR	

Pos	Part No	UN	Qty	Description	Page No

Machine Type | Group Description | Used-In | Group Number | Page No

PRODUCT LINE MANOMETER

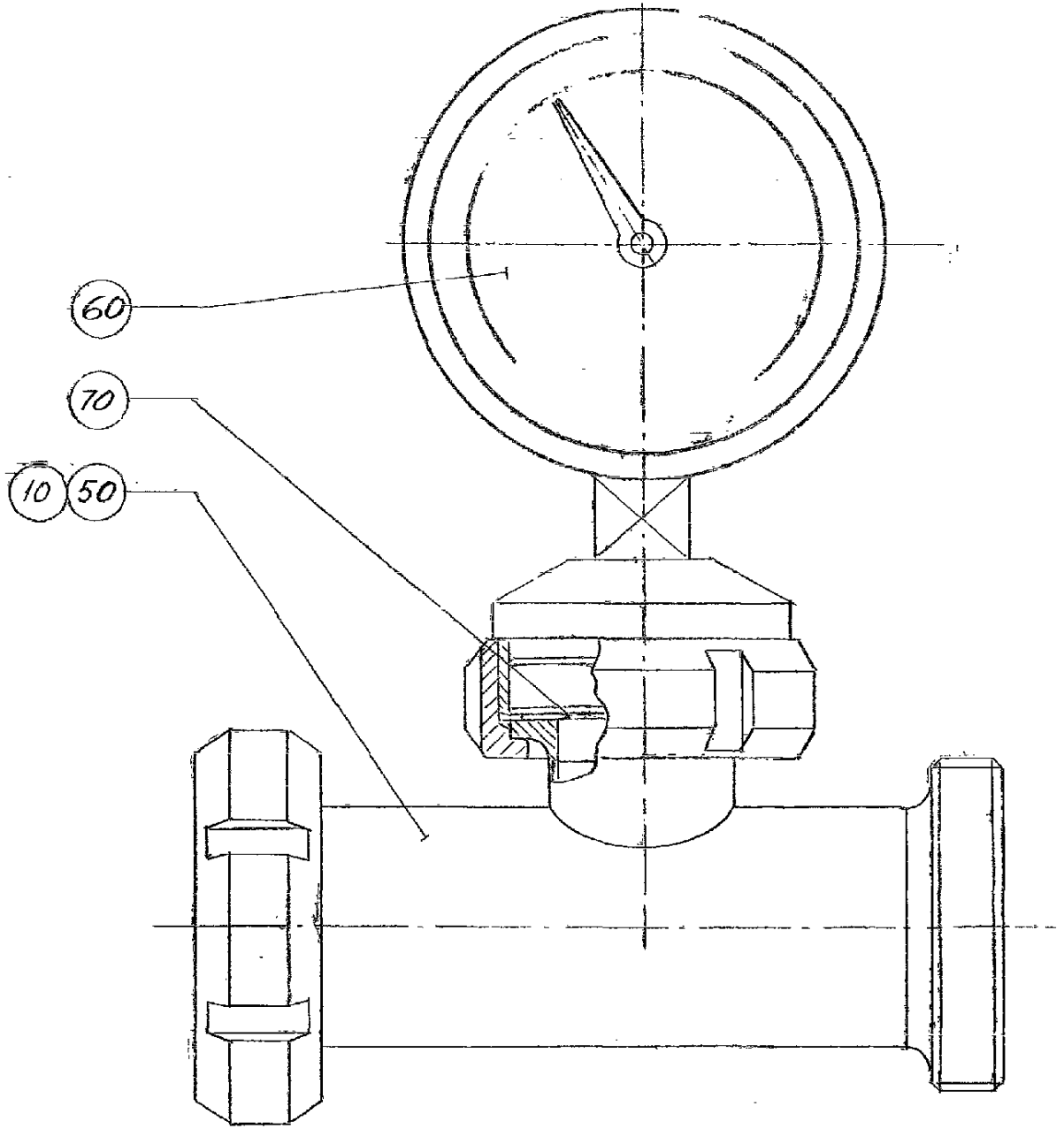

ECM: 71011 - 19970811
Group number: 266215-0100
Assembly Drawing: 266215-1_1_AA

Pos	Part No	UN	Qty	Description	Page No
TB/8 2"					
050	449193-0000		1	PRESSURE GAUGE TUBE	
Common Parts					
060	90043-0050		1	PRESSURE GAUGE, 2940.100 MM+2940	
	90043-0301		*1*	*DIAPHRAGM*	
070	315250-0103		1	GASKET 48X38X5,5 MM	

Pos	Part No	UN	Qty	Description	Page No

LIGHT FIXTURE MULTI INSTALLATION

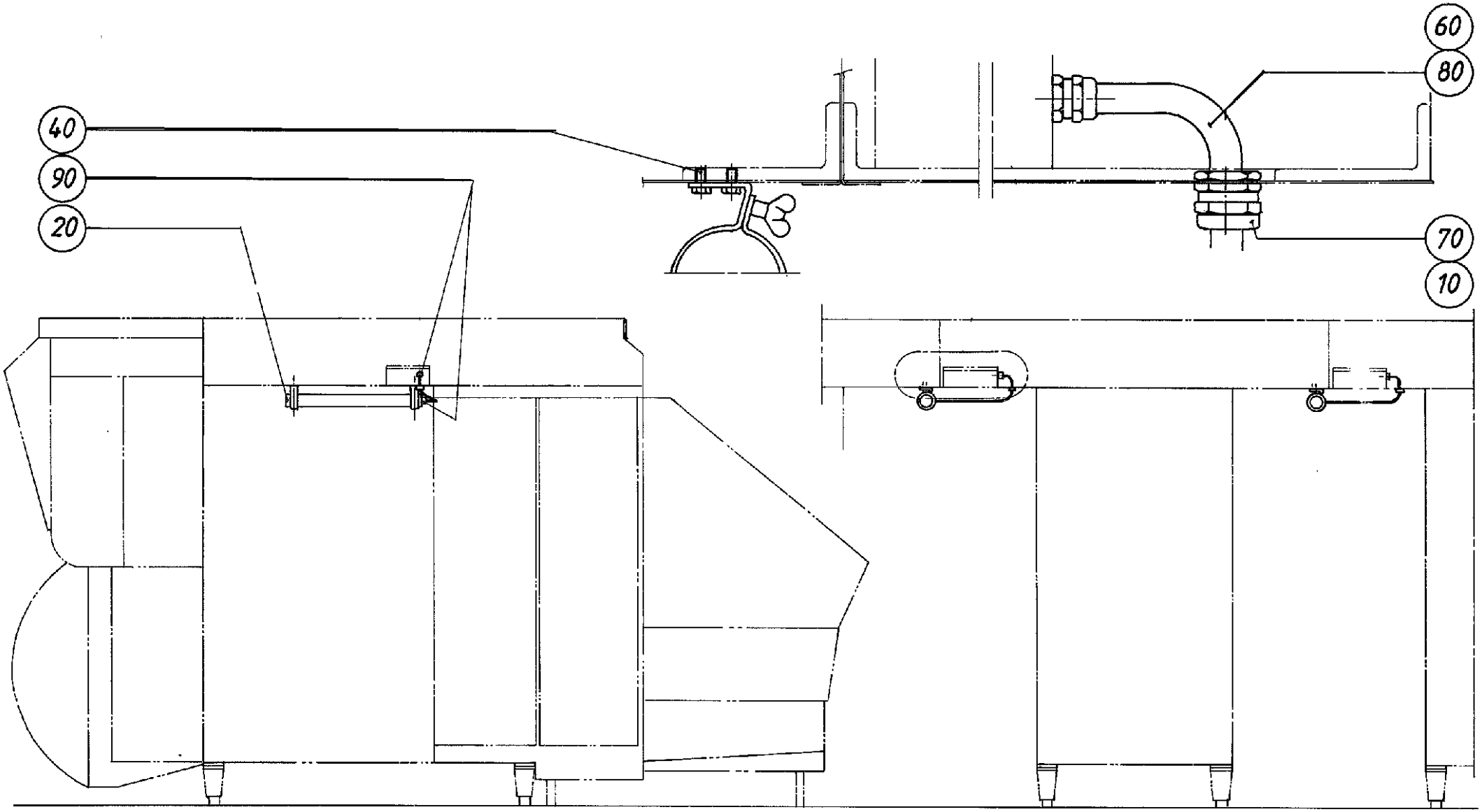

ECM: - -
Group number: 268794-0200
Assembly Drawing: 268794-2_1_AA

Pos	Part No	UN	Qty	Description	Page No
-					
010	90099-0011		1	NUT PR 37 BRASS	
020	90164-0003		1	LIGHT FIXTURE	
	90297-0002		*1*	*FLUORESCENT TUBE, TLD 18/33*	
040	312105-0366		4	SCREW M6S ISO 4017 M6X12 A480	
060	351123-0144	MM	800	CABLE FKK 3X15 MM2 WHITE	
070	352103-0121		1	CABLE GLAND, ST 29, PR37,0/PG29	
080	352135-0106	MM	700	SPIRAL CONDUIT DI=16 MM	
090	352136-0107		2	GLAND FITTING PR12,5 PG7 FOR HOSE	

Pos	Part No	UN	Qty	Description	Page No

Machine Type | Group Description | Used-In | Group Number | Page No

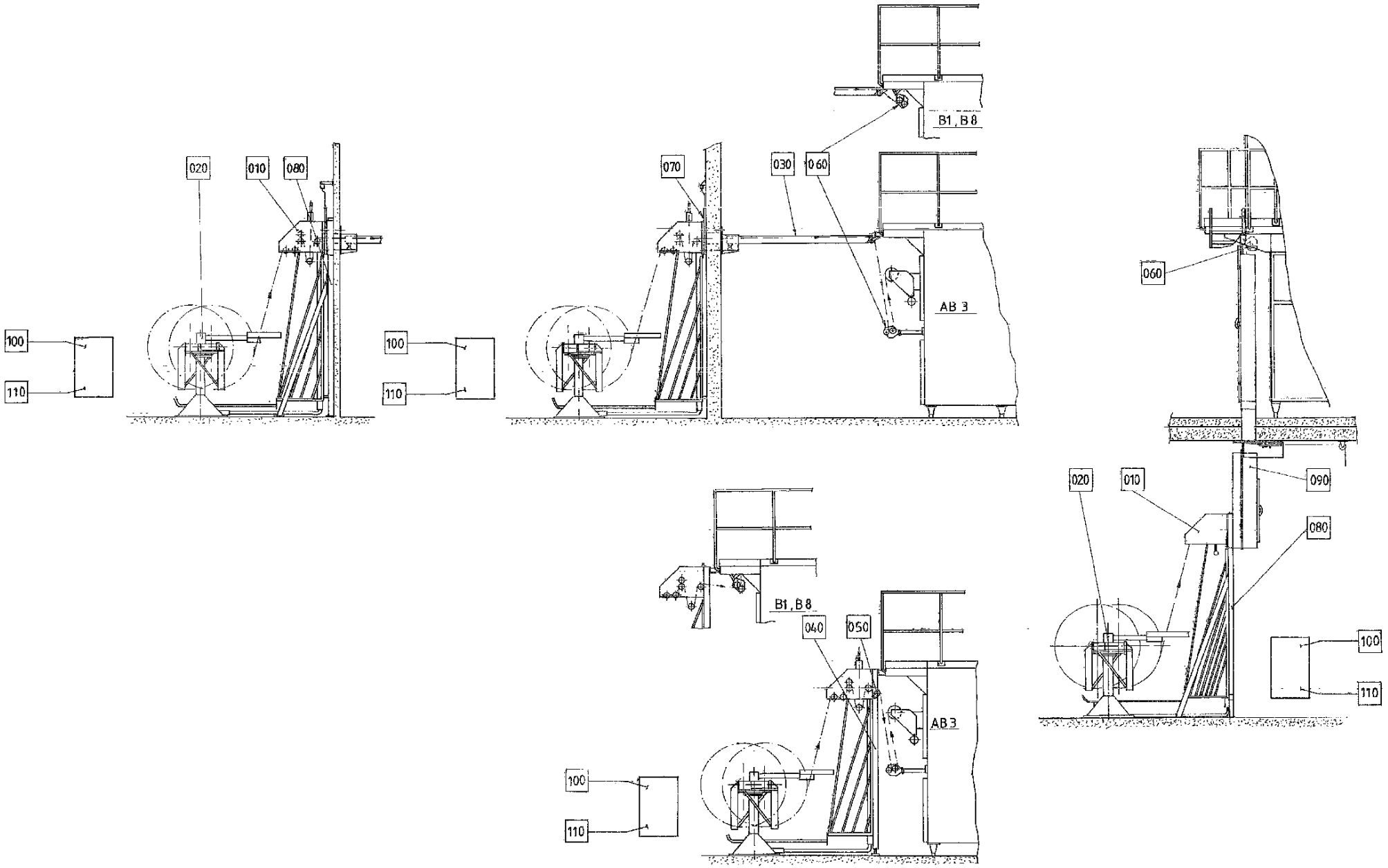
020
010
080
100
110
070
030
060
B1, B8
AB 3
060
020
010
090
080
100
110
B1, B8
040
050
AB 3
100
110

ECM: - -
Group number: 268931-0800
Assembly Drawing: 268931-4_1_AA

Pos	Part No	UN	Qty	Description	Page No
-					
F110	557270-0100		1	WITHOUT A.S.U.	**12-17**
F100	649045-0100		1	EL. EQUIPMENT JUMBO REEL	
F090	537300-0101		1	CEILING PASSAGE	**12-21**
F080	479821-0101		1	FREE STAND	**12-35**
F070	476189-0100		1	WALL LEAD-IN	**12-37**
F060	268930-0500		1	MODIF.OF BRAKING DEVICE	**12-39, 12-41**
F040	251513-0300		1	STAND	**12-43**
F030	237776-0400		1	PAPER GUARD	**12-45**
F020	232781-0400		1	REVOLVING HEAD	**12-47**
F010	229400-0700		1	UNREELING DEVICE	**12-49**
F000	531366-0300		1	COMPL EQUIP F JUMBO REEL	**12-51**

Pos	Part No	UN	Qty	Description	Page No

This page is intentionally left blank.

ECM: - -
Group number: 557270-0100
Assembly Drawing:

Pos	Part No	UN	Qty	Description	Page No	Pos	Part No	UN	Qty	Description	Page No
-											
020	557272-0100		1	ELECTRIC MATERIALS	**12-19**						

Machine Type	Group Description	Used-In	Group Number	Page No

This page is intentionally left blank.

ECM: - -
Group number: 557272-0100
Assembly Drawing:

Pos	Part No	UN	Qty	Description	Page No
-					
0100	90194-0302		1	MARKING LABELS REBUILDING KIT	
0200	351172-0102	M	10	CABLE AWM 1X 0,75 MM2 DARKBLUE	
0210	351180-0102	M	15	CABLE AWM 1X075 MM2 ORANGE	
X101	90110-0128		1	MALE INSERT HAN 24 E-M 65330242631	

Pos	Part No	UN	Qty	Description	Page No

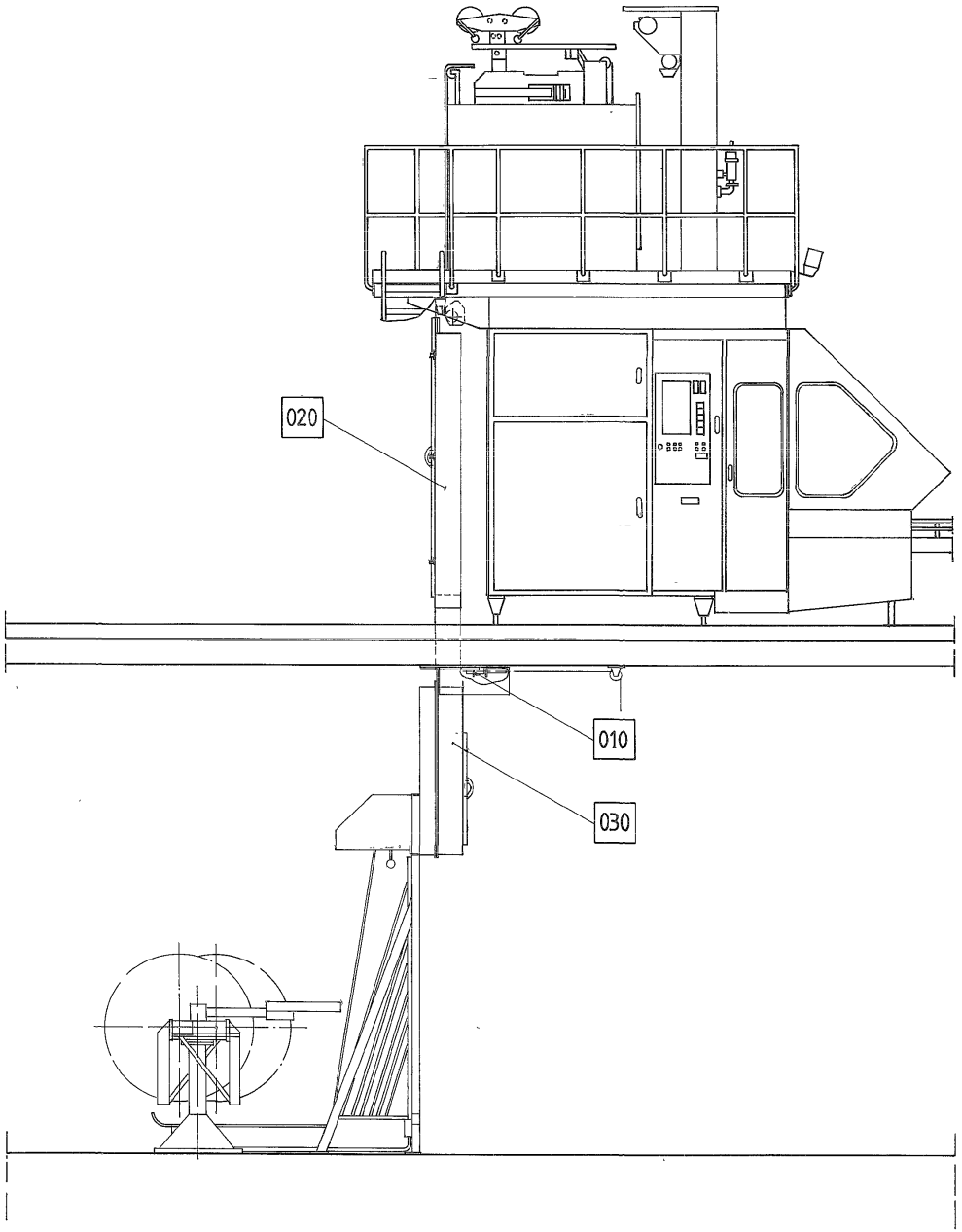
020
010
030

ECM: - -
Group number: 537300-0101
Assembly Drawing: 537300-1_1_AA

Pos	Part No	UN	Qty	Description	Page No
-					
F030	537314-0100		1	COVER LOWER	**12-23**
F020	537313-0100		1	COVER UPPER	**12-29**
F010	537301-0100		1	GUILLOTINE	**12-33**

Pos	Part No	UN	Qty	Description	Page No

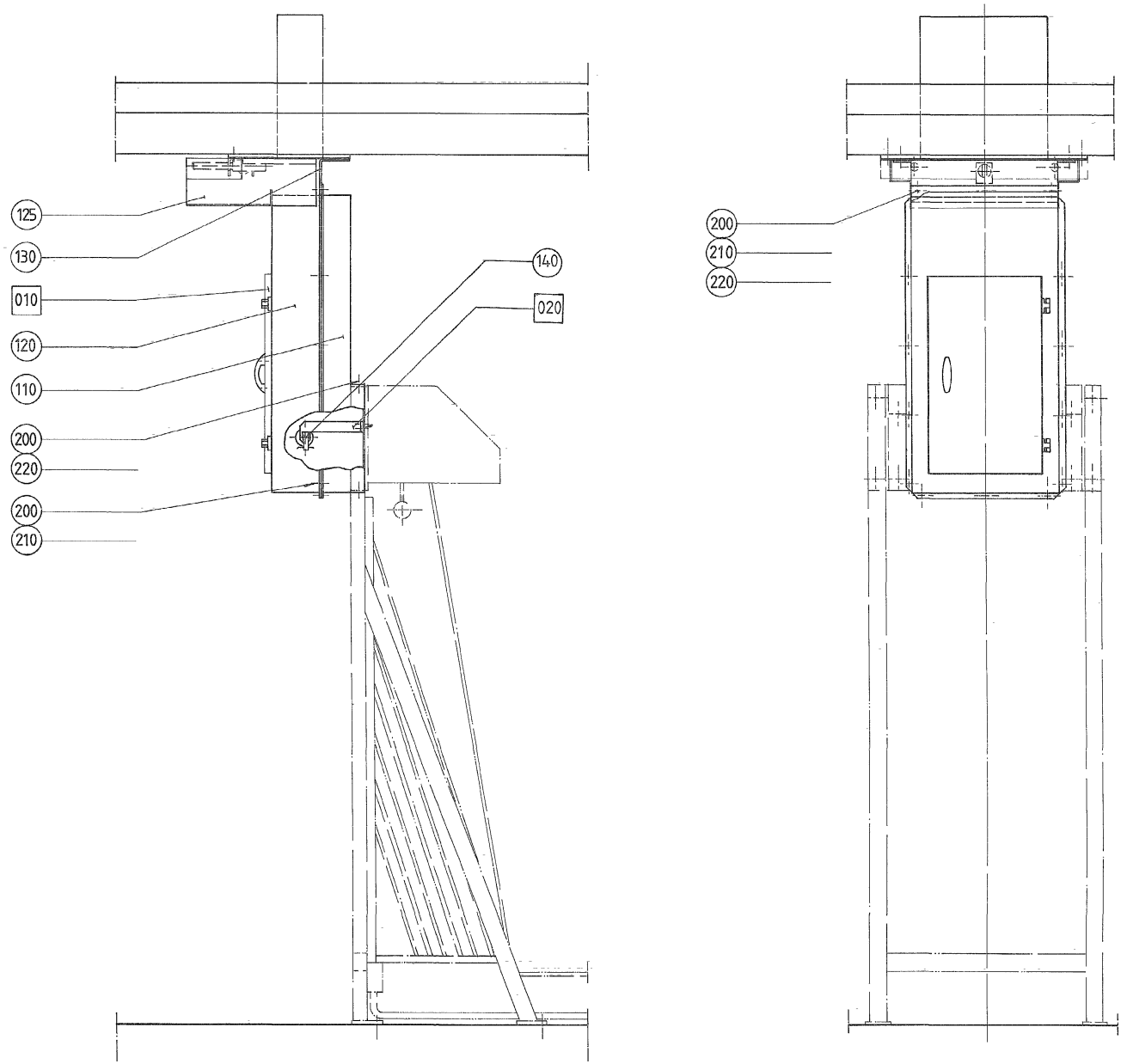
125
130
010
120
110
200
220
200
210
140
020
200
210
220

ECM: - -
Group number: 537314-0100
Assembly Drawing: 537314-1_1_AA

Pos	Part No	UN	Qty	Description	Page No
-					
110	537317-0000		1	COVER	
120	537318-0000		1	COVER	
125	538255-0000		1	COVER	
130	537320-0000		1	MOUNTING SHEET	
140	539344-0000		1	PAPER GUIDE PLATE	
200	312105-0366		20	SCREW M6S ISO 4017 M6X12 A480	
210	312605-0316		14	HEXAGON NUT, M6M M6 A280	
220	315105-0153		12	WASHER BRB 6,4X12 RFR	
F020	265565-0100		1	BENDING ROLLER BRACKET	**12-25**
F010	537315-0100		1	INSPECTIONSDOOR , LOWER	**12-27**

Pos	Part No	UN	Qty	Description	Page No

BENDING ROLLER BRACKET

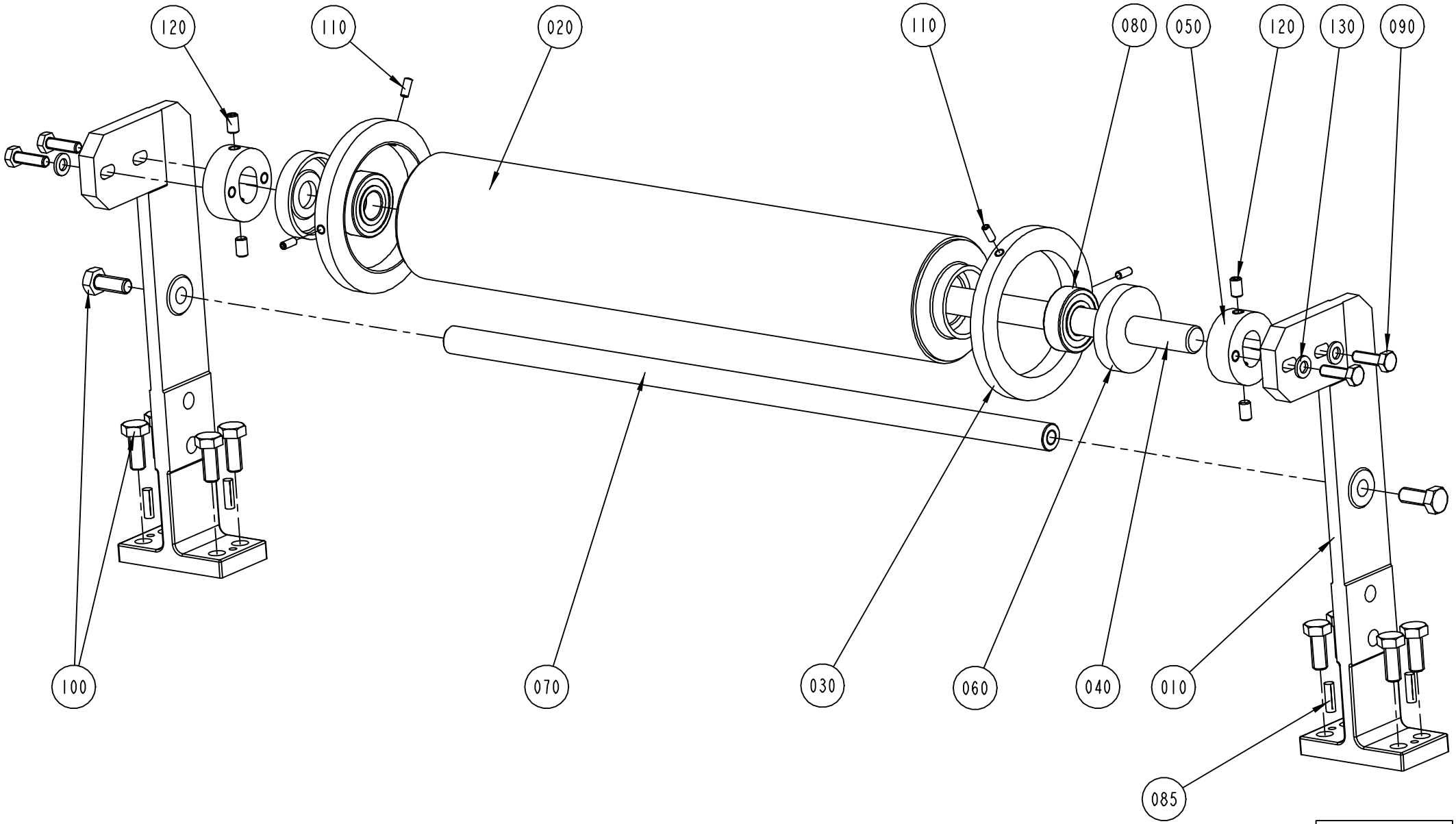

ECM: 72005 - 19990401
Group number: 265565-0100
Assembly Drawing: 265565-1_1_AC

Pos	Part No	UN	Qty	Description	Page No
-					
010	265563-0000		2	CANTILEVER REPBY 0546116-0000	
020	265564-0000		1	BENDING ROLLER	
030	250588-0000		2	FLANGE	
040	265566-0001		1	SHAFT	
050	265567-0000		2	BEARING UNIT	
060	265568-0000		2	DUST COVER	
070	265569-0001		1	STRUT	
080	90214-0028		2	BALL BEARING REPBY 90214-98	
085	311305-0308		4	LOTTED PIRPC5X16FZB	
090	312105-0370		4	SCREW M6S ISO 4017 M6X20 A480	
100	312105-0451		10	SCREW M6S ISO 4017 M8X20 A480	
110	312318-0289		4	SCREW ISO4029 M4X10 A4	
120	312318-0364		4	SCREW ISO4029 M6X10 A4	
130	315105-0153		4	WASHER BRB 6,4X12 RFR	

Pos	Part No	UN	Qty	Description	Page No

INSPECTIONSDOOR , LOWER

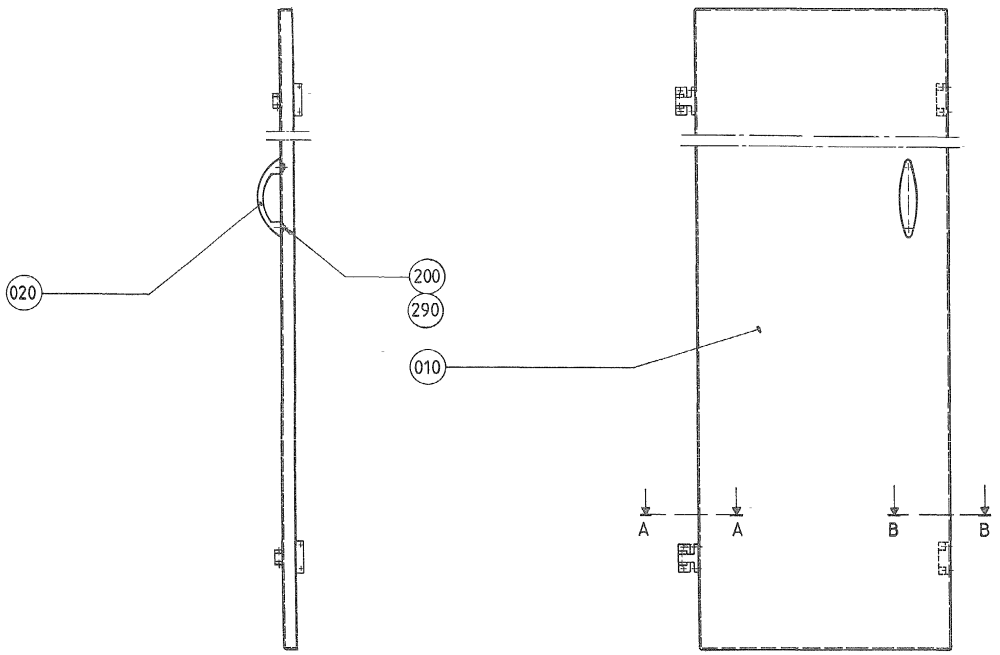

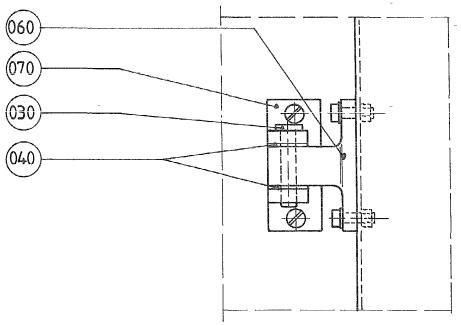

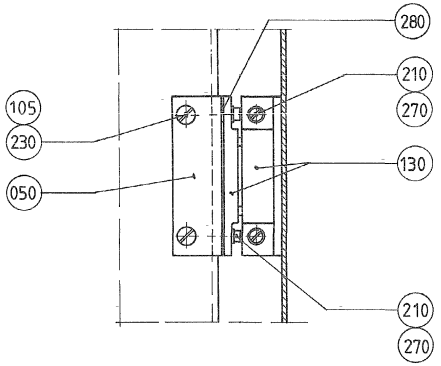

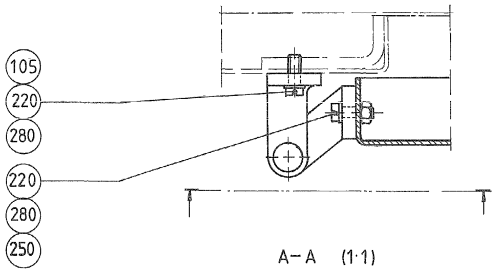

A–A (1:1)

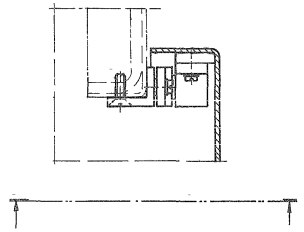

B–B (1:1)

ECM: - -
Group number: 537315-0100
Assembly Drawing: 537315-1_1_AA

Pos	Part No	UN	Qty	Description	Page No
-					
010	537316-0000		1	DOOR	
020	7309-0000		1	HANDLE	
030	257397-0000		2	PIN	
040	271011-0000		4	WASHER	
050	272453-0000		2	SPACER	
060	272510-0000		2	HINGE	
070	272511-0000		2	HINGE	
105	90157-0016	ML		LOCKING FLUID LOCTITE 242 50 ML	
130	90339-0004		2	MAGNETIC LOCK, 57X16X19 MM	
200	312105-0364		2	SCREW M6S ISO 4017 M6X10 A480	
210	312125-0222		8	SCREW ISO 1207 M3X8 A4	
220	312125-0291		8	SCREW ISO 1207 M4X12 A4	
230	312145-0291		4	SCREW ISO 2009 MFS M4X12 A4	
250	312605-0312		4	HEXAGON NUT, M6M M4 A280	
270	315105-0124		8	WASHER BRB 3,2X7 RFR	
280	315105-0136		12	WASHER BRB 4,3X9 RFR	
290	315105-0153		2	WASHER BRB 6,4X12 RFR	

Pos	Part No	UN	Qty	Description	Page No

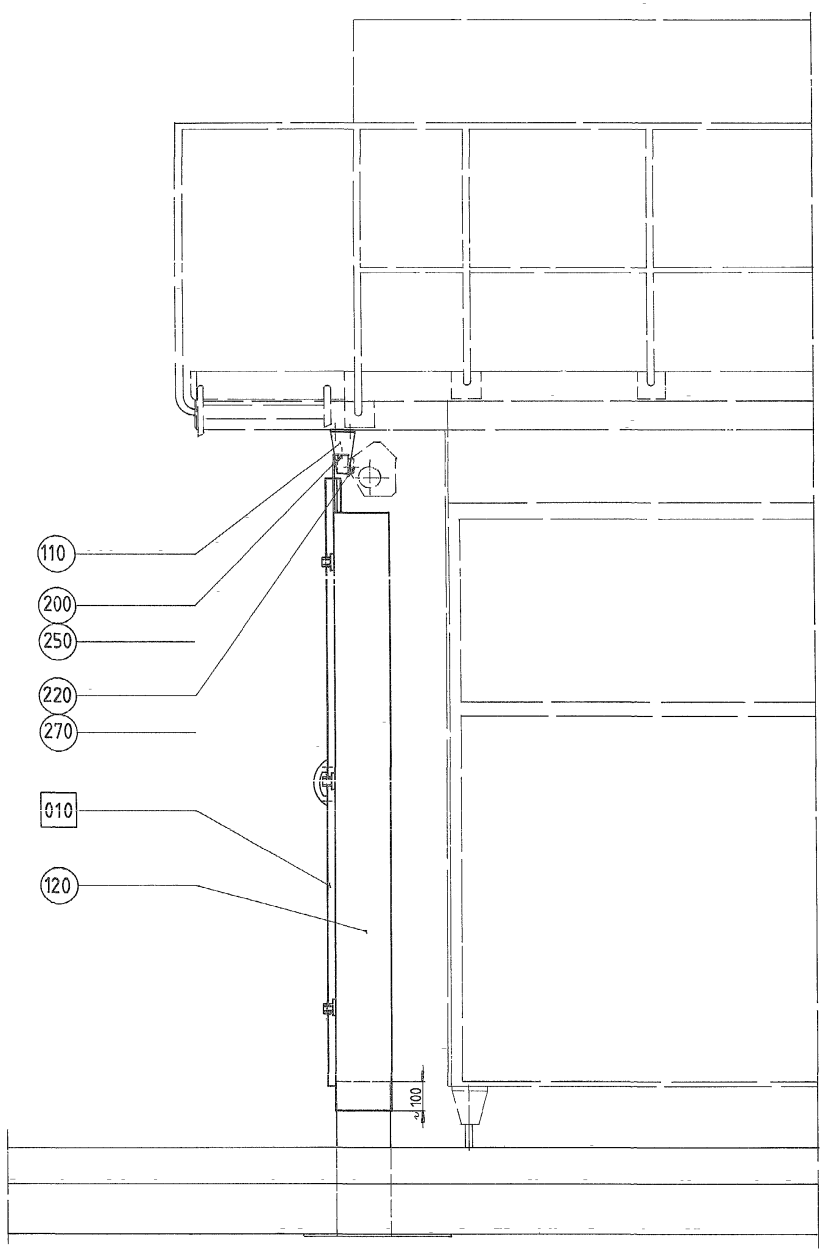
110
200
250
220
270
010
120
100

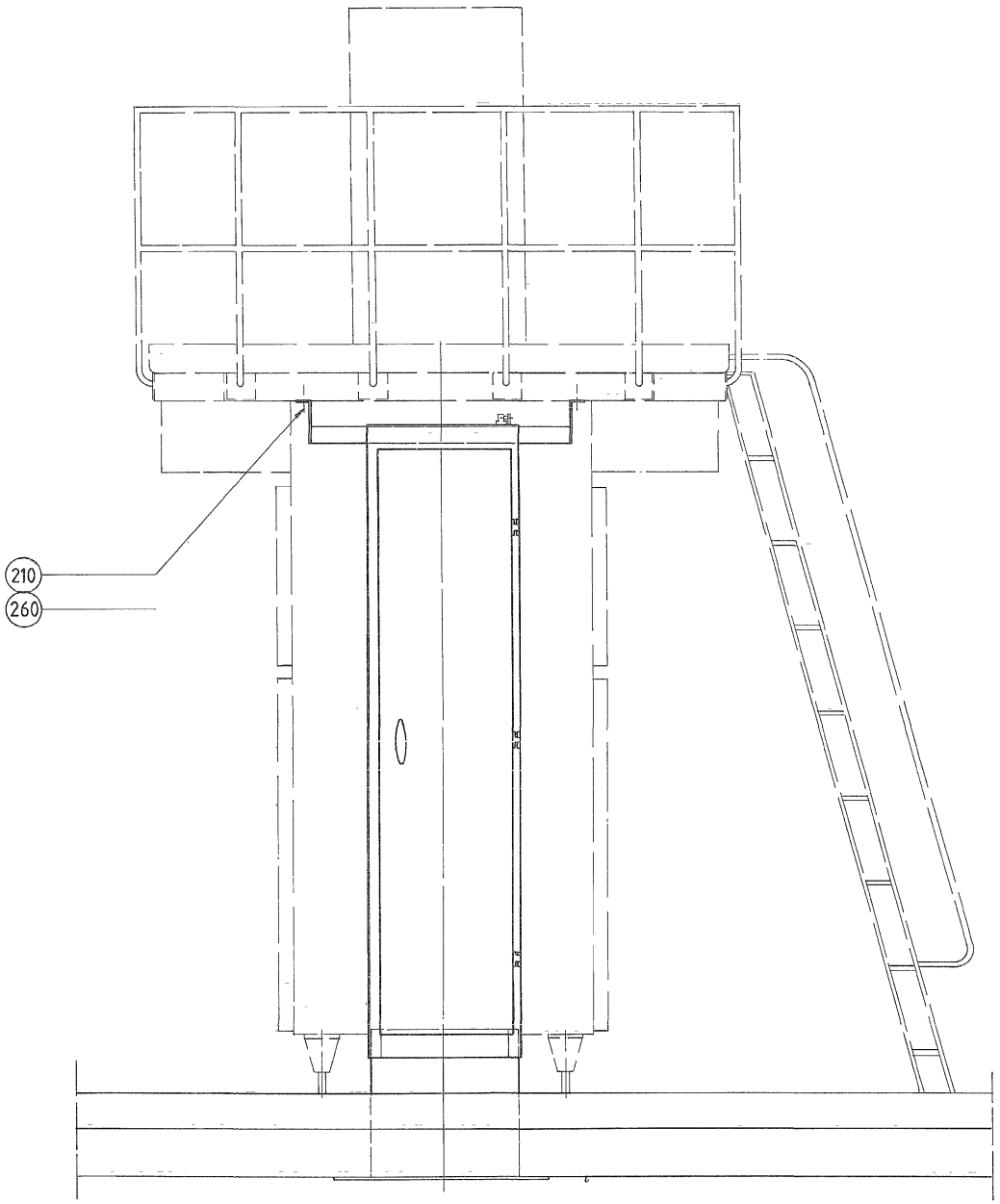
210
260

ECM: - -
Group number: 537313-0100
Assembly Drawing: 537313-1_1_AA

Pos	Part No	UN	Qty	Description	Page No
-					
110	537310-0000		1	CANTILEVER	
120	537319-0000		1	COVER	
200	312105-0366		3	SCREW M6S ISO 4017 M6X12 A480	
210	312105-0449		4	SCREW M6S ISO 4017 M8X16 A480	
220	312105-0453		3	SCREW M6S ISO 4017 M8X25 A480	
250	315105-0153		3	WASHER BRB 6,4X12 RFR	
260	315105-0165		4	WASHER BRB 8,4X16 RFR	
270	315125-0165		3	WASHER TBRSB 8,4X26X5 A4	
F010	537311-0100		1	INSPECTIONDOOR UPPER	**12-31**

Pos	Part No	UN	Qty	Description	Page No

Machine Type | Group Description | Used-In | Group Number | Page No

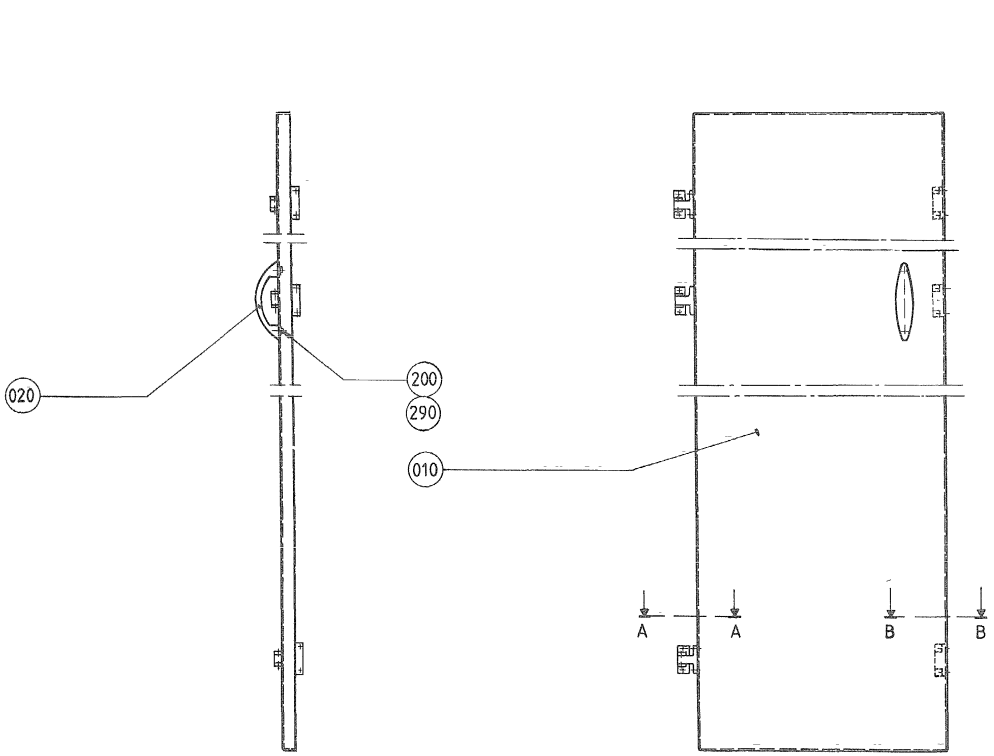
020
200
290
010
A
A
B
B

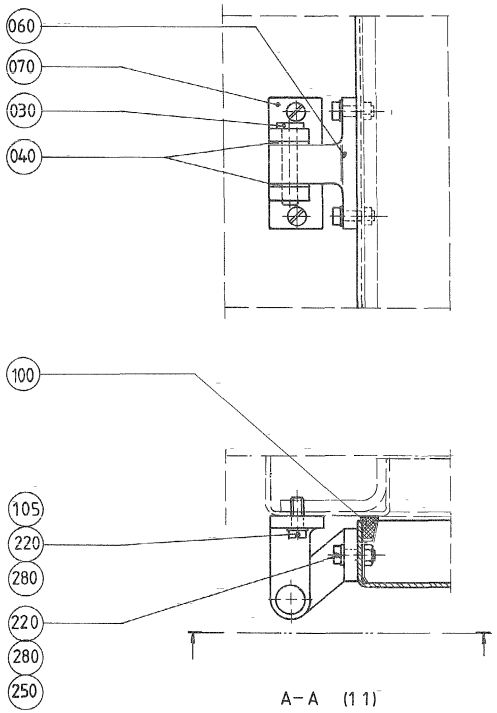
060
070
030
040
100
105
220
280
220
280
250

A – A (1:1)

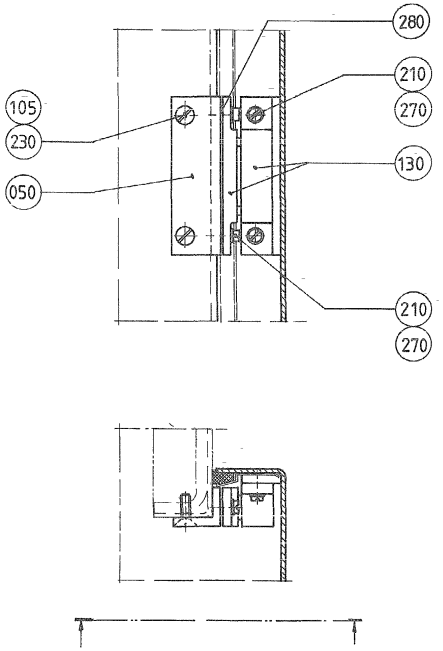
280
210
270
105
230
130
050
210
270

B – B (1:1)

ECM: - -
Group number: 537311-0100
Assembly Drawing: 537311-1_1_AA

Pos	Part No	UN	Qty	Description	Page No
-					
010	537312-0000		1	DOOR	
020	7309-0000		1	HANDLE	
030	257397-0000		3	PIN	
040	271011-0000		6	WASHER	
050	272453-0000		3	SPACER	
060	272510-0000		3	HINGE	
070	272511-0000		3	HINGE	
100	90143-0047	MM	5200	RUBBER STRIP	
105	90157-0016	ML		LOCKING FLUID LOCTITE 242 50 ML	
130	90339-0004		3	MAGNETIC LOCK, 57X16X19 MM	
200	312105-0364		2	SCREW M6S ISO 4017 M6X10 A480	
210	312125-0222		12	SCREW ISO 1207 M3X8 A4	
220	312125-0291		12	SCREW ISO 1207 M4X12 A4	
230	312145-0291		6	SCREW ISO 2009 MFS M4X12 A4	
250	312605-0312		6	HEXAGON NUT, M6M M4 A280	
270	315105-0124		12	WASHER BRB 3,2X7 RFR	
280	315105-0136		18	WASHER BRB 4,3X9 RFR	
290	315105-0153		2	WASHER BRB 6,4X12 RFR	

Pos	Part No	UN	Qty	Description	Page No

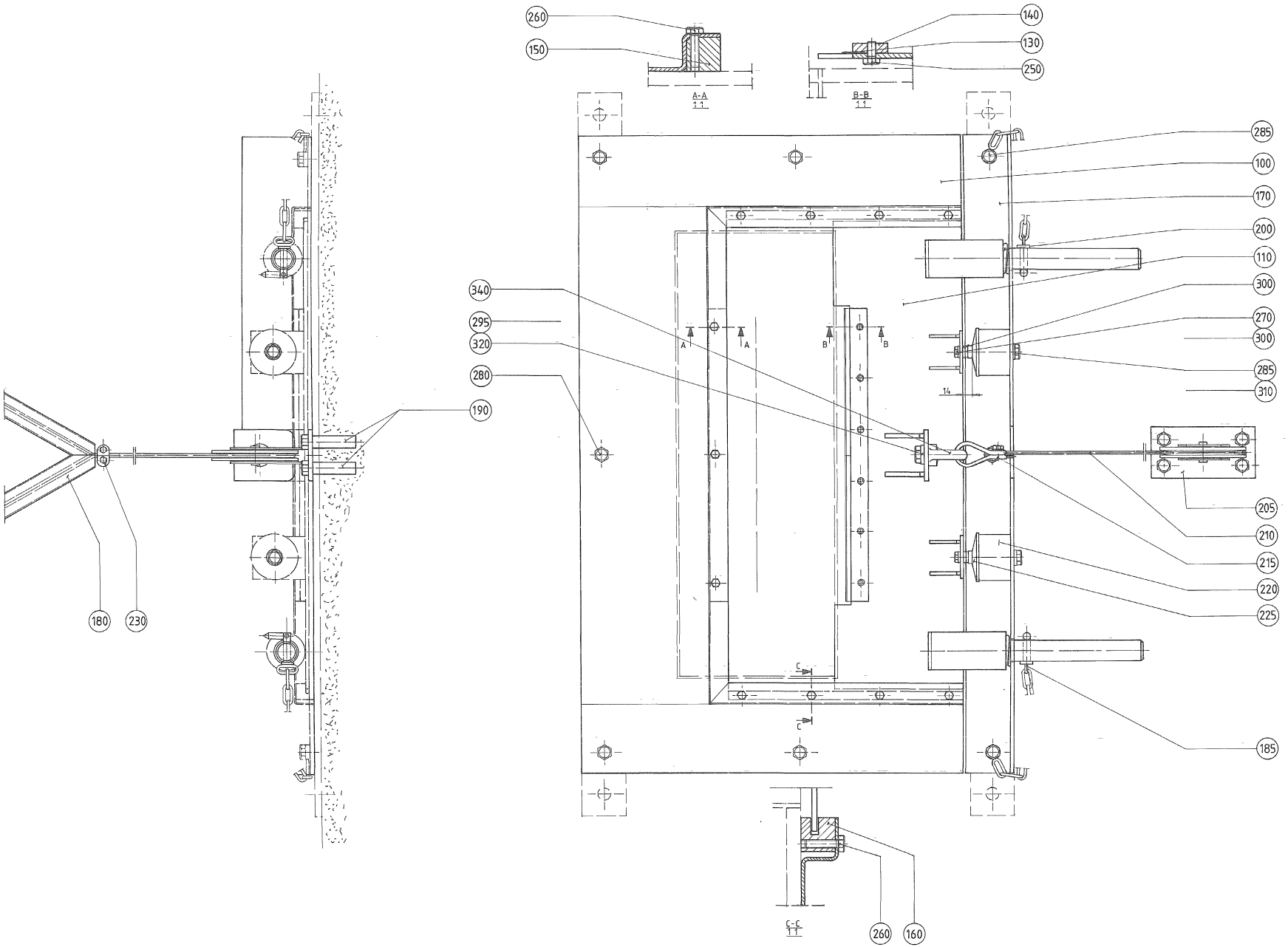
260
150
140
130
250
A-A
1:1
B-B
1:1
285
100
170
200
110
300
270
300
285
310
340
295
320
280
190
180
230
205
210
215
220
225
185
C-C
1:1
260
160

ECM: - -
Group number: 537301-0100
Assembly Drawing: 537301-1_1_AA

Pos	Part No	UN	Qty	Description	Page No
-					
100	537302-0000		1	FRAME	
110	537303-0000		1	HATCH	
130	294009-0000		2	KNIFE	
140	537304-0000		1	KNIFE HOLDER	
150	537305-0000		1	DOLLY	
160	537306-0000		2	STEERING	
170	537307-0000		1	FASTENING BRACKET	
180	537309-0000		1	HANDLE	
185	537321-0000		2	LOCKING FINGER	
190	90287-0147		4	EXPANDING PLUG M8X115 FZV	
200	538240-0000		2	COMPRESSION SPRING	
205	90039-0014		1	GUIDE SPROCKET	
210	90145-0012	M	5	STRING	
215	90211-0005		1	WIRE EYELET, 6 MM	
220	90081-0026		2	MAGNET	
225	90081-0027		2	MAGNET DISC	
230	90211-0006		1	WIRE LOCK, 6 MM	
250	312105-0325		6	SCREW M6S ISO 4017 M5X10 A480	
260	312105-0331		11	SCREW M6S ISO 4017 M5X20 A480	
270	312105-0370		2	SCREW M6S ISO 4017 M6X20 A480	
280	312105-0447		6	SCREW M6S ISO 4017 M8X12 A480	
285	312105-0449		4	SCREW M6S ISO 4017 M8X16 A480	
295	312105-0491		1	SCREW M6S ISO 4017 M10X20 A480	
300	315115-0153		4	WASHER PLAIN, TBRB 6,4/12 H=3	
310	315115-0165		2	WASHER PLAIN, TBRB 8,4/16 H=3	
320	315115-0173		1	WASHER PLAIN, TBRB 10,5/22 H=4	
340	318302-0120		1	EYE BOLT NUT, TYPE, LH, M10	

Pos	Part No	UN	Qty	Description	Page No

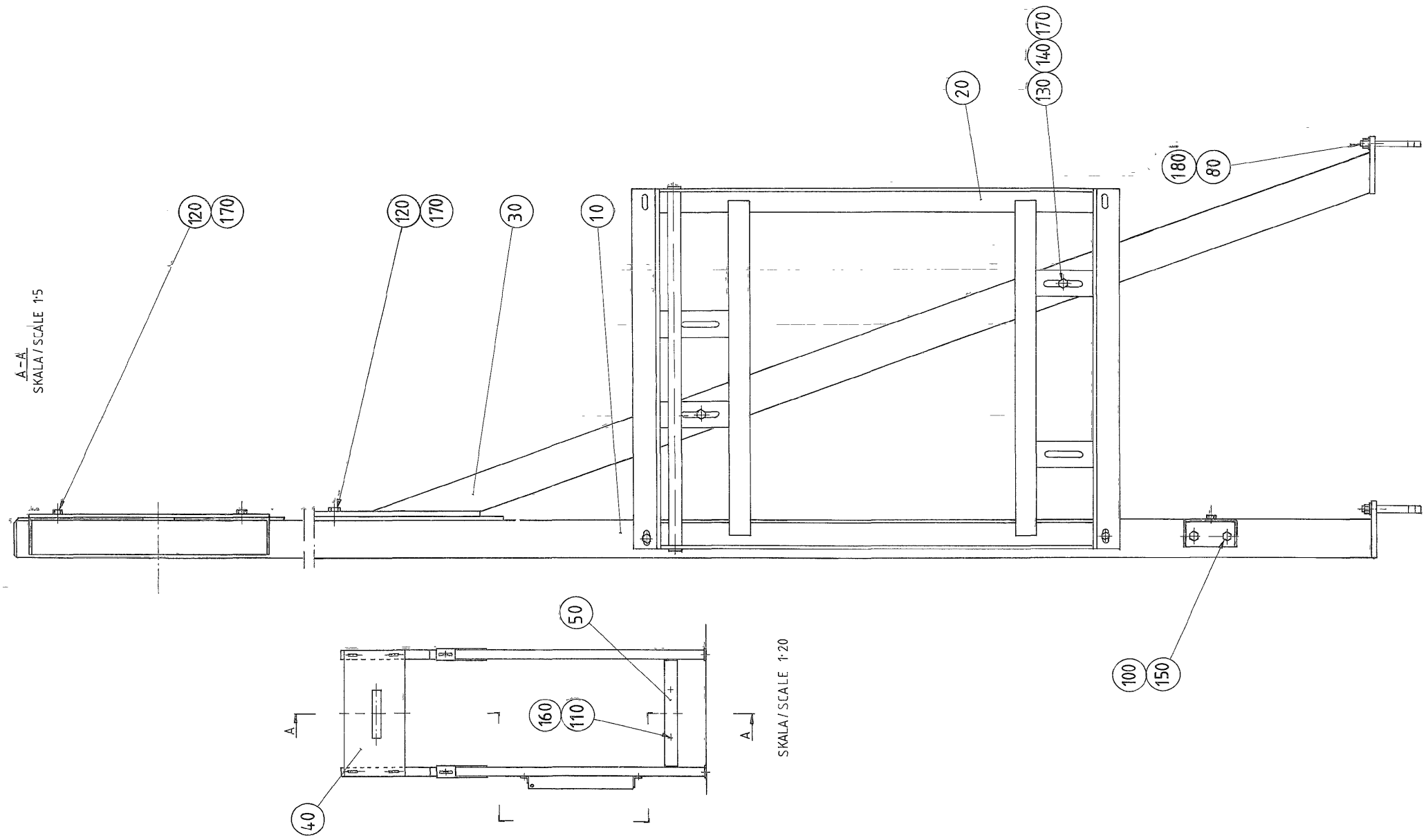
A–A
SKALA / SCALE 1:5
120
170
120
170
30
10
20
170
140
130
180
80
50
160
110
40
100
150
A
A
SKALA / SCALE 1:20

ECM: - -
Group number: 479821-0101
Assembly Drawing: 479821-1_1_AA

Pos	Part No	UN	Qty	Description	Page No
-					
010	479822-0000		2	PILLAR	
020	531139-0000		1	CANTILEVER	
030	479823-0000		2	STRUT	
040	479824-0000		1	FASTENING PLATE	
050	479825-0000		1	CROSS BAR	
080	90287-0117		4	EXPANSIONSBOLT HSAF 12X110	
100	312101-0368		4	SCREW M6S M6X16 FZB	
110	312101-0459		2	SCREW M6S M8X40 FZB	
120	312101-0493		6	SCREW M6S M10X25 FZB	
130	312101-0509		4	SCREW M6S M10X90 FZB	
140	312601-0320		4	HEXAGON NUT, M10 8 FZB, ISO 4032	
150	315101-0153		4	WASHER PLAIN, BRB, 6,4/12 H=1,5	
160	315101-0165		2	WASHER PLAIN, BRB, 8,4/16 H=1,5	
170	315111-0173		14	WASHER PLAIN, TBRB 10,5/22 H=4	
180	315111-0178		4	WASHER PLAIN, TBRB 13/24 H=4	

Pos	Part No	UN	Qty	Description	Page No

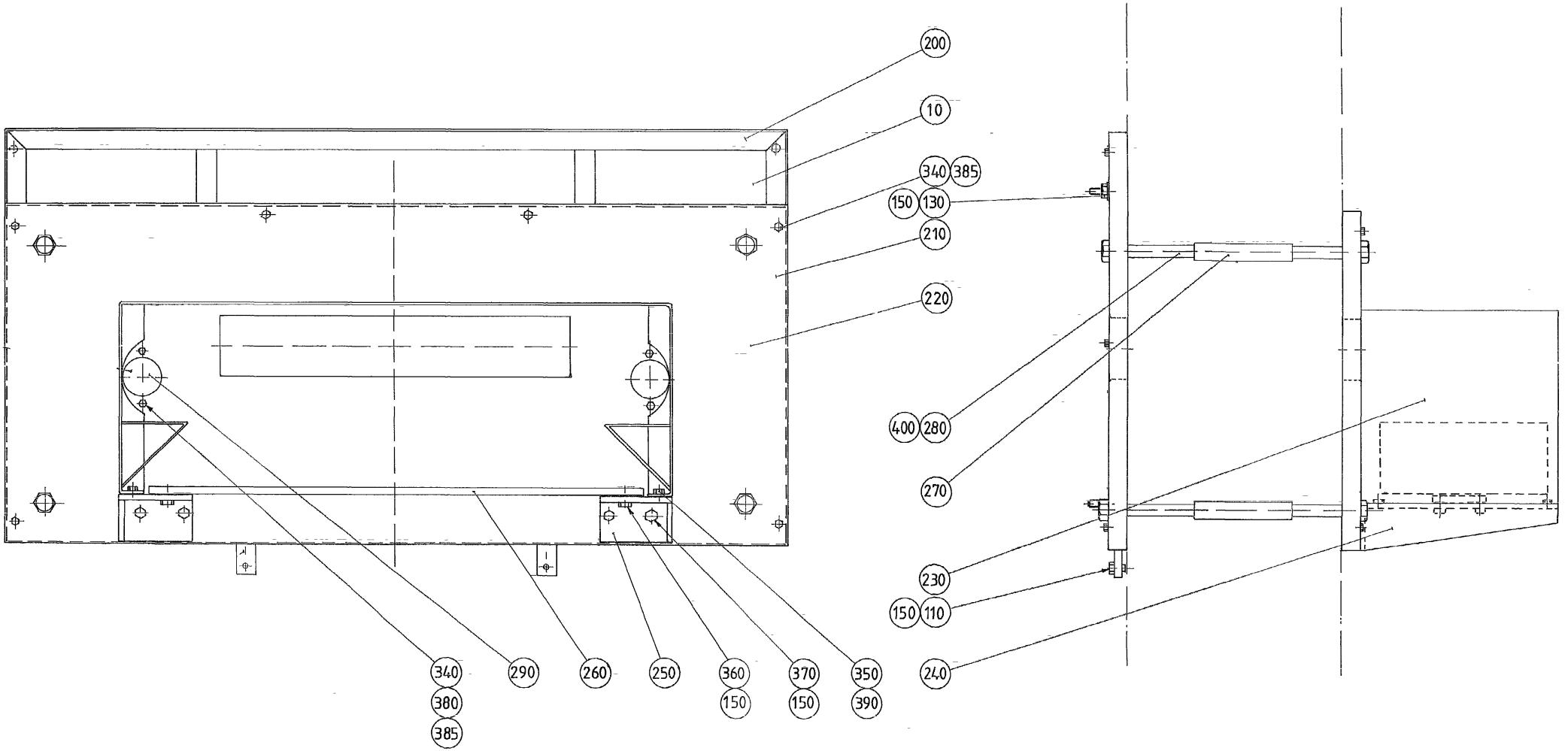
200
10
340
385
150
130
210
220
400
280
270
230
150
110
240
340
380
385
290
260
250
360
150
370
150
350
390

ECM: 70826 - 19970729
Group number: 476189-0100
Assembly Drawing: 476189-1_1_AA

Pos	Part No	UN	Qty	Description	Page No
-					
010	476192-0000		1	COVERING PLATE	
110	312105-0447		2	SCREW M6S ISO 4017 M8X12 A480	
130	312605-0318		4	HEXAGON NUT, M6M M8 A280	
150	315105-0165		14	WASHER BRB 8,4X16 RFR	
200	476190-0000		1	FRAME	
210	476191-0000		1	FRAME	
220	476194-0000		1	COVERING PLATE	
230	476195-0000		1	COVER	
240	476198-0001		1	CANTILEVER	
250	476198-0002		1	CANTILEVER	
260	476199-0000		1	PLATE	
270	476201-0000		4	SLEEVE	
280	476202-0000		8	SCREW	
290	479826-0000		4	COVERING PLATE	
340	312105-0325		20	SCREW M6S ISO 4017 M5X10 A480	
350	312105-0364		4	SCREW M6S ISO 4017 M6X10 A480	
360	312105-0449		4	SCREW M6S ISO 4017 M8X16 A480	
370	312105-0451		4	SCREW M6S ISO 4017 M8X20 A480	
380	312605-0314		8	HEXAGON NUT, M6M M5 A280	
385	315105-0146		28	WASHER BRB 5,3X10 RFR	
390	315105-0153		4	WASHER BRB 6,4X12 RFR	
400	315105-0178		8	WASHER BRB 13X24 RFR	

Pos	Part No	UN	Qty	Description	Page No

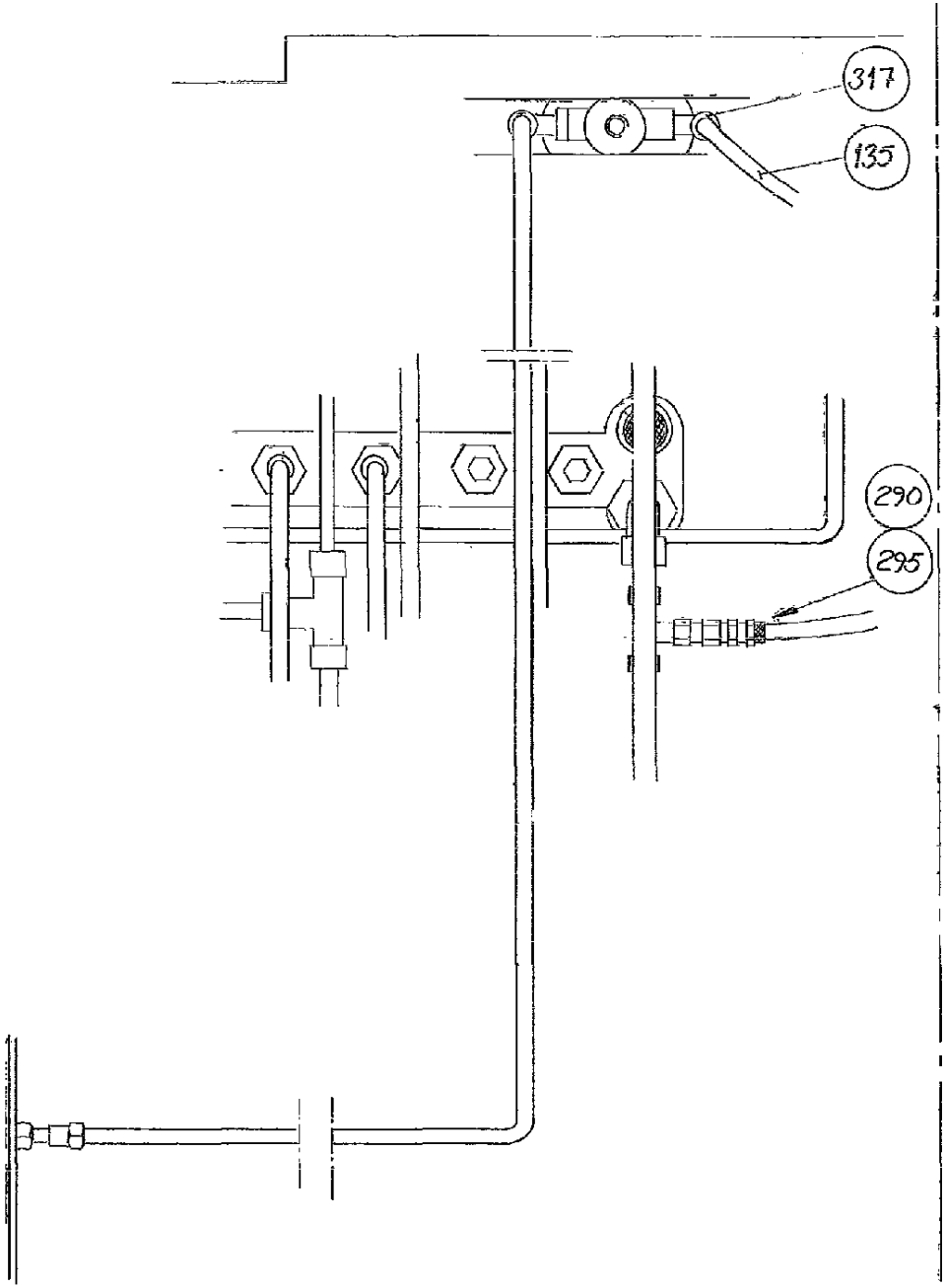
317
135
290
295

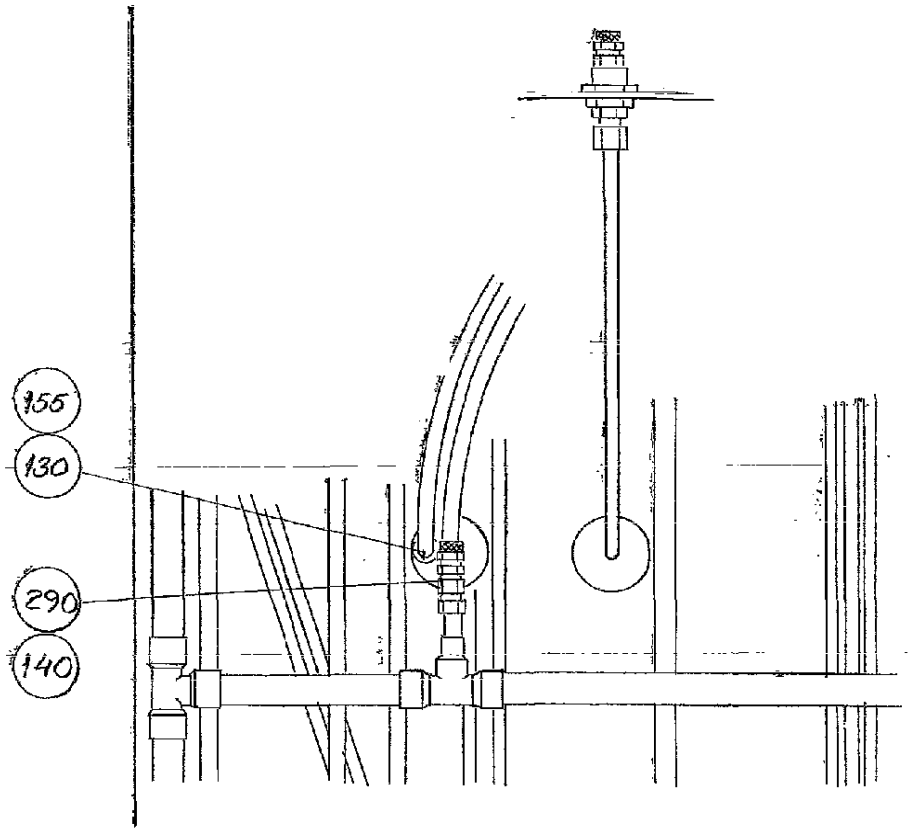
155
130
290
140

ECM: - -
Group number: 268930-0500
Assembly Drawing: 268930-4_1_AA

This list covers pages from 12-38 to 12-41

Pos	Part No	UN	Qty	Description	Page No
TB/8					
030	479963-0000		1	CANTILEVER	
030	283712-0000		1	CANTILEVER	
060	484574-0000		1	BOW CLAMP	
090	90042-0074		1	SOLENOID VALVE MECMAN 581-211-100	
	90042-0385		*1*	*SEAL KIT 04904 273 09*	
	90042-0371		*1*	*WEAR & TEAR PARTS KIT*	
090	90042-0042		1	SOLENOID VALVE MECMAN 48VDC	
	90235-0370		*1*	*SEAL KIT*	
	90042-0366		*1*	*1ONTACT, 2-POLE+EARTH*	
	90042-0326		*1*	*COIL 48VDC MECMAN*	
135	90166-0124	M	7	TUBE 6 MM PA,TRANSP.	
260-03	312105-0453		7	SCREW M6S ISO 4017 M8X25 A480	
260-02	312105-0453		4	SCREW M6S ISO 4017 M8X25 A480	
270-03	312605-0318		7	HEXAGON NUT, M6M M8 A280	
270-02	312605-0318		4	HEXAGON NUT, M6M M8 A280	
295	342920-0113		1	STRAIGHT COUPLING,EXT.THREADED 6/4-R1/8"	
297	342920-0114		4	STRAIGHT COUPLING,EXT.THREADED 6/4-R1/4"	
315	342930-0113		1	ELBOW 90 COUPL.,EXT.THREAD 6/4-R1/8"	
317	342930-0114		1	ELBOW 90 COUPL.,EXT.THREAD 6/4-R1/4"	
Common Parts					
070	90015-0010		3	BUSHING	
080	90030-0116		1	NIPPLES, REDUCING, EXT. THR. NO. 2520	
105	90043-0073		1	PRESSURE GAUGE	
110	90110-0035		1	CABLE CONNECTION, T3108-001	
120	90110-0036		1	CABLE CONNECTION	
180	90236-0008		1	BRACKET	
200	90328-0002		2	SILENCER, 338/12D	
250	312105-0364		2	SCREW M6S ISO 4017 M6X10 A480	
280	321110-0202		2	FLANGE BUSHING, 16E7X12	
290	342723-0103		1	CONN. STR. PIPE GI-8-G1/8	
300	342921-0114		1	STRAIGHT COUPLING,EXT.THREADED 6/4-G1/4"	
310	342926-0112		1	STRAIGHT COUPLING,UNION 6/4	
320	351150-0142	M	3	CABLE OILFLEX N3X0,75	
325	352103-0101		1	CABLE GLAND, ST 9, PR15,2/PG9	
330	353103-0120		6	CABLE SHOE 1,25 MMÂ² RED	

Pos	Part No	UN	Qty	Description	Page No

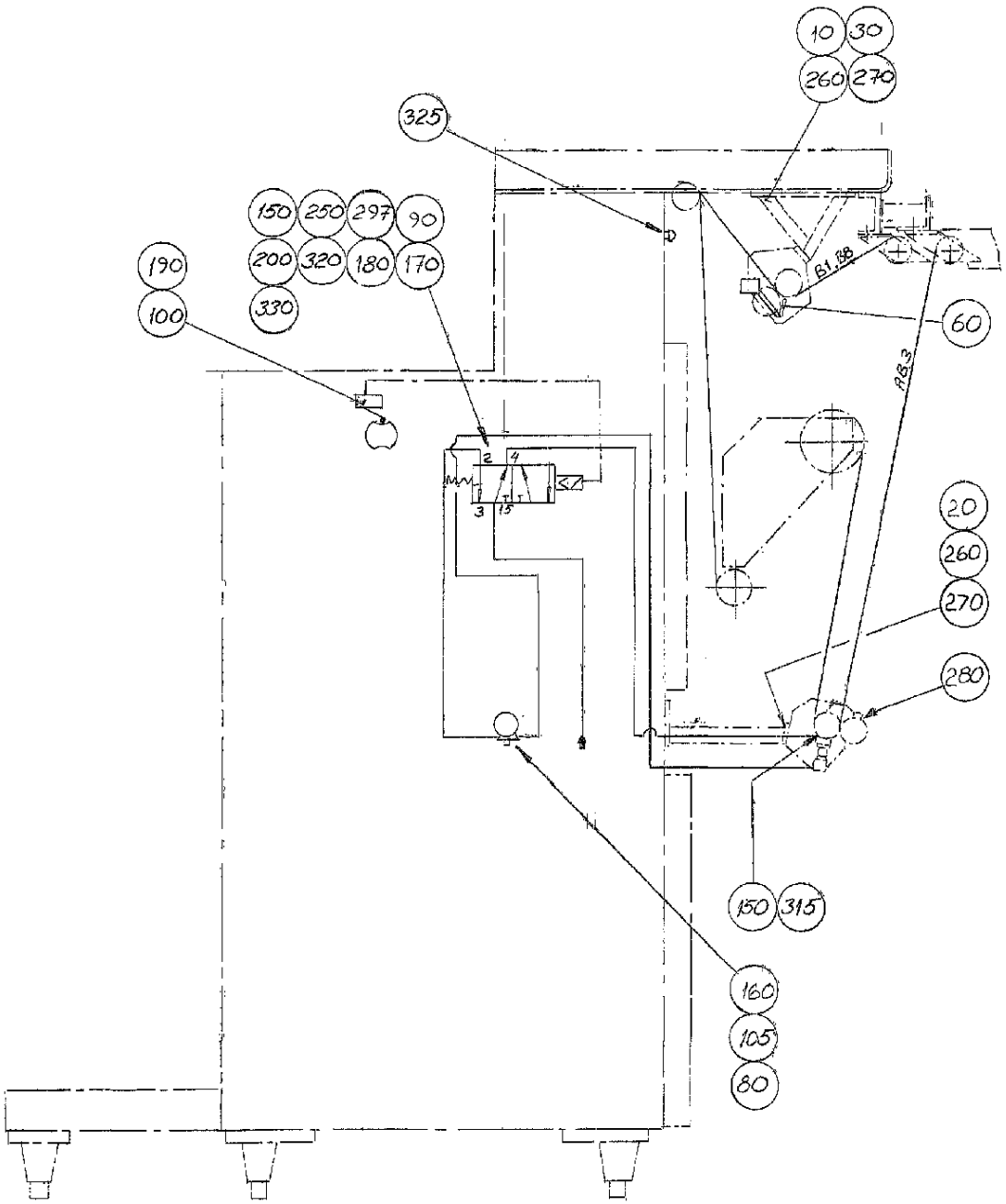
10
30
260
270
325
150
250
297
90
200
320
180
170
330
190
100
60
B1.88
A83
20
260
270
280
150
315
160
105
80

ECM: - -
Group number: 268930-0500
Assembly Drawing: 268930-6_1_AA

This list covers pages from 12-38 to 12-41

Pos	Part No	UN	Qty	Description	Page No
TB/8					
030	479963-0000		1	CANTILEVER	
030	283712-0000		1	CANTILEVER	
060	484574-0000		1	BOW CLAMP	
090	90042-0074		1	SOLENOID VALVE MECMAN 581-211-100	
	90042-0385		*1*	*SEAL KIT 04904 273 09*	
	90042-0371		*1*	*WEAR & TEAR PARTS KIT*	
090	90042-0042		1	SOLENOID VALVE MECMAN 48VDC	
	90235-0370		*1*	*SEAL KIT*	
	90042-0366		*1*	*1ONTACT, 2-POLE+EARTH*	
	90042-0326		*1*	*COIL 48VDC MECMAN*	
135	90166-0124	M	7	TUBE 6 MM PA,TRANSP.	
260-03	312105-0453		7	SCREW M6S ISO 4017 M8X25 A480	
260-02	312105-0453		4	SCREW M6S ISO 4017 M8X25 A480	
270-03	312605-0318		7	HEXAGON NUT, M6M M8 A280	
270-02	312605-0318		4	HEXAGON NUT, M6M M8 A280	
295	342920-0113		1	STRAIGHT COUPLING,EXT.THREADED 6/4-R1/8"	
297	342920-0114		4	STRAIGHT COUPLING,EXT.THREADED 6/4-R1/4"	
315	342930-0113		1	ELBOW 90 COUPL.,EXT.THREAD 6/4-R1/8"	
317	342930-0114		1	ELBOW 90 COUPL.,EXT.THREAD 6/4-R1/4"	
Common Parts					
070	90015-0010		3	BUSHING	
080	90030-0116		1	NIPPLES, REDUCING, EXT. THR. NO. 2520	
105	90043-0073		1	PRESSURE GAUGE	
110	90110-0035		1	CABLE CONNECTION, T3108-001	
120	90110-0036		1	CABLE CONNECTION	
180	90236-0008		1	BRACKET	
200	90328-0002		2	SILENCER, 338/12D	
250	312105-0364		2	SCREW M6S ISO 4017 M6X10 A480	
280	321110-0202		2	FLANGE BUSHING, 16E7X12	
290	342723-0103		1	CONN. STR. PIPE GI-8-G1/8	
300	342921-0114		1	STRAIGHT COUPLING,EXT.THREADED 6/4-G1/4"	
310	342926-0112		1	STRAIGHT COUPLING,UNION 6/4	
320	351150-0142	M	3	CABLE OILFLEX N3X0,75	
325	352103-0101		1	CABLE GLAND, ST 9, PR15,2/PG9	
330	353103-0120		6	CABLE SHOE 1,25 MMÂ² RED	

Pos	Part No	UN	Qty	Description	Page No

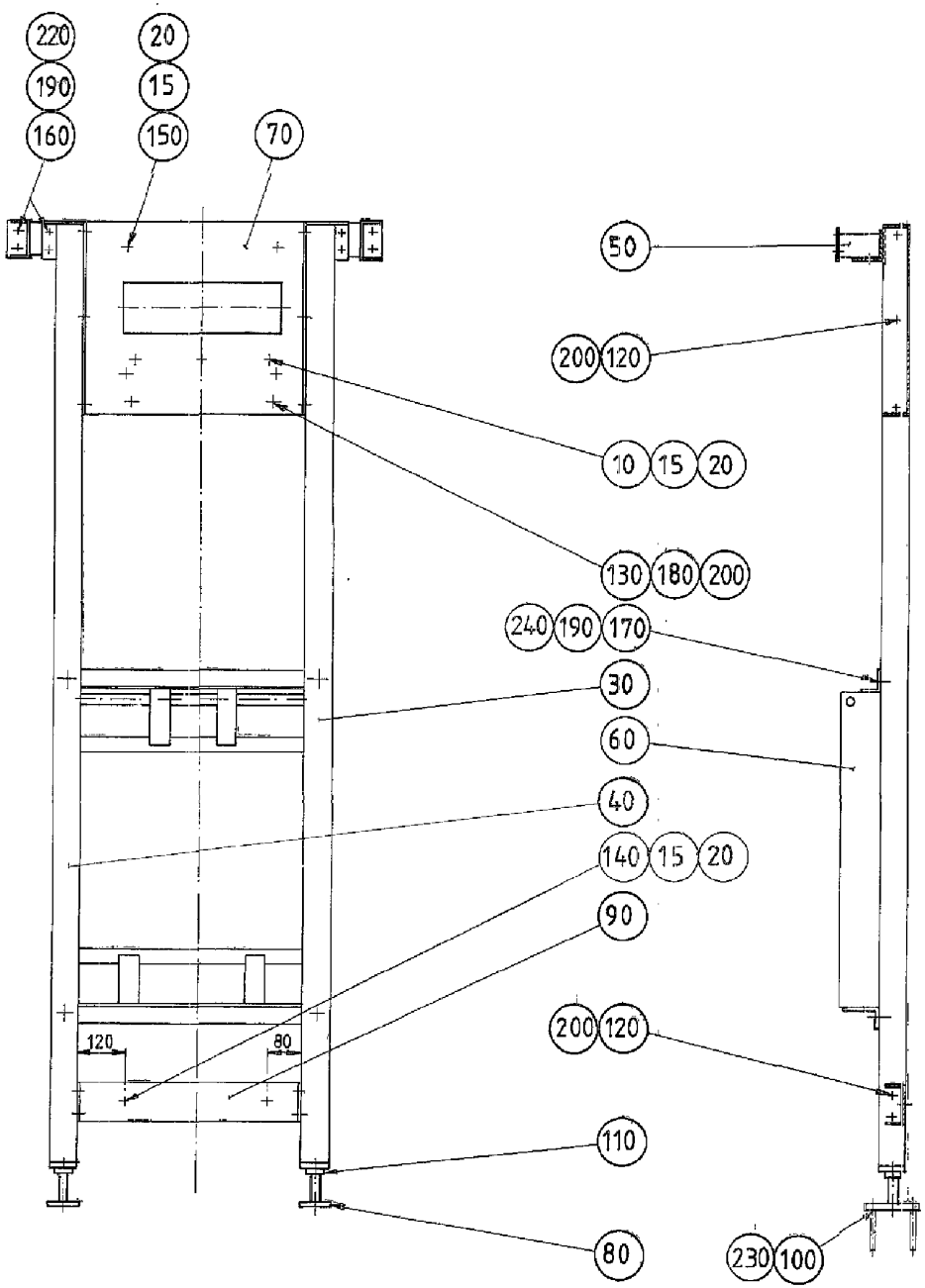
220
190
160
20
15
150
70
50
200
120
10
15
20
130
180
200
240
190
170
30
60
40
140
15
20
90
200
120
120
80
110
80
230
100

ECM: - -
Group number: 251513-0300
Assembly Drawing: 251513-2_1_AA

Pos	Part No	UN	Qty	Description	Page No
TB/8					
015	312605-0318		6	HEXAGON NUT, M6M M8 A280	
020	315105-0165		6	WASHER BRB 8,4X16 RFR	
Common Parts					
030	530485-0001		1	PILLAR	
040	530485-0002		1	PILLAR	
050	530518-0000		1	SPACER	
060	531139-0000		1	CANTILEVER	
070	283247-0000		1	MOUNTING SHEET	
080	497120-0000		2	FOOT PLATE	
090	530603-0000		1	BEAM	
100	90287-0117		4	EXPANSIONSBOLT HSAF 12X110	
110	90330-0087		2	NUT, HEXAGON, R1	
120	312101-0367		10	SCREW M6S M6X14 FZB	
130	312105-0366		2	SCREW M6S ISO 4017 M6X12 A480	
140	312105-0449		2	SCREW M6S ISO 4017 M8X16 A480	
150	312105-0453		4	SCREW M6S ISO 4017 M8X25 A480	
160	312105-0493		12	SCREW M6S ISO 4017 M10X25 A480	
170	312105-0509		4	SCREW M6S ISO 4014 M10X90 A480	
180	312601-0316		2	HEXAGON NUT, DIN 934 M6 8 FZB	
190	312605-0320		20	HEXAGON NUT, M6M M10 A280	
200	315101-0153		12	WASHER PLAIN, BRB, 6,4/12 H=1,5	
220	315105-0173		24	WASHER BRB 10,5X20 RFR	
230	315111-0178		4	WASHER PLAIN, TBRB 13/24 H=4	
240	315115-0173		8	WASHER PLAIN, TBRB 10,5/22 H=4	

Pos	Part No	UN	Qty	Description	Page No

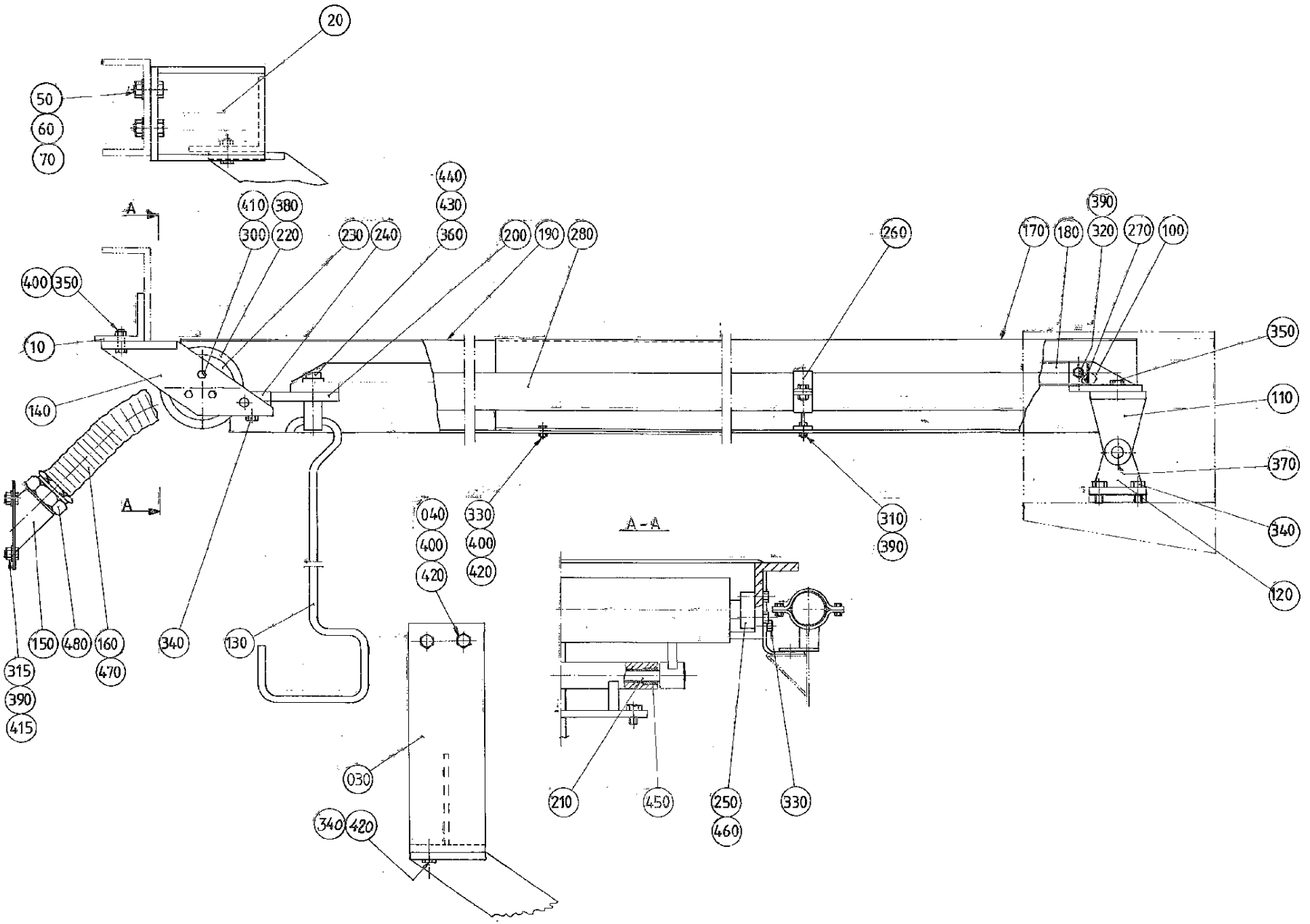
20
50
60
70
440
430
360
410
380
300
220
230
240
200
190
280
260
390
170
180
320
270
100
400
350
10
140
A
A
040
400
420
330
400
420
A-A
310
390
350
110
370
340
120
150
480
160
470
340
130
315
390
415
030
340
420
210
450
250
460
330

ECM: 71011 - 19970811
Group number: 237776-0400
Assembly Drawing: 237776-4_1_AA

Pos	Part No	UN	Qty	Description	Page No
TB/8					
010	269166-0000		1	CANTILEVER	
340	312105-0449		6	SCREW M6S ISO 4017 M8X16 A480	
350	312105-0451		4	SCREW M6S ISO 4017 M8X20 A480	
400	312605-0318		6	HEXAGON NUT, M6M M8 A280	
420	315105-0165		4	WASHER BRB 8,4X16 RFR	
Common Parts					
100	530775-0000		1	END PIECE	
110	236628-0000		1	CANTILEVER	
120	236629-0000		1	WALL BRACKET	
130	236631-0000		1	HANDLE	
140	269961-0000		1	CANTILEVER	
150	297959-0000		1	FLANGE	
160	297960-0000		1	ATTACHMENT	
170	530776-0000		1	PAPER GUARD	
180	530777-0000		1	GRILL	
190	530785-0000		1	PAPER GUARD	
200	236633-0000		1	COCK HANDLE	
210	236634-0000		1	SHAFT	
220	251358-0000		2	FLANGE	
230	255420-0000		1	BENDING ROLLER	
240	269962-0000		1	STEERING	
250	297349-0000		2	BRACKET	
260	530784-0000		3	PIPE CLAMP	
270	534882-0000		4	SHAFT	
280	90266-0022	MM	4200	DAIRY PIPE 38X1,2	
300	312105-0327		6	SCREW M6S ISO 4017 M5X12 A480	
310	312105-0368		3	SCREW M6S ISO 4017 M6X16 A480	
315	312105-0366		4	SCREW M6S ISO 4017 M6X12 A480	
320	312105-0374		4	SCREW M6S ISO 4014 M6X30 A480	
330	312105-0447		6	SCREW M6S ISO 4017 M8X12 A480	
360	312180-0489		1	SCREW ISO7379 H10X16	
370	312316-0443		2	SCREW HEX.SOCK.SET CUP P.MSK6SS8X8 FZB	
380	312318-0285		4	SCREW ISO4029 M4X6 A4	
390	312605-0316		11	HEXAGON NUT, M6M M6 A280	
410	315105-0146		6	WASHER BRB 5,3X10 RFR	
415	315105-0153		4	WASHER BRB 6,4X12 RFR	
430	315111-0173		1	WASHER PLAIN, TBRB 10,5/22 H=4	
440	321105-0163		1	BEARING BUSH W/O FLANGE, 10X16X10 MM	
450	321105-0173		2	BEARING BUSH W/O FLANGE, 12X18X12 MM	
460	321308-0202		2	BALL BEARING, 15X32X9 MM	
470	352130-0107	M	1	FLEXIBLE CG 37,5	
480	352131-0107		1	MUFF	37

Machine Type	Group Description	Used-In	Group Number	Page No

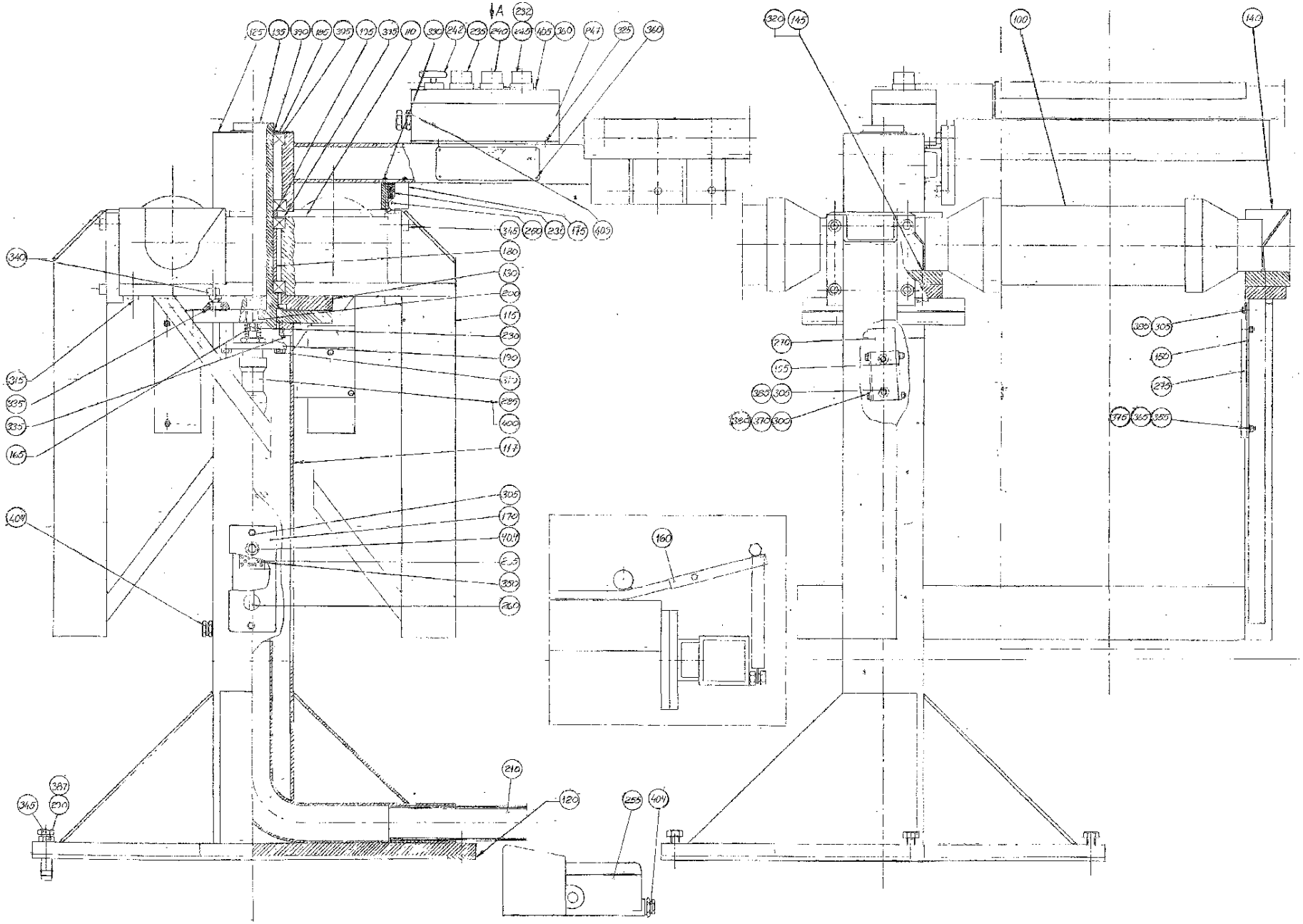
A
232
125
135
390
185
305
195
335
110
330
242
235
240
405
360
247
325
360
345
280
230
175
405
340
120
130
200
115
230
190
315
285
335
400
165
117
305
170
409
160
210
387
345
230
120
255
404
320
145
100
140
270
155
383
300
380
370
300
385
305
150
275
376
365
355

ECM: 73030 - 20000321
Group number: 232781-0400
Assembly Drawing: 232781-4_1_AA

Pos	Part No	UN	Qty	Description	Page No
0300B					
100	237827-0002		2	ROLLER SHAFT	
0500B, 1136B, 0568B, 1000B					
100	237827-0001		2	ROLLER SHAFT	
0500S					
100	751350-0004		2	ROLLER SHAFT	
Common Parts					
110	232784-0000		1	BEARING HOUSING	
115	251539-0000		2	HOLDER	
117	434453-0000		1	MACHINE BODY	
120	243234-0000		1	FRAME	
125	434454-0000		1	BRACKET	
130	232786-0000		1	FLANGE	
135	232787-0000		1	AXLE PIN	
140	237825-0000		2	BEARING	
145	237826-0000		2	BEARING	
150	267732-0000		2	BRACKET	
155	267733-0000		1	ANGLE	
160	268640-0000		1	EXTENSION PIECE	
165	111426-0000		1	COMPRESSION SPRING	
170	232788-0000		1	LID	
175	232789-0000		1	SPRING HOUSING	
180	232790-0000		1	SPACER PIPE	
185	232791-0000		1	SPACER RING	
190	232792-0000		1	CYLINDER BRACKET	
195	232793-0000		1	COVERING PLATE	
200	232794-0000		1	CONE	
210	434437-0000		1	PROTECTION	
230	90016-0040		20	DISC SPRING, CONICAL 20X10,2X0,8 MM	
232	90036-0009		1	LIGHT BULB, BA15D 24V	
235	90064-0041		1	PUSH BUTTON, XB2/MW RED 10124	
	90064-0309		*1*	*GASKET, FOR XB 2 3MM*	
240	90064-0045		1	PUSH BUTTON XB2/MW YELLOW	
	90064-0306		*1*	*GUARD*	
	90064-0309		*1*	*GASKET, FOR XB 2 3MM*	
242	90064-0052		1	PUSH BUTTON, RED, XB2-MT42	
245	90064-0054		1	PUSH BUTTON, GREEN, XB2MW	
	90064-0309		*1*	*GASKET, FOR XB 2 3MM*	
	90064-0306		*1*	*GUARD*	
247	90066-0018		1	PUSH BUTTON BOX XAP.M4604	
250	90090-0012		1	BALL, D=12 MM	
255	90111-0104		1	SWITCH, LM-531SWH+2PA PG 16-34	
260	90166-0081	M	20	TUBE 6 MM PA BLUE	
265	90077-0102		1	TERMINAL BLOCK, 1952.2	
270	90232-0077		1	PH.CELL E3N-R7 H41 SI-G + E39-R2	
275	90232-0307		2	REFLECTOR VISOLUX 40X180MM	
280	90239-0181		1	CONNECTION	
285	90239-0189		1	DOUBLE ACTING, MINI-ISO, CYL 25-32	
	90285-0094		*1*	*SEAL KIT*	
290	90287-0117		5	EXPANSIONSBOLT HSAF 12X110	
300	312101-0341		2	SCREW M6S M5X50 FZB	
305	312101-0364		6	SCREW M6S M6X10 FZB	
310	312101-0380		2	SCREW M6S M6X50 FZB	
315	312101-0536		4	SCREW M6S M12X30 FZB	
320	312101-0538		2	SCREW M6S M12X35 FZB	
325	312111-0364		2	SCREW HEX.SOCK.HD.MC6S-TT 6X10 88 FZB	
330	312111-0378		4	SCREW HEX.SOCK.HD.MC6S-TT 6X40 88 FZB	
335	312111-0493		8	SCREW HEX.SOCK.HD.MC6S-TT 10X25 88 FZ	
340	312111-0533		2	SCREW HEX.SOCK.HD.MC6S-TT 12X22 88 FZ	
345	312111-0536		13	SCREW HEX.SOCK.HD.MC6S-TT 12X30 88 FZ	
350	312121-0228		2	SCREW ISO 1207 M3X16 4.8 - 5.8 Z.PL.	
355	312121-0293		4	SCREW ISO 1207 M4X16 4.8 - 5.8 Z.PL.	
360	312502-0169		12	DRIVE SCREW ROUND HEAD KDS 2X5	
365	312601-0312		4	HEXAGON NUT, DIN 934 M4 8 FZB	
370	312601-0314		2	HEXAGON NUT, DIN 934 M5 8 FZB	
375	315101-0136		4	WASHER BRB, 4,3/8 H=0,8	
380	315101-0146		2	WASHER PLAIN, BRB, 5,3/10 H=1	
385	315101-0153		4	WASHER PLAIN, BRB, 6,4/12 H=1,5	
387	315111-0178		5	WASHER PLAIN, TBRB 13/24 H=4	
390	315750-0135		1	RETAINING RING SHAFT DIN 471 ST 60	
395	321308-0112		4	BALL BEARING, 60X95X18 MM	
400	342732-0103		2	ELBOW PIPE JOINT, EXT.THREAD, D=6MM-G1/4	
403	352103-0116		1	CABLE GLAND, ST 21, PR28,3/PG21	
404	352103-0100		4	CABLE GLAND, STR 9, PR15,2/PG9	
405	359240-0100		4	SIGN HOLDER FOR 359240-0001	

Machine Type	Group Description	Used-In	Group Number	Page No

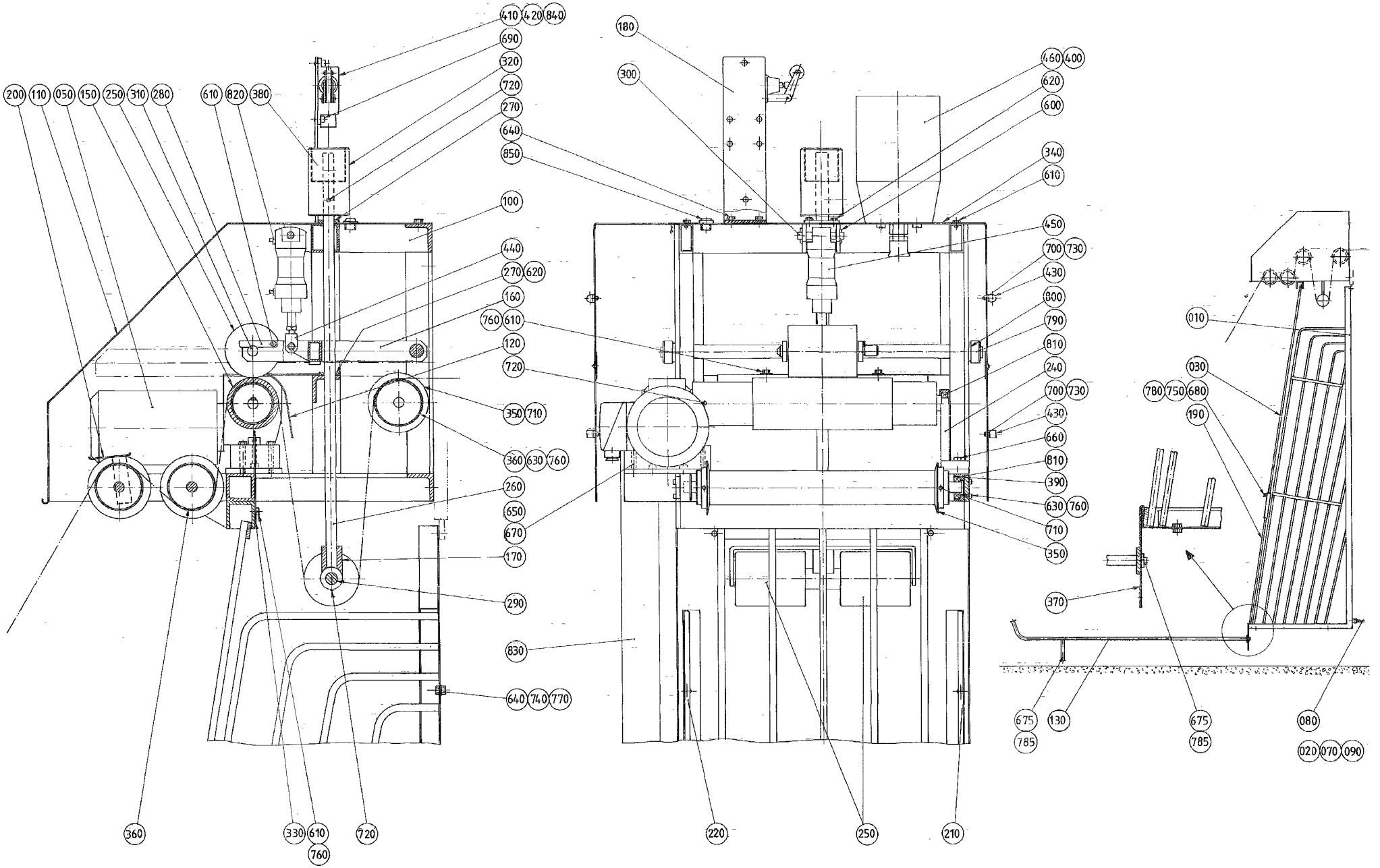
410 420 840
690
320
720
270
640
850
100
440
270 620
160
760 610
120
720
350 710
360 630 760
260
650
670
170
290
830
640 740 770
200 110 050 150 250 310 280
610 820 380
360
330 610 760
720
180
300
220
250
210
460 400
620
600
340
610
450
700 730
430
800
790
810
240
700 730
430
660
810
390
630 760
710
350
370
010
030
780 750 680
190
675 785
130
675 785
080
020 070 090

ECM: - -
Group number: 229400-0700
Assembly Drawing: 229400-7_1_AA

Pos	Part No	UN	Qty	Description	Page No
TB/8					
010	530519-0000		1	BACK PIECE, FLOOR	
010	529348-0000		1	BACK PIECE, WALL	
020	531139-0000		1	CANTILEVER	
030	548688-0000		1	GRILL	
030	547909-0000		1	GRILL	
050	90069-0098		1	GEARS, WORM MOTOR ODM90-80 E4	
070	90287-0105		4	EXPANSION BOLT 10X100	
080	90287-0147		2	EXPANDING PLUG M8X115 FZV	
090	315111-0173		4	WASHER PLAIN, TBRB 10,5/22 H=4	
200	479182-0000		1	PAPER GUIDE PLATE	
Common Parts					
100	251440-0000		1	FRAME	
110	251449-0000		1	COVER	
120	297394-0000		1	LEAD PLATE	
130	297395-0000		1	PAPER GUARD	
150	229402-0000		1	ROLLER	
160	229403-0000		1	ARM	
170	229404-0000		1	BOW CLAMP	
180	232772-0000		1	FASTENING BRACKET	
190	548689-0000		1	GRILL	
210	547907-0000		1	GABLE RIGHT	
220	547908-0000		1	GABLE LEFT	
240	229405-0000		1	BEARING BRACKET	
250	229406-0000		3	PRESSURE ROLLER	
260	229408-0000		1	ROD	
270	229409-0000		2	BEARING	
280	229410-0000		1	BARRIER	
290	229411-0000		1	SHAFT	
300	229412-0000		1	SHAFT	
310	229413-0000		1	SHAFT	
320	229414-0000		1	WEIGHT	
330	237810-0000		1	SHEET	
340	237812-0000		1	SHEET	
350	251358-0000		6	FLANGE	
360	255420-0000		3	BENDING ROLLER	
370	269425-0000		1	SHEET	
380	283795-0000		1	WEIGHT	
390	297349-0000		6	BRACKET	
400	90036-0035		1	LIGHT BULB, E27 24V	
410	90044-0003		1	MICRO SWITCH HONEYWELL BAF3-2RN 2-RHPG	
	90044-0011		*1*	*MICRO SWITCH HONEYWELL BA-2R/708/P*	
420	90089-0006		1	REDUCING SLEEVE, G 1/2/PR18,6	
430	90184-0001		2	SNAP-IN BALL LOCK, 49X9 MM	
440	90239-0127		1	BRACKET	
450	90239-0189		1	DOUBLE ACTING, MINI-ISO, CYL 25-32	
	90285-0094		*1*	*SEAL KIT*	
460	90419-0005		1	ALARM BEACON,RED24V	
	90419-0302		*1*	*LENS FOR -304, RED*	
	90036-0038		*1*	*LIGHT BULB, E27 24V*	
600	311401-0165		2	SPLIT PIN SP2,5X16FZB	
610	312101-0323		9	SCREW M6S M5X8 FZB	
620	312101-0325		4	SCREW M6S M5X10 FZB	
630	312101-0327		18	SCREW M6S M5X12 FZB	
640	312101-0367		10	SCREW M6S M6X14 FZB	
650	312101-0368		4	SCREW M6S M6X16 FZB	
660	312101-0370		2	SCREW M6S M6X20 FZB	
670	312101-0379		4	SCREW M6S M6X45 FZB	
675	312105-0366		4	SCREW M6S ISO 4017 M6X12 A480	
680	312105-0368		3	SCREW M6S ISO 4017 M6X16 A480	
690	312111-0370		3	SCREW HEX.SOCK.HD.MC6S-TT 6X20 88 FZB	
700	312151-0220		8	SCREW EN 10642 MF6S M3X6 10.9 EL.PL	
710	312316-0283		12	SCREW HEX.SOCK.SET CUP P.MSK6SS4X4 FZB	
720	312316-0362		3	SCREW HEX.SOCK.SET CUP P.MSK6SS6X8 FZB	
730	312601-0310		8	HEXAGON NUT, DIN 934 M3 8 FZB	
740	312601-0316		8	HEXAGON NUT, DIN 934 M6 8 FZB	
750	312605-0316		3	HEXAGON NUT, M6M M6 A280	
760	315101-0146		22	WASHER PLAIN, BRB, 5,3/10 H=1	
770	315101-0153		8	WASHER PLAIN, BRB, 6,4/12 H=1,5	
780	315105-0153		6	WASHER BRB 6,4X12 RFR	
785	315115-0153		4	WASHER PLAIN, TBRB 6,4/12 H=3	
790	315742-0112		2	RETAINING RING 16 SMS 199 RFR	
800	321110-0202		2	FLANGE BUSHING, 16E7X12	
810	321308-0202		7	BALL BEARING, 15X32X9 MM	
820	342732-0103		2	ELBOW PIPE JOINT, EXT.THREAD, D=6MM-G1/4	
830	352030-0122	M	4	CABLE DUCT A2	
840	352100-0105		1	CABLE GLAND NO.18,6-8,5	
850	352101-0102		1	LEAD-IN, PR15,2/PG9, E-1457515	

Machine Type | Group Description | Used-In | Group Number | Page No

This page is intentionally left blank.

ECM: - -
Group number: 531366-0300
Assembly Drawing:

Pos	Part No	UN	Qty	Description	Page No
TB/8 0300B ST-R					
F070	293681-0501		1	DATING UNIT	**12-53, 12-55**
TB/8 0568B ST-ER, TB/8 1000B ST-ER, TB/8 0300B ST-ER, TB/8 0500B ST-ER, TB/8 1136B ST-ER					
F060	293680-0500		1	DATING UNIT	**12-67, 12-69, 12-71, 12-73**
Common Parts					
F100	547905-0101		1	COVERING PLATE	**12-81**
F050	266736-0200		1	BRAKE	**12-83**
F040	243966-0100		1	SPLICING TABLE	**12-85**
F030	243965-0101		1	TEARING DEVICE	**12-87**
F020	37894-0101		1	COUNTER RAIL	**12-89**
F010	37877-0301		1	HEATING BLOCK	**12-91**

Pos	Part No	UN	Qty	Description	Page No

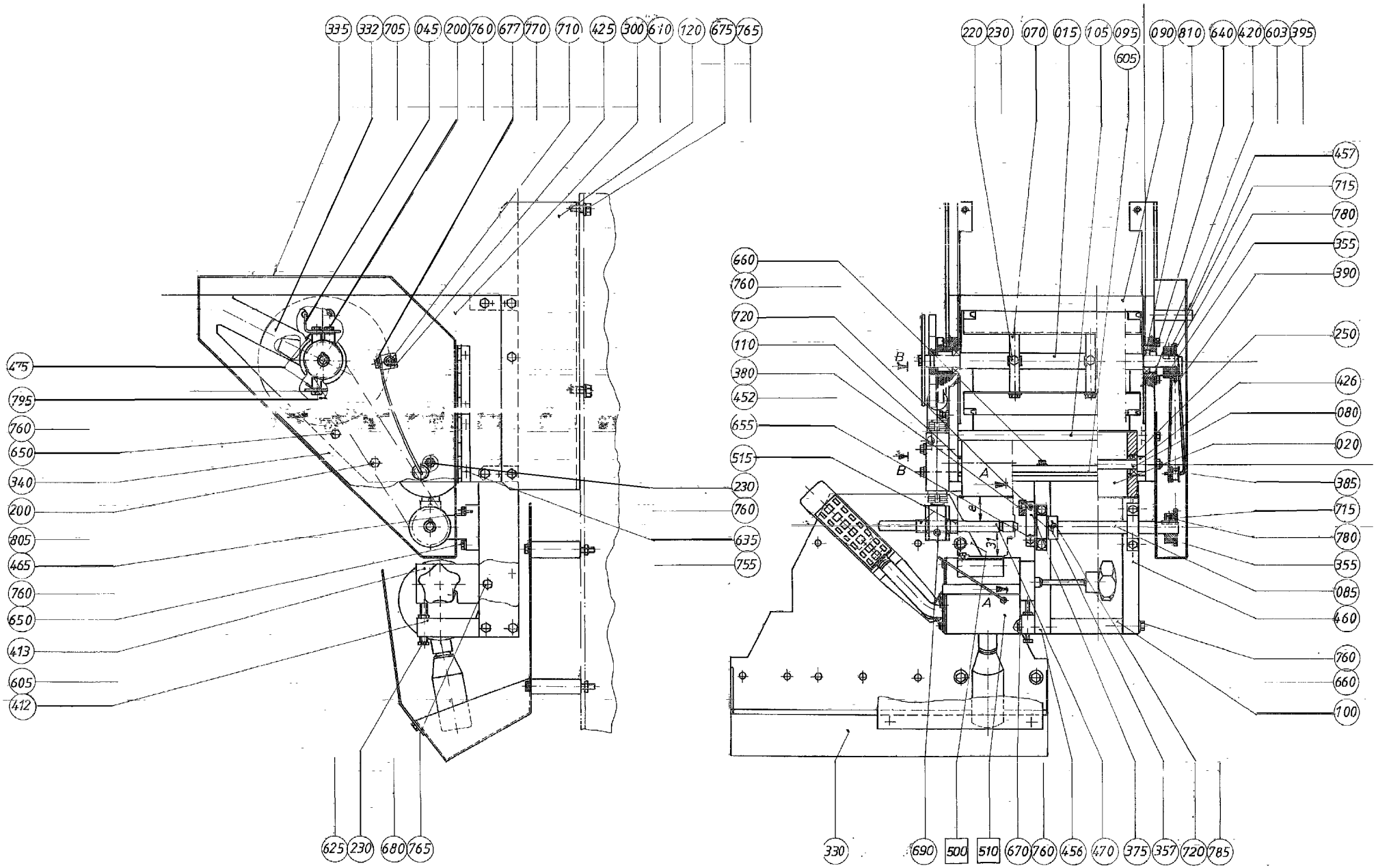
335 332 705 045 200 760 677 770 710 425 300 610 120 675 765
220 230 070 015 105 095 605 090 810 640 420 603 395
457 715 780 355 390 250 426 080 020 385 715 780 355 085 460 760 660 100
660 760 720 110 380 452 655 515 230 760 635 755
475 795 760 650 340 200 805 465 760 650 413 605 412
625 230 680 765
330 690 500 510 670 760 456 470 375 357 720 785
A
B
31

ECM: - -
Group number: 293681-0501
Assembly Drawing: 293681-3_1_AA

This list covers pages from 12-52 to 12-55

Pos	Part No	UN	Qty	Description	Page No
-					
015 2	293620-0003		1	SHAFT	
015 1	293620-0002		1	SHAFT	
020 2	293621-0003		1	BENDING ROLLER	
020 1	293621-0002		1	BENDING ROLLER	
025 1	293622-0003		1	BENDING ROLLER	
045 1	458107-0000		2	CREASE FORMER	
070 5	293634-0003		4	SPACER	
070 3	293633-0003		4	SPACER	
070 1	293633-0005		4	SPACER	
075 2	293637-0003		1	SHAFT	
080 2	476263-0003		1	SHAFT	
080 1	476263-0002		1	SHAFT	
085 1	293639-0005		1	SHAFT	
090 2	293640-0003		1	SPACER	
090 1	293640-0002		1	SPACER	
095 2	466049-0003		1	SPACER LOWER	
095 1	466049-0002		1	SPACER LOWER	
100 2	466050-0003		1	FRAME LOWER	
100 1	466050-0002		1	FRAME LOWER	
105 2	293644-0003		1	SPACER	
105 1	293644-0002		1	SPACER	
110	293646-0001		1	WASHER	
115 3	434786-0000		1	FASTENING BRACKET	
120 2	434783-0000		1	FASTENING BRACKET	
130 3	434792-0005		3	SPACER	
130 2	434792-0003		3	SPACER	
200 2-02	312105-0364		8	SCREW M6S ISO 4017 M6X10 A480	
200 1	312105-0362		2	SCREW M6S ISO 4017 M6X8 A480	
210 3	312105-0386		3	SCREW M6S ISO 4014 M6X80 A480	
220 2	312105-0378		2	SCREW M6S ISO 4014 M6X40 A480	
230-02	312605-0316		13	HEXAGON NUT, M6M M6 A280	
250	90214-0107		2	BALL BEARING, 12X28X8 MM	
300	293617-0000		1	SIDE FRAME	
305	293618-0000		1	SIDE FRAME	
330	239849-0000		1	SPLASH PLATE	
332	293624-0002		2	PROTECTION PLATE	
335	293626-0000		1	CHAIN GUARD	
340	293627-0000		1	PROTECTION PLATE	
345	293673-0002		1	DISC	
350	464009-0002		1	BLOCKING PIECE	
355	32629-0000		2	SPROCKET	
357	32634-0001		2	WASHER	
375	32925-0000		1	CARRIER	
380	32926-0000		1	ROLL	
385	33182-0000		1	ROLL	
390	33183-0000		1	SPRING	
393	232978-0000		1	SCREEN	
395	255119-0000		8	WASHER	
400	267532-0000		1	CAM DISC	
405	267533-0000		1	PLATE	
410	269600-0000		1	SPACER	
412	284754-0000		1	CANTILEVER	
413	292047-0000		1	CANTILEVER	
415	530771-0002		1	FLANGE	
420	530772-0000		1	FLANGE	
425	293645-0000		1	BRACKET	
426	293646-0002		1	WASHER	
430	464011-0000		1	LOCK STUD	
440	450500-0000		1	DOWEL	
445	464010-0000		1	ARM	
446	464012-0000		1	CURVE	
452	293674-0000		1	DOWEL	
456	293678-0000		1	FRAME LEFT	
457	293679-0000		1	SCREW	
460	434704-0000		1	FRAME RIGHT	
465	434705-0000		2	CANTILEVER	
470	228653-0000		1	SHAFT	
471	450497-0000		1	SHAFT	
473	476377-0000		2	SCREW	
475 3	458194-0003		4	WASHER	
475 2	458194-0002		4	WASHER	
475 1	458194-0001		4	WASHER	
480	466430-0000		1	BUSHING	
500	90044-0104		1	PROX.SWITCH IFM IN 3002(RP 90044-194)	
510	90165-0024		7	PIPE CLIP FOR TUBE D=5 MM	
515	90166-0059	MM	18	HOSE PVC 12/16MM TRANSP.	
525	90335-0064		1	COMP. SPRING 22270, 1,25X13,75X62,5	
600	311103-0232		1	PARALLEL PIN ISO 2338 3M6X8 A1	
603	311103-0269		4	PARALLEL PIN ISO 2338 4M6X14 A1	
605	311103-0274		4	PARALLEL PIN ISO 2338 4M6X25 A1	
607	311103-0318		2	PARALLEL PIN ISO 2338 5M6X40 A1	
610	311103-0314		8	PARALLEL PIN ISO 2338 5M6X30 A1	
615	311103-0357		1	PARALLEL PIN ISO 2338 6M6X30 A1	

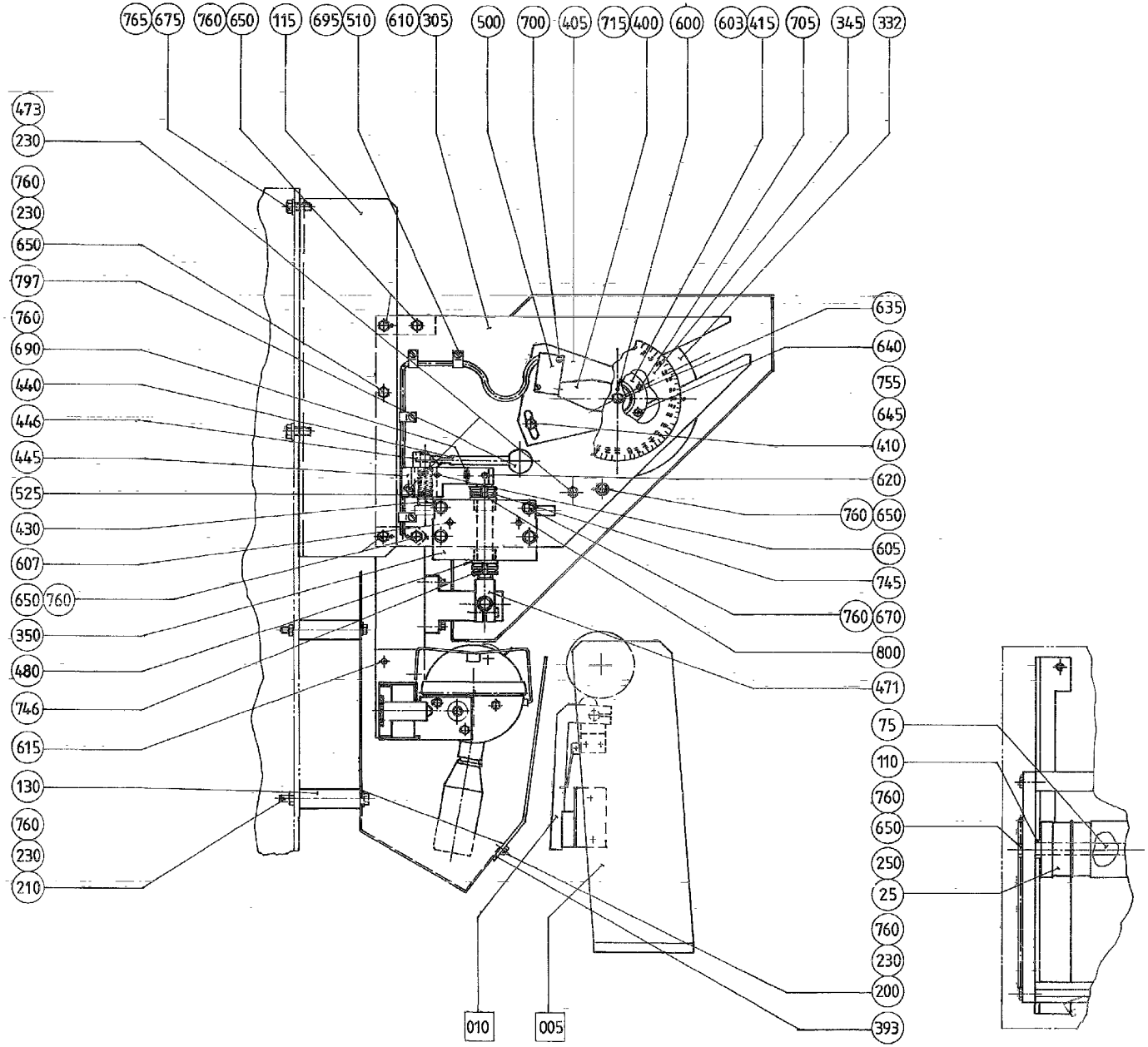
765
675
760
650
115
695
510
610
305
500
700
405
715
400
600
603
415
705
345
332
473
230
760
230
650
797
760
690
440
446
445
525
430
607
650
760
350
480
746
615
130
760
230
210
635
640
755
645
410
620
760
650
605
745
760
670
800
471
75
110
760
650
250
25
760
230
200
393
010
005

ECM: - -
Group number: 293681-0501
Assembly Drawing: 293681-5_1_AA

This list covers pages from 12-52 to 12-55

Pos	Part No	UN	Qty	Description	Page No
- (Cont'd)					
620	311202-0241		1	TAPER PIN EN 22339 A 4X25 SS	
625	312104-0380		1	SCREW M6S M6X50H FZB	
635	312105-0323		5	SCREW M6S ISO 4017 M5X8 A480	
640	312105-0328		8	SCREW M6S ISO 4017 M5X14 A480	
645	312105-0333		1	SCREW M6S ISO 4017 M5X25 A480	
650	312105-0372		16	SCREW M6S ISO 4017 M6X25 A480	
655	312105-0374		1	SCREW M6S ISO 4014 M6X30 A480	
660	312105-0376		6	SCREW M6S ISO 4014 M6X35 A480	
670	312105-0380		6	SCREW M6S ISO 4014 M6X50 A480	
675	312105-0449		4	SCREW M6S ISO 4017 M8X16 A480	
677	312105-0366		1	SCREW M6S ISO 4017 M6X12 A480	
680	312105-0457		1	SCREW M6S ISO 4014 M8X35 A480	
690	312115-0370		2	SCREW ISO4762 M6X20 A4 80	
695	312121-0287		7	SCREW ISO 1207 M4X8 4.8 - 5.8 Z.PL.	
700	312122-0230		2	SCREW ISO 1207 M3X20 NI PL BRASS	
705	312155-0329		4	SCREW DIN 7991 MF6S M5X16 A4 70	
710	312151-0379		1	SCREW EN 10642 MF6S M6X45 10.9 EL.PL	
715	312316-0323		3	SCREW HEX.SOCK.SET CUP P.MSK6SS5X8 FZB	
720	312316-0362		2	SCREW HEX.SOCK.SET CUP P.MSK6SS6X8 FZB	
745	312805-0102		2	NUT ROUND WITH SLOTS M15X1 FE	
746	312805-0103		2	NUT ROUND WITH SLOTS M17X1 FE	
755	315105-0146		5	WASHER BRB 5,3X10 RFR	
760	315105-0153		41	WASHER BRB 6,4X12 RFR	
765	315105-0165		5	WASHER BRB 8,4X16 RFR	
770	315121-0153		1	WASHER PLAIN, TBRSB 6,4/22 H=4	
780	315701-0201		2	PARALLEL KEY W. ROUND ENDS 5X5X20 MM	
785	315742-0111		1	RETAINING RING 15 SMS 199 RFR	
795	318207-0151		1	ROLLER CHAIN, SINGLE 6MM-151	
797	318800-0103		1	HANDLES,SPHERICAL KNOB,INT.THRE.,D.25-M6	
800	321111-0212		1	FLANGE BUSHING, 15X21X15 MM	
805	321120-0122		2	BEARING BUSH W/O FLANGE, 15X17X15 MM	
810	90214-0106		2	BALL BEARING, 15X28X7 MM	
F510	434774-0301		1	INK UNIT	**12-57**
F500	293685-0200		2	PRINTING WHEEL SS	**8-11, 12-59**
F010	450314-0200		1	SPLICE DETECTOR	**12-61, 12-63**
F005	266625-0400		1	BENDING ROLLER	**12-65**

Pos	Part No	UN	Qty	Description	Page No

Machine Type	Group Description	Used-In	Group Number	Page No

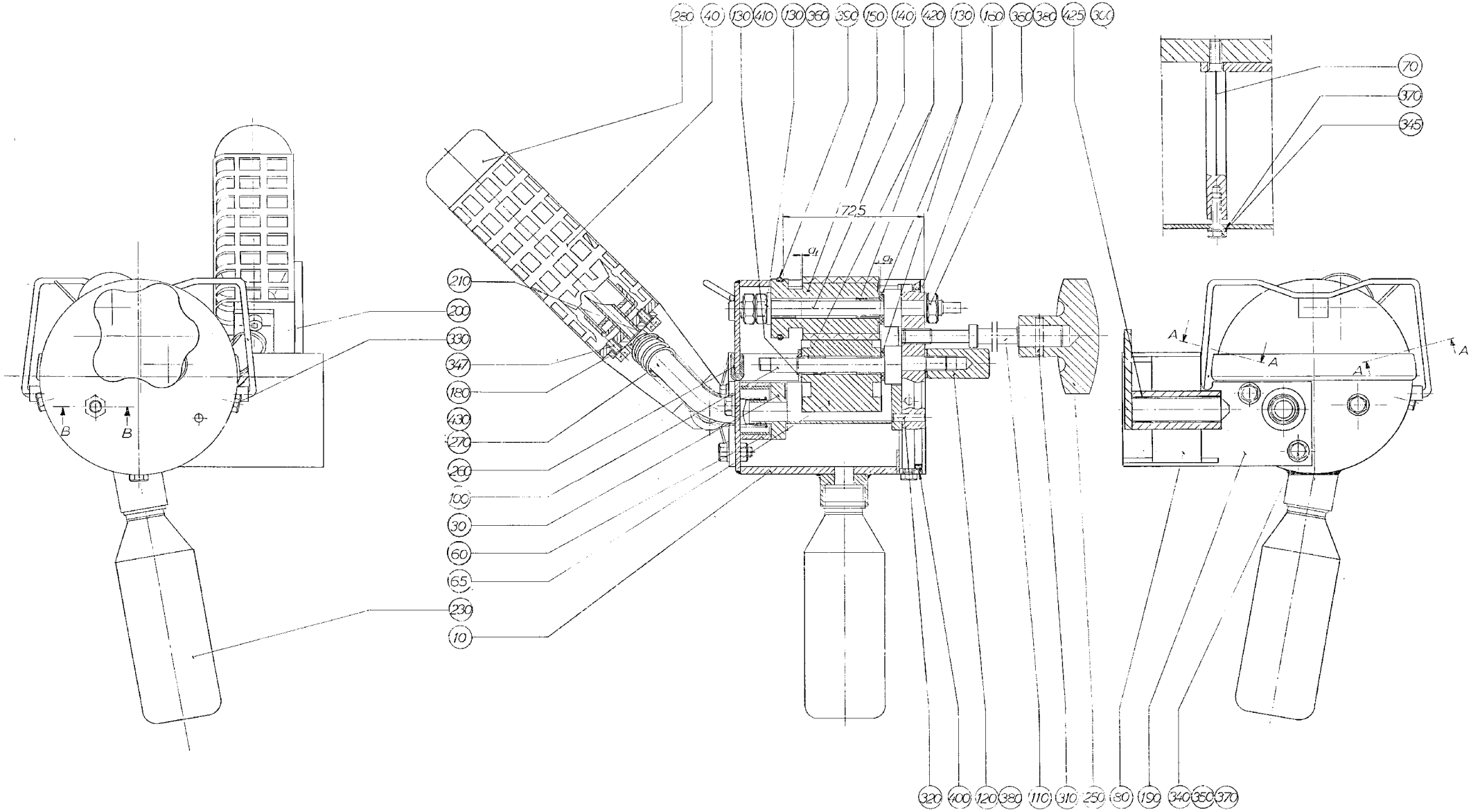
280
40
130
410
130
360
350
150
140
420
130
160
360
380
425
300
70
370
345
72,5
a_1
a_2
210
200
330
347
180
430
270
260
100
30
60
65
230
10
B
B
A
A
A
A
320
400
120
380
110
310
250
80
190
340
350
370

ECM: - -
Group number: 434774-0301
Assembly Drawing: 434774-3_1_AA

Pos	Part No	UN	Qty	Description	Page No
-					
010	297989-0000		1	COVER	
030	297210-0000		1	INK WELL	
040	476356-0000		1	HOLDER FOR INK BOTTLE	
060	445542-0000		1	MANTEL RUBBER	
065	450355-0000		1	INK ROLLER	
070	33010-0000		1	SCREW	
080	35547-0000		1	SPRING	
100	292044-0000		1	SHAFT	
110	293667-0000		1	DOWEL	
120	436927-0000		1	NUT	
130 4	293669-0004		2	WASHER	
130 3	293669-0003		2	WASHER	
130 2	293669-0002		2	WASHER	
130 1	293669-0001		4	WASHER	
140	293670-0000		1	SHAFT	
150	543135-0000		1	INK TRANSFER ROLLER	
	90153-0050		*1*	*ADHESIVE, 3M TYPE SCOTCH-WELD 2216 B/A*	
	321120-0100		*1*	*BEARING BUSH W/O FLANGE, 8X10X12 MM*	
160	297213-0000		1	END SECTION	
180	476355-0000		1	CANNULAR TUBE	
190	456772-0000		1	PIVOT BRACKET	
200	434747-0000		1	BOW CLAMP	
210	537308-0000		1	SPRING	
230 1	90050-0008		1	BOTTLE	
250	90051-0077		1	HANDLE	
260	90143-0029	MM	295	STRIP	
270	90166-0138	MM	100	HOSE	
280	90299-0072			INK	
300	311103-0236		2	PARALLEL PIN ISO 2338 3M6X16 A1	
310	311103-0238		1	PARALLEL PIN ISO 2338 3M6X20 A1	
320	311103-0270		1	PARALLEL PIN ISO 2338 4M6X16 A1	
330	312105-0291		3	SCREW M6S ISO 4017 M4X12 A470	
340	312105-0327		2	SCREW M6S ISO 4017 M5X12 A480	
345	312105-0329		1	SCREW M6S ISO 4017 M5X16 A480	
347	312115-0287		2	SCREW ISO4762 M4X8 A4 80	
350	312605-0314		2	HEXAGON NUT, M6M M5 A280	
360	312605-0318		3	HEXAGON NUT, M6M M8 A280	
370	315105-0146		3	WASHER BRB 5,3X10 RFR	
380	315105-0165		2	WASHER BRB 8,4X16 RFR	
390	315202-0218		1	O-RING 26,2X3 MM	
400	315202-0309		1	O-RING 89,5X3 MM	
410	315750-0105		1	RETAINING RING SHAFT DIN 471 ST 8	
420	321120-0100		4	BEARING BUSH W/O FLANGE, 8X10X12 MM	
425	321120-0109		2	BEARING BUSH W/O FLANGE, 12X14X10 MM	
430	352113-0101		1	CABLE TIE, BLACK 92X2,5 MM	

Machine Type | Group Description | Used-In | Group Number | Page No

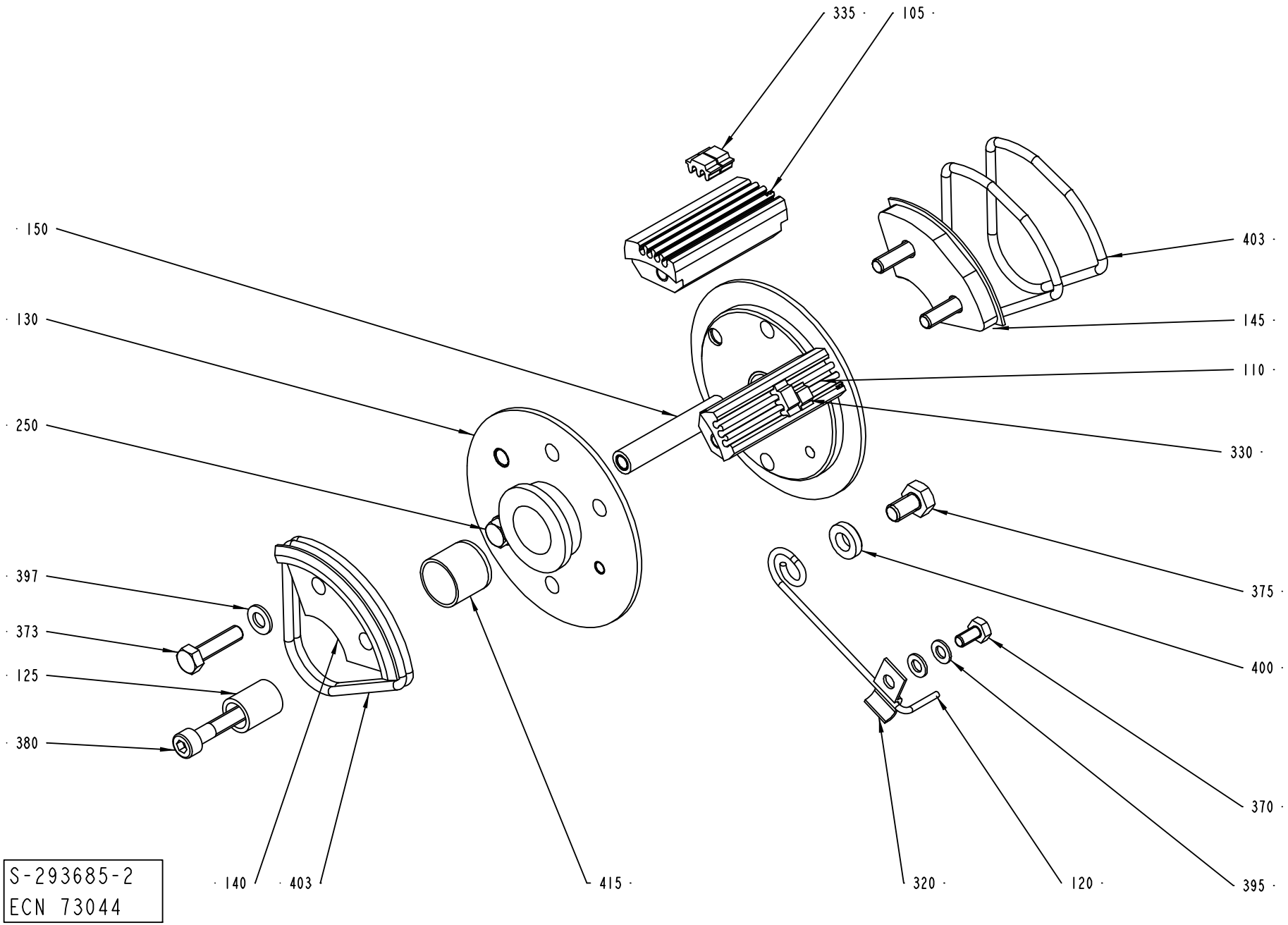
335
105
150
403
130
145
110
250
330
375
397
373
400
125
380
370
140
403
415
320
120
395
S-293685-2
ECN 73044

ECM: 180719 - 20040910
Group number: 293685-0200
Assembly Drawing: 293685-2_1_AB

Pos	Part No	UN	Qty	Description	Page No
0300B					
105-02	293395-0002		2	TYPE HOLDER	
110-02	293395-0001		2	TYPE HOLDER	
130	292412-0000		1	END SECTION	
135	292413-0000		1	END SECTION	
140	292414-0000		1	CARRIER	
373-02	312101-0331		7	SCREW M6S M5X20 FZB	
397-02	315101-0146		7	WASHER PLAIN, BRB, 5,3/10 H=1	
405	315202-0304		2	O-RING 64,5X3 MM	
410	315202-0305		2	O-RING 69,5X3 MM	
Common Parts					
120	32691-0000		1	LOCK SPRING	
125	33011-0000		1	SLEEVE	
320	90165-0010		1	CLIP	
330	90413-0043		1	CODE INSERT SET	
330	90413-0033		1	CODE INSERT SET C 2/16	
335	90413-0047		1	CODE INSERT SET A 2/16	
335	90413-0044		1	CODE INSERT SET	
370	312101-0287		1	SCREW M6S M4X8 FZB	
375	312101-0364		1	SCREW M6S M6X10 FZB	
380	312111-0335		1	SCREW HEX.SOCK.HD.MC6S-TT 5X30 88 FZB	
395	315101-0136		1	WASHER BRB, 4,3/8 H=0,8	
400	315111-0153		1	WASHER PLAIN, TBRB 6,4/12 H=3	
415	321120-0122		2	BEARING BUSH W/O FLANGE, 15X17X15 MM	

Pos	Part No	UN	Qty	Description	Page No

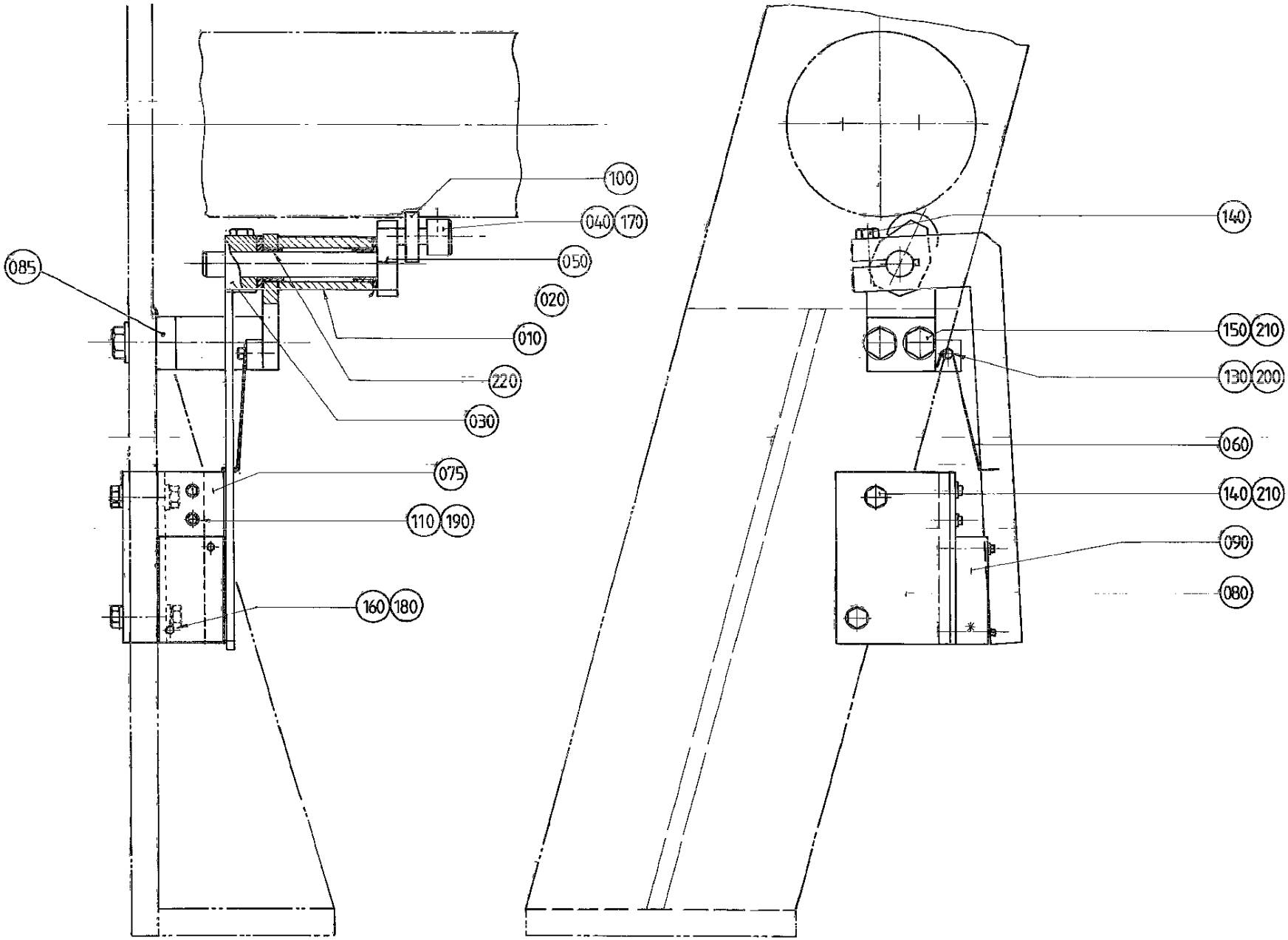
100
040
170
050
020
010
220
030
085
075
110
190
160
180
140
150
210
130
200
060
140
210
090
080

ECM: - -
Group number: 450314-0200
Assembly Drawing: 450314-2_1_AA

This list covers pages from 12-60 to 12-63

Pos	Part No	UN	Qty	Description	Page No
TB/8 0300B					
080	529403-0000		1	BRACKET	
135	312105-0366		2	SCREW M6S ISO 4017 M6X12 A480	
140	312105-0370		1	SCREW M6S ISO 4017 M6X20 A480	
150	312105-0372		2	SCREW M6S ISO 4017 M6X25 A480	
TB/8 0568B, TB/8 0500B					
075	479714-0000		1	FASTENING PLATE	
080	529402-0000		1	BRACKET	
110	312105-0287		2	SCREW M6S ISO 4017 M4X8 A470	
140-02	312105-0370		3	SCREW M6S ISO 4017 M6X20 A480	
150	312105-0372		2	SCREW M6S ISO 4017 M6X25 A480	
190	315105-0136		2	WASHER BRB 4,3X9 RFR	
Common Parts					
010	450116-0000		1	CANTILEVER	
020	271211-0000		2	WASHER	
030	271653-0000		1	ARM	
040	271654-0000		1	RETAINING RING	
050	271655-0000		1	HOLDER	
060	529401-0000		1	SPRING	
090	90044-0104		1	PROX.SWITCH IFM IN 3002(RP 90044-194)	
100	90214-0138		1	BALL BEARING, 5X19X6 MM	
130	312105-0327		1	SCREW M6S ISO 4017 M5X12 A480	
160	312115-0228		2	SCREW ISO4762 M3X16 A4 80	
170	312318-0283		1	SCREW ISO4029 M4X4 A4	
180	315105-0124		2	WASHER BRB 3,2X7 RFR	
200	315105-0146		1	WASHER BRB 5,3X10 RFR	
210	315105-0153		4	WASHER BRB 6,4X12 RFR	
220	321127-0100		2	BEARING BUSH W/O FLANGE, 10X13X10 MM	

Pos	Part No	UN	Qty	Description	Page No

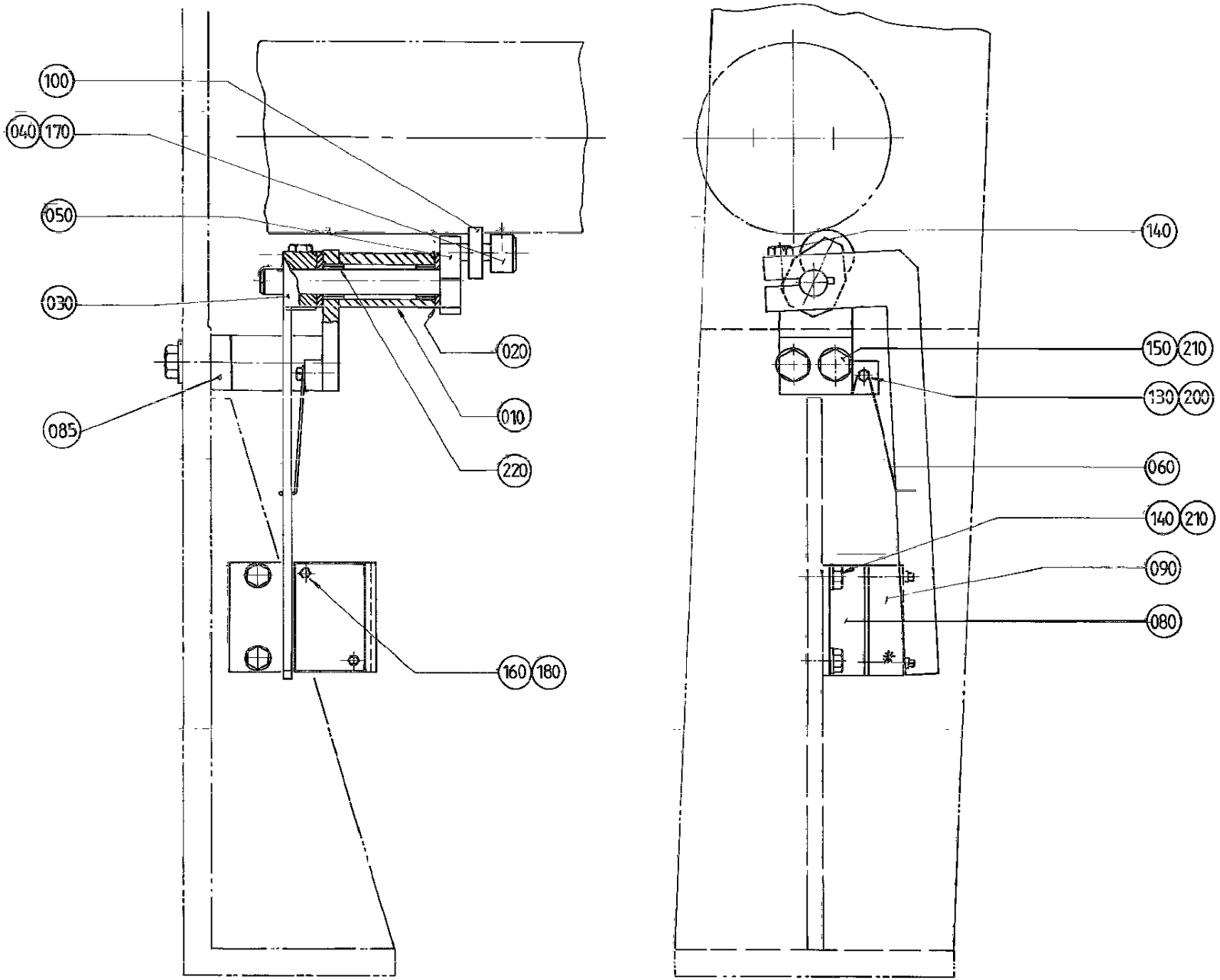
100
040
170
050
030
085
020
010
220
160
180
140
150
210
130
200
060
140
210
090
080

ECM: - -
Group number: 450314-0200
Assembly Drawing: 450314-3_1_AA

This list covers pages from 12-60 to 12-63

Pos	Part No	UN	Qty	Description	Page No
TB/8 0300B					
080	529403-0000		1	BRACKET	
135	312105-0366		2	SCREW M6S ISO 4017 M6X12 A480	
140	312105-0370		1	SCREW M6S ISO 4017 M6X20 A480	
150	312105-0372		2	SCREW M6S ISO 4017 M6X25 A480	
TB/8 0568B, TB/8 0500B					
075	479714-0000		1	FASTENING PLATE	
080	529402-0000		1	BRACKET	
110	312105-0287		2	SCREW M6S ISO 4017 M4X8 A470	
140-02	312105-0370		3	SCREW M6S ISO 4017 M6X20 A480	
150	312105-0372		2	SCREW M6S ISO 4017 M6X25 A480	
190	315105-0136		2	WASHER BRB 4,3X9 RFR	
Common Parts					
010	450116-0000		1	CANTILEVER	
020	271211-0000		2	WASHER	
030	271653-0000		1	ARM	
040	271654-0000		1	RETAINING RING	
050	271655-0000		1	HOLDER	
060	529401-0000		1	SPRING	
090	90044-0104		1	PROX.SWITCH IFM IN 3002(RP 90044-194)	
100	90214-0138		1	BALL BEARING, 5X19X6 MM	
130	312105-0327		1	SCREW M6S ISO 4017 M5X12 A480	
160	312115-0228		2	SCREW ISO4762 M3X16 A4 80	
170	312318-0283		1	SCREW ISO4029 M4X4 A4	
180	315105-0124		2	WASHER BRB 3,2X7 RFR	
200	315105-0146		1	WASHER BRB 5,3X10 RFR	
210	315105-0153		4	WASHER BRB 6,4X12 RFR	
220	321127-0100		2	BEARING BUSH W/O FLANGE, 10X13X10 MM	

Pos	Part No	UN	Qty	Description	Page No

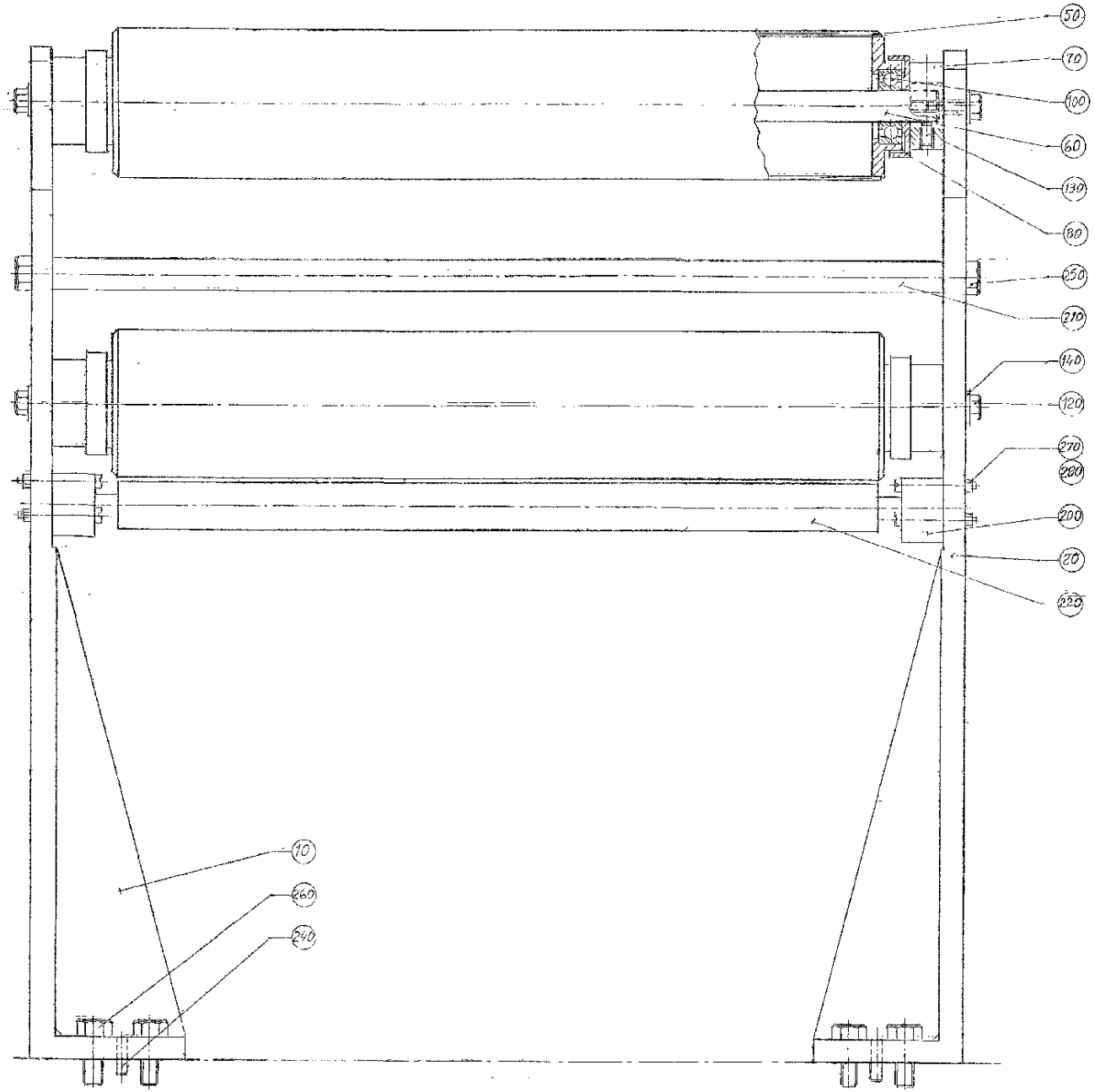
50
70
100
60
130
80
250
210
140
120
270
280
200
20
225
10
260
240

ECM: - -
Group number: 266625-0400
Assembly Drawing: 266625-4_1_AA

Pos	Part No	UN	Qty	Description	Page No
0300B					
010	436375-0000		1	CANTILEVER	
020	436376-0000		1	CANTILEVER	
0500B, 0568B					
010	436373-0000		1	CANTILEVER	
020	436374-0000		1	CANTILEVER	
Common Parts					
050	449843-0001		2	BENDING ROLLER	
060	265566-0001		2	SHAFT	
070	265567-0000		4	BEARING UNIT	
080	265568-0000		4	DUST COVER	
100	90214-0098		4	BALL BEARING, 15X35X11 MM	
120	312105-0370		8	SCREW M6S ISO 4017 M6X20 A480	
130	312318-0364		8	SCREW ISO4029 M6X10 A4	
140	315105-0153		8	WASHER BRB 6,4X12 RFR	
200	24206-0000		2	BEARING	
210	265569-0001		1	STRUT	
220	283462-0000		1	ROLL REPBY 0573666-0000	
240	311305-0308		2	LOTTED PIRPC5X16FZB	
250	312105-0451		2	SCREW M6S ISO 4017 M8X20 A480	
260	312105-0491		4	SCREW M6S ISO 4017 M10X20 A480	
270	312125-0301		6	SCREW ISO 1207 M4X35 A4	
280	312605-0312		6	HEXAGON NUT, M6M M4 A280	

Pos	Part No	UN	Qty	Description	Page No

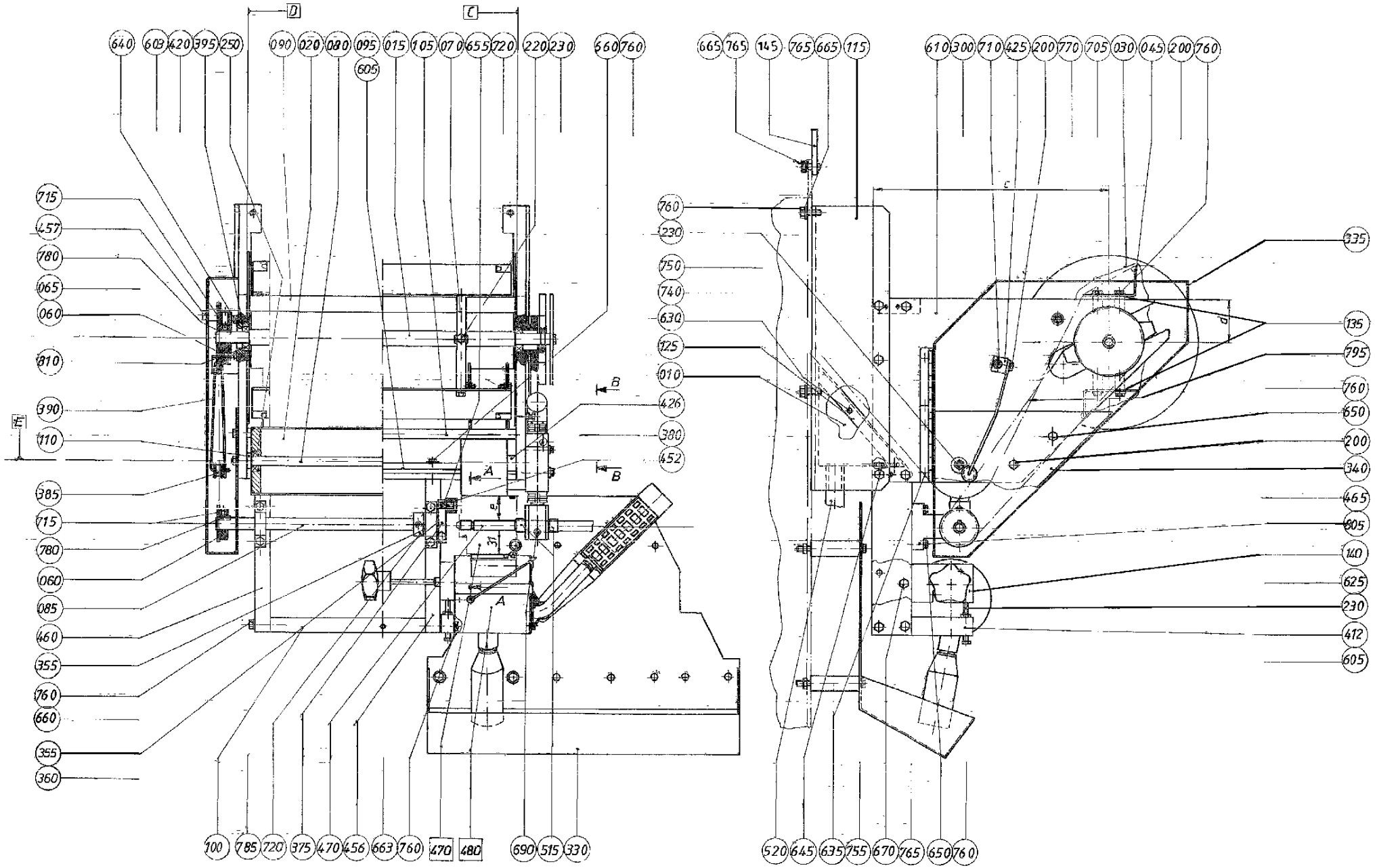
D
C
640 603 420 395 250 090 020 080 095 605 015 105 070 655 720 220 230 560 760
665 765 145 765 665 115 610 300 710 425 200 770 705 030 045 200 760
715 457 780 065 060 810 390 110 385 715 780 060 085 460 355 760 660 355 360
760 230 750 740 630 125 010 426 380 452
335 135 795 760 650 200 340 465 605 140 625 230 412 605
B
A
E
100 785 720 375 470 456 663 760 470 480 690 515 330
520 645 635 755 670 765 650 760

ECM: - -
Group number: 293680-0500
Assembly Drawing: 293680-3_1_AA

This list covers pages from 12-66 to 12-73

Pos	Part No	UN	Qty	Description	Page No
0300B					
015	293620-0002		1	SHAFT	
020	293621-0002		1	BENDING ROLLER	
030	293624-0002		2	PROTECTION PLATE	
045	458107-0000		2	CREASE FORMER	
050	464009-0002		1	BLOCKING PIECE	
060-02	32629-0000		2	SPROCKET	
070	293633-0005		4	SPACER	
080	476263-0002		1	SHAFT	
085	293639-0005		1	SHAFT	
090	293640-0002		1	SPACER	
095	466049-0002		1	SPACER LOWER	
100	466050-0002		1	FRAME LOWER	
105	293644-0002		1	SPACER	
110	293646-0001		1	WASHER	
115	434786-0000		1	FASTENING BRACKET	
120	434783-0000		1	FASTENING BRACKET	
130	434792-0005		3	SPACER	
135	458194-0001		4	WASHER	
135	458194-0003		4	WASHER	
135	458194-0002		4	WASHER	
140	458489-0000		1	CANTILEVER	
200-02	312105-0366		10	SCREW M6S ISO 4017 M6X12 A480	
210	312105-0386		3	SCREW M6S ISO 4014 M6X80 A480	
220	312105-0378		2	SCREW M6S ISO 4014 M6X40 A480	
230-02	312605-0316		11	HEXAGON NUT, M6M M6 A280	
250	90214-0107		2	BALL BEARING, 12X28X8 MM	
355	32634-0001		1	WASHER	
360	32634-0004		1	WASHER	
663-02	312105-0380		6	SCREW M6S ISO 4014 M6X50 A480	
665	312105-0449		4	SCREW M6S ISO 4017 M8X16 A480	
765	315105-0165		5	WASHER BRB 8,4X16 RFR	
F007	450314-0200		1	SPLICE DETECTOR	**12-61, 12-63**
F005	266625-0400		1	BENDING ROLLER	**12-65**
0500B					
015	293620-0001		1	SHAFT	
020	293621-0001		1	BNDING ROLLER	
025	293623-0001		1	BENDING ROLLER	
030	293624-0002		2	PROTECTION PLATE	
045	458106-0000		2	CREASE FORMER	
050	464009-0001		1	BLOCKING PIECE	
060-02	32629-0000		2	SPROCKET	
070	293672-0004		4	SPACER	
075	293637-0001		1	SHAFT	
080	476263-0001		1	SHAFT	
085	293639-0001		1	SHAFT	
090	293641-0000		1	SPACER	
095	466049-0001		1	SPACER LOWER	
100	466050-0001		1	FRAME LOWER	
105	293644-0001		1	SPACER	
110-02	293646-0001		3	WASHER	
115	293647-0000		1	FASTENING BRACKET	
120	293648-0000		1	FASTENING BRACKET	
135	458193-0002		4	WASHER	
135	458193-0001		4	WASHER	
135	458193-0003		4	WASHER	
140	292046-0000		1	CANTILEVER	
200-02	312105-0366		10	SCREW M6S ISO 4017 M6X12 A480	
210	312105-0368		3	SCREW M6S ISO 4017 M6X16 A480	
220	312105-0379		2	SCREW M6S ISO 4014 M6X45 A480	
230	312605-0316		9	HEXAGON NUT, M6M M6 A280	
250-02	90214-0107		4	BALL BEARING, 12X28X8 MM	
355-02	32634-0001		2	WASHER	
661	312105-0378		4	SCREW M6S ISO 4014 M6X40 A480	
663	312105-0380		2	SCREW M6S ISO 4014 M6X50 A480	
665	312105-0449		4	SCREW M6S ISO 4017 M8X16 A480	
765	315105-0165		5	WASHER BRB 8,4X16 RFR	
F007	450314-0200		1	SPLICE DETECTOR	**12-61, 12-63**
F005	266625-0400		1	BENDING ROLLER	**12-65**
0568B					
015	293620-0001		1	SHAFT	
020	293621-0001		1	BNDING ROLLER	
025	293623-0001		1	BENDING ROLLER	
030	293624-0002		2	PROTECTION PLATE	
045	458106-0000		2	CREASE FORMER	
050	464009-0001		1	BLOCKING PIECE	
060-02	32629-0000		2	SPROCKET	
070	293672-0003		4	SPACER	
075	293637-0001		1	SHAFT	
080	476263-0001		1	SHAFT	
085	293639-0001		1	SHAFT	
090	293641-0000		1	SPACER	
095	466049-0001		1	SPACER LOWER	
100	466050-0001		1	FRAME LOWER	

Machine Type | Group Description | Used-In | Group Number | Page No

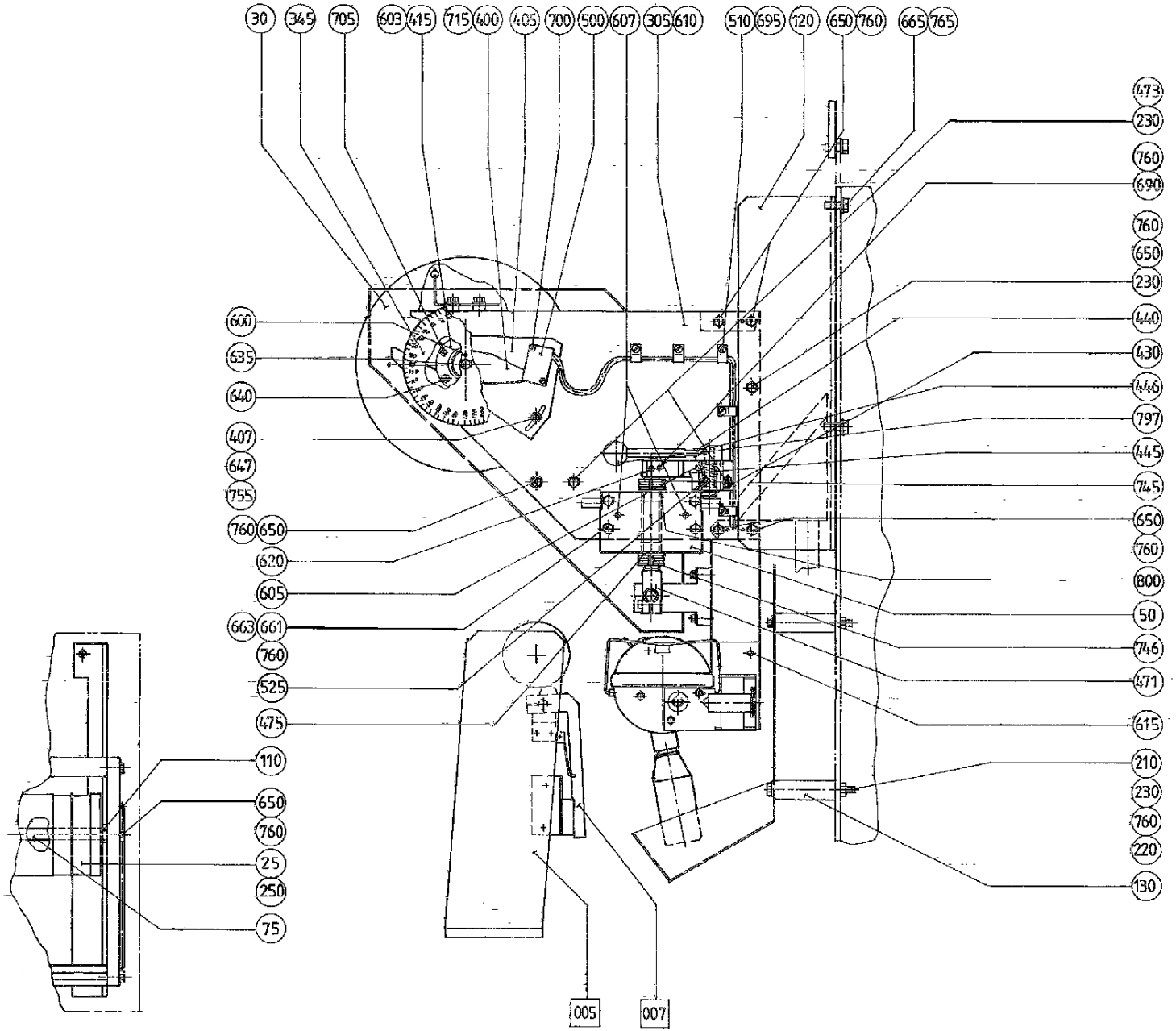
30
345
705
603
415
715
400
405
700
500
607
305
610
510
695
120
650
760
665
765
473
230
760
690
760
650
230
440
430
446
797
445
745
650
760
800
50
746
471
615
210
230
760
220
130
600
635
640
407
647
755
760
650
620
605
663
661
760
525
475
110
650
760
25
250
75
005
007

ECM: - -
Group number: 293680-0500
Assembly Drawing: 293680-5_1_AA

This list covers pages from 12-66 to 12-73

Pos	Part No	UN	Qty	Description	Page No
0568B (Cont'd)					
105	293644-0001		1	SPACER	
110-02	293646-0001		3	WASHER	
115	484697-0000		1	ANGLE BRACKET RIGHT	
120	484698-0000		1	ANGLE BRACKET LEFT	
135	458193-0002		4	WASHER	
135	458193-0003		4	WASHER	
135	458193-0001		4	WASHER	
140	292046-0000		1	CANTILEVER	
200-02	312105-0366		10	SCREW M6S ISO 4017 M6X12 A480	
210	312105-0368		3	SCREW M6S ISO 4017 M6X16 A480	
220	312105-0379		2	SCREW M6S ISO 4014 M6X45 A480	
230	312605-0316		9	HEXAGON NUT, M6M M6 A280	
250-02	90214-0107		4	BALL BEARING, 12X28X8 MM	
355-02	32634-0001		2	WASHER	
661	312105-0378		4	SCREW M6S ISO 4014 M6X40 A480	
663	312105-0380		2	SCREW M6S ISO 4014 M6X50 A480	
665	312105-0449		4	SCREW M6S ISO 4017 M8X16 A480	
765	315105-0165		5	WASHER BRB 8,4X16 RFR	
F007	450314-0200		1	SPLICE DETECTOR	**12-61, 12-63**
F005	266625-0400		1	BENDING ROLLER	**12-65**
1000B HIFIN					
015	293620-0001		1	SHAFT	
020	293621-0001		1	BNDING ROLLER	
030	293624-0001		2	PROTECTION PLATE	
045	458104-0000		2	CREASE FORMER	
050	464009-0001		1	BLOCKING PIECE	
060	32629-0000		1	SPROCKET	
065	32630-0000		1	SPROCKET	
070	293672-0002		4	SPACER	
080	476263-0001		1	SHAFT	
085	293639-0001		1	SHAFT	
090	293641-0000		1	SPACER	
095	466049-0001		1	SPACER LOWER	
100	466050-0001		1	FRAME LOWER	
105	293644-0001		1	SPACER	
110	293646-0001		1	WASHER	
115	484694-0000		1	ANGLE BRACKET RIGHT	
120	484695-0000		1	ANGLE BRACKET LEFT	
130	434792-0002		3	SPACER	
135	458193-0003		4	WASHER	
135	458193-0001		4	WASHER	
135	458193-0002		4	WASHER	
140	292046-0000		1	CANTILEVER	
145	526935-0000		1	PLATE	
200-02	312105-0366		10	SCREW M6S ISO 4017 M6X12 A480	
210	312105-0378		3	SCREW M6S ISO 4014 M6X40 A480	
220	312105-0380		2	SCREW M6S ISO 4014 M6X50 A480	
230-02	312605-0316		11	HEXAGON NUT, M6M M6 A280	
250	90214-0107		2	BALL BEARING, 12X28X8 MM	
355-02	32634-0001		2	WASHER	
661	312105-0378		4	SCREW M6S ISO 4014 M6X40 A480	
663	312105-0380		2	SCREW M6S ISO 4014 M6X50 A480	
665-02	312105-0449		6	SCREW M6S ISO 4017 M8X16 A480	
765-02	315105-0165		7	WASHER BRB 8,4X16 RFR	
1000B LOFIN					
010	442197-0000		1	NOZZLE	
015	293620-0001		1	SHAFT	
020	293621-0001		1	BNDING ROLLER	
030	293624-0001		2	PROTECTION PLATE	
045	458105-0000		2	CREASE FORMER	
050	464009-0001		1	BLOCKING PIECE	
060	32629-0000		1	SPROCKET	
065	32630-0000		1	SPROCKET	
070	293672-0001		4	SPACER	
080	476263-0001		1	SHAFT	
085	293639-0001		1	SHAFT	
090	293641-0000		1	SPACER	
095	466049-0001		1	SPACER LOWER	
100	466050-0001		1	FRAME LOWER	
105	293644-0001		1	SPACER	
110	293646-0001		1	WASHER	
115	442200-0000		1	FASTENING BRACKET	
120	442199-0000		1	FASTENING BRACKET	
125	442201-0000		2	RIM	
130	434792-0003		3	SPACER	
135	458193-0003		4	WASHER	
135	458193-0002		4	WASHER	
135	458193-0001		4	WASHER	
140	292046-0000		1	CANTILEVER	
200-02	312105-0366		10	SCREW M6S ISO 4017 M6X12 A480	
220-03	312105-0380		5	SCREW M6S ISO 4014 M6X50 A480	
230-02	312605-0316		11	HEXAGON NUT, M6M M6 A280	
250	90214-0107		2	BALL BEARING, 12X28X8 MM	

Machine Type | Group Description | Used-In | Group Number | Page No

See previous drawings pages: 12-66, 12-68.

ECM: - -
Group number: 293680-0500
Assembly Drawing: 293680-5_1_AA

This list covers pages from 12-66 to 12-73

Pos	Part No	UN	Qty	Description	Page No
1000B LOFIN (Cont'd)					
355-02	32634-0001		2	WASHER	
520	90166-0087	MM	1500	HOSE 15/23 REINF.PVC TRANSP.	
630	312105-0287		8	SCREW M6S ISO 4017 M4X8 A470	
645	312105-0329		2	SCREW M6S ISO 4017 M5X16 A480	
661	312105-0378		4	SCREW M6S ISO 4014 M6X40 A480	
663	312105-0380		2	SCREW M6S ISO 4014 M6X50 A480	
665	312105-0449		4	SCREW M6S ISO 4017 M8X16 A480	
740	312605-0312		8	HEXAGON NUT, M6M M4 A280	
750	315105-0136		8	WASHER BRB 4,3X9 RFR	
765	315105-0165		5	WASHER BRB 8,4X16 RFR	
1136B					
010	442197-0000		1	NOZZLE	
015	293620-0001		1	SHAFT	
020	293621-0001		1	BNDING ROLLER	
030	293624-0001		2	PROTECTION PLATE	
045	458105-0000		2	CREASE FORMER	
050	464009-0001		1	BLOCKING PIECE	
060	32629-0000		1	SPROCKET	
065	32630-0000		1	SPROCKET	
070	247004-0001		4	SPACER FOR CREASE WHEEL	
080	476263-0001		1	SHAFT	
085	293639-0001		1	SHAFT	
090	293641-0000		1	SPACER	
095	466049-0001		1	SPACER LOWER	
100	466050-0001		1	FRAME LOWER	
105	293644-0001		1	SPACER	
110	293646-0001		1	WASHER	
115	442200-0000		1	FASTENING BRACKET	
120	442199-0000		1	FASTENING BRACKET	
125	442201-0000		2	RIM	
130	434792-0003		3	SPACER	
135	458193-0003		4	WASHER	
135	458193-0002		4	WASHER	
135	458193-0001		4	WASHER	
140	292046-0000		1	CANTILEVER	
145	526935-0000		1	PLATE	
200-02	312105-0366		10	SCREW M6S ISO 4017 M6X12 A480	
220-03	312105-0380		5	SCREW M6S ISO 4014 M6X50 A480	
230-02	312605-0316		11	HEXAGON NUT, M6M M6 A280	
250	90214-0107		2	BALL BEARING, 12X28X8 MM	
355-02	32634-0001		2	WASHER	
520	90166-0087	MM	1500	HOSE 15/23 REINF.PVC TRANSP.	
630	312105-0287		8	SCREW M6S ISO 4017 M4X8 A470	
645	312105-0329		2	SCREW M6S ISO 4017 M5X16 A480	
661	312105-0378		4	SCREW M6S ISO 4014 M6X40 A480	
663	312105-0380		2	SCREW M6S ISO 4014 M6X50 A480	
665-02	312105-0449		6	SCREW M6S ISO 4017 M8X16 A480	
740	312605-0312		8	HEXAGON NUT, M6M M4 A280	
750	315105-0136		8	WASHER BRB 4,3X9 RFR	
765-02	315105-0165		7	WASHER BRB 8,4X16 RFR	
Common Parts					
300	293617-0000		1	SIDE FRAME	
305	293618-0000		1	SIDE FRAME	
330	239849-0000		1	SPLASH PLATE	
335	293625-0000		1	CHAIN GUARD	
340	293627-0000		1	PROTECTION PLATE	
345	293673-0001		1	DISC	
375	32925-0000		1	CARRIER	
380	32926-0000		1	ROLL	
385	33182-0000		1	ROLL	
390	33183-0000		1	SPRING	
395	255119-0000		8	WASHER	
400	267532-0000		1	CAM DISC	
405	267533-0000		1	PLATE	
407	269600-0000		1	SPACER	
412	284754-0000		1	CANTILEVER	
415	530771-0001		1	FLANGE	
420	530772-0000		1	FLANGE	
425	293645-0000		1	BRACKET	
426	293646-0002		1	WASHER	
430	464011-0000		1	LOCK STUD	
440	450500-0000		1	DOWEL	
445	464010-0000		1	ARM	
446	464012-0000		1	CURVE	
452	293674-0000		1	DOWEL	
456	293678-0000		1	FRAME LEFT	
457	293679-0000		1	SCREW	
460	434704-0000		1	FRAME RIGHT	
465	434705-0000		2	CANTILEVER	
470	228653-0000		1	SHAFT	
471	450497-0000		1	SHAFT	
473	476377-0000		2	SCREW	
475	466430-0000		1	BUSHING	

Machine Type | Group Description | Used-In | Group Number | Page No

See previous drawings pages: 12-66, 12-68.

ECM: - -
Group number: 293680-0500
Assembly Drawing: 293680-5_1_AA

This list covers pages from 12-66 to 12-73

Pos	Part No	UN	Qty	Description	Page No
Common Parts (Cont'd)					
500	90044-0104		1	PROX.SWITCH IFM IN 3002(RP 90044-194)	
510	90165-0024		7	PIPE CLIP FOR TUBE D=5 MM	
515	90166-0059	MM	18	HOSE PVC 12/16MM TRANSP.	
525	90335-0064		1	COMP. SPRING 22270, 1,25X13,75X62,5	
600	311103-0232		1	PARALLEL PIN ISO 2338 3M6X8 A1	
603	311103-0269		4	PARALLEL PIN ISO 2338 4M6X14 A1	
605	311103-0274		4	PARALLEL PIN ISO 2338 4M6X25 A1	
607	311103-0318		2	PARALLEL PIN ISO 2338 5M6X40 A1	
610	311103-0314		8	PARALLEL PIN ISO 2338 5M6X30 A1	
615	311103-0357		1	PARALLEL PIN ISO 2338 6M6X30 A1	
620	311202-0241		1	TAPER PIN EN 22339 A 4X25 SS	
625	312104-0380		1	SCREW M6S M6X50H FZB	
635	312105-0323		5	SCREW M6S ISO 4017 M5X8 A480	
640	312105-0328		8	SCREW M6S ISO 4017 M5X14 A480	
647	312105-0333		1	SCREW M6S ISO 4017 M5X25 A480	
650	312105-0372		16	SCREW M6S ISO 4017 M6X25 A480	
655	312105-0374		1	SCREW M6S ISO 4014 M6X30 A480	
660	312105-0376		6	SCREW M6S ISO 4014 M6X35 A480	
670	312105-0457		1	SCREW M6S ISO 4014 M8X35 A480	
690	312115-0370		2	SCREW ISO4762 M6X20 A4 80	
695	312121-0287		7	SCREW ISO 1207 M4X8 4.8 - 5.8 Z.PL.	
700	312122-0230		2	SCREW ISO 1207 M3X20 NI PL BRASS	
705	312155-0329		4	SCREW DIN 7991 MF6S M5X16 A4 70	
710	312151-0379		1	SCREW EN 10642 MF6S M6X45 10.9 EL.PL	
715	312316-0323		3	SCREW HEX.SOCK.SET CUP P.MSK6SS5X8 FZB	
720	312316-0362		2	SCREW HEX.SOCK.SET CUP P.MSK6SS6X8 FZB	
745	312805-0102		2	NUT ROUND WITH SLOTS M15X1 FE	
746	312805-0103		2	NUT ROUND WITH SLOTS M17X1 FE	
755	315105-0146		5	WASHER BRB 5,3X10 RFR	
760	315105-0153		39	WASHER BRB 6,4X12 RFR	
770	315121-0153		1	WASHER PLAIN, TBRSB 6,4/22 H=4	
780	315701-0201		2	PARALLEL KEY W. ROUND ENDS 5X5X20 MM	
785	315742-0111		1	RETAINING RING 15 SMS 199 RFR	
795	318207-0151		1	ROLLER CHAIN, SINGLE 6MM-151	
797	318800-0103		1	HANDLES,SPHERICAL KNOB,INT.THRE.,D.25-M6	
800	321111-0212		1	FLANGE BUSHING, 15X21X15 MM	
805	321120-0122		2	BEARING BUSH W/O FLANGE, 15X17X15 MM	
810	90214-0106		2	BALL BEARING, 15X28X7 MM	
F480	434074-0301		1	INK UNIT	**12-75**
F470	293684-0200		2	PRINTING WHEEL NSS	**8-35, 8-37, 12-77, 12-79**

Machine Type	Group Description	Used-In	Group Number	Page No

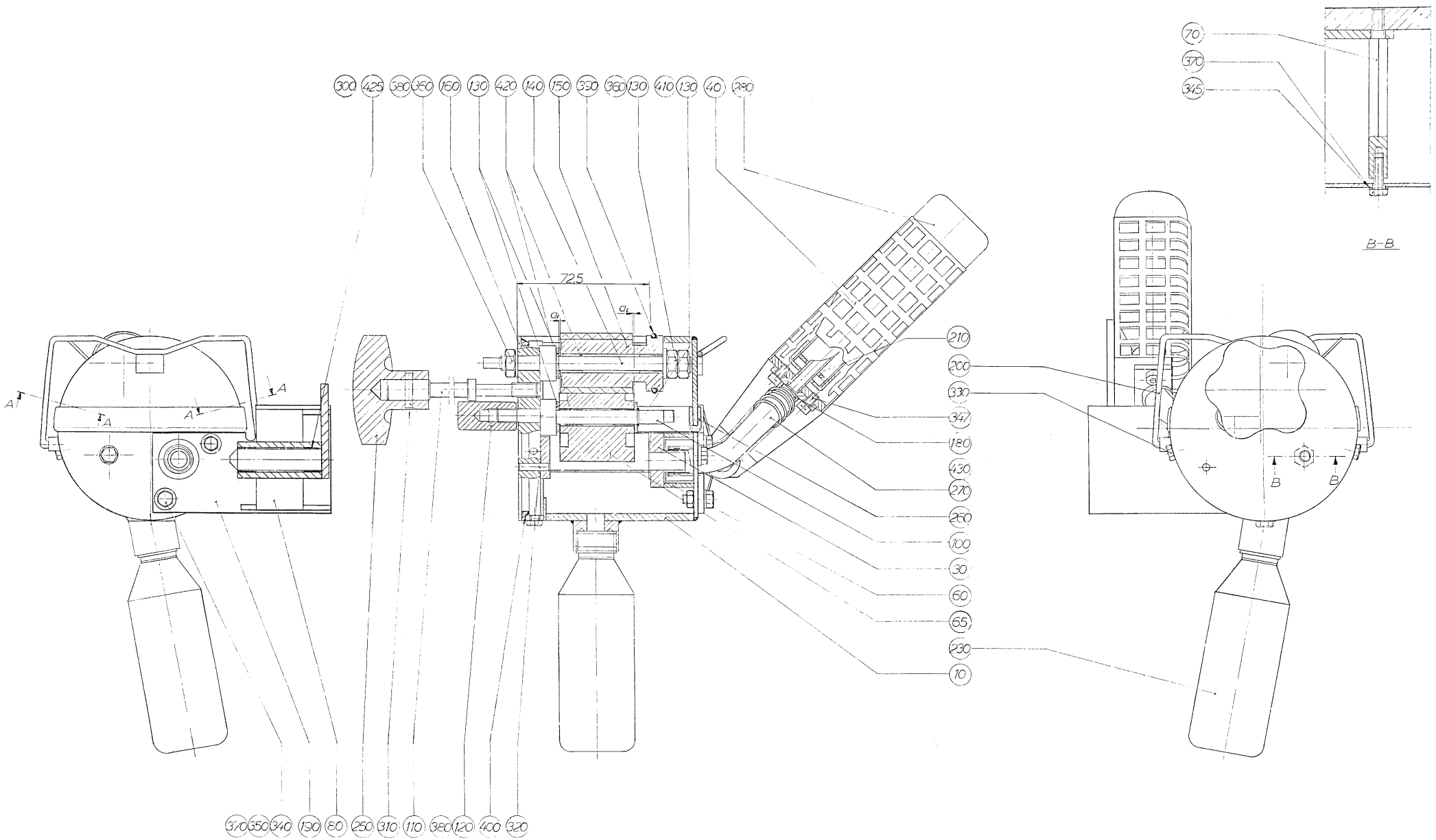
300
425
380
350
160
130
420
140
150
330
360
130
410
130
40
280
725
a_1
a_2
210
200
330
347
180
430
270
260
100
30
60
65
230
10
370
350
340
190
80
250
310
110
380
120
400
320
70
370
345
B–B
A
A
A
A
B
B

ECM: - -
Group number: 434074-0301
Assembly Drawing: 434074-3_1_AA

Pos	Part No	UN	Qty	Description	Page No
-					
010	297988-0000		1	COVER	
030	297211-0000		1	INK WELL	
040	476356-0000		1	HOLDER FOR INK BOTTLE	
060	445542-0000		1	MANTEL RUBBER	
065	450355-0000		1	INK ROLLER	
070	33010-0000		1	SCREW	
080	35547-0000		1	SPRING	
100	292044-0000		1	SHAFT	
110	293667-0000		1	DOWEL	
120	436927-0000		1	NUT	
130 4	293669-0004		2	WASHER	
130 3	293669-0003		2	WASHER	
130 2	293669-0002		2	WASHER	
130 1	293669-0001		4	WASHER	
140	293670-0000		1	SHAFT	
150	543135-0000		1	INK TRANSFER ROLLER	
	90153-0050		*1*	*ADHESIVE, 3M TYPE SCOTCH-WELD 2216 B/A*	
	321120-0100		*1*	*BEARING BUSH W/O FLANGE, 8X10X12 MM*	
160	293697-0000		1	END SECTION	
180	476354-0000		1	CANNULAR TUBE	
190	456773-0000		1	PIVOT BRACKET	
200	434747-0000		1	BOW CLAMP	
210	537308-0000		1	SPRING	
230 1	90050-0008		1	BOTTLE	
250	90051-0077		1	HANDLE	
260	90143-0029	MM	295	STRIP	
270	90166-0138	MM	100	HOSE	
280	90299-0072			INK	
300	311103-0236		2	PARALLEL PIN ISO 2338 3M6X16 A1	
310	311103-0238		1	PARALLEL PIN ISO 2338 3M6X20 A1	
320	311103-0270		1	PARALLEL PIN ISO 2338 4M6X16 A1	
330	312105-0291		3	SCREW M6S ISO 4017 M4X12 A470	
340	312105-0327		2	SCREW M6S ISO 4017 M5X12 A480	
345	312105-0329		1	SCREW M6S ISO 4017 M5X16 A480	
347	312115-0287		2	SCREW ISO4762 M4X8 A4 80	
350	312605-0314		2	HEXAGON NUT, M6M M5 A280	
360	312605-0318		3	HEXAGON NUT, M6M M8 A280	
370	315105-0146		3	WASHER BRB 5,3X10 RFR	
380	315105-0165		2	WASHER BRB 8,4X16 RFR	
390	315202-0218		1	O-RING 26,2X3 MM	
400	315202-0309		1	O-RING 89,5X3 MM	
410	315750-0105		1	RETAINING RING SHAFT DIN 471 ST 8	
420	321120-0100		4	BEARING BUSH W/O FLANGE, 8X10X12 MM	
425	321120-0109		2	BEARING BUSH W/O FLANGE, 12X14X10 MM	
430	352113-0101		1	CABLE TIE, BLACK 92X2,5 MM	

Machine Type	Group Description	Used-In	Group Number	Page No

PRINTING WHEEL NSS

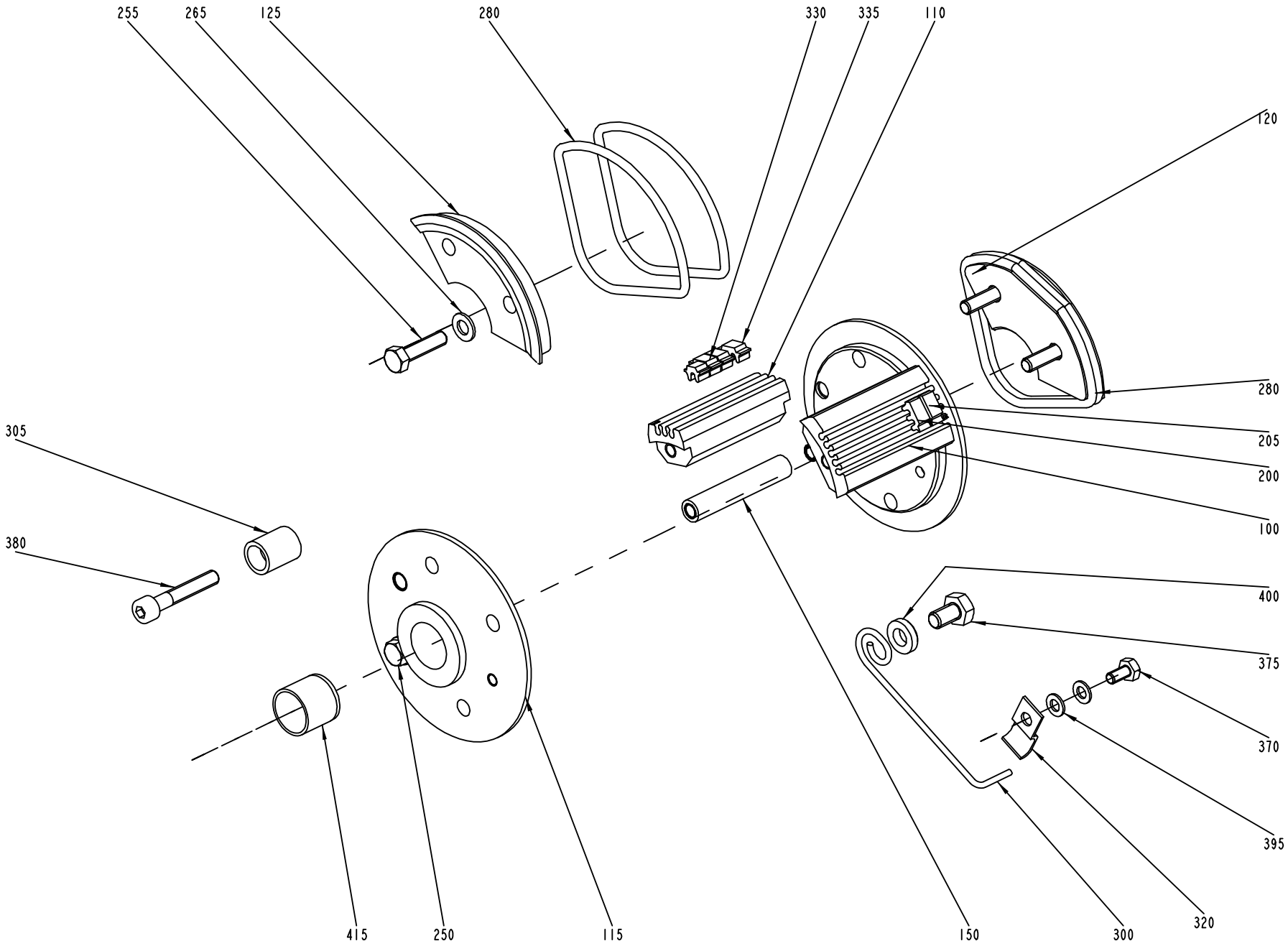

Pos	Part No	UN	Qty	Description	Page No
TB 0300B (See drawing on pages: 8-36, 12-78)					
105	293395-0002		2	TYPE HOLDER	
110	293395-0001		2	TYPE HOLDER	
130	292412-0000		1	END SECTION	
135	292413-0000		1	END SECTION	
145	293659-0000		1	CARRIER	
255	312101-0331		7	SCREW M6S M5X20 FZB	
265	315101-0146		7	WASHER PLAIN, BRB, 5,3/10 H=1	
285	315202-0304		2	O-RING 64,5X3 MM	
410	315202-0305		2	O-RING 69,5X3 MM	
TB 0568B, TB 0500B (See drawing on pages: 8-34, 12-76)					
100	293395-0003		2	TYPE HOLDER	
110	293395-0001		2	TYPE HOLDER	
115	434787-0000		1	END SECTION	
120	292410-0000		1	END SECTION	
155	293676-0000		1	CARRIER	
200	90413-0048		1	CODE INSERT SET A 9/28	
205	90413-0049		1	CODE INSERT SET C 9/28	
255	312101-0331		7	SCREW M6S M5X20 FZB	
265	315101-0146		7	WASHER PLAIN, BRB, 5,3/10 H=1	
285	315202-0304		2	O-RING 64,5X3 MM	
410	315202-0305		2	O-RING 69,5X3 MM	
TB 0500S (See drawing on pages: 8-36, 12-78)					
105	293395-0002		1	TYPE HOLDER	
110	293395-0001		1	TYPE HOLDER	
125	479237-0000		1	CARRIER	
140	479236-0000		2	END SECTION	
145	479238-0000		1	CARRIER	
150	293671-0000		1	SPACER	
250	312101-0329		2	SCREW M6S M5X16 FZB	
255	312101-0331		3	SCREW M6S M5X20 FZB	
265	315101-0146		5	WASHER PLAIN, BRB, 5,3/10 H=1	
275	315202-0224		4	O-RING 42,2X3 MM	
TB 1136B, TB 1500B, TB 0568SQ, TB 0500SQ, TB 1000SQ, TB 1000S, TB 1000B LOFIN (See drawing on pages: 8-34, 12-76)					
100	293395-0003		1	TYPE HOLDER	
110	293395-0001		1	TYPE HOLDER	
115	292409-0000		2	END SECTION	
120	442072-0000		1	CARRIER	
125	292411-0000		1	CARRIER	
150	293671-0000		1	SPACER	
200	90413-0048		1	CODE INSERT SET A 9/28	
205	90413-0049		1	CODE INSERT SET C 9/28	
250	312101-0329		2	SCREW M6S M5X16 FZB	
255	312101-0331		3	SCREW M6S M5X20 FZB	
265	315101-0146		5	WASHER PLAIN, BRB, 5,3/10 H=1	
280	315202-0301		4	O-RING 49,5X3 MM	
TB 1000B HIFIN (See drawing on pages: 8-34, 12-76)					
100	293395-0003		1	TYPE HOLDER	
110	293395-0001		1	TYPE HOLDER	
115	293690-0000		2	END SECTION	
120	442431-0000		1	CARRIER	
125	293688-0000		1	CARRIER	
150	293671-0000		1	SPACER	
200	90413-0048		1	CODE INSERT SET A 9/28	
205	90413-0049		1	CODE INSERT SET C 9/28	
250	312101-0329		2	SCREW M6S M5X16 FZB	
255	312101-0331		3	SCREW M6S M5X20 FZB	
265	315101-0146		5	WASHER PLAIN, BRB, 5,3/10 H=1	
280	315202-0301		4	O-RING 49,5X3 MM	
Common Parts					
300	32691-0000		1	LOCK SPRING	
305	33011-0000		1	SLEEVE	
320	1511572-0000		1	CLIP	
330	90413-0043		1	CODE INSERT SET	
330	90413-0033		1	CODE INSERT SET C 2/16	
335	90413-0044		1	CODE INSERT SET	
335	90413-0047		1	CODE INSERT SET A 2/16	
370	312101-0287		1	SCREW M6S M4X8 FZB	
375	312101-0364		1	SCREW M6S M6X10 FZB	
380	312111-0335		1	SCREW HEX.SOCK.HD.MC6S-TT 5X30 88 FZB	
395	315101-0136		2	WASHER BRB, 4,3/8 H=0,8	
400	315111-0153		1	WASHER PLAIN, TBRB 6,4/12 H=3	
415	321120-0122		2	BEARING BUSH W/O FLANGE, 15X17X15 MM	

PRINTING WHEEL NSS

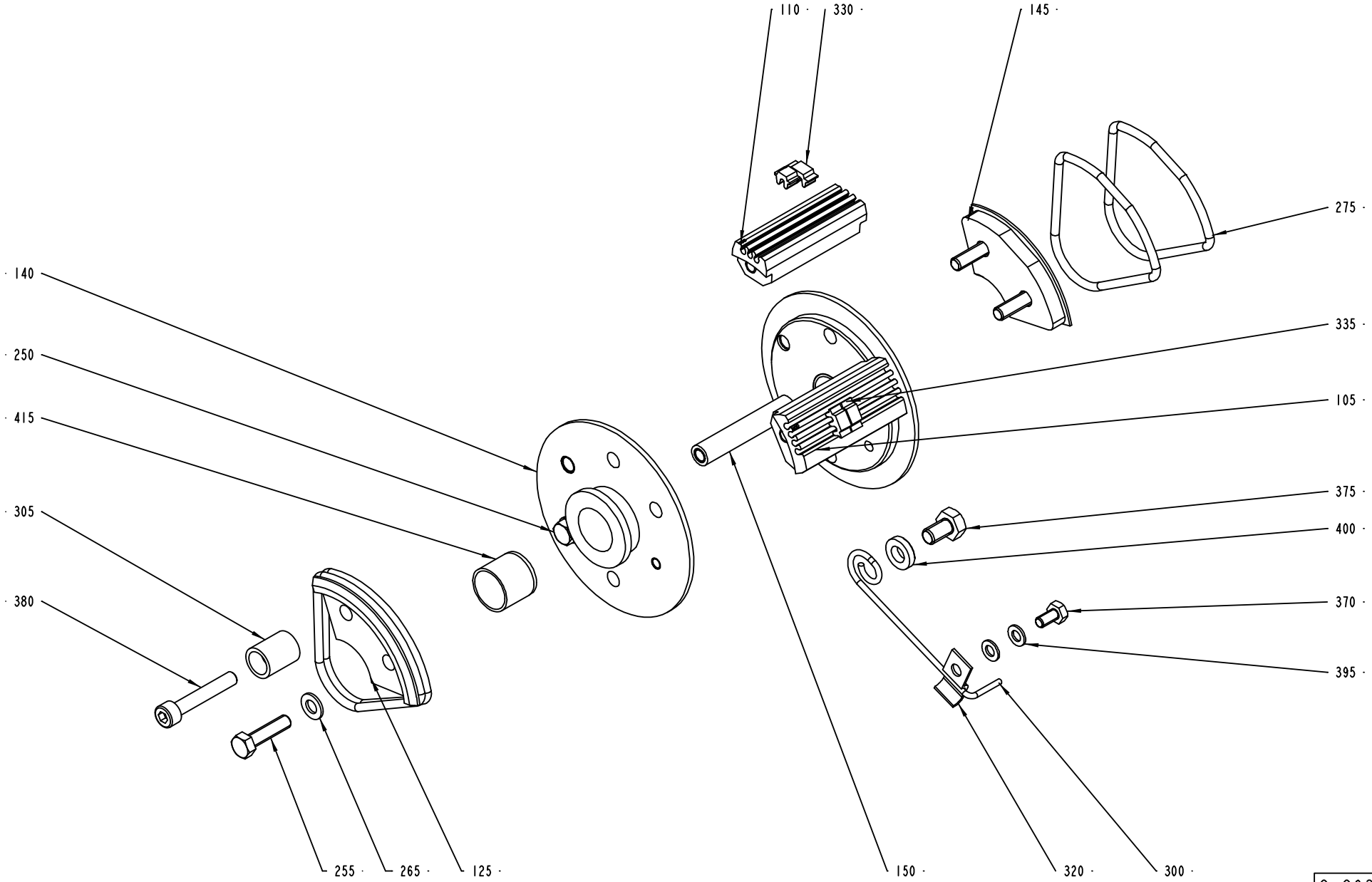

S-293684-4
ECN 73044

ECM: 227528 - 20051011
Group number: 293684-0200
Assembly Drawing: 293684-4_1_AB

This list covers pages from 12-76 to 12-79

Pos	Part No	UN	Qty	Description	Page No
TB 0300B (See drawing on pages: 8-36, 12-78)					
105	293395-0002		2	TYPE HOLDER	
110	293395-0001		2	TYPE HOLDER	
130	292412-0000		1	END SECTION	
135	292413-0000		1	END SECTION	
145	293659-0000		1	CARRIER	
255	312101-0331		7	SCREW M6S M5X20 FZB	
265	315101-0146		7	WASHER PLAIN, BRB, 5,3/10 H=1	
285	315202-0304		2	O-RING 64,5X3 MM	
410	315202-0305		2	O-RING 69,5X3 MM	
TB 0568B, TB 0500B (See drawing on pages: 8-34, 12-76)					
100	293395-0003		2	TYPE HOLDER	
110	293395-0001		2	TYPE HOLDER	
115	434787-0000		1	END SECTION	
120	292410-0000		1	END SECTION	
155	293676-0000		1	CARRIER	
200	90413-0048		1	CODE INSERT SET A 9/28	
205	90413-0049		1	CODE INSERT SET C 9/28	
255	312101-0331		7	SCREW M6S M5X20 FZB	
265	315101-0146		7	WASHER PLAIN, BRB, 5,3/10 H=1	
285	315202-0304		2	O-RING 64,5X3 MM	
410	315202-0305		2	O-RING 69,5X3 MM	
TB 0500S (See drawing on pages: 8-36, 12-78)					
105	293395-0002		1	TYPE HOLDER	
110	293395-0001		1	TYPE HOLDER	
125	479237-0000		1	CARRIER	
140	479236-0000		2	END SECTION	
145	479238-0000		1	CARRIER	
150	293671-0000		1	SPACER	
250	312101-0329		2	SCREW M6S M5X16 FZB	
255	312101-0331		3	SCREW M6S M5X20 FZB	
265	315101-0146		5	WASHER PLAIN, BRB, 5,3/10 H=1	
275	315202-0224		4	O-RING 42,2X3 MM	
TB 1136B, TB 1500B, TB 0568SQ, TB 0500SQ, TB 1000SQ, TB 1000S, TB 1000B LOFIN (See drawing on pages: 8-34, 12-76)					
100	293395-0003		1	TYPE HOLDER	
110	293395-0001		1	TYPE HOLDER	
115	292409-0000		2	END SECTION	
120	442072-0000		1	CARRIER	
125	292411-0000		1	CARRIER	
150	293671-0000		1	SPACER	
200	90413-0048		1	CODE INSERT SET A 9/28	
205	90413-0049		1	CODE INSERT SET C 9/28	
250	312101-0329		2	SCREW M6S M5X16 FZB	
255	312101-0331		3	SCREW M6S M5X20 FZB	
265	315101-0146		5	WASHER PLAIN, BRB, 5,3/10 H=1	
280	315202-0301		4	O-RING 49,5X3 MM	
TB 1000B HIFIN (See drawing on pages: 8-34, 12-76)					
100	293395-0003		1	TYPE HOLDER	
110	293395-0001		1	TYPE HOLDER	
115	293690-0000		2	END SECTION	
120	442431-0000		1	CARRIER	
125	293688-0000		1	CARRIER	
150	293671-0000		1	SPACER	
200	90413-0048		1	CODE INSERT SET A 9/28	
205	90413-0049		1	CODE INSERT SET C 9/28	
250	312101-0329		2	SCREW M6S M5X16 FZB	
255	312101-0331		3	SCREW M6S M5X20 FZB	
265	315101-0146		5	WASHER PLAIN, BRB, 5,3/10 H=1	
280	315202-0301		4	O-RING 49,5X3 MM	
Common Parts					
300	32691-0000		1	LOCK SPRING	
305	33011-0000		1	SLEEVE	
320	1511572-0000		1	CLIP	
330	90413-0043		1	CODE INSERT SET	
330	90413-0033		1	CODE INSERT SET C 2/16	
335	90413-0044		1	CODE INSERT SET	
335	90413-0047		1	CODE INSERT SET A 2/16	
370	312101-0287		1	SCREW M6S M4X8 FZB	
375	312101-0364		1	SCREW M6S M6X10 FZB	
380	312111-0335		1	SCREW HEX.SOCK.HD.MC6S-TT 5X30 88 FZB	
395	315101-0136		2	WASHER BRB, 4,3/8 H=0,8	
400	315111-0153		1	WASHER PLAIN, TBRB 6,4/12 H=3	
415	321120-0122		2	BEARING BUSH W/O FLANGE, 15X17X15 MM	

Machine Type | Group Description | Used-In | Group Number | Page No

COVERING PLATE

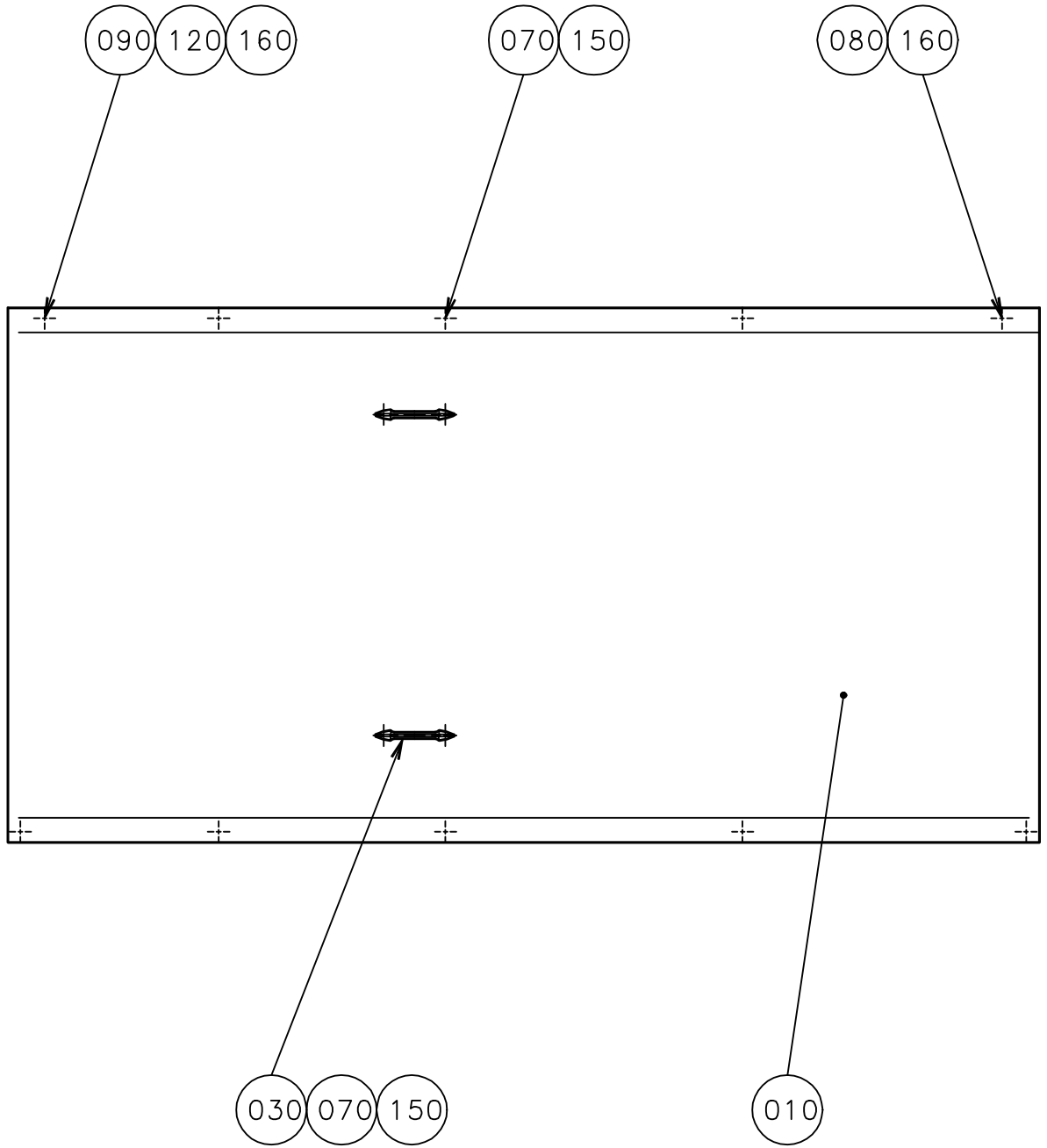

ECM: - -
Group number: 547905-0101
Assembly Drawing: 547905-1_1_AA

Pos	Part No	UN	Qty	Description	Page No
-					
010	451394-0000		1	COVER PLATE STAINLESS	
030	7309-0000		2	HANDLE	
070	312105-0367		10	SCREW M6S ISO 4017 M6X14 A480	
080	312105-0489		2	SCREW M6S ISO 4017 M10X16 A480	
090	312318-0499		2	SCREW ISO4029 M10X40 A4	
120	312605-0320		2	HEXAGON NUT, M6M M10 A280	
150	315105-0153		10	WASHER BRB 6,4X12 RFR	
160	315105-0173		4	WASHER BRB 10,5X20 RFR	

Pos	Part No	UN	Qty	Description	Page No

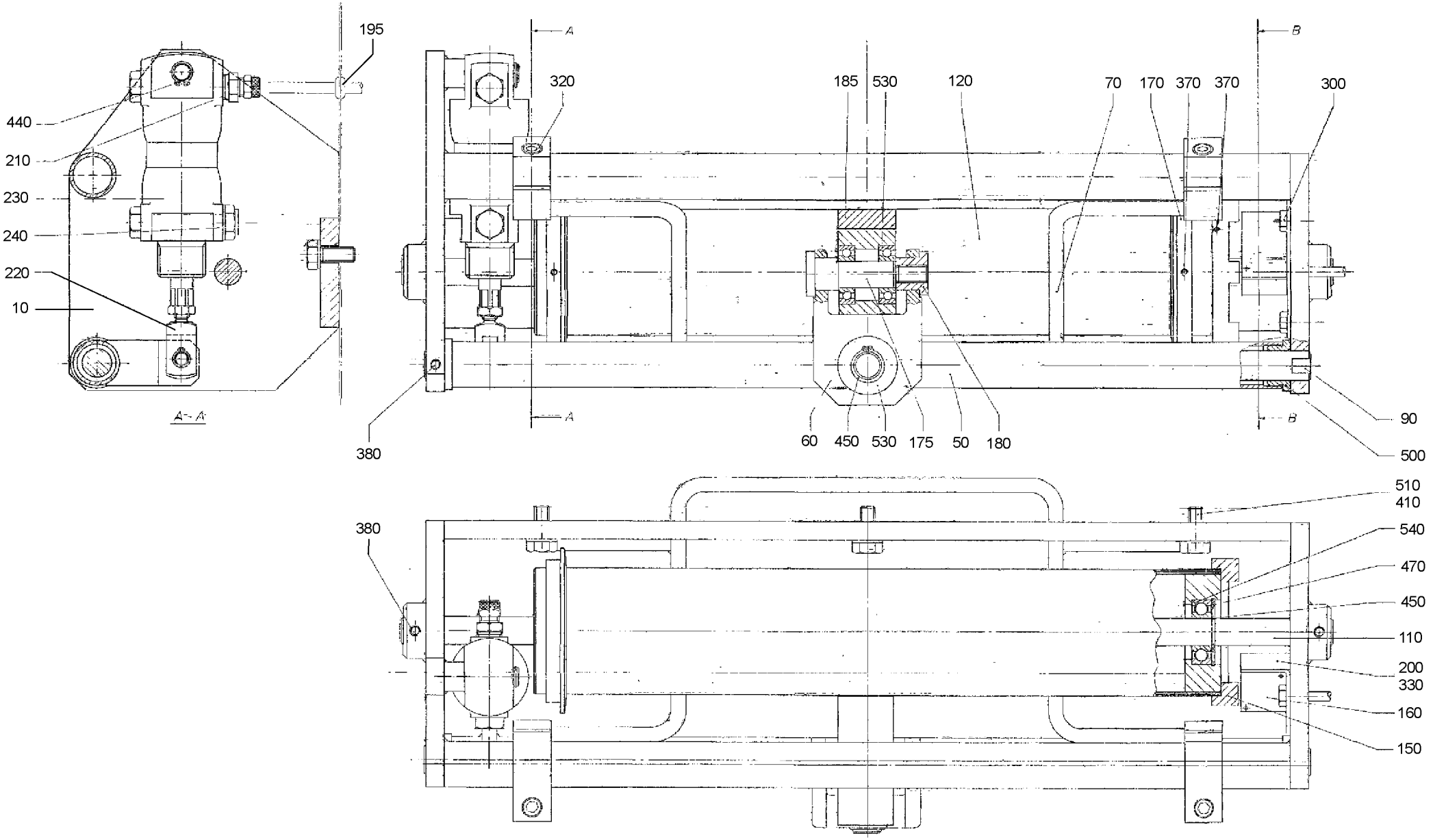
195
440
210
230
240
220
10
A - A
A
B
320
185
530
120
70
170
370
370
300
380
60
450
530
175
50
180
90
500
510
410
540
470
450
110
200
330
160
150

ECM: - -
Group number: 266736-0200
Assembly Drawing: 266736-1_1_AA

Pos	Part No	UN	Qty	Description	Page No
TB/8 0300B					
185	266710-0000		1	WHEEL	
TB/8 1000B, TB/8 0568B, TB/8 0500B, TB/8 1136B					
185	263151-0000		1	WHEEL REPBY 0540719-0000	
Common Parts					
010	297312-0000		1	CANTILEVER	
050	257663-0000		1	PIPE	
060	263150-0000		1	BRACKET	
070	297314-0000		1	BOW CLAMP	
090	252867-0000		1	SHAFT	
110	252869-0000		1	SHAFT	
120	252870-0000		1	BENDING ROLLER	
150	255281-0000		1	RING	
160	255282-0000		1	BRACKET	
170	255283-0000		2	FLANGE	
175	263152-0000		1	SHAFT	
180	263153-0000		1	NUT	
195	90015-0010		1	BUSHING	
200	90044-0087		1	PROXIMITY SWITCH REPL.BY 90044-104	
210	90224-0097		1	NIPPLE	
220	90239-0127		1	BRACKET	
230	90239-0189		1	DOUBLE ACTING, MINI-ISO, CYL 25-32	
	90285-0094		*1*	*SEAL KIT*	
240	90257-0001		1	FILTER PLUG ART.NO.8145-00-140 TYPE F14	
300	312105-0366		2	SCREW M6S ISO 4017 M6X12 A480	
310	312105-0453		3	SCREW M6S ISO 4017 M8X25 A480	
320	312115-0372		2	SCREW ISO4762 M6X25 A4 80	
330	312125-0228		2	SCREW ISO 1207 M3X16 A4	
370	312318-0285		7	SCREW ISO4029 M4X6 A4	
380	312318-0362		4	SCREW ISO4029 M6X8 A4	
410	315105-0165		3	WASHER BRB 8,4X16 RFR	
440	315750-0107		1	RETAINING RING SHAFT DIN 471 ST 10	
450	315750-0112		3	RETAINING RING SHAFT DIN 471 ST 15	
470	315752-0124		2	RETAINING RING FOR BORE DIN 472 35 ST	
500	321101-0202		2	FLANGE BUSHING, 16X22X12 MM	
530	321308-0202		4	BALL BEARING, 15X32X9 MM	
540	321313-0102		2	BALL BEARING, 15X35X11 MM	

Pos	Part No	UN	Qty	Description	Page No

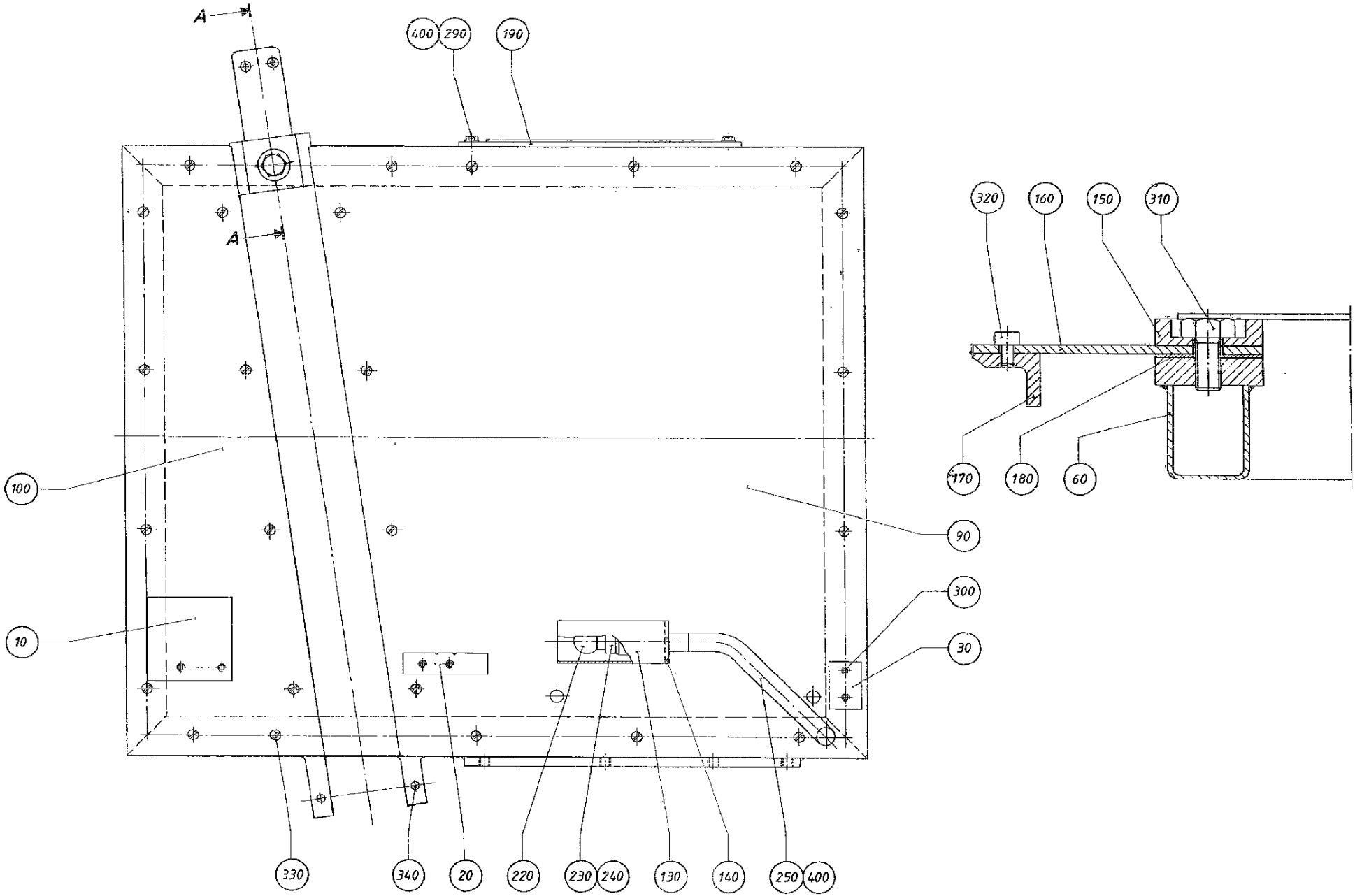
A
A
400
290
190
320
160
150
310
170
180
60
100
90
300
10
30
330
340
20
220
230
240
130
140
250
400

ECM: - -
Group number: 243966-0100
Assembly Drawing: 243966-1_1_AA

Pos	Part No	UN	Qty	Description	Page No
0300B					
010	37947-0000		1	RULER	
020	37944-0000		1	RULER	
030	37946-0000		1	RULER	
0500B, 1136B, 0568B, 1000B					
010	37913-0000		1	RULER	
020	37914-0000		1	RULER	
030	37915-0000		1	RULER	
0500S					
010	442385-0000		1	RULER	
020	442386-0000		1	RULER	
030	442387-0000		1	RULER	
Common Parts					
060	243141-0000		1	FRAME	
090	37906-0000		1	SHEET	
100	37907-0000		1	SHEET	
130	37774-0000		1	PROTECTIVE COVER	
140	37775-0000		1	LAMP HOLDER	
150	37908-0000		1	PLATE	
160	37909-0000		1	SPRING	
170	37910-0000		1	LOCK	
180	37911-0000		1	LACE	
190	37912-0000		1	LOCK PLATE	
220	90036-0009		1	LIGHT BULB, BA15D 24V	
230	90037-0001		1	LAMPHOLDER	
240	90086-0001		1	NIPPLE, M10X1	
250	90152-0001		1	HOSE L=280MM THREAD M10X1	
290	312105-0325		2	SCREW M6S ISO 4017 M5X10 A480	
300	312105-0362		6	SCREW M6S ISO 4017 M6X8 A480	
310	312105-0491		1	SCREW M6S ISO 4017 M10X20 A480	
320	312115-0323		2	SCREW ISO4762 M5X8 A4 80	
330	312145-0220		25	SCREW ISO 2009 MFS M3X6 A4	
340	312318-0362		2	SCREW ISO4029 M6X8 A4	
370	315105-0146		2	WASHER BRB 5,3X10 RFR	
400	352101-0102		1	LEAD-IN, PR15,2/PG9, E-1457515	

Pos	Part No	UN	Qty	Description	Page No

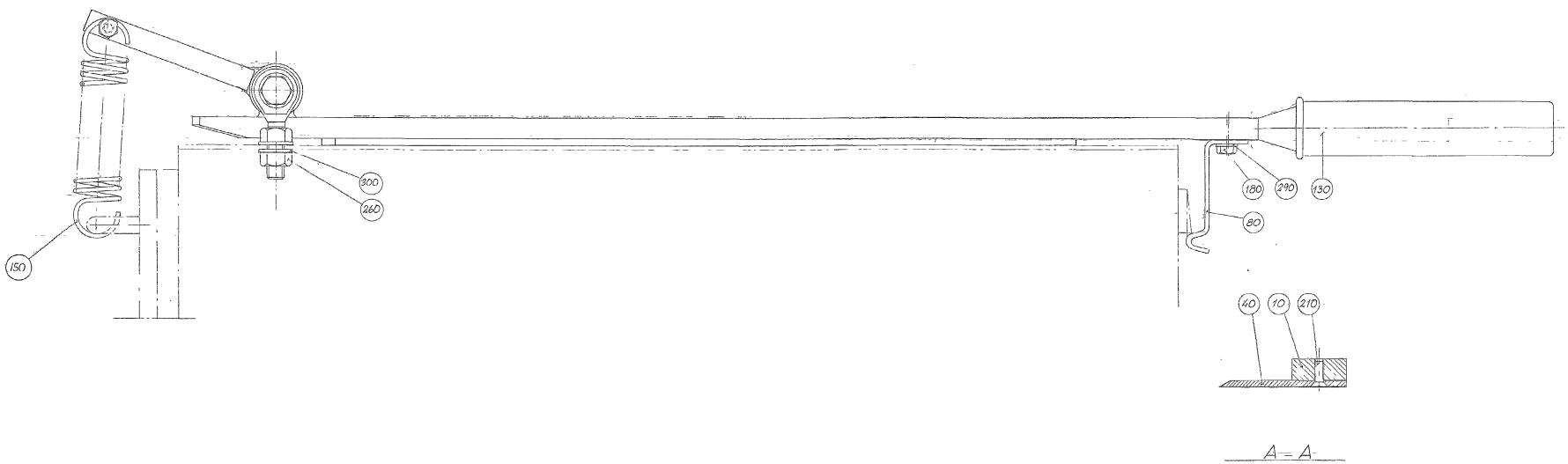
300
260
150
180
290
130
80
40
10
210
A – A

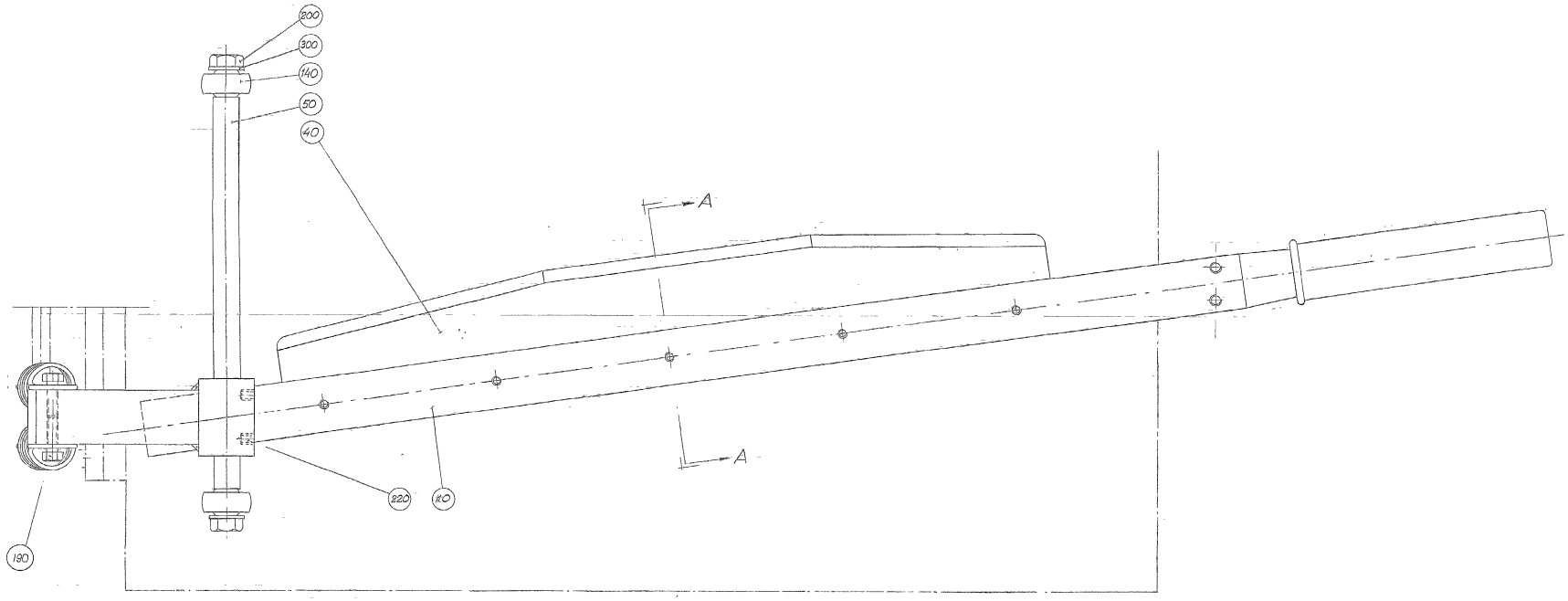
300
300
140
50
40
A
A
220
110
190

ECM: - -
Group number: 243965-0101
Assembly Drawing: 243965-1_1_AA

Pos	Part No	UN	Qty	Description	Page No
-					
010	243153-0000		1	PRESSURE ARM	
040	37900-0000		1	KNIFE	
050	37901-0000		1	SHAFT	
080	206913-0000		1	LOCKING LOOP	
130	90017-0001		1	BIKE HANDLE	
140	90115-0054		2	ROD END, ID=8 MM, M8X1,25	
150	90335-0004		2	TENSION SPRING 42380, 2X22X62,8	
180	312101-0327		2	SCREW M6S M5X12 FZB	
190	312101-0329		2	SCREW M6S M5X16 FZB	
200	312105-0455		2	SCREW M6S ISO 4017 M8X30 A480	
210	312145-0291		5	SCREW ISO 2009 MFS M4X12 A4	
220	312316-0321		2	SCREW HEX.SOCK.SET CUP P.MSK6SS5X6 FZB	
260	312605-0318		4	HEXAGON NUT, M6M M8 A280	
290	315101-0146		2	WASHER PLAIN, BRB, 5,3/10 H=1	
300	315105-0165		6	WASHER BRB 8,4X16 RFR	

Pos	Part No	UN	Qty	Description	Page No

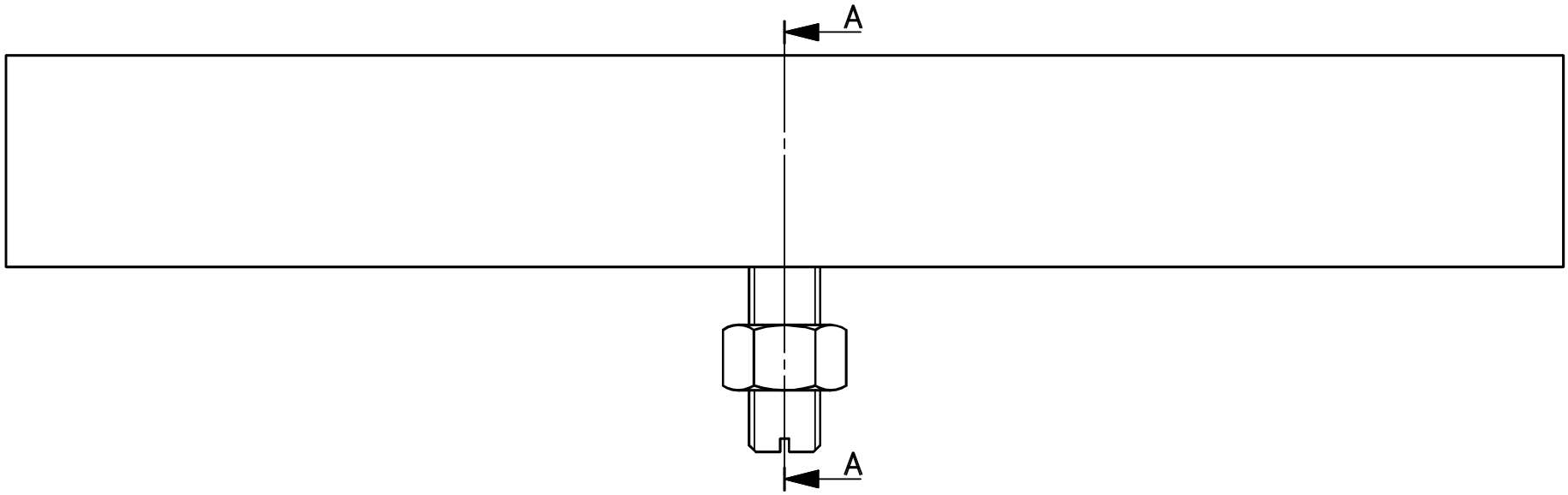

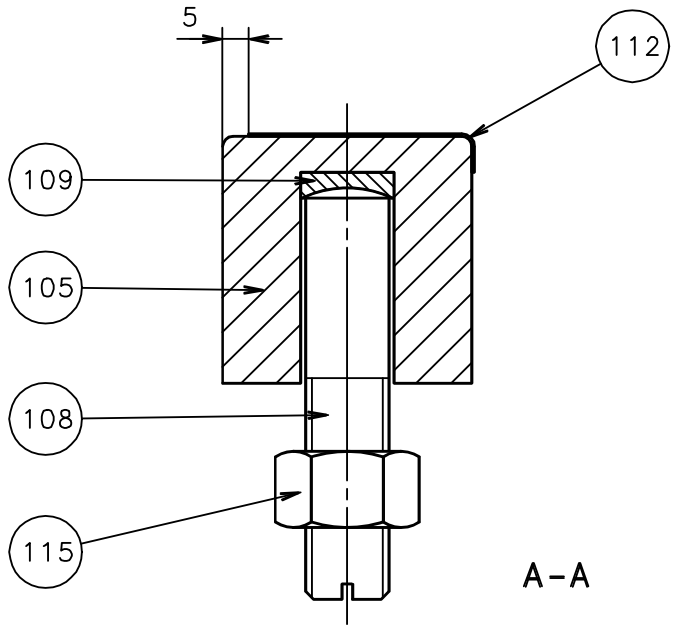

A-A

ECM: - -
Group number: 37894-0101
Assembly Drawing: 37894-1_1_AA

Pos	Part No	UN	Qty	Description	Page No
-					
105	37895-0000		1	RAIL	
108	37896-0000		1	DOWEL	
109	37897-0000		1	WASHER	
112	90144-0030	MM	360	TAPE	
115	312605-0324		1	HEXAGON NUT, M6M M16 A280	

Pos	Part No	UN	Qty	Description	Page No

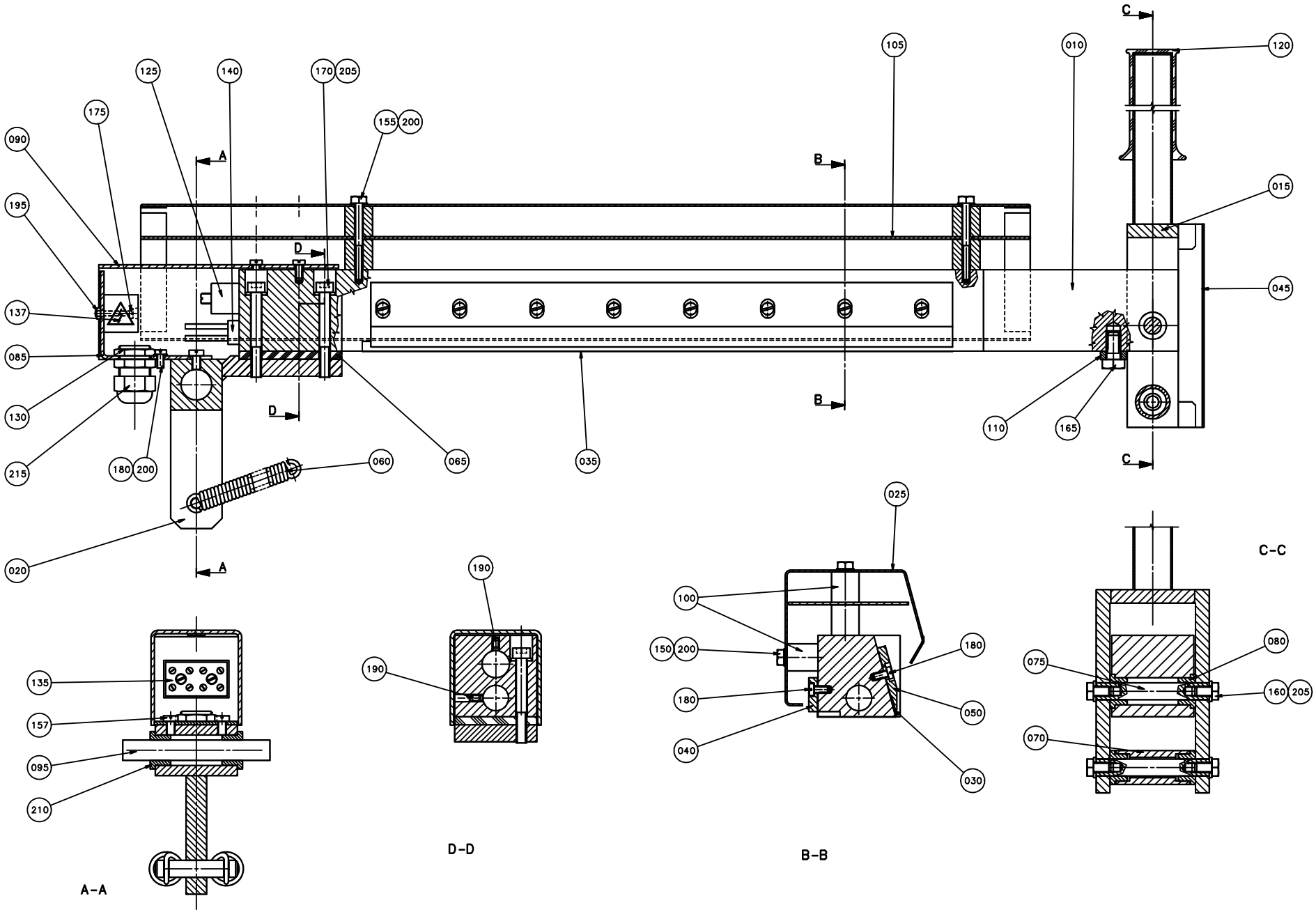
090
175
125
140
170
205
155
200
105
010
120
195
015
045
137
085
130
215
180
200
060
065
035
110
165
020
025
190
100
150
200
180
050
040
030
135
157
095
210
075
080
160
205
070
A-A
D-D
B-B
C-C

ECM: - -
Group number: 37877-0301
Assembly Drawing: 37877-2_1_AA

Pos	Part No	UN	Qty	Description	Page No	Pos	Part No	UN	Qty	Description	Page No
-											
010	255301-0000		1	HEATING RAIL							
015	37879-0000		1	LOCKING ARM							
020	37880-0000		1	HINGE							
025	243132-0000		1	PROTECTION PLATE							
030	31017-0000		1	KNIFE							
035	31723-0000		1	TEFLON STRIP							
040	31724-0000		1	LOCK BAR							
045	37882-0000		1	PROTECTION PLATE							
050	37883-0000		1	LOCK BAR							
055	37884-0000		1	SHAFT							
060	37885-0000		2	TENSION SPRING							
065	37886-0000		1	INSULATING DISK							
070	37888-0000		1	ROLL							
075	37889-0000		2	SHAFT							
080	37890-0000		4	FLANGE ROLLER							
085	37892-0000		1	CONNECTION BOX							
090	37893-0000		1	LID							
095	208173-0000		1	SHAFT							
100	229775-0000		6	SPACER							
105	243133-0000		1	SHIELD PLATE							
110	245221-0000		1	STOP							
120	90017-0001		1	BIKE HANDLE							
125	90059-0001		1	THERMOSTAT							
130	90099-0002		1	NUT PR 18,6 BRASS							
135	90077-0102		1	TERMINAL BLOCK, 1952.2							
137	90194-0016		1	WARNING SIGN, RISK OF ELECTRIC SHOCK							
140	90206-0053		1	HEATING ELEMENT 230V 1200W							
150	312105-0297		2	SCREW M6S ISO 4017 M4X25 A470							
155	312105-0304		2	SCREW M6S M4X45 A280							
157	312105-0323		2	SCREW M6S ISO 4017 M5X8 A480							
160	312105-0364		4	SCREW M6S ISO 4017 M6X10 A480							
165	312105-0449		2	SCREW M6S ISO 4017 M8X16 A480							
170	312115-0380		4	SCREW ISO4762 M6X50 A4 80							
175	312125-0230		2	SCREW ISO 1207 M3X20 A4							
180	312125-0287		19	SCREW ISO 1207 M4X8 A4							
190	312318-0287		2	SCREW ISO4029 M4X8 A4							
195	312605-0310		2	HEXAGON NUT, M6M M3 A280							
200	315105-0136		5	WASHER BRB 4,3X9 RFR							
205	315105-0153		8	WASHER BRB 6,4X12 RFR							
210	321101-0173		2	FLANGE BUSHING, 12X18X12 MM							
215	352103-0106		1	CABLE GLAND, ST 11, PR18,6/PG11							

Machine Type	Group Description	Used-In	Group Number	Page No

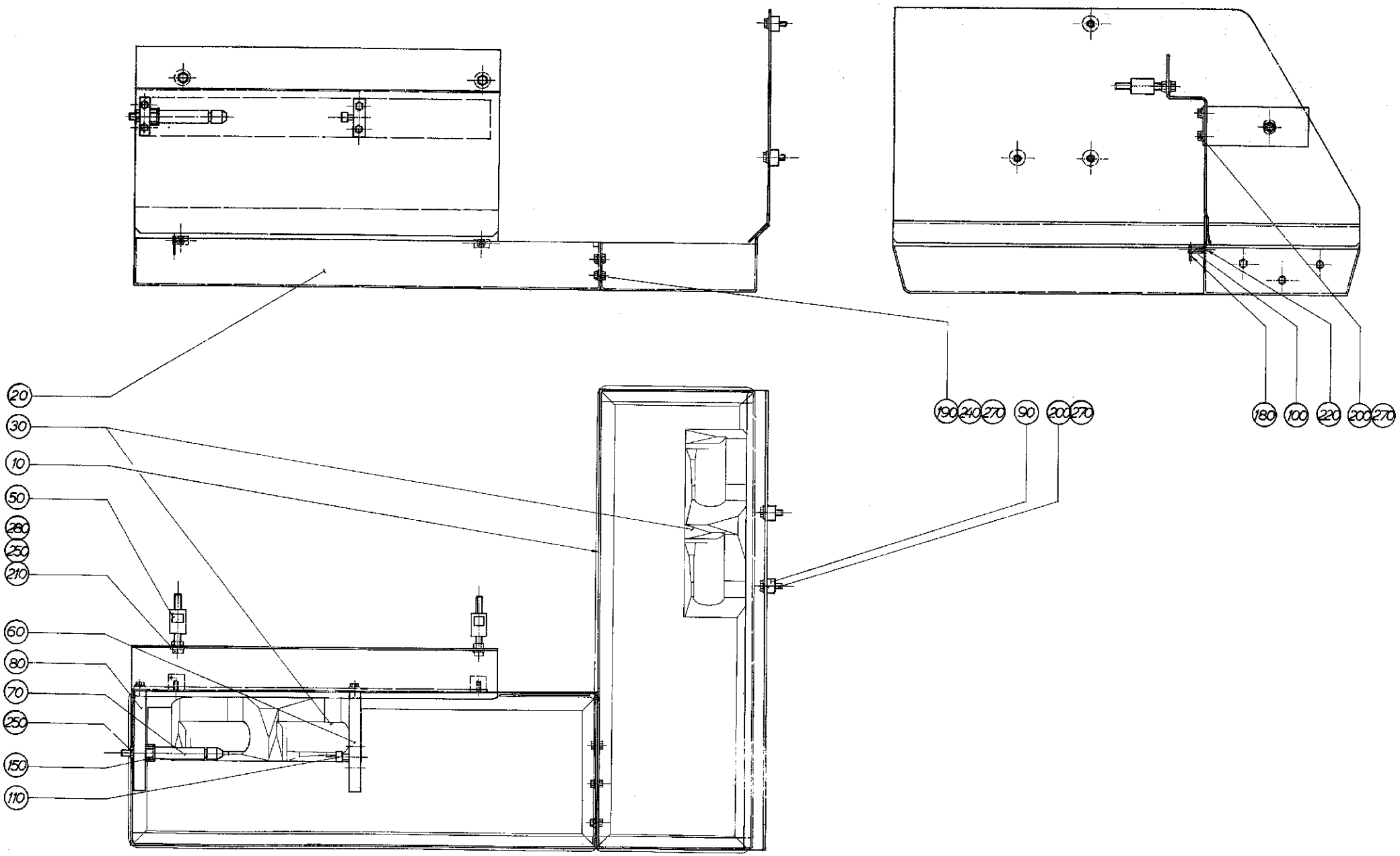
20
30
10
50
280
250
210
60
80
70
250
150
110
190
240
270
90
200
270
180
100
220
200
270

ECM: - -
Group number: 434446-0100
Assembly Drawing: 434446-1_1_AA

Pos	Part No	UN	Qty	Description	Page No
-					
010	434403-0000		1	SPLASH PLATE	
020	434404-0000		1	SERVICE TABLE	
030	440090-0000		2	TROUGH	
050	292136-0000		2	SPACER	
060	292137-0000		1	CANTILEVER	
070	434406-0000		1	SHAFT	
080	434407-0000		1	CANTILEVER	
090	434408-0000		3	SPACER	
100	434409-0000		2	SPACER	
110	436249-0000		1	SCREW	
150	90166-0059	MM	12	HOSE PVC 12/16MM TRANSP.	
180	311103-0210		1	PARALLEL PIN ISO 2338 2,5M6X16 A1	
190	312105-0366		3	SCREW M6S ISO 4017 M6X12 A480	
200	312105-0370		7	SCREW M6S ISO 4017 M6X20 A480	
210	312109-0459		2	SCREW M6S ISO 4017 M8X40 A480	
220	312155-0325		2	SCREW DIN 7991 MF6S M5X10 A4 70	
240	312605-0316		3	HEXAGON NUT, M6M M6 A280	
250	312605-0318		3	HEXAGON NUT, M6M M8 A280	
270	315105-0153		10	WASHER BRB 6,4X12 RFR	
280	315105-0165		2	WASHER BRB 8,4X16 RFR	

Pos	Part No	UN	Qty	Description	Page No

PAPER REEL HOLDER SMALL

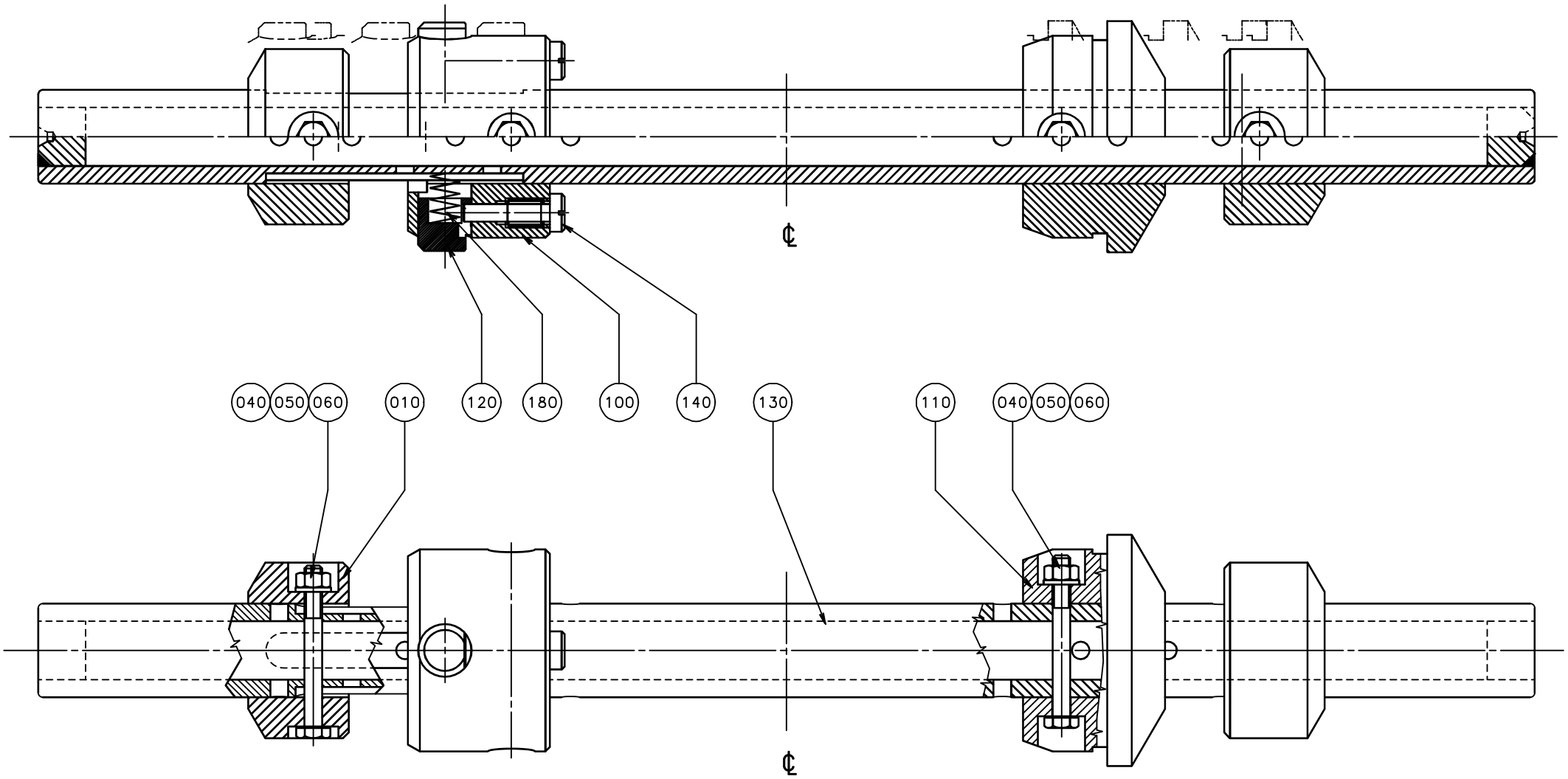

ECM: 70502 - 19970123
Group number: 440258-0100
Assembly Drawing: 440258-1_1_AA

Pos	Part No	UN	Qty	Description	Page No
0500S, 0300B (See drawing on page: 12-94)					
010	440259-0000		2	RETAINING RING	
040-02	312101-0381		4	SCREW M6S M6X55 FZB	
050-02	312812-0316		4	HEXAGON NUT, NY-LOCK M6 A480	
060-02	315101-0153		4	WASHER PLAIN, BRB, 6,4/12 H=1,5	
100	271239-0000		1	SLEEVE	
110	272810-0001		1	SLEEVE	
120	272813-0000		2	PLUNGER	
0500B, 1136B, 0568B, 1000B (See drawing on page: 12-94)					
040	312101-0381		2	SCREW M6S M6X55 FZB	
050	312812-0316		2	HEXAGON NUT, NY-LOCK M6 A480	
060	315101-0153		2	WASHER PLAIN, BRB, 6,4/12 H=1,5	
100	271239-0000		1	SLEEVE	
110	272810-0001		1	SLEEVE	
120	272813-0000		2	PLUNGER	
1000S (See drawing on page: 12-94)					
040	312101-0381		2	SCREW M6S M6X55 FZB	
050	312812-0316		2	HEXAGON NUT, NY-LOCK M6 A480	
060	315101-0153		2	WASHER PLAIN, BRB, 6,4/12 H=1,5	
100	569942-0000		1	SLEEVE	
110	569943-0000		1	SLEEVE	
120	272813-0000		2	PLUNGER	
1500B (See drawing on page: 12-94)					
040	312101-0381		2	SCREW M6S M6X55 FZB	
050	312812-0316		2	HEXAGON NUT, NY-LOCK M6 A480	
060	315101-0153		2	WASHER PLAIN, BRB, 6,4/12 H=1,5	
100	271239-0000		1	SLEEVE	
110	593562-0000		1	SLEEVE	
120	593563-0000		2	PLUNGER	
Common Parts					
130	440260-0000		1	SHAFT	
140	271241-0000		2	SCREW	
180	90335-0025		2	COMP. SPRING 22010, 1X11X26	

Pos	Part No	UN	Qty	Description	Page No

Machine Type	Group Description	Used-In	Group Number	Page No

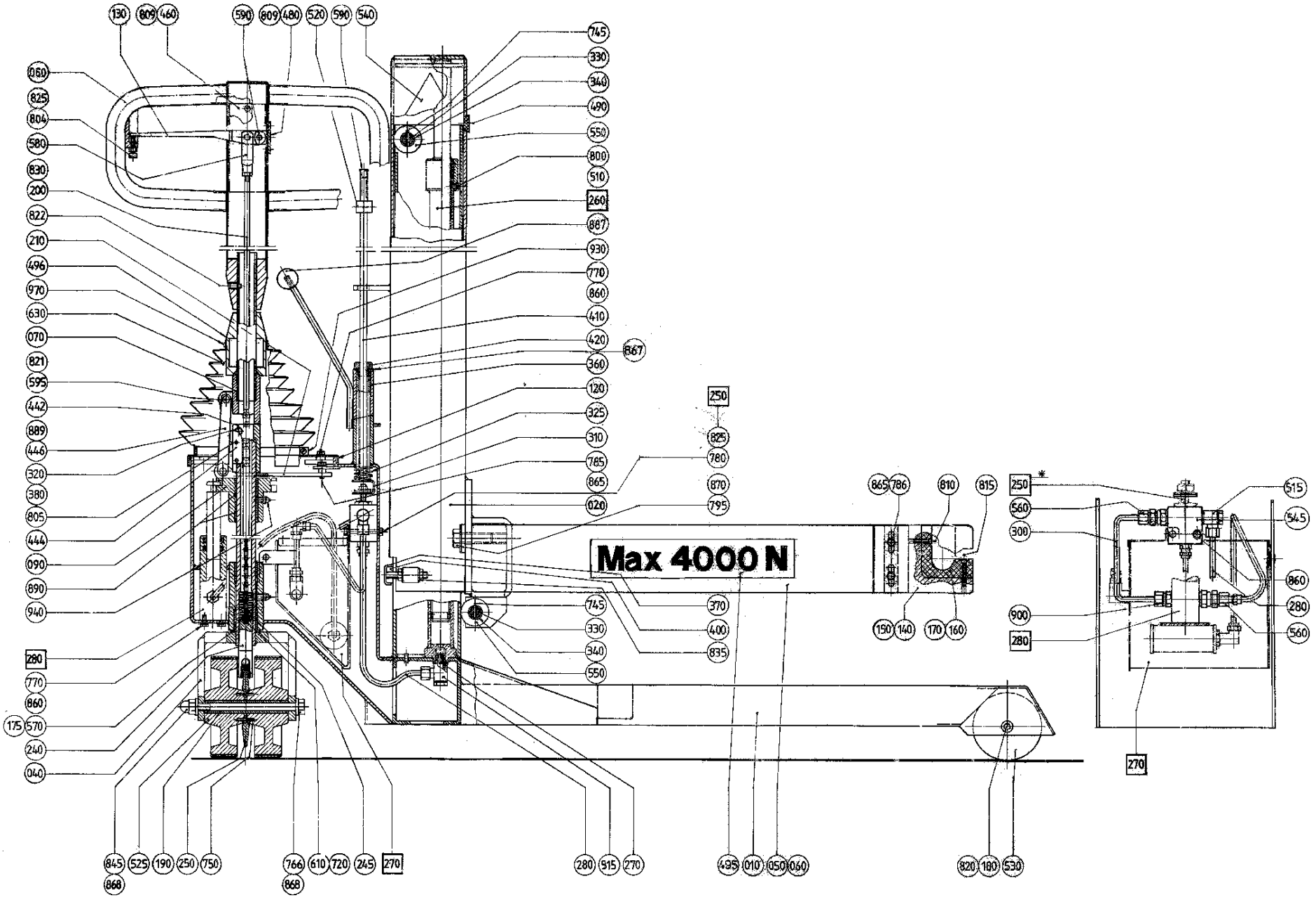
Max 4000 N

ECM: 71011 - 19970811
Group number: 464100-0200
Assembly Drawing: 464100-2_1_AA

This list covers pages from 12-96 to 12-99

Pos	Part No	UN	Qty	Description	Page No
TB/8					
020	530765-0000		1	PILLAR	
140	493558-0000		1	HOLDER R	
150	493559-0000		1	HOLDER L	
160	493560-0000		1	SUPPORT R	
170	493561-0000		1	SUPPORT L	
F280	493729-0100		1	PUMP	**12-101**
F270	493700-0100		1	TANK	**12-105**
F260	464124-0100		1	LIFTING CYLINDER	**12-107**
F250	464108-0100		1	HYDRAULIC VALVE	**12-111**
Common Parts					
010	464080-0000		1	MACHINE BODY	
040	464086-0000		1	FORK	
050	493553-0000		1	LIFTING FORK	
060	493554-0000		1	LIFTING FORK	
070	493555-0000		1	HANDLE BRACKET	
080	493556-0000		1	HANDLE	
090	464085-0000		1	CARRIER	
120	527776-0000		1	LID	
130	493557-0000		1	BRAKE HANDLE	
175	451719-0003		1	WASHER	
180	464082-0000		2	SHAFT	
190	464088-0000		1	SHAFT	
200	464089-0000		1	STRUT	
210	464090-0000		1	SUPPORT	
240	464093-0000		1	YOKE	
245	536387-0000		1	COMPRESSION SPRING	
250	464095-0000		1	BRAKE DISC	
270	464102-0000		1	CONE (PRESSURE)	
280	536398-0000		1	PIPE	
300	464105-0000		1	PIPE	
310	464107-0000		1	BRACKET	
320	527794-0000		2	BOLT	
325	464112-0000		1	COMPRESSION SPRING	
330	464115-0000		2	SHAFT	
340	464116-0000		2	SPACER PIPE	
360	464119-0000		1	HANDSPIKE	
370	464121-0000		1	HOLDER	
380	464122-0000		2	BUSHING	
400	464129-0000		1	SLIDE PLATE	
410	464130-0000		1	PIPE	
420	534875-0000		1	NIPPLE	
442	493562-0000		1	BRACKET	
444	493563-0000		1	STEERING	
446	493564-0000		1	STRUT	
460	493566-0000		1	LID	
480	493568-0000		1	BRACKET	
490	493569-0000		1	PLUG	
495	522308-0000		2	SIGN	
496	527777-0000		1	BUSHING	
510	90005-0010		1	BONDED SEAL SS/NBR M5	
515	90030-0160		2	CONN. BANJO, 8-G1/4	
520	90165-0063		1	CLIP	
525	90191-0037		2	WHEEL	
530	90191-0038		2	WHEEL, NO. 100 UK	
540	90194-0012		1	LABEL REPL.BY 90194-0127	
545	90201-0018		1	HOUSING, NO. 40421	
550	90214-0053		4	ROLLER BEARING, 15X40X15, 9 MM	
560	90230-0024		2	NON-RETURN VALVE OPENING PRESSURE 0,2BAR	
570	90240-0133		1	FLANGE BUSHING, 30X34X30 MM	
580	90254-0010		1	LINK	
590	90258-0036		2	BOLT	
595	90258-0037		2	BOLT	
610	90288-0045		1	ROLLER CHAIN, SINGLE 1/2 -28	
630	90342-0010		1	RUBBER BELLOWS, 60X152 MM	
720	311103-0237		1	PARALLEL PIN ISO 2338 3M6X18 A1	
745	311111-0308		2	SPRING PIN ISO 8752 5X20-ST	
750	311111-0310		4	SPRING PIN ISO 8752 5X24-ST	
766	312101-0561		1	SCREW M6S M12X160FZB	
770	312105-0366		6	SCREW M6S ISO 4017 M6X12 A480	
780	312105-0380		2	SCREW M6S ISO 4014 M6X50 A480	
785	312105-0451		2	SCREW M6S ISO 4017 M8X20 A480	
786	312105-0455		4	SCREW M6S ISO 4017 M8X30 A480	
795	312105-0630		2	SCREW M6S ISO 4017 M16X50 A480	
800	312111-0323		1	SCREW HEX.SOCK.HD.MC6S-TT 5X8 88 FZB	
804	312115-0372		1	SCREW ISO4762 M6X25 A4 80	
805	312115-0374		2	SCREW ISO4762 M6X30 A4 80	
809	312155-0289		4	SCREW DIN 7991 MF6S M4X10 A4 70	
810	312155-0372		2	SCREW DIN 7991 MF6S M6X25A4 70	
815	312155-0378		2	SCREW DIN 7991 MF6S M6X40 A4 70	
820	312155-0449		4	SCREW DIN 7991 MF6S M8X16 A4 70	
821	312316-0284		2	SCREW HEX.SOCK.SET CUP P.MSK6SS4X5 FZB	
822	312311-0489		1	SCREW ISO4028 M10X16 FZB	
825	312605-0316		3	HEXAGON NUT, M6M M6 A280	

Machine Type | Group Description | Used-In | Group Number | Page No

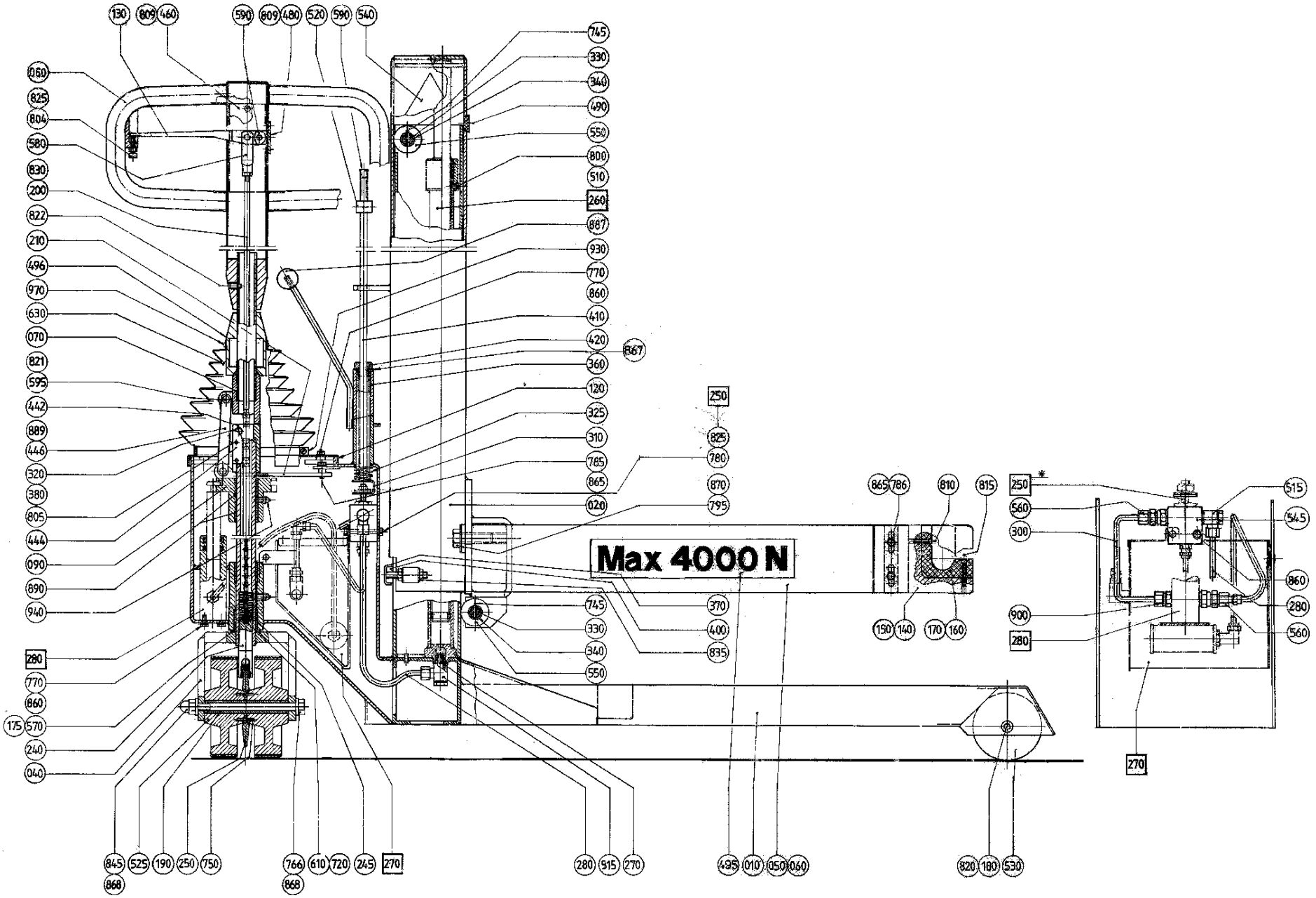
Max 4000 N

ECM: 71011 - 19970811
Group number: 464100-0200
Assembly Drawing: 464100-2_1_AA

This list covers pages from 12-96 to 12-99

Pos	Part No	UN	Qty	Description	Page No
Common Parts (Cont'd)					
830	312605-0318		1	HEXAGON NUT, M6M M8 A280	
835	312605-0320		4	HEXAGON NUT, M6M M10 A280	
845	312705-0322		1	NUT HEX. DOMED CAP MHM-6 M12 A2	
860	315105-0153		5	WASHER BRB 6,4X12 RFR	
865	315105-0165		6	WASHER BRB 8,4X16 RFR	
867	315105-0186		1	WASHER BRB 17X30 RFR	
868	315115-0178		2	WASHER PLAIN, TBRB 13/24 H=4	
870	315121-0186		2	WASHER PLAIN, TBRSB 17/42 H=8	
887	318800-0104		1	HANDLE,SPHERICAL KNOB,INT.THRE.,D.30-M8	
889	321120-0104		4	BEARING BUSH W/O FLANGE, 10X12X10 MM	
890	321120-0171		3	BEARING BUSH W/O FLANGE, 30X34X30 MM	
900	342752-0103		1	CONN. STR. GA-8-G1/4	
930	342991-0116		1	HOSE CLIP,WORM DRIVE TYPE (136)-163	
940	344502-0026		2	GREASE NIPPLE STRAIGHT R1/8 CON.	
970	352113-0103		1	CABLE TIE, BLACK 290X7,6 MM	

Pos	Part No	UN	Qty	Description	Page No

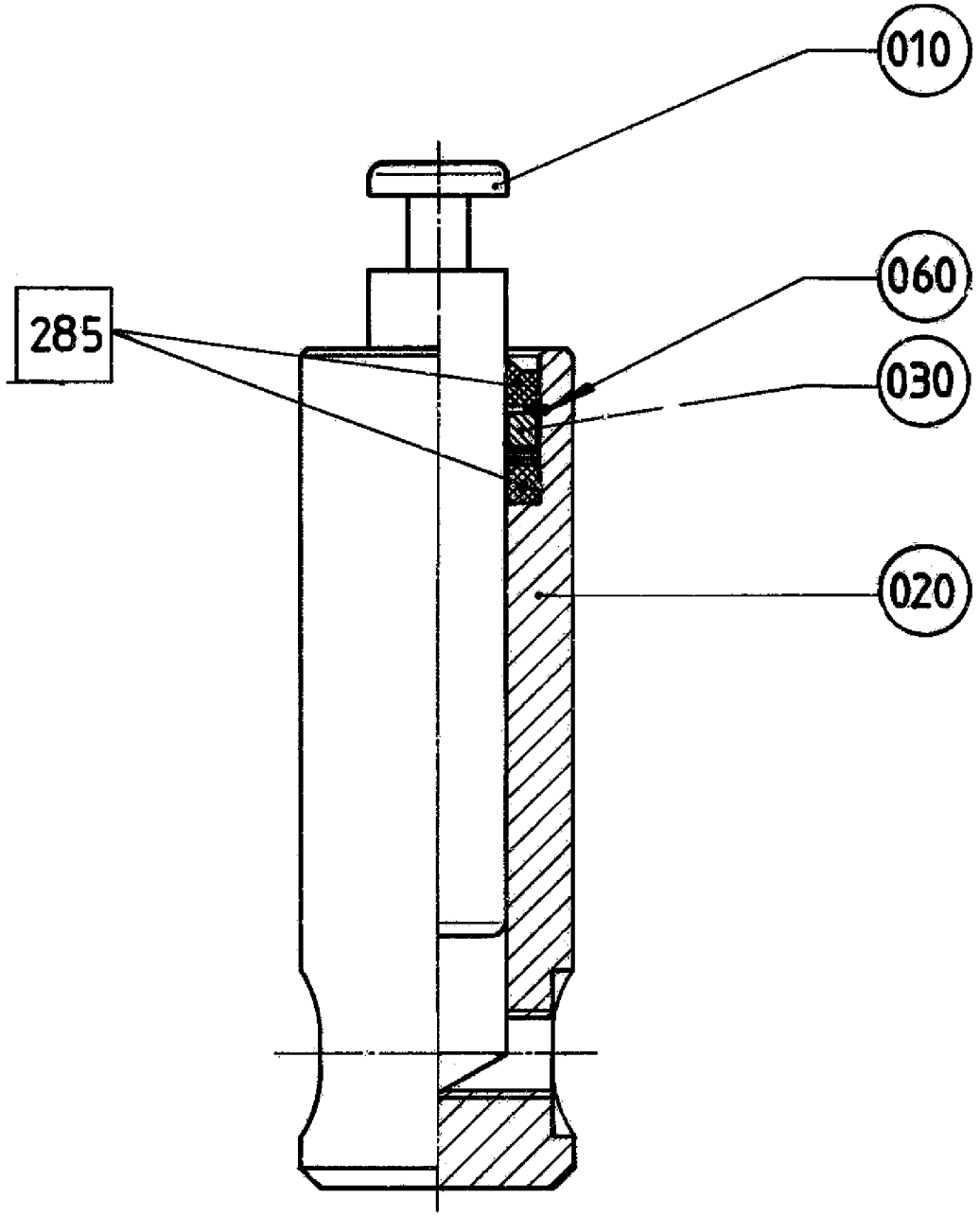
010
060
285
030
020

ECM: 71011 - 19970811
Group number: 493729-0100
Assembly Drawing: 493729-1_1_AA

Pos	Part No	UN	Qty	Description	Page No
-					
010	464084-0000		1	PISTON ROD	
020	493730-0000		1	MANTLE	
030	493731-0000		1	WASHER	
060	315753-0122		1	RETAINING RING FOR BORE DIN 472 30 A2	
F285	529279-0100		1	SEAL KIT	**12-103**

Pos	Part No	UN	Qty	Description	Page No

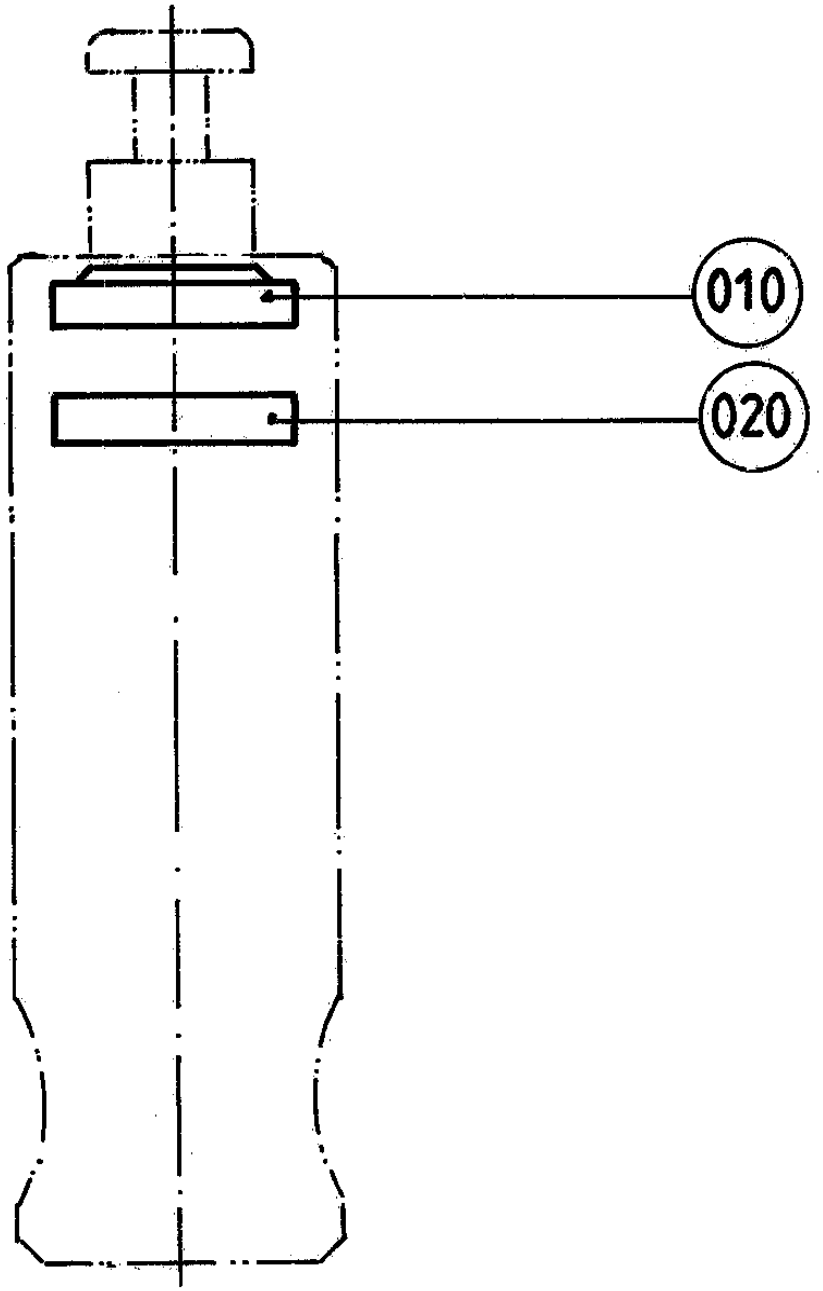
010
020

ECM: - -
Group number: 529279-0100
Assembly Drawing: 529279-1_1_AA

Pos	Part No	UN	Qty	Description	Page No	Pos	Part No	UN	Qty	Description	Page No
-											
010	90091-0038		1	SCRAPER 20X30X10 MM							
020	90091-0158		1	SEAL RING 30X20X8 MM							

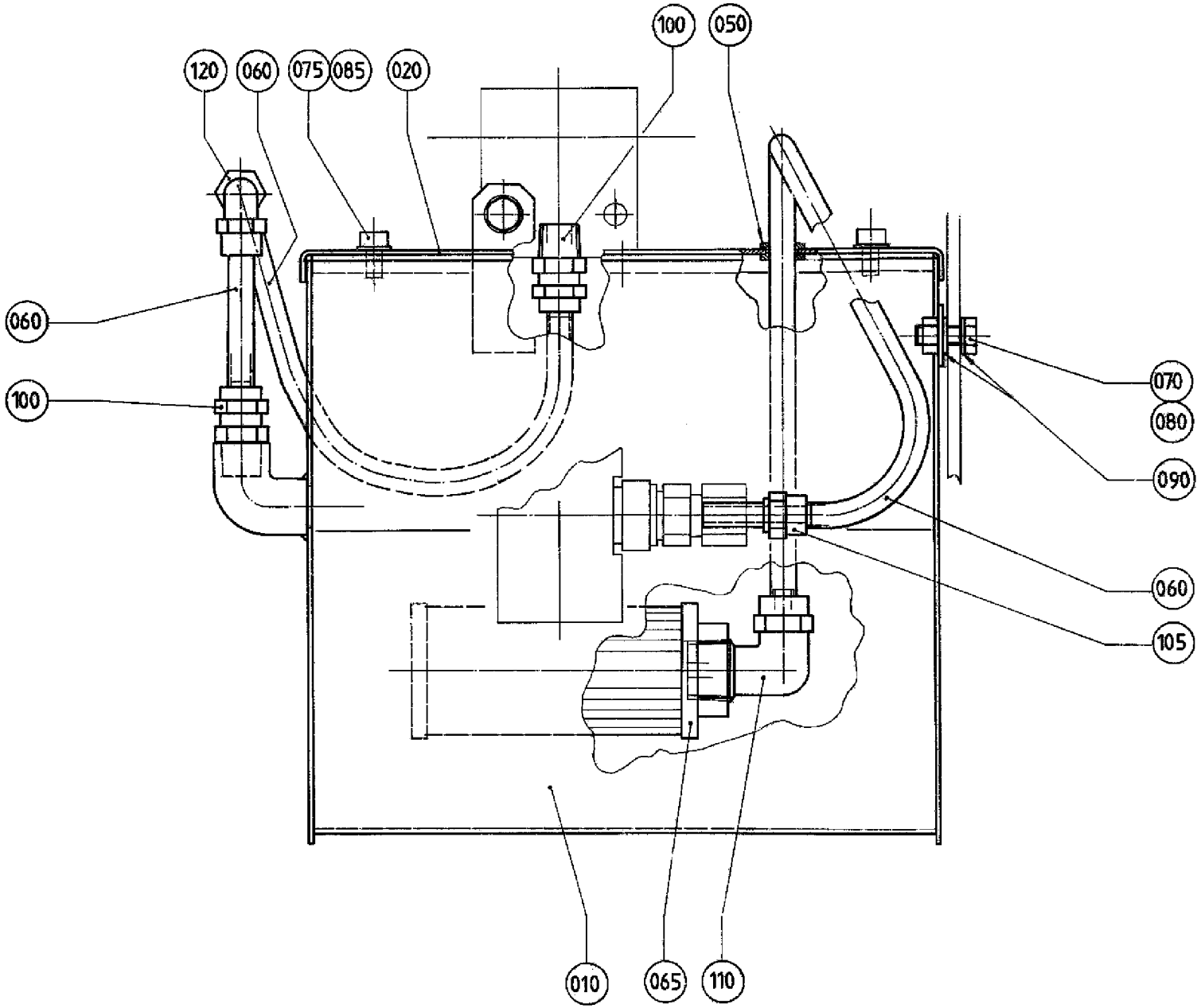
100
050
120
060
075
085
020
060
100
070
080
090
060
105
010
065
110

ECM: - -
Group number: 493700-0100
Assembly Drawing: 493700-1_1_AA

Pos	Part No	UN	Qty	Description	Page No
-					
010	493701-0000		1	TANK	
020	493702-0000		1	LID	
050	90015-0011		1	BUSHING	
060	90166-0122	MM	900	TUBE 8 MM PA,TRANSP.	
065	90415-0031		1	SUCTION FILTER / HY SUE 15-125	
070	312105-0368		1	SCREW M6S ISO 4017 M6X16 A480	
075	312115-0325		6	SCREW ISO4762 M5X10 A4 80	
080	312605-0316		1	HEXAGON NUT, M6M M6 A280	
085	315105-0146		6	WASHER BRB 5,3X10 RFR	
090	315105-0153		2	WASHER BRB 6,4X12 RFR	
100	342920-0122		2	STRAIGHT COUPLING,EXT.THREADED 8/6-R1/4"	
105	342929-0121		1	STRAIGHT COUPLING,SOLDER 8/6-8	
110	342930-0124		1	ELBOW 90 COUPL.,EXT.THREAD 8/6-R1/2"	
120	342936-0122		1	ELBOW 90 COUPL.,UNION 8/6	

Pos	Part No	UN	Qty	Description	Page No

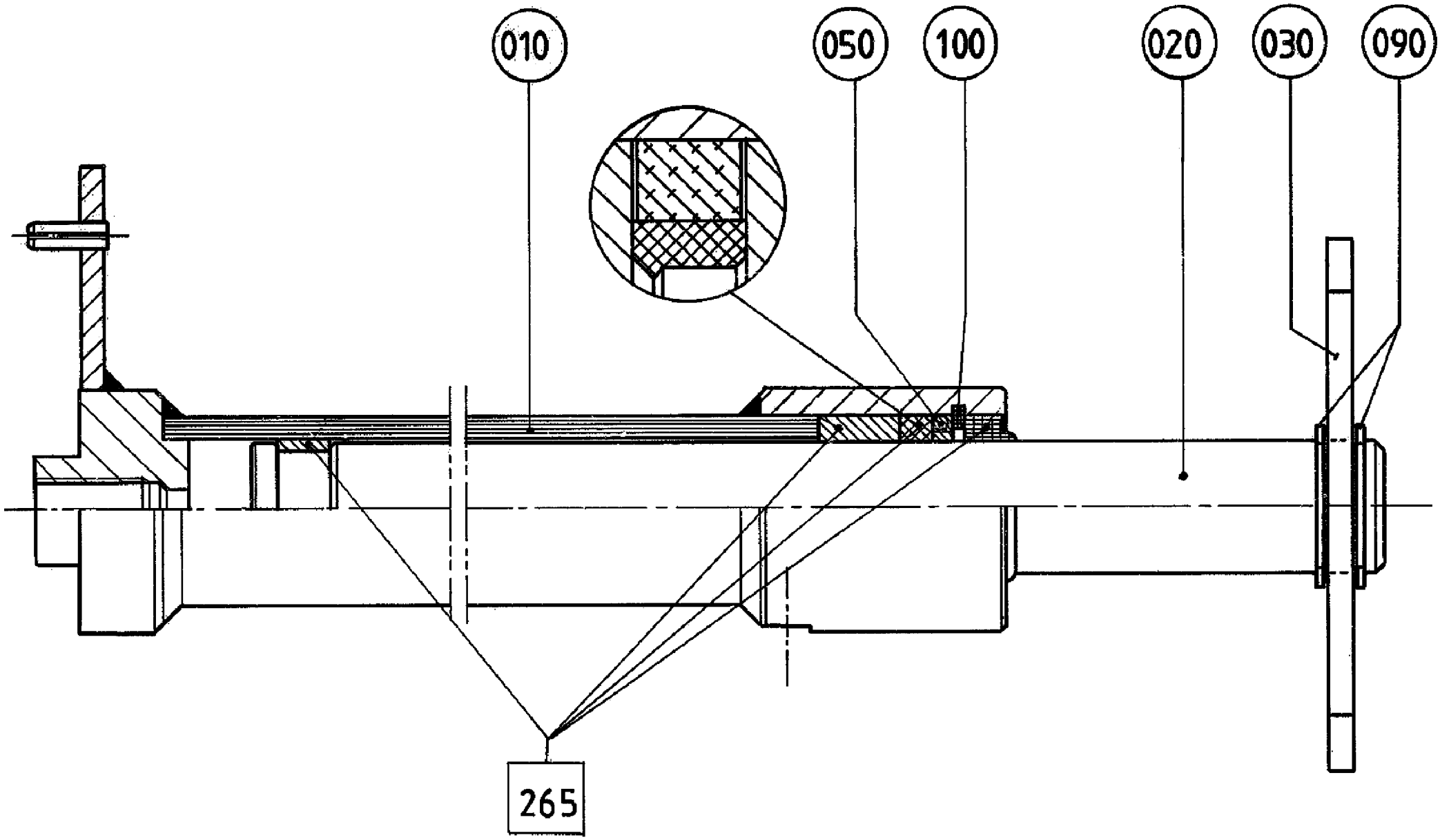
010
050
100
020
030
090
265

ECM: 71011 - 19970811
Group number: 464124-0100
Assembly Drawing: 464124-1_1_AA

Pos	Part No	UN	Qty	Description	Page No
-					
010	464101-0000		1	CYLINDER SHELL	
020	464099-0000		1	PISTON ROD	
030	464120-0000		1	HEAD PLATE	
050	464126-0000		1	SPACER RING	
090	315751-0119		2	RETAINING RING FOR SHAFT DIN 471 25 A2	
100	315753-0124		1	RETAINING RING FOR BORE DIN 472 35 A2	
F265	529278-0100		1	SEAL KIT	**12-109**

Pos	Part No	UN	Qty	Description	Page No

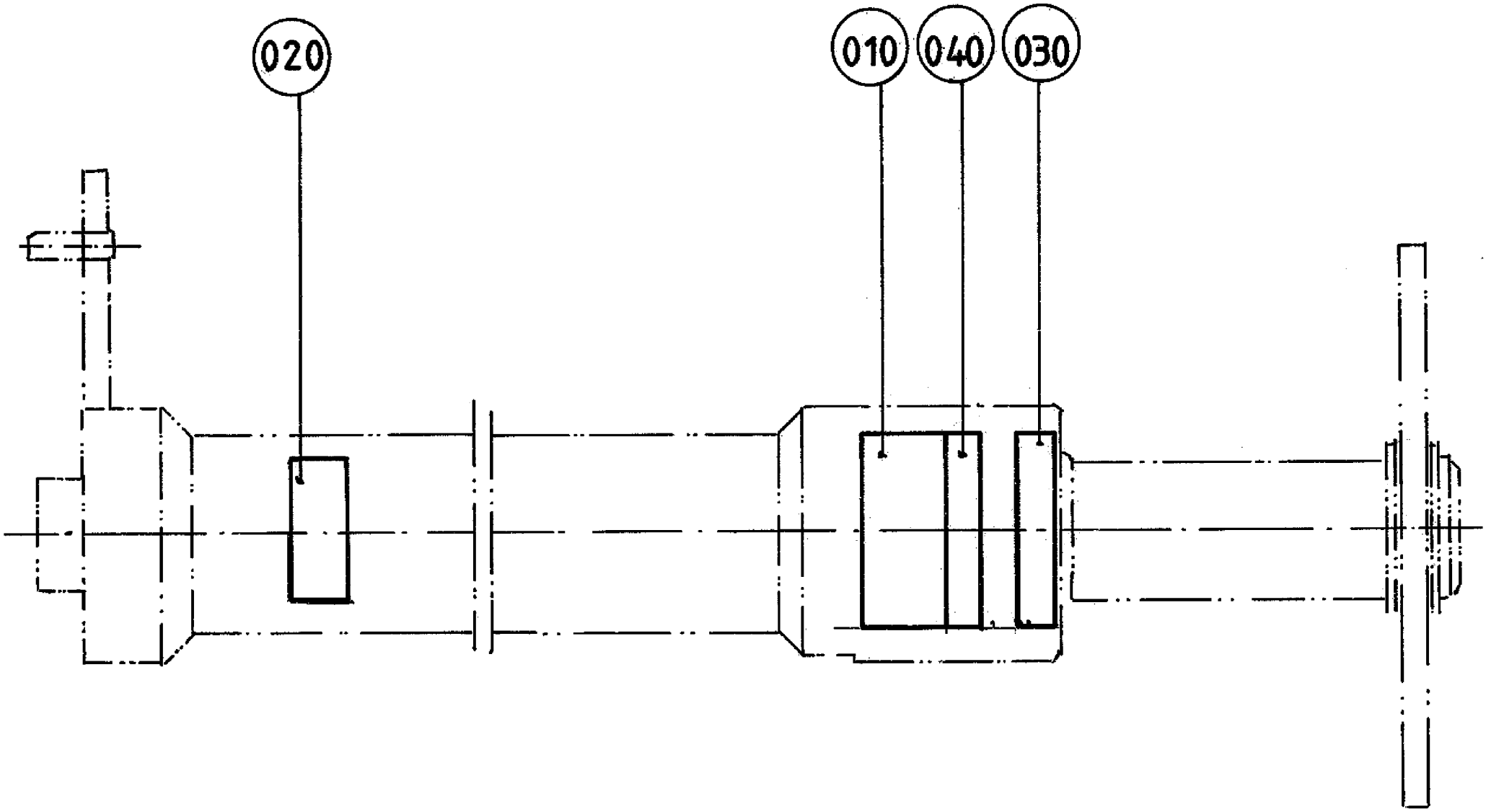
020
010
040
030

ECM: - -
Group number: 529278-0100
Assembly Drawing: 529278-1_1_AA

Pos	Part No	UN	Qty	Description	Page No
-					
010	464125-0000		1	SLIDING SLEEVE	
020	464127-0000		1	SLIDING SLEEVE*	
030	90091-0125		1	SCRAPER 35X45X10 MM	
040	90091-0157		1	ROD SEAL, STEPSEAL 25X35X4,2 MM	

Pos	Part No	UN	Qty	Description	Page No

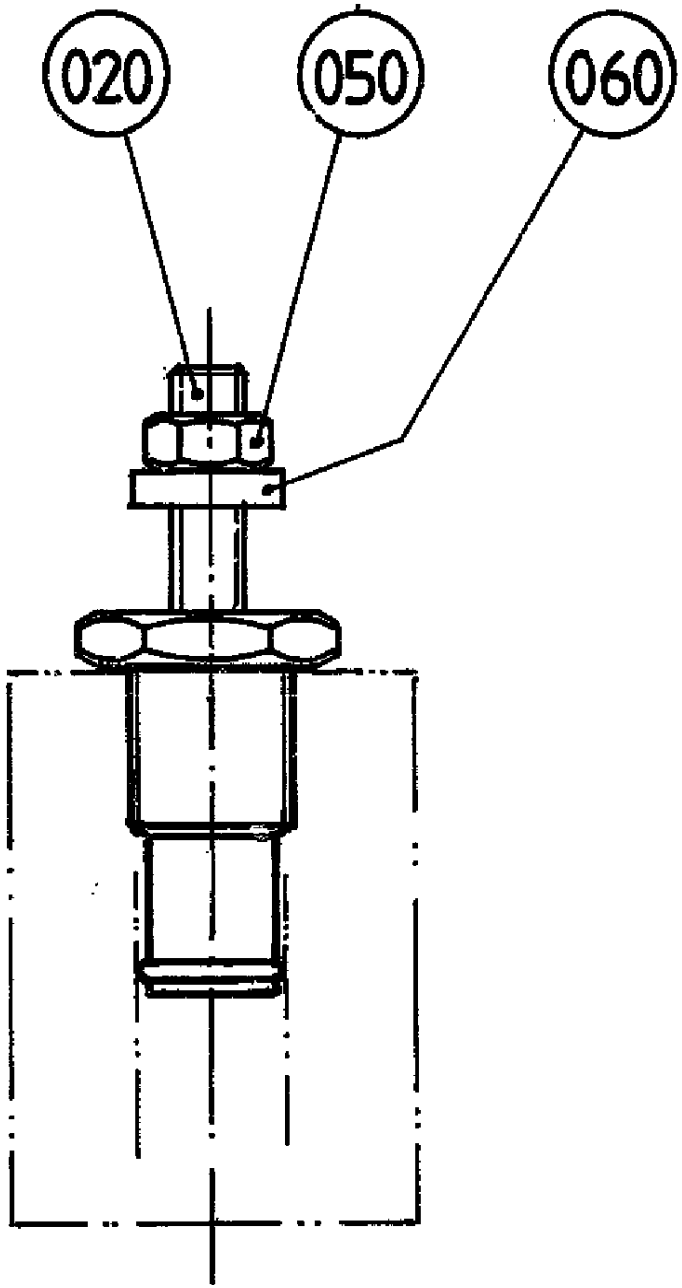
020
050
060

ECM: - -
Group number: 464108-0100
Assembly Drawing: 464108-1_1_AA

Pos	Part No	UN	Qty	Description	Page No
-					
020	90201-0019		1	SHUT-OFF VALVE, NO. MPV1-10-T-0	
050	312652-0301		1	NUT U6M1/4" FZB	
060	315111-0156		1	WASHER PLAIN, TBRB 6,7/14 H=3	

Pos	Part No	UN	Qty	Description	Page No

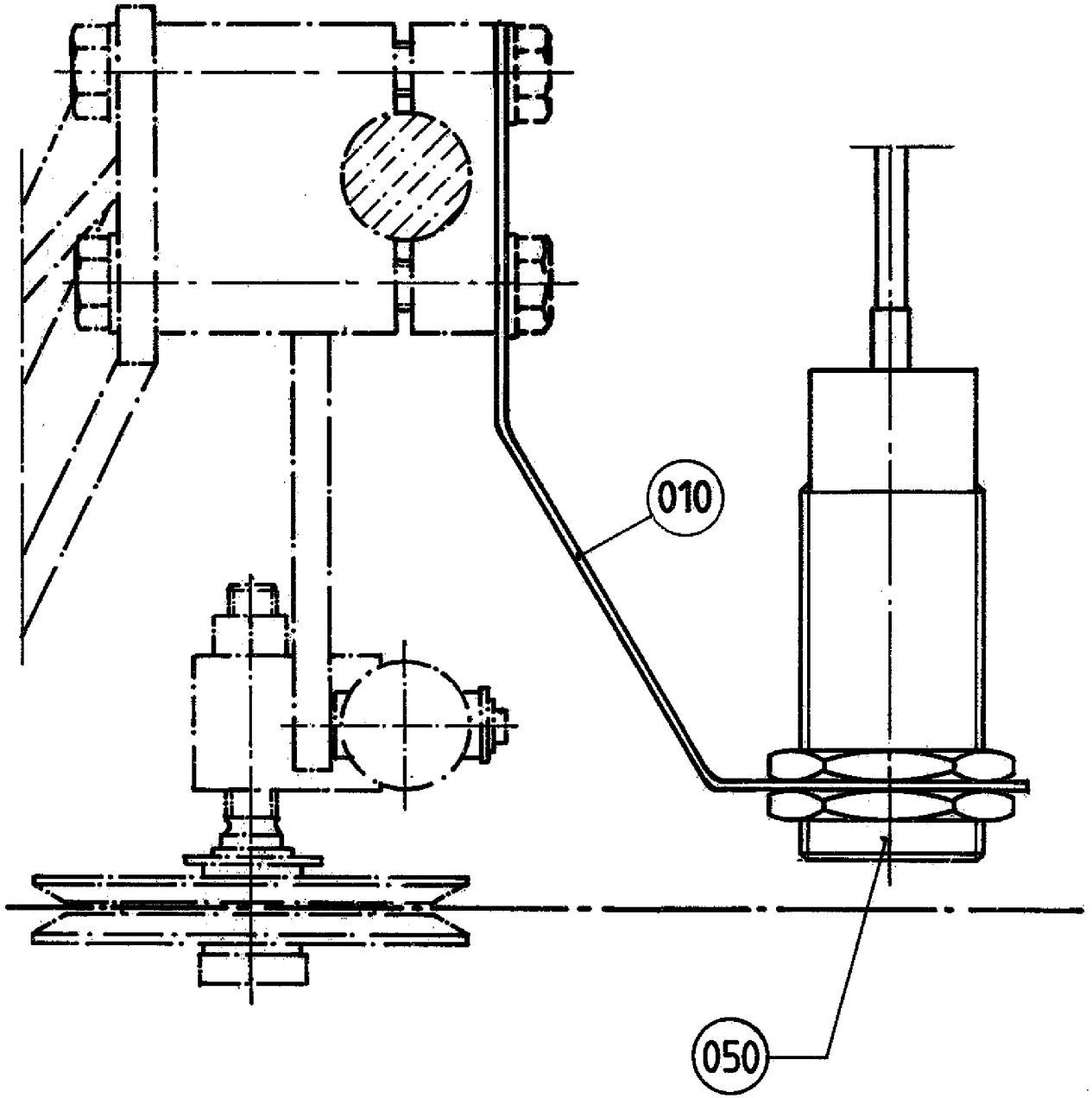
010
050

ECM: - -
Group number: 497243-0200
Assembly Drawing: 497243-2_1_AA

Pos	Part No	UN	Qty	Description	Page No
-					
010	526999-0000		1	FASTENING BRACKET	
050	90044-0095		1	PROX.SW. 3010BPKG REPBY 90458-256	

Pos	Part No	UN	Qty	Description	Page No

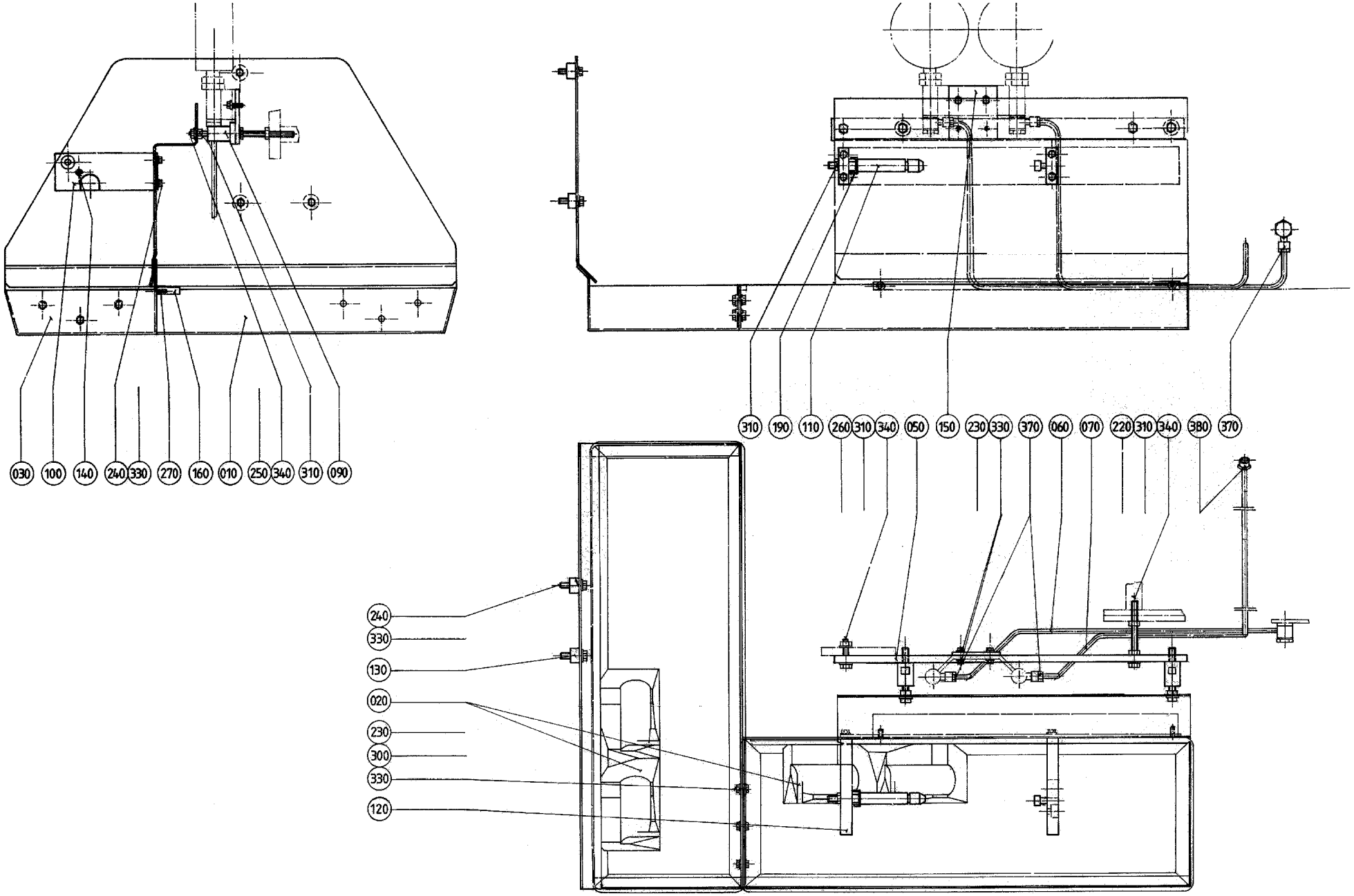
030
100
140
240
330
270
160
010
250
340
310
090
310
190
110
260
310
340
050
150
230
330
370
060
070
220
310
340
380
370
240
330
130
020
230
300
330
120

ECM: - -
Group number: 499390-0100
Assembly Drawing: 499390-1_1_AA

Pos	Part No	UN	Qty	Description	Page No
-					
010	434403-0000		1	SPLASH PLATE	
020	440090-0000		2	TROUGH	
030	499391-0000		1	SERVICE TABLE	
050	499392-0000		1	ROD	
060	499393-0000		1	PIPE	
070	499394-0000		1	PIPE	
090	292136-0000		2	SPACER	
100	292137-0000		1	CANTILEVER	
110	434406-0000		1	SHAFT	
120	434407-0000		1	CANTILEVER	
130	434408-0000		3	SPACER	
140	436249-0000		1	SCREW	
150	499395-0000		1	PLATE	
160	499396-0000		1	SUPPORT	
190	90166-0059	MM	12	HOSE PVC 12/16MM TRANSP.	
220	312104-0467		1	SCREW M6S M8X80HFZB	
230	312105-0366		7	SCREW M6S ISO 4017 M6X12 A480	
240	312105-0370		7	SCREW M6S ISO 4017 M6X20 A480	
250	312105-0453		2	SCREW M6S ISO 4017 M8X25 A480	
260	312105-0455		1	SCREW M6S ISO 4017 M8X30 A480	
270	312155-0325		2	SCREW DIN 7991 MF6S M5X10 A4 70	
300	312605-0316		3	HEXAGON NUT, M6M M6 A280	
310	312605-0318		6	HEXAGON NUT, M6M M8 A280	
330	315105-0153		17	WASHER BRB 6,4X12 RFR	
340	315105-0165		5	WASHER BRB 8,4X16 RFR	
370	342797-0122		3	CONN. BANJO, RINGPIECE 6-1/4	
380	342923-0113		1	STRAIGHT COUPL.,INT.THREADED 6/4-G1/8"	

Pos	Part No	UN	Qty	Description	Page No

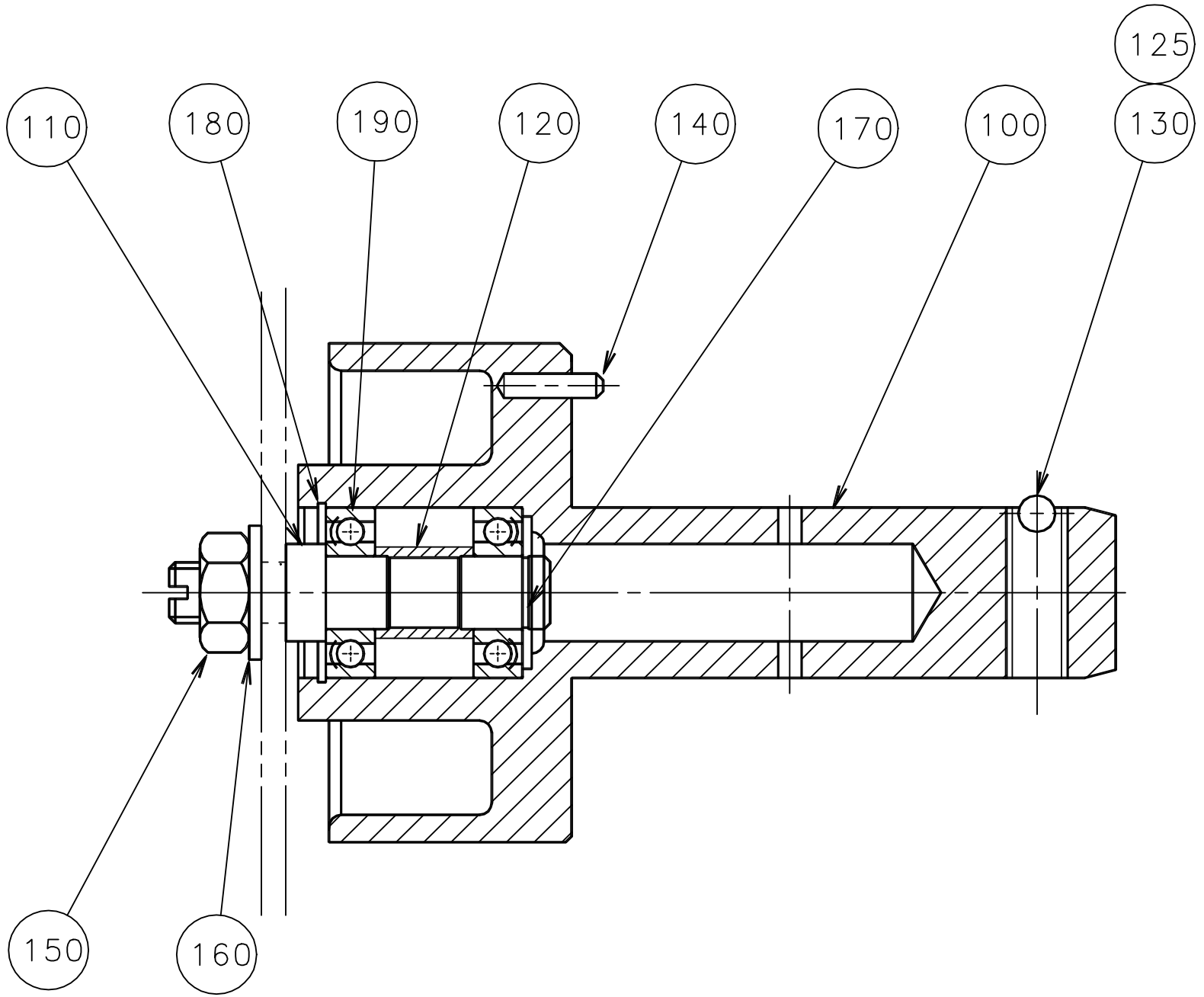
125
110
180
190
120
140
170
100
130
150
160

ECM: - -
Group number: 530619-0100
Assembly Drawing: 530619-1_1_AA

Pos	Part No	UN	Qty	Description	Page No
-					
100	530620-0000		1	HUB	
110	530626-0000		1	SHAFT	
120	539173-0000		1	SPACER PIPE	
125	90157-0016		1	LOCKING FLUID LOCTITE 242 50 ML	
130	90287-0106		1	SCREW SPRINGLOAD. SLOTTED HEAD M10X21	
140	311103-0270		1	PARALLEL PIN ISO 2338 4M6X16 A1	
150	312605-0320		1	HEXAGON NUT, M6M M10 A280	
160	315105-0173		1	WASHER BRB 10,5X20 RFR	
170	315751-0109		1	RETAINING RING FOR SHAFT DIN 471 12 A2	
180	315753-0121		1	RETAINING RING FOR BORE DIN 472 28 A2	
190	321308-0201		2	BALL BEARING, 12X28X8 MM	

Pos	Part No	UN	Qty	Description	Page No

TIGHTNESS TESTER

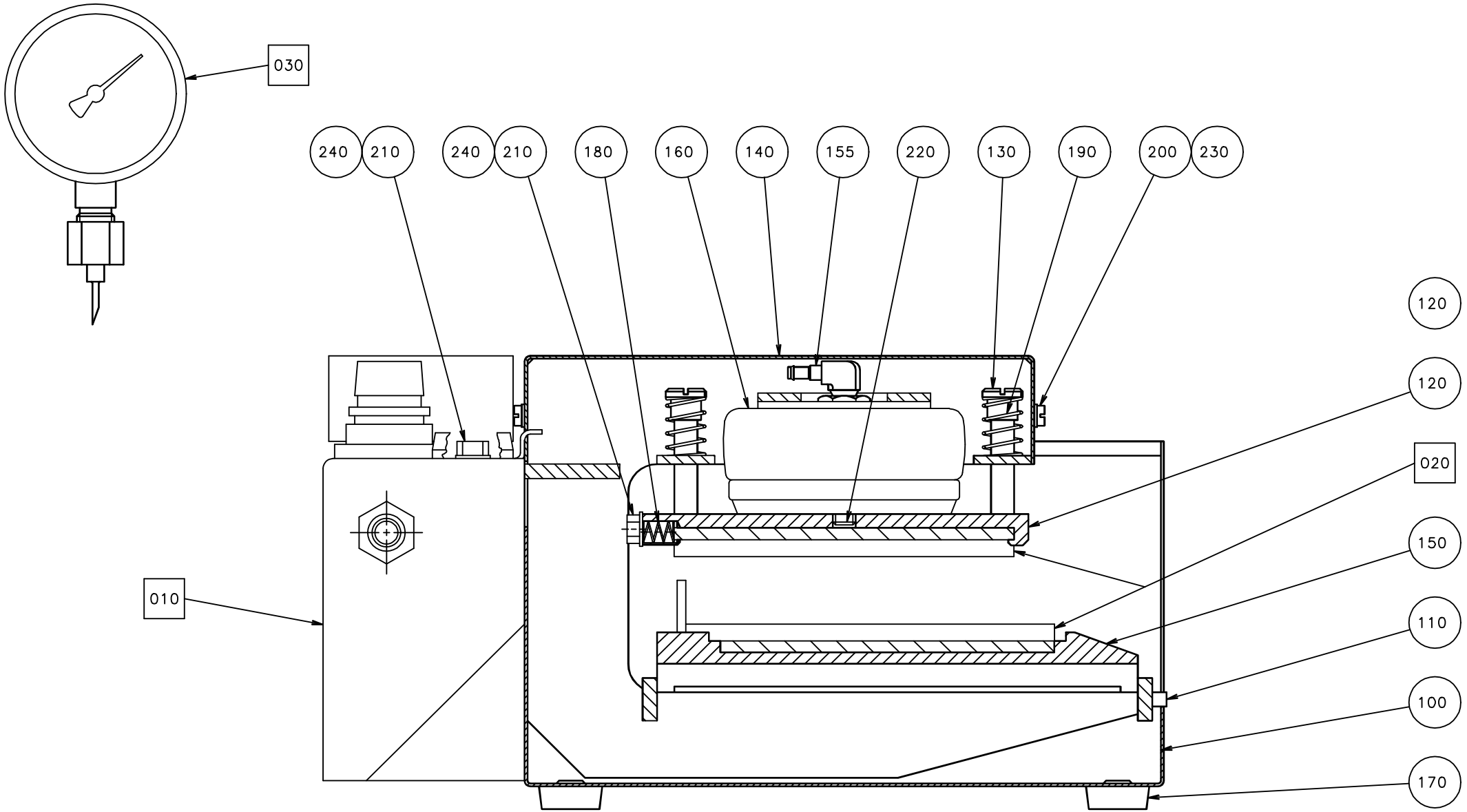

ECM: 71120 - 19971013
Group number: 533003-0100
Assembly Drawing: 533003-1_1_AA

Pos	Part No	UN	Qty	Description	Page No
-					
010	533004-0100		1	PNEUMATIC PANEL	**12-121**
020	577201-0100		1	VOLUME KIT	**12-123**
030	578765-0100		1	PRESSURE GAUGE	**12-125**
100	531606-0000		1	TUB	
110	531608-0000		1	YOKE	
120	531609-0000		1	BRACKET	
130	531610-0000		4	SCREW	
140	531611-0000		1	PROTECTION	
150	541991-0000		1	SPACER PLATE	
155	576975-0000		1	NIPPLE	
160	576976-0000		1	CYLINDER	
170	576977-0000		4	FOOT	
180	90335-0011		1	COMP. SPRING 22100, 1,25X7,55X12	
190	90335-0024		4	COMP. SPRING 22250, 1,25X13,75X27	
200	312125-0287		4	SCREW ISO 1207 M4X8 A4	
210	312105-0362		4	SCREW M6S ISO 4017 M6X8 A480	
220	312318-0447		1	SCREW ISO4029 M8X12 A4	
230	315105-0136		4	WASHER BRB 4,3X9 RFR	
240	315105-0153		4	WASHER BRB 6,4X12 RFR	

Pos	Part No	UN	Qty	Description	Page No

PNEUMATIC PANEL

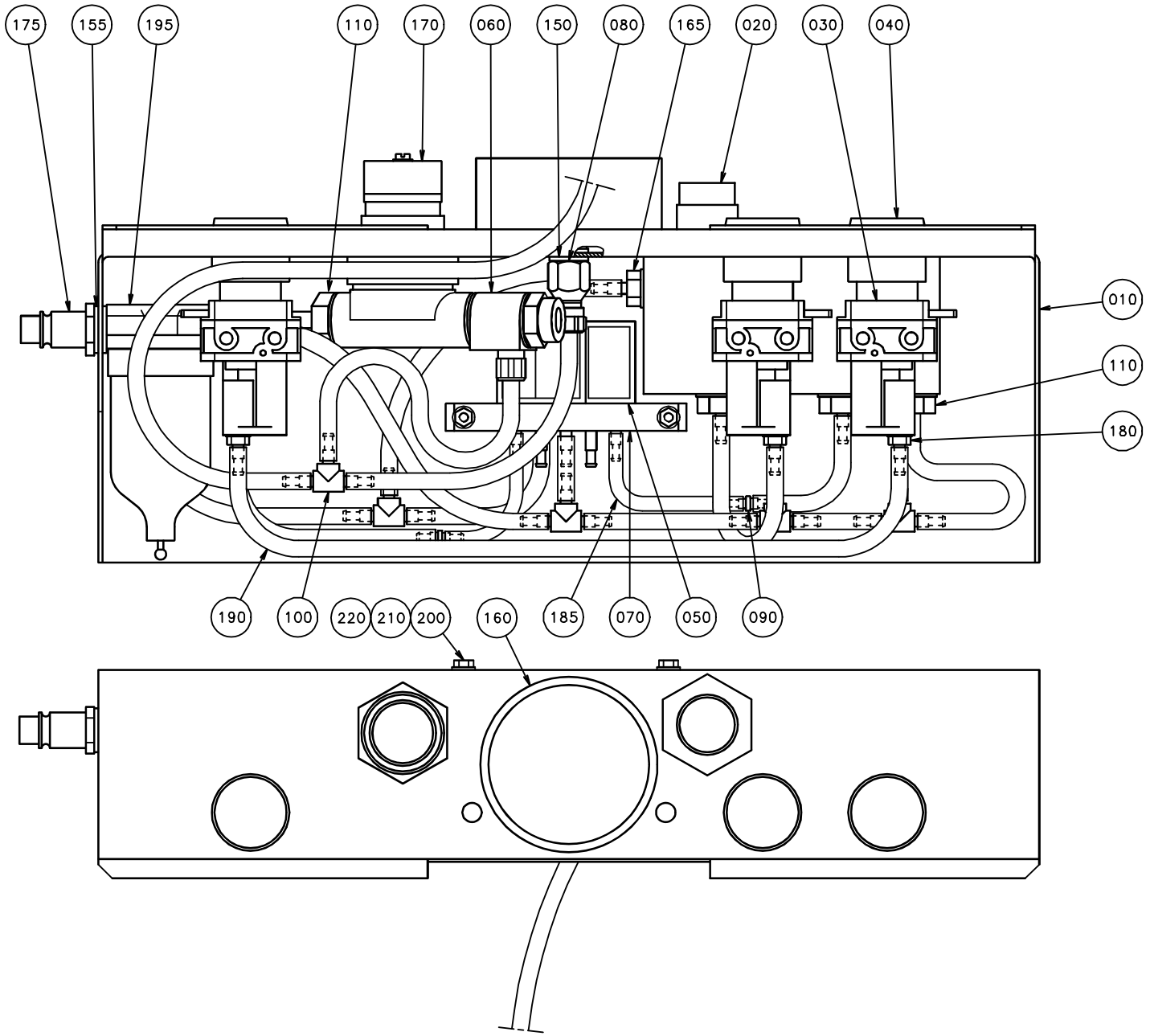

ECM: - -
Group number: 533004-0100
Assembly Drawing: 533004-1_1_AA

Pos	Part No	UN	Qty	Description	Page No
-					
010	555763-0000		1	PANEL	
020	576965-0000		1	VALVE	
030	576966-0000		3	VALVE	
040	576967-0000		3	BUTTON	
050	576968-0000		1	VALVE	
060	576969-0000		1	VALVE	
070	576970-0000		1	PLATE	
080	576971-0000		1	NIPPLE	
090	576972-0000		2	NIPPLE	
100	576973-0000		5	NIPPLE	
110	576974-0000		5	NIPPLE	
150	90005-0011		2	WASHER,PL.RND.CU.10/14,H=1,5	
155	90005-0012		2	WASHER,PL.RND.CU.13,5/17,H=1,5	
160	90043-0006		1	PRESSURE GAUGE, 2041 D=63 MM	
165	90055-0074		1	HOSE NIPPLE, EXT.THR. M5X4 MM	
170	90113-0021		1	AIR PRESSURE REGULATOR	
175	90163-0007		1	CONNECTION	
180	90163-0042		6	NIPPLE FESTO CN-M5-PK-4	
185	90166-0099	MM	100	TUBE PUR BLUE	
190	90166-0105	M	2	TUBE PUR BLUE	
195	90277-0019		1	FILTER	
200	312105-0301		2	SCREW M6S ISO 4017 M4X35 A470	
210	312605-0312		2	HEXAGON NUT, M6M M4 A280	
220	315105-0136		4	WASHER BRB 4,3X9 RFR	

Pos	Part No	UN	Qty	Description	Page No

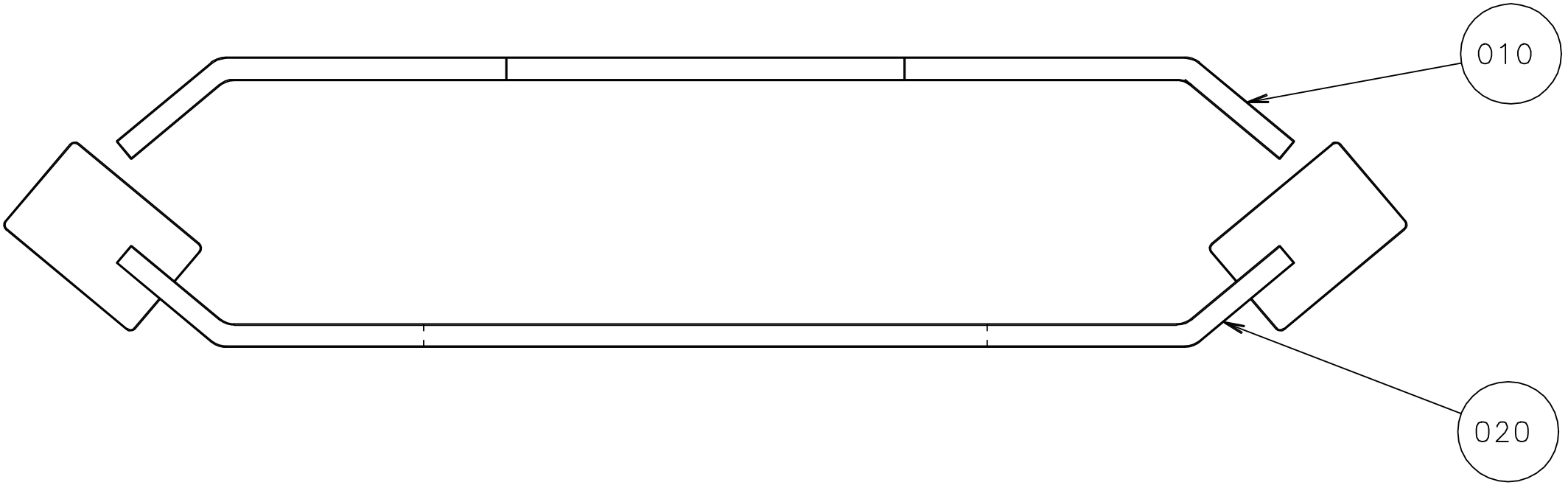
010
020

ECM: 186185 - 20040928
Group number: 577201-0100
Assembly Drawing: 577201-1_1_AA

Pos	Part No	UN	Qty	Description	Page No
0300B					
010	531603-0000		1	PLATE,UPPER	
020	531604-0000		1	PLATE,LOWER	
0500B					
010	541983-0000		1	PLATE,UPPER	
020	541984-0000		1	PLATE,LOWER	
0500S					
010	589325-0000		1	PLATE,UPPER	
020	589326-0000		1	PLATE,LOWER	
0500SQ					
010	589323-0000		1	PLATE,UPPER	
020	589324-0000		1	PLATE,LOWER	
0568B					
010	541981-0000		1	PLATE,UPPER	
020	541982-0000		1	PLATE,LOWER	
0568SQ					
010	1362438-0000		1	PLATE,UPPER	
020	1362437-0000		1	PLATE,LOWER	
1000B HIFIN					
010	531599-0000		1	PLATE,UPPER	
020	531600-0000		1	PLATE,LOWER	
1000B LOFIN					
010	531601-0000		1	PLATE,UPPER	
020	531602-0000		1	PLATE,LOWER	
1000SQ					
010	573991-0000		1	PLATE,UPPER	
020	573992-0000		1	PLATE,LOWER	
1136B					
010	552916-0000		1	PLATE,UPPER	
020	552917-0000		1	PLATE,LOWER	
1500B					
010	593844-0000		1	PLATE UPPER	
020	593845-0000		1	PLATE LOWER	

Pos	Part No	UN	Qty	Description	Page No

PRESSURE GAUGE

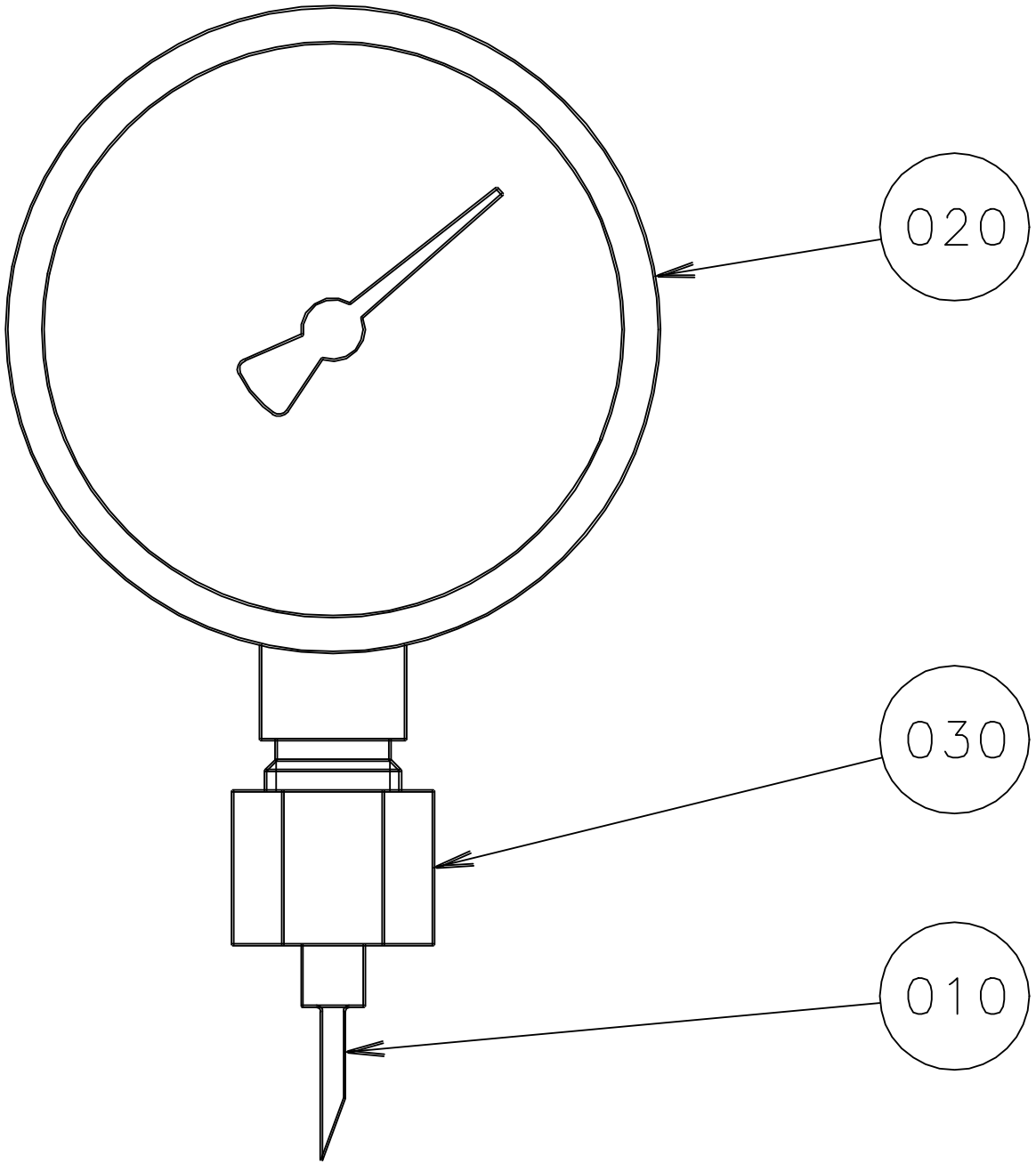

ECM: - -
Group number: 578765-0100
Assembly Drawing: 578765-1_1_AA

Pos	Part No	UN	Qty	Description	Page No
-					
010	578766-0000		1	NEEDLE	
020	90043-0004		1	PRESSURE GAUGE, 2040 D=63 MM	
030	342703-0208		1	NUT, PIPES & CONNECTORS,NUT M-8 SS	

Pos	Part No	UN	Qty	Description	Page No

AUTOMATIC SPLICING UNIT IN SEPARATE ROOM

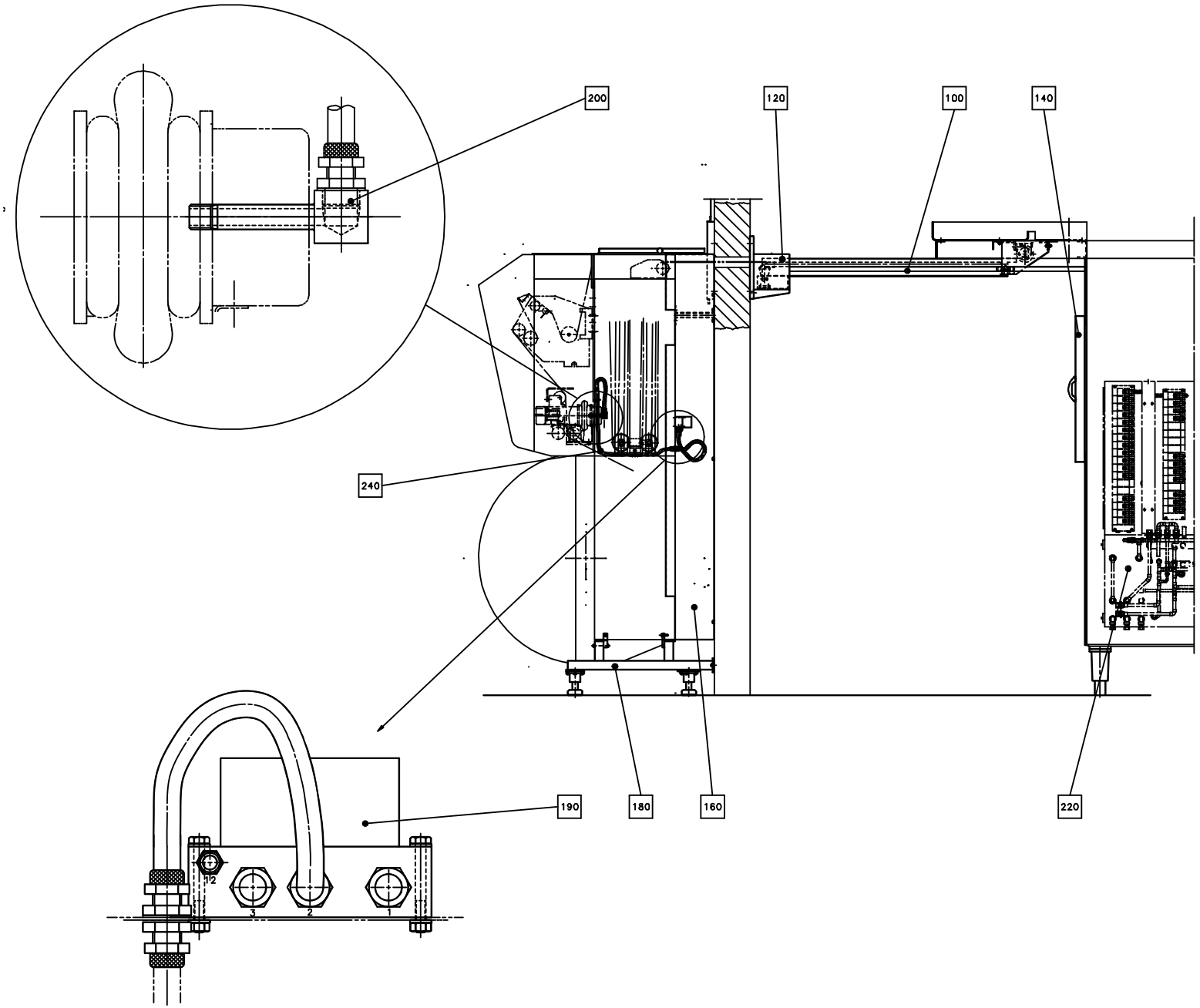

ECM: 71011 - 19970811
Group number: 554603-0300
Assembly Drawing: 554603-1_1_AA

Pos	Part No	UN	Qty	Description	Page No
TB/8 FIREPLATE					
F250	557282-0100		1	A.S.U. SEPARATE ROOM	**12-129**
F120	476189-0100		1	WALL LEAD-IN	**12-37**
TB/8 NOFIREPLATE					
F250	557282-0100		1	A.S.U. SEPARATE ROOM	**12-129**
F120	1296816-0100		1	WALL LEAD-IN	**12-133**
Common Parts					
F240	554958-0100		1	PNEUMATIC DRW	**12-135**
F220	554832-0100		1	REB.KIT VALVE PANEL LOWER	**12-137**
F200	554831-0100		1	NIPPLE	**12-139**
F190	554607-0100		1	ASU VALVE	**12-141**
F180	539340-0100		1	BASE TO ASU	**12-143**
F160	546231-0100		1	COVERPLATE ON ASU	**12-145**
F140	546128-0100		1	BRACKET,COVERPL.TB/TBA/8	**12-147**
F100	237776-0400		1	PAPER GUARD	**12-45**

Pos	Part No	UN	Qty	Description	Page No

Machine Type | Group Description | Used-In | Group Number | Page No

This page is intentionally left blank.

ECM: 71011 - 19970811
Group number: 557282-0100
Assembly Drawing:

Pos	Part No	UN	Qty	Description	Page No
-					
010	557283-0100		1	ELECTRICAL DOCUMENT ASU	
020	557284-0100		1	ELECTRIC MATERIALS ASU	**12-131**

Pos	Part No	UN	Qty	Description	Page No

This page is intentionally left blank.

ECM: - -
Group number: 557284-0100
Assembly Drawing:

Pos	Part No	UN	Qty	Description	Page No
-					
0301	351123-0184	M	15	CABLE FKK 5X15 MM2 WHITE	
0303	351123-0145	M	15	CABLE FKK 3X25 MM2 WHITE	
0360	351150-0409	M	15	CABLE OILFLEX 27X0,75MM2	
0372	90220-0034	M	15	THERMOCABLE TEX/SITW-20F-KX 2X0,5MM2	

Pos	Part No	UN	Qty	Description	Page No

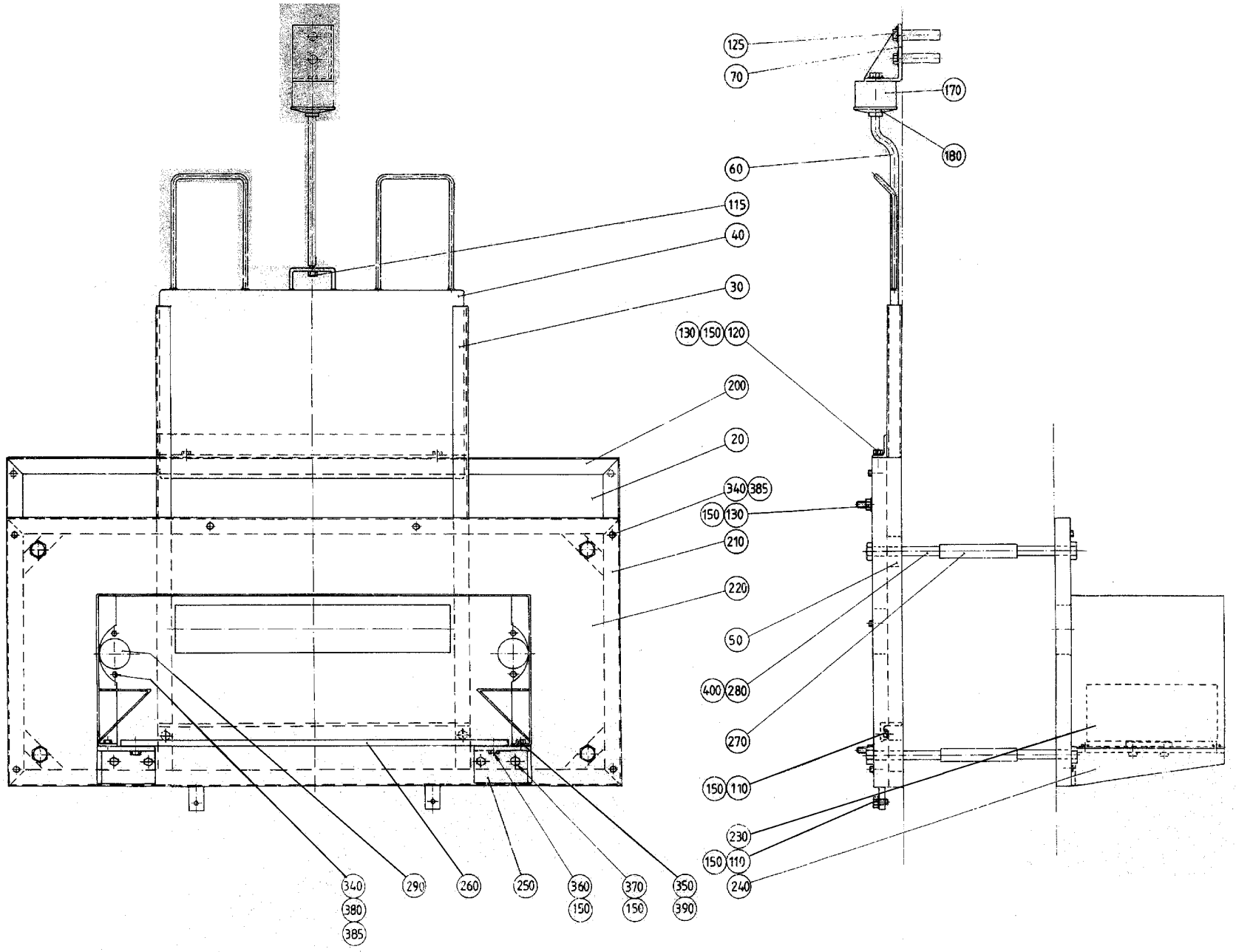
125
70
170
180
60
115
40
30
130 150 120
200
20
340 385
150 130
210
220
50
400 280
270
150 110
230
150 110
240
340 380 385
290
260
250
360 150
370 150
350 390

ECM: 70826 - 19970729
Group number: 1296816-0100
Assembly Drawing: 1296816-1_1_AA

Pos	Part No	UN	Qty	Description	Page No
-					
020	476193-0000		1	COVERING PLATE	
030	476196-0000		1	GUIDE RAIL	
040	476197-0000		1	DROP WING	
050	476200-0000		4	SPACER	
060	529313-0000		1	ROD	
070	529314-0000		1	CANTILEVER	
110	312105-0447		4	SCREW M6S ISO 4017 M8X12 A480	
115	312115-0368		1	SCREW ISO4762 M6X16 A4 80	
120	312115-0457		2	SCREW ISO4762 M8X35 A4 80	
125	312293-0106		2	EXPANSION M8X10 L	
130	312605-0318		6	HEXAGON NUT, M6M M8 A280	
150	315105-0165		20	WASHER BRB 8,4X16 RFR	
170	90081-0026		1	MAGNET	
180	90081-0027		1	MAGNET DISC	
200	476190-0000		1	FRAME	
210	476191-0000		1	FRAME	
220	476194-0000		1	COVERING PLATE	
230	476195-0000		1	COVER	
240	476198-0001		1	CANTILEVER	
250	476198-0002		1	CANTILEVER	
260	476199-0000		1	PLATE	
270	476201-0000		4	SLEEVE	
280	476202-0000		8	SCREW	
290	479826-0000		4	COVERING PLATE	
340	312105-0325		20	SCREW M6S ISO 4017 M5X10 A480	
350	312105-0364		4	SCREW M6S ISO 4017 M6X10 A480	
360	312105-0449		4	SCREW M6S ISO 4017 M8X16 A480	
370	312105-0451		4	SCREW M6S ISO 4017 M8X20 A480	
380	312605-0314		8	HEXAGON NUT, M6M M5 A280	
385	315105-0146		28	WASHER BRB 5,3X10 RFR	
390	315105-0153		4	WASHER BRB 6,4X12 RFR	
400	315105-0178		8	WASHER BRB 13X24 RFR	

Pos	Part No	UN	Qty	Description	Page No

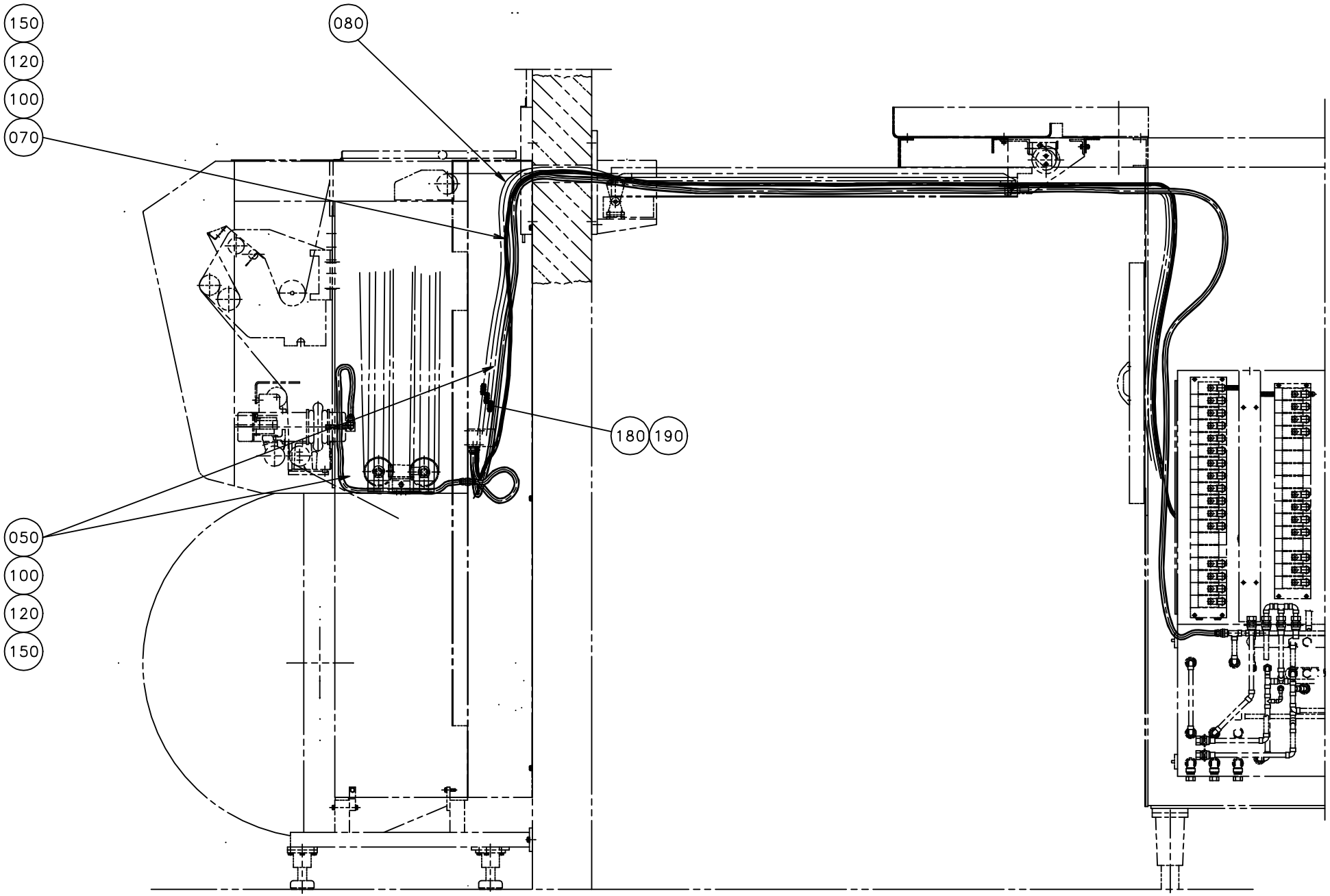
150
120
100
070
080
180
190
050
100
120
150

ECM: - -
Group number: 554958-0100
Assembly Drawing: 554958-1_1_AA

Pos	Part No	UN	Qty	Description	Page No
-					
050	90166-0110	M	10	TUBE 15 MM PA,TRANSP.	
070	90166-0122	M	8	TUBE 8 MM PA,TRANSP.	
080	90166-0124	M	21	TUBE 6 MM PA,TRANSP.	
100	90182-0005		20	CABLE TIE, 79X2,3MM	
120	90182-0007		20	PLATE 29X29MM REPL.BY 352113-206	
150	312125-0285		20	SCREW ISO 1207 M4X6 A4	
180	342926-0112		2	STRAIGHT COUPLING,UNION 6/4	
190	342926-0122		1	STRAIGHT COUPLING,UNION 8/6	

Pos	Part No	UN	Qty	Description	Page No

REB.KIT VALVE PANEL LOWER

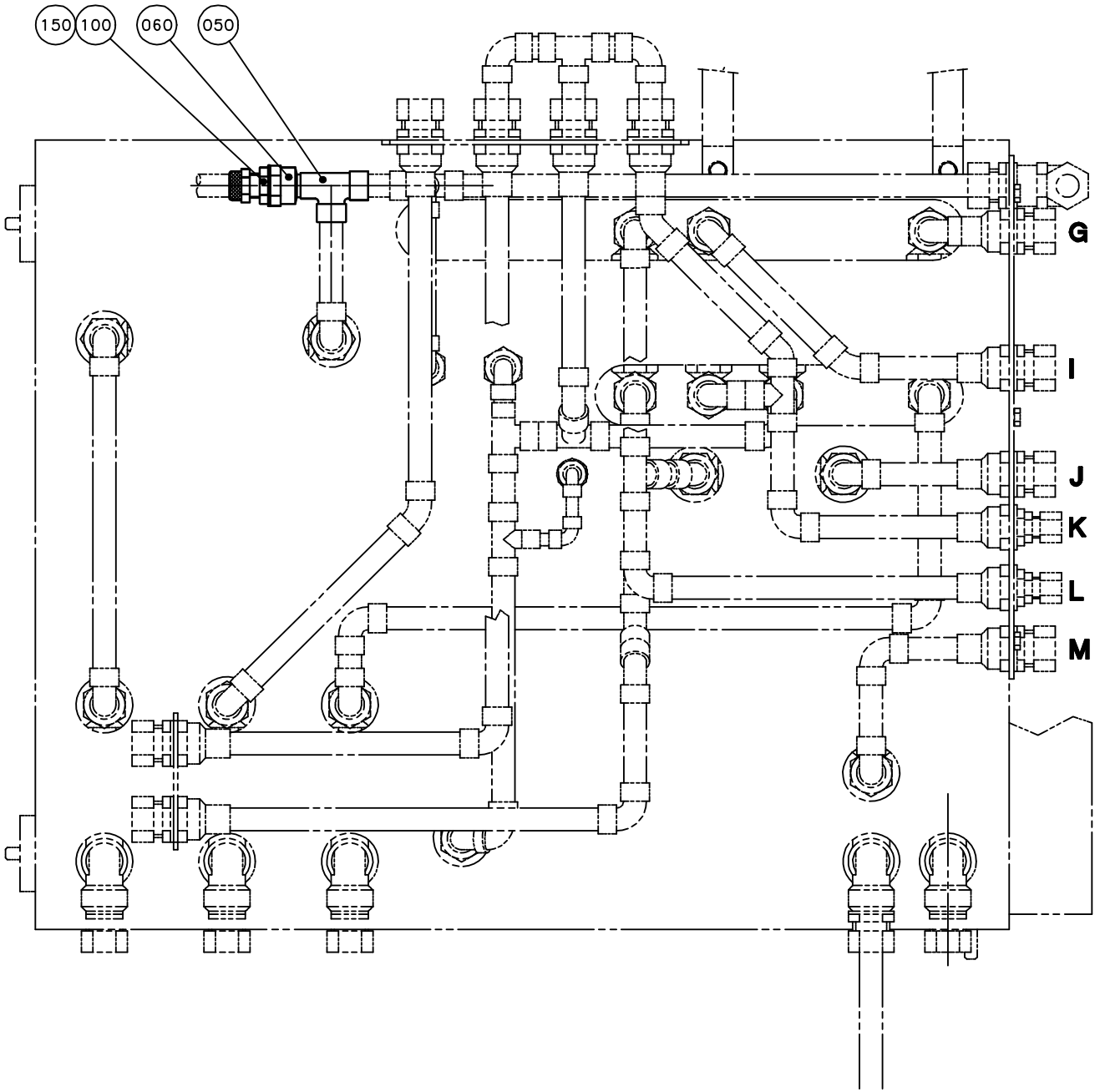

ECM: - -
Group number: 554832-0100
Assembly Drawing: 554832-1_1_AA

Pos	Part No	UN	Qty	Description	Page No
-					
050	90418-0048		1	,T-PIPE, INT. CONN. NO. 7130-15	
060	90418-0057		1	ADAPTER, EXT. CONN. NO. 7276CU / 15-G1/2	
100	315233-0113		1	WASHER CAPTIVE SEALING G1/2	
150	342921-0151		1	STRAIGHT COUPL.,EXT.THREAD.15/12,5-G1/2"	

Pos	Part No	UN	Qty	Description	Page No

Machine Type	Group Description	Used-In	Group Number	Page No

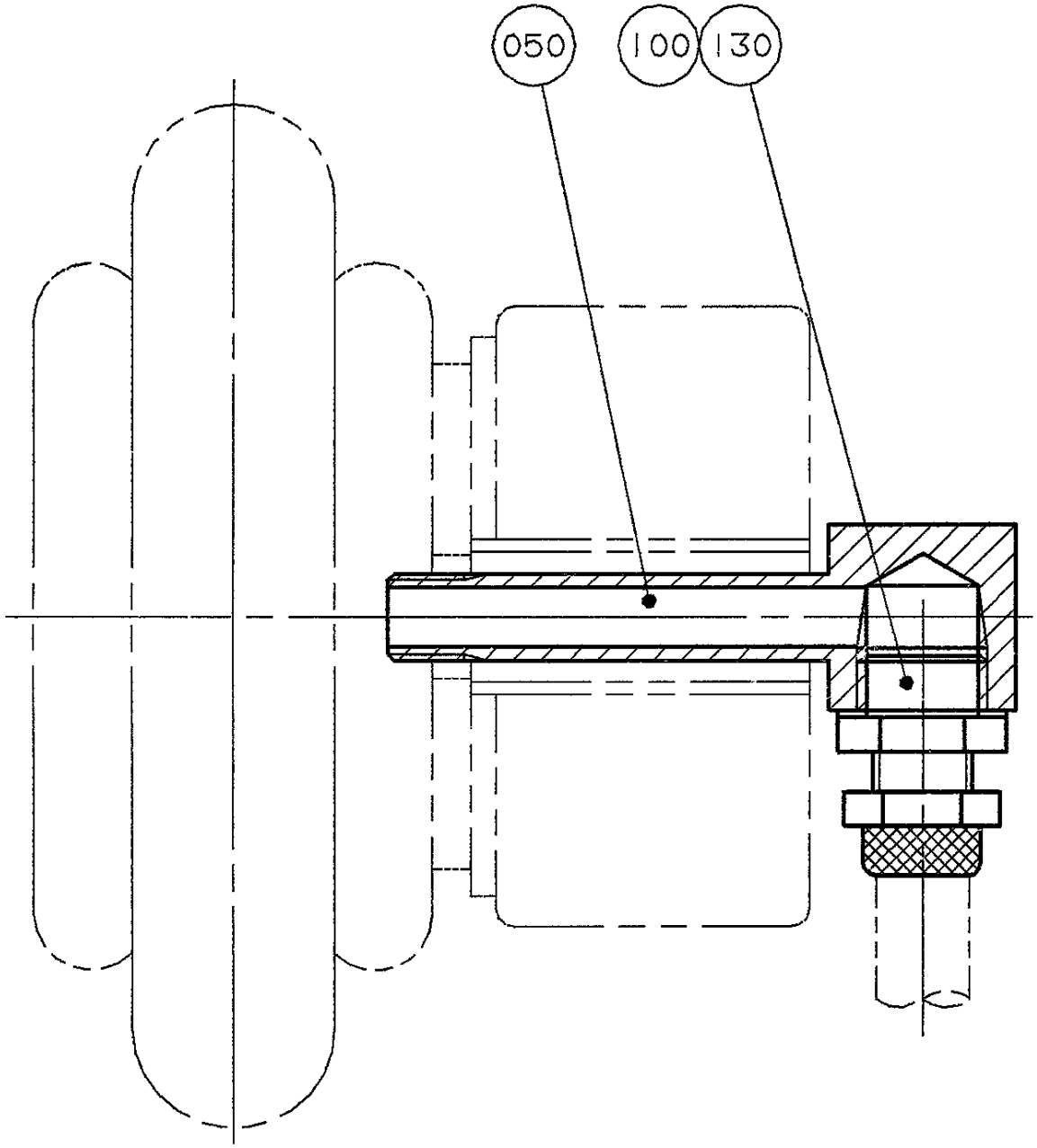
050
100
130

ECM: - -
Group number: 554831-0100
Assembly Drawing: 554831-1_1_AA

Pos	Part No	UN	Qty	Description	Page No
-					
050	549207-0000		1	NIPPLE	
100	315233-0113		1	WASHER CAPTIVE SEALING G1/2	
130	342921-0151		1	STRAIGHT COUPL.,EXT.THREAD.15/12,5-G1/2"	

Pos	Part No	UN	Qty	Description	Page No

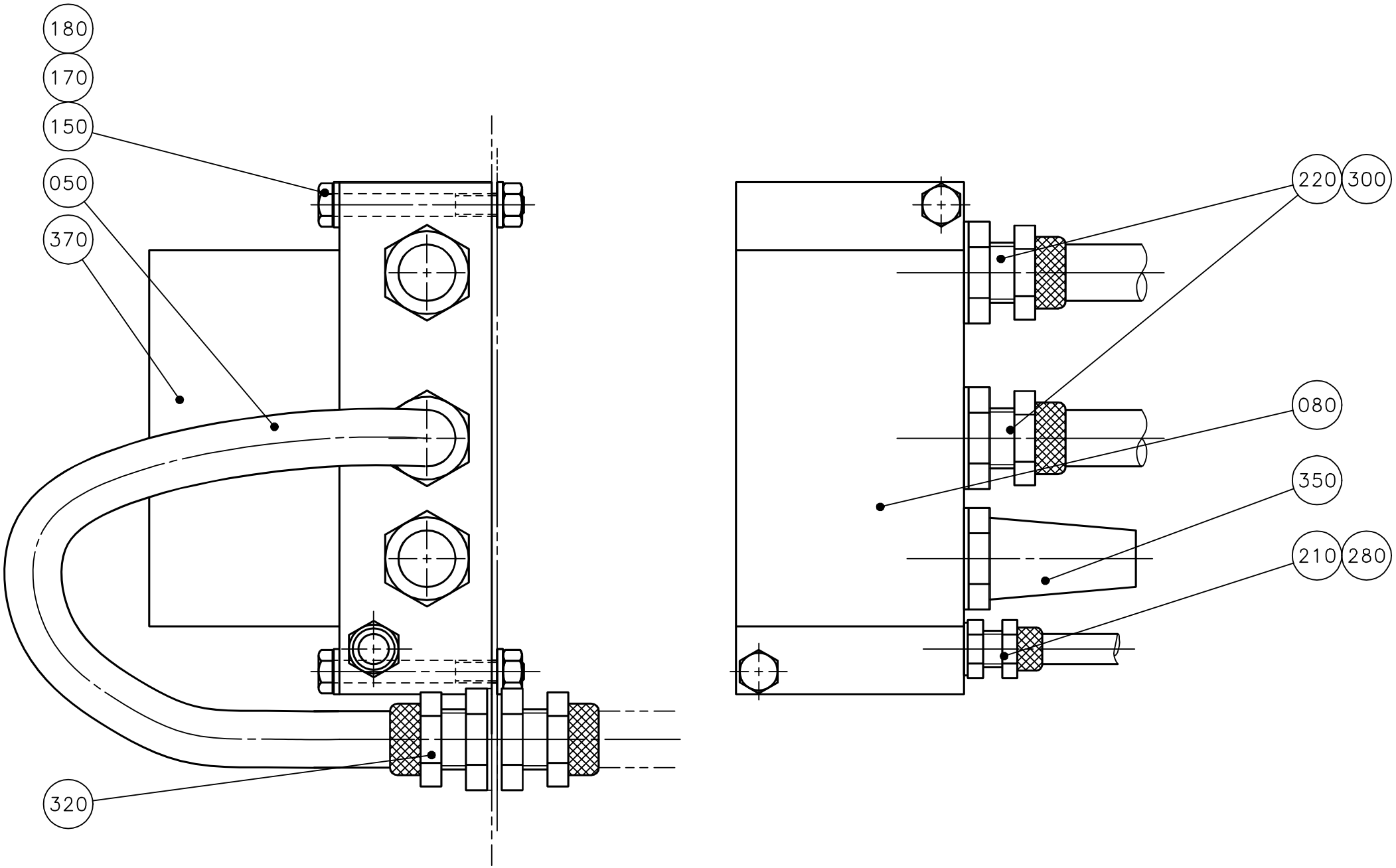
180
170
150
050
370
320
220
300
080
350
210
280

ECM: - -
Group number: 554607-0100
Assembly Drawing: 554607-1_1_AA

Pos	Part No	UN	Qty	Description	Page No
-					
050	90166-0110	MM	1650	TUBE 15 MM PA,TRANSP.	
080	90235-0702		1	PRESSURIZING UNIT, 565-400-000	
	90235-0441		*1*	*SEAL KIT*	
150	312105-0380		2	SCREW M6S ISO 4014 M6X50 A480	
170	312605-0316		2	HEXAGON NUT, M6M M6 A280	
180	315105-0153		4	WASHER BRB 6,4X12 RFR	
210	315233-0109		1	WASHER CAPTIVE SEALING G1/8	
220	315233-0113		2	WASHER CAPTIVE SEALING G1/2	
280	342921-0121		1	STRAIGHT CPLNG,EXT.THREADED 8/6-G1/8INCH	
300	342921-0151		2	STRAIGHT COUPL.,EXT.THREAD.15/12,5-G1/2"	
320	342960-0151		1	BULKHEAD COUPLING 15/12,5	
350	346800-0113		1	SILENCER FILTER R1/2"	
370	90235-0254		1	VALVE 565-201-000 MECMAN	
	90042-0352		*1*	*WEAR & TEAR PARTS KIT*	

Pos	Part No	UN	Qty	Description	Page No

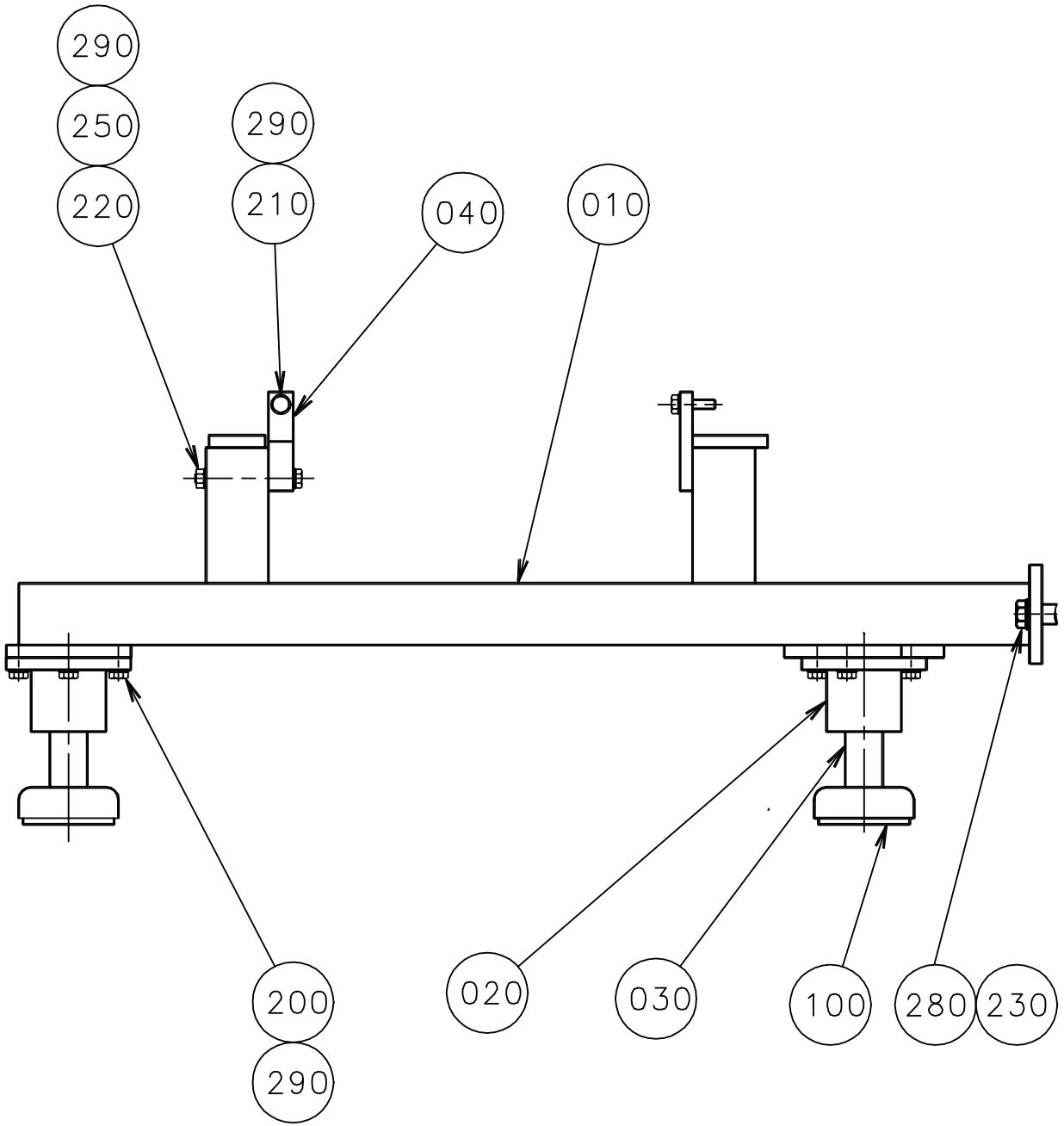
290
250
220
290
210
040
010
200
290
020
030
100
280
230

ECM: - -
Group number: 539340-0100
Assembly Drawing: 539340-1_1_AA

Pos	Part No	UN	Qty	Description	Page No
-					
010	533901-0000		1	FRAME	
020	256640-0000		4	HOLDER	
030	256641-0000		4	LEG	
040	533902-0000		2	BRACKET	
100	90347-0079		4	DAMPER TFE 601	
200	312105-0451		16	SCREW M6S ISO 4017 M8X20 A480	
210	312105-0455		4	SCREW M6S ISO 4017 M8X30 A480	
220	312105-0467		2	SCREW M6S ISO 4014 M8X80 A480	
230	312293-0115		2	EXPANSION M12X25 L	
250	312605-0318		2	HEXAGON NUT, M6M M8 A280	
280	315103-0178		2	WASHER PLAIN, BRB, 13/24 H=2,5	
290	315105-0165		22	WASHER BRB 8,4X16 RFR	

Pos	Part No	UN	Qty	Description	Page No

COVERPLATE ON ASU

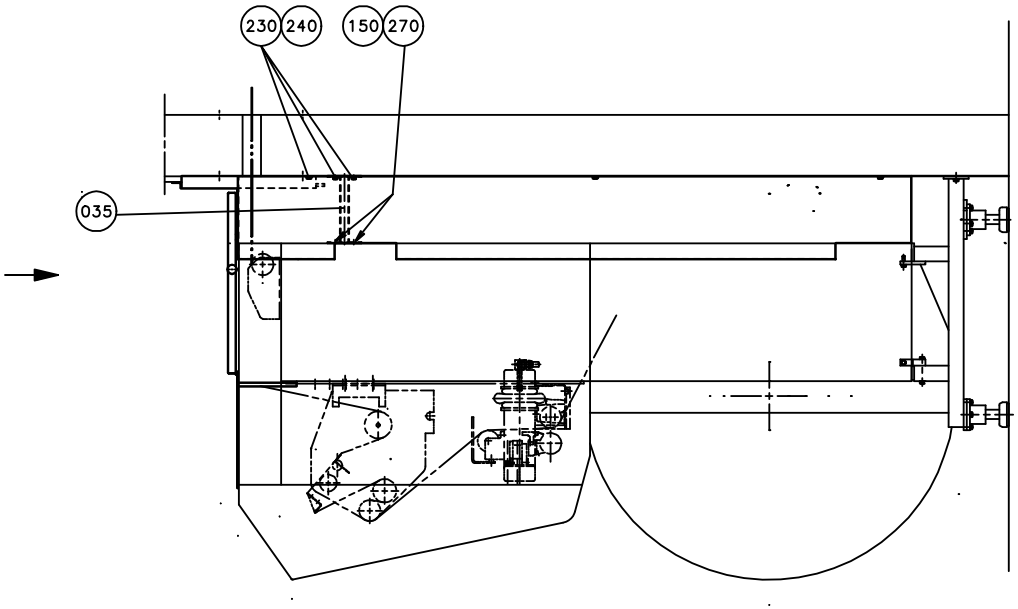

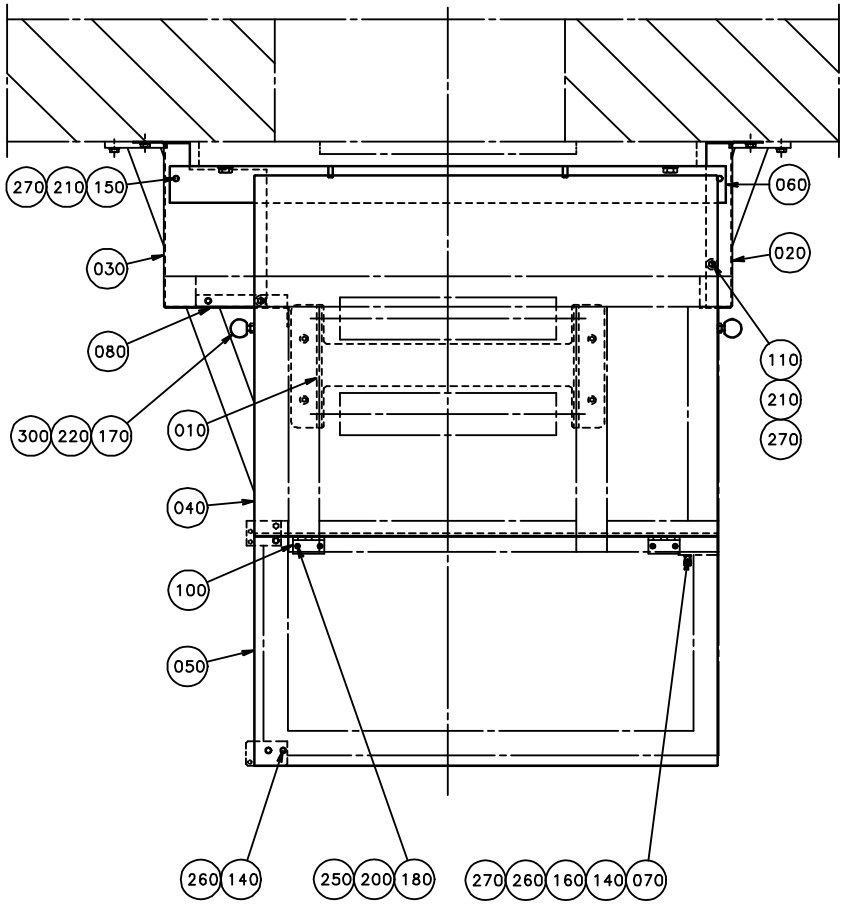

ECM: - -
Group number: 546231-0100
Assembly Drawing: 546231-1_1_AA

Pos	Part No	UN	Qty	Description	Page No
-					
010	533908-0000		1	CANTILEVER	
020	546232-0000		1	SIDE PLATE	
030	546233-0000		1	SIDE PLATE	
035	555433-0000		2	SPACER	
040	546234-0000		1	TOP COVER	
050	546235-0000		1	TOP PLATE	
060	546236-0000		1	TOP PLATE	
070	546237-0000		1	TOP SUPPORT	
080	546238-0000		1	GUSSET PLATE	
100	90248-0002		2	HINGE, 4002-2	
110	90347-0007		2	VIBRATION DAMPER	
140	312105-0329		4	SCREW M6S ISO 4017 M5X16 A480	
150	312105-0366		7	SCREW M6S ISO 4017 M6X12 A480	
160	312105-0374		2	SCREW M6S ISO 4014 M6X30 A480	
170	312105-0455		2	SCREW M6S ISO 4017 M8X30 A480	
180	312155-0289		8	SCREW DIN 7991 MF6S M4X10 A4 70	
200	312605-0312		8	HEXAGON NUT, M6M M4 A280	
210	312605-0316		5	HEXAGON NUT, M6M M6 A280	
220	312605-0318		2	HEXAGON NUT, M6M M8 A280	
230	312293-0106		10	EXPANSION M8X10 L	
240	315103-0165		10	WASHER PLAIN, BRB, 8,4/16,H=1,5 NIPL BR	
250	315105-0136		8	WASHER BRB 4,3X9 RFR	
260	315105-0146		4	WASHER BRB 5,3X10 RFR	
270	315105-0153		14	WASHER BRB 6,4X12 RFR	
300	318800-0104		2	HANDLE,SPHERICAL KNOB,INT.THRE.,D.30-M8	

Pos	Part No	UN	Qty	Description	Page No

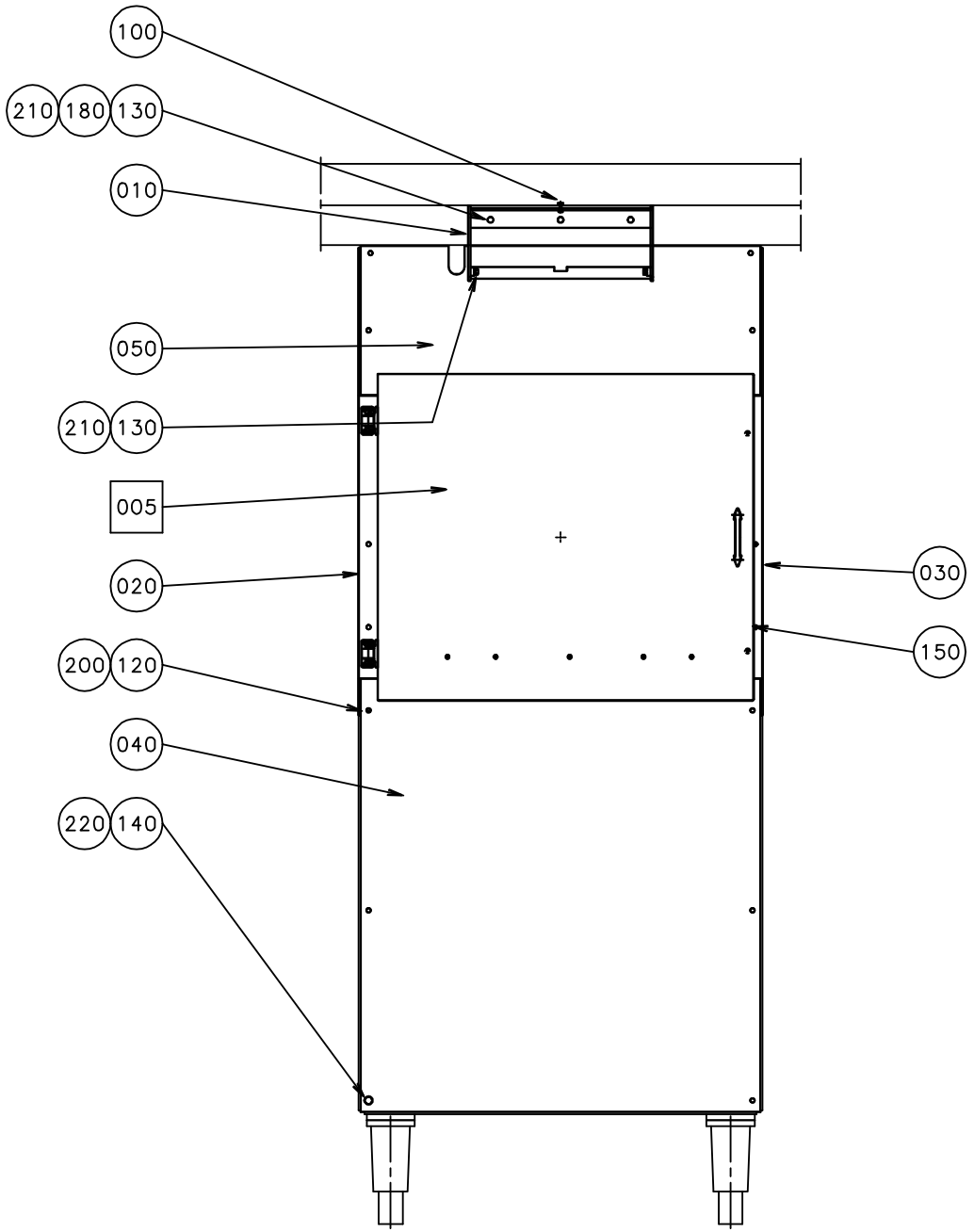
100
210
180
130
010
050
210
130
005
020
200
120
040
220
140
030
150

ECM: 71011 - 19970811
Group number: 546128-0100
Assembly Drawing: 546128-1_1_AA

Pos	Part No	UN	Qty	Description	Page No
-					
010	546120-0000		1	CANTILEVER	
020	546121-0000		1	RULER	
030	546122-0000		1	RULER	
040	546123-0000		1	COVERING PLATE	
050	546124-0000		1	COVERING PLATE	
100	90287-0076		1	SCREW SLOT. PAN HEAD LKCS M6X20	
120	312105-0370		11	SCREW M6S ISO 4017 M6X20 A480	
130	312105-0453		5	SCREW M6S ISO 4017 M8X25 A480	
140	312105-0489		1	SCREW M6S ISO 4017 M10X16 A480	
150	312155-0368		2	SCREW DIN 7991 MF6S M6X16 A4 70	
180	312605-0318		3	HEXAGON NUT, M6M M8 A280	
200	315105-0153		11	WASHER BRB 6,4X12 RFR	
210	315105-0165		8	WASHER BRB 8,4X16 RFR	
220	315105-0173		1	WASHER BRB 10,5X20 RFR	
F005	243510-0100		1	DOOR	**12-149**

Pos	Part No	UN	Qty	Description	Page No

Machine Type	Group Description	Used-In	Group Number	Page No

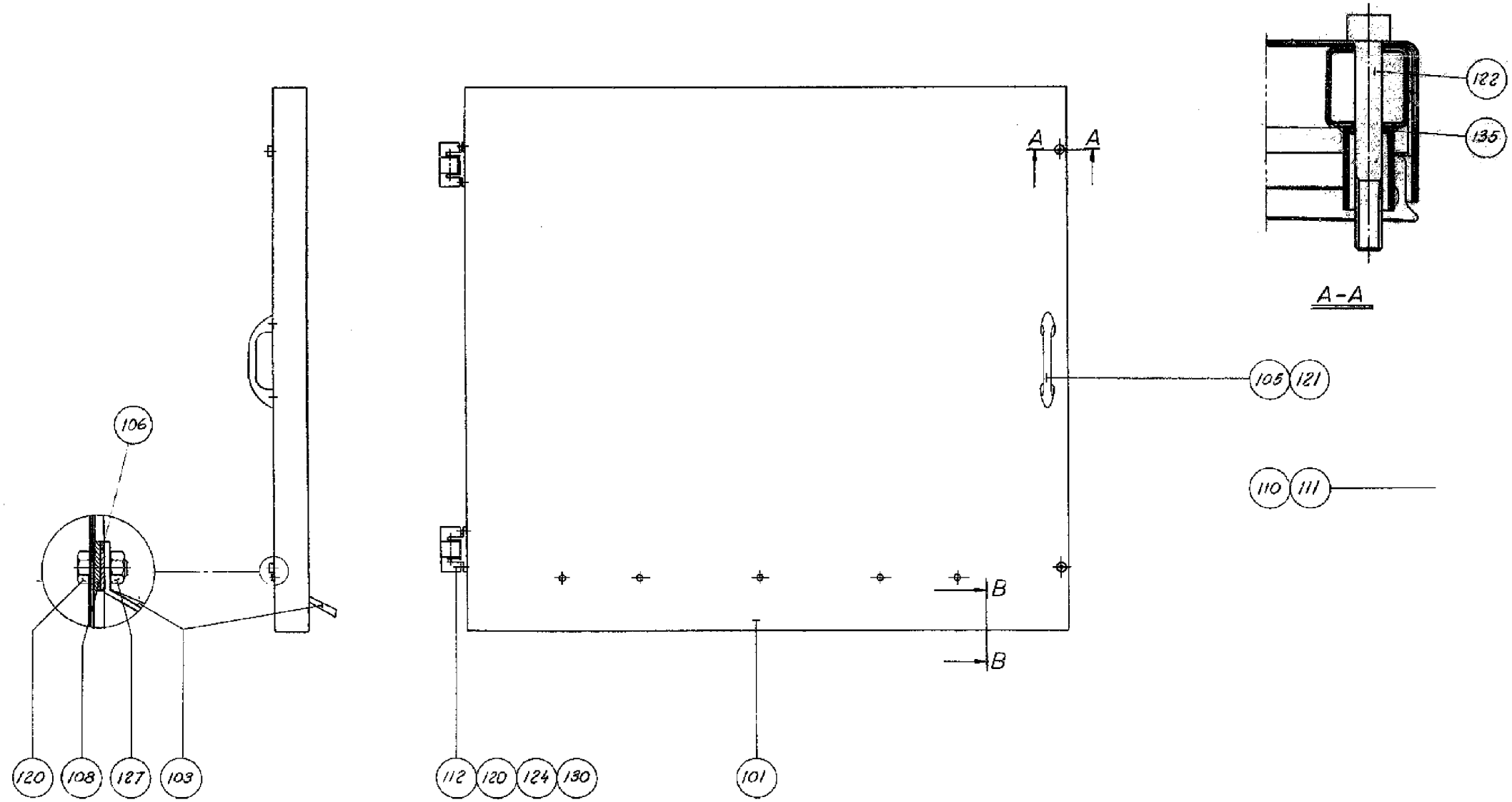
122
135
A-A
A
A
105
121
110
111
B
B
106
120
108
127
103
112
120
124
130
101

ECM: - -
Group number: 243510-0100
Assembly Drawing: 243510-1_1_AA

Pos	Part No	UN	Qty	Description	Page No
-					
101	243512-0000		1	DOOR	
103	209815-0000		1	SPLASH PLATE	
105	7309-0000		1	HANDLE	
106	245281-0000		1	GASKET	
108	245282-0000		2	GASKET	
110	90143-0017	MM	3600	FOAMRUBBERSTRIP B68205	
111	90153-0017	G	1	ADHESIVE, 2963 TUBE 160G	
112	90248-0013		2	HINGE 3562E STUV	
120	312105-0327		13	SCREW M6S ISO 4017 M5X12 A480	
121	312105-0366		2	SCREW M6S ISO 4017 M6X12 A480	
122	312115-0464		2	SCREW ISO4762 M8X65 A4 80	
124	312145-0325		8	SCREW ISO 2009 MFS M5X10 A4	
127	312605-0314		5	HEXAGON NUT, M6M M5 A280	
130	315105-0146		8	WASHER BRB 5,3X10 RFR	
135	315202-0105		2	O-RING 7,1X1,6 MM	

Pos	Part No	UN	Qty	Description	Page No

This page is intentionally left blank.

ECM: 73196 - 20000124
Group number: 595142-0100
Assembly Drawing:

Pos	Part No	UN	Qty	Description	Page No
-					
0000	1363722-0000		1	DOCUMENT FOLDER	
0000	593005-0000		1	DOCUMENT FOLDER	
010	591295-0100		1	REBUILDING KIT COLUMN	**12-153**
020	595141-0100		1	MACHINE BODY	**12-155**
030	595137-0100		1	DRIVE UNIT	**12-169**
040	595136-0100		1	JAW SYSTEM	**12-171**
060	558674-0100		1	ELECTRICAL DOCUMENT	**12-233**
070	595135-0100		1	TOOL KIT	**12-241**
	595139-0001		1	MODIFICATION DRAWING	

Pos	Part No	UN	Qty	Description	Page No

Machine Type | Group Description | Used-In | Group Number | Page No

This page is intentionally left blank.

ECM: 70372 - 19961217
Group number: 591295-0100
Assembly Drawing:

Pos	Part No	UN	Qty	Description	Page No	Pos	Part No	UN	Qty	Description	Page No
-											
000	267494-0000		2	COIL HEATER							
000	209331-0007		1	GEAR WHEEL							
000	207019-0002		1	GEAR WHEEL							

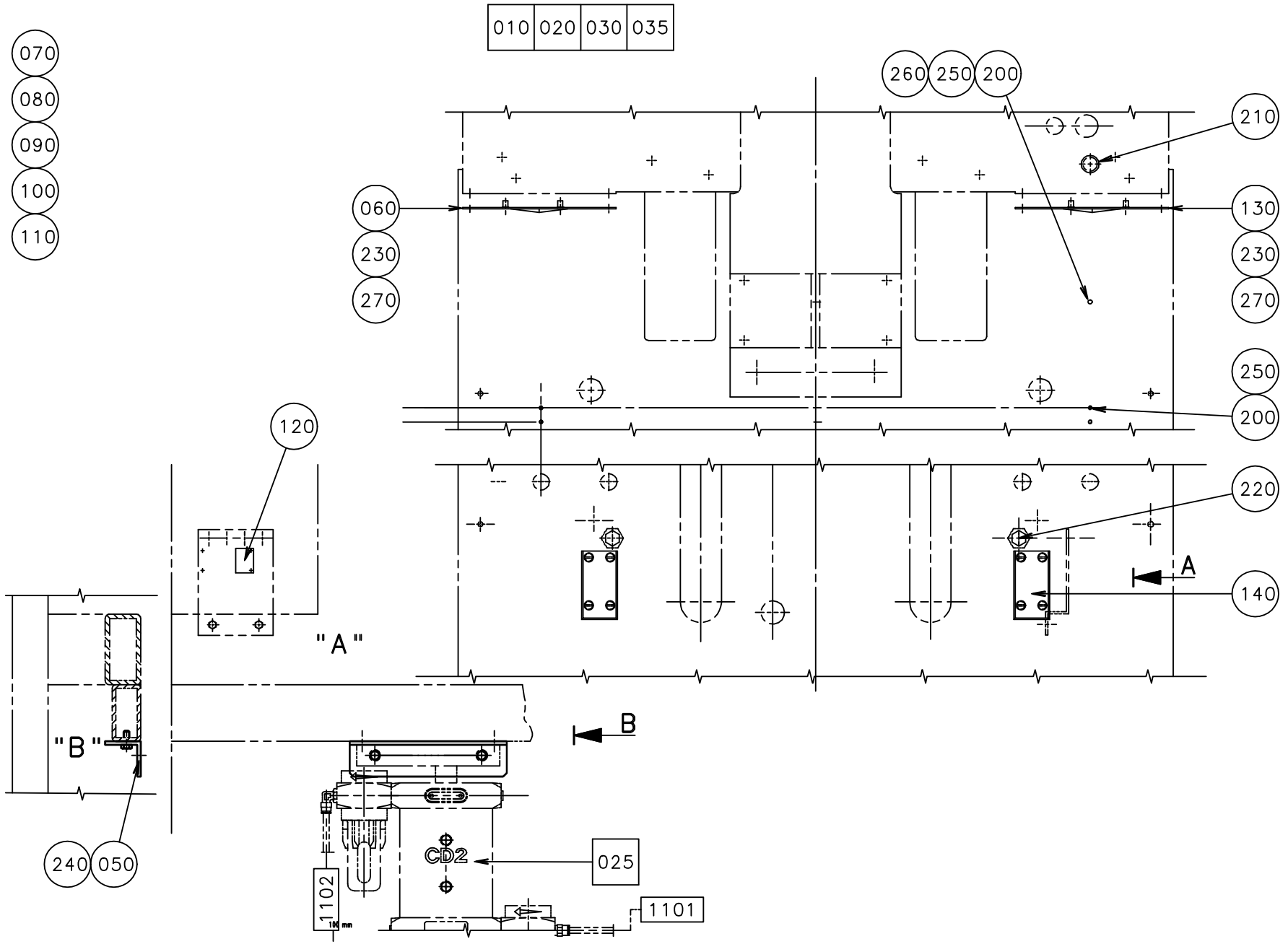
010
020
030
035
070
080
090
100
110
260
250
200
210
060
230
270
130
230
270
250
200
120
220
A
140
"A"
B
"B"
240
050
CD2
025
1102
1101

ECM: 94090 - 20010601
Group number: 595141-0100
Assembly Drawing: 595141-1_1_AA

Pos	Part No	UN	Qty	Description	Page No
-					
010	591296-0100		1	CABLE CONDUIT	**12-157**
020	595138-0100		1	VALVE PANEL UPPER	**12-159**
025	1362511-0100		1	UK NEW VERSION OF AIR DRYER	**12-161, 13-153**
030	592349-0100		1	DRAIN VALVE	**12-163**
035	595140-0100		1	PIPE WORK-HYDRAULIC	**12-165**
050	591294-0000		1	BRACKET	
060	929839-0000		1	COVER PLATE	
070	1143132-0000		1	WATER DIAGRAM	
080	597570-0000		1	VALVE PANEL	
090	597569-0000		1	PNEUMATIC DIAGRAM	
100	1143244-0000		1	CENTRAL LUBRIC. DIAGRAM	
110	592989-0000		1	HYDRAULIC DIAGRAM	
120	1143242-0000		1	SIGN	
130	1143875-0000		1	COVER PLATE	
140	592719-0000		2	SEALING WASHER	
200	90165-0174		6	HOSE HOLDER	
210	352101-0104		1	LEAD-IN PR 20,4;PG13,5	
220	90330-0026		2	PLUG, EXT. G-THREAD, G1/4	
230	312105-0327		8	SCREW M6S ISO 4017 M5X12 A480	
240	312105-0447		2	SCREW M6S ISO 4017 M8X12 A480	
250	312125-0327		6	SCREW ISO 1207 M5X12 A4	
260	312812-0314		2	HEXAGON NUT, NY-LOCK M5 A480	
270	315105-0146		8	WASHER BRB 5,3X10 RFR	

Pos	Part No	UN	Qty	Description	Page No

Machine Type | Group Description | Used-In | Group Number | Page No

CABLE CONDUIT

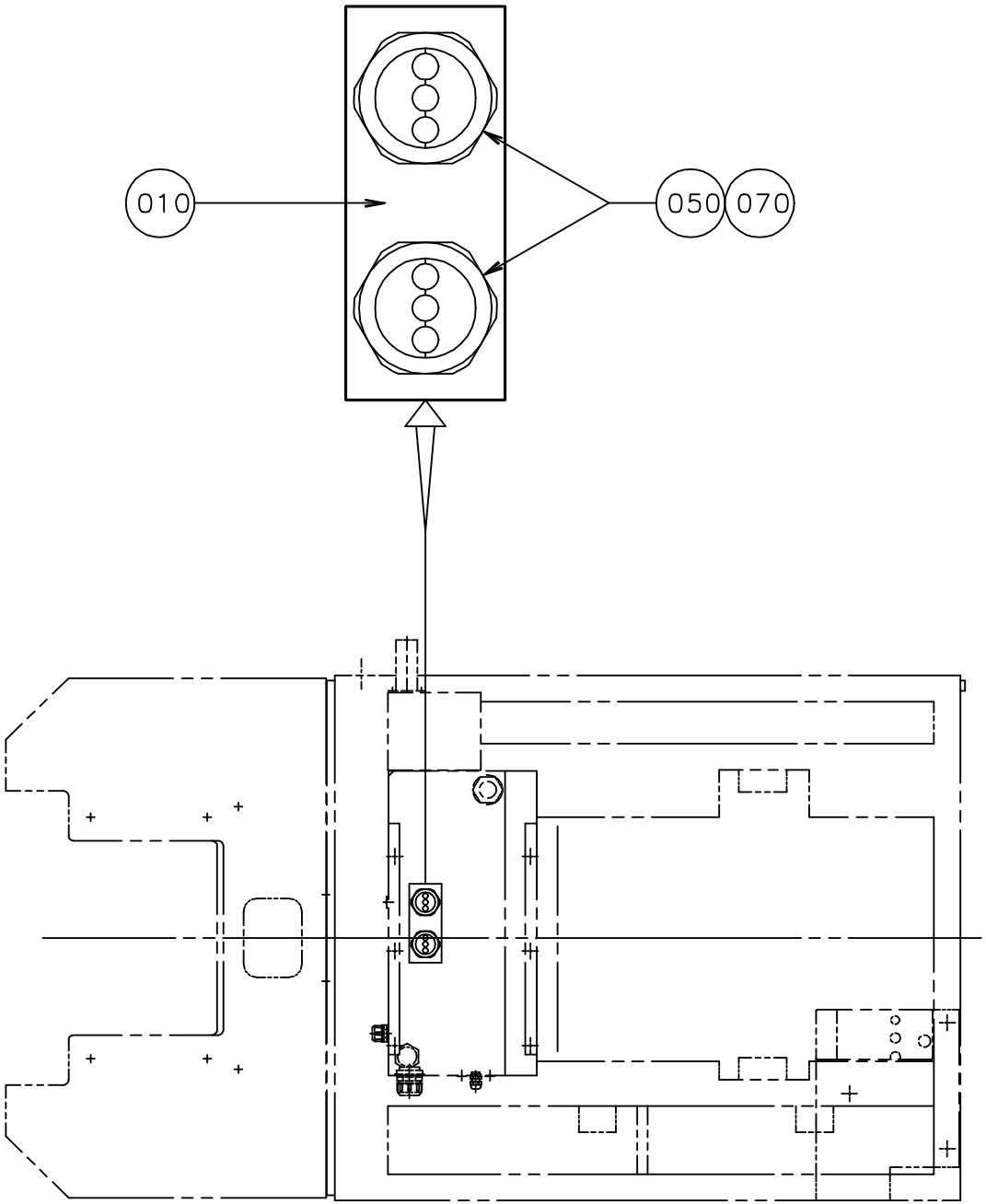

ECM: 70372 - 19961217
Group number: 591296-0100
Assembly Drawing: 591296-1_1_AA

Pos	Part No	UN	Qty	Description	Page No
-					
010	1143839-0000		1	NUT PLATE	
050	353246-0001		2	GLAND FITTING, VK156D	
070	353249-0058		2	GLAND,INSERT,E156 3/10	

Pos	Part No	UN	Qty	Description	Page No

VALVE PANEL UPPER

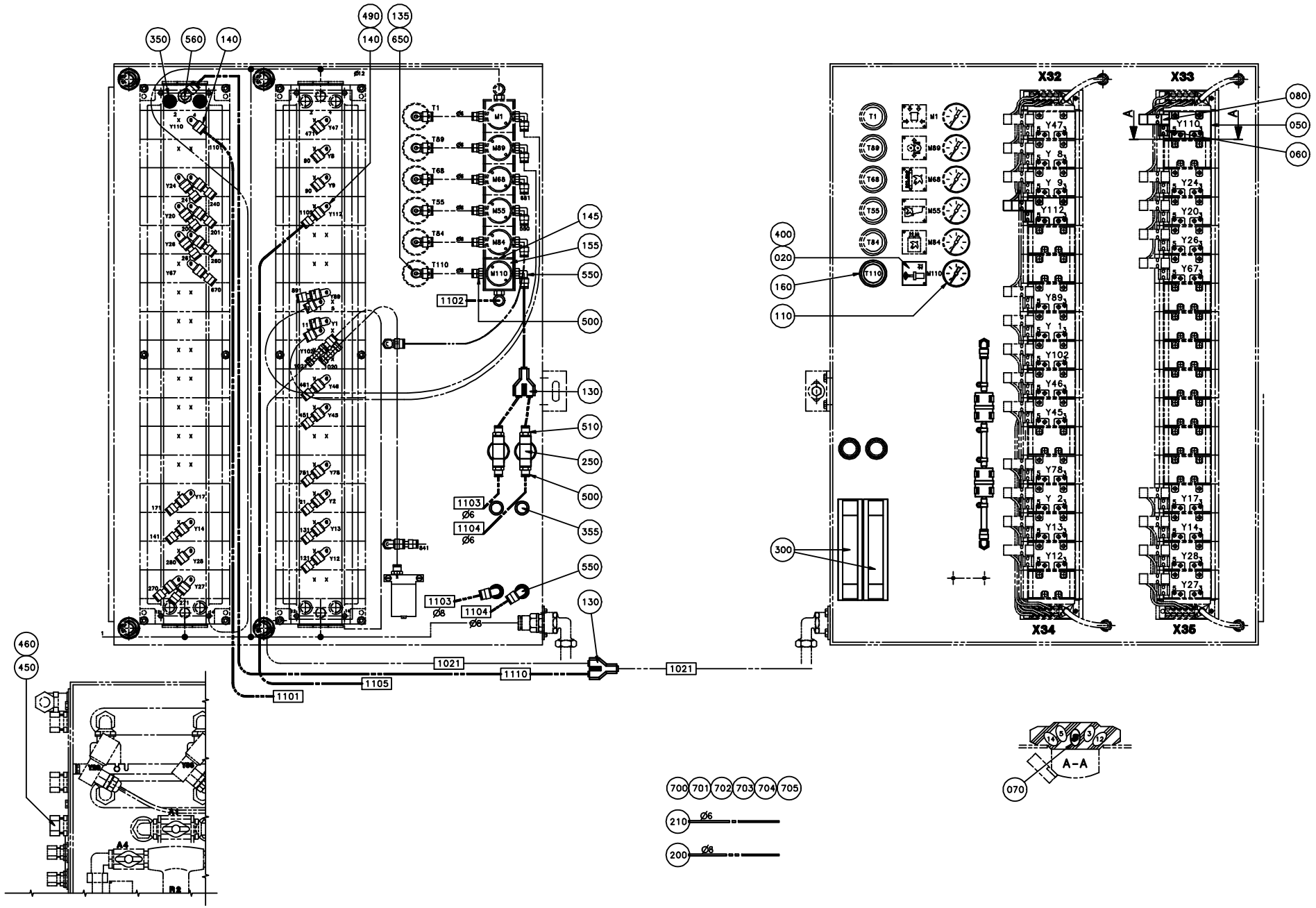

ECM: 71008 - 19980424
Group number: 595138-0100
Assembly Drawing: 595138-1_1_AA

Pos	Part No	UN	Qty	Description	Page No
-					
020	1143241-0000		1	SIGN	
050	90042-0215		2	VALVE BODY 5/2 UNISTABLE	
060	90042-0527		2	SEAL KIT PILOT VALVE	
070	90042-0528		1	BLANKING KIT SEALS ISO SIZE 1	
080	90042-0539		2	PILOT VALVE L=350MM	
110	90043-0056		1	PRESSURE GAUGE, 2041 D=40 MM	
130	90055-0101		2	Y-CONNECTION, 8-8	
135	90055-0217		1	ELBOW PIPE JOINT	
140	90055-0118		2	ELBOW WITH TAILPIECE 8/8 MM	
145	90087-0036		2	PLUG, KR 1/4	
155	90113-0071		1	PRESSURE REGULATOR	
160	90113-0379		1	NUT	
200	90166-0013	M	20	TUBE 8 MM PA BLUE	
210	90166-0081	M	20	TUBE 6 MM PA BLUE	
250	90187-0149		2	THROTTLE VALVE, G1/4, G1/4, MALE	
300	90243-0427		2	FLOW METER	
350	90328-0024		2	SILENCER G3/8"	
355	90328-0026		2	SILENCER G1/4"	
400	312502-0120		4	DRIVE SCREW ROUND HEAD KDS 0X5	
450	342702-0115		1	NUT, PIPES & CONNECTORS,NUT M-16 BR	
460	342711-0115		1	ACCESSORIES, PLUG PL-15 AND 16	
490	342716-0203		1	REDUCER 6-8	
500	342722-0203		3	STRAIGHT COUPLING	
510	342722-0205		2	STRAIGHT COUPLING D=8-G1/4"	
550	342732-0104		4	ELBOW PIPE JOINT, EXT.THREAD, D=8MM-G1/4	
560	342732-0105		1	ELBOW PIPE JOINT ,EXT.THREAD,D=8 MM R3/8	
650	342770-0105		1	STRAIGHT COUPLING INT, D=6 MM - G1/8	
700	359000-0400		15	WIRE MARKING, YELLOW, PA2/4"0"	
701	359000-0401		35	WIRE MARKING, YELLOW, PA2/4"1"	
702	359000-0402		5	WIRE MARKING, YELLOW, PA2/4"2"	
703	359000-0403		5	WIRE MARKING, YELLOW, PA2/4"3"	
704	359000-0404		5	WIRE MARKING, YELLOW, PA2/4"4"	
705	359000-0405		5	WIRE MARKING, YELLOW, PA2/4"5"	

Pos	Part No	UN	Qty	Description	Page No

Machine Type	Group Description	Used-In	Group Number	Page No

UK NEW VERSION OF AIR DRYER

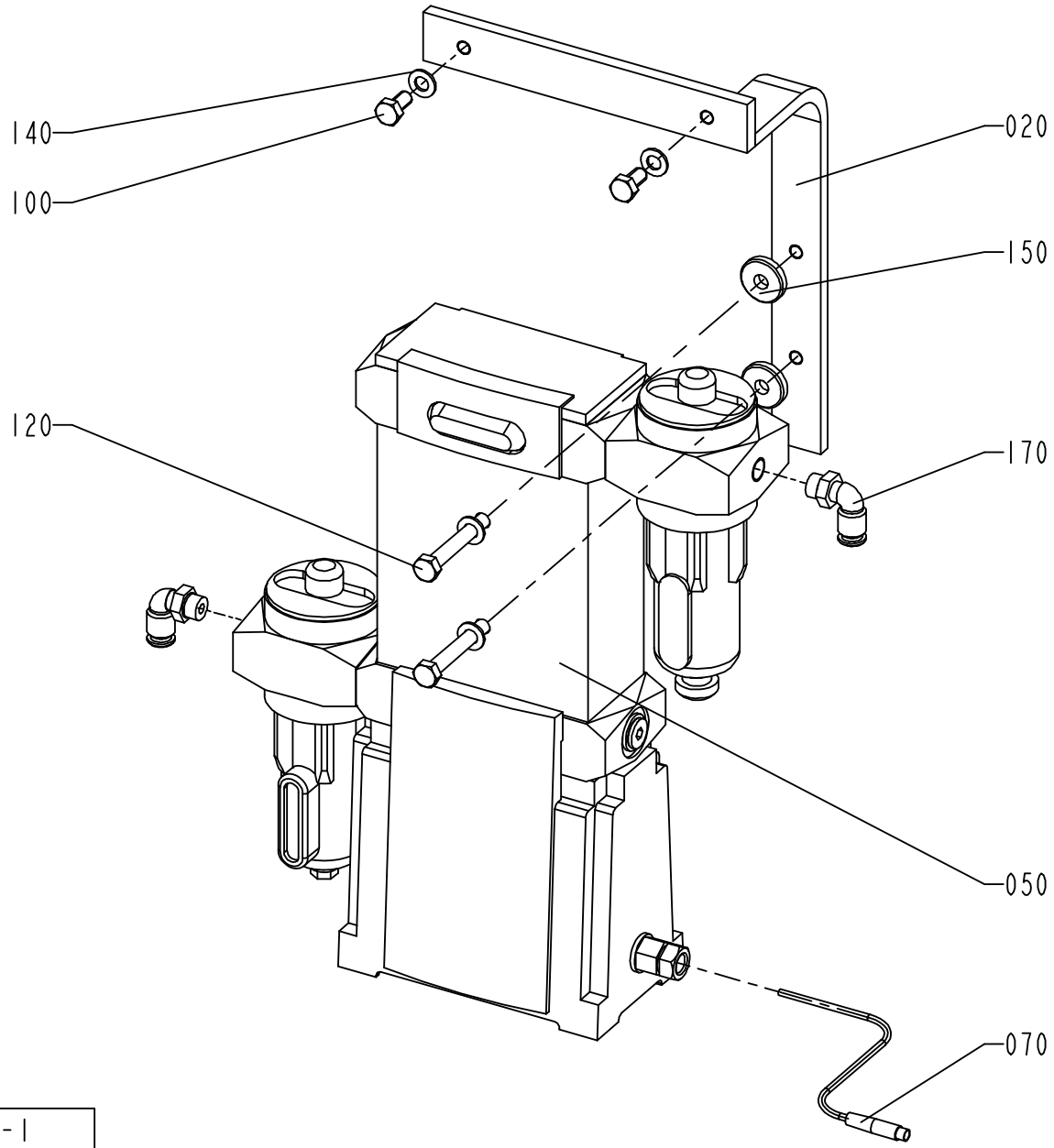

1362511-1
ECN 73488

ECM: 73488 - 20000224
Group number: 1362511-0100
Assembly Drawing: 1362511-1_1_AA

Pos	Part No	UN	Qty	Description	Page No
-					
020	597562-0000		1	BRACKET	
050	90457-0862		1	AIR DRYER. TYP LDF-H1-GÂ¬-24	
010	*90415-0356*		*1*	*OUTLET FILTER CATRIDGE LFMBP-H*	
020	*90415-0362*		*1*	*INLET FILTER CATRIDGE LFMAP-H*	
030	*90415-0363*		*1*	*DRYING AGENT. LDF-TM-H1-H7-1KG*	
070	90042-0600		1	CABLE MECMAN 440-428 500-1	
100	312105-0449		2	SCREW M6S ISO 4017 M8X16 A480	
120	312105-0467		2	SCREW M6S ISO 4014 M8X80 A480	
140	315105-0165		4	WASHER BRB 8,4X16 RFR	
150	315125-0165		2	WASHER TBRSB 8,4X26X5 A4	
170	342732-0104		2	ELBOW PIPE JOINT, EXT.THREAD, D=8MM-G1/4	

Pos	Part No	UN	Qty	Description	Page No

This page is intentionally left blank.

ECM: 70372 - 19961217
Group number: 592349-0100
Assembly Drawing:

Pos	Part No	UN	Qty	Description	Page No
-					
000	90012-0063		1	CABLE GLAND PR 15,2	
000	90030-0594		1	REDUCING ADAPTER	
000	90042-0398		1	CONTACT 3 POLE+EARTH	
000	90152-0033	MM	500	SPIRAL CONDUIT FOR PR 15,2(PG 9)	
000	90201-0058		1	SOLENOID VALVE	
	90201-0334		*1*	*SOL. COIL, 24VDC,NO 507848, F.90201-0058*	
000	90201-0407		1	BOLT KIT	
000	342731-0102		1	CONN. ELBOW WE 6-LRFZB	
000	352136-0113		1	GLAND FITTING PR18,6/PG11 DI=12MM	
000	592558-0000		1	TUBE	

Pos	Part No	UN	Qty	Description	Page No

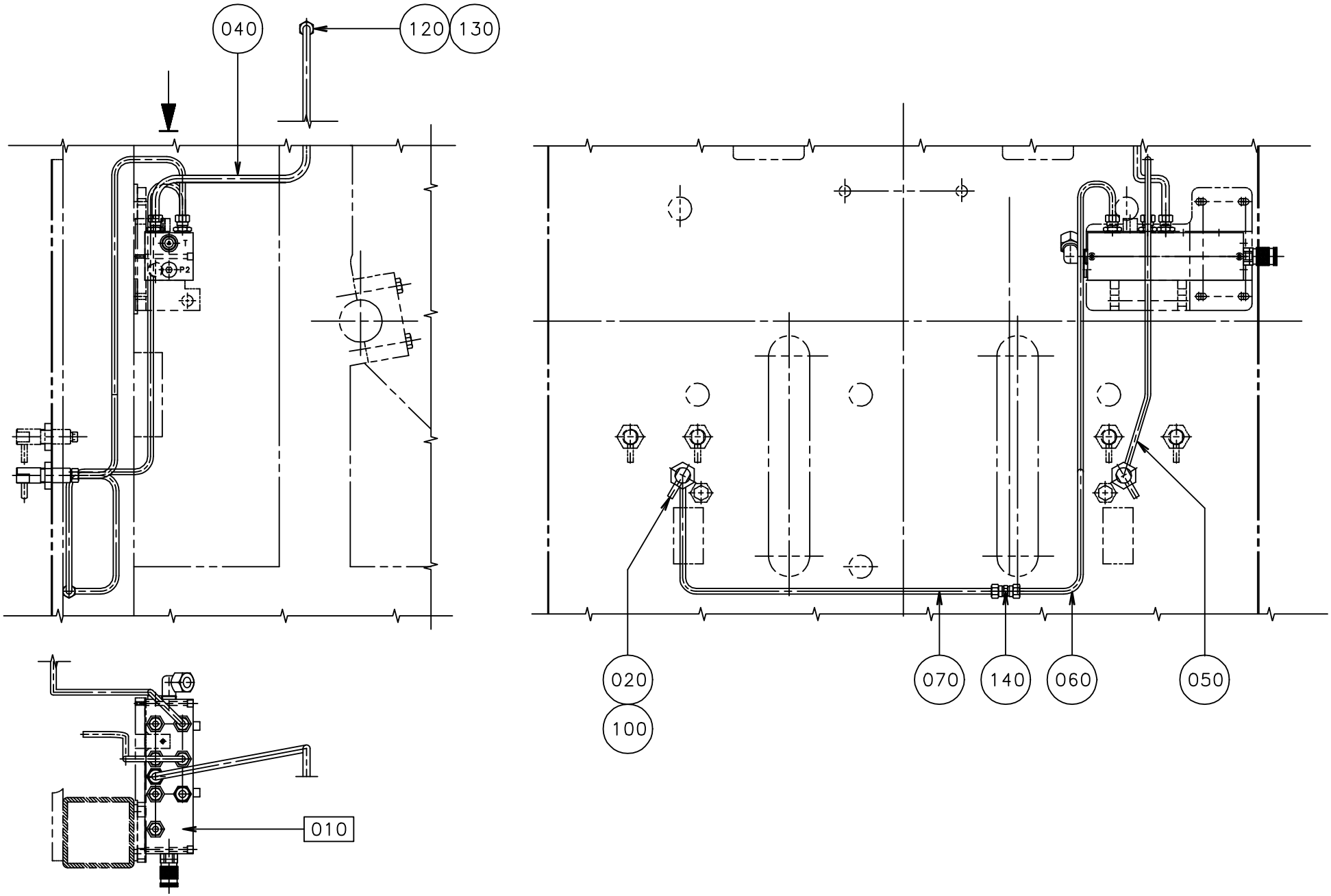
040
120
130
T
P1
P2
020
100
070
140
060
050
010

ECM: 71008 - 19980424
Group number: 595140-0100
Assembly Drawing: 595140-1_1_AA

Pos	Part No	UN	Qty	Description	Page No
-					
010	597538-0100		1	HYDRAULIC BLOCK	**12-167, 13-97**
020	540718-0000		2	ELBOW PIPE JOINT	
040	592716-0000		1	PIPE	
050	592718-0000		1	PIPE	
060	597534-0000		1	PIPE	
070	597535-0000		1	PIPE	
100	90330-0093		2	NUT, HEXAGON, G1/2	
120	342703-0108		1	NUT, PIPES & CONNECTORS,NUT M-10 FE	
130	342705-0108		1	ACCESSORIES, FERRULE 10-LFZB	
140	342727-0103		1	CONN. PIPE G-8-LFZB	

Pos	Part No	UN	Qty	Description	Page No

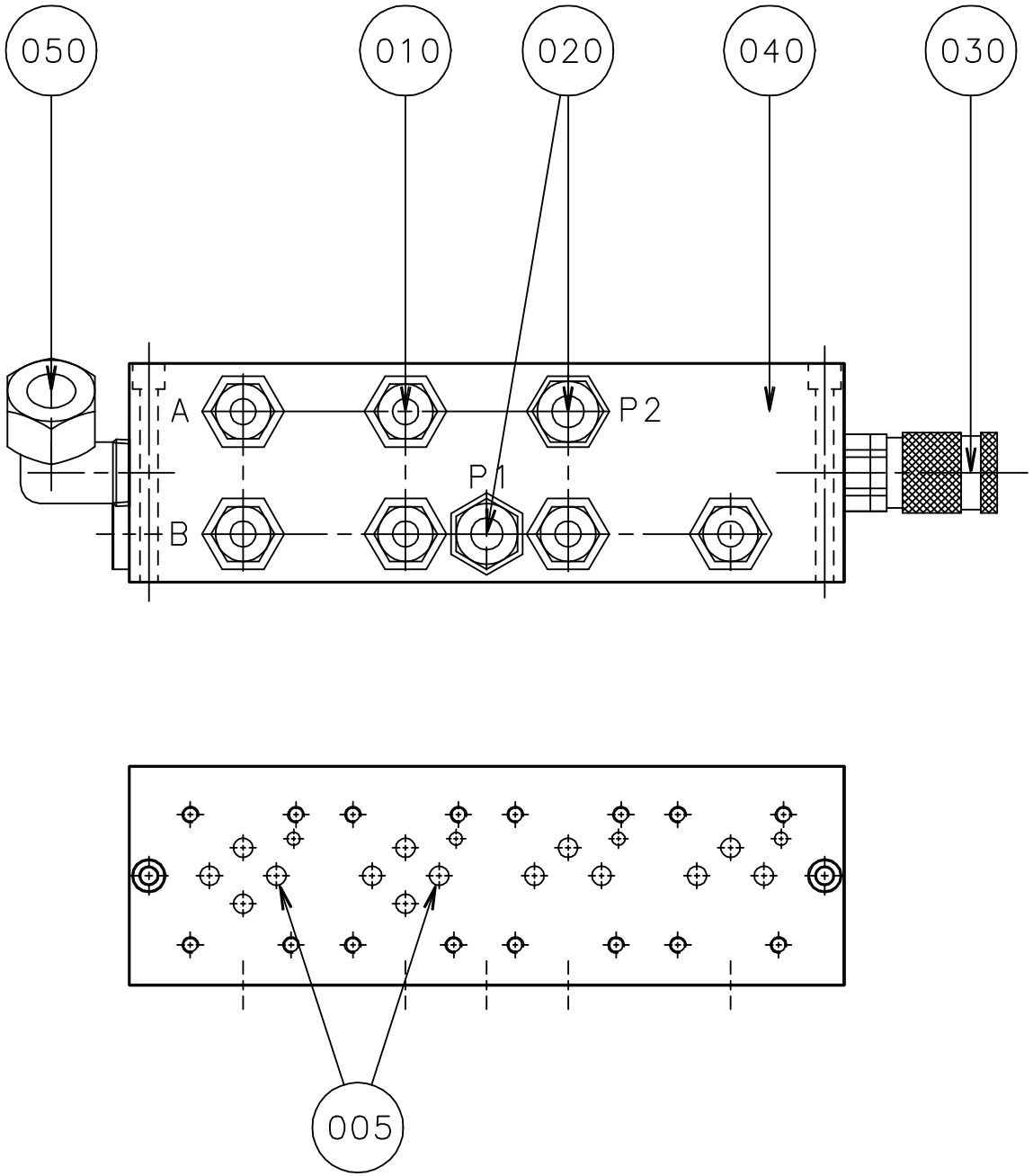
050
010
020
040
030
A
P2
P1
B
005

ECM: 71630 - 19980703
Group number: 597538-0100
Assembly Drawing: 597538-1_1_AA

Pos	Part No	UN	Qty	Description	Page No
-					
005	295391-0003		2	THROTTLE SCREW	
010	90030-0155		6	CONN. STR., 8-R3/8, EXT. THREAD	
020	90030-0157		2	CONN. STR. 10-R3/8, EXT. THREAD	
030	90163-0076		1	QUICK COUPLING, (F) LP-006-0-WR021	
040	90201-0427		1	BLOCK	
050	342731-0114		1	CONN. ELBOW WE 15-LRFZB	

Pos	Part No	UN	Qty	Description	Page No

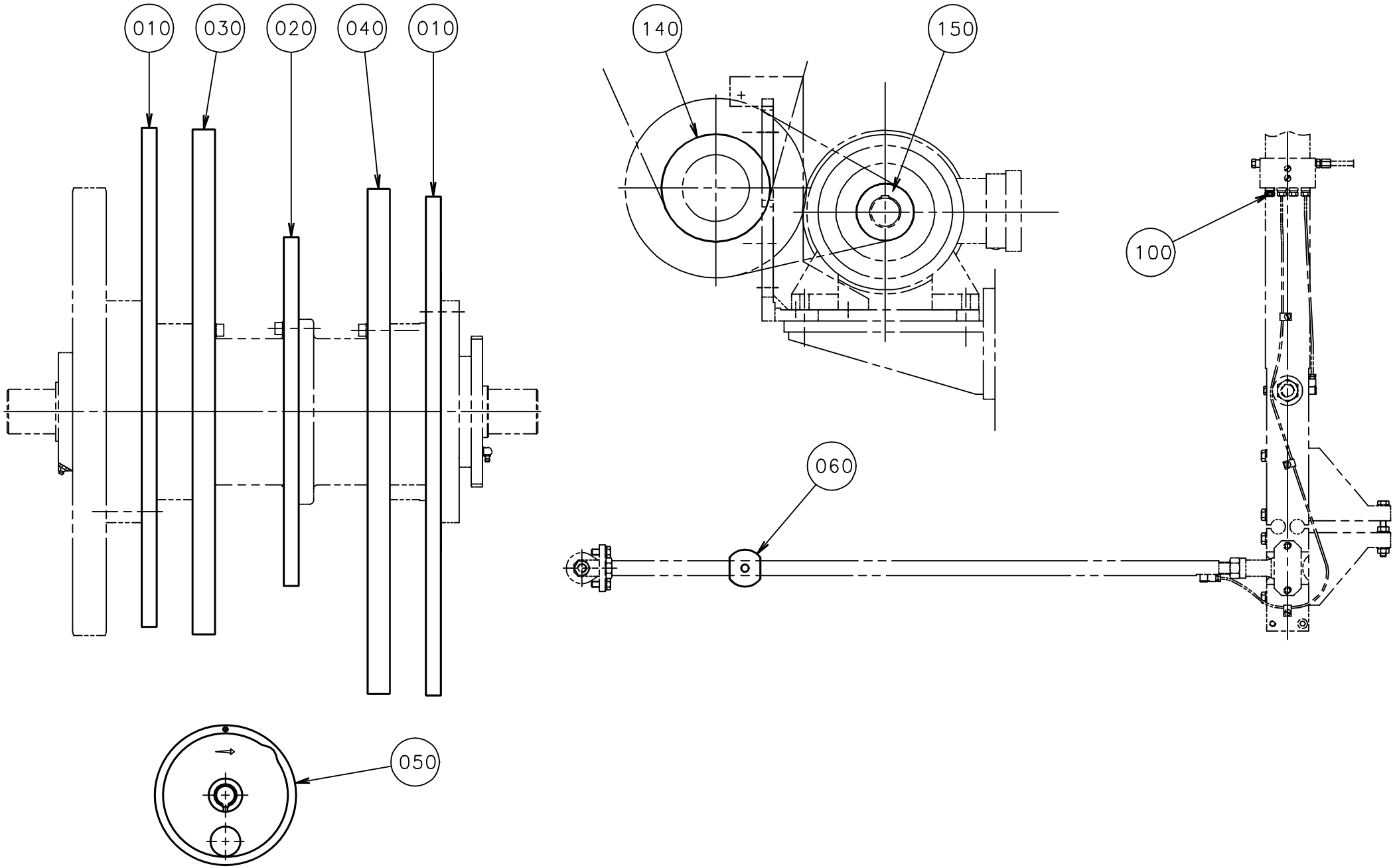
010
030
020
040
010
140
150
100
060
050

ECM: 71576 - 19981112
Group number: 595137-0100
Assembly Drawing: 595137-1_1_AA

Pos	Part No	UN	Qty	Description	Page No
50HZ					
140	90196-0055		1	PULLEY	
60HZ					
140	90196-0065		1	PULLEY	
Common Parts					
010	929045-0000		2	MAIN CAM	
020	929046-0000		1	COUNTER CAM	
030	592340-0000		1	CAM LEFT	
040	592341-0000		1	CAM RIGHT	
050	556579-0000		1	CURVE	
060	928948-0000		4	BEARING	
100	90134-0052		2	PLUG DOSING BLOCK	
150	90196-0062		1	PULLEY	

Pos	Part No	UN	Qty	Description	Page No

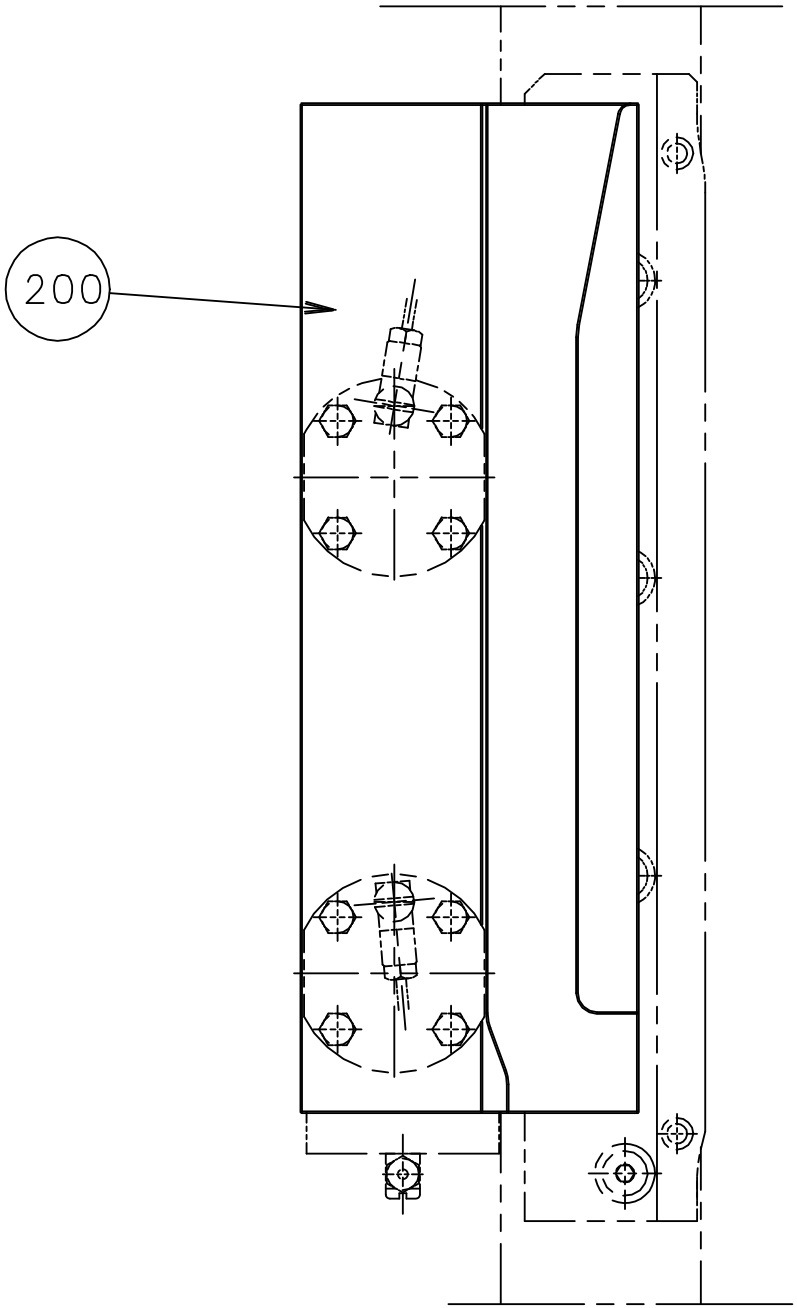
200

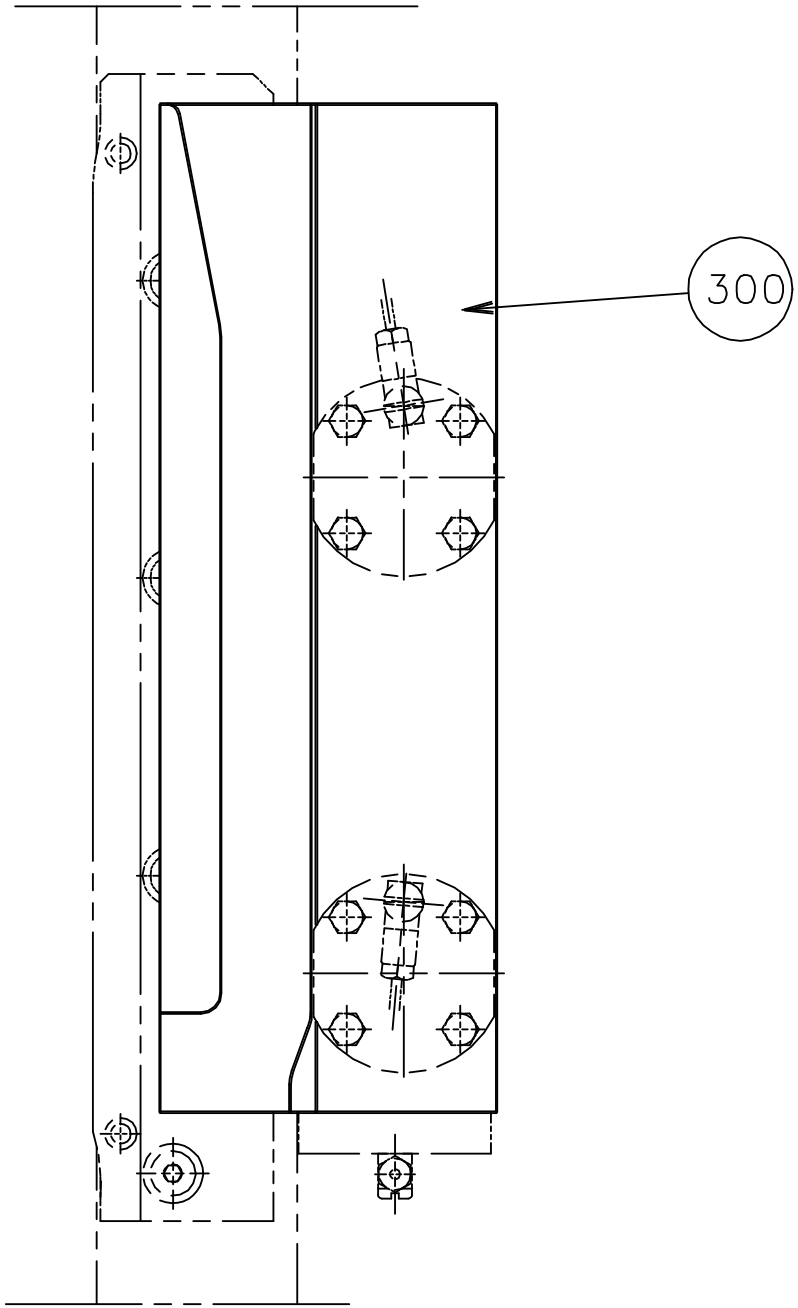
300

ECM: 71008 - 19980424
Group number: 595136-0100
Assembly Drawing: 595136-1_1_AA

Pos	Part No	UN	Qty	Description	Page No
-					
010	928976-0100		2	KNIFE HOLDER ULTRA SONIC	**4-9, 12-173**
020	246327-0400		1	SHOCK ABSORBER	**4-113, 4-115, 4-117, 4-119, 4-121 4-123, 4-125, 4-127, 4-129, 12-175, 12-177, 12-179, 12-181 12-183, 12-185, 12-187, 12-189, 12-191**
030	928982-0100		1	CUTTING JAW LEFT	**4-17, 4-19, 4-21, 12-193, 12-195 12-197**
040	928983-0100		1	CUTTING JAW RIGHT	**4-11, 4-13, 4-15, 12-199, 12-201 12-203**
050	246468-0800		4	VOLUME FLAP	**4-53, 4-55, 4-57, 4-59, 12-205, 12-207 12-209, 12-211**
060	591301-0100		1	ARM WITH AXLE PRESSURE	**12-213**
070	597566-0100		1	PRESSURE JAW LEFT	**12-215, 12-217**
080	597567-0100		1	PRESSURE JAW RIGHT	**12-219, 12-221**
090	591302-0100		1	FOLDING DEVICE LEFT	**12-223**
100	591303-0100		1	FOLDING DEVICE RIGHT	**12-227**
110	592336-0100		1	VOLUME CAM	**12-229**
120	597568-0100		1	START-UP KIT	**12-231**
200	565188-0000		1	FOLDING FLAP CAM	
300	565189-0000		1	FOLDING FLAP CAM	

Pos	Part No	UN	Qty	Description	Page No

KNIFE HOLDER ULTRA SONIC

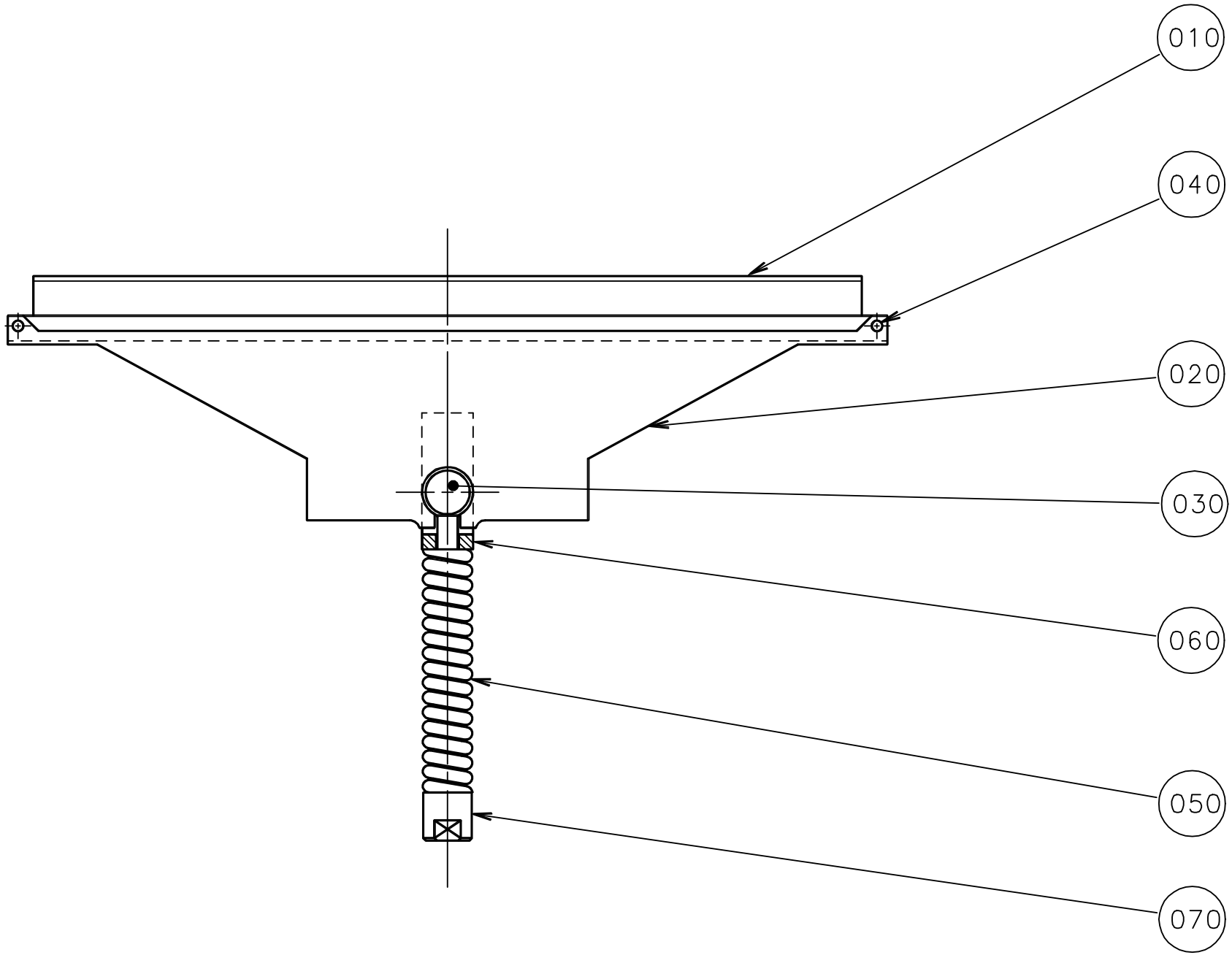

ECM: 114925 - 20020909
Group number: 928976-0100
Assembly Drawing: 928976-1_1_AA

Pos	Part No	UN	Qty	Description	Page No
1000SQ, 0500SQ, 0568SQ					
010	1338867-0000		1	KNIFE	
020	1143597-0000		1	KNIFE HOLDER	
1500B					
010	593578-0000		1	KNIFE	
020	593577-0000		1	KNIFE HOLDER	
Common Parts					
030	1285003-0000		1	LINK	
040	456011-0000		2	PIN	
050	1538109-0000		1	COMPRESSION SPRING	
060	1285006-0000		1	SPACER	
070	1285005-0000		1	NUT	

Pos	Part No	UN	Qty	Description	Page No

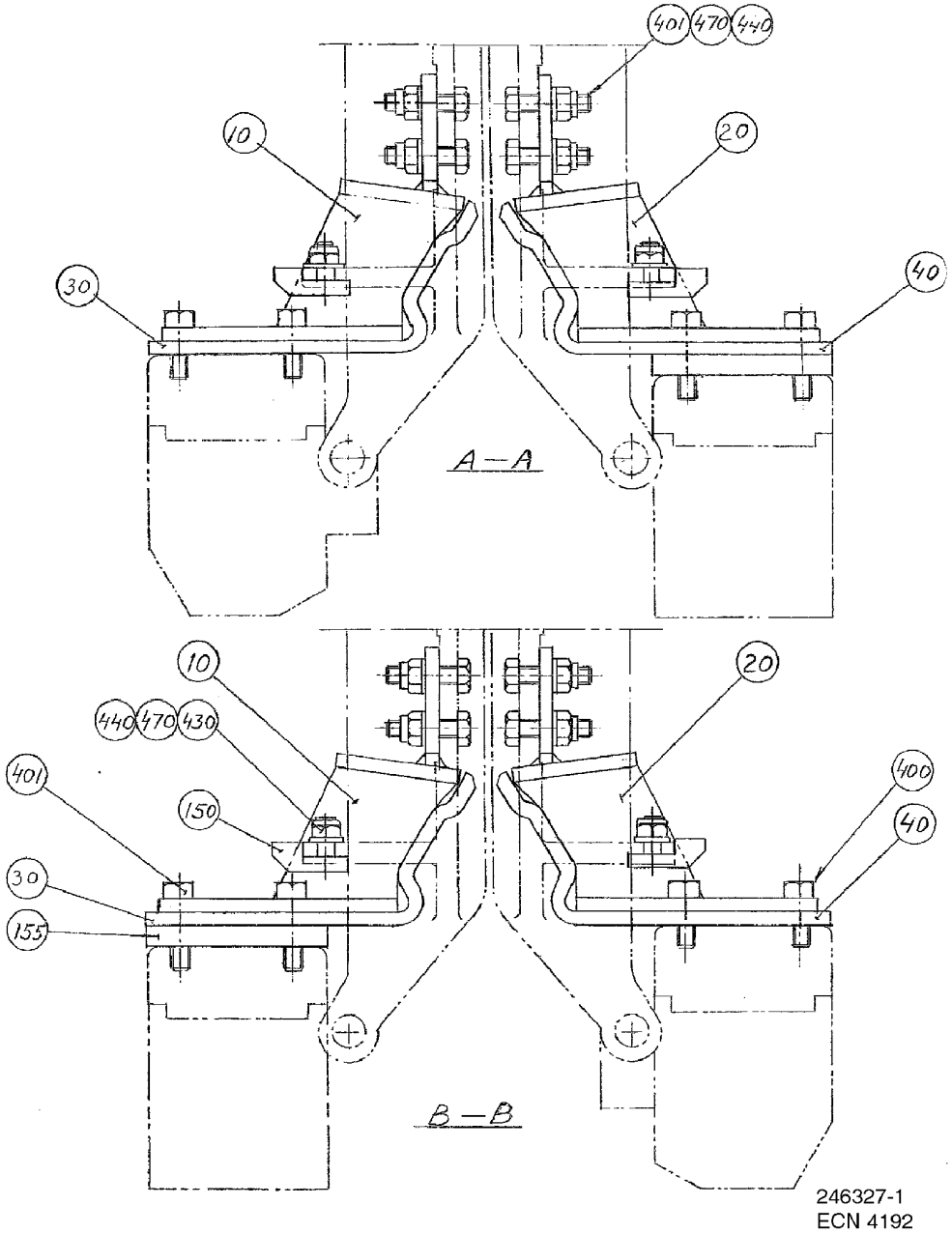

246327-1
ECN 4192

ECM: 72090 - 19981214
Group number: 246327-0400
Assembly Drawing: 246327-1_1_AA

This list covers pages from 12-174 to 12-191

Pos	Part No	UN	Qty	Description	Page No
TB/8 1000SQ TPC (See drawing on pages: 4-120, 12-182)					
140	545651-0000		8	GUIDE STUD	
150	33152-0000		4	STOPPER	
180	1143216-0000		4	SPRING	
190	1143215-0000		4	SPRING	
205	593270-0000		2	CATCH	
212	597574-0000		4	SPRING BRACKET	
220	571298-0000		2	LACE	
230	571297-0000		2	LACE	
240	263684-0000		4	SPACER	
250	593271-0000		2	CATCH	
401	312105-0331		8	SCREW M6S ISO 4017 M5X20 A480	
402	312115-0327		4	SCREW ISO4762 M5X12 A4 80	
412	312115-0340		8	SCREW ISO4762 M5X45 A4 80	
420	312105-0325		8	SCREW M6S ISO 4017 M5X10 A480	
470	315105-0146		16	WASHER BRB 5,3X10 RFR	
TB/8 0300B TPC (See drawing on pages: 4-118, 12-180)					
140	545651-0000		8	GUIDE STUD	
150	545125-0000		2	STOPPER	
152	545126-0000		2	STOPPER	
180	38467-0000		4	SPRING	
190	251530-0000		4	SPRING	
205	545127-0000		2	CATCH	
210	247262-0000		2	SPRING BRACKET	
212	545128-0000		2	SPRING BRACKET	
215	247263-0000		8	SPACER	
220	247271-0000		2	LACE	
240	263684-0000		4	SPACER	
250	545136-0000		2	CATCH	
401	312105-0331		8	SCREW M6S ISO 4017 M5X20 A480	
410	312105-0340		8	SCREW M6S ISO 4014 M5X45 A480	
420	312105-0325		8	SCREW M6S ISO 4017 M5X10 A480	
470	315105-0146		24	WASHER BRB 5,3X10 RFR	
TB/8 0568B TPC, TB/8 0500B TPC (See drawing on pages: 4-118, 12-180)					
140	33150-0000		8	GUIDE STUD	
150	33152-0000		4	STOPPER	
180	246328-0000		4	SPRING	
190	246329-0000		4	SPRING	
205	246332-0000		2	CATCH	
210	247262-0000		2	SPRING BRACKET	
212	545128-0000		2	SPRING BRACKET	
215	247263-0000		8	SPACER	
220	247271-0000		2	LACE	
240	263684-0000		4	SPACER	
250	263693-0000		2	CATCH	
401	312105-0331		8	SCREW M6S ISO 4017 M5X20 A480	
410	312105-0340		8	SCREW M6S ISO 4014 M5X45 A480	
420	312145-0325		8	SCREW ISO 2009 MFS M5X10 A4	
470	315105-0146		16	WASHER BRB 5,3X10 RFR	
TB/8 0568SQ US, TB/8 0500SQ US (See drawing on pages: 4-128, 12-190)					
140	545651-0000		8	GUIDE STUD	
150	33152-0000		8	STOPPER	
180	1037767-0000		4	SPRING RIGHT	
190	1037768-0000		4	SPRING LEFT	
205	593612-0000		2	CATCH	
210	593681-0000		2	SPRING BRACKET	
212	591080-0000		2	SPRING BRACKET	
220	593680-0000		2	LACE	
220	591078-0000		2	LACE	
230	593679-0000		2	LACE	
250	593271-0000		2	CATCH	
401	312105-0331		8	SCREW M6S ISO 4017 M5X20 A480	
402	312105-0333		4	SCREW M6S ISO 4017 M5X25 A480	
405	312105-0327		4	SCREW M6S ISO 4017 M5X12 A480	
412	312115-0337		4	SCREW ISO4762 M5X35 A4 80	
420	312105-0325		8	SCREW M6S ISO 4017 M5X10 A480	
421	312105-0370		4	SCREW M6S ISO 4017 M6X20 A480	
470	315105-0146		18	WASHER BRB 5,3X10 RFR	
480	315105-0153		4	WASHER BRB 6,4X12 RFR	
TB/8 1000B HIFIN TPC (See drawing on pages: 4-116, 12-178)					
010	252808-0000		2	DAMPER LEFT	
020	252809-0000		2	DAMPER RIGHT	
030	255473-0000		2	STOP	
040	255474-0000		2	STOP	
150	251598-0000		4	STOPPER	
155	251597-0000		6	LACE	
401	312105-0331		12	SCREW M6S ISO 4017 M5X20 A480	
402	312105-0333		4	SCREW M6S ISO 4017 M5X25 A480	
430	312155-0329		8	SCREW DIN 7991 MF6S M5X16 A4 70	
440	312812-0314		16	HEXAGON NUT, NY-LOCK M5 A480	
470	315105-0146		16	WASHER BRB 5,3X10 RFR	
TB/8 1000B LOFIN TPC, TB/8 1136B TPC (See drawing on pages: 4-112, 12-174)					
010	252808-0000		2	DAMPER LEFT	
020	252809-0000		2	DAMPER RIGHT	

Machine Type | Group Description | Used-In | Group Number | Page No

SHOCK ABSORBER

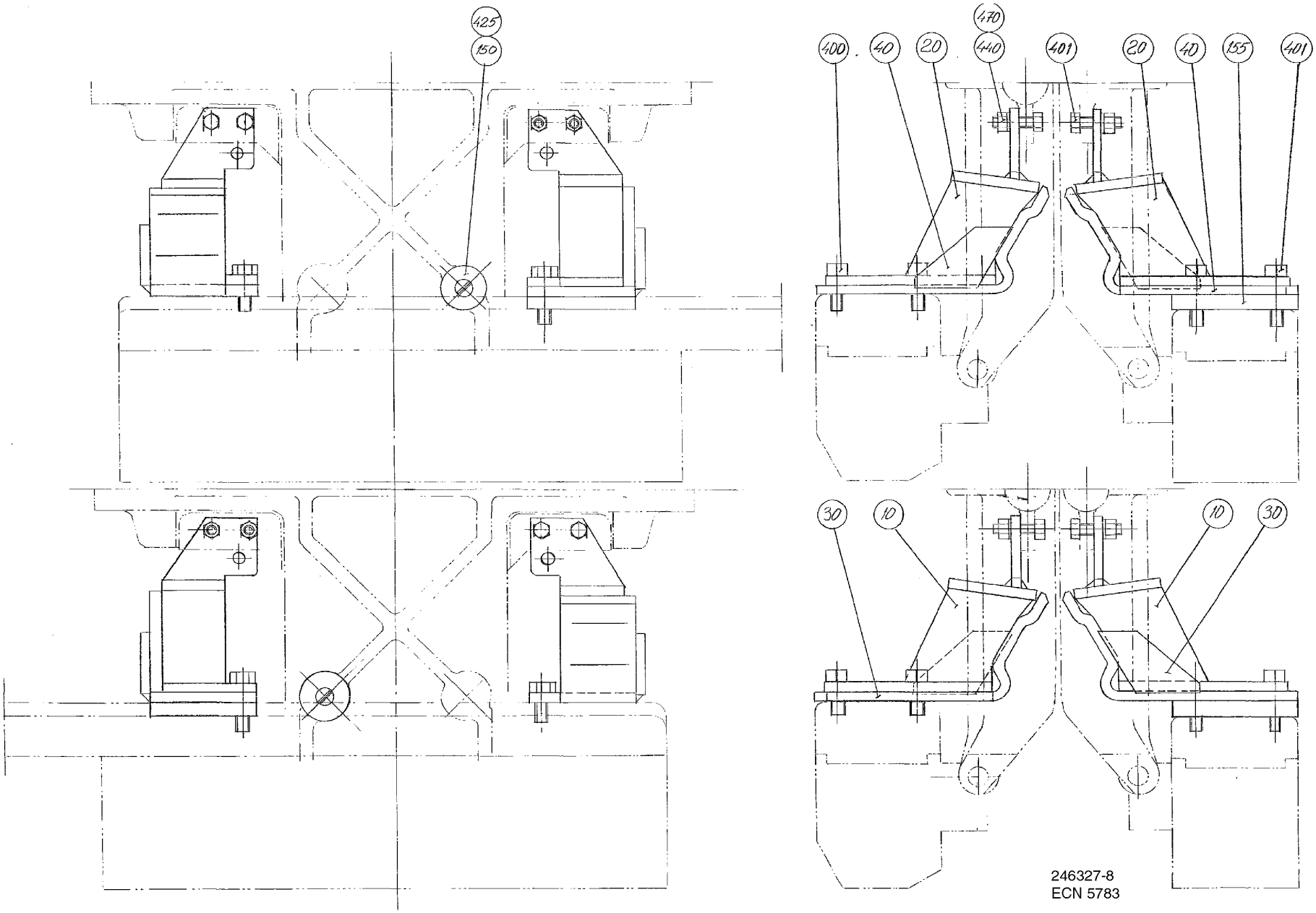

Pos	Part No	UN	Qty	Description	Page No
TB/8 1000B LOFIN TPC, TB/8 1136B TPC (Cont'd) (See drawing on pages: 4-112, 12-174)					
030	255473-0000		2	STOP	
040	255474-0000		2	STOP	
150	251598-0000		4	STOPPER	
155	251597-0000		2	LACE	
400	312105-0329		4	SCREW M6S ISO 4017 M5X16 A480	
401	312105-0331		12	SCREW M6S ISO 4017 M5X20 A480	
430	312155-0329		8	SCREW DIN 7991 MF6S M5X16 A4 70	
440	312812-0314		16	HEXAGON NUT, NY-LOCK M5 A480	
470	315105-0146		16	WASHER BRB 5,3X10 RFR	
TB/8 1000S TPC (See drawing on pages: 4-122, 12-184)					
140	545651-0000		8	GUIDE STUD	
150	1255207-0000		2	STOPPER	
152	1255208-0000		2	STOPPER	
180	1143216-0000		4	SPRING	
190	1143215-0000		4	SPRING	
205	593270-0000		2	CATCH	
212	573993-0000		4	SPRING BRACKET	
220	571298-0000		2	LACE	
230	571297-0000		2	LACE	
240	263684-0000		4	SPACER	
250	593271-0000		2	CATCH	
401	312105-0331		8	SCREW M6S ISO 4017 M5X20 A480	
402	312105-0335		4	SCREW M6S ISO 4014 M5X30 A480	
412	312115-0340		8	SCREW ISO4762 M5X45 A4 80	
420	312105-0325		12	SCREW M6S ISO 4017 M5X10 A480	
470	315105-0146		24	WASHER BRB 5,3X10 RFR	
TB/8 1000SQ US, TB/8 1500B US (See drawing on pages: 4-124, 12-186)					
140	545651-0000		8	GUIDE STUD	
150	33152-0000		4	STOPPER	
180	1143216-0000		4	SPRING	
190	1143215-0000		4	SPRING	
205	594653-0000		2	CATCH	
212	929813-0000		4	SPRING BRACKET	
220	929550-0000		2	LACE	
230	929548-0000		2	LACE	
250	594654-0000		2	CATCH	
401	312105-0331		8	SCREW M6S ISO 4017 M5X20 A480	
402	312105-0335		4	SCREW M6S ISO 4014 M5X30 A480	
412	312115-0341		4	SCREW ISO4762 M5X50 A4 80	
420	312105-0325		8	SCREW M6S ISO 4017 M5X10 A480	
422	312105-0374		4	SCREW M6S ISO 4014 M6X30 A480	
470	315105-0146		20	WASHER BRB 5,3X10 RFR	
480	315105-0153		4	WASHER BRB 6,4X12 RFR	
TB/8 0500S TPC (See drawing on pages: 4-114, 12-176)					
010	499397-0000		2	DAMPER LEFT	
020	499398-0000		2	DAMPER RIGHT	
030	499125-0000		2	STOP	
040	499124-0000		2	STOP	
150	445770-0000		4	STOPPER	
155	251597-0000		2	LACE	
400	312105-0329		4	SCREW M6S ISO 4017 M5X16 A480	
401	312105-0331		12	SCREW M6S ISO 4017 M5X20 A480	
425	312145-0289		4	SCREW ISO 2009 MFS M4X10 A4	
440	312812-0314		8	HEXAGON NUT, NY-LOCK M5 A480	
470	315105-0146		8	WASHER BRB 5,3X10 RFR	
TB/8 0500SQ TPC (See drawing on pages: 4-126, 12-188)					
140	545651-0000		8	GUIDE STUD	
150	33152-0000		4	STOPPER	
180	1037767-0000		4	SPRING RIGHT	
190	1037768-0000		4	SPRING LEFT	
205	593270-0000		2	CATCH	
212	591080-0000		4	SPRING BRACKET	
220	591078-0000		2	LACE	
230	571297-0000		2	LACE	
250	593271-0000		2	CATCH	
401	312105-0331		8	SCREW M6S ISO 4017 M5X20 A480	
402	312105-0335		4	SCREW M6S ISO 4014 M5X30 A480	
405	312105-0327		4	SCREW M6S ISO 4017 M5X12 A480	
412	312115-0337		8	SCREW ISO4762 M5X35 A4 80	
420	312105-0325		8	SCREW M6S ISO 4017 M5X10 A480	
470	315105-0146		20	WASHER BRB 5,3X10 RFR	

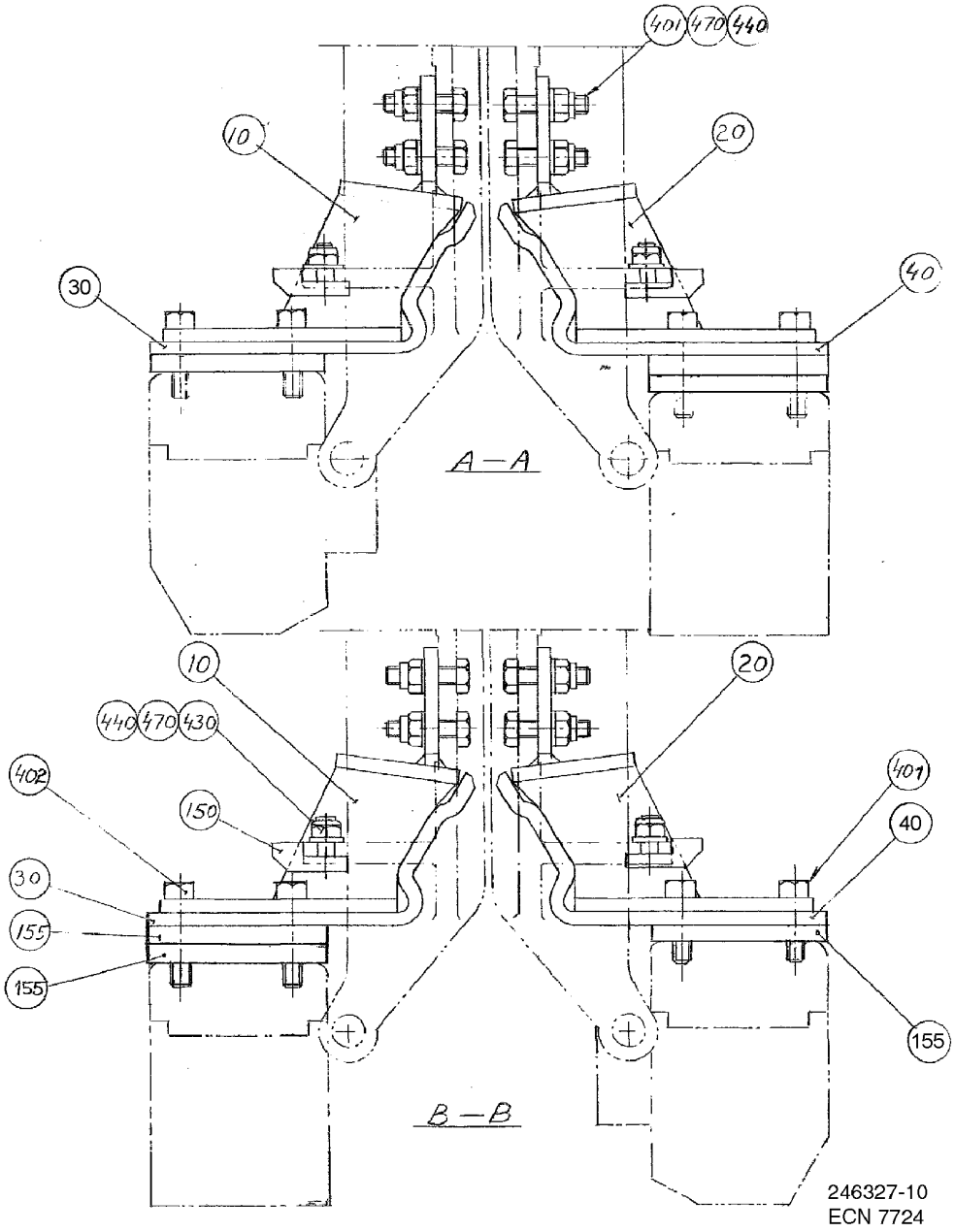
401
470
440
10
20
30
40
A—A
10
20
440
470
430
402
150
401
40
30
155
155
155
B—B
246327-10
ECN 7724

Pos	Part No	UN	Qty	Description	Page No	Pos	Part No	UN	Qty	Description	Page No

SEE PREVIOUS LISTS PAGES: 12-175, 12-177.

SHOCK ABSORBER

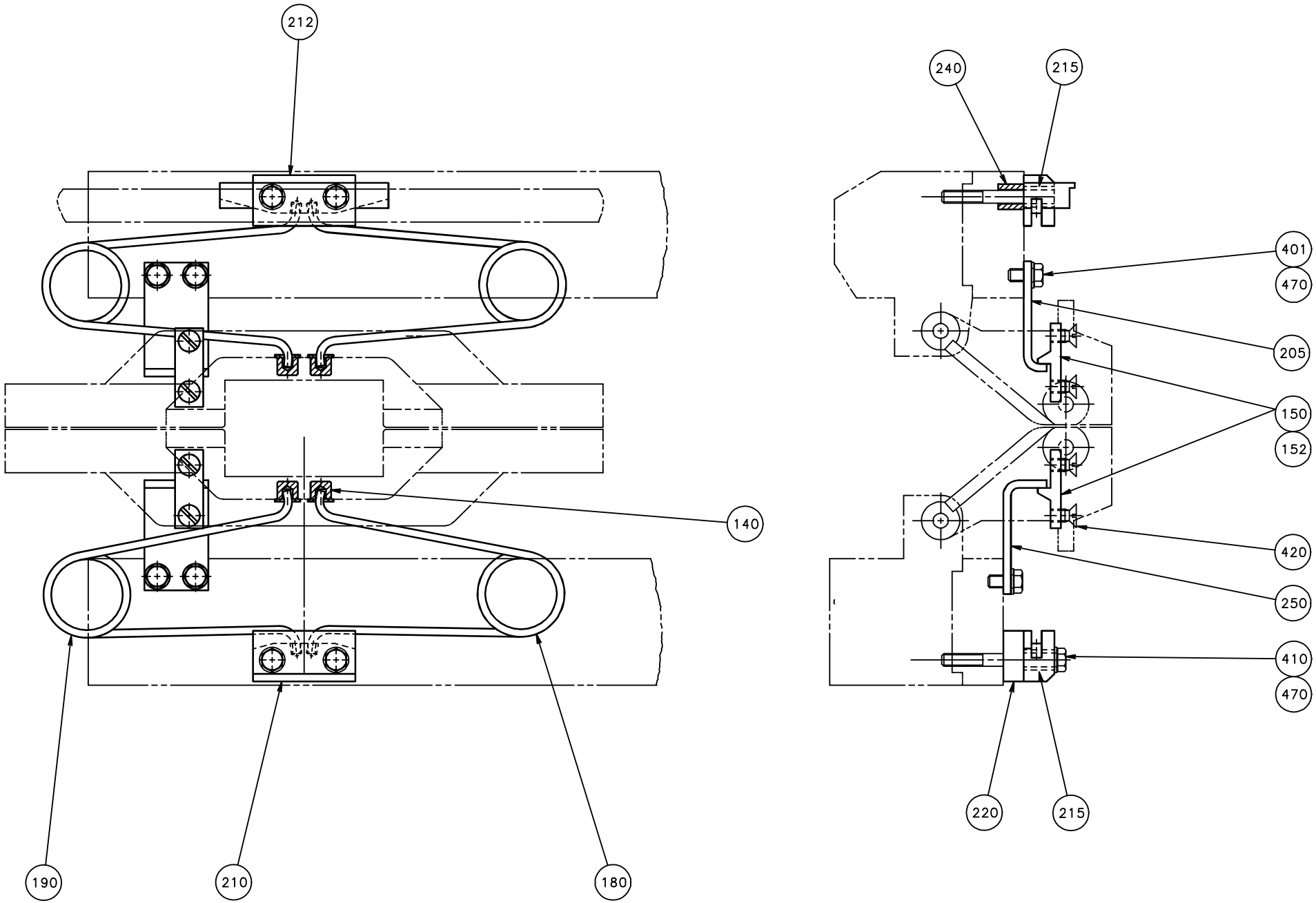

Pos	Part No	UN	Qty	Description	Page No	Pos	Part No	UN	Qty	Description	Page No

SEE PREVIOUS LISTS PAGES: 12-175, 12-177.

SHOCK ABSORBER

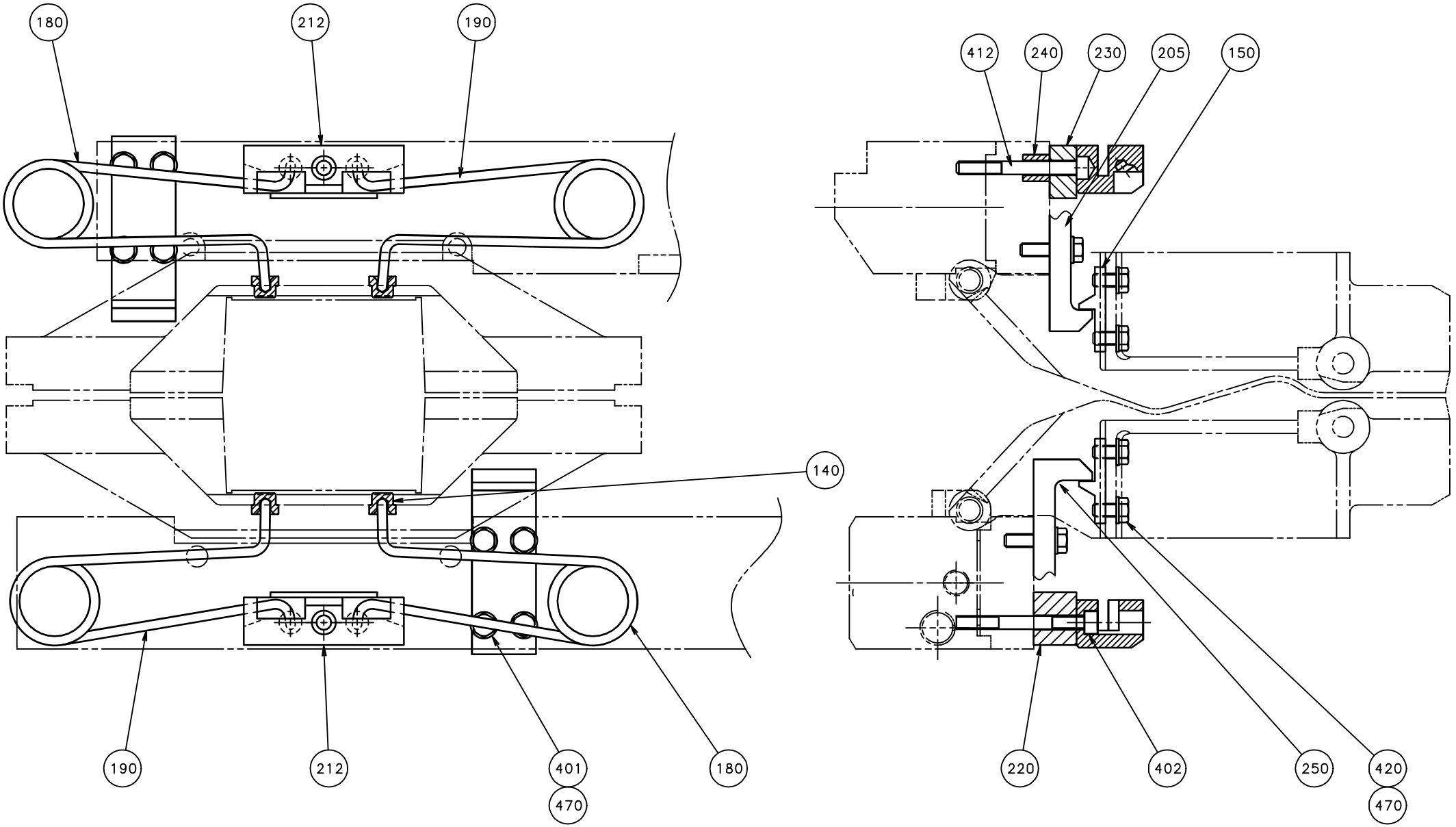

Pos	Part No	UN	Qty	Description	Page No	Pos	Part No	UN	Qty	Description	Page No

SEE PREVIOUS LISTS PAGES: 12-175, 12-177.

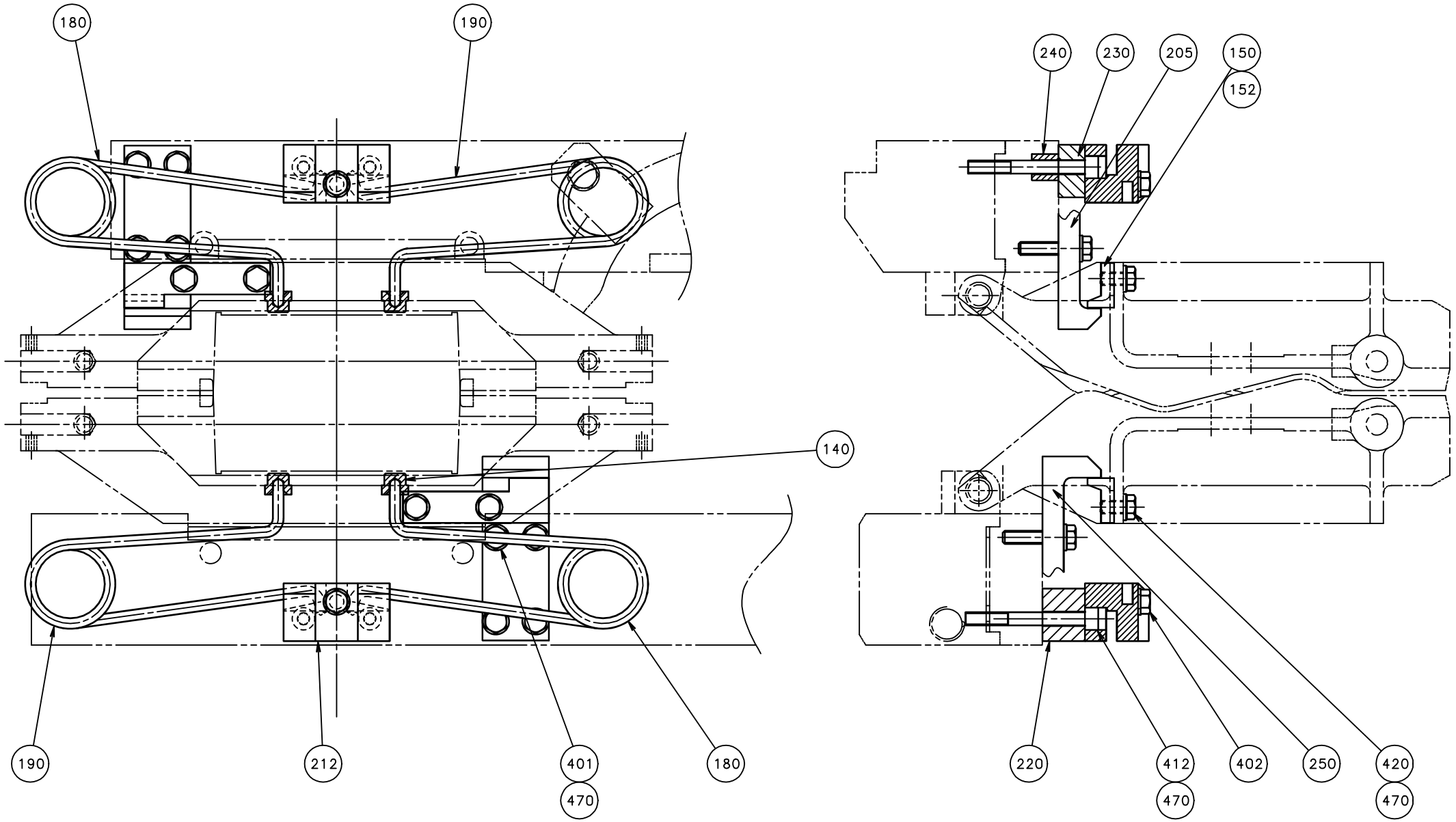
180
190
140
190
212
401
470
180
240
230
205
150
152
220
412
470
402
250
420
470

Pos	Part No	UN	Qty	Description	Page No	Pos	Part No	UN	Qty	Description	Page No

SEE PREVIOUS LISTS PAGES: 12-175, 12-177.

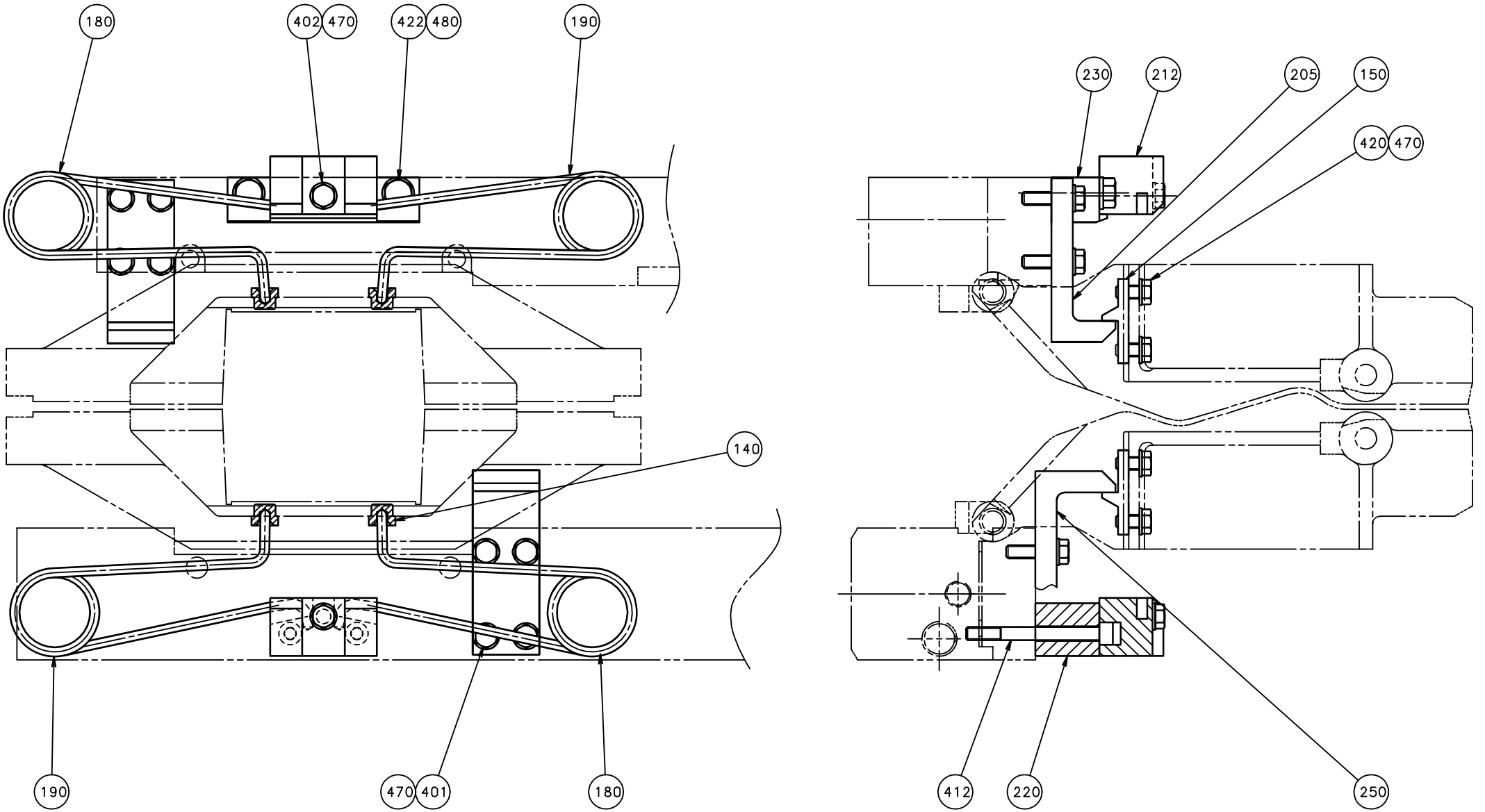
180
402
470
422
480
190
140
190
470
401
180
230
212
205
150
420
470
412
220
250

Pos	Part No	UN	Qty	Description	Page No	Pos	Part No	UN	Qty	Description	Page No

SEE PREVIOUS LISTS PAGES: 12-175, 12-177.

SHOCK ABSORBER

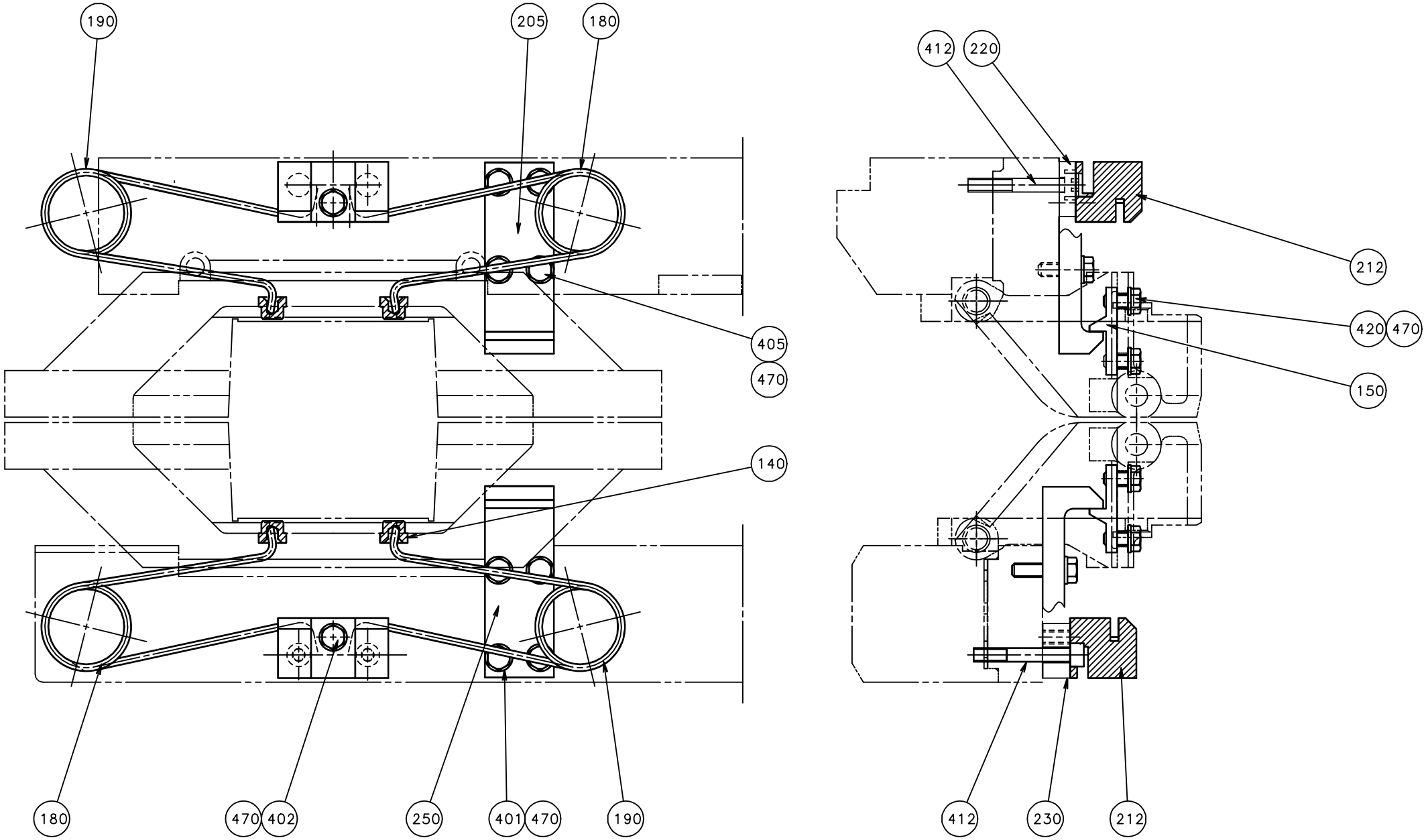

Pos	Part No	UN	Qty	Description	Page No	Pos	Part No	UN	Qty	Description	Page No

SEE PREVIOUS LISTS PAGES: 12-175, 12-177.

SHOCK ABSORBER

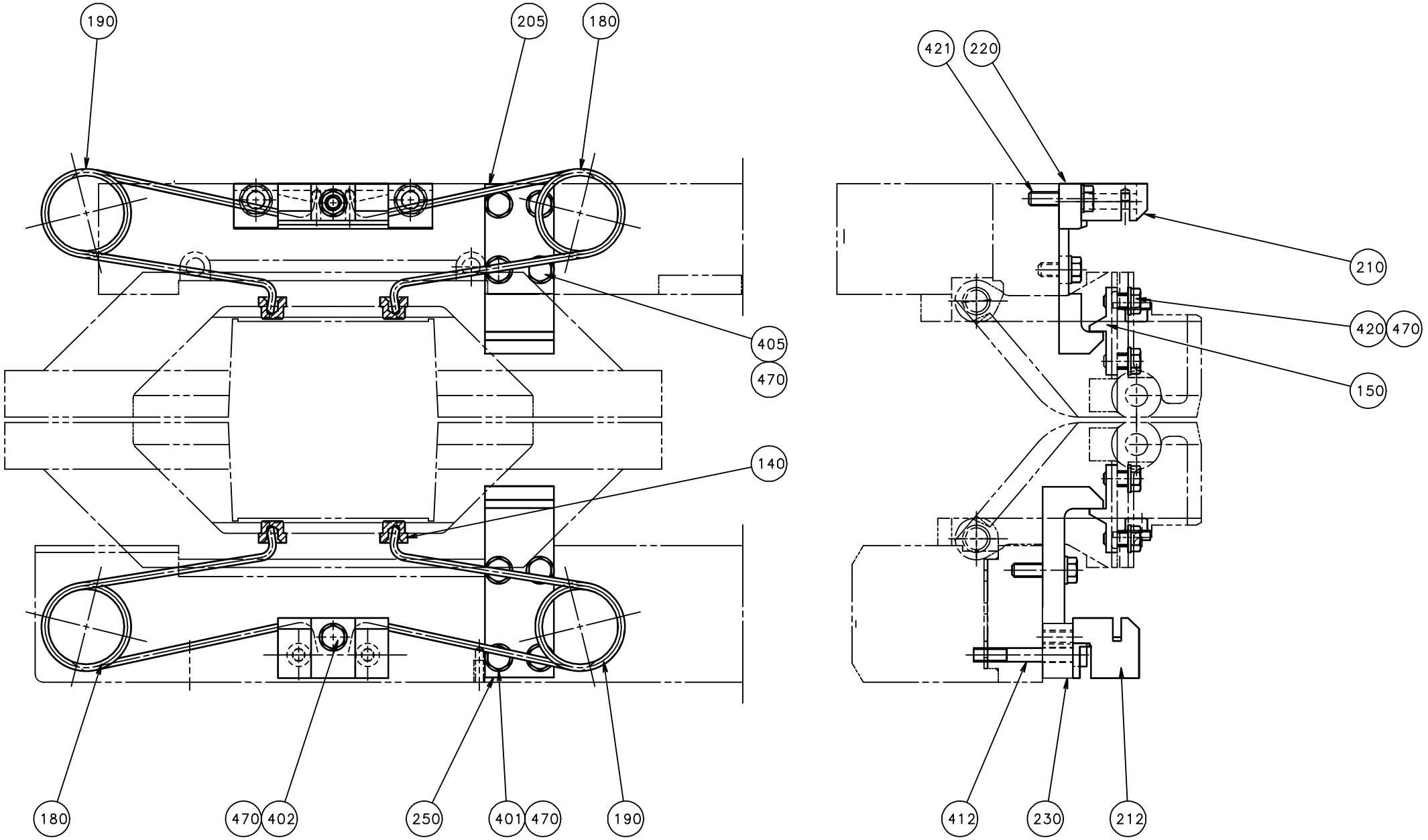

Pos	Part No	UN	Qty	Description	Page No	Pos	Part No	UN	Qty	Description	Page No

SEE PREVIOUS LISTS PAGES: 12-175, 12-177.

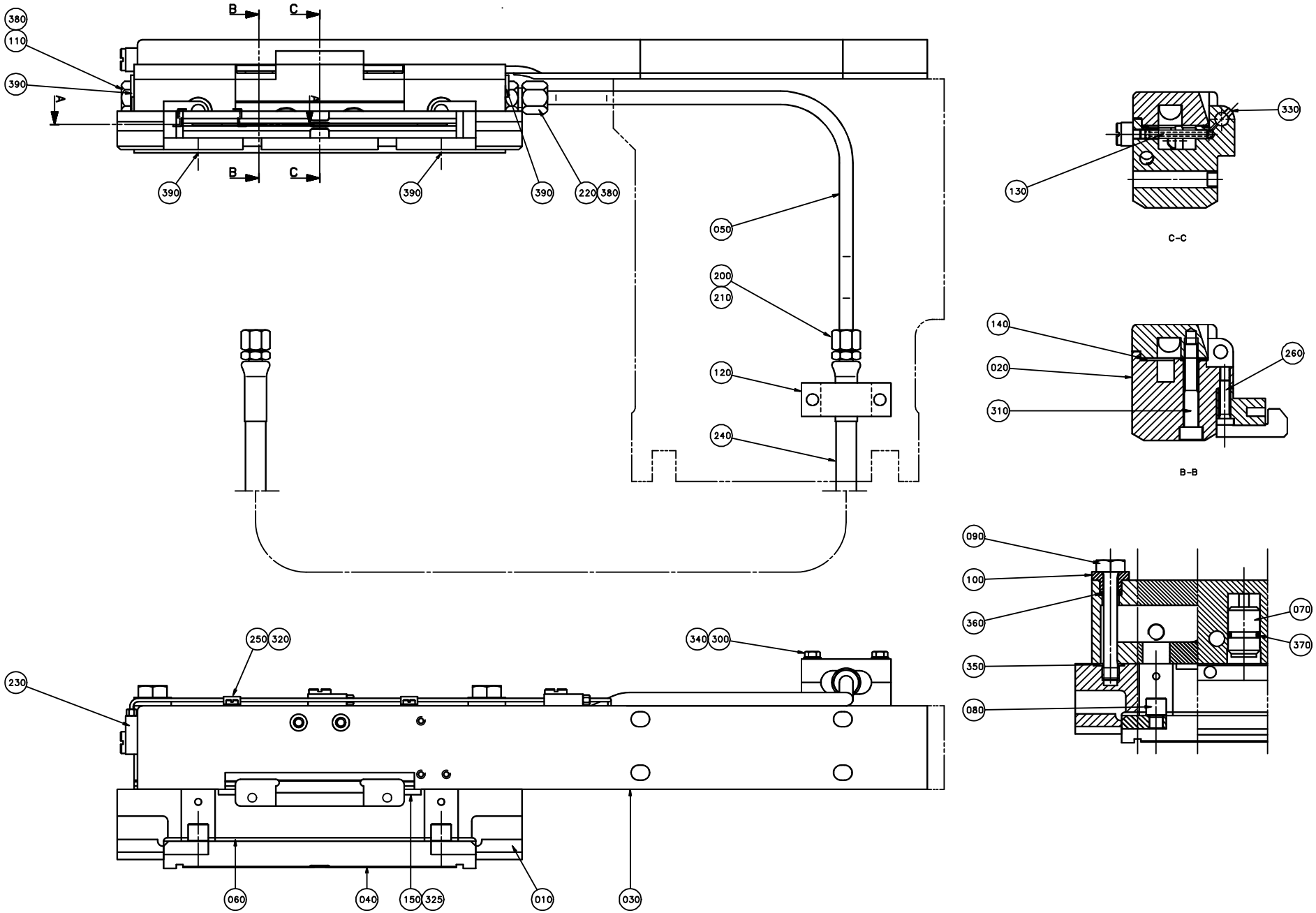
380
110
390
A
B
C
B
C
390
390
390
220
380
050
200
210
120
240
330
130
C–C
140
020
310
260
B–B
090
100
360
350
080
070
370
250
320
340
300
230
060
040
150
325
010
030

ECM: 262010 - 20060630
Group number: 928982-0100
Assembly Drawing: 928982-1_1_AA

This list covers pages from 12-192 to 12-197

Pos	Part No	UN	Qty	Description	Page No
0568SQ US (See drawing on pages: 4-20, 12-196)					
010	2728743-0000		1	CUTTING JAW	
020	929540-0000		1	BEARING HOUSING	
030	1143901-0000		1	CARRIER, CUT, LEFT	
040	2826927-0000		1	USTS CUTTING RAIL	
060	928986-0000		1	DAMPER	
090	243143-0000		2	SCREW	
140	573988-0000		1	GASKET	
150	928987-0000		2	DAMPER	
160	2728742-0000		1	VOLUME BULGE	
400	312145-0287		2	SCREW ISO 2009 MFS M4X8 A4	
1000SQ US, 0500SQ US (See drawing on pages: 4-16, 12-192)					
010	929539-0000		1	CUTTING JAW	
020	929540-0000		1	BEARING HOUSING	
030	1143901-0000		1	CARRIER, CUT, LEFT	
040	2826927-0000		1	USTS CUTTING RAIL	
060	928986-0000		1	DAMPER	
090	243143-0000		2	SCREW	
140	573988-0000		1	GASKET	
150	928987-0000		2	DAMPER	
1500B US (See drawing on pages: 4-18, 12-194)					
010	593571-0000		1	CUTTING JAW	
012	593573-0000		2	CATCH	
020	593570-0000		1	BEARING HOUSING	
030	593583-0000		1	CARRIER, CUT, LEFT	
040	2505168-0000		1	USTS CUTTING RAIL	
	593579-0000		*2*	*AXLE BOLT*	
	1338572-0000		*1*	*USTS CUTTING RAIL*	
060	593574-0000		1	DAMPER	
080	593579-0000		2	AXLE BOLT	
090	573583-0000		2	SCREW	
140	593576-0000		1	GASKET	
150	593575-0000		2	DAMPER	
Common Parts					
050	22489-0000		1	ELBOW PIPE	
070	28880-0000		2	PLUNGER	
100	243144-0000		2	BUSHING	
110	255278-0000		1	PLUG FINISHER	
120	279103-0000		2	CONNECTION CLAMP	
130	573984-0000		1	SCREW	
200	90030-0098		1	ACCESSORIES, FERRULE 8	
210	90030-0172		1	NUT M8 "REPL.BY 342703-208"	
220	90030-0201		1	CONN. STR., 8-R1/4, EXT. THREAD	
230	90134-0058		3	CONNECTION	
240	90148-0033		1	HOSE	
250	90165-0058		2	PIPE CLIP FOR TUBE D=2,5 MM	
260	90287-0070		2	SCREW MLC6S M6X23	
300	312105-0378		2	SCREW M6S ISO 4014 M6X40 A480	
310	312115-0461		2	SCREW ISO4762 M8X50 A4 80	
320	312125-0287		2	SCREW ISO 1207 M4X8 A4	
325	312145-0236		4	SCREW ISO 2009 MFS M3X35 A4	
330	312318-0283		1	SCREW ISO4029 M4X4 A4	
340	315105-0153		2	WASHER BRB 6,4X12 RFR	
350	315202-0111		2	O-RING 13,1X1,6 MM	
360	315202-0207		2	O-RING 8,3X2,4 MM	
370	315202-0212		2	O-RING 14,3X2,4 MM	
380	315234-0110		2	WASHER,PL.RND.CU.13,5/18 H=1,5	
390	342713-0209		4	PLUG (QUANT.MINIMA= 10PC).	

Machine Type | Group Description | Used-In | Group Number | Page No

CUTTING JAW LEFT

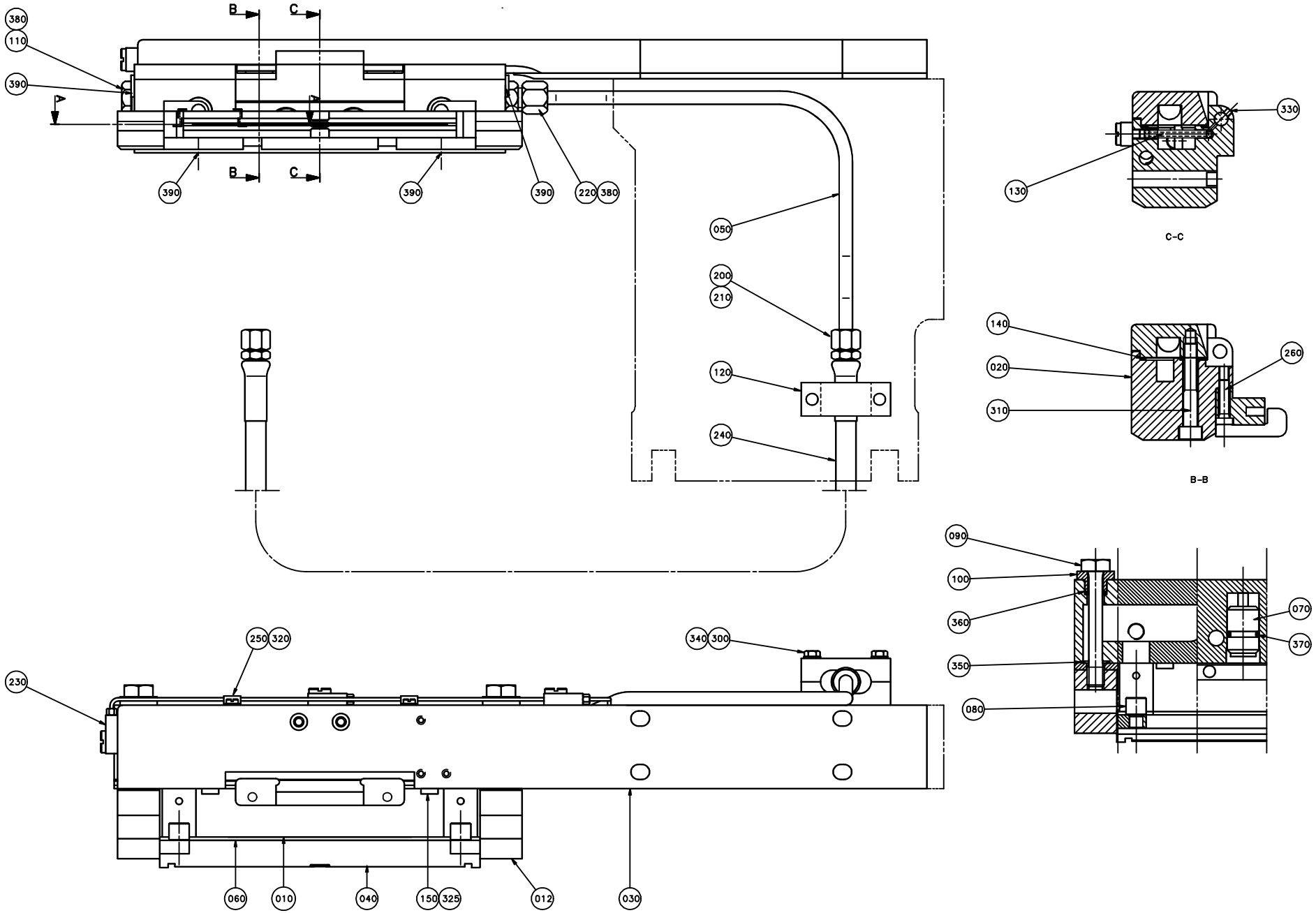

ECM: 262010 - 20060630
Group number: 928982-0100
Assembly Drawing: 928982-2_1_AA

This list covers pages from 12-192 to 12-197

Pos	Part No	UN	Qty	Description	Page No
0568SQ US (See drawing on pages: 4-20, 12-196)					
010	2728743-0000		1	CUTTING JAW	
020	929540-0000		1	BEARING HOUSING	
030	1143901-0000		1	CARRIER, CUT, LEFT	
040	2826927-0000		1	USTS CUTTING RAIL	
060	928986-0000		1	DAMPER	
090	243143-0000		2	SCREW	
140	573988-0000		1	GASKET	
150	928987-0000		2	DAMPER	
160	2728742-0000		1	VOLUME BULGE	
400	312145-0287		2	SCREW ISO 2009 MFS M4X8 A4	
1000SQ US, 0500SQ US (See drawing on pages: 4-16, 12-192)					
010	929539-0000		1	CUTTING JAW	
020	929540-0000		1	BEARING HOUSING	
030	1143901-0000		1	CARRIER, CUT, LEFT	
040	2826927-0000		1	USTS CUTTING RAIL	
060	928986-0000		1	DAMPER	
090	243143-0000		2	SCREW	
140	573988-0000		1	GASKET	
150	928987-0000		2	DAMPER	
1500B US (See drawing on pages: 4-18, 12-194)					
010	593571-0000		1	CUTTING JAW	
012	593573-0000		2	CATCH	
020	593570-0000		1	BEARING HOUSING	
030	593583-0000		1	CARRIER, CUT, LEFT	
040	2505168-0000		1	USTS CUTTING RAIL	
	593579-0000		*2*	*AXLE BOLT*	
	1338572-0000		*1*	*USTS CUTTING RAIL*	
060	593574-0000		1	DAMPER	
080	593579-0000		2	AXLE BOLT	
090	573583-0000		2	SCREW	
140	593576-0000		1	GASKET	
150	593575-0000		2	DAMPER	
Common Parts					
050	22489-0000		1	ELBOW PIPE	
070	28880-0000		2	PLUNGER	
100	243144-0000		2	BUSHING	
110	255278-0000		1	PLUG FINISHER	
120	279103-0000		2	CONNECTION CLAMP	
130	573984-0000		1	SCREW	
200	90030-0098		1	ACCESSORIES, FERRULE 8	
210	90030-0172		1	NUT M8 "REPL.BY 342703-208"	
220	90030-0201		1	CONN. STR., 8-R1/4, EXT. THREAD	
230	90134-0058		3	CONNECTION	
240	90148-0033		1	HOSE	
250	90165-0058		2	PIPE CLIP FOR TUBE D=2,5 MM	
260	90287-0070		2	SCREW MLC6S M6X23	
300	312105-0378		2	SCREW M6S ISO 4014 M6X40 A480	
310	312115-0461		2	SCREW ISO4762 M8X50 A4 80	
320	312125-0287		2	SCREW ISO 1207 M4X8 A4	
325	312145-0236		4	SCREW ISO 2009 MFS M3X35 A4	
330	312318-0283		1	SCREW ISO4029 M4X4 A4	
340	315105-0153		2	WASHER BRB 6,4X12 RFR	
350	315202-0111		2	O-RING 13,1X1,6 MM	
360	315202-0207		2	O-RING 8,3X2,4 MM	
370	315202-0212		2	O-RING 14,3X2,4 MM	
380	315234-0110		2	WASHER,PL.RND.CU.13,5/18 H=1,5	
390	342713-0209		4	PLUG (QUANT.MINIMA= 10PC).	

Machine Type | Group Description | Used-In | Group Number | Page No

CUTTING JAW LEFT

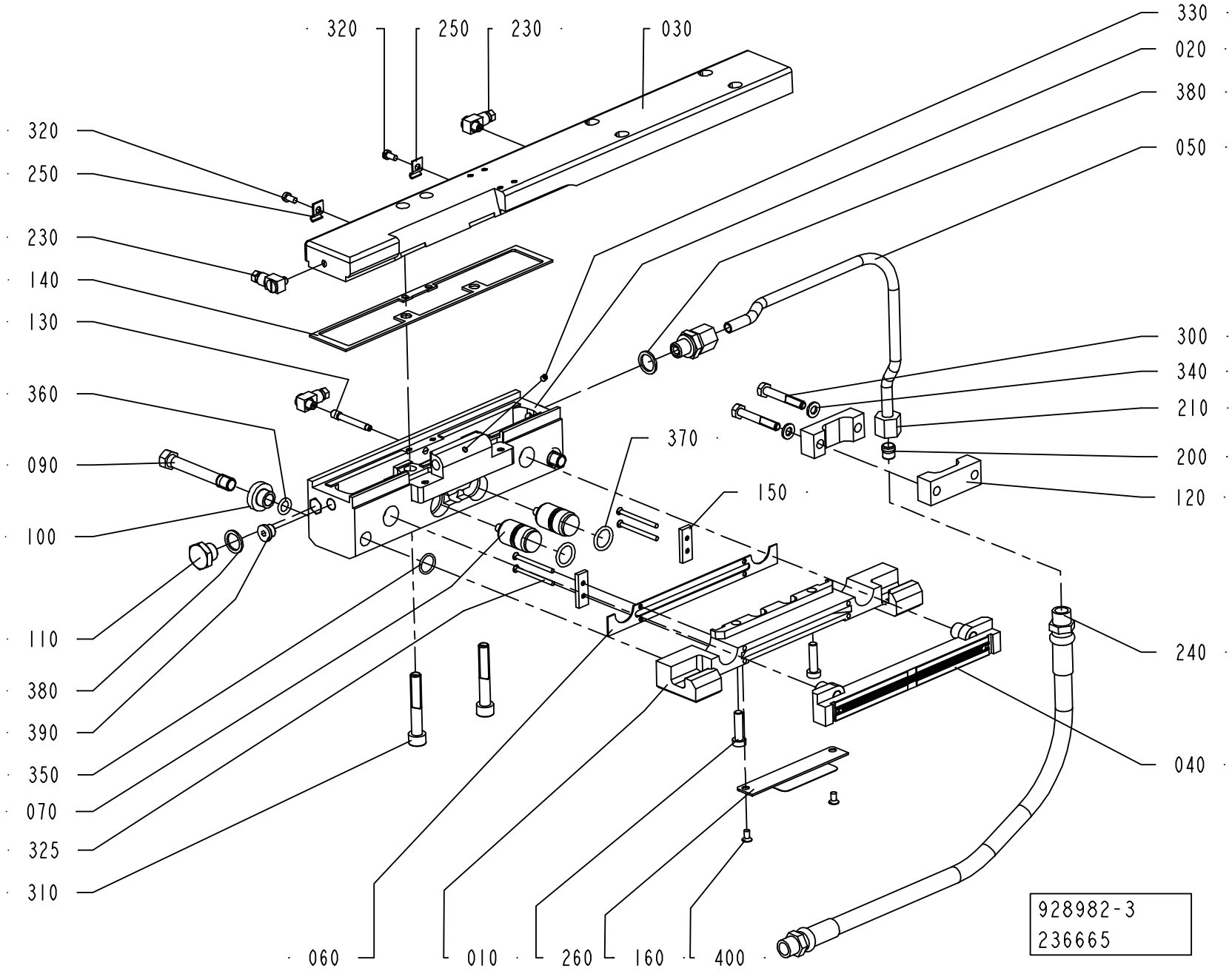

ECM: 262010 - 20060630
Group number: 928982-0100
Assembly Drawing: 928982-3_1_AA

This list covers pages from 12-192 to 12-197

Pos	Part No	UN	Qty	Description	Page No
0568SQ US (See drawing on pages: 4-20, 12-196)					
010	2728743-0000		1	CUTTING JAW	
020	929540-0000		1	BEARING HOUSING	
030	1143901-0000		1	CARRIER, CUT, LEFT	
040	2826927-0000		1	USTS CUTTING RAIL	
060	928986-0000		1	DAMPER	
090	243143-0000		2	SCREW	
140	573988-0000		1	GASKET	
150	928987-0000		2	DAMPER	
160	2728742-0000		1	VOLUME BULGE	
400	312145-0287		2	SCREW ISO 2009 MFS M4X8 A4	
1000SQ US, 0500SQ US (See drawing on pages: 4-16, 12-192)					
010	929539-0000		1	CUTTING JAW	
020	929540-0000		1	BEARING HOUSING	
030	1143901-0000		1	CARRIER, CUT, LEFT	
040	2826927-0000		1	USTS CUTTING RAIL	
060	928986-0000		1	DAMPER	
090	243143-0000		2	SCREW	
140	573988-0000		1	GASKET	
150	928987-0000		2	DAMPER	
1500B US (See drawing on pages: 4-18, 12-194)					
010	593571-0000		1	CUTTING JAW	
012	593573-0000		2	CATCH	
020	593570-0000		1	BEARING HOUSING	
030	593583-0000		1	CARRIER, CUT, LEFT	
040	2505168-0000		1	USTS CUTTING RAIL	
	593579-0000		*2*	*AXLE BOLT*	
	1338572-0000		*1*	*USTS CUTTING RAIL*	
060	593574-0000		1	DAMPER	
080	593579-0000		2	AXLE BOLT	
090	573583-0000		2	SCREW	
140	593576-0000		1	GASKET	
150	593575-0000		2	DAMPER	
Common Parts					
050	22489-0000		1	ELBOW PIPE	
070	28880-0000		2	PLUNGER	
100	243144-0000		2	BUSHING	
110	255278-0000		1	PLUG FINISHER	
120	279103-0000		2	CONNECTION CLAMP	
130	573984-0000		1	SCREW	
200	90030-0098		1	ACCESSORIES, FERRULE 8	
210	90030-0172		1	NUT M8 "REPL.BY 342703-208"	
220	90030-0201		1	CONN. STR., 8-R1/4, EXT. THREAD	
230	90134-0058		3	CONNECTION	
240	90148-0033		1	HOSE	
250	90165-0058		2	PIPE CLIP FOR TUBE D=2,5 MM	
260	90287-0070		2	SCREW MLC6S M6X23	
300	312105-0378		2	SCREW M6S ISO 4014 M6X40 A480	
310	312115-0461		2	SCREW ISO4762 M8X50 A4 80	
320	312125-0287		2	SCREW ISO 1207 M4X8 A4	
325	312145-0236		4	SCREW ISO 2009 MFS M3X35 A4	
330	312318-0283		1	SCREW ISO4029 M4X4 A4	
340	315105-0153		2	WASHER BRB 6,4X12 RFR	
350	315202-0111		2	O-RING 13,1X1,6 MM	
360	315202-0207		2	O-RING 8,3X2,4 MM	
370	315202-0212		2	O-RING 14,3X2,4 MM	
380	315234-0110		2	WASHER,PL.RND.CU.13,5/18 H=1,5	
390	342713-0209		4	PLUG (QUANT.MINIMA= 10PC).	

CUTTING JAW RIGHT

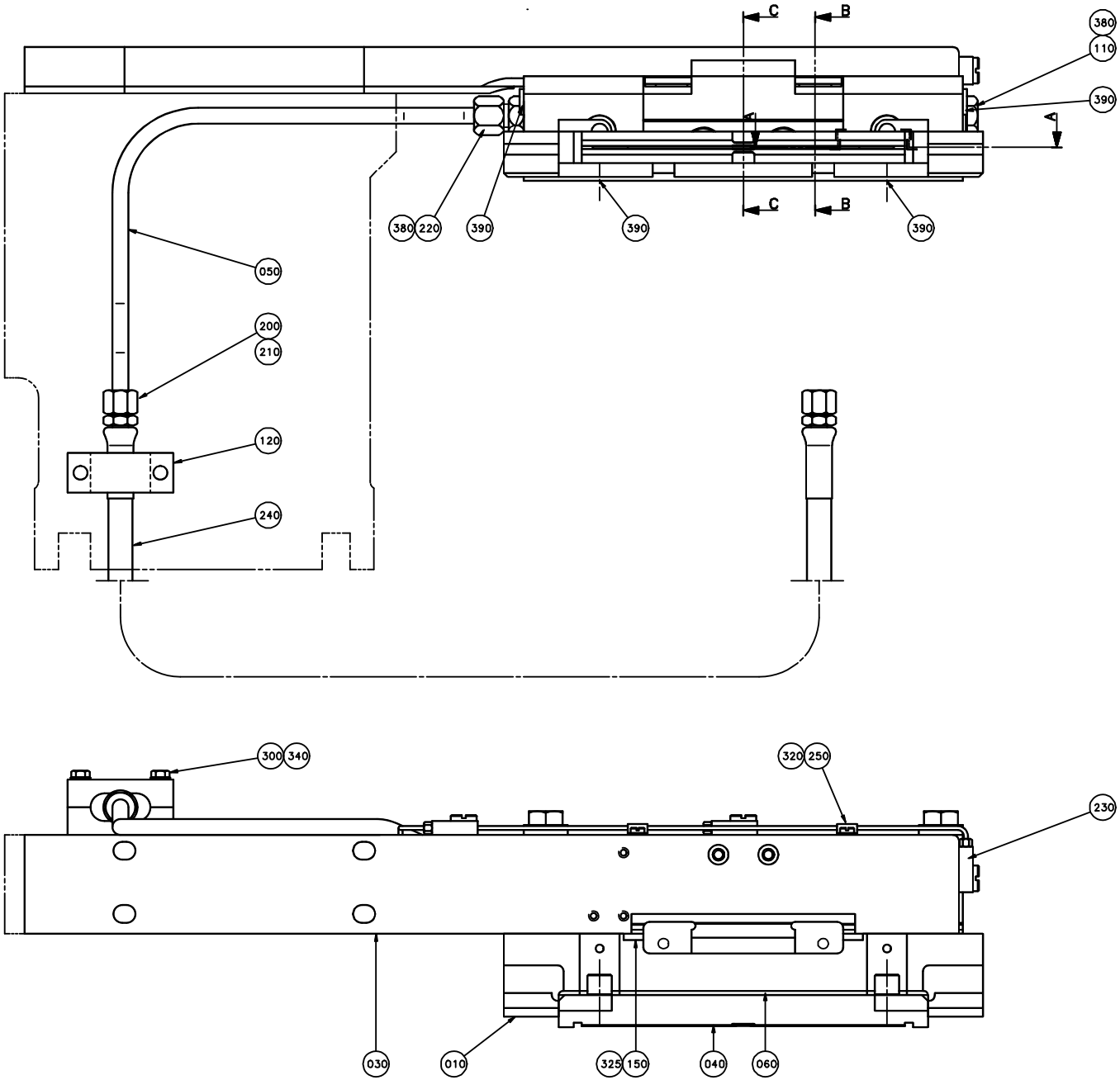

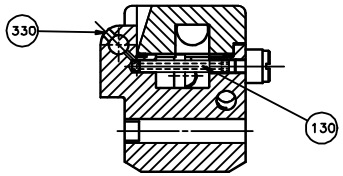

C–C

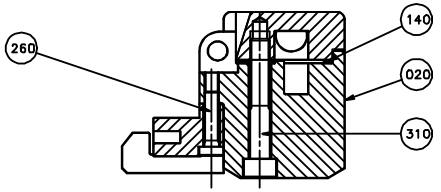

B–B

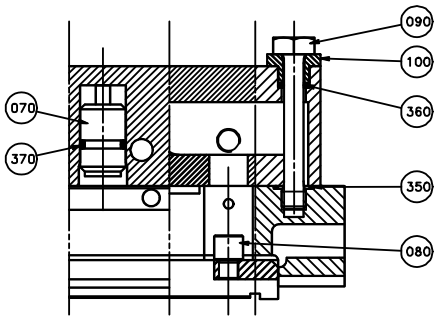

ECM: 262011 - 20060630
Group number: 928983-0100
Assembly Drawing: 928983-1_1_AA

This list covers pages from 12-198 to 12-203

Pos	Part No	UN	Qty	Description	Page No
0568SQ US (See drawing on pages: 4-14, 12-202)					
010	2728743-0000		1	CUTTING JAW	
020	929540-0000		1	BEARING HOUSING	
030	1143902-0000		1	CARRIER, CUT, RIGHT	
040	2826927-0000		1	USTS CUTTING RAIL	
060	928986-0000		1	DAMPER	
090	243143-0000		2	SCREW	
140	573988-0000		1	GASKET	
150	928987-0000		2	DAMPER	
160	2728742-0000		1	VOLUME BULGE	
400	312145-0287		2	SCREW ISO 2009 MFS M4X8 A4	
1000SQ US, 0500SQ US (See drawing on pages: 4-10, 12-198)					
010	929539-0000		1	CUTTING JAW	
020	929540-0000		1	BEARING HOUSING	
030	1143902-0000		1	CARRIER, CUT, RIGHT	
040	2826927-0000		1	USTS CUTTING RAIL	
060	928986-0000		1	DAMPER	
090	243143-0000		2	SCREW	
140	573988-0000		1	GASKET	
150	928987-0000		2	DAMPER	
1500B US (See drawing on pages: 4-12, 12-200)					
010	593571-0000		1	CUTTING JAW	
012	593573-0000		2	CATCH	
020	593570-0000		1	BEARING HOUSING	
030	593584-0000		1	CARRIER, CUT, RIGHT	
040	2505168-0000		1	USTS CUTTING RAIL	
	593579-0000		*2*	*AXLE BOLT*	
	1338572-0000		*1*	*USTS CUTTING RAIL*	
060	593574-0000		1	DAMPER	
080	593579-0000		2	AXLE BOLT	
090	573583-0000		2	SCREW	
140	593576-0000		1	GASKET	
150	593575-0000		2	DAMPER	
Common Parts					
050	22488-0000		1	ELBOW PIPE	
070	28880-0000		2	PLUNGER	
100	243144-0000		2	BUSHING	
110	255278-0000		1	PLUG FINISHER	
120	279103-0000		2	CONNECTION CLAMP	
130	573984-0000		1	SCREW	
200	90030-0098		1	ACCESSORIES, FERRULE 8	
210	90030-0172		1	NUT M8 "REPL.BY 342703-208"	
220	90030-0201		1	CONN. STR., 8-R1/4, EXT. THREAD	
230	90134-0058		3	CONNECTION	
240	90148-0033		1	HOSE	
250	90165-0058		2	PIPE CLIP FOR TUBE D=2,5 MM	
260	90287-0070		2	SCREW MLC6S M6X23	
300	312105-0378		2	SCREW M6S ISO 4014 M6X40 A480	
310	312115-0461		2	SCREW ISO4762 M8X50 A4 80	
320	312125-0287		2	SCREW ISO 1207 M4X8 A4	
325	312145-0236		4	SCREW ISO 2009 MFS M3X35 A4	
330	312318-0283		1	SCREW ISO4029 M4X4 A4	
340	315105-0153		2	WASHER BRB 6,4X12 RFR	
350	315202-0111		2	O-RING 13,1X1,6 MM	
360	315202-0207		2	O-RING 8,3X2,4 MM	
370	315202-0212		2	O-RING 14,3X2,4 MM	
380	315234-0110		2	WASHER,PL.RND.CU.13,5/18 H=1,5	
390	342713-0209		4	PLUG (QUANT.MINIMA= 10PC).	

Machine Type | Group Description | Used-In | Group Number | Page No

CUTTING JAW RIGHT

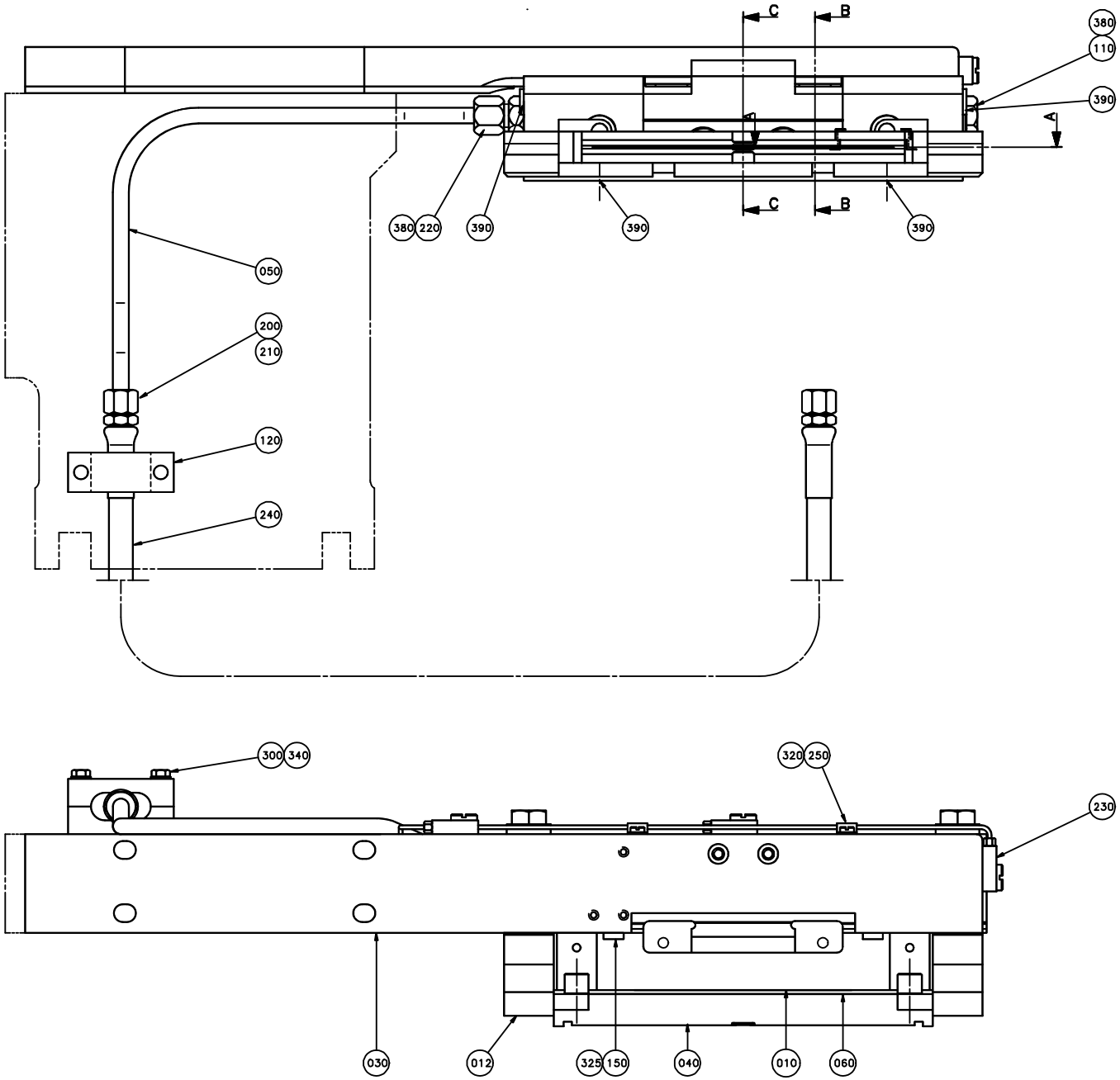

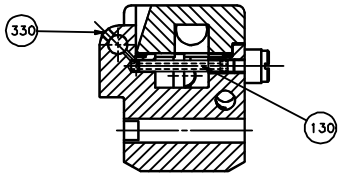

C–C

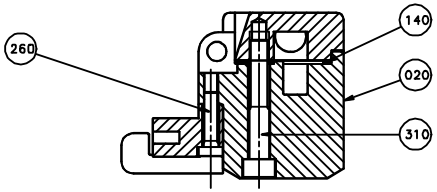

B–B

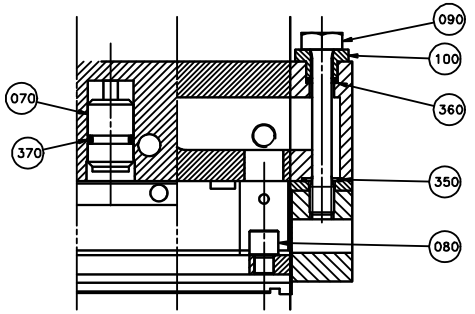

ECM: 262011 - 20060630
Group number: 928983-0100
Assembly Drawing: 928983-2_1_AA

This list covers pages from 12-198 to 12-203

Pos	Part No	UN	Qty	Description	Page No
0568SQ US (See drawing on pages: 4-14, 12-202)					
010	2728743-0000		1	CUTTING JAW	
020	929540-0000		1	BEARING HOUSING	
030	1143902-0000		1	CARRIER, CUT, RIGHT	
040	2826927-0000		1	USTS CUTTING RAIL	
060	928986-0000		1	DAMPER	
090	243143-0000		2	SCREW	
140	573988-0000		1	GASKET	
150	928987-0000		2	DAMPER	
160	2728742-0000		1	VOLUME BULGE	
400	312145-0287		2	SCREW ISO 2009 MFS M4X8 A4	
1000SQ US, 0500SQ US (See drawing on pages: 4-10, 12-198)					
010	929539-0000		1	CUTTING JAW	
020	929540-0000		1	BEARING HOUSING	
030	1143902-0000		1	CARRIER, CUT, RIGHT	
040	2826927-0000		1	USTS CUTTING RAIL	
060	928986-0000		1	DAMPER	
090	243143-0000		2	SCREW	
140	573988-0000		1	GASKET	
150	928987-0000		2	DAMPER	
1500B US (See drawing on pages: 4-12, 12-200)					
010	593571-0000		1	CUTTING JAW	
012	593573-0000		2	CATCH	
020	593570-0000		1	BEARING HOUSING	
030	593584-0000		1	CARRIER, CUT, RIGHT	
040	2505168-0000		1	USTS CUTTING RAIL	
	593579-0000		*2*	*AXLE BOLT*	
	1338572-0000		*1*	*USTS CUTTING RAIL*	
060	593574-0000		1	DAMPER	
080	593579-0000		2	AXLE BOLT	
090	573583-0000		2	SCREW	
140	593576-0000		1	GASKET	
150	593575-0000		2	DAMPER	
Common Parts					
050	22488-0000		1	ELBOW PIPE	
070	28880-0000		2	PLUNGER	
100	243144-0000		2	BUSHING	
110	255278-0000		1	PLUG FINISHER	
120	279103-0000		2	CONNECTION CLAMP	
130	573984-0000		1	SCREW	
200	90030-0098		1	ACCESSORIES, FERRULE 8	
210	90030-0172		1	NUT M8 "REPL.BY 342703-208"	
220	90030-0201		1	CONN. STR., 8-R1/4, EXT. THREAD	
230	90134-0058		3	CONNECTION	
240	90148-0033		1	HOSE	
250	90165-0058		2	PIPE CLIP FOR TUBE D=2,5 MM	
260	90287-0070		2	SCREW MLC6S M6X23	
300	312105-0378		2	SCREW M6S ISO 4014 M6X40 A480	
310	312115-0461		2	SCREW ISO4762 M8X50 A4 80	
320	312125-0287		2	SCREW ISO 1207 M4X8 A4	
325	312145-0236		4	SCREW ISO 2009 MFS M3X35 A4	
330	312318-0283		1	SCREW ISO4029 M4X4 A4	
340	315105-0153		2	WASHER BRB 6,4X12 RFR	
350	315202-0111		2	O-RING 13,1X1,6 MM	
360	315202-0207		2	O-RING 8,3X2,4 MM	
370	315202-0212		2	O-RING 14,3X2,4 MM	
380	315234-0110		2	WASHER,PL.RND.CU.13,5/18 H=1,5	
390	342713-0209		4	PLUG (QUANT.MINIMA= 10PC).	

Machine Type	Group Description	Used-In	Group Number	Page No

CUTTING JAW RIGHT

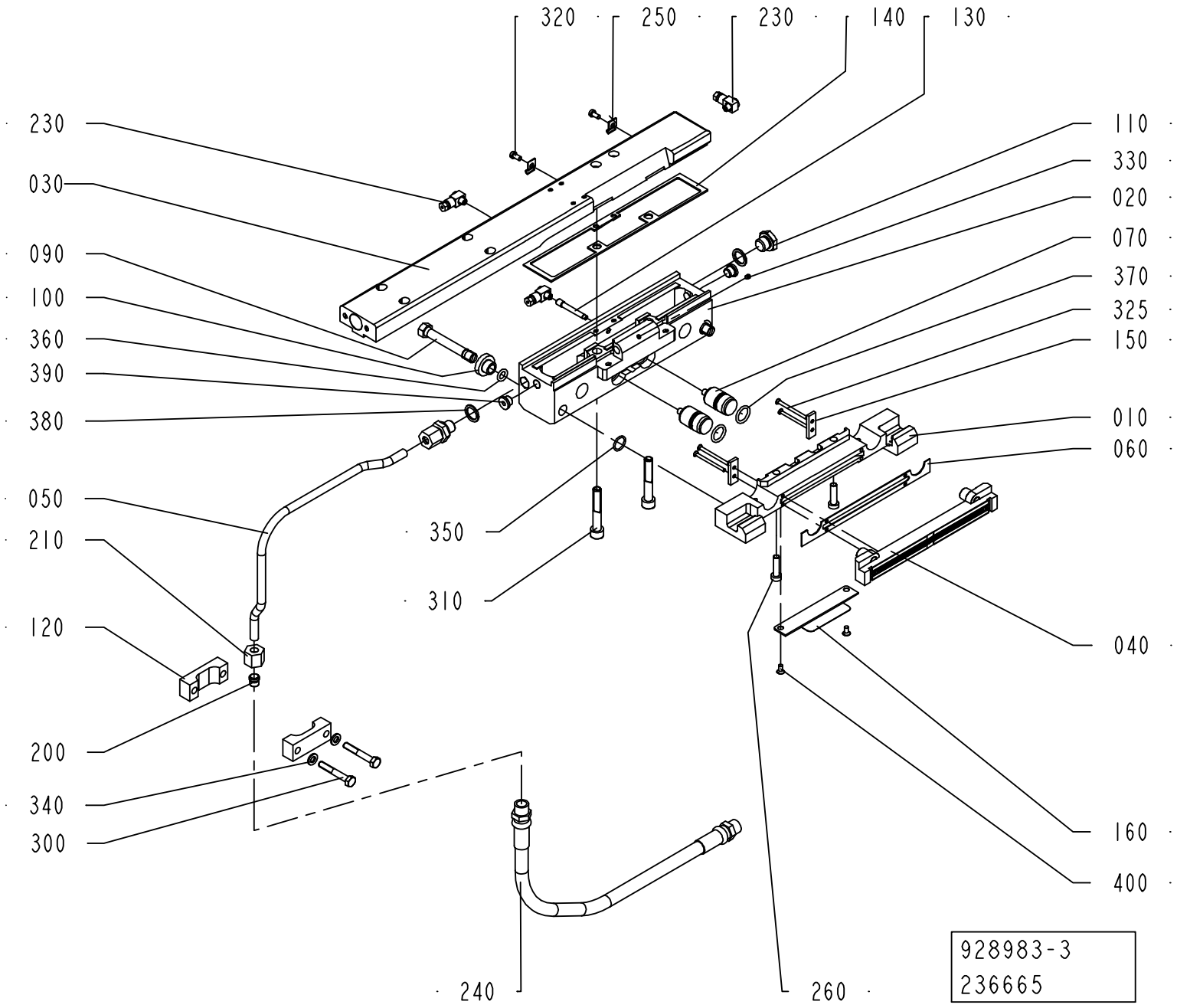

ECM: 262011 - 20060630
Group number: 928983-0100
Assembly Drawing: 928983-3_1_AA

This list covers pages from 12-198 to 12-203

Pos	Part No	UN	Qty	Description	Page No
0568SQ US (See drawing on pages: 4-14, 12-202)					
010	2728743-0000		1	CUTTING JAW	
020	929540-0000		1	BEARING HOUSING	
030	1143902-0000		1	CARRIER, CUT, RIGHT	
040	2826927-0000		1	USTS CUTTING RAIL	
060	928986-0000		1	DAMPER	
090	243143-0000		2	SCREW	
140	573988-0000		1	GASKET	
150	928987-0000		2	DAMPER	
160	2728742-0000		1	VOLUME BULGE	
400	312145-0287		2	SCREW ISO 2009 MFS M4X8 A4	
1000SQ US, 0500SQ US (See drawing on pages: 4-10, 12-198)					
010	929539-0000		1	CUTTING JAW	
020	929540-0000		1	BEARING HOUSING	
030	1143902-0000		1	CARRIER, CUT, RIGHT	
040	2826927-0000		1	USTS CUTTING RAIL	
060	928986-0000		1	DAMPER	
090	243143-0000		2	SCREW	
140	573988-0000		1	GASKET	
150	928987-0000		2	DAMPER	
1500B US (See drawing on pages: 4-12, 12-200)					
010	593571-0000		1	CUTTING JAW	
012	593573-0000		2	CATCH	
020	593570-0000		1	BEARING HOUSING	
030	593584-0000		1	CARRIER, CUT, RIGHT	
040	2505168-0000		1	USTS CUTTING RAIL	
	593579-0000		*2*	*AXLE BOLT*	
	1338572-0000		*1*	*USTS CUTTING RAIL*	
060	593574-0000		1	DAMPER	
080	593579-0000		2	AXLE BOLT	
090	573583-0000		2	SCREW	
140	593576-0000		1	GASKET	
150	593575-0000		2	DAMPER	
Common Parts					
050	22488-0000		1	ELBOW PIPE	
070	28880-0000		2	PLUNGER	
100	243144-0000		2	BUSHING	
110	255278-0000		1	PLUG FINISHER	
120	279103-0000		2	CONNECTION CLAMP	
130	573984-0000		1	SCREW	
200	90030-0098		1	ACCESSORIES, FERRULE 8	
210	90030-0172		1	NUT M8 "REPL.BY 342703-208"	
220	90030-0201		1	CONN. STR., 8-R1/4, EXT. THREAD	
230	90134-0058		3	CONNECTION	
240	90148-0033		1	HOSE	
250	90165-0058		2	PIPE CLIP FOR TUBE D=2,5 MM	
260	90287-0070		2	SCREW MLC6S M6X23	
300	312105-0378		2	SCREW M6S ISO 4014 M6X40 A480	
310	312115-0461		2	SCREW ISO4762 M8X50 A4 80	
320	312125-0287		2	SCREW ISO 1207 M4X8 A4	
325	312145-0236		4	SCREW ISO 2009 MFS M3X35 A4	
330	312318-0283		1	SCREW ISO4029 M4X4 A4	
340	315105-0153		2	WASHER BRB 6,4X12 RFR	
350	315202-0111		2	O-RING 13,1X1,6 MM	
360	315202-0207		2	O-RING 8,3X2,4 MM	
370	315202-0212		2	O-RING 14,3X2,4 MM	
380	315234-0110		2	WASHER,PL.RND.CU.13,5/18 H=1,5	
390	342713-0209		4	PLUG (QUANT.MINIMA= 10PC).	

Machine Type | Group Description | Used-In | Group Number | Page No

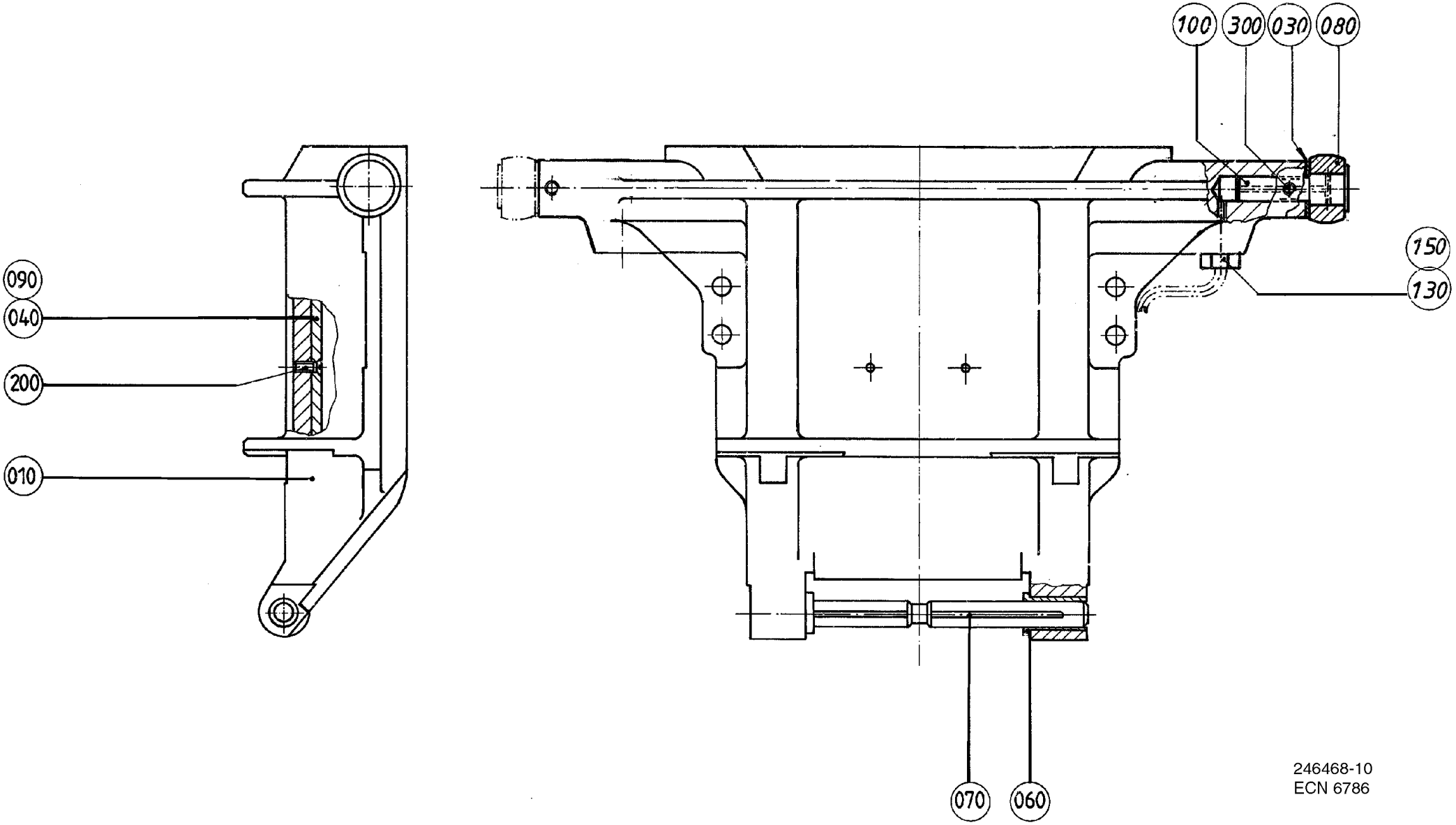
100
300
030
080
150
130
090
040
200
010
070
060
246468-10
ECN 6786

ECM: 146884 - 20031028
Group number: 246468-0800
Assembly Drawing: 246468-10_1_AA

This list covers pages from 12-204 to 12-211

Pos	Part No	UN	Qty	Description	Page No
TB/8 1000S TPC (See drawing on pages: 4-52, 12-204)					
010	1260781-0000		1	VOLUME FLAP	
030	19972-0000		1	WASHER	
040	569055-0000		1	VOLUME BULGE	
060	36133-0000		2	BUSHING	
070	458164-0000		1	SHAFT	
080	434321-0000		1	CURVE ROLLER	
090	569056-0000		3	VOLUME SHIM	
100	434320-0000		1	AXLE PIN	
130	90028-0020		1	CONE TUBE 2,5MM	
150	90134-0063		1	BUSHING/NUT M8X1, D=2,5 MM	
210	312145-0289		2	SCREW ISO 2009 MFS M4X10 A4	
300	312318-0285		1	SCREW ISO4029 M4X6 A4	
TB/8 1000SQ TPC (See drawing on pages: 4-52, 12-204)					
010	1195070-0000		1	VOLUME FLAP	
030	19972-0000		1	WASHER	
040	1143049-0000		1	VOLUME BULGE	
060	36133-0000		2	BUSHING	
070	544292-0000		1	SHAFT	
080	434321-0000		1	CURVE ROLLER	
090	1143050-0000		3	VOLUME SHIM	
100	434320-0000		1	AXLE PIN	
130	90028-0020		1	CONE TUBE 2,5MM	
150	90134-0063		1	BUSHING/NUT M8X1, D=2,5 MM	
210	312145-0289		2	SCREW ISO 2009 MFS M4X10 A4	
300	312318-0285		1	SCREW ISO4029 M4X6 A4	
TB/8 0300B TPC (See drawing on pages: 4-54, 12-206)					
010	582911-0000		1	VOLUME FLAP	
020	449908-0000		2	BUSHING	
030	19972-0000		1	WASHER	
040	449584-0000		1	VOLUME BULGE	
070	458165-0000		1	SHAFT	
080	436556-0000		1	CURVE ROLLER	
090	450302-0000		3	VOLUME SHIM	
100	434320-0000		1	AXLE PIN	
130	90028-0020		1	CONE TUBE 2,5MM	
150	90134-0063		1	BUSHING/NUT M8X1, D=2,5 MM	
210	312145-0289		2	SCREW ISO 2009 MFS M4X10 A4	
300	312318-0285		1	SCREW ISO4029 M4X6 A4	
TB/8 0500B TPC (See drawing on pages: 4-54, 12-206)					
010	563609-0000		1	VOLUME FLAP	
030	19972-0000		1	WASHER	
040	458467-0000		1	VOLUME BULGE	
060	36133-0000		2	BUSHING	
070	458164-0000		1	SHAFT	
080	436556-0000		1	CURVE ROLLER	
090	479245-0000		3	VOLUME SHIM	
100	434320-0000		1	AXLE PIN	
130	90028-0020		1	CONE TUBE 2,5MM	
150	90134-0063		1	BUSHING/NUT M8X1, D=2,5 MM	
210	312145-0289		2	SCREW ISO 2009 MFS M4X10 A4	
300	312318-0285		1	SCREW ISO4029 M4X6 A4	
TB/8 0500S TPC (See drawing on pages: 4-56, 12-208)					
010	592923-0000		1	VOLUME FLAP	
020	449908-0000		2	BUSHING	
030	19972-0000		1	WASHER	
040	464314-0000		1	VOLUME BULGE	
070	458165-0000		1	SHAFT	
080	434321-0000		1	CURVE ROLLER	
090	464315-0000		3	VOLUME SHIM	
100	434320-0000		1	AXLE PIN	
130	90028-0020		1	CONE TUBE 2,5MM	
150	90134-0063		1	BUSHING/NUT M8X1, D=2,5 MM	
200	312145-0222		2	SCREW ISO 2009 MFS M3X8 A4	
300	312318-0285		1	SCREW ISO4029 M4X6 A4	
TB/8 0568B TPC (See drawing on pages: 4-54, 12-206)					
010	533441-0000		1	VOLUME FLAP	
030	19972-0000		1	WASHER	
040	541204-0000		1	VOLUME BULGE	
060	36133-0000		2	BUSHING	
070	458164-0000		1	SHAFT	
080	436556-0000		1	CURVE ROLLER	
090	479246-0000		3	VOLUME SHIM	
100	434320-0000		1	AXLE PIN	
130	90028-0020		1	CONE TUBE 2,5MM	
150	90134-0063		1	BUSHING/NUT M8X1, D=2,5 MM	
210	312145-0289		2	SCREW ISO 2009 MFS M4X10 A4	
300	312318-0285		1	SCREW ISO4029 M4X6 A4	
TB/8 1000SQ US (See drawing on pages: 4-52, 12-204)					
010	929541-0000		1	VOLUME FLAP	
030	19972-0000		1	WASHER	
040	1143049-0000		1	VOLUME BULGE	
060	36133-0000		2	BUSHING	
070	544292-0000		1	SHAFT	

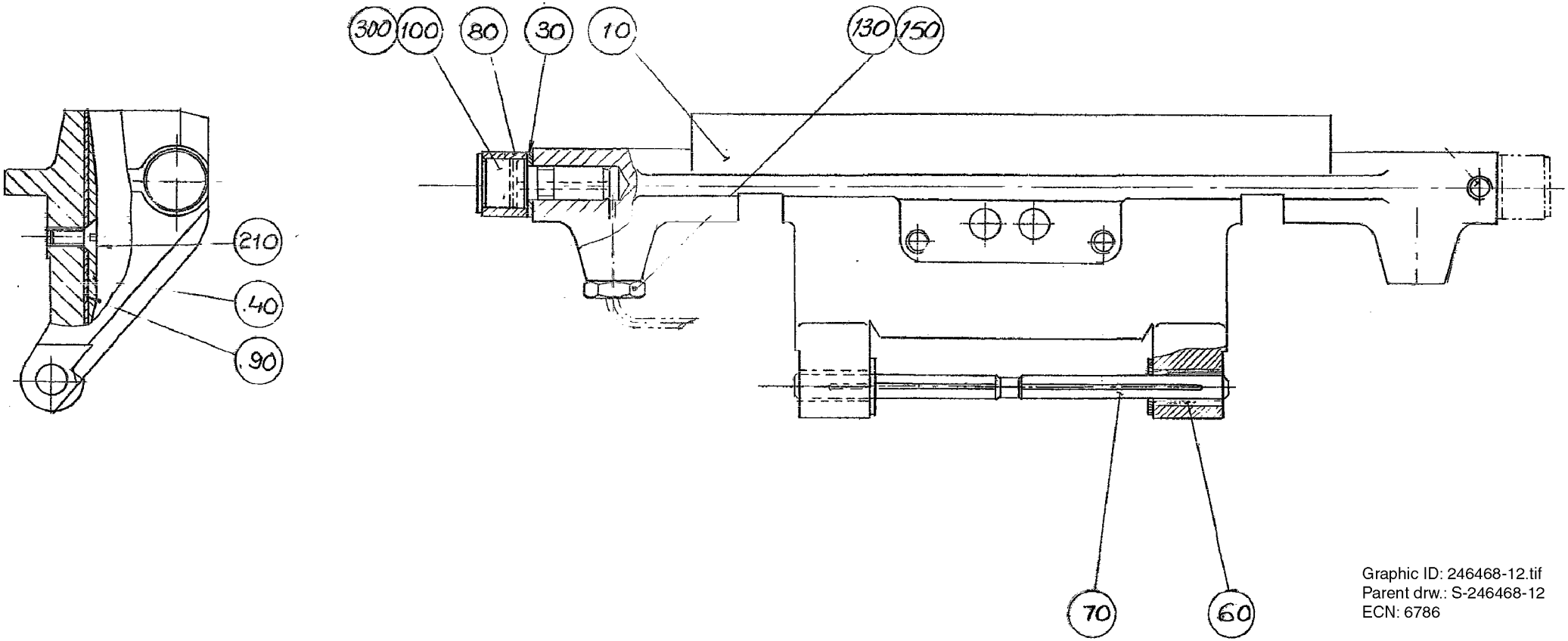

Graphic ID: 246468-12.tif
Parent drw.: S-246468-12
ECN: 6786

ECM: 146884 - 20031028
Group number: 246468-0800
Assembly Drawing: 246468-12_1_AA

This list covers pages from 12-204 to 12-211

Pos	Part No	UN	Qty	Description	Page No
TB/8 1000SQ US (Cont'd) (See drawing on pages: 4-52, 12-204)					
080	434321-0000		1	CURVE ROLLER	
090	1143050-0000		3	VOLUME SHIM	
100	434320-0000		1	AXLE PIN	
130	90028-0020		1	CONE TUBE 2,5MM	
150	90134-0063		1	BUSHING/NUT M8X1, D=2,5 MM	
210	312145-0289		2	SCREW ISO 2009 MFS M4X10 A4	
300	312318-0285		1	SCREW ISO4029 M4X6 A4	
TB/8 1136B TPC (See drawing on pages: 4-52, 12-204)					
010	544344-0000		1	VOLUME FLAP	
030	19972-0000		1	WASHER	
040	544345-0000		1	VOLUME BULGE	
060	36133-0000		2	BUSHING	
070	458164-0000		1	SHAFT	
080	434321-0000		1	CURVE ROLLER	
090	544346-0000		3	VOLUME SHIM	
100	434320-0000		1	AXLE PIN	
130	90028-0020		1	CONE TUBE 2,5MM	
150	90134-0063		1	BUSHING/NUT M8X1, D=2,5 MM	
200	312145-0222		2	SCREW ISO 2009 MFS M3X8 A4	
300	312318-0285		1	SCREW ISO4029 M4X6 A4	
TB/8 1500B US (See drawing on pages: 4-58, 12-210)					
010	593280-0000		1	VOLUME FLAP	
030	19972-0000		2	WASHER	
040	596085-0000		1	VOLUME BULGE	
060	36133-0000		2	BUSHING	
070	458164-0000		1	SHAFT	
080	434321-0000		2	CURVE ROLLER	
090	1143050-0000		3	VOLUME SHIM	
100	434320-0000		2	AXLE PIN	
130	90028-0020		2	CONE TUBE 2,5MM	
150	90134-0063		2	BUSHING/NUT M8X1, D=2,5 MM	
210	312145-0289		2	SCREW ISO 2009 MFS M4X10 A4	
300	312318-0285		2	SCREW ISO4029 M4X6 A4	
TB/8 0500SQ TPC (See drawing on pages: 4-52, 12-204)					
010	1361917-0000		1	VOLUME FLAP	
030	19972-0000		1	WASHER	
040	589925-0000		1	VOLUME BULGE	
060	36133-0000		2	BUSHING	
070	544292-0000		1	SHAFT	
080	436556-0000		1	CURVE ROLLER	
090	589926-0000		3	VOLUME SHIM	
100	434320-0000		1	AXLE PIN	
130	90028-0020		1	CONE TUBE 2,5MM	
150	90134-0063		1	BUSHING/NUT M8X1, D=2,5 MM	
210	312145-0289		2	SCREW ISO 2009 MFS M4X10 A4	
300	312318-0285		1	SCREW ISO4029 M4X6 A4	
TB/8 1000B LOFIN TPC, TB/8 1000B HIFIN TPC (See drawing on pages: 4-52, 12-204)					
010	532718-0000		1	VOLUMEN FLAP	
030	19972-0000		1	WASHER	
040	26075-0000		1	VOLUME BULGE	
060	36133-0000		2	BUSHING	
070	458164-0000		1	SHAFT	
080	434321-0000		1	CURVE ROLLER	
090	208709-0000		3	VOLUME SHIM	
100	434320-0000		1	AXLE PIN	
130	90028-0020		1	CONE TUBE 2,5MM	
150	90134-0063		1	BUSHING/NUT M8X1, D=2,5 MM	
200	312145-0222		2	SCREW ISO 2009 MFS M3X8 A4	
300	312318-0285		1	SCREW ISO4029 M4X6 A4	

Machine Type | Group Description | Used-In | Group Number | Page No

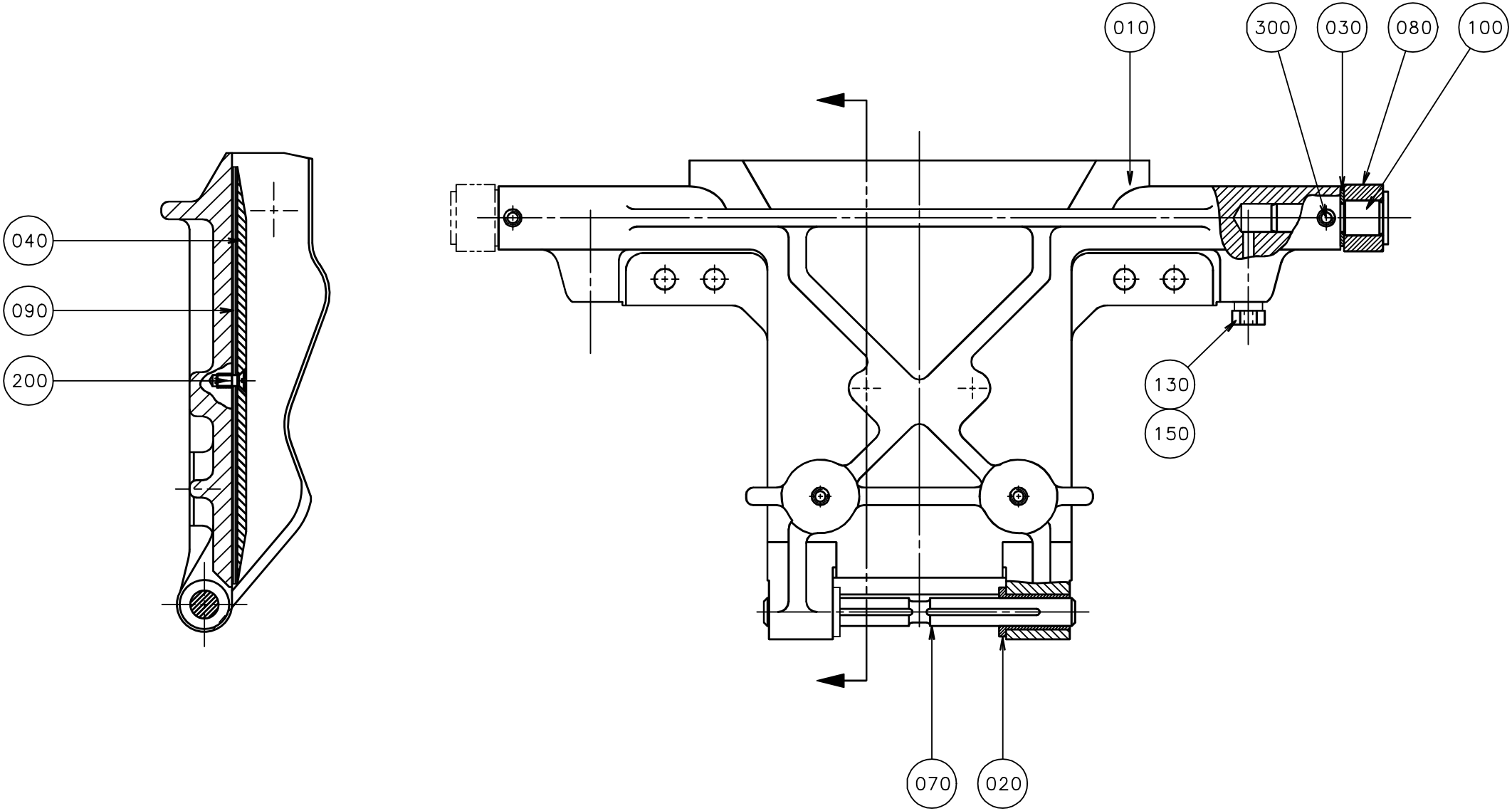
010
300
030
080
100
040
090
200
130
150
070
020

Pos	Part No	UN	Qty	Description	Page No	Pos	Part No	UN	Qty	Description	Page No

SEE PREVIOUS LISTS PAGES: 12-205, 12-207.

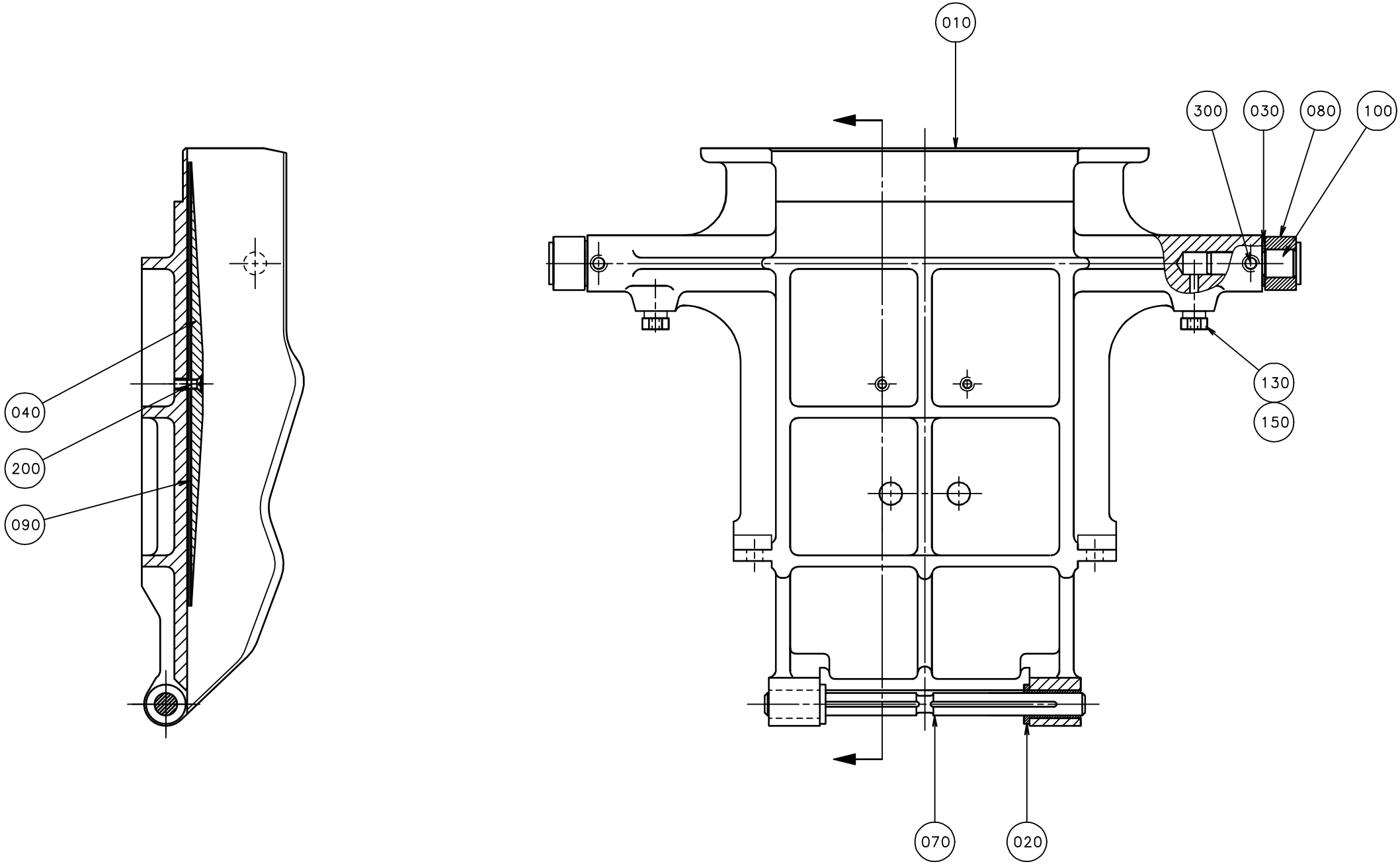
010
300
030
080
100
130
150
040
200
090
070
020

Pos	Part No	UN	Qty	Description	Page No	Pos	Part No	UN	Qty	Description	Page No

SEE PREVIOUS LISTS PAGES: 12-205, 12-207.

ARM WITH AXLE PRESSURE

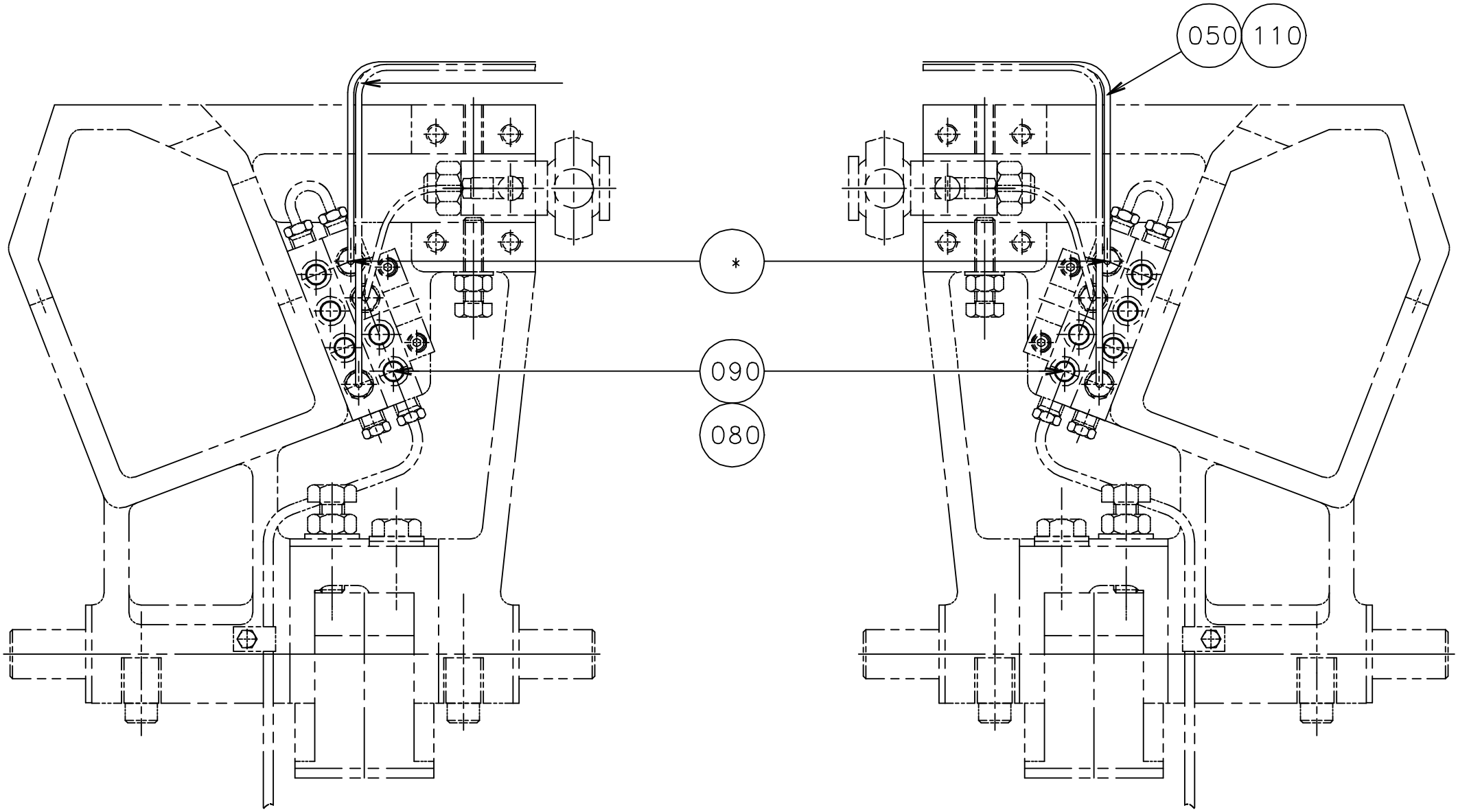

ECM: 70372 - 19961217
Group number: 591301-0100
Assembly Drawing: 591301-1_1_AA

Pos	Part No	UN	Qty	Description	Page No
-					
050	90028-0020		6	CONE TUBE 2,5MM	
080	90134-0039		10	BUSHING VALVE CONNECTION 2,5 MM	
090	90134-0052		10	PLUG DOSING BLOCK	
110	90166-0143	MM	800	TUBE 2,5 MM PA,TRANSP.	

Pos	Part No	UN	Qty	Description	Page No

PRESSURE JAW LEFT

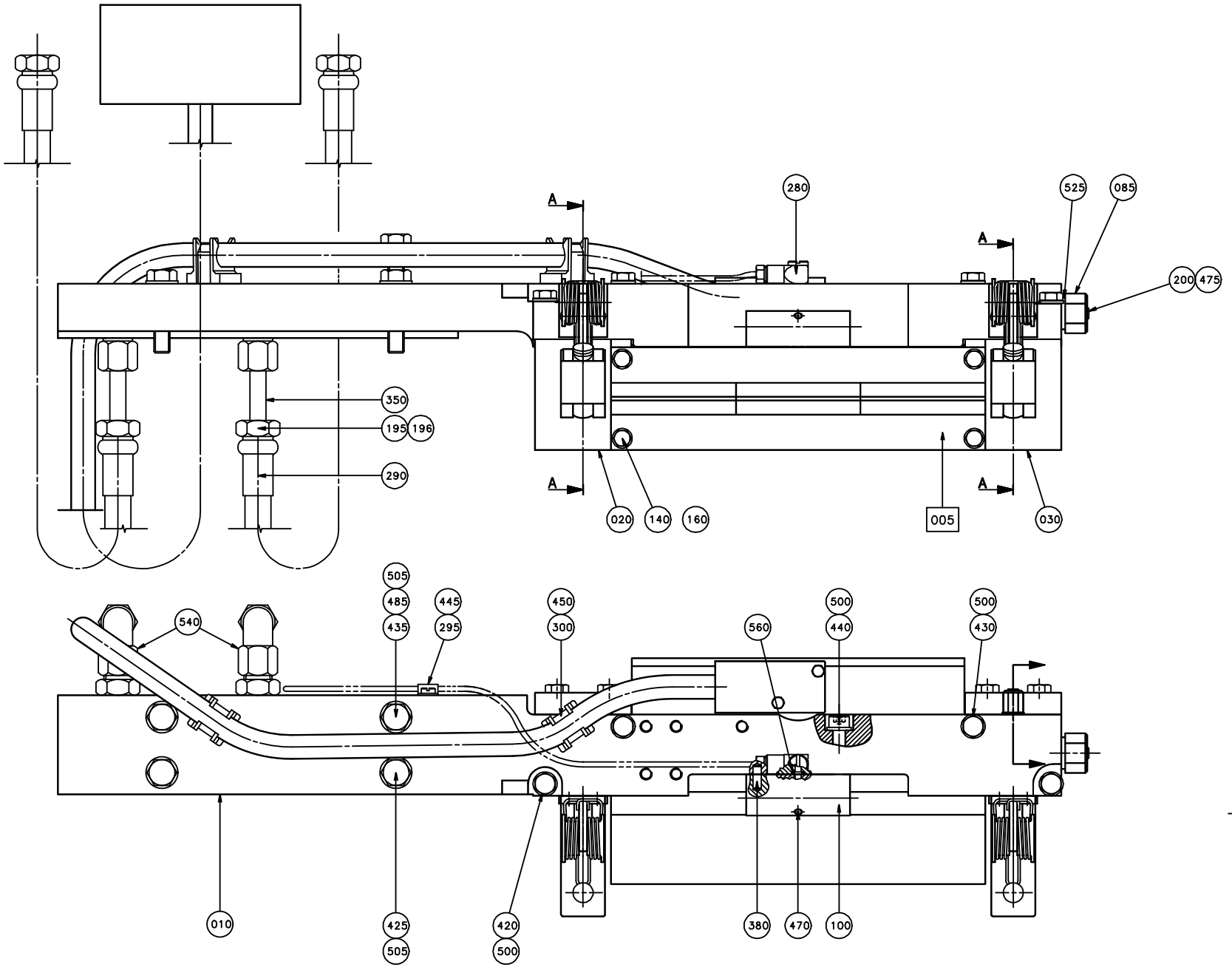

ECM: 73196 - 20000124
Group number: 597566-0100
Assembly Drawing: 597566-1_1_AA

This list covers pages from 12-214 to 12-217

Pos	Part No	UN	Qty	Description	Page No
-					
005	1255806-0101		1	COMPACT TRANSDUCER	
010	598615-0000		1	CARRIER LEFT	
020	592538-0000		1	BEARING HOUSING	
030	592536-0000		1	BEARING HOUSING	
035	592921-0000		1	NIPPLE	
040	592537-0000		2	LID	
050	591410-0000		2	CATCH	
060	592563-0000		2	PISTON	
065	590369-0000		2	COMPRESSION SPRING	
070	592715-0000		2	BRACKET	
072	1129552-0000		2	KNOB	
080	592539-0000		2	SLEEVE	
082	594219-0000		2	WASHER	
085	593647-0000		1	NIPPLE	
100	929551-0000		1	AXLE SUPPORT	
110	1129473-0000		2	RESORTE (REEMPLAZADO X 1549378)	
120	950351-0000		2	SHAFT	
130	1038240-0000		2	SPACER	
140	1143885-0000		4	SCREW	
160	591087-0000		2	SHIM	
170	1129833-0000		4	GUIDE ROLLER	
195	90030-0098		4	ACCESSORIES, FERRULE 8	
196	342703-0208		4	NUT, PIPES & CONNECTORS,NUT M-8 SS	
200	90090-0013		2	BALL, D=4 MM	
230	90091-0362		2	SCRAPER, EXCLUDER2 18X22,8X3,7 MM	
240	90091-0393		2	PISTON SEAL GLIDE RING T17,5X25X3,2	
250	90091-0364		2	ROD SEAL, STEPSEAL 18X25,3X3,2 MM	
260	90091-0366		2	WEAR RING 18X23X3,9 MM	
270	90091-0394		2	WEAR RING 20X25X5,6 MM	
280	90134-0058		1	CONNECTION	
285	90141-0015		4	RETAINING RING FOR SHAFT DIN 471 8 A2	
290	90148-0033		2	HOSE	
295	90165-0058		1	PIPE CLIP FOR TUBE D=2,5 MM	
300	90165-0174		2	HOSE HOLDER	
330	315202-0220		2	O-RING 32,2X3 MM	
350	90266-0167	MM	80	PIPE	
380	311103-0268		2	PARALLEL PIN ISO 2338 4M6X12 A1	
420	312105-0372		2	SCREW M6S ISO 4017 M6X25 A480	
425	312105-0457		3	SCREW M6S ISO 4014 M8X35 A480	
430	312109-0376		2	SCREW M6S ISO 4017 M6X35 A480	
435	312109-0463		1	SCREW M6S ISO 4017 M8X60 A480	
437	312105-0327		4	SCREW M6S ISO 4017 M5X12 A480	
438	312115-0329		2	SCREW ISO4762 M5X16 A4 80	
439	312105-0370		8	SCREW M6S ISO 4017 M6X20 A480	
440	312115-0374		2	SCREW ISO4762 M6X30 A4 80	
445	312125-0287		1	SCREW ISO 1207 M4X8 A4	
450	312125-0327		2	SCREW ISO 1207 M5X12 A4	
470	312318-0285		1	SCREW ISO4029 M4X6 A4	
475	312318-0362		2	SCREW ISO4029 M6X8 A4	
485	312605-0318		1	HEXAGON NUT, M6M M8 A280	
488	312812-0314		2	HEXAGON NUT, NY-LOCK M5 A480	
495	315105-0146		4	WASHER BRB 5,3X10 RFR	
500	315105-0153		6	WASHER BRB 6,4X12 RFR	
505	315105-0165		4	WASHER BRB 8,4X16 RFR	
510	315202-0124		4	O-RING 37,1X1,6 MM	
520	315202-0105		4	O-RING 7,1X1,6 MM	
523	315211-0103		1	BONDED SEAL SS/NBR90 M6	
525	315211-0105		1	BONDED SEAL SS/NBR90 G1/8	
540	342738-0208		2	ADJUSTABLE ELBOW CONNECTION,EXT 8-G1/4	
560	315202-0101		1	O-RING 3,1X1,6 MM	

Machine Type	Group Description	Used-In	Group Number	Page No

PRESSURE JAW LEFT

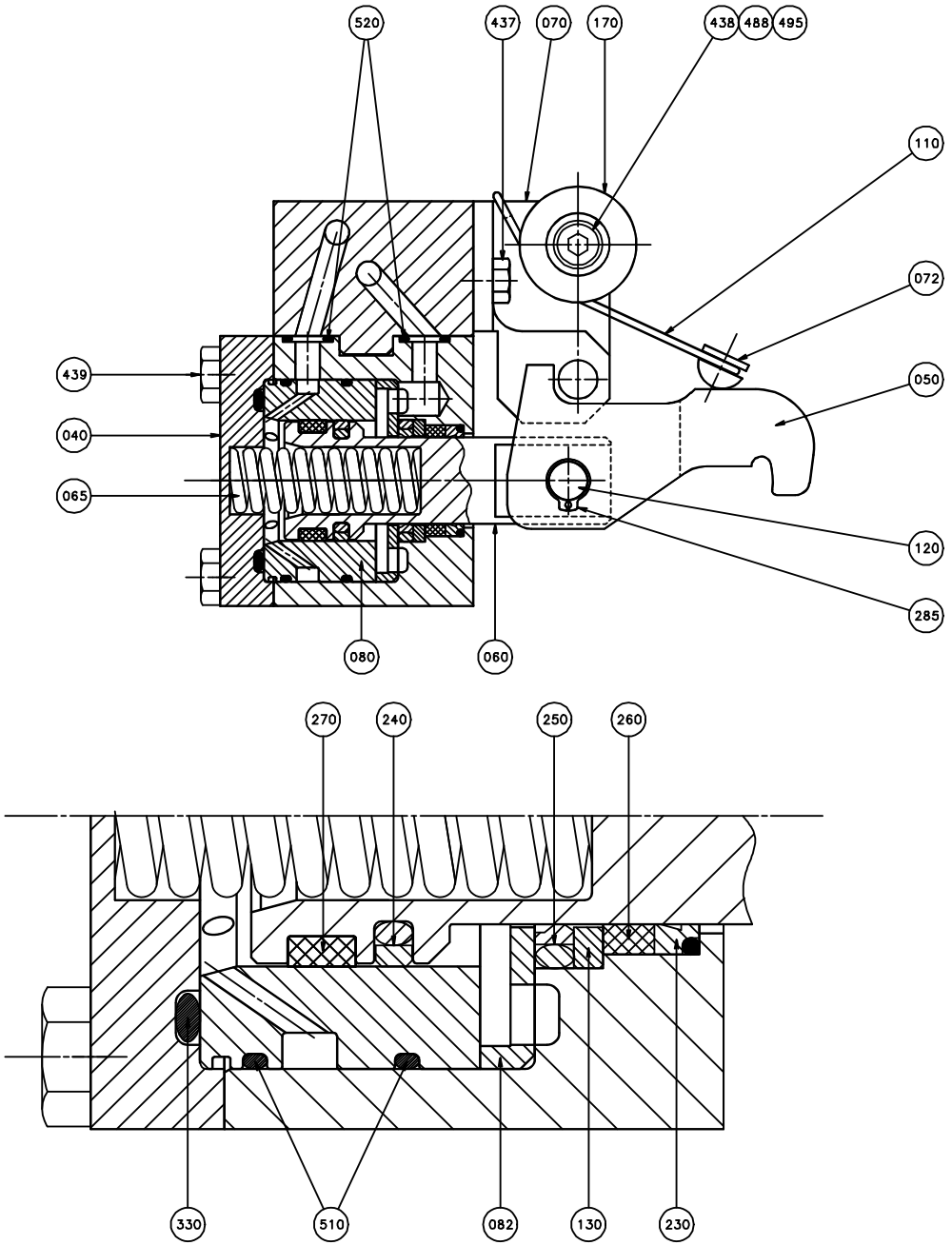

ECM: 73196 - 20000124
Group number: 597566-0100
Assembly Drawing: 597566-2_1_AA

This list covers pages from 12-214 to 12-217

Pos	Part No	UN	Qty	Description	Page No
-					
005	1255806-0101		1	COMPACT TRANSDUCER	
010	598615-0000		1	CARRIER LEFT	
020	592538-0000		1	BEARING HOUSING	
030	592536-0000		1	BEARING HOUSING	
035	592921-0000		1	NIPPLE	
040	592537-0000		2	LID	
050	591410-0000		2	CATCH	
060	592563-0000		2	PISTON	
065	590369-0000		2	COMPRESSION SPRING	
070	592715-0000		2	BRACKET	
072	1129552-0000		2	KNOB	
080	592539-0000		2	SLEEVE	
082	594219-0000		2	WASHER	
085	593647-0000		1	NIPPLE	
100	929551-0000		1	AXLE SUPPORT	
110	1129473-0000		2	RESORTE (REEMPLAZADO X 1549378)	
120	950351-0000		2	SHAFT	
130	1038240-0000		2	SPACER	
140	1143885-0000		4	SCREW	
160	591087-0000		2	SHIM	
170	1129833-0000		4	GUIDE ROLLER	
195	90030-0098		4	ACCESSORIES, FERRULE 8	
196	342703-0208		4	NUT, PIPES & CONNECTORS,NUT M-8 SS	
200	90090-0013		2	BALL, D=4 MM	
230	90091-0362		2	SCRAPER, EXCLUDER2 18X22,8X3,7 MM	
240	90091-0393		2	PISTON SEAL GLIDE RING T17,5X25X3,2	
250	90091-0364		2	ROD SEAL, STEPSEAL 18X25,3X3,2 MM	
260	90091-0366		2	WEAR RING 18X23X3,9 MM	
270	90091-0394		2	WEAR RING 20X25X5,6 MM	
280	90134-0058		1	CONNECTION	
285	90141-0015		4	RETAINING RING FOR SHAFT DIN 471 8 A2	
290	90148-0033		2	HOSE	
295	90165-0058		1	PIPE CLIP FOR TUBE D=2,5 MM	
300	90165-0174		2	HOSE HOLDER	
330	315202-0220		2	O-RING 32,2X3 MM	
350	90266-0167	MM	80	PIPE	
380	311103-0268		2	PARALLEL PIN ISO 2338 4M6X12 A1	
420	312105-0372		2	SCREW M6S ISO 4017 M6X25 A480	
425	312105-0457		3	SCREW M6S ISO 4014 M8X35 A480	
430	312109-0376		2	SCREW M6S ISO 4017 M6X35 A480	
435	312109-0463		1	SCREW M6S ISO 4017 M8X60 A480	
437	312105-0327		4	SCREW M6S ISO 4017 M5X12 A480	
438	312115-0329		2	SCREW ISO4762 M5X16 A4 80	
439	312105-0370		8	SCREW M6S ISO 4017 M6X20 A480	
440	312115-0374		2	SCREW ISO4762 M6X30 A4 80	
445	312125-0287		1	SCREW ISO 1207 M4X8 A4	
450	312125-0327		2	SCREW ISO 1207 M5X12 A4	
470	312318-0285		1	SCREW ISO4029 M4X6 A4	
475	312318-0362		2	SCREW ISO4029 M6X8 A4	
485	312605-0318		1	HEXAGON NUT, M6M M8 A280	
488	312812-0314		2	HEXAGON NUT, NY-LOCK M5 A480	
495	315105-0146		4	WASHER BRB 5,3X10 RFR	
500	315105-0153		6	WASHER BRB 6,4X12 RFR	
505	315105-0165		4	WASHER BRB 8,4X16 RFR	
510	315202-0124		4	O-RING 37,1X1,6 MM	
520	315202-0105		4	O-RING 7,1X1,6 MM	
523	315211-0103		1	BONDED SEAL SS/NBR90 M6	
525	315211-0105		1	BONDED SEAL SS/NBR90 G1/8	
540	342738-0208		2	ADJUSTABLE ELBOW CONNECTION,EXT 8-G1/4	
560	315202-0101		1	O-RING 3,1X1,6 MM	

Machine Type	Group Description	Used-In	Group Number	Page No

PRESSURE JAW RIGHT

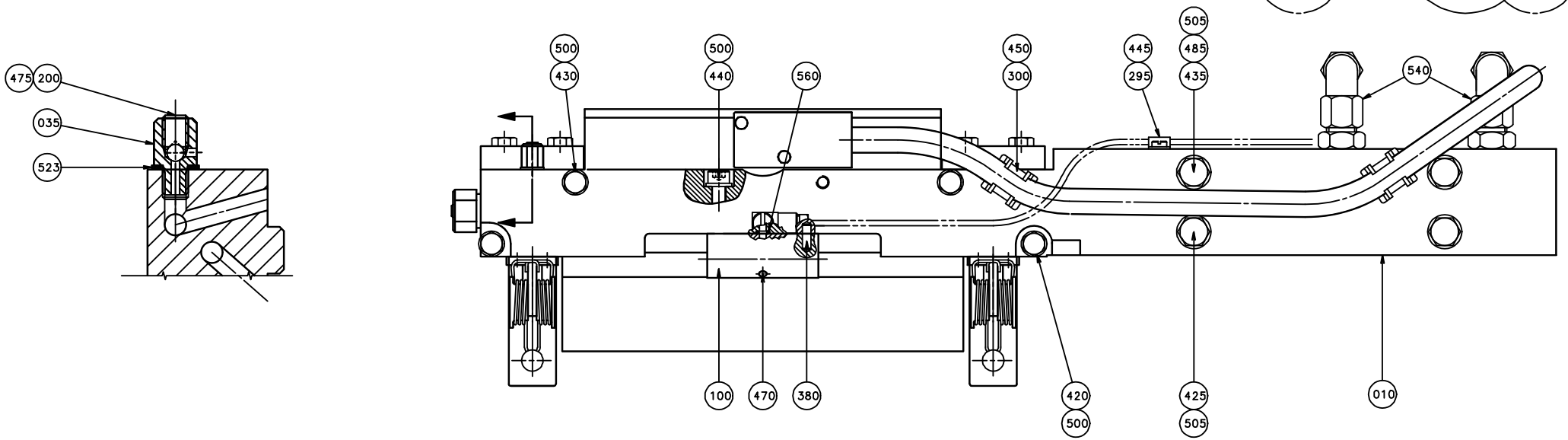

ECM: 73196 - 20000124
Group number: 597567-0100
Assembly Drawing: 597567-1_1_AA

This list covers pages from 12-218 to 12-221

Pos	Part No	UN	Qty	Description	Page No
-					
005	1255806-0101		1	COMPACT TRANSDUCER	
010	598616-0000		1	CARRIER RIGHT	
020	592538-0000		1	BEARING HOUSING	
030	592536-0000		1	BEARING HOUSING	
035	592921-0000		1	NIPPLE	
040	592537-0000		2	LID	
050	591410-0000		2	CATCH	
060	592563-0000		2	PISTON	
065	590369-0000		2	COMPRESSION SPRING	
070	592715-0000		2	BRACKET	
072	1129552-0000		2	KNOB	
080	592539-0000		2	SLEEVE	
082	594219-0000		2	WASHER	
085	593647-0000		1	NIPPLE	
100	929551-0000		1	AXLE SUPPORT	
110	1129473-0000		2	RESORTE (REEMPLAZADO X 1549378)	
120	950351-0000		2	SHAFT	
130	1038240-0000		2	SPACER	
140	1143885-0000		4	SCREW	
160	591087-0000		2	SHIM	
170	1129833-0000		4	GUIDE ROLLER	
195	90030-0098		4	ACCESSORIES, FERRULE 8	
196	342703-0208		4	NUT, PIPES & CONNECTORS,NUT M-8 SS	
200	90090-0013		2	BALL, D=4 MM	
230	90091-0362		2	SCRAPER, EXCLUDER2 18X22,8X3,7 MM	
240	90091-0393		2	PISTON SEAL GLIDE RING T17,5X25X3,2	
250	90091-0364		2	ROD SEAL, STEPSEAL 18X25,3X3,2 MM	
260	90091-0366		2	WEAR RING 18X23X3,9 MM	
270	90091-0394		2	WEAR RING 20X25X5,6 MM	
280	90134-0058		1	CONNECTION	
285	90141-0015		4	RETAINING RING FOR SHAFT DIN 471 8 A2	
290	90148-0033		2	HOSE	
295	90165-0058		1	PIPE CLIP FOR TUBE D=2,5 MM	
300	90165-0174		2	HOSE HOLDER	
330	315202-0220		2	O-RING 32,2X3 MM	
350	90266-0167	MM	80	PIPE	
380	311103-0268		2	PARALLEL PIN ISO 2338 4M6X12 A1	
420	312105-0372		2	SCREW M6S ISO 4017 M6X25 A480	
425	312105-0457		3	SCREW M6S ISO 4014 M8X35 A480	
430	312109-0376		2	SCREW M6S ISO 4017 M6X35 A480	
435	312109-0463		1	SCREW M6S ISO 4017 M8X60 A480	
437	312105-0327		4	SCREW M6S ISO 4017 M5X12 A480	
438	312115-0329		2	SCREW ISO4762 M5X16 A4 80	
439	312105-0370		8	SCREW M6S ISO 4017 M6X20 A480	
440	312115-0374		2	SCREW ISO4762 M6X30 A4 80	
445	312125-0287		1	SCREW ISO 1207 M4X8 A4	
450	312125-0327		2	SCREW ISO 1207 M5X12 A4	
470	312318-0285		1	SCREW ISO4029 M4X6 A4	
475	312318-0362		2	SCREW ISO4029 M6X8 A4	
485	312605-0318		1	HEXAGON NUT, M6M M8 A280	
488	312812-0314		2	HEXAGON NUT, NY-LOCK M5 A480	
495	315105-0146		4	WASHER BRB 5,3X10 RFR	
500	315105-0153		6	WASHER BRB 6,4X12 RFR	
505	315105-0165		4	WASHER BRB 8,4X16 RFR	
510	315202-0124		4	O-RING 37,1X1,6 MM	
520	315202-0105		4	O-RING 7,1X1,6 MM	
523	315211-0103		1	BONDED SEAL SS/NBR90 M6	
525	315211-0105		1	BONDED SEAL SS/NBR90 G1/8	
540	342738-0208		2	ADJUSTABLE ELBOW CONNECTION,EXT 8-G1/4	
560	315202-0101		1	O-RING 3,1X1,6 MM	

Machine Type	Group Description	Used-In	Group Number	Page No

PRESSURE JAW RIGHT

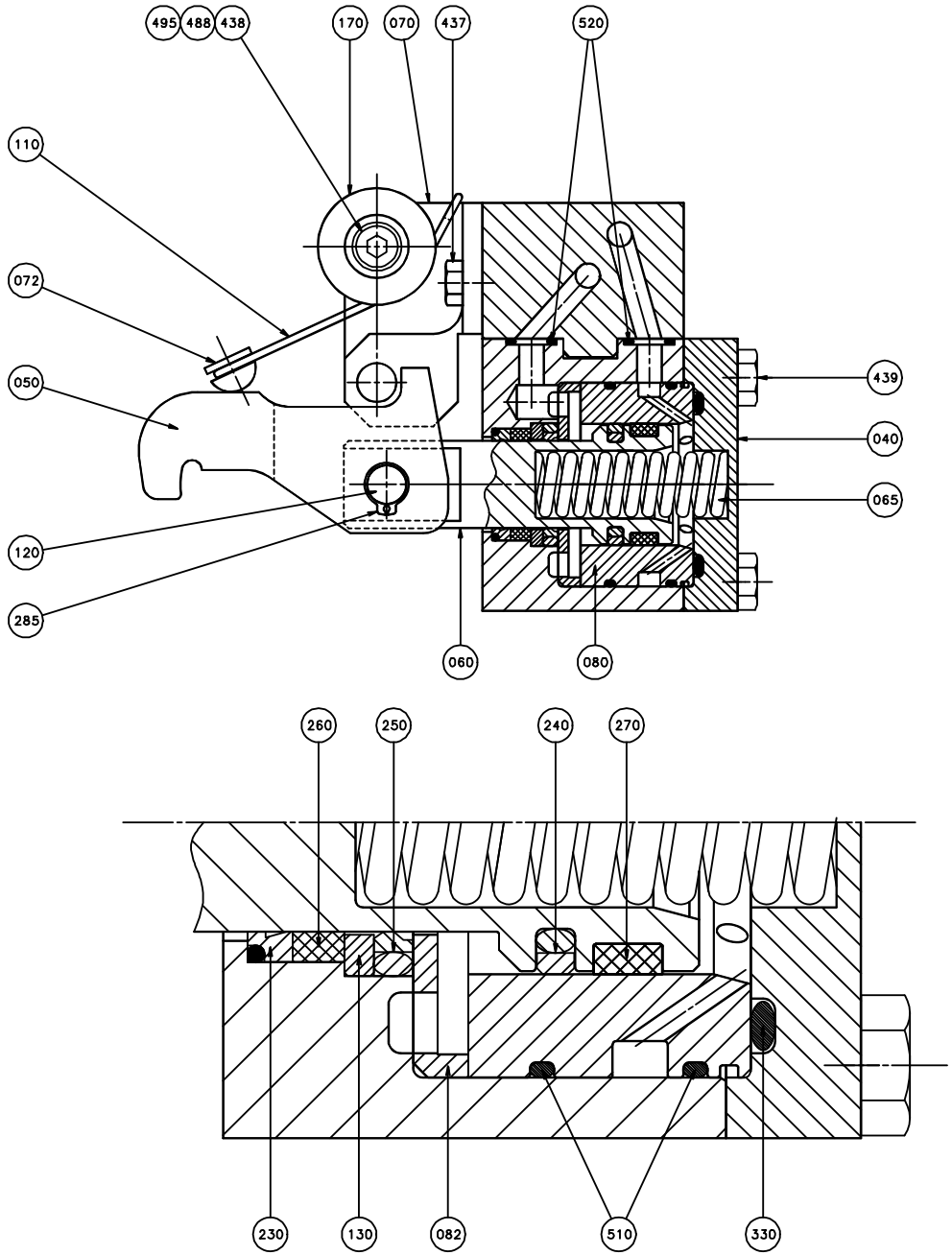

ECM: 73196 - 20000124
Group number: 597567-0100
Assembly Drawing: 597567-2_1_AA

This list covers pages from 12-218 to 12-221

Pos	Part No	UN	Qty	Description	Page No
-					
005	1255806-0101		1	COMPACT TRANSDUCER	
010	598616-0000		1	CARRIER RIGHT	
020	592538-0000		1	BEARING HOUSING	
030	592536-0000		1	BEARING HOUSING	
035	592921-0000		1	NIPPLE	
040	592537-0000		2	LID	
050	591410-0000		2	CATCH	
060	592563-0000		2	PISTON	
065	590369-0000		2	COMPRESSION SPRING	
070	592715-0000		2	BRACKET	
072	1129552-0000		2	KNOB	
080	592539-0000		2	SLEEVE	
082	594219-0000		2	WASHER	
085	593647-0000		1	NIPPLE	
100	929551-0000		1	AXLE SUPPORT	
110	1129473-0000		2	RESORTE (REEMPLAZADO X 1549378)	
120	950351-0000		2	SHAFT	
130	1038240-0000		2	SPACER	
140	1143885-0000		4	SCREW	
160	591087-0000		2	SHIM	
170	1129833-0000		4	GUIDE ROLLER	
195	90030-0098		4	ACCESSORIES, FERRULE 8	
196	342703-0208		4	NUT, PIPES & CONNECTORS,NUT M-8 SS	
200	90090-0013		2	BALL, D=4 MM	
230	90091-0362		2	SCRAPER, EXCLUDER2 18X22,8X3,7 MM	
240	90091-0393		2	PISTON SEAL GLIDE RING T17,5X25X3,2	
250	90091-0364		2	ROD SEAL, STEPSEAL 18X25,3X3,2 MM	
260	90091-0366		2	WEAR RING 18X23X3,9 MM	
270	90091-0394		2	WEAR RING 20X25X5,6 MM	
280	90134-0058		1	CONNECTION	
285	90141-0015		4	RETAINING RING FOR SHAFT DIN 471 8 A2	
290	90148-0033		2	HOSE	
295	90165-0058		1	PIPE CLIP FOR TUBE D=2,5 MM	
300	90165-0174		2	HOSE HOLDER	
330	315202-0220		2	O-RING 32,2X3 MM	
350	90266-0167	MM	80	PIPE	
380	311103-0268		2	PARALLEL PIN ISO 2338 4M6X12 A1	
420	312105-0372		2	SCREW M6S ISO 4017 M6X25 A480	
425	312105-0457		3	SCREW M6S ISO 4014 M8X35 A480	
430	312109-0376		2	SCREW M6S ISO 4017 M6X35 A480	
435	312109-0463		1	SCREW M6S ISO 4017 M8X60 A480	
437	312105-0327		4	SCREW M6S ISO 4017 M5X12 A480	
438	312115-0329		2	SCREW ISO4762 M5X16 A4 80	
439	312105-0370		8	SCREW M6S ISO 4017 M6X20 A480	
440	312115-0374		2	SCREW ISO4762 M6X30 A4 80	
445	312125-0287		1	SCREW ISO 1207 M4X8 A4	
450	312125-0327		2	SCREW ISO 1207 M5X12 A4	
470	312318-0285		1	SCREW ISO4029 M4X6 A4	
475	312318-0362		2	SCREW ISO4029 M6X8 A4	
485	312605-0318		1	HEXAGON NUT, M6M M8 A280	
488	312812-0314		2	HEXAGON NUT, NY-LOCK M5 A480	
495	315105-0146		4	WASHER BRB 5,3X10 RFR	
500	315105-0153		6	WASHER BRB 6,4X12 RFR	
505	315105-0165		4	WASHER BRB 8,4X16 RFR	
510	315202-0124		4	O-RING 37,1X1,6 MM	
520	315202-0105		4	O-RING 7,1X1,6 MM	
523	315211-0103		1	BONDED SEAL SS/NBR90 M6	
525	315211-0105		1	BONDED SEAL SS/NBR90 G1/8	
540	342738-0208		2	ADJUSTABLE ELBOW CONNECTION,EXT 8-G1/4	
560	315202-0101		1	O-RING 3,1X1,6 MM	

Machine Type | Group Description | Used-In | Group Number | Page No

FOLDING DEVICE LEFT

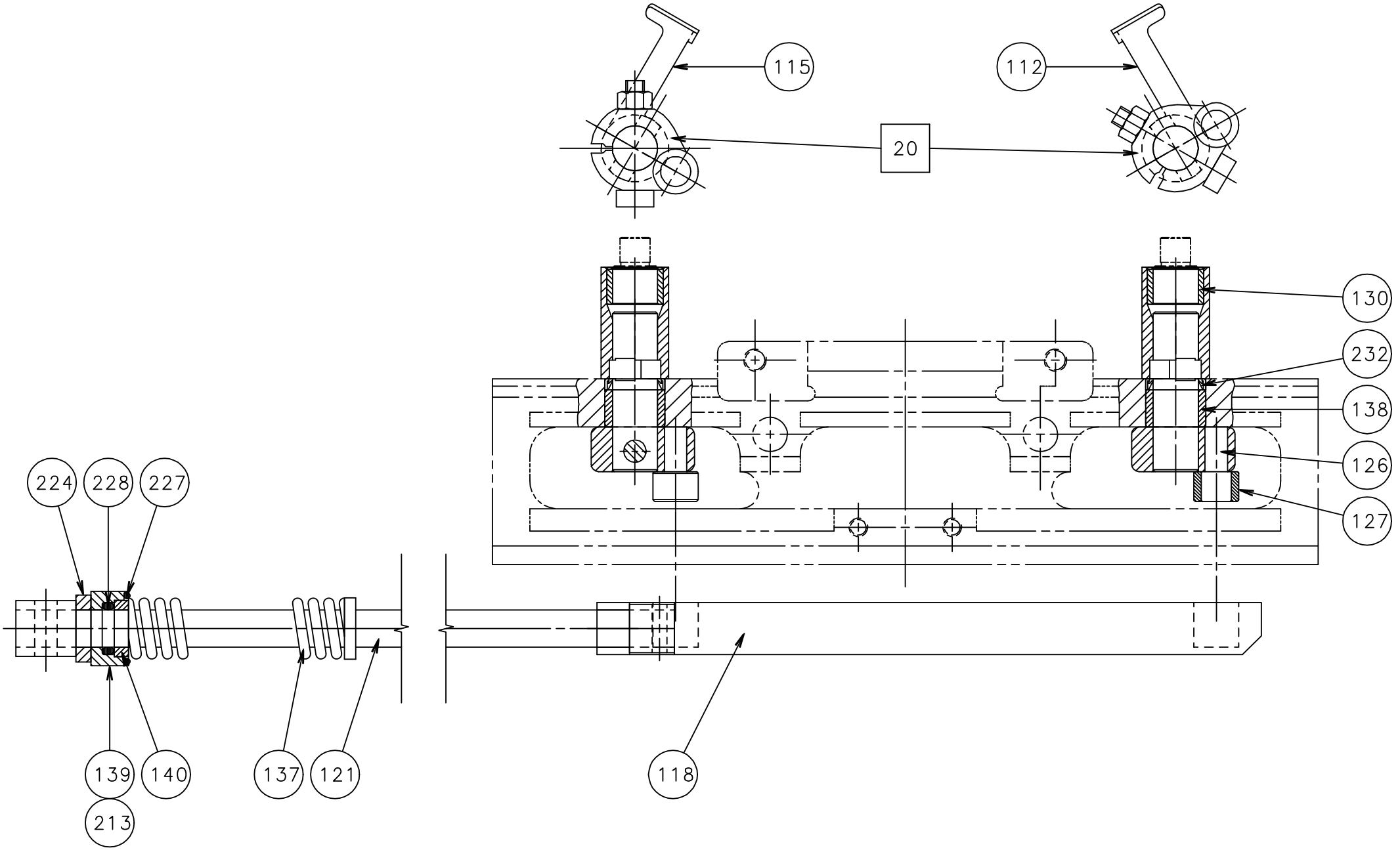

ECM: 70372 - 19961217
Group number: 591302-0100
Assembly Drawing: 591302-1_1_AA

Pos	Part No	UN	Qty	Description	Page No
-					
112	573978-0000		1	FOLDING FLAP REPBY 1317809	
115	573977-0000		1	FOLDING FLAP REPBY 1317808	
118	573979-0000		1	CARRIER RULER	
121	32468-0000		1	OPERATING ROD	
126	22462-0000		2	SHAFT	
127	22463-0000		2	ROLL	
130	32463-0000		2	BEARING	
137	107000-0000		1	SPRING	
138	33408-0000		2	BEARING	
139	113653-0000		1	BEARING PLATE	
140	113654-0000		1	RING	
213	312115-0366		2	SCREW ISO4762 M6X12 A4 80	
224	315115-0171		1	WASHER PLAIN, TBRB 10/18 H=4	
227	315202-0114		1	O-RING 16,1X1,6 MM	
228	315202-0208		1	O-RING 9,3X2,4 MM	
232	315230-0157		2	BEARING SEAL 12X16X3 MM	
F020	26642-0200		2	CARRIER	**4-145, 12-225**

Pos	Part No	UN	Qty	Description	Page No

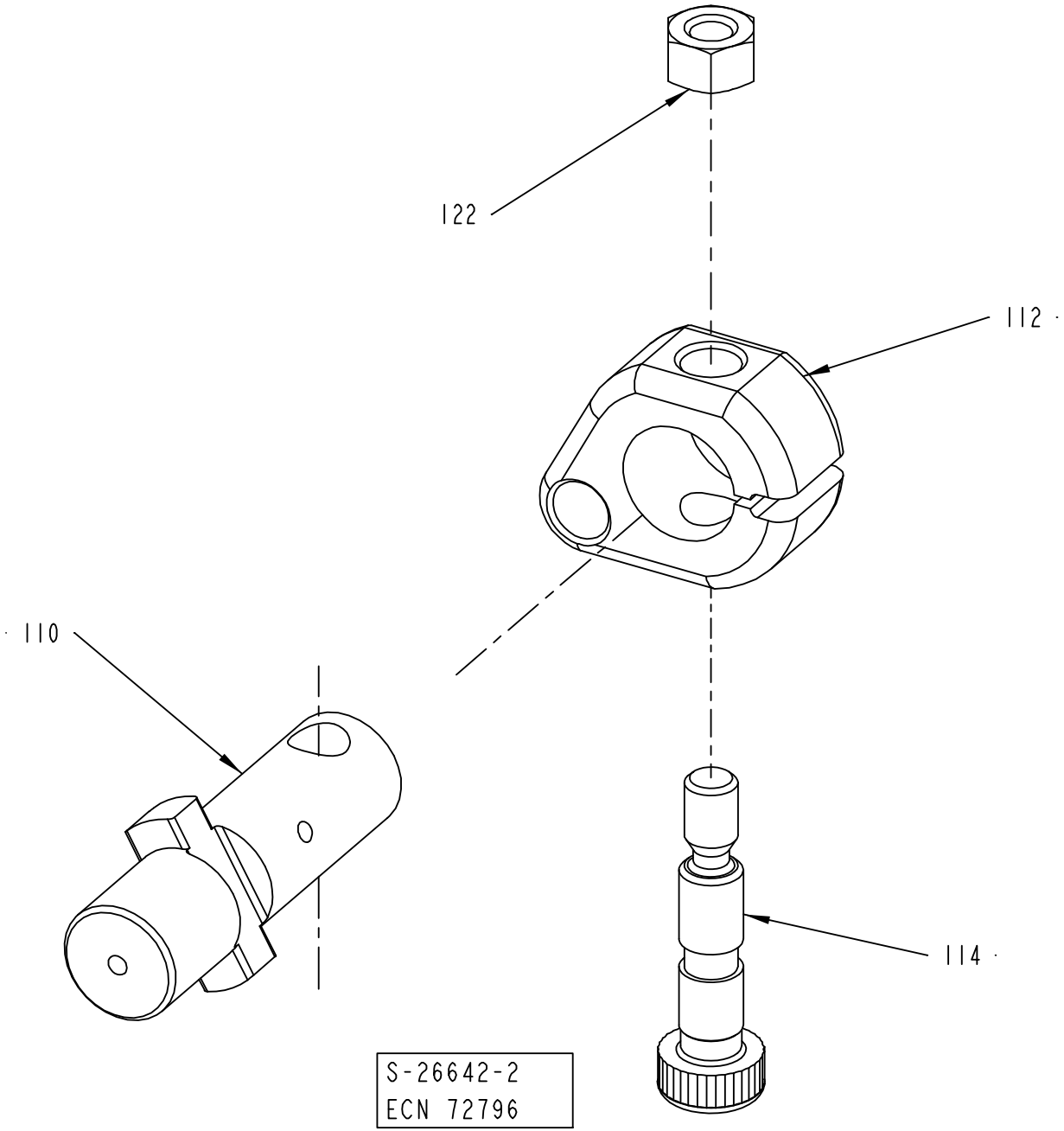
122
112
110
114
S-26642-2
ECN 72796

ECM: 189547 - 20041104
Group number: 26642-0200
Assembly Drawing: 26642-2_1_AA

Pos	Part No	UN	Qty	Description	Page No
-					
110	32462-0000		1	SHAFT	
112	25640-0000		1	CARRIER	
114	25641-0000		1	REAMED BOLT	
122	312605-0314		1	HEXAGON NUT, M6M M5 A280	

Pos	Part No	UN	Qty	Description	Page No

FOLDING DEVICE RIGHT

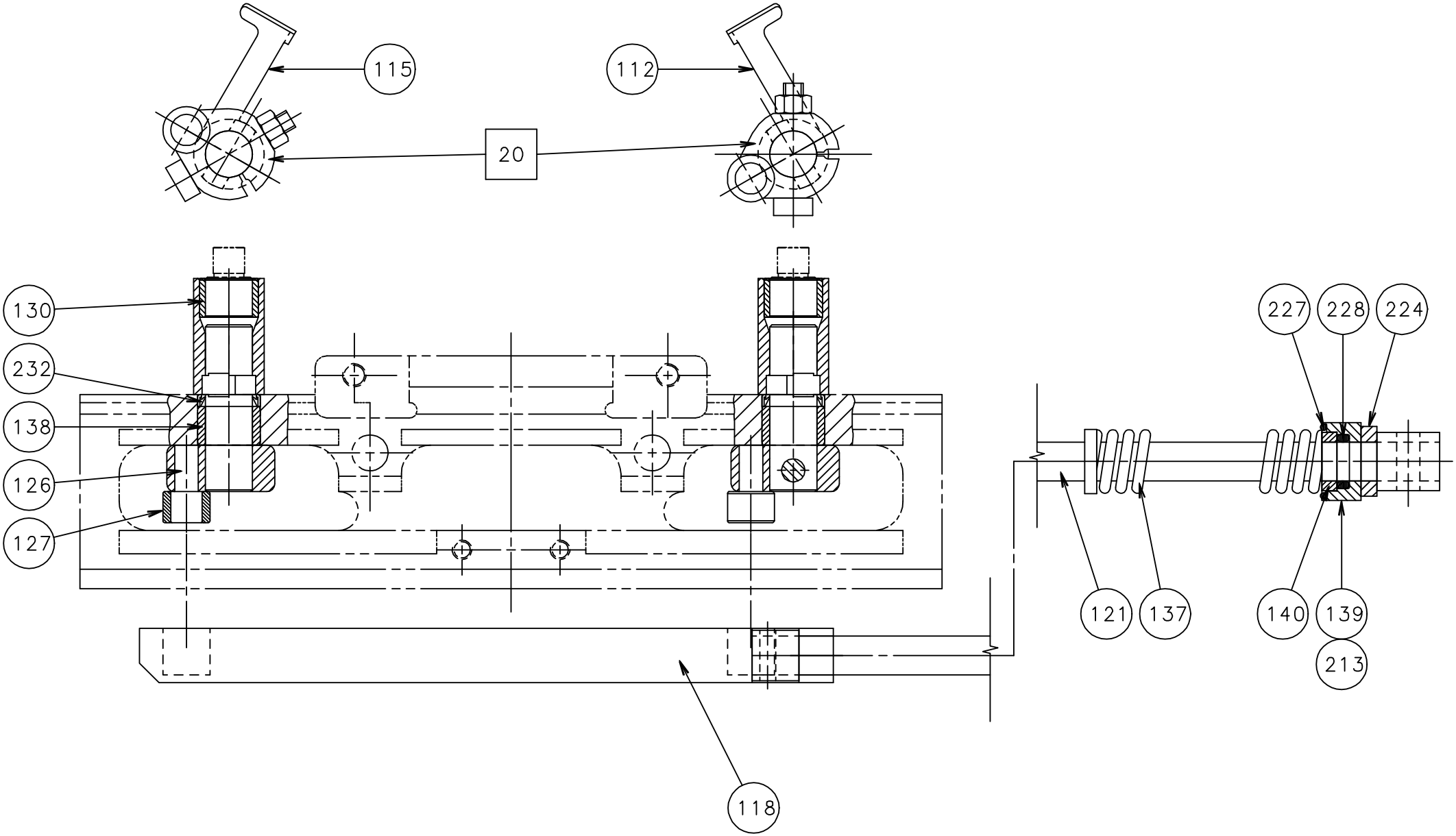

ECM: 70372 - 19961217
Group number: 591303-0100
Assembly Drawing: 591303-1_1_AA

Pos	Part No	UN	Qty	Description	Page No
-					
112	573978-0000		1	FOLDING FLAP REPBY 1317809	
115	573977-0000		1	FOLDING FLAP REPBY 1317808	
118	573980-0000		1	CARRIER RULER	
121	32468-0000		1	OPERATING ROD	
126	22462-0000		2	SHAFT	
127	22463-0000		2	ROLL	
130	32463-0000		2	BEARING	
137	107000-0000		1	SPRING	
138	33408-0000		2	BEARING	
139	113653-0000		1	BEARING PLATE	
140	113654-0000		1	RING	
213	312115-0366		2	SCREW ISO4762 M6X12 A4 80	
224	315115-0171		1	WASHER PLAIN, TBRB 10/18 H=4	
227	315202-0114		1	O-RING 16,1X1,6 MM	
228	315202-0208		1	O-RING 9,3X2,4 MM	
232	315230-0157		2	BEARING SEAL 12X16X3 MM	
F020	26642-0200		2	CARRIER	**4-145, 12-225**

Pos	Part No	UN	Qty	Description	Page No

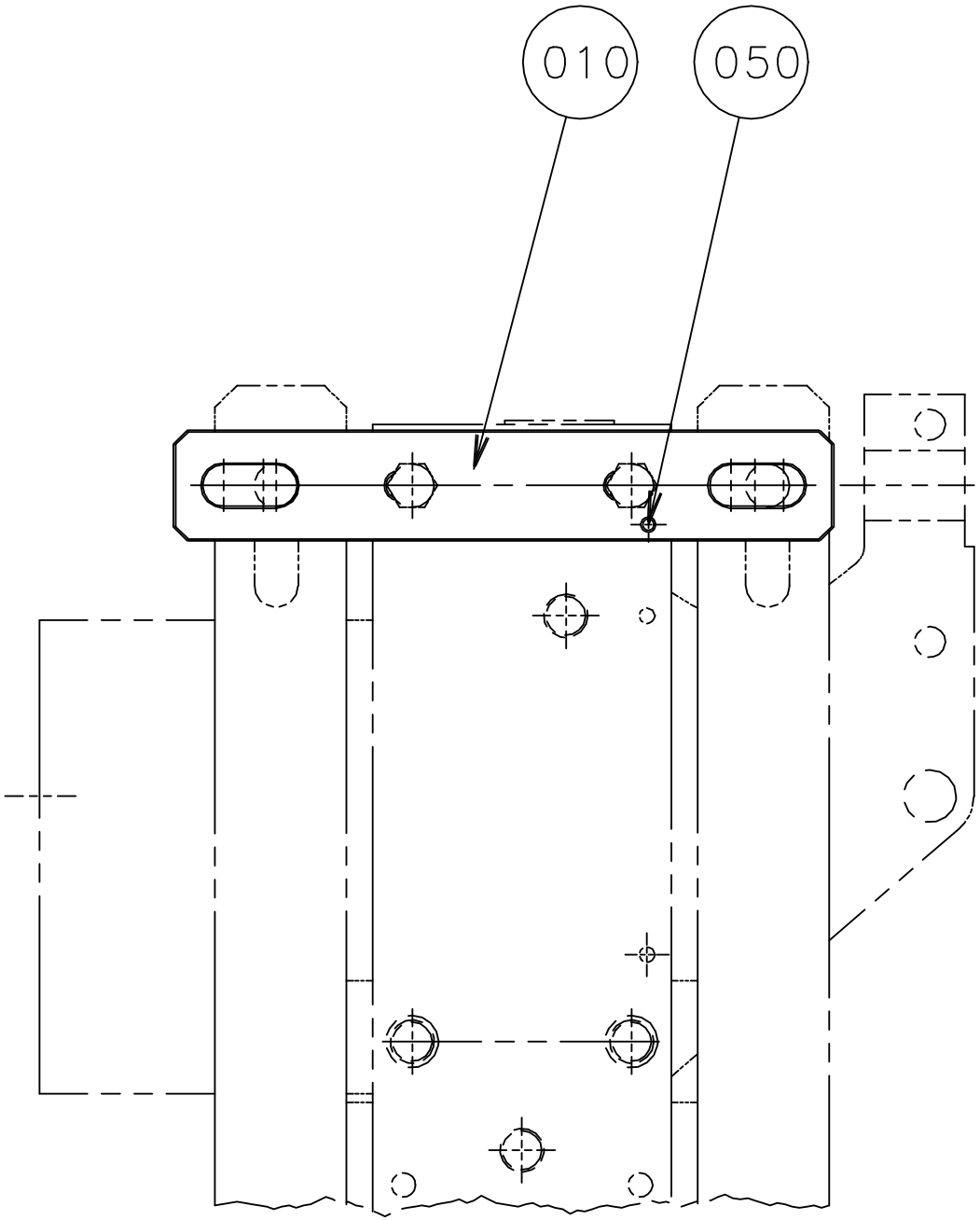
010
050

ECM: 70372 - 19961217
Group number: 592336-0100
Assembly Drawing: 592336-1_1_AA

Pos	Part No	UN	Qty	Description	Page No	Pos	Part No	UN	Qty	Description	Page No
-											
010	591086-0000		2	SUPPORT							
050	311112-0204		2	SPRING PIN, ISO 8752 3X8-C							

This page is intentionally left blank.

ECM: 71008 - 19980424
Group number: 597568-0100
Assembly Drawing:

Pos	Part No	UN	Qty	Description	Page No
-					
010	456011-0000		4	PIN	
012	927440-0000		1	LINK	
014	927441-0000		1	NUT	
020	1143050-0000		8	VOLUME SHIM	
030	315202-0111		4	O-RING 13,1X1,6 MM	
032	315202-0207		4	O-RING 8,3X2,4 MM	
034	315202-0212		4	O-RING 14,3X2,4 MM	
040	315202-0114		4	O-RING 16,1X1,6 MM	
042	315202-0208		4	O-RING 9,3X2,4 MM	
050	90090-0013		4	BALL, D=4 MM	
052	90091-0362		4	SCRAPER, EXCLUDER2 18X22,8X3,7 MM	
054	90091-0364		4	ROD SEAL, STEPSEAL 18X25,3X3,2 MM	
056	90091-0366		4	WEAR RING 18X23X3,9 MM	
058	90091-0393		4	PISTON SEAL GLIDE RING T17,5X25X3,2	
060	90091-0394		4	WEAR RING 20X25X5,6 MM	
062	315202-0101		4	O-RING 3,1X1,6 MM	
064	315202-0105		8	O-RING 7,1X1,6 MM	
066	315202-0124		8	O-RING 37,1X1,6 MM	
068	315202-0220		4	O-RING 32,2X3 MM	

Pos	Part No	UN	Qty	Description	Page No

This page is intentionally left blank.

ECM: 72417 - 19990407
Group number: 558674-0100
Assembly Drawing:

Pos	Part No	UN	Qty	Description	Page No
-					
0400	558675-0100		1	ELECTRIC MATERIALS	**12-235, 12-237**

Pos	Part No	UN	Qty	Description	Page No

This page is intentionally left blank.

ECM: 71232 - 19980415
Group number: 558675-0100
Assembly Drawing:

This list covers pages from 12-234 to 12-237

Pos	Part No	UN	Qty	Description	Page No
-					
	929604-0100		1	FRAME	**12-239**
010	351172-0102	M	100	CABLE AWM 1X 0,75 MM2 DARKBLUE	
020	351179-0105	M	20	CABLE AWM 1X2,5 MM2 BLACK	
030	351173-0105	M	5	CABLE AWM 1X25 MM2 LIGHTBLUE	
040	351175-0105	M	5	CABLE AWM 1X2,5 MM2 YELLOW-GREEN	
100	90194-0302		1	MARKING LABELS REBUILDING KIT	
311	90172-0317		1	HF-CABLE 4000 MM	
312	90172-0317		1	HF-CABLE 4000 MM	
313	90172-0317		1	HF-CABLE 4000 MM	
314	90172-0317		1	HF-CABLE 4000 MM	
315	90172-0317		1	HF-CABLE 4000 MM	
316	90172-0317		1	HF-CABLE 4000 MM	
A005	558230-0101		1	TMCC CONTROLLER	
100	*558370-0101*		*1*	*TMCC, MAIN PCB*	
100	*576100-0000*		*1*	*COMPONENTS WITHOUT TP-NO*	
110	*573131-0000*		*1*	*PRINTED CIRCUIT BOARD*	
120	*576101-0000*		*1*	*COOLING BLOCK*	
110	*576102-0000*		*1*	*COMPONENTS WITHOUT TP-NO*	
120	*576103-0000*		*1*	*CASING*	
130	*576104-0000*		*1*	*FRONT PLATE*	
140	*542036-0000*		*1*	*LABEL "PART NO" 84X140MM*	
A005:1	67372-0101		1	BACKPLANE 8TE(32 POLE)	
0010	*543336-0001*		*1*	*COMPONENTS WITHOUT TP-NO*	
0020	*543319-0000*		*1*	*PRINTED CIRCUIT BOARD*	
0030	*543337-0000*		*1*	*TERMINAL LABELS 1-4*	
A006	558230-0101		1	TMCC CONTROLLER	
100	*558370-0101*		*1*	*TMCC, MAIN PCB*	
100	*576100-0000*		*1*	*COMPONENTS WITHOUT TP-NO*	
110	*573131-0000*		*1*	*PRINTED CIRCUIT BOARD*	
120	*576101-0000*		*1*	*COOLING BLOCK*	
110	*576102-0000*		*1*	*COMPONENTS WITHOUT TP-NO*	
120	*576103-0000*		*1*	*CASING*	
130	*576104-0000*		*1*	*FRONT PLATE*	
140	*542036-0000*		*1*	*LABEL "PART NO" 84X140MM*	
A006:1	67372-0101		1	BACKPLANE 8TE(32 POLE)	
0010	*543336-0001*		*1*	*COMPONENTS WITHOUT TP-NO*	
0020	*543319-0000*		*1*	*PRINTED CIRCUIT BOARD*	
0030	*543337-0000*		*1*	*TERMINAL LABELS 1-4*	
A007	558230-0101		1	TMCC CONTROLLER	
100	*558370-0101*		*1*	*TMCC, MAIN PCB*	
100	*576100-0000*		*1*	*COMPONENTS WITHOUT TP-NO*	
110	*573131-0000*		*1*	*PRINTED CIRCUIT BOARD*	
120	*576101-0000*		*1*	*COOLING BLOCK*	
110	*576102-0000*		*1*	*COMPONENTS WITHOUT TP-NO*	
120	*576103-0000*		*1*	*CASING*	
130	*576104-0000*		*1*	*FRONT PLATE*	
140	*542036-0000*		*1*	*LABEL "PART NO" 84X140MM*	
A007:1	67372-0101		1	BACKPLANE 8TE(32 POLE)	
0010	*543336-0001*		*1*	*COMPONENTS WITHOUT TP-NO*	
0020	*543319-0000*		*1*	*PRINTED CIRCUIT BOARD*	
0030	*543337-0000*		*1*	*TERMINAL LABELS 1-4*	
A008	558390-0104		1	UNIVERSAL THUMBWHEEL UNIT	
110	*577454-0000*		*1*	*CIRCUIT BOARD*	
120	*577455-0000*		*1*	*CASING*	
134	*581847-0000*		*1*	*FRONT PLATE*	
140	*542036-0000*		*1*	*LABEL "PART NO" 84X140MM*	
A005:2	47836-0101		1	TUBUS ENER.& POW.CONTROL	
A005:3	589361-0000		1	LABEL	
A006:2	47836-0101		1	TUBUS ENER.& POW.CONTROL	
A006:3	589361-0000		1	LABEL	
A007:2	47836-0101		1	TUBUS ENER.& POW.CONTROL	
A007:3	589361-0000		1	LABEL	
A106	90025-0017		1	INPUT MODULE TPMC	
A106:1	90025-0024		1	TERMINAL BLOCK, 491168307	
A500	90172-0031		1	GENERATOR	
A500:1	352551-0141		1	FINE-WIRE 10 A	
A500:2	352551-0141		1	FINE-WIRE 10 A	
A500:3	352551-0141		1	FINE-WIRE 10 A	
A500:4	352551-0137		1	FINE-WIRE 4 A	
A501	90172-0032		1	SWITCH, 911 758 001 SB-3-6R	
A501:1	352551-0134		1	FINE-WIRE FUSE 2 A SLOW,5X20MM	
F005	90233-0027		1	TUBE FUSE, 16A	
	90233-0305		*1*	*INDICATOR*	
F005:1	90233-0303		1	FUSE HOLDER, ST 10 1-POLE	
F006	90233-0027		1	TUBE FUSE, 16A	
	90233-0305		*1*	*INDICATOR*	
F006:1	90233-0303		1	FUSE HOLDER, ST 10 1-POLE	
F034	90007-0148		1	CIRCUIT BREAKER, 3P 16 A K	
W005	1140660-0001		1	ANALOGUE CABLE	
0010	*90220-0093*	*MM*	*2500*	*PAIR TWISTED CABLE 4X2X0,25MM2*	
0020	*90110-0143*		*1*	*CONTACT UNIT, DB25P064TX*	
0030	*90110-0146*		*1*	*COVER*	
0040	*90166-0171*	*MM*	*30*	*SHRINKABLE HOSE (12,7MM) BLACK*	

Machine Type | Group Description | Used-In | Group Number | Page No

This page is intentionally left blank.

Pos	Part No	UN	Qty	Description	Page No
- (Cont'd)					
W005	1140660-0001		1	ANALOGUE CABLE	
0010	*90220-0093*	*MM*	*2500*	*PAIR TWISTED CABLE 4X2X0,25MM2*	
0020	*90110-0143*		*1*	*CONTACT UNIT, DB25P064TX*	
0030	*90110-0146*		*1*	*COVER*	
0040	*90166-0171*	*MM*	*30*	*SHRINKABLE HOSE (12,7MM) BLACK*	
0050	*90166-0111*	*MM*	*350*	*SHRINKABLE HOSE 6.4 MM(1/4")BLACK*	
0060	*353101-0132*		*1*	*CABLE SHOE 1,5-2,5MM2 M5 BLUE*	
0070	*353001-0116*		*7*	*END SLEEVE H0.5/14 ORANGE*	
W006	90172-0318		1	HF-CABLE 450MM, TELSONIC 514 210 004	
W007	90172-0318		1	HF-CABLE 450MM, TELSONIC 514 210 004	
W008	90172-0318		1	HF-CABLE 450MM, TELSONIC 514 210 004	
X004	90172-0319		1	CONNECTION 372 640 001	
X005	90172-0321		1	TERMINAL BLOCK, 373 593 000	
X013	90172-0320		1	TERMINAL BLOCK	

Pos	Part No	UN	Qty	Description	Page No

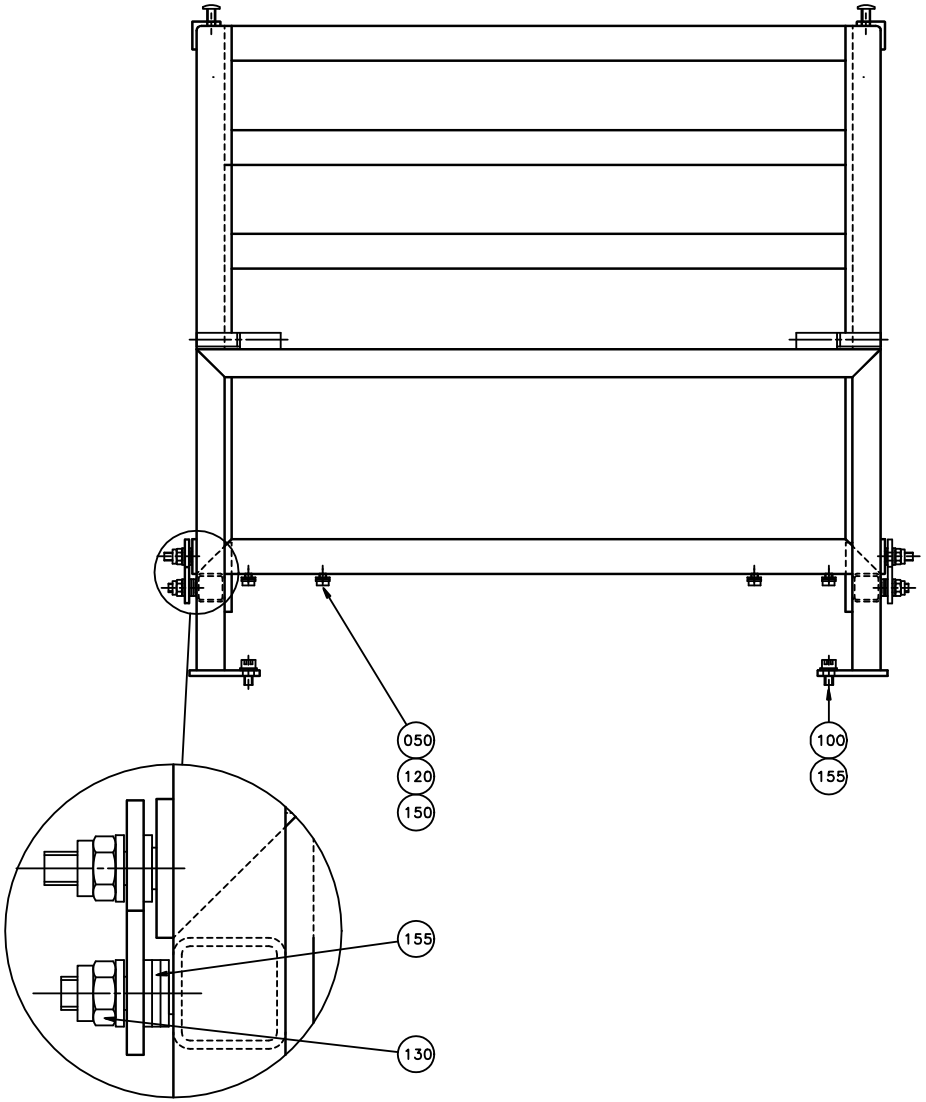
050
120
150
100
155
155
130

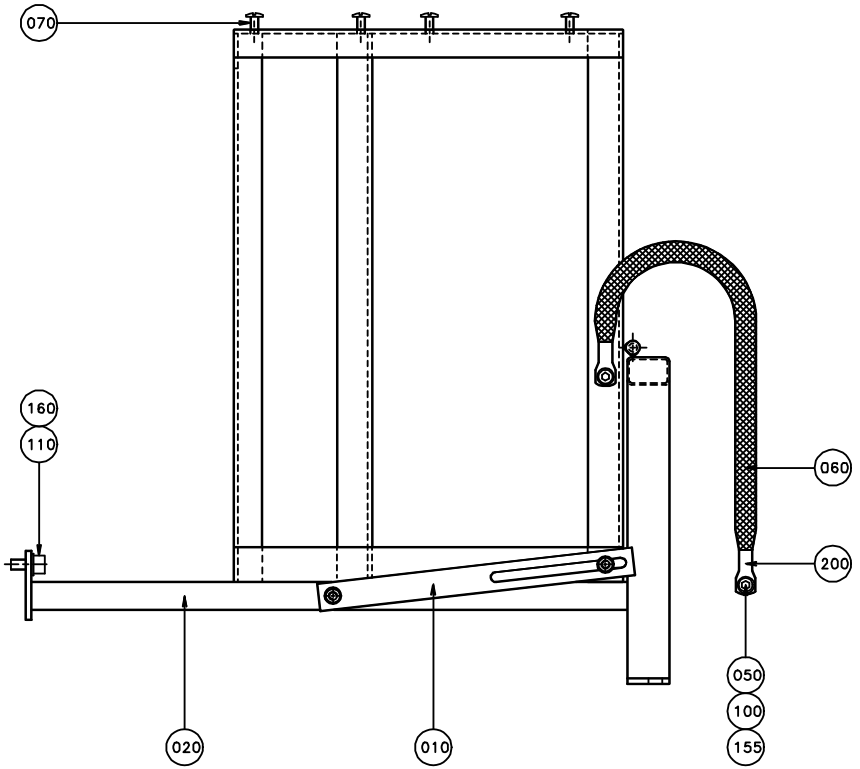
070
160
110
060
200
050
100
155
020
010

ECM: 70295 - 19960806
Group number: 929604-0100
Assembly Drawing: 929604-1_1_AA

Pos	Part No	UN	Qty	Description	Page No
-					
010	583870-0000		2	STOP	
020	929605-0000		1	STAND	
050	90062-0021		4	LOCK WASHER DIN 6797 TYPE A 5,3	
055	90062-0022		2	LOCKING WASHER D=6,4/11	
060	90203-0009	MM	400	CU LITZ CABLE 15X2 MM	
070	90287-0075		8	SCREW SLOT. PAN HEAD LKCS M6X12	
100	312115-0366		4	SCREW ISO4762 M6X12 A4 80	
110	312115-0449		2	SCREW ISO4762 M8X16 A4 80	
120	312125-0323		4	SCREW ISO 1207 M5X8 A4	
130	312812-0316		4	HEXAGON NUT, NY-LOCK M6 A480	
150	315105-0146		4	WASHER BRB 5,3X10 RFR	
155	315105-0153		16	WASHER BRB 6,4X12 RFR	
160	315105-0165		2	WASHER BRB 8,4X16 RFR	
200	353104-0175		2	CABLE SHOE, RING UNINS., YAV 25 M 6	

Pos	Part No	UN	Qty	Description	Page No

This page is intentionally left blank.

ECM: 71008 - 19980424
Group number: 595135-0100
Assembly Drawing:

Pos	Part No	UN	Qty	Description	Page No
-					
010	769211-0114		1	SAW BLADE	
020	769211-0117		1	SAW BLADE	
030	769211-0120		1	SAW BLADE	
050	769211-0148		1	SAW BLADE	
100	769219-0101		1	HOLDER	
110	769219-0102		1	HANDLE BRACKET	

Pos	Part No	UN	Qty	Description	Page No

This page is intentionally left blank.

ECM: 71968 - 19981130
Group number: 597557-0100
Assembly Drawing:

Pos	Part No	UN	Qty	Description	Page No
0300B					
	36936-0003		1	TRIMMING ROLLER MINUS	
	36935-0003		1	TRIMMING ROLLER PLUS	
0500S ST-ER					
	583182-0002		1	TRIMMING ROLLER PLUS	
	583182-0003		1	TRIMMING ROLLER MINUS	
1000S ST-ER					
	582012-0003		1	TRIMMING ROLLER MINUS	
	582012-0002		1	TRIMMING ROLLER PLUS	
1000SQ ST-ER, 0500SQ ST-ER, 0568SQ ST-ER					
	574010-0003		1	TRIMMING ROLLER MINUS	
	574010-0002		1	TRIMMING ROLLER PLUS	
1136B ST-ER, 0500B ST-ER, 1000B ST-ER, 0568B ST-ER					
	28833-0000		1	TRIMMING ROLLER PLUS	
	28834-0000		1	TRIMMING ROLLER MINUS	
1500B ST-ER					
	592936-0003		1	TRIMMING ROLLER MINUS	
	592936-0002		1	TRIMMING ROLLER PLUS	

Pos	Part No	UN	Qty	Description	Page No

This page is intentionally left blank.

ECM: 70939 - 19970625
Group number: 1285044-0100
Assembly Drawing:

Pos	Part No	UN	Qty	Description	Page No
TB/8					
F020	596160-0100		1	EL RK "REVFIN" FOR TB/8.	**12-247**
Common Parts					
	1285357-0000		1	DOCUMENT FOLDER	
F010	1285045-0100		1	MECHANICAL DOCUMENT	**12-249**

Pos	Part No	UN	Qty	Description	Page No

This page is intentionally left blank.

ECM: 191324 - 20050830
Group number: 596160-0100
Assembly Drawing:

Pos	Part No	UN	Qty	Description	Page No	Pos	Part No	UN	Qty	Description	Page No
-											
0010	596161-0100		1	ELECTRICAL MATERIAL							
0010	*351172-0102*	*M*	*20*	*CABLE AWM 1X 0,75 MM2 DARKBLUE*							
0020	559473-0100		1	ELECTRICAL DOCUMENT							

This page is intentionally left blank.

ECM: 70613 - 19970430
Group number: 1285045-0100
Assembly Drawing:

Pos	Part No	UN	Qty	Description	Page No
-					
F070	1296259-0100		1	GUIDE	**12-251**
F060	1285051-0100		1	WHEEL	**12-253**
F050	1285050-0100		1	FOLDING DEVICE	**12-255**
F040	1285049-0100		1	PUSHERBLOCK	**12-257**
F030	1285048-0100		1	HOLDER	**12-259**
F020	1285047-0100		1	MACHINE BODY	**12-261**
F010	1285046-0100		1	VALVE PANEL	**12-263**

Pos	Part No	UN	Qty	Description	Page No

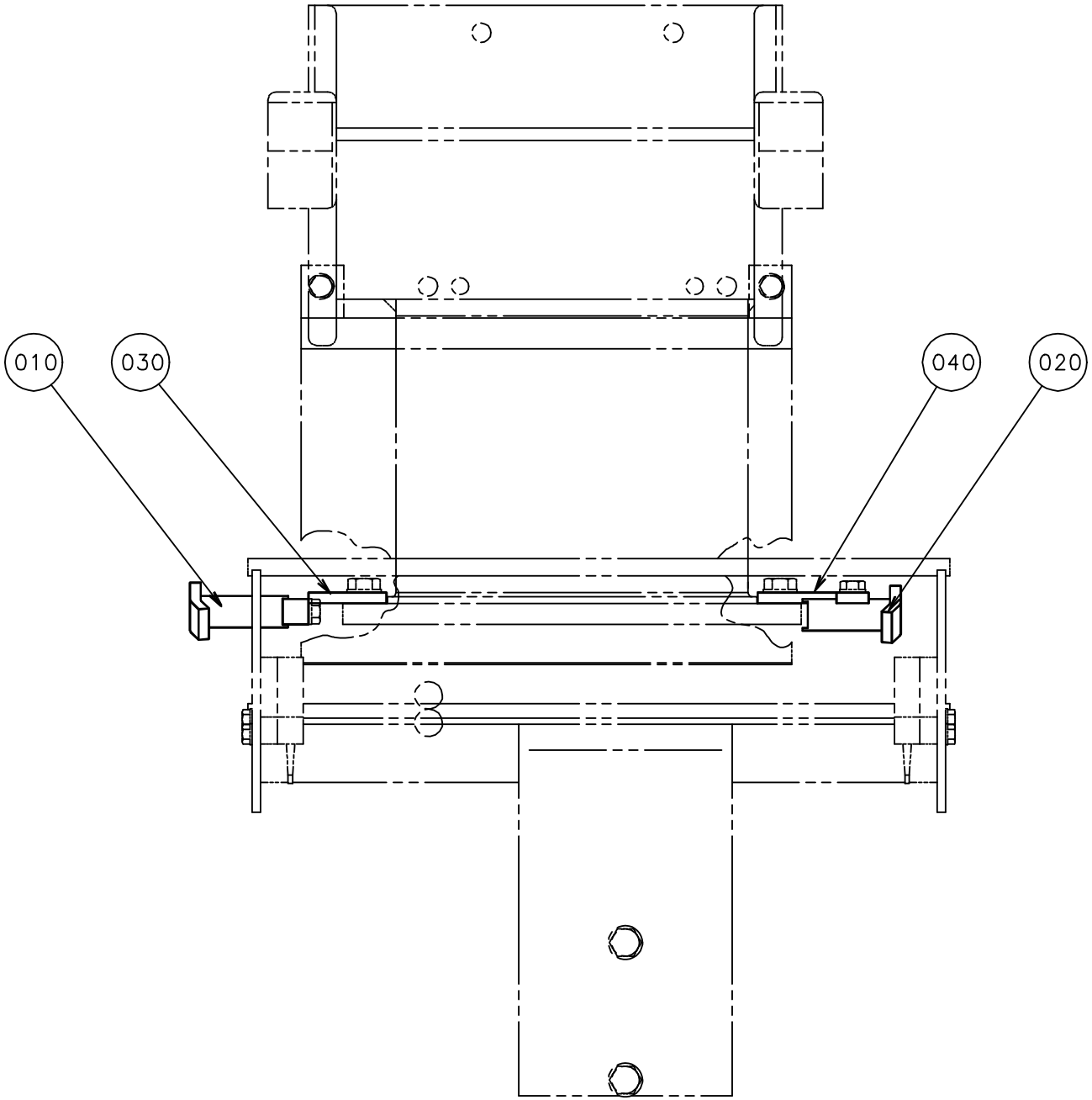
010
030
040
020

ECM: 70613 - 19970430
Group number: 1296259-0100
Assembly Drawing: 1296259-1_1_AA

Pos	Part No	UN	Qty	Description	Page No
-					
010	1143006-0000		1	STEERING	
020	1143007-0000		1	STEERING	
030	1143008-0000		1	BRACKET	
040	1143009-0000		1	BRACKET	

Pos	Part No	UN	Qty	Description	Page No

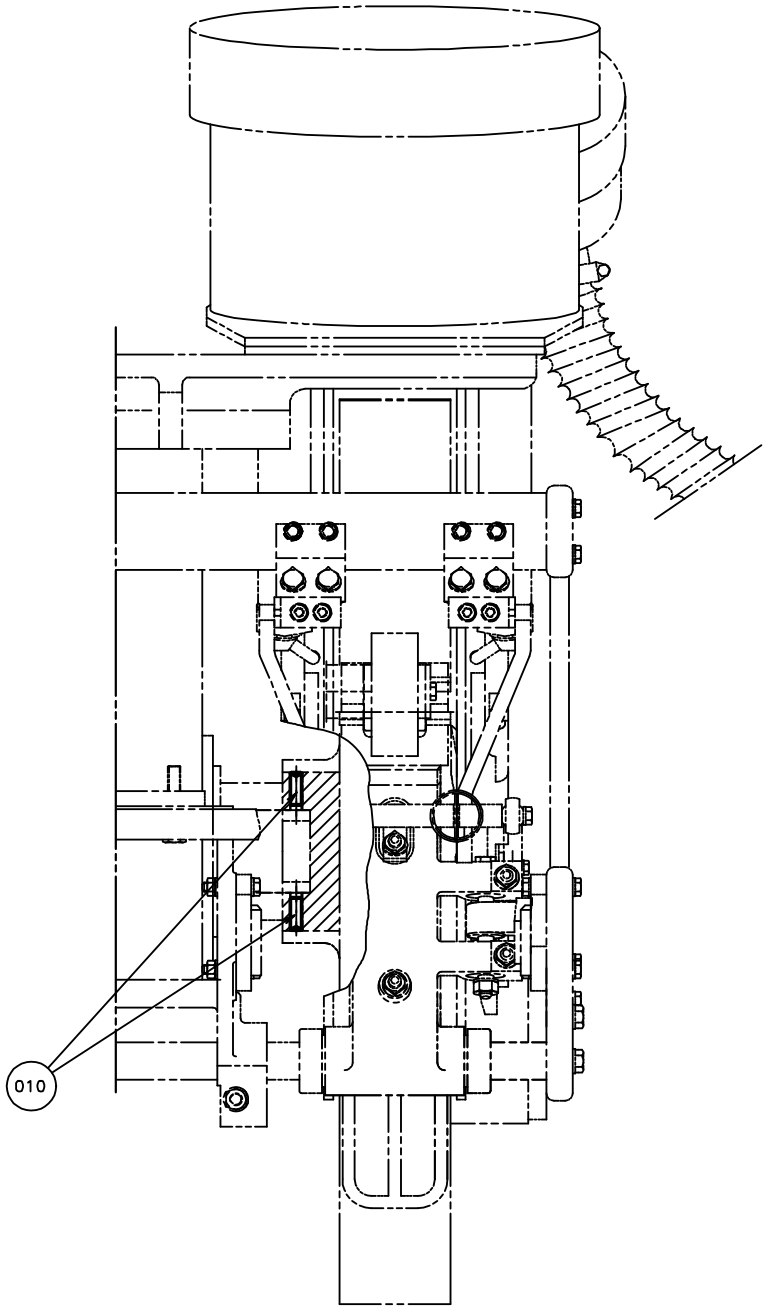
010

ECM: 70613 - 19970430
Group number: 1285051-0100
Assembly Drawing: 1285051-1_1_AA

Pos	Part No	UN	Qty	Description	Page No	Pos	Part No	UN	Qty	Description	Page No
-											
010	312318-0455		4	SCREW ISO4029 M8X30 A4							

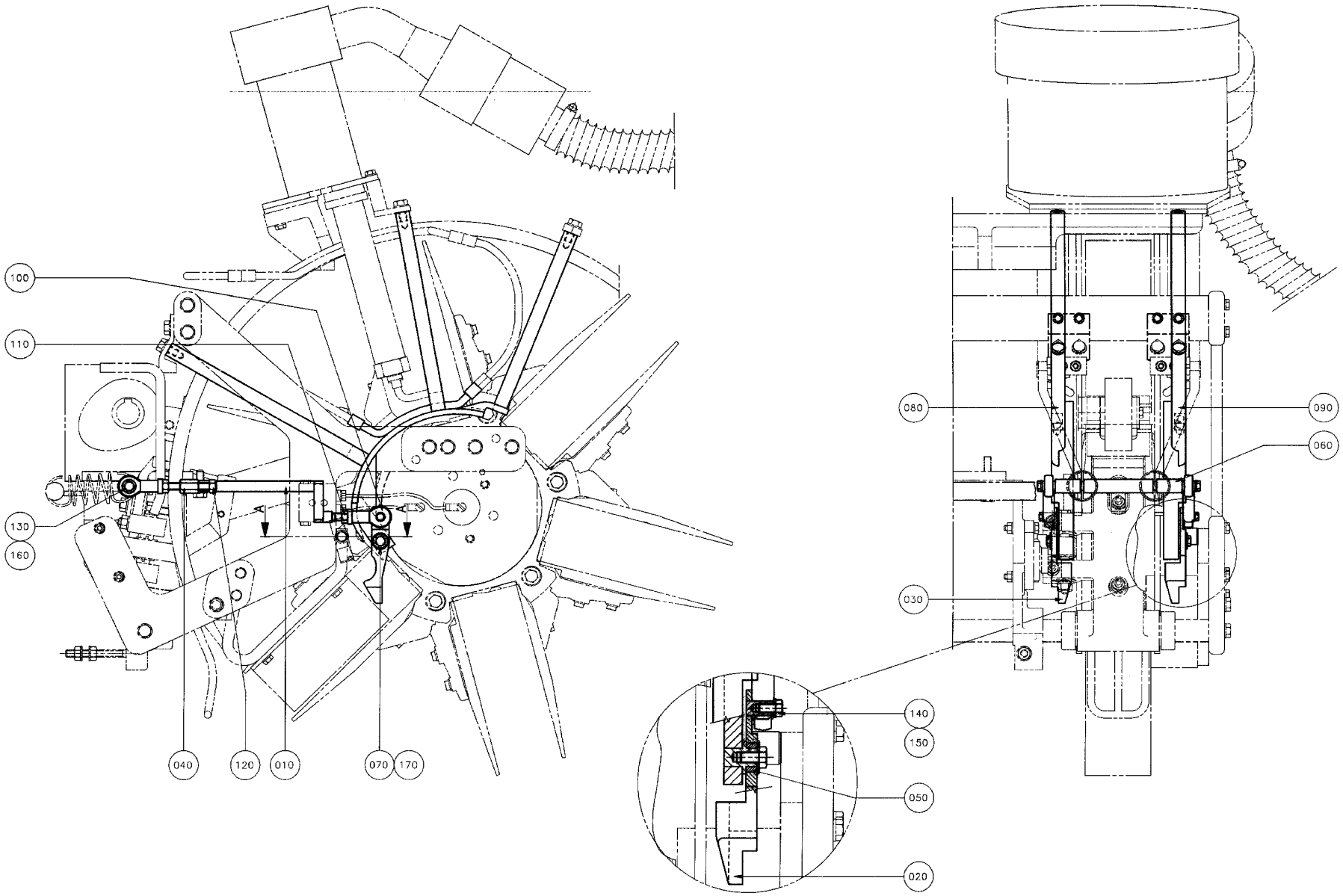
100
110
130
160
040
120
010
070
170
080
090
060
030
140
150
050
020

ECM: 70613 - 19970430
Group number: 1285050-0100
Assembly Drawing: 1285050-1_1_AA

Pos	Part No	UN	Qty	Description	Page No
-					
010	1255161-0000		4	ARM	
020	1255162-0000		2	ROCKER ARM	
030	1255163-0000		2	ROCKER ARM	
040	1255160-0000		4	THREADED INSERT	
050	1143015-0000		4	BUSHING	
060	1143016-0000		2	AXLE PIN	
070	1143223-0000		4	WASHER	
080	1143020-0000		2	FOLDING BAR	
090	1143021-0000		2	FOLDING BAR	
100	90115-0139		8	ROD END, ID=8 MM, M8X1,25	
110	312605-0318		8	HEXAGON NUT, M6M M8 A280	
120	312902-0318		4	NUT HEX. LEFT THREAD, M8 A280	
130	315105-0153		4	WASHER BRB 6,4X12 RFR	
140	315105-0146		4	WASHER BRB 5,3X10 RFR	
150	312105-0323		4	SCREW M6S ISO 4017 M5X8 A480	
160	312105-0370		4	SCREW M6S ISO 4017 M6X20 A480	
170	312105-0362		4	SCREW M6S ISO 4017 M6X8 A480	

Pos	Part No	UN	Qty	Description	Page No

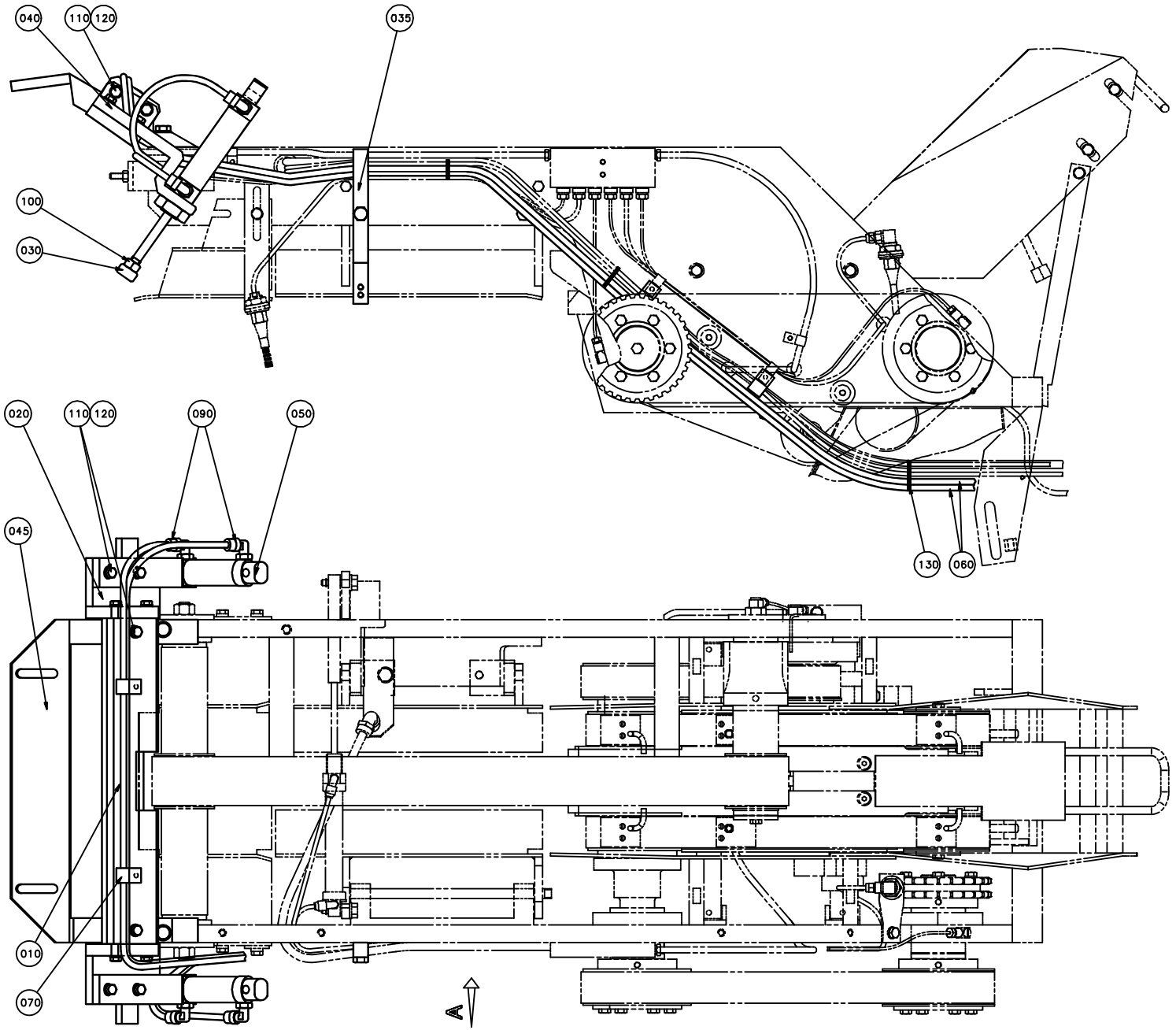
040
110
120
035
100
030
020
110
120
090
050
045
130
060
010
070
A

ECM: 70613 - 19970430
Group number: 1285049-0100
Assembly Drawing: 1285049-1_1_AA

Pos	Part No	UN	Qty	Description	Page No
-					
010	1143001-0000		1	ATTACHMENT PLATE	
020	1143002-0000		2	BRACKET	
030	1143000-0000		2	PUSHER	
035	1195333-0000		1	STOP	
040	1143004-0000		2	CYLINDER BRACKET	
045	1143003-0000		1	BRACKET	
050	90450-0377		2	CYLINDER	
060	90166-0124	M	7	TUBE 6 MM PA,TRANSP.	
070	90074-0002		4	CABLE CLIPS, D=11 MM	
080	312125-0287		6	SCREW ISO 1207 M4X8 A4	
090	342732-0102		4	ELBOW PIPE JOINT, EXT.THREAD, D=6MM-G1/8	
100	312631-0321		2	HEX.NUT FINE, EN 24032 M6M M10X1,25 FZB8	
110	312105-0372		10	SCREW M6S ISO 4017 M6X25 A480	
120	315101-0153		10	WASHER PLAIN, BRB, 6,4/12 H=1,5	
130	352113-0101		3	CABLE TIE, BLACK 92X2,5 MM	

Pos	Part No	UN	Qty	Description	Page No

This page is intentionally left blank.

ECM: 70613 - 19970430
Group number: 1285048-0100
Assembly Drawing:

Pos	Part No	UN	Qty	Description	Page No	Pos	Part No	UN	Qty	Description	Page No
TB/8											
010	1143444-0000		1	VALVE PANEL							
020	1143445-0000		1	PNEUMATIC DIAGRAM							

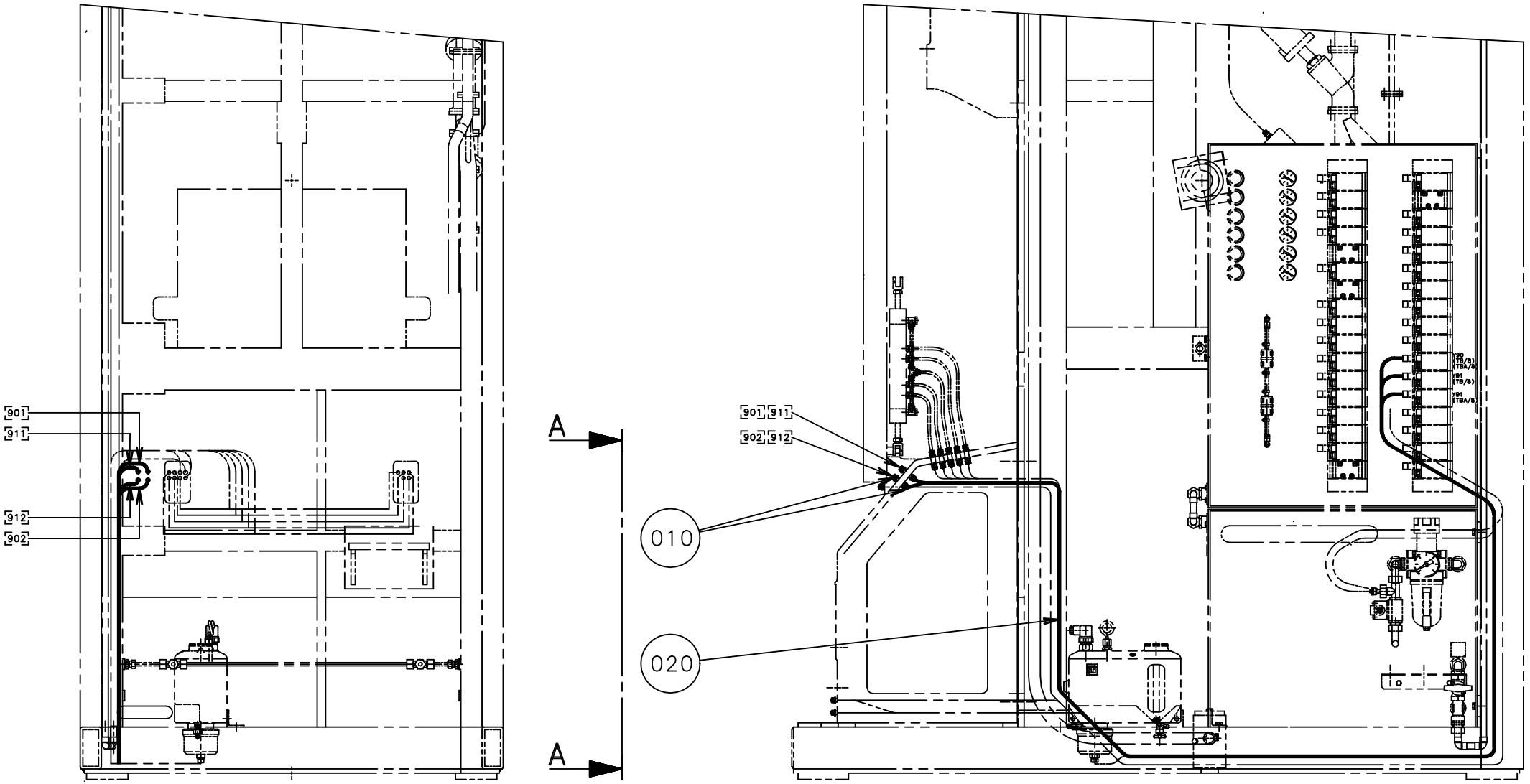
901
911
912
902
A
A
901 911
902 912
010
020

ECM: 70613 - 19970430
Group number: 1285047-0100
Assembly Drawing: 1285047-1_1_AA

Pos	Part No	UN	Qty	Description	Page No
-					
010	342920-0113		8	STRAIGHT COUPLING,EXT.THREADED 6/4-R1/8"	
020	90166-0124	M	20	TUBE 6 MM PA,TRANSP.	

Pos	Part No	UN	Qty	Description	Page No

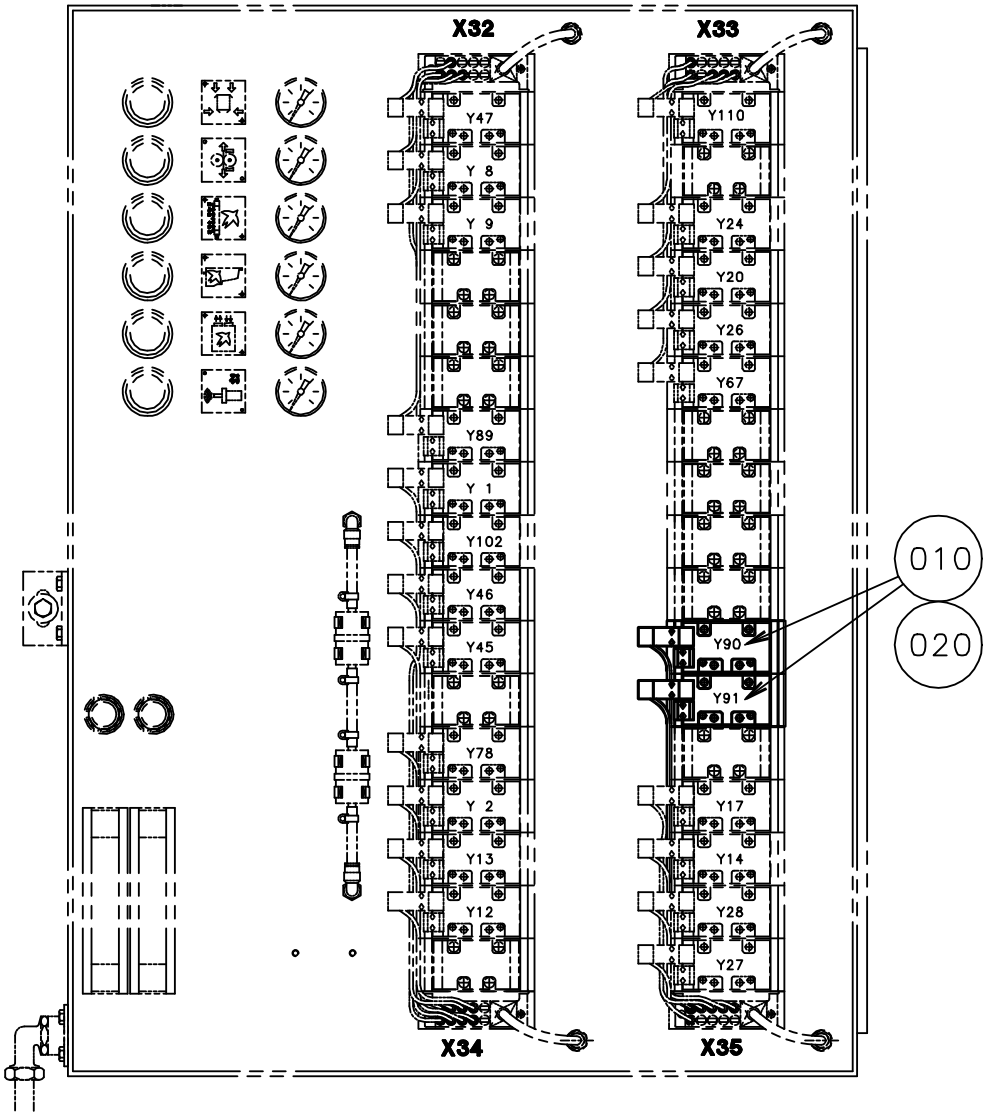
X32
X33
Y47
Y 8
Y 9
Y89
Y 1
Y102
Y46
Y45
Y78
Y 2
Y13
Y12
Y110
Y24
Y20
Y26
Y67
Y90
Y91
Y17
Y14
Y28
Y27
X34
X35
010
020

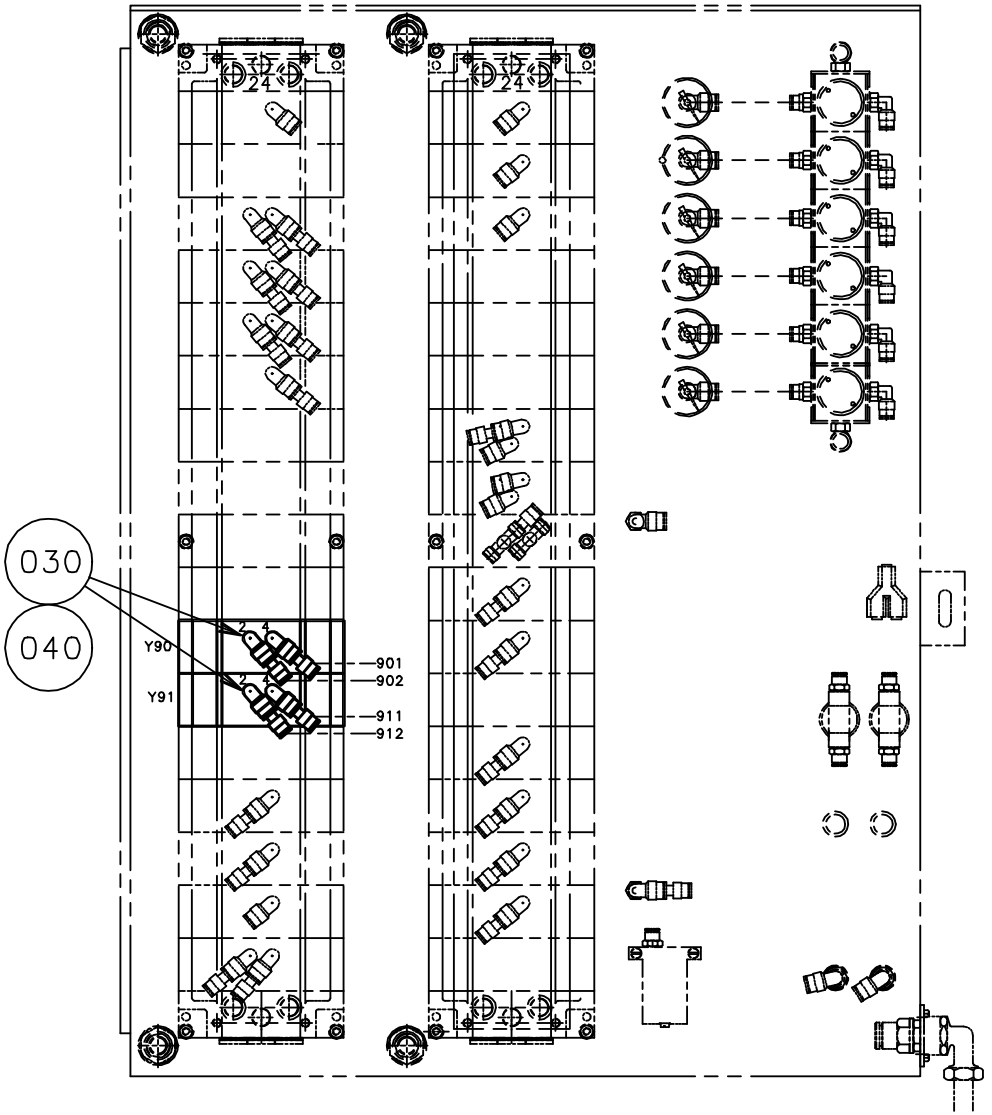
030
040
Y90
Y91
901
902
911
912

ECM: 70613 - 19970430
Group number: 1285046-0100
Assembly Drawing: 1285046-2_1_AA

Pos	Part No	UN	Qty	Description	Page No	Pos	Part No	UN	Qty	Description	Page No
-											
010	90042-0215		2	VALVE BODY 5/2 UNISTABLE							
020	90042-0538		2	PILOT VALVE L=500MM							
030	90055-0118		4	ELBOW WITH TAILPIECE 8/8 MM							
040	342716-0203		4	REDUCER 6-8							

This page is intentionally left blank.

ECM: 72056 - 19981210
Group number: 1362445-0100
Assembly Drawing:

Pos	Part No	UN	Qty	Description	Page No
TB/8					
020	596160-0100		1	EL RK "REVFIN" FOR TB/8.	**12-247**
Common Parts					
	1360006-0000		1	DOCUMENT FOLDER	
010	1362444-0100		1	MECHANICAL DOCUMENT	**12-267**
	597599-0001		1	MODIFICATION DRAWING	

Pos	Part No	UN	Qty	Description	Page No

Machine Type | Group Description | Used-In | Group Number | Page No

This page is intentionally left blank.

ECM: 72056 - 19981210
Group number: 1362444-0100
Assembly Drawing:

Pos	Part No	UN	Qty	Description	Page No
-					
010	1285046-0100		1	VALVE PANEL	**12-263**
020	1285047-0100		1	MACHINE BODY	**12-261**
030	1285048-0100		1	HOLDER	**12-259**
040	1362442-0100		1	PUSHERBLOCK	**12-269**
050	597602-0100		1	FOLDING DEVICE	**12-271, 13-127**
060	1362443-0100		1	GUIDE	**12-273**

Pos	Part No	UN	Qty	Description	Page No

Machine Type | Group Description | Used-In | Group Number | Page No

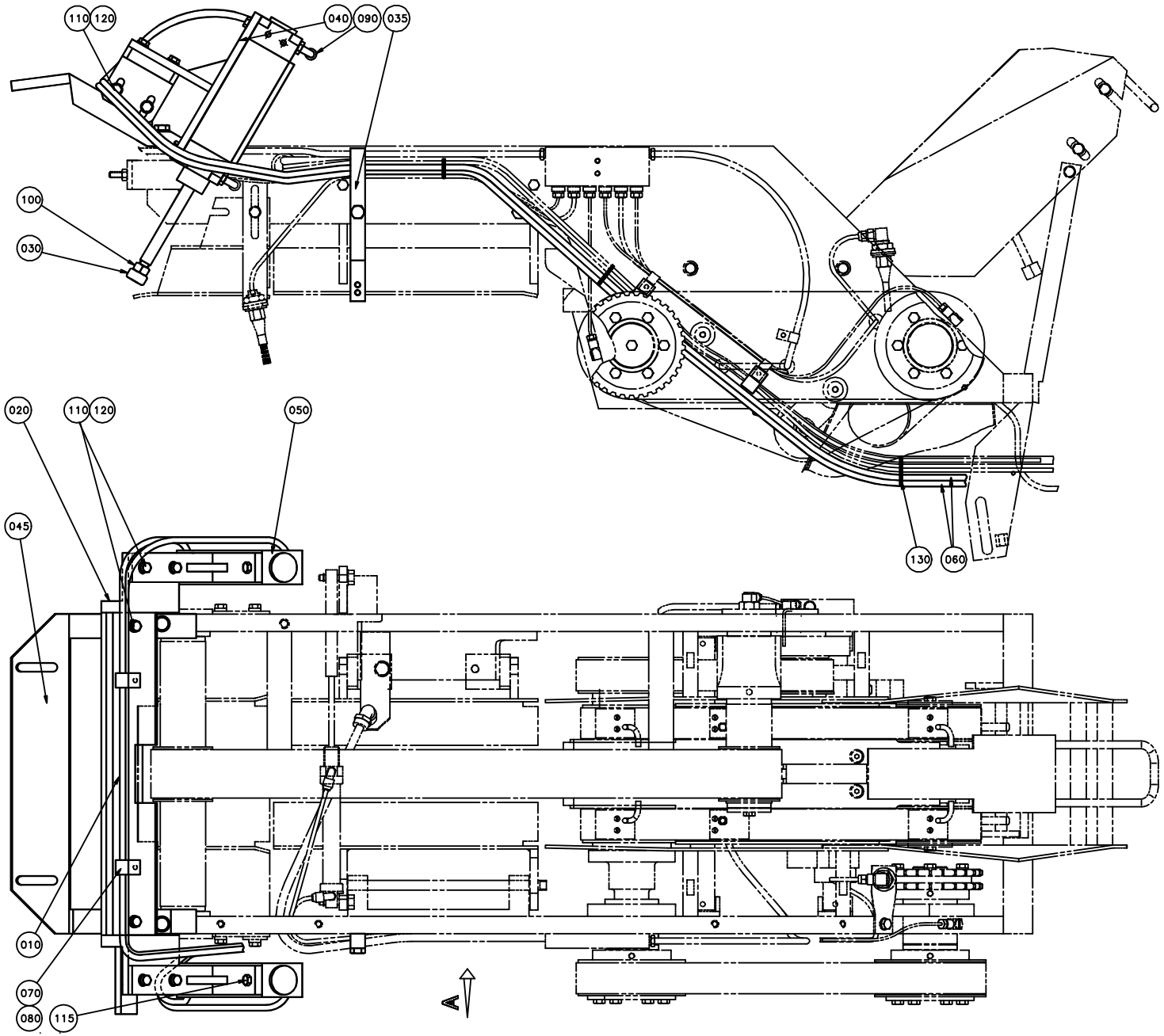
110
120
040
090
035
100
030
020
110
120
050
045
130
060
010
070
080
115
A

ECM: 72056 - 19981210
Group number: 1362442-0100
Assembly Drawing: 1362442-1_1_AA

Pos	Part No	UN	Qty	Description	Page No
-					
010	1143001-0000		1	ATTACHMENT PLATE	
020	1143002-0000		2	BRACKET	
030	1143000-0000		2	PUSHER	
035	1195333-0000		1	STOP	
040	597584-0000		2	BRACKET	
045	1143003-0000		1	BRACKET	
050	90450-0495		2	CYLINDER	
060	90166-0124	M	7	TUBE 6 MM PA,TRANSP.	
070	90074-0002		4	CABLE CLIPS, D=11 MM	
080	312125-0287		6	SCREW ISO 1207 M4X8 A4	
090	342732-0102		4	ELBOW PIPE JOINT, EXT.THREAD, D=6MM-G1/8	
100	312631-0321		2	HEX.NUT FINE, EN 24032 M6M M10X1,25 FZB8	
110	312105-0372		10	SCREW M6S ISO 4017 M6X25 A480	
115	312105-0368		4	SCREW M6S ISO 4017 M6X16 A480	
120	315101-0153		10	WASHER PLAIN, BRB, 6,4/12 H=1,5	
130	352113-0101		3	CABLE TIE, BLACK 92X2,5 MM	

Pos	Part No	UN	Qty	Description	Page No

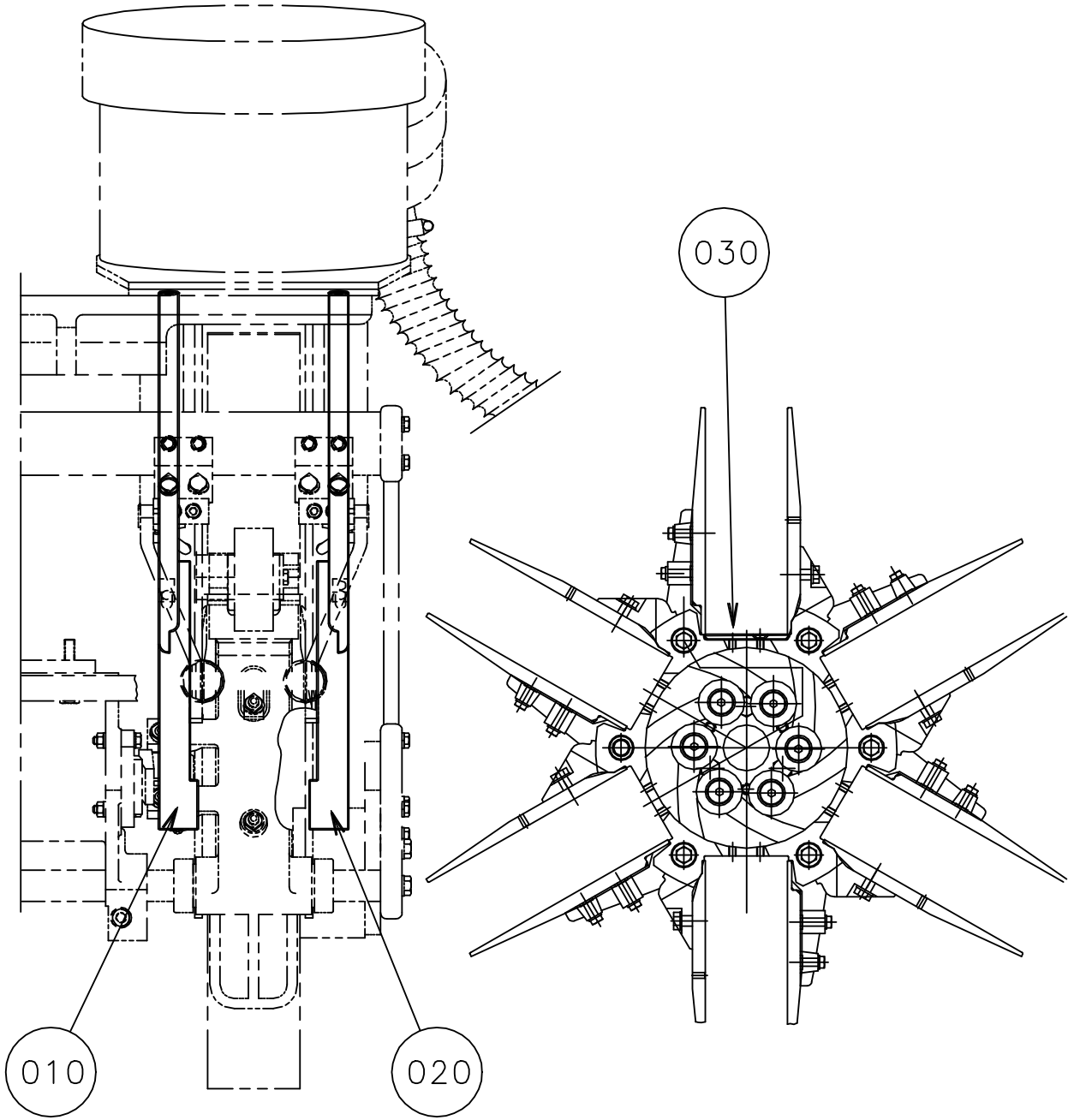
030
010
020

ECM: 71720 - 19981130
Group number: 597602-0100
Assembly Drawing: 597602-1_1_AA

Pos	Part No	UN	Qty	Description	Page No
-					
010	597537-0000		2	FOLDING BAR	
020	597536-0000		2	FOLDING BAR	
030	597608-0000		12	BOTTOM	

Pos	Part No	UN	Qty	Description	Page No

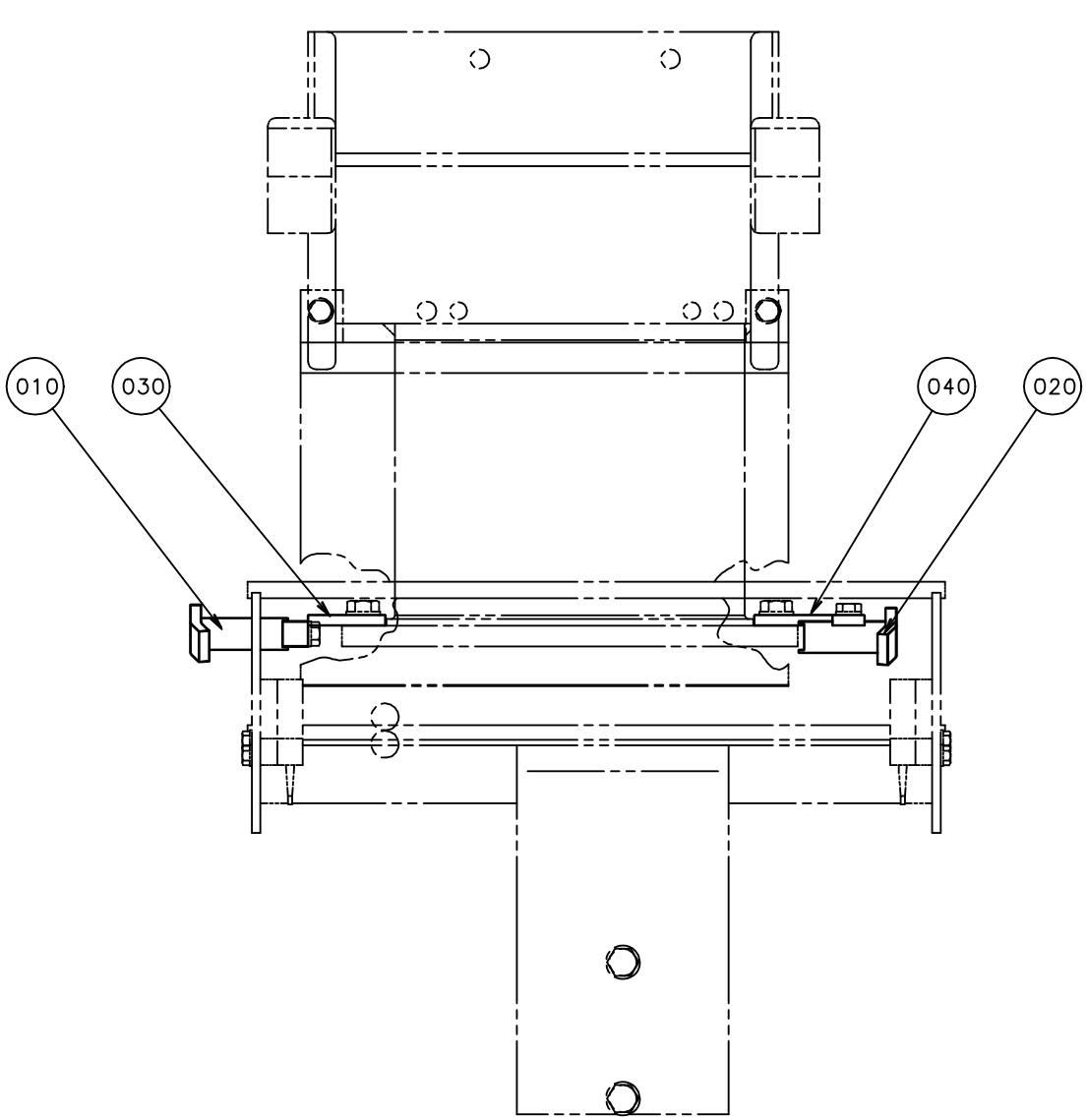
010
030
040
020

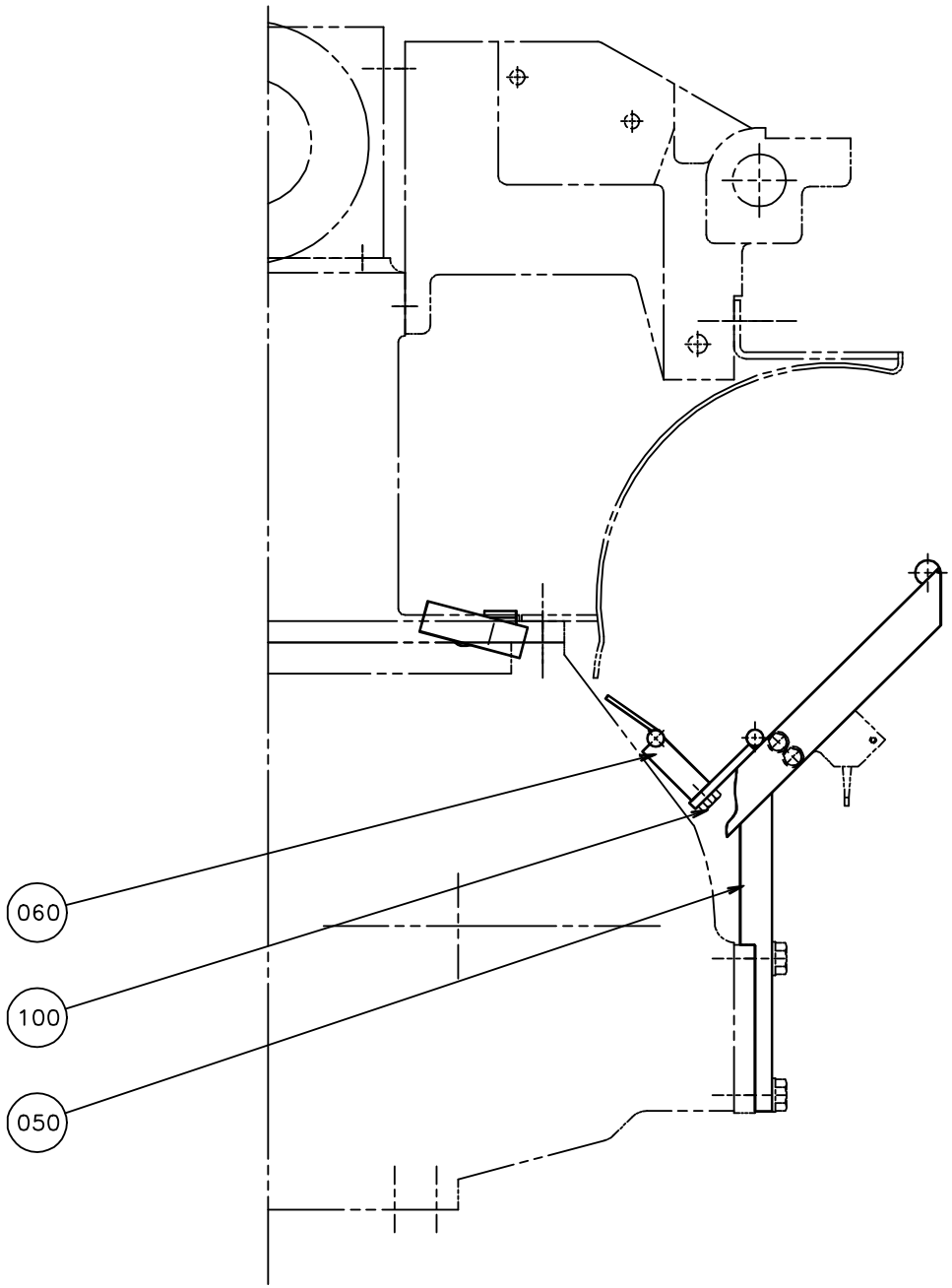
060
100
050

ECM: 72056 - 19981210
Group number: 1362443-0100
Assembly Drawing: 1362443-1_1_AA

Pos	Part No	UN	Qty	Description	Page No
-					
010	1143006-0000		1	STEERING	
020	1143007-0000		1	STEERING	
030	1143008-0000		1	BRACKET	
040	1143009-0000		1	BRACKET	
050	597539-0000		1	SLIDE RAIL	
060	597543-0000		1	RAIL NORM.FIN	
060	597542-0000		1	RAIL REV.FIN	
100	312105-0366		2	SCREW M6S ISO 4017 M6X12 A480	

Pos	Part No	UN	Qty	Description	Page No

This page is intentionally left blank.

ECM: 160557 - 20040211
Group number: 2660686-0100
Assembly Drawing:

Pos	Part No	UN	Qty	Description	Page No
-					
	2525467-0100		1	LUBRICATING PIPE CUT TB/TBA/8	**12-277**
	2525468-0100		1	LUBRICATING PIPE PRESS TB/TBA/8	**12-279**
	1036278-0000		1	SLEEVE	
	1036279-0000		1	PLUNGER	
	1369843-0001		1	SLEEVE	
	2660680-0000		1	BEARING HOUSING	
	2660681-0001		1	MODIFICATION DRAWING	

Pos	Part No	UN	Qty	Description	Page No

This page is intentionally left blank.

ECM: 111972 - 20020708
Group number: 2525467-0100
Assembly Drawing:

Pos	Part No	UN	Qty	Description	Page No
0500B, 0500S					
025	90166-0143	MM	290	TUBE 2,5 MM PA,TRANSP.	
1000SQ US, 1000SQ, 1000S, 1000B					
030	90166-0143	MM	330	TUBE 2,5 MM PA,TRANSP.	
Common Parts					
010	90166-0143	MM	198	TUBE 2,5 MM PA,TRANSP.	
015	90166-0143	MM	485	TUBE 2,5 MM PA,TRANSP.	
020	90166-0143	MM	335	TUBE 2,5 MM PA,TRANSP.	
050	90166-0132	MM	105	TUBE 6 MM PA,TRANSP.	
060	90166-0133	MM	23	TUBE 8 MM PA,TRANSP.	
065	90166-0133	MM	45	TUBE 8 MM PA,TRANSP.	
070	90166-0133	MM	78	TUBE 8 MM PA,TRANSP.	
100	90028-0020		5	CONE TUBE 2,5MM	
110	90134-0039		4	BUSHING VALVE CONNECTION 2,5 MM	
120	90134-0058		3	CONNECTION	
130	90134-0063		1	BUSHING/NUT M8X1, D=2,5 MM	
140	352113-0101		1	CABLE TIE, BLACK 92X2,5 MM	

Pos	Part No	UN	Qty	Description	Page No

This page is intentionally left blank.

ECM: 111973 - 20020708
Group number: 2525468-0100
Assembly Drawing:

Pos	Part No	UN	Qty	Description	Page No
0500B, 0500S					
030	90166-0143	MM	420	TUBE 2,5 MM PA,TRANSP.	
1000SQ US, 1000SQ, 1000S, 1000B					
035	90166-0143	MM	450	TUBE 2,5 MM PA,TRANSP.	
Common Parts					
010	90166-0143	MM	420	TUBE 2,5 MM PA,TRANSP.	
015	90166-0143	MM	380	TUBE 2,5 MM PA,TRANSP.	
020	90166-0143	MM	485	TUBE 2,5 MM PA,TRANSP.	
025	90166-0143	MM	435	TUBE 2,5 MM PA,TRANSP.	
060	90166-0133	MM	35	TUBE 8 MM PA,TRANSP.	
061	90166-0133	MM	35	TUBE 8 MM PA,TRANSP.	
062	90166-0133	MM	35	TUBE 8 MM PA,TRANSP.	
100	90028-0020		6	CONE TUBE 2,5MM	
110	90134-0039		5	BUSHING VALVE CONNECTION 2,5 MM	
120	90134-0058		4	CONNECTION	
130	90134-0063		1	BUSHING/NUT M8X1, D=2,5 MM	
140	352113-0101		2	CABLE TIE, BLACK 92X2,5 MM	

Pos	Part No	UN	Qty	Description	Page No

This page is intentionally left blank.

ECM: 276688 - 20060926
Group number: 2827006-0100
Assembly Drawing:

Pos	Part No	UN	Qty	Description	Page No	Pos	Part No	UN	Qty	Description	Page No
-											
010	2827003-0000		2	CUTTING RAIL							

Machine Type	Group Description	Used-In	Group Number	Page No

Tetra Pak

SPC
Spare Parts Catalogue

This page is intentionally left blank.

ECM: 239285 - 20051128
Group number: 648071-1000
Assembly Drawing:

Pos	Part No	UN	Qty	Description	Page No
-					
	592900-0100		1	REBUILDING KIT ARGENTINA	
	592922-0100		1	REBUILDING KIT US HYDRAULIC	13-5
	592987-0100		1	REBUILDING KIT US DRAIN VALVE	13-25
	597528-0100		1	UK HOLD DOWN DEVICE	13-31
	597529-0100		1	MKC LS SEALING AVAILABLE	13-35
	927600-0100		1	RK KNIFE SPRING TBA/8	
	927668-0100		1	RK-PAPER TROLLEY	13-43
	928013-0100		1	MKS ENVIRONMENT KIT	13-45
	1143051-0100		1	UPGRADE PT/10	
	1143137-0100		1	UK COOLING FAN FOR DRIVE CABINET PT/10	
	1143220-0101		1	MKC TUBE ADAPTED TPC-BARS TB/8-1000SQ	13-73
	1143615-0100		1	MKC VOLUME FLAP SPRINGS	13-79
	1282642-0100		1	UK VOLUME FLAP SPRING	13-83
	1285052-0100		1	MKC KNIFE HOLDER SPRING	13-89
	1334528-0200		1	UK OUTFEED TENSION DEVICE	
	1350298-0100		1	MKC PATCH/TAB MISSING DETECTOR	
	1350873-0100		1	MKC PATCH/TAB MISSING DETECTOR	
	597527-0100		1	MKC MIDDLE HYDRAULIC SYSTEM USTS	13-91
	597571-0100		1	MKC TB/8 1000B USTS UPGRAGE 1000SQ	13-107
	1348088-0100		1	UK NEW TAB ANGLE FEEDING	
	597587-0100		1	MKC AIR DRYER	13-113
	597593-0100		1	MKC SPRING HOLDER	13-119
	1478582-0100		1	UK FOLDING DEVICE AJUSTMENT	
	597600-0100		1	UK SIMPLIFIED REVERSED FIN KIT	13-121
	1347803-0100		1	UK STRIP GUIDE	13-131
	1362446-0100		1	MKC NEW IMPULSE TRANSMITTER CURVE	13-135
	1338216-0100		1	REBUILDING KITS DIMC8	
	1499124-0100		1	UK COOLER PT/8	
	1484401-0100		1	MKS INFEED TENSION DEVICE	
	1499073-0100		1	UK COUNTER ROLLER DRIVE MOTOR	
	1365570-0100		1	MKC IMPROVED USTS JAW SYSTEM	13-137
	1366161-0100		1	MKC USTS SPLIT CUTTING RAIL	13-149
	1362511-0100		1	UK NEW VERSION OF AIR DRYER	12-161, 13-153
	2504997-0100		1	MKC USTS SERRATED & STEPPED CUTTING RAIL	13-155
	2505169-0100		1	MKC DISCHARGE CHUTE	13-159
	1338678-0100		1	MKC BEARING HOUSING	13-167
	2529282-0100		1	MKC SPRING KNIFE 2	13-169
	2505159-0100		1	UK FLAP SEALING KIT	13-171
	2539286-0100		1	MKC STRIP BRAKE SUPERVISION	13-187
	1346128-0100		1	UK ASU PAPER HOLDER IMPROVEMENT	13-195
	1347400-0100		1	MKC OVERLOAD PROTECTION CAM KIT	13-199
	559624-0100		1	USTS UPDATING (TMCC)	13-139
	2529941-0100		1	MKC DCS8 PLUS FOR TB/8-1002	13-201
	2504976-0100		1	UK NEW THYRISTOR UNIT	13-205
	2653890-0100		1	UK USTS CUTTING RAIL	13-217
	2590350-0100		1	REBUILDING KITS DIMC MULTI 020	
	2590351-0100		1	REBUILDING KITS DIMC MULTI 010	
	2660676-0100		1	RK-FREQ. CONVERTER	13-219
	2660700-0100		1	RK-RECORDER	13-225
	2660701-0100		1	RK-COUNTER	13-229
	2727542-0100		1	MKS LOCKING PIN	13-235
	2727709-0100		1	UK IMPROVED STRIP GUIDE	13-237
	2727622-0100		1	UK REVOLVING STAND	13-239
	2767112-0100		1	UK ALARM BEACON	13-245

Machine Type	Group Description	Used-In	Group Number	Page No

This page is intentionally left blank.

ECM: 70854 - 19970514
Group number: 592922-0100
Assembly Drawing:

Pos	Part No	UN	Qty	Description	Page No
-					
040	592989-0000		1	HYDRAULIC DIAGRAM	
050	593672-0000		1	VALVE PANEL	
060	593633-0000		1	PNEUMATIC DIAGRAM	
070	593673-0000		1	VALVE PANEL	
080	593674-0000		1	PNEUMATIC DIAGRAM	
F050	592994-0100		1	PRESSURE JAW RIGHT	**13-7**
F040	592993-0100		1	PRESSURE JAW LEFT	**13-9**
F030	593272-0100		1	IMPULSE TRANSMITTER US	**3-11, 13-11**
F020	592879-0100		1	PIPE WORK-HYDRAULIC	**2-35, 13-15**
F010	592878-0100		1	PIPE WORK-PNEUMATIC	**2-13, 2-15, 2-17, 2-19, 13-17, 13-19, 13-21, 13-23**

Pos	Part No	UN	Qty	Description	Page No

Machine Type	Group Description	Used-In	Group Number	Page No

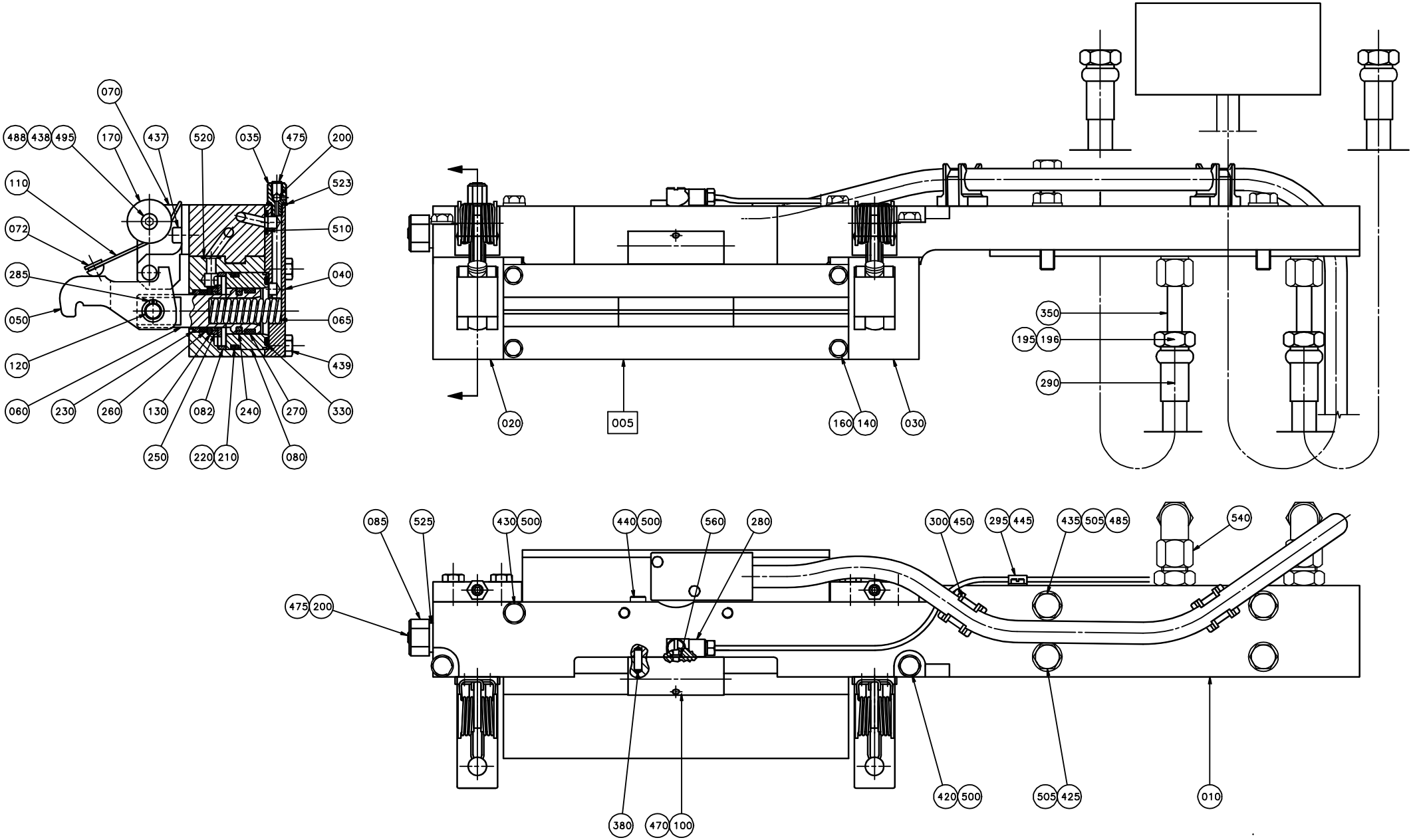
070
488 438 495
170
437
520
035
475
200
110
523
072
510
285
040
050
065
120
439
060
230
260
130
082
240
270
330
250
220 210
080
020
005
160 140
030
350
195 196
290
085
525
430 500
440 500
560
280
300 450
295 445
435 505 485
540
475 200
420 500
505 425
010
380
470 100

ECM: 71461 - 19980331
Group number: 592994-0100
Assembly Drawing: 592994-1_1_AA

Pos	Part No	UN	Qty	Description	Page No
-					
005	1255806-0100		1	COMPACT TRANSDUCER	
010	929538-0000		1	CARRIER, RIGHT	
020	594216-0000		1	BEARING HOUSING	
030	594217-0000		1	BEARING HOUSING	
035	592921-0000		2	NIPPLE	
040	592547-0000		2	LID	
050	591410-0000		2	CATCH	
060	592563-0000		2	PISTON	
065	590369-0000		2	COMPRESSION SPRING	
070	592715-0000		2	BRACKET	
072	1129552-0000		2	KNOB	
080	594218-0000		2	SLEEVE	
082	594219-0000		2	WASHER	
085	593647-0000		1	NIPPLE	
100	929551-0000		1	AXLE SUPPORT	
110	1129473-0000		2	RESORTE (REEMPLAZADO X 1549378)	
120	950351-0000		2	SHAFT	
130	1038240-0000		2	SPACER	
140	1143885-0000		4	SCREW	
160	591087-0000		1	SHIM	
170	1129833-0000		4	GUIDE ROLLER	
195	90030-0098		4	ACCESSORIES, FERRULE 8	
196	342703-0208		4	NUT, PIPES & CONNECTORS,NUT M-8 SS	
200	90090-0013		3	BALL, D=4 MM	
210	90091-0359		2	X-SEAL 36,17X2,62 MM	
220	90091-0360		2	BACK-UP RING 37,5X1,4 MM	
230	90091-0362		2	SCRAPER, EXCLUDER2 18X22,8X3,7 MM	
240	90091-0393		2	PISTON SEAL GLIDE RING T17,5X25X3,2	
250	90091-0364		2	ROD SEAL, STEPSEAL 18X25,3X3,2 MM	
260	90091-0366		2	WEAR RING 18X23X3,9 MM	
270	90091-0394		2	WEAR RING 20X25X5,6 MM	
280	90134-0058		1	CONNECTION	
285	90141-0015		4	RETAINING RING FOR SHAFT DIN 471 8 A2	
290	90148-0033		2	HOSE	
295	90165-0058		1	PIPE CLIP FOR TUBE D=2,5 MM	
300	90165-0174		2	HOSE HOLDER	
330	315202-0220		2	O-RING 32,2X3 MM	
350	90266-0167	MM	80	PIPE	
380	311103-0268		2	PARALLEL PIN ISO 2338 4M6X12 A1	
420	312105-0372		2	SCREW M6S ISO 4017 M6X25 A480	
425	312105-0457		3	SCREW M6S ISO 4014 M8X35 A480	
430	312109-0376		2	SCREW M6S ISO 4017 M6X35 A480	
435	312109-0463		1	SCREW M6S ISO 4017 M8X60 A480	
437	312115-0327		4	SCREW ISO4762 M5X12 A4 80	
438	312115-0329		2	SCREW ISO4762 M5X16 A4 80	
439	312105-0370		8	SCREW M6S ISO 4017 M6X20 A480	
440	312115-0374		2	SCREW ISO4762 M6X30 A4 80	
445	312125-0287		1	SCREW ISO 1207 M4X8 A4	
450	312125-0327		2	SCREW ISO 1207 M5X12 A4	
470	312318-0285		1	SCREW ISO4029 M4X6 A4	
475	312318-0362		3	SCREW ISO4029 M6X8 A4	
485	312605-0318		1	HEXAGON NUT, M6M M8 A280	
488	312812-0314		2	HEXAGON NUT, NY-LOCK M5 A480	
495	315105-0146		4	WASHER BRB 5,3X10 RFR	
500	315105-0153		6	WASHER BRB 6,4X12 RFR	
505	315105-0165		4	WASHER BRB 8,4X16 RFR	
510	315202-0207		2	O-RING 8,3X2,4 MM	
520	315202-0105		2	O-RING 7,1X1,6 MM	
523	315211-0103		2	BONDED SEAL SS/NBR90 M6	
525	315211-0105		1	BONDED SEAL SS/NBR90 G1/8	
540	342738-0208		2	ADJUSTABLE ELBOW CONNECTION,EXT 8-G1/4	
560	315202-0101		1	O-RING 3,1X1,6 MM	

Machine Type	Group Description	Used-In	Group Number	Page No

PRESSURE JAW LEFT

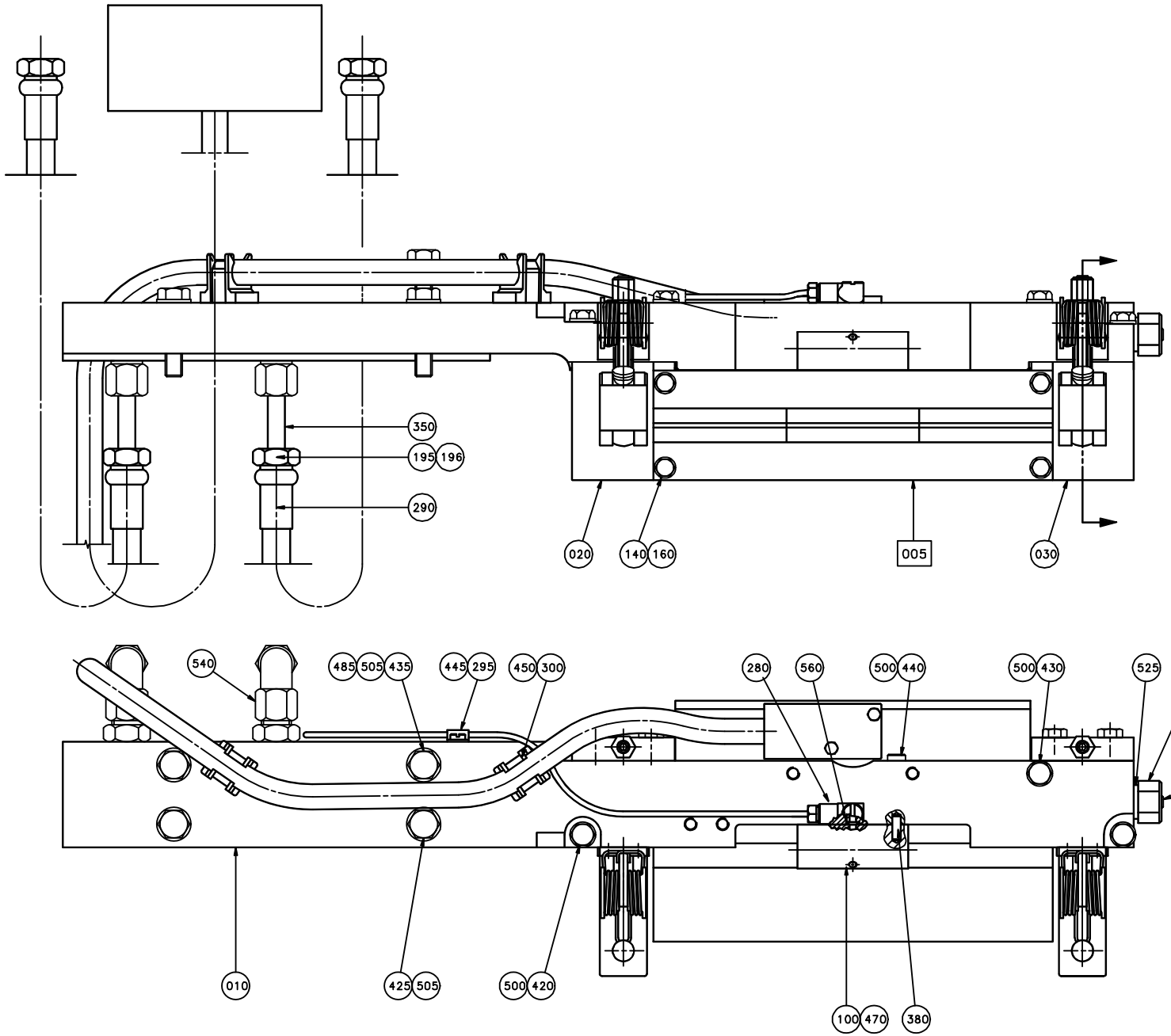

ECM: 71461 - 19980331
Group number: 592993-0100
Assembly Drawing: 592993-1_1_AA

Pos	Part No	UN	Qty	Description	Page No
-					
005	1255806-0100		1	COMPACT TRANSDUCER	
010	929537-0000		1	CARRIER LEFT	
020	594216-0000		1	BEARING HOUSING	
030	594217-0000		1	BEARING HOUSING	
035	592921-0000		2	NIPPLE	
040	592547-0000		2	LID	
050	591410-0000		2	CATCH	
060	592563-0000		2	PISTON	
065	590369-0000		2	COMPRESSION SPRING	
070	592715-0000		2	BRACKET	
072	1129552-0000		2	KNOB	
080	594218-0000		2	SLEEVE	
082	594219-0000		2	WASHER	
085	593647-0000		1	NIPPLE	
100	929551-0000		1	AXLE SUPPORT	
110	1129473-0000		2	RESORTE (REEMPLAZADO X 1549378)	
120	950351-0000		2	SHAFT	
130	1038240-0000		2	SPACER	
140	1143885-0000		4	SCREW	
160	591087-0000		1	SHIM	
170	1129833-0000		4	GUIDE ROLLER	
195	90030-0098		4	ACCESSORIES, FERRULE 8	
196	342703-0208		4	NUT, PIPES & CONNECTORS,NUT M-8 SS	
200	90090-0013		3	BALL, D=4 MM	
210	90091-0359		2	X-SEAL 36,17X2,62 MM	
220	90091-0360		2	BACK-UP RING 37,5X1,4 MM	
230	90091-0362		2	SCRAPER, EXCLUDER2 18X22,8X3,7 MM	
240	90091-0393		2	PISTON SEAL GLIDE RING T17,5X25X3,2	
250	90091-0364		2	ROD SEAL, STEPSEAL 18X25,3X3,2 MM	
260	90091-0366		2	WEAR RING 18X23X3,9 MM	
270	90091-0394		2	WEAR RING 20X25X5,6 MM	
280	90134-0058		1	CONNECTION	
285	90141-0015		4	RETAINING RING FOR SHAFT DIN 471 8 A2	
290	90148-0033		2	HOSE	
295	90165-0058		1	PIPE CLIP FOR TUBE D=2,5 MM	
300	90165-0174		2	HOSE HOLDER	
330	315202-0220		2	O-RING 32,2X3 MM	
350	90266-0167	MM	80	PIPE	
380	311103-0268		2	PARALLEL PIN ISO 2338 4M6X12 A1	
420	312105-0372		2	SCREW M6S ISO 4017 M6X25 A480	
425	312105-0457		3	SCREW M6S ISO 4014 M8X35 A480	
430	312109-0376		2	SCREW M6S ISO 4017 M6X35 A480	
435	312109-0463		1	SCREW M6S ISO 4017 M8X60 A480	
437	312115-0327		4	SCREW ISO4762 M5X12 A4 80	
438	312115-0329		2	SCREW ISO4762 M5X16 A4 80	
439	312105-0370		8	SCREW M6S ISO 4017 M6X20 A480	
440	312115-0374		2	SCREW ISO4762 M6X30 A4 80	
445	312125-0287		1	SCREW ISO 1207 M4X8 A4	
450	312125-0327		2	SCREW ISO 1207 M5X12 A4	
470	312318-0285		1	SCREW ISO4029 M4X6 A4	
475	312318-0362		3	SCREW ISO4029 M6X8 A4	
485	312605-0318		1	HEXAGON NUT, M6M M8 A280	
488	312812-0314		2	HEXAGON NUT, NY-LOCK M5 A480	
495	315105-0146		4	WASHER BRB 5,3X10 RFR	
500	315105-0153		6	WASHER BRB 6,4X12 RFR	
505	315105-0165		4	WASHER BRB 8,4X16 RFR	
510	315202-0207		2	O-RING 8,3X2,4 MM	
520	315202-0105		2	O-RING 7,1X1,6 MM	
523	315211-0103		2	BONDED SEAL SS/NBR90 M6	
525	315211-0105		1	BONDED SEAL SS/NBR90 G1/8	
540	342738-0208		2	ADJUSTABLE ELBOW CONNECTION,EXT 8-G1/4	
560	315202-0101		1	O-RING 3,1X1,6 MM	

Machine Type	Group Description	Used-In	Group Number	Page No

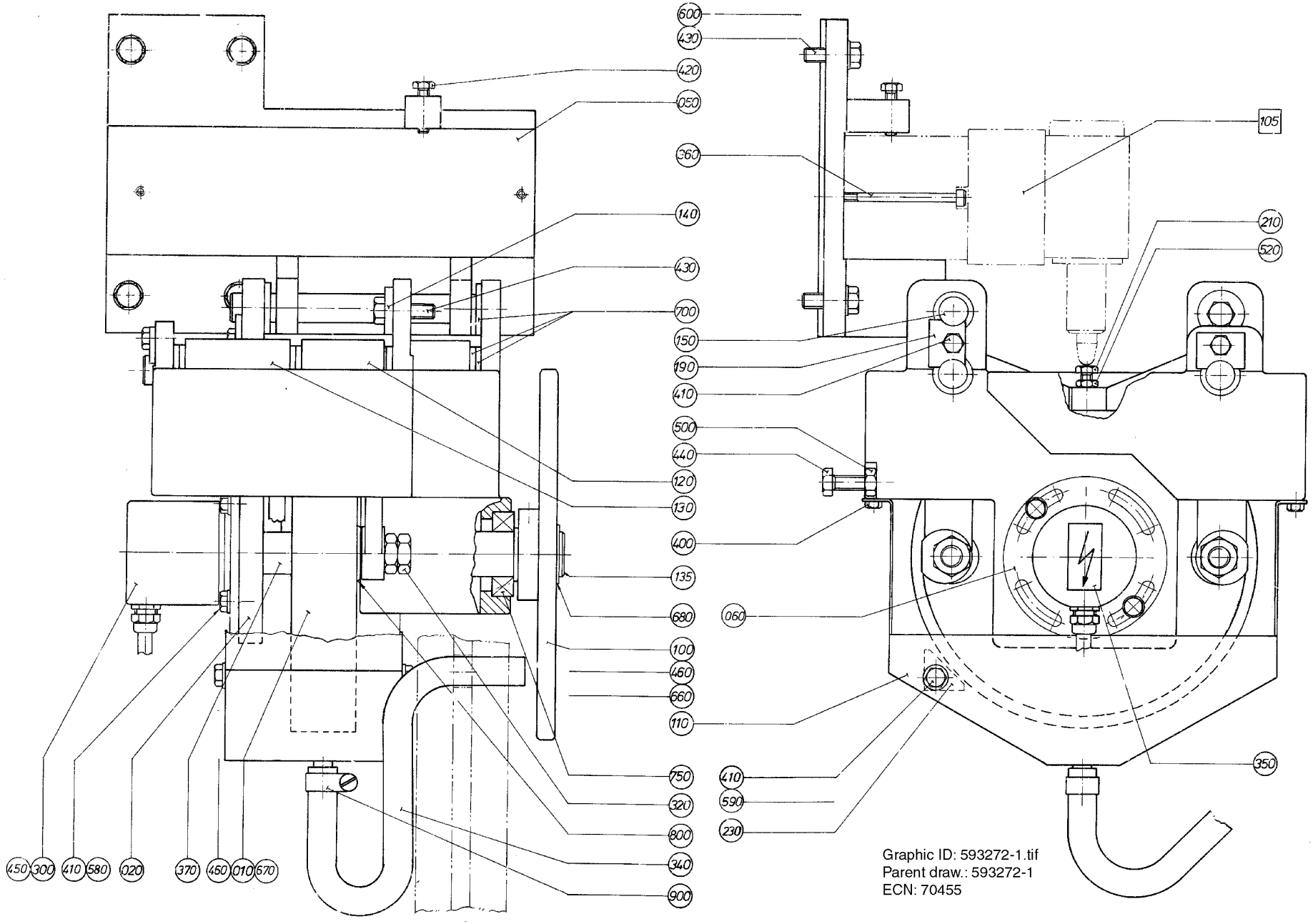
600
430
420
050
360
140
430
700
150
190
410
500
440
120
130
400
135
680
100
460
660
110
750
320
800
340
900
105
210
520
060
410
590
230
350
450
300
410
580
020
370
460
010
670
Graphic ID: 593272-1.tif
Parent draw.: 593272-1
ECN: 70455

ECM: 72495 - 19990924
Group number: 593272-0100
Assembly Drawing: 593272-1_1_AA

Pos	Part No	UN	Qty	Description	Page No
-					
010	556579-0000		1	CURVE	
020	292473-0000		1	CANTILEVER	
050	292472-0000		1	HOLDER	
060	542063-0000		1	FLANGE	
100	243017-0000		1	GEAR WHEEL	
105	592880-0100		1	VALVE GROUP	**3-13, 13-13**
110	543476-0000		1	TROUGH	
120	297091-0000		2	ARM	
130	297092-0000		2	ARM	
135	540949-0000		1	SHAFT	
140	28036-0000		1	WASHER	
150	292477-0000		3	SHAFT	
190	292482-0000		2	WASHER	
210	479354-0000		4	SCREW	
230	479753-0000		1	STRIPPER	
300	90061-0018		1	ANGLE ENC 8BIT GRAY (REPL BY 90061-27)	
320	90099-0015		8	NUT HEX. ML6M, M12X1,5, FE	
340	90166-0113	MM	700	HOSE	
350	90194-0039		1	WARNING SIGN, RISK OF ELECTRIC SHOCK	
360	90287-0073		2	SCREW MC6S M5X70 129	
370	90355-0031		1	TORQUE RIGID COUPLING, 10X10 MM	
400	312101-0325		2	SCREW M6S M5X10 FZB	
410	312101-0366		6	SCREW M6S M6X12 FZB	
420	312101-0372		1	SCREW M6S M6X25 FZB	
430	312101-0453		5	SCREW M6S M8X25 FZB	
440	312104-0460		1	SCREW M6S M8X45H FZB	
450	312155-0289		3	SCREW DIN 7991 MF6S M4X10 A4 70	
460	312318-0360		2	SCREW ISO4029 M6X6 A4	
500	312601-0318		1	HEXAGON NUT, DIN 934 M8 8 FZB	
520	312601-0316		4	HEXAGON NUT, DIN 934 M6 8 FZB	
580	315105-0153		2	WASHER BRB 6,4X12 RFR	
590	315105-0156		2	WASHER BRB 6,7X14 RFR	
600	315101-0165		4	WASHER PLAIN, BRB, 8,4/16 H=1,5	
660	315701-0262		1	PARALLEL KEY W.ROUND ENDS 8X7X18	
670	315701-0263		1	PARALLEL KEY W.ROUND ENDS 8X7X20	
680	315750-0119		2	RETAINING RING SHAFT DIN 471 ST 25	
700	321111-0240		14	FLANGE BUSHING, 16X22X12 MM	
750	321308-0205		2	BALL BEARING, 25X47X12MM	
800	321580-0165		4	CAM ROLLER, 12X30X40 MM	
900	342991-0101		1	HOSE CLIP,WORM DRIVE TYPE (13)-16	

Pos	Part No	UN	Qty	Description	Page No

Machine Type | Group Description | Used-In | Group Number | Page No

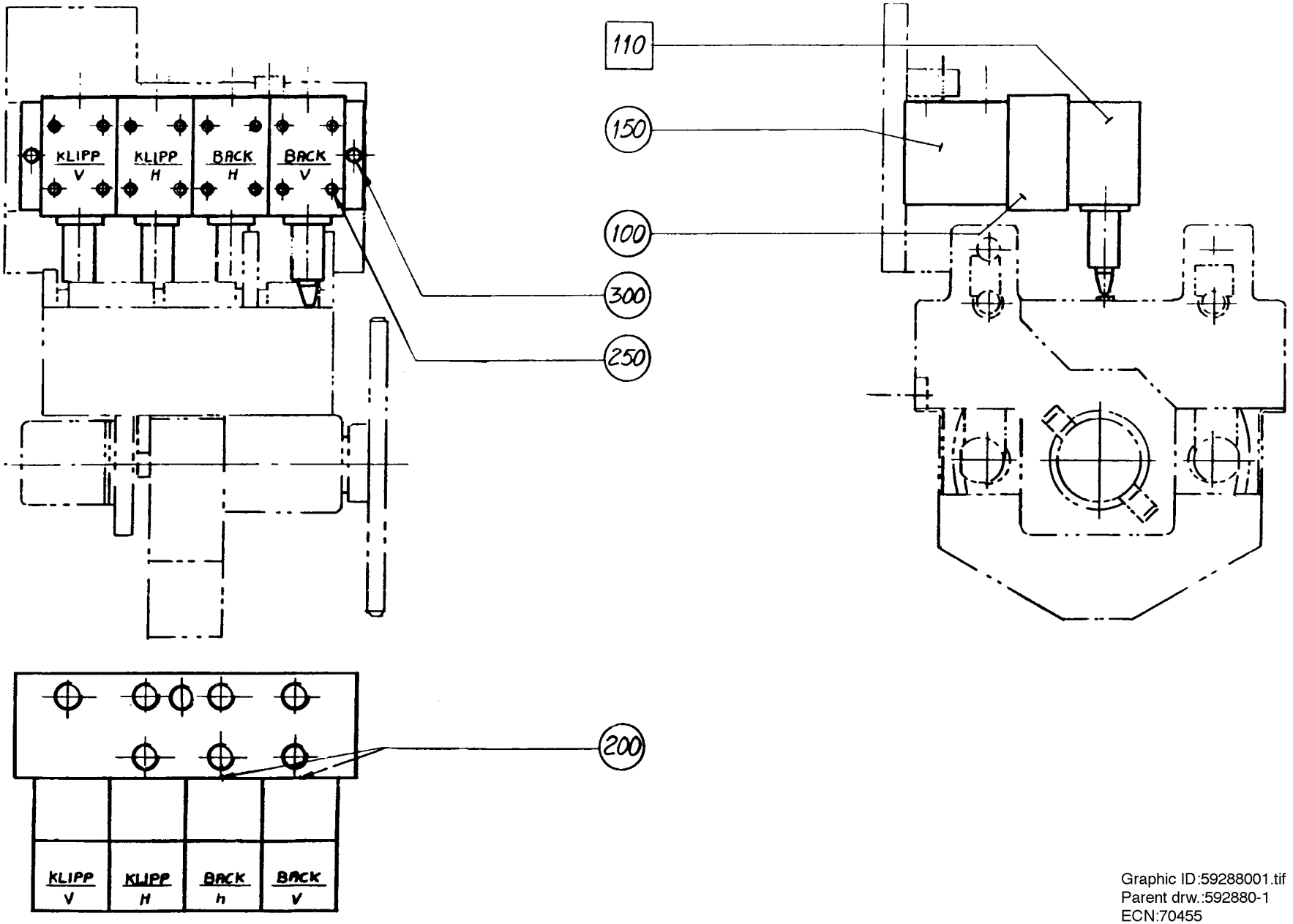

Graphic ID:59288001.tif
Parent drw.:592880-1
ECN:70455

ECM: 70455 - 19961129
Group number: 592880-0100
Assembly Drawing: 592880-1_1_AA

Pos	Part No	UN	Qty	Description	Page No
-					
100	90201-0010		4	DIRECT CHECK VALVE, NO. DGMDC-3-Y-PK-41	
	90201-0300		*1*	*MOUNTING PLATE, NO. A1-89 57B*	
	90201-0301		*1*	*SPRING*	
	90201-0302		*1*	*WASHER*	
	90201-0303		*1*	*SPARE PARTS KIT*	
150	90201-0427		1	BLOCK	
200	295391-0003		2	THROTTLE SCREW	
250	90201-0303		4	SPARE PARTS KIT	
300	90287-0073		2	SCREW MC6S M5X70 129	
F110	90201-0057		4	VALVE	

Pos	Part No	UN	Qty	Description	Page No

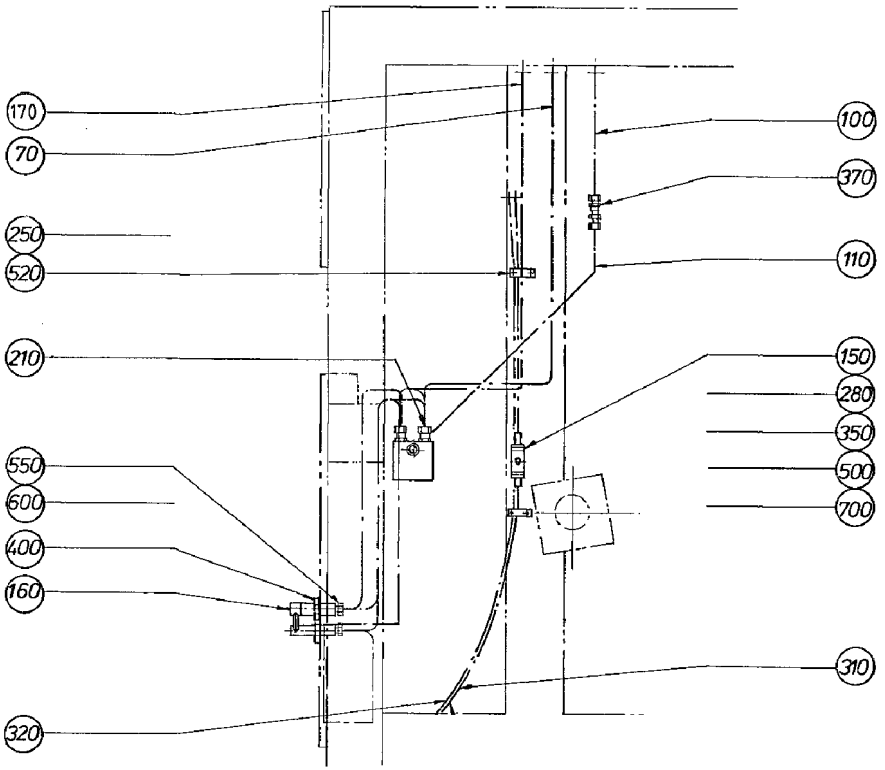

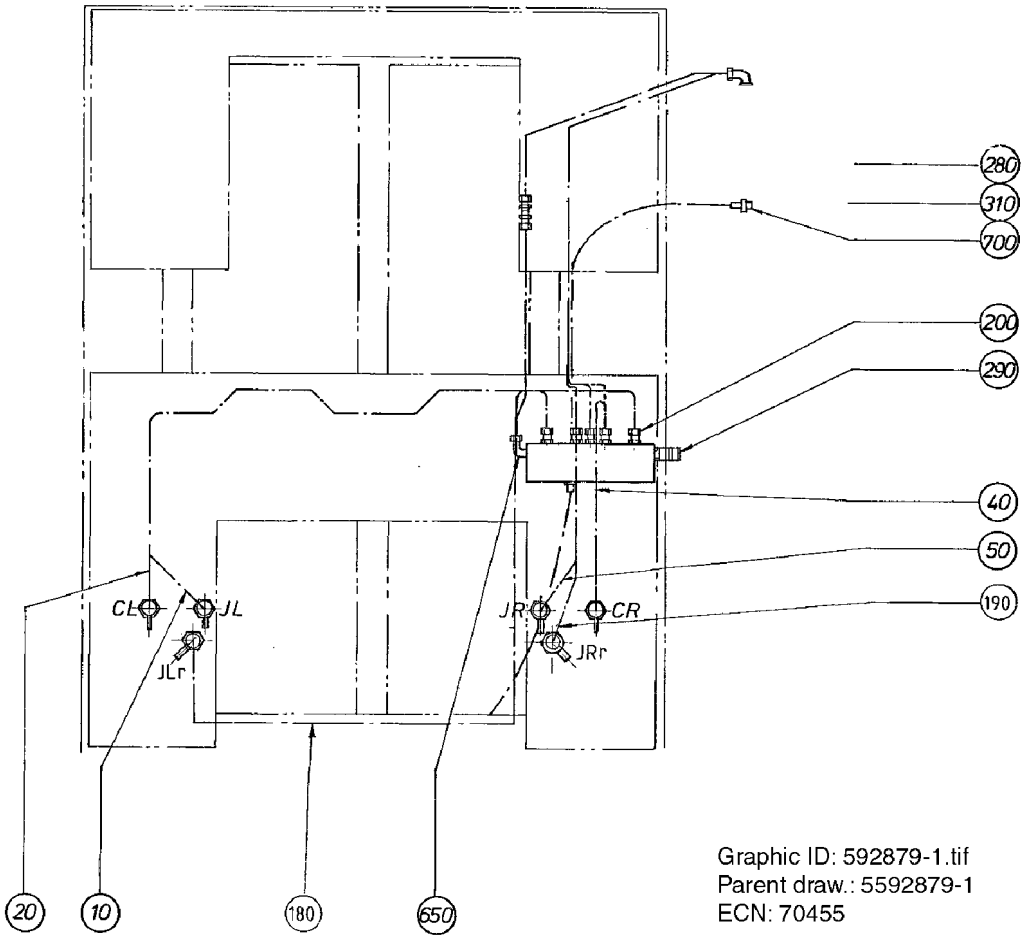

Graphic ID: 592879-1.tif
Parent draw.: 5592879-1
ECN: 70455

ECM: 70706 - 19970404
Group number: 592879-0100
Assembly Drawing: 592879-1_1_AA

Pos	Part No	UN	Qty	Description	Page No
-					
010	294493-0000		1	HYDRAULIC PIPE	
020	294494-0000		1	HYDRAULIC PIPE	
040	294495-0000		1	HYDRAULIC PIPE	
050	294496-0000		1	HYDRAULIC PIPE	
070	445539-0000		1	HYDRAULIC PIPE	
100	445540-0000		1	HYDRAULIC PIPE	
110	445541-0000		1	HYDRAULIC PIPE	
150	255017-0000		1	BRACKET	
160	540718-0000		6	ELBOW PIPE JOINT	
170	592716-0000		1	PIPE	
180	592717-0000		1	PIPE	
190	592718-0000		1	PIPE	
200	90030-0155		6	CONN. STR., 8-R3/8, EXT. THREAD	
210	90030-0157		2	CONN. STR. 10-R3/8, EXT. THREAD	
250	90074-0006		2	CABLE CLIPS, D=2X12 MM	
280	90163-0041		3	HOSE NIPPLE, EXT.THR. 3/8-12 MM	
290	90163-0076		1	QUICK COUPLING, (F) LP-006-0-WR021	
310	90166-0007	MM	2000	HOSE PVC 10/14 TRANSP.	
320	90166-0122	MM	2000	TUBE 8 MM PA,TRANSP.	
350	90187-0054		1	BALL VALVE G3/8	
370	90230-0011		1	NON-RETURN VALVE RHD-115L	
400	90330-0093		6	NUT, HEXAGON, G1/2	
500	312101-0331		2	SCREW M6S M5X20 FZB	
520	312125-0323		4	SCREW ISO 1207 M5X8 A4	
550	342703-0103		6	NUT, PIPES & CONNECTORS,NUT M-8 FE	
600	342705-0103		6	ACCESSORIES, FERRULE 8-LFZB	
650	342731-0114		1	CONN. ELBOW WE 15-LRFZB	
700	342991-0101		3	HOSE CLIP,WORM DRIVE TYPE (13)-16	

Pos	Part No	UN	Qty	Description	Page No

Machine Type | Group Description | Used-In | Group Number | Page No

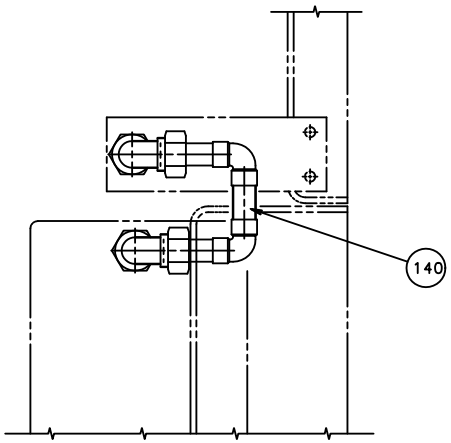

C-C

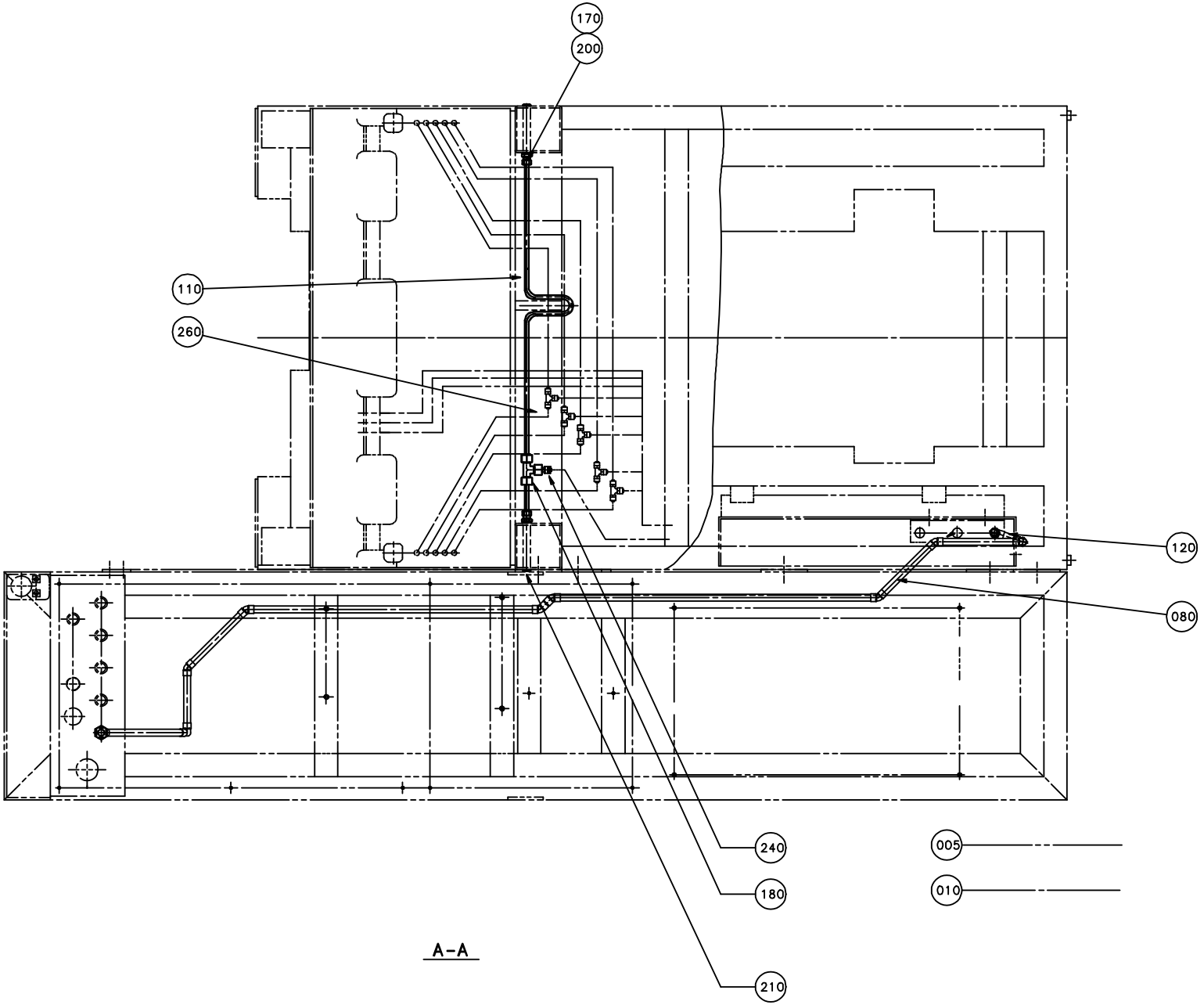

A-A

ECM: 70670 - 19970220
Group number: 592878-0100
Assembly Drawing: 592878-1_1_AA

This list covers pages from 13-16 to 13-23

Pos	Part No	UN	Qty	Description	Page No
NORMFIN (See drawing on pages: 2-12, 2-14, 13-16, 13-18)					
010	90166-0081	M	77	TUBE 6 MM PA BLUE	
REVFIN (See drawing on pages: 2-16, 2-18, 13-20, 13-22)					
010-02	90166-0081	M	92	TUBE 6 MM PA BLUE	
Common Parts					
005	90166-0013	M	23	TUBE 8 MM PA BLUE	
080	544692-0000		1	PIPE	
110	450736-0000		1	PIPE	
120	544697-0000		1	PIPE	
140	450791-0000		1	PIPE	
170	90224-0319		2	CONN. STR., 8-R1/4, EXT. THREAD	
180	90224-0323		1	CONNECTION	
200	315233-0110		4	WASHER CAPTIVE SEALING G1/4	
205	315233-0113		1	WASHER CAPTIVE SEALING G1/2	
210	342713-0210		1	PLUG,EXT THREAD HEX SOCKET(PAK OF 10 PCS	
220	342720-0114		1	CONN. STR. GA-15-G1/2	
240	342929-0121		1	STRAIGHT COUPLING,SOLDER 8/6-8	
260	342946-0112		5	T-COUPLING,UNION 6/4	
280	342960-0112		10	BULKHEAD COUPLING 6/4	

Pos	Part No	UN	Qty	Description	Page No

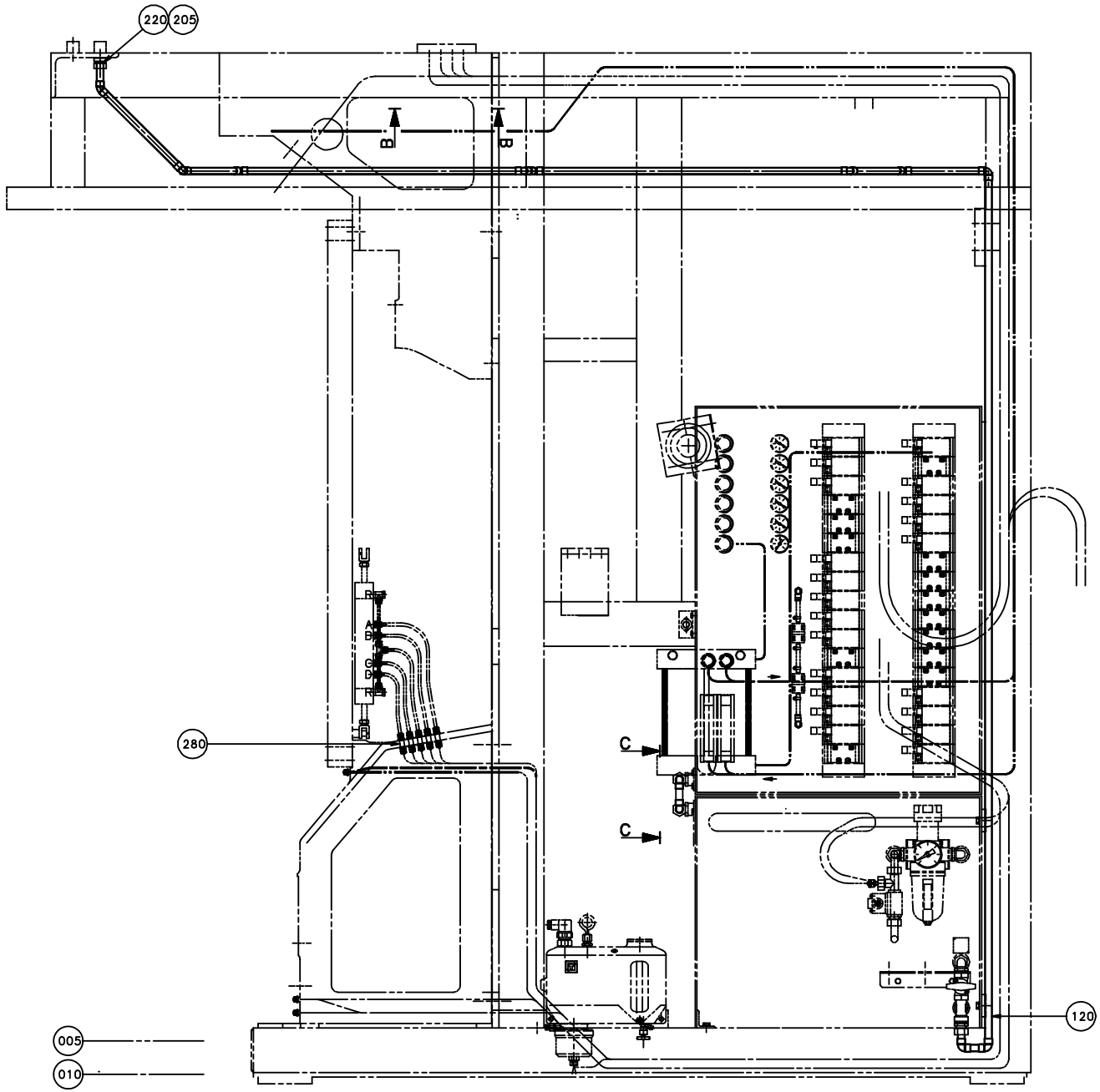
220
205
B
B
280
C
C
120
005
010

ECM: 70670 - 19970220
Group number: 592878-0100
Assembly Drawing: 592878-2_1_AA

This list covers pages from 13-16 to 13-23

Pos	Part No	UN	Qty	Description	Page No
NORMFIN (See drawing on pages: 2-12, 2-14, 13-16, 13-18)					
010	90166-0081	M	77	TUBE 6 MM PA BLUE	
REVFIN (See drawing on pages: 2-16, 2-18, 13-20, 13-22)					
010-02	90166-0081	M	92	TUBE 6 MM PA BLUE	
Common Parts					
005	90166-0013	M	23	TUBE 8 MM PA BLUE	
080	544692-0000		1	PIPE	
110	450736-0000		1	PIPE	
120	544697-0000		1	PIPE	
140	450791-0000		1	PIPE	
170	90224-0319		2	CONN. STR., 8-R1/4, EXT. THREAD	
180	90224-0323		1	CONNECTION	
200	315233-0110		4	WASHER CAPTIVE SEALING G1/4	
205	315233-0113		1	WASHER CAPTIVE SEALING G1/2	
210	342713-0210		1	PLUG,EXT THREAD HEX SOCKET(PAK OF 10 PCS	
220	342720-0114		1	CONN. STR. GA-15-G1/2	
240	342929-0121		1	STRAIGHT COUPLING,SOLDER 8/6-8	
260	342946-0112		5	T-COUPLING,UNION 6/4	
280	342960-0112		10	BULKHEAD COUPLING 6/4	

Pos	Part No	UN	Qty	Description	Page No

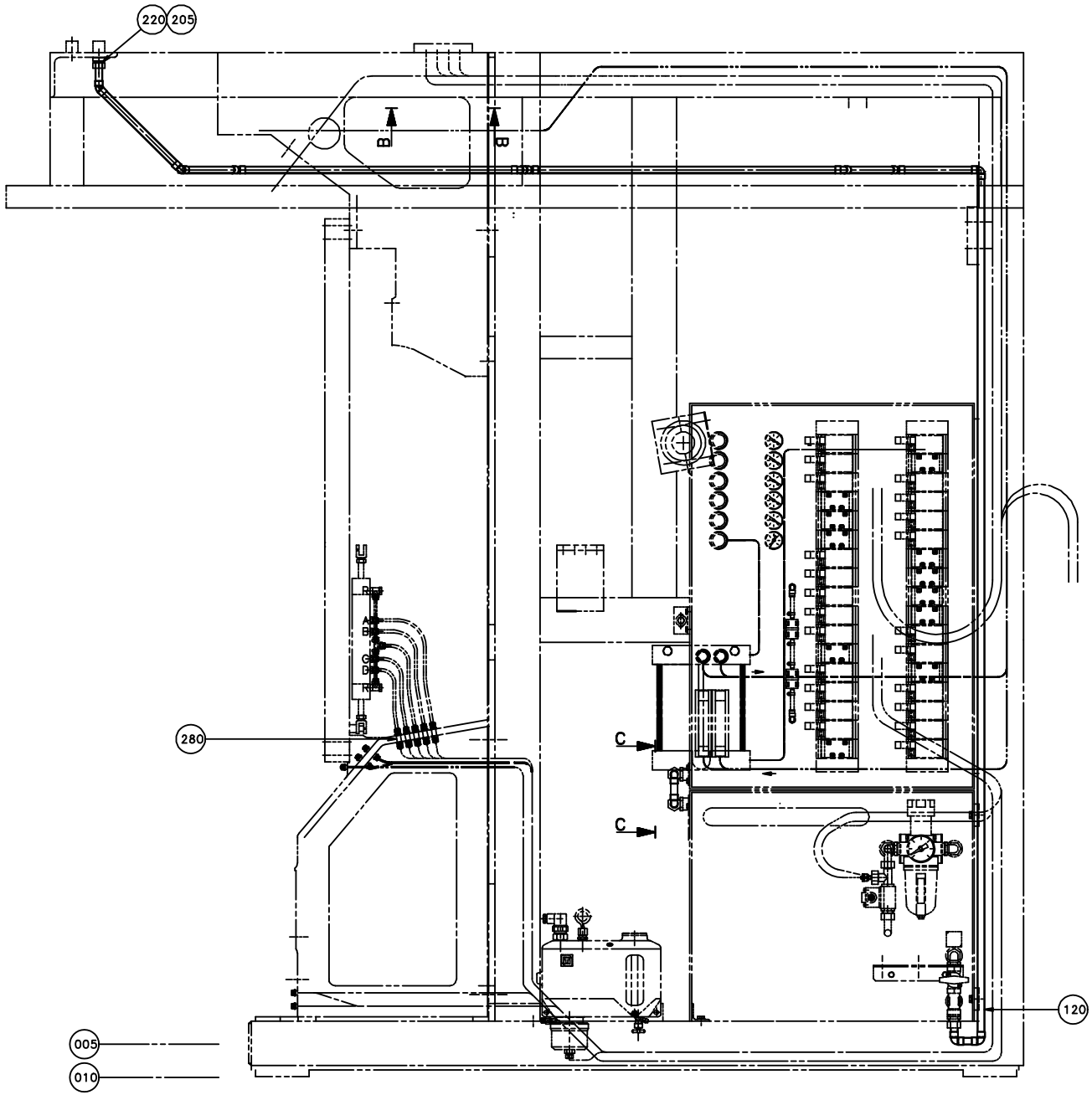
220
205
B
B
280
C
C
120
005
010

Pos	Part No	UN	Qty	Description	Page No
NORMFIN (See drawing on pages: 2-12, 2-14, 13-16, 13-18)					
010	90166-0081	M	77	TUBE 6 MM PA BLUE	
REVFIN (See drawing on pages: 2-16, 2-18, 13-20, 13-22)					
010-02	90166-0081	M	92	TUBE 6 MM PA BLUE	
Common Parts					
005	90166-0013	M	23	TUBE 8 MM PA BLUE	
080	544692-0000		1	PIPE	
110	450736-0000		1	PIPE	
120	544697-0000		1	PIPE	
140	450791-0000		1	PIPE	
170	90224-0319		2	CONN. STR., 8-R1/4, EXT. THREAD	
180	90224-0323		1	CONNECTION	
200	315233-0110		4	WASHER CAPTIVE SEALING G1/4	
205	315233-0113		1	WASHER CAPTIVE SEALING G1/2	
210	342713-0210		1	PLUG,EXT THREAD HEX SOCKET(PAK OF 10 PCS	
220	342720-0114		1	CONN. STR. GA-15-G1/2	
240	342929-0121		1	STRAIGHT COUPLING,SOLDER 8/6-8	
260	342946-0112		5	T-COUPLING,UNION 6/4	
280	342960-0112		10	BULKHEAD COUPLING 6/4	

Pos	Part No	UN	Qty	Description	Page No

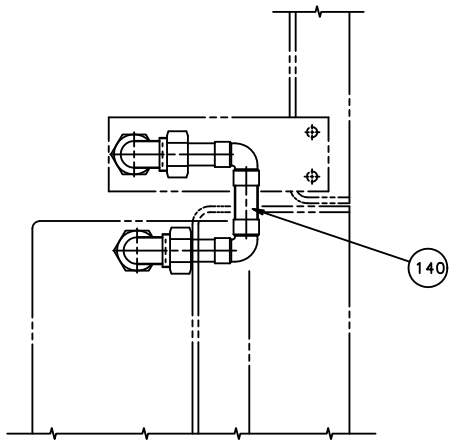

C-C

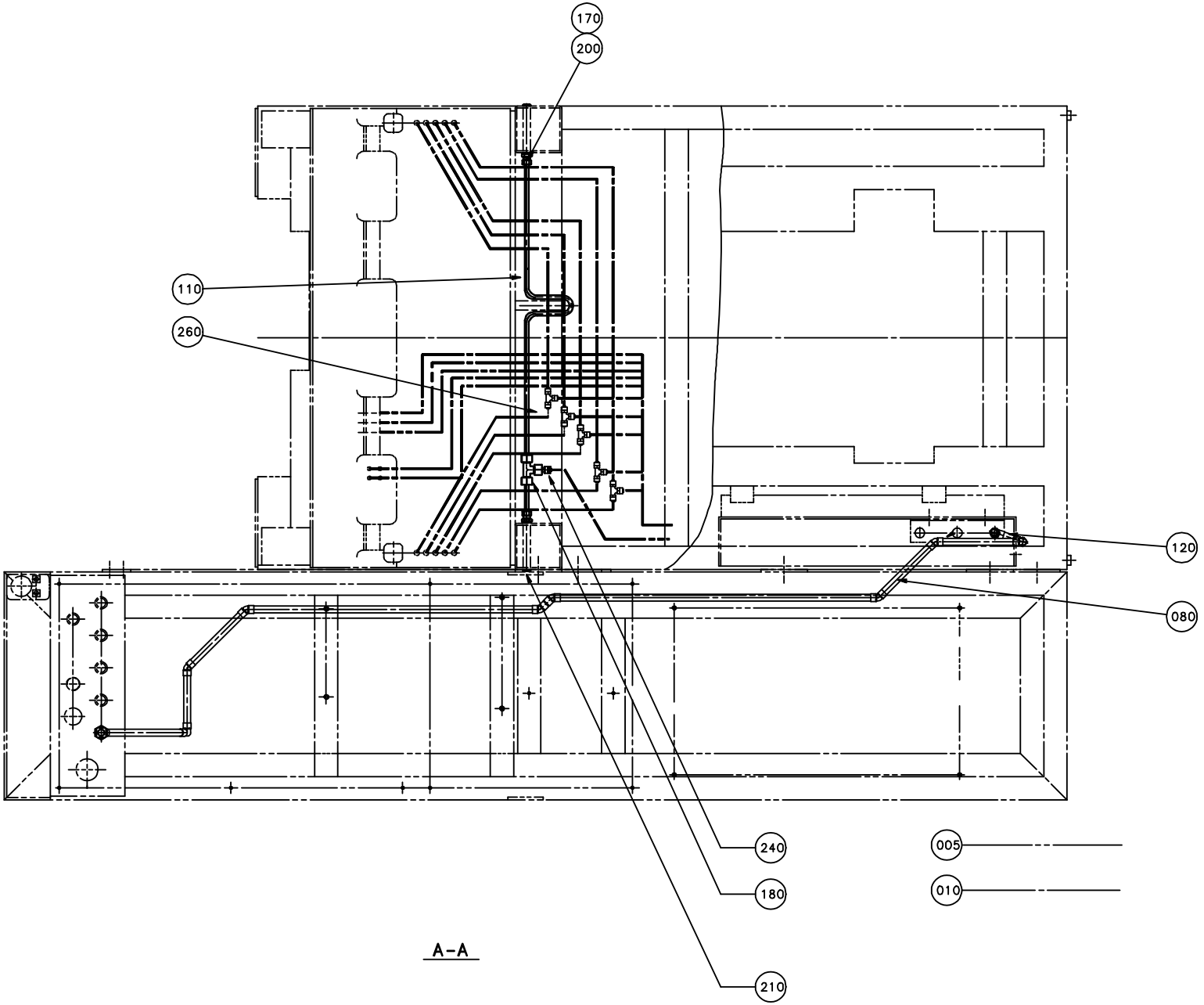

A-A

ECM: 70670 - 19970220
Group number: 592878-0100
Assembly Drawing: 592878-5_1_AA

This list covers pages from 13-16 to 13-23

Pos	Part No	UN	Qty	Description	Page No
NORMFIN (See drawing on pages: 2-12, 2-14, 13-16, 13-18)					
010	90166-0081	M	77	TUBE 6 MM PA BLUE	
REVFIN (See drawing on pages: 2-16, 2-18, 13-20, 13-22)					
010-02	90166-0081	M	92	TUBE 6 MM PA BLUE	
Common Parts					
005	90166-0013	M	23	TUBE 8 MM PA BLUE	
080	544692-0000		1	PIPE	
110	450736-0000		1	PIPE	
120	544697-0000		1	PIPE	
140	450791-0000		1	PIPE	
170	90224-0319		2	CONN. STR., 8-R1/4, EXT. THREAD	
180	90224-0323		1	CONNECTION	
200	315233-0110		4	WASHER CAPTIVE SEALING G1/4	
205	315233-0113		1	WASHER CAPTIVE SEALING G1/2	
210	342713-0210		1	PLUG,EXT THREAD HEX SOCKET(PAK OF 10 PCS	
220	342720-0114		1	CONN. STR. GA-15-G1/2	
240	342929-0121		1	STRAIGHT COUPLING,SOLDER 8/6-8	
260	342946-0112		5	T-COUPLING,UNION 6/4	
280	342960-0112		10	BULKHEAD COUPLING 6/4	

Pos	Part No	UN	Qty	Description	Page No

This page is intentionally left blank.

ECM: 70455 - 19961129
Group number: 592987-0100
Assembly Drawing:

Pos	Part No	UN	Qty	Description	Page No
-					
030	592990-0000		1	HYDRAULIC DIAGRAM	
F020	593007-0100		1	CABLE DUCT	**2-21, 13-27**
F010	592564-0100		1	LID	**2-173, 13-29**

Pos	Part No	UN	Qty	Description	Page No

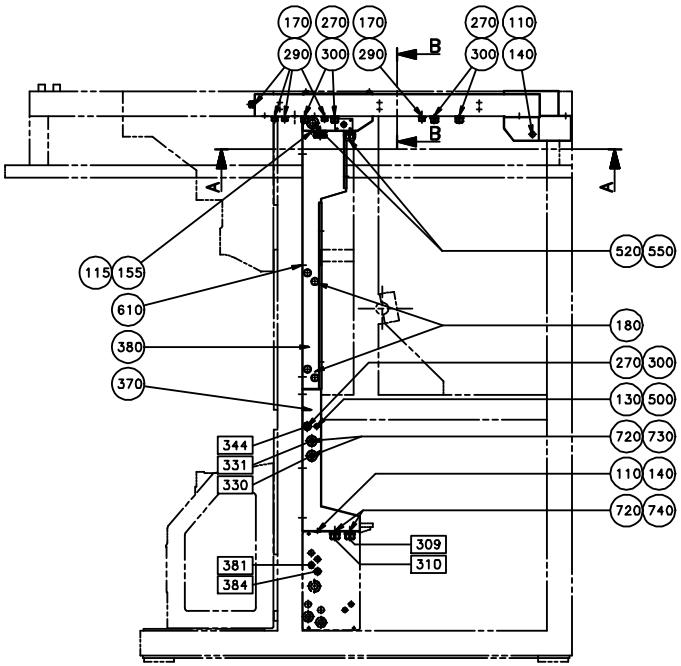
170 270 170 270 110
290 300 290 300 140
B
B
A
A
520 550
115 155
610
180
380
270 300
370
130 500
344
331
330
720 730
110 140
720 740
309
310
381
384

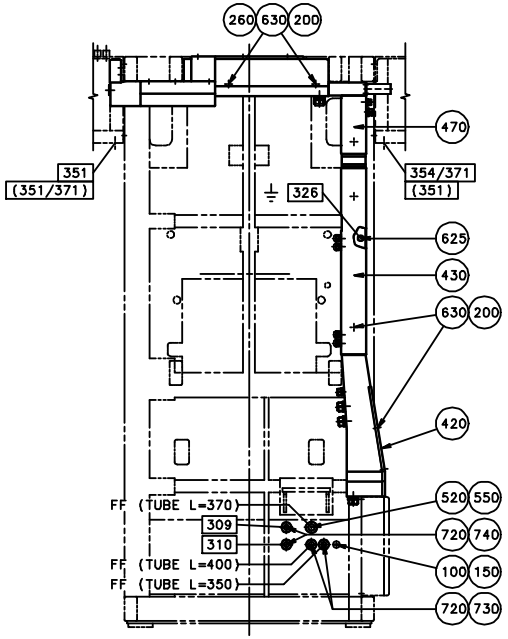
260 630 200
470
351
(351/371)
354/371
(351)
326
625
430
630 200
420
FF (TUBE L=370)
520 550
309
720 740
310
FF (TUBE L=400)
100 150
FF (TUBE L=350)
720 730

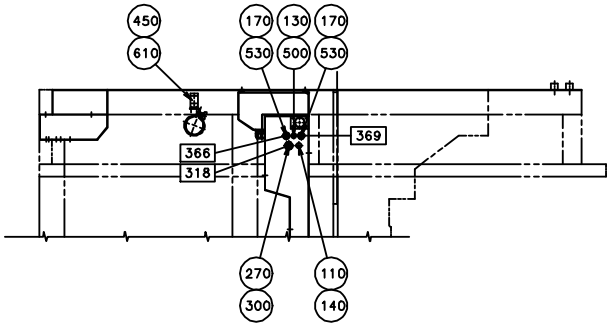
450
610
170 130 170
530 500 530
369
366
318
270 110
300 140

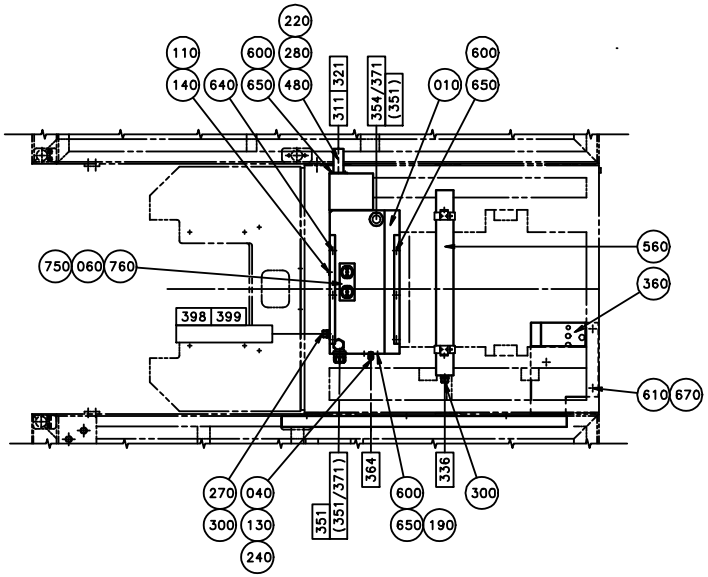
220
110
600 280
140 640 650 480
311 321
354/371
(351)
010 650
600
560
750 060 760
360
398 399
610 670
270 040
300 130
240
351
(351/371)
364
600
650 190
336
300

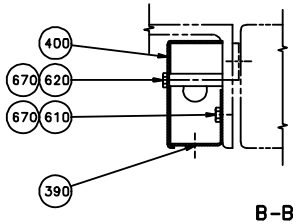
400
670 620
670 610
390

B–B

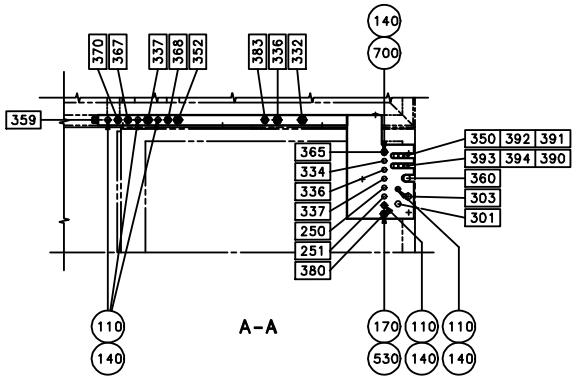
140
700
370 367
337 368 352
383 336 332
359
365
334
336
337
250
251
380
350 392 391
393 394 390
360
303
301
110
140
170 110 110
530 140 140

A–A

ECM: 70455 - 19961129
Group number: 593007-0100
Assembly Drawing: 593007-1_1_AA

Pos	Part No	UN	Qty	Description	Page No
-					
010	1143661-0000		1	CABLE DUCT	
040	464193-0000		1	ATTACHMENT PLATE	
060	1143839-0000		1	NUT PLATE	
100	90002-0004		2	BLANK-OFF PLUG, PR 22,5 SKINDICHT-BLK16	
110	90002-0009		9	BLANK-OFF PLUG, PR 18.6 SKINDICHT-BLK11	
115	90002-0010		1	BLANK-OFF PLUG, PR 37 SKINDICHT-BLK29	
130	90099-0001		3	NUT PG 9/PR 15,2	
140	90099-0002		9	NUT PR 18,6 BRASS	
155	90099-0011		1	NUT PR 37 BRASS	
170	90152-0033	MM	6800	SPIRAL CONDUIT FOR PR 15,2(PG 9)	
180	90261-0019		4	PLUG, BLIND, PLASTIC, TYPEF23	
200	315101-0136		7	WASHER BRB, 4,3/8 H=0,8	
220	342991-0108		1	HOSE CLIP 38-50MMRFR	
240	352103-0101		1	CABLE GLAND, ST 9, PR15,2/PG9	
260	352113-0205		2	ANCHOR PLATES FOR STRIPS, TYPE TM2S8-C10	
270	352135-0106	MM	3200	SPIRAL CONDUIT DI=16 MM	
290	352136-0113		5	GLAND FITTING PR18,6/PG11 DI=12MM	
300	352136-0127		9	GLAND FITTING PR 18,6	
360	575464-0000		1	CABLE DUCT	
370	540721-0000		1	CABLE DUCT	
380	450284-0000		1	CABLE DUCT	
390	450285-0000		1	CABLE DUCT	
400	450286-0000		1	LID	
420	540722-0000		1	LID	
430	450287-0000		1	LID	
450	246374-0000		2	BRACKET	
470	450290-0000		1	LID	
480	450291-0000		1	ATTACHMENT PIPE	
500	90002-0013		2	BLANK-OFF PLUG, PR 15,2 SKINDICHT-BLK9	
520	90012-0061		3	GLAND	
530	90012-0063		4	CABLE GLAND PR 15,2	
550	90152-0031	MM	2270	HOSE	
560	90164-0003		1	LIGHT FIXTURE	
	90297-0002		*1*	*FLUORESCENT TUBE, TLD 18/33*	
600	312101-0325		11	SCREW M6S M5X10 FZB	
610	312101-0364		18	SCREW M6S M6X10 FZB	
620	312101-0380		3	SCREW M6S M6X50 FZB	
625	312101-0447		1	SCREW M6S M8X12 FZB	
630	312121-0287		7	SCREW ISO 1207 M4X8 4.8 - 5.8 Z.PL.	
640	312141-0325		3	SCREW ISO 2009 MFS M5X10 4.8 EL.PL	
650	315101-0146		11	WASHER PLAIN, BRB, 5,3/10 H=1	
670	315101-0153		15	WASHER PLAIN, BRB, 6,4/12 H=1,5	
700	352103-0106		1	CABLE GLAND, ST 11, PR18,6/PG11	
720	352135-0109	MM	3700	HOSE .022	
730	352136-0142		4	GLAND FITTING	
740	352136-0143		4	GLAND FITTING	
750	353246-0001		2	GLAND FITTING, VK156D	
760	353249-0058		2	GLAND,INSERT,E156 3/10	

Machine Type | Group Description | Used-In | Group Number | Page No

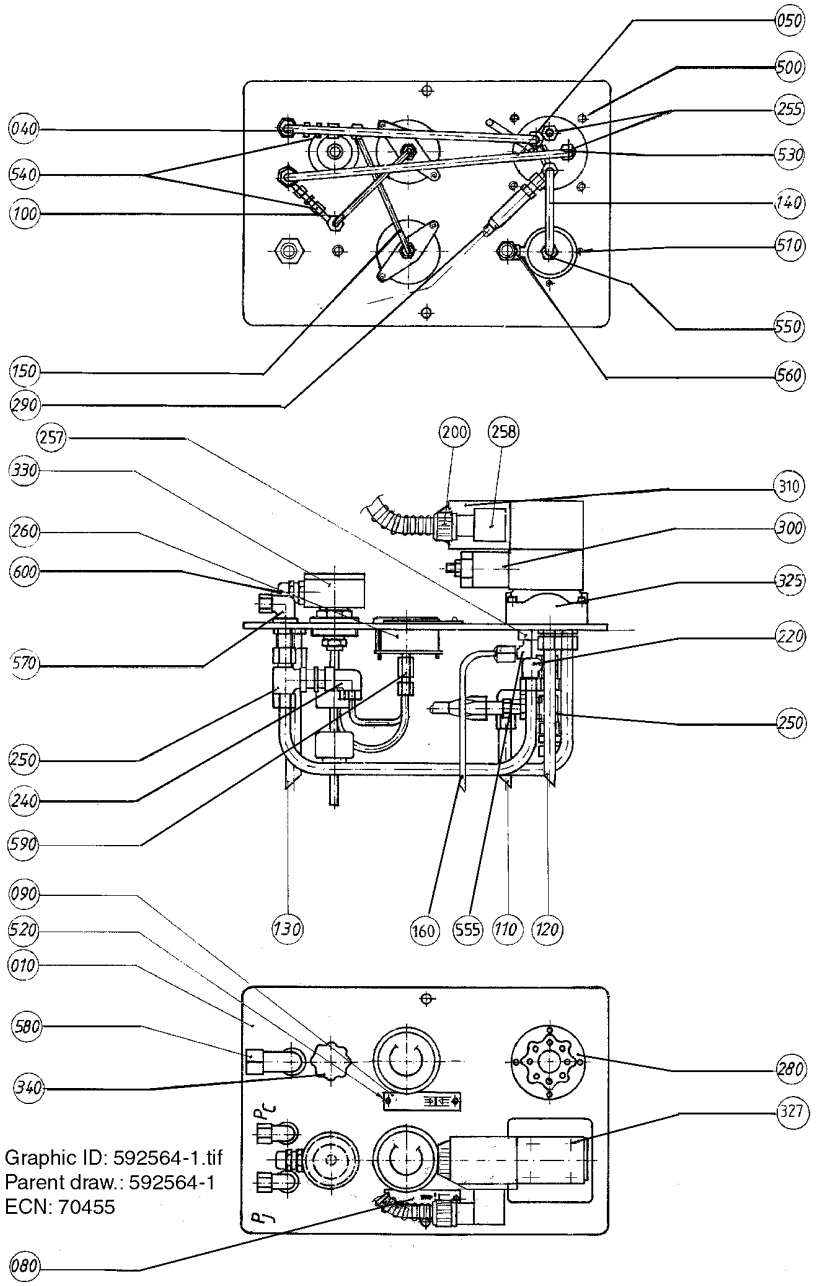
050
500
255
530
040
540
100
140
510
550
150
560
290
257
200
258
330
310
260
300
600
325
220
570
250
250
240
590
090
130
160
555
110
120
520
010
580
280
340
327
Graphic ID: 592564-1.tif
Parent draw.: 592564-1
ECN: 70455
080

ECM: 70455 - 19961129
Group number: 592564-0100
Assembly Drawing: 592564-1_1_AA

Pos	Part No	UN	Qty	Description	Page No	Pos	Part No	UN	Qty	Description	Page No
-											
010	442076-0000		1	LID							
040	434708-0000		1	PIPE							
050	434709-0000		1	PIPE							
080	247385-0000		1	SIGN							
090	247386-0000		1	SIGN							
100	434711-0000		1	PIPE							
110	434712-0001		1	PIPE							
120	434712-0002		1	PIPE							
130	434713-0000		1	PIPE							
140	434715-0000		1	PIPE							
150	434716-0000		1	PIPE							
160	592558-0000		1	TUBE							
200	90012-0063		1	CABLE GLAND PR 15,2							
220	90030-0121		1	CONN. ELBOW ADJ.,INT 10							
240	90030-0146		2	ADJUSTABLE ELBOW CONNECTION,EXT 6-G1/8							
250	90030-0120		4	ADJ. L-PIPE CONNECTION EVL, INT.T-10							
255	90030-0157		3	CONN. STR. 10-R3/8, EXT. THREAD							
257	90030-0594		1	REDUCING ADAPTER							
258	90042-0398		1	CONTACT 3 POLE+EARTH							
260	90043-0062		2	MANOMETER							
280	90113-0044		1	PRESSURE REGULATOR							
290	90148-0036		1	HOSE							
300	90201-0014		1	VALVE							
310	90201-0058		1	SOLENOID VALVE							
	90201-0334		*1*	*SOL. COIL, 24VDC,NO 507848, F.90201-0058*							
325	90201-0308		1	BLANKING, NO. DGVM-3-10-R							
327	90201-0407		1	BOLT KIT							
330	90274-0053		1	LEVEL GUARD, 40VA/250V AC/DC							
340	90277-0041		1	TANK BREATH. FILTER / UC-SAB-3101 UCC							
500	312111-0333		4	SCREW HEX.SOCK.HD.MC6S-TT 5X25 88 FZB							
510	312111-0368		4	SCREW HEX.SOCK.HD.MC6S-TT 6X16 88 FZB							
520	312502-0171		4	DRIVE SCREW ROUND HEAD KDS 2X6							
530	342713-0311		1	PLUG, EXT. THREAD HEX. SOCKET. BPS38							
540	342714-0202		2	REDUCTION KOR 10/6-LFZB							
550	342752-0104		1	CONN. STR. GA-10-G1/4							
555	342731-0102		1	CONN. ELBOW WE 6-LRFZB							
560	342731-0108		1	CONN. ELBOW WE 10-LRFZB							
570	342764-0108		2	CONN. ELBOW BULKHEAD LWSV10-LFZB							
580	342764-0114		1	CONN. ELBOW BULKHEAD LWSV15-LFZB							
590	342790-0102		2	CONN. PRESS. GAUGE MAV6-LRFZB							
600	352136-0113		1	GLAND FITTING PR18,6/PG11 DI=12MM							

This page is intentionally left blank.

ECM: 70959 - 19980127
Group number: 597528-0100
Assembly Drawing:

Pos	Part No	UN	Qty	Description	Page No
-					
0	593001-0000		1	DOCUMENT FOLDER	
010	595131-0100		1	REBUILDING KIT HOLD DOWN DEVICE	**13-33**

Pos	Part No	UN	Qty	Description	Page No

REBUILDING KIT HOLD DOWN DEVICE

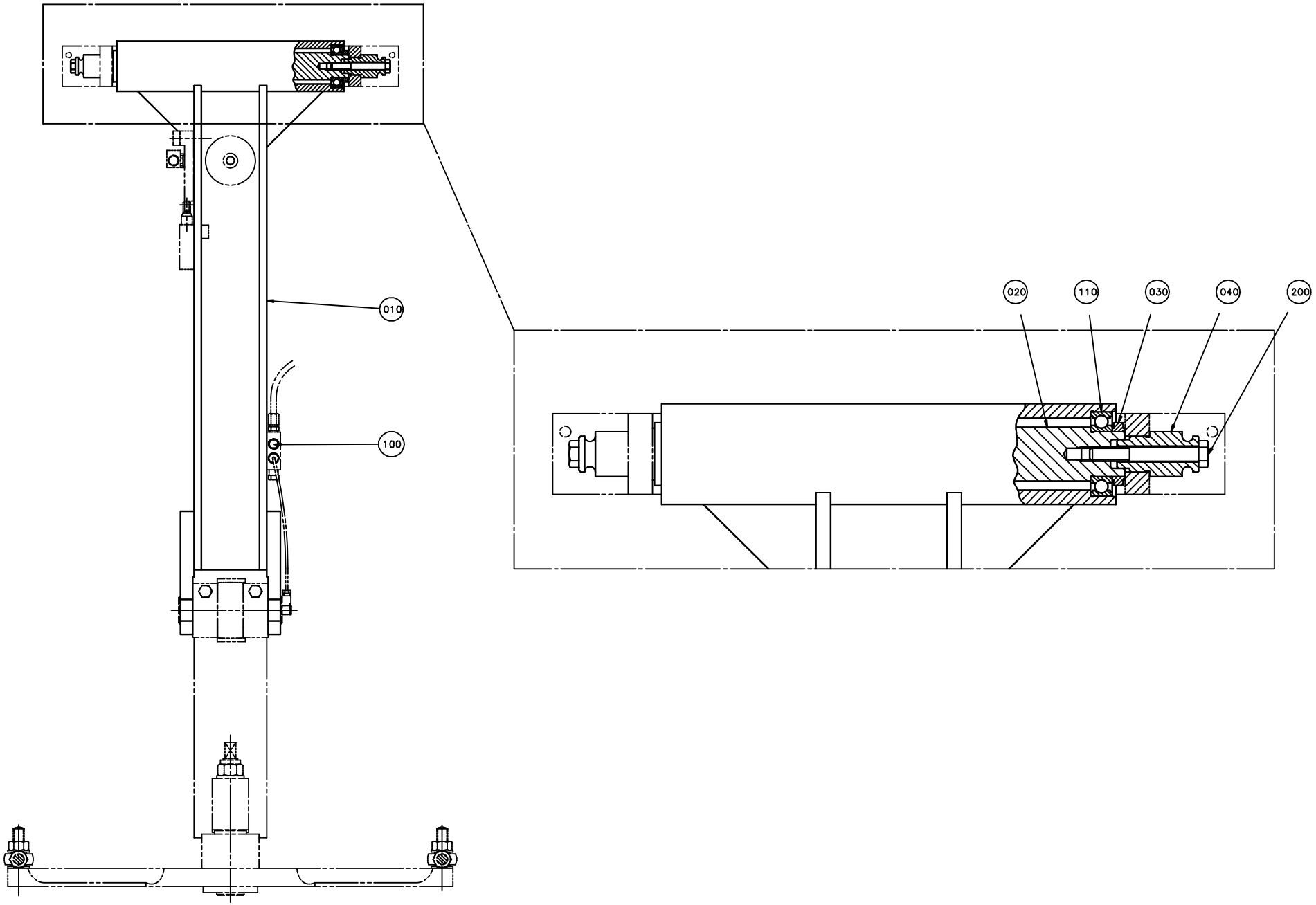

ECM: 70959 - 19980127
Group number: 595131-0100
Assembly Drawing: 595131-1_1_AA

Pos	Part No	UN	Qty	Description	Page No
-					
010	591245-0000		1	ARM	
020	591246-0000		1	SHAFT	
030	568287-0000		2	RING	
040	591247-0000		2	SLEEVE	
100	90134-0052		1	PLUG DOSING BLOCK	
110	90214-0163		2	BALL BEARING SOLID OIL 25X47X12 MM	
200	312109-0463		2	SCREW M6S ISO 4017 M8X60 A480	

Pos	Part No	UN	Qty	Description	Page No

Machine Type | Group Description | Used-In | Group Number | Page No

This page is intentionally left blank.

ECM: 70959 - 19980127
Group number: 597529-0100
Assembly Drawing:

Pos	Part No	UN	Qty	Description	Page No
-					
0	593002-0000		1	DOCUMENT FOLDER	
010	597524-0100		1	REBUILDING KIT LS SEALING	**13-37**

Pos	Part No	UN	Qty	Description	Page No

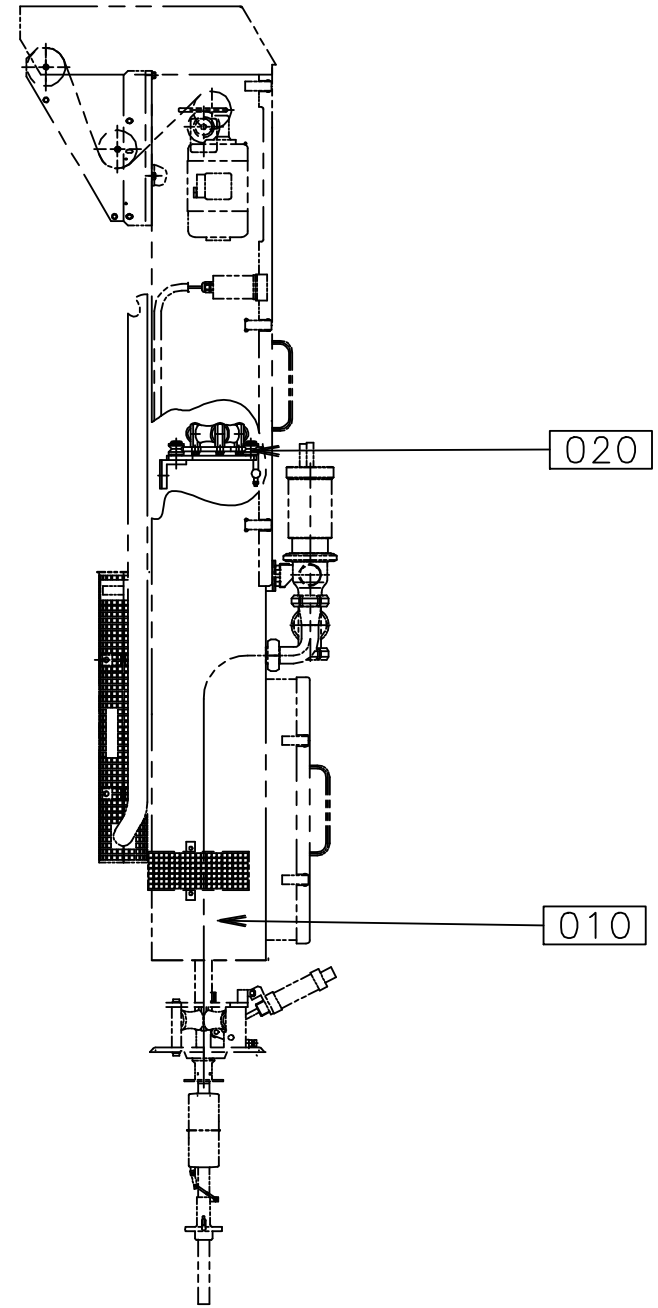
020
010

ECM: 70959 - 19980127
Group number: 597524-0100
Assembly Drawing: 597524-1_1_AA

Pos	Part No	UN	Qty	Description	Page No
-					
F020	597523-0100		1	BOW CLAMP	**13-39**
F010	595133-0100		1	AIR NOZZLE	**13-41**

Pos	Part No	UN	Qty	Description	Page No

BOW CLAMP

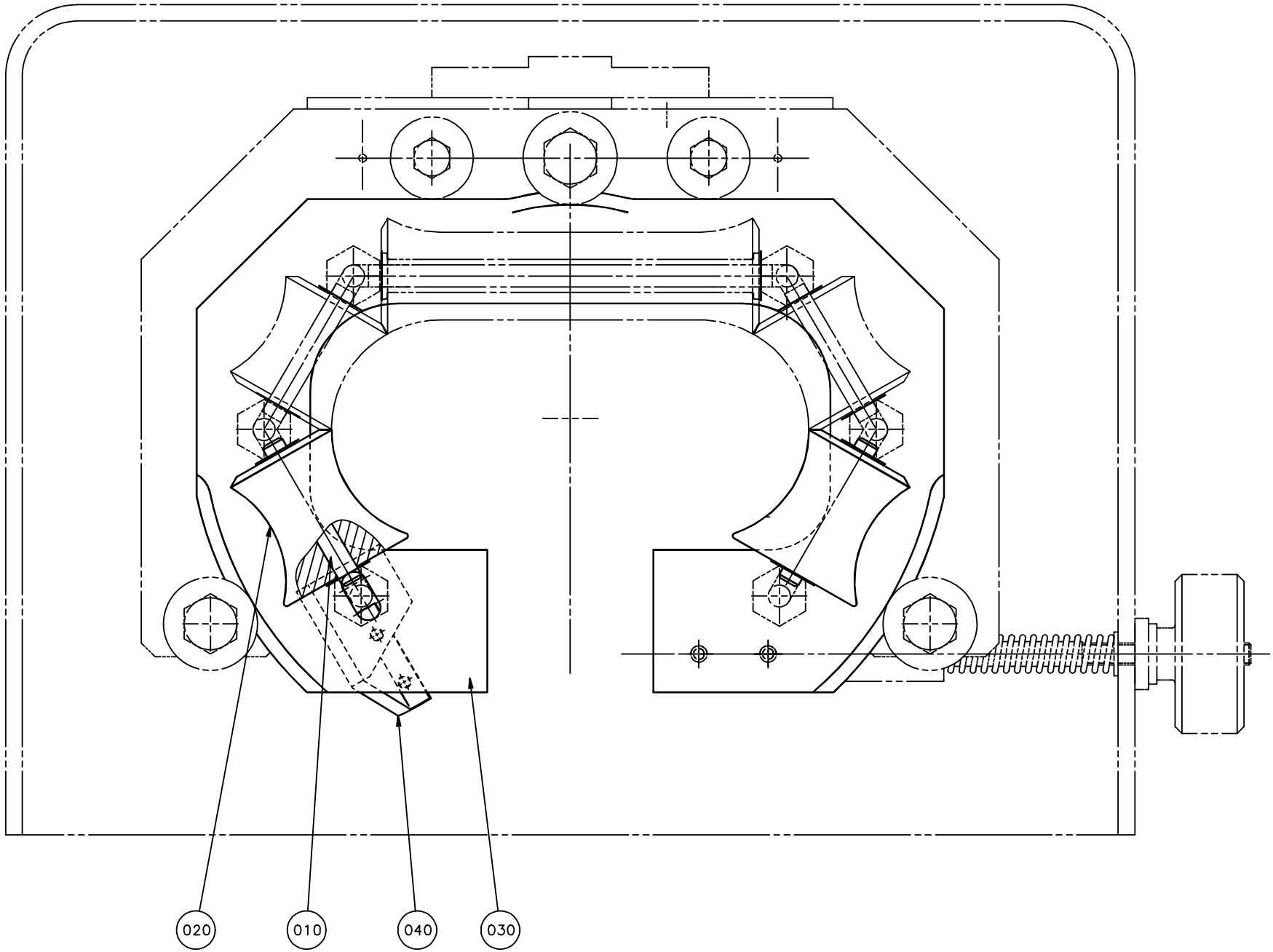

ECM: 73075 - 19991216
Group number: 597523-0100
Assembly Drawing: 597523-1_1_AA

Pos	Part No	UN	Qty	Description	Page No
-					
010	263655-0022		2	SHAFT	
020	593664-0000		2	ROLL	
030	1362456-0000		1	BOW CLAMP	
040	597545-0000		1	HOLDER	

Pos	Part No	UN	Qty	Description	Page No

AIR NOZZLE

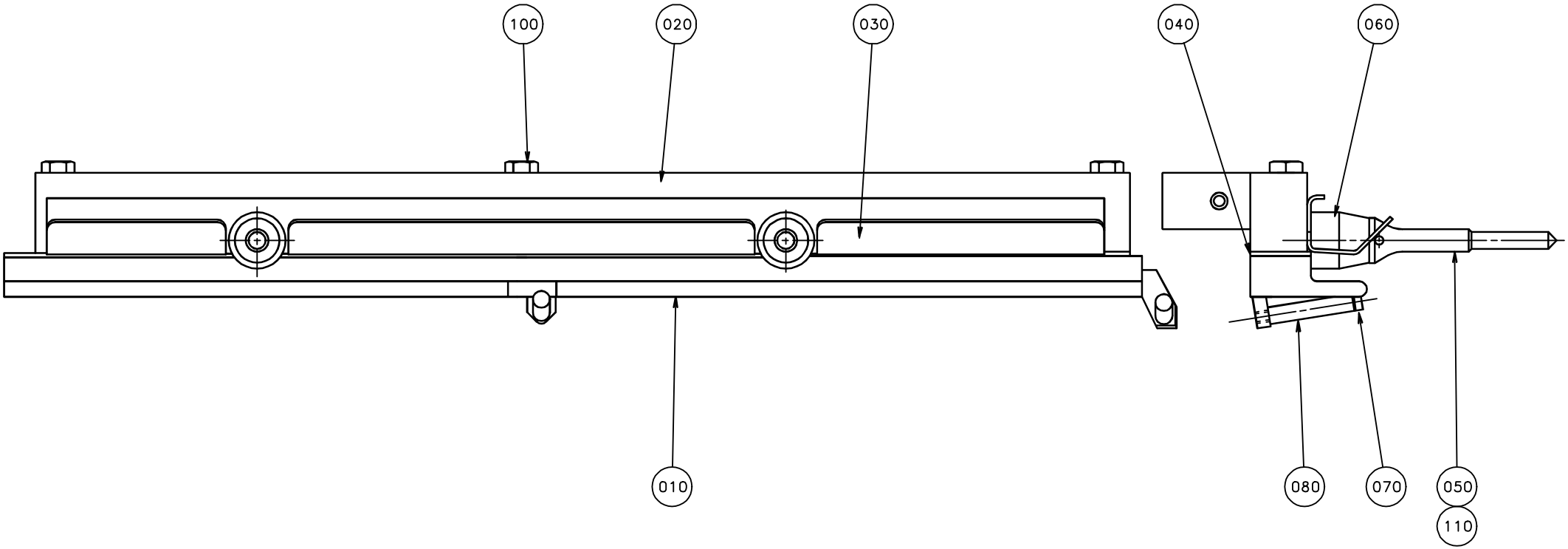

ECM: 70959 - 19980127
Group number: 595133-0100
Assembly Drawing: 595133-1_1_AA

Pos	Part No	UN	Qty	Description	Page No
-					
010	595134-0000		1	AIR NOZZLE	
020	243846-0000		1	ATTACHMENT	
030	567735-0000		1	HEAD PLATE	
040	569104-0000		1	DISTRIBUTOR WING	
050	593646-0000		2	SHAFT	
060	6161-0000		2	ROLL	
070	526690-0000		2	SHAFT	
080	526691-0000		2	ROLL	
100	312105-0376		3	SCREW M6S ISO 4014 M6X35 A480	
110	315105-0136		2	WASHER BRB 4,3X9 RFR	

Pos	Part No	UN	Qty	Description	Page No

This page is intentionally left blank.

ECM: - -
Group number: 927668-0100
Assembly Drawing:

Pos	Part No	UN	Qty	Description	Page No	Pos	Part No	UN	Qty	Description	Page No
-											
000	927664-0000		1	DOCUMENT FOLDER							
010	927667-0000		2	EXTENSION PIECE							

This page is intentionally left blank.

ECM: 70796 - 19970425
Group number: 928013-0100
Assembly Drawing:

Pos	Part No	UN	Qty	Description	Page No
-					
	451354-0007		1	INSTALLATION DRAW.	
F020-02	558628-0100		1	HYGIENIC & PROTECTION KIT	**13-47**
F020	558628-0100		1	HYGIENIC & PROTECTION KIT	**13-47**
F010	581360-0100		1	HYGIENE AND PROTECT. KIT	**13-51**
	928891-0001		1	MODIFICATION DRAWING	
	928890-0001		1	MODIFICATION DRAWING	
	928889-0001		1	MODIFICATION DRAWING	
	592342-0001		1	MODIFICATION DRAWING	

Pos	Part No	UN	Qty	Description	Page No

This page is intentionally left blank.

ECM: - -
Group number: 558628-0100
Assembly Drawing:

Pos	Part No	UN	Qty	Description	Page No
-					
0010	558629-0100		1	ELECTRIC MATERIALS	**13-49**

Pos	Part No	UN	Qty	Description	Page No

Machine Type	Group Description	Used-In	Group Number	Page No

This page is intentionally left blank.

ECM: - -
Group number: 558629-0100
Assembly Drawing:

Pos	Part No	UN	Qty	Description	Page No
-					
0010	353021-0217		4	FEED THROUGH TERMINAL, 10201.8	
0020	359011-0810		1	MARKING PLATES 5-FW 151-200	
0030	928831-0000		1	LABEL	
0080	351172-0102	M	25	CABLE AWM 1X 0,75 MM2 DARKBLUE	
0100	90194-0302		1	MARKING LABELS REBUILDING KIT	
0495	351150-0122	M	5	CABLE	
0496	351150-0122	M	5	CABLE	
Q014	90259-0306		1	AUX CONTACT	
Q030	90259-0306		1	AUX CONTACT	

Pos	Part No	UN	Qty	Description	Page No

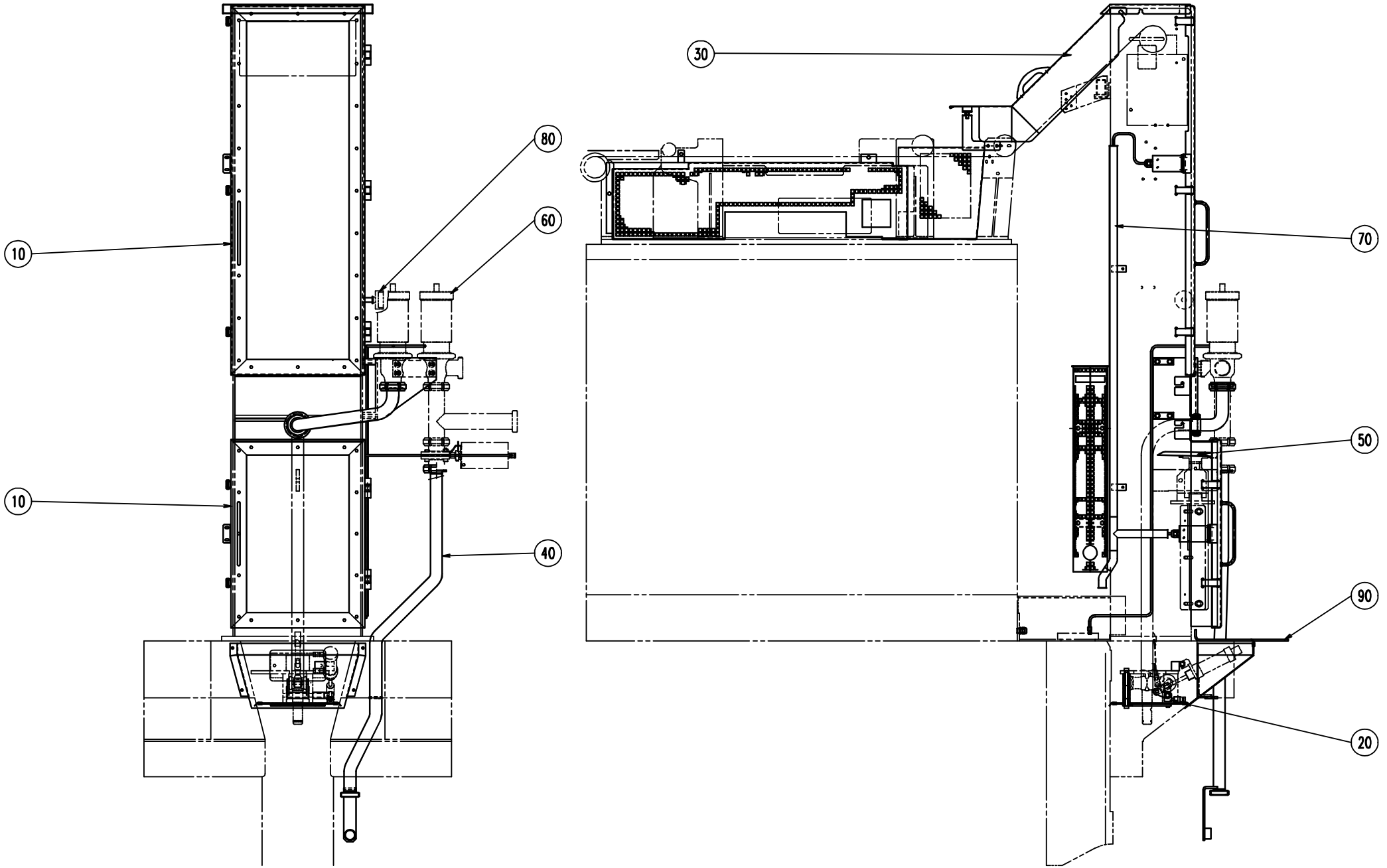
30
80
60
10
10
40
70
50
90
20

ECM: 73488 - 20000224
Group number: 581360-0100
Assembly Drawing: 581360-1_1_AA

Pos	Part No	UN	Qty	Description	Page No
-					
010	593748-0100		1	DOOR	**13-53**
010	581338-0100		1	DOOR	**13-55**
020	581358-0100		1	REBUILDING KIT L.FORM.RIN	**13-57**
030	581359-0100		1	REBUILDING KIT,PROTECTION	**13-59**
040	581361-0100		1	REBUILDING KIT	**13-61**
050	581362-0100		1	REBUILDING KIT CANTILEVER	**13-63**
060	581364-0100		1	REBUILDING KIT VALVE	**13-65**
070	581365-0100		1	REBUILDING KIT,CABLE COU.	**13-67**
080	581366-0100		1	REBUILDING KIT MOVABLE F.	**13-69**
090	581367-0100		1	REBUILDING KITPLATFORM	**13-71**

Pos	Part No	UN	Qty	Description	Page No

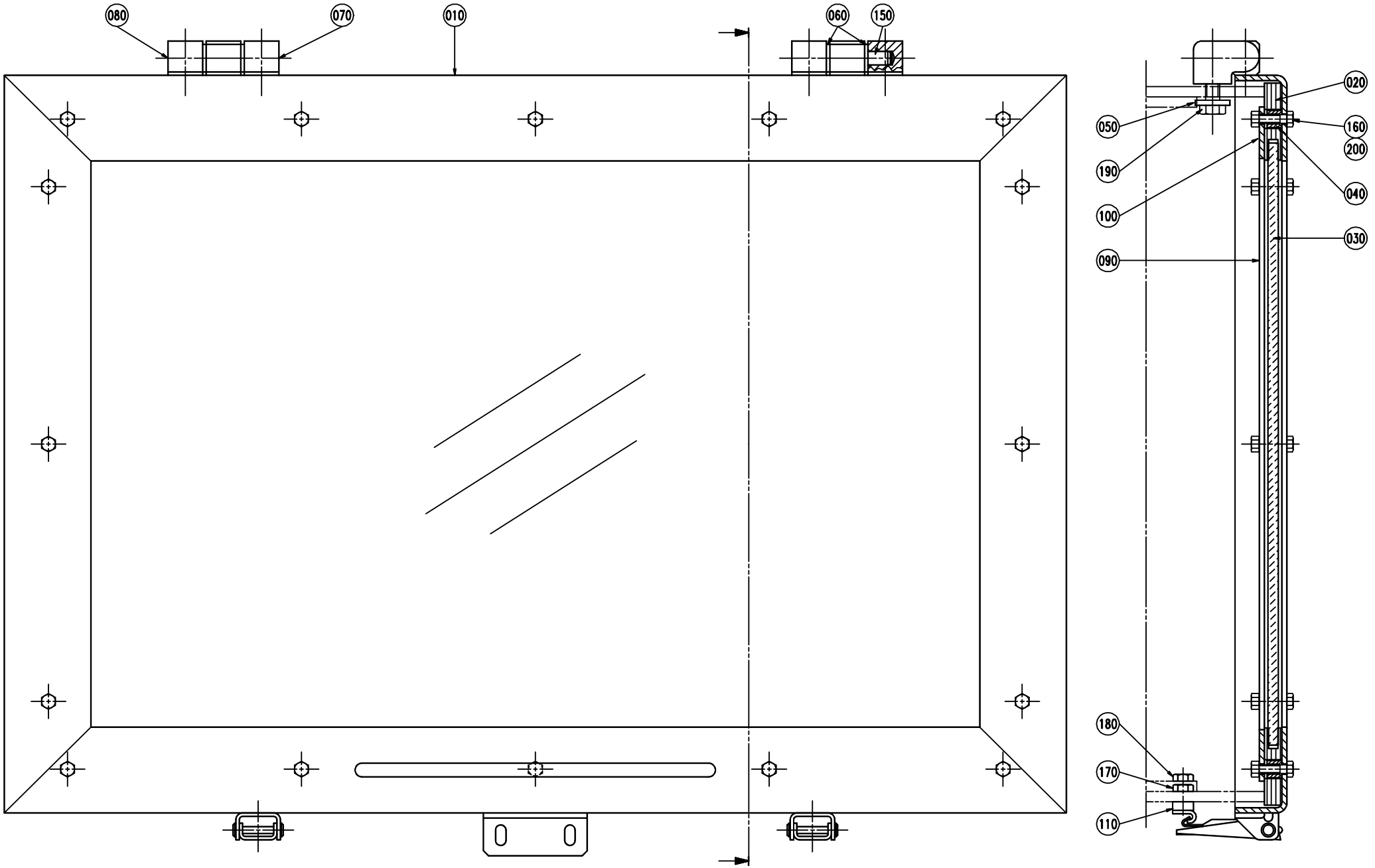
080
070
010
060
150
020
050
160
200
190
040
100
030
090
180
170
110

ECM: 70748 - 19970404
Group number: 593748-0100
Assembly Drawing: 593748-1_1_AA

Pos	Part No	UN	Qty	Description	Page No
-					
010	573614-0000		1	DOOR	
020	252798-0000		1	RUBBER STRIP	
030	252733-0000		1	GLASS PANE	
040	441718-0000		16	SPACER	
050	441737-0000		2	WASHER	
060	441739-0000		4	WASHER	
070	441740-0000		2	HINGE FLANGE	
080	441741-0000		2	HINGE FLANGE	
090	573615-0000		2	COVER SLIP	
100	573617-0000		2	COVER SLIP	
110	271860-0000		2	CLAMP BLOCK	
150	311103-0413		2	PARALLEL PIN ISO 2338 8M6X50 A1	
160	312105-0331		16	SCREW M6S ISO 4017 M5X20 A480	
170	312105-0366		2	SCREW M6S ISO 4017 M6X12 A480	
180	312105-0370		2	SCREW M6S ISO 4017 M6X20 A480	
190	312105-0451		4	SCREW M6S ISO 4017 M8X20 A480	
200	312605-0314		16	HEXAGON NUT, M6M M5 A280	

Pos	Part No	UN	Qty	Description	Page No

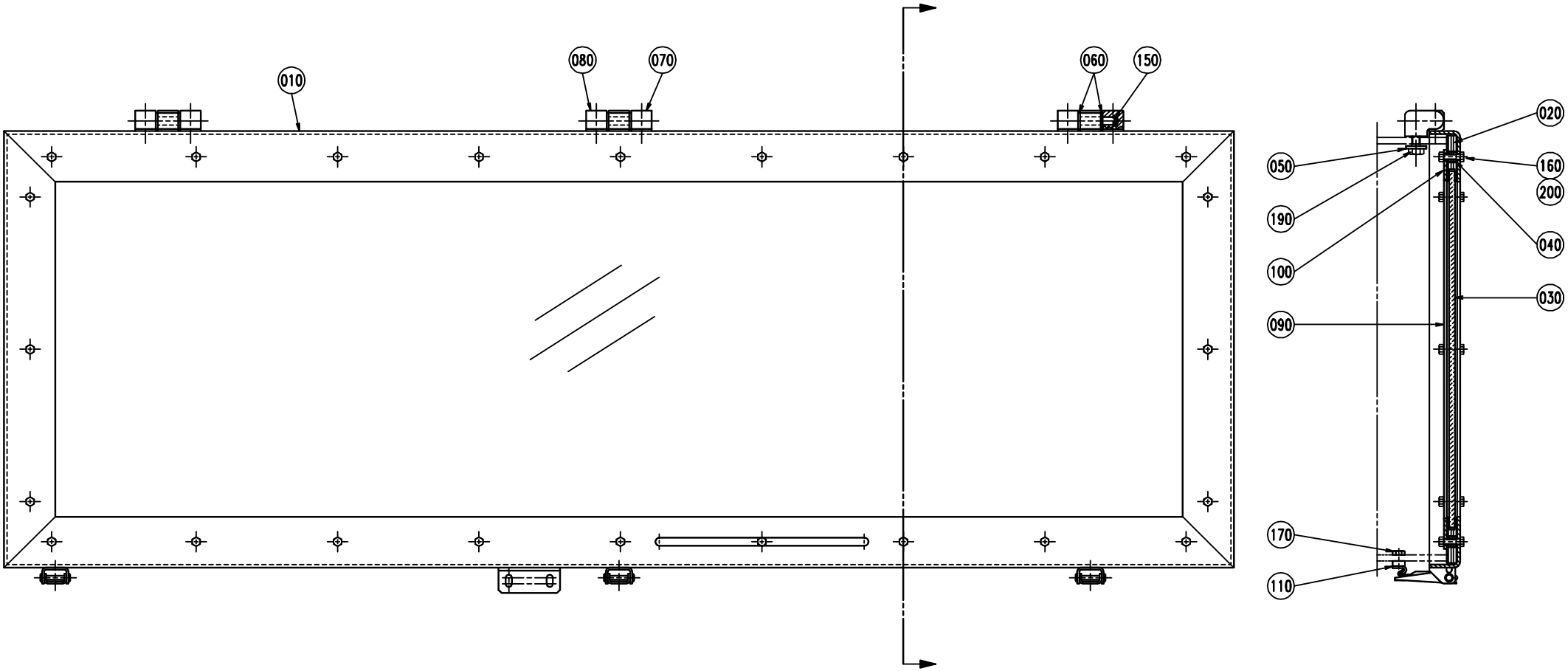
010
080
070
060
150
020
050
160
200
190
040
100
030
090
170
110

ECM: 70748 - 19970404
Group number: 581338-0100
Assembly Drawing: 581338-1_1_AA

Pos	Part No	UN	Qty	Description	Page No
-					
010	581337-0000		1	DOOR	
020	581343-0000		1	RUBBER STRIP	
030	581344-0000		1	GLASS PANE	
040-02	441718-0000		24	SPACER	
050-02	441737-0000		3	WASHER	
060-02	441739-0000		6	WASHER	
070-02	441740-0000		3	HINGE FLANGE	
080-02	441741-0000		3	HINGE FLANGE	
090	573615-0000		2	COVER SLIP	
100	581342-0000		2	COVER SLIP	
110-02	271860-0000		3	CLAMP BLOCK	
150-02	311103-0413		3	PARALLEL PIN ISO 2338 8M6X50 A1	
160-02	312105-0331		24	SCREW M6S ISO 4017 M5X20 A480	
170-02	312105-0366		6	SCREW M6S ISO 4017 M6X12 A480	
190-02	312105-0451		6	SCREW M6S ISO 4017 M8X20 A480	
200-02	312605-0314		24	HEXAGON NUT, M6M M5 A280	

Pos	Part No	UN	Qty	Description	Page No

REBUILDING KIT L.FORM.RIN

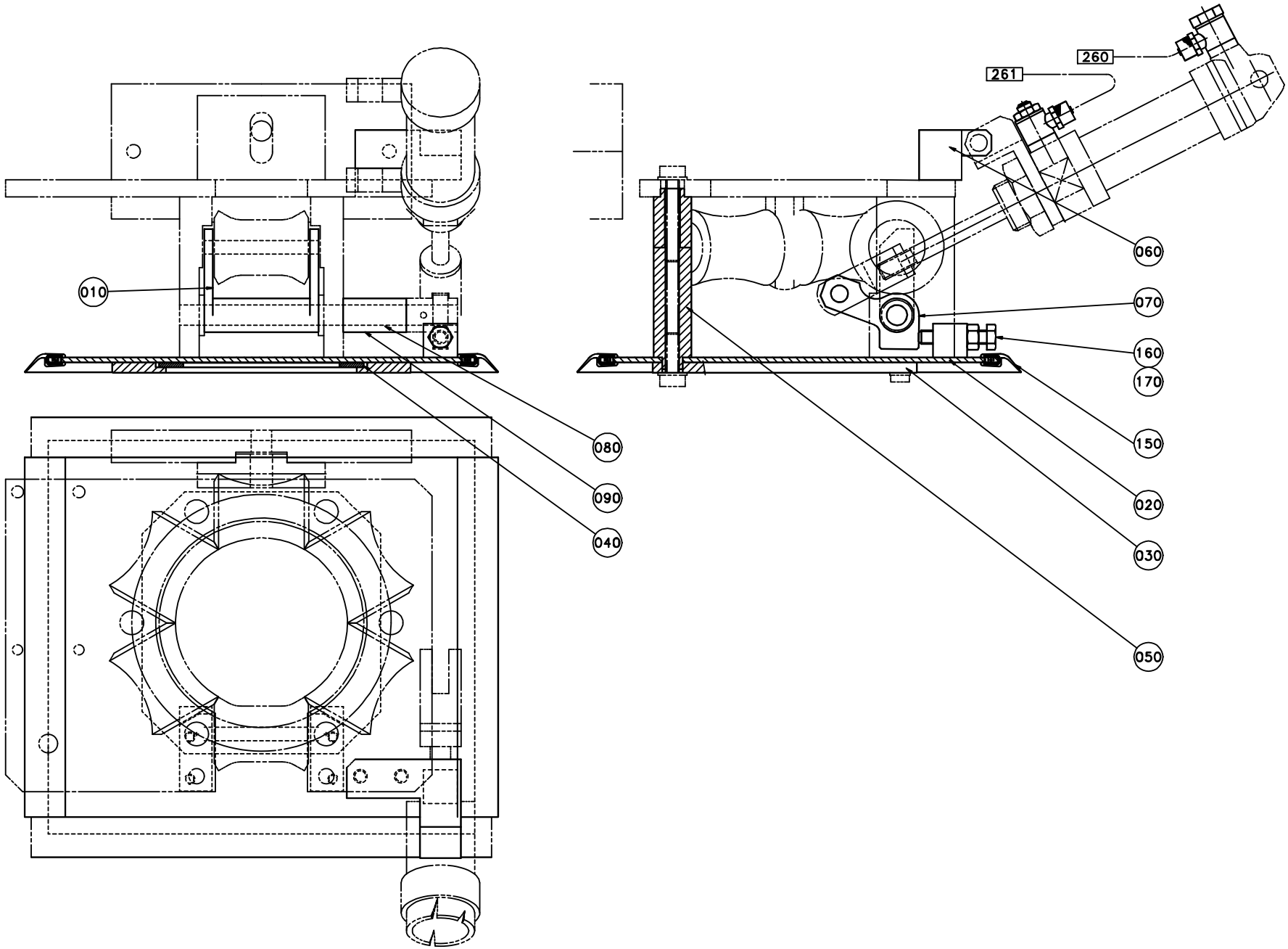

ECM: 73075 - 19991216
Group number: 581358-0100
Assembly Drawing: 581358-1_1_AA

Pos	Part No	UN	Qty	Description	Page No
0300B					
010	927587-0000		1	FORK	
020	927590-0000		1	CAP NUT	
030	927602-0000		1	RING	
040	581370-0002		1	RING	
080	927734-0001		1	SHAFT	
090	927735-0001		1	SPACER	
0500B, 1136B, 0568B, 1000B					
010	927586-0000		1	FORK	
020	927591-0000		1	CAP NUT	
030	927601-0000		1	RING	
040	581370-0001		1	RING	
080	927734-0002		1	SHAFT	
090	927735-0001		1	SPACER	
1000S					
010	927588-0000		1	FORK	
020	927589-0000		1	CAP NUT	
030	927603-0000		1	RING	
040	581370-0004		1	RING	
080	927734-0002		1	SHAFT	
090	927735-0002		1	SPACER	
1000SQ, 0500SQ, 0568SQ					
010	927588-0000		1	FORK	
020	1362493-0000		1	BOTTOM PLATE	
030	927603-0000		1	RING	
040	581370-0003		1	RING	
080	927734-0002		1	SHAFT	
090	927735-0002		1	SPACER	
Common Parts					
050	927592-0000		2	SUPPORT	
060	927593-0000		1	CYLINDER CONSOLE	
070	927594-0000		1	ARM	
150	90143-0050	M	1	STRIP	
160	312109-0460		1	SCREW M6S ISO 4017 M8X45 A480	
170	312605-0318		1	HEXAGON NUT, M6M M8 A280	

Pos	Part No	UN	Qty	Description	Page No

Machine Type | Group Description | Used-In | Group Number | Page No

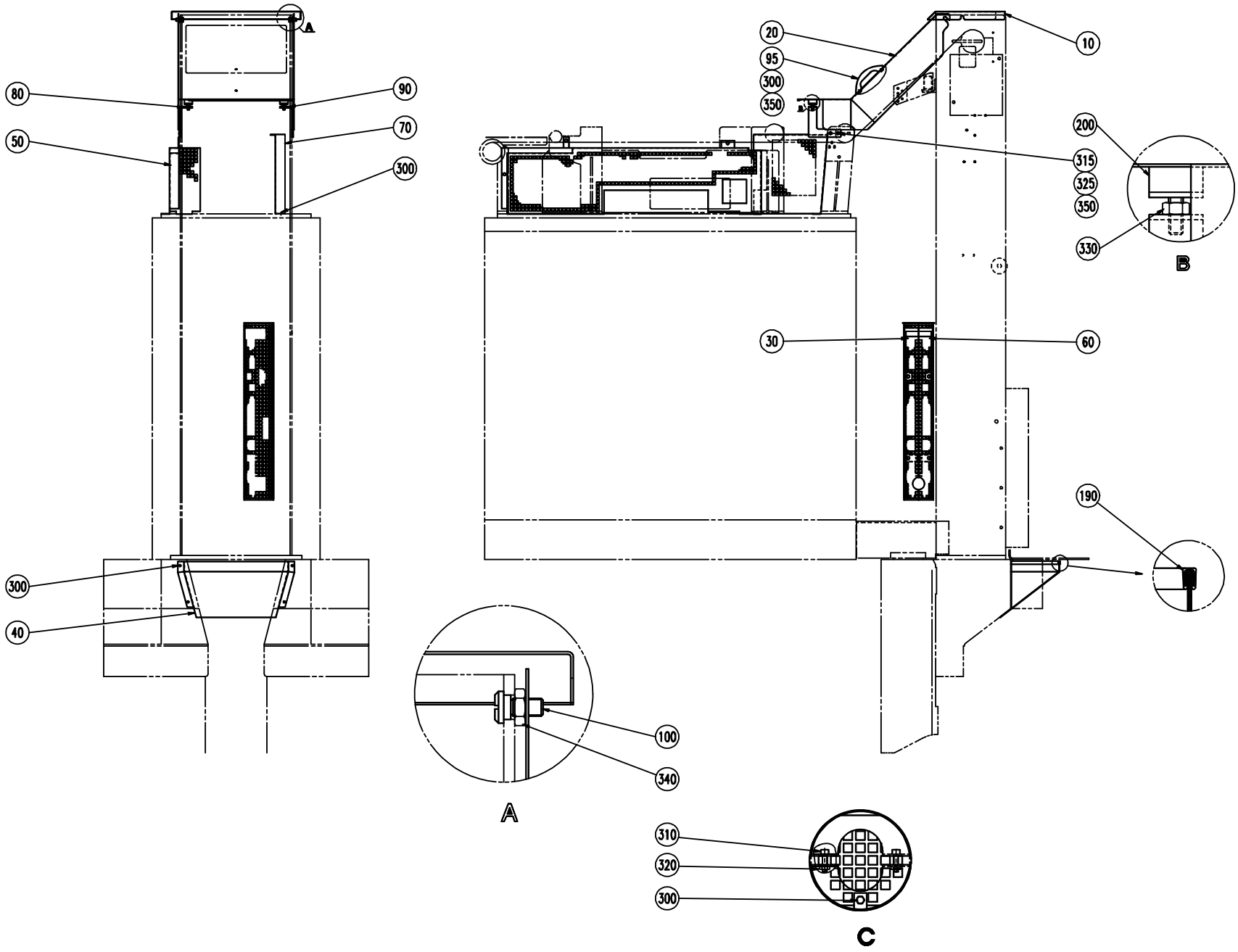
A
80
90
50
70
300
300
40
20
95
300
350
10
200
315
325
350
330
B
30
60
190
100
340
A
310
320
300
C

ECM: 71967 - 19981102
Group number: 581359-0100
Assembly Drawing: 581359-1_1_AA

Pos	Part No	UN	Qty	Description	Page No
0500B, 1136B, 1000SQ, 0500SQ, 0500S, 1000S, 0568SQ, 0568B, 0300B, 1000B					
020	581334-0000		1	COVER	
1500B					
020	592587-0000		1	COVER	
Common Parts					
010	581333-0000		1	COVER	
030	927595-0000		1	COVER	
040	927596-0000		1	COVER	
050	927621-0000		1	COVER	
060	927625-0000		1	COVER	
070	927660-0000		1	TOUCH GUARD	
080	581350-0000		1	SUPPORT	
090	581351-0000		1	SUPPORT	
095	7309-0000		1	HANDLE	
100	581348-0000		2	SCREW	
190	90143-0060	MM	710	EDGE STRIP 9,5X6,3MM BLACK PVC	
200	90347-0004		2	VIBRATION DAMPER D=30 TH=M8 H=17 H2=21MM	
300	312105-0364		9	SCREW M6S ISO 4017 M6X10 A480	
310	312115-0331		4	SCREW ISO4762 M5X20 A4 80	
315	312105-0372		4	SCREW M6S ISO 4017 M6X25 A480	
320	312605-0314		4	HEXAGON NUT, M6M M5 A280	
325	312605-0316		4	HEXAGON NUT, M6M M6 A280	
330	312605-0318		2	HEXAGON NUT, M6M M8 A280	
340	312625-0322		2	HEXAGON THIN NUT, EN 24035 ML6M M12 A4	
350	315105-0153		6	WASHER BRB 6,4X12 RFR	

Pos	Part No	UN	Qty	Description	Page No

Machine Type | Group Description | Used-In | Group Number | Page No

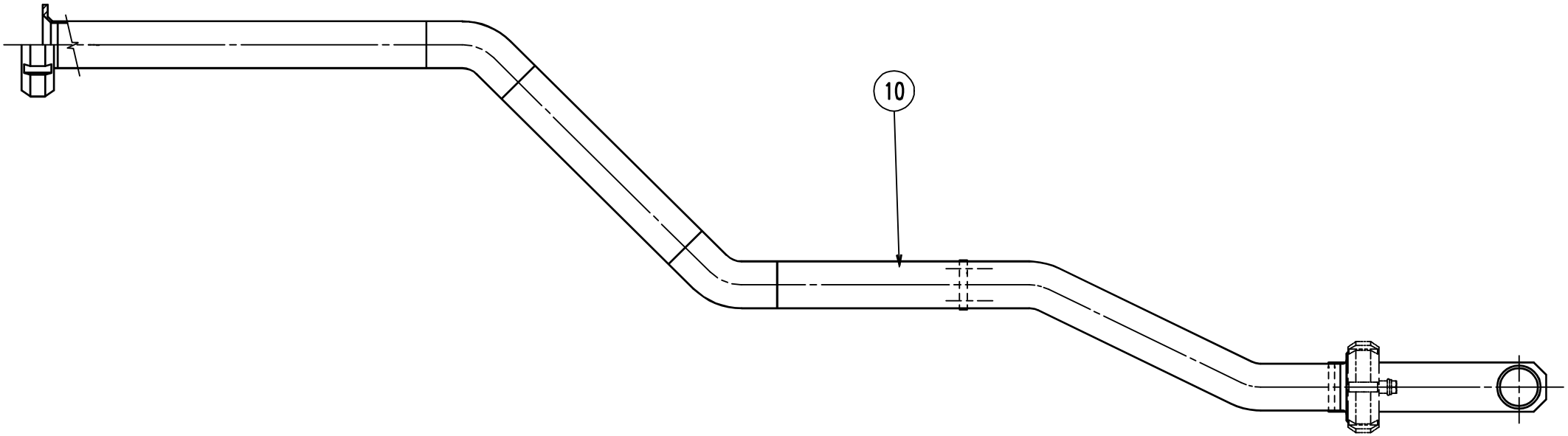
10

ECM: - -
Group number: 581361-0100
Assembly Drawing: 581361-1_1_AA

Pos	Part No	UN	Qty	Description	Page No	Pos	Part No	UN	Qty	Description	Page No
-											
010	927618-0000		1	CLEANING PIPE							

Machine Type	Group Description	Used-In	Group Number	Page No

REBUILDING KIT CANTILEVER

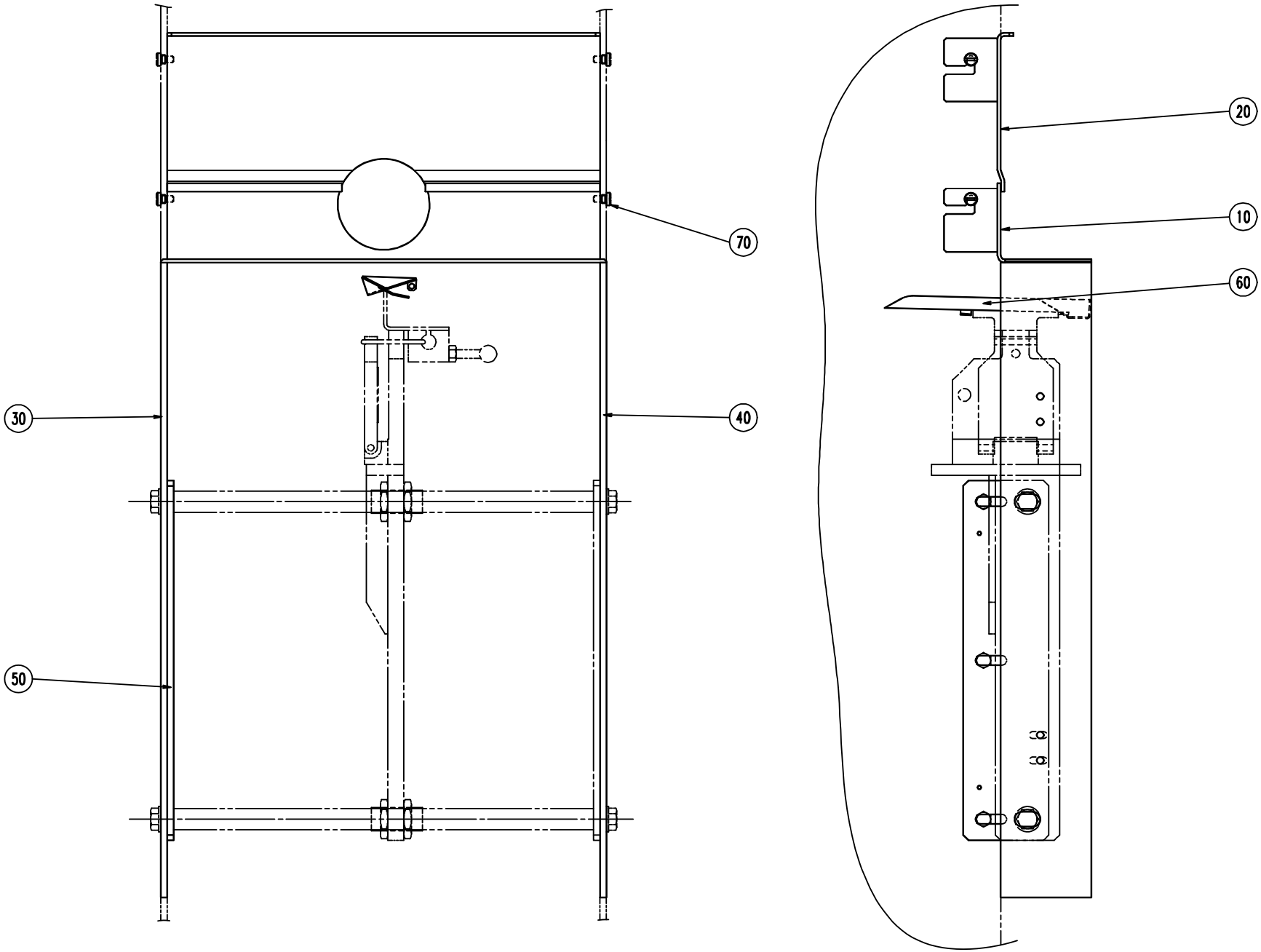

ECM: - -
Group number: 581362-0100
Assembly Drawing: 581362-1_1_AA

Pos	Part No	UN	Qty	Description	Page No
-					
010	581335-0000		1	CANTILEVER	
020	581336-0000		1	CANTILEVER	
030	581339-0000		1	CANTILEVER	
040	581340-0000		1	CANTILEVER	
050	581363-0000		1	FASTENING PLATE	
060	581345-0000		1	DRIP GUARD	
070	581349-0000		4	SCREW	

Pos	Part No	UN	Qty	Description	Page No

Machine Type	Group Description	Used-In	Group Number	Page No

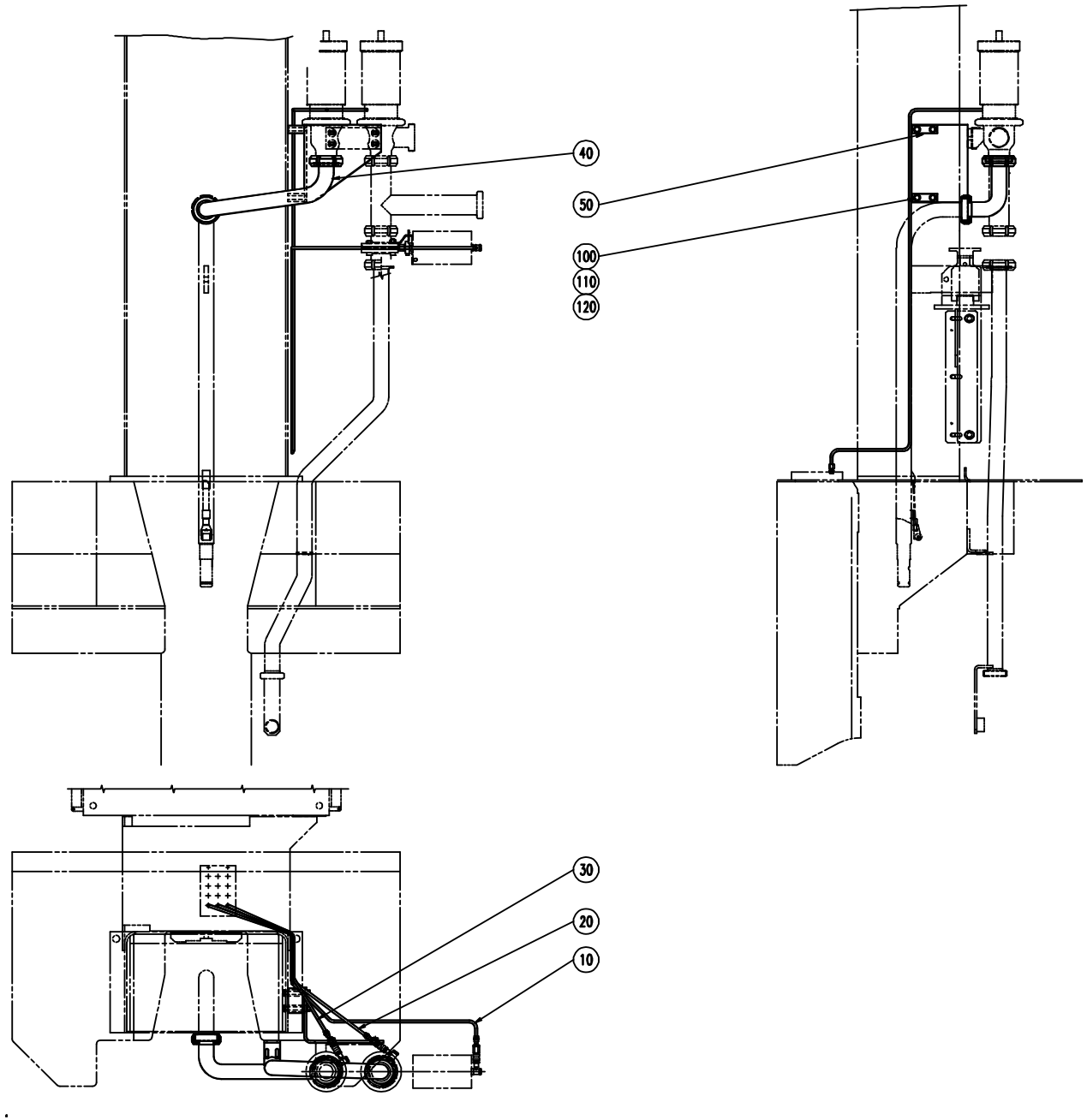
40
50
100
110
120
30
20
10

ECM: - -
Group number: 581364-0100
Assembly Drawing: 581364-1_1_AA

Pos	Part No	UN	Qty	Description	Page No
-					
010	581354-0000		1	PIPE	
020	581355-0000		1	PIPE	
030	581356-0000		1	PIPE	
040	581346-0000		1	PIPE-LINE	
050	581368-0000		1	CANTILEVER	
100	312105-0465		4	SCREW M6S ISO 4014 M8X70 A480	
110	312605-0318		4	HEXAGON NUT, M6M M8 A280	
120	315115-0165		8	WASHER PLAIN, TBRB 8,4/16 H=3	

Pos	Part No	UN	Qty	Description	Page No

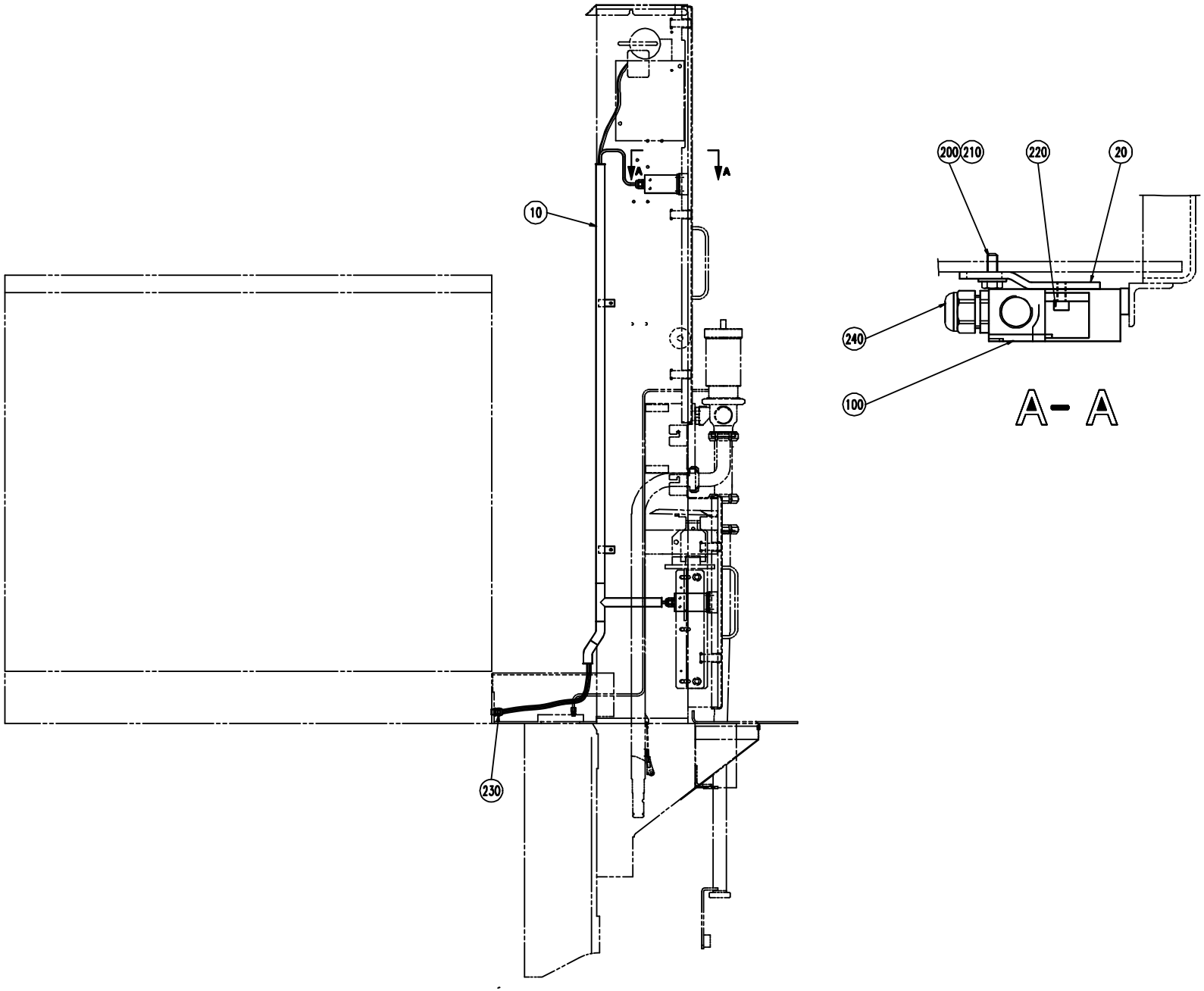
10
230
A
A
200
210
220
20
240
100
A- A

ECM: - -
Group number: 581365-0100
Assembly Drawing: 581365-1_1_AA

Pos	Part No	UN	Qty	Description	Page No
-					
010	581369-0000		1	CABLE CONDUIT	
020	978531-0000		2	BRACKET	
100	90044-0103		2	KEY SAFETY SWITCH AZ 15 ZVR-2254	
	90044-0310		*1*	*KEY FOR SAFETY SWITCH AZ 15/16 B1*	
200	312105-0368		4	SCREW M6S ISO 4017 M6X16 A480	
210	315115-0153		4	WASHER PLAIN, TBRB 6,4/12 H=3	
220	312115-0329		4	SCREW ISO4762 M5X16 A4 80	
230	352103-0101		2	CABLE GLAND, ST 9, PR15,2/PG9	
240	352103-0105		2	CABLE GLAND, STR 11, PR 18,6/PG11	

Pos	Part No	UN	Qty	Description	Page No

REBUILDING KIT MOVABLE F.

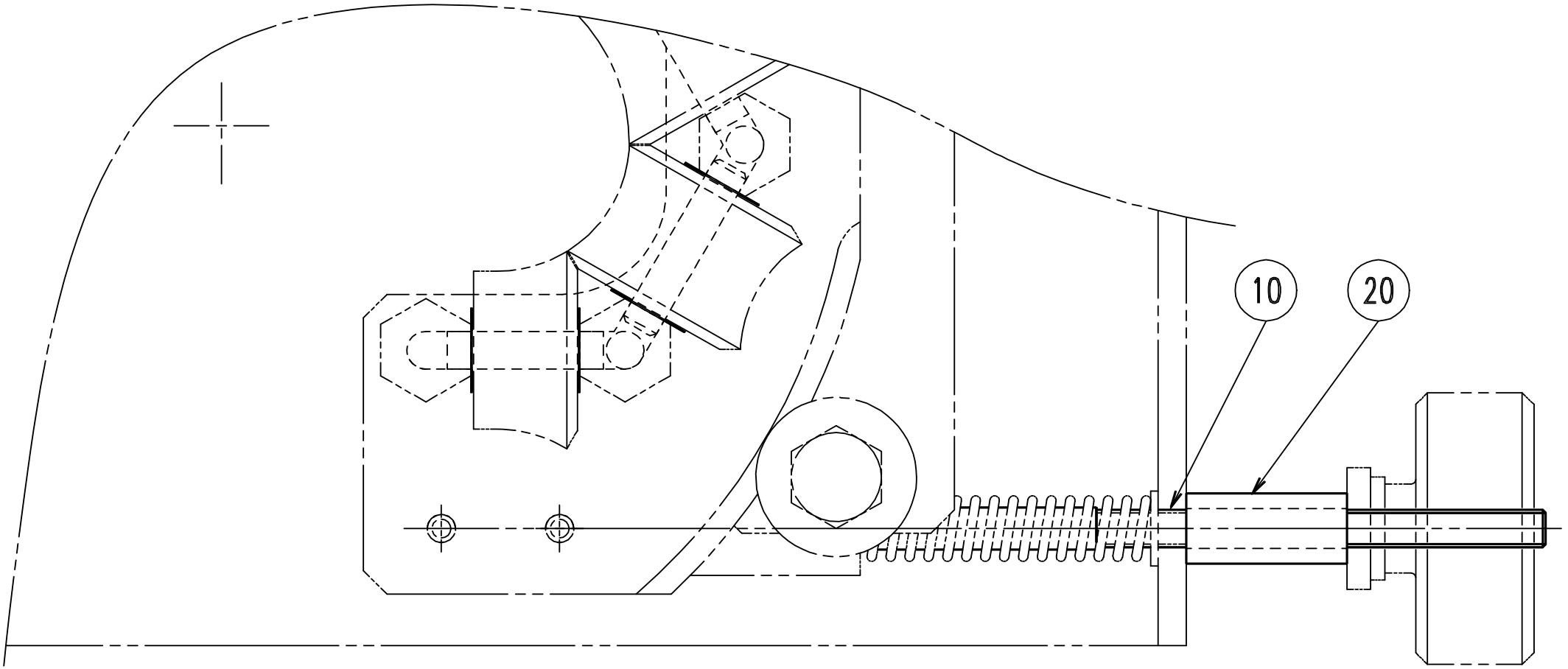

ECM: - -
Group number: 581366-0100
Assembly Drawing: 581366-1_1_AA

Pos	Part No	UN	Qty	Description	Page No	Pos	Part No	UN	Qty	Description	Page No
-											
010	581352-0000		1	SHAFT							
020	581347-0000		1	SPACER							

Machine Type	Group Description	Used-In	Group Number	Page No

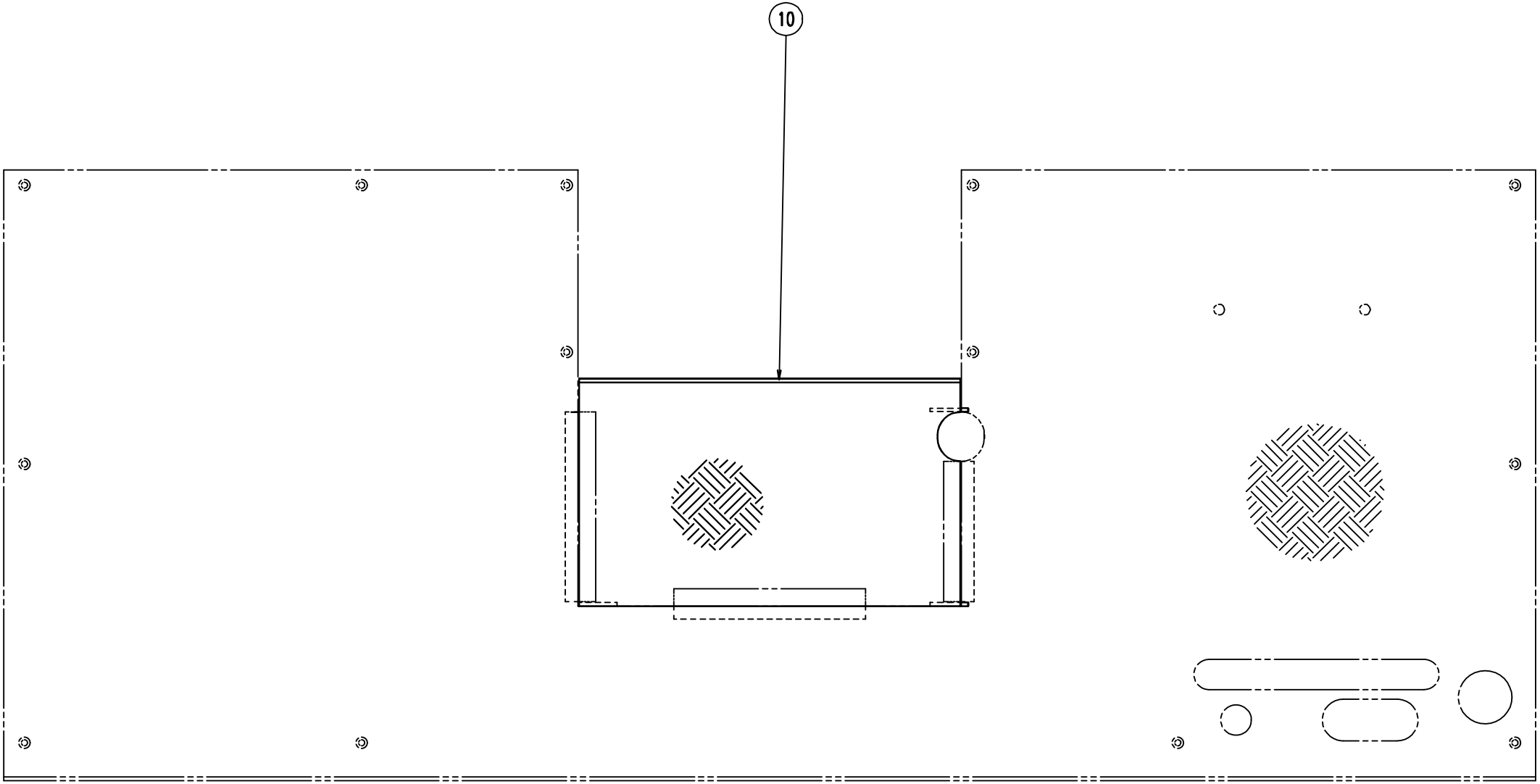
10

ECM: - -
Group number: 581367-0100
Assembly Drawing: 581367-1_1_AA

Pos	Part No	UN	Qty	Description	Page No	Pos	Part No	UN	Qty	Description	Page No
-											
010	581357-0000		1	HATCH							

This page is intentionally left blank.

ECM: - -
Group number: 1143220-0101
Assembly Drawing:

Pos	Part No	UN	Qty	Description	Page No
-					
000	582889-0000		1	DOCUMENT FOLDER	
040	1143143-0000		2	CUTTING JAW	
F010	1143222-0101		2	TPC-BAR	
F020	1143224-0101		2	REBUILDING KIT KNIFE HOL.	**13-75**
F030	1143225-0101		2	REBUILDING KIT PRESS.JAW	**13-77**

Pos	Part No	UN	Qty	Description	Page No

Machine Type	Group Description	Used-In	Group Number	Page No

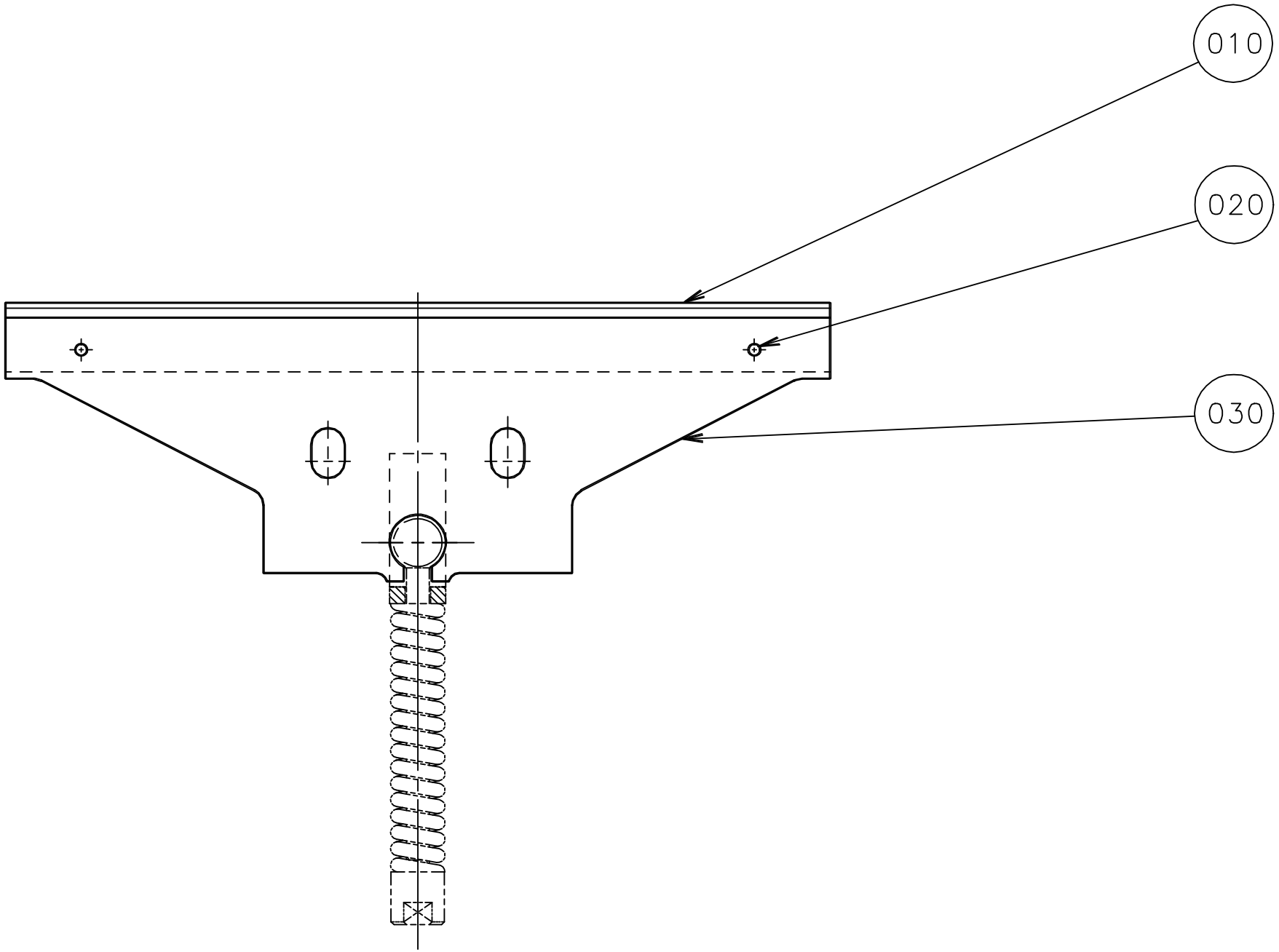
010
020
030

ECM: - -
Group number: 1143224-0101
Assembly Drawing: 1143224-1_1_AA

Pos	Part No	UN	Qty	Description	Page No	Pos	Part No	UN	Qty	Description	Page No
-											
010	927753-0000		1	KNIFE							
020	456011-0000		2	PIN							
030	1143142-0000		1	KNIFE HOLDER							

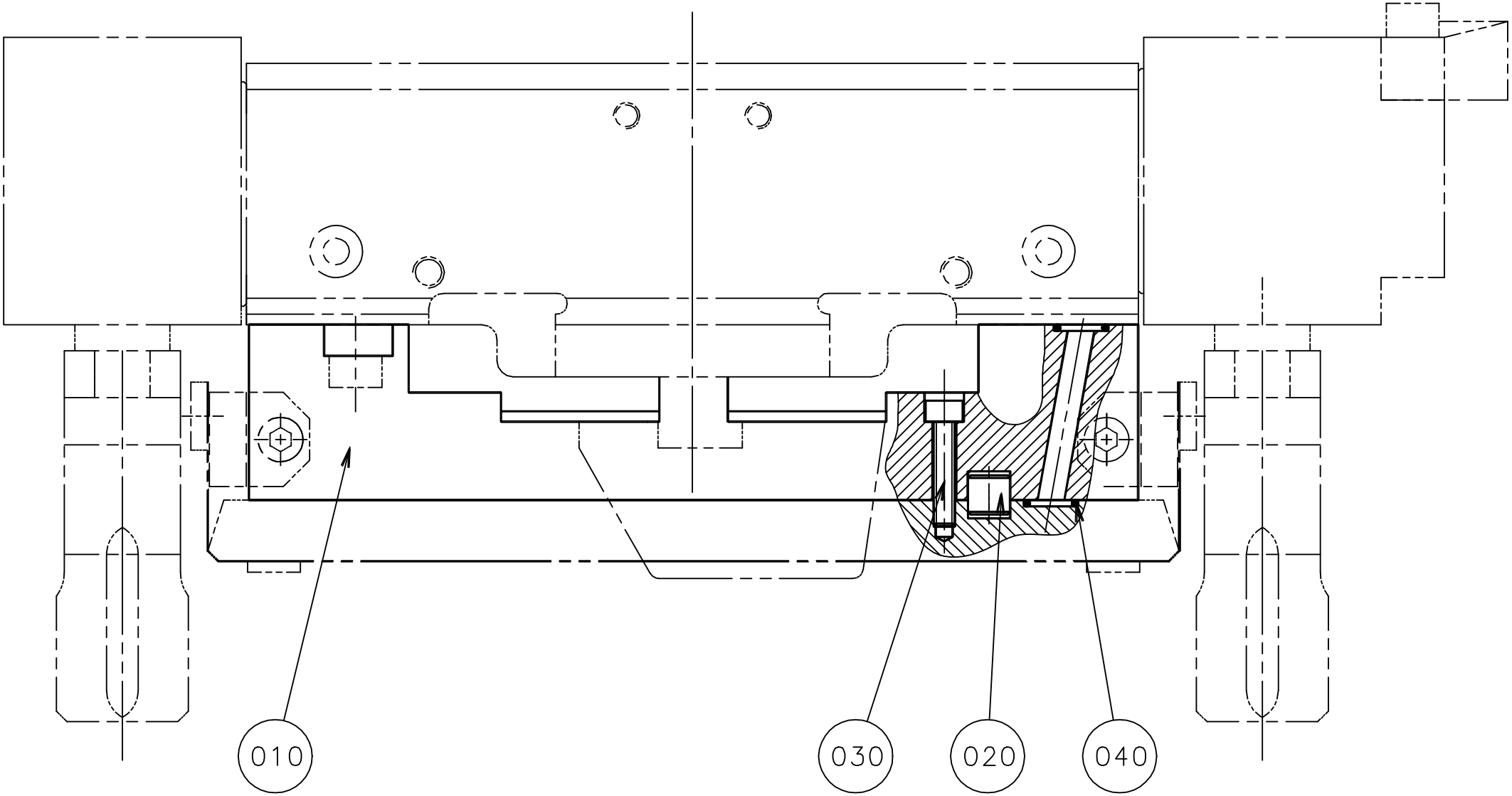
010
030
020
040

ECM: - -
Group number: 1143225-0101
Assembly Drawing: 1143225-1_1_AA

Pos	Part No	UN	Qty	Description	Page No	Pos	Part No	UN	Qty	Description	Page No
-											
010	1143144-0000		1	RAIL							
020	107426-0000		4	GUIDE SLEEVE							
030	312115-0295		2	SCREW ISO4762 M4X20 A4 80							
040	315202-0105		6	O-RING 7,1X1,6 MM							

This page is intentionally left blank.

ECM: - -
Group number: 1143615-0100
Assembly Drawing:

Pos	Part No	UN	Qty	Description	Page No
-					
000	1143617-0000		1	DOCUMENT FOLDER	
F010	1143616-0100		1	VOLUME FLAP SPRINGS	**13-81**

Pos	Part No	UN	Qty	Description	Page No

VOLUME FLAP SPRINGS

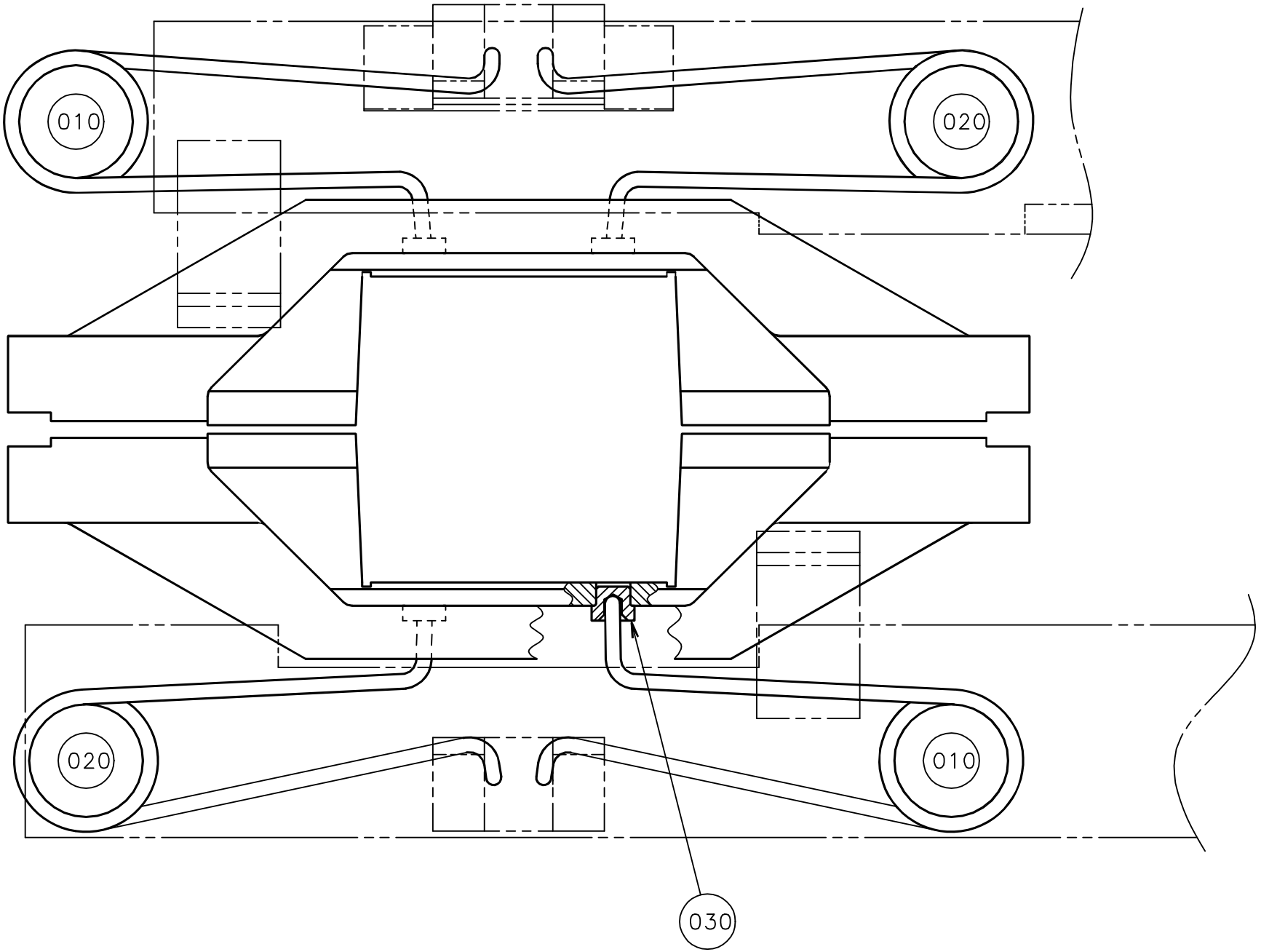

ECM: 70009 - 19960201
Group number: 1143616-0100
Assembly Drawing: 1143616-1_1_AA

Pos	Part No	UN	Qty	Description	Page No	Pos	Part No	UN	Qty	Description	Page No
-											
010	1143216-0000		4	SPRING							
020	1143215-0000		4	SPRING							
030	545651-0000		8	GUIDE STUD							

This page is intentionally left blank.

ECM: 101982 - 20011127
Group number: 1282642-0100
Assembly Drawing:

Pos	Part No	UN	Qty	Description	Page No
-					
010	1531005-0102		1	DOCUMENT FOLDER	
020	1282643-0100		1	VOLUME FLAP SPRINGS	**13-85, 13-87**

Pos	Part No	UN	Qty	Description	Page No

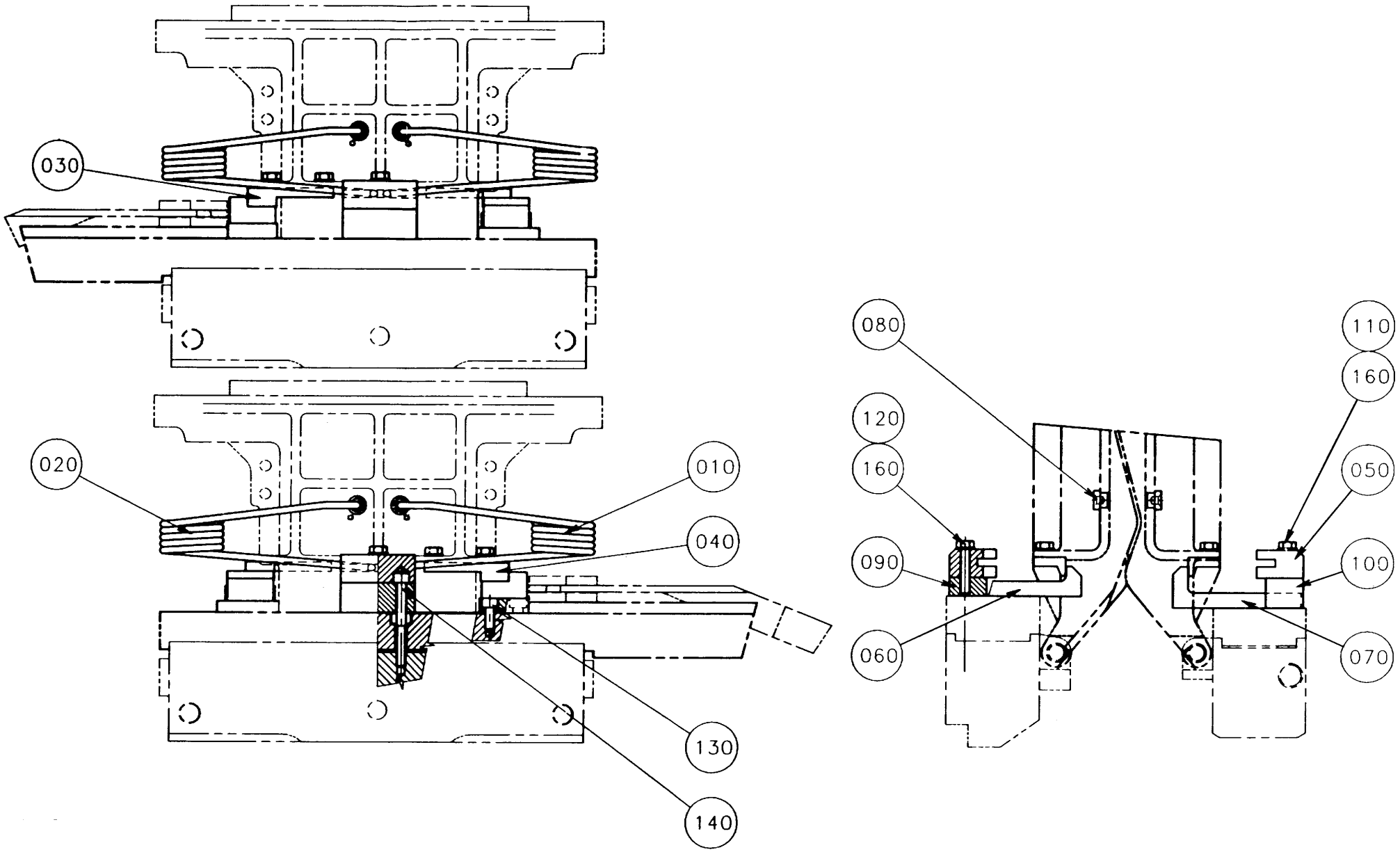
030
020
010
040
130
140
080
110
160
120
160
050
090
100
060
070

ECM: 101835 - 20011127
Group number: 1282643-0100
Assembly Drawing: 1282643-1_1_AA

This list covers pages from 13-84 to 13-87

Pos	Part No	UN	Qty	Description	Page No
TB/8 1000B (See drawing on page: 13-86)					
	1282597-0001		1	MODIFICATION DRAWING VOLUME FLAP	
	1282598-0001		1	MODIFICATION DRAWING CARRIER	
010	1143216-0000		4	SPRING	
020	1143215-0000		4	SPRING	
030	1282592-0000		2	STOPPER	
040	1282593-0000		2	STOPPER	
050	1282594-0000		4	SPRING BRACKET	
060	1282595-0000		2	CATCH	
070	1282596-0000		2	CATCH	
110	312105-0325		8	SCREW M6S ISO 4017 M5X10 A480	
130	312115-0329		16	SCREW ISO4762 M5X16 A4 80	
160	315105-0146		12	WASHER BRB 5,3X10 RFR	
Common Parts					
080	545651-0000		8	GUIDE STUD	
090	571297-0000		2	LACE	
100	571298-0000		2	LACE	
120	312105-0333		4	SCREW M6S ISO 4017 M5X25 A480	
140	312115-0340		8	SCREW ISO4762 M5X45 A4 80	

Pos	Part No	UN	Qty	Description	Page No

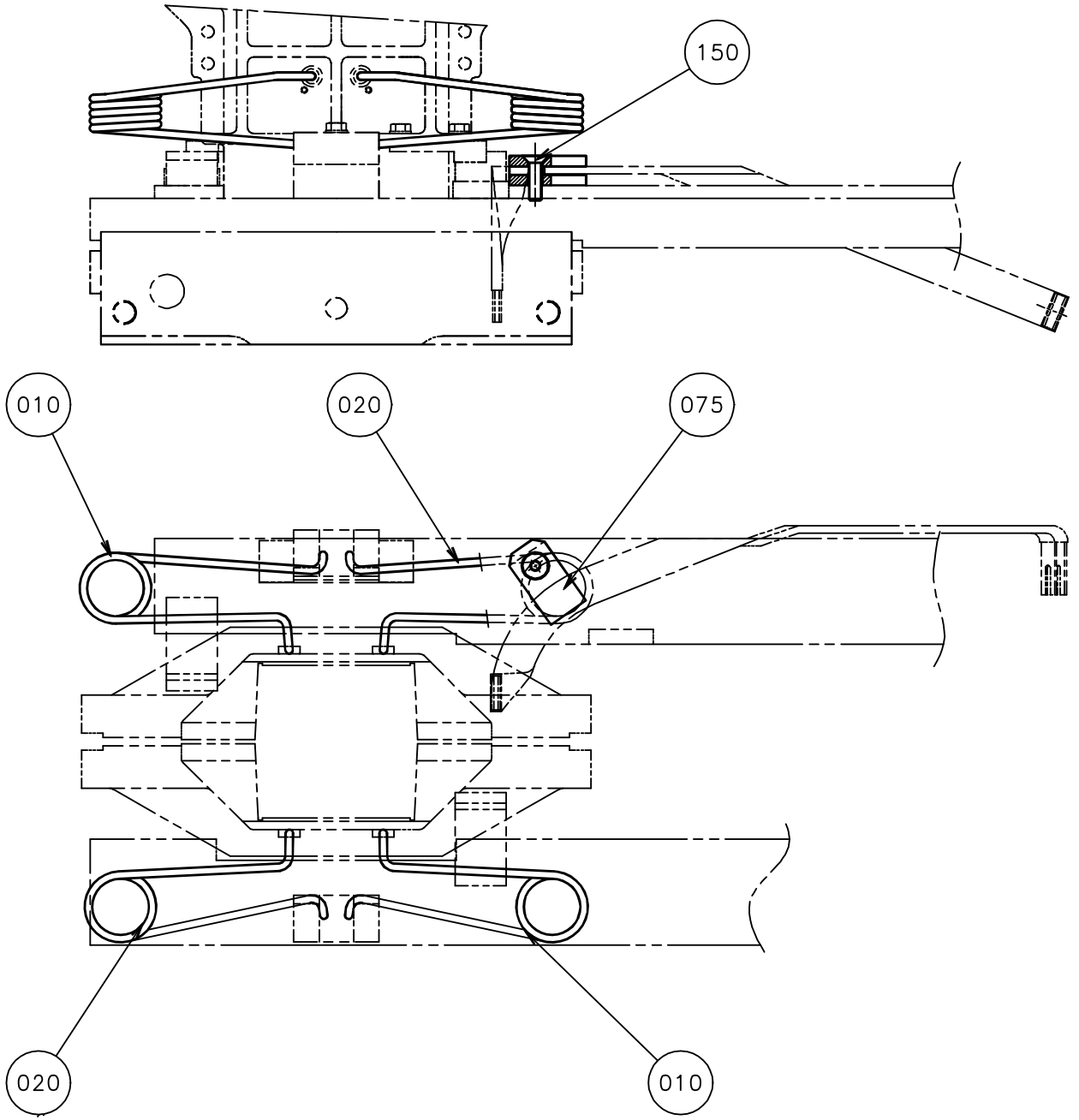
150
010
020
075
020
010

ECM: 101835 - 20011127
Group number: 1282643-0100
Assembly Drawing: 1282643-2_1_AA

This list covers pages from 13-84 to 13-87

Pos	Part No	UN	Qty	Description	Page No
TB/8 1000B (See drawing on page: 13-86)					
	1282597-0001		1	MODIFICATION DRAWING VOLUME FLAP	
	1282598-0001		1	MODIFICATION DRAWING CARRIER	
010	1143216-0000		4	SPRING	
020	1143215-0000		4	SPRING	
030	1282592-0000		2	STOPPER	
040	1282593-0000		2	STOPPER	
050	1282594-0000		4	SPRING BRACKET	
060	1282595-0000		2	CATCH	
070	1282596-0000		2	CATCH	
110	312105-0325		8	SCREW M6S ISO 4017 M5X10 A480	
130	312115-0329		16	SCREW ISO4762 M5X16 A4 80	
160	315105-0146		12	WASHER BRB 5,3X10 RFR	
Common Parts					
080	545651-0000		8	GUIDE STUD	
090	571297-0000		2	LACE	
100	571298-0000		2	LACE	
120	312105-0333		4	SCREW M6S ISO 4017 M5X25 A480	
140	312115-0340		8	SCREW ISO4762 M5X45 A4 80	

Pos	Part No	UN	Qty	Description	Page No

MKC KNIFE HOLDER SPRING

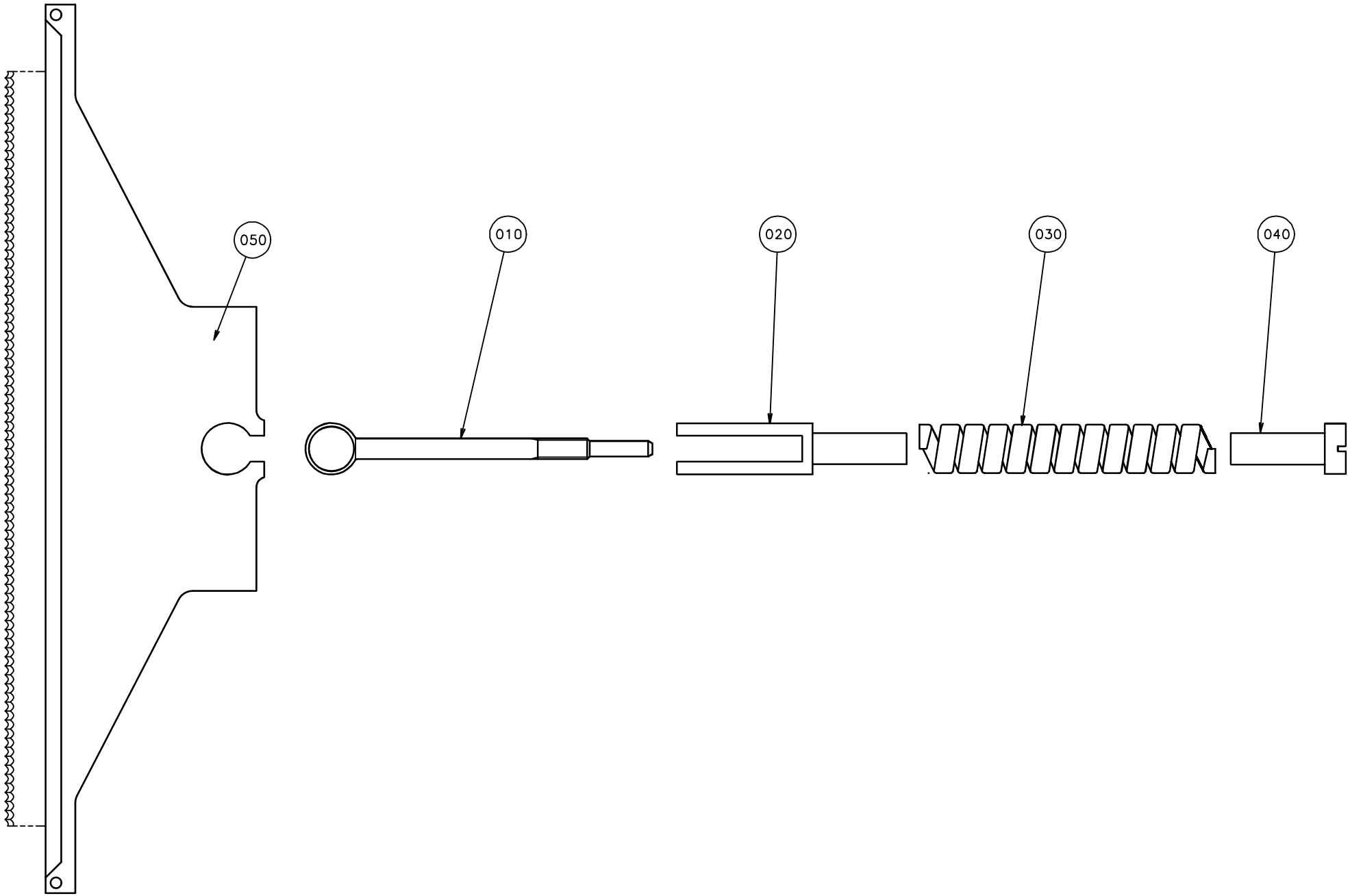

ECM: 72443 - 19990413
Group number: 1285052-0100
Assembly Drawing: 1285052-1_1_AB

Pos	Part No	UN	Qty	Description	Page No
TB/8-100V					
10	1285003-0000		2	LINK	
20	1285006-0000		2	SPACER	
30	1285004-0000		2	COMPRESSION SPRING	
40	1285005-0000		2	NUT	
Common Parts					
60	1361300-0000		1	DOCUMENT FOLDER	
	1349010-0001		1	MODIFICATION DRAWING	
	1349009-0001		1	MODIFICATION DRAWING	

Pos	Part No	UN	Qty	Description	Page No

This page is intentionally left blank.

ECM: 85435 - 20010705
Group number: 597527-0100
Assembly Drawing:

Pos	Part No	UN	Qty	Description	Page No
-					
010	593004-0000		1	DOCUMENT FOLDER	
020	597530-0100		1	REB HYDRAULIC UNIT	**13-93**
030	597533-0100		1	PIPE WORK-HYDRAULIC	**13-95**
040	597531-0100		1	PRESSURE JAW LEFT	**13-99, 13-101**
050	597532-0100		1	PRESSURE JAW RIGHT	**13-103, 13-105**
090	767141-0115		1	TAP	
100	769211-0122		1	SAW BLADE	
110	769219-0101		1	HOLDER	
120	342702-0115		1	NUT, PIPES & CONNECTORS,NUT M-16 BR	
125	342711-0115		1	ACCESSORIES, PLUG PL-15 AND 16	
130	342715-0103		1	BLIND PLUG 8 MM	
140	2505064-0000		2	USTS CUTTING RAIL	
	32464-0000		*2*	*SHAFT*	
	1338682-0000		*1*	*USTS CUTTING RAIL*	
143	1364236-0000		2	DAMPER	
144	1364237-0000		4	DAMPER	
147	312145-0238		8	SCREW ISO 2009 MFS M3X40 A4	
150	592989-0000		1	HYDRAULIC DIAGRAM	
160	593672-0000		1	VALVE PANEL	
170	593673-0000		1	VALVE PANEL	
180	593633-0000		1	PNEUMATIC DIAGRAM	
190	593674-0000		1	PNEUMATIC DIAGRAM	
	597544-0001		1	MODIFICATION DRAWING	

Pos	Part No	UN	Qty	Description	Page No

REB HYDRAULIC UNIT

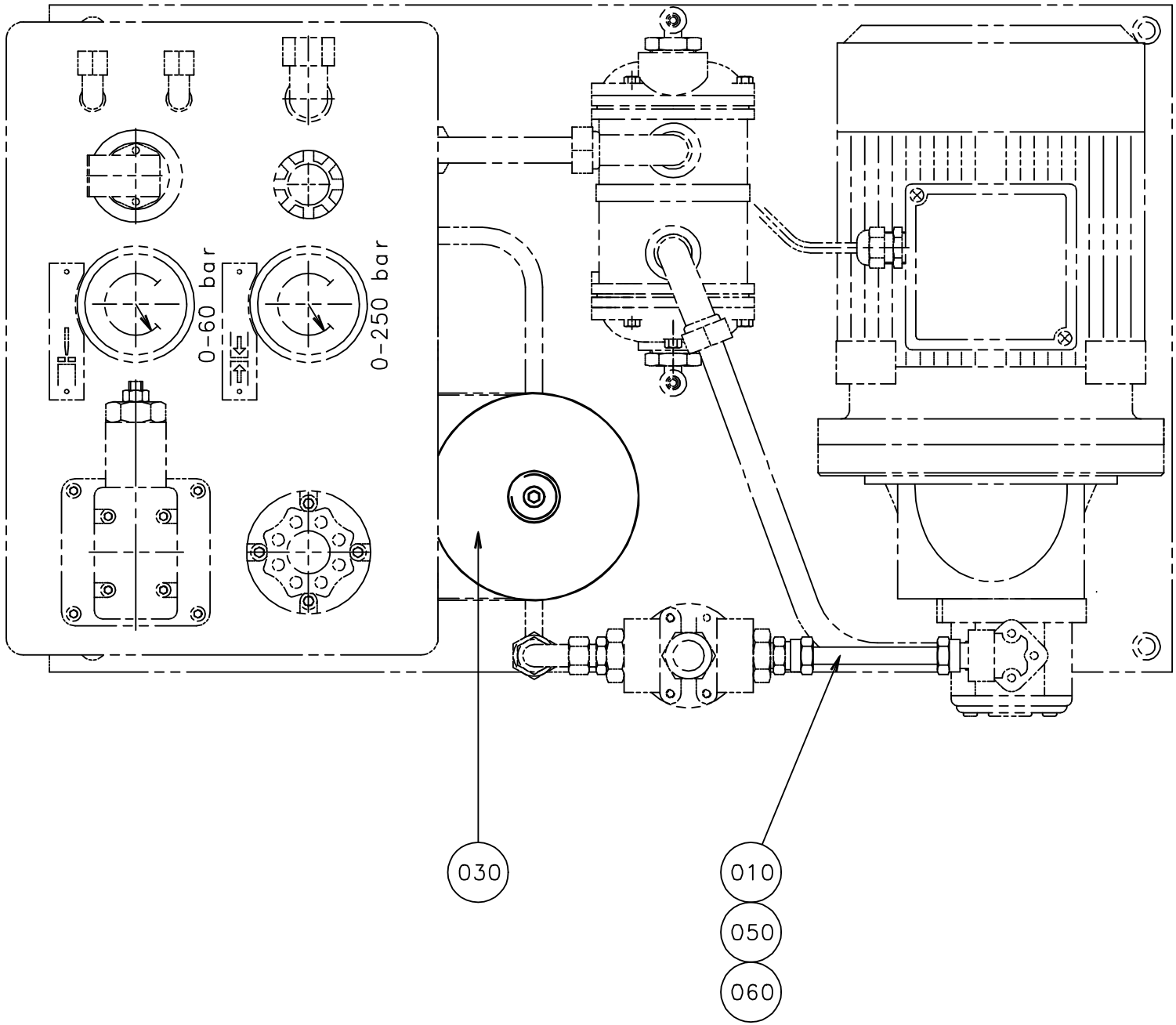

ECM: 71146 - 19980227
Group number: 597530-0100
Assembly Drawing: 597530-1_1_AA

Pos	Part No	UN	Qty	Description	Page No	Pos	Part No	UN	Qty	Description	Page No
-											
010	434714-0000		1	PIPE							
030	90321-0381		1	HYDRACCU SBO210-0,75E1/112U-210AK75							
050	342703-0108		2	NUT, PIPES & CONNECTORS,NUT M-10 FE							
060	342705-0108		2	ACCESSORIES, FERRULE 10-LFZB							

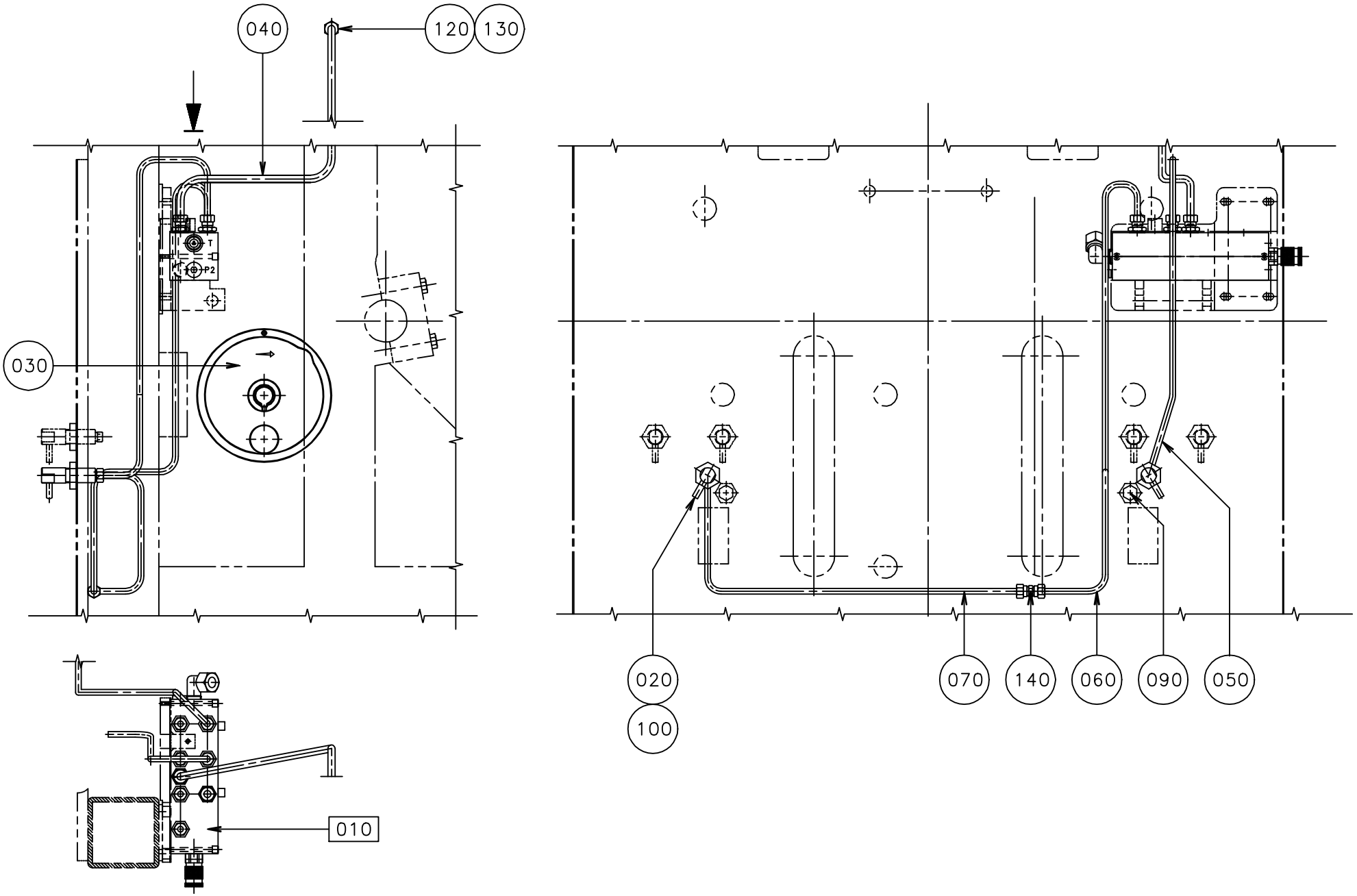
040
120
130
030
T
P2
020
100
070
140
060
090
050
010

ECM: 116318 - 20021112
Group number: 597533-0100
Assembly Drawing: 597533-1_1_AA

Pos	Part No	UN	Qty	Description	Page No
-					
010	597538-0100		1	HYDRAULIC BLOCK	**12-167, 13-97**
020	540718-0000		2	ELBOW PIPE JOINT	
030	556579-0000		1	CURVE	
040	592716-0000		1	PIPE	
050	592718-0000		1	PIPE	
060	597534-0000		1	PIPE	
070	597535-0000		1	PIPE	
090	90330-0026		1	PLUG, EXT. G-THREAD, G1/4	
100	90330-0093		2	NUT, HEXAGON, G1/2	
120	342703-0108		1	NUT, PIPES & CONNECTORS,NUT M-10 FE	
130	342705-0108		1	ACCESSORIES, FERRULE 10-LFZB	
140	342727-0103		1	CONN. PIPE G-8-LFZB	

Pos	Part No	UN	Qty	Description	Page No

HYDRAULIC BLOCK

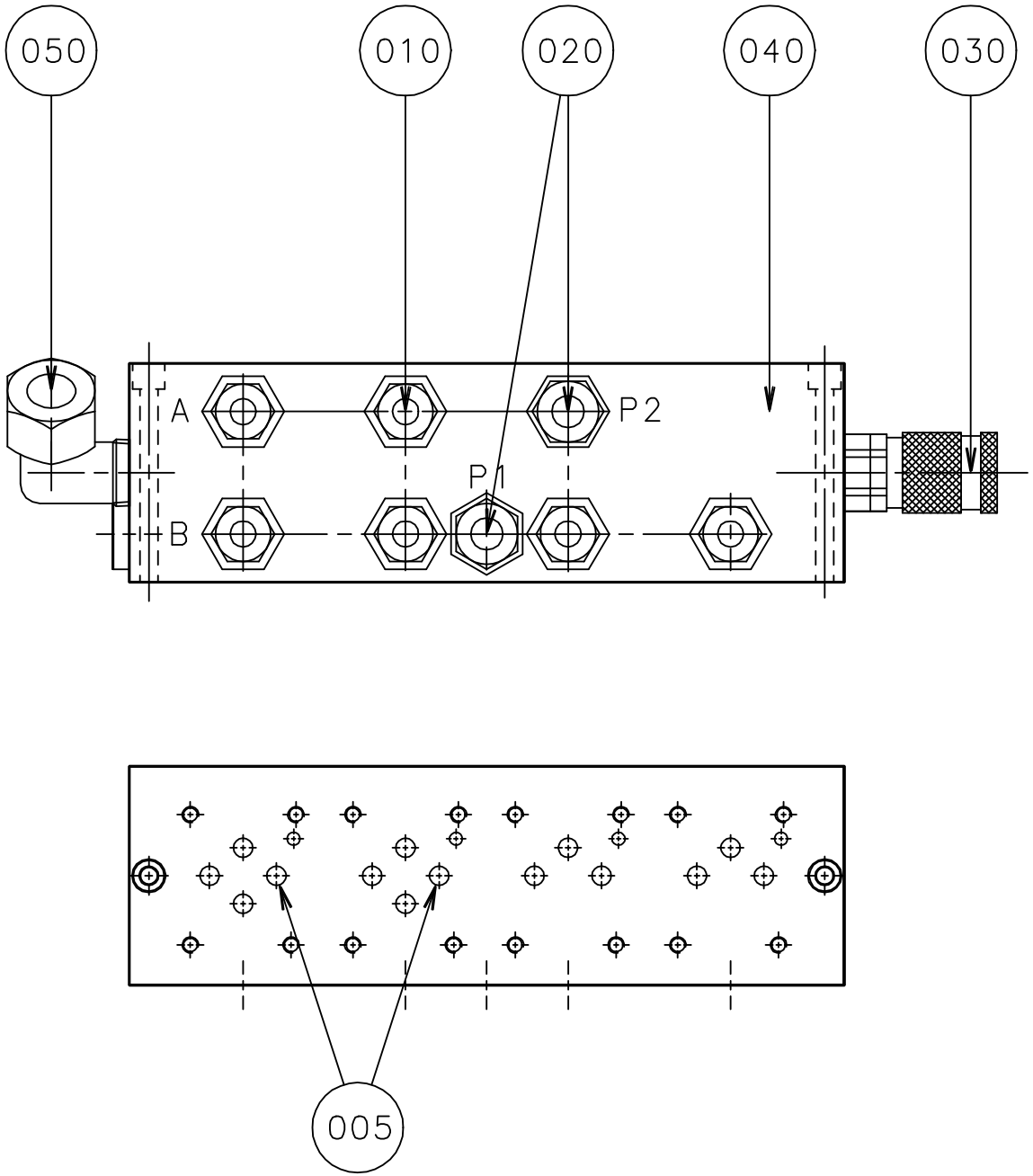

ECM: 71630 - 19980703
Group number: 597538-0100
Assembly Drawing: 597538-1_1_AA

Pos	Part No	UN	Qty	Description	Page No
-					
005	295391-0003		2	THROTTLE SCREW	
010	90030-0155		6	CONN. STR., 8-R3/8, EXT. THREAD	
020	90030-0157		2	CONN. STR. 10-R3/8, EXT. THREAD	
030	90163-0076		1	QUICK COUPLING, (F) LP-006-0-WR021	
040	90201-0427		1	BLOCK	
050	342731-0114		1	CONN. ELBOW WE 15-LRFZB	

Pos	Part No	UN	Qty	Description	Page No

PRESSURE JAW LEFT

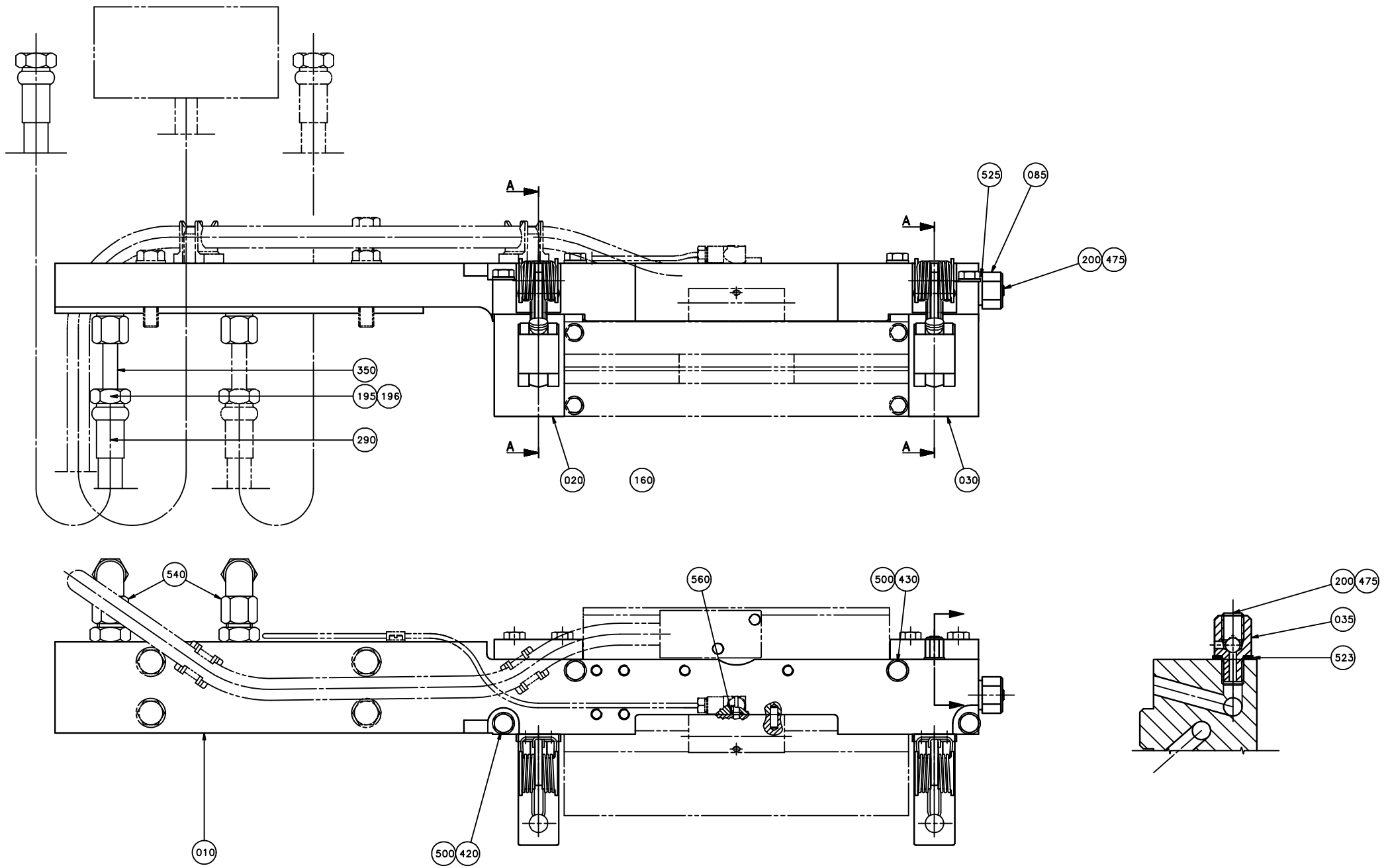

ECM: 71146 - 19980227
Group number: 597531-0100
Assembly Drawing: 597531-1_1_AA

This list covers pages from 13-98 to 13-101

Pos	Part No	UN	Qty	Description	Page No
-					
010	598615-0000		1	CARRIER LEFT	
020	592538-0000		1	BEARING HOUSING	
030	592536-0000		1	BEARING HOUSING	
035	592921-0000		1	NIPPLE	
040	592537-0000		2	LID	
050	591410-0000		2	CATCH	
060	592563-0000		2	PISTON	
065	590369-0000		2	COMPRESSION SPRING	
070	592715-0000		2	BRACKET	
072	1129552-0000		2	KNOB	
080	592539-0000		2	SLEEVE	
082	594219-0000		2	WASHER	
085	593647-0000		1	NIPPLE	
110	1129473-0000		2	RESORTE (REEMPLAZADO X 1549378)	
120	950351-0000		2	SHAFT	
130	1038240-0000		2	SPACER	
160	591087-0000		2	SHIM	
170	1129833-0000		4	GUIDE ROLLER	
195	90030-0098		2	ACCESSORIES, FERRULE 8	
196	342703-0208		2	NUT, PIPES & CONNECTORS,NUT M-8 SS	
200	90090-0013		2	BALL, D=4 MM	
230	90091-0362		2	SCRAPER, EXCLUDER2 18X22,8X3,7 MM	
240	90091-0393		2	PISTON SEAL GLIDE RING T17,5X25X3,2	
250	90091-0364		2	ROD SEAL, STEPSEAL 18X25,3X3,2 MM	
260	90091-0366		2	WEAR RING 18X23X3,9 MM	
270	90091-0394		2	WEAR RING 20X25X5,6 MM	
285	90141-0015		4	RETAINING RING FOR SHAFT DIN 471 8 A2	
290	90148-0033		1	HOSE	
330	315202-0220		2	O-RING 32,2X3 MM	
350	90266-0167	MM	40	PIPE	
420	312105-0372		2	SCREW M6S ISO 4017 M6X25 A480	
430	312109-0376		2	SCREW M6S ISO 4017 M6X35 A480	
437	312105-0327		4	SCREW M6S ISO 4017 M5X12 A480	
438	312115-0329		2	SCREW ISO4762 M5X16 A4 80	
439	312105-0370		8	SCREW M6S ISO 4017 M6X20 A480	
475	312318-0362		2	SCREW ISO4029 M6X8 A4	
488	312812-0314		2	HEXAGON NUT, NY-LOCK M5 A480	
495	315105-0146		4	WASHER BRB 5,3X10 RFR	
500	315105-0153		4	WASHER BRB 6,4X12 RFR	
510	315202-0124		4	O-RING 37,1X1,6 MM	
520	315202-0105		4	O-RING 7,1X1,6 MM	
523	315211-0103		1	BONDED SEAL SS/NBR90 M6	
525	315211-0105		1	BONDED SEAL SS/NBR90 G1/8	
540	342738-0208		2	ADJUSTABLE ELBOW CONNECTION,EXT 8-G1/4	
560	315202-0101		1	O-RING 3,1X1,6 MM	

Machine Type | Group Description | Used-In | Group Number | Page No

PRESSURE JAW LEFT

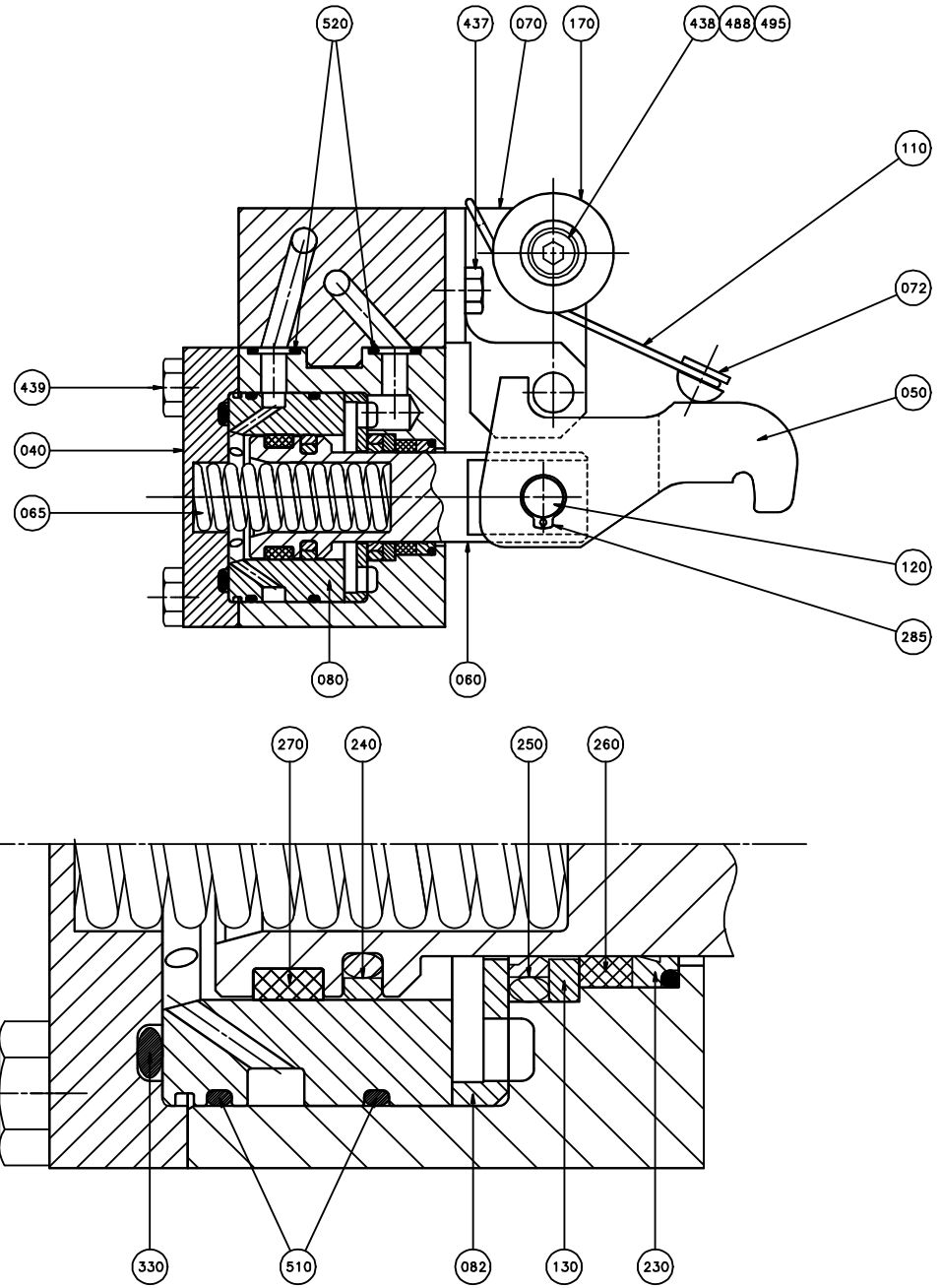

ECM: 71146 - 19980227
Group number: 597531-0100
Assembly Drawing: 597531-2_1_AA

This list covers pages from 13-98 to 13-101

Pos	Part No	UN	Qty	Description	Page No
-					
010	598615-0000		1	CARRIER LEFT	
020	592538-0000		1	BEARING HOUSING	
030	592536-0000		1	BEARING HOUSING	
035	592921-0000		1	NIPPLE	
040	592537-0000		2	LID	
050	591410-0000		2	CATCH	
060	592563-0000		2	PISTON	
065	590369-0000		2	COMPRESSION SPRING	
070	592715-0000		2	BRACKET	
072	1129552-0000		2	KNOB	
080	592539-0000		2	SLEEVE	
082	594219-0000		2	WASHER	
085	593647-0000		1	NIPPLE	
110	1129473-0000		2	RESORTE (REEMPLAZADO X 1549378)	
120	950351-0000		2	SHAFT	
130	1038240-0000		2	SPACER	
160	591087-0000		2	SHIM	
170	1129833-0000		4	GUIDE ROLLER	
195	90030-0098		2	ACCESSORIES, FERRULE 8	
196	342703-0208		2	NUT, PIPES & CONNECTORS,NUT M-8 SS	
200	90090-0013		2	BALL, D=4 MM	
230	90091-0362		2	SCRAPER, EXCLUDER2 18X22,8X3,7 MM	
240	90091-0393		2	PISTON SEAL GLIDE RING T17,5X25X3,2	
250	90091-0364		2	ROD SEAL, STEPSEAL 18X25,3X3,2 MM	
260	90091-0366		2	WEAR RING 18X23X3,9 MM	
270	90091-0394		2	WEAR RING 20X25X5,6 MM	
285	90141-0015		4	RETAINING RING FOR SHAFT DIN 471 8 A2	
290	90148-0033		1	HOSE	
330	315202-0220		2	O-RING 32,2X3 MM	
350	90266-0167	MM	40	PIPE	
420	312105-0372		2	SCREW M6S ISO 4017 M6X25 A480	
430	312109-0376		2	SCREW M6S ISO 4017 M6X35 A480	
437	312105-0327		4	SCREW M6S ISO 4017 M5X12 A480	
438	312115-0329		2	SCREW ISO4762 M5X16 A4 80	
439	312105-0370		8	SCREW M6S ISO 4017 M6X20 A480	
475	312318-0362		2	SCREW ISO4029 M6X8 A4	
488	312812-0314		2	HEXAGON NUT, NY-LOCK M5 A480	
495	315105-0146		4	WASHER BRB 5,3X10 RFR	
500	315105-0153		4	WASHER BRB 6,4X12 RFR	
510	315202-0124		4	O-RING 37,1X1,6 MM	
520	315202-0105		4	O-RING 7,1X1,6 MM	
523	315211-0103		1	BONDED SEAL SS/NBR90 M6	
525	315211-0105		1	BONDED SEAL SS/NBR90 G1/8	
540	342738-0208		2	ADJUSTABLE ELBOW CONNECTION,EXT 8-G1/4	
560	315202-0101		1	O-RING 3,1X1,6 MM	

Machine Type | Group Description | Used-In | Group Number | Page No

PRESSURE JAW RIGHT

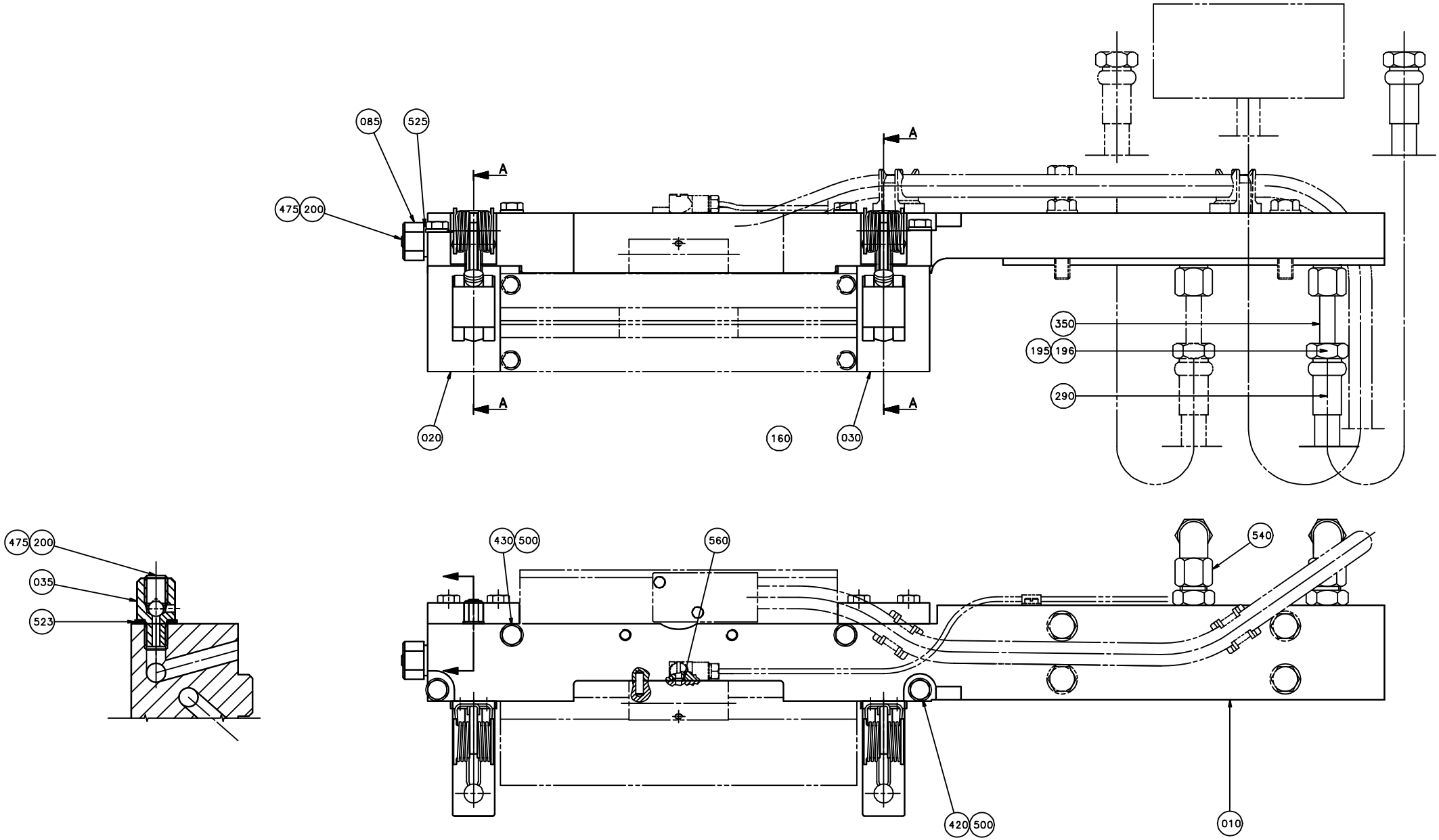

ECM: 71146 - 19980227
Group number: 597532-0100
Assembly Drawing: 597532-1_1_AA

This list covers pages from 13-102 to 13-105

Pos	Part No	UN	Qty	Description	Page No
-					
010	598616-0000		1	CARRIER RIGHT	
020	592538-0000		1	BEARING HOUSING	
030	592536-0000		1	BEARING HOUSING	
035	592921-0000		1	NIPPLE	
040	592537-0000		2	LID	
050	591410-0000		2	CATCH	
060	592563-0000		2	PISTON	
065	590369-0000		2	COMPRESSION SPRING	
070	592715-0000		2	BRACKET	
072	1129552-0000		2	KNOB	
080	592539-0000		2	SLEEVE	
082	594219-0000		2	WASHER	
085	593647-0000		1	NIPPLE	
110	1129473-0000		2	RESORTE (REEMPLAZADO X 1549378)	
120	950351-0000		2	SHAFT	
130	1038240-0000		2	SPACER	
160	591087-0000		2	SHIM	
170	1129833-0000		4	GUIDE ROLLER	
195	90030-0098		2	ACCESSORIES, FERRULE 8	
196	342703-0208		2	NUT, PIPES & CONNECTORS,NUT M-8 SS	
200	90090-0013		2	BALL, D=4 MM	
230	90091-0362		2	SCRAPER, EXCLUDER2 18X22,8X3,7 MM	
240	90091-0393		2	PISTON SEAL GLIDE RING T17,5X25X3,2	
250	90091-0364		2	ROD SEAL, STEPSEAL 18X25,3X3,2 MM	
260	90091-0366		2	WEAR RING 18X23X3,9 MM	
270	90091-0394		2	WEAR RING 20X25X5,6 MM	
285	90141-0015		4	RETAINING RING FOR SHAFT DIN 471 8 A2	
290	90148-0033		1	HOSE	
330	315202-0220		2	O-RING 32,2X3 MM	
350	90266-0167	MM	40	PIPE	
420	312105-0372		2	SCREW M6S ISO 4017 M6X25 A480	
430	312109-0376		2	SCREW M6S ISO 4017 M6X35 A480	
437	312105-0327		4	SCREW M6S ISO 4017 M5X12 A480	
438	312115-0329		2	SCREW ISO4762 M5X16 A4 80	
439	312105-0370		8	SCREW M6S ISO 4017 M6X20 A480	
475	312318-0362		2	SCREW ISO4029 M6X8 A4	
488	312812-0314		2	HEXAGON NUT, NY-LOCK M5 A480	
495	315105-0146		4	WASHER BRB 5,3X10 RFR	
500	315105-0153		4	WASHER BRB 6,4X12 RFR	
510	315202-0124		4	O-RING 37,1X1,6 MM	
520	315202-0105		4	O-RING 7,1X1,6 MM	
523	315211-0103		1	BONDED SEAL SS/NBR90 M6	
525	315211-0105		1	BONDED SEAL SS/NBR90 G1/8	
540	342738-0208		1	ADJUSTABLE ELBOW CONNECTION,EXT 8-G1/4	
560	315202-0101		1	O-RING 3,1X1,6 MM	

Machine Type	Group Description	Used-In	Group Number	Page No

PRESSURE JAW RIGHT

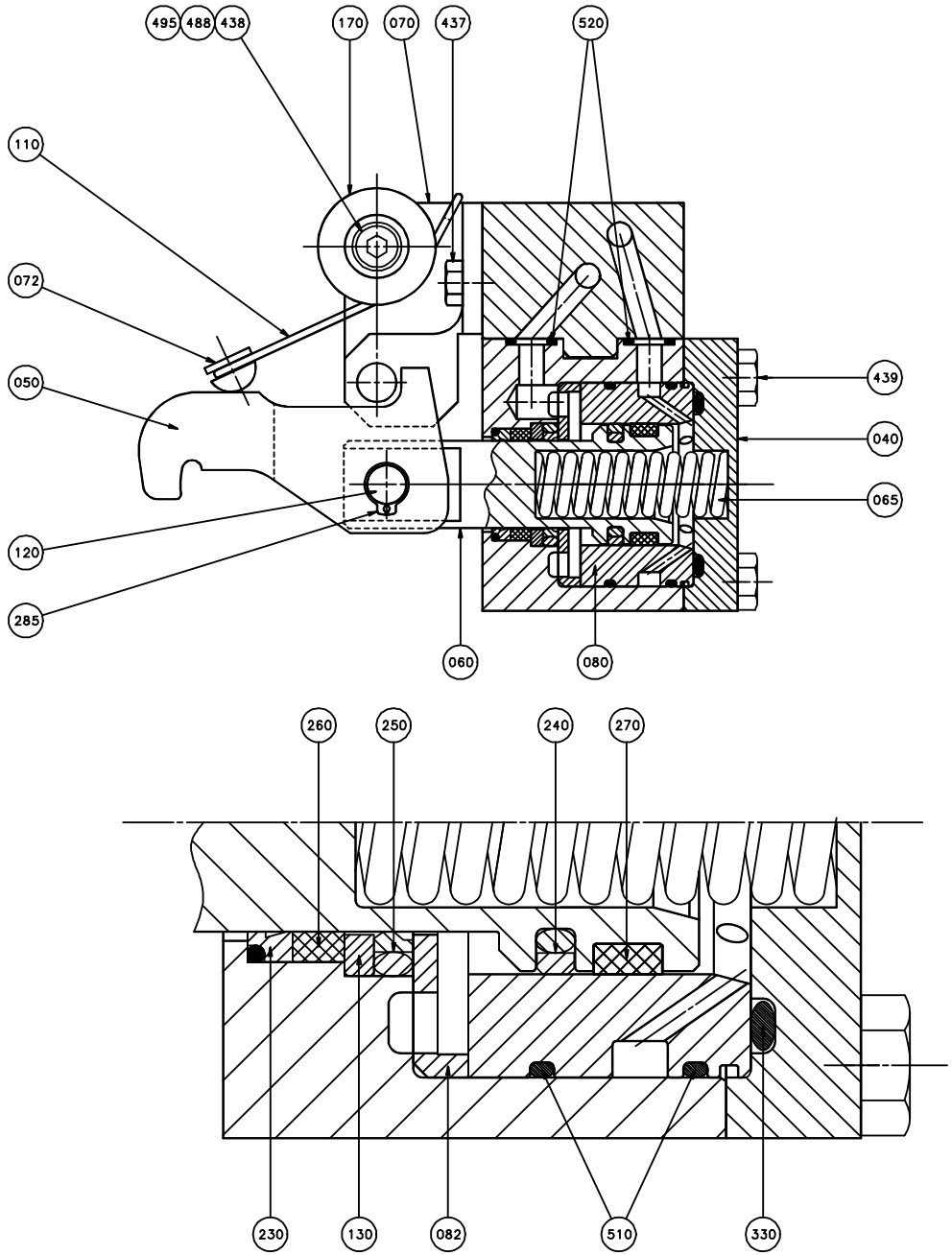

ECM: 71146 - 19980227
Group number: 597532-0100
Assembly Drawing: 597532-2_1_AA

This list covers pages from 13-102 to 13-105

Pos	Part No	UN	Qty	Description	Page No
-					
010	598616-0000		1	CARRIER RIGHT	
020	592538-0000		1	BEARING HOUSING	
030	592536-0000		1	BEARING HOUSING	
035	592921-0000		1	NIPPLE	
040	592537-0000		2	LID	
050	591410-0000		2	CATCH	
060	592563-0000		2	PISTON	
065	590369-0000		2	COMPRESSION SPRING	
070	592715-0000		2	BRACKET	
072	1129552-0000		2	KNOB	
080	592539-0000		2	SLEEVE	
082	594219-0000		2	WASHER	
085	593647-0000		1	NIPPLE	
110	1129473-0000		2	RESORTE (REEMPLAZADO X 1549378)	
120	950351-0000		2	SHAFT	
130	1038240-0000		2	SPACER	
160	591087-0000		2	SHIM	
170	1129833-0000		4	GUIDE ROLLER	
195	90030-0098		2	ACCESSORIES, FERRULE 8	
196	342703-0208		2	NUT, PIPES & CONNECTORS,NUT M-8 SS	
200	90090-0013		2	BALL, D=4 MM	
230	90091-0362		2	SCRAPER, EXCLUDER2 18X22,8X3,7 MM	
240	90091-0393		2	PISTON SEAL GLIDE RING T17,5X25X3,2	
250	90091-0364		2	ROD SEAL, STEPSEAL 18X25,3X3,2 MM	
260	90091-0366		2	WEAR RING 18X23X3,9 MM	
270	90091-0394		2	WEAR RING 20X25X5,6 MM	
285	90141-0015		4	RETAINING RING FOR SHAFT DIN 471 8 A2	
290	90148-0033		1	HOSE	
330	315202-0220		2	O-RING 32,2X3 MM	
350	90266-0167	MM	40	PIPE	
420	312105-0372		2	SCREW M6S ISO 4017 M6X25 A480	
430	312109-0376		2	SCREW M6S ISO 4017 M6X35 A480	
437	312105-0327		4	SCREW M6S ISO 4017 M5X12 A480	
438	312115-0329		2	SCREW ISO4762 M5X16 A4 80	
439	312105-0370		8	SCREW M6S ISO 4017 M6X20 A480	
475	312318-0362		2	SCREW ISO4029 M6X8 A4	
488	312812-0314		2	HEXAGON NUT, NY-LOCK M5 A480	
495	315105-0146		4	WASHER BRB 5,3X10 RFR	
500	315105-0153		4	WASHER BRB 6,4X12 RFR	
510	315202-0124		4	O-RING 37,1X1,6 MM	
520	315202-0105		4	O-RING 7,1X1,6 MM	
523	315211-0103		1	BONDED SEAL SS/NBR90 M6	
525	315211-0105		1	BONDED SEAL SS/NBR90 G1/8	
540	342738-0208		1	ADJUSTABLE ELBOW CONNECTION,EXT 8-G1/4	
560	315202-0101		1	O-RING 3,1X1,6 MM	

Machine Type	Group Description	Used-In	Group Number	Page No

This page is intentionally left blank.

ECM: 85436 - 20010705
Group number: 597571-0100
Assembly Drawing:

Pos	Part No	UN	Qty	Description	Page No
-					
010	597572-0100		1	PRESSURE JAW LEFT	**13-109**
020	597573-0100		1	PRESSURE JAW RIGHT	**13-111**
040	2505064-0000		2	USTS CUTTING RAIL	
	32464-0000		*2*	*SHAFT*	
	1338682-0000		*1*	*USTS CUTTING RAIL*	
045	1364236-0000		2	DAMPER	
050	1364237-0000		4	DAMPER	
055	312145-0238		8	SCREW ISO 2009 MFS M3X40 A4	
080	1360000-0000		1	DOCUMENT FOLDER	

Pos	Part No	UN	Qty	Description	Page No

Machine Type | Group Description | Used-In | Group Number | Page No

PRESSURE JAW LEFT

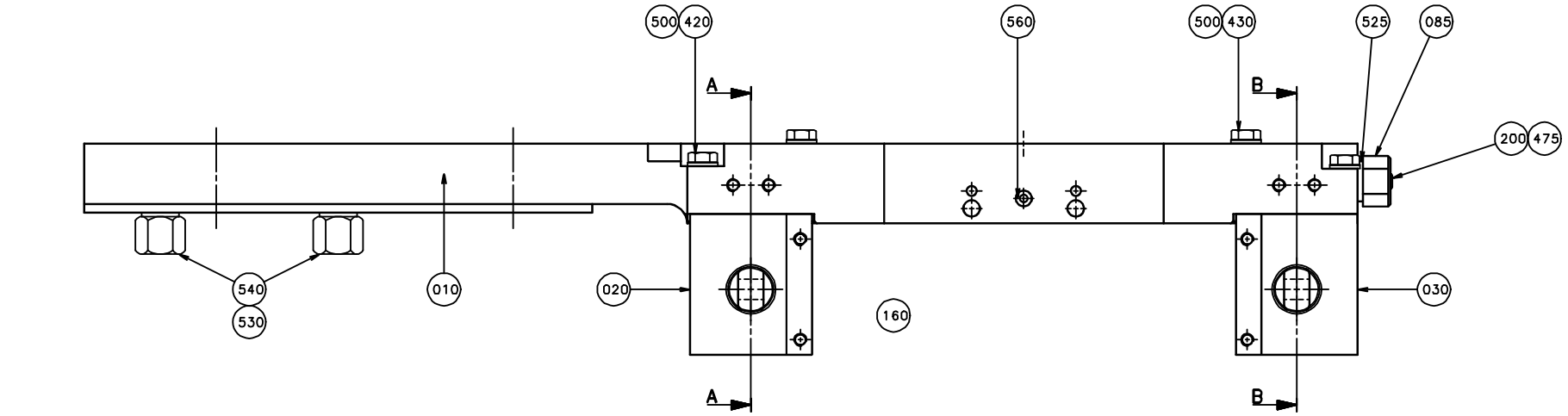

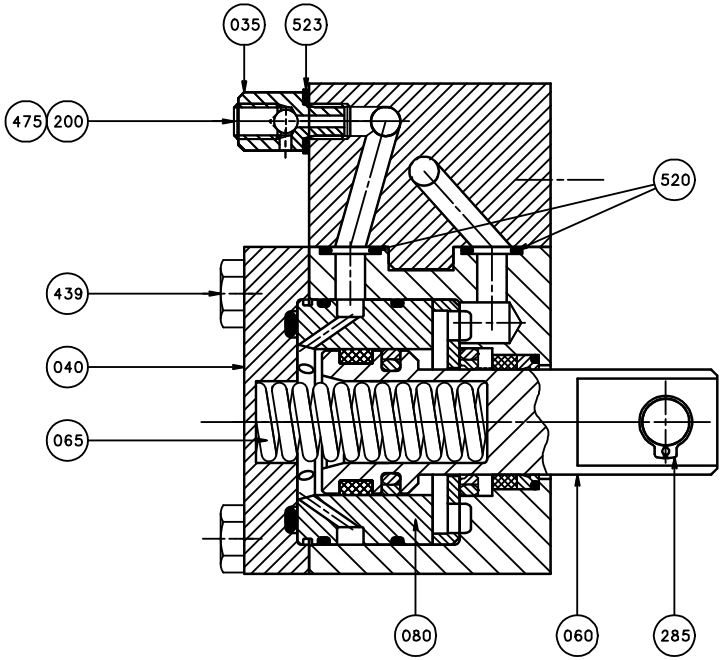

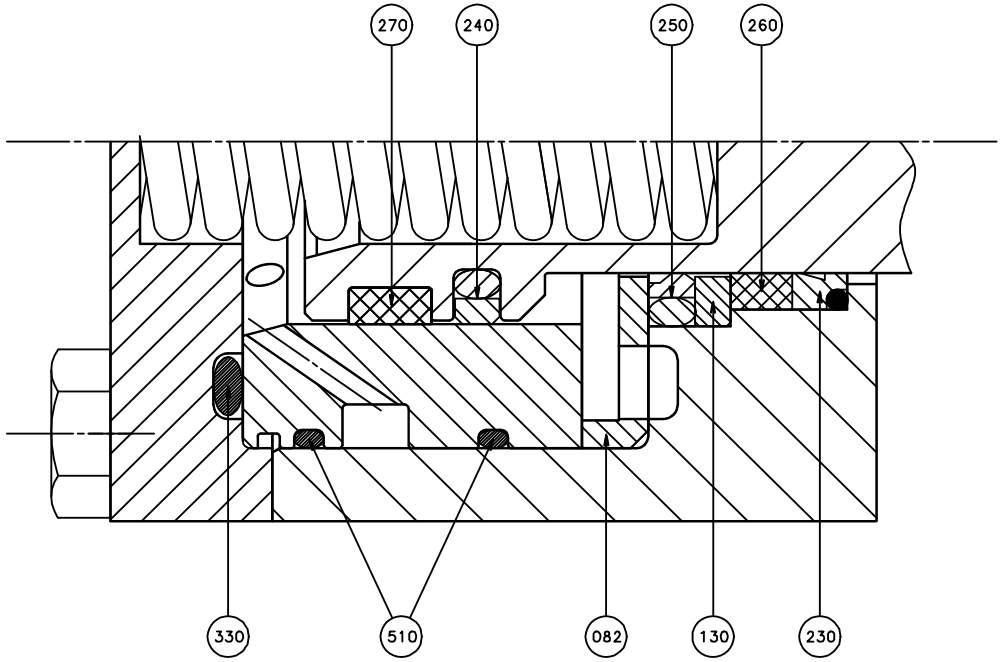

A-A B-B

ECM: 71485 - 19980403
Group number: 597572-0100
Assembly Drawing: 597572-1_1_AA

Pos	Part No	UN	Qty	Description	Page No
-					
010	598615-0000		1	CARRIER LEFT	
020	592538-0000		1	BEARING HOUSING	
030	592536-0000		1	BEARING HOUSING	
035	592921-0000		1	NIPPLE	
040	592537-0000		2	LID	
060	592563-0000		2	PISTON	
065	590369-0000		2	COMPRESSION SPRING	
080	592539-0000		2	SLEEVE	
082	594219-0000		2	WASHER	
085	593647-0000		1	NIPPLE	
130	1038240-0000		2	SPACER	
160	591087-0000		2	SHIM	
200	90090-0013		2	BALL, D=4 MM	
230	90091-0362		2	SCRAPER, EXCLUDER2 18X22,8X3,7 MM	
240	90091-0393		2	PISTON SEAL GLIDE RING T17,5X25X3,2	
250	90091-0364		2	ROD SEAL, STEPSEAL 18X25,3X3,2 MM	
260	90091-0366		2	WEAR RING 18X23X3,9 MM	
270	90091-0394		2	WEAR RING 20X25X5,6 MM	
285	90141-0015		4	RETAINING RING FOR SHAFT DIN 471 8 A2	
330	315202-0220		2	O-RING 32,2X3 MM	
420	312105-0372		2	SCREW M6S ISO 4017 M6X25 A480	
430	312109-0376		2	SCREW M6S ISO 4017 M6X35 A480	
439	312105-0370		8	SCREW M6S ISO 4017 M6X20 A480	
475	312318-0362		2	SCREW ISO4029 M6X8 A4	
500	315105-0153		4	WASHER BRB 6,4X12 RFR	
510	315202-0124		4	O-RING 37,1X1,6 MM	
520	315202-0105		4	O-RING 7,1X1,6 MM	
523	315211-0103		1	BONDED SEAL SS/NBR90 M6	
525	315211-0105		1	BONDED SEAL SS/NBR90 G1/8	
530	315211-0108		2	BONDED SEAL SS/NBR90 G1/4	
540	342738-0208		2	ADJUSTABLE ELBOW CONNECTION,EXT 8-G1/4	
560	315202-0101		1	O-RING 3,1X1,6 MM	

Pos	Part No	UN	Qty	Description	Page No

Machine Type	Group Description	Used-In	Group Number	Page No

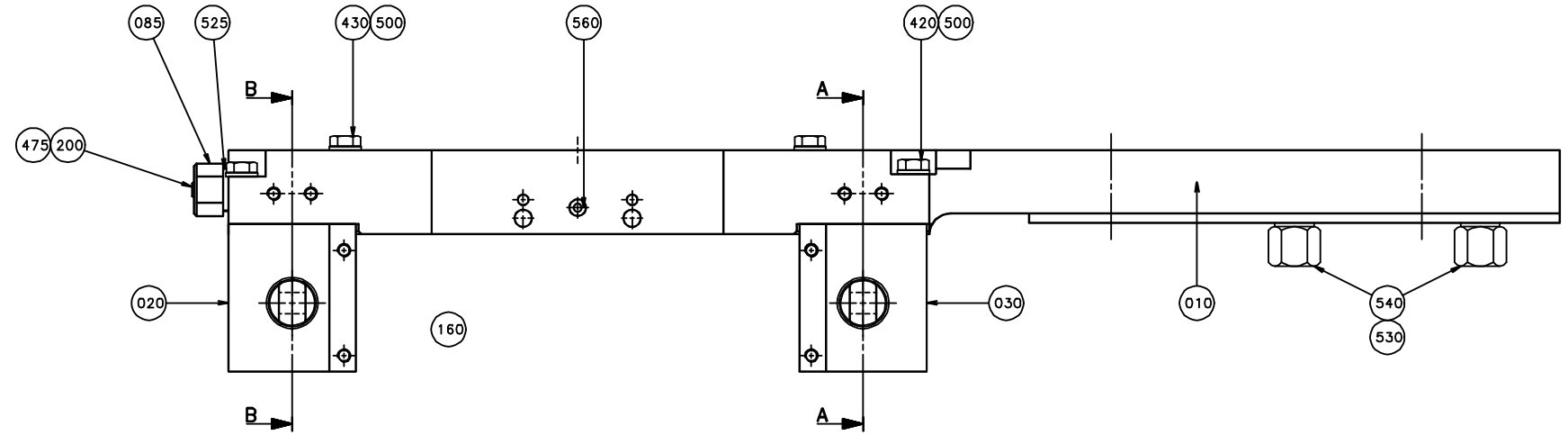
085
525
430
500
560
420
500
B
A
475
200
020
160
030
010
540
530
B
A

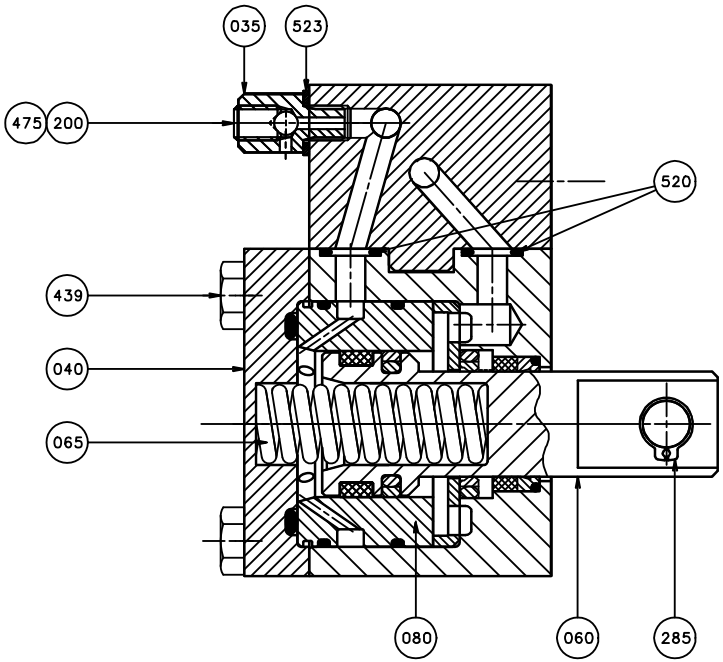
035
523
475
200
520
439
040
065
080
060
285

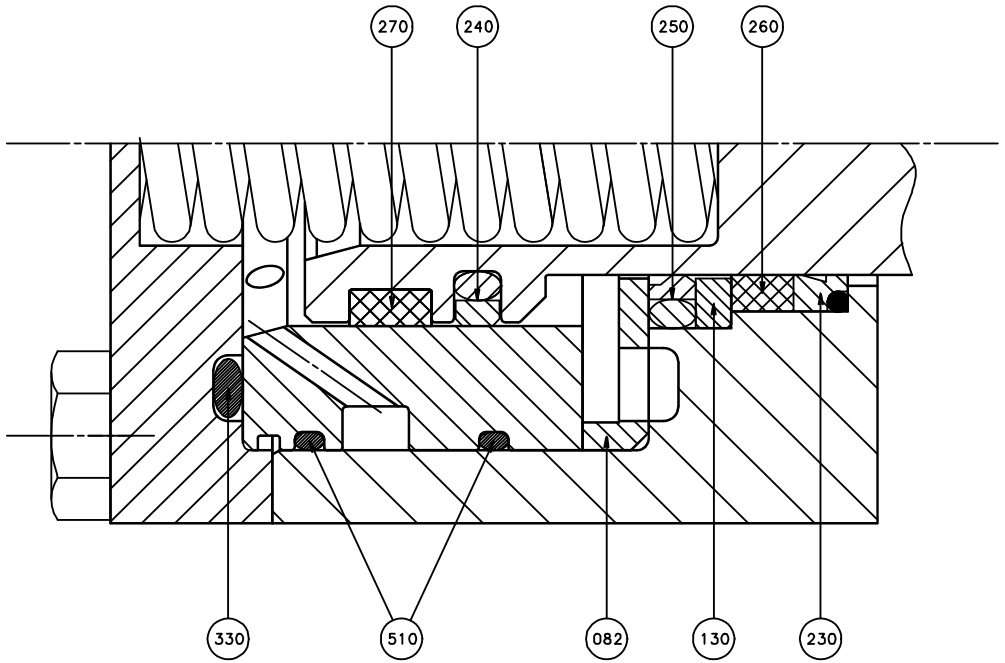
270
240
250
260
330
510
082
130
230

A-A B-B

ECM: 71485 - 19980403
Group number: 597573-0100
Assembly Drawing: 597573-1_1_AA

Pos	Part No	UN	Qty	Description	Page No
-					
010	598616-0000		1	CARRIER RIGHT	
020	592538-0000		1	BEARING HOUSING	
030	592536-0000		1	BEARING HOUSING	
035	592921-0000		1	NIPPLE	
040	592537-0000		2	LID	
060	592563-0000		2	PISTON	
065	590369-0000		2	COMPRESSION SPRING	
080	592539-0000		2	SLEEVE	
082	594219-0000		2	WASHER	
085	593647-0000		1	NIPPLE	
130	1038240-0000		2	SPACER	
160	591087-0000		2	SHIM	
200	90090-0013		2	BALL, D=4 MM	
230	90091-0362		2	SCRAPER, EXCLUDER2 18X22,8X3,7 MM	
240	90091-0393		2	PISTON SEAL GLIDE RING T17,5X25X3,2	
250	90091-0364		2	ROD SEAL, STEPSEAL 18X25,3X3,2 MM	
260	90091-0366		2	WEAR RING 18X23X3,9 MM	
270	90091-0394		2	WEAR RING 20X25X5,6 MM	
285	90141-0015		4	RETAINING RING FOR SHAFT DIN 471 8 A2	
330	315202-0220		2	O-RING 32,2X3 MM	
420	312105-0372		2	SCREW M6S ISO 4017 M6X25 A480	
430	312109-0376		2	SCREW M6S ISO 4017 M6X35 A480	
439	312105-0370		8	SCREW M6S ISO 4017 M6X20 A480	
475	312318-0362		2	SCREW ISO4029 M6X8 A4	
500	315105-0153		4	WASHER BRB 6,4X12 RFR	
510	315202-0124		4	O-RING 37,1X1,6 MM	
520	315202-0105		4	O-RING 7,1X1,6 MM	
523	315211-0103		1	BONDED SEAL SS/NBR90 M6	
525	315211-0105		1	BONDED SEAL SS/NBR90 G1/8	
530	315211-0108		2	BONDED SEAL SS/NBR90 G1/4	
540	342738-0208		2	ADJUSTABLE ELBOW CONNECTION,EXT 8-G1/4	
560	315202-0101		1	O-RING 3,1X1,6 MM	

Pos	Part No	UN	Qty	Description	Page No

Machine Type	Group Description	Used-In	Group Number	Page No

This page is intentionally left blank.

ECM: 73488 - 20000224
Group number: 597587-0100
Assembly Drawing:

Pos	Part No	UN	Qty	Description	Page No
-					
010	597565-0100		1	DRYER	**13-115**
020	597592-0100		1	VALVE PANEL UPPER	**13-117**
050	597569-0000		1	PNEUMATIC DIAGRAM	
060	597570-0000		1	VALVE PANEL	
070	597596-0000		1	PNEUMATIC DIAGRAM	
080	597597-0000		1	VALVE PANEL	

Pos	Part No	UN	Qty	Description	Page No

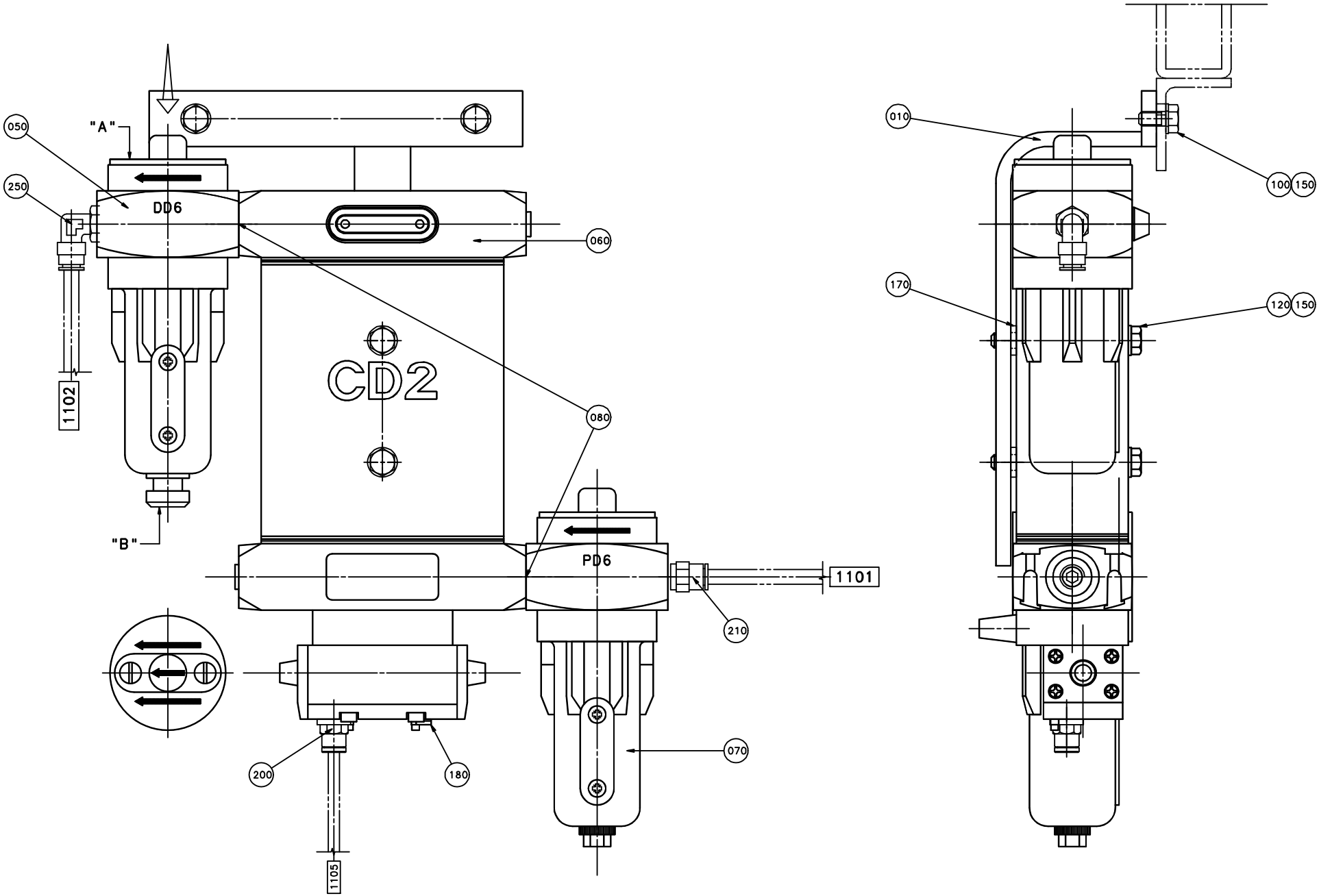
"A"
050
250
DD6
060
080
CD2
"B"
1102
PD6
1101
210
070
200
180
1105
010
100
150
170
120
150

ECM: 71008 - 19980424
Group number: 597565-0100
Assembly Drawing: 597565-1_1_AA

Pos	Part No	UN	Qty	Description	Page No
-					
010	597562-0000		1	BRACKET	
050	90415-0063		1	DUSTFILTER / DD6 ART NO 8102 0215 43	
	90415-0356		*1*	*OUTLET FILTER CATRIDGE LFMBP-H*	
060	90415-0066		1	CD-2 DRYER	
010	*90415-0363*		*1*	*DRYING AGENT. LDF-TM-H1-H7-1KG*	
070	90415-0067		1	PD-6 FILTER	
010	*90415-0362*		*1*	*INLET FILTER CATRIDGE LFMAP-H*	
080	90415-0361		2	HOLDER SERIAL CONNECTION / 8092 2102 54	
100	312105-0449		2	SCREW M6S ISO 4017 M8X16 A480	
120	312105-0466		2	SCREW M6S ISO 4014 M8X75 A480	
150	315105-0165		4	WASHER BRB 8,4X16 RFR	
170	315115-0165		2	WASHER PLAIN, TBRB 8,4/16 H=3	
180	342713-0208		1	PLUG, EXT. THREAD HEX. SOCKET. BPM10	
200	342722-0197		1	STRAIGHT COUPLING	
210	342722-0205		1	STRAIGHT COUPLING D=8-G1/4"	
250	342732-0104		1	ELBOW PIPE JOINT, EXT.THREAD, D=8MM-G1/4	

Pos	Part No	UN	Qty	Description	Page No

VALVE PANEL UPPER

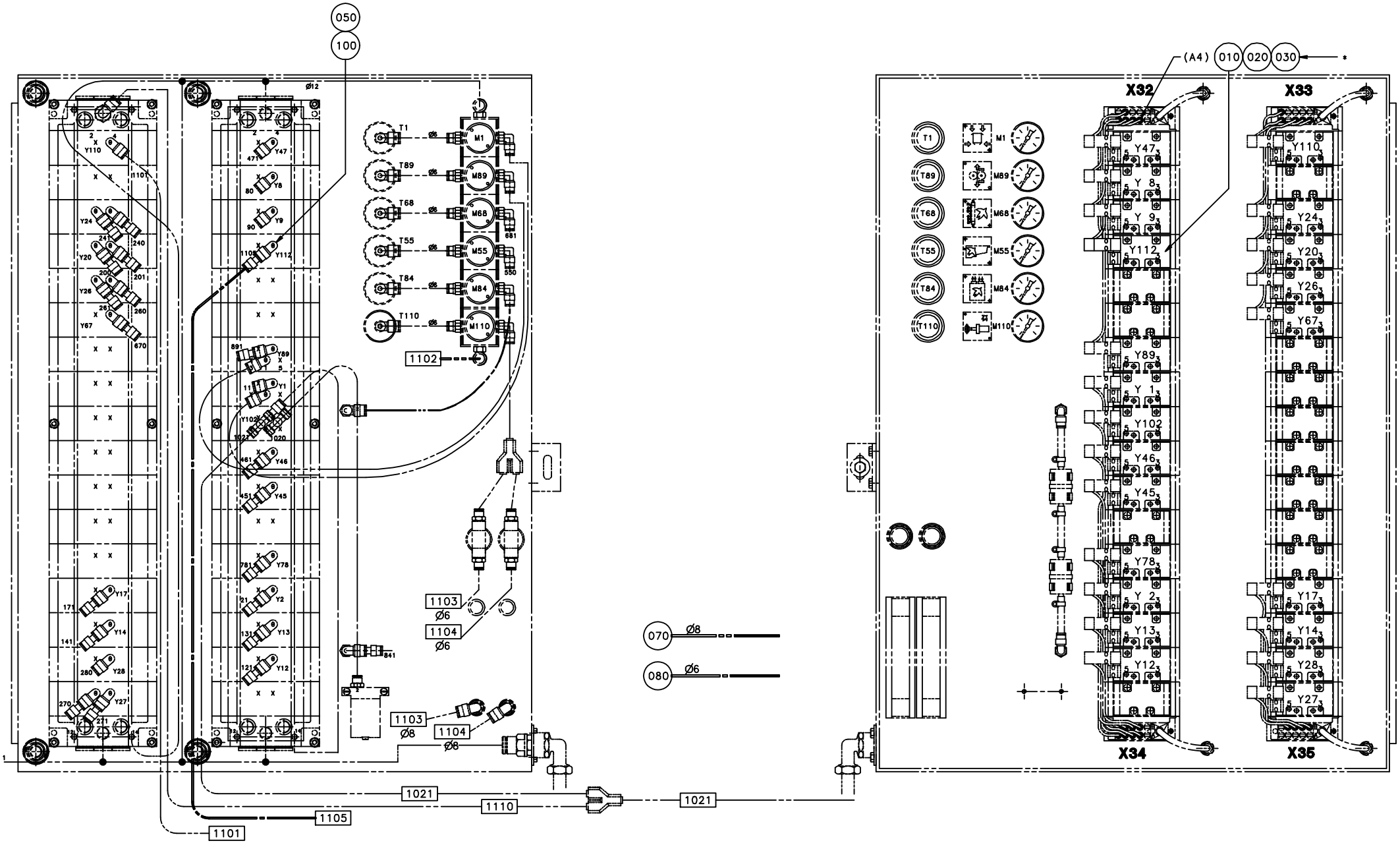

ECM: 71630 - 19980703
Group number: 597592-0100
Assembly Drawing: 597592-1_1_AA

Pos	Part No	UN	Qty	Description	Page No
-					
010	90042-0215		1	VALVE BODY 5/2 UNISTABLE	
020	90042-0527		1	SEAL KIT PILOT VALVE	
030	90042-0539		1	PILOT VALVE L=350MM	
050	90055-0118		1	ELBOW WITH TAILPIECE 8/8 MM	
070	90166-0013	M	3	TUBE 8 MM PA BLUE	
080	90166-0081	M	2	TUBE 6 MM PA BLUE	
100	342716-0203		1	REDUCER 6-8	

Pos	Part No	UN	Qty	Description	Page No

MKC SPRING HOLDER

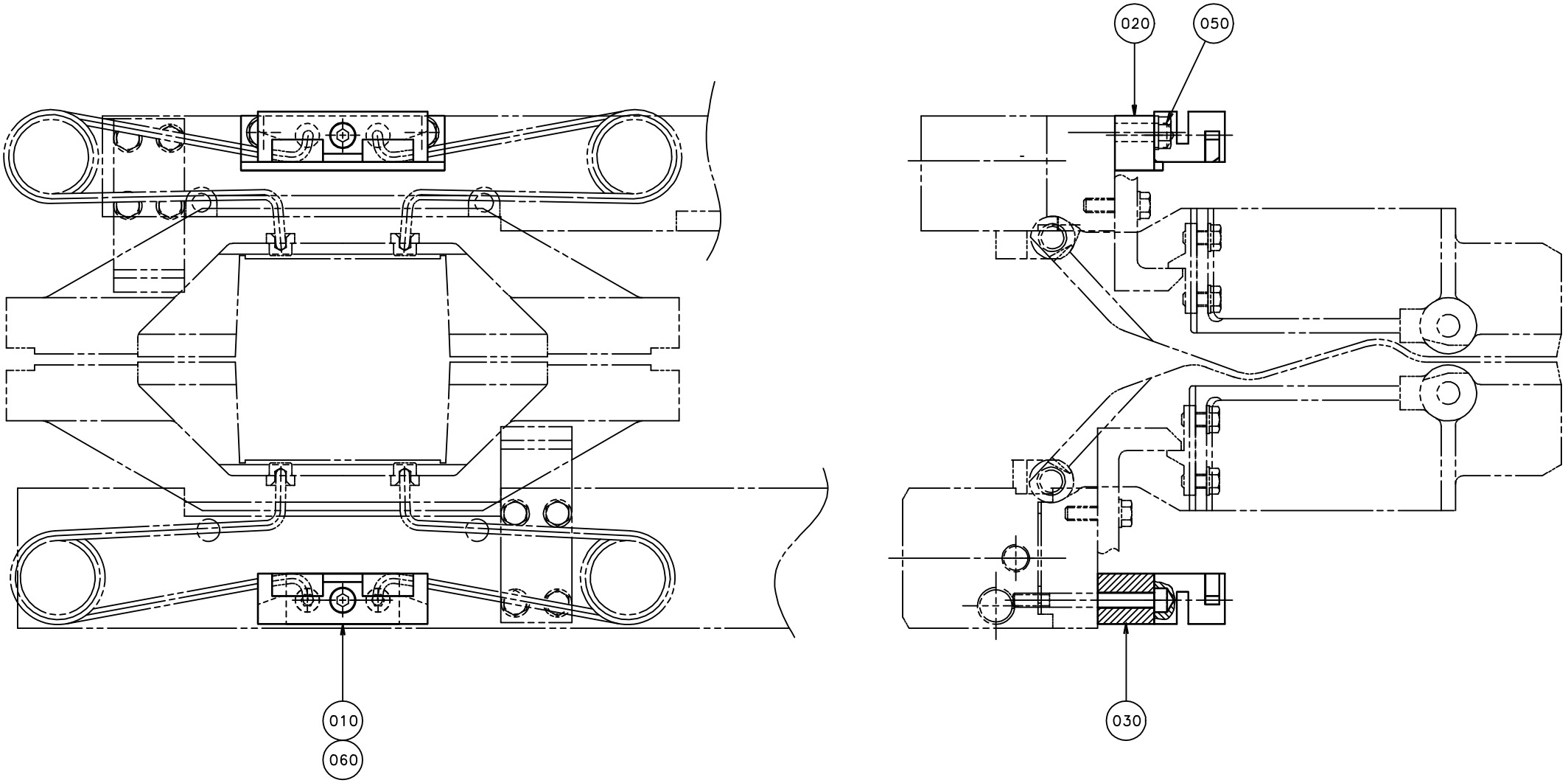

ECM: 71630 - 19980703
Group number: 597593-0100
Assembly Drawing: 597593-1_1_AA

Pos	Part No	UN	Qty	Description	Page No
-					
010	597574-0000		4	SPRING BRACKET	
020	597575-0000		2	LACE	
030	597576-0000		2	LACE	
050	312105-0372		4	SCREW M6S ISO 4017 M6X25 A480	
060	312115-0327		4	SCREW ISO4762 M5X12 A4 80	
100	1360002-0000		1	DOCUMENT FOLDER	

Pos	Part No	UN	Qty	Description	Page No

This page is intentionally left blank.

ECM: 72103 - 19981203
Group number: 597600-0100
Assembly Drawing:

Pos	Part No	UN	Qty	Description	Page No
TB/8					
	1360001-0000		1	DOCUMENT FOLDER	
	558966-0100		1	EL. RK "ENABLE FOR REVERSE FIN"	**13-123**
	595143-0100		1	ELECTRICAL DOCUMENT	
	597603-0100		1	GUIDE	**13-125**
	597602-0100		1	FOLDING DEVICE	**12-271, 13-127**
	597601-0100		1	PUSHER	**13-129**
	597599-0001		1	MODIFICATION DRAWING	

Pos	Part No	UN	Qty	Description	Page No

This page is intentionally left blank.

ECM: 71010 - 19981125
Group number: 558966-0100
Assembly Drawing:

Pos	Part No	UN	Qty	Description	Page No	Pos	Part No	UN	Qty	Description	Page No
-											
0010	559289-0100		1	ELECTRICAL DOCUMENT							

Machine Type	Group Description	Used-In	Group Number	Page No

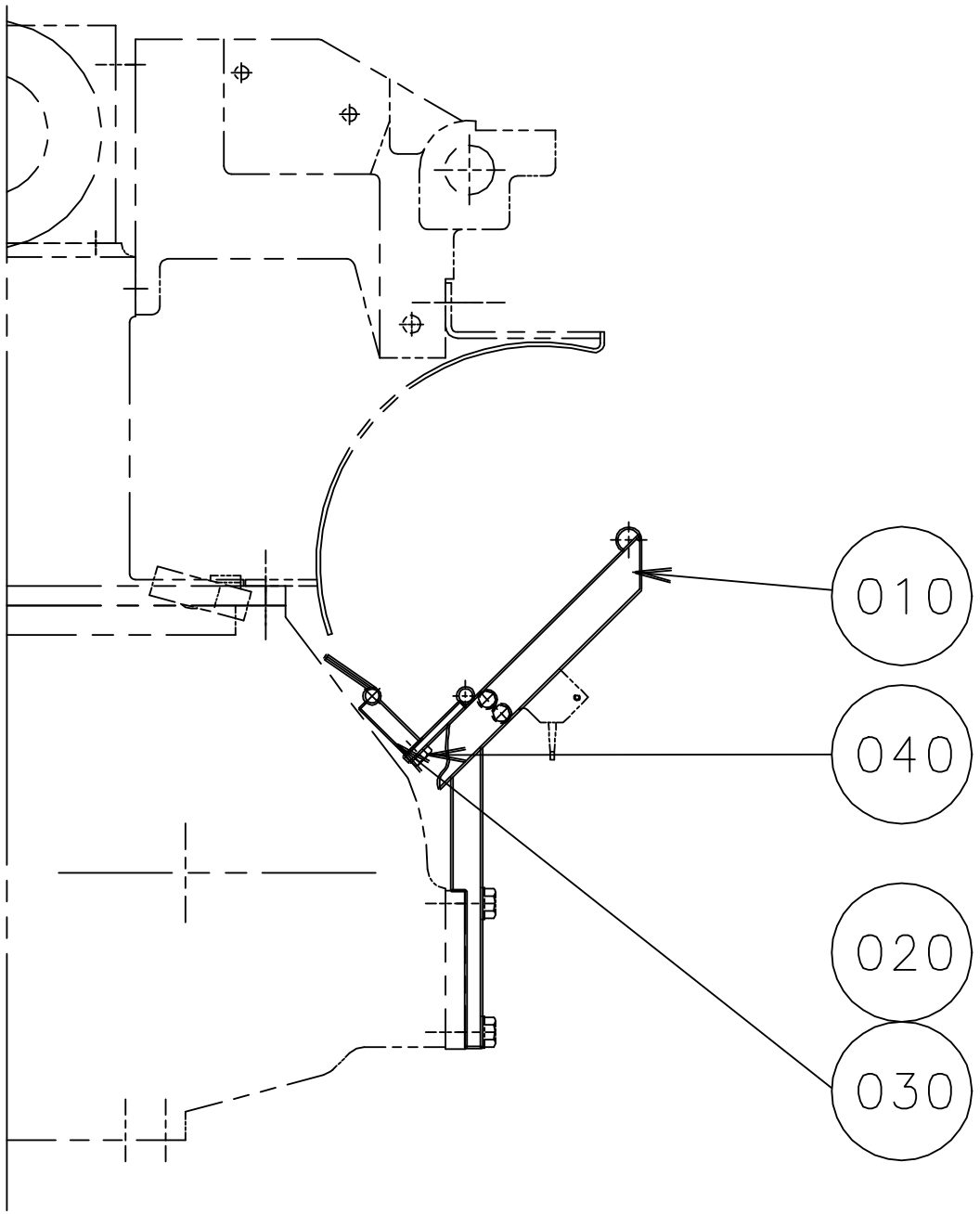
010
040
020
030

ECM: 71720 - 19981130
Group number: 597603-0100
Assembly Drawing: 597603-1_1_AA

Pos	Part No	UN	Qty	Description	Page No
-					
010	597539-0000		1	SLIDE RAIL	
020	597542-0000		1	RAIL REV.FIN	
030	597543-0000		1	RAIL NORM.FIN	
040	312105-0366		2	SCREW M6S ISO 4017 M6X12 A480	

Pos	Part No	UN	Qty	Description	Page No

FOLDING DEVICE

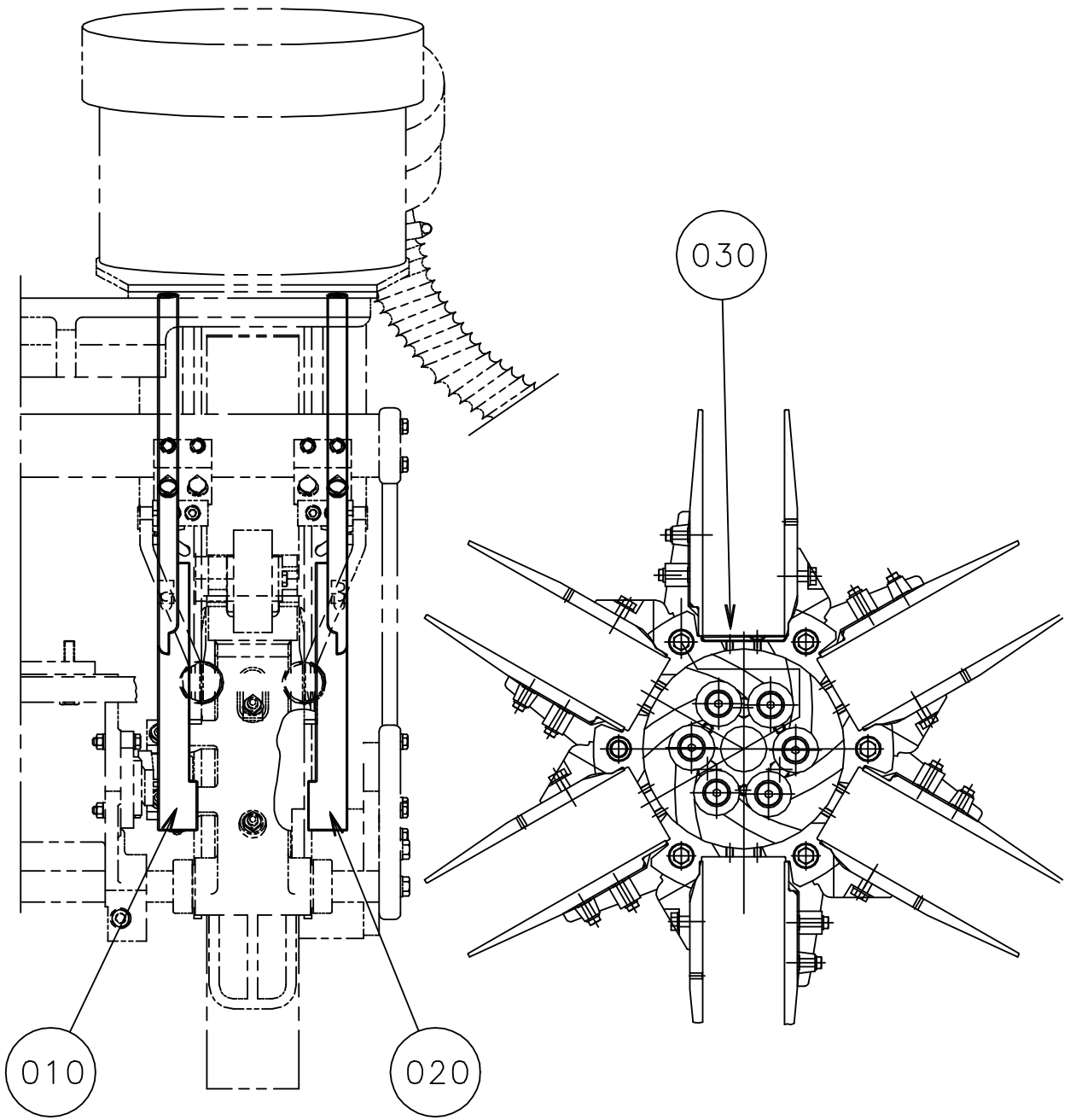

ECM: 71720 - 19981130
Group number: 597602-0100
Assembly Drawing: 597602-1_1_AA

Pos	Part No	UN	Qty	Description	Page No
-					
010	597537-0000		2	FOLDING BAR	
020	597536-0000		2	FOLDING BAR	
030	597608-0000		12	BOTTOM	

Pos	Part No	UN	Qty	Description	Page No

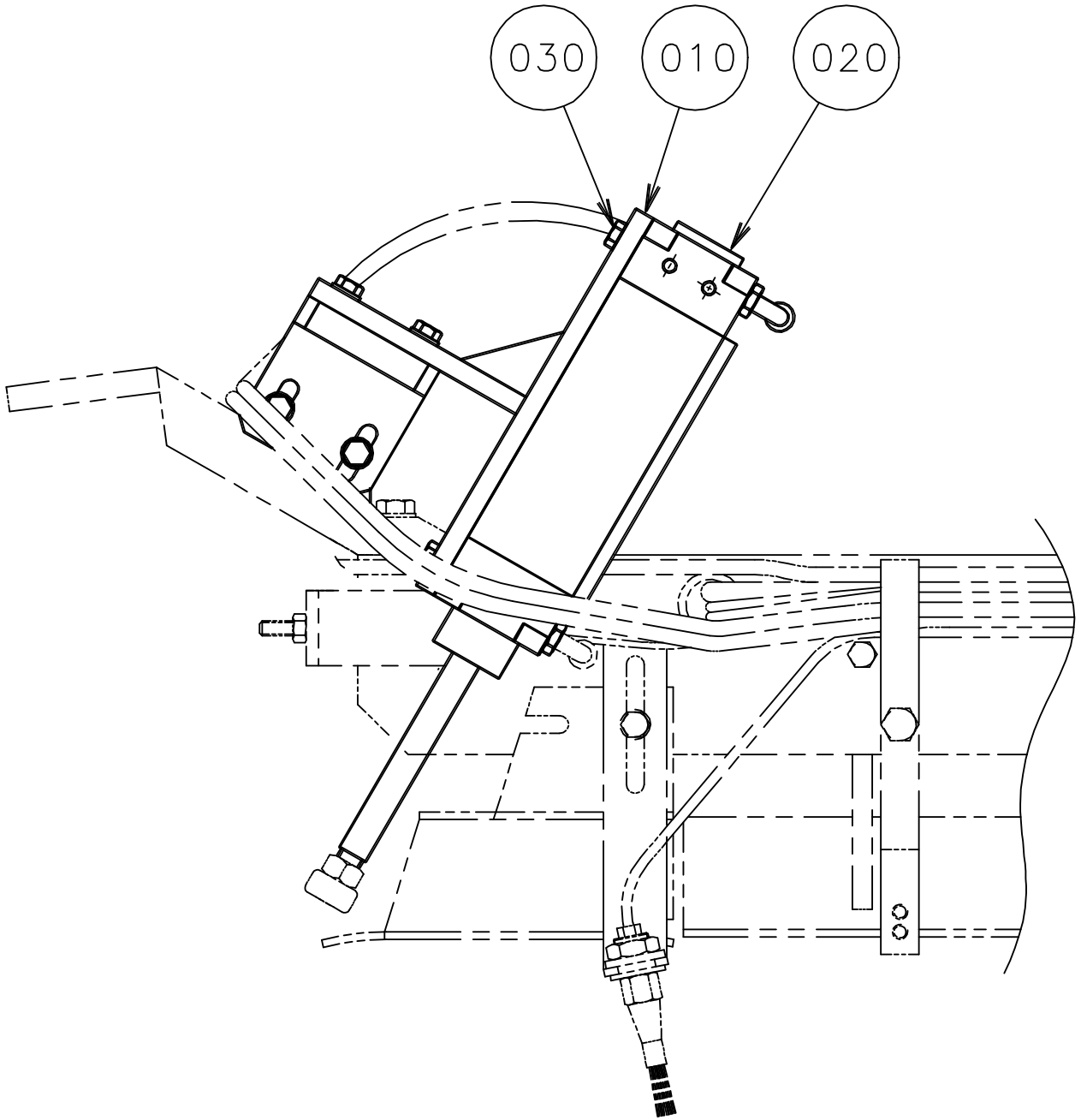
030
010
020

ECM: 71720 - 19981130
Group number: 597601-0100
Assembly Drawing: 597601-1_1_AA

Pos	Part No	UN	Qty	Description	Page No
-					
010	597584-0000		2	BRACKET	
020	90450-0495		2	CYLINDER	
030	312105-0368		4	SCREW M6S ISO 4017 M6X16 A480	

Pos	Part No	UN	Qty	Description	Page No

This page is intentionally left blank.

ECM: 71626 - 19981125
Group number: 1347803-0100
Assembly Drawing:

Pos	Part No	UN	Qty	Description	Page No
-					
	599720-0000		1	DOCUMENT FOLDER	
	1347717-0100		1	STRIP GUIDE	**13-133**

Pos	Part No	UN	Qty	Description	Page No

Machine Type	Group Description	Used-In	Group Number	Page No

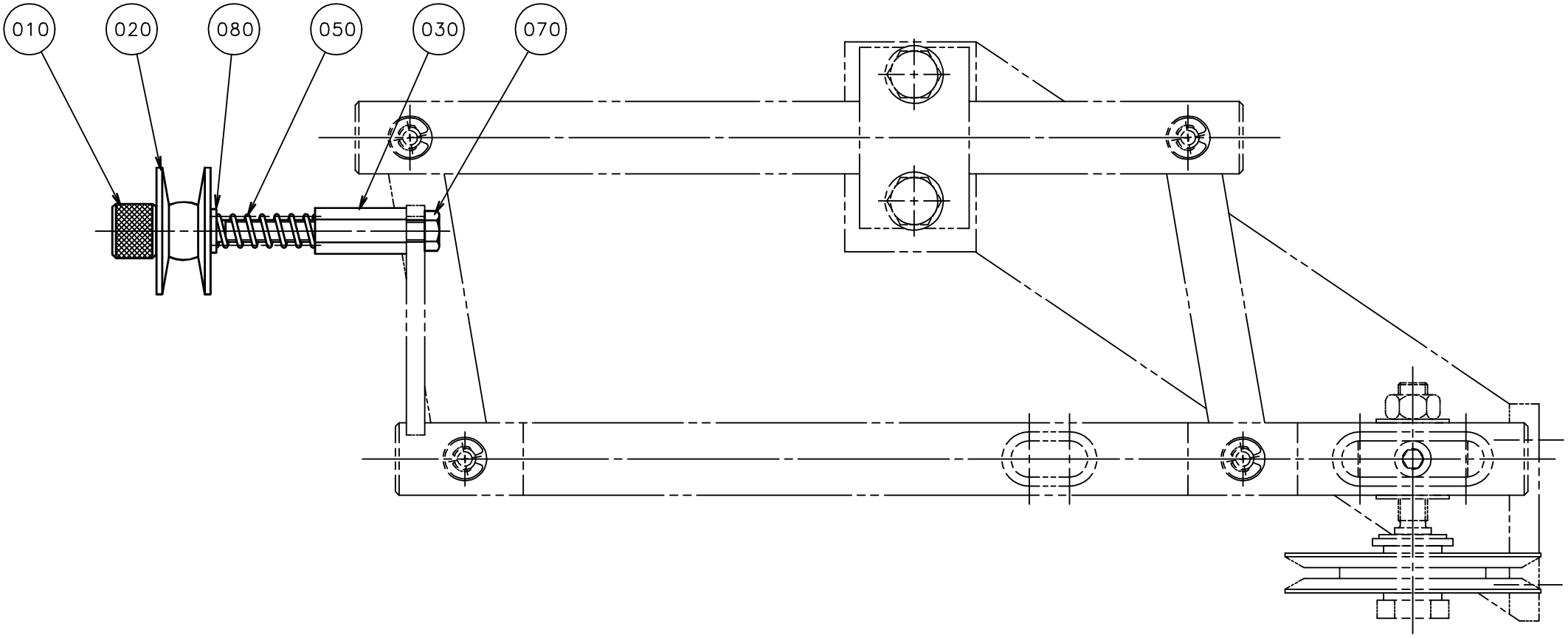
010
020
080
050
030
070

ECM: 71626 - 19981125
Group number: 1347717-0100
Assembly Drawing: 1347717-1_1_AA

Pos	Part No	UN	Qty	Description	Page No
-					
010	1035893-0000		1	ADJUSTING SCREW	
020	1285546-0000		1	ROLL	
030	1346505-0000		1	SPACER	
050	90335-0027		1	COMP. SPRING 22170, 1,25X9,25X33	
070	312105-0366		1	SCREW M6S ISO 4017 M6X12 A480	
080	315105-0153		1	WASHER BRB 6,4X12 RFR	

Pos	Part No	UN	Qty	Description	Page No

This page is intentionally left blank.

ECM: 72060 - 19981201
Group number: 1362446-0100
Assembly Drawing:

Pos	Part No	UN	Qty	Description	Page No	Pos	Part No	UN	Qty	Description	Page No
-											
010	556579-0000		1	CURVE							
020	1360007-0000		1	DOCUMENT FOLDER							

Machine Type	Group Description	Used-In	Group Number	Page No

This page is intentionally left blank.

ECM: 73488 - 20000224
Group number: 1365570-0100
Assembly Drawing:

Pos	Part No	UN	Qty	Description	Page No
-					
	1363722-0000		1	DOCUMENT FOLDER	
	90134-0052		4	PLUG DOSING BLOCK	
	559624-0100		1	USTS UPDATING (TMCC)	**13-139**
	1365571-0100		1	IMPROVED USTS JAWSYSTEM	**13-143**

Pos	Part No	UN	Qty	Description	Page No

This page is intentionally left blank.

ECM: 83267 - 20001107
Group number: 559624-0100
Assembly Drawing:

Pos	Part No	UN	Qty	Description	Page No
-					
0010	559625-0100		1	ELECTRICAL DOCUMENT	
0020	559687-0100		1	ELECTRICAL MATERIALS	**13-141**

Pos	Part No	UN	Qty	Description	Page No

This page is intentionally left blank.

ECM: 83269 - 20001107
Group number: 559687-0100
Assembly Drawing:

Pos	Part No	UN	Qty	Description	Page No	Pos	Part No	UN	Qty	Description	Page No
-											
0100	351172-0102	M	5	CABLE AWM 1X 0,75 MM2 DARKBLUE							
A005-7:1	47836-0201		1	TEPC, TUBUS ENERGY AND POWER CONTROL							
A005-7:3	1338607-0000		1	LABEL							

This page is intentionally left blank.

ECM: 73488 - 20000224
Group number: 1365571-0100
Assembly Drawing:

Pos	Part No	UN	Qty	Description	Page No
-					
	1365573-0100		1	IMPROVED USTS PRESSURE JAW	**13-145**
	1365572-0100		1	TRANSVERSAL SETTING	**13-147**

Pos	Part No	UN	Qty	Description	Page No

IMPROVED USTS PRESSURE JAW

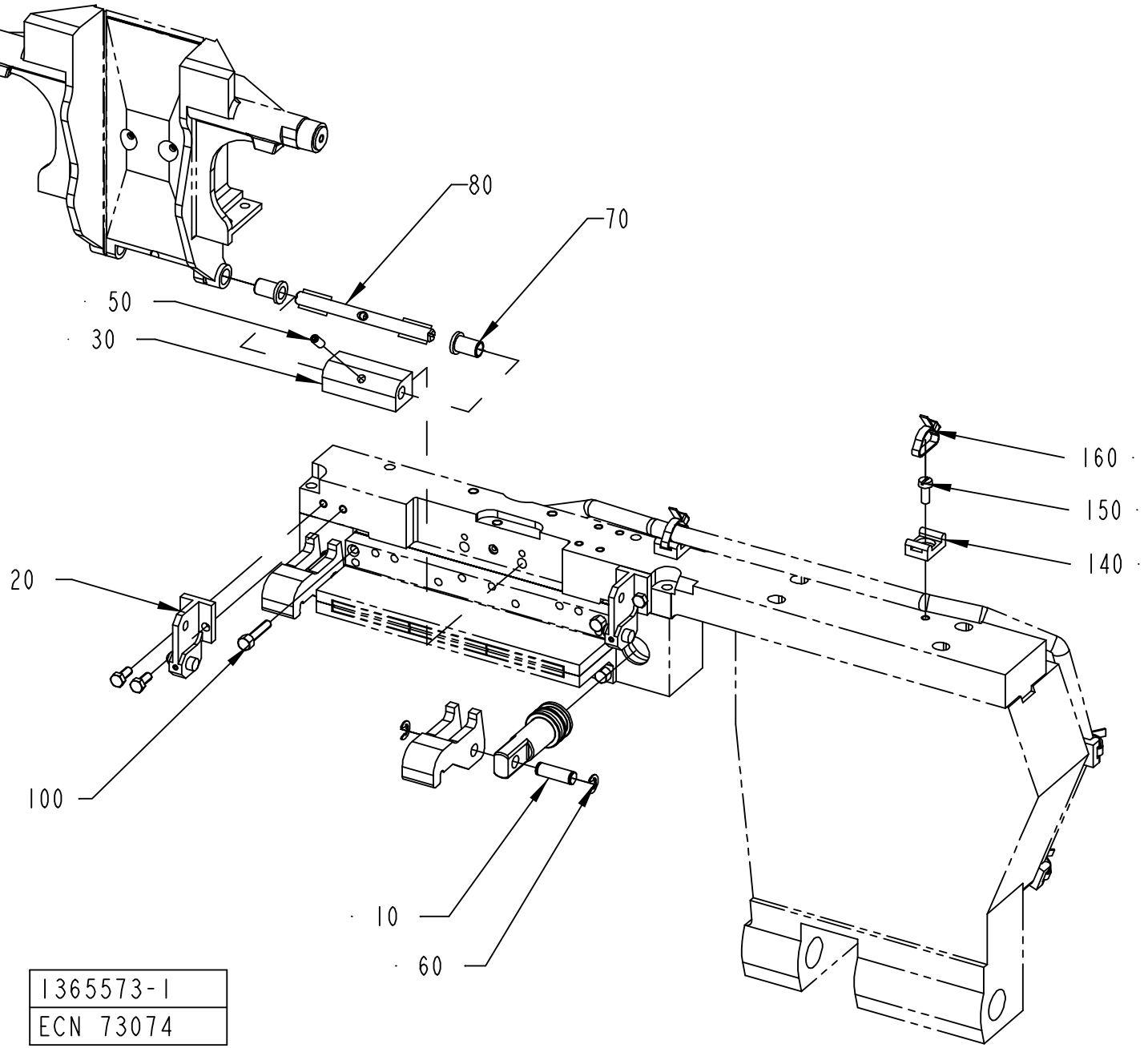

ECM: 73488 - 20000224
Group number: 1365573-0100
Assembly Drawing: 1365573-1_1_AA

Pos	Part No	UN	Qty	Description	Page No
-					
010	1362496-0000		4	AXLE	
020	1362502-0000		4	BRACKET	
030	1362504-0000		2	AXLE SUPPORT	
050	312318-0327		4	SCREW ISO4029 M5X12 A4	
060	315755-0108		8	RETAINING RING SHAFT DIN 6799 6 A2	
070	1255541-0000		8	BUSHING	
080	1349980-0000		4	SHAFT	
100	1364239-0000		8	SCREW	
140	352113-0204		8	ANCHOR PLATES FOR STRIPS, TYPE TM3S25-M	
150	312125-0327		8	SCREW ISO 1207 M5X12 A4	
160	352113-0102		8	CABLE TIE, BLACK 188X4,8 MM	

Pos	Part No	UN	Qty	Description	Page No

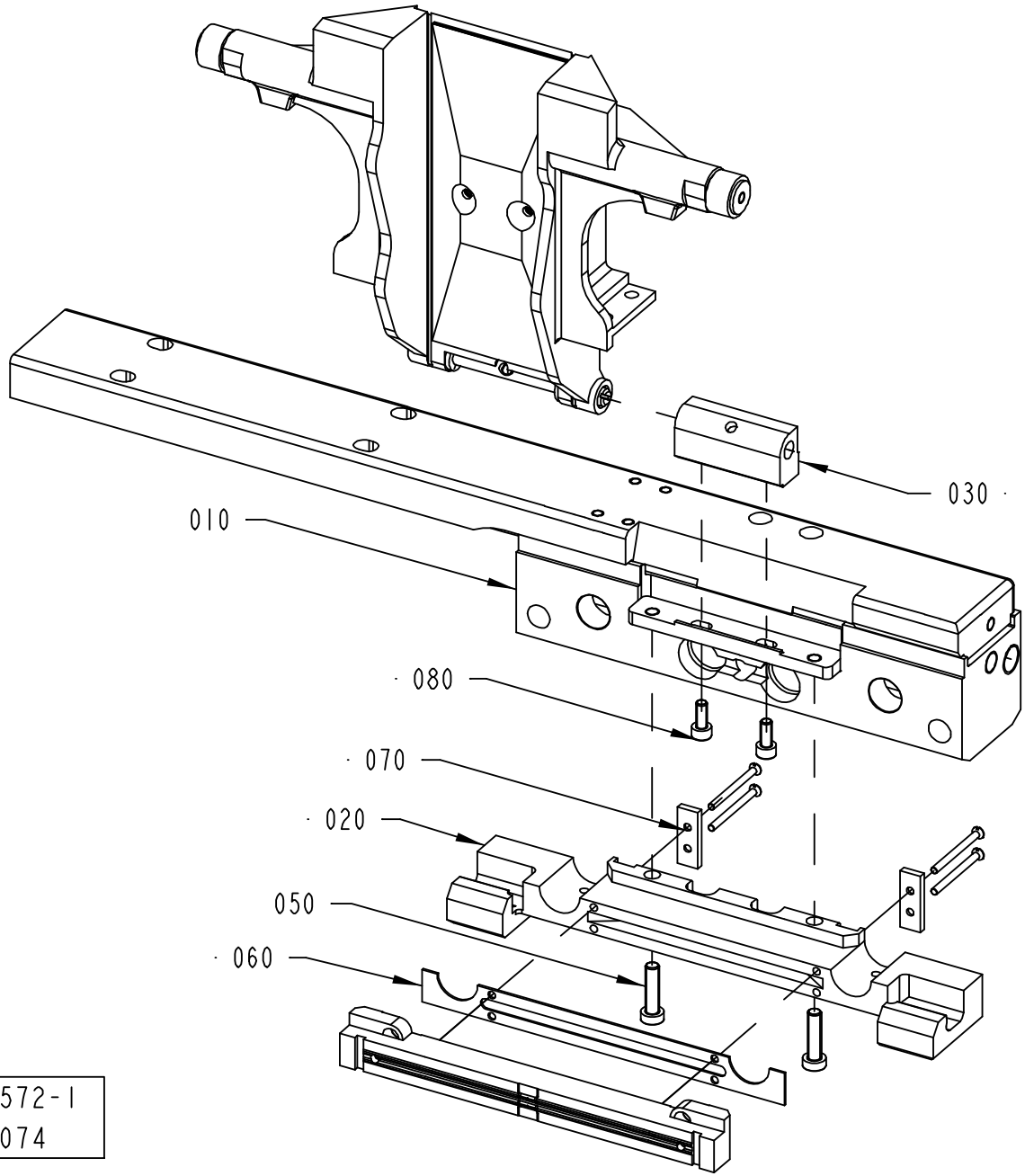
030
010
080
070
020
050
060
S-1365572-1
ECN 73074

ECM: 73597 - 20000412
Group number: 1365572-0100
Assembly Drawing: 1365572-1_1_AA

Pos	Part No	UN	Qty	Description	Page No
-					
010	1360217-0000		2	BEARING HOUSING	
020	1360218-0000		2	CUTTING JAW	
030	1360216-0000		2	AXLE SUPPORT	
050	90287-0070		4	SCREW MLC6S M6X23	
060	1364236-0000		2	DAMPER	
070	1364237-0000		4	DAMPER	
080	312115-0327		4	SCREW ISO4762 M5X12 A4 80	
090	315202-0212		4	O-RING 14,3X2,4 MM	
100	33408-0000		4	BEARING	
110	573988-0000		2	GASKET	
120	315230-0157		4	BEARING SEAL 12X16X3 MM	

Pos	Part No	UN	Qty	Description	Page No

This page is intentionally left blank.

ECM: 73410 - 20000125
Group number: 1366161-0100
Assembly Drawing:

Pos	Part No	UN	Qty	Description	Page No
-					
	1363724-0000		1	DOCUMENT FOLDER	
	1366160-0100		1	USTS SPLIT CUTTING RAIL	**13-151**

Pos	Part No	UN	Qty	Description	Page No

USTS SPLIT CUTTING RAIL

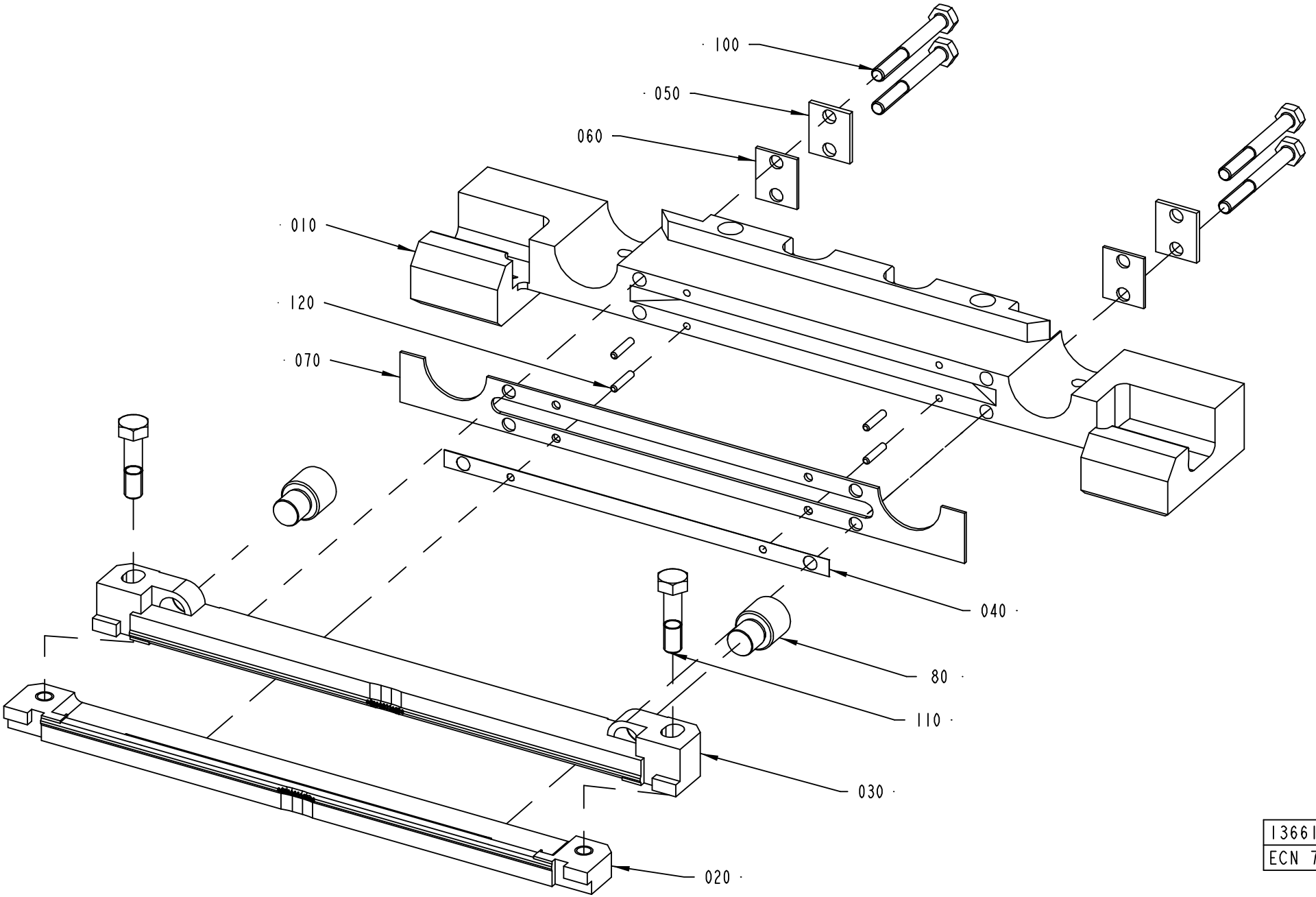

1366160-1
ECN 73185

ECM: 73185 - 19991221
Group number: 1366160-0100
Assembly Drawing: 1366160-1_1_AA

Pos	Part No	UN	Qty	Description	Page No
-					
010	1364231-0000		2	CUTTING JAW	
020	1364234-0000		2	USTS CUTTING RAIL	
030	1364235-0000		2	USTS CUTTING RAIL	
040	598623-0000		10	SHIM	
050	1364232-0000		4	PLATE	
060	1364233-0000		4	DAMPER	
070	1365565-0000		2	DAMPER	
080	32464-0000		4	SHAFT	
100	1366154-0000		8	SCREW	
110	1366155-0000		4	SCREW	
120	311102-0187		8	PARALLEL PIN ISO 2338 2M6X10 ST	

Pos	Part No	UN	Qty	Description	Page No

UK NEW VERSION OF AIR DRYER

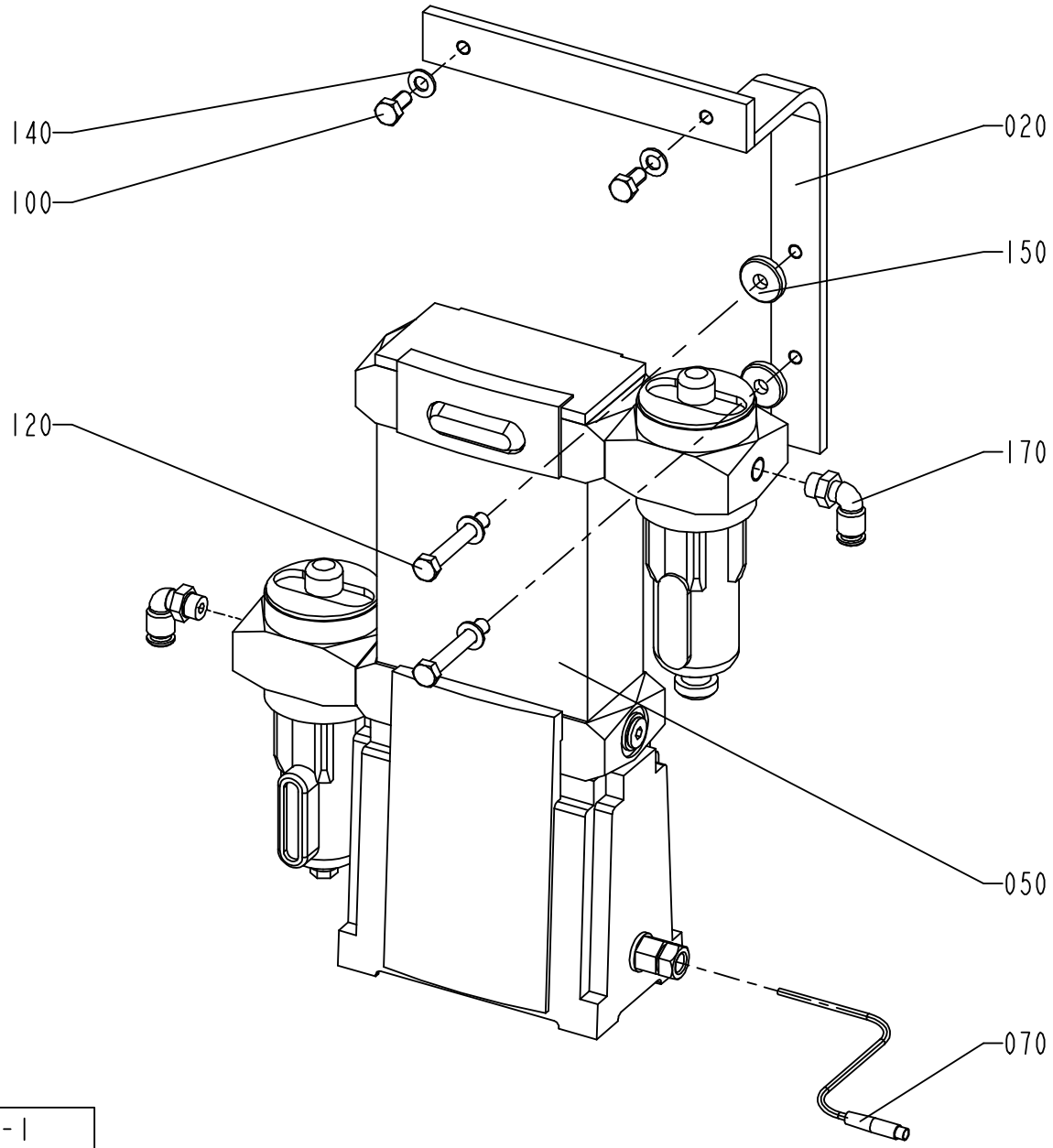

1362511-1
ECN 73488

ECM: 73488 - 20000224
Group number: 1362511-0100
Assembly Drawing: 1362511-1_1_AA

Pos	Part No	UN	Qty	Description	Page No
-					
020	597562-0000		1	BRACKET	
050	90457-0862		1	AIR DRYER. TYP LDF-H1-GÂ¬-24	
010	*90415-0356*		*1*	*OUTLET FILTER CATRIDGE LFMBP-H*	
020	*90415-0362*		*1*	*INLET FILTER CATRIDGE LFMAP-H*	
030	*90415-0363*		*1*	*DRYING AGENT. LDF-TM-H1-H7-1KG*	
070	90042-0600		1	CABLE MECMAN 440-428 500-1	
100	312105-0449		2	SCREW M6S ISO 4017 M8X16 A480	
120	312105-0467		2	SCREW M6S ISO 4014 M8X80 A480	
140	315105-0165		4	WASHER BRB 8,4X16 RFR	
150	315125-0165		2	WASHER TBRSB 8,4X26X5 A4	
170	342732-0104		2	ELBOW PIPE JOINT, EXT.THREAD, D=8MM-G1/4	

Pos	Part No	UN	Qty	Description	Page No

This page is intentionally left blank.

ECM: 93730 - 20010705
Group number: 2504997-0100
Assembly Drawing:

Pos	Part No	UN	Qty	Description	Page No
-					
010	1367830-0101		1	DOCUMENT FOLDER	
020	2504998-0100		1	USTS SERRATED & STEPPED CUTTING RAIL	**13-157**
030	2510542-0100		1	"USTS SERRATED & STEPPED CUTTING RAIL"	

Pos	Part No	UN	Qty	Description	Page No

Machine Type	Group Description	Used-In	Group Number	Page No

This page is intentionally left blank.

ECM: 93731 - 20010705
Group number: 2504998-0100
Assembly Drawing:

Pos	Part No	UN	Qty	Description	Page No	Pos	Part No	UN	Qty	Description	Page No
-											
010	2505064-0000		2	USTS CUTTING RAIL							
	32464-0000		*2*	*SHAFT*							
	1338682-0000		*1*	*USTS CUTTING RAIL*							
030	574010-0002		2	TRIMMING ROLLER PLUS							

Machine Type | Group Description | Used-In | Group Number | Page No

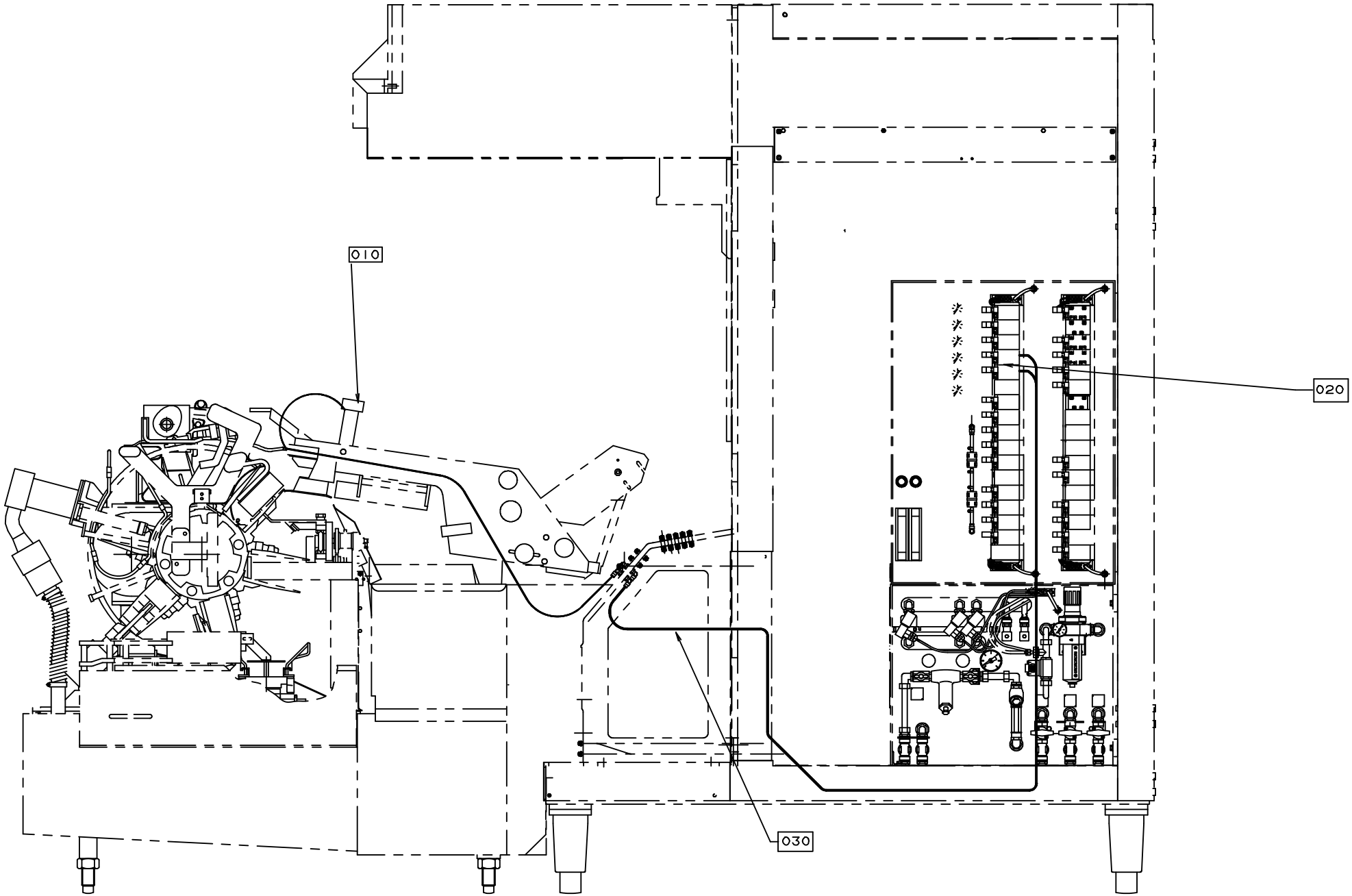
010
020
030

ECM: 97445 - 20011122
Group number: 2505169-0100
Assembly Drawing: 2505169-1_1_AA

Pos	Part No	UN	Qty	Description	Page No
-					
	2505155-0000		1	VALVE PANELS	
	2505152-0000		1	PNEUMATIC DIAGRAM	
	1367837-0101		1	DOCUMENT FOLDER	
	2525655-0100		1	EL "DISCHARGE CHUTE"	
010	2505143-0100		1	PUSHER	**13-161**
020	2505149-0100		1	VALVE PANEL	**13-163**
030	2505150-0100		1	PIPE WORK-PNEUMATIC	**13-165**
	2505117-0001		1	MODIFICATION DRAWING	
	2505118-0001		1	MODIFICATION DRAWING	
	2505146-0001		1	MODIFICATION DRAWING	

Pos	Part No	UN	Qty	Description	Page No

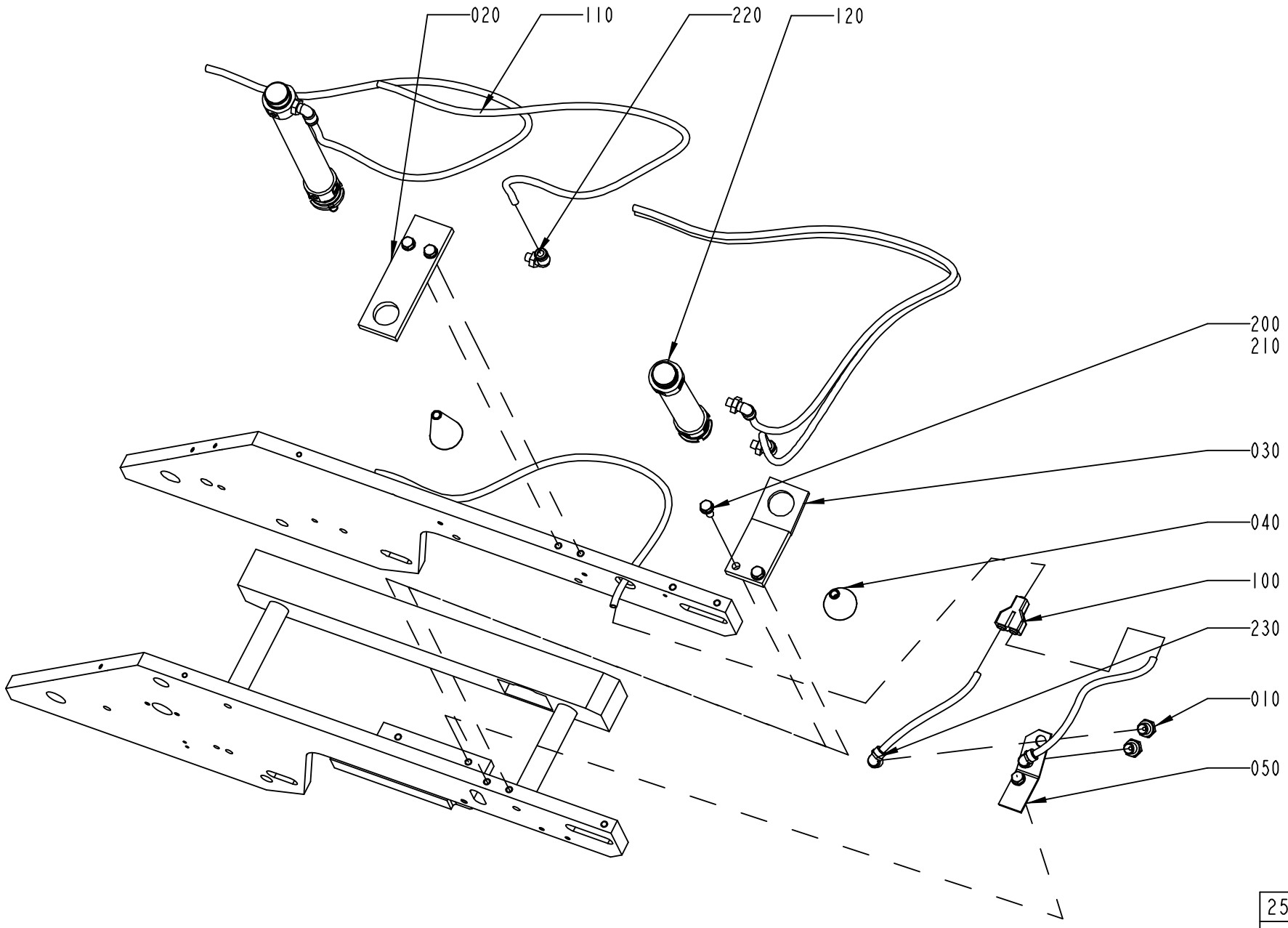

2505143-1
ECN 97440

ECM: 97442 - 20011122
Group number: 2505143-0100
Assembly Drawing: 2505143-1_1_AA

Pos	Part No	UN	Qty	Description	Page No
-					
010	1362527-0000		2	NOZZLE	
020	2505104-0000		1	BRACKET	
030	2505105-0000		1	BRACKET	
040	2505106-0000		2	PUSHER	
050	2505107-0000		1	BRACKET	
100	90055-0101		1	Y-CONNECTION, 8-8	
110	90166-0122	M	9	TUBE 8 MM PA,TRANSP.	
120	90458-2370		2	DOUBLE ACTING, ROUND, CYL 32-150	
200	312105-0451		4	SCREW M6S ISO 4017 M8X20 A480	
210	315105-0165		4	WASHER BRB 8,4X16 RFR	
220	342732-0801		4	ELBOW PIPE JOINT, EXT.THREAD, D=8MM-G1/8	
230	342933-0122		1	ELBOW 90 COUPL.,INT.THREAD 8/6-G1/4	

Pos	Part No	UN	Qty	Description	Page No

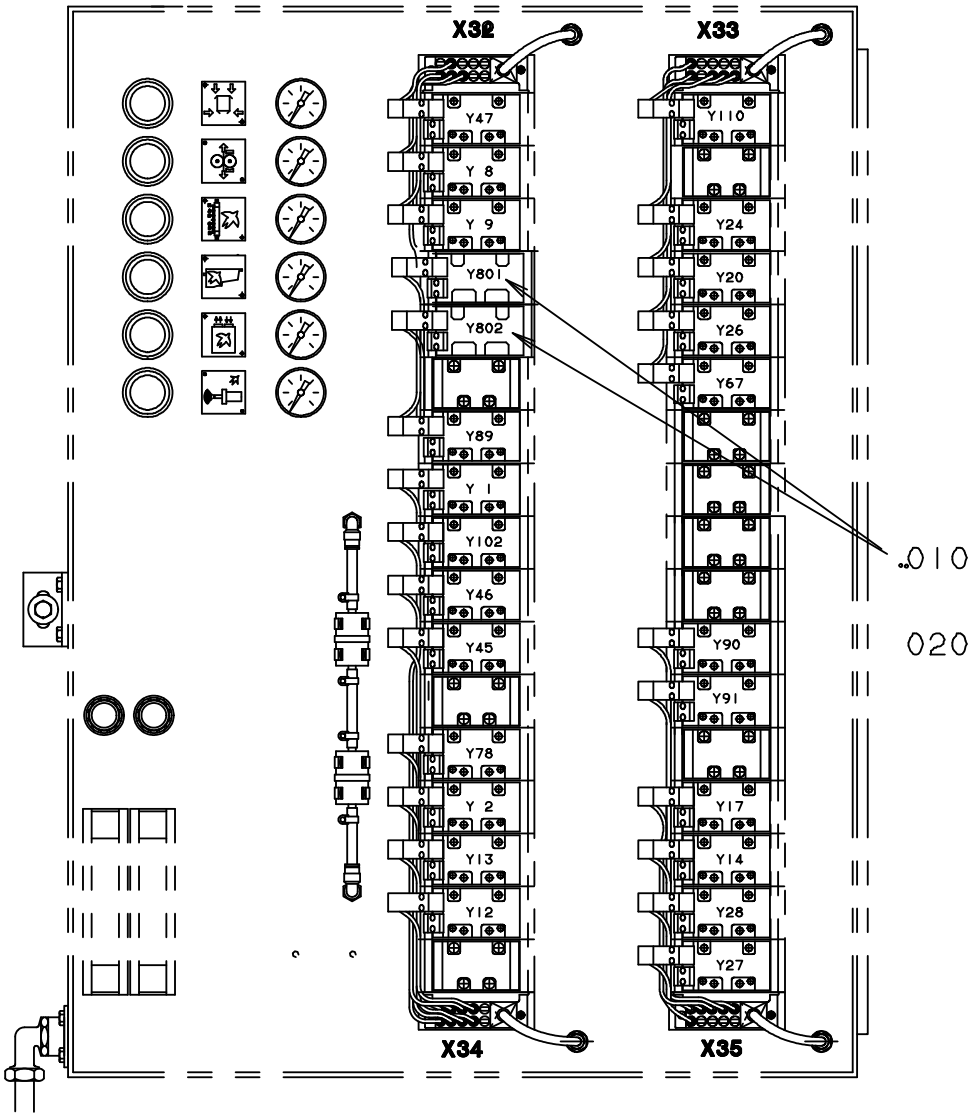
X32
X33
Y47
Y 8
Y 9
Y801
Y802
Y89
Y 1
Y102
Y46
Y45
Y78
Y 2
Y13
Y12
Y110
Y24
Y20
Y26
Y67
Y90
Y91
Y17
Y14
Y28
Y27
X34
X35
010
020

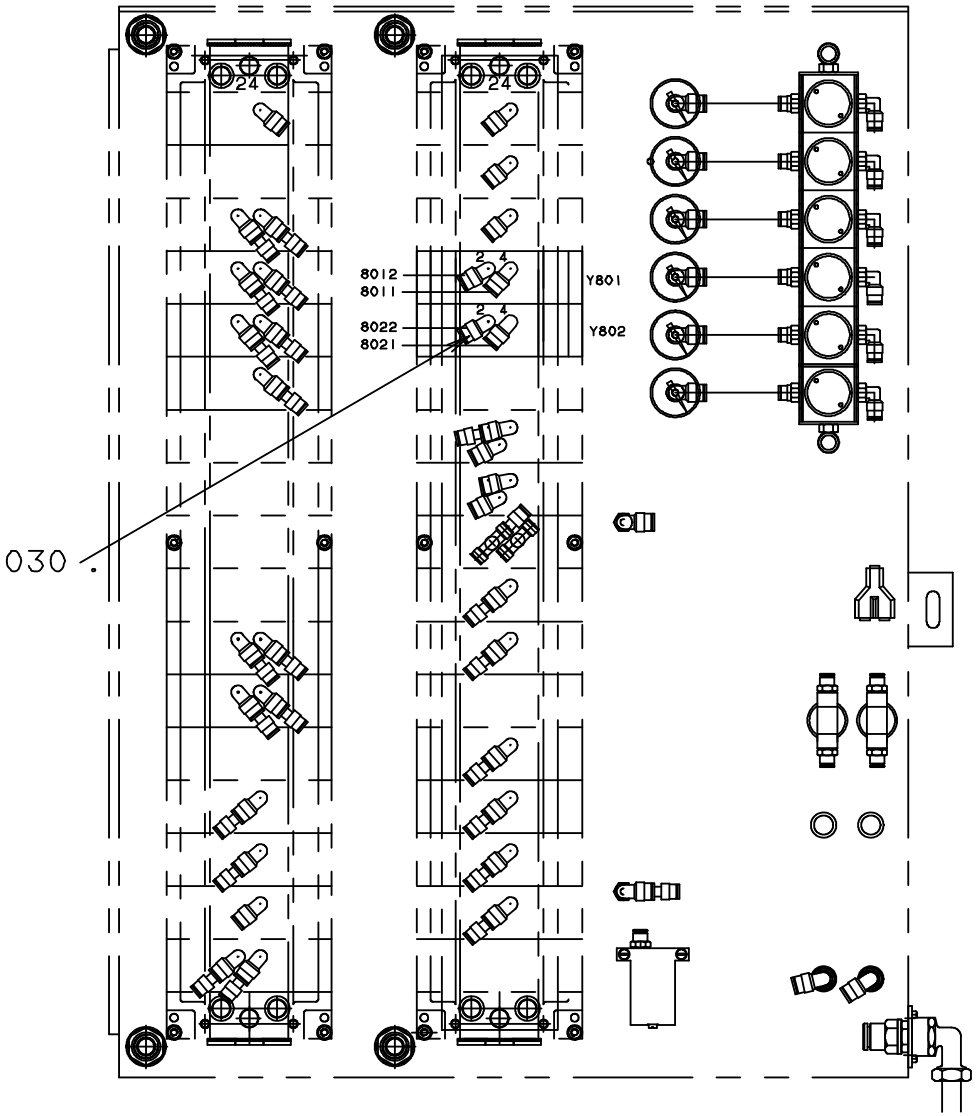
24
24
8012
8011
8022
8021
Y801
Y802
030

ECM: 97443 - 20011122
Group number: 2505149-0100
Assembly Drawing: 2505149-1_1_AA

Pos	Part No	UN	Qty	Description	Page No
-					
010	90042-0215		2	VALVE BODY 5/2 UNISTABLE	
020	90042-0538		2	PILOT VALVE L=500MM	
030	90055-0118		4	ELBOW WITH TAILPIECE 8/8 MM	

Pos	Part No	UN	Qty	Description	Page No

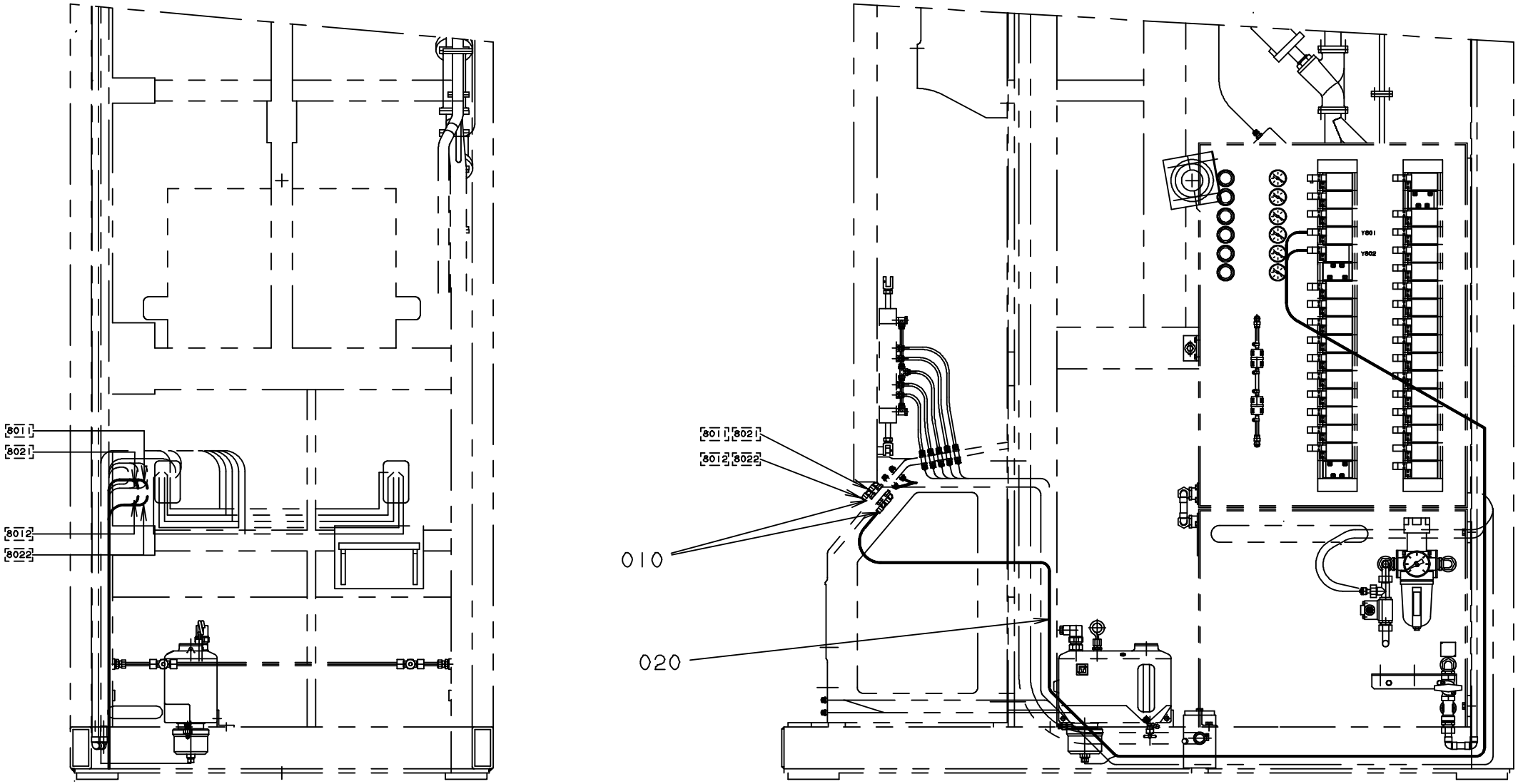
801
802
8012
8022
801
802
8012
8022
010
020
Y601
Y602

ECM: 97444 - 20011122
Group number: 2505150-0100
Assembly Drawing: 2505150-1_1_AA

Pos	Part No	UN	Qty	Description	Page No
-					
010	342732-0104		8	ELBOW PIPE JOINT, EXT.THREAD, D=8MM-G1/4	
020	90166-0013	M	15	TUBE 8 MM PA BLUE	

Pos	Part No	UN	Qty	Description	Page No

MKC BEARING HOUSING

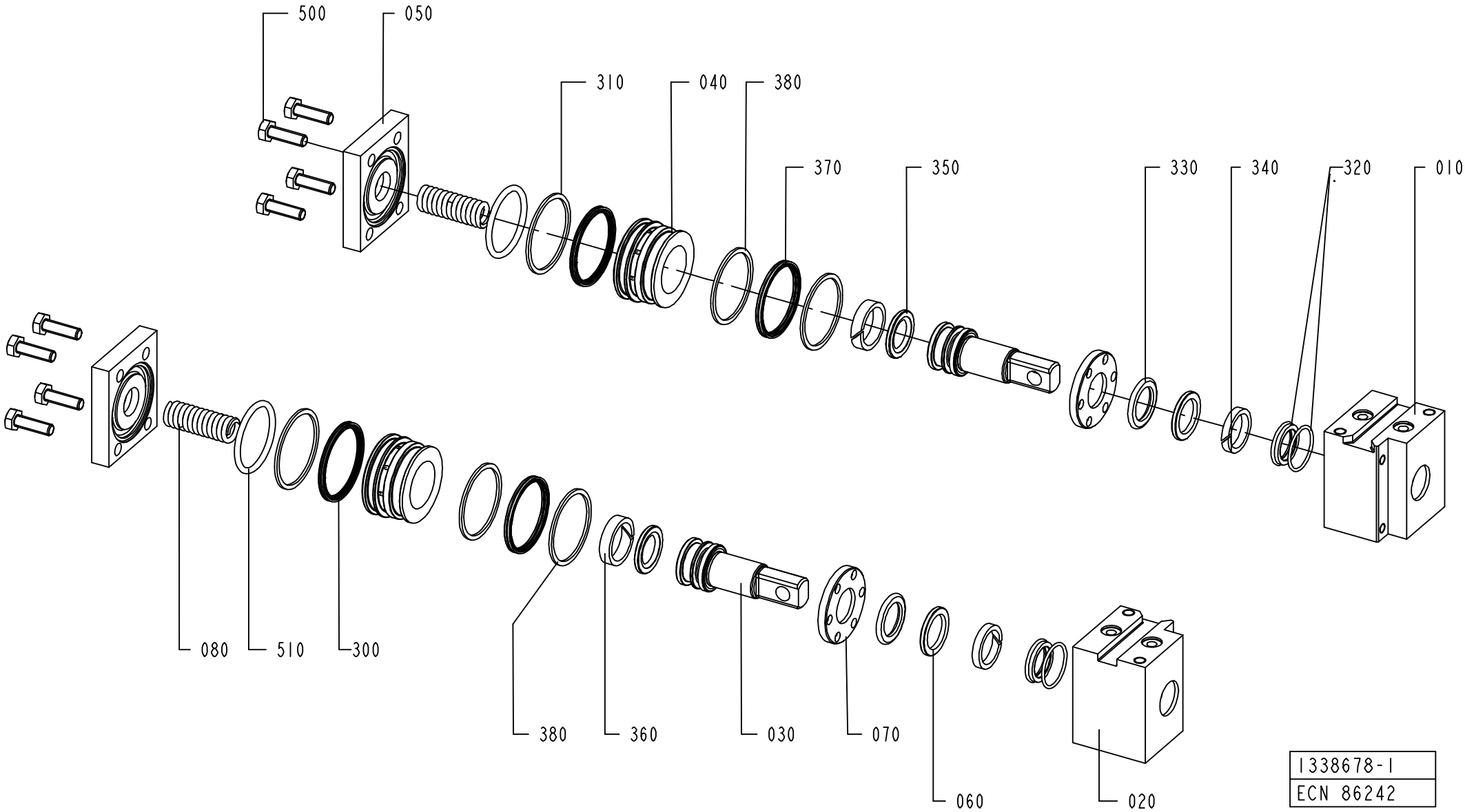

ECM: 86269 - 20020205
Group number: 1338678-0100
Assembly Drawing: 1338678-1_1_AA

Pos	Part No	UN	Qty	Description	Page No
-					
010	1338673-0000		2	BEARING HOUSING	
020	1338674-0000		2	BEARING HOUSING	
030	1362513-0000		4	PISTON	
040	1338675-0000		4	SLEEVE	
050	1338676-0000		4	LID	
060	1038240-0000		4	SPACER	
070	1338677-0000		4	WASHER	
080	590369-0000		4	COMPRESSION SPRING	
300	90091-0359		4	X-SEAL 36,17X2,62 MM	
310	90091-0360		4	BACK-UP RING 37,5X1,4 MM	
320	90091-0362		4	SCRAPER, EXCLUDER2 18X22,8X3,7 MM	
330	90091-0364		4	ROD SEAL, STEPSEAL 18X25,3X3,2 MM	
340	90091-0366		4	WEAR RING 18X23X3,9 MM	
350	90091-0393		4	PISTON SEAL GLIDE RING T17,5X25X3,2	
360	90091-0394		4	WEAR RING 20X25X5,6 MM	
370	90458-1915		4	X-SEAL 34,59X2,62 MM	
380	90458-1916		8	BACK-UP RING 35,5X1,4 MM	
500	312105-0370		16	SCREW M6S ISO 4017 M6X20 A480	
510	315204-0220		4	O-RING 32,2X3 MM	

Pos	Part No	UN	Qty	Description	Page No

MKC SPRING KNIFE 2

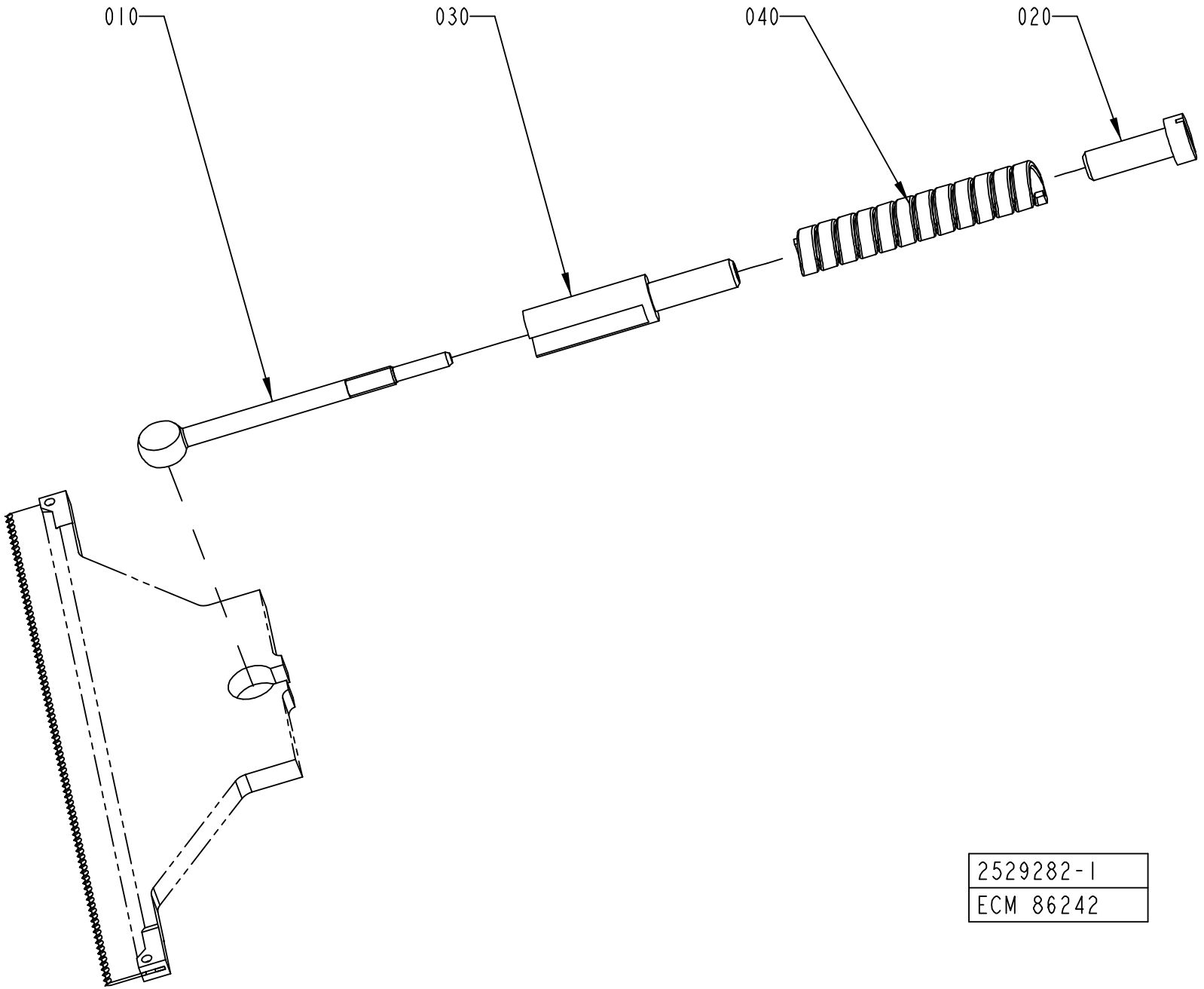

2529282-1
ECM 86242

ECM: 103504 - 20020205
Group number: 2529282-0100
Assembly Drawing: 2529282-1_1_AA

Pos	Part No	UN	Qty	Description	Page No	Pos	Part No	UN	Qty	Description	Page No
-											
010	1285003-0000		2	LINK							
020	1285005-0000		2	NUT							
030	1285006-0000		2	SPACER							
040	1538109-0000		2	COMPRESSION SPRING							

UK FLAP SEALING KIT

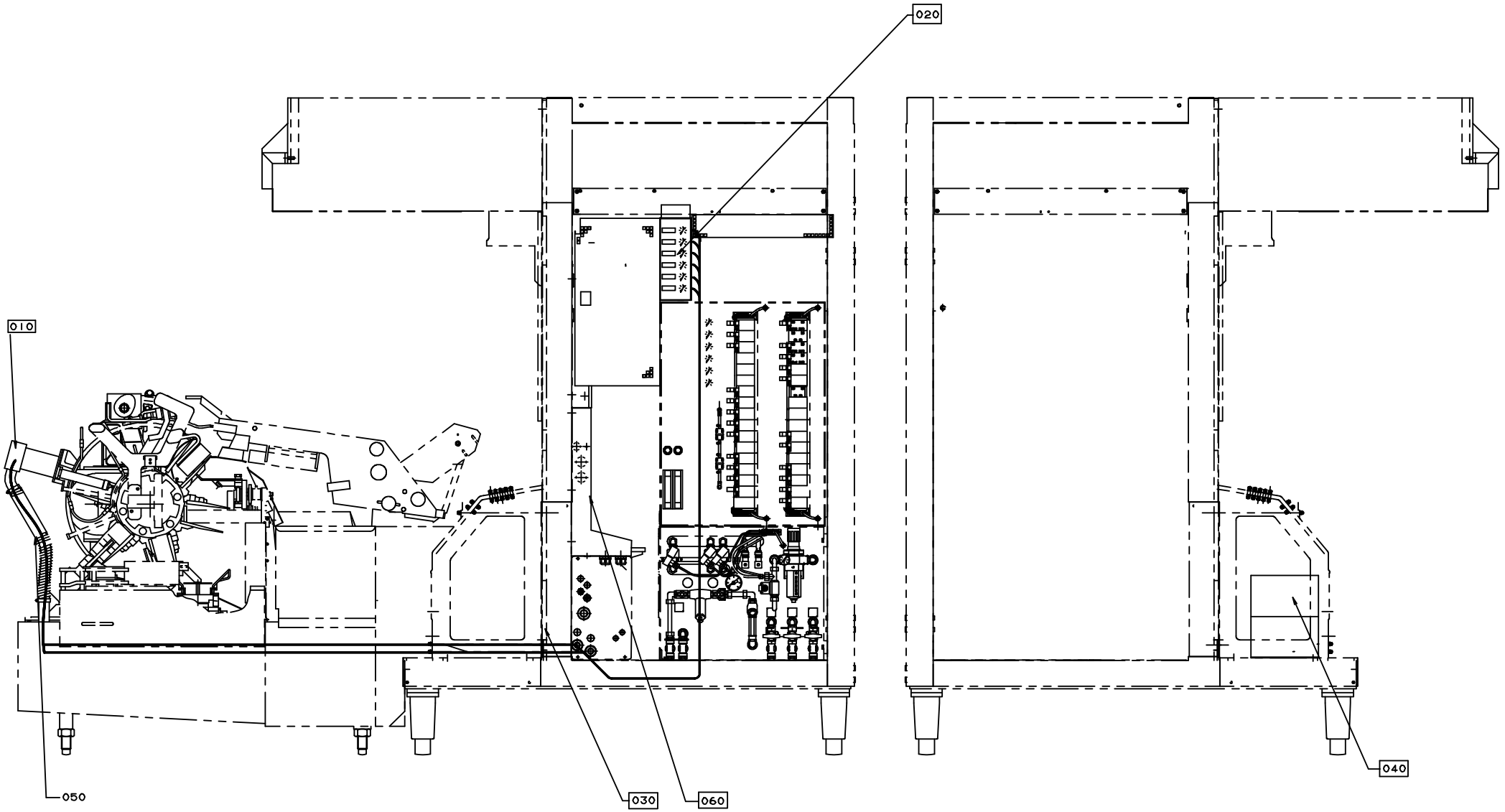

ECM: 97707 - 20020701
Group number: 2505159-0100
Assembly Drawing: 2505159-1_1_AA

Pos	Part No	UN	Qty	Description	Page No
-					
	2510293-0100		1	EL RK "FLAP SEALING"	**13-173**
	1367836-0101		1	DOCUMENT FOLDER	
	769219-0102		1	HANDLE BRACKET	
	769219-0101		1	HOLDER	
	769211-0138		1	SAW BLADE	
	769211-0129		1	SAW BLADE	
	769211-0116		1	SAW BLADE	
	765102-0167		2	SPIRAL DRILL	
	342715-0103		2	BLIND PLUG 8 MM	
	90042-0519		1	BLANK PLATE ISO SIZE 1	
010	2505037-0100		1	HEATING UNIT	**13-177**
020	2505096-0100		1	VALVE PANEL	**13-179**
030	2505109-0100		1	MACHINE BODY	**13-181**
040	2505171-0100		1	EL.CONNECTION BOX	**13-183**
050	352135-0116	MM	1300	FLEXIBLE CONDUIT DIA. 40	
060	2539209-0100		1	CABLE DUCT	**13-185**
	2539195-0001		1	MODIFICATION DRAWING	
	2505108-0001		1	MODIFICATION DRAWING	

Pos	Part No	UN	Qty	Description	Page No

This page is intentionally left blank.

ECM: 95217 - 20020628
Group number: 2510293-0100
Assembly Drawing:

Pos	Part No	UN	Qty	Description	Page No
-					
010	2510294-0100		1	ELECTRICAL DOCUMENT	
020	2510295-0100		1	ELECTRICAL MATERIAL	**13-175**

Pos	Part No	UN	Qty	Description	Page No

This page is intentionally left blank.

ECM: 95219 - 20020628
Group number: 2510295-0100
Assembly Drawing:

Pos	Part No	UN	Qty	Description	Page No
-					
0010	2542386-0000		1	WIRE MANUFACTURE DIAGRAM	
0020	2542387-0000		1	CABLE MANUFACTURE DIAGRAM	
0030	353021-0213		12	FEED THROUGH TERMINAL, 10201.0	
0040	353021-0217		16	FEED THROUGH TERMINAL, 10201.8	
0050	353024-0205		5	EARTH TERMINAL, 1010.1	
0060	353032-0004		1	END PLATE WAP 2,5-10 BEIGE	
0070	353032-0005		1	END PLATE WAP 2,5-10 BLUE	
0080	353031-0203		4	END SUPPORT, WEW 35/2	
0090	359011-0821		4	SET OF SIGNS 6-FW 1-50	
0100	359011-0834		1	SET OF SIGNS 6-GW(EARTH)	
0110	731771-0000		1	COOLING PLATE,SOLIDSTATE	
0120	312502-0219		12	DRIVE SCREW ROUND HEAD KDS 4X5	
0130	1143884-0000		5	COPPER BRAID	
0140	2532882-0000		1	COPPER BRAID	
0150	312101-0366		6	SCREW M6S M6X12 FZB	
0160	315103-0153		6	WASHER, BRB, 6,4/12,H=1,5 NIPL BR	
0170	90062-0015		6	LOCK WASHER SERRAT.EXT.GEAR,6,4/11 H=0,7	
0180	312125-0287		16	SCREW ISO 1207 M4X8 A4	
0190	315105-0136		16	WASHER BRB 4,3X9 RFR	
0200	352113-0101		100	CABLE TIE, BLACK 92X2,5 MM	
0210	352113-0102		50	CABLE TIE, BLACK 188X4,8 MM	
0220	90296-0051		1	PASTE	
A805.2	359240-0100		1	SIGN HOLDER FOR 359240-0001	
A805.1	2505090-0000		1	SIGN	
A805	90410-0051		1	TEMPERATURE CONTROLLER, KS 40	
A804.2	359240-0100		1	SIGN HOLDER FOR 359240-0001	
A804.1	2505089-0000		1	SIGN	
A804	90410-0051		1	TEMPERATURE CONTROLLER, KS 40	
A803.2	359240-0100		1	SIGN HOLDER FOR 359240-0001	
A803.1	2505088-0000		1	SIGN	
A803	90410-0051		1	TEMPERATURE CONTROLLER, KS 40	
A802.2	359240-0100		1	SIGN HOLDER FOR 359240-0001	
A802.1	2505093-0000		1	SIGN	
A802	90410-0051		1	TEMPERATURE CONTROLLER, KS 40	
A801.2	359240-0100		1	SIGN HOLDER FOR 359240-0001	
A801.1	2505092-0000		1	SIGN	
A801	90410-0051		1	TEMPERATURE CONTROLLER, KS 40	
A800.2	359240-0100		1	SIGN HOLDER FOR 359240-0001	
A800.1	2505091-0000		1	SIGN	
A800	90410-0051		1	TEMPERATURE CONTROLLER, KS 40	
F805.1	90233-0303		1	FUSE HOLDER, ST 10 1-POLE	
F805	90233-0027		1	TUBE FUSE, 16A	
	90233-0305		*1*	*INDICATOR*	
F804.1	90233-0303		1	FUSE HOLDER, ST 10 1-POLE	
F804	90233-0028		1	TUBE FUSE, 10A	
F803.1	90233-0303		1	FUSE HOLDER, ST 10 1-POLE	
F803	90233-0028		1	TUBE FUSE, 10A	
F802.1	90233-0303		1	FUSE HOLDER, ST 10 1-POLE	
F802	90233-0027		1	TUBE FUSE, 16A	
	90233-0305		*1*	*INDICATOR*	
F801.1	90233-0303		1	FUSE HOLDER, ST 10 1-POLE	
F801	90233-0028		1	TUBE FUSE, 10A	
F800.1	90233-0303		1	FUSE HOLDER, ST 10 1-POLE	
F800	90233-0028		1	TUBE FUSE, 10A	
K805.1	90119-0067		1	SOLID-STATE RELAY, H12WD4850	
K804.1	90119-0067		1	SOLID-STATE RELAY, H12WD4850	
K803.1	90119-0067		1	SOLID-STATE RELAY, H12WD4850	
K802.1	90119-0067		1	SOLID-STATE RELAY, H12WD4850	
K801.1	90119-0067		1	SOLID-STATE RELAY, H12WD4850	
K801	90075-0125		1	CONTACTOR, 7,5KW 24VDC	
	90075-0313		*1*	*AUXILIARY CONTACT K&M 22 DILM.2NO,2NC*	
K800.1	90119-0067		1	SOLID-STATE RELAY, H12WD4850	
K800	90075-0125		1	CONTACTOR, 7,5KW 24VDC	
	90075-0313		*1*	*AUXILIARY CONTACT K&M 22 DILM.2NO,2NC*	

Machine Type | Group Description | Used-In | Group Number | Page No

HEATING UNIT

Drawing file: 2505037-1_1_AA.hpgl

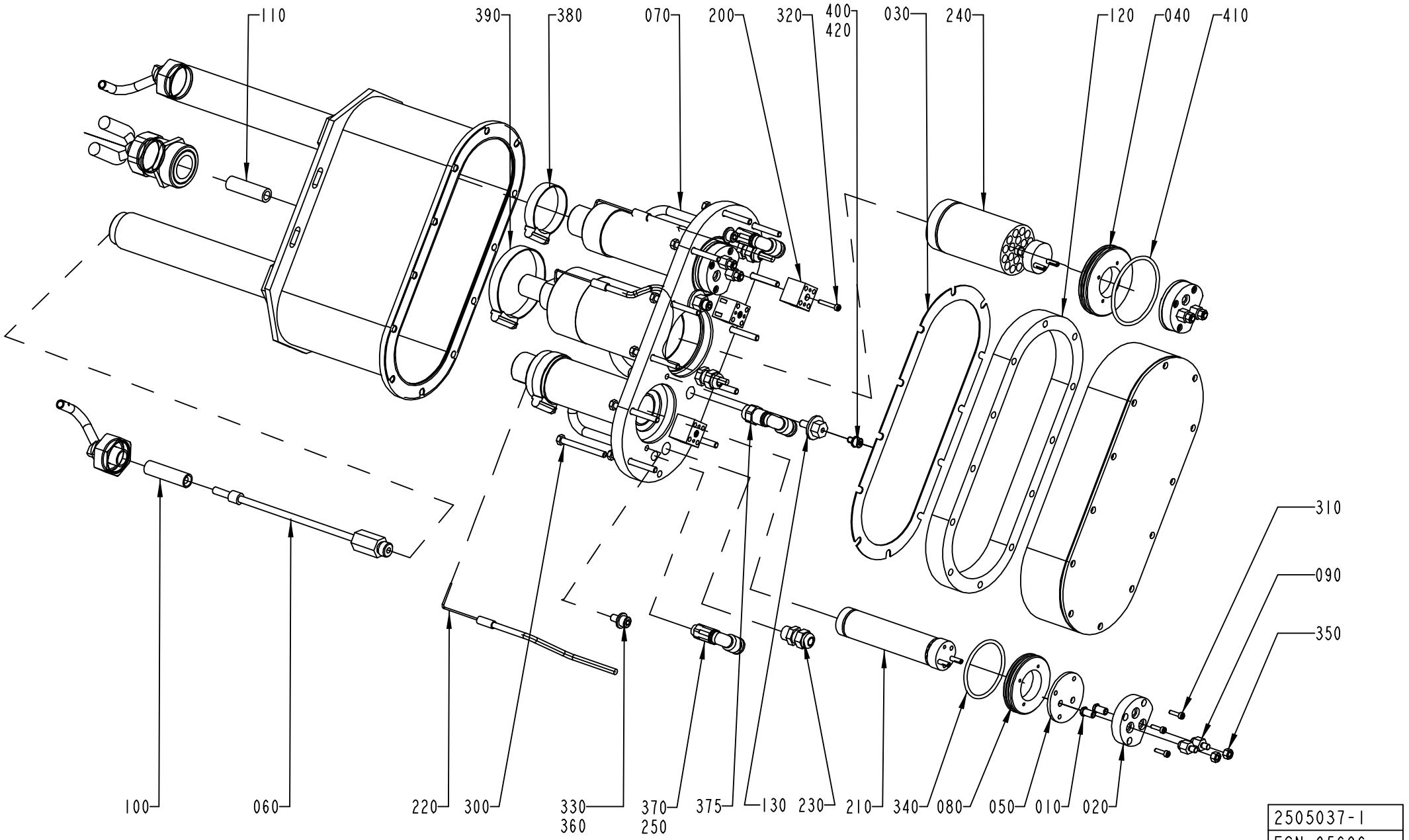

2505037-1
ECN 95606

ECM: 95608 - 20020701
Group number: 2505037-0100
Assembly Drawing: 2505037-1_1_AA

Pos	Part No	UN	Qty	Description	Page No
0500SQ					
060	2505048-0000		4	EXTENSION	
0568SQ					
060	2505080-0000		4	EXTENSION	
1000SQ					
060	2505040-0000		4	EXTENSION	
Common Parts					
010	270927-0000		12	SCREW	
020	294464-0000		6	BASE PLATE	
030	531730-0000		8	FLANGE SEAL	
040	1285307-0000		2	SPACER	
050	1285308-0000		6	GASKET	
070	2505041-0000		2	HOUSING	
080	2505042-0000		4	SPACER	
090	2505043-0000		12	CABLE GLAND	
100	2505044-0000		4	SLEEVE	
110	2505045-0000		2	SLEEVE	
120	2505046-0000		2	SPACER PLATE	
130	2505047-0000		4	SCREW	
200	90195-0020		6	TERMINAL BLOCK, 1977.2	
210	90206-0125		4	HEATING ELEMENT 1000W 220V	
220	90326-0060		6	THERMOCOUPLE, CR-AL	
230	90458-2050		6	CABLE GLAND, PG7, 149D7	
240	90206-0030		2	HEATING ELEMENT 3000W, 220V	
250	90055-0118		6	ELBOW WITH TAILPIECE 8/8 MM	
300	312105-0341		24	SCREW M6S ISO 4014 M5X50 A480	
310	312115-0226		18	SCREW ISO4762 M3X12 A4 80	
320	312115-0230		6	SCREW ISO4762 M3X20 A4 80	
330	312115-0366		4	SCREW ISO4762 M6X12 A4 80	
340	315204-0301		4	O-RING 49,5X3 MM	
350	312605-0314		12	HEXAGON NUT, M6M M5 A280	
360	315105-0156		4	WASHER BRB 6,7X14 RFR	
370	342722-0204		4	PIPE COUPLING	
375	342722-0205		2	STRAIGHT COUPLING D=8-G1/4"	
380	342991-0108		4	HOSE CLIP 38-50MMRFR	
390	342991-0111		2	HOSE CLIP,WORM DRIVE TYPE (63)-73	
400	312115-0323		4	SCREW ISO4762 M5X8 A4 80	
410	315204-0303		2	O-RING 59,5X3 MM	
420	315105-0146		4	WASHER BRB 5,3X10 RFR	

Pos	Part No	UN	Qty	Description	Page No

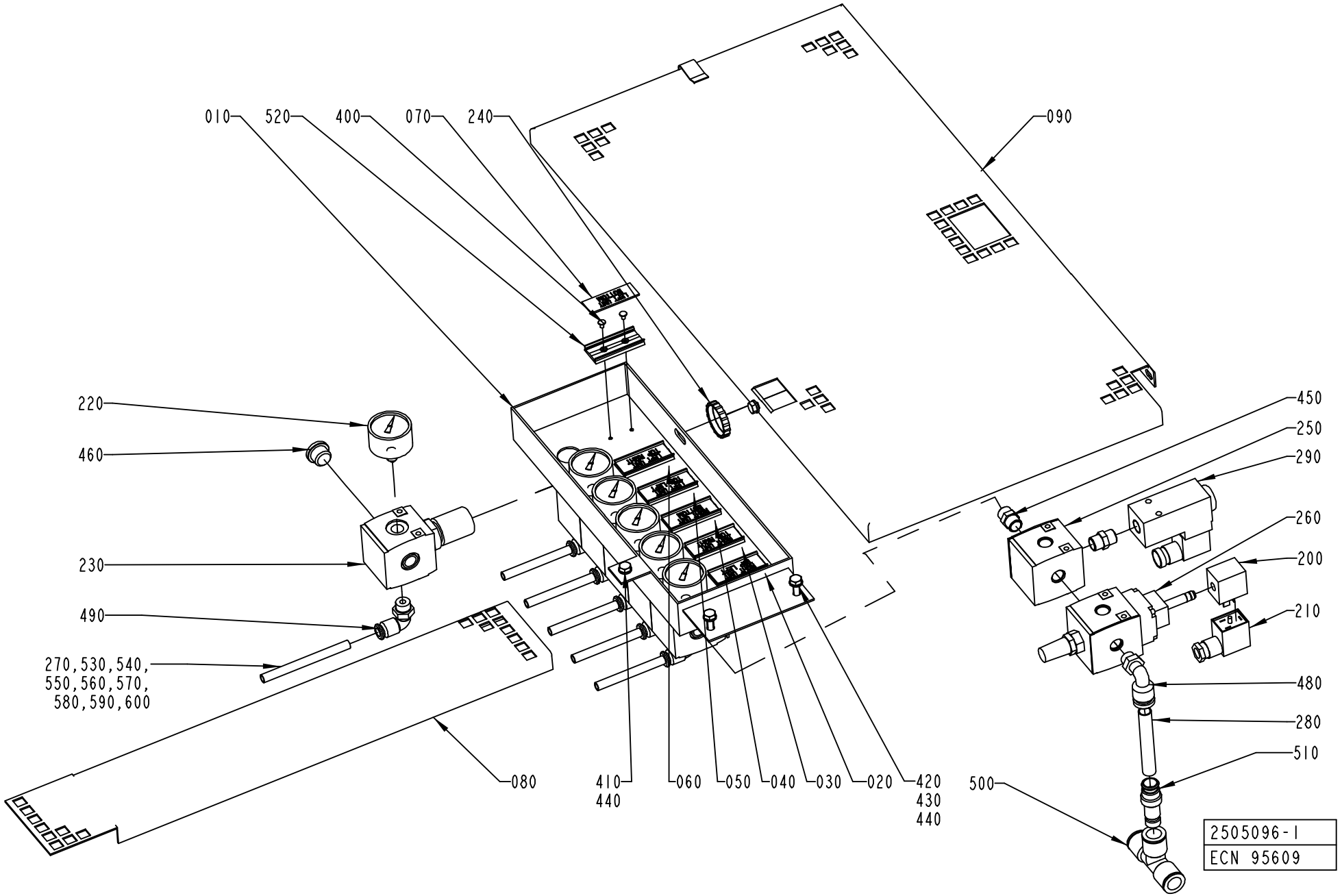
010
520
400
070
240
090
220
460
230
490
270,530,540,
550,560,570,
580,590,600
080
410
440
060
050
040
030
020
420
430
440
500
450
250
290
260
200
210
480
280
510
2505096-1
ECN 95609

ECM: 95609 - 20020701
Group number: 2505096-0100
Assembly Drawing: 2505096-1_1_AA

Pos	Part No	UN	Qty	Description	Page No
-					
	2529324-0000		1	PNEUMATIC DIAGRAM	
010	2505087-0000		1	FRAME	
020	2505088-0000		1	SIGN	
030	2505089-0000		1	SIGN	
040	2505090-0000		1	SIGN	
050	2505091-0000		1	SIGN	
060	2505092-0000		1	SIGN	
070	2505093-0000		1	SIGN	
080	2505094-0000		1	PROTECTION	
090	2505095-0000		1	PROTECTION	
200	90042-0345		1	COIL 24V DC	
210	90042-0392		1	CONTACT 2 POLE + EARTH	
220	90043-0056		6	PRESSURE GAUGE, 2041 D=40 MM	
230	90113-0071		6	PRESSURE REGULATOR	
240	90113-0379		6	NUT	
250	90113-0385		1	SEPARATION BLOCK	
260	90113-0386		1	VALVE	
270	90166-0013	M	50	TUBE 8 MM PA BLUE	
280	90166-0068	M	1	TUBE 12 MM PA BLUE	
290	90274-0074		1	PRESSURE GUARD, 530 KPA	
400	311521-0142		12	BLANK RIVET 3,2X6	
410	312105-0364		2	SCREW M6S ISO 4017 M6X10 A480	
420	312105-0372		2	SCREW M6S ISO 4017 M6X25 A480	
430	312605-0316		2	HEXAGON NUT, M6M M6 A280	
440	315105-0153		6	WASHER BRB 6,4X12 RFR	
450	342700-0110		2	NIPPLES,HEXAGON,EXT.G-THREAD G1/4"-G1/4"	
460	342713-0210		1	PLUG,EXT THREAD HEX SOCKET(PAK OF 10 PCS	
480	342732-0109		1	ELBOW PIPE JOINT, EXT.THREAD, D=1MM-G1/4	
490	342732-0104		6	ELBOW PIPE JOINT, EXT.THREAD, D=8MM-G1/4	
500	342748-0110		1	T-CONNECTION 14MM	
510	342716-0211		1	REDUCER 12-14	
520	359240-0100		6	SIGN HOLDER FOR 359240-0001	
530	359009-0100		48	CABLE MARKING, YELLOW, PK2/4"0"	
540	359009-0101		4	CABLE MARKING, YELLOW, PK 2/4"1"	
550	359009-0102		4	CABLE MARKING, YELLOW, PK 2/4"2"	
560	359009-0103		4	CABLE MARKING, YELLOW, PK 2/4"3"	
570	359009-0104		4	CABLE MARKING, YELLOW, PK 2/4"4"	
580	359009-0105		4	CABLE MARKING, YELLOW, PK 2/4"5"	
590	359009-0106		4	CABLE MARKING, YELLOW, PK 2/4"6"	
600	359009-0108		24	CABLE MARKING, YELLOW, PK 2/4"8"	

Pos	Part No	UN	Qty	Description	Page No

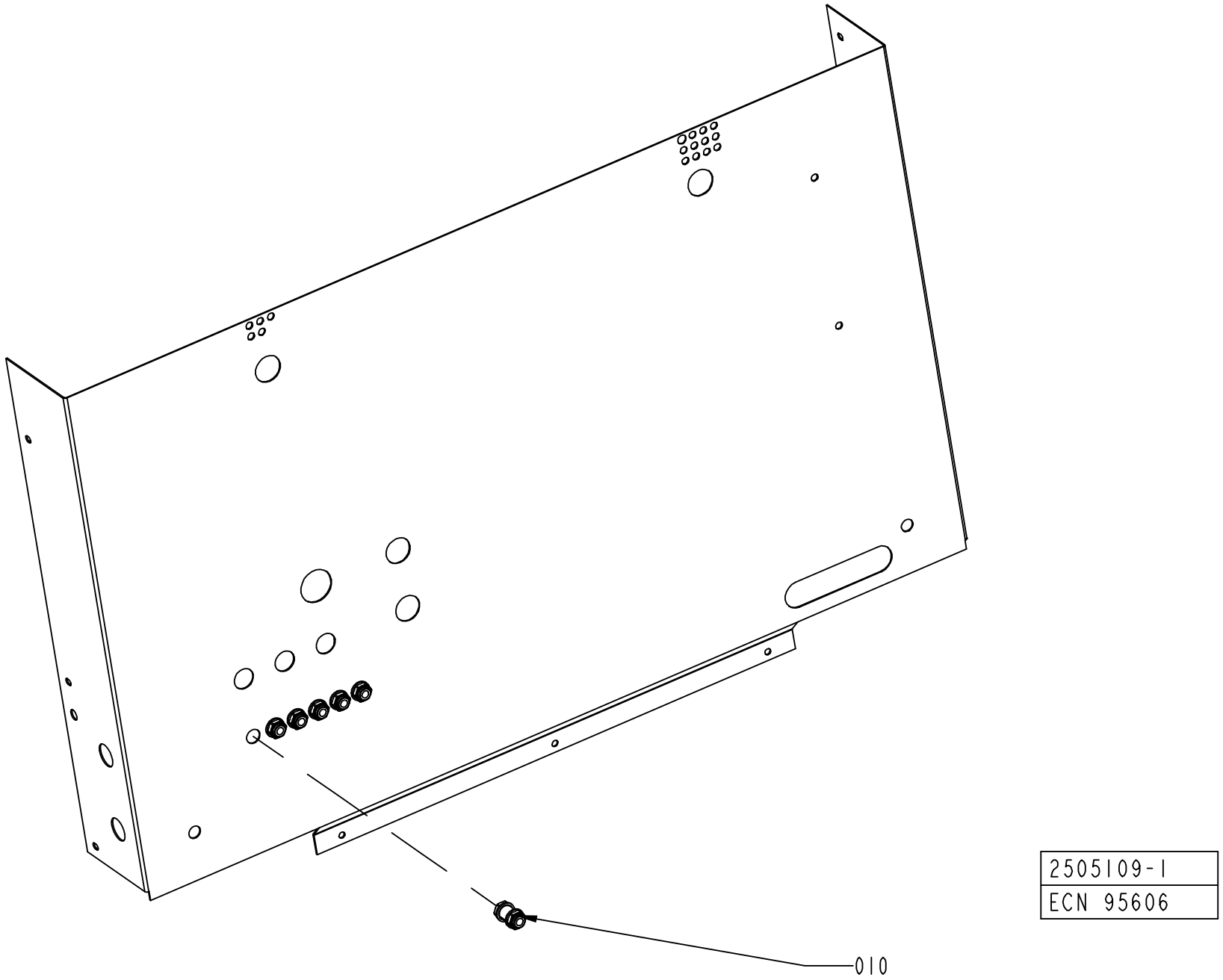

2505109-1
ECN 95606

ECM: 95610 - 20020701
Group number: 2505109-0100
Assembly Drawing: 2505109-1_1_AA

Pos	Part No	UN	Qty	Description	Page No	Pos	Part No	UN	Qty	Description	Page No
-											
010	342768-0103		6	BULKHEAD CONNECTOR, 8 MM							

EL.CONNECTION BOX

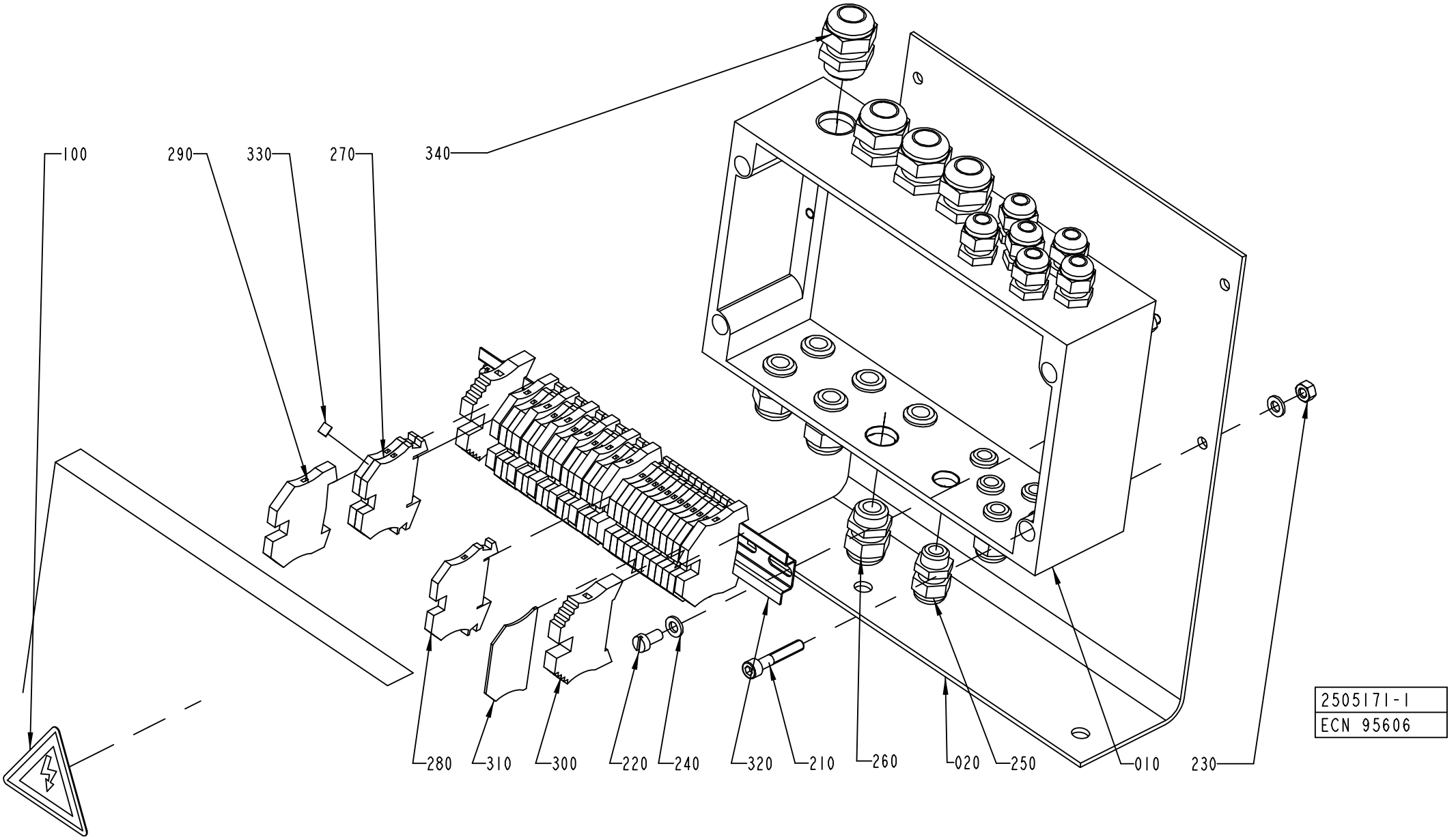

ECM: 97708 - 20020701
Group number: 2505171-0100
Assembly Drawing: 2505171-1_1_AA

Pos	Part No	UN	Qty	Description	Page No
-					
010	2505172-0000		1	CONNECTION BOX	
020	2517816-0000		1	HOLDER	
100	90194-0016		1	WARNING SIGN, RISK OF ELECTRIC SHOCK	
210	312115-0376		4	SCREW ISO4762 M6X35 A4 80	
220	312125-0366		2	SCREW ISO 1207 M6X12 A4	
230	312605-0316		4	HEXAGON NUT, M6M M6 A280	
240	315105-0153		6	WASHER BRB 6,4X12 RFR	
250	352103-0101		12	CABLE GLAND, ST 9, PR15,2/PG9	
260	352103-0106		6	CABLE GLAND, ST 11, PR18,6/PG11	
270	353021-0212		12	FEED THROUGH TERMINAL, 10200.0	
280	353021-0216		12	FEED THROUGH TERMINAL, 10200.8	
290	353024-0205		8	EARTH TERMINAL, 1010.1	
300	353031-0203		2	END SUPPORT, WEW 35/2	
310	353032-0004		1	END PLATE WAP 2,5-10 BEIGE	
320	353042-0004	M	1	RAIL TS 35/7,5	
330	359011-0821		2	SET OF SIGNS 6-FW 1-50	
340	352103-0111		4	CABLE GLAND, ST 16, PR22,5/PG16	

Pos	Part No	UN	Qty	Description	Page No

CABLE DUCT

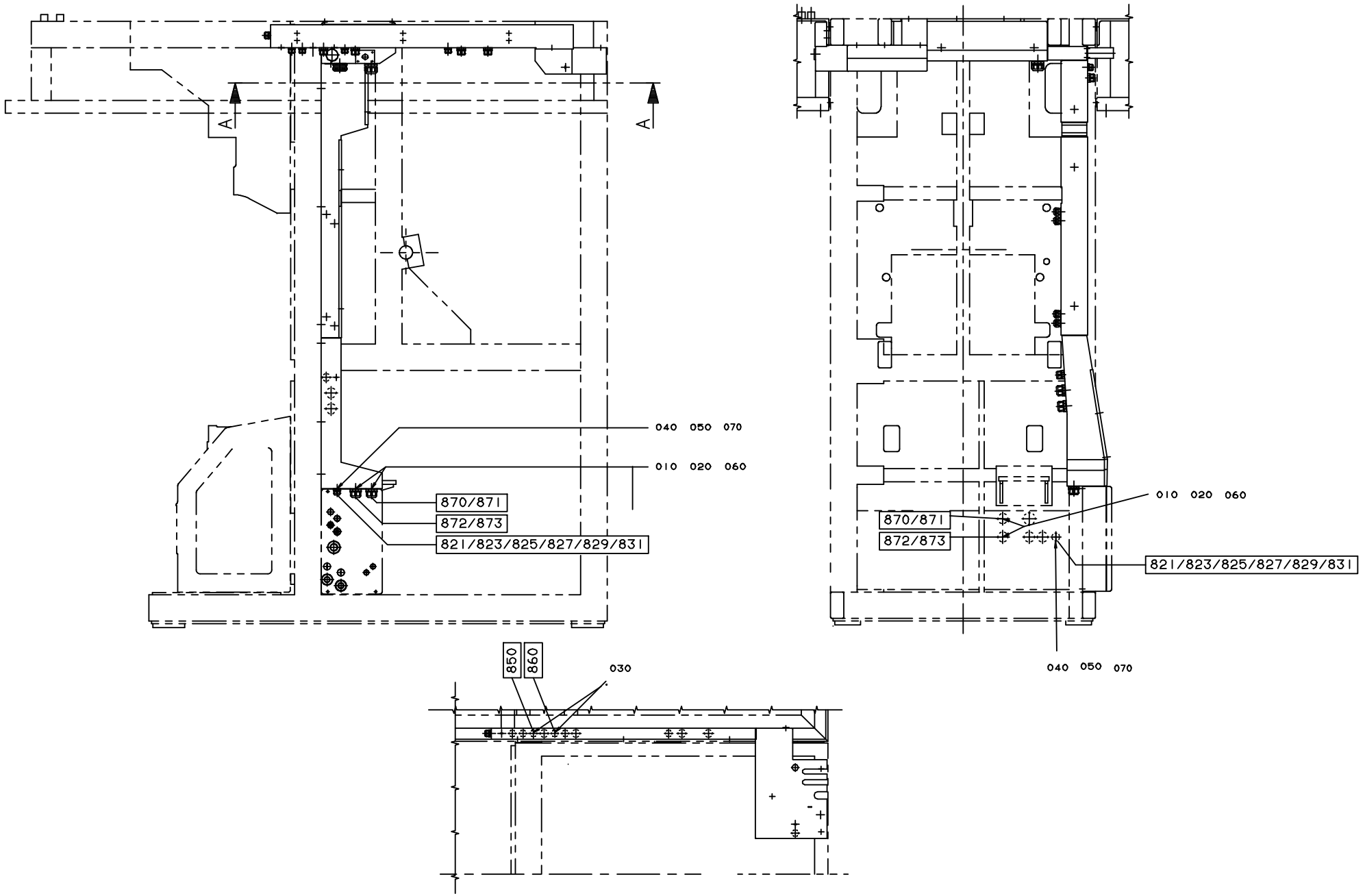
A
A
040 050 070
010 020 060
870/871
872/873
821/823/825/827/829/831
010 020 060
870/871
872/873
821/823/825/827/829/831
040 050 070
850
860
030

ECM: 106801 - 20020701
Group number: 2539209-0100
Assembly Drawing: 2539209-1_1_AA

Pos	Part No	UN	Qty	Description	Page No
-					
010	90099-0180		4	GLAND, LOCK NUT, PG 29	
020	90152-0060	MM	1100	SPIRAL CONDUIT, 42X35, UL3529	
030	352103-0105		2	CABLE GLAND, STR 11, PR 18,6/PG11	
040	90152-0070	MM	500	METAL HOSE, 32,5X26, UL 2621	
050	353243-0007		2	HOSE GLAND W/O INSERT PG21 EXTENDED	
060	353243-0008		4	HOSE GLAND W/O INSERT PG29 EXTENDED	
070	90099-0179		2	GLAND, LOCK NUT, PG 21	

Pos	Part No	UN	Qty	Description	Page No

This page is intentionally left blank.

ECM: 108447 - 20030409
Group number: 2539286-0100
Assembly Drawing:

Pos	Part No	UN	Qty	Description	Page No
TPC					
	2542404-0100		1	EL RK "IMPROVED STRIP BREAK SUPERVISION"	**13-189**
Ultra Sonic Heat					
	2542396-0100		1	RK EL "IMPROVED STRIPBREAK SUPERVISION".	**13-191**
Common Parts					
	1367841-0101		1	DOCUMENT FOLDER	
	2529340-0100		1	PILLAR SA	**13-193**

Pos	Part No	UN	Qty	Description	Page No

This page is intentionally left blank.

ECM: 129644 - 20030328
Group number: 2542404-0100
Assembly Drawing:

Pos	Part No	UN	Qty	Description	Page No	Pos	Part No	UN	Qty	Description	Page No
-											
0010	2542405-0100		1	ELECTRICAL DOCUMENT							

Machine Type	Group Description	Used-In	Group Number	Page No

This page is intentionally left blank.

ECM: 107771 - 20020927
Group number: 2542396-0100
Assembly Drawing:

Pos	Part No	UN	Qty	Description	Page No	Pos	Part No	UN	Qty	Description	Page No
-											
0010	2542397-0100		1	ELECTRICAL DOCUMENT							

Machine Type	Group Description	Used-In	Group Number	Page No

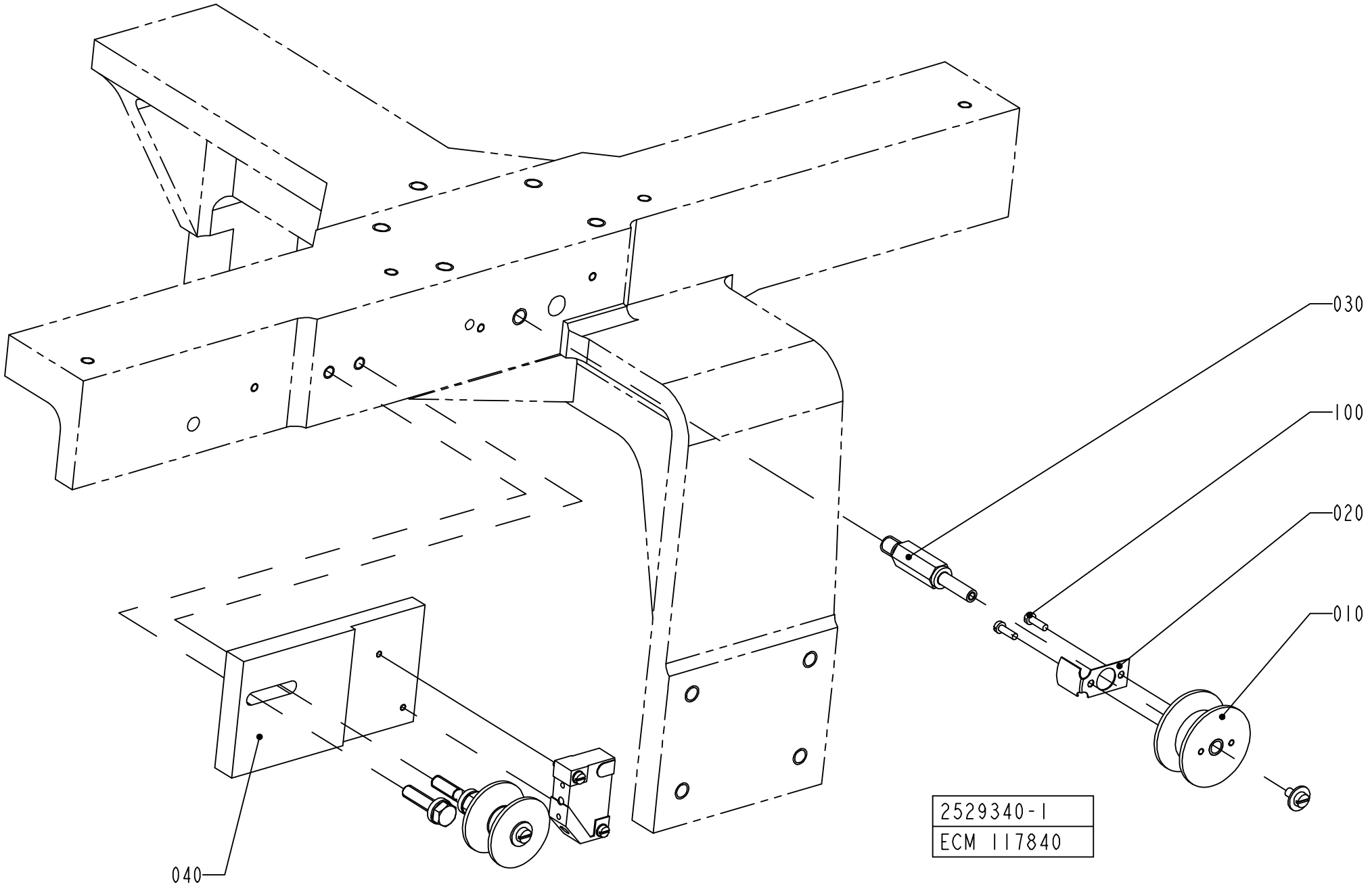
030
100
020
010
040
2529340-1
ECM 117840

ECM: 117840 - 20030409
Group number: 2529340-0100
Assembly Drawing: 2529340-1_1_AA

Pos	Part No	UN	Qty	Description	Page No
-					
010	590409-0000		1	ROLL	
020	590410-0000		1	SHEET	
030	2529312-0000		1	AXLE PIN	
040	2529313-0000		1	PLATE	
100	312125-0224		2	SCREW ISO 1207 M3X10 A4	

Pos	Part No	UN	Qty	Description	Page No

This page is intentionally left blank.

ECM: 71351 - 19980203
Group number: 1346128-0100
Assembly Drawing:

Pos	Part No	UN	Qty	Description	Page No
-					
	598071-0000		1	DOCUMENT FOLDER	
	1346132-0100		1	PAPER HOLDER	**13-197**

Pos	Part No	UN	Qty	Description	Page No

Machine Type	Group Description	Used-In	Group Number	Page No

PAPER HOLDER

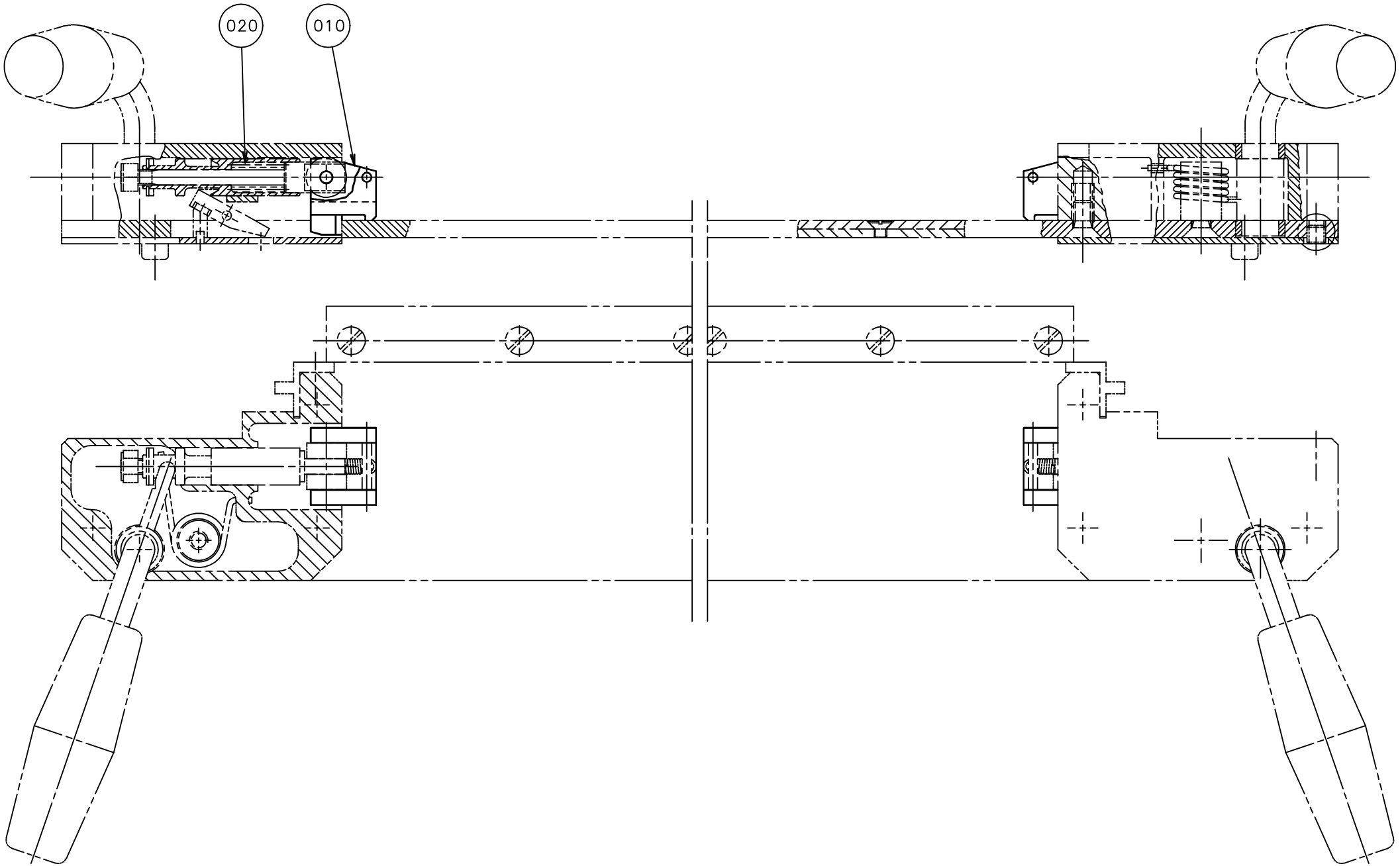

ECM: 71351 - 19980203
Group number: 1346132-0100
Assembly Drawing: 1346132-1_1_AA

Pos	Part No	UN	Qty	Description	Page No
-					
010	1317719-0000		2	CLAMP	
020	90335-0237		2	COMP. SPRING, DM12360	

Pos	Part No	UN	Qty	Description	Page No

MKC OVERLOAD PROTECTION CAM KIT

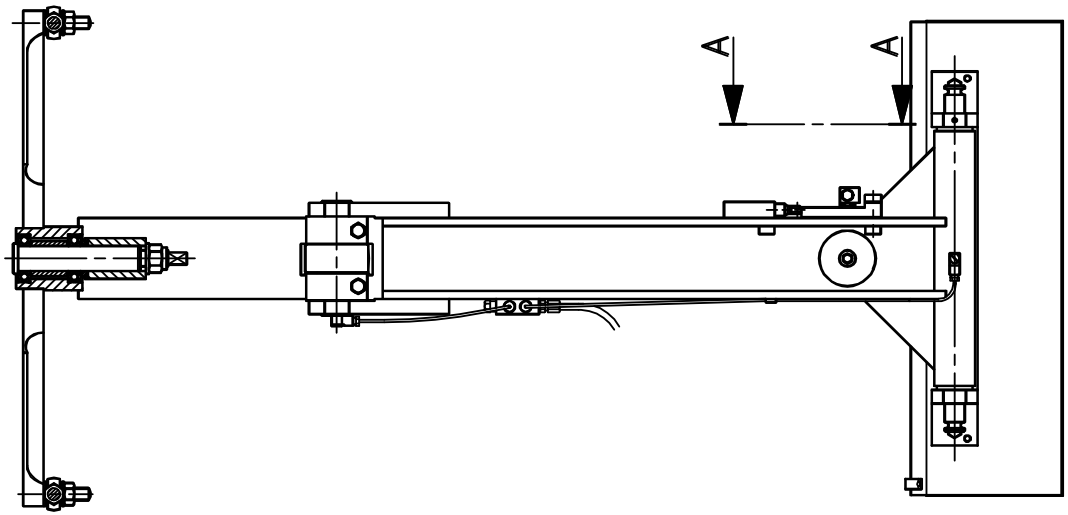

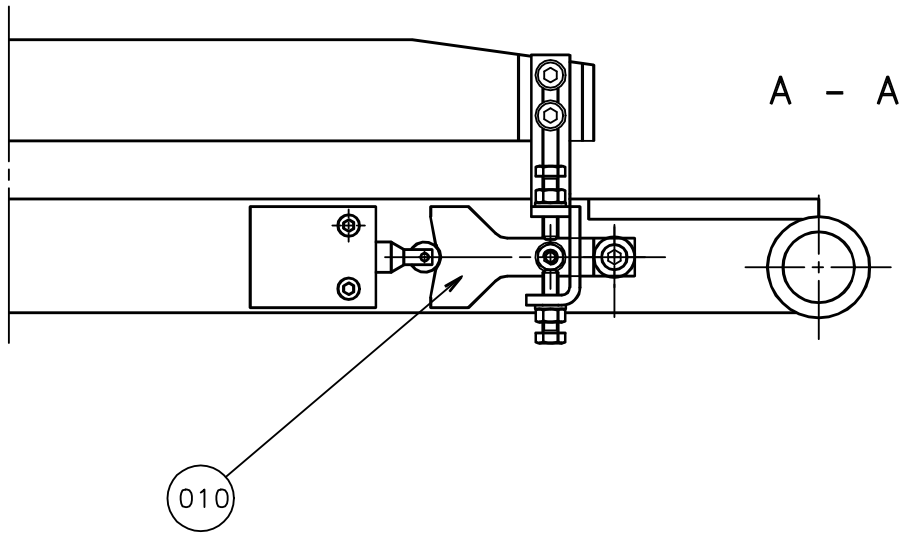

ECM: 71567 - 19980424
Group number: 1347400-0100
Assembly Drawing: 1347400-1_1_AA

Pos	Part No	UN	Qty	Description	Page No
-					
000	599613-0000		1	DOCUMENT FOLDER	
010	1346316-0000		1	CURVE	

Pos	Part No	UN	Qty	Description	Page No

Machine Type | Group Description | Used-In | Group Number | Page No

This page is intentionally left blank.

ECM: 102306 - 20030227
Group number: 2529941-0100
Assembly Drawing:

Pos	Part No	UN	Qty	Description	Page No
-					
010	2529942-0100		1	ELECTRICAL DOCUMENT	
020	2529943-0100		1	ELECTRICAL MATERIAL	**13-203**

Pos	Part No	UN	Qty	Description	Page No

This page is intentionally left blank.

ECM: 157961 - 20040209
Group number: 2529943-0100
Assembly Drawing:

Pos	Part No	UN	Qty	Description	Page No
1500B US					
A106:1	90025-0024		1	TERMINAL BLOCK, 491168307	
A106	90025-0017		1	INPUT MODULE TPMC	
Common Parts					
0010	48393-0201		1	DCS8+	
0020	351160-0102	MM	3000	CABLE (1UNIT = 100M)	
0030	353001-0119		2	END SLEEVE H 1.0/14 YELLOW	

Pos	Part No	UN	Qty	Description	Page No

This page is intentionally left blank.

ECM: 219564 - 20050607
Group number: 2504976-0100
Assembly Drawing:

Pos	Part No	UN	Qty	Description	Page No
100V					
	2530869-0100		1	EL RK "NEW THYRISTOR"	**13-207**
	2598827-0001		1	MODIFICATION DRAWING	
Common Parts					
	1338698-0100		1	REB. ELECTRICAL CABINET	**13-211**
	1338722-0100		1	REB. CONTROL PANEL DOOR	**13-213**
	1338961-0100		1	REB. CABINET DOOR	**13-215**
	1338963-0000		1	DRILLING TEMPLATE	
	765100-0269		1	SPIRAL DRILL	
	765100-0179		1	SPIRAL DRILL	
	765100-0157		1	SPIRAL DRILL	
SP	1367827-0104		1	DOCUMENT FOLDER	

Pos	Part No	UN	Qty	Description	Page No

This page is intentionally left blank.

ECM: 103029 - 20030508
Group number: 2530869-0100
Assembly Drawing:

Pos	Part No	UN	Qty	Description	Page No
-					
0010	2530873-0100		1	ELECTRICAL DOCUMENT	
0020	2530874-0100		1	ELECTRICAL MATERIAL	**13-209**

Pos	Part No	UN	Qty	Description	Page No

This page is intentionally left blank.

ECM: 146944 - 20031013
Group number: 2530874-0100
Assembly Drawing:

Pos	Part No	UN	Qty	Description	Page No
-					
	353023-0102		2	FUSE TERMINAL, 10110.0	
	353001-0115		50	END SLEEVE 2,5/14	
	353001-0113		100	END SLEEVE 0,75MM2	
	352550-0123		2	FINE-WIRE,, 500 MA	
	351164-0105	M	50	CABLE (1UNIT = 100M)	
	351162-0105	M	20	CABLE AWM 1X2,5 MM2 YELLOW-GREEN	
	351161-0105	M	30	CABLE AWM 1X2,5 MM2 LIGHTBLUE	
	351160-0102	M	50	CABLE (1UNIT = 100M)	
	90233-0032		2	TUBE FUSE, 50 A	
	90077-0117		2	FUSEHOLDER, ST 14 1-POLE	
	359000-0300		10	WIRE MARKING, YELLOW, PA1/3"0"	
	359002-0028		10	WIRE MARKING, BLUE, PA1/3"BLANK"	
	359000-0714		10	WIRE MARKING, YELLOW, PA1/3"O"	
	359000-0711		10	WIRE MARKING, YELLOW, PA1/3"L"	
	359000-0703		10	WIRE MARKING, YELLOW, PA1/3"D"	
	359000-0700		10	WIRE MARKING, YELLOW, PA1/3"A"	
	359000-0309		10	WIRE MARKING, YELLOW, PA1/3"9"	
	359000-0308		10	WIRE MARKING, YELLOW, PA1/3"8"	
	359000-0301		10	WIRE MARKING, YELLOW, PA1/3"1"	
	359000-0302		10	WIRE MARKING, YELLOW, PA1/3"2"	
	359000-0303		10	WIRE MARKING, YELLOW, PA1/3"3"	
	359000-0304		10	WIRE MARKING, YELLOW, PA1/3"4"	
	359000-0305		10	WIRE MARKING, YELLOW, PA1/3"5"	
	359000-0306		10	WIRE MARKING, YELLOW, PA1/3"6"	
	359000-0307		10	WIRE MARKING, YELLOW, PA1/3"7"	
K117:2	90119-0063		1	OPTO-RELAY, DC/DC AMMS-10-1/30VDC	
K117:1	90119-0063		1	OPTO-RELAY, DC/DC AMMS-10-1/30VDC	
K116:2	90119-0063		1	OPTO-RELAY, DC/DC AMMS-10-1/30VDC	
K116:1	90119-0063		1	OPTO-RELAY, DC/DC AMMS-10-1/30VDC	

Pos	Part No	UN	Qty	Description	Page No

REB. ELECTRICAL CABINET

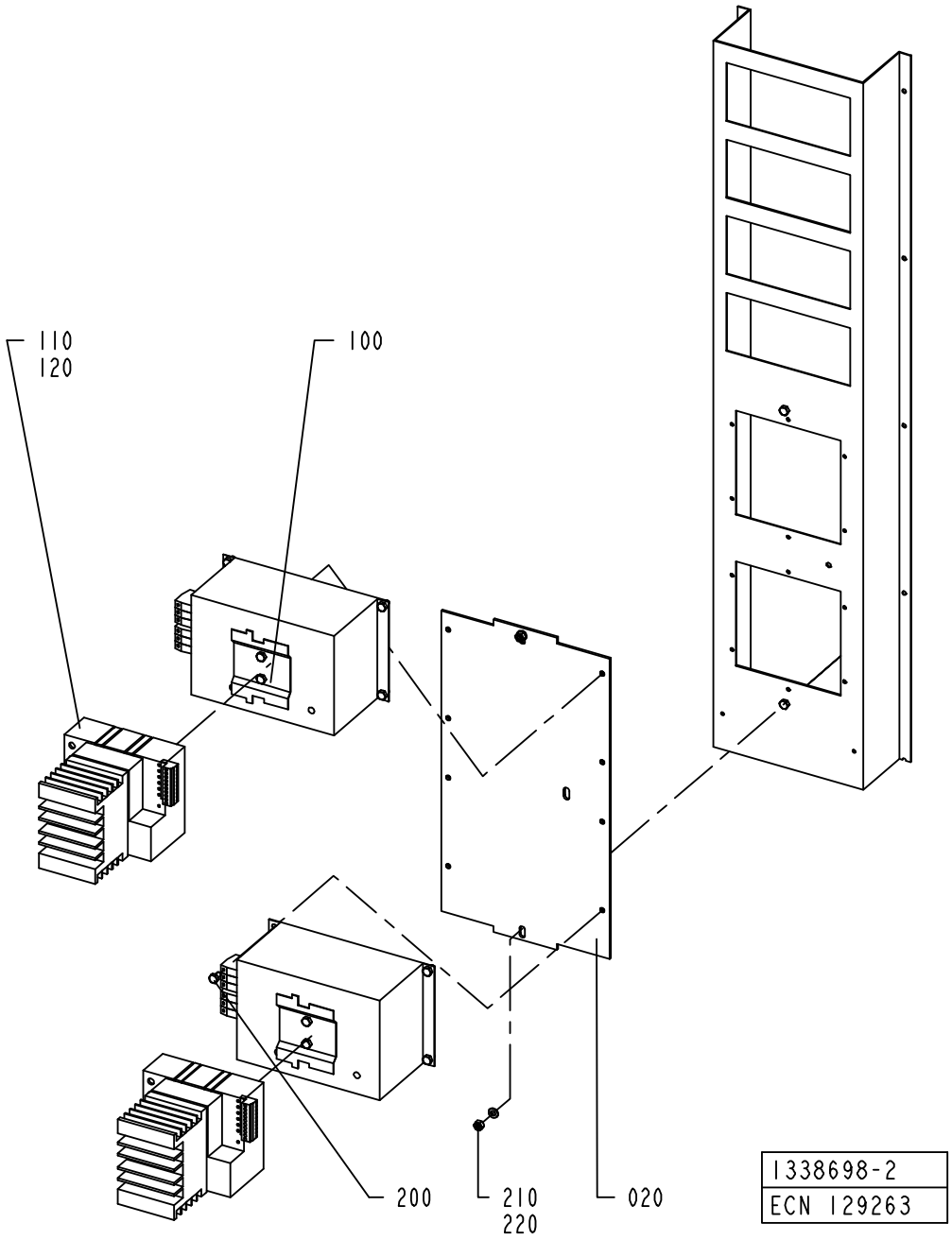

ECM: 129266 - 20030508
Group number: 1338698-0100
Assembly Drawing: 1338698-2_1_AA

Pos	Part No	UN	Qty	Description	Page No
-					
020	1338694-0000		1	PLATE	
100	90430-0335		2	FILTER LA174936U025	
110	90458-0637		2	THYRISTOR UNIT, 425A/40A	
120	90194-0154		1	TERM. MARKING LABEL KIT, BLA-BSTB, 1-24	
200	312105-0364		8	SCREW M6S ISO 4017 M6X10 A480	
210	312605-0316		2	HEXAGON NUT, M6M M6 A280	
220	315105-0153		2	WASHER BRB 6,4X12 RFR	

Pos	Part No	UN	Qty	Description	Page No

REB. CONTROL PANEL DOOR

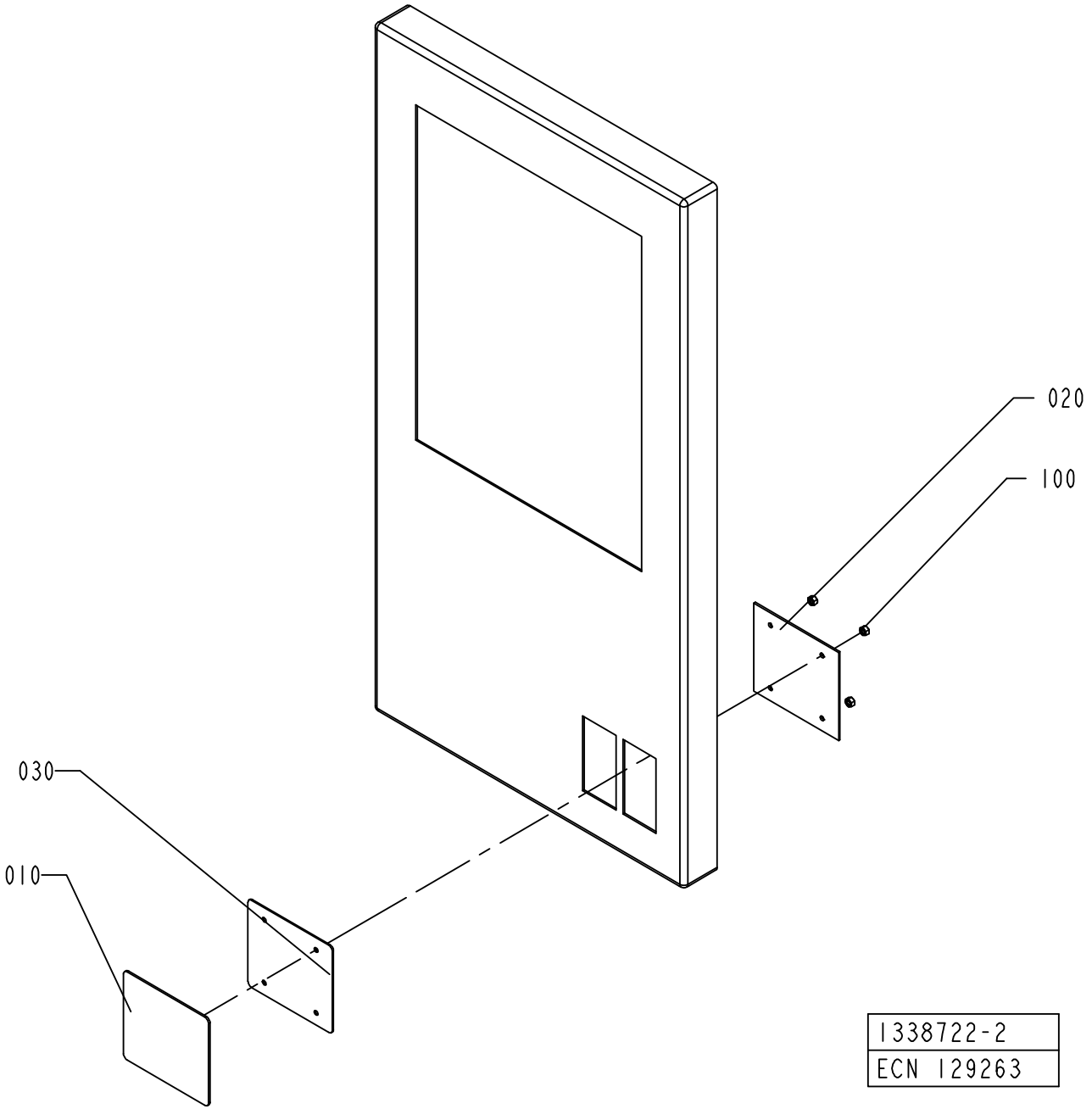

ECM: 150621 - 20031121
Group number: 1338722-0100
Assembly Drawing: 1338722-2_1_AA

Pos	Part No	UN	Qty	Description	Page No
-					
010	1338719-0000		1	COVERING PLATE	
020	1338720-0000		1	PLATE	
030	1338721-0000		1	GASKET	
100	312605-0314		4	HEXAGON NUT, M6M M5 A280	

Pos	Part No	UN	Qty	Description	Page No

REB. CABINET DOOR

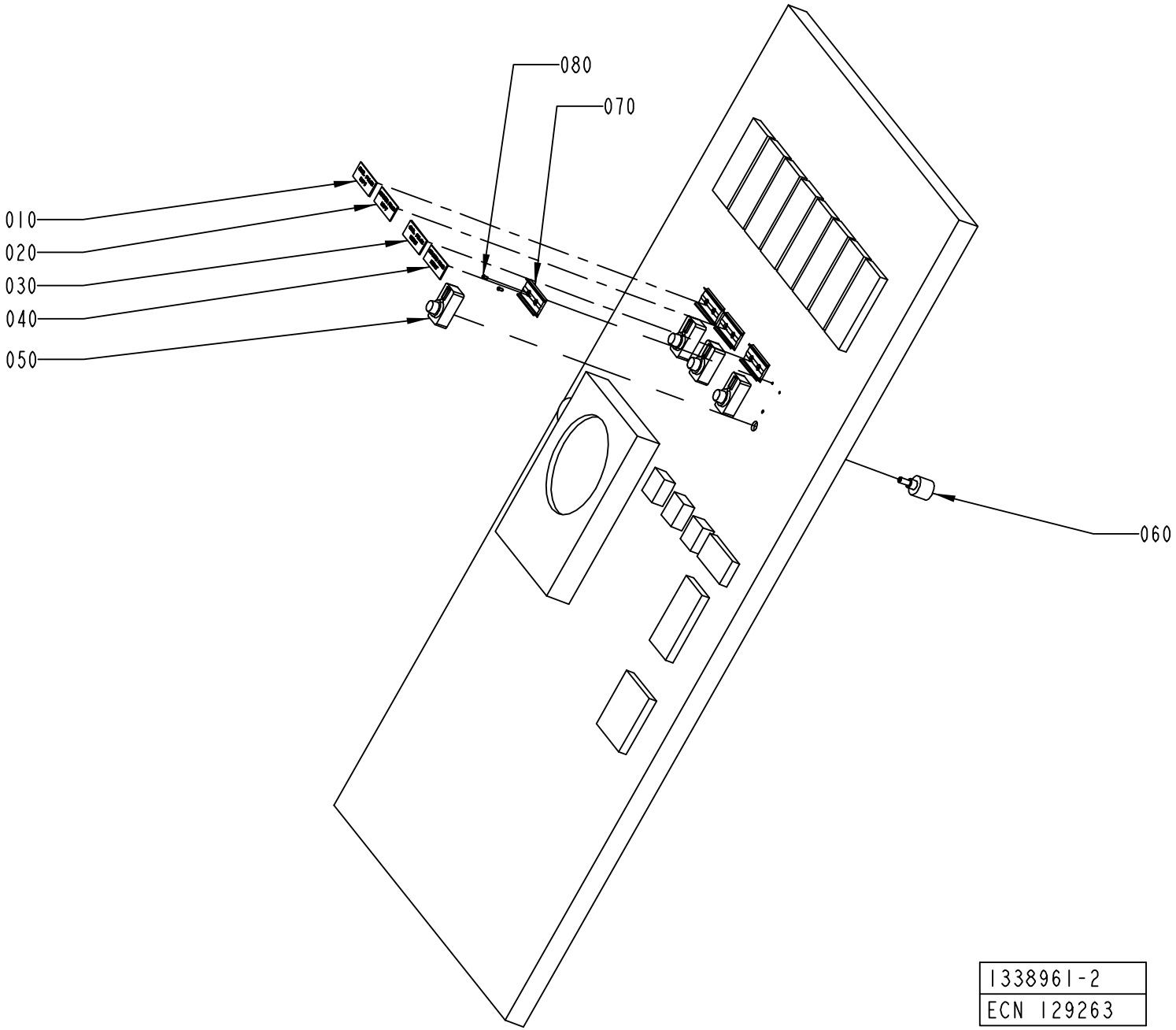

ECM: 129268 - 20030508
Group number: 1338961-0100
Assembly Drawing: 1338961-2_1_AA

Pos	Part No	UN	Qty	Description	Page No
-					
010	1338969-0000		1	SIGN	
020	1338972-0000		1	SIGN	
030	1338970-0000		1	SIGN	
040	1338971-0000		1	SIGN	
050	90130-0301		4	ADJUSTING KNOB WITH DIAL	
060	90130-0022		4	POTENTIOMETER, 5 KOHM	
070	359240-0100		4	SIGN HOLDER FOR 359240-0001	
080	312502-0169		8	DRIVE SCREW ROUND HEAD KDS 2X5	

Pos	Part No	UN	Qty	Description	Page No

This page is intentionally left blank.

ECM: 147628 - 20031023
Group number: 2653890-0100
Assembly Drawing:

Pos	Part No	UN	Qty	Description	Page No	Pos	Part No	UN	Qty	Description	Page No
-											
	2637716-0000		2	USTS CUTTING RAIL							

Machine Type	Group Description	Used-In	Group Number	Page No

This page is intentionally left blank.

ECM: 160090 - 20040922
Group number: 2660676-0100
Assembly Drawing:

Pos	Part No	UN	Qty	Description	Page No
1000SQ US, TPC, 0500SQ US, 0568SQ US					
	2660660-0001		1	MODIFICATION DRAWING	
1500B US					
	2660663-0001		1	MODIFICATION DRAWING	
Common Parts					
	2660659-0100		1	RK-ELECTRICAL CABINET	**13-221**
	2667998-0100		1	EL RK "FREQ. CONVERTER" FOR TB/8-100V.	**13-223**
	2691037-0101		1	REBUILDING MANUAL	

Pos	Part No	UN	Qty	Description	Page No

RK-ELECTRICAL CABINET

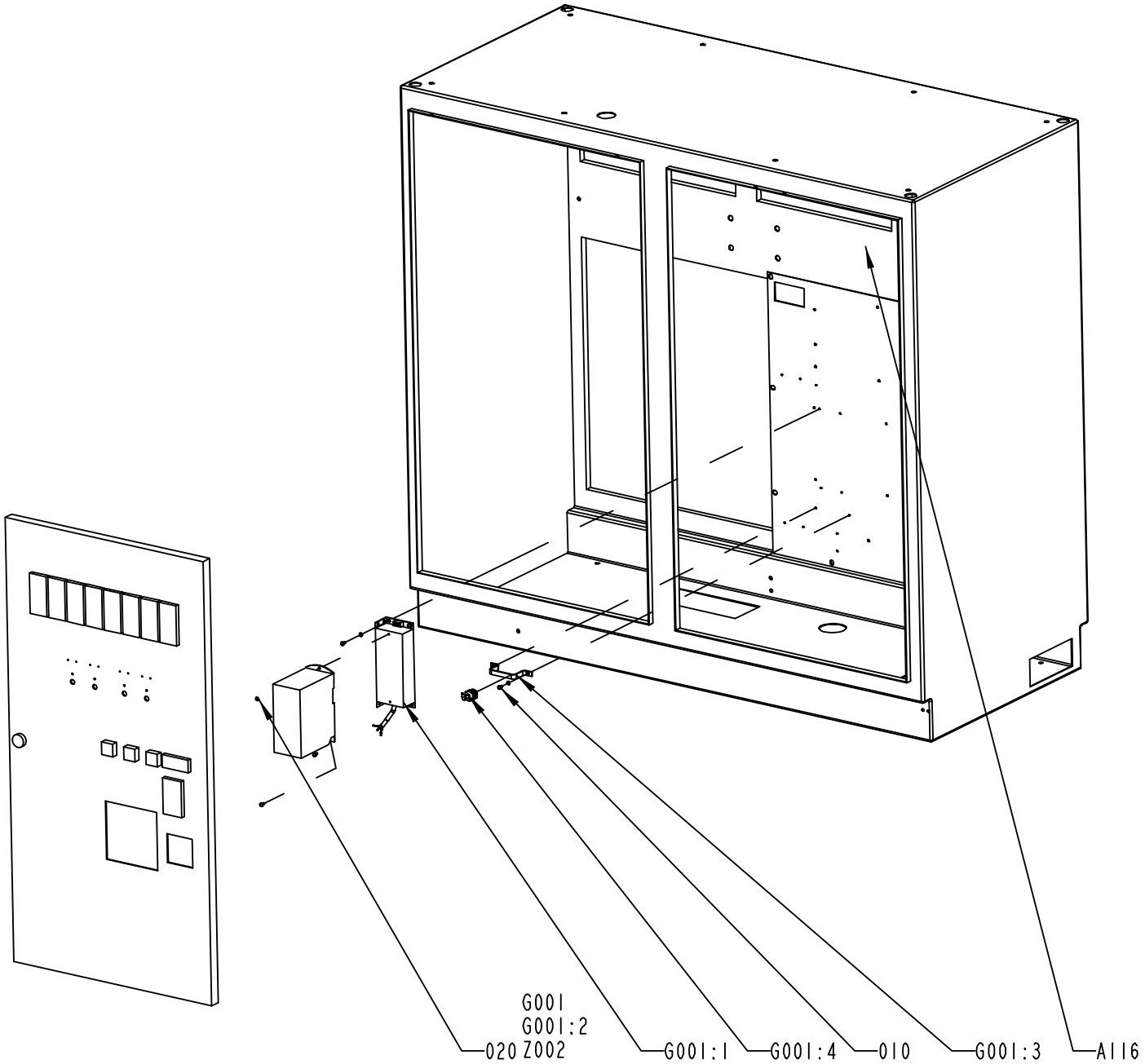

2660659-1
160087

ECM: 160089 - 20040922
Group number: 2660659-0100
Assembly Drawing: 2660659-1_1_AA

Pos	Part No	UN	Qty	Description	Page No
1000SQ US, TPC, 0500SQ US, 0568SQ US					
010	312105-0287		8	SCREW M6S ISO 4017 M4X8 A470	
020	315105-0136		8	WASHER BRB 4,3X9 RFR	
A116	90025-0017		1	INPUT MODULE TPMC	
F027	90007-0131		1	CIRCUIT BREAKER, 1P 16 A K	
G001:1	90459-3726		1	FILTER 6SE6400-2FS01-0AB0	
G001	90459-3720		1	FREQUENCY CHANGER 6SE6440-2AB17-5AA1	
1500B US					
010	312105-0287		10	SCREW M6S ISO 4017 M4X8 A470	
020	315105-0136		10	WASHER BRB 4,3X9 RFR	
G001:1	90459-4081		1	FILTER 6SE6400-2FS02-6BB0	
G001	90459-4082		1	FREQUENCY CHANGER 6SE6440-2AB21-5BA1	
Common Parts					
	90194-0302		1	MARKING LABELS REBUILDING KIT	
	351160-0102	M	25	CABLE (1UNIT = 100M)	
G001:4	90135-0039		1	SHIELD CLIP KLBU 4-13.5	
G001:3	1361035-0000		1	PROFILE 70X10X40MM	
G001:2	90459-4049		1	BASIC OP PANEL MM4, 6SE6400-0BP00-0AA0	
K114:1	90129-0006		1	BASE, S3-B	
K114	90119-0056		1	RELAY, AUXILIARY MK3P5-S 24VDC	
K006:1	90129-0006		1	BASE, S3-B	
K006	90119-0056		1	RELAY, AUXILIARY MK3P5-S 24VDC	
Z002	90024-0047		1	FERRITE, 28B1020-100	

Pos	Part No	UN	Qty	Description	Page No

This page is intentionally left blank.

ECM: 187171 - 20050830
Group number: 2667998-0100
Assembly Drawing:

Pos	Part No	UN	Qty	Description	Page No
1000SQ US, 0500SQ US, 0568SQ US					
0020	2704122-0100		1	ELECTRICAL DOCUMENT	
1500B US					
0030	2704123-0100		1	ELECTRICAL DOCUMENT	
TPC					
0010	2704121-0100		1	ELECTRICAL DOCUMENT	

Pos	Part No	UN	Qty	Description	Page No

Machine Type	Group Description	Used-In	Group Number	Page No

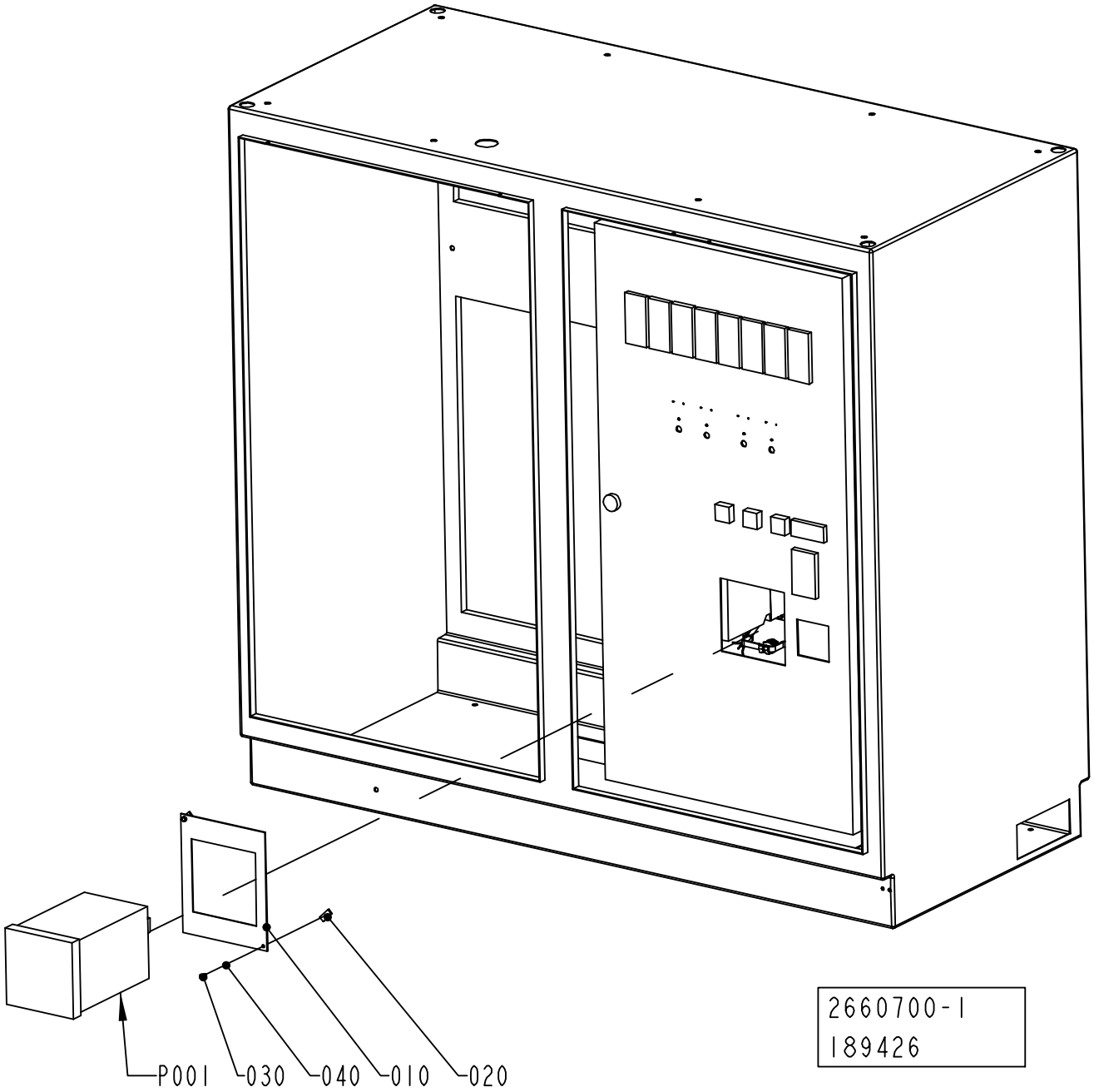
P001
030
040
010
020
2660700-1
189426

ECM: 189428 - 20041019
Group number: 2660700-0100
Assembly Drawing: 2660700-1_1_AB

Pos	Part No	UN	Qty	Description	Page No
1500B US					
010	2696850-0000		1	COVER PLATE	
020	730445-0000		2	SPLICE	
030	312105-0289		2	SCREW M6S ISO 4017 M4X10 A470	
040	315105-0136		2	WASHER BRB 4,3X9 RFR	
Common Parts					
	2691038-0101		1	REBUILDING MANUAL	
	2668000-0100		1	EL RK "RECORDER" FOR TB/8-100V.	**13-227**
P001	90459-0083		1	RECORDER 1-CHANNEL, LOGOLINE 500	

Pos	Part No	UN	Qty	Description	Page No

This page is intentionally left blank.

ECM: 158779 - 20040922
Group number: 2668000-0100
Assembly Drawing:

Pos	Part No	UN	Qty	Description	Page No
1000SQ US, 0500SQ US, 0568SQ US					
0020	2704128-0100		1	ELECTRICAL DOCUMENT	
1500B US					
0030	2704129-0100		1	ELECTRICAL DOCUMENT	
TPC					
0010	2704127-0100		1	ELECTRICAL DOCUMENT	

Pos	Part No	UN	Qty	Description	Page No

Machine Type	Group Description	Used-In	Group Number	Page No

This page is intentionally left blank.

ECM: 161692 - 20040922
Group number: 2660701-0100
Assembly Drawing:

Pos	Part No	UN	Qty	Description	Page No
-					
	2691039-0101		1	REBUILDING MANUAL	
	2667999-0100		1	EL RK "COUNTER" FOR TB/8-100V.	**13-231**
	2660702-0100		1	RK-ELECTRICAL CABINET	**13-233**

Pos	Part No	UN	Qty	Description	Page No

This page is intentionally left blank.

ECM: 158778 - 20040922
Group number: 2667999-0100
Assembly Drawing:

Pos	Part No	UN	Qty	Description	Page No
1000SQ US, 0500SQ US, 0568SQ US					
0020	2704125-0100		1	ELECTRICAL DOCUMENT	
1500B US					
0030	2704126-0100		1	ELECTRICAL DOCUMENT	
TPC					
0010	2704124-0100		1	ELECTRICAL DOCUMENT	

Pos	Part No	UN	Qty	Description	Page No

RK-ELECTRICAL CABINET

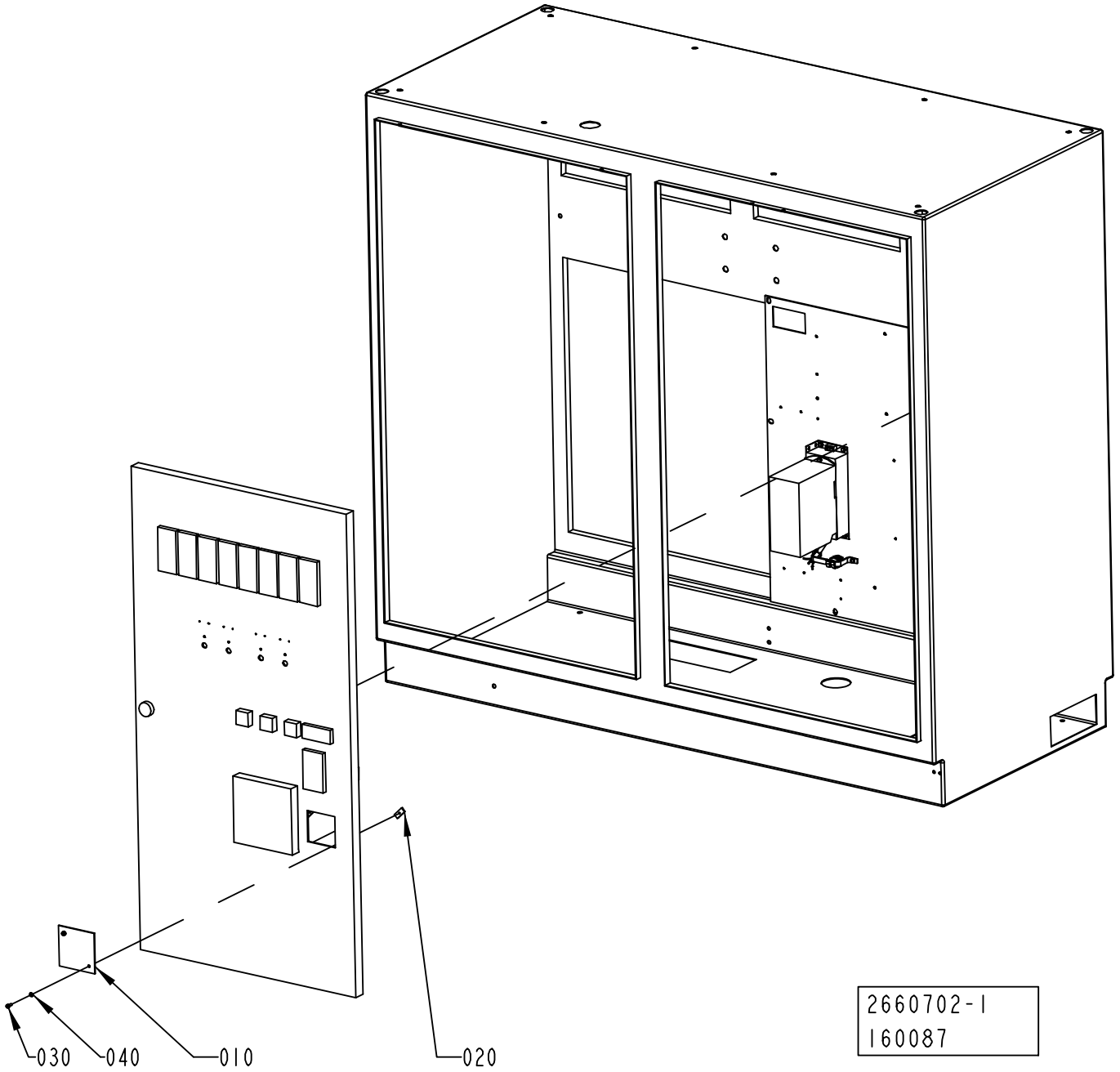

ECM: 161691 - 20040922
Group number: 2660702-0100
Assembly Drawing: 2660702-1_1_AA

Pos	Part No	UN	Qty	Description	Page No
-					
010	2660658-0000		1	COVERING PLATE	
020	730445-0000		2	SPLICE	
030	312105-0289		2	SCREW M6S ISO 4017 M4X10 A470	
040	315105-0136		2	WASHER BRB 4,3X9 RFR	

Pos	Part No	UN	Qty	Description	Page No

MKS LOCKING PIN

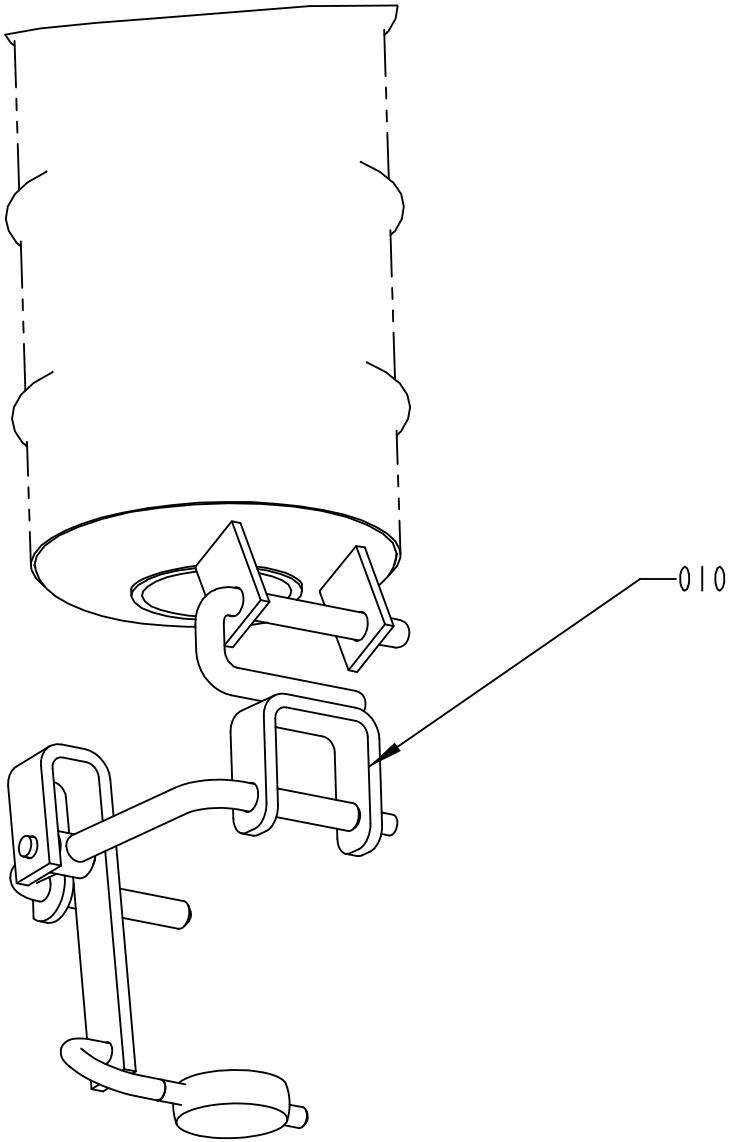

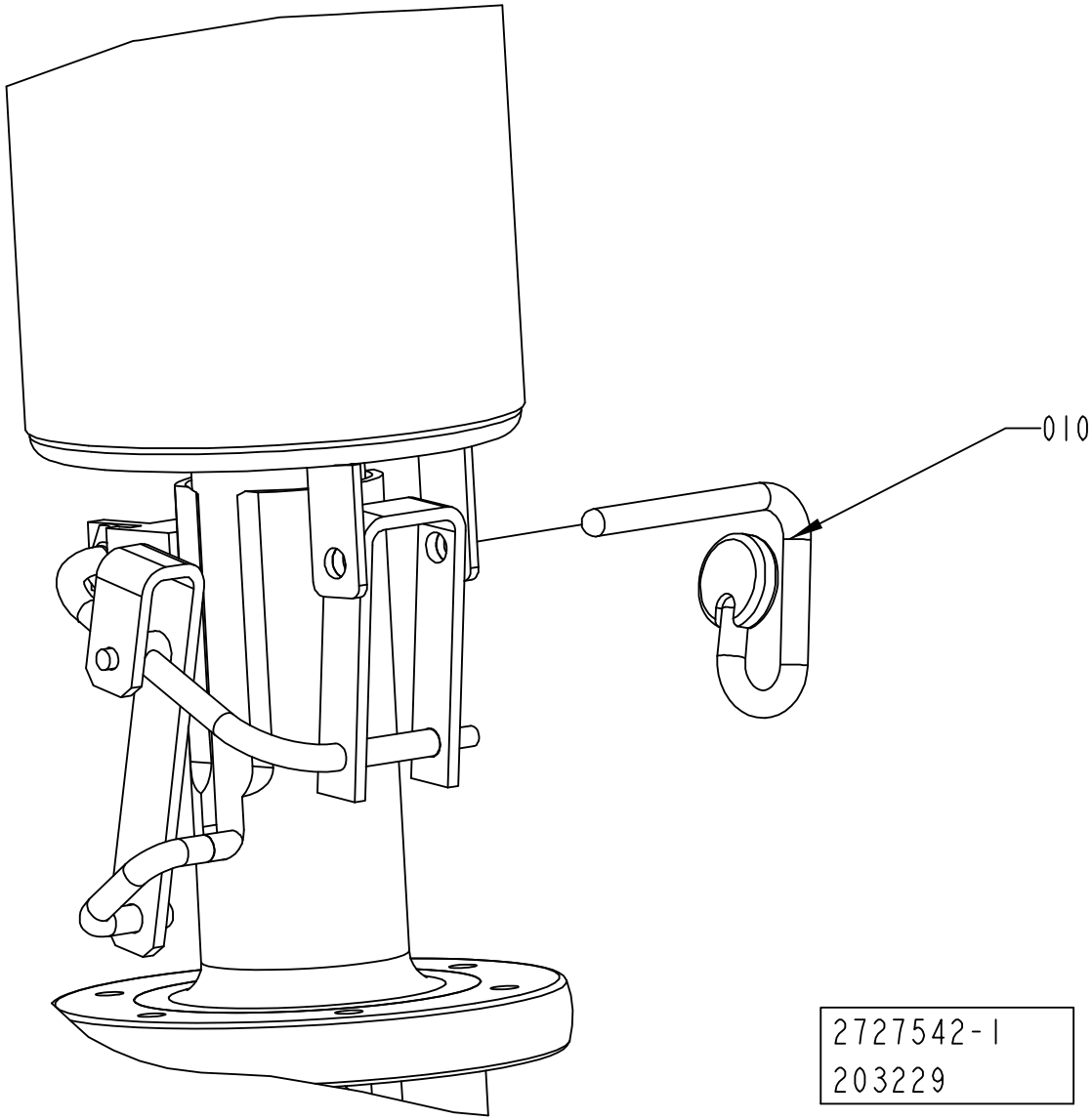

ECM: 221711 - 20050622
Group number: 2727542-0100
Assembly Drawing: 2727542-1_1_AA

Pos	Part No	UN	Qty	Description	Page No
-					
010	2689281-0000		1	LINK	
	36816-0000		*1*	*LINK*	
	37296-0000		*1*	*ARM*	
	2565548-0000		*1*	*LINK*	
010	1490099-0000		1	PIN	

Pos	Part No	UN	Qty	Description	Page No

This page is intentionally left blank.

ECM: 220951 - 20050630
Group number: 2727709-0100
Assembly Drawing: 2727709-1_1_AA

Pos	Part No	UN	Qty	Description	Page No	Pos	Part No	UN	Qty	Description	Page No
-											
140	2727686-0000		2	AXLE PIN							
150	544730-0000		2	ROLL							
420	312810-0316		2	HEXAGON NUT, NY-LOCK M6 FZB							
480	315105-0165		2	WASHER BRB 8,4X16 RFR							
540	312125-0285		2	SCREW ISO 1207 M4X6 A4							

This page is intentionally left blank.

ECM: 237602 - 20051114
Group number: 2727622-0100
Assembly Drawing: 2727622-1_1_AA

Pos	Part No	UN	Qty	Description	Page No
-					
	2795698-0101		1	DOCUMENT FOLDER	
	2742067-0100		1	EL UK "REVOLVING STAND" FOR JUMBO REEL. ..	**13-241**
155	2727602-0000		1	BRACKET	
270	90232-0129		1	PH.CELL E3S-CR61-5M	
300	312105-0291		2	SCREW M6S ISO 4017 M4X12 A470	
305	312105-0364		2	SCREW M6S ISO 4017 M6X10 A480	
380	315105-0136		2	WASHER BRB 4,3X9 RFR	
404	352103-0100		1	CABLE GLAND, STR 9, PR15,2/PG9	

Pos	Part No	UN	Qty	Description	Page No

This page is intentionally left blank.

ECM: 204038 - 20060131
Group number: 2742067-0100
Assembly Drawing:

Pos	Part No	UN	Qty	Description	Page No
-					
0010	2742068-0100		1	ELECTRICAL DOCUMENT	
0020	2742069-0100		1	ELECTRIC MATERIALS	**13-243**

Pos	Part No	UN	Qty	Description	Page No

This page is intentionally left blank.

ECM: 204040 - 20060131
Group number: 2742069-0100
Assembly Drawing:

Pos	Part No	UN	Qty	Description	Page No
-					
F.D6	90232-0129		1	PH.CELL E3S-CR61-5M	
G1	90459-4807		1	POWER SUPPLY UNIT 100-240 VAC/24VDC2,5A	
K20:1	90129-0018		1	BASE OMRON P2RF-08-E	
K20	90119-0108		1	RELAY OMRON G2R-2-SNI-24DC	
	90129-0018		*1*	*BASE OMRON P2RF-08-E*	

Pos	Part No	UN	Qty	Description	Page No

This page is intentionally left blank.

ECM: 238273 - 20051114
Group number: 2767112-0100
Assembly Drawing: 2767112-1_1_AA

Pos	Part No	UN	Qty	Description	Page No
-					
010	2767109-0000		1	BRACKET	
200	90036-0068		1	BULB 6.5W 24V	
210	90458-0292		1	BASE, KT70-1001	
220	90458-0293		1	LIGHT ELEMENT, RED, KL70-401R	
300	352103-0105		1	CABLE GLAND, STR 11, PR 18,6/PG11	

Pos	Part No	UN	Qty	Description	Page No

Tetra Pak

SPC
Spare Parts Catalogue

This page is intentionally left blank.

ECM: 71348 - 19980211
Group number: 648081-1000
Assembly Drawing:

Pos	Part No	UN	Qty	Description	Page No
-					
	597559-0100		1	SERVICE TOOLS AND TEMPLATES TB/8	**14-5**
	597560-0100		1	PRODUCTION TOOLS AND TEMPLATES TB/8	

Pos	Part No	UN	Qty	Description	Page No

This page is intentionally left blank.

ECM: 73090 - 19991117
Group number: 597559-0100
Assembly Drawing:

Pos	Part No	UN	Qty	Description	Page No
-					
	440094-0000		1	GAUGE	
	434448-0000		1	TOOL	
	293692-0000		1	GAUGE	
	283084-0000		1	GUIDE SHAFT	
	90335-0071		2	TENSION SPRING 42880, 3,2X36X179	
	90157-0016		1	LOCKING FLUID LOCTITE 242 50 ML	
	76138-0000		1	LOCKING LOOP	
	590444-0000		1	MOUNTING TOOL	
	567751-0000		1	POSITION TEMPLATE	
	547959-0000		1	SETTING TEMPLATE	
	533460-0000		1	TEMPLATE	
	525359-0000		1	ADJUSTER	
	522023-0000		1	GAUGE	
	458492-0000		2	HOOK SPANNER	
	1365575-0100		1	HYDRAULIC PRESSURE MEASUREMENT	**14-7**
	1365574-0100		1	COMPACT TRANSDUCER TEST INSTRUMENT	**14-9**
	596144-0100		1	TEMPLATES USTS	**14-11**
	595210-0100		1	SETTING TOOL	**14-13, 14-15**
	592350-0100		1	TEMPLATE FILLING PIPE	**14-17**
	567732-0100		1	CALIBRATION EQUIPMENT	**14-19**
	544357-0100		1	TEMPLATES FLAP SEALING	**14-29**
	527869-0100		1	TEMPLATE FOR WHEELS	**14-31**
	458444-0201		1	LASER TEMPLATE JUMBO REEL	**14-33**
	451026-0100		1	TEMPLATE	**14-35**
	293578-0200		1	TEMPLATE	**14-37**
	75105-0200		1	ASSEMBLY TOOL	**14-39**
	75100-0300		1	SETTING TOOL	**14-41, 14-43**
	75071-0100		1	CLAMPING PIECE	**14-45**
	74767-0102		1	DYNAMOMETER	**14-47**
	74305-0100		1	PULLER	**14-49**
	72846-0102		1	COMPRESSION SPRING	**14-51**
	72374-0100		1	TEMPLATE	**14-53**

Pos	Part No	UN	Qty	Description	Page No

Machine Type | Group Description | Used-In | Group Number | Page No

HYDRAULIC PRESSURE MEASUREMENT

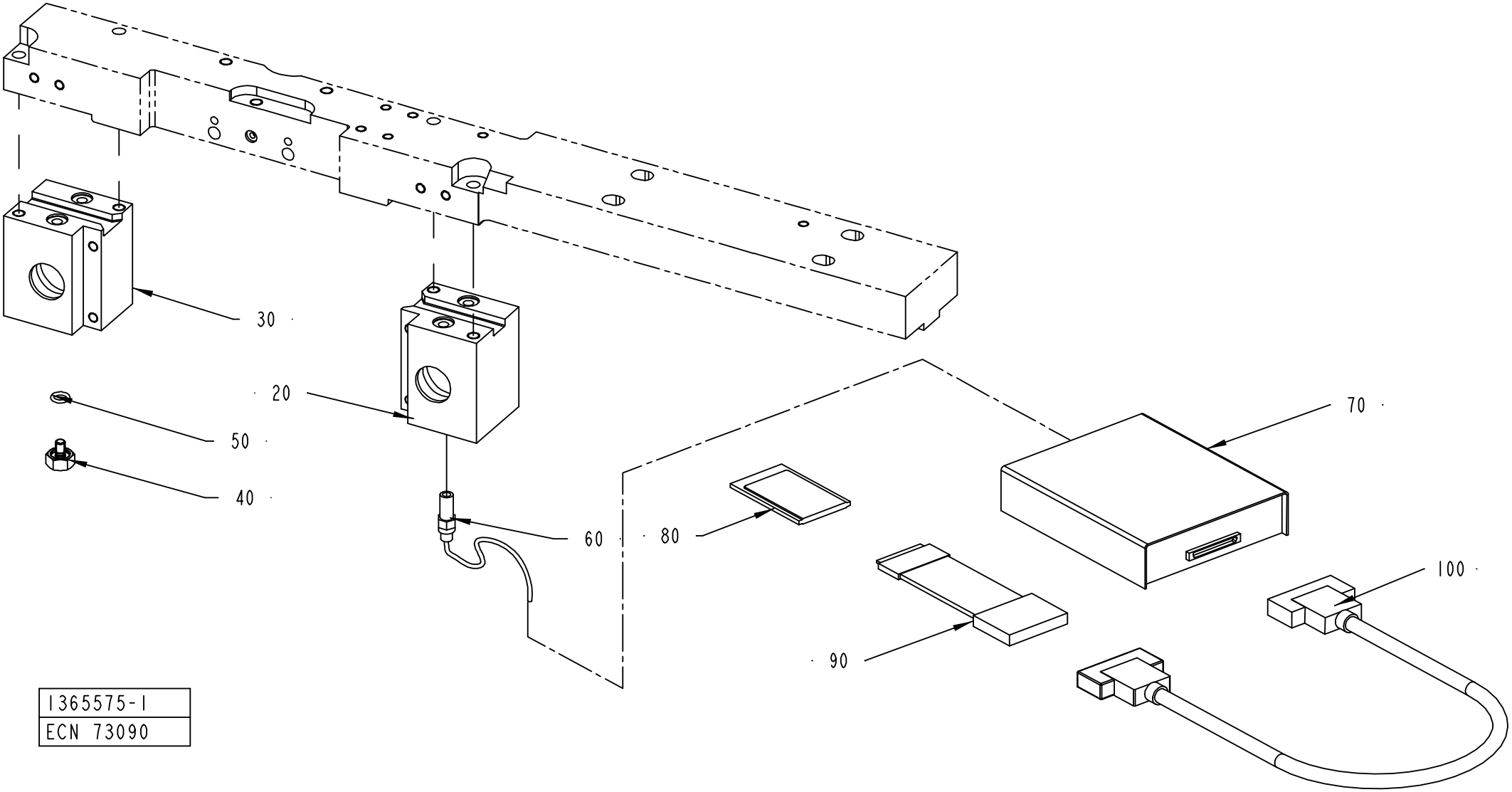

ECM: 73321 - 20000208
Group number: 1365575-0100
Assembly Drawing: 1365575-1_1_AA

Pos	Part No	UN	Qty	Description	Page No
-					
	48731-0101		1	PMS, PRESSURE MONITORING SYSTEM	
	90195-0017		1	TERMINAL BLOCK, 1953.2	
	90220-0091	MM	2000	PAIR TWISTED CABLE 2X2X0,25MM2	
	90457-0913		1	POWER SUPPLY MASCOT TYPE 7416	
	351172-0105	MM	5000	CABLE AWM 1X25 MM2 DARKBLUE	
020	1365561-0000		2	BEARING HOUSING	
030	1365562-0000		2	BEARING HOUSING	
040	1365563-0000		4	PLUG	
050	315204-0104		4	O-RING 6,1X1,6 MM	
060	90172-0325		4	PRESSURE SENSOR, 0,047 MV/PS1	
070	90172-0037		1	COMPUTOR EQUIPMENT	
080	90172-0324		1	COMPUTOR EQUIPMENT	
090	90172-0327		1	CONNECTION CABLE ULTRA SONIC/PC	
100	90172-0328		1	CABLE	

Pos	Part No	UN	Qty	Description	Page No

COMPACT TRANSDUCER TEST INSTRUMENT

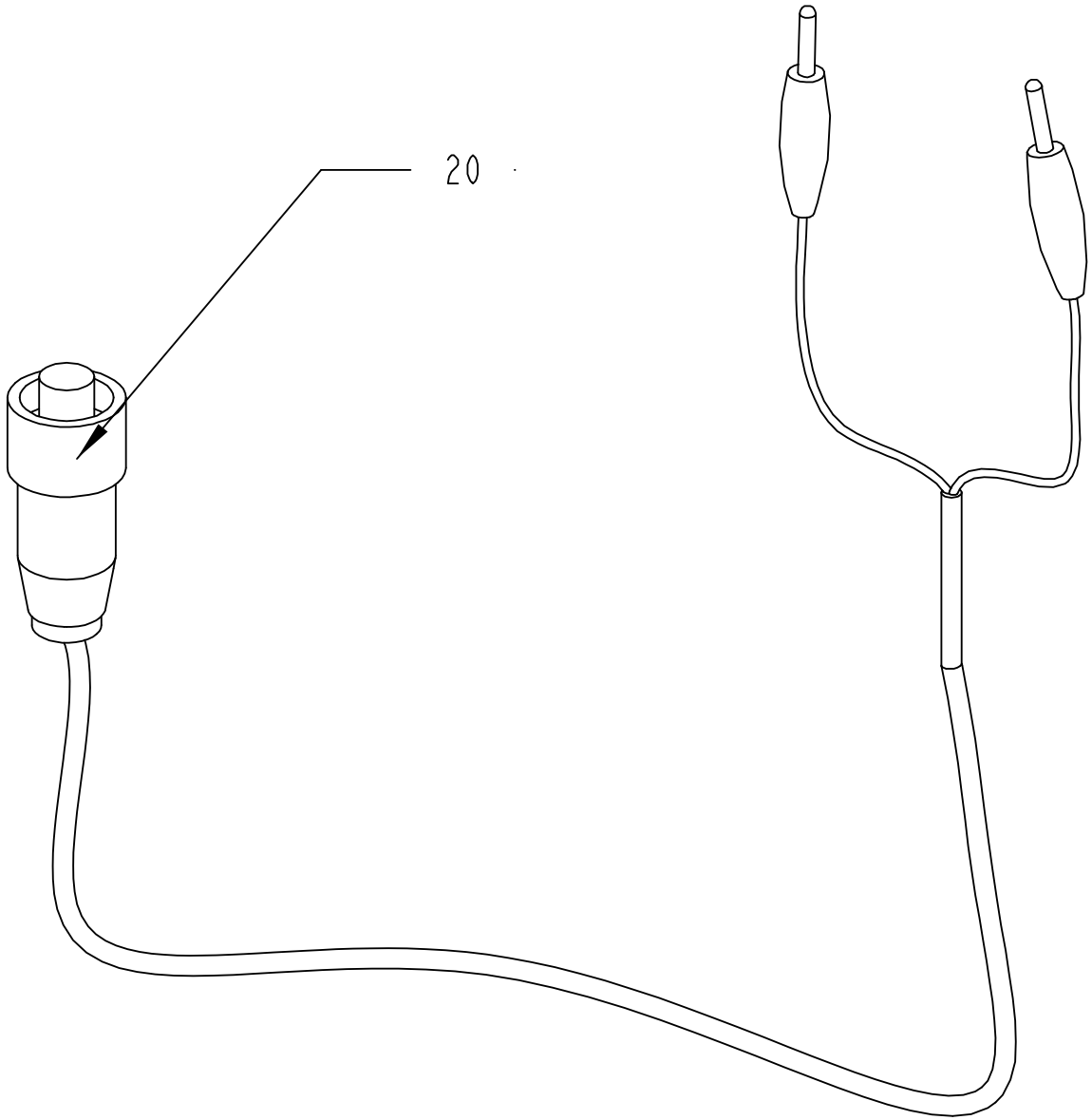

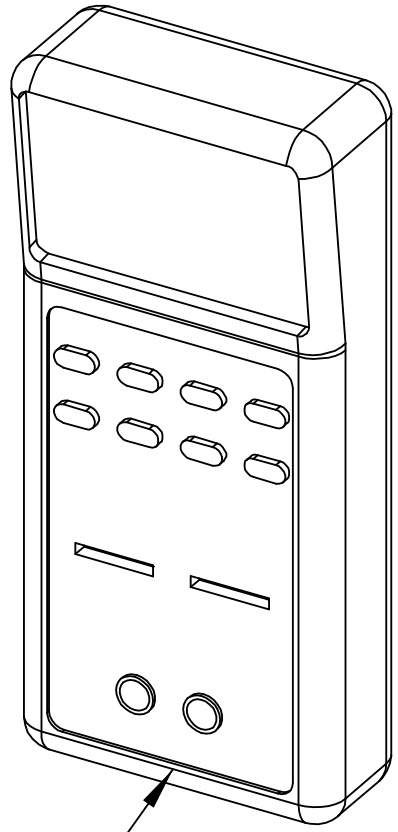

1365574-1
ECN 73090

ECM: 73090 - 19991117
Group number: 1365574-0100
Assembly Drawing: 1365574-1_1_AA

Pos	Part No	UN	Qty	Description	Page No
-					
010	90172-0038		1	DUAL DISPLAY LCR METER	
020	90172-0326		1	CABLE FOR LCR METER	

Pos	Part No	UN	Qty	Description	Page No

Machine Type | Group Description | Used-In | Group Number | Page No

This page is intentionally left blank.

ECM: 113554 - 20021016
Group number: 596144-0100
Assembly Drawing:

Pos	Part No	UN	Qty	Description	Page No	Pos	Part No	UN	Qty	Description	Page No
-											
	592551-0000		1	TEMPLATE							
	598630-0000		1	TEMPLATE							
	598631-0000		1	TEMPLATE							
	598633-0000		1	TEMPLATE							
	1552445-0000		1	PD STRIP							
	2505008-0000		1	STRIP HOLDER							
	2517848-0000		1	CLEANING DEVICE							

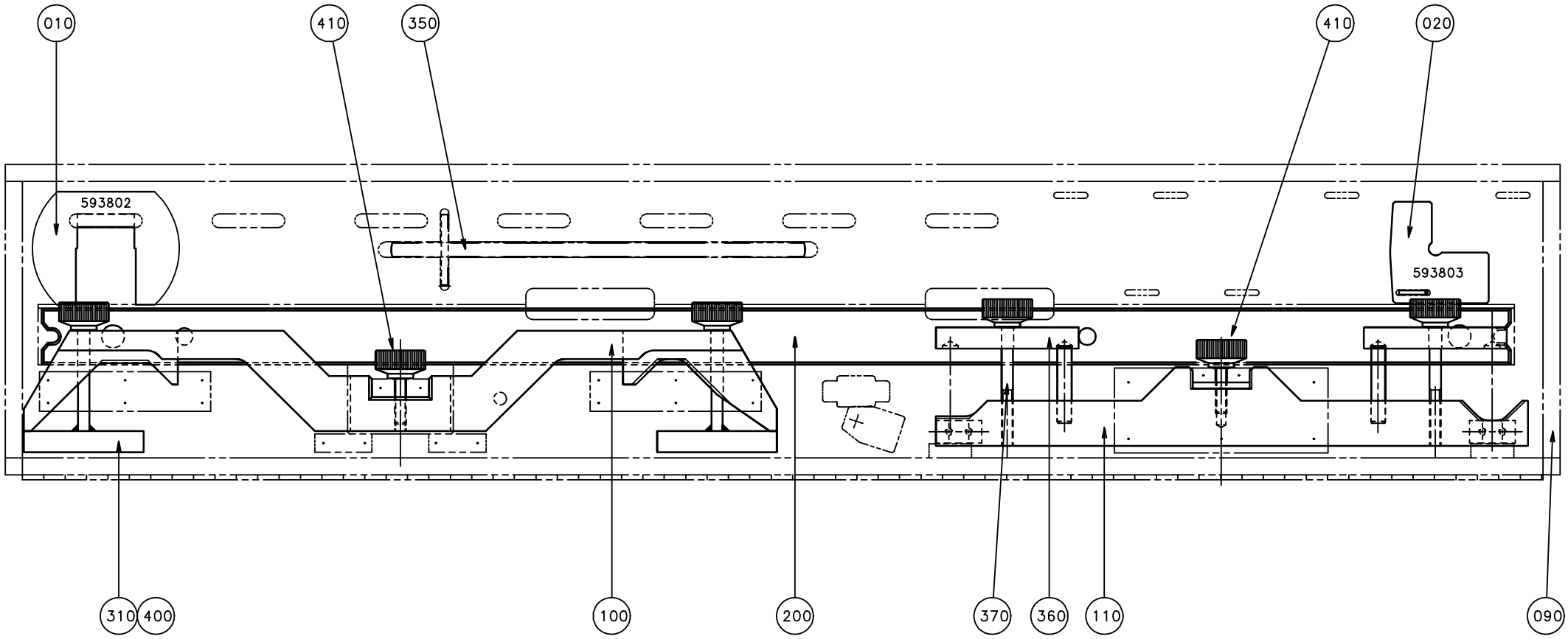
010
410
350
410
020
593802
593803
310
400
100
200
370
360
110
090

ECM: 70941 - 19970626
Group number: 595210-0100
Assembly Drawing: 595210-1_1_AA

This list covers pages from 14-12 to 14-15

Pos	Part No	UN	Qty	Description	Page No
-					
010	593802-0000		1	TEMPLATE	
020	593803-0000		1	TEMPLATE	
090	929651-0000		1	WOODENBOX	
100	929652-0000		1	HOLDER	
110	276300-0000		1	LOWER BRACKET	
200	263758-0000		1	RULER	
310	263767-0000		2	FLAT STEEL	
350	273567-0000		1	SHAFT	
360	276301-0000		2	CAP	
370	276307-0000		2	SHIFTER HANDLE	
400	90051-0040		2	KNOB, INTERNAL THREAD, NO. 8308-0627	
410	90051-0059		2	KNOB, EXTERNAL THREAD. NO. 8308-1550	

Pos	Part No	UN	Qty	Description	Page No

SETTING TOOL

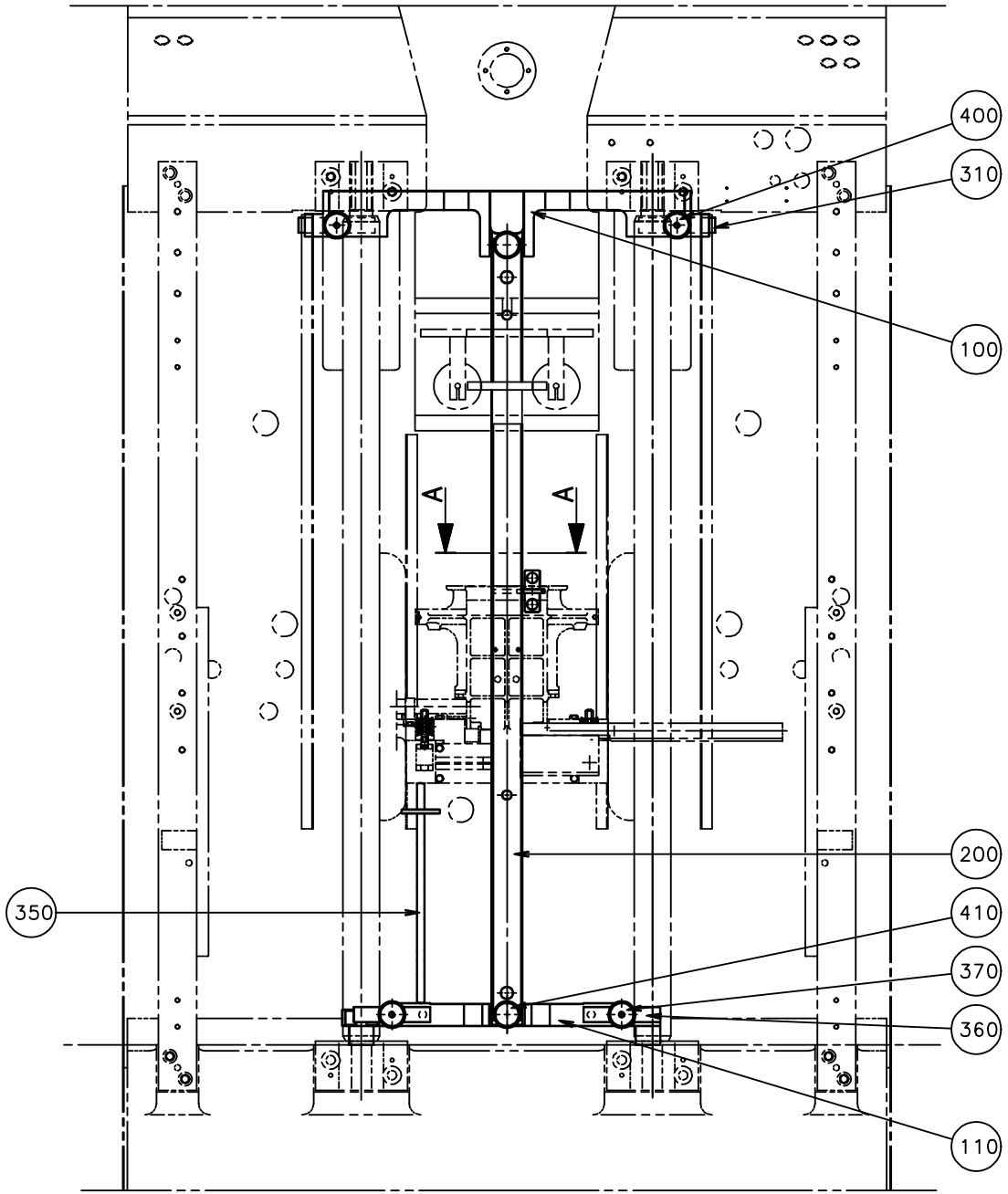

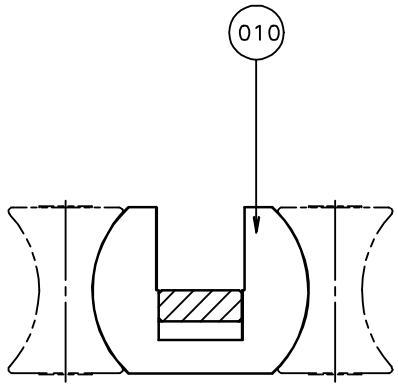

B–B

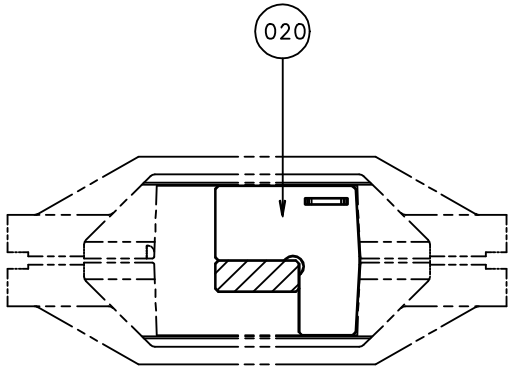

A–A

ECM: 70941 - 19970626
Group number: 595210-0100
Assembly Drawing: 595210-2_1_AA

This list covers pages from 14-12 to 14-15

Pos	Part No	UN	Qty	Description	Page No
-					
010	593802-0000		1	TEMPLATE	
020	593803-0000		1	TEMPLATE	
090	929651-0000		1	WOODENBOX	
100	929652-0000		1	HOLDER	
110	276300-0000		1	LOWER BRACKET	
200	263758-0000		1	RULER	
310	263767-0000		2	FLAT STEEL	
350	273567-0000		1	SHAFT	
360	276301-0000		2	CAP	
370	276307-0000		2	SHIFTER HANDLE	
400	90051-0040		2	KNOB, INTERNAL THREAD, NO. 8308-0627	
410	90051-0059		2	KNOB, EXTERNAL THREAD. NO. 8308-1550	

Pos	Part No	UN	Qty	Description	Page No

This page is intentionally left blank.

ECM: 71970 - 19981102
Group number: 592350-0100
Assembly Drawing:

Pos	Part No	UN	Qty	Description	Page No
TB/8 0500S					
010	591291-0004		1	TEMPLATE FILLINGPIPE	
020	592347-0000		1	TEMPLATE FILLINGPIPE	
TB/8 0568SQ, TB/8 1000SQ, TB/8 0500SQ					
010	591291-0003		1	TEMPLATE FILLINGPIPE	
020	591292-0000		1	TEMPLATE FILLINGPIPE	
TB/8 1000B, TB/8 0568B, TB/8 0500B, TB/8 1136B					
010	591291-0001		1	TEMPLATE FILLINGPIPE	
020	591293-0000		1	TEMPLATE FILLINGPIPE	
TB/8 1000S					
010	591291-0002		1	TEMPLATE FILLINGPIPE	
020	591292-0000		1	TEMPLATE FILLINGPIPE	
TB/8 1500B					
010	593252-0000		1	TEMPLATE FILLING PIPE	
020	593253-0000		1	TEMPLATE FILLING PIPE	

Pos	Part No	UN	Qty	Description	Page No

CALIBRATION EQUIPMENT

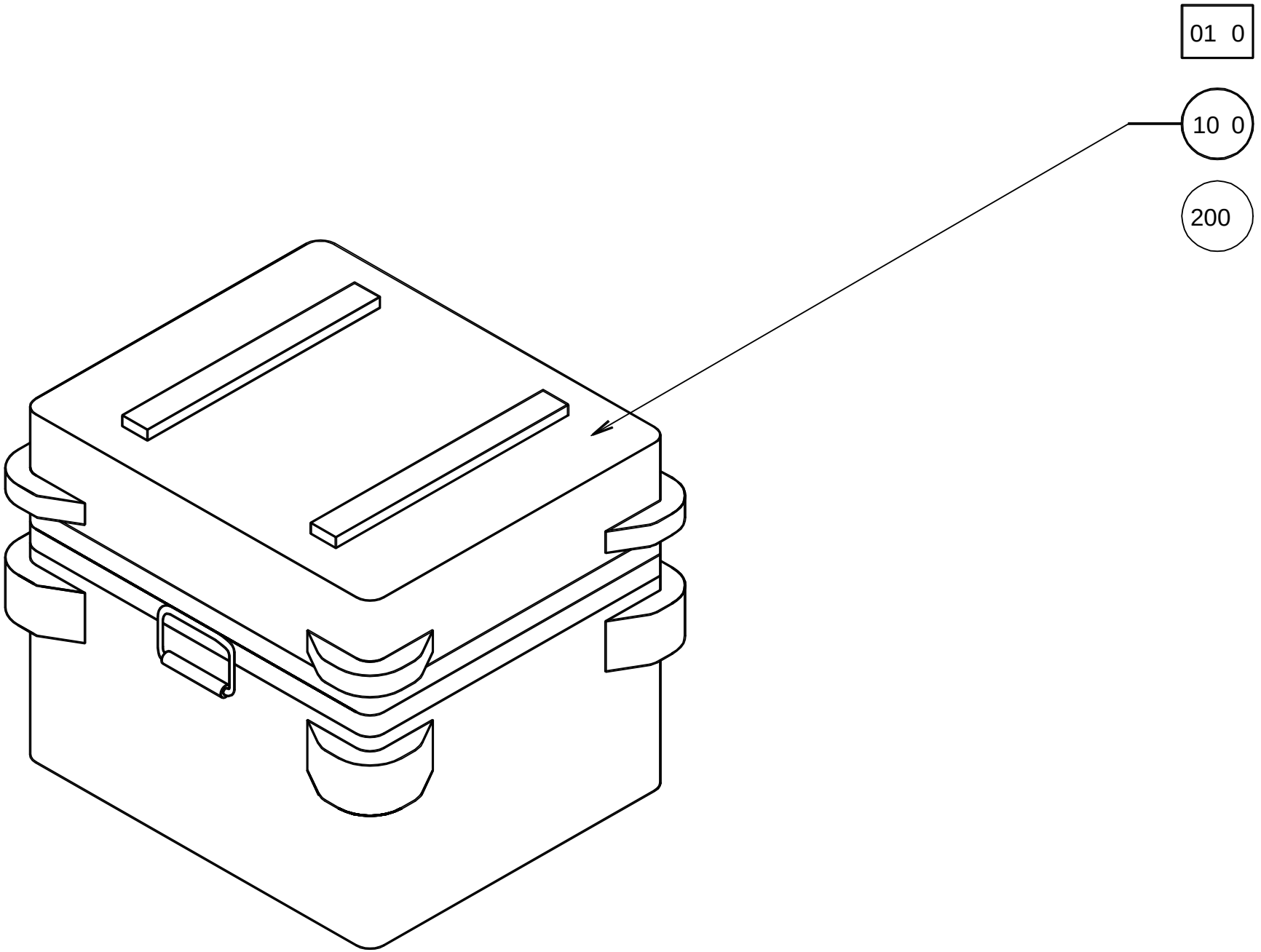

ECM: 71120 - 19971013
Group number: 567732-0100
Assembly Drawing: 567732-1_1_AA

Pos	Part No	UN	Qty	Description	Page No
-					
010	557793-0100		1	CALIBRATION EQUIPMENT	**14-21**
100	555568-0000		1	PONCH	
200	567745-0000		1	PACKING DESCRIPTION	

Pos	Part No	UN	Qty	Description	Page No

This page is intentionally left blank.

ECM: 71120 - 19971013
Group number: 557793-0100
Assembly Drawing:

Pos	Part No	UN	Qty	Description	Page No
-					
0001	90326-0308		1	THERMOCOUPLE CABLE FOR CE-557793/MALE 5M	
0002	90326-0309		1	THERMOCOUPLE CABLE FOR CE-557793/FEMALE	
0003	90194-0113		1	ADHESIVE LABEL, CALIBRATED & DATE	
0004	90194-0109		1	SIGN, TRANSP. OH-FOLIE, BLANC	
0005	90243-0208		1	SCREW DRIVER	
0006	90220-0077		1	CABLE, POWER SUPPLY, RKK 3X0,75 2M	
A008	90326-0310		1	THERMOCOUPLE, 5130020-000	
A007	90326-0310		1	THERMOCOUPLE, 5130020-000	
A004	90410-0339		1	ADAPTER FOR TEMP.REGULATOR, 101	
A003:4	90220-0079		1	CABLE, LABORATORY FLEX, 1X1,5 1M BLACK	
A003:3	90220-0078		1	CABLE, LABORATORY FLEX, 1X1,5 1M RED	
A003:2	90220-0081		1	CONNECTOR WITH GRAB HOOK,4 MM RED	
A003:1	90220-0080		1	CONNECTOR WITH GRAB HOOK,4 MM BLACK	
A003	90243-0099		1	ANALOG/DIGITAL MULTIMETER 175	
A002:1	90410-0340		1	AC-ADAPTER 5100072-002	
A002	90410-0338		1	CALIBRATION INSTRUMENT 5100071-001	
A001:2	90326-0311		1	HOUSE, 5103053-000	
A001:1	90326-0312		3	HOUSE, 5103050-000	
A001	90410-0337		1	CALIBRATION INSTRUMENT 5100071-001	
A006	557826-0101		1	TEMPERATURE REG. ADAPTER	**14-23**
A005	567733-0101		1	ADAPTER	**14-27**

Pos	Part No	UN	Qty	Description	Page No

Machine Type | Group Description | Used-In | Group Number | Page No

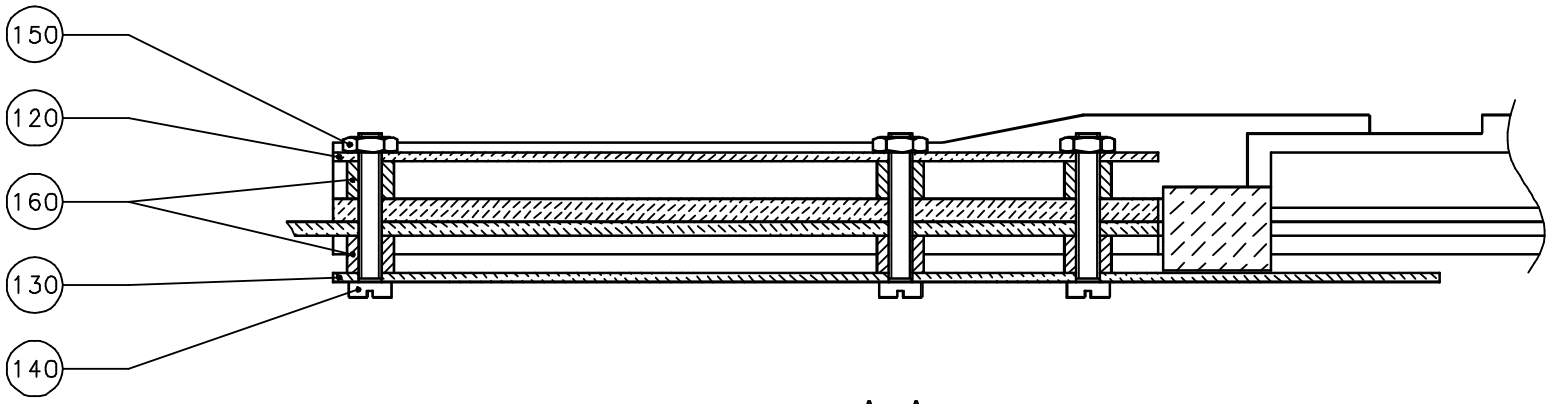

A-A

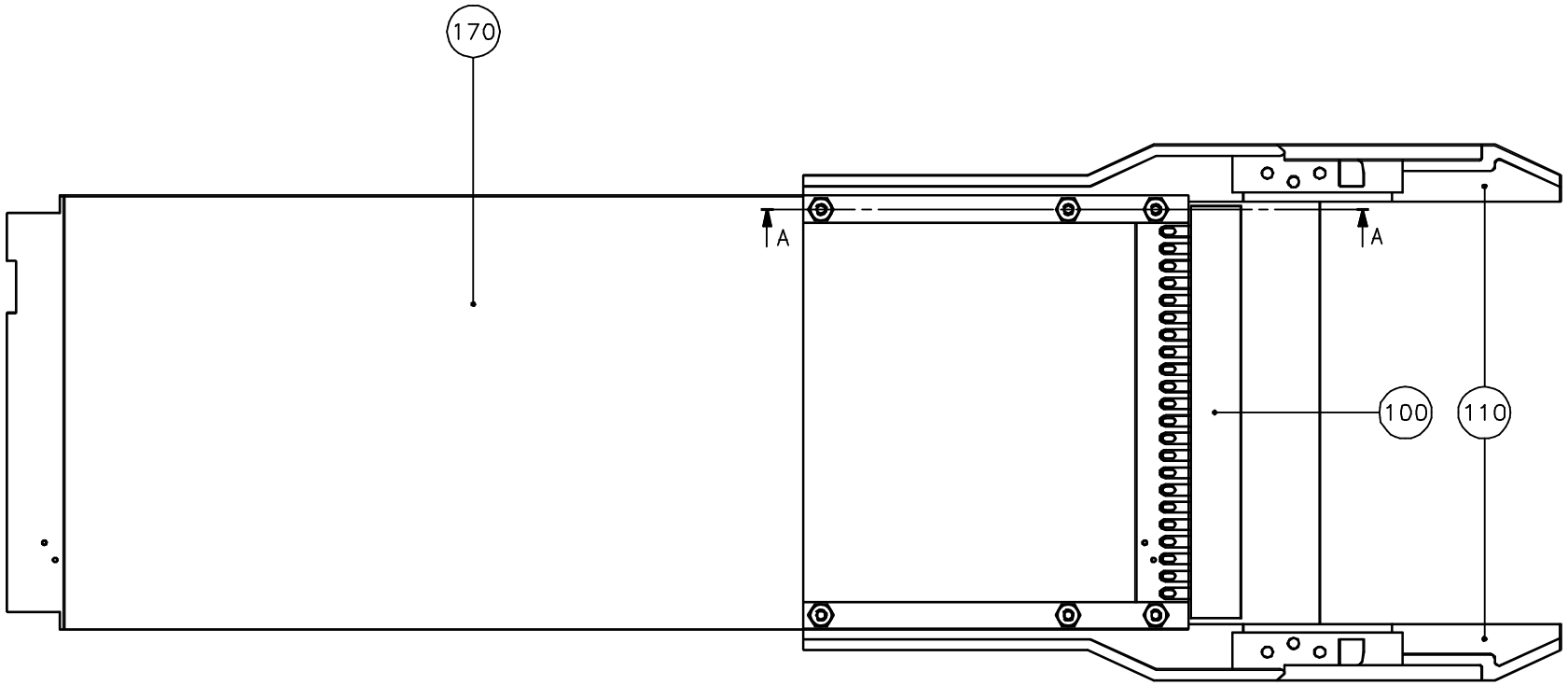

557826-1
16570

ECM: - -
Group number: 557826-0101
Assembly Drawing: 557826-1_1_AA

Pos	Part No	UN	Qty	Description	Page No
-					
110	90129-0014		1	CARD HOLDER, SCHROFF 20800-213	
120	570127-0000		1	PROTECTION	
130	570128-0000		1	PROTECTION	
140	90287-0221		6	SCREW PAN HEAD MCS M2,5X16	
150	90099-0050		6	HEXAGON NUT, M2, 5	
160	90316-0002		12	SPACER, 2,65/5X4	
170	557063-0100		1	TEMP.REG.ADAPT: MAIN CARD	**14-25**

Pos	Part No	UN	Qty	Description	Page No

This page is intentionally left blank.

ECM: - -
Group number: 557063-0100
Assembly Drawing:

Pos	Part No	UN	Qty	Description	Page No	Pos	Part No	UN	Qty	Description	Page No
-											
100	570131-0000		1	BASE							
170	569101-0000		1	TEMP.REG.ADAPT: MAIN CARD							

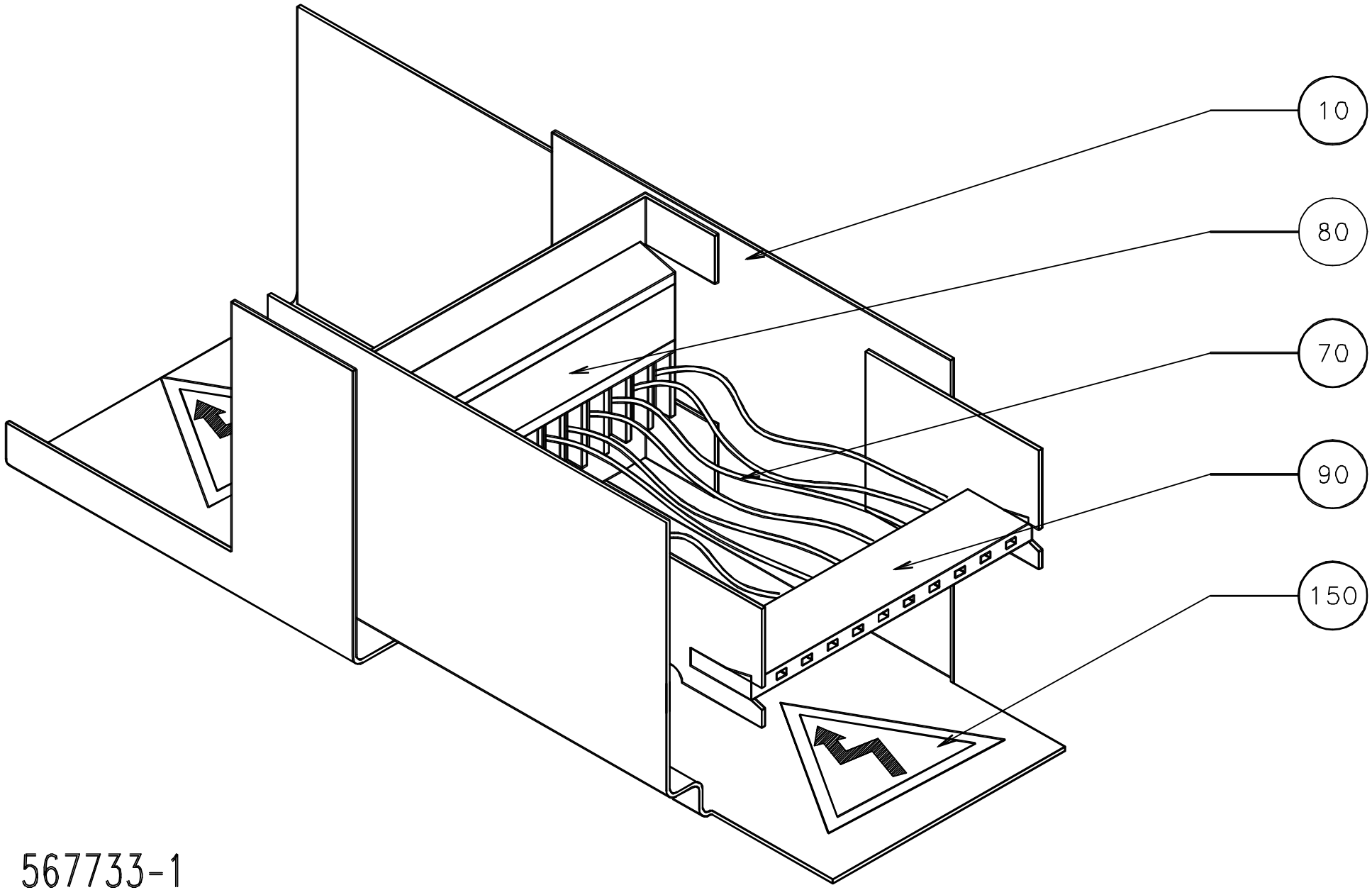

567733-1
16570

ECM: - -
Group number: 567733-0101
Assembly Drawing: 567733-1_1_AA

Pos	Part No	UN	Qty	Description	Page No
-					
010	567731-0000		1	ADAPTER	
070	351179-0102	M	2	CABLE AWM 1X075 MM2 BLACK	
080	353012-0010		1	MALE PLUG	
090	353012-0011		1	SOCKET	
150	90194-0016		2	WARNING SIGN, RISK OF ELECTRIC SHOCK	

Pos	Part No	UN	Qty	Description	Page No

This page is intentionally left blank.

ECM: 71970 - 19981102
Group number: 544357-0100
Assembly Drawing:

Pos	Part No	UN	Qty	Description	Page No
0300B					
010	544355-0000		1	TEMPLATE	
020	544356-0000		1	TEMPLATE	
0500S					
010	544353-0000		1	TEMPLATE	
020	544354-0000		1	TEMPLATE	
0500B, 1136B, 0568B, 1000B					
010	544351-0000		1	TEMPLATE	
020	544352-0000		1	TEMPLATE	
1000S					
010	79001-0000		1	TEMPLATE	
020	79002-0000		1	TEMPLATE	
1000SQ NO SHARP EDGES, 0500SQ, 0568SQ					
010	576722-0000		1	TEMPLATE	
020	576723-0000		1	TEMPLATE	
1000SQ SHARP EDGES					
010	596285-0000		1	TEMPLATE	
020	596288-0000		1	TEMPLATE	

Pos	Part No	UN	Qty	Description	Page No

This page is intentionally left blank.

ECM: 70995 - 19970801
Group number: 527869-0100
Assembly Drawing:

Pos	Part No	UN	Qty	Description	Page No
1136B					
010	527864-0001		1	TEMPLATE	
0300B					
100	527864-0010		1	TEMPLATE	
0500B					
070	527864-0007		1	TEMPLATE	
0500S					
080	527864-0008		1	TEMPLATE	
0568B					
060	527864-0006		1	TEMPLATE	
1000B HIFIN					
040	527864-0004		1	TEMPLATE	
1000B LOFIN					
030	527864-0003		1	TEMPLATE	

Pos	Part No	UN	Qty	Description	Page No

LASER TEMPLATE JUMBO REEL

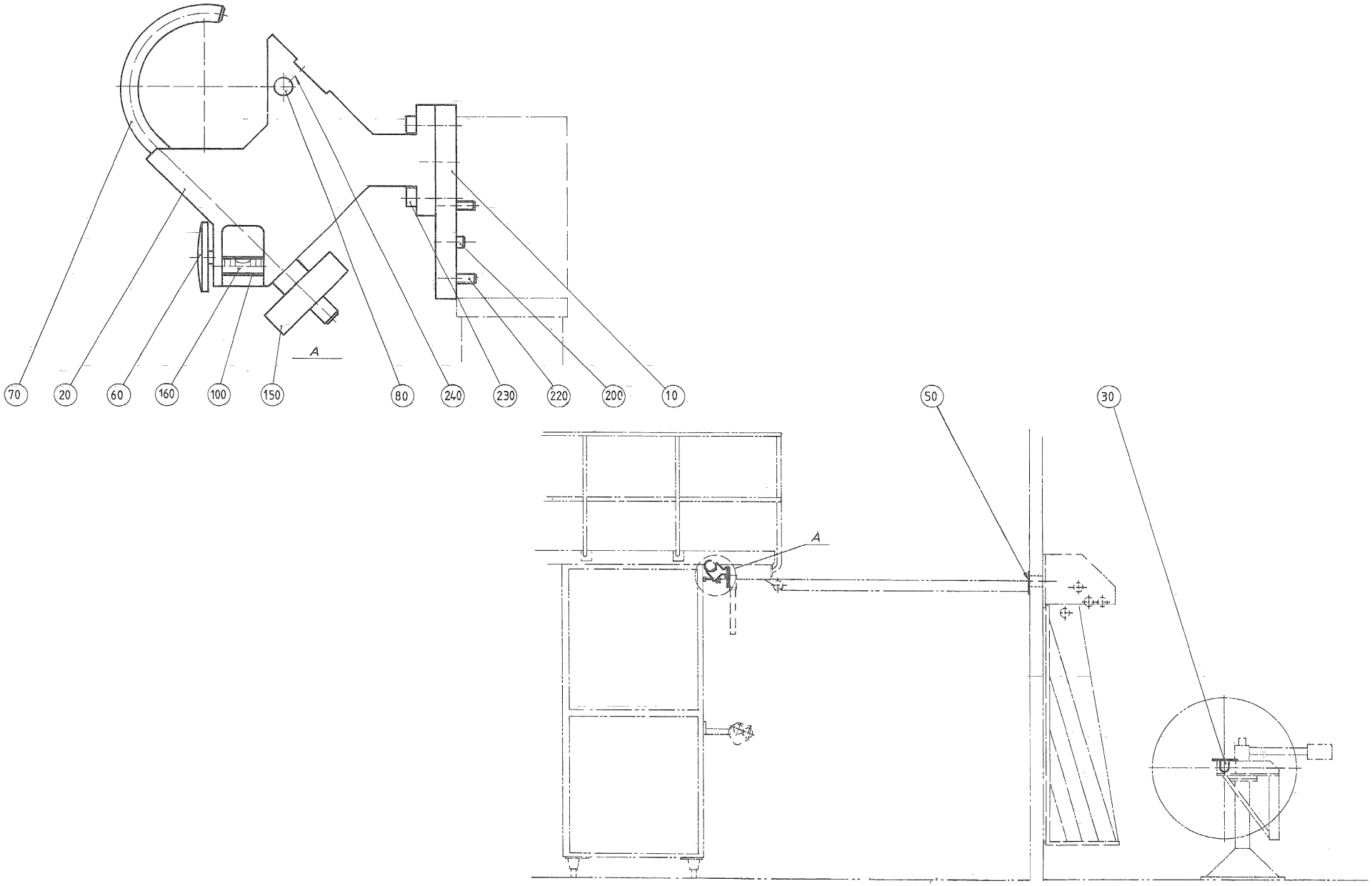

ECM: - -
Group number: 458444-0201
Assembly Drawing: 458444-2_1_AA

Pos	Part No	UN	Qty	Description	Page No
-					
010 1	449125-0000		1	JIG	
020	449153-0000		1	BRACKET	
030	445664-0000		1	TEMPLATE	
050	479994-0000		1	LASER TEMPLATE	
060	449154-0000		1	SHIFTER HANDLE	
070	449155-0000		1	HOOK	
080	449156-0000		1	ROD	
100	458488-0000		1	PROTECTION	
150	90051-0080		1	KNOB, KNURLED, NO. 8324-4212	
160	90243-0125		1	SPIRIT LEVEL	
200	311103-0351		2	PARALLEL PIN ISO 2338 6M6X16 A1	
220	312115-0368		4	SCREW ISO4762 M6X16 A4 80	
230	312115-0370		4	SCREW ISO4762 M6X20 A4 80	
240	312318-0323		1	SCREW ISO4029 M5X8 A4	

Pos	Part No	UN	Qty	Description	Page No

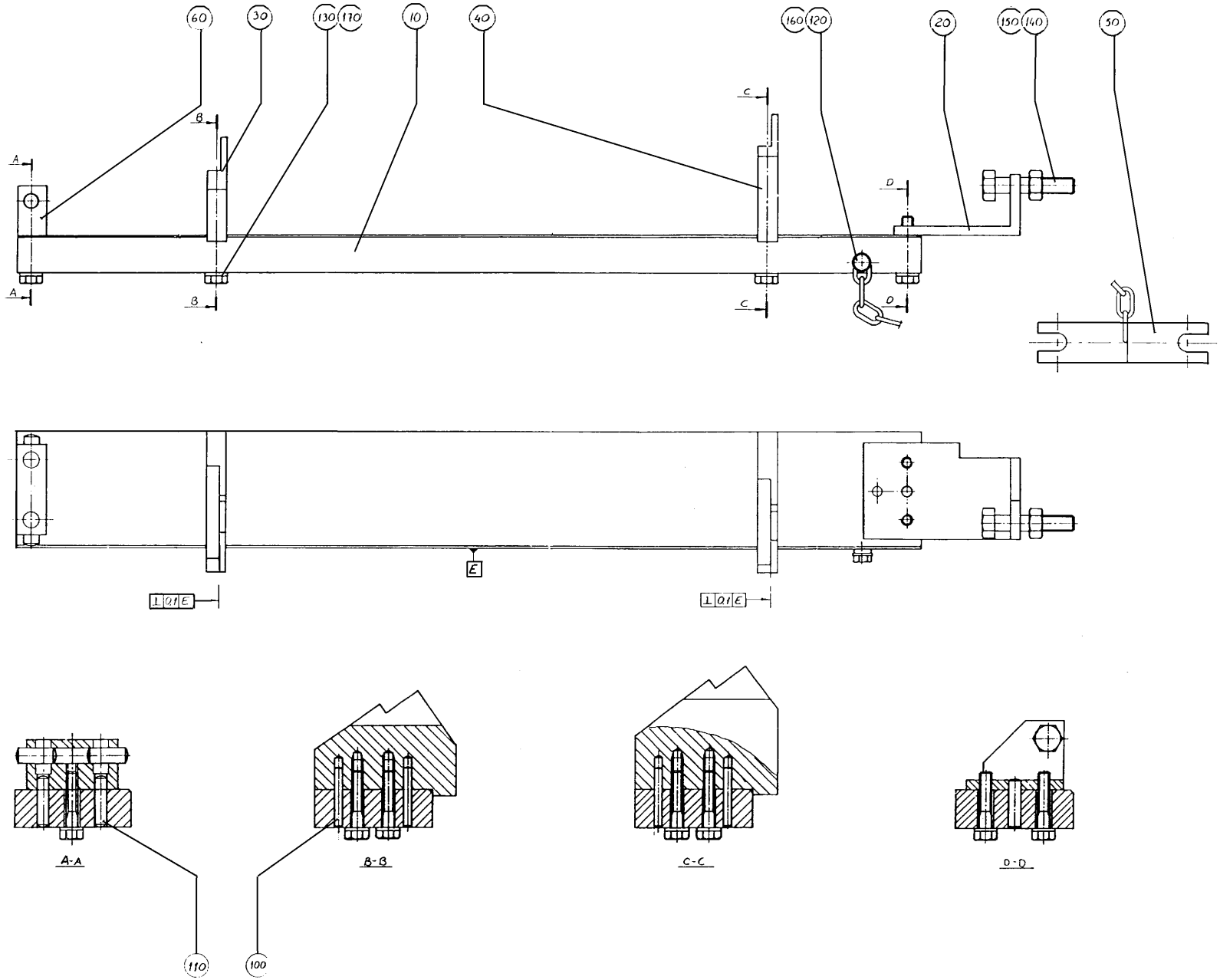
60
30
130
110
10
40
160
120
20
150
140
50
A
B
C
D
E
⊥ 0.1 E
A-A
B-B
C-C
D-D
110
100

ECM: - -
Group number: 451026-0100
Assembly Drawing: 451026-1_1_AA

Pos	Part No	UN	Qty	Description	Page No
0300B					
010	440078-0000		1	RULER	
020	440066-0002		1	BRACKET	
030	450111-0000		1	STOPPER	
040	450112-0000		1	STOPPER	
Common Parts					
050	293583-0000		1	SPACER	
060	440067-0000		1	BRACKET	
100	311103-0276		4	PARALLEL PIN ISO 2338 4M6X30 A1	
110	311103-0355		4	PARALLEL PIN ISO 2338 6M6X25 A1	
120	312105-0325		1	SCREW M6S ISO 4017 M5X10 A480	
130	312105-0374		7	SCREW M6S ISO 4014 M6X30 A480	
140	312105-0459		1	SCREW M6S ISO 4014 M8X40 A480	
150	312605-0318		1	HEXAGON NUT, M6M M8 A280	
160	315105-0146		1	WASHER BRB 5,3X10 RFR	
170	315105-0153		7	WASHER BRB 6,4X12 RFR	

Pos	Part No	UN	Qty	Description	Page No

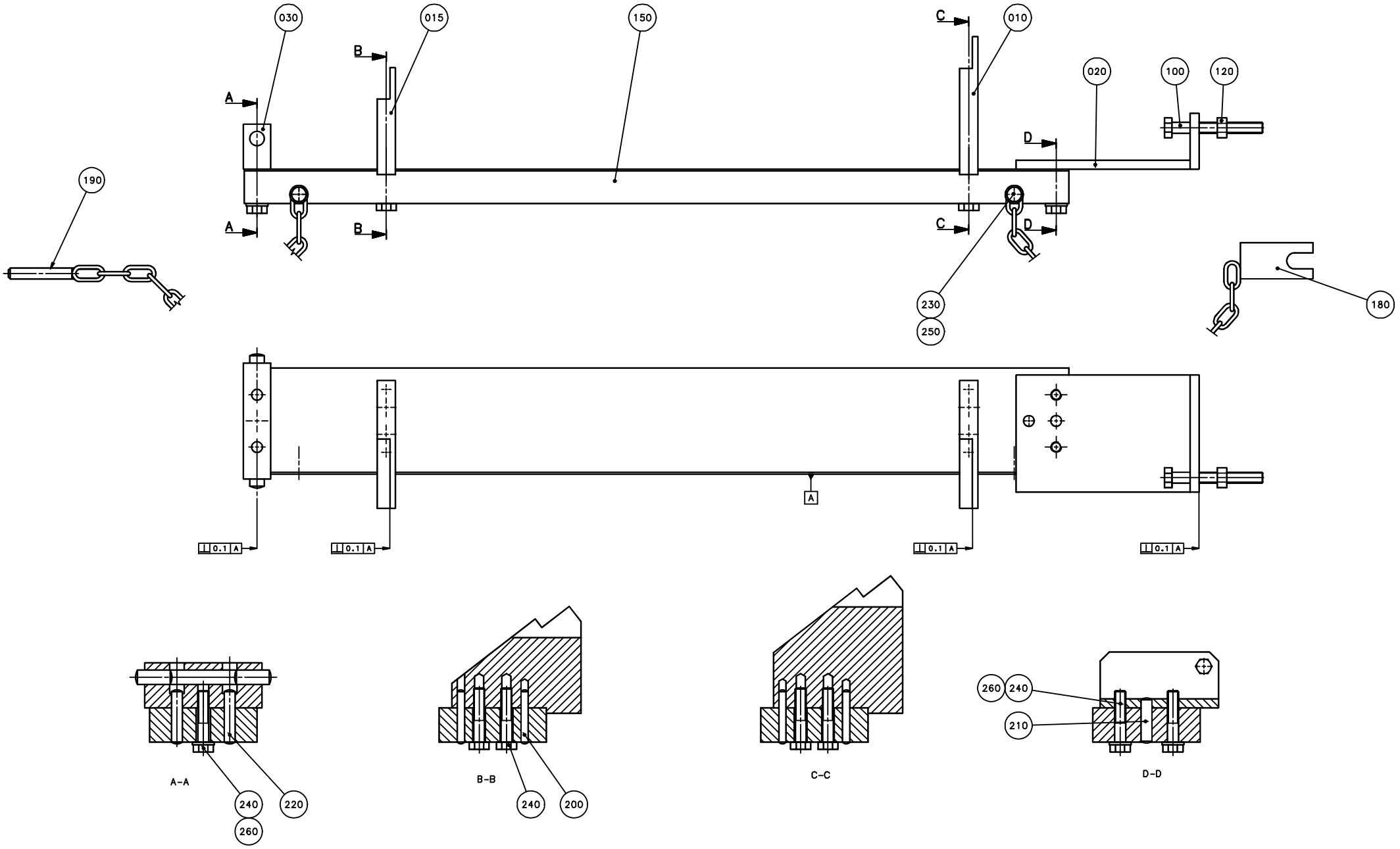
030
015
150
010
020
100
120
190
180
230
250
A
B
C
D
0.1 A
A-A
B-B
C-C
D-D
240
220
260
200
210

ECM: 100801 - 20011109
Group number: 293578-0200
Assembly Drawing: 293578-1_1_AF

Pos	Part No	UN	Qty	Description	Page No
TB/8 0568SQ, TB/8 0500SQ					
010	927752-0000		1	STOPPER	
015	927751-0000		1	STOPPER	
020	927337-0000		1	BRACKET	
030	576262-0000		1	BRACKET	
150	293579-0000		1	RULER	
TB/8 1000B, TB/8 0568B, TB/8 0500B, TB/8 1136B					
010	451043-0000		1	STOPPER	
015	293581-0000		1	STOPPER	
020	293584-0000		1	BRACKET	
030	293580-0000		1	BRACKET	
150	293579-0000		1	RULER	
230	312105-0325		1	SCREW M6S ISO 4017 M5X10 A480	
250	315105-0146		1	WASHER BRB 5,3X10 RFR	
TB/8 1000S					
010	583863-0000		1	STOPPER	
015	583862-0000		1	STOPPER	
020	293585-0000		1	BRACKET	
030	293580-0000		1	BRACKET	
150	293579-0000		1	RULER	
230	312105-0325		1	SCREW M6S ISO 4017 M5X10 A480	
250	315105-0146		1	WASHER BRB 5,3X10 RFR	
TB/8 1000SQ					
010	927752-0000		1	STOPPER	
015	927751-0000		1	STOPPER	
020	927337-0000		1	BRACKET	
030	576262-0000		1	BRACKET	
150	293579-0000		1	RULER	
230	312105-0325		1	SCREW M6S ISO 4017 M5X10 A480	
250	315105-0146		1	WASHER BRB 5,3X10 RFR	
TB/8 1500B					
010	596083-0000		1	STOPPER	
015	596084-0000		1	STOPPER	
020	596086-0000		1	BRACKET	
030	596087-0000		1	BRACKET	
150	530458-0000		1	RULER	
230	312105-0325		1	SCREW M6S ISO 4017 M5X10 A480	
250	315105-0146		1	WASHER BRB 5,3X10 RFR	
Common Parts					
100	312105-0459		1	SCREW M6S ISO 4014 M8X40 A480	
120	312605-0318		1	HEXAGON NUT, M6M M8 A280	
180	466444-0000		1	SPACER	
200	311103-0276		4	PARALLEL PIN ISO 2338 4M6X30 A1	
210	311103-0355		2	PARALLEL PIN ISO 2338 6M6X25 A1	
220	311103-0357		2	PARALLEL PIN ISO 2338 6M6X30 A1	
240	312105-0374		7	SCREW M6S ISO 4014 M6X30 A480	
260	315105-0153		3	WASHER BRB 6,4X12 RFR	

Machine Type | Group Description | Used-In | Group Number | Page No

ASSEMBLY TOOL

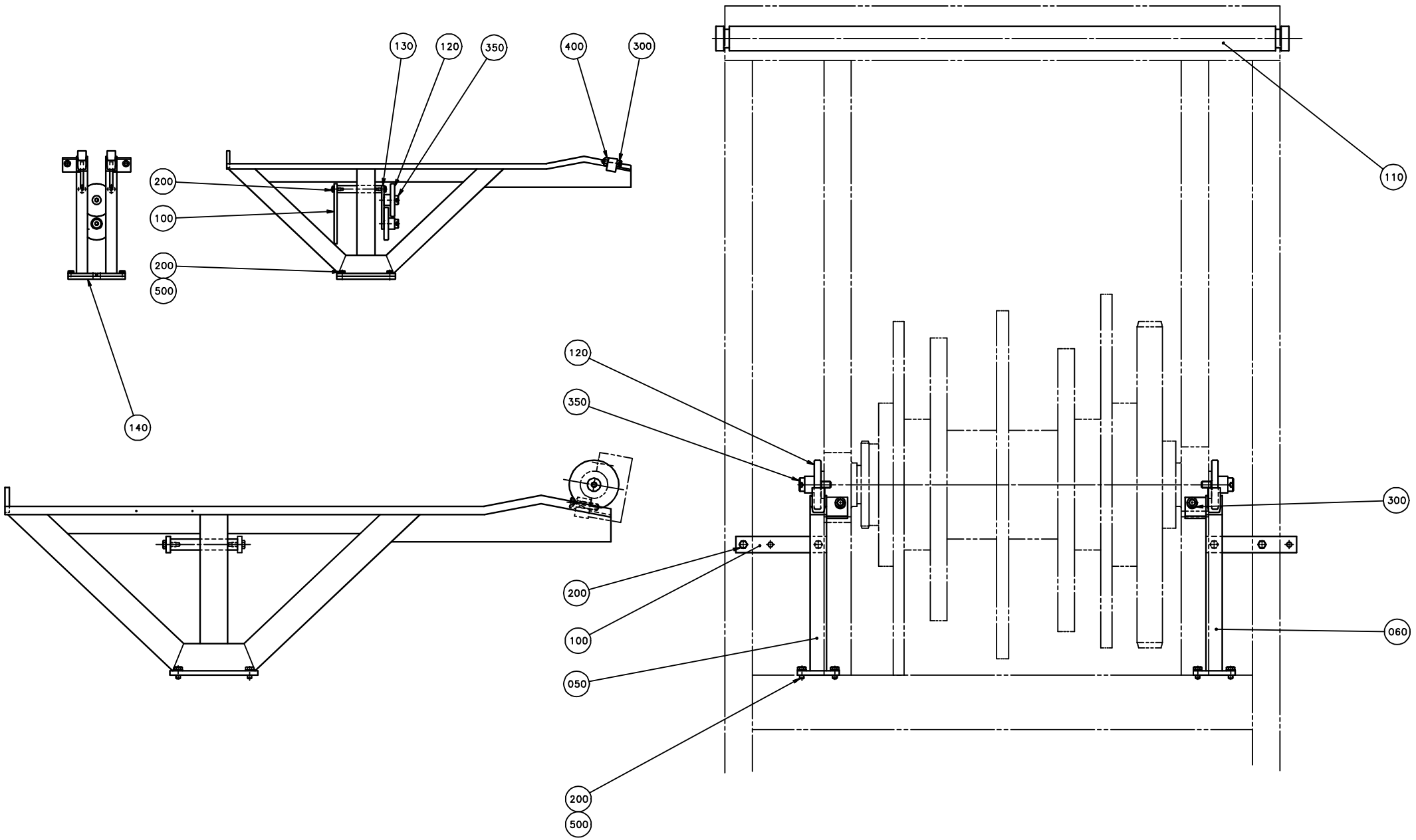

ECM: - -
Group number: 75105-0200
Assembly Drawing: 75105-2_1_AA

Pos	Part No	UN	Qty	Description	Page No
-					
050	554103-0000		1	ROLLER BED	
060	554104-0000		1	ROLLER BED	
100	263425-0000		2	BRACKET	
110	263426-0000		1	SHAFT	
120	263427-0000		2	WHEEL	
130	294445-0000		1	PLATE	
140	294446-0000		1	PLATE	
150	294447-0000		1	SPACER	
200	312101-0449		8	SCREW M6S M8X16 FZB	
300	312111-0540		2	SCREW HEX.SOCK.HD.MC6S-TT 12X40 88 FZ	
350	312180-0624		2	SCREW ISO7379 H16X30	
400	312601-0322		2	HEXAGON NUT, DIN 934 M12 8 FZB	
500	315101-0165		4	WASHER PLAIN, BRB, 8,4/16 H=1,5	

Pos	Part No	UN	Qty	Description	Page No

Machine Type | Group Description | Used-In | Group Number | Page No

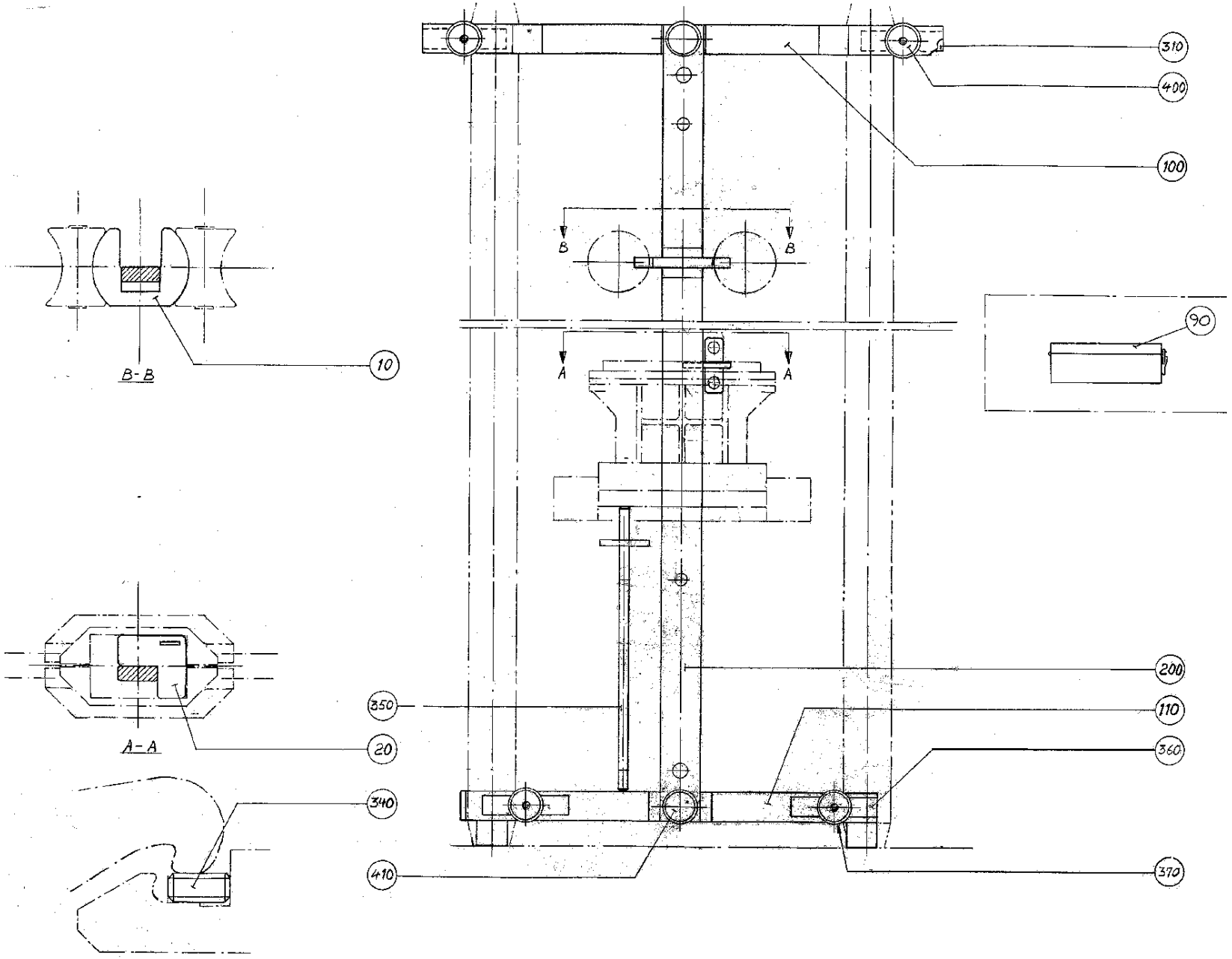
B-B
A-A
B
B
A
A
10
20
90
100
200
110
310
340
350
360
370
400
410

ECM: 70995 - 19970801
Group number: 75100-0300
Assembly Drawing: 75100-2_1_AA

This list covers pages from 14-40 to 14-43

Pos	Part No	UN	Qty	Description	Page No
TB/8 0300B					
010	263759-0000		1	TEMPLATE	
020	263765-0000		1	TEMPLATE	
TB/8 0500S					
010	450759-0000		1	TEMPLATE	
020	450760-0000		1	TEMPLATE	
TB/8 0568B, TB/8 0500B					
010	263761-0000		1	TEMPLATE	
020	263762-0000		1	TEMPLATE	
TB/8 1000B, TB/8 1136B					
010	263761-0000		1	TEMPLATE	
020	263763-0000		1	TEMPLATE	
TB/8 1000S					
010	569064-0000		1	TEMPLATE	
020	569065-0000		1	TEMPLATE	
TB/8 1000SQ					
010	574162-0000		1	TEMPLATE	
020	574163-0000		1	TEMPLATE	
TB/8 ALLVOLUMES					
010	263759-0000		1	TEMPLATE	
010	263761-0000		1	TEMPLATE	
010	544340-0000		1	TEMPLATE	
010	574162-0000		1	TEMPLATE	
010	569064-0000		1	TEMPLATE	
010	450759-0000		1	TEMPLATE	
010	571943-0000		1	TEMPLATE	
020	263762-0000		1	TEMPLATE	
020	263763-0000		1	TEMPLATE	
020	574163-0000		1	TEMPLATE	
020	263765-0000		1	TEMPLATE	
020	569065-0000		1	TEMPLATE	
020	544341-0000		1	TEMPLATE	
020	450760-0000		1	TEMPLATE	
Common Parts					
090	577334-0000		1	WOODENBOX	
100	263756-0000		1	HOLDER	
110	276300-0000		1	LOWER BRACKET	
200	263758-0000		1	RULER	
310	263767-0000		2	FLAT STEEL	
340	265832-0000		2	TEMPLATE	
350	273567-0000		1	SHAFT	
360	276301-0000		2	CAP	
370	276307-0000		2	SHIFTER HANDLE	
400	90051-0040		2	KNOB, INTERNAL THREAD, NO. 8308-0627	
410	90051-0059		2	KNOB, EXTERNAL THREAD. NO. 8308-1550	

Machine Type | Group Description | Used-In | Group Number | Page No

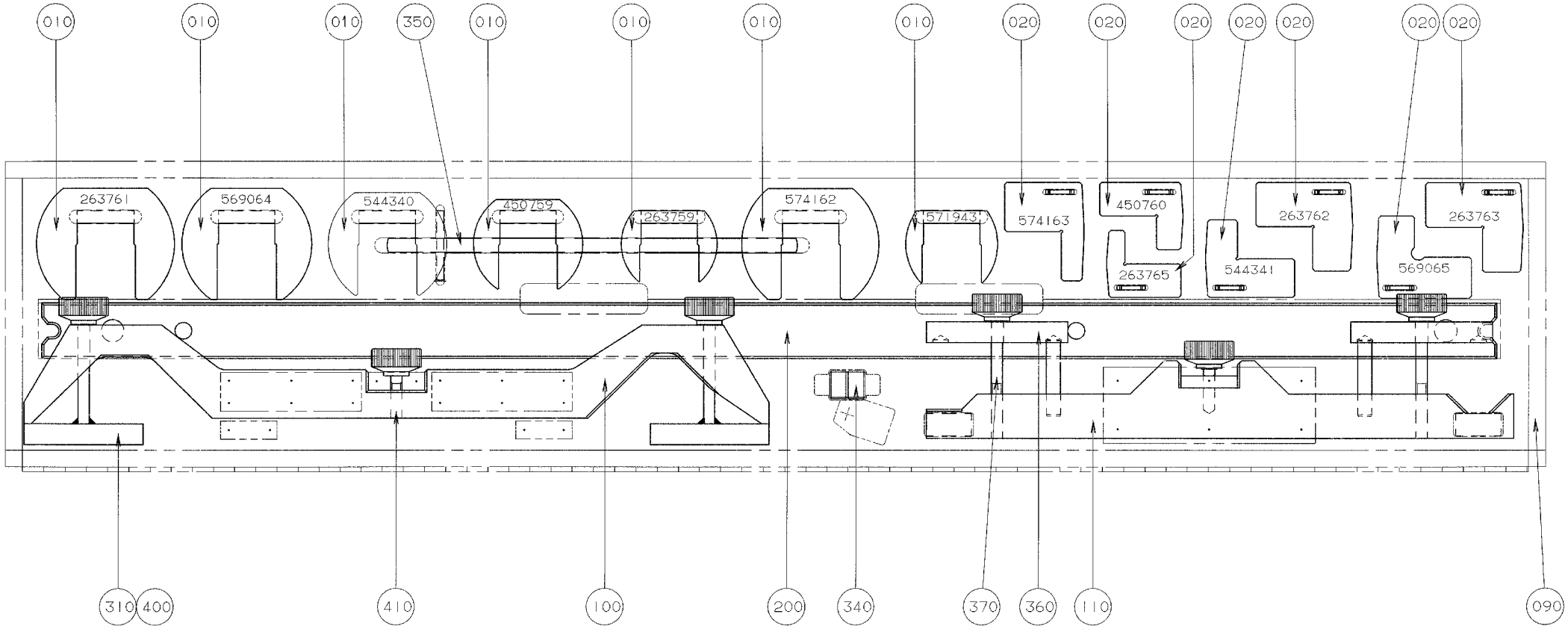
010
010
010
350
010
010
010
010
010
020
020
020
020
020
020
020
263761
569064
544340
450759
263759
574162
571943
574163
450760
263765
544341
263762
569065
263763
310
400
410
100
200
340
370
360
110
090

ECM: 70995 - 19970801
Group number: 75100-0300
Assembly Drawing: 75100-3_1_AA

This list covers pages from 14-40 to 14-43

Pos	Part No	UN	Qty	Description	Page No
TB/8 0300B					
010	263759-0000		1	TEMPLATE	
020	263765-0000		1	TEMPLATE	
TB/8 0500S					
010	450759-0000		1	TEMPLATE	
020	450760-0000		1	TEMPLATE	
TB/8 0568B, TB/8 0500B					
010	263761-0000		1	TEMPLATE	
020	263762-0000		1	TEMPLATE	
TB/8 1000B, TB/8 1136B					
010	263761-0000		1	TEMPLATE	
020	263763-0000		1	TEMPLATE	
TB/8 1000S					
010	569064-0000		1	TEMPLATE	
020	569065-0000		1	TEMPLATE	
TB/8 1000SQ					
010	574162-0000		1	TEMPLATE	
020	574163-0000		1	TEMPLATE	
TB/8 ALLVOLUMES					
010	263759-0000		1	TEMPLATE	
010	263761-0000		1	TEMPLATE	
010	544340-0000		1	TEMPLATE	
010	574162-0000		1	TEMPLATE	
010	569064-0000		1	TEMPLATE	
010	450759-0000		1	TEMPLATE	
010	571943-0000		1	TEMPLATE	
020	263762-0000		1	TEMPLATE	
020	263763-0000		1	TEMPLATE	
020	574163-0000		1	TEMPLATE	
020	263765-0000		1	TEMPLATE	
020	569065-0000		1	TEMPLATE	
020	544341-0000		1	TEMPLATE	
020	450760-0000		1	TEMPLATE	
Common Parts					
090	577334-0000		1	WOODENBOX	
100	263756-0000		1	HOLDER	
110	276300-0000		1	LOWER BRACKET	
200	263758-0000		1	RULER	
310	263767-0000		2	FLAT STEEL	
340	265832-0000		2	TEMPLATE	
350	273567-0000		1	SHAFT	
360	276301-0000		2	CAP	
370	276307-0000		2	SHIFTER HANDLE	
400	90051-0040		2	KNOB, INTERNAL THREAD, NO. 8308-0627	
410	90051-0059		2	KNOB, EXTERNAL THREAD. NO. 8308-1550	

Machine Type | Group Description | Used-In | Group Number | Page No

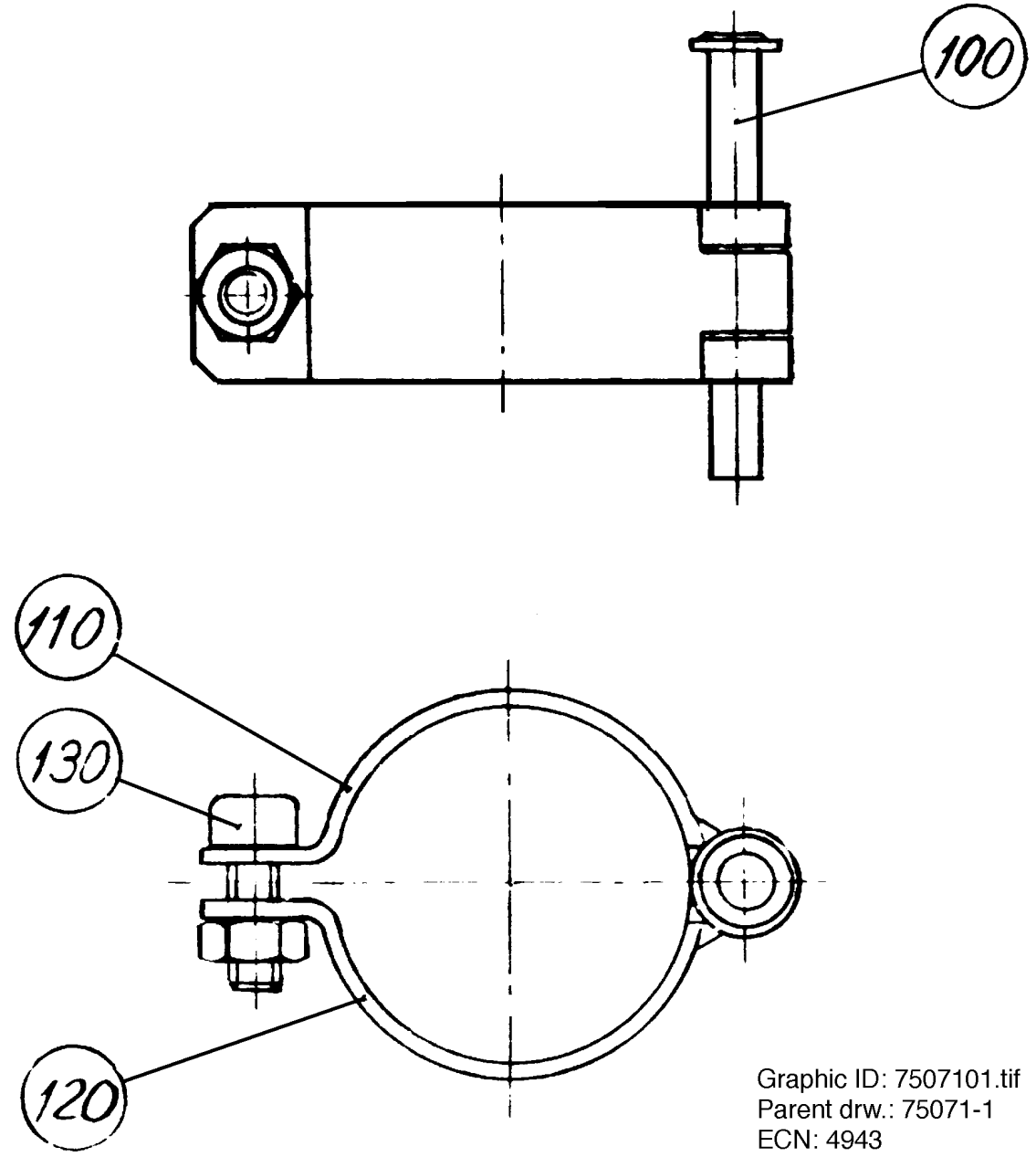

Graphic ID: 7507101.tif
Parent drw.: 75071-1
ECN: 4943

ECM: - -
Group number: 75071-0100
Assembly Drawing: 75071-1_1_AA

Pos	Part No	UN	Qty	Description	Page No
-					
100	74655-0000		1	SHAFT	
110	75069-0000		1	CLAMPING PIECE	
120	75070-0000		1	CLAMPING PIECE	
130	312115-0368		1	SCREW ISO4762 M6X16 A4 80	

Pos	Part No	UN	Qty	Description	Page No

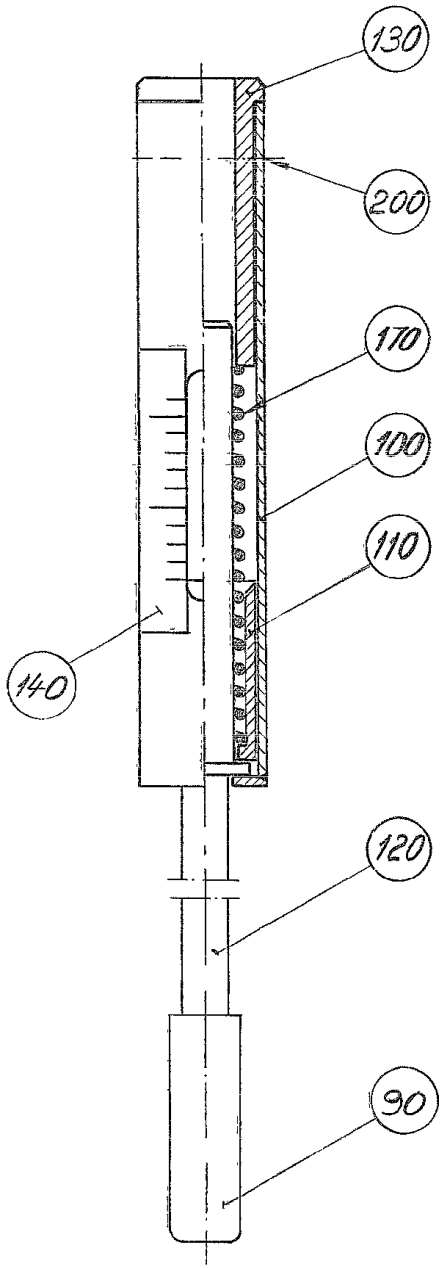
130
200
170
100
110
140
120
90

ECM: 71001 - 19970802
Group number: 74767-0102
Assembly Drawing: 74767-1_1_AA

Pos	Part No	UN	Qty	Description	Page No
-					
090	74912-0000		1	DOWEL	
100	74768-0000		1	SLEEVE	
110	74769-0000		1	SLEEVE	
120	74770-0000		1	ROD	
130	74771-0000		1	STEERING	
140	74772-0000		1	DIAL	
170	107000-0000		1	SPRING	
200	312125-0285		2	SCREW ISO 1207 M4X6 A4	

Pos	Part No	UN	Qty	Description	Page No

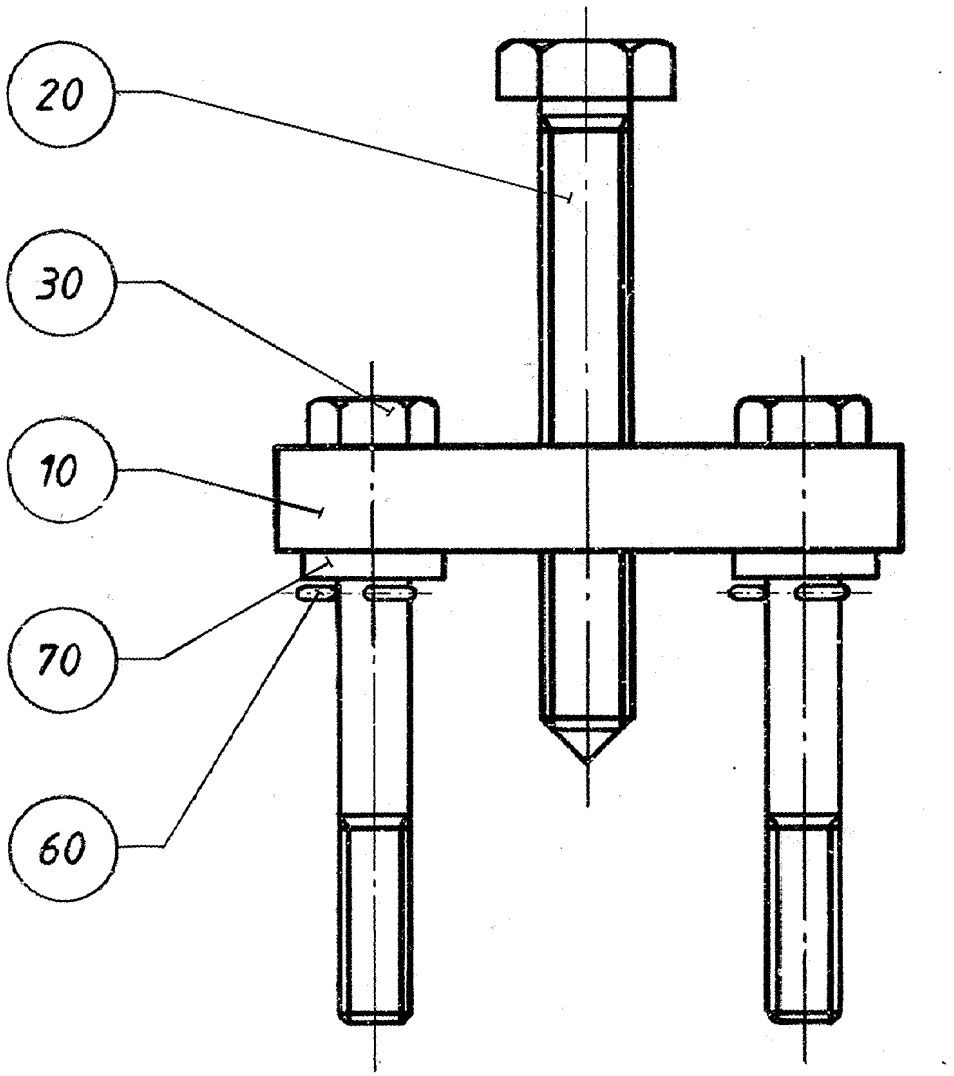
20
30
10
70
60

ECM: - -
Group number: 74305-0100
Assembly Drawing: 74305-1_1_AA

Pos	Part No	UN	Qty	Description	Page No
-					
010	74363-0000		1	FASTENING PLATE	
020	74364-0000		1	EXTRACTOR BOLT	
030	74365-0000		2	SCREW	
060	311411-0152		2	SPLIT PIN SP2X16RFR	
070	315115-0165		2	WASHER PLAIN, TBRB 8,4/16 H=3	

Pos	Part No	UN	Qty	Description	Page No

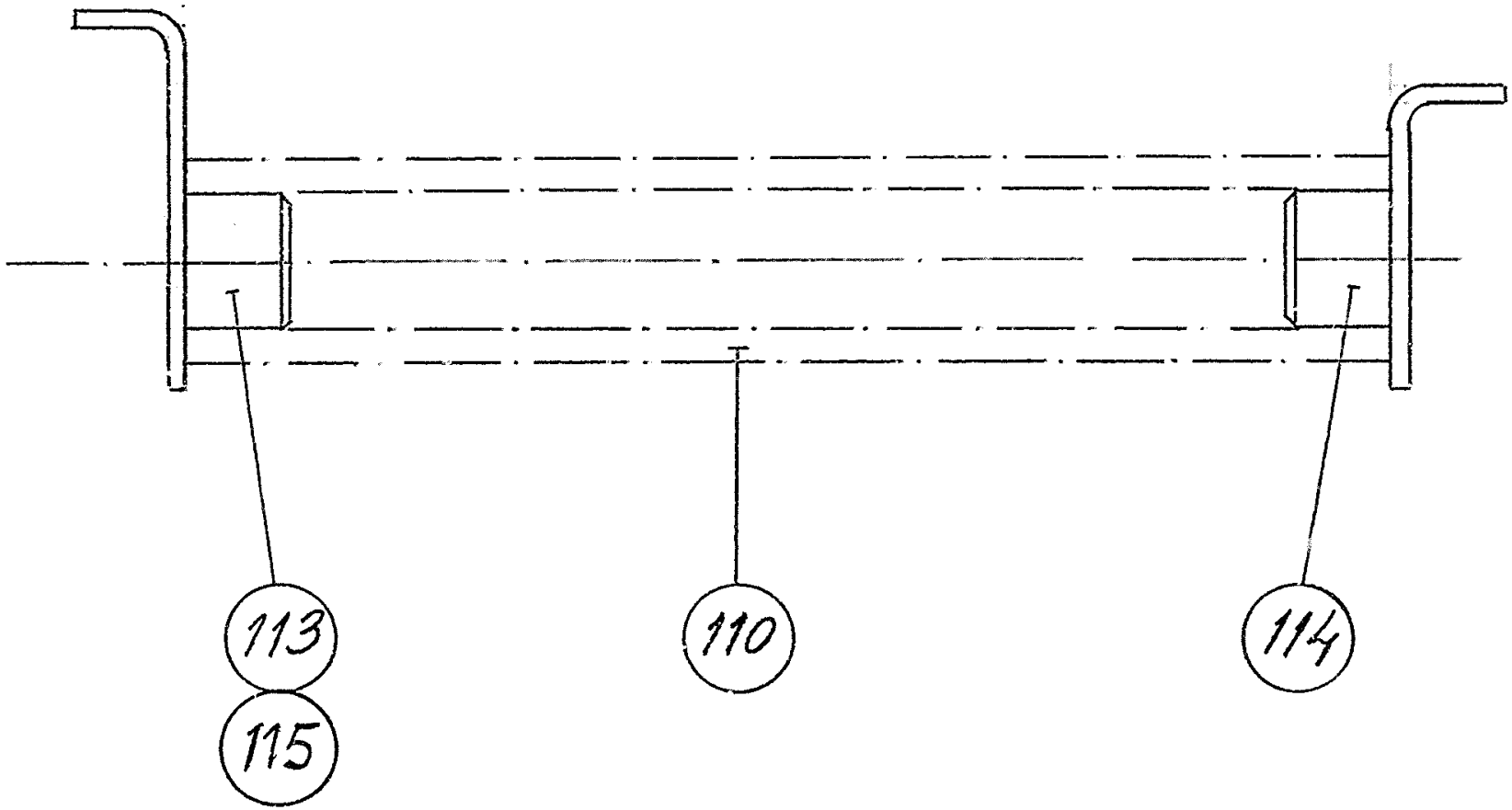
113
115
110
114

ECM: 71001 - 19970802
Group number: 72846-0102
Assembly Drawing: 72846-1_1_AA

Pos	Part No	UN	Qty	Description	Page No
-					
110	72887-0000		1	COMPRESSION SPRING	
114	72888-0002		1	SPRING BRACKET	
115	72888-0003		1	SPRING BRACKET	

Pos	Part No	UN	Qty	Description	Page No

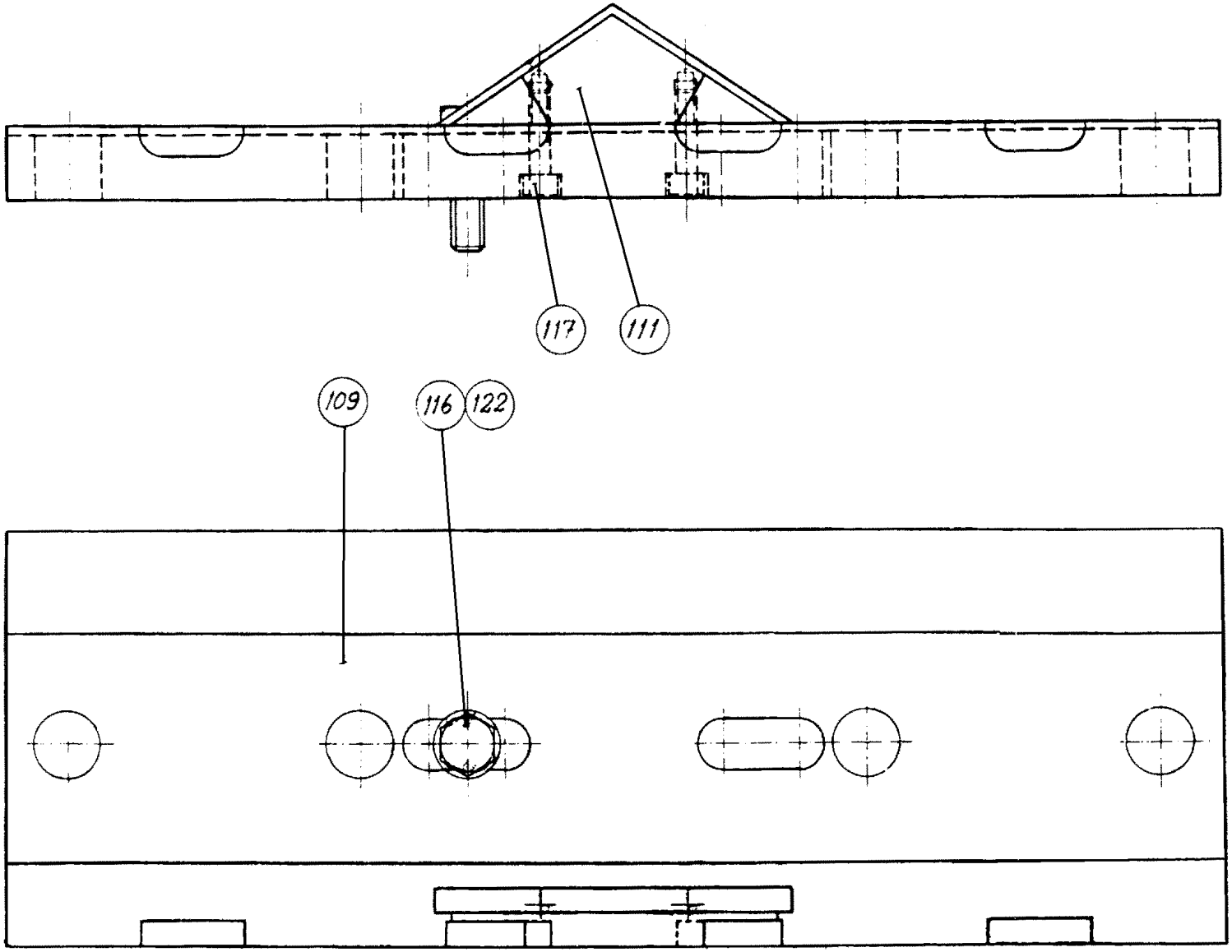

Graphic ID: 7237400.tif
Parent drw.: 72374-0
ECN:

ECM: - -
Group number: 72374-0100
Assembly Drawing: 72374-1_1_AA

Pos	Part No	UN	Qty	Description	Page No
-					
109	72375-0000		1	PLATE	
111	72376-0000		1	GUIDE LUG	
116	312101-0455		1	SCREW M6S M8X30 FZB	
117	312111-0331		2	SCREW HEX.SOCK.HD.MC6S-TT 5X20 88 FZB	
122	315121-0165		1	WASHER PLAIN, TBRSB 8,4/26 H=5	

Pos	Part No	UN	Qty	Description	Page No

Tetra Pak

SPC
Spare Parts Catalogue

Part No	Description	Page No
1013-0000	SHAFT	8-55
1881-0001	COMPRESSION SPRING	1-43, 1-45
2033-0008	WASHER	1-31, 1-33, 1-43, 1-45, 1-75, 1-77, 1-79, 1-81, 1-83, 7-19
2033-0009	WASHER	7-35, 7-41
2487-0000	SPACER ELEMENT	8-17
6161-0000	ROLL	1-37, 13-41
6278-0000	WASHER	5-7, 5-9, 5-33, 5-35, 5-37, 5-53, 5-55
6692-0000	SHAFT	1-65, 1-67, 1-69
7309-0000	HANDLE	1-7, 1-9, 2-133, 2-181, 2-183, 7-17, 12-27, 12-31, 12-81, 12-149, 13-59
10258-0000	COMPRESSION SPRING	8-5, 8-7, 8-21, 8-23, 8-25, 8-27, 8-29, 8-31, 8-33
14600-0000	HOOD	1-65, 1-67, 1-69
14729-0000	NUT	4-131, 4-133, 4-135, 4-137
19262-0000	WASHER	7-31, 7-33
19972-0000	WASHER	4-31, 4-53, 4-55, 12-205, 12-207
20073-0000	ADJUSTING SCREW	1-73
20494-0000	COMPRESSION SPRING	4-139, 4-141
20705-0001	INSULATING PIPE	5-73, 5-75
20718-0000	BEARING	4-45, 4-47, 4-49, 4-51
20770-0000	WASHER	2-177
20772-0000	INSULATOR BODY 70X70X15MM	5-73, 5-75
21394-0700	UPPER FORMING RING	1-3
21397-0000	ROLL	1-31, 1-33, 1-39
21400-0000	FORMING RING	1-75, 1-77, 1-79, 1-81, 1-83
21401-0000	ROLL	1-75, 1-77, 1-79, 1-81, 1-83
21903-0000	ROLL	7-27, 7-35, 7-41
21944-0000	BEARING PANEL	1-73
22462-0000	SHAFT	4-143, 4-147, 12-223, 12-227
22463-0000	ROLL	4-143, 4-147, 12-223, 12-227
22473-0000	ROLLER BRACKET	4-147
22483-0000	FORK	4-45, 4-47, 4-49, 4-51
22485-0000	DOWEL	4-45, 4-47, 4-49, 4-51
22486-0000	DOWEL	4-45, 4-47, 4-49, 4-51
22488-0000	ELBOW PIPE	4-11, 4-13, 4-15, 4-73, 12-199, 12-201, 12-203
22489-0000	ELBOW PIPE	4-17, 4-19, 4-21, 4-73, 12-193, 12-195, 12-197
22504-0000	STOP LUG	4-45, 4-47, 4-49, 4-51
22559-0000	GRUB SCREW	7-37, 7-39
22560-0000	PAPER SUPPORT	7-37, 7-39
23117-0000	TRANSFORMER	2-159, 2-161
23127-0101	TRANSFORMER	2-47
23139-0000	TRANSFORMER 1PH. AUTO 2,1 KVA	9-5, 9-7, 9-9, 9-11, 9-13, 9-15, 9-25, 9-27, 9-29, 9-31, 9-33, 9-45, 9-47, 9-49, 9-51, 9-53, 9-55
23229-0000	BRACKET	4-143, 4-147
23270-0000	BUSHING	3-35
23291-0000	BEARING COVER	4-45, 4-47, 4-49, 4-51
23292-0000	BEARING HOUSING	4-45, 4-47, 4-49, 4-51
23312-0000	BUSHING	4-45, 4-47, 4-49, 4-51
23361-0000	ROLLER BRACKET	4-143
23458-0000	SHAFT	3-9, 3-19
23462-0000	SPACER RING	3-9, 3-19
23580-0000	SHIFTER HANDLE	7-45
23582-0000	HOLDER	1-43, 1-45, 7-45
23583-0000	GUIDE FINGER	1-43, 1-45, 7-45
23584-0000	SCREW	1-43, 1-45, 7-45
23763-0003	SPACER PIPE	5-69, 5-71, 5-77, 5-79
23763-0004	SPACER PIPE	5-69, 5-71, 5-77, 5-79
23763-0005	SPACER PIPE	5-69, 5-71, 5-77, 5-79
23763-0006	SPACER PIPE	5-69, 5-71, 5-77, 5-79
23763-0010	SPACER PIPE	5-69, 5-71, 5-77, 5-79
23765-0001	INSULATING PIPE	5-69, 5-71, 5-77, 5-79, 6-21, 6-25
23765-0002	INSULATING PIPE	5-69, 5-71, 5-77, 5-79
23765-0003	INSULATING PIPE	5-69, 5-71, 5-77, 5-79, 6-21, 6-25
23765-0004	INSULATING PIPE	5-69, 5-71, 5-77, 5-79
23765-0005	INSULATING PIPE	5-69, 5-71, 5-77, 5-79, 6-23
23769-0000	STOP PLATE	5-69, 5-71, 5-77, 5-79
23771-0000	SPACER RING 4X78X1MM	5-73, 5-75
23972-0000	PLUNGER	4-77, 4-79, 4-85, 4-87
24200-0000	COUNTER ROLLER	1-5
24206-0000	BEARING	1-5, 1-13, 1-15, 7-13, 7-47, 12-65
24237-0000	NUT	1-73
24351-0000	BOW CLAMP	1-43, 1-45, 7-45
24352-0000	SHAFT	7-45
24355-0000	DOWEL	1-43, 1-45, 7-45
24356-0000	PIECE	1-43, 1-45, 7-45
24495-0000	FORMING RING	1-75, 1-77, 1-79, 1-81, 1-83
24928-0000	LOCKING RUBBER	1-39, 1-65, 1-67, 1-69
25096-0700	KNIFE HOLDER	4-3, 4-5
25640-0000	CARRIER	4-145, 12-225
25641-0000	REAMED BOLT	4-145, 12-225
25961-0000	ROLL	1-75, 1-77, 1-79, 1-81, 1-83
26075-0000	VOLUME BULGE	4-53, 4-55, 12-205, 12-207
26372-0000	COUNTER CAM	4-49, 4-51
26373-0000	COUNTER CAM	4-45, 4-47
26423-0000	LACE	4-143, 4-147
26425-0000	LACE	4-131, 4-133, 4-135, 4-137

Part No	Description	Page No
26426-0000	LACE	4-45, 4-47, 4-49, 4-51
26642-0200	CARRIER	4-143, 4-147, 12-223, 12-227
26760-0000	LOCATING PIECE	4-139, 4-141
27171-0000	WASHER	4-73
28036-0000	WASHER	1-75, 1-77, 1-79, 1-81, 1-83, 3-11, 3-21, 13-11
28037-0000	WASHER	1-43, 1-45, 5-133, 5-135
28334-0000	CURVE ROLLER	3-41, 3-43
28833-0000	TRIMMING ROLLER PLUS	12-243
28834-0000	TRIMMING ROLLER MINUS	12-243
28880-0000	PLUNGER	4-11, 4-13, 4-15, 4-17, 4-19, 4-21, 4-77, 4-79, 4-85, 4-87, 12-193, 12-195, 12-197, 12-199, 12-201, 12-203
29411-0000	SPACER PIPE	5-73
29413-0000	LACE	5-73, 5-75
29886-0000	LACE	4-139, 4-141
30310-0001	FF HEATING ELEMENT TOP	5-73
30310-0002	FF HEATING ELEMENT TOP	5-73
30310-0003	FF HEATING ELEMENT TOP	5-73
30311-0001	FF HEATINGELEMENT BUTTOM KANTHAL 2333-02	5-75
30311-0002	FF HEATINGELEMENT BUTTOM KANTHAL 2333-02	5-75
31017-0000	KNIFE	12-91
31390-0100	FF-ELEMENT TOP	5-69, 5-71, 5-77, 5-79
31390-0110	FF-ELEMENT BOTTOM	5-69, 5-71, 5-77, 5-79
31417-0000	LINK	7-31, 7-33
31418-0000	SHAFT	7-31, 7-33
31419-0000	SHAFT	7-31, 7-33
31420-0000	WASHER	7-31, 7-33
31423-0000	MOUNTING LUG	7-31, 7-33
31424-0000	ROLLER BRACKET	7-31, 7-33
31553-0002	WASHER	5-121, 5-157, 6-9
31653-0001	SHEET	5-73
31653-0002	FIX PLATE 39X85X0,5MM	5-75
31723-0000	TEFLON STRIP	12-91
31724-0000	LOCK BAR	12-91
31837-0000	SPRING HOUSING	4-139, 4-141
31838-0000	PLUNGER	4-139, 4-141
32079-0000	WASHER	8-69, 8-71, 8-73
32203-0000	LEAD	1-35
32204-0000	HOLDER	1-35
32205-0000	HOLDER	1-35
32206-0000	ATTACHMENT	1-35
32213-0000	WASHER	1-35, 7-37, 7-39
32214-0000	HOLDER	1-35
32215-0000	HOLDER	1-35, 7-37, 7-39
32217-0000	BOTTOM SECTION	1-35, 7-37, 7-39
32219-0000	WASHER	1-35, 7-37, 7-39
32221-0000	CANTILEVER	1-35
32223-0000	BEARING	1-35, 7-37, 7-39
32400-0000	HOLDER	7-37, 7-39
32451-0000	AIR DUCT	7-37, 7-39
32452-0000	MANTLE	1-35
32453-0000	MANTLE	1-35, 7-37, 7-39
32462-0000	SHAFT	4-145, 12-225
32463-0000	BEARING	4-143, 4-147, 12-223, 12-227
32464-0000	SHAFT	4-77, 4-79, 4-85, 4-87, 13-151
32468-0000	OPERATING ROD	4-143, 4-147, 12-223, 12-227
32474-0000	ATTACHMENT	7-37, 7-39
32477-0000	CLAMPING PIECE	1-55
32494-0000	OPERATING ROD	4-143, 4-147
32629-0000	SPROCKET	8-21, 8-23, 8-25, 8-27, 8-29, 8-31, 8-33, 12-53, 12-55, 12-67, 12-69, 12-71, 12-73
32630-0000	SPROCKET	8-5, 8-7, 8-21, 8-23, 8-25, 8-27, 8-29, 8-31, 8-33, 12-67, 12-69, 12-71, 12-73
32634-0001	WASHER	12-53, 12-55, 12-67, 12-69, 12-71, 12-73
32634-0004	WASHER	12-67, 12-69, 12-71, 12-73
32668-0000	ARM	7-37, 7-39
32691-0000	LOCK SPRING	8-11, 8-35, 8-37, 12-59, 12-77, 12-79
32925-0000	CARRIER	8-5, 8-7, 8-21, 8-23, 8-25, 8-27, 8-29, 8-31, 8-33, 12-53, 12-55, 12-67, 12-69, 12-71, 12-73
32926-0000	ROLL	8-5, 8-7, 8-21, 8-23, 8-25, 8-27, 8-29, 8-31, 8-33, 12-53, 12-55, 12-67, 12-69, 12-71, 12-73
32957-0000	SCREW	4-131, 4-133, 4-135, 4-137
33010-0000	SCREW	8-9, 8-39, 12-57, 12-75
33011-0000	SLEEVE	8-11, 8-35, 8-37, 12-59, 12-77, 12-79
33150-0000	GUIDE STUD	4-113, 4-115, 12-175, 12-177
33152-0000	STOPPER	4-113, 4-115, 12-175, 12-177
33182-0000	ROLL	8-5, 8-7, 8-21, 8-23, 8-25, 8-27, 8-29, 8-31, 8-33, 12-53, 12-55, 12-67, 12-69, 12-71, 12-73
33183-0000	SPRING	8-5, 8-7, 8-21, 8-23, 8-25, 8-27, 8-29, 8-31, 8-33, 12-53, 12-55, 12-67, 12-69, 12-71, 12-73
33261-0000	SPRING PLATE	5-121, 5-157, 6-9
33408-0000	BEARING	4-143, 4-147, 12-223, 12-227, 13-147
33409-0000	SCREW	4-45, 4-47, 4-49, 4-51
33442-0000	ROLL	1-31, 1-33
33577-0000	CANTILEVER	1-55, 7-9
33648-0000	HOLDER	1-43, 1-45
35547-0000	SPRING	8-9, 8-39, 12-57, 12-75
35553-0001	SPACER	1-55
35768-0000	SHAFT	1-37
35827-0000	BRACKET	3-35
35849-0000	FLANGE	1-49, 1-51, 1-53

Part No	Description	Page No
35962-0000	LID	2-135
36133-0000	BUSHING	4-53, 4-55, 12-205, 12-207
36749-0000	MANTLE	7-37, 7-39
36753-0000	RING	4-139, 4-141
36804-0000	ARM	1-17, 1-19, 1-21
36805-0000	LINK	1-17, 1-19, 1-21
36806-0000	CLAMPING ELEMENT	1-17, 1-19, 1-21
36816-0000	LINK	1-17, 1-19, 1-21
36817-0000	CLAMPING ELEMENT	1-17, 1-19, 1-21, 1-25
36860-0000	FILLER TUBE	1-65, 1-67, 1-69
36885-0000	CRANK ARM	3-27
36934-0003	ROLL	1-31, 1-33, 1-39
36935-0003	TRIMMING ROLLER PLUS	12-243
36936-0003	TRIMMING ROLLER MINUS	12-243
36938-0004	ROLL	1-75, 1-77, 1-79, 1-81, 1-83
36939-0004	EDGE ROLLER	1-75, 1-77, 1-79, 1-81, 1-83
36943-0001	ROLL	1-43, 1-45
36944-0001	ROLL	1-43, 1-45
36945-0001	ROLL	1-43, 1-45
36953-0010	ROLL	1-5, 1-11, 1-23
37070-0000	SPRING	4-101, 4-103, 4-105, 4-107
37071-0000	WASHER	4-101, 4-103, 4-105, 4-107
37097-0000	CARRIER	3-31, 3-33
37258-0000	BUSHING	4-143, 4-147
37296-0000	ARM	1-17, 1-19, 1-21
37535-0000	SUPPORTING PART 56X56X31,5MM	5-73, 5-75
37536-0000	INSULATOR BODY LOWER 70X70X15MM	5-73, 5-75
37537-0000	SPACER RING LOWER 72X78X1MM	5-73, 5-75
37768-0000	THERMOCOUPLE CR-AL	7-37, 7-39
37774-0000	PROTECTIVE COVER	12-85
37775-0000	LAMP HOLDER	12-85
37782-0000	THROTTLE	1-17, 1-19, 1-21
37877-0301	HEATING BLOCK	12-51
37879-0000	LOCKING ARM	12-91
37880-0000	HINGE	12-91
37882-0000	PROTECTION PLATE	12-91
37883-0000	LOCK BAR	12-91
37884-0000	SHAFT	12-91
37885-0000	TENSION SPRING	12-91
37886-0000	INSULATING DISK	12-91
37888-0000	ROLL	12-91
37889-0000	SHAFT	12-91
37890-0000	FLANGE ROLLER	12-91
37892-0000	CONNECTION BOX	12-91
37893-0000	LID	12-91
37894-0101	COUNTER RAIL	12-51
37895-0000	RAIL	12-89
37896-0000	DOWEL	12-89
37897-0000	WASHER	12-89
37900-0000	KNIFE	12-87
37901-0000	SHAFT	12-87
37906-0000	SHEET	12-85
37907-0000	SHEET	12-85
37908-0000	PLATE	12-85
37909-0000	SPRING	12-85
37910-0000	LOCK	12-85
37911-0000	LACE	12-85
37912-0000	LOCK PLATE	12-85
37913-0000	RULER	12-85
37914-0000	RULER	12-85
37915-0000	RULER	12-85
37944-0000	RULER	12-85
37946-0000	RULER	12-85
37947-0000	RULER	12-85
38087-0000	WASHER	2-131
38467-0000	SPRING	4-113, 4-115, 12-175, 12-177
38603-0002	SPACER	4-101, 4-103, 4-105, 4-107
38630-0001	COUNTER ROLLER	1-31, 1-33, 1-39
38630-0005	COUNTER ROLLER	1-31, 1-33, 1-39
42504-1000	EL CABINET, TB/8-1002.	9-3
42505-1000	MACHINE, TB/8-1002.	9-3
42506-1000	ELECTRICAL DOCUMENT, TB/8-1002.	9-3
42507-1000	SOFTWARE, TB/8-1002.	9-3
42508-1000	EXTRA EQUIPMENT, TB/8-1002.	9-3
42509-1000	SPARE PARTS, TB/8-1002.	9-3
42510-1000	CONTROL PANEL, TB/8-1002.	9-3
42511-1000	SIDE PROTECTION, TB/8-1002.	9-3
42869-1000	EL CABINET, TB/8-1003.	9-3
42870-1000	MACHINE, TB/8-1003.	9-3
42871-1000	ELECTRICAL DOCUMENT, TB/8-1003.	9-3
42872-1000	SOFTWARE, TB/8-1003.	9-3
42873-1000	EXTRA EQUIPMENT, TB/8-1003.	9-3
42874-1000	SPARE PARTS, TB/8-1003.	9-3
42875-1000	CONTROL PANEL, TB/8-1003.	9-3

Part No	Description	Page No
42876-1000	SIDE PROTECTION, TB/8-1003.	9-3
47832-0101	DCS8,DESIGN CONTR.PROG.	9-5, 9-7, 9-9, 9-11, 9-13, 9-15, 9-25, 9-27, 9-29, 9-31, 9-33, 9-45, 9-47, 9-49, 9-51, 9-53, 9-55
47836-0101	TUBUS ENER.& POW.CONTROL	9-5, 9-7, 9-9, 9-11, 9-13, 9-15, 12-235, 12-237
47836-0201	TEPC, TUBUS ENERGY AND POWER CONTROL	9-45, 9-47, 9-49, 9-51, 9-53, 9-55, 13-141
48393-0201	DCS8+	13-203
48731-0101	PMS, PRESSURE MONITORING SYSTEM	14-7
67267-1000	EL CABINET, TB/8-1001.	9-3
67268-1000	MACHINE, TB/8-1001.	9-3
67269-1000	ELECTRICAL DOCUMENT, TB/8-1001.	9-3
67270-1000	SOFTWARE, TB/8-1001.	9-3
67271-1000	EXTRA EQUIPMENT, TB/8-1001.	9-3
67369-0102	RACK WALLMOUNTED 84TE	9-5, 9-7, 9-9, 9-11, 9-13, 9-15, 9-25, 9-27, 9-29, 9-31, 9-33, 9-45, 9-47, 9-49, 9-51, 9-53, 9-55
67372-0101	BACKPLANE 8TE(32 POLE)	9-5, 9-7, 9-9, 9-11, 9-13, 9-15, 9-25, 9-27, 9-29, 9-31, 9-33, 9-45, 9-47, 9-49, 9-51, 9-53, 9-55, 12-235, 12-237
67520-1000	SPARE PARTS, TB/8-1001.	9-3
68378-1000	CONTROL PANEL, TB/8-1001.	9-3
68444-0101	SHUNT RESISTOR FOR SSR	9-5, 9-7, 9-9, 9-11, 9-13, 9-15, 9-25, 9-27, 9-29, 9-31, 9-33, 9-45, 9-47, 9-49, 9-51, 9-53, 9-55
68910-1000	SIDE PROTECTION, TB/8-1001.	9-3
68917-0100	ANGLE INDICATOR	2-127
72374-0100	TEMPLATE	14-5
72375-0000	PLATE	14-53
72376-0000	GUIDE LUG	14-53
72846-0102	COMPRESSION SPRING	14-5
72887-0000	COMPRESSION SPRING	14-51
72888-0002	SPRING BRACKET	14-51
72888-0003	SPRING BRACKET	14-51
72947-0000	HOOK SPANNER	10-9
74305-0100	PULLER	14-5
74363-0000	FASTENING PLATE	14-49
74364-0000	EXTRACTOR BOLT	14-49
74365-0000	SCREW	14-49
74387-0000	HOOK SPANNER	10-9
74655-0000	SHAFT	14-45
74767-0102	DYNAMOMETER	14-5
74768-0000	SLEEVE	14-47
74769-0000	SLEEVE	14-47
74770-0000	ROD	14-47
74771-0000	STEERING	14-47
74772-0000	DIAL	14-47
74912-0000	DOWEL	14-47
75069-0000	CLAMPING PIECE	14-45
75070-0000	CLAMPING PIECE	14-45
75071-0100	CLAMPING PIECE	14-5
75100-0300	SETTING TOOL	14-5
75105-0200	ASSEMBLY TOOL	14-5
76138-0000	LOCKING LOOP	10-9, 14-5
78073-0100	SPLICE TEST PLIERS	10-3
78074-0000	OUTER JAW,LEFT	10-5
78075-0000	OUTER JAW,RIGHT	10-5
78076-0000	INNER JAW,LEFT	10-5
78077-0000	INNER JAW,RIGHT	10-5
78078-0000	UPPER GRIP	10-5
78079-0000	LOWER GRIP	10-5
78080-0000	HANDLE	10-5
78081-0000	BRACKET	10-5
78083-0000	CENTER PIN	10-5
78085-0000	SPRING HOLD PIN	10-5
79001-0000	TEMPLATE	14-29
79002-0000	TEMPLATE	14-29
90001-0028	WALL SOCKET OUTLET REPL.BY 90001-33	9-5, 9-7, 9-9, 9-11, 9-13, 9-15, 9-25, 9-27, 9-29, 9-31, 9-33, 9-45, 9-47, 9-49, 9-51, 9-53, 9-55
90002-0004	BLANK-OFF PLUG, PR 22,5 SKINDICHT-BLK16	2-21, 2-45, 2-77, 2-91, 2-117, 2-119, 8-61, 8-63, 8-65, 13-27
90002-0009	BLANK-OFF PLUG, PR 18.6 SKINDICHT-BLK11	2-21, 2-45, 2-77, 2-91, 2-117, 2-119, 2-147, 8-61, 8-63, 8-65, 13-27
90002-0010	BLANK-OFF PLUG, PR 37 SKINDICHT-BLK29	2-21, 2-77, 2-117, 2-119, 2-185, 13-27
90002-0012	BLANK-OFF PLUG, PR 28,3 SKINDICHT-BLK21	2-77, 2-91, 2-185, 8-67
90002-0013	BLANK-OFF PLUG, PR 15,2 SKINDICHT-BLK9	2-21, 2-45, 2-77, 2-85, 2-87, 2-91, 2-117, 2-119, 2-163, 6-67, 7-11, 8-67, 13-27
90002-0014	BLIND PLUG D=22,5MM	9-5, 9-7, 9-9, 9-11, 9-13, 9-15, 9-25, 9-27, 9-29, 9-31, 9-33, 9-45, 9-47, 9-49, 9-51, 9-53, 9-55
90002-0016	BLANK-OFF PLUG PR 20.4 SKINDICHT-BLK13,5	2-85, 2-87
90005-0007	BONDED SEAL SS/NBR M8	4-93, 4-95
90005-0010	BONDED SEAL SS/NBR M5	12-97, 12-99
90005-0011	WASHER,PL.RND.CU.10/14,H=1,5	12-121
90005-0012	WASHER,PL.RND.CU.13,5/17,H=1,5	12-121
90005-0060	WASHER PLAIN, RBS 6,4/M6)/18,H=1,5	7-19
90005-0082	WASHER PLAIN ROUND 4,3(M4)/12,H=1	7-15, 7-17, 7-21, 7-23
90007-0100	CIRCUIT BREAKER, CF2 Z100-1-90007-100	2-47
90007-0101	FUSE,	2-47, 2-159, 2-161
90007-0129	CIRCUIT BREAKER, 1P 10 A K	9-5, 9-7, 9-9, 9-11, 9-13, 9-15, 9-25, 9-27, 9-29, 9-31, 9-33, 9-45

Part No	Description	Page No
		9-47, 9-49, 9-51, 9-53, 9-55
90007-0131	CIRCUIT BREAKER, 1P 16 A K	9-5, 9-7, 9-9, 9-11, 9-13, 9-15, 9-25, 9-27, 9-29, 9-31, 9-33, 9-45
		9-47, 9-49, 9-51, 9-53, 9-55, 13-221
90007-0147	CIRCUIT BREAKER, 3P 10 A K	9-5, 9-7, 9-9, 9-11, 9-13, 9-15, 9-25, 9-27, 9-29, 9-31, 9-33, 9-45
		9-47, 9-49, 9-51, 9-53, 9-55
90007-0148	CIRCUIT BREAKER, 3P 16 A K	12-235, 12-237
90012-0049	CABLE GLAND, STR13,5, PR20,4/PG13,5	6-67
90012-0061	GLAND	2-21, 2-45, 2-77, 2-91, 2-117, 2-119, 6-67, 13-27
90012-0063	CABLE GLAND PR 21,2	2-21, 2-77, 2-117, 2-119, 2-149, 2-151, 2-163, 2-173, 2-179, 12-163, 13-27, 13-29
90012-0071	GLAND FITTING	5-7, 5-9, 5-35, 5-37, 6-67
90012-0072	GLAND FITTING	5-7, 5-9, 5-35, 5-37, 6-67
90012-0073	GLAND FITTING	5-17
90012-0079	GLAND FITTING	6-67
90012-0137	GLAND, EXTENDED WITH INSERT, PG11	1-49, 1-51, 1-53, 8-61, 8-63, 8-65
90012-0148	SPACER	6-67
90015-0010	BUSHING	2-37, 2-39, 2-41, 2-85, 2-87, 12-39, 12-41, 12-83
90015-0011	BUSHING	2-37, 2-39, 2-41, 2-85, 2-87, 12-105
90015-0020	LEAD-IN, TET5-7, E-1458016	5-7, 5-9, 5-35, 5-37
90015-0021	LEAD-IN, TET10-14, E-1458023	2-37, 2-39, 2-41, 2-85, 2-87
90016-0040	DISC SPRING, CONICAL 20X10,2X0,8 MM	12-47
90017-0001	BIKE HANDLE	12-87, 12-91
90017-0009	HANDLE, SWIVWLLING, SIZE32 /M12 THREAD	3-27
90020-0028	SLEEVE	1-63
90024-0031	POWER LINE FILTER, 75 A 230/400 VAC	9-5, 9-7, 9-9, 9-11, 9-13, 9-15, 9-25, 9-27, 9-29, 9-31
		9-33, 9-45, 9-47, 9-49, 9-51, 9-53, 9-55
90024-0036	FILTERED TERMINAL BLOCK	9-5, 9-7, 9-9, 9-11, 9-13, 9-15, 9-25, 9-27, 9-29, 9-31, 9-33, 9-45
		9-47, 9-49, 9-51, 9-53, 9-55
90024-0047	FERRITE, 28B1020-100	13-221
90025-0016	ENCODER MODULE TPMC	9-5, 9-7, 9-9, 9-11, 9-13, 9-15, 9-25, 9-27, 9-29, 9-31, 9-33, 9-45, 9-47
		9-49, 9-51, 9-53, 9-55
90025-0017	INPUT MODULE TPMC	9-5, 9-7, 9-9, 9-11, 9-13, 9-15, 9-25, 9-27, 9-29, 9-31, 9-33, 9-45, 9-47
		9-49, 9-51, 9-53, 9-55, 12-235, 12-237, 13-203, 13-221
90025-0022	RACK TERMINATION TPMC	9-5, 9-7, 9-9, 9-11, 9-13, 9-15, 9-25, 9-27, 9-29, 9-31, 9-33, 9-45
		9-47, 9-49, 9-51, 9-53, 9-55
90025-0024	TERMINAL BLOCK, 491168307	9-5, 9-7, 9-9, 9-11, 9-13, 9-15, 9-25, 9-27, 9-29, 9-31, 9-33, 9-45
		9-47, 9-49, 9-51, 9-53, 9-55, 12-235, 12-237, 13-203
90025-0025	TERMINAL BLOCK ENCODER TPMC	9-5, 9-7, 9-9, 9-11, 9-13, 9-15, 9-25, 9-27, 9-29, 9-31, 9-33
		9-45, 9-47, 9-49, 9-51, 9-53, 9-55
90025-0052	MAIN RACK COMPAKT (MCR)	9-5, 9-7, 9-9, 9-11, 9-13, 9-15, 9-25, 9-27, 9-29, 9-31, 9-33, 9-45
		9-47, 9-49, 9-51, 9-53, 9-55
90025-0053	OUTPUT MODULE TPMC OM16	9-5, 9-7, 9-9, 9-11, 9-13, 9-15, 9-25, 9-27, 9-29, 9-31, 9-33, 9-45
		9-47, 9-49, 9-51, 9-53, 9-55
90025-0054	KUPPL.SOCKEL MSTB 2,5-5,08 FÃ¼R 90025-53	9-5, 9-7, 9-9, 9-11, 9-13, 9-15, 9-25, 9-27, 9-29
		9-31, 9-33, 9-45, 9-47, 9-49, 9-51, 9-53, 9-55
90025-0055	POWER SUPPLY UNIT TPMC PS32	9-5, 9-7, 9-9, 9-11, 9-13, 9-15, 9-25, 9-27, 9-29, 9-31, 9-33
		9-45, 9-47, 9-49, 9-51, 9-53, 9-55
90025-0058	EXPANSIONS RACK COMPACT-8	9-5, 9-7, 9-9, 9-11, 9-13, 9-15, 9-25, 9-27, 9-29, 9-31, 9-33
		9-45, 9-47, 9-49, 9-51, 9-53, 9-55
90025-0070	PROCESSOR TPMC CPU 64.1	9-5, 9-7, 9-9, 9-11, 9-13, 9-15, 9-25, 9-27, 9-29, 9-31, 9-33, 9-45
		9-47, 9-49, 9-51, 9-53, 9-55
90025-0088	PANEL INTERFACE CU64.1	9-21, 9-41, 9-61
90025-0094	TERMINAL BLOCK 4-POLE	9-5, 9-7, 9-9, 9-11, 9-13, 9-15, 9-25, 9-27, 9-29, 9-31, 9-33, 9-45, 9-47
		9-49, 9-51, 9-53, 9-55
90028-0001	CONE 5/32"	5-33, 5-53, 5-55, 5-67, 5-81, 5-83, 5-133, 5-135
90028-0020	CONE TUBE 2,5MM	2-179, 3-35, 3-37, 3-39, 3-41, 3-43, 4-31, 4-33, 4-35, 4-37, 4-39, 4-41, 4-43
		4-45, 4-47, 4-49, 4-51, 4-53, 4-55, 4-101, 4-103, 4-105, 4-107, 4-131, 4-133, 4-135, 4-137, 4-139
		4-141, 5-25, 5-27, 5-29, 5-33, 5-41, 5-43, 5-45, 5-47, 5-49, 5-51, 5-53, 5-55, 5-81, 5-83, 6-29, 12-205
		12-207, 12-213, 12-277, 12-279
90028-0021	CONE TUBE 4 MM	2-179, 4-33, 4-35, 4-37, 4-39, 4-41, 4-43, 4-45, 4-47, 4-49, 4-51, 4-101, 4-103
		4-105, 4-107, 4-131, 4-133, 4-135, 4-137, 4-139, 4-141, 5-29, 5-33, 5-49, 5-51, 5-53, 5-55, 5-81, 5-83
90028-0022	CONE TUBE 6 MM	2-179, 3-35, 5-7, 5-9, 5-25, 5-27, 5-35, 5-37, 5-41, 5-43, 5-45, 5-47
90028-0024	CONE TUBE 4 MM	2-179, 3-35
90028-0025	CONE TUBE 6 MM	2-179, 3-35, 5-25, 5-27, 5-29, 5-33, 5-41, 5-43, 5-45, 5-47, 5-49, 5-51, 5-53
		5-55, 5-81, 5-83, 6-29
90030-0030	CONN. BULKHEAD SV 12-L/SY	2-85, 2-87
90030-0066	CONN. BULKHEAD SV 6-L/SY	2-37, 2-39, 2-41, 2-85, 2-87
90030-0067	CONN. BULKHEAD SV 8-L/SY	2-37, 2-39, 2-41, 2-85, 2-87
90030-0076	CONN. T-PIPE T-6	2-157
90030-0091	CONN. PIPE G-8	2-137, 2-139
90030-0098	ACCESSORIES, FERRULE 8	4-11, 4-13, 4-15, 4-17, 4-19, 4-21, 4-23, 4-25, 4-27, 4-29, 4-73
		12-193, 12-195, 12-197, 12-199, 12-201, 12-203, 12-215, 12-217, 12-219, 12-221, 13-7, 13-9, 13-99
		13-101, 13-103, 13-105
90030-0107	CONN. STR. 6-1/8 NPT, EXT. TAPPERED	5-67
90030-0115	CONN. ELBOW WA 12-R3/8	2-23, 2-79
90030-0116	NIPPLES, REDUCING, EXT. THR. NO. 2520	12-39, 12-41
90030-0120	ADJ. L-PIPE CONNECTION EVL, INT.T-10	2-173, 2-175, 13-29
90030-0121	CONN. ELBOW ADJ.,INT 10	2-169, 2-173, 2-175, 13-29
90030-0146	ADJUSTABLE ELBOW CONNECTION,EXT 6-G1/8	2-173, 2-175, 13-29
90030-0155	CONN. STR., 8-R3/8, EXT. THREAD	2-35, 2-121, 2-123, 12-167, 13-15, 13-97
90030-0157	CONN. STR. 10-R3/8, EXT. THREAD	2-35, 2-121, 2-123, 2-169, 2-171, 2-173, 2-175, 12-167
		13-15, 13-29, 13-97
90030-0159	CONN. BULKHEAD SV 15-L/SY	2-37, 2-39, 2-41, 2-85, 2-87, 2-137, 2-139
90030-0160	CONN. BANJO, 8-G1/4	12-97, 12-99
90030-0162	CONN. STR. 6-M10X1, EXT. THREAD	3-41, 3-43

Part No	Description	Page No
90030-0172	NUT M8 "REPL.BY 342703-208"	4-11, 4-13, 4-15, 4-17, 4-19, 4-21, 4-73, 12-193, 12-195, 12-197, 12-199, 12-201, 12-203
90030-0178	CONN. STR., 10-R1/4, EXT. THREAD	2-169
90030-0179	CONN. BULKHEAD SV 22-L/SY	2-37, 2-39, 2-41, 2-85, 2-87
90030-0183	NIPPLES, EXT. THREAD, HEXAGON, R1/2XR1/4	2-171
90030-0187	CONN. STR. GA-12-G3/8	2-23
90030-0201	CONN. STR., 8-R1/4, EXT. THREAD	4-11, 4-13, 4-15, 4-17, 4-19, 4-21, 4-77, 4-79, 4-85, 4-87, 12-193, 12-195, 12-197, 12-199, 12-201, 12-203
90030-0222	CONN. ELBOW, 6-1/8 NPT, EXT.THREAD	5-67
90030-0265	HOLLOW SCREW, 1631-01-1/4 OR 2661-1/4	4-97, 4-99
90030-0266	HOLLOW SCREW, 1631-02-1/4 OR 2651-1/4	4-97, 4-99
90030-0594	REDUCING ADAPTER	2-173, 12-163, 13-29
90032-0034	DISTR. BLOCK & DIST.5/16-24UNF X8	5-133, 5-135
90032-0035	DISTR. BLOCK & DIST.5/16-24UNF X8	5-67
90032-0038	BLOCK 2 WAYS	2-179, 3-37, 3-39, 4-45, 4-47, 4-49, 4-51, 4-101, 4-103, 4-105, 4-107, 5-25, 5-27, 5-41, 5-43, 5-45, 5-47
90032-0039	BLOCK 4 WAYS	3-35, 3-41, 3-43, 4-33, 4-35, 4-37, 4-39, 4-41, 4-43, 4-131, 4-133, 4-135, 4-137, 4-139, 4-141, 5-33, 5-53, 5-55, 5-81, 5-83, 6-29
90032-0040	BLOCK 6 WAYS	4-131, 4-133, 4-135, 4-137, 5-29, 5-49, 5-51, 5-81, 5-83, 6-29
90032-0043	DISTRIBUTION BLOCK 3 WAYS	2-179, 3-35
90032-0044	DISTRIBUTION BLOCK 4 WAYS	2-179, 5-7, 5-9, 5-25, 5-27, 5-35, 5-37, 5-41, 5-43, 5-45, 5-47
90032-0046	DISTRIBUTION BLOCK 6 WAYS	2-179
90036-0009	LIGHT BULB, BA15D 24V	12-47, 12-85
90036-0035	LIGHT BULB, E27 24V	12-49
90036-0038	LIGHT BULB, E27 24V	2-167
90036-0057	LIGHT BULB, BA9S 28V	9-19, 9-39, 9-59
90036-0068	BULB 6.5W 24V	13-245
90037-0001	LAMPHOLDER	12-85
90038-0024	RECTIFIER, 10/22A SKD 50/04A3	9-5, 9-7, 9-9, 9-11, 9-13, 9-15, 9-25, 9-27, 9-29, 9-31, 9-33, 9-45, 9-47, 9-49, 9-51, 9-53, 9-55
90039-0014	GUIDE SPROCKET	12-33
90042-0042	SOLENOID VALVE MECMAN 48VDC	12-39, 12-41
90042-0074	SOLENOID VALVE MECMAN 581-211-100	12-39, 12-41
90042-0172	SOLENOID VALVE 4023/1005/1032 24VDC	2-149, 2-151
90042-0215	VALVE BODY 5/2 UNISTABLE	2-27, 2-29, 2-31, 2-81, 2-83, 12-159, 12-263, 13-117, 13-163
90042-0221	VALVE BODY 5/2 BISTABLE	2-81, 2-83
90042-0260	SOLENOID VALVE BÃ¼RKERT 048 696 F	2-7
90042-0345	COIL 24V DC	13-179
90042-0392	CONTACT 2 POLE + EARTH	13-179
90042-0398	CONTACT 3 POLE+EARTH	2-173, 12-163, 13-29
90042-0481	CONNECTION TABLE 583-471-000 MECMAN	2-149, 2-151
90042-0519	BLANK PLATE ISO SIZE 1	2-27, 2-29, 2-31, 2-81, 2-83, 13-171
90042-0520	BASE PLATE ISO SIZE 1	2-27, 2-29, 2-31, 2-81, 2-83
90042-0522	PORTED END PIECE ISO SIZE 1	2-27, 2-29, 2-31, 2-81, 2-83
90042-0527	SEAL KIT PILOT VALVE	2-27, 2-29, 2-31, 2-81, 2-83, 12-159, 13-117
90042-0528	BLANKING KIT SEALS ISO SIZE 1	2-27, 2-29, 2-31, 2-81, 2-83, 12-159
90042-0532	BASE PLATE ISO SIZE 1	2-27, 2-29, 2-31, 2-81, 2-83
90042-0535	TERMINAL BOARD 19 CORDS	2-27, 2-29, 2-31, 2-81, 2-83, 2-149, 2-151
90042-0536	PILOT CABLE MECMAN 440-728-000-1	2-149, 2-151
90042-0538	PILOT VALVE L=500MM	2-27, 2-29, 2-31, 2-81, 2-83, 12-263, 13-163
90042-0539	PILOT VALVE L=350MM	2-27, 2-29, 2-31, 2-81, 2-83, 12-159, 13-117
90042-0550	PROTECTION PLUG FOR UNUSED CONNECTION	2-27, 2-29, 2-31, 2-81, 2-83, 2-149, 2-151
90042-0600	CABLE MECMAN 440-428 500-1	12-161, 13-153
90043-0004	PRESSURE GAUGE, 2040 D=63 MM	12-125
90043-0006	PRESSURE GAUGE, 2041 D=63 MM	2-149, 2-151, 12-121
90043-0021	PRESSURE GAUGE 0-1 BAR 1/8" D=40	2-27, 2-29, 2-31, 2-81, 2-83
90043-0034	PRESSURE GAUGE	1-55, 7-9
90043-0043	PRESSURE GAUGE 0-10 BAR 1/8"	2-27, 2-29, 2-31, 2-81, 2-83, 2-149, 2-151
90043-0050	PRESSURE GAUGE, 2940.100 MM+2940	12-11
90043-0056	PRESSURE GAUGE, 2041 D=40 MM	2-27, 2-29, 2-31, 2-81, 2-83, 12-159, 13-179
90043-0062	MANOMETER	2-173, 2-175, 13-29
90043-0068	PRESSURE GAUGE	2-81, 2-83
90043-0073	PRESSURE GAUGE	12-39, 12-41
90043-0075	PRESSURE GAUGE, 2740, D=63 MM, GLYC.	2-171
90043-0302	SCREW	1-55, 7-9
90044-0003	MICRO SWITCH HONEYWELL BAF3-2RN 2-RHPG	12-49
90044-0087	PROXIMITY SWITCH REPL.BY 90044-104	12-83
90044-0094	LIMIT SW. 924 CE31-Y20-X5	2-63, 2-65, 2-97, 2-99, 2-177, 3-37, 3-39
90044-0095	PROX.SW. 3010BPKG REPBY 90458-256	2-67, 12-113
90044-0103	KEY SAFETY SWITCH AZ 15 ZVR-2254	8-51, 8-53, 13-67
90044-0104	PROX.SWITCH IFM IN 3002(RP 90044-194)	1-27, 1-29, 1-49, 1-51, 1-53, 5-17, 5-25, 5-27, 5-41, 5-43, 5-45, 5-47, 5-89, 5-91, 5-101, 5-103, 5-129, 5-131, 6-7, 6-29, 6-33, 6-59, 6-61, 7-15, 7-29, 8-61, 8-63, 8-65, 12-53, 12-55, 12-61, 12-63, 12-67, 12-69, 12-71, 12-73
90044-0117	PROX.SW. IX 0208	6-49
90044-0122	PROX.SW. 922AA4XM-A9P-050-LZ-87	8-61, 8-63, 8-65
90044-0139	KEY SAF.SW. AZ16-02 ZVR K-2254 USE 90459	8-51, 8-53
90045-0049	MOTOR 3GAA 082002-ASA	5-21
90046-0015	DRIVE BRAKE MOTOR 50HZ	3-31, 3-33
90046-0016	DRIVE BRAKE MOTOR 60HZ	3-31, 3-33
90048-0022	MANUAL PUMP INCL. BARROW 50-60 L	12-3
90048-0033	GEAR PUMP, C 2347	5-67
90048-0034	OIL PUMP INCL. CONTAINER 4,5 L	2-179
90048-0420	FILTER	5-67
90050-0008	BOTTLE	8-9, 8-39, 12-57, 12-75

Machine Type Group Description Page No

Part No	Description	Page No
90050-0011	BOTTLE	2-135
90051-0025	KNOB, EXTERNAL THREAD. NO. 8306-0200	5-159
90051-0040	KNOB, INTERNAL THREAD, NO. 8308-0627	14-13, 14-15, 14-41, 14-43
90051-0059	KNOB, EXTERNAL THREAD. NO. 8308-1550	14-13, 14-15, 14-41, 14-43
90051-0077	HANDLE	8-9, 8-39, 12-57, 12-75
90051-0080	KNOB, KNURLED, NO. 8324-4212	14-33
90051-0089	SHIFTER HANDLE	8-13, 8-15
90051-0125	LOCK KNOB, NO. GN 617-6-A-N1	6-11
90053-0028	3 DIGIT COUNTER KOYO KCX-3-DM-V	9-5, 9-7, 9-9, 9-11, 9-13, 9-15, 9-25, 9-27, 9-29, 9-31, 9-33, 9-45, 9-47, 9-49, 9-51, 9-53, 9-55
90053-0029	COUNTER, F524.800FA3C 24VDC	9-5, 9-7, 9-9, 9-11, 9-13, 9-15, 9-25, 9-27, 9-29, 9-31, 9-33, 9-45, 9-47, 9-49, 9-51, 9-53, 9-55
90053-0031	HOUR COUNTER, B 609.10 10-50VDC	9-5, 9-7, 9-9, 9-11, 9-13, 9-15, 9-25, 9-27, 9-29, 9-31, 9-33, 9-45, 9-47, 9-49, 9-51, 9-53, 9-55
90053-0032	COUNTER, F524.650DA3B 24VDC	9-5, 9-7, 9-9, 9-11, 9-13, 9-15, 9-25, 9-27, 9-29, 9-31, 9-33, 9-45, 9-47, 9-49, 9-51, 9-53, 9-55
90053-0309	BASE	9-5, 9-7, 9-9, 9-11, 9-13, 9-15, 9-25, 9-27, 9-29, 9-31, 9-33, 9-45, 9-47, 9-49, 9-51, 9-53, 9-55
90055-0033	HOSE NIPPLE, EXT.THR. R1/2-13 MM	2-37, 2-39, 2-41, 2-85, 2-87
90055-0051	HOSE NIPPLE, EXT.THR. R3/8X13 MM	1-71
90055-0074	HOSE NIPPLE, EXT.THR. M5X4 MM	12-121
90055-0096	STRAIGHT COUPLING	2-27, 2-29, 2-31, 2-81, 2-83
90055-0100	Y-CONNECTION, 6-6	2-101, 2-103, 2-105, 2-107, 2-109, 2-111, 2-113
90055-0101	Y-CONNECTION, 8-8	2-27, 2-29, 2-31, 2-71, 2-73, 2-75, 2-81, 2-83, 2-101, 2-103, 2-105, 2-107, 2-109, 2-111, 2-113, 2-149, 2-151, 12-159, 13-161
90055-0105	V-JUNCTION COUPLING14MM REPBY 342735-110	2-27, 2-29, 2-31, 2-81, 2-83
90055-0117	ELBOW WITH TAILPIECE	2-27, 2-29, 2-31, 2-81, 2-83
90055-0118	ELBOW WITH TAILPIECE 8/8 MM	2-27, 2-29, 2-31, 2-71, 2-73, 2-75, 2-81, 2-83, 12-159, 12-263, 13-117, 13-163, 13-177
90055-0217	ELBOW PIPE JOINT	12-159
90055-0252	BULKHEAD LEAD-IN	6-35
90056-0099	GEARS, BEVEL ALU-00	5-53, 5-55
90056-0147	GEARS, BEVEL ALU-00	5-33
90059-0001	THERMOSTAT	12-91
90061-0018	ANGLE ENC 8BIT GRAY (REPL BY 90061-27)	3-11, 3-21, 13-11
90062-0015	LOCK WASHER SERRAT.EXT.GEAR,6,4/11 H=0,7	6-21, 6-23, 6-25, 13-175
90062-0021	LOCK WASHER DIN 6797 TYPE A 5,3	12-239
90062-0022	LOCKING WASHER D=6,4/11	12-239
90062-0049	LOCK WASHER NORD-LOCK,8,7/13,5, T=2,2	5-125, 5-127
90062-0058	LOCK WASHER SERRAT.EXT.GEAR,3,2/6 H=0,4	9-5, 9-7, 9-9, 9-11, 9-13, 9-15, 9-25, 9-27, 9-29, 9-31, 9-33, 9-45, 9-47, 9-49, 9-51, 9-53, 9-55
90062-0070	LOCK WASHER NORD-LOCK,10,3/16 T=2,2	5-157, 6-9
90064-0041	PUSH BUTTON, XB2/MW RED 10124	12-47
90064-0045	PUSH BUTTON XB2/MW YELLOW	12-47
90064-0052	PUSH BUTTON, RED, XB2-MT42	12-47
90064-0054	PUSH BUTTON, GREEN, XB2MW	12-47
90064-0082	PUSH BUTTON, WHITE	9-21, 9-41, 9-61
90064-0084	PUSH BUTTON, YELLOW	2-147, 7-9, 8-61, 8-63, 8-65, 9-19, 9-21, 9-39, 9-41, 9-59, 9-61
90064-0085	PUSH BUTTON, RED	8-61, 8-63, 8-65, 9-5, 9-7, 9-9, 9-11, 9-13, 9-15, 9-21, 9-23, 9-25, 9-27, 9-29, 9-31, 9-33, 9-41, 9-43, 9-45, 9-47, 9-49, 9-51, 9-53, 9-55, 9-61, 9-63
90064-0088	PUSH BUTTON, YELLOW	9-21, 9-41, 9-61
90064-0093	PUSH BUTTON, GREEN	9-21, 9-23, 9-41, 9-43, 9-61, 9-63
90064-0094	PUSH BUTTON, RED	2-147
90064-0095	PUSH BUTTON, YELLOW	2-147
90064-0096	PUSH BUTTON, GREEN	2-147
90064-0105	EMERGENCY STOP BUTTON REPL.BY 90064-124	9-41, 9-43, 9-61, 9-63
90064-0124	SWITCH, EM. STOP, ZB2-BS844+ZB2-BZ1045	7-9, 7-31, 7-33, 8-61, 8-63, 8-65, 9-21, 9-23
90064-0315	LAMP REMOVER, NO:700	9-19, 9-39, 9-59
90064-0317	TOUCHGUARD, 704-9645	2-147
90066-0018	PUSH BUTTON BOX XAP.M4604	12-47
90066-0021	PUSH BUTTON BOX XAP-M1501	7-31, 7-33
90066-0029	PUSH BUTTON BOX XB2-SLS12	7-9
90067-0021	CARRIAGE 32 04 129 5	8-91
90069-0098	GEARS, WORM MOTOR ODM90-80 E4	12-49
90069-0116	GEARS, WORM MOTOR REPBY 90069-0281	8-19, 8-41
90069-0278	GEARS, WORM MOTOR KM120-80E3	1-49, 1-51, 1-53
90074-0001	CABLE CLIPS, D=10 MM	2-37, 2-39, 2-41, 2-85, 2-87
90074-0002	CABLE CLIPS, D=11 MM	1-55, 2-135, 5-81, 5-83, 12-257, 12-269
90074-0004	CABLE CLIPS, D=16 MM	2-159, 2-161
90074-0006	CABLE CLIPS, D=2X12 MM	2-35, 2-37, 2-39, 2-41, 2-85, 2-87, 2-121, 2-123, 13-15
90074-0018	CABLE CLIPS, D=2X10 MM	1-55, 5-25, 5-27, 5-41, 5-43, 5-45, 5-47
90074-0023	CLIP,SINGLE 22	1-55
90074-0026	PIPE CLIP FOR TUBE D=24-35 MM	2-27, 2-29, 2-31, 2-81, 2-83
90075-0125	CONTACTOR, 7,5KW 24VDC	9-5, 9-7, 9-9, 9-11, 9-13, 9-15, 9-25, 9-27, 9-29, 9-31, 9-33, 9-45, 9-47, 9-49, 9-51, 9-53, 9-55, 13-175
90075-0126	CONTACTOR, 22KW 24VDC	9-5, 9-7, 9-9, 9-11, 9-13, 9-15, 9-25, 9-27, 9-29, 9-31, 9-33, 9-45, 9-47, 9-49, 9-51, 9-53, 9-55
90077-0064	TERMINAL SAK2,5 PA FOR TS32	7-11
90077-0102	TERMINAL BLOCK, 1952.2	2-163, 9-5, 9-7, 9-9, 9-11, 9-13, 9-15, 9-25, 9-27, 9-29, 9-31, 9-33, 9-45, 9-47, 9-49, 9-51, 9-53, 9-55, 12-47, 12-91
90077-0112	FUSE HOLDER FERRAZ PST REPL.BY 90233-303	9-25, 9-27, 9-29, 9-31, 9-33, 9-45, 9-47, 9-49, 9-51, 9-53, 9-55
90077-0115	TERMINALS, DISCONNECTABLE	2-147
90077-0117	FUSEHOLDER, ST 14 1-POLE	13-209
90077-0300	END PLATE AP2,5	7-11

Part No	Description	Page No
90077-0302	RAIL TS/35X7,5	2-147
90077-0341	DIODE HOLDER, WSD 2,5, 10584.6	9-19, 9-39, 9-59
90081-0026	MAGNET	12-33, 12-133
90081-0027	MAGNET DISC	12-33, 12-133
90082-0010	OVERVOLT.PROT.PU4R230V3PH	9-5, 9-7, 9-9, 9-11, 9-13, 9-15, 9-25, 9-27, 9-29, 9-31, 9-33, 9-45, 9-47, 9-49, 9-51, 9-53, 9-55
90082-0300	OVERVOLT.PROT.PU1 230 VAC	9-19
90083-0052	NEEDLE ROLLER THRUST BEARING, 30X47X2 MM	6-49
90083-0053	SHAFT LOCATING WASHER, 30X47X1MM	6-49
90086-0001	NIPPLE, M10X1	12-85
90087-0002	PIPE PLUG	2-137, 2-139, 2-185
90087-0003	PIPE PLUG	3-31, 3-33
90087-0015	PLUG, EXT. THREAD HEX. SOCKET VSTI 1/4-E	5-125, 5-127
90087-0019	PLUG M10X1 STAINLESS	2-179, 3-35, 3-37, 3-39, 3-41, 3-43, 4-33, 4-35, 4-37, 4-39, 4-41, 4-43, 4-45, 4-47, 4-49, 4-51, 4-101, 4-103, 4-105, 4-107, 4-131, 4-133, 4-135, 4-137, 5-25, 5-27, 5-29, 5-33, 5-41, 5-43, 5-45, 5-47, 5-49, 5-51, 5-53, 5-55, 5-81, 5-83, 6-29
90087-0036	PLUG, KR 1/4	12-159
90089-0003	REDUCING SLEEVE, PR22,5/PR18,6	7-31, 7-33
90089-0006	REDUCING SLEEVE, G 1/2/PR18,6	12-49
90089-0013	REDUCING SLEEVE, PR20,4/PR18,6	7-11
90090-0012	BALL, D=12 MM	12-47
90090-0013	BALL, D=4 MM	4-7, 4-23, 4-25, 4-27, 4-29, 4-61, 4-63, 4-65, 4-67, 4-69, 4-71, 12-215, 12-217, 12-219, 12-221, 12-231, 13-7, 13-9, 13-99, 13-101, 13-103, 13-105, 13-109, 13-111
90090-0014	BALL, D=7,938 MM	2-37, 2-39, 2-41, 2-85, 2-87
90090-0016	BALL, D=15 MM	4-97, 4-99
90090-0020	BALL, D=5 MM	2-11, 2-25, 2-53, 2-55, 2-59, 2-61
90091-0029	RADIAL SEAL 80X105X13 MM	3-9, 3-19
90091-0038	SCRAPER 20X30X10 MM	12-103
90091-0054	RADIAL SEAL 30X47X8 MM DUST LIP	5-19
90091-0078	ROD SEAL, O-RING 18X25X3 MM	4-61, 4-63, 4-65, 4-67, 4-69, 4-71
90091-0079	PISTON SEAL GLIDE RING 27X35X3,5MM	4-61, 4-63, 4-65, 4-67, 4-69, 4-71
90091-0080	SCRAPER 48X60X10 MM	4-139, 4-141
90091-0125	SCRAPER 35X45X10 MM	12-109
90091-0130	RADIAL SEAL 90X110X12 MM DUST LIP	5-125, 5-127
90091-0142	RADIAL SEAL 35X50X9 MM	5-123
90091-0143	RADIAL SEAL 47X62X6 MM	5-61
90091-0145	RADIAL SEAL 30X62X10 MM	5-19
90091-0157	ROD SEAL, STEPSEAL 25X35X4,2 MM	12-109
90091-0158	SEAL RING 30X20X8 MM	12-103
90091-0159	GASKET 330X308X9 MM	2-169
90091-0202	RADIAL SEAL 58X80X13 MM DUST LIP	5-61
90091-0297	RADIAL SEAL 35X47X7 MM DUST LIP	6-33, 6-57, 6-59, 6-61
90091-0298	RADIAL SEAL 45X65X8 MM DUST LIP	6-59, 6-61
90091-0299	RADIAL SEAL 30X52X7 MM DUST LIP	6-57
90091-0359	X-SEAL 36,17X2,62 MM	4-23, 4-25, 4-27, 4-29, 13-7, 13-9, 13-167
90091-0360	BACK-UP RING 37,5X1,4 MM	4-23, 4-25, 4-27, 4-29, 13-7, 13-9, 13-167
90091-0362	SCRAPER, EXCLUDER2 18X22,8X3,7 MM	4-7, 4-23, 4-25, 4-27, 4-29, 12-215, 12-217, 12-219, 12-221, 12-231, 13-7, 13-9, 13-99, 13-101, 13-103, 13-105, 13-109, 13-111, 13-167
90091-0364	ROD SEAL, STEPSEAL 18X25,3X3,2 MM	4-7, 4-23, 4-25, 4-27, 4-29, 12-215, 12-217, 12-219, 12-221, 12-231, 13-7, 13-9, 13-99, 13-101, 13-103, 13-105, 13-109, 13-111, 13-167
90091-0366	WEAR RING 18X23X3,9 MM	4-7, 4-23, 4-25, 4-27, 4-29, 12-215, 12-217, 12-219, 12-221, 12-231, 13-7, 13-9, 13-99, 13-101, 13-103, 13-105, 13-109, 13-111, 13-167
90091-0380	SCRAPER, EXCLUDER 20X24,8X3,7 MM	6-59, 6-61
90091-0391	SEAL SLYDRING	4-23, 4-25, 4-27, 4-29
90091-0393	PISTON SEAL GLIDE RING T17,5X25X3,2	4-7, 4-23, 4-25, 4-27, 4-29, 12-215, 12-217, 12-219, 12-221, 12-231, 13-7, 13-9, 13-99, 13-101, 13-103, 13-105, 13-109, 13-111, 13-167
90091-0394	WEAR RING 20X25X5,6 MM	4-7, 4-23, 4-25, 4-27, 4-29, 12-215, 12-217, 12-219, 12-221, 12-231, 13-7, 13-9, 13-99, 13-101, 13-103, 13-105, 13-109, 13-111, 13-167
90091-0398	1PISTON SEAL GLIDE RING T 20,5X28X3,2 MM	4-23, 4-25, 4-27, 4-29
90091-0404	RADIAL SEAL 22X40X7 MM DUST LIP	6-31, 6-33, 6-43, 6-45
90091-0406	RADIAL SEAL 25X40X7 MM DUST LIP	6-33
90091-0408	BEARING SEAL 70X78X5 MM	6-59, 6-61
90091-0415	RADIAL SEAL 35X52X7 MM DUST LIP	6-49
90091-0416	RADIAL SEAL 70X90X10 MM DUST LIP	6-49
90091-0444	VARISEAL ROTO HICLEAN 35X47X4,8 MM	6-59, 6-61
90092-0038	METERING VALVE, CJB 1, 5/16-24 UNF	5-67
90092-0048	OIL BRUSH, FLAT, 5/16-24 UNF	5-29, 5-33, 5-49, 5-51, 5-53, 5-55, 5-81, 5-83
90092-0052	METERING VALVE 10 MM3	2-179, 3-37, 3-39, 3-41, 3-43, 4-33, 4-35, 4-37, 4-39, 4-41, 4-43, 4-45, 4-47, 4-49, 4-51, 4-131, 4-133, 4-135, 4-137, 4-139, 4-141, 5-25, 5-27, 5-29, 5-33, 5-41, 5-43, 5-45, 5-47, 5-49, 5-51, 5-53, 5-55, 5-81, 5-83, 6-29
90092-0053	METERING VALVE 30 MM3	2-179, 3-35, 3-37, 3-39, 3-41, 3-43, 4-33, 4-35, 4-37, 4-39, 4-41, 4-43, 4-101, 4-103, 4-105, 4-107, 4-131, 4-133, 4-135, 4-137, 4-139, 4-141, 5-25, 5-27, 5-41, 5-43, 5-45, 5-47, 5-81, 5-83, 6-29
90092-0054	METERING VALVE 50 MM3	3-35, 4-45, 4-47, 4-49, 4-51, 4-131, 4-133, 4-135, 4-137
90092-0077	METERING VALVE, FKD3, G1/8	5-121
90092-0081	MET.VALVE CONT. LUBR., 5/16-24 UNF	5-67
90094-0004	END SUPPORT EWK 2061.6 WM	7-11
90095-0072	OVERLOAD PROTECTION, PKZM 1,0 A	9-5, 9-7, 9-9, 9-11, 9-13, 9-15
90095-0073	OVERLOAD PROTECTION, PKZM 1,6 A	9-5, 9-7, 9-9, 9-11, 9-13, 9-15, 9-25, 9-27, 9-29, 9-31, 9-33, 9-45, 9-47, 9-49, 9-51, 9-53, 9-55
90095-0074	OVERLOAD PROTECTION, PKZM 2,5 A	9-5, 9-7, 9-9, 9-11, 9-13, 9-15, 9-25, 9-27, 9-29, 9-31, 9-33, 9-45, 9-47, 9-49, 9-51, 9-53, 9-55
90095-0075	OVERLOAD PROTECTION, PKZM 4 A	9-5, 9-7, 9-9, 9-11, 9-13, 9-15, 9-25, 9-27, 9-29, 9-31, 9-33, 9-45, 9-47, 9-49, 9-51, 9-53, 9-55

Part No	Description	Page No
90095-0076	OVERLOAD PROTECTION, PKZM 6,3 A	9-5, 9-7, 9-9, 9-11, 9-13, 9-15, 9-25, 9-27, 9-29, 9-31, 9-33, 9-45, 9-47, 9-49, 9-51, 9-53, 9-55
90095-0077	OVERLOAD PROTECTION, PKZM 6-10 A	9-5, 9-7, 9-9, 9-11, 9-13, 9-15, 9-25, 9-27, 9-29, 9-31, 9-33, 9-45, 9-47, 9-49, 9-51, 9-53, 9-55
90095-0080	OVERLOAD PROTECTION, PKZM 25 A	9-5, 9-7, 9-9, 9-11, 9-13, 9-15, 9-25, 9-27, 9-29, 9-31, 9-33, 9-45, 9-47, 9-49, 9-51, 9-53, 9-55
90098-0020	DIODE FUSE, 55ET	9-19, 9-25, 9-27, 9-29, 9-31, 9-33, 9-39, 9-59
90099-0001	NUT PG 9/PR 15,2	2-21, 2-77, 2-117, 2-119, 13-27
90099-0002	NUT PR 18,6 BRASS	2-21, 2-77, 2-117, 2-119, 2-147, 7-15, 12-91, 13-27
90099-0003	NUT PR 22,5	2-77, 2-117, 2-119, 2-135, 6-67, 8-61, 8-63, 8-65
90099-0004	NUT	2-37, 2-39, 2-41, 2-77, 2-85, 2-87
90099-0010	HEXAGON NUT, LB6LM, M8, SIS 5170-4	4-73
90099-0011	NUT PR 37 BRASS	2-21, 2-37, 2-39, 2-41, 2-77, 2-85, 2-87, 2-117, 2-119, 12-13, 13-27
90099-0012	NUT HEX. M18X1,5, FE	3-41, 3-43
90099-0015	NUT HEX. ML6M, M12X1,5, FE	3-11, 3-21, 13-11
90099-0050	HEXAGON NUT, M2, 5	14-23
90099-0085	NUT	2-165
90099-0119	NUT, PR 28,3 (PG21)	2-77
90099-0178	GLAND, LOCK NUT, PG 16	5-21
90099-0179	GLAND, LOCK NUT, PG 21	13-185
90099-0180	GLAND, LOCK NUT, PG 29	13-185
90110-0028	CONTACT UNIT 4-POLEADAPTER	9-5, 9-7, 9-9, 9-11, 9-13, 9-15, 9-25, 9-27, 9-29, 9-31, 9-33
90110-0029	CONTACT UNIT, ATE 57-30140	9-5, 9-7, 9-9, 9-11, 9-13, 9-15, 9-25, 9-27, 9-29, 9-31, 9-33
90110-0035	CABLE CONNECTION, T3108-001	12-39, 12-41
90110-0036	CABLE CONNECTION	12-39, 12-41
90110-0057	FEMALE INSERT HAN 24 E 09 33 002 4201	9-5, 9-7, 9-9, 9-11, 9-13, 9-15, 9-25, 9-27, 9-29, 9-31, 9-33, 9-45, 9-47, 9-49, 9-51, 9-53, 9-55
90110-0095	CONNECTOR 3 POLE + EARTH	2-149, 2-151
90110-0128	MALE INSERT HAN 24 E-M 65330242631	2-27, 2-29, 2-31, 2-81, 2-83, 2-91, 2-127, 2-149, 2-151, 8-61, 8-63, 8-65, 9-21, 9-23, 9-41, 9-43, 9-61, 9-63, 12-19
90110-0334	SCHRAUBE HARTING	9-5, 9-7, 9-9, 9-11, 9-13, 9-15, 9-25, 9-27, 9-29, 9-31, 9-33, 9-45, 9-47, 9-49, 9-51, 9-53, 9-55
90111-0104	SWITCH, LM-531SWH+2PA PG 16-34	12-47
90111-0120	SWITCH, 2 POS.704.510 .0A+704.901.5/A	9-5, 9-7, 9-9, 9-11, 9-13, 9-15, 9-21, 9-25, 9-27, 9-29, 9-31, 9-33, 9-41, 9-45, 9-47, 9-49, 9-51, 9-53, 9-55, 9-61
90111-0121	SWITCH, 3 POS.704.502.0A+2 PCE 704.901.3	2-147
90111-0131	MAIN SWITCH P3-100/V/SVB-SW/N/HI11/H-P3	9-5, 9-7, 9-9, 9-11, 9-13, 9-15, 9-25, 9-27, 9-29, 9-31, 9-33, 9-45, 9-47, 9-49, 9-51, 9-53, 9-55
90111-0142	SWITCH GEAR, NO.OF DIGIT: 4	9-5, 9-7, 9-9, 9-11, 9-13, 9-15, 9-25, 9-27, 9-29, 9-31, 9-33, 9-45, 9-47, 9-49, 9-51, 9-53, 9-55
90111-0150	SWITCH GEAR, 704.502 .0+704.901.3	8-61, 8-63, 8-65
90111-0332	NEUTRAL CONTACT, N-P3Z	9-5, 9-7, 9-9, 9-11, 9-13, 9-15, 9-25, 9-27, 9-29, 9-31, 9-33
90113-0021	AIR PRESSURE REGULATOR	12-121
90113-0044	PRESSURE REGULATOR	2-171, 2-173, 2-175, 13-29
90113-0069	PRESSURE REGULATOR	2-27, 2-29, 2-31, 2-81, 2-83
90113-0071	PRESSURE REGULATOR	2-27, 2-29, 2-31, 2-81, 2-83, 12-159, 13-179
90113-0076	PRESSURE REGULATOR	2-27, 2-29, 2-31, 2-81, 2-83
90113-0114	REGULATOR, B64G-NNK-AD1-RMN	2-149, 2-151
90113-0379	NUT	2-27, 2-29, 2-31, 2-81, 2-83, 12-159, 13-179
90113-0385	SEPARATION BLOCK	13-179
90113-0386	VALVE	13-179
90113-0407	YOKE SINGLE, Y64A-4GA-N1N	2-149, 2-151
90115-0054	ROD END, ID=8 MM, M8X1,25	12-87
90115-0067	ROD END, ID=16 MM, M16X2	3-41, 3-43
90115-0105	ROD END, ID=10 MM, M10X1,5	3-31, 3-33
90115-0106	ROD END, ID=8 MM, M8X1,25	3-15, 3-17
90115-0107	ROD END, ID=8 MM, M8X1,25 LH	3-15, 3-17
90115-0111	ROD END, ID=22 MM, M22X1,5 LH	2-9, 2-69
90115-0122	ROD END, ID=8 MM, M8X1,25	3-41, 3-43
90115-0133	ROD END, ID=12 MM, M12X1,25	3-37, 3-39
90115-0137	ROD END, ID=6 MM, M6X1	6-27
90115-0139	ROD END, ID=8 MM, M8X1,25	5-137, 5-139, 5-141, 5-143, 12-255
90115-0181	ROD END, ID=10 MM M10X1,5	6-57
90115-0182	ROD END, ID=10 MM M10X1,5LH	6-57
90119-0043	OPTO-RELAY, 22DC 60S-3/32VDC	9-5, 9-7, 9-9, 9-11, 9-13, 9-15, 9-25, 9-27, 9-29, 9-31, 9-33, 9-45, 9-47, 9-49, 9-51, 9-53, 9-55
90119-0056	RELAY, AUXILIARY MK3P5-S 24VDC	9-5, 9-7, 9-9, 9-11, 9-13, 9-15, 9-19, 9-25, 9-27, 9-29, 9-31, 9-33, 9-39, 9-45, 9-47, 9-49, 9-51, 9-53, 9-55, 9-59, 13-221
90119-0063	OPTO-RELAY, DC/DC AMMS-10-1/30VDC	9-5, 9-7, 9-9, 9-11, 9-13, 9-15, 9-25, 9-27, 9-29, 9-31, 9-33, 9-45, 9-47, 9-49, 9-51, 9-53, 9-55, 13-209
90119-0067	SOLID-STATE RELAY, H12WD4850	9-5, 9-7, 9-9, 9-11, 9-13, 9-15, 9-19, 9-25, 9-27, 9-29, 9-31, 9-33, 9-39, 9-45, 9-47, 9-49, 9-51, 9-53, 9-55, 9-59, 13-175
90119-0072	SAFETY RELAY, JSBR4	9-5, 9-7, 9-9, 9-11, 9-13, 9-15, 9-25, 9-27, 9-29, 9-31, 9-33, 9-45, 9-47, 9-49, 9-51, 9-53, 9-55
90119-0077	CURRENT RELAY SYRELEC DIRT2 230	9-5, 9-7, 9-9, 9-11, 9-13, 9-15, 9-25, 9-27, 9-29, 9-31, 9-33, 9-45, 9-47, 9-49, 9-51, 9-53, 9-55
90119-0080	SAFETY RELAY JSBR3	9-5, 9-7, 9-9, 9-11, 9-13, 9-15, 9-25, 9-27, 9-29, 9-31, 9-33, 9-45, 9-47, 9-49, 9-51, 9-53, 9-55
90119-0086	RELAY, AUXILIARY MY4IN4 24VDC	9-25, 9-27, 9-29, 9-31, 9-33, 9-45, 9-47, 9-49, 9-51, 9-53, 9-55
90119-0108	RELAY OMRON G2R-2-SNI-24DC	13-243
90119-0309	BASE UNIT, TYPE PYF 14AE	9-25, 9-27, 9-29, 9-31, 9-33, 9-45, 9-47, 9-49, 9-51, 9-53, 9-55
90119-0310	CLAMP, TYPE PYC-A1	9-25, 9-27, 9-29, 9-31, 9-33, 9-45, 9-47, 9-49, 9-51, 9-53, 9-55
90121-0116	RESISTANCE FIXED, 0,15 KOHM, 0,25 W	9-5, 9-7, 9-9, 9-11, 9-13, 9-15, 9-19, 9-21, 9-25, 9-27, 9-29, 9-31, 9-33, 9-39, 9-41, 9-45, 9-47, 9-49, 9-51, 9-53, 9-55, 9-59, 9-61

Part No	Description	Page No
90125-0020	PLATE COMPLETE	7-41
90129-0006	BASE, S3-B	9-5, 9-7, 9-9, 9-11, 9-13, 9-15, 9-25, 9-27, 9-29, 9-31, 9-33, 9-45, 9-47, 9-49, 9-51, 9-53, 9-55, 13-221
90129-0014	CARD HOLDER, SCHROFF 20800-213	14-23
90129-0018	BASE OMRON P2RF-08-E	13-243
90130-0022	POTENTIOMETER, 5 KOHM	13-215
90130-0301	ADJUSTING KNOB WITH DIAL	13-215
90131-0004	HOSE COUPLING	2-135
90132-0021	HOSE CLIP 6-10MM	2-27, 2-29, 2-31, 2-81, 2-83
90134-0002	CONNECTOR R1/8, D=4 MM	5-29, 5-33, 5-49, 5-51, 5-53, 5-55, 5-81, 5-83
90134-0003	BUSHING	5-33, 5-53, 5-55, 5-67, 5-81, 5-83, 5-133, 5-135
90134-0004	PIPE CONNECTION R1/8	2-37, 2-39, 2-41
90134-0030	SLEEVE FOR PLASTIC TUBE	2-179, 3-35, 3-41, 3-43, 5-7, 5-9, 5-25, 5-27, 5-29, 5-33, 5-35, 5-37, 5-41, 5-43, 5-45, 5-47, 5-49, 5-51, 5-53, 5-55, 5-59, 5-81, 5-83, 6-29, 6-35
90134-0031	SLEEVE FOR PLASTIC TUBE	2-179, 3-35, 3-37, 3-39, 4-33, 4-35, 4-37, 4-39, 4-41, 4-43, 4-45, 4-47, 4-49, 4-51, 4-101, 4-103, 4-105, 4-107, 4-131, 4-133, 4-135, 4-137, 4-139, 4-141
90134-0034	NIPPLE	5-67
90134-0038	BUSHING/NUT INLET/OUTLET 4 MM	2-179, 3-35, 3-37, 3-39, 4-33, 4-35, 4-37, 4-39, 4-41, 4-43, 4-45, 4-47, 4-49, 4-51, 4-101, 4-103, 4-105, 4-107, 4-131, 4-133, 4-135, 4-137, 4-139, 4-141
90134-0039	BUSHING VALVE CONNECTION 2,5 MM	2-179, 3-35, 3-37, 3-39, 3-41, 3-43, 4-33, 4-35, 4-37, 4-39, 4-41, 4-43, 4-45, 4-47, 4-49, 4-51, 4-101, 4-103, 4-105, 4-107, 4-131, 4-133, 4-135, 4-137, 4-139, 4-141, 5-25, 5-27, 5-29, 5-33, 5-41, 5-43, 5-45, 5-47, 5-49, 5-51, 5-53, 5-55, 5-81, 5-83, 6-29, 12-213, 12-277, 12-279
90134-0040	BUSHING VALVE CONNECTION 4 MM	4-139, 4-141, 5-29, 5-33, 5-49, 5-51, 5-53, 5-55, 5-81, 5-83
90134-0045	PLUG M12X1	5-33, 5-53, 5-55
90134-0051	SPACING COLLAR DOSING BLOCK	4-139, 4-141
90134-0052	PLUG DOSING BLOCK	2-179, 3-35, 3-37, 3-39, 3-41, 3-43, 4-33, 4-35, 4-37, 4-39, 4-41, 4-43, 4-131, 4-133, 4-135, 4-137, 5-33, 5-53, 5-55, 6-29, 12-169, 12-213, 13-33, 13-137
90134-0054	BLOCK CONNECTION M10X1	2-179
90134-0055	BUSHING/NUT INLET/OUTLET 6 MM	2-179, 3-35, 5-7, 5-9, 5-25, 5-27, 5-29, 5-33, 5-35, 5-37, 5-41, 5-43, 5-45, 5-47, 5-49, 5-51, 5-53, 5-55, 5-81, 5-83, 6-29
90134-0058	CONNECTION	3-35, 3-37, 3-39, 3-41, 3-43, 4-11, 4-13, 4-15, 4-17, 4-19, 4-21, 4-23, 4-25, 4-27, 4-29, 4-33, 4-35, 4-37, 4-39, 4-41, 4-43, 4-45, 4-47, 4-49, 4-51, 4-65, 4-67, 4-69, 4-71, 4-77, 4-79, 4-85, 4-87, 4-139, 4-141, 4-143, 4-147, 5-25, 5-27, 5-29, 5-33, 5-41, 5-43, 5-45, 5-47, 5-49, 5-51, 5-53, 5-55, 5-81, 5-83, 6-5, 6-59, 6-61, 12-193, 12-195, 12-197, 12-199, 12-201, 12-203, 12-215, 12-217, 12-219, 12-221, 12-277, 12-279, 13-7, 13-9
90134-0063	BUSHING/NUT M8X1, D=2,5 MM	4-31, 4-53, 4-55, 12-205, 12-207, 12-277, 12-279
90135-0022	EARTH TERMINAL EK 2,5N	7-11
90135-0031	BUSBAR HOLDER K&M SHO165/2	9-5, 9-7, 9-9, 9-11, 9-13, 9-15, 9-25, 9-27, 9-29, 9-31, 9-33, 9-45, 9-47, 9-49, 9-51, 9-53, 9-55
90135-0038	CABLE CLAMP K&M K*12 5-1	9-5, 9-7, 9-9, 9-11, 9-13, 9-15, 9-25, 9-27, 9-29, 9-31, 9-33, 9-45
90135-0039	SHIELD CLIP KLBU 4-13.5	13-221
90136-0002	PLUG 5/16"24	5-67, 5-133, 5-135
90137-0002	BANJO CONN. 1/8 - 5/16-24UNF	5-29, 5-33, 5-49, 5-51, 5-53, 5-55, 5-81, 5-83
90137-0005	BANJO CONN. M6, 5/16-24UNF	5-67, 5-133, 5-135
90137-0010	BANJO CONN. M6, D=2,5 MM	5-67
90140-0010	T-PIPE, INT. THREAD, 20031/2	2-149, 2-151
90140-0011	T-PIPE, INT. THREAD, NO. 2070-1/2-1/2	2-149, 2-151
90140-0012	ELBOW, 90 INT/EXT, 2020-1/2-1/2	2-149, 2-151
90140-0013	ELBOW, 90 INT/EXT, 2020-1/4-1/4	6-33
90141-0012	RETAINING RING FOR SHAFT, 17X1,5MM	5-19
90141-0015	RETAINING RING FOR SHAFT DIN 471 8 A2	4-23, 4-25, 4-27, 4-29, 7-19, 12-215, 12-217, 12-219, 12-221, 13-7, 13-9, 13-99, 13-101, 13-103, 13-105, 13-109, 13-111
90141-0019	RETAINING RING FOR BORE DIN 472 50 A2	6-47
90143-0017	FOAMRUBBERSTRIP B68205	12-149
90143-0029	STRIP	8-9, 8-39, 12-57, 12-75
90143-0035	STRIP	2-49, 2-51, 2-63, 2-65, 2-93, 2-97, 2-99, 6-35
90143-0039	STRIP	2-49, 2-51, 2-63, 2-65, 2-93, 2-97, 2-99, 8-49, 8-51, 8-53
90143-0047	RUBBER STRIP	12-31
90143-0049	RUBBER STRIP 11X21MM	2-85, 2-87, 2-133, 2-181, 2-183
90143-0050	STRIP	1-31, 1-33, 13-57
90143-0052	STRAP	5-121
90143-0054	STRIP	2-37, 2-39, 2-41, 2-85, 2-87
90143-0060	EDGE STRIP 9,5X6,3MM BLACK PVC	13-59
90143-0068	RUBBER STRIP EMKA 1011-06	2-49, 2-51
90144-0030	TAPE	12-89
90145-0005	WIRE	5-73
90145-0012	STRING	12-33
90148-0021	HOSE	1-71
90148-0033	HOSE	4-11, 4-13, 4-15, 4-17, 4-19, 4-21, 4-23, 4-25, 4-27, 4-29, 4-73, 12-193, 12-195, 12-197, 12-199, 12-201, 12-203, 12-215, 12-217, 12-219, 12-221, 13-7, 13-9, 13-99, 13-101, 13-103, 13-105
90148-0036	HOSE	2-173, 2-175, 13-29
90151-0001	BRASS PIPE DI=2,6 MM	4-45, 4-47, 4-49, 4-51, 4-139, 4-141
90152-0001	HOSE L=280MM THREAD M10X1	12-85
90152-0014	HOSE , 1,5" PVC BLACK	1-35
90152-0016	HOSE (SPIRAL)	2-189
90152-0017	HOSE (SPIRAL)	2-187
90152-0031	HOSE	2-21, 2-77, 2-117, 2-119, 6-67, 13-27
90152-0032	HOSE 5"=127MM	2-159, 2-161
90152-0033	SPIRAL CONDUIT FOR PR 15,2(PG 9)	2-21, 2-77, 2-117, 2-119, 2-147, 2-149, 2-151, 2-163, 7-9, 7-31, 7-33, 8-61, 8-63, 8-65, 12-163, 13-27
90152-0044	FLEXIBLE CONDUIT 3641-0070	5-7, 5-9, 5-35, 5-37

Part No	Description	Page No
90152-0050	SPIRAL CONDUIT, 20X13, UL 1313	5-7, 5-9, 5-35, 5-37, 6-67
90152-0051	SPIRAL CONDUIT, 25X18, UL 1816	5-7, 5-9, 5-35, 5-37, 6-67
90152-0060	SPIRAL CONDUIT, 42X35, UL3529	13-185
90152-0070	METAL HOSE, 32,5X26, UL 2621	2-77, 13-185
90153-0017	ADHESIVE, 2963 TUBE 160G	12-149
90153-0043	ADHESIVE, LOCTITE 495 20G	5-57, 5-121, 5-133, 5-135
90157-0002	SEALING COMPOUND, COLLEXIN	5-159
90157-0016	LOCKING FLUID LOCTITE 242 50 ML	2-57, 2-95, 3-41, 3-43, 4-65, 4-67, 4-69, 4-71, 4-97, 4-99, 4-139, 4-141, 7-25, 12-27, 12-31, 12-117, 14-5
90157-0022	SEALING COMPOUND, SILICONE	2-37, 2-39, 2-41, 2-85, 2-87, 5-133, 5-135
90157-0034	THREAD SEALANT LOCTITE 572 50 ML	5-57
90157-0041	SEALING COMPOUND, RHODORSEAL 5651	8-49
90161-0001	O-RING MATERIAL 3 MM	5-57, 5-133, 5-135
90163-0007	CONNECTION	12-121
90163-0041	HOSE NIPPLE, EXT.THR. 3/8-12 MM	2-35, 2-121, 2-123, 13-15
90163-0042	NIPPLE FESTO CN-M5-PK-4	12-121
90163-0050	QUICK COUPLING, (M) 5089 / 9	2-179
90163-0057	QUICK COUPLING, (M) 5150-1/8	1-27, 1-29
90163-0062	QUICK COUPLING, (F) 5053-1/8	1-27, 1-29
90163-0064	QUICK COUPLING, (M) LP-006-2-WR517	2-179
90163-0076	QUICK COUPLING, (F) LP-006-0-WR021	2-35, 2-121, 2-123, 12-167, 13-15, 13-97
90163-0133	QUICK COUPLING, (F) LP-004-0-WR013-21-1	2-115, 2-137, 2-139
90163-0134	QUICK COUPLING, LP-004-1-SL006-21	2-115, 2-137, 2-139
90164-0003	LIGHT FIXTURE	2-9, 2-21, 2-77, 2-117, 2-119, 12-13, 13-27
90164-0016	LIGHT FIXTURE, RL70-118	2-69
90164-0301	HOLDING FIXTURE	9-5, 9-7, 9-9, 9-11, 9-13, 9-15, 9-25, 9-27, 9-29, 9-31, 9-33, 9-45, 9-47, 9-49, 9-51, 9-53, 9-55
90165-0003	PIPE CLIP FOR TUBE D=4 MM	2-179, 3-35
90165-0005	PIPE CLIP FOR TUBE D=6 MM	2-179, 3-35
90165-0007	PIPE CLIP FOR TUBE D=8 MM	2-137, 2-139
90165-0010	CLIP	8-11, 12-59
90165-0022	PIPE CLIP, FOR TUBE D=2,5 MM, B-3570	2-179, 3-37, 3-39, 3-41, 3-43
90165-0024	PIPE CLIP FOR TUBE D=5 MM	12-53, 12-55, 12-67, 12-69, 12-71, 12-73
90165-0056	PIPE CLIP FOR TUBE D=4 MM	4-33, 4-35, 4-37, 4-39, 4-41, 4-43, 4-101, 4-103, 4-105, 4-107, 4-131, 4-133, 4-135, 4-137, 4-143, 4-147, 5-17, 5-29, 5-33, 5-49, 5-51, 5-53, 5-55, 5-57, 5-81, 5-83, 5-89, 5-91, 5-117, 6-29
90165-0057	PIPE CLIP FOR TUBE D=6 MM	4-97, 4-99, 5-7, 5-9, 5-25, 5-27, 5-29, 5-35, 5-37, 5-41, 5-43, 5-45, 5-47, 5-49, 5-51, 5-57, 5-81, 5-83, 5-137, 5-139, 5-141, 5-143, 8-5, 8-7, 8-21, 8-23, 8-25, 8-27, 8-29, 8-31, 8-33
90165-0058	PIPE CLIP FOR TUBE D=2,5 MM	4-11, 4-13, 4-15, 4-17, 4-19, 4-21, 4-23, 4-25, 4-27, 4-29, 4-45, 4-47, 4-49, 4-51, 4-65, 4-67, 4-69, 4-71, 4-77, 4-79, 4-85, 4-87, 4-101, 4-103, 4-105, 4-107, 12-193, 12-195, 12-197, 12-199, 12-201, 12-203, 12-215, 12-217, 12-219, 12-221, 13-7, 13-9
90165-0060	PIPE CLIP FOR TUBE D=5 MM	4-77, 4-79, 4-85, 4-87, 4-139, 4-141, 5-7, 5-9, 5-33, 5-35, 5-37, 5-53, 5-55, 7-9, 7-15
90165-0063	CLIP	12-97, 12-99
90165-0086	PIPE CLAMP, RSGU 1.24/15-V4, D=24 MM	2-167
90165-0174	HOSE HOLDER	2-37, 2-39, 2-41, 2-85, 2-87, 4-23, 4-25, 4-27, 4-29, 12-155, 12-215, 12-217, 12-219, 12-221, 13-7, 13-9
90166-0007	HOSE PVC 10/14 TRANSP.	2-35, 2-121, 2-123, 2-159, 2-161, 13-15
90166-0011	TUBE 6 MM PA,TRANSP.	5-17
90166-0013	TUBE 8 MM PA BLUE	2-13, 2-15, 2-17, 2-19, 2-27, 2-29, 2-31, 2-71, 2-73, 2-75, 2-81, 2-83, 2-101, 2-103, 2-105, 2-107, 2-109, 2-111, 2-113, 2-149, 2-151, 6-17, 8-61, 8-63, 8-65, 12-159, 13-17, 13-19, 13-21, 13-23, 13-117, 13-165, 13-179
90166-0051	TUBE PA,TRANSP.	5-29, 5-33, 5-49, 5-51, 5-53, 5-55, 5-67, 5-81, 5-83
90166-0059	HOSE PVC 12/16MM TRANSP.	6-35, 8-5, 8-7, 8-21, 8-23, 8-25, 8-27, 8-29, 8-31, 8-33, 12-53, 12-55, 12-67, 12-69, 12-71, 12-73, 12-93, 12-115
90166-0068	TUBE 12 MM PA BLUE	2-27, 2-29, 2-31, 2-81, 2-83, 13-179
90166-0081	TUBE 6 MM PA BLUE	2-13, 2-15, 2-17, 2-19, 2-27, 2-29, 2-31, 2-71, 2-73, 2-75, 2-81, 2-83, 2-101, 2-103, 2-105, 2-107, 2-109, 2-111, 2-113, 2-149, 2-151, 8-17, 8-61, 8-63, 8-65, 12-47, 12-159, 13-17, 13-19, 13-21, 13-23, 13-117
90166-0087	HOSE 15/23 REINF.PVC TRANSP.	5-7, 5-9, 5-35, 5-37, 6-35, 7-37, 7-39, 7-41, 12-67, 12-69, 12-71, 12-73
90166-0095	TUBE 4 MM PA BLUE (50M)	5-81, 5-83
90166-0099	TUBE PUR BLUE	12-121
90166-0105	TUBE PUR BLUE	12-121
90166-0108	TUBE 6 MM PA,TRANSP.	2-179, 3-35, 5-7, 5-9, 5-25, 5-27, 5-29, 5-33, 5-35, 5-37, 5-41, 5-43, 5-45, 5-47, 5-49, 5-51, 5-53, 5-55, 5-59, 5-67, 5-81, 5-83, 6-29, 6-35
90166-0109	TUBE 4 MM PA,TRANSP.	2-179, 3-35, 4-33, 4-35, 4-37, 4-39, 4-41, 4-43, 4-101, 4-103, 4-105, 4-107, 4-131, 4-133, 4-135, 4-137, 4-139, 4-141
90166-0110	TUBE 15 MM PA,TRANSP.	12-135, 12-141
90166-0113	HOSE	2-179, 3-11, 3-21, 13-11
90166-0118	TUBE 8 MM PA BLACK	6-27
90166-0121	HOSE	2-37, 2-39, 2-41, 2-85, 2-87
90166-0122	TUBE 8 MM PA,TRANSP.	2-35, 2-121, 2-123, 2-137, 2-139, 5-13, 5-25, 5-27, 5-41, 5-43, 5-45, 5-47, 5-81, 5-83, 5-117, 6-35, 8-69, 8-71, 8-73, 12-105, 12-135, 13-15, 13-161
90166-0123	HOSE	4-73, 6-33
90166-0124	TUBE 6 MM PA,TRANSP.	2-137, 2-139, 4-45, 4-47, 4-49, 4-51, 4-97, 4-99, 5-81, 5-83, 6-63, 7-7, 12-39, 12-41, 12-135, 12-257, 12-261, 12-269
90166-0132	TUBE 6 MM PA,TRANSP.	5-15, 5-57, 6-35, 12-277
90166-0133	TUBE 8 MM PA,TRANSP.	2-115, 2-137, 2-139, 12-277, 12-279
90166-0138	HOSE	8-9, 8-39, 12-57, 12-75
90166-0142	HOSE	2-49, 2-51, 2-57, 2-95
90166-0143	TUBE 2,5 MM PA,TRANSP.	3-35, 3-37, 3-39, 3-41, 3-43, 4-33, 4-35, 4-37, 4-39, 4-41, 4-43, 4-45, 4-47, 4-49, 4-51, 4-131, 4-133, 4-135, 4-137, 4-139, 4-141, 4-143, 4-147, 5-25, 5-27, 5-29, 5-33, 5-41

Part No	Description	Page No
		5-43, 5-45, 5-47, 5-49, 5-51, 5-53, 5-55, 5-81, 5-83, 6-29, 12-213, 12-277, 12-279
90166-0160	TUBE 10 MM PA BLUE	2-71, 2-73, 2-75
90166-0194	TUBE 8 MM PUR BLUE	2-27, 2-29, 2-31, 2-81, 2-83
90166-0199	RUBBER HOSE	5-15
90166-0206	TUBE 14 MM PUR BLUE	2-27, 2-29, 2-31, 2-81, 2-83
90172-0031	GENERATOR	9-5, 9-7, 9-9, 9-11, 9-13, 9-15, 9-45, 9-47, 9-49, 9-51, 9-53, 9-55, 12-235, 12-237
90172-0032	SWITCH, 911 758 001 SB-3-6R	9-5, 9-7, 9-9, 9-11, 9-13, 9-15, 12-235, 12-237
90172-0037	COMPUTOR EQUIPMENT	14-7
90172-0038	DUAL DISPLAY LCR METER	14-9
90172-0317	HF-CABLE 4000 MM	9-17, 9-57, 12-235, 12-237
90172-0318	HF-CABLE 450MM, TELSONIC 514 210 004	9-5, 9-7, 9-9, 9-11, 9-13, 9-15, 9-45, 9-47, 9-49, 9-51, 9-53, 9-55, 12-235, 12-237
90172-0319	CONNECTION 372 640 001	9-5, 9-7, 9-9, 9-11, 9-13, 9-15, 9-45, 9-47, 9-49, 9-51, 9-53, 9-55, 12-235, 12-237
90172-0320	TERMINAL BLOCK	9-5, 9-7, 9-9, 9-11, 9-13, 9-15, 9-45, 9-47, 9-49, 9-51, 9-53, 9-55, 12-235, 12-237
90172-0321	TERMINAL BLOCK, 373 593 000	9-5, 9-7, 9-9, 9-11, 9-13, 9-15, 9-45, 9-47, 9-49, 9-51, 9-53, 9-55, 12-235, 12-237
90172-0324	COMPUTOR EQUIPMENT	14-7
90172-0325	PRESSURE SENSOR, 0,047 MV/PS1	14-7
90172-0326	CABLE FOR LCR METER	14-9
90172-0327	CONNECTION CABLE ULTRA SONIC/PC	14-7
90172-0328	CABLE	14-7
90182-0005	CABLE TIE, 79X2,3MM	12-135
90182-0007	PLATE 29X29MM REPL.BY 352113-206	12-135
90184-0001	SNAP-IN BALL LOCK, 49X9 MM	12-49
90187-0029	BALL VALVE G1/2, NPBR	2-37, 2-39, 2-41, 2-85, 2-87, 2-149, 2-151
90187-0054	BALL VALVE G3/8	2-35, 2-121, 2-123, 13-15
90187-0062	BALL VALVE G1/2, NPBR	2-149, 2-151
90187-0073	BALL VALVE G3/8	1-71
90187-0149	THROTTLE VALVE, G1/4, G1/4, MALE	2-27, 2-29, 2-31, 2-81, 2-83, 12-159
90191-0037	WHEEL	12-97, 12-99
90191-0038	WHEEL, NO. 100 UK	12-97, 12-99
90194-0012	LABEL REPL.BY 90194-0127	12-97, 12-99
90194-0016	WARNING SIGN, RISK OF ELECTRIC SHOCK	2-37, 2-39, 2-41, 2-45, 2-91, 2-127, 2-147, 2-163, 7-9, 7-11, 7-31, 7-33, 8-61, 8-63, 8-65, 8-69, 8-71, 8-73, 9-5, 9-7, 9-9, 9-11, 9-13, 9-15, 9-21, 9-23, 9-25, 9-27, 9-29, 9-31, 9-33, 9-41, 9-43, 9-45, 9-47, 9-49, 9-51, 9-53, 9-55, 9-61, 9-63, 12-91, 13-183, 14-27
90194-0039	WARNING SIGN, RISK OF ELECTRIC SHOCK	3-11, 3-21, 13-11
90194-0080	SIGN, IDENTIFICATION OF WIRING	9-5, 9-7, 9-9, 9-11, 9-13, 9-15, 9-25, 9-27, 9-29, 9-31, 9-33, 9-45, 9-47, 9-49, 9-51, 9-53, 9-55
90194-0109	SIGN, TRANSP. OH-FOLIE, BLANC	14-21
90194-0112	SIGN"WHITE CARD EL.EQ."REPL.BY 90194-133	9-41, 9-43, 9-61, 9-63
90194-0113	ADHESIVE LABEL, CALIBRATED & DATE	14-21
90194-0133	SIGN "DELIVERED DESIGN"	9-5, 9-7, 9-9, 9-11, 9-13, 9-15, 9-21, 9-23, 9-25, 9-27, 9-29, 9-31, 9-33, 9-45, 9-47, 9-49, 9-51, 9-53, 9-55
90194-0154	TERM. MARKING LABEL KIT, BLA-BSTB, 1-24	13-211
90194-0302	MARKING LABELS REBUILDING KIT	12-19, 12-235, 12-237, 13-49, 13-221
90195-0017	TERMINAL BLOCK, 1953.2	14-7
90195-0020	TERMINAL BLOCK, 1977.2	2-135, 6-21, 6-23, 6-25, 8-69, 8-71, 8-73, 9-21, 9-41, 9-61, 13-177
90196-0055	PULLEY	3-31, 3-33, 12-169
90196-0061	PULLEY	3-31, 3-33
90196-0062	PULLEY	3-31, 3-33, 12-169
90196-0063	PULLEY	3-31, 3-33
90196-0064	PULLEY	3-31, 3-33
90196-0065	PULLEY	3-31, 3-33, 12-169
90196-0066	PULLEY	3-31, 3-33
90196-0067	PULLEY	3-29
90196-0079	TIMING BELT PULLEY	3-31, 3-33
90196-0086	TIMING BELT PULLEY	3-31, 3-33
90199-0004	LEVEL GLASS, ST60	5-57
90201-0010	DIRECT CHECK VALVE, NO. DGMDC-3-Y-PK-41	2-171, 3-13, 3-23, 3-25, 13-13
90201-0014	VALVE	2-173, 2-175, 13-29
90201-0018	HOUSING, NO. 40421	12-97, 12-99
90201-0019	SHUT-OFF VALVE, NO. MPV1-10-T-0	12-111
90201-0057	VALVE	3-13, 3-23, 3-25, 13-13
90201-0058	SOLENOID VALVE	2-171, 2-173, 12-163, 13-29
90201-0300	MOUNTING PLATE, NO. A1-89 57B	3-23, 3-25
90201-0302	WASHER	2-171
90201-0303	SPARE PARTS KIT	2-171, 3-13, 3-23, 3-25, 13-13
90201-0307	BLANKING, NO. DGMA-3-C1-10	2-175
90201-0308	BLANKING, NO. DGVM-3-10-R	2-173, 2-175, 13-29
90201-0309	BLANKING, NO. A4-9905	2-171
90201-0310	BLANKING, NO. A1-9904	3-23, 3-25
90201-0311	BLANKING, NO. A4-9906	3-23, 3-25
90201-0407	BOLT KIT	2-173, 12-163, 13-29
90201-0427	BLOCK	3-13, 12-167, 13-13, 13-97
90203-0009	CU LITZ CABLE 15X2 MM	9-21, 9-41, 9-61, 12-239
90206-0030	HEATING ELEMENT 3000W, 220V	6-23, 13-177
90206-0053	HEATING ELEMENT 230V 1200W	12-91
90206-0085	HEATING CARTRIDGE 460W 105 OHM	7-41
90206-0086	HEATING CARTRIDGE, 970W 50 OHM	1-31, 1-33
90206-0097	HEATING CARTRIDGE 500W 220V	8-69, 8-71, 8-73
90206-0125	HEATING ELEMENT 1000W 220V	13-177
90206-0131	HEATING ELEMENT 1200W 220V	6-21, 6-25
90206-0322	GASKET	1-31, 1-33, 7-41

Part No	Description	Page No
90207-0052	VALVE, BUTTERFLY, N.C. LKBA-1-SMS-51	1-27, 1-29
90208-0067	CLAMPING ELEMENT	3-29
90208-0080	CLAMPING ELEMENT WITH SLEEVE, 25X34 MM	6-59, 6-61
90208-0087	CLAMPING ELEMENT WITH SLEEVE, 45X59 MM	6-5
90211-0005	WIRE EYELET, 6 MM	12-33
90211-0006	WIRE LOCK, 6 MM	12-33
90214-0028	BALL BEARING REPBY 90214-98	12-25
90214-0053	ROLLER BEARING, 15X40X15, 9 MM	12-97, 12-99
90214-0087	TAPER ROLLER BEARING, 70X110X25 MM	5-125, 5-127
90214-0098	BALL BEARING, 15X35X11 MM	1-49, 1-51, 1-53, 7-13, 7-43, 12-65
90214-0106	BALL BEARING, 15X28X7 MM	12-53, 12-55, 12-67, 12-69, 12-71, 12-73
90214-0107	BALL BEARING, 12X28X8 MM	12-53, 12-55, 12-67, 12-69, 12-71, 12-73
90214-0138	BALL BEARING, 5X19X6 MM	1-39, 1-43, 1-45, 7-29, 7-45, 12-61, 12-63
90214-0163	BALL BEARING SOLID OIL 25X47X12 MM	3-37, 3-39, 13-33
90214-0169	BALL BEARING SOLID OIL 15X35X11 MM	3-35, 3-41, 3-43
90214-0207	BALL BEARING, 15X32X9 MM	7-25
90214-0219	CYL.ROLLER BEARING, 17X40X12 MM	6-33
90214-0229	BALL BEARING, 65X85X10 MM	6-59, 6-61
90214-0310	SEALING LID, 62X8 MM	5-19
90217-0053	NIPPLE, RD 60-6 - R1 1/2 M	2-57, 2-95
90220-0034	THERMOCABLE TEX/SITW-20F-KX 2X0,5MM2	9-17, 9-35, 9-37, 9-57, 12-131
90220-0040	SCR. CABLE 2X0,75 MM2 BLACK	9-5, 9-7, 9-9, 9-11, 9-13, 9-15, 9-25, 9-27, 9-29, 9-31, 9-33, 9-45, 9-47, 9-49, 9-51, 9-53, 9-55
90220-0059	THERMOCOUPLE CABLE K/PVC/20AWG 2X0,5MM2	9-5, 9-7, 9-9, 9-11, 9-13, 9-15, 9-17, 9-25, 9-27, 9-29, 9-31, 9-33, 9-45, 9-47, 9-49, 9-51, 9-53, 9-55
90220-0077	CABLE, POWER SUPPLY, RKK 3X0,75 2M	14-21
90220-0078	CABLE, LABORATORY FLEX, 1X1,5 1M RED	14-21
90220-0079	CABLE, LABORATORY FLEX, 1X1,5 1M BLACK	14-21
90220-0080	CONNECTOR WITH GRAB HOOK,4 MM BLACK	14-21
90220-0081	CONNECTOR WITH GRAB HOOK,4 MM RED	14-21
90220-0082	CABLE PAIR TWISTED 2X0,75 MM2 LIGHT/GREY	9-17, 9-35, 9-37, 9-57
90220-0091	PAIR TWISTED CABLE 2X2X0,25MM2	14-7
90220-0105	SCR. CABLE 4X2,5MM2	9-5, 9-7, 9-9, 9-11, 9-13, 9-15, 9-17, 9-25, 9-27, 9-29, 9-31, 9-33, 9-35, 9-37, 9-45, 9-47, 9-49, 9-51, 9-53, 9-55, 9-57
90220-0108	SCR. CABLE 5X1,5MM2	9-5, 9-7, 9-9, 9-11, 9-13, 9-15, 9-17, 9-25, 9-27, 9-29, 9-31, 9-33, 9-35, 9-37, 9-45, 9-47, 9-49, 9-51, 9-53, 9-55, 9-57
90220-0302	CLAMP FOR SCR.CABLE, 16MM, 55-016-89	9-5, 9-7, 9-9, 9-11, 9-13, 9-15, 9-25, 9-27, 9-29, 9-31, 9-33, 9-45, 9-47, 9-49, 9-51, 9-53, 9-55
90220-0304	CLAMP FOR SCR.CABLE, 24MM,	9-5, 9-7, 9-9, 9-11, 9-13, 9-15, 9-25, 9-27, 9-29, 9-31, 9-33, 9-45, 9-47, 9-49, 9-51, 9-53, 9-55
90224-0066	CONN. STRAIGHT, 160Â•SSA	5-121
90224-0097	NIPPLE	1-35, 12-83
90224-0304	CONNECTION	7-7
90224-0307	STRAIGHT FITTING, 6MM, 1/8",	1-27, 1-29, 2-165
90224-0308	CONN. BANJO, ART. NO. 2023-1/8-1/8	1-27, 1-29
90224-0310	CONNECTION	1-55
90224-0316	CONNECTION	2-137, 2-139
90224-0318	CONNECTION	2-137, 2-139
90224-0319	CONN. STR., 8-R1/4, EXT. THREAD	2-13, 2-15, 2-17, 2-19, 2-71, 2-73, 2-75, 2-101, 2-103, 2-105, 2-107, 2-109, 2-111, 2-113, 2-137, 2-139, 13-17, 13-19, 13-21, 13-23
90224-0320	STRAIGHT COUPLING,EXT.THREAD 1051-8-3/8	2-137, 2-139
90224-0323	CONNECTION	2-13, 2-15, 2-17, 2-19, 2-71, 2-73, 2-75, 2-101, 2-103, 2-105, 2-107, 2-109, 2-111, 2-113, 13-17, 13-19, 13-21, 13-23
90224-0331	CONN. STR., 6-R1/4, EXT. THREAD	1-55
90226-0004	CABINET	12-3
90230-0007	NON-RETURN VALVE	2-137, 2-139
90230-0011	NON-RETURN VALVE RHD-115L	2-35, 2-121, 2-123, 13-15
90230-0017	NON-RETURN VALVE RHD 10-L	2-169
90230-0021	NON-RETURN VALVE, NO. RHD-15-L/MS 59	2-135
90230-0023	NON-RETURN VALVE	2-137, 2-139
90230-0024	NON-RETURN VALVE OPENING PRESSURE 0,2BAR	12-97, 12-99
90230-0031	NON-RETURN VALVE B5146	5-67
90232-0075	PH.CELL NT6-14900S12	4-97, 4-99
90232-0077	PH.CELL E3N-R7 H41 SI-G + E39-R2	12-47
90232-0103	PH.CELL E3S-CT61-L-5M	6-37, 6-39, 8-61, 8-63, 8-65
90232-0104	PH.CELL E3S-CT61-D-5M	6-37, 6-39, 8-61, 8-63, 8-65
90232-0106	PH.CELL E3S-CR11-5M	8-61, 8-63, 8-65
90232-0129	PH.CELL E3S-CR61-5M	13-239, 13-243
90232-0307	REFLECTOR VISOLUX 40X180MM	12-47
90232-0333	REFLECTOR E39-R1	8-49
90233-0027	TUBE FUSE, 16A	9-5, 9-7, 9-9, 9-11, 9-13, 9-15, 9-45, 9-47, 9-49, 9-51, 9-53, 9-55, 12-235, 12-237, 13-175
90233-0028	TUBE FUSE, 10A	9-5, 9-7, 9-9, 9-11, 9-13, 9-15, 9-19, 9-25, 9-27, 9-29, 9-31, 9-33, 9-39, 9-45, 9-47, 9-49, 9-51, 9-53, 9-55, 9-59, 13-175
90233-0032	TUBE FUSE, 50 A	13-209
90233-0303	FUSE HOLDER, ST 10 1-POLE	9-5, 9-7, 9-9, 9-11, 9-13, 9-15, 12-235, 12-237, 13-175
90235-0254	VALVE 565-201-000 MECMAN	12-141
90235-0259	VALVE	1-27, 1-29
90235-0274	THROTTLE CHECK VALVE, G1/8", SCU-604-1/8	1-31, 1-33, 1-35, 7-37, 7-39, 7-41
90235-0295	THROTTLE CHECK VALVE,G1/4"	2-137, 2-139
90235-0450	PLATE	2-27, 2-29, 2-31, 2-81, 2-83
90235-0702	PRESSURIZING UNIT, 565-400-000	12-141
90235-0708	VALVE	2-27, 2-29, 2-31, 2-81, 2-83
90235-0731	THROTTLE CHECK VALVE, G1/4", SCO-606-1/4	6-33

Part No	Description	Page No
90235-0767	VALVE	2-149, 2-151
90236-0008	BRACKET	12-39, 12-41
90236-0041	BRACKET	2-149, 2-151
90237-0011	BAR CLAMP	2-63, 2-65, 2-97, 2-99
90237-0046	MAGNETIC LOCK, 46X33X15 MM	2-47, 2-135, 8-51, 8-53
90237-0061	HANDLE, FIX 0035-0230	2-63, 2-65, 2-97, 2-99
90237-0066	LOCK, FIX 590, L=1820 MM	2-65, 2-99
90237-0067	LOCK, FIX 590, L=1198 MM	2-63, 2-97
90237-0070	SNAP-IN BALL LOCK, 69X19 MM	2-133
90237-0075	FAST LOCK, SK-M8	8-51, 8-53
90237-0319	LOCK HOUSING, 1000-U134	2-147
90237-0320	LOCK HOUSING, 1000-U136	2-147
90237-0335	LOCKING CATCH	2-147
90239-0127	BRACKET	12-49, 12-83
90239-0181	CONNECTION	12-47
90239-0189	DOUBLE ACTING, MINI-ISO, CYL 25-32	12-47, 12-49, 12-83
90239-0231	BELLOWS	8-69, 8-71, 8-73
90239-0259	CYLINDER	8-5, 8-7, 8-17, 8-21, 8-23, 8-25, 8-27, 8-29, 8-31, 8-33, 8-41, 8-69, 8-71, 8-73
90239-0357	ROD END, CLEVIS WITH AXLE M10X1,25	1-35, 8-17
90239-0368	BRACKET	1-35
90239-0487	REAR,CLEVIS,MINI-ISO 20-25	7-37, 7-39
90239-0516	ROD END, CLEVIS WITH AXLE M10X1,25	1-31, 1-33, 5-137, 5-139, 5-141, 5-143, 7-37, 7-39
90239-0532	ROD END, CLEVIS WITH AXLE M8X1,25	7-41
90239-0818	DOUBLE ACTING, MINI-ISO, CYL.16-80	5-119
90239-0821	DOUBLE ACTING, MINI-ISO, CYL.20-25	7-41
90239-0828	DOUBLE ACTING, MINI-ISO, CYL.25-25	5-137, 5-139, 5-141, 5-143
90239-0829	DOUBLE ACTING, MINI-ISO, CYL.25-50	7-37, 7-39
90239-0835	DOUBLE ACTING, MINI-ISO, CYL.32-50	1-31, 1-33
90239-0852	DOUBLE ACTING, MINI-ISO, CYL.25-25	8-17
90239-0960	CYLINDER	5-15
90240-0088	BEARING BUSHING W/O FL, 10X12X10 MM	5-137, 5-139, 5-141, 5-143
90240-0097	FLANGE BUSHING, 12X14X9 MM	3-41, 3-43
90240-0133	FLANGE BUSHING, 30X34X30 MM	12-97, 12-99
90240-0172	FLANGE BUSHING, 8X12X10 MM	1-23, 1-43, 1-45
90240-0180	FLANGE BUSHING 10X14X15MM	4-101, 4-103, 4-105, 4-107
90240-0233	BEAR. BUSH. WITHOUT FL, 14X20X14 MM	5-145, 5-147, 5-149, 5-151, 5-153, 5-155
90240-0315	SPHER. BEARING, 30X47X22 PLASTIC MM	6-55
90240-0316	FLANGE BUSHING, 12X14X8 MM	6-7
90242-0115	O-RING MATERIAL 5,7 MM	2-37, 2-39, 2-41, 2-85, 2-87
90242-0116	O-RING 55X2,5 MM	5-19
90242-0117	O-RING 70X2 MM	5-123
90242-0118	O-RING 90X2 MM	5-61
90242-0120	O-RING 28X3,5 MM	5-61
90242-0121	O-RING 11X2,5 MM	5-61, 5-123
90242-0148	O-RING 19,2X3 MM	7-21, 7-23
90242-0270	O-RING 82,27X1,78 MM	6-59, 6-61
90242-0271	O-RING 63,22X1,78 MM	6-59, 6-61
90243-0099	ANALOG/DIGITAL MULTIMETER 175	14-21
90243-0125	SPIRIT LEVEL	14-33
90243-0133	CONTAINER	10-3
90243-0169	BINDER CLIP, DIAM.29 MM, NO. 4670819	2-131
90243-0208	SCREW DRIVER	14-21
90243-0427	FLOW METER	2-27, 2-29, 2-31, 2-81, 2-83, 12-159
90245-0019	TRANSF. 3-PH.750VA SEC.23A	9-5, 9-7, 9-9, 9-11, 9-13, 9-15, 9-25, 9-27, 9-29, 9-31, 9-33, 9-45, 9-47, 9-49, 9-51, 9-53, 9-55
90248-0002	HINGE, 4002-2	12-145
90248-0007	HINGE, 4002-1 1/4	2-159, 2-161
90248-0013	HINGE 3562E STUV	2-133, 12-149
90254-0010	LINK	12-97, 12-99
90257-0001	FILTER PLUG ART.NO.8145-00-140 TYPE F14	12-83
90257-0003	FILTER PLUG ART.NO.8145-00-180 TYPE F18	8-17
90258-0001	PIN, STRAIGHT SLOTTED SPRING FRP 2X20	4-143, 4-147
90258-0030	PIN, STRAIGHT SLOTTED SPRING FRP 3X24	8-77, 8-79
90258-0031	PIN, STRAIGHT SLOTTED SPRING FRP 3X20	8-69, 8-71, 8-73
90258-0036	BOLT	12-97, 12-99
90258-0037	BOLT	12-97, 12-99
90259-0031	OVERLOAD RELAY, 25-40 A	9-5, 9-7, 9-9, 9-11, 9-13, 9-15, 9-25, 9-27, 9-29, 9-31, 9-33, 9-45, 9-47, 9-49, 9-51, 9-53, 9-55
90259-0037	OVERVOLT PROT.PU1 230VREPBY 0090082-0300	9-39, 9-59
90259-0306	AUX CONTACT	13-49
90259-0310	ADAPTER PLATE, K&M SP PKZ M	9-5, 9-7, 9-9, 9-11, 9-13, 9-15, 9-25, 9-27, 9-29, 9-31, 9-33, 9-45, 9-47, 9-49, 9-51, 9-53, 9-55
90259-0312	ADAPTER PLATE K&M SP PKZ SOND C	9-5, 9-7, 9-9, 9-11, 9-13, 9-15, 9-25, 9-27, 9-29, 9-31, 9-33, 9-45, 9-47, 9-49, 9-51, 9-53, 9-55
90259-0313	AUX. CONTACT K&M NHI21-PKZM0	9-5, 9-7, 9-9, 9-11, 9-13, 9-15, 9-25, 9-27, 9-29, 9-31, 9-33, 9-45, 9-47, 9-49, 9-51, 9-53, 9-55
90261-0003	PLUG, BLIND, PLASTIC GPN300V-10	2-37, 2-39, 2-41, 2-85, 2-87
90261-0004	PIPE PLUG R 1/8"	5-7, 5-9, 5-35, 5-37
90261-0008	PLUG, BLIND, PLASTIC GPN300F26	2-27, 2-29, 2-31
90261-0011	PLUG, BLIND, PLASTIC GPN300F233	2-37, 2-39, 2-41, 2-85, 2-87, 7-9
90261-0013	PLUG F-11	2-27, 2-29, 2-31
90261-0018	PLUG, BLIND, PLASTIC GPN300F-183	2-37, 2-39, 2-41
90261-0019	PLUG, BLIND, PLASTIC, TYPEF23	2-21, 2-117, 2-119, 13-27
90261-0032	PLUG, BLIND, PLASTIC, NO. 1073	5-25, 5-27, 5-41, 5-43, 5-45, 5-47, 5-121

Part No	Description	Page No
90261-0033	PLUG, BLIND, PLASTIC GPN300F182	2-27, 2-29, 2-31, 2-37, 2-39, 2-41, 2-85, 2-87
90261-0036	PIPE PLUG "REPL.BY 90261-71"	4-45, 4-47, 4-49, 4-51
90261-0042	PLUG, BLIND, PLASTIC, F-142	2-85, 2-87
90261-0049	PLUG, BLIND, PLASTIC, NO. SR1750	7-25
90264-0019	FAN, G2E160-AY47-80	2-163
90264-0042	FAN SIEMENS 2BH1 300-1AH	7-9
90264-0344	FAN CASING, US 1412	2-163
90265-0081	CONNECTION BOX 01 1626 09	8-67
90266-0006	TUBE	3-35
90266-0007	TUBE	2-137, 2-139
90266-0010	TUBE	2-85, 2-87
90266-0019	PIPE	2-179, 3-35, 4-33, 4-35, 4-37, 4-39, 4-41, 4-43, 4-101, 4-103, 4-105, 4-107, 4-139, 4-141, 4-143, 4-147, 5-81, 5-83
90266-0022	DAIRY PIPE 38X1,2	12-45
90266-0165	BRASS PIPE	4-33, 4-35, 4-37, 4-39, 4-41, 4-43, 4-131, 4-133, 4-135, 4-137
90266-0167	PIPE	4-23, 4-25, 4-27, 4-29, 12-215, 12-217, 12-219, 12-221, 13-7, 13-9, 13-99, 13-101, 13-103, 13-105
90266-0174	TUBE 12X1 SS 2333-22	2-79
90274-0002	PRESSURE SWITCH XMJ, REPBY 90458-0844	5-17
90274-0043	PRESSURE GUARD, 300 KPA	2-149, 2-151
90274-0044	PRESSURE GUARD, 400 KPA	2-149, 2-151
90274-0053	LEVEL GUARD, 40VA/250V AC/DC	2-173, 2-175, 13-29
90274-0074	PRESSURE GUARD, 530 KPA	13-179
90274-0084	PRESSURE GUARD, 1800 KPA	2-179
90277-0019	FILTER	12-121
90277-0041	TANK BREATH. FILTER / UC-SAB-3101 UCC	2-173, 2-175, 13-29
90277-0045	FILTER / 9900-05-BK	2-27, 2-29, 2-31, 2-81, 2-83
90277-0046	FILTER / 9933-05-101	2-27, 2-29, 2-31, 2-81, 2-83
90287-0009	SPRING-LOADED SCREW M10X19	7-45
90287-0056	SCREW MC6S-TT M8X40	10-19, 12-7
90287-0062	SCREW M6	2-167
90287-0070	SCREW MLC6S M6X23	4-11, 4-13, 4-15, 4-17, 4-19, 4-21, 4-77, 4-79, 4-85, 4-87, 12-193, 12-195, 12-197, 12-199, 12-201, 12-203, 13-147
90287-0073	SCREW MC6S M5X70 129	3-11, 3-13, 3-23, 3-25, 13-11, 13-13
90287-0074	SCREW SLOT. PAN HEAD LKCS M4X12	2-167
90287-0075	SCREW SLOT. PAN HEAD LKCS M6X12	2-37, 2-39, 2-41, 2-85, 2-87, 2-159, 2-161, 2-165, 2-167, 2-185, 8-51, 8-53, 8-69, 8-71, 8-73, 12-239
90287-0076	SCREW SLOT. PAN HEAD LKCS M6X20	2-167, 8-51, 8-53, 10-15, 10-17, 10-21, 12-5, 12-9, 12-147
90287-0105	EXPANSION BOLT 10X100	12-49
90287-0106	SCREW SPRINGLOAD. SLOTTED HEAD M10X21	7-25, 12-117
90287-0109	SCREW SPRINGLOAD. SLOTTED HEAD M16X24	5-29, 5-49, 5-51
90287-0117	EXPANSIONSBOLT HSAF 12X110	12-35, 12-43, 12-47
90287-0136	SCREW MC6S M10X150 129	3-37, 3-39
90287-0147	EXPANDING PLUG M8X115 FZV	12-33, 12-49
90287-0155	SCREW M6S M10X25 88 NY-LOCK	5-121
90287-0161	SCREW, SOCK.SET DOGPOINT M8X12	5-89, 5-91, 5-101, 5-103
90287-0165	SCREW M6S M8X20 A480 NY-LOCK	5-57, 5-157
90287-0167	SCREW SPRINGLOAD. SOCK. HEX HEAD M6X20	8-13, 8-15
90287-0206	SLOTTED SCREW	8-77, 8-79
90287-0221	SCREW PAN HEAD MCS M2,5X16	14-23
90288-0045	ROLLER CHAIN, SINGLE 1/2 -28	12-97, 12-99
90288-0053	ROLLER CHAIN, SINGLE 1/2 -14	5-105, 5-107, 5-109, 5-111
90288-0055	ROLLER CHAIN, SINGLE 5/8 -42	5-29, 5-49, 5-51
90288-0057	ROLLER CHAIN, SINGLE 1/2 -16	5-105, 5-107, 5-109, 5-111
90288-0305	CONNECTING LINK SINGLE 3/4",SS	4-143, 4-147
90288-0311	LINK	5-105, 5-107, 5-109, 5-111
90296-0009	SILICONE GREASE DOW CORNING 150 GR.	1-49, 1-51, 1-53, 5-13, 5-57, 5-121, 5-133, 5-135, 8-77, 8-79
90296-0051	PASTE	8-69, 8-71, 8-73, 13-175
90296-0075	SHELL OMALA OIL 320, DRUM 208 LITRES	5-19
90297-0006	FLUORESCENT TUBE, PL9	9-5, 9-7, 9-9, 9-11, 9-13, 9-15, 9-25, 9-27, 9-29, 9-31, 9-33, 9-45, 9-47, 9-49, 9-51, 9-53, 9-55
90297-0300	BALLAST COIL 50HZ	2-147
90297-0306	BALLAST COIL 50/60 HZ	9-5, 9-7, 9-9, 9-11, 9-13, 9-15, 9-25, 9-27, 9-29, 9-31, 9-33, 9-45, 9-47, 9-49, 9-51, 9-53, 9-55
90298-0022	ZERUST CAPSULE	2-45
90299-0072	INK	8-9, 8-39, 12-57, 12-75
90303-0011	PROTECTIVE GOGGLES	10-7
90303-0012	PROTECTIVE GLOVES	10-7
90303-0013	APRON	10-7
90314-0021	LEVELRELAY0,5-10KOHM REPLACED BY90314-38	9-5, 9-7, 9-9, 9-11, 9-13, 9-15, 9-25, 9-27, 9-29, 9-31, 9-33, 9-45, 9-47, 9-49, 9-51, 9-53, 9-55
90316-0002	SPACER, 2,65/5X4	14-23
90321-0015	PUMP 502 CFX 7ETV 302 50HZ IP55	5-7, 5-9, 5-35, 5-37
90321-0018	GEAR PUMP MLPS/T124D	2-169
90321-0034	PUMP 502 CFX 5ETV 362 60HZ IP55	5-7, 5-9, 5-35, 5-37
90321-0037	PUMP C-6125P EP 220V, 50HZ	2-135
90321-0111	PUMP LOWARA SV806R406T 60HZ	6-35
90321-0112	PUMP LOWARA SV806R30T 50HZ	6-35
90321-0381	HYDRACCU SBO210-0,75E1/112U-210AK75	2-169, 13-93
90321-0382	FLANGE, RG 26/12-3/8 FOR 90321-18	2-169
90321-0383	PUMP CONN. ELBOW FLANGE RG 26/12-1/2	2-169
90321-0384	DISTANCE PIECE	2-169
90321-0385	COUPLING	2-169
90326-0012	PROTECTIVE COVER, T31A4618	1-35, 7-37, 7-39

Part No	Description	Page No
90326-0017	GLAND 1/8" REPBY 90326-306	1-35
90326-0020	PLUG, FEMALE YELLOW CR-AL	1-35, 7-37, 7-39, 8-69, 8-71, 8-73
90326-0022	PLUG, MALE YELLOW CR-AL	8-69, 8-71, 8-73
90326-0048	THERMOCOUPLE, 12826-31	1-35
90326-0060	THERMOCOUPLE, CR-AL	8-69, 8-71, 8-73, 13-177
90326-0081	THERMOCOUPLE, ISA TYPE K.	6-21, 6-23, 6-25
90326-0304	LEAD IN, 9041-15-KS-UB60	1-35
90326-0308	THERMOCOUPLE CABLE FOR CE-557793/MALE 5M	14-21
90326-0309	THERMOCOUPLE CABLE FOR CE-557793/FEMALE	14-21
90326-0310	THERMOCOUPLE, 5130020-000	14-21
90326-0311	HOUSE, 5103053-000	14-21
90326-0312	HOUSE, 5103050-000	14-21
90328-0001	SILENCER, 338/130 B140-00-120	2-149, 2-151
90328-0002	SILENCER, 338/12D	12-39, 12-41
90328-0003	SILENCER, 338/110	1-27, 1-29
90328-0024	SILENCER G3/8"	2-27, 2-29, 2-31, 2-81, 2-83, 12-159
90328-0026	SILENCER G1/4"	2-7, 2-27, 2-29, 2-31, 2-81, 2-83, 12-159
90330-0020	ELBOW, 90 INT. THREAD, R-2221/2	5-57
90330-0021	NIPPLES, EXT. THREAD. R-207R1/2	5-57
90330-0024	T-PIPE, INT. THREAD, RP1/4	2-49, 2-51
90330-0026	PLUG, EXT. G-THREAD, G1/4	2-57, 2-95, 5-19, 12-155, 13-95
90330-0028	NIPPLES, EXT. THREAD. R-207R3/8	1-71
90330-0032	NIPPLES, EXT. THREAD. ISO 7/1 R1/8-R1/8	1-27, 1-29
90330-0034	NUT, HEXAGON, G1/4	2-11, 2-25, 2-53, 2-55, 2-59, 2-61
90330-0037	PLUG, EXT. G-THREAD, G1/2	2-37, 2-39, 2-41, 5-19
90330-0043	NIPPLES, EXT. THREAD. R-207R1/4	2-7
90330-0066	PLUG, EXT. G-THREAD, G1/8	2-37, 2-39, 2-41
90330-0083	NIPPLES, EXT. THREAD. R3/8-R1/4	2-49, 2-51
90330-0086	PLUG, INT. THREAD, NO. R-231-R1/2	5-57
90330-0087	NUT, HEXAGON, R1	12-43
90330-0093	NUT, HEXAGON, G1/2	2-35, 2-121, 2-123, 5-57, 12-165, 13-15, 13-95
90330-0105	NUT, HEXAGON, R3/8	1-55, 7-9
90332-0007	RECORDER, ZSN 005/D 220V,50HZ	9-5, 9-7, 9-9, 9-11, 9-13, 9-15
90332-0008	RECORDER, ZSN 005/D 220V;60HZ	9-5, 9-7, 9-9, 9-11, 9-13, 9-15
90332-0019	RECORDER HONEYWELL 1 CH. .	9-25, 9-27, 9-29, 9-31, 9-33, 9-45, 9-47, 9-49, 9-51, 9-53, 9-55
90332-0322	PEN	9-59
90332-0323	RECORDER CHARTS	9-59
90333-0004	GRAPH PAPER 24 HOURS	9-19, 9-39
90334-0006	BATTERY 3,6V SIZE AA	9-5, 9-7, 9-9, 9-11, 9-13, 9-15, 9-25, 9-27, 9-29, 9-31, 9-33, 9-45, 9-47, 9-49, 9-51, 9-53, 9-55
90335-0004	TENSION SPRING 42380, 2X22X62,8	12-87
90335-0005	SPRING	5-159
90335-0011	COMP. SPRING 22100, 1,25X7,55X12	12-119
90335-0012	SPRING	5-67
90335-0015	TENSION SPRING 42360, 2X14X98	7-17
90335-0024	COMP. SPRING 22250, 1,25X13,75X27	12-119
90335-0025	COMP. SPRING 22010, 1X11X26	8-45, 8-47, 12-95
90335-0027	COMP. SPRING 22170, 1,25X9,25X33	8-77, 8-79, 13-133
90335-0036	COMP. SPRING 22450, 1,6X14,1X24	6-27
90335-0037	COMP. SPRING 22900, 2,2X15X20	8-21, 8-23, 8-25, 8-27, 8-29, 8-31, 8-33
90335-0064	COMP. SPRING 22270, 1,25X13,75X62,5	8-5, 8-7, 8-21, 8-23, 8-25, 8-27, 8-29, 8-31, 8-33, 12-53, 12-55, 12-67, 12-69, 12-71, 12-73
90335-0071	TENSION SPRING 42880, 3,2X36X179	14-5
90335-0237	COMP. SPRING, DM12360	13-197
90339-0004	MAGNETIC LOCK, 57X16X19 MM	12-27, 12-31
90339-0011	MAGNETIC LOCK, 40X18X14 MM	8-51, 8-53
90342-0010	RUBBER BELLOWS, 60X152 MM	12-97, 12-99
90344-0049	CHAIN TENSIONER	5-29, 5-49, 5-51
90344-0073	TOOTHED WHEEL	6-55
90345-0038	STANDING BEARING, TYPE SY 35 TF	5-157
90347-0004	VIBRATION DAMPER D=30 TH=M8 H=17 H2=21MM	2-181, 2-183, 7-15, 7-35, 13-59
90347-0007	VIBRATION DAMPER	5-119, 12-145
90347-0034	VIBRATION DAMPER	5-137, 5-139, 5-141, 5-143
90347-0036	GAS SPRING E0A1-52-195-460--001/900N	2-9
90347-0038	GAS SPRINGE 0A1-52-195-460--002/1075N	2-9
90347-0054	DAMPER	8-5, 8-7, 8-21, 8-23, 8-25, 8-27, 8-29, 8-31, 8-33
90347-0079	DAMPER TFE 601	12-143
90347-0108	GAS SPRING NO. 03-08-100-084174	8-49
90347-0110	MACHINE SHOE TFE 601 SS	10-3
90347-0111	MACHINE SHOE TFE 1201 SS	10-3
90347-0300	ROD END, ID=10 MM, M10 FOR 90347-36;-38	2-9, 2-69
90348-0007	FREE-WHEEL COUPLING, 15,875X22,225 MM	1-49, 1-51, 1-53
90355-0031	TORQUE RIGID COUPLING, 10X10 MM	3-11, 3-21, 13-11
90410-0044	TEMP.REG.PHILIPS KS 40" REPL.BY 90410-51	9-5, 9-7, 9-9, 9-11, 9-13, 9-15, 9-25, 9-27, 9-29, 9-31, 9-33
90410-0051	TEMPERATURE CONTROLLER, KS 40	9-5, 9-7, 9-9, 9-11, 9-13, 9-15, 9-45, 9-47, 9-49, 9-51, 9-53, 9-55, 13-175
90410-0337	CALIBRATION INSTRUMENT 5100071-001	14-21
90410-0338	CALIBRATION INSTRUMENT 5100071-001	14-21
90410-0339	ADAPTER FOR TEMP.REGULATOR, 101	14-21
90410-0340	AC-ADAPTER 5100072-002	14-21
90413-0033	CODE INSERT SET C 2/16	8-11, 8-35, 8-37, 12-59, 12-77, 12-79
90413-0043	CODE INSERT SET	8-11, 8-35, 8-37, 12-59, 12-77, 12-79
90413-0044	CODE INSERT SET	8-11, 8-35, 8-37, 12-59, 12-77, 12-79

Part No	Description	Page No
90413-0047	CODE INSERT SET A 2/16	8-11, 8-35, 8-37, 12-59, 12-77, 12-79
90413-0048	CODE INSERT SET A 9/28	8-35, 8-37, 12-77, 12-79
90413-0049	CODE INSERT SET C 9/28	8-35, 8-37, 12-77, 12-79
90415-0018	FILTER FOR LIME SEPARATING / D MOD.AD	2-149, 2-151
90415-0019	FILTER / ART.NO. HH-M15-RG	2-149, 2-151
90415-0029	PRESSURE FILTER MDF-BNHC-030-LB-010-B1.0	2-169
90415-0031	SUCTION FILTER / HY SUE 15-125	12-105
90415-0032	FILTER / 3-02-00-1 1/2"	2-57, 2-95
90415-0033	OIL FILTER REFILLING UC-HP-1229-25	5-67
90415-0063	DUSTFILTER / DD6 ART NO 8102 0215 43	2-7, 13-115
90415-0064	SIMPLIFIED CD2 DRYER	2-7
90415-0066	CD-2 DRYER	13-115
90415-0067	PD-6 FILTER	13-115
90415-0361	HOLDER SERIAL CONNECTION / 8092 2102 54	13-115
90417-0133	TIMING BELT 12,7X990,6X38,1	3-31, 3-33
90417-0134	TIMING BELT 12,7X1600,2X38,1	3-31, 3-33
90417-0180	TIMING BELT T10X920X40 POLYURETHANE	5-7, 5-9, 5-35, 5-37
90417-0329	TIMING BELT T10X960X32 POLYURETHANE	5-93, 5-95
90417-0330	TIMING BELT T10X1350X50 POLYURETHANE	5-97
90417-0345	TIMING BELT T10X690X32 POLYURETHANE	5-89, 5-91
90417-0415	TIMING BELT	6-59, 6-61
90418-0014	ELBOW PIPE	2-149, 2-151
90418-0039	ELBOW PIPE	2-149, 2-151
90418-0048	,T-PIPE, INT. CONN. NO. 7130-15	2-149, 2-151, 12-137
90418-0050	T-PIPE, REDUCTION, INT, NO. 7130-15X12X1	2-149, 2-151
90418-0053	ELBOW, 90, INT. CONN. NO. 7090-15	2-149, 2-151
90418-0054	ELBOW, 45, INT. CONN. NO. 7041-15	2-149, 2-151
90418-0055	ELBOW, 45, INT/EXT. CONN. NO. 7040-15	2-149, 2-151
90418-0056	T-PIPE, REDUCTION, INT, NO. 7130-15X15X1	2-149, 2-151
90418-0057	ADAPTER, EXT. CONN. NO. 7276CU / 15-G1/2	12-137
90418-0058	ELBOW, 90, INT/EXT. CONN. NO. 7092-15	2-149, 2-151
90418-0063	ADAPTER, INT. CONN. NO. 7272CU/15-G1/2	2-149, 2-151
90418-0068	T-PIPE, REDUCTION, INT, NO. 7130-15X8X15	2-149, 2-151
90419-0005	ALARM BEACON,RED24V	2-167, 12-49
90422-0008	COOLER	2-169
90424-0025	SPRAY NOZZLE 145 DEG	2-49, 2-51
90424-0026	SPRAY NOZZLE 95 DEG	2-11, 2-25, 2-53, 2-55, 2-59, 2-61
90424-0035	SPRAY NOZZLE 95 DEG	2-9, 2-23, 2-79, 5-81, 5-83
90424-0068	AIR NOZZLE, G1/4, MOD. 216 BSP	6-27
90424-0070	SPRAY NOZZLE 61 DEG	2-69, 2-79
90426-0003	HAND SHOWER	2-187
90430-0013	THYRISTOR UNIT TELEMETRIC 5THU1,50A/220V	9-25, 9-27, 9-29, 9-31, 9-33
90430-0036	MOTOR DRIVE CONTROL SCANDIALOGIC VPM SL	9-25, 9-27, 9-29, 9-31, 9-33, 9-45, 9-47, 9-49, 9-51, 9-53, 9-55
90430-0037	MOTOR DRIVE CONTR.PME 1802. REPL.BY -67	9-5, 9-7, 9-9, 9-11, 9-13, 9-15, 9-25, 9-27, 9-29, 9-31, 9-33, 9-45, 9-47, 9-49, 9-51, 9-53, 9-55
90430-0038	FREQ.INVERTER 1PH 2,2KW	9-5, 9-7, 9-9, 9-11, 9-13, 9-15
90430-0304	SET POINT UNIT TELEMETRIC 2SPU1	9-41
90430-0335	FILTER LA174936U025	13-211
90450-0066	CYLINDER	1-35
90450-0105	5 STEPS CYLINDER MECMAN	4-45, 4-47, 4-49, 4-51
90450-0377	CYLINDER	5-81, 5-83, 12-257
90450-0454	CYLINDER	8-21, 8-23, 8-25, 8-27, 8-29, 8-31, 8-33
90450-0495	CYLINDER	5-81, 5-83, 12-269, 13-129
90450-0500	PNEUMATIC CYLINDER	6-63
90450-0504	DOUBLE ACTING, PROFILE, CYL 50-25	6-17
90457-0036	3-PHASE MOTOR,FOOT MOUNT.1,1KW,1410 RPM	2-169
90457-0862	AIR DRYER. TYP LDF-H1-GÂ¬-24	12-161, 13-153
90457-0913	POWER SUPPLY MASCOT TYPE 7416	14-7
90458-0292	BASE, KT70-1001	13-245
90458-0293	LIGHT ELEMENT, RED, KL70-401R	13-245
90458-0637	THYRISTOR UNIT, 425A/40A	13-211
90458-0921	FILTER SP 122-200	2-149, 2-151
90458-1851	CONN. STR., 8-R1/4, EXT. THREAD	2-149, 2-151
90458-1915	X-SEAL 34,59X2,62 MM	4-23, 4-25, 4-27, 4-29, 13-167
90458-1916	BACK-UP RING 35,5X1,4 MM	4-23, 4-25, 4-27, 4-29, 13-167
90458-2050	CABLE GLAND, PG7, 149D7	13-177
90458-2370	DOUBLE ACTING, ROUND, CYL 32-150	13-161
90458-2954	ELBOW PIPE JOINT, EXT.THREAD, D=4MM M5	5-119
90459-0083	RECORDER 1-CHANNEL, LOGOLINE 500	13-225
90459-0173	AIR GUN ASSEMBLY, CEJN SERIE 208	2-189
90459-2525	TRIPLE SWITCH, SB-3-6-R1	9-45, 9-47, 9-49, 9-51, 9-53, 9-55
90459-3720	FREQUENCY CHANGER 6SE6440-2AB17-5AA1	13-221
90459-3726	FILTER 6SE6400-2FS01-0AB0	13-221
90459-4049	BASIC OP PANEL MM4, 6SE6400-0BP00-0AA0	13-221
90459-4081	FILTER 6SE6400-2FS02-6BB0	13-221
90459-4082	FREQUENCY CHANGER 6SE6440-2AB21-5BA1	13-221
90459-4807	POWER SUPPLY UNIT 100-240 VAC/24VDC2,5A	13-243
107000-0000	SPRING	12-223, 12-227, 14-47
107062-0000	LID	3-9, 3-19
107095-0000	LID	3-29
107334-0000	SPACER SLEEVE	4-45, 4-47, 4-49, 4-51
107335-0000	SPACER RING	4-45, 4-47, 4-49, 4-51
107339-0000	DOWEL	4-45, 4-47, 4-49, 4-51

Part No	Description	Page No
107426-0000	GUIDE SLEEVE	4-65, 4-67, 4-69, 4-71, 13-77
110220-0000	FORCE PLATE	1-73
110221-0000	WASHER	1-73
110222-0000	BOW CLAMP	1-73
110223-0000	DOWEL	1-73
110224-0000	LINK	1-73
110225-0000	STUD SCREW	1-73
110226-0000	SHAFT	1-73
110227-0000	SHAFT	1-73
111017-0000	SPACER RING	3-29
111032-0000	SHAFT	1-73
111426-0000	COMPRESSION SPRING	12-47
111543-0000	GUIDE CONE	1-43, 1-45, 7-45
113653-0000	BEARING PLATE	4-143, 4-147, 12-223, 12-227
113654-0000	RING	4-143, 4-147, 12-223, 12-227
159720-0002	WASHER	4-65, 4-67, 4-69, 4-71
206913-0000	LOCKING LOOP	12-87
207016-0000	SHAFT	1-49, 1-51, 1-53
207017-0001	WASHER	1-49, 1-51, 1-53
207018-0000	SUPPORT	1-49, 1-51, 1-53
207019-0001	GEAR WHEEL	1-49, 1-51, 1-53
207019-0002	GEAR WHEEL	1-49, 1-51, 1-53, 12-153
207019-0003	GEAR WHEEL	1-49, 1-51, 1-53, 8-17, 8-41
207024-0001	BENDING ROLLER	1-49, 1-51, 1-53
207024-0002	BENDING ROLLER	1-49, 1-51, 1-53
208173-0000	SHAFT	12-91
208361-0001	STAIR	10-19, 12-7
208658-0001	SPACER	10-19, 12-7
208709-0000	VOLUME SHIM	4-53, 4-55, 4-61, 4-63, 12-205, 12-207
208843-0000	ANGLE BRACKET	1-23
209182-0000	BRACKET	2-67
209184-0000	BRACKET	2-67
209331-0002	GEAR WHEEL	1-49, 1-51, 1-53
209331-0006	GEAR WHEEL	1-49, 1-51, 1-53
209331-0007	GEAR WHEEL	1-49, 1-51, 1-53, 12-153
209331-0009	GEAR WHEEL	1-49, 1-51, 1-53
209331-0010	GEAR WHEEL	1-49, 1-51, 1-53
209331-0012	GEAR WHEEL	1-49, 1-51, 1-53
209331-0013	GEAR WHEEL	1-49, 1-51, 1-53
209332-0000	BEARING HOLDER	1-49, 1-51, 1-53
209334-0000	WASHER	1-49, 1-51, 1-53
209815-0000	SPLASH PLATE	12-149
209839-0000	CANTILEVER	1-35
226097-0002	BENDING ROLLER	8-57, 8-59
226098-0000	BEARING	8-57, 8-59
228332-0000	FASTENING PLATE	2-37, 2-39, 2-41, 2-85, 2-87
228641-0000	CANTILEVER	1-73
228642-0000	MOUNTING SHEET	1-73
228643-0000	SHAFT	1-73
228653-0000	SHAFT	8-5, 8-7, 8-21, 8-23, 8-25, 8-27, 8-29, 8-31, 8-33, 12-53, 12-55, 12-67, 12-69, 12-71, 12-73
228843-0001	SPACER	5-23, 5-39
228845-0000	MOUNTING BLOCK	5-23, 5-39
229075-0000	LACE	2-37, 2-39, 2-41, 2-85, 2-87
229201-0001	SPACER	5-39
229201-0002	SPACER	5-23, 5-39
229202-0000	MOUNTING BLOCK	5-23, 5-39
229206-0000	LOCATING PIECE	5-23, 5-39
229207-0000	BEARING SLEEVE	5-23, 5-39, 6-37, 6-39
229400-0700	UNREELING DEVICE	12-15
229402-0000	ROLLER	12-49
229403-0000	ARM	12-49
229404-0000	BOW CLAMP	12-49
229405-0000	BEARING BRACKET	12-49
229406-0000	PRESSURE ROLLER	12-49
229408-0000	ROD	12-49
229409-0000	BEARING	12-49
229410-0000	BARRIER	12-49
229411-0000	SHAFT	12-49
229412-0000	SHAFT	12-49
229413-0000	SHAFT	12-49
229414-0000	WEIGHT	12-49
229508-0029	STUD SCREW	5-23, 5-39
229508-0031	STUD SCREW	5-39
229516-0000	PIN	5-23, 5-33, 5-39, 5-53, 5-55
229760-0012	STUD SCREW	5-39
229760-0013	STUD SCREW	5-23, 5-39
229775-0000	SPACER	12-91
230107-0000	WASHER	7-37, 7-39
230143-0001	KNIFE	4-75
230143-0002	KNIFE	4-75
230143-0004	KNIFE	4-75
230226-0000	BLOCKING PIECE	2-133
230462-0000	BUSHING	3-41, 3-43
230922-0100	AIR JET GUN	2-3, 2-5

Part No	Description	Page No
232236-0000	TOOTH PART	4-33, 4-35, 4-37, 4-39, 4-41, 4-43
232237-0000	SCREW	4-33, 4-35, 4-37, 4-39, 4-41, 4-43
232238-0000	TOOTH PART	4-131, 4-133, 4-135, 4-137
232772-0000	FASTENING BRACKET	12-49
232781-0400	REVOLVING HEAD	12-15
232784-0000	BEARING HOUSING	12-47
232786-0000	FLANGE	12-47
232787-0000	AXLE PIN	12-47
232788-0000	LID	12-47
232789-0000	SPRING HOUSING	12-47
232790-0000	SPACER PIPE	12-47
232791-0000	SPACER RING	12-47
232792-0000	CYLINDER BRACKET	12-47
232793-0000	COVERING PLATE	12-47
232794-0000	CONE	12-47
232978-0000	SCREEN	12-53, 12-55
232979-0000	PRESSURE ROLLER (PAK OF 10)	1-39, 1-65, 1-67, 1-69, 7-15
236628-0000	CANTILEVER	12-45
236629-0000	WALL BRACKET	12-45
236631-0000	HANDLE	12-45
236633-0000	COCK HANDLE	12-45
236634-0000	SHAFT	12-45
237082-0001	MOUNTING BLOCK	5-39
237082-0002	MOUNTING BLOCK	5-23, 5-39
237725-0000	BEARING HOUSING	3-29
237776-0400	PAPER GUARD	12-15, 12-127
237810-0000	SHEET	12-49
237812-0000	SHEET	12-49
237825-0000	BEARING	12-47
237826-0000	BEARING	12-47
237827-0001	ROLLER SHAFT	12-47
237827-0002	ROLLER SHAFT	12-47
239383-0000	SLEEVE	3-37, 3-39
239476-0000	ROD	4-131, 4-133, 4-135, 4-137
239533-0000	DRUM	3-9, 3-19
239534-0000	FLANGE	3-9, 3-19
239535-0000	FLANGE	3-9, 3-19
239536-0000	GEAR WHEEL	3-9, 3-19
239538-0000	WASHER	3-41, 3-43
239665-0000	GUIDE SHAFT	7-31, 7-33
239715-0200	BENDING ROLLER	1-3
239847-0000	HINGE	2-167
239849-0000	SPLASH PLATE	12-53, 12-55, 12-67, 12-69, 12-71, 12-73
239870-0000	SPACER SLEEVE	3-29
239874-0000	WASHER	4-139, 4-141
239890-0300	INTERMEDIARY SHAFT	3-3, 3-5, 3-7
242954-0000	WASHER	7-41
243016-0000	GEARING	3-9, 3-19
243017-0000	GEAR WHEEL	3-11, 3-21, 13-11
243041-0000	ARM	1-35
243043-0000	CYLINDER CONSOLE	1-35
243132-0000	PROTECTION PLATE	12-91
243133-0000	SHIELD PLATE	12-91
243141-0000	FRAME	12-85
243143-0000	SCREW	4-11, 4-13, 4-15, 4-17, 4-19, 4-21, 4-77, 4-79, 4-85, 4-87, 12-193, 12-195, 12-197, 12-199, 12-201, 12-203
243144-0000	BUSHING	4-11, 4-13, 4-15, 4-17, 4-19, 4-21, 4-77, 4-79, 4-85, 4-87, 12-193, 12-195, 12-197, 12-199, 12-201, 12-203
243151-0000	SHAFT	7-31, 7-33
243153-0000	PRESSURE ARM	12-87
243171-0100	LADDER	12-5
243171-0200	LADDER	10-15, 10-17
243172-0001	SIDE PIECE	10-19, 12-7
243172-0002	SIDE PIECE	10-19, 12-7
243218-0000	CANTILEVER	7-31, 7-33
243234-0000	FRAME	12-47
243336-0500	START-UP KIT	1-3
243434-0500	DESIGN CORRECTION DEVICE LEFT	4-3, 4-5
243435-0500	DESIGN CORRECTION DEVICE RIGHT	4-3, 4-5
243510-0100	DOOR	12-147
243512-0000	DOOR	12-149
243573-0000	LACE	2-37, 2-39, 2-41, 2-85, 2-87
243776-0300	CURVE SHAFT	3-3, 3-5, 3-7
243839-0300	CLEANING PIPE	1-3
243843-0400	CLEANING PIPE	2-3, 2-5
243846-0000	ATTACHMENT	13-41
243927-0700	ARM	3-3, 3-5, 3-7
243928-0000	BRACKET	3-35
243930-0000	SHAFT	3-35
243931-0000	SECURING PLATE	3-35
243942-0400	YOKE	4-3, 4-5
243943-0000	BUSHING	4-139, 4-141
243951-0000	YOKE	4-139
243952-0000	YOKE	4-141

Part No	Description	Page No
243965-0101	TEARING DEVICE	12-51
243966-0100	SPLICING TABLE	12-51
243971-0000	SPRING	3-37, 3-39
244778-0400	HOT AIR ELEMENT LS	1-3
244828-0303	DISTANCE PIECE-PLATF. 600 MM WITH LADDER	12-3
244828-0304	DISTANCE PIECE-PLATF. 600 MM NO LADDER	12-3
245039-0000	GUIDE WHEEL	5-23, 5-39, 6-37, 6-39
245165-0000	ASSEMBLY CONE	10-11
245189-0001	ATTACHMENT	7-37, 7-39
245190-0000	FLOAT	1-17, 1-19, 1-21
245210-0000	BODY	7-45
245221-0000	STOP	12-91
245271-0000	GASKET	4-77, 4-79, 4-85, 4-87
245272-0000	GASKET	4-77, 4-79, 4-85, 4-87
245281-0000	GASKET	12-149
245282-0000	GASKET	12-149
246327-0400	SHOCK ABSORBER	4-3, 4-5, 12-171
246328-0000	SPRING	4-113, 4-115, 12-175, 12-177
246329-0000	SPRING	4-113, 4-115, 12-175, 12-177
246332-0000	CATCH	4-113, 4-115, 12-175, 12-177
246337-0500	CUTTING JAW LEFT	4-3, 4-5
246338-0500	CUTTING JAW RIGHT	4-3, 4-5
246342-0000	PAPER SUPPORT	7-37, 7-39
246344-0000	HEAT GUARD	7-37, 7-39
246374-0000	BRACKET	2-21, 2-117, 2-119, 13-27
246468-0800	VOLUME FLAP	4-3, 4-5, 12-171
246494-0000	ATTACHMENT	4-69, 4-71
246495-0000	ATTACHMENT	4-65, 4-67
246497-0900	PRESSURE JAW LEFT	4-3, 4-5
246497-0950	PRESSURE JAW RIGHT	4-3, 4-5
246498-0600	ARM	4-3, 4-5
246499-0600	ARM WITH AXLE,CUT L	4-3, 4-5
246513-0000	BEARING	4-139, 4-141
246739-0000	BRACKET	2-133
246787-0000	SCREW	3-35
246790-0000	LINK	3-35
246885-0000	WASHER	2-23, 2-79
246948-0000	BRACKET	3-37, 3-39
246982-0000	PROTRACTOR	3-9, 3-19
247004-0001	SPACER FOR CREASE WHEEL	12-67, 12-69, 12-71, 12-73
247080-0000	BRACKET	2-37, 2-39, 2-41, 2-85, 2-87
247082-0000	LEG	2-37, 2-39, 2-41, 2-85, 2-87
247112-0000	SHAFT	4-139, 4-141
247119-0000	ROD	3-41, 3-43
247123-0600	START-UP KIT TPC	4-3, 4-5
247145-0000	PLATAFORM	10-15, 10-17
247146-0000	PLATFORM	10-15, 10-17, 10-21
247187-0500	CARRIER LEFT HAND SIDE	4-3, 4-5
247187-0550	CARRIER RIGHT HAND SIDE	4-3, 4-5
247227-0002	AIR NOZZLE	5-69, 5-71, 5-77, 5-79
247227-0003	AIR NOZZLE	5-69, 5-71, 5-77, 5-79
247262-0000	SPRING BRACKET	4-113, 4-115, 12-175, 12-177
247263-0000	SPACER	4-113, 4-115, 12-175, 12-177
247271-0000	LACE	4-113, 4-115, 12-175, 12-177
247385-0000	SIGN	2-173, 2-175, 13-29
247386-0000	SIGN	2-173, 2-175, 13-29
250588-0000	FLANGE	7-43, 12-25
250610-0200	TOOL KIT	10-3
251279-0000	COIL HEATER	1-35, 7-27, 7-37, 7-39
251358-0000	FLANGE	12-45, 12-49
251440-0000	FRAME	12-49
251449-0000	COVER	12-49
251490-0000	FASTENING BRACKET	7-37, 7-39
251493-0000	FORK	7-35
251494-0000	SHAFT	7-35
251495-0000	SHAFT	7-35
251496-0000	SHAFT	7-35
251498-0000	BARRIER	7-35
251502-0000	HEAT GUARD	7-37, 7-39
251513-0300	STAND	12-15
251530-0000	SPRING	4-113, 4-115, 12-175, 12-177
251539-0000	HOLDER	12-47
251561-0000	LINK	3-35
251562-0000	SHAFT	3-35
251597-0000	LACE	4-113, 4-115, 12-175, 12-177
251598-0000	STOPPER	4-113, 4-115, 12-175, 12-177
252653-0002	COUNTER CAM	4-49, 4-51
252654-0002	COUNTER CAM	4-45, 4-47
252707-0000	SPRING	3-41, 3-43
252733-0000	GLASS PANE	13-53
252766-0001	INSULATING PIPE	5-69, 5-71, 5-77, 5-79, 6-23
252766-0002	INSULATING PIPE	5-69, 5-71, 5-77, 5-79, 6-21, 6-25
252768-0000	CANTILEVER	4-101, 4-103, 4-105, 4-107
252770-0000	RAIL BRACKET	4-101, 4-103, 4-105, 4-107

Part No	Description	Page No
252773-0000	FASTENING PLATE	4-101, 4-103, 4-105, 4-107
252774-0000	FASTENING PLATE	4-101, 4-103, 4-105, 4-107
252775-0000	CURVE	4-101, 4-103, 4-105, 4-107
252776-0000	VOLUME CAM	4-101, 4-103, 4-105, 4-107
252780-0000	RULER	4-101, 4-103, 4-105, 4-107
252785-0000	SCREW	4-101, 4-103, 4-105, 4-107
252786-0000	WASHER	4-101, 4-103, 4-105, 4-107
252787-0000	BUSHING	4-101, 4-103, 4-105, 4-107
252788-0000	BUSHING	4-101, 4-103, 4-105, 4-107
252789-0000	NUT	4-101, 4-103, 4-105, 4-107
252791-0000	NUT	4-101, 4-103, 4-105, 4-107
252792-0000	NUT	4-101, 4-103, 4-105, 4-107
252793-0000	SUPPORT	4-101, 4-103, 4-105, 4-107
252794-0000	LACE	4-101, 4-103, 4-105, 4-107
252798-0000	RUBBER STRIP	13-53
252808-0000	DAMPER LEFT	4-113, 4-115, 12-175, 12-177
252809-0000	DAMPER RIGHT	4-113, 4-115, 12-175, 12-177
252867-0000	SHAFT	12-83
252869-0000	SHAFT	12-83
252870-0000	BENDING ROLLER	12-83
252889-0000	FILLER TUBE	1-65, 1-67, 1-69
252930-0000	SPACER SCREW	4-101, 4-103, 4-105, 4-107
252953-0000	TANK	2-169
252972-0000	SHOULDER SCREW	1-7, 1-9
255017-0000	BRACKET	2-35, 2-121, 2-123, 13-15
255064-0000	BUSHING	7-31, 7-33
255119-0000	WASHER	12-53, 12-55, 12-67, 12-69, 12-71, 12-73
255278-0000	PLUG FINISHER	4-11, 4-13, 4-15, 4-17, 4-19, 4-21, 4-77, 4-79, 4-85, 4-87, 12-193, 12-195, 12-197, 12-199, 12-201, 12-203
255281-0000	RING	12-83
255282-0000	BRACKET	12-83
255283-0000	FLANGE	12-83
255301-0000	HEATING RAIL	12-91
255335-0000	SHAFT	3-41, 3-43
255368-0000	PRESSURE GAUGE TUBE	1-27, 1-29
255398-0000	SLEEVE	3-41, 3-43
255417-0000	WASHER	7-41
255420-0000	BENDING ROLLER	12-45, 12-49
255473-0000	STOP	4-113, 4-115, 12-175, 12-177
255474-0000	STOP	4-113, 4-115, 12-175, 12-177
255578-0000	BEARING HOLDER	1-31, 1-33
255581-0001	SHAFT	1-31, 1-33
255582-0001	CAP	1-31, 1-33
255582-0003	CAP	1-31, 1-33
256640-0000	HOLDER	12-143
256641-0000	LEG	12-143
257090-0000	SHIFTER HANDLE	1-43, 1-45
257397-0000	PIN	12-27, 12-31
257663-0000	PIPE	12-83
257721-0000	MOUNTING SHEET	1-49, 1-51, 1-53
257722-0000	SHAFT	1-49, 1-51, 1-53
257723-0000	CONNECTION	1-49, 1-51, 1-53
257845-0000	RAILING	10-15, 10-17, 10-21
257846-0000	RAILING	10-15, 10-17
257852-0000	PLATFORM	10-15, 10-17, 10-21
257854-0000	CANTILEVER	10-15, 10-17, 10-21
257855-0000	CANTILEVER	10-15, 10-17
257859-0000	RAILING	10-15, 10-17, 10-21
257862-0000	PLATFORM	10-15, 10-17, 10-21
257900-0400	LOWER FORMING RING	1-3
257904-0000	HEAT GUARD	1-31, 1-33
257923-0000	GUIDE WHEEL	7-31, 7-33
257987-0000	AXLE SUPPORT	1-31, 1-33, 1-43, 1-45, 1-75, 1-77, 1-79, 1-81, 1-83
257988-0000	AXLE SUPPORT	1-43, 1-45, 1-75, 1-77, 1-79, 1-81, 1-83
259549-0001	SUPPORT PLATE	1-37
259550-0000	MOUNTING SHEET	1-37
259867-0000	HOSE CLAMP	2-135
259881-0000	FORK	1-65, 1-67, 1-69
259899-0000	SHAFT	1-65, 1-67, 1-69
259902-0000	FLOAT	1-17, 1-19, 1-21
262028-0001	FITTING BOLT	5-145, 5-147, 5-149, 5-151, 5-153, 5-155
262028-0002	FITTING BOLT	5-137, 5-139, 5-141, 5-143
262028-0011	FITTING BOLT	5-133, 5-135
262179-0001	PIN	5-137, 5-139, 5-141, 5-143, 5-145, 5-147, 5-149, 5-151, 5-153, 5-155
262183-0000	BUSHING	5-137, 5-139, 5-141, 5-143
262234-0000	BRACKET	5-133, 5-135
262235-0000	ARM	5-133, 5-135
262252-0000	HATCH	5-121
262253-0000	GASKET	5-121
262261-0000	SHAFT	5-63, 5-65
262264-0000	CANTILEVER	5-121
262266-0000	SHAFT	5-133, 5-135
262267-0000	BUSHING	5-133, 5-135
262272-0000	HEATING CHAMBER	5-69, 5-71, 5-77, 5-79

Part No	Description	Page No
262274-0002	BRACKET	5-59
262274-0005	BRACKET	5-57
262275-0002	CAP	5-59
262275-0003	CAP	5-57, 5-157
262288-0000	LID	5-69, 5-71, 5-77, 5-79
262290-0001	LACE	5-69, 5-71, 5-77, 5-79
262290-0002	LACE	5-69, 5-71, 5-77, 5-79
262309-0000	SLEEVE	5-133, 5-135
262313-0000	LID	5-133, 5-135
262314-0000	RUBBER GASKET	5-133, 5-135
262315-0000	LID	5-133, 5-135
262316-0000	RUBBER GASKET	5-133, 5-135
262322-0000	SHAFT	5-133, 5-135
262323-0000	SHAFT	5-133, 5-135
262324-0000	SHAFT	5-133, 5-135
262325-0000	SHAFT	5-133, 5-135
262343-0000	SECURING PLATE	5-133, 5-135
262350-0001	PIN	5-133, 5-135
262415-0000	LINK	5-133, 5-135
262427-0001	SHAFT	5-137, 5-139, 5-141, 5-143
262427-0002	SHAFT	5-137, 5-139, 5-141, 5-143
262427-0005	SHAFT	5-137, 5-139, 5-141, 5-143
262427-0007	SHAFT	5-137, 5-139, 5-141, 5-143
262427-0008	SHAFT	5-137, 5-139, 5-141, 5-143
262610-0000	LINK	5-133, 5-135
262720-0000	STEERING	5-133, 5-135
262774-0009	GLASS PANE	2-49, 2-51, 2-93
262906-0000	ARM	5-133, 5-135
262907-0000	ARM	5-133, 5-135
262922-0000	HOUSE	5-121
262924-0000	CANTILEVER	5-137, 5-139, 5-141, 5-143
262932-0000	HATCH	5-121
262933-0000	GASKET	5-121
262970-0000	RAIL	5-137, 5-139, 5-141, 5-143
263062-0000	PRESSURE ROLLER	1-39, 1-65, 1-67, 1-69
263150-0000	BRACKET	8-17, 12-83
263151-0000	WHEEL REPBY 0540719-0000	12-83
263152-0000	SHAFT	8-17, 12-83
263153-0000	NUT	8-17, 12-83
263313-0000	LINK HEAD M8 RECHTSGEWINDE	3-41, 3-43
263314-0000	LINK HEAD M8 LINKSGEWINDE	3-41, 3-43
263322-0000	RAILING	10-15, 10-17
263323-0000	RAILING	2-167
263328-0000	SPACER	3-41, 3-43
263329-0000	NUT	3-41, 3-43
263425-0000	BRACKET	14-39
263426-0000	SHAFT	14-39
263427-0000	WHEEL	14-39
263509-0000	LID	4-139, 4-141
263612-0000	RAIL	2-167
263619-0000	RAILING	10-15, 10-17
263621-0000	PLATFORM	12-5
263655-0001	SHAFT	1-43, 1-45
263655-0002	SHAFT	1-43, 1-45
263655-0003	SHAFT	1-43, 1-45
263655-0004	SHAFT	1-43, 1-45
263655-0005	SHAFT	1-43, 1-45
263655-0006	SHAFT	1-31, 1-33
263655-0007	SHAFT	1-75, 1-77, 1-79, 1-81, 1-83
263655-0008	SHAFT	1-43, 1-45, 1-75, 1-77, 1-79, 1-81, 1-83
263655-0009	SHAFT	1-31, 1-33, 1-75, 1-77, 1-79, 1-81, 1-83
263655-0010	SHAFT	1-75, 1-77, 1-79, 1-81, 1-83
263655-0011	SHAFT	1-43, 1-45
263655-0012	SHAFT	1-43, 1-45
263655-0018	SHAFT	1-43, 1-45
263655-0022	SHAFT	13-39
263655-0024	SHAFT	1-43, 1-45
263655-0025	SHAFT	1-31, 1-33
263655-0026	SHAFT	1-43, 1-45
263673-0000	GASKET	5-69, 5-71, 5-77, 5-79, 6-21, 6-23, 6-25
263684-0000	SPACER	4-113, 4-115, 12-175, 12-177
263693-0000	CATCH	4-113, 4-115, 12-175, 12-177
263704-0000	FORK	1-65, 1-67, 1-69
263756-0000	HOLDER	14-41, 14-43
263758-0000	RULER	14-13, 14-15, 14-41, 14-43
263759-0000	TEMPLATE	14-41, 14-43
263761-0000	TEMPLATE	14-41, 14-43
263762-0000	TEMPLATE	14-41, 14-43
263763-0000	TEMPLATE	14-41, 14-43
263765-0000	TEMPLATE	14-41, 14-43
263767-0000	FLAT STEEL	14-13, 14-15, 14-41, 14-43
263828-0000	JUNCTION RAIL	2-37, 2-39, 2-41, 2-85, 2-87
265563-0000	CANTILEVER REPBY 0546116-0000	12-25
265564-0000	BENDING ROLLER	7-43, 8-57, 8-59, 8-75, 12-25

Part No	Description	Page No
265565-0100	BENDING ROLLER BRACKET	12-23
265565-0200	BENDING ROLLER BRACKET	7-3, 7-5
265566-0001	SHAFT	7-13, 7-43, 12-25, 12-65
265566-0006	SHAFT	7-13, 7-43
265567-0000	BEARING UNIT	7-13, 7-43, 12-25, 12-65
265568-0000	DUST COVER	7-13, 7-43, 12-25, 12-65
265569-0001	STRUT	7-9, 7-13, 7-43, 12-25, 12-65
265569-0002	STRUT	7-9
265569-0003	STRUT	7-9
265569-0006	STRUT	7-9
265569-0007	STRUT	7-9, 7-13, 7-43
265706-0000	PROTECTION PLATE	12-7
265832-0000	TEMPLATE	14-41, 14-43
265889-0300	CATCH SAFETY	2-3, 2-5
265957-0000	SHAFT	1-37
265985-0100	BRACKET TO SUPERSTRUCTURE	1-3
265987-0000	HOLDER	1-35
265988-0000	HOLDER	1-35
266215-0100	PRODUCT LINE MANOMETER	12-3
266487-0100	FILLER TUBE UPPER	1-3
266625-0400	BENDING ROLLER	12-53, 12-55, 12-67, 12-69, 12-71, 12-73
266710-0000	WHEEL	8-17, 8-41, 12-83
266726-0300	PRESSURE ROLLER	7-3, 7-5
266728-0000	CANTILEVER	7-41
266730-0000	HOLDER	7-41
266731-0000	SHAFT	7-41
266732-0000	SHAFT	7-41
266736-0200	BRAKE	12-51
266737-0000	WASHER	7-41
266738-0000	COVER	7-41
266739-0000	CABLE GLAND	6-21, 6-23, 6-25, 7-41
266740-0001	SPACER	7-41
266740-0002	SPACER	7-41
266755-0200	PLATFORM	10-13
266756-0500	PLATFORM	10-13
266758-0000	CANTILEVER	7-31, 7-33
266761-0000	MOUNTING LUG	7-31, 7-33
266776-0300	PAPER GUARD	1-3
267316-0000	CANTILEVER	7-45
267327-0000	HOLDER	4-101, 4-103, 4-105, 4-107
267424-0002	FILLER TUBE	1-17, 1-19, 1-21
267424-0003	FILLER TUBE	1-17, 1-19, 1-21
267462-0000	LOCK SHEET	2-37, 2-39, 2-41, 2-85, 2-87
267463-0000	LOCK SHEET	2-37, 2-39, 2-41, 2-85, 2-87
267494-0000	COIL HEATER	1-35, 7-27, 7-37, 7-39, 12-153
267532-0000	CAM DISC	12-53, 12-55, 12-67, 12-69, 12-71, 12-73
267533-0000	PLATE	12-53, 12-55, 12-67, 12-69, 12-71, 12-73
267569-0000	STOPPER	1-73
267602-0000	PRESSURE FLANGE	1-17, 1-19, 1-21
267676-0000	HOLDER	4-101, 4-103, 4-105, 4-107
267732-0000	BRACKET	12-47
267733-0000	ANGLE	12-47
267754-0000	BOW CLAMP	4-131, 4-133, 4-135, 4-137
267835-0000	CANTILEVER	2-37, 2-39, 2-41, 2-85, 2-87
268059-0000	ROLL	1-31, 1-33
268078-0000	SHAFT	1-31, 1-33
268139-0000	DISTANCE PIECE	12-5, 12-9
268195-0000	SCREW	4-101, 4-103, 4-105, 4-107
268568-0000	AIR NOZZLE	1-37
268590-0000	PAPER GUARD	1-55
268640-0000	EXTENSION PIECE	12-47
268642-0000	CONTACT PIECE	4-65, 4-67, 4-69, 4-71
268643-0000	BUSHING	4-65, 4-67, 4-69, 4-71
268644-0000	WASHER	4-65, 4-67, 4-69, 4-71
268693-0000	DRIP GUARD	1-73
268746-0000	SCREW	2-125
268794-0200	LIGHT FIXTURE MULTI INSTALLATION	12-3
268830-0000	COMPRESSION SPRING	5-133, 5-135, 11-19
268930-0500	MODIF.OF BRAKING DEVICE	12-15
268931-0800	JUMBO REEL EQUIPMENT	12-3
269053-0001	SHAFT	7-15
269053-0003	SHAFT	7-15
269054-0000	ARM	7-15
269056-0000	CATCH	7-15
269057-0000	TENSION SPRING	7-15
269059-0000	COUNTER CAM	4-49, 4-51
269060-0000	COUNTER CAM	4-45, 4-47
269112-0600	STRIP APPLICATOR	7-3, 7-5
269136-0200	EDGE ROLLER	1-3
269151-0000	SHAFT	1-31, 1-33
269166-0000	CANTILEVER	12-45
269274-0000	PLATFORM COVER	2-167
269275-0000	PLATFORM COVER	2-167
269285-0000	PROTECTION PLATE	2-37, 2-39, 2-41, 2-85, 2-87

Part No	Description	Page No
269291-0000	RULER	2-37, 2-39, 2-41, 2-85, 2-87
269294-0000	RULER	2-37, 2-39, 2-41, 2-85, 2-87
269295-0000	PROTECTION PLATE	2-37, 2-39, 2-41, 2-85, 2-87
269296-0000	PROTECTION PLATE	2-37, 2-39, 2-41, 2-85, 2-87
269297-0000	PROTECTION PLATE	2-37, 2-39, 2-41, 2-85, 2-87
269301-0500	SIDE BOX RIGHT	2-3, 2-5
269320-0000	RAIL	2-133
269321-0000	RAIL	2-133
269322-0300	COVER UPPER	2-3, 2-5
269324-0400	HATCH	2-3, 2-5
269339-0000	CANTILEVER	10-15, 10-17, 10-21
269340-0000	CANTILEVER	10-15, 10-17, 10-21
269366-0000	DOWEL	4-143, 4-147
269425-0000	SHEET	12-49
269600-0000	SPACER	12-53, 12-55, 12-67, 12-69, 12-71, 12-73
269792-0000	DAMPER	4-101, 4-103, 4-105, 4-107
269961-0000	CANTILEVER	12-45
269962-0000	STEERING	12-45
270927-0000	SCREW	6-21, 6-23, 6-25, 13-177
271011-0000	WASHER	12-27, 12-31
271211-0000	WASHER	7-29, 12-61, 12-63
271239-0000	SLEEVE	12-95
271241-0000	SCREW	12-95
271653-0000	ARM	7-29, 12-61, 12-63
271654-0000	RETAINING RING	7-29, 12-61, 12-63
271655-0000	HOLDER	7-29, 12-61, 12-63
271860-0000	CLAMP BLOCK	13-53, 13-55
272453-0000	SPACER	12-27, 12-31
272510-0000	HINGE	12-27, 12-31
272511-0000	HINGE	12-27, 12-31
272728-0000	BARRIER	8-45, 8-47
272810-0001	SLEEVE	12-95
272813-0000	PLUNGER	12-95
272814-0000	SLEEVE	8-45, 8-47
272815-0001	SLEEVE	8-45, 8-47
273428-0000	WASHER	4-65, 4-67, 4-69, 4-71
273429-0000	WASHER	1-35
273449-0000	SIGN, FLAP SEALING	2-27, 2-29, 2-31
273455-0000	SIGN, COLD WATER	2-149, 2-151
273456-0000	SIGN, HOT WATER	2-149, 2-151
273458-0000	SIGN, AIR	2-149, 2-151
273565-0300	TPC BAR	4-3, 4-5, 4-61, 4-63
273567-0000	SHAFT	14-13, 14-15, 14-41, 14-43
273728-0300	VALVE GROUP	3-21
273751-0000	FRONT PLATE	2-37, 2-39, 2-41, 2-85, 2-87
273753-0000	PROTECTION PLATE	2-37, 2-39, 2-41, 2-85, 2-87
276172-0000	AXLE PIN	4-143, 4-147
276173-0000	CURVE ROLLER	4-143, 4-147
276189-0000	DAMPER	4-101, 4-103, 4-105, 4-107
276300-0000	LOWER BRACKET	14-13, 14-15, 14-41, 14-43
276301-0000	CAP	14-13, 14-15, 14-41, 14-43
276307-0000	SHIFTER HANDLE	14-13, 14-15, 14-41, 14-43
276343-0300	LID	2-169
276398-0000	HEXAGON NIPPLE	2-101, 2-103, 2-105, 2-107, 2-109, 2-111, 2-113, 2-137, 2-139
276460-0000	PLATFORM	12-9
276613-0000	LID	5-59
276636-0000	WASHER	5-59
276659-0000	WASHER	5-121, 5-133, 5-135
276664-0000	WASHER	5-137, 5-139, 5-141, 5-143
279027-0000	HOUSING	4-65, 4-67, 4-69, 4-71
279029-0000	RAIL	4-65, 4-67, 4-69, 4-71
279074-0000	TENSION SPRING	7-35
279103-0000	CONNECTION CLAMP	4-11, 4-13, 4-15, 4-17, 4-19, 4-21, 4-73, 12-193, 12-195, 12-197, 12-199, 12-201, 12-203
279105-0000	WASHER	2-137, 2-139
279210-0100	PAPER GUIDE	7-3, 7-5
279370-0000	STEERING	2-37, 2-39, 2-41
279374-0000	ROLL	1-31, 1-33
279466-0000	BRACKET	3-35
279480-0000	STEERING RAIL	7-15
279526-0000	BRACKET	2-137, 2-139
279564-0300	FOLDING DEVICE	4-3, 4-5
279565-0300	FOLDING DEVICE	4-3, 4-5
279621-0000	FASTENING PLATE	4-101, 4-103, 4-105, 4-107
279672-0000	ATTACHMENT	7-37, 7-39
279969-0000	DRIP PLATE	3-37, 3-39
279979-0500	CENTRAL LUBRICATION	2-3, 2-5
279983-0000	SPLASH PROTECTION	3-15
279984-0000	SPLASH PROTECTION	3-15
279985-0000	BRACKET	3-15
279987-0000	BRACKET	3-15, 3-17
279989-0000	SPACER	3-15, 3-17
279991-0000	BRACKET	3-15, 3-17
279992-0000	BRACKET	3-15, 3-17

Part No	Description	Page No
279993-0000	BRACKET	3-15, 3-17
279997-0000	BRACKET	3-15, 3-17
279998-0000	SHAFT	3-15, 3-17
279999-0000	COVERING PLATE	3-15
282507-0000	BRACKET LEFT	2-181, 2-183
282511-0000	COVERING PLATE	3-15
282512-0000	BRACKET	3-15, 3-17
282513-0000	BRACKET	3-15, 3-17
282528-0200	PRESSURE ROLLER	7-3, 7-5
282549-0000	MOUNTING RAIL	7-11
282596-0000	SUPPORT	7-35
282634-0300	STRIP GUIDE	7-3, 7-5
282635-0000	GUIDE WHEEL	7-31, 7-33
282647-0001	RAIL	1-37
282802-0000	PIPE	7-7
283026-0400	CONNECTION BOX	7-3, 7-5
283027-0000	APPLIANCE BOX	7-11
283084-0000	GUIDE SHAFT	10-9, 14-5
283085-0000	SLEEVE	10-11
283172-0000	BEARING HOUSING	7-37, 7-39
283247-0000	MOUNTING SHEET	12-43
283361-0000	AIR NOZZLE	7-37, 7-39
283391-0200	AIR NOZZLE LS	1-35
283462-0000	ROLL REPBY 0573666-0000	12-65
283712-0000	CANTILEVER	12-39, 12-41
283774-0000	BEARING	3-15
283775-0000	SLIDE	3-15
283795-0000	WEIGHT	12-49
283884-0000	OIL TROUGH	2-37, 2-39, 2-41, 2-85, 2-87
283992-0000	RULER	2-37, 2-39, 2-41, 2-85, 2-87
284124-0000	HOLDER	4-101, 4-103, 4-105, 4-107
284754-0000	CANTILEVER	12-53, 12-55, 12-67, 12-69, 12-71, 12-73
284833-0000	LID	4-65, 4-67, 4-69, 4-71
285027-0000	CARRIER	5-59
285054-0000	CURVE	5-59
285055-0000	CURVE	5-59
285132-0000	SHAFT	5-23, 5-39
285133-0000	CANTILEVER	5-23, 5-39
285141-0003	CLAMPING SLEEVE	5-121
285142-0002	SLEEVE	5-121
285142-0003	SLEEVE	5-121
285145-0002	INTERMEDIARY SECTION	5-121
285147-0000	INTERMEDIARY SECTION	5-121
285157-0000	LINK	5-133, 5-135
285158-0000	LINK	5-133, 5-135
285162-0000	LUBRICATING PIPE	5-133, 5-135
285164-0000	LUBRICATING PIPE	5-133, 5-135
285168-0000	BUSHING	5-25, 5-27, 5-41, 5-43, 5-45, 5-47
285287-0500	DRIVE UNIT	5-7, 5-9, 5-35, 5-37
285291-0400	BEVEL GEAR	5-57
285299-0100	PRESSURE ARM	5-57
285300-0000	BRACKET	5-63, 5-65
285303-0400	LOWER SECTION	5-3, 5-5
285310-0001	FLAP	5-145, 5-147, 5-149, 5-151, 5-153, 5-155
285310-0002	FLAP	5-145, 5-147, 5-149, 5-151, 5-153, 5-155
285316-0002	SPACER PIECE	5-145, 5-147, 5-149, 5-151, 5-153, 5-155
285321-0000	ROLL	5-145, 5-147, 5-149, 5-151, 5-153, 5-155
285322-0000	WASHER	5-145, 5-147, 5-149, 5-151, 5-153, 5-155
285330-0000	HOLDER	5-7, 5-9, 5-35, 5-37
285363-0000	WASHER	5-89, 5-91
285380-0002	WEDGE	5-93, 5-95
285403-0000	WASHER	5-17
285444-0000	SPACER	5-137, 5-139, 5-141, 5-143
285448-0000	PROTECTIVE CASING	5-133, 5-135
285449-0000	ARM	5-133, 5-135
285456-0300	PRESSURE DEVICE	5-3, 5-5
285479-0500	SUPERSTRUCTURE	5-3, 5-5
285507-0002	AIR NOZZLE	5-69, 5-71, 5-77, 5-79
285508-0002	AIR NOZZLE	5-69, 5-71, 5-77, 5-79
285591-0400	STATION	5-3, 5-5
285592-0600	MACHINE BODY	5-3, 5-5
285655-0000	ARM	5-137, 5-139, 5-141, 5-143
285656-0000	ARM	5-137, 5-139, 5-141, 5-143
285657-0000	ARM	5-137, 5-139, 5-141, 5-143
285660-0000	ARM	5-137, 5-139, 5-141, 5-143
285661-0000	ARM	5-137, 5-139, 5-141, 5-143
285664-0000	SHAFT	5-137, 5-139, 5-141, 5-143
285676-0000	AIR NOZZLE	5-69, 5-71, 5-77, 5-79
285677-0000	AIR NOZZLE	5-69, 5-71, 5-77, 5-79
285712-0000	RAIL	5-137, 5-139, 5-141, 5-143
285723-0000	ARM	5-137, 5-139, 5-141, 5-143
285724-0002	RAIL	5-137, 5-139, 5-141, 5-143
285729-0000	BUSHING	5-137, 5-139, 5-141, 5-143
285736-0300	PULL-DOWN DEVICE	5-3, 5-5

Part No	Description	Page No
285801-0000	BEAM	2-37, 2-39, 2-41, 2-85, 2-87
285825-0000	SHAFT	2-9, 2-69
285851-0000	BEARING	5-25, 5-27, 5-41, 5-43, 5-45, 5-47
285853-0200	STEERING RAIL	5-121
285861-0500	GEAR REDUCTION	5-7, 5-9, 5-35, 5-37
285891-0000	SCREW	5-121
285892-0000	CONNECTION	5-121
285923-0000	SCREW	5-7, 5-9, 5-35, 5-37
285956-0000	HANDLE	2-49, 2-51
285970-0000	COMPRESSION SPRING	5-133, 5-135
285979-0000	PIPE	2-9
285994-0000	NUT	5-7, 5-9, 5-35, 5-37
292032-0000	FILLER TUBE	1-65, 1-67, 1-69
292044-0000	SHAFT	8-9, 8-39, 12-57, 12-75
292046-0000	CANTILEVER	12-67, 12-69, 12-71, 12-73
292047-0000	CANTILEVER	8-5, 8-7, 12-53, 12-55
292071-0200	SPLASH PROTECTION	3-3, 3-5, 3-7
292136-0000	SPACER	12-93, 12-115
292137-0000	CANTILEVER	12-93, 12-115
292367-0000	PISTON	4-65, 4-67, 4-69, 4-71
292409-0000	END SECTION	8-35, 8-37, 12-77, 12-79
292410-0000	END SECTION	8-35, 8-37, 12-77, 12-79
292411-0000	CARRIER	8-35, 8-37, 12-77, 12-79
292412-0000	END SECTION	8-11, 8-35, 8-37, 12-59, 12-77, 12-79
292413-0000	END SECTION	8-11, 8-35, 8-37, 12-59, 12-77, 12-79
292414-0000	CARRIER	8-11, 12-59
292472-0000	HOLDER	3-11, 3-21, 13-11
292473-0000	CANTILEVER	3-11, 3-21, 13-11
292477-0000	SHAFT	3-11, 3-21, 13-11
292482-0000	WASHER	3-11, 3-21, 13-11
293158-0000	HATCH	2-37, 2-39, 2-41
293159-0000	HATCH	2-37, 2-39, 2-41
293160-0000	COVERING PLATE	2-37, 2-39, 2-41, 2-85, 2-87
293161-0000	COVERING PLATE	2-37, 2-39, 2-41, 2-85, 2-87
293198-0002	BRACKET	2-179
293201-0000	PIPE	2-149, 2-151
293333-0000	SIGN, WEB BRAKE	2-27, 2-29, 2-31
293351-0000	CRAMP	2-137, 2-139
293352-0000	CRAMP	2-137, 2-139
293363-0000	BARRIER NUT	7-9
293364-0000	THROTTLE SCREW	7-9
293375-0000	PLATE	2-167
293376-0000	PLATE RIGHT	2-167
293395-0001	TYPE HOLDER	8-11, 8-35, 8-37, 12-59, 12-77, 12-79
293395-0002	TYPE HOLDER	8-11, 8-35, 8-37, 12-59, 12-77, 12-79
293395-0003	TYPE HOLDER	8-35, 8-37, 12-77, 12-79
293455-0000	LID	2-67
293456-0000	LINK CHAIN	2-67
293566-0000	MOUNTINGS	2-63, 2-65, 2-97, 2-99
293578-0200	TEMPLATE	14-5
293579-0000	RULER	14-37
293580-0000	BRACKET	14-37
293581-0000	STOPPER	14-37
293583-0000	SPACER	14-35
293584-0000	BRACKET	14-37
293585-0000	BRACKET	14-37
293598-0000	GLASS PANE	2-63, 2-65, 2-97, 2-99
293605-0500	VOLUME CURVE PIECE	4-3, 4-5
293606-0000	SHIFTER HANDLE	4-101, 4-103, 4-105, 4-107
293608-0000	BEARING CONSOLE	4-101, 4-103, 4-105, 4-107
293609-0000	BEARING CONSOLE	4-101, 4-103, 4-105, 4-107
293610-0000	GEAR WHEEL	4-101, 4-103, 4-105, 4-107
293611-0000	SHAFT	4-101, 4-103, 4-105, 4-107
293612-0000	SCREW	4-101, 4-103, 4-105, 4-107
293617-0000	SIDE FRAME	12-53, 12-55, 12-67, 12-69, 12-71, 12-73
293618-0000	SIDE FRAME	12-53, 12-55, 12-67, 12-69, 12-71, 12-73
293620-0001	SHAFT	12-67, 12-69, 12-71, 12-73
293620-0002	SHAFT	12-53, 12-55, 12-67, 12-69, 12-71, 12-73
293620-0003	SHAFT	12-53, 12-55
293621-0001	BNDING ROLLER	8-21, 8-23, 8-25, 8-27, 8-29, 8-31, 8-33, 12-67, 12-69, 12-71, 12-73
293621-0002	BENDING ROLLER	8-5, 8-7, 12-53, 12-55, 12-67, 12-69, 12-71, 12-73
293621-0003	BENDING ROLLER	12-53, 12-55
293621-0005	BENDING ROLLER	8-21, 8-23, 8-25, 8-27, 8-29, 8-31, 8-33
293622-0003	BENDING ROLLER	12-53, 12-55
293623-0001	BENDING ROLLER	12-67, 12-69, 12-71, 12-73
293624-0001	PROTECTION PLATE	8-21, 8-23, 8-25, 8-27, 8-29, 8-31, 8-33, 12-67, 12-69, 12-71, 12-73
293624-0002	PROTECTION PLATE	8-5, 8-7, 8-21, 8-23, 8-25, 8-27, 8-29, 8-31, 8-33, 12-53, 12-55, 12-67, 12-69, 12-71, 12-73
293625-0000	CHAIN GUARD	12-67, 12-69, 12-71, 12-73
293626-0000	CHAIN GUARD	12-53, 12-55
293627-0000	PROTECTION PLATE	12-53, 12-55, 12-67, 12-69, 12-71, 12-73
293633-0003	SPACER	12-53, 12-55
293633-0005	SPACER	12-53, 12-55, 12-67, 12-69, 12-71, 12-73
293634-0003	SPACER	12-53, 12-55

Part No	Description	Page No
293637-0001	SHAFT	12-67, 12-69, 12-71, 12-73
293637-0003	SHAFT	12-53, 12-55
293639-0001	SHAFT	12-67, 12-69, 12-71, 12-73
293639-0005	SHAFT	12-53, 12-55, 12-67, 12-69, 12-71, 12-73
293640-0002	SPACER	12-53, 12-55, 12-67, 12-69, 12-71, 12-73
293640-0003	SPACER	12-53, 12-55
293641-0000	SPACER	12-67, 12-69, 12-71, 12-73
293644-0001	SPACER	12-67, 12-69, 12-71, 12-73
293644-0002	SPACER	12-53, 12-55, 12-67, 12-69, 12-71, 12-73
293644-0003	SPACER	12-53, 12-55
293645-0000	BRACKET	8-5, 8-7, 8-21, 8-23, 8-25, 8-27, 8-29, 8-31, 8-33, 12-53, 12-55, 12-67, 12-69, 12-71, 12-73
293646-0001	WASHER	8-5, 8-7, 8-21, 8-23, 8-25, 8-27, 8-29, 8-31, 8-33, 12-53, 12-55, 12-67, 12-69, 12-71, 12-73
293646-0002	WASHER	8-5, 8-7, 8-21, 8-23, 8-25, 8-27, 8-29, 8-31, 8-33, 12-53, 12-55, 12-67, 12-69, 12-71, 12-73
293646-0003	WASHER	8-21, 8-23, 8-25, 8-27, 8-29, 8-31, 8-33
293647-0000	FASTENING BRACKET	12-67, 12-69, 12-71, 12-73
293648-0000	FASTENING BRACKET	12-67, 12-69, 12-71, 12-73
293659-0000	CARRIER	8-35, 8-37, 12-77, 12-79
293667-0000	DOWEL	8-9, 8-39, 12-57, 12-75
293669-0001	WASHER	8-9, 8-39, 12-57, 12-75
293669-0002	WASHER	8-9, 8-39, 12-57, 12-75
293669-0003	WASHER	8-9, 8-39, 12-57, 12-75
293669-0004	WASHER	8-9, 8-39, 12-57, 12-75
293670-0000	SHAFT	8-9, 8-39, 12-57, 12-75
293671-0000	SPACER	8-35, 8-37, 12-77, 12-79
293672-0001	SPACER	12-67, 12-69, 12-71, 12-73
293672-0002	SPACER	12-67, 12-69, 12-71, 12-73
293672-0003	SPACER	12-67, 12-69, 12-71, 12-73
293672-0004	SPACER	12-67, 12-69, 12-71, 12-73
293673-0001	DISC	12-67, 12-69, 12-71, 12-73
293673-0002	DISC	12-53, 12-55
293674-0000	DOWEL	8-5, 8-7, 8-21, 8-23, 8-25, 8-27, 8-29, 8-31, 8-33, 12-53, 12-55, 12-67, 12-69, 12-71, 12-73
293676-0000	CARRIER	8-35, 8-37, 12-77, 12-79
293678-0000	FRAME LEFT	12-53, 12-55, 12-67, 12-69, 12-71, 12-73
293679-0000	SCREW	12-53, 12-55, 12-67, 12-69, 12-71, 12-73
293680-0500	DATING UNIT	12-51
293681-0501	DATING UNIT	12-51
293684-0200	PRINTING WHEEL NSS	8-21, 8-23, 8-25, 8-27, 8-29, 8-31, 8-33, 12-67, 12-69, 12-71, 12-73
293685-0200	PRINTING WHEEL SS	8-5, 8-7, 12-53, 12-55
293688-0000	CARRIER	8-35, 8-37, 12-77, 12-79
293690-0000	END SECTION	8-35, 8-37, 12-77, 12-79
293692-0000	GAUGE	14-5
293697-0000	END SECTION	8-39, 12-75
294009-0000	KNIFE	8-69, 8-71, 8-73, 8-89, 12-33
294042-0000	SEALING WASHER	4-101, 4-103, 4-105, 4-107
294056-0200	TRANSMISSION	4-3, 4-5
294057-0000	CONNECTION SOCKET	4-73
294058-0001	STUD SCREW	4-73
294058-0002	STUD SCREW	4-73
294059-0000	SPACER	4-73
294108-0000	CANTILEVER	7-13
294109-0000	CANTILEVER	7-13
294110-0001	SLIDE PLATE	1-37
294445-0000	PLATE	14-39
294446-0000	PLATE	14-39
294447-0000	SPACER	14-39
294464-0000	BASE PLATE	6-21, 6-23, 6-25, 13-177
294493-0000	HYDRAULIC PIPE	2-35, 2-121, 2-123, 13-15
294494-0000	HYDRAULIC PIPE	2-35, 2-121, 2-123, 13-15
294495-0000	HYDRAULIC PIPE	2-35, 2-121, 2-123, 13-15
294496-0000	HYDRAULIC PIPE	2-35, 2-121, 2-123, 13-15
295391-0003	THROTTLE SCREW	3-13, 3-23, 3-25, 12-167, 13-13, 13-97
295435-0000	WASHER	5-7, 5-9, 5-35, 5-37, 6-35
297084-0000	HOLDER	1-31, 1-33
297091-0000	ARM	3-11, 3-21, 13-11
297092-0000	ARM	3-11, 3-21, 13-11
297210-0000	INK WELL	8-9, 12-57
297211-0000	INK WELL	8-39, 12-75
297213-0000	END SECTION	8-9, 12-57
297312-0000	CANTILEVER	12-83
297314-0000	BOW CLAMP	12-83
297349-0000	BRACKET	12-45, 12-49
297394-0000	LEAD PLATE	12-49
297395-0000	PAPER GUARD	12-49
297413-0000	PIPE	5-13
297488-0000	GLASS PANE	2-49, 2-51, 2-93
297496-0000	LACE	5-133, 5-135
297499-0001	SIDE PIPE	5-69, 5-71, 5-77, 5-79
297499-0002	SIDE PIPE	5-69, 5-71, 5-77, 5-79
297499-0003	SIDE PIPE	5-69, 5-71, 5-77, 5-79
297551-0000	SHEET	5-7, 5-9, 5-35, 5-37
297567-0000	TENSION SPRING	5-137, 5-139, 5-141, 5-143
297569-0000	SIDE PLATE	5-23, 5-39
297574-0001	SPACER	5-39

Part No	Description	Page No
297574-0002	SPACER	5-23, 5-39
297576-0000	BEAM	2-37, 2-39, 2-41, 2-85, 2-87
297604-0400	HOOD	2-3, 2-5
297608-0000	BRACKET	5-11
297609-0000	ARM	5-11
297610-0000	SCREW	5-11
297611-0000	SHAFT	5-11
297638-0200	CHAIN TENSIONER	5-7, 5-9, 5-35, 5-37
297643-0000	BRACKET	5-137, 5-139, 5-141, 5-143
297644-0000	SHAFT	5-137, 5-139, 5-141, 5-143
297646-0000	FLAP	5-145, 5-147, 5-149, 5-151, 5-153, 5-155
297663-0000	POST HOLDER1	5-7, 5-9, 5-35, 5-37
297664-0000	POST HOLDER	5-7, 5-9, 5-35, 5-37
297669-0000	POST	2-37, 2-39, 2-41, 2-85, 2-87
297670-0000	POST	2-37, 2-39, 2-41, 2-85, 2-87
297679-0000	PIPE	2-49, 2-51
297681-0300	WHEEL	5-3, 5-5
297682-0300	WHEEL	5-3, 5-5
297751-0000	SHAFT	5-97
297755-0000	WEDGE	5-97
297770-0000	SCREW	2-9, 2-69
297794-0000	SHEET	5-97
297795-0000	SPRING	5-97, 6-37, 6-39
297800-0000	PIPE	2-57
297802-0000	BRACKET	2-57, 2-95
297805-0000	PIPE	2-57, 2-95
297808-0500	CLEANING EQUIPMENT	2-3, 2-5
297814-0000	BRACKET	5-7, 5-9, 5-35, 5-37
297860-0000	BUSHING	5-7, 5-9, 5-35, 5-37
297899-0000	SPROCKET	5-101, 5-103
297959-0000	FLANGE	12-45
297960-0000	ATTACHMENT	12-45
297988-0000	COVER	12-75
297989-0000	COVER	12-57
297998-0000	ADJUSTMENT PLATE	4-101, 4-103, 4-105, 4-107
297999-0000	ADJUSTMENT PLATE	4-101, 4-103, 4-105, 4-107
311101-0274	PARALLEL PIN ISO 2338 4H6X25 ST	8-77, 8-79
311102-0187	PARALLEL PIN ISO 2338 2M6X10 ST	13-151
311102-0232	PARALLEL PIN ISO 2338 3M6X8 ST	1-35
311102-0236	PARALLEL PIN ISO 2338 3M6X16 ST	8-77, 8-79
311102-0267	PARALLEL PIN ISO 2338 4M6X10 ST	1-35
311102-0268	PARALLEL PIN ISO 2338 4M6X12 ST	1-73
311102-0350	PARALLEL PIN ISO 2338 6M6X14 ST	8-51, 8-53
311102-0353	PARALLEL PIN ISO 2338 6M6X20 ST	8-17, 8-41, 8-43
311103-0210	PARALLEL PIN ISO 2338 2,5M6X16 A1	12-93
311103-0232	PARALLEL PIN ISO 2338 3M6X8 A1	7-37, 7-39, 10-5, 12-53, 12-55, 12-67, 12-69, 12-71, 12-73
311103-0233	PARALLEL PIN ISO 2338 3M6X10 A1	8-49
311103-0235	PARALLEL PIN ISO 2338 3M6X14 A1	1-75, 1-77, 1-79, 1-81, 1-83, 10-5
311103-0236	PARALLEL PIN ISO 2338 3M6X16 A1	1-43, 1-45, 8-9, 8-39, 12-57, 12-75
311103-0237	PARALLEL PIN ISO 2338 3M6X18 A1	10-5, 12-97, 12-99
311103-0238	PARALLEL PIN ISO 2338 3M6X20 A1	8-9, 8-39, 12-57, 12-75
311103-0267	PARALLEL PIN ISO 2338 4M6X10 A1	7-37, 7-39, 10-5
311103-0268	PARALLEL PIN ISO 2338 4M6X12 A1	4-23, 4-25, 4-27, 4-29, 12-215, 12-217, 12-219, 12-221, 13-7, 13-9
311103-0269	PARALLEL PIN ISO 2338 4M6X14 A1	12-53, 12-55, 12-67, 12-69, 12-71, 12-73
311103-0270	PARALLEL PIN ISO 2338 4M6X16 A1	8-9, 8-39, 8-51, 8-53, 12-57, 12-75, 12-117
311103-0272	PARALLEL PIN ISO 2338 4M6X20 A1	4-101, 4-103, 4-105, 4-107, 8-85, 8-87
311103-0273	PARALLEL PIN ISO 2338 4M6X22 A1	8-5, 8-7, 8-21, 8-23, 8-25, 8-27, 8-29, 8-31, 8-33
311103-0274	PARALLEL PIN ISO 2338 4M6X25 A1	8-5, 8-7, 8-21, 8-23, 8-25, 8-27, 8-29, 8-31, 8-33, 12-53, 12-55, 12-67, 12-69, 12-71, 12-73
311103-0276	PARALLEL PIN ISO 2338 4M6X30 A1	4-101, 4-103, 4-105, 4-107, 14-35, 14-37
311103-0306	PARALLEL PIN ISO 2338 5M6X12 A1	5-133, 5-135
311103-0310	PARALLEL PIN ISO 2338 5M6X20 A1	4-45, 4-47, 4-49, 4-51, 4-101, 4-103, 4-105, 4-107, 4-143, 4-147, 8-5, 8-7, 8-21, 8-23, 8-25, 8-27, 8-29, 8-31, 8-33
311103-0314	PARALLEL PIN ISO 2338 5M6X30 A1	2-37, 2-39, 2-41, 2-85, 2-87, 12-53, 12-55, 12-67, 12-69, 12-71, 12-73
311103-0318	PARALLEL PIN ISO 2338 5M6X40 A1	12-53, 12-55, 12-67, 12-69, 12-71, 12-73
311103-0350	PARALLEL PIN ISO 2338 6M6X14 A1	7-45, 8-57, 8-59, 10-5
311103-0351	PARALLEL PIN ISO 2338 6M6X16 A1	14-33
311103-0353	PARALLEL PIN ISO 2338 6M6X20 A1	8-5, 8-7, 8-21, 8-23, 8-25, 8-27, 8-29, 8-31, 8-33, 8-55
311103-0355	PARALLEL PIN ISO 2338 6M6X25 A1	6-59, 6-61, 8-55, 14-35, 14-37
311103-0357	PARALLEL PIN ISO 2338 6M6X30 A1	2-37, 2-39, 2-41, 2-85, 2-87, 4-45, 4-47, 4-49, 4-51, 4-101, 4-103, 4-105, 4-107, 8-5, 8-7, 8-21, 8-23, 8-25, 8-27, 8-29, 8-31, 8-33, 10-5, 12-53, 12-55, 12-67, 12-69, 12-71, 12-73, 14-37
311103-0365	PARALLEL PIN ISO 2338 6M6X50 A1	8-13, 8-15
311103-0399	PARALLEL PIN ISO 2338 8M6X16 A1	5-7, 5-9, 5-29, 5-35, 5-37, 5-49, 5-51, 5-57, 5-121
311103-0403	PARALLEL PIN ISO 2338 8M6X25 A1	2-133
311103-0407	PARALLEL PIN ISO 2338 8M6X35 A1	5-125, 5-127, 6-13, 6-33
311103-0411	PARALLEL PIN ISO 2338 8M6X45 A1	5-125, 5-127
311103-0413	PARALLEL PIN ISO 2338 8M6X50 A1	2-37, 2-39, 2-41, 2-85, 2-87, 13-53, 13-55
311103-1274	PARALLEL PIN ISO 2338 4M6X24 A1	8-45, 8-47
311111-0260	SPRING PIN ISO 8752 4X28-ST	1-49, 1-51, 1-53
311111-0305	SPRING PIN ISO 8752 5X14-ST	5-61
311111-0308	SPRING PIN ISO 8752 5X20-ST	12-97, 12-99

Part No	Description	Page No
311111-0310	SPRING PIN ISO 8752 5X24-ST	12-97, 12-99
311112-0192	SPRING PIN, ISO 8752 2,5X24-C	4-45, 4-47, 4-49, 4-51
311112-0204	SPRING PIN, ISO 8752 3X8-C	4-101, 4-103, 4-105, 4-107, 12-229
311112-0205	SPRING PIN, ISO 8752 3X10-C	7-17
311112-0251	SPRING PIN, ISO 8752 4X10-C	6-13
311112-0256	SPRING PIN, ISO 8752 4X20-C	8-85, 8-87
311112-0258	SPRING PIN, ISO 8752 4X24-C	8-85, 8-87
311112-0341	SPRING PIN, ISO 8752 6X24-C	5-17
311112-0347	SPRING PIN, ISO 8752 6X40-C	6-51
311112-0350	SPRING PIN, ISO 8752 6X55-C	8-45, 8-47
311202-0241	TAPER PIN EN 22339 A 4X25 SS	8-5, 8-7, 8-21, 8-23, 8-25, 8-27, 8-29, 8-31, 8-33, 12-53, 12-55, 12-67, 12-69, 12-71, 12-73
311202-0320	TAPER PIN EN 22339 A 8X35 SS	2-37, 2-39, 2-41, 2-85, 2-87
311211-0267	TAPER PIN THREADED ISO 8737 M5X05 SS	2-37, 2-39, 2-41, 2-85, 2-87
311211-0292	TAPER PIN THREADED ISO 8737 M6X30 SS	2-129, 8-69, 8-71, 8-73
311211-0299	TAPER PIN THREADED ISO 8737 M6X55 SS	1-55
311303-0356	SLOTTED PIN RPB 6X30 ZINC COATED	3-37, 3-39
311305-0308	LOTTED PIRPC5X16FZB	7-9, 7-13, 7-31, 7-33, 7-37, 7-39, 7-43, 12-25, 12-65
311401-0165	SPLIT PIN SP2,5X16FZB	12-49
311411-0127	SPLIT PIN SP1,2X12RFR	5-97
311411-0152	SPLIT PIN SP2X16RFR	14-49
311508-0416	RIVET, ROUND HEAD, KN, 4X10	4-77, 4-79, 4-85, 4-87
311520-0329	RIVET, BLANK 2,4X8	2-147
311520-0420	RIVET, BLANK 3,2X4	2-133, 2-183
311521-0142	BLANK RIVET 3,2X6	13-179
311521-0143	BLANK RIVET 3,2X8	8-91
311521-0144	BLANK RIVET 3,2X10	10-23
312101-0287	SCREW M6S M4X8 FZB	2-163, 8-11, 8-35, 8-37, 12-59, 12-77, 12-79
312101-0289	SCREW M6S M4X10 FZB	2-177, 8-69, 8-71, 8-73
312101-0291	SCREW M6S M4X12 FZB	8-69, 8-71, 8-73
312101-0295	SCREW M6S M4X20 FZB	2-179, 3-35, 3-37, 3-39
312101-0323	SCREW M6S M5X8 FZB	2-37, 2-39, 2-41, 2-85, 2-87, 3-41, 3-43, 8-17, 8-41, 8-69, 8-71, 8-73, 12-49
312101-0325	SCREW M6S M5X10 FZB	1-35, 2-21, 2-77, 2-117, 2-119, 3-11, 3-21, 12-49, 13-11, 13-27
312101-0327	SCREW M6S M5X12 FZB	2-137, 2-139, 12-49, 12-87
312101-0329	SCREW M6S M5X16 FZB	8-17, 8-35, 8-37, 8-41, 8-69, 8-71, 8-73, 12-77, 12-79, 12-87
312101-0331	SCREW M6S M5X20 FZB	2-35, 2-121, 2-123, 8-11, 8-35, 8-37, 8-69, 8-71, 8-73, 12-59, 12-77, 12-79, 13-15
312101-0333	SCREW M6S M5X25 FZB	2-165, 8-69, 8-71, 8-73
312101-0335	SCREW M6S M5X30 FZB	8-69, 8-71, 8-73
312101-0341	SCREW M6S M5X50 FZB	12-47
312101-0362	SCREW M6S M6X8 FZB	3-35
312101-0364	SCREW M6S M6X10 FZB	2-21, 2-77, 2-117, 2-119, 2-137, 2-139, 2-159, 2-161, 2-163, 2-181, 2-183, 3-31, 3-33, 8-11, 8-17, 8-35, 8-37, 12-47, 12-59, 12-77, 12-79, 13-27
312101-0366	SCREW M6S M6X12 FZB	1-35, 2-37, 2-39, 2-41, 2-85, 2-87, 2-129, 2-163, 2-179, 3-11, 3-21, 3-41, 3-43, 8-69, 8-71, 8-73, 13-11, 13-175
312101-0367	SCREW M6S M6X14 FZB	12-43, 12-49
312101-0368	SCREW M6S M6X16 FZB	2-37, 2-39, 2-41, 2-85, 2-87, 2-159, 2-161, 2-169, 2-177, 3-35, 8-69, 8-71, 8-73, 12-35, 12-49
312101-0370	SCREW M6S M6X20 FZB	1-35, 8-17, 12-49
312101-0372	SCREW M6S M6X25 FZB	2-137, 2-139, 3-11, 3-21, 3-37, 3-39, 13-11
312101-0374	SCREW M6S M6X30 FZB	5-59
312101-0379	SCREW M6S M6X45 FZB	12-49
312101-0380	SCREW M6S M6X50 FZB	2-21, 2-77, 2-117, 2-119, 12-47, 13-27
312101-0381	SCREW M6S M6X55 FZB	8-45, 8-47, 12-95
312101-0383	SCREW M6S M6X65 FZB	3-15, 3-17
312101-0447	SCREW M6S M8X12 FZB	1-35, 2-21, 2-77, 2-117, 2-119, 13-27
312101-0449	SCREW M6S M8X16 FZB	2-159, 2-161, 2-163, 2-181, 2-183, 3-29, 14-39
312101-0451	SCREW M6S M8X20 FZB	2-47, 2-177, 5-59
312101-0453	SCREW M6S M8X25 FZB	2-37, 2-39, 2-41, 2-85, 2-87, 2-167, 2-169, 3-11, 3-21, 3-37, 3-39, 5-59, 13-11
312101-0455	SCREW M6S M8X30 FZB	3-31, 3-33, 14-53
312101-0459	SCREW M6S M8X40 FZB	3-37, 3-39, 12-35
312101-0460	SCREW M6S M8X45 FZB	8-17
312101-0461	SCREW M6S M8X50 FZB	2-47, 2-159, 2-161
312101-0463	SCREW M6S M8X60 FZB	2-169
312101-0465	SCREW M6S M8X70 FZB	3-35, 3-41, 3-43
312101-0467	SCREW M6S M8X80 FZB	2-179
312101-0473	SCREW M6S M8X110 FZB	2-181, 2-183
312101-0493	SCREW M6S M10X25 FZB	8-69, 8-71, 8-73, 12-35
312101-0495	SCREW M6S M10X30 FZB	2-169, 10-15, 10-17, 10-19, 10-21, 12-7
312101-0499	SCREW M6S M10X40 FZB	2-37, 2-39, 2-41, 2-85, 2-87, 3-29, 12-5, 12-9
312101-0500	SCREW M6S M10X45 FZB	10-15, 10-17, 10-21
312101-0501	SCREW M6S M10X50 FZB	3-31, 3-33
312101-0509	SCREW M6S M10X90 FZB	12-35
312101-0518	SCREW M6S M10X140 FZB	2-37, 2-39, 2-41, 2-85, 2-87
312101-0536	SCREW M6S M12X30 FZB	3-31, 3-33, 12-47
312101-0538	SCREW M6S M12X35 FZB	2-37, 2-39, 2-41, 2-85, 2-87, 12-47
312101-0540	SCREW M6S M12X40 FZB	2-159, 2-161, 2-167, 2-185, 3-31, 3-33
312101-0546	SCREW M6S M12X70 FZB	3-37, 3-39
312101-0561	SCREW M6S M12X160FZB	12-97, 12-99
312101-0674	SCREW M6S M20X50 FZB	10-23
312104-0380	SCREW M6S M6X50H FZB	12-53, 12-55, 12-67, 12-69, 12-71, 12-73
312104-0460	SCREW M6S M8X45H FZB	3-11, 3-21, 13-11
312104-0465	SCREW M6S M8X70H FZB	3-31, 3-33, 3-41, 3-43
312104-0467	SCREW M6S M8X80HFZB	12-115

Part No	Description	Page No
312104-0505 ...	SCREW M6S M10X70H FZB	3-31, 3-33
312105-0287 ...	SCREW M6S ISO 4017 M4X8 A470	4-33, 4-35, 4-37, 4-39, 4-41, 4-43, 4-131, 4-133, 4-135, 4-137, 4-139, 4-141, 5-29, 5-49, 5-51, 5-57, 5-105, 5-107, 5-109, 5-111, 6-27, 6-37, 6-39, 7-9, 7-29, 8-69, 8-71, 8-73, 12-61, 12-63, 12-67, 12-69, 12-71, 12-73, 13-221
312105-0289 ...	SCREW M6S ISO 4017 M4X10 A470	13-225, 13-233
312105-0291 ...	SCREW M6S ISO 4017 M4X12 A470	2-133, 4-101, 4-103, 4-105, 4-107, 7-37, 7-39, 8-9, 8-39, 12-57, 12-75, 13-239
312105-0293 ...	SCREW M6S ISO 4017 M4X16 A470	5-57, 8-55
312105-0295 ...	SCREW M6S ISO 4017 M4X20 A470	4-45, 4-47, 4-49, 4-51, 4-101, 4-103, 4-105, 4-107, 4-139, 4-141, 5-7, 5-9, 5-25, 5-27, 5-35, 5-37, 5-41, 5-43, 5-45, 5-47
312105-0297 ...	SCREW M6S ISO 4017 M4X25 A470	12-91
312105-0299 ...	SCREW M6S ISO 4017 M4X30 A470	7-47
312105-0301 ...	SCREW M6S ISO 4017 M4X35 A470	7-47, 12-121
312105-0304 ...	SCREW M6S M4X45 A280	12-91
312105-0323 ...	SCREW M6S ISO 4017 M5X8 A480	1-37, 1-49, 1-51, 1-53, 1-73, 2-27, 2-29, 2-31, 2-81, 2-83, 2-135, 5-137, 5-139, 5-141, 5-143, 6-7, 6-13, 6-37, 6-39, 8-49, 12-53, 12-55, 12-67, 12-69, 12-71, 12-73, 12-91, 12-255
312105-0325 ...	SCREW M6S ISO 4017 M5X10 A480	2-157, 4-113, 4-115, 5-29, 5-49, 5-51, 5-69, 5-71, 5-77, 5-79, 6-49, 7-37, 7-39, 8-55, 12-33, 12-37, 12-85, 12-133, 12-175, 12-177, 13-85, 13-87, 14-35, 14-37
312105-0327 ...	SCREW M6S ISO 4017 M5X12 A480	2-37, 2-39, 2-41, 2-63, 2-65, 2-85, 2-87, 2-97, 2-99, 2-133, 4-113, 4-115, 5-25, 5-27, 5-41, 5-43, 5-45, 5-47, 5-67, 6-7, 7-17, 8-9, 8-39, 8-51, 8-53, 8-75, 12-45, 12-57, 12-61, 12-63, 12-75, 12-149, 12-155, 12-175, 12-177, 12-215, 12-217, 12-219, 12-221, 13-99, 13-101, 13-103, 13-105
312105-0328 ...	SCREW M6S ISO 4017 M5X14 A480	5-69, 5-71, 5-77, 5-79, 5-129, 5-131, 12-53, 12-55, 12-67, 12-69, 12-71, 12-73
312105-0329 ...	SCREW M6S ISO 4017 M5X16 A480	1-73, 4-45, 4-47, 4-49, 4-51, 4-97, 4-99, 4-113, 4-115, 5-7, 5-9, 5-35, 5-37, 6-9, 6-31, 6-33, 6-43, 6-45, 8-9, 8-39, 8-55, 8-69, 8-71, 8-73, 12-57, 12-67, 12-69, 12-71, 12-73, 12-75, 12-145, 12-175, 12-177
312105-0331 ...	SCREW M6S ISO 4017 M5X20 A480	4-101, 4-103, 4-105, 4-107, 4-113, 4-115, 6-7, 8-41, 8-49, 8-75, 12-33, 12-175, 12-177, 13-53, 13-55
312105-0333 ...	SCREW M6S ISO 4017 M5X25 A480	4-113, 4-115, 6-29, 12-53, 12-55, 12-67, 12-69, 12-71, 12-73, 12-175, 12-177, 13-85, 13-87
312105-0335 ...	SCREW M6S ISO 4014 M5X30 A480	4-113, 4-115, 4-139, 4-141, 12-175, 12-177
312105-0337 ...	SCREW M6S ISO 4014 M5X35 A480	8-85, 8-87
312105-0339 ...	SCREW M6S ISO 4014 M5X40 A480	2-27, 2-29, 2-31, 2-81, 2-83
312105-0340 ...	SCREW M6S ISO 4014 M5X45 A480	4-113, 4-115, 12-175, 12-177
312105-0341 ...	SCREW M6S ISO 4014 M5X50 A480	13-177
312105-0362 ...	SCREW M6S ISO 4017 M6X8 A480	1-7, 1-9, 2-147, 2-149, 2-151, 4-65, 4-67, 4-69, 4-71, 5-7, 5-9, 5-23, 5-35, 5-37, 5-39, 5-81, 5-83, 5-133, 5-135, 5-137, 5-139, 5-141, 5-143, 6-5, 6-35, 6-55, 12-53, 12-55, 12-85, 12-119, 12-255
312105-0364 ...	SCREW M6S ISO 4017 M6X10 A480	2-27, 2-29, 2-31, 2-37, 2-39, 2-41, 2-63, 2-65, 2-81, 2-83, 2-85, 2-87, 2-97, 2-99, 3-15, 3-17, 4-97, 4-99, 5-7, 5-9, 5-13, 5-17, 5-25, 5-27, 5-35, 5-37, 5-41, 5-43, 5-45, 5-47, 5-99, 5-115, 5-159, 6-27, 7-37, 7-39, 12-27, 12-31, 12-37, 12-39, 12-41, 12-53, 12-55, 12-91, 12-133, 13-59, 13-179, 13-211, 13-239
312105-0366 ...	SCREW M6S ISO 4017 M6X12 A480	1-5, 1-7, 1-9, 1-11, 1-23, 1-55, 1-73, 2-47, 2-67, 2-133, 2-185, 3-15, 3-17, 4-93, 4-95, 4-101, 4-103, 4-105, 4-107, 5-25, 5-27, 5-29, 5-33, 5-41, 5-43, 5-45, 5-47, 5-49, 5-51, 5-53, 5-55, 5-81, 5-83, 5-89, 5-91, 5-101, 5-103, 5-117, 5-129, 5-131, 5-137, 5-139, 5-141, 5-143, 6-9, 6-27, 6-31, 6-33, 6-35, 6-37, 6-39, 6-55, 6-59, 6-61, 7-9, 7-17, 7-35, 7-37, 7-39, 8-5, 8-7, 8-21, 8-23, 8-25, 8-27, 8-29, 8-31, 8-33, 8-43, 11-9, 11-11, 11-13, 11-15, 11-19, 12-13, 12-23, 12-29, 12-43, 12-45, 12-49, 12-53, 12-55, 12-61, 12-63, 12-67, 12-69, 12-71, 12-73, 12-83, 12-93, 12-97, 12-99, 12-115, 12-145, 12-149, 12-273, 13-53, 13-55, 13-125, 13-133
312105-0367 ...	SCREW M6S ISO 4017 M6X14 A480	5-7, 5-9, 5-23, 5-35, 5-37, 5-39, 5-121, 6-55, 12-81
312105-0368 ...	SCREW M6S ISO 4017 M6X16 A480	1-35, 1-55, 2-9, 2-37, 2-39, 2-41, 2-49, 2-51, 2-57, 2-63, 2-65, 2-67, 2-69, 2-85, 2-87, 2-95, 2-97, 2-99, 2-115, 2-133, 2-135, 5-7, 5-9, 5-15, 5-23, 5-25, 5-27, 5-29, 5-31, 5-33, 5-35, 5-37, 5-39, 5-41, 5-43, 5-45, 5-47, 5-49, 5-51, 5-53, 5-55, 5-81, 5-83, 5-89, 5-91, 5-101, 5-103, 5-117, 5-121, 5-129, 5-131, 5-133, 5-135, 5-145, 5-147, 5-149, 5-151, 5-153, 5-155, 6-5, 6-9, 6-11, 6-21, 6-23, 6-25, 6-27, 6-33, 6-37, 6-39, 6-49, 6-55, 6-57, 6-59, 6-61, 6-63, 7-9, 7-17, 7-29, 7-35, 7-37, 7-39, 7-45, 8-5, 8-7, 8-21, 8-23, 8-25, 8-27, 8-29, 8-31, 8-33, 8-43, 8-51, 8-53, 8-55, 8-75, 11-19, 12-45, 12-49, 12-67, 12-69, 12-71, 12-73, 12-105, 12-269, 13-67, 13-129
312105-0370 ...	SCREW M6S ISO 4017 M6X20 A480	1-5, 1-23, 1-55, 1-73, 2-57, 2-65, 2-93, 2-95, 2-99, 3-15, 3-17, 4-23, 4-25, 4-27, 4-29, 4-45, 4-47, 4-49, 4-51, 4-97, 4-99, 4-101, 4-103, 4-105, 4-107, 4-113, 4-115, 5-7, 5-9, 5-13, 5-15, 5-17, 5-25, 5-27, 5-29, 5-35, 5-37, 5-41, 5-43, 5-45, 5-47, 5-49, 5-51, 5-57, 5-67, 5-89, 5-91, 5-101, 5-103, 5-115, 5-121, 5-133, 5-135, 5-137, 5-139, 5-141, 5-143, 6-5, 6-29, 6-33, 6-35, 6-37, 6-39, 6-43, 6-45, 6-59, 6-61, 6-63, 7-7, 7-13, 7-29, 7-41, 7-43, 8-5, 8-7, 8-21, 8-23, 8-25, 8-27, 8-29, 8-31, 8-33, 8-51, 8-53, 11-19, 12-25, 12-33, 12-61, 12-63, 12-65, 12-93, 12-115, 12-147, 12-175, 12-177, 12-215, 12-217, 12-219, 12-221, 12-255, 13-7, 13-9, 13-53, 13-99, 13-101, 13-103, 13-105, 13-109, 13-111, 13-167
312105-0371 ...	SCREW M6S ISO 4017 M6X22 A480	5-59, 5-129, 5-131, 11-19, 11-23
312105-0372 ...	SCREW M6S ISO 4017 M6X25 A480	2-23, 4-23, 4-25, 4-27, 4-29, 4-45, 4-47, 4-49, 4-51, 4-65, 4-67, 4-69, 4-71, 4-73, 5-69, 5-71, 5-77, 5-79, 5-81, 5-83, 5-89, 5-91, 5-101, 5-103, 5-121, 5-133, 5-135, 5-137, 5-139, 5-141, 5-143, 5-145, 5-147, 5-149, 5-151, 5-153, 5-155, 5-159, 6-7, 6-13, 6-21, 6-23, 6-25, 6-47, 6-59, 6-61, 6-65, 7-15, 7-29, 8-5, 8-7, 8-21, 8-23, 8-25, 8-27, 8-29, 8-31, 8-33, 8-75, 11-19, 12-53, 12-55, 12-61, 12-63, 12-67, 12-69, 12-71, 12-73, 12-215, 12-217, 12-219, 12-221, 12-257, 12-269, 13-7, 13-9, 13-59, 13-99, 13-101, 13-103, 13-105, 13-109, 13-111, 13-119, 13-179
312105-0374 ...	SCREW M6S ISO 4014 M6X30 A480	3-15, 3-17, 3-35, 4-113, 4-115, 5-15, 5-25, 5-27, 5-41, 5-43, 5-45, 5-47, 5-69, 5-71, 5-77, 5-79, 5-89, 5-91, 5-115, 5-119, 5-137, 5-139, 5-141, 5-143, 5-145, 5-147, 5-149, 5-151, 5-153, 5-155, 6-17, 6-29, 6-37, 6-39, 6-63, 12-45, 12-53, 12-55, 12-67, 12-69, 12-71, 12-73, 12-145, 12-175, 12-177, 14-35, 14-37
312105-0376 ...	SCREW M6S ISO 4014 M6X35 A480	1-37, 2-27, 2-29, 2-31, 2-81, 2-83, 3-15, 3-17, 4-101, 4-103, 4-105, 4-107, 5-7, 5-9, 5-29, 5-33, 5-35, 5-37, 5-49, 5-51, 5-53, 5-55, 5-69, 5-71, 5-77, 5-79, 5-115, 5-137, 5-139, 5-141, 5-143, 5-145, 5-147, 5-149, 5-151, 5-153, 5-155, 6-5, 6-7, 6-59, 6-61, 12-53, 12-55, 12-67, 12-69, 12-71, 12-73, 13-41
312105-0378 ...	SCREW M6S ISO 4014 M6X40 A480	4-11, 4-13, 4-15, 4-17, 4-19, 4-21, 4-73, 5-25, 5-27, 5-33, 5-41, 5-43, 5-45, 5-47, 5-53, 5-55, 5-115, 5-145, 5-147, 5-149, 5-151, 5-153, 5-155, 7-21, 7-23, 7-37

Part No	Description	Page No
	.....	7-39, 12-53, 12-55, 12-67, 12-69, 12-71, 12-73, 12-193, 12-195, 12-197, 12-199, 12-201, 12-203
312105-0379 ...	SCREW M6S ISO 4014 M6X45 A480	5-29, 5-49, 5-51, 5-63, 5-65, 5-67, 5-145, 5-147, 5-149, 5-151
	.....	5-153, 5-155, 12-67, 12-69, 12-71, 12-73
312105-0380 ...	SCREW M6S ISO 4014 M6X50 A480	5-67, 5-115, 6-7, 12-53, 12-55, 12-67, 12-69, 12-71, 12-73
	.....	12-97, 12-99, 12-141
312105-0381 ...	SCREW M6S ISO 4014 M6X55 A480	..... 2-115, 5-115
312105-0382 ...	SCREW M6S ISO 4014 M6X60 A480	 6-55
312105-0384 ...	SCREW M6S ISO 4014 M6X70 A480	..... 3-15, 3-17, 5-17, 5-101, 5-103, 6-41
312105-0386 ...	SCREW M6S ISO 4014 M6X80 A480	... 5-33, 5-53, 5-55, 12-53, 12-55, 12-67, 12-69, 12-71, 12-73
312105-0388 ...	SCREW M6S ISO 4014 M6X90 A480	..... 1-11, 5-67, 5-69, 5-71, 5-77, 5-79
312105-0447 ...	SCREW M6S ISO 4017 M8X12 A480	4-93, 4-95, 5-89, 5-91, 5-133, 5-135, 6-33, 7-9, 7-41, 12-33
	.....	12-37, 12-45, 12-133, 12-155
312105-0449 ...	SCREW M6S ISO 4017 M8X16 A480	1-55, 1-57, 2-27, 2-29, 2-31, 2-37, 2-39, 2-41, 2-81, 2-83
		2-85, 2-87, 3-35, 3-41, 3-43, 4-101, 4-103, 4-105, 4-107, 5-23, 5-25, 5-27, 5-31, 5-33, 5-39, 5-41, 5-43
		5-45, 5-47, 5-53, 5-55, 5-101, 5-103, 5-117, 5-133, 5-135, 6-27, 6-37, 6-39, 6-55, 7-15, 7-21, 7-23
		7-35, 12-29, 12-33, 12-37, 12-43, 12-45, 12-53, 12-55, 12-67, 12-69, 12-71, 12-73, 12-91, 12-133
	.....	12-161, 13-115, 13-153
312105-0451 ...	SCREW M6S ISO 4017 M8X20 A480	1-13, 1-15, 1-43, 1-45, 1-49, 1-51, 1-53, 1-73, 2-49, 2-51
		2-63, 2-65, 2-93, 2-97, 2-99, 5-7, 5-9, 5-11, 5-17, 5-21, 5-25, 5-27, 5-31, 5-33, 5-35, 5-37, 5-41, 5-43
		5-45, 5-47, 5-53, 5-55, 5-67, 5-119, 5-121, 5-129, 5-131, 5-137, 5-139, 5-141, 5-143, 5-145, 5-147
		5-149, 5-151, 5-153, 5-155, 6-5, 6-9, 6-33, 6-35, 6-37, 6-39, 6-55, 6-59, 6-61, 7-9, 7-13, 7-31, 7-33
		7-37, 7-39, 7-41, 7-43, 7-47, 8-5, 8-7, 8-21, 8-23, 8-25, 8-27, 8-29, 8-31, 8-33, 8-55, 8-57, 8-59, 12-25
	.....	12-37, 12-45, 12-65, 12-97, 12-99, 12-133, 12-143, 13-53, 13-55, 13-161
312105-0452 ...	SCREW M6S ISO 4017 M8X22 A4 80	..... 4-101, 4-103, 4-105, 4-107, 7-15
312105-0453 ...	SCREW M6S ISO 4017 M8X25 A480	1-7, 1-9, 1-27, 1-29, 1-49, 1-51, 1-53, 1-75, 1-77, 1-79, 1-81
		1-83, 2-149, 2-151, 3-15, 3-17, 3-41, 3-43, 4-101, 4-103, 4-105, 4-107, 4-131, 4-133, 4-135, 4-137
		5-7, 5-9, 5-21, 5-29, 5-33, 5-35, 5-37, 5-49, 5-51, 5-53, 5-55, 5-57, 5-89, 5-91, 5-101, 5-103, 5-121
		5-133, 5-135, 5-137, 5-139, 5-141, 5-143, 5-145, 5-147, 5-149, 5-151, 5-153, 5-155, 6-19, 6-27, 6-35
	.....	6-49, 6-57, 7-47, 10-15, 10-17, 12-29, 12-39, 12-41, 12-43, 12-83, 12-115, 12-147
312105-0455 ...	SCREW M6S ISO 4017 M8X30 A480	2-7, 4-97, 4-99, 5-7, 5-9, 5-17, 5-25, 5-27, 5-29, 5-35, 5-37
		5-41, 5-43, 5-45, 5-47, 5-49, 5-51, 5-89, 5-91, 5-101, 5-103, 5-119, 5-121, 6-9, 6-29, 7-31, 7-33, 8-51
	.....	8-53, 12-87, 12-97, 12-99, 12-115, 12-143, 12-145
312105-0457 ...	SCREW M6S ISO 4014 M8X35 A480	1-49, 1-51, 1-53, 4-23, 4-25, 4-27, 4-29, 4-93, 4-95, 4-131
		4-133, 4-135, 4-137, 5-21, 5-89, 5-91, 5-101, 5-103, 5-133, 5-135, 5-145, 5-147, 5-149, 5-151, 5-153
		5-155, 6-17, 6-27, 6-41, 6-59, 6-61, 8-5, 8-7, 8-21, 8-23, 8-25, 8-27, 8-29, 8-31, 8-33, 12-53, 12-55
	.....	12-67, 12-69, 12-71, 12-73, 12-215, 12-217, 12-219, 12-221, 13-7, 13-9
312105-0459 ...	SCREW M6S ISO 4014 M8X40 A480	5-117, 5-133, 5-135, 5-145, 5-147, 5-149, 5-151, 5-153
	.....	5-155, 14-35, 14-37
312105-0460 ...	SCREW M6S ISO 4014 M8X45 A480	..... 5-119, 5-129, 5-131, 5-137, 5-139, 5-141, 5-143
312105-0462 ...	SCREW M6S ISO 4014 M8X55 A480	.. 1-43, 1-45, 1-75, 1-77, 1-79, 1-81, 1-83, 5-119, 11-17, 12-7
312105-0463 ...	SCREW M6S ISO 4014 M8X60 A480	..... 1-43, 1-45, 5-89, 5-91, 6-11
312105-0464 ...	SCREW M6S ISO 4014 M8X65 A480	..... 5-25, 5-27, 5-41, 5-43, 5-45, 5-47
312105-0465 ...	SCREW M6S ISO 4014 M8X70 A480	 13-65
312105-0466 ...	SCREW M6S ISO 4014 M8X75 A480	.. 4-131, 4-133, 4-135, 4-137, 6-21, 6-25, 8-57, 8-59, 13-115
312105-0467 ...	SCREW M6S ISO 4014 M8X80 A480	..... 12-143, 12-161, 13-153
312105-0469 ...	SCREW M6S ISO 4014 M8X90 A480	..... 5-25, 5-27, 5-39, 5-41, 5-43, 5-45, 5-47
312105-0471 ...	SCREW M6S ISO 4014 M8X100 A480	..... 5-23, 5-39, 6-5
312105-0473 ...	SCREW M6S ISO 4014 M8X110 A480	..... 6-37, 6-39
312105-0489 ...	SCREW M6S ISO 4017 M10X16 A480	..... 6-37, 6-39, 7-37, 7-39, 12-81, 12-147
312105-0491 ...	SCREW M6S ISO 4017 M10X20 A480	..... 2-167, 7-13, 7-31, 7-33, 12-33, 12-65, 12-85
312105-0493 ...	SCREW M6S ISO 4017 M10X25 A480	2-9, 2-37, 2-39, 2-41, 2-69, 2-85, 2-87, 2-167, 4-101, 4-103
		..... 4-105, 4-107, 5-17, 5-57, 5-157, 6-29, 6-33, 7-9, 10-15, 10-17, 10-21, 12-5, 12-9, 12-43
312105-0495 ...	SCREW M6S ISO 4017 M10X30 A480	2-9, 2-69, 4-101, 4-103, 4-105, 4-107, 5-7, 5-9, 5-35, 5-37
	.....	5-157, 6-9, 6-33, 6-41, 6-47, 6-57, 8-55
312105-0497 ...	SCREW M6S ISO 4017 M10X35 A480	2-9, 2-69, 4-33, 4-35, 4-37, 4-39, 4-41, 4-43, 5-121, 6-17, 6-41
312105-0499 ...	SCREW M6S ISO 4014 M10X40 A480	..... 4-101, 4-103, 4-105, 4-107
312105-0501 ...	SCREW M6S ISO 4014 M10X50 A480	..... 6-13, 6-41
312105-0507 ...	SCREW M6S ISO 4014 M10X80 A480	 6-41
312105-0509 ...	SCREW M6S ISO 4014 M10X90 A480	 12-43
312105-0513 ...	SCREW M6S ISO 4014 M10X110 A480	..... 6-37, 6-39
312105-0517 ...	SCREW M6S ISO 4014 M10X130 A480	..... 5-121, 6-37, 6-39
312105-0532 ...	SCREW M6S ISO 4017 M12X20 A480	 6-35
312105-0534 ...	SCREW M6S ISO 4017 M12X25 A480	 5-15
312105-0536 ...	SCREW M6S ISO 4017 M12X30 A480	..... 1-73, 6-35
312105-0538 ...	SCREW M6S ISO 4017 M12X35 A480	 5-157
312105-0540 ...	SCREW M6S ISO 4017 M12X40 A480	1-43, 1-45, 1-55, 1-75, 1-77, 1-79, 1-81, 1-83, 2-37, 2-39
	.....	2-41, 2-85, 2-87, 6-29
312105-0542 ...	SCREW M6S ISO 4014 M12X50 A480	..... 2-37, 2-39, 2-41, 2-85, 2-87, 5-7, 5-9, 5-35, 5-37
312105-0630 ...	SCREW M6S ISO 4017 M16X50 A480	..... 6-35, 12-97, 12-99
312105-0631 ...	SCREW M6S ISO 4014 M16X55 A480	 6-13
312109-0374 ...	SCREW M6S ISO 4017 M6X30 A480	5-17, 6-17, 6-33, 6-37, 6-39, 7-17, 8-5, 8-7, 8-21, 8-23, 8-25
	.....	8-27, 8-29, 8-31, 8-33
312109-0376 ...	SCREW M6S ISO 4017 M6X35 A480	4-23, 4-25, 4-27, 4-29, 5-89, 5-91, 5-101, 5-103, 6-11, 6-29
		6-33, 6-35, 11-19, 12-215, 12-217, 12-219, 12-221, 13-7, 13-9, 13-99, 13-101, 13-103, 13-105
	.....	13-109, 13-111
312109-0378 ...	SCREW M6S ISO 4017 M6X40 A480	..... 6-33, 11-19
312109-0381 ...	SCREW M6S ISO 4017 M6X55 A480	..... 5-117, 7-37, 7-39
312109-0457 ...	SCREW M6S ISO 4017 M8X35 A480	.... 4-33, 4-35, 4-37, 4-39, 4-41, 4-43, 5-33, 5-53, 5-55, 6-23
312109-0459 ...	SCREW M6S ISO 4017 M8X40 A480	4-131, 4-133, 4-135, 4-137, 5-145, 5-147, 5-149, 5-151
	.....	5-153, 5-155, 12-93
312109-0460 ...	SCREW M6S ISO 4017 M8X45 A480	..... 1-31, 1-33, 6-57, 6-59, 6-61, 11-17, 13-57
312109-0461 ...	SCREW M6S ISO 4017 M8X50 A480	..... 5-33, 5-53, 5-55, 6-27, 6-47
312109-0463 ...	SCREW M6S ISO 4017 M8X60 A480	3-35, 3-37, 3-39, 4-23, 4-25, 4-27, 4-29, 4-45, 4-47, 4-49
	.....	4-51, 4-93, 4-95, 6-29, 12-215, 12-217, 12-219, 12-221, 13-7, 13-9, 13-33

Part No	Description	Page No
312109-0499 ...	SCREW M6S ISO 4017 M10X40 A480	6-33
312109-0500 ...	SCREW M6S ISO 4017 M10X45 A480	6-41
312111-0297 ...	SCREW HEX.SOCK.HD.MC6S-TT 4X25 88 FZB	2-179
312111-0323 ...	SCREW HEX.SOCK.HD.MC6S-TT 5X8 88 FZB	8-61, 8-63, 8-65, 12-97, 12-99
312111-0325 ...	SCREW HEX.SOCK.HD.MC6S-TT 5X10 88 FZB	8-69, 8-71, 8-73
312111-0327 ...	SCREW HEX.SOCK.HD.MC6S-TT 5X12 88 FZB	8-69, 8-71, 8-73
312111-0329 ...	SCREW HEX.SOCK.HD.MC6S-TT 5X16 88 FZB	2-177, 5-19, 8-69, 8-71, 8-73
312111-0331 ...	SCREW HEX.SOCK.HD.MC6S-TT 5X20 88 FZB	8-17, 8-41, 14-53
312111-0333 ...	SCREW HEX.SOCK.HD.MC6S-TT 5X25 88 FZB	2-173, 2-175, 8-5, 8-7, 8-21, 8-23, 8-25, 8-27, 8-29, 8-31, 8-33, 8-41, 13-29
312111-0335 ...	SCREW HEX.SOCK.HD.MC6S-TT 5X30 88 FZB	3-37, 3-39, 8-5, 8-7, 8-11, 8-21, 8-23, 8-25, 8-27, 8-29, 8-31, 8-33, 8-35, 8-37, 12-59, 12-77, 12-79
312111-0337 ...	SCREW HEX.SOCK.HD.MC6S-TT 5X35 88 FZB	8-21, 8-23, 8-25, 8-27, 8-29, 8-31, 8-33
312111-0343 ...	SCREW HEX.SOCK.HD.MC6S-TT 5X60 88 FZB	2-175
312111-0345 ...	SCREW HEX.SOCK.HD.MC6S-TT 5X70 88 FZB	2-171
312111-0364 ...	SCREW HEX.SOCK.HD.MC6S-TT 6X10 88 FZB	2-37, 2-39, 2-41, 2-85, 2-87, 8-5, 8-7, 8-21, 8-23, 8-25, 8-27, 8-29, 8-31, 8-33, 12-47
312111-0366 ...	SCREW HEX.SOCK.HD.MC6S-TT 6X12 88 FZB	8-17
312111-0368 ...	SCREW HEX.SOCK.HD.MC6S-TT 6X16 88 FZB	2-173, 2-175, 3-37, 3-39, 5-123, 13-29
312111-0370 ...	SCREW HEX.SOCK.HD.MC6S-TT 6X20 88 FZB	5-19, 5-61, 8-17, 12-49
312111-0371 ...	SCREW HEX.SOCK.HD.MC6S-TT 6X22 88 FZB	8-41
312111-0372 ...	SCREW HEX.SOCK.HD.MC6S-TT 6X25 88 FZB	7-11, 8-67, 8-69, 8-71, 8-73
312111-0374 ...	SCREW HEX.SOCK.HD.MC6S-TT 6X30 88 FZB	3-9, 3-19
312111-0378 ...	SCREW HEX.SOCK.HD.MC6S-TT 6X40 88 FZB	12-47
312111-0449 ...	SCREW HEX.SOCK.HD.MC6S-TT 8X16 88 FZB	8-17, 8-41
312111-0451 ...	SCREW HEX.SOCK.HD.MC6S-TT 8X20 88 FZB	3-31, 3-33, 5-61, 5-125, 5-127
312111-0453 ...	SCREW HEX.SOCK.HD.MC6S-TT 8X25 88 FZB	5-61, 5-125, 5-127
312111-0455 ...	SCREW HEX.SOCK.HD.MC6S-TT 8X30 88 FZB	3-41, 3-43
312111-0457 ...	SCREW HEX.SOCK.HD.MC6S-TT 8X35 88 FZB	5-125, 5-127
312111-0459 ...	SCREW HEX.SOCK.HD.MC6S-TT 8X40 88 FZB	2-125
312111-0467 ...	SCREW HEX.SOCK.HD.MC6S-TT 8X80 88 FZB	8-57, 8-59
312111-0491 ...	SCREW HEX.SOCK.HD.MC6S-TT 10X20 88 FZ	5-61
312111-0492 ...	SCREW HEX.SOCK.HD.MC6S-TT 10X22 88 FZ	3-9, 3-19
312111-0493 ...	SCREW HEX.SOCK.HD.MC6S-TT 10X25 88 FZ	12-47
312111-0497 ...	SCREW HEX.SOCK.HD.MC6S-TT 10X35 88 FZ	3-9, 3-19
312111-0499 ...	SCREW HEX.SOCK.HD.MC6S-TT 10X40 88 FZ	3-9, 3-19
312111-0501 ...	SCREW HEX.SOCK.HD.MC6S-TT 10X50 88 FZ	3-9, 3-19
312111-0504 ...	SCREW HEX.SOCK.HD.MC6S-TT 10X65 88 FZ	3-9, 3-19
312111-0506 ...	SCREW HEX.SOCK.HD.MC6S-TT 10X75 88 FZ	3-9, 3-19
312111-0533 ...	SCREW HEX.SOCK.HD.MC6S-TT 12X22 88 FZ	12-47
312111-0536 ...	SCREW HEX.SOCK.HD.MC6S-TT 12X30 88 FZ	12-47
312111-0540 ...	SCREW HEX.SOCK.HD.MC6S-TT 12X40 88 FZ	14-39
312115-0226 ...	SCREW ISO4762 M3X12 A4 80	6-21, 6-23, 6-25, 13-177
312115-0228 ...	SCREW ISO4762 M3X16 A4 80	7-29, 12-61, 12-63
312115-0230 ...	SCREW ISO4762 M3X20 A4 80	6-21, 6-23, 6-25, 6-59, 6-61, 13-177
312115-0232 ...	SCREW ISO4762 M3X25 A4 80	1-49, 1-51, 1-53
312115-0287 ...	SCREW ISO4762 M4X8 A4 80	2-147, 4-65, 4-67, 4-69, 4-71, 6-55, 8-9, 8-39, 12-57, 12-75
312115-0289 ...	SCREW ISO4762 M4X10 A4 80	4-131, 4-133, 4-135, 4-137
312115-0291 ...	SCREW ISO4762 M4X12 A4 80	4-65, 4-67, 4-69, 4-71, 5-17
312115-0293 ...	SCREW ISO4762 M4X16 A4 80	4-65, 4-67, 4-69, 4-71, 5-133, 5-135
312115-0295 ...	SCREW ISO4762 M4X20 A4 80	1-49, 1-51, 1-53, 4-65, 4-67, 4-69, 4-71, 5-17, 13-77
312115-0299 ...	SCREW ISO4762 M4X30 A4 80	4-61, 4-63, 4-65, 4-67, 4-69, 4-71
312115-0303 ...	SCREW ISO4762 M4X40 A4 80	4-33, 4-35, 4-37, 4-39, 4-41, 4-43, 6-11
312115-0304 ...	SCREW ISO4762 M4X45 A4 80	1-27, 1-29
312115-0323 ...	SCREW ISO4762 M5X8 A4 80	5-25, 5-27, 5-41, 5-43, 5-45, 5-47, 5-159, 8-77, 8-79, 12-85, 13-177
312115-0325 ...	SCREW ISO4762 M5X10 A4 80	2-63, 2-65, 2-97, 2-99, 2-131, 2-133, 5-159, 12-105
312115-0327 ...	SCREW ISO4762 M5X12 A4 80	4-23, 4-25, 4-27, 4-29, 4-113, 4-115, 7-29, 12-175, 12-177, 13-7, 13-9, 13-119, 13-147
312115-0329 ...	SCREW ISO4762 M5X16 A4 80	1-49, 1-51, 1-53, 2-63, 2-65, 2-97, 2-99, 4-33, 4-35, 4-37, 4-39, 4-41, 4-43, 4-139, 4-141, 8-85, 8-87, 12-215, 12-217, 12-219, 12-221, 13-7, 13-9, 13-67, 13-85, 13-87, 13-99, 13-101, 13-103, 13-105
312115-0331 ...	SCREW ISO4762 M5X20 A4 80	4-23, 4-25, 4-27, 4-29, 4-77, 4-79, 4-85, 4-87, 4-93, 4-95, 13-59
312115-0333 ...	SCREW ISO4762 M5X25 A4 80	2-149, 2-151, 4-65, 4-67, 4-69, 4-71
312115-0337 ...	SCREW ISO4762 M5X35 A4 80	4-113, 4-115, 12-175, 12-177
312115-0339 ...	SCREW ISO4762 M5X40 A4 80	8-85, 8-87
312115-0340 ...	SCREW ISO4762 M5X45 A4 80	4-113, 4-115, 8-69, 8-71, 8-73, 12-175, 12-177, 13-85, 13-87
312115-0341 ...	SCREW ISO4762 M5X50 A4 80	4-113, 4-115, 12-175, 12-177
312115-0366 ...	SCREW ISO4762 M6X12 A4 80	1-43, 1-45, 2-63, 2-65, 2-97, 2-99, 2-149, 2-151, 4-93, 4-95, 4-143, 4-147, 7-15, 7-19, 7-45, 12-223, 12-227, 12-239, 13-177
312115-0367 ...	SCREW ISO4762 M6X14 A4 80	4-65, 4-67, 4-69, 4-71
312115-0368 ...	SCREW ISO4762 M6X16 A4 80	4-65, 4-67, 4-69, 4-71, 5-23, 5-33, 5-39, 5-53, 5-55, 7-31, 7-33, 7-37, 7-39, 8-13, 8-15, 12-133, 14-33, 14-45
312115-0370 ...	SCREW ISO4762 M6X20 A4 80	4-65, 4-67, 4-69, 4-71, 4-143, 4-147, 5-17, 5-101, 5-103, 6-59, 6-61, 8-5, 8-7, 8-21, 8-23, 8-25, 8-27, 8-29, 8-31, 8-33, 8-57, 8-59, 8-85, 8-87, 12-53, 12-55, 12-67, 12-69, 12-71, 12-73, 14-33
312115-0372 ...	SCREW ISO4762 M6X25 A4 80	2-45, 2-91, 4-65, 4-67, 4-69, 4-71, 8-5, 8-7, 8-21, 8-23, 8-25, 8-27, 8-29, 8-31, 8-33, 12-83, 12-97, 12-99
312115-0374 ...	SCREW ISO4762 M6X30 A4 80	4-23, 4-25, 4-27, 4-29, 4-65, 4-67, 4-69, 4-71, 4-77, 4-79, 4-85, 4-87, 5-89, 5-91, 5-101, 5-103, 12-97, 12-99, 12-215, 12-217, 12-219, 12-221, 13-7, 13-9
312115-0376 ...	SCREW ISO4762 M6X35 A4 80	3-15, 3-17, 8-5, 8-7, 8-21, 8-23, 8-25, 8-27, 8-29, 8-31, 8-33, 13-183
312115-0378 ...	SCREW ISO4762 M6X40 A4 80	2-37, 2-39, 2-41, 2-85, 2-87
312115-0380 ...	SCREW ISO4762 M6X50 A4 80	5-89, 5-91, 12-91
312115-0382 ...	SCREW ISO4762 M6X60 A4 80	11-13, 11-15
312115-0449 ...	SCREW ISO4762 M8X16 A4 80	4-143, 4-147, 12-239

Part No	Description	Page No
312115-0451	SCREW ISO4762 M8X20 A4 80	2-37, 2-39, 2-41, 2-85, 2-87, 5-125, 5-127, 8-43
312115-0453	SCREW ISO4762 M8X25 A4 80	3-35, 4-73, 5-125, 5-127, 10-15, 10-17, 10-21, 12-5, 12-9
312115-0455	SCREW ISO4762 M8X30 A4 80	2-63, 2-65, 2-97, 2-99, 4-33, 4-35, 4-37, 4-39, 4-41, 4-43, 4-131, 4-133, 4-135, 4-137, 5-25, 5-27, 5-41, 5-43, 5-45, 5-47, 6-5, 6-47
312115-0457	SCREW ISO4762 M8X35 A4 80	12-133
312115-0459	SCREW ISO4762 M8X40 A4 80	1-61
312115-0461	SCREW ISO4762 M8X50 A4 80	4-11, 4-13, 4-15, 4-17, 4-19, 4-21, 4-45, 4-47, 4-49, 4-51, 4-77, 4-79, 4-85, 4-87, 12-193, 12-195, 12-197, 12-199, 12-201, 12-203
312115-0464	SCREW ISO4762 M8X65 A4 80	12-149
312115-0495	SCREW ISO4762 M10X30 A4 80	8-55
312115-0501	SCREW ISO4762 M10X50 A4 80	2-37, 2-39, 2-41, 2-85, 2-87
312115-0503	SCREW ISO4762 M10X60 A4 80	2-37, 2-39, 2-41, 2-85, 2-87
312121-0228	SCREW ISO 1207 M3X16 4.8 - 5.8 Z.PL.	8-61, 8-63, 8-65, 8-69, 8-71, 8-73, 12-47
312121-0230	SCREW ISO 1207 M3X20 4.8 - 5.8 Z.PL.	2-163, 8-69, 8-71, 8-73
312121-0285	SCREW ISO 1207 M4X6 4.8 - 5.8 Z.PL.	2-179, 3-9, 3-19, 3-35, 3-37, 3-39
312121-0287	SCREW ISO 1207 M4X8 4.8 - 5.8 Z.PL.	2-21, 2-77, 2-117, 2-119, 2-137, 2-139, 2-159, 2-161, 3-41, 3-43, 12-53, 12-55, 12-67, 12-69, 12-71, 12-73, 13-27
312121-0291	SCREW ISO 1207 M4X12 4.8 - 5.8 Z.PL.	2-47
312121-0293	SCREW ISO 1207 M4X16 4.8 - 5.8 Z.PL.	2-163, 12-47
312121-0321	SCREW ISO 1207 M5X6 4.8 - 5.8 Z.PL.	2-165, 8-69, 8-71, 8-73
312121-0323	SCREW ISO 1207 M5X8 4.8 - 5.8 Z.PL.	2-147
312121-0364	SCREW ISO 1207 M6X10 4.8 - 5.8 Z.PL.	8-67
312122-0230	SCREW ISO 1207 M3X20 NI PL BRASS	12-53, 12-55, 12-67, 12-69, 12-71, 12-73
312125-0220	SCREW ISO 1207 M3X6 A4	2-27, 2-29, 2-31, 2-47, 2-81, 2-83, 2-127, 2-135, 2-137, 2-139, 5-93, 5-95, 5-97, 7-41
312125-0222	SCREW ISO 1207 M3X8 A4	2-65, 2-99, 8-51, 8-53, 12-27, 12-31
312125-0224	SCREW ISO 1207 M3X10 A4	2-149, 2-151, 7-15, 8-49, 13-193
312125-0228	SCREW ISO 1207 M3X16 A4	5-17, 6-7, 6-29, 6-33, 7-15, 8-17, 8-43, 8-61, 8-63, 8-65, 12-83
312125-0230	SCREW ISO 1207 M3X20 A4	1-27, 1-29, 5-25, 5-27, 5-41, 5-43, 5-45, 5-47, 5-89, 5-91, 5-101, 5-103, 5-129, 5-131, 12-91
312125-0232	SCREW ISO 1207 M3X25 A4	4-139, 4-141, 9-5, 9-7, 9-9, 9-11, 9-13, 9-15, 9-25, 9-27, 9-29, 9-31, 9-33, 9-45, 9-47, 9-49, 9-51, 9-53, 9-55
312125-0234	SCREW ISO 1207 M3X30 A4	8-61, 8-63, 8-65
312125-0285	SCREW ISO 1207 M4X6 A4	1-27, 1-29, 2-9, 2-69, 4-45, 4-47, 4-49, 4-51, 4-65, 4-67, 4-69, 4-71, 4-97, 4-99, 4-139, 4-141, 5-33, 5-53, 5-55, 7-15, 7-37, 7-39, 8-5, 8-7, 8-21, 8-23, 8-25, 8-27, 8-29, 8-31, 8-33, 12-135, 13-237, 14-47
312125-0287	SCREW ISO 1207 M4X8 A4	2-37, 2-39, 2-41, 2-85, 2-87, 4-11, 4-13, 4-15, 4-17, 4-19, 4-21, 4-23, 4-25, 4-27, 4-29, 4-77, 4-79, 4-85, 4-87, 4-101, 4-103, 4-105, 4-107, 4-143, 4-147, 5-7, 5-9, 5-17, 5-25, 5-27, 5-35, 5-37, 5-41, 5-43, 5-45, 5-47, 5-81, 5-83, 5-89, 5-91, 5-117, 6-29, 6-37, 6-39, 6-59, 6-61, 7-9, 7-15, 7-17, 7-19, 7-21, 7-23, 7-37, 7-39, 12-91, 12-119, 12-193, 12-195, 12-197, 12-199, 12-201, 12-203, 12-215, 12-217, 12-219, 12-221, 12-257, 12-269, 13-7, 13-9, 13-175
312125-0289	SCREW ISO 1207 M4X10 A4	1-37, 5-33, 5-53, 5-55, 7-9
312125-0291	SCREW ISO 1207 M4X12 A4	2-127, 5-7, 5-9, 5-25, 5-27, 5-35, 5-37, 5-41, 5-43, 5-45, 5-47, 5-137, 5-139, 5-141, 5-143, 7-41, 12-27, 12-31
312125-0297	SCREW ISO 1207 M4X25 A4	1-5
312125-0299	SCREW ISO 1207 M4X30 A4	1-13, 1-15
312125-0301	SCREW ISO 1207 M4X35 A4	7-13, 12-65
312125-0323	SCREW ISO 1207 M5X8 A4	1-55, 1-63, 2-35, 2-121, 2-123, 2-137, 2-139, 5-7, 5-9, 5-35, 5-37, 7-31, 7-33, 8-55, 8-61, 8-63, 8-65, 12-239, 13-15
312125-0327	SCREW ISO 1207 M5X12 A4	2-37, 2-39, 2-41, 2-85, 2-87, 4-23, 4-25, 4-27, 4-29, 12-155, 12-215, 12-217, 12-219, 12-221, 13-7, 13-9, 13-145
312125-0329	SCREW ISO 1207 M5X16 A4	6-33, 7-35, 8-51, 8-53
312125-0333	SCREW ISO 1207 M5X25 A4	7-31, 7-33
312125-0366	SCREW ISO 1207 M6X12 A4	13-183
312125-0376	SCREW ISO 1207 M6X35 A4	2-45, 2-91
312132-0284	SCREW SLOT. PAN HEAD MSCS M4X5	6-21, 6-23, 6-25
312132-0323	SCREW SLOT. PAN HEAD MSCS M5X8	8-69, 8-71, 8-73
312141-0222	SCREW ISO 2009 MFS M3X8 4.8 EL.PL	2-159, 2-161
312141-0295	SCREW ISO 2009 MFS M4X20 4.8 EL.PL	3-41, 3-43
312141-0325	SCREW ISO 2009 MFS M5X10 4.8 EL.PL	2-21, 2-77, 2-117, 2-119, 13-27
312141-0364	SCREW ISO 2009 MFS M6X10 4.8 EL.PL	7-11
312141-0366	SCREW ISO 2009 MFS M6X12 4.8 EL.PL	1-55, 8-77, 8-79
312145-0220	SCREW ISO 2009 MFS M3X6 A4	12-85
312145-0222	SCREW ISO 2009 MFS M3X8 A4	4-53, 4-55, 12-205, 12-207
312145-0236	SCREW ISO 2009 MFS M3X35 A4	4-11, 4-13, 4-15, 4-17, 4-19, 4-21, 12-193, 12-195, 12-197, 12-199, 12-201, 12-203
312145-0238	SCREW ISO 2009 MFS M3X40 A4	7-41, 13-91, 13-107
312145-0285	SCREW ISO 2009 MFS M4X6 A4	2-133, 4-33, 4-35, 4-37, 4-39, 4-41, 4-43, 4-131, 4-133, 4-135, 4-137, 8-77, 8-79
312145-0287	SCREW ISO 2009 MFS M4X8 A4	4-11, 4-13, 4-15, 4-17, 4-19, 4-21, 8-77, 8-79, 12-193, 12-195, 12-197, 12-199, 12-201, 12-203
312145-0289	SCREW ISO 2009 MFS M4X10 A4	4-31, 4-53, 4-55, 4-113, 4-115, 8-69, 8-71, 8-73, 8-85, 8-87, 12-175, 12-177, 12-205, 12-207
312145-0291	SCREW ISO 2009 MFS M4X12 A4	8-77, 8-79, 8-85, 8-87, 12-27, 12-31, 12-87
312145-0292	SCREW ISO 2009 MFS M4X14 A4	8-43
312145-0297	SCREW ISO 2009 MFS M4X25 A4	4-131, 4-133, 4-135, 4-137
312145-0305	SCREW ISO 2009 MFS M4X50 A4	4-139, 4-141
312145-0323	SCREW ISO 2009 MFS M5X8 A4	4-65, 4-67, 4-69, 4-71, 8-51, 8-53, 8-77, 8-79
312145-0325	SCREW ISO 2009 MFS M5X10 A4	4-133, 4-77, 4-79, 4-85, 4-87, 4-113, 4-115, 12-149, 12-175, 12-177
312145-0327	SCREW ISO 2009 MFS M5X12 A4	2-133, 8-69, 8-71, 8-73, 8-85, 8-87
312145-0329	SCREW ISO 2009 MFS M5X16 A4	8-69, 8-71, 8-73, 8-85, 8-87
312145-0331	SCREW ISO 2009 MFS M5X20 A4	8-85, 8-87
312145-0335	SCREW ISO 2009 MFS M5X30 A4	8-69, 8-71, 8-73
312145-0366	SCREW ISO 2009 MFS M6X12 A4	2-47, 4-101, 4-103, 4-105, 4-107

Part No	Description	Page No
312145-0370	SCREW ISO 2009 MFS M6X20 A4	2-37, 2-39, 2-41, 4-73
312145-0378	SCREW ISO 2009 MFS M6X40 A4	5-11
312151-0220	SCREW EN 10642 MF6S M3X6 10.9 EL.PL	12-49
312151-0366	SCREW EN 10642 MF6S M6X12 10.9 EL.PL	2-37, 2-39, 2-41, 2-85, 2-87
312151-0368	SCREW EN 10642 MF6S M6X16 10.9 EL.PL	8-69, 8-71, 8-73
312151-0379	SCREW EN 10642 MF6S M6X45 10.9 EL.PL	12-53, 12-55, 12-67, 12-69, 12-71, 12-73
312151-0384	SCREW EN 10642 MF6S M6X70 10.9 EL.PL	8-69, 8-71, 8-73
312151-0451	SCREW EN 10642 MF6S M8X20 10.9 EL.PL	5-61
312155-0289	SCREW DIN 7991 MF6S M4X10 A4 70	3-11, 3-21, 12-97, 12-99, 12-145, 13-11
312155-0291	SCREW DIN 7991 MF6S M4X12 A4 70	5-29, 5-49, 5-51, 6-37, 6-39
312155-0295	SCREW DIN 7991 MF6S M4X20 A4 70	4-33, 4-35, 4-37, 4-39, 4-41, 4-43, 5-33, 5-53, 5-55, 5-81, 5-83
312155-0297	SCREW DIN 7991 MF6S M4X25 A4 70	5-25, 5-27, 5-29, 5-41, 5-43, 5-45, 5-47, 5-49, 5-51, 6-29
312155-0301	SCREW DIN 7991 MF6S M4X35 A4 70	4-33, 4-35, 4-37, 4-39, 4-41, 4-43
312155-0323	SCREW DIN 7991 MF6S M5X8 A4 70	8-49
312155-0325	SCREW DIN 7991 MF6S M5X10 A4 70	6-37, 6-39, 12-93, 12-115
312155-0327	SCREW DIN 7991 MF6S M5X12 A4 70	2-37, 2-39, 2-41, 2-85, 2-87, 6-59, 6-61, 8-51, 8-53, 8-55
312155-0329	SCREW DIN 7991 MF6S M5X16 A4 70	1-7, 1-9, 4-93, 4-95, 4-113, 4-115, 8-5, 8-7, 8-21, 8-23, 8-25, 8-27, 8-29, 8-31, 8-33, 8-61, 8-63, 8-65, 12-53, 12-55, 12-67, 12-69, 12-71, 12-73, 12-175, 12-177
312155-0331	SCREW DIN 7991 MF6S M5X20 A4 70	1-49, 1-51, 1-53
312155-0333	SCREW DIN 7991 MF6S M5X25 A4 70	8-5, 8-7, 8-21, 8-23, 8-25, 8-27, 8-29, 8-31, 8-33
312155-0364	SCREW DIN 7991 MF6S M6X10 A4 70	5-145, 5-147, 5-149, 5-151, 5-153, 5-155
312155-0366	SCREW DIN 7991 MF6S M6X12 A4 70	2-37, 2-39, 2-41, 2-85, 2-87, 5-7, 5-9, 5-35, 5-37, 5-89, 5-91, 5-101, 5-103, 6-35, 6-37, 6-39, 6-55
312155-0368	SCREW DIN 7991 MF6S M6X16 A4 70	2-37, 2-39, 2-41, 2-85, 2-87, 5-137, 5-139, 5-141, 5-143, 5-145, 5-147, 5-149, 5-151, 5-153, 5-155, 6-33, 6-37, 6-39, 8-57, 8-59, 12-147
312155-0370	SCREW DIN 7991 MF6S M6X20 A4 70	2-37, 2-39, 2-41, 2-85, 2-87, 2-167, 4-93, 4-95, 5-23, 5-39, 6-35, 6-59, 6-61, 8-21, 8-23, 8-25, 8-27, 8-29, 8-31, 8-33
312155-0372	SCREW DIN 7991 MF6S M6X25A4 70	2-47, 4-93, 4-95, 5-117, 12-97, 12-99
312155-0374	SCREW DIN 7991 MF6S M6X30 A4 70	4-143, 4-147
312155-0376	SCREW DIN 7991 MF6S M6X35 A4 70	5-89, 5-91, 5-101, 5-103
312155-0378	SCREW DIN 7991 MF6S M6X40 A4 70	5-145, 5-147, 5-149, 5-151, 5-153, 5-155, 12-97, 12-99
312155-0380	SCREW DIN 7991 MF6S M6X50 A4 70	6-5
312155-0382	SCREW DIN 7991 MF6S M6X60 A4 70	4-45, 4-47, 4-49, 4-51, 11-9, 11-11
312155-0449	SCREW DIN 7991 MF6S M8X16 A4 70	8-69, 8-71, 8-73, 12-97, 12-99
312155-0451	SCREW DIN 7991 MF6S M8X20 A4 70	2-37, 2-39, 2-41, 2-85, 2-87, 8-55
312155-0453	SCREW DIN 7991 MF6S M8X25 A4 70	6-59, 6-61, 8-49
312155-0495	SCREW DIN 7991 MF6S M10X30 A4 70	6-29, 6-33
312155-0499	SCREW DIN 7991 MF6S M10X40 A4 70	5-145, 5-147, 5-149, 5-151, 5-153, 5-155, 6-5
312155-0532	SCREW DIN 7991 MF6S M12X20 A4 70	1-27, 1-29
312180-0447	SCREW ISO7379 H8X12	2-177
312180-0489	SCREW ISO7379 H10X16	3-37, 3-39, 3-41, 3-43, 12-45
312180-0499	SCREW ISO7379 H10X40	4-139, 4-141
312180-0530	SCREW ISO7379 H10X16	5-21
312180-0624	SCREW ISO7379 H16X30	14-39
312293-0106	EXPANSION M8X10 L	12-133, 12-145
312293-0115	EXPANSION M12X25 L	12-143
312303-0374	SCREW DIN 938 PS M6X25 A4 80	8-57, 8-59
312306-0287	SCREW ISO4026 M4X8 FZB	8-69, 8-71, 8-73
312306-0360	SCREW ISO4026 M6X6 FZB	8-77, 8-79
312306-0366	SCREW ISO4026 M6X12 FZB	8-17, 8-43, 8-81, 8-83
312306-0459	SCREW ISO4026 M8X40 FZB	1-55, 4-45, 4-47, 4-49, 4-51
312311-0292	SCREW ISO4028 M4X14 FZB	7-41
312311-0370	SCREW ISO4028 M6X20 FZB	5-63, 5-65
312311-0489	SCREW ISO4028 M10X16 FZB	12-97, 12-99
312316-0283	SCREW HEX.SOCK.SET CUP P.MSK6SS4X4 FZB	3-41, 3-43, 7-45, 12-49
312316-0284	SCREW HEX.SOCK.SET CUP P.MSK6SS4X5 FZB	12-97, 12-99
312316-0285	SCREW HEX.SOCK.SET CUP P.MSK6SS4X6 FZB	8-41
312316-0291	SCREW HEX.SOCK.SET CUP P.MSK6SS4X12 FZB	7-45
312316-0320	SCREW HEX.SOCK.SET CUP P.MSK6SS5X5 FZB	5-125, 5-127
312316-0321	SCREW HEX.SOCK.SET CUP P.MSK6SS5X6 FZB	12-87
312316-0323	SCREW HEX.SOCK.SET CUP P.MSK6SS5X8 FZB	5-125, 5-127, 12-53, 12-55, 12-67, 12-69, 12-71, 12-73
312316-0327	SCREW HEX.SOCK.SET CUP P.MSK6SS5X12 FZB	3-37, 3-39
312316-0360	SCREW HEX.SOCK.SET CUP P.MSK6SS6X6 FZB	8-61, 8-63, 8-65
312316-0362	SCREW HEX.SOCK.SET CUP P.MSK6SS6X8 FZB	8-43, 12-49, 12-53, 12-55, 12-67, 12-69, 12-71, 12-73
312316-0443	SCREW HEX.SOCK.SET CUP P.MSK6SS8X8 FZB	12-45
312318-0283	SCREW ISO4029 M4X4 A4	1-43, 1-45, 4-11, 4-13, 4-15, 4-17, 4-19, 4-21, 4-23, 4-25, 4-27, 4-29, 5-67, 7-21, 7-23, 7-29, 12-61, 12-63, 12-193, 12-195, 12-197, 12-199, 12-201, 12-203
312318-0284	SCREW ISO4029 M4X5 A4	1-27, 1-29, 8-19
312318-0285	SCREW ISO4029 M4X6 A4	1-43, 1-45, 4-31, 4-53, 4-55, 7-35, 7-45, 8-43, 12-45, 12-83, 12-205, 12-207, 12-215, 12-217, 12-219, 12-221, 13-7, 13-9
312318-0287	SCREW ISO4029 M4X8 A4	5-133, 5-135, 12-91
312318-0289	SCREW ISO4029 M4X10 A4	4-101, 4-103, 4-105, 4-107, 7-43, 12-25
312318-0291	SCREW ISO4029 M4X12 A4	1-43, 1-45
312318-0321	SCREW ISO4029 M5X6 A4	4-77, 4-79, 4-85, 4-87, 8-69, 8-71, 8-73
312318-0323	SCREW ISO4029 M5X8 A4	4-97, 4-99, 8-5, 8-7, 8-21, 8-23, 8-25, 8-27, 8-29, 8-31, 8-33, 14-33
312318-0327	SCREW ISO4029 M5X12 A4	1-49, 1-51, 1-53, 8-17, 13-145
312318-0360	SCREW ISO4029 M6X6 A4	1-49, 1-51, 1-53, 3-11, 3-21, 13-11
312318-0362	SCREW ISO4029 M6X8 A4	1-49, 1-51, 1-53, 2-9, 2-69, 4-23, 4-25, 4-27, 4-29, 5-121, 5-133, 5-135, 6-57, 8-5, 8-7, 8-21, 8-23, 8-25, 8-27, 8-29, 8-31, 8-33, 8-55, 12-83, 12-85, 12-215, 12-217, 12-219, 12-221, 13-7, 13-9, 13-99, 13-101, 13-103, 13-105, 13-109, 13-111
312318-0364	SCREW ISO4029 M6X10 A4	7-13, 7-43, 12-25, 12-65
312318-0366	SCREW ISO4029 M6X12 A4	1-49, 1-51, 1-53

Part No	Description	Page No
312318-0368	SCREW ISO4029 M6X16 A4	1-31, 1-33, 5-29, 5-49, 5-51, 6-59, 6-61, 8-13, 8-15
312318-0370	SCREW ISO4029 M6X20 A4	4-143, 4-147, 5-137, 5-139, 5-141, 5-143
312318-0372	SCREW ISO4029 M6X25 A4	5-133, 5-135
312318-0443	SCREW ISO4029 M8X8 A4	5-137, 5-139, 5-141, 5-143, 6-55
312318-0447	SCREW ISO4029 M8X12 A4	12-119
312318-0449	SCREW ISO4029 M8X16 A4	5-137, 5-139, 5-141, 5-143
312318-0455	SCREW ISO4029 M8X30 A4	5-145, 5-147, 5-149, 5-151, 5-153, 5-155, 12-253
312318-0499	SCREW ISO4029 M10X40 A4	4-45, 4-47, 4-49, 4-51, 12-81
312502-0120	DRIVE SCREW ROUND HEAD KDS 0X5	1-55, 2-27, 2-29, 2-31, 2-81, 2-83, 2-149, 2-151, 7-9, 12-159
312502-0169	DRIVE SCREW ROUND HEAD KDS 2X5	12-47, 13-215
312502-0171	DRIVE SCREW ROUND HEAD KDS 2X6	2-173, 2-175, 13-29
312502-0219	DRIVE SCREW ROUND HEAD KDS 4X5	13-175
312503-0275	TAPPING SCREW ISO 7049-ST3,5X6,5-C-Z	3-37, 3-39
312601-0310	HEXAGON NUT, DIN 934 M3 8 FZB	2-159, 2-161, 12-49
312601-0312	HEXAGON NUT, DIN 934 M4 8 FZB	2-167, 8-69, 8-71, 8-73, 12-47
312601-0314	HEXAGON NUT, DIN 934 M5 8 FZB	2-77, 2-147, 2-171, 8-69, 8-71, 8-73, 12-47
312601-0316	HEXAGON NUT, DIN 934 M6 8 FZB	2-163, 2-167, 2-169, 3-11, 3-21, 3-37, 3-39, 8-41, 8-67, 8-69, 8-71, 8-73, 10-15, 10-17, 10-21, 12-5, 12-9, 12-43, 12-49, 13-11
312601-0318	HEXAGON NUT, DIN 934 M8 8 FZB	2-159, 2-161, 2-167, 2-169, 2-179, 2-181, 2-183, 3-11, 3-21, 3-31, 3-33, 8-17, 13-11
312601-0320	HEXAGON NUT, M10 8 FZB, ISO 4032	1-35, 2-37, 2-39, 2-41, 2-85, 2-87, 3-31, 3-33, 10-15, 10-17, 10-19, 10-21, 12-5, 12-7, 12-9, 12-35
312601-0322	HEXAGON NUT, DIN 934 M12 8 FZB	2-167, 3-27, 3-31, 3-33, 3-37, 3-39, 14-39
312601-0324	HEXAGON NUT, DIN 934 M16 8 FZB	3-41, 3-43
312605-0310	HEXAGON NUT, M6M M3 A280	1-27, 1-29, 2-63, 2-65, 2-97, 2-99, 2-135, 7-41, 8-49, 8-61, 8-63, 8-65, 9-5, 9-7, 9-9, 9-11, 9-13, 9-15, 9-25, 9-27, 9-29, 9-31, 9-33, 9-45, 9-47, 9-49, 9-51, 9-53, 9-55, 12-91
312605-0312	HEXAGON NUT, M6M M4 A280	1-13, 1-15, 1-31, 1-33, 1-37, 1-43, 1-45, 2-63, 2-65, 2-97, 2-99, 2-133, 4-139, 4-141, 5-7, 5-9, 5-35, 5-37, 7-13, 7-45, 7-47, 8-13, 8-15, 8-61, 8-63, 8-65, 12-27, 12-31, 12-65, 12-67, 12-69, 12-71, 12-73, 12-121, 12-145
312605-0314	HEXAGON NUT, M6M M5 A280	1-31, 1-33, 2-37, 2-39, 2-41, 2-63, 2-65, 2-85, 2-87, 2-97, 2-99, 2-131, 2-149, 2-151, 4-145, 5-7, 5-9, 5-35, 5-37, 7-41, 8-5, 8-7, 8-9, 8-21, 8-23, 8-25, 8-27, 8-29, 8-31, 8-33, 8-39, 8-51, 8-53, 8-55, 12-37, 12-57, 12-75, 12-133, 12-149, 12-225, 13-53, 13-55, 13-59, 13-177, 13-213
312605-0316	HEXAGON NUT, M6M M6 A280	1-5, 1-11, 1-23, 1-31, 1-33, 1-35, 1-43, 1-45, 1-55, 1-73, 2-9, 2-23, 2-27, 2-29, 2-31, 2-37, 2-39, 2-41, 2-47, 2-49, 2-51, 2-57, 2-63, 2-65, 2-67, 2-69, 2-81, 2-83, 2-85, 2-87, 2-93, 2-95, 2-97, 2-99, 2-115, 5-7, 5-9, 5-23, 5-25, 5-27, 5-29, 5-31, 5-33, 5-35, 5-37, 5-39, 5-41, 5-43, 5-45, 5-47, 5-49, 5-51, 5-53, 5-55, 5-67, 5-89, 5-91, 5-101, 5-103, 5-117, 5-119, 5-133, 5-135, 5-137, 5-139, 5-141, 5-143, 6-7, 6-9, 6-27, 6-35, 6-55, 6-59, 6-61, 7-17, 7-21, 7-23, 7-31, 7-33, 7-35, 7-37, 7-39, 8-5, 8-7, 8-21, 8-23, 8-25, 8-27, 8-29, 8-31, 8-33, 8-49, 8-69, 8-71, 8-73, 8-85, 8-87, 11-17, 11-23, 12-23, 12-45, 12-49, 12-53, 12-55, 12-67, 12-69, 12-71, 12-73, 12-93, 12-97, 12-99, 12-105, 12-115, 12-141, 12-145, 13-59, 13-179, 13-183, 13-211
312605-0318	HEXAGON NUT, M6M M8 A280	1-7, 1-9, 1-13, 1-15, 1-27, 1-29, 1-31, 1-33, 1-49, 1-51, 1-53, 1-55, 1-73, 2-125, 3-15, 3-17, 3-35, 3-41, 3-43, 4-23, 4-25, 4-27, 4-29, 4-33, 4-35, 4-37, 4-39, 4-41, 4-43, 4-45, 4-47, 4-49, 4-51, 4-93, 4-95, 4-101, 4-103, 4-105, 4-107, 4-131, 4-133, 4-135, 4-137, 4-143, 4-147, 5-11, 5-21, 5-23, 5-25, 5-27, 5-33, 5-39, 5-41, 5-43, 5-45, 5-47, 5-53, 5-55, 5-67, 5-113, 5-133, 5-135, 5-137, 5-139, 5-141, 5-143, 5-145, 5-147, 5-149, 5-151, 5-153, 5-155, 6-11, 6-27, 6-33, 6-35, 6-37, 6-39, 6-47, 6-55, 6-59, 6-61, 7-15, 7-17, 7-31, 7-33, 7-35, 7-37, 7-39, 7-41, 7-47, 8-9, 8-39, 8-51, 8-53, 10-15, 10-17, 10-21, 12-5, 12-9, 12-37, 12-39, 12-41, 12-43, 12-45, 12-57, 12-75, 12-87, 12-93, 12-97, 12-99, 12-115, 12-133, 12-143, 12-145, 12-147, 12-215, 12-217, 12-219, 12-221, 12-255, 13-7, 13-9, 13-57, 13-59, 13-65, 14-35, 14-37
312605-0320	HEXAGON NUT, M6M M10 A280	2-7, 2-37, 2-39, 2-41, 2-85, 2-87, 2-167, 4-33, 4-35, 4-37, 4-39, 4-41, 4-43, 5-23, 5-39, 5-89, 5-91, 6-29, 6-57, 7-25, 7-37, 7-39, 10-15, 10-17, 10-21, 12-5, 12-9, 12-43, 12-81, 12-97, 12-99, 12-117
312605-0322	HEXAGON NUT, M6M M12 A280	2-9, 2-69, 5-7, 5-9, 5-11, 5-33, 5-35, 5-37, 5-53, 5-55, 5-89, 5-91, 5-101, 5-103, 5-133, 5-135
312605-0324	HEXAGON NUT, M6M M16 A280	5-29, 5-49, 5-51, 6-35, 12-89
312621-0318	ROD END,NUT M8	3-41, 3-43
312621-0324	NUT ML6M16FZB	3-41, 3-43
312625-0316	HEXAGON THIN NUT, EN 24035 ML6M M6 A4	5-137, 5-139, 5-141, 5-143
312625-0318	HEXAGON THIN NUT, EN 24035 ML6M M8 A4	5-33, 5-53, 5-55, 6-37, 6-39
312625-0322	HEXAGON THIN NUT, EN 24035 ML6M M12 A4	13-59
312631-0321	HEX.NUT FINE, EN 24032 M6M M10X1,25 FZB8	5-81, 5-83, 12-257, 12-269
312631-0324	HEX.NUT FINE, EN 24032 M6M M16X1,5 FZB8	5-63, 5-65
312635-0320	NUT M6M 10X1 STAINLESS A2 80	4-45, 4-47, 4-49, 4-51, 4-131, 4-133, 4-135, 4-137
312652-0301	NUT U6M1/4" FZB	12-111
312705-0316	NUT HEX. DOMED CAP MHM-6 M6 A280	8-5, 8-7, 8-21, 8-23, 8-25, 8-27, 8-29, 8-31, 8-33
312705-0322	NUT HEX. DOMED CAP MHM-6 M12 A2	12-97, 12-99
312715-0114	WING NUT DIN 315 A2 MVM-K M5	2-47
312805-0100	NUT ROUND WITH SLOTS M10X0,75 FE	4-45, 4-47, 4-49, 4-51
312805-0101	NUT ROUND WITH SLOTS M12X1 FE	4-45, 4-47, 4-49, 4-51
312805-0102	NUT ROUND WITH SLOTS M15X1 FE	12-53, 12-55, 12-67, 12-69, 12-71, 12-73
312805-0103	NUT ROUND WITH SLOTS M17X1 FE	12-53, 12-55, 12-67, 12-69, 12-71, 12-73
312805-0107	NUT ROUND WITH SLOTS M35X1,5 FE	5-123
312805-0108	NUT ROUND WITH SLOTS M40X1,5 FE	5-125, 5-127
312805-0110	NUT ROUND WITH SLOTS M50X1,5 FE	5-61
312805-0114	NUT ROUND WITH SLOTS M70X20 FE	5-125, 5-127
312810-0310	HEXAGON NUT, NY-LOCK M3 FZB	2-65, 2-99
312810-0316	HEXAGON NUT, NY-LOCK M6 FZB	13-237
312810-0318	HEXAGON NUT, NY-LOCK M8 FZB	1-73
312810-0322	HEXAGON NUT, NY-LOCK M12 FZB	3-37, 3-39
312810-0324	HEXAGON NUT, NY-LOCK M16 FZB	3-37, 3-39
312811-0316	NUT HEX.LOCK HELI COIL MID GRIP M6 SS	3-15, 3-17, 5-73, 5-75, 8-69, 8-71, 8-73
312811-0318	NUT HEX.LOCK HELI COIL M8 SS	4-45, 4-47, 4-49, 4-51, 4-139, 4-141, 8-49
312811-0322	NUT HEX.LOCK HELI COIL MID GRIP M12 SS	3-41, 3-43

Part No	Description	Page No
312811-0324	NUT HEX.LOCK HELI COIL MID GRIP M16 SS	3-35
312812-0312	HEXAGON NUT, NY-LOCK M4 A480	6-33
312812-0314	HEXAGON NUT, NY-LOCK M5 A480	4-23, 4-25, 4-27, 4-29, 4-113, 4-115, 6-37, 6-39, 8-5, 8-7, 8-21, 8-23, 8-25, 8-27, 8-29, 8-31, 8-33, 8-77, 8-79, 12-155, 12-175, 12-177, 12-215, 12-217, 12-219, 12-221, 13-7, 13-9, 13-99, 13-101, 13-103, 13-105
312812-0316	HEXAGON NUT, NY-LOCK M6 A480	2-167, 4-97, 4-99, 5-29, 5-49, 5-51, 5-101, 5-103, 5-119, 8-45, 8-47, 8-51, 8-53, 12-95, 12-239
312812-0318	HEXAGON NUT, NY-LOCK M8 A480	2-67, 4-97, 4-99, 6-5
312812-0320	HEXAGON NUT, NY-LOCK M10 A480	3-31, 3-33, 5-121, 6-37, 6-39
312821-0102	HEX. WELD NUT DIN 929 M4 A2	2-163
312902-0318	NUT HEX. LEFT THREAD, M8 A2-70	3-17, 3-41, 3-43, 5-137, 5-139, 5-141, 5-143, 6-59, 6-61, 12-255
312910-0126	THREADED INSERT, FREE RUNNING M8X1,5D	5-123
312923-0149	RIVET NUT M8, CLAMP. LENGTH 1,5 - 3,0	6-35
315101-0124	WASHER PLAIN, BRB, 3,2/6 H=0,5	2-159, 2-161, 2-163
315101-0136	WASHER BRB, 4,3/8 H=0,8	2-21, 2-47, 2-77, 2-117, 2-119, 2-159, 2-161, 2-163, 2-177, 8-11, 8-35, 8-37, 8-61, 8-63, 8-65, 8-69, 8-71, 8-73, 12-47, 12-59, 12-77, 12-79, 13-27
315101-0146	WASHER PLAIN, BRB, 5,3/10 H=1	2-21, 2-77, 2-117, 2-119, 2-177, 8-11, 8-17, 8-35, 8-37, 8-41, 8-69, 8-71, 8-73, 12-47, 12-49, 12-59, 12-77, 12-79, 12-87, 13-27
315101-0153	WASHER PLAIN, BRB, 6,4/12 H=1,5	2-21, 2-77, 2-117, 2-119, 2-129, 2-137, 2-139, 2-159, 2-161, 2-163, 2-167, 2-177, 2-179, 2-185, 3-37, 3-39, 3-41, 3-43, 5-81, 5-83, 8-17, 8-41, 8-45, 8-47, 8-69, 8-71, 8-73, 10-15, 10-17, 10-21, 12-5, 12-9, 12-35, 12-43, 12-47, 12-49, 12-95, 12-257, 12-269, 13-27
315101-0165	WASHER PLAIN, BRB, 8,4/16 H=1,5	2-47, 2-159, 2-161, 2-163, 2-167, 2-179, 3-11, 3-21, 3-31, 3-33, 3-35, 5-59, 5-125, 5-127, 8-17, 8-41, 12-35, 13-11, 14-39
315101-0173	WASHER PLAIN, BRB, 10,5/22 H=2	1-35, 2-37, 2-39, 2-41, 2-85, 2-87, 3-29, 3-31, 3-33, 8-69, 8-71, 8-73, 10-15, 10-17, 10-21, 12-5, 12-9
315101-0178	WASHER PLAIN, BRB, 13/24 H=2	2-159, 2-161, 2-167, 2-185, 3-31, 3-33, 3-37, 3-39
315101-0186	WASHER PLAIN, BRB, 17/30 H=3	3-37, 3-39
315102-0192	WASHER PLAIN, BRFB 21/36 H=3	10-23
315103-0153	WASHER, BRB, 6,4/12,H=1,5 NIPL BR	6-59, 6-61, 13-175
315103-0165	WASHER PLAIN, BRB, 8,4/16,H=1,5 NIPL BR	12-145
315103-0178	WASHER PLAIN, BRB, 13/24 H=2,5	12-143
315103-0195	WASHER PLAIN, BRB, 23/40,H=3 NI PL BR	2-9, 2-69
315105-0124	WASHER BRB 3,2X7 RFR	1-27, 1-29, 2-47, 2-63, 2-65, 2-97, 2-99, 5-17, 5-25, 5-27, 5-41, 5-43, 5-45, 5-47, 5-89, 5-91, 5-97, 5-101, 5-103, 5-129, 5-131, 6-7, 6-29, 6-33, 6-59, 6-61, 7-15, 7-29, 8-49, 8-51, 8-53, 8-61, 8-63, 8-65, 9-5, 9-7, 9-9, 9-11, 9-13, 9-15, 9-25, 9-27, 9-29, 9-31, 9-33, 9-45, 9-47, 9-49, 9-51, 9-53, 9-55, 12-27, 12-31, 12-61, 12-63
315105-0136	WASHER BRB 4,3X9 RFR	1-5, 1-13, 1-15, 1-27, 1-29, 1-37, 1-49, 1-51, 1-53, 2-63, 2-65, 2-97, 2-99, 2-133, 4-33, 4-35, 4-37, 4-39, 4-41, 4-43, 4-101, 4-103, 4-105, 4-107, 4-131, 4-133, 4-135, 4-137, 4-139, 4-141, 5-7, 5-9, 5-17, 5-25, 5-27, 5-35, 5-37, 5-41, 5-43, 5-45, 5-47, 5-57, 5-105, 5-107, 5-109, 5-111, 6-11, 6-27, 6-37, 6-39, 7-9, 7-15, 7-19, 7-29, 7-37, 7-39, 7-47, 8-13, 8-15, 8-55, 8-69, 8-71, 8-73, 12-27, 12-31, 12-61, 12-63, 12-67, 12-69, 12-71, 12-73, 12-91, 12-119, 12-121, 12-145, 13-41, 13-175, 13-221, 13-225, 13-233, 13-239
315105-0146	WASHER BRB 5,3X10 RFR	1-43, 1-45, 1-49, 1-51, 1-53, 2-27, 2-29, 2-31, 2-37, 2-39, 2-41, 2-47, 2-63, 2-65, 2-81, 2-83, 2-85, 2-87, 2-97, 2-99, 2-133, 4-23, 4-25, 4-27, 4-29, 4-97, 4-99, 4-113, 4-115, 5-7, 5-9, 5-25, 5-27, 5-29, 5-35, 5-37, 5-41, 5-43, 5-45, 5-47, 5-49, 5-51, 5-67, 5-129, 5-131, 5-137, 5-139, 5-141, 5-143, 5-159, 6-7, 6-13, 6-29, 6-31, 6-33, 6-37, 6-39, 7-15, 7-17, 7-29, 7-37, 7-39, 7-45, 8-5, 8-7, 8-9, 8-21, 8-23, 8-25, 8-27, 8-29, 8-31, 8-33, 8-39, 8-49, 8-51, 8-53, 8-55, 8-61, 8-63, 8-65, 8-69, 8-71, 8-73, 8-75, 8-85, 8-87, 12-37, 12-45, 12-53, 12-55, 12-57, 12-61, 12-63, 12-67, 12-69, 12-71, 12-73, 12-75, 12-85, 12-105, 12-133, 12-145, 12-149, 12-155, 12-175, 12-177, 12-215, 12-217, 12-219, 12-221, 12-239, 12-255, 13-7, 13-9, 13-85, 13-87, 13-99, 13-101, 13-103, 13-105, 13-177, 14-35, 14-37
315105-0153	WASHER BRB 6,4X12 RFR	1-5, 1-7, 1-9, 1-11, 1-23, 1-35, 1-55, 2-9, 2-27, 2-29, 2-31, 2-37, 2-39, 2-41, 2-45, 2-47, 2-49, 2-51, 2-57, 2-63, 2-65, 2-67, 2-69, 2-81, 2-83, 2-85, 2-87, 2-91, 2-93, 2-95, 2-97, 2-99, 2-115, 2-133, 2-135, 2-147, 2-149, 2-151, 3-11, 3-15, 3-17, 3-21, 3-35, 4-11, 4-13, 4-15, 4-17, 4-19, 4-21, 4-23, 4-25, 4-27, 4-29, 4-45, 4-47, 4-49, 4-51, 4-65, 4-67, 4-69, 4-71, 4-73, 4-93, 4-95, 4-97, 4-99, 4-101, 4-103, 4-105, 4-107, 4-113, 4-115, 5-7, 5-9, 5-13, 5-15, 5-17, 5-23, 5-25, 5-27, 5-29, 5-31, 5-33, 5-35, 5-37, 5-39, 5-41, 5-43, 5-45, 5-47, 5-49, 5-51, 5-53, 5-55, 5-63, 5-65, 5-67, 5-69, 5-71, 5-73, 5-75, 5-77, 5-79, 5-89, 5-91, 5-99, 5-101, 5-103, 5-115, 5-117, 5-119, 5-121, 5-129, 5-131, 5-133, 5-135, 5-137, 5-139, 5-141, 5-143, 5-145, 5-147, 5-149, 5-151, 5-153, 5-155, 5-159, 6-5, 6-7, 6-9, 6-17, 6-27, 6-29, 6-33, 6-35, 6-37, 6-39, 6-55, 6-57, 6-59, 6-61, 6-63, 6-65, 7-7, 7-13, 7-15, 7-17, 7-21, 7-23, 7-29, 7-31, 7-33, 7-35, 7-37, 7-39, 7-41, 7-43, 7-45, 8-5, 8-7, 8-13, 8-15, 8-21, 8-23, 8-25, 8-27, 8-29, 8-31, 8-33, 8-43, 8-51, 8-53, 8-55, 8-57, 8-59, 8-69, 8-71, 8-73, 8-75, 8-85, 8-87, 12-23, 12-25, 12-27, 12-29, 12-31, 12-37, 12-45, 12-49, 12-53, 12-55, 12-61, 12-63, 12-65, 12-67, 12-69, 12-71, 12-73, 12-81, 12-91, 12-93, 12-97, 12-99, 12-105, 12-115, 12-119, 12-133, 12-141, 12-145, 12-147, 12-175, 12-177, 12-193, 12-195, 12-197, 12-199, 12-201, 12-203, 12-215, 12-217, 12-219, 12-221, 12-239, 12-255, 13-7, 13-9, 13-11, 13-59, 13-99, 13-101, 13-103, 13-105, 13-109, 13-111, 13-133, 13-179, 13-183, 13-211, 14-35, 14-37
315105-0156	WASHER BRB 6,7X14 RFR	3-11, 3-21, 6-11, 13-11, 13-177
315105-0165	WASHER BRB 8,4X16 RFR	1-7, 1-9, 1-43, 1-45, 1-55, 1-57, 1-73, 2-37, 2-39, 2-41, 2-49, 2-51, 2-63, 2-65, 2-67, 2-85, 2-87, 2-93, 2-97, 2-99, 2-149, 2-151, 3-15, 3-17, 3-41, 3-43, 4-23, 4-25, 4-27, 4-29, 4-33, 4-35, 4-37, 4-39, 4-41, 4-43, 4-45, 4-47, 4-49, 4-51, 4-93, 4-95, 4-97, 4-99, 4-101, 4-103, 4-105, 4-107, 4-131, 4-133, 4-135, 4-137, 4-143, 4-147, 5-7, 5-9, 5-11, 5-17, 5-21, 5-23, 5-25, 5-27, 5-29, 5-31, 5-33, 5-35, 5-37, 5-39, 5-41, 5-43, 5-45, 5-47, 5-49, 5-51, 5-53, 5-55, 5-57, 5-67, 5-89, 5-91, 5-101, 5-103, 5-117, 5-119, 5-121, 5-125, 5-127, 5-129, 5-131, 5-133, 5-135, 5-137, 5-139, 5-141, 5-143, 5-145, 5-147, 5-149, 5-151, 5-153, 5-155, 5-157, 6-5, 6-9, 6-11, 6-17, 6-19, 6-27, 6-29, 6-33, 6-35, 6-37, 6-39, 6-41, 6-55, 6-57, 6-59, 6-61, 7-15, 7-17, 7-19, 7-21, 7-23, 7-31, 7-33, 7-35, 7-37, 7-39, 7-41, 7-47, 8-5, 8-7, 8-9, 8-21, 8-23, 8-25, 8-27, 8-29, 8-31, 8-33, 8-39, 8-55, 8-57, 8-59, 10-15, 10-17, 10-21, 12-5, 12-9, 12-29, 12-37, 12-43, 12-45, 12-53, 12-55, 12-57, 12-67, 12-69, 12-71, 12-73, 12-75, 12-83, 12-87, 12-93, 12-97, 12-99, 12-115, 12-133, 12-143, 12-147, 12-161, 12-215, 12-217, 12-219, 12-221, 12-239, 13-7, 13-9, 13-115, 13-153, 13-161, 13-237
315105-0171	WASHER BRB 10X18 RFR	6-9, 6-57
315105-0173	WASHER BRB 10,5X20 RFR	2-7, 2-9, 2-37, 2-39, 2-41, 2-69, 2-85, 2-87, 2-167, 4-33, 4-35, 4-37, 4-39, 4-41, 4-43, 4-101, 4-103, 4-105, 4-107, 5-7, 5-9, 5-17, 5-23, 5-35, 5-37, 5-39, 5-57, 5-89, 5-91, 5-145, 5-147, 5-149, 5-151, 5-153, 5-155, 5-157, 6-17, 6-27, 6-33, 6-37, 6-39, 6-41, 6-47, 6-57, 7-25

Part No	Description	Page No
		7-31, 7-33, 7-37, 7-39, 8-5, 8-7, 8-21, 8-23, 8-25, 8-27, 8-29, 8-31, 8-33, 8-49, 8-55, 8-75, 10-15
		10-17, 10-21, 12-5, 12-9, 12-43, 12-81, 12-117, 12-147
315105-0176 ...	WASHER BRB 12X22 RFR	4-101, 4-103, 4-105, 4-107
315105-0178 ...	WASHER BRB 13X24 RFR	1-31, 1-33, 1-43, 1-45, 1-55, 1-75, 1-77, 1-79, 1-81, 1-83, 5-7, 5-9, 5-15
		5-35, 5-37, 5-133, 5-135, 5-157, 6-11, 6-29, 6-35, 12-37, 12-133
315105-0186 ...	WASHER BRB 17X30 RFR	5-29, 5-49, 5-51, 6-13, 6-35, 12-97, 12-99
315105-0192 ...	WASHER BRB 21X37 RFR	6-13
315111-0153 ...	WASHER PLAIN, TBRB 6,4/12 H=3	8-11, 8-35, 8-37, 12-59, 12-77, 12-79
315111-0156 ...	WASHER PLAIN, TBRB 6,7/14 H=3	12-111
315111-0165 ...	WASHER PLAIN, TBRB 8,4/16 H=3	2-169, 2-177, 11-17
315111-0173 ...	WASHER PLAIN, TBRB 10,5/22 H=4	12-35, 12-45, 12-49
315111-0178 ...	WASHER PLAIN, TBRB 13/24 H=4	2-37, 2-39, 2-41, 2-85, 2-87, 12-35, 12-43, 12-47
315111-0179 ...	WASHER PLAIN, TBRB 13,5/24 H=4	2-171
315115-0153 ...	WASHER PLAIN, TBRB 6,4/12 H=3	5-7, 5-9, 5-15, 5-25, 5-27, 5-29, 5-31, 5-33, 5-35, 5-37, 5-41
		5-43, 5-45, 5-47, 5-49, 5-51, 5-53, 5-55, 5-57, 5-59, 5-67, 5-69, 5-71, 5-73, 5-75, 5-77, 5-79, 5-81
		5-83, 5-89, 5-91, 5-101, 5-103, 5-121, 5-137, 5-139, 5-141, 5-143, 5-145, 5-147, 5-149, 5-151, 5-153
		5-155, 5-159, 7-15, 8-5, 8-7, 8-21, 8-23, 8-25, 8-27, 8-29, 8-31, 8-33, 8-75, 11-19, 12-33, 12-49, 13-67
315115-0165 ...	WASHER PLAIN, TBRB 8,4/16 H=3	1-13, 1-15, 1-27, 1-29, 1-43, 1-45, 1-49, 1-51, 1-53, 1-75, 1-77
		1-79, 1-81, 1-83, 2-65, 2-99, 4-131, 4-133, 4-135, 4-137, 5-7, 5-9, 5-21, 5-25, 5-27, 5-33, 5-35, 5-37
		5-41, 5-43, 5-45, 5-47, 5-53, 5-55, 5-89, 5-91, 5-101, 5-103, 5-117, 5-119, 5-121, 5-133, 5-135, 5-137
		5-139, 5-141, 5-143, 5-145, 5-147, 5-149, 5-151, 5-153, 5-155, 7-9, 7-11, 12-33, 13-65, 13-115, 14-49
315115-0171 ...	WASHER PLAIN, TBRB 10/18 H=4	4-143, 4-147, 12-223, 12-227
315115-0173 ...	WASHER PLAIN, TBRB 10,5/22 H=4	4-139, 4-141, 5-121, 7-9, 12-33, 12-43
315115-0178 ...	WASHER PLAIN, TBRB 13/24 H=4	1-31, 1-33, 2-37, 2-39, 2-41, 2-85, 2-87, 5-7, 5-9, 5-35, 5-37
		12-97, 12-99
315121-0153 ...	WASHER PLAIN, TBRSB 6,4/22 H=4	2-37, 2-39, 2-41, 2-47, 2-85, 2-87, 7-35, 8-5, 8-7, 8-17, 8-21
		8-23, 8-25, 8-27, 8-29, 8-31, 8-33, 12-53, 12-55, 12-67, 12-69, 12-71, 12-73
315121-0165 ...	WASHER PLAIN, TBRSB 8,4/26 H=5	3-35, 3-41, 3-43, 7-37, 7-39, 14-53
315121-0173 ...	WASHER PLAIN, TBRSB 10,5/28 H=6	7-9
315121-0186 ...	WASHER PLAIN, TBRSB 17/42 H=8	12-97, 12-99
315125-0153 ...	WASHER TBRSB 6,4X22X4 A4	2-93, 5-117, 6-31, 6-33, 6-43, 6-45, 8-21, 8-23, 8-25, 8-27, 8-29
		8-31, 8-33
315125-0165 ...	WASHER TBRSB 8,4X26X5 A4	1-43, 1-45, 2-27, 2-29, 2-31, 2-81, 2-83, 5-21, 6-21, 6-25, 6-55
		12-29, 12-161, 13-153
315125-0173 ...	WASHER TBRSB 10,5X28X6 A4	6-33, 6-41
315202-0101 ...	O-RING 3,1X1,6 MM	4-7, 4-23, 4-25, 4-27, 4-29, 12-215, 12-217, 12-219, 12-221, 12-231, 13-7
		13-9, 13-99, 13-101, 13-103, 13-105, 13-109, 13-111
315202-0104 ...	O-RING 6,1X1,6 MM	4-61, 4-63, 4-65, 4-67, 4-69, 4-71
315202-0105 ...	O-RING 7,1X1,6 MM	4-7, 4-23, 4-25, 4-27, 4-29, 4-61, 4-63, 4-65, 4-67, 4-69, 4-71, 12-149, 12-215
		12-217, 12-219, 12-221, 12-231, 13-7, 13-9, 13-77, 13-99, 13-101, 13-103, 13-105, 13-109, 13-111
315202-0106 ...	O-RING 8,1X1,6 MM	5-15
315202-0111 ...	O-RING 13,1X1,6 MM	4-7, 4-11, 4-13, 4-15, 4-17, 4-19, 4-21, 4-61, 4-63, 4-77, 4-79, 4-85, 4-87
		12-193, 12-195, 12-197, 12-199, 12-201, 12-203, 12-231
315202-0113 ...	O-RING 15,1X1,6 MM	6-49
315202-0114 ...	O-RING 16,1X1,6 MM	4-7, 4-61, 4-63, 4-143, 4-147, 12-223, 12-227, 12-231
315202-0124 ...	O-RING 37,1X1,6 MM	4-7, 12-215, 12-217, 12-219, 12-221, 12-231, 13-99, 13-101, 13-103, 13-105
		13-109, 13-111
315202-0206 ...	O-RING 7,3X2,4 MM	2-181, 2-183
315202-0207 ...	O-RING 8,3X2,4 MM	4-7, 4-11, 4-13, 4-15, 4-17, 4-19, 4-21, 4-61, 4-63, 4-77, 4-79, 4-85, 4-87
		12-193, 12-195, 12-197, 12-199, 12-201, 12-203, 12-231, 13-7, 13-9
315202-0208 ...	O-RING 9,3X2,4 MM	4-7, 4-61, 4-63, 4-143, 4-147, 12-223, 12-227, 12-231
315202-0211 ...	O-RING 13,3X2,4 MM	2-11, 2-25, 2-53, 2-55, 2-59, 2-61
315202-0212 ...	O-RING 14,3X2,4 MM	4-7, 4-11, 4-13, 4-15, 4-17, 4-19, 4-21, 4-61, 4-63, 4-73, 4-77, 4-79, 4-85
		4-87, 12-193, 12-195, 12-197, 12-199, 12-201, 12-203, 12-231, 13-147
315202-0213 ...	O-RING 15,3X2,4 MM	4-61, 4-63, 4-77, 4-79, 4-85, 4-87
315202-0214 ...	O-RING 17,3X2,4 MM	1-39, 1-65, 1-67, 1-69, 5-15, 6-63
315202-0216 ...	O-RING 22,2X3 MM	2-9, 2-49, 2-51, 2-69
315202-0217 ...	O-RING 24,2X3 MM	1-39, 1-65, 1-67, 1-69, 5-133, 5-135, 6-49, 6-57, 6-59, 6-61
315202-0218 ...	O-RING 26,2X3 MM	8-9, 8-39, 12-57, 12-75
315202-0220 ...	O-RING 32,2X3 MM	4-7, 5-15, 6-43, 6-45, 12-215, 12-217, 12-219, 12-221, 12-231, 13-7, 13-9
		13-99, 13-101, 13-103, 13-105, 13-109, 13-111
315202-0221 ...	O-RING 34,2X3 MM	6-31, 6-33
315202-0223 ...	O-RING 39,2X3 MM	6-41
315202-0224 ...	O-RING 42,2X3 MM	8-35, 8-37, 10-11, 12-77, 12-79
315202-0225 ...	O-RING 44,2X3 MM	6-5, 6-35, 6-59, 6-61
315202-0226 ...	O-RING 44,2X5,7 MM	5-15, 6-63
315202-0229 ...	O-RING 59,2X5,7 MM	5-7, 5-9, 5-35, 5-37
315202-0265 ...	O-RING 12,3X2,4 MM	4-73
315202-0267 ...	O-RING 16,3X2,4 MM	6-33
315202-0301 ...	O-RING 49,5X3 MM	5-13, 8-35, 8-37, 12-77, 12-79
315202-0302 ...	O-RING 54,5X3 MM	5-15, 6-49, 6-59, 6-61, 6-63
315202-0303 ...	O-RING 59,5X3 MM	5-15, 6-59, 6-61, 6-63
315202-0304 ...	O-RING 64,5X3 MM	8-11, 8-35, 8-37, 12-59, 12-77, 12-79
315202-0305 ...	O-RING 69,5X3 MM	6-29, 8-11, 8-35, 8-37, 12-59, 12-77, 12-79
315202-0308 ...	O-RING 84,5X3 MM	1-63
315202-0309 ...	O-RING 89,5X3 MM	5-59, 8-9, 8-39, 12-57, 12-75
315202-0311 ...	O-RING 99,5X3 MM	5-121, 6-5
315202-0316 ...	O-RING 124,5X3 MM	5-125, 5-127
315202-0518 ...	O-RING 23,39X3,53 MM	11-19
315204-0104 ...	O-RING 6,1X1,6 MM	14-7
315204-0116 ...	O-RING 18,1X1,6 MM	4-97, 4-99
315204-0215 ...	O-RING 19,2X3 MM	1-63, 6-21, 6-23, 6-25
315204-0220 ...	O-RING 32,2X3 MM	4-23, 4-25, 4-27, 4-29, 13-167
315204-0224 ...	O-RING 42,2X3 MM	4-23, 4-25, 4-27, 4-29

Part No	Description	Page No
315204-0301	O-RING 49,5X3 MM	6-35, 13-177
315204-0303	O-RING 59,5X3 MM	6-21, 6-23, 6-25, 13-177
315211-0103	BONDED SEAL SS/NBR90 M6	4-23, 4-25, 4-27, 4-29, 6-41, 12-215, 12-217, 12-219, 12-221, 13-7, 13-9, 13-99, 13-101, 13-103, 13-105, 13-109, 13-111
315211-0105	BONDED SEAL SS/NBR90 G1/8	4-23, 4-25, 4-27, 4-29, 12-215, 12-217, 12-219, 12-221, 13-7, 13-9, 13-99, 13-101, 13-103, 13-105, 13-109, 13-111
315211-0108	BONDED SEAL SS/NBR90 G1/4	4-23, 4-25, 4-27, 4-29, 13-109, 13-111
315220-0121	V-RINGS 12,5X18,5X7,7 MM V-14S	8-5, 8-7, 8-21, 8-23, 8-25, 8-27, 8-29, 8-31, 8-33
315220-0175	V-RINGS 31X39X10,5 MM V-35S	5-133, 5-135
315220-0198	V-RINGS 45X55X13 MM V-50S	3-29
315221-0171	RADIAL SEAL 30X62X7 MM	5-123, 5-125, 5-127
315221-0197	RADIAL SEAL 48X72X8 MM	3-29
315221-0200	RADIAL SEAL 50X72X8 MM	5-59
315221-0221	RADIAL SEAL 70X90X10 MM	3-9, 3-19
315226-0196	AXIAL SEAL WITH STEEL COVER 48X65X4,5 MM	4-101, 4-103, 4-105, 4-107
315226-0200	AXIAL SEAL WITH STEEL COVER 50X70X4,5 MM	5-59
315229-0104	GASKETS, 35,8X42,8X3,7 MM 1"1/2 FD	6-35
315230-0157	BEARING SEAL 12X16X3 MM	4-143, 4-147, 12-223, 12-227, 13-147
315233-0101	WASHER CAPTIVE SEALING M5(NEW315239-101)	1-63
315233-0109	WASHER CAPTIVE SEALING G1/8	2-165, 5-121, 12-141
315233-0110	WASHER CAPTIVE SEALING G1/4	2-13, 2-15, 2-17, 2-19, 2-71, 2-73, 2-75, 2-101, 2-103, 2-105, 2-107, 2-109, 2-111, 2-113, 2-137, 2-139, 2-187, 4-73, 5-81, 5-83, 5-121, 13-17, 13-19, 13-21, 13-23
315233-0111	WASHER CAPTIVE SEALING G3/8	1-71, 2-179
315233-0113	WASHER CAPTIVE SEALING G1/2	2-13, 2-15, 2-17, 2-19, 2-27, 2-29, 2-31, 2-71, 2-73, 2-75, 2-81, 2-83, 2-101, 2-103, 2-105, 2-107, 2-109, 2-111, 2-113, 2-115, 2-137, 2-139, 2-149, 2-151, 2-187, 12-137, 12-139, 12-141, 13-17, 13-19, 13-21, 13-23
315234-0109	WASHER,PL.RND.CU.10,3/13,5 H=1,0	5-69, 5-71, 5-77, 5-79, 6-21, 6-23, 6-25
315234-0110	WASHER,PL.RND.CU.13,5/18 H=1,5	4-11, 4-13, 4-15, 4-17, 4-19, 4-21, 4-77, 4-79, 4-85, 4-87, 5-19, 12-193, 12-195, 12-197, 12-199, 12-201, 12-203
315234-0113	WASHER PL.RND.CU.21,3//26 H=1,5	2-23, 2-79, 5-19
315239-0109	NYLON WASHER G1/8	5-67
315239-0110	NYLON WASHER G1/4	2-149, 2-151, 5-67
315239-0111	NYLON WASHER G3/8	2-149, 2-151
315250-0103	GASKET 48X38X5,5 MM	1-65, 1-67, 1-69, 2-57, 2-67, 2-95, 5-7, 5-9, 5-35, 5-37, 12-11
315250-0104	GASKET 61X51X5,5 MM	1-27, 1-29
315259-0103	FELT SEAL 47-67 MM	4-139, 4-141
315401-0153	WASHER FBH6,1FZB	3-9, 3-19
315401-0173	WASHER FBH10,2FZB	3-9, 3-19
315401-0178	WASHER FBH12,2FZB	3-27
315402-0156	LOCK WASHER FBB 6,5	5-73, 5-75
315402-0173	LOCK WASHER FBB 10,2	2-37, 2-39, 2-41, 2-85, 2-87, 5-61
315402-0178	LOCK WASHER FBB 12,2	1-73
315410-0100	LOCK WASHER MB 0 D=10 H=1	4-45, 4-47, 4-49, 4-51
315410-0101	LOCK WASHER MB 1 D=12 H=1	4-45, 4-47, 4-49, 4-51
315410-0107	LOCK WASHER MB 7 D=35 H=1,25	5-123
315410-0108	LOCK WASHER MB 8 D=40 H=1,25	5-125, 5-127
315410-0110	LOCK WASHER MB 10 D=50 H=1,25	5-61
315410-0114	LOCK WASHER MB 14 D=70 H=1,5	5-125, 5-127
315701-0134	PARALLEL KEY W. ROUND ENDS 3X3X10 MM	5-67
315701-0169	PARALLEL KEY W. ROUND ENDS 4X4X18 MM	8-41
315701-0201	PARALLEL KEY W. ROUND ENDS 5X5X20 MM	8-5, 8-7, 8-21, 8-23, 8-25, 8-27, 8-29, 8-31, 8-33, 12-53, 12-55, 12-67, 12-69, 12-71, 12-73
315701-0202	PARALLEL KEY W. ROUND ENDS 5X5X22 MM	5-19
315701-0234	PARALLEL KEY W. ROUND ENDS 6X6X25 MM	5-19
315701-0262	PARALLEL KEY W.ROUND ENDS 8X7X18	3-11, 3-21, 13-11
315701-0263	PARALLEL KEY W.ROUND ENDS 8X7X20	3-11, 3-21, 13-11
315701-0268	PARALLEL KEY W. ROUND ENDS 8X7X32 MM	5-123
315701-0270	PARALLEL KEY W. ROUND ENDS 8X7X40 MM	3-35, 5-19, 5-121, 5-123
315701-0272	PARALLEL KEY W. ROUND ENDS 8X7X50 MM	5-19
315701-0274	PARALLEL KEY W. ROUND ENDS 8X7X60 MM	5-121
315701-0296	PARALLEL KEY W. ROUND ENDS 10X8X25 MM	5-61
315701-0299	PARALLEL KEY W. ROUND ENDS 10X8X32 MM	5-123
315701-0307	PARALLEL KEY W. ROUND ENDS 10X8X70 MM	3-31, 3-33
315701-0330	PARALLEL KEY W. ROUND ENDS 12X8X32 MM	2-37, 2-39, 2-41, 2-85, 2-87
315701-0336	PARALLEL KEY W. ROUND ENDS 12X8X63 MM	2-37, 2-39, 2-41, 2-85, 2-87
315701-0338	PARALLEL KEY W. ROUND ENDS 12X8X70 MM	5-125, 5-127
315701-0363	PARALLEL KEY W. ROUND ENDS 14X9X40 MM	5-61
315701-0802	PARALLEL KEY W. ROUND ENDS 10X8X36 MM	5-123
315705-0166	PARALLEL KEY W. ROUND ENDS 4X4X12 MM	6-55
315705-0202	PARALLEL KEY W ROUND ENDS 5X5X25MM	6-33
315705-0238	PARALLEL KEY W. ROUND ENDS 6X6X36 MM	6-55
315705-0267	PARALLEL KEY W. ROUND ENDS 8X7X30 MM	6-57, 6-59, 6-61
315705-0270	PARALLEL KEY W. ROUND ENDS 8X7X40 MM	6-57
315705-0277	PARALLEL KEY W. ROUND ENDS 8X7X80 MM	6-41
315742-0111	RETAINING RING 15 SMS 199 RFR	12-53, 12-55, 12-67, 12-69, 12-71, 12-73
315742-0112	RETAINING RING 16 SMS 199 RFR	12-49
315742-0114	RETAINING RING 18 SMS 199 RFR	5-89, 5-91
315742-0119	RETAINING RING 25 SMS 199 RFR	5-137, 5-139, 5-141, 5-143
315742-0122	RETAINING RING 30 SMS 199	6-55
315750-0103	RETAINING RING SHAFT DIN 471 ST 6	1-73
315750-0105	RETAINING RING SHAFT DIN 471 ST 8	7-35, 8-9, 8-39, 12-57, 12-75
315750-0107	RETAINING RING SHAFT DIN 471 ST 10	4-45, 4-47, 4-49, 4-51, 7-41, 12-83
315750-0109	RETAINING RING SHAFT DIN 471 ST 12	8-41
315750-0112	RETAINING RING SHAFT DIN 471 ST 15	8-17, 8-41, 12-83

Part No	Description	Page No
315750-0119	RETAINING RING SHAFT DIN 471 ST 25	3-11, 3-21, 13-11
315750-0122	RETAINING RING SHAFT DIN 471 ST 30	5-19
315750-0127	RETAINING RING SHAFT DIN 471 ST 40	5-19
315750-0131	RETAINING RING SHAFT DIN 471 ST 50	5-59
315750-0135	RETAINING RING SHAFT DIN 471 ST 60	12-47
315751-0103	RETAINING RING FOR SHAFT DIN 471 6 A2	8-13, 8-15
315751-0109	RETAINING RING FOR SHAFT DIN 471 12 A2	7-21, 7-23, 12-117
315751-0112	RETAINING RING FOR SHAFT DIN 471 15 A2	7-25, 8-43
315751-0119	RETAINING RING FOR SHAFT DIN 471 25 A2	6-33, 6-47, 6-55, 12-107
315751-0124	RETAINING RING FOR SHAFT DIN 471 35 A2	6-49
315752-0123	RETAINING RING FOR BORE DIN 472 32 ST	8-5, 8-7, 8-21, 8-23, 8-25, 8-27, 8-29, 8-31, 8-33
315752-0124	RETAINING RING FOR BORE DIN 472 35 ST	12-83
315752-0136	RETAINING RING FOR BORE DIN 472 62 ST	4-139, 4-141, 5-19
315752-0149	RETAINING RING FOR BORE DIN 472 110 ST	5-125, 5-127
315753-0121	RETAINING RING FOR BORE DIN 472 28 A2	12-117
315753-0122	RETAINING RING FOR BORE DIN 472 30 A2	6-59, 6-61, 12-101
315753-0124	RETAINING RING FOR BORE DIN 472 35 A2	12-107
315753-0132	RETAINING RING FOR BORE DIN 472 52 A2	6-33, 6-57
315754-0107	LOCKING WAE 5	7-31, 7-33
315754-0110	LOCKING WAE 9	7-31, 7-33
315754-0113	LOCKING WAE 15	1-63
315755-0105	RETAINING RING SHAFT DIN 6799 3,2 A2	7-19
315755-0106	RETAINING RING SHAFT DIN 6799 4 A2	6-7
315755-0107	RETAINING RING SHAFT DIN 6799 5 A2	5-119
315755-0108	RETAINING RING SHAFT DIN 6799 6 A2	8-77, 8-79, 13-145
315755-0109	RETAINING RING SHAFT DIN 6799 7 A2	3-15, 3-17
315755-0111	RETAINING RING SHAFT DIN 6799 10 A2	8-49
315755-0113	RETAINING RING SHAFT DIN 6799 15 A2	5-23, 5-39
315755-0801	RETAINING RING SHAFT DIN 6799 8 A2	8-5, 8-7, 8-21, 8-23, 8-25, 8-27, 8-29, 8-31, 8-33
316810-0106	PIPE CLIP FOR TUBE D=8 MM	4-65, 4-67, 4-69, 4-71, 5-7, 5-9, 5-25, 5-27, 5-35, 5-37, 5-41, 5-43, 5-45, 5-47, 5-81, 5-83, 6-27, 6-29, 8-69, 8-71, 8-73
318201-0076	ROLLER CHAIN, SINGLE 3/8 -76	5-67
318207-0151	ROLLER CHAIN, SINGLE 6MM-151	12-53, 12-55, 12-67, 12-69, 12-71, 12-73
318207-0168	ROLLER CHAIN, SINGLE 6MM-168	8-5, 8-7, 8-21, 8-23, 8-25, 8-27, 8-29, 8-31, 8-33
318212-0006	ROLLER CHAIN, SINGLE 1/2 -6	5-105, 5-107, 5-109, 5-111
318212-0008	ROLLER CHAIN, SINGLE 1/2 -8,SS	5-105, 5-107, 5-109, 5-111
318212-0066	ROLLER CHAIN, SINGLE 1/2 -66,SS	5-53, 5-55
318212-0074	ROLLER CHAIN, SINGLE 1/2 -74,SS	5-33
318212-0119	ROLLER CHAIN, SINGLE 1/2 -119,SS	5-29, 5-49, 5-51
318212-0150	ROLLER CHAIN, SINGLE 1/2 -150,SS	5-101, 5-103
318219-0187	CONNECTING LINK SINGLE 1/2",SS	5-101, 5-103
318219-0487	CONNECTING LINK, DUPLEX 1/2", SS	5-89, 5-91
318242-0034	ROLLER CHAIN DUPLEX 1/2"-34,SS	5-33, 5-53, 5-55
318242-0036	ROLLER CHAIN DUPLEX 1/2"-36SS	5-113
318242-0108	ROLLER CHAIN, DUPLEX 1/2"-108, SS	5-89, 5-91
318301-0130	LIFTING EYE BOLT, TYPE, LT, M30	10-9
318302-0120	EYE BOLT NUT, TYPE, LH, M10	12-33
318800-0102	HANDLES,SPHERICAL KNOB,INT.THRE.,D.20-M5	7-15
318800-0103	HANDLES,SPHERICAL KNOB,INT.THRE.,D.25-M6	8-5, 8-7, 8-21, 8-23, 8-25, 8-27, 8-29, 8-31, 8-33, 12-53, 12-55, 12-67, 12-69, 12-71, 12-73
318800-0104	HANDLE,SPHERICAL KNOB,INT.THRE.,D.30-M8	1-73, 7-35, 8-51, 8-53, 12-97, 12-99, 12-145
318800-0106	HANDLE,SPHERICAL KNOB,INT.THRE,D.40-M10	8-49
318800-0107	HANDLE,SPHERICAL KNOB,INT.THRE.,D45-M10	8-85, 8-87
319030-0125	DISC SPRING, CONICAL 12,5X6,2X0,5 MM	8-69, 8-71, 8-73
321101-0143	FLANGE BUSHING, 8X14X8 MM	4-97, 4-99
321101-0163	FLANGE BUSHING, 10X16X10 MM	4-143, 4-147
321101-0172	FLANGE BUSHING, 12X18X10 MM	5-67
321101-0173	FLANGE BUSHING, 12X18X12 MM	1-35, 2-9, 2-69, 7-37, 7-39, 12-91
321101-0202	FLANGE BUSHING, 16X22X12 MM	8-17, 12-83
321101-0223	FLANGE BUSHING, 18X25X16	5-89, 5-91
321101-0232	FLANGE BUSHING, 20X28X16 MM	5-63, 5-65
321101-0233	FLANGE BUSHING, 20X28X20 MM	2-9, 2-69, 3-37, 3-39
321101-0252	FLANGE BUSHING, 25X35X16 MM	5-29, 5-49, 5-51, 5-89, 5-91, 5-101, 5-103
321101-0253	FLANGE BUSHING, 25X35X25 MM	5-89, 5-91, 5-101, 5-103
321101-0272	FLANGE BUSHING, 30X40X20 MM	5-33, 5-53, 5-55, 5-101, 5-103
321101-0283	FLANGE BUSHING, 35X45X35 MM	5-89, 5-91, 5-101, 5-103
321105-0163	BEARING BUSH W/O FLANGE, 10X16X10 MM	12-45
321105-0173	BEARING BUSH W/O FLANGE, 12X18X12 MM	12-45
321105-0234	BEARING BUSH W/O FLANGE, 20X28X30 MM	4-139, 4-141, 8-55
321110-0202	FLANGE BUSHING, 16E7X12	12-39, 12-41, 12-49
321111-0095	FLANGE BUSHING, 8X12X6 MM	3-15, 3-17
321111-0097	FLANGE BUSHING, 8X12X12 MM	11-19
321111-0135	FLANGE BUSHING, 10X16X10 MM	8-5, 8-7, 8-21, 8-23, 8-25, 8-27, 8-29, 8-31, 8-33, 11-19
321111-0136	FLANGE BUSHING, 10X16X16 MM	11-19
321111-0157	FLANGE BUSHING, 12X18X8 MM	8-49
321111-0163	FLANGE BUSHING, 12X18X20 MM	4-101, 4-103, 4-105, 4-107
321111-0185	FLANGE BUSHING, 14X20X14 MM	5-145, 5-147, 5-149, 5-151, 5-153, 5-155
321111-0212	FLANGE BUSHING, 15X21X15 MM	8-5, 8-7, 8-21, 8-23, 8-25, 8-27, 8-29, 8-31, 8-33, 12-53, 12-55, 12-67, 12-69, 12-71, 12-73
321111-0240	FLANGE BUSHING, 16X22X12 MM	3-11, 3-21, 13-11
321111-0243	FLANGE BUSHING, 16X22X25 MM	6-5, 11-9, 11-11, 11-13, 11-15
321116-0127	BEARING BUSH W/O FLANGE, 10X14X10 MM	5-25, 5-27, 5-41, 5-43, 5-45, 5-47
321116-0128	BEARING BUSH W/O FLANGE, 10X14X16 MM	5-25, 5-27, 5-41, 5-43, 5-45, 5-47, 5-89, 5-91, 5-101, 5-103

Part No	Description	Page No
321116-0163	BEARING BUSH W/O FLANGE, 12X18X20 MM	4-101, 4-103, 4-105, 4-107
321116-0179	BEARING BUSH W/O FLANGE, 14X18X14 MM	8-69, 8-71, 8-73
321116-0234	BEARING BUSH W/O FLANGE, 16X20X12 MM	6-17
321120-0100	BEARING BUSH W/O FLANGE, 8X10X12 MM	8-9, 8-13, 8-15, 8-39, 12-57, 12-75
321120-0101	BEARING BUSH W/O FLANGE, 6X8X6 MM	8-13, 8-15
321120-0104	BEARING BUSH W/O FLANGE, 10X12X10 MM	7-35, 7-41, 12-97, 12-99
321120-0109	BEARING BUSH W/O FLANGE, 12X14X10 MM	8-9, 8-39, 12-57, 12-75
321120-0110	BEARING BUSH W/O FLANGE, 12X14X12 MM	7-41
321120-0122	BEARING BUSH W/O FLANGE, 15X17X15 MM	5-29, 5-49, 5-51, 5-133, 5-135, 8-11, 8-35, 8-37, 12-53, 12-55, 12-59, 12-67, 12-69, 12-71, 12-73, 12-77, 12-79
321120-0171	BEARING BUSH W/O FLANGE, 30X34X30 MM	12-97, 12-99
321120-0183	BEARING BUSH W/O FLANGE, 35X39X20 MM	5-133, 5-135
321127-0100	BEARING BUSH W/O FLANGE, 10X13X10 MM	7-29, 12-61, 12-63
321129-0110	THRUST WASHER, 14X26X1,5 MM	6-59, 6-61
321130-0180	THRUST WASHER, 12X24X1,5 MM	7-21, 7-23, 8-49
321141-0100	BEARING BUSH W/O FLANGE, 8X10X8 MM	7-19
321141-0140	BEARING BUSH W/O FLANGE, 10X12X10 MM	7-19
321141-0193	BEARING BUSH W/O FLANGE, 12X14X25 MM	7-21, 7-23
321141-0305	BEARING BUSH W/O FLANGE, 25X28X30 MM	5-133, 5-135
321300-0094	BALL BEARING, 4X13X5 MM	8-77, 8-79
321306-0104	BALL BEARING, 20X42X12 MM	5-133, 5-135
321306-0107	BALL BEARING, 35X62X14 MM	5-19, 5-123, 6-15
321306-0110	BALL BEARING, 50X80X16 MM	3-29, 5-61
321306-0114	BALL BEARING, 70X110X20 MM	5-125, 5-127
321308-0101	BALL BEARING, 12X28X8 MM	8-5, 8-7, 8-21, 8-23, 8-25, 8-27, 8-29, 8-31, 8-33
321308-0112	BALL BEARING, 60X95X18 MM	12-47
321308-0201	BALL BEARING, 12X28X8 MM	8-41, 12-117
321308-0202	BALL BEARING, 15X32X9 MM	8-5, 8-7, 8-17, 8-21, 8-23, 8-25, 8-27, 8-29, 8-31, 8-33, 8-41, 12-45, 12-49, 12-83
321308-0205	BALL BEARING, 25X47X12MM	3-11, 3-21, 6-33, 6-47, 6-57, 13-11
321308-0207	BALL BEARING, 35X62X14 MM	6-49
321309-0100	BALL BEARING, 10X30X9 MM	4-45, 4-47, 4-49, 4-51
321309-0106	BALL BEARING, 30X62X16 MM	5-19, 5-125, 5-127
321309-0108	BALL BEARING, 40X80X18 MM	3-29
321309-0110	BALL BEARING, 50X90X20 MM	5-59
321309-0114	BALL BEARING, 70X125X24 MM	3-9, 3-19
321312-0100	BALL BEARING, 10X30X9 MM	4-45, 4-47, 4-49, 4-51
321312-0101	BALL BEARING, 12X32X10 MM	4-45, 4-47, 4-49, 4-51
321313-0102	BALL BEARING, 15X35X11 MM	8-17, 8-43, 8-57, 8-59, 8-81, 8-83, 12-83
321313-0103	BALL BEARING, 17X40X12MM	6-31, 6-33, 6-43, 6-45
321313-0105	BALL BEARING, 25X52X15MM	6-57, 6-59, 6-61
321313-0107	BALL BEARING, 35X72X17MM	6-59, 6-61
321316-0108	BALL BEARING, 40X90X23 MM	3-31, 3-33
321316-0200	BALL BEARING, 10X35X11 MM	8-5, 8-7, 8-21, 8-23, 8-25, 8-27, 8-29, 8-31, 8-33, 8-75
321316-0201	BALL BEARING, 12X37X12 MM	8-17, 8-41
321316-0206	BALL BEARING, 30X72X19 MM	6-29
321361-0105	TAPER ROLLER BEARING, 25X52X16,25 MM	5-125, 5-127
321364-0106	TAPER ROLLER BEARING, 30X72X19 MM	5-125, 5-127
321576-0360	ROLLER BEARING, 30X62X29 MM	3-35, 3-37, 3-39
321580-0165	CAM ROLLER, 12X30X40 MM	3-11, 3-21, 13-11
321582-0212	CAM ROLLER, 16X35X52 MM	5-63, 5-65
341001-0148	COPPER TUBE	2-7, 2-149, 2-151
341001-0192	COPPER TUBE	2-149, 2-151
341001-0228	COPPER TUBE	2-37, 2-39, 2-41, 2-85, 2-87, 2-137, 2-139, 2-149, 2-151
342700-0110	NIPPLES,HEXAGON,EXT.G-THREAD G1/4"-G1/4"	13-179
342701-0205	BUSHING,INT./EXT.G-THREAD G1/2"-G1/4"	2-23, 2-79, 2-149, 2-151, 2-187
342701-0206	BUSHING,INT./EXT.G-THREAD G1/2"-G3/8"	2-23, 2-27, 2-29, 2-31, 2-79, 2-81, 2-83
342701-0208	BUSHING, INT/EXT. G-THREAD NO. 3/4-1/4	2-169
342702-0115	NUT, PIPES & CONNECTORS,NUT M-16 BR	12-159, 13-91
342703-0103	NUT, PIPES & CONNECTORS,NUT M-8 FE	2-35, 2-121, 2-123, 13-15
342703-0108	NUT, PIPES & CONNECTORS,NUT M-10 FE	12-165, 13-93, 13-95
342703-0208	NUT, PIPES & CONNECTORS,NUT M-8 SS	4-23, 4-25, 4-27, 4-29, 12-125, 12-215, 12-217, 12-219, 12-221, 13-7, 13-9, 13-99, 13-101, 13-103, 13-105
342705-0103	ACCESSORIES, FERRULE 8-LFZB	2-35, 2-121, 2-123, 13-15
342705-0108	ACCESSORIES, FERRULE 10-LFZB	12-165, 13-93, 13-95
342706-0114	ACCESSORIES, INSERT SLEEVE 4 MM	5-29, 5-33, 5-49, 5-51, 5-53, 5-55, 5-67, 5-81, 5-83
342706-0130	ACCESSORIES, INSERT SLEEVE 6 MM	5-17, 5-67, 7-7
342707-0110	SLEEVE, INT. THREAD, NO. 2543-1/4	2-101, 2-103, 2-105, 2-107, 2-109, 2-111, 2-113, 2-137, 2-139
342710-0115	REDUCTION RBM 16/8	2-149, 2-151
342711-0115	ACCESSORIES, PLUG PL-15 AND 16	2-149, 2-151, 12-159, 13-91
342712-0205	BUSHING, INT/EXT. G-THREAD NO. 1/2X1/4	2-169, 2-171
342713-0208	PLUG, EXT. THREAD HEX. SOCKET. BPM10	13-115
342713-0209	PLUG (QUANT.MINIMA= 10PC).	2-165, 4-11, 4-13, 4-15, 4-17, 4-19, 4-21, 4-65, 4-67, 4-69, 4-71, 4-77, 4-79, 4-85, 4-87, 12-193, 12-195, 12-197, 12-199, 12-201, 12-203
342713-0210	PLUG,EXT THREAD HEX SOCKET(PAK OF 10 PCS	2-13, 2-15, 2-17, 2-19, 2-27, 2-29, 2-31, 2-71, 2-73, 2-75, 2-79, 2-81, 2-83, 2-101, 2-103, 2-105, 2-107, 2-109, 2-111, 2-113, 2-137, 2-139, 8-69, 8-71, 8-73, 13-17, 13-19, 13-21, 13-23, 13-179
342713-0211	PLUG, EXT THREAD HEX SOCKET 8638-00-380	2-27, 2-29, 2-31, 2-81, 2-83, 2-137, 2-139
342713-0213	PLUG, EXT THREAD HEX SOCKET 8638-00-120	2-149, 2-151
342713-0311	PLUG, EXT. THREAD HEX. SOCKET. BPS38	2-171, 2-173, 2-175, 13-29
342714-0202	REDUCTION KOR 10/6-LFZB	2-173, 2-175, 13-29
342714-0209	REDUCTION KOR 15/10-LFZB	2-121, 2-123
342715-0100	BLIND PLUG 4 MM	2-81, 2-83

Part No	Description	Page No
342715-0102	BLIND PLUG 6 MM	2-27, 2-29, 2-31, 2-81, 2-83
342715-0103	BLIND PLUG 8 MM	2-27, 2-29, 2-31, 2-81, 2-83, 13-91, 13-171
342716-0203	REDUCER 6-8	2-27, 2-29, 2-31, 2-81, 2-83, 12-159, 12-263, 13-117
342716-0209	REDUCER 8-12	2-27, 2-29, 2-31, 2-81, 2-83
342716-0210	REDUCER 6-12	2-27, 2-29, 2-31, 2-81, 2-83
342716-0211	REDUCER 12-14	2-27, 2-29, 2-31, 2-81, 2-83, 13-179
342720-0102	CONN. STR. GA-6-G1/8	5-121
342720-0103	CONN. STR. GA-8-G1/8	2-149, 2-151
342720-0104	CONN. STR. GA-8-G1/4	5-125, 5-127
342720-0109	CONN. STR. GA-12-G3/8	2-79
342720-0114	CONN. STR. GA-15-G1/2	2-13, 2-15, 2-17, 2-19, 2-23, 2-71, 2-73, 2-75, 2-79, 2-101, 2-103, 2-105, 2-107, 2-109, 2-111, 2-113, 2-115, 2-137, 2-139, 2-149, 2-151, 13-17, 13-19, 13-21, 13-23
342720-0115	CONN. STR. GA-16-G1/2	5-17
342721-0108	PIPE COUPLGA10-LRFZB REPBY 0342752-0104	2-169, 2-171, 2-175
342721-0114	PIPE COUPLGA15-LRFZB REPBY 0342752-0114	2-169
342722-0197	STRAIGHT COUPLING	13-115
342722-0202	PIPE COUPLING 1/8" D=6MM	2-27, 2-29, 2-31, 2-81, 2-83, 2-165
342722-0203	STRAIGHT COUPLING	2-27, 2-29, 2-31, 2-81, 2-83, 12-159
342722-0204	PIPE COUPLING	6-21, 6-25, 13-177
342722-0205	STRAIGHT COUPLING D=8-G1/4"	2-7, 2-27, 2-29, 2-31, 2-81, 2-83, 2-85, 2-87, 8-69, 8-71, 8-73, 12-159, 13-115, 13-177
342722-0211	STRAIGHT COUPLING D=10-G1/4"	6-23
342723-0103	CONN. STR. PIPE GI-8-G1/8	12-39, 12-41
342723-0109	CONN. STR. PIPE GI-12-G3/8	2-149, 2-151
342723-0114	CONN. STR. PIPE GI-15-G1/2	2-163
342727-0103	CONN. PIPE G-8-LFZB	12-165, 13-95
342730-0104	CONN. ELBOW WA-8-1/4	5-125, 5-127
342730-0114	CONN. ELBOW WA-15-1/2	2-149, 2-151
342731-0102	CONN. ELBOW WE 6-LRFZB	2-173, 5-59, 12-163, 13-29
342731-0108	CONN. ELBOW WE 10-LRFZB	2-173, 2-175, 13-29
342731-0114	CONN. ELBOW WE 15-LRFZB	2-35, 2-121, 2-123, 2-169, 12-167, 13-15, 13-97
342732-0102	ELBOW PIPE JOINT, EXT.THREAD, D=6MM-G1/8	2-37, 2-39, 2-41, 5-81, 5-83, 5-137, 5-139, 5-141, 5-143, 6-13, 6-63, 12-257, 12-269
342732-0103	ELBOW PIPE JOINT, EXT.THREAD, D=6MM-G1/4	2-27, 2-29, 2-31, 2-81, 2-83, 12-47, 12-49
342732-0104	ELBOW PIPE JOINT, EXT.THREAD, D=8MM-G1/4	2-7, 2-27, 2-29, 2-31, 2-81, 2-83, 2-85, 2-87 2-101, 2-103, 2-105, 2-107, 2-109, 2-111, 2-113, 6-27, 12-159, 12-161, 13-115, 13-153, 13-165, 13-179
342732-0105	ELBOW PIPE JOINT ,EXT.THREAD,D=8 MM R3/8	12-159
342732-0109	ELBOW PIPE JOINT, EXT.THREAD, D=1MM-G1/4	2-27, 2-29, 2-31, 2-81, 2-83, 13-179
342732-0113	ELBOW PIPE JOINT, EXT.THREAD,D=10MM-G1/4	2-81, 2-83
342732-0801	ELBOW PIPE JOINT, EXT.THREAD, D=8MM-G1/8	13-161
342733-0114	CONN. ELBOW WI-15-G1/2	2-27, 2-29, 2-31, 2-81, 2-83, 2-149, 2-151
342735-0103	ELBOW PIPE JOINT	2-27, 2-29, 2-31, 2-81, 2-83
342736-0114	CONN. ELBOW W-15	2-137, 2-139, 2-149, 2-151
342737-0204	CONN. ELBOW W-6 LRFR	7-7
342738-0208	ADJUSTABLE ELBOW CONNECTION,EXT 8-G1/4	4-23, 4-25, 4-27, 4-29, 6-33, 12-215, 12-217 12-219, 12-221, 13-7, 13-9, 13-99, 13-101, 13-103, 13-105, 13-109, 13-111
342741-0108	CONN. T-PIPE TA-10-R1/4	2-169
342747-0114	CONN. T-PIPE T-15	2-121, 2-123
342748-0102	T-CONNECTION 6MM	2-27, 2-29, 2-31, 2-81, 2-83
342748-0103	T-CONNECTION 8MM	2-27, 2-29, 2-31, 2-81, 2-83
342748-0110	T-CONNECTION 14MM	2-27, 2-29, 2-31, 2-81, 2-83, 13-179
342750-0114	CONN. L-PIPE, EXT. LA-15-G1/2	2-149, 2-151
342752-0103	CONN. STR. GA-8-G1/4	2-7, 2-85, 2-87, 12-97, 12-99
342752-0104	CONN. STR. GA-10-G1/4	2-173, 13-29
342764-0108	CONN. ELBOW BULKHEAD LWSV10-LFZB	2-173, 2-175, 13-29
342764-0114	CONN. ELBOW BULKHEAD LWSV15-LFZB	2-173, 2-175, 13-29
342767-0100	CONN. BULKHEAD G1/8	1-55
342767-0114	CONN. BULKHEAD G1/2	2-23, 2-79
342768-0103	BULKHEAD CONNECTOR, 8 MM	2-27, 2-29, 2-31, 2-71, 2-73, 2-75, 2-81, 2-83, 2-85, 2-87, 6-35, 13-181
342768-0104	BULKHEAD CONNECTOR, 10 MM	2-71, 2-73, 2-75
342770-0105	STRAIGHT COUPLING INT, D=6 MM - G1/8	2-27, 2-29, 2-31, 2-81, 2-83, 12-159
342770-0108	STRAIGHT COUPLING INT, D=8 MM - G1/4	2-85, 2-87
342790-0102	CONN. PRESS. GAUGE MAV6-LRFZB	2-173, 2-175, 13-29
342790-0202	CONN. PRESS. GAUGE MAV6-S/R3/8FZB	5-17
342797-0121	CONN. BANJO, RINGPIECE 6-1/8	1-35, 1-55, 7-37, 7-39, 7-41
342797-0122	CONN. BANJO, RINGPIECE 6-1/4	1-35, 7-9, 7-37, 7-39, 12-115
342803-0104	UNION NUT, RD 70-6 (SMS 51)	1-27, 1-29
342812-0104	FERRULE, SMS 1145, 2333, NO. 190707	1-27, 1-29
342920-0113	STRAIGHT COUPLING,EXT.THREADED 6/4-R1/8"	2-37, 2-39, 2-41, 4-45, 4-47, 4-49, 4-51, 5-15 5-57, 12-39, 12-41, 12-261
342920-0114	STRAIGHT COUPLING,EXT.THREADED 6/4-R1/4"	12-39, 12-41
342920-0121	STRAIGHT COUPLING,EXT.THREADED 8/6-R1/8"	2-37, 2-39, 2-41, 5-25, 5-27, 5-41, 5-43, 5-45 5-47, 5-117
342920-0122	STRAIGHT COUPLING,EXT.THREADED 8/6-R1/4"	12-105
342921-0113	STRAIGHT COUPLING,EXT.THREADED 6/4-G1/8"	7-41
342921-0114	STRAIGHT COUPLING,EXT.THREADED 6/4-G1/4"	5-67, 12-39, 12-41
342921-0121	STRAIGHT CPLNG,EXT.THREADED 8/6-G1/8INCH	5-69, 5-71, 5-77, 5-79, 12-141
342921-0151	STRAIGHT COUPL.,EXT.THREAD.15/12,5-G1/2"	12-137, 12-139, 12-141
342923-0113	STRAIGHT COUPL.,INT.THREADED 6/4-G1/8"	12-115
342923-0114	STRAIGHT COUPL.,INT.THREADED 6/4-G1/4"	2-137, 2-139
342923-0122	STRAIGHT COUPL.,INT.THREADED 8/6-G1/4"	2-137, 2-139
342926-0112	STRAIGHT COUPLING,UNION 6/4	12-39, 12-41, 12-135
342926-0122	STRAIGHT COUPLING,UNION 8/6	12-135
342929-0121	STRAIGHT COUPLING,SOLDER 8/6-8	2-13, 2-15, 2-17, 2-19, 2-37, 2-39, 2-41, 2-71, 2-73, 2-75

Part No	Description	Page No
		2-85, 2-87, 2-101, 2-103, 2-105, 2-107, 2-109, 2-111, 2-113, 2-149, 2-151, 12-105, 13-17, 13-19, 13-21, 13-23
342930-0113	ELBOW 90 COUPL.,EXT.THREAD 6/4-R1/8"	1-55, 2-149, 2-151, 5-57, 8-17, 12-39, 12-41
342930-0114	ELBOW 90 COUPL.,EXT.THREAD 6/4-R1/4"	2-137, 2-139, 12-39, 12-41
342930-0121	ELBOW 90 COUPL.,EXT.THREAD 8/6-R1/8"	5-25, 5-27, 5-41, 5-43, 5-45, 5-47
342930-0122	ELBOW 90 COUPL.,EXT.THREAD 8/6-R1/4"	2-169, 6-17
342930-0124	ELBOW 90 COUPL.,EXT.THREAD 8/6-R1/2"	12-105
342931-0113	ELBOW 90 COUPL.,EXT.THREAD 6/4-G1/8"	2-179
342931-0121	ELBOW 90 COUPL.,EXT.THREAD 8/6-G1/8"	6-27
342933-0122	ELBOW 90 COUPL.,INT.THREAD 8/6-G1/4	5-81, 5-83, 13-161
342936-0122	ELBOW 90 COUPL.,UNION 8/6	12-105
342946-0112	T-COUPLING,UNION 6/4	2-13, 2-15, 2-17, 2-19, 2-71, 2-73, 2-75, 4-45, 4-47, 4-49, 4-51, 5-17, 8-61, 8-63, 8-65, 13-17, 13-19, 13-21, 13-23
342946-0122	T-COUPLING,UNION 8/6	5-13
342960-0112	BULKHEAD COUPLING 6/4	2-13, 2-15, 2-17, 2-19, 2-37, 2-39, 2-41, 2-71, 2-73, 2-75, 2-85, 2-87, 2-101, 2-103, 2-105, 2-107, 2-109, 2-111, 2-113, 5-67, 6-35, 13-17, 13-19, 13-21, 13-23
342960-0122	BULKHEAD COUPLING 8/6	2-37, 2-39, 2-41, 6-35
342960-0151	BULKHEAD COUPLING 15/12,5	12-141
342980-0113	BANJO-CONNECTION,RING 6/4-G1/8 INCH	4-45, 4-47, 4-49, 4-51, 8-5, 8-7, 8-21, 8-23, 8-25, 8-27, 8-29, 8-31, 8-33, 8-41, 8-69, 8-71, 8-73
342980-0114	BANJO-CONNECTION,RING 6/4-G1/4"	4-97, 4-99
342980-0122	BANJO-CONNECTION,RING 8/6-G1/4 INCH	2-101, 2-103, 2-105, 2-107, 2-109, 2-111, 2-113, 2-137, 2-139, 4-73
342980-0303	BANJO-HOLLOW BOLT COUPL,EXT.THR.01-G1/8	1-27, 1-29, 1-55, 4-45, 4-47, 4-49, 4-51, 8-5, 8-7, 8-21, 8-23, 8-25, 8-27, 8-29, 8-31, 8-33, 8-41, 8-69, 8-71, 8-73
342980-0304	BANJO-HOLLOW BOLT COUPL,EXT.THR.01-G1/4	1-35, 2-101, 2-103, 2-105, 2-107, 2-109, 2-111, 2-113, 2-137, 2-139, 4-73, 7-9, 7-37, 7-39
342981-0122	BANJO CONNEC,RING,FOR PLAST.TUBE 8-G1/4"	6-33
342991-0100	HOSE CLIP,WORM DRIVE TYPE 10-13	2-179
342991-0101	HOSE CLIP,WORM DRIVE TYPE (13)-16	2-35, 2-121, 2-123, 2-159, 2-161, 3-11, 3-21, 6-35, 13-11, 13-15
342991-0103	HOSE CLIP,WORM DRIVE TYPE (19)-23	2-37, 2-39, 2-41, 2-85, 2-87, 5-7, 5-9, 5-35, 5-37, 6-35, 7-37, 7-39, 7-41
342991-0104	HOSE CLIP,WORM DRIVE TYPE (23)-27	1-71
342991-0106	HOSE CLIP,WORM DRIVE TYPE (30)-36	2-49, 2-51, 2-57, 2-95
342991-0108	HOSE CLIP 38-50MMRFR	2-21, 2-117, 2-119, 13-27, 13-177
342991-0109	HOSE CLIP,WORM DRIVE TYPE (48)-50	1-35, 5-69, 5-71, 5-77, 5-79
342991-0111	HOSE CLIP,WORM DRIVE TYPE (63)-73	5-15, 13-177
342991-0112	HOSE CLIP,WORM DRIVE TYPE (73)-83	5-7, 5-9, 5-35, 5-37
342991-0115	HOSE CLIP,WORM DRIVE TYPE (110)-136	2-159, 2-161
342991-0116	HOSE CLIP,WORM DRIVE TYPE (136)-163	12-97, 12-99
342995-0101	HOSE CLIP 7-9MMFZB	4-73
344502-0026	GREASE NIPPLE STRAIGHT R1/8 CON.	3-9, 3-19, 12-97, 12-99
344502-0046	GREASE NIPPLE 45 DEG. R1/8 CON.	3-31, 3-33
344502-0066	GREASE NIPPLE 90 DEG. R1/8 CON.	3-9, 3-19, 3-29
346800-0109	SILENCER FILTER R1/8"	1-27, 1-29
346800-0113	SILENCER FILTER R1/2"	12-141
351120-0144	CABLE SILFLEX SIHF 3X1,5 0046014	9-17
351120-0145	CABLE SILFLEX SIHF 3X2,5 0046020	9-17, 9-35, 9-37, 9-57
351121-0200	CABLE RADOX 155 1X16 MMÂ² BLACK	9-35, 9-37, 9-57
351121-0201	CABLE RADOX 155 1X35 MMÂ² BLACK	9-35, 9-37, 9-57
351123-0144	CABLE FKK 3X15 MM2 WHITE	12-13
351123-0145	CABLE FKK 3X25 MM2 WHITE	12-131
351123-0184	CABLE FKK 5X15 MM2 WHITE	12-131
351150-0122	CABLE	9-17, 9-35, 9-37, 9-57, 13-49
351150-0142	CABLE OILFLEX N3X0,75	12-39, 12-41
351150-0403	CABLE OLFLEX 3X0,75 MM2 LIGHT/GREY	9-17
351150-0404	CABLE OLFLEX 4X0,75 MM2 LIGHT/GREY	9-17, 9-35, 9-37, 9-57
351150-0405	CABLE OLFLEX 5X0,75 MM2 LIGHT/GREY	9-17, 9-35, 9-37, 9-57
351150-0406	CABLE OLFLEX 7X0,75 MM2 LIGHT/GREY	9-17, 9-35, 9-37, 9-57
351150-0407	CABLE OLFLEX 12X0,75 MM2 LIGHT/GREY	9-17, 9-35, 9-37, 9-57
351150-0408	CABLE OILFLEX 16X0,75MM2	9-17, 9-35, 9-37, 9-57
351150-0409	CABLE OILFLEX 27X0,75MM2	12-131
351150-0410	CABLE OLFLEX 36X0,75MM2	9-17, 9-35, 9-37, 9-57
351150-0412	CABLE OLFLEX 3X1,5 MM2 LIGHT/GREY	9-17, 9-35, 9-37, 9-57
351150-0413	CABLE OLFLEX 4X1,5 MM2 LIGHT/GREY	9-17
351150-0417	CABLE OLFLEX 3X2,5 MM2 LIGHT/GREY	9-17, 9-35, 9-37, 9-57
351150-0418	CABLE OLFLEX 4X2,5 MM2 LIGHT/GREY	9-17, 9-35, 9-37, 9-57
351150-0419	CABLE OLFLEX 5X2,5 MM2 LIGHT/GREY	9-17, 9-35, 9-37, 9-57
351150-0420	CABLE OLFLEX 7X2,5 MM2 LIGHT/GREY	9-17, 9-35, 9-37, 9-57
351150-0422	CABLE OLFLEX 3X4 MM2 LIGHT/GREY	9-35, 9-37, 9-57
351150-0425	CABLE OLFLEX 25X0,75 MM2 LIGHT/GREY	9-17, 9-35, 9-37, 9-57
351160-0102	CABLE (1UNIT = 100M)	13-203, 13-209, 13-221
351161-0105	CABLE AWM 1X2,5 MM2 LIGHTBLUE	13-209
351162-0105	CABLE AWM 1X2,5 MM2 YELLOW-GREEN	13-209
351164-0105	CABLE (1UNIT = 100M)	13-209
351172-0102	CABLE AWM 1X 0,75 MM2 DARKBLUE	9-5, 9-7, 9-9, 9-11, 9-13, 9-15, 9-25, 9-27, 9-29, 9-31, 9-33, 9-35, 9-37, 9-45, 9-47, 9-49, 9-51, 9-53, 9-55, 12-19, 12-235, 12-237, 13-49, 13-141
351172-0105	CABLE AWM 1X25 MM2 DARKBLUE	14-7
351172-0106	CABLE AWM 1X4 MM2 DARKBLUE	9-5, 9-7, 9-9, 9-11, 9-13, 9-15, 9-25, 9-27, 9-29, 9-31, 9-33, 9-45, 9-47, 9-49, 9-51, 9-53, 9-55
351173-0104	CABLE AWM LIGHTBLUE 1,5MM2	9-5, 9-7, 9-9, 9-11, 9-13, 9-15, 9-45, 9-47, 9-49, 9-51, 9-53, 9-55
351173-0105	CABLE AWM 1X25 MM2 LIGHTBLUE	9-25, 9-27, 9-29, 9-31, 9-33, 12-235, 12-237
351173-0110	CABLE AWM 1X25 MM2 LIGHTBLUE	9-5, 9-7, 9-9, 9-11, 9-13, 9-15, 9-25, 9-27, 9-29, 9-31, 9-33, 9-45, 9-47, 9-49, 9-51, 9-53, 9-55

Part No	Description	Page No
351175-0102	CABLE AWM 1X 075 MM2 YELLOW-GREEN	9-5, 9-7, 9-9, 9-11, 9-13, 9-15, 9-25, 9-27, 9-29, 9-31, 9-33, 9-45, 9-47, 9-49, 9-51, 9-53, 9-55
351175-0104	KABEL AWM 1X15 MM2 YELLOW-GREEN	9-5, 9-7, 9-9, 9-11, 9-13, 9-15, 9-25, 9-27, 9-29, 9-31, 9-33, 9-45, 9-47, 9-49, 9-51, 9-53, 9-55
351175-0105	CABLE AWM 1X2,5 MM2 YELLOW-GREEN	9-5, 9-7, 9-9, 9-11, 9-13, 9-15, 9-25, 9-27, 9-29, 9-31, 9-33, 9-45, 9-47, 9-49, 9-51, 9-53, 9-55, 12-235, 12-237
351175-0106	CABLE AWM 1X4 MM2 YELLOW-GREEN	9-5, 9-7, 9-9, 9-11, 9-13, 9-15, 9-17, 9-25, 9-27, 9-29, 9-31, 9-33, 9-45, 9-47, 9-49, 9-51, 9-53, 9-55
351175-0107	CABLE AWM 1X6 MM2 YELLOW-GREEN	9-5, 9-7, 9-9, 9-11, 9-13, 9-15, 9-25, 9-27, 9-29, 9-31, 9-33, 9-45, 9-47, 9-49, 9-51, 9-53, 9-55
351175-0109	CABLE AWM 1X16 MM2 YELLOW-GREEN	9-5, 9-7, 9-9, 9-11, 9-13, 9-15, 9-17, 9-25, 9-27, 9-29, 9-31, 9-33, 9-35, 9-37, 9-45, 9-47, 9-49, 9-51, 9-53, 9-55, 9-57
351176-0104	CABLE AWM 1X15 MM2 RED	9-5, 9-7, 9-9, 9-11, 9-13, 9-15, 9-25, 9-27, 9-29, 9-31, 9-33, 9-45, 9-47, 9-49, 9-51, 9-53, 9-55
351176-0106	CABLE AWM 1X4 MM2 RED	9-5, 9-7, 9-9, 9-11, 9-13, 9-15, 9-25, 9-27, 9-29, 9-31, 9-33, 9-45, 9-47, 9-49, 9-51, 9-53, 9-55
351179-0102	CABLE AWM 1X075 MM2 BLACK	14-27
351179-0104	CABLE AWM 1X15 MM2 BLACK	9-5, 9-7, 9-9, 9-11, 9-13, 9-15, 9-25, 9-27, 9-29, 9-31, 9-33, 9-45, 9-47, 9-49, 9-51, 9-53, 9-55
351179-0105	CABLE AWM 1X2,5 MM2 BLACK	9-5, 9-7, 9-9, 9-11, 9-13, 9-15, 9-25, 9-27, 9-29, 9-31, 9-33, 9-45, 9-47, 9-49, 9-51, 9-53, 9-55, 12-235, 12-237
351179-0106	CABLE AWM 1X4 MM2 BLACK	9-5, 9-7, 9-9, 9-11, 9-13, 9-15, 9-25, 9-27, 9-29, 9-31, 9-33, 9-45, 9-47, 9-49, 9-51, 9-53, 9-55
351179-0107	CABLE AWM 1X6 MM2 BLACK	9-5, 9-7, 9-9, 9-11, 9-13, 9-15, 9-25, 9-27, 9-29, 9-31, 9-33, 9-45, 9-47, 9-49, 9-51, 9-53, 9-55
351179-0109	CABLE AWM 1X16 MM2 BLACK	9-35, 9-37, 9-57
351179-0110	CABLE AWM 1X25 MM2 BLACK	9-5, 9-7, 9-9, 9-11, 9-13, 9-15, 9-25, 9-27, 9-29, 9-31, 9-33, 9-45, 9-47, 9-49, 9-51, 9-53, 9-55
351179-0111	CABLE AWM 1X35 MM2 BLACK	9-35, 9-37, 9-57
351180-0102	CABLE AWM 1X075 MM2 ORANGE	9-5, 9-7, 9-9, 9-11, 9-13, 9-15, 9-25, 9-27, 9-29, 9-31, 9-33, 9-45, 9-47, 9-49, 9-51, 9-53, 9-55, 12-19
352030-0122	CABLE DUCT A2	12-49
352100-0100	CABLE GLAND NO.15,2-7,5	2-163
352100-0105	CABLE GLAND NO.18,6-8,5	12-49
352100-0106	CABLE GLAND NO.18,6-10,5	1-35, 2-163, 7-37, 7-39, 7-41
352100-0108	CABLE GLAND NO.20,4-12	2-169
352100-0115	CABLE GLAND NO.28,3-15,5	3-31, 3-33
352100-0126	CABLE GLAND NO.47-32,5	2-185
352100-0127	CABLE GLAND NO.47-34,5	2-165
352100-0227	CABLE GLAND NO.31-34,5	2-185
352101-0102	LEAD-IN, PR15,2/PG9, E-1457515	12-49, 12-85
352101-0103	LEAD-IN, PR18,6/PG11, E-1457518	2-37, 2-39, 2-41, 2-47, 2-85, 2-87, 2-179, 7-15, 8-55, 8-61, 8-63, 8-65
352101-0104	LEAD-IN PR 20,4;PG13,5	12-155
352101-0105	LEAD-IN, PR22,5/PG16, E-1457522	8-61, 8-63, 8-65
352101-0107	LEAD-IN, PR37/PG29, E-1457537	7-7
352103-0100	CABLE GLAND, STR 9, PR15,2/PG9	2-149, 2-151, 5-7, 5-9, 5-35, 5-37, 7-11, 8-61, 8-63, 8-65, 12-47, 13-239
352103-0101	CABLE GLAND, ST 9, PR15,2/PG9	1-57, 2-21, 2-77, 2-91, 2-117, 2-119, 2-163, 5-7, 5-9, 5-35, 5-37, 8-67, 12-39, 12-41, 13-27, 13-67, 13-183
352103-0105	CABLE GLAND, STR 11, PR 18,6/PG11	2-37, 2-39, 2-41, 2-85, 2-87, 13-67, 13-185, 13-245
352103-0106	CABLE GLAND, ST 11, PR18,6/PG11	1-57, 2-21, 2-45, 2-77, 2-91, 2-117, 2-119, 2-127, 5-69, 5-71, 5-77, 5-79, 6-21, 6-23, 6-25, 8-67, 12-91, 13-27, 13-183
352103-0108	CABLE GLAND, ST 13,5 , PR20,4/PG13,5	7-11, 8-69, 8-71, 8-73
352103-0110	CABLE GLAND, STR 16, PR22,5/PG16	2-91, 2-117, 2-119, 7-9
352103-0111	CABLE GLAND, ST 16, PR22,5/PG16	1-57, 2-91, 5-69, 5-71, 5-77, 5-79, 8-61, 8-63, 8-65, 13-183
352103-0115	CABLE GLAND, STR 21, PR28,3/PG21	8-67
352103-0116	CABLE GLAND, ST 21, PR28,3/PG21	2-37, 2-39, 2-41, 2-45, 2-85, 2-87, 8-67, 12-47
352103-0120	CABLE GLAND, STR 29, PR37,0/PG29	2-45
352103-0121	CABLE GLAND, ST 29, PR37,0/PG29	2-37, 2-39, 2-41, 2-85, 2-87, 2-91, 12-13
352110-0099	CABLE CLIPS, D=3-5 MM	8-61, 8-63, 8-65, 8-69, 8-71, 8-73
352110-0100	CABLE CLIPS, D=5-7 MM	6-37, 6-39
352110-0101	CABLE CLIPS, D=7-10 MM	2-37, 2-39, 2-41, 2-85, 2-87, 3-37, 3-39
352113-0101	CABLE TIE, BLACK 92X2,5 MM	3-35, 4-73, 5-7, 5-9, 5-35, 5-37, 5-81, 5-83, 6-29, 6-59, 6-61, 8-9, 8-39, 12-57, 12-75, 12-257, 12-269, 12-277, 12-279, 13-175
352113-0102	CABLE TIE, BLACK 188X4,8 MM	5-7, 5-9, 5-35, 5-37, 6-27, 6-29, 6-59, 6-61, 7-9, 13-145, 13-175
352113-0103	CABLE TIE, BLACK 290X7,6 MM	12-97, 12-99
352113-0202	ANCHOR TM2S8-M REPL.BY 352113-205	2-117, 2-119
352113-0203	ANCHOR PLATES FOR STRIPS, TYPE TM3S8-M0	6-29, 6-59, 6-61, 7-9
352113-0204	ANCHOR PLATES FOR STRIPS, TYPE TM3S25-M	5-7, 5-9, 5-35, 5-37, 8-61, 8-63, 8-65, 13-145
352113-0205	ANCHOR PLATES FOR STRIPS, TYPE TM2S8-C10	2-21, 13-27
352130-0107	FLEXIBLE CG 37,5	12-45
352131-0107	MUFF 37	12-45
352135-0106	SPIRAL CONDUIT DI=16 MM	2-21, 2-27, 2-29, 2-31, 2-77, 2-81, 2-83, 2-117, 2-119, 2-127, 2-147, 2-149, 2-151, 2-163, 7-15, 8-61, 8-63, 8-65, 12-13, 13-27
352135-0109	HOSE .022	2-21, 2-77, 2-117, 2-119, 8-61, 8-63, 8-65, 13-27
352135-0116	FLEXIBLE CONDUIT DIA. 40	2-117, 2-119, 5-69, 5-71, 5-77, 5-79, 13-171
352135-0201	CLIP, 12 MM, 913.012	2-9, 2-37, 2-39, 2-41, 2-69, 2-85, 2-87
352135-0202	CLIP, 16 MM, 913.016	2-37, 2-39, 2-41, 2-85, 2-87
352136-0107	GLAND FITTING PR12,5 PG7 FOR HOSE	12-13
352136-0113	GLAND FITTING PR18,6/PG11 DI=12MM	2-21, 2-45, 2-77, 2-91, 2-117, 2-119, 2-147, 2-149, 2-151, 2-167, 2-173, 2-175, 7-9, 7-11, 7-31, 7-33, 7-37, 7-39, 7-41, 8-61, 8-63, 8-65, 12-163, 13-27, 13-29
352136-0127	GLAND FITTING PR 18,6	2-9, 2-21, 2-27, 2-29, 2-31, 2-69, 2-77, 2-81, 2-83, 2-117, 2-119, 2-127, 2-135, 2-147, 2-149, 2-151, 2-163, 7-11, 8-61, 8-63, 8-65, 13-27

Part No	Description	Page No
352136-0128	GLAND FITTING	2-169
352136-0129	GLAND FITTING PR22,5/PG16 DI=16MM	8-61, 8-63, 8-65
352136-0142	GLAND FITTING	2-21, 2-45, 2-77, 2-91, 2-117, 2-119, 13-27
352136-0143	GLAND FITTING	2-21, 2-117, 2-119, 3-31, 3-33, 8-61, 8-63, 8-65, 13-27
352136-0152	GLAND FITTING	2-63, 2-65, 2-77, 2-97, 2-99
352137-0113	COND.FITTING PR 18,6 DI=12MM	2-147, 8-61, 8-63, 8-65
352137-0127	COND.FITTING PR 18,6 DI=16MM	2-147, 7-15, 8-61, 8-63, 8-65
352137-0129	CABLE GLAND PR22,5(PG16)	2-147
352141-0800	FLANGE, DGP 21	1-57
352550-0120	FINE-WIRE 315 MA	9-5, 9-7, 9-9, 9-11, 9-13, 9-15, 9-19, 9-25, 9-27, 9-29, 9-31, 9-33, 9-39, 9-45, 9-47, 9-49, 9-51, 9-53, 9-55, 9-59
352550-0123	FINE-WIRE,, 500 MA	13-209
352550-0133	FINE-WIRE, 1.6 A	9-5, 9-7, 9-9, 9-11, 9-13, 9-15, 9-25, 9-27, 9-29, 9-31, 9-33, 9-45, 9-47, 9-49, 9-51, 9-53, 9-55
352550-0136	FINE-WIRE, 3,15 A	9-19, 9-39, 9-59
352551-0134	FINE-WIRE FUSE 2 A SLOW,5X20MM	9-5, 9-7, 9-9, 9-11, 9-13, 9-15, 9-19, 9-45, 9-47, 9-49, 9-51, 9-53, 9-55, 9-59, 12-235, 12-237
352551-0136	FINE-WIRE FUSE 3,15 A SLOW	9-5, 9-7, 9-9, 9-11, 9-13, 9-15, 9-19, 9-25, 9-27, 9-29, 9-31, 9-33, 9-39, 9-45, 9-47, 9-49, 9-51, 9-53, 9-55, 9-59
352551-0137	FINE-WIRE 4 A	9-5, 9-7, 9-9, 9-11, 9-13, 9-15, 9-19, 9-45, 9-47, 9-49, 9-51, 9-53, 9-55, 9-59, 12-235, 12-237
352551-0138	FINE-WIRE 5 A	9-19, 9-39, 9-59
352551-0139	FINE-WIRE 6,3 A	9-19, 9-39, 9-59
352551-0141	FINE-WIRE 10 A	9-5, 9-7, 9-9, 9-11, 9-13, 9-15, 9-19, 9-45, 9-47, 9-49, 9-51, 9-53, 9-55, 9-59, 12-235, 12-237
353001-0113	END SLEEVE 0,75MM2	13-209
353001-0115	END SLEEVE 2,5/14	13-209
353001-0119	END SLEEVE H 1.0/14 YELLOW	13-203
353012-0010	MALE PLUG	14-27
353012-0011	SOCKET	14-27
353021-0212	FEED THROUGH TERMINAL, 10200.0	2-45, 2-91, 13-183
353021-0213	FEED THROUGH TERMINAL, 10201.0	2-147, 8-67, 13-175
353021-0214	FEED THROUGH TERMINAL, 10202.0	9-5, 9-7, 9-9, 9-11, 9-13, 9-15, 9-25, 9-27, 9-29, 9-31, 9-33, 9-45, 9-47, 9-49, 9-51, 9-53, 9-55
353021-0216	FEED THROUGH TERMINAL, 10200.8	13-183
353021-0217	FEED THROUGH TERMINAL, 10201.8	2-147, 13-49, 13-175
353021-0228	EARTH TERMINAL WPE 4	2-91
353021-0302	TERMINALS,TRIPLE-LEVEL, DLD 2,5/35 PA	2-45, 2-91, 8-67
353023-0102	FUSE TERMINAL, 10110.0	9-5, 9-7, 9-9, 9-11, 9-13, 9-15, 9-25, 9-27, 9-29, 9-31, 9-33, 9-45, 9-47, 9-49, 9-51, 9-53, 9-55, 13-209
353024-0204	EARTH TERMINAL WPE 2,5	2-91
353024-0205	EARTH TERMINAL, 1010.1	2-45, 2-147, 8-67, 13-175, 13-183
353031-0201	END BRACKET EW35	2-45, 2-91, 2-147, 9-5, 9-7, 9-9, 9-11, 9-13, 9-15, 9-25, 9-27, 9-29, 9-31, 9-33, 9-45, 9-47, 9-49, 9-51, 9-53, 9-55
353031-0203	END SUPPORT, WEW 35/2	13-175, 13-183
353032-0004	END PLATE WAP 2,5-10 BEIGE	9-5, 9-7, 9-9, 9-11, 9-13, 9-15, 9-25, 9-27, 9-29, 9-31, 9-33, 9-45, 9-47, 9-49, 9-51, 9-53, 9-55, 13-175, 13-183
353032-0005	END PLATE WAP 2,5-10 BLUE	2-147, 13-175
353032-0302	END PLATE WAP, 13176.6	2-45, 2-91, 8-67
353034-0031	BRIDGE CONNECTOR, WQV 4/10, 10520.6	2-147
353034-0401	BRIDGE CONNECTOR Q2, 13125.0	2-45, 2-91, 8-67
353034-0404	BRIDGE CONNECTOR Q10, 13131.0	2-45, 2-91, 8-67
353042-0004	RAIL TS 35/7,5	2-45, 2-91, 13-183
353042-0005	RAIL TS 35/7.5	8-67
353101-0130	CABLE SHOE 1,5-2,5MM2 M4 BLUE	7-41
353101-0132	CABLE SHOE 1,5-2,5MM2 M5 BLUE	8-69, 8-71, 8-73
353101-0134	CABLE SHOE 1,5-2,5MM2 M8 BLUE	1-35, 7-37, 7-39
353103-0120	CABLE SHOE 1,25 MMÂ² RED	12-39, 12-41
353104-0130	CABLE SHOE, RING UNINS., YAV 025 M 4	1-35, 7-37, 7-39
353104-0168	CABLE SHOE, RING UNINS., YAV 16 M 6	5-69, 5-71, 5-77, 5-79
353104-0175	CABLE SHOE, RING UNINS., YAV 25 M 6	12-239
353104-0182	CABLE SHOE, RING UNINS., YAV 35 M 6	5-69, 5-71, 5-77, 5-79
353104-0183	CABLE SHOE, RING UNINS., YAV 35 M 8	4-73
353240-0004	GLAND W/O INSERT PG16 NORMAL	2-45
353243-0003	HOSE GLAND W/O INSERT PG11 EXTENDED	6-67
353243-0005	HOSE GLAND W/O INSERT PG16 EXTENDED	6-67
353243-0007	HOSE GLAND W/O INSERT PG21 EXTENDED	13-185
353243-0008	HOSE GLAND W/O INSERT PG29 EXTENDED	13-185
353243-0009	HOSE GLAND W/O INSERT PG13,5 EXTENDED	6-67
353245-0005	GLAND, EXTENDED WITH INSERT, PG16/PR 22,	5-21
353246-0001	GLAND FITTING, VK156D	2-21, 2-77, 2-117, 2-119, 12-157, 13-27
353247-0004	HOSE GLAND EMC PG16 EXTENDED	6-67
353247-0005	HOSE GLAND EMC PG21 EXTENDED	2-77, 6-21, 6-23, 6-25
353249-0011	INSERT, SINGEL HOLE, EK 153/11	6-67
353249-0027	INSERT, MULTI HOLE, E153M3X7	2-45
353249-0058	GLAND,INSERT,E156 3/10	2-21, 2-77, 2-117, 2-119, 12-157, 13-27
353249-0306	SEALING PIN, 7X25	2-45
359000-0300	WIRE MARKING, YELLOW, PA1/3"0"	13-209
359000-0301	WIRE MARKING, YELLOW, PA1/3"1"	13-209
359000-0302	WIRE MARKING, YELLOW, PA1/3"2"	13-209
359000-0303	WIRE MARKING, YELLOW, PA1/3"3"	13-209
359000-0304	WIRE MARKING, YELLOW, PA1/3"4"	13-209
359000-0305	WIRE MARKING, YELLOW, PA1/3"5"	13-209
359000-0306	WIRE MARKING, YELLOW, PA1/3"6"	13-209

Part No	Description	Page No
359000-0307	WIRE MARKING, YELLOW, PA1/3"7"	13-209
359000-0308	WIRE MARKING, YELLOW, PA1/3"8"	13-209
359000-0309	WIRE MARKING, YELLOW, PA1/3"9"	13-209
359000-0400	WIRE MARKING, YELLOW, PA2/4"0"	12-159
359000-0401	WIRE MARKING, YELLOW, PA2/4"1"	12-159
359000-0402	WIRE MARKING, YELLOW, PA2/4"2"	12-159
359000-0403	WIRE MARKING, YELLOW, PA2/4"3"	12-159
359000-0404	WIRE MARKING, YELLOW, PA2/4"4"	12-159
359000-0405	WIRE MARKING, YELLOW, PA2/4"5"	12-159
359000-0700	WIRE MARKING, YELLOW, PA1/3"A"	13-209
359000-0703	WIRE MARKING, YELLOW, PA1/3"D"	13-209
359000-0711	WIRE MARKING, YELLOW, PA1/3"L"	13-209
359000-0714	WIRE MARKING, YELLOW, PA1/3"O"	13-209
359002-0028	WIRE MARKING, BLUE, PA1/3"BLANK"	13-209
359009-0100	CABLE MARKING, YELLOW, PK2/4"0"	13-179
359009-0101	CABLE MARKING, YELLOW, PK 2/4"1"	13-179
359009-0102	CABLE MARKING, YELLOW, PK 2/4"2"	13-179
359009-0103	CABLE MARKING, YELLOW, PK 2/4"3"	13-179
359009-0104	CABLE MARKING, YELLOW, PK 2/4"4"	13-179
359009-0105	CABLE MARKING, YELLOW, PK 2/4"5"	13-179
359009-0106	CABLE MARKING, YELLOW, PK 2/4"6"	13-179
359009-0108	CABLE MARKING, YELLOW, PK 2/4"8"	13-179
359011-0801	SIGN BOARD BSFW 1-50	7-11
359011-0807	MARKING PLATES 5-FW 1-50	2-45, 2-91, 2-147, 8-67
359011-0808	MARKING PLATES 5-FW 51-100	2-45, 2-91, 8-67
359011-0809	MARKING PLATES 5-FW 101-150	2-45, 2-91
359011-0810	MARKING PLATES 5-FW 151-200	13-49
359011-0819	MARKING PLATES 5-GW (EARTH)	8-67
359011-0821	SET OF SIGNS 6-FW 1-50	13-175, 13-183
359011-0834	SET OF SIGNS 6-GW(EARTH)	13-175
359020-0012	SIGN "EARTHSYMBOL" 4X6MM	8-69, 8-71, 8-73
359240-0001	SIGN, NOT ENGRAVED	9-5, 9-7, 9-9, 9-11, 9-13, 9-15, 9-25, 9-27, 9-29, 9-31, 9-33, 9-45, 9-47, 9-49, 9-51, 9-53, 9-55
359240-0100	SIGN HOLDER FOR 359240-0001	2-147, 9-5, 9-7, 9-9, 9-11, 9-13, 9-15, 9-25, 9-27, 9-29, 9-31, 9-33, 9-45, 9-47, 9-49, 9-51, 9-53, 9-55, 12-47, 13-175, 13-179, 13-215
359241-0124	SIGN: " MAIN SWITCH"	9-5, 9-7, 9-9, 9-11, 9-13, 9-15, 9-25, 9-27, 9-29, 9-31, 9-33, 9-45, 9-47, 9-49, 9-51, 9-53, 9-55
359241-0127	SIGN: " LIGHT JAW SYSTEM & MACHINE BODY"	2-147
359241-0131	SIGN: " TEMP. LS"	9-5, 9-7, 9-9, 9-11, 9-13, 9-15, 9-25, 9-27, 9-29, 9-31, 9-33, 9-45, 9-47, 9-49, 9-51, 9-53, 9-55
359241-0132	SIGN: " TEMP. SA"	9-5, 9-7, 9-9, 9-11, 9-13, 9-15, 9-25, 9-27, 9-29, 9-31, 9-33, 9-45, 9-47, 9-49, 9-51, 9-53, 9-55
359241-0158	SIGN: " LEVEL IN HYDRAULIC OIL TANK"	2-147
359241-0251	SIGN: " TEMP.-SPLICING"	9-5, 9-7, 9-9, 9-11, 9-13, 9-15, 9-25, 9-27, 9-29, 9-31, 9-33, 9-45, 9-47, 9-49, 9-51, 9-53, 9-55
359241-0269	SIGN: " SMALL ROLL LARGE ROLL LOW FOR...	8-61, 8-63, 8-65
359241-0297	SIGN: " 50 HZ"	9-5, 9-7, 9-9, 9-11, 9-13, 9-15, 9-25, 9-27, 9-29, 9-31, 9-33, 9-45, 9-47, 9-49, 9-51, 9-53, 9-55
359241-0298	SIGN: " 60 HZ"	9-5, 9-7, 9-9, 9-11, 9-13, 9-15, 9-25, 9-27, 9-29, 9-31, 9-33, 9-45, 9-47, 9-49, 9-51, 9-53, 9-55
359241-0324	SIGN: " PREPERATIONS"	9-5, 9-7, 9-9, 9-11, 9-13, 9-15, 9-25, 9-27, 9-29, 9-31, 9-33, 9-45, 9-47, 9-49, 9-51, 9-53, 9-55
359241-0337	SIGN: " FLAP HEATING TOP RIGHT"	9-5, 9-7, 9-9, 9-11, 9-13, 9-15
359241-0338	SIGN: " FLAP HEATING TOP LEFT"	9-5, 9-7, 9-9, 9-11, 9-13, 9-15
359301-0001	BUTTON SIGN, UP	9-21, 9-41, 9-61
359301-0005	BUTTON SIGN, DOWN	9-21, 9-41, 9-61
359301-0050	BUTTON SIGN, DROP CHUTE BRIK	9-21, 9-23, 9-41, 9-43, 9-61, 9-63
359301-0051	BUTTON SIGN, EJECTION AT SPLICING	7-9
359301-0090	BUTTON SIGN, INCHING	9-21, 9-41, 9-61
359301-0091	BUTTON SIGN, INCHING FINAL FOLDER	9-21, 9-41, 9-61
359301-0100	BUTTON SIGN, SPLICING	8-61, 8-63, 8-65
359301-0105	BUTTON SIGN, ALARM STOP	9-21, 9-41, 9-61
359301-0110	BUTTON SIGN, SHORT STOP	8-61, 8-63, 8-65, 9-5, 9-7, 9-9, 9-11, 9-13, 9-15, 9-21, 9-23, 9-25, 9-27, 9-29, 9-31, 9-33, 9-41, 9-43, 9-45, 9-47, 9-49, 9-51, 9-53, 9-55, 9-61, 9-63
359301-0125	BUTTON SIGN, LUBRICATION	2-147
359301-0130	BUTTON SIGN, LAMP TEST	9-21, 9-41, 9-61
359301-0160	BUTTON SIGN, DRAINAGE OF PRODUCT TUBE	9-21, 9-41, 9-61
359301-0170	BUTTON SIGN, SPOOLING OF FINAL FOLDER	9-21, 9-41, 9-61
359301-0215	BUTTON SIGN, WASH PRODUCT VALVE	9-21, 9-41, 9-61
359301-0335	BUTTON SIGN, ROLL FEED	8-61, 8-63, 8-65
359320-0003	SIGN, THUMB WHEEL UNIT FILLING ON	9-5, 9-7, 9-9, 9-11, 9-13, 9-15, 9-25, 9-27, 9-29, 9-31, 9-33, 9-45, 9-47, 9-49, 9-51, 9-53, 9-55
359705-0001	WARNING SIGN ISO, ENTANGLEMENT	8-5, 8-7, 8-21, 8-23, 8-25, 8-27, 8-29, 8-31, 8-33
359705-0002	WARNING SIGN ISO, ENTAGLEMENT	5-159
359705-0005	WARNING SIGN ISO, MOVING PART	8-57, 8-59
359705-0015	WARNING SIGN ISO, RISK OF ELECTRIC SHOCK	6-21, 6-23, 6-25
359710-0002	WARNING SIGN ISO, HOT SURFACE	5-69, 5-71, 5-77, 5-79
434020-0000	BEARING CONSOLE	4-101, 4-103, 4-105, 4-107
434021-0000	SCREW	4-101, 4-103, 4-105, 4-107
434062-0000	SHAFT	3-37, 3-39
434073-0000	NUT	4-101, 4-103, 4-105, 4-107
434074-0301	INK UNIT	12-67, 12-69, 12-71, 12-73
434098-0000	STRUT	3-37, 3-39
434142-0000	PISTON	3-41, 3-43

Part No	Description	Page No
434143-0000	END SECTION	3-41, 3-43
434171-0000	PIPE	2-137, 2-139
434320-0000	AXLE PIN	4-31, 4-53, 4-55, 12-205, 12-207
434321-0000	CURVE ROLLER	4-53, 4-55, 12-205, 12-207
434379-0000	TIE ROD	3-31, 3-33
434380-0000	SHAFT	3-31, 3-33
434387-0000	BRACKET	4-45, 4-47, 4-49, 4-51
434388-0000	SHAFT	4-45, 4-47, 4-49, 4-51
434403-0000	SPLASH PLATE	12-93, 12-115
434404-0000	SERVICE TABLE	12-93
434406-0000	SHAFT	12-93, 12-115
434407-0000	CANTILEVER	12-93, 12-115
434408-0000	SPACER	12-93, 12-115
434409-0000	SPACER	12-93
434437-0000	PROTECTION	12-47
434446-0100	TABLE	12-3
434448-0000	TOOL	14-5
434453-0000	MACHINE BODY	12-47
434454-0000	BRACKET	12-47
434493-0000	FORMING RING	1-75, 1-77, 1-79, 1-81, 1-83
434659-0000	CRANK BRACKET	2-177
434661-0000	BUSHING	2-177
434664-0000	BRACKET	2-177
434665-0000	HOOD	1-65, 1-67, 1-69
434668-0400	DRIVE UNIT	3-3, 3-5, 3-7
434669-0400	IMPULSE TRANSMITTER	3-3, 3-5, 3-7
434670-0600	LINK SYSTEM	3-3, 3-5, 3-7
434704-0000	FRAME RIGHT	12-53, 12-55, 12-67, 12-69, 12-71, 12-73
434705-0000	CANTILEVER	12-53, 12-55, 12-67, 12-69, 12-71, 12-73
434707-0300	HYDRAULIC SYSTEM	2-3, 2-5
434708-0000	PIPE	2-173, 2-175, 13-29
434709-0000	PIPE	2-173, 2-175, 13-29
434710-0000	PIPE	2-169
434711-0000	PIPE	2-173, 2-175, 13-29
434712-0001	PIPE	2-173, 2-175, 13-29
434712-0002	PIPE	2-173, 2-175, 13-29
434713-0000	PIPE	2-173, 2-175, 13-29
434714-0000	PIPE	2-169, 13-93
434715-0000	PIPE	2-173, 2-175, 13-29
434716-0000	PIPE	2-173, 2-175, 13-29
434717-0000	PIPE	2-169
434718-0000	PIPE	2-169
434719-0000	PIPE	2-169
434731-0000	PIPE HOLDER	1-55, 7-7
434732-0000	FASTENING PLATE	1-55
434739-0000	PIPE	1-55
434740-0000	PIPE	1-55
434747-0000	BOW CLAMP	8-9, 8-39, 12-57, 12-75
434749-0000	FLOAT	1-17, 1-19, 1-21
434750-0000	PRESSURE FLANGE	1-17, 1-19, 1-21
434751-0000	ARM	1-17, 1-19, 1-21, 1-25
434752-0000	LINK	1-17, 1-19, 1-21, 1-25
434774-0301	INK UNIT	12-53, 12-55
434783-0000	FASTENING BRACKET	12-53, 12-55, 12-67, 12-69, 12-71, 12-73
434786-0000	FASTENING BRACKET	12-53, 12-55, 12-67, 12-69, 12-71, 12-73
434787-0000	END SECTION	8-35, 8-37, 12-77, 12-79
434792-0002	SPACER	12-67, 12-69, 12-71, 12-73
434792-0003	SPACER	12-53, 12-55, 12-67, 12-69, 12-71, 12-73
434792-0005	SPACER	12-53, 12-55, 12-67, 12-69, 12-71, 12-73
434841-0000	GAUGE	10-9
434858-0000	CUSHION	2-63, 2-65, 2-97, 2-99
434919-0000	COLUMN LEFT	2-37, 2-39, 2-41
434920-0000	COLUMN RIGHT	2-37, 2-39, 2-41
436249-0000	SCREW	12-93, 12-115
436302-0000	ROLLER	1-43, 1-45
436355-0000	REAMED BOLT	1-43, 1-45
436356-0000	BUSHING	1-43, 1-45
436357-0000	NUT	1-43, 1-45
436373-0000	CANTILEVER	12-65
436374-0000	CANTILEVER	12-65
436375-0000	CANTILEVER	12-65
436376-0000	CANTILEVER	12-65
436395-0000	CANTILEVER	1-43, 1-45
436403-0000	WASHER	1-43, 1-45
436404-0000	BOW CLAMP	1-43, 1-45
436405-0000	FORK	1-43, 1-45
436435-0500	PILLAR	1-3
436471-0000	PIPE	10-3
436482-0000	BEARING BRACKET	3-31, 3-33
436483-0000	SHAFT	3-31, 3-33
436484-0000	BRACKET	3-31, 3-33
436485-0000	LACE	3-31, 3-33
436486-0000	LID	3-31, 3-33
436487-0000	SPACER	3-31, 3-33

Part No	Description	Page No
436488-0000	WASHER	3-31, 3-33
436512-0000	PIPE	10-3
436556-0000	CURVE ROLLER	4-31, 4-53, 4-55, 12-205, 12-207
436671-0000	ECCENTRIC SHAFT	4-45, 4-47, 4-49, 4-51
436672-0000	LINK	3-15, 3-17
436740-0000	LINK	4-45, 4-47, 4-49, 4-51
436776-0000	MACHINE BODY	2-37, 2-39, 2-41
436927-0000	NUT	8-9, 8-39, 12-57, 12-75
436939-0000	CYLINDER BRACKET	8-5, 8-7, 8-21, 8-23, 8-25, 8-27, 8-29, 8-31, 8-33
436940-0000	SHAFT	8-5, 8-7, 8-21, 8-23, 8-25, 8-27, 8-29, 8-31, 8-33
436991-0000	BEARING	8-51, 8-53
440023-0000	PROTECTION PLATE	2-37, 2-39, 2-41, 2-85, 2-87
440024-0000	PROTECTION PLATE	2-37, 2-39, 2-41, 2-85, 2-87
440025-0000	PROTECTION PLATE	2-37, 2-39, 2-41, 2-85, 2-87
440026-0000	CANTILEVER	2-37, 2-39, 2-41, 2-85, 2-87
440027-0000	RIM	2-85, 2-87
440028-0000	RIM	2-85, 2-87
440066-0002	BRACKET	14-35
440067-0000	BRACKET	14-35
440077-0000	COVERING PLATE	2-37, 2-39, 2-41, 2-85, 2-87
440078-0000	RULER	14-35
440090-0000	TROUGH	12-93, 12-115
440094-0000	GAUGE	14-5
440098-0300	CRANK BRACKET	2-3, 2-5
440132-0200	START-UP KIT	8-3
440133-0400	MACHINE BODY	8-3
440135-0100	BENDING ROLLER	8-69, 8-71, 8-73
440136-0001	ROLL	8-17, 8-83
440136-0002	ROLL	8-81
440136-0003	ROLL	8-81
440136-0004	ROLL	8-81
440136-0007	ROLL	8-81
440136-0008	ROLL	8-81
440136-0009	ROLL	8-43
440137-0001	SHAFT	8-83
440137-0002	SHAFT	8-81
440138-0000	LOCKING CIRCLIP	8-17, 8-43, 8-81, 8-83
440157-0000	MAGNET BRACKET	8-43
440180-0000	WASHER	8-43
440184-0100	BENDING ROLLER	8-69, 8-71, 8-73
440185-0000	HOLDER	8-55
440186-0000	HOLDER	8-55
440192-0000	BRACKET	8-55
440193-0000	HOLDER	8-55
440194-0000	WASHER	8-81
440195-0000	JOINT	8-55
440196-0000	HANGER	8-55
440197-0000	SHAFT	8-55
440198-0000	WASHER	8-55
440199-0000	PROTECTION PLATE	8-55
440200-0000	PROTECTION PLATE	8-55
440202-0000	PROTECTION PLATE	8-55
440203-0000	RULER	2-37, 2-39, 2-41, 2-85, 2-87
440204-0000	RULER	2-37, 2-39, 2-41, 2-85, 2-87
440205-0000	RULER	2-37, 2-39, 2-41, 2-85, 2-87
440206-0000	RULER	2-37, 2-39, 2-41, 2-85, 2-87
440210-0200	ROLL	8-3
440211-0000	GUIDE	8-57, 8-59
440212-0000	LUG	8-57, 8-59
440213-0000	LUG	8-57, 8-59
440214-0000	HOLDER	8-57, 8-59
440215-0000	HOLDER	8-57, 8-59
440217-0000	BUSHING	8-57, 8-59
440247-0000	HOLDER	8-49
440248-0000	HOLDER	8-49
440249-0000	SLIDE BELT	8-49
440250-0000	AXLE PIN	8-49
440251-0000	GLASS PANE	8-49
440252-0000	SLEEVE	8-55
440253-0000	SLEEVE	8-55
440256-0000	ARM	8-61, 8-63, 8-65
440258-0100	PAPER REEL HOLDER SMALL	12-3
440259-0000	RETAINING RING	8-45, 8-47, 12-95
440260-0000	SHAFT	8-45, 8-47, 12-95
440271-0000	SCREW	8-55
440277-0000	LACE	8-5, 8-7, 8-21, 8-23, 8-25, 8-27, 8-29, 8-31, 8-33
440282-0003	SPACER	8-21, 8-23, 8-25, 8-27, 8-29, 8-31, 8-33
440282-0004	SPACER	8-21, 8-23, 8-25, 8-27, 8-29, 8-31, 8-33
440285-0100	PAPER REEL HOLDER	8-3
440286-0300	INK UNIT NSS	8-21, 8-23, 8-25, 8-27, 8-29, 8-31, 8-33
440287-0000	COVER	8-39
440349-0000	FASTENING IRON	2-163
440352-0000	PIN	4-73
440384-0500	PLATFORM	2-3, 2-5

Part No	Description	Page No
440385-0000	CANTILEVER	2-167
440386-0000	PLATFORM REAR	2-167
440389-0000	HATCH	2-167
440415-0200	TRANSFORMER	2-3, 2-5
440422-0600	BOTTOM PLATE	2-3, 2-5
440424-0000	DRUM	2-165
440437-0300	BOX LEFT	2-3, 2-5
440474-0100	TUBE FLUSHING DEVICE	2-3, 2-5
440482-0000	PROTECTION	2-129
440491-0000	NIPPLE	4-65, 4-67, 4-69, 4-71
440537-0500	MACHINE BODY	2-3, 2-5
440541-0000	PLATFORM FRONT	2-167
440542-0000	HATCH	2-167
440565-0000	CYLINDER	4-65, 4-67, 4-69, 4-71
440588-0200	CRANK	3-3, 3-5, 3-7
440600-0000	ROTOR	2-11, 2-25, 2-53, 2-55, 2-59, 2-61
440604-0001	PIPE	2-11, 2-53, 2-59, 2-61
440605-0001	PIPE	2-25, 2-53, 2-55, 2-61
440632-0000	CYLINDER HOUSING	1-63
440637-0000	PISTON ROD	1-63
440638-0000	PISTON	1-63
440647-0000	SLEEVE	1-27, 1-29
440651-0000	WASHER	1-63
440655-0000	RING	1-63
440663-0000	COMPRESSION SPRING	1-63
440702-0000	BEAM	2-37, 2-39, 2-41
440731-0000	PLATE	1-27, 1-29
440930-0000	COUNTER CAM	4-49, 4-51
440931-0000	COUNTER CAM	4-45, 4-47
441718-0000	SPACER	13-53, 13-55
441737-0000	WASHER	13-53, 13-55
441739-0000	WASHER	13-53, 13-55
441740-0000	HINGE FLANGE	13-53, 13-55
441741-0000	HINGE FLANGE	13-53, 13-55
442072-0000	CARRIER	8-35, 8-37, 12-77, 12-79
442076-0000	LID	2-173, 2-175, 13-29
442077-0200	DECREASE OF PRESSURE	2-169
442078-0000	CANTILEVER	2-171
442079-0000	PIPE	2-121, 2-123
442193-0000	PROTECTIVE CASING	2-65, 2-99
442194-0000	PROTECTIVE CASING	2-63, 2-97
442195-0000	LID	2-65, 2-99
442197-0000	NOZZLE	12-67, 12-69, 12-71, 12-73
442199-0000	FASTENING BRACKET	12-67, 12-69, 12-71, 12-73
442200-0000	FASTENING BRACKET	12-67, 12-69, 12-71, 12-73
442201-0000	RIM	12-67, 12-69, 12-71, 12-73
442217-0000	BEAM	2-159, 2-161
442385-0000	RULER	12-85
442386-0000	RULER	12-85
442387-0000	RULER	12-85
442413-0200	CONTACT FLANGE	1-55
442431-0000	CARRIER	8-35, 8-37, 12-77, 12-79
442480-0000	BOW CLAMP	7-37, 7-39
442500-0000	SPROCKET	5-17
442523-0000	HOLDER	5-63, 5-65
442524-0000	ARM	5-63, 5-65
442532-0000	COVER	5-133, 5-135
442533-0000	RUBBER GASKET	5-133, 5-135
442537-0500	WASTE CHUTE	5-3, 5-5
442545-0000	SHEET	5-7, 5-9, 5-35, 5-37
442554-0000	GEARING	5-19
442555-0000	GEAR WHEEL	5-19
442556-0000	GEAR WHEEL	5-19
442557-0000	GEAR WHEEL	5-19
442558-0000	GEAR WHEEL	5-19
442559-0000	GEAR WHEEL	5-19
442560-0000	LUBR.OIL PIPE	5-133, 5-135
442563-0000	AXLE PIN	5-145, 5-147, 5-149, 5-151, 5-153, 5-155
442564-0000	CURVE	5-25, 5-27, 5-41, 5-43, 5-45, 5-47, 5-137, 5-139, 5-141, 5-143
442565-0000	CURVE	5-25, 5-27, 5-41, 5-43, 5-45, 5-47, 5-137, 5-139, 5-141, 5-143
442566-0000	BRACKET	2-9
442582-0100	DRIVE GEAR	5-17
442613-0000	GEAR WHEEL	5-61
442614-0000	GEAR WHEEL	5-61
442615-0000	SPACER	5-61
442616-0000	SPACER	5-61
442617-0000	SPACER	5-61
442621-0000	SPACER	5-123
442622-0000	SPACER	5-123
442644-0300	DOUBLE GEAR	5-59
442646-0200	TOP GEAR	5-121
442776-0000	SLIDE RAIL	5-23, 5-39
442809-0000	LEAD RAIL	5-53, 5-55
442811-0001	ARCH	5-53, 5-55

Part No	Description	Page No
442811-0002	ARCH	5-53, 5-55
442829-0000	BRACKET	5-53, 5-55
442830-0000	BRACKET	5-33, 5-53, 5-55
442836-0000	SPROCKET	5-33, 5-53, 5-55
442841-0000	AIR SCREW	5-19
442851-0000	SHAFT	5-15
442852-0000	VALVE	5-15, 6-63
442853-0000	ATTACHMENT PIPE	5-15, 6-63
442867-0000	AIR NOZZLE	5-69, 5-71, 5-77, 5-79
442882-0000	SPINDLE	5-133, 5-135
442883-0000	SPACING WASHER	5-133, 5-135
442884-0000	LOCK PLATE	5-133, 5-135
442885-0000	FLAP	5-133, 5-135
442886-0000	FLAP	5-133, 5-135
442894-0000	SHIM	5-145, 5-147, 5-149, 5-151, 5-153, 5-155
442903-0000	SHIM	5-19
442904-0000	SHIM	5-19
442905-0000	SHIM	5-19
442909-0001	SHEET	5-137, 5-139, 5-141, 5-143
442910-0001	SHEET	5-137, 5-139, 5-141, 5-143
442931-0000	SLIDE RAIL	5-29, 5-49, 5-51
442939-0000	SHIM	5-145, 5-147, 5-149, 5-151, 5-153, 5-155
442981-0000	SHIM	5-145, 5-147, 5-149, 5-151, 5-153, 5-155
443021-0000	SHEET	5-137, 5-139, 5-141, 5-143
443022-0000	SHEET	5-137, 5-139, 5-141, 5-143
443023-0000	SHEET	5-137, 5-139, 5-141, 5-143
443024-0000	SHEET	5-137, 5-139, 5-141, 5-143
443038-0000	FLAP	5-133, 5-135
443047-0000	SPROCKET	5-59
443048-0000	SPROCKET	5-67
443049-0000	SHAFT	5-67
443050-0000	GUIDE SLEEVE	5-67
443051-0000	CONNECTION	5-67
443052-0000	SPACER RING	5-59
443053-0000	CHAIN GUIDE	5-67
443055-0000	SHIM	5-61
443056-0000	SHIM	5-61
443057-0000	SHIM	5-61
443058-0000	SHIM	5-61
443076-0000	BOTTOM	5-145, 5-147, 5-149, 5-151, 5-153, 5-155
443081-0000	SPROCKET	5-33, 5-53, 5-55
443122-0000	HOUSE	5-15
443123-0000	HOUSE	5-15
443126-0000	CONNECTION PIPE	5-57
443149-0000	STUD SCREW	5-59
443150-0000	SUCTION TUBE	5-67
443151-0000	PIPE	5-67
443158-0000	SIDE PIPE	5-69, 5-71, 5-77, 5-79
443173-0100	DRIVE SHAFT	5-3, 5-5
443175-0000	SHAFT	5-157
443176-0000	SPROCKET	5-57
443177-0000	SPROCKET	5-157
443178-0000	BRACKET	5-157
443179-0000	SPACER	5-157
443182-0000	FLAP	5-133, 5-135
443186-0000	CHUTE	5-7, 5-9, 5-35, 5-37
443187-0000	SHEET	5-7, 5-9, 5-35, 5-37
443188-0000	GEAR WHEEL	5-123
443193-0000	SHIM	5-123
443194-0000	SHIM	5-123
443206-0001	ARCH	5-53, 5-55
443206-0002	ARCH	5-53, 5-55
443207-0001	ARCH	5-53, 5-55
443207-0003	ARCH	5-53, 5-55
443210-0000	PLATE STAINLESS	5-33, 5-53, 5-55
443213-0000	BRACKET	5-33, 5-53, 5-55
443215-0000	SPACER	5-33, 5-53, 5-55
443217-0000	BRACKET	5-33, 5-53, 5-55
443218-0000	INTERMEDIARY SECTION	5-121
443229-0000	BRACKET	5-29, 5-49, 5-51
443232-0000	HOLDER	5-29, 5-49, 5-51
443235-0000	SPROCKET	5-29, 5-49, 5-51
443237-0000	SLIDER	5-29, 5-49, 5-51
443239-0000	WASHER	5-29, 5-49, 5-51
443240-0000	DRIP PLATE	5-25, 5-27, 5-41, 5-43, 5-45, 5-47
443248-0000	OIL PIPE	5-17
443271-0000	HEAD PLATE	5-117
443272-0000	HEAD PLATE	5-117
443273-0000	HEAD PLATE	5-117
443274-0000	HEAD PLATE	5-117
443289-0000	TOOTHED PULLY	5-89, 5-91
443290-0000	GEAR WHEEL	5-89, 5-91, 5-101, 5-103
443291-0000	GEAR WHEEL	5-101, 5-103
443292-0000	STEERING	5-89, 5-91

Part No	Description	Page No
443293-0000	BRACKET	5-89, 5-91, 5-101, 5-103
443295-0000	WASHER	5-33, 5-53, 5-55, 5-89, 5-91, 5-101, 5-103
443296-0000	WASHER	5-89, 5-91, 5-101, 5-103
443297-0000	WASHER	5-101, 5-103
443298-0000	WASHER	5-101, 5-103
443299-0000	WASHER	5-89, 5-91, 5-101, 5-103
443300-0000	WASHER	5-89, 5-91, 5-101, 5-103
443301-0000	WASHER	5-89, 5-91, 5-101, 5-103
443305-0000	SHAFT	5-101, 5-103
443306-0000	SPROCKET	5-101, 5-103
443307-0000	SHAFT	5-89, 5-91, 5-101, 5-103
443309-0000	SHAFT	5-119
443310-0000	AXLE PIN	5-119
443312-0000	SPACER	5-89, 5-91
443313-0000	STUD SCREW	5-137, 5-139, 5-141, 5-143
443336-0008	TIMING BELT PULLEY	5-21
443348-0000	PLATE	5-137, 5-139, 5-141, 5-143
443350-0000	BRACKET	5-101, 5-103
443351-0000	FLAP	5-133, 5-135
443362-0000	CURVE	5-121
443365-0000	BRACKET	5-119
443367-0000	PROFILE	5-11
443387-0000	HEAD PLATE	5-101, 5-103
443388-0001	HEAD PLATE	5-101, 5-103
443414-0000	WASHER	5-101, 5-103
443419-0000	SPACER	5-115
443445-0000	SIDE PLATE	5-101, 5-103
443446-0000	SIDE PLATE	5-101, 5-103
443447-0000	BRACKET	5-117
443448-0000	HEAD PLATE	5-119
443450-0000	HEAD PLATE	5-101, 5-103
443451-0000	HEAD PLATE	5-101, 5-103
443454-0000	BRACKET	5-101, 5-103
443455-0000	SHAFT	5-101, 5-103
443456-0000	SHAFT	5-101, 5-103
443457-0000	SHAFT	5-101, 5-103
443458-0000	SHAFT	5-101, 5-103
443462-0000	SUPPORT	5-117
443463-0000	SUPPORT	5-117
443464-0000	SPROCKET	5-101, 5-103
443467-0000	SPROCKET	5-101, 5-103
443468-0000	CARRIER	5-105, 5-107, 5-109, 5-111
443469-0000	ARRIER	5-105, 5-107
443470-0000	CARRIER	5-109, 5-111
443474-0000	BRACKET	5-119
443476-0000	GABLE PLATE	5-115
443477-0000	GABLE PLATE	5-115
443478-0001	SPROCKET	5-101, 5-103
443478-0002	SPROCKET	5-101, 5-103
443478-0004	SPROCKET	5-101, 5-103
443479-0001	SPROCKET	5-101, 5-103
443479-0002	SPROCKET	5-101, 5-103
443479-0004	SPROCKET	5-101, 5-103
443480-0000	BRACKET	5-101, 5-103
443482-0000	BRACKET	5-89, 5-91, 5-101, 5-103
443483-0000	BRACKET	5-89, 5-91, 5-101, 5-103
443484-0000	ARM	5-89, 5-91, 5-101, 5-103
443485-0000	SCREW	5-89, 5-91, 5-101, 5-103
443486-0000	GUIDE	5-101, 5-103
443487-0000	ROLL	5-137, 5-139, 5-141, 5-143
443488-0000	ROLL	5-137, 5-139, 5-141, 5-143
443489-0000	BRACKET	5-89, 5-91, 5-101, 5-103
443491-0000	BRACKET	5-117
443492-0000	BRACKET	5-117
443493-0000	HEAD PLATE	5-119
443495-0000	HEAD PLATE	5-119
443497-0000	SUPPORT	5-117
443498-0000	SUPPORT	5-117
445537-0200	PIPE WORK-HYDRAULIC	2-3, 2-5
445538-0000	HYDRAULIC PIPE	2-121, 2-123
445539-0000	HYDRAULIC PIPE	2-35, 2-121, 2-123, 13-15
445540-0000	HYDRAULIC PIPE	2-35, 2-121, 2-123, 13-15
445541-0000	HYDRAULIC PIPE	2-35, 2-121, 2-123, 13-15
445542-0000	MANTEL RUBBER	8-9, 8-39, 12-57, 12-75
445567-0200	FILLER TUBE	1-3
445583-0000	VALVE	2-157
445664-0000	TEMPLATE	14-33
445669-0000	HOLDER	7-37, 7-39
445670-0000	PAPER SUPPORT	7-37, 7-39
445688-0000	AIR GUIDE	7-37, 7-39
445736-0000	HINGE	2-27, 2-29, 2-31, 2-81, 2-83
445770-0000	STOPPER	4-113, 4-115, 12-175, 12-177
445837-0000	CANTILEVER	8-41
445838-0000	SHAFT	8-17, 8-41

Part No	Description	Page No
445839-0000	SECURING PLATE	8-41
445840-0100	DRIVE UNIT	8-3
445841-0000	CANTILEVER	8-41
445842-0000	MOTOR PLATE	8-41
445844-0000	SLEEVE	8-61, 8-63, 8-65
445845-0000	DRIVE ROLLER	8-17, 8-41
445846-0000	SLEEVE	8-61, 8-63, 8-65
445847-0000	SHAFT	8-17, 8-41
445848-0000	ELASTIC COUPLING	6-55, 8-41
445849-0000	SPACER DISC	8-17, 8-41
445850-0000	SPACER SLEEVE	8-41
445851-0000	SHAFT	8-41
445852-0000	LID	8-17, 8-41
445854-0001	GEAR WHEEL	8-41
445854-0002	GEAR WHEEL	8-41
445857-0000	PROTECTION PLATE	8-55
445858-0000	WASHER	2-167
445861-0000	FRAME	8-51, 8-53
445863-0000	PROTECTION	8-51, 8-53
445872-0000	HINGE	8-51, 8-53
445873-0000	HINGE	8-51, 8-53
445874-0000	HINGE	8-51, 8-53
445877-0000	SUPPORT	8-51, 8-53
445879-0000	SUPPORT	8-51, 8-53
445880-0600	SPLICING DEVICE	8-3
445881-0000	BRACKET LEFT	8-69, 8-71, 8-73
445882-0000	BRACKET RIGHT	8-69, 8-71, 8-73
445885-0000	BEAM	8-69, 8-71, 8-73
445886-0000	BEAM	8-69, 8-71, 8-73
445894-0000	SEAL	8-69, 8-71, 8-73
445898-0000	NUT	8-69, 8-71, 8-73
445901-0000	FRAME	8-69, 8-71, 8-73
445902-0000	ARM	8-69, 8-71, 8-73
445903-0000	ECCENTRIC SHAFT	8-69, 8-71, 8-73
445904-0000	SHAFT	8-69, 8-71, 8-73
445907-0000	SCREW	8-69, 8-71, 8-73
445909-0000	NIPPLE	8-69, 8-71, 8-73
445911-0000	CANTILEVER	8-69, 8-71, 8-73
445915-0000	STEERING	8-69, 8-71, 8-73
445918-0000	SCREW	8-69, 8-71, 8-73
445920-0600	EL-PNEUMATIC EQUIPMENT	8-3
445926-0000	WASHER	8-57, 8-59
445929-0000	GASKET	8-55
445934-0000	LID	8-55
445935-0000	PROTECTION PLATE	8-55
449000-0000	BRACKET	1-7, 1-9
449125-0000	JIG	14-33
449153-0000	BRACKET	14-33
449154-0000	SHIFTER HANDLE	14-33
449155-0000	HOOK	14-33
449156-0000	ROD	14-33
449168-0300	CLEANING SYSTEM	2-3, 2-5
449170-0000	CLEANING PIPE	2-23, 2-79
449190-0000	SHAFT	6-17
449193-0000	PRESSURE GAUGE TUBE	12-11
449584-0000	VOLUME BULGE	4-53, 4-55, 12-205, 12-207
449623-0000	STEERING	8-69, 8-71, 8-73
449624-0000	STEERING	8-69, 8-71, 8-73
449626-0000	SEAL	8-69, 8-71, 8-73
449629-0000	BRACKET	8-69, 8-71, 8-73
449630-0300	PAPER HOLDER	8-69, 8-71, 8-73
449631-0000	BEARING HOUSING	8-77, 8-79
449632-0000	BEARING HOUSING	8-77, 8-79
449634-0000	COVERING PLATE	8-77, 8-79
449635-0000	COVERING PLATE	8-77, 8-79
449744-0000	TURN SPRING	8-77, 8-79
449745-0000	TURN SPRING	8-77, 8-79
449746-0000	STEERING	8-77, 8-79
449748-0000	BEARING	8-77, 8-79
449751-0000	PROTECTION	8-69, 8-71, 8-73
449753-0000	SCREW	8-69, 8-71, 8-73
449761-0000	WASHER	8-69, 8-71, 8-73
449770-0000	INSULATION	8-69, 8-71, 8-73
449843-0001	BENDING ROLLER	7-13, 12-65
449843-0005	BENDING ROLLER	7-13
449908-0000	BUSHING	4-53, 4-55, 12-205, 12-207
449922-0000	GASKET	1-37
449926-0000	HOLDER	4-101, 4-103, 4-105, 4-107
449930-0500	CONNECTION BOX	2-3, 2-5
449932-0500	PIPE WORK-WATER	2-3, 2-5
450017-0000	PLATE	8-69, 8-71, 8-73
450105-0000	CUTTING JAW	4-77, 4-79, 4-85, 4-87
450111-0000	STOPPER	14-35
450112-0000	STOPPER	14-35

Part No	Description	Page No
450116-0000	CANTILEVER	7-29, 12-61, 12-63
450145-0000	STRUT	3-31, 3-33
450146-0000	STRUT	3-31, 3-33
450284-0000	CABLE DUCT	2-21, 2-77, 2-117, 2-119, 13-27
450285-0000	CABLE DUCT	2-21, 2-77, 2-117, 2-119, 13-27
450286-0000	LID	2-21, 2-77, 2-117, 2-119, 13-27
450287-0000	LID	2-21, 2-77, 2-117, 2-119, 13-27
450290-0000	LID	2-21, 2-77, 2-117, 2-119, 13-27
450291-0000	ATTACHMENT PIPE	2-21, 2-117, 2-119, 13-27
450293-0500	CABLE DUCT	2-3, 2-5
450298-0000	COVERING PLATE	2-37, 2-39, 2-41, 2-85, 2-87
450299-0000	SWIVEL PLATE	2-47
450300-0000	BEAM	2-47
450301-0000	FASTENING PLATE	2-47
450302-0000	VOLUME SHIM	4-53, 4-55, 4-61, 4-63, 12-205, 12-207
450314-0200	SPLICE DETECTOR	12-53, 12-55, 12-67, 12-69, 12-71, 12-73
450315-0000	HOLDER	4-101, 4-103, 4-105, 4-107
450340-0000	PIPE	2-157
450342-0000	COVERING PLATE	2-37, 2-39, 2-41, 2-85, 2-87
450355-0000	INK ROLLER	8-9, 8-39, 12-57, 12-75
450363-0000	LID	8-41
450460-0001	GUIDE SHAFT	7-31, 7-33
450460-0002	GUIDE SHAFT	7-31, 7-33
450460-0003	GUIDE SHAFT	7-31, 7-33
450461-0000	SHAFT	7-31, 7-33
450495-0000	CONNECTION BOX	2-163
450497-0000	SHAFT	8-5, 8-7, 8-21, 8-23, 8-25, 8-27, 8-29, 8-31, 8-33, 12-53, 12-55, 12-67, 12-69, 12-71, 12-73
450500-0000	DOWEL	8-5, 8-7, 8-21, 8-23, 8-25, 8-27, 8-29, 8-31, 8-33, 12-53, 12-55, 12-67, 12-69, 12-71, 12-73
450503-0000	BEARING HOUSING	4-77, 4-79, 4-85, 4-87
450504-0000	BEARING HOUSING	4-65, 4-67, 4-69, 4-71
450505-0000	CARRIER RULER LEFT	4-147
450506-0000	CARRIER RULER	4-143
450667-0000	SPLASH GUARD	2-47
450668-0000	SPLASH GUARD	2-47
450669-0000	TOUCH GUARD	2-47
450670-0000	ARM	3-37, 3-39
450724-0000	PIPE	2-137, 2-139
450725-0000	ATTACHMENT PLATE	2-137, 2-139
450730-0000	PIPE	2-137, 2-139
450731-0000	PIPE	2-137, 2-139
450733-0000	PIPE	2-137, 2-139
450736-0000	PIPE	2-13, 2-15, 2-17, 2-19, 2-71, 2-73, 2-75, 2-101, 2-103, 2-105, 2-107, 2-109, 2-111, 2-113
		2-137, 2-139, 13-17, 13-19, 13-21, 13-23
450737-0000	PIPE	2-137, 2-139
450738-0000	PIPE	2-137, 2-139
450739-0000	PIPE	2-137, 2-139
450740-0000	PIPE	2-137, 2-139
450742-0000	PIPE	2-137, 2-139
450744-0000	CRAMP	2-137, 2-139
450745-0000	SPACER	2-137, 2-139
450746-0000	HOLDER	2-137, 2-139
450747-0000	PIPE	2-101, 2-103, 2-105, 2-107, 2-109, 2-111, 2-113, 2-137, 2-139
450748-0000	PIPE	2-137, 2-139
450759-0000	TEMPLATE	14-41, 14-43
450760-0000	TEMPLATE	14-41, 14-43
450788-0600	PIPE WORK-PNEUMATIC	2-3, 2-5
450791-0000	PIPE	2-13, 2-15, 2-17, 2-19, 2-71, 2-73, 2-75, 2-101, 2-103, 2-105, 2-107, 2-109, 2-111, 2-113
		13-17, 13-19, 13-21, 13-23
450792-0100	DETERGENT PUMP	2-3, 2-5
450793-0000	PIPE	2-135
450794-0000	PIPE	2-135
450795-0000	PIPE	2-135
450796-0000	BRACKET	2-135
450824-0200	DOOR	2-3, 2-5
450826-0000	BRACKET	2-133
450840-0400	LIFTING UNIT	2-3, 2-5
450841-0000	CANTILEVER	2-9, 2-69
450853-0000	PROTECTION	8-69, 8-71, 8-73
450869-0000	BRACKET RIGHT	2-181, 2-183
450879-0000	PRESSURE FLANGE	1-17, 1-19, 1-21
450882-0000	OUTER PIPE	7-9
450883-0400	PROTECTION	2-3, 2-5
450884-0000	PROTECTION	2-129
450887-0000	CRAMP	7-41
450888-0000	INSULATING PLATE	7-41
450899-0001	SPACER	2-45, 2-91
450973-0000	BRACKET	2-133
451026-0100	TEMPLATE	14-5
451042-0000	THROTTLE	1-25
451043-0000	STOPPER	14-37
451088-0000	PROTECTION	2-47
451089-0000	BRACKET	2-47
451127-0000	CHUTE, LEFT FRONT	2-65, 2-99
451128-0000	CHUTE, RIGHT FRONT	2-63, 2-97

Part No	Description	Page No
451348-0200	CONNECTION BOX	2-3, 2-5
451354-0007	INSTALLATION DRAW.	13-45
451394-0000	COVER PLATE STAINLESS	12-81
451406-0000	VIBRATION DAMPER	10-15, 10-17, 10-21, 12-5, 12-9
451407-0000	RAILING	10-15, 10-17, 10-21
451408-0000	BUFFER RING	10-15, 10-17, 10-21, 12-5, 12-9
451412-0000	WASHER	8-69, 8-71, 8-73
451413-0000	WASHER	8-69, 8-71, 8-73
451423-0000	CIRCUIT BOARD	2-127
451426-0000	RAILING	12-5, 12-9
451427-0000	BOW CLAMP	12-5
451719-0003	WASHER	12-97, 12-99
456011-0000	PIN	4-7, 4-9, 4-61, 4-63, 4-75, 12-173, 12-231, 13-75
456256-0000	PROTECTIVE COVER	2-163
456772-0000	PIVOT BRACKET	8-9, 12-57
456773-0000	PIVOT BRACKET	8-39, 12-75
457354-0000	SCREW	2-9, 2-69
457355-0000	NUT	2-9, 2-69
457357-0000	BRACKET	2-37, 2-39, 2-41, 2-85, 2-87
457358-0000	SLEEVE	8-55
457359-0000	BRACKET	4-97, 4-99
457361-0000	CANTILEVER	4-97, 4-99
457364-0000	PLATE RIGHT	4-97, 4-99
457365-0000	PLATE LEFT	4-97, 4-99
457367-0000	SHAFT	4-97, 4-99
457368-0000	SPRING	4-97, 4-99
457370-0000	CATCH	8-77, 8-79
457430-0000	BEATER	8-5, 8-7, 8-21, 8-23, 8-25, 8-27, 8-29, 8-31, 8-33
457486-0000	BEARING HOUSING	8-77, 8-79
457487-0000	BEARING HOUSING	8-77, 8-79
457488-0000	BEARING HOUSING	8-77, 8-79
457489-0000	BEARING HOUSING	8-77, 8-79
457492-0000	COVERING PLATE	8-77, 8-79
457493-0000	COVERING PLATE	8-77, 8-79
457494-0000	COVERING PLATE	8-77, 8-79
457495-0000	COVERING PLATE	8-77, 8-79
457586-0000	SLIDE	8-77, 8-79
457627-0000	DOLLY	8-69, 8-71, 8-73
457658-0000	INSULATION	8-69, 8-71, 8-73
457696-0001	JOINT PIECE	6-37, 6-39
458020-0000	BEARING HOUSING	4-65, 4-67, 4-69, 4-71
458021-0000	BEARING HOUSING	4-77, 4-79, 4-85, 4-87
458030-0000	CARRIER RULER	4-147
458031-0000	CARRIER RULER	4-143
458038-0000	CARRIER RULER	4-147
458039-0000	CARRIER RULER	4-143
458041-0000	COMPRESSION SPRING	8-77, 8-79, 8-85, 8-87
458042-0000	SPRING	8-77, 8-79
458062-0000	TENSION SPRING	8-69, 8-71, 8-73
458104-0000	CREASE FORMER	8-21, 8-23, 8-25, 8-27, 8-29, 8-31, 8-33, 12-67, 12-69, 12-71, 12-73
458105-0000	CREASE FORMER	8-21, 8-23, 8-25, 8-27, 8-29, 8-31, 8-33, 12-67, 12-69, 12-71, 12-73
458106-0000	CREASE FORMER	8-21, 8-23, 8-25, 8-27, 8-29, 8-31, 8-33, 12-67, 12-69, 12-71, 12-73
458107-0000	CREASE FORMER	8-5, 8-7, 12-53, 12-55, 12-67, 12-69, 12-71, 12-73
458108-0000	CREASE FORMER	8-21, 8-23, 8-25, 8-27, 8-29, 8-31, 8-33
458164-0000	SHAFT	4-53, 4-55, 12-205, 12-207
458165-0000	SHAFT	4-53, 4-55, 12-205, 12-207
458188-0000	HOLDER	2-159, 2-161
458189-0000	DRIP GUARD	2-159, 2-161
458192-0300	INK UNIT SS	8-5, 8-7
458193-0001	WASHER	8-21, 8-23, 8-25, 8-27, 8-29, 8-31, 8-33, 12-67, 12-69, 12-71, 12-73
458193-0002	WASHER	8-21, 8-23, 8-25, 8-27, 8-29, 8-31, 8-33, 12-67, 12-69, 12-71, 12-73
458193-0003	WASHER	8-21, 8-23, 8-25, 8-27, 8-29, 8-31, 8-33, 12-67, 12-69, 12-71, 12-73
458194-0001	WASHER	8-5, 8-7, 12-53, 12-55, 12-67, 12-69, 12-71, 12-73
458194-0002	WASHER	8-5, 8-7, 12-53, 12-55, 12-67, 12-69, 12-71, 12-73
458194-0003	WASHER	8-5, 8-7, 12-53, 12-55, 12-67, 12-69, 12-71, 12-73
458362-0000	PLUG	8-61, 8-63, 8-65
458364-0000	COVER	8-9
458444-0201	LASER TEMPLATE JUMBO REEL	14-5
458467-0000	VOLUME BULGE	4-53, 4-55, 12-205, 12-207
458480-0000	THROTTLE	1-17, 1-19, 1-21
458488-0000	PROTECTION	14-33
458489-0000	CANTILEVER	8-21, 8-23, 8-25, 8-27, 8-29, 8-31, 8-33, 12-67, 12-69, 12-71, 12-73
458492-0000	HOOK SPANNER	14-5
458791-0000	SHAFT	1-5, 1-11, 1-23
458908-0000	BRACKET	8-69, 8-71, 8-73
458909-0000	BRACKET	8-69, 8-71, 8-73
458912-0000	BRACKET	8-69, 8-71, 8-73
458915-0000	HEAD RAIL	8-69, 8-71, 8-73
458916-0000	SHAFT	8-69, 8-71, 8-73
458917-0000	SUPPORT	8-69, 8-71, 8-73
458929-0000	TURN SPRING	8-69, 8-71, 8-73
464004-0000	HOLDER	2-159, 2-161
464009-0001	BLOCKING PIECE	12-67, 12-69, 12-71, 12-73
464009-0002	BLOCKING PIECE	12-53, 12-55, 12-67, 12-69, 12-71, 12-73

Part No	Description	Page No
464010-0000	ARM	8-5, 8-7, 8-21, 8-23, 8-25, 8-27, 8-29, 8-31, 8-33, 12-53, 12-55, 12-67, 12-69, 12-71, 12-73
464011-0000	LOCK STUD	8-5, 8-7, 8-21, 8-23, 8-25, 8-27, 8-29, 8-31, 8-33, 12-53, 12-55, 12-67, 12-69, 12-71, 12-73
464012-0000	CURVE	8-5, 8-7, 8-21, 8-23, 8-25, 8-27, 8-29, 8-31, 8-33, 12-53, 12-55, 12-67, 12-69, 12-71, 12-73
464080-0000	MACHINE BODY	12-97, 12-99
464082-0000	SHAFT	12-97, 12-99
464084-0000	PISTON ROD	12-101
464085-0000	CARRIER	12-97, 12-99
464086-0000	FORK	12-97, 12-99
464088-0000	SHAFT	12-97, 12-99
464089-0000	STRUT	12-97, 12-99
464090-0000	SUPPORT	12-97, 12-99
464093-0000	YOKE	12-97, 12-99
464095-0000	BRAKE DISC	12-97, 12-99
464099-0000	PISTON ROD	12-107
464100-0200	PAPER REEL TROLLEY	12-3
464101-0000	CYLINDER SHELL	12-107
464102-0000	CONE (PRESSURE)	12-97, 12-99
464105-0000	PIPE	12-97, 12-99
464107-0000	BRACKET	12-97, 12-99
464108-0100	HYDRAULIC VALVE	12-97, 12-99
464112-0000	COMPRESSION SPRING	12-97, 12-99
464115-0000	SHAFT	12-97, 12-99
464116-0000	SPACER PIPE	12-97, 12-99
464119-0000	HANDSPIKE	12-97, 12-99
464120-0000	HEAD PLATE	12-107
464121-0000	HOLDER	12-97, 12-99
464122-0000	BUSHING	12-97, 12-99
464124-0100	LIFTING CYLINDER	12-97, 12-99
464125-0000	SLIDING SLEEVE	12-109
464126-0000	SPACER RING	12-107
464127-0000	SLIDING SLEEVE*	12-109
464129-0000	SLIDE PLATE	12-97, 12-99
464130-0000	PIPE	12-97, 12-99
464141-0000	LEAD-IN PLATE	8-55
464173-0000	LABEL HOLDER	1-55, 7-9
464174-0000	SIGN, LONGITUDINAL SEALING	1-55
464175-0000	SIGN, LONGITUDINAL SEALING SHORT STOP	1-55
464176-0000	SIGN, STRIP APPLICATOR	7-9
464177-0000	SIGN, STRIP APPLICATOR SHORT STOP	7-9
464193-0000	ATTACHMENT PLATE	2-21, 2-77, 2-117, 2-119, 13-27
464194-0000	COVER DISC	2-37, 2-39, 2-41, 2-85, 2-87
464195-0000	DRIP GUARD	2-159, 2-161
464196-0000	SLIDE RAIL	2-159, 2-161
464197-0000	AIR NOZZLE	7-41
464200-0000	LOCKING BLOCK	2-159, 2-161
464289-0000	MOUNTING PLATE	2-159, 2-161
464297-0000	CONNECTION BOX	2-127
464310-0000	FOLDING FLAP	4-143, 4-147
464311-0000	FOLDING FLAP	4-143, 4-147
464314-0000	VOLUME BULGE	4-53, 4-55, 12-205, 12-207
464315-0000	VOLUME SHIM	4-53, 4-55, 12-205, 12-207
464363-0000	HOLDER	3-41, 3-43
464370-0000	SPACER	4-73
464431-0000	PIPE	2-137, 2-139
464432-0000	PIPE	2-101, 2-103, 2-105, 2-107, 2-109, 2-111, 2-113, 2-137, 2-139
464547-0000	NUT	8-69, 8-71, 8-73
464548-0000	BRACKET	8-69, 8-71, 8-73
464697-0000	SHAFT	4-77, 4-79, 4-85, 4-87
464720-0000	SIGN	2-137, 2-139
464758-0000	CUTTING JAW	4-77, 4-79, 4-85, 4-87
464854-0000	TENSION SPRING	8-69, 8-71, 8-73
464983-0000	SCREW	8-69, 8-71, 8-73
466049-0001	SPACER LOWER	12-67, 12-69, 12-71, 12-73
466049-0002	SPACER LOWER	12-53, 12-55, 12-67, 12-69, 12-71, 12-73
466049-0003	SPACER LOWER	12-53, 12-55
466050-0001	FRAME LOWER	12-67, 12-69, 12-71, 12-73
466050-0002	FRAME LOWER	12-53, 12-55, 12-67, 12-69, 12-71, 12-73
466050-0003	FRAME LOWER	12-53, 12-55
466074-0002	SLIDER	6-37, 6-39
466337-0000	CONNECTION BOX	8-61, 8-63, 8-65
466412-0000	PLATE	7-41
466430-0000	BUSHING	8-5, 8-7, 8-21, 8-23, 8-25, 8-27, 8-29, 8-31, 8-33, 12-53, 12-55, 12-67, 12-69, 12-71, 12-73
466444-0000	SPACER	14-37
466446-0000	HANDLE	8-69, 8-71, 8-73
466469-0000	HOLDER	8-43
466618-0000	CATCH	8-69, 8-71, 8-73
466619-0000	CATCH	8-69, 8-71, 8-73
466620-0000	PISTON	8-69, 8-71, 8-73
466621-0000	PISTON	8-69, 8-71, 8-73
466623-0000	COMPRESSION SPRING	8-69, 8-71, 8-73
469096-0000	LEG	6-35
469463-0000	SHAFT	1-31, 1-33
469464-0000	ROLL	1-31, 1-33
469795-0000	HOLDER	2-65, 2-99

Part No	Description	Page No
476015-0000	DOWEL	8-57, 8-59
476016-0000	RUBBER	8-57, 8-59
476117-0000	CATCH	8-55
476165-0000	LEAD-IN PLATE	2-165
476177-0200	HOLD-DOWN DEVICE	3-3, 3-5, 3-7
476189-0100	WALL LEAD-IN	12-15, 12-127
476190-0000	FRAME	12-37, 12-133
476191-0000	FRAME	12-37, 12-133
476192-0000	COVERING PLATE	12-37
476193-0000	COVERING PLATE	12-133
476194-0000	COVERING PLATE	12-37, 12-133
476195-0000	COVER	12-37, 12-133
476196-0000	GUIDE RAIL	12-133
476197-0000	DROP WING	12-133
476198-0001	CANTILEVER	12-37, 12-133
476198-0002	CANTILEVER	12-37, 12-133
476199-0000	PLATE	12-37, 12-133
476200-0000	SPACER	12-133
476201-0000	SLEEVE	12-37, 12-133
476202-0000	SCREW	12-37, 12-133
476203-0000	PROTECTION	1-63
476220-0000	SPACER	6-37, 6-39
476263-0001	SHAFT	12-67, 12-69, 12-71, 12-73
476263-0002	SHAFT	12-53, 12-55, 12-67, 12-69, 12-71, 12-73
476263-0003	SHAFT	12-53, 12-55
476288-0000	PIPE	8-69, 8-71, 8-73
476289-0000	SCREW	8-69, 8-71, 8-73
476354-0000	CANNULAR TUBE	8-39, 12-75
476355-0000	CANNULAR TUBE	8-9, 12-57
476356-0000	HOLDER FOR INK BOTTLE	8-9, 8-39, 12-57, 12-75
476377-0000	SCREW	8-5, 8-7, 8-21, 8-23, 8-25, 8-27, 8-29, 8-31, 8-33, 12-53, 12-55, 12-67, 12-69, 12-71, 12-73
476401-0000	SHAFT	8-57, 8-59
476503-0000	BRACKET	8-41
476556-0000	GUIDE	8-57, 8-59
476667-0000	COUNTER CAM	4-45, 4-47
476668-0000	COUNTER CAM	4-49, 4-51
476824-0000	COVERING PLATE	2-37, 2-39, 2-41
476884-0200	CLEANING HEAD	2-57
476885-0200	CLEANING HEAD	2-49, 2-51
476886-0200	CLEANING HEAD	2-49, 2-51
476887-0200	CLEANING HEAD	2-57
476894-0000	PIPE HOLDER	2-9
476975-0000	WHEEL	5-23, 5-39, 6-37, 6-39
479182-0000	PAPER GUIDE PLATE	12-49
479188-0000	INSULATION	8-69, 8-71, 8-73
479223-0000	RAIL	8-69, 8-71, 8-73, 8-75
479224-0000	STEERING	8-69, 8-71, 8-73
479236-0000	END SECTION	8-35, 8-37, 12-77, 12-79
479237-0000	CARRIER	8-35, 8-37, 12-77, 12-79
479238-0000	CARRIER	8-35, 8-37, 12-77, 12-79
479245-0000	VOLUME SHIM	4-53, 4-55, 4-61, 4-63, 12-205, 12-207
479246-0000	VOLUME SHIM	4-53, 4-55, 4-61, 4-63, 12-205, 12-207
479261-0000	NIPPLE	2-149, 2-151
479354-0000	SCREW	3-11, 3-21, 13-11
479374-0000	DRIP PLATE	2-37, 2-39, 2-41, 2-85, 2-87
479383-0000	BRACKET, PRODUCT VALVE	1-27, 1-29
479384-0000	PIPE BEND	1-27, 1-29
479714-0000	FASTENING PLATE	7-29, 12-61, 12-63
479715-0000	ANGLE BRACKET	7-29
479741-0000	VALVE BODY TB/8	1-59
479743-0000	COMPRESSION SPRING	4-65, 4-67, 4-69, 4-71
479744-0000	COMPRESSION SPRING	4-65, 4-67, 4-69, 4-71
479753-0000	STRIPPER	3-11, 3-21, 13-11
479821-0101	FREE STAND	12-15
479822-0000	PILLAR	12-35
479823-0000	STRUT	12-35
479824-0000	FASTENING PLATE	12-35
479825-0000	CROSS BAR	12-35
479826-0000	COVERING PLATE	12-37, 12-133
479858-0000	HYDRAULIC DIAGRAM	2-131
479859-0000	HYDRAULIC DIAGRAM	2-131
479963-0000	CANTILEVER	12-39, 12-41
479964-0000	SIGN	2-27, 2-29, 2-31, 2-81, 2-83
479994-0000	LASER TEMPLATE	14-33
484103-0000	PIPE	2-137, 2-139
484104-0000	PIPE	2-137, 2-139
484212-0000	BRACKET	2-37, 2-39, 2-41, 2-85, 2-87
484213-0000	BRACKET	2-37, 2-39, 2-41, 2-85, 2-87
484219-0000	SHAFT	2-9, 2-69
484220-0000	BRACKET	2-9, 2-69
484221-0000	BRACKET	2-9, 2-69
484222-0000	SHAFT	2-9, 2-69
484223-0000	NUT	2-9, 2-69
484529-0000	CYLINDER BRACKET	8-69, 8-71, 8-73

Part No	Description	Page No
484574-0000	BOW CLAMP	12-39, 12-41
484682-0000	COMPRESSION SPRING	8-69, 8-71, 8-73
484694-0000	ANGLE BRACKET RIGHT	12-67, 12-69, 12-71, 12-73
484695-0000	ANGLE BRACKET LEFT	12-67, 12-69, 12-71, 12-73
484697-0000	ANGLE BRACKET RIGHT	12-67, 12-69, 12-71, 12-73
484698-0000	ANGLE BRACKET LEFT	12-67, 12-69, 12-71, 12-73
484701-0000	SHUTTER	6-37, 6-39
484783-0000	RAIL	8-69, 8-71, 8-73
484839-0000	CABLE TRENCH	1-55
484840-0000	CABLE TRENCH	1-55
484844-0000	INSULATION	8-69, 8-71, 8-73
484848-0001	MACHINE BODY	8-21, 8-23, 8-25, 8-27, 8-29, 8-31, 8-33
484848-0002	MACHINE BODY	8-21, 8-23, 8-25, 8-27, 8-29, 8-31, 8-33
484848-0003	MACHINE BODY	8-21, 8-23, 8-25, 8-27, 8-29, 8-31, 8-33
484870-0000	CLEANING PIPE 500-1000ML	1-71
484871-0000	CLEANING PIPE	2-67
484872-0000	T-PIPE	1-27, 1-29
484877-0000	STEERING	8-69, 8-71, 8-73
484878-0000	HOLDER	8-69, 8-71, 8-73
484895-0001	SHEET	8-69, 8-71, 8-73
484895-0002	SHEET	8-69, 8-71, 8-73
484895-0003	SHEET	8-69, 8-71, 8-73
484895-0006	SHEET	8-69, 8-71, 8-73
484895-0007	SHEET	8-69, 8-71, 8-73
484975-0000	WASHER	1-63
484998-0000	END SECTION	1-63
486790-0000	BRACKET	4-97, 4-99
486794-0000	HOLDER	4-97, 4-99
486826-0001	SIGN "EMERGENCY STOP"	7-9, 7-31, 7-33, 8-61, 8-63, 8-65, 9-21, 9-23, 9-41, 9-43, 9-61, 9-63
486958-0200	DATING UNIT	8-3
486960-0001	SHAFT	8-21, 8-23, 8-25, 8-27, 8-29, 8-31, 8-33
486960-0002	SHAFT	8-5, 8-7
486961-0000	PLATE	8-21, 8-23, 8-25, 8-27, 8-29, 8-31, 8-33
486962-0001	FASTENING BRACKET	8-21, 8-23, 8-25, 8-27, 8-29, 8-31, 8-33
486962-0002	FASTENING BRACKET	8-21, 8-23, 8-25, 8-27, 8-29, 8-31, 8-33
486962-0003	FASTENING BRACKET	8-5, 8-7
486962-0004	FASTENING BRACKET	8-21, 8-23, 8-25, 8-27, 8-29, 8-31, 8-33
486962-0009	FASTENING BRACKET	8-21, 8-23, 8-25, 8-27, 8-29, 8-31, 8-33
486962-0010	FASTENING BRACKET	8-21, 8-23, 8-25, 8-27, 8-29, 8-31, 8-33
486962-0011	FASTENING BRACKET	8-21, 8-23, 8-25, 8-27, 8-29, 8-31, 8-33
486964-0000	HEAD PLATE	8-21, 8-23, 8-25, 8-27, 8-29, 8-31, 8-33
486966-0001	SHAFT	8-21, 8-23, 8-25, 8-27, 8-29, 8-31, 8-33
486966-0002	SHAFT FOR CARRIER	8-5, 8-7
486967-0000	SHEET	8-5, 8-7, 8-21, 8-23, 8-25, 8-27, 8-29, 8-31, 8-33
486968-0001	SHAFT FOR BENDINGROLLER	8-21, 8-23, 8-25, 8-27, 8-29, 8-31, 8-33
486968-0002	SHAFT FOR BENDINGROLLER	8-5, 8-7
486969-0000	GUIDE LUG	8-5, 8-7, 8-21, 8-23, 8-25, 8-27, 8-29, 8-31, 8-33
486971-0000	ANGLE	8-5, 8-7, 8-21, 8-23, 8-25, 8-27, 8-29, 8-31, 8-33
493021-0000	ARM	2-9
493022-0000	ARM	2-9, 2-69
493084-0000	CLEANING PIPE 180-300ML	1-71
493553-0000	LIFTING FORK	12-97, 12-99
493554-0000	LIFTING FORK	12-97, 12-99
493555-0000	HANDLE BRACKET	12-97, 12-99
493556-0000	HANDLE	12-97, 12-99
493557-0000	BRAKE HANDLE	12-97, 12-99
493558-0000	HOLDER R	12-97, 12-99
493559-0000	HOLDER L	12-97, 12-99
493560-0000	SUPPORT R	12-97, 12-99
493561-0000	SUPPORT L	12-97, 12-99
493562-0000	BRACKET	12-97, 12-99
493563-0000	STEERING	12-97, 12-99
493564-0000	STRUT	12-97, 12-99
493566-0000	LID	12-97, 12-99
493568-0000	BRACKET	12-97, 12-99
493569-0000	PLUG	12-97, 12-99
493614-0100	SPRAY GUN	2-3, 2-5
493700-0100	TANK	12-97, 12-99
493701-0000	TANK	12-105
493702-0000	LID	12-105
493710-0000	FOLDING FLAP	4-143, 4-147
493711-0000	FOLDING FLAP	4-143, 4-147
493729-0100	PUMP	12-97, 12-99
493730-0000	MANTLE	12-101
493731-0000	WASHER	12-101
493747-0000	GUIDE STUD	1-43, 1-45
493886-0000	SHAFT	1-43, 1-45
493948-0000	CANTILEVER	1-75, 1-77, 1-79, 1-81, 1-83
495201-0000	COOLING ELEMENT	2-163
497040-0000	STEERING	4-65, 4-67, 4-69, 4-71
497120-0000	FOOT PLATE	12-43
497172-0000	PIPE	2-121, 2-123
497173-0000	PIPE	2-121, 2-123
497174-0000	PIPE	2-121, 2-123

Part No	Description	Page No
497175-0000	PIPE	2-121, 2-123
497176-0000	PIPE	2-121, 2-123
497243-0200	INDUCTIVE SWITCH	12-3
497572-0000	BEARING HOUSING	4-77, 4-79, 4-85, 4-87
497720-0000	WASHER	1-43, 1-45
497748-0000	PIN	1-61
497912-0000	CONTACT PIECE	4-65, 4-67, 4-69, 4-71
497913-0000	CONTACT PIECE	4-65, 4-67, 4-69, 4-71
497914-0000	INSULATING PLATE	4-65, 4-67, 4-69, 4-71
497915-0000	INSULATING PLATE	4-65, 4-67, 4-69, 4-71
497916-0000	WASHER	4-65, 4-67, 4-69, 4-71
497933-0000	BUSHING	1-63
499011-0000	SHAFT	1-65, 1-67, 1-69
499016-0000	FORK	1-65, 1-67, 1-69
499082-0403	ADAPTER, TYPE 1	10-3
499082-0404	ADAPTER, TYPE 1	10-3
499082-0407	ADAPTER, TYPE 1	10-3
499124-0000	STOP	4-113, 4-115, 12-175, 12-177
499125-0000	STOP	4-113, 4-115, 12-175, 12-177
499132-0002	SHAFT	8-75
499387-0000	PRESSURE ROLLER	1-39, 1-65, 1-67, 1-69
499390-0100	SERVICE TABLE B8 ST-R	12-3
499391-0000	SERVICE TABLE	12-115
499392-0000	ROD	12-115
499393-0000	PIPE	12-115
499394-0000	PIPE	12-115
499395-0000	PLATE	12-115
499396-0000	SUPPORT	12-115
499397-0000	DAMPER LEFT	4-113, 4-115, 12-175, 12-177
499398-0000	DAMPER RIGHT	4-113, 4-115, 12-175, 12-177
499473-0000	GEAR WHEEL	3-29
499474-0000	SHAFT	3-29
499701-0100	ATTACHMENT	1-3
499833-0000	PIPE RIGHT	2-49, 2-51
499834-0000	PIPE LEFT	2-49, 2-51
499872-0200	PRODUCT VALVE	1-3
499879-0000	RETAINING RING	1-27, 1-29
499885-0000	CLEANING PIPE 1000 HIFIN	1-71
499890-0000	FLANGE	1-57
522000-0000	PLATE	1-27, 1-29
522023-0000	GAUGE	14-5
522121-0200	CUTTING TABLE	8-3
522122-0001	RAIL	8-85, 8-87
522122-0002	RAIL	8-85, 8-87
522123-0000	PLATE	8-85, 8-87
522124-0000	RULER	8-85, 8-87
522125-0000	BEARING HOUSING	8-85, 8-87
522126-0000	SHEET	8-85, 8-87
522128-0000	KNIFE	8-85, 8-87
522129-0000	KNIFE HOLDER	8-85, 8-87
522130-0000	HANDLE	8-85, 8-87
522131-0000	STEERING	8-85, 8-87
522132-0000	SLIDE BELT	8-85, 8-87
522133-0000	SHAFT	8-85, 8-87
522134-0000	END PLATE	8-85, 8-87
522137-0000	PUSH BUTTON	8-85, 8-87
522138-0000	STOPPER	8-85, 8-87
522139-0001	STOPPER	8-85, 8-87
522139-0002	STOPPER	8-85, 8-87
522158-0000	COMPRESSION SPRING	8-85, 8-87
522173-0000	CANTILEVER	8-75
522308-0000	SIGN	8-91, 12-97, 12-99
522318-0000	ROCKER ARM	1-31, 1-33
522319-0001	SHAFT	1-31, 1-33
522319-0003	SHAFT	1-31, 1-33
522321-0000	FORMING RING	1-31, 1-33
522408-0000	BEARING HOUSING	8-5, 8-7, 8-21, 8-23, 8-25, 8-27, 8-29, 8-31, 8-33
522410-0200	BENDING ROLLER	8-69, 8-71, 8-73
522474-0000	BLOCK L	8-77, 8-79
522475-0000	BLOCK R	8-77, 8-79
522558-0000	ROCKER ARM	1-31, 1-33
525000-0200	FOLDING PART RIGHT OUT	5-3, 5-5
525001-0000	FOLDING BAR	5-25, 5-27, 5-41, 5-43, 5-45, 5-47
525002-0000	FOLDING BAR	5-41, 5-43, 5-45, 5-47
525003-0000	FOLDING BAR	5-25, 5-27, 5-41, 5-43, 5-45, 5-47
525004-0000	FOLDING BAR	5-41, 5-43, 5-45, 5-47
525005-0002	FOLDING BAR	5-41, 5-43, 5-45, 5-47
525005-0004	FOLDING BAR	5-41, 5-43, 5-45, 5-47
525005-0005	FOLDING BAR	5-41, 5-43, 5-45, 5-47
525005-0006	FOLDING BAR	5-41, 5-43, 5-45, 5-47
525005-0008	FOLDING BAR	5-41, 5-43, 5-45, 5-47
525006-0002	FOLDING BAR	5-41, 5-43, 5-45, 5-47
525006-0004	FOLDING BAR	5-41, 5-43, 5-45, 5-47
525006-0005	FOLDING BAR	5-41, 5-43, 5-45, 5-47

Part No	Description	Page No
525006-0006	FOLDING BAR	5-41, 5-43, 5-45, 5-47
525006-0008	FOLDING BAR	5-41, 5-43, 5-45, 5-47
525007-0001	CANTILEVER	5-41, 5-43, 5-45, 5-47
525007-0002	CANTILEVER	5-25, 5-27, 5-41, 5-43, 5-45, 5-47
525007-0003	CANTILEVER	5-41, 5-43, 5-45, 5-47
525008-0001	BRACKET	5-25, 5-27, 5-41, 5-43, 5-45, 5-47
525008-0002	BRACKET	5-41, 5-43, 5-45, 5-47
525008-0003	BRACKET	5-41, 5-43, 5-45, 5-47
525011-0001	BRACKET	5-41, 5-43, 5-45, 5-47
525011-0002	BRACKET	5-41, 5-43, 5-45, 5-47
525011-0004	BRACKET	5-41, 5-43, 5-45, 5-47
525011-0005	BRACKET	5-41, 5-43, 5-45, 5-47
525011-0006	BRACKET	5-41, 5-43, 5-45, 5-47
525011-0008	BRACKET	5-41, 5-43, 5-45, 5-47
525012-0001	COUNTER PLATE	5-41, 5-43, 5-45, 5-47
525012-0002	COUNTER PLATE	5-41, 5-43, 5-45, 5-47
525012-0004	COUNTER PLATE	5-41, 5-43, 5-45, 5-47
525012-0005	COUNTER PLATE	5-41, 5-43, 5-45, 5-47
525014-0002	COUNTER PLATE	5-41, 5-43, 5-45, 5-47
525015-0001	SCREW	5-41, 5-43, 5-45, 5-47
525015-0002	SCREW	5-25, 5-27, 5-41, 5-43, 5-45, 5-47
525015-0003	SCREW	5-41, 5-43, 5-45, 5-47
525016-0000	FASTENING PLATE	5-25, 5-27, 5-41, 5-43, 5-45, 5-47
525017-0000	STEERING GUIDE	5-25, 5-27, 5-41, 5-43, 5-45, 5-47
525018-0000	51SPACER	5-25, 5-27, 5-41, 5-43, 5-45, 5-47
525019-0000	BRACKET	5-25, 5-27, 5-41, 5-43, 5-45, 5-47
525038-0000	GABLE PLATE	5-115
525039-0000	GABLE PLATE	5-115
525046-0000	GASKET	5-57
525047-0000	GASKET	5-57
525051-0000	HEAD PLATE	5-115
525052-0001	SPACER	5-115
525052-0002	SPACER	5-115
525052-0003	SPACER	5-115
525052-0004	SPACER	5-115
525052-0005	SPACER	5-115
525052-0006	SPACER	5-115
525053-0000	PLATE (CIRCULAR)	5-23, 5-39
525054-0000	SIDE PLATE	5-39
525055-0000	BRACKET	5-97
525063-0000	BOTTOM	5-145, 5-147, 5-149, 5-151, 5-153, 5-155
525066-0000	SHEET	5-137, 5-139, 5-141, 5-143
525067-0000	SHEET	5-137, 5-139, 5-141, 5-143
525068-0000	SHEET	5-137, 5-139, 5-141, 5-143
525069-0000	SHEET	5-137, 5-139, 5-141, 5-143
525070-0000	ELECTRICAL CONNECTION	5-69, 5-71, 5-77, 5-79
525071-0000	SPACER PIECE	5-69, 5-71
525073-0000	COVER	5-69, 5-71, 5-77, 5-79
525074-0000	ARM	5-119
525075-0001	LINK	5-119
525075-0002	LINK	5-119
525075-0003	LINK	5-119
525075-0005	LINK	5-119
525075-0006	LINK	5-119
525077-0000	AXLE PIN	5-119
525078-0000	BRACKET	5-119
525079-0000	BRACKET	5-119
525080-0000	BRACKET	5-119
525081-0000	BRACKET	5-119
525082-0000	BRACKET	5-119
525083-0000	BRACKET	5-119
525084-0000	HEAD PLATE	5-119
525085-0200	LUBRICATING SYSTEM	5-3, 5-5
525086-0200	CONVEYING EQUIPMENT	5-81, 5-83
525087-0100	DROP	5-81, 5-83
525088-0200	DISCHARGE CHUTE	5-81, 5-83
525089-0100	CHAIN RIGHT	5-81, 5-83
525090-0100	CHAIN LINKS	5-81, 5-83
525091-0100	CHAIN	5-81, 5-83
525092-0100	CHAIN GUARD	5-81, 5-83
525100-0000	BLOCKING PIECE	5-133, 5-135
525101-0001	BLOCKING PIECE	5-133, 5-135
525101-0002	BLOCKING PIECE	5-133, 5-135
525102-0200	LUBRICATING SYSTEM	5-57
525109-0000	BRACKET	5-17
525110-0100	CABLE CONDUIT	5-7, 5-9, 5-35, 5-37
525117-0300	INDEXING GEAR	5-121
525125-0000	PIN	5-133, 5-135
525128-0100	FF-ELEMENT R	5-3, 5-5
525129-0100	ELEMENT	5-3, 5-5
525130-0000	LEG	5-7, 5-9, 5-35, 5-37
525132-0000	CABLE TRENCH	5-7, 5-9, 5-35, 5-37
525134-0000	SPACER PIECE	5-77, 5-79
525135-0000	PLATE	5-13

Part No	Description	Page No
525136-0000	SHAFT	5-19
525138-0000	SHEET	5-29, 5-49, 5-51
525140-0000	HOLDER	5-29, 5-49, 5-51
525143-0200	BOTTOM VALVE	5-7, 5-9, 5-35, 5-37
525147-0000	BRACKET	5-117
525150-0000	GABLE PLATE	5-115
525151-0000	GABLE PLATE	5-115
525164-0000	STEERING	5-117
525166-0000	MOTOR CRADLE	5-21
525169-0000	SIDE PLATE	5-39
525170-0000	SIDE PLATE	5-39
525171-0001	BRACKET	5-23, 5-39
525171-0002	BRACKET	5-39
525172-0000	SPACER	5-129, 5-131
525173-0000	CANTILEVER	5-67
525174-0000	BRACKET	5-7, 5-9, 5-35, 5-37
525175-0000	BRACKET	5-7, 5-9, 5-35, 5-37
525178-0000	BRACKET	5-25, 5-27, 5-41, 5-43, 5-45, 5-47
525179-0001	FOLDING ARM	5-41, 5-43, 5-45, 5-47
525179-0002	FOLDING ARM	5-41, 5-43, 5-45, 5-47
525180-0001	FOLDING ARM	5-41, 5-43, 5-45, 5-47
525180-0002	FOLDING ARM	5-41, 5-43, 5-45, 5-47
525181-0000	WASHER	5-25, 5-27, 5-41, 5-43, 5-45, 5-47
525182-0001	COUNTER PLATE	5-41, 5-43, 5-45, 5-47
525185-0000	HATCH	5-57
525194-0000	SPROCKET	5-29, 5-49, 5-51
525195-0000	WASHER	5-29, 5-49, 5-51
525197-0000	BLOW-OFF NOZZLE TR	5-69, 5-71, 5-77, 5-79
525198-0000	BLOW-OFF NOZZLE TL	5-69, 5-71, 5-77, 5-79
525200-0000	BRACKET	5-29, 5-49, 5-51
525208-0001	CARRIER	5-113
525208-0002	CARRIER	5-113
525208-0003	CARRIER	5-113
525211-0000	PLATE	5-137, 5-139, 5-141, 5-143
525212-0000	PLATE	5-137, 5-139, 5-141, 5-143
525213-0200	INFEEDER	5-3, 5-5
525215-0006	TIMING BELT PULLEY	5-17
525216-0000	SLEEVE	5-17
525232-0000	BRACKET	5-17
525233-0000	GASKET 16X2X6MM	5-73, 5-75
525234-0002	PLATE	5-137, 5-139, 5-141, 5-143
525235-0000	CURVE	5-121
525242-0000	BRACKET	5-101, 5-103
525243-0000	PROFILE	5-101, 5-103
525244-0000	PROFILE	5-101, 5-103
525245-0000	PROFILE	5-101, 5-103
525246-0000	PROFILE	5-101, 5-103
525247-0000	PROFILE	5-101, 5-103
525248-0000	PROFILE	5-101, 5-103
525252-0000	BEARING	5-23, 5-39
525255-0000	HEAD PLATE	5-117
525256-0000	HEAD PLATE	5-117
525262-0000	COVERING PLATE	5-7, 5-9, 5-35, 5-37
525265-0001	LEAD PLATE	5-31
525265-0002	LEAD PLATE	5-31
525265-0003	LEAD PLATE	5-31
525265-0004	LEAD PLATE	5-31
525266-0000	LEG	5-7, 5-9, 5-35, 5-37
525267-0000	LEG	5-7, 5-9, 5-35, 5-37
525268-0000	LEG	5-7, 5-9, 5-35, 5-37
525269-0000	PIPE	5-15
525270-0000	PIPE	5-15
525271-0000	ELBOW PIPE	5-7, 5-9, 5-35, 5-37
525272-0000	STRUT	5-7, 5-9, 5-35, 5-37
525273-0000	STRUT	5-7, 5-9, 5-35, 5-37
525274-0000	FINISH FRAME	5-7, 5-9, 5-35, 5-37
525275-0000	COVERING PLATE	5-7, 5-9, 5-35, 5-37
525276-0000	HOUSE	5-57
525277-0000	CABLE TRENCH	5-7, 5-9, 5-35, 5-37
525278-0000	CLEANING TROUGH	5-35, 5-37
525279-0000	HATCH	5-121
525280-0000	SHEET	5-7, 5-9, 5-35, 5-37
525281-0000	GASKET	5-7, 5-9, 5-35, 5-37
525292-0000	BRACKET	5-121
525293-0000	PIPE	5-121
525294-0000	PIPE	5-121
525295-0000	ARM	5-25, 5-27, 5-41, 5-43, 5-45, 5-47
525296-0000	BRACKET	5-25, 5-27, 5-41, 5-43, 5-45, 5-47
525297-0000	BRACKET	5-41, 5-43, 5-45, 5-47
525298-0000	SPROCKET	5-33, 5-53, 5-55
525299-0000	SHAFT	5-33, 5-53, 5-55
525300-0000	MACHINE BODY	5-53, 5-55
525301-0000	ARM	5-29, 5-49, 5-51
525302-0000	ARM	5-49, 5-51

Part No	Description	Page No
525303-0000	ARM	5-49, 5-51
525304-0000	ARM	5-29, 5-49, 5-51
525305-0000	DISTRIBUTOR	5-49, 5-51
525307-0000	DISTRIBUTOR	5-49, 5-51
525308-0000	DISTRIBUTOR	5-49, 5-51
525309-0000	DISTRIBUTOR	5-49, 5-51
525310-0000	BRACKET	5-29, 5-49, 5-51
525312-0000	SHAFT	5-29, 5-49, 5-51
525315-0000	SLIDER	5-29, 5-49, 5-51
525317-0000	FITTING BOLT	5-29, 5-49, 5-51
525320-0100	CHAIN GUARD	5-29, 5-49, 5-51
525321-0000	SCREW	5-25, 5-27, 5-41, 5-43, 5-45, 5-47
525322-0001	LEAD RAIL	5-53, 5-55
525322-0002	LEAD RAIL	5-53, 5-55
525322-0003	LEAD RAIL	5-53, 5-55
525323-0000	BRACKET	5-53, 5-55
525324-0000	PROFILE	5-33, 5-53, 5-55
525325-0200	DISCHARGER	5-3, 5-5
525326-0000	CHAIN GUARD	5-31
525327-0000	CHAIN GUARD	5-31
525328-0000	CHAIN GUARD	5-31
525329-0000	SLEEVE	5-145, 5-147, 5-149, 5-151, 5-153, 5-155
525330-0000	SHAFT	5-145, 5-147, 5-149, 5-151, 5-153, 5-155
525331-0000	SHIM	5-61
525332-0000	SHIM	5-61
525334-0000	BRACKET	5-89, 5-91, 5-101, 5-103
525335-0000	HOUSE	5-133, 5-135
525337-0000	BRACKET	5-17
525338-0000	SPACER	5-99, 5-115
525339-0000	COVERING PLATE	5-115
525340-0000	BRACKET	5-25, 5-27, 5-41, 5-43, 5-45, 5-47
525341-0001	LEAD RAIL	5-41, 5-43, 5-45, 5-47
525341-0002	LEAD RAIL	5-41, 5-43, 5-45, 5-47
525346-0000	SIDE PLATE	5-7, 5-9, 5-35, 5-37
525347-0000	SLIDE RAIL	5-129, 5-131
525348-0000	SLIDE RAIL	5-129, 5-131
525349-0000	SLIDE RAIL	5-129, 5-131
525351-0000	SLIDE RAIL	5-129, 5-131
525352-0000	SLIDE RAIL	5-129, 5-131
525353-0000	SLIDE RAIL	5-129, 5-131
525356-0000	SLIDE RAIL	5-129, 5-131
525357-0000	SPACER	5-129, 5-131
525358-0000	BRACKET	5-67
525359-0000	ADJUSTER	14-5
525360-0000	BRACKET	5-41, 5-43, 5-45, 5-47
525363-0002	SHAFT	5-89, 5-91
525367-0000	SLEEVE	5-133, 5-135
525368-0000	BOTTOM	5-145, 5-147, 5-149, 5-151, 5-153, 5-155
525369-0000	BOTTOM	5-145, 5-147, 5-149, 5-151, 5-153, 5-155
525370-0000	BOTTOM	5-145, 5-147, 5-149, 5-151, 5-153, 5-155
525373-0000	BOTTOM	5-145, 5-147, 5-149, 5-151, 5-153, 5-155
525374-0000	CARRIER	5-33, 5-53, 5-55
525375-0000	OIL PIPE	5-67
525376-0000	BOW CLAMP	5-67
525377-0000	HATCH	5-57
525379-0000	COMPRESSION SPRING	5-133, 5-135
525380-0000	HATCH	5-159
525381-0000	BRACKET	5-159
525382-0000	SHAFT	5-159
525383-0000	BRACKET	5-159
525384-0000	DOWEL	5-159
525385-0000	BRACKET	8-51, 8-53
525394-0000	HINGE	5-159
525400-0000	SHAFT	5-89, 5-91, 5-101, 5-103
525401-0000	SHAFT	5-101, 5-103
525402-0000	SHAFT	5-89, 5-91, 5-101, 5-103
525403-0000	PROFILE	5-101, 5-103
525404-0000	PROFILE	5-101, 5-103
525405-0000	PROFILE	5-101, 5-103
525406-0000	PROFILE	5-101, 5-103
525408-0000	HEAD PLATE	5-129, 5-131
525409-0000	WASTE CHUTE	5-159
525410-0000	LEAD RAIL	5-41, 5-43, 5-45, 5-47
525411-0000	PROFILE	5-33, 5-53, 5-55
525412-0000	RULER	5-33, 5-53, 5-55
525413-0000	LEAD RAIL	5-53, 5-55
525414-0000	CARRIER	5-53, 5-55
525416-0000	STOP	5-119
525417-0000	STEERING	5-49, 5-51
525418-0000	HOLDER	5-49, 5-51
525419-0000	LEAD RAIL	5-101, 5-103
525423-0000	COVERING PLATE	5-159
525424-0000	HEAD PLATE	5-129, 5-131
525425-0000	PROFILE	5-101, 5-103

Part No	Description	Page No
525426-0000	PROFILE	5-101, 5-103
525427-0000	PROFILE	5-101, 5-103
525428-0000	PROFILE	5-101, 5-103
525429-0000	PLATE	5-137, 5-139, 5-141, 5-143
525431-0000	CARRIER	5-105, 5-107
525432-0000	CARRIER	5-109, 5-111
525437-0000	ARCH	5-53, 5-55
525439-0000	DRIP PLATE	5-159
525445-0000	HUB	5-151, 5-153, 5-155
525446-0000	HUB	5-145, 5-147, 5-149
525449-0000	HUB	5-151, 5-153, 5-155
525450-0000	HUB	5-145, 5-147, 5-149
525451-0000	FLAP	5-145, 5-147, 5-149, 5-151, 5-153, 5-155
525453-0000	FLAP	5-145, 5-147, 5-149, 5-151, 5-153, 5-155
525455-0000	FLAP	5-145, 5-147, 5-149, 5-151, 5-153, 5-155
525456-0000	FLAP	5-145, 5-147, 5-149, 5-151, 5-153, 5-155
525459-0000	FLAP	5-145, 5-147, 5-149, 5-151, 5-153, 5-155
525461-0000	SPACER PIECE	5-145, 5-147, 5-149, 5-151, 5-153, 5-155
525465-0000	BRACKET	5-119
525466-0000	ARCH	5-53, 5-55
526582-0000	NET	7-9
526677-0000	CANTILEVER	4-97, 4-99
526680-0000	FENDER WALING	8-41
526690-0000	SHAFT	13-41
526691-0000	ROLL	13-41
526904-0000	LINK HEAD	3-41, 3-43
526933-0400	BOTTOM PLATE TB/8	7-3, 7-5
526934-0200	HOSE & PIPE ASSEMBLY TB/8	7-3, 7-5
526935-0000	PLATE	12-67, 12-69, 12-71, 12-73
526947-0000	MOUNTING SHEET	7-35
526948-0000	MOUNTING SHEET	7-37, 7-39
526949-0000	CANTILEVER	4-97, 4-99
526954-0100	START-UP KIT	7-3, 7-5
526974-0000	PIPE	7-7
526984-0000	SADDLE	8-13, 8-15
526985-0000	PLATE	8-13, 8-15
526986-0001	SHAFT	8-13, 8-15
526999-0000	FASTENING BRACKET	12-113
527648-0000	WASHER	3-37, 3-39
527649-0000	DISTANCE RUBBER	8-13, 8-15
527776-0000	LID	12-97, 12-99
527777-0000	BUSHING	12-97, 12-99
527794-0000	BOLT	12-97, 12-99
527803-0000	CARRIER	4-93
527804-0000	CARRIER	4-95
527864-0001	TEMPLATE	14-31
527864-0003	TEMPLATE	14-31
527864-0004	TEMPLATE	14-31
527864-0006	TEMPLATE	14-31
527864-0007	TEMPLATE	14-31
527864-0008	TEMPLATE	14-31
527864-0010	TEMPLATE	14-31
527869-0100	TEMPLATE FOR WHEELS	14-5
529278-0100	SEAL KIT	12-107
529279-0100	SEAL KIT	12-101
529312-0000	HEAD PLATE	5-129, 5-131
529313-0000	ROD	12-133
529314-0000	CANTILEVER	12-133
529331-0000	COVERING PLATE	5-35, 5-37
529348-0000	BACK PIECE, WALL	12-49
529362-0000	SPROCKET	8-13, 8-15
529401-0000	SPRING	7-29, 12-61, 12-63
529402-0000	BRACKET	12-61, 12-63
529403-0000	BRACKET	12-61, 12-63
529455-0000	PLATE	8-61, 8-63, 8-65
529456-0000	PLATE	8-61, 8-63, 8-65
529476-0000	SIDE GUARD	8-51, 8-53
529478-0000	HEAD PLATE	5-129, 5-131
529498-0000	SIDE GUARD RIGHT	8-51, 8-53
530458-0000	RULER	14-37
530485-0001	PILLAR	12-43
530485-0002	PILLAR	12-43
530518-0000	SPACER	12-43
530519-0000	BACK PIECE, FLOOR	12-49
530556-0000	JUNCTION PIPE UPPER	2-23, 2-79
530565-0000	PILLAR	1-55
530589-0000	SEAL RING	1-41, 1-63
530590-0000	VALVE CONE	1-63
530592-0000	SEAL RING HOLDER	1-63
530595-0000	SEAL RING HOLDER	1-63
530603-0000	BEAM	12-43
530619-0100	LS STRIP SMALL HUB	12-3
530620-0000	HUB	12-117
530626-0000	SHAFT	12-117

Part No	Description	Page No
530708-0000	ARM	3-35
530713-0000	FORK	1-31, 1-33
530716-0000	CYLINDER BRACKET	1-31, 1-33
530718-0000	BUSHING	1-31, 1-33
530719-0000	BUSHING	1-31, 1-33
530745-0400	SIDE GUARD	8-3
530754-0000	FASTENING BRACKET	3-31, 3-33
530755-0000	SCREW	3-31, 3-33
530765-0000	PILLAR	12-97, 12-99
530766-0001	SHAFT	1-31, 1-33
530771-0001	FLANGE	12-67, 12-69, 12-71, 12-73
530771-0002	FLANGE	12-53, 12-55
530772-0000	FLANGE	12-53, 12-55, 12-67, 12-69, 12-71, 12-73
530775-0000	END PIECE	12-45
530776-0000	PAPER GUARD	12-45
530777-0000	GRILL	12-45
530778-0000	LACE	8-85, 8-87
530784-0000	PIPE CLAMP	12-45
530785-0000	PAPER GUARD	12-45
531109-0000	VOLUME CAM	4-101, 4-103, 4-105, 4-107
531110-0000	RAIL BRACKET	4-101, 4-103, 4-105, 4-107
531116-0000	GASKET	5-15
531119-0000	STRAINER	5-7, 5-9, 5-35, 5-37
531139-0000	CANTILEVER	12-35, 12-43, 12-49
531182-0000	CANTILEVER	2-37, 2-39, 2-41
531189-0000	GASKET	5-15
531310-0000	HEAD PLATE	5-129, 5-131
531312-0000	HEAD PLATE	5-129, 5-131
531337-0000	MACHINE BODY	8-55
531345-0200	PERSONAL PROTECT. EQ H2O2	10-3
531365-0000	BRACKET	2-37, 2-39, 2-41, 2-85, 2-87
531366-0300	COMPL EQUIP F JUMBO REEL	12-15
531599-0000	PLATE,UPPER	12-123
531600-0000	PLATE,LOWER	12-123
531601-0000	PLATE,UPPER	12-123
531602-0000	PLATE,LOWER	12-123
531603-0000	PLATE,UPPER	12-123
531604-0000	PLATE,LOWER	12-123
531606-0000	TUB	12-119
531608-0000	YOKE	12-119
531609-0000	BRACKET	12-119
531610-0000	SCREW	12-119
531611-0000	PROTECTION	12-119
531616-0000	HOLDER	2-63, 2-65, 2-97, 2-99
531730-0000	FLANGE SEAL	5-69, 5-71, 5-77, 5-79, 13-177
531733-0000	GASKET	1-35, 7-27, 7-37, 7-39
531734-0000	GASKET	1-35, 7-27, 7-37, 7-39
531735-0000	GASKET	7-27, 7-37, 7-39
531736-0000	GASKET	1-35, 7-27, 7-37, 7-39
531741-0000	GASKET	1-31, 1-33
531761-0000	HOLDER	2-63, 2-97
531885-0000	STEERING	8-75
531886-0000	PROTECTION PLATE	8-69, 8-71, 8-73
531887-0000	PROTECTION PLATE	8-69, 8-71, 8-73
532024-0000	GASKET	8-55
532026-0000	SEAL COVER	8-55
532082-0000	ROUND NUT	8-5, 8-7, 8-21, 8-23, 8-25, 8-27, 8-29, 8-31, 8-33
532083-0000	ROUND NUT	8-5, 8-7, 8-21, 8-23, 8-25, 8-27, 8-29, 8-31, 8-33
532117-0000	CLAMP RING	1-61
532151-0300	CONNECTION BOX	8-61, 8-63, 8-65
532276-0000	PIPE	1-55
532277-0000	PIPE	1-55
532278-0000	PIPE	1-55
532279-0000	PIPE	1-55
532280-0000	PIPE	1-55
532281-0001	PIPE	1-55
532281-0002	PIPE	1-55
532282-0000	PIPE	1-55
532283-0000	PIPE	1-55
532315-0001	PIPE	1-55
532315-0002	PIPE	1-55
532316-0000	PIPE	1-55
532317-0000	PIPE	1-55
532318-0000	CATCH GUARD RIGHT	2-125
532319-0000	CATCH GUARD LEFT	2-125
532371-0000	STOP LUG	2-9, 2-69
532718-0000	VOLUMEN FLAP	4-53, 4-55, 12-205, 12-207
532719-0001	FEEDING ROLLER	8-21, 8-23, 8-25, 8-27, 8-29, 8-31, 8-33
532719-0002	FEEDING ROLLER	8-5, 8-7
532720-0000	CLAMPING ELEMENT	1-17, 1-19, 1-21
532722-0100	SUPPORT ROLLERS	1-3
532723-0000	CANTILEVER	1-11
532724-0000	ROLL	1-11
532725-0000	SHAFT	1-11

Part No	Description	Page No
532726-0100	BENDING ROLLERS	1-3
532727-0000	MOUNTING SHEET	1-5
532728-0000	MOUNTING SHEET	1-5
533003-0100	TIGHTNESS TESTER	12-3
533004-0100	PNEUMATIC PANEL	12-119
533169-0000	DIAPHRAGM	1-41, 1-63
533426-0000	STOP PLATE	2-65, 2-99
533428-0000	HATCH	2-181
533441-0000	VOLUME FLAP	4-53, 4-55, 12-205, 12-207
533446-0000	FILLER TUBE	1-17, 1-19, 1-21
533449-0001	BENDING ROLLER	8-21, 8-23, 8-25, 8-27, 8-29, 8-31, 8-33
533449-0002	BENDING ROLLER	8-5, 8-7
533453-0000	LID	8-21, 8-23, 8-25, 8-27, 8-29, 8-31, 8-33
533454-0000	FRAME	8-21, 8-23, 8-25, 8-27, 8-29, 8-31, 8-33
533457-0001	SHAFT	8-21, 8-23, 8-25, 8-27, 8-29, 8-31, 8-33
533457-0002	SHAFT	8-5, 8-7
533458-0000	WASHER	8-5, 8-7, 8-21, 8-23, 8-25, 8-27, 8-29, 8-31, 8-33
533459-0000	SCREW	8-5, 8-7, 8-21, 8-23, 8-25, 8-27, 8-29, 8-31, 8-33
533460-0000	TEMPLATE	14-5
533818-0000	HOLDER	4-33, 4-35, 4-37, 4-39, 4-41, 4-43, 4-131, 4-133, 4-135, 4-137
533886-0000	CRAMP	4-33, 4-35, 4-37, 4-39, 4-41, 4-43
533888-0000	CRAMP	4-33, 4-35, 4-37, 4-39, 4-41, 4-43
533894-0000	CARRIER	4-93
533895-0000	CARRIER	4-95
533896-0000	JUNCTION BLOCK	4-73
533901-0000	FRAME	12-143
533902-0000	BRACKET	12-143
533908-0000	CANTILEVER	12-145
533955-0000	CURVE	4-101, 4-103, 4-105, 4-107
534486-0000	PIPE HOLDER	2-9
534875-0000	NIPPLE	12-97, 12-99
534878-0000	SHAFT	2-11, 2-25, 2-53, 2-55, 2-59, 2-61
534879-0000	BEARING HOUSING	2-11, 2-25, 2-53, 2-55, 2-59, 2-61
534880-0000	END SECTION	2-11, 2-25, 2-53, 2-55, 2-59, 2-61
534882-0000	SHAFT	12-45
535016-0000	FORCE SPRING	2-23, 2-79
535017-0000	BRACKET	2-23, 2-79
535200-0000	HOLDER	4-97, 4-99
535608-0000	GASKET	7-9
535623-0000	BRANCH PIPE	7-9
535624-0000	INNER PIPE	7-9
536387-0000	COMPRESSION SPRING	12-97, 12-99
536398-0000	PIPE	12-97, 12-99
536421-0000	CUTTING JAW	4-77, 4-79, 4-85, 4-87
536703-0000	SHAFT	3-41, 3-43
536704-0000	WASHER	4-33, 4-35, 4-37, 4-39, 4-41, 4-43, 4-131, 4-133, 4-135, 4-137
536705-0000	BRACKET	4-33, 4-35, 4-37, 4-39, 4-41, 4-43
536913-0000	HUB	7-25
536916-0000	AXLE PIN	7-17
536917-0000	AXLE PIN	7-21, 7-23
536978-0000	CUTTING JAW	4-77, 4-79, 4-85, 4-87
536979-0000	CUTTING JAW	4-77, 4-79, 4-85, 4-87
536980-0000	SCREW	4-77, 4-79, 4-85, 4-87
536988-0001	SHAFT	1-43, 1-45
536988-0002	SHAFT	1-43, 1-45
536989-0000	ROLL	1-43, 1-45
536990-0100	MOVABLE FORMING RING	1-3
536991-0000	ROLL	1-43, 1-45
536992-0000	ROLL	1-43, 1-45
536993-0000	ROLL	1-43, 1-45
536994-0000	ROLL	1-43, 1-45
536995-0000	ROLL	1-43, 1-45
537297-0000	ROLL	1-43, 1-45
537298-0000	BOW CLAMP	1-43, 1-45
537300-0101	CEILING PASSAGE	12-15
537301-0100	GUILLOTINE	12-21
537302-0000	FRAME	12-33
537303-0000	HATCH	12-33
537304-0000	KNIFE HOLDER	12-33
537305-0000	DOLLY	12-33
537306-0000	STEERING	12-33
537307-0000	FASTENING BRACKET	12-33
537308-0000	SPRING	8-9, 8-39, 12-57, 12-75
537309-0000	HANDLE	12-33
537310-0000	CANTILEVER	12-29
537311-0100	INSPECTIONDOOR UPPER	12-29
537312-0000	DOOR	12-31
537313-0100	COVER UPPER	12-21
537314-0100	COVER LOWER	12-21
537315-0100	INSPECTIONSDOOR , LOWER	12-23
537316-0000	DOOR	12-27
537317-0000	COVER	12-23
537318-0000	COVER	12-23
537319-0000	COVER	12-29

Part No	Description	Page No
537320-0000	MOUNTING SHEET	12-23
537321-0000	LOCKING FINGER	12-33
537327-0000	SHAFT	7-25
537329-0100	HUB JUMBO	7-17
537383-0000	SHAFT	8-17
537384-0000	SHAFT	8-17
537388-0000	HOLDER	8-17
537389-0000	SECURING PLATE	8-17
537918-0000	PIPE	2-23
537919-0000	PIPE HOLDER	2-23
538236-0002	MACHINE BODY	8-5, 8-7
538237-0001	LID	8-5, 8-7
538238-0000	FRAME	8-5, 8-7
538239-0000	HEAD PLATE	8-5, 8-7
538240-0000	COMPRESSION SPRING	12-33
538241-0002	SPACER	8-21, 8-23, 8-25, 8-27, 8-29, 8-31, 8-33
538241-0003	SPACER	8-21, 8-23, 8-25, 8-27, 8-29, 8-31, 8-33
538241-0004	SPACER	8-21, 8-23, 8-25, 8-27, 8-29, 8-31, 8-33
538245-0000	SHIM	2-37, 2-39, 2-41, 2-85, 2-87
538248-0200	DATING UNIT	8-3
538255-0000	COVER	12-23
538399-0000	SHAFT	4-33, 4-35, 4-37, 4-39, 4-41, 4-43, 4-131, 4-133, 4-135, 4-137
538400-0000	ARM LEFT	4-135, 4-137
538401-0000	ARM RIGHT	4-131, 4-133
539052-0000	KNIFE HOLDER	8-69, 8-71, 8-73
539173-0000	SPACER PIPE	12-117
539180-0000	CANTILEVER	8-17
539181-0000	PIPE	8-17
539182-0000	PLATE	8-17
539183-0000	PROTECTION PLATE	8-17
539185-0000	HOLDER	8-17
539186-0000	RING	8-17
539187-0001	GEAR WHEEL	8-19
539187-0002	GEAR WHEEL	8-19
539209-0100	A-CYLINDER	1-59
539338-0000	CAP	8-5, 8-7, 8-21, 8-23, 8-25, 8-27, 8-29, 8-31, 8-33
539340-0100	BASE TO ASU	12-127
539344-0000	PAPER GUIDE PLATE	12-23
539613-0000	SPREADER	2-157
540331-0000	CLAMP RIGHT	4-73
540332-0000	CRAMP	4-73
540334-0000	RUBBER RING	4-73
540335-0000	LINK	3-41, 3-43
540718-0000	ELBOW PIPE JOINT	2-35, 12-165, 13-15, 13-95
540719-0000	WHEEL	8-17
540721-0000	CABLE DUCT	2-21, 2-77, 2-117, 2-119, 13-27
540722-0000	LID	2-21, 2-77, 2-117, 2-119, 13-27
540723-0100	CONNECTION BOX	2-37, 2-39, 2-41
540724-0000	CONNECTION BOX	2-45
540725-0000	FRONT PLATE, LOWER	2-37, 2-39, 2-41
540726-0000	HOOK HOLDER	2-37, 2-39, 2-41, 2-85, 2-87
540727-0000	FASTENING BRACKET	2-37, 2-39, 2-41, 2-85, 2-87
540869-0000	SHEET	7-17
540870-0000	ARM	7-21, 7-23
540949-0000	SHAFT	3-11, 3-21, 13-11
541009-0000	CRANK HOLDER	2-177
541057-0000	ARM	7-21, 7-23
541064-0000	FORK	7-21, 7-23
541065-0000	SHAFT	7-21, 7-23
541066-0000	ROLL	7-21, 7-23
541067-0000	SPRING BRACKET	7-21, 7-23
541068-0000	SPRING HOLDER	7-17
541069-0000	SPRING BRACKET	7-21, 7-23
541070-0000	SHAFT	7-21, 7-23
541152-0000	CABLE	4-73
541163-0100	CLAMP RING	1-59
541165-0000	WASHER	1-61
541166-0000	WASHER	1-63
541167-0000	SPACER SLEEVE	1-63
541172-0000	SET SCREW	7-17
541173-0000	STOP	7-17
541188-0200	BAR CODE	4-3, 4-5
541204-0000	VOLUME BULGE	4-53, 4-55, 12-205, 12-207
541559-0100	SEAL KIT	1-39
541697-0000	CATCH	4-65, 4-67, 4-69, 4-71
541751-0000	CONICAL BOBBIN	7-25
541981-0000	PLATE,UPPER	12-123
541982-0000	PLATE,LOWER	12-123
541983-0000	PLATE,UPPER	12-123
541984-0000	PLATE,LOWER	12-123
541991-0000	SPACER PLATE	12-119
542063-0000	FLANGE	3-11, 3-21, 13-11
542090-0000	HEAT GUARD	7-41
542262-0000	CRANK	3-27

Part No	Description	Page No
542269-0000	SPACER	7-29
542546-0000	BUSBAR	4-93
542547-0000	BUSBAR	4-95
542548-0000	BUSBAR	4-93
542549-0000	BUSBAR	4-95
542550-0000	BUSBAR	4-93
542551-0000	BUSBAR	4-95
542552-0000	BUSBAR	4-93
542553-0000	BUSBAR	4-95
542554-0000	BUSBAR	4-93
542555-0000	BUSBAR	4-95
542556-0000	BUSBAR	4-93
542557-0000	BUSBAR	4-95
542558-0000	BRACKET	4-93
542559-0000	BRACKET	4-95
542560-0000	CRAMP	4-93, 4-95
542561-0000	CRAMP	4-93, 4-95
542695-0000	COVERPLATE R	2-185
542697-0000	COVER PLATE L	2-159, 2-161
542700-0000	VALVEPANEL LOWER	2-149, 2-151
542706-0000	PIPE	2-57, 2-95
542781-0000	ARM	7-19
542782-0000	AXLE PIN	7-19
542784-0000	LINK ARM	7-19
542785-0000	ROLL	7-19
542786-0000	FLAG	7-19
542849-0000	CANTILEVER	1-7, 1-9
542850-0000	COVERING PLATE	1-7, 1-9
542853-0001	PAPER GUARD	1-7, 1-9
542853-0002	PAPER GUARD	1-7, 1-9
542854-0000	COVERING PLATE	1-7, 1-9
542855-0000	BRACKET	1-7, 1-9
542860-0000	COVER PLATE	2-65
542902-0100	DRIVE BRAKE	8-3
542904-0100	WORM GEAR MOTOR	8-17
543125-0000	ANGLE	7-17
543126-0000	STOP LUG	7-17
543127-0000	BRACKET	2-149, 2-151
543128-0000	VALVE BRACKET	2-149, 2-151
543130-0000	BRACKET	2-149, 2-151
543131-0000	BRACKET	2-149, 2-151
543134-0000	PLATE	2-149, 2-151
543135-0000	INK TRANSFER ROLLER	8-9, 8-39, 12-57, 12-75
543137-0002	SPACER	8-21, 8-23, 8-25, 8-27, 8-29, 8-31, 8-33
543137-0003	SPACER	8-21, 8-23, 8-25, 8-27, 8-29, 8-31, 8-33
543139-0000	SPACER	8-5, 8-7
543141-0000	SIGN	8-13, 8-15
543142-0000	SIGN	8-13, 8-15
543143-0100	ADJUSTMENT DEVICE	8-5, 8-7, 8-21, 8-23, 8-25, 8-27, 8-29, 8-31, 8-33
543148-0000	HOOD	2-49, 2-51
543151-0000	CANTILEVER	2-37, 2-39, 2-41
543152-0000	HOSE ATTACHMENT	2-37, 2-39, 2-41
543157-0300	HOLDER	2-129
543476-0000	TROUGH	3-11, 3-21, 13-11
543575-0000	LOCK SHEET	7-19
543701-0000	SHEET	5-137, 5-139, 5-141, 5-143
543702-0000	SHEET	5-137, 5-139, 5-141, 5-143
543705-0000	GEAR WHEEL WIDE	5-125, 5-127
543706-0000	GEAR WHEEL SLIM, INNER	5-125, 5-127
543707-0000	GEAR WHEEL SLIM, OUTER	5-125, 5-127
543818-0000	PROTECTION PLATE	7-17
543819-0000	HINGE	7-17
543820-0000	SPRING	7-21, 7-23
543821-0100	LEVEL PROBE	7-17
543822-0100	BRAKE ARM	7-17
543823-0100	STRIP MAGAZINE	7-3, 7-5
544229-0001	DROP WING	5-117
544229-0002	DROP WING	5-117
544229-0003	DROP WING	5-117
544229-0005	DROP WING	5-117
544290-0000	RAIL	5-137, 5-139, 5-141, 5-143
544292-0000	SHAFT	4-53, 4-55, 12-205, 12-207
544295-0000	FLOAT	1-17, 1-19, 1-21
544318-0000	DISTRIBUTOR	11-17
544340-0000	TEMPLATE	14-41, 14-43
544341-0000	TEMPLATE	14-41, 14-43
544342-0000	RAIL BRACKET	4-101, 4-103, 4-105, 4-107
544343-0000	CANTILEVER	4-97, 4-99
544344-0000	VOLUME FLAP	4-53, 4-55, 12-205, 12-207
544345-0000	VOLUME BULGE	4-53, 4-55, 12-205, 12-207
544346-0000	VOLUME SHIM	4-53, 4-55, 4-61, 4-63, 12-205, 12-207
544351-0000	TEMPLATE	14-29
544352-0000	TEMPLATE	14-29
544353-0000	TEMPLATE	14-29

Part No	Description	Page No
544354-0000	TEMPLATE	14-29
544355-0000	TEMPLATE	14-29
544356-0000	TEMPLATE	14-29
544357-0100	TEMPLATES FLAP SEALING	14-5
544367-0000	SHAFT	8-21, 8-23, 8-25, 8-27, 8-29, 8-31, 8-33
544380-0000	WASTE CHUTE	8-5, 8-7
544480-0000	NUT	2-63, 2-65, 2-97, 2-99
544481-0000	PLATE	2-63, 2-65, 2-97, 2-99
544482-0000	BRACKET	2-63, 2-97
544483-0000	BRACKET	2-65, 2-99
544484-0000	HOLDER	2-63, 2-65, 2-97, 2-99
544486-0000	BEARING UNIT	2-63, 2-65, 2-97, 2-99
544508-0000	BRACKET	2-63, 2-97
544510-0000	BRACKET	2-65
544526-0000	MACHINE PLATE TB	2-167
544533-0000	PLASTIC PEHD 21172-10	2-167
544539-0000	HOUSEMARK REPBY 0574658-0000	2-133, 2-183
544680-0000	SIDE GUARD R	2-63
544681-0000	SIDEGUARD L	2-65
544688-0000	PIPE	2-137, 2-139
544689-0000	PIPE	2-137, 2-139
544690-0000	PIPE	2-137, 2-139
544691-0000	PIPE	2-137, 2-139
544692-0000	PIPE 2-13, 2-15, 2-17, 2-19, 2-71, 2-73, 2-75, 2-101, 2-103, 2-105, 2-107, 2-109, 2-111, 2-113	13-17, 13-19, 13-21, 13-23
544693-0000	PIPE	2-137, 2-139
544694-0000	PIPE	2-137, 2-139
544695-0000	PIPE	2-137, 2-139
544696-0000	PIPE	2-137, 2-139
544697-0000	PIPE 2-13, 2-15, 2-17, 2-19, 2-71, 2-73, 2-75, 2-101, 2-103, 2-105, 2-107, 2-109, 2-111, 2-113	13-17, 13-19, 13-21, 13-23
544702-0000	COVERING PLATE	2-37, 2-39, 2-41
544706-0000	FLANGE	8-5, 8-7, 8-21, 8-23, 8-25, 8-27, 8-29, 8-31, 8-33
544725-0000	AXLE PIN	7-17
544726-0000	AXLE PIN	7-21, 7-23
544727-0000	AXLE PIN	7-17
544730-0000	ROLL	7-15, 7-17, 7-21, 7-23, 13-237
544894-0000	SPRING	1-39, 1-65, 1-67, 1-69
544899-0000	SIDECOVER LEFT FRONT	2-65, 2-99
544900-0000	SIDECOVER RIGHT FRONT	2-63, 2-97
544973-0100	PILLAR	7-3, 7-5
544974-0000	PILLAR	7-15
545099-0200	SIDE GUARD	2-3, 2-5
545100-0200	SIDE GUARD, RIGHT	2-3, 2-5
545107-0000	CHUTE LEFT	2-65, 2-99
545108-0000	CHUTE	2-63, 2-97
545113-0000	SIGN STRIP MAGAZINE	7-17
545125-0000	STOPPER	4-113, 4-115, 12-175, 12-177
545126-0000	STOPPER	4-113, 4-115, 12-175, 12-177
545127-0000	CATCH	4-113, 4-115, 12-175, 12-177
545128-0000	SPRING BRACKET	4-113, 4-115, 12-175, 12-177
545136-0000	CATCH	4-113, 4-115, 12-175, 12-177
545138-0000	CANTILEVER	7-15
545392-0000	CLAMP LEFT	4-73
545409-0000	ARM RIGHT	4-33, 4-35, 4-37
545410-0000	ARM LEFT	4-39, 4-41, 4-43
545651-0000	GUIDE STUD	4-113, 4-115, 12-175, 12-177, 13-81, 13-85, 13-87
545789-0000	HOLDER	4-97, 4-99
546030-0001	CANTILEVER	7-15
546030-0002	CANTILEVER	7-15
546116-0000	CANTILEVER	7-43
546120-0000	CANTILEVER	12-147
546121-0000	RULER	12-147
546122-0000	RULER	12-147
546123-0000	COVERING PLATE	12-147
546124-0000	COVERING PLATE	12-147
546128-0100	BRACKET,COVERPL.TB/TBA/8	12-127
546133-0100	SUPPORT ROLLER	1-3
546134-0000	CANTILEVER	1-13, 1-15
546179-0100	BENDING ROLLER	7-3, 7-5
546180-0100	SPLICE DETECTOR	7-3, 7-5
546231-0100	COVERPLATE ON ASU	12-127
546232-0000	SIDE PLATE	12-145
546233-0000	SIDE PLATE	12-145
546234-0000	TOP COVER	12-145
546235-0000	TOP PLATE	12-145
546236-0000	TOP PLATE	12-145
546237-0000	TOP SUPPORT	12-145
546238-0000	GUSSET PLATE	12-145
546929-0000	FILTER	2-163
547220-0000	CABLE DUCT	2-117, 2-119
547560-0000	MAIN CAM	3-19
547902-0000	BRACKET	2-179
547904-0000	TUBE	2-179

Part No	Description	Page No
547905-0101	COVERING PLATE	12-51
547906-0000	SHELF	2-135
547907-0000	GABLE RIGHT	12-49
547908-0000	GABLE LEFT	12-49
547909-0000	GRILL	12-49
547924-0000	AXLE PIN	7-15
547959-0000	SETTING TEMPLATE	14-5
548336-0000	WASHER	4-97, 4-99
548337-0000	BUSHING	4-97, 4-99
548343-0000	BOTTOM PANEL	2-185
548344-0000	BOTTOM PANEL	2-159, 2-161
548346-0000	FRONT GUARD	2-167
548348-0000	HATCH	2-167
548397-0000	FOLDING BAR	5-41, 5-43, 5-45, 5-47
548398-0000	FOLDING BAR	5-41, 5-43, 5-45, 5-47
548402-0000	SIDE PIPE	5-69, 5-71, 5-77, 5-79
548406-0000	FLAP	5-133, 5-135
548688-0000	GRILL	12-49
548689-0000	GRILL	12-49
548696-0000	SHAFT	8-57, 8-59
548699-0000	SHAFT	8-57, 8-59
548778-0000	LIFTING UNIT	10-23
548794-0000	HEATING JAW	8-69, 8-71, 8-73
549044-0000	DOOR	2-133
549045-0000	HATCH	2-183
549107-0000	FOLDING FLAP CAM	4-49, 4-51
549108-0000	FOLDING FLAP CAM	4-45, 4-47
549109-0000	COUNTER CAM	4-49, 4-51
549110-0000	COUNTER CAM	4-45, 4-47
549207-0000	NIPPLE	12-139
549826-0000	WASHER	8-57, 8-59
549827-0000	LUG	8-57, 8-59
549828-0000	CAP	8-57, 8-59
549830-0000	PROTECTION PLATE	8-55
549832-0000	WASTE CHUTE	8-21, 8-23, 8-25, 8-27, 8-29, 8-31, 8-33
549834-0000	CUTTING RAIL	8-77, 8-79
549835-0000	CUTTING RAIL	8-77, 8-79
550149-0000	FLAP	5-145, 5-147, 5-149, 5-151, 5-153, 5-155
550235-0000	BOTTOM	5-145, 5-147, 5-149, 5-151, 5-153, 5-155
550359-0000	ARM	5-25, 5-27, 5-41, 5-43, 5-45, 5-47
550503-0000	PROTECTION	2-49, 2-51
551281-0000	RAIL BRACKET	4-101, 4-103, 4-105, 4-107
551282-0000	FASTENING PLATE	4-101, 4-103, 4-105, 4-107
551283-0000	CURVE	4-101, 4-103, 4-105, 4-107
551284-0000	VOLUME CAM	4-101, 4-103, 4-105, 4-107
551285-0000	FOLDING FLAP CAM	4-49, 4-51
551286-0000	FOLDING FLAP CAM	4-45, 4-47
551626-0000	VOLUME CAM	4-101, 4-103, 4-105, 4-107
551826-0000	COUNTER CAM	3-19
551903-0000	KICKPLATE,LEFT	10-15, 10-17
551922-0000	LABEL,POTENTIOMETER DESIGN CORR.	9-21, 9-41, 9-61
551997-0100	LIFTING UNIT	10-3
552916-0000	PLATE,UPPER	12-123
552917-0000	PLATE,LOWER	12-123
553162-0000	STOP PLATE	2-65, 2-99
553164-0000	LOW IMPEDANCELITZ L=150MM	2-63, 2-65, 2-97, 2-99
553227-0000	HEAD PLATE	1-37
553228-0000	CONNECTION LS	1-37
553763-0000	ADJUSTING SCREW	8-69, 8-71, 8-73
553770-0001	PRESSURE JAW	8-69, 8-71, 8-73
553770-0002	PRESSURE JAW	8-69, 8-71, 8-73
553851-0000	SCREW	4-65, 4-67, 4-69, 4-71
554103-0000	ROLLER BED	14-39
554104-0000	ROLLER BED	14-39
554171-0300	PLATFORM ADDITION	10-3
554393-0000	BRACKET	1-13, 1-15
554603-0300	AUTOMATIC SPLICING UNIT IN SEPARATE ROOM	12-3
554607-0100	ASU VALVE	12-127
554831-0100	NIPPLE	12-127
554832-0100	REB.KIT VALVE PANEL LOWER	12-127
554958-0100	PNEUMATIC DRW	12-127
555433-0000	SPACER	12-145
555568-0000	PONCH	14-19
555763-0000	PANEL	12-121
555882-0000	PAPER GUARD	1-7, 1-9
555888-0000	BRACKET	3-15, 3-17
556316-0000	INSULATION	8-69, 8-71, 8-73
556317-0000	INSULATION	8-69, 8-71, 8-73
556318-0000	INSULATION	8-69, 8-71, 8-73
556319-0000	WASHER	8-77, 8-79
556320-0000	SLEEVE	8-77, 8-79
556321-0000	CLAMPING PIECE	8-77, 8-79
556322-0000	SHAFT	8-77, 8-79
556324-0000	SHAFT	8-77, 8-79

Part No	Description	Page No
556325-0000	SHAFT	8-77, 8-79
556391-0000	HANDLE	8-77, 8-79
556392-0000	HANDLE	8-77, 8-79
556394-0000	CUTTING RAIL	8-77, 8-79
556395-0000	CUTTING RAIL	8-77, 8-79
556439-0000	BARRIER	8-85, 8-87
556440-0000	BARRIER	8-85, 8-87
556441-0000	ARM	8-85, 8-87
556442-0000	ARM	8-85, 8-87
556443-0000	BEARING HOUSING	8-85, 8-87
556548-0000	FASTENING PLATE	7-9
556550-0000	BRACKET	7-37, 7-39
556551-0000	CYLINDER BRACKET	7-41
556552-0000	BRACKET	7-41
556561-0001	PIPE	7-7
556561-0002	PIPE	7-7
556561-0003	PIPE	7-7
556561-0004	PIPE	7-7
556562-0001	PIPE	7-7
556562-0002	PIPE	7-7
556562-0003	PIPE	7-7
556562-0004	PIPE	7-7
556563-0001	PIPE	7-7
556563-0002	PIPE	7-7
556563-0003	PIPE	7-7
556564-0001	PIPE	7-7
556564-0002	PIPE	7-7
556564-0003	PIPE	7-7
556565-0000	ROCKER ARM	7-41
556579-0000	CURVE	3-11, 12-169, 13-11, 13-95, 13-135
556868-0000	ANGLE	8-51, 8-53
556872-0000	BEARING UNIT	8-49
556873-0000	EXTENSION PIECE	8-49
556874-0000	BLOCKING RING	8-49
556875-0100	COVER	8-3
556879-0000	COVER	8-49
556886-0000	BRACKET	5-89, 5-91, 5-101, 5-103
557063-0100	TEMP.REG.ADAPT: MAIN CARD	14-23
557270-0100	WITHOUT A.S.U.	12-15
557272-0100	ELECTRIC MATERIALS	12-17
557282-0100	A.S.U. SEPARATE ROOM	12-127
557283-0100	ELECTRICAL DOCUMENT ASU	12-129
557284-0100	ELECTRIC MATERIALS ASU	12-129
557793-0100	CALIBRATION EQUIPMENT	14-19
557826-0101	TEMPERATURE REG. ADAPTER	14-21
558230-0101	TMCC CONTROLLER	9-5, 9-7, 9-9, 9-11, 9-13, 9-15, 9-25, 9-27, 9-29, 9-31, 9-33, 9-45, 9-47, 9-49, 9-51, 9-53, 9-55, 12-235, 12-237
558389-0101	MULTI PURPOSE POTENTIOM.	9-21, 9-41, 9-61
558390-0104	UNIVERSAL THUMBWHEEL UNIT	9-5, 9-7, 9-9, 9-11, 9-13, 9-15, 9-45, 9-47, 9-49, 9-51, 9-53, 9-55, 12-235, 12-237
558628-0100	HYGIENIC & PROTECTION KIT	13-45
558629-0100	ELECTRIC MATERIALS	13-47
558674-0100	ELECTRICAL DOCUMENT	12-151
558675-0100	ELECTRIC MATERIALS	12-233
558966-0100	EL. RK "ENABLE FOR REVERSE FIN"	13-121
559289-0100	ELECTRICAL DOCUMENT	13-123
559473-0100	ELECTRICAL DOCUMENT	12-247
559624-0100	USTS UPDATING (TMCC)	13-3, 13-137
559625-0100	ELECTRICAL DOCUMENT	13-139
559687-0100	ELECTRICAL MATERIALS	13-139
560122-0000	SUPPORT ROLLER	4-101, 4-103, 4-105, 4-107
560417-0000	ROCKER ARM	3-37, 3-39
560418-0000	SHAFT	3-37, 3-39
560797-0000	SIDE PIECE	2-185
560798-0000	SIDE PIECE	2-159, 2-161
560799-0000	FRONT GUARD	2-167
560800-0000	BEARING UNIT	2-63, 2-65, 2-97, 2-99
560856-0000	KNIFE HOLDER	4-75
560872-0000	PLATE	2-63, 2-65, 2-97, 2-99
560873-0000	PLATE	2-63, 2-65, 2-97, 2-99
561411-0000	RAIL	4-65, 4-67, 4-69, 4-71
561412-0000	PUSHER PLATE	4-65, 4-67, 4-69, 4-71
561413-0000	SCREW	4-65, 4-67, 4-69, 4-71
561416-0000	BRACKET	4-45, 4-47, 4-49, 4-51
561423-0000	BRACKET	2-185
561426-0000	LACE	8-69, 8-71, 8-73
561542-0000	SUPPORT ROLLER	4-101, 4-103, 4-105, 4-107
561543-0000	SUPPORT ROLLER	4-101, 4-103, 4-105, 4-107
561545-0000	SHAFT	4-101, 4-103, 4-105, 4-107
561547-0000	SHAFT	4-101, 4-103, 4-105, 4-107
561575-0000	CAM LEFT	3-19
561576-0000	CAM RIGHT	3-19
561590-0000	CENTRAL LUBRIC. DIAGRAM	2-131
561595-0000	SIGN MULTISTEP 35X35MM	2-27, 2-29, 2-31, 2-81, 2-83

Part No	Description	Page No
562134-0000	COMPRESSION SPRING	4-65, 4-67, 4-69, 4-71
562140-0000	CAP	3-41, 3-43
562746-0000	ARM	3-41, 3-43
562747-0000	ARM	3-41, 3-43
562748-0000	BRACKET	3-41, 3-43
562749-0000	BRACKET	3-41, 3-43
562971-0000	CANTILEVER	4-97, 4-99
562974-0000	MAIN CAM	3-19
562975-0000	COUNTER CAM	3-19
562976-0000	CAM LEFT	3-19
562977-0000	CAM RIGHT	3-19
563061-0000	REAMED BOLT	3-41, 3-43
563064-0000	FOLDING FLAP CAM	4-49, 4-51
563065-0000	FOLDING FLAP CAM	4-45, 4-47
563201-0000	MAIN CAM	3-19
563202-0000	COUNTER CAM	3-19
563203-0000	CAM LEFT	3-19
563204-0000	CAM RIGHT	3-19
563205-0000	RAIL BRACKET	4-101, 4-103, 4-105, 4-107
563206-0000	FOLDING FLAP CAM	4-49, 4-51
563207-0000	FOLDING FLAP CAM	4-45, 4-47
563212-0000	SHAFT	3-37, 3-39
563609-0000	VOLUME FLAP	4-53, 4-55, 12-205, 12-207
564519-0000	SIDE PLATE	2-159, 2-161
564520-0000	SIDE PLATE	2-159, 2-161
564521-0000	SIDE PLATE	2-185
564522-0000	SIDE PLATE	2-185
564523-0000	RIM	2-159, 2-161, 2-185
564541-0200	POWER LINE FILTER.	12-3
564542-0200	ATTACHED LS-STRIP.	12-3
564628-0000	FOLDING FLAP CAM	4-49, 4-51
564629-0000	FOLDING FLAP CAM	4-45, 4-47
565043-0000	MAIN CAM	3-19
565044-0000	COUNTER CAM	3-19
565045-0000	CAM LEFT	3-19
565046-0000	CAM RIGHT	3-19
565130-0000	MAIN CAM	3-19
565131-0000	COUNTER CAM	3-19
565132-0000	CAM LEFT	3-19
565133-0000	CAM RIGHT	3-19
565188-0000	FOLDING FLAP CAM	4-49, 4-51, 12-171
565189-0000	FOLDING FLAP CAM	4-45, 4-47, 12-171
565190-0000	MAIN CAM	3-19
565191-0000	COUNTER CAM	3-19
565192-0000	CAM LEFT	3-19
565193-0000	CAM RIGHT	3-19
565322-0000	INTERMEDIARY SHAFT	5-125, 5-127
565323-0000	OUTPUT SHAFT, LONG	5-125, 5-127
565324-0000	LID	5-125, 5-127
565325-0000	INPUT SHAFT	5-125, 5-127
565326-0000	LID	5-125, 5-127
565327-0000	RING NUT	5-125, 5-127
565328-0000	SCREW RING	5-125, 5-127
565329-0000	SPACER	5-125, 5-127
565330-0000	SPACER	5-125, 5-127
565331-0000	BEARING HOLDER	5-125, 5-127
565332-0000	BEARING HOLDER	5-125, 5-127
565333-0000	BEARING HOLDER	5-125, 5-127
565334-0000	BEARING HOLDER	5-125, 5-127
565335-0000	BEARING HOLDER	5-125, 5-127
565336-0000	OUTPUT SHAFT SHORT	5-125, 5-127
565338-0000	GEAR HOUSING	5-125, 5-127
565339-0000	OIL PIPE	5-125, 5-127
565340-0000	OIL LEVEL TUBE	5-125, 5-127
565961-0000	KICKPLATE,RIGHT	10-15, 10-17
565967-0000	ARM	5-145, 5-147, 5-149, 5-151, 5-153, 5-155
566016-0000	WASHER	5-133, 5-135
566180-0000	BRACKET	1-71
566311-0000	PROFILE	5-29, 5-49, 5-51
566312-0000	BRACKET	5-29, 5-49, 5-51
566313-0000	HOLDER	5-81, 5-83
566314-0000	HOLDER	5-53, 5-55
566315-0000	HOLDER	5-29, 5-49, 5-51
566316-0000	HOLDER	5-81, 5-83
566317-0000	HOLDER	5-81, 5-83
566416-0000	COVERING PLATE	5-115
566533-0000	BRACKET	5-29, 5-49, 5-51
566645-0000	SIDE GUARD	2-37, 2-39, 2-41
566646-0000	SIDE GUARD	2-37, 2-39, 2-41, 2-85, 2-87
566683-0100	AIR COOLER	2-159, 2-161
566685-0000	BRACKET	2-163
566686-0000	CONDENSATE TRAY	2-163
566687-0000	NOZZLE	2-163
566771-0000	BALL BEARING	10-5

Part No	Description	Page No
566772-0000	TENSION SPRING	10-5
566773-0000	TENSION SPRING	10-5
566774-0000	RIVET	10-5
566775-0000	CARRIER	5-17
567033-0000	ARM	3-37, 3-39
567266-0000	TUBE	2-137, 2-139
567267-0000	TUBE	2-137, 2-139
567345-0000	BEARING COVER	5-19
567347-0000	SHAFT	5-19
567348-0000	SHAFT	5-19
567349-0000	SPACER	5-19
567350-0000	WEDGE	5-19
567373-0000	GEAR HOUSING	5-19
567702-0000	CURVE	3-37, 3-39
567703-0000	LINK	3-37, 3-39
567731-0000	ADAPTER	14-27
567732-0100	CALIBRATION EQUIPMENT	14-5
567733-0101	ADAPTER	14-21
567735-0000	HEAD PLATE	13-41
567745-0000	PACKING DESCRIPTION	14-19
567751-0000	POSITION TEMPLATE	14-5
568070-0000	GEAR HOUSING	5-123
568071-0000	BEARING SEAT	5-123
568072-0000	BEARING SEAT	5-123
568073-0000	SHAFT	5-123
568074-0000	SHAFT	5-123
568151-0000	GEAR HOUSING	5-61
568152-0000	GEAR HOUSING	5-61
568153-0000	BEARING SEAT	5-61
568154-0000	BEARING SEAT	5-61
568155-0000	BEARING COVER	5-61
568156-0000	FLANGE	5-61
568157-0000	SHAFT	5-61
568158-0000	SHAFT	5-61
568159-0000	SHAFT	5-61
568160-0000	FASTENING PLATE	5-61
568161-0000	WASHER	5-61
568162-0000	WEDGE	5-61
568166-0000	REAMED BOLT	8-49
568167-0000	CATCH	8-55
568286-0000	SLEEVE	3-37, 3-39
568287-0000	RING	3-37, 3-39, 13-33
569055-0000	VOLUME BULGE	4-53, 4-55, 12-205, 12-207
569056-0000	VOLUME SHIM	4-53, 4-55, 4-61, 4-63, 12-205, 12-207
569057-0000	BEARING HOUSING	4-77, 4-79, 4-85, 4-87
569058-0000	SUPPORT ROLLER	4-101, 4-103, 4-105, 4-107
569060-0000	FOLDING FLAP	4-143, 4-147
569061-0000	FOLDING FLAP	4-143, 4-147
569062-0000	CARRIER RULER	4-147
569063-0000	CARRIER RULER	4-143
569064-0000	TEMPLATE	14-41, 14-43
569065-0000	TEMPLATE	14-41, 14-43
569085-0000	SHAFT	1-31, 1-33
569091-0000	SHAFT	1-43, 1-45
569096-0000	BOW CLAMP	1-43, 1-45
569099-0000	HOLDER	1-31, 1-33
569100-0000	SHAFT	1-31, 1-33
569101-0000	TEMP.REG.ADAPT: MAIN CARD	14-25
569104-0000	DISTRIBUTOR WING	13-41
569111-0000	FLAP	5-133, 5-135
569112-0000	BLOCKING PIECE	5-133, 5-135
569114-0000	PLATE	5-137, 5-139, 5-141, 5-143
569115-0000	SHEET	5-137, 5-139, 5-141, 5-143
569116-0000	SHEET	5-137, 5-139, 5-141, 5-143
569117-0000	FLAP	5-145, 5-147, 5-149, 5-151, 5-153, 5-155
569118-0000	FLAP	5-145, 5-147, 5-149, 5-151, 5-153, 5-155
569119-0000	BOTTOM	5-145, 5-147, 5-149, 5-151, 5-153, 5-155
569120-0000	FOLDING BAR	5-41, 5-43, 5-45, 5-47
569121-0000	FOLDING BAR	5-41, 5-43, 5-45, 5-47
569122-0000	FOLDING ARM	5-25, 5-27, 5-41, 5-43, 5-45, 5-47
569123-0000	FOLDING ARM	5-25, 5-27, 5-41, 5-43, 5-45, 5-47
569124-0000	AIR NOZZLE	5-69, 5-71, 5-77, 5-79
569125-0000	AIR NOZZLE	5-69, 5-71, 5-77, 5-79
569126-0000	AIR NOZZLE	5-69, 5-71, 5-77, 5-79
569127-0000	SLIDE RAIL	5-129, 5-131
569128-0000	HEAD PLATE	5-129, 5-131
569129-0000	DISTRIBUTOR	5-49, 5-51
569130-0000	LEAD RAIL	5-53, 5-55
569131-0000	BRACKET	5-117
569132-0000	HEAD PLATE	5-101, 5-103
569133-0000	BRACKET	5-101, 5-103
569134-0000	HEAD PLATE	5-119
569135-0000	BRACKET	5-119
569136-0000	BRACKET	5-119

Part No	Description	Page No
569163-0000	ARM	2-177
569651-0000	CREASE FORMER	8-21, 8-23, 8-25, 8-27, 8-29, 8-31, 8-33
569652-0001	SPACER	8-21, 8-23, 8-25, 8-27, 8-29, 8-31, 8-33
569652-0002	SPACER	8-21, 8-23, 8-25, 8-27, 8-29, 8-31, 8-33
569652-0003	SPACER	8-21, 8-23, 8-25, 8-27, 8-29, 8-31, 8-33
569917-0000	LOCKING CIRCLIP	8-81
569918-0000	COVER PLATE L.	8-77, 8-79
569919-0000	COVER PLATE R.	8-77, 8-79
569920-0000	SHAFT	8-77, 8-79
569921-0000	BEARING HOUSING LEFT	8-77, 8-79
569922-0000	BEARING HOUSING RIGHT	8-77, 8-79
569923-0000	CUTTING RAIL	8-77, 8-79
569924-0000	STOPPER	8-85, 8-87
569942-0000	SLEEVE	12-95
569943-0000	SLEEVE	12-95
569944-0000	SLEEVE	8-45, 8-47
569945-0000	SLEEVE	8-45, 8-47
570066-0000	SHAFT	3-35, 3-41, 3-43
570067-0000	RING	3-35, 3-41, 3-43
570125-0000	SLEEVE	3-35, 3-41, 3-43
570126-0000	SLEEVE	3-35, 3-41, 3-43
570127-0000	PROTECTION	14-23
570128-0000	PROTECTION	14-23
570131-0000	BASE	14-25
571297-0000	LACE	4-113, 4-115, 12-175, 12-177, 13-85, 13-87
571298-0000	LACE	4-113, 4-115, 12-175, 12-177, 13-85, 13-87
571418-0000	HOOD	8-51, 8-53
571419-0000	HOOD	8-51, 8-53
571421-0000	COVER	8-51, 8-53
571423-0000	GLASS PANE	8-51, 8-53
571424-0000	HINGE	8-51, 8-53
571425-0000	BRACKET	8-51, 8-53
571428-0000	TOUCH GUARD	7-37, 7-39
571654-0000	NOZZLE	2-23, 2-79
571943-0000	TEMPLATE	14-41, 14-43
572243-0000	PROTECTION	8-5, 8-7
572246-0000	BRACKET	8-51, 8-53
573277-0000	PIPE	2-149, 2-151
573278-0000	PIPE	2-149, 2-151
573353-0000	SPROCKET	5-89, 5-91
573371-0000	DISTR.TERM.	9-25, 9-27, 9-29, 9-31, 9-33
573373-0000	CONTROL TERMINALX1:1	9-25, 9-27, 9-29, 9-31, 9-33
573374-0000	GRND.TERM.X2,NEUT.TERM.X3	9-25, 9-27, 9-29, 9-31, 9-33
573485-0000	BRACKET	5-41, 5-43, 5-45, 5-47
573486-0000	STEERING	5-41, 5-43, 5-45, 5-47, 5-129, 5-131
573487-0000	STEERING	5-41, 5-43, 5-45, 5-47, 5-129, 5-131
573488-0000	BRACKET	5-129, 5-131
573489-0000	BRACKET	5-129, 5-131
573507-0000	SIDE GUARD	8-51, 8-53
573508-0000	MOUNTING BAR	8-51, 8-53
573583-0000	SCREW	4-11, 4-13, 4-15, 4-17, 4-19, 4-21, 4-77, 4-79, 4-85, 4-87, 12-193, 12-195, 12-197, 12-199, 12-201, 12-203
573614-0000	DOOR	13-53
573615-0000	COVER SLIP	13-53, 13-55
573617-0000	COVER SLIP	13-53
573663-0100	SUPPORT ROLLER	7-3, 7-5
573664-0000	CANTILEVER	7-47
573665-0000	FASTENING PLATE	7-47
573666-0000	SUPPORT ROLLER	1-13, 1-15, 7-13, 7-47
573667-0000	SUPPORT ROLLER	7-47
573827-0001	PROTECTION	8-21, 8-23, 8-25, 8-27, 8-29, 8-31, 8-33
573827-0002	PROTECTION	8-21, 8-23, 8-25, 8-27, 8-29, 8-31, 8-33
573827-0003	PROTECTION	8-21, 8-23, 8-25, 8-27, 8-29, 8-31, 8-33
573828-0000	COVERING PLATE	8-69, 8-71, 8-73
573976-0000	SUPPORT ROLLER	4-101, 4-103, 4-105, 4-107
573977-0000	FOLDING FLAP REPBY 1317808	12-223, 12-227
573978-0000	FOLDING FLAP REPBY 1317809	12-223, 12-227
573979-0000	CARRIER RULER	4-147, 12-223
573980-0000	CARRIER RULER	4-143, 12-227
573983-0000	BEARING HOUSING	4-65, 4-67, 4-69, 4-71
573984-0000	SCREW	4-11, 4-13, 4-15, 4-17, 4-19, 4-21, 12-193, 12-195, 12-197, 12-199, 12-201, 12-203
573985-0000	BEARING HOUSING	4-77, 4-79, 4-85, 4-87
573986-0000	CUTTING JAW	4-77, 4-79, 4-85, 4-87
573987-0000	KNIFE HOLDER	4-75
573988-0000	GASKET	4-11, 4-13, 4-15, 4-17, 4-19, 4-21, 4-77, 4-79, 4-85, 4-87, 12-193, 12-195, 12-197, 12-199, 12-201, 12-203, 13-147
573991-0000	PLATE,UPPER	12-123
573992-0000	PLATE,LOWER	12-123
573993-0000	SPRING BRACKET	4-113, 4-115, 12-175, 12-177
573994-0000	CURVE	3-21
573995-0000	ROLL	1-43, 1-45
573996-0000	ROLL	1-43, 1-45
573997-0000	ROLL	1-43, 1-45
573998-0000	ROLL	1-43, 1-45

Part No	Description	Page No
573999-0000	FOLDING FLAP CAM	4-49, 4-51
574000-0000	FOLDING FLAP CAM	4-45, 4-47
574001-0000	ROLL	1-75, 1-77, 1-79, 1-81, 1-83
574002-0000	EDGE ROLLER	1-75, 1-77, 1-79, 1-81, 1-83
574003-0000	EDGE ROLLER	1-75, 1-77, 1-79, 1-81, 1-83
574004-0000	EDGE ROLLER	1-75, 1-77, 1-79, 1-81, 1-83
574005-0000	FORK	1-65, 1-67, 1-69
574006-0000	PRESSURE FLANGE	1-17, 1-19, 1-21
574009-0000	FORK	1-31, 1-33
574010-0001	ROLL	1-31, 1-33
574010-0002	TRIMMING ROLLER PLUS	1-31, 1-33, 12-243, 13-157
574010-0003	TRIMMING ROLLER MINUS	12-243
574026-0000	HUB	5-145, 5-147, 5-149
574027-0000	HUB	5-151, 5-153, 5-155
574028-0000	ARM	5-145, 5-147, 5-149, 5-151, 5-153, 5-155
574029-0000	FLAP	5-145, 5-147, 5-149, 5-151, 5-153, 5-155
574030-0000	FLAP	5-145, 5-147, 5-149, 5-151, 5-153, 5-155
574031-0000	BOTTOM	5-145, 5-147, 5-149, 5-151, 5-153, 5-155
574032-0000	BLOWING NOZZLE B	5-69, 5-71, 5-77, 5-79
574033-0000	BLOWING NOZZLE TH	5-69, 5-71, 5-77, 5-79
574034-0000	BLOWING NOZZLE TV	5-69, 5-71, 5-77, 5-79
574035-0000	FLAP	5-133, 5-135
574036-0000	BLOCKING PIECE	5-133, 5-135
574037-0000	SPACER	7-15
574038-0000	SUPPORT ROLLER	7-47
574039-0000	RAIL	5-137, 5-139, 5-141, 5-143
574040-0000	SHEET	5-137, 5-139, 5-141, 5-143
574041-0000	SHEET	5-137, 5-139, 5-141, 5-143
574042-0000	PLATE	5-137, 5-139, 5-141, 5-143
574043-0000	CREASE FORMER	8-21, 8-23, 8-25, 8-27, 8-29, 8-31, 8-33
574044-0000	FASTENING BRACKET	8-21, 8-23, 8-25, 8-27, 8-29, 8-31, 8-33
574045-0000	FOLDING BAR	5-25, 5-27, 5-41, 5-43, 5-45, 5-47
574046-0000	FOLDING BAR	5-25, 5-27, 5-41, 5-43, 5-45, 5-47
574047-0000	LEAD RAIL	5-25, 5-27, 5-41, 5-43, 5-45, 5-47
574048-0000	BRACKET	5-25, 5-27, 5-41, 5-43, 5-45, 5-47
574049-0000	COUNTER PLATE	5-25, 5-27, 5-41, 5-43, 5-45, 5-47
574050-0000	CURVE	5-25, 5-27, 5-41, 5-43, 5-45, 5-47
574051-0000	RETAINING RING	8-45, 8-47
574052-0000	STOPPER	8-85, 8-87
574053-0000	SLIDE RAIL	5-129, 5-131
574054-0000	HEAD PLATE	5-129, 5-131
574055-0000	ARCH	5-53, 5-55
574056-0000	DISTRIBUTOR	5-29, 5-49, 5-51, 11-17
574057-0000	LEAD RAIL	5-53, 5-55
574058-0000	HOLDER	5-29, 5-49, 5-51
574059-0000	BEARING HOUSING	8-77, 8-79
574060-0000	BEARING HOUSING	8-77, 8-79
574061-0000	CUTTING RAIL	8-77, 8-79
574062-0000	COVERING PLATE	8-77, 8-79
574063-0000	COVERING PLATE	8-77, 8-79
574064-0000	SHAFT	8-77, 8-79
574065-0000	SIDE PLATE	5-89, 5-91
574066-0000	SIDE PLATE	5-89, 5-91
574067-0000	TIMING BELT SHAFT	5-89, 5-91
574068-0000	TIMING BELT SHAFT	5-89, 5-91
574069-0000	AXLE PIN	5-89, 5-91
574070-0000	TIMING BELT SHAFT	5-89, 5-91
574071-0000	PROFILE	5-89, 5-91
574072-0000	PROFILE	5-89, 5-91
574073-0000	BRACKET	5-89, 5-91
574074-0000	ROLLER BRACKET	5-89, 5-91
574075-0000	ROLL	5-89, 5-91
574076-0000	BRACKET	5-89, 5-91
574077-0000	HEAD PLATE	5-119
574078-0000	BRACKET	5-119
574079-0000	BRACKET	5-119
574080-0000	BRACKET	5-117
574081-0000	SLEEVE	5-17
574082-0000	GEAR WHEEL	5-89, 5-91
574083-0000	WASHER	5-89, 5-91
574084-0000	SCREW	5-89, 5-91
574085-0000	TIMING BELT PULLEY	5-89, 5-91
574086-0000	TIMING BELT PULLEY	5-89, 5-91
574087-0000	WASHER	5-89, 5-91
574088-0000	SPROCKET	5-17
574089-0000	CARRIER	5-93
574090-0000	CARRIER	5-95
574091-0000	CARRIER	5-95
574092-0000	CARRIER	5-93
574093-0000	PROFILE	5-11
574094-0000	HEAD PLATE	5-89, 5-91
574095-0000	PROTECTIVE COVER	5-99
574096-0000	PROTECTION PLATE	5-99
574097-0000	STEERING	5-25, 5-27, 5-41, 5-43, 5-45, 5-47, 5-129, 5-131

Part No	Description	Page No
574098-0000	STEERING	5-25, 5-27, 5-41, 5-43, 5-45, 5-47, 5-129, 5-131
574099-0000	STEERING	5-49, 5-51
574112-0000	PROTECTION PLATE	5-99
574113-0000	PROTECTION PLATE	5-99
574115-0000	MAIN CAM	3-19
574116-0000	COUNTER CAM	3-19
574117-0000	CAM LEFT	3-19
574118-0000	CAM RIGHT	3-19
574119-0000	HEAD PLATE	5-89, 5-91
574120-0000	HEAD PLATE	5-89, 5-91
574121-0000	BRACKET	5-89, 5-91
574122-0000	BRACKET	5-89, 5-91
574123-0000	BRACKET	5-89, 5-91
574124-0000	WASTE CHUTE	5-159
574125-0000	BRACKET	5-41, 5-43, 5-45, 5-47
574126-0000	HEAD PLATE	5-119
574129-0000	CURVE	4-101, 4-103, 4-105, 4-107
574130-0000	DAMPER	4-101, 4-103, 4-105, 4-107
574131-0000	LEAD PLATE	5-31
574162-0000	TEMPLATE	14-41, 14-43
574163-0000	TEMPLATE	14-41, 14-43
574166-0000	DROP WING	5-117
574167-0000	LIMIT PLATE	3-15, 3-17
574323-0100	CONVEYING EQUIPMENT	5-81, 5-83
574332-0100	BELT	5-89, 5-91
574601-0100	VALVE PANEL	2-3, 2-5
574602-0000	VALVE PANEL UPPER	2-27, 2-29, 2-31
574603-0000	BRACKET	2-27, 2-29, 2-31, 2-81, 2-83
574604-0000	BRACKET	2-27, 2-29, 2-31, 2-81, 2-83
574605-0000	CONNECTION BOX	2-147
574606-0000	SHEET	2-147
574651-0000	SHEET	8-75
574652-0000	PROTECTION	2-177
574658-0000	LOGOTYPE TP	8-91
575002-0000	PLUNGER	8-45, 8-47
575003-0000	PLUNGER	8-45, 8-47
575392-0100	VALVE PANEL LOWER	2-3, 2-5
575449-0000	DOCUMENT FOLDER	2-131
575450-0000	PNEUMATIC DIAGRAM	2-131
575464-0000	CABLE DUCT	2-21, 2-117, 2-119, 13-27
575786-0000	PAPER SUPPORT	8-21, 8-23, 8-25, 8-27, 8-29, 8-31, 8-33
575792-0000	ANGLE STRUT	2-115
575795-0000	WATER PIPE	2-137, 2-139
575797-0100	FLOWMETER GROUP	2-3, 2-5
576111-0000	JUNCTION BLOCK	2-115
576217-0000	PAPER SUPPORT	8-21, 8-23, 8-25, 8-27, 8-29, 8-31, 8-33
576220-0000	PAPER SUPPORT	8-5, 8-7
576245-0100	BELT RIGHT	5-89, 5-91
576246-0100	BELT LEFT	5-89, 5-91
576247-0100	PROTECTION	5-81, 5-83
576262-0000	BRACKET	14-37
576410-0000	BRACKET	8-51, 8-53
576722-0000	TEMPLATE	14-29
576723-0000	TEMPLATE	14-29
576731-0000	WATER DIAGRAM	2-131
576739-0200	(PAPER)REEL TROLLEY	8-3
576742-0000	OIL TROUGH	3-37, 3-39
576834-0000	PLATFORM	2-167
576835-0000	PLATFORM COVER	2-167
576965-0000	VALVE	12-121
576966-0000	VALVE	12-121
576967-0000	BUTTON	12-121
576968-0000	VALVE	12-121
576969-0000	VALVE	12-121
576970-0000	PLATE	12-121
576971-0000	NIPPLE	12-121
576972-0000	NIPPLE	12-121
576973-0000	NIPPLE	12-121
576974-0000	NIPPLE	12-121
576975-0000	NIPPLE	12-119
576976-0000	CYLINDER	12-119
576977-0000	FOOT	12-119
577201-0100	VOLUME KIT	12-119
577334-0000	WOODENBOX	14-41, 14-43
577796-0001	CIRCUIT BOARD, COMPONENTS	9-41, 9-61
578046-0000	DISTR.TERM,DIODE TERM	9-25, 9-27, 9-29, 9-31, 9-33
578765-0100	PRESSURE GAUGE	12-119
578766-0000	NEEDLE	12-125
579008-0000	PROTECTIVE CASING	1-49, 1-51, 1-53
579009-0000	PROTECTIVE CASING	1-49, 1-51, 1-53
579010-0000	THROTTLE	1-17, 1-19, 1-21
579681-0000	SHEET	7-9
580860-0000	BOTTOM PLATE	2-165
581333-0000	COVER	13-59

Part No	Description	Page No
581334-0000	COVER	13-59
581335-0000	CANTILEVER	13-63
581336-0000	CANTILEVER	13-63
581337-0000	DOOR	13-55
581338-0100	DOOR	13-51
581339-0000	CANTILEVER	13-63
581340-0000	CANTILEVER	13-63
581342-0000	COVER SLIP	13-55
581343-0000	RUBBER STRIP	13-55
581344-0000	GLASS PANE	13-55
581345-0000	DRIP GUARD	13-63
581346-0000	PIPE-LINE	13-65
581347-0000	SPACER	1-43, 1-45, 13-69
581348-0000	SCREW	13-59
581349-0000	SCREW	13-63
581350-0000	SUPPORT	13-59
581351-0000	SUPPORT	13-59
581352-0000	SHAFT	1-43, 1-45, 13-69
581354-0000	PIPE	13-65
581355-0000	PIPE	13-65
581356-0000	PIPE	13-65
581357-0000	HATCH	2-167, 13-71
581358-0100	REBUILDING KIT L.FORM.RIN	13-51
581359-0100	REBUILDING KIT,PROTECTION	13-51
581360-0100	HYGIENE AND PROTECT. KIT	13-45
581361-0100	REBUILDING KIT	13-51
581362-0100	REBUILDING KIT CANTILEVER	13-51
581363-0000	FASTENING PLATE	13-63
581364-0100	REBUILDING KIT VALVE	13-51
581365-0100	REBUILDING KIT,CABLE COU.	13-51
581366-0100	REBUILDING KIT MOVABLE F.	13-51
581367-0100	REBUILDING KITPLATFORM	13-51
581368-0000	CANTILEVER	13-65
581369-0000	CABLE CONDUIT	13-67
581370-0001	RING	13-57
581370-0002	RING	13-57
581370-0003	RING	13-57
581370-0004	RING	13-57
581807-0000	CANTILEVER	4-101, 4-103, 4-105, 4-107
581808-0000	CANTILEVER	2-85, 2-87
581814-0000	SPACER	4-101, 4-103, 4-105, 4-107
581815-0000	COVERING PLATE	2-85, 2-87
581823-0000	RAIL BRACKET	4-101, 4-103, 4-105, 4-107
581826-0000	DAMPER	4-101, 4-103, 4-105, 4-107
581953-0000	ALARM DISPLAY	9-41, 9-61
582012-0001	ROLL	1-31, 1-33, 1-39
582012-0002	TRIMMING ROLLER PLUS	12-243
582012-0003	TRIMMING ROLLER MINUS	12-243
582013-0000	COUNTER ROLLER	1-31, 1-33, 1-39
582014-0000	ROLL	1-43, 1-45
582015-0000	ROLL	1-43, 1-45
582016-0000	ROLL	1-43, 1-45
582017-0000	ROLL	1-43, 1-45
582018-0000	FILLER TUBE	1-65, 1-67, 1-69
582020-0000	SHEET	7-9
582105-0000	BEARING HOUSING	4-65, 4-67, 4-69, 4-71
582107-0000	MAIN CAM	3-19
582108-0000	COUNTER CAM	3-19
582109-0000	CAM LEFT	3-19
582110-0000	CAM RIGHT	3-19
582889-0000	DOCUMENT FOLDER	13-73
582911-0000	VOLUME FLAP	4-53, 4-55, 12-205, 12-207
583176-0000	ROLL	1-75, 1-77, 1-79, 1-81, 1-83
583177-0000	EDGE ROLLER	1-75, 1-77, 1-79, 1-81, 1-83
583178-0000	EDGE ROLLER	1-75, 1-77, 1-79, 1-81, 1-83
583179-0000	ROLL	1-75, 1-77, 1-79, 1-81, 1-83
583182-0001	ROLL	1-31, 1-33, 1-39
583182-0002	TRIMMING ROLLER PLUS	12-243
583182-0003	TRIMMING ROLLER MINUS	12-243
583183-0000	COUNTER ROLLER	1-31, 1-33, 1-39
583187-0000	SHEET	7-9
583188-0000	LOWER FILLING PIPE	1-17, 1-19, 1-21
583254-0000	BOW CLAMP	1-43, 1-45
583255-0000	ROLL	1-43, 1-45
583256-0000	ROLL	1-43, 1-45
583257-0000	ROLL	1-43, 1-45
583258-0000	ROLL	1-43, 1-45
583259-0000	RAIL	4-65, 4-67, 4-69, 4-71
583260-0000	BEARING HOUSING	4-77, 4-79, 4-85, 4-87
583261-0000	BEARING HOUSING	4-65, 4-67, 4-69, 4-71
583262-0000	CUTTING JAW	4-77, 4-79, 4-85, 4-87
583264-0000	KNIFE HOLDER	4-75
583404-0000	MAIN CAM	3-19
583405-0000	COUNTER CAM	3-19

Part No	Description	Page No
583406-0000	CAM LEFT	3-19
583407-0000	CAM RIGHT	3-19
583446-0000	SLIDE RAIL	5-129, 5-131
583447-0000	SHEET	5-137, 5-139, 5-141, 5-143
583448-0000	SIDE PIPE	5-69, 5-71, 5-77, 5-79
583449-0000	BOTTOM	5-145, 5-147, 5-149, 5-151, 5-153, 5-155
583451-0000	FLAP	5-133, 5-135
583452-0000	LEAD RAIL	5-53, 5-55
583453-0000	FOLDING BAR	5-25, 5-27, 5-41, 5-43, 5-45, 5-47
583454-0000	SUPPORT	5-145, 5-147, 5-149, 5-151, 5-153, 5-155
583455-0000	SHEET	5-137, 5-139, 5-141, 5-143
583456-0000	BRACKET	5-25, 5-27, 5-41, 5-43, 5-45, 5-47
583457-0000	COUNTER PLATE	5-25, 5-27, 5-41, 5-43, 5-45, 5-47
583458-0000	FOLDING BAR	5-25, 5-27, 5-41, 5-43, 5-45, 5-47
583459-0000	HEAD PLATE	5-117
583460-0000	HEAD PLATE	5-117
583628-0000	ARCH	5-53, 5-55
583629-0000	BRACKET	5-33, 5-53, 5-55
583630-0000	DISTRIBUTOR	5-29, 5-49, 5-51
583631-0000	BOTTOM PANEL	5-145, 5-147, 5-149, 5-151, 5-153, 5-155
583791-0000	PRESSURE FLANGE	1-17, 1-19, 1-21
583827-0000	VOLUME SHIM	4-7, 4-31
583828-0000	FOLDING FLAP CAM	4-49, 4-51
583829-0000	FOLDING FLAP CAM	4-45, 4-47
583862-0000	STOPPER	14-37
583863-0000	STOPPER	14-37
583870-0000	STOP	12-239
583968-0000	FILLER TUBE	1-17, 1-19, 1-21
589323-0000	PLATE,UPPER	12-123
589324-0000	PLATE,LOWER	12-123
589325-0000	PLATE,UPPER	12-123
589326-0000	PLATE,LOWER	12-123
589361-0000	LABEL	9-5, 9-7, 9-9, 9-11, 9-13, 9-15, 9-45, 9-47, 9-49, 9-51, 9-53, 9-55, 12-235, 12-237
589369-0000	BENDING ROLLER	1-49, 1-51, 1-53
589876-0000	BUSBAR	4-95
589877-0000	BUSBAR	4-93
589878-0000	BUSBAR	4-95
589879-0000	BUSBAR	4-93
589920-0000	MAIN CAM	3-19
589921-0000	COUNTER CAM	3-19
589922-0000	CAM LEFT	3-19
589923-0000	CAM RIGHT	3-19
589925-0000	VOLUME BULGE	4-53, 4-55, 12-205, 12-207
589926-0000	VOLUME SHIM	4-53, 4-55, 4-61, 4-63, 12-205, 12-207
590369-0000	COMPRESSION SPRING	4-23, 4-25, 4-27, 4-29, 12-215, 12-217, 12-219, 12-221, 13-7, 13-9, 13-99, 13-101, 13-103, 13-105, 13-109, 13-111, 13-167
590409-0000	ROLL	7-15, 13-193
590410-0000	SHEET	7-15, 13-193
590444-0000	MOUNTING TOOL	10-9, 14-5
590591-0000	NUT	11-21
591078-0000	LACE	4-113, 4-115, 12-175, 12-177
591080-0000	SPRING BRACKET	4-113, 4-115, 12-175, 12-177
591084-0000	GUIDE LUG	5-89, 5-91
591085-0000	SPACER	5-25, 5-27, 5-41, 5-43, 5-45, 5-47
591086-0000	SUPPORT	4-101, 4-103, 4-105, 4-107, 12-229
591087-0000	SHIM	4-7, 4-23, 4-25, 4-27, 4-29, 12-215, 12-217, 12-219, 12-221, 13-7, 13-9, 13-99, 13-101, 13-103, 13-105, 13-109, 13-111
591245-0000	ARM	3-37, 3-39, 13-33
591246-0000	SHAFT	3-37, 3-39, 13-33
591247-0000	SLEEVE	3-37, 3-39, 13-33
591291-0001	TEMPLATE FILLINGPIPE	14-17
591291-0002	TEMPLATE FILLINGPIPE	14-17
591291-0003	TEMPLATE FILLINGPIPE	14-17
591291-0004	TEMPLATE FILLINGPIPE	14-17
591292-0000	TEMPLATE FILLINGPIPE	14-17
591293-0000	TEMPLATE FILLINGPIPE	14-17
591294-0000	BRACKET	12-155
591295-0100	REBUILDING KIT COLUMN	12-151
591296-0100	CABLE CONDUIT	12-155
591301-0100	ARM WITH AXLE PRESSURE	12-171
591302-0100	FOLDING DEVICE LEFT	12-171
591303-0100	FOLDING DEVICE RIGHT	12-171
591410-0000	CATCH	4-23, 4-25, 4-27, 4-29, 12-215, 12-217, 12-219, 12-221, 13-7, 13-9, 13-99, 13-101, 13-103, 13-105
591981-0000	CATCH	4-77, 4-79, 4-85, 4-87
591982-0000	CATCH	4-77, 4-79, 4-85, 4-87
592214-0000	GUIDE RIGHT	11-17, 11-23
592215-0000	GUIDE LEFT	11-17, 11-23
592216-0000	BRACKET	11-17
592217-0000	BRACKET	11-17
592218-0000	BRACKET	11-23
592219-0000	BRACKET	11-23
592221-0000	AXLE PIN	11-19
592223-0000	MOUNTING PLATE	11-19
592224-0000	BRACKET	11-19

Part No	Description	Page No
592225-0000	ARM	11-19
592226-0000	PENDULUM ARM	11-19
592227-0000	PIN	11-19
592230-0000	FORMING PLATE	11-19
592336-0100	VOLUME CAM	12-171
592340-0000	CAM LEFT	3-9, 12-169
592341-0000	CAM RIGHT	3-9, 12-169
592342-0001	MODIFICATION DRAWING	13-45
592347-0000	TEMPLATE FILLINGPIPE	14-17
592349-0100	DRAIN VALVE	12-155
592350-0100	TEMPLATE FILLING PIPE	14-5
592519-0100	PRESSURE JAW LEFT	4-3, 4-5
592520-0100	PRESSURE JAW RIGHT	4-3, 4-5
592536-0000	BEARING HOUSING	12-215, 12-217, 12-219, 12-221, 13-99, 13-101, 13-103, 13-105, 13-109, 13-111
592537-0000	LID	12-215, 12-217, 12-219, 12-221, 13-99, 13-101, 13-103, 13-105, 13-109, 13-111
592538-0000	BEARING HOUSING	12-215, 12-217, 12-219, 12-221, 13-99, 13-101, 13-103, 13-105, 13-109, 13-111
592539-0000	SLEEVE	12-215, 12-217, 12-219, 12-221, 13-99, 13-101, 13-103, 13-105, 13-109, 13-111
592547-0000	LID	13-7, 13-9
592551-0000	TEMPLATE	14-11
592558-0000	TUBE	2-173, 12-163, 13-29
592563-0000	PISTON	12-215, 12-217, 12-219, 12-221, 13-7, 13-9, 13-99, 13-101, 13-103, 13-105, 13-109, 13-111
592564-0100	LID	2-169, 13-25
592586-0000	HOLDER	7-37, 7-39
592587-0000	COVER	13-59
592588-0000	SPACER	7-15
592589-0000	SUPPORT ROLLER	1-13, 1-15
592590-0000	CANTILEVER	1-13, 1-15
592592-0000	SHAFT	7-31, 7-33
592593-0000	GUIDE SHAFT	7-31, 7-33
592594-0000	BENDING ROLLER	7-43
592596-0000	SHEET	7-9
592597-0000	SUPPORT ROLLER	7-13, 7-47
592599-0000	PAPER GUARD	1-7, 1-9
592600-0000	PAPER GUARD	1-7, 1-9
592715-0000	BRACKET	4-23, 4-25, 4-27, 4-29, 12-215, 12-217, 12-219, 12-221, 13-7, 13-9, 13-99, 13-101, 13-103, 13-105
592716-0000	PIPE	2-35, 12-165, 13-15, 13-95
592717-0000	PIPE	2-35, 13-15
592718-0000	PIPE	2-35, 12-165, 13-15, 13-95
592719-0000	SEALING WASHER	2-37, 2-39, 2-41, 12-155
592720-0000	FRONT PLATE	2-37, 2-39, 2-41
592878-0100	PIPE WORK-PNEUMATIC	2-3, 2-5, 13-5
592879-0100	PIPE WORK-HYDRAULIC	2-3, 2-5, 13-5
592880-0100	VALVE GROUP	3-11, 13-11
592900-0100	REBUILDING KIT ARGENTINA	13-3
592921-0000	NIPPLE	4-23, 4-25, 4-27, 4-29, 12-215, 12-217, 12-219, 12-221, 13-7, 13-9, 13-99, 13-101, 13-103, 13-105, 13-109, 13-111
592922-0100	REBUILDING KIT US HYDRAULIC	13-3
592923-0000	VOLUME FLAP	4-53, 4-55, 12-205, 12-207
592924-0000	BOW CLAMP	1-43, 1-45
592925-0000	SHAFT	1-43, 1-45
592926-0000	ROLL	1-43, 1-45
592927-0000	ROLL	1-43, 1-45
592928-0000	ROLL	1-43, 1-45
592929-0000	ROLL	1-43, 1-45
592930-0000	FORK	1-43, 1-45
592931-0000	FORMING RING	1-75, 1-77, 1-79, 1-81, 1-83
592932-0000	ROLL	1-75, 1-77, 1-79, 1-81, 1-83
592933-0000	ROLL	1-75, 1-77, 1-79, 1-81, 1-83
592934-0000	ROLL	1-75, 1-77, 1-79, 1-81, 1-83
592935-0000	ROLL	1-75, 1-77, 1-79, 1-81, 1-83
592936-0001	ROLL	1-31, 1-33
592936-0002	TRIMMING ROLLER PLUS	12-243
592936-0003	TRIMMING ROLLER MINUS	12-243
592937-0000	COUNTER ROLLER	1-31, 1-33, 1-39
592938-0000	RING	1-31, 1-33
592962-0000	SHAFT	1-49, 1-51, 1-53
592963-0000	BENDING ROLLER	1-49, 1-51, 1-53
592964-0000	SPACER PLATE	1-49, 1-51, 1-53
592965-0000	GEAR WHEEL	1-49, 1-51, 1-53
592987-0100	REBUILDING KIT US DRAIN VALVE	13-3
592989-0000	HYDRAULIC DIAGRAM	2-131, 12-155, 13-5, 13-91
592990-0000	HYDRAULIC DIAGRAM	13-25
592993-0100	PRESSURE JAW LEFT	13-5
592994-0100	PRESSURE JAW RIGHT	13-5
593000-0000	DOCUMENT FOLDER	11-5
593001-0000	DOCUMENT FOLDER	13-31
593002-0000	DOCUMENT FOLDER	13-35
593004-0000	DOCUMENT FOLDER	13-91
593005-0000	DOCUMENT FOLDER	12-151
593007-0100	CABLE DUCT	2-3, 2-5, 13-25
593211-0000	SHIM	11-19
593213-0000	FLAP	11-9, 11-11, 11-13, 11-15
593214-0000	FLAP	11-9, 11-11, 11-13, 11-15

Machine Type Group Description Page No

Part No	Description	Page No
593218-0000	SHIM	11-9, 11-11, 11-13, 11-15
593219-0000	BLOCK	11-9, 11-11, 11-13, 11-15
593221-0000	SHIM	11-9, 11-11, 11-13, 11-15
593222-0000	SHIM	11-9, 11-11, 11-13, 11-15
593234-0000	FORMING PLATE	11-19
593235-0000	FORMING PLATE	11-19
593236-0000	FLAP	11-9, 11-11, 11-13, 11-15
593237-0000	FLAP	11-9, 11-11, 11-13, 11-15
593238-0000	ECCENTRIC BOLT	11-19
593239-0000	INTERMEDIARY SECTION	11-17
593240-0000	FLOAT	1-25
593242-0000	PRESSURE FLANGE	1-25
593244-0000	FILLING PIPE	1-25
593252-0000	TEMPLATE FILLING PIPE	14-17
593253-0000	TEMPLATE FILLING PIPE	14-17
593270-0000	CATCH	4-113, 4-115, 12-175, 12-177
593271-0000	CATCH	4-113, 4-115, 12-175, 12-177
593272-0100	IMPULSE TRANSMITTER US	3-3, 3-5, 3-7, 13-5
593273-0000	MAIN CAM	3-9
593274-0000	COUNTER CAM	3-9
593275-0000	CAM LEFT	3-9
593276-0000	CAM RIGHT	3-9
593277-0000	FOLDING FLAP CAM	4-49, 4-51
593278-0000	FOLDING FLAP CAM	4-45, 4-47
593279-0000	VOLUME CAM	4-101, 4-103, 4-105, 4-107
593280-0000	VOLUME FLAP	4-53, 4-55, 12-205, 12-207
593501-0000	VOLUME SHIM	4-7
593552-0000	SHAFT	8-43
593553-0000	BENDING ROLLER	8-43
593554-0000	SPACER	8-43
593555-0100	BENDING UNIT	8-3
593556-0000	CREASE FORMER	8-21, 8-23, 8-25, 8-27, 8-29, 8-31, 8-33
593560-0000	SLEEVE	8-45, 8-47
593561-0000	PLUNGER	8-45, 8-47
593562-0000	SLEEVE	12-95
593563-0000	PLUNGER	12-95
593564-0000	COVER	8-49
593565-0000	GLASS PANE	8-49
593566-0000	BEARING HOUSING	8-77, 8-79
593567-0000	BEARING HOUSING	8-77, 8-79
593568-0000	CUTTING RAIL	8-77, 8-79
593569-0000	COVERING PLATE	8-77, 8-79
593570-0000	BEARING HOUSING	4-11, 4-13, 4-15, 4-17, 4-19, 4-21, 12-193, 12-195, 12-197, 12-199, 12-201, 12-203
593571-0000	CUTTING JAW	4-11, 4-13, 4-15, 4-17, 4-19, 4-21, 12-193, 12-195, 12-197, 12-199, 12-201, 12-203
593573-0000	CATCH	4-11, 4-13, 4-15, 4-17, 4-19, 4-21, 12-193, 12-195, 12-197, 12-199, 12-201, 12-203
593574-0000	DAMPER	4-11, 4-13, 4-15, 4-17, 4-19, 4-21, 12-193, 12-195, 12-197, 12-199, 12-201, 12-203
593575-0000	DAMPER	4-11, 4-13, 4-15, 4-17, 4-19, 4-21, 12-193, 12-195, 12-197, 12-199, 12-201, 12-203
593576-0000	GASKET	4-11, 4-13, 4-15, 4-17, 4-19, 4-21, 12-193, 12-195, 12-197, 12-199, 12-201, 12-203
593577-0000	KNIFE HOLDER	4-9, 12-173
593578-0000	KNIFE	4-9, 12-173
593579-0000	AXLE BOLT	4-11, 4-13, 4-15, 4-17, 4-19, 4-21, 12-193, 12-195, 12-197, 12-199, 12-201, 12-203
593580-0000	CARRIER RULER	4-147
593581-0000	CARRIER RULER	4-143
593582-0000	AXLE SUPPORT	4-23, 4-25, 4-27, 4-29
593583-0000	CARRIER, CUT, LEFT	4-17, 4-19, 4-21, 12-193, 12-195, 12-197
593584-0000	CARRIER, CUT, RIGHT	4-11, 4-13, 4-15, 12-199, 12-201, 12-203
593585-0000	SUPPORT ROLLER	4-101, 4-103, 4-105, 4-107
593586-0000	SPACER	8-21, 8-23, 8-25, 8-27, 8-29, 8-31, 8-33
593587-0000	SHAFT	8-21, 8-23, 8-25, 8-27, 8-29, 8-31, 8-33
593588-0000	DOWEL	8-21, 8-23, 8-25, 8-27, 8-29, 8-31, 8-33
593589-0000	ROLL	8-21, 8-23, 8-25, 8-27, 8-29, 8-31, 8-33
593590-0000	FRAME	8-21, 8-23, 8-25, 8-27, 8-29, 8-31, 8-33
593612-0000	CATCH	4-113, 4-115, 12-175, 12-177
593631-0000	CABLE DUCT	2-77
593632-0000	FRONT PLATE	2-85, 2-87
593633-0000	PNEUMATIC DIAGRAM	2-131, 13-5, 13-91
593634-0200	DIAGRAM	10-3
593636-0000	PNEUMATIC DIAGRAM	2-131
593637-0000	VALVE PANEL	2-131
593638-0000	CENTRAL LUBRIC. SYSTEM	2-131
593639-0000	VALVE PANEL UPPER	2-81, 2-83
593641-0000	CANTILEVER	8-41
593642-0000	RAIL	8-85, 8-87
593643-0000	PLATE	8-85, 8-87
593644-0000	RULER	8-85, 8-87
593645-0000	STEERING	8-85, 8-87
593646-0000	SHAFT	1-37, 13-41
593647-0000	NIPPLE	4-23, 4-25, 4-27, 4-29, 12-215, 12-217, 12-219, 12-221, 13-7, 13-9, 13-99, 13-101, 13-103, 13-105, 13-109, 13-111
593648-0000	COVERING PLATE	8-77, 8-79
593649-0000	BLOCK LEFT	8-77, 8-79
593650-0000	BLOCK RIGHT	8-77, 8-79
593651-0000	BRACKET	8-69, 8-71, 8-73
593652-0000	BRACKET	8-69, 8-71, 8-73

Part No	Description	Page No
593653-0000	STOPPER	8-85, 8-87
593654-0000	SCREW SET	8-85, 8-87
593655-0000	VOLUME BULGE	4-31
593656-0000	BRACKET LEFT	8-69, 8-71, 8-73
593657-0000	BRACKET RIGHT	8-69, 8-71, 8-73
593662-0000	LOCKING PIN UPPER	1-17, 1-19, 1-21, 1-25
593663-0000	LOCKING PIN LOWER	1-17, 1-19, 1-21
593664-0000	ROLL	13-39
593672-0000	VALVE PANEL	2-131, 13-5, 13-91
593673-0000	VALVE PANEL	13-5, 13-91
593674-0000	PNEUMATIC DIAGRAM	13-5, 13-91
593679-0000	LACE	4-113, 4-115, 12-175, 12-177
593680-0000	LACE	4-113, 4-115, 12-175, 12-177
593681-0000	SPRING BRACKET	4-113, 4-115, 12-175, 12-177
593746-0000	CANTILEVER	8-21, 8-23, 8-25, 8-27, 8-29, 8-31, 8-33
593748-0100	DOOR	13-51
593749-0100	YOKE	4-3, 4-5
593750-0100	ARM WITH AXLE,CUT R	4-3, 4-5
593802-0000	TEMPLATE	14-13, 14-15
593803-0000	TEMPLATE	14-13, 14-15
593844-0000	PLATE UPPER	12-123
593845-0000	PLATE LOWER	12-123
593848-0000	SUPPORT	11-19
593850-0000	GAUGE BLOCK	11-19
593851-0000	GAUGE BLOCK	11-19
593853-0000	SHIM	11-9, 11-11, 11-13, 11-15
593854-0000	FOLDING BAR RIGHT	11-23
593855-0000	FOLDING BAR LEFT	11-23
593856-0000	HUB LEFT	11-13, 11-15
593857-0000	HUB RIGHT	11-9, 11-11
593858-0000	HUB LEFT	11-13, 11-15
593859-0000	HUB RIGHT	11-9, 11-11
593861-0000	BOTTOM	11-9, 11-11, 11-13, 11-15
593862-0100	FOLDING PART	11-7
593863-0100	PRESSURE DEVICE	11-7
593864-0100	SUPERSTRUCTURE	11-7
593865-0100	WHEEL LEFT	11-7
593866-0100	WHEEL RIGHT	11-7
593868-0000	ROCKER ARM	3-37, 3-39
594216-0000	BEARING HOUSING	13-7, 13-9
594217-0000	BEARING HOUSING	13-7, 13-9
594218-0000	SLEEVE	13-7, 13-9
594219-0000	WASHER	12-215, 12-217, 12-219, 12-221, 13-7, 13-9, 13-99, 13-101, 13-103, 13-105, 13-109, 13-111
594501-0000	CONTROL TERMINAL X1:3	9-25, 9-27, 9-29, 9-31, 9-33
594502-0001	FUSE PANEL SIGN	9-25, 9-27, 9-29, 9-31, 9-33
594502-0002	FUSE PANEL SIGN	9-25, 9-27, 9-29, 9-31, 9-33
594588-0000	HOOD	2-49, 2-51
594589-0000	CLEANING TROUGH	5-7, 5-9
594590-0100	REB.KIT SHARP EDGES	11-3
594591-0100	FINAL FOLDER SHARP EDGES	11-5
594593-0100	ELEMENT	11-7
594613-0100	CLEANING HEAD	2-9
594614-0100	CLEANING HEAD	2-23
594615-0001	INSTALLATION DRAWING	10-3
594615-0002	INSTALLATION DRAWING	10-3
594620-0100	BRAKE ARM	7-17
594621-0100	PRESSURE ARM	5-57
594622-0100	VALVE PANEL	2-3, 2-5
594632-0000	SIDE PLATE	5-23
594644-0000	LEAD RAIL	5-33
594653-0000	CATCH	4-113, 4-115, 12-175, 12-177
594654-0000	CATCH	4-113, 4-115, 12-175, 12-177
595044-0000	MACHINE BODY	5-33
595046-0000	CARRIER	5-33
595048-0000	ARCH	5-33
595052-0000	ARCH	5-33
595053-0000	BRACKET	5-33
595054-0000	PROTECTION	2-49, 2-51
595055-0000	BRACKET	5-25, 5-27
595056-0000	BRACKET	5-33
595057-0000	BRACKET	5-25, 5-27
595060-0000	LEAD RAIL	5-33
595061-0000	HOLDER	5-33
595066-0000	COVERING PLATE	5-7, 5-9
595068-0000	STEERING	5-29
595086-0100	MACHINE BODY	5-3, 5-5
595087-0100	STATION	5-3, 5-5
595088-0100	FOLDING PART LEFT OUT	5-3, 5-5
595089-0100	INFEEDER	5-3, 5-5
595090-0100	DISCHARGER	5-3, 5-5
595106-0100	LOW LEVEL FILLING HL TB/8	12-3
595111-0000	LOCKING PIN UPPER	1-17, 1-19, 1-21
595112-0000	LOCKING PIN LOWER	1-17, 1-19, 1-21
595116-0100	TPC-BAR	4-61, 4-63

Part No	Description	Page No
595131-0100	REBUILDING KIT HOLD DOWN DEVICE	13-31
595133-0100	AIR NOZZLE	13-37
595134-0000	AIR NOZZLE	13-41
595135-0100	TOOL KIT	12-151
595136-0100	JAW SYSTEM	12-151
595137-0100	DRIVE UNIT	12-151
595138-0100	VALVE PANEL UPPER	12-155
595139-0001	MODIFICATION DRAWING	12-151
595140-0100	PIPE WORK-HYDRAULIC	12-155
595141-0100	MACHINE BODY	12-151
595142-0100	REB.KIT TPC 1000 SQ TO USTS HYDRAULIC	12-3
595143-0100	ELECTRICAL DOCUMENT	13-121
595200-0100	ARM	4-3, 4-5
595202-0000	SHAFT	8-21, 8-23, 8-25, 8-27, 8-29, 8-31, 8-33
595203-0000	LACE	8-21, 8-23, 8-25, 8-27, 8-29, 8-31, 8-33
595204-0000	CYLINDER BRACKET	8-21, 8-23, 8-25, 8-27, 8-29, 8-31, 8-33
595207-0100	PIPE WORK-PNEUMATIC	2-3, 2-5
595208-0000	SPREADER	2-157
595209-0000	CURVE	4-101, 4-103, 4-105, 4-107
595210-0100	SETTING TOOL	14-5
595211-0000	LOCKING FINGER	1-25
595212-0000	CAP	1-31, 1-33
595213-0000	RING	1-31, 1-33
595214-0000	LID	8-41
596082-0000	WASHER	1-49, 1-51, 1-53
596083-0000	STOPPER	14-37
596084-0000	STOPPER	14-37
596085-0000	VOLUME BULGE	4-53, 4-55, 12-205, 12-207
596086-0000	BRACKET	14-37
596087-0000	BRACKET	14-37
596088-0000	FLAP	6-5
596089-0000	FLAP	6-5
596090-0000	PUSHER	6-59, 6-61
596091-0000	GAUGE BLOCK	6-59, 6-61
596098-0000	CONTROL TERMINAL X1:1	9-5, 9-7, 9-9, 9-11, 9-13, 9-15
596099-0001	FUSE PANEL LABEL	9-5, 9-7, 9-9, 9-11, 9-13, 9-15
596099-0002	FUSE PANEL LABEL	9-5, 9-7, 9-9, 9-11, 9-13, 9-15
596101-0000	SPACER	6-17, 6-33
596102-0000	SLIDE	6-33
596103-0000	SLIDE	6-33
596104-0000	PLATE	6-33
596105-0000	FOLDING BAR	6-27
596108-0000	BOTTOM	6-5
596110-0000	GUIDE	6-33
596111-0000	BLOCK	6-57
596113-0000	PLATE	6-59, 6-61
596116-0000	FOLDING BAR	6-27
596120-0000	RAIL	6-37, 6-39
596121-0000	SPACER	6-37, 6-39
596122-0000	RAIL	6-37, 6-39
596124-0000	DISTRIBUTOR	6-27
596125-0000	AIR NOZZLE	6-21
596126-0000	AIR NOZZLE	6-25
596127-0000	AIR NOZZLE	6-23
596128-0000	SPACER	6-21, 6-25
596137-0000	GEJD	6-33
596138-0000	GUIDE	6-37, 6-39
596139-0000	SLIDE	6-35
596140-0000	GUIDE	6-37, 6-39
596141-0000	SLIDE	6-35
596142-0000	BRACKET	6-37, 6-39
596143-0000	GUIDE	6-55
596144-0100	TEMPLATES USTS	14-5
596160-0100	EL RK "REVFIN" FOR TB/8.	12-245, 12-265
596161-0100	ELECTRICAL MATERIAL	12-247
596254-0000	SHIM	11-9, 11-11, 11-13, 11-15
596259-0000	PIN	11-9, 11-11, 11-13, 11-15
596260-0000	SLEEVE	11-9, 11-11, 11-13, 11-15
596285-0000	TEMPLATE	14-29
596288-0000	TEMPLATE	14-29
596295-0000	SLIDE RAIL	11-17
596737-0000	DISTR. TERMINAL, 220V	9-5, 9-7, 9-9, 9-11, 9-13, 9-15
596738-0000	GROUND AND NEUTRAL TERM.	9-5, 9-7, 9-9, 9-11, 9-13, 9-15
596739-0000	CONTROL TERMINAL X1:3	9-5, 9-7, 9-9, 9-11, 9-13, 9-15
596740-0000	DISTR. TERMINAL, DIODES	9-5, 9-7, 9-9, 9-11, 9-13, 9-15
596741-0000	TERMINAL BLOCK X10	9-5, 9-7, 9-9, 9-11, 9-13, 9-15
596742-0000	TERMINAL BLOCK X012	9-5, 9-7, 9-9, 9-11, 9-13, 9-15
596743-0000	TERMINAL BLOCK X1:2	9-5, 9-7, 9-9, 9-11, 9-13, 9-15
597523-0100	BOW CLAMP	13-37
597524-0100	REBUILDING KIT LS SEALING	13-35
597527-0100	MKC MIDDLE HYDRAULIC SYSTEM USTS	13-3
597528-0100	UK HOLD DOWN DEVICE	13-3
597529-0100	MKC LS SEALING AVAILABLE	13-3
597530-0100	REB HYDRAULIC UNIT	13-91

Part No	Description	Page No
597531-0100	PRESSURE JAW LEFT	13-91
597532-0100	PRESSURE JAW RIGHT	13-91
597533-0100	PIPE WORK-HYDRAULIC	13-91
597534-0000	PIPE	12-165, 13-95
597535-0000	PIPE	12-165, 13-95
597536-0000	FOLDING BAR	12-271, 13-127
597537-0000	FOLDING BAR	12-271, 13-127
597538-0100	HYDRAULIC BLOCK	12-165, 13-95
597539-0000	SLIDE RAIL	12-273, 13-125
597542-0000	RAIL REV.FIN	12-273, 13-125
597543-0000	RAIL NORM.FIN	12-273, 13-125
597544-0001	MODIFICATION DRAWING	13-91
597545-0000	HOLDER	13-39
597547-0000	KNIFE HOLDER	4-75
597548-0000	KNIFE	4-75
597549-0000	CUTTING JAW	4-77, 4-79, 4-85, 4-87
597557-0100	TRIMMING ROLLERS TB/8	12-3
597558-0100	CODE INSERT SETS TB/8	12-3
597559-0100	SERVICE TOOLS AND TEMPLATES TB/8	14-3
597560-0100	PRODUCTION TOOLS AND TEMPLATES TB/8	14-3
597562-0000	BRACKET	12-161, 13-115, 13-153
597564-0000	PLATE	5-29, 5-49, 5-51
597565-0100	DRYER	13-113
597566-0100	PRESSURE JAW LEFT	12-171
597567-0100	PRESSURE JAW RIGHT	12-171
597568-0100	START-UP KIT	12-171
597569-0000	PNEUMATIC DIAGRAM	12-155, 13-113
597570-0000	VALVE PANEL	12-155, 13-113
597571-0100	MKC TB/8 1000B USTS UPGRAGE 1000SQ	13-3
597572-0100	PRESSURE JAW LEFT	13-107
597573-0100	PRESSURE JAW RIGHT	13-107
597574-0000	SPRING BRACKET	4-113, 4-115, 12-175, 12-177, 13-119
597575-0000	LACE	13-119
597576-0000	LACE	13-119
597584-0000	BRACKET	5-81, 5-83, 12-269, 13-129
597587-0100	MKC AIR DRYER	13-3
597592-0100	VALVE PANEL UPPER	13-113
597593-0100	MKC SPRING HOLDER	13-3
597596-0000	PNEUMATIC DIAGRAM	13-113
597597-0000	VALVE PANEL	13-113
597599-0001	MODIFICATION DRAWING	12-265, 13-121
597600-0100	UK SIMPLIFIED REVERSED FIN KIT	13-3
597601-0100	PUSHER	13-121
597602-0100	FOLDING DEVICE	12-267, 13-121
597603-0100	GUIDE	13-121
597608-0000	BOTTOM	12-271, 13-127
597609-0000	SIDE PIPE	5-69, 5-71, 5-77, 5-79
597610-0000	FOLDING BAR	5-25, 5-27, 5-41, 5-43, 5-45, 5-47
597611-0000	FOLDING BAR	5-25, 5-27, 5-41, 5-43, 5-45, 5-47
597612-0000	COUNTER PLATE	5-25, 5-27, 5-41, 5-43, 5-45, 5-47
597613-0000	BRACKET	5-25, 5-27, 5-41, 5-43, 5-45, 5-47
597614-0000	SLIDE RAIL	5-129, 5-131
597616-0000	FLAP	5-133, 5-135
597617-0000	SHEET	5-137, 5-139, 5-141, 5-143
597618-0000	SHEET	5-137, 5-139, 5-141, 5-143
597619-0000	SUPPORT	5-145, 5-147, 5-149, 5-151, 5-153, 5-155
597620-0000	BOTTOM	5-145, 5-147, 5-149, 5-151, 5-153, 5-155
598071-0000	DOCUMENT FOLDER	13-195
598101-0000	BEARING HOUSING	6-29
598205-0000	CIRCUIT BOARD	9-21
598561-0000	HUB	6-5
598562-0000	PIN	6-5
598564-0000	SLEEVE	6-5
598565-0000	SHIM	6-5
598566-0000	SHIM	6-5
598567-0000	SHIM	6-5
598572-0000	SUPPORT	6-59, 6-61
598575-0000	BLOCK	6-5
598578-0000	SHIM	6-5
598615-0000	CARRIER LEFT	4-23, 4-25, 12-215, 12-217, 13-99, 13-101, 13-109
598616-0000	CARRIER RIGHT	4-27, 4-29, 12-219, 12-221, 13-103, 13-105, 13-111
598623-0000	SHIM	13-151
598630-0000	TEMPLATE	14-11
598631-0000	TEMPLATE	14-11
598633-0000	TEMPLATE	14-11
598646-0000	MAIN CAM	3-9
598647-0000	CAM LEFT	3-9
598648-0000	CAM RIGHT	3-9
598649-0000	COUNTER CAM	3-9
598652-0000	COUNTER CAM L	4-49, 4-51
598653-0000	COUNTER CAM R	4-45, 4-47
598878-0000	MACHINE SIGN 2 ADR. EEA	10-3
598975-0000	SHIFTER HANDLE	4-101, 4-103, 4-105, 4-107
598976-0000	SHAFT	4-101, 4-103, 4-105, 4-107

Part No	Description	Page No
598979-0000	PIPE	2-85, 2-87
599593-0000	ALARM DISPLAY	9-21
599613-0000	DOCUMENT FOLDER	13-199
599720-0000	DOCUMENT FOLDER	13-131
649045-0100	EL. EQUIPMENT JUMBO REEL	12-15
730445-0000	SPLICE	13-225, 13-233
731771-0000	COOLING PLATE,SOLIDSTATE	13-175
735738-0000	NUT	6-35
751143-0000	CYLINDER BRACKET	5-137, 5-139, 5-141, 5-143
751350-0004	ROLLER SHAFT	12-47
752587-0000	LINK	1-17, 1-19, 1-21
752590-0000	THROTTLE	1-17, 1-19, 1-21
752699-0000	PLATE	1-49, 1-51, 1-53
752700-0000	PROTECTIVE CASING	1-49, 1-51, 1-53
752701-0000	PROTECTIVE CASING	1-49, 1-51, 1-53
752740-0000	ROLLER	1-23
752907-0000	PROTECTIVE CASING	1-49, 1-51, 1-53
752908-0000	PROTECTIVE CASING	1-49, 1-51, 1-53
765100-0157	SPIRAL DRILL	13-205
765100-0179	SPIRAL DRILL	13-205
765100-0269	SPIRAL DRILL	13-205
765102-0167	SPIRAL DRILL	13-171
767141-0115	TAP	13-91
769211-0114	SAW BLADE	12-241
769211-0116	SAW BLADE	13-171
769211-0117	SAW BLADE	12-241
769211-0120	SAW BLADE	12-241
769211-0122	SAW BLADE	13-91
769211-0129	SAW BLADE	13-171
769211-0138	SAW BLADE	13-171
769211-0148	SAW BLADE	12-241
769219-0101	HOLDER	12-241, 13-91, 13-171
769219-0102	HANDLE BRACKET	12-241, 13-171
776422-0101	BRASS WIRESTE	10-9
777200-0101	PIPE WRENCH	10-9
777510-0101	SCISSORS	10-9
779910-0101	PADLOCK	9-5, 9-7, 9-9, 9-11, 9-13, 9-15, 9-25, 9-27, 9-29, 9-31, 9-33, 9-39, 9-45, 9-47, 9-49, 9-51, 9-53, 9-55
795581-0000	PLATE	1-49, 1-51, 1-53
922871-0000	FILLER TUBE	1-17, 1-19, 1-21
927258-0000	BRACKET	1-49, 1-51, 1-53
927279-0000	TERMINAL BLOCK X010.	9-25, 9-27, 9-29, 9-31, 9-33
927314-0000	CAM	5-125, 5-127
927315-0000	TURRET	5-125, 5-127
927318-0000	ROLLER	5-125, 5-127
927332-0000	BRACKET	5-17
927333-0000	BAR CLAMP	5-17
927337-0000	BRACKET	14-37
927428-0000	COVERING PLATE	8-69, 8-71, 8-73
927440-0000	LINK	4-7, 4-61, 4-63, 12-231
927441-0000	NUT	4-7, 4-61, 4-63, 12-231
927448-0000	LINK	4-143, 4-147
927449-0000	SECURITY PLATE LEFT	4-147
927450-0000	SECURITY PLATE RIGHT	4-143
927586-0000	FORK	1-31, 1-33, 13-57
927587-0000	FORK	13-57
927588-0000	FORK	13-57
927589-0000	CAP NUT	13-57
927590-0000	CAP NUT	13-57
927591-0000	CAP NUT	13-57
927592-0000	SUPPORT	1-31, 1-33, 13-57
927593-0000	CYLINDER CONSOLE	1-31, 1-33, 13-57
927594-0000	ARM	1-31, 1-33, 13-57
927595-0000	COVER	13-59
927596-0000	COVER	13-59
927600-0100	RK KNIFE SPRING TBA/8	13-3
927601-0000	RING	13-57
927602-0000	RING	13-57
927603-0000	RING	13-57
927618-0000	CLEANING PIPE	2-67, 13-61
927621-0000	COVER	13-59
927625-0000	COVER	13-59
927660-0000	TOUCH GUARD	13-59
927664-0000	DOCUMENT FOLDER	13-43
927667-0000	EXTENSION PIECE	13-43
927668-0100	RK-PAPER TROLLEY	13-3
927734-0001	SHAFT	13-57
927734-0002	SHAFT	1-31, 1-33, 13-57
927735-0001	SPACER	1-31, 1-33, 13-57
927735-0002	SPACER	13-57
927743-0000	BENDING ROLLER	8-21, 8-23, 8-25, 8-27, 8-29, 8-31, 8-33
927744-0000	FLANGE	8-43
927745-0000	PROTECTION PLATE	8-21, 8-23, 8-25, 8-27, 8-29, 8-31, 8-33
927751-0000	STOPPER	14-37

Part No	Description	Page No
927752-0000	STOPPER	14-37
927753-0000	KNIFE	4-75, 13-75
927830-0000	PROTECTION	8-21, 8-23, 8-25, 8-27, 8-29, 8-31, 8-33
927849-0000	HEAD PLATE	8-43
927850-0000	CANTILEVER	8-43
927859-0000	TOOTHED PULLY	6-33
928013-0100	MKS ENVIRONMENT KIT	13-3
928119-0000	BRACKET	2-77
928232-0000	SIDE GUARD ,R	2-97
928233-0000	SIDE GUARD ,L	2-99
928305-0000	COVERING PLATE	3-17
928306-0000	COVERING PLATE	3-17
928332-0000	DOUBLE JACKET FILLINGPIPE	1-65, 1-67, 1-69
928736-0000	FLANGE	6-9
928831-0000	LABEL	13-49
928837-0000	AIR DISTRIBUTOR	2-163
928889-0001	MODIFICATION DRAWING	13-45
928890-0001	MODIFICATION DRAWING	13-45
928891-0001	MODIFICATION DRAWING	13-45
928901-0000	COVERING PLATE	5-115
928948-0000	BEARING	3-15, 3-17, 12-169
928976-0100	KNIFE HOLDER ULTRA SONIC	4-3, 4-5, 12-171
928982-0100	CUTTING JAW LEFT	4-3, 4-5, 12-171
928983-0100	CUTTING JAW RIGHT	4-3, 4-5, 12-171
928986-0000	DAMPER	4-11, 4-13, 4-15, 4-17, 4-19, 4-21, 12-193, 12-195, 12-197, 12-199, 12-201, 12-203
928987-0000	DAMPER	4-11, 4-13, 4-15, 4-17, 4-19, 4-21, 12-193, 12-195, 12-197, 12-199, 12-201, 12-203
929045-0000	MAIN CAM	3-9, 12-169
929046-0000	COUNTER CAM	3-9, 12-169
929505-0100	CURVE SHAFT ULTRA SONIC	3-3, 3-5, 3-7
929537-0000	CARRIER LEFT	13-9
929538-0000	CARRIER, RIGHT	13-7
929539-0000	CUTTING JAW	4-11, 4-13, 4-15, 4-17, 4-19, 4-21, 12-193, 12-195, 12-197, 12-199, 12-201, 12-203
929540-0000	BEARING HOUSING	4-11, 4-13, 4-15, 4-17, 4-19, 4-21, 12-193, 12-195, 12-197, 12-199, 12-201, 12-203
929541-0000	VOLUME FLAP	4-53, 4-55, 12-205, 12-207
929548-0000	LACE	4-113, 4-115, 12-175, 12-177
929550-0000	LACE	4-113, 4-115, 12-175, 12-177
929551-0000	AXLE SUPPORT	4-23, 4-25, 4-27, 4-29, 12-215, 12-217, 12-219, 12-221, 13-7, 13-9
929604-0100	FRAME	12-235, 12-237
929605-0000	STAND	12-239
929620-0100	FILLER TUBE	1-3
929632-0100	SPLASH PROTECTION	3-3, 3-5, 3-7
929651-0000	WOODENBOX	14-13, 14-15
929652-0000	HOLDER	14-13, 14-15
929655-0100	SIDE GUARD, LEFT	2-3, 2-5
929656-0100	SIDE GUARD, RIGHT	2-3, 2-5
929659-0100	MACHINE BODY	2-3, 2-5
929660-0100	CONNECTION BOX	2-85, 2-87
929661-0100	CABLE DUCT	2-3, 2-5
929717-0000	WASTE PIPE	2-137, 2-139
929724-0000	COLUMN RIGHT	2-85, 2-87
929725-0000	COLUMN LEFT	2-85, 2-87
929726-0000	MACHINE BODY	2-85, 2-87
929732-0000	PIPE	2-137, 2-139
929739-0000	CONNECTION BOX	2-91
929740-0000	FRONT PLATE	2-85, 2-87
929753-0000	HOLDER	4-97, 4-99
929813-0000	SPRING BRACKET	4-113, 4-115, 12-175, 12-177
929839-0000	COVER PLATE	2-37, 2-39, 2-41, 2-85, 2-87, 12-155
950351-0000	SHAFT	4-23, 4-25, 4-27, 4-29, 12-215, 12-217, 12-219, 12-221, 13-7, 13-9, 13-99, 13-101, 13-103, 13-105
971373-0101	ELECTRICAL CABINET	9-25, 9-27, 9-29, 9-31, 9-33
971373-0102	ELECTRICAL CABINET	9-5, 9-7, 9-9, 9-11, 9-13, 9-15, 9-45, 9-47, 9-49, 9-51, 9-53, 9-55
971410-0101	CONTROL PANEL	9-41
971410-0102	CONTROL PANEL	9-21, 9-61
971444-0101	SIDE PANEL	9-23, 9-43, 9-63
978531-0000	BRACKET	13-67
978603-0000	SIGN	2-27, 2-29, 2-31, 2-81, 2-83
979491-0000	BLOCK	2-79
979707-0000	SCREW	6-35
1020142-0002	RAIL HOLDER, B55 WIDTH 30 MM	6-37, 6-39
1020146-0000	LOCKING BLOCK REPL BY 1020290-101	6-37, 6-39
1035893-0000	ADJUSTING SCREW	13-133
1036278-0000	SLEEVE	12-275
1036279-0000	PLUNGER	12-275
1037767-0000	SPRING RIGHT	4-113, 4-115, 12-175, 12-177
1037768-0000	SPRING LEFT	4-113, 4-115, 12-175, 12-177
1038240-0000	SPACER	4-23, 4-25, 4-27, 4-29, 12-215, 12-217, 12-219, 12-221, 13-7, 13-9, 13-99, 13-101, 13-103, 13-105, 13-109, 13-111, 13-167
1129473-0000	RESORTE (REEMPLAZADO X 1549378)	4-23, 4-25, 4-27, 4-29, 12-215, 12-217, 12-219, 12-221, 13-7, 13-9, 13-99, 13-101, 13-103, 13-105
1129552-0000	KNOB	4-23, 4-25, 4-27, 4-29, 12-215, 12-217, 12-219, 12-221, 13-7, 13-9, 13-99, 13-101, 13-103, 13-105
1129833-0000	GUIDE ROLLER	4-23, 4-25, 4-27, 4-29, 12-215, 12-217, 12-219, 12-221, 13-7, 13-9, 13-99, 13-101, 13-103, 13-105
1140660-0001	ANALOGUE CABLE	9-5, 9-7, 9-9, 9-11, 9-13, 9-15, 9-45, 9-47, 9-49, 9-51, 9-53, 9-55, 12-235, 12-237

Part No	Description	Page No
1143000-0000	PUSHER	5-81, 5-83, 12-257, 12-269
1143001-0000	ATTACHMENT PLATE	5-81, 5-83, 12-257, 12-269
1143002-0000	BRACKET	5-81, 5-83, 12-257, 12-269
1143003-0000	BRACKET	5-89, 5-91, 12-257, 12-269
1143004-0000	CYLINDER BRACKET	5-81, 5-83, 12-257
1143006-0000	STEERING	5-129, 5-131, 12-251, 12-273
1143007-0000	STEERING	5-129, 5-131, 12-251, 12-273
1143008-0000	BRACKET	5-129, 5-131, 12-251, 12-273
1143009-0000	BRACKET	5-129, 5-131, 12-251, 12-273
1143015-0000	BUSHING	5-137, 5-139, 5-141, 5-143, 12-255
1143016-0000	AXLE PIN	5-137, 5-139, 5-141, 5-143, 12-255
1143020-0000	FOLDING BAR	5-25, 5-27, 5-41, 5-43, 5-45, 5-47, 12-255
1143021-0000	FOLDING BAR	5-25, 5-27, 5-41, 5-43, 5-45, 5-47, 12-255
1143049-0000	VOLUME BULGE	4-53, 4-55, 12-205, 12-207
1143050-0000	VOLUME SHIM	4-7, 4-53, 4-55, 4-61, 4-63, 12-205, 12-207, 12-231
1143051-0100	UPGRADE PT/10	13-3
1143132-0000	WATER DIAGRAM	2-131, 12-155
1143135-0000	VALVE PANEL	2-131
1143137-0100	UK COOLING FAN FOR DRIVE CABINET PT/10	13-3
1143140-0000	PNEUMATIC DIAGRAM	2-131
1143142-0000	KNIFE HOLDER	4-75, 13-75
1143143-0000	CUTTING JAW	4-77, 4-79, 4-85, 4-87, 13-73
1143144-0000	RAIL	4-65, 4-67, 4-69, 4-71, 13-77
1143215-0000	SPRING	4-113, 4-115, 12-175, 12-177, 13-81, 13-85, 13-87
1143216-0000	SPRING	4-113, 4-115, 12-175, 12-177, 13-81, 13-85, 13-87
1143220-0101	MKC TUBE ADAPTED TPC-BARS TB/8-1000SQ	13-3
1143222-0100	TPC-BAR	4-61, 4-63
1143222-0101	TPC-BAR	13-73
1143223-0000	WASHER	5-137, 5-139, 5-141, 5-143, 12-255
1143224-0101	REBUILDING KIT KNIFE HOL.	13-73
1143225-0101	REBUILDING KIT PRESS.JAW	13-73
1143241-0000	SIGN	2-27, 2-29, 2-31, 2-81, 2-83, 12-159
1143242-0000	SIGN	2-137, 2-139, 12-155
1143243-0100	DRYER	2-3, 2-5
1143244-0000	CENTRAL LUBRIC. DIAGRAM	2-131, 12-155
1143419-0001	FUSE PANEL LABEL	9-45, 9-47, 9-49, 9-51, 9-53, 9-55
1143419-0002	FUSE PANEL LABEL	9-45, 9-47, 9-49, 9-51, 9-53, 9-55
1143444-0000	VALVE PANEL	2-131, 12-259
1143445-0000	PNEUMATIC DIAGRAM	2-131, 12-259
1143456-0000	MACHINE SIGN CE	10-23
1143597-0000	KNIFE HOLDER	4-9, 12-173
1143605-0000	SPACER	8-49
1143615-0100	MKC VOLUME FLAP SPRINGS	13-3
1143616-0100	VOLUME FLAP SPRINGS	13-79
1143617-0000	DOCUMENT FOLDER	13-79
1143628-0000	COVERING PLATE	2-63
1143661-0000	CABLE DUCT	2-21, 2-117, 2-119, 13-27
1143668-0000	DISTR. TERMINAL, 220V	9-45, 9-47, 9-49, 9-51, 9-53, 9-55
1143670-0000	CONTROL TERMINAL X1:1	9-45, 9-47, 9-49, 9-51, 9-53, 9-55
1143671-0000	GROUND AND NEUTRAL TERM.	9-45, 9-47, 9-49, 9-51, 9-53, 9-55
1143672-0000	CONTROL TERMINAL X1:3	9-45, 9-47, 9-49, 9-51, 9-53, 9-55
1143673-0000	DISTR. TERMINAL, DIODES	9-45, 9-47, 9-49, 9-51, 9-53, 9-55
1143674-0000	TERMINAL BLOCK X10	9-45, 9-47, 9-49, 9-51, 9-53, 9-55
1143677-0000	PAPER SUPPORT	7-37, 7-39
1143775-0000	TERMINAL BLOCK X001:2	9-25, 9-27, 9-29, 9-31, 9-33
1143839-0000	NUT PLATE	2-21, 2-77, 2-117, 2-119, 12-157, 13-27
1143875-0000	COVER PLATE	2-37, 2-39, 2-41, 2-85, 2-87, 12-155
1143884-0000	COPPER BRAID	9-5, 9-7, 9-9, 9-11, 9-13, 9-15, 9-25, 9-27, 9-29, 9-31, 9-33, 9-45, 9-47, 9-49, 9-51, 9-53, 9-55, 13-175
1143885-0000	SCREW	4-23, 4-25, 4-27, 4-29, 12-215, 12-217, 12-219, 12-221, 13-7, 13-9
1143901-0000	CARRIER, CUT, LEFT	4-17, 4-19, 4-21, 4-85, 4-87, 12-193, 12-195, 12-197
1143902-0000	CARRIER, CUT, RIGHT	4-11, 4-13, 4-15, 4-77, 4-79, 12-199, 12-201, 12-203
1143954-0000	TERMINAL BLOCK X006	9-25, 9-27, 9-29, 9-31, 9-33
1143959-0000	TERMINAL BLOCK X012	9-45, 9-47, 9-49, 9-51, 9-53, 9-55
1143963-0000	TERMINAL BLOCK X1:2	9-45, 9-47, 9-49, 9-51, 9-53, 9-55
1143968-0000	FRAME	6-35
1144084-0000	MOTOR	6-9
1144153-0000	SLIDE	3-17
1144154-0000	SPLASH PROTECTION	3-17
1144155-0000	SPLASH PROTECTION	3-17
1144156-0000	BRACKET	3-17
1144158-0000	BRACKET	6-35
1144189-0000	SLEEVE	6-9
1144237-0000	JOINT	6-9
1144242-0000	SHAFT	6-55
1144243-0000	FLANGE	6-55
1144252-0000	BELT	6-55
1144253-0000	RAIL	6-55
1144254-0000	SHAFT	6-55
1144255-0000	PLATE	6-35
1144256-0000	PLATE	6-35
1144257-0000	ROLLER	6-55
1144261-0000	GASKET	6-35
1144262-0000	GASKET	6-35

Part No	Description	Page No
1144273-0000	CANTILEVER	2-85, 2-87
1144274-0100	HOOD	2-3, 2-5
1144277-0000	BEAM	2-85, 2-87
1144278-0000	STEERING	2-85, 2-87
1144279-0000	HATCH	2-85, 2-87
1144280-0000	HATCH	2-85, 2-87
1144281-0100	CLEANING SYSTEM	2-3, 2-5
1144282-0000	PIPE	2-95
1144312-0000	AXLE PIN	6-5
1144315-0000	PIPE	6-35
1144318-0100	DRIVE UNIT	6-3
1144319-0100	CRANK	6-3
1144320-0100	INDEXING GEAR	6-3
1144321-0100	DROP CHUTE	6-3
1144324-0100	FRAMEWORK	6-3
1144325-0100	CONVEYOR	6-3
1144326-0100	FRAME	6-3
1144327-0100	PACKAGE OUTFEED	6-3
1144328-0100	CONVEYOR BELT	6-3
1144329-0100	PULL DOWN DEVICE	6-3
1144331-0100	PRESSURE DEVICE	6-3
1144335-0000	ROLLER	6-5
1144345-0000	PLATE	6-35
1144346-0000	GASKET	6-35
1144347-0000	GASKET	6-9
1144348-0000	SHEET	6-9
1144354-0000	WASHER	6-5
1144356-0000	COVER	6-5
1144415-0000	DRIP PLATE	6-5
1144468-0000	BEARING HOUSING	6-33
1144470-0000	SHAFT	6-33
1144472-0000	LEVER	6-57
1144473-0000	LEVER	6-57
1144474-0000	LEVER	6-57
1144475-0000	BRACKET	6-57
1144476-0000	BRACKET	6-57
1144482-0000	SUPPORT	6-59, 6-61
1144483-0000	PLATE	6-59, 6-61
1144485-0000	SUPPORT	6-59, 6-61
1144487-0000	PLUG	6-59, 6-61
1144488-0000	COLUMN	6-59, 6-61
1144489-0000	FLANGE	6-59, 6-61
1144490-0000	SUPPORT	6-59, 6-61
1144492-0000	SPRING	6-59, 6-61
1144493-0000	WASHER	6-59, 6-61
1144494-0000	AXLE PIN	6-59, 6-61
1144495-0000	ECCENTRIC	6-59, 6-61
1144496-0000	ECCENTRIC	6-59, 6-61
1144497-0000	CONNECTING ROD	6-59, 6-61
1144498-0000	FLANGE	6-59, 6-61
1144501-0000	SPACER	6-59, 6-61
1144502-0000	WASHER	6-59, 6-61
1144503-0000	FLANGE	6-59, 6-61
1144504-0000	SHAFT	6-59, 6-61
1144505-0000	COLUMN	6-59, 6-61
1144506-0000	LEVER	6-59, 6-61
1144507-0000	BUSHING	6-59, 6-61
1144508-0000	AXLE PIN	6-59, 6-61
1144511-0000	SHIM	6-59, 6-61
1144514-0000	BUSHING	6-59, 6-61
1144515-0000	INSERT	6-59, 6-61
1144517-0000	BUSHING	6-59, 6-61
1144520-0000	ROLLER	6-59, 6-61
1144521-0000	CLAMP	6-59, 6-61
1144527-0000	FLAG	6-59, 6-61
1144529-0000	BUSHING	6-59, 6-61
1144535-0000	PLATE	6-17
1144536-0000	BRACKET	6-35
1144537-0000	PLATE	6-37, 6-39
1144539-0000	PIPE	6-35
1144542-0000	BUSHING	6-35
1144546-0000	SUPPORT	6-11
1144547-0000	FLAT KEY	6-11
1144548-0000	SUPPORT	6-11
1144552-0000	PLATE	6-37, 6-39
1144555-0000	STUD SCREW	6-27
1144566-0000	FLANGE	6-57
1144570-0000	PULLEY	6-41
1144571-0000	PULLEY	6-15
1144572-0000	PULLEY	6-41
1144577-0000	BLOCK	6-17
1144578-0000	BRACKET	6-17
1144579-0000	AXLE	6-17
1144581-0000	ROLLER	6-47

Part No	Description	Page No
1144588-0000	SUPPORT	6-33
1144594-0000	ROLLER	6-31, 6-33
1144595-0000	ECCENTRIC SHAFT	6-33
1144596-0000	PLUG	6-31, 6-33, 6-43, 6-45
1144597-0000	SPACER	6-33
1144598-0000	SHAFT	6-33
1144603-0000	BRACKET	2-99
1144606-0000	SIGN	2-81, 2-83
1144607-0000	SIGN	2-81, 2-83
1144614-0000	ROLLER	6-33
1144618-0000	FLANGE	6-29
1144619-0000	SHAFT	6-33
1144620-0000	WASHER	6-29
1144625-0000	SPACER	6-33
1144632-0000	PLATE	6-29
1144635-0000	CRANK	6-11
1144646-0000	PROTECTION	6-7
1144648-0000	BLOCK	6-7
1144653-0000	SWITCH	6-11
1144657-0000	PROTRACTOR	6-13
1144661-0000	LEVER	6-7
1144665-0000	SEAL RING	6-29
1144666-0000	GUARD PLATE	6-7
1144667-0000	HINGE	6-7
1144668-0000	HINGE	6-7
1144669-0000	PIN	6-7
1144670-0000	COVER	2-93
1144671-0000	COVER	2-93
1144673-0000	PLATE	6-7
1144674-0000	AXLE PIN	6-45
1144676-0000	AXLE PIN	6-43
1144677-0000	SPACER	6-43, 6-45
1144678-0000	SHAFT	6-57
1144681-0000	WASHER	6-13, 6-41, 6-57
1144683-0000	AXLE PIN	6-57
1144684-0000	SPACER	6-57
1144685-0000	SCREW	6-57
1144686-0000	TIE ROD	6-57
1144687-0000	TIE ROD	6-57
1144688-0000	SCREW	6-57
1144694-0000	NUT	6-15
1144697-0000	SPACER	6-41
1144704-0000	BLOCK	6-7
1144705-0000	BLOCK	6-7
1144711-0000	COVER PLATE	6-55
1144718-0000	FLANGE	6-13
1144745-0100	FLAP HEATER	6-3
1144758-0000	SLEEVE	6-35, 6-67
1144797-0000	SUPPORT	6-29
1144803-0000	GASKET	6-35
1144804-0000	HANDLE	2-93
1144831-0100	LIFTING UNIT	2-3, 2-5
1144832-0000	PIPE	2-69
1144833-0000	PIPE	2-69
1144834-0000	ARM	2-69
1144838-0000	DAMPER	2-69
1144839-0000	BLOCK	6-29
1144840-0000	BRACKET	6-33
1144845-0000	COVER	6-35
1144848-0100	BOTTOM VALVE	6-3
1144849-0000	SWITCH	6-13
1144850-0000	SHAFT	6-63
1144851-0000	SUPPORT	6-29
1144853-0000	SCREW	6-55
1144854-0000	HOUSE	6-63
1144890-0000	PLATE	6-9
1144891-0000	PLATE	6-9
1144909-0000	COVER	6-35
1144910-0000	PLATE	6-35
1144914-0000	LEVER	6-59, 6-61
1144915-0000	LEVER	6-59, 6-61
1144916-0000	ADJUSTING SCREW	6-59, 6-61
1144918-0000	PLATE	6-33
1144919-0000	CARRIER	6-33
1144920-0000	SIDE PLATE	6-37, 6-39
1144921-0000	SIDE PLATE	6-37, 6-39
1144922-0000	SLIDE RAIL UPPER	6-37, 6-39
1144925-0000	SUPPORT	6-37, 6-39
1144929-0000	RAIL	6-37, 6-39
1144931-0000	RAIL	6-37, 6-39
1144941-0000	COVERING PLATE	6-27
1144943-0000	SPACER	6-37, 6-39
1144972-0000	SUPPORT	6-37, 6-39
1144973-0000	CARRIER	6-37, 6-39

Part No	Description	Page No
1144974-0000	ADJUSTING PLATE	6-27
1144976-0000	STOP SCREW	6-27
1144978-0000	CAM	6-59, 6-61
1144979-0000	WASHER	6-27
1144980-0000	RAIL	6-37, 6-39
1144981-0000	RAIL	6-37, 6-39
1144989-0000	SCREW	6-37, 6-39
1145400-0100	PULLTAB UNIT PT8	12-3
1195070-0000	VOLUME FLAP	4-53, 4-55, 12-205, 12-207
1195094-0000	BRACKET	8-55
1195097-0100	DOUBLE JACKET FILLING PIPE	12-3
1195111-0000	CLEANING PIPE	1-71
1195333-0000	STOP	5-119, 12-257, 12-269
1255160-0000	THREADED INSERT	5-137, 5-139, 5-141, 5-143, 12-255
1255161-0000	ARM	5-137, 5-139, 5-141, 5-143, 12-255
1255162-0000	ROCKER ARM	5-137, 5-139, 5-141, 5-143, 12-255
1255163-0000	ROCKER ARM	5-137, 5-139, 5-141, 5-143, 12-255
1255207-0000	STOPPER	4-113, 4-115, 12-175, 12-177
1255208-0000	STOPPER	4-113, 4-115, 12-175, 12-177
1255541-0000	BUSHING	4-31, 13-145
1255806-0100	COMPACT TRANSDUCER	13-7, 13-9
1255806-0101	COMPACT TRANSDUCER	12-215, 12-217, 12-219, 12-221
1255806-0102	COMPACT TRANSDUCER	4-23, 4-25, 4-27, 4-29
1255806-0201	COMPACT TRANSDUCER	4-23, 4-25, 4-27, 4-29
1260781-0000	VOLUME FLAP	4-53, 4-55, 12-205, 12-207
1260824-0000	SPACER RING	6-57
1260825-0000	SPACER	6-49
1260832-0000	WASHER	6-49
1260833-0000	FLANGE	6-49
1260834-0000	FLANGE	6-49
1260836-0000	BLOCK	6-47
1260837-0000	TOOTHED PULLEY	6-41
1260838-0000	AXLE BOLT	6-47
1260931-0000	SCREW	6-29
1260944-0000	BUSHING	6-57
1260945-0000	CRADLE	6-17
1260949-0000	PLATE LEFT	6-17
1279411-0000	PLATE RIGHT	6-17
1279415-0000	SLIDE RAIL LOWER	6-37, 6-39
1279438-0100	CLEANING EQUIPMENT	2-3, 2-5
1279507-0000	TIMING BELT	6-37, 6-39
1279509-0000	SUPPORT	6-11
1279510-0000	SUPPORT	6-11
1279532-0000	GUIDE UPPER L	6-27
1279559-0000	ARM	6-5
1279568-0000	GLAND FITTING	6-67
1279578-0000	BRACKET	6-35
1282100-0400	DIMC UNIT	12-3
1282325-0000	HUB	6-15
1282326-0000	RING	6-15
1282327-0000	PLATE	6-47
1282331-0000	BUSHING	6-53
1282344-0000	HUB	6-41
1282345-0000	SPRING	6-49
1282382-0000	TIMING BELT	6-33
1282390-0000	PLATE	6-33
1282402-0000	ROLLER	6-33
1282403-0000	SPACER	6-37, 6-39
1282409-0000	SUPPORT	6-37, 6-39
1282410-0000	RAIL	6-37, 6-39
1282592-0000	STOPPER	13-85, 13-87
1282593-0000	STOPPER	13-85, 13-87
1282594-0000	SPRING BRACKET	13-85, 13-87
1282595-0000	CATCH	13-85, 13-87
1282596-0000	CATCH	13-85, 13-87
1282597-0001	MODIFICATION DRAWING VOLUME FLAP	13-85, 13-87
1282598-0001	MODIFICATION DRAWING CARRIER	13-85, 13-87
1282642-0100	UK VOLUME FLAP SPRING	13-3
1282643-0100	VOLUME FLAP SPRINGS	13-83
1282681-0000	TOOTHED PULLEY	6-33
1282701-0000	BRACKET	6-33
1282702-0000	SLIDE	6-33
1282703-0000	SLIDE	6-33
1282704-0000	SLIDE	6-33
1282705-0000	SUPPORT	6-27
1282711-0000	GUIDE UPPER R	6-27
1282843-0000	SUPPORT	6-27
1282844-0000	SUPPORT	6-29
1282855-0000	TIMING BELT	6-41
1285003-0000	LINK	4-9, 4-75, 12-173, 13-89, 13-169
1285004-0000	COMPRESSION SPRING	13-89
1285005-0000	NUT	4-9, 4-75, 12-173, 13-89, 13-169
1285006-0000	SPACER	4-9, 4-75, 12-173, 13-89, 13-169
1285009-0000	HOLDER	6-37, 6-39

Part No	Description	Page No
1285010-0000	HOLDER	6-37, 6-39
1285012-0100	FOLDING PART	6-3
1285044-0100	REVERSE FIN KIT	12-3
1285045-0100	MECHANICAL DOCUMENT	12-245
1285046-0100	VALVE PANEL	12-249, 12-267
1285047-0100	MACHINE BODY	12-249, 12-267
1285048-0100	HOLDER	12-249, 12-267
1285049-0100	PUSHERBLOCK	12-249
1285050-0100	FOLDING DEVICE	12-249
1285051-0100	WHEEL	12-249
1285052-0100	MKC KNIFE HOLDER SPRING	13-3
1285242-0000	PLATE	6-35
1285267-0000	SUPPORT	6-27
1285288-0000	SPACER	6-21, 6-25
1285291-0000	PLATE	6-19
1285293-0000	HEATING PIPE	6-23
1285299-0000	BRACKET	6-27
1285306-0000	SPACER	6-37, 6-39
1285307-0000	SPACER	6-21, 6-23, 6-25, 13-177
1285308-0000	GASKET	6-21, 6-23, 6-25, 13-177
1285309-0000	COVER	6-21, 6-23, 6-25
1285310-0000	EXTENSION	6-21, 6-25
1285311-0000	PLATE	6-21, 6-23, 6-25
1285312-0000	GASKET	6-21, 6-23, 6-25
1285357-0000	DOCUMENT FOLDER	12-245
1285546-0000	ROLL	13-133
1285858-0000	SUPPORT	6-65
1285861-0100	INDEXING GEAR	6-13
1285862-0100	FRICTION WHEEL	6-13
1285865-0000	NUT	2-77
1285866-0000	CABLE DUCT	2-77
1285867-0000	SIDE GUARD	2-85, 2-87
1285869-0000	SPACER	6-23
1285870-0000	EXTENSION	6-23
1285874-0000	SPACER	6-23
1285875-0100	BELT TENSIONER	6-41
1285877-0000	COVER	6-65
1285885-0000	SCREW	6-7, 6-65
1285888-0000	AXLE PIN	6-15
1285889-0000	AXLE PIN	6-15
1285890-0000	SEAL RING	6-15
1285891-0000	SPRING	6-15
1285892-0000	SPACER RING	6-15
1285893-0000	SPACER	6-65
1285894-0000	SHAFT	6-65
1285898-0000	WASHER	6-65
1296003-0000	PAPER SUPPORT	7-37, 7-39
1296070-0000	HEATING PIPE	6-21, 6-25
1296085-0000	SUPPORT	6-65
1296148-0100	PROTECTION	6-3
1296149-0000	CAM	6-5
1296156-0000	PLATE	6-55
1296200-0100	INFEEDING COVER	6-3
1296259-0100	GUIDE	12-249
1296816-0100	WALL LEAD-IN	12-127
1296884-0000	SCREW	4-65, 4-67, 4-69, 4-71, 4-77, 4-79, 4-85, 4-87
1296886-0000	SCREW	4-65, 4-67, 4-69, 4-71, 4-77, 4-79, 4-85, 4-87
1296966-0100	HEATING ELEMENT	6-19
1296967-0100	HEATING ELEMENT	6-19
1296968-0100	HEATING ELEMENT	6-19
1296981-0000	SCREW	4-65, 4-67, 4-69, 4-71, 4-77, 4-79, 4-85, 4-87
1296982-0000	SCREW	4-65, 4-67, 4-69, 4-71, 4-77, 4-79, 4-85, 4-87
1317049-0000	GUIDE	6-7
1317053-0000	BRACKET	6-41
1317054-0000	FLANGE	6-49
1317055-0000	FLANGE	6-49
1317056-0100	SHAFT	6-49
1317082-0000	SUPPORT	6-37, 6-39
1317083-0000	DISC	6-53
1317084-0000	SHAFT	6-51
1317085-0000	NUT	6-21, 6-25
1317094-0000	SCREW	6-13
1317362-0000	SHAFT	6-59, 6-61
1317363-0000	SHAFT	6-59, 6-61
1317573-0000	COUNTER PLATE	11-23
1317577-0000	BUSHING	6-53
1317719-0000	CLAMP	13-197
1317808-0000	FOLDING FLAP	4-143, 4-147
1317809-0000	FOLDING FLAP	4-143, 4-147
1334018-0000	SHIM	6-57
1334328-0000	SPACER	6-57
1334432-0100	DRIVE UNIT (OUTFEED)	6-37, 6-39
1334433-0100	MAIN SHAFT	6-41
1334434-0100	SHAFT, PULLEY	6-41

Part No	Description	Page No
1334435-0100	BELT TENSIONER	6-41
1334436-0000	ELBOW WITH TAILPIECE	2-71, 2-73, 2-75
1334440-0000	PIPE	6-67
1334451-0100	CABLE DUCT	6-3
1334453-0000	PULLEY	6-43, 6-45
1334456-0000	PLATE	6-33
1334457-0000	PLATE	6-33
1334528-0200	UK OUTFEED TENSION DEVICE	13-3
1334785-0000	COUNTER PLATE	11-23
1338216-0100	REBUILDING KITS DIMC8	13-3
1338607-0000	LABEL	13-141
1338673-0000	BEARING HOUSING	4-23, 4-25, 4-27, 4-29, 13-167
1338674-0000	BEARING HOUSING	4-23, 4-25, 4-27, 4-29, 13-167
1338675-0000	SLEEVE	4-23, 4-25, 4-27, 4-29, 13-167
1338676-0000	LID	4-23, 4-25, 4-27, 4-29, 13-167
1338677-0000	WASHER	4-23, 4-25, 4-27, 4-29, 13-167
1338678-0100	MKC BEARING HOUSING	13-3
1338691-0000	VOLUME FLAP LEFT	4-31
1338692-0000	VOLUME FLAP RIGHT	4-31
1338694-0000	PLATE	13-211
1338698-0100	REB. ELECTRICAL CABINET	13-205
1338702-0000	PISTON	4-23, 4-25, 4-27, 4-29
1338703-0000	SLEEVE	4-23, 4-25, 4-27, 4-29
1338719-0000	COVERING PLATE	13-213
1338720-0000	PLATE	13-213
1338721-0000	GASKET	13-213
1338722-0100	REB. CONTROL PANEL DOOR	13-205
1338867-0000	KNIFE	4-9, 12-173
1338954-0100	VOLUME FLAP	4-3, 4-5
1338961-0100	REB. CABINET DOOR	13-205
1338963-0000	DRILLING TEMPLATE	13-205
1338969-0000	SIGN	13-215
1338970-0000	SIGN	13-215
1338971-0000	SIGN	13-215
1338972-0000	SIGN	13-215
1346073-0000	AXLE	6-37, 6-39
1346074-0000	HOLDER	6-37, 6-39
1346128-0100	UK ASU PAPER HOLDER IMPROVEMENT	13-3
1346132-0100	PAPER HOLDER	13-195
1346212-0000	GUIDE	6-37, 6-39
1346316-0000	CURVE	13-199
1346471-0000	WEDGE	6-33
1346491-0100	KIT ASU IN SEPARATE ROOM FOR PT/8	11-3
1346505-0000	SPACER	13-133
1346517-0000	PIN	6-37, 6-39
1346587-0000	TIMING BELT	6-33
1346615-0000	PIPE	6-33
1346952-0000	SPRING	6-7
1347007-0000	STUD BOLT	11-17, 11-23
1347057-0000	GUIDE	6-27
1347219-0000	PLATE	6-35
1347220-0000	PLATE	6-35
1347221-0000	PLATE	6-35
1347227-0000	PLATE	6-29
1347244-0000	COVER	6-35
1347400-0100	MKC OVERLOAD PROTECTION CAM KIT	13-3
1347461-0000	PIPE	6-5
1347717-0100	STRIP GUIDE	13-131
1347803-0100	UK STRIP GUIDE	13-3
1348088-0100	UK NEW TAB ANGLE FEEDING	13-3
1348234-0000	COVER	6-35
1348386-0000	BEARING HOUSING	6-55
1348392-0000	AXLE PIN	6-53
1348393-0000	AXLE PIN	6-53
1348394-0100	MOMENT RESTRICTOR	6-51
1348923-0000	SHAFT	6-55
1349000-0000	WORM GEAR MOTOR	6-55
1349009-0001	MODIFICATION DRAWING	13-89
1349010-0001	MODIFICATION DRAWING	13-89
1349146-0000	FLANGE	6-55
1349161-0000	BRACKET	6-55
1349422-0000	FRAME	6-55
1349980-0000	SHAFT	4-31, 13-145
1350298-0100	MKC PATCH/TAB MISSING DETECTOR	13-3
1350305-0000	SEALING RING	6-47
1350423-0000	FOLDING BAR	6-27
1350424-0000	GUIDE RIGHT	6-27
1350425-0000	GUIDE LEFT	6-27
1350430-0000	SIGN"FLAPS HEATING BOTTOM"	9-5, 9-7, 9-9, 9-11, 9-13, 9-15
1350488-0000	BLOCK	11-9, 11-11, 11-13, 11-15
1350564-0000	CLAMP HUB	6-49
1350873-0100	MKC PATCH/TAB MISSING DETECTOR	13-3
1360000-0000	DOCUMENT FOLDER	13-107
1360001-0000	DOCUMENT FOLDER	13-121

Part No	Description	Page No
1360002-0000	DOCUMENT FOLDER	13-119
1360006-0000	DOCUMENT FOLDER	12-265
1360007-0000	DOCUMENT FOLDER	13-135
1360216-0000	AXLE SUPPORT	13-147
1360217-0000	BEARING HOUSING	13-147
1360218-0000	CUTTING JAW	13-147
1361035-0000	PROFILE 70X10X40MM	13-221
1361243-0000	BRACKET	6-59, 6-61
1361244-0000	SPACER ROD	6-59, 6-61
1361245-0000	SUPPORT	6-59, 6-61
1361246-0000	TIMING BELT PULLEY	6-13
1361247-0000	TIMING BELT PULLEY	6-59, 6-61
1361248-0000	BEARING COVER	6-59, 6-61
1361249-0000	AXLE PIN	6-31
1361250-0000	SPACER	6-59, 6-61
1361252-0000	ARCH	5-33
1361300-0000	DOCUMENT FOLDER	13-89
1361908-0000	SLIDE RAIL	5-129, 5-131
1361909-0000	LEAD RAIL	5-33
1361910-0000	FOLDING BAR	5-25, 5-27, 5-41, 5-43, 5-45, 5-47
1361911-0000	FOLDING BAR	5-25, 5-27, 5-41, 5-43, 5-45, 5-47
1361912-0000	BRACKET	5-25, 5-27
1361916-0000	RAIL REV.FIN	5-129, 5-131
1361917-0000	VOLUME FLAP	4-53, 4-55, 12-205, 12-207
1362432-0000	VOLUME BULGE	4-31
1362433-0000	VOLUME SHIM	4-7, 4-31
1362434-0000	FOLDING BAR	5-25, 5-27, 5-41, 5-43, 5-45, 5-47
1362435-0000	FOLDING BAR	5-25, 5-27, 5-41, 5-43, 5-45, 5-47
1362436-0000	SLIDE RAIL	5-129, 5-131
1362437-0000	PLATE,LOWER	12-123
1362438-0000	PLATE,UPPER	12-123
1362439-0100	START-UP KIT US	4-3, 4-5
1362442-0100	PUSHERBLOCK	12-267
1362443-0100	GUIDE	12-267
1362444-0100	MECHANICAL DOCUMENT	12-265
1362445-0100	MKC SIMPLIFIED REVERSED FIN KIT 2	12-3
1362446-0100	MKC NEW IMPULSE TRANSMITTER CURVE	13-3
1362450-0000	FORMING RING	1-31, 1-33
1362455-0000	FORMING RING	1-75, 1-77, 1-79, 1-81, 1-83
1362456-0000	BOW CLAMP	13-39
1362458-0000	HOLDER	4-101, 4-103, 4-105, 4-107
1362460-0000	ADJUSTING PLATE	4-101, 4-103, 4-105, 4-107
1362483-0000	HEAD PLATE	5-129, 5-131
1362484-0000	HEAD PLATE	5-129, 5-131
1362485-0000	ARM	5-137, 5-139, 5-141, 5-143
1362486-0000	PUSHER	5-137, 5-139, 5-141, 5-143
1362487-0000	HOLDER	5-137, 5-139, 5-141, 5-143
1362489-0000	PRESSURE FLANGE	1-17, 1-19, 1-21
1362492-0100	WHEEL	6-3
1362493-0000	BOTTOM PLATE	13-57
1362496-0000	AXLE	13-145
1362499-0000	ROLLER	7-43
1362500-0000	HOLDER	4-101, 4-103, 4-105, 4-107
1362501-0000	PAPER SUPPORT	7-37, 7-39
1362502-0000	BRACKET	13-145
1362504-0000	AXLE SUPPORT	13-145
1362505-0000	SPREADER	2-157
1362511-0100	UK NEW VERSION OF AIR DRYER	12-155, 13-3
1362513-0000	PISTON	4-23, 4-25, 4-27, 4-29, 13-167
1362525-0000	FOLDING FLAP CAM	4-49, 4-51
1362526-0000	FOLDING FLAP CAM	4-45, 4-47
1362527-0000	NOZZLE	13-161
1362932-0000	SUPPORT	6-27
1362933-0000	RAIL	6-27
1362934-0000	RAIL	6-27
1362936-0100	BELT TIGHTENER	6-29
1363722-0000	DOCUMENT FOLDER	12-151, 13-137
1363724-0000	DOCUMENT FOLDER	13-149
1364231-0000	CUTTING JAW	13-151
1364232-0000	PLATE	13-151
1364233-0000	DAMPER	13-151
1364234-0000	USTS CUTTING RAIL	13-151
1364235-0000	USTS CUTTING RAIL	13-151
1364236-0000	DAMPER	13-91, 13-107, 13-147
1364237-0000	DAMPER	13-91, 13-107, 13-147
1364239-0000	SCREW	13-145
1364730-0000	MAIN CAM	3-9
1364731-0000	CAM LEFT	3-9
1364732-0000	CAM RIGHT	3-9
1364733-0000	COUNTER CAM	3-9
1364784-0000	FOLDING FLAP CAM	4-49, 4-51
1364785-0000	FOLDING FLAP CAM	4-45, 4-47
1365561-0000	BEARING HOUSING	14-7
1365562-0000	BEARING HOUSING	14-7

Part No	Description	Page No
1365563-0000	PLUG	14-7
1365565-0000	DAMPER	13-151
1365570-0100	MKC IMPROVED USTS JAW SYSTEM	13-3
1365571-0100	IMPROVED USTS JAWSYSTEM	13-137
1365572-0100	TRANSVERSAL SETTING	13-143
1365573-0100	IMPROVED USTS PRESSURE JAW	13-143
1365574-0100	COMPACT TRANSDUCER TEST INSTRUMENT	14-5
1365575-0100	HYDRAULIC PRESSURE MEASUREMENT	14-5
1366154-0000	SCREW	13-151
1366155-0000	SCREW	13-151
1366160-0100	USTS SPLIT CUTTING RAIL	13-149
1366161-0100	MKC USTS SPLIT CUTTING RAIL	13-3
1367827-0104	DOCUMENT FOLDER	13-205
1367830-0101	DOCUMENT FOLDER	13-155
1367836-0101	DOCUMENT FOLDER	13-171
1367837-0101	DOCUMENT FOLDER	13-159
1367841-0101	DOCUMENT FOLDER	13-187
1369843-0001	SLEEVE	12-275
1478563-0000	STRAINER	6-35
1478582-0100	UK FOLDING DEVICE AJUSTMENT	13-3
1478881-0000	GUIDE	5-29, 5-49, 5-51
1478928-0000	BUSHING	6-17
1484401-0100	MKS INFEED TENSION DEVICE	13-3
1484444-0000	ELBOW PIPE	6-63
1484447-0000	BALL BEARING	6-49
1484448-0000	ROLLER BEARING	6-49
1487685-0000	PLUG	2-45
1490099-0000	PIN	1-17, 1-19, 1-21, 1-25, 13-235
1499073-0100	UK COUNTER ROLLER DRIVE MOTOR	13-3
1499124-0100	UK COOLER PT/8	13-3
1511572-0000	CLIP	8-35, 8-37, 12-77, 12-79
1528700-0100	DIMC MULTI APPLICATOR	12-3
1531005-0102	DOCUMENT FOLDER	13-83
1538109-0000	COMPRESSION SPRING	4-9, 4-75, 12-173, 13-169
1552445-0000	PD STRIP	14-11
2504976-0100	UK NEW THYRISTOR UNIT	13-3
2504997-0100	MKC USTS SERRATED & STEPPED CUTTING RAIL	13-3
2504998-0100	USTS SERRATED & STEPPED CUTTING RAIL	13-155
2505008-0000	STRIP HOLDER	14-11
2505037-0100	HEATING UNIT	13-171
2505040-0000	EXTENSION	13-177
2505041-0000	HOUSING	13-177
2505042-0000	SPACER	13-177
2505043-0000	CABLE GLAND	13-177
2505044-0000	SLEEVE	13-177
2505045-0000	SLEEVE	13-177
2505046-0000	SPACER PLATE	13-177
2505047-0000	SCREW	13-177
2505048-0000	EXTENSION	13-177
2505064-0000	USTS CUTTING RAIL	13-91, 13-107, 13-157
2505080-0000	EXTENSION	13-177
2505087-0000	FRAME	13-179
2505088-0000	SIGN	13-175, 13-179
2505089-0000	SIGN	13-175, 13-179
2505090-0000	SIGN	13-175, 13-179
2505091-0000	SIGN	13-175, 13-179
2505092-0000	SIGN	13-175, 13-179
2505093-0000	SIGN	13-175, 13-179
2505094-0000	PROTECTION	13-179
2505095-0000	PROTECTION	13-179
2505096-0100	VALVE PANEL	13-171
2505104-0000	BRACKET	13-161
2505105-0000	BRACKET	13-161
2505106-0000	PUSHER	13-161
2505107-0000	BRACKET	13-161
2505108-0001	MODIFICATION DRAWING	13-171
2505109-0100	MACHINE BODY	13-171
2505117-0001	MODIFICATION DRAWING	13-159
2505118-0001	MODIFICATION DRAWING	13-159
2505143-0100	PUSHER	13-159
2505146-0001	MODIFICATION DRAWING	13-159
2505147-0000	HOLDER	4-101, 4-103, 4-105, 4-107
2505149-0100	VALVE PANEL	13-159
2505150-0100	PIPE WORK-PNEUMATIC	13-159
2505152-0000	PNEUMATIC DIAGRAM	13-159
2505155-0000	VALVE PANELS	13-159
2505159-0100	UK FLAP SEALING KIT	13-3
2505168-0000	USTS CUTTING RAIL	4-11, 4-13, 4-15, 4-17, 4-19, 4-21, 12-193, 12-195, 12-197, 12-199, 12-201, 12-203
2505169-0100	MKC DISCHARGE CHUTE	13-3
2505171-0100	EL.CONNECTION BOX	13-171
2505172-0000	CONNECTION BOX	13-183
2510293-0100	EL RK "FLAP SEALING"	13-171
2510294-0100	ELECTRICAL DOCUMENT	13-173
2510295-0100	ELECTRICAL MATERIAL	13-173

Tetra Pak

SPC
Spare Parts Catalogue

Part No	Description	Page No
2510542-0100	"USTS SERRATED & STEPPED CUTTING RAIL"	13-155
576739-0200	(PAPER)REEL TROLLEY	8-3
90418-0048	,T-PIPE, INT. CONN. NO. 7130-15	2-149, 2-151, 12-137
90091-0398	1PISTON SEAL GLIDE RING T 20,5X28X3,2 MM	4-23, 4-25, 4-27, 4-29
90053-0028	3 DIGIT COUNTER KOYO KCX-3-DM-V	9-5, 9-7, 9-9, 9-11, 9-13, 9-15, 9-25, 9-27, 9-29, 9-31, 9-33, 9-45, 9-47, 9-49, 9-51, 9-53, 9-55
90457-0036	3-PHASE MOTOR,FOOT MOUNT.1,1KW,1410 RPM	2-169
90450-0105	5 STEPS CYLINDER MECMAN	4-45, 4-47, 4-49, 4-51
525018-0000	51SPACER	5-25, 5-27, 5-41, 5-43, 5-45, 5-47
539209-0100	A-CYLINDER	1-59
557282-0100	A.S.U. SEPARATE ROOM	12-127
90410-0340	AC-ADAPTER 5100072-002	14-21
342705-0108	ACCESSORIES, FERRULE 10-LFZB	12-165, 13-93, 13-95
90030-0098	ACCESSORIES, FERRULE 8	4-11, 4-13, 4-15, 4-17, 4-19, 4-21, 4-23, 4-25, 4-27, 4-29, 4-73, 12-193, 12-195, 12-197, 12-199, 12-201, 12-203, 12-215, 12-217, 12-219, 12-221, 13-7, 13-9, 13-99, 13-101, 13-103, 13-105
342705-0103	ACCESSORIES, FERRULE 8-LFZB	2-35, 2-121, 2-123, 13-15
342706-0114	ACCESSORIES, INSERT SLEEVE 4 MM	5-29, 5-33, 5-49, 5-51, 5-53, 5-55, 5-67, 5-81, 5-83
342706-0130	ACCESSORIES, INSERT SLEEVE 6 MM	5-17, 5-67, 7-7
342711-0115	ACCESSORIES, PLUG PL-15 AND 16	2-149, 2-151, 12-159, 13-91
567731-0000	ADAPTER	14-27
567733-0101	ADAPTER	14-21
90410-0339	ADAPTER FOR TEMP.REGULATOR, 101	14-21
90259-0312	ADAPTER PLATE K&M SP PKZ SOND C	9-5, 9-7, 9-9, 9-11, 9-13, 9-15, 9-25, 9-27, 9-29, 9-31, 9-33, 9-45, 9-47, 9-49, 9-51, 9-53, 9-55
90259-0310	ADAPTER PLATE, K&M SP PKZ M	9-5, 9-7, 9-9, 9-11, 9-13, 9-15, 9-25, 9-27, 9-29, 9-31, 9-33, 9-45, 9-47, 9-49, 9-51, 9-53, 9-55
90418-0057	ADAPTER, EXT. CONN. NO. 7276CU / 15-G1/2	12-137
90418-0063	ADAPTER, INT. CONN. NO. 7272CU/15-G1/2	2-149, 2-151
499082-0403	ADAPTER, TYPE 1	10-3
499082-0404	ADAPTER, TYPE 1	10-3
499082-0407	ADAPTER, TYPE 1	10-3
90194-0113	ADHESIVE LABEL, CALIBRATED & DATE	14-21
90153-0017	ADHESIVE, 2963 TUBE 160G	12-149
90153-0043	ADHESIVE, LOCTITE 495 20G	5-57, 5-121, 5-133, 5-135
90030-0120	ADJ. L-PIPE CONNECTION EVL, INT.T-10	2-173, 2-175, 13-29
90030-0146	ADJUSTABLE ELBOW CONNECTION,EXT 6-G1/8	2-173, 2-175, 13-29
342738-0208	ADJUSTABLE ELBOW CONNECTION,EXT 8-G1/4	4-23, 4-25, 4-27, 4-29, 6-33, 12-215, 12-217, 12-219, 12-221, 13-7, 13-9, 13-99, 13-101, 13-103, 13-105, 13-109, 13-111
525359-0000	ADJUSTER	14-5
90130-0301	ADJUSTING KNOB WITH DIAL	13-215
1144974-0000	ADJUSTING PLATE	6-27
1362460-0000	ADJUSTING PLATE	4-101, 4-103, 4-105, 4-107
20073-0000	ADJUSTING SCREW	1-73
553763-0000	ADJUSTING SCREW	8-69, 8-71, 8-73
1035893-0000	ADJUSTING SCREW	13-133
1144916-0000	ADJUSTING SCREW	6-59, 6-61
543143-0100	ADJUSTMENT DEVICE	8-5, 8-7, 8-21, 8-23, 8-25, 8-27, 8-29, 8-31, 8-33
297998-0000	ADJUSTMENT PLATE	4-101, 4-103, 4-105, 4-107
297999-0000	ADJUSTMENT PLATE	4-101, 4-103, 4-105, 4-107
566683-0100	AIR COOLER	2-159, 2-161
928837-0000	AIR DISTRIBUTOR	2-163
90457-0862	AIR DRYER. TYP LDF-H1-GÂ¬-24	12-161, 13-153
32451-0000	AIR DUCT	7-37, 7-39
445688-0000	AIR GUIDE	7-37, 7-39
90459-0173	AIR GUN ASSEMBLY, CEJN SERIE 208	2-189
230922-0100	AIR JET GUN	2-3, 2-5
247227-0002	AIR NOZZLE	5-69, 5-71, 5-77, 5-79
247227-0003	AIR NOZZLE	5-69, 5-71, 5-77, 5-79
268568-0000	AIR NOZZLE	1-37
283361-0000	AIR NOZZLE	7-37, 7-39
285507-0002	AIR NOZZLE	5-69, 5-71, 5-77, 5-79
285508-0002	AIR NOZZLE	5-69, 5-71, 5-77, 5-79
285676-0000	AIR NOZZLE	5-69, 5-71, 5-77, 5-79
285677-0000	AIR NOZZLE	5-69, 5-71, 5-77, 5-79
442867-0000	AIR NOZZLE	5-69, 5-71, 5-77, 5-79
464197-0000	AIR NOZZLE	7-41
569124-0000	AIR NOZZLE	5-69, 5-71, 5-77, 5-79
569125-0000	AIR NOZZLE	5-69, 5-71, 5-77, 5-79
569126-0000	AIR NOZZLE	5-69, 5-71, 5-77, 5-79
595133-0100	AIR NOZZLE	13-37
595134-0000	AIR NOZZLE	13-41
596125-0000	AIR NOZZLE	6-21
596126-0000	AIR NOZZLE	6-25
596127-0000	AIR NOZZLE	6-23
283391-0200	AIR NOZZLE LS	1-35
90424-0068	AIR NOZZLE, G1/4, MOD. 216 BSP	6-27
90113-0021	AIR PRESSURE REGULATOR	12-121
442841-0000	AIR SCREW	5-19
90419-0005	ALARM BEACON,RED24V	2-167, 12-49
581953-0000	ALARM DISPLAY	9-41, 9-61
599593-0000	ALARM DISPLAY	9-21
90243-0099	ANALOG/DIGITAL MULTIMETER 175	14-21
1140660-0001	ANALOGUE CABLE	9-5, 9-7, 9-9, 9-11, 9-13, 9-15, 9-45, 9-47, 9-49, 9-51, 9-53, 9-55, 12-235, 12-237

Part No	Description	Page No
352113-0205	ANCHOR PLATES FOR STRIPS, TYPE TM2S8-C10	2-21, 13-27
352113-0204	ANCHOR PLATES FOR STRIPS, TYPE TM3S25-M	5-7, 5-9, 5-35, 5-37, 8-61, 8-63, 8-65, 13-145
352113-0203	ANCHOR PLATES FOR STRIPS, TYPE TM3S8-M0	6-29, 6-59, 6-61, 7-9
352113-0202	ANCHOR TM2S8-M REPL.BY 352113-205	2-117, 2-119
267733-0000	ANGLE	12-47
486971-0000	ANGLE	8-5, 8-7, 8-21, 8-23, 8-25, 8-27, 8-29, 8-31, 8-33
543125-0000	ANGLE	7-17
556868-0000	ANGLE	8-51, 8-53
208843-0000	ANGLE BRACKET	1-23
479715-0000	ANGLE BRACKET	7-29
484695-0000	ANGLE BRACKET LEFT	12-67, 12-69, 12-71, 12-73
484698-0000	ANGLE BRACKET LEFT	12-67, 12-69, 12-71, 12-73
484694-0000	ANGLE BRACKET RIGHT	12-67, 12-69, 12-71, 12-73
484697-0000	ANGLE BRACKET RIGHT	12-67, 12-69, 12-71, 12-73
90061-0018	ANGLE ENC 8BIT GRAY (REPL BY 90061-27)	3-11, 3-21, 13-11
68917-0100	ANGLE INDICATOR	2-127
575792-0000	ANGLE STRUT	2-115
283027-0000	APPLIANCE BOX	7-11
90303-0013	APRON	10-7
442811-0001	ARCH	5-53, 5-55
442811-0002	ARCH	5-53, 5-55
443206-0001	ARCH	5-53, 5-55
443206-0002	ARCH	5-53, 5-55
443207-0001	ARCH	5-53, 5-55
443207-0003	ARCH	5-53, 5-55
525437-0000	ARCH	5-53, 5-55
525466-0000	ARCH	5-53, 5-55
574055-0000	ARCH	5-53, 5-55
583628-0000	ARCH	5-53, 5-55
595048-0000	ARCH	5-33
595052-0000	ARCH	5-33
1361252-0000	ARCH	5-33
32668-0000	ARM	7-37, 7-39
36804-0000	ARM	1-17, 1-19, 1-21
37296-0000	ARM	1-17, 1-19, 1-21
229403-0000	ARM	12-49
243041-0000	ARM	1-35
243927-0700	ARM	3-3, 3-5, 3-7
246498-0600	ARM	4-3, 4-5
262235-0000	ARM	5-133, 5-135
262906-0000	ARM	5-133, 5-135
262907-0000	ARM	5-133, 5-135
269054-0000	ARM	7-15
271653-0000	ARM	7-29, 12-61, 12-63
285449-0000	ARM	5-133, 5-135
285655-0000	ARM	5-137, 5-139, 5-141, 5-143
285656-0000	ARM	5-137, 5-139, 5-141, 5-143
285657-0000	ARM	5-137, 5-139, 5-141, 5-143
285660-0000	ARM	5-137, 5-139, 5-141, 5-143
285661-0000	ARM	5-137, 5-139, 5-141, 5-143
285723-0000	ARM	5-137, 5-139, 5-141, 5-143
297091-0000	ARM	3-11, 3-21, 13-11
297092-0000	ARM	3-11, 3-21, 13-11
297609-0000	ARM	5-11
434751-0000	ARM	1-17, 1-19, 1-21, 1-25
440256-0000	ARM	8-61, 8-63, 8-65
442524-0000	ARM	5-63, 5-65
443484-0000	ARM	5-89, 5-91, 5-101, 5-103
445902-0000	ARM	8-69, 8-71, 8-73
450670-0000	ARM	3-37, 3-39
464010-0000	ARM	8-5, 8-7, 8-21, 8-23, 8-25, 8-27, 8-29, 8-31, 8-33, 12-53, 12-55, 12-67, 12-69, 12-71, 12-73
493021-0000	ARM	2-9
493022-0000	ARM	2-9, 2-69
525074-0000	ARM	5-119
525295-0000	ARM	5-25, 5-27, 5-41, 5-43, 5-45, 5-47
525301-0000	ARM	5-29, 5-49, 5-51
525302-0000	ARM	5-49, 5-51
525303-0000	ARM	5-49, 5-51
525304-0000	ARM	5-29, 5-49, 5-51
530708-0000	ARM	3-35
540870-0000	ARM	7-21, 7-23
541057-0000	ARM	7-21, 7-23
542781-0000	ARM	7-19
550359-0000	ARM	5-25, 5-27, 5-41, 5-43, 5-45, 5-47
556441-0000	ARM	8-85, 8-87
556442-0000	ARM	8-85, 8-87
562746-0000	ARM	3-41, 3-43
562747-0000	ARM	3-41, 3-43
565967-0000	ARM	5-145, 5-147, 5-149, 5-151, 5-153, 5-155
567033-0000	ARM	3-37, 3-39
569163-0000	ARM	2-177
574028-0000	ARM	5-145, 5-147, 5-149, 5-151, 5-153, 5-155
591245-0000	ARM	3-37, 3-39, 13-33
592225-0000	ARM	11-19

Part No	Description	Page No
595200-0100	ARM	4-3, 4-5
927594-0000	ARM	1-31, 1-33, 13-57
1144834-0000	ARM	2-69
1255161-0000	ARM	5-137, 5-139, 5-141, 5-143, 12-255
1279559-0000	ARM	6-5
1362485-0000	ARM	5-137, 5-139, 5-141, 5-143
538400-0000	ARM LEFT	4-135, 4-137
545410-0000	ARM LEFT	4-39, 4-41, 4-43
538401-0000	ARM RIGHT	4-131, 4-133
545409-0000	ARM RIGHT	4-33, 4-35, 4-37
591301-0100	ARM WITH AXLE PRESSURE	12-171
246499-0600	ARM WITH AXLE,CUT L	4-3, 4-5
593750-0100	ARM WITH AXLE,CUT R	4-3, 4-5
443469-0000	ARRIER	5-105, 5-107
245165-0000	ASSEMBLY CONE	10-11
75105-0200	ASSEMBLY TOOL	14-5
2594032-0100	ASSEMBLY TOOL	10-9
554607-0100	ASU VALVE	12-127
564542-0200	ATTACHED LS-STRIP.	12-3
32206-0000	ATTACHMENT	1-35
32474-0000	ATTACHMENT	7-37, 7-39
243846-0000	ATTACHMENT	13-41
245189-0001	ATTACHMENT	7-37, 7-39
246494-0000	ATTACHMENT	4-69, 4-71
246495-0000	ATTACHMENT	4-65, 4-67
279672-0000	ATTACHMENT	7-37, 7-39
297960-0000	ATTACHMENT	12-45
499701-0100	ATTACHMENT	1-3
442853-0000	ATTACHMENT PIPE	5-15, 6-63
450291-0000	ATTACHMENT PIPE	2-21, 2-117, 2-119, 13-27
450725-0000	ATTACHMENT PLATE	2-137, 2-139
464193-0000	ATTACHMENT PLATE	2-21, 2-77, 2-117, 2-119, 13-27
1143001-0000	ATTACHMENT PLATE	5-81, 5-83, 12-257, 12-269
554603-0300	AUTOMATIC SPLICING UNIT IN SEPARATE ROOM	12-3
90259-0306	AUX CONTACT	13-49
90259-0313	AUX. CONTACT K&M NHI21-PKZM0	9-5, 9-7, 9-9, 9-11, 9-13, 9-15, 9-25, 9-27, 9-29, 9-31, 9-33, 9-45, 9-47, 9-49, 9-51, 9-53, 9-55
315226-0196	AXIAL SEAL WITH STEEL COVER 48X65X4,5 MM	4-101, 4-103, 4-105, 4-107
315226-0200	AXIAL SEAL WITH STEEL COVER 50X70X4,5 MM	5-59
1144579-0000	AXLE	6-17
1346073-0000	AXLE	6-37, 6-39
1362496-0000	AXLE	13-145
593579-0000	AXLE BOLT	4-11, 4-13, 4-15, 4-17, 4-19, 4-21, 12-193, 12-195, 12-197, 12-199, 12-201, 12-203
1260838-0000	AXLE BOLT	6-47
232787-0000	AXLE PIN	12-47
276172-0000	AXLE PIN	4-143, 4-147
434320-0000	AXLE PIN	4-31, 4-53, 4-55, 12-205, 12-207
440250-0000	AXLE PIN	8-49
442563-0000	AXLE PIN	5-145, 5-147, 5-149, 5-151, 5-153, 5-155
443310-0000	AXLE PIN	5-119
525077-0000	AXLE PIN	5-119
536916-0000	AXLE PIN	7-17
536917-0000	AXLE PIN	7-21, 7-23
542782-0000	AXLE PIN	7-19
544725-0000	AXLE PIN	7-17
544726-0000	AXLE PIN	7-21, 7-23
544727-0000	AXLE PIN	7-17
547924-0000	AXLE PIN	7-15
574069-0000	AXLE PIN	5-89, 5-91
592221-0000	AXLE PIN	11-19
1143016-0000	AXLE PIN	5-137, 5-139, 5-141, 5-143, 12-255
1144312-0000	AXLE PIN	6-5
1144494-0000	AXLE PIN	6-59, 6-61
1144508-0000	AXLE PIN	6-59, 6-61
1144674-0000	AXLE PIN	6-45
1144676-0000	AXLE PIN	6-43
1144683-0000	AXLE PIN	6-57
1285888-0000	AXLE PIN	6-15
1285889-0000	AXLE PIN	6-15
1348392-0000	AXLE PIN	6-53
1348393-0000	AXLE PIN	6-53
1361249-0000	AXLE PIN	6-31
2529312-0000	AXLE PIN	7-15, 13-193
2727686-0000	AXLE PIN	13-237
257987-0000	AXLE SUPPORT	1-31, 1-33, 1-43, 1-45, 1-75, 1-77, 1-79, 1-81, 1-83
257988-0000	AXLE SUPPORT	1-43, 1-45, 1-75, 1-77, 1-79, 1-81, 1-83
593582-0000	AXLE SUPPORT	4-23, 4-25, 4-27, 4-29
929551-0000	AXLE SUPPORT	4-23, 4-25, 4-27, 4-29, 12-215, 12-217, 12-219, 12-221, 13-7, 13-9
1360216-0000	AXLE SUPPORT	13-147
1362504-0000	AXLE SUPPORT	13-145
530519-0000	BACK PIECE, FLOOR	12-49
529348-0000	BACK PIECE, WALL	12-49
90458-1916	BACK-UP RING 35,5X1,4 MM	4-23, 4-25, 4-27, 4-29, 13-167
90091-0360	BACK-UP RING 37,5X1,4 MM	4-23, 4-25, 4-27, 4-29, 13-7, 13-9, 13-167

Part No	Description	Page No
67372-0101	BACKPLANE 8TE(32 POLE)	9-5, 9-7, 9-9, 9-11, 9-13, 9-15, 9-25, 9-27, 9-29, 9-31, 9-33, 9-45, 9-47, 9-49, 9-51, 9-53, 9-55, 12-235, 12-237
566771-0000	BALL BEARING	10-5
1484447-0000	BALL BEARING	6-49
90214-0028	BALL BEARING REPBY 90214-98	12-25
90214-0169	BALL BEARING SOLID OIL 15X35X11 MM	3-35, 3-41, 3-43
90214-0163	BALL BEARING SOLID OIL 25X47X12 MM	3-37, 3-39, 13-33
321309-0100	BALL BEARING, 10X30X9 MM	4-45, 4-47, 4-49, 4-51
321312-0100	BALL BEARING, 10X30X9 MM	4-45, 4-47, 4-49, 4-51
321316-0200	BALL BEARING, 10X35X11 MM	8-5, 8-7, 8-21, 8-23, 8-25, 8-27, 8-29, 8-31, 8-33, 8-75
90214-0107	BALL BEARING, 12X28X8 MM	12-53, 12-55, 12-67, 12-69, 12-71, 12-73
321308-0101	BALL BEARING, 12X28X8 MM	8-5, 8-7, 8-21, 8-23, 8-25, 8-27, 8-29, 8-31, 8-33
321308-0201	BALL BEARING, 12X28X8 MM	8-41, 12-117
321312-0101	BALL BEARING, 12X32X10 MM	4-45, 4-47, 4-49, 4-51
321316-0201	BALL BEARING, 12X37X12 MM	8-17, 8-41
90214-0106	BALL BEARING, 15X28X7 MM	12-53, 12-55, 12-67, 12-69, 12-71, 12-73
90214-0207	BALL BEARING, 15X32X9 MM	7-25
321308-0202	BALL BEARING, 15X32X9 MM	8-5, 8-7, 8-17, 8-21, 8-23, 8-25, 8-27, 8-29, 8-31, 8-33, 8-41, 12-45, 12-49, 12-83
90214-0098	BALL BEARING, 15X35X11 MM	1-49, 1-51, 1-53, 7-13, 7-43, 12-65
321313-0102	BALL BEARING, 15X35X11 MM	8-17, 8-43, 8-57, 8-59, 8-81, 8-83, 12-83
321313-0103	BALL BEARING, 17X40X12MM	6-31, 6-33, 6-43, 6-45
321306-0104	BALL BEARING, 20X42X12 MM	5-133, 5-135
321308-0205	BALL BEARING, 25X47X12MM	3-11, 3-21, 6-33, 6-47, 6-57, 13-11
321313-0105	BALL BEARING, 25X52X15MM	6-57, 6-59, 6-61
321309-0106	BALL BEARING, 30X62X16 MM	5-19, 5-125, 5-127
321316-0206	BALL BEARING, 30X72X19 MM	6-29
321306-0107	BALL BEARING, 35X62X14 MM	5-19, 5-123, 6-15
321308-0207	BALL BEARING, 35X62X14 MM	6-49
321313-0107	BALL BEARING, 35X72X17MM	6-59, 6-61
321309-0108	BALL BEARING, 40X80X18 MM	3-29
321316-0108	BALL BEARING, 40X90X23 MM	3-31, 3-33
321300-0094	BALL BEARING, 4X13X5 MM	8-77, 8-79
321306-0110	BALL BEARING, 50X80X16 MM	3-29, 5-61
321309-0110	BALL BEARING, 50X90X20 MM	5-59
90214-0138	BALL BEARING, 5X19X6 MM	1-39, 1-43, 1-45, 7-29, 7-45, 12-61, 12-63
321308-0112	BALL BEARING, 60X95X18 MM	12-47
90214-0229	BALL BEARING, 65X85X10 MM	6-59, 6-61
321306-0114	BALL BEARING, 70X110X20 MM	5-125, 5-127
321309-0114	BALL BEARING, 70X125X24 MM	3-9, 3-19
90187-0029	BALL VALVE G1/2, NPBR	2-37, 2-39, 2-41, 2-85, 2-87, 2-149, 2-151
90187-0062	BALL VALVE G1/2, NPBR	2-149, 2-151
90187-0054	BALL VALVE G3/8	2-35, 2-121, 2-123, 13-15
90187-0073	BALL VALVE G3/8	1-71
90090-0012	BALL, D=12 MM	12-47
90090-0016	BALL, D=15 MM	4-97, 4-99
90090-0013	BALL, D=4 MM	4-7, 4-23, 4-25, 4-27, 4-29, 4-61, 4-63, 4-65, 4-67, 4-69, 4-71, 12-215, 12-217, 12-219, 12-221, 12-231, 13-7, 13-9, 13-99, 13-101, 13-103, 13-105, 13-109, 13-111
90090-0020	BALL, D=5 MM	2-11, 2-25, 2-53, 2-55, 2-59, 2-61
90090-0014	BALL, D=7,938 MM	2-37, 2-39, 2-41, 2-85, 2-87
90297-0306	BALLAST COIL 50/60 HZ	9-5, 9-7, 9-9, 9-11, 9-13, 9-15, 9-25, 9-27, 9-29, 9-31, 9-33, 9-45, 9-47, 9-49, 9-51, 9-53, 9-55
90297-0300	BALLAST COIL 50HZ	2-147
90137-0002	BANJO CONN. 1/8 - 5/16-24UNF	5-29, 5-33, 5-49, 5-51, 5-53, 5-55, 5-81, 5-83
90137-0005	BANJO CONN. M6, 5/16-24UNF	5-67, 5-133, 5-135
90137-0010	BANJO CONN. M6, D=2,5 MM	5-67
342981-0122	BANJO CONNEC,RING,FOR PLAST.TUBE 8-G1/4"	6-33
342980-0114	BANJO-CONNECTION,RING 6/4-G1/4"	4-97, 4-99
342980-0113	BANJO-CONNECTION,RING 6/4-G1/8 INCH	4-45, 4-47, 4-49, 4-51, 8-5, 8-7, 8-21, 8-23, 8-25, 8-27, 8-29, 8-31, 8-33, 8-41, 8-69, 8-71, 8-73
342980-0122	BANJO-CONNECTION,RING 8/6-G1/4 INCH	2-101, 2-103, 2-105, 2-107, 2-109, 2-111, 2-113, 2-137, 2-139, 4-73
342980-0304	BANJO-HOLLOW BOLT COUPL,EXT.THR.01-G1/4	1-35, 2-101, 2-103, 2-105, 2-107, 2-109, 2-111, 2-113, 2-137, 2-139, 4-73, 7-9, 7-37, 7-39
342980-0303	BANJO-HOLLOW BOLT COUPL,EXT.THR.01-G1/8	1-27, 1-29, 1-55, 4-45, 4-47, 4-49, 4-51, 8-5, 8-7, 8-21, 8-23, 8-25, 8-27, 8-29, 8-31, 8-33, 8-41, 8-69, 8-71, 8-73
90237-0011	BAR CLAMP	2-63, 2-65, 2-97, 2-99
927333-0000	BAR CLAMP	5-17
541188-0200	BAR CODE	4-3, 4-5
229410-0000	BARRIER	12-49
251498-0000	BARRIER	7-35
272728-0000	BARRIER	8-45, 8-47
556439-0000	BARRIER	8-85, 8-87
556440-0000	BARRIER	8-85, 8-87
293363-0000	BARRIER NUT	7-9
90053-0309	BASE	9-5, 9-7, 9-9, 9-11, 9-13, 9-15, 9-25, 9-27, 9-29, 9-31, 9-33, 9-45, 9-47, 9-49, 9-51, 9-53, 9-55
570131-0000	BASE	14-25
90129-0018	BASE OMRON P2RF-08-E	13-243
294464-0000	BASE PLATE	6-21, 6-23, 6-25, 13-177
90042-0520	BASE PLATE ISO SIZE 1	2-27, 2-29, 2-31, 2-81, 2-83
90042-0532	BASE PLATE ISO SIZE 1	2-27, 2-29, 2-31, 2-81, 2-83
539340-0100	BASE TO ASU	12-127
90119-0309	BASE UNIT, TYPE PYF 14AE	9-25, 9-27, 9-29, 9-31, 9-33, 9-45, 9-47, 9-49, 9-51, 9-53, 9-55
90458-0292	BASE, KT70-1001	13-245

Part No	Description	Page No
90129-0006	BASE, S3-B	9-5, 9-7, 9-9, 9-11, 9-13, 9-15, 9-25, 9-27, 9-29, 9-31, 9-33, 9-45, 9-47, 9-49, 9-51, 9-53, 9-55, 13-221
90459-4049	BASIC OP PANEL MM4, 6SE6400-0BP00-0AA0	13-221
90334-0006	BATTERY 3,6V SIZE AA	9-5, 9-7, 9-9, 9-11, 9-13, 9-15, 9-25, 9-27, 9-29, 9-31, 9-33, 9-45, 9-47, 9-49, 9-51, 9-53, 9-55
285801-0000	BEAM	2-37, 2-39, 2-41, 2-85, 2-87
297576-0000	BEAM	2-37, 2-39, 2-41, 2-85, 2-87
440702-0000	BEAM	2-37, 2-39, 2-41
442217-0000	BEAM	2-159, 2-161
445885-0000	BEAM	8-69, 8-71, 8-73
445886-0000	BEAM	8-69, 8-71, 8-73
450300-0000	BEAM	2-47
530603-0000	BEAM	12-43
1144277-0000	BEAM	2-85, 2-87
90240-0233	BEAR. BUSH. WITHOUT FL, 14X20X14 MM	5-145, 5-147, 5-149, 5-151, 5-153, 5-155
20718-0000	BEARING	4-45, 4-47, 4-49, 4-51
24206-0000	BEARING	1-5, 1-13, 1-15, 7-13, 7-47, 12-65
32223-0000	BEARING	1-35, 7-37, 7-39
32463-0000	BEARING	4-143, 4-147, 12-223, 12-227
33408-0000	BEARING	4-143, 4-147, 12-223, 12-227, 13-147
226098-0000	BEARING	8-57, 8-59
229409-0000	BEARING	12-49
237825-0000	BEARING	12-47
237826-0000	BEARING	12-47
246513-0000	BEARING	4-139, 4-141
283774-0000	BEARING	3-15
285851-0000	BEARING	5-25, 5-27, 5-41, 5-43, 5-45, 5-47
436991-0000	BEARING	8-51, 8-53
449748-0000	BEARING	8-77, 8-79
525252-0000	BEARING	5-23, 5-39
928948-0000	BEARING	3-15, 3-17, 12-169
229405-0000	BEARING BRACKET	12-49
436482-0000	BEARING BRACKET	3-31, 3-33
321120-0104	BEARING BUSH W/O FLANGE, 10X12X10 MM	7-35, 7-41, 12-97, 12-99
321141-0140	BEARING BUSH W/O FLANGE, 10X12X10 MM	7-19
321127-0100	BEARING BUSH W/O FLANGE, 10X13X10 MM	7-29, 12-61, 12-63
321116-0127	BEARING BUSH W/O FLANGE, 10X14X10 MM	5-25, 5-27, 5-41, 5-43, 5-45, 5-47
321116-0128	BEARING BUSH W/O FLANGE, 10X14X16 MM	5-25, 5-27, 5-41, 5-43, 5-45, 5-47, 5-89, 5-91, 5-101, 5-103
321105-0163	BEARING BUSH W/O FLANGE, 10X16X10 MM	12-45
321120-0109	BEARING BUSH W/O FLANGE, 12X14X10 MM	8-9, 8-39, 12-57, 12-75
321120-0110	BEARING BUSH W/O FLANGE, 12X14X12 MM	7-41
321141-0193	BEARING BUSH W/O FLANGE, 12X14X25 MM	7-21, 7-23
321105-0173	BEARING BUSH W/O FLANGE, 12X18X12 MM	12-45
321116-0163	BEARING BUSH W/O FLANGE, 12X18X20 MM	4-101, 4-103, 4-105, 4-107
321116-0179	BEARING BUSH W/O FLANGE, 14X18X14 MM	8-69, 8-71, 8-73
321120-0122	BEARING BUSH W/O FLANGE, 15X17X15 MM	5-29, 5-49, 5-51, 5-133, 5-135, 8-11, 8-35, 8-37, 12-53, 12-55, 12-59, 12-67, 12-69, 12-71, 12-73, 12-77, 12-79
321116-0234	BEARING BUSH W/O FLANGE, 16X20X12 MM	6-17
321105-0234	BEARING BUSH W/O FLANGE, 20X28X30 MM	4-139, 4-141, 8-55
321141-0305	BEARING BUSH W/O FLANGE, 25X28X30 MM	5-133, 5-135
321120-0171	BEARING BUSH W/O FLANGE, 30X34X30 MM	12-97, 12-99
321120-0183	BEARING BUSH W/O FLANGE, 35X39X20 MM	5-133, 5-135
321120-0101	BEARING BUSH W/O FLANGE, 6X8X6 MM	8-13, 8-15
321120-0100	BEARING BUSH W/O FLANGE, 8X10X12 MM	8-9, 8-13, 8-15, 8-39, 12-57, 12-75
321141-0100	BEARING BUSH W/O FLANGE, 8X10X8 MM	7-19
90240-0088	BEARING BUSHING W/O FL, 10X12X10 MM	5-137, 5-139, 5-141, 5-143
293608-0000	BEARING CONSOLE	4-101, 4-103, 4-105, 4-107
293609-0000	BEARING CONSOLE	4-101, 4-103, 4-105, 4-107
434020-0000	BEARING CONSOLE	4-101, 4-103, 4-105, 4-107
23291-0000	BEARING COVER	4-45, 4-47, 4-49, 4-51
567345-0000	BEARING COVER	5-19
568155-0000	BEARING COVER	5-61
1361248-0000	BEARING COVER	6-59, 6-61
209332-0000	BEARING HOLDER	1-49, 1-51, 1-53
255578-0000	BEARING HOLDER	1-31, 1-33
565331-0000	BEARING HOLDER	5-125, 5-127
565332-0000	BEARING HOLDER	5-125, 5-127
565333-0000	BEARING HOLDER	5-125, 5-127
565334-0000	BEARING HOLDER	5-125, 5-127
565335-0000	BEARING HOLDER	5-125, 5-127
23292-0000	BEARING HOUSING	4-45, 4-47, 4-49, 4-51
232784-0000	BEARING HOUSING	12-47
237725-0000	BEARING HOUSING	3-29
283172-0000	BEARING HOUSING	7-37, 7-39
449631-0000	BEARING HOUSING	8-77, 8-79
449632-0000	BEARING HOUSING	8-77, 8-79
450503-0000	BEARING HOUSING	4-77, 4-79, 4-85, 4-87
450504-0000	BEARING HOUSING	4-65, 4-67, 4-69, 4-71
457486-0000	BEARING HOUSING	8-77, 8-79
457487-0000	BEARING HOUSING	8-77, 8-79
457488-0000	BEARING HOUSING	8-77, 8-79
457489-0000	BEARING HOUSING	8-77, 8-79
458020-0000	BEARING HOUSING	4-65, 4-67, 4-69, 4-71

Part No	Description	Page No
458021-0000	BEARING HOUSING	4-77, 4-79, 4-85, 4-87
497572-0000	BEARING HOUSING	4-77, 4-79, 4-85, 4-87
522125-0000	BEARING HOUSING	8-85, 8-87
522408-0000	BEARING HOUSING	8-5, 8-7, 8-21, 8-23, 8-25, 8-27, 8-29, 8-31, 8-33
534879-0000	BEARING HOUSING	2-11, 2-25, 2-53, 2-55, 2-59, 2-61
556443-0000	BEARING HOUSING	8-85, 8-87
569057-0000	BEARING HOUSING	4-77, 4-79, 4-85, 4-87
573983-0000	BEARING HOUSING	4-65, 4-67, 4-69, 4-71
573985-0000	BEARING HOUSING	4-77, 4-79, 4-85, 4-87
574059-0000	BEARING HOUSING	8-77, 8-79
574060-0000	BEARING HOUSING	8-77, 8-79
582105-0000	BEARING HOUSING	4-65, 4-67, 4-69, 4-71
583260-0000	BEARING HOUSING	4-77, 4-79, 4-85, 4-87
583261-0000	BEARING HOUSING	4-65, 4-67, 4-69, 4-71
592536-0000	BEARING HOUSING	12-215, 12-217, 12-219, 12-221, 13-99, 13-101, 13-103, 13-105, 13-109, 13-111
592538-0000	BEARING HOUSING	12-215, 12-217, 12-219, 12-221, 13-99, 13-101, 13-103, 13-105, 13-109, 13-111
593566-0000	BEARING HOUSING	8-77, 8-79
593567-0000	BEARING HOUSING	8-77, 8-79
593570-0000	BEARING HOUSING	4-11, 4-13, 4-15, 4-17, 4-19, 4-21, 12-193, 12-195, 12-197, 12-199, 12-201, 12-203
594216-0000	BEARING HOUSING	13-7, 13-9
594217-0000	BEARING HOUSING	13-7, 13-9
598101-0000	BEARING HOUSING	6-29
929540-0000	BEARING HOUSING	4-11, 4-13, 4-15, 4-17, 4-19, 4-21, 12-193, 12-195, 12-197, 12-199, 12-201, 12-203
1144468-0000	BEARING HOUSING	6-33
1338673-0000	BEARING HOUSING	4-23, 4-25, 4-27, 4-29, 13-167
1338674-0000	BEARING HOUSING	4-23, 4-25, 4-27, 4-29, 13-167
1348386-0000	BEARING HOUSING	6-55
1360217-0000	BEARING HOUSING	13-147
1365561-0000	BEARING HOUSING	14-7
1365562-0000	BEARING HOUSING	14-7
2660680-0000	BEARING HOUSING	12-275
569921-0000	BEARING HOUSING LEFT	8-77, 8-79
569922-0000	BEARING HOUSING RIGHT	8-77, 8-79
21944-0000	BEARING PANEL	1-73
113653-0000	BEARING PLATE	4-143, 4-147, 12-223, 12-227
315230-0157	BEARING SEAL 12X16X3 MM	4-143, 4-147, 12-223, 12-227, 13-147
90091-0408	BEARING SEAL 70X78X5 MM	6-59, 6-61
568071-0000	BEARING SEAT	5-123
568072-0000	BEARING SEAT	5-123
568153-0000	BEARING SEAT	5-61
568154-0000	BEARING SEAT	5-61
229207-0000	BEARING SLEEVE	5-23, 5-39, 6-37, 6-39
265567-0000	BEARING UNIT	7-13, 7-43, 12-25, 12-65
544486-0000	BEARING UNIT	2-63, 2-65, 2-97, 2-99
556872-0000	BEARING UNIT	8-49
560800-0000	BEARING UNIT	2-63, 2-65, 2-97, 2-99
457430-0000	BEATER	8-5, 8-7, 8-21, 8-23, 8-25, 8-27, 8-29, 8-31, 8-33
90239-0231	BELLOWS	8-69, 8-71, 8-73
574332-0100	BELT	5-89, 5-91
1144252-0000	BELT	6-55
576246-0100	BELT LEFT	5-89, 5-91
576245-0100	BELT RIGHT	5-89, 5-91
1285875-0100	BELT TENSIONER	6-41
1334435-0100	BELT TENSIONER	6-41
1362936-0100	BELT TIGHTENER	6-29
207024-0001	BENDING ROLLER	1-49, 1-51, 1-53
207024-0002	BENDING ROLLER	1-49, 1-51, 1-53
226097-0002	BENDING ROLLER	8-57, 8-59
239715-0200	BENDING ROLLER	1-3
252870-0000	BENDING ROLLER	12-83
255420-0000	BENDING ROLLER	12-45, 12-49
265564-0000	BENDING ROLLER	7-43, 8-57, 8-59, 8-75, 12-25
266625-0400	BENDING ROLLER	12-53, 12-55, 12-67, 12-69, 12-71, 12-73
293621-0002	BENDING ROLLER	8-5, 8-7, 12-53, 12-55, 12-67, 12-69, 12-71, 12-73
293621-0003	BENDING ROLLER	12-53, 12-55
293621-0005	BENDING ROLLER	8-21, 8-23, 8-25, 8-27, 8-29, 8-31, 8-33
293622-0003	BENDING ROLLER	12-53, 12-55
293623-0001	BENDING ROLLER	12-67, 12-69, 12-71, 12-73
440135-0100	BENDING ROLLER	8-69, 8-71, 8-73
440184-0100	BENDING ROLLER	8-69, 8-71, 8-73
449843-0001	BENDING ROLLER	7-13, 12-65
449843-0005	BENDING ROLLER	7-13
522410-0200	BENDING ROLLER	8-69, 8-71, 8-73
533449-0001	BENDING ROLLER	8-21, 8-23, 8-25, 8-27, 8-29, 8-31, 8-33
533449-0002	BENDING ROLLER	8-5, 8-7
546179-0100	BENDING ROLLER	7-3, 7-5
589369-0000	BENDING ROLLER	1-49, 1-51, 1-53
592594-0000	BENDING ROLLER	7-43
592963-0000	BENDING ROLLER	1-49, 1-51, 1-53
593553-0000	BENDING ROLLER	8-43
927743-0000	BENDING ROLLER	8-21, 8-23, 8-25, 8-27, 8-29, 8-31, 8-33
265565-0100	BENDING ROLLER BRACKET	12-23
265565-0200	BENDING ROLLER BRACKET	7-3, 7-5

Part No	Description	Page No
532726-0100	BENDING ROLLERS	1-3
593555-0100	BENDING UNIT	8-3
285291-0400	BEVEL GEAR	5-57
90017-0001	BIKE HANDLE	12-87, 12-91
90243-0169	BINDER CLIP, DIAM.29 MM, NO. 4670819	2-131
90042-0519	BLANK PLATE ISO SIZE 1	2-27, 2-29, 2-31, 2-81, 2-83, 13-171
311521-0144	BLANK RIVET 3,2X10	10-23
311521-0142	BLANK RIVET 3,2X6	13-179
311521-0143	BLANK RIVET 3,2X8	8-91
90002-0016	BLANK-OFF PLUG PR 20.4 SKINDICHT-BLK13,5	2-85, 2-87
90002-0013	BLANK-OFF PLUG, PR 15,2 SKINDICHT-BLK9	2-21, 2-45, 2-77, 2-85, 2-87, 2-91, 2-117, 2-119, 2-163, 6-67, 7-11, 8-67, 13-27
90002-0009	BLANK-OFF PLUG, PR 18.6 SKINDICHT-BLK11	2-21, 2-45, 2-77, 2-91, 2-117, 2-119, 2-147, 8-61, 8-63, 8-65, 13-27
90002-0004	BLANK-OFF PLUG, PR 22,5 SKINDICHT-BLK16	2-21, 2-45, 2-77, 2-91, 2-117, 2-119, 8-61, 8-63, 8-65, 13-27
90002-0012	BLANK-OFF PLUG, PR 28,3 SKINDICHT-BLK21	2-77, 2-91, 2-185, 8-67
90002-0010	BLANK-OFF PLUG, PR 37 SKINDICHT-BLK29	2-21, 2-77, 2-117, 2-119, 2-185, 13-27
90042-0528	BLANKING KIT SEALS ISO SIZE 1	2-27, 2-29, 2-31, 2-81, 2-83, 12-159
90201-0310	BLANKING, NO. A1-9904	3-23, 3-25
90201-0309	BLANKING, NO. A4-9905	2-171
90201-0311	BLANKING, NO. A4-9906	3-23, 3-25
90201-0307	BLANKING, NO. DGMA-3-C1-10	2-175
90201-0308	BLANKING, NO. DGVM-3-10-R	2-173, 2-175, 13-29
342715-0100	BLIND PLUG 4 MM	2-81, 2-83
342715-0102	BLIND PLUG 6 MM	2-27, 2-29, 2-31, 2-81, 2-83
342715-0103	BLIND PLUG 8 MM	2-27, 2-29, 2-31, 2-81, 2-83, 13-91, 13-171
90002-0014	BLIND PLUG D=22,5MM	9-5, 9-7, 9-9, 9-11, 9-13, 9-15, 9-25, 9-27, 9-29, 9-31, 9-33, 9-45, 9-47, 9-49, 9-51, 9-53, 9-55
90201-0427	BLOCK	3-13, 12-167, 13-13, 13-97
593219-0000	BLOCK	11-9, 11-11, 11-13, 11-15
596111-0000	BLOCK	6-57
598575-0000	BLOCK	6-5
979491-0000	BLOCK	2-79
1144577-0000	BLOCK	6-17
1144648-0000	BLOCK	6-7
1144704-0000	BLOCK	6-7
1144705-0000	BLOCK	6-7
1144839-0000	BLOCK	6-29
1260836-0000	BLOCK	6-47
1350488-0000	BLOCK	11-9, 11-11, 11-13, 11-15
90032-0038	BLOCK 2 WAYS	2-179, 3-37, 3-39, 4-45, 4-47, 4-49, 4-51, 4-101, 4-103, 4-105, 4-107, 5-25, 5-27, 5-41, 5-43, 5-45, 5-47
90032-0039	BLOCK 4 WAYS	3-35, 3-41, 3-43, 4-33, 4-35, 4-37, 4-39, 4-41, 4-43, 4-131, 4-133, 4-135, 4-137, 4-139, 4-141, 5-33, 5-53, 5-55, 5-81, 5-83, 6-29
90032-0040	BLOCK 6 WAYS	4-131, 4-133, 4-135, 4-137, 5-29, 5-49, 5-51, 5-81, 5-83, 6-29
90134-0054	BLOCK CONNECTION M10X1	2-179
522474-0000	BLOCK L	8-77, 8-79
593649-0000	BLOCK LEFT	8-77, 8-79
522475-0000	BLOCK R	8-77, 8-79
593650-0000	BLOCK RIGHT	8-77, 8-79
230226-0000	BLOCKING PIECE	2-133
464009-0001	BLOCKING PIECE	12-67, 12-69, 12-71, 12-73
464009-0002	BLOCKING PIECE	12-53, 12-55, 12-67, 12-69, 12-71, 12-73
525100-0000	BLOCKING PIECE	5-133, 5-135
525101-0001	BLOCKING PIECE	5-133, 5-135
525101-0002	BLOCKING PIECE	5-133, 5-135
569112-0000	BLOCKING PIECE	5-133, 5-135
574036-0000	BLOCKING PIECE	5-133, 5-135
556874-0000	BLOCKING RING	8-49
525198-0000	BLOW-OFF NOZZLE TL	5-69, 5-71, 5-77, 5-79
525197-0000	BLOW-OFF NOZZLE TR	5-69, 5-71, 5-77, 5-79
574032-0000	BLOWING NOZZLE B	5-69, 5-71, 5-77, 5-79
574033-0000	BLOWING NOZZLE TH	5-69, 5-71, 5-77, 5-79
574034-0000	BLOWING NOZZLE TV	5-69, 5-71, 5-77, 5-79
293621-0001	BNDING ROLLER	8-21, 8-23, 8-25, 8-27, 8-29, 8-31, 8-33, 12-67, 12-69, 12-71, 12-73
245210-0000	BODY	7-45
90258-0036	BOLT	12-97, 12-99
90258-0037	BOLT	12-97, 12-99
527794-0000	BOLT	12-97, 12-99
90201-0407	BOLT KIT	2-173, 12-163, 13-29
90005-0010	BONDED SEAL SS/NBR M5	12-97, 12-99
90005-0007	BONDED SEAL SS/NBR M8	4-93, 4-95
315211-0108	BONDED SEAL SS/NBR90 G1/4	4-23, 4-25, 4-27, 4-29, 13-109, 13-111
315211-0105	BONDED SEAL SS/NBR90 G1/8	4-23, 4-25, 4-27, 4-29, 12-215, 12-217, 12-219, 12-221, 13-7, 13-9, 13-99, 13-101, 13-103, 13-105, 13-109, 13-111
315211-0103	BONDED SEAL SS/NBR90 M6	4-23, 4-25, 4-27, 4-29, 6-41, 12-215, 12-217, 12-219, 12-221, 13-7, 13-9, 13-99, 13-101, 13-103, 13-105, 13-109, 13-111
90050-0008	BOTTLE	8-9, 8-39, 12-57, 12-75
90050-0011	BOTTLE	2-135
443076-0000	BOTTOM	5-145, 5-147, 5-149, 5-151, 5-153, 5-155
525063-0000	BOTTOM	5-145, 5-147, 5-149, 5-151, 5-153, 5-155
525368-0000	BOTTOM	5-145, 5-147, 5-149, 5-151, 5-153, 5-155

Part No	Description	Page No
525369-0000	BOTTOM	5-145, 5-147, 5-149, 5-151, 5-153, 5-155
525370-0000	BOTTOM	5-145, 5-147, 5-149, 5-151, 5-153, 5-155
525373-0000	BOTTOM	5-145, 5-147, 5-149, 5-151, 5-153, 5-155
550235-0000	BOTTOM	5-145, 5-147, 5-149, 5-151, 5-153, 5-155
569119-0000	BOTTOM	5-145, 5-147, 5-149, 5-151, 5-153, 5-155
574031-0000	BOTTOM	5-145, 5-147, 5-149, 5-151, 5-153, 5-155
583449-0000	BOTTOM	5-145, 5-147, 5-149, 5-151, 5-153, 5-155
593861-0000	BOTTOM	11-9, 11-11, 11-13, 11-15
596108-0000	BOTTOM	6-5
597608-0000	BOTTOM	12-271, 13-127
597620-0000	BOTTOM	5-145, 5-147, 5-149, 5-151, 5-153, 5-155
548343-0000	BOTTOM PANEL	2-185
548344-0000	BOTTOM PANEL	2-159, 2-161
583631-0000	BOTTOM PANEL	5-145, 5-147, 5-149, 5-151, 5-153, 5-155
440422-0600	BOTTOM PLATE	2-3, 2-5
580860-0000	BOTTOM PLATE	2-165
1362493-0000	BOTTOM PLATE	13-57
526933-0400	BOTTOM PLATE TB/8	7-3, 7-5
32217-0000	BOTTOM SECTION	1-35, 7-37, 7-39
525143-0200	BOTTOM VALVE	5-7, 5-9, 5-35, 5-37
1144848-0100	BOTTOM VALVE	6-3
24351-0000	BOW CLAMP	1-43, 1-45, 7-45
110222-0000	BOW CLAMP	1-73
229404-0000	BOW CLAMP	12-49
267754-0000	BOW CLAMP	4-131, 4-133, 4-135, 4-137
297314-0000	BOW CLAMP	12-83
434747-0000	BOW CLAMP	8-9, 8-39, 12-57, 12-75
436404-0000	BOW CLAMP	1-43, 1-45
442480-0000	BOW CLAMP	7-37, 7-39
451427-0000	BOW CLAMP	12-5
484574-0000	BOW CLAMP	12-39, 12-41
525376-0000	BOW CLAMP	5-67
537298-0000	BOW CLAMP	1-43, 1-45
569096-0000	BOW CLAMP	1-43, 1-45
583254-0000	BOW CLAMP	1-43, 1-45
592924-0000	BOW CLAMP	1-43, 1-45
597523-0100	BOW CLAMP	13-37
1362456-0000	BOW CLAMP	13-39
440437-0300	BOX LEFT	2-3, 2-5
23229-0000	BRACKET	4-143, 4-147
35827-0000	BRACKET	3-35
78081-0000	BRACKET	10-5
90236-0008	BRACKET	12-39, 12-41
90236-0041	BRACKET	2-149, 2-151
90239-0127	BRACKET	12-49, 12-83
90239-0368	BRACKET	1-35
209182-0000	BRACKET	2-67
209184-0000	BRACKET	2-67
243928-0000	BRACKET	3-35
246374-0000	BRACKET	2-21, 2-117, 2-119, 13-27
246739-0000	BRACKET	2-133
246948-0000	BRACKET	3-37, 3-39
247080-0000	BRACKET	2-37, 2-39, 2-41, 2-85, 2-87
255017-0000	BRACKET	2-35, 2-121, 2-123, 13-15
255282-0000	BRACKET	12-83
262234-0000	BRACKET	5-133, 5-135
262274-0002	BRACKET	5-59
262274-0005	BRACKET	5-57
263150-0000	BRACKET	8-17, 12-83
263425-0000	BRACKET	14-39
267732-0000	BRACKET	12-47
279466-0000	BRACKET	3-35
279526-0000	BRACKET	2-137, 2-139
279985-0000	BRACKET	3-15
279987-0000	BRACKET	3-15, 3-17
279991-0000	BRACKET	3-15, 3-17
279992-0000	BRACKET	3-15, 3-17
279993-0000	BRACKET	3-15, 3-17
279997-0000	BRACKET	3-15, 3-17
282512-0000	BRACKET	3-15, 3-17
282513-0000	BRACKET	3-15, 3-17
285300-0000	BRACKET	5-63, 5-65
293198-0002	BRACKET	2-179
293580-0000	BRACKET	14-37
293584-0000	BRACKET	14-37
293585-0000	BRACKET	14-37
293645-0000	BRACKET	8-5, 8-7, 8-21, 8-23, 8-25, 8-27, 8-29, 8-31, 8-33, 12-53, 12-55, 12-67, 12-69, 12-71, 12-73
297349-0000	BRACKET	12-45, 12-49
297608-0000	BRACKET	5-11
297643-0000	BRACKET	5-137, 5-139, 5-141, 5-143
297802-0000	BRACKET	2-57, 2-95
297814-0000	BRACKET	5-7, 5-9, 5-35, 5-37
434387-0000	BRACKET	4-45, 4-47, 4-49, 4-51
434454-0000	BRACKET	12-47

Part No	Description	Page No
434664-0000	BRACKET	2-177
436484-0000	BRACKET	3-31, 3-33
440066-0002	BRACKET	14-35
440067-0000	BRACKET	14-35
440192-0000	BRACKET	8-55
442566-0000	BRACKET	2-9
442829-0000	BRACKET	5-53, 5-55
442830-0000	BRACKET	5-33, 5-53, 5-55
443178-0000	BRACKET	5-157
443213-0000	BRACKET	5-33, 5-53, 5-55
443217-0000	BRACKET	5-33, 5-53, 5-55
443229-0000	BRACKET	5-29, 5-49, 5-51
443293-0000	BRACKET	5-89, 5-91, 5-101, 5-103
443350-0000	BRACKET	5-101, 5-103
443365-0000	BRACKET	5-119
443447-0000	BRACKET	5-117
443454-0000	BRACKET	5-101, 5-103
443474-0000	BRACKET	5-119
443480-0000	BRACKET	5-101, 5-103
443482-0000	BRACKET	5-89, 5-91, 5-101, 5-103
443483-0000	BRACKET	5-89, 5-91, 5-101, 5-103
443489-0000	BRACKET	5-89, 5-91, 5-101, 5-103
443491-0000	BRACKET	5-117
443492-0000	BRACKET	5-117
449000-0000	BRACKET	1-7, 1-9
449153-0000	BRACKET	14-33
449629-0000	BRACKET	8-69, 8-71, 8-73
450796-0000	BRACKET	2-135
450826-0000	BRACKET	2-133
450973-0000	BRACKET	2-133
451089-0000	BRACKET	2-47
457357-0000	BRACKET	2-37, 2-39, 2-41, 2-85, 2-87
457359-0000	BRACKET	4-97, 4-99
458908-0000	BRACKET	8-69, 8-71, 8-73
458909-0000	BRACKET	8-69, 8-71, 8-73
458912-0000	BRACKET	8-69, 8-71, 8-73
464107-0000	BRACKET	12-97, 12-99
464548-0000	BRACKET	8-69, 8-71, 8-73
476503-0000	BRACKET	8-41
484212-0000	BRACKET	2-37, 2-39, 2-41, 2-85, 2-87
484213-0000	BRACKET	2-37, 2-39, 2-41, 2-85, 2-87
484220-0000	BRACKET	2-9, 2-69
484221-0000	BRACKET	2-9, 2-69
486790-0000	BRACKET	4-97, 4-99
493562-0000	BRACKET	12-97, 12-99
493568-0000	BRACKET	12-97, 12-99
525008-0001	BRACKET	5-25, 5-27, 5-41, 5-43, 5-45, 5-47
525008-0002	BRACKET	5-41, 5-43, 5-45, 5-47
525008-0003	BRACKET	5-41, 5-43, 5-45, 5-47
525011-0001	BRACKET	5-41, 5-43, 5-45, 5-47
525011-0002	BRACKET	5-41, 5-43, 5-45, 5-47
525011-0004	BRACKET	5-41, 5-43, 5-45, 5-47
525011-0005	BRACKET	5-41, 5-43, 5-45, 5-47
525011-0006	BRACKET	5-41, 5-43, 5-45, 5-47
525011-0008	BRACKET	5-41, 5-43, 5-45, 5-47
525019-0000	BRACKET	5-25, 5-27, 5-41, 5-43, 5-45, 5-47
525055-0000	BRACKET	5-97
525078-0000	BRACKET	5-119
525079-0000	BRACKET	5-119
525080-0000	BRACKET	5-119
525081-0000	BRACKET	5-119
525082-0000	BRACKET	5-119
525083-0000	BRACKET	5-119
525109-0000	BRACKET	5-17
525147-0000	BRACKET	5-117
525171-0001	BRACKET	5-23, 5-39
525171-0002	BRACKET	5-39
525174-0000	BRACKET	5-7, 5-9, 5-35, 5-37
525175-0000	BRACKET	5-7, 5-9, 5-35, 5-37
525178-0000	BRACKET	5-25, 5-27, 5-41, 5-43, 5-45, 5-47
525200-0000	BRACKET	5-29, 5-49, 5-51
525232-0000	BRACKET	5-17
525242-0000	BRACKET	5-101, 5-103
525292-0000	BRACKET	5-121
525296-0000	BRACKET	5-25, 5-27, 5-41, 5-43, 5-45, 5-47
525297-0000	BRACKET	5-41, 5-43, 5-45, 5-47
525310-0000	BRACKET	5-29, 5-49, 5-51
525323-0000	BRACKET	5-53, 5-55
525334-0000	BRACKET	5-89, 5-91, 5-101, 5-103
525337-0000	BRACKET	5-17
525340-0000	BRACKET	5-25, 5-27, 5-41, 5-43, 5-45, 5-47
525358-0000	BRACKET	5-67
525360-0000	BRACKET	5-41, 5-43, 5-45, 5-47
525381-0000	BRACKET	5-159

Part No	Description	Page No
525383-0000	BRACKET	5-159
525385-0000	BRACKET	8-51, 8-53
525465-0000	BRACKET	5-119
529402-0000	BRACKET	12-61, 12-63
529403-0000	BRACKET	12-61, 12-63
531365-0000	BRACKET	2-37, 2-39, 2-41, 2-85, 2-87
531609-0000	BRACKET	12-119
533902-0000	BRACKET	12-143
535017-0000	BRACKET	2-23, 2-79
536705-0000	BRACKET	4-33, 4-35, 4-37, 4-39, 4-41, 4-43
542558-0000	BRACKET	4-93
542559-0000	BRACKET	4-95
542855-0000	BRACKET	1-7, 1-9
543127-0000	BRACKET	2-149, 2-151
543130-0000	BRACKET	2-149, 2-151
543131-0000	BRACKET	2-149, 2-151
544482-0000	BRACKET	2-63, 2-97
544483-0000	BRACKET	2-65, 2-99
544508-0000	BRACKET	2-63, 2-97
544510-0000	BRACKET	2-65
547902-0000	BRACKET	2-179
554393-0000	BRACKET	1-13, 1-15
555888-0000	BRACKET	3-15, 3-17
556550-0000	BRACKET	7-37, 7-39
556552-0000	BRACKET	7-41
556886-0000	BRACKET	5-89, 5-91, 5-101, 5-103
561416-0000	BRACKET	4-45, 4-47, 4-49, 4-51
561423-0000	BRACKET	2-185
562748-0000	BRACKET	3-41, 3-43
562749-0000	BRACKET	3-41, 3-43
566180-0000	BRACKET	1-71
566312-0000	BRACKET	5-29, 5-49, 5-51
566533-0000	BRACKET	5-29, 5-49, 5-51
566685-0000	BRACKET	2-163
569131-0000	BRACKET	5-117
569133-0000	BRACKET	5-101, 5-103
569135-0000	BRACKET	5-119
569136-0000	BRACKET	5-119
571425-0000	BRACKET	8-51, 8-53
572246-0000	BRACKET	8-51, 8-53
573485-0000	BRACKET	5-41, 5-43, 5-45, 5-47
573488-0000	BRACKET	5-129, 5-131
573489-0000	BRACKET	5-129, 5-131
574048-0000	BRACKET	5-25, 5-27, 5-41, 5-43, 5-45, 5-47
574073-0000	BRACKET	5-89, 5-91
574076-0000	BRACKET	5-89, 5-91
574078-0000	BRACKET	5-119
574079-0000	BRACKET	5-119
574080-0000	BRACKET	5-117
574121-0000	BRACKET	5-89, 5-91
574122-0000	BRACKET	5-89, 5-91
574123-0000	BRACKET	5-89, 5-91
574125-0000	BRACKET	5-41, 5-43, 5-45, 5-47
574603-0000	BRACKET	2-27, 2-29, 2-31, 2-81, 2-83
574604-0000	BRACKET	2-27, 2-29, 2-31, 2-81, 2-83
576262-0000	BRACKET	14-37
576410-0000	BRACKET	8-51, 8-53
583456-0000	BRACKET	5-25, 5-27, 5-41, 5-43, 5-45, 5-47
583629-0000	BRACKET	5-33, 5-53, 5-55
591294-0000	BRACKET	12-155
592216-0000	BRACKET	11-17
592217-0000	BRACKET	11-17
592218-0000	BRACKET	11-23
592219-0000	BRACKET	11-23
592224-0000	BRACKET	11-19
592715-0000	BRACKET	4-23, 4-25, 4-27, 4-29, 12-215, 12-217, 12-219, 12-221, 13-7, 13-9, 13-99, 13-101, 13-103, 13-105
593651-0000	BRACKET	8-69, 8-71, 8-73
593652-0000	BRACKET	8-69, 8-71, 8-73
595053-0000	BRACKET	5-33
595055-0000	BRACKET	5-25, 5-27
595056-0000	BRACKET	5-33
595057-0000	BRACKET	5-25, 5-27
596086-0000	BRACKET	14-37
596087-0000	BRACKET	14-37
596142-0000	BRACKET	6-37, 6-39
597562-0000	BRACKET	12-161, 13-115, 13-153
597584-0000	BRACKET	5-81, 5-83, 12-269, 13-129
597613-0000	BRACKET	5-25, 5-27, 5-41, 5-43, 5-45, 5-47
927258-0000	BRACKET	1-49, 1-51, 1-53
927332-0000	BRACKET	5-17
927337-0000	BRACKET	14-37
928119-0000	BRACKET	2-77
978531-0000	BRACKET	13-67

Part No	Description	Page No
1143002-0000	BRACKET	5-81, 5-83, 12-257, 12-269
1143003-0000	BRACKET	5-89, 5-91, 12-257, 12-269
1143008-0000	BRACKET	5-129, 5-131, 12-251, 12-273
1143009-0000	BRACKET	5-129, 5-131, 12-251, 12-273
1144156-0000	BRACKET	3-17
1144158-0000	BRACKET	6-35
1144475-0000	BRACKET	6-57
1144476-0000	BRACKET	6-57
1144536-0000	BRACKET	6-35
1144578-0000	BRACKET	6-17
1144603-0000	BRACKET	2-99
1144840-0000	BRACKET	6-33
1195094-0000	BRACKET	8-55
1279578-0000	BRACKET	6-35
1282701-0000	BRACKET	6-33
1285299-0000	BRACKET	6-27
1317053-0000	BRACKET	6-41
1349161-0000	BRACKET	6-55
1361243-0000	BRACKET	6-59, 6-61
1361912-0000	BRACKET	5-25, 5-27
1362502-0000	BRACKET	13-145
2505104-0000	BRACKET	13-161
2505105-0000	BRACKET	13-161
2505107-0000	BRACKET	13-161
2727602-0000	BRACKET	13-239
2767109-0000	BRACKET	13-245
282507-0000	BRACKET LEFT	2-181, 2-183
445881-0000	BRACKET LEFT	8-69, 8-71, 8-73
593656-0000	BRACKET LEFT	8-69, 8-71, 8-73
445882-0000	BRACKET RIGHT	8-69, 8-71, 8-73
450869-0000	BRACKET RIGHT	2-181, 2-183
593657-0000	BRACKET RIGHT	8-69, 8-71, 8-73
265985-0100	BRACKET TO SUPERSTRUCTURE	1-3
479383-0000	BRACKET, PRODUCT VALVE	1-27, 1-29
546128-0100	BRACKET,COVERPL.TB/TBA/8	12-127
266736-0200	BRAKE	12-51
543822-0100	BRAKE ARM	7-17
594620-0100	BRAKE ARM	7-17
464095-0000	BRAKE DISC	12-97, 12-99
493557-0000	BRAKE HANDLE	12-97, 12-99
535623-0000	BRANCH PIPE	7-9
90266-0165	BRASS PIPE	4-33, 4-35, 4-37, 4-39, 4-41, 4-43, 4-131, 4-133, 4-135, 4-137
90151-0001	BRASS PIPE DI=2,6 MM	4-45, 4-47, 4-49, 4-51, 4-139, 4-141
776422-0101	BRASS WIRESTE	10-9
353034-0404	BRIDGE CONNECTOR Q10, 13131.0	2-45, 2-91, 8-67
353034-0401	BRIDGE CONNECTOR Q2, 13125.0	2-45, 2-91, 8-67
353034-0031	BRIDGE CONNECTOR, WQV 4/10, 10520.6	2-147
451408-0000	BUFFER RING	10-15, 10-17, 10-21, 12-5, 12-9
90036-0068	BULB 6.5W 24V	13-245
342768-0104	BULKHEAD CONNECTOR, 10 MM	2-71, 2-73, 2-75
342768-0103	BULKHEAD CONNECTOR, 8 MM	2-27, 2-29, 2-31, 2-71, 2-73, 2-75, 2-81, 2-83, 2-85, 2-87, 6-35, 13-181
342960-0151	BULKHEAD COUPLING 15/12,5	12-141
342960-0112	BULKHEAD COUPLING 6/4	2-13, 2-15, 2-17, 2-19, 2-37, 2-39, 2-41, 2-71, 2-73, 2-75, 2-85, 2-87, 2-101, 2-103, 2-105, 2-107, 2-109, 2-111, 2-113, 5-67, 6-35, 13-17, 13-19, 13-21, 13-23
342960-0122	BULKHEAD COUPLING 8/6	2-37, 2-39, 2-41, 6-35
90055-0252	BULKHEAD LEAD-IN	6-35
542546-0000	BUSBAR	4-93
542547-0000	BUSBAR	4-95
542548-0000	BUSBAR	4-93
542549-0000	BUSBAR	4-95
542550-0000	BUSBAR	4-93
542551-0000	BUSBAR	4-95
542552-0000	BUSBAR	4-93
542553-0000	BUSBAR	4-95
542554-0000	BUSBAR	4-93
542555-0000	BUSBAR	4-95
542556-0000	BUSBAR	4-93
542557-0000	BUSBAR	4-95
589876-0000	BUSBAR	4-95
589877-0000	BUSBAR	4-93
589878-0000	BUSBAR	4-95
589879-0000	BUSBAR	4-93
90135-0031	BUSBAR HOLDER K&M SHO165/2	9-5, 9-7, 9-9, 9-11, 9-13, 9-15, 9-25, 9-27, 9-29, 9-31, 9-33, 9-45, 9-47, 9-49, 9-51, 9-53, 9-55
23270-0000	BUSHING	3-35
23312-0000	BUSHING	4-45, 4-47, 4-49, 4-51
36133-0000	BUSHING	4-53, 4-55, 12-205, 12-207
37258-0000	BUSHING	4-143, 4-147
90015-0010	BUSHING	2-37, 2-39, 2-41, 2-85, 2-87, 12-39, 12-41, 12-83
90015-0011	BUSHING	2-37, 2-39, 2-41, 2-85, 2-87, 12-105
90134-0003	BUSHING	5-33, 5-53, 5-55, 5-67, 5-81, 5-83, 5-133, 5-135
230462-0000	BUSHING	3-41, 3-43
243144-0000	BUSHING	4-11, 4-13, 4-15, 4-17, 4-19, 4-21, 4-77, 4-79, 4-85, 4-87, 12-193, 12-195, 12-197, 12-199, 12-201, 12-203

Part No	Description	Page No
243943-0000	BUSHING	4-139, 4-141
252787-0000	BUSHING	4-101, 4-103, 4-105, 4-107
252788-0000	BUSHING	4-101, 4-103, 4-105, 4-107
255064-0000	BUSHING	7-31, 7-33
262183-0000	BUSHING	5-137, 5-139, 5-141, 5-143
262267-0000	BUSHING	5-133, 5-135
268643-0000	BUSHING	4-65, 4-67, 4-69, 4-71
285168-0000	BUSHING	5-25, 5-27, 5-41, 5-43, 5-45, 5-47
285729-0000	BUSHING	5-137, 5-139, 5-141, 5-143
297860-0000	BUSHING	5-7, 5-9, 5-35, 5-37
434661-0000	BUSHING	2-177
436356-0000	BUSHING	1-43, 1-45
440217-0000	BUSHING	8-57, 8-59
449908-0000	BUSHING	4-53, 4-55, 12-205, 12-207
464122-0000	BUSHING	12-97, 12-99
466430-0000	BUSHING	8-5, 8-7, 8-21, 8-23, 8-25, 8-27, 8-29, 8-31, 8-33, 12-53, 12-55, 12-67, 12-69, 12-71, 12-73
497933-0000	BUSHING	1-63
527777-0000	BUSHING	12-97, 12-99
530718-0000	BUSHING	1-31, 1-33
530719-0000	BUSHING	1-31, 1-33
548337-0000	BUSHING	4-97, 4-99
1143015-0000	BUSHING	5-137, 5-139, 5-141, 5-143, 12-255
1144507-0000	BUSHING	6-59, 6-61
1144514-0000	BUSHING	6-59, 6-61
1144517-0000	BUSHING	6-59, 6-61
1144529-0000	BUSHING	6-59, 6-61
1144542-0000	BUSHING	6-35
1255541-0000	BUSHING	4-31, 13-145
1260944-0000	BUSHING	6-57
1282331-0000	BUSHING	6-53
1317577-0000	BUSHING	6-53
1478928-0000	BUSHING	6-17
90134-0039	BUSHING VALVE CONNECTION 2,5 MM	2-179, 3-35, 3-37, 3-39, 3-41, 3-43, 4-33, 4-35, 4-37 4-39, 4-41, 4-43, 4-45, 4-47, 4-49, 4-51, 4-101, 4-103, 4-105, 4-107, 4-131, 4-133, 4-135, 4-137 4-139, 4-141, 5-25, 5-27, 5-29, 5-33, 5-41, 5-43, 5-45, 5-47, 5-49, 5-51, 5-53, 5-55, 5-81, 5-83, 6-29 12-213, 12-277, 12-279
90134-0040	BUSHING VALVE CONNECTION 4 MM	4-139, 4-141, 5-29, 5-33, 5-49, 5-51, 5-53, 5-55, 5-81 5-83
342701-0208	BUSHING, INT/EXT. G-THREAD NO. 3/4-1/4	2-169
342712-0205	BUSHING, INT/EXT. G-THREAD NO. 1/2X1/4	2-169, 2-171
342701-0205	BUSHING,INT./EXT.G-THREAD G1/2"-G1/4"	2-23, 2-79, 2-149, 2-151, 2-187
342701-0206	BUSHING,INT./EXT.G-THREAD G1/2"-G3/8"	2-23, 2-27, 2-29, 2-31, 2-79, 2-81, 2-83
90134-0038	BUSHING/NUT INLET/OUTLET 4 MM	2-179, 3-35, 3-37, 3-39, 4-33, 4-35, 4-37, 4-39, 4-41, 4-43 4-45, 4-47, 4-49, 4-51, 4-101, 4-103, 4-105, 4-107, 4-131, 4-133, 4-135, 4-137, 4-139, 4-141
90134-0055	BUSHING/NUT INLET/OUTLET 6 MM	2-179, 3-35, 5-7, 5-9, 5-25, 5-27, 5-29, 5-33, 5-35, 5-37 5-41, 5-43, 5-45, 5-47, 5-49, 5-51, 5-53, 5-55, 5-81, 5-83, 6-29
90134-0063	BUSHING/NUT M8X1, D=2,5 MM	4-31, 4-53, 4-55, 12-205, 12-207, 12-277, 12-279
576967-0000	BUTTON	12-121
359301-0105	BUTTON SIGN, ALARM STOP	9-21, 9-41, 9-61
359301-0005	BUTTON SIGN, DOWN	9-21, 9-41, 9-61
359301-0160	BUTTON SIGN, DRAINAGE OF PRODUCT TUBE	9-21, 9-41, 9-61
359301-0050	BUTTON SIGN, DROP CHUTE BRIK	9-21, 9-23, 9-41, 9-43, 9-61, 9-63
359301-0051	BUTTON SIGN, EJECTION AT SPLICING	7-9
359301-0090	BUTTON SIGN, INCHING	9-21, 9-41, 9-61
359301-0091	BUTTON SIGN, INCHING FINAL FOLDER	9-21, 9-41, 9-61
359301-0130	BUTTON SIGN, LAMP TEST	9-21, 9-41, 9-61
359301-0125	BUTTON SIGN, LUBRICATION	2-147
359301-0335	BUTTON SIGN, ROLL FEED	8-61, 8-63, 8-65
359301-0110	BUTTON SIGN, SHORT STOP	8-61, 8-63, 8-65, 9-5, 9-7, 9-9, 9-11, 9-13, 9-15, 9-21, 9-23, 9-25 9-27, 9-29, 9-31, 9-33, 9-41, 9-43, 9-45, 9-47, 9-49, 9-51, 9-53, 9-55, 9-61, 9-63
359301-0100	BUTTON SIGN, SPLICING	8-61, 8-63, 8-65
359301-0170	BUTTON SIGN, SPOOLING OF FINAL FOLDER	9-21, 9-41, 9-61
359301-0001	BUTTON SIGN, UP	9-21, 9-41, 9-61
359301-0215	BUTTON SIGN, WASH PRODUCT VALVE	9-21, 9-41, 9-61
90226-0004	CABINET	12-3
90172-0328	CABLE	14-7
351150-0122	CABLE	9-17, 9-35, 9-37, 9-57, 13-49
541152-0000	CABLE	4-73
351160-0102	CABLE (1UNIT = 100M)	13-203, 13-209, 13-221
351164-0105	CABLE (1UNIT = 100M)	13-209
351172-0102	CABLE AWM 1X 0,75 MM2 DARKBLUE	9-5, 9-7, 9-9, 9-11, 9-13, 9-15, 9-25, 9-27, 9-29, 9-31 9-33, 9-35, 9-37, 9-45, 9-47, 9-49, 9-51, 9-53, 9-55, 12-19, 12-235, 12-237, 13-49, 13-141
351175-0102	CABLE AWM 1X 075 MM2 YELLOW-GREEN	9-5, 9-7, 9-9, 9-11, 9-13, 9-15, 9-25, 9-27, 9-29 9-31, 9-33, 9-45, 9-47, 9-49, 9-51, 9-53, 9-55
351179-0102	CABLE AWM 1X075 MM2 BLACK	14-27
351180-0102	CABLE AWM 1X075 MM2 ORANGE	9-5, 9-7, 9-9, 9-11, 9-13, 9-15, 9-25, 9-27, 9-29, 9-31, 9-33 9-45, 9-47, 9-49, 9-51, 9-53, 9-55, 12-19
351179-0104	CABLE AWM 1X15 MM2 BLACK	9-5, 9-7, 9-9, 9-11, 9-13, 9-15, 9-25, 9-27, 9-29, 9-31, 9-33, 9-45 9-47, 9-49, 9-51, 9-53, 9-55
351176-0104	CABLE AWM 1X15 MM2 RED	9-5, 9-7, 9-9, 9-11, 9-13, 9-15, 9-25, 9-27, 9-29, 9-31, 9-33, 9-45 9-47, 9-49, 9-51, 9-53, 9-55
351179-0109	CABLE AWM 1X16 MM2 BLACK	9-35, 9-37, 9-57
351175-0109	CABLE AWM 1X16 MM2 YELLOW-GREEN	9-5, 9-7, 9-9, 9-11, 9-13, 9-15, 9-17, 9-25, 9-27, 9-29 9-31, 9-33, 9-35, 9-37, 9-45, 9-47, 9-49, 9-51, 9-53, 9-55, 9-57

Part No	Description	Page No
351179-0105	CABLE AWM 1X2,5 MM2 BLACK	9-5, 9-7, 9-9, 9-11, 9-13, 9-15, 9-25, 9-27, 9-29, 9-31, 9-33, 9-45, 9-47, 9-49, 9-51, 9-53, 9-55, 12-235, 12-237
351161-0105	CABLE AWM 1X2,5 MM2 LIGHTBLUE	13-209
351162-0105	CABLE AWM 1X2,5 MM2 YELLOW-GREEN	13-209
351175-0105	CABLE AWM 1X2,5 MM2 YELLOW-GREEN	9-5, 9-7, 9-9, 9-11, 9-13, 9-15, 9-25, 9-27, 9-29, 9-31, 9-33, 9-45, 9-47, 9-49, 9-51, 9-53, 9-55, 12-235, 12-237
351179-0110	CABLE AWM 1X25 MM2 BLACK	9-5, 9-7, 9-9, 9-11, 9-13, 9-15, 9-25, 9-27, 9-29, 9-31, 9-33, 9-45, 9-47, 9-49, 9-51, 9-53, 9-55
351172-0105	CABLE AWM 1X25 MM2 DARKBLUE	14-7
351173-0105	CABLE AWM 1X25 MM2 LIGHTBLUE	9-25, 9-27, 9-29, 9-31, 9-33, 12-235, 12-237
351173-0110	CABLE AWM 1X25 MM2 LIGHTBLUE	9-5, 9-7, 9-9, 9-11, 9-13, 9-15, 9-25, 9-27, 9-29, 9-31, 9-33, 9-45, 9-47, 9-49, 9-51, 9-53, 9-55
351179-0111	CABLE AWM 1X35 MM2 BLACK	9-35, 9-37, 9-57
351179-0106	CABLE AWM 1X4 MM2 BLACK	9-5, 9-7, 9-9, 9-11, 9-13, 9-15, 9-25, 9-27, 9-29, 9-31, 9-33, 9-45, 9-47, 9-49, 9-51, 9-53, 9-55
351172-0106	CABLE AWM 1X4 MM2 DARKBLUE	9-5, 9-7, 9-9, 9-11, 9-13, 9-15, 9-25, 9-27, 9-29, 9-31, 9-33, 9-45, 9-47, 9-49, 9-51, 9-53, 9-55
351176-0106	CABLE AWM 1X4 MM2 RED	9-5, 9-7, 9-9, 9-11, 9-13, 9-15, 9-25, 9-27, 9-29, 9-31, 9-33, 9-45, 9-47, 9-49, 9-51, 9-53, 9-55
351175-0106	CABLE AWM 1X4 MM2 YELLOW-GREEN	9-5, 9-7, 9-9, 9-11, 9-13, 9-15, 9-17, 9-25, 9-27, 9-29, 9-31, 9-33, 9-45, 9-47, 9-49, 9-51, 9-53, 9-55
351179-0107	CABLE AWM 1X6 MM2 BLACK	9-5, 9-7, 9-9, 9-11, 9-13, 9-15, 9-25, 9-27, 9-29, 9-31, 9-33, 9-45, 9-47, 9-49, 9-51, 9-53, 9-55
351175-0107	CABLE AWM 1X6 MM2 YELLOW-GREEN	9-5, 9-7, 9-9, 9-11, 9-13, 9-15, 9-25, 9-27, 9-29, 9-31, 9-33, 9-45, 9-47, 9-49, 9-51, 9-53, 9-55
351173-0104	CABLE AWM LIGHTBLUE 1,5MM2	9-5, 9-7, 9-9, 9-11, 9-13, 9-15, 9-45, 9-47, 9-49, 9-51, 9-53, 9-55
90135-0038	CABLE CLAMP K&M K*12 5-1	9-5, 9-7, 9-9, 9-11, 9-13, 9-15, 9-25, 9-27, 9-29, 9-31, 9-33, 9-45, 9-47, 9-49, 9-51, 9-53, 9-55
90074-0001	CABLE CLIPS, D=10 MM	2-37, 2-39, 2-41, 2-85, 2-87
90074-0002	CABLE CLIPS, D=11 MM	1-55, 2-135, 5-81, 5-83, 12-257, 12-269
90074-0004	CABLE CLIPS, D=16 MM	2-159, 2-161
90074-0018	CABLE CLIPS, D=2X10 MM	1-55, 5-25, 5-27, 5-41, 5-43, 5-45, 5-47
90074-0006	CABLE CLIPS, D=2X12 MM	2-35, 2-37, 2-39, 2-41, 2-85, 2-87, 2-121, 2-123, 13-15
352110-0099	CABLE CLIPS, D=3-5 MM	8-61, 8-63, 8-65, 8-69, 8-71, 8-73
352110-0100	CABLE CLIPS, D=5-7 MM	6-37, 6-39
352110-0101	CABLE CLIPS, D=7-10 MM	2-37, 2-39, 2-41, 2-85, 2-87, 3-37, 3-39
525110-0100	CABLE CONDUIT	5-7, 5-9, 5-35, 5-37
581369-0000	CABLE CONDUIT	13-67
591296-0100	CABLE CONDUIT	12-155
90110-0036	CABLE CONNECTION	12-39, 12-41
90110-0035	CABLE CONNECTION, T3108-001	12-39, 12-41
450284-0000	CABLE DUCT	2-21, 2-77, 2-117, 2-119, 13-27
450285-0000	CABLE DUCT	2-21, 2-77, 2-117, 2-119, 13-27
450293-0500	CABLE DUCT	2-3, 2-5
540721-0000	CABLE DUCT	2-21, 2-77, 2-117, 2-119, 13-27
547220-0000	CABLE DUCT	2-117, 2-119
575464-0000	CABLE DUCT	2-21, 2-117, 2-119, 13-27
593007-0100	CABLE DUCT	2-3, 2-5, 13-25
593631-0000	CABLE DUCT	2-77
929661-0100	CABLE DUCT	2-3, 2-5
1143661-0000	CABLE DUCT	2-21, 2-117, 2-119, 13-27
1285866-0000	CABLE DUCT	2-77
1334451-0100	CABLE DUCT	6-3
2539209-0100	CABLE DUCT	13-171
352030-0122	CABLE DUCT A2	12-49
351123-0144	CABLE FKK 3X15 MM2 WHITE	12-13
351123-0145	CABLE FKK 3X25 MM2 WHITE	12-131
351123-0184	CABLE FKK 5X15 MM2 WHITE	12-131
90172-0326	CABLE FOR LCR METER	14-9
266739-0000	CABLE GLAND	6-21, 6-23, 6-25, 7-41
2505043-0000	CABLE GLAND	13-177
352100-0100	CABLE GLAND NO.15,2-7,5	2-163
352100-0106	CABLE GLAND NO.18,6-10,5	1-35, 2-163, 7-37, 7-39, 7-41
352100-0105	CABLE GLAND NO.18,6-8,5	12-49
352100-0108	CABLE GLAND NO.20,4-12	2-169
352100-0115	CABLE GLAND NO.28,3-15,5	3-31, 3-33
352100-0227	CABLE GLAND NO.31-34,5	2-185
352100-0126	CABLE GLAND NO.47-32,5	2-185
352100-0127	CABLE GLAND NO.47-34,5	2-165
90012-0063	CABLE GLAND PR 15,2	2-21, 2-77, 2-117, 2-119, 2-149, 2-151, 2-163, 2-173, 2-179, 12-163, 13-27, 13-29
352137-0129	CABLE GLAND PR22,5(PG16)	2-147
90458-2050	CABLE GLAND, PG7, 149D7	13-177
352103-0106	CABLE GLAND, ST 11, PR18,6/PG11	1-57, 2-21, 2-45, 2-77, 2-91, 2-117, 2-119, 2-127, 5-69, 5-71, 5-77, 5-79, 6-21, 6-23, 6-25, 8-67, 12-91, 13-27, 13-183
352103-0108	CABLE GLAND, ST 13,5 , PR20,4/PG13,5	7-11, 8-69, 8-71, 8-73
352103-0111	CABLE GLAND, ST 16, PR22,5/PG16	1-57, 2-91, 5-69, 5-71, 5-77, 5-79, 8-61, 8-63, 8-65, 13-183
352103-0116	CABLE GLAND, ST 21, PR28,3/PG21	2-37, 2-39, 2-41, 2-45, 2-85, 2-87, 8-67, 12-47
352103-0121	CABLE GLAND, ST 29, PR37,0/PG29	2-37, 2-39, 2-41, 2-85, 2-87, 2-91, 12-13
352103-0101	CABLE GLAND, ST 9, PR15,2/PG9	1-57, 2-21, 2-77, 2-91, 2-117, 2-119, 2-163, 5-7, 5-9, 5-35, 5-37, 8-67, 12-39, 12-41, 13-27, 13-67, 13-183
352103-0105	CABLE GLAND, STR 11, PR 18,6/PG11	2-37, 2-39, 2-41, 2-85, 2-87, 13-67, 13-185, 13-245
352103-0110	CABLE GLAND, STR 16, PR22,5/PG16	2-91, 2-117, 2-119, 7-9
352103-0115	CABLE GLAND, STR 21, PR28,3/PG21	8-67

Part No	Description	Page No
352103-0120	CABLE GLAND, STR 29, PR37,0/PG29	2-45
352103-0100	CABLE GLAND, STR 9, PR15,2/PG9	2-149, 2-151, 5-7, 5-9, 5-35, 5-37, 7-11, 8-61, 8-63, 8-65, 12-47, 13-239
90012-0049	CABLE GLAND, STR13,5, PR20,4/PG13,5	6-67
2542387-0000	CABLE MANUFACTURE DIAGRAM	13-175
359009-0101	CABLE MARKING, YELLOW, PK 2/4"1"	13-179
359009-0102	CABLE MARKING, YELLOW, PK 2/4"2"	13-179
359009-0103	CABLE MARKING, YELLOW, PK 2/4"3"	13-179
359009-0104	CABLE MARKING, YELLOW, PK 2/4"4"	13-179
359009-0105	CABLE MARKING, YELLOW, PK 2/4"5"	13-179
359009-0106	CABLE MARKING, YELLOW, PK 2/4"6"	13-179
359009-0108	CABLE MARKING, YELLOW, PK 2/4"8"	13-179
359009-0100	CABLE MARKING, YELLOW, PK2/4"0"	13-179
90042-0600	CABLE MECMAN 440-428 500-1	12-161, 13-153
351150-0408	CABLE OILFLEX 16X0,75MM2	9-17, 9-35, 9-37, 9-57
351150-0409	CABLE OILFLEX 27X0,75MM2	12-131
351150-0142	CABLE OILFLEX N3X0,75	12-39, 12-41
351150-0407	CABLE OLFLEX 12X0,75 MM2 LIGHT/GREY	9-17, 9-35, 9-37, 9-57
351150-0425	CABLE OLFLEX 25X0,75 MM2 LIGHT/GREY	9-17, 9-35, 9-37, 9-57
351150-0410	CABLE OLFLEX 36X0,75MM2	9-17, 9-35, 9-37, 9-57
351150-0403	CABLE OLFLEX 3X0,75 MM2 LIGHT/GREY	9-17
351150-0412	CABLE OLFLEX 3X1,5 MM2 LIGHT/GREY	9-17, 9-35, 9-37, 9-57
351150-0417	CABLE OLFLEX 3X2,5 MM2 LIGHT/GREY	9-17, 9-35, 9-37, 9-57
351150-0422	CABLE OLFLEX 3X4 MM2 LIGHT/GREY	9-35, 9-37, 9-57
351150-0404	CABLE OLFLEX 4X0,75 MM2 LIGHT/GREY	9-17, 9-35, 9-37, 9-57
351150-0413	CABLE OLFLEX 4X1,5 MM2 LIGHT/GREY	9-17
351150-0418	CABLE OLFLEX 4X2,5 MM2 LIGHT/GREY	9-17, 9-35, 9-37, 9-57
351150-0405	CABLE OLFLEX 5X0,75 MM2 LIGHT/GREY	9-17, 9-35, 9-37, 9-57
351150-0419	CABLE OLFLEX 5X2,5 MM2 LIGHT/GREY	9-17, 9-35, 9-37, 9-57
351150-0406	CABLE OLFLEX 7X0,75 MM2 LIGHT/GREY	9-17, 9-35, 9-37, 9-57
351150-0420	CABLE OLFLEX 7X2,5 MM2 LIGHT/GREY	9-17, 9-35, 9-37, 9-57
90220-0082	CABLE PAIR TWISTED 2X0,75 MM2 LIGHT/GREY	9-17, 9-35, 9-37, 9-57
351121-0200	CABLE RADOX 155 1X16 MMÂ² BLACK	9-35, 9-37, 9-57
351121-0201	CABLE RADOX 155 1X35 MMÂ² BLACK	9-35, 9-37, 9-57
353103-0120	CABLE SHOE 1,25 MMÂ² RED	12-39, 12-41
353101-0130	CABLE SHOE 1,5-2,5MM2 M4 BLUE	7-41
353101-0132	CABLE SHOE 1,5-2,5MM2 M5 BLUE	8-69, 8-71, 8-73
353101-0134	CABLE SHOE 1,5-2,5MM2 M8 BLUE	1-35, 7-37, 7-39
353104-0130	CABLE SHOE, RING UNINS., YAV 025 M 4	1-35, 7-37, 7-39
353104-0168	CABLE SHOE, RING UNINS., YAV 16 M 6	5-69, 5-71, 5-77, 5-79
353104-0175	CABLE SHOE, RING UNINS., YAV 25 M 6	12-239
353104-0182	CABLE SHOE, RING UNINS., YAV 35 M 6	5-69, 5-71, 5-77, 5-79
353104-0183	CABLE SHOE, RING UNINS., YAV 35 M 8	4-73
351120-0144	CABLE SILFLEX SIHF 3X1,5 0046014	9-17
351120-0145	CABLE SILFLEX SIHF 3X2,5 0046020	9-17, 9-35, 9-37, 9-57
90182-0005	CABLE TIE, 79X2,3MM	12-135
352113-0102	CABLE TIE, BLACK 188X4,8 MM	5-7, 5-9, 5-35, 5-37, 6-27, 6-29, 6-59, 6-61, 7-9, 13-145, 13-175
352113-0103	CABLE TIE, BLACK 290X7,6 MM	12-97, 12-99
352113-0101	CABLE TIE, BLACK 92X2,5 MM	3-35, 4-73, 5-7, 5-9, 5-35, 5-37, 5-81, 5-83, 6-29, 6-59, 6-61, 8-9, 8-39, 12-57, 12-75, 12-257, 12-269, 12-277, 12-279, 13-175
484839-0000	CABLE TRENCH	1-55
484840-0000	CABLE TRENCH	1-55
525132-0000	CABLE TRENCH	5-7, 5-9, 5-35, 5-37
525277-0000	CABLE TRENCH	5-7, 5-9, 5-35, 5-37
90220-0079	CABLE, LABORATORY FLEX, 1X1,5 1M BLACK	14-21
90220-0078	CABLE, LABORATORY FLEX, 1X1,5 1M RED	14-21
90220-0077	CABLE, POWER SUPPLY, RKK 3X0,75 2M	14-21
557793-0100	CALIBRATION EQUIPMENT	14-19
567732-0100	CALIBRATION EQUIPMENT	14-5
90410-0337	CALIBRATION INSTRUMENT 5100071-001	14-21
90410-0338	CALIBRATION INSTRUMENT 5100071-001	14-21
927314-0000	CAM	5-125, 5-127
1144978-0000	CAM	6-59, 6-61
1296149-0000	CAM	6-5
267532-0000	CAM DISC	12-53, 12-55, 12-67, 12-69, 12-71, 12-73
561575-0000	CAM LEFT	3-19
562976-0000	CAM LEFT	3-19
563203-0000	CAM LEFT	3-19
565045-0000	CAM LEFT	3-19
565132-0000	CAM LEFT	3-19
565192-0000	CAM LEFT	3-19
574117-0000	CAM LEFT	3-19
582109-0000	CAM LEFT	3-19
583406-0000	CAM LEFT	3-19
589922-0000	CAM LEFT	3-19
592340-0000	CAM LEFT	3-9, 12-169
593275-0000	CAM LEFT	3-9
598647-0000	CAM LEFT	3-9
1364731-0000	CAM LEFT	3-9
561576-0000	CAM RIGHT	3-19
562977-0000	CAM RIGHT	3-19
563204-0000	CAM RIGHT	3-19
565046-0000	CAM RIGHT	3-19
565133-0000	CAM RIGHT	3-19

Part No	Description	Page No
565193-0000	CAM RIGHT	3-19
574118-0000	CAM RIGHT	3-19
582110-0000	CAM RIGHT	3-19
583407-0000	CAM RIGHT	3-19
589923-0000	CAM RIGHT	3-19
592341-0000	CAM RIGHT	3-9, 12-169
593276-0000	CAM RIGHT	3-9
598648-0000	CAM RIGHT	3-9
1364732-0000	CAM RIGHT	3-9
321580-0165	CAM ROLLER, 12X30X40 MM	3-11, 3-21, 13-11
321582-0212	CAM ROLLER, 16X35X52 MM	5-63, 5-65
476354-0000	CANNULAR TUBE	8-39, 12-75
476355-0000	CANNULAR TUBE	8-9, 12-57
32221-0000	CANTILEVER	1-35
33577-0000	CANTILEVER	1-55, 7-9
209839-0000	CANTILEVER	1-35
228641-0000	CANTILEVER	1-73
236628-0000	CANTILEVER	12-45
243218-0000	CANTILEVER	7-31, 7-33
252768-0000	CANTILEVER	4-101, 4-103, 4-105, 4-107
257854-0000	CANTILEVER	10-15, 10-17, 10-21
257855-0000	CANTILEVER	10-15, 10-17
262264-0000	CANTILEVER	5-121
262924-0000	CANTILEVER	5-137, 5-139, 5-141, 5-143
266728-0000	CANTILEVER	7-41
266758-0000	CANTILEVER	7-31, 7-33
267316-0000	CANTILEVER	7-45
267835-0000	CANTILEVER	2-37, 2-39, 2-41, 2-85, 2-87
269166-0000	CANTILEVER	12-45
269339-0000	CANTILEVER	10-15, 10-17, 10-21
269340-0000	CANTILEVER	10-15, 10-17, 10-21
269961-0000	CANTILEVER	12-45
283712-0000	CANTILEVER	12-39, 12-41
284754-0000	CANTILEVER	12-53, 12-55, 12-67, 12-69, 12-71, 12-73
285133-0000	CANTILEVER	5-23, 5-39
292046-0000	CANTILEVER	12-67, 12-69, 12-71, 12-73
292047-0000	CANTILEVER	8-5, 8-7, 12-53, 12-55
292137-0000	CANTILEVER	12-93, 12-115
292473-0000	CANTILEVER	3-11, 3-21, 13-11
294108-0000	CANTILEVER	7-13
294109-0000	CANTILEVER	7-13
297312-0000	CANTILEVER	12-83
434407-0000	CANTILEVER	12-93, 12-115
434705-0000	CANTILEVER	12-53, 12-55, 12-67, 12-69, 12-71, 12-73
436373-0000	CANTILEVER	12-65
436374-0000	CANTILEVER	12-65
436375-0000	CANTILEVER	12-65
436376-0000	CANTILEVER	12-65
436395-0000	CANTILEVER	1-43, 1-45
440026-0000	CANTILEVER	2-37, 2-39, 2-41, 2-85, 2-87
440385-0000	CANTILEVER	2-167
442078-0000	CANTILEVER	2-171
445837-0000	CANTILEVER	8-41
445841-0000	CANTILEVER	8-41
445911-0000	CANTILEVER	8-69, 8-71, 8-73
450116-0000	CANTILEVER	7-29, 12-61, 12-63
450841-0000	CANTILEVER	2-9, 2-69
457361-0000	CANTILEVER	4-97, 4-99
458489-0000	CANTILEVER	8-21, 8-23, 8-25, 8-27, 8-29, 8-31, 8-33, 12-67, 12-69, 12-71, 12-73
476198-0001	CANTILEVER	12-37, 12-133
476198-0002	CANTILEVER	12-37, 12-133
479963-0000	CANTILEVER	12-39, 12-41
493948-0000	CANTILEVER	1-75, 1-77, 1-79, 1-81, 1-83
522173-0000	CANTILEVER	8-75
525007-0001	CANTILEVER	5-41, 5-43, 5-45, 5-47
525007-0002	CANTILEVER	5-25, 5-27, 5-41, 5-43, 5-45, 5-47
525007-0003	CANTILEVER	5-41, 5-43, 5-45, 5-47
525173-0000	CANTILEVER	5-67
526677-0000	CANTILEVER	4-97, 4-99
526949-0000	CANTILEVER	4-97, 4-99
529314-0000	CANTILEVER	12-133
531139-0000	CANTILEVER	12-35, 12-43, 12-49
531182-0000	CANTILEVER	2-37, 2-39, 2-41
532723-0000	CANTILEVER	1-11
533908-0000	CANTILEVER	12-145
537310-0000	CANTILEVER	12-29
539180-0000	CANTILEVER	8-17
542849-0000	CANTILEVER	1-7, 1-9
543151-0000	CANTILEVER	2-37, 2-39, 2-41
544343-0000	CANTILEVER	4-97, 4-99
545138-0000	CANTILEVER	7-15
546030-0001	CANTILEVER	7-15
546030-0002	CANTILEVER	7-15
546116-0000	CANTILEVER	7-43

Part No	Description	Page No
546120-0000 ...	CANTILEVER	12-147
546134-0000 ...	CANTILEVER	1-13, 1-15
562971-0000 ...	CANTILEVER	4-97, 4-99
573664-0000 ...	CANTILEVER	7-47
581335-0000 ...	CANTILEVER	13-63
581336-0000 ...	CANTILEVER	13-63
581339-0000 ...	CANTILEVER	13-63
581340-0000 ...	CANTILEVER	13-63
581368-0000 ...	CANTILEVER	13-65
581807-0000 ...	CANTILEVER	4-101, 4-103, 4-105, 4-107
581808-0000 ...	CANTILEVER	2-85, 2-87
592590-0000 ...	CANTILEVER	1-13, 1-15
593641-0000 ...	CANTILEVER	8-41
593746-0000 ...	CANTILEVER	8-21, 8-23, 8-25, 8-27, 8-29, 8-31, 8-33
927850-0000 ...	CANTILEVER	8-43
1144273-0000 .	CANTILEVER	2-85, 2-87
265563-0000 ...	CANTILEVER REPBY 0546116-0000	12-25
255582-0001 ...	CAP	1-31, 1-33
255582-0003 ...	CAP	1-31, 1-33
262275-0002 ...	CAP	5-59
262275-0003 ...	CAP	5-57, 5-157
276301-0000 ...	CAP	14-13, 14-15, 14-41, 14-43
539338-0000 ...	CAP	8-5, 8-7, 8-21, 8-23, 8-25, 8-27, 8-29, 8-31, 8-33
549828-0000 ...	CAP	8-57, 8-59
562140-0000 ...	CAP	3-41, 3-43
595212-0000 ...	CAP	1-31, 1-33
927589-0000 ...	CAP NUT	13-57
927590-0000 ...	CAP NUT	13-57
927591-0000 ...	CAP NUT	13-57
90129-0014	CARD HOLDER, SCHROFF 20800-213	14-23
90067-0021	CARRIAGE 32 04 129 5	8-91
25640-0000	CARRIER	4-145, 12-225
26642-0200	CARRIER	4-143, 4-147, 12-223, 12-227
32925-0000	CARRIER	8-5, 8-7, 8-21, 8-23, 8-25, 8-27, 8-29, 8-31, 8-33, 12-53, 12-55, 12-67, 12-69, 12-71, 12-73
37097-0000	CARRIER	3-31, 3-33
285027-0000 ...	CARRIER	5-59
292411-0000 ...	CARRIER	8-35, 8-37, 12-77, 12-79
292414-0000 ...	CARRIER	8-11, 12-59
293659-0000 ...	CARRIER	8-35, 8-37, 12-77, 12-79
293676-0000 ...	CARRIER	8-35, 8-37, 12-77, 12-79
293688-0000 ...	CARRIER	8-35, 8-37, 12-77, 12-79
442072-0000 ...	CARRIER	8-35, 8-37, 12-77, 12-79
442431-0000 ...	CARRIER	8-35, 8-37, 12-77, 12-79
443468-0000 ...	CARRIER	5-105, 5-107, 5-109, 5-111
443470-0000 ...	CARRIER	5-109, 5-111
464085-0000 ...	CARRIER	12-97, 12-99
479237-0000 ...	CARRIER	8-35, 8-37, 12-77, 12-79
479238-0000 ...	CARRIER	8-35, 8-37, 12-77, 12-79
525208-0001 ...	CARRIER	5-113
525208-0002 ...	CARRIER	5-113
525208-0003 ...	CARRIER	5-113
525374-0000 ...	CARRIER	5-33, 5-53, 5-55
525414-0000 ...	CARRIER	5-53, 5-55
525431-0000 ...	CARRIER	5-105, 5-107
525432-0000 ...	CARRIER	5-109, 5-111
527803-0000 ...	CARRIER	4-93
527804-0000 ...	CARRIER	4-95
533894-0000 ...	CARRIER	4-93
533895-0000 ...	CARRIER	4-95
566775-0000 ...	CARRIER	5-17
574089-0000 ...	CARRIER	5-93
574090-0000 ...	CARRIER	5-95
574091-0000 ...	CARRIER	5-95
574092-0000 ...	CARRIER	5-93
595046-0000 ...	CARRIER	5-33
1144919-0000 .	CARRIER	6-33
1144973-0000 .	CARRIER	6-37, 6-39
598615-0000 ...	CARRIER LEFT	4-23, 4-25, 12-215, 12-217, 13-99, 13-101, 13-109
929537-0000 ...	CARRIER LEFT	13-9
247187-0500 ...	CARRIER LEFT HAND SIDE	4-3, 4-5
598616-0000 ...	CARRIER RIGHT	4-27, 4-29, 12-219, 12-221, 13-103, 13-105, 13-111
247187-0550 ...	CARRIER RIGHT HAND SIDE	4-3, 4-5
450506-0000 ...	CARRIER RULER	4-143
458030-0000 ...	CARRIER RULER	4-147
458031-0000 ...	CARRIER RULER	4-143
458038-0000 ...	CARRIER RULER	4-147
458039-0000 ...	CARRIER RULER	4-143
569062-0000 ...	CARRIER RULER	4-147
569063-0000 ...	CARRIER RULER	4-143
573979-0000 ...	CARRIER RULER	4-147, 12-223
573980-0000 ...	CARRIER RULER	4-143, 12-227
593580-0000 ...	CARRIER RULER	4-147
593581-0000 ...	CARRIER RULER	4-143
450505-0000 ...	CARRIER RULER LEFT	4-147

Part No	Description	Page No
593583-0000 ...	CARRIER, CUT, LEFT	4-17, 4-19, 4-21, 12-193, 12-195, 12-197
1143901-0000 .	CARRIER, CUT, LEFT	4-17, 4-19, 4-21, 4-85, 4-87, 12-193, 12-195, 12-197
593584-0000 ...	CARRIER, CUT, RIGHT	4-11, 4-13, 4-15, 12-199, 12-201, 12-203
1143902-0000 .	CARRIER, CUT, RIGHT	4-11, 4-13, 4-15, 4-77, 4-79, 12-199, 12-201, 12-203
929538-0000 ...	CARRIER, RIGHT	13-7
246332-0000 ...	CATCH	4-113, 4-115, 12-175, 12-177
263693-0000 ...	CATCH	4-113, 4-115, 12-175, 12-177
269056-0000 ...	CATCH	7-15
457370-0000 ...	CATCH	8-77, 8-79
466618-0000 ...	CATCH	8-69, 8-71, 8-73
466619-0000 ...	CATCH	8-69, 8-71, 8-73
476117-0000 ...	CATCH	8-55
541697-0000 ...	CATCH	4-65, 4-67, 4-69, 4-71
545127-0000 ...	CATCH	4-113, 4-115, 12-175, 12-177
545136-0000 ...	CATCH	4-113, 4-115, 12-175, 12-177
568167-0000 ...	CATCH	8-55
591410-0000 ...	CATCH	4-23, 4-25, 4-27, 4-29, 12-215, 12-217, 12-219, 12-221, 13-7, 13-9, 13-99, 13-101, 13-103, 13-105
591981-0000 ...	CATCH	4-77, 4-79, 4-85, 4-87
591982-0000 ...	CATCH	4-77, 4-79, 4-85, 4-87
593270-0000 ...	CATCH	4-113, 4-115, 12-175, 12-177
593271-0000 ...	CATCH	4-113, 4-115, 12-175, 12-177
593573-0000 ...	CATCH	4-11, 4-13, 4-15, 4-17, 4-19, 4-21, 12-193, 12-195, 12-197, 12-199, 12-201, 12-203
593612-0000 ...	CATCH	4-113, 4-115, 12-175, 12-177
594653-0000 ...	CATCH	4-113, 4-115, 12-175, 12-177
594654-0000 ...	CATCH	4-113, 4-115, 12-175, 12-177
1282595-0000 .	CATCH	13-85, 13-87
1282596-0000 .	CATCH	13-85, 13-87
532319-0000 ...	CATCH GUARD LEFT	2-125
532318-0000 ...	CATCH GUARD RIGHT	2-125
265889-0300 ...	CATCH SAFETY	2-3, 2-5
90415-0066	CD-2 DRYER	13-115
537300-0101 ...	CEILING PASSAGE	12-15
78083-0000	CENTER PIN	10-5
561590-0000 ...	CENTRAL LUBRIC. DIAGRAM	2-131
1143244-0000 .	CENTRAL LUBRIC. DIAGRAM	2-131, 12-155
593638-0000 ...	CENTRAL LUBRIC. SYSTEM	2-131
279979-0500 ...	CENTRAL LUBRICATION	2-3, 2-5
525091-0100 ...	CHAIN	5-81, 5-83
293625-0000 ...	CHAIN GUARD	12-67, 12-69, 12-71, 12-73
293626-0000 ...	CHAIN GUARD	12-53, 12-55
525092-0100 ...	CHAIN GUARD	5-81, 5-83
525320-0100 ...	CHAIN GUARD	5-29, 5-49, 5-51
525326-0000 ...	CHAIN GUARD	5-31
525327-0000 ...	CHAIN GUARD	5-31
525328-0000 ...	CHAIN GUARD	5-31
443053-0000 ...	CHAIN GUIDE	5-67
525090-0100 ...	CHAIN LINKS	5-81, 5-83
525089-0100 ...	CHAIN RIGHT	5-81, 5-83
90344-0049	CHAIN TENSIONER	5-29, 5-49, 5-51
297638-0200 ...	CHAIN TENSIONER	5-7, 5-9, 5-35, 5-37
443186-0000 ...	CHUTE	5-7, 5-9, 5-35, 5-37
545108-0000 ...	CHUTE	2-63, 2-97
545107-0000 ...	CHUTE LEFT	2-65, 2-99
451127-0000 ...	CHUTE, LEFT FRONT	2-65, 2-99
451128-0000 ...	CHUTE, RIGHT FRONT	2-63, 2-97
451423-0000 ...	CIRCUIT BOARD	2-127
598205-0000 ...	CIRCUIT BOARD	9-21
577796-0001 ...	CIRCUIT BOARD, COMPONENTS	9-41, 9-61
90007-0129	CIRCUIT BREAKER, 1P 10 A K	9-5, 9-7, 9-9, 9-11, 9-13, 9-15, 9-25, 9-27, 9-29, 9-31, 9-33, 9-45, 9-47, 9-49, 9-51, 9-53, 9-55
90007-0131	CIRCUIT BREAKER, 1P 16 A K	9-5, 9-7, 9-9, 9-11, 9-13, 9-15, 9-25, 9-27, 9-29, 9-31, 9-33, 9-45, 9-47, 9-49, 9-51, 9-53, 9-55, 13-221
90007-0147	CIRCUIT BREAKER, 3P 10 A K	9-5, 9-7, 9-9, 9-11, 9-13, 9-15, 9-25, 9-27, 9-29, 9-31, 9-33, 9-45, 9-47, 9-49, 9-51, 9-53, 9-55
90007-0148	CIRCUIT BREAKER, 3P 16 A K	12-235, 12-237
90007-0100	CIRCUIT BREAKER, CF2 Z100-1-90007-100	2-47
1144521-0000 .	CLAMP	6-59, 6-61
1317719-0000 .	CLAMP	13-197
271860-0000 ...	CLAMP BLOCK	13-53, 13-55
90220-0302	CLAMP FOR SCR.CABLE, 16MM, 55-016-89	9-5, 9-7, 9-9, 9-11, 9-13, 9-15, 9-25, 9-27, 9-29, 9-31, 9-33, 9-45, 9-47, 9-49, 9-51, 9-53, 9-55
90220-0304	CLAMP FOR SCR.CABLE, 24MM,	9-5, 9-7, 9-9, 9-11, 9-13, 9-15, 9-25, 9-27, 9-29, 9-31, 9-33, 9-45, 9-47, 9-49, 9-51, 9-53, 9-55
1350564-0000 .	CLAMP HUB	6-49
545392-0000 ...	CLAMP LEFT	4-73
540331-0000 ...	CLAMP RIGHT	4-73
532117-0000 ...	CLAMP RING	1-61
541163-0100 ...	CLAMP RING	1-59
90119-0310	CLAMP, TYPE PYC-A1	9-25, 9-27, 9-29, 9-31, 9-33, 9-45, 9-47, 9-49, 9-51, 9-53, 9-55
36806-0000	CLAMPING ELEMENT	1-17, 1-19, 1-21
36817-0000	CLAMPING ELEMENT	1-17, 1-19, 1-21, 1-25
90208-0067	CLAMPING ELEMENT	3-29
532720-0000 ...	CLAMPING ELEMENT	1-17, 1-19, 1-21
90208-0080	CLAMPING ELEMENT WITH SLEEVE, 25X34 MM	6-59, 6-61

Part No	Description	Page No
90208-0087	CLAMPING ELEMENT WITH SLEEVE, 45X59 MM	6-5
32477-0000	CLAMPING PIECE	1-55
75069-0000	CLAMPING PIECE	14-45
75070-0000	CLAMPING PIECE	14-45
75071-0100	CLAMPING PIECE	14-5
556321-0000	CLAMPING PIECE	8-77, 8-79
285141-0003	CLAMPING SLEEVE	5-121
2517848-0000	CLEANING DEVICE	14-11
297808-0500	CLEANING EQUIPMENT	2-3, 2-5
1279438-0100	CLEANING EQUIPMENT	2-3, 2-5
476884-0200	CLEANING HEAD	2-57
476885-0200	CLEANING HEAD	2-49, 2-51
476886-0200	CLEANING HEAD	2-49, 2-51
476887-0200	CLEANING HEAD	2-57
594613-0100	CLEANING HEAD	2-9
594614-0100	CLEANING HEAD	2-23
243839-0300	CLEANING PIPE	1-3
243843-0400	CLEANING PIPE	2-3, 2-5
449170-0000	CLEANING PIPE	2-23, 2-79
484871-0000	CLEANING PIPE	2-67
927618-0000	CLEANING PIPE	2-67, 13-61
1195111-0000	CLEANING PIPE	1-71
499885-0000	CLEANING PIPE 1000 HIFIN	1-71
493084-0000	CLEANING PIPE 180-300ML	1-71
484870-0000	CLEANING PIPE 500-1000ML	1-71
449168-0300	CLEANING SYSTEM	2-3, 2-5
1144281-0100	CLEANING SYSTEM	2-3, 2-5
525278-0000	CLEANING TROUGH	5-35, 5-37
594589-0000	CLEANING TROUGH	5-7, 5-9
90165-0010	CLIP	8-11, 12-59
90165-0063	CLIP	12-97, 12-99
1511572-0000	CLIP	8-35, 8-37, 12-77, 12-79
352135-0201	CLIP, 12 MM, 913.012	2-9, 2-37, 2-39, 2-41, 2-69, 2-85, 2-87
352135-0202	CLIP, 16 MM, 913.016	2-37, 2-39, 2-41, 2-85, 2-87
90074-0023	CLIP,SINGLE 22	1-55
236633-0000	COCK HANDLE	12-45
90413-0043	CODE INSERT SET	8-11, 8-35, 8-37, 12-59, 12-77, 12-79
90413-0044	CODE INSERT SET	8-11, 8-35, 8-37, 12-59, 12-77, 12-79
90413-0047	CODE INSERT SET A 2/16	8-11, 8-35, 8-37, 12-59, 12-77, 12-79
90413-0048	CODE INSERT SET A 9/28	8-35, 8-37, 12-77, 12-79
90413-0033	CODE INSERT SET C 2/16	8-11, 8-35, 8-37, 12-59, 12-77, 12-79
90413-0049	CODE INSERT SET C 9/28	8-35, 8-37, 12-77, 12-79
597558-0100	CODE INSERT SETS TB/8	12-3
90042-0345	COIL 24V DC	13-179
251279-0000	COIL HEATER	1-35, 7-27, 7-37, 7-39
267494-0000	COIL HEATER	1-35, 7-27, 7-37, 7-39, 12-153
1144488-0000	COLUMN	6-59, 6-61
1144505-0000	COLUMN	6-59, 6-61
434919-0000	COLUMN LEFT	2-37, 2-39, 2-41
929725-0000	COLUMN LEFT	2-85, 2-87
434920-0000	COLUMN RIGHT	2-37, 2-39, 2-41
929724-0000	COLUMN RIGHT	2-85, 2-87
90335-0025	COMP. SPRING 22010, 1X11X26	8-45, 8-47, 12-95
90335-0011	COMP. SPRING 22100, 1,25X7,55X12	12-119
90335-0027	COMP. SPRING 22170, 1,25X9,25X33	8-77, 8-79, 13-133
90335-0024	COMP. SPRING 22250, 1,25X13,75X27	12-119
90335-0064	COMP. SPRING 22270, 1,25X13,75X62,5	8-5, 8-7, 8-21, 8-23, 8-25, 8-27, 8-29, 8-31, 8-33, 12-53, 12-55, 12-67, 12-69, 12-71, 12-73
90335-0036	COMP. SPRING 22450, 1,6X14,1X24	6-27
90335-0037	COMP. SPRING 22900, 2,2X15X20	8-21, 8-23, 8-25, 8-27, 8-29, 8-31, 8-33
90335-0237	COMP. SPRING, DM12360	13-197
1255806-0100	COMPACT TRANSDUCER	13-7, 13-9
1255806-0101	COMPACT TRANSDUCER	12-215, 12-217, 12-219, 12-221
1255806-0102	COMPACT TRANSDUCER	4-23, 4-25, 4-27, 4-29
1255806-0201	COMPACT TRANSDUCER	4-23, 4-25, 4-27, 4-29
1365574-0100	COMPACT TRANSDUCER TEST INSTRUMENT	14-5
531366-0300	COMPL EQUIP F JUMBO REEL	12-15
1881-0001	COMPRESSION SPRING	1-43, 1-45
10258-0000	COMPRESSION SPRING	8-5, 8-7, 8-21, 8-23, 8-25, 8-27, 8-29, 8-31, 8-33
20494-0000	COMPRESSION SPRING	4-139, 4-141
72846-0102	COMPRESSION SPRING	14-5
72887-0000	COMPRESSION SPRING	14-51
111426-0000	COMPRESSION SPRING	12-47
268830-0000	COMPRESSION SPRING	5-133, 5-135, 11-19
285970-0000	COMPRESSION SPRING	5-133, 5-135
440663-0000	COMPRESSION SPRING	1-63
458041-0000	COMPRESSION SPRING	8-77, 8-79, 8-85, 8-87
464112-0000	COMPRESSION SPRING	12-97, 12-99
466623-0000	COMPRESSION SPRING	8-69, 8-71, 8-73
479743-0000	COMPRESSION SPRING	4-65, 4-67, 4-69, 4-71
479744-0000	COMPRESSION SPRING	4-65, 4-67, 4-69, 4-71
484682-0000	COMPRESSION SPRING	8-69, 8-71, 8-73
522158-0000	COMPRESSION SPRING	8-85, 8-87
525379-0000	COMPRESSION SPRING	5-133, 5-135

Part No	Description	Page No
536387-0000	COMPRESSION SPRING	12-97, 12-99
538240-0000	COMPRESSION SPRING	12-33
562134-0000	COMPRESSION SPRING	4-65, 4-67, 4-69, 4-71
590369-0000	COMPRESSION SPRING	4-23, 4-25, 4-27, 4-29, 12-215, 12-217, 12-219, 12-221, 13-7, 13-9, 13-99, 13-101, 13-103, 13-105, 13-109, 13-111, 13-167
1285004-0000	COMPRESSION SPRING	13-89
1538109-0000	COMPRESSION SPRING	4-9, 4-75, 12-173, 13-169
2525463-0000	COMPRESSION SPRING	4-143, 4-147
90172-0037	COMPUTOR EQUIPMENT	14-7
90172-0324	COMPUTOR EQUIPMENT	14-7
352137-0113	COND.FITTING PR 18,6 DI=12MM	2-147, 8-61, 8-63, 8-65
352137-0127	COND.FITTING PR 18,6 DI=16MM	2-147, 7-15, 8-61, 8-63, 8-65
566686-0000	CONDENSATE TRAY	2-163
232794-0000	CONE	12-47
464102-0000	CONE (PRESSURE)	12-97, 12-99
90028-0001	CONE 5/32"	5-33, 5-53, 5-55, 5-67, 5-81, 5-83, 5-133, 5-135
90028-0020	CONE TUBE 2,5MM	2-179, 3-35, 3-37, 3-39, 3-41, 3-43, 4-31, 4-33, 4-35, 4-37, 4-39, 4-41, 4-43, 4-45, 4-47, 4-49, 4-51, 4-53, 4-55, 4-101, 4-103, 4-105, 4-107, 4-131, 4-133, 4-135, 4-137, 4-139, 4-141, 5-25, 5-27, 5-29, 5-33, 5-41, 5-43, 5-45, 5-47, 5-49, 5-51, 5-53, 5-55, 5-81, 5-83, 6-29, 12-205, 12-207, 12-213, 12-277, 12-279
90028-0021	CONE TUBE 4 MM	2-179, 4-33, 4-35, 4-37, 4-39, 4-41, 4-43, 4-45, 4-47, 4-49, 4-51, 4-101, 4-103, 4-105, 4-107, 4-131, 4-133, 4-135, 4-137, 4-139, 4-141, 5-29, 5-33, 5-49, 5-51, 5-53, 5-55, 5-81, 5-83
90028-0024	CONE TUBE 4 MM	2-179, 3-35
90028-0022	CONE TUBE 6 MM	2-179, 3-35, 5-7, 5-9, 5-25, 5-27, 5-35, 5-37, 5-41, 5-43, 5-45, 5-47
90028-0025	CONE TUBE 6 MM	2-179, 3-35, 5-25, 5-27, 5-29, 5-33, 5-41, 5-43, 5-45, 5-47, 5-49, 5-51, 5-53, 5-55, 5-81, 5-83, 6-29
541751-0000	CONICAL BOBBIN	7-25
90030-0160	CONN. BANJO, 8-G1/4	12-97, 12-99
90224-0308	CONN. BANJO, ART. NO. 2023-1/8-1/8	1-27, 1-29
342797-0122	CONN. BANJO, RINGPIECE 6-1/4	1-35, 7-9, 7-37, 7-39, 12-115
342797-0121	CONN. BANJO, RINGPIECE 6-1/8	1-35, 1-55, 7-37, 7-39, 7-41
342767-0114	CONN. BULKHEAD G1/2	2-23, 2-79
342767-0100	CONN. BULKHEAD G1/8	1-55
90030-0030	CONN. BULKHEAD SV 12-L/SY	2-85, 2-87
90030-0159	CONN. BULKHEAD SV 15-L/SY	2-37, 2-39, 2-41, 2-85, 2-87, 2-137, 2-139
90030-0179	CONN. BULKHEAD SV 22-L/SY	2-37, 2-39, 2-41, 2-85, 2-87
90030-0066	CONN. BULKHEAD SV 6-L/SY	2-37, 2-39, 2-41, 2-85, 2-87
90030-0067	CONN. BULKHEAD SV 8-L/SY	2-37, 2-39, 2-41, 2-85, 2-87
90030-0121	CONN. ELBOW ADJ.,INT 10	2-169, 2-173, 2-175, 13-29
342764-0108	CONN. ELBOW BULKHEAD LWSV10-LFZB	2-173, 2-175, 13-29
342764-0114	CONN. ELBOW BULKHEAD LWSV15-LFZB	2-173, 2-175, 13-29
342736-0114	CONN. ELBOW W-15	2-137, 2-139, 2-149, 2-151
342737-0204	CONN. ELBOW W-6 LRFR	7-7
90030-0115	CONN. ELBOW WA 12-R3/8	2-23, 2-79
342730-0114	CONN. ELBOW WA-15-1/2	2-149, 2-151
342730-0104	CONN. ELBOW WA-8-1/4	5-125, 5-127
342731-0108	CONN. ELBOW WE 10-LRFZB	2-173, 2-175, 13-29
342731-0114	CONN. ELBOW WE 15-LRFZB	2-35, 2-121, 2-123, 2-169, 12-167, 13-15, 13-97
342731-0102	CONN. ELBOW WE 6-LRFZB	2-173, 5-59, 12-163, 13-29
342733-0114	CONN. ELBOW WI-15-G1/2	2-27, 2-29, 2-31, 2-81, 2-83, 2-149, 2-151
90030-0222	CONN. ELBOW, 6-1/8 NPT, EXT.THREAD	5-67
342750-0114	CONN. L-PIPE, EXT. LA-15-G1/2	2-149, 2-151
90030-0091	CONN. PIPE G-8	2-137, 2-139
342727-0103	CONN. PIPE G-8-LFZB	12-165, 13-95
342790-0102	CONN. PRESS. GAUGE MAV6-LRFZB	2-173, 2-175, 13-29
342790-0202	CONN. PRESS. GAUGE MAV6-S/R3/8FZB	5-17
342720-0104	CONN. STR. GA-8-G1/4	5-125, 5-127
90030-0157	CONN. STR. 10-R3/8, EXT. THREAD	2-35, 2-121, 2-123, 2-169, 2-171, 2-173, 2-175, 12-167, 13-15, 13-29, 13-97
90030-0107	CONN. STR. 6-1/8 NPT, EXT. TAPPERED	5-67
90030-0162	CONN. STR. 6-M10X1, EXT. THREAD	3-41, 3-43
342752-0104	CONN. STR. GA-10-G1/4	2-173, 13-29
90030-0187	CONN. STR. GA-12-G3/8	2-23
342720-0109	CONN. STR. GA-12-G3/8	2-79
342720-0114	CONN. STR. GA-15-G1/2	2-13, 2-15, 2-17, 2-19, 2-23, 2-71, 2-73, 2-75, 2-79, 2-101, 2-103, 2-105, 2-107, 2-109, 2-111, 2-113, 2-115, 2-137, 2-139, 2-149, 2-151, 13-17, 13-19, 13-21, 13-23
342720-0115	CONN. STR. GA-16-G1/2	5-17
342720-0102	CONN. STR. GA-6-G1/8	5-121
342752-0103	CONN. STR. GA-8-G1/4	2-7, 2-85, 2-87, 12-97, 12-99
342720-0103	CONN. STR. GA-8-G1/8	2-149, 2-151
342723-0109	CONN. STR. PIPE GI-12-G3/8	2-149, 2-151
342723-0114	CONN. STR. PIPE GI-15-G1/2	2-163
342723-0103	CONN. STR. PIPE GI-8-G1/8	12-39, 12-41
90030-0178	CONN. STR., 10-R1/4, EXT. THREAD	2-169
90224-0331	CONN. STR., 6-R1/4, EXT. THREAD	1-55
90030-0201	CONN. STR., 8-R1/4, EXT. THREAD	4-11, 4-13, 4-15, 4-17, 4-19, 4-21, 4-77, 4-79, 4-85, 4-87, 12-193, 12-195, 12-197, 12-199, 12-201, 12-203
90224-0319	CONN. STR., 8-R1/4, EXT. THREAD	2-13, 2-15, 2-17, 2-19, 2-71, 2-73, 2-75, 2-101, 2-103, 2-105, 2-107, 2-109, 2-111, 2-113, 2-137, 2-139, 13-17, 13-19, 13-21, 13-23
90458-1851	CONN. STR., 8-R1/4, EXT. THREAD	2-149, 2-151
90030-0155	CONN. STR., 8-R3/8, EXT. THREAD	2-35, 2-121, 2-123, 12-167, 13-15, 13-97
90224-0066	CONN. STRAIGHT, 160Â•SSA	5-121
342747-0114	CONN. T-PIPE T-15	2-121, 2-123
90030-0076	CONN. T-PIPE T-6	2-157

Part No	Description	Page No
342741-0108 ...	CONN. T-PIPE TA-10-R1/4	2-169
318219-0187 ...	CONNECTING LINK SINGLE 1/2",SS	5-101, 5-103
90288-0305	CONNECTING LINK SINGLE 3/4",SS	4-143, 4-147
318219-0487 ...	CONNECTING LINK, DUPLEX 1/2", SS	5-89, 5-91
1144497-0000 .	CONNECTING ROD	6-59, 6-61
90134-0058	CONNECTION	3-35, 3-37, 3-39, 3-41, 3-43, 4-11, 4-13, 4-15, 4-17, 4-19, 4-21, 4-23, 4-25, 4-27, 4-29, 4-33, 4-35, 4-37, 4-39, 4-41, 4-43, 4-45, 4-47, 4-49, 4-51, 4-65, 4-67, 4-69, 4-71, 4-77, 4-79, 4-85, 4-87, 4-139, 4-141, 4-143, 4-147, 5-25, 5-27, 5-29, 5-33, 5-41, 5-43, 5-45, 5-47, 5-49, 5-51, 5-53, 5-55, 5-81, 5-83, 6-5, 6-59, 6-61, 12-193, 12-195, 12-197, 12-199, 12-201, 12-203, 12-215, 12-217, 12-219, 12-221, 12-277, 12-279, 13-7, 13-9
90163-0007	CONNECTION	12-121
90224-0304	CONNECTION	7-7
90224-0310	CONNECTION	1-55
90224-0316	CONNECTION	2-137, 2-139
90224-0318	CONNECTION	2-137, 2-139
90224-0323	CONNECTION	2-13, 2-15, 2-17, 2-19, 2-71, 2-73, 2-75, 2-101, 2-103, 2-105, 2-107, 2-109, 2-111, 2-113, 13-17, 13-19, 13-21, 13-23
90239-0181	CONNECTION	12-47
257723-0000 ...	CONNECTION	1-49, 1-51, 1-53
285892-0000 ...	CONNECTION	5-121
443051-0000 ...	CONNECTION	5-67
90172-0319	CONNECTION 372 640 001	9-5, 9-7, 9-9, 9-11, 9-13, 9-15, 9-45, 9-47, 9-49, 9-51, 9-53, 9-55, 12-235, 12-237
37892-0000	CONNECTION BOX	12-91
283026-0400 ...	CONNECTION BOX	7-3, 7-5
449930-0500 ...	CONNECTION BOX	2-3, 2-5
450495-0000 ...	CONNECTION BOX	2-163
451348-0200 ...	CONNECTION BOX	2-3, 2-5
464297-0000 ...	CONNECTION BOX	2-127
466337-0000 ...	CONNECTION BOX	8-61, 8-63, 8-65
532151-0300 ...	CONNECTION BOX	8-61, 8-63, 8-65
540723-0100 ...	CONNECTION BOX	2-37, 2-39, 2-41
540724-0000 ...	CONNECTION BOX	2-45
574605-0000 ...	CONNECTION BOX	2-147
929660-0100 ...	CONNECTION BOX	2-85, 2-87
929739-0000 ...	CONNECTION BOX	2-91
2505172-0000 .	CONNECTION BOX	13-183
90265-0081	CONNECTION BOX 01 1626 09	8-67
90172-0327	CONNECTION CABLE ULTRA SONIC/PC	14-7
279103-0000 ...	CONNECTION CLAMP	4-11, 4-13, 4-15, 4-17, 4-19, 4-21, 4-73, 12-193, 12-195, 12-197, 12-199, 12-201, 12-203
553228-0000 ...	CONNECTION LS	1-37
443126-0000 ...	CONNECTION PIPE	5-57
294057-0000 ...	CONNECTION SOCKET	4-73
90042-0481	CONNECTION TABLE 583-471-000 MECMAN	2-149, 2-151
90110-0095	CONNECTOR 3 POLE + EARTH	2-149, 2-151
90134-0002	CONNECTOR R1/8, D=4 MM	5-29, 5-33, 5-49, 5-51, 5-53, 5-55, 5-81, 5-83
90220-0080	CONNECTOR WITH GRAB HOOK,4 MM BLACK	14-21
90220-0081	CONNECTOR WITH GRAB HOOK,4 MM RED	14-21
90042-0392	CONTACT 2 POLE + EARTH	13-179
90042-0398	CONTACT 3 POLE+EARTH	2-173, 12-163, 13-29
442413-0200 ...	CONTACT FLANGE	1-55
268642-0000 ...	CONTACT PIECE	4-65, 4-67, 4-69, 4-71
497912-0000 ...	CONTACT PIECE	4-65, 4-67, 4-69, 4-71
497913-0000 ...	CONTACT PIECE	4-65, 4-67, 4-69, 4-71
90110-0028	CONTACT UNIT 4-POLEADAPTER	9-5, 9-7, 9-9, 9-11, 9-13, 9-15, 9-25, 9-27, 9-29, 9-31, 9-33
90110-0029	CONTACT UNIT, ATE 57-30140	9-5, 9-7, 9-9, 9-11, 9-13, 9-15, 9-25, 9-27, 9-29, 9-31, 9-33
90075-0126	CONTACTOR, 22KW 24VDC	9-5, 9-7, 9-9, 9-11, 9-13, 9-15, 9-25, 9-27, 9-29, 9-31, 9-33, 9-45, 9-47, 9-49, 9-51, 9-53, 9-55
90075-0125	CONTACTOR, 7,5KW 24VDC	9-5, 9-7, 9-9, 9-11, 9-13, 9-15, 9-25, 9-27, 9-29, 9-31, 9-33, 9-45, 9-47, 9-49, 9-51, 9-53, 9-55, 13-175
90243-0133	CONTAINER	10-3
971410-0101 ...	CONTROL PANEL	9-41
971410-0102 ...	CONTROL PANEL	9-21, 9-61
68378-1000	CONTROL PANEL, TB/8-1001.	9-3
42510-1000	CONTROL PANEL, TB/8-1002.	9-3
42875-1000	CONTROL PANEL, TB/8-1003.	9-3
596098-0000 ...	CONTROL TERMINAL X1:1	9-5, 9-7, 9-9, 9-11, 9-13, 9-15
1143670-0000 .	CONTROL TERMINAL X1:1	9-45, 9-47, 9-49, 9-51, 9-53, 9-55
594501-0000 ...	CONTROL TERMINAL X1:3	9-25, 9-27, 9-29, 9-31, 9-33
596739-0000 ...	CONTROL TERMINAL X1:3	9-5, 9-7, 9-9, 9-11, 9-13, 9-15
1143672-0000 .	CONTROL TERMINAL X1:3	9-45, 9-47, 9-49, 9-51, 9-53, 9-55
573373-0000 ...	CONTROL TERMINALX1:1	9-25, 9-27, 9-29, 9-31, 9-33
525086-0200 ...	CONVEYING EQUIPMENT	5-81, 5-83
574323-0100 ...	CONVEYING EQUIPMENT	5-81, 5-83
1144325-0100 .	CONVEYOR	6-3
1144328-0100 .	CONVEYOR BELT	6-3
90422-0008	COOLER	2-169
495201-0000 ...	COOLING ELEMENT	2-163
731771-0000 ...	COOLING PLATE,SOLIDSTATE	13-175
1143884-0000 .	COPPER BRAID	9-5, 9-7, 9-9, 9-11, 9-13, 9-15, 9-25, 9-27, 9-29, 9-31, 9-33, 9-45, 9-47, 9-49, 9-51, 9-53, 9-55, 13-175
2532882-0000 .	COPPER BRAID	13-175
341001-0148 ...	COPPER TUBE	2-7, 2-149, 2-151

Part No	Description	Page No
341001-0192	COPPER TUBE	2-149, 2-151
341001-0228	COPPER TUBE	2-37, 2-39, 2-41, 2-85, 2-87, 2-137, 2-139, 2-149, 2-151
26372-0000	COUNTER CAM	4-49, 4-51
26373-0000	COUNTER CAM	4-45, 4-47
252653-0002	COUNTER CAM	4-49, 4-51
252654-0002	COUNTER CAM	4-45, 4-47
269059-0000	COUNTER CAM	4-49, 4-51
269060-0000	COUNTER CAM	4-45, 4-47
440930-0000	COUNTER CAM	4-49, 4-51
440931-0000	COUNTER CAM	4-45, 4-47
476667-0000	COUNTER CAM	4-45, 4-47
476668-0000	COUNTER CAM	4-49, 4-51
549109-0000	COUNTER CAM	4-49, 4-51
549110-0000	COUNTER CAM	4-45, 4-47
551826-0000	COUNTER CAM	3-19
562975-0000	COUNTER CAM	3-19
563202-0000	COUNTER CAM	3-19
565044-0000	COUNTER CAM	3-19
565131-0000	COUNTER CAM	3-19
565191-0000	COUNTER CAM	3-19
574116-0000	COUNTER CAM	3-19
582108-0000	COUNTER CAM	3-19
583405-0000	COUNTER CAM	3-19
589921-0000	COUNTER CAM	3-19
593274-0000	COUNTER CAM	3-9
598649-0000	COUNTER CAM	3-9
929046-0000	COUNTER CAM	3-9, 12-169
1364733-0000	COUNTER CAM	3-9
598652-0000	COUNTER CAM L	4-49, 4-51
598653-0000	COUNTER CAM R	4-45, 4-47
525012-0001	COUNTER PLATE	5-41, 5-43, 5-45, 5-47
525012-0002	COUNTER PLATE	5-41, 5-43, 5-45, 5-47
525012-0004	COUNTER PLATE	5-41, 5-43, 5-45, 5-47
525012-0005	COUNTER PLATE	5-41, 5-43, 5-45, 5-47
525014-0002	COUNTER PLATE	5-41, 5-43, 5-45, 5-47
525182-0001	COUNTER PLATE	5-41, 5-43, 5-45, 5-47
574049-0000	COUNTER PLATE	5-25, 5-27, 5-41, 5-43, 5-45, 5-47
583457-0000	COUNTER PLATE	5-25, 5-27, 5-41, 5-43, 5-45, 5-47
597612-0000	COUNTER PLATE	5-25, 5-27, 5-41, 5-43, 5-45, 5-47
1317573-0000	COUNTER PLATE	11-23
1334785-0000	COUNTER PLATE	11-23
37894-0101	COUNTER RAIL	12-51
24200-0000	COUNTER ROLLER	1-5
38630-0001	COUNTER ROLLER	1-31, 1-33, 1-39
38630-0005	COUNTER ROLLER	1-31, 1-33, 1-39
582013-0000	COUNTER ROLLER	1-31, 1-33, 1-39
583183-0000	COUNTER ROLLER	1-31, 1-33, 1-39
592937-0000	COUNTER ROLLER	1-31, 1-33, 1-39
90053-0032	COUNTER, F524.650DA3B 24VDC	9-5, 9-7, 9-9, 9-11, 9-13, 9-15, 9-25, 9-27, 9-29, 9-31, 9-33, 9-45, 9-47, 9-49, 9-51, 9-53, 9-55
90053-0029	COUNTER, F524.800FA3C 24VDC	9-5, 9-7, 9-9, 9-11, 9-13, 9-15, 9-25, 9-27, 9-29, 9-31, 9-33, 9-45, 9-47, 9-49, 9-51, 9-53, 9-55
90321-0385	COUPLING	2-169
251449-0000	COVER	12-49
266738-0000	COVER	7-41
297988-0000	COVER	12-75
297989-0000	COVER	12-57
440287-0000	COVER	8-39
442532-0000	COVER	5-133, 5-135
458364-0000	COVER	8-9
476195-0000	COVER	12-37, 12-133
525073-0000	COVER	5-69, 5-71, 5-77, 5-79
537317-0000	COVER	12-23
537318-0000	COVER	12-23
537319-0000	COVER	12-29
538255-0000	COVER	12-23
556875-0100	COVER	8-3
556879-0000	COVER	8-49
571421-0000	COVER	8-51, 8-53
581333-0000	COVER	13-59
581334-0000	COVER	13-59
592587-0000	COVER	13-59
593564-0000	COVER	8-49
927595-0000	COVER	13-59
927596-0000	COVER	13-59
927621-0000	COVER	13-59
927625-0000	COVER	13-59
1144356-0000	COVER	6-5
1144670-0000	COVER	2-93
1144671-0000	COVER	2-93
1144845-0000	COVER	6-35
1144909-0000	COVER	6-35
1285309-0000	COVER	6-21, 6-23, 6-25
1285877-0000	COVER	6-65

Part No	Description	Page No
1347244-0000 .	COVER	6-35
1348234-0000 .	COVER	6-35
537314-0100 ...	COVER LOWER	12-21
464194-0000 ...	COVER DISC	2-37, 2-39, 2-41, 2-85, 2-87
542860-0000 ...	COVER PLATE	2-65
929839-0000 ...	COVER PLATE	2-37, 2-39, 2-41, 2-85, 2-87, 12-155
1143875-0000 .	COVER PLATE	2-37, 2-39, 2-41, 2-85, 2-87, 12-155
1144711-0000 .	COVER PLATE	6-55
2696850-0000 .	COVER PLATE	13-225
542697-0000 ...	COVER PLATE L	2-159, 2-161
569918-0000 ...	COVER PLATE L.	8-77, 8-79
569919-0000 ...	COVER PLATE R.	8-77, 8-79
451394-0000 ...	COVER PLATE STAINLESS	12-81
573615-0000 ...	COVER SLIP	13-53, 13-55
573617-0000 ...	COVER SLIP	13-53
581342-0000 ...	COVER SLIP	13-55
269322-0300 ...	COVER UPPER	2-3, 2-5
537313-0100 ...	COVER UPPER	12-21
232793-0000 ...	COVERING PLATE	12-47
279999-0000 ...	COVERING PLATE	3-15
282511-0000 ...	COVERING PLATE	3-15
293160-0000 ...	COVERING PLATE	2-37, 2-39, 2-41, 2-85, 2-87
293161-0000 ...	COVERING PLATE	2-37, 2-39, 2-41, 2-85, 2-87
440077-0000 ...	COVERING PLATE	2-37, 2-39, 2-41, 2-85, 2-87
449634-0000 ...	COVERING PLATE	8-77, 8-79
449635-0000 ...	COVERING PLATE	8-77, 8-79
450298-0000 ...	COVERING PLATE	2-37, 2-39, 2-41, 2-85, 2-87
450342-0000 ...	COVERING PLATE	2-37, 2-39, 2-41, 2-85, 2-87
457492-0000 ...	COVERING PLATE	8-77, 8-79
457493-0000 ...	COVERING PLATE	8-77, 8-79
457494-0000 ...	COVERING PLATE	8-77, 8-79
457495-0000 ...	COVERING PLATE	8-77, 8-79
476192-0000 ...	COVERING PLATE	12-37
476193-0000 ...	COVERING PLATE	12-133
476194-0000 ...	COVERING PLATE	12-37, 12-133
476824-0000 ...	COVERING PLATE	2-37, 2-39, 2-41
479826-0000 ...	COVERING PLATE	12-37, 12-133
525262-0000 ...	COVERING PLATE	5-7, 5-9, 5-35, 5-37
525275-0000 ...	COVERING PLATE	5-7, 5-9, 5-35, 5-37
525339-0000 ...	COVERING PLATE	5-115
525423-0000 ...	COVERING PLATE	5-159
529331-0000 ...	COVERING PLATE	5-35, 5-37
542850-0000 ...	COVERING PLATE	1-7, 1-9
542854-0000 ...	COVERING PLATE	1-7, 1-9
544702-0000 ...	COVERING PLATE	2-37, 2-39, 2-41
546123-0000 ...	COVERING PLATE	12-147
546124-0000 ...	COVERING PLATE	12-147
547905-0101 ...	COVERING PLATE	12-51
566416-0000 ...	COVERING PLATE	5-115
573828-0000 ...	COVERING PLATE	8-69, 8-71, 8-73
574062-0000 ...	COVERING PLATE	8-77, 8-79
574063-0000 ...	COVERING PLATE	8-77, 8-79
581815-0000 ...	COVERING PLATE	2-85, 2-87
593569-0000 ...	COVERING PLATE	8-77, 8-79
593648-0000 ...	COVERING PLATE	8-77, 8-79
595066-0000 ...	COVERING PLATE	5-7, 5-9
927428-0000 ...	COVERING PLATE	8-69, 8-71, 8-73
928305-0000 ...	COVERING PLATE	3-17
928306-0000 ...	COVERING PLATE	3-17
928901-0000 ...	COVERING PLATE	5-115
1143628-0000 .	COVERING PLATE	2-63
1144941-0000 .	COVERING PLATE	6-27
1338719-0000 .	COVERING PLATE	13-213
2660658-0000 .	COVERING PLATE	13-233
546231-0100 ...	COVERPLATE ON ASU	12-127
542695-0000 ...	COVERPLATE R	2-185
1260945-0000 .	CRADLE	6-17
293351-0000 ...	CRAMP	2-137, 2-139
293352-0000 ...	CRAMP	2-137, 2-139
450744-0000 ...	CRAMP	2-137, 2-139
450887-0000 ...	CRAMP	7-41
533886-0000 ...	CRAMP	4-33, 4-35, 4-37, 4-39, 4-41, 4-43
533888-0000 ...	CRAMP	4-33, 4-35, 4-37, 4-39, 4-41, 4-43
540332-0000 ...	CRAMP	4-73
542560-0000 ...	CRAMP	4-93, 4-95
542561-0000 ...	CRAMP	4-93, 4-95
440588-0200 ...	CRANK	3-3, 3-5, 3-7
542262-0000 ...	CRANK	3-27
1144319-0100 .	CRANK	6-3
1144635-0000 .	CRANK	6-11
36885-0000	CRANK ARM	3-27
434659-0000 ...	CRANK BRACKET	2-177
440098-0300 ...	CRANK BRACKET	2-3, 2-5
541009-0000 ...	CRANK HOLDER	2-177

Part No	Description	Page No
458104-0000	CREASE FORMER	8-21, 8-23, 8-25, 8-27, 8-29, 8-31, 8-33, 12-67, 12-69, 12-71, 12-73
458105-0000	CREASE FORMER	8-21, 8-23, 8-25, 8-27, 8-29, 8-31, 8-33, 12-67, 12-69, 12-71, 12-73
458106-0000	CREASE FORMER	8-21, 8-23, 8-25, 8-27, 8-29, 8-31, 8-33, 12-67, 12-69, 12-71, 12-73
458107-0000	CREASE FORMER	8-5, 8-7, 12-53, 12-55, 12-67, 12-69, 12-71, 12-73
458108-0000	CREASE FORMER	8-21, 8-23, 8-25, 8-27, 8-29, 8-31, 8-33
569651-0000	CREASE FORMER	8-21, 8-23, 8-25, 8-27, 8-29, 8-31, 8-33
574043-0000	CREASE FORMER	8-21, 8-23, 8-25, 8-27, 8-29, 8-31, 8-33
593556-0000	CREASE FORMER	8-21, 8-23, 8-25, 8-27, 8-29, 8-31, 8-33
479825-0000	CROSS BAR	12-35
90203-0009	CU LITZ CABLE 15X2 MM	9-21, 9-41, 9-61, 12-239
90119-0077	CURRENT RELAY SYRELEC DIRT2 230	9-5, 9-7, 9-9, 9-11, 9-13, 9-15, 9-25, 9-27, 9-29, 9-31, 9-33, 9-45, 9-47, 9-49, 9-51, 9-53, 9-55
252775-0000	CURVE	4-101, 4-103, 4-105, 4-107
285054-0000	CURVE	5-59
285055-0000	CURVE	5-59
442564-0000	CURVE	5-25, 5-27, 5-41, 5-43, 5-45, 5-47, 5-137, 5-139, 5-141, 5-143
442565-0000	CURVE	5-25, 5-27, 5-41, 5-43, 5-45, 5-47, 5-137, 5-139, 5-141, 5-143
443362-0000	CURVE	5-121
464012-0000	CURVE	8-5, 8-7, 8-21, 8-23, 8-25, 8-27, 8-29, 8-31, 8-33, 12-53, 12-55, 12-67, 12-69, 12-71, 12-73
525235-0000	CURVE	5-121
533955-0000	CURVE	4-101, 4-103, 4-105, 4-107
551283-0000	CURVE	4-101, 4-103, 4-105, 4-107
556579-0000	CURVE	3-11, 12-169, 13-11, 13-95, 13-135
567702-0000	CURVE	3-37, 3-39
573994-0000	CURVE	3-21
574050-0000	CURVE	5-25, 5-27, 5-41, 5-43, 5-45, 5-47
574129-0000	CURVE	4-101, 4-103, 4-105, 4-107
595209-0000	CURVE	4-101, 4-103, 4-105, 4-107
1346316-0000	CURVE	13-199
28334-0000	CURVE ROLLER	3-41, 3-43
276173-0000	CURVE ROLLER	4-143, 4-147
434321-0000	CURVE ROLLER	4-53, 4-55, 12-205, 12-207
436556-0000	CURVE ROLLER	4-31, 4-53, 4-55, 12-205, 12-207
243776-0300	CURVE SHAFT	3-3, 3-5, 3-7
929505-0100	CURVE SHAFT ULTRA SONIC	3-3, 3-5, 3-7
434858-0000	CUSHION	2-63, 2-65, 2-97, 2-99
450105-0000	CUTTING JAW	4-77, 4-79, 4-85, 4-87
464758-0000	CUTTING JAW	4-77, 4-79, 4-85, 4-87
536421-0000	CUTTING JAW	4-77, 4-79, 4-85, 4-87
536978-0000	CUTTING JAW	4-77, 4-79, 4-85, 4-87
536979-0000	CUTTING JAW	4-77, 4-79, 4-85, 4-87
573986-0000	CUTTING JAW	4-77, 4-79, 4-85, 4-87
583262-0000	CUTTING JAW	4-77, 4-79, 4-85, 4-87
593571-0000	CUTTING JAW	4-11, 4-13, 4-15, 4-17, 4-19, 4-21, 12-193, 12-195, 12-197, 12-199, 12-201, 12-203
597549-0000	CUTTING JAW	4-77, 4-79, 4-85, 4-87
929539-0000	CUTTING JAW	4-11, 4-13, 4-15, 4-17, 4-19, 4-21, 12-193, 12-195, 12-197, 12-199, 12-201, 12-203
1143143-0000	CUTTING JAW	4-77, 4-79, 4-85, 4-87, 13-73
1360218-0000	CUTTING JAW	13-147
1364231-0000	CUTTING JAW	13-151
2728743-0000	CUTTING JAW	4-11, 4-13, 4-15, 4-17, 4-19, 4-21, 12-193, 12-195, 12-197, 12-199, 12-201, 12-203
246337-0500	CUTTING JAW LEFT	4-3, 4-5
928982-0100	CUTTING JAW LEFT	4-3, 4-5, 12-171
246338-0500	CUTTING JAW RIGHT	4-3, 4-5
928983-0100	CUTTING JAW RIGHT	4-3, 4-5, 12-171
549834-0000	CUTTING RAIL	8-77, 8-79
549835-0000	CUTTING RAIL	8-77, 8-79
556394-0000	CUTTING RAIL	8-77, 8-79
556395-0000	CUTTING RAIL	8-77, 8-79
569923-0000	CUTTING RAIL	8-77, 8-79
574061-0000	CUTTING RAIL	8-77, 8-79
593568-0000	CUTTING RAIL	8-77, 8-79
2827003-0000	CUTTING RAIL	12-281
522121-0200	CUTTING TABLE	8-3
90214-0219	CYL.ROLLER BEARING, 17X40X12 MM	6-33
90239-0259	CYLINDER	8-5, 8-7, 8-17, 8-21, 8-23, 8-25, 8-27, 8-29, 8-31, 8-33, 8-41, 8-69, 8-71, 8-73
90239-0960	CYLINDER	5-15
90450-0066	CYLINDER	1-35
90450-0377	CYLINDER	5-81, 5-83, 12-257
90450-0454	CYLINDER	8-21, 8-23, 8-25, 8-27, 8-29, 8-31, 8-33
90450-0495	CYLINDER	5-81, 5-83, 12-269, 13-129
440565-0000	CYLINDER	4-65, 4-67, 4-69, 4-71
576976-0000	CYLINDER	12-119
232792-0000	CYLINDER BRACKET	12-47
436939-0000	CYLINDER BRACKET	8-5, 8-7, 8-21, 8-23, 8-25, 8-27, 8-29, 8-31, 8-33
484529-0000	CYLINDER BRACKET	8-69, 8-71, 8-73
530716-0000	CYLINDER BRACKET	1-31, 1-33
556551-0000	CYLINDER BRACKET	7-41
595204-0000	CYLINDER BRACKET	8-21, 8-23, 8-25, 8-27, 8-29, 8-31, 8-33
751143-0000	CYLINDER BRACKET	5-137, 5-139, 5-141, 5-143
1143004-0000	CYLINDER BRACKET	5-81, 5-83, 12-257
243043-0000	CYLINDER CONSOLE	1-35
927593-0000	CYLINDER CONSOLE	1-31, 1-33, 13-57
440632-0000	CYLINDER HOUSING	1-63
464101-0000	CYLINDER SHELL	12-107

Part No	Description	Page No
90266-0022	DAIRY PIPE 38X1,2	12-45
90347-0054	DAMPER	8-5, 8-7, 8-21, 8-23, 8-25, 8-27, 8-29, 8-31, 8-33
269792-0000	DAMPER	4-101, 4-103, 4-105, 4-107
276189-0000	DAMPER	4-101, 4-103, 4-105, 4-107
574130-0000	DAMPER	4-101, 4-103, 4-105, 4-107
581826-0000	DAMPER	4-101, 4-103, 4-105, 4-107
593574-0000	DAMPER	4-11, 4-13, 4-15, 4-17, 4-19, 4-21, 12-193, 12-195, 12-197, 12-199, 12-201, 12-203
593575-0000	DAMPER	4-11, 4-13, 4-15, 4-17, 4-19, 4-21, 12-193, 12-195, 12-197, 12-199, 12-201, 12-203
928986-0000	DAMPER	4-11, 4-13, 4-15, 4-17, 4-19, 4-21, 12-193, 12-195, 12-197, 12-199, 12-201, 12-203
928987-0000	DAMPER	4-11, 4-13, 4-15, 4-17, 4-19, 4-21, 12-193, 12-195, 12-197, 12-199, 12-201, 12-203
1144838-0000	DAMPER	2-69
1364233-0000	DAMPER	13-151
1364236-0000	DAMPER	13-91, 13-107, 13-147
1364237-0000	DAMPER	13-91, 13-107, 13-147
1365565-0000	DAMPER	13-151
252808-0000	DAMPER LEFT	4-113, 4-115, 12-175, 12-177
499397-0000	DAMPER LEFT	4-113, 4-115, 12-175, 12-177
252809-0000	DAMPER RIGHT	4-113, 4-115, 12-175, 12-177
499398-0000	DAMPER RIGHT	4-113, 4-115, 12-175, 12-177
90347-0079	DAMPER TFE 601	12-143
293680-0500	DATING UNIT	12-51
293681-0501	DATING UNIT	12-51
486958-0200	DATING UNIT	8-3
538248-0200	DATING UNIT	8-3
48393-0201	DCS8+	13-203
47832-0101	DCS8,DESIGN CONTR.PROG.	9-5, 9-7, 9-9, 9-11, 9-13, 9-15, 9-25, 9-27, 9-29, 9-31, 9-33, 9-45, 9-47, 9-49, 9-51, 9-53, 9-55
442077-0200	DECREASE OF PRESSURE	2-169
243434-0500	DESIGN CORRECTION DEVICE LEFT	4-3, 4-5
243435-0500	DESIGN CORRECTION DEVICE RIGHT	4-3, 4-5
450792-0100	DETERGENT PUMP	2-3, 2-5
593634-0200	DIAGRAM	10-3
74772-0000	DIAL	14-47
533169-0000	DIAPHRAGM	1-41, 1-63
1528700-0100	DIMC MULTI APPLICATOR	12-3
1282100-0400	DIMC UNIT	12-3
90098-0020	DIODE FUSE, 55ET	9-19, 9-25, 9-27, 9-29, 9-31, 9-33, 9-39, 9-59
90077-0341	DIODE HOLDER, WSD 2,5, 10584.6	9-19, 9-39, 9-59
90201-0010	DIRECT CHECK VALVE, NO. DGMDC-3-Y-PK-41	2-171, 3-13, 3-23, 3-25, 13-13
293673-0001	DISC	12-67, 12-69, 12-71, 12-73
293673-0002	DISC	12-53, 12-55
1317083-0000	DISC	6-53
319030-0125	DISC SPRING, CONICAL 12,5X6,2X0,5 MM	8-69, 8-71, 8-73
90016-0040	DISC SPRING, CONICAL 20X10,2X0,8 MM	12-47
525088-0200	DISCHARGE CHUTE	5-81, 5-83
525325-0200	DISCHARGER	5-3, 5-5
595090-0100	DISCHARGER	5-3, 5-5
90321-0384	DISTANCE PIECE	2-169
268139-0000	DISTANCE PIECE	12-5, 12-9
244828-0304	DISTANCE PIECE-PLATF. 600 MM NO LADDER	12-3
244828-0303	DISTANCE PIECE-PLATF. 600 MM WITH LADDER	12-3
527649-0000	DISTANCE RUBBER	8-13, 8-15
90032-0034	DISTR. BLOCK & DIST.5/16-24UNF X8	5-133, 5-135
90032-0035	DISTR. BLOCK & DIST.5/16-24UNF X8	5-67
596737-0000	DISTR. TERMINAL, 220V	9-5, 9-7, 9-9, 9-11, 9-13, 9-15
1143668-0000	DISTR. TERMINAL, 220V	9-45, 9-47, 9-49, 9-51, 9-53, 9-55
596740-0000	DISTR. TERMINAL, DIODES	9-5, 9-7, 9-9, 9-11, 9-13, 9-15
1143673-0000	DISTR. TERMINAL, DIODES	9-45, 9-47, 9-49, 9-51, 9-53, 9-55
578046-0000	DISTR.TERM,DIODE TERM	9-25, 9-27, 9-29, 9-31, 9-33
573371-0000	DISTR.TERM.	9-25, 9-27, 9-29, 9-31, 9-33
90032-0043	DISTRIBUTION BLOCK 3 WAYS	2-179, 3-35
90032-0044	DISTRIBUTION BLOCK 4 WAYS	2-179, 5-7, 5-9, 5-25, 5-27, 5-35, 5-37, 5-41, 5-43, 5-45, 5-47
90032-0046	DISTRIBUTION BLOCK 6 WAYS	2-179
525305-0000	DISTRIBUTOR	5-49, 5-51
525307-0000	DISTRIBUTOR	5-49, 5-51
525308-0000	DISTRIBUTOR	5-49, 5-51
525309-0000	DISTRIBUTOR	5-49, 5-51
544318-0000	DISTRIBUTOR	11-17
569129-0000	DISTRIBUTOR	5-49, 5-51
574056-0000	DISTRIBUTOR	5-29, 5-49, 5-51, 11-17
583630-0000	DISTRIBUTOR	5-29, 5-49, 5-51
596124-0000	DISTRIBUTOR	6-27
569104-0000	DISTRIBUTOR WING	13-41
575449-0000	DOCUMENT FOLDER	2-131
582889-0000	DOCUMENT FOLDER	13-73
593000-0000	DOCUMENT FOLDER	11-5
593001-0000	DOCUMENT FOLDER	13-31
593002-0000	DOCUMENT FOLDER	13-35
593004-0000	DOCUMENT FOLDER	13-91
593005-0000	DOCUMENT FOLDER	12-151
598071-0000	DOCUMENT FOLDER	13-195
599613-0000	DOCUMENT FOLDER	13-199
599720-0000	DOCUMENT FOLDER	13-131
927664-0000	DOCUMENT FOLDER	13-43

Part No	Description	Page No
1143617-0000	DOCUMENT FOLDER	13-79
1285357-0000	DOCUMENT FOLDER	12-245
1360000-0000	DOCUMENT FOLDER	13-107
1360001-0000	DOCUMENT FOLDER	13-121
1360002-0000	DOCUMENT FOLDER	13-119
1360006-0000	DOCUMENT FOLDER	12-265
1360007-0000	DOCUMENT FOLDER	13-135
1361300-0000	DOCUMENT FOLDER	13-89
1363722-0000	DOCUMENT FOLDER	12-151, 13-137
1363724-0000	DOCUMENT FOLDER	13-149
1367827-0104	DOCUMENT FOLDER	13-205
1367830-0101	DOCUMENT FOLDER	13-155
1367836-0101	DOCUMENT FOLDER	13-171
1367837-0101	DOCUMENT FOLDER	13-159
1367841-0101	DOCUMENT FOLDER	13-187
1531005-0102	DOCUMENT FOLDER	13-83
2795698-0101	DOCUMENT FOLDER	13-239
457627-0000	DOLLY	8-69, 8-71, 8-73
537305-0000	DOLLY	12-33
243510-0100	DOOR	12-147
243512-0000	DOOR	12-149
450824-0200	DOOR	2-3, 2-5
537312-0000	DOOR	12-31
537316-0000	DOOR	12-27
549044-0000	DOOR	2-133
573614-0000	DOOR	13-53
581337-0000	DOOR	13-55
581338-0100	DOOR	13-51
593748-0100	DOOR	13-51
90239-0189	DOUBLE ACTING, MINI-ISO, CYL 25-32	12-47, 12-49, 12-83
90239-0818	DOUBLE ACTING, MINI-ISO, CYL.16-80	5-119
90239-0821	DOUBLE ACTING, MINI-ISO, CYL.20-25	7-41
90239-0828	DOUBLE ACTING, MINI-ISO, CYL.25-25	5-137, 5-139, 5-141, 5-143
90239-0852	DOUBLE ACTING, MINI-ISO, CYL.25-25	8-17
90239-0829	DOUBLE ACTING, MINI-ISO, CYL.25-50	7-37, 7-39
90239-0835	DOUBLE ACTING, MINI-ISO, CYL.32-50	1-31, 1-33
90450-0504	DOUBLE ACTING, PROFILE, CYL 50-25	6-17
90458-2370	DOUBLE ACTING, ROUND, CYL 32-150	13-161
442644-0300	DOUBLE GEAR	5-59
1195097-0100	DOUBLE JACKET FILLING PIPE	12-3
928332-0000	DOUBLE JACKET FILLINGPIPE	1-65, 1-67, 1-69
22485-0000	DOWEL	4-45, 4-47, 4-49, 4-51
22486-0000	DOWEL	4-45, 4-47, 4-49, 4-51
24355-0000	DOWEL	1-43, 1-45, 7-45
37896-0000	DOWEL	12-89
74912-0000	DOWEL	14-47
107339-0000	DOWEL	4-45, 4-47, 4-49, 4-51
110223-0000	DOWEL	1-73
269366-0000	DOWEL	4-143, 4-147
293667-0000	DOWEL	8-9, 8-39, 12-57, 12-75
293674-0000	DOWEL	8-5, 8-7, 8-21, 8-23, 8-25, 8-27, 8-29, 8-31, 8-33, 12-53, 12-55, 12-67, 12-69, 12-71, 12-73
450500-0000	DOWEL	8-5, 8-7, 8-21, 8-23, 8-25, 8-27, 8-29, 8-31, 8-33, 12-53, 12-55, 12-67, 12-69, 12-71, 12-73
476015-0000	DOWEL	8-57, 8-59
525384-0000	DOWEL	5-159
593588-0000	DOWEL	8-21, 8-23, 8-25, 8-27, 8-29, 8-31, 8-33
592349-0100	DRAIN VALVE	12-155
1338963-0000	DRILLING TEMPLATE	13-205
268693-0000	DRIP GUARD	1-73
458189-0000	DRIP GUARD	2-159, 2-161
464195-0000	DRIP GUARD	2-159, 2-161
581345-0000	DRIP GUARD	13-63
279969-0000	DRIP PLATE	3-37, 3-39
443240-0000	DRIP PLATE	5-25, 5-27, 5-41, 5-43, 5-45, 5-47
479374-0000	DRIP PLATE	2-37, 2-39, 2-41, 2-85, 2-87
525439-0000	DRIP PLATE	5-159
1144415-0000	DRIP PLATE	6-5
542902-0100	DRIVE BRAKE	8-3
90046-0015	DRIVE BRAKE MOTOR 50HZ	3-31, 3-33
90046-0016	DRIVE BRAKE MOTOR 60HZ	3-31, 3-33
442582-0100	DRIVE GEAR	5-17
445845-0000	DRIVE ROLLER	8-17, 8-41
312502-0120	DRIVE SCREW ROUND HEAD KDS 0X5	1-55, 2-27, 2-29, 2-31, 2-81, 2-83, 2-149, 2-151, 7-9, 12-159
312502-0169	DRIVE SCREW ROUND HEAD KDS 2X5	12-47, 13-215
312502-0171	DRIVE SCREW ROUND HEAD KDS 2X6	2-173, 2-175, 13-29
312502-0219	DRIVE SCREW ROUND HEAD KDS 4X5	13-175
443173-0100	DRIVE SHAFT	5-3, 5-5
285287-0500	DRIVE UNIT	5-7, 5-9, 5-35, 5-37
434668-0400	DRIVE UNIT	3-3, 3-5, 3-7
445840-0100	DRIVE UNIT	8-3
595137-0100	DRIVE UNIT	12-151
1144318-0100	DRIVE UNIT	6-3
1334432-0100	DRIVE UNIT (OUTFEED)	6-37, 6-39
525087-0100	DROP	5-81, 5-83
1144321-0100	DROP CHUTE	6-3

Part No	Description	Page No
476197-0000 ...	DROP WING	12-133
544229-0001 ...	DROP WING	5-117
544229-0002 ...	DROP WING	5-117
544229-0003 ...	DROP WING	5-117
544229-0005 ...	DROP WING	5-117
574166-0000 ...	DROP WING	5-117
239533-0000 ...	DRUM	3-9, 3-19
440424-0000 ...	DRUM	2-165
597565-0100 ...	DRYER	13-113
1143243-0100 .	DRYER	2-3, 2-5
90172-0038	DUAL DISPLAY LCR METER	14-9
265568-0000 ...	DUST COVER	7-13, 7-43, 12-25, 12-65
90415-0063	DUSTFILTER / DD6 ART NO 8102 0215 43	2-7, 13-115
74767-0102	DYNAMOMETER	14-5
90135-0022	EARTH TERMINAL EK 2,5N	7-11
353024-0204 ...	EARTH TERMINAL WPE 2,5	2-91
353021-0228 ...	EARTH TERMINAL WPE 4	2-91
353024-0205 ...	EARTH TERMINAL, 1010.1	2-45, 2-147, 8-67, 13-175, 13-183
1144495-0000 .	ECCENTRIC	6-59, 6-61
1144496-0000 .	ECCENTRIC	6-59, 6-61
593238-0000 ...	ECCENTRIC BOLT	11-19
436671-0000 ...	ECCENTRIC SHAFT	4-45, 4-47, 4-49, 4-51
445903-0000 ...	ECCENTRIC SHAFT	8-69, 8-71, 8-73
1144595-0000 .	ECCENTRIC SHAFT	6-33
36939-0004	EDGE ROLLER	1-75, 1-77, 1-79, 1-81, 1-83
269136-0200 ...	EDGE ROLLER	1-3
574002-0000 ...	EDGE ROLLER	1-75, 1-77, 1-79, 1-81, 1-83
574003-0000 ...	EDGE ROLLER	1-75, 1-77, 1-79, 1-81, 1-83
574004-0000 ...	EDGE ROLLER	1-75, 1-77, 1-79, 1-81, 1-83
583177-0000 ...	EDGE ROLLER	1-75, 1-77, 1-79, 1-81, 1-83
583178-0000 ...	EDGE ROLLER	1-75, 1-77, 1-79, 1-81, 1-83
90143-0060	EDGE STRIP 9,5X6,3MM BLACK PVC	13-59
2525655-0100 .	EL "DISCHARGE CHUTE"	13-159
67267-1000	EL CABINET, TB/8-1001.	9-3
42504-1000	EL CABINET, TB/8-1002.	9-3
42869-1000	EL CABINET, TB/8-1003.	9-3
2667999-0100 .	EL RK "COUNTER" FOR TB/8-100V.	13-229
2510293-0100 .	EL RK "FLAP SEALING"	13-171
2667998-0100 .	EL RK "FREQ. CONVERTER" FOR TB/8-100V.	13-219
2542404-0100 .	EL RK "IMPROVED STRIP BREAK SUPERVISION"	13-187
2530869-0100 .	EL RK "NEW THYRISTOR"	13-205
2668000-0100 .	EL RK "RECORDER" FOR TB/8-100V.	13-225
596160-0100 ...	EL RK "REVFIN" FOR TB/8.	12-245, 12-265
2742067-0100 .	EL UK "REVOLVING STAND" FOR JUMBO REEL.	13-239
445920-0600 ...	EL-PNEUMATIC EQUIPMENT	8-3
649045-0100 ...	EL. EQUIPMENT JUMBO REEL	12-15
558966-0100 ...	EL. RK "ENABLE FOR REVERSE FIN"	13-121
2505171-0100 .	EL.CONNECTION BOX	13-171
445848-0000 ...	ELASTIC COUPLING	6-55, 8-41
342931-0113 ...	ELBOW 90 COUPL.,EXT.THREAD 6/4-G1/8"	2-179
342930-0114 ...	ELBOW 90 COUPL.,EXT.THREAD 6/4-R1/4"	2-137, 2-139, 12-39, 12-41
342930-0113 ...	ELBOW 90 COUPL.,EXT.THREAD 6/4-R1/8"	1-55, 2-149, 2-151, 5-57, 8-17, 12-39, 12-41
342931-0121 ...	ELBOW 90 COUPL.,EXT.THREAD 8/6-G1/8"	6-27
342930-0124 ...	ELBOW 90 COUPL.,EXT.THREAD 8/6-R1/2"	12-105
342930-0122 ...	ELBOW 90 COUPL.,EXT.THREAD 8/6-R1/4"	2-169, 6-17
342930-0121 ...	ELBOW 90 COUPL.,EXT.THREAD 8/6-R1/8"	5-25, 5-27, 5-41, 5-43, 5-45, 5-47
342933-0122 ...	ELBOW 90 COUPL.,INT.THREAD 8/6-G1/4	5-81, 5-83, 13-161
342936-0122 ...	ELBOW 90 COUPL.,UNION 8/6	12-105
22488-0000	ELBOW PIPE	4-11, 4-13, 4-15, 4-73, 12-199, 12-201, 12-203
22489-0000	ELBOW PIPE	4-17, 4-19, 4-21, 4-73, 12-193, 12-195, 12-197
90418-0014	ELBOW PIPE	2-149, 2-151
90418-0039	ELBOW PIPE	2-149, 2-151
525271-0000 ...	ELBOW PIPE	5-7, 5-9, 5-35, 5-37
1484444-0000 .	ELBOW PIPE	6-63
90055-0217	ELBOW PIPE JOINT	12-159
342735-0103 ...	ELBOW PIPE JOINT	2-27, 2-29, 2-31, 2-81, 2-83
540718-0000 ...	ELBOW PIPE JOINT	2-35, 12-165, 13-15, 13-95
2795371-0000 .	ELBOW PIPE JOINT	2-121, 2-123
342732-0105 ...	ELBOW PIPE JOINT ,EXT.THREAD,D=8 MM R3/8	12-159
342732-0109 ...	ELBOW PIPE JOINT, EXT.THREAD, D=1MM-G1/4	2-27, 2-29, 2-31, 2-81, 2-83, 13-179
90458-2954	ELBOW PIPE JOINT, EXT.THREAD, D=4MM M5	5-119
342732-0103 ...	ELBOW PIPE JOINT, EXT.THREAD, D=6MM-G1/4	2-27, 2-29, 2-31, 2-81, 2-83, 12-47, 12-49
342732-0102 ...	ELBOW PIPE JOINT, EXT.THREAD, D=6MM-G1/8	2-37, 2-39, 2-41, 5-81, 5-83, 5-137, 5-139 5-141, 5-143, 6-13, 6-63, 12-257, 12-269
342732-0104 ...	ELBOW PIPE JOINT, EXT.THREAD, D=8MM-G1/4	2-7, 2-27, 2-29, 2-31, 2-81, 2-83, 2-85, 2-87 2-101, 2-103, 2-105, 2-107, 2-109, 2-111, 2-113, 6-27, 12-159, 12-161, 13-115, 13-153, 13-165, 13-179
342732-0801 ...	ELBOW PIPE JOINT, EXT.THREAD, D=8MM-G1/8	13-161
342732-0113 ...	ELBOW PIPE JOINT, EXT.THREAD,D=10MM-G1/4	2-81, 2-83
90055-0117	ELBOW WITH TAILPIECE	2-27, 2-29, 2-31, 2-81, 2-83
1334436-0000 .	ELBOW WITH TAILPIECE	2-71, 2-73, 2-75
90055-0118	ELBOW WITH TAILPIECE 8/8 MM	2-27, 2-29, 2-31, 2-71, 2-73, 2-75, 2-81, 2-83, 12-159, 12-263 13-117, 13-163, 13-177
90418-0054	ELBOW, 45, INT. CONN. NO. 7041-15	2-149, 2-151
90418-0055	ELBOW, 45, INT/EXT. CONN. NO. 7040-15	2-149, 2-151

Part No	Description	Page No
90330-0020	ELBOW, 90 INT. THREAD, R-2221/2	5-57
90140-0012	ELBOW, 90 INT/EXT, 2020-1/2-1/2	2-149, 2-151
90140-0013	ELBOW, 90 INT/EXT, 2020-1/4-1/4	6-33
90418-0053	ELBOW, 90, INT. CONN. NO. 7090-15	2-149, 2-151
90418-0058	ELBOW, 90, INT/EXT. CONN. NO. 7092-15	2-149, 2-151
557272-0100	ELECTRIC MATERIALS	12-17
558629-0100	ELECTRIC MATERIALS	13-47
558675-0100	ELECTRIC MATERIALS	12-233
2742069-0100	ELECTRIC MATERIALS	13-241
557284-0100	ELECTRIC MATERIALS ASU	12-129
971373-0101	ELECTRICAL CABINET	9-25, 9-27, 9-29, 9-31, 9-33
971373-0102	ELECTRICAL CABINET	9-5, 9-7, 9-9, 9-11, 9-13, 9-15, 9-45, 9-47, 9-49, 9-51, 9-53, 9-55
525070-0000	ELECTRICAL CONNECTION	5-69, 5-71, 5-77, 5-79
558674-0100	ELECTRICAL DOCUMENT	12-151
559289-0100	ELECTRICAL DOCUMENT	13-123
559473-0100	ELECTRICAL DOCUMENT	12-247
559625-0100	ELECTRICAL DOCUMENT	13-139
595143-0100	ELECTRICAL DOCUMENT	13-121
2510294-0100	ELECTRICAL DOCUMENT	13-173
2529942-0100	ELECTRICAL DOCUMENT	13-201
2530873-0100	ELECTRICAL DOCUMENT	13-207
2542397-0100	ELECTRICAL DOCUMENT	13-191
2542405-0100	ELECTRICAL DOCUMENT	13-189
2704121-0100	ELECTRICAL DOCUMENT	13-223
2704122-0100	ELECTRICAL DOCUMENT	13-223
2704123-0100	ELECTRICAL DOCUMENT	13-223
2704124-0100	ELECTRICAL DOCUMENT	13-231
2704125-0100	ELECTRICAL DOCUMENT	13-231
2704126-0100	ELECTRICAL DOCUMENT	13-231
2704127-0100	ELECTRICAL DOCUMENT	13-227
2704128-0100	ELECTRICAL DOCUMENT	13-227
2704129-0100	ELECTRICAL DOCUMENT	13-227
2742068-0100	ELECTRICAL DOCUMENT	13-241
557283-0100	ELECTRICAL DOCUMENT ASU	12-129
67269-1000	ELECTRICAL DOCUMENT, TB/8-1001.	9-3
42506-1000	ELECTRICAL DOCUMENT, TB/8-1002.	9-3
42871-1000	ELECTRICAL DOCUMENT, TB/8-1003.	9-3
596161-0100	ELECTRICAL MATERIAL	12-247
2510295-0100	ELECTRICAL MATERIAL	13-173
2529943-0100	ELECTRICAL MATERIAL	13-201
2530874-0100	ELECTRICAL MATERIAL	13-207
559687-0100	ELECTRICAL MATERIALS	13-139
525129-0100	ELEMENT	5-3, 5-5
594593-0100	ELEMENT	11-7
90064-0105	EMERGENCY STOP BUTTON REPL.BY 90064-124	9-41, 9-43, 9-61, 9-63
90025-0016	ENCODER MODULE TPMC	9-5, 9-7, 9-9, 9-11, 9-13, 9-15, 9-25, 9-27, 9-29, 9-31, 9-33, 9-45, 9-47, 9-49, 9-51, 9-53, 9-55
353031-0201	END BRACKET EW35	2-45, 2-91, 2-147, 9-5, 9-7, 9-9, 9-11, 9-13, 9-15, 9-25, 9-27, 9-29, 9-31, 9-33, 9-45, 9-47, 9-49, 9-51, 9-53, 9-55
530775-0000	END PIECE	12-45
522134-0000	END PLATE	8-85, 8-87
90077-0300	END PLATE AP2,5	7-11
353032-0004	END PLATE WAP 2,5-10 BEIGE	9-5, 9-7, 9-9, 9-11, 9-13, 9-15, 9-25, 9-27, 9-29, 9-31, 9-33, 9-45, 9-47, 9-49, 9-51, 9-53, 9-55, 13-175, 13-183
353032-0005	END PLATE WAP 2,5-10 BLUE	2-147, 13-175
353032-0302	END PLATE WAP, 13176.6	2-45, 2-91, 8-67
292409-0000	END SECTION	8-35, 8-37, 12-77, 12-79
292410-0000	END SECTION	8-35, 8-37, 12-77, 12-79
292412-0000	END SECTION	8-11, 8-35, 8-37, 12-59, 12-77, 12-79
292413-0000	END SECTION	8-11, 8-35, 8-37, 12-59, 12-77, 12-79
293690-0000	END SECTION	8-35, 8-37, 12-77, 12-79
293697-0000	END SECTION	8-39, 12-75
297213-0000	END SECTION	8-9, 12-57
434143-0000	END SECTION	3-41, 3-43
434787-0000	END SECTION	8-35, 8-37, 12-77, 12-79
479236-0000	END SECTION	8-35, 8-37, 12-77, 12-79
484998-0000	END SECTION	1-63
534880-0000	END SECTION	2-11, 2-25, 2-53, 2-55, 2-59, 2-61
353001-0113	END SLEEVE 0,75MM2	13-209
353001-0115	END SLEEVE 2,5/14	13-209
353001-0119	END SLEEVE H 1.0/14 YELLOW	13-203
90094-0004	END SUPPORT EWK 2061.6 WM	7-11
353031-0203	END SUPPORT, WEW 35/2	13-175, 13-183
90287-0147	EXPANDING PLUG M8X115 FZV	12-33, 12-49
90287-0105	EXPANSION BOLT 10X100	12-49
312293-0115	EXPANSION M12X25 L	12-143
312293-0106	EXPANSION M8X10 L	12-133, 12-145
90025-0058	EXPANSIONS RACK COMPACT-8	9-5, 9-7, 9-9, 9-11, 9-13, 9-15, 9-25, 9-27, 9-29, 9-31, 9-33, 9-45, 9-47, 9-49, 9-51, 9-53, 9-55
90287-0117	EXPANSIONSBOLT HSAF 12X110	12-35, 12-43, 12-47
1285310-0000	EXTENSION	6-21, 6-25
1285870-0000	EXTENSION	6-23
2505040-0000	EXTENSION	13-177
2505048-0000	EXTENSION	13-177

Part No	Description	Page No
2505080-0000	EXTENSION	13-177
268640-0000	EXTENSION PIECE	12-47
556873-0000	EXTENSION PIECE	8-49
927667-0000	EXTENSION PIECE	13-43
67271-1000	EXTRA EQUIPMENT, TB/8-1001.	9-3
42508-1000	EXTRA EQUIPMENT, TB/8-1002.	9-3
42873-1000	EXTRA EQUIPMENT, TB/8-1003.	9-3
74364-0000	EXTRACTOR BOLT	14-49
318302-0120	EYE BOLT NUT, TYPE, LH, M10	12-33
90264-0344	FAN CASING, US 1412	2-163
90264-0042	FAN SIEMENS 2BH1 300-1AH	7-9
90264-0019	FAN, G2E160-AY47-80	2-163
90237-0075	FAST LOCK, SK-M8	8-51, 8-53
232772-0000	FASTENING BRACKET	12-49
251490-0000	FASTENING BRACKET	7-37, 7-39
293647-0000	FASTENING BRACKET	12-67, 12-69, 12-71, 12-73
293648-0000	FASTENING BRACKET	12-67, 12-69, 12-71, 12-73
434783-0000	FASTENING BRACKET	12-53, 12-55, 12-67, 12-69, 12-71, 12-73
434786-0000	FASTENING BRACKET	12-53, 12-55, 12-67, 12-69, 12-71, 12-73
442199-0000	FASTENING BRACKET	12-67, 12-69, 12-71, 12-73
442200-0000	FASTENING BRACKET	12-67, 12-69, 12-71, 12-73
486962-0001	FASTENING BRACKET	8-21, 8-23, 8-25, 8-27, 8-29, 8-31, 8-33
486962-0002	FASTENING BRACKET	8-21, 8-23, 8-25, 8-27, 8-29, 8-31, 8-33
486962-0003	FASTENING BRACKET	8-5, 8-7
486962-0004	FASTENING BRACKET	8-21, 8-23, 8-25, 8-27, 8-29, 8-31, 8-33
486962-0009	FASTENING BRACKET	8-21, 8-23, 8-25, 8-27, 8-29, 8-31, 8-33
486962-0010	FASTENING BRACKET	8-21, 8-23, 8-25, 8-27, 8-29, 8-31, 8-33
486962-0011	FASTENING BRACKET	8-21, 8-23, 8-25, 8-27, 8-29, 8-31, 8-33
526999-0000	FASTENING BRACKET	12-113
530754-0000	FASTENING BRACKET	3-31, 3-33
537307-0000	FASTENING BRACKET	12-33
540727-0000	FASTENING BRACKET	2-37, 2-39, 2-41, 2-85, 2-87
574044-0000	FASTENING BRACKET	8-21, 8-23, 8-25, 8-27, 8-29, 8-31, 8-33
440349-0000	FASTENING IRON	2-163
74363-0000	FASTENING PLATE	14-49
228332-0000	FASTENING PLATE	2-37, 2-39, 2-41, 2-85, 2-87
252773-0000	FASTENING PLATE	4-101, 4-103, 4-105, 4-107
252774-0000	FASTENING PLATE	4-101, 4-103, 4-105, 4-107
279621-0000	FASTENING PLATE	4-101, 4-103, 4-105, 4-107
434732-0000	FASTENING PLATE	1-55
450301-0000	FASTENING PLATE	2-47
479714-0000	FASTENING PLATE	7-29, 12-61, 12-63
479824-0000	FASTENING PLATE	12-35
525016-0000	FASTENING PLATE	5-25, 5-27, 5-41, 5-43, 5-45, 5-47
551282-0000	FASTENING PLATE	4-101, 4-103, 4-105, 4-107
556548-0000	FASTENING PLATE	7-9
568160-0000	FASTENING PLATE	5-61
573665-0000	FASTENING PLATE	7-47
581363-0000	FASTENING PLATE	13-63
353021-0212	FEED THROUGH TERMINAL, 10200.0	2-45, 2-91, 13-183
353021-0216	FEED THROUGH TERMINAL, 10200.8	13-183
353021-0213	FEED THROUGH TERMINAL, 10201.0	2-147, 8-67, 13-175
353021-0217	FEED THROUGH TERMINAL, 10201.8	2-147, 13-49, 13-175
353021-0214	FEED THROUGH TERMINAL, 10202.0	9-5, 9-7, 9-9, 9-11, 9-13, 9-15, 9-25, 9-27, 9-29, 9-31, 9-33, 9-45, 9-47, 9-49, 9-51, 9-53, 9-55
532719-0001	FEEDING ROLLER	8-21, 8-23, 8-25, 8-27, 8-29, 8-31, 8-33
532719-0002	FEEDING ROLLER	8-5, 8-7
315259-0103	FELT SEAL 47-67 MM	4-139, 4-141
90110-0057	FEMALE INSERT HAN 24 E 09 33 002 4201	9-5, 9-7, 9-9, 9-11, 9-13, 9-15, 9-25, 9-27, 9-29, 9-31, 9-33, 9-45, 9-47, 9-49, 9-51, 9-53, 9-55
526680-0000	FENDER WALING	8-41
90024-0047	FERRITE, 28B1020-100	13-221
342812-0104	FERRULE, SMS 1145, 2333, NO. 190707	1-27, 1-29
30310-0001	FF HEATING ELEMENT TOP	5-73
30310-0002	FF HEATING ELEMENT TOP	5-73
30310-0003	FF HEATING ELEMENT TOP	5-73
30311-0001	FF HEATINGELEMENT BUTTOM KANTHAL 2333-02	5-75
30311-0002	FF HEATINGELEMENT BUTTOM KANTHAL 2333-02	5-75
31390-0110	FF-ELEMENT BOTTOM	5-69, 5-71, 5-77, 5-79
525128-0100	FF-ELEMENT R	5-3, 5-5
31390-0100	FF-ELEMENT TOP	5-69, 5-71, 5-77, 5-79
36860-0000	FILLER TUBE	1-65, 1-67, 1-69
252889-0000	FILLER TUBE	1-65, 1-67, 1-69
267424-0002	FILLER TUBE	1-17, 1-19, 1-21
267424-0003	FILLER TUBE	1-17, 1-19, 1-21
292032-0000	FILLER TUBE	1-65, 1-67, 1-69
445567-0200	FILLER TUBE	1-3
533446-0000	FILLER TUBE	1-17, 1-19, 1-21
582018-0000	FILLER TUBE	1-65, 1-67, 1-69
583968-0000	FILLER TUBE	1-17, 1-19, 1-21
922871-0000	FILLER TUBE	1-17, 1-19, 1-21
929620-0100	FILLER TUBE	1-3
266487-0100	FILLER TUBE UPPER	1-3
593244-0000	FILLING PIPE	1-25

Part No	Description	Page No
90048-0420	FILTER	5-67
90277-0019	FILTER	12-121
546929-0000	FILTER	2-163
90415-0032	FILTER / 3-02-00-1 1/2"	2-57, 2-95
90277-0045	FILTER / 9900-05-BK	2-27, 2-29, 2-31, 2-81, 2-83
90277-0046	FILTER / 9933-05-101	2-27, 2-29, 2-31, 2-81, 2-83
90415-0019	FILTER / ART.NO. HH-M15-RG	2-149, 2-151
90459-3726	FILTER 6SE6400-2FS01-0AB0	13-221
90459-4081	FILTER 6SE6400-2FS02-6BB0	13-221
90415-0018	FILTER FOR LIME SEPARATING / D MOD.AD	2-149, 2-151
90430-0335	FILTER LA174936U025	13-211
90257-0001	FILTER PLUG ART.NO.8145-00-140 TYPE F14	12-83
90257-0003	FILTER PLUG ART.NO.8145-00-180 TYPE F18	8-17
90458-0921	FILTER SP 122-200	2-149, 2-151
90024-0036	FILTERED TERMINAL BLOCK	9-5, 9-7, 9-9, 9-11, 9-13, 9-15, 9-25, 9-27, 9-29, 9-31, 9-33, 9-45, 9-47, 9-49, 9-51, 9-53, 9-55
594591-0100	FINAL FOLDER SHARP EDGES	11-5
352551-0141	FINE-WIRE 10 A	9-5, 9-7, 9-9, 9-11, 9-13, 9-15, 9-19, 9-45, 9-47, 9-49, 9-51, 9-53, 9-55, 9-59, 12-235, 12-237
352550-0120	FINE-WIRE 315 MA	9-5, 9-7, 9-9, 9-11, 9-13, 9-15, 9-19, 9-25, 9-27, 9-29, 9-31, 9-33, 9-39, 9-45, 9-47, 9-49, 9-51, 9-53, 9-55, 9-59
352551-0137	FINE-WIRE 4 A	9-5, 9-7, 9-9, 9-11, 9-13, 9-15, 9-19, 9-45, 9-47, 9-49, 9-51, 9-53, 9-55, 9-59, 12-235, 12-237
352551-0138	FINE-WIRE 5 A	9-19, 9-39, 9-59
352551-0139	FINE-WIRE 6,3 A	9-19, 9-39, 9-59
352551-0134	FINE-WIRE FUSE 2 A SLOW,5X20MM	9-5, 9-7, 9-9, 9-11, 9-13, 9-15, 9-19, 9-45, 9-47, 9-49, 9-51, 9-53, 9-55, 9-59, 12-235, 12-237
352551-0136	FINE-WIRE FUSE 3,15 A SLOW	9-5, 9-7, 9-9, 9-11, 9-13, 9-15, 9-19, 9-25, 9-27, 9-29, 9-31, 9-33, 9-39, 9-45, 9-47, 9-49, 9-51, 9-53, 9-55, 9-59
352550-0133	FINE-WIRE, 1.6 A	9-5, 9-7, 9-9, 9-11, 9-13, 9-15, 9-25, 9-27, 9-29, 9-31, 9-33, 9-45, 9-47, 9-49, 9-51, 9-53, 9-55
352550-0136	FINE-WIRE, 3,15 A	9-19, 9-39, 9-59
352550-0123	FINE-WIRE,, 500 MA	13-209
525274-0000	FINISH FRAME	5-7, 5-9, 5-35, 5-37
262028-0001	FITTING BOLT	5-145, 5-147, 5-149, 5-151, 5-153, 5-155
262028-0002	FITTING BOLT	5-137, 5-139, 5-141, 5-143
262028-0011	FITTING BOLT	5-133, 5-135
525317-0000	FITTING BOLT	5-29, 5-49, 5-51
31653-0002	FIX PLATE 39X85X0,5MM	5-75
542786-0000	FLAG	7-19
1144527-0000	FLAG	6-59, 6-61
35849-0000	FLANGE	1-49, 1-51, 1-53
232786-0000	FLANGE	12-47
239534-0000	FLANGE	3-9, 3-19
239535-0000	FLANGE	3-9, 3-19
250588-0000	FLANGE	7-43, 12-25
251358-0000	FLANGE	12-45, 12-49
255283-0000	FLANGE	12-83
297959-0000	FLANGE	12-45
499890-0000	FLANGE	1-57
530771-0001	FLANGE	12-67, 12-69, 12-71, 12-73
530771-0002	FLANGE	12-53, 12-55
530772-0000	FLANGE	12-53, 12-55, 12-67, 12-69, 12-71, 12-73
542063-0000	FLANGE	3-11, 3-21, 13-11
544706-0000	FLANGE	8-5, 8-7, 8-21, 8-23, 8-25, 8-27, 8-29, 8-31, 8-33
568156-0000	FLANGE	5-61
927744-0000	FLANGE	8-43
928736-0000	FLANGE	6-9
1144243-0000	FLANGE	6-55
1144489-0000	FLANGE	6-59, 6-61
1144498-0000	FLANGE	6-59, 6-61
1144503-0000	FLANGE	6-59, 6-61
1144566-0000	FLANGE	6-57
1144618-0000	FLANGE	6-29
1144718-0000	FLANGE	6-13
1260833-0000	FLANGE	6-49
1260834-0000	FLANGE	6-49
1317054-0000	FLANGE	6-49
1317055-0000	FLANGE	6-49
1349146-0000	FLANGE	6-55
90240-0180	FLANGE BUSHING 10X14X15MM	4-101, 4-103, 4-105, 4-107
321101-0163	FLANGE BUSHING, 10X16X10 MM	4-143, 4-147
321111-0135	FLANGE BUSHING, 10X16X10 MM	8-5, 8-7, 8-21, 8-23, 8-25, 8-27, 8-29, 8-31, 8-33, 11-19
321111-0136	FLANGE BUSHING, 10X16X16 MM	11-19
90240-0316	FLANGE BUSHING, 12X14X8 MM	6-7
90240-0097	FLANGE BUSHING, 12X14X9 MM	3-41, 3-43
321101-0172	FLANGE BUSHING, 12X18X10 MM	5-67
321101-0173	FLANGE BUSHING, 12X18X12 MM	1-35, 2-9, 2-69, 7-37, 7-39, 12-91
321111-0163	FLANGE BUSHING, 12X18X20 MM	4-101, 4-103, 4-105, 4-107
321111-0157	FLANGE BUSHING, 12X18X8 MM	8-49
321111-0185	FLANGE BUSHING, 14X20X14 MM	5-145, 5-147, 5-149, 5-151, 5-153, 5-155
321111-0212	FLANGE BUSHING, 15X21X15 MM	8-5, 8-7, 8-21, 8-23, 8-25, 8-27, 8-29, 8-31, 8-33, 12-53, 12-55, 12-67, 12-69, 12-71, 12-73
321110-0202	FLANGE BUSHING, 16E7X12	12-39, 12-41, 12-49

Part No	Description	Page No
321101-0202	FLANGE BUSHING, 16X22X12 MM	8-17, 12-83
321111-0240	FLANGE BUSHING, 16X22X12 MM	3-11, 3-21, 13-11
321111-0243	FLANGE BUSHING, 16X22X25 MM	6-5, 11-9, 11-11, 11-13, 11-15
321101-0223	FLANGE BUSHING, 18X25X16	5-89, 5-91
321101-0232	FLANGE BUSHING, 20X28X16 MM	5-63, 5-65
321101-0233	FLANGE BUSHING, 20X28X20 MM	2-9, 2-69, 3-37, 3-39
321101-0252	FLANGE BUSHING, 25X35X16 MM	5-29, 5-49, 5-51, 5-89, 5-91, 5-101, 5-103
321101-0253	FLANGE BUSHING, 25X35X25 MM	5-89, 5-91, 5-101, 5-103
90240-0133	FLANGE BUSHING, 30X34X30 MM	12-97, 12-99
321101-0272	FLANGE BUSHING, 30X40X20 MM	5-33, 5-53, 5-55, 5-101, 5-103
321101-0283	FLANGE BUSHING, 35X45X35 MM	5-89, 5-91, 5-101, 5-103
90240-0172	FLANGE BUSHING, 8X12X10 MM	1-23, 1-43, 1-45
321111-0097	FLANGE BUSHING, 8X12X12 MM	11-19
321111-0095	FLANGE BUSHING, 8X12X6 MM	3-15, 3-17
321101-0143	FLANGE BUSHING, 8X14X8 MM	4-97, 4-99
37890-0000	FLANGE ROLLER	12-91
531730-0000	FLANGE SEAL	5-69, 5-71, 5-77, 5-79, 13-177
352141-0800	FLANGE, DGP 21	1-57
90321-0382	FLANGE, RG 26/12-3/8 FOR 90321-18	2-169
285310-0001	FLAP	5-145, 5-147, 5-149, 5-151, 5-153, 5-155
285310-0002	FLAP	5-145, 5-147, 5-149, 5-151, 5-153, 5-155
297646-0000	FLAP	5-145, 5-147, 5-149, 5-151, 5-153, 5-155
442885-0000	FLAP	5-133, 5-135
442886-0000	FLAP	5-133, 5-135
443038-0000	FLAP	5-133, 5-135
443182-0000	FLAP	5-133, 5-135
443351-0000	FLAP	5-133, 5-135
525451-0000	FLAP	5-145, 5-147, 5-149, 5-151, 5-153, 5-155
525453-0000	FLAP	5-145, 5-147, 5-149, 5-151, 5-153, 5-155
525455-0000	FLAP	5-145, 5-147, 5-149, 5-151, 5-153, 5-155
525456-0000	FLAP	5-145, 5-147, 5-149, 5-151, 5-153, 5-155
525459-0000	FLAP	5-145, 5-147, 5-149, 5-151, 5-153, 5-155
548406-0000	FLAP	5-133, 5-135
550149-0000	FLAP	5-145, 5-147, 5-149, 5-151, 5-153, 5-155
569111-0000	FLAP	5-133, 5-135
569117-0000	FLAP	5-145, 5-147, 5-149, 5-151, 5-153, 5-155
569118-0000	FLAP	5-145, 5-147, 5-149, 5-151, 5-153, 5-155
574029-0000	FLAP	5-145, 5-147, 5-149, 5-151, 5-153, 5-155
574030-0000	FLAP	5-145, 5-147, 5-149, 5-151, 5-153, 5-155
574035-0000	FLAP	5-133, 5-135
583451-0000	FLAP	5-133, 5-135
593213-0000	FLAP	11-9, 11-11, 11-13, 11-15
593214-0000	FLAP	11-9, 11-11, 11-13, 11-15
593236-0000	FLAP	11-9, 11-11, 11-13, 11-15
593237-0000	FLAP	11-9, 11-11, 11-13, 11-15
596088-0000	FLAP	6-5
596089-0000	FLAP	6-5
597616-0000	FLAP	5-133, 5-135
1144745-0100	FLAP HEATER	6-3
1144547-0000	FLAT KEY	6-11
263767-0000	FLAT STEEL	14-13, 14-15, 14-41, 14-43
352130-0107	FLEXIBLE CG 37,5	12-45
90152-0044	FLEXIBLE CONDUIT 3641-0070	5-7, 5-9, 5-35, 5-37
352135-0116	FLEXIBLE CONDUIT DIA. 40	2-117, 2-119, 5-69, 5-71, 5-77, 5-79, 13-171
245190-0000	FLOAT	1-17, 1-19, 1-21
259902-0000	FLOAT	1-17, 1-19, 1-21
434749-0000	FLOAT	1-17, 1-19, 1-21
544295-0000	FLOAT	1-17, 1-19, 1-21
593240-0000	FLOAT	1-25
90243-0427	FLOW METER	2-27, 2-29, 2-31, 2-81, 2-83, 12-159
575797-0100	FLOWMETER GROUP	2-3, 2-5
90297-0006	FLUORESCENT TUBE, PL9	9-5, 9-7, 9-9, 9-11, 9-13, 9-15, 9-25, 9-27, 9-29, 9-31, 9-33, 9-45, 9-47, 9-49, 9-51, 9-53, 9-55
90143-0017	FOAMRUBBERSTRIP B68205	12-149
525179-0001	FOLDING ARM	5-41, 5-43, 5-45, 5-47
525179-0002	FOLDING ARM	5-41, 5-43, 5-45, 5-47
525180-0001	FOLDING ARM	5-41, 5-43, 5-45, 5-47
525180-0002	FOLDING ARM	5-41, 5-43, 5-45, 5-47
569122-0000	FOLDING ARM	5-25, 5-27, 5-41, 5-43, 5-45, 5-47
569123-0000	FOLDING ARM	5-25, 5-27, 5-41, 5-43, 5-45, 5-47
525001-0000	FOLDING BAR	5-25, 5-27, 5-41, 5-43, 5-45, 5-47
525002-0000	FOLDING BAR	5-41, 5-43, 5-45, 5-47
525003-0000	FOLDING BAR	5-25, 5-27, 5-41, 5-43, 5-45, 5-47
525004-0000	FOLDING BAR	5-41, 5-43, 5-45, 5-47
525005-0002	FOLDING BAR	5-41, 5-43, 5-45, 5-47
525005-0004	FOLDING BAR	5-41, 5-43, 5-45, 5-47
525005-0005	FOLDING BAR	5-41, 5-43, 5-45, 5-47
525005-0006	FOLDING BAR	5-41, 5-43, 5-45, 5-47
525005-0008	FOLDING BAR	5-41, 5-43, 5-45, 5-47
525006-0002	FOLDING BAR	5-41, 5-43, 5-45, 5-47
525006-0004	FOLDING BAR	5-41, 5-43, 5-45, 5-47
525006-0005	FOLDING BAR	5-41, 5-43, 5-45, 5-47
525006-0006	FOLDING BAR	5-41, 5-43, 5-45, 5-47
525006-0008	FOLDING BAR	5-41, 5-43, 5-45, 5-47

Part No	Description	Page No
548397-0000 ...	FOLDING BAR	5-41, 5-43, 5-45, 5-47
548398-0000 ...	FOLDING BAR	5-41, 5-43, 5-45, 5-47
569120-0000 ...	FOLDING BAR	5-41, 5-43, 5-45, 5-47
569121-0000 ...	FOLDING BAR	5-41, 5-43, 5-45, 5-47
574045-0000 ...	FOLDING BAR	5-25, 5-27, 5-41, 5-43, 5-45, 5-47
574046-0000 ...	FOLDING BAR	5-25, 5-27, 5-41, 5-43, 5-45, 5-47
583453-0000 ...	FOLDING BAR	5-25, 5-27, 5-41, 5-43, 5-45, 5-47
583458-0000 ...	FOLDING BAR	5-25, 5-27, 5-41, 5-43, 5-45, 5-47
596105-0000 ...	FOLDING BAR	6-27
596116-0000 ...	FOLDING BAR	6-27
597536-0000 ...	FOLDING BAR	12-271, 13-127
597537-0000 ...	FOLDING BAR	12-271, 13-127
597610-0000 ...	FOLDING BAR	5-25, 5-27, 5-41, 5-43, 5-45, 5-47
597611-0000 ...	FOLDING BAR	5-25, 5-27, 5-41, 5-43, 5-45, 5-47
1143020-0000 .	FOLDING BAR	5-25, 5-27, 5-41, 5-43, 5-45, 5-47, 12-255
1143021-0000 .	FOLDING BAR	5-25, 5-27, 5-41, 5-43, 5-45, 5-47, 12-255
1350423-0000 .	FOLDING BAR	6-27
1361910-0000 .	FOLDING BAR	5-25, 5-27, 5-41, 5-43, 5-45, 5-47
1361911-0000 .	FOLDING BAR	5-25, 5-27, 5-41, 5-43, 5-45, 5-47
1362434-0000 .	FOLDING BAR	5-25, 5-27, 5-41, 5-43, 5-45, 5-47
1362435-0000 .	FOLDING BAR	5-25, 5-27, 5-41, 5-43, 5-45, 5-47
593855-0000 ...	FOLDING BAR LEFT	11-23
593854-0000 ...	FOLDING BAR RIGHT	11-23
279564-0300 ...	FOLDING DEVICE	4-3, 4-5
279565-0300 ...	FOLDING DEVICE	4-3, 4-5
597602-0100 ...	FOLDING DEVICE	12-267, 13-121
1285050-0100 .	FOLDING DEVICE	12-249
591302-0100 ...	FOLDING DEVICE LEFT	12-171
591303-0100 ...	FOLDING DEVICE RIGHT	12-171
464310-0000 ...	FOLDING FLAP	4-143, 4-147
464311-0000 ...	FOLDING FLAP	4-143, 4-147
493710-0000 ...	FOLDING FLAP	4-143, 4-147
493711-0000 ...	FOLDING FLAP	4-143, 4-147
569060-0000 ...	FOLDING FLAP	4-143, 4-147
569061-0000 ...	FOLDING FLAP	4-143, 4-147
1317808-0000 .	FOLDING FLAP	4-143, 4-147
1317809-0000 .	FOLDING FLAP	4-143, 4-147
573978-0000 ...	FOLDING FLAP REPBY 1317809	12-223, 12-227
573977-0000 ...	FOLDING FLAP REPBY 1317808	12-223, 12-227
549107-0000 ...	FOLDING FLAP CAM	4-49, 4-51
549108-0000 ...	FOLDING FLAP CAM	4-45, 4-47
551285-0000 ...	FOLDING FLAP CAM	4-49, 4-51
551286-0000 ...	FOLDING FLAP CAM	4-45, 4-47
563064-0000 ...	FOLDING FLAP CAM	4-49, 4-51
563065-0000 ...	FOLDING FLAP CAM	4-45, 4-47
563206-0000 ...	FOLDING FLAP CAM	4-49, 4-51
563207-0000 ...	FOLDING FLAP CAM	4-45, 4-47
564628-0000 ...	FOLDING FLAP CAM	4-49, 4-51
564629-0000 ...	FOLDING FLAP CAM	4-45, 4-47
565188-0000 ...	FOLDING FLAP CAM	4-49, 4-51, 12-171
565189-0000 ...	FOLDING FLAP CAM	4-45, 4-47, 12-171
573999-0000 ...	FOLDING FLAP CAM	4-49, 4-51
574000-0000 ...	FOLDING FLAP CAM	4-45, 4-47
583828-0000 ...	FOLDING FLAP CAM	4-49, 4-51
583829-0000 ...	FOLDING FLAP CAM	4-45, 4-47
593277-0000 ...	FOLDING FLAP CAM	4-49, 4-51
593278-0000 ...	FOLDING FLAP CAM	4-45, 4-47
1362525-0000 .	FOLDING FLAP CAM	4-49, 4-51
1362526-0000 .	FOLDING FLAP CAM	4-45, 4-47
1364784-0000 .	FOLDING FLAP CAM	4-49, 4-51
1364785-0000 .	FOLDING FLAP CAM	4-45, 4-47
593862-0100 ...	FOLDING PART	11-7
1285012-0100 .	FOLDING PART	6-3
595088-0100 ...	FOLDING PART LEFT OUT	5-3, 5-5
525000-0200 ...	FOLDING PART RIGHT OUT	5-3, 5-5
576977-0000 ...	FOOT	12-119
497120-0000 ...	FOOT PLATE	12-43
110220-0000 ...	FORCE PLATE	1-73
535016-0000 ...	FORCE SPRING	2-23, 2-79
22483-0000	FORK	4-45, 4-47, 4-49, 4-51
251493-0000 ...	FORK	7-35
259881-0000 ...	FORK	1-65, 1-67, 1-69
263704-0000 ...	FORK	1-65, 1-67, 1-69
436405-0000 ...	FORK	1-43, 1-45
464086-0000 ...	FORK	12-97, 12-99
499016-0000 ...	FORK	1-65, 1-67, 1-69
530713-0000 ...	FORK	1-31, 1-33
541064-0000 ...	FORK	7-21, 7-23
574005-0000 ...	FORK	1-65, 1-67, 1-69
574009-0000 ...	FORK	1-31, 1-33
592930-0000 ...	FORK	1-43, 1-45
927586-0000 ...	FORK	1-31, 1-33, 13-57
927587-0000 ...	FORK	13-57
927588-0000 ...	FORK	13-57

Part No	Description	Page No
592230-0000 ...	FORMING PLATE	11-19
593234-0000 ...	FORMING PLATE	11-19
593235-0000 ...	FORMING PLATE	11-19
21400-0000	FORMING RING	1-75, 1-77, 1-79, 1-81, 1-83
24495-0000	FORMING RING	1-75, 1-77, 1-79, 1-81, 1-83
434493-0000 ...	FORMING RING	1-75, 1-77, 1-79, 1-81, 1-83
522321-0000 ...	FORMING RING	1-31, 1-33
592931-0000 ...	FORMING RING	1-75, 1-77, 1-79, 1-81, 1-83
1362450-0000 .	FORMING RING	1-31, 1-33
1362455-0000 .	FORMING RING	1-75, 1-77, 1-79, 1-81, 1-83
243141-0000 ...	FRAME	12-85
243234-0000 ...	FRAME	12-47
251440-0000 ...	FRAME	12-49
445861-0000 ...	FRAME	8-51, 8-53
445901-0000 ...	FRAME	8-69, 8-71, 8-73
476190-0000 ...	FRAME	12-37, 12-133
476191-0000 ...	FRAME	12-37, 12-133
533454-0000 ...	FRAME	8-21, 8-23, 8-25, 8-27, 8-29, 8-31, 8-33
533901-0000 ...	FRAME	12-143
537302-0000 ...	FRAME	12-33
538238-0000 ...	FRAME	8-5, 8-7
593590-0000 ...	FRAME	8-21, 8-23, 8-25, 8-27, 8-29, 8-31, 8-33
929604-0100 ...	FRAME	12-235, 12-237
1143968-0000 .	FRAME	6-35
1144326-0100 .	FRAME	6-3
1349422-0000 .	FRAME	6-55
2505087-0000 .	FRAME	13-179
293678-0000 ...	FRAME LEFT	12-53, 12-55, 12-67, 12-69, 12-71, 12-73
466050-0001 ...	FRAME LOWER	12-67, 12-69, 12-71, 12-73
466050-0002 ...	FRAME LOWER	12-53, 12-55, 12-67, 12-69, 12-71, 12-73
466050-0003 ...	FRAME LOWER	12-53, 12-55
434704-0000 ...	FRAME RIGHT	12-53, 12-55, 12-67, 12-69, 12-71, 12-73
1144324-0100 .	FRAMEWORK	6-3
479821-0101 ...	FREE STAND	12-15
90348-0007	FREE-WHEEL COUPLING, 15,875X22,225 MM	1-49, 1-51, 1-53
90430-0038	FREQ.INVERTER 1PH 2,2KW	9-5, 9-7, 9-9, 9-11, 9-13, 9-15
90459-3720	FREQUENCY CHANGER 6SE6440-2AB17-5AA1	13-221
90459-4082	FREQUENCY CHANGER 6SE6440-2AB21-5BA1	13-221
1285862-0100 .	FRICTION WHEEL	6-13
548346-0000 ...	FRONT GUARD	2-167
560799-0000 ...	FRONT GUARD	2-167
273751-0000 ...	FRONT PLATE	2-37, 2-39, 2-41, 2-85, 2-87
592720-0000 ...	FRONT PLATE	2-37, 2-39, 2-41
593632-0000 ...	FRONT PLATE	2-85, 2-87
929740-0000 ...	FRONT PLATE	2-85, 2-87
540725-0000 ...	FRONT PLATE, LOWER	2-37, 2-39, 2-41
90077-0112	FUSE HOLDER FERRAZ PST REPL.BY 90233-303	9-25, 9-27, 9-29, 9-31, 9-33, 9-45, 9-47, 9-49, 9-51, 9-53, 9-55
90233-0303	FUSE HOLDER, ST 10 1-POLE	9-5, 9-7, 9-9, 9-11, 9-13, 9-15, 12-235, 12-237, 13-175
596099-0001 ...	FUSE PANEL LABEL	9-5, 9-7, 9-9, 9-11, 9-13, 9-15
596099-0002 ...	FUSE PANEL LABEL	9-5, 9-7, 9-9, 9-11, 9-13, 9-15
1143419-0001 .	FUSE PANEL LABEL	9-45, 9-47, 9-49, 9-51, 9-53, 9-55
1143419-0002 .	FUSE PANEL LABEL	9-45, 9-47, 9-49, 9-51, 9-53, 9-55
594502-0001 ...	FUSE PANEL SIGN	9-25, 9-27, 9-29, 9-31, 9-33
594502-0002 ...	FUSE PANEL SIGN	9-25, 9-27, 9-29, 9-31, 9-33
353023-0102 ...	FUSE TERMINAL, 10110.0	9-5, 9-7, 9-9, 9-11, 9-13, 9-15, 9-25, 9-27, 9-29, 9-31, 9-33, 9-45, 9-47, 9-49, 9-51, 9-53, 9-55, 13-209
90007-0101	FUSE,	2-47, 2-159, 2-161
90077-0117	FUSEHOLDER, ST 14 1-POLE	13-209
547908-0000 ...	GABLE LEFT	12-49
443476-0000 ...	GABLE PLATE	5-115
443477-0000 ...	GABLE PLATE	5-115
525038-0000 ...	GABLE PLATE	5-115
525039-0000 ...	GABLE PLATE	5-115
525150-0000 ...	GABLE PLATE	5-115
525151-0000 ...	GABLE PLATE	5-115
547907-0000 ...	GABLE RIGHT	12-49
90347-0036	GAS SPRING E0A1-52-195-460--001/900N	2-9
90347-0108	GAS SPRING NO. 03-08-100-084174	8-49
90347-0038	GAS SPRINGE 0A1-52-195-460--002/1075N	2-9
90206-0322	GASKET	1-31, 1-33, 7-41
245271-0000 ...	GASKET	4-77, 4-79, 4-85, 4-87
245272-0000 ...	GASKET	4-77, 4-79, 4-85, 4-87
245281-0000 ...	GASKET	12-149
245282-0000 ...	GASKET	12-149
262253-0000 ...	GASKET	5-121
262933-0000 ...	GASKET	5-121
263673-0000 ...	GASKET	5-69, 5-71, 5-77, 5-79, 6-21, 6-23, 6-25
445929-0000 ...	GASKET	8-55
449922-0000 ...	GASKET	1-37
525046-0000 ...	GASKET	5-57
525047-0000 ...	GASKET	5-57
525281-0000 ...	GASKET	5-7, 5-9, 5-35, 5-37
531116-0000 ...	GASKET	5-15

Part No	Description	Page No
531189-0000	GASKET	5-15
531733-0000	GASKET	1-35, 7-27, 7-37, 7-39
531734-0000	GASKET	1-35, 7-27, 7-37, 7-39
531735-0000	GASKET	7-27, 7-37, 7-39
531736-0000	GASKET	1-35, 7-27, 7-37, 7-39
531741-0000	GASKET	1-31, 1-33
532024-0000	GASKET	8-55
535608-0000	GASKET	7-9
573988-0000	GASKET	4-11, 4-13, 4-15, 4-17, 4-19, 4-21, 4-77, 4-79, 4-85, 4-87, 12-193, 12-195, 12-197, 12-199, 12-201, 12-203, 13-147
593576-0000	GASKET	4-11, 4-13, 4-15, 4-17, 4-19, 4-21, 12-193, 12-195, 12-197, 12-199, 12-201, 12-203
1144261-0000	GASKET	6-35
1144262-0000	GASKET	6-35
1144346-0000	GASKET	6-35
1144347-0000	GASKET	6-9
1144803-0000	GASKET	6-35
1285308-0000	GASKET	6-21, 6-23, 6-25, 13-177
1285312-0000	GASKET	6-21, 6-23, 6-25
1338721-0000	GASKET	13-213
525233-0000	GASKET 16X2X6MM	5-73, 5-75
90091-0159	GASKET 330X308X9 MM	2-169
315250-0103	GASKET 48X38X5,5 MM	1-65, 1-67, 1-69, 2-57, 2-67, 2-95, 5-7, 5-9, 5-35, 5-37, 12-11
315250-0104	GASKET 61X51X5,5 MM	1-27, 1-29
315229-0104	GASKETS, 35,8X42,8X3,7 MM 1"1/2 FD	6-35
293692-0000	GAUGE	14-5
434841-0000	GAUGE	10-9
440094-0000	GAUGE	14-5
522023-0000	GAUGE	14-5
593850-0000	GAUGE BLOCK	11-19
593851-0000	GAUGE BLOCK	11-19
596091-0000	GAUGE BLOCK	6-59, 6-61
565338-0000	GEAR HOUSING	5-125, 5-127
567373-0000	GEAR HOUSING	5-19
568070-0000	GEAR HOUSING	5-123
568151-0000	GEAR HOUSING	5-61
568152-0000	GEAR HOUSING	5-61
90321-0018	GEAR PUMP MLPS/T124D	2-169
90048-0033	GEAR PUMP, C 2347	5-67
285861-0500	GEAR REDUCTION	5-7, 5-9, 5-35, 5-37
207019-0001	GEAR WHEEL	1-49, 1-51, 1-53
207019-0002	GEAR WHEEL	1-49, 1-51, 1-53, 12-153
207019-0003	GEAR WHEEL	1-49, 1-51, 1-53, 8-17, 8-41
209331-0002	GEAR WHEEL	1-49, 1-51, 1-53
209331-0006	GEAR WHEEL	1-49, 1-51, 1-53
209331-0007	GEAR WHEEL	1-49, 1-51, 1-53, 12-153
209331-0009	GEAR WHEEL	1-49, 1-51, 1-53
209331-0010	GEAR WHEEL	1-49, 1-51, 1-53
209331-0012	GEAR WHEEL	1-49, 1-51, 1-53
209331-0013	GEAR WHEEL	1-49, 1-51, 1-53
239536-0000	GEAR WHEEL	3-9, 3-19
243017-0000	GEAR WHEEL	3-11, 3-21, 13-11
293610-0000	GEAR WHEEL	4-101, 4-103, 4-105, 4-107
442555-0000	GEAR WHEEL	5-19
442556-0000	GEAR WHEEL	5-19
442557-0000	GEAR WHEEL	5-19
442558-0000	GEAR WHEEL	5-19
442559-0000	GEAR WHEEL	5-19
442613-0000	GEAR WHEEL	5-61
442614-0000	GEAR WHEEL	5-61
443188-0000	GEAR WHEEL	5-123
443290-0000	GEAR WHEEL	5-89, 5-91, 5-101, 5-103
443291-0000	GEAR WHEEL	5-101, 5-103
445854-0001	GEAR WHEEL	8-41
445854-0002	GEAR WHEEL	8-41
499473-0000	GEAR WHEEL	3-29
539187-0001	GEAR WHEEL	8-19
539187-0002	GEAR WHEEL	8-19
574082-0000	GEAR WHEEL	5-89, 5-91
592965-0000	GEAR WHEEL	1-49, 1-51, 1-53
543706-0000	GEAR WHEEL SLIM, INNER	5-125, 5-127
543707-0000	GEAR WHEEL SLIM, OUTER	5-125, 5-127
543705-0000	GEAR WHEEL WIDE	5-125, 5-127
243016-0000	GEARING	3-9, 3-19
442554-0000	GEARING	5-19
90056-0099	GEARS, BEVEL ALU-00	5-53, 5-55
90056-0147	GEARS, BEVEL ALU-00	5-33
90069-0278	GEARS, WORM MOTOR KM120-80E3	1-49, 1-51, 1-53
90069-0098	GEARS, WORM MOTOR ODM90-80 E4	12-49
90069-0116	GEARS, WORM MOTOR REPBY 90069-0281	8-19, 8-41
596137-0000	GEJD	6-33
90172-0031	GENERATOR	9-5, 9-7, 9-9, 9-11, 9-13, 9-15, 9-45, 9-47, 9-49, 9-51, 9-53, 9-55, 12-235, 12-237
90012-0061	GLAND	2-21, 2-45, 2-77, 2-91, 2-117, 2-119, 6-67, 13-27
353240-0004	GLAND W/O INSERT PG16 NORMAL	2-45
90326-0017	GLAND 1/8" REPBY 90326-306	1-35

Part No	Description	Page No
90012-0071	GLAND FITTING	5-7, 5-9, 5-35, 5-37, 6-67
90012-0072	GLAND FITTING	5-7, 5-9, 5-35, 5-37, 6-67
90012-0073	GLAND FITTING	5-17
90012-0079	GLAND FITTING	6-67
352136-0128	GLAND FITTING	2-169
352136-0142	GLAND FITTING	2-21, 2-45, 2-77, 2-91, 2-117, 2-119, 13-27
352136-0143	GLAND FITTING	2-21, 2-117, 2-119, 3-31, 3-33, 8-61, 8-63, 8-65, 13-27
352136-0152	GLAND FITTING	2-63, 2-65, 2-77, 2-97, 2-99
1279568-0000	GLAND FITTING	6-67
352136-0127	GLAND FITTING PR 18,6	2-9, 2-21, 2-27, 2-29, 2-31, 2-69, 2-77, 2-81, 2-83, 2-117, 2-119, 2-127, 2-135, 2-147, 2-149, 2-151, 2-163, 7-11, 8-61, 8-63, 8-65, 13-27
352136-0107	GLAND FITTING PR12,5 PG7 FOR HOSE	12-13
352136-0113	GLAND FITTING PR18,6/PG11 DI=12MM	2-21, 2-45, 2-77, 2-91, 2-117, 2-119, 2-147, 2-149, 2-151, 2-167, 2-173, 2-175, 7-9, 7-11, 7-31, 7-33, 7-37, 7-39, 7-41, 8-61, 8-63, 8-65, 12-163, 13-27, 13-29
352136-0129	GLAND FITTING PR22,5/PG16 DI=16MM	8-61, 8-63, 8-65
353246-0001	GLAND FITTING, VK156D	2-21, 2-77, 2-117, 2-119, 12-157, 13-27
90012-0137	GLAND, EXTENDED WITH INSERT, PG11	1-49, 1-51, 1-53, 8-61, 8-63, 8-65
353245-0005	GLAND, EXTENDED WITH INSERT, PG16/PR 22,	5-21
90099-0178	GLAND, LOCK NUT, PG 16	5-21
90099-0179	GLAND, LOCK NUT, PG 21	13-185
90099-0180	GLAND, LOCK NUT, PG 29	13-185
353249-0058	GLAND,INSERT,E156 3/10	2-21, 2-77, 2-117, 2-119, 12-157, 13-27
252733-0000	GLASS PANE	13-53
262774-0009	GLASS PANE	2-49, 2-51, 2-93
293598-0000	GLASS PANE	2-63, 2-65, 2-97, 2-99
297488-0000	GLASS PANE	2-49, 2-51, 2-93
440251-0000	GLASS PANE	8-49
571423-0000	GLASS PANE	8-51, 8-53
581344-0000	GLASS PANE	13-55
593565-0000	GLASS PANE	8-49
90333-0004	GRAPH PAPER 24 HOURS	9-19, 9-39
344502-0046	GREASE NIPPLE 45 DEG. R1/8 CON.	3-31, 3-33
344502-0066	GREASE NIPPLE 90 DEG. R1/8 CON.	3-9, 3-19, 3-29
344502-0026	GREASE NIPPLE STRAIGHT R1/8 CON.	3-9, 3-19, 12-97, 12-99
530777-0000	GRILL	12-45
547909-0000	GRILL	12-49
548688-0000	GRILL	12-49
548689-0000	GRILL	12-49
573374-0000	GRND.TERM.X2,NEUT.TERM.X3	9-25, 9-27, 9-29, 9-31, 9-33
596738-0000	GROUND AND NEUTRAL TERM.	9-5, 9-7, 9-9, 9-11, 9-13, 9-15
1143671-0000	GROUND AND NEUTRAL TERM.	9-45, 9-47, 9-49, 9-51, 9-53, 9-55
22559-0000	GRUB SCREW	7-37, 7-39
1144666-0000	GUARD PLATE	6-7
440211-0000	GUIDE	8-57, 8-59
443486-0000	GUIDE	5-101, 5-103
476556-0000	GUIDE	8-57, 8-59
596110-0000	GUIDE	6-33
596138-0000	GUIDE	6-37, 6-39
596140-0000	GUIDE	6-37, 6-39
596143-0000	GUIDE	6-55
597603-0100	GUIDE	13-121
1296259-0100	GUIDE	12-249
1317049-0000	GUIDE	6-7
1346212-0000	GUIDE	6-37, 6-39
1347057-0000	GUIDE	6-27
1362443-0100	GUIDE	12-267
1478881-0000	GUIDE	5-29, 5-49, 5-51
111543-0000	GUIDE CONE	1-43, 1-45, 7-45
23583-0000	GUIDE FINGER	1-43, 1-45, 7-45
592215-0000	GUIDE LEFT	11-17, 11-23
1350425-0000	GUIDE LEFT	6-27
72376-0000	GUIDE LUG	14-53
486969-0000	GUIDE LUG	8-5, 8-7, 8-21, 8-23, 8-25, 8-27, 8-29, 8-31, 8-33
591084-0000	GUIDE LUG	5-89, 5-91
476196-0000	GUIDE RAIL	12-133
592214-0000	GUIDE RIGHT	11-17, 11-23
1350424-0000	GUIDE RIGHT	6-27
1129833-0000	GUIDE ROLLER	4-23, 4-25, 4-27, 4-29, 12-215, 12-217, 12-219, 12-221, 13-7, 13-9, 13-99, 13-101, 13-103, 13-105
239665-0000	GUIDE SHAFT	7-31, 7-33
283084-0000	GUIDE SHAFT	10-9, 14-5
450460-0001	GUIDE SHAFT	7-31, 7-33
450460-0002	GUIDE SHAFT	7-31, 7-33
450460-0003	GUIDE SHAFT	7-31, 7-33
592593-0000	GUIDE SHAFT	7-31, 7-33
107426-0000	GUIDE SLEEVE	4-65, 4-67, 4-69, 4-71, 13-77
443050-0000	GUIDE SLEEVE	5-67
90039-0014	GUIDE SPROCKET	12-33
33150-0000	GUIDE STUD	4-113, 4-115, 12-175, 12-177
493747-0000	GUIDE STUD	1-43, 1-45
545651-0000	GUIDE STUD	4-113, 4-115, 12-175, 12-177, 13-81, 13-85, 13-87
1279532-0000	GUIDE UPPER L	6-27
1282711-0000	GUIDE UPPER R	6-27
245039-0000	GUIDE WHEEL	5-23, 5-39, 6-37, 6-39

Part No	Description	Page No
257923-0000	GUIDE WHEEL	7-31, 7-33
282635-0000	GUIDE WHEEL	7-31, 7-33
537301-0100	GUILLOTINE	12-21
546238-0000	GUSSET PLATE	12-145
90426-0003	HAND SHOWER	2-187
7309-0000	HANDLE	1-7, 1-9, 2-133, 2-181, 2-183, 7-17, 12-27, 12-31, 12-81, 12-149, 13-59
78080-0000	HANDLE	10-5
90051-0077	HANDLE	8-9, 8-39, 12-57, 12-75
236631-0000	HANDLE	12-45
285956-0000	HANDLE	2-49, 2-51
466446-0000	HANDLE	8-69, 8-71, 8-73
493556-0000	HANDLE	12-97, 12-99
522130-0000	HANDLE	8-85, 8-87
537309-0000	HANDLE	12-33
556391-0000	HANDLE	8-77, 8-79
556392-0000	HANDLE	8-77, 8-79
1144804-0000	HANDLE	2-93
493555-0000	HANDLE BRACKET	12-97, 12-99
769219-0102	HANDLE BRACKET	12-241, 13-171
90237-0061	HANDLE, FIX 0035-0230	2-63, 2-65, 2-97, 2-99
90017-0009	HANDLE, SWIVWLLING, SIZE32 /M12 THREAD	3-27
318800-0106	HANDLE,SPHERICAL KNOB,INT.THRE,D.40-M10	8-49
318800-0104	HANDLE,SPHERICAL KNOB,INT.THRE.,D.30-M8	1-73, 7-35, 8-51, 8-53, 12-97, 12-99, 12-145
318800-0107	HANDLE,SPHERICAL KNOB,INT.THRE.,D45-M10	8-85, 8-87
318800-0102	HANDLES,SPHERICAL KNOB,INT.THRE.,D.20-M5	7-15
318800-0103	HANDLES,SPHERICAL KNOB,INT.THRE.,D.25-M6	8-5, 8-7, 8-21, 8-23, 8-25, 8-27, 8-29, 8-31, 8-33, 12-53, 12-55, 12-67, 12-69, 12-71, 12-73
464119-0000	HANDSPIKE	12-97, 12-99
440196-0000	HANGER	8-55
262252-0000	HATCH	5-121
262932-0000	HATCH	5-121
269324-0400	HATCH	2-3, 2-5
293158-0000	HATCH	2-37, 2-39, 2-41
293159-0000	HATCH	2-37, 2-39, 2-41
440389-0000	HATCH	2-167
440542-0000	HATCH	2-167
525185-0000	HATCH	5-57
525279-0000	HATCH	5-121
525377-0000	HATCH	5-57
525380-0000	HATCH	5-159
533428-0000	HATCH	2-181
537303-0000	HATCH	12-33
548348-0000	HATCH	2-167
549045-0000	HATCH	2-183
581357-0000	HATCH	2-167, 13-71
1144279-0000	HATCH	2-85, 2-87
1144280-0000	HATCH	2-85, 2-87
443271-0000	HEAD PLATE	5-117
443272-0000	HEAD PLATE	5-117
443273-0000	HEAD PLATE	5-117
443274-0000	HEAD PLATE	5-117
443387-0000	HEAD PLATE	5-101, 5-103
443388-0001	HEAD PLATE	5-101, 5-103
443448-0000	HEAD PLATE	5-119
443450-0000	HEAD PLATE	5-101, 5-103
443451-0000	HEAD PLATE	5-101, 5-103
443493-0000	HEAD PLATE	5-119
443495-0000	HEAD PLATE	5-119
464120-0000	HEAD PLATE	12-107
486964-0000	HEAD PLATE	8-21, 8-23, 8-25, 8-27, 8-29, 8-31, 8-33
525051-0000	HEAD PLATE	5-115
525084-0000	HEAD PLATE	5-119
525255-0000	HEAD PLATE	5-117
525256-0000	HEAD PLATE	5-117
525408-0000	HEAD PLATE	5-129, 5-131
525424-0000	HEAD PLATE	5-129, 5-131
529312-0000	HEAD PLATE	5-129, 5-131
529478-0000	HEAD PLATE	5-129, 5-131
531310-0000	HEAD PLATE	5-129, 5-131
531312-0000	HEAD PLATE	5-129, 5-131
538239-0000	HEAD PLATE	8-5, 8-7
553227-0000	HEAD PLATE	1-37
567735-0000	HEAD PLATE	13-41
569128-0000	HEAD PLATE	5-129, 5-131
569132-0000	HEAD PLATE	5-101, 5-103
569134-0000	HEAD PLATE	5-119
574054-0000	HEAD PLATE	5-129, 5-131
574077-0000	HEAD PLATE	5-119
574094-0000	HEAD PLATE	5-89, 5-91
574119-0000	HEAD PLATE	5-89, 5-91
574120-0000	HEAD PLATE	5-89, 5-91
574126-0000	HEAD PLATE	5-119
583459-0000	HEAD PLATE	5-117
583460-0000	HEAD PLATE	5-117

Part No	Description	Page No
927849-0000 ...	HEAD PLATE	8-43
1362483-0000 .	HEAD PLATE	5-129, 5-131
1362484-0000 .	HEAD PLATE	5-129, 5-131
458915-0000 ...	HEAD RAIL	8-69, 8-71, 8-73
246344-0000 ...	HEAT GUARD	7-37, 7-39
251502-0000 ...	HEAT GUARD	7-37, 7-39
257904-0000 ...	HEAT GUARD	1-31, 1-33
542090-0000 ...	HEAT GUARD	7-41
37877-0301	HEATING BLOCK	12-51
90206-0085	HEATING CARTRIDGE 460W 105 OHM	7-41
90206-0097	HEATING CARTRIDGE 500W 220V	8-69, 8-71, 8-73
90206-0086	HEATING CARTRIDGE, 970W 50 OHM	1-31, 1-33
262272-0000 ...	HEATING CHAMBER	5-69, 5-71, 5-77, 5-79
1296966-0100 .	HEATING ELEMENT	6-19
1296967-0100 .	HEATING ELEMENT	6-19
1296968-0100 .	HEATING ELEMENT	6-19
90206-0125	HEATING ELEMENT 1000W 220V	13-177
90206-0131	HEATING ELEMENT 1200W 220V	6-21, 6-25
90206-0053	HEATING ELEMENT 230V 1200W	12-91
90206-0030	HEATING ELEMENT 3000W, 220V	6-23, 13-177
548794-0000 ...	HEATING JAW	8-69, 8-71, 8-73
1285293-0000 .	HEATING PIPE	6-23
1296070-0000 .	HEATING PIPE	6-21, 6-25
255301-0000 ...	HEATING RAIL	12-91
2505037-0100 .	HEATING UNIT	13-171
312821-0102 ...	HEX. WELD NUT DIN 929 M4 A2	2-163
312631-0321 ...	HEX.NUT FINE, EN 24032 M6M M10X1,25 FZB8	5-81, 5-83, 12-257, 12-269
312631-0324 ...	HEX.NUT FINE, EN 24032 M6M M16X1,5 FZB8	5-63, 5-65
276398-0000 ...	HEXAGON NIPPLE	2-101, 2-103, 2-105, 2-107, 2-109, 2-111, 2-113, 2-137, 2-139
312601-0320 ...	HEXAGON NUT, M10 8 FZB, ISO 4032	1-35, 2-37, 2-39, 2-41, 2-85, 2-87, 3-31, 3-33, 10-15, 10-17, 10-19, 10-21, 12-5, 12-7, 12-9, 12-35
312601-0322 ...	HEXAGON NUT, DIN 934 M12 8 FZB	2-167, 3-27, 3-31, 3-33, 3-37, 3-39, 14-39
312601-0324 ...	HEXAGON NUT, DIN 934 M16 8 FZB	3-41, 3-43
312601-0310 ...	HEXAGON NUT, DIN 934 M3 8 FZB	2-159, 2-161, 12-49
312601-0312 ...	HEXAGON NUT, DIN 934 M4 8 FZB	2-167, 8-69, 8-71, 8-73, 12-47
312601-0314 ...	HEXAGON NUT, DIN 934 M5 8 FZB	2-77, 2-147, 2-171, 8-69, 8-71, 8-73, 12-47
312601-0316 ...	HEXAGON NUT, DIN 934 M6 8 FZB	2-163, 2-167, 2-169, 3-11, 3-21, 3-37, 3-39, 8-41, 8-67, 8-69, 8-71, 8-73, 10-15, 10-17, 10-21, 12-5, 12-9, 12-43, 12-49, 13-11
312601-0318 ...	HEXAGON NUT, DIN 934 M8 8 FZB	2-159, 2-161, 2-167, 2-169, 2-179, 2-181, 2-183, 3-11, 3-21, 3-31, 3-33, 8-17, 13-11
90099-0010	HEXAGON NUT, LB6LM, M8, SIS 5170-4	4-73
90099-0050	HEXAGON NUT, M2, 5	14-23
312605-0320 ...	HEXAGON NUT, M6M M10 A280	2-7, 2-37, 2-39, 2-41, 2-85, 2-87, 2-167, 4-33, 4-35, 4-37, 4-39, 4-41, 4-43, 5-23, 5-39, 5-89, 5-91, 6-29, 6-57, 7-25, 7-37, 7-39, 10-15, 10-17, 10-21, 12-5, 12-9, 12-43, 12-81, 12-97, 12-99, 12-117
312605-0322 ...	HEXAGON NUT, M6M M12 A280	2-9, 2-69, 5-7, 5-9, 5-11, 5-33, 5-35, 5-37, 5-53, 5-55, 5-89, 5-91, 5-101, 5-103, 5-133, 5-135
312605-0324 ...	HEXAGON NUT, M6M M16 A280	5-29, 5-49, 5-51, 6-35, 12-89
312605-0310 ...	HEXAGON NUT, M6M M3 A280	1-27, 1-29, 2-63, 2-65, 2-97, 2-99, 2-135, 7-41, 8-49, 8-61, 8-63, 8-65, 9-5, 9-7, 9-9, 9-11, 9-13, 9-15, 9-25, 9-27, 9-29, 9-31, 9-33, 9-45, 9-47, 9-49, 9-51, 9-53, 9-55, 12-91
312605-0312 ...	HEXAGON NUT, M6M M4 A280	1-13, 1-15, 1-31, 1-33, 1-37, 1-43, 1-45, 2-63, 2-65, 2-97, 2-99, 2-133, 4-139, 4-141, 5-7, 5-9, 5-35, 5-37, 7-13, 7-45, 7-47, 8-13, 8-15, 8-61, 8-63, 8-65, 12-27, 12-31, 12-65, 12-67, 12-69, 12-71, 12-73, 12-121, 12-145
312605-0314 ...	HEXAGON NUT, M6M M5 A280	1-31, 1-33, 2-37, 2-39, 2-41, 2-63, 2-65, 2-85, 2-87, 2-97, 2-99, 2-131, 2-149, 2-151, 4-145, 5-7, 5-9, 5-35, 5-37, 7-41, 8-5, 8-7, 8-9, 8-21, 8-23, 8-25, 8-27, 8-29, 8-31, 8-33, 8-39, 8-51, 8-53, 8-55, 12-37, 12-57, 12-75, 12-133, 12-149, 12-225, 13-53, 13-55, 13-59, 13-177, 13-213
312605-0316 ...	HEXAGON NUT, M6M M6 A280	1-5, 1-11, 1-23, 1-31, 1-33, 1-35, 1-43, 1-45, 1-55, 1-73, 2-9, 2-23, 2-27, 2-29, 2-31, 2-37, 2-39, 2-41, 2-47, 2-49, 2-51, 2-57, 2-63, 2-65, 2-67, 2-69, 2-81, 2-83, 2-85, 2-87, 2-93, 2-95, 2-97, 2-99, 2-115, 5-7, 5-9, 5-23, 5-25, 5-27, 5-29, 5-31, 5-33, 5-35, 5-37, 5-39, 5-41, 5-43, 5-45, 5-47, 5-49, 5-51, 5-53, 5-55, 5-67, 5-89, 5-91, 5-101, 5-103, 5-117, 5-119, 5-133, 5-135, 5-137, 5-139, 5-141, 5-143, 6-7, 6-9, 6-27, 6-35, 6-55, 6-59, 6-61, 7-17, 7-21, 7-23, 7-31, 7-33, 7-35, 7-37, 7-39, 8-5, 8-7, 8-21, 8-23, 8-25, 8-27, 8-29, 8-31, 8-33, 8-49, 8-69, 8-71, 8-73, 8-85, 8-87, 11-17, 11-23, 12-23, 12-45, 12-49, 12-53, 12-55, 12-67, 12-69, 12-71, 12-73, 12-93, 12-97, 12-99, 12-105, 12-115, 12-141, 12-145, 13-59, 13-179, 13-183, 13-211
312605-0318 ...	HEXAGON NUT, M6M M8 A280	1-7, 1-9, 1-13, 1-15, 1-27, 1-29, 1-31, 1-33, 1-49, 1-51, 1-53, 1-55, 1-73, 2-125, 3-15, 3-17, 3-35, 3-41, 3-43, 4-23, 4-25, 4-27, 4-29, 4-33, 4-35, 4-37, 4-39, 4-41, 4-43, 4-45, 4-47, 4-49, 4-51, 4-93, 4-95, 4-101, 4-103, 4-105, 4-107, 4-131, 4-133, 4-135, 4-137, 4-143, 4-147, 5-11, 5-21, 5-23, 5-25, 5-27, 5-33, 5-39, 5-41, 5-43, 5-45, 5-47, 5-53, 5-55, 5-67, 5-113, 5-133, 5-135, 5-137, 5-139, 5-141, 5-143, 5-145, 5-147, 5-149, 5-151, 5-153, 5-155, 6-11, 6-27, 6-33, 6-35, 6-37, 6-39, 6-47, 6-55, 6-59, 6-61, 7-15, 7-17, 7-31, 7-33, 7-35, 7-37, 7-39, 7-41, 7-47, 8-9, 8-39, 8-51, 8-53, 10-15, 10-17, 10-21, 12-5, 12-9, 12-37, 12-39, 12-41, 12-43, 12-45, 12-57, 12-75, 12-87, 12-93, 12-97, 12-99, 12-115, 12-133, 12-143, 12-145, 12-147, 12-215, 12-217, 12-219, 12-221, 12-255, 13-7, 13-9, 13-57, 13-59, 13-65, 14-35, 14-37
312812-0320 ...	HEXAGON NUT, NY-LOCK M10 A480	3-31, 3-33, 5-121, 6-37, 6-39
312810-0322 ...	HEXAGON NUT, NY-LOCK M12 FZB	3-37, 3-39
312810-0324 ...	HEXAGON NUT, NY-LOCK M16 FZB	3-37, 3-39
312810-0310 ...	HEXAGON NUT, NY-LOCK M3 FZB	2-65, 2-99
312812-0312 ...	HEXAGON NUT, NY-LOCK M4 A480	6-33
312812-0314 ...	HEXAGON NUT, NY-LOCK M5 A480	4-23, 4-25, 4-27, 4-29, 4-113, 4-115, 6-37, 6-39, 8-5, 8-7, 8-21, 8-23, 8-25, 8-27, 8-29, 8-31, 8-33, 8-77, 8-79, 12-155, 12-175, 12-177, 12-215, 12-217, 12-219, 12-221, 13-7, 13-9, 13-99, 13-101, 13-103, 13-105
312812-0316 ...	HEXAGON NUT, NY-LOCK M6 A480	2-167, 4-97, 4-99, 5-29, 5-49, 5-51, 5-101, 5-103, 5-119, 8-45, 8-47, 8-51, 8-53, 12-95, 12-239

Part No	Description	Page No
312810-0316	HEXAGON NUT, NY-LOCK M6 FZB	13-237
312812-0318	HEXAGON NUT, NY-LOCK M8 A480	2-67, 4-97, 4-99, 6-5
312810-0318	HEXAGON NUT, NY-LOCK M8 FZB	1-73
312625-0322	HEXAGON THIN NUT, EN 24035 ML6M M12 A4	13-59
312625-0316	HEXAGON THIN NUT, EN 24035 ML6M M6 A4	5-137, 5-139, 5-141, 5-143
312625-0318	HEXAGON THIN NUT, EN 24035 ML6M M8 A4	5-33, 5-53, 5-55, 6-37, 6-39
90172-0317	HF-CABLE 4000 MM	9-17, 9-57, 12-235, 12-237
90172-0318	HF-CABLE 450MM, TELSONIC 514 210 004	9-5, 9-7, 9-9, 9-11, 9-13, 9-15, 9-45, 9-47, 9-49, 9-51, 9-53, 9-55, 12-235, 12-237
37880-0000	HINGE	12-91
239847-0000	HINGE	2-167
272510-0000	HINGE	12-27, 12-31
272511-0000	HINGE	12-27, 12-31
445736-0000	HINGE	2-27, 2-29, 2-31, 2-81, 2-83
445872-0000	HINGE	8-51, 8-53
445873-0000	HINGE	8-51, 8-53
445874-0000	HINGE	8-51, 8-53
525394-0000	HINGE	5-159
543819-0000	HINGE	7-17
571424-0000	HINGE	8-51, 8-53
1144667-0000	HINGE	6-7
1144668-0000	HINGE	6-7
90248-0013	HINGE 3562E STUV	2-133, 12-149
441740-0000	HINGE FLANGE	13-53, 13-55
441741-0000	HINGE FLANGE	13-53, 13-55
90248-0007	HINGE, 4002-1 1/4	2-159, 2-161
90248-0002	HINGE, 4002-2	12-145
476177-0200	HOLD-DOWN DEVICE	3-3, 3-5, 3-7
23582-0000	HOLDER	1-43, 1-45, 7-45
32204-0000	HOLDER	1-35
32205-0000	HOLDER	1-35
32214-0000	HOLDER	1-35
32215-0000	HOLDER	1-35, 7-37, 7-39
32400-0000	HOLDER	7-37, 7-39
33648-0000	HOLDER	1-43, 1-45
251539-0000	HOLDER	12-47
256640-0000	HOLDER	12-143
263756-0000	HOLDER	14-41, 14-43
265987-0000	HOLDER	1-35
265988-0000	HOLDER	1-35
266730-0000	HOLDER	7-41
267327-0000	HOLDER	4-101, 4-103, 4-105, 4-107
267676-0000	HOLDER	4-101, 4-103, 4-105, 4-107
271655-0000	HOLDER	7-29, 12-61, 12-63
284124-0000	HOLDER	4-101, 4-103, 4-105, 4-107
285330-0000	HOLDER	5-7, 5-9, 5-35, 5-37
292472-0000	HOLDER	3-11, 3-21, 13-11
297084-0000	HOLDER	1-31, 1-33
440185-0000	HOLDER	8-55
440186-0000	HOLDER	8-55
440193-0000	HOLDER	8-55
440214-0000	HOLDER	8-57, 8-59
440215-0000	HOLDER	8-57, 8-59
440247-0000	HOLDER	8-49
440248-0000	HOLDER	8-49
442523-0000	HOLDER	5-63, 5-65
443232-0000	HOLDER	5-29, 5-49, 5-51
445669-0000	HOLDER	7-37, 7-39
449926-0000	HOLDER	4-101, 4-103, 4-105, 4-107
450315-0000	HOLDER	4-101, 4-103, 4-105, 4-107
450746-0000	HOLDER	2-137, 2-139
458188-0000	HOLDER	2-159, 2-161
464004-0000	HOLDER	2-159, 2-161
464121-0000	HOLDER	12-97, 12-99
464363-0000	HOLDER	3-41, 3-43
466469-0000	HOLDER	8-43
469795-0000	HOLDER	2-65, 2-99
484878-0000	HOLDER	8-69, 8-71, 8-73
486794-0000	HOLDER	4-97, 4-99
525140-0000	HOLDER	5-29, 5-49, 5-51
525418-0000	HOLDER	5-49, 5-51
531616-0000	HOLDER	2-63, 2-65, 2-97, 2-99
531761-0000	HOLDER	2-63, 2-97
533818-0000	HOLDER	4-33, 4-35, 4-37, 4-39, 4-41, 4-43, 4-131, 4-133, 4-135, 4-137
535200-0000	HOLDER	4-97, 4-99
537388-0000	HOLDER	8-17
539185-0000	HOLDER	8-17
543157-0300	HOLDER	2-129
544484-0000	HOLDER	2-63, 2-65, 2-97, 2-99
545789-0000	HOLDER	4-97, 4-99
566313-0000	HOLDER	5-81, 5-83
566314-0000	HOLDER	5-53, 5-55
566315-0000	HOLDER	5-29, 5-49, 5-51
566316-0000	HOLDER	5-81, 5-83

Part No	Description	Page No
566317-0000	HOLDER	5-81, 5-83
569099-0000	HOLDER	1-31, 1-33
574058-0000	HOLDER	5-29, 5-49, 5-51
592586-0000	HOLDER	7-37, 7-39
595061-0000	HOLDER	5-33
597545-0000	HOLDER	13-39
769219-0101	HOLDER	12-241, 13-91, 13-171
929652-0000	HOLDER	14-13, 14-15
929753-0000	HOLDER	4-97, 4-99
1285009-0000	HOLDER	6-37, 6-39
1285010-0000	HOLDER	6-37, 6-39
1285048-0100	HOLDER	12-249, 12-267
1346074-0000	HOLDER	6-37, 6-39
1362458-0000	HOLDER	4-101, 4-103, 4-105, 4-107
1362487-0000	HOLDER	5-137, 5-139, 5-141, 5-143
1362500-0000	HOLDER	4-101, 4-103, 4-105, 4-107
2505147-0000	HOLDER	4-101, 4-103, 4-105, 4-107
2517816-0000	HOLDER	13-183
2554286-0000	HOLDER	8-57, 8-59
476356-0000	HOLDER FOR INK BOTTLE	8-9, 8-39, 12-57, 12-75
493559-0000	HOLDER L	12-97, 12-99
493558-0000	HOLDER R	12-97, 12-99
90415-0361	HOLDER SERIAL CONNECTION / 8092 2102 54	13-115
90164-0301	HOLDING FIXTURE	9-5, 9-7, 9-9, 9-11, 9-13, 9-15, 9-25, 9-27, 9-29, 9-31, 9-33, 9-45, 9-47, 9-49, 9-51, 9-53, 9-55
90030-0265	HOLLOW SCREW, 1631-01-1/4 OR 2661-1/4	4-97, 4-99
90030-0266	HOLLOW SCREW, 1631-02-1/4 OR 2651-1/4	4-97, 4-99
14600-0000	HOOD	1-65, 1-67, 1-69
297604-0400	HOOD	2-3, 2-5
434665-0000	HOOD	1-65, 1-67, 1-69
543148-0000	HOOD	2-49, 2-51
571418-0000	HOOD	8-51, 8-53
571419-0000	HOOD	8-51, 8-53
594588-0000	HOOD	2-49, 2-51
1144274-0100	HOOD	2-3, 2-5
449155-0000	HOOK	14-33
540726-0000	HOOK HOLDER	2-37, 2-39, 2-41, 2-85, 2-87
72947-0000	HOOK SPANNER	10-9
74387-0000	HOOK SPANNER	10-9
458492-0000	HOOK SPANNER	14-5
90148-0021	HOSE	1-71
90148-0033	HOSE	4-11, 4-13, 4-15, 4-17, 4-19, 4-21, 4-23, 4-25, 4-27, 4-29, 4-73, 12-193, 12-195, 12-197, 12-199, 12-201, 12-203, 12-215, 12-217, 12-219, 12-221, 13-7, 13-9, 13-99, 13-101, 13-103, 13-105
90148-0036	HOSE	2-173, 2-175, 13-29
90152-0031	HOSE	2-21, 2-77, 2-117, 2-119, 6-67, 13-27
90166-0113	HOSE	2-179, 3-11, 3-21, 13-11
90166-0121	HOSE	2-37, 2-39, 2-41, 2-85, 2-87
90166-0123	HOSE	4-73, 6-33
90166-0138	HOSE	8-9, 8-39, 12-57, 12-75
90166-0142	HOSE	2-49, 2-51, 2-57, 2-95
352135-0109	HOSE .022	2-21, 2-77, 2-117, 2-119, 8-61, 8-63, 8-65, 13-27
526934-0200	HOSE & PIPE ASSEMBLY TB/8	7-3, 7-5
90152-0016	HOSE (SPIRAL)	2-189
90152-0017	HOSE (SPIRAL)	2-187
90152-0014	HOSE , 1,5" PVC BLACK	1-35
90166-0087	HOSE 15/23 REINF.PVC TRANSP.	5-7, 5-9, 5-35, 5-37, 6-35, 7-37, 7-39, 7-41, 12-67, 12-69, 12-71, 12-73
90152-0032	HOSE 5"=127MM	2-159, 2-161
543152-0000	HOSE ATTACHMENT	2-37, 2-39, 2-41
259867-0000	HOSE CLAMP	2-135
342991-0108	HOSE CLIP 38-50MMRFR	2-21, 2-117, 2-119, 13-27, 13-177
90132-0021	HOSE CLIP 6-10MM	2-27, 2-29, 2-31, 2-81, 2-83
342995-0101	HOSE CLIP 7-9MMFZB	4-73
342991-0115	HOSE CLIP,WORM DRIVE TYPE (110)-136	2-159, 2-161
342991-0101	HOSE CLIP,WORM DRIVE TYPE (13)-16	2-35, 2-121, 2-123, 2-159, 2-161, 3-11, 3-21, 6-35, 13-11, 13-15
342991-0116	HOSE CLIP,WORM DRIVE TYPE (136)-163	12-97, 12-99
342991-0103	HOSE CLIP,WORM DRIVE TYPE (19)-23	2-37, 2-39, 2-41, 2-85, 2-87, 5-7, 5-9, 5-35, 5-37, 6-35, 7-37, 7-39, 7-41
342991-0104	HOSE CLIP,WORM DRIVE TYPE (23)-27	1-71
342991-0106	HOSE CLIP,WORM DRIVE TYPE (30)-36	2-49, 2-51, 2-57, 2-95
342991-0109	HOSE CLIP,WORM DRIVE TYPE (48)-50	1-35, 5-69, 5-71, 5-77, 5-79
342991-0111	HOSE CLIP,WORM DRIVE TYPE (63)-73	5-15, 13-177
342991-0112	HOSE CLIP,WORM DRIVE TYPE (73)-83	5-7, 5-9, 5-35, 5-37
342991-0100	HOSE CLIP,WORM DRIVE TYPE 10-13	2-179
90131-0004	HOSE COUPLING	2-135
353247-0004	HOSE GLAND EMC PG16 EXTENDED	6-67
353247-0005	HOSE GLAND EMC PG21 EXTENDED	2-77, 6-21, 6-23, 6-25
353243-0003	HOSE GLAND W/O INSERT PG11 EXTENDED	6-67
353243-0009	HOSE GLAND W/O INSERT PG13,5 EXTENDED	6-67
353243-0005	HOSE GLAND W/O INSERT PG16 EXTENDED	6-67
353243-0007	HOSE GLAND W/O INSERT PG21 EXTENDED	13-185
353243-0008	HOSE GLAND W/O INSERT PG29 EXTENDED	13-185

Part No	Description	Page No
90165-0174	HOSE HOLDER	2-37, 2-39, 2-41, 2-85, 2-87, 4-23, 4-25, 4-27, 4-29, 12-155, 12-215, 12-217, 12-219, 12-221, 13-7, 13-9
90152-0001	HOSE L=280MM THREAD M10X1	12-85
90163-0041	HOSE NIPPLE, EXT.THR. 3/8-12 MM	2-35, 2-121, 2-123, 13-15
90055-0074	HOSE NIPPLE, EXT.THR. M5X4 MM	12-121
90055-0033	HOSE NIPPLE, EXT.THR. R1/2-13 MM	2-37, 2-39, 2-41, 2-85, 2-87
90055-0051	HOSE NIPPLE, EXT.THR. R3/8X13 MM	1-71
90166-0007	HOSE PVC 10/14 TRANSP.	2-35, 2-121, 2-123, 2-159, 2-161, 13-15
90166-0059	HOSE PVC 12/16MM TRANSP.	6-35, 8-5, 8-7, 8-21, 8-23, 8-25, 8-27, 8-29, 8-31, 8-33, 12-53, 12-55, 12-67, 12-69, 12-71, 12-73, 12-93, 12-115
244778-0400	HOT AIR ELEMENT LS	1-3
90053-0031	HOUR COUNTER, B 609.10 10-50VDC	9-5, 9-7, 9-9, 9-11, 9-13, 9-15, 9-25, 9-27, 9-29, 9-31, 9-33, 9-45, 9-47, 9-49, 9-51, 9-53, 9-55
262922-0000	HOUSE	5-121
443122-0000	HOUSE	5-15
443123-0000	HOUSE	5-15
525276-0000	HOUSE	5-57
525335-0000	HOUSE	5-133, 5-135
1144854-0000	HOUSE	6-63
90326-0312	HOUSE, 5103050-000	14-21
90326-0311	HOUSE, 5103053-000	14-21
544539-0000	HOUSEMARK REPBY 0574658-0000	2-133, 2-183
279027-0000	HOUSING	4-65, 4-67, 4-69, 4-71
2505041-0000	HOUSING	13-177
90201-0018	HOUSING, NO. 40421	12-97, 12-99
525445-0000	HUB	5-151, 5-153, 5-155
525446-0000	HUB	5-145, 5-147, 5-149
525449-0000	HUB	5-151, 5-153, 5-155
525450-0000	HUB	5-145, 5-147, 5-149
530620-0000	HUB	12-117
536913-0000	HUB	7-25
574026-0000	HUB	5-145, 5-147, 5-149
574027-0000	HUB	5-151, 5-153, 5-155
598561-0000	HUB	6-5
1282325-0000	HUB	6-15
1282344-0000	HUB	6-41
537329-0100	HUB JUMBO	7-17
593856-0000	HUB LEFT	11-13, 11-15
593858-0000	HUB LEFT	11-13, 11-15
593857-0000	HUB RIGHT	11-9, 11-11
593859-0000	HUB RIGHT	11-9, 11-11
90321-0381	HYDRACCU SBO210-0,75E1/112U-210AK75	2-169, 13-93
597538-0100	HYDRAULIC BLOCK	12-165, 13-95
479858-0000	HYDRAULIC DIAGRAM	2-131
479859-0000	HYDRAULIC DIAGRAM	2-131
592989-0000	HYDRAULIC DIAGRAM	2-131, 12-155, 13-5, 13-91
592990-0000	HYDRAULIC DIAGRAM	13-25
294493-0000	HYDRAULIC PIPE	2-35, 2-121, 2-123, 13-15
294494-0000	HYDRAULIC PIPE	2-35, 2-121, 2-123, 13-15
294495-0000	HYDRAULIC PIPE	2-35, 2-121, 2-123, 13-15
294496-0000	HYDRAULIC PIPE	2-35, 2-121, 2-123, 13-15
445538-0000	HYDRAULIC PIPE	2-121, 2-123
445539-0000	HYDRAULIC PIPE	2-35, 2-121, 2-123, 13-15
445540-0000	HYDRAULIC PIPE	2-35, 2-121, 2-123, 13-15
445541-0000	HYDRAULIC PIPE	2-35, 2-121, 2-123, 13-15
1365575-0100	HYDRAULIC PRESSURE MEASUREMENT	14-5
434707-0300	HYDRAULIC SYSTEM	2-3, 2-5
464108-0100	HYDRAULIC VALVE	12-97, 12-99
581360-0100	HYGIENE AND PROTECT. KIT	13-45
558628-0100	HYGIENIC & PROTECTION KIT	13-45
1365571-0100	IMPROVED USTS JAWSYSTEM	13-137
1365573-0100	IMPROVED USTS PRESSURE JAW	13-143
434669-0400	IMPULSE TRANSMITTER	3-3, 3-5, 3-7
593272-0100	IMPULSE TRANSMITTER US	3-3, 3-5, 3-7, 13-5
525117-0300	INDEXING GEAR	5-121
1144320-0100	INDEXING GEAR	6-3
1285861-0100	INDEXING GEAR	6-13
497243-0200	INDUCTIVE SWITCH	12-3
525213-0200	INFEEDER	5-3, 5-5
595089-0100	INFEEDER	5-3, 5-5
1296200-0100	INFEEDING COVER	6-3
90299-0072	INK	8-9, 8-39, 12-57, 12-75
450355-0000	INK ROLLER	8-9, 8-39, 12-57, 12-75
543135-0000	INK TRANSFER ROLLER	8-9, 8-39, 12-57, 12-75
434074-0301	INK UNIT	12-67, 12-69, 12-71, 12-73
434774-0301	INK UNIT	12-53, 12-55
440286-0300	INK UNIT NSS	8-21, 8-23, 8-25, 8-27, 8-29, 8-31, 8-33
458192-0300	INK UNIT SS	8-5, 8-7
297210-0000	INK WELL	8-9, 12-57
297211-0000	INK WELL	8-39, 12-75
78076-0000	INNER JAW,LEFT	10-5
78077-0000	INNER JAW,RIGHT	10-5
535624-0000	INNER PIPE	7-9
90025-0017	INPUT MODULE TPMC	9-5, 9-7, 9-9, 9-11, 9-13, 9-15, 9-25, 9-27, 9-29, 9-31, 9-33, 9-45, 9-47

Part No	Description	Page No
		9-49, 9-51, 9-53, 9-55, 12-235, 12-237, 13-203, 13-221
565325-0000 ...	INPUT SHAFT	5-125, 5-127
1144515-0000 .	INSERT	6-59, 6-61
353249-0027 ...	INSERT, MULTI HOLE, E153M3X7	2-45
353249-0011 ...	INSERT, SINGEL HOLE, EK 153/11	6-67
537311-0100 ...	INSPECTIONDOOR UPPER	12-29
537315-0100 ...	INSPECTIONSDOOR , LOWER	12-23
451354-0007 ...	INSTALLATION DRAW.	13-45
594615-0001 ...	INSTALLATION DRAWING	10-3
594615-0002 ...	INSTALLATION DRAWING	10-3
37886-0000	INSULATING DISK	12-91
20705-0001	INSULATING PIPE	5-73, 5-75
23765-0001	INSULATING PIPE	5-69, 5-71, 5-77, 5-79, 6-21, 6-25
23765-0002	INSULATING PIPE	5-69, 5-71, 5-77, 5-79
23765-0003	INSULATING PIPE	5-69, 5-71, 5-77, 5-79, 6-21, 6-25
23765-0004	INSULATING PIPE	5-69, 5-71, 5-77, 5-79
23765-0005	INSULATING PIPE	5-69, 5-71, 5-77, 5-79, 6-23
252766-0001 ...	INSULATING PIPE	5-69, 5-71, 5-77, 5-79, 6-23
252766-0002 ...	INSULATING PIPE	5-69, 5-71, 5-77, 5-79, 6-21, 6-25
450888-0000 ...	INSULATING PLATE	7-41
497914-0000 ...	INSULATING PLATE	4-65, 4-67, 4-69, 4-71
497915-0000 ...	INSULATING PLATE	4-65, 4-67, 4-69, 4-71
449770-0000 ...	INSULATION	8-69, 8-71, 8-73
457658-0000 ...	INSULATION	8-69, 8-71, 8-73
479188-0000 ...	INSULATION	8-69, 8-71, 8-73
484844-0000 ...	INSULATION	8-69, 8-71, 8-73
556316-0000 ...	INSULATION	8-69, 8-71, 8-73
556317-0000 ...	INSULATION	8-69, 8-71, 8-73
556318-0000 ...	INSULATION	8-69, 8-71, 8-73
20772-0000	INSULATOR BODY 70X70X15MM	5-73, 5-75
37536-0000	INSULATOR BODY LOWER 70X70X15MM	5-73, 5-75
285145-0002 ...	INTERMEDIARY SECTION	5-121
285147-0000 ...	INTERMEDIARY SECTION	5-121
443218-0000 ...	INTERMEDIARY SECTION	5-121
593239-0000 ...	INTERMEDIARY SECTION	11-17
239890-0300 ...	INTERMEDIARY SHAFT	3-3, 3-5, 3-7
565322-0000 ...	INTERMEDIARY SHAFT	5-125, 5-127
595136-0100 ...	JAW SYSTEM	12-151
449125-0000 ...	JIG	14-33
440195-0000 ...	JOINT	8-55
1144237-0000 .	JOINT	6-9
457696-0001 ...	JOINT PIECE	6-37, 6-39
268931-0800 ...	JUMBO REEL EQUIPMENT	12-3
533896-0000 ...	JUNCTION BLOCK	4-73
576111-0000 ...	JUNCTION BLOCK	2-115
530556-0000 ...	JUNCTION PIPE UPPER	2-23, 2-79
263828-0000 ...	JUNCTION RAIL	2-37, 2-39, 2-41, 2-85, 2-87
351175-0104 ...	KABEL AWM 1X15 MM2 YELLOW-GREEN	9-5, 9-7, 9-9, 9-11, 9-13, 9-15, 9-25, 9-27, 9-29, 9-31, 9-33, 9-45, 9-47, 9-49, 9-51, 9-53, 9-55
90044-0139	KEY SAF.SW. AZ16-02 ZVR K-2254 USE 90459	8-51, 8-53
90044-0103	KEY SAFETY SWITCH AZ 15 ZVR-2254	8-51, 8-53, 13-67
551903-0000 ...	KICKPLATE,LEFT	10-15, 10-17
565961-0000 ...	KICKPLATE,RIGHT	10-15, 10-17
1346491-0100 .	KIT ASU IN SEPARATE ROOM FOR PT/8	11-3
31017-0000	KNIFE	12-91
37900-0000	KNIFE	12-87
230143-0001 ...	KNIFE	4-75
230143-0002 ...	KNIFE	4-75
230143-0004 ...	KNIFE	4-75
294009-0000 ...	KNIFE	8-69, 8-71, 8-73, 8-89, 12-33
522128-0000 ...	KNIFE	8-85, 8-87
593578-0000 ...	KNIFE	4-9, 12-173
597548-0000 ...	KNIFE	4-75
927753-0000 ...	KNIFE	4-75, 13-75
1338867-0000 .	KNIFE	4-9, 12-173
25096-0700	KNIFE HOLDER	4-3, 4-5
522129-0000 ...	KNIFE HOLDER	8-85, 8-87
537304-0000 ...	KNIFE HOLDER	12-33
539052-0000 ...	KNIFE HOLDER	8-69, 8-71, 8-73
560856-0000 ...	KNIFE HOLDER	4-75
573987-0000 ...	KNIFE HOLDER	4-75
583264-0000 ...	KNIFE HOLDER	4-75
593577-0000 ...	KNIFE HOLDER	4-9, 12-173
597547-0000 ...	KNIFE HOLDER	4-75
1143142-0000 .	KNIFE HOLDER	4-75, 13-75
1143597-0000 .	KNIFE HOLDER	4-9, 12-173
928976-0100 ...	KNIFE HOLDER ULTRA SONIC	4-3, 4-5, 12-171
1129552-0000 .	KNIFE	4-23, 4-25, 4-27, 4-29, 12-215, 12-217, 12-219, 12-221, 13-7, 13-9, 13-99, 13-101, 13-103, 13-105
90051-0025	KNOB, EXTERNAL THREAD. NO. 8306-0200	5-159
90051-0059	KNOB, EXTERNAL THREAD. NO. 8308-1550	14-13, 14-15, 14-41, 14-43
90051-0040	KNOB, INTERNAL THREAD, NO. 8308-0627	14-13, 14-15, 14-41, 14-43
90051-0080	KNOB, KNURLED, NO. 8324-4212	14-33
90025-0054	KUPPL.SOCKEL MSTB 2,5-5,08 FÃ¼R 90025-53	9-5, 9-7, 9-9, 9-11, 9-13, 9-15, 9-25, 9-27, 9-29

Part No	Description	Page No
		9-31, 9-33, 9-45, 9-47, 9-49, 9-51, 9-53, 9-55
589361-0000	LABEL	9-5, 9-7, 9-9, 9-11, 9-13, 9-15, 9-45, 9-47, 9-49, 9-51, 9-53, 9-55, 12-235, 12-237
928831-0000	LABEL	13-49
1338607-0000	LABEL	13-141
90194-0012	LABEL REPL.BY 90194-0127	12-97, 12-99
464173-0000	LABEL HOLDER	1-55, 7-9
551922-0000	LABEL,POTENTIOMETER DESIGN CORR.	9-21, 9-41, 9-61
26423-0000	LACE	4-143, 4-147
26425-0000	LACE	4-131, 4-133, 4-135, 4-137
26426-0000	LACE	4-45, 4-47, 4-49, 4-51
29413-0000	LACE	5-73, 5-75
29886-0000	LACE	4-139, 4-141
37911-0000	LACE	12-85
229075-0000	LACE	2-37, 2-39, 2-41, 2-85, 2-87
243573-0000	LACE	2-37, 2-39, 2-41, 2-85, 2-87
247271-0000	LACE	4-113, 4-115, 12-175, 12-177
251597-0000	LACE	4-113, 4-115, 12-175, 12-177
252794-0000	LACE	4-101, 4-103, 4-105, 4-107
262290-0001	LACE	5-69, 5-71, 5-77, 5-79
262290-0002	LACE	5-69, 5-71, 5-77, 5-79
297496-0000	LACE	5-133, 5-135
436485-0000	LACE	3-31, 3-33
440277-0000	LACE	8-5, 8-7, 8-21, 8-23, 8-25, 8-27, 8-29, 8-31, 8-33
530778-0000	LACE	8-85, 8-87
561426-0000	LACE	8-69, 8-71, 8-73
571297-0000	LACE	4-113, 4-115, 12-175, 12-177, 13-85, 13-87
571298-0000	LACE	4-113, 4-115, 12-175, 12-177, 13-85, 13-87
591078-0000	LACE	4-113, 4-115, 12-175, 12-177
593679-0000	LACE	4-113, 4-115, 12-175, 12-177
593680-0000	LACE	4-113, 4-115, 12-175, 12-177
595203-0000	LACE	8-21, 8-23, 8-25, 8-27, 8-29, 8-31, 8-33
597575-0000	LACE	13-119
597576-0000	LACE	13-119
929548-0000	LACE	4-113, 4-115, 12-175, 12-177
929550-0000	LACE	4-113, 4-115, 12-175, 12-177
243171-0100	LADDER	12-5
243171-0200	LADDER	10-15, 10-17
37775-0000	LAMP HOLDER	12-85
90064-0315	LAMP REMOVER, NO:700	9-19, 9-39, 9-59
90037-0001	LAMPHOLDER	12-85
479994-0000	LASER TEMPLATE	14-33
458444-0201	LASER TEMPLATE JUMBO REEL	14-5
32203-0000	LEAD	1-35
90326-0304	LEAD IN, 9041-15-KS-UB60	1-35
297394-0000	LEAD PLATE	12-49
525265-0001	LEAD PLATE	5-31
525265-0002	LEAD PLATE	5-31
525265-0003	LEAD PLATE	5-31
525265-0004	LEAD PLATE	5-31
574131-0000	LEAD PLATE	5-31
442809-0000	LEAD RAIL	5-53, 5-55
525322-0001	LEAD RAIL	5-53, 5-55
525322-0002	LEAD RAIL	5-53, 5-55
525322-0003	LEAD RAIL	5-53, 5-55
525341-0001	LEAD RAIL	5-41, 5-43, 5-45, 5-47
525341-0002	LEAD RAIL	5-41, 5-43, 5-45, 5-47
525410-0000	LEAD RAIL	5-41, 5-43, 5-45, 5-47
525413-0000	LEAD RAIL	5-53, 5-55
525419-0000	LEAD RAIL	5-101, 5-103
569130-0000	LEAD RAIL	5-53, 5-55
574047-0000	LEAD RAIL	5-25, 5-27, 5-41, 5-43, 5-45, 5-47
574057-0000	LEAD RAIL	5-53, 5-55
583452-0000	LEAD RAIL	5-53, 5-55
594644-0000	LEAD RAIL	5-33
595060-0000	LEAD RAIL	5-33
1361909-0000	LEAD RAIL	5-33
464141-0000	LEAD-IN PLATE	8-55
476165-0000	LEAD-IN PLATE	2-165
352101-0104	LEAD-IN PR 20,4;PG13,5	12-155
352101-0102	LEAD-IN, PR15,2/PG9, E-1457515	12-49, 12-85
352101-0103	LEAD-IN, PR18,6/PG11, E-1457518	2-37, 2-39, 2-41, 2-47, 2-85, 2-87, 2-179, 7-15, 8-55, 8-61, 8-63, 8-65
352101-0105	LEAD-IN, PR22,5/PG16, E-1457522	8-61, 8-63, 8-65
352101-0107	LEAD-IN, PR37/PG29, E-1457537	7-7
90015-0021	LEAD-IN, TET10-14, E-1458023	2-37, 2-39, 2-41, 2-85, 2-87
90015-0020	LEAD-IN, TET5-7, E-1458016	5-7, 5-9, 5-35, 5-37
247082-0000	LEG	2-37, 2-39, 2-41, 2-85, 2-87
256641-0000	LEG	12-143
469096-0000	LEG	6-35
525130-0000	LEG	5-7, 5-9, 5-35, 5-37
525266-0000	LEG	5-7, 5-9, 5-35, 5-37
525267-0000	LEG	5-7, 5-9, 5-35, 5-37
525268-0000	LEG	5-7, 5-9, 5-35, 5-37

Part No	Description	Page No
90199-0004	LEVEL GLASS, ST60	5-57
90274-0053	LEVEL GUARD, 40VA/250V AC/DC	2-173, 2-175, 13-29
543821-0100	LEVEL PROBE	7-17
90314-0021	LEVELRELAY0,5-10KOHM REPLACED BY90314-38	9-5, 9-7, 9-9, 9-11, 9-13, 9-15, 9-25, 9-27, 9-29, 9-31, 9-33, 9-45, 9-47, 9-49, 9-51, 9-53, 9-55
1144472-0000	LEVER	6-57
1144473-0000	LEVER	6-57
1144474-0000	LEVER	6-57
1144506-0000	LEVER	6-59, 6-61
1144661-0000	LEVER	6-7
1144914-0000	LEVER	6-59, 6-61
1144915-0000	LEVER	6-59, 6-61
35962-0000	LID	2-135
37893-0000	LID	12-91
107062-0000	LID	3-9, 3-19
107095-0000	LID	3-29
232788-0000	LID	12-47
262288-0000	LID	5-69, 5-71, 5-77, 5-79
262313-0000	LID	5-133, 5-135
262315-0000	LID	5-133, 5-135
263509-0000	LID	4-139, 4-141
276343-0300	LID	2-169
276613-0000	LID	5-59
284833-0000	LID	4-65, 4-67, 4-69, 4-71
293455-0000	LID	2-67
436486-0000	LID	3-31, 3-33
442076-0000	LID	2-173, 2-175, 13-29
442195-0000	LID	2-65, 2-99
445852-0000	LID	8-17, 8-41
445934-0000	LID	8-55
450286-0000	LID	2-21, 2-77, 2-117, 2-119, 13-27
450287-0000	LID	2-21, 2-77, 2-117, 2-119, 13-27
450290-0000	LID	2-21, 2-77, 2-117, 2-119, 13-27
450363-0000	LID	8-41
493566-0000	LID	12-97, 12-99
493702-0000	LID	12-105
527776-0000	LID	12-97, 12-99
533453-0000	LID	8-21, 8-23, 8-25, 8-27, 8-29, 8-31, 8-33
538237-0001	LID	8-5, 8-7
540722-0000	LID	2-21, 2-77, 2-117, 2-119, 13-27
565324-0000	LID	5-125, 5-127
565326-0000	LID	5-125, 5-127
592537-0000	LID	12-215, 12-217, 12-219, 12-221, 13-99, 13-101, 13-103, 13-105, 13-109, 13-111
592547-0000	LID	13-7, 13-9
592564-0100	LID	2-169, 13-25
595214-0000	LID	8-41
1338676-0000	LID	4-23, 4-25, 4-27, 4-29, 13-167
464124-0100	LIFTING CYLINDER	12-97, 12-99
318301-0130	LIFTING EYE BOLT, TYPE, LT, M30	10-9
493553-0000	LIFTING FORK	12-97, 12-99
493554-0000	LIFTING FORK	12-97, 12-99
450840-0400	LIFTING UNIT	2-3, 2-5
548778-0000	LIFTING UNIT	10-23
551997-0100	LIFTING UNIT	10-3
1144831-0100	LIFTING UNIT	2-3, 2-5
90036-0009	LIGHT BULB, BA15D 24V	12-47, 12-85
90036-0057	LIGHT BULB, BA9S 28V	9-19, 9-39, 9-59
90036-0035	LIGHT BULB, E27 24V	12-49
90036-0038	LIGHT BULB, E27 24V	2-167
90458-0293	LIGHT ELEMENT, RED, KL70-401R	13-245
90164-0003	LIGHT FIXTURE	2-9, 2-21, 2-77, 2-117, 2-119, 12-13, 13-27
268794-0200	LIGHT FIXTURE MULTI INSTALLATION	12-3
90164-0016	LIGHT FIXTURE, RL70-118	2-69
574167-0000	LIMIT PLATE	3-15, 3-17
90044-0094	LIMIT SW. 924 CE31-Y20-X5	2-63, 2-65, 2-97, 2-99, 2-177, 3-37, 3-39
31417-0000	LINK	7-31, 7-33
36805-0000	LINK	1-17, 1-19, 1-21
36816-0000	LINK	1-17, 1-19, 1-21
90254-0010	LINK	12-97, 12-99
90288-0311	LINK	5-105, 5-107, 5-109, 5-111
110224-0000	LINK	1-73
246790-0000	LINK	3-35
251561-0000	LINK	3-35
262415-0000	LINK	5-133, 5-135
262610-0000	LINK	5-133, 5-135
285157-0000	LINK	5-133, 5-135
285158-0000	LINK	5-133, 5-135
434752-0000	LINK	1-17, 1-19, 1-21, 1-25
436672-0000	LINK	3-15, 3-17
436740-0000	LINK	4-45, 4-47, 4-49, 4-51
525075-0001	LINK	5-119
525075-0002	LINK	5-119
525075-0003	LINK	5-119
525075-0005	LINK	5-119

Part No	Description	Page No
525075-0006	LINK	5-119
540335-0000	LINK	3-41, 3-43
567703-0000	LINK	3-37, 3-39
752587-0000	LINK	1-17, 1-19, 1-21
927440-0000	LINK	4-7, 4-61, 4-63, 12-231
927448-0000	LINK	4-143, 4-147
1285003-0000	LINK	4-9, 4-75, 12-173, 13-89, 13-169
2549933-0000	LINK	5-33, 5-53, 5-55, 5-113
2689281-0000	LINK	13-235
542784-0000	LINK ARM	7-19
293456-0000	LINK CHAIN	2-67
526904-0000	LINK HEAD	3-41, 3-43
263314-0000	LINK HEAD M8 LINKSGEWINDE	3-41, 3-43
263313-0000	LINK HEAD M8 RECHTSGEWINDE	3-41, 3-43
434670-0600	LINK SYSTEM	3-3, 3-5, 3-7
26760-0000	LOCATING PIECE	4-139, 4-141
229206-0000	LOCATING PIECE	5-23, 5-39
37910-0000	LOCK	12-85
31724-0000	LOCK BAR	12-91
37883-0000	LOCK BAR	12-91
90237-0319	LOCK HOUSING, 1000-U134	2-147
90237-0320	LOCK HOUSING, 1000-U136	2-147
90051-0125	LOCK KNOB, NO. GN 617-6-A-N1	6-11
37912-0000	LOCK PLATE	12-85
442884-0000	LOCK PLATE	5-133, 5-135
267462-0000	LOCK SHEET	2-37, 2-39, 2-41, 2-85, 2-87
267463-0000	LOCK SHEET	2-37, 2-39, 2-41, 2-85, 2-87
543575-0000	LOCK SHEET	7-19
32691-0000	LOCK SPRING	8-11, 8-35, 8-37, 12-59, 12-77, 12-79
464011-0000	LOCK STUD	8-5, 8-7, 8-21, 8-23, 8-25, 8-27, 8-29, 8-31, 8-33, 12-53, 12-55, 12-67, 12-69, 12-71, 12-73
90062-0021	LOCK WASHER DIN 6797 TYPE A 5,3	12-239
315402-0173	LOCK WASHER FBB 10,2	2-37, 2-39, 2-41, 2-85, 2-87, 5-61
315402-0178	LOCK WASHER FBB 12,2	1-73
315402-0156	LOCK WASHER FBB 6,5	5-73, 5-75
315410-0100	LOCK WASHER MB 0 D=10 H=1	4-45, 4-47, 4-49, 4-51
315410-0101	LOCK WASHER MB 1 D=12 H=1	4-45, 4-47, 4-49, 4-51
315410-0110	LOCK WASHER MB 10 D=50 H=1,25	5-61
315410-0114	LOCK WASHER MB 14 D=70 H=1,5	5-125, 5-127
315410-0107	LOCK WASHER MB 7 D=35 H=1,25	5-123
315410-0108	LOCK WASHER MB 8 D=40 H=1,25	5-125, 5-127
90062-0070	LOCK WASHER NORD-LOCK,10,3/16 T=2,2	5-157, 6-9
90062-0049	LOCK WASHER NORD-LOCK,8,7/13,5, T=2,2	5-125, 5-127
90062-0058	LOCK WASHER SERRAT.EXT.GEAR,3,2/6 H=0,4	9-5, 9-7, 9-9, 9-11, 9-13, 9-15, 9-25, 9-27, 9-29, 9-31, 9-33, 9-45, 9-47, 9-49, 9-51, 9-53, 9-55
90062-0015	LOCK WASHER SERRAT.EXT.GEAR,6,4/11 H=0,7	6-21, 6-23, 6-25, 13-175
90237-0067	LOCK, FIX 590, L=1198 MM	2-63, 2-97
90237-0066	LOCK, FIX 590, L=1820 MM	2-65, 2-99
37879-0000	LOCKING ARM	12-91
464200-0000	LOCKING BLOCK	2-159, 2-161
1020146-0000	LOCKING BLOCK REPL BY 1020290-101	6-37, 6-39
90237-0335	LOCKING CATCH	2-147
440138-0000	LOCKING CIRCLIP	8-17, 8-43, 8-81, 8-83
569917-0000	LOCKING CIRCLIP	8-81
537321-0000	LOCKING FINGER	12-33
595211-0000	LOCKING FINGER	1-25
90157-0016	LOCKING FLUID LOCTITE 242 50 ML	2-57, 2-95, 3-41, 3-43, 4-65, 4-67, 4-69, 4-71, 4-97, 4-99, 4-139, 4-141, 7-25, 12-27, 12-31, 12-117, 14-5
76138-0000	LOCKING LOOP	10-9, 14-5
206913-0000	LOCKING LOOP	12-87
593663-0000	LOCKING PIN LOWER	1-17, 1-19, 1-21
595112-0000	LOCKING PIN LOWER	1-17, 1-19, 1-21
593662-0000	LOCKING PIN UPPER	1-17, 1-19, 1-21, 1-25
595111-0000	LOCKING PIN UPPER	1-17, 1-19, 1-21
24928-0000	LOCKING RUBBER	1-39, 1-65, 1-67, 1-69
315754-0113	LOCKING WAE 15	1-63
315754-0107	LOCKING WAE 5	7-31, 7-33
315754-0110	LOCKING WAE 9	7-31, 7-33
90062-0022	LOCKING WASHER D=6,4/11	12-239
574658-0000	LOGOTYPE TP	8-91
311305-0308	LOTTED PIRPC5X16FZB	7-9, 7-13, 7-31, 7-33, 7-37, 7-39, 7-43, 12-25, 12-65
553164-0000	LOW IMPEDANCELITZ L=150MM	2-63, 2-65, 2-97, 2-99
595106-0100	LOW LEVEL FILLING HL TB/8	12-3
276300-0000	LOWER BRACKET	14-13, 14-15, 14-41, 14-43
583188-0000	LOWER FILLING PIPE	1-17, 1-19, 1-21
257900-0400	LOWER FORMING RING	1-3
78079-0000	LOWER GRIP	10-5
285303-0400	LOWER SECTION	5-3, 5-5
530619-0100	LS STRIP SMALL HUB	12-3
442560-0000	LUBR.OIL PIPE	5-133, 5-135
285162-0000	LUBRICATING PIPE	5-133, 5-135
285164-0000	LUBRICATING PIPE	5-133, 5-135
2525467-0100	LUBRICATING PIPE CUT TB/TBA/8	12-275
2525468-0100	LUBRICATING PIPE PRESS TB/TBA/8	12-275
525085-0200	LUBRICATING SYSTEM	5-3, 5-5

Part No	Description	Page No
525102-0200	LUBRICATING SYSTEM	5-57
440212-0000	LUG	8-57, 8-59
440213-0000	LUG	8-57, 8-59
549827-0000	LUG	8-57, 8-59
285592-0600	MACHINE BODY	5-3, 5-5
434453-0000	MACHINE BODY	12-47
436776-0000	MACHINE BODY	2-37, 2-39, 2-41
440133-0400	MACHINE BODY	8-3
440537-0500	MACHINE BODY	2-3, 2-5
464080-0000	MACHINE BODY	12-97, 12-99
484848-0001	MACHINE BODY	8-21, 8-23, 8-25, 8-27, 8-29, 8-31, 8-33
484848-0002	MACHINE BODY	8-21, 8-23, 8-25, 8-27, 8-29, 8-31, 8-33
484848-0003	MACHINE BODY	8-21, 8-23, 8-25, 8-27, 8-29, 8-31, 8-33
525300-0000	MACHINE BODY	5-53, 5-55
531337-0000	MACHINE BODY	8-55
538236-0002	MACHINE BODY	8-5, 8-7
595044-0000	MACHINE BODY	5-33
595086-0100	MACHINE BODY	5-3, 5-5
595141-0100	MACHINE BODY	12-151
929659-0100	MACHINE BODY	2-3, 2-5
929726-0000	MACHINE BODY	2-85, 2-87
1285047-0100	MACHINE BODY	12-249, 12-267
2505109-0100	MACHINE BODY	13-171
544526-0000	MACHINE PLATE TB	2-167
90347-0111	MACHINE SHOE TFE 1201 SS	10-3
90347-0110	MACHINE SHOE TFE 601 SS	10-3
598878-0000	MACHINE SIGN 2 ADR. EEA	10-3
1143456-0000	MACHINE SIGN CE	10-23
67268-1000	MACHINE, TB/8-1001.	9-3
42505-1000	MACHINE, TB/8-1002.	9-3
42870-1000	MACHINE, TB/8-1003.	9-3
90081-0026	MAGNET	12-33, 12-133
440157-0000	MAGNET BRACKET	8-43
90081-0027	MAGNET DISC	12-33, 12-133
90339-0011	MAGNETIC LOCK, 40X18X14 MM	8-51, 8-53
90237-0046	MAGNETIC LOCK, 46X33X15 MM	2-47, 2-135, 8-51, 8-53
90339-0004	MAGNETIC LOCK, 57X16X19 MM	12-27, 12-31
547560-0000	MAIN CAM	3-19
562974-0000	MAIN CAM	3-19
563201-0000	MAIN CAM	3-19
565043-0000	MAIN CAM	3-19
565130-0000	MAIN CAM	3-19
565190-0000	MAIN CAM	3-19
574115-0000	MAIN CAM	3-19
582107-0000	MAIN CAM	3-19
583404-0000	MAIN CAM	3-19
589920-0000	MAIN CAM	3-19
593273-0000	MAIN CAM	3-9
598646-0000	MAIN CAM	3-9
929045-0000	MAIN CAM	3-9, 12-169
1364730-0000	MAIN CAM	3-9
90025-0052	MAIN RACK COMPAKT (MCR)	9-5, 9-7, 9-9, 9-11, 9-13, 9-15, 9-25, 9-27, 9-29, 9-31, 9-33, 9-45, 9-47, 9-49, 9-51, 9-53, 9-55
1334433-0100	MAIN SHAFT	6-41
90111-0131	MAIN SWITCH P3-100/V/SVB-SW/N/HI11/H-P3	9-5, 9-7, 9-9, 9-11, 9-13, 9-15, 9-25, 9-27, 9-29, 9-31, 9-33, 9-45, 9-47, 9-49, 9-51, 9-53, 9-55
90110-0128	MALE INSERT HAN 24 E-M 65330242631	2-27, 2-29, 2-31, 2-81, 2-83, 2-91, 2-127, 2-149, 2-151, 8-61, 8-63, 8-65, 9-21, 9-23, 9-41, 9-43, 9-61, 9-63, 12-19
353012-0010	MALE PLUG	14-27
90043-0062	MANOMETER	2-173, 2-175, 13-29
445542-0000	MANTEL RUBBER	8-9, 8-39, 12-57, 12-75
32452-0000	MANTLE	1-35
32453-0000	MANTLE	1-35, 7-37, 7-39
36749-0000	MANTLE	7-37, 7-39
493730-0000	MANTLE	12-101
90048-0022	MANUAL PUMP INCL. BARROW 50-60 L	12-3
90194-0302	MARKING LABELS REBUILDING KIT	12-19, 12-235, 12-237, 13-49, 13-221
359011-0807	MARKING PLATES 5-FW 1-50	2-45, 2-91, 2-147, 8-67
359011-0809	MARKING PLATES 5-FW 101-150	2-45, 2-91
359011-0810	MARKING PLATES 5-FW 151-200	13-49
359011-0808	MARKING PLATES 5-FW 51-100	2-45, 2-91, 8-67
359011-0819	MARKING PLATES 5-GW (EARTH)	8-67
1285045-0100	MECHANICAL DOCUMENT	12-245
1362444-0100	MECHANICAL DOCUMENT	12-265
90092-0081	MET.VALVE CONT. LUBR., 5/16-24 UNF	5-67
90152-0070	METAL HOSE, 32,5X26, UL 2621	2-77, 13-185
90092-0052	METERING VALVE 10 MM3	2-179, 3-37, 3-39, 3-41, 3-43, 4-33, 4-35, 4-37, 4-39, 4-41, 4-43, 4-45, 4-47, 4-49, 4-51, 4-131, 4-133, 4-135, 4-137, 4-139, 4-141, 5-25, 5-27, 5-29, 5-33, 5-41, 5-43, 5-45, 5-47, 5-49, 5-51, 5-53, 5-55, 5-81, 5-83, 6-29
90092-0053	METERING VALVE 30 MM3	2-179, 3-35, 3-37, 3-39, 3-41, 3-43, 4-33, 4-35, 4-37, 4-39, 4-41, 4-43, 4-101, 4-103, 4-105, 4-107, 4-131, 4-133, 4-135, 4-137, 4-139, 4-141, 5-25, 5-27, 5-41, 5-43, 5-45, 5-47, 5-81, 5-83, 6-29
90092-0054	METERING VALVE 50 MM3	3-35, 4-45, 4-47, 4-49, 4-51, 4-131, 4-133, 4-135, 4-137
90092-0038	METERING VALVE, CJB 1, 5/16-24 UNF	5-67

Part No	Description	Page No
90092-0077	METERING VALVE, FKD3, G1/8	5-121
90044-0003	MICRO SWITCH HONEYWELL BAF3-2RN 2-RHPG	12-49
597587-0100	MKC AIR DRYER	13-3
1338678-0100	MKC BEARING HOUSING	13-3
2529941-0100	MKC DCS8 PLUS FOR TB/8-1002	13-3
2505169-0100	MKC DISCHARGE CHUTE	13-3
1365570-0100	MKC IMPROVED USTS JAW SYSTEM	13-3
1285052-0100	MKC KNIFE HOLDER SPRING	13-3
597529-0100	MKC LS SEALING AVAILABLE	13-3
597527-0100	MKC MIDDLE HYDRAULIC SYSTEM USTS	13-3
1362446-0100	MKC NEW IMPULSE TRANSMITTER CURVE	13-3
1347400-0100	MKC OVERLOAD PROTECTION CAM KIT	13-3
1350298-0100	MKC PATCH/TAB MISSING DETECTOR	13-3
1350873-0100	MKC PATCH/TAB MISSING DETECTOR	13-3
1362445-0100	MKC SIMPLIFIED REVERSED FIN KIT 2	12-3
597593-0100	MKC SPRING HOLDER	13-3
2529282-0100	MKC SPRING KNIFE 2	13-3
2539286-0100	MKC STRIP BRAKE SUPERVISION	13-3
597571-0100	MKC TB/8 1000B USTS UPGRAGE 1000SQ	13-3
1143220-0101	MKC TUBE ADAPTED TPC-BARS TB/8-1000SQ	13-3
2504997-0100	MKC USTS SERRATED & STEPPED CUTTING RAIL	13-3
1366161-0100	MKC USTS SPLIT CUTTING RAIL	13-3
1143615-0100	MKC VOLUME FLAP SPRINGS	13-3
928013-0100	MKS ENVIRONMENT KIT	13-3
1484401-0100	MKS INFEED TENSION DEVICE	13-3
2727542-0100	MKS LOCKING PIN	13-3
268930-0500	MODIF.OF BRAKING DEVICE	12-15
592342-0001	MODIFICATION DRAWING	13-45
595139-0001	MODIFICATION DRAWING	12-151
597544-0001	MODIFICATION DRAWING	13-91
597599-0001	MODIFICATION DRAWING	12-265, 13-121
928889-0001	MODIFICATION DRAWING	13-45
928890-0001	MODIFICATION DRAWING	13-45
928891-0001	MODIFICATION DRAWING	13-45
1349009-0001	MODIFICATION DRAWING	13-89
1349010-0001	MODIFICATION DRAWING	13-89
2505108-0001	MODIFICATION DRAWING	13-171
2505117-0001	MODIFICATION DRAWING	13-159
2505118-0001	MODIFICATION DRAWING	13-159
2505146-0001	MODIFICATION DRAWING	13-159
2539195-0001	MODIFICATION DRAWING	13-171
2598827-0001	MODIFICATION DRAWING	13-205
2660660-0001	MODIFICATION DRAWING	13-219
2660663-0001	MODIFICATION DRAWING	13-219
2660681-0001	MODIFICATION DRAWING	12-275
1282598-0001	MODIFICATION DRAWING CARRIER	13-85, 13-87
1282597-0001	MODIFICATION DRAWING VOLUME FLAP	13-85, 13-87
1348394-0100	MOMENT RESTRICTOR	6-51
1144084-0000	MOTOR	6-9
90045-0049	MOTOR 3GAA 082002-ASA	5-21
525166-0000	MOTOR CRADLE	5-21
90430-0037	MOTOR DRIVE CONTR.PME 1802. REPL.BY -67	9-5, 9-7, 9-9, 9-11, 9-13, 9-15, 9-25, 9-27, 9-29, 9-31, 9-33, 9-45, 9-47, 9-49, 9-51, 9-53, 9-55
90430-0036	MOTOR DRIVE CONTROL SCANDIALOGIC VPM SL	9-25, 9-27, 9-29, 9-31, 9-33, 9-45, 9-47, 9-49, 9-51, 9-53, 9-55
445842-0000	MOTOR PLATE	8-41
573508-0000	MOUNTING BAR	8-51, 8-53
228845-0000	MOUNTING BLOCK	5-23, 5-39
229202-0000	MOUNTING BLOCK	5-23, 5-39
237082-0001	MOUNTING BLOCK	5-39
237082-0002	MOUNTING BLOCK	5-23, 5-39
31423-0000	MOUNTING LUG	7-31, 7-33
266761-0000	MOUNTING LUG	7-31, 7-33
464289-0000	MOUNTING PLATE	2-159, 2-161
592223-0000	MOUNTING PLATE	11-19
90201-0300	MOUNTING PLATE, NO. A1-89 57B	3-23, 3-25
282549-0000	MOUNTING RAIL	7-11
228642-0000	MOUNTING SHEET	1-73
257721-0000	MOUNTING SHEET	1-49, 1-51, 1-53
259550-0000	MOUNTING SHEET	1-37
283247-0000	MOUNTING SHEET	12-43
526947-0000	MOUNTING SHEET	7-35
526948-0000	MOUNTING SHEET	7-37, 7-39
532727-0000	MOUNTING SHEET	1-5
532728-0000	MOUNTING SHEET	1-5
537320-0000	MOUNTING SHEET	12-23
590444-0000	MOUNTING TOOL	10-9, 14-5
293566-0000	MOUNTINGS	2-63, 2-65, 2-97, 2-99
536990-0100	MOVABLE FORMING RING	1-3
352131-0107	MUFF 37	12-45
558389-0101	MULTI PURPOSE POTENTIOM.	9-21, 9-41, 9-61
578766-0000	NEEDLE	12-125
90083-0052	NEEDLE ROLLER THRUST BEARING, 30X47X2 MM	6-49
526582-0000	NET	7-9

Part No	Description	Page No
90111-0332	NEUTRAL CONTACT, N-P3Z	9-5, 9-7, 9-9, 9-11, 9-13, 9-15, 9-25, 9-27, 9-29, 9-31, 9-33
90134-0034	NIPPLE	5-67
90224-0097	NIPPLE	1-35, 12-83
440491-0000	NIPPLE	4-65, 4-67, 4-69, 4-71
445909-0000	NIPPLE	8-69, 8-71, 8-73
479261-0000	NIPPLE	2-149, 2-151
534875-0000	NIPPLE	12-97, 12-99
549207-0000	NIPPLE	12-139
554831-0100	NIPPLE	12-127
576971-0000	NIPPLE	12-121
576972-0000	NIPPLE	12-121
576973-0000	NIPPLE	12-121
576974-0000	NIPPLE	12-121
576975-0000	NIPPLE	12-119
592921-0000	NIPPLE	4-23, 4-25, 4-27, 4-29, 12-215, 12-217, 12-219, 12-221, 13-7, 13-9, 13-99, 13-101, 13-103, 13-105, 13-109, 13-111
593647-0000	NIPPLE	4-23, 4-25, 4-27, 4-29, 12-215, 12-217, 12-219, 12-221, 13-7, 13-9, 13-99, 13-101, 13-103, 13-105, 13-109, 13-111
90163-0042	NIPPLE FESTO CN-M5-PK-4	12-121
90086-0001	NIPPLE, M10X1	12-85
90217-0053	NIPPLE, RD 60-6 - R1 1/2 M	2-57, 2-95
90030-0183	NIPPLES, EXT. THREAD, HEXAGON, R1/2XR1/4	2-171
90330-0032	NIPPLES, EXT. THREAD. ISO 7/1 R1/8-R1/8	1-27, 1-29
90330-0021	NIPPLES, EXT. THREAD. R-207R1/2	5-57
90330-0043	NIPPLES, EXT. THREAD. R-207R1/4	2-7
90330-0028	NIPPLES, EXT. THREAD. R-207R3/8	1-71
90330-0083	NIPPLES, EXT. THREAD. R3/8-R1/4	2-49, 2-51
90030-0116	NIPPLES, REDUCING, EXT. THR. NO. 2520	12-39, 12-41
342700-0110	NIPPLES,HEXAGON,EXT.G-THREAD G1/4"-G1/4"	13-179
90230-0007	NON-RETURN VALVE	2-137, 2-139
90230-0023	NON-RETURN VALVE	2-137, 2-139
90230-0031	NON-RETURN VALVE B5146	5-67
90230-0024	NON-RETURN VALVE OPENING PRESSURE 0,2BAR	12-97, 12-99
90230-0017	NON-RETURN VALVE RHD 10-L	2-169
90230-0011	NON-RETURN VALVE RHD-115L	2-35, 2-121, 2-123, 13-15
90230-0021	NON-RETURN VALVE, NO. RHD-15-L/MS 59	2-135
442197-0000	NOZZLE	12-67, 12-69, 12-71, 12-73
566687-0000	NOZZLE	2-163
571654-0000	NOZZLE	2-23, 2-79
1362527-0000	NOZZLE	13-161
14729-0000	NUT	4-131, 4-133, 4-135, 4-137
24237-0000	NUT	1-73
90099-0004	NUT	2-37, 2-39, 2-41, 2-77, 2-85, 2-87
90099-0085	NUT	2-165
90113-0379	NUT	2-27, 2-29, 2-31, 2-81, 2-83, 12-159, 13-179
252789-0000	NUT	4-101, 4-103, 4-105, 4-107
252791-0000	NUT	4-101, 4-103, 4-105, 4-107
252792-0000	NUT	4-101, 4-103, 4-105, 4-107
263153-0000	NUT	8-17, 12-83
263329-0000	NUT	3-41, 3-43
285994-0000	NUT	5-7, 5-9, 5-35, 5-37
434073-0000	NUT	4-101, 4-103, 4-105, 4-107
436357-0000	NUT	1-43, 1-45
436927-0000	NUT	8-9, 8-39, 12-57, 12-75
445898-0000	NUT	8-69, 8-71, 8-73
457355-0000	NUT	2-9, 2-69
464547-0000	NUT	8-69, 8-71, 8-73
484223-0000	NUT	2-9, 2-69
544480-0000	NUT	2-63, 2-65, 2-97, 2-99
590591-0000	NUT	11-21
735738-0000	NUT	6-35
927441-0000	NUT	4-7, 4-61, 4-63, 12-231
1144694-0000	NUT	6-15
1285005-0000	NUT	4-9, 4-75, 12-173, 13-89, 13-169
1285865-0000	NUT	2-77
1317085-0000	NUT	6-21, 6-25
312621-0324	NUT ML6M16FZB	3-41, 3-43
312705-0322	NUT HEX. DOMED CAP MHM-6 M12 A2	12-97, 12-99
312705-0316	NUT HEX. DOMED CAP MHM-6 M6 A280	8-5, 8-7, 8-21, 8-23, 8-25, 8-27, 8-29, 8-31, 8-33
312902-0318	NUT HEX. LEFT THREAD, M8 A2B	3-15, 3-17, 3-41, 3-43, 5-137, 5-139, 5-141, 5-143, 6-59, 6-61, 12-255
90099-0012	NUT HEX. M18X1,5, FE	3-41, 3-43
90099-0015	NUT HEX. ML6M, M12X1,5, FE	3-11, 3-21, 13-11
312811-0318	NUT HEX.LOCK HELI COIL M8 SS	4-45, 4-47, 4-49, 4-51, 4-139, 4-141, 8-49
312811-0322	NUT HEX.LOCK HELI COIL MID GRIP M12 SS	3-41, 3-43
312811-0324	NUT HEX.LOCK HELI COIL MID GRIP M16 SS	3-35
312811-0316	NUT HEX.LOCK HELI COIL MID GRIP M6 SS	3-15, 3-17, 5-73, 5-75, 8-69, 8-71, 8-73
312635-0320	NUT M6M 10X1 STAINLESS A2 80	4-45, 4-47, 4-49, 4-51, 4-131, 4-133, 4-135, 4-137
90030-0172	NUT M8 "REPL.BY 342703-208"	4-11, 4-13, 4-15, 4-17, 4-19, 4-21, 4-73, 12-193, 12-195, 12-197, 12-199, 12-201, 12-203
90099-0001	NUT PG 9/PR 15,2	2-21, 2-77, 2-117, 2-119, 13-27
1143839-0000	NUT PLATE	2-21, 2-77, 2-117, 2-119, 12-157, 13-27
90099-0002	NUT PR 18,6 BRASS	2-21, 2-77, 2-117, 2-119, 2-147, 7-15, 12-91, 13-27
90099-0003	NUT PR 22,5	2-77, 2-117, 2-119, 2-135, 6-67, 8-61, 8-63, 8-65
90099-0011	NUT PR 37 BRASS	2-21, 2-37, 2-39, 2-41, 2-77, 2-85, 2-87, 2-117, 2-119, 12-13, 13-27

Part No	Description	Page No
312805-0100	NUT ROUND WITH SLOTS M10X0,75 FE	4-45, 4-47, 4-49, 4-51
312805-0101	NUT ROUND WITH SLOTS M12X1 FE	4-45, 4-47, 4-49, 4-51
312805-0102	NUT ROUND WITH SLOTS M15X1 FE	12-53, 12-55, 12-67, 12-69, 12-71, 12-73
312805-0103	NUT ROUND WITH SLOTS M17X1 FE	12-53, 12-55, 12-67, 12-69, 12-71, 12-73
312805-0107	NUT ROUND WITH SLOTS M35X1,5 FE	5-123
312805-0108	NUT ROUND WITH SLOTS M40X1,5 FE	5-125, 5-127
312805-0110	NUT ROUND WITH SLOTS M50X1,5 FE	5-61
312805-0114	NUT ROUND WITH SLOTS M70X20 FE	5-125, 5-127
312652-0301	NUT U6M1/4" FZB	12-111
90330-0093	NUT, HEXAGON, G1/2	2-35, 2-121, 2-123, 5-57, 12-165, 13-15, 13-95
90330-0034	NUT, HEXAGON, G1/4	2-11, 2-25, 2-53, 2-55, 2-59, 2-61
90330-0087	NUT, HEXAGON, R1	12-43
90330-0105	NUT, HEXAGON, R3/8	1-55, 7-9
342703-0108	NUT, PIPES & CONNECTORS,NUT M-10 FE	12-165, 13-93, 13-95
342702-0115	NUT, PIPES & CONNECTORS,NUT M-16 BR	12-159, 13-91
342703-0103	NUT, PIPES & CONNECTORS,NUT M-8 FE	2-35, 2-121, 2-123, 13-15
342703-0208	NUT, PIPES & CONNECTORS,NUT M-8 SS	4-23, 4-25, 4-27, 4-29, 12-125, 12-215, 12-217, 12-219, 12-221, 13-7, 13-9, 13-99, 13-101, 13-103, 13-105
90099-0119	NUT, PR 28,3 (PG21)	2-77
315239-0110	NYLON WASHER G1/4	2-149, 2-151, 5-67
315239-0109	NYLON WASHER G1/8	5-67
315239-0111	NYLON WASHER G3/8	2-149, 2-151
90242-0121	O-RING 11X2,5 MM	5-61, 5-123
315202-0265	O-RING 12,3X2,4 MM	4-73
315202-0316	O-RING 124,5X3 MM	5-125, 5-127
315202-0111	O-RING 13,1X1,6 MM	4-7, 4-11, 4-13, 4-15, 4-17, 4-19, 4-21, 4-61, 4-63, 4-77, 4-79, 4-85, 4-87, 12-193, 12-195, 12-197, 12-199, 12-201, 12-203, 12-231
315202-0211	O-RING 13,3X2,4 MM	2-11, 2-25, 2-53, 2-55, 2-59, 2-61
315202-0212	O-RING 14,3X2,4 MM	4-7, 4-11, 4-13, 4-15, 4-17, 4-19, 4-21, 4-61, 4-63, 4-73, 4-77, 4-79, 4-85, 4-87, 12-193, 12-195, 12-197, 12-199, 12-201, 12-203, 12-231, 13-147
315202-0113	O-RING 15,1X1,6 MM	6-49
315202-0213	O-RING 15,3X2,4 MM	4-61, 4-63, 4-77, 4-79, 4-85, 4-87
315202-0114	O-RING 16,1X1,6 MM	4-7, 4-61, 4-63, 4-143, 4-147, 12-223, 12-227, 12-231
315202-0267	O-RING 16,3X2,4 MM	6-33
315202-0214	O-RING 17,3X2,4 MM	1-39, 1-65, 1-67, 1-69, 5-15, 6-63
315204-0116	O-RING 18,1X1,6 MM	4-97, 4-99
90242-0148	O-RING 19,2X3 MM	7-21, 7-23
315204-0215	O-RING 19,2X3 MM	1-63, 6-21, 6-23, 6-25
315202-0216	O-RING 22,2X3 MM	2-9, 2-49, 2-51, 2-69
315202-0518	O-RING 23,39X3,53 MM	11-19
315202-0217	O-RING 24,2X3 MM	1-39, 1-65, 1-67, 1-69, 5-133, 5-135, 6-49, 6-57, 6-59, 6-61
315202-0218	O-RING 26,2X3 MM	8-9, 8-39, 12-57, 12-75
90242-0120	O-RING 28X3,5 MM	5-61
315202-0101	O-RING 3,1X1,6 MM	4-7, 4-23, 4-25, 4-27, 4-29, 12-215, 12-217, 12-219, 12-221, 12-231, 13-7, 13-9, 13-99, 13-101, 13-103, 13-105, 13-109, 13-111
315202-0220	O-RING 32,2X3 MM	4-7, 5-15, 6-43, 6-45, 12-215, 12-217, 12-219, 12-221, 12-231, 13-7, 13-9, 13-99, 13-101, 13-103, 13-105, 13-109, 13-111
315204-0220	O-RING 32,2X3 MM	4-23, 4-25, 4-27, 4-29, 13-167
315202-0221	O-RING 34,2X3 MM	6-31, 6-33
315202-0124	O-RING 37,1X1,6 MM	4-7, 12-215, 12-217, 12-219, 12-221, 12-231, 13-99, 13-101, 13-103, 13-105, 13-109, 13-111
315202-0223	O-RING 39,2X3 MM	6-41
315202-0224	O-RING 42,2X3 MM	8-35, 8-37, 10-11, 12-77, 12-79
315204-0224	O-RING 42,2X3 MM	4-23, 4-25, 4-27, 4-29
315202-0225	O-RING 44,2X3 MM	6-5, 6-35, 6-59, 6-61
315202-0226	O-RING 44,2X5,7 MM	5-15, 6-63
315202-0301	O-RING 49,5X3 MM	5-13, 8-35, 8-37, 12-77, 12-79
315204-0301	O-RING 49,5X3 MM	6-35, 13-177
315202-0302	O-RING 54,5X3 MM	5-15, 6-49, 6-59, 6-61, 6-63
90242-0116	O-RING 55X2,5 MM	5-19
315202-0229	O-RING 59,2X5,7 MM	5-7, 5-9, 5-35, 5-37
315202-0303	O-RING 59,5X3 MM	5-15, 6-59, 6-61, 6-63
315204-0303	O-RING 59,5X3 MM	6-21, 6-23, 6-25, 13-177
315202-0104	O-RING 6,1X1,6 MM	4-61, 4-63, 4-65, 4-67, 4-69, 4-71
315204-0104	O-RING 6,1X1,6 MM	14-7
90242-0271	O-RING 63,22X1,78 MM	6-59, 6-61
315202-0304	O-RING 64,5X3 MM	8-11, 8-35, 8-37, 12-59, 12-77, 12-79
315202-0305	O-RING 69,5X3 MM	6-29, 8-11, 8-35, 8-37, 12-59, 12-77, 12-79
315202-0105	O-RING 7,1X1,6 MM	4-7, 4-23, 4-25, 4-27, 4-29, 4-61, 4-63, 4-65, 4-67, 4-69, 4-71, 12-149, 12-215 . 12-217, 12-219, 12-221, 12-231, 13-7, 13-9, 13-77, 13-99, 13-101, 13-103, 13-105, 13-109, 13-111
315202-0206	O-RING 7,3X2,4 MM	2-181, 2-183
90242-0117	O-RING 70X2 MM	5-123
315202-0106	O-RING 8,1X1,6 MM	5-15
315202-0207	O-RING 8,3X2,4 MM	4-7, 4-11, 4-13, 4-15, 4-17, 4-19, 4-21, 4-61, 4-63, 4-77, 4-79, 4-85, 4-87, 12-193, 12-195, 12-197, 12-199, 12-201, 12-203, 12-231, 13-7, 13-9
90242-0270	O-RING 82,27X1,78 MM	6-59, 6-61
315202-0308	O-RING 84,5X3 MM	1-63
315202-0309	O-RING 89,5X3 MM	5-59, 8-9, 8-39, 12-57, 12-75
315202-0208	O-RING 9,3X2,4 MM	4-7, 4-61, 4-63, 4-143, 4-147, 12-223, 12-227, 12-231
90242-0118	O-RING 90X2 MM	5-61
315202-0311	O-RING 99,5X3 MM	5-121, 6-5
90161-0001	O-RING MATERIAL 3 MM	5-57, 5-133, 5-135
90242-0115	O-RING MATERIAL 5,7 MM	2-37, 2-39, 2-41, 2-85, 2-87
90092-0048	OIL BRUSH, FLAT, 5/16-24 UNF	5-29, 5-33, 5-49, 5-51, 5-53, 5-55, 5-81, 5-83

Part No	Description	Page No
90415-0033	OIL FILTER REFILLING UC-HP-1229-25	5-67
565340-0000	OIL LEVEL TUBE	5-125, 5-127
443248-0000	OIL PIPE	5-17
525375-0000	OIL PIPE	5-67
565339-0000	OIL PIPE	5-125, 5-127
90048-0034	OIL PUMP INCL. CONTAINER 4,5 L	2-179
283884-0000	OIL TROUGH	2-37, 2-39, 2-41, 2-85, 2-87
576742-0000	OIL TROUGH	3-37, 3-39
2827006-0100	OK POTLATCH 320 mN (CTMP FREEBOARD)	12-3
32468-0000	OPERATING ROD	4-143, 4-147, 12-223, 12-227
32494-0000	OPERATING ROD	4-143, 4-147
90119-0043	OPTO-RELAY, 22DC 60S-3/32VDC	9-5, 9-7, 9-9, 9-11, 9-13, 9-15, 9-25, 9-27, 9-29, 9-31, 9-33, 9-45, 9-47, 9-49, 9-51, 9-53, 9-55
90119-0063	OPTO-RELAY, DC/DC AMMS-10-1/30VDC	9-5, 9-7, 9-9, 9-11, 9-13, 9-15, 9-25, 9-27, 9-29, 9-31, 9-33, 9-45, 9-47, 9-49, 9-51, 9-53, 9-55, 13-209
78074-0000	OUTER JAW,LEFT	10-5
78075-0000	OUTER JAW,RIGHT	10-5
450882-0000	OUTER PIPE	7-9
90025-0053	OUTPUT MODULE TPMC OM16	9-5, 9-7, 9-9, 9-11, 9-13, 9-15, 9-25, 9-27, 9-29, 9-31, 9-33, 9-45, 9-47, 9-49, 9-51, 9-53, 9-55
565336-0000	OUTPUT SHAFT SHORT	5-125, 5-127
565323-0000	OUTPUT SHAFT, LONG	5-125, 5-127
90095-0072	OVERLOAD PROTECTION, PKZM 1,0 A	9-5, 9-7, 9-9, 9-11, 9-13, 9-15
90095-0073	OVERLOAD PROTECTION, PKZM 1,6 A	9-5, 9-7, 9-9, 9-11, 9-13, 9-15, 9-25, 9-27, 9-29, 9-31, 9-33, 9-45, 9-47, 9-49, 9-51, 9-53, 9-55
90095-0074	OVERLOAD PROTECTION, PKZM 2,5 A	9-5, 9-7, 9-9, 9-11, 9-13, 9-15, 9-25, 9-27, 9-29, 9-31, 9-33, 9-45, 9-47, 9-49, 9-51, 9-53, 9-55
90095-0080	OVERLOAD PROTECTION, PKZM 25 A	9-5, 9-7, 9-9, 9-11, 9-13, 9-15, 9-25, 9-27, 9-29, 9-31, 9-33, 9-45, 9-47, 9-49, 9-51, 9-53, 9-55
90095-0075	OVERLOAD PROTECTION, PKZM 4 A	9-5, 9-7, 9-9, 9-11, 9-13, 9-15, 9-25, 9-27, 9-29, 9-31, 9-33, 9-45, 9-47, 9-49, 9-51, 9-53, 9-55
90095-0076	OVERLOAD PROTECTION, PKZM 6,3 A	9-5, 9-7, 9-9, 9-11, 9-13, 9-15, 9-25, 9-27, 9-29, 9-31, 9-33, 9-45, 9-47, 9-49, 9-51, 9-53, 9-55
90095-0077	OVERLOAD PROTECTION, PKZM 6-10 A	9-5, 9-7, 9-9, 9-11, 9-13, 9-15, 9-25, 9-27, 9-29, 9-31, 9-33, 9-45, 9-47, 9-49, 9-51, 9-53, 9-55
90259-0031	OVERLOAD RELAY, 25-40 A	9-5, 9-7, 9-9, 9-11, 9-13, 9-15, 9-25, 9-27, 9-29, 9-31, 9-33, 9-45, 9-47, 9-49, 9-51, 9-53, 9-55
90259-0037	OVERVOLT PROT.PU1 230VREPBY 0090082-0300	9-39, 9-59
90082-0300	OVERVOLT.PROT.PU1 230 VAC	9-19
90082-0010	OVERVOLT.PROT.PU4R230V3PH	9-5, 9-7, 9-9, 9-11, 9-13, 9-15, 9-25, 9-27, 9-29, 9-31, 9-33, 9-45, 9-47, 9-49, 9-51, 9-53, 9-55
1144327-0100	PACKAGE OUTFEED	6-3
567745-0000	PACKING DESCRIPTION	14-19
779910-0101	PADLOCK	9-5, 9-7, 9-9, 9-11, 9-13, 9-15, 9-25, 9-27, 9-29, 9-31, 9-33, 9-39, 9-45, 9-47, 9-49, 9-51, 9-53, 9-55
90220-0091	PAIR TWISTED CABLE 2X2X0,25MM2	14-7
555763-0000	PANEL	12-121
90025-0088	PANEL INTERFACE CU64.1	9-21, 9-41, 9-61
237776-0400	PAPER GUARD	12-15, 12-127
266776-0300	PAPER GUARD	1-3
268590-0000	PAPER GUARD	1-55
297395-0000	PAPER GUARD	12-49
530776-0000	PAPER GUARD	12-45
530785-0000	PAPER GUARD	12-45
542853-0001	PAPER GUARD	1-7, 1-9
542853-0002	PAPER GUARD	1-7, 1-9
555882-0000	PAPER GUARD	1-7, 1-9
592599-0000	PAPER GUARD	1-7, 1-9
592600-0000	PAPER GUARD	1-7, 1-9
279210-0100	PAPER GUIDE	7-3, 7-5
479182-0000	PAPER GUIDE PLATE	12-49
539344-0000	PAPER GUIDE PLATE	12-23
449630-0300	PAPER HOLDER	8-69, 8-71, 8-73
1346132-0100	PAPER HOLDER	13-195
440285-0100	PAPER REEL HOLDER	8-3
440258-0100	PAPER REEL HOLDER SMALL	12-3
464100-0200	PAPER REEL TROLLEY	12-3
22560-0000	PAPER SUPPORT	7-37, 7-39
246342-0000	PAPER SUPPORT	7-37, 7-39
445670-0000	PAPER SUPPORT	7-37, 7-39
575786-0000	PAPER SUPPORT	8-21, 8-23, 8-25, 8-27, 8-29, 8-31, 8-33
576217-0000	PAPER SUPPORT	8-21, 8-23, 8-25, 8-27, 8-29, 8-31, 8-33
576220-0000	PAPER SUPPORT	8-5, 8-7
1143677-0000	PAPER SUPPORT	7-37, 7-39
1296003-0000	PAPER SUPPORT	7-37, 7-39
1362501-0000	PAPER SUPPORT	7-37, 7-39
315705-0202	PARALLEL KEY W ROUND ENDS 5X5X25MM	6-33
315701-0296	PARALLEL KEY W. ROUND ENDS 10X8X25 MM	5-61
315701-0299	PARALLEL KEY W. ROUND ENDS 10X8X32 MM	5-123
315701-0802	PARALLEL KEY W. ROUND ENDS 10X8X36 MM	5-123
315701-0307	PARALLEL KEY W. ROUND ENDS 10X8X70 MM	3-31, 3-33
315701-0330	PARALLEL KEY W. ROUND ENDS 12X8X32 MM	2-37, 2-39, 2-41, 2-85, 2-87
315701-0336	PARALLEL KEY W. ROUND ENDS 12X8X63 MM	2-37, 2-39, 2-41, 2-85, 2-87
315701-0338	PARALLEL KEY W. ROUND ENDS 12X8X70 MM	5-125, 5-127

Machine Type Group Description Page No

Part No	Description	Page No
315701-0363	PARALLEL KEY W. ROUND ENDS 14X9X40 MM	5-61
315701-0134	PARALLEL KEY W. ROUND ENDS 3X3X10 MM	5-67
315705-0166	PARALLEL KEY W. ROUND ENDS 4X4X12 MM	6-55
315701-0169	PARALLEL KEY W. ROUND ENDS 4X4X18 MM	8-41
315701-0201	PARALLEL KEY W. ROUND ENDS 5X5X20 MM	8-5, 8-7, 8-21, 8-23, 8-25, 8-27, 8-29, 8-31, 8-33, 12-53, 12-55, 12-67, 12-69, 12-71, 12-73
315701-0202	PARALLEL KEY W. ROUND ENDS 5X5X22 MM	5-19
315701-0234	PARALLEL KEY W. ROUND ENDS 6X6X25 MM	5-19
315705-0238	PARALLEL KEY W. ROUND ENDS 6X6X36 MM	6-55
315705-0267	PARALLEL KEY W. ROUND ENDS 8X7X30 MM	6-57, 6-59, 6-61
315701-0268	PARALLEL KEY W. ROUND ENDS 8X7X32 MM	5-123
315701-0270	PARALLEL KEY W. ROUND ENDS 8X7X40 MM	3-35, 5-19, 5-121, 5-123
315705-0270	PARALLEL KEY W. ROUND ENDS 8X7X40 MM	6-57
315701-0272	PARALLEL KEY W. ROUND ENDS 8X7X50 MM	5-19
315701-0274	PARALLEL KEY W. ROUND ENDS 8X7X60 MM	5-121
315705-0277	PARALLEL KEY W. ROUND ENDS 8X7X80 MM	6-41
315701-0262	PARALLEL KEY W.ROUND ENDS 8X7X18	3-11, 3-21, 13-11
315701-0263	PARALLEL KEY W.ROUND ENDS 8X7X20	3-11, 3-21, 13-11
311103-0210	PARALLEL PIN ISO 2338 2,5M6X16 A1	12-93
311102-0187	PARALLEL PIN ISO 2338 2M6X10 ST	13-151
311103-0233	PARALLEL PIN ISO 2338 3M6X10 A1	8-49
311103-0235	PARALLEL PIN ISO 2338 3M6X14 A1	1-75, 1-77, 1-79, 1-81, 1-83, 10-5
311103-0236	PARALLEL PIN ISO 2338 3M6X16 A1	1-43, 1-45, 8-9, 8-39, 12-57, 12-75
311102-0236	PARALLEL PIN ISO 2338 3M6X16 ST	8-77, 8-79
311103-0237	PARALLEL PIN ISO 2338 3M6X18 A1	10-5, 12-97, 12-99
311103-0238	PARALLEL PIN ISO 2338 3M6X20 A1	8-9, 8-39, 12-57, 12-75
311103-0232	PARALLEL PIN ISO 2338 3M6X8 A1	7-37, 7-39, 10-5, 12-53, 12-55, 12-67, 12-69, 12-71, 12-73
311102-0232	PARALLEL PIN ISO 2338 3M6X8 ST	1-35
311101-0274	PARALLEL PIN ISO 2338 4H6X25 ST	8-77, 8-79
311103-0267	PARALLEL PIN ISO 2338 4M6X10 A1	7-37, 7-39, 10-5
311102-0267	PARALLEL PIN ISO 2338 4M6X10 ST	1-35
311103-0268	PARALLEL PIN ISO 2338 4M6X12 A1	4-23, 4-25, 4-27, 4-29, 12-215, 12-217, 12-219, 12-221, 13-7, 13-9
311102-0268	PARALLEL PIN ISO 2338 4M6X12 ST	1-73
311103-0269	PARALLEL PIN ISO 2338 4M6X14 A1	12-53, 12-55, 12-67, 12-69, 12-71, 12-73
311103-0270	PARALLEL PIN ISO 2338 4M6X16 A1	8-9, 8-39, 8-51, 8-53, 12-57, 12-75, 12-117
311103-0272	PARALLEL PIN ISO 2338 4M6X20 A1	4-101, 4-103, 4-105, 4-107, 8-85, 8-87
311103-0273	PARALLEL PIN ISO 2338 4M6X22 A1	8-5, 8-7, 8-21, 8-23, 8-25, 8-27, 8-29, 8-31, 8-33
311103-1274	PARALLEL PIN ISO 2338 4M6X24 A1	8-45, 8-47
311103-0274	PARALLEL PIN ISO 2338 4M6X25 A1	8-5, 8-7, 8-21, 8-23, 8-25, 8-27, 8-29, 8-31, 8-33, 12-53, 12-55, 12-67, 12-69, 12-71, 12-73
311103-0276	PARALLEL PIN ISO 2338 4M6X30 A1	4-101, 4-103, 4-105, 4-107, 14-35, 14-37
311103-0306	PARALLEL PIN ISO 2338 5M6X12 A1	5-133, 5-135
311103-0310	PARALLEL PIN ISO 2338 5M6X20 A1	4-45, 4-47, 4-49, 4-51, 4-101, 4-103, 4-105, 4-107, 4-143, 4-147, 8-5, 8-7, 8-21, 8-23, 8-25, 8-27, 8-29, 8-31, 8-33
311103-0314	PARALLEL PIN ISO 2338 5M6X30 A1	2-37, 2-39, 2-41, 2-85, 2-87, 12-53, 12-55, 12-67, 12-69, 12-71, 12-73
311103-0318	PARALLEL PIN ISO 2338 5M6X40 A1	12-53, 12-55, 12-67, 12-69, 12-71, 12-73
311103-0350	PARALLEL PIN ISO 2338 6M6X14 A1	7-45, 8-57, 8-59, 10-5
311102-0350	PARALLEL PIN ISO 2338 6M6X14 ST	8-51, 8-53
311103-0351	PARALLEL PIN ISO 2338 6M6X16 A1	14-33
311103-0353	PARALLEL PIN ISO 2338 6M6X20 A1	8-5, 8-7, 8-21, 8-23, 8-25, 8-27, 8-29, 8-31, 8-33, 8-55
311102-0353	PARALLEL PIN ISO 2338 6M6X20 ST	8-17, 8-41, 8-43
311103-0355	PARALLEL PIN ISO 2338 6M6X25 A1	6-59, 6-61, 8-55, 14-35, 14-37
311103-0357	PARALLEL PIN ISO 2338 6M6X30 A1	2-37, 2-39, 2-41, 2-85, 2-87, 4-45, 4-47, 4-49, 4-51, 4-101, 4-103, 4-105, 4-107, 8-5, 8-7, 8-21, 8-23, 8-25, 8-27, 8-29, 8-31, 8-33, 10-5, 12-53, 12-55, 12-67, 12-69, 12-71, 12-73, 14-37
311103-0365	PARALLEL PIN ISO 2338 6M6X50 A1	8-13, 8-15
311103-0399	PARALLEL PIN ISO 2338 8M6X16 A1	5-7, 5-9, 5-29, 5-35, 5-37, 5-49, 5-51, 5-57, 5-121
311103-0403	PARALLEL PIN ISO 2338 8M6X25 A1	2-133
311103-0407	PARALLEL PIN ISO 2338 8M6X35 A1	5-125, 5-127, 6-13, 6-33
311103-0411	PARALLEL PIN ISO 2338 8M6X45 A1	5-125, 5-127
311103-0413	PARALLEL PIN ISO 2338 8M6X50 A1	2-37, 2-39, 2-41, 2-85, 2-87, 13-53, 13-55
90296-0051	PASTE	8-69, 8-71, 8-73, 13-175
1552445-0000	PD STRIP	14-11
90415-0067	PD-6 FILTER	13-115
90332-0322	PEN	9-59
592226-0000	PENDULUM ARM	11-19
531345-0200	PERSONAL PROTECT. EQ H2O2	10-3
90232-0077	PH.CELL E3N-R7 H41 SI-G + E39-R2	12-47
90232-0106	PH.CELL E3S-CR11-5M	8-61, 8-63, 8-65
90232-0129	PH.CELL E3S-CR61-5M	13-239, 13-243
90232-0104	PH.CELL E3S-CT61-D-5M	6-37, 6-39, 8-61, 8-63, 8-65
90232-0103	PH.CELL E3S-CT61-L-5M	6-37, 6-39, 8-61, 8-63, 8-65
90232-0075	PH.CELL NT6-14900S12	4-97, 4-99
24356-0000	PIECE	1-43, 1-45, 7-45
436435-0500	PILLAR	1-3
479822-0000	PILLAR	12-35
530485-0001	PILLAR	12-43
530485-0002	PILLAR	12-43
530565-0000	PILLAR	1-55
530765-0000	PILLAR	12-97, 12-99
544973-0100	PILLAR	7-3, 7-5
544974-0000	PILLAR	7-15
2529340-0100	PILLAR SA	13-187

Part No	Description	Page No
90042-0536	PILOT CABLE MECMAN 440-728-000-1	2-149, 2-151
90042-0539	PILOT VALVE L=350MM	2-27, 2-29, 2-31, 2-81, 2-83, 12-159, 13-117
90042-0538	PILOT VALVE L=500MM	2-27, 2-29, 2-31, 2-81, 2-83, 12-263, 13-163
229516-0000	PIN	5-23, 5-33, 5-39, 5-53, 5-55
257397-0000	PIN	12-27, 12-31
262179-0001	PIN	5-137, 5-139, 5-141, 5-143, 5-145, 5-147, 5-149, 5-151, 5-153, 5-155
262350-0001	PIN	5-133, 5-135
440352-0000	PIN	4-73
456011-0000	PIN	4-7, 4-9, 4-61, 4-63, 4-75, 12-173, 12-231, 13-75
497748-0000	PIN	1-61
525125-0000	PIN	5-133, 5-135
592227-0000	PIN	11-19
596259-0000	PIN	11-9, 11-11, 11-13, 11-15
598562-0000	PIN	6-5
1144669-0000	PIN	6-7
1346517-0000	PIN	6-37, 6-39
1490099-0000	PIN	1-17, 1-19, 1-21, 1-25, 13-235
90258-0001	PIN, STRAIGHT SLOTTED SPRING FRP 2X20	4-143, 4-147
90258-0031	PIN, STRAIGHT SLOTTED SPRING FRP 3X20	8-69, 8-71, 8-73
90258-0030	PIN, STRAIGHT SLOTTED SPRING FRP 3X24	8-77, 8-79
90266-0019	PIPE	2-179, 3-35, 4-33, 4-35, 4-37, 4-39, 4-41, 4-43, 4-101, 4-103, 4-105, 4-107, 4-139, 4-141, 4-143, 4-147, 5-81, 5-83
90266-0167	PIPE	4-23, 4-25, 4-27, 4-29, 12-215, 12-217, 12-219, 12-221, 13-7, 13-9, 13-99, 13-101, 13-103, 13-105
257663-0000	PIPE	12-83
282802-0000	PIPE	7-7
285979-0000	PIPE	2-9
293201-0000	PIPE	2-149, 2-151
297413-0000	PIPE	5-13
297679-0000	PIPE	2-49, 2-51
297800-0000	PIPE	2-57
297805-0000	PIPE	2-57, 2-95
434171-0000	PIPE	2-137, 2-139
434708-0000	PIPE	2-173, 2-175, 13-29
434709-0000	PIPE	2-173, 2-175, 13-29
434710-0000	PIPE	2-169
434711-0000	PIPE	2-173, 2-175, 13-29
434712-0001	PIPE	2-173, 2-175, 13-29
434712-0002	PIPE	2-173, 2-175, 13-29
434713-0000	PIPE	2-173, 2-175, 13-29
434714-0000	PIPE	2-169, 13-93
434715-0000	PIPE	2-173, 2-175, 13-29
434716-0000	PIPE	2-173, 2-175, 13-29
434717-0000	PIPE	2-169
434718-0000	PIPE	2-169
434719-0000	PIPE	2-169
434739-0000	PIPE	1-55
434740-0000	PIPE	1-55
436471-0000	PIPE	10-3
436512-0000	PIPE	10-3
440604-0001	PIPE	2-11, 2-53, 2-59, 2-61
440605-0001	PIPE	2-25, 2-53, 2-55, 2-61
442079-0000	PIPE	2-121, 2-123
443151-0000	PIPE	5-67
450340-0000	PIPE	2-157
450724-0000	PIPE	2-137, 2-139
450730-0000	PIPE	2-137, 2-139
450731-0000	PIPE	2-137, 2-139
450733-0000	PIPE	2-137, 2-139
450736-0000	PIPE	2-13, 2-15, 2-17, 2-19, 2-71, 2-73, 2-75, 2-101, 2-103, 2-105, 2-107, 2-109, 2-111, 2-113, 2-137, 2-139, 13-17, 13-19, 13-21, 13-23
450737-0000	PIPE	2-137, 2-139
450738-0000	PIPE	2-137, 2-139
450739-0000	PIPE	2-137, 2-139
450740-0000	PIPE	2-137, 2-139
450742-0000	PIPE	2-137, 2-139
450747-0000	PIPE	2-101, 2-103, 2-105, 2-107, 2-109, 2-111, 2-113, 2-137, 2-139
450748-0000	PIPE	2-137, 2-139
450791-0000	PIPE	2-13, 2-15, 2-17, 2-19, 2-71, 2-73, 2-75, 2-101, 2-103, 2-105, 2-107, 2-109, 2-111, 2-113, 13-17, 13-19, 13-21, 13-23
450793-0000	PIPE	2-135
450794-0000	PIPE	2-135
450795-0000	PIPE	2-135
464105-0000	PIPE	12-97, 12-99
464130-0000	PIPE	12-97, 12-99
464431-0000	PIPE	2-137, 2-139
464432-0000	PIPE	2-101, 2-103, 2-105, 2-107, 2-109, 2-111, 2-113, 2-137, 2-139
476288-0000	PIPE	8-69, 8-71, 8-73
484103-0000	PIPE	2-137, 2-139
484104-0000	PIPE	2-137, 2-139
497172-0000	PIPE	2-121, 2-123
497173-0000	PIPE	2-121, 2-123
497174-0000	PIPE	2-121, 2-123
497175-0000	PIPE	2-121, 2-123
497176-0000	PIPE	2-121, 2-123

Part No	Description	Page No
499393-0000 ...	PIPE	12-115
499394-0000 ...	PIPE	12-115
525269-0000 ...	PIPE	5-15
525270-0000 ...	PIPE	5-15
525293-0000 ...	PIPE	5-121
525294-0000 ...	PIPE	5-121
526974-0000 ...	PIPE	7-7
532276-0000 ...	PIPE	1-55
532277-0000 ...	PIPE	1-55
532278-0000 ...	PIPE	1-55
532279-0000 ...	PIPE	1-55
532280-0000 ...	PIPE	1-55
532281-0001 ...	PIPE	1-55
532281-0002 ...	PIPE	1-55
532282-0000 ...	PIPE	1-55
532283-0000 ...	PIPE	1-55
532315-0001 ...	PIPE	1-55
532315-0002 ...	PIPE	1-55
532316-0000 ...	PIPE	1-55
532317-0000 ...	PIPE	1-55
536398-0000 ...	PIPE	12-97, 12-99
537918-0000 ...	PIPE	2-23
539181-0000 ...	PIPE	8-17
542706-0000 ...	PIPE	2-57, 2-95
544688-0000 ...	PIPE	2-137, 2-139
544689-0000 ...	PIPE	2-137, 2-139
544690-0000 ...	PIPE	2-137, 2-139
544691-0000 ...	PIPE	2-137, 2-139
544692-0000 ...	PIPE	2-13, 2-15, 2-17, 2-19, 2-71, 2-73, 2-75, 2-101, 2-103, 2-105, 2-107, 2-109, 2-111, 2-113, 13-17, 13-19, 13-21, 13-23
544693-0000 ...	PIPE	2-137, 2-139
544694-0000 ...	PIPE	2-137, 2-139
544695-0000 ...	PIPE	2-137, 2-139
544696-0000 ...	PIPE	2-137, 2-139
544697-0000 ...	PIPE	2-13, 2-15, 2-17, 2-19, 2-71, 2-73, 2-75, 2-101, 2-103, 2-105, 2-107, 2-109, 2-111, 2-113, 13-17, 13-19, 13-21, 13-23
556561-0001 ...	PIPE	7-7
556561-0002 ...	PIPE	7-7
556561-0003 ...	PIPE	7-7
556561-0004 ...	PIPE	7-7
556562-0001 ...	PIPE	7-7
556562-0002 ...	PIPE	7-7
556562-0003 ...	PIPE	7-7
556562-0004 ...	PIPE	7-7
556563-0001 ...	PIPE	7-7
556563-0002 ...	PIPE	7-7
556563-0003 ...	PIPE	7-7
556564-0001 ...	PIPE	7-7
556564-0002 ...	PIPE	7-7
556564-0003 ...	PIPE	7-7
573277-0000 ...	PIPE	2-149, 2-151
573278-0000 ...	PIPE	2-149, 2-151
581354-0000 ...	PIPE	13-65
581355-0000 ...	PIPE	13-65
581356-0000 ...	PIPE	13-65
592716-0000 ...	PIPE	2-35, 12-165, 13-15, 13-95
592717-0000 ...	PIPE	2-35, 13-15
592718-0000 ...	PIPE	2-35, 12-165, 13-15, 13-95
597534-0000 ...	PIPE	12-165, 13-95
597535-0000 ...	PIPE	12-165, 13-95
598979-0000 ...	PIPE	2-85, 2-87
929732-0000 ...	PIPE	2-137, 2-139
1144282-0000 .	PIPE	2-95
1144315-0000 .	PIPE	6-35
1144539-0000 .	PIPE	6-35
1144832-0000 .	PIPE	2-69
1144833-0000 .	PIPE	2-69
1334440-0000 .	PIPE	6-67
1346615-0000 .	PIPE	6-33
1347461-0000 .	PIPE	6-5
479384-0000 ...	PIPE BEND	1-27, 1-29
530784-0000 ...	PIPE CLAMP	12-45
90165-0086	PIPE CLAMP, RSGU 1.24/15-V4, D=24 MM	2-167
90165-0058	PIPE CLIP FOR TUBE D=2,5 MM	4-11, 4-13, 4-15, 4-17, 4-19, 4-21, 4-23, 4-25, 4-27, 4-29, 4-45, 4-47, 4-49, 4-51, 4-65, 4-67, 4-69, 4-71, 4-77, 4-79, 4-85, 4-87, 4-101, 4-103, 4-105, 4-107, 12-193, 12-195, 12-197, 12-199, 12-201, 12-203, 12-215, 12-217, 12-219, 12-221, 13-7, 13-9
90074-0026	PIPE CLIP FOR TUBE D=24-35 MM	2-27, 2-29, 2-31, 2-81, 2-83
90165-0003	PIPE CLIP FOR TUBE D=4 MM	2-179, 3-35
90165-0056	PIPE CLIP FOR TUBE D=4 MM	4-33, 4-35, 4-37, 4-39, 4-41, 4-43, 4-101, 4-103, 4-105, 4-107, 4-131, 4-133, 4-135, 4-137, 4-143, 4-147, 5-17, 5-29, 5-33, 5-49, 5-51, 5-53, 5-55, 5-57, 5-81, 5-83, 5-89, 5-91, 5-117, 6-29
90165-0024	PIPE CLIP FOR TUBE D=5 MM	12-53, 12-55, 12-67, 12-69, 12-71, 12-73
90165-0060	PIPE CLIP FOR TUBE D=5 MM	4-77, 4-79, 4-85, 4-87, 4-139, 4-141, 5-7, 5-9, 5-33, 5-35, 5-37, 5-53, 5-55, 7-9, 7-15

Part No	Description	Page No
90165-0005	PIPE CLIP FOR TUBE D=6 MM	2-179, 3-35
90165-0057	PIPE CLIP FOR TUBE D=6 MM	4-97, 4-99, 5-7, 5-9, 5-25, 5-27, 5-29, 5-35, 5-37, 5-41, 5-43, 5-45, 5-47, 5-49, 5-51, 5-57, 5-81, 5-83, 5-137, 5-139, 5-141, 5-143, 8-5, 8-7, 8-21, 8-23, 8-25, 8-27, 8-29, 8-31, 8-33
90165-0007	PIPE CLIP FOR TUBE D=8 MM	2-137, 2-139
316810-0106	PIPE CLIP FOR TUBE D=8 MM	4-65, 4-67, 4-69, 4-71, 5-7, 5-9, 5-25, 5-27, 5-35, 5-37, 5-41, 5-43, 5-45, 5-47, 5-81, 5-83, 6-27, 6-29, 8-69, 8-71, 8-73
90165-0022	PIPE CLIP, FOR TUBE D=2,5 MM, B-3570	2-179, 3-37, 3-39, 3-41, 3-43
90134-0004	PIPE CONNECTION R1/8	2-37, 2-39, 2-41
342721-0108	PIPE COUPLGA10-LRFZB REPBY 0342752-0104	2-169, 2-171, 2-175
342721-0114	PIPE COUPLGA15-LRFZB REPBY 0342752-0114	2-169
342722-0204	PIPE COUPLING	6-21, 6-25, 13-177
342722-0202	PIPE COUPLING 1/8" D=6MM	2-27, 2-29, 2-31, 2-81, 2-83, 2-165
434731-0000	PIPE HOLDER	1-55, 7-7
476894-0000	PIPE HOLDER	2-9
534486-0000	PIPE HOLDER	2-9
537919-0000	PIPE HOLDER	2-23
499834-0000	PIPE LEFT	2-49, 2-51
90087-0002	PIPE PLUG	2-137, 2-139, 2-185
90087-0003	PIPE PLUG	3-31, 3-33
90261-0036	PIPE PLUG "REPL.BY 90261-71"	4-45, 4-47, 4-49, 4-51
90261-0004	PIPE PLUG R 1/8"	5-7, 5-9, 5-35, 5-37
499833-0000	PIPE RIGHT	2-49, 2-51
445537-0200	PIPE WORK-HYDRAULIC	2-3, 2-5
592879-0100	PIPE WORK-HYDRAULIC	2-3, 2-5, 13-5
595140-0100	PIPE WORK-HYDRAULIC	12-155
597533-0100	PIPE WORK-HYDRAULIC	13-91
450788-0600	PIPE WORK-PNEUMATIC	2-3, 2-5
592878-0100	PIPE WORK-PNEUMATIC	2-3, 2-5, 13-5
595207-0100	PIPE WORK-PNEUMATIC	2-3, 2-5
2505150-0100	PIPE WORK-PNEUMATIC	13-159
449932-0500	PIPE WORK-WATER	2-3, 2-5
777200-0101	PIPE WRENCH	10-9
581346-0000	PIPE-LINE	13-65
292367-0000	PISTON	4-65, 4-67, 4-69, 4-71
434142-0000	PISTON	3-41, 3-43
440638-0000	PISTON	1-63
466620-0000	PISTON	8-69, 8-71, 8-73
466621-0000	PISTON	8-69, 8-71, 8-73
592563-0000	PISTON	12-215, 12-217, 12-219, 12-221, 13-7, 13-9, 13-99, 13-101, 13-103, 13-105, 13-109, 13-111
1338702-0000	PISTON	4-23, 4-25, 4-27, 4-29
1362513-0000	PISTON	4-23, 4-25, 4-27, 4-29, 13-167
440637-0000	PISTON ROD	1-63
464084-0000	PISTON ROD	12-101
464099-0000	PISTON ROD	12-107
90091-0079	PISTON SEAL GLIDE RING 27X35X3,5MM	4-61, 4-63, 4-65, 4-67, 4-69, 4-71
90091-0393	PISTON SEAL GLIDE RING T17,5X25X3,2	4-7, 4-23, 4-25, 4-27, 4-29, 12-215, 12-217, 12-219, 12-221, 12-231, 13-7, 13-9, 13-99, 13-101, 13-103, 13-105, 13-109, 13-111, 13-167
456772-0000	PIVOT BRACKET	8-9, 12-57
456773-0000	PIVOT BRACKET	8-39, 12-75
544533-0000	PLASTIC PEHD 21172-10	2-167
247145-0000	PLATAFORM	10-15, 10-17
37908-0000	PLATE	12-85
72375-0000	PLATE	14-53
90235-0450	PLATE	2-27, 2-29, 2-31, 2-81, 2-83
267533-0000	PLATE	12-53, 12-55, 12-67, 12-69, 12-71, 12-73
293375-0000	PLATE	2-167
294445-0000	PLATE	14-39
294446-0000	PLATE	14-39
440731-0000	PLATE	1-27, 1-29
443348-0000	PLATE	5-137, 5-139, 5-141, 5-143
450017-0000	PLATE	8-69, 8-71, 8-73
466412-0000	PLATE	7-41
476199-0000	PLATE	12-37, 12-133
486961-0000	PLATE	8-21, 8-23, 8-25, 8-27, 8-29, 8-31, 8-33
499395-0000	PLATE	12-115
522000-0000	PLATE	1-27, 1-29
522123-0000	PLATE	8-85, 8-87
525135-0000	PLATE	5-13
525211-0000	PLATE	5-137, 5-139, 5-141, 5-143
525212-0000	PLATE	5-137, 5-139, 5-141, 5-143
525234-0002	PLATE	5-137, 5-139, 5-141, 5-143
525429-0000	PLATE	5-137, 5-139, 5-141, 5-143
526935-0000	PLATE	12-67, 12-69, 12-71, 12-73
526985-0000	PLATE	8-13, 8-15
529455-0000	PLATE	8-61, 8-63, 8-65
529456-0000	PLATE	8-61, 8-63, 8-65
539182-0000	PLATE	8-17
543134-0000	PLATE	2-149, 2-151
544481-0000	PLATE	2-63, 2-65, 2-97, 2-99
560872-0000	PLATE	2-63, 2-65, 2-97, 2-99
560873-0000	PLATE	2-63, 2-65, 2-97, 2-99
569114-0000	PLATE	5-137, 5-139, 5-141, 5-143
574042-0000	PLATE	5-137, 5-139, 5-141, 5-143

Part No	Description	Page No
576970-0000 ...	PLATE	12-121
593643-0000 ...	PLATE	8-85, 8-87
596104-0000 ...	PLATE	6-33
596113-0000 ...	PLATE	6-59, 6-61
597564-0000 ...	PLATE	5-29, 5-49, 5-51
752699-0000 ...	PLATE	1-49, 1-51, 1-53
795581-0000 ...	PLATE	1-49, 1-51, 1-53
1144255-0000 .	PLATE	6-35
1144256-0000 .	PLATE	6-35
1144345-0000 .	PLATE	6-35
1144483-0000 .	PLATE	6-59, 6-61
1144535-0000 .	PLATE	6-17
1144537-0000 .	PLATE	6-37, 6-39
1144552-0000 .	PLATE	6-37, 6-39
1144632-0000 .	PLATE	6-29
1144673-0000 .	PLATE	6-7
1144890-0000 .	PLATE	6-9
1144891-0000 .	PLATE	6-9
1144910-0000 .	PLATE	6-35
1144918-0000 .	PLATE	6-33
1282327-0000 .	PLATE	6-47
1282390-0000 .	PLATE	6-33
1285242-0000 .	PLATE	6-35
1285291-0000 .	PLATE	6-19
1285311-0000 .	PLATE	6-21, 6-23, 6-25
1296156-0000 .	PLATE	6-55
1334456-0000 .	PLATE	6-33
1334457-0000 .	PLATE	6-33
1338694-0000 .	PLATE	13-211
1338720-0000 .	PLATE	13-213
1347219-0000 .	PLATE	6-35
1347220-0000 .	PLATE	6-35
1347221-0000 .	PLATE	6-35
1347227-0000 .	PLATE	6-29
1364232-0000 .	PLATE	13-151
2529313-0000 .	PLATE	7-15, 13-193
525053-0000 ...	PLATE (CIRCULAR)	5-23, 5-39
90182-0007	PLATE 29X29MM REPL.BY 352113-206	12-135
90125-0020	PLATE COMPLETE	7-41
457365-0000 ...	PLATE LEFT	4-97, 4-99
1260949-0000 .	PLATE LEFT	6-17
593845-0000 ...	PLATE LOWER	12-123
293376-0000 ...	PLATE RIGHT	2-167
457364-0000 ...	PLATE RIGHT	4-97, 4-99
1279411-0000 .	PLATE RIGHT	6-17
443210-0000 ...	PLATE STAINLESS	5-33, 5-53, 5-55
593844-0000 ...	PLATE UPPER	12-123
531600-0000 ...	PLATE,LOWER	12-123
531602-0000 ...	PLATE,LOWER	12-123
531604-0000 ...	PLATE,LOWER	12-123
541982-0000 ...	PLATE,LOWER	12-123
541984-0000 ...	PLATE,LOWER	12-123
552917-0000 ...	PLATE,LOWER	12-123
573992-0000 ...	PLATE,LOWER	12-123
589324-0000 ...	PLATE,LOWER	12-123
589326-0000 ...	PLATE,LOWER	12-123
1362437-0000 .	PLATE,LOWER	12-123
531599-0000 ...	PLATE,UPPER	12-123
531601-0000 ...	PLATE,UPPER	12-123
531603-0000 ...	PLATE,UPPER	12-123
541981-0000 ...	PLATE,UPPER	12-123
541983-0000 ...	PLATE,UPPER	12-123
552916-0000 ...	PLATE,UPPER	12-123
573991-0000 ...	PLATE,UPPER	12-123
589323-0000 ...	PLATE,UPPER	12-123
589325-0000 ...	PLATE,UPPER	12-123
1362438-0000 .	PLATE,UPPER	12-123
247146-0000 ...	PLATFORM	10-15, 10-17, 10-21
257852-0000 ...	PLATFORM	10-15, 10-17, 10-21
257862-0000 ...	PLATFORM	10-15, 10-17, 10-21
263621-0000 ...	PLATFORM	12-5
266755-0200 ...	PLATFORM	10-13
266756-0500 ...	PLATFORM	10-13
276460-0000 ...	PLATFORM	12-9
440384-0500 ...	PLATFORM	2-3, 2-5
576834-0000 ...	PLATFORM	2-167
554171-0300 ...	PLATFORM ADDITION	10-3
269274-0000 ...	PLATFORM COVER	2-167
269275-0000 ...	PLATFORM COVER	2-167
576835-0000 ...	PLATFORM COVER	2-167
440541-0000 ...	PLATFORM FRONT	2-167
440386-0000 ...	PLATFORM REAR	2-167
458362-0000 ...	PLUG	8-61, 8-63, 8-65
493569-0000 ...	PLUG	12-97, 12-99

Part No	Description	Page No
1144487-0000	PLUG	6-59, 6-61
1144596-0000	PLUG	6-31, 6-33, 6-43, 6-45
1365563-0000	PLUG	14-7
1487685-0000	PLUG	2-45
342713-0209	PLUG (QUANT.MINIMA= 10PC).	2-165, 4-11, 4-13, 4-15, 4-17, 4-19, 4-21, 4-65, 4-67, 4-69, 4-71, 4-77, 4-79, 4-85, 4-87, 12-193, 12-195, 12-197, 12-199, 12-201, 12-203
90136-0002	PLUG 5/16"24	5-67, 5-133, 5-135
90134-0052	PLUG DOSING BLOCK	2-179, 3-35, 3-37, 3-39, 3-41, 3-43, 4-33, 4-35, 4-37, 4-39, 4-41, 4-43, 4-131, 4-133, 4-135, 4-137, 5-33, 5-53, 5-55, 6-29, 12-169, 12-213, 13-33, 13-137
90261-0013	PLUG F-11	2-27, 2-29, 2-31
255278-0000	PLUG FINISHER	4-11, 4-13, 4-15, 4-17, 4-19, 4-21, 4-77, 4-79, 4-85, 4-87, 12-193, 12-195, 12-197, 12-199, 12-201, 12-203
90087-0019	PLUG M10X1 STAINLESS	2-179, 3-35, 3-37, 3-39, 3-41, 3-43, 4-33, 4-35, 4-37, 4-39, 4-41, 4-43, 4-45, 4-47, 4-49, 4-51, 4-101, 4-103, 4-105, 4-107, 4-131, 4-133, 4-135, 4-137, 5-25, 5-27, 5-29, 5-33, 5-41, 5-43, 5-45, 5-47, 5-49, 5-51, 5-53, 5-55, 5-81, 5-83, 6-29
90134-0045	PLUG M12X1	5-33, 5-53, 5-55
90261-0018	PLUG, BLIND, PLASTIC GPN300F-183	2-37, 2-39, 2-41
90261-0033	PLUG, BLIND, PLASTIC GPN300F182	2-27, 2-29, 2-31, 2-37, 2-39, 2-41, 2-85, 2-87
90261-0011	PLUG, BLIND, PLASTIC GPN300F233	2-37, 2-39, 2-41, 2-85, 2-87, 7-9
90261-0008	PLUG, BLIND, PLASTIC GPN300F26	2-27, 2-29, 2-31
90261-0003	PLUG, BLIND, PLASTIC GPN300V-10	2-37, 2-39, 2-41, 2-85, 2-87
90261-0042	PLUG, BLIND, PLASTIC, F-142	2-85, 2-87
90261-0032	PLUG, BLIND, PLASTIC, NO. 1073	5-25, 5-27, 5-41, 5-43, 5-45, 5-47, 5-121
90261-0049	PLUG, BLIND, PLASTIC, NO. SR1750	7-25
90261-0019	PLUG, BLIND, PLASTIC, TYPEF23	2-21, 2-117, 2-119, 13-27
342713-0213	PLUG, EXT THREAD HEX SOCKET 8638-00-120	2-149, 2-151
342713-0211	PLUG, EXT THREAD HEX SOCKET 8638-00-380	2-27, 2-29, 2-31, 2-81, 2-83, 2-137, 2-139
90330-0037	PLUG, EXT. G-THREAD, G1/2	2-37, 2-39, 2-41, 5-19
90330-0026	PLUG, EXT. G-THREAD, G1/4	2-57, 2-95, 5-19, 12-155, 13-95
90330-0066	PLUG, EXT. G-THREAD, G1/8	2-37, 2-39, 2-41
90087-0015	PLUG, EXT. THREAD HEX. SOCKET VSTI 1/4-E	5-125, 5-127
342713-0208	PLUG, EXT. THREAD HEX. SOCKET. BPM10	13-115
342713-0311	PLUG, EXT. THREAD HEX. SOCKET. BPS38	2-171, 2-173, 2-175, 13-29
90326-0020	PLUG, FEMALE YELLOW CR-AL	1-35, 7-37, 7-39, 8-69, 8-71, 8-73
90330-0086	PLUG, INT. THREAD, NO. R-231-R1/2	5-57
90087-0036	PLUG, KR 1/4	12-159
90326-0022	PLUG, MALE YELLOW CR-AL	8-69, 8-71, 8-73
342713-0210	PLUG,EXT THREAD HEX SOCKET(PAK OF 10 PCS	2-13, 2-15, 2-17, 2-19, 2-27, 2-29, 2-31, 2-71, 2-73, 2-75, 2-79, 2-81, 2-83, 2-101, 2-103, 2-105, 2-107, 2-109, 2-111, 2-113, 2-137, 2-139, 8-69, 8-71, 8-73, 13-17, 13-19, 13-21, 13-23, 13-179
23972-0000	PLUNGER	4-77, 4-79, 4-85, 4-87
28880-0000	PLUNGER	4-11, 4-13, 4-15, 4-17, 4-19, 4-21, 4-77, 4-79, 4-85, 4-87, 12-193, 12-195, 12-197, 12-199, 12-201, 12-203
31838-0000	PLUNGER	4-139, 4-141
272813-0000	PLUNGER	12-95
575002-0000	PLUNGER	8-45, 8-47
575003-0000	PLUNGER	8-45, 8-47
593561-0000	PLUNGER	8-45, 8-47
593563-0000	PLUNGER	12-95
1036279-0000	PLUNGER	12-275
48731-0101	PMS, PRESSURE MONITORING SYSTEM	14-7
90450-0500	PNEUMATIC CYLINDER	6-63
575450-0000	PNEUMATIC DIAGRAM	2-131
593633-0000	PNEUMATIC DIAGRAM	2-131, 13-5, 13-91
593636-0000	PNEUMATIC DIAGRAM	2-131
593674-0000	PNEUMATIC DIAGRAM	13-5, 13-91
597569-0000	PNEUMATIC DIAGRAM	12-155, 13-113
597596-0000	PNEUMATIC DIAGRAM	13-113
1143140-0000	PNEUMATIC DIAGRAM	2-131
1143445-0000	PNEUMATIC DIAGRAM	2-131, 12-259
2505152-0000	PNEUMATIC DIAGRAM	13-159
2529324-0000	PNEUMATIC DIAGRAM	13-179
554958-0100	PNEUMATIC DRW	12-127
533004-0100	PNEUMATIC PANEL	12-119
555568-0000	PONCH	14-19
90042-0522	PORTED END PIECE ISO SIZE 1	2-27, 2-29, 2-31, 2-81, 2-83
567751-0000	POSITION TEMPLATE	14-5
297669-0000	POST	2-37, 2-39, 2-41, 2-85, 2-87
297670-0000	POST	2-37, 2-39, 2-41, 2-85, 2-87
297664-0000	POST HOLDER	5-7, 5-9, 5-35, 5-37
297663-0000	POST HOLDER1	5-7, 5-9, 5-35, 5-37
90130-0022	POTENTIOMETER, 5 KOHM	13-215
90024-0031	POWER LINE FILTER, 75 A 230/400 VAC	9-5, 9-7, 9-9, 9-11, 9-13, 9-15, 9-25, 9-27, 9-29, 9-31, 9-33, 9-45, 9-47, 9-49, 9-51, 9-53, 9-55
564541-0200	POWER LINE FILTER.	12-3
90457-0913	POWER SUPPLY MASCOT TYPE 7416	14-7
90459-4807	POWER SUPPLY UNIT 100-240 VAC/24VDC2,5A	13-243
90025-0055	POWER SUPPLY UNIT TPMC PS32	9-5, 9-7, 9-9, 9-11, 9-13, 9-15, 9-25, 9-27, 9-29, 9-31, 9-33, 9-45, 9-47, 9-49, 9-51, 9-53, 9-55
243153-0000	PRESSURE ARM	12-87
285299-0100	PRESSURE ARM	5-57
594621-0100	PRESSURE ARM	5-57
285456-0300	PRESSURE DEVICE	5-3, 5-5

Part No	Description	Page No
593863-0100	PRESSURE DEVICE	11-7
1144331-0100	PRESSURE DEVICE	6-3
90415-0029	PRESSURE FILTER MDF-BNHC-030-LB-010-B1.0	2-169
267602-0000	PRESSURE FLANGE	1-17, 1-19, 1-21
434750-0000	PRESSURE FLANGE	1-17, 1-19, 1-21
450879-0000	PRESSURE FLANGE	1-17, 1-19, 1-21
574006-0000	PRESSURE FLANGE	1-17, 1-19, 1-21
583791-0000	PRESSURE FLANGE	1-17, 1-19, 1-21
593242-0000	PRESSURE FLANGE	1-25
1362489-0000	PRESSURE FLANGE	1-17, 1-19, 1-21
90043-0034	PRESSURE GAUGE	1-55, 7-9
90043-0068	PRESSURE GAUGE	2-81, 2-83
90043-0073	PRESSURE GAUGE	12-39, 12-41
578765-0100	PRESSURE GAUGE	12-119
90043-0021	PRESSURE GAUGE 0-1 BAR 1/8" D=40	2-27, 2-29, 2-31, 2-81, 2-83
90043-0043	PRESSURE GAUGE 0-10 BAR 1/8"	2-27, 2-29, 2-31, 2-81, 2-83, 2-149, 2-151
255368-0000	PRESSURE GAUGE TUBE	1-27, 1-29
449193-0000	PRESSURE GAUGE TUBE	12-11
90043-0004	PRESSURE GAUGE, 2040 D=63 MM	12-125
90043-0056	PRESSURE GAUGE, 2041 D=40 MM	2-27, 2-29, 2-31, 2-81, 2-83, 12-159, 13-179
90043-0006	PRESSURE GAUGE, 2041 D=63 MM	2-149, 2-151, 12-121
90043-0075	PRESSURE GAUGE, 2740, D=63 MM, GLYC.	2-171
90043-0050	PRESSURE GAUGE, 2940.100 MM+2940	12-11
90274-0084	PRESSURE GUARD, 1800 KPA	2-179
90274-0043	PRESSURE GUARD, 300 KPA	2-149, 2-151
90274-0044	PRESSURE GUARD, 400 KPA	2-149, 2-151
90274-0074	PRESSURE GUARD, 530 KPA	13-179
553770-0001	PRESSURE JAW	8-69, 8-71, 8-73
553770-0002	PRESSURE JAW	8-69, 8-71, 8-73
246497-0900	PRESSURE JAW LEFT	4-3, 4-5
592519-0100	PRESSURE JAW LEFT	4-3, 4-5
592993-0100	PRESSURE JAW LEFT	13-5
597531-0100	PRESSURE JAW LEFT	13-91
597566-0100	PRESSURE JAW LEFT	12-171
597572-0100	PRESSURE JAW LEFT	13-107
246497-0950	PRESSURE JAW RIGHT	4-3, 4-5
592520-0100	PRESSURE JAW RIGHT	4-3, 4-5
592994-0100	PRESSURE JAW RIGHT	13-5
597532-0100	PRESSURE JAW RIGHT	13-91
597567-0100	PRESSURE JAW RIGHT	12-171
597573-0100	PRESSURE JAW RIGHT	13-107
90113-0044	PRESSURE REGULATOR	2-171, 2-173, 2-175, 13-29
90113-0069	PRESSURE REGULATOR	2-27, 2-29, 2-31, 2-81, 2-83
90113-0071	PRESSURE REGULATOR	2-27, 2-29, 2-31, 2-81, 2-83, 12-159, 13-179
90113-0076	PRESSURE REGULATOR	2-27, 2-29, 2-31, 2-81, 2-83
229406-0000	PRESSURE ROLLER	12-49
263062-0000	PRESSURE ROLLER	1-39, 1-65, 1-67, 1-69
266726-0300	PRESSURE ROLLER	7-3, 7-5
282528-0200	PRESSURE ROLLER	7-3, 7-5
499387-0000	PRESSURE ROLLER	1-39, 1-65, 1-67, 1-69
232979-0000	PRESSURE ROLLER (PAK OF 10)	1-39, 1-65, 1-67, 1-69, 7-15
90172-0325	PRESSURE SENSOR, 0,047 MV/PS1	14-7
90274-0002	PRESSURE SWITCH XMJ, REPBY 90458-0844	5-17
90235-0702	PRESSURIZING UNIT, 565-400-000	12-141
293684-0200	PRINTING WHEEL NSS	8-21, 8-23, 8-25, 8-27, 8-29, 8-31, 8-33, 12-67, 12-69, 12-71, 12-73
293685-0200	PRINTING WHEEL SS	8-5, 8-7, 12-53, 12-55
90025-0070	PROCESSOR TPMC CPU 64.1	9-5, 9-7, 9-9, 9-11, 9-13, 9-15, 9-25, 9-27, 9-29, 9-31, 9-33, 9-45, 9-47, 9-49, 9-51, 9-53, 9-55
266215-0100	PRODUCT LINE MANOMETER	12-3
499872-0200	PRODUCT VALVE	1-3
597560-0100	PRODUCTION TOOLS AND TEMPLATES TB/8	14-3
443367-0000	PROFILE	5-11
525243-0000	PROFILE	5-101, 5-103
525244-0000	PROFILE	5-101, 5-103
525245-0000	PROFILE	5-101, 5-103
525246-0000	PROFILE	5-101, 5-103
525247-0000	PROFILE	5-101, 5-103
525248-0000	PROFILE	5-101, 5-103
525324-0000	PROFILE	5-33, 5-53, 5-55
525403-0000	PROFILE	5-101, 5-103
525404-0000	PROFILE	5-101, 5-103
525405-0000	PROFILE	5-101, 5-103
525406-0000	PROFILE	5-101, 5-103
525411-0000	PROFILE	5-33, 5-53, 5-55
525425-0000	PROFILE	5-101, 5-103
525426-0000	PROFILE	5-101, 5-103
525427-0000	PROFILE	5-101, 5-103
525428-0000	PROFILE	5-101, 5-103
566311-0000	PROFILE	5-29, 5-49, 5-51
574071-0000	PROFILE	5-89, 5-91
574072-0000	PROFILE	5-89, 5-91
574093-0000	PROFILE	5-11
1361035-0000	PROFILE 70X10X40MM	13-221
434437-0000	PROTECTION	12-47

Part No	Description	Page No
440482-0000	PROTECTION	2-129
445863-0000	PROTECTION	8-51, 8-53
449751-0000	PROTECTION	8-69, 8-71, 8-73
450853-0000	PROTECTION	8-69, 8-71, 8-73
450883-0400	PROTECTION	2-3, 2-5
450884-0000	PROTECTION	2-129
451088-0000	PROTECTION	2-47
458488-0000	PROTECTION	14-33
476203-0000	PROTECTION	1-63
531611-0000	PROTECTION	12-119
550503-0000	PROTECTION	2-49, 2-51
570127-0000	PROTECTION	14-23
570128-0000	PROTECTION	14-23
572243-0000	PROTECTION	8-5, 8-7
573827-0001	PROTECTION	8-21, 8-23, 8-25, 8-27, 8-29, 8-31, 8-33
573827-0002	PROTECTION	8-21, 8-23, 8-25, 8-27, 8-29, 8-31, 8-33
573827-0003	PROTECTION	8-21, 8-23, 8-25, 8-27, 8-29, 8-31, 8-33
574652-0000	PROTECTION	2-177
576247-0100	PROTECTION	5-81, 5-83
595054-0000	PROTECTION	2-49, 2-51
927830-0000	PROTECTION	8-21, 8-23, 8-25, 8-27, 8-29, 8-31, 8-33
1144646-0000	PROTECTION	6-7
1296148-0100	PROTECTION	6-3
2505094-0000	PROTECTION	13-179
2505095-0000	PROTECTION	13-179
37882-0000	PROTECTION PLATE	12-91
243132-0000	PROTECTION PLATE	12-91
265706-0000	PROTECTION PLATE	12-7
269285-0000	PROTECTION PLATE	2-37, 2-39, 2-41, 2-85, 2-87
269295-0000	PROTECTION PLATE	2-37, 2-39, 2-41, 2-85, 2-87
269296-0000	PROTECTION PLATE	2-37, 2-39, 2-41, 2-85, 2-87
269297-0000	PROTECTION PLATE	2-37, 2-39, 2-41, 2-85, 2-87
273753-0000	PROTECTION PLATE	2-37, 2-39, 2-41, 2-85, 2-87
293624-0001	PROTECTION PLATE	8-21, 8-23, 8-25, 8-27, 8-29, 8-31, 8-33, 12-67, 12-69, 12-71, 12-73
293624-0002	PROTECTION PLATE	8-5, 8-7, 8-21, 8-23, 8-25, 8-27, 8-29, 8-31, 8-33, 12-53, 12-55, 12-67, 12-69, 12-71, 12-73
293627-0000	PROTECTION PLATE	12-53, 12-55, 12-67, 12-69, 12-71, 12-73
440023-0000	PROTECTION PLATE	2-37, 2-39, 2-41, 2-85, 2-87
440024-0000	PROTECTION PLATE	2-37, 2-39, 2-41, 2-85, 2-87
440025-0000	PROTECTION PLATE	2-37, 2-39, 2-41, 2-85, 2-87
440199-0000	PROTECTION PLATE	8-55
440200-0000	PROTECTION PLATE	8-55
440202-0000	PROTECTION PLATE	8-55
445857-0000	PROTECTION PLATE	8-55
445935-0000	PROTECTION PLATE	8-55
531886-0000	PROTECTION PLATE	8-69, 8-71, 8-73
531887-0000	PROTECTION PLATE	8-69, 8-71, 8-73
539183-0000	PROTECTION PLATE	8-17
543818-0000	PROTECTION PLATE	7-17
549830-0000	PROTECTION PLATE	8-55
574096-0000	PROTECTION PLATE	5-99
574112-0000	PROTECTION PLATE	5-99
574113-0000	PROTECTION PLATE	5-99
927745-0000	PROTECTION PLATE	8-21, 8-23, 8-25, 8-27, 8-29, 8-31, 8-33
90042-0550	PROTECTION PLUG FOR UNUSED CONNECTION	2-27, 2-29, 2-31, 2-81, 2-83, 2-149, 2-151
285448-0000	PROTECTIVE CASING	5-133, 5-135
442193-0000	PROTECTIVE CASING	2-65, 2-99
442194-0000	PROTECTIVE CASING	2-63, 2-97
579008-0000	PROTECTIVE CASING	1-49, 1-51, 1-53
579009-0000	PROTECTIVE CASING	1-49, 1-51, 1-53
752700-0000	PROTECTIVE CASING	1-49, 1-51, 1-53
752701-0000	PROTECTIVE CASING	1-49, 1-51, 1-53
752907-0000	PROTECTIVE CASING	1-49, 1-51, 1-53
752908-0000	PROTECTIVE CASING	1-49, 1-51, 1-53
37774-0000	PROTECTIVE COVER	12-85
456256-0000	PROTECTIVE COVER	2-163
574095-0000	PROTECTIVE COVER	5-99
90326-0012	PROTECTIVE COVER, T31A4618	1-35, 7-37, 7-39
90303-0012	PROTECTIVE GLOVES	10-7
90303-0011	PROTECTIVE GOGGLES	10-7
246982-0000	PROTRACTOR	3-9, 3-19
1144657-0000	PROTRACTOR	6-13
90044-0095	PROX.SW. 3010BPKG REPBY 90458-256	2-67, 12-113
90044-0122	PROX.SW. 922AA4XM-A9P-050-LZ-87	8-61, 8-63, 8-65
90044-0117	PROX.SW. IX 0208	6-49
90044-0104	PROX.SWITCH IFM IN 3002(RP 90044-194)	1-27, 1-29, 1-49, 1-51, 1-53, 5-17, 5-25, 5-27, 5-41, 5-43, 5-45, 5-47, 5-89, 5-91, 5-101, 5-103, 5-129, 5-131, 6-7, 6-29, 6-33, 6-59, 6-61, 7-15, 7-29, 8-61, 8-63, 8-65, 12-53, 12-55, 12-61, 12-63, 12-67, 12-69, 12-71, 12-73
90044-0087	PROXIMITY SWITCH REPL.BY 90044-104	12-83
1144329-0100	PULL DOWN DEVICE	6-3
285736-0300	PULL-DOWN DEVICE	5-3, 5-5
74305-0100	PULLER	14-5
90196-0055	PULLEY	3-31, 3-33, 12-169
90196-0061	PULLEY	3-31, 3-33

Part No	Description	Page No
90196-0062	PULLEY	3-31, 3-33, 12-169
90196-0063	PULLEY	3-31, 3-33
90196-0064	PULLEY	3-31, 3-33
90196-0065	PULLEY	3-31, 3-33, 12-169
90196-0066	PULLEY	3-31, 3-33
90196-0067	PULLEY	3-29
1144570-0000	PULLEY	6-41
1144571-0000	PULLEY	6-15
1144572-0000	PULLEY	6-41
1334453-0000	PULLEY	6-43, 6-45
1145400-0100	PULLTAB UNIT PT8	12-3
493729-0100	PUMP	12-97, 12-99
90321-0034	PUMP 502 CFX 5ETV 362 60HZ IP55	5-7, 5-9, 5-35, 5-37
90321-0015	PUMP 502 CFX 7ETV 302 50HZ IP55	5-7, 5-9, 5-35, 5-37
90321-0037	PUMP C-6125P EP 220V, 50HZ	2-135
90321-0383	PUMP CONN. ELBOW FLANGE RG 26/12-1/2	2-169
90321-0112	PUMP LOWARA SV806R30T 50HZ	6-35
90321-0111	PUMP LOWARA SV806R406T 60HZ	6-35
522137-0000	PUSH BUTTON	8-85, 8-87
90066-0021	PUSH BUTTON BOX XAP-M1501	7-31, 7-33
90066-0018	PUSH BUTTON BOX XAP.M4604	12-47
90066-0029	PUSH BUTTON BOX XB2-SLS12	7-9
90064-0045	PUSH BUTTON XB2/MW YELLOW	12-47
90064-0093	PUSH BUTTON, GREEN	9-21, 9-23, 9-41, 9-43, 9-61, 9-63
90064-0096	PUSH BUTTON, GREEN	2-147
90064-0054	PUSH BUTTON, GREEN, XB2MW	12-47
90064-0085	PUSH BUTTON, RED	8-61, 8-63, 8-65, 9-5, 9-7, 9-9, 9-11, 9-13, 9-15, 9-21, 9-23, 9-25, 9-27, 9-29, 9-31, 9-33, 9-41, 9-43, 9-45, 9-47, 9-49, 9-51, 9-53, 9-55, 9-61, 9-63
90064-0094	PUSH BUTTON, RED	2-147
90064-0052	PUSH BUTTON, RED, XB2-MT42	12-47
90064-0082	PUSH BUTTON, WHITE	9-21, 9-41, 9-61
90064-0041	PUSH BUTTON, XB2/MW RED 10124	12-47
90064-0084	PUSH BUTTON, YELLOW	2-147, 7-9, 8-61, 8-63, 8-65, 9-19, 9-21, 9-39, 9-41, 9-59, 9-61
90064-0088	PUSH BUTTON, YELLOW	9-21, 9-41, 9-61
90064-0095	PUSH BUTTON, YELLOW	2-147
596090-0000	PUSHER	6-59, 6-61
597601-0100	PUSHER	13-121
1143000-0000	PUSHER	5-81, 5-83, 12-257, 12-269
1362486-0000	PUSHER	5-137, 5-139, 5-141, 5-143
2505106-0000	PUSHER	13-161
2505143-0100	PUSHER	13-159
561412-0000	PUSHER PLATE	4-65, 4-67, 4-69, 4-71
1285049-0100	PUSHERBLOCK	12-249
1362442-0100	PUSHERBLOCK	12-267
90163-0062	QUICK COUPLING, (F) 5053-1/8	1-27, 1-29
90163-0133	QUICK COUPLING, (F) LP-004-0-WR013-21-1	2-115, 2-137, 2-139
90163-0076	QUICK COUPLING, (F) LP-006-0-WR021	2-35, 2-121, 2-123, 12-167, 13-15, 13-97
90163-0050	QUICK COUPLING, (M) 5089 / 9	2-179
90163-0057	QUICK COUPLING, (M) 5150-1/8	1-27, 1-29
90163-0064	QUICK COUPLING, (M) LP-006-2-WR517	2-179
90163-0134	QUICK COUPLING, LP-004-1-SL006-21	2-115, 2-137, 2-139
90025-0022	RACK TERMINATION TPMC	9-5, 9-7, 9-9, 9-11, 9-13, 9-15, 9-25, 9-27, 9-29, 9-31, 9-33, 9-45, 9-47, 9-49, 9-51, 9-53, 9-55
67369-0102	RACK WALLMOUNTED 84TE	9-5, 9-7, 9-9, 9-11, 9-13, 9-15, 9-25, 9-27, 9-29, 9-31, 9-33, 9-45, 9-47, 9-49, 9-51, 9-53, 9-55
90091-0404	RADIAL SEAL 22X40X7 MM DUST LIP	6-31, 6-33, 6-43, 6-45
90091-0406	RADIAL SEAL 25X40X7 MM DUST LIP	6-33
90091-0054	RADIAL SEAL 30X47X8 MM DUST LIP	5-19
90091-0299	RADIAL SEAL 30X52X7 MM DUST LIP	6-57
90091-0145	RADIAL SEAL 30X62X10 MM	5-19
315221-0171	RADIAL SEAL 30X62X7 MM	5-123, 5-125, 5-127
90091-0297	RADIAL SEAL 35X47X7 MM DUST LIP	6-33, 6-57, 6-59, 6-61
90091-0142	RADIAL SEAL 35X50X9 MM	5-123
90091-0415	RADIAL SEAL 35X52X7 MM DUST LIP	6-49
90091-0298	RADIAL SEAL 45X65X8 MM DUST LIP	6-59, 6-61
90091-0143	RADIAL SEAL 47X62X6 MM	5-61
315221-0197	RADIAL SEAL 48X72X8 MM	3-29
315221-0200	RADIAL SEAL 50X72X8 MM	5-59
90091-0202	RADIAL SEAL 58X80X13 MM DUST LIP	5-61
315221-0221	RADIAL SEAL 70X90X10 MM	3-9, 3-19
90091-0416	RADIAL SEAL 70X90X10 MM DUST LIP	6-49
90091-0029	RADIAL SEAL 80X105X13 MM	3-9, 3-19
90091-0130	RADIAL SEAL 90X110X12 MM DUST LIP	5-125, 5-127
37895-0000	RAIL	12-89
262970-0000	RAIL	5-137, 5-139, 5-141, 5-143
263612-0000	RAIL	2-167
269320-0000	RAIL	2-133
269321-0000	RAIL	2-133
279029-0000	RAIL	4-65, 4-67, 4-69, 4-71
282647-0001	RAIL	1-37
285712-0000	RAIL	5-137, 5-139, 5-141, 5-143
285724-0002	RAIL	5-137, 5-139, 5-141, 5-143
479223-0000	RAIL	8-69, 8-71, 8-73, 8-75
484783-0000	RAIL	8-69, 8-71, 8-73

Part No	Description	Page No
522122-0001 ...	RAIL	8-85, 8-87
522122-0002 ...	RAIL	8-85, 8-87
544290-0000 ...	RAIL	5-137, 5-139, 5-141, 5-143
561411-0000 ...	RAIL	4-65, 4-67, 4-69, 4-71
574039-0000 ...	RAIL	5-137, 5-139, 5-141, 5-143
583259-0000 ...	RAIL	4-65, 4-67, 4-69, 4-71
593642-0000 ...	RAIL	8-85, 8-87
596120-0000 ...	RAIL	6-37, 6-39
596122-0000 ...	RAIL	6-37, 6-39
1143144-0000 .	RAIL	4-65, 4-67, 4-69, 4-71, 13-77
1144253-0000 .	RAIL	6-55
1144929-0000 .	RAIL	6-37, 6-39
1144931-0000 .	RAIL	6-37, 6-39
1144980-0000 .	RAIL	6-37, 6-39
1144981-0000 .	RAIL	6-37, 6-39
1282410-0000 .	RAIL	6-37, 6-39
1362933-0000 .	RAIL	6-27
1362934-0000 .	RAIL	6-27
252770-0000 ...	RAIL BRACKET	4-101, 4-103, 4-105, 4-107
531110-0000 ...	RAIL BRACKET	4-101, 4-103, 4-105, 4-107
544342-0000 ...	RAIL BRACKET	4-101, 4-103, 4-105, 4-107
551281-0000 ...	RAIL BRACKET	4-101, 4-103, 4-105, 4-107
563205-0000 ...	RAIL BRACKET	4-101, 4-103, 4-105, 4-107
581823-0000 ...	RAIL BRACKET	4-101, 4-103, 4-105, 4-107
1020142-0002 .	RAIL HOLDER, B55 WIDTH 30 MM	6-37, 6-39
597543-0000 ...	RAIL NORM.FIN	12-273, 13-125
597542-0000 ...	RAIL REV.FIN	12-273, 13-125
1361916-0000 .	RAIL REV.FIN	5-129, 5-131
353042-0004 ...	RAIL TS 35/7,5	2-45, 2-91, 13-183
353042-0005 ...	RAIL TS 35/7.5	8-67
90077-0302	RAIL TS/35X7,5	2-147
257845-0000 ...	RAILING	10-15, 10-17, 10-21
257846-0000 ...	RAILING	10-15, 10-17
257859-0000 ...	RAILING	10-15, 10-17, 10-21
263322-0000 ...	RAILING	10-15, 10-17
263323-0000 ...	RAILING	2-167
263619-0000 ...	RAILING	10-15, 10-17
451407-0000 ...	RAILING	10-15, 10-17, 10-21
451426-0000 ...	RAILING	12-5, 12-9
25641-0000	REAMED BOLT	4-145, 12-225
436355-0000 ...	REAMED BOLT	1-43, 1-45
563061-0000 ...	REAMED BOLT	3-41, 3-43
568166-0000 ...	REAMED BOLT	8-49
90239-0487	REAR,CLEVIS,MINI-ISO 20-25	7-37, 7-39
597530-0100 ...	REB HYDRAULIC UNIT	13-91
1338961-0100 .	REB. CABINET DOOR	13-205
1338722-0100 .	REB. CONTROL PANEL DOOR	13-205
1338698-0100 .	REB. ELECTRICAL CABINET	13-205
594590-0100 ...	REB.KIT SHARP EDGES	11-3
595142-0100 ...	REB.KIT TPC 1000 SQ TO USTS HYDRAULIC	12-3
554832-0100 ...	REB.KIT VALVE PANEL LOWER	12-127
581361-0100 ...	REBUILDING KIT	13-51
592900-0100 ...	REBUILDING KIT ARGENTINA	13-3
581362-0100 ...	REBUILDING KIT CANTILEVER	13-51
591295-0100 ...	REBUILDING KIT COLUMN	12-151
595131-0100 ...	REBUILDING KIT HOLD DOWN DEVICE	13-31
1143224-0101 .	REBUILDING KIT KNIFE HOL.	13-73
581358-0100 ...	REBUILDING KIT L.FORM.RIN	13-51
597524-0100 ...	REBUILDING KIT LS SEALING	13-35
581366-0100 ...	REBUILDING KIT MOVABLE F.	13-51
1143225-0101 .	REBUILDING KIT PRESS.JAW	13-73
592987-0100 ...	REBUILDING KIT US DRAIN VALVE	13-3
592922-0100 ...	REBUILDING KIT US HYDRAULIC	13-3
581364-0100 ...	REBUILDING KIT VALVE	13-51
581365-0100 ...	REBUILDING KIT,CABLE COU.	13-51
581359-0100 ...	REBUILDING KIT,PROTECTION	13-51
581367-0100 ...	REBUILDING KITPLATFORM	13-51
2590351-0100 .	REBUILDING KITS DIMC MULTI 010	13-3
2590350-0100 .	REBUILDING KITS DIMC MULTI 020	13-3
1338216-0100 .	REBUILDING KITS DIMC8	13-3
2691037-0101 .	REBUILDING MANUAL	13-219
2691038-0101 .	REBUILDING MANUAL	13-225
2691039-0101 .	REBUILDING MANUAL	13-229
90459-0083	RECORDER 1-CHANNEL, LOGOLINE 500	13-225
90332-0323	RECORDER CHARTS	9-59
90332-0019	RECORDER HONEYWELL 1 CH.	9-25, 9-27, 9-29, 9-31, 9-33, 9-45, 9-47, 9-49, 9-51, 9-53, 9-55
90332-0007	RECORDER, ZSN 005/D 220V,50HZ	9-5, 9-7, 9-9, 9-11, 9-13, 9-15
90332-0008	RECORDER, ZSN 005/D 220V;60HZ	9-5, 9-7, 9-9, 9-11, 9-13, 9-15
90038-0024	RECTIFIER, 10/22A SKD 50/04A3	9-5, 9-7, 9-9, 9-11, 9-13, 9-15, 9-25, 9-27, 9-29, 9-31, 9-33, 9-45, 9-47, 9-49, 9-51, 9-53, 9-55
342716-0211 ...	REDUCER 12-14	2-27, 2-29, 2-31, 2-81, 2-83, 13-179
342716-0210 ...	REDUCER 6-12	2-27, 2-29, 2-31, 2-81, 2-83
342716-0203 ...	REDUCER 6-8	2-27, 2-29, 2-31, 2-81, 2-83, 12-159, 12-263, 13-117
342716-0209 ...	REDUCER 8-12	2-27, 2-29, 2-31, 2-81, 2-83

Part No	Description	Page No
90030-0594	REDUCING ADAPTER	2-173, 12-163, 13-29
90089-0006	REDUCING SLEEVE, G 1/2/PR18,6	12-49
90089-0013	REDUCING SLEEVE, PR20,4/PR18,6	7-11
90089-0003	REDUCING SLEEVE, PR22,5/PR18,6	7-31, 7-33
342714-0202	REDUCTION KOR 10/6-LFZB	2-173, 2-175, 13-29
342714-0209	REDUCTION KOR 15/10-LFZB	2-121, 2-123
342710-0115	REDUCTION RBM 16/8	2-149, 2-151
90232-0333	REFLECTOR E39-R1	8-49
90232-0307	REFLECTOR VISOLUX 40X180MM	12-47
90113-0114	REGULATOR, B64G-NNK-AD1-RMN	2-149, 2-151
90119-0108	RELAY OMRON G2R-2-SNI-24DC	13-243
90119-0056	RELAY, AUXILIARY MK3P5-S 24VDC	9-5, 9-7, 9-9, 9-11, 9-13, 9-15, 9-19, 9-25, 9-27, 9-29, 9-31, 9-33, 9-39, 9-45, 9-47, 9-49, 9-51, 9-53, 9-55, 9-59, 13-221
90119-0086	RELAY, AUXILIARY MY4IN4 24VDC	9-25, 9-27, 9-29, 9-31, 9-33, 9-45, 9-47, 9-49, 9-51, 9-53, 9-55
90121-0116	RESISTANCE FIXED, 0,15 KOHM, 0,25 W	9-5, 9-7, 9-9, 9-11, 9-13, 9-15, 9-19, 9-21, 9-25, 9-27, 9-29, 9-31, 9-33, 9-39, 9-41, 9-45, 9-47, 9-49, 9-51, 9-53, 9-55, 9-59, 9-61
1129473-0000	RESORTE (REEMPLAZADO X 1549378)	4-23, 4-25, 4-27, 4-29, 12-215, 12-217, 12-219, 12-221, 13-7, 13-9, 13-99, 13-101, 13-103, 13-105
271654-0000	RETAINING RING	7-29, 12-61, 12-63
440259-0000	RETAINING RING	8-45, 8-47, 12-95
499879-0000	RETAINING RING	1-27, 1-29
574051-0000	RETAINING RING	8-45, 8-47
315742-0111	RETAINING RING 15 SMS 199 RFR	12-53, 12-55, 12-67, 12-69, 12-71, 12-73
315742-0112	RETAINING RING 16 SMS 199 RFR	12-49
315742-0114	RETAINING RING 18 SMS 199 RFR	5-89, 5-91
315742-0119	RETAINING RING 25 SMS 199 RFR	5-137, 5-139, 5-141, 5-143
315742-0122	RETAINING RING 30 SMS 199	6-55
315752-0149	RETAINING RING FOR BORE DIN 472 110 ST	5-125, 5-127
315753-0121	RETAINING RING FOR BORE DIN 472 28 A2	12-117
315753-0122	RETAINING RING FOR BORE DIN 472 30 A2	6-59, 6-61, 12-101
315752-0123	RETAINING RING FOR BORE DIN 472 32 ST	8-5, 8-7, 8-21, 8-23, 8-25, 8-27, 8-29, 8-31, 8-33
315753-0124	RETAINING RING FOR BORE DIN 472 35 A2	12-107
315752-0124	RETAINING RING FOR BORE DIN 472 35 ST	12-83
90141-0019	RETAINING RING FOR BORE DIN 472 50 A2	6-47
315753-0132	RETAINING RING FOR BORE DIN 472 52 A2	6-33, 6-57
315752-0136	RETAINING RING FOR BORE DIN 472 62 ST	4-139, 4-141, 5-19
315751-0109	RETAINING RING FOR SHAFT DIN 471 12 A2	7-21, 7-23, 12-117
315751-0112	RETAINING RING FOR SHAFT DIN 471 15 A2	7-25, 8-43
315751-0119	RETAINING RING FOR SHAFT DIN 471 25 A2	6-33, 6-47, 6-55, 12-107
315751-0124	RETAINING RING FOR SHAFT DIN 471 35 A2	6-49
315751-0103	RETAINING RING FOR SHAFT DIN 471 6 A2	8-13, 8-15
90141-0015	RETAINING RING FOR SHAFT DIN 471 8 A2	4-23, 4-25, 4-27, 4-29, 7-19, 12-215, 12-217, 12-219, 12-221, 13-7, 13-9, 13-99, 13-101, 13-103, 13-105, 13-109, 13-111
90141-0012	RETAINING RING FOR SHAFT, 17X1,5MM	5-19
315750-0107	RETAINING RING SHAFT DIN 471 ST 10	4-45, 4-47, 4-49, 4-51, 7-41, 12-83
315750-0109	RETAINING RING SHAFT DIN 471 ST 12	8-41
315750-0112	RETAINING RING SHAFT DIN 471 ST 15	8-17, 8-41, 12-83
315750-0119	RETAINING RING SHAFT DIN 471 ST 25	3-11, 3-21, 13-11
315750-0122	RETAINING RING SHAFT DIN 471 ST 30	5-19
315750-0127	RETAINING RING SHAFT DIN 471 ST 40	5-19
315750-0131	RETAINING RING SHAFT DIN 471 ST 50	5-59
315750-0103	RETAINING RING SHAFT DIN 471 ST 6	1-73
315750-0135	RETAINING RING SHAFT DIN 471 ST 60	12-47
315750-0105	RETAINING RING SHAFT DIN 471 ST 8	7-35, 8-9, 8-39, 12-57, 12-75
315755-0111	RETAINING RING SHAFT DIN 6799 10 A2	8-49
315755-0113	RETAINING RING SHAFT DIN 6799 15 A2	5-23, 5-39
315755-0105	RETAINING RING SHAFT DIN 6799 3,2 A2	7-19
315755-0106	RETAINING RING SHAFT DIN 6799 4 A2	6-7
315755-0107	RETAINING RING SHAFT DIN 6799 5 A2	5-119
315755-0108	RETAINING RING SHAFT DIN 6799 6 A2	8-77, 8-79, 13-145
315755-0109	RETAINING RING SHAFT DIN 6799 7 A2	3-15, 3-17
315755-0801	RETAINING RING SHAFT DIN 6799 8 A2	8-5, 8-7, 8-21, 8-23, 8-25, 8-27, 8-29, 8-31, 8-33
1285044-0100	REVERSE FIN KIT	12-3
232781-0400	REVOLVING HEAD	12-15
440027-0000	RIM	2-85, 2-87
440028-0000	RIM	2-85, 2-87
442201-0000	RIM	12-67, 12-69, 12-71, 12-73
564523-0000	RIM	2-159, 2-161, 2-185
36753-0000	RING	4-139, 4-141
113654-0000	RING	4-143, 4-147, 12-223, 12-227
255281-0000	RING	12-83
440655-0000	RING	1-63
539186-0000	RING	8-17
568287-0000	RING	3-37, 3-39, 13-33
570067-0000	RING	3-35, 3-41, 3-43
581370-0001	RING	13-57
581370-0002	RING	13-57
581370-0003	RING	13-57
581370-0004	RING	13-57
592938-0000	RING	1-31, 1-33
595213-0000	RING	1-31, 1-33
927601-0000	RING	13-57
927602-0000	RING	13-57

Part No	Description	Page No
927603-0000	RING	13-57
1282326-0000	RING	6-15
565327-0000	RING NUT	5-125, 5-127
566774-0000	RIVET	10-5
312923-0149	RIVET NUT M8, CLAMP. LENGTH 1,5 - 3,0	6-35
311520-0329	RIVET, BLANK 2,4X8	2-147
311520-0420	RIVET, BLANK 3,2X4	2-133, 2-183
311508-0416	RIVET, ROUND HEAD, KN, 4X10	4-77, 4-79, 4-85, 4-87
2542396-0100	RK EL "IMPROVED STRIPBREAK SUPERVISION".	13-187
927600-0100	RK KNIFE SPRING TBA/8	13-3
2660701-0100	RK-COUNTER	13-3
2660659-0100	RK-ELECTRICAL CABINET	13-219
2660702-0100	RK-ELECTRICAL CABINET	13-229
2660676-0100	RK-FREQ. CONVERTER	13-3
927668-0100	RK-PAPER TROLLEY	13-3
2660700-0100	RK-RECORDER	13-3
522318-0000	ROCKER ARM	1-31, 1-33
522558-0000	ROCKER ARM	1-31, 1-33
556565-0000	ROCKER ARM	7-41
560417-0000	ROCKER ARM	3-37, 3-39
593868-0000	ROCKER ARM	3-37, 3-39
1255162-0000	ROCKER ARM	5-137, 5-139, 5-141, 5-143, 12-255
1255163-0000	ROCKER ARM	5-137, 5-139, 5-141, 5-143, 12-255
74770-0000	ROD	14-47
229408-0000	ROD	12-49
239476-0000	ROD	4-131, 4-133, 4-135, 4-137
247119-0000	ROD	3-41, 3-43
449156-0000	ROD	14-33
499392-0000	ROD	12-115
529313-0000	ROD	12-133
90239-0357	ROD END, CLEVIS WITH AXLE M10X1,25	1-35, 8-17
90239-0516	ROD END, CLEVIS WITH AXLE M10X1,25	1-31, 1-33, 5-137, 5-139, 5-141, 5-143, 7-37, 7-39
90239-0532	ROD END, CLEVIS WITH AXLE M8X1,25	7-41
90115-0181	ROD END, ID=10 MM M10X1,5	6-57
90115-0182	ROD END, ID=10 MM M10X1,5LH	6-57
90347-0300	ROD END, ID=10 MM, M10 FOR 90347-36;-38	2-9, 2-69
90115-0105	ROD END, ID=10 MM, M10X1,5	3-31, 3-33
90115-0133	ROD END, ID=12 MM, M12X1,25	3-37, 3-39
90115-0067	ROD END, ID=16 MM, M16X2	3-41, 3-43
90115-0111	ROD END, ID=22 MM, M22X1,5 LH	2-9, 2-69
90115-0137	ROD END, ID=6 MM, M6X1	6-27
90115-0054	ROD END, ID=8 MM, M8X1,25	12-87
90115-0106	ROD END, ID=8 MM, M8X1,25	3-15, 3-17
90115-0122	ROD END, ID=8 MM, M8X1,25	3-41, 3-43
90115-0139	ROD END, ID=8 MM, M8X1,25	5-137, 5-139, 5-141, 5-143, 12-255
90115-0107	ROD END, ID=8 MM, M8X1,25 LH	3-15, 3-17
312621-0318	ROD END,NUT M8	3-41, 3-43
90091-0078	ROD SEAL, O-RING 18X25X3 MM	4-61, 4-63, 4-65, 4-67, 4-69, 4-71
90091-0364	ROD SEAL, STEPSEAL 18X25,3X3,2 MM	4-7, 4-23, 4-25, 4-27, 4-29, 12-215, 12-217, 12-219 12-221, 12-231, 13-7, 13-9, 13-99, 13-101, 13-103, 13-105, 13-109, 13-111, 13-167
90091-0157	ROD SEAL, STEPSEAL 25X35X4,2 MM	12-109
6161-0000	ROLL	1-37, 13-41
21397-0000	ROLL	1-31, 1-33, 1-39
21401-0000	ROLL	1-75, 1-77, 1-79, 1-81, 1-83
21903-0000	ROLL	7-27, 7-35, 7-41
22463-0000	ROLL	4-143, 4-147, 12-223, 12-227
25961-0000	ROLL	1-75, 1-77, 1-79, 1-81, 1-83
32926-0000	ROLL	8-5, 8-7, 8-21, 8-23, 8-25, 8-27, 8-29, 8-31, 8-33, 12-53, 12-55, 12-67, 12-69, 12-71, 12-73
33182-0000	ROLL	8-5, 8-7, 8-21, 8-23, 8-25, 8-27, 8-29, 8-31, 8-33, 12-53, 12-55, 12-67, 12-69, 12-71, 12-73
33442-0000	ROLL	1-31, 1-33
36934-0003	ROLL	1-31, 1-33, 1-39
36938-0004	ROLL	1-75, 1-77, 1-79, 1-81, 1-83
36943-0001	ROLL	1-43, 1-45
36944-0001	ROLL	1-43, 1-45
36945-0001	ROLL	1-43, 1-45
36953-0010	ROLL	1-5, 1-11, 1-23
37888-0000	ROLL	12-91
268059-0000	ROLL	1-31, 1-33
279374-0000	ROLL	1-31, 1-33
285321-0000	ROLL	5-145, 5-147, 5-149, 5-151, 5-153, 5-155
440136-0001	ROLL	8-17, 8-83
440136-0002	ROLL	8-81
440136-0003	ROLL	8-81
440136-0004	ROLL	8-81
440136-0007	ROLL	8-81
440136-0008	ROLL	8-81
440136-0009	ROLL	8-43
440210-0200	ROLL	8-3
443487-0000	ROLL	5-137, 5-139, 5-141, 5-143
443488-0000	ROLL	5-137, 5-139, 5-141, 5-143
469464-0000	ROLL	1-31, 1-33
526691-0000	ROLL	13-41
532724-0000	ROLL	1-11
536989-0000	ROLL	1-43, 1-45

Part No	Description	Page No
536991-0000	ROLL	1-43, 1-45
536992-0000	ROLL	1-43, 1-45
536993-0000	ROLL	1-43, 1-45
536994-0000	ROLL	1-43, 1-45
536995-0000	ROLL	1-43, 1-45
537297-0000	ROLL	1-43, 1-45
541066-0000	ROLL	7-21, 7-23
542785-0000	ROLL	7-19
544730-0000	ROLL	7-15, 7-17, 7-21, 7-23, 13-237
573995-0000	ROLL	1-43, 1-45
573996-0000	ROLL	1-43, 1-45
573997-0000	ROLL	1-43, 1-45
573998-0000	ROLL	1-43, 1-45
574001-0000	ROLL	1-75, 1-77, 1-79, 1-81, 1-83
574010-0001	ROLL	1-31, 1-33
574075-0000	ROLL	5-89, 5-91
582012-0001	ROLL	1-31, 1-33, 1-39
582014-0000	ROLL	1-43, 1-45
582015-0000	ROLL	1-43, 1-45
582016-0000	ROLL	1-43, 1-45
582017-0000	ROLL	1-43, 1-45
583176-0000	ROLL	1-75, 1-77, 1-79, 1-81, 1-83
583179-0000	ROLL	1-75, 1-77, 1-79, 1-81, 1-83
583182-0001	ROLL	1-31, 1-33, 1-39
583255-0000	ROLL	1-43, 1-45
583256-0000	ROLL	1-43, 1-45
583257-0000	ROLL	1-43, 1-45
583258-0000	ROLL	1-43, 1-45
590409-0000	ROLL	7-15, 13-193
592926-0000	ROLL	1-43, 1-45
592927-0000	ROLL	1-43, 1-45
592928-0000	ROLL	1-43, 1-45
592929-0000	ROLL	1-43, 1-45
592932-0000	ROLL	1-75, 1-77, 1-79, 1-81, 1-83
592933-0000	ROLL	1-75, 1-77, 1-79, 1-81, 1-83
592934-0000	ROLL	1-75, 1-77, 1-79, 1-81, 1-83
592935-0000	ROLL	1-75, 1-77, 1-79, 1-81, 1-83
592936-0001	ROLL	1-31, 1-33
593589-0000	ROLL	8-21, 8-23, 8-25, 8-27, 8-29, 8-31, 8-33
593664-0000	ROLL	13-39
1285546-0000	ROLL	13-133
283462-0000	ROLL REPBY 0573666-0000	12-65
229402-0000	ROLLER	12-49
436302-0000	ROLLER	1-43, 1-45
752740-0000	ROLLER	1-23
927318-0000	ROLLER	5-125, 5-127
1144257-0000	ROLLER	6-55
1144335-0000	ROLLER	6-5
1144520-0000	ROLLER	6-59, 6-61
1144581-0000	ROLLER	6-47
1144594-0000	ROLLER	6-31, 6-33
1144614-0000	ROLLER	6-33
1282402-0000	ROLLER	6-33
1362499-0000	ROLLER	7-43
1484448-0000	ROLLER BEARING	6-49
90214-0053	ROLLER BEARING, 15X40X15, 9 MM	12-97, 12-99
321576-0360	ROLLER BEARING, 30X62X29 MM	3-35, 3-37, 3-39
554103-0000	ROLLER BED	14-39
554104-0000	ROLLER BED	14-39
22473-0000	ROLLER BRACKET	4-147
23361-0000	ROLLER BRACKET	4-143
31424-0000	ROLLER BRACKET	7-31, 7-33
574074-0000	ROLLER BRACKET	5-89, 5-91
318242-0034	ROLLER CHAIN DUPLEX 1/2"-34,SS	5-33, 5-53, 5-55
318242-0036	ROLLER CHAIN DUPLEX 1/2"-36SS	5-113
318242-0108	ROLLER CHAIN, DUPLEX 1/2"-108, SS	5-89, 5-91
318212-0119	ROLLER CHAIN, SINGLE 1/2 -119,SS	5-29, 5-49, 5-51
90288-0053	ROLLER CHAIN, SINGLE 1/2 -14	5-105, 5-107, 5-109, 5-111
318212-0150	ROLLER CHAIN, SINGLE 1/2 -150,SS	5-101, 5-103
90288-0057	ROLLER CHAIN, SINGLE 1/2 -16	5-105, 5-107, 5-109, 5-111
90288-0045	ROLLER CHAIN, SINGLE 1/2 -28	12-97, 12-99
318212-0006	ROLLER CHAIN, SINGLE 1/2 -6	5-105, 5-107, 5-109, 5-111
318212-0066	ROLLER CHAIN, SINGLE 1/2 -66,SS	5-53, 5-55
318212-0074	ROLLER CHAIN, SINGLE 1/2 -74,SS	5-33
318212-0008	ROLLER CHAIN, SINGLE 1/2 -8,SS	5-105, 5-107, 5-109, 5-111
318201-0076	ROLLER CHAIN, SINGLE 3/8 -76	5-67
90288-0055	ROLLER CHAIN, SINGLE 5/8 -42	5-29, 5-49, 5-51
318207-0151	ROLLER CHAIN, SINGLE 6MM-151	12-53, 12-55, 12-67, 12-69, 12-71, 12-73
318207-0168	ROLLER CHAIN, SINGLE 6MM-168	8-5, 8-7, 8-21, 8-23, 8-25, 8-27, 8-29, 8-31, 8-33
237827-0001	ROLLER SHAFT	12-47
237827-0002	ROLLER SHAFT	12-47
751350-0004	ROLLER SHAFT	12-47
2660686-0100	ROT. UNIT PARTS	12-3
440600-0000	ROTOR	2-11, 2-25, 2-53, 2-55, 2-59, 2-61

Part No	Description	Page No
532082-0000	ROUND NUT	8-5, 8-7, 8-21, 8-23, 8-25, 8-27, 8-29, 8-31, 8-33
532083-0000	ROUND NUT	8-5, 8-7, 8-21, 8-23, 8-25, 8-27, 8-29, 8-31, 8-33
476016-0000	RUBBER	8-57, 8-59
90342-0010	RUBBER BELLOWS, 60X152 MM	12-97, 12-99
262314-0000	RUBBER GASKET	5-133, 5-135
262316-0000	RUBBER GASKET	5-133, 5-135
442533-0000	RUBBER GASKET	5-133, 5-135
90166-0199	RUBBER HOSE	5-15
540334-0000	RUBBER RING	4-73
90143-0047	RUBBER STRIP	12-31
252798-0000	RUBBER STRIP	13-53
581343-0000	RUBBER STRIP	13-55
90143-0049	RUBBER STRIP 11X21MM	2-85, 2-87, 2-133, 2-181, 2-183
90143-0068	RUBBER STRIP EMKA 1011-06	2-49, 2-51
37913-0000	RULER	12-85
37914-0000	RULER	12-85
37915-0000	RULER	12-85
37944-0000	RULER	12-85
37946-0000	RULER	12-85
37947-0000	RULER	12-85
252780-0000	RULER	4-101, 4-103, 4-105, 4-107
263758-0000	RULER	14-13, 14-15, 14-41, 14-43
269291-0000	RULER	2-37, 2-39, 2-41, 2-85, 2-87
269294-0000	RULER	2-37, 2-39, 2-41, 2-85, 2-87
283992-0000	RULER	2-37, 2-39, 2-41, 2-85, 2-87
293579-0000	RULER	14-37
440078-0000	RULER	14-35
440203-0000	RULER	2-37, 2-39, 2-41, 2-85, 2-87
440204-0000	RULER	2-37, 2-39, 2-41, 2-85, 2-87
440205-0000	RULER	2-37, 2-39, 2-41, 2-85, 2-87
440206-0000	RULER	2-37, 2-39, 2-41, 2-85, 2-87
442385-0000	RULER	12-85
442386-0000	RULER	12-85
442387-0000	RULER	12-85
522124-0000	RULER	8-85, 8-87
525412-0000	RULER	5-33, 5-53, 5-55
530458-0000	RULER	14-37
546121-0000	RULER	12-147
546122-0000	RULER	12-147
593644-0000	RULER	8-85, 8-87
526984-0000	SADDLE	8-13, 8-15
90119-0080	SAFETY RELAY JSBR3	9-5, 9-7, 9-9, 9-11, 9-13, 9-15, 9-25, 9-27, 9-29, 9-31, 9-33, 9-45, 9-47, 9-49, 9-51, 9-53, 9-55
90119-0072	SAFETY RELAY, JSBR4	9-5, 9-7, 9-9, 9-11, 9-13, 9-15, 9-25, 9-27, 9-29, 9-31, 9-33, 9-45, 9-47, 9-49, 9-51, 9-53, 9-55
769211-0114	SAW BLADE	12-241
769211-0116	SAW BLADE	13-171
769211-0117	SAW BLADE	12-241
769211-0120	SAW BLADE	12-241
769211-0122	SAW BLADE	13-91
769211-0129	SAW BLADE	13-171
769211-0138	SAW BLADE	13-171
769211-0148	SAW BLADE	12-241
90110-0334	SCHRAUBE HARTING	9-5, 9-7, 9-9, 9-11, 9-13, 9-15, 9-25, 9-27, 9-29, 9-31, 9-33, 9-45, 9-47, 9-49, 9-51, 9-53, 9-55
777510-0101	SCISSORS	10-9
90220-0040	SCR. CABLE 2X0,75 MM2 BLACK	9-5, 9-7, 9-9, 9-11, 9-13, 9-15, 9-25, 9-27, 9-29, 9-31, 9-33, 9-45, 9-47, 9-49, 9-51, 9-53, 9-55
90220-0105	SCR. CABLE 4X2,5MM2	9-5, 9-7, 9-9, 9-11, 9-13, 9-15, 9-17, 9-25, 9-27, 9-29, 9-31, 9-33, 9-35, 9-37, 9-45, 9-47, 9-49, 9-51, 9-53, 9-55, 9-57
90220-0108	SCR. CABLE 5X1,5MM2	9-5, 9-7, 9-9, 9-11, 9-13, 9-15, 9-17, 9-25, 9-27, 9-29, 9-31, 9-33, 9-35, 9-37, 9-45, 9-47, 9-49, 9-51, 9-53, 9-55, 9-57
90091-0038	SCRAPER 20X30X10 MM	12-103
90091-0125	SCRAPER 35X45X10 MM	12-109
90091-0080	SCRAPER 48X60X10 MM	4-139, 4-141
90091-0380	SCRAPER, EXCLUDER 20X24,8X3,7 MM	6-59, 6-61
90091-0362	SCRAPER, EXCLUDER2 18X22,8X3,7 MM	4-7, 4-23, 4-25, 4-27, 4-29, 12-215, 12-217, 12-219, 12-221, 12-231, 13-7, 13-9, 13-99, 13-101, 13-103, 13-105, 13-109, 13-111, 13-167
232978-0000	SCREEN	12-53, 12-55
23584-0000	SCREW	1-43, 1-45, 7-45
32957-0000	SCREW	4-131, 4-133, 4-135, 4-137
33010-0000	SCREW	8-9, 8-39, 12-57, 12-75
33409-0000	SCREW	4-45, 4-47, 4-49, 4-51
74365-0000	SCREW	14-49
90043-0302	SCREW	1-55, 7-9
232237-0000	SCREW	4-33, 4-35, 4-37, 4-39, 4-41, 4-43
243143-0000	SCREW	4-11, 4-13, 4-15, 4-17, 4-19, 4-21, 4-77, 4-79, 4-85, 4-87, 12-193, 12-195, 12-197, 12-199, 12-201, 12-203
246787-0000	SCREW	3-35
252785-0000	SCREW	4-101, 4-103, 4-105, 4-107
268195-0000	SCREW	4-101, 4-103, 4-105, 4-107
268746-0000	SCREW	2-125
270927-0000	SCREW	6-21, 6-23, 6-25, 13-177

Part No	Description	Page No
271241-0000	SCREW	12-95
285891-0000	SCREW	5-121
285923-0000	SCREW	5-7, 5-9, 5-35, 5-37
293612-0000	SCREW	4-101, 4-103, 4-105, 4-107
293679-0000	SCREW	12-53, 12-55, 12-67, 12-69, 12-71, 12-73
297610-0000	SCREW	5-11
297770-0000	SCREW	2-9, 2-69
434021-0000	SCREW	4-101, 4-103, 4-105, 4-107
436249-0000	SCREW	12-93, 12-115
440271-0000	SCREW	8-55
443485-0000	SCREW	5-89, 5-91, 5-101, 5-103
445907-0000	SCREW	8-69, 8-71, 8-73
445918-0000	SCREW	8-69, 8-71, 8-73
449753-0000	SCREW	8-69, 8-71, 8-73
457354-0000	SCREW	2-9, 2-69
464983-0000	SCREW	8-69, 8-71, 8-73
476202-0000	SCREW	12-37, 12-133
476289-0000	SCREW	8-69, 8-71, 8-73
476377-0000	SCREW	8-5, 8-7, 8-21, 8-23, 8-25, 8-27, 8-29, 8-31, 8-33, 12-53, 12-55, 12-67, 12-69, 12-71, 12-73
479354-0000	SCREW	3-11, 3-21, 13-11
525015-0001	SCREW	5-41, 5-43, 5-45, 5-47
525015-0002	SCREW	5-25, 5-27, 5-41, 5-43, 5-45, 5-47
525015-0003	SCREW	5-41, 5-43, 5-45, 5-47
525321-0000	SCREW	5-25, 5-27, 5-41, 5-43, 5-45, 5-47
530755-0000	SCREW	3-31, 3-33
531610-0000	SCREW	12-119
533459-0000	SCREW	8-5, 8-7, 8-21, 8-23, 8-25, 8-27, 8-29, 8-31, 8-33
536980-0000	SCREW	4-77, 4-79, 4-85, 4-87
553851-0000	SCREW	4-65, 4-67, 4-69, 4-71
561413-0000	SCREW	4-65, 4-67, 4-69, 4-71
573583-0000	SCREW	4-11, 4-13, 4-15, 4-17, 4-19, 4-21, 4-77, 4-79, 4-85, 4-87, 12-193, 12-195, 12-197, 12-199, 12-201, 12-203
573984-0000	SCREW	4-11, 4-13, 4-15, 4-17, 4-19, 4-21, 12-193, 12-195, 12-197, 12-199, 12-201, 12-203
574084-0000	SCREW	5-89, 5-91
581348-0000	SCREW	13-59
581349-0000	SCREW	13-63
979707-0000	SCREW	6-35
1143885-0000	SCREW	4-23, 4-25, 4-27, 4-29, 12-215, 12-217, 12-219, 12-221, 13-7, 13-9
1144685-0000	SCREW	6-57
1144688-0000	SCREW	6-57
1144853-0000	SCREW	6-55
1144989-0000	SCREW	6-37, 6-39
1260931-0000	SCREW	6-29
1285885-0000	SCREW	6-7, 6-65
1296884-0000	SCREW	4-65, 4-67, 4-69, 4-71, 4-77, 4-79, 4-85, 4-87
1296886-0000	SCREW	4-65, 4-67, 4-69, 4-71, 4-77, 4-79, 4-85, 4-87
1296981-0000	SCREW	4-65, 4-67, 4-69, 4-71, 4-77, 4-79, 4-85, 4-87
1296982-0000	SCREW	4-65, 4-67, 4-69, 4-71, 4-77, 4-79, 4-85, 4-87
1317094-0000	SCREW	6-13
1364239-0000	SCREW	13-145
1366154-0000	SCREW	13-151
1366155-0000	SCREW	13-151
2505047-0000	SCREW	13-177
312155-0495	SCREW DIN 7991 MF6S M10X30 A4 70	6-29, 6-33
312155-0499	SCREW DIN 7991 MF6S M10X40 A4 70	5-145, 5-147, 5-149, 5-151, 5-153, 5-155, 6-5
312155-0532	SCREW DIN 7991 MF6S M12X20 A4 70	1-27, 1-29
312155-0289	SCREW DIN 7991 MF6S M4X10 A4 70	3-11, 3-21, 12-97, 12-99, 12-145, 13-11
312155-0291	SCREW DIN 7991 MF6S M4X12 A4 70	5-29, 5-49, 5-51, 6-37, 6-39
312155-0295	SCREW DIN 7991 MF6S M4X20 A4 70	4-33, 4-35, 4-37, 4-39, 4-41, 4-43, 5-33, 5-53, 5-55, 5-81, 5-83
312155-0297	SCREW DIN 7991 MF6S M4X25 A4 70	5-25, 5-27, 5-29, 5-41, 5-43, 5-45, 5-47, 5-49, 5-51, 6-29
312155-0301	SCREW DIN 7991 MF6S M4X35 A4 70	4-33, 4-35, 4-37, 4-39, 4-41, 4-43
312155-0325	SCREW DIN 7991 MF6S M5X10 A4 70	6-37, 6-39, 12-93, 12-115
312155-0327	SCREW DIN 7991 MF6S M5X12 A4 70	2-37, 2-39, 2-41, 2-85, 2-87, 6-59, 6-61, 8-51, 8-53, 8-55
312155-0329	SCREW DIN 7991 MF6S M5X16 A4 70	1-7, 1-9, 4-93, 4-95, 4-113, 4-115, 8-5, 8-7, 8-21, 8-23, 8-25, 8-27, 8-29, 8-31, 8-33, 8-61, 8-63, 8-65, 12-53, 12-55, 12-67, 12-69, 12-71, 12-73, 12-175, 12-177
312155-0331	SCREW DIN 7991 MF6S M5X20 A4 70	1-49, 1-51, 1-53
312155-0333	SCREW DIN 7991 MF6S M5X25 A4 70	8-5, 8-7, 8-21, 8-23, 8-25, 8-27, 8-29, 8-31, 8-33
312155-0323	SCREW DIN 7991 MF6S M5X8 A4 70	8-49
312155-0364	SCREW DIN 7991 MF6S M6X10 A4 70	5-145, 5-147, 5-149, 5-151, 5-153, 5-155
312155-0366	SCREW DIN 7991 MF6S M6X12 A4 70	2-37, 2-39, 2-41, 2-85, 2-87, 5-7, 5-9, 5-35, 5-37, 5-89, 5-91, 5-101, 5-103, 6-35, 6-37, 6-39, 6-55
312155-0368	SCREW DIN 7991 MF6S M6X16 A4 70	2-37, 2-39, 2-41, 2-85, 2-87, 5-137, 5-139, 5-141, 5-143, 5-145, 5-147, 5-149, 5-151, 5-153, 5-155, 6-33, 6-37, 6-39, 8-57, 8-59, 12-147
312155-0370	SCREW DIN 7991 MF6S M6X20 A4 70	2-37, 2-39, 2-41, 2-85, 2-87, 2-167, 4-93, 4-95, 5-23, 5-39, 6-35, 6-59, 6-61, 8-21, 8-23, 8-25, 8-27, 8-29, 8-31, 8-33
312155-0372	SCREW DIN 7991 MF6S M6X25A4 70	2-47, 4-93, 4-95, 5-117, 12-97, 12-99
312155-0374	SCREW DIN 7991 MF6S M6X30 A4 70	4-143, 4-147
312155-0376	SCREW DIN 7991 MF6S M6X35 A4 70	5-89, 5-91, 5-101, 5-103
312155-0378	SCREW DIN 7991 MF6S M6X40 A4 70	5-145, 5-147, 5-149, 5-151, 5-153, 5-155, 12-97, 12-99
312155-0380	SCREW DIN 7991 MF6S M6X50 A4 70	6-5
312155-0382	SCREW DIN 7991 MF6S M6X60 A4 70	4-45, 4-47, 4-49, 4-51, 11-9, 11-11
312155-0449	SCREW DIN 7991 MF6S M8X16 A4 70	8-69, 8-71, 8-73, 12-97, 12-99
312155-0451	SCREW DIN 7991 MF6S M8X20 A4 70	2-37, 2-39, 2-41, 2-85, 2-87, 8-55

Part No	Description	Page No
312155-0453	SCREW DIN 7991 MF6S M8X25 A4 70	6-59, 6-61, 8-49
312303-0374	SCREW DIN 938 PS M6X25 A4 80	8-57, 8-59
90243-0208	SCREW DRIVER	14-21
312151-0220	SCREW EN 10642 MF6S M3X6 10.9 EL.PL	12-49
312151-0366	SCREW EN 10642 MF6S M6X12 10.9 EL.PL	2-37, 2-39, 2-41, 2-85, 2-87
312151-0368	SCREW EN 10642 MF6S M6X16 10.9 EL.PL	8-69, 8-71, 8-73
312151-0379	SCREW EN 10642 MF6S M6X45 10.9 EL.PL	12-53, 12-55, 12-67, 12-69, 12-71, 12-73
312151-0384	SCREW EN 10642 MF6S M6X70 10.9 EL.PL	8-69, 8-71, 8-73
312151-0451	SCREW EN 10642 MF6S M8X20 10.9 EL.PL	5-61
312111-0491	SCREW HEX.SOCK.HD.MC6S-TT 10X20 88 FZ	5-61
312111-0492	SCREW HEX.SOCK.HD.MC6S-TT 10X22 88 FZ	3-9, 3-19
312111-0493	SCREW HEX.SOCK.HD.MC6S-TT 10X25 88 FZ	12-47
312111-0497	SCREW HEX.SOCK.HD.MC6S-TT 10X35 88 FZ	3-9, 3-19
312111-0499	SCREW HEX.SOCK.HD.MC6S-TT 10X40 88 FZ	3-9, 3-19
312111-0501	SCREW HEX.SOCK.HD.MC6S-TT 10X50 88 FZ	3-9, 3-19
312111-0504	SCREW HEX.SOCK.HD.MC6S-TT 10X65 88 FZ	3-9, 3-19
312111-0506	SCREW HEX.SOCK.HD.MC6S-TT 10X75 88 FZ	3-9, 3-19
312111-0533	SCREW HEX.SOCK.HD.MC6S-TT 12X22 88 FZ	12-47
312111-0536	SCREW HEX.SOCK.HD.MC6S-TT 12X30 88 FZ	12-47
312111-0540	SCREW HEX.SOCK.HD.MC6S-TT 12X40 88 FZ	14-39
312111-0297	SCREW HEX.SOCK.HD.MC6S-TT 4X25 88 FZB	2-179
312111-0325	SCREW HEX.SOCK.HD.MC6S-TT 5X10 88 FZB	8-69, 8-71, 8-73
312111-0327	SCREW HEX.SOCK.HD.MC6S-TT 5X12 88 FZB	8-69, 8-71, 8-73
312111-0329	SCREW HEX.SOCK.HD.MC6S-TT 5X16 88 FZB	2-177, 5-19, 8-69, 8-71, 8-73
312111-0331	SCREW HEX.SOCK.HD.MC6S-TT 5X20 88 FZB	8-17, 8-41, 14-53
312111-0333	SCREW HEX.SOCK.HD.MC6S-TT 5X25 88 FZB	2-173, 2-175, 8-5, 8-7, 8-21, 8-23, 8-25, 8-27, 8-29, 8-31, 8-33, 8-41, 13-29
312111-0335	SCREW HEX.SOCK.HD.MC6S-TT 5X30 88 FZB	3-37, 3-39, 8-5, 8-7, 8-11, 8-21, 8-23, 8-25, 8-27, 8-29, 8-31, 8-33, 8-35, 8-37, 12-59, 12-77, 12-79
312111-0337	SCREW HEX.SOCK.HD.MC6S-TT 5X35 88 FZB	8-21, 8-23, 8-25, 8-27, 8-29, 8-31, 8-33
312111-0343	SCREW HEX.SOCK.HD.MC6S-TT 5X60 88 FZB	2-175
312111-0345	SCREW HEX.SOCK.HD.MC6S-TT 5X70 88 FZB	2-171
312111-0323	SCREW HEX.SOCK.HD.MC6S-TT 5X8 88 FZB	8-61, 8-63, 8-65, 12-97, 12-99
312111-0364	SCREW HEX.SOCK.HD.MC6S-TT 6X10 88 FZB	2-37, 2-39, 2-41, 2-85, 2-87, 8-5, 8-7, 8-21, 8-23, 8-25, 8-27, 8-29, 8-31, 8-33, 12-47
312111-0366	SCREW HEX.SOCK.HD.MC6S-TT 6X12 88 FZB	8-17
312111-0368	SCREW HEX.SOCK.HD.MC6S-TT 6X16 88 FZB	2-173, 2-175, 3-37, 3-39, 5-123, 13-29
312111-0370	SCREW HEX.SOCK.HD.MC6S-TT 6X20 88 FZB	5-19, 5-61, 8-17, 12-49
312111-0371	SCREW HEX.SOCK.HD.MC6S-TT 6X22 88 FZB	8-41
312111-0372	SCREW HEX.SOCK.HD.MC6S-TT 6X25 88 FZB	7-11, 8-67, 8-69, 8-71, 8-73
312111-0374	SCREW HEX.SOCK.HD.MC6S-TT 6X30 88 FZB	3-9, 3-19
312111-0378	SCREW HEX.SOCK.HD.MC6S-TT 6X40 88 FZB	12-47
312111-0449	SCREW HEX.SOCK.HD.MC6S-TT 8X16 88 FZB	8-17, 8-41
312111-0451	SCREW HEX.SOCK.HD.MC6S-TT 8X20 88 FZB	3-31, 3-33, 5-61, 5-125, 5-127
312111-0453	SCREW HEX.SOCK.HD.MC6S-TT 8X25 88 FZB	5-61, 5-125, 5-127
312111-0455	SCREW HEX.SOCK.HD.MC6S-TT 8X30 88 FZB	3-41, 3-43
312111-0457	SCREW HEX.SOCK.HD.MC6S-TT 8X35 88 FZB	5-125, 5-127
312111-0459	SCREW HEX.SOCK.HD.MC6S-TT 8X40 88 FZB	2-125
312111-0467	SCREW HEX.SOCK.HD.MC6S-TT 8X80 88 FZB	8-57, 8-59
312316-0291	SCREW HEX.SOCK.SET CUP P.MSK6SS4X12 FZB	7-45
312316-0283	SCREW HEX.SOCK.SET CUP P.MSK6SS4X4 FZB	3-41, 3-43, 7-45, 12-49
312316-0284	SCREW HEX.SOCK.SET CUP P.MSK6SS4X5 FZB	12-97, 12-99
312316-0285	SCREW HEX.SOCK.SET CUP P.MSK6SS4X6 FZB	8-41
312316-0327	SCREW HEX.SOCK.SET CUP P.MSK6SS5X12 FZB	3-37, 3-39
312316-0320	SCREW HEX.SOCK.SET CUP P.MSK6SS5X5 FZB	5-125, 5-127
312316-0321	SCREW HEX.SOCK.SET CUP P.MSK6SS5X6 FZB	12-87
312316-0323	SCREW HEX.SOCK.SET CUP P.MSK6SS5X8 FZB	5-125, 5-127, 12-53, 12-55, 12-67, 12-69, 12-71, 12-73
312316-0360	SCREW HEX.SOCK.SET CUP P.MSK6SS6X6 FZB	8-61, 8-63, 8-65
312316-0362	SCREW HEX.SOCK.SET CUP P.MSK6SS6X8 FZB	8-43, 12-49, 12-53, 12-55, 12-67, 12-69, 12-71, 12-73
312316-0443	SCREW HEX.SOCK.SET CUP P.MSK6SS8X8 FZB	12-45
312125-0224	SCREW ISO 1207 M3X10 A4	2-149, 2-151, 7-15, 8-49, 13-193
312121-0228	SCREW ISO 1207 M3X16 4.8 - 5.8 Z.PL.	8-61, 8-63, 8-65, 8-69, 8-71, 8-73, 12-47
312125-0228	SCREW ISO 1207 M3X16 A4	5-17, 6-7, 6-29, 6-33, 7-15, 8-17, 8-43, 8-61, 8-63, 8-65, 12-83
312121-0230	SCREW ISO 1207 M3X20 4.8 - 5.8 Z.PL.	2-163, 8-69, 8-71, 8-73
312125-0230	SCREW ISO 1207 M3X20 A4	1-27, 1-29, 5-25, 5-27, 5-41, 5-43, 5-45, 5-47, 5-89, 5-91, 5-101, 5-103, 5-129, 5-131, 12-91
312122-0230	SCREW ISO 1207 M3X20 NI PL BRASS	12-53, 12-55, 12-67, 12-69, 12-71, 12-73
312125-0232	SCREW ISO 1207 M3X25 A4	4-139, 4-141, 9-5, 9-7, 9-9, 9-11, 9-13, 9-15, 9-25, 9-27, 9-29, 9-31, 9-33, 9-45, 9-47, 9-49, 9-51, 9-53, 9-55
312125-0234	SCREW ISO 1207 M3X30 A4	8-61, 8-63, 8-65
312125-0220	SCREW ISO 1207 M3X6 A4	2-27, 2-29, 2-31, 2-47, 2-81, 2-83, 2-127, 2-135, 2-137, 2-139, 5-93, 5-95, 5-97, 7-41
312125-0222	SCREW ISO 1207 M3X8 A4	2-65, 2-99, 8-51, 8-53, 12-27, 12-31
312125-0289	SCREW ISO 1207 M4X10 A4	1-37, 5-33, 5-53, 5-55, 7-9
312121-0291	SCREW ISO 1207 M4X12 4.8 - 5.8 Z.PL.	2-47
312125-0291	SCREW ISO 1207 M4X12 A4	2-127, 5-7, 5-9, 5-25, 5-27, 5-35, 5-37, 5-41, 5-43, 5-45, 5-47, 5-137, 5-139, 5-141, 5-143, 7-41, 12-27, 12-31
312121-0293	SCREW ISO 1207 M4X16 4.8 - 5.8 Z.PL.	2-163, 12-47
312125-0297	SCREW ISO 1207 M4X25 A4	1-5
312125-0299	SCREW ISO 1207 M4X30 A4	1-13, 1-15
312125-0301	SCREW ISO 1207 M4X35 A4	7-13, 12-65
312121-0285	SCREW ISO 1207 M4X6 4.8 - 5.8 Z.PL.	2-179, 3-9, 3-19, 3-35, 3-37, 3-39

Part No	Description	Page No
312125-0285 ...	SCREW ISO 1207 M4X6 A4	1-27, 1-29, 2-9, 2-69, 4-45, 4-47, 4-49, 4-51, 4-65, 4-67, 4-69, 4-71, 4-97, 4-99, 4-139, 4-141, 5-33, 5-53, 5-55, 7-15, 7-37, 7-39, 8-5, 8-7, 8-21, 8-23, 8-25, 8-27, 8-29, 8-31, 8-33, 12-135, 13-237, 14-47
312121-0287 ...	SCREW ISO 1207 M4X8 4.8 - 5.8 Z.PL.	2-21, 2-77, 2-117, 2-119, 2-137, 2-139, 2-159, 2-161, 3-41, 3-43, 12-53, 12-55, 12-67, 12-69, 12-71, 12-73, 13-27
312125-0287 ...	SCREW ISO 1207 M4X8 A4	2-37, 2-39, 2-41, 2-85, 2-87, 4-11, 4-13, 4-15, 4-17, 4-19, 4-21, 4-23, 4-25, 4-27, 4-29, 4-77, 4-79, 4-85, 4-87, 4-101, 4-103, 4-105, 4-107, 4-143, 4-147, 5-7, 5-9, 5-17, 5-25, 5-27, 5-35, 5-37, 5-41, 5-43, 5-45, 5-47, 5-81, 5-83, 5-89, 5-91, 5-117, 6-29, 6-37, 6-39, 6-59, 6-61, 7-9, 7-15, 7-17, 7-19, 7-21, 7-23, 7-37, 7-39, 12-91, 12-119, 12-193, 12-195, 12-197, 12-199, 12-201, 12-203, 12-215, 12-217, 12-219, 12-221, 12-257, 12-269, 13-7, 13-9, 13-175
312125-0327 ...	SCREW ISO 1207 M5X12 A4	2-37, 2-39, 2-41, 2-85, 2-87, 4-23, 4-25, 4-27, 4-29, 12-155, 12-215, 12-217, 12-219, 12-221, 13-7, 13-9, 13-145
312125-0329 ...	SCREW ISO 1207 M5X16 A4	6-33, 7-35, 8-51, 8-53
312125-0333 ...	SCREW ISO 1207 M5X25 A4	7-31, 7-33
312121-0321 ...	SCREW ISO 1207 M5X6 4.8 - 5.8 Z.PL.	2-165, 8-69, 8-71, 8-73
312121-0323 ...	SCREW ISO 1207 M5X8 4.8 - 5.8 Z.PL.	2-147
312125-0323 ...	SCREW ISO 1207 M5X8 A4	1-55, 1-63, 2-35, 2-121, 2-123, 2-137, 2-139, 5-7, 5-9, 5-35, 5-37, 7-31, 7-33, 8-55, 8-61, 8-63, 8-65, 12-239, 13-15
312121-0364 ...	SCREW ISO 1207 M6X10 4.8 - 5.8 Z.PL.	8-67
312125-0366 ...	SCREW ISO 1207 M6X12 A4	13-183
312125-0376 ...	SCREW ISO 1207 M6X35 A4	2-45, 2-91
312145-0236 ...	SCREW ISO 2009 MFS M3X35 A4	4-11, 4-13, 4-15, 4-17, 4-19, 4-21, 12-193, 12-195, 12-197, 12-199, 12-201, 12-203
312145-0238 ...	SCREW ISO 2009 MFS M3X40 A4	7-41, 13-91, 13-107
312145-0220 ...	SCREW ISO 2009 MFS M3X6 A4	12-85
312141-0222 ...	SCREW ISO 2009 MFS M3X8 4.8 EL.PL	2-159, 2-161
312145-0222 ...	SCREW ISO 2009 MFS M3X8 A4	4-53, 4-55, 12-205, 12-207
312145-0289 ...	SCREW ISO 2009 MFS M4X10 A4	4-31, 4-53, 4-55, 4-113, 4-115, 8-69, 8-71, 8-73, 8-85, 8-87, 12-175, 12-177, 12-205, 12-207
312145-0291 ...	SCREW ISO 2009 MFS M4X12 A4	8-77, 8-79, 8-85, 8-87, 12-27, 12-31, 12-87
312145-0292 ...	SCREW ISO 2009 MFS M4X14 A4	8-43
312141-0295 ...	SCREW ISO 2009 MFS M4X20 4.8 EL.PL	3-41, 3-43
312145-0297 ...	SCREW ISO 2009 MFS M4X25 A4	4-131, 4-133, 4-135, 4-137
312145-0305 ...	SCREW ISO 2009 MFS M4X50 A4	4-139, 4-141
312145-0285 ...	SCREW ISO 2009 MFS M4X6 A4	2-133, 4-33, 4-35, 4-37, 4-39, 4-41, 4-43, 4-131, 4-133, 4-135, 4-137, 8-77, 8-79
312145-0287 ...	SCREW ISO 2009 MFS M4X8 A4	4-11, 4-13, 4-15, 4-17, 4-19, 4-21, 8-77, 8-79, 12-193, 12-195, 12-197, 12-199, 12-201, 12-203
312141-0325 ...	SCREW ISO 2009 MFS M5X10 4.8 EL.PL	2-21, 2-77, 2-117, 2-119, 13-27
312145-0325 ...	SCREW ISO 2009 MFS M5X10 A4	2-133, 4-77, 4-79, 4-85, 4-87, 4-113, 4-115, 12-149, 12-175, 12-177
312145-0327 ...	SCREW ISO 2009 MFS M5X12 A4	2-133, 8-69, 8-71, 8-73, 8-85, 8-87
312145-0329 ...	SCREW ISO 2009 MFS M5X16 A4	8-69, 8-71, 8-73, 8-85, 8-87
312145-0331 ...	SCREW ISO 2009 MFS M5X20 A4	8-85, 8-87
312145-0335 ...	SCREW ISO 2009 MFS M5X30 A4	8-69, 8-71, 8-73
312145-0323 ...	SCREW ISO 2009 MFS M5X8 A4	4-65, 4-67, 4-69, 4-71, 8-51, 8-53, 8-77, 8-79
312141-0364 ...	SCREW ISO 2009 MFS M6X10 4.8 EL.PL	7-11
312141-0366 ...	SCREW ISO 2009 MFS M6X12 4.8 EL.PL	1-55, 8-77, 8-79
312145-0366 ...	SCREW ISO 2009 MFS M6X12 A4	2-47, 4-101, 4-103, 4-105, 4-107
312145-0370 ...	SCREW ISO 2009 MFS M6X20 A4	2-37, 2-39, 2-41, 4-73
312145-0378 ...	SCREW ISO 2009 MFS M6X40 A4	5-11
312306-0287 ...	SCREW ISO4026 M4X8 FZB	8-69, 8-71, 8-73
312306-0366 ...	SCREW ISO4026 M6X12 FZB	8-17, 8-43, 8-81, 8-83
312306-0360 ...	SCREW ISO4026 M6X6 FZB	8-77, 8-79
312306-0459 ...	SCREW ISO4026 M8X40 FZB	1-55, 4-45, 4-47, 4-49, 4-51
312311-0489 ...	SCREW ISO4028 M10X16 FZB	12-97, 12-99
312311-0292 ...	SCREW ISO4028 M4X14 FZB	7-41
312311-0370 ...	SCREW ISO4028 M6X20 FZB	5-63, 5-65
312318-0499 ...	SCREW ISO4029 M10X40 A4	4-45, 4-47, 4-49, 4-51, 12-81
312318-0289 ...	SCREW ISO4029 M4X10 A4	4-101, 4-103, 4-105, 4-107, 7-43, 12-25
312318-0291 ...	SCREW ISO4029 M4X12 A4	1-43, 1-45
312318-0283 ...	SCREW ISO4029 M4X4 A4	1-43, 1-45, 4-11, 4-13, 4-15, 4-17, 4-19, 4-21, 4-23, 4-25, 4-27, 4-29, 5-67, 7-21, 7-23, 7-29, 12-61, 12-63, 12-193, 12-195, 12-197, 12-199, 12-201, 12-203
312318-0284 ...	SCREW ISO4029 M4X5 A4	1-27, 1-29, 8-19
312318-0285 ...	SCREW ISO4029 M4X6 A4	1-43, 1-45, 4-31, 4-53, 4-55, 7-35, 7-45, 8-43, 12-45, 12-83, 12-205, 12-207, 12-215, 12-217, 12-219, 12-221, 13-7, 13-9
312318-0287 ...	SCREW ISO4029 M4X8 A4	5-133, 5-135, 12-91
312318-0327 ...	SCREW ISO4029 M5X12 A4	1-49, 1-51, 1-53, 8-17, 13-145
312318-0321 ...	SCREW ISO4029 M5X6 A4	4-77, 4-79, 4-85, 4-87, 8-69, 8-71, 8-73
312318-0323 ...	SCREW ISO4029 M5X8 A4	4-97, 4-99, 8-5, 8-7, 8-21, 8-23, 8-25, 8-27, 8-29, 8-31, 8-33, 14-33
312318-0364 ...	SCREW ISO4029 M6X10 A4	7-13, 7-43, 12-25, 12-65
312318-0366 ...	SCREW ISO4029 M6X12 A4	1-49, 1-51, 1-53
312318-0368 ...	SCREW ISO4029 M6X16 A4	1-31, 1-33, 5-29, 5-49, 5-51, 6-59, 6-61, 8-13, 8-15
312318-0370 ...	SCREW ISO4029 M6X20 A4	4-143, 4-147, 5-137, 5-139, 5-141, 5-143
312318-0372 ...	SCREW ISO4029 M6X25 A4	5-133, 5-135
312318-0360 ...	SCREW ISO4029 M6X6 A4	1-49, 1-51, 1-53, 3-11, 3-21, 13-11
312318-0362 ...	SCREW ISO4029 M6X8 A4	1-49, 1-51, 1-53, 2-9, 2-69, 4-23, 4-25, 4-27, 4-29, 5-121, 5-133, 5-135, 6-57, 8-5, 8-7, 8-21, 8-23, 8-25, 8-27, 8-29, 8-31, 8-33, 8-55, 12-83, 12-85, 12-215, 12-217, 12-219, 12-221, 13-7, 13-9, 13-99, 13-101, 13-103, 13-105, 13-109, 13-111
312318-0447 ...	SCREW ISO4029 M8X12 A4	12-119
312318-0449 ...	SCREW ISO4029 M8X16 A4	5-137, 5-139, 5-141, 5-143
312318-0455 ...	SCREW ISO4029 M8X30 A4	5-145, 5-147, 5-149, 5-151, 5-153, 5-155, 12-253
312318-0443 ...	SCREW ISO4029 M8X8 A4	5-137, 5-139, 5-141, 5-143, 6-55
312115-0495 ...	SCREW ISO4762 M10X30 A4 80	8-55
312115-0501 ...	SCREW ISO4762 M10X50 A4 80	2-37, 2-39, 2-41, 2-85, 2-87

Part No	Description	Page No
312115-0503	SCREW ISO4762 M10X60 A4 80	2-37, 2-39, 2-41, 2-85, 2-87
312115-0226	SCREW ISO4762 M3X12 A4 80	6-21, 6-23, 6-25, 13-177
312115-0228	SCREW ISO4762 M3X16 A4 80	7-29, 12-61, 12-63
312115-0230	SCREW ISO4762 M3X20 A4 80	6-21, 6-23, 6-25, 6-59, 6-61, 13-177
312115-0232	SCREW ISO4762 M3X25 A4 80	1-49, 1-51, 1-53
312115-0289	SCREW ISO4762 M4X10 A4 80	4-131, 4-133, 4-135, 4-137
312115-0291	SCREW ISO4762 M4X12 A4 80	4-65, 4-67, 4-69, 4-71, 5-17
312115-0293	SCREW ISO4762 M4X16 A4 80	4-65, 4-67, 4-69, 4-71, 5-133, 5-135
312115-0295	SCREW ISO4762 M4X20 A4 80	1-49, 1-51, 1-53, 4-65, 4-67, 4-69, 4-71, 5-17, 13-77
312115-0299	SCREW ISO4762 M4X30 A4 80	4-61, 4-63, 4-65, 4-67, 4-69, 4-71
312115-0303	SCREW ISO4762 M4X40 A4 80	4-33, 4-35, 4-37, 4-39, 4-41, 4-43, 6-11
312115-0304	SCREW ISO4762 M4X45 A4 80	1-27, 1-29
312115-0287	SCREW ISO4762 M4X8 A4 80	2-147, 4-65, 4-67, 4-69, 4-71, 6-55, 8-9, 8-39, 12-57, 12-75
312115-0325	SCREW ISO4762 M5X10 A4 80	2-63, 2-65, 2-97, 2-99, 2-131, 2-133, 5-159, 12-105
312115-0327	SCREW ISO4762 M5X12 A4 80	4-23, 4-25, 4-27, 4-29, 4-113, 4-115, 7-29, 12-175, 12-177, 13-7, 13-9, 13-119, 13-147
312115-0329	SCREW ISO4762 M5X16 A4 80	1-49, 1-51, 1-53, 2-63, 2-65, 2-97, 2-99, 4-33, 4-35, 4-37, 4-39, 4-41, 4-43, 4-139, 4-141, 8-85, 8-87, 12-215, 12-217, 12-219, 12-221, 13-7, 13-9, 13-67, 13-85, 13-87, 13-99, 13-101, 13-103, 13-105
312115-0331	SCREW ISO4762 M5X20 A4 80	4-23, 4-25, 4-27, 4-29, 4-77, 4-79, 4-85, 4-87, 4-93, 4-95, 13-59
312115-0333	SCREW ISO4762 M5X25 A4 80	2-149, 2-151, 4-65, 4-67, 4-69, 4-71
312115-0337	SCREW ISO4762 M5X35 A4 80	4-113, 4-115, 12-175, 12-177
312115-0339	SCREW ISO4762 M5X40 A4 80	8-85, 8-87
312115-0340	SCREW ISO4762 M5X45 A4 80	4-113, 4-115, 8-69, 8-71, 8-73, 12-175, 12-177, 13-85, 13-87
312115-0341	SCREW ISO4762 M5X50 A4 80	4-113, 4-115, 12-175, 12-177
312115-0323	SCREW ISO4762 M5X8 A4 80	5-25, 5-27, 5-41, 5-43, 5-45, 5-47, 5-159, 8-77, 8-79, 12-85, 13-177
312115-0366	SCREW ISO4762 M6X12 A4 80	1-43, 1-45, 2-63, 2-65, 2-97, 2-99, 2-149, 2-151, 4-93, 4-95, 4-143, 4-147, 7-15, 7-19, 7-45, 12-223, 12-227, 12-239, 13-177
312115-0367	SCREW ISO4762 M6X14 A4 80	4-65, 4-67, 4-69, 4-71
312115-0368	SCREW ISO4762 M6X16 A4 80	4-65, 4-67, 4-69, 4-71, 5-23, 5-33, 5-39, 5-53, 5-55, 7-31, 7-33, 7-37, 7-39, 8-13, 8-15, 12-133, 14-33, 14-45
312115-0370	SCREW ISO4762 M6X20 A4 80	4-65, 4-67, 4-69, 4-71, 4-143, 4-147, 5-17, 5-101, 5-103, 6-59, 6-61, 8-5, 8-7, 8-21, 8-23, 8-25, 8-27, 8-29, 8-31, 8-33, 8-57, 8-59, 8-85, 8-87, 12-53, 12-55, 12-67, 12-69, 12-71, 12-73, 14-33
312115-0372	SCREW ISO4762 M6X25 A4 80	2-45, 2-91, 4-65, 4-67, 4-69, 4-71, 8-5, 8-7, 8-21, 8-23, 8-25, 8-27, 8-29, 8-31, 8-33, 12-83, 12-97, 12-99
312115-0374	SCREW ISO4762 M6X30 A4 80	4-23, 4-25, 4-27, 4-29, 4-65, 4-67, 4-69, 4-71, 4-77, 4-79, 4-85, 4-87, 5-89, 5-91, 5-101, 5-103, 12-97, 12-99, 12-215, 12-217, 12-219, 12-221, 13-7, 13-9
312115-0376	SCREW ISO4762 M6X35 A4 80	3-15, 3-17, 8-5, 8-7, 8-21, 8-23, 8-25, 8-27, 8-29, 8-31, 8-33, 13-183
312115-0378	SCREW ISO4762 M6X40 A4 80	2-37, 2-39, 2-41, 2-85, 2-87
312115-0380	SCREW ISO4762 M6X50 A4 80	5-89, 5-91, 12-91
312115-0382	SCREW ISO4762 M6X60 A4 80	11-13, 11-15
312115-0449	SCREW ISO4762 M8X16 A4 80	4-143, 4-147, 12-239
312115-0451	SCREW ISO4762 M8X20 A4 80	2-37, 2-39, 2-41, 2-85, 2-87, 5-125, 5-127, 8-43
312115-0453	SCREW ISO4762 M8X25 A4 80	3-35, 4-73, 5-125, 5-127, 10-15, 10-17, 10-21, 12-5, 12-9
312115-0455	SCREW ISO4762 M8X30 A4 80	2-63, 2-65, 2-97, 2-99, 4-33, 4-35, 4-37, 4-39, 4-41, 4-43, 4-131, 4-133, 4-135, 4-137, 5-25, 5-27, 5-41, 5-43, 5-45, 5-47, 6-5, 6-47
312115-0457	SCREW ISO4762 M8X35 A4 80	12-133
312115-0459	SCREW ISO4762 M8X40 A4 80	1-61
312115-0461	SCREW ISO4762 M8X50 A4 80	4-11, 4-13, 4-15, 4-17, 4-19, 4-21, 4-45, 4-47, 4-49, 4-51, 4-77, 4-79, 4-85, 4-87, 12-193, 12-195, 12-197, 12-199, 12-201, 12-203
312115-0464	SCREW ISO4762 M8X65 A4 80	12-149
312180-0489	SCREW ISO7379 H10X16	3-37, 3-39, 3-41, 3-43, 12-45
312180-0530	SCREW ISO7379 H10X16	5-21
312180-0499	SCREW ISO7379 H10X40	4-139, 4-141
312180-0624	SCREW ISO7379 H16X30	14-39
312180-0447	SCREW ISO7379 H8X12	2-177
90287-0062	SCREW M6	2-167
312105-0513	SCREW M6S ISO 4014 M10X110 A480	6-37, 6-39
312105-0517	SCREW M6S ISO 4014 M10X130 A480	5-121, 6-37, 6-39
312105-0499	SCREW M6S ISO 4014 M10X40 A480	4-101, 4-103, 4-105, 4-107
312105-0501	SCREW M6S ISO 4014 M10X50 A480	6-13, 6-41
312105-0507	SCREW M6S ISO 4014 M10X80 A480	6-41
312105-0509	SCREW M6S ISO 4014 M10X90 A480	12-43
312105-0542	SCREW M6S ISO 4014 M12X50 A480	2-37, 2-39, 2-41, 2-85, 2-87, 5-7, 5-9, 5-35, 5-37
312105-0631	SCREW M6S ISO 4014 M16X55 A480	6-13
312105-0335	SCREW M6S ISO 4014 M5X30 A480	4-113, 4-115, 4-139, 4-141, 12-175, 12-177
312105-0337	SCREW M6S ISO 4014 M5X35 A480	8-85, 8-87
312105-0339	SCREW M6S ISO 4014 M5X40 A480	2-27, 2-29, 2-31, 2-81, 2-83
312105-0340	SCREW M6S ISO 4014 M5X45 A480	4-113, 4-115, 12-175, 12-177
312105-0341	SCREW M6S ISO 4014 M5X50 A480	13-177
312105-0374	SCREW M6S ISO 4014 M6X30 A480	3-15, 3-17, 3-35, 4-113, 4-115, 5-15, 5-25, 5-27, 5-41, 5-43, 5-45, 5-47, 5-69, 5-71, 5-77, 5-79, 5-89, 5-91, 5-115, 5-119, 5-137, 5-139, 5-141, 5-143, 5-145, 5-147, 5-149, 5-151, 5-153, 5-155, 6-17, 6-29, 6-37, 6-39, 6-63, 12-45, 12-53, 12-55, 12-67, 12-69, 12-71, 12-73, 12-145, 12-175, 12-177, 14-35, 14-37
312105-0376	SCREW M6S ISO 4014 M6X35 A480	1-37, 2-27, 2-29, 2-31, 2-81, 2-83, 3-15, 3-17, 4-101, 4-103, 4-105, 4-107, 5-7, 5-9, 5-29, 5-33, 5-35, 5-37, 5-49, 5-51, 5-53, 5-55, 5-69, 5-71, 5-77, 5-79, 5-115, 5-137, 5-139, 5-141, 5-143, 5-145, 5-147, 5-149, 5-151, 5-153, 5-155, 6-5, 6-7, 6-59, 6-61, 12-53, 12-55, 12-67, 12-69, 12-71, 12-73, 13-41
312105-0378	SCREW M6S ISO 4014 M6X40 A480	4-11, 4-13, 4-15, 4-17, 4-19, 4-21, 4-73, 5-25, 5-27, 5-33, 5-41, 5-43, 5-45, 5-47, 5-53, 5-55, 5-115, 5-145, 5-147, 5-149, 5-151, 5-153, 5-155, 7-21, 7-23, 7-37, 7-39, 12-53, 12-55, 12-67, 12-69, 12-71, 12-73, 12-193, 12-195, 12-197, 12-199, 12-201, 12-203
312105-0379	SCREW M6S ISO 4014 M6X45 A480	5-29, 5-49, 5-51, 5-63, 5-65, 5-67, 5-145, 5-147, 5-149, 5-151, 5-153, 5-155, 12-67, 12-69, 12-71, 12-73

Part No	Description	Page No
312105-0380 ...	SCREW M6S ISO 4014 M6X50 A480	5-67, 5-115, 6-7, 12-53, 12-55, 12-67, 12-69, 12-71, 12-73, 12-97, 12-99, 12-141
312105-0381 ...	SCREW M6S ISO 4014 M6X55 A480	2-115, 5-115
312105-0382 ...	SCREW M6S ISO 4014 M6X60 A480	6-55
312105-0384 ...	SCREW M6S ISO 4014 M6X70 A480	3-15, 3-17, 5-17, 5-101, 5-103, 6-41
312105-0386 ...	SCREW M6S ISO 4014 M6X80 A480	5-33, 5-53, 5-55, 12-53, 12-55, 12-67, 12-69, 12-71, 12-73
312105-0388 ...	SCREW M6S ISO 4014 M6X90 A480	1-11, 5-67, 5-69, 5-71, 5-77, 5-79
312105-0471 ...	SCREW M6S ISO 4014 M8X100 A480	5-23, 5-39, 6-5
312105-0473 ...	SCREW M6S ISO 4014 M8X110 A480	6-37, 6-39
312105-0457 ...	SCREW M6S ISO 4014 M8X35 A480	1-49, 1-51, 1-53, 4-23, 4-25, 4-27, 4-29, 4-93, 4-95, 4-131, 4-133, 4-135, 4-137, 5-21, 5-89, 5-91, 5-101, 5-103, 5-133, 5-135, 5-145, 5-147, 5-149, 5-151, 5-153, 5-155, 6-17, 6-27, 6-41, 6-59, 6-61, 8-5, 8-7, 8-21, 8-23, 8-25, 8-27, 8-29, 8-31, 8-33, 12-53, 12-55, 12-67, 12-69, 12-71, 12-73, 12-215, 12-217, 12-219, 12-221, 13-7, 13-9
312105-0459 ...	SCREW M6S ISO 4014 M8X40 A480	5-117, 5-133, 5-135, 5-145, 5-147, 5-149, 5-151, 5-153, 5-155, 14-35, 14-37
312105-0460 ...	SCREW M6S ISO 4014 M8X45 A480	5-119, 5-129, 5-131, 5-137, 5-139, 5-141, 5-143
312105-0462 ...	SCREW M6S ISO 4014 M8X55 A480	1-43, 1-45, 1-75, 1-77, 1-79, 1-81, 1-83, 5-119, 11-17, 12-7
312105-0463 ...	SCREW M6S ISO 4014 M8X60 A480	1-43, 1-45, 5-89, 5-91, 6-11
312105-0464 ...	SCREW M6S ISO 4014 M8X65 A480	5-25, 5-27, 5-41, 5-43, 5-45, 5-47
312105-0465 ...	SCREW M6S ISO 4014 M8X70 A480	13-65
312105-0466 ...	SCREW M6S ISO 4014 M8X75 A480	4-131, 4-133, 4-135, 4-137, 6-21, 6-25, 8-57, 8-59, 13-115
312105-0467 ...	SCREW M6S ISO 4014 M8X80 A480	12-143, 12-161, 13-153
312105-0469 ...	SCREW M6S ISO 4014 M8X90 A480	5-25, 5-27, 5-39, 5-41, 5-43, 5-45, 5-47
312105-0489 ...	SCREW M6S ISO 4017 M10X16 A480	6-37, 6-39, 7-37, 7-39, 12-81, 12-147
312105-0491 ...	SCREW M6S ISO 4017 M10X20 A480	2-167, 7-13, 7-31, 7-33, 12-33, 12-65, 12-85
312105-0493 ...	SCREW M6S ISO 4017 M10X25 A480	2-9, 2-37, 2-39, 2-41, 2-69, 2-85, 2-87, 2-167, 4-101, 4-103, 4-105, 4-107, 5-17, 5-57, 5-157, 6-29, 6-33, 7-9, 10-15, 10-17, 10-21, 12-5, 12-9, 12-43
312105-0495 ...	SCREW M6S ISO 4017 M10X30 A480	2-9, 2-69, 4-101, 4-103, 4-105, 4-107, 5-7, 5-9, 5-35, 5-37, 5-157, 6-9, 6-33, 6-41, 6-47, 6-57, 8-55
312105-0497 ...	SCREW M6S ISO 4017 M10X35 A480	2-9, 2-69, 4-33, 4-35, 4-37, 4-39, 4-41, 4-43, 5-121, 6-17, 6-41
312109-0499 ...	SCREW M6S ISO 4017 M10X40 A480	6-33
312109-0500 ...	SCREW M6S ISO 4017 M10X45 A480	6-41
312105-0532 ...	SCREW M6S ISO 4017 M12X20 A480	6-35
312105-0534 ...	SCREW M6S ISO 4017 M12X25 A480	5-15
312105-0536 ...	SCREW M6S ISO 4017 M12X30 A480	1-73, 6-35
312105-0538 ...	SCREW M6S ISO 4017 M12X35 A480	5-157
312105-0540 ...	SCREW M6S ISO 4017 M12X40 A480	1-43, 1-45, 1-55, 1-75, 1-77, 1-79, 1-81, 1-83, 2-37, 2-39, 2-41, 2-85, 2-87, 6-29
312105-0630 ...	SCREW M6S ISO 4017 M16X50 A480	6-35, 12-97, 12-99
312105-0289 ...	SCREW M6S ISO 4017 M4X10 A470	13-225, 13-233
312105-0291 ...	SCREW M6S ISO 4017 M4X12 A470	2-133, 4-101, 4-103, 4-105, 4-107, 7-37, 7-39, 8-9, 8-39, 12-57, 12-75, 13-239
312105-0293 ...	SCREW M6S ISO 4017 M4X16 A470	5-57, 8-55
312105-0295 ...	SCREW M6S ISO 4017 M4X20 A470	4-45, 4-47, 4-49, 4-51, 4-101, 4-103, 4-105, 4-107, 4-139, 4-141, 5-7, 5-9, 5-25, 5-27, 5-35, 5-37, 5-41, 5-43, 5-45, 5-47
312105-0297 ...	SCREW M6S ISO 4017 M4X25 A470	12-91
312105-0299 ...	SCREW M6S ISO 4017 M4X30 A470	7-47
312105-0301 ...	SCREW M6S ISO 4017 M4X35 A470	7-47, 12-121
312105-0287 ...	SCREW M6S ISO 4017 M4X8 A470	4-33, 4-35, 4-37, 4-39, 4-41, 4-43, 4-131, 4-133, 4-135, 4-137, 4-139, 4-141, 5-29, 5-49, 5-51, 5-57, 5-105, 5-107, 5-109, 5-111, 6-27, 6-37, 6-39, 7-9, 7-29, 8-69, 8-71, 8-73, 12-61, 12-63, 12-67, 12-69, 12-71, 12-73, 13-221
312105-0325 ...	SCREW M6S ISO 4017 M5X10 A480	2-157, 4-113, 4-115, 5-29, 5-49, 5-51, 5-69, 5-71, 5-77, 5-79, 6-49, 7-37, 7-39, 8-55, 12-33, 12-37, 12-85, 12-133, 12-175, 12-177, 13-85, 13-87, 14-35, 14-37
312105-0327 ...	SCREW M6S ISO 4017 M5X12 A480	2-37, 2-39, 2-41, 2-63, 2-65, 2-85, 2-87, 2-97, 2-99, 2-133, 4-113, 4-115, 5-25, 5-27, 5-41, 5-43, 5-45, 5-47, 5-67, 6-7, 7-17, 8-9, 8-39, 8-51, 8-53, 8-75, 12-45, 12-57, 12-61, 12-63, 12-75, 12-149, 12-155, 12-175, 12-177, 12-215, 12-217, 12-219, 12-221, 13-99, 13-101, 13-103, 13-105
312105-0328 ...	SCREW M6S ISO 4017 M5X14 A480	5-69, 5-71, 5-77, 5-79, 5-129, 5-131, 12-53, 12-55, 12-67, 12-69, 12-71, 12-73
312105-0329 ...	SCREW M6S ISO 4017 M5X16 A480	1-73, 4-45, 4-47, 4-49, 4-51, 4-97, 4-99, 4-113, 4-115, 5-7, 5-9, 5-35, 5-37, 6-9, 6-31, 6-33, 6-43, 6-45, 8-9, 8-39, 8-55, 8-69, 8-71, 8-73, 12-57, 12-67, 12-69, 12-71, 12-73, 12-75, 12-145, 12-175, 12-177
312105-0331 ...	SCREW M6S ISO 4017 M5X20 A480	4-101, 4-103, 4-105, 4-107, 4-113, 4-115, 6-7, 8-41, 8-49, 8-75, 12-33, 12-175, 12-177, 13-53, 13-55
312105-0333 ...	SCREW M6S ISO 4017 M5X25 A480	4-113, 4-115, 6-29, 12-53, 12-55, 12-67, 12-69, 12-71, 12-73, 12-175, 12-177, 13-85, 13-87
312105-0323 ...	SCREW M6S ISO 4017 M5X8 A480	1-37, 1-49, 1-51, 1-53, 1-73, 2-27, 2-29, 2-31, 2-81, 2-83, 2-135, 5-137, 5-139, 5-141, 5-143, 6-7, 6-13, 6-37, 6-39, 8-49, 12-53, 12-55, 12-67, 12-69, 12-71, 12-73, 12-91, 12-255
312105-0364 ...	SCREW M6S ISO 4017 M6X10 A480	2-27, 2-29, 2-31, 2-37, 2-39, 2-41, 2-63, 2-65, 2-81, 2-83, 2-85, 2-87, 2-97, 2-99, 3-15, 3-17, 4-97, 4-99, 5-7, 5-9, 5-13, 5-17, 5-25, 5-27, 5-35, 5-37, 5-41, 5-43, 5-45, 5-47, 5-99, 5-115, 5-159, 6-27, 7-37, 7-39, 12-27, 12-31, 12-37, 12-39, 12-41, 12-53, 12-55, 12-91, 12-133, 13-59, 13-179, 13-211, 13-239
312105-0366 ...	SCREW M6S ISO 4017 M6X12 A480	1-5, 1-7, 1-9, 1-11, 1-23, 1-55, 1-73, 2-47, 2-67, 2-133, 2-185, 3-15, 3-17, 4-93, 4-95, 4-101, 4-103, 4-105, 4-107, 5-25, 5-27, 5-29, 5-33, 5-41, 5-43, 5-45, 5-47, 5-49, 5-51, 5-53, 5-55, 5-81, 5-83, 5-89, 5-91, 5-101, 5-103, 5-117, 5-129, 5-131, 5-137, 5-139, 5-141, 5-143, 6-9, 6-27, 6-31, 6-33, 6-35, 6-37, 6-39, 6-55, 6-59, 6-61, 7-9, 7-17, 7-35, 7-37, 7-39, 8-5, 8-7, 8-21, 8-23, 8-25, 8-27, 8-29, 8-31, 8-33, 8-43, 11-9, 11-11, 11-13, 11-15, 11-19, 12-13, 12-23, 12-29, 12-43, 12-45, 12-49, 12-53, 12-55, 12-61, 12-63, 12-67, 12-69, 12-71, 12-73, 12-83, 12-93, 12-97, 12-99, 12-115, 12-145, 12-149, 12-273, 13-53, 13-55, 13-125, 13-133
312105-0367 ...	SCREW M6S ISO 4017 M6X14 A480	5-7, 5-9, 5-23, 5-35, 5-37, 5-39, 5-121, 6-55, 12-81
312105-0368 ...	SCREW M6S ISO 4017 M6X16 A480	1-35, 1-55, 2-9, 2-37, 2-39, 2-41, 2-49, 2-51, 2-57, 2-63, 2-65, 2-67, 2-69, 2-85, 2-87, 2-95, 2-97, 2-99, 2-115, 2-133, 2-135, 5-7, 5-9, 5-15, 5-23, 5-25, 5-27, 5-29, 5-31, 5-33, 5-35, 5-37, 5-39, 5-41, 5-43, 5-45, 5-47, 5-49, 5-51, 5-53, 5-55, 5-81, 5-83, 5-89, 5-91

Part No	Description	Page No
		5-101, 5-103, 5-117, 5-121, 5-129, 5-131, 5-133, 5-135, 5-145, 5-147, 5-149, 5-151, 5-153, 5-155, 6-5
		6-9, 6-11, 6-21, 6-23, 6-25, 6-27, 6-33, 6-37, 6-39, 6-49, 6-55, 6-57, 6-59, 6-61, 6-63, 7-9, 7-17, 7-29
		7-35, 7-37, 7-39, 7-45, 8-5, 8-7, 8-21, 8-23, 8-25, 8-27, 8-29, 8-31, 8-33, 8-43, 8-51, 8-53, 8-55, 8-75
		..... 11-19, 12-45, 12-49, 12-67, 12-69, 12-71, 12-73, 12-105, 12-269, 13-67, 13-129
312105-0370 ...	SCREW M6S ISO 4017 M6X20 A480	1-5, 1-23, 1-55, 1-73, 2-57, 2-65, 2-93, 2-95, 2-99, 3-15, 3-17
		4-23, 4-25, 4-27, 4-29, 4-45, 4-47, 4-49, 4-51, 4-97, 4-99, 4-101, 4-103, 4-105, 4-107, 4-113, 4-115
		5-7, 5-9, 5-13, 5-15, 5-17, 5-25, 5-27, 5-29, 5-35, 5-37, 5-41, 5-43, 5-45, 5-47, 5-49, 5-51, 5-57, 5-67
		5-89, 5-91, 5-101, 5-103, 5-115, 5-121, 5-133, 5-135, 5-137, 5-139, 5-141, 5-143, 6-5, 6-29, 6-33
		6-35, 6-37, 6-39, 6-43, 6-45, 6-59, 6-61, 6-63, 7-7, 7-13, 7-29, 7-41, 7-43, 8-5, 8-7, 8-21, 8-23, 8-25
		8-27, 8-29, 8-31, 8-33, 8-51, 8-53, 11-19, 12-25, 12-33, 12-61, 12-63, 12-65, 12-93, 12-115, 12-147
		12-175, 12-177, 12-215, 12-217, 12-219, 12-221, 12-255, 13-7, 13-9, 13-53, 13-99, 13-101, 13-103
		.....13-105, 13-109, 13-111, 13-167
312105-0371 ...	SCREW M6S ISO 4017 M6X22 A480	..... 5-59, 5-129, 5-131, 11-19, 11-23
312105-0372 ...	SCREW M6S ISO 4017 M6X25 A480	2-23, 4-23, 4-25, 4-27, 4-29, 4-45, 4-47, 4-49, 4-51, 4-65
		4-67, 4-69, 4-71, 4-73, 5-69, 5-71, 5-77, 5-79, 5-81, 5-83, 5-89, 5-91, 5-101, 5-103, 5-121, 5-133
		5-135, 5-137, 5-139, 5-141, 5-143, 5-145, 5-147, 5-149, 5-151, 5-153, 5-155, 5-159, 6-7, 6-13, 6-21
		6-23, 6-25, 6-47, 6-59, 6-61, 6-65, 7-15, 7-29, 8-5, 8-7, 8-21, 8-23, 8-25, 8-27, 8-29, 8-31, 8-33, 8-75
		11-19, 12-53, 12-55, 12-61, 12-63, 12-67, 12-69, 12-71, 12-73, 12-215, 12-217, 12-219, 12-221
		.. 12-257, 12-269, 13-7, 13-9, 13-59, 13-99, 13-101, 13-103, 13-105, 13-109, 13-111, 13-119, 13-179
312109-0374 ...	SCREW M6S ISO 4017 M6X30 A480	5-17, 6-17, 6-33, 6-37, 6-39, 7-17, 8-5, 8-7, 8-21, 8-23, 8-25
		.....8-27, 8-29, 8-31, 8-33
312109-0376 ...	SCREW M6S ISO 4017 M6X35 A480	4-23, 4-25, 4-27, 4-29, 5-89, 5-91, 5-101, 5-103, 6-11, 6-29
		6-33, 6-35, 11-19, 12-215, 12-217, 12-219, 12-221, 13-7, 13-9, 13-99, 13-101, 13-103, 13-105, 13-109, 13-111
312109-0378 ...	SCREW M6S ISO 4017 M6X40 A480	..... 6-33, 11-19
312109-0381 ...	SCREW M6S ISO 4017 M6X55 A480	..... 5-117, 7-37, 7-39
312105-0362 ...	SCREW M6S ISO 4017 M6X8 A480	1-7, 1-9, 2-147, 2-149, 2-151, 4-65, 4-67, 4-69, 4-71, 5-7, 5-9
		5-23, 5-35, 5-37, 5-39, 5-81, 5-83, 5-133, 5-135, 5-137, 5-139, 5-141, 5-143, 6-5, 6-35, 6-55, 12-53
		.....12-55, 12-85, 12-119, 12-255
312105-0447 ...	SCREW M6S ISO 4017 M8X12 A480	4-93, 4-95, 5-89, 5-91, 5-133, 5-135, 6-33, 7-9, 7-41, 12-33
		.....12-37, 12-45, 12-133, 12-155
312105-0449 ...	SCREW M6S ISO 4017 M8X16 A480	1-55, 1-57, 2-27, 2-29, 2-31, 2-37, 2-39, 2-41, 2-81, 2-83
		2-85, 2-87, 3-35, 3-41, 3-43, 4-101, 4-103, 4-105, 4-107, 5-23, 5-25, 5-27, 5-31, 5-33, 5-39, 5-41, 5-43
		5-45, 5-47, 5-53, 5-55, 5-101, 5-103, 5-117, 5-133, 5-135, 6-27, 6-37, 6-39, 6-55, 7-15, 7-21, 7-23
		7-35, 12-29, 12-33, 12-37, 12-43, 12-45, 12-53, 12-55, 12-67, 12-69, 12-71, 12-73, 12-91, 12-133
		.....12-161, 13-115, 13-153
312105-0451 ...	SCREW M6S ISO 4017 M8X20 A480	1-13, 1-15, 1-43, 1-45, 1-49, 1-51, 1-53, 1-73, 2-49, 2-51
		2-63, 2-65, 2-93, 2-97, 2-99, 5-7, 5-9, 5-11, 5-17, 5-21, 5-25, 5-27, 5-31, 5-33, 5-35, 5-37, 5-41, 5-43
		5-45, 5-47, 5-53, 5-55, 5-67, 5-119, 5-121, 5-129, 5-131, 5-137, 5-139, 5-141, 5-143, 5-145, 5-147
		5-149, 5-151, 5-153, 5-155, 6-5, 6-9, 6-33, 6-35, 6-37, 6-39, 6-55, 6-59, 6-61, 7-9, 7-13, 7-31, 7-33
		7-37, 7-39, 7-41, 7-43, 7-47, 8-5, 8-7, 8-21, 8-23, 8-25, 8-27, 8-29, 8-31, 8-33, 8-55, 8-57, 8-59, 12-25
		..... 12-37, 12-45, 12-65, 12-97, 12-99, 12-133, 12-143, 13-53, 13-55, 13-161
312105-0452 ...	SCREW M6S ISO 4017 M8X22 A4 80	..... 4-101, 4-103, 4-105, 4-107, 7-15
312105-0453 ...	SCREW M6S ISO 4017 M8X25 A480	1-7, 1-9, 1-27, 1-29, 1-49, 1-51, 1-53, 1-75, 1-77, 1-79, 1-81
		1-83, 2-149, 2-151, 3-15, 3-17, 3-41, 3-43, 4-101, 4-103, 4-105, 4-107, 4-131, 4-133, 4-135, 4-137
		5-7, 5-9, 5-21, 5-29, 5-33, 5-35, 5-37, 5-49, 5-51, 5-53, 5-55, 5-57, 5-89, 5-91, 5-101, 5-103, 5-121
		5-133, 5-135, 5-137, 5-139, 5-141, 5-143, 5-145, 5-147, 5-149, 5-151, 5-153, 5-155, 6-19, 6-27, 6-35
		..... 6-49, 6-57, 7-47, 10-15, 10-17, 12-29, 12-39, 12-41, 12-43, 12-83, 12-115, 12-147
312105-0455 ...	SCREW M6S ISO 4017 M8X30 A480	2-7, 4-97, 4-99, 5-7, 5-9, 5-17, 5-25, 5-27, 5-29, 5-35, 5-37
		5-41, 5-43, 5-45, 5-47, 5-49, 5-51, 5-89, 5-91, 5-101, 5-103, 5-119, 5-121, 6-9, 6-29, 7-31, 7-33, 8-51
		.....8-53, 12-87, 12-97, 12-99, 12-115, 12-143, 12-145
312109-0457 ...	SCREW M6S ISO 4017 M8X35 A480	.... 4-33, 4-35, 4-37, 4-39, 4-41, 4-43, 5-33, 5-53, 5-55, 6-23
312109-0459 ...	SCREW M6S ISO 4017 M8X40 A480	4-131, 4-133, 4-135, 4-137, 5-145, 5-147, 5-149, 5-151
		.....5-153, 5-155, 12-93
312109-0460 ...	SCREW M6S ISO 4017 M8X45 A480	..... 1-31, 1-33, 6-57, 6-59, 6-61, 11-17, 13-57
312109-0461 ...	SCREW M6S ISO 4017 M8X50 A480	.....5-33, 5-53, 5-55, 6-27, 6-47
312109-0463 ...	SCREW M6S ISO 4017 M8X60 A480	3-35, 3-37, 3-39, 4-23, 4-25, 4-27, 4-29, 4-45, 4-47, 4-49
		..... 4-51, 4-93, 4-95, 6-29, 12-215, 12-217, 12-219, 12-221, 13-7, 13-9, 13-33
312101-0518 ...	SCREW M6S M10X140 FZB	..... 2-37, 2-39, 2-41, 2-85, 2-87
90287-0155	SCREW M6S M10X25 88 NY-LOCK	5-121
312101-0493 ...	SCREW M6S M10X25 FZB	.....8-69, 8-71, 8-73, 12-35
312101-0495 ...	SCREW M6S M10X30 FZB	..... 2-169, 10-15, 10-17, 10-19, 10-21, 12-7
312101-0499 ...	SCREW M6S M10X40 FZB	..... 2-37, 2-39, 2-41, 2-85, 2-87, 3-29, 12-5, 12-9
312101-0500 ...	SCREW M6S M10X45 FZB	.....10-15, 10-17, 10-21
312101-0501 ...	SCREW M6S M10X50 FZB	.....3-31, 3-33
312104-0505 ...	SCREW M6S M10X70H FZB	..... 3-31, 3-33
312101-0509 ...	SCREW M6S M10X90 FZB	12-35
312101-0561 ...	SCREW M6S M12X160FZB	.....12-97, 12-99
312101-0536 ...	SCREW M6S M12X30 FZB	.....3-31, 3-33, 12-47
312101-0538 ...	SCREW M6S M12X35 FZB	..... 2-37, 2-39, 2-41, 2-85, 2-87, 12-47
312101-0540 ...	SCREW M6S M12X40 FZB	..... 2-159, 2-161, 2-167, 2-185, 3-31, 3-33
312101-0546 ...	SCREW M6S M12X70 FZB	.....3-37, 3-39
312101-0674 ...	SCREW M6S M20X50 FZB	10-23
312101-0289 ...	SCREW M6S M4X10 FZB	.....2-177, 8-69, 8-71, 8-73
312101-0291 ...	SCREW M6S M4X12 FZB	.....8-69, 8-71, 8-73
312101-0295 ...	SCREW M6S M4X20 FZB	.....2-179, 3-35, 3-37, 3-39
312105-0304 ...	SCREW M6S M4X45 A280	12-91
312101-0287 ...	SCREW M6S M4X8 FZB	..... 2-163, 8-11, 8-35, 8-37, 12-59, 12-77, 12-79
312101-0325 ...	SCREW M6S M5X10 FZB	..... 1-35, 2-21, 2-77, 2-117, 2-119, 3-11, 3-21, 12-49, 13-11, 13-27
312101-0327 ...	SCREW M6S M5X12 FZB	.....2-137, 2-139, 12-49, 12-87
312101-0329 ...	SCREW M6S M5X16 FZB	..... 8-17, 8-35, 8-37, 8-41, 8-69, 8-71, 8-73, 12-77, 12-79, 12-87
312101-0331 ...	SCREW M6S M5X20 FZB	2-35, 2-121, 2-123, 8-11, 8-35, 8-37, 8-69, 8-71, 8-73, 12-59, 12-77
		.....12-79, 13-15
312101-0333 ...	SCREW M6S M5X25 FZB	.....2-165, 8-69, 8-71, 8-73

Machine Type	Group Description	Page No

Part No	Description	Page No
312101-0335	SCREW M6S M5X30 FZB	8-69, 8-71, 8-73
312101-0341	SCREW M6S M5X50 FZB	12-47
312101-0323	SCREW M6S M5X8 FZB	2-37, 2-39, 2-41, 2-85, 2-87, 3-41, 3-43, 8-17, 8-41, 8-69, 8-71, 8-73, 12-49
312101-0364	SCREW M6S M6X10 FZB	2-21, 2-77, 2-117, 2-119, 2-137, 2-139, 2-159, 2-161, 2-163, 2-181, 2-183, 3-31, 3-33, 8-11, 8-17, 8-35, 8-37, 12-47, 12-59, 12-77, 12-79, 13-27
312101-0366	SCREW M6S M6X12 FZB	1-35, 2-37, 2-39, 2-41, 2-85, 2-87, 2-129, 2-163, 2-179, 3-11, 3-21, 3-41, 3-43, 8-69, 8-71, 8-73, 13-11, 13-175
312101-0367	SCREW M6S M6X14 FZB	12-43, 12-49
312101-0368	SCREW M6S M6X16 FZB	2-37, 2-39, 2-41, 2-85, 2-87, 2-159, 2-161, 2-169, 2-177, 3-35, 8-69, 8-71, 8-73, 12-35, 12-49
312101-0370	SCREW M6S M6X20 FZB	1-35, 8-17, 12-49
312101-0372	SCREW M6S M6X25 FZB	2-137, 2-139, 3-11, 3-21, 3-37, 3-39, 13-11
312101-0374	SCREW M6S M6X30 FZB	5-59
312101-0379	SCREW M6S M6X45 FZB	12-49
312101-0380	SCREW M6S M6X50 FZB	2-21, 2-77, 2-117, 2-119, 12-47, 13-27
312104-0380	SCREW M6S M6X50H FZB	12-53, 12-55, 12-67, 12-69, 12-71, 12-73
312101-0381	SCREW M6S M6X55 FZB	8-45, 8-47, 12-95
312101-0383	SCREW M6S M6X65 FZB	3-15, 3-17
312101-0362	SCREW M6S M6X8 FZB	3-35
312101-0473	SCREW M6S M8X110 FZB	2-181, 2-183
312101-0447	SCREW M6S M8X12 FZB	1-35, 2-21, 2-77, 2-117, 2-119, 13-27
312101-0449	SCREW M6S M8X16 FZB	2-159, 2-161, 2-163, 2-181, 2-183, 3-29, 14-39
90287-0165	SCREW M6S M8X20 A480 NY-LOCK	5-57, 5-157
312101-0451	SCREW M6S M8X20 FZB	2-47, 2-177, 5-59
312101-0453	SCREW M6S M8X25 FZB	2-37, 2-39, 2-41, 2-85, 2-87, 2-167, 2-169, 3-11, 3-21, 3-37, 3-39, 5-59, 13-11
312101-0455	SCREW M6S M8X30 FZB	3-31, 3-33, 14-53
312101-0459	SCREW M6S M8X40 FZB	3-37, 3-39, 12-35
312101-0460	SCREW M6S M8X45 FZB	8-17
312104-0460	SCREW M6S M8X45H FZB	3-11, 3-21, 13-11
312101-0461	SCREW M6S M8X50 FZB	2-47, 2-159, 2-161
312101-0463	SCREW M6S M8X60 FZB	2-169
312101-0465	SCREW M6S M8X70 FZB	3-35, 3-41, 3-43
312104-0465	SCREW M6S M8X70H FZB	3-31, 3-33, 3-41, 3-43
312101-0467	SCREW M6S M8X80 FZB	2-179
312104-0467	SCREW M6S M8X80HFZB	12-115
90287-0136	SCREW MC6S M10X150 129	3-37, 3-39
90287-0073	SCREW MC6S M5X70 129	3-11, 3-13, 3-23, 3-25, 13-11, 13-13
90287-0056	SCREW MC6S-TT M8X40	10-19, 12-7
90287-0070	SCREW MLC6S M6X23	4-11, 4-13, 4-15, 4-17, 4-19, 4-21, 4-77, 4-79, 4-85, 4-87, 12-193, 12-195, 12-197, 12-199, 12-201, 12-203, 13-147
90287-0221	SCREW PAN HEAD MCS M2,5X16	14-23
565328-0000	SCREW RING	5-125, 5-127
593654-0000	SCREW SET	8-85, 8-87
90287-0074	SCREW SLOT. PAN HEAD LKCS M4X12	2-167
90287-0075	SCREW SLOT. PAN HEAD LKCS M6X12	2-37, 2-39, 2-41, 2-85, 2-87, 2-159, 2-161, 2-165, 2-167, 2-185, 8-51, 8-53, 8-69, 8-71, 8-73, 12-239
90287-0076	SCREW SLOT. PAN HEAD LKCS M6X20	2-167, 8-51, 8-53, 10-15, 10-17, 10-21, 12-5, 12-9, 12-147
312132-0284	SCREW SLOT. PAN HEAD MSCS M4X5	6-21, 6-23, 6-25
312132-0323	SCREW SLOT. PAN HEAD MSCS M5X8	8-69, 8-71, 8-73
90287-0106	SCREW SPRINGLOAD. SLOTTED HEAD M10X21	7-25, 12-117
90287-0109	SCREW SPRINGLOAD. SLOTTED HEAD M16X24	5-29, 5-49, 5-51
90287-0167	SCREW SPRINGLOAD. SOCK. HEX HEAD M6X20	8-13, 8-15
90287-0161	SCREW, SOCK.SET DOGPOINT M8X12	5-89, 5-91, 5-101, 5-103
445894-0000	SEAL	8-69, 8-71, 8-73
449626-0000	SEAL	8-69, 8-71, 8-73
532026-0000	SEAL COVER	8-55
529278-0100	SEAL KIT	12-107
529279-0100	SEAL KIT	12-101
541559-0100	SEAL KIT	1-39
90042-0527	SEAL KIT PILOT VALVE	2-27, 2-29, 2-31, 2-81, 2-83, 12-159, 13-117
530589-0000	SEAL RING	1-41, 1-63
1144665-0000	SEAL RING	6-29
1285890-0000	SEAL RING	6-15
90091-0158	SEAL RING 30X20X8 MM	12-103
530592-0000	SEAL RING HOLDER	1-63
530595-0000	SEAL RING HOLDER	1-63
90091-0391	SEAL SLYDRING	4-23, 4-25, 4-27, 4-29
90157-0002	SEALING COMPOUND, COLLEXIN	5-159
90157-0041	SEALING COMPOUND, RHODORSEAL 5651	8-49
90157-0022	SEALING COMPOUND, SILICONE	2-37, 2-39, 2-41, 2-85, 2-87, 5-133, 5-135
90214-0310	SEALING LID, 62X8 MM	5-19
353249-0306	SEALING PIN, 7X25	2-45
1350305-0000	SEALING RING	6-47
294042-0000	SEALING WASHER	4-101, 4-103, 4-105, 4-107
592719-0000	SEALING WASHER	2-37, 2-39, 2-41, 12-155
243931-0000	SECURING PLATE	3-35
262343-0000	SECURING PLATE	5-133, 5-135
445839-0000	SECURING PLATE	8-41
537389-0000	SECURING PLATE	8-17
927449-0000	SECURITY PLATE LEFT	4-147
927450-0000	SECURITY PLATE RIGHT	4-143
90113-0385	SEPARATION BLOCK	13-179
434404-0000	SERVICE TABLE	12-93
499391-0000	SERVICE TABLE	12-115

Part No	Description	Page No
499390-0100	SERVICE TABLE B8 ST-R	12-3
597559-0100	SERVICE TOOLS AND TEMPLATES TB/8	14-3
359011-0821	SET OF SIGNS 6-FW 1-50	13-175, 13-183
359011-0834	SET OF SIGNS 6-GW(EARTH)	13-175
90430-0304	SET POINT UNIT TELEMETRIC 2SPU1	9-41
541172-0000	SET SCREW	7-17
547959-0000	SETTING TEMPLATE	14-5
75100-0300	SETTING TOOL	14-5
595210-0100	SETTING TOOL	14-5
1013-0000	SHAFT	8-55
6692-0000	SHAFT	1-65, 1-67, 1-69
22462-0000	SHAFT	4-143, 4-147, 12-223, 12-227
23458-0000	SHAFT	3-9, 3-19
24352-0000	SHAFT	7-45
31418-0000	SHAFT	7-31, 7-33
31419-0000	SHAFT	7-31, 7-33
32462-0000	SHAFT	4-145, 12-225
32464-0000	SHAFT	4-77, 4-79, 4-85, 4-87, 13-151
35768-0000	SHAFT	1-37
37884-0000	SHAFT	12-91
37889-0000	SHAFT	12-91
37901-0000	SHAFT	12-87
74655-0000	SHAFT	14-45
110226-0000	SHAFT	1-73
110227-0000	SHAFT	1-73
111032-0000	SHAFT	1-73
207016-0000	SHAFT	1-49, 1-51, 1-53
208173-0000	SHAFT	12-91
228643-0000	SHAFT	1-73
228653-0000	SHAFT	8-5, 8-7, 8-21, 8-23, 8-25, 8-27, 8-29, 8-31, 8-33, 12-53, 12-55, 12-67, 12-69, 12-71, 12-73
229411-0000	SHAFT	12-49
229412-0000	SHAFT	12-49
229413-0000	SHAFT	12-49
236634-0000	SHAFT	12-45
243151-0000	SHAFT	7-31, 7-33
243930-0000	SHAFT	3-35
247112-0000	SHAFT	4-139, 4-141
251494-0000	SHAFT	7-35
251495-0000	SHAFT	7-35
251496-0000	SHAFT	7-35
251562-0000	SHAFT	3-35
252867-0000	SHAFT	12-83
252869-0000	SHAFT	12-83
255335-0000	SHAFT	3-41, 3-43
255581-0001	SHAFT	1-31, 1-33
257722-0000	SHAFT	1-49, 1-51, 1-53
259899-0000	SHAFT	1-65, 1-67, 1-69
262261-0000	SHAFT	5-63, 5-65
262266-0000	SHAFT	5-133, 5-135
262322-0000	SHAFT	5-133, 5-135
262323-0000	SHAFT	5-133, 5-135
262324-0000	SHAFT	5-133, 5-135
262325-0000	SHAFT	5-133, 5-135
262427-0001	SHAFT	5-137, 5-139, 5-141, 5-143
262427-0002	SHAFT	5-137, 5-139, 5-141, 5-143
262427-0005	SHAFT	5-137, 5-139, 5-141, 5-143
262427-0007	SHAFT	5-137, 5-139, 5-141, 5-143
262427-0008	SHAFT	5-137, 5-139, 5-141, 5-143
263152-0000	SHAFT	8-17, 12-83
263426-0000	SHAFT	14-39
263655-0001	SHAFT	1-43, 1-45
263655-0002	SHAFT	1-43, 1-45
263655-0003	SHAFT	1-43, 1-45
263655-0004	SHAFT	1-43, 1-45
263655-0005	SHAFT	1-43, 1-45
263655-0006	SHAFT	1-31, 1-33
263655-0007	SHAFT	1-75, 1-77, 1-79, 1-81, 1-83
263655-0008	SHAFT	1-43, 1-45, 1-75, 1-77, 1-79, 1-81, 1-83
263655-0009	SHAFT	1-31, 1-33, 1-75, 1-77, 1-79, 1-81, 1-83
263655-0010	SHAFT	1-75, 1-77, 1-79, 1-81, 1-83
263655-0011	SHAFT	1-43, 1-45
263655-0012	SHAFT	1-43, 1-45
263655-0018	SHAFT	1-43, 1-45
263655-0022	SHAFT	13-39
263655-0024	SHAFT	1-43, 1-45
263655-0025	SHAFT	1-31, 1-33
263655-0026	SHAFT	1-43, 1-45
265566-0001	SHAFT	7-13, 7-43, 12-25, 12-65
265566-0006	SHAFT	7-13, 7-43
265957-0000	SHAFT	1-37
266731-0000	SHAFT	7-41
266732-0000	SHAFT	7-41
268078-0000	SHAFT	1-31, 1-33
269053-0001	SHAFT	7-15

Part No	Description	Page No
269053-0003	SHAFT	7-15
269151-0000	SHAFT	1-31, 1-33
273567-0000	SHAFT	14-13, 14-15, 14-41, 14-43
279998-0000	SHAFT	3-15, 3-17
285132-0000	SHAFT	5-23, 5-39
285664-0000	SHAFT	5-137, 5-139, 5-141, 5-143
285825-0000	SHAFT	2-9, 2-69
292044-0000	SHAFT	8-9, 8-39, 12-57, 12-75
292477-0000	SHAFT	3-11, 3-21, 13-11
293611-0000	SHAFT	4-101, 4-103, 4-105, 4-107
293620-0001	SHAFT	12-67, 12-69, 12-71, 12-73
293620-0002	SHAFT	12-53, 12-55, 12-67, 12-69, 12-71, 12-73
293620-0003	SHAFT	12-53, 12-55
293637-0001	SHAFT	12-67, 12-69, 12-71, 12-73
293637-0003	SHAFT	12-53, 12-55
293639-0001	SHAFT	12-67, 12-69, 12-71, 12-73
293639-0005	SHAFT	12-53, 12-55, 12-67, 12-69, 12-71, 12-73
293670-0000	SHAFT	8-9, 8-39, 12-57, 12-75
297611-0000	SHAFT	5-11
297644-0000	SHAFT	5-137, 5-139, 5-141, 5-143
297751-0000	SHAFT	5-97
434062-0000	SHAFT	3-37, 3-39
434380-0000	SHAFT	3-31, 3-33
434388-0000	SHAFT	4-45, 4-47, 4-49, 4-51
434406-0000	SHAFT	12-93, 12-115
436483-0000	SHAFT	3-31, 3-33
436940-0000	SHAFT	8-5, 8-7, 8-21, 8-23, 8-25, 8-27, 8-29, 8-31, 8-33
440137-0001	SHAFT	8-83
440137-0002	SHAFT	8-81
440197-0000	SHAFT	8-55
440260-0000	SHAFT	8-45, 8-47, 12-95
442851-0000	SHAFT	5-15
443049-0000	SHAFT	5-67
443175-0000	SHAFT	5-157
443305-0000	SHAFT	5-101, 5-103
443307-0000	SHAFT	5-89, 5-91, 5-101, 5-103
443309-0000	SHAFT	5-119
443455-0000	SHAFT	5-101, 5-103
443456-0000	SHAFT	5-101, 5-103
443457-0000	SHAFT	5-101, 5-103
443458-0000	SHAFT	5-101, 5-103
445838-0000	SHAFT	8-17, 8-41
445847-0000	SHAFT	8-17, 8-41
445851-0000	SHAFT	8-41
445904-0000	SHAFT	8-69, 8-71, 8-73
449190-0000	SHAFT	6-17
450461-0000	SHAFT	7-31, 7-33
450497-0000	SHAFT	8-5, 8-7, 8-21, 8-23, 8-25, 8-27, 8-29, 8-31, 8-33, 12-53, 12-55, 12-67, 12-69, 12-71, 12-73
457367-0000	SHAFT	4-97, 4-99
458164-0000	SHAFT	4-53, 4-55, 12-205, 12-207
458165-0000	SHAFT	4-53, 4-55, 12-205, 12-207
458791-0000	SHAFT	1-5, 1-11, 1-23
458916-0000	SHAFT	8-69, 8-71, 8-73
464082-0000	SHAFT	12-97, 12-99
464088-0000	SHAFT	12-97, 12-99
464115-0000	SHAFT	12-97, 12-99
464697-0000	SHAFT	4-77, 4-79, 4-85, 4-87
469463-0000	SHAFT	1-31, 1-33
476263-0001	SHAFT	12-67, 12-69, 12-71, 12-73
476263-0002	SHAFT	12-53, 12-55, 12-67, 12-69, 12-71, 12-73
476263-0003	SHAFT	12-53, 12-55
476401-0000	SHAFT	8-57, 8-59
484219-0000	SHAFT	2-9, 2-69
484222-0000	SHAFT	2-9, 2-69
486960-0001	SHAFT	8-21, 8-23, 8-25, 8-27, 8-29, 8-31, 8-33
486960-0002	SHAFT	8-5, 8-7
486966-0001	SHAFT	8-21, 8-23, 8-25, 8-27, 8-29, 8-31, 8-33
493886-0000	SHAFT	1-43, 1-45
499011-0000	SHAFT	1-65, 1-67, 1-69
499132-0002	SHAFT	8-75
499474-0000	SHAFT	3-29
522133-0000	SHAFT	8-85, 8-87
522319-0001	SHAFT	1-31, 1-33
522319-0003	SHAFT	1-31, 1-33
525136-0000	SHAFT	5-19
525299-0000	SHAFT	5-33, 5-53, 5-55
525312-0000	SHAFT	5-29, 5-49, 5-51
525330-0000	SHAFT	5-145, 5-147, 5-149, 5-151, 5-153, 5-155
525363-0002	SHAFT	5-89, 5-91
525382-0000	SHAFT	5-159
525400-0000	SHAFT	5-89, 5-91, 5-101, 5-103
525401-0000	SHAFT	5-101, 5-103
525402-0000	SHAFT	5-89, 5-91, 5-101, 5-103
526690-0000	SHAFT	13-41

Part No	Description	Page No
526986-0001	SHAFT	8-13, 8-15
530626-0000	SHAFT	12-117
530766-0001	SHAFT	1-31, 1-33
532725-0000	SHAFT	1-11
533457-0001	SHAFT	8-21, 8-23, 8-25, 8-27, 8-29, 8-31, 8-33
533457-0002	SHAFT	8-5, 8-7
534878-0000	SHAFT	2-11, 2-25, 2-53, 2-55, 2-59, 2-61
534882-0000	SHAFT	12-45
536703-0000	SHAFT	3-41, 3-43
536988-0001	SHAFT	1-43, 1-45
536988-0002	SHAFT	1-43, 1-45
537327-0000	SHAFT	7-25
537383-0000	SHAFT	8-17
537384-0000	SHAFT	8-17
538399-0000	SHAFT	4-33, 4-35, 4-37, 4-39, 4-41, 4-43, 4-131, 4-133, 4-135, 4-137
540949-0000	SHAFT	3-11, 3-21, 13-11
541065-0000	SHAFT	7-21, 7-23
541070-0000	SHAFT	7-21, 7-23
544292-0000	SHAFT	4-53, 4-55, 12-205, 12-207
544367-0000	SHAFT	8-21, 8-23, 8-25, 8-27, 8-29, 8-31, 8-33
548696-0000	SHAFT	8-57, 8-59
548699-0000	SHAFT	8-57, 8-59
556322-0000	SHAFT	8-77, 8-79
556324-0000	SHAFT	8-77, 8-79
556325-0000	SHAFT	8-77, 8-79
560418-0000	SHAFT	3-37, 3-39
561545-0000	SHAFT	4-101, 4-103, 4-105, 4-107
561547-0000	SHAFT	4-101, 4-103, 4-105, 4-107
563212-0000	SHAFT	3-37, 3-39
567347-0000	SHAFT	5-19
567348-0000	SHAFT	5-19
568073-0000	SHAFT	5-123
568074-0000	SHAFT	5-123
568157-0000	SHAFT	5-61
568158-0000	SHAFT	5-61
568159-0000	SHAFT	5-61
569085-0000	SHAFT	1-31, 1-33
569091-0000	SHAFT	1-43, 1-45
569100-0000	SHAFT	1-31, 1-33
569920-0000	SHAFT	8-77, 8-79
570066-0000	SHAFT	3-35, 3-41, 3-43
574064-0000	SHAFT	8-77, 8-79
581352-0000	SHAFT	1-43, 1-45, 13-69
591246-0000	SHAFT	3-37, 3-39, 13-33
592592-0000	SHAFT	7-31, 7-33
592925-0000	SHAFT	1-43, 1-45
592962-0000	SHAFT	1-49, 1-51, 1-53
593552-0000	SHAFT	8-43
593587-0000	SHAFT	8-21, 8-23, 8-25, 8-27, 8-29, 8-31, 8-33
593646-0000	SHAFT	1-37, 13-41
595202-0000	SHAFT	8-21, 8-23, 8-25, 8-27, 8-29, 8-31, 8-33
598976-0000	SHAFT	4-101, 4-103, 4-105, 4-107
927734-0001	SHAFT	13-57
927734-0002	SHAFT	1-31, 1-33, 13-57
950351-0000	SHAFT	4-23, 4-25, 4-27, 4-29, 12-215, 12-217, 12-219, 12-221, 13-7, 13-9, 13-99, 13-101, 13-103, 13-105
1144242-0000	SHAFT	6-55
1144254-0000	SHAFT	6-55
1144470-0000	SHAFT	6-33
1144504-0000	SHAFT	6-59, 6-61
1144598-0000	SHAFT	6-33
1144619-0000	SHAFT	6-33
1144678-0000	SHAFT	6-57
1144850-0000	SHAFT	6-63
1285894-0000	SHAFT	6-65
1317056-0100	SHAFT	6-49
1317084-0000	SHAFT	6-51
1317362-0000	SHAFT	6-59, 6-61
1317363-0000	SHAFT	6-59, 6-61
1348923-0000	SHAFT	6-55
1349980-0000	SHAFT	4-31, 13-145
486968-0001	SHAFT FOR BENDINGROLLER	8-21, 8-23, 8-25, 8-27, 8-29, 8-31, 8-33
486968-0002	SHAFT FOR BENDINGROLLER	8-5, 8-7
486966-0002	SHAFT FOR CARRIER	8-5, 8-7
90083-0053	SHAFT LOCATING WASHER, 30X47X1MM	6-49
1334434-0100	SHAFT, PULLEY	6-41
31653-0001	SHEET	5-73
37906-0000	SHEET	12-85
37907-0000	SHEET	12-85
237810-0000	SHEET	12-49
237812-0000	SHEET	12-49
269425-0000	SHEET	12-49
297551-0000	SHEET	5-7, 5-9, 5-35, 5-37
297794-0000	SHEET	5-97
442545-0000	SHEET	5-7, 5-9, 5-35, 5-37

Part No	Description	Page No
442909-0001	SHEET	5-137, 5-139, 5-141, 5-143
442910-0001	SHEET	5-137, 5-139, 5-141, 5-143
443021-0000	SHEET	5-137, 5-139, 5-141, 5-143
443022-0000	SHEET	5-137, 5-139, 5-141, 5-143
443023-0000	SHEET	5-137, 5-139, 5-141, 5-143
443024-0000	SHEET	5-137, 5-139, 5-141, 5-143
443187-0000	SHEET	5-7, 5-9, 5-35, 5-37
484895-0001	SHEET	8-69, 8-71, 8-73
484895-0002	SHEET	8-69, 8-71, 8-73
484895-0003	SHEET	8-69, 8-71, 8-73
484895-0006	SHEET	8-69, 8-71, 8-73
484895-0007	SHEET	8-69, 8-71, 8-73
486967-0000	SHEET	8-5, 8-7, 8-21, 8-23, 8-25, 8-27, 8-29, 8-31, 8-33
522126-0000	SHEET	8-85, 8-87
525066-0000	SHEET	5-137, 5-139, 5-141, 5-143
525067-0000	SHEET	5-137, 5-139, 5-141, 5-143
525068-0000	SHEET	5-137, 5-139, 5-141, 5-143
525069-0000	SHEET	5-137, 5-139, 5-141, 5-143
525138-0000	SHEET	5-29, 5-49, 5-51
525280-0000	SHEET	5-7, 5-9, 5-35, 5-37
540869-0000	SHEET	7-17
543701-0000	SHEET	5-137, 5-139, 5-141, 5-143
543702-0000	SHEET	5-137, 5-139, 5-141, 5-143
569115-0000	SHEET	5-137, 5-139, 5-141, 5-143
569116-0000	SHEET	5-137, 5-139, 5-141, 5-143
574040-0000	SHEET	5-137, 5-139, 5-141, 5-143
574041-0000	SHEET	5-137, 5-139, 5-141, 5-143
574606-0000	SHEET	2-147
574651-0000	SHEET	8-75
579681-0000	SHEET	7-9
582020-0000	SHEET	7-9
583187-0000	SHEET	7-9
583447-0000	SHEET	5-137, 5-139, 5-141, 5-143
583455-0000	SHEET	5-137, 5-139, 5-141, 5-143
590410-0000	SHEET	7-15, 13-193
592596-0000	SHEET	7-9
597617-0000	SHEET	5-137, 5-139, 5-141, 5-143
597618-0000	SHEET	5-137, 5-139, 5-141, 5-143
1144348-0000	SHEET	6-9
547906-0000	SHELF	2-135
90296-0075	SHELL OMALA OIL 320, DRUM 208 LITRES	5-19
90135-0039	SHIELD CLIP KLBU 4-13.5	13-221
243133-0000	SHIELD PLATE	12-91
23580-0000	SHIFTER HANDLE	7-45
90051-0089	SHIFTER HANDLE	8-13, 8-15
257090-0000	SHIFTER HANDLE	1-43, 1-45
276307-0000	SHIFTER HANDLE	14-13, 14-15, 14-41, 14-43
293606-0000	SHIFTER HANDLE	4-101, 4-103, 4-105, 4-107
449154-0000	SHIFTER HANDLE	14-33
598975-0000	SHIFTER HANDLE	4-101, 4-103, 4-105, 4-107
442894-0000	SHIM	5-145, 5-147, 5-149, 5-151, 5-153, 5-155
442903-0000	SHIM	5-19
442904-0000	SHIM	5-19
442905-0000	SHIM	5-19
442939-0000	SHIM	5-145, 5-147, 5-149, 5-151, 5-153, 5-155
442981-0000	SHIM	5-145, 5-147, 5-149, 5-151, 5-153, 5-155
443055-0000	SHIM	5-61
443056-0000	SHIM	5-61
443057-0000	SHIM	5-61
443058-0000	SHIM	5-61
443193-0000	SHIM	5-123
443194-0000	SHIM	5-123
525331-0000	SHIM	5-61
525332-0000	SHIM	5-61
538245-0000	SHIM	2-37, 2-39, 2-41, 2-85, 2-87
591087-0000	SHIM	4-7, 4-23, 4-25, 4-27, 4-29, 12-215, 12-217, 12-219, 12-221, 13-7, 13-9, 13-99, 13-101, 13-103, 13-105, 13-109, 13-111
593211-0000	SHIM	11-19
593218-0000	SHIM	11-9, 11-11, 11-13, 11-15
593221-0000	SHIM	11-9, 11-11, 11-13, 11-15
593222-0000	SHIM	11-9, 11-11, 11-13, 11-15
593853-0000	SHIM	11-9, 11-11, 11-13, 11-15
596254-0000	SHIM	11-9, 11-11, 11-13, 11-15
598565-0000	SHIM	6-5
598566-0000	SHIM	6-5
598567-0000	SHIM	6-5
598578-0000	SHIM	6-5
598623-0000	SHIM	13-151
1144511-0000	SHIM	6-59, 6-61
1334018-0000	SHIM	6-57
246327-0400	SHOCK ABSORBER	4-3, 4-5, 12-171
252972-0000	SHOULDER SCREW	1-7, 1-9
68444-0101	SHUNT RESISTOR FOR SSR	9-5, 9-7, 9-9, 9-11, 9-13, 9-15, 9-25, 9-27, 9-29, 9-31, 9-33, 9-45, 9-47, 9-49, 9-51, 9-53, 9-55

Part No	Description	Page No
90201-0019	SHUT-OFF VALVE, NO. MPV1-10-T-0	12-111
484701-0000	SHUTTER	6-37, 6-39
269301-0500	SIDE BOX RIGHT	2-3, 2-5
293617-0000	SIDE FRAME	12-53, 12-55, 12-67, 12-69, 12-71, 12-73
293618-0000	SIDE FRAME	12-53, 12-55, 12-67, 12-69, 12-71, 12-73
529476-0000	SIDE GUARD	8-51, 8-53
530745-0400	SIDE GUARD	8-3
545099-0200	SIDE GUARD	2-3, 2-5
566645-0000	SIDE GUARD	2-37, 2-39, 2-41
566646-0000	SIDE GUARD	2-37, 2-39, 2-41, 2-85, 2-87
573507-0000	SIDE GUARD	8-51, 8-53
1285867-0000	SIDE GUARD	2-85, 2-87
928233-0000	SIDE GUARD ,L	2-99
928232-0000	SIDE GUARD ,R	2-97
544680-0000	SIDE GUARD R	2-63
529498-0000	SIDE GUARD RIGHT	8-51, 8-53
929655-0100	SIDE GUARD, LEFT	2-3, 2-5
545100-0200	SIDE GUARD, RIGHT	2-3, 2-5
929656-0100	SIDE GUARD, RIGHT	2-3, 2-5
971444-0101	SIDE PANEL	9-23, 9-43, 9-63
243172-0001	SIDE PIECE	10-19, 12-7
243172-0002	SIDE PIECE	10-19, 12-7
560797-0000	SIDE PIECE	2-185
560798-0000	SIDE PIECE	2-159, 2-161
297499-0001	SIDE PIPE	5-69, 5-71, 5-77, 5-79
297499-0002	SIDE PIPE	5-69, 5-71, 5-77, 5-79
297499-0003	SIDE PIPE	5-69, 5-71, 5-77, 5-79
443158-0000	SIDE PIPE	5-69, 5-71, 5-77, 5-79
548402-0000	SIDE PIPE	5-69, 5-71, 5-77, 5-79
583448-0000	SIDE PIPE	5-69, 5-71, 5-77, 5-79
597609-0000	SIDE PIPE	5-69, 5-71, 5-77, 5-79
297569-0000	SIDE PLATE	5-23, 5-39
443445-0000	SIDE PLATE	5-101, 5-103
443446-0000	SIDE PLATE	5-101, 5-103
525054-0000	SIDE PLATE	5-39
525169-0000	SIDE PLATE	5-39
525170-0000	SIDE PLATE	5-39
525346-0000	SIDE PLATE	5-7, 5-9, 5-35, 5-37
546232-0000	SIDE PLATE	12-145
546233-0000	SIDE PLATE	12-145
564519-0000	SIDE PLATE	2-159, 2-161
564520-0000	SIDE PLATE	2-159, 2-161
564521-0000	SIDE PLATE	2-185
564522-0000	SIDE PLATE	2-185
574065-0000	SIDE PLATE	5-89, 5-91
574066-0000	SIDE PLATE	5-89, 5-91
594632-0000	SIDE PLATE	5-23
1144920-0000	SIDE PLATE	6-37, 6-39
1144921-0000	SIDE PLATE	6-37, 6-39
68910-1000	SIDE PROTECTION, TB/8-1001.	9-3
42511-1000	SIDE PROTECTION, TB/8-1002.	9-3
42876-1000	SIDE PROTECTION, TB/8-1003.	9-3
544899-0000	SIDECOVER LEFT FRONT	2-65, 2-99
544900-0000	SIDECOVER RIGHT FRONT	2-63, 2-97
544681-0000	SIDEGUARD L	2-65
247385-0000	SIGN	2-173, 2-175, 13-29
247386-0000	SIGN	2-173, 2-175, 13-29
464720-0000	SIGN	2-137, 2-139
479964-0000	SIGN	2-27, 2-29, 2-31, 2-81, 2-83
522308-0000	SIGN	8-91, 12-97, 12-99
543141-0000	SIGN	8-13, 8-15
543142-0000	SIGN	8-13, 8-15
978603-0000	SIGN	2-27, 2-29, 2-31, 2-81, 2-83
1143241-0000	SIGN	2-27, 2-29, 2-31, 2-81, 2-83, 12-159
1143242-0000	SIGN	2-137, 2-139, 12-155
1144606-0000	SIGN	2-81, 2-83
1144607-0000	SIGN	2-81, 2-83
1338969-0000	SIGN	13-215
1338970-0000	SIGN	13-215
1338971-0000	SIGN	13-215
1338972-0000	SIGN	13-215
2505088-0000	SIGN	13-175, 13-179
2505089-0000	SIGN	13-175, 13-179
2505090-0000	SIGN	13-175, 13-179
2505091-0000	SIGN	13-175, 13-179
2505092-0000	SIGN	13-175, 13-179
2505093-0000	SIGN	13-175, 13-179
90194-0133	SIGN "DELIVERED DESIGN"	9-5, 9-7, 9-9, 9-11, 9-13, 9-15, 9-21, 9-23, 9-25, 9-27, 9-29, 9-31, 9-33, 9-45, 9-47, 9-49, 9-51, 9-53, 9-55
359020-0012	SIGN "EARTHSYMBOL" 4X6MM	8-69, 8-71, 8-73
486826-0001	SIGN "EMERGENCY STOP"	7-9, 7-31, 7-33, 8-61, 8-63, 8-65, 9-21, 9-23, 9-41, 9-43, 9-61, 9-63
359011-0801	SIGN BOARD BSFW 1-50	7-11
359240-0100	SIGN HOLDER FOR 359240-0001	2-147, 9-5, 9-7, 9-9, 9-11, 9-13, 9-15, 9-25, 9-27, 9-29, 9-31, 9-33, 9-45, 9-47, 9-49, 9-51, 9-53, 9-55, 12-47, 13-175, 13-179, 13-215

Part No	Description	Page No
561595-0000	SIGN MULTISTEP 35X35MM	2-27, 2-29, 2-31, 2-81, 2-83
545113-0000	SIGN STRIP MAGAZINE	7-17
1350430-0000	SIGN"FLAPS HEATING BOTTOM"	9-5, 9-7, 9-9, 9-11, 9-13, 9-15
90194-0112	SIGN"WHITE CARD EL.EQ."REPL.BY 90194-133	9-41, 9-43, 9-61, 9-63
273458-0000	SIGN, AIR	2-149, 2-151
273455-0000	SIGN, COLD WATER	2-149, 2-151
273449-0000	SIGN, FLAP SEALING	2-27, 2-29, 2-31
273456-0000	SIGN, HOT WATER	2-149, 2-151
90194-0080	SIGN, IDENTIFICATION OF WIRING	9-5, 9-7, 9-9, 9-11, 9-13, 9-15, 9-25, 9-27, 9-29, 9-31, 9-33, 9-45, 9-47, 9-49, 9-51, 9-53, 9-55
464174-0000	SIGN, LONGITUDINAL SEALING	1-55
464175-0000	SIGN, LONGITUDINAL SEALING SHORT STOP	1-55
359240-0001	SIGN, NOT ENGRAVED	9-5, 9-7, 9-9, 9-11, 9-13, 9-15, 9-25, 9-27, 9-29, 9-31, 9-33, 9-45, 9-47, 9-49, 9-51, 9-53, 9-55
464176-0000	SIGN, STRIP APPLICATOR	7-9
464177-0000	SIGN, STRIP APPLICATOR SHORT STOP	7-9
359320-0003	SIGN, THUMB WHEEL UNIT FILLING ON	9-5, 9-7, 9-9, 9-11, 9-13, 9-15, 9-25, 9-27, 9-29, 9-31, 9-33, 9-45, 9-47, 9-49, 9-51, 9-53, 9-55
90194-0109	SIGN, TRANSP. OH-FOLIE, BLANC	14-21
293333-0000	SIGN, WEB BRAKE	2-27, 2-29, 2-31
359241-0297	SIGN: " 50 HZ"	9-5, 9-7, 9-9, 9-11, 9-13, 9-15, 9-25, 9-27, 9-29, 9-31, 9-33, 9-45, 9-47, 9-49, 9-51, 9-53, 9-55
359241-0298	SIGN: " 60 HZ"	9-5, 9-7, 9-9, 9-11, 9-13, 9-15, 9-25, 9-27, 9-29, 9-31, 9-33, 9-45, 9-47, 9-49, 9-51, 9-53, 9-55
359241-0338	SIGN: " FLAP HEATING TOP LEFT"	9-5, 9-7, 9-9, 9-11, 9-13, 9-15
359241-0337	SIGN: " FLAP HEATING TOP RIGHT"	9-5, 9-7, 9-9, 9-11, 9-13, 9-15
359241-0158	SIGN: " LEVEL IN HYDRAULIC OIL TANK"	2-147
359241-0127	SIGN: " LIGHT JAW SYSTEM & MACHINE BODY"	2-147
359241-0124	SIGN: " MAIN SWITCH"	9-5, 9-7, 9-9, 9-11, 9-13, 9-15, 9-25, 9-27, 9-29, 9-31, 9-33, 9-45, 9-47, 9-49, 9-51, 9-53, 9-55
359241-0324	SIGN: " PREPERATIONS"	9-5, 9-7, 9-9, 9-11, 9-13, 9-15, 9-25, 9-27, 9-29, 9-31, 9-33, 9-45, 9-47, 9-49, 9-51, 9-53, 9-55
359241-0269	SIGN: " SMALL ROLL LARGE ROLL LOW FOR...	8-61, 8-63, 8-65
359241-0131	SIGN: " TEMP. LS"	9-5, 9-7, 9-9, 9-11, 9-13, 9-15, 9-25, 9-27, 9-29, 9-31, 9-33, 9-45, 9-47, 9-49, 9-51, 9-53, 9-55
359241-0132	SIGN: " TEMP. SA"	9-5, 9-7, 9-9, 9-11, 9-13, 9-15, 9-25, 9-27, 9-29, 9-31, 9-33, 9-45, 9-47, 9-49, 9-51, 9-53, 9-55
359241-0251	SIGN: " TEMP.-SPLICING"	9-5, 9-7, 9-9, 9-11, 9-13, 9-15, 9-25, 9-27, 9-29, 9-31, 9-33, 9-45, 9-47, 9-49, 9-51, 9-53, 9-55
346800-0113	SILENCER FILTER R1/2"	12-141
346800-0109	SILENCER FILTER R1/8"	1-27, 1-29
90328-0026	SILENCER G1/4"	2-7, 2-27, 2-29, 2-31, 2-81, 2-83, 12-159
90328-0024	SILENCER G3/8"	2-27, 2-29, 2-31, 2-81, 2-83, 12-159
90328-0003	SILENCER, 338/110	1-27, 1-29
90328-0002	SILENCER, 338/12D	12-39, 12-41
90328-0001	SILENCER, 338/130 B140-00-120	2-149, 2-151
90296-0009	SILICONE GREASE DOW CORNING 150 GR.	1-49, 1-51, 1-53, 5-13, 5-57, 5-121, 5-133, 5-135, 8-77, 8-79
90415-0064	SIMPLIFIED CD2 DRYER	2-7
33011-0000	SLEEVE	8-11, 8-35, 8-37, 12-59, 12-77, 12-79
74768-0000	SLEEVE	14-47
74769-0000	SLEEVE	14-47
90020-0028	SLEEVE	1-63
239383-0000	SLEEVE	3-37, 3-39
255398-0000	SLEEVE	3-41, 3-43
262309-0000	SLEEVE	5-133, 5-135
271239-0000	SLEEVE	12-95
272810-0001	SLEEVE	12-95
272814-0000	SLEEVE	8-45, 8-47
272815-0001	SLEEVE	8-45, 8-47
283085-0000	SLEEVE	10-11
285142-0002	SLEEVE	5-121
285142-0003	SLEEVE	5-121
440252-0000	SLEEVE	8-55
440253-0000	SLEEVE	8-55
440647-0000	SLEEVE	1-27, 1-29
445844-0000	SLEEVE	8-61, 8-63, 8-65
445846-0000	SLEEVE	8-61, 8-63, 8-65
457358-0000	SLEEVE	8-55
476201-0000	SLEEVE	12-37, 12-133
525216-0000	SLEEVE	5-17
525329-0000	SLEEVE	5-145, 5-147, 5-149, 5-151, 5-153, 5-155
525367-0000	SLEEVE	5-133, 5-135
556320-0000	SLEEVE	8-77, 8-79
568286-0000	SLEEVE	3-37, 3-39
569942-0000	SLEEVE	12-95
569943-0000	SLEEVE	12-95
569944-0000	SLEEVE	8-45, 8-47
569945-0000	SLEEVE	8-45, 8-47
570125-0000	SLEEVE	3-35, 3-41, 3-43
570126-0000	SLEEVE	3-35, 3-41, 3-43
574081-0000	SLEEVE	5-17
591247-0000	SLEEVE	3-37, 3-39, 13-33
592539-0000	SLEEVE	12-215, 12-217, 12-219, 12-221, 13-99, 13-101, 13-103, 13-105, 13-109, 13-111

Part No	Description	Page No
593560-0000 ...	SLEEVE	8-45, 8-47
593562-0000 ...	SLEEVE	12-95
594218-0000 ...	SLEEVE	13-7, 13-9
596260-0000 ...	SLEEVE	11-9, 11-11, 11-13, 11-15
598564-0000 ...	SLEEVE	6-5
1036278-0000 .	SLEEVE	12-275
1144189-0000 .	SLEEVE	6-9
1144758-0000 .	SLEEVE	6-35, 6-67
1338675-0000 .	SLEEVE	4-23, 4-25, 4-27, 4-29, 13-167
1338703-0000 .	SLEEVE	4-23, 4-25, 4-27, 4-29
1369843-0001 .	SLEEVE	12-275
2505044-0000 .	SLEEVE	13-177
2505045-0000 .	SLEEVE	13-177
90134-0030	SLEEVE FOR PLASTIC TUBE	2-179, 3-35, 3-41, 3-43, 5-7, 5-9, 5-25, 5-27, 5-29, 5-33, 5-35, 5-37, 5-41, 5-43, 5-45, 5-47, 5-49, 5-51, 5-53, 5-55, 5-59, 5-81, 5-83, 6-29, 6-35
90134-0031	SLEEVE FOR PLASTIC TUBE	2-179, 3-35, 3-37, 3-39, 4-33, 4-35, 4-37, 4-39, 4-41, 4-43, 4-45, 4-47, 4-49, 4-51, 4-101, 4-103, 4-105, 4-107, 4-131, 4-133, 4-135, 4-137, 4-139, 4-141
342707-0110 ...	SLEEVE, INT. THREAD, NO. 2543-1/4	2-101, 2-103, 2-105, 2-107, 2-109, 2-111, 2-113, 2-137, 2-139
283775-0000 ...	SLIDE	3-15
457586-0000 ...	SLIDE	8-77, 8-79
596102-0000 ...	SLIDE	6-33
596103-0000 ...	SLIDE	6-33
596139-0000 ...	SLIDE	6-35
596141-0000 ...	SLIDE	6-35
1144153-0000 .	SLIDE	3-17
1282702-0000 .	SLIDE	6-33
1282703-0000 .	SLIDE	6-33
1282704-0000 .	SLIDE	6-33
440249-0000 ...	SLIDE BELT	8-49
522132-0000 ...	SLIDE BELT	8-85, 8-87
294110-0001 ...	SLIDE PLATE	1-37
464129-0000 ...	SLIDE PLATE	12-97, 12-99
442776-0000 ...	SLIDE RAIL	5-23, 5-39
442931-0000 ...	SLIDE RAIL	5-29, 5-49, 5-51
464196-0000 ...	SLIDE RAIL	2-159, 2-161
525347-0000 ...	SLIDE RAIL	5-129, 5-131
525348-0000 ...	SLIDE RAIL	5-129, 5-131
525349-0000 ...	SLIDE RAIL	5-129, 5-131
525351-0000 ...	SLIDE RAIL	5-129, 5-131
525352-0000 ...	SLIDE RAIL	5-129, 5-131
525353-0000 ...	SLIDE RAIL	5-129, 5-131
525356-0000 ...	SLIDE RAIL	5-129, 5-131
569127-0000 ...	SLIDE RAIL	5-129, 5-131
574053-0000 ...	SLIDE RAIL	5-129, 5-131
583446-0000 ...	SLIDE RAIL	5-129, 5-131
596295-0000 ...	SLIDE RAIL	11-17
597539-0000 ...	SLIDE RAIL	12-273, 13-125
597614-0000 ...	SLIDE RAIL	5-129, 5-131
1361908-0000 .	SLIDE RAIL	5-129, 5-131
1362436-0000 .	SLIDE RAIL	5-129, 5-131
1279415-0000 .	SLIDE RAIL LOWER	6-37, 6-39
1144922-0000 .	SLIDE RAIL UPPER	6-37, 6-39
443237-0000 ...	SLIDER	5-29, 5-49, 5-51
466074-0002 ...	SLIDER	6-37, 6-39
525315-0000 ...	SLIDER	5-29, 5-49, 5-51
464125-0000 ...	SLIDING SLEEVE	12-109
464127-0000 ...	SLIDING SLEEVE*	12-109
311303-0356 ...	SLOTTED PIN RPB 6X30 ZINC COATED	3-37, 3-39
90287-0206	SLOTTED SCREW	8-77, 8-79
90184-0001	SNAP-IN BALL LOCK, 49X9 MM	12-49
90237-0070	SNAP-IN BALL LOCK, 69X19 MM	2-133
353012-0011 ...	SOCKET	14-27
67270-1000	SOFTWARE, TB/8-1001.	9-3
42507-1000	SOFTWARE, TB/8-1002.	9-3
42872-1000	SOFTWARE, TB/8-1003.	9-3
90201-0058	SOLENOID VALVE	2-171, 2-173, 12-163, 13-29
90042-0172	SOLENOID VALVE 4023/1005/1032 24VDC	2-149, 2-151
90042-0260	SOLENOID VALVE BÃ¼RKERT 048 696 F	2-7
90042-0042	SOLENOID VALVE MECMAN 48VDC	12-39, 12-41
90042-0074	SOLENOID VALVE MECMAN 581-211-100	12-39, 12-41
90119-0067	SOLID-STATE RELAY, H12WD4850	9-5, 9-7, 9-9, 9-11, 9-13, 9-15, 9-19, 9-25, 9-27, 9-29, 9-31, 9-33, 9-39, 9-45, 9-47, 9-49, 9-51, 9-53, 9-55, 9-59, 13-175
35553-0001	SPACER	1-55
38603-0002	SPACER	4-101, 4-103, 4-105, 4-107
90012-0148	SPACER	6-67
208658-0001 ...	SPACER	10-19, 12-7
228843-0001 ...	SPACER	5-23, 5-39
229201-0001 ...	SPACER	5-39
229201-0002 ...	SPACER	5-23, 5-39
229775-0000 ...	SPACER	12-91
247263-0000 ...	SPACER	4-113, 4-115, 12-175, 12-177
263328-0000 ...	SPACER	3-41, 3-43
263684-0000 ...	SPACER	4-113, 4-115, 12-175, 12-177

Part No	Description	Page No
266740-0001	SPACER	7-41
266740-0002	SPACER	7-41
269600-0000	SPACER	12-53, 12-55, 12-67, 12-69, 12-71, 12-73
272453-0000	SPACER	12-27, 12-31
279989-0000	SPACER	3-15, 3-17
285444-0000	SPACER	5-137, 5-139, 5-141, 5-143
292136-0000	SPACER	12-93, 12-115
293583-0000	SPACER	14-35
293633-0003	SPACER	12-53, 12-55
293633-0005	SPACER	12-53, 12-55, 12-67, 12-69, 12-71, 12-73
293634-0003	SPACER	12-53, 12-55
293640-0002	SPACER	12-53, 12-55, 12-67, 12-69, 12-71, 12-73
293640-0003	SPACER	12-53, 12-55
293641-0000	SPACER	12-67, 12-69, 12-71, 12-73
293644-0001	SPACER	12-67, 12-69, 12-71, 12-73
293644-0002	SPACER	12-53, 12-55, 12-67, 12-69, 12-71, 12-73
293644-0003	SPACER	12-53, 12-55
293671-0000	SPACER	8-35, 8-37, 12-77, 12-79
293672-0001	SPACER	12-67, 12-69, 12-71, 12-73
293672-0002	SPACER	12-67, 12-69, 12-71, 12-73
293672-0003	SPACER	12-67, 12-69, 12-71, 12-73
293672-0004	SPACER	12-67, 12-69, 12-71, 12-73
294059-0000	SPACER	4-73
294447-0000	SPACER	14-39
297574-0001	SPACER	5-39
297574-0002	SPACER	5-23, 5-39
434408-0000	SPACER	12-93, 12-115
434409-0000	SPACER	12-93
434792-0002	SPACER	12-67, 12-69, 12-71, 12-73
434792-0003	SPACER	12-53, 12-55, 12-67, 12-69, 12-71, 12-73
434792-0005	SPACER	12-53, 12-55, 12-67, 12-69, 12-71, 12-73
436487-0000	SPACER	3-31, 3-33
440282-0003	SPACER	8-21, 8-23, 8-25, 8-27, 8-29, 8-31, 8-33
440282-0004	SPACER	8-21, 8-23, 8-25, 8-27, 8-29, 8-31, 8-33
441718-0000	SPACER	13-53, 13-55
442615-0000	SPACER	5-61
442616-0000	SPACER	5-61
442617-0000	SPACER	5-61
442621-0000	SPACER	5-123
442622-0000	SPACER	5-123
443179-0000	SPACER	5-157
443215-0000	SPACER	5-33, 5-53, 5-55
443312-0000	SPACER	5-89, 5-91
443419-0000	SPACER	5-115
450745-0000	SPACER	2-137, 2-139
450899-0001	SPACER	2-45, 2-91
464370-0000	SPACER	4-73
466444-0000	SPACER	14-37
476200-0000	SPACER	12-133
476220-0000	SPACER	6-37, 6-39
525052-0001	SPACER	5-115
525052-0002	SPACER	5-115
525052-0003	SPACER	5-115
525052-0004	SPACER	5-115
525052-0005	SPACER	5-115
525052-0006	SPACER	5-115
525172-0000	SPACER	5-129, 5-131
525338-0000	SPACER	5-99, 5-115
525357-0000	SPACER	5-129, 5-131
530518-0000	SPACER	12-43
538241-0002	SPACER	8-21, 8-23, 8-25, 8-27, 8-29, 8-31, 8-33
538241-0003	SPACER	8-21, 8-23, 8-25, 8-27, 8-29, 8-31, 8-33
538241-0004	SPACER	8-21, 8-23, 8-25, 8-27, 8-29, 8-31, 8-33
542269-0000	SPACER	7-29
543137-0002	SPACER	8-21, 8-23, 8-25, 8-27, 8-29, 8-31, 8-33
543137-0003	SPACER	8-21, 8-23, 8-25, 8-27, 8-29, 8-31, 8-33
543139-0000	SPACER	8-5, 8-7
555433-0000	SPACER	12-145
565329-0000	SPACER	5-125, 5-127
565330-0000	SPACER	5-125, 5-127
567349-0000	SPACER	5-19
569652-0001	SPACER	8-21, 8-23, 8-25, 8-27, 8-29, 8-31, 8-33
569652-0002	SPACER	8-21, 8-23, 8-25, 8-27, 8-29, 8-31, 8-33
569652-0003	SPACER	8-21, 8-23, 8-25, 8-27, 8-29, 8-31, 8-33
574037-0000	SPACER	7-15
581347-0000	SPACER	1-43, 1-45, 13-69
581814-0000	SPACER	4-101, 4-103, 4-105, 4-107
591085-0000	SPACER	5-25, 5-27, 5-41, 5-43, 5-45, 5-47
592588-0000	SPACER	7-15
593554-0000	SPACER	8-43
593586-0000	SPACER	8-21, 8-23, 8-25, 8-27, 8-29, 8-31, 8-33
596101-0000	SPACER	6-17, 6-33
596121-0000	SPACER	6-37, 6-39
596128-0000	SPACER	6-21, 6-25

Part No	Description	Page No
927735-0001	SPACER	1-31, 1-33, 13-57
927735-0002	SPACER	13-57
1038240-0000	SPACER	4-23, 4-25, 4-27, 4-29, 12-215, 12-217, 12-219, 12-221, 13-7, 13-9, 13-99, 13-101, 13-103, 13-105, 13-109, 13-111, 13-167
1143605-0000	SPACER	8-49
1144501-0000	SPACER	6-59, 6-61
1144597-0000	SPACER	6-33
1144625-0000	SPACER	6-33
1144677-0000	SPACER	6-43, 6-45
1144684-0000	SPACER	6-57
1144697-0000	SPACER	6-41
1144943-0000	SPACER	6-37, 6-39
1260825-0000	SPACER	6-49
1282403-0000	SPACER	6-37, 6-39
1285006-0000	SPACER	4-9, 4-75, 12-173, 13-89, 13-169
1285288-0000	SPACER	6-21, 6-25
1285306-0000	SPACER	6-37, 6-39
1285307-0000	SPACER	6-21, 6-23, 6-25, 13-177
1285869-0000	SPACER	6-23
1285874-0000	SPACER	6-23
1285893-0000	SPACER	6-65
1334328-0000	SPACER	6-57
1346505-0000	SPACER	13-133
1361250-0000	SPACER	6-59, 6-61
2505042-0000	SPACER	13-177
445849-0000	SPACER DISC	8-17, 8-41
2487-0000	SPACER ELEMENT	8-17
247004-0001	SPACER FOR CREASE WHEEL	12-67, 12-69, 12-71, 12-73
466049-0001	SPACER LOWER	12-67, 12-69, 12-71, 12-73
466049-0002	SPACER LOWER	12-53, 12-55, 12-67, 12-69, 12-71, 12-73
466049-0003	SPACER LOWER	12-53, 12-55
285316-0002	SPACER PIECE	5-145, 5-147, 5-149, 5-151, 5-153, 5-155
525071-0000	SPACER PIECE	5-69, 5-71
525134-0000	SPACER PIECE	5-77, 5-79
525461-0000	SPACER PIECE	5-145, 5-147, 5-149, 5-151, 5-153, 5-155
23763-0003	SPACER PIPE	5-69, 5-71, 5-77, 5-79
23763-0004	SPACER PIPE	5-69, 5-71, 5-77, 5-79
23763-0005	SPACER PIPE	5-69, 5-71, 5-77, 5-79
23763-0006	SPACER PIPE	5-69, 5-71, 5-77, 5-79
23763-0010	SPACER PIPE	5-69, 5-71, 5-77, 5-79
29411-0000	SPACER PIPE	5-73
232790-0000	SPACER PIPE	12-47
464116-0000	SPACER PIPE	12-97, 12-99
539173-0000	SPACER PIPE	12-117
541991-0000	SPACER PLATE	12-119
592964-0000	SPACER PLATE	1-49, 1-51, 1-53
2505046-0000	SPACER PLATE	13-177
23462-0000	SPACER RING	3-9, 3-19
107335-0000	SPACER RING	4-45, 4-47, 4-49, 4-51
111017-0000	SPACER RING	3-29
232791-0000	SPACER RING	12-47
443052-0000	SPACER RING	5-59
464126-0000	SPACER RING	12-107
1260824-0000	SPACER RING	6-57
1285892-0000	SPACER RING	6-15
23771-0000	SPACER RING 4X78X1MM	5-73, 5-75
37537-0000	SPACER RING LOWER 72X78X1MM	5-73, 5-75
1361244-0000	SPACER ROD	6-59, 6-61
252930-0000	SPACER SCREW	4-101, 4-103, 4-105, 4-107
107334-0000	SPACER SLEEVE	4-45, 4-47, 4-49, 4-51
239870-0000	SPACER SLEEVE	3-29
445850-0000	SPACER SLEEVE	8-41
541167-0000	SPACER SLEEVE	1-63
90316-0002	SPACER, 2,65/5X4	14-23
90134-0051	SPACING COLLAR DOSING BLOCK	4-139, 4-141
442883-0000	SPACING WASHER	5-133, 5-135
90201-0303	SPARE PARTS KIT	2-171, 3-13, 3-23, 3-25, 13-13
67520-1000	SPARE PARTS, TB/8-1001.	9-3
42509-1000	SPARE PARTS, TB/8-1002.	9-3
42874-1000	SPARE PARTS, TB/8-1003.	9-3
90240-0315	SPHER. BEARING, 30X47X22 PLASTIC MM	6-55
442882-0000	SPINDLE	5-133, 5-135
352135-0106	SPIRAL CONDUIT DI=16 MM	2-21, 2-27, 2-29, 2-31, 2-77, 2-81, 2-83, 2-117, 2-119, 2-127, 2-147, 2-149, 2-151, 2-163, 7-15, 8-61, 8-63, 8-65, 12-13, 13-27
90152-0033	SPIRAL CONDUIT FOR PR 15,2(PG 9)	2-21, 2-77, 2-117, 2-119, 2-147, 2-149, 2-151, 2-163, 7-9, 7-31, 7-33, 8-61, 8-63, 8-65, 12-163, 13-27
90152-0050	SPIRAL CONDUIT, 20X13, UL 1313	5-7, 5-9, 5-35, 5-37, 6-67
90152-0051	SPIRAL CONDUIT, 25X18, UL 1816	5-7, 5-9, 5-35, 5-37, 6-67
90152-0060	SPIRAL CONDUIT, 42X35, UL3529	13-185
765100-0157	SPIRAL DRILL	13-205
765100-0179	SPIRAL DRILL	13-205
765100-0269	SPIRAL DRILL	13-205
765102-0167	SPIRAL DRILL	13-171
90243-0125	SPIRIT LEVEL	14-33

Part No	Description	Page No
450667-0000	SPLASH GUARD	2-47
450668-0000	SPLASH GUARD	2-47
209815-0000	SPLASH PLATE	12-149
239849-0000	SPLASH PLATE	12-53, 12-55, 12-67, 12-69, 12-71, 12-73
434403-0000	SPLASH PLATE	12-93, 12-115
279983-0000	SPLASH PROTECTION	3-15
279984-0000	SPLASH PROTECTION	3-15
292071-0200	SPLASH PROTECTION	3-3, 3-5, 3-7
929632-0100	SPLASH PROTECTION	3-3, 3-5, 3-7
1144154-0000	SPLASH PROTECTION	3-17
1144155-0000	SPLASH PROTECTION	3-17
730445-0000	SPLICE	13-225, 13-233
450314-0200	SPLICE DETECTOR	12-53, 12-55, 12-67, 12-69, 12-71, 12-73
546180-0100	SPLICE DETECTOR	7-3, 7-5
78073-0100	SPLICE TEST PLIERS	10-3
445880-0600	SPLICING DEVICE	8-3
243966-0100	SPLICING TABLE	12-51
311411-0127	SPLIT PIN SP1,2X12RFR	5-97
311401-0165	SPLIT PIN SP2,5X16FZB	12-49
311411-0152	SPLIT PIN SP2X16RFR	14-49
493614-0100	SPRAY GUN	2-3, 2-5
90424-0025	SPRAY NOZZLE 145 DEG	2-49, 2-51
90424-0070	SPRAY NOZZLE 61 DEG	2-69, 2-79
90424-0026	SPRAY NOZZLE 95 DEG	2-11, 2-25, 2-53, 2-55, 2-59, 2-61
90424-0035	SPRAY NOZZLE 95 DEG	2-9, 2-23, 2-79, 5-81, 5-83
539613-0000	SPREADER	2-157
595208-0000	SPREADER	2-157
1362505-0000	SPREADER	2-157
33183-0000	SPRING	8-5, 8-7, 8-21, 8-23, 8-25, 8-27, 8-29, 8-31, 8-33, 12-53, 12-55, 12-67, 12-69, 12-71, 12-73
35547-0000	SPRING	8-9, 8-39, 12-57, 12-75
37070-0000	SPRING	4-101, 4-103, 4-105, 4-107
37909-0000	SPRING	12-85
38467-0000	SPRING	4-113, 4-115, 12-175, 12-177
90335-0005	SPRING	5-159
90335-0012	SPRING	5-67
107000-0000	SPRING	12-223, 12-227, 14-47
243971-0000	SPRING	3-37, 3-39
246328-0000	SPRING	4-113, 4-115, 12-175, 12-177
246329-0000	SPRING	4-113, 4-115, 12-175, 12-177
251530-0000	SPRING	4-113, 4-115, 12-175, 12-177
252707-0000	SPRING	3-41, 3-43
297795-0000	SPRING	5-97, 6-37, 6-39
457368-0000	SPRING	4-97, 4-99
458042-0000	SPRING	8-77, 8-79
529401-0000	SPRING	7-29, 12-61, 12-63
537308-0000	SPRING	8-9, 8-39, 12-57, 12-75
543820-0000	SPRING	7-21, 7-23
544894-0000	SPRING	1-39, 1-65, 1-67, 1-69
1143215-0000	SPRING	4-113, 4-115, 12-175, 12-177, 13-81, 13-85, 13-87
1143216-0000	SPRING	4-113, 4-115, 12-175, 12-177, 13-81, 13-85, 13-87
1144492-0000	SPRING	6-59, 6-61
1282345-0000	SPRING	6-49
1285891-0000	SPRING	6-15
1346952-0000	SPRING	6-7
72888-0002	SPRING BRACKET	14-51
72888-0003	SPRING BRACKET	14-51
247262-0000	SPRING BRACKET	4-113, 4-115, 12-175, 12-177
541067-0000	SPRING BRACKET	7-21, 7-23
541069-0000	SPRING BRACKET	7-21, 7-23
545128-0000	SPRING BRACKET	4-113, 4-115, 12-175, 12-177
573993-0000	SPRING BRACKET	4-113, 4-115, 12-175, 12-177
591080-0000	SPRING BRACKET	4-113, 4-115, 12-175, 12-177
593681-0000	SPRING BRACKET	4-113, 4-115, 12-175, 12-177
597574-0000	SPRING BRACKET	4-113, 4-115, 12-175, 12-177, 13-119
929813-0000	SPRING BRACKET	4-113, 4-115, 12-175, 12-177
1282594-0000	SPRING BRACKET	13-85, 13-87
78085-0000	SPRING HOLD PIN	10-5
541068-0000	SPRING HOLDER	7-17
31837-0000	SPRING HOUSING	4-139, 4-141
232789-0000	SPRING HOUSING	12-47
1037768-0000	SPRING LEFT	4-113, 4-115, 12-175, 12-177
311111-0260	SPRING PIN ISO 8752 4X28-ST	1-49, 1-51, 1-53
311111-0305	SPRING PIN ISO 8752 5X14-ST	5-61
311111-0308	SPRING PIN ISO 8752 5X20-ST	12-97, 12-99
311111-0310	SPRING PIN ISO 8752 5X24-ST	12-97, 12-99
311112-0192	SPRING PIN, ISO 8752 2,5X24-C	4-45, 4-47, 4-49, 4-51
311112-0205	SPRING PIN, ISO 8752 3X10-C	7-17
311112-0204	SPRING PIN, ISO 8752 3X8-C	4-101, 4-103, 4-105, 4-107, 12-229
311112-0251	SPRING PIN, ISO 8752 4X10-C	6-13
311112-0256	SPRING PIN, ISO 8752 4X20-C	8-85, 8-87
311112-0258	SPRING PIN, ISO 8752 4X24-C	8-85, 8-87
311112-0341	SPRING PIN, ISO 8752 6X24-C	5-17
311112-0347	SPRING PIN, ISO 8752 6X40-C	6-51
311112-0350	SPRING PIN, ISO 8752 6X55-C	8-45, 8-47

Part No	Description	Page No
33261-0000	SPRING PLATE	5-121, 5-157, 6-9
1037767-0000	SPRING RIGHT	4-113, 4-115, 12-175, 12-177
90287-0009	SPRING-LOADED SCREW M10X19	7-45
32629-0000	SPROCKET	8-21, 8-23, 8-25, 8-27, 8-29, 8-31, 8-33, 12-53, 12-55, 12-67, 12-69, 12-71, 12-73
32630-0000	SPROCKET	8-5, 8-7, 8-21, 8-23, 8-25, 8-27, 8-29, 8-31, 8-33, 12-67, 12-69, 12-71, 12-73
297899-0000	SPROCKET	5-101, 5-103
442500-0000	SPROCKET	5-17
442836-0000	SPROCKET	5-33, 5-53, 5-55
443047-0000	SPROCKET	5-59
443048-0000	SPROCKET	5-67
443081-0000	SPROCKET	5-33, 5-53, 5-55
443176-0000	SPROCKET	5-57
443177-0000	SPROCKET	5-157
443235-0000	SPROCKET	5-29, 5-49, 5-51
443306-0000	SPROCKET	5-101, 5-103
443464-0000	SPROCKET	5-101, 5-103
443467-0000	SPROCKET	5-101, 5-103
443478-0001	SPROCKET	5-101, 5-103
443478-0002	SPROCKET	5-101, 5-103
443478-0004	SPROCKET	5-101, 5-103
443479-0001	SPROCKET	5-101, 5-103
443479-0002	SPROCKET	5-101, 5-103
443479-0004	SPROCKET	5-101, 5-103
525194-0000	SPROCKET	5-29, 5-49, 5-51
525298-0000	SPROCKET	5-33, 5-53, 5-55
529362-0000	SPROCKET	8-13, 8-15
573353-0000	SPROCKET	5-89, 5-91
574088-0000	SPROCKET	5-17
208361-0001	STAIR	10-19, 12-7
251513-0300	STAND	12-15
929605-0000	STAND	12-239
90345-0038	STANDING BEARING, TYPE SY 35 TF	5-157
243336-0500	START-UP KIT	1-3
440132-0200	START-UP KIT	8-3
526954-0100	START-UP KIT	7-3, 7-5
597568-0100	START-UP KIT	12-171
247123-0600	START-UP KIT TPC	4-3, 4-5
1362439-0100	START-UP KIT US	4-3, 4-5
285591-0400	STATION	5-3, 5-5
595087-0100	STATION	5-3, 5-5
74771-0000	STEERING	14-47
262720-0000	STEERING	5-133, 5-135
269962-0000	STEERING	12-45
279370-0000	STEERING	2-37, 2-39, 2-41
443292-0000	STEERING	5-89, 5-91
445915-0000	STEERING	8-69, 8-71, 8-73
449623-0000	STEERING	8-69, 8-71, 8-73
449624-0000	STEERING	8-69, 8-71, 8-73
449746-0000	STEERING	8-77, 8-79
479224-0000	STEERING	8-69, 8-71, 8-73
484877-0000	STEERING	8-69, 8-71, 8-73
493563-0000	STEERING	12-97, 12-99
497040-0000	STEERING	4-65, 4-67, 4-69, 4-71
522131-0000	STEERING	8-85, 8-87
525164-0000	STEERING	5-117
525417-0000	STEERING	5-49, 5-51
531885-0000	STEERING	8-75
537306-0000	STEERING	12-33
573486-0000	STEERING	5-41, 5-43, 5-45, 5-47, 5-129, 5-131
573487-0000	STEERING	5-41, 5-43, 5-45, 5-47, 5-129, 5-131
574097-0000	STEERING	5-25, 5-27, 5-41, 5-43, 5-45, 5-47, 5-129, 5-131
574098-0000	STEERING	5-25, 5-27, 5-41, 5-43, 5-45, 5-47, 5-129, 5-131
574099-0000	STEERING	5-49, 5-51
593645-0000	STEERING	8-85, 8-87
595068-0000	STEERING	5-29
1143006-0000	STEERING	5-129, 5-131, 12-251, 12-273
1143007-0000	STEERING	5-129, 5-131, 12-251, 12-273
1144278-0000	STEERING	2-85, 2-87
525017-0000	STEERING GUIDE	5-25, 5-27, 5-41, 5-43, 5-45, 5-47
279480-0000	STEERING RAIL	7-15
285853-0200	STEERING RAIL	5-121
245221-0000	STOP	12-91
255473-0000	STOP	4-113, 4-115, 12-175, 12-177
255474-0000	STOP	4-113, 4-115, 12-175, 12-177
499124-0000	STOP	4-113, 4-115, 12-175, 12-177
499125-0000	STOP	4-113, 4-115, 12-175, 12-177
525416-0000	STOP	5-119
541173-0000	STOP	7-17
583870-0000	STOP	12-239
1195333-0000	STOP	5-119, 12-257, 12-269
22504-0000	STOP LUG	4-45, 4-47, 4-49, 4-51
532371-0000	STOP LUG	2-9, 2-69
543126-0000	STOP LUG	7-17
23769-0000	STOP PLATE	5-69, 5-71, 5-77, 5-79

Part No	Description	Page No
533426-0000	STOP PLATE	2-65, 2-99
553162-0000	STOP PLATE	2-65, 2-99
1144976-0000	STOP SCREW	6-27
33152-0000	STOPPER	4-113, 4-115, 12-175, 12-177
251598-0000	STOPPER	4-113, 4-115, 12-175, 12-177
267569-0000	STOPPER	1-73
293581-0000	STOPPER	14-37
445770-0000	STOPPER	4-113, 4-115, 12-175, 12-177
450111-0000	STOPPER	14-35
450112-0000	STOPPER	14-35
451043-0000	STOPPER	14-37
522138-0000	STOPPER	8-85, 8-87
522139-0001	STOPPER	8-85, 8-87
522139-0002	STOPPER	8-85, 8-87
545125-0000	STOPPER	4-113, 4-115, 12-175, 12-177
545126-0000	STOPPER	4-113, 4-115, 12-175, 12-177
569924-0000	STOPPER	8-85, 8-87
574052-0000	STOPPER	8-85, 8-87
583862-0000	STOPPER	14-37
583863-0000	STOPPER	14-37
593653-0000	STOPPER	8-85, 8-87
596083-0000	STOPPER	14-37
596084-0000	STOPPER	14-37
927751-0000	STOPPER	14-37
927752-0000	STOPPER	14-37
1255207-0000	STOPPER	4-113, 4-115, 12-175, 12-177
1255208-0000	STOPPER	4-113, 4-115, 12-175, 12-177
1282592-0000	STOPPER	13-85, 13-87
1282593-0000	STOPPER	13-85, 13-87
342921-0151	STRAIGHT COUPL.,EXT.THREAD.15/12,5-G1/2"	12-137, 12-139, 12-141
342923-0114	STRAIGHT COUPL.,INT.THREADED 6/4-G1/4"	2-137, 2-139
342923-0113	STRAIGHT COUPL.,INT.THREADED 6/4-G1/8"	12-115
342923-0122	STRAIGHT COUPL.,INT.THREADED 8/6-G1/4"	2-137, 2-139
90055-0096	STRAIGHT COUPLING	2-27, 2-29, 2-31, 2-81, 2-83
342722-0197	STRAIGHT COUPLING	13-115
342722-0203	STRAIGHT COUPLING	2-27, 2-29, 2-31, 2-81, 2-83, 12-159
342722-0211	STRAIGHT COUPLING D=10-G1/4"	6-23
342722-0205	STRAIGHT COUPLING D=8-G1/4"	2-7, 2-27, 2-29, 2-31, 2-81, 2-83, 2-85, 2-87, 8-69, 8-71, 8-73, 12-159, 13-115, 13-177
342770-0105	STRAIGHT COUPLING INT, D=6 MM - G1/8	2-27, 2-29, 2-31, 2-81, 2-83, 12-159
342770-0108	STRAIGHT COUPLING INT, D=8 MM - G1/4	2-85, 2-87
90224-0320	STRAIGHT COUPLING,EXT.THREAD 1051-8-3/8	2-137, 2-139
342921-0114	STRAIGHT COUPLING,EXT.THREADED 6/4-G1/4"	5-67, 12-39, 12-41
342921-0113	STRAIGHT COUPLING,EXT.THREADED 6/4-G1/8"	7-41
342920-0114	STRAIGHT COUPLING,EXT.THREADED 6/4-R1/4"	12-39, 12-41
342920-0113	STRAIGHT COUPLING,EXT.THREADED 6/4-R1/8"	2-37, 2-39, 2-41, 4-45, 4-47, 4-49, 4-51, 5-15, 5-57, 12-39, 12-41, 12-261
342920-0122	STRAIGHT COUPLING,EXT.THREADED 8/6-R1/4"	12-105
342920-0121	STRAIGHT COUPLING,EXT.THREADED 8/6-R1/8"	2-37, 2-39, 2-41, 5-25, 5-27, 5-41, 5-43, 5-45, 5-47, 5-117
342929-0121	STRAIGHT COUPLING,SOLDER 8/6-8	2-13, 2-15, 2-17, 2-19, 2-37, 2-39, 2-41, 2-71, 2-73, 2-75, 2-85, 2-87, 2-101, 2-103, 2-105, 2-107, 2-109, 2-111, 2-113, 2-149, 2-151, 12-105, 13-17, 13-19, 13-21, 13-23
342926-0112	STRAIGHT COUPLING,UNION 6/4	12-39, 12-41, 12-135
342926-0122	STRAIGHT COUPLING,UNION 8/6	12-135
342921-0121	STRAIGHT CPLNG,EXT.THREADED 8/6-G1/8INCH	5-69, 5-71, 5-77, 5-79, 12-141
90224-0307	STRAIGHT FITTING, 6MM, 1/8",	1-27, 1-29, 2-165
531119-0000	STRAINER	5-7, 5-9, 5-35, 5-37
1478563-0000	STRAINER	6-35
90143-0052	STRAP	5-121
90145-0012	STRING	12-33
90143-0029	STRIP	8-9, 8-39, 12-57, 12-75
90143-0035	STRIP	2-49, 2-51, 2-63, 2-65, 2-93, 2-97, 2-99, 6-35
90143-0039	STRIP	2-49, 2-51, 2-63, 2-65, 2-93, 2-97, 2-99, 8-49, 8-51, 8-53
90143-0050	STRIP	1-31, 1-33, 13-57
90143-0054	STRIP	2-37, 2-39, 2-41, 2-85, 2-87
269112-0600	STRIP APPLICATOR	7-3, 7-5
282634-0300	STRIP GUIDE	7-3, 7-5
1347717-0100	STRIP GUIDE	13-131
2505008-0000	STRIP HOLDER	14-11
543823-0100	STRIP MAGAZINE	7-3, 7-5
479753-0000	STRIPPER	3-11, 3-21, 13-11
265569-0001	STRUT	7-9, 7-13, 7-43, 12-25, 12-65
265569-0002	STRUT	7-9
265569-0003	STRUT	7-9
265569-0006	STRUT	7-9
265569-0007	STRUT	7-9, 7-13, 7-43
434098-0000	STRUT	3-37, 3-39
450145-0000	STRUT	3-31, 3-33
450146-0000	STRUT	3-31, 3-33
464089-0000	STRUT	12-97, 12-99
479823-0000	STRUT	12-35
493564-0000	STRUT	12-97, 12-99
525272-0000	STRUT	5-7, 5-9, 5-35, 5-37

Part No	Description	Page No
525273-0000 ...	STRUT	5-7, 5-9, 5-35, 5-37
1347007-0000 .	STUD BOLT	11-17, 11-23
110225-0000 ...	STUD SCREW	1-73
229508-0029 ...	STUD SCREW	5-23, 5-39
229508-0031 ...	STUD SCREW	5-39
229760-0012 ...	STUD SCREW	5-39
229760-0013 ...	STUD SCREW	5-23, 5-39
294058-0001 ...	STUD SCREW	4-73
294058-0002 ...	STUD SCREW	4-73
443149-0000 ...	STUD SCREW	5-59
443313-0000 ...	STUD SCREW	5-137, 5-139, 5-141, 5-143
1144555-0000 .	STUD SCREW	6-27
90415-0031	SUCTION FILTER / HY SUE 15-125	12-105
443150-0000 ...	SUCTION TUBE	5-67
285479-0500 ...	SUPERSTRUCTURE	5-3, 5-5
593864-0100 ...	SUPERSTRUCTURE	11-7
207018-0000 ...	SUPPORT	1-49, 1-51, 1-53
252793-0000 ...	SUPPORT	4-101, 4-103, 4-105, 4-107
282596-0000 ...	SUPPORT	7-35
443462-0000 ...	SUPPORT	5-117
443463-0000 ...	SUPPORT	5-117
443497-0000 ...	SUPPORT	5-117
443498-0000 ...	SUPPORT	5-117
445877-0000 ...	SUPPORT	8-51, 8-53
445879-0000 ...	SUPPORT	8-51, 8-53
458917-0000 ...	SUPPORT	8-69, 8-71, 8-73
464090-0000 ...	SUPPORT	12-97, 12-99
499396-0000 ...	SUPPORT	12-115
581350-0000 ...	SUPPORT	13-59
581351-0000 ...	SUPPORT	13-59
583454-0000 ...	SUPPORT	5-145, 5-147, 5-149, 5-151, 5-153, 5-155
591086-0000 ...	SUPPORT	4-101, 4-103, 4-105, 4-107, 12-229
593848-0000 ...	SUPPORT	11-19
597619-0000 ...	SUPPORT	5-145, 5-147, 5-149, 5-151, 5-153, 5-155
598572-0000 ...	SUPPORT	6-59, 6-61
927592-0000 ...	SUPPORT	1-31, 1-33, 13-57
1144482-0000 .	SUPPORT	6-59, 6-61
1144485-0000 .	SUPPORT	6-59, 6-61
1144490-0000 .	SUPPORT	6-59, 6-61
1144546-0000 .	SUPPORT	6-11
1144548-0000 .	SUPPORT	6-11
1144588-0000 .	SUPPORT	6-33
1144797-0000 .	SUPPORT	6-29
1144851-0000 .	SUPPORT	6-29
1144925-0000 .	SUPPORT	6-37, 6-39
1144972-0000 .	SUPPORT	6-37, 6-39
1279509-0000 .	SUPPORT	6-11
1279510-0000 .	SUPPORT	6-11
1282409-0000 .	SUPPORT	6-37, 6-39
1282705-0000 .	SUPPORT	6-27
1282843-0000 .	SUPPORT	6-27
1282844-0000 .	SUPPORT	6-29
1285267-0000 .	SUPPORT	6-27
1285858-0000 .	SUPPORT	6-65
1296085-0000 .	SUPPORT	6-65
1317082-0000 .	SUPPORT	6-37, 6-39
1361245-0000 .	SUPPORT	6-59, 6-61
1362932-0000 .	SUPPORT	6-27
2564735-0000 .	SUPPORT	6-27
493561-0000 ...	SUPPORT L	12-97, 12-99
259549-0001 ...	SUPPORT PLATE	1-37
493560-0000 ...	SUPPORT R	12-97, 12-99
546133-0100 ...	SUPPORT ROLLER	1-3
560122-0000 ...	SUPPORT ROLLER	4-101, 4-103, 4-105, 4-107
561542-0000 ...	SUPPORT ROLLER	4-101, 4-103, 4-105, 4-107
561543-0000 ...	SUPPORT ROLLER	4-101, 4-103, 4-105, 4-107
569058-0000 ...	SUPPORT ROLLER	4-101, 4-103, 4-105, 4-107
573663-0100 ...	SUPPORT ROLLER	7-3, 7-5
573666-0000 ...	SUPPORT ROLLER	1-13, 1-15, 7-13, 7-47
573667-0000 ...	SUPPORT ROLLER	7-47
573976-0000 ...	SUPPORT ROLLER	4-101, 4-103, 4-105, 4-107
574038-0000 ...	SUPPORT ROLLER	7-47
592589-0000 ...	SUPPORT ROLLER	1-13, 1-15
592597-0000 ...	SUPPORT ROLLER	7-13, 7-47
593585-0000 ...	SUPPORT ROLLER	4-101, 4-103, 4-105, 4-107
532722-0100 ...	SUPPORT ROLLERS	1-3
37535-0000	SUPPORTING PART 56X56X31,5MM	5-73, 5-75
1144653-0000 .	SWITCH	6-11
1144849-0000 .	SWITCH	6-13
90111-0150	SWITCH GEAR, 704.502 .0+704.901.3	8-61, 8-63, 8-65
90111-0142	SWITCH GEAR, NO.OF DIGIT: 4	9-5, 9-7, 9-9, 9-11, 9-13, 9-15, 9-25, 9-27, 9-29, 9-31, 9-33, 9-45, 9-47, 9-49, 9-51, 9-53, 9-55
90111-0120	SWITCH, 2 POS.704.510 .0A+704.901.5/A	9-5, 9-7, 9-9, 9-11, 9-13, 9-15, 9-21, 9-25, 9-27, 9-29, 9-31, 9-33, 9-41, 9-45, 9-47, 9-49, 9-51, 9-53, 9-55, 9-61

Part No	Description	Page No
90111-0121	SWITCH, 3 POS.704.502.0A+2 PCE 704.901.3	2-147
90172-0032	SWITCH, 911 758 001 SB-3-6R	9-5, 9-7, 9-9, 9-11, 9-13, 9-15, 12-235, 12-237
90064-0124	SWITCH, EM. STOP, ZB2-BS844+ZB2-BZ1045	7-9, 7-31, 7-33, 8-61, 8-63, 8-65, 9-21, 9-23
90111-0104	SWITCH, LM-531SWH+2PA PG 16-34	12-47
450299-0000	SWIVEL PLATE	2-47
342748-0110	T-CONNECTION 14MM	2-27, 2-29, 2-31, 2-81, 2-83, 13-179
342748-0102	T-CONNECTION 6MM	2-27, 2-29, 2-31, 2-81, 2-83
342748-0103	T-CONNECTION 8MM	2-27, 2-29, 2-31, 2-81, 2-83
342946-0112	T-COUPLING,UNION 6/4	2-13, 2-15, 2-17, 2-19, 2-71, 2-73, 2-75, 4-45, 4-47, 4-49, 4-51, 5-17, 8-61, 8-63, 8-65, 13-17, 13-19, 13-21, 13-23
342946-0122	T-COUPLING,UNION 8/6	5-13
484872-0000	T-PIPE	1-27, 1-29
90140-0010	T-PIPE, INT. THREAD, 20031/2	2-149, 2-151
90140-0011	T-PIPE, INT. THREAD, NO. 2070-1/2-1/2	2-149, 2-151
90330-0024	T-PIPE, INT. THREAD, RP1/4	2-49, 2-51
90418-0050	T-PIPE, REDUCTION, INT, NO. 7130-15X12X1	2-149, 2-151
90418-0056	T-PIPE, REDUCTION, INT, NO. 7130-15X15X1	2-149, 2-151
90418-0068	T-PIPE, REDUCTION, INT, NO. 7130-15X8X15	2-149, 2-151
434446-0100	TABLE	12-3
252953-0000	TANK	2-169
493700-0100	TANK	12-97, 12-99
493701-0000	TANK	12-105
90277-0041	TANK BREATH. FILTER / UC-SAB-3101 UCC	2-173, 2-175, 13-29
767141-0115	TAP	13-91
90144-0030	TAPE	12-89
311202-0241	TAPER PIN EN 22339 A 4X25 SS	8-5, 8-7, 8-21, 8-23, 8-25, 8-27, 8-29, 8-31, 8-33, 12-53, 12-55, 12-67, 12-69, 12-71, 12-73
311202-0320	TAPER PIN EN 22339 A 8X35 SS	2-37, 2-39, 2-41, 2-85, 2-87
311211-0267	TAPER PIN THREADED ISO 8737 M5X05 SS	2-37, 2-39, 2-41, 2-85, 2-87
311211-0292	TAPER PIN THREADED ISO 8737 M6X30 SS	2-129, 8-69, 8-71, 8-73
311211-0299	TAPER PIN THREADED ISO 8737 M6X55 SS	1-55
321361-0105	TAPER ROLLER BEARING, 25X52X16,25 MM	5-125, 5-127
321364-0106	TAPER ROLLER BEARING, 30X72X19 MM	5-125, 5-127
90214-0087	TAPER ROLLER BEARING, 70X110X25 MM	5-125, 5-127
312503-0275	TAPPING SCREW ISO 7049-ST3,5X6,5-C-Z	3-37, 3-39
243965-0101	TEARING DEVICE	12-51
31723-0000	TEFLON STRIP	12-91
557063-0100	TEMP.REG.ADAPT: MAIN CARD	14-23
569101-0000	TEMP.REG.ADAPT: MAIN CARD	14-25
90410-0044	TEMP.REG.PHILIPS KS 40" REPL.BY 90410-51	9-5, 9-7, 9-9, 9-11, 9-13, 9-15, 9-25, 9-27, 9-29, 9-31, 9-33
90410-0051	TEMPERATURE CONTROLLER, KS 40	9-5, 9-7, 9-9, 9-11, 9-13, 9-15, 9-45, 9-47, 9-49, 9-51, 9-53
		9-55, 13-175
557826-0101	TEMPERATURE REG. ADAPTER	14-21
72374-0100	TEMPLATE	14-5
79001-0000	TEMPLATE	14-29
79002-0000	TEMPLATE	14-29
263759-0000	TEMPLATE	14-41, 14-43
263761-0000	TEMPLATE	14-41, 14-43
263762-0000	TEMPLATE	14-41, 14-43
263763-0000	TEMPLATE	14-41, 14-43
263765-0000	TEMPLATE	14-41, 14-43
265832-0000	TEMPLATE	14-41, 14-43
293578-0200	TEMPLATE	14-5
445664-0000	TEMPLATE	14-33
450759-0000	TEMPLATE	14-41, 14-43
450760-0000	TEMPLATE	14-41, 14-43
451026-0100	TEMPLATE	14-5
527864-0001	TEMPLATE	14-31
527864-0003	TEMPLATE	14-31
527864-0004	TEMPLATE	14-31
527864-0006	TEMPLATE	14-31
527864-0007	TEMPLATE	14-31
527864-0008	TEMPLATE	14-31
527864-0010	TEMPLATE	14-31
533460-0000	TEMPLATE	14-5
544340-0000	TEMPLATE	14-41, 14-43
544341-0000	TEMPLATE	14-41, 14-43
544351-0000	TEMPLATE	14-29
544352-0000	TEMPLATE	14-29
544353-0000	TEMPLATE	14-29
544354-0000	TEMPLATE	14-29
544355-0000	TEMPLATE	14-29
544356-0000	TEMPLATE	14-29
569064-0000	TEMPLATE	14-41, 14-43
569065-0000	TEMPLATE	14-41, 14-43
571943-0000	TEMPLATE	14-41, 14-43
574162-0000	TEMPLATE	14-41, 14-43
574163-0000	TEMPLATE	14-41, 14-43
576722-0000	TEMPLATE	14-29
576723-0000	TEMPLATE	14-29
592551-0000	TEMPLATE	14-11
593802-0000	TEMPLATE	14-13, 14-15

Part No	Description	Page No
593803-0000	TEMPLATE	14-13, 14-15
596285-0000	TEMPLATE	14-29
596288-0000	TEMPLATE	14-29
598630-0000	TEMPLATE	14-11
598631-0000	TEMPLATE	14-11
598633-0000	TEMPLATE	14-11
592350-0100	TEMPLATE FILLING PIPE	14-5
593252-0000	TEMPLATE FILLING PIPE	14-17
593253-0000	TEMPLATE FILLING PIPE	14-17
591291-0001	TEMPLATE FILLINGPIPE	14-17
591291-0002	TEMPLATE FILLINGPIPE	14-17
591291-0003	TEMPLATE FILLINGPIPE	14-17
591291-0004	TEMPLATE FILLINGPIPE	14-17
591292-0000	TEMPLATE FILLINGPIPE	14-17
591293-0000	TEMPLATE FILLINGPIPE	14-17
592347-0000	TEMPLATE FILLINGPIPE	14-17
527869-0100	TEMPLATE FOR WHEELS	14-5
544357-0100	TEMPLATES FLAP SEALING	14-5
596144-0100	TEMPLATES USTS	14-5
37885-0000	TENSION SPRING	12-91
269057-0000	TENSION SPRING	7-15
279074-0000	TENSION SPRING	7-35
297567-0000	TENSION SPRING	5-137, 5-139, 5-141, 5-143
458062-0000	TENSION SPRING	8-69, 8-71, 8-73
464854-0000	TENSION SPRING	8-69, 8-71, 8-73
566772-0000	TENSION SPRING	10-5
566773-0000	TENSION SPRING	10-5
90335-0015	TENSION SPRING 42360, 2X14X98	7-17
90335-0004	TENSION SPRING 42380, 2X22X62,8	12-87
90335-0071	TENSION SPRING 42880, 3,2X36X179	14-5
47836-0201	TEPC, TUBUS ENERGY AND POWER CONTROL	9-45, 9-47, 9-49, 9-51, 9-53, 9-55, 13-141
90194-0154	TERM. MARKING LABEL KIT, BLA-BSTB, 1-24	13-211
90172-0320	TERMINAL BLOCK	9-5, 9-7, 9-9, 9-11, 9-13, 9-15, 9-45, 9-47, 9-49, 9-51, 9-53, 9-55, 12-235, 12-237
90025-0094	TERMINAL BLOCK 4-POLE	9-5, 9-7, 9-9, 9-11, 9-13, 9-15, 9-25, 9-27, 9-29, 9-31, 9-33, 9-45, 9-47, 9-49, 9-51, 9-53, 9-55
90025-0025	TERMINAL BLOCK ENCODER TPMC	9-5, 9-7, 9-9, 9-11, 9-13, 9-15, 9-25, 9-27, 9-29, 9-31, 9-33, 9-45, 9-47, 9-49, 9-51, 9-53, 9-55
1143775-0000	TERMINAL BLOCK X001:2	9-25, 9-27, 9-29, 9-31, 9-33
1143954-0000	TERMINAL BLOCK X006	9-25, 9-27, 9-29, 9-31, 9-33
927279-0000	TERMINAL BLOCK X010.	9-25, 9-27, 9-29, 9-31, 9-33
596742-0000	TERMINAL BLOCK X012	9-5, 9-7, 9-9, 9-11, 9-13, 9-15
1143959-0000	TERMINAL BLOCK X012	9-45, 9-47, 9-49, 9-51, 9-53, 9-55
596741-0000	TERMINAL BLOCK X10	9-5, 9-7, 9-9, 9-11, 9-13, 9-15
1143674-0000	TERMINAL BLOCK X10	9-45, 9-47, 9-49, 9-51, 9-53, 9-55
596743-0000	TERMINAL BLOCK X1:2	9-5, 9-7, 9-9, 9-11, 9-13, 9-15
1143963-0000	TERMINAL BLOCK X1:2	9-45, 9-47, 9-49, 9-51, 9-53, 9-55
90077-0102	TERMINAL BLOCK, 1952.2	2-163, 9-5, 9-7, 9-9, 9-11, 9-13, 9-15, 9-25, 9-27, 9-29, 9-31, 9-33, 9-45, 9-47, 9-49, 9-51, 9-53, 9-55, 12-47, 12-91
90195-0017	TERMINAL BLOCK, 1953.2	14-7
90195-0020	TERMINAL BLOCK, 1977.2	2-135, 6-21, 6-23, 6-25, 8-69, 8-71, 8-73, 9-21, 9-41, 9-61, 13-177
90172-0321	TERMINAL BLOCK, 373 593 000	9-5, 9-7, 9-9, 9-11, 9-13, 9-15, 9-45, 9-47, 9-49, 9-51, 9-53, 9-55, 12-235, 12-237
90025-0024	TERMINAL BLOCK, 491168307	9-5, 9-7, 9-9, 9-11, 9-13, 9-15, 9-25, 9-27, 9-29, 9-31, 9-33, 9-45, 9-47, 9-49, 9-51, 9-53, 9-55, 12-235, 12-237, 13-203
90042-0535	TERMINAL BOARD 19 CORDS	2-27, 2-29, 2-31, 2-81, 2-83, 2-149, 2-151
90077-0064	TERMINAL SAK2,5 PA FOR TS32	7-11
90077-0115	TERMINALS, DISCONNECTABLE	2-147
353021-0302	TERMINALS,TRIPLE-LEVEL, DLD 2,5/35 PA	2-45, 2-91, 8-67
90220-0034	THERMOCABLE TEX/SITW-20F-KX 2X0,5MM2	9-17, 9-35, 9-37, 9-57, 12-131
90326-0309	THERMOCOUPLE CABLE FOR CE-557793/FEMALE	14-21
90326-0308	THERMOCOUPLE CABLE FOR CE-557793/MALE 5M	14-21
90220-0059	THERMOCOUPLE CABLE K/PVC/20AWG 2X0,5MM2	9-5, 9-7, 9-9, 9-11, 9-13, 9-15, 9-17, 9-25, 9-27, 9-29, 9-31, 9-33, 9-45, 9-47, 9-49, 9-51, 9-53, 9-55
37768-0000	THERMOCOUPLE CR-AL	7-37, 7-39
90326-0048	THERMOCOUPLE, 12826-31	1-35
90326-0310	THERMOCOUPLE, 5130020-000	14-21
90326-0060	THERMOCOUPLE, CR-AL	8-69, 8-71, 8-73, 13-177
90326-0081	THERMOCOUPLE, ISA TYPE K.	6-21, 6-23, 6-25
90059-0001	THERMOSTAT	12-91
90157-0034	THREAD SEALANT LOCTITE 572 50 ML	5-57
1255160-0000	THREADED INSERT	5-137, 5-139, 5-141, 5-143, 12-255
312910-0126	THREADED INSERT, FREE RUNNING M8X1,5D	5-123
37782-0000	THROTTLE	1-17, 1-19, 1-21
451042-0000	THROTTLE	1-25
458480-0000	THROTTLE	1-17, 1-19, 1-21
579010-0000	THROTTLE	1-17, 1-19, 1-21
752590-0000	THROTTLE	1-17, 1-19, 1-21
90235-0731	THROTTLE CHECK VALVE, G1/4", SCO-606-1/4	6-33
90235-0274	THROTTLE CHECK VALVE, G1/8", SCU-604-1/8	1-31, 1-33, 1-35, 7-37, 7-39, 7-41
90235-0295	THROTTLE CHECK VALVE,G1/4"	2-137, 2-139
293364-0000	THROTTLE SCREW	7-9
295391-0003	THROTTLE SCREW	3-13, 3-23, 3-25, 12-167, 13-13, 13-97
90187-0149	THROTTLE VALVE, G1/4, G1/4, MALE	2-27, 2-29, 2-31, 2-81, 2-83, 12-159
321130-0180	THRUST WASHER, 12X24X1,5 MM	7-21, 7-23, 8-49

Part No	Description	Page No
321129-0110	THRUST WASHER, 14X26X1,5 MM	6-59, 6-61
90430-0013	THYRISTOR UNIT TELEMETRIC 5THU1,50A/220V	9-25, 9-27, 9-29, 9-31, 9-33
90458-0637	THYRISTOR UNIT, 425A/40A	13-211
434379-0000	TIE ROD	3-31, 3-33
1144686-0000	TIE ROD	6-57
1144687-0000	TIE ROD	6-57
533003-0100	TIGHTNESS TESTER	12-3
90417-0415	TIMING BELT	6-59, 6-61
1279507-0000	TIMING BELT	6-37, 6-39
1282382-0000	TIMING BELT	6-33
1282855-0000	TIMING BELT	6-41
1346587-0000	TIMING BELT	6-33
90417-0134	TIMING BELT 12,7X1600,2X38,1	3-31, 3-33
90417-0133	TIMING BELT 12,7X990,6X38,1	3-31, 3-33
90196-0079	TIMING BELT PULLEY	3-31, 3-33
90196-0086	TIMING BELT PULLEY	3-31, 3-33
443336-0008	TIMING BELT PULLEY	5-21
525215-0006	TIMING BELT PULLEY	5-17
574085-0000	TIMING BELT PULLEY	5-89, 5-91
574086-0000	TIMING BELT PULLEY	5-89, 5-91
1361246-0000	TIMING BELT PULLEY	6-13
1361247-0000	TIMING BELT PULLEY	6-59, 6-61
574067-0000	TIMING BELT SHAFT	5-89, 5-91
574068-0000	TIMING BELT SHAFT	5-89, 5-91
574070-0000	TIMING BELT SHAFT	5-89, 5-91
90417-0330	TIMING BELT T10X1350X50 POLYURETHANE	5-97
90417-0345	TIMING BELT T10X690X32 POLYURETHANE	5-89, 5-91
90417-0180	TIMING BELT T10X920X40 POLYURETHANE	5-7, 5-9, 5-35, 5-37
90417-0329	TIMING BELT T10X960X32 POLYURETHANE	5-93, 5-95
558230-0101	TMCC CONTROLLER	9-5, 9-7, 9-9, 9-11, 9-13, 9-15, 9-25, 9-27, 9-29, 9-31, 9-33, 9-45, 9-47, 9-49, 9-51, 9-53, 9-55, 12-235, 12-237
434448-0000	TOOL	14-5
250610-0200	TOOL KIT	10-3
595135-0100	TOOL KIT	12-151
232236-0000	TOOTH PART	4-33, 4-35, 4-37, 4-39, 4-41, 4-43
232238-0000	TOOTH PART	4-131, 4-133, 4-135, 4-137
1260837-0000	TOOTHED PULLEY	6-41
1282681-0000	TOOTHED PULLEY	6-33
443289-0000	TOOTHED PULLY	5-89, 5-91
927859-0000	TOOTHED PULLY	6-33
90344-0073	TOOTHED WHEEL	6-55
546234-0000	TOP COVER	12-145
442646-0200	TOP GEAR	5-121
546235-0000	TOP PLATE	12-145
546236-0000	TOP PLATE	12-145
546237-0000	TOP SUPPORT	12-145
90355-0031	TORQUE RIGID COUPLING, 10X10 MM	3-11, 3-21, 13-11
450669-0000	TOUCH GUARD	2-47
571428-0000	TOUCH GUARD	7-37, 7-39
927660-0000	TOUCH GUARD	13-59
90064-0317	TOUCHGUARD, 704-9645	2-147
273565-0300	TPC BAR	4-3, 4-5, 4-61, 4-63
595116-0100	TPC-BAR	4-61, 4-63
1143222-0100	TPC-BAR	4-61, 4-63
1143222-0101	TPC-BAR	13-73
90245-0019	TRANSF. 3-PH.750VA SEC.23A	9-5, 9-7, 9-9, 9-11, 9-13, 9-15, 9-25, 9-27, 9-29, 9-31, 9-33, 9-45, 9-47, 9-49, 9-51, 9-53, 9-55
23117-0000	TRANSFORMER	2-159, 2-161
23127-0101	TRANSFORMER	2-47
440415-0200	TRANSFORMER	2-3, 2-5
23139-0000	TRANSFORMER 1PH. AUTO 2,1 KVA	9-5, 9-7, 9-9, 9-11, 9-13, 9-15, 9-25, 9-27, 9-29, 9-31, 9-33, 9-45, 9-47, 9-49, 9-51, 9-53, 9-55
294056-0200	TRANSMISSION	4-3, 4-5
1365572-0100	TRANSVERSAL SETTING	13-143
28834-0000	TRIMMING ROLLER MINUS	12-243
36936-0003	TRIMMING ROLLER MINUS	12-243
574010-0003	TRIMMING ROLLER MINUS	12-243
582012-0003	TRIMMING ROLLER MINUS	12-243
583182-0003	TRIMMING ROLLER MINUS	12-243
592936-0003	TRIMMING ROLLER MINUS	12-243
28833-0000	TRIMMING ROLLER PLUS	12-243
36935-0003	TRIMMING ROLLER PLUS	12-243
574010-0002	TRIMMING ROLLER PLUS	1-31, 1-33, 12-243, 13-157
582012-0002	TRIMMING ROLLER PLUS	12-243
583182-0002	TRIMMING ROLLER PLUS	12-243
592936-0002	TRIMMING ROLLER PLUS	12-243
597557-0100	TRIMMING ROLLERS TB/8	12-3
90459-2525	TRIPLE SWITCH, SB-3-6-R1	9-45, 9-47, 9-49, 9-51, 9-53, 9-55
440090-0000	TROUGH	12-93, 12-115
543476-0000	TROUGH	3-11, 3-21, 13-11
531606-0000	TUB	12-119
90266-0006	TUBE	3-35
90266-0007	TUBE	2-137, 2-139
90266-0010	TUBE	2-85, 2-87

Part No	Description	Page No
547904-0000	TUBE	2-179
567266-0000	TUBE	2-137, 2-139
567267-0000	TUBE	2-137, 2-139
592558-0000	TUBE	2-173, 12-163, 13-29
90166-0160	TUBE 10 MM PA BLUE	2-71, 2-73, 2-75
90166-0068	TUBE 12 MM PA BLUE	2-27, 2-29, 2-31, 2-81, 2-83, 13-179
90266-0174	TUBE 12X1 SS 2333-22	2-79
90166-0206	TUBE 14 MM PUR BLUE	2-27, 2-29, 2-31, 2-81, 2-83
90166-0110	TUBE 15 MM PA,TRANSP.	12-135, 12-141
90166-0143	TUBE 2,5 MM PA,TRANSP.	3-35, 3-37, 3-39, 3-41, 3-43, 4-33, 4-35, 4-37, 4-39, 4-41, 4-43, 4-45 4-47, 4-49, 4-51, 4-131, 4-133, 4-135, 4-137, 4-139, 4-141, 4-143, 4-147, 5-25, 5-27, 5-29, 5-33, 5-41 5-43, 5-45, 5-47, 5-49, 5-51, 5-53, 5-55, 5-81, 5-83, 6-29, 12-213, 12-277, 12-279
90166-0095	TUBE 4 MM PA BLUE (50M)	5-81, 5-83
90166-0109	TUBE 4 MM PA,TRANSP.	2-179, 3-35, 4-33, 4-35, 4-37, 4-39, 4-41, 4-43, 4-101, 4-103, 4-105 4-107, 4-131, 4-133, 4-135, 4-137, 4-139, 4-141
90166-0081	TUBE 6 MM PA BLUE	2-13, 2-15, 2-17, 2-19, 2-27, 2-29, 2-31, 2-71, 2-73, 2-75, 2-81, 2-83, 2-101 2-103, 2-105, 2-107, 2-109, 2-111, 2-113, 2-149, 2-151, 8-17, 8-61, 8-63, 8-65, 12-47, 12-159, 13-17 13-19, 13-21, 13-23, 13-117
90166-0011	TUBE 6 MM PA,TRANSP.	5-17
90166-0108	TUBE 6 MM PA,TRANSP.	2-179, 3-35, 5-7, 5-9, 5-25, 5-27, 5-29, 5-33, 5-35, 5-37, 5-41, 5-43, 5-45 5-47, 5-49, 5-51, 5-53, 5-55, 5-59, 5-67, 5-81, 5-83, 6-29, 6-35
90166-0124	TUBE 6 MM PA,TRANSP.	2-137, 2-139, 4-45, 4-47, 4-49, 4-51, 4-97, 4-99, 5-81, 5-83, 6-63, 7-7 12-39, 12-41, 12-135, 12-257, 12-261, 12-269
90166-0132	TUBE 6 MM PA,TRANSP.	5-15, 5-57, 6-35, 12-277
90166-0118	TUBE 8 MM PA BLACK	6-27
90166-0013	TUBE 8 MM PA BLUE	2-13, 2-15, 2-17, 2-19, 2-27, 2-29, 2-31, 2-71, 2-73, 2-75, 2-81, 2-83, 2-101 2-103, 2-105, 2-107, 2-109, 2-111, 2-113, 2-149, 2-151, 6-17, 8-61, 8-63, 8-65, 12-159, 13-17, 13-19 13-21, 13-23, 13-117, 13-165, 13-179
90166-0122	TUBE 8 MM PA,TRANSP.	2-35, 2-121, 2-123, 2-137, 2-139, 5-13, 5-25, 5-27, 5-41, 5-43, 5-45, 5-47 5-81, 5-83, 5-117, 6-35, 8-69, 8-71, 8-73, 12-105, 12-135, 13-15, 13-161
90166-0133	TUBE 8 MM PA,TRANSP.	2-115, 2-137, 2-139, 12-277, 12-279
90166-0194	TUBE 8 MM PUR BLUE	2-27, 2-29, 2-31, 2-81, 2-83
440474-0100	TUBE FLUSHING DEVICE	2-3, 2-5
90233-0028	TUBE FUSE, 10A	9-5, 9-7, 9-9, 9-11, 9-13, 9-15, 9-19, 9-25, 9-27, 9-29, 9-31, 9-33, 9-39, 9-45, 9-47 9-49, 9-51, 9-53, 9-55, 9-59, 13-175
90233-0027	TUBE FUSE, 16A	9-5, 9-7, 9-9, 9-11, 9-13, 9-15, 9-45, 9-47, 9-49, 9-51, 9-53, 9-55, 12-235, 12-237 13-175
90233-0032	TUBE FUSE, 50 A	13-209
90166-0051	TUBE PA,TRANSP.	5-29, 5-33, 5-49, 5-51, 5-53, 5-55, 5-67, 5-81, 5-83
90166-0099	TUBE PUR BLUE	12-121
90166-0105	TUBE PUR BLUE	12-121
47836-0101	TUBUS ENER.& POW.CONTROL	9-5, 9-7, 9-9, 9-11, 9-13, 9-15, 12-235, 12-237
449744-0000	TURN SPRING	8-77, 8-79
449745-0000	TURN SPRING	8-77, 8-79
458929-0000	TURN SPRING	8-69, 8-71, 8-73
927315-0000	TURRET	5-125, 5-127
293395-0001	TYPE HOLDER	8-11, 8-35, 8-37, 12-59, 12-77, 12-79
293395-0002	TYPE HOLDER	8-11, 8-35, 8-37, 12-59, 12-77, 12-79
293395-0003	TYPE HOLDER	8-35, 8-37, 12-77, 12-79
2767112-0100	UK ALARM BEACON	13-3
1346128-0100	UK ASU PAPER HOLDER IMPROVEMENT	13-3
1499124-0100	UK COOLER PT/8	13-3
1143137-0100	UK COOLING FAN FOR DRIVE CABINET PT/10	13-3
1499073-0100	UK COUNTER ROLLER DRIVE MOTOR	13-3
2505159-0100	UK FLAP SEALING KIT	13-3
1478582-0100	UK FOLDING DEVICE AJUSTMENT	13-3
597528-0100	UK HOLD DOWN DEVICE	13-3
2727709-0100	UK IMPROVED STRIP GUIDE	13-3
1348088-0100	UK NEW TAB ANGLE FEEDING	13-3
2504976-0100	UK NEW THYRISTOR UNIT	13-3
1362511-0100	UK NEW VERSION OF AIR DRYER	12-155, 13-3
1334528-0200	UK OUTFEED TENSION DEVICE	13-3
2727622-0100	UK REVOLVING STAND	13-3
597600-0100	UK SIMPLIFIED REVERSED FIN KIT	13-3
1347803-0100	UK STRIP GUIDE	13-3
2653890-0100	UK USTS CUTTING RAIL	13-3
1282642-0100	UK VOLUME FLAP SPRING	13-3
342803-0104	UNION NUT, RD 70-6 (SMS 51)	1-27, 1-29
558390-0104	UNIVERSAL THUMBWHEEL UNIT	9-5, 9-7, 9-9, 9-11, 9-13, 9-15, 9-45, 9-47, 9-49, 9-51, 9-53 9-55, 12-235, 12-237
229400-0700	UNREELING DEVICE	12-15
1143051-0100	UPGRADE PT/10	13-3
21394-0700	UPPER FORMING RING	1-3
78078-0000	UPPER GRIP	10-5
1364234-0000	USTS CUTTING RAIL	13-151
1364235-0000	USTS CUTTING RAIL	13-151
2505064-0000	USTS CUTTING RAIL	13-91, 13-107, 13-157
2505168-0000	USTS CUTTING RAIL	4-11, 4-13, 4-15, 4-17, 4-19, 4-21, 12-193, 12-195, 12-197, 12-199, 12-201, 12-203
2637716-0000	USTS CUTTING RAIL	13-217
2826927-0000	USTS CUTTING RAIL	4-11, 4-13, 4-15, 4-17, 4-19, 4-21, 12-193, 12-195, 12-197, 12-199, 12-201 12-203
2504998-0100	USTS SERRATED & STEPPED CUTTING RAIL	13-155
1366160-0100	USTS SPLIT CUTTING RAIL	13-149
559624-0100	USTS UPDATING (TMCC)	13-3, 13-137

Machine Type Group Description Page No

Part No	Description	Page No
90055-0105	V-JUNCTION COUPLING14MM REPBY 342735-110	2-27, 2-29, 2-31, 2-81, 2-83
315220-0121	V-RINGS 12,5X18,5X7,7 MM V-14S	8-5, 8-7, 8-21, 8-23, 8-25, 8-27, 8-29, 8-31, 8-33
315220-0175	V-RINGS 31X39X10,5 MM V-35S	5-133, 5-135
315220-0198	V-RINGS 45X55X13 MM V-50S	3-29
90113-0386	VALVE	13-179
90201-0014	VALVE	2-173, 2-175, 13-29
90201-0057	VALVE	3-13, 3-23, 3-25, 13-13
90235-0259	VALVE	1-27, 1-29
90235-0708	VALVE	2-27, 2-29, 2-31, 2-81, 2-83
90235-0767	VALVE	2-149, 2-151
442852-0000	VALVE	5-15, 6-63
445583-0000	VALVE	2-157
576965-0000	VALVE	12-121
576966-0000	VALVE	12-121
576968-0000	VALVE	12-121
576969-0000	VALVE	12-121
90235-0254	VALVE 565-201-000 MECMAN	12-141
90042-0221	VALVE BODY 5/2 BISTABLE	2-81, 2-83
90042-0215	VALVE BODY 5/2 UNISTABLE	2-27, 2-29, 2-31, 2-81, 2-83, 12-159, 12-263, 13-117, 13-163
479741-0000	VALVE BODY TB/8	1-59
543128-0000	VALVE BRACKET	2-149, 2-151
530590-0000	VALVE CONE	1-63
273728-0300	VALVE GROUP	3-21
592880-0100	VALVE GROUP	3-11, 13-11
574601-0100	VALVE PANEL	2-3, 2-5
593637-0000	VALVE PANEL	2-131
593672-0000	VALVE PANEL	2-131, 13-5, 13-91
593673-0000	VALVE PANEL	13-5, 13-91
594622-0100	VALVE PANEL	2-3, 2-5
597570-0000	VALVE PANEL	12-155, 13-113
597597-0000	VALVE PANEL	13-113
1143135-0000	VALVE PANEL	2-131
1143444-0000	VALVE PANEL	2-131, 12-259
1285046-0100	VALVE PANEL	12-249, 12-267
2505096-0100	VALVE PANEL	13-171
2505149-0100	VALVE PANEL	13-159
575392-0100	VALVE PANEL LOWER	2-3, 2-5
574602-0000	VALVE PANEL UPPER	2-27, 2-29, 2-31
593639-0000	VALVE PANEL UPPER	2-81, 2-83
595138-0100	VALVE PANEL UPPER	12-155
597592-0100	VALVE PANEL UPPER	13-113
2505155-0000	VALVE PANELS	13-159
90207-0052	VALVE, BUTTERFLY, N.C. LKBA-1-SMS-51	1-27, 1-29
542700-0000	VALVEPANEL LOWER	2-149, 2-151
90091-0444	VARISEAL ROTO HICLEAN 35X47X4,8 MM	6-59, 6-61
90347-0007	VIBRATION DAMPER	5-119, 12-145
90347-0034	VIBRATION DAMPER	5-137, 5-139, 5-141, 5-143
451406-0000	VIBRATION DAMPER	10-15, 10-17, 10-21, 12-5, 12-9
90347-0004	VIBRATION DAMPER D=30 TH=M8 H=17 H2=21MM	2-181, 2-183, 7-15, 7-35, 13-59
26075-0000	VOLUME BULGE	4-53, 4-55, 12-205, 12-207
449584-0000	VOLUME BULGE	4-53, 4-55, 12-205, 12-207
458467-0000	VOLUME BULGE	4-53, 4-55, 12-205, 12-207
464314-0000	VOLUME BULGE	4-53, 4-55, 12-205, 12-207
541204-0000	VOLUME BULGE	4-53, 4-55, 12-205, 12-207
544345-0000	VOLUME BULGE	4-53, 4-55, 12-205, 12-207
569055-0000	VOLUME BULGE	4-53, 4-55, 12-205, 12-207
589925-0000	VOLUME BULGE	4-53, 4-55, 12-205, 12-207
593655-0000	VOLUME BULGE	4-31
596085-0000	VOLUME BULGE	4-53, 4-55, 12-205, 12-207
1143049-0000	VOLUME BULGE	4-53, 4-55, 12-205, 12-207
1362432-0000	VOLUME BULGE	4-31
2728742-0000	VOLUME BULGE	4-11, 4-13, 4-15, 4-17, 4-19, 4-21, 12-193, 12-195, 12-197, 12-199, 12-201, 12-203
252776-0000	VOLUME CAM	4-101, 4-103, 4-105, 4-107
531109-0000	VOLUME CAM	4-101, 4-103, 4-105, 4-107
551284-0000	VOLUME CAM	4-101, 4-103, 4-105, 4-107
551626-0000	VOLUME CAM	4-101, 4-103, 4-105, 4-107
592336-0100	VOLUME CAM	12-171
593279-0000	VOLUME CAM	4-101, 4-103, 4-105, 4-107
293605-0500	VOLUME CURVE PIECE	4-3, 4-5
246468-0800	VOLUME FLAP	4-3, 4-5, 12-171
533441-0000	VOLUME FLAP	4-53, 4-55, 12-205, 12-207
544344-0000	VOLUME FLAP	4-53, 4-55, 12-205, 12-207
563609-0000	VOLUME FLAP	4-53, 4-55, 12-205, 12-207
582911-0000	VOLUME FLAP	4-53, 4-55, 12-205, 12-207
592923-0000	VOLUME FLAP	4-53, 4-55, 12-205, 12-207
593280-0000	VOLUME FLAP	4-53, 4-55, 12-205, 12-207
929541-0000	VOLUME FLAP	4-53, 4-55, 12-205, 12-207
1195070-0000	VOLUME FLAP	4-53, 4-55, 12-205, 12-207
1260781-0000	VOLUME FLAP	4-53, 4-55, 12-205, 12-207
1338954-0100	VOLUME FLAP	4-3, 4-5
1361917-0000	VOLUME FLAP	4-53, 4-55, 12-205, 12-207
2598856-0000	VOLUME FLAP	4-31
1338691-0000	VOLUME FLAP LEFT	4-31
1338692-0000	VOLUME FLAP RIGHT	4-31

Part No	Description	Page No
1143616-0100	VOLUME FLAP SPRINGS	13-79
1282643-0100	VOLUME FLAP SPRINGS	13-83
577201-0100	VOLUME KIT	12-119
208709-0000	VOLUME SHIM	4-53, 4-55, 4-61, 4-63, 12-205, 12-207
450302-0000	VOLUME SHIM	4-53, 4-55, 4-61, 4-63, 12-205, 12-207
464315-0000	VOLUME SHIM	4-53, 4-55, 12-205, 12-207
479245-0000	VOLUME SHIM	4-53, 4-55, 4-61, 4-63, 12-205, 12-207
479246-0000	VOLUME SHIM	4-53, 4-55, 4-61, 4-63, 12-205, 12-207
544346-0000	VOLUME SHIM	4-53, 4-55, 4-61, 4-63, 12-205, 12-207
569056-0000	VOLUME SHIM	4-53, 4-55, 4-61, 4-63, 12-205, 12-207
583827-0000	VOLUME SHIM	4-7, 4-31
589926-0000	VOLUME SHIM	4-53, 4-55, 4-61, 4-63, 12-205, 12-207
593501-0000	VOLUME SHIM	4-7
1143050-0000	VOLUME SHIM	4-7, 4-53, 4-55, 4-61, 4-63, 12-205, 12-207, 12-231
1362433-0000	VOLUME SHIM	4-7, 4-31
532718-0000	VOLUMEN FLAP	4-53, 4-55, 12-205, 12-207
236629-0000	WALL BRACKET	12-45
476189-0100	WALL LEAD-IN	12-15, 12-127
1296816-0100	WALL LEAD-IN	12-127
90001-0028	WALL SOCKET OUTLET REPL.BY 90001-33	9-5, 9-7, 9-9, 9-11, 9-13, 9-15, 9-25, 9-27, 9-29, 9-31, 9-33, 9-45, 9-47, 9-49, 9-51, 9-53, 9-55
359705-0002	WARNING SIGN ISO, ENTAGLEMENT	5-159
359705-0001	WARNING SIGN ISO, ENTANGLEMENT	8-5, 8-7, 8-21, 8-23, 8-25, 8-27, 8-29, 8-31, 8-33
359710-0002	WARNING SIGN ISO, HOT SURFACE	5-69, 5-71, 5-77, 5-79
359705-0005	WARNING SIGN ISO, MOVING PART	8-57, 8-59
359705-0015	WARNING SIGN ISO, RISK OF ELECTRIC SHOCK	6-21, 6-23, 6-25
90194-0016	WARNING SIGN, RISK OF ELECTRIC SHOCK	2-37, 2-39, 2-41, 2-45, 2-91, 2-127, 2-147, 2-163, 7-9, 7-11, 7-31, 7-33, 8-61, 8-63, 8-65, 8-69, 8-71, 8-73, 9-5, 9-7, 9-9, 9-11, 9-13, 9-15, 9-21, 9-23, 9-25, 9-27, 9-29, 9-31, 9-33, 9-41, 9-43, 9-45, 9-47, 9-49, 9-51, 9-53, 9-55, 9-61, 9-63, 12-91, 13-183, 14-27
90194-0039	WARNING SIGN, RISK OF ELECTRIC SHOCK	3-11, 3-21, 13-11
2033-0008	WASHER	1-31, 1-33, 1-43, 1-45, 1-75, 1-77, 1-79, 1-81, 1-83, 7-19
2033-0009	WASHER	7-35, 7-41
6278-0000	WASHER	5-7, 5-9, 5-33, 5-35, 5-37, 5-53, 5-55
19262-0000	WASHER	7-31, 7-33
19972-0000	WASHER	4-31, 4-53, 4-55, 12-205, 12-207
20770-0000	WASHER	2-177
27171-0000	WASHER	4-73
28036-0000	WASHER	1-75, 1-77, 1-79, 1-81, 1-83, 3-11, 3-21, 13-11
28037-0000	WASHER	1-43, 1-45, 5-133, 5-135
31420-0000	WASHER	7-31, 7-33
31553-0002	WASHER	5-121, 5-157, 6-9
32079-0000	WASHER	8-69, 8-71, 8-73
32213-0000	WASHER	1-35, 7-37, 7-39
32219-0000	WASHER	1-35, 7-37, 7-39
32634-0001	WASHER	12-53, 12-55, 12-67, 12-69, 12-71, 12-73
32634-0004	WASHER	12-67, 12-69, 12-71, 12-73
37071-0000	WASHER	4-101, 4-103, 4-105, 4-107
37897-0000	WASHER	12-89
38087-0000	WASHER	2-131
90201-0302	WASHER	2-171
110221-0000	WASHER	1-73
159720-0002	WASHER	4-65, 4-67, 4-69, 4-71
207017-0001	WASHER	1-49, 1-51, 1-53
209334-0000	WASHER	1-49, 1-51, 1-53
230107-0000	WASHER	7-37, 7-39
239538-0000	WASHER	3-41, 3-43
239874-0000	WASHER	4-139, 4-141
242954-0000	WASHER	7-41
246885-0000	WASHER	2-23, 2-79
252786-0000	WASHER	4-101, 4-103, 4-105, 4-107
255119-0000	WASHER	12-53, 12-55, 12-67, 12-69, 12-71, 12-73
255417-0000	WASHER	7-41
266737-0000	WASHER	7-41
268644-0000	WASHER	4-65, 4-67, 4-69, 4-71
271011-0000	WASHER	12-27, 12-31
271211-0000	WASHER	7-29, 12-61, 12-63
273428-0000	WASHER	4-65, 4-67, 4-69, 4-71
273429-0000	WASHER	1-35
276636-0000	WASHER	5-59
276659-0000	WASHER	5-121, 5-133, 5-135
276664-0000	WASHER	5-137, 5-139, 5-141, 5-143
279105-0000	WASHER	2-137, 2-139
285322-0000	WASHER	5-145, 5-147, 5-149, 5-151, 5-153, 5-155
285363-0000	WASHER	5-89, 5-91
285403-0000	WASHER	5-17
292482-0000	WASHER	3-11, 3-21, 13-11
293646-0001	WASHER	8-5, 8-7, 8-21, 8-23, 8-25, 8-27, 8-29, 8-31, 8-33, 12-53, 12-55, 12-67, 12-69, 12-71, 12-73
293646-0002	WASHER	8-5, 8-7, 8-21, 8-23, 8-25, 8-27, 8-29, 8-31, 8-33, 12-53, 12-55, 12-67, 12-69, 12-71, 12-73
293646-0003	WASHER	8-21, 8-23, 8-25, 8-27, 8-29, 8-31, 8-33
293669-0001	WASHER	8-9, 8-39, 12-57, 12-75
293669-0002	WASHER	8-9, 8-39, 12-57, 12-75
293669-0003	WASHER	8-9, 8-39, 12-57, 12-75
293669-0004	WASHER	8-9, 8-39, 12-57, 12-75

Part No	Description	Page No
295435-0000	WASHER	5-7, 5-9, 5-35, 5-37, 6-35
436403-0000	WASHER	1-43, 1-45
436488-0000	WASHER	3-31, 3-33
440180-0000	WASHER	8-43
440194-0000	WASHER	8-81
440198-0000	WASHER	8-55
440651-0000	WASHER	1-63
441737-0000	WASHER	13-53, 13-55
441739-0000	WASHER	13-53, 13-55
443239-0000	WASHER	5-29, 5-49, 5-51
443295-0000	WASHER	5-33, 5-53, 5-55, 5-89, 5-91, 5-101, 5-103
443296-0000	WASHER	5-89, 5-91, 5-101, 5-103
443297-0000	WASHER	5-101, 5-103
443298-0000	WASHER	5-101, 5-103
443299-0000	WASHER	5-89, 5-91, 5-101, 5-103
443300-0000	WASHER	5-89, 5-91, 5-101, 5-103
443301-0000	WASHER	5-89, 5-91, 5-101, 5-103
443414-0000	WASHER	5-101, 5-103
445858-0000	WASHER	2-167
445926-0000	WASHER	8-57, 8-59
449761-0000	WASHER	8-69, 8-71, 8-73
451412-0000	WASHER	8-69, 8-71, 8-73
451413-0000	WASHER	8-69, 8-71, 8-73
451719-0003	WASHER	12-97, 12-99
458193-0001	WASHER	8-21, 8-23, 8-25, 8-27, 8-29, 8-31, 8-33, 12-67, 12-69, 12-71, 12-73
458193-0002	WASHER	8-21, 8-23, 8-25, 8-27, 8-29, 8-31, 8-33, 12-67, 12-69, 12-71, 12-73
458193-0003	WASHER	8-21, 8-23, 8-25, 8-27, 8-29, 8-31, 8-33, 12-67, 12-69, 12-71, 12-73
458194-0001	WASHER	8-5, 8-7, 12-53, 12-55, 12-67, 12-69, 12-71, 12-73
458194-0002	WASHER	8-5, 8-7, 12-53, 12-55, 12-67, 12-69, 12-71, 12-73
458194-0003	WASHER	8-5, 8-7, 12-53, 12-55, 12-67, 12-69, 12-71, 12-73
484975-0000	WASHER	1-63
493731-0000	WASHER	12-101
497720-0000	WASHER	1-43, 1-45
497916-0000	WASHER	4-65, 4-67, 4-69, 4-71
525181-0000	WASHER	5-25, 5-27, 5-41, 5-43, 5-45, 5-47
525195-0000	WASHER	5-29, 5-49, 5-51
527648-0000	WASHER	3-37, 3-39
533458-0000	WASHER	8-5, 8-7, 8-21, 8-23, 8-25, 8-27, 8-29, 8-31, 8-33
536704-0000	WASHER	4-33, 4-35, 4-37, 4-39, 4-41, 4-43, 4-131, 4-133, 4-135, 4-137
541165-0000	WASHER	1-61
541166-0000	WASHER	1-63
548336-0000	WASHER	4-97, 4-99
549826-0000	WASHER	8-57, 8-59
556319-0000	WASHER	8-77, 8-79
566016-0000	WASHER	5-133, 5-135
568161-0000	WASHER	5-61
574083-0000	WASHER	5-89, 5-91
574087-0000	WASHER	5-89, 5-91
594219-0000	WASHER	12-215, 12-217, 12-219, 12-221, 13-7, 13-9, 13-99, 13-101, 13-103, 13-105, 13-109, 13-111
596082-0000	WASHER	1-49, 1-51, 1-53
1143223-0000	WASHER	5-137, 5-139, 5-141, 5-143, 12-255
1144354-0000	WASHER	6-5
1144493-0000	WASHER	6-59, 6-61
1144502-0000	WASHER	6-59, 6-61
1144620-0000	WASHER	6-29
1144681-0000	WASHER	6-13, 6-41, 6-57
1144979-0000	WASHER	6-27
1260832-0000	WASHER	6-49
1285898-0000	WASHER	6-65
1338677-0000	WASHER	4-23, 4-25, 4-27, 4-29, 13-167
315105-0173	WASHER BRB 10,5X20 RFR	2-7, 2-9, 2-37, 2-39, 2-41, 2-69, 2-85, 2-87, 2-167, 4-33, 4-35, 4-37, 4-39, 4-41, 4-43, 4-101, 4-103, 4-105, 4-107, 5-7, 5-9, 5-17, 5-23, 5-35, 5-37, 5-39, 5-57, 5-89, 5-91, 5-145, 5-147, 5-149, 5-151, 5-153, 5-155, 5-157, 6-17, 6-27, 6-33, 6-37, 6-39, 6-41, 6-47, 6-57, 7-25, 7-31, 7-33, 7-37, 7-39, 8-5, 8-7, 8-21, 8-23, 8-25, 8-27, 8-29, 8-31, 8-33, 8-49, 8-55, 8-75, 10-15, 10-17, 10-21, 12-5, 12-9, 12-43, 12-81, 12-117, 12-147
315105-0171	WASHER BRB 10X18 RFR	6-9, 6-57
315105-0176	WASHER BRB 12X22 RFR	4-101, 4-103, 4-105, 4-107
315105-0178	WASHER BRB 13X24 RFR	1-31, 1-33, 1-43, 1-45, 1-55, 1-75, 1-77, 1-79, 1-81, 1-83, 5-7, 5-9, 5-15, 5-35, 5-37, 5-133, 5-135, 5-157, 6-11, 6-29, 6-35, 12-37, 12-133
315105-0186	WASHER BRB 17X30 RFR	5-29, 5-49, 5-51, 6-13, 6-35, 12-97, 12-99
315105-0192	WASHER BRB 21X37 RFR	6-13
315105-0124	WASHER BRB 3,2X7 RFR	1-27, 1-29, 2-47, 2-63, 2-65, 2-97, 2-99, 5-17, 5-25, 5-27, 5-41, 5-43, 5-45, 5-47, 5-89, 5-91, 5-97, 5-101, 5-103, 5-129, 5-131, 6-7, 6-29, 6-33, 6-59, 6-61, 7-15, 7-29, 8-49, 8-51, 8-53, 8-61, 8-63, 8-65, 9-5, 9-7, 9-9, 9-11, 9-13, 9-15, 9-25, 9-27, 9-29, 9-31, 9-33, 9-45, 9-47, 9-49, 9-51, 9-53, 9-55, 12-27, 12-31, 12-61, 12-63
315105-0136	WASHER BRB 4,3X9 RFR	1-5, 1-13, 1-15, 1-27, 1-29, 1-37, 1-49, 1-51, 1-53, 2-63, 2-65, 2-97, 2-99, 2-133, 4-33, 4-35, 4-37, 4-39, 4-41, 4-43, 4-101, 4-103, 4-105, 4-107, 4-131, 4-133, 4-135, 4-137, 4-139, 4-141, 5-7, 5-9, 5-17, 5-25, 5-27, 5-35, 5-37, 5-41, 5-43, 5-45, 5-47, 5-57, 5-105, 5-107, 5-109, 5-111, 6-11, 6-27, 6-37, 6-39, 7-9, 7-15, 7-19, 7-29, 7-37, 7-39, 7-47, 8-13, 8-15, 8-55, 8-69, 8-71, 8-73, 12-27, 12-31, 12-61, 12-63, 12-67, 12-69, 12-71, 12-73, 12-91, 12-119, 12-121, 12-145, 13-41, 13-175, 13-221, 13-225, 13-233, 13-239
315105-0146	WASHER BRB 5,3X10 RFR	1-43, 1-45, 1-49, 1-51, 1-53, 2-27, 2-29, 2-31, 2-37, 2-39, 2-41, 2-47, 2-63, 2-65, 2-81, 2-83, 2-85, 2-87, 2-97, 2-99, 2-133, 4-23, 4-25, 4-27, 4-29, 4-97, 4-99, 4-113, 4-115, 5-7, 5-9, 5-25, 5-27, 5-29, 5-35, 5-37, 5-41, 5-43, 5-45, 5-47, 5-49, 5-51, 5-67, 5-129, 5-131, 5-137

Part No	Description	Page No
		5-139, 5-141, 5-143, 5-159, 6-7, 6-13, 6-29, 6-31, 6-33, 6-37, 6-39, 7-15, 7-17, 7-29, 7-37, 7-39, 7-45
		8-5, 8-7, 8-9, 8-21, 8-23, 8-25, 8-27, 8-29, 8-31, 8-33, 8-39, 8-49, 8-51, 8-53, 8-55, 8-61, 8-63, 8-65
		8-69, 8-71, 8-73, 8-75, 8-85, 8-87, 12-37, 12-45, 12-53, 12-55, 12-57, 12-61, 12-63, 12-67, 12-69
		12-71, 12-73, 12-75, 12-85, 12-105, 12-133, 12-145, 12-149, 12-155, 12-175, 12-177, 12-215, 12-217
		12-219, 12-221, 12-239, 12-255, 13-7, 13-9, 13-85, 13-87, 13-99, 13-101, 13-103, 13-105, 13-177
		14-35, 14-37
315105-0153 ...	WASHER BRB 6,4X12 RFR	1-5, 1-7, 1-9, 1-11, 1-23, 1-35, 1-55, 2-9, 2-27, 2-29, 2-31, 2-37, 2-39
		2-41, 2-45, 2-47, 2-49, 2-51, 2-57, 2-63, 2-65, 2-67, 2-69, 2-81, 2-83, 2-85, 2-87, 2-91, 2-93, 2-95
		2-97, 2-99, 2-115, 2-133, 2-135, 2-147, 2-149, 2-151, 3-11, 3-15, 3-17, 3-21, 3-35, 4-11, 4-13, 4-15
		4-17, 4-19, 4-21, 4-23, 4-25, 4-27, 4-29, 4-45, 4-47, 4-49, 4-51, 4-65, 4-67, 4-69, 4-71, 4-73, 4-93
		4-95, 4-97, 4-99, 4-101, 4-103, 4-105, 4-107, 4-113, 4-115, 5-7, 5-9, 5-13, 5-15, 5-17, 5-23, 5-25, 5-27
		5-29, 5-31, 5-33, 5-35, 5-37, 5-39, 5-41, 5-43, 5-45, 5-47, 5-49, 5-51, 5-53, 5-55, 5-63, 5-65, 5-67
		5-69, 5-71, 5-73, 5-75, 5-77, 5-79, 5-89, 5-91, 5-99, 5-101, 5-103, 5-115, 5-117, 5-119, 5-121, 5-129
		5-131, 5-133, 5-135, 5-137, 5-139, 5-141, 5-143, 5-145, 5-147, 5-149, 5-151, 5-153, 5-155, 5-159, 6-5
		6-7, 6-9, 6-17, 6-27, 6-29, 6-33, 6-35, 6-37, 6-39, 6-55, 6-57, 6-59, 6-61, 6-63, 6-65, 7-7, 7-13, 7-15
		7-17, 7-21, 7-23, 7-29, 7-31, 7-33, 7-35, 7-37, 7-39, 7-41, 7-43, 7-45, 8-5, 8-7, 8-13, 8-15, 8-21, 8-23
		8-25, 8-27, 8-29, 8-31, 8-33, 8-43, 8-51, 8-53, 8-55, 8-57, 8-59, 8-69, 8-71, 8-73, 8-75, 8-85, 8-87
		12-23, 12-25, 12-27, 12-29, 12-31, 12-37, 12-45, 12-49, 12-53, 12-55, 12-61, 12-63, 12-65, 12-67
		12-69, 12-71, 12-73, 12-81, 12-91, 12-93, 12-97, 12-99, 12-105, 12-115, 12-119, 12-133, 12-141
		12-145, 12-147, 12-175, 12-177, 12-193, 12-195, 12-197, 12-199, 12-201, 12-203, 12-215, 12-217
		12-219, 12-221, 12-239, 12-255, 13-7, 13-9, 13-11, 13-59, 13-99, 13-101, 13-103, 13-105, 13-109
		13-111, 13-133, 13-179, 13-183, 13-211, 14-35, 14-37
315105-0156 ...	WASHER BRB 6,7X14 RFR	3-11, 3-21, 6-11, 13-11, 13-177
315105-0165 ...	WASHER BRB 8,4X16 RFR	1-7, 1-9, 1-43, 1-45, 1-55, 1-57, 1-73, 2-37, 2-39, 2-41, 2-49, 2-51
		2-63, 2-65, 2-67, 2-85, 2-87, 2-93, 2-97, 2-99, 2-149, 2-151, 3-15, 3-17, 3-41, 3-43, 4-23, 4-25, 4-27
		4-29, 4-33, 4-35, 4-37, 4-39, 4-41, 4-43, 4-45, 4-47, 4-49, 4-51, 4-93, 4-95, 4-97, 4-99, 4-101, 4-103
		4-105, 4-107, 4-131, 4-133, 4-135, 4-137, 4-143, 4-147, 5-7, 5-9, 5-11, 5-17, 5-21, 5-23, 5-25, 5-27
		5-29, 5-31, 5-33, 5-35, 5-37, 5-39, 5-41, 5-43, 5-45, 5-47, 5-49, 5-51, 5-53, 5-55, 5-57, 5-67, 5-89
		5-91, 5-101, 5-103, 5-117, 5-119, 5-121, 5-125, 5-127, 5-129, 5-131, 5-133, 5-135, 5-137, 5-139
		5-141, 5-143, 5-145, 5-147, 5-149, 5-151, 5-153, 5-155, 5-157, 6-5, 6-9, 6-11, 6-17, 6-19, 6-27, 6-29
		6-33, 6-35, 6-37, 6-39, 6-41, 6-55, 6-57, 6-59, 6-61, 7-15, 7-17, 7-19, 7-21, 7-23, 7-31, 7-33, 7-35
		7-37, 7-39, 7-41, 7-47, 8-5, 8-7, 8-9, 8-21, 8-23, 8-25, 8-27, 8-29, 8-31, 8-33, 8-39, 8-55, 8-57, 8-59
		10-15, 10-17, 10-21, 12-5, 12-9, 12-29, 12-37, 12-43, 12-45, 12-53, 12-55, 12-57, 12-67, 12-69, 12-71
		12-73, 12-75, 12-83, 12-87, 12-93, 12-97, 12-99, 12-115, 12-133, 12-143, 12-147, 12-161, 12-215
		12-217, 12-219, 12-221, 12-239, 13-7, 13-9, 13-115, 13-153, 13-161, 13-237
315101-0136 ...	WASHER BRB, 4,3/8 H=0,8	2-21, 2-47, 2-77, 2-117, 2-119, 2-159, 2-161, 2-163, 2-177, 8-11, 8-35
		8-37, 8-61, 8-63, 8-65, 8-69, 8-71, 8-73, 12-47, 12-59, 12-77, 12-79, 13-27
315233-0113 ...	WASHER CAPTIVE SEALING G1/2	2-13, 2-15, 2-17, 2-19, 2-27, 2-29, 2-31, 2-71, 2-73, 2-75, 2-81
		2-83, 2-101, 2-103, 2-105, 2-107, 2-109, 2-111, 2-113, 2-115, 2-137, 2-139, 2-149, 2-151, 2-187
		12-137, 12-139, 12-141, 13-17, 13-19, 13-21, 13-23
315233-0110 ...	WASHER CAPTIVE SEALING G1/4	2-13, 2-15, 2-17, 2-19, 2-71, 2-73, 2-75, 2-101, 2-103, 2-105
		2-107, 2-109, 2-111, 2-113, 2-137, 2-139, 2-187, 4-73, 5-81, 5-83, 5-121, 13-17, 13-19, 13-21, 13-23
315233-0109 ...	WASHER CAPTIVE SEALING G1/8	2-165, 5-121, 12-141
315233-0111 ...	WASHER CAPTIVE SEALING G3/8	1-71, 2-179
315233-0101 ...	WASHER CAPTIVE SEALING M5(NEW315239-101)	1-63
315401-0173 ...	WASHER FBH10,2FZB	3-9, 3-19
315401-0178 ...	WASHER FBH12,2FZB	3-27
315401-0153 ...	WASHER FBH6,1FZB	3-9, 3-19
315234-0113 ...	WASHER PL.RND.CU.21,3//26 H=1,5	2-23, 2-79, 5-19
90005-0082	WASHER PLAIN ROUND 4,3(M4)/12,H=1	7-15, 7-17, 7-21, 7-23
315101-0173 ...	WASHER PLAIN, BRB, 10,5/22 H=2	1-35, 2-37, 2-39, 2-41, 2-85, 2-87, 3-29, 3-31, 3-33, 8-69
		8-71, 8-73, 10-15, 10-17, 10-21, 12-5, 12-9
315101-0178 ...	WASHER PLAIN, BRB, 13/24 H=2	2-159, 2-161, 2-167, 2-185, 3-31, 3-33, 3-37, 3-39
315103-0178 ...	WASHER PLAIN, BRB, 13/24 H=2,5	12-143
315101-0186 ...	WASHER PLAIN, BRB, 17/30 H=3	3-37, 3-39
315103-0195 ...	WASHER PLAIN, BRB, 23/40,H=3 NI PL BR	2-9, 2-69
315101-0124 ...	WASHER PLAIN, BRB, 3,2/6 H=0,5	2-159, 2-161, 2-163
315101-0146 ...	WASHER PLAIN, BRB, 5,3/10 H=1	2-21, 2-77, 2-117, 2-119, 2-177, 8-11, 8-17, 8-35, 8-37, 8-41
		8-69, 8-71, 8-73, 12-47, 12-49, 12-59, 12-77, 12-79, 12-87, 13-27
315101-0153 ...	WASHER PLAIN, BRB, 6,4/12 H=1,5	2-21, 2-77, 2-117, 2-119, 2-129, 2-137, 2-139, 2-159, 2-161
		2-163, 2-167, 2-177, 2-179, 2-185, 3-37, 3-39, 3-41, 3-43, 5-81, 5-83, 8-17, 8-41, 8-45, 8-47, 8-69
		8-71, 8-73, 10-15, 10-17, 10-21, 12-5, 12-9, 12-35, 12-43, 12-47, 12-49, 12-95, 12-257, 12-269, 13-27
315101-0165 ...	WASHER PLAIN, BRB, 8,4/16 H=1,5	2-47, 2-159, 2-161, 2-163, 2-167, 2-179, 3-11, 3-21, 3-31
		3-33, 3-35, 5-59, 5-125, 5-127, 8-17, 8-41, 12-35, 13-11, 14-39
315103-0165 ...	WASHER PLAIN, BRB, 8,4/16,H=1,5 NIPL BR	12-145
315102-0192 ...	WASHER PLAIN, BRFB 21/36 H=3	10-23
90005-0060	WASHER PLAIN, RBS 6,4/M6)/18,H=1,5	7-19
315111-0173 ...	WASHER PLAIN, TBRB 10,5/22 H=4	12-35, 12-45, 12-49
315115-0173 ...	WASHER PLAIN, TBRB 10,5/22 H=4	4-139, 4-141, 5-121, 7-9, 12-33, 12-43
315115-0171 ...	WASHER PLAIN, TBRB 10/18 H=4	4-143, 4-147, 12-223, 12-227
315111-0179 ...	WASHER PLAIN, TBRB 13,5/24 H=4	2-171
315111-0178 ...	WASHER PLAIN, TBRB 13/24 H=4	2-37, 2-39, 2-41, 2-85, 2-87, 12-35, 12-43, 12-47
315115-0178 ...	WASHER PLAIN, TBRB 13/24 H=4	1-31, 1-33, 2-37, 2-39, 2-41, 2-85, 2-87, 5-7, 5-9, 5-35, 5-37
		12-97, 12-99
315111-0153 ...	WASHER PLAIN, TBRB 6,4/12 H=3	8-11, 8-35, 8-37, 12-59, 12-77, 12-79
315115-0153 ...	WASHER PLAIN, TBRB 6,4/12 H=3	5-7, 5-9, 5-15, 5-25, 5-27, 5-29, 5-31, 5-33, 5-35, 5-37, 5-41
		5-43, 5-45, 5-47, 5-49, 5-51, 5-53, 5-55, 5-57, 5-59, 5-67, 5-69, 5-71, 5-73, 5-75, 5-77, 5-79, 5-81
		5-83, 5-89, 5-91, 5-101, 5-103, 5-121, 5-137, 5-139, 5-141, 5-143, 5-145, 5-147, 5-149, 5-151, 5-153
		5-155, 5-159, 7-15, 8-5, 8-7, 8-21, 8-23, 8-25, 8-27, 8-29, 8-31, 8-33, 8-75, 11-19, 12-33, 12-49, 13-67
315111-0156 ...	WASHER PLAIN, TBRB 6,7/14 H=3	12-111
315111-0165 ...	WASHER PLAIN, TBRB 8,4/16 H=3	2-169, 2-177, 11-17
315115-0165 ...	WASHER PLAIN, TBRB 8,4/16 H=3	1-13, 1-15, 1-27, 1-29, 1-43, 1-45, 1-49, 1-51, 1-53, 1-75, 1-77

Tetra Pak

SPC
Spare Parts Catalogue

Pos	Part No	Description	Page No
A			
A001	90410-0337	CALIBRATION INSTRUMENT 5100071-001	14-21
A001:1	90326-0312	HOUSE, 5103050-000	14-21
A001:2	90326-0311	HOUSE, 5103053-000	14-21
A002	90410-0338	CALIBRATION INSTRUMENT 5100071-001	14-21
A002	90430-0037	MOTOR DRIVE CONTR.PME 1802. REPL.BY -67	9-5, 9-7, 9-9, 9-11, 9-13, 9-15, 9-25, 9-27, 9-29, 9-31, 9-33, 9-45, 9-47, 9-49, 9-51, 9-53, 9-55
A002:1	67372-0101	BACKPLANE 8TE(32 POLE)	9-5, 9-7, 9-9, 9-11, 9-13, 9-15, 9-25, 9-27, 9-29, 9-31, 9-33, 9-45, 9-47, 9-49, 9-51, 9-53, 9-55
A002:1	90410-0340	AC-ADAPTER 5100072-002	14-21
A002:2	352551-0136	FINE-WIRE FUSE 3,15 A SLOW	9-5, 9-7, 9-9, 9-11, 9-13, 9-15, 9-25, 9-27, 9-29, 9-31, 9-33, 9-45, 9-47, 9-49, 9-51, 9-53, 9-55
A003	90243-0099	ANALOG/DIGITAL MULTIMETER 175	14-21
A003	90430-0037	MOTOR DRIVE CONTR.PME 1802. REPL.BY -67	9-5, 9-7, 9-9, 9-11, 9-13, 9-15, 9-25, 9-27, 9-29, 9-31, 9-33, 9-45, 9-47, 9-49, 9-51, 9-53, 9-55
A003:1	67372-0101	BACKPLANE 8TE(32 POLE)	9-5, 9-7, 9-9, 9-11, 9-13, 9-15, 9-25, 9-27, 9-29, 9-31, 9-33, 9-45, 9-47, 9-49, 9-51, 9-53, 9-55
A003:1	90220-0080	CONNECTOR WITH GRAB HOOK,4 MM BLACK	14-21
A003:2	90220-0081	CONNECTOR WITH GRAB HOOK,4 MM RED	14-21
A003:2	352551-0136	FINE-WIRE FUSE 3,15 A SLOW	9-5, 9-7, 9-9, 9-11, 9-13, 9-15, 9-25, 9-27, 9-29, 9-31, 9-33, 9-45, 9-47, 9-49, 9-51, 9-53, 9-55
A003:3	90220-0078	CABLE, LABORATORY FLEX, 1X1,5 1M RED	14-21
A003:4	90220-0079	CABLE, LABORATORY FLEX, 1X1,5 1M BLACK	14-21
A004	90410-0339	ADAPTER FOR TEMP.REGULATOR, 101	14-21
A004	558230-0101	TMCC CONTROLLER	9-5, 9-7, 9-9, 9-11, 9-13, 9-15, 9-25, 9-27, 9-29, 9-31, 9-33, 9-45, 9-47, 9-49, 9-51, 9-53, 9-55
A004:1	47832-0101	DCS8,DESIGN CONTR.PROG.	9-5, 9-7, 9-9, 9-11, 9-13, 9-15, 9-25, 9-27, 9-29, 9-31, 9-33, 9-45, 9-47, 9-49, 9-51, 9-53, 9-55
A004:1	558389-0101	MULTI PURPOSE POTENTIOM.	9-21, 9-41, 9-61
A004:2	67372-0101	BACKPLANE 8TE(32 POLE)	9-5, 9-7, 9-9, 9-11, 9-13, 9-15, 9-25, 9-27, 9-29, 9-31, 9-33, 9-45, 9-47, 9-49, 9-51, 9-53, 9-55
A004:2	551922-0000	LABEL,POTENTIOMETER DESIGN CORR.	9-21, 9-41, 9-61
A005	558230-0101	TMCC CONTROLLER	9-5, 9-7, 9-9, 9-11, 9-13, 9-15, 9-45, 9-47, 9-49, 9-51, 9-53, 9-55, 12-235, 12-237
A005	567733-0101	ADAPTER	14-21
A005:1	47836-0101	TUBUS ENER.& POW.CONTROL	9-5, 9-7, 9-9, 9-11, 9-13, 9-15
A005:1	47836-0201	TEPC, TUBUS ENERGY AND POWER CONTROL	9-45, 9-47, 9-49, 9-51, 9-53, 9-55
A005-7:1	47836-0201	TEPC, TUBUS ENERGY AND POWER CONTROL	13-141
A005:1	67372-0101	BACKPLANE 8TE(32 POLE)	12-235, 12-237
A005:2	47836-0101	TUBUS ENER.& POW.CONTROL	12-235, 12-237
A005:2	67372-0101	BACKPLANE 8TE(32 POLE)	9-5, 9-7, 9-9, 9-11, 9-13, 9-15, 9-45, 9-47, 9-49, 9-51, 9-53, 9-55
A005:3	589361-0000	LABEL	9-5, 9-7, 9-9, 9-11, 9-13, 9-15, 9-45, 9-47, 9-49, 9-51, 9-53, 9-55, 12-235, 12-237
A005-7:3	1338607-0000	LABEL	13-141
A006	557826-0101	TEMPERATURE REG. ADAPTER	14-21
A006	558230-0101	TMCC CONTROLLER	9-5, 9-7, 9-9, 9-11, 9-13, 9-15, 9-45, 9-47, 9-49, 9-51, 9-53, 9-55, 12-235, 12-237
A006:1	47836-0101	TUBUS ENER.& POW.CONTROL	9-5, 9-7, 9-9, 9-11, 9-13, 9-15
A006:1	47836-0201	TEPC, TUBUS ENERGY AND POWER CONTROL	9-45, 9-47, 9-49, 9-51, 9-53, 9-55
A006:1	67372-0101	BACKPLANE 8TE(32 POLE)	12-235, 12-237
A006:2	47836-0101	TUBUS ENER.& POW.CONTROL	12-235, 12-237
A006:2	67372-0101	BACKPLANE 8TE(32 POLE)	9-5, 9-7, 9-9, 9-11, 9-13, 9-15, 9-45, 9-47, 9-49, 9-51, 9-53, 9-55
A006:3	589361-0000	LABEL	9-5, 9-7, 9-9, 9-11, 9-13, 9-15, 9-45, 9-47, 9-49, 9-51, 9-53, 9-55, 12-235, 12-237
A007	90326-0310	THERMOCOUPLE, 5130020-000	14-21
A007	558230-0101	TMCC CONTROLLER	9-5, 9-7, 9-9, 9-11, 9-13, 9-15, 9-45, 9-47, 9-49, 9-51, 9-53, 9-55, 12-235, 12-237
A007:1	47836-0101	TUBUS ENER.& POW.CONTROL	9-5, 9-7, 9-9, 9-11, 9-13, 9-15
A007:1	47836-0201	TEPC, TUBUS ENERGY AND POWER CONTROL	9-45, 9-47, 9-49, 9-51, 9-53, 9-55
A007:1	67372-0101	BACKPLANE 8TE(32 POLE)	12-235, 12-237
A007:2	47836-0101	TUBUS ENER.& POW.CONTROL	12-235, 12-237
A007:2	67372-0101	BACKPLANE 8TE(32 POLE)	9-5, 9-7, 9-9, 9-11, 9-13, 9-15, 9-45, 9-47, 9-49, 9-51, 9-53, 9-55
A007:3	589361-0000	LABEL	9-5, 9-7, 9-9, 9-11, 9-13, 9-15, 9-45, 9-47, 9-49, 9-51, 9-53, 9-55, 12-235, 12-237
A008	90326-0310	THERMOCOUPLE, 5130020-000	14-21
A008	558390-0104	UNIVERSAL THUMBWHEEL UNIT	9-5, 9-7, 9-9, 9-11, 9-13, 9-15, 9-45, 9-47, 9-49, 9-51, 9-53, 9-55, 12-235, 12-237
A012	90119-0072	SAFETY RELAY, JSBR4	9-5, 9-7, 9-9, 9-11, 9-13, 9-15, 9-25, 9-27, 9-29, 9-31, 9-33, 9-45, 9-47, 9-49, 9-51, 9-53, 9-55
A013	90119-0080	SAFETY RELAY JSBR3	9-5, 9-7, 9-9, 9-11, 9-13, 9-15, 9-25, 9-27, 9-29, 9-31, 9-33, 9-45, 9-47, 9-49, 9-51, 9-53, 9-55
A100	90025-0088	PANEL INTERFACE CU64.1	9-21, 9-41, 9-61
A101	90025-0016	ENCODER MODULE TPMC	9-5, 9-7, 9-9, 9-11, 9-13, 9-15, 9-25, 9-27, 9-29, 9-31, 9-33, 9-45, 9-47, 9-49, 9-51, 9-53, 9-55
A101:1	90025-0025	TERMINAL BLOCK ENCODER TPMC	9-5, 9-7, 9-9, 9-11, 9-13, 9-15, 9-25, 9-27, 9-29, 9-31, 9-33, 9-45, 9-47, 9-49, 9-51, 9-53, 9-55
A102	90025-0017	INPUT MODULE TPMC	9-5, 9-7, 9-9, 9-11, 9-13, 9-15, 9-25, 9-27, 9-29, 9-31, 9-33, 9-45, 9-47, 9-49, 9-51, 9-53, 9-55
A102:1	90025-0024	TERMINAL BLOCK, 491168307	9-5, 9-7, 9-9, 9-11, 9-13, 9-15, 9-25, 9-27, 9-29, 9-31, 9-33, 9-45, 9-47, 9-49, 9-51, 9-53, 9-55
A103	90025-0017	INPUT MODULE TPMC	9-5, 9-7, 9-9, 9-11, 9-13, 9-15, 9-25, 9-27, 9-29, 9-31, 9-33, 9-45, 9-47, 9-49, 9-51, 9-53, 9-55
A103:1	90025-0024	TERMINAL BLOCK, 491168307	9-5, 9-7, 9-9, 9-11, 9-13, 9-15, 9-25, 9-27, 9-29

Pos	Part No	Description	Page No
			9-31, 9-33, 9-45, 9-47, 9-49, 9-51, 9-53, 9-55
A104	90025-0017	INPUT MODULE TPMC	9-5, 9-7, 9-9, 9-11, 9-13, 9-15, 9-25, 9-27, 9-29, 9-31, 9-33
			9-45, 9-47, 9-49, 9-51, 9-53, 9-55
A104:1	90025-0024	TERMINAL BLOCK, 491168307	9-5, 9-7, 9-9, 9-11, 9-13, 9-15, 9-25, 9-27, 9-29
			9-31, 9-33, 9-45, 9-47, 9-49, 9-51, 9-53, 9-55
A105	90025-0017	INPUT MODULE TPMC	9-5, 9-7, 9-9, 9-11, 9-13, 9-15, 9-25, 9-27, 9-29, 9-31, 9-33
			9-45, 9-47, 9-49, 9-51, 9-53, 9-55
A105:1	90025-0024	TERMINAL BLOCK, 491168307	9-5, 9-7, 9-9, 9-11, 9-13, 9-15, 9-25, 9-27, 9-29
			9-31, 9-33, 9-45, 9-47, 9-49, 9-51, 9-53, 9-55
A106	90025-0017	INPUT MODULE TPMC	9-5, 9-7, 9-9, 9-11, 9-13, 9-15, 9-45, 9-47, 9-49, 9-51, 9-53
			9-55, 12-235, 12-237, 13-203
A106:1	90025-0024	TERMINAL BLOCK, 491168307	9-5, 9-7, 9-9, 9-11, 9-13, 9-15, 9-45, 9-47, 9-49
			9-51, 9-53, 9-55, 12-235, 12-237, 13-203
A108	90025-0052	MAIN RACK COMPAKT (MCR)	9-5, 9-7, 9-9, 9-11, 9-13, 9-15, 9-25, 9-27, 9-29
			9-31, 9-33, 9-45, 9-47, 9-49, 9-51, 9-53, 9-55
A110	577796-0001	CIRCUIT BOARD, COMPONENTS	9-41, 9-61
A110	598205-0000	CIRCUIT BOARD	9-21
A110:1	581953-0000	ALARM DISPLAY	9-41, 9-61
A110:1	599593-0000	ALARM DISPLAY	9-21
A112	90025-0053	OUTPUT MODULE TPMC OM16	9-5, 9-7, 9-9, 9-11, 9-13, 9-15, 9-25, 9-27, 9-29
			9-31, 9-33, 9-45, 9-47, 9-49, 9-51, 9-53, 9-55
A112:1	90025-0054	KUPPL.SOCKEL MSTB 2,5-5,08 FÃ¼R 90025-53	9-5, 9-7, 9-9, 9-11, 9-13, 9-15
			9-25, 9-27, 9-29, 9-31, 9-33, 9-45, 9-47, 9-49, 9-51, 9-53, 9-55
A113	90025-0053	OUTPUT MODULE TPMC OM16	9-5, 9-7, 9-9, 9-11, 9-13, 9-15, 9-25, 9-27, 9-29
			9-31, 9-33, 9-45, 9-47, 9-49, 9-51, 9-53, 9-55
A113:1	90025-0054	KUPPL.SOCKEL MSTB 2,5-5,08 FÃ¼R 90025-53	9-5, 9-7, 9-9, 9-11, 9-13, 9-15
			9-25, 9-27, 9-29, 9-31, 9-33, 9-45, 9-47, 9-49, 9-51, 9-53, 9-55
A114	90025-0053	OUTPUT MODULE TPMC OM16	9-5, 9-7, 9-9, 9-11, 9-13, 9-15, 9-25, 9-27, 9-29
			9-31, 9-33, 9-45, 9-47, 9-49, 9-51, 9-53, 9-55
A114:1	90025-0054	KUPPL.SOCKEL MSTB 2,5-5,08 FÃ¼R 90025-53	9-5, 9-7, 9-9, 9-11, 9-13, 9-15
			9-25, 9-27, 9-29, 9-31, 9-33, 9-45, 9-47, 9-49, 9-51, 9-53, 9-55
A115	90025-0053	OUTPUT MODULE TPMC OM16	9-5, 9-7, 9-9, 9-11, 9-13, 9-15, 9-25, 9-27, 9-29
			9-31, 9-33, 9-45, 9-47, 9-49, 9-51, 9-53, 9-55
A115:1	90025-0054	KUPPL.SOCKEL MSTB 2,5-5,08 FÃ¼R 90025-53	9-5, 9-7, 9-9, 9-11, 9-13, 9-15
			9-25, 9-27, 9-29, 9-31, 9-33, 9-45, 9-47, 9-49, 9-51, 9-53, 9-55
A116	90025-0017	INPUT MODULE TPMC	13-221
A116	90025-0053	OUTPUT MODULE TPMC OM16	9-5, 9-7, 9-9, 9-11, 9-13, 9-15, 9-25, 9-27, 9-29
			9-31, 9-33, 9-45, 9-47, 9-49, 9-51, 9-53, 9-55
A116:1	90025-0054	KUPPL.SOCKEL MSTB 2,5-5,08 FÃ¼R 90025-53	9-5, 9-7, 9-9, 9-11, 9-13, 9-15
			9-25, 9-27, 9-29, 9-31, 9-33, 9-45, 9-47, 9-49, 9-51, 9-53, 9-55
A117	90025-0053	OUTPUT MODULE TPMC OM16	9-5, 9-7, 9-9, 9-11, 9-13, 9-15, 9-25, 9-27, 9-29
			9-31, 9-33, 9-45, 9-47, 9-49, 9-51, 9-53, 9-55
A117:1	90025-0054	KUPPL.SOCKEL MSTB 2,5-5,08 FÃ¼R 90025-53	9-5, 9-7, 9-9, 9-11, 9-13, 9-15
			9-25, 9-27, 9-29, 9-31, 9-33, 9-45, 9-47, 9-49, 9-51, 9-53, 9-55
A118	90025-0058	EXPANSIONS RACK COMPACT-8	9-5, 9-7, 9-9, 9-11, 9-13, 9-15, 9-25, 9-27
			9-29, 9-31, 9-33, 9-45, 9-47, 9-49, 9-51, 9-53, 9-55
A118:1	90025-0022	RACK TERMINATION TPMC	9-5, 9-7, 9-9, 9-11, 9-13, 9-15, 9-25, 9-27, 9-29
			9-31, 9-33, 9-45, 9-47, 9-49, 9-51, 9-53, 9-55
A205	90410-0044	TEMP.REG.PHILIPS KS 40" REPL.BY 90410-51	9-25, 9-27, 9-29, 9-31, 9-33
A205	90410-0051	TEMPERATURE CONTROLLER, KS 40	9-5, 9-7, 9-9, 9-11, 9-13, 9-15, 9-45, 9-47
			9-49, 9-51, 9-53, 9-55
A205:1	359241-0132	SIGN: " TEMP. SA"	9-5, 9-7, 9-9, 9-11, 9-13, 9-15, 9-25, 9-27, 9-29, 9-31, 9-33
			9-45, 9-47, 9-49, 9-51, 9-53, 9-55
A205:2	359240-0100	SIGN HOLDER FOR 359240-0001	9-5, 9-7, 9-9, 9-11, 9-13, 9-15, 9-25, 9-27, 9-29
			9-31, 9-33, 9-45, 9-47, 9-49, 9-51, 9-53, 9-55
A206	90410-0044	TEMP.REG.PHILIPS KS 40" REPL.BY 90410-51	9-25, 9-27, 9-29, 9-31, 9-33
A206	90410-0051	TEMPERATURE CONTROLLER, KS 40	9-5, 9-7, 9-9, 9-11, 9-13, 9-15, 9-45, 9-47
			9-49, 9-51, 9-53, 9-55
A206:1	359241-0131	SIGN: " TEMP. LS"	9-5, 9-7, 9-9, 9-11, 9-13, 9-15, 9-25, 9-27, 9-29, 9-31, 9-33
			9-45, 9-47, 9-49, 9-51, 9-53, 9-55
A206:2	359240-0100	SIGN HOLDER FOR 359240-0001	9-5, 9-7, 9-9, 9-11, 9-13, 9-15, 9-25, 9-27, 9-29
			9-31, 9-33, 9-45, 9-47, 9-49, 9-51, 9-53, 9-55
A208	90410-0044	TEMP.REG.PHILIPS KS 40" REPL.BY 90410-51	9-25, 9-27, 9-29, 9-31, 9-33
A208	90410-0051	TEMPERATURE CONTROLLER, KS 40	9-5, 9-7, 9-9, 9-11, 9-13, 9-15, 9-45, 9-47
			9-49, 9-51, 9-53, 9-55
A208:1	359241-0251	SIGN: " TEMP.-SPLICING"	9-5, 9-7, 9-9, 9-11, 9-13, 9-15, 9-25, 9-27, 9-29, 9-31
			9-33, 9-45, 9-47, 9-49, 9-51, 9-53, 9-55
A208:2	359240-0100	SIGN HOLDER FOR 359240-0001	9-5, 9-7, 9-9, 9-11, 9-13, 9-15, 9-25, 9-27, 9-29
			9-31, 9-33, 9-45, 9-47, 9-49, 9-51, 9-53, 9-55
A209:1	359240-0001	SIGN, NOT ENGRAVED	9-5, 9-7, 9-9, 9-11, 9-13, 9-15, 9-25, 9-27, 9-29, 9-31
			9-33, 9-45, 9-47, 9-49, 9-51, 9-53, 9-55
A209:2	359240-0100	SIGN HOLDER FOR 359240-0001	9-5, 9-7, 9-9, 9-11, 9-13, 9-15, 9-25, 9-27, 9-29
			9-31, 9-33, 9-45, 9-47, 9-49, 9-51, 9-53, 9-55
A210	90410-0044	TEMP.REG.PHILIPS KS 40" REPL.BY 90410-51	9-5, 9-7, 9-9, 9-11, 9-13, 9-15
A210:1	359241-0338	SIGN: " FLAP HEATING TOP LEFT"	9-5, 9-7, 9-9, 9-11, 9-13, 9-15
A210:2	359240-0100	SIGN HOLDER FOR 359240-0001	9-5, 9-7, 9-9, 9-11, 9-13, 9-15
A211	90410-0044	TEMP.REG.PHILIPS KS 40" REPL.BY 90410-51	9-5, 9-7, 9-9, 9-11, 9-13, 9-15
A211:1	359241-0337	SIGN: " FLAP HEATING TOP RIGHT"	9-5, 9-7, 9-9, 9-11, 9-13, 9-15
A211:2	359240-0100	SIGN HOLDER FOR 359240-0001	9-5, 9-7, 9-9, 9-11, 9-13, 9-15
A212	90410-0044	TEMP.REG.PHILIPS KS 40" REPL.BY 90410-51	9-5, 9-7, 9-9, 9-11, 9-13, 9-15
A212:1	1350430-0000	SIGN"FLAPS HEATING BOTTOM"	9-5, 9-7, 9-9, 9-11, 9-13, 9-15
A212:2	359240-0100	SIGN HOLDER FOR 359240-0001	9-5, 9-7, 9-9, 9-11, 9-13, 9-15

Pos	Part No	Description	Page No
A			
A301	90314-0021	LEVELRELAY0,5-10KOHM REPLACED BY90314-38	9-5, 9-7, 9-9, 9-11, 9-13, 9-15, 9-25, 9-27, 9-29, 9-31, 9-33, 9-45, 9-47, 9-49, 9-51, 9-53, 9-55
A450	90119-0077	CURRENT RELAY SYRELEC DIRT2 230	9-5, 9-7, 9-9, 9-11, 9-13, 9-15, 9-25, 9-27, 9-29, 9-31, 9-33, 9-45, 9-47, 9-49, 9-51, 9-53, 9-55
A451	90119-0077	CURRENT RELAY SYRELEC DIRT2 230	9-5, 9-7, 9-9, 9-11, 9-13, 9-15, 9-25, 9-27, 9-29, 9-31, 9-33, 9-45, 9-47, 9-49, 9-51, 9-53, 9-55
A500	90172-0031	GENERATOR	9-5, 9-7, 9-9, 9-11, 9-13, 9-15, 9-45, 9-47, 9-49, 9-51, 9-53, 9-55, 12-235, 12-237
A500:1	352551-0141	FINE-WIRE 10 A	9-5, 9-7, 9-9, 9-11, 9-13, 9-15, 9-45, 9-47, 9-49, 9-51, 9-53, 9-55, 12-235, 12-237
A500:2	352551-0141	FINE-WIRE 10 A	9-5, 9-7, 9-9, 9-11, 9-13, 9-15, 9-45, 9-47, 9-49, 9-51, 9-53, 9-55, 12-235, 12-237
A500:3	352551-0141	FINE-WIRE 10 A	9-5, 9-7, 9-9, 9-11, 9-13, 9-15, 9-45, 9-47, 9-49, 9-51, 9-53, 9-55, 12-235, 12-237
A500:4	352551-0137	FINE-WIRE 4 A	9-5, 9-7, 9-9, 9-11, 9-13, 9-15, 9-45, 9-47, 9-49, 9-51, 9-53, 9-55, 12-235, 12-237
A501	90172-0032	SWITCH, 911 758 001 SB-3-6R	9-5, 9-7, 9-9, 9-11, 9-13, 9-15, 12-235, 12-237
A501	90459-2525	TRIPLE SWITCH, SB-3-6-R1	9-45, 9-47, 9-49, 9-51, 9-53, 9-55
A501:1	352551-0134	FINE-WIRE FUSE 2 A SLOW,5X20MM	9-5, 9-7, 9-9, 9-11, 9-13, 9-15, 9-45, 9-47, 9-49, 9-51, 9-53, 9-55, 12-235, 12-237
A800	90410-0051	TEMPERATURE CONTROLLER, KS 40	13-175
A800.2	359240-0100	SIGN HOLDER FOR 359240-0001	13-175
A800.1	2505091-0000	SIGN	13-175
A801	90410-0051	TEMPERATURE CONTROLLER, KS 40	13-175
A801.2	359240-0100	SIGN HOLDER FOR 359240-0001	13-175
A801.1	2505092-0000	SIGN	13-175
A802	90410-0051	TEMPERATURE CONTROLLER, KS 40	13-175
A802.2	359240-0100	SIGN HOLDER FOR 359240-0001	13-175
A802.1	2505093-0000	SIGN	13-175
A803	90410-0051	TEMPERATURE CONTROLLER, KS 40	13-175
A803.2	359240-0100	SIGN HOLDER FOR 359240-0001	13-175
A803.1	2505088-0000	SIGN	13-175
A804	90410-0051	TEMPERATURE CONTROLLER, KS 40	13-175
A804.2	359240-0100	SIGN HOLDER FOR 359240-0001	13-175
A804.1	2505089-0000	SIGN	13-175
A805	90410-0051	TEMPERATURE CONTROLLER, KS 40	13-175
A805.2	359240-0100	SIGN HOLDER FOR 359240-0001	13-175
A805.1	2505090-0000	SIGN	13-175
B			
B5302	90044-0104	PROX.SWITCH IFM IN 3002(RP 90044-194)	6-59, 6-61
B5314	90044-0104	PROX.SWITCH IFM IN 3002(RP 90044-194)	6-29
D			
D108	90025-0070	PROCESSOR TPMC CPU 64.1	9-5, 9-7, 9-9, 9-11, 9-13, 9-15, 9-25, 9-27, 9-29, 9-31, 9-33, 9-45, 9-47, 9-49, 9-51, 9-53, 9-55
D108:1	90025-0094	TERMINAL BLOCK 4-POLE	9-5, 9-7, 9-9, 9-11, 9-13, 9-15, 9-25, 9-27, 9-29, 9-31, 9-33, 9-45, 9-47, 9-49, 9-51, 9-53, 9-55
D108:2	90334-0006	BATTERY 3,6V SIZE AA	9-5, 9-7, 9-9, 9-11, 9-13, 9-15, 9-25, 9-27, 9-29, 9-31, 9-33, 9-45, 9-47, 9-49, 9-51, 9-53, 9-55
E			
E001	90297-0006	FLUORESCENT TUBE, PL9	9-5, 9-7, 9-9, 9-11, 9-13, 9-15, 9-25, 9-27, 9-29, 9-31, 9-33, 9-45, 9-47, 9-49, 9-51, 9-53, 9-55
E001:1	90164-0301	HOLDING FIXTURE	9-5, 9-7, 9-9, 9-11, 9-13, 9-15, 9-25, 9-27, 9-29, 9-31, 9-33, 9-45, 9-47, 9-49, 9-51, 9-53, 9-55
E002	90297-0006	FLUORESCENT TUBE, PL9	9-5, 9-7, 9-9, 9-11, 9-13, 9-15, 9-25, 9-27, 9-29, 9-31, 9-33, 9-45, 9-47, 9-49, 9-51, 9-53, 9-55
E002:1	90164-0301	HOLDING FIXTURE	9-5, 9-7, 9-9, 9-11, 9-13, 9-15, 9-25, 9-27, 9-29, 9-31, 9-33, 9-45, 9-47, 9-49, 9-51, 9-53, 9-55
F			
F000	90135-0038	CABLE CLAMP K&M K*12 5-1	9-5, 9-7, 9-9, 9-11, 9-13, 9-15, 9-25, 9-27, 9-29, 9-31, 9-33, 9-45, 9-47, 9-49, 9-51, 9-53, 9-55
F000	531366-0300	COMPL EQUIP F JUMBO REEL	12-15
F000:1	90135-0031	BUSBAR HOLDER K&M SHO165/2	9-5, 9-7, 9-9, 9-11, 9-13, 9-15, 9-25, 9-27, 9-29, 9-31, 9-33, 9-45, 9-47, 9-49, 9-51, 9-53, 9-55
F000:2	353021-0214	FEED THROUGH TERMINAL, 10202.0	9-5, 9-7, 9-9, 9-11, 9-13, 9-15, 9-25, 9-27, 9-29, 9-31, 9-33, 9-45, 9-47, 9-49, 9-51, 9-53, 9-55
F000:3	353032-0004	END PLATE WAP 2,5-10 BEIGE	9-5, 9-7, 9-9, 9-11, 9-13, 9-15, 9-25, 9-27, 9-29, 9-31, 9-33, 9-45, 9-47, 9-49, 9-51, 9-53, 9-55
F000:4	353031-0201	END BRACKET EW35	9-5, 9-7, 9-9, 9-11, 9-13, 9-15, 9-25, 9-27, 9-29, 9-31, 9-33, 9-45, 9-47, 9-49, 9-51, 9-53, 9-55
F005	90233-0027	TUBE FUSE, 16A	9-5, 9-7, 9-9, 9-11, 9-13, 9-15, 9-45, 9-47, 9-49, 9-51, 9-53, 9-55, 12-235, 12-237
F005	90233-0028	TUBE FUSE, 10A	9-25, 9-27, 9-29, 9-31, 9-33
F005	243510-0100	DOOR	12-147
F005	266625-0400	BENDING ROLLER	12-53, 12-55, 12-67, 12-69, 12-71, 12-73
F005	541559-0100	SEAL KIT	1-39
F005	542904-0100	WORM GEAR MOTOR	8-17
F005	543157-0300	HOLDER	2-129
F005:1	90077-0112	FUSE HOLDER FERRAZ PST REPL.BY 90233-303	9-25, 9-27, 9-29, 9-31, 9-33, 9-45, 9-47, 9-49, 9-51, 9-53, 9-55
F005:1	90233-0303	FUSE HOLDER, ST 10 1-POLE	9-5, 9-7, 9-9, 9-11, 9-13, 9-15, 12-235, 12-237
F006	90233-0027	TUBE FUSE, 16A	9-5, 9-7, 9-9, 9-11, 9-13, 9-15, 9-45, 9-47, 9-49, 9-51, 9-53, 9-55, 12-235, 12-237
F006	90233-0028	TUBE FUSE, 10A	9-25, 9-27, 9-29, 9-31, 9-33

Pos	Part No	Description	Page No
F			
F006:1	90077-0112	FUSE HOLDER FERRAZ PST REPL.BY 90233-303	9-25, 9-27, 9-29, 9-31, 9-33, 9-45, 9-47, 9-49, 9-51, 9-53, 9-55
F006:1	90233-0303	FUSE HOLDER, ST 10 1-POLE	9-5, 9-7, 9-9, 9-11, 9-13, 9-15, 12-235, 12-237
F007	450314-0200	SPLICE DETECTOR	12-67, 12-69, 12-71, 12-73
F008	90233-0028	TUBE FUSE, 10A	9-5, 9-7, 9-9, 9-11, 9-13, 9-15, 9-25, 9-27, 9-29, 9-31, 9-33, 9-45, 9-47, 9-49, 9-51, 9-53, 9-55
F008:1	90077-0112	FUSE HOLDER FERRAZ PST REPL.BY 90233-303	9-25, 9-27, 9-29, 9-31, 9-33, 9-45, 9-47, 9-49, 9-51, 9-53, 9-55
F008:1	90233-0303	FUSE HOLDER, ST 10 1-POLE	9-5, 9-7, 9-9, 9-11, 9-13, 9-15
F010	21394-0700	UPPER FORMING RING	1-3
F010	37877-0301	HEATING BLOCK	12-51
F010	229400-0700	UNREELING DEVICE	12-15
F010	266755-0200	PLATFORM	10-13
F010	279564-0300	FOLDING DEVICE	4-3, 4-5
F010	440588-0200	CRANK	3-3, 3-5, 3-7
F010	450314-0200	SPLICE DETECTOR	12-53, 12-55
F010	537301-0100	GUILLOTINE	12-21
F010	537311-0100	INSPECTIONDOOR UPPER	12-29
F010	537315-0100	INSPECTIONSDOOR , LOWER	12-23
F010	537329-0100	HUB JUMBO	7-17
F010	539209-0100	A-CYLINDER	1-59
F010	581360-0100	HYGIENE AND PROTECT. KIT	13-45
F010	592564-0100	LID	13-25
F010	592878-0100	PIPE WORK-PNEUMATIC	13-5
F010	593862-0100	FOLDING PART	11-7
F010	594591-0100	FINAL FOLDER SHARP EDGES	11-5
F010	595133-0100	AIR NOZZLE	13-37
F010	1143222-0101	TPC-BAR	13-73
F010	1143616-0100	VOLUME FLAP SPRINGS	13-79
F010	1285045-0100	MECHANICAL DOCUMENT	12-245
F010	1285046-0100	VALVE PANEL	12-249
F020	26642-0200	CARRIER	12-223, 12-227
F020	37894-0101	COUNTER RAIL	12-51
F020	90007-0147	CIRCUIT BREAKER, 3P 10 A K	9-5, 9-7, 9-9, 9-11, 9-13, 9-15, 9-25, 9-27, 9-29, 9-31, 9-33, 9-45, 9-47, 9-49, 9-51, 9-53, 9-55
F020	230922-0100	AIR JET GUN	2-3, 2-5
F020	232781-0400	REVOLVING HEAD	12-15
F020	239890-0300	INTERMEDIARY SHAFT	3-3, 3-5, 3-7
F020	265565-0100	BENDING ROLLER BRACKET	12-23
F020	266756-0500	PLATFORM	10-13
F020	285287-0500	DRIVE UNIT	5-7, 5-9, 5-35, 5-37
F020	440285-0100	PAPER REEL HOLDER	8-3
F020	537313-0100	COVER UPPER	12-21
F020	541163-0100	CLAMP RING	1-59
F020	543822-0100	BRAKE ARM	7-17
F020-02	558628-0100	HYGIENIC & PROTECTION KIT	13-45
F020	558628-0100	HYGIENIC & PROTECTION KIT	13-45
F020	592879-0100	PIPE WORK-HYDRAULIC	13-5
F020	593007-0100	CABLE DUCT	13-25
F020	593863-0100	PRESSURE DEVICE	11-7
F020	596160-0100	EL RK "REVFIN" FOR TB/8.	12-245
F020	597523-0100	BOW CLAMP	13-37
F020	1143224-0101	REBUILDING KIT KNIFE HOL.	13-73
F020	1285047-0100	MACHINE BODY	12-249
F022	90007-0129	CIRCUIT BREAKER, 1P 10 A K	9-5, 9-7, 9-9, 9-11, 9-13, 9-15, 9-25, 9-27, 9-29, 9-31, 9-33, 9-45, 9-47, 9-49, 9-51, 9-53, 9-55
F023	90007-0129	CIRCUIT BREAKER, 1P 10 A K	9-5, 9-7, 9-9, 9-11, 9-13, 9-15, 9-25, 9-27, 9-29, 9-31, 9-33, 9-45, 9-47, 9-49, 9-51, 9-53, 9-55
F025	90007-0129	CIRCUIT BREAKER, 1P 10 A K	9-5, 9-7, 9-9, 9-11, 9-13, 9-15, 9-25, 9-27, 9-29, 9-31, 9-33, 9-45, 9-47, 9-49, 9-51, 9-53, 9-55
F026	90007-0131	CIRCUIT BREAKER, 1P 16 A K	9-25, 9-27, 9-29, 9-31, 9-33, 9-45, 9-47, 9-49, 9-51, 9-53, 9-55
F026	90233-0028	TUBE FUSE, 10A	9-5, 9-7, 9-9, 9-11, 9-13, 9-15
F026:1	90233-0303	FUSE HOLDER, ST 10 1-POLE	9-5, 9-7, 9-9, 9-11, 9-13, 9-15
F027	90007-0129	CIRCUIT BREAKER, 1P 10 A K	9-25, 9-27, 9-29, 9-31, 9-33, 9-45, 9-47, 9-49, 9-51, 9-53, 9-55
F027	90007-0131	CIRCUIT BREAKER, 1P 16 A K	9-5, 9-7, 9-9, 9-11, 9-13, 9-15, 13-221
F028	90007-0129	CIRCUIT BREAKER, 1P 10 A K	9-5, 9-7, 9-9, 9-11, 9-13, 9-15, 9-25, 9-27, 9-29, 9-31, 9-33, 9-45, 9-47, 9-49, 9-51, 9-53, 9-55
F029	90007-0131	CIRCUIT BREAKER, 1P 16 A K	9-25, 9-27, 9-29, 9-31, 9-33, 9-45, 9-47, 9-49, 9-51, 9-53, 9-55
F029	90233-0027	TUBE FUSE, 16A	9-5, 9-7, 9-9, 9-11, 9-13, 9-15
F029:1	90233-0303	FUSE HOLDER, ST 10 1-POLE	9-5, 9-7, 9-9, 9-11, 9-13, 9-15
F030	68917-0100	ANGLE INDICATOR	2-127
F030	237776-0400	PAPER GUARD	12-15
F030	243965-0101	TEARING DEVICE	12-51
F030	279565-0300	FOLDING DEVICE	4-3, 4-5
F030	285861-0500	GEAR REDUCTION	5-7, 5-9, 5-35, 5-37
F030	445840-0100	DRIVE UNIT	8-3
F030	493614-0100	SPRAY GUN	2-3, 2-5
F030	537314-0100	COVER LOWER	12-21
F030	593272-0100	IMPULSE TRANSMITTER US	13-5

Machine Type Group Description Page No

Pos	Part No	Description	Page No
F			
F030	593864-0100	SUPERSTRUCTURE	11-7
F030	594620-0100	BRAKE ARM	7-17
F030	1143225-0101	REBUILDING KIT PRESS.JAW	13-73
F030	1285048-0100	HOLDER	12-249
F032	90007-0131	CIRCUIT BREAKER, 1P 16 A K	9-25, 9-27, 9-29, 9-31, 9-33
F033	90007-0131	CIRCUIT BREAKER, 1P 16 A K	9-25, 9-27, 9-29, 9-31, 9-33
F034	90007-0147	CIRCUIT BREAKER, 3P 10 A K	9-5, 9-7, 9-9, 9-11, 9-13, 9-15, 9-45, 9-47, 9-49, 9-51, 9-53, 9-55
F034	90007-0148	CIRCUIT BREAKER, 3P 16 A K	12-235, 12-237
F040	243843-0400	CLEANING PIPE	2-3, 2-5
F040	243942-0400	YOKE	4-3, 4-5
F040	243966-0100	SPLICING TABLE	12-51
F040	251513-0300	STAND	12-15
F040	265985-0100	BRACKET TO SUPERSTRUCTURE	1-3
F040	442582-0100	DRIVE GEAR	5-17
F040	543821-0100	LEVEL PROBE	7-17
F040	546179-0100	BENDING ROLLER	7-3, 7-5
F040	556875-0100	COVER	8-3
F040	592993-0100	PRESSURE JAW LEFT	13-5
F040	593865-0100	WHEEL LEFT	11-7
F040	1285049-0100	PUSHERBLOCK	12-249
F050	243839-0300	CLEANING PIPE	1-3
F050	265889-0300	CATCH SAFETY	2-3, 2-5
F050	266736-0200	BRAKE	12-51
F050	352550-0133	FINE-WIRE, 1.6 A	9-5, 9-7, 9-9, 9-11, 9-13, 9-15, 9-25, 9-27, 9-29, 9-31, 9-33, 9-45, 9-47, 9-49, 9-51, 9-53, 9-55
F050	434668-0400	DRIVE UNIT	3-3, 3-5, 3-7
F050	530745-0400	SIDE GUARD	8-3
F050	592994-0100	PRESSURE JAW RIGHT	13-5
F050	593749-0100	YOKE	4-3, 4-5
F050	593866-0100	WHEEL RIGHT	11-7
F050	1285050-0100	FOLDING DEVICE	12-249
F050:1	353023-0102	FUSE TERMINAL, 10110.0	9-5, 9-7, 9-9, 9-11, 9-13, 9-15, 9-25, 9-27, 9-29, 9-31, 9-33, 9-45, 9-47, 9-49, 9-51, 9-53, 9-55
F060	243434-0500	DESIGN CORRECTION DEVICE LEFT	4-3, 4-5
F060	268930-0500	MODIF.OF BRAKING DEVICE	12-15
F060	293680-0500	DATING UNIT	12-51
F060	445567-0200	FILLER TUBE	1-3
F060	525143-0200	BOTTOM VALVE	5-7, 5-9, 5-35, 5-37
F060	594593-0100	ELEMENT	11-7
F060	929620-0100	FILLER TUBE	1-3
F060	1285051-0100	WHEEL	12-249
F065	573663-0100	SUPPORT ROLLER	7-3, 7-5
F070	243435-0500	DESIGN CORRECTION DEVICE RIGHT	4-3, 4-5
F070	243776-0300	CURVE SHAFT	3-3, 3-5, 3-7
F070	266487-0100	FILLER TUBE UPPER	1-3
F070	269301-0500	SIDE BOX RIGHT	2-3, 2-5
F070	283026-0400	CONNECTION BOX	7-3, 7-5
F070	293681-0501	DATING UNIT	12-51
F070	440133-0400	MACHINE BODY	8-3
F070	476189-0100	WALL LEAD-IN	12-15
F070	525110-0100	CABLE CONDUIT	5-7, 5-9, 5-35, 5-37
F070	929505-0100	CURVE SHAFT ULTRA SONIC	3-3, 3-5, 3-7
F070	1296259-0100	GUIDE	12-249
F075	499872-0200	PRODUCT VALVE	1-3
F080	243927-0700	ARM	3-3, 3-5, 3-7
F080	246499-0600	ARM WITH AXLE,CUT L	4-3, 4-5
F080	440210-0200	ROLL	8-3
F080	479821-0101	FREE STAND	12-15
F080	526933-0400	BOTTOM PLATE TB/8	7-3, 7-5
F090	436435-0500	PILLAR	1-3
F090	476177-0200	HOLD-DOWN DEVICE	3-3, 3-5, 3-7
F090	486958-0200	DATING UNIT	8-3
F090	526934-0200	HOSE & PIPE ASSEMBLY TB/8	7-3, 7-5
F090	537300-0101	CEILING PASSAGE	12-15
F090	538248-0200	DATING UNIT	8-3
F090	593750-0100	ARM WITH AXLE,CUT R	4-3, 4-5
F095	279210-0100	PAPER GUIDE	7-3, 7-5
F095	442413-0200	CONTACT FLANGE	1-55
F100	237776-0400	PAPER GUARD	12-127
F100	239715-0200	BENDING ROLLER	1-3
F100	246498-0600	ARM	4-3, 4-5
F100	265565-0200	BENDING ROLLER BRACKET	7-3, 7-5
F100	269322-0300	COVER UPPER	2-3, 2-5
F100	297638-0200	CHAIN TENSIONER	5-7, 5-9, 5-35, 5-37
F100	434669-0400	IMPULSE TRANSMITTER	3-3, 3-5, 3-7
F100	547905-0101	COVERING PLATE	12-51
F100	593272-0100	IMPULSE TRANSMITTER US	3-3, 3-5, 3-7
F100	649045-0100	EL. EQUIPMENT JUMBO REEL	12-15
F105	273728-0300	VALVE GROUP	3-21
F110	90201-0057	VALVE	3-13, 13-13
F110	266726-0300	PRESSURE ROLLER	7-3, 7-5

Pos	Part No	Description	Page No
F			
F110	269324-0400	HATCH	2-3, 2-5
F110	440286-0300	INK UNIT NSS	8-21, 8-23, 8-25, 8-27, 8-29, 8-31, 8-33
F110	458192-0300	INK UNIT SS	8-5, 8-7
F110	536990-0100	MOVABLE FORMING RING	1-3
F110	557270-0100	WITHOUT A.S.U.	12-15
F110	595200-0100	ARM	4-3, 4-5
F120	246468-0800	VOLUME FLAP	4-3, 4-5
F120	269112-0600	STRIP APPLICATOR	7-3, 7-5
F120	269136-0200	EDGE ROLLER	1-3
F120	292071-0200	SPLASH PROTECTION	3-3, 3-5, 3-7
F120	293684-0200	PRINTING WHEEL NSS	8-21, 8-23, 8-25, 8-27, 8-29, 8-31, 8-33
F120	293685-0200	PRINTING WHEEL SS	8-5, 8-7
F120	476189-0100	WALL LEAD-IN	12-127
F120	929632-0100	SPLASH PROTECTION	3-3, 3-5, 3-7
F120	1296816-0100	WALL LEAD-IN	12-127
F120	1338954-0100	VOLUME FLAP	4-3, 4-5
F125	543143-0100	ADJUSTMENT DEVICE	8-5, 8-7, 8-21, 8-23, 8-25, 8-27, 8-29, 8-31, 8-33
F130	243336-0500	START-UP KIT	1-3
F130	246327-0400	SHOCK ABSORBER	4-3, 4-5
F130	282528-0200	PRESSURE ROLLER	7-3, 7-5
F130	434670-0600	LINK SYSTEM	3-3, 3-5, 3-7
F130	445920-0600	EL-PNEUMATIC EQUIPMENT	8-3
F135	282634-0300	STRIP GUIDE	7-3, 7-5
F140	247187-0500	CARRIER LEFT HAND SIDE	4-3, 4-5
F140	279979-0500	CENTRAL LUBRICATION	2-3, 2-5
F140	546128-0100	BRACKET,COVERPL.TB/TBA/8	12-127
F140	592520-0100	PRESSURE JAW RIGHT	4-3, 4-5
F150	247187-0550	CARRIER RIGHT HAND SIDE	4-3, 4-5
F150	445880-0600	SPLICING DEVICE	8-3
F150	546133-0100	SUPPORT ROLLER	1-3
F150	592519-0100	PRESSURE JAW LEFT	4-3, 4-5
F160	273565-0300	TPC BAR	4-3, 4-5
F160	440135-0100	BENDING ROLLER	8-69, 8-71, 8-73
F160	546180-0100	SPLICE DETECTOR	7-3, 7-5
F160	546231-0100	COVERPLATE ON ASU	12-127
F170	246337-0500	CUTTING JAW LEFT	4-3, 4-5
F170	440184-0100	BENDING ROLLER	8-69, 8-71, 8-73
F170	526954-0100	START-UP KIT	7-3, 7-5
F170	928982-0100	CUTTING JAW LEFT	4-3, 4-5
F180	31390-0100	FF-ELEMENT TOP	5-69, 5-71, 5-77, 5-79
F180	244778-0400	HOT AIR ELEMENT LS	1-3
F180	246338-0500	CUTTING JAW RIGHT	4-3, 4-5
F180	449630-0300	PAPER HOLDER	8-69, 8-71, 8-73
F180	539340-0100	BASE TO ASU	12-127
F180	543823-0100	STRIP MAGAZINE	7-3, 7-5
F180	928983-0100	CUTTING JAW RIGHT	4-3, 4-5
F185	522410-0200	BENDING ROLLER	8-69, 8-71, 8-73
F190	25096-0700	KNIFE HOLDER	4-3, 4-5
F190	31390-0110	FF-ELEMENT BOTTOM	5-69, 5-71, 5-77, 5-79
F190	283391-0200	AIR NOZZLE LS	1-35
F190	545099-0200	SIDE GUARD	2-3, 2-5
F190	554607-0100	ASU VALVE	12-127
F190	593555-0100	BENDING UNIT	8-3
F190	928976-0100	KNIFE HOLDER ULTRA SONIC	4-3, 4-5
F190	929655-0100	SIDE GUARD, LEFT	2-3, 2-5
F200	294056-0200	TRANSMISSION	4-3, 4-5
F200	522121-0200	CUTTING TABLE	8-3
F200	532722-0100	SUPPORT ROLLERS	1-3
F200	554831-0100	NIPPLE	12-127
F210	545100-0200	SIDE GUARD, RIGHT	2-3, 2-5
F210	929656-0100	SIDE GUARD, RIGHT	2-3, 2-5
F220	440132-0200	START-UP KIT	8-3
F220	544973-0100	PILLAR	7-3, 7-5
F220	554832-0100	REB.KIT VALVE PANEL LOWER	12-127
F230	293605-0500	VOLUME CURVE PIECE	4-3, 4-5
F230	297808-0500	CLEANING EQUIPMENT	2-3, 2-5
F230	576739-0200	(PAPER)REEL TROLLEY	8-3
F230	1279438-0100	CLEANING EQUIPMENT	2-3, 2-5
F240	246497-0900	PRESSURE JAW LEFT	4-3, 4-5
F240	476887-0200	CLEANING HEAD	2-57
F240	554958-0100	PNEUMATIC DRW	12-127
F250	246497-0950	PRESSURE JAW RIGHT	4-3, 4-5
F250	464108-0100	HYDRAULIC VALVE	12-97, 12-99
F250	476884-0200	CLEANING HEAD	2-57
F250	542902-0100	DRIVE BRAKE	8-3
F250	557282-0100	A.S.U. SEPARATE ROOM	12-127
F260	297604-0400	HOOD	2-3, 2-5
F260	464124-0100	LIFTING CYLINDER	12-97, 12-99
F260	1144274-0100	HOOD	2-3, 2-5
F265	476885-0200	CLEANING HEAD	2-49, 2-51
F265	529278-0100	SEAL KIT	12-107
F270	247123-0600	START-UP KIT TPC	4-3, 4-5

Pos	Part No	Description	Page No
F			
F270	476886-0200	CLEANING HEAD	2-49, 2-51
F270	493700-0100	TANK	12-97, 12-99
F270	1362439-0100	START-UP KIT US	4-3, 4-5
F280	434707-0300	HYDRAULIC SYSTEM	2-3, 2-5
F280	493729-0100	PUMP	12-97, 12-99
F280	541188-0200	BAR CODE	4-3, 4-5
F285	529279-0100	SEAL KIT	12-101
F290	276343-0300	LID	2-169
F290	592564-0100	LID	2-169
F295	243171-0100	LADDER	12-5
F300	442077-0200	DECREASE OF PRESSURE	2-169
F310	440098-0300	CRANK BRACKET	2-3, 2-5
F320	243171-0200	LADDER	10-15, 10-17
F320	257900-0400	LOWER FORMING RING	1-3
F320	440384-0500	PLATFORM	2-3, 2-5
F330	440415-0200	TRANSFORMER	2-3, 2-5
F340	440422-0600	BOTTOM PLATE	2-3, 2-5
F350	440437-0300	BOX LEFT	2-3, 2-5
F360	566683-0100	AIR COOLER	2-159, 2-161
F390	285853-0200	STEERING RAIL	5-121
F390	440474-0100	TUBE FLUSHING DEVICE	2-3, 2-5
F395	525117-0300	INDEXING GEAR	5-121
F400	440537-0500	MACHINE BODY	2-3, 2-5
F400	929659-0100	MACHINE BODY	2-3, 2-5
F405	442646-0200	TOP GEAR	5-121
F405	540723-0100	CONNECTION BOX	2-37, 2-39, 2-41
F405	929660-0100	CONNECTION BOX	2-85, 2-87
F420	445537-0200	PIPE WORK-HYDRAULIC	2-3, 2-5
F420	592879-0100	PIPE WORK-HYDRAULIC	2-3, 2-5
F430	575392-0100	VALVE PANEL LOWER	2-3, 2-5
F440	574601-0100	VALVE PANEL	2-3, 2-5
F440	594622-0100	VALVE PANEL	2-3, 2-5
F450	449930-0500	CONNECTION BOX	2-3, 2-5
F455	449168-0300	CLEANING SYSTEM	2-3, 2-5
F455	1144281-0100	CLEANING SYSTEM	2-3, 2-5
F460	449932-0500	PIPE WORK-WATER	2-3, 2-5
F470	293684-0200	PRINTING WHEEL NSS	12-67, 12-69, 12-71, 12-73
F470	450293-0500	CABLE DUCT	2-3, 2-5
F470	593007-0100	CABLE DUCT	2-3, 2-5
F470	929661-0100	CABLE DUCT	2-3, 2-5
F480	434074-0301	INK UNIT	12-67, 12-69, 12-71, 12-73
F490	575797-0100	FLOWMETER GROUP	2-3, 2-5
F500	293685-0200	PRINTING WHEEL SS	12-53, 12-55
F510	434774-0301	INK UNIT	12-53, 12-55
F510	450788-0600	PIPE WORK-PNEUMATIC	2-3, 2-5
F510	592878-0100	PIPE WORK-PNEUMATIC	2-3, 2-5
F510	595207-0100	PIPE WORK-PNEUMATIC	2-3, 2-5
F520	450792-0100	DETERGENT PUMP	2-3, 2-5
F530	450824-0200	DOOR	2-3, 2-5
F540	450840-0400	LIFTING UNIT	2-3, 2-5
F540	1144831-0100	LIFTING UNIT	2-3, 2-5
F550	594613-0100	CLEANING HEAD	2-9
F560	450883-0400	PROTECTION	2-3, 2-5
F570	451348-0200	CONNECTION BOX	2-3, 2-5
F580	1143243-0100	DRYER	2-3, 2-5
F700	266776-0300	PAPER GUARD	1-3
F710	532726-0100	BENDING ROLLERS	1-3
F720	499701-0100	ATTACHMENT	1-3
F800	90233-0028	TUBE FUSE, 10A	13-175
F800.1	90233-0303	FUSE HOLDER, ST 10 1-POLE	13-175
F801	90233-0028	TUBE FUSE, 10A	13-175
F801.1	90233-0303	FUSE HOLDER, ST 10 1-POLE	13-175
F802	90233-0027	TUBE FUSE, 16A	13-175
F802.1	90233-0303	FUSE HOLDER, ST 10 1-POLE	13-175
F803	90233-0028	TUBE FUSE, 10A	13-175
F803.1	90233-0303	FUSE HOLDER, ST 10 1-POLE	13-175
F804	90233-0028	TUBE FUSE, 10A	13-175
F804.1	90233-0303	FUSE HOLDER, ST 10 1-POLE	13-175
F805	90233-0027	TUBE FUSE, 16A	13-175
F805.1	90233-0303	FUSE HOLDER, ST 10 1-POLE	13-175
F950	574332-0100	BELT	5-89, 5-91
F960	576245-0100	BELT RIGHT	5-89, 5-91
F970	576246-0100	BELT LEFT	5-89, 5-91
G			
G001	90430-0036	MOTOR DRIVE CONTROL SCANDIALOGIC VPM SL	9-25, 9-27, 9-29, 9-31, 9-33, 9-45, 9-47, 9-49, 9-51, 9-53, 9-55
G001	90430-0038	FREQ.INVERTER 1PH 2,2KW	9-5, 9-7, 9-9, 9-11, 9-13, 9-15
G001	90459-3720	FREQUENCY CHANGER 6SE6440-2AB17-5AA1	13-221
G001	90459-4082	FREQUENCY CHANGER 6SE6440-2AB21-5BA1	13-221
G1	90459-4807	POWER SUPPLY UNIT 100-240 VAC/24VDC2,5A	13-243
G001:1	90459-3726	FILTER 6SE6400-2FS01-0AB0	13-221
G001:1	90459-4081	FILTER 6SE6400-2FS02-6BB0	13-221

Pos	Part No	Description	Page No
G			
G001:1	352550-0120	FINE-WIRE 315 MA	9-5, 9-7, 9-9, 9-11, 9-13, 9-15, 9-25, 9-27, 9-29, 9-31, 9-33, 9-45, 9-47, 9-49, 9-51, 9-53, 9-55
G001:2	90459-4049	BASIC OP PANEL MM4, 6SE6400-0BP00-0AA0	13-221
G001:3	1361035-0000	PROFILE 70X10X40MM	13-221
G001:4	90135-0039	SHIELD CLIP KLBU 4-13.5	13-221
G100	90025-0055	POWER SUPPLY UNIT TPMC PS32	9-5, 9-7, 9-9, 9-11, 9-13, 9-15, 9-25, 9-27, 9-29, 9-31, 9-33, 9-45, 9-47, 9-49, 9-51, 9-53, 9-55
G100:1	352551-0136	FINE-WIRE FUSE 3,15 A SLOW	9-5, 9-7, 9-9, 9-11, 9-13, 9-15, 9-25, 9-27, 9-29, 9-31, 9-33, 9-45, 9-47, 9-49, 9-51, 9-53, 9-55
K			
K001	90075-0125	CONTACTOR, 7,5KW 24VDC	9-5, 9-7, 9-9, 9-11, 9-13, 9-15, 9-25, 9-27, 9-29, 9-31, 9-33, 9-45, 9-47, 9-49, 9-51, 9-53, 9-55
K002	90075-0125	CONTACTOR, 7,5KW 24VDC	9-5, 9-7, 9-9, 9-11, 9-13, 9-15, 9-25, 9-27, 9-29, 9-31, 9-33, 9-45, 9-47, 9-49, 9-51, 9-53, 9-55
K004	90075-0125	CONTACTOR, 7,5KW 24VDC	9-5, 9-7, 9-9, 9-11, 9-13, 9-15, 9-25, 9-27, 9-29, 9-31, 9-33, 9-45, 9-47, 9-49, 9-51, 9-53, 9-55
K005	90075-0125	CONTACTOR, 7,5KW 24VDC	9-5, 9-7, 9-9, 9-11, 9-13, 9-15, 9-25, 9-27, 9-29, 9-31, 9-33, 9-45, 9-47, 9-49, 9-51, 9-53, 9-55
K006	90075-0125	CONTACTOR, 7,5KW 24VDC	9-5, 9-7, 9-9, 9-11, 9-13, 9-15, 9-25, 9-27, 9-29, 9-31, 9-33, 9-45, 9-47, 9-49, 9-51, 9-53, 9-55
K006	90119-0056	RELAY, AUXILIARY MK3P5-S 24VDC	13-221
K006:1	90129-0006	BASE, S3-B	13-221
K007	90075-0125	CONTACTOR, 7,5KW 24VDC	9-5, 9-7, 9-9, 9-11, 9-13, 9-15, 9-25, 9-27, 9-29, 9-31, 9-33, 9-45, 9-47, 9-49, 9-51, 9-53, 9-55
K008	90075-0125	CONTACTOR, 7,5KW 24VDC	9-5, 9-7, 9-9, 9-11, 9-13, 9-15, 9-25, 9-27, 9-29, 9-31, 9-33, 9-45, 9-47, 9-49, 9-51, 9-53, 9-55
K009	90075-0125	CONTACTOR, 7,5KW 24VDC	9-5, 9-7, 9-9, 9-11, 9-13, 9-15, 9-25, 9-27, 9-29, 9-31, 9-33, 9-45, 9-47, 9-49, 9-51, 9-53, 9-55
K012	90075-0125	CONTACTOR, 7,5KW 24VDC	9-5, 9-7, 9-9, 9-11, 9-13, 9-15, 9-25, 9-27, 9-29, 9-31, 9-33, 9-45, 9-47, 9-49, 9-51, 9-53, 9-55
K013	90075-0125	CONTACTOR, 7,5KW 24VDC	9-5, 9-7, 9-9, 9-11, 9-13, 9-15, 9-25, 9-27, 9-29, 9-31, 9-33, 9-45, 9-47, 9-49, 9-51, 9-53, 9-55
K014	90075-0125	CONTACTOR, 7,5KW 24VDC	9-5, 9-7, 9-9, 9-11, 9-13, 9-15, 9-25, 9-27, 9-29, 9-31, 9-33, 9-45, 9-47, 9-49, 9-51, 9-53, 9-55
K015	90075-0125	CONTACTOR, 7,5KW 24VDC	9-5, 9-7, 9-9, 9-11, 9-13, 9-15, 9-25, 9-27, 9-29, 9-31, 9-33, 9-45, 9-47, 9-49, 9-51, 9-53, 9-55
K016	90075-0125	CONTACTOR, 7,5KW 24VDC	9-5, 9-7, 9-9, 9-11, 9-13, 9-15, 9-25, 9-27, 9-29, 9-31, 9-33, 9-45, 9-47, 9-49, 9-51, 9-53, 9-55
K020	90075-0125	CONTACTOR, 7,5KW 24VDC	9-5, 9-7, 9-9, 9-11, 9-13, 9-15, 9-25, 9-27, 9-29, 9-31, 9-33, 9-45, 9-47, 9-49, 9-51, 9-53, 9-55
K20	90119-0108	RELAY OMRON G2R-2-SNI-24DC	13-243
K20:1	90129-0018	BASE OMRON P2RF-08-E	13-243
K021	90075-0125	CONTACTOR, 7,5KW 24VDC	9-5, 9-7, 9-9, 9-11, 9-13, 9-15
K022	90075-0125	CONTACTOR, 7,5KW 24VDC	9-5, 9-7, 9-9, 9-11, 9-13, 9-15, 9-25, 9-27, 9-29, 9-31, 9-33, 9-45, 9-47, 9-49, 9-51, 9-53, 9-55
K023	90075-0125	CONTACTOR, 7,5KW 24VDC	9-5, 9-7, 9-9, 9-11, 9-13, 9-15, 9-25, 9-27, 9-29, 9-31, 9-33, 9-45, 9-47, 9-49, 9-51, 9-53, 9-55
K030	90075-0126	CONTACTOR, 22KW 24VDC	9-5, 9-7, 9-9, 9-11, 9-13, 9-15, 9-25, 9-27, 9-29, 9-31, 9-33, 9-45, 9-47, 9-49, 9-51, 9-53, 9-55
K050	90119-0063	OPTO-RELAY, DC/DC AMMS-10-1/30VDC	9-5, 9-7, 9-9, 9-11, 9-13, 9-15, 9-25, 9-27, 9-29, 9-31, 9-33, 9-45, 9-47, 9-49, 9-51, 9-53, 9-55
K051	90119-0063	OPTO-RELAY, DC/DC AMMS-10-1/30VDC	9-5, 9-7, 9-9, 9-11, 9-13, 9-15, 9-25, 9-27, 9-29, 9-31, 9-33, 9-45, 9-47, 9-49, 9-51, 9-53, 9-55
K101	90119-0056	RELAY, AUXILIARY MK3P5-S 24VDC	9-5, 9-7, 9-9, 9-11, 9-13, 9-15
K101	90119-0086	RELAY, AUXILIARY MY4IN4 24VDC	9-25, 9-27, 9-29, 9-31, 9-33, 9-45, 9-47, 9-49, 9-51, 9-53, 9-55
K101:1	90119-0309	BASE UNIT, TYPE PYF 14AE	9-25, 9-27, 9-29, 9-31, 9-33, 9-45, 9-47, 9-49, 9-51, 9-53, 9-55
K101:1	90129-0006	BASE, S3-B	9-5, 9-7, 9-9, 9-11, 9-13, 9-15
K101:2	90119-0310	CLAMP, TYPE PYC-A1	9-25, 9-27, 9-29, 9-31, 9-33, 9-45, 9-47, 9-49, 9-51, 9-53, 9-55
K102	90119-0056	RELAY, AUXILIARY MK3P5-S 24VDC	9-5, 9-7, 9-9, 9-11, 9-13, 9-15, 9-25, 9-27, 9-29, 9-31, 9-33, 9-45, 9-47, 9-49, 9-51, 9-53, 9-55
K102:1	90129-0006	BASE, S3-B	9-5, 9-7, 9-9, 9-11, 9-13, 9-15, 9-25, 9-27, 9-29, 9-31, 9-33, 9-45, 9-47, 9-49, 9-51, 9-53, 9-55
K110	90119-0056	RELAY, AUXILIARY MK3P5-S 24VDC	9-5, 9-7, 9-9, 9-11, 9-13, 9-15, 9-25, 9-27, 9-29, 9-31, 9-33, 9-45, 9-47, 9-49, 9-51, 9-53, 9-55
K110:1	90129-0006	BASE, S3-B	9-5, 9-7, 9-9, 9-11, 9-13, 9-15, 9-25, 9-27, 9-29, 9-31, 9-33, 9-45, 9-47, 9-49, 9-51, 9-53, 9-55
K111	90119-0056	RELAY, AUXILIARY MK3P5-S 24VDC	9-5, 9-7, 9-9, 9-11, 9-13, 9-15, 9-25, 9-27, 9-29, 9-31, 9-33, 9-45, 9-47, 9-49, 9-51, 9-53, 9-55
K111:1	90129-0006	BASE, S3-B	9-5, 9-7, 9-9, 9-11, 9-13, 9-15, 9-25, 9-27, 9-29, 9-31, 9-33, 9-45, 9-47, 9-49, 9-51, 9-53, 9-55
K112	90119-0056	RELAY, AUXILIARY MK3P5-S 24VDC	9-5, 9-7, 9-9, 9-11, 9-13, 9-15, 9-25, 9-27, 9-29, 9-31, 9-33, 9-45, 9-47, 9-49, 9-51, 9-53, 9-55
K112:1	90129-0006	BASE, S3-B	9-5, 9-7, 9-9, 9-11, 9-13, 9-15, 9-25, 9-27, 9-29, 9-31, 9-33, 9-45, 9-47, 9-49, 9-51, 9-53, 9-55
K113	90119-0056	RELAY, AUXILIARY MK3P5-S 24VDC	9-5, 9-7, 9-9, 9-11, 9-13, 9-15, 9-25, 9-27, 9-29, 9-31, 9-33, 9-45, 9-47, 9-49, 9-51, 9-53, 9-55
K113:1	90129-0006	BASE, S3-B	9-5, 9-7, 9-9, 9-11, 9-13, 9-15, 9-25, 9-27, 9-29, 9-31, 9-33, 9-45, 9-47, 9-49, 9-51, 9-53, 9-55
K114	90119-0056	RELAY, AUXILIARY MK3P5-S 24VDC	13-221
K114:1	90129-0006	BASE, S3-B	13-221

Pos	Part No	Description	Page No
K			
K116:1	90119-0063	OPTO-RELAY, DC/DC AMMS-10-1/30VDC	13-209
K116:2	90119-0063	OPTO-RELAY, DC/DC AMMS-10-1/30VDC	13-209
K117:1	90119-0063	OPTO-RELAY, DC/DC AMMS-10-1/30VDC	13-209
K117:2	90119-0063	OPTO-RELAY, DC/DC AMMS-10-1/30VDC	13-209
K120	90119-0056	RELAY, AUXILIARY MK3P5-S 24VDC	9-5, 9-7, 9-9, 9-11, 9-13, 9-15, 9-25, 9-27, 9-29, 9-31, 9-33, 9-45, 9-47, 9-49, 9-51, 9-53, 9-55
K120:1	90129-0006	BASE, S3-B	9-5, 9-7, 9-9, 9-11, 9-13, 9-15, 9-25, 9-27, 9-29, 9-31, 9-33, 9-45, 9-47, 9-49, 9-51, 9-53, 9-55
K121	90119-0056	RELAY, AUXILIARY MK3P5-S 24VDC	9-5, 9-7, 9-9, 9-11, 9-13, 9-15, 9-25, 9-27, 9-29, 9-31, 9-33, 9-45, 9-47, 9-49, 9-51, 9-53, 9-55
K121:1	90129-0006	BASE, S3-B	9-5, 9-7, 9-9, 9-11, 9-13, 9-15, 9-25, 9-27, 9-29, 9-31, 9-33, 9-45, 9-47, 9-49, 9-51, 9-53, 9-55
K124	90119-0056	RELAY, AUXILIARY MK3P5-S 24VDC	9-5, 9-7, 9-9, 9-11, 9-13, 9-15, 9-25, 9-27, 9-29, 9-31, 9-33, 9-45, 9-47, 9-49, 9-51, 9-53, 9-55
K124:1	90129-0006	BASE, S3-B	9-5, 9-7, 9-9, 9-11, 9-13, 9-15, 9-25, 9-27, 9-29, 9-31, 9-33, 9-45, 9-47, 9-49, 9-51, 9-53, 9-55
K125	90119-0056	RELAY, AUXILIARY MK3P5-S 24VDC	9-5, 9-7, 9-9, 9-11, 9-13, 9-15, 9-25, 9-27, 9-29, 9-31, 9-33, 9-45, 9-47, 9-49, 9-51, 9-53, 9-55
K125:1	90129-0006	BASE, S3-B	9-5, 9-7, 9-9, 9-11, 9-13, 9-15, 9-25, 9-27, 9-29, 9-31, 9-33, 9-45, 9-47, 9-49, 9-51, 9-53, 9-55
K126	90119-0056	RELAY, AUXILIARY MK3P5-S 24VDC	9-5, 9-7, 9-9, 9-11, 9-13, 9-15, 9-25, 9-27, 9-29, 9-31, 9-33, 9-45, 9-47, 9-49, 9-51, 9-53, 9-55
K126:1	90129-0006	BASE, S3-B	9-5, 9-7, 9-9, 9-11, 9-13, 9-15, 9-25, 9-27, 9-29, 9-31, 9-33, 9-45, 9-47, 9-49, 9-51, 9-53, 9-55
K127	90119-0056	RELAY, AUXILIARY MK3P5-S 24VDC	9-5, 9-7, 9-9, 9-11, 9-13, 9-15, 9-25, 9-27, 9-29, 9-31, 9-33, 9-45, 9-47, 9-49, 9-51, 9-53, 9-55
K127:1	90129-0006	BASE, S3-B	9-5, 9-7, 9-9, 9-11, 9-13, 9-15, 9-25, 9-27, 9-29, 9-31, 9-33, 9-45, 9-47, 9-49, 9-51, 9-53, 9-55
K128	90119-0056	RELAY, AUXILIARY MK3P5-S 24VDC	9-5, 9-7, 9-9, 9-11, 9-13, 9-15, 9-25, 9-27, 9-29, 9-31, 9-33, 9-45, 9-47, 9-49, 9-51, 9-53, 9-55
K128:1	90129-0006	BASE, S3-B	9-5, 9-7, 9-9, 9-11, 9-13, 9-15, 9-25, 9-27, 9-29, 9-31, 9-33, 9-45, 9-47, 9-49, 9-51, 9-53, 9-55
K202	90119-0043	OPTO-RELAY, 22DC 60S-3/32VDC	9-5, 9-7, 9-9, 9-11, 9-13, 9-15, 9-25, 9-27, 9-29, 9-31, 9-33, 9-45, 9-47, 9-49, 9-51, 9-53, 9-55
K203	90119-0067	SOLID-STATE RELAY, H12WD4850	9-5, 9-7, 9-9, 9-11, 9-13, 9-15, 9-25, 9-27, 9-29, 9-31, 9-33, 9-45, 9-47, 9-49, 9-51, 9-53, 9-55
K204	90119-0067	SOLID-STATE RELAY, H12WD4850	9-5, 9-7, 9-9, 9-11, 9-13, 9-15, 9-25, 9-27, 9-29, 9-31, 9-33, 9-45, 9-47, 9-49, 9-51, 9-53, 9-55
K211	90119-0067	SOLID-STATE RELAY, H12WD4850	9-5, 9-7, 9-9, 9-11, 9-13, 9-15, 9-25, 9-27, 9-29, 9-31, 9-33, 9-45, 9-47, 9-49, 9-51, 9-53, 9-55
K212	90119-0067	SOLID-STATE RELAY, H12WD4850	9-5, 9-7, 9-9, 9-11, 9-13, 9-15
K213	90119-0067	SOLID-STATE RELAY, H12WD4850	9-5, 9-7, 9-9, 9-11, 9-13, 9-15
K214	90119-0067	SOLID-STATE RELAY, H12WD4850	9-5, 9-7, 9-9, 9-11, 9-13, 9-15
K800	90075-0125	CONTACTOR, 7,5KW 24VDC	13-175
K800.1	90119-0067	SOLID-STATE RELAY, H12WD4850	13-175
K801	90075-0125	CONTACTOR, 7,5KW 24VDC	13-175
K801.1	90119-0067	SOLID-STATE RELAY, H12WD4850	13-175
K802.1	90119-0067	SOLID-STATE RELAY, H12WD4850	13-175
K803.1	90119-0067	SOLID-STATE RELAY, H12WD4850	13-175
K804.1	90119-0067	SOLID-STATE RELAY, H12WD4850	13-175
K805.1	90119-0067	SOLID-STATE RELAY, H12WD4850	13-175
L			
L001	90297-0306	BALLAST COIL 50/60 HZ	9-5, 9-7, 9-9, 9-11, 9-13, 9-15, 9-25, 9-27, 9-29, 9-31, 9-33, 9-45, 9-47, 9-49, 9-51, 9-53, 9-55
P			
P001	90332-0007	RECORDER, ZSN 005/D 220V,50HZ	9-5, 9-7, 9-9, 9-11, 9-13, 9-15
P001	90332-0008	RECORDER, ZSN 005/D 220V;60HZ	9-5, 9-7, 9-9, 9-11, 9-13, 9-15
P001	90332-0019	RECORDER HONEYWELL 1 CH.	9-25, 9-27, 9-29, 9-31, 9-33, 9-45, 9-47, 9-49, 9-51, 9-53, 9-55
P001	90459-0083	RECORDER 1-CHANNEL, LOGOLINE 500	13-225
P003	90053-0028	3 DIGIT COUNTER KOYO KCX-3-DM-V	9-5, 9-7, 9-9, 9-11, 9-13, 9-15, 9-25, 9-27, 9-29, 9-31, 9-33, 9-45, 9-47, 9-49, 9-51, 9-53, 9-55
P003:1	90053-0309	BASE	9-5, 9-7, 9-9, 9-11, 9-13, 9-15, 9-25, 9-27, 9-29, 9-31, 9-33, 9-45, 9-47, 9-49, 9-51, 9-53, 9-55
P004	90053-0031	HOUR COUNTER, B 609.10 10-50VDC	9-5, 9-7, 9-9, 9-11, 9-13, 9-15, 9-25, 9-27, 9-29, 9-31, 9-33, 9-45, 9-47, 9-49, 9-51, 9-53, 9-55
P005	90053-0032	COUNTER, F524.650DA3B 24VDC	9-5, 9-7, 9-9, 9-11, 9-13, 9-15, 9-25, 9-27, 9-29, 9-31, 9-33, 9-45, 9-47, 9-49, 9-51, 9-53, 9-55
P006	90053-0029	COUNTER, F524.800FA3C 24VDC	9-5, 9-7, 9-9, 9-11, 9-13, 9-15, 9-25, 9-27, 9-29, 9-31, 9-33, 9-45, 9-47, 9-49, 9-51, 9-53, 9-55
Q			
Q000	90259-0310	ADAPTER PLATE, K&M SP PKZ M	9-25, 9-27, 9-29, 9-31, 9-33, 9-45, 9-47, 9-49, 9-51, 9-53, 9-55
Q000	90259-0312	ADAPTER PLATE K&M SP PKZ SOND C	9-5, 9-7, 9-9, 9-11, 9-13, 9-15
Q000:1	90259-0310	ADAPTER PLATE, K&M SP PKZ M	9-5, 9-7, 9-9, 9-11, 9-13, 9-15
Q000:1	90259-0312	ADAPTER PLATE K&M SP PKZ SOND C	9-25, 9-27, 9-29, 9-31, 9-33, 9-45, 9-47, 9-49, 9-51, 9-53, 9-55
Q001	90095-0075	OVERLOAD PROTECTION, PKZM 4 A	9-5, 9-7, 9-9, 9-11, 9-13, 9-15, 9-25, 9-27, 9-29, 9-31, 9-33, 9-45, 9-47, 9-49, 9-51, 9-53, 9-55
Q001:1	90259-0313	AUX. CONTACT K&M NHI21-PKZM0	9-5, 9-7, 9-9, 9-11, 9-13, 9-15, 9-25, 9-27, 9-29, 9-31, 9-33, 9-45, 9-47, 9-49, 9-51, 9-53, 9-55
Q002	90095-0076	OVERLOAD PROTECTION, PKZM 6,3 A	9-5, 9-7, 9-9, 9-11, 9-13, 9-15, 9-25

Pos	Part No	Description	Page No
			9-27, 9-29, 9-31, 9-33, 9-45, 9-47, 9-49, 9-51, 9-53, 9-55
Q002:1	90259-0313	AUX. CONTACT K&M NHI21-PKZM0	9-5, 9-7, 9-9, 9-11, 9-13, 9-15, 9-25, 9-27
			9-29, 9-31, 9-33, 9-45, 9-47, 9-49, 9-51, 9-53, 9-55
Q003	90095-0074	OVERLOAD PROTECTION, PKZM 2,5 A	9-5, 9-7, 9-9, 9-11, 9-13, 9-15, 9-25, 9-27
			9-29, 9-31, 9-33, 9-45, 9-47, 9-49, 9-51, 9-53, 9-55
Q003:1	90259-0313	AUX. CONTACT K&M NHI21-PKZM0	9-5, 9-7, 9-9, 9-11, 9-13, 9-15, 9-25, 9-27
			9-29, 9-31, 9-33, 9-45, 9-47, 9-49, 9-51, 9-53, 9-55
Q009	90095-0075	OVERLOAD PROTECTION, PKZM 4 A	9-5, 9-7, 9-9, 9-11, 9-13, 9-15, 9-25, 9-27
			9-29, 9-31, 9-33, 9-45, 9-47, 9-49, 9-51, 9-53, 9-55
Q009:1	90259-0313	AUX. CONTACT K&M NHI21-PKZM0	9-5, 9-7, 9-9, 9-11, 9-13, 9-15, 9-25, 9-27
			9-29, 9-31, 9-33, 9-45, 9-47, 9-49, 9-51, 9-53, 9-55
Q012	90095-0077	OVERLOAD PROTECTION, PKZM 6-10 A	9-5, 9-7, 9-9, 9-11, 9-13, 9-15, 9-25
			9-27, 9-29, 9-31, 9-33, 9-45, 9-47, 9-49, 9-51, 9-53, 9-55
Q012:1	90259-0313	AUX. CONTACT K&M NHI21-PKZM0	9-5, 9-7, 9-9, 9-11, 9-13, 9-15, 9-25, 9-27
			9-29, 9-31, 9-33, 9-45, 9-47, 9-49, 9-51, 9-53, 9-55
Q013	90095-0073	OVERLOAD PROTECTION, PKZM 1,6 A	9-5, 9-7, 9-9, 9-11, 9-13, 9-15, 9-25, 9-27
			9-29, 9-31, 9-33, 9-45, 9-47, 9-49, 9-51, 9-53, 9-55
Q013:1	90259-0313	AUX. CONTACT K&M NHI21-PKZM0	9-5, 9-7, 9-9, 9-11, 9-13, 9-15, 9-25, 9-27
			9-29, 9-31, 9-33, 9-45, 9-47, 9-49, 9-51, 9-53, 9-55
Q014	90095-0073	OVERLOAD PROTECTION, PKZM 1,6 A	9-5, 9-7, 9-9, 9-11, 9-13, 9-15, 9-25, 9-27
			9-29, 9-31, 9-33, 9-45, 9-47, 9-49, 9-51, 9-53, 9-55
Q014	90259-0306	AUX CONTACT	13-49
Q014:1	90259-0313	AUX. CONTACT K&M NHI21-PKZM0	9-5, 9-7, 9-9, 9-11, 9-13, 9-15, 9-25, 9-27
			9-29, 9-31, 9-33, 9-45, 9-47, 9-49, 9-51, 9-53, 9-55
Q021	90095-0072	OVERLOAD PROTECTION, PKZM 1,0 A	9-5, 9-7, 9-9, 9-11, 9-13, 9-15
Q021:1	90259-0313	AUX. CONTACT K&M NHI21-PKZM0	9-5, 9-7, 9-9, 9-11, 9-13, 9-15
Q030	90095-0080	OVERLOAD PROTECTION, PKZM 25 A	9-5, 9-7, 9-9, 9-11, 9-13, 9-15, 9-25, 9-27
			9-29, 9-31, 9-33, 9-45, 9-47, 9-49, 9-51, 9-53, 9-55
Q030	90259-0306	AUX CONTACT	13-49
Q030:1	90259-0313	AUX. CONTACT K&M NHI21-PKZM0	9-5, 9-7, 9-9, 9-11, 9-13, 9-15, 9-25, 9-27
			9-29, 9-31, 9-33, 9-45, 9-47, 9-49, 9-51, 9-53, 9-55
Q101	90111-0131	MAIN SWITCH P3-100/V/SVB-SW/N/HI11/H-P3	9-5, 9-7, 9-9, 9-11, 9-13, 9-15
			9-25, 9-27, 9-29, 9-31, 9-33, 9-45, 9-47, 9-49, 9-51, 9-53, 9-55
Q101:1	90111-0332	NEUTRAL CONTACT, N-P3/Z	9-5, 9-7, 9-9, 9-11, 9-13, 9-15, 9-25, 9-27, 9-29, 9-31, 9-33
Q101:2	359241-0124	SIGN: " MAIN SWITCH"	9-5, 9-7, 9-9, 9-11, 9-13, 9-15, 9-25, 9-27, 9-29, 9-31, 9-33
			9-45, 9-47, 9-49, 9-51, 9-53, 9-55
Q101:3	359240-0100	SIGN HOLDER FOR 359240-0001	9-5, 9-7, 9-9, 9-11, 9-13, 9-15, 9-25, 9-27, 9-29
			9-31, 9-33, 9-45, 9-47, 9-49, 9-51, 9-53, 9-55
Q101:4	779910-0101	PADLOCK	9-5, 9-7, 9-9, 9-11, 9-13, 9-15, 9-25, 9-27, 9-29, 9-31, 9-33, 9-45, 9-47
			9-49, 9-51, 9-53, 9-55
Q101:5	359241-0297	SIGN: " 50 HZ"	9-5, 9-7, 9-9, 9-11, 9-13, 9-15, 9-25, 9-27, 9-29, 9-31, 9-33, 9-45
			9-47, 9-49, 9-51, 9-53, 9-55
Q101:6	359241-0298	SIGN: " 60 HZ"	9-5, 9-7, 9-9, 9-11, 9-13, 9-15, 9-25, 9-27, 9-29, 9-31, 9-33, 9-45
			9-47, 9-49, 9-51, 9-53, 9-55
Q102	90259-0031	OVERLOAD RELAY, 25-40 A	9-5, 9-7, 9-9, 9-11, 9-13, 9-15, 9-25, 9-27, 9-29
			9-31, 9-33, 9-45, 9-47, 9-49, 9-51, 9-53, 9-55
R			
R100	90121-0116	RESISTANCE FIXED, 0,15 KOHM, 0,25 W	9-21, 9-41, 9-61
R108	90121-0116	RESISTANCE FIXED, 0,15 KOHM, 0,25 W	9-5, 9-7, 9-9, 9-11, 9-13, 9-15, 9-25
			9-27, 9-29, 9-31, 9-33, 9-45, 9-47, 9-49, 9-51, 9-53, 9-55
R202	68444-0101	SHUNT RESISTOR FOR SSR	9-5, 9-7, 9-9, 9-11, 9-13, 9-15, 9-25, 9-27, 9-29
			9-31, 9-33, 9-45, 9-47, 9-49, 9-51, 9-53, 9-55
S			
S001	90064-0105	EMERGENCY STOP BUTTON REPL.BY 90064-124	9-41, 9-43, 9-61, 9-63
S001	90064-0124	SWITCH, EM. STOP, ZB2-BS844+ZB2-BZ1045	9-21, 9-23
S001:1	486826-0001	SIGN "EMERGENCY STOP"	9-21, 9-23, 9-41, 9-43, 9-61, 9-63
S002	90064-0085	PUSH BUTTON, RED	9-23, 9-43, 9-63
S002:1	359301-0110	BUTTON SIGN, SHORT STOP	9-23, 9-43, 9-63
S003	90064-0085	PUSH BUTTON, RED	9-5, 9-7, 9-9, 9-11, 9-13, 9-15, 9-25, 9-27, 9-29, 9-31, 9-33
			9-45, 9-47, 9-49, 9-51, 9-53, 9-55
S003:1	359301-0110	BUTTON SIGN, SHORT STOP	9-5, 9-7, 9-9, 9-11, 9-13, 9-15, 9-25, 9-27, 9-29
			9-31, 9-33, 9-45, 9-47, 9-49, 9-51, 9-53, 9-55
S005	90064-0084	PUSH BUTTON, YELLOW	9-21, 9-41, 9-61
S005:1	359301-0160	BUTTON SIGN, DRAINAGE OF PRODUCT TUBE	9-21, 9-41, 9-61
S006	90111-0142	SWITCH GEAR, NO.OF DIGIT: 4	9-5, 9-7, 9-9, 9-11, 9-13, 9-15, 9-25, 9-27, 9-29
			9-31, 9-33, 9-45, 9-47, 9-49, 9-51, 9-53, 9-55
S006:1	359320-0003	SIGN, THUMB WHEEL UNIT FILLING ON	9-5, 9-7, 9-9, 9-11, 9-13, 9-15, 9-25
			9-27, 9-29, 9-31, 9-33, 9-45, 9-47, 9-49, 9-51, 9-53, 9-55
S006:2	359240-0100	SIGN HOLDER FOR 359240-0001	9-5, 9-7, 9-9, 9-11, 9-13, 9-15, 9-25, 9-27, 9-29
			9-31, 9-33, 9-45, 9-47, 9-49, 9-51, 9-53, 9-55
S007	90111-0120	SWITCH, 2 POS.704.510 .0A+704.901.5/A	9-21, 9-41, 9-61
S008	90002-0014	BLIND PLUG D=22,5MM	9-5, 9-7, 9-9, 9-11, 9-13, 9-15, 9-25, 9-27, 9-29, 9-31
			9-33, 9-45, 9-47, 9-49, 9-51, 9-53, 9-55
S008:1	359240-0001	SIGN, NOT ENGRAVED	9-5, 9-7, 9-9, 9-11, 9-13, 9-15, 9-25, 9-27, 9-29, 9-31
			9-33, 9-45, 9-47, 9-49, 9-51, 9-53, 9-55
S008:2	359240-0100	SIGN HOLDER FOR 359240-0001	9-5, 9-7, 9-9, 9-11, 9-13, 9-15, 9-25, 9-27, 9-29
			9-31, 9-33, 9-45, 9-47, 9-49, 9-51, 9-53, 9-55
S009	90002-0014	BLIND PLUG D=22,5MM	9-5, 9-7, 9-9, 9-11, 9-13, 9-15, 9-25, 9-27, 9-29, 9-31
			9-33, 9-45, 9-47, 9-49, 9-51, 9-53, 9-55
S009:1	359240-0001	SIGN, NOT ENGRAVED	9-5, 9-7, 9-9, 9-11, 9-13, 9-15, 9-25, 9-27, 9-29, 9-31
			9-33, 9-45, 9-47, 9-49, 9-51, 9-53, 9-55
S009:2	359240-0100	SIGN HOLDER FOR 359240-0001	9-5, 9-7, 9-9, 9-11, 9-13, 9-15, 9-25, 9-27, 9-29

Pos	Part No	Description	Page No
			9-31, 9-33, 9-45, 9-47, 9-49, 9-51, 9-53, 9-55
S012	90064-0082	PUSH BUTTON, WHITE	9-21, 9-41, 9-61
S012:1	359301-0130	BUTTON SIGN, LAMP TEST	9-21, 9-41, 9-61
S015	90111-0120	SWITCH, 2 POS.704.510 .0A+704.901.5/A	9-5, 9-7, 9-9, 9-11, 9-13, 9-15, 9-25
			9-27, 9-29, 9-31, 9-33, 9-45, 9-47, 9-49, 9-51, 9-53, 9-55
S015:1	359241-0324	SIGN: " PREPERATIONS"	9-5, 9-7, 9-9, 9-11, 9-13, 9-15, 9-25, 9-27, 9-29, 9-31
			9-33, 9-45, 9-47, 9-49, 9-51, 9-53, 9-55
S015:2	359240-0100	SIGN HOLDER FOR 359240-0001	9-5, 9-7, 9-9, 9-11, 9-13, 9-15, 9-25, 9-27, 9-29
			9-31, 9-33, 9-45, 9-47, 9-49, 9-51, 9-53, 9-55
S019	90064-0093	PUSH BUTTON, GREEN	9-21, 9-23, 9-41, 9-43, 9-61, 9-63
S019:1	359301-0050	BUTTON SIGN, DROP CHUTE BRIK	9-21, 9-23, 9-41, 9-43, 9-61, 9-63
S020	90064-0093	PUSH BUTTON, GREEN	9-21, 9-41, 9-61
S020:1	359301-0170	BUTTON SIGN, SPOOLING OF FINAL FOLDER	9-21, 9-41, 9-61
SP	1367827-0104	DOCUMENT FOLDER	13-205
T			
T001	90245-0019	TRANSF. 3-PH.750VA SEC.23A	9-5, 9-7, 9-9, 9-11, 9-13, 9-15, 9-25, 9-27, 9-29
			9-31, 9-33, 9-45, 9-47, 9-49, 9-51, 9-53, 9-55
T003	23139-0000	TRANSFORMER 1PH. AUTO 2,1 KVA	9-5, 9-7, 9-9, 9-11, 9-13, 9-15, 9-25, 9-27
			9-29, 9-31, 9-33, 9-45, 9-47, 9-49, 9-51, 9-53, 9-55
V			
V001	90038-0024	RECTIFIER, 10/22A SKD 50/04A3	9-5, 9-7, 9-9, 9-11, 9-13, 9-15, 9-25, 9-27, 9-29
			9-31, 9-33, 9-45, 9-47, 9-49, 9-51, 9-53, 9-55
V003	90430-0013	THYRISTOR UNIT TELEMETRIC 5THU1,50A/220V .	9-25, 9-27, 9-29, 9-31, 9-33
V003	90430-0304	SET POINT UNIT TELEMETRIC 2SPU1	9-41
V003:2	90098-0020	DIODE FUSE, 55ET	9-25, 9-27, 9-29, 9-31, 9-33
V004	90430-0013	THYRISTOR UNIT TELEMETRIC 5THU1,50A/220V .	9-25, 9-27, 9-29, 9-31, 9-33
V004	90430-0304	SET POINT UNIT TELEMETRIC 2SPU1	9-41
V004:2	90098-0020	DIODE FUSE, 55ET	9-25, 9-27, 9-29, 9-31, 9-33
W			
W001	90220-0059	THERMOCOUPLE CABLE K/PVC/20AWG 2X0,5MM2	9-5, 9-7, 9-9, 9-11, 9-13
			9-15, 9-25, 9-27, 9-29, 9-31, 9-33, 9-45, 9-47, 9-49, 9-51, 9-53, 9-55
W002	90220-0059	THERMOCOUPLE CABLE K/PVC/20AWG 2X0,5MM2	9-5, 9-7, 9-9, 9-11, 9-13
			9-15, 9-25, 9-27, 9-29, 9-31, 9-33, 9-45, 9-47, 9-49, 9-51, 9-53, 9-55
W003	90220-0040	SCR. CABLE 2X0,75 MM2 BLACK	9-5, 9-7, 9-9, 9-11, 9-13, 9-15, 9-25, 9-27, 9-29
			9-31, 9-33, 9-45, 9-47, 9-49, 9-51, 9-53, 9-55
W004	90220-0059	THERMOCOUPLE CABLE K/PVC/20AWG 2X0,5MM2	9-5, 9-7, 9-9, 9-11, 9-13
			9-15, 9-25, 9-27, 9-29, 9-31, 9-33, 9-45, 9-47, 9-49, 9-51, 9-53, 9-55
W005	1140660-0001	ANALOGUE CABLE	9-5, 9-7, 9-9, 9-11, 9-13, 9-15, 9-45, 9-47, 9-49, 9-51, 9-53
			9-55, 12-235, 12-237
W006	90172-0318	HF-CABLE 450MM, TELSONIC 514 210 004	9-5, 9-7, 9-9, 9-11, 9-13, 9-15, 9-45
			9-47, 9-49, 9-51, 9-53, 9-55, 12-235, 12-237
W007	90172-0318	HF-CABLE 450MM, TELSONIC 514 210 004	9-7, 9-9, 9-11, 9-13, 9-15, 9-45, 9-47
			9-49, 9-51, 9-53, 9-55, 12-235, 12-237
W008	90172-0318	HF-CABLE 450MM, TELSONIC 514 210 004	9-7, 9-9, 9-11, 9-13, 9-15, 9-45, 9-47
			9-49, 9-51, 9-53, 9-55, 12-235, 12-237
W010	90220-0105	SCR. CABLE 4X2,5MM2	9-5, 9-7, 9-9, 9-11, 9-13, 9-15, 9-25, 9-27, 9-29, 9-31
			9-33, 9-45, 9-47, 9-49, 9-51, 9-53, 9-55
W011	90220-0105	SCR. CABLE 4X2,5MM2	9-7, 9-9, 9-11, 9-13, 9-15, 9-25, 9-27, 9-29, 9-31, 9-33
			9-45, 9-47, 9-49, 9-51, 9-53, 9-55
W012	90220-0108	SCR. CABLE 5X1,5MM2	9-5, 9-7, 9-9, 9-11, 9-13, 9-15, 9-25, 9-27, 9-29, 9-31
			9-33, 9-45, 9-47, 9-49, 9-51, 9-53, 9-55
W013	90220-0108	SCR. CABLE 5X1,5MM2	9-7, 9-9, 9-11, 9-13, 9-15, 9-25, 9-27, 9-29, 9-31, 9-33
			9-45, 9-47, 9-49, 9-51, 9-53, 9-55
W015	90220-0059	THERMOCOUPLE CABLE K/PVC/20AWG 2X0,5MM2	9-5, 9-7, 9-9, 9-11, 9-13, 9-15
W016	90220-0059	THERMOCOUPLE CABLE K/PVC/20AWG 2X0,5MM2	9-7, 9-9, 9-11, 9-13, 9-15
W017	90220-0059	THERMOCOUPLE CABLE K/PVC/20AWG 2X0,5MM2	9-7, 9-9, 9-11, 9-13, 9-15
W020	1143884-0000	COPPER BRAID	9-5, 9-7, 9-9, 9-11, 9-13, 9-15, 9-25, 9-27, 9-29, 9-31, 9-33, 9-45
			9-47, 9-49, 9-51, 9-53, 9-55
W021	1143884-0000	COPPER BRAID	9-7, 9-9, 9-11, 9-13, 9-15, 9-25, 9-27, 9-29, 9-31, 9-33, 9-45
			9-47, 9-49, 9-51, 9-53, 9-55
W022	1143884-0000	COPPER BRAID	9-7, 9-9, 9-11, 9-13, 9-15, 9-25, 9-27, 9-29, 9-31, 9-33, 9-45
			9-47, 9-49, 9-51, 9-53, 9-55
W024	1143884-0000	COPPER BRAID	9-7, 9-9, 9-11, 9-13, 9-15
W025	1143884-0000	COPPER BRAID	9-7, 9-9, 9-11, 9-13, 9-15
W026	1143884-0000	COPPER BRAID	9-7, 9-9, 9-11, 9-13, 9-15
X			
XL:1	573371-0000	DISTR.TERM.	9-25, 9-27, 9-29, 9-31, 9-33
XL:1	596737-0000	DISTR. TERMINAL, 220V	9-5, 9-7, 9-9, 9-11, 9-13, 9-15
XL:1	1143668-0000	DISTR. TERMINAL, 220V	9-45, 9-47, 9-49, 9-51, 9-53, 9-55
XL:2	578046-0000	DISTR.TERM,DIODE TERM	9-25, 9-27, 9-29, 9-31, 9-33
XL:2	596740-0000	DISTR. TERMINAL, DIODES	9-5, 9-7, 9-9, 9-11, 9-13, 9-15
XL:2	1143673-0000	DISTR. TERMINAL, DIODES	9-45, 9-47, 9-49, 9-51, 9-53, 9-55
X001:1	573373-0000	CONTROL TERMINALX1:1	9-25, 9-27, 9-29, 9-31, 9-33
X001:1	596098-0000	CONTROL TERMINAL X1:1	9-5, 9-7, 9-9, 9-11, 9-13, 9-15
X001:1	1143670-0000	CONTROL TERMINAL X1:1	9-45, 9-47, 9-49, 9-51, 9-53, 9-55
X001:2	596743-0000	TERMINAL BLOCK X1:2	9-5, 9-7, 9-9, 9-11, 9-13, 9-15
X001:2	1143775-0000	TERMINAL BLOCK X001:2	9-25, 9-27, 9-29, 9-31, 9-33
X001:2	1143963-0000	TERMINAL BLOCK X1:2	9-45, 9-47, 9-49, 9-51, 9-53, 9-55
X001:3	594501-0000	CONTROL TERMINAL X1:3	9-25, 9-27, 9-29, 9-31, 9-33
X001:3	596739-0000	CONTROL TERMINAL X1:3	9-5, 9-7, 9-9, 9-11, 9-13, 9-15
X001:3	1143672-0000	CONTROL TERMINAL X1:3	9-45, 9-47, 9-49, 9-51, 9-53, 9-55
X002-3	573374-0000	GRND.TERM.X2,NEUT.TERM.X3	9-25, 9-27, 9-29, 9-31, 9-33

Pos	Part No	Description	Page No
X			
X002	596738-0000	GROUND AND NEUTRAL TERM.	9-5, 9-7, 9-9, 9-11, 9-13, 9-15
X002-3	1143671-0000	GROUND AND NEUTRAL TERM.	9-45, 9-47, 9-49, 9-51, 9-53, 9-55
X003	90195-0020	TERMINAL BLOCK, 1977.2	9-21, 9-41, 9-61
X004	90001-0028	WALL SOCKET OUTLET REPL.BY 90001-33	9-25, 9-27, 9-29, 9-31, 9-33
X004	90172-0319	CONNECTION 372 640 001	9-5, 9-7, 9-9, 9-11, 9-13, 9-15, 9-45, 9-47, 9-49, 9-51, 9-53, 9-55, 12-235, 12-237
X005	90172-0321	TERMINAL BLOCK, 373 593 000	9-5, 9-7, 9-9, 9-11, 9-13, 9-15, 9-45, 9-47, 9-49, 9-51, 9-53, 9-55, 12-235, 12-237
X006	90172-0320	TERMINAL BLOCK	9-5, 9-7, 9-9, 9-11, 9-13, 9-15, 9-45, 9-47, 9-49, 9-51, 9-53, 9-55
X006	1143954-0000	TERMINAL BLOCK X006	9-25, 9-27, 9-29, 9-31, 9-33
X007	90077-0102	TERMINAL BLOCK, 1952.2	9-5, 9-7, 9-9, 9-11, 9-13, 9-15, 9-25, 9-27, 9-29, 9-31, 9-33, 9-45, 9-47, 9-49, 9-51, 9-53, 9-55
X008	90110-0029	CONTACT UNIT, ATE 57-30140	9-5, 9-7, 9-9, 9-11, 9-13, 9-15, 9-25, 9-27, 9-29, 9-31, 9-33
X009	90110-0028	CONTACT UNIT 4-POLEADAPTER	9-5, 9-7, 9-9, 9-11, 9-13, 9-15, 9-25, 9-27, 9-29, 9-31, 9-33
X010	596741-0000	TERMINAL BLOCK X10	9-5, 9-7, 9-9, 9-11, 9-13, 9-15
X010	927279-0000	TERMINAL BLOCK X010.	9-25, 9-27, 9-29, 9-31, 9-33
X010	1143674-0000	TERMINAL BLOCK X10	9-45, 9-47, 9-49, 9-51, 9-53, 9-55
X011	90001-0028	WALL SOCKET OUTLET REPL.BY 90001-33	9-5, 9-7, 9-9, 9-11, 9-13, 9-15, 9-45, 9-47, 9-49, 9-51, 9-53, 9-55
X012	596742-0000	TERMINAL BLOCK X012	9-5, 9-7, 9-9, 9-11, 9-13, 9-15
X012	1143959-0000	TERMINAL BLOCK X012	9-45, 9-47, 9-49, 9-51, 9-53, 9-55
X013	90172-0320	TERMINAL BLOCK	12-235, 12-237
X100	90110-0057	FEMALE INSERT HAN 24 E 09 33 002 4201	9-5, 9-7, 9-9, 9-11, 9-13, 9-15, 9-25, 9-27, 9-29, 9-31, 9-33, 9-45, 9-47, 9-49, 9-51, 9-53, 9-55
X100	90110-0334	SCHRAUBE HARTING	9-5, 9-7, 9-9, 9-11, 9-13, 9-15
X100:1	90110-0334	SCHRAUBE HARTING	9-25, 9-27, 9-29, 9-31, 9-33, 9-45, 9-47, 9-49, 9-51, 9-53, 9-55
X101	90110-0057	FEMALE INSERT HAN 24 E 09 33 002 4201	9-5, 9-7, 9-9, 9-11, 9-13, 9-15, 9-25, 9-27, 9-29, 9-31, 9-33, 9-45, 9-47, 9-49, 9-51, 9-53, 9-55
X101	90110-0128	MALE INSERT HAN 24 E-M 65330242631	12-19
X101	90110-0334	SCHRAUBE HARTING	9-5, 9-7, 9-9, 9-11, 9-13, 9-15
X101:1	90110-0334	SCHRAUBE HARTING	9-25, 9-27, 9-29, 9-31, 9-33, 9-45, 9-47, 9-49, 9-51, 9-53, 9-55
X102	90110-0057	FEMALE INSERT HAN 24 E 09 33 002 4201	9-5, 9-7, 9-9, 9-11, 9-13, 9-15, 9-25, 9-27, 9-29, 9-31, 9-33, 9-45, 9-47, 9-49, 9-51, 9-53, 9-55
X102	90110-0334	SCHRAUBE HARTING	9-7, 9-9, 9-11, 9-13, 9-15
X102:1	90110-0334	SCHRAUBE HARTING	9-25, 9-27, 9-29, 9-31, 9-33, 9-45, 9-47, 9-49, 9-51, 9-53, 9-55
X103	90110-0057	FEMALE INSERT HAN 24 E 09 33 002 4201	9-5, 9-7, 9-9, 9-11, 9-13, 9-15, 9-25, 9-27, 9-29, 9-31, 9-33, 9-45, 9-47, 9-49, 9-51, 9-53, 9-55
X103	90110-0334	SCHRAUBE HARTING	9-5, 9-7, 9-9, 9-11, 9-13, 9-15
X103:1	90110-0334	SCHRAUBE HARTING	9-25, 9-27, 9-29, 9-31, 9-33, 9-45, 9-47, 9-49, 9-51, 9-53, 9-55
X104	90110-0057	FEMALE INSERT HAN 24 E 09 33 002 4201	9-5, 9-7, 9-9, 9-11, 9-13, 9-15, 9-25, 9-27, 9-29, 9-31, 9-33, 9-45, 9-47, 9-49, 9-51, 9-53, 9-55
X104	90110-0334	SCHRAUBE HARTING	9-5, 9-7, 9-9, 9-11, 9-13, 9-15
X104:1	90110-0334	SCHRAUBE HARTING	9-25, 9-27, 9-29, 9-31, 9-33, 9-45, 9-47, 9-49, 9-51, 9-53, 9-55
X107	90110-0057	FEMALE INSERT HAN 24 E 09 33 002 4201	9-5, 9-7, 9-9, 9-11, 9-13, 9-15, 9-25, 9-27, 9-29, 9-31, 9-33, 9-45, 9-47, 9-49, 9-51, 9-53, 9-55
X107	90110-0128	MALE INSERT HAN 24 E-M 65330242631	9-21, 9-41, 9-61
X107	90110-0334	SCHRAUBE HARTING	9-7, 9-9, 9-11, 9-13, 9-15
X107:1	90110-0334	SCHRAUBE HARTING	9-25, 9-27, 9-29, 9-31, 9-33, 9-45, 9-47, 9-49, 9-51, 9-53, 9-55
X108	90110-0057	FEMALE INSERT HAN 24 E 09 33 002 4201	9-7, 9-9, 9-11, 9-13, 9-15, 9-25, 9-27, 9-29, 9-31, 9-33, 9-45, 9-47, 9-49, 9-51, 9-53, 9-55
X108	90110-0334	SCHRAUBE HARTING	9-5, 9-7, 9-9, 9-11, 9-13, 9-15
X108:1	90110-0334	SCHRAUBE HARTING	9-25, 9-27, 9-29, 9-31, 9-33, 9-45, 9-47, 9-49, 9-51, 9-53, 9-55
X109	90110-0057	FEMALE INSERT HAN 24 E 09 33 002 4201	9-5, 9-7, 9-9, 9-11, 9-13, 9-15, 9-25, 9-27, 9-29, 9-31, 9-33, 9-45, 9-47, 9-49, 9-51, 9-53, 9-55
X109	90110-0334	SCHRAUBE HARTING	9-5, 9-7, 9-9, 9-11, 9-13, 9-15
X109:1	90110-0334	SCHRAUBE HARTING	9-25, 9-27, 9-29, 9-31, 9-33, 9-45, 9-47, 9-49, 9-51, 9-53, 9-55
X111	90110-0057	FEMALE INSERT HAN 24 E 09 33 002 4201	9-5, 9-7, 9-9, 9-11, 9-13, 9-15, 9-25, 9-27, 9-29, 9-31, 9-33, 9-45, 9-47, 9-49, 9-51, 9-53, 9-55
X111	90110-0128	MALE INSERT HAN 24 E-M 65330242631	9-23, 9-43, 9-63
X111	90110-0334	SCHRAUBE HARTING	9-7, 9-9, 9-11, 9-13, 9-15
X111:1	90110-0334	SCHRAUBE HARTING	9-25, 9-27, 9-29, 9-31, 9-33, 9-45, 9-47, 9-49, 9-51, 9-53, 9-55
Z			
Z002	90024-0047	FERRITE, 28B1020-100	13-221
Z100	90024-0031	POWER LINE FILTER, 75 A 230/400 VAC	9-5, 9-7, 9-9, 9-11, 9-13, 9-15, 9-25, 9-27, 9-29, 9-31, 9-33, 9-45, 9-47, 9-49, 9-51, 9-53, 9-55
Z101	90082-0010	OVERVOLT.PROT.PU4R230V3PH	9-5, 9-7, 9-9, 9-11, 9-13, 9-15, 9-25, 9-27, 9-29, 9-31, 9-33, 9-45, 9-47, 9-49, 9-51, 9-53, 9-55
Z102	90024-0036	FILTERED TERMINAL BLOCK	9-5, 9-7, 9-9, 9-11, 9-13, 9-15, 9-25, 9-27, 9-29, 9-31, 9-33, 9-45, 9-47, 9-49, 9-51, 9-53, 9-55

Tetra Pak

SPC binder labels. 40 mm Full width
using the **variable definitions** *made in the* **front page** *file!!*

Note! This page is generated **automatically.**

TB/8 100V 1(2)
648021-1000
Issue: 2006-11 Doc No: SPC-82241-0112

TB/8 100V 1(2)
648021-1000
Issue: 2006-11 Doc No: SPC-82241-0112

TB/8 100V 2(2)
648021-1000
Issue: 2006-11 Doc No: SPC-82241-0112

TB/8 100V 2(2)
648021-1000
Issue: 2006-11 Doc No: SPC-82241-0112

TB/8 100V 1(2)
648021-1000
Issue: 2006-11 Doc No: SPC-82241-0112

TB/8 100V 1(2)
648021-1000
Issue: 2006-11 Doc No: SPC-82241-0112

TB/8 100V 2(2)
648021-1000
Issue: 2006-11 Doc No: SPC-82241-0112

TB/8 100V 2(2)
648021-1000
Issue: 2006-11 Doc No: SPC-82241-0112

TB/8 100V 1(2)
648021-1000
Issue: 2006-11 Doc No: SPC-82241-0112

TB/8 100V 1(2)
648021-1000
Issue: 2006-11 Doc No: SPC-82241-0112

TB/8 100V 2(2)
648021-1000
Issue: 2006-11 Doc No: SPC-82241-0112

TB/8 100V 2(2)
648021-1000
Issue: 2006-11 Doc No: SPC-82241-0112

SPC binder labels. 30 mm Half width using the **variable definitions** *made in the* **front page** *file!!*

Note! This page is generated **automatically.**

TB/8 100V 1(2)
648021-1000
Issue: 2006-11 Doc No: SPC-82241-0112

TB/8 100V 1(2)
648021-1000
Issue: 2006-11 Doc No: SPC-82241-0112

TB/8 100V 2(2)
648021-1000
Issue: 2006-11 Doc No: SPC-82241-0112

TB/8 100V 2(2)
648021-1000
Issue: 2006-11 Doc No: SPC-82241-0112

TB/8 100V 1(2)
648021-1000
Issue: 2006-11 Doc No: SPC-82241-0112

TB/8 100V 1(2)
648021-1000
Issue: 2006-11 Doc No: SPC-82241-0112

TB/8 100V 2(2)
648021-1000
Issue: 2006-11 Doc No: SPC-82241-0112

TB/8 100V 2(2)
648021-1000
Issue: 2006-11 Doc No: SPC-82241-0112

TB/8 100V 1(2)
648021-1000
Issue: 2006-11 Doc No: SPC-82241-0112

TB/8 100V 1(2)
648021-1000
Issue: 2006-11 Doc No: SPC-82241-0112

TB/8 100V 2(2)
648021-1000
Issue: 2006-11 Doc No: SPC-82241-0112

TB/8 100V 2(2)
648021-1000
Issue: 2006-11 Doc No: SPC-82241-0112

TB/8 100V 1(2)
648021-1000
Issue: 2006-11 Doc No: SPC-82241-0112

TB/8 100V 1(2)
648021-1000
Issue: 2006-11 Doc No: SPC-82241-0112

TB/8 100V 2(2)
648021-1000
Issue: 2006-11 Doc No: SPC-82241-0112

TB/8 100V 2(2)
648021-1000
Issue: 2006-11 Doc No: SPC-82241-0112