SPC
Spare Parts Catalogue

TBA/8 100V

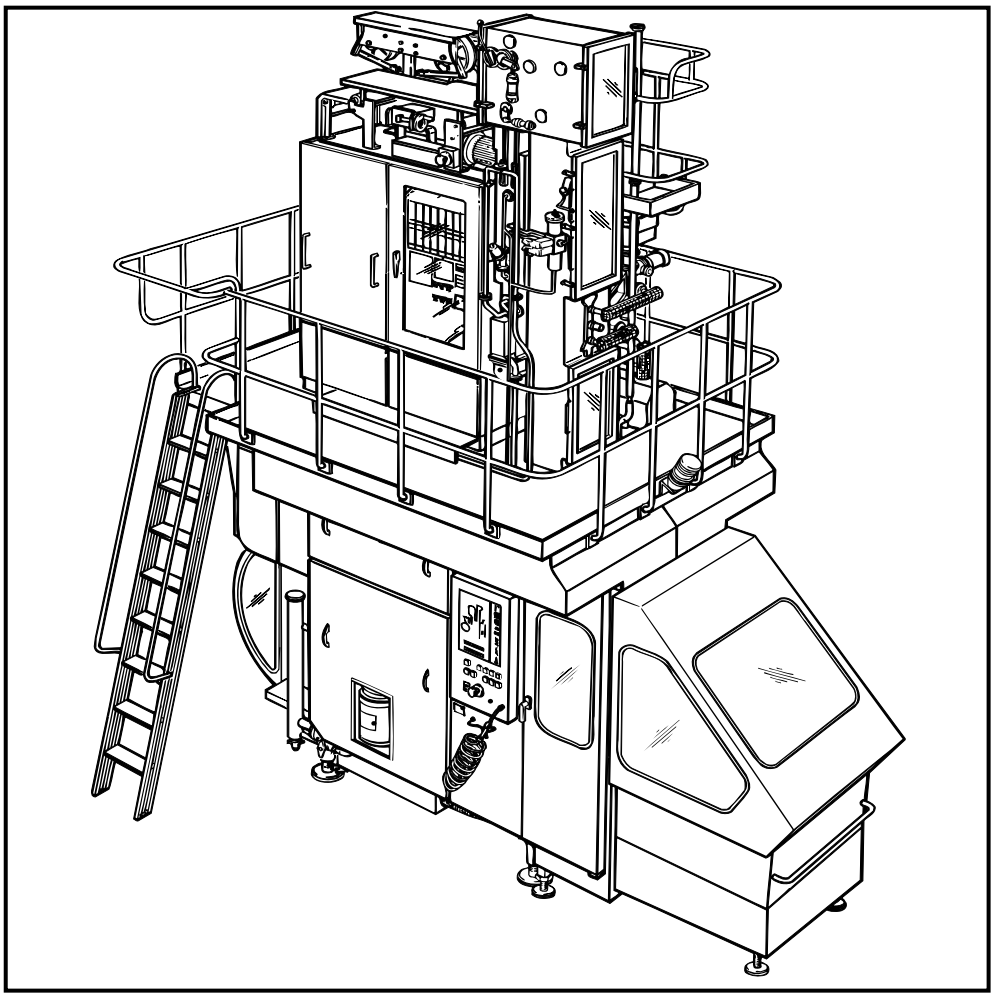

Tetra Pak

Doc No: SPC-80239-0104

Main Groups of the Machine

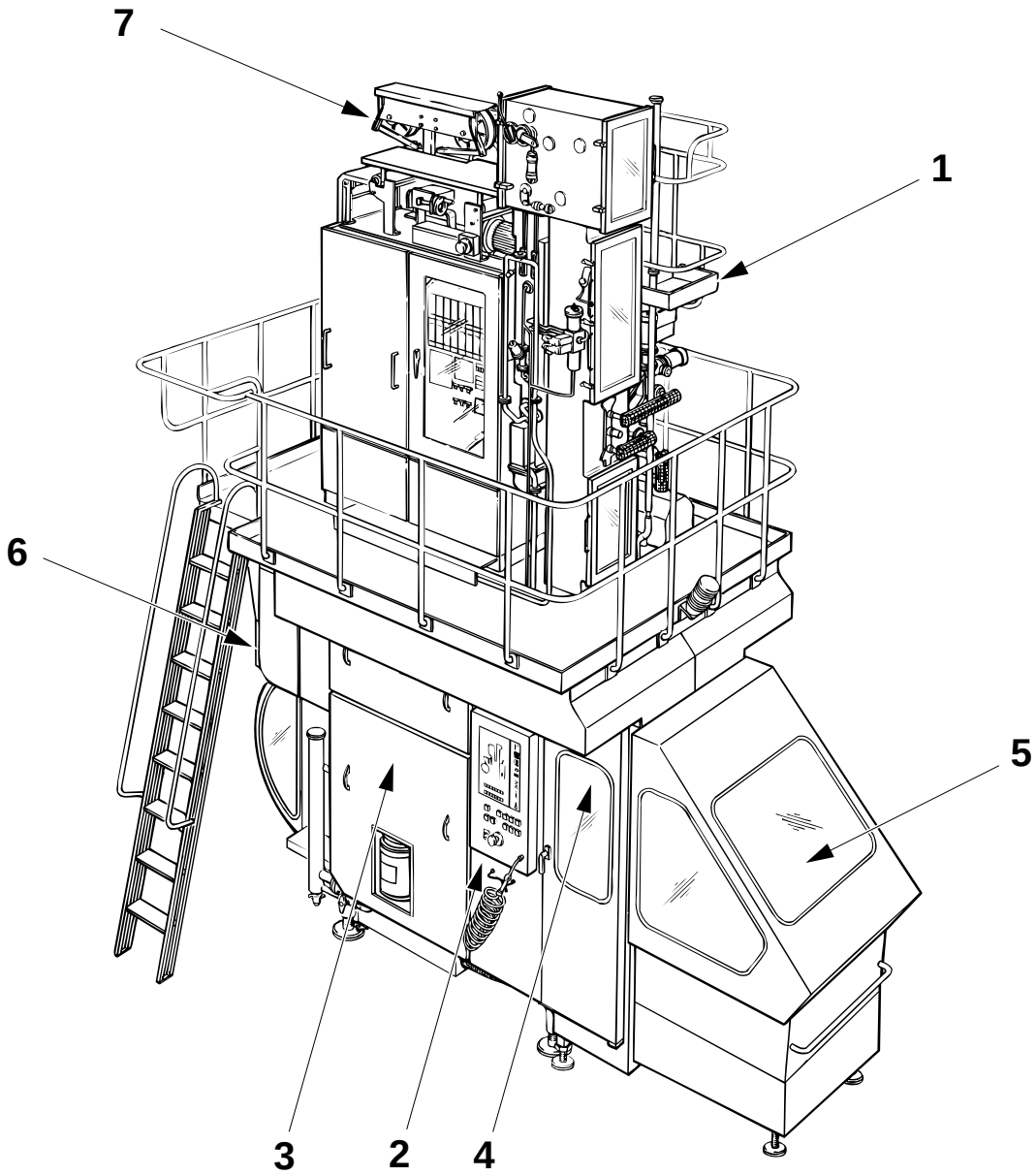

1 - Superstructure
2 - Machine Body
3 - Drive
4 - Jaw System
5 - Final Folder
6 - Automatic Splicing Unit
7 - Strip Applicator

For the correct machine data, check your machine specification, supplied with the machine!

This document is valid for:

Series No/ Machine No Sign.

SPC
Spare Parts Catalogue

Tetra Brik Aseptic
TBA/8
648022-100V

Table of Content:

Introduction **5**

Superstructure
B- 648011-080V **15**

Machine Body
B- 648012-0801 ..... **147**

Drive
B- 648003-1002 ..... **281**

Jaw System
B- 648004-0902 ..... **313**

Final Folder
B- 648035-0701 ..... **409**

Regular Accessories
B- 648009-0902 ..... **573**

Automatic Splicing Unit
B- 648013-060V **601**

Strip Applicator
B- 648007-0401 ..... **671**

Part number index **713**

Doc No: SPC-80239-0104

Issue 9810

Tetra Pak

Tetra Brik Packaging Systems

This page intentionally left blank

Manufacturer

This Tetra Pak equipment has been manufactured by:

Tetra Brik Packaging Systems AB
Ruben Rausing gata
221 86 LUND
Sweden

or

Tetra Brik Packaging Systems S.p.A.
Via Delfini 1
411 00 MODENA
Italy

Service

Contact the nearest Tetra Pak service station.

Identification

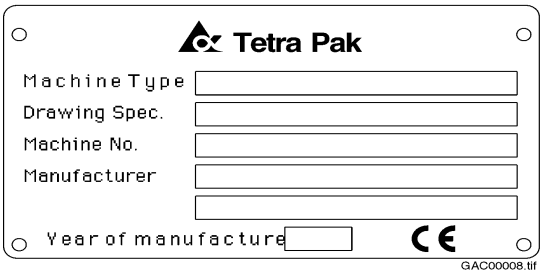

1 Machine type
2 Volume
3 Drawing specifications
4 Machine serial number
5 Manufacturer
6 CE mark
7 Year of manufacture

This equipment sign carries data needed when contacting Tetra Pak concerning this specific equipment.

CE marking

This equipment complies with the basic health and safety regulations of the European Economic Area (EEA).

Purpose of Spare Parts Catalogue

The purpose of the Spare Parts Catalogue (SPC) is to provide the technicians and contact personnel with information on how to find and order spare parts for maintenance and service of the equipment.

For instructions of how to replace parts and adjust machine setup, see the Maintenance Manual (MM).

Design modifications

The content of this document is in accordance with the design and construction of the machine at the time it was delivered from the Tetra Pak production plant.

Technical publications

The technical publications for this equipment are:

- Electrical Manual (EM)
- Installation Manual (IM)
- Maintenance Manual (MM)
- Operation Manual (OM)
- Spare Parts Catalogue (SPC)

Additional copies can be ordered from the nearest Tetra Pak service station.

When ordering technical publications, always quote the **document number** that can be found in the machine specification document.

Number of pages

This document contains a total of **788 pages**.

Copyright © 1998 Tetra Brik Packaging Systems

All rights reserved. No parts of this document may be reproduced or copied in any forms or by any means, without written permission from Tetra Brik Packaging Systems.

How to find the correct spare part number

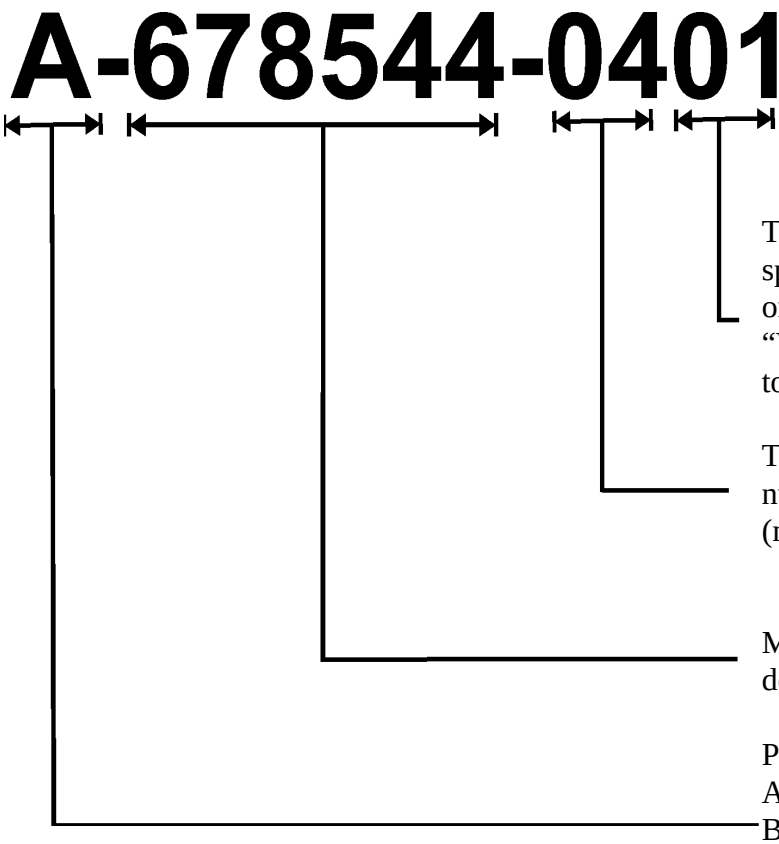

***)** Customized distribution machines are registered as B-level as well.

A. Check that the data on your equipment sign, and/or machine specification, corresponds with the catalogue.

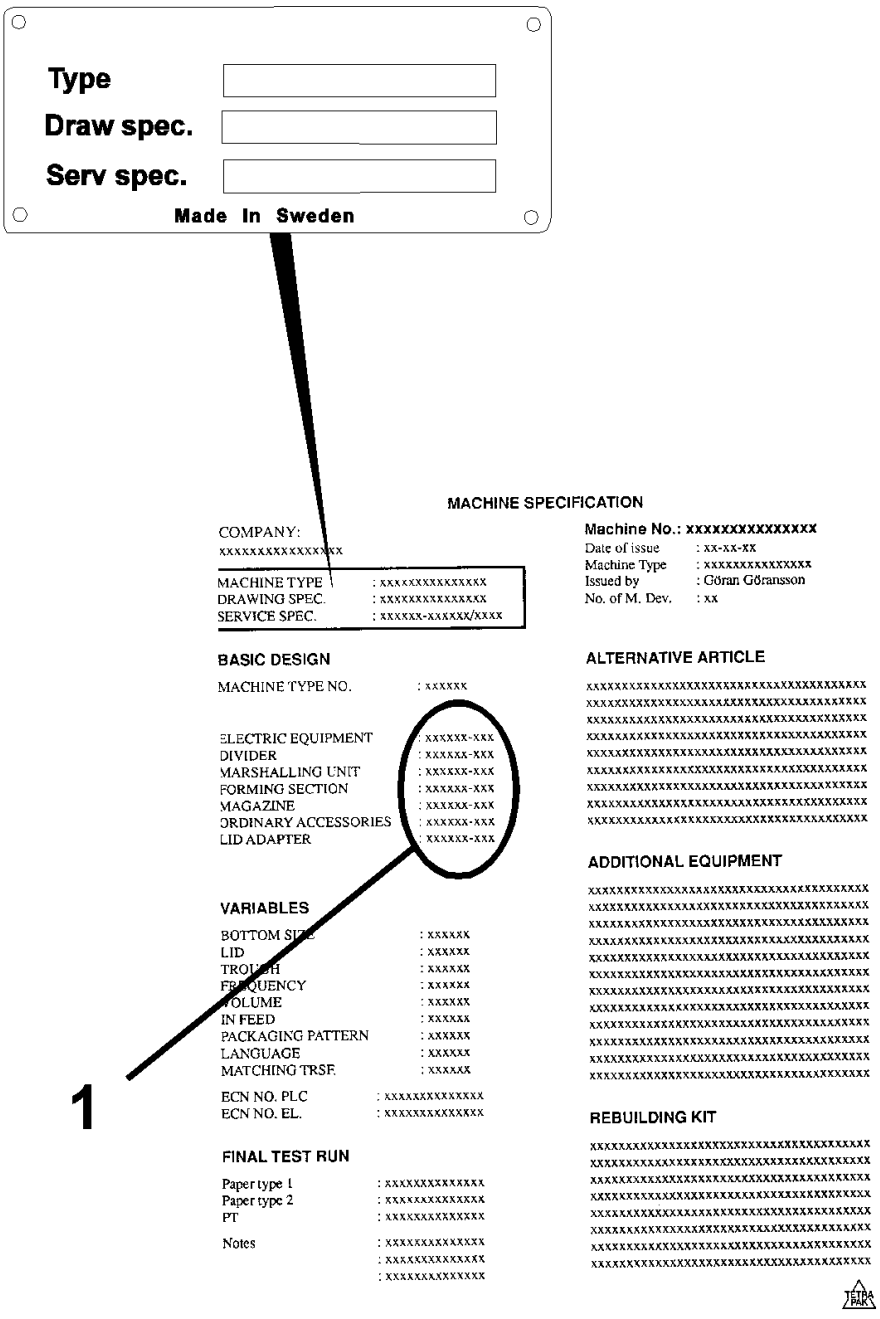

1 Main groups of the equipment

B. The second catalogue sheet contains a table of content for the main groups, included in the catalogue. The information regarding equipment and main group status must correspond with your equipment specification.
Locate and choose the main groups page number (1), in which you want to search for spare parts.

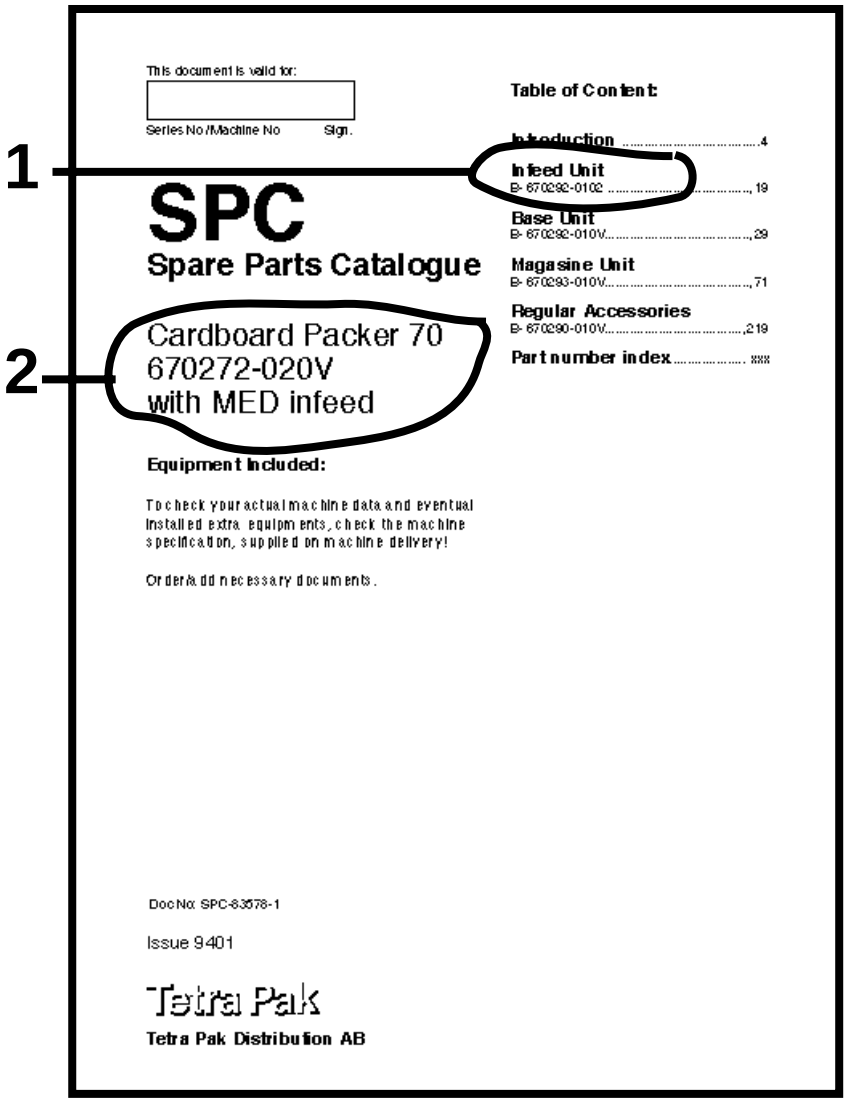

1 Main Group
2 Machine type

C. Search in the main group illustration, the item number, which may hold your wanted spare part. Go to the text page below and find the page number for the actual group.

3) Internal information, such as latest Engineering Change Notice (ECN), bill-of-material included in the catalogue page
4) Used-In reference to next higher level in the machine structure
5) Pos numbering on illustration
6) Illustration number in the SPC database
7) Continuous page numbering through the document
8) Pos number corresponding to illustration
9) Group or article number.
10) Group or article description
11) Machine type including development staus
12) Group description
13) Group number (bill-of-material) including development status
14) Document number

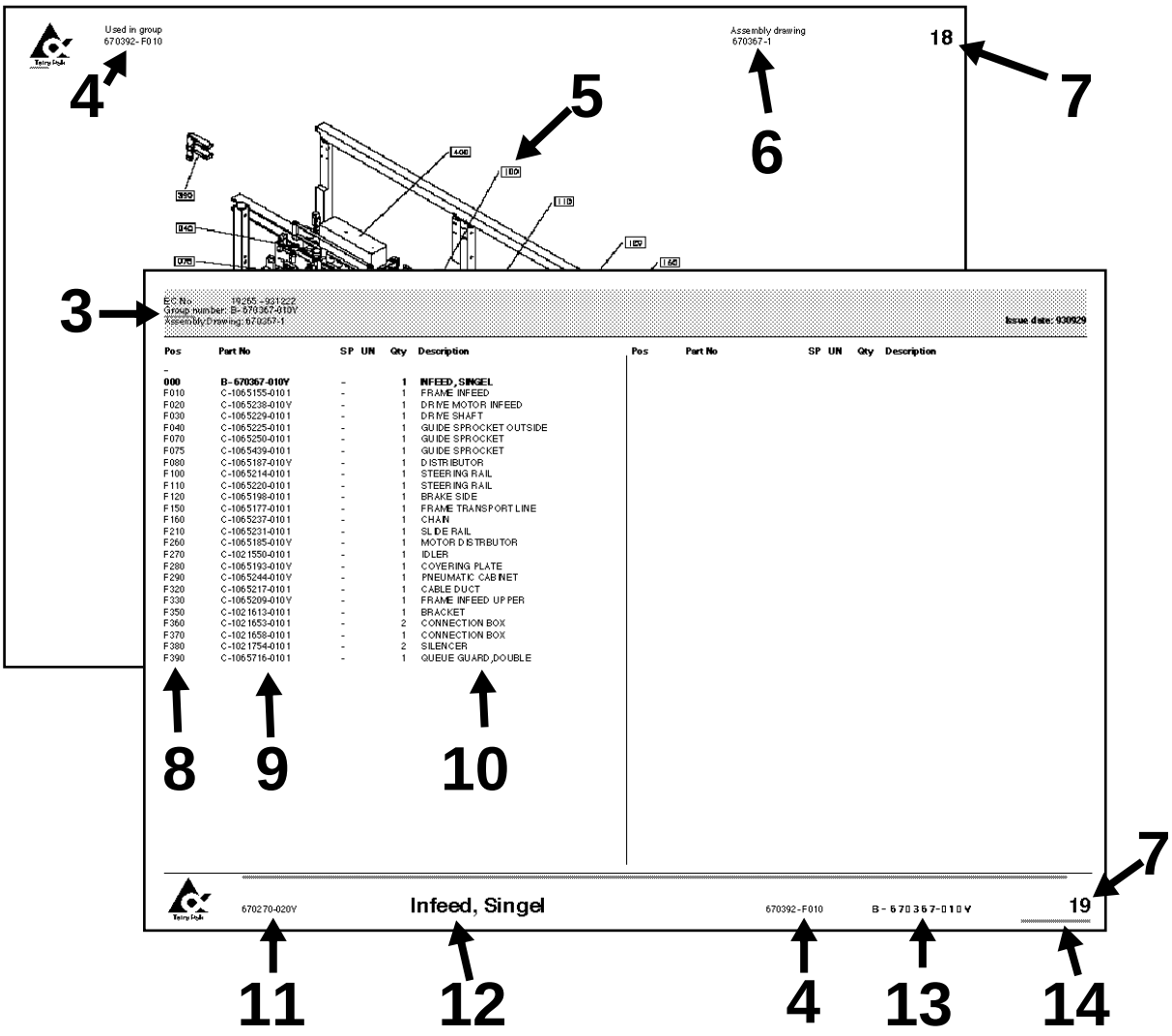

D. Continue to the found page number, and search in the illustration for your spare part. Go to the text row for the found item number, and read the part number. Take eventual variant headings in consideration; if you are unsure, read your machine specification.

15) Variant heading (e.g. volume, left /right).
16) Heading for common parts.
17) SP = Code for articles, which are included into various spare part kits:
    - U = starting-up kit supplied on machine delivery
    - P = production kit to be held at production site workshop
    - S = service kit to be held at service stations store
    - C = central depot kit to be available at the central store
18) UN = Short code for measure units (e.g. mm, kg)ß.
19) Qty = Number of items needed in the complete assembly.

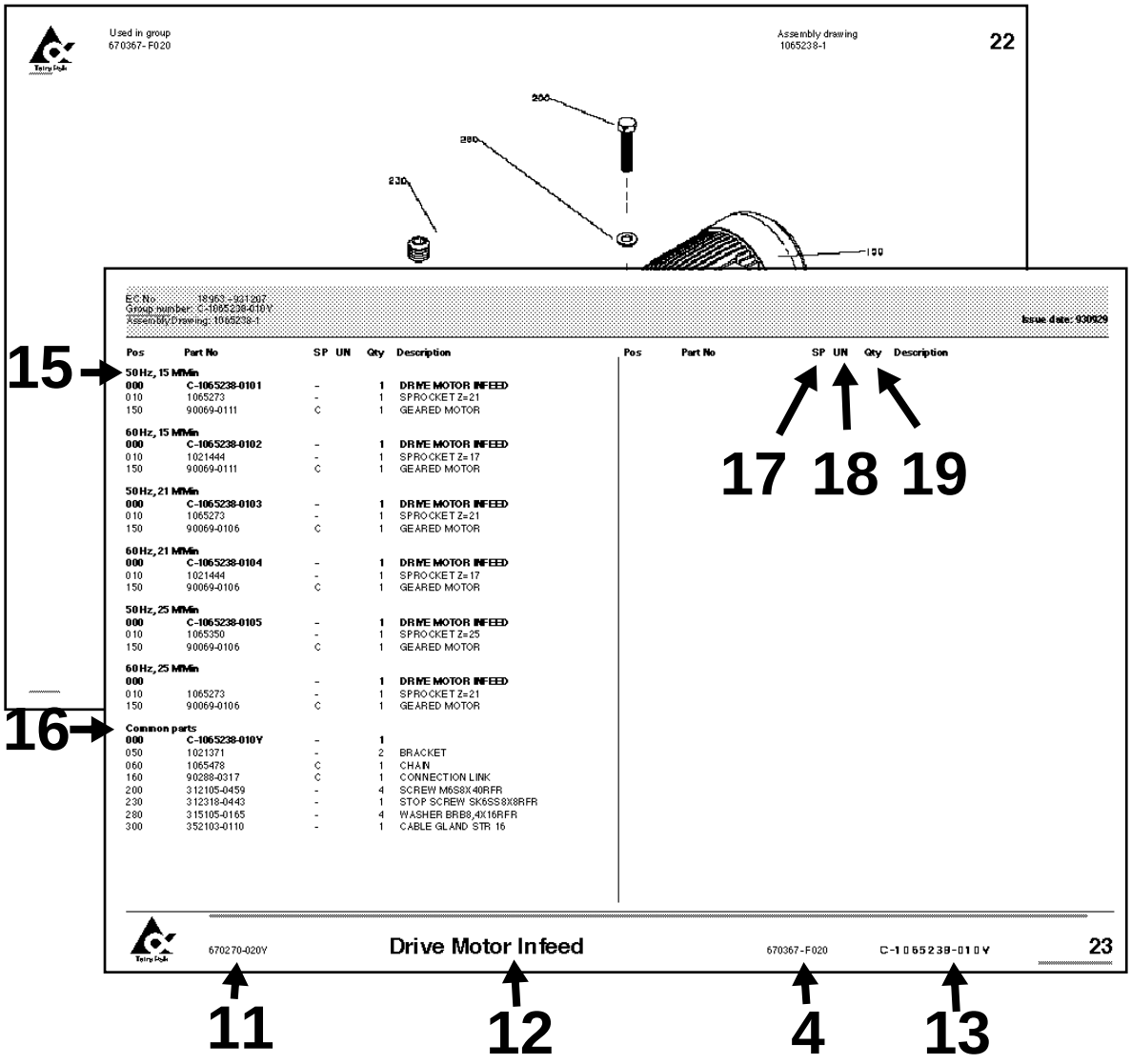

Special terminology and abbreviations

This page is intentionally left blank

SPC

Spare Parts Catalogue

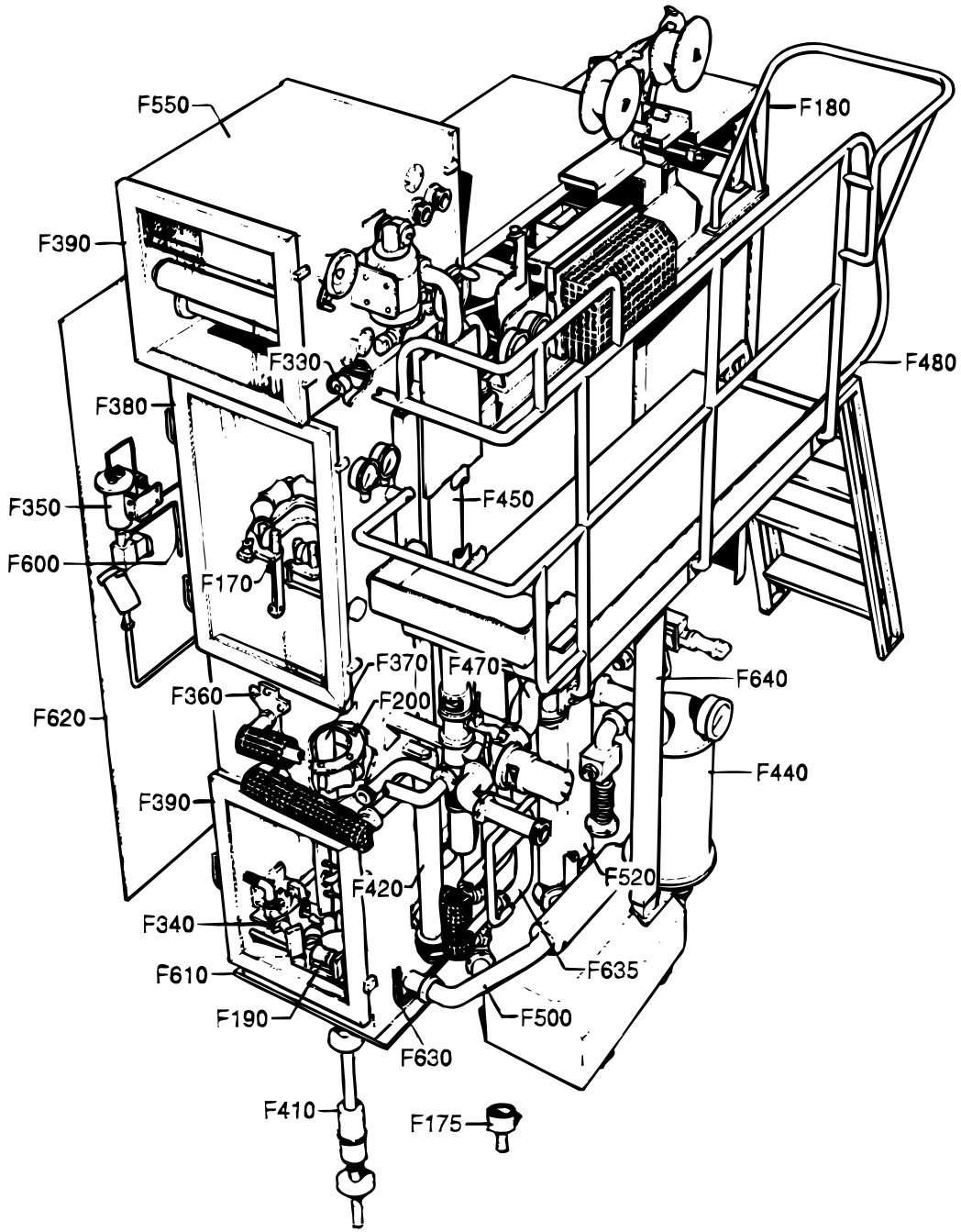
F550
F180
F390
F330
F480
F380
F450
F350
F600
F170
F370
F470
F640
F360
F200
F620
F440
F390
F420
F520
F340
F635
F610
F500
F190
F630
F410
F175

Pos	Part No	SP	UN	Qty	Description	Page No
VOLUMES 1055 B, 1000 B, 1000 S, 1000 Sq, 750 B, 750 S, 568 B, 500 B						
000	**B- 648011-0801**	**-**		**1**	**SUPERSTRUCTURE**	
F170	C- 263805-020V	-		1	FORM CLAMP	**17**
VOLUMES 500 Sq, 500 S, 400 B, 375 S, 355 B						
000	**B- 648011-0802**	**-**		**1**	**SUPERSTRUCTURE**	
F170	C- 450490-010V	-		1	FORM CLAMP	**21**
Common parts						
F175	C- 263948-030V	-		1	CUP	**23**
F180	C- 265809-0301	-		1	PAPER GUARD	**25**
F190	C- 269113-060V	-		1	LOWER FORMING RING	**27**
F200	C- 269115-050V	-		1	UPPER FORMING RING	**35**
F330	C- 269136-0201	-		2	EDGE ROLLER	**41**
F340	C- 269158-040V	-		1	HOT AIR ELEMENT	**43**
F350	C- 560930-0101	-		1	CONTAINER	**45**
F360	C- 269715-0101	-		1	PIPE HOLDER	**47**
F370	C- 269720-030V	-		1	FILLER TUBE	**49**
F380	C- 573612-0101	-		1	DOOR	**51**
F390	C- 573612-0102	-		3	DOOR	**51**
F410	C- 269828-050V	S		1	FILLER TUBE	**55**
F420	C- 269915-070V	-		1	HOT AIR ELEMENT	**59**
	C- 283926-030V	-		-	. AIR NOZZLE	**61**
F440	C- 575474-010V	-		1	COMPRESSOR	**63**
	C- 476859-0203	-		-	. CHANGE-OVER VALVE	**65**
	C- 569003-0101	-		-	. SEPARATION INSERT	**71**
	C- 575475-0101	-		-	. SCRUBBER	**73**
F450	C- 269941-060V	-		1	BATH	**75**
	C- 269932-0501	-			. COVER	**79**
F470	C- 561268-020V	-		1	CONNECTION ASSEMBLY	**81**
	C- 440630-020V	-		-	. AP-VALVE	**87**
	C- 539209-0101	-		-	. . A-CYLINDER	**89**
	C- 539210-0101	-		-	. . C-CYLINDER	**91**
	C- 539211-0101	-		-	. . B-CYLINDER	**93**
	C- 541163-0101	-		-	. . CLAMP RING	**95**
	C- 541164-0101	-		-	. . CLAMP RING	**97**
	C- 539209-0102	-		-	. . A-CYLINDER	**89**
F480	C- 269970-0501	-		1	PLATFORM	**99**
	C- 269971-0201	-		-	. LADDER	**101**
F500	C- 269988-0601	-		1	VENTILATION SYSTEM	**103**
	C- 273401-0301	-		-	. CHANGE-OVER VALVE	**105**
	C- 476849-0101	-		-	. VALVE	**107**
	C- 476859-0201	-		-	. CHANGE-OVER VALVE	**65**
	C- 476859-0202	-		-	. CHANGE-OVER VALVE	**65**

Pos	Part No	SP	UN	Qty	Description	Page No
F520	C- 273400-0701	-		1	STERILE AIR SYSTEM	**109**
	C- 269989-0301	-		-	. VALVE	**111**
	C- 269989-0302	-		-	. VALVE	**111**
	C- 273402-0401	-		-	. AIR SUPER-HEATER	**113**
F550	C- 276373-0701	-		1	DRIER	**115**
	C- 263391-0401	-		-	. CALENDER ROLLER	**117**
	C- 263394-030V	-		-	. BENDING ROLLER	**119**
	C- 276345-030V	-		-	. AIR KNIFE	**121**
F600	C- 276480-0501	-		1	PIPE WORK	**123**
F610	C- 278956-0701	-		1	PILLAR	**125**
	C- 466399-010V	-		-	. SEAL	**127**
F620	C- 279651-0601	-		1	TOUCH GUARD	**129**
F630	C- 282805-080V	-		1	PIPE WORK-PNEUMATIC	**131**
F635	C- 451131-0101	-		1	CLEANING PIPE	**135**
F640	C- 451342-0501	-		1	CABLE DUCT	**137**
	C- 451365-0201	-		-	. TERMINAL PLINTH	**139**
F650	C- 284163-050V	-		1	START-UP KIT	**141**
	SP- 499255-0201	-		-	. SEAL KIT	**143**

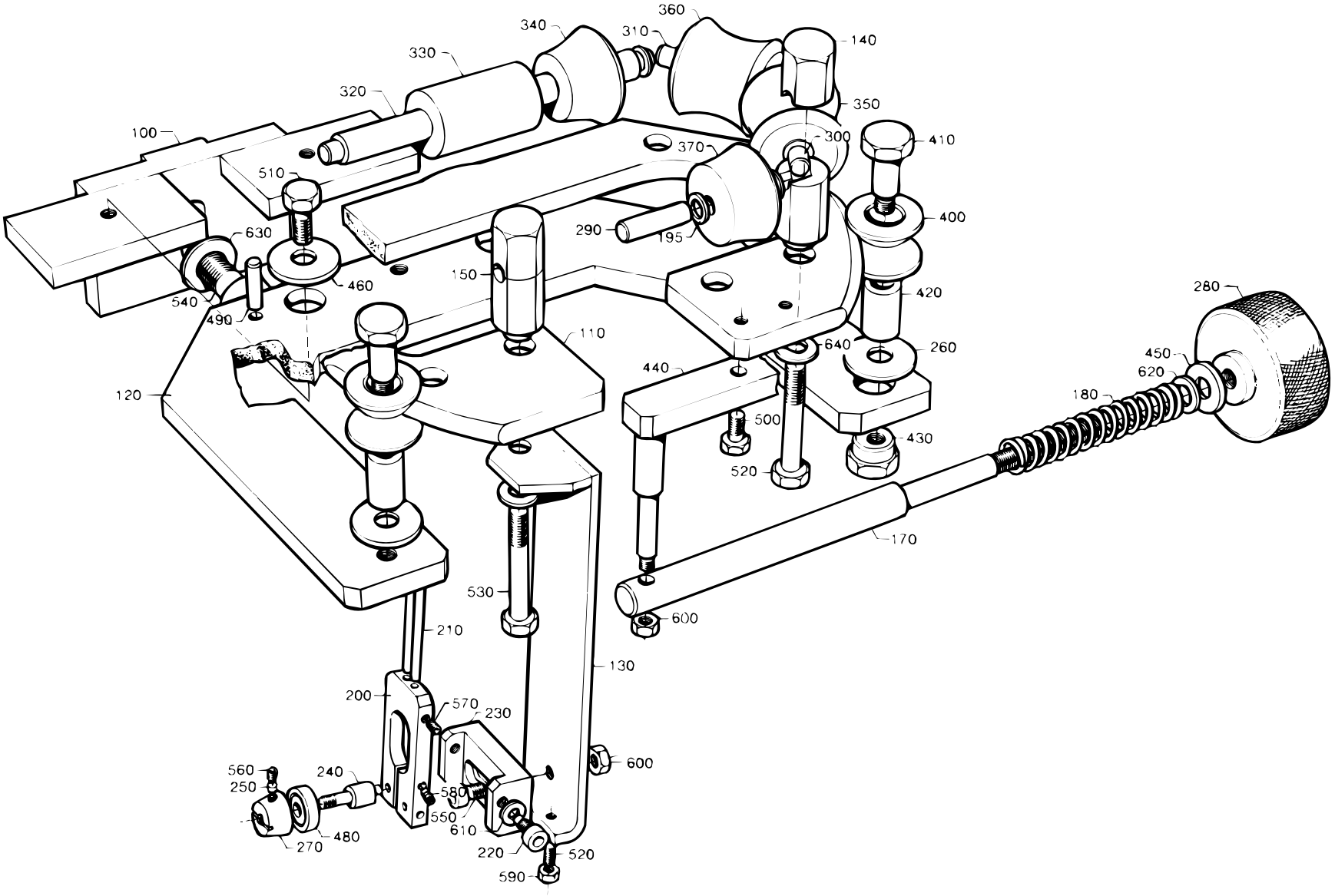
360
340
310
140
330
320
350
100
370
300
410
510
630
290
195
400
150
460
420
540
490
280
110
640
260
450
620
440
180
500
430
120
520
170
530
600
210
130
200
570
230
600
560
240
250
580
550
610
480
270
220
520
590

Pos	Part No	SP	UN	Qty	Description	Page No
VOLUMES 1055 B, 1000 B, 750 B, 500 B						
000	**C- 263805-0201**	**-**		**1**	**FORM CLAMP**	
110	436404	-		1	BOW CLAMP	
290	263655-0003	S		2	SHAFT	
300	263655-0004	S		2	SHAFT	
310	263655-0008	S		2	SHAFT	
320	263656-0002	S		1	SHAFT	
330	294474	P		2	ROLL	
340	294475	P		2	ROLL	
350	294476	P		2	ROLL	
360	294477	P		2	ROLL	
370	294480	P		2	ROLL	
VOLUME 750 S						
000	**C- 263805-0202**	**-**		**1**	**FORM CLAMP**	
110	544286	-		1	BOW CLAMP	
290	263655-0021	S		2	SHAFT	
300	263655-0023	S		2	SHAFT	
310	263655-0012	S		2	SHAFT	
320	263655-0024	S		1	SHAFT	
340	752583	P		1	ROLL	
350	752585	P		2	ROLL	
360	752584	P		2	ROLL	
370	752586	P		2	ROLL	
380	90240-0172	-		10	FLANGE BUSHING	
390	752156	-		4	FLANGE BUSHING	
VOLUME 1000 S						
000	**C- 263805-0203**	**-**		**1**	**FORM CLAMP**	
110	569096	-		1	BOW CLAMP	
290	263655-0002	S		2	SHAFT	
300	569091	S		2	SHAFT	
310	263655-0012	S		2	SHAFT	
320	263655-0024	S		1	SHAFT	
340	569095	P		1	ROLL	
350	569093	P		2	ROLL	
360	569094	P		2	ROLL	
370	569092	P		2	ROLL	
380	90240-0172	-		10	FLANGE BUSHING	
390	752156	-		4	FLANGE BUSHING	
VOLUME 1000 Sq, 500 Sq						
000	**C- 263805-0204**	**-**		**1**	**FORM CLAMP**	
110	569096	-		1	BOW CLAMP	
290	263655-0002	S		2	SHAFT	
300	569091	S		2	SHAFT	
310	263655-0012	S		2	SHAFT	
320	263655-0024	S		1	SHAFT	
340	579306	P		1	ROLL	
350	579307	P		2	ROLL	
360	579308	P		2	ROLL	
370	579309	P		2	ROLL	
380	90240-0172	-		10	FLANGE BUSHING	
390	752156	-		4	FLANGE BUSHING	
Common parts						
100	436395	-		1	CANTILEVER	
120	436405	-		1	FORK	
130	33648	-		1	HOLDER	
140	257987	-		6	AXLE SUPPORT	
150	257988	-		2	AXLE SUPPORT	
170	436378	C		1	SHAFT	
180	1881-0001	P		1	COMPRESSION SPRING	
190	2033-0008	P		14	WASHER	
200	23582	-		1	HOLDER	
210	23583	-		1	GUIDE FINGER	
220	23584	-		2	SCREW	
230	24351	-		1	BOW CLAMP	
240	24355	-		2	DOWEL	
250	24356	-		4	PIECE	
260	28037	-		3	WASHER	
270	111543	P		2	GUIDE CONE	
280	257090	-		1	SHIFTER HANDLE	
400	436302	C		3	ROLL	
410	436355	S		3	REAMED BOLT	
420	436356	S		3	BUSHING	
430	436357	C		1	NUT	
440	436377	C		1	JOINT	
450	436403	P		1	WASHER	
460	497720	-		2	WASHER	
480	90214-0138	SU		2	BALL BEARING	
490	311103-0236	-		2	CYLINDRICACP M6 3X16 RFR	
500	312105-0366	-		2	SCREW O4017 M6X12A280	
510	312105-0451	-		2	SCREW SO4017 8X20A280	
520	312105-0462	-		7	SCREW O4014 M8X55A280	
530	312105-0463	-		1	SCREW O4014 M8X60A280	
540	312105-0540	-		1	SCREW 4017 M12X40A280	

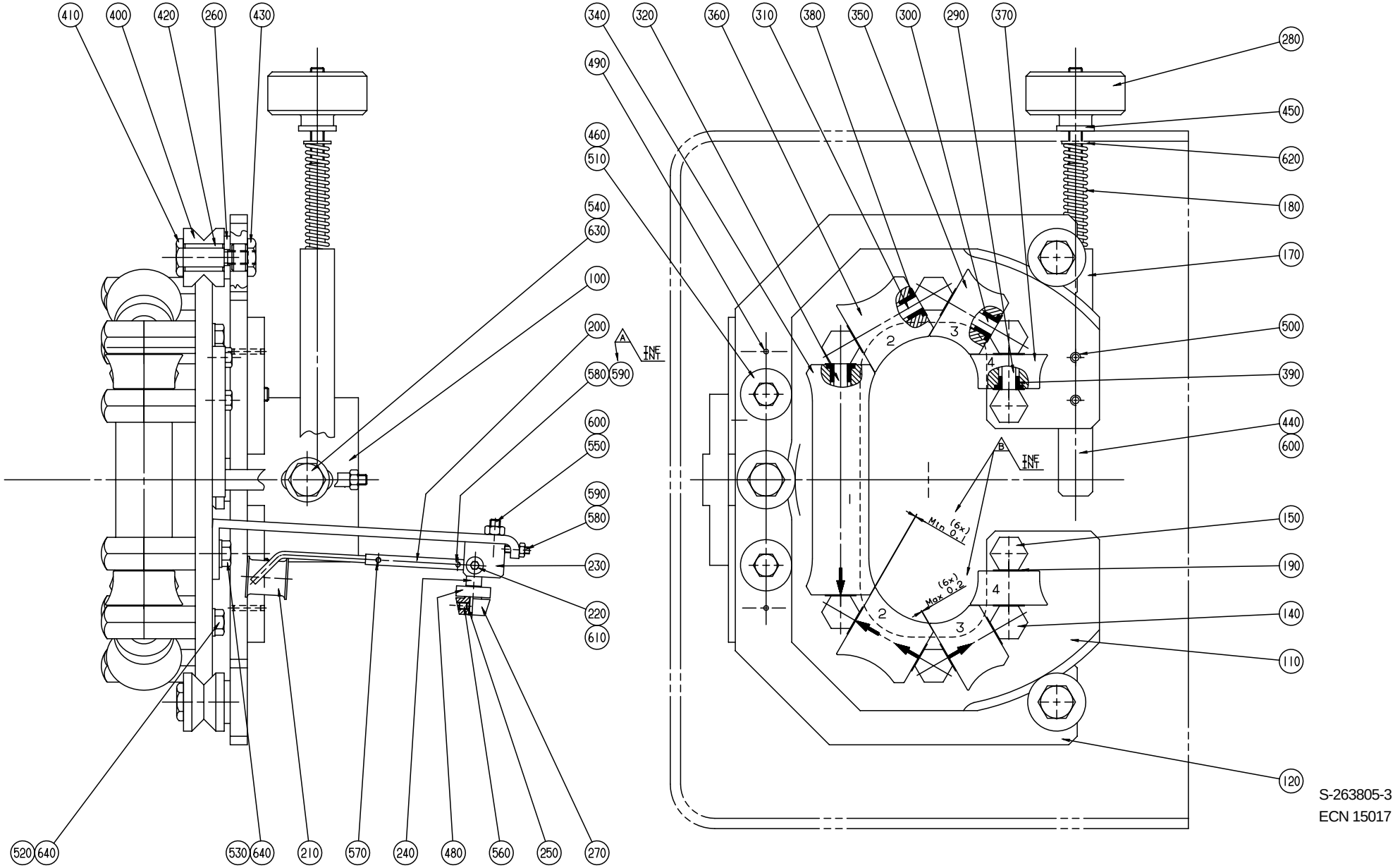

S-263805-3
ECN 15017

Pos	Part No	SP	UN	Qty	Description	Page No
550	312115-0366	-		1	SCREW O4762 M6X12A280	
560	312318-0283	-		4	STOP SCREW SK6SS4X4RFR	
570	312318-0285	-		2	STOP SCREW SK6SS4X6RFR	
580	312318-0291	-		3	STOP SCREW SK6SS4X12RFR	
590	312605-0312	-		3	NUT M6M4 STAINLESS	
600	312605-0316	-		2	NUT M6M6 A280 STAINLESS	
610	315105-0146	-		2	WASHER BRB5,3X10RFR	
620	315105-0165	-		1	WASHER BRB8,4X16RFR	
630	315105-0178	-		1	WASHER BRB13X24RFR	
640	315115-0165	-		8	WASHER TBRB8,4X16RFR	

Pos	Part No	SP	UN	Qty	Description	Page No

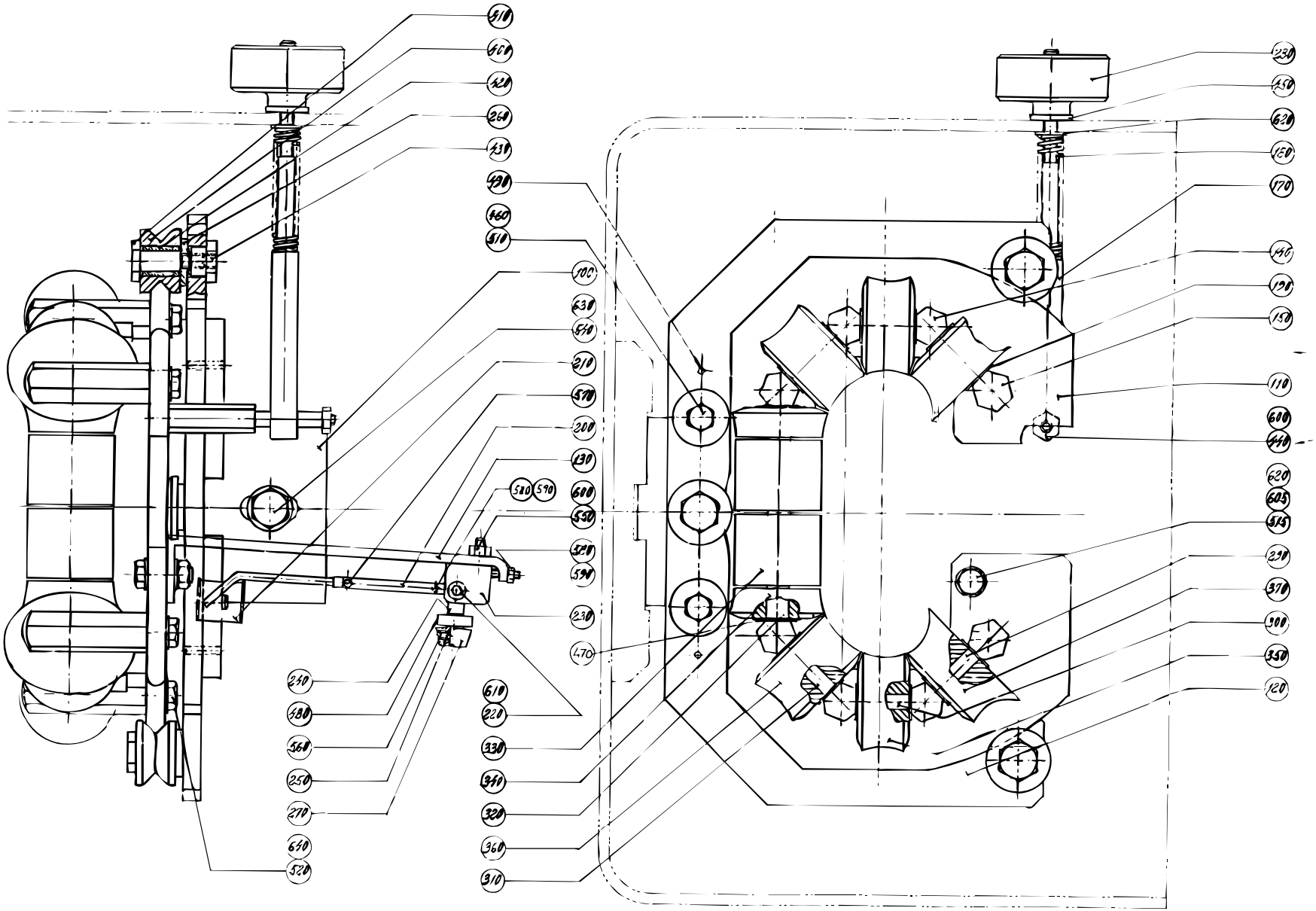

S-450490-1
ECN 14605

Pos	Part No	SP	UN	Qty	Description	Page No
VOLUMES 1055 B, 1000 B, 750 B, 568 B, 500 B						
000	**C- 450490-0101**	**-**		**1**	**FORM CLAMP**	
110	450491	-		1	BOW CLAMP	
290	445788-0002	S		2	SHAFT	
300	445788-0003	S		2	SHAFT	
310	263655-0006	S		2	SHAFT	
320	434490-0001	S		1	SHAFT	
330	445776	P		2	ROLL	
340	445778	P		2	ROLL	
350	445782	P		2	ROLL	
360	445781	P		2	ROLL	
370	445785	P		2	ROLL	
VOLUMES 500 S, 355 B, 400 B						
000	**C- 450490-0102**	**-**		**1**	**FORM CLAMP**	
110	450492	-		1	BOW CLAMP	
290	263655-0018	S		2	SHAFT	
300	445788-0005	S		2	SHAFT	
310	445788-0003	S		2	SHAFT	
320	434490-0002	S		1	SHAFT	
330	445777	P		2	ROLL	
340	445779	P		2	ROLL	
350	445783	P		2	ROLL	
360	445782	P		2	ROLL	
370	445786	P		2	ROLL	
VOLUME 375 S						
000	**C- 450490-0103**	**-**		**1**	**FORM CLAMP**	
110	450493	-		1	BOW CLAMP	
290	445788-0005	S		2	SHAFT	
300	445788-0006	S		2	SHAFT	
310	445788-0005	S		2	SHAFT	
320	434490-0003	S		1	SHAFT	
330	445777	P		2	ROLL	
340	445780	P		2	ROLL	
350	445784	P		2	ROLL	
360	445783	P		2	ROLL	
370	445787	P		2	ROLL	
Common parts						
100	436395	-		1	CANTILEVER	
120	436405	-		1	FORK	
130	33648	-		1	HOLDER	
140	445790	-		6	AXLE SUPPORT	
150	445791	-		2	AXLE SUPPORT	
170	493886	C		1	SHAFT	
180	1881-0001	P		1	COMPRESSION SPRING	
190	2033-0008	P		14	WASHER	
200	23582	-		1	HOLDER	
210	23583	-		1	GUIDE FINGER	
220	23584	-		2	SCREW	
230	24351	-		1	BOW CLAMP	
240	24355	-		2	DOWEL	
250	24356	-		4	PIECE	
260	28037	-		3	WASHER	
270	111543	P		2	GUIDE CONE	
280	257090	-		1	SHIFTER HANDLE	
400	436302	C		3	ROLL	
410	436355	S		3	REAMED BOLT	
420	436356	S		3	BUSHING	
430	436357	C		1	NUT	
440	493747	C		1	GUIDE STUD	
450	436403	P		1	WASHER	
460	497720	-		2	WASHER	
470	536987	-		X	WASHER	
480	90214-0138	SU		2	BALL BEARING	
490	311103-0236	-		2	CYLINDRICACP M6 3X16 RFR	
510	312105-0451	-		2	SCREW SO4017 8X20A280	
515	312105-0453	-		1	SCREW O4017 M8X25A280	
520	312105-0464	-		8	SCREW O4014 M8X65A280	
540	312105-0540	-		1	SCREW 4017 M12X40A280	
550	312115-0366	-		1	SCREW O4762 M6X12A280	
560	312318-0283	-		4	STOP SCREW SK6SS4X4RFR	
570	312318-0285	-		2	STOP SCREW SK6SS4X6RFR	
580	312318-0291	-		3	STOP SCREW SK6SS4X12RFR	
590	312605-0312	-		3	NUT M6M4 STAINLESS	
600	312605-0316	-		2	NUT M6M6 A280 STAINLESS	
605	312605-0318	-		1	NUT M6M8RFR	
610	315105-0146	-		2	WASHER BRB5,3X10RFR	
620	315105-0165	-		3	WASHER BRB8,4X16RFR	
630	315105-0178	-		1	WASHER BRB13X24RFR	
640	315115-0165	-		8	WASHER TBRB8,4X16RFR	

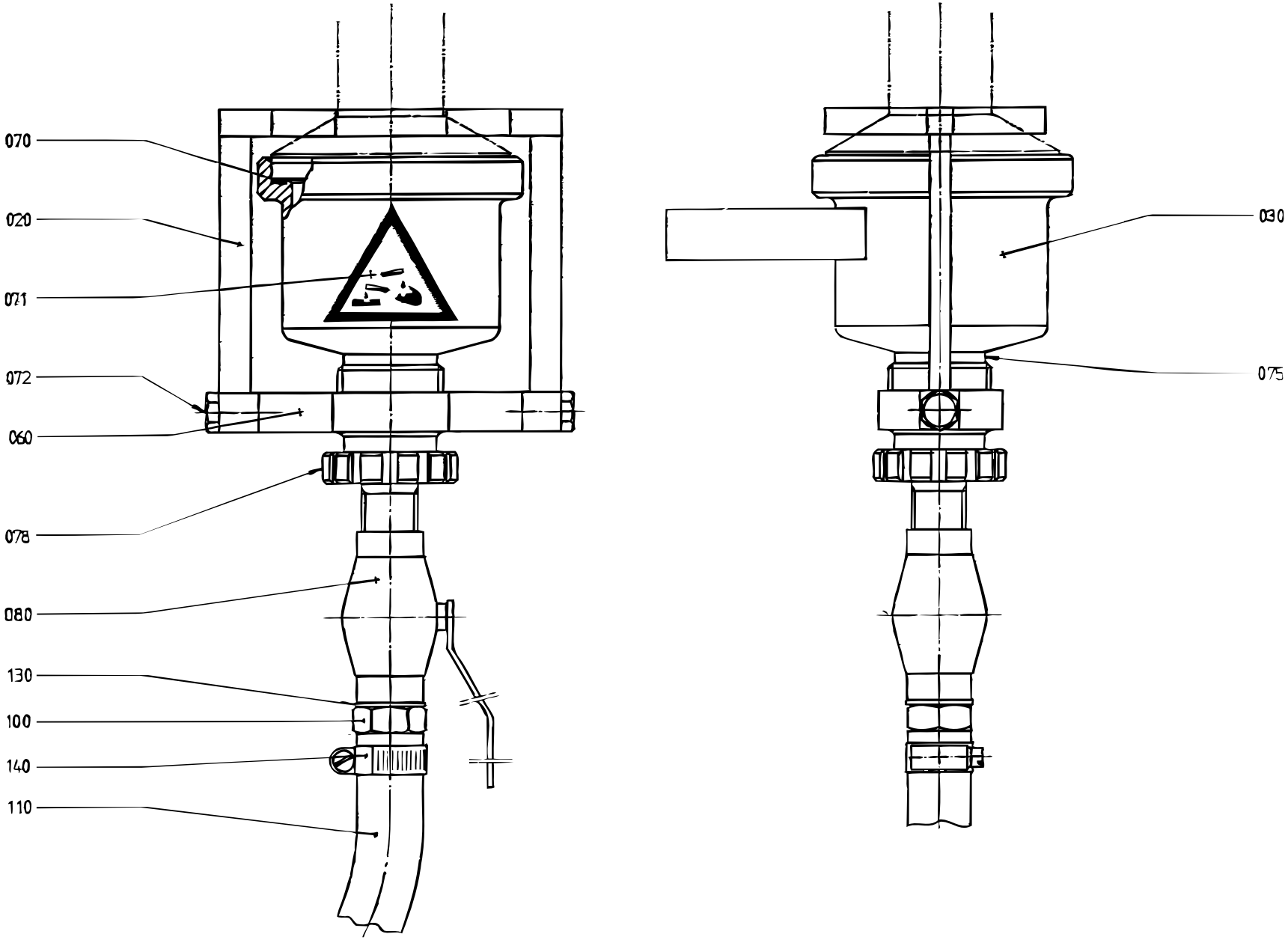

S-263948-3
ECN 22848

Pos	Part No	SP	UN	Qty	Description	Page No
VOLUMES 1055 B, 1000 B, 750 B, 568 B, 500 B						
000	**C- 263948-0301**	**-**		**1**	**CUP**	
020	458783	-		1	BOW CLAMP	
030	458784	-		1	CUP	
060	458785	-		1	BRACKET	
070	458786	-		1	GASKET	
VOLUMES 500S, 400 B, 355 B						
000	**C- 263948-0302**	**-**		**1**	**CUP**	
020	449853	-		1	BOW CLAMP	
030	449854	-		1	CUP	
060	449991	-		1	BRACKET	
070	449992	-		1	GASKET	
VOLUME 375 S						
000	**C- 263948-0303**	**-**		**1**	**CUP**	
020	449853	-		1	BOW CLAMP	
030	449855	-		1	CUP	
060	449991	-		1	BRACKET	
070	449993	-		1	GASKET	
VOLUME 750 S						
000	**C- 263948-0304**	**-**		**1**	**CUP**	
020	449853	-		1	BOW CLAMP	
030	544299	-		1	CUP	
060	449991	-		1	BRACKET	
070	544300	-		1	GASKET	
VOLUMES 1000 S, 1000 Sq, 500 Sq						
000	**C- 263948-0305**	**-**		**1**	**CUP**	
020	579951	-		1	BOW CLAMP	
030	569105	-		1	CUP	
060	458785	-		1	BRACKET	
070	569106	-		1	GASKET	
Common parts						
071	359705-0003	-		1	WARNING SIGN"CORROSION"	
072	449190	-		2	SHAFT	
075	458787	-		1	BUSHING	
078	458788	-		1	NUT	
080	90187-0082	-		1	BALL VALVE	
100	90055-0071	-		1	HOSE NIPPLE	
110	90148-0021	-	MM	2500	HOSE	
130	315233-0113	-		1	SEAL RING R1/2"	
140	342991-0104	-		1	HOSE CLIP 19-28MMRFR	

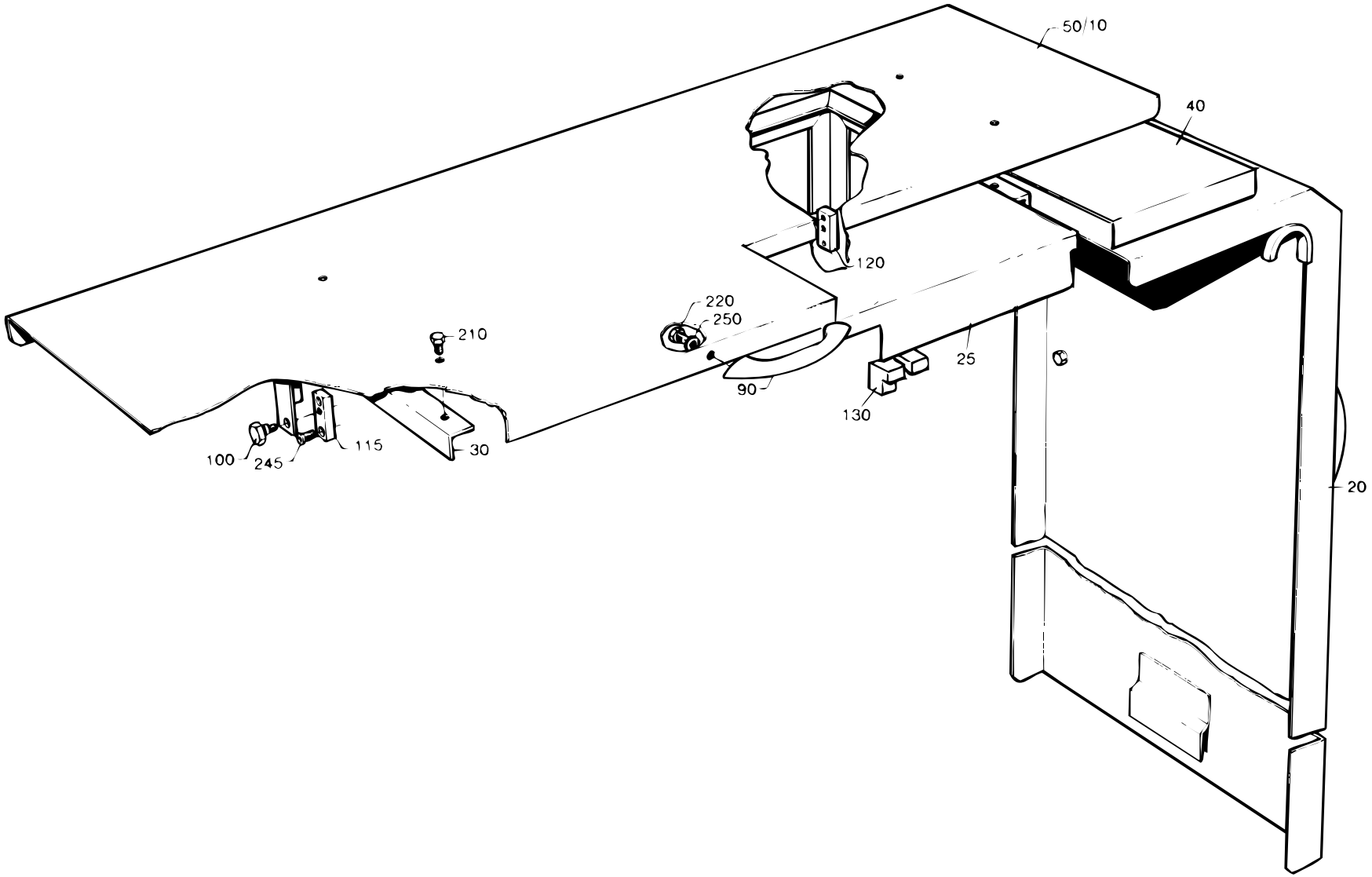

S-265809-3
ECN 12311

Pos	Part No	SP	UN	Qty	Description	Page No
-						
000	**C- 265809-0301**	**-**		**1**	**PAPER GUARD**	
010	542847	-		1	PAPER GUARD	
020	266797-0002	-		1	PAPER GUARD	
025	542848	-		1	HATCH	
030	542849	-		1	CANTILEVER	
040	542850	-		1	COVERING PLATE	
090	7309	-		4	HANDLE	
100	252972	-		2	SHOULDER SCREW	
115	283271	-		1	BRACKET	
120	449000	-		1	BRACKET	
130	542851	-		2	HINGE	
210	312105-0362	-		4	SCREW O4017 M6X8A280	
220	312105-0366	-		10	SCREW O4017 M6X12A280	
245	312155-0329	-		4	SCREW MF6S5X16RFR	
250	315105-0153	-		12	WASHER BRB6,4X12RFR	

Pos	Part No	SP	UN	Qty	Description	Page No

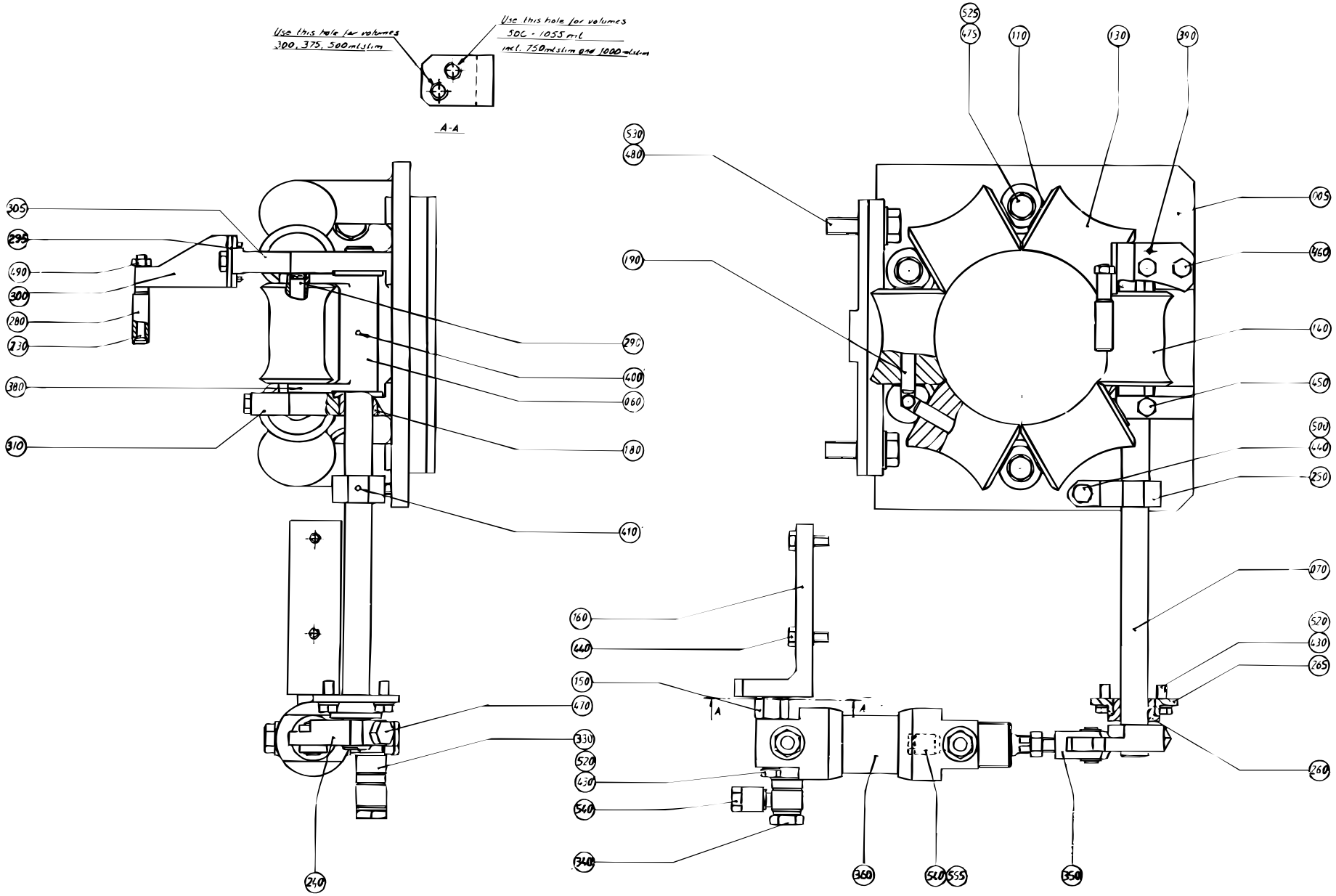

S-269113-3
ECN 18018

Pos	Part No	SP	UN	Qty	Description	Page No
VOLUMES 1055 B, 1000 B, 750 B, 568 B, 500 B						
000	**C- 269113-0601**	**-**		**1**	**LOWER FORMING RING**	
005	450459-0001	-		1	FORMING RING	
060	269146	-		1	FORK	
070	269147	S		1	SHAFT	
130	36953-0001	P		5	ROLL	
140	38630-0001	P		1	COUNTER ROLLER	
190	263655-0009	P		5	SHAFT	
265	486803	S		1	BEARING HOUSING	
290	284973	P		1	SHAFT	
300	569099	-		1	HOLDER	
VOLUMES 500S, 400 B, 355 B						
000	**C- 269113-0602**	**-**		**1**	**LOWER FORMING RING**	
005	450459-0002	-		1	FORMING RING	
060	434499	-		1	FORK	
070	434500	S		1	SHAFT	
130	449840-0001	P		5	ROLLER, (STD.SIZE)	
140	533442	P		1	COUNTER ROLLER	
190	434504	P		5	SHAFT	
265	486803	S		1	BEARING HOUSING	
290	434507	P		1	SHAFT	
300	534177	-		1	HOLDER	
VOLUME 375 S						
000	**C- 269113-0603**	**-**		**1**	**LOWER FORMING RING**	
005	450459-0002	-		1	FORMING RING	
060	434499	-		1	FORK	
070	434500	S		1	SHAFT	
130	449589-0001	P		5	ROLLER, (STD.SIZE)	
140	529181	P		1	COUNTER ROLLER	
190	434504	P		5	SHAFT	
265	486803	S		1	BEARING HOUSING	
290	434507	P		1	SHAFT	
300	529184	-		1	HOLDER	
VOLUME 750 S						
000	**C- 269113-0604**	**-**		**1**	**LOWER FORMING RING**	
005	544333	-		1	FORMING RING	
060	544335	-		1	FORK	
070	269147	S		1	SHAFT	
130	752578-0001	P		5	ROLLER, (STD.SIZE)	
140	556139	P		1	ROLL	
190	263655-0022	P		5	SHAFT	
200	90240-0172	-		12	FLANGE BUSHING	
265	544306	S		1	BEARING HOUSING	
290	544336	P		1	SHAFT	
300	534177	-		1	HOLDER	
VOLUMES 1000 S						
000	**C- 269113-0605**	**-**		**1**	**LOWER FORMING RING**	
005	567744	-		1	FORMING RING	
060	567748	-		1	FORK	
070	269147	S		1	SHAFT	
130	567746-0001	P		5	ROLLER, (STD.SIZE)	
140	567747	P		1	ROLL	
190	569100	-		5	SHAFT	
200	90240-0172	-		12	FLANGE BUSHING	
265	544306	S		1	BEARING HOUSING	
290	569085	-		1	SHAFT	
300	569099	-		1	HOLDER	
VOLUMES 1000 Sq, 500 Sq						
000	**C- 269113-0606**	**-**		**1**	**LOWER FORMING RING**	
005	567744	-		1	FORMING RING	
060	567748	-		1	FORK	
070	269147	S		1	SHAFT	
130	579310-0001	P		5	ROLLER, (STD.SIZE)	
140	579311	P		1	COUNTER ROLLER	
190	569100	-		5	SHAFT	
200	90240-0172	-		12	FLANGE BUSHING	
265	544306	S		1	BEARING HOUSING	
290	569085	-		1	SHAFT	
300	569099	-		1	HOLDER	
Common parts						
110	2033-0008	P		10	WASHER	
150	263257	C		1	CYLINDER BRACKET	
160	571945	-		1	FASTENING BRACKET	
180	263262	S		2	BUSHING	
230	469463	-		1	SHAFT	
240	269152	C		1	ROCKER ARM	
250	269153	-		1	STOP	
260	269154	S		1	BUSHING	
280	469464	P		1	ROLL	
295	434101	-		1	WASHER	
305	544445	-		1	SPACER	
310	436342	-		1	SPACER	

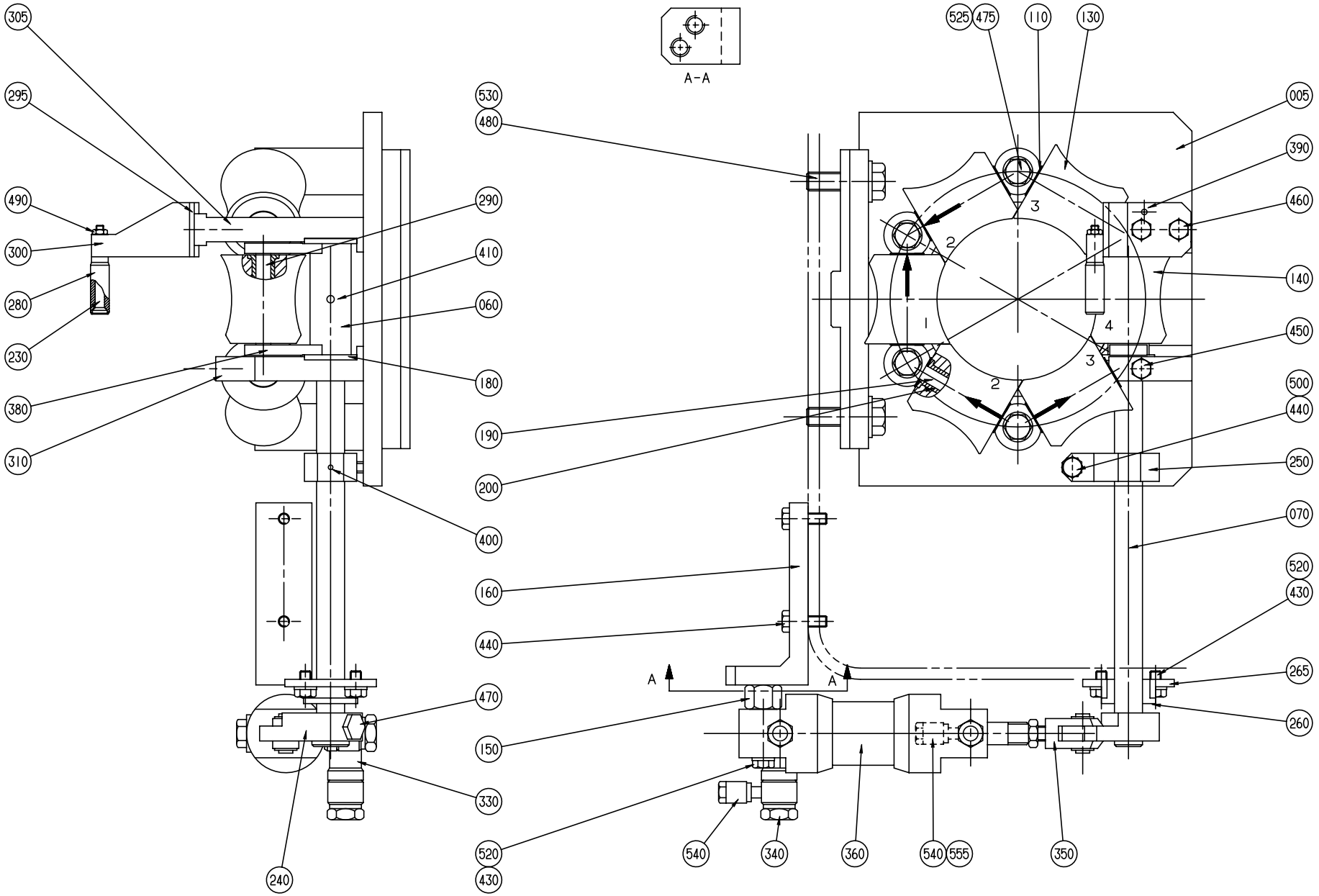

S-269113-4
ECN 18018

Pos	Part No	SP	UN	Qty	Description	Page No
330	90224-0284	S		1	SWIVEL	
340	90235-0275	S		1	VALVE	
350	90239-0127	S		1	BRACKET	
360	90239-0166	P		1	CYLINDER	
360a	90285-0094	S		0	* SEAL	
380	311103-0212	-		1	CYLINDRICACP M6 2,5X20RFR	
390	311103-0233	-		2	CYLINDRICACP M6 3X10 RFR	
400	311103-0272	-		1	CYLINDRICACP M6 4X20 RFR	
410	311103-0276	-		1	CYLINDRICACP M6 4X30 RFR	
430	312105-0364	-		5	SCREW M6S6X10RFR	
440	312105-0370	-		3	SCREW O4017 M6X20A280	
450	312105-0376	-		1	SCREW O4017 M6X35A280	
460	312105-0380	-		2	SCREW O4014 M6X50A280	
470	312105-0449	-		1	SCREW O4017 M8X16A280	
475	312105-0451	-		4	SCREW SO4017 8X20A280	
480	312105-0497	-		2	SCREW 4017 M10X35A280	
490	312605-0312	-		1	NUT M6M4 STAINLESS	
500	312605-0316	-		1	NUT M6M6 A280 STAINLESS	
520	315105-0153	-		5	WASHER BRB6,4X12RFR	
525	315105-0165	-		4	WASHER BRB8,4X16RFR	
530	315105-0173	-		2	WASHER BRB10,5X22RFR	
540	342797-0122	S		2	BANJO CONN SINGLE 6-1/4	
555	342980-0304	S		1	BANJO CONN SINGLE 1/4"	

Pos	Part No	SP	UN	Qty	Description	Page No

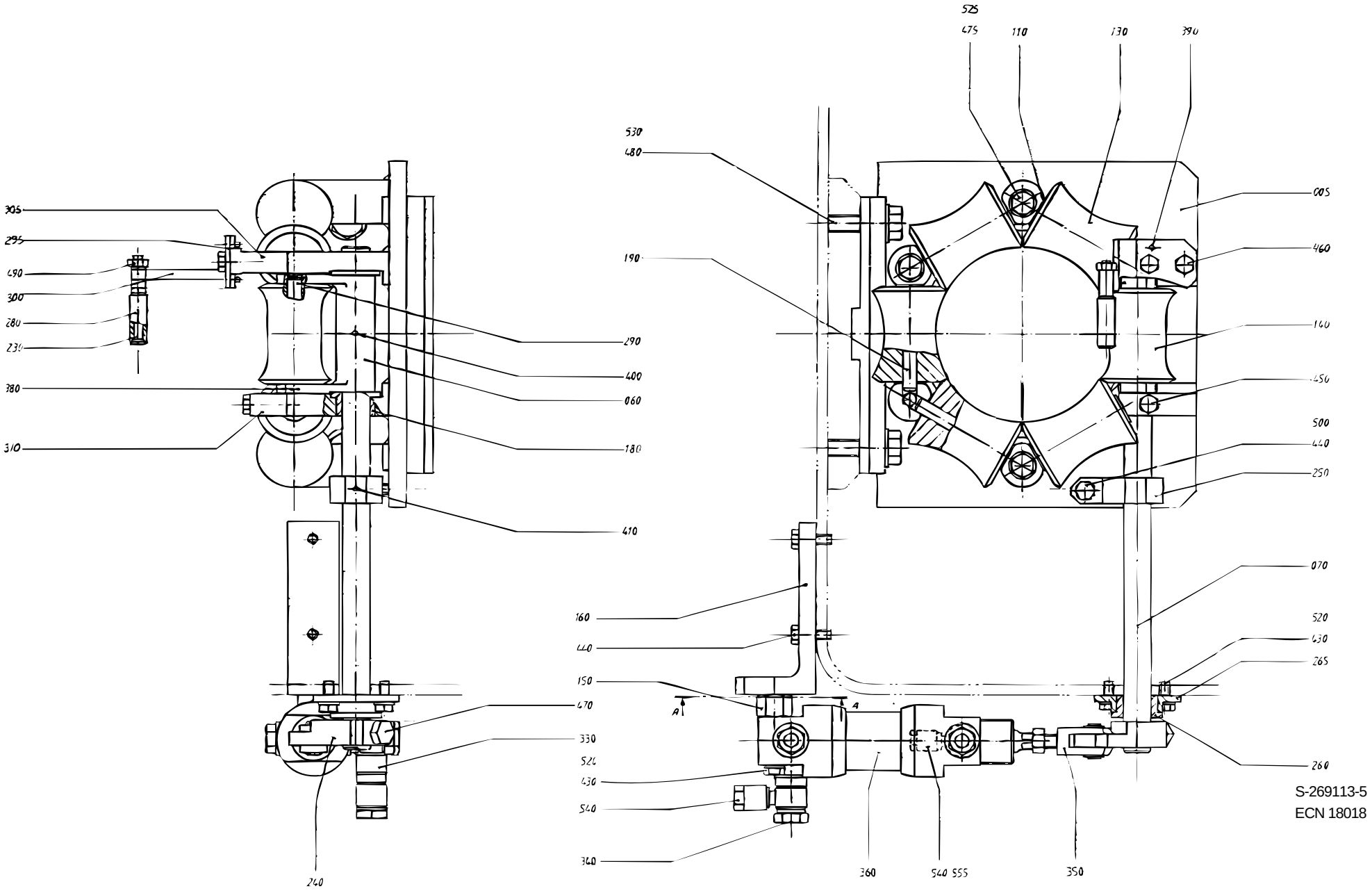

S-269113-5
ECN 18018

Pos	Part No	SP	UN	Qty	Description	Page No
VOLUMES 1055 B, 1000 B, 750 B, 568 B, 500 B						
000	**C- 269113-0601**	**-**		**1**	**LOWER FORMING RING**	
005	450459-0001	-		1	FORMING RING	
060	269146	-		1	FORK	
070	269147	S		1	SHAFT	
130	36953-0001	P		5	ROLL	
140	38630-0001	P		1	COUNTER ROLLER	
190	263655-0009	P		5	SHAFT	
265	486803	S		1	BEARING HOUSING	
290	284973	P		1	SHAFT	
300	569099	-		1	HOLDER	
VOLUMES 500S, 400 B, 355 B						
000	**C- 269113-0602**	**-**		**1**	**LOWER FORMING RING**	
005	450459-0002	-		1	FORMING RING	
060	434499	-		1	FORK	
070	434500	S		1	SHAFT	
130	449840-0001	P		5	ROLLER, (STD.SIZE)	
140	533442	P		1	COUNTER ROLLER	
190	434504	P		5	SHAFT	
265	486803	S		1	BEARING HOUSING	
290	434507	P		1	SHAFT	
300	534177	-		1	HOLDER	
VOLUME 375 S						
000	**C- 269113-0603**	**-**		**1**	**LOWER FORMING RING**	
005	450459-0002	-		1	FORMING RING	
060	434499	-		1	FORK	
070	434500	S		1	SHAFT	
130	449589-0001	P		5	ROLLER, (STD.SIZE)	
140	529181	P		1	COUNTER ROLLER	
190	434504	P		5	SHAFT	
265	486803	S		1	BEARING HOUSING	
290	434507	P		1	SHAFT	
300	529184	-		1	HOLDER	
VOLUME 750 S						
000	**C- 269113-0604**	**-**		**1**	**LOWER FORMING RING**	
005	544333	-		1	FORMING RING	
060	544335	-		1	FORK	
070	269147	S		1	SHAFT	
130	752578-0001	P		5	ROLLER, (STD.SIZE)	
140	556139	P		1	ROLL	
190	263655-0022	P		5	SHAFT	
200	90240-0172	-		12	FLANGE BUSHING	
265	544306	S		1	BEARING HOUSING	
290	544336	P		1	SHAFT	
300	534177	-		1	HOLDER	
VOLUMES 1000 S						
000	**C- 269113-0605**	**-**		**1**	**LOWER FORMING RING**	
005	567744	-		1	FORMING RING	
060	567748	-		1	FORK	
070	269147	S		1	SHAFT	
130	567746-0001	P		5	ROLLER, (STD.SIZE)	
140	567747	P		1	ROLL	
190	569100	-		5	SHAFT	
200	90240-0172	-		12	FLANGE BUSHING	
265	544306	S		1	BEARING HOUSING	
290	569085	-		1	SHAFT	
300	569099	-		1	HOLDER	
VOLUMES 1000 Sq, 500 Sq						
000	**C- 269113-0606**	**-**		**1**	**LOWER FORMING RING**	
005	567744	-		1	FORMING RING	
060	567748	-		1	FORK	
070	269147	S		1	SHAFT	
130	579310-0001	P		5	ROLLER, (STD.SIZE)	
140	579311	P		1	COUNTER ROLLER	
190	569100	-		5	SHAFT	
200	90240-0172	-		12	FLANGE BUSHING	
265	544306	S		1	BEARING HOUSING	
290	569085	-		1	SHAFT	
300	569099	-		1	HOLDER	
Common parts						
110	2033-0008	P		10	WASHER	
150	263257	C		1	CYLINDER BRACKET	
160	571945	-		1	FASTENING BRACKET	
180	263262	S		2	BUSHING	
230	469463	-		1	SHAFT	
240	269152	C		1	ROCKER ARM	
250	269153	-		1	STOP	
260	269154	S		1	BUSHING	
280	469464	P		1	ROLL	
295	434101	-		1	WASHER	
305	544445	-		1	SPACER	
310	436342	-		1	SPACER	

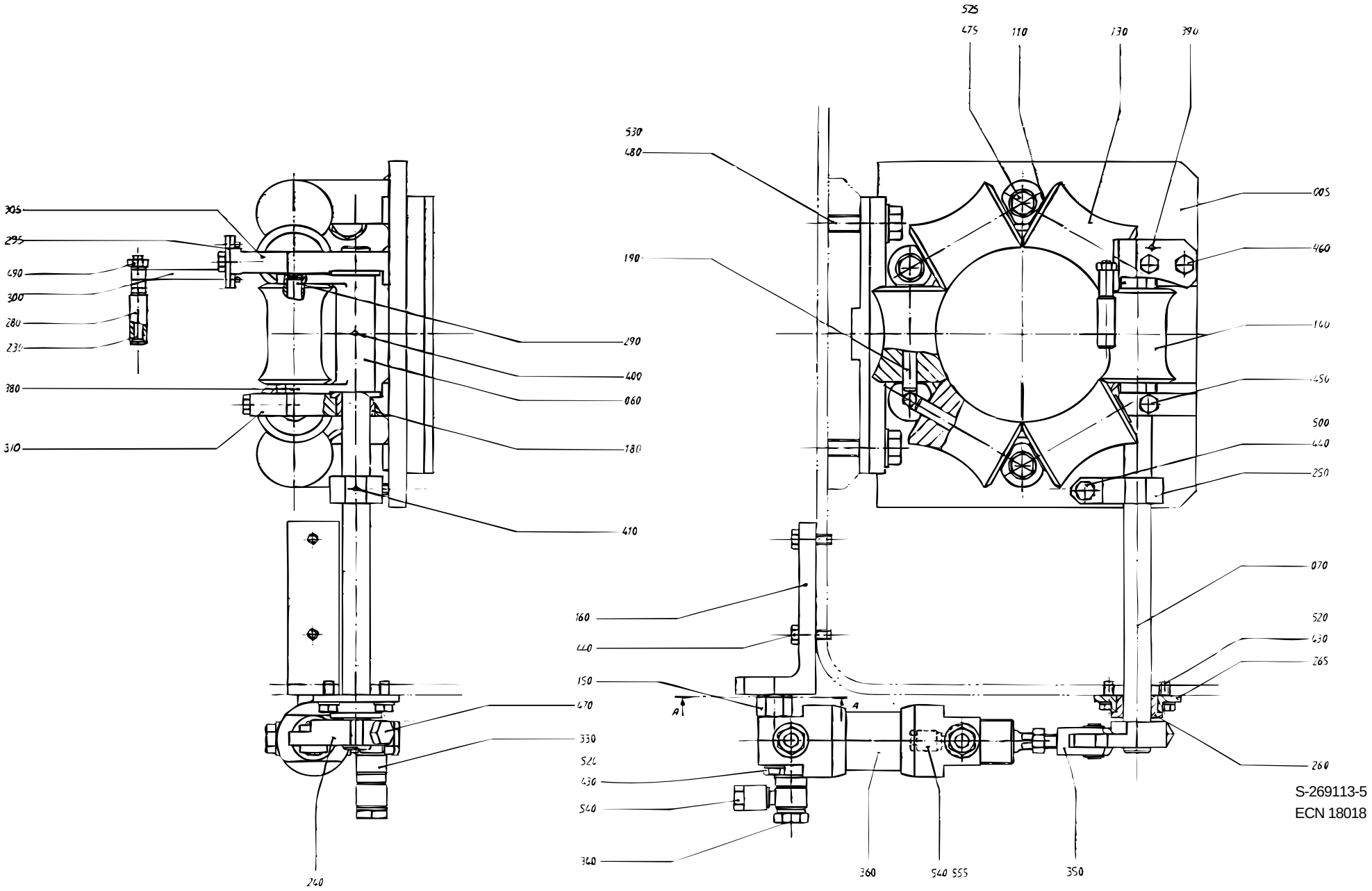

S-269113-5
ECN 18018

Pos	Part No	SP	UN	Qty	Description	Page No
330	90224-0284	S		1	SWIVEL	
340	90235-0275	S		1	VALVE	
350	90239-0127	S		1	BRACKET	
360	90239-0166	P		1	CYLINDER	
360a	90285-0094	S		0	* SEAL	
380	311103-0212	-		1	CYLINDRICACP M6 2,5X20RFR	
390	311103-0233	-		2	CYLINDRICACP M6 3X10 RFR	
400	311103-0272	-		1	CYLINDRICACP M6 4X20 RFR	
410	311103-0276	-		1	CYLINDRICACP M6 4X30 RFR	
430	312105-0364	-		5	SCREW M6S6X10RFR	
440	312105-0370	-		3	SCREW O4017 M6X20A280	
450	312105-0376	-		1	SCREW O4017 M6X35A280	
460	312105-0380	-		2	SCREW O4014 M6X50A280	
470	312105-0449	-		1	SCREW O4017 M8X16A280	
475	312105-0451	-		4	SCREW SO4017 8X20A280	
480	312105-0497	-		2	SCREW 4017 M10X35A280	
490	312605-0312	-		1	NUT M6M4 STAINLESS	
500	312605-0316	-		1	NUT M6M6 A280 STAINLESS	
520	315105-0153	-		5	WASHER BRB6,4X12RFR	
525	315105-0165	-		4	WASHER BRB8,4X16RFR	
530	315105-0173	-		2	WASHER BRB10,5X22RFR	
540	342797-0122	S		2	BANJO CONN SINGLE 6-1/4	
555	342980-0304	S		1	BANJO CONN SINGLE 1/4"	

Pos	Part No	SP	UN	Qty	Description	Page No

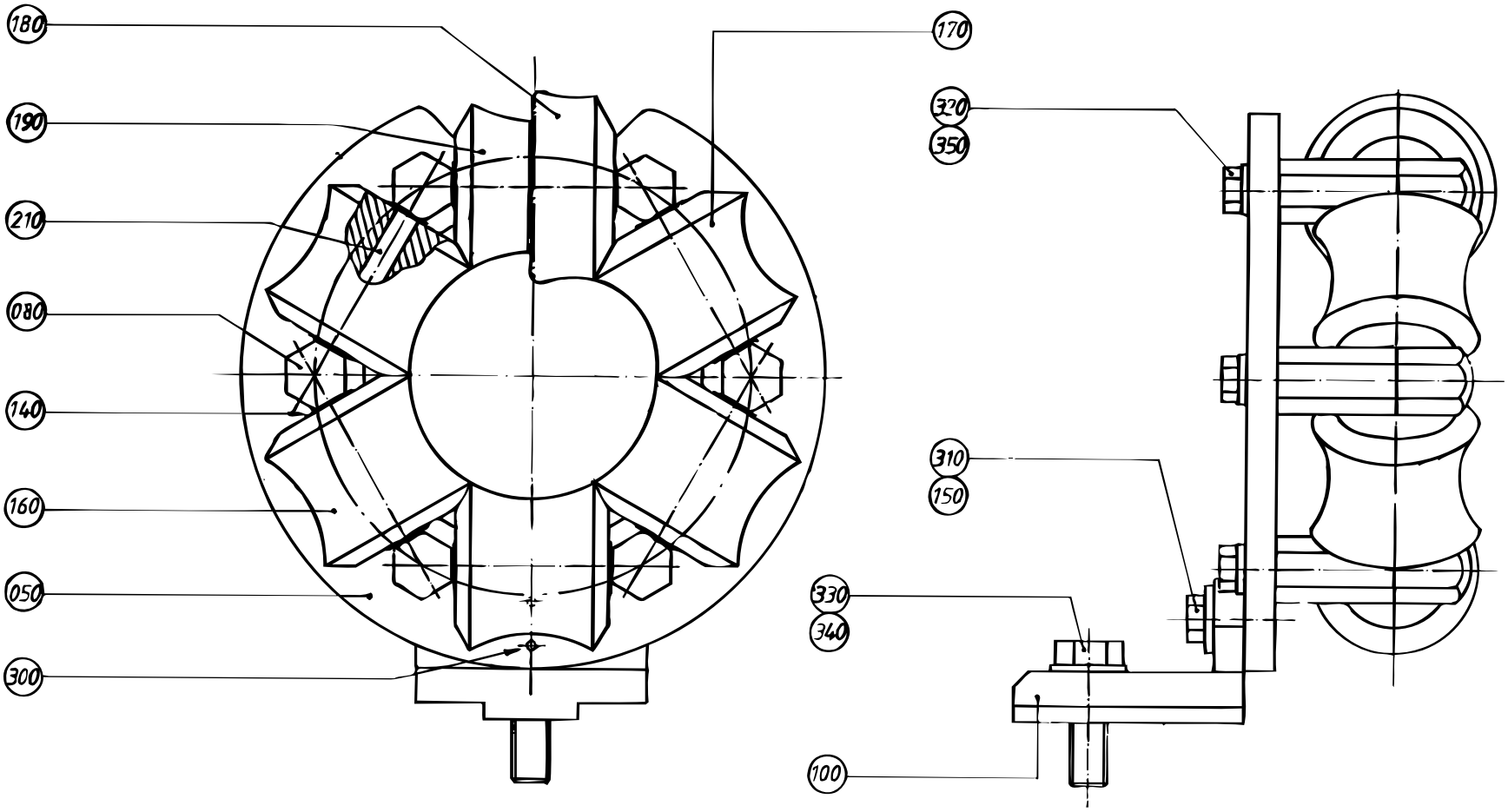
180
190
210
080
140
160
050
300
170
320
350
310
150
330
340
100

Pos	Part No	SP	UN	Qty	Description	Page No
VOLUMES 1055 B, 1000 B, 750 B, 568 B, 500 B						
000	**C- 269115-0501**	**-**		**1**	**UPPER FORMING RING**	
050	250594	-		1	FORMING RING	
080	257987	-		6	AXLE SUPPORT	
100	436648	-		1	CANTILEVER	
140	2033-0008	P		13	WASHER	
160	543471	-		4	ROLL	
170	567736	-		1	EDGE ROLLER	
180	567737	-		1	GUIDE ROLLER	
190	567738	-		1	GUIDE ROLLER	
210	263655-0010	S		6	SHAFT	
320	312105-0462	-		6	SCREW O4014 M8X55A280	
VOLUMES 500S, 400 B, 355 B						
000	**C- 269115-0502**	**-**		**1**	**UPPER FORMING RING**	
050	434493	-		1	FORMING RING	
080	257987	-		6	AXLE SUPPORT	
100	493948	-		1	CANTILEVER	
140	2033-0008	P		13	WASHER	
160	440068	-		4	ROLL	
170	530566	-		1	EDGE ROLLER	
180	530567	-		1	GUIDE ROLLER	
190	530568	-		1	GUIDE ROLLER	
210	263655-0008	S		6	SHAFT	
320	312105-0462	-		6	SCREW O4014 M8X55A280	
VOLUME 375 S						
000	**C- 269115-0503**	**-**		**1**	**UPPER FORMING RING**	
050	434493	-		1	FORMING RING	
080	526958	-		6	AXLE SUPPORT	
100	493948	-		1	CANTILEVER	
140	2033-0008	P		13	WASHER	
160	449586	-		4	ROLL	
170	529039	-		1	EDGE ROLLER	
180	529040	-		1	GUIDE ROLLER	
190	529041	-		1	GUIDE ROLLER	
210	263655-0008	S		6	SHAFT	
320	312105-0464	-		6	SCREW O4014 M8X65A280	
VOLUME 750 S						
000	**C- 269115-0504**	**-**		**1**	**UPPER FORMING RING**	
050	544263	-		1	FORMING RING	
080	257987	-		6	AXLE SUPPORT	
100	493948	-		1	CANTILEVER	
130	90240-0172	-		14	FLANGE BUSHING	
140	2033-0008	P		12	WASHER	
160	752719	-		4	ROLL	
170	752721	-		1	ROLL	
180	752720	-		1	ROLL	
190	752718	-		1	ROLL	
210	263655-0009	S		6	SHAFT	
320	312105-0462	-		6	SCREW O4014 M8X55A280	
VOLUMES 1000 S, 1000 Sq, 500 Sq						
000	**C- 269115-0505**	**-**		**1**	**UPPER FORMING RING**	
050	569090	-		1	FORMING RING	
080	257987	-		6	AXLE SUPPORT	
100	493948	-		1	CANTILEVER	
130	90240-0172	-		14	FLANGE BUSHING	
140	2033-0008	P		13	WASHER	
160	569087	-		4	ROLL	
170	569086	-		1	ROLL	
180	569089	-		1	ROLL	
190	569088	-		1	ROLL	
210	263655-0009	S		6	SHAFT	
320	312105-0462	-		6	SCREW O4014 M8X55A280	
Common parts						
150	28036	-		2	WASHER	
300	311103-0235	-		2	CYLINDRICACP M6 3X14 RFR	
310	312105-0453	-		2	SCREW O4017 M8X25A280	
330	312105-0540	-		1	SCREW 4017 M12X40A280	
340	315105-0178	-		1	WASHER BRB13X24RFR	
350	315115-0165	-		6	WASHER TBRB8,4X16RFR	

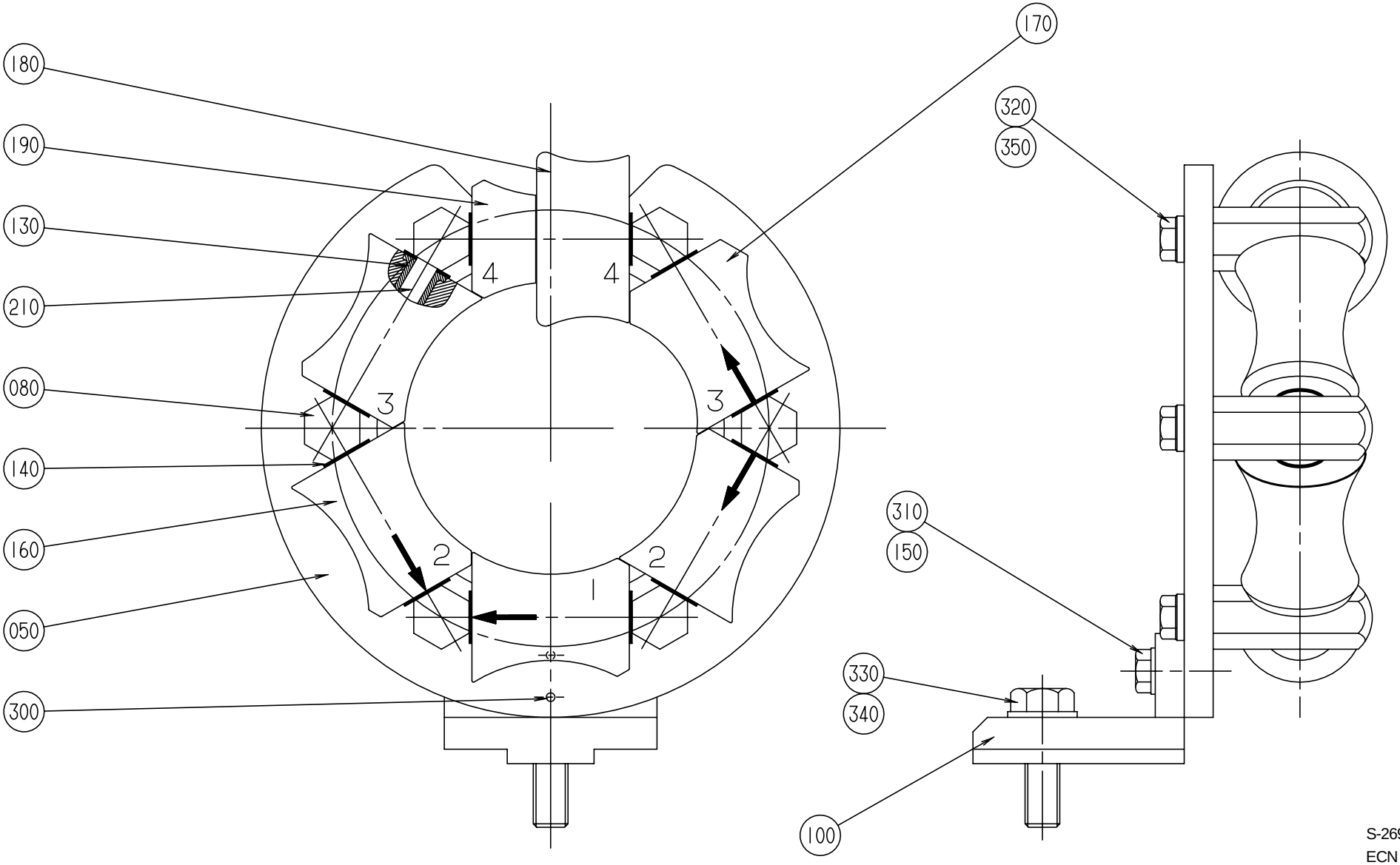

S-269115-4
ECN 15017

Pos	Part No	SP	UN	Qty	Description	Page No
VOLUMES 1055 B, 1000 B, 750 B, 568 B, 500 B						
000	**C- 269115-0501**	**-**		**1**	**UPPER FORMING RING**	
050	250594	-		1	FORMING RING	
080	257987	-		6	AXLE SUPPORT	
100	436648	-		1	CANTILEVER	
140	2033-0008	P		13	WASHER	
160	543471	-		4	ROLL	
170	567736	-		1	EDGE ROLLER	
180	567737	-		1	GUIDE ROLLER	
190	567738	-		1	GUIDE ROLLER	
210	263655-0010	S		6	SHAFT	
320	312105-0462	-		6	SCREW O4014 M8X55A280	
VOLUMES 500S, 400 B, 355 B						
000	**C- 269115-0502**	**-**		**1**	**UPPER FORMING RING**	
050	434493	-		1	FORMING RING	
080	257987	-		6	AXLE SUPPORT	
100	493948	-		1	CANTILEVER	
140	2033-0008	P		13	WASHER	
160	440068	-		4	ROLL	
170	530566	-		1	EDGE ROLLER	
180	530567	-		1	GUIDE ROLLER	
190	530568	-		1	GUIDE ROLLER	
210	263655-0008	S		6	SHAFT	
320	312105-0462	-		6	SCREW O4014 M8X55A280	
VOLUME 375 S						
000	**C- 269115-0503**	**-**		**1**	**UPPER FORMING RING**	
050	434493	-		1	FORMING RING	
080	526958	-		6	AXLE SUPPORT	
100	493948	-		1	CANTILEVER	
140	2033-0008	P		13	WASHER	
160	449586	-		4	ROLL	
170	529039	-		1	EDGE ROLLER	
180	529040	-		1	GUIDE ROLLER	
190	529041	-		1	GUIDE ROLLER	
210	263655-0008	S		6	SHAFT	
320	312105-0464	-		6	SCREW O4014 M8X65A280	
VOLUME 750 S						
000	**C- 269115-0504**	**-**		**1**	**UPPER FORMING RING**	
050	544263	-		1	FORMING RING	
080	257987	-		6	AXLE SUPPORT	
100	493948	-		1	CANTILEVER	
130	90240-0172	-		14	FLANGE BUSHING	
140	2033-0008	P		12	WASHER	
160	752719	-		4	ROLL	
170	752721	-		1	ROLL	
180	752720	-		1	ROLL	
190	752718	-		1	ROLL	
210	263655-0009	S		6	SHAFT	
320	312105-0462	-		6	SCREW O4014 M8X55A280	
VOLUMES 1000 S, 1000 Sq, 500 Sq						
000	**C- 269115-0505**	**-**		**1**	**UPPER FORMING RING**	
050	569090	-		1	FORMING RING	
080	257987	-		6	AXLE SUPPORT	
100	493948	-		1	CANTILEVER	
130	90240-0172	-		14	FLANGE BUSHING	
140	2033-0008	P		13	WASHER	
160	569087	-		4	ROLL	
170	569086	-		1	ROLL	
180	569089	-		1	ROLL	
190	569088	-		1	ROLL	
210	263655-0009	S		6	SHAFT	
320	312105-0462	-		6	SCREW O4014 M8X55A280	
Common parts						
150	28036	-		2	WASHER	
300	311103-0235	-		2	CYLINDRICACP M6 3X14 RFR	
310	312105-0453	-		2	SCREW O4017 M8X25A280	
330	312105-0540	-		1	SCREW 4017 M12X40A280	
340	315105-0178	-		1	WASHER BRB13X24RFR	
350	315115-0165	-		6	WASHER TBRB8,4X16RFR	

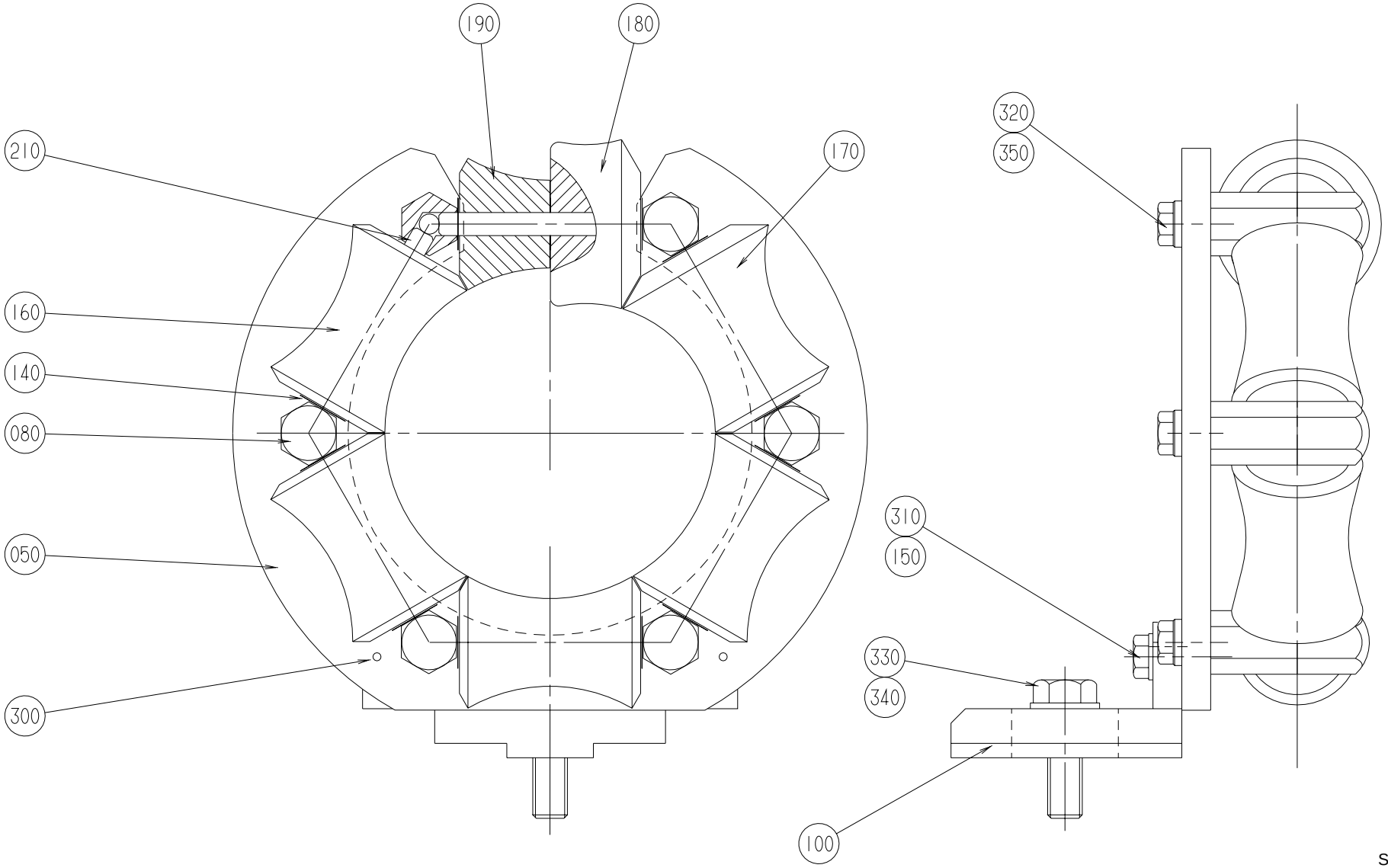

S-269115-5
ECN 19641

Pos	Part No	SP	UN	Qty	Description	Page No
VOLUMES 1055 B, 1000 B, 750 B, 568 B, 500 B						
000	**C- 269115-0501**	**-**		**1**	**UPPER FORMING RING**	
050	250594	-		1	FORMING RING	
080	257987	-		6	AXLE SUPPORT	
100	436648	-		1	CANTILEVER	
140	2033-0008	P		13	WASHER	
160	543471	-		4	ROLL	
170	567736	-		1	EDGE ROLLER	
180	567737	-		1	GUIDE ROLLER	
190	567738	-		1	GUIDE ROLLER	
210	263655-0010	S		6	SHAFT	
320	312105-0462	-		6	SCREW O4014 M8X55A280	
VOLUMES 500S, 400 B, 355 B						
000	**C- 269115-0502**	**-**		**1**	**UPPER FORMING RING**	
050	434493	-		1	FORMING RING	
080	257987	-		6	AXLE SUPPORT	
100	493948	-		1	CANTILEVER	
140	2033-0008	P		13	WASHER	
160	440068	-		4	ROLL	
170	530566	-		1	EDGE ROLLER	
180	530567	-		1	GUIDE ROLLER	
190	530568	-		1	GUIDE ROLLER	
210	263655-0008	S		6	SHAFT	
320	312105-0462	-		6	SCREW O4014 M8X55A280	
VOLUME 375 S						
000	**C- 269115-0503**	**-**		**1**	**UPPER FORMING RING**	
050	434493	-		1	FORMING RING	
080	526958	-		6	AXLE SUPPORT	
100	493948	-		1	CANTILEVER	
140	2033-0008	P		13	WASHER	
160	449586	-		4	ROLL	
170	529039	-		1	EDGE ROLLER	
180	529040	-		1	GUIDE ROLLER	
190	529041	-		1	GUIDE ROLLER	
210	263655-0008	S		6	SHAFT	
320	312105-0464	-		6	SCREW O4014 M8X65A280	
VOLUME 750 S						
000	**C- 269115-0504**	**-**		**1**	**UPPER FORMING RING**	
050	544263	-		1	FORMING RING	
080	257987	-		6	AXLE SUPPORT	
100	493948	-		1	CANTILEVER	
130	90240-0172	-		14	FLANGE BUSHING	
140	2033-0008	P		12	WASHER	
160	752719	-		4	ROLL	
170	752721	-		1	ROLL	
180	752720	-		1	ROLL	
190	752718	-		1	ROLL	
210	263655-0009	S		6	SHAFT	
320	312105-0462	-		6	SCREW O4014 M8X55A280	
VOLUMES 1000 S, 1000 Sq, 500 Sq						
000	**C- 269115-0505**	**-**		**1**	**UPPER FORMING RING**	
050	569090	-		1	FORMING RING	
080	257987	-		6	AXLE SUPPORT	
100	493948	-		1	CANTILEVER	
130	90240-0172	-		14	FLANGE BUSHING	
140	2033-0008	P		13	WASHER	
160	569087	-		4	ROLL	
170	569086	-		1	ROLL	
180	569089	-		1	ROLL	
190	569088	-		1	ROLL	
210	263655-0009	S		6	SHAFT	
320	312105-0462	-		6	SCREW O4014 M8X55A280	
Common parts						
150	28036	-		2	WASHER	
300	311103-0235	-		2	CYLINDRICACP M6 3X14 RFR	
310	312105-0453	-		2	SCREW O4017 M8X25A280	
330	312105-0540	-		1	SCREW 4017 M12X40A280	
340	315105-0178	-		1	WASHER BRB13X24RFR	
350	315115-0165	-		6	WASHER TBRB8,4X16RFR	

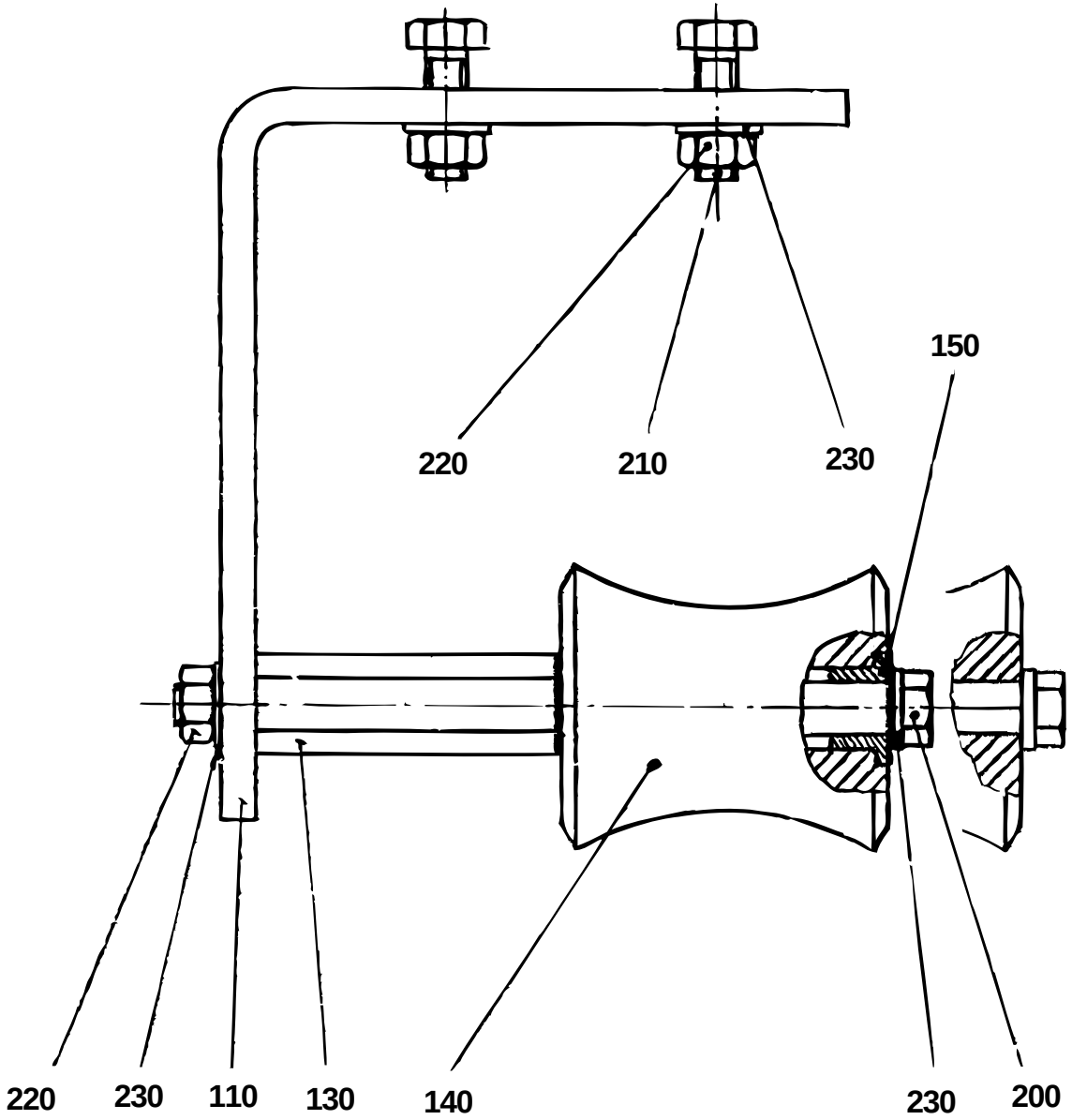
220
210
230
150
220
230
110
130
140
230
200

Pos	Part No	SP	UN	Qty	Description	Page No
VOLUMES 1055 B, 1000 B, 750 B, 568 B, 500 B, 500S, 400 B, 375 S, 355 B						
000	**C- 269136-0201**	**-**		**2**	**EDGE ROLLER**	
140 1	36953-0010	C		1	ROLL	
VOLUMES 1000 S, 1000 Sq, 750 S, 500 Sq, 1500 S						
000	**C- 269136-0202**	**-**		**2**	**EDGE ROLLER**	
140 2	752740	-		1	ROLL	
150	90240-0172	-		2	FLANGE BUSHING	
-Common parts						
110	208843	-		1	ANGLE BRACKET	
130	458791	-		1	SHAFT	
200	312105-0366	-		1	SCREW O4017 M6X12A280	
210	312105-0370	-		2	SCREW O4017 M6X20A280	
220	312605-0316	-		3	NUT M6M6 A280 STAINLESS	
230	315105-0153	-		4	WASHER BRB6,4X12RFR	

Pos	Part No	SP	UN	Qty	Description	Page No

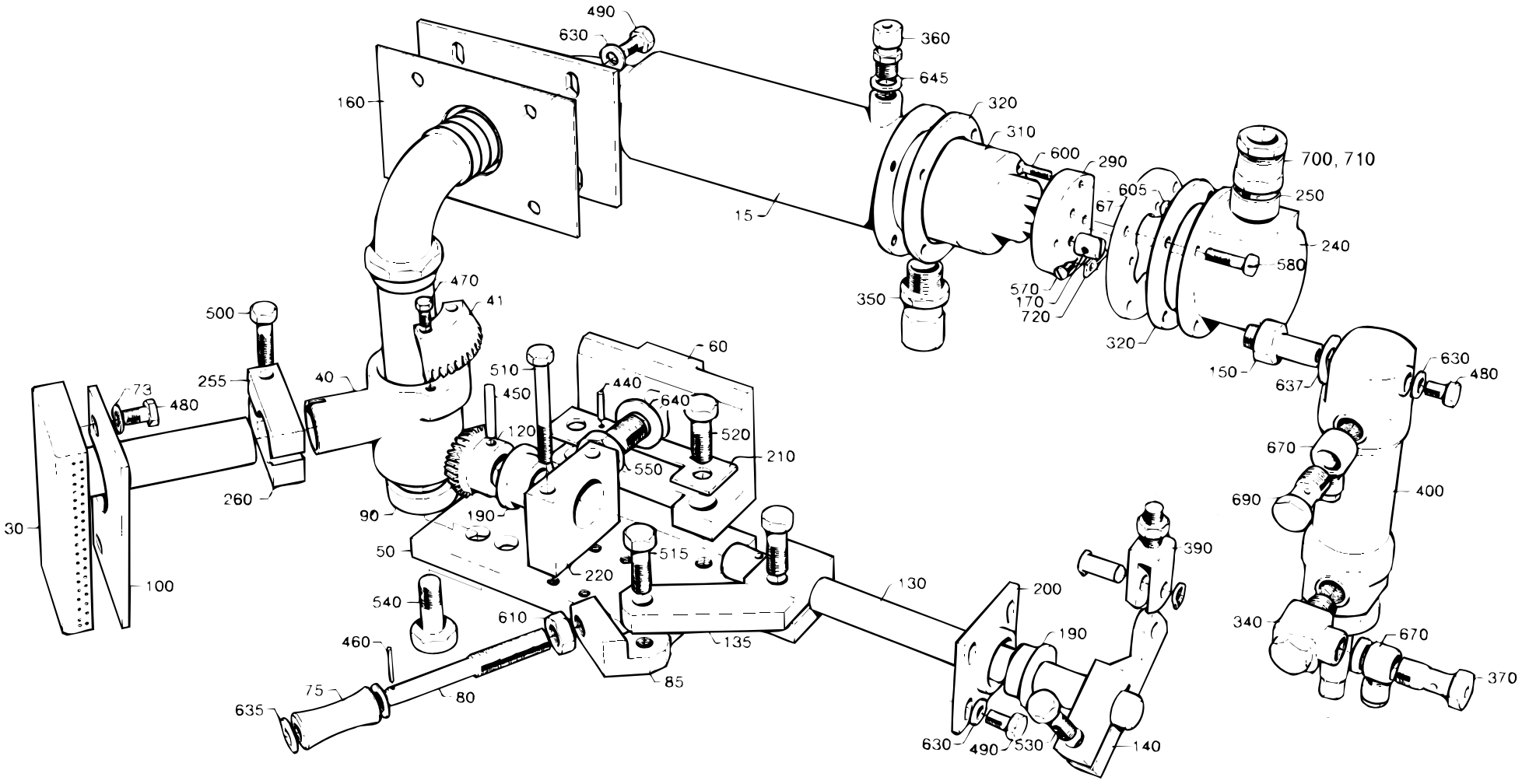

S-269158-2
ECN 17647

Pos	Part No	SP	UN	Qty	Description	Page No
VOLUMES 1055 B, 1000 B, 1000 S, 1000 Sq, 750 B, 568 B, 500 B, 500 Sq						
000	**C- 269158-0401**	**-**		**1**	**HOT AIR ELEMENT**	
030	257903	S		1	AIR NOZZLE	
100	257904	S		1	HEAT GUARD	
VOLUMES 750 S, 500S, 400 B, 355 B						
000	**C- 269158-0402**	**-**		**1**	**HOT AIR ELEMENT**	
030	534176	S		1	AIR NOZZLE	
100	526697	S		1	HEAT GUARD	
VOLUME 375 S						
000	**C- 269158-0403**	**-**		**1**	**HOT AIR ELEMENT**	
030	526696	S		1	AIR NOZZLE	
100	526697	S		1	HEAT GUARD	
Common parts						
015	297309	C		1	PIPE-LINE	
040	263249	C		1	PIVOT ARM	
041	263250	C		1	TOOTH PART	
050	269313	C		1	FASTENING PLATE	
060	269314	C		1	CANTILEVER	
067	297310	-		1	FLANGE	
073	6278	-		2	WASHER	
075	33442	S		1	ROLL	
080	239440	S		1	SHAFT	
085	239441	S		1	BRACKET	
090	250663	S		2	BEARING	
120	263251	C		1	GEAR WHEEL	
130	263252	-		1	SHAFT	
135	263254	S		1	BRACKET	
140	263256	C		1	ROCKER ARM	
150	263257	S		1	CYLINDER BRACKET	
160	531741	S		1	GASKET	
170	266739	S		3	CABLE GLAND	
190	269154	S		2	BUSHING	
200	269242	S		1	BEARING HOUSING	
210	269315	S		1	WASHER	
220	269316	S		1	BEARING HOUSING	
240	297311	-		1	COVER	
250	458046	-		1	PIPE	
255	497579	S		1	CLAMP HALF	
260	497580	S		1	CLAMP HALF	
290	90125-0020	S		1	PLATE	
290a	270926	S		6	* NUT	
290b	270927	S		3	* SCREW	
290c	294464	S		1	* BASE PLATE	
310	90206-0085	P		1	HEATING CARTRIDGE	
320	90206-0322	P		2	GASKET	
340	90224-0284	S		1	SWIVEL	
350	90224-0301	S		1	CONNECTION	
360	90224-0307	S		1	CONNECTION	
370	90235-0275	S		1	VALVE	
390	90239-0127	S		1	BRACKET	
400	90239-0166	P		1	CYLINDER	
400a	90285-0094	S		0	* SEAL	
440	311103-0209	-		2	CYLINDRICACP M6 2,5X14RFR	
450	311103-0274	-		1	CYLINDRICACP 4X25 RFR	
460	311411-0140	-		1	SPLIT PIN SP1,6X16RFR	
470	312105-0291	-		2	SCREW O4017 M4X12A280	
480	312105-0364	-		3	SCREW M6S6X10RFR	
490	312105-0366	-		8	SCREW O4017 M6X12A280	
500	312105-0374	-		2	SCREW O4017 M6X30A280	
510	312105-0380	-		2	SCREW O4014 M6X50A280	
515	312105-0451	-		1	SCREW SO4017 8X20A280	
520	312105-0453	-		3	SCREW O4017 M8X25A280	
530	312105-0455	-		1	SCREW O4017 M8X30A280	
540	312105-0493	-		1	SCREW 4017 M10X25A280	
550	312105-0536	-		1	SCREW 4017 M12X30A280	
570	312125-0220	-		3	SLOTTED HEMCS3X6RFR	
580	312125-0295	-		4	SLOTTED HEMCS4X20RFR	
600	312145-0228	-		3	SLOTTED HEMFS3X16RFR	
605	312605-0310	-		3	NUT M6M3RFR	
610	312605-0320	-		1	NUT M6M10RFR	
630	315105-0153	-		9	WASHER BRB6,4X12RFR	
635	315105-0165	-		2	WASHER BRB8,4X16RFR	
637	315105-0173	-		1	WASHER BRB10,5X22RFR	
640	315105-0178	-		1	WASHER BRB13X24RFR	
645	315237-0109	-		1	SEAL RING 1/8"	
670	342797-0122	-		2	BANJO CONN SINGLE 6-1/4	
690	342980-0304	-		1	BANJO CONN SINGLE 1/4"	
700	352136-0127	C		1	GLAND FITT	
710	352100-0106	C		1	CABLE GLANR.18,6-10,5	
720	353104-0129	-		1	CABLE SHOEAV 025 M 35*	

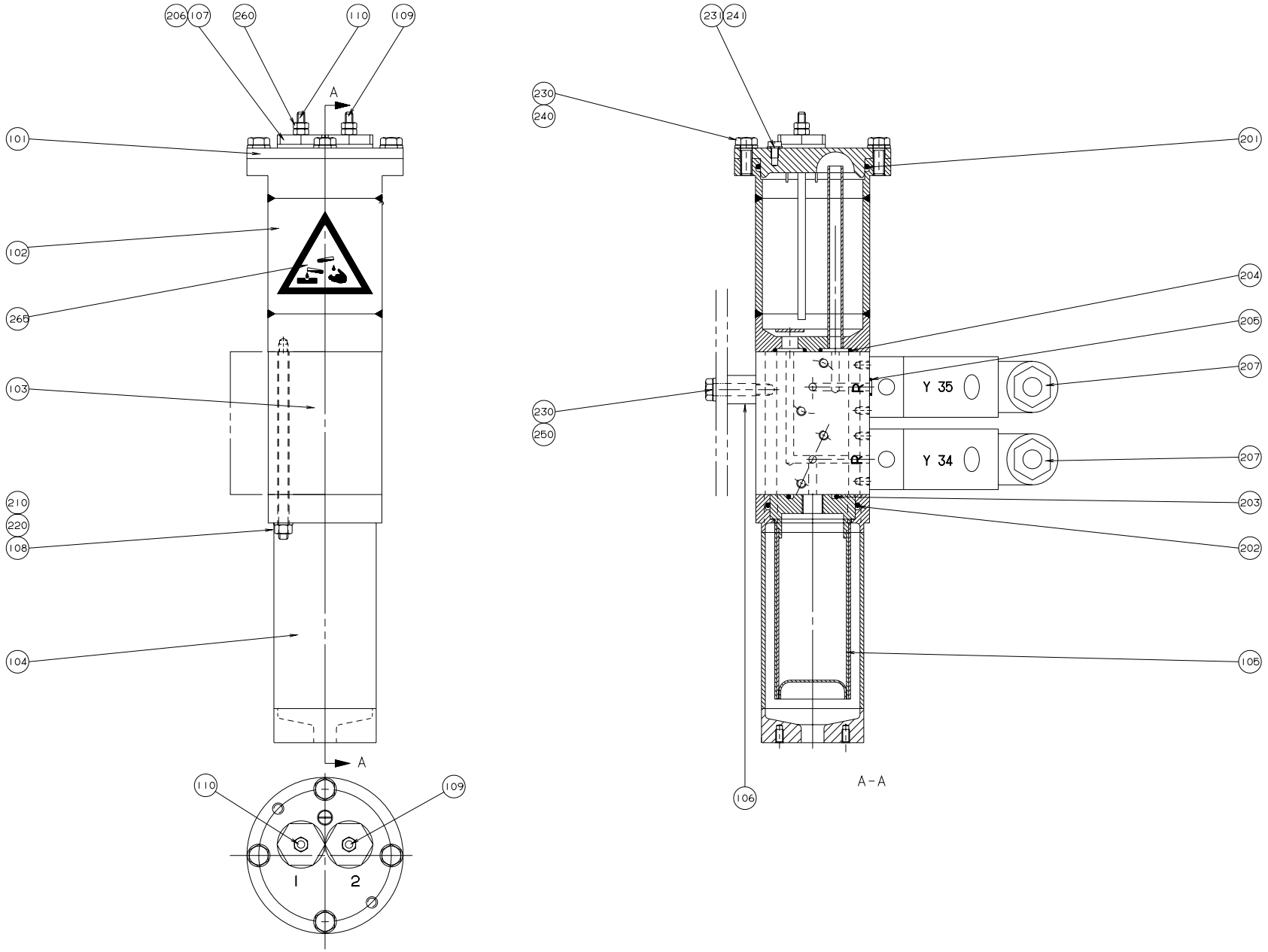

S-560930-1
ECN 22848

Pos	Part No	SP	UN	Qty	Description	Page No
-						
000	**C- 560930-0101**	**-**		**1**	**CONTAINER**	
101	549267	-		1	LID	
102	549264	-		1	CONTAINER	
103	549263	-		1	BLOCK	
104	554142	-		1	FILTER HOUSING	
105	554141	-		1	FILTER	
106	560932	-		1	INTERMEDIATE PART	
107	560931	-		2	BRACKET	
108	554585	-		4	STUD SCREW	
109	560934	-		1	ELECTRODE	
110	560933	-		1	ELECTRODE	
201	927422-0009	-		1	O-RING 54.5X3 SILICON	
202	927422-0007	-		1	O-RING 44.2X3 SILICON	
203	927422-0001	-		1	O-RING 19.2X3 SILICON	
204	927421-0002	-		2	O-RING 12.3X2.4 SILICON	
205	927420-0001	-		6	O-RING 5.1X1.6 SILICON	
206	927421-0004	-		2	O-RING 15.3X2.4 SILICON	
207	90042-0203	P		2	SOLENOID VALVE	
210	315105-0146	-		4	WASHER BRB5,3X10RFR	
220	312605-0314	-		4	NUT M6M5RFR	
230	315105-0153	-		6	WASHER BRB6,4X12RFR	
231	315105-0136	-		1	WASHER BRB4,3X8RFR	
240	312105-0368	-		4	SCREW O4017 M6X16A280	
241	312125-0285	-		1	SLOTTED HEMCS4X6RFR	
250	312109-0374	-		2	SCREW M6S6X30HRFR	
260	312605-0312	-		4	NUT M6M4 STAINLESS	
265	359705-0003	-		1	WARNING SIGN"CORROSION"	

Pos	Part No	SP	UN	Qty	Description	Page No

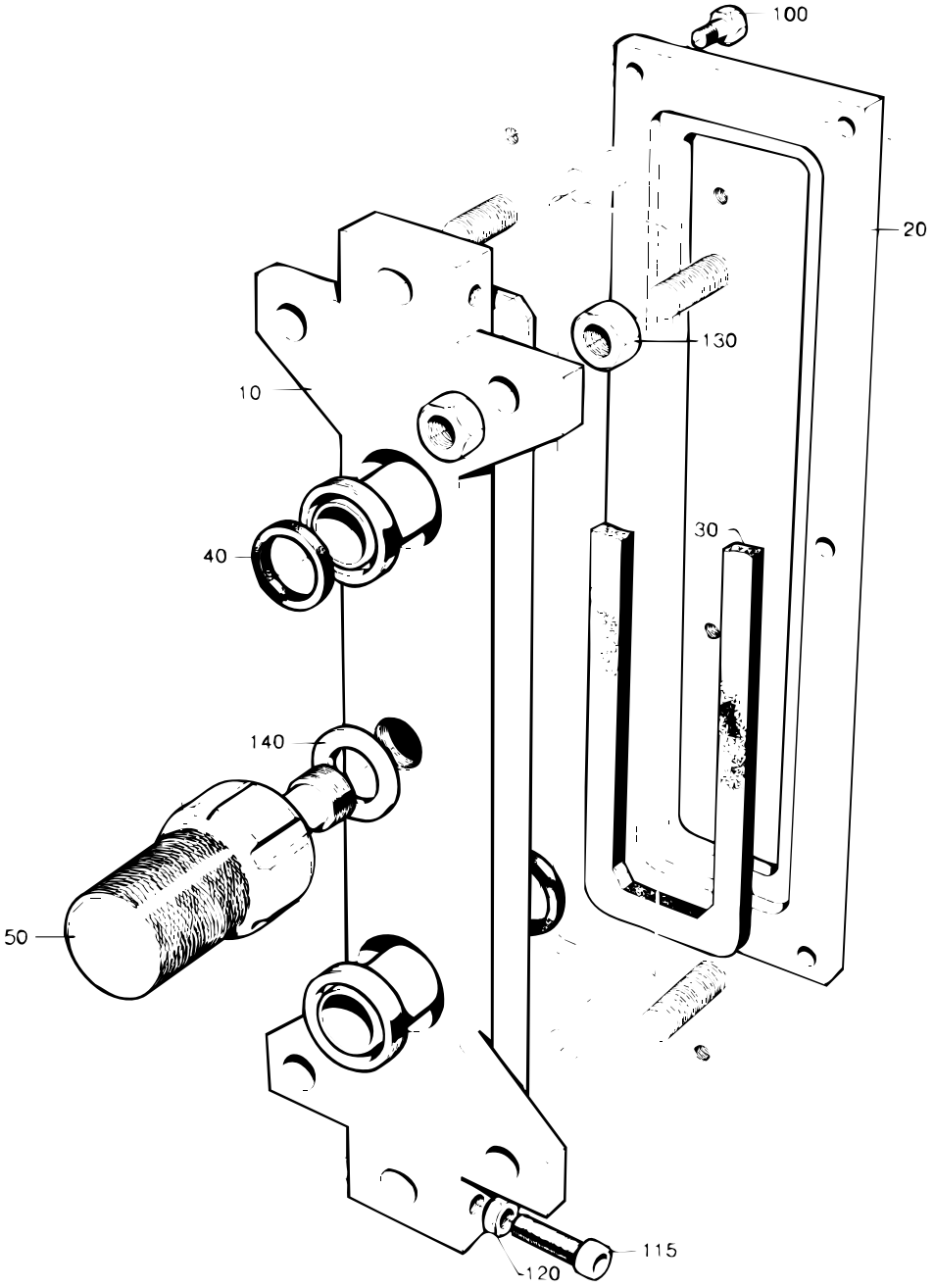
100
20
130
10
30
40
140
50
115
120

Pos	Part No	SP	UN	Qty	Description	Page No
-						
000	**C- 269715-0101**	**-**		**1**	**PIPE HOLDER**	
010	269716	C		1	FASTENING PLATE	
020	269717	C		1	GASKET HOLDER	
030	269718	P		1	GASKET	
040	12242-0001	P		4	GASKET	
050	269719	S		1	SCREW	
100	312105-0368	-		6	SCREW O4017 M6X16A280	
115	312115-0455	-		4	SCREW O4762 M8X30A280	
120	312605-0318	-		4	NUT M6M8RFR	
130	312605-0322	-		8	NUT M6M12RFR	
140	315105-0192	-		1	WASHER BRB21X36RFR	

Pos	Part No	SP	UN	Qty	Description	Page No

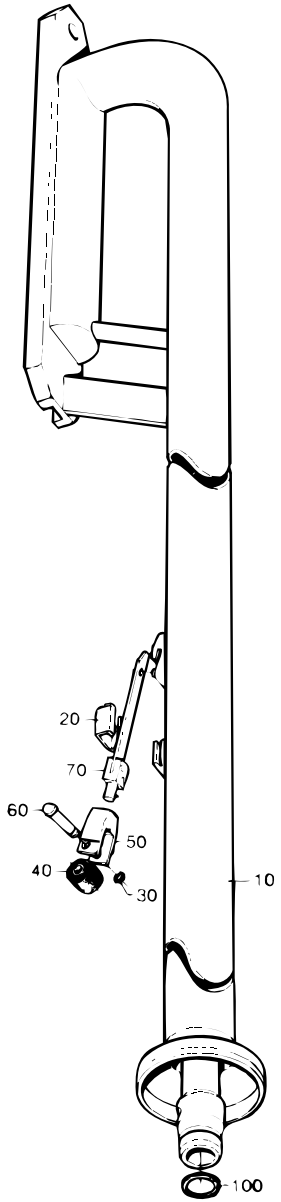
20
70
60
50
40
30
10
100

Pos	Part No	SP	UN	Qty	Description	Page No
VOLUMES 1055 B, 1000 B, 750 B, 568 B, 500 B						
000	**C- 269720-0301**	**-**		**1**	**FILLER TUBE**	
010	434222	C		1	FILLER TUBE	
020	14600	-		1	HOOD	
040	232979	PU		1	PRESSURE ROLLER	
050	267727	P		1	FORK	
060	267728	P		1	SHAFT	
070	544892	P		1	SPRING	
VOLUMES 500S, 400 B, 355 B						
000	**C- 269720-0302**	**-**		**1**	**FILLER TUBE**	
010	450010	C		1	FILLER TUBE	
020	434665	-		1	HOOD	
040	499387	PU		1	PRESSURE ROLLER	
050	499016	P		1	FORK	
060	499011	P		1	SHAFT	
070	544892	P		1	SPRING	
VOLUME 375 S						
000	**C- 269720-0303**	**-**		**1**	**FILLER TUBE**	
010	497131	C		1	FILLER TUBE	
020	526682	-		1	HOOD	
040	499387	PU		1	PRESSURE ROLLER	
050	529180	P		1	FORK	
060	499011	P		1	SHAFT	
070	544893	P		1	SPRING	
VOLUME 750 S						
000	**C- 269720-0304**	**-**		**1**	**FILLER TUBE**	
010	544287	C		1	FILLER TUBE	
020	434665	-		1	HOOD	
040	499387	PU		1	PRESSURE ROLLER	
050	499016	P		1	FORK	
060	499011	P		1	SHAFT	
070	544892	P		1	SPRING	
VOLUME 1000 S						
000	**C- 269720-0305**	**-**		**1**	**FILLER TUBE**	
010	569097	C		1	FILLER TUBE	
020	434665	-		1	HOOD	
040	499387	PU		1	PRESSURE ROLLER	
050	499016	P		1	FORK	
060	499011	P		1	SHAFT	
070	544892	P		1	SPRING	

Pos	Part No	SP	UN	Qty	Description	Page No
VOLUMES 1000 Sq, 500 Sq						
000	**C- 269720-0306**	**-**		**1**	**FILLER TUBE**	
010	579316	C		1	FILLER TUBE	
020	434665	-		1	HOOD	
040	499387	PU		1	PRESSURE ROLLER	
050	499016	P		1	FORK	
060	499011	P		1	SHAFT	
070	544892	P		1	SPRING	
Common parts						
030	24928	P		1	LOCKING RUBBER	
100	315204-0217	PU		1	O-RING 24,2X3VITON	

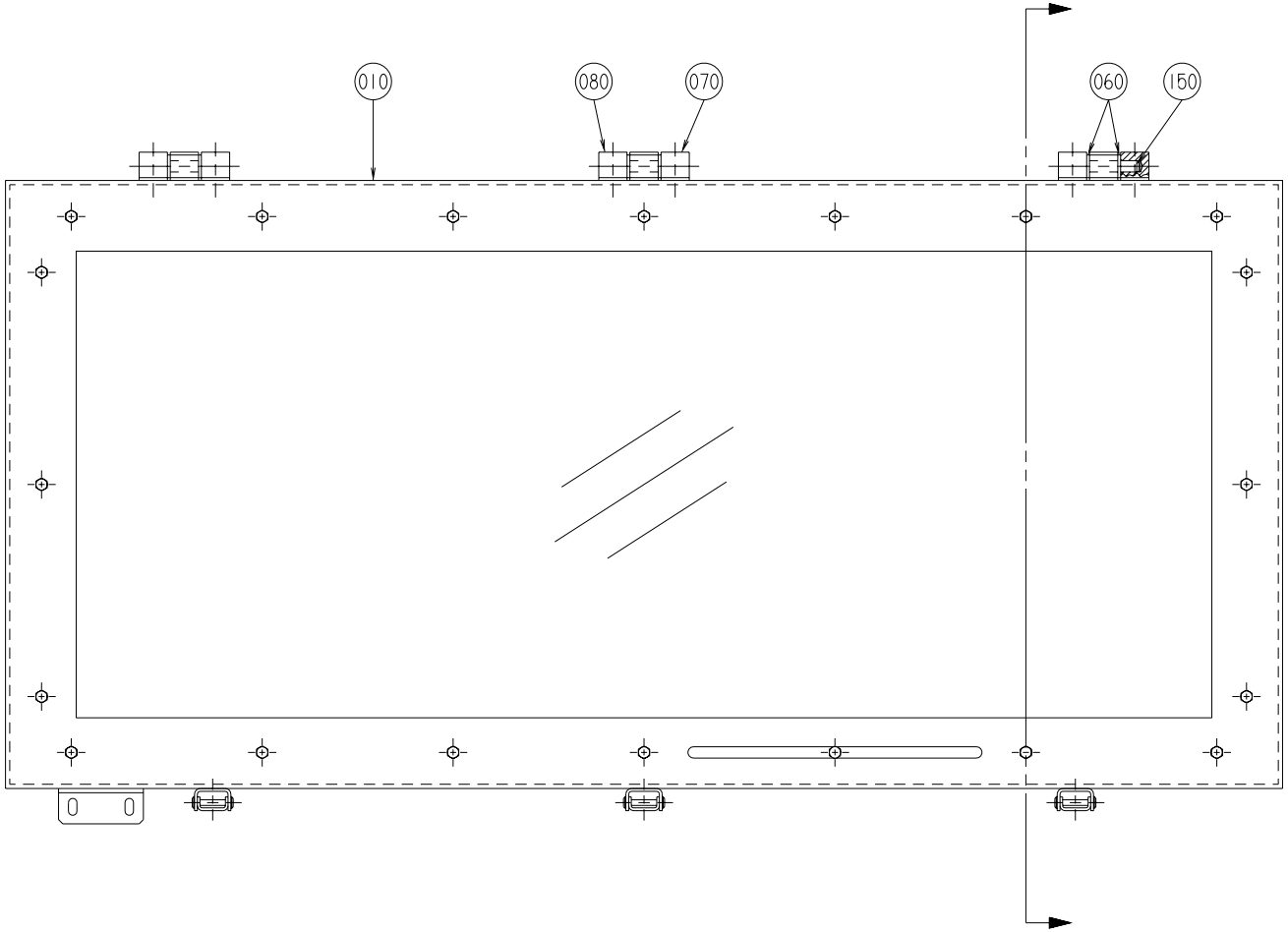
010
080
070
060
150

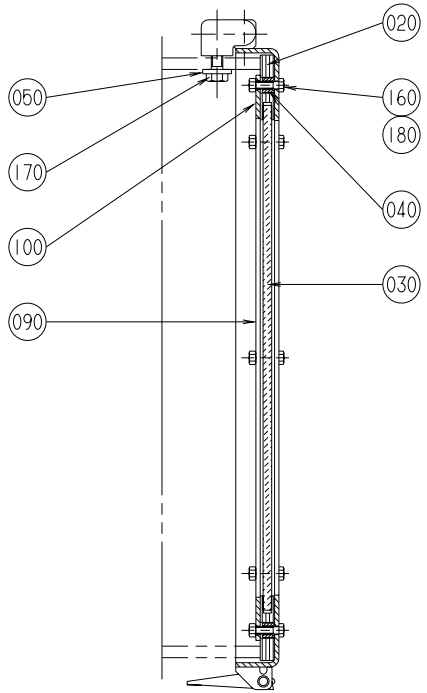
020
050
160
180
170
040
100
030
090

Pos	Part No	SP	UN	Qty	Description	Page No
BIG DOOR						
000	**C- 573612-0101**	**-**		**1**	**DOOR**	
010	573613	-		1	DOOR	
020	252797	S		1	RUBBER STRIP	
030	252732	S		1	GLASS PANE	
040	441718	-		20	SPACER	
050	441737	S		3	WASHER	
060	441739	S		6	WASHER	
070	G- 441740	S		3	HINGE FLANGE	
080	G- 441741	S		3	HINGE FLANGE	
100	573616	-		2	COVER SLIP	
150	311103-0413	-		3	CYLINDRICACP M6 8X50 RFR	
160	312105-0331	-		20	SCREW O4017 M5X20A280	
170	312105-0451	-		6	SCREW SO4017 8X20A280	
180	312605-0314	-		20	NUT M6M5RFR	
SMALL DOOR						
000	**C- 573612-0102**	**-**		**3**	**DOOR**	
010	573614	-		1	DOOR	
020	252798	S		1	RUBBER STRIP	
030	252733	S		1	GLASS PANE	
040	441718	-		16	SPACER	
050	441737	S		2	WASHER	
060	441739	S		4	WASHER	
070	G- 441740	S		2	HINGE FLANGE	
080	G- 441741	S		2	HINGE FLANGE	
100	573617	-		2	COVER SLIP	
150	311103-0413	-		2	CYLINDRICACP M6 8X50 RFR	
160	312105-0331	-		16	SCREW O4017 M5X20A280	
170	312105-0451	-		4	SCREW SO4017 8X20A280	
180	312605-0314	-		16	NUT M6M5RFR	
Common parts						
090	573615	-		2	COVER SLIP	

Pos	Part No	SP	UN	Qty	Description	Page No

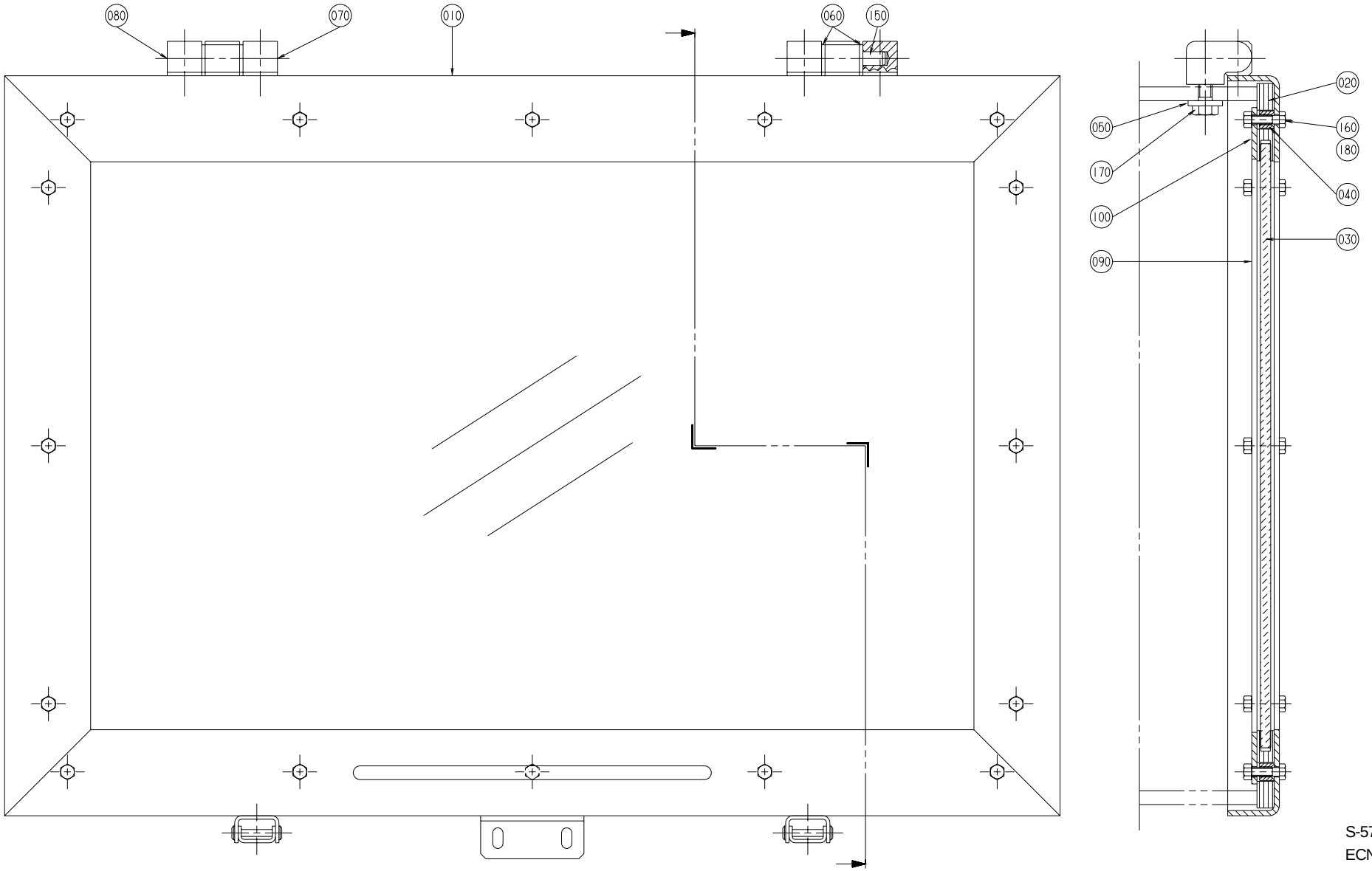

S-573612-2
ECN 19141

Pos	Part No	SP	UN	Qty	Description	Page No
BIG DOOR						
000	**C- 573612-0101**	**-**		**1**	**DOOR**	
010	573613	-		1	DOOR	
020	252797	S		1	RUBBER STRIP	
030	252732	S		1	GLASS PANE	
040	441718	-		20	SPACER	
050	441737	S		3	WASHER	
060	441739	S		6	WASHER	
070	G- 441740	S		3	HINGE FLANGE	
080	G- 441741	S		3	HINGE FLANGE	
100	573616	-		2	COVER SLIP	
150	311103-0413	-		3	CYLINDRICACP M6 8X50 RFR	
160	312105-0331	-		20	SCREW O4017 M5X20A280	
170	312105-0451	-		6	SCREW SO4017 8X20A280	
180	312605-0314	-		20	NUT M6M5RFR	
SMALL DOOR						
000	**C- 573612-0102**	**-**		**3**	**DOOR**	
010	573614	-		1	DOOR	
020	252798	S		1	RUBBER STRIP	
030	252733	S		1	GLASS PANE	
040	441718	-		16	SPACER	
050	441737	S		2	WASHER	
060	441739	S		4	WASHER	
070	G- 441740	S		2	HINGE FLANGE	
080	G- 441741	S		2	HINGE FLANGE	
100	573617	-		2	COVER SLIP	
150	311103-0413	-		2	CYLINDRICACP M6 8X50 RFR	
160	312105-0331	-		16	SCREW O4017 M5X20A280	
170	312105-0451	-		4	SCREW SO4017 8X20A280	
180	312605-0314	-		16	NUT M6M5RFR	
Common parts						
090	573615	-		2	COVER SLIP	

Pos	Part No	SP	UN	Qty	Description	Page No

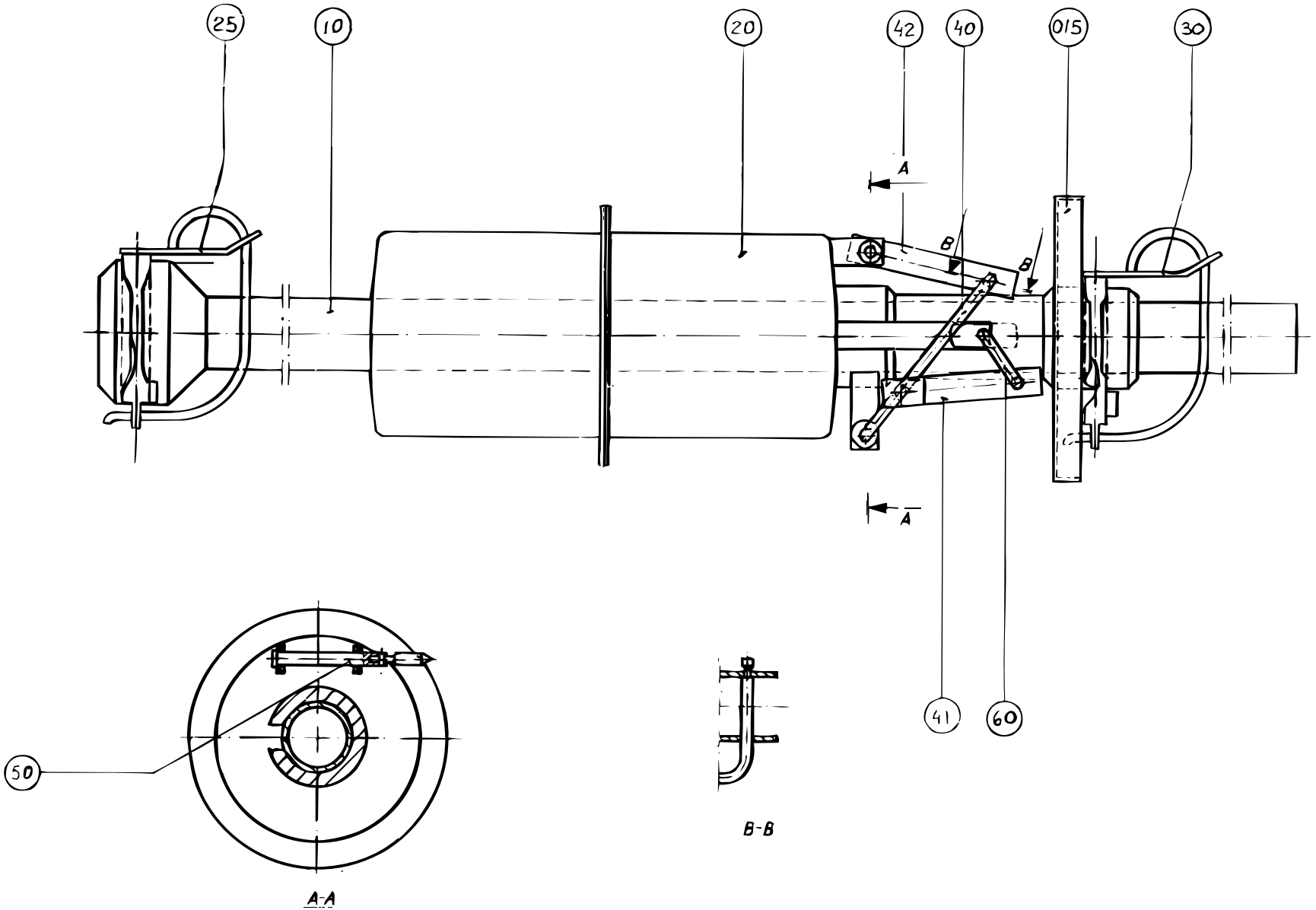
25
10
20
42
40
015
30
A
B
B
A
41
60
50
A-A
B-B

Pos	Part No	SP	UN	Qty	Description	Page No
VOLUME 1000 B LOFIN						
000	**C- 269828-0501**	**S**		**1**	**FILLER TUBE**	
010	269827-0001	-		1	FILLER TUBE	
015	466463	-		1	PRESSURE FLANGE	
020	245190	S		1	FLOAT	
025	445504	P		1	LOCKING PIN UPPER	
030	445502	P		1	LOCKING PIN LOWER	
040	36804	S		1	ARM	
041	36805	S		1	LINK	
042	36806	S		1	CLAMPING ELEMENT	
050	36821-0001	P		1	SHEAR PIN	
060	37782	S		1	THROTTLE	
VOLUMES 500 B, 568 B						
000	**C- 269828-0502**	**S**		**1**	**FILLER TUBE**	
010	476878	-		1	FILLER TUBE	
015	476879	-		1	PRESSURE FLANGE	
020	245190	S		1	FLOAT	
025	445504	P		1	LOCKING PIN UPPER	
030	445502	P		1	LOCKING PIN LOWER	
040	36804	S		1	ARM	
041	36805	S		1	LINK	
042	36806	S		1	CLAMPING ELEMENT	
050	36821-0001	P		1	SHEAR PIN	
060	37782	S		1	THROTTLE	
VOLUME 500 S						
000	**C- 269828-0503**	**S**		**1**	**FILLER TUBE**	
010	493875	-		1	FILLING TUBE LOWER	
015	434750	-		1	PRESSURE FLANGE	
020	434749	S		1	FLOAT	
025	493733	P		1	LOCKING PIN UPPER	
030	493734	P		1	LOCKING PIN LOWER	
040	434751	S		1	ARM	
041	434752	S		1	LINK	
042	36817	S		1	CLAMPING ELEMENT	
050	36821-0002	P		1	SHEAR PIN	
060	37782	S		1	THROTTLE	
VOLUME 375 S						
000	**C- 269828-0504**	**S**		**1**	**FILLER TUBE**	
010	529033	-		1	FILLING TUBE LOWER	
015	526960	-		1	PRESSURE FLANGE	
020	259902	S		1	FLOAT	
025	493733	P		1	LOCKING PIN UPPER	
030	445503	P		1	LOCKING PIN LOWER	
040	37296	S		1	ARM	
041	36816	S		1	LINK	
042	36817	S		1	CLAMPING ELEMENT	
050	36821-0002	P		1	SHEAR PIN	
060	228943	S		1	THROTTLE	
VOLUME 355 B						
000	**C- 269828-0505**	**S**		**1**	**FILLER TUBE**	
010	530826	-		1	FILLING TUBE LOWER	
015	434750	-		1	PRESSURE FLANGE	
020	434749	S		1	FLOAT	
025	493733	P		1	LOCKING PIN UPPER	
030	493734	P		1	LOCKING PIN LOWER	
040	434751	S		1	ARM	
041	752587	S		1	LINK	
042	36817	S		1	CLAMPING ELEMENT	
050	36821-0002	P		1	SHEAR PIN	
060	37782	S		1	THROTTLE	
VOLUMES 1055 B, 1000 B HIFIN						
000	**C- 269828-0506**	**S**		**1**	**FILLER TUBE**	
010	544294	-		1	FILLER TUBE	
015	466463	-		1	PRESSURE FLANGE	
020	245190	S		1	FLOAT	
025	445504	P		1	LOCKING PIN UPPER	
030	445502	P		1	LOCKING PIN LOWER	
040	529376	-		1	ARM	
041	529378	-		1	LINK	
042	529377	-		1	CLAMP	
050	36821-0001	P		1	SHEAR PIN	
060	37782	S		1	THROTTLE	
VOLUME 750 S						
000	**C- 269828-0507**	**S**		**1**	**FILLER TUBE**	
010	544294	-		1	FILLER TUBE	
015	752860	-		1	PRESSURE FLANGE	
020	544295	S		1	FLOAT	
025	493733	P		1	LOCKING PIN UPPER	
030	493734	P		1	LOCKING PIN LOWER	
040	434751	S		1	ARM	
041	434752	S		1	LINK	
042	36817	S		1	CLAMPING ELEMENT	

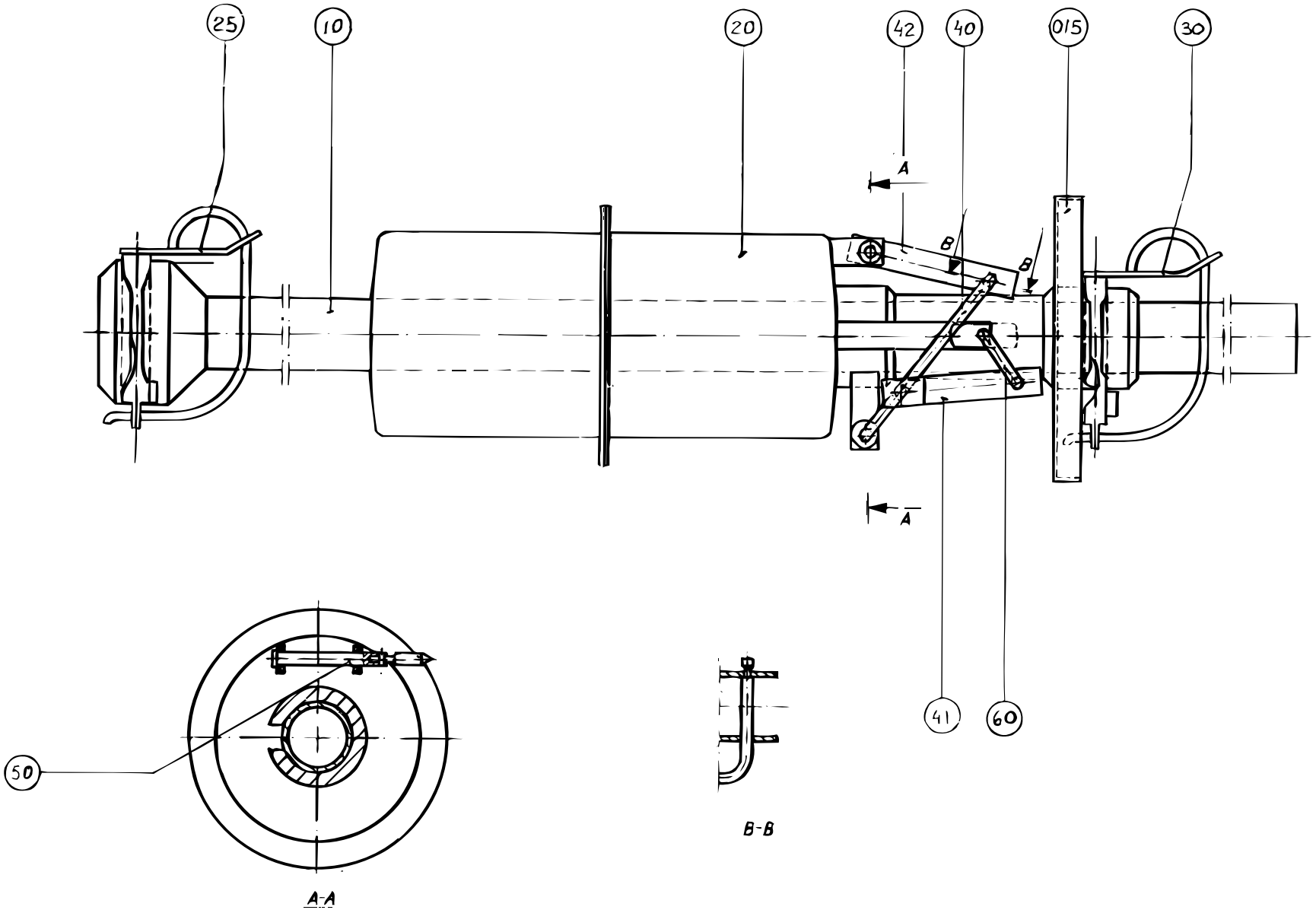
25
10
20
42
40
015
30
A
B
B
A
41
60
50
A-A
B-B

Pos	Part No	SP	UN	Qty	Description	Page No
050	36821-0002	P		1	SHEAR PIN	
060	752590	S		1	THROTTLE	
VOLUME 750 B						
000	**C- 269828-0508**	**S**		**1**	**FILLER TUBE**	
010	269827-0002	-		1	FILLER TUBE	
015	466463	-		1	PRESSURE FLANGE	
020	245190	S		1	FLOAT	
025	445504	P		1	LOCKING PIN UPPER	
030	445502	P		1	LOCKING PIN LOWER	
040	36804	S		1	ARM	
041	36805	S		1	LINK	
042	36806	S		1	CLAMPING ELEMENT	
050	36821-0001	P		1	SHEAR PIN	
060	37782	S		1	THROTTLE	
VOLUME 1000 S						
000	**C- 269828-0509**	**S**		**1**	**FILLER TUBE**	
010	544294	-		1	FILLER TUBE	
015	569098	-		1	PRESSURE FLANGE	
020	544295	S		1	FLOAT	
025	493733	P		1	LOCKING PIN UPPER	
030	493734	P		1	LOCKING PIN LOWER	
040	434751	S		1	ARM	
041	434752	S		1	LINK	
042	36817	S		1	CLAMPING ELEMENT	
050	36821-0002	P		1	SHEAR PIN	
060	752590	S		1	THROTTLE	
VOLUME 400 B						
000	**C- 269828-0510**	**S**		**1**	**FILLER TUBE**	
010	574013	-		1	FILLING PIPE LOWER	
015	434750	-		1	PRESSURE FLANGE	
020	434749	S		1	FLOAT	
025	493733	P		1	LOCKING PIN UPPER	
030	493734	P		1	LOCKING PIN LOWER	
040	434751	S		1	ARM	
041	434752	S		1	LINK	
042	36817	S		1	CLAMPING ELEMENT	
050	36821-0002	P		1	SHEAR PIN	
060	37782	S		1	THROTTLE	

Pos	Part No	SP	UN	Qty	Description	Page No
VOLUME 1000 Sq						
000	**C- 269828-0511**	**S**		**1**	**FILLER TUBE**	
010	544294	-		1	FILLER TUBE	
015	574006	-		1	PRESSURE FLANGE	
020	544295	S		1	FLOAT	
025	493733	P		1	LOCKING PIN UPPER	
030	493734	P		1	LOCKING PIN LOWER	
040	434751	S		1	ARM	
041	434752	S		1	LINK	
042	36817	S		1	CLAMPING ELEMENT	
050	36821-0002	P		1	SHEAR PIN	
060	579010	S		1	THROTTLE	
VOLUME 500 Sq						
000	**C- 269828-0515**	**S**		**1**	**FILLER TUBE**	
010	1361251	-		1	FILLER TUBE	
015	574006	-		1	PRESSURE FLANGE	
020	544295	S		1	FLOAT	
025	493733	P		1	LOCKING PIN UPPER	
030	493734	P		1	LOCKING PIN LOWER	
040	434751	S		1	ARM	
041	434752	S		1	LINK	
042	36817	S		1	CLAMPING ELEMENT	
050	36821-0002	P		1	SHEAR PIN	
060	579010	S		1	THROTTLE	

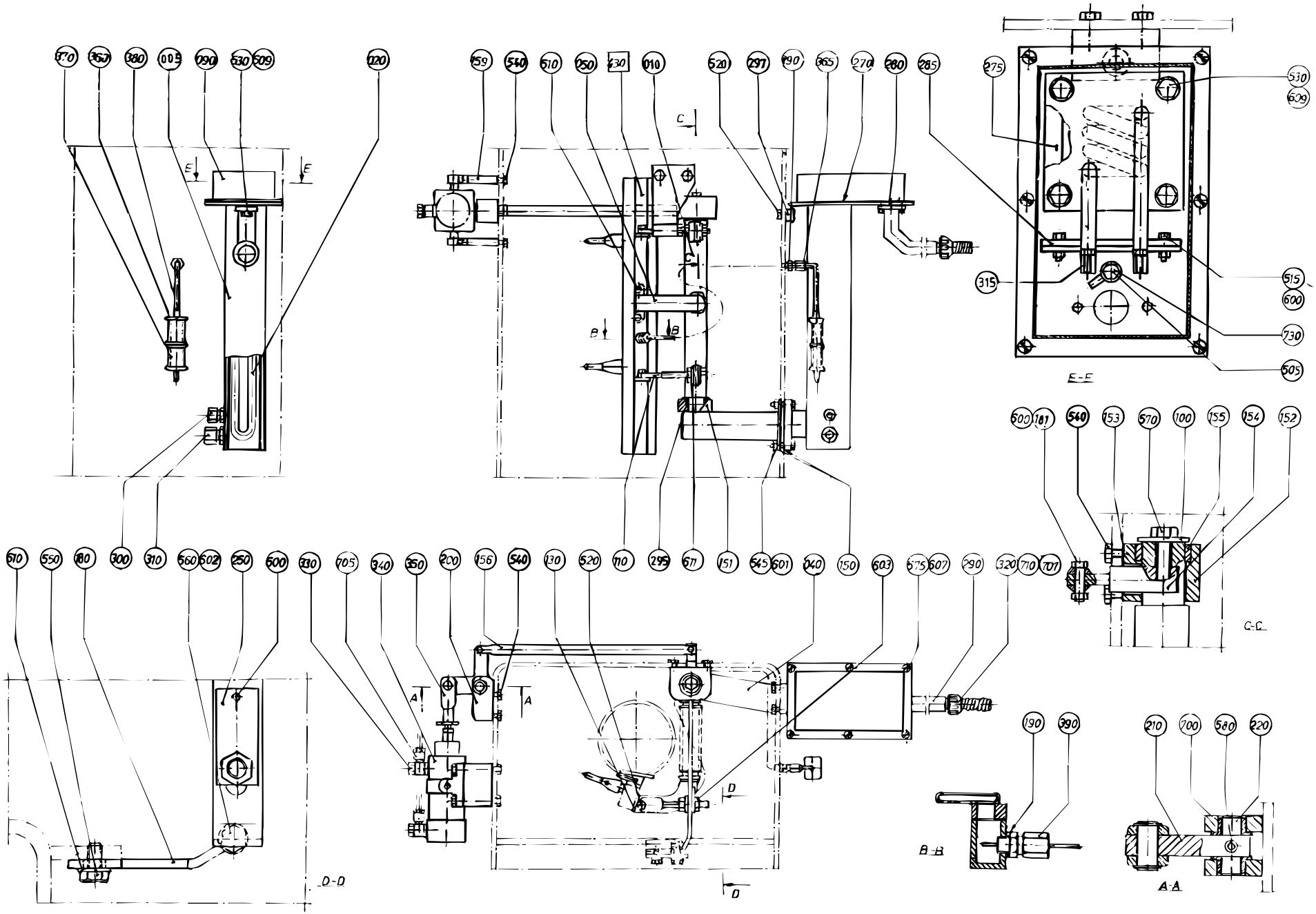

S-269915-5
ECN 17647

Pos	Part No	SP	UN	Qty	Description	Page No
-						
000	**C- 269915-0701**	**-**		**1**	**HOT AIR ELEMENT**	
005	533195	C		1	MANTLE	
010	250654	C		1	PIVOT ARM	
020	555545	-		1	COIL HEATER	
040	250656	C		1	ATTACHMENT PIPE	
050	434829	C		1	LEAD	
090	476360	-		1	LID	
100	28037	-		1	WASHER	
110	32215	-		2	HOLDER	
130	531734	PU		1	GASKET	
150	531738	PU		2	GASKET	
151	531739	PU		1	GASKET	
152	250660	S		1	BEARING CONSOLE	
153	531740	PU		1	GASKET	
154	250662	-		1	LEVER	
155	250663	S		1	BEARING	
156	250664	C		1	TIE ROD	
159	250668	-		2	SPACER	
180	269913	S		1	STOPPER	
181	269914	S		2	SHOULDER SCREW	
190	273429	S		2	WASHER	
200	279208	S		1	BEARING HOUSING	
210	279209	C		1	ROCKER ARM	
220	279213	S		1	DOWEL	
250	297054	-		2	WASHER	
270	531744	PU		1	GASKET	
275	531745	PU		1	GASKET	
280	531764	PU		1	GASKET	
285	555546	-		1	INSULATING PLATE	
290	479176	-		1	PIPE	
295	530622	S		1	BUSHING	
297	533196	C		1	FASTENING PLATE	
300	90030-0092	S		1	PIPE CONNECTION	
310	90030-0187	S		1	PIPE CONNECTION	
315	90097-0017	-		2	FLAT PIN PLUG	
320	90152-0033	C	MM	500	HOSE	
330	90235-0275	S		2	VALVE	
340	90239-0951	P		1	CYLINDER	
340a	90239-0443	S		1	* SEAL KIT	
350	90239-0346	S		1	BRACKET	
360	90326-0012	P		1	PROTECTIVE COVER	
365	90326-0017	P		1	GLAND	
370	90326-0020	P		1	PLUG,FEMALE YELLOW CR-AL	
380	90326-0048	P		1	THERMOELEMENT	
390	90326-0304	S		1	LEAD IN	
500	311103-0233	-		2	CYLINDRICACP M6 3X10 RFR	
505	312105-0289	-		1	SCREW M6S4X10 A2 80	
510	312105-0325	-		2	SCREW M6S5X10 A2 80	
515	312105-0327	-		2	SCREW ISO 4017 M5X12A280	
520	312105-0364	-		4	SCREW M6S6X10RFR	
530	312105-0368	-		6	SCREW O4017 M6X16A280	
540	312105-0370	-		16	SCREW O4017 M6X20A280	
545	312105-0372	-		4	SCREW O4017 M6X25A280	
550	312105-0449	-		2	SCREW O4017 M8X16A280	
560	312105-0453	-		1	SCREW O4017 M8X25A280	
570	312105-0455	-		1	SCREW O4017 M8X30A280	
575	312125-0327	-		6	SLOTTED HEMCS5X12RFR	
580	312318-0362	-		1	STOP SCREW SK6SS6X8RFR	
600	312605-0314	-		4	NUT M6M5RFR	
601	312605-0316	-		4	NUT M6M6 A280 STAINLESS	
602	312605-0318	-		1	NUT M6M8RFR	
603	312605-0320	-		4	NUT M6M10RFR	
607	315105-0146	-		6	WASHER BRB5,3X10RFR	
609	315105-0153	-		6	WASHER BRB6,4X12RFR	
610	315105-0165	-		2	WASHER BRB8,4X16RFR	
611	315105-0173	-		4	WASHER BRB10,5X22RFR	
700	321111-0159	-		2	FLANGE BUS 12E7X12	
705	342797-0122	-		2	BANJO CONN SINGLE 6-1/4	
707	352100-0106	C		1	CABLE GLANR.18,6-10,5	
710	352136-0113	C		1	GLAND FITT	
730	353104-0130	-		1	CABLE SHOEYAV 025 M 4*	
F430	C- 283926-030V	-		1	AIR NOZZLE	**61**

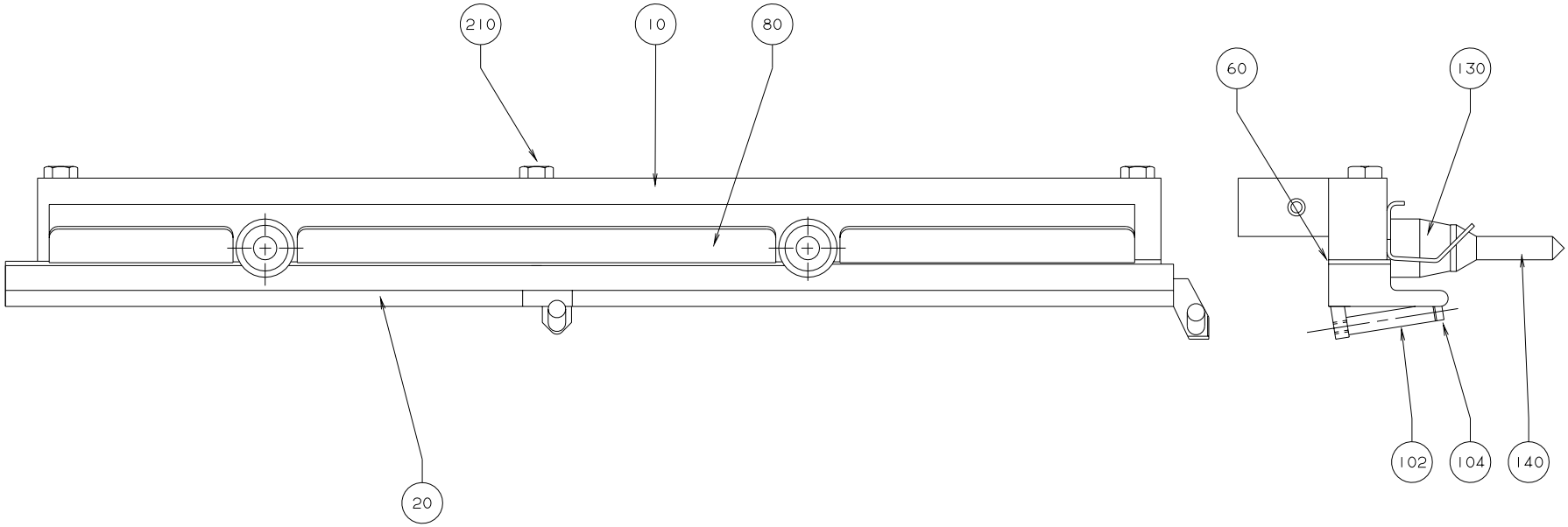
210
10
80
20
60
130
102
104
140

Pos	Part No	SP	UN	Qty	Description	Page No
VOLUMES 1055 B, 1000 B, 750 B, 568 B, 500 B						
000	**C- 283926-0301**	**-**		**1**	**AIR NOZZLE**	
010	243846	-		1	ATTACHMENT	
020	567734	-		1	AIR NOZZLE	
060	569104	-		1	DISTRIBUTOR WING	
080	567735	-		1	HEAD PLATE	
130	6161	P		2	ROLL	
VOLUMES 1000 S, 1000 Sq, 500 Sq						
000	**C- 283926-0302**	**-**		**1**	**AIR NOZZLE**	
010	243846	-		1	ATTACHMENT	
020	573058	-		1	AIR NOZZLE	
060	569104	-		1	DISTRIBUTOR WING	
080	567735	-		1	HEAD PLATE	
130	6161	P		2	ROLL	
VOLUMES 750 S, 500S, 400 B, 375 S, 355 B						
000	**C- 283926-0303**	**-**		**1**	**AIR NOZZLE**	
010	526687	-		1	ATTACHMENT	
020	526587	-		1	AIR NOZZLE	
060	526689	-		1	DISTRIBUTOR WING	
080	526688	-		1	HEAD PLATE	
130	526692	-		2	ROLL	
Common parts						
102	526691	-		2	ROLL	
104	526690	-		2	SHAFT	
140	265957	S		2	SHAFT	
210	312105-0376	-		3	SCREW O4017 M6X35A280	
240	315105-0136	-		2	WASHER BRB4,3X8RFR	

Pos	Part No	SP	UN	Qty	Description	Page No

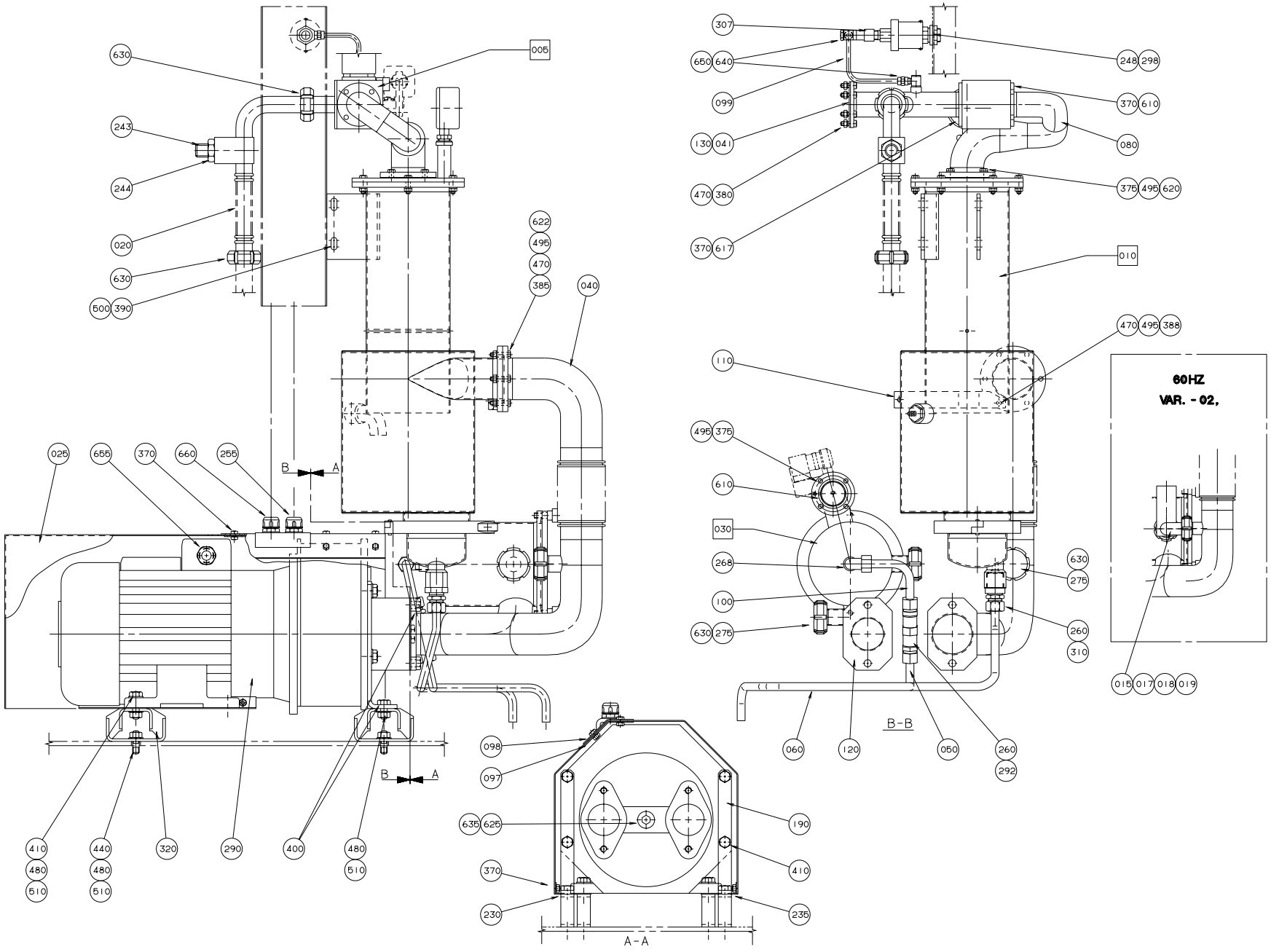

S-575474-1
ECN 20650

Pos	Part No	SP	UN	Qty	Description	Page No
HZ - 50						
000	**C- 575474-0101**	**-**		**1**	**COMPRESSOR**	
275	90217-0026	-		3	NUT	
HZ - 60						
000	**C- 575474-0102**	**-**		**1**	**COMPRESSOR**	
015	568805	-		1	PIPE	
017	442236	-		1	THROTTLE SCREW	
018	442237	-		1	NUT	
019	315202-0119	-		1	O-RING 25,1X1,6	
275	90217-0026	-		1	NUT	
Common parts						
020	449130	C		1	CONNECTING PIPE	
025	451321	-		1	COVER	
040	568804	-		1	PIPE	
041	555544	-		1	PIPE	
050	568807	C		1	PIPE	
060	568808	C		1	PIPE	
080	568809	-		1	PIPE	
097	526782	-		1	COVERING PLATE	
098	451323	-		1	SHEET	
099	451324	C		1	PIPE	
100	568810	C		1	PIPE	
110	571086	C		1	BRACKET	
120	230551	PU		1	GASKET	
130	531742	PU		1	GASKET	
190	269859	C		2	BRACKET	
230	282682	C		1	BRACKET	
235	282683	C		1	BRACKET	
243	295878	C		1	THROTTLE SCREW	
244	295879	C		1	NUT	
248	479234	-		1	WASHER	
255	90012-0063	C		1	GLAND	
260	90030-0187	S		3	PIPE CONNECTION	
268	90030-0115	-		1	PIPE CONNECTION	
290	90270-0011	C		1	COMPRESSOR ELMO RA112	
290a	90270-0338	S		1	* SPARE PARTS KIT	
290b	90270-0345	S		1	* SHIMS	
290c	90270-0346	S		1	* GASKET	
290d	90270-0348	R		1	* MOTOR ELMO RA112/MB4208	
292	90270-0347	-		1	VALVE	
298	90274-0045	S		1	GUARD	
307	90330-0012	S		1	REDUCTION SLEEVE	
310	90330-0078	-		1	BUSHING	
320	90347-0026	S		4	DAMPER	
370	312105-0366	-		18	SCREW O4017 M6X12A280	
375	312105-0368	-		8	SCREW O4017 M6X16A280	
380	312105-0370	-		6	SCREW O4017 M6X20A280	
385	312105-0372	-		5	SCREW O4017 M6X25A280	
388	312105-0374	-		1	SCREW O4017 M6X30A280	
390	312105-0447	-		4	SCREW O4017 M8X12A280	
400	312105-0491	-		8	SCREW 4017 M10X20A280	
410	312105-0497	-		8	SCREW 4017 M10X35A280	
440	312303-0497	-		4	STUD SCREWMPS 10X25 RFR	
470	312605-0316	-		12	NUT M6M6 A280 STAINLESS	
480	312605-0320	-		10	NUT M6M10RFR	
495	315105-0153	-		14	WASHER BRB6,4X12RFR	
500	315105-0165	-		4	WASHER BRB8,4X16RFR	
510	315105-0173	-		14	WASHER BRB10,5X22RFR	
610	315204-0222	-		2	O-RING 36,2X3VITON	
617	315204-0223	-		1	O-RING 39,2X3 MM VITON	
620	315204-0302	-		1	O-RING 54,5X3VITON	
622	315204-0304	-		1	O-RING 64,5X3 VITON	
625	315233-0113	-		1	SEAL RING R1/2"	
630	315250-0101	-		5	GASKET 32/25	
635	342713-0213	-		1	BLIND PLUG	
640	342797-0121	-		2	BANJO CONNSINGEL 6-1/8	
650	342980-0303	-		2	BANJO CONN SINGEL 1/8"	
655	352103-0111	-		1	CABLE GLAND ST 16;10-14MM	
660	352136-0127	C		1	GLAND FITT	
F005	C- 476859-0203	-		1	CHANGE-OVER VALVE	**65**
F010	C- 569003-0101	-		1	SEPARATION INSERT	**71**
F030	C- 575475-0101	-		1	SCRUBBER	**73**

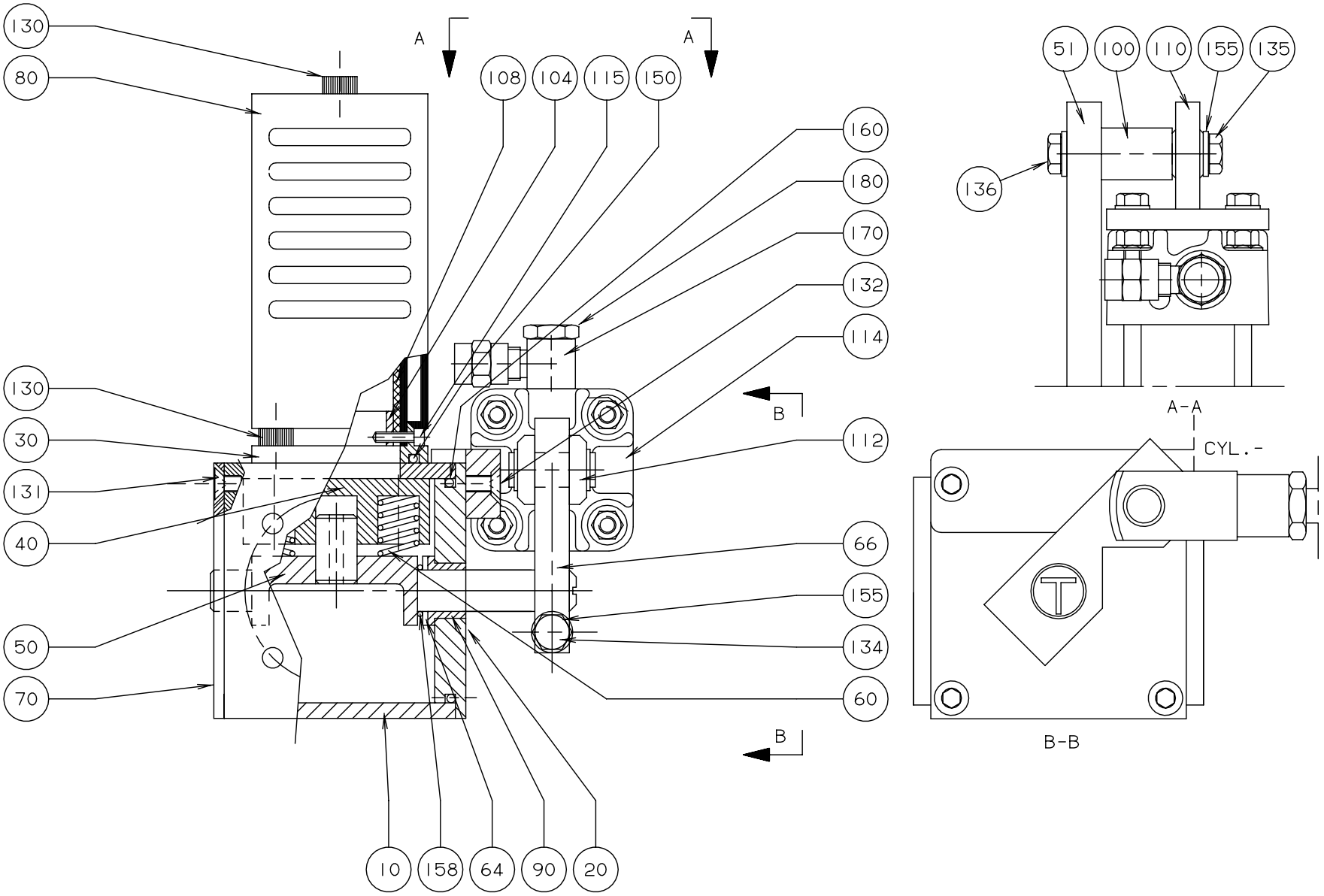

S-476859-3
ECN 17647

Pos	Part No	SP	UN	Qty	Description	Page No
-						
000	**C- 476859-0201**	**-**		**1**	**CHANGE-OVER VALVE**	
030	466477	-		1	INNER PIPE	
080	466478	-		1	OUTER PIPE	
104	466483	-		1	CLAMPING PIECE	
108	466484	-		1	NET	
115	312115-0224	-		2	SCREW S 3X10 A4 80	
130	312115-0364	-		5	SCREW 6X10 A4 80	
150	315204-0222	-		1	O-RING 36,2X3VITON	
-						
000	**C- 476859-0202**	**-**		**1**	**CHANGE-OVER VALVE**	
-						
000	**C- 476859-0203**	**-**		**1**	**CHANGE-OVER VALVE**	
030	466477	-		1	INNER PIPE	
080	466478	-		1	OUTER PIPE	
104	466483	-		1	CLAMPING PIECE	
108	466484	-		1	NET	
115	312115-0224	-		2	SCREW S 3X10 A4 80	
130	312115-0364	-		5	SCREW 6X10 A4 80	
150	315204-0222	-		1	O-RING 36,2X3VITON	
Common parts						
010	466474	-		1	VALVE HOUSING	
020	255874	-		1	BEARING COVER	
040	466479	S		1	PIECE	
050	555541	-		1	BRACKET	
051	555542	-		1	BRACKET	
060	21521	S		2	COMPRESSION SPRING	
064	266737	-		1	WASHER	
066	441483	-		1	CYLINDER BRACKET	
070	255874	-		1	BEARING COVER	
090	255875	S		2	BUSHING	
100	555540	-		1	SPACER	
110	90239-0453	-		1	BRACKET	
112	90239-0516	-		1	PISTON ROD HEAD	
114	90239-0779	-		1	CYLINDER	
114a	90239-0442	S		1	* SEAL KIT	
131	312155-0364	-		6	SCREW MF6S6X10RFR	
132	312155-0370	-		2	SCREW MF6S6X20RFR	
134	312105-0370	-		1	SCREW O4017 M6X20A280	
135	312105-0364	-		2	SCREW M6S6X10RFR	
136	312105-0368	-		1	SCREW O4017 M6X16A280	
155	315105-0153	-		3	WASHER BRB6,4X12RFR	
158	315204-0110	-		1	O-RING 1X1,6 VITON	
160	315204-0302	S		2	O-RING 54,5X3VITON	
170	342797-0121	-		2	BANJO CONNSINGEL 6-1/8	
180	342980-0303	-		2	BANJO CONN SINGEL 1/8"	

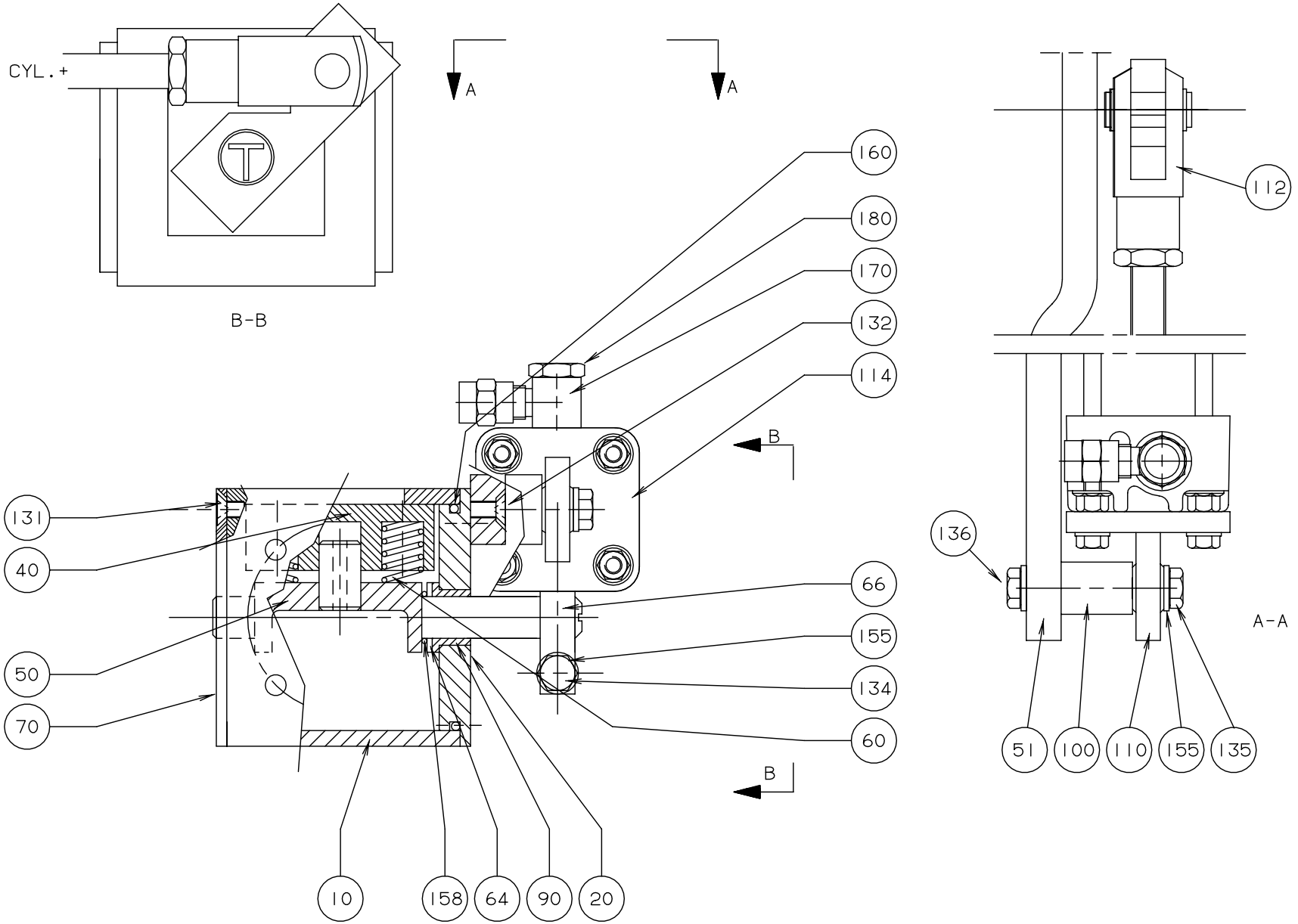

S-476859-4
ECN 15602

Pos	Part No	SP	UN	Qty	Description	Page No
-						
000	**C- 476859-0201**	**-**		**1**	**CHANGE-OVER VALVE**	
030	466477	-		1	INNER PIPE	
080	466478	-		1	OUTER PIPE	
104	466483	-		1	CLAMPING PIECE	
108	466484	-		1	NET	
115	312115-0224	-		2	SCREW S 3X10 A4 80	
130	312115-0364	-		5	SCREW 6X10 A4 80	
150	315204-0222	-		1	O-RING 36,2X3VITON	
-						
000	**C- 476859-0202**	**-**		**1**	**CHANGE-OVER VALVE**	
-						
000	**C- 476859-0203**	**-**		**1**	**CHANGE-OVER VALVE**	
030	466477	-		1	INNER PIPE	
080	466478	-		1	OUTER PIPE	
104	466483	-		1	CLAMPING PIECE	
108	466484	-		1	NET	
115	312115-0224	-		2	SCREW S 3X10 A4 80	
130	312115-0364	-		5	SCREW 6X10 A4 80	
150	315204-0222	-		1	O-RING 36,2X3VITON	
Common parts						
010	466474	-		1	VALVE HOUSING	
020	255874	-		1	BEARING COVER	
040	466479	S		1	PIECE	
050	555541	-		1	BRACKET	
051	555542	-		1	BRACKET	
060	21521	S		2	COMPRESSION SPRING	
064	266737	-		1	WASHER	
066	441483	-		1	CYLINDER BRACKET	
070	255874	-		1	BEARING COVER	
090	255875	S		2	BUSHING	
100	555540	-		1	SPACER	
110	90239-0453	-		1	BRACKET	
112	90239-0516	-		1	PISTON ROD HEAD	
114	90239-0779	-		1	CYLINDER	
114a	90239-0442	S		1	* SEAL KIT	
131	312155-0364	-		6	SCREW MF6S6X10RFR	
132	312155-0370	-		2	SCREW MF6S6X20RFR	
134	312105-0370	-		1	SCREW O4017 M6X20A280	
135	312105-0364	-		2	SCREW M6S6X10RFR	
136	312105-0368	-		1	SCREW O4017 M6X16A280	
155	315105-0153	-		3	WASHER BRB6,4X12RFR	
158	315204-0110	-		1	O-RING 1X1,6 VITON	
160	315204-0302	S		2	O-RING 54,5X3VITON	
170	342797-0121	-		2	BANJO CONNSINGEL 6-1/8	
180	342980-0303	-		2	BANJO CONN SINGEL 1/8"	

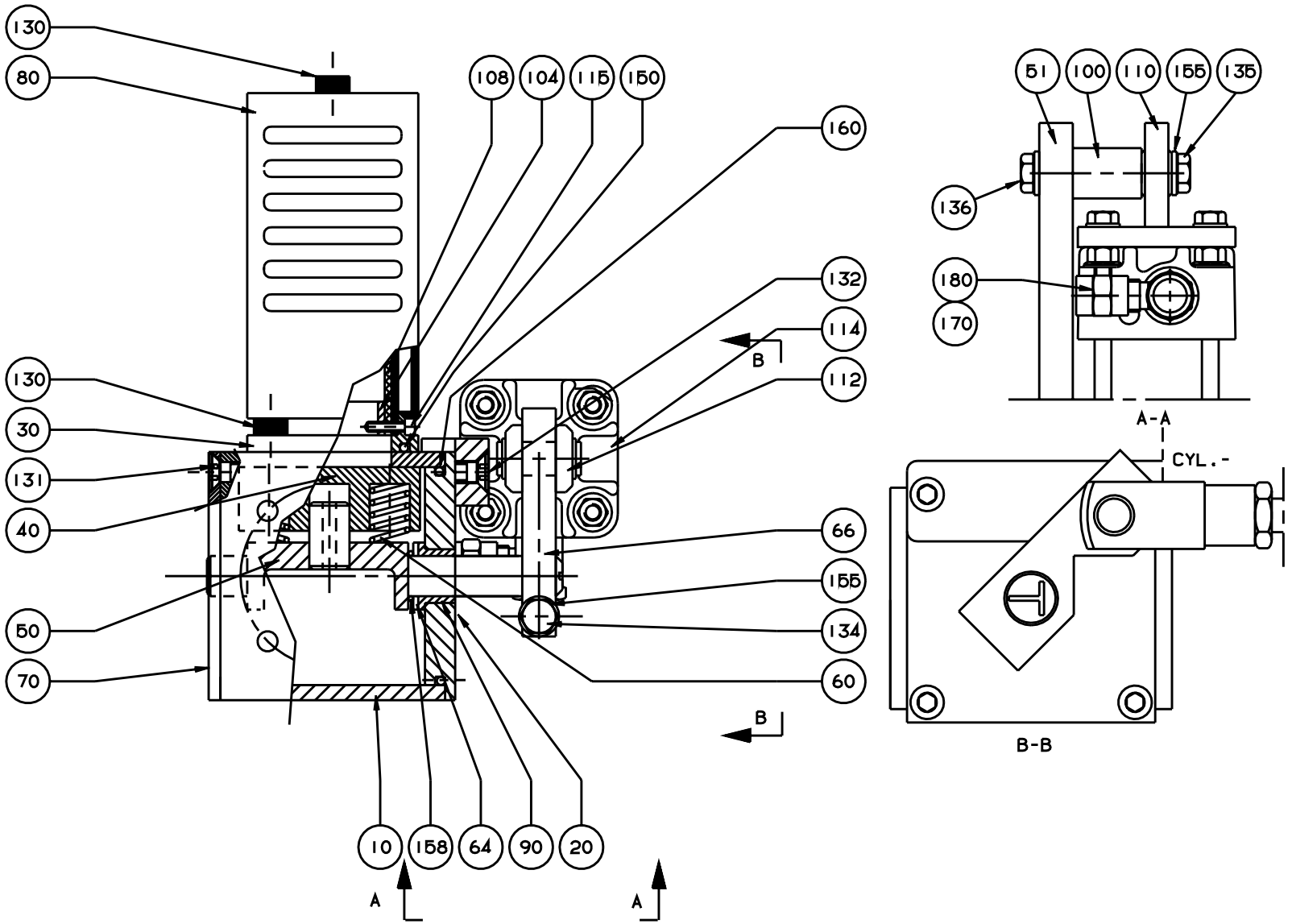
130
80
108
104
115
150
160
132
114
112
130
30
131
40
66
155
134
60
50
70
10
158
64
90
20
A
A
B
B
51
100
110
155
135
136
180
170
A-A
CYL.-
B-B

Pos	Part No	SP	UN	Qty	Description	Page No
-						
000	**C- 476859-0201**	**-**		**1**	**CHANGE-OVER VALVE**	
030	466477	-		1	INNER PIPE	
080	466478	-		1	OUTER PIPE	
104	466483	-		1	CLAMPING PIECE	
108	466484	-		1	NET	
115	312115-0224	-		2	SCREW S 3X10 A4 80	
130	312115-0364	-		5	SCREW 6X10 A4 80	
150	315204-0222	-		1	O-RING 36,2X3VITON	
-						
000	**C- 476859-0202**	**-**		**1**	**CHANGE-OVER VALVE**	
-						
000	**C- 476859-0203**	**-**		**1**	**CHANGE-OVER VALVE**	
030	466477	-		1	INNER PIPE	
080	466478	-		1	OUTER PIPE	
104	466483	-		1	CLAMPING PIECE	
108	466484	-		1	NET	
115	312115-0224	-		2	SCREW S 3X10 A4 80	
130	312115-0364	-		5	SCREW 6X10 A4 80	
150	315204-0222	-		1	O-RING 36,2X3VITON	
Common parts						
010	466474	-		1	VALVE HOUSING	
020	255874	-		1	BEARING COVER	
040	466479	S		1	PIECE	
050	555541	-		1	BRACKET	
051	555542	-		1	BRACKET	
060	21521	S		2	COMPRESSION SPRING	
064	266737	-		1	WASHER	
066	441483	-		1	CYLINDER BRACKET	
070	255874	-		1	BEARING COVER	
090	255875	S		2	BUSHING	
100	555540	-		1	SPACER	
110	90239-0453	-		1	BRACKET	
112	90239-0516	-		1	PISTON ROD HEAD	
114	90239-0779	-		1	CYLINDER	
114a	90239-0442	S		1	* SEAL KIT	
131	312155-0364	-		6	SCREW MF6S6X10RFR	
132	312155-0370	-		2	SCREW MF6S6X20RFR	
134	312105-0370	-		1	SCREW O4017 M6X20A280	
135	312105-0364	-		2	SCREW M6S6X10RFR	
136	312105-0368	-		1	SCREW O4017 M6X16A280	
155	315105-0153	-		3	WASHER BRB6,4X12RFR	
158	315204-0110	-		1	O-RING 1X1,6 VITON	
160	315204-0302	S		2	O-RING 54,5X3VITON	
170	342797-0121	-		2	BANJO CONNSINGEL 6-1/8	
180	342980-0303	-		2	BANJO CONN SINGEL 1/8"	

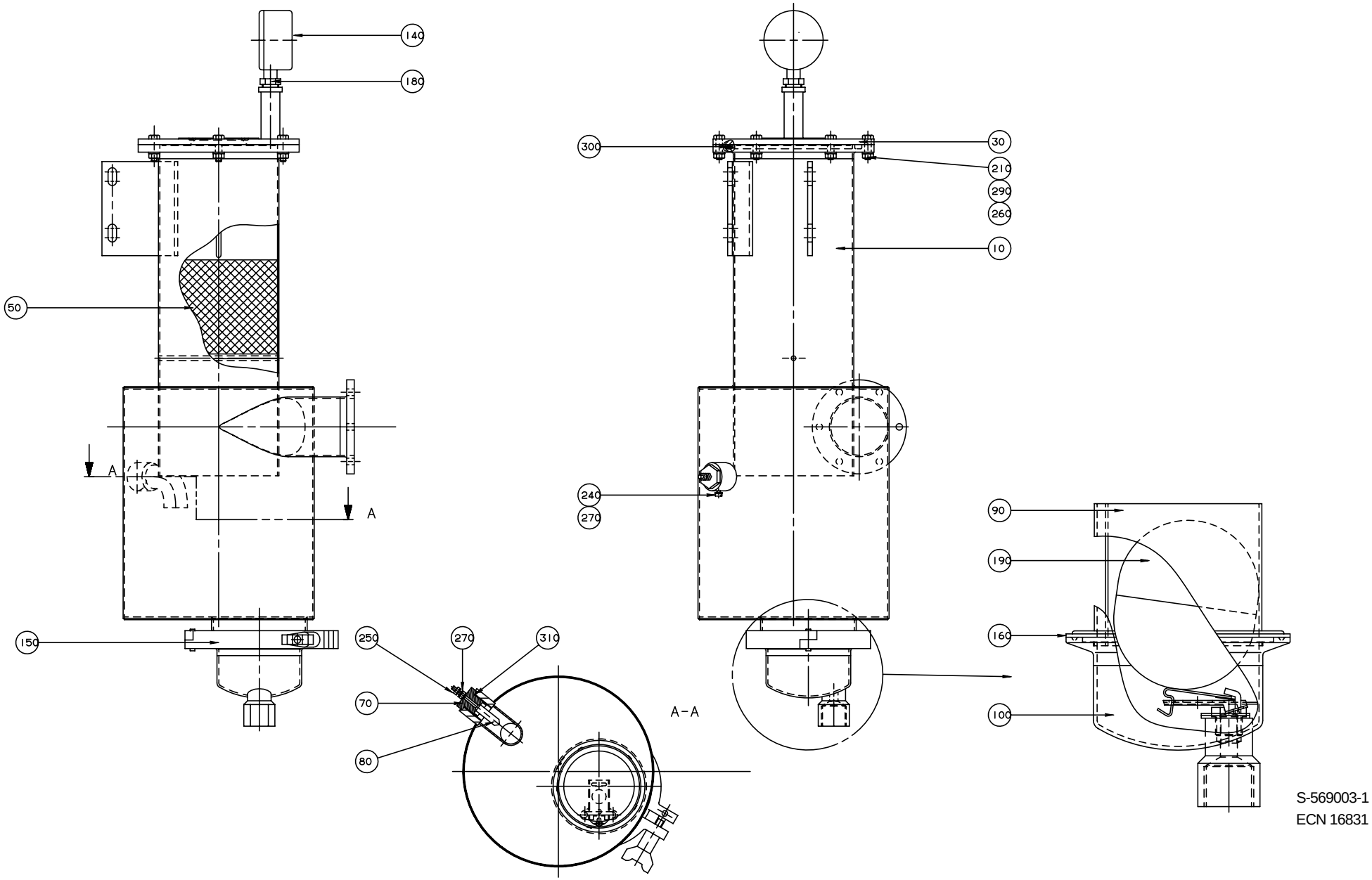

S-569003-1
ECN 16831

Pos	Part No	SP	UN	Qty	Description	Page No
-						
000	**C- 569003-0101**	**-**		**1**	**SEPARATION INSERT**	
010	568802	-		1	CONTAINER	
030	568827	-		1	LID	
050	546929	C		1	FILTER	
070	560931	C		1	BRACKET	
080	567070-0012	-		1	ELECTRODE	
090	568828	-		1	FLOAT GUARD	
100	571088	-		1	DRAINING	
100a	90360-0304	C		1	* SPARE PART KIT	
140	90043-0095	C		1	PRESSURE GAUGE	
150	90217-0312	-		1	CRAMP	
160	90217-0313	S		1	SEAL	
180	90330-0042	-		1	BUSHING	
190	90360-0305	C		1	FLOAT	
210	312105-0372	-		6	SCREW O4017 M6X25A280	
240	312125-0285	-		1	SLOTTED HEMCS4X6RFR	
250	312605-0312	-		2	NUT M6M4 STAINLESS	
260	312605-0316	-		6	NUT M6M6 A280 STAINLESS	
270	315105-0136	-		4	WASHER BRB4,3X8RFR	
290	315105-0153	-		6	WASHER BRB6,4X12RFR	
300	315202-0244	PU		1	O-RING 134,3X5,7	
310	315204-0213	-		1	O-RING 15,3X2,4VITON	

Pos	Part No	SP	UN	Qty	Description	Page No

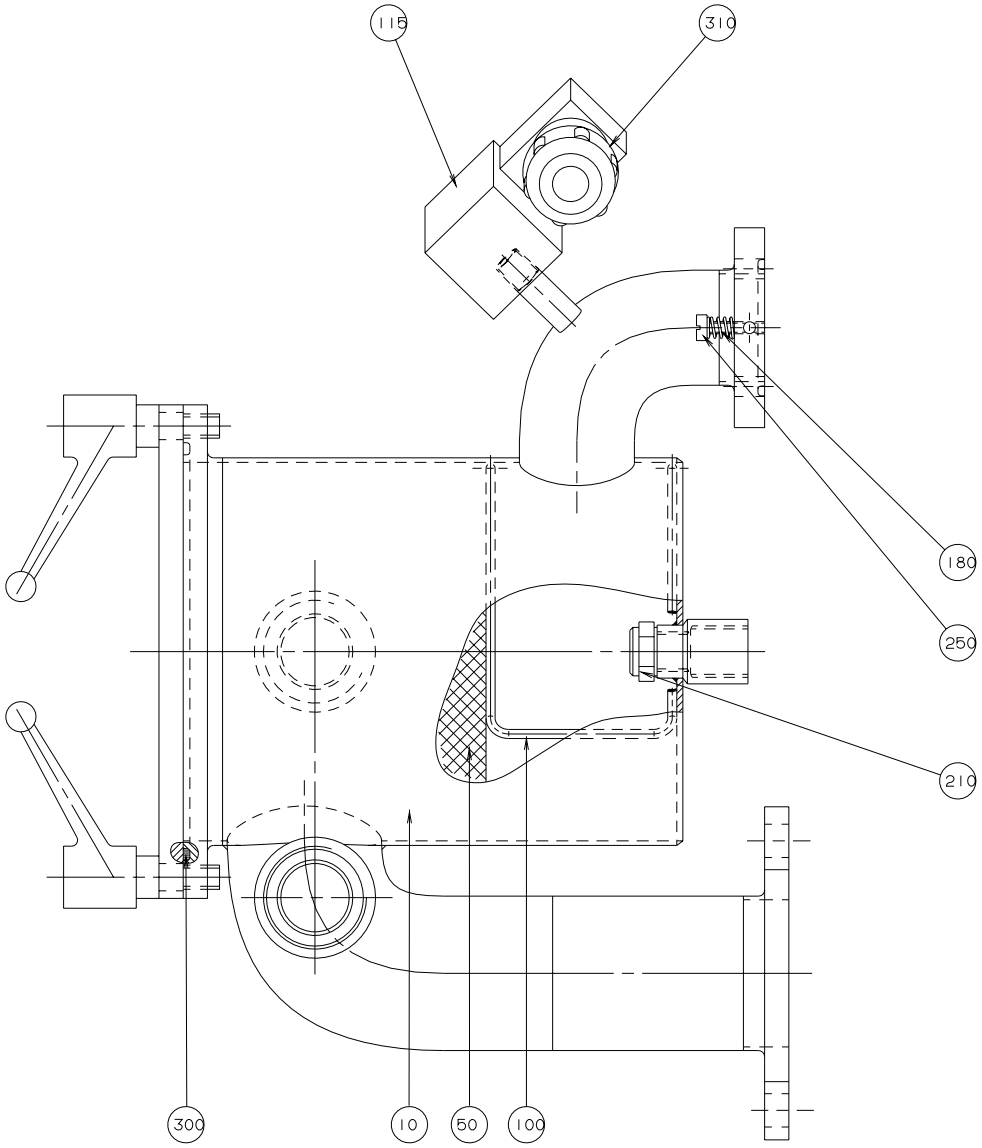

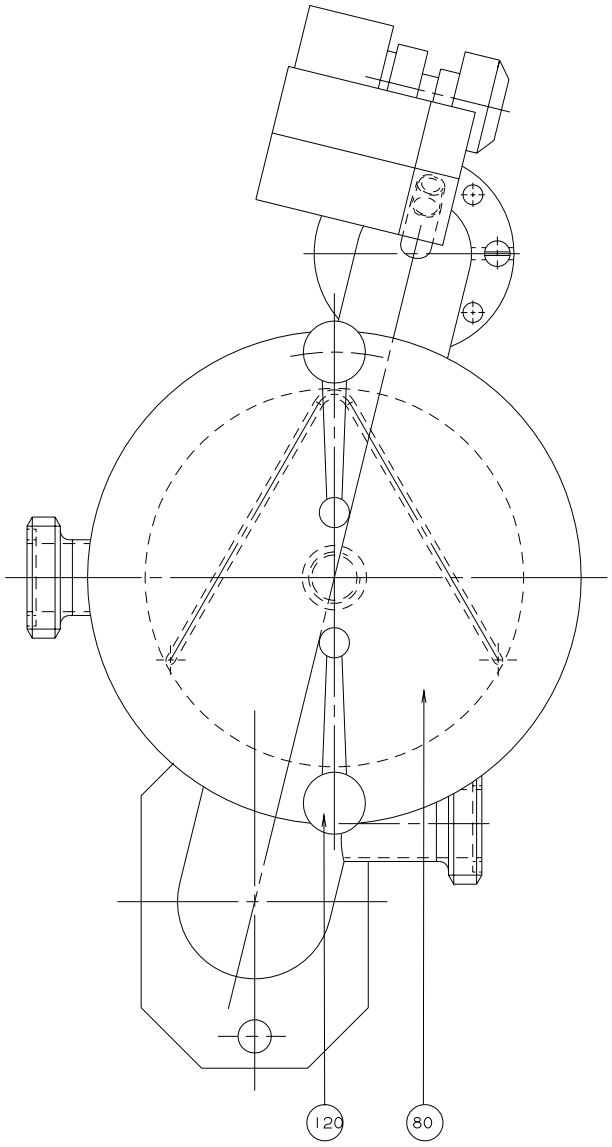

S-575475-1
ECN 19538

Pos	Part No	SP	UN	Qty	Description	Page No
-						
000	**C- 575475-0101**	**-**		**1**	**SCRUBBER**	
010	568803	-		1	CONTAINER	
050	546929	C		1	FILTER	
080	568806	-		1	LID	
100	571087	-		1	RETAINING RING	
115	90042-0187	-		1	SOLENOID VALVE	
120	90117-0008	-		2	HANDLE	
180	90335-0034	-		1	SPRING	
210	90424-0054	C		1	NOZZLE	
250	312125-0327	-		1	SLOTTED HEMCS5X12RFR	
300	315202-0317	S		1	O-RING 129,5X3	
310	352136-0113	-		1	GLAND FITT	

Pos	Part No	SP	UN	Qty	Description	Page No

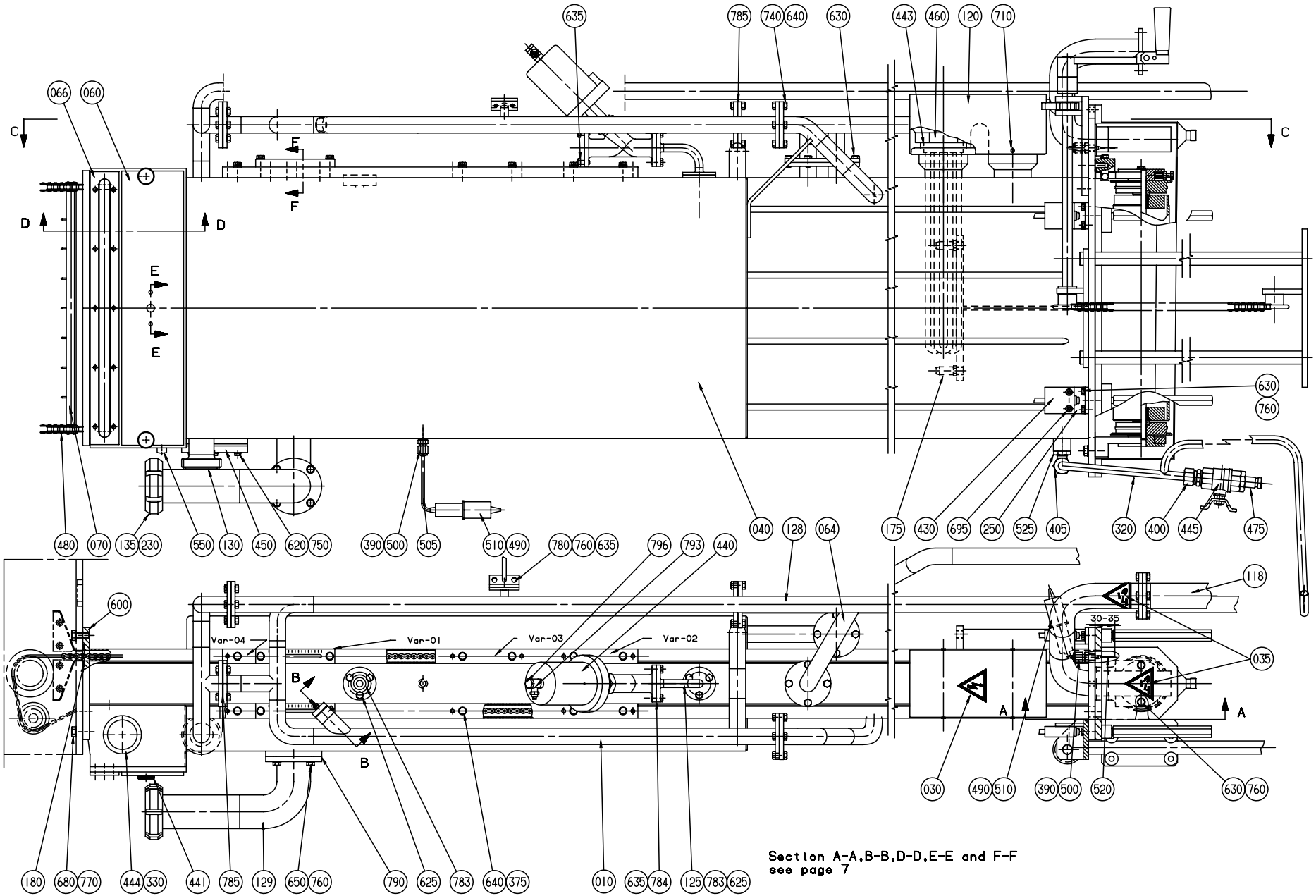

Section A-A,B-B,D-D,E-E and F-F
see page 7

S-269941-6
ECN 22848

Pos	Part No	SP	UN	Qty	Description	Page No
VOLUMES 1055 B, 1000 B, 750 S						
000	**C- 269941-0601**	**-**		**1**	**BATH**	
010	561420	C		1	OVERFLOW TUBE	
VOLUMES 568 B, 500B, 400 B, 355 B						
000	**C- 269941-0602**	**-**		**1**	**BATH**	
010	561421	C		1	OVERFLOW TUBE	
VOLUMES 750 B, 500 S, 500 Sq, 375 S						
000	**C- 269941-0603**	**-**		**1**	**BATH**	
010	561422	C		1	OVERFLOW TUBE	
VOLUMES 1000 S, 1000 Sq						
000	**C- 269941-0604**	**-**		**1**	**BATH**	
010	927085	-		1	OVERFLOW TUBE	
Common parts						
030	90194-0016	-		1	SIGN "FLASH SIGN" 50X50MM	
035	359705-0003	-		2	WARNING SIGN"CORROSION"	
040	560614	C		1	BATH	
060	273934	C		1	LID	
062	273961	P		1	SEAL	
064	450509	-		1	PIPE	
066	476087	C		1	LID	
070	247236	S		1	CARRIER	
075	541177	C		1	BENDING ROLLER	
100	279471	-		1	CANTILEVER	
118	560615	-		1	PIPE	
120	450512	-		1	COVER	
125	476400	-		1	PIPE	
128	542075	-		1	PIPE	
129	551340	-		1	FILLER TUBE	
130	12242-0003	PU		1	GASKET	
135	12242-0005	PU		1	GASKET	
150	247160	-		1	AXLE SUPPORT	
160	531167	C		1	SHAFT	
165	531168	S		2	WHEEL	
170	247241	-		1	AXLE SUPPORT	
175	247248	-		2	PIN	
180	247252	S		1	GASKET	
185	531169	S		2	WASHER	
215	267056	C		1	BEARING CONSOLE	
230	269931	C		1	NUT	
235	273937	P		1	DIAPHRAGM	
240	273938	C		1	WASHER	
250	279472	-		4	FASTENING BRACKET	
280	279478	-		1	BEARING PLATE	
320	560472	-		1	PIPE	
330	293405	C		2	GASKET	
350	567070-0012	S		1	ELECTRODE	
351	560931	-		1	BRACKET	
355	543470	S		2	LEVEL GLASS	
360	476398	S		2	LID	
365	569016	S		4	GASKET	
375	479025	S		10	WASHER	
390	273429	S		2	WASHER	
400	90030-0109	S		1	PIPE CONNECTION	
405	90030-0115	-		1	PIPE CONNECTION	
430	90044-0084	P		4	LIMITSW.14CE1-4 HONEYWELL	
440	544896	S		1	VALVE	
441	491126	-		2	SCREW	
442	90143-0020	P	MM	900	STRIP	
443	90144-0004	-	MM	X	TAPE	
444	90153-0016	-	ML	X	ADHESIVE	
445	90187-0081	-		1	BALL VALVE	
450	90199-0010	S		1	LEVEL GLASS	
460	90206-0070	P		2	HEATING ELEMENT	
470	90240-0146	S		2	FLANGE BUSHING	
475	90224-0078	-		1	CONNECTION	
480	560617	S		2	ROLLER CHAIN	
490	90326-0012	P		2	PROTECTIVE COVER	
500	90326-0017	S		2	GLAND	
505	90326-0019	P		1	THERMOELEMENT	
510	90326-0020	P		2	PLUG,FEMALE YELLOW CR-AL	
520	90326-0043	P		1	THERMOCOUPLE CR-ALPREM.G	
525	90330-0048	-		1	BUSHING	
550	90330-0066	-		1	PLUG	
600	311103-0310	-		2	CYLINDRICACP M6 5X20 RFR	
615	312105-0325	-		2	SCREW M6S5X10 A2 80	
620	312105-0332	-		6	SCREW M6S5X22RFR	
625	312105-0364	-		6	SCREW M6S6X10RFR	
630	312105-0366	-		20	SCREW O4017 M6X12A280	
635	312105-0367	-		10	SCREW M6S6X14RFR	
640	312105-0368	-		40	SCREW O4017 M6X16A280	
650	312105-0370	-		10	SCREW O4017 M6X20A280	
660	312105-0371	-		2	SCREW M6S6X22RFR	
670	312105-0376	-		2	SCREW O4017 M6X35A280	

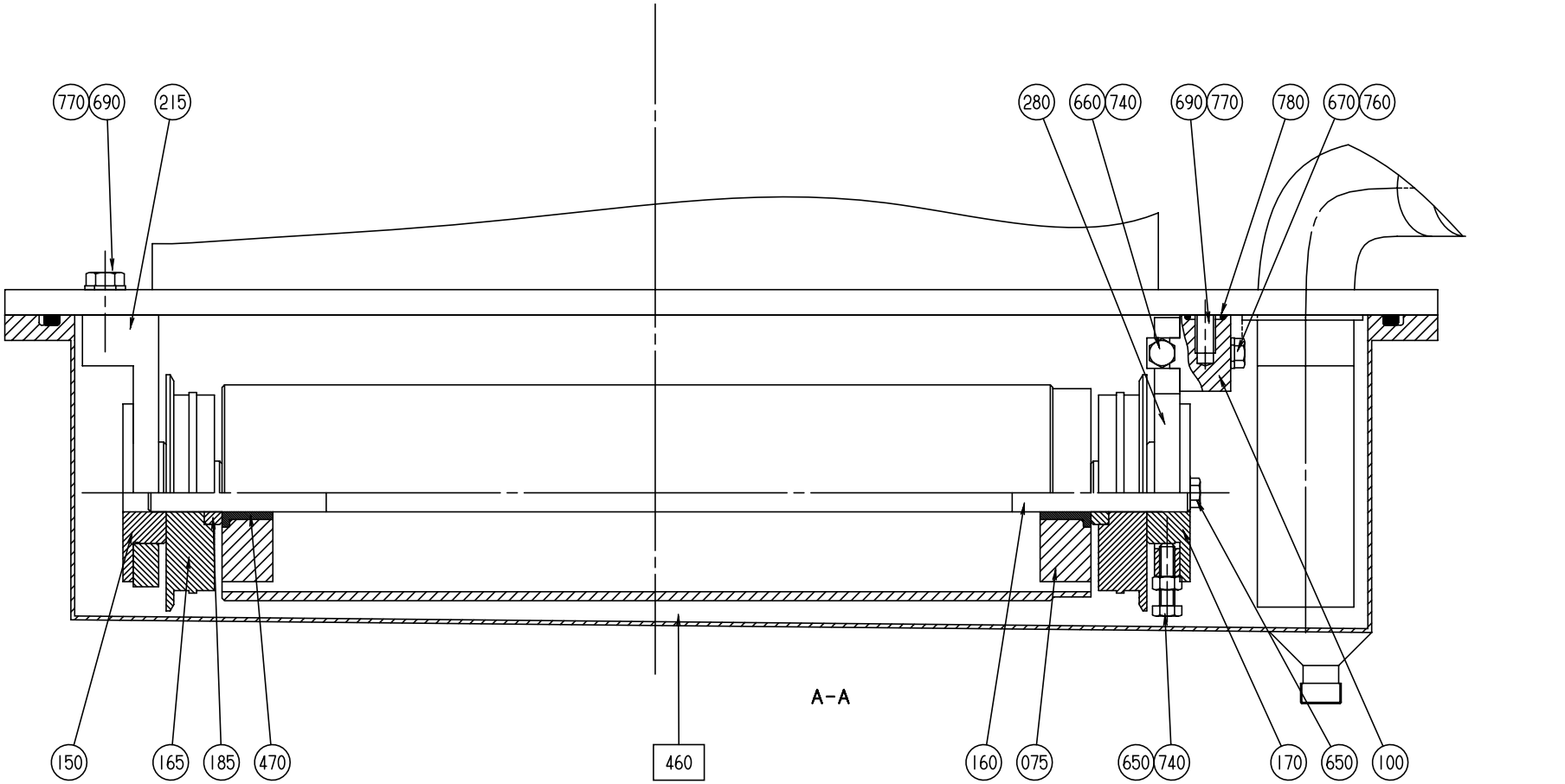

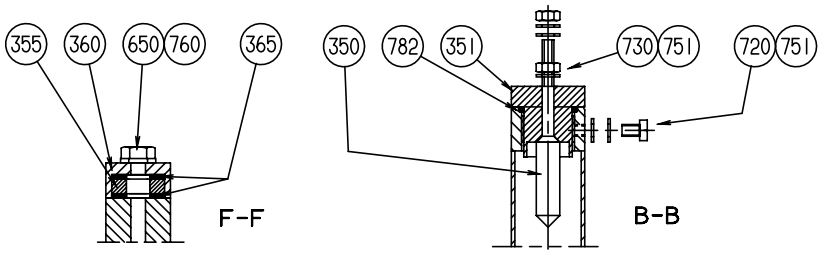

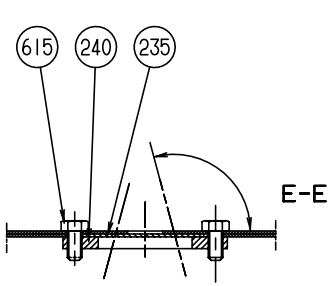

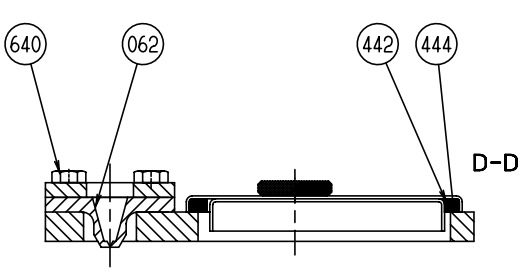

S-269941-7
ECN 18018

Pos	Part No	SP	UN	Qty	Description	Page No
680	312105-0451	-		6	SCREW SO4017 8X20A280	
690	312105-0452	-		4	SCREW M6S8X22RFR	
695	312115-0329	-		8	SCREW O4762 M5X16A280	
710	312125-0220	-		4	SLOTTED HEMCS3X6RFR	
720	312125-0285	-		1	SLOTTED HEMCS4X6RFR	
730	312605-0312	-		2	NUT M6M4 STAINLESS	
740	312605-0316	-		23	NUT M6M6 A280 STAINLESS	
750	315105-0146	-		6	WASHER BRB5,3X10RFR	
751	315105-0136	-		5	WASHER BRB4,3X8RFR	
760	315105-0153	-		22	WASHER BRB6,4X12RFR	
770	315105-0165	-		10	WASHER BRB8,4X16RFR	
780	927421-0001	-		5	O-RING 9.3X2.4 SILICON	
782	927421-0003	-		1	O-RING 13.3X2.4 SILICON	
783	927422-0001	-		1	O-RING 19.2X3 SILICON	
784	927422-0004	-		1	O-RING 29.2X3 SILICON	
785	927422-0006	-		7	O-RING 42.2X3 SILICON	
790	927422-0009	-		1	O-RING 54.5X3 SILICON	
793	342797-0122	-		1	BANJO CONN SINGLE 6-1/4	
796	342980-0304	-		1	BANJO CONN SINGLE 1/4"	
F460	C- 269932-0501	-		1	COVER	**79**

Pos	Part No	SP	UN	Qty	Description	Page No

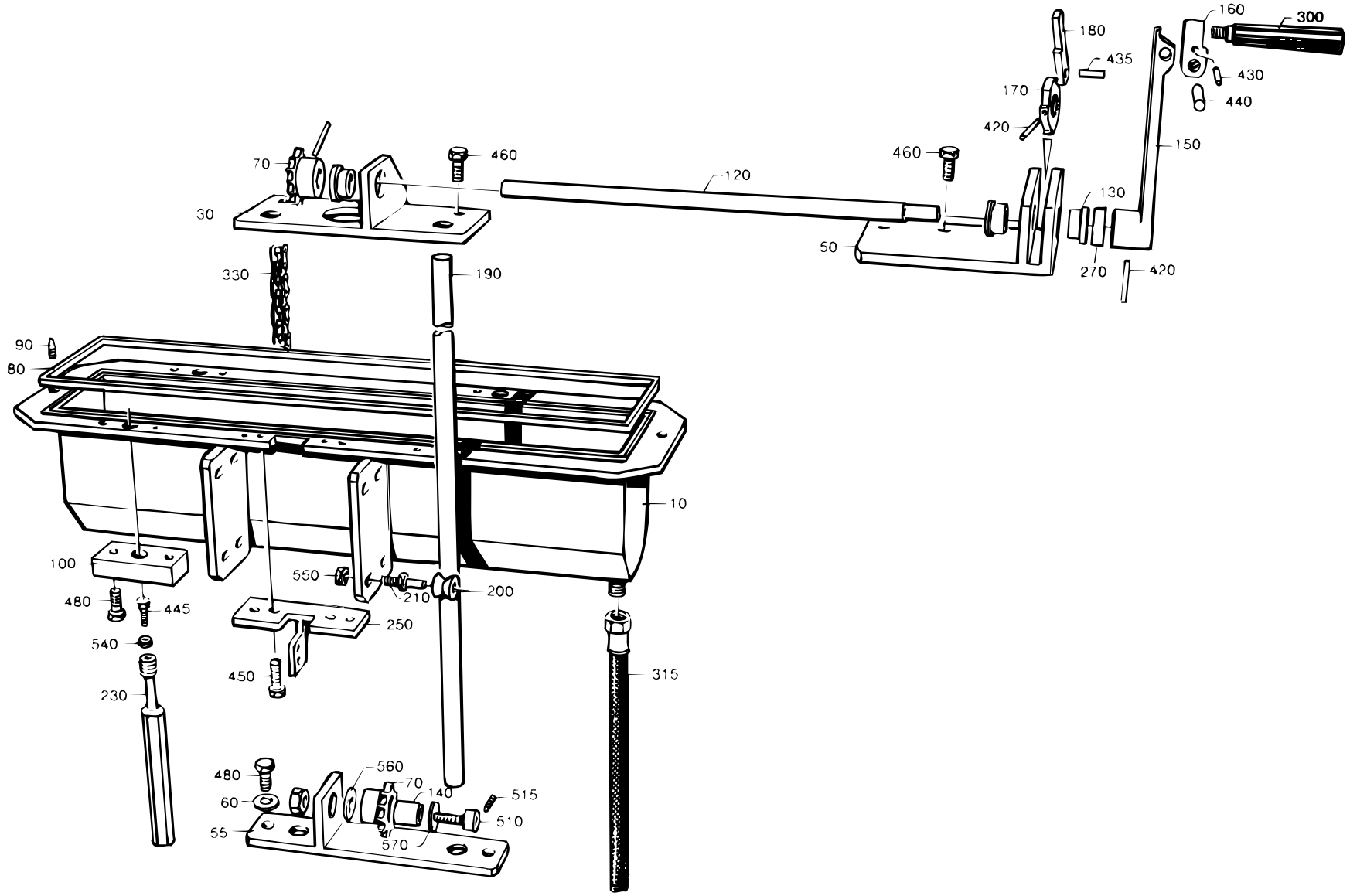

S-269932-4
ECN 20817

Pos	Part No	SP	UN	Qty	Description	Page No
-						
000	**C- 269932-0501**	**-**		**1**	**COVER**	
010	269929	C		1	COVER	
030	263572	C		1	CANTILEVER	
050	263574	C		1	BEARING CONSOLE	
055	450846	-		1	CANTILEVER	
060	38087	-		2	WASHER	
070	247357	S		2	SPROCKET	
080	263575	P		1	GASKET	
090	263576	S		2	GUIDE STUD	
100	263579	S		4	WASHER	
130	263585	P		3	BUSHING	
140	263586	P		1	BUSHING	
150	263587	C		1	CRANK	
160	263588	S		1	JOINT	
170	263589	S		1	RATCHET	
180	263590	S		1	BARRIER	
190	560616	C		2	PILLAR	
200	263592	P		8	WHEEL	
210	263593	P		8	SHAFT	
230	269930	S		4	SCREW	
250	297163	C		1	CARRIER	
260	547567	C		1	SHAFT	
270	547568	-		1	SPACER	
300	90051-0065	C		1	HANDLE	
315	484189	-		1	HIGH PRESSURE HOSE	
330	90288-0062	S		1	ROLLER CHAIN	
420	311103-0276	-		3	CYLINDRICACP M6 4X30 RFR	
430	311103-0310	-		1	CYLINDRICACP M6 5X20 RFR	
435	311103-0357	-		1	CYLINDRICACP M6 6X30 RFR	
440	311103-0401	-		1	CYLINDRICACP M6 8X20 RFR	
445	312105-0329	-		4	SCREW O4017 M5X16A280	
450	312105-0366	-		4	SCREW O4017 M6X12A280	
460	312105-0368	-		4	SCREW O4017 M6X16A280	
480	312105-0372	-		10	SCREW O4017 M6X25A280	
510	312180-0493	-		1	REAMED BOL	
515	312318-0325	-		2	STOP SCREW SK6SS5X10RFR	
540	312605-0314	-		4	NUT M6M5RFR	
550	312605-0318	-		9	NUT M6M8RFR	
560	315105-0165	-		1	WASHER BRB8,4X16RFR	
570	315105-0173	-		1	WASHER BRB10,5X22RFR	

Pos	Part No	SP	UN	Qty	Description	Page No

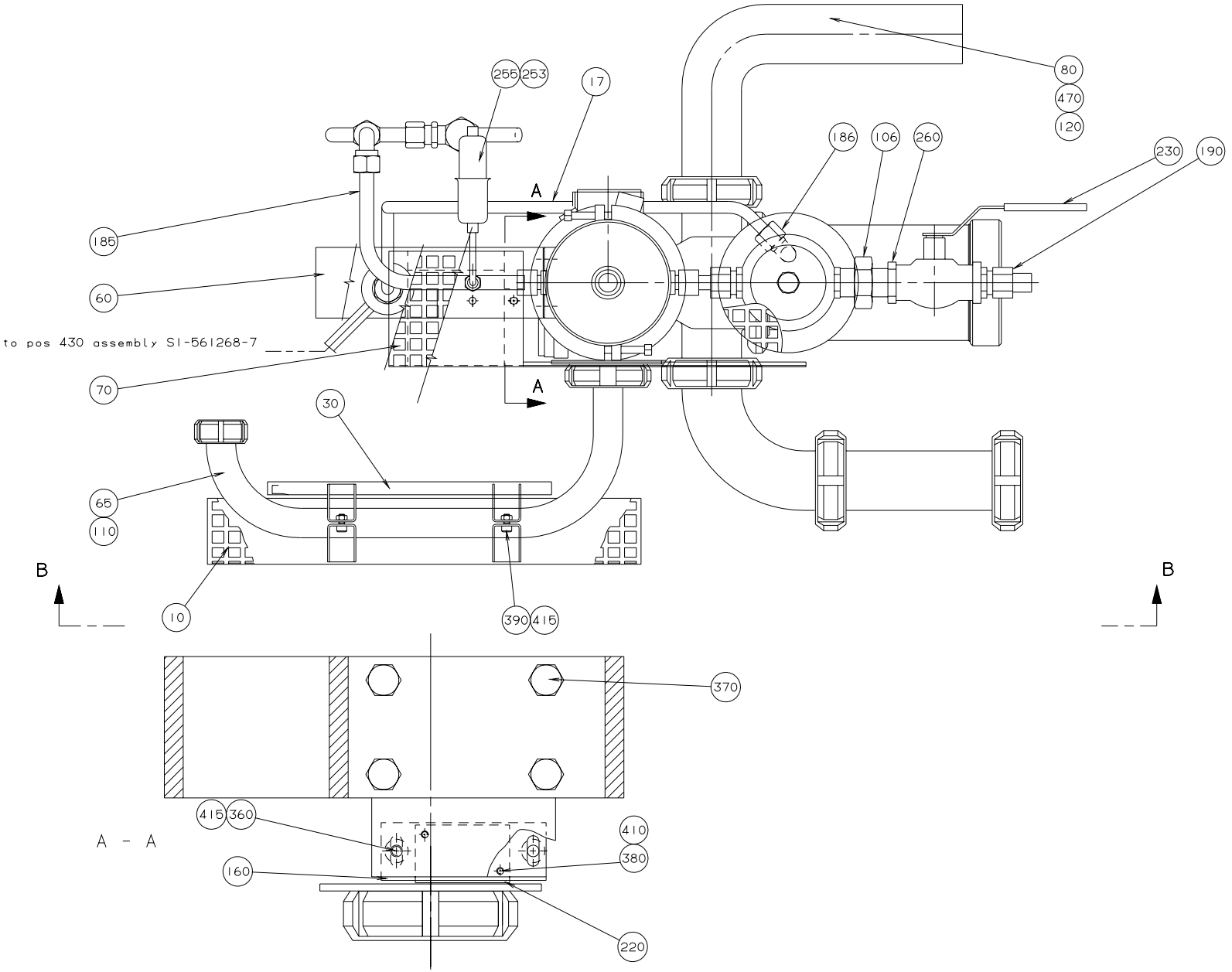
255
253
17
80
470
120
186
106
260
230
190
185
60
to pos 430 assembly SI-561268-7
70
A
A
30
65
110
B
B
10
390
415
370
415
360
410
380
160
220
A - A

Pos	Part No	SP	UN	Qty	Description	Page No
PRODUCT VALVE 2"						
000	**C- 561268-0201**	**-**		**1**	**CONNECTION ASSEMBLY**	
050	255368	C		1	PRESSURE GAUGE TUBE	
080	440977	C		1	ATTACHMENT PIPE	
090	440978	C		1	PIPE BEND	
120	12242-0005	P		4	GASKET	
470	342803-0104	-		1	NUT 51	
PRODUCT VALVE 3"						
000	**C- 561268-0202**	**-**		**1**	**CONNECTION ASSEMBLY**	
050	436779	C		1	PRESSURE GAUGE TUBE	
080	436778	C		1	PIPE	
090	445515	C		1	PIPE BEND	
120	436781	P		4	GASKET	
470	342803-0106	-		1	NUT 76	
Common parts						
010	273547-0001	C		1	TOUCH GUARD	
015	927195	-		1	PIPE	
016	927196	-		1	PIPE	
017	927198	-		1	PIPE	
030	273548-0001	C		1	TOUCH GUARD	
060	554582	-		1	CANTILEVER	
065	484047	C		1	PIPE	
070	560929	-		1	TOUCH GUARD	
075	752176	-		1	PROTECTIVE CASING	
082	927197	-		1	PIPE	
084	927199	-		2	CLAMP BRACKET	
086	927200	-		1	PIPE	
095	927226	-		1	PIPE	
100	927311	-		1	PIPE	
106	90330-0106	-		1	PIPE COUPLING	
110	12242-0003	P		2	GASKET	
130	37768	P		1	THERMOCOUPLE CR-AL	
160	297195	-		1	SPACER	
170	440647	-		1	SLEEVE	
175	752711	-		1	PIPE	
180	440731	-		1	PLATE	
185	560927	-		1	PIPE	
186	90030-0070	-		1	CONNECTION	
187	90030-0096	-		1	PIPE CONNECTION	
190	90030-0109	S		1	PIPE CONNECTION	
191	90030-0180	-		1	PIPE CONNECTION	
194	90030-0186	-		2	PIPE CONNECTION	
195	90030-0187	C		2	PIPE CONNECTION	
220	90044-0104	P		2	PROX.SWITCH IFM IN 3002	
223	90163-0057	C		4	NIPPLE	
225	90030-0088	-		2	PIPE CONNECTION	
226	90163-0062	C		4	SLEEVE	
230	90187-0082	S		1	BALL VALVE	
243	90224-0307	C		4	CONNECTION	
246	90224-0308	C		3	BANJO CONNECTION	
248	90235-0259	-		1	VALVE	
250	90235-0274	S		1	VALVE	
253	90326-0012	P		1	PROTECTIVE COVER	
255	90326-0020	P		1	PLUG,FEMALE YELLOW CR-AL	
258	90328-0003	-		1	SILENCER	
260	90330-0021	-		1	NIPPLE	
270	90330-0032	-		1	NIPPLE	
335	90277-0055	-		1	FILTER	
340	90337-0315	-		1	FILTER	
341	90360-0011	-		1	STEAM TRAP	
345	90360-0009	-		1	STEAM TRAP	
350	315105-0136	-		2	WASHER BRB4,3X8RFR	
360	312105-0331	-		2	SCREW O4017 M5X20A280	
365	312105-0364	-		2	SCREW M6S6X10RFR	
370	312105-0451	-		8	SCREW SO4017 8X20A280	
380	312115-0228	-		4	SCREW O4762 M3X16A280	
385	312115-0305	-		2	SCREW O4762 M4X50A280	
390	312115-0329	-		4	SCREW O4762 M5X16A280	
400	312155-0532	-		1	SCREW MF6S12X20RFR	
410	315105-0124	-		4	WASHER BRB3,2X6RFR	
415	315105-0146	-		6	WASHER BRB5,3X10RFR	
418	342727-0208	-		1	PIPE COUPLG 10-L/SY	
420	342737-0212	-		1	ELBOW PIPE W 10-L RFR	
430	342739-0108	-		1	BULKHEAD L	
500	342980-0303	-		2	BANJO CONN SINGEL 1/8"	
510	346800-0109	C		2	SILENCER FILTER R1/8"	
F475	C- 440630-020V	-		1	AP-VALVE	**87**
F475a	SP- 499255-0201	PU		1	* SEAL KIT	
F475b	SP- 499255-0202	P		1	* SEAL KIT	
F475c	SP- 499255-0203	P		1	* SEAL KIT	

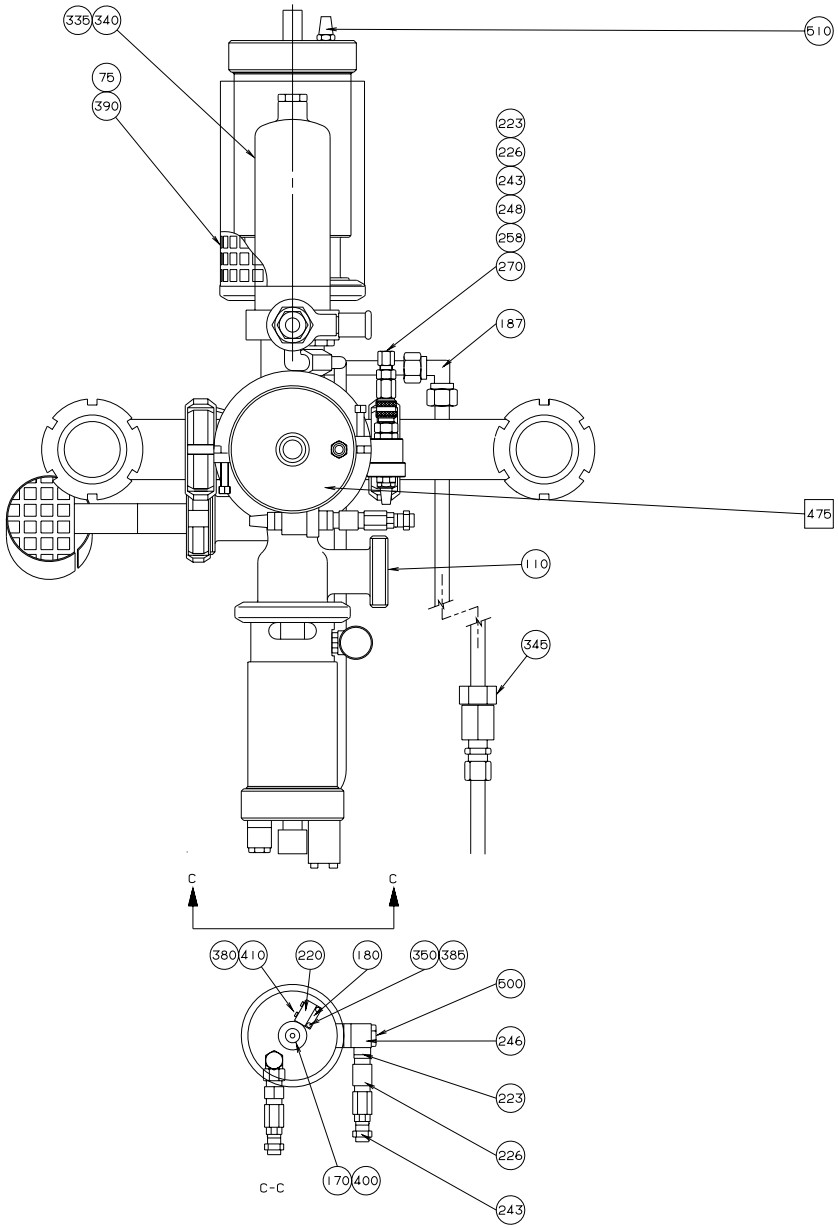

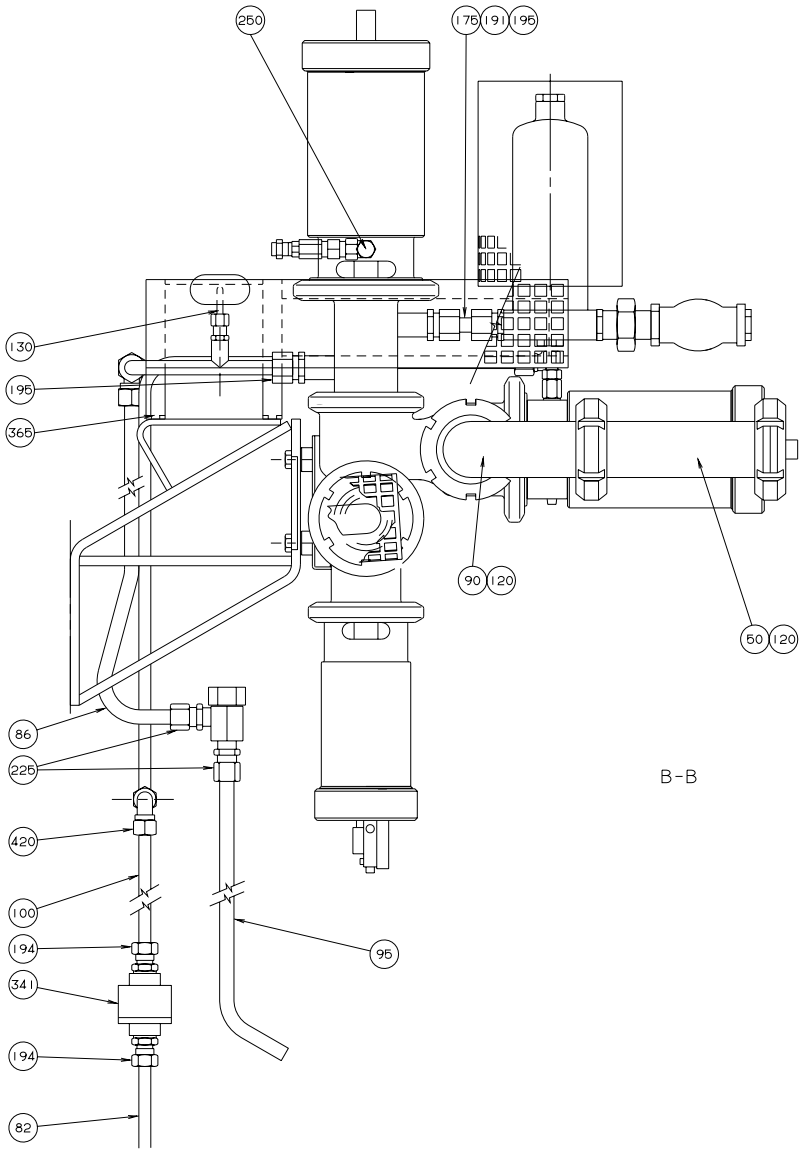

S-561268-6
ECN 21064

Pos	Part No	SP	UN	Qty	Description	Page No
PRODUCT VALVE 2"						
000	**C- 561268-0201**	**-**		**1**	**CONNECTION ASSEMBLY**	
050	255368	C		1	PRESSURE GAUGE TUBE	
080	440977	C		1	ATTACHMENT PIPE	
090	440978	C		1	PIPE BEND	
120	12242-0005	P		4	GASKET	
470	342803-0104	-		1	NUT 51	
PRODUCT VALVE 3"						
000	**C- 561268-0202**	**-**		**1**	**CONNECTION ASSEMBLY**	
050	436779	C		1	PRESSURE GAUGE TUBE	
080	436778	C		1	PIPE	
090	445515	C		1	PIPE BEND	
120	436781	P		4	GASKET	
470	342803-0106	-		1	NUT 76	
Common parts						
010	273547-0001	C		1	TOUCH GUARD	
015	927195	-		1	PIPE	
016	927196	-		1	PIPE	
017	927198	-		1	PIPE	
030	273548-0001	C		1	TOUCH GUARD	
060	554582	-		1	CANTILEVER	
065	484047	C		1	PIPE	
070	560929	-		1	TOUCH GUARD	
075	752176	-		1	PROTECTIVE CASING	
082	927197	-		1	PIPE	
084	927199	-		2	CLAMP BRACKET	
086	927200	-		1	PIPE	
095	927226	-		1	PIPE	
100	927311	-		1	PIPE	
106	90330-0106	-		1	PIPE COUPLING	
110	12242-0003	P		2	GASKET	
130	37768	P		1	THERMOCOUPLE CR-AL	
160	297195	-		1	SPACER	
170	440647	-		1	SLEEVE	
175	752711	-		1	PIPE	
180	440731	-		1	PLATE	
185	560927	-		1	PIPE	
186	90030-0070	-		1	CONNECTION	
187	90030-0096	-		1	PIPE CONNECTION	
190	90030-0109	S		1	PIPE CONNECTION	
191	90030-0180	-		1	PIPE CONNECTION	
194	90030-0186	-		2	PIPE CONNECTION	
195	90030-0187	C		2	PIPE CONNECTION	
220	90044-0104	P		2	PROX.SWITCH IFM IN 3002	
223	90163-0057	C		4	NIPPLE	
225	90030-0088	-		2	PIPE CONNECTION	
226	90163-0062	C		4	SLEEVE	
230	90187-0082	S		1	BALL VALVE	
243	90224-0307	C		4	CONNECTION	
246	90224-0308	C		3	BANJO CONNECTION	
248	90235-0259	-		1	VALVE	
250	90235-0274	S		1	VALVE	
253	90326-0012	P		1	PROTECTIVE COVER	
255	90326-0020	P		1	PLUG,FEMALE YELLOW CR-AL	
258	90328-0003	-		1	SILENCER	
260	90330-0021	-		1	NIPPLE	
270	90330-0032	-		1	NIPPLE	
335	90277-0055	-		1	FILTER	
340	90337-0315	-		1	FILTER	
341	90360-0011	-		1	STEAM TRAP	
345	90360-0009	-		1	STEAM TRAP	
350	315105-0136	-		2	WASHER BRB4,3X8RFR	
360	312105-0331	-		2	SCREW O4017 M5X20A280	
365	312105-0364	-		2	SCREW M6S6X10RFR	
370	312105-0451	-		8	SCREW SO4017 8X20A280	
380	312115-0228	-		4	SCREW O4762 M3X16A280	
385	312115-0305	-		2	SCREW O4762 M4X50A280	
390	312115-0329	-		4	SCREW O4762 M5X16A280	
400	312155-0532	-		1	SCREW MF6S12X20RFR	
410	315105-0124	-		4	WASHER BRB3,2X6RFR	
415	315105-0146	-		6	WASHER BRB5,3X10RFR	
418	342727-0208	-		1	PIPE COUPLG 10-L/SY	
420	342737-0212	-		1	ELBOW PIPE W 10-L RFR	
430	342739-0108	-		1	BULKHEAD L	
500	342980-0303	-		2	BANJO CONN SINGEL 1/8"	
510	346800-0109	C		2	SILENCER FILTER R1/8"	
F475	C- 440630-020V	-		1	AP-VALVE	**87**
F475a	SP- 499255-0201	PU		1	* SEAL KIT	
F475b	SP- 499255-0202	P		1	* SEAL KIT	
F475c	SP- 499255-0203	P		1	* SEAL KIT	

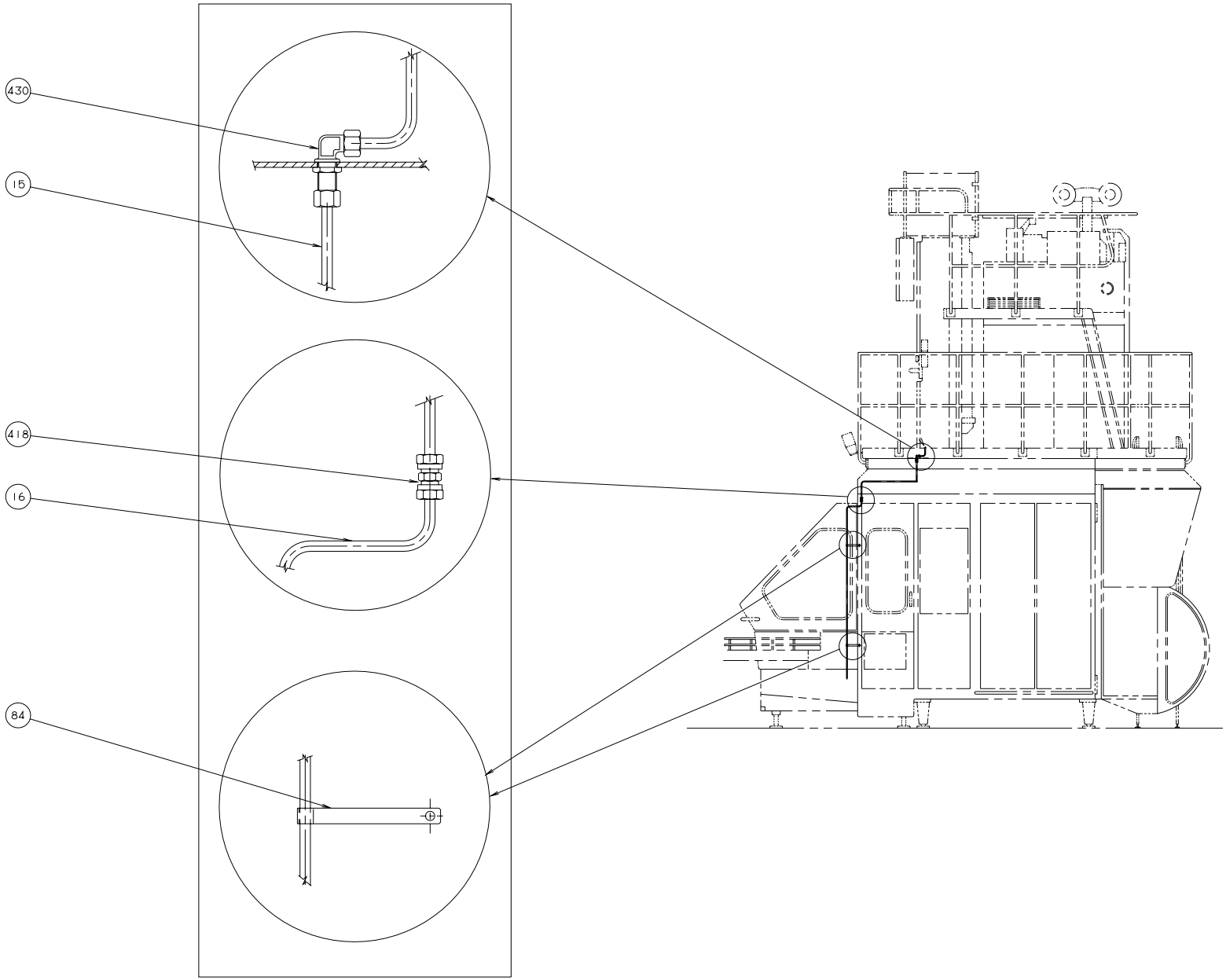
430
15
418
16
84

Pos	Part No	SP	UN	Qty	Description	Page No
PRODUCT VALVE 2"						
000	**C- 561268-0201**	**-**		**1**	**CONNECTION ASSEMBLY**	
050	255368	C		1	PRESSURE GAUGE TUBE	
080	440977	C		1	ATTACHMENT PIPE	
090	440978	C		1	PIPE BEND	
120	12242-0005	P		4	GASKET	
470	342803-0104	-		1	NUT 51	
PRODUCT VALVE 3"						
000	**C- 561268-0202**	**-**		**1**	**CONNECTION ASSEMBLY**	
050	436779	C		1	PRESSURE GAUGE TUBE	
080	436778	C		1	PIPE	
090	445515	C		1	PIPE BEND	
120	436781	P		4	GASKET	
470	342803-0106	-		1	NUT 76	
Common parts						
010	273547-0001	C		1	TOUCH GUARD	
015	927195	-		1	PIPE	
016	927196	-		1	PIPE	
017	927198	-		1	PIPE	
030	273548-0001	C		1	TOUCH GUARD	
060	554582	-		1	CANTILEVER	
065	484047	C		1	PIPE	
070	560929	-		1	TOUCH GUARD	
075	752176	-		1	PROTECTIVE CASING	
082	927197	-		1	PIPE	
084	927199	-		2	CLAMP BRACKET	
086	927200	-		1	PIPE	
095	927226	-		1	PIPE	
100	927311	-		1	PIPE	
106	90330-0106	-		1	PIPE COUPLING	
110	12242-0003	P		2	GASKET	
130	37768	P		1	THERMOCOUPLE CR-AL	
160	297195	-		1	SPACER	
170	440647	-		1	SLEEVE	
175	752711	-		1	PIPE	
180	440731	-		1	PLATE	
185	560927	-		1	PIPE	
186	90030-0070	-		1	CONNECTION	
187	90030-0096	-		1	PIPE CONNECTION	
190	90030-0109	S		1	PIPE CONNECTION	
191	90030-0180	-		1	PIPE CONNECTION	
194	90030-0186	-		2	PIPE CONNECTION	
195	90030-0187	C		2	PIPE CONNECTION	
220	90044-0104	P		2	PROX.SWITCH IFM IN 3002	
223	90163-0057	C		4	NIPPLE	
225	90030-0088	-		2	PIPE CONNECTION	
226	90163-0062	C		4	SLEEVE	
230	90187-0082	S		1	BALL VALVE	
243	90224-0307	C		4	CONNECTION	
246	90224-0308	C		3	BANJO CONNECTION	
248	90235-0259	-		1	VALVE	
250	90235-0274	S		1	VALVE	
253	90326-0012	P		1	PROTECTIVE COVER	
255	90326-0020	P		1	PLUG,FEMALE YELLOW CR-AL	
258	90328-0003	-		1	SILENCER	
260	90330-0021	-		1	NIPPLE	
270	90330-0032	-		1	NIPPLE	
335	90277-0055	-		1	FILTER	
340	90337-0315	-		1	FILTER	
341	90360-0011	-		1	STEAM TRAP	
345	90360-0009	-		1	STEAM TRAP	
350	315105-0136	-		2	WASHER BRB4,3X8RFR	
360	312105-0331	-		2	SCREW O4017 M5X20A280	
365	312105-0364	-		2	SCREW M6S6X10RFR	
370	312105-0451	-		8	SCREW SO4017 8X20A280	
380	312115-0228	-		4	SCREW O4762 M3X16A280	
385	312115-0305	-		2	SCREW O4762 M4X50A280	
390	312115-0329	-		4	SCREW O4762 M5X16A280	
400	312155-0532	-		1	SCREW MF6S12X20RFR	
410	315105-0124	-		4	WASHER BRB3,2X6RFR	
415	315105-0146	-		6	WASHER BRB5,3X10RFR	
418	342727-0208	-		1	PIPE COUPLG 10-L/SY	
420	342737-0212	-		1	ELBOW PIPE W 10-L RFR	
430	342739-0108	-		1	BULKHEAD L	
500	342980-0303	-		2	BANJO CONN SINGEL 1/8"	
510	346800-0109	C		2	SILENCER FILTER R1/8"	
F475	C- 440630-020V	-		1	AP-VALVE	**87**
F475a	SP- 499255-0201	PU		1	* SEAL KIT	
F475b	SP- 499255-0202	P		1	* SEAL KIT	
F475c	SP- 499255-0203	P		1	* SEAL KIT	

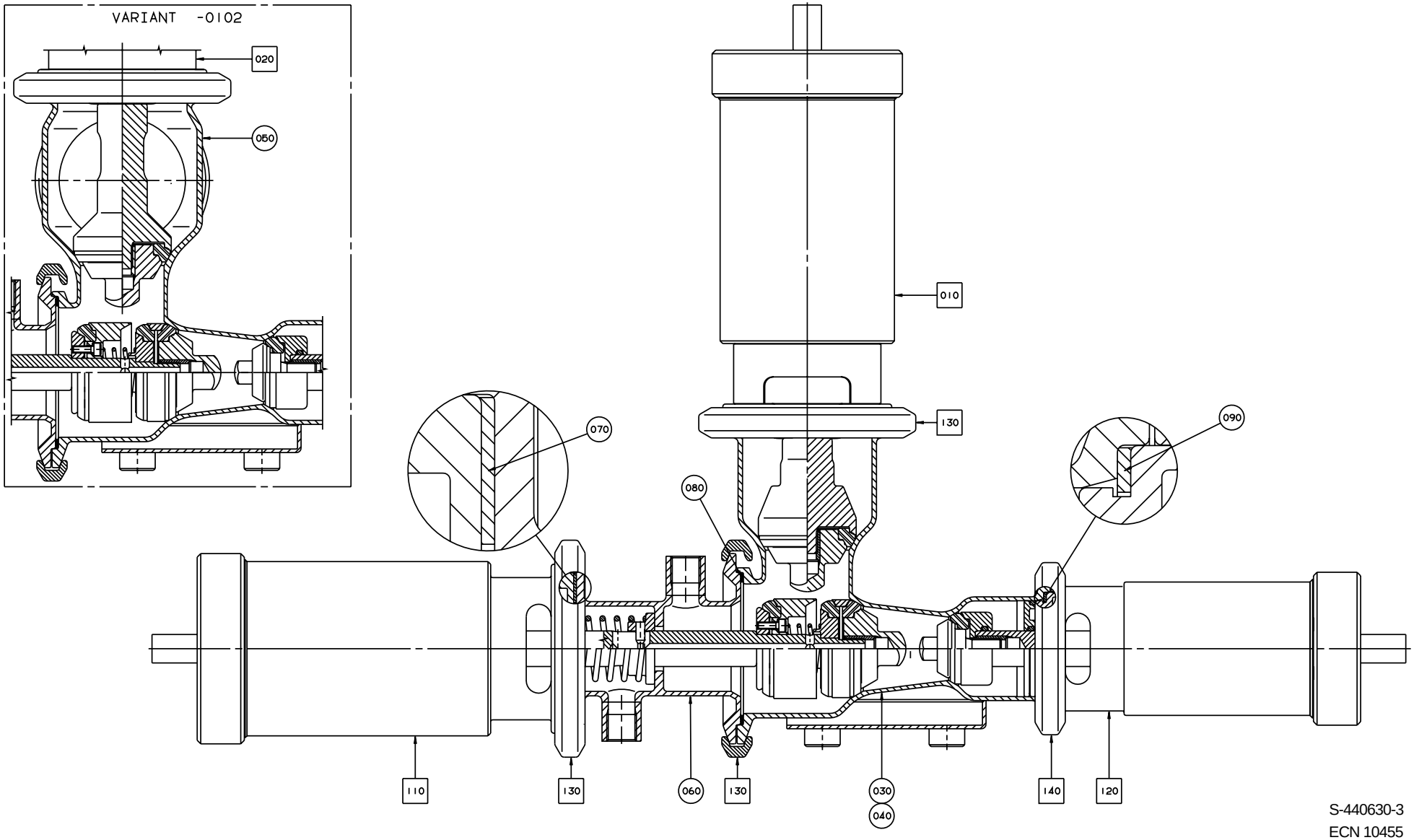

S-440630-3
ECN 10455

Pos	Part No	SP	UN	Qty	Description	Page No
PRODUCT VALVE 2"						
000	**C- 440630-0201**	**-**		**1**	**AP-VALVE**	
030	440631	-		1	VALVE BODY 51	
F010	C- 539209-0101	-		1	A-CYLINDER	**89**
PRODUCT VALVE 3"						
000	**C- 440630-0202**	**-**		**1**	**AP-VALVE**	
050	449678	-		1	VALVE BODY 76	
F020	C- 539209-0102	-		1	A-CYLINDER	**89**
Common parts						
060	440634	-		1	HOUSE	
070	539212	-		1	GASKET	
080	90207-0363	-		1	GASKET	
090	90207-0365	-		1	GASKET	
F110	C- 539210-0101	-		1	C-CYLINDER	**91**
F120	C- 539211-0101	-		1	B-CYLINDER	**93**
F130	C- 541163-0101	-		3	CLAMP RING	**95**
F140	C- 541164-0101	-		1	CLAMP RING	**97**

Pos	Part No	SP	UN	Qty	Description	Page No

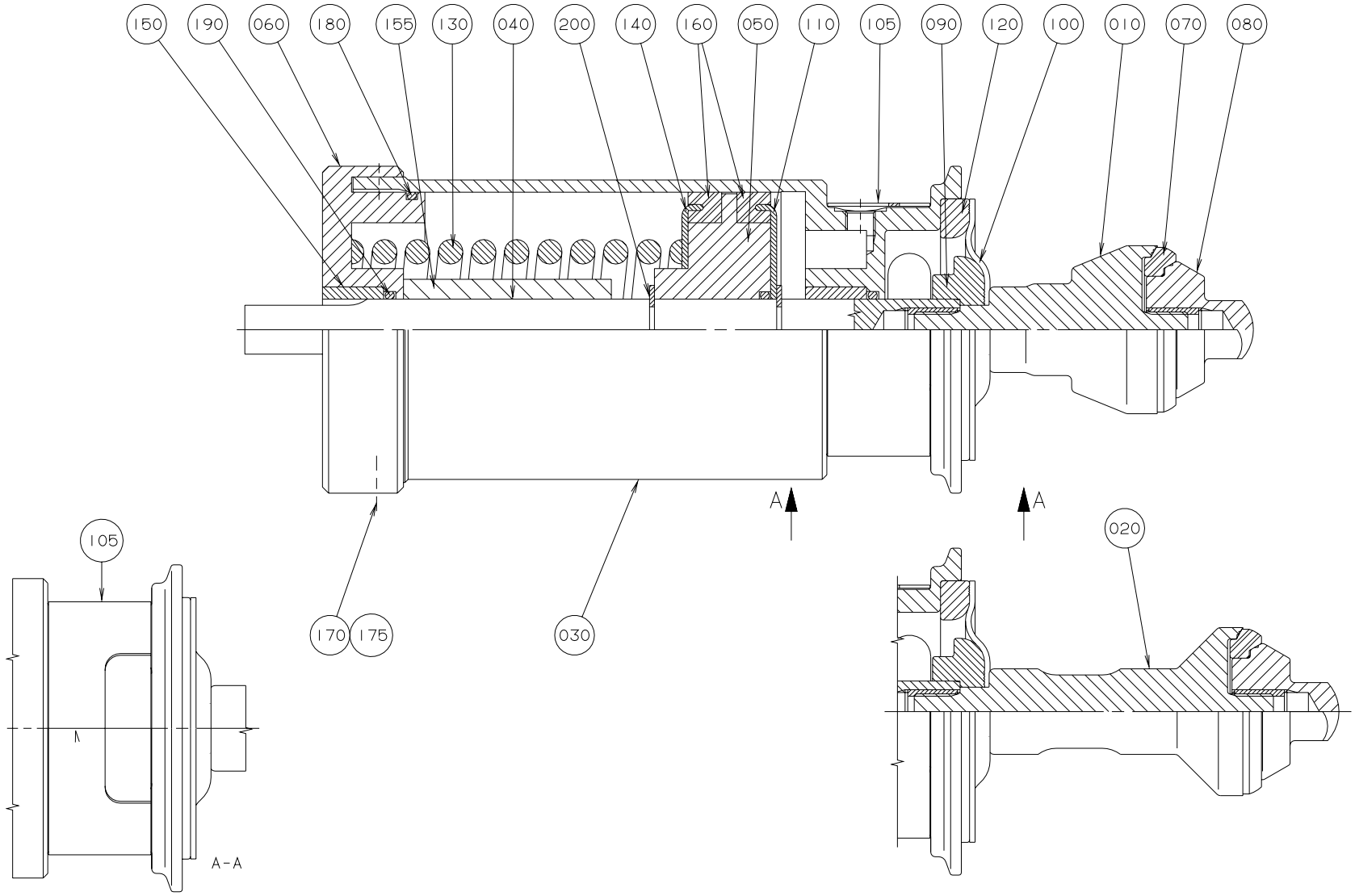
150
190
060
180
155
130
040
200
140
160
050
110
105
090
120
100
010
070
080
A
A
105
020
170
175
030
A-A

Pos	Part No	SP	UN	Qty	Description	Page No
PRODUCT VALVE 2"						
000	**C- 539209-0101**	**-**		**1**	**A-CYLINDER**	
010	530592	-		1	SEAL RING HOLDER	
PRODUCT VALVE 3"						
000	**C- 539209-0102**	**-**		**1**	**A-CYLINDER**	
020	530595	-		1	SEAL RING HOLDER	
Common parts						
030	440632	-		1	CYLINDER HOUSING	
040	440637	-		1	PISTON ROD	
050	440638	-		1	PISTON	
060	484998	-		1	END SECTION	
070	530589	PU		1	SEAL RING	
080	530590	-		1	VALVE CONE	
090	541166	-		1	WASHER	
100	533169	PU		1	DIAPHRAGM	
105	476203	-		1	PROTECTION	
110	440651	-		1	WASHER	
120	440655	-		1	RING	
130	440663	-		1	COMPRESSION SPRING	
140	484975	-		1	WASHER	
150	497933	-		2	BUSHING	
155	541167	-		1	SPACER SLEEVE	
160	90020-0028	P		2	SLEEVE	
170	312125-0323	-		1	SLOTTED HEMCS5X8RFR	
175	315233-0101	-		1	SEAL RING M5	
180	315202-0308	P		1	O-RING 84,5X3	
190	315204-0215	P		3	O-RING 19,2X3VITON	
200	315754-0113	P		2	LOCKING WAE 15	

Pos	Part No	SP	UN	Qty	Description	Page No

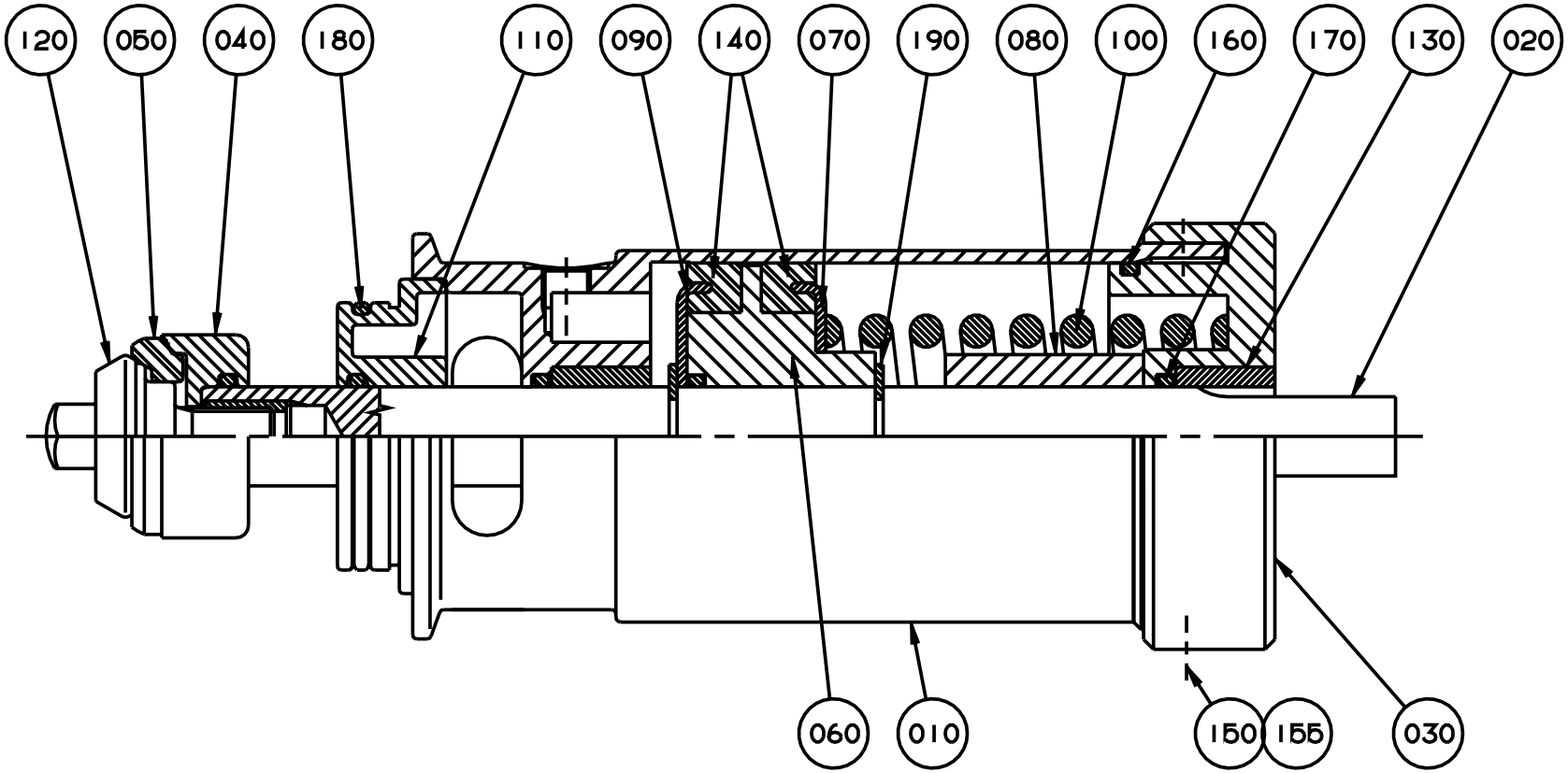
120
050
040
180
110
090
140
070
190
080
100
160
170
130
020
060
010
150
155
030

Pos	Part No	SP	UN	Qty	Description	Page No
-						
000	**C- 539210-0101**	**-**		**1**	**C-CYLINDER**	
010	440632	-		1	CYLINDER HOUSING	
020	440635	-		1	PISTON ROD	
030	440638	-		1	PISTON	
040	484998	-		1	END SECTION	
050	530589	PU		3	SEAL RING	
060	530590	-		1	VALVE CONE	
070	530591	-		1	HOLDER	
080	440648	-		1	SEALING WASHER	
090	440650	-		1	WASHER	
100	440651	-		1	WASHER	
110	440659	-		1	CYLINDRICAL PIN	
120	440660	-		1	COMPRESSION SPRING	
130	440661	-		1	COMPRESSION SPRING	
140	440663	-		1	COMPRESSION SPRING	
150	484975	-		1	WASHER	
160	497933	-		2	BUSHING	
170	530597	-		1	WASHER	
180	530598	-		1	WASHER	
190	530599	-		1	RING	
200	90020-0028	P		2	SLEEVE	
210	312115-0291	-		4	SCREW O4762 M4X12A280	
220	312125-0323	-		1	SLOTTED HEMCS5X8RFR	
225	315233-0101	-		1	SEAL RING M5	
230	315202-0308	P		1	O-RING 84,5X3	
240	315204-0215	P		4	O-RING 19,2X3VITON	
250	315402-0136	-		4	WASHER FBB4,1RFR	
260	315754-0113	P		2	LOCKING WAE 15	

Pos	Part No	SP	UN	Qty	Description	Page No

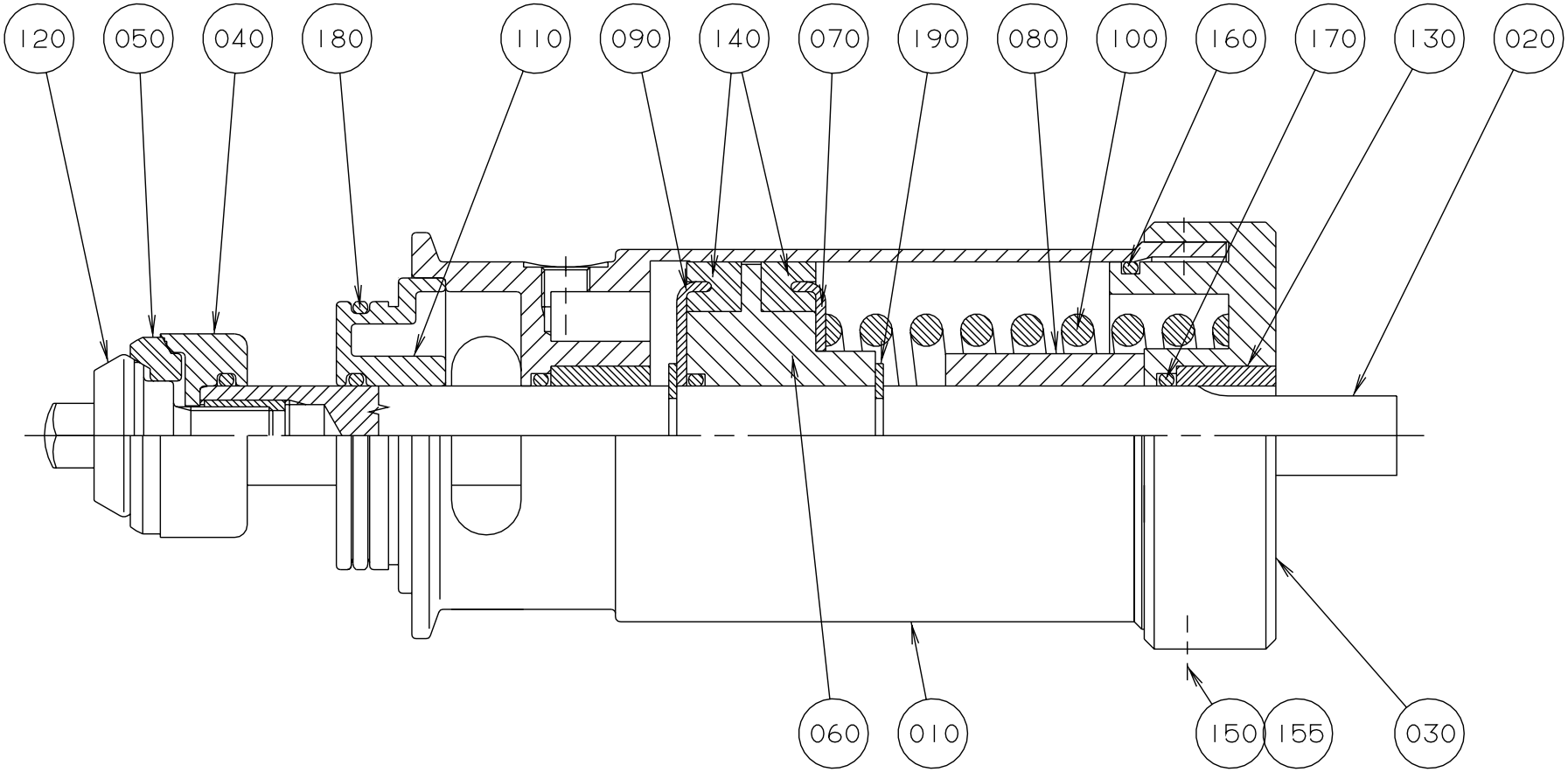
120
050
040
180
110
090
140
070
190
080
100
160
170
130
020
060
010
150
155
030

Pos	Part No	SP	UN	Qty	Description	Page No
-						
000	**C- 539211-0101**	**-**		**1**	**B-CYLINDER**	
010	440633	-		1	CYLINDER HOUSING	
020	440636	-		1	PISTON ROD	
030	440695	-		1	END SECTION	
040	530587	-		1	WASHER	
050	530588	PU		1	SEAL RING	
060	440646	-		1	PISTON	
070	440652	-		1	WASHER	
080	440654	-		1	SPACER SLEEVE	
090	440656	-		1	WASHER	
100	440662	-		1	COMPRESSION SPRING	
110	440664	-		1	SEALING WASHER	
120	476185	-		1	VALVE CONE	
130	497933	-		2	BUSHING	
140	90020-0027	P		2	SLEEVE	
150	312125-0323	-		1	SLOTTED HEMCS5X8RFR	
155	315233-0101	-		1	SEAL RING M5	
160	315202-0304	P		1	O-RING 64,5X3	
170	315204-0215	PU		5	O-RING 19,2X3VITON	
180	315204-0301	PU		1	O-RING 49,5X3VITON	
190	315754-0113	P		2	LOCKING WAE 15	

Pos	Part No	SP	UN	Qty	Description	Page No

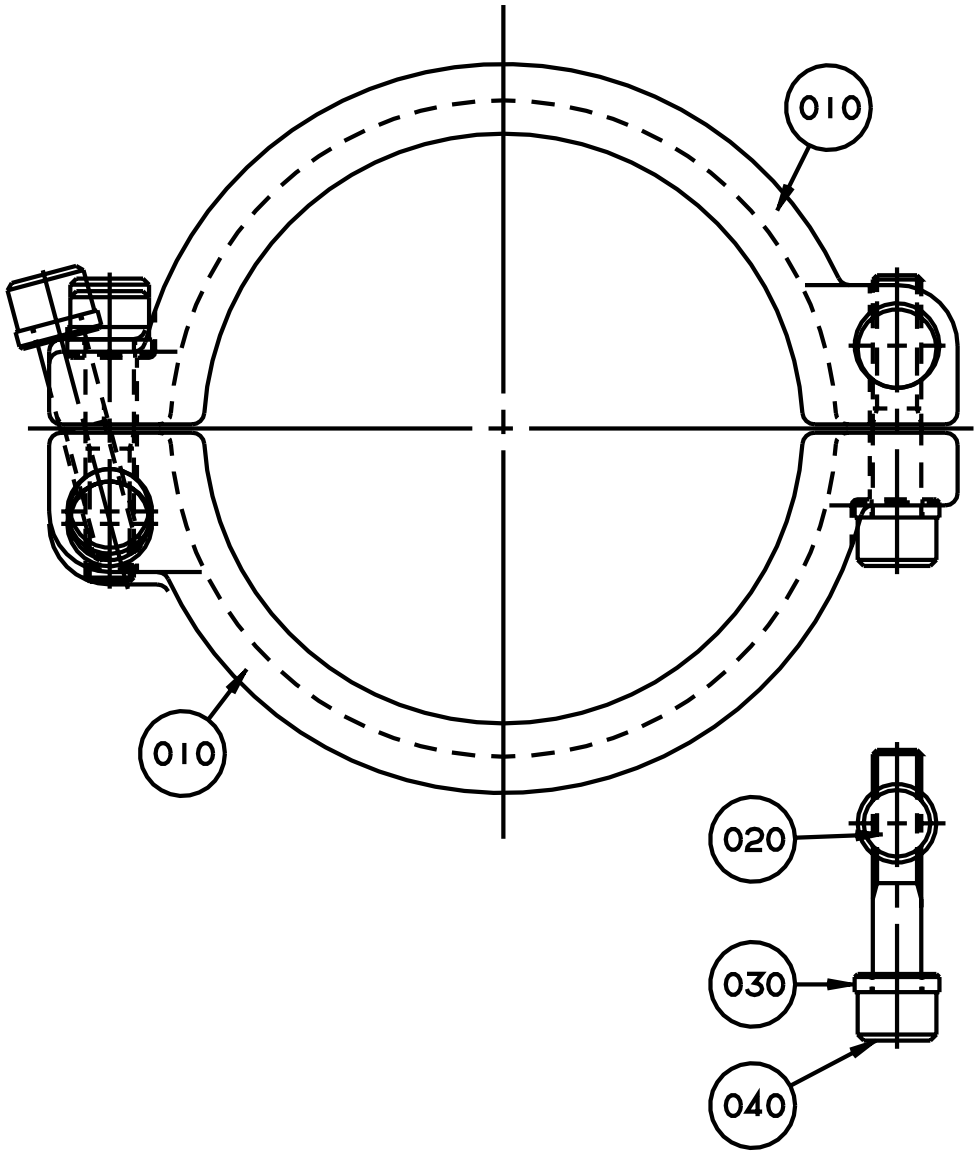
010
010
020
030
040

Pos	Part No	SP	UN	Qty	Description	Page No
-						
000	**C- 541163-0101**	**-**		**3**	**CLAMP RING**	
010	G- 532117	-		2	CLAMP RING	
020	497748	-		2	PIN	
030	541165	-		2	WASHER	
040	312115-0459	-		2	SCREW O4762 M8X40A280	

Pos	Part No	SP	UN	Qty	Description	Page No

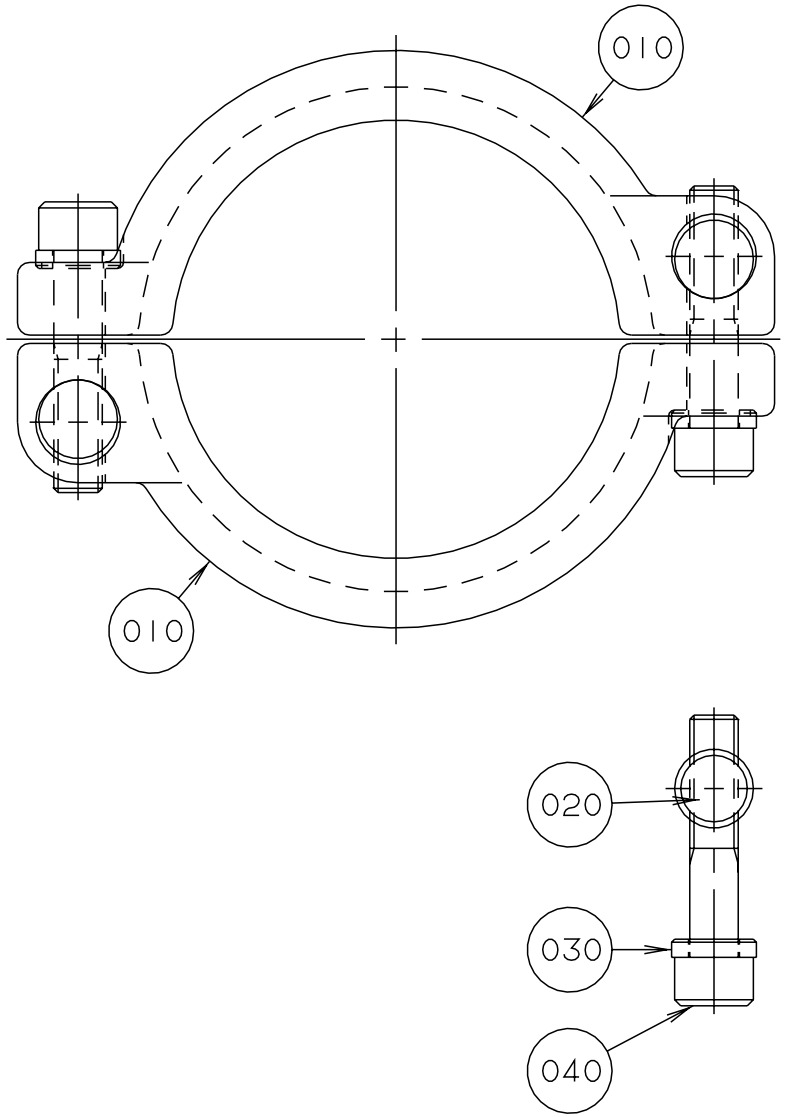
010
010
020
030
040

Pos	Part No	SP	UN	Qty	Description	Page No
-						
000	**C- 541164-0101**	**-**		**1**	**CLAMP RING**	
010	G- 532118	-		2	CLAMP RING	
020	497748	-		2	PIN	
030	541165	-		2	WASHER	
040	312115-0459	-		2	SCREW O4762 M8X40A280	

Pos	Part No	SP	UN	Qty	Description	Page No

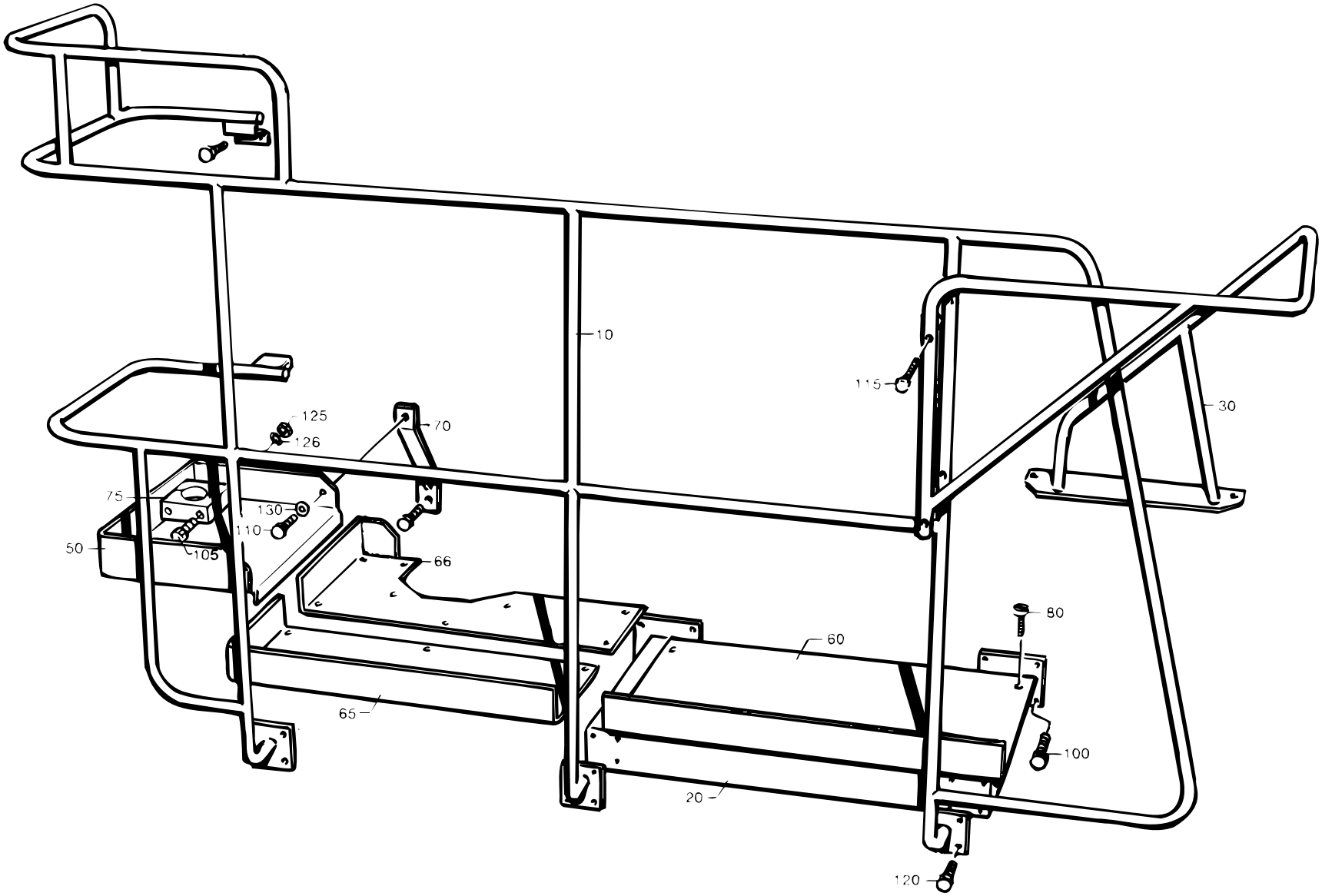

S-269970-4
ECN 7094

Pos	Part No	SP	UN	Qty	Description	Page No
-						
000	**C- 269970-0501**	**-**		**1**	**PLATFORM**	
010	434270	-		1	RAILING	
020	542852	-		1	CANTILEVER	
030	282893	-		1	SAFETY GUARD	
050	476599	-		1	PLATFORM	
060	451389	-		1	PLATFORM	
065	451390	-		1	PLATFORM	
066	451391	-		1	PLATFORM	
070	434273	-		2	STRUT	
075	476600	-		2	PIPE HOLDER	
080	90287-0075	-		20	SCREW	
100	312101-0493	-		8	SCREW M6S10X25FZB	
105	312105-0384	-		2	SCREW O4014 M6X70A280	
110	312105-0449	-		12	SCREW O4017 M8X16A280	
115	312105-0453	-		2	SCREW O4017 M8X25A280	
120	312105-0491	-		12	SCREW 4017 M10X20A280	
125	312605-0316	-		2	NUT M6M6 A280 STAINLESS	
126	315105-0156	-		4	WASHER BRB6,7X14RFR	
130	315105-0165	-		4	WASHER BRB8,4X16RFR	
F490	C- 269971-0201	-		1	LADDER	**101**

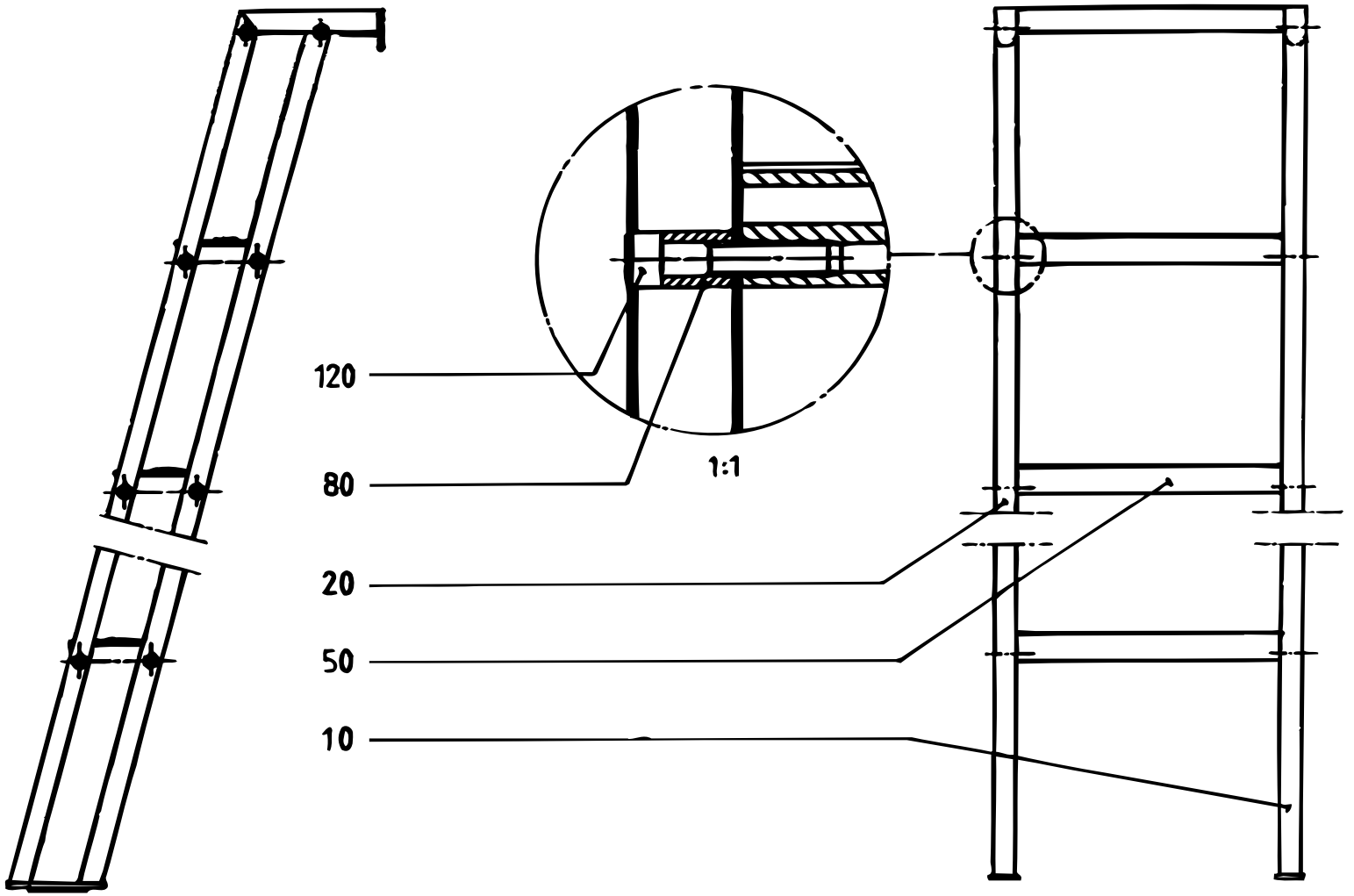
120
80
20
50
10
1:1

Pos	Part No	SP	UN	Qty	Description	Page No
-						
000	**C- 269971-0201**	**-**		**1**	**LADDER**	
010	247296-0001	-		1	SIDE PIECE	
020	247296-0002	-		1	SIDE PIECE	
050	208361-0002	-		5	STAIR	
080	208658-0001	-		20	SPACER	
120	90287-0056	-		20	SCREW	

Pos	Part No	SP	UN	Qty	Description	Page No

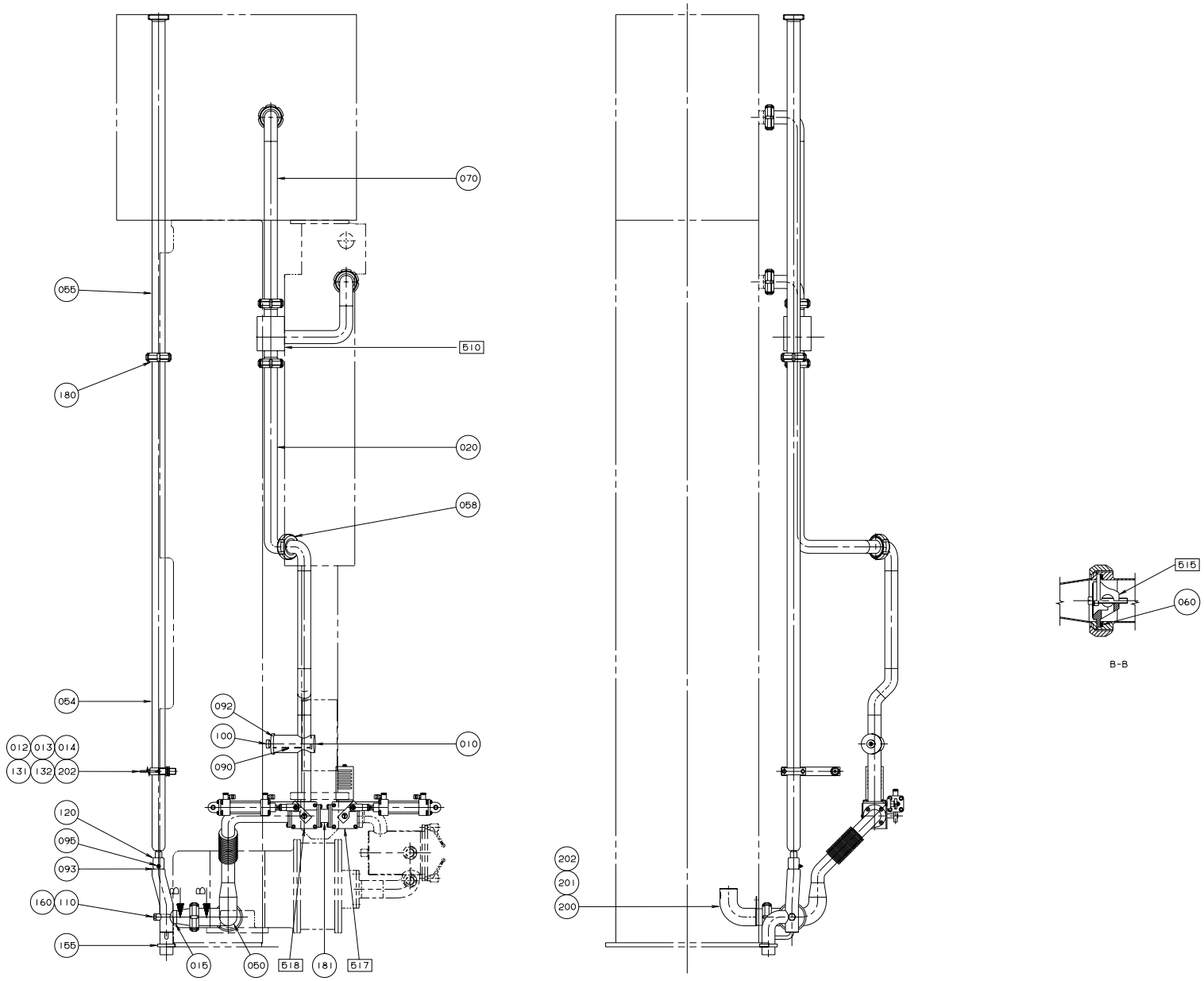

S-269988-5
ECN 19538

Pos	Part No	SP	UN	Qty	Description	Page No
-						
000	**C- 269988-0601**	**-**		**1**	**VENTILATION SYSTEM**	
010	544436	-		1	FILTER PIPE	
012	90044-0126	-		1	INDUCTIVE SWITCH	
013	566228	-		1	BRACKET	
014	476600	-		2	PIPE HOLDER	
015	476449	-		1	PIPE	
020	466471	-		1	PIPE	
050	544435	-		1	PIPE	
054	499826	-		1	PIPE	
055	574654	-		1	PIPE	
058	12242-0003	PU		1	GASKET	
060	12242-0005	PU		1	GASKET	
070	269522	-		1	PIPE	
090	273950	C		1	FILTER	
092	493653	P		1	GASKET	
093	499181	-		4	WASHER	
095	90030-0207	-		1	NIPPLE	
100	90051-0053	P		1	HANDLE	
110	90330-0026	-		1	PLUG	
120	90425-0009	C		1	EJECTOR	
131	312105-0382	-		2	SCREW O4014 M6X60A280	
132	312812-0316	-		2	LOCK NUT A2-M6RFR	
140	312105-0364	-		16	SCREW M6S6X10RFR	
150	315204-0222	P		4	O-RING 36,2X3VITON	
155	499825	-		1	GASKET	
160	315233-0110	-		1	SEAL RING R1/4"	
180	315250-0103	-		1	GASKET 48/38	
181	544439	-		1	INTERMEDIATE PIPE	
200	544506	-		1	PIPE	
201	312105-0362	-		1	SCREW O4017 M6X8A280	
202	315105-0153	-		5	WASHER BRB6,4X12RFR	
F510	C- 273401-0301	-		1	CHANGE-OVER VALVE	**105**
F515	C- 476849-0101	-		1	VALVE	**107**
F517	C- 476859-0201	-		1	CHANGE-OVER VALVE	**65**
F518	C- 476859-0202	-		1	CHANGE-OVER VALVE	**65**

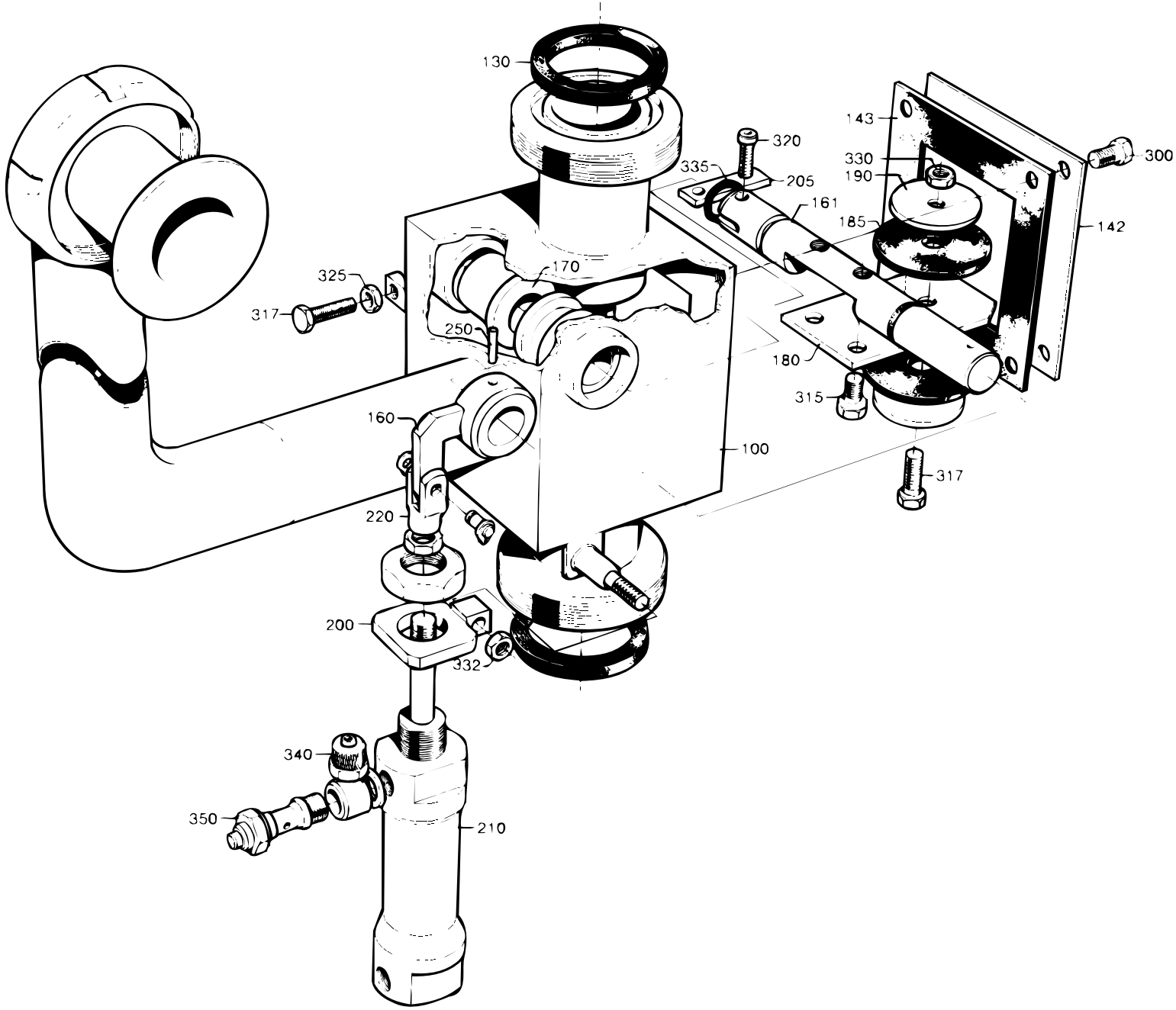
130
320
335
205
143
330
190
161
185
300
142
325
317
170
250
180
315
160
100
317
220
200
332
340
350
210

Pos	Part No	SP	UN	Qty	Description	Page No
-						
000	**C- 273401-0301**	**-**		**1**	**CHANGE-OVER VALVE**	
100	531034	C		1	VALVE HOUSING	
130	12242-0003	P		2	GASKET	
142	251454	-		1	LID	
143	251455	P		1	SEAL	
160	531035	-		1	ARM	
161	531036	-		1	SHAFT	
170	266182	P		2	BUSHING	
180	531037	-		1	FLAP	
185	531038	P		2	GASKET	
190	531039	S		2	WASHER	
200	531040	-		1	BRACKET	
205	531041	-		1	WEDGE	
210	90239-0822	P		1	CYLINDER 20-50	
220	90239-0490	S		1	BRACKET	
250	311103-0236	-		1	CYLINDRICACP M6 3X16 RFR	
300	312105-0325	-		4	SCREW M6S5X10 A2 80	
315	312105-0364	-		2	SCREW M6S6X10RFR	
317	312105-0370	-		2	SCREW O4017 M6X20A280	
320	312115-0329	-		1	SCREW O4762 M5X16A280	
325	312605-0316	-		1	NUT M6M6 A280 STAINLESS	
330	312811-0316	-		1	LOCK NUT M6RFR	
332	312812-0316	-		1	LOCK NUT A2-M6RFR	
335	315204-0111	-		2	O-RING 1X1,6 VITON	
340	342980-0113	-		2	BANJO CONNSINGEL 6/4-1/8	
350	90235-0274	-		2	VALVE	

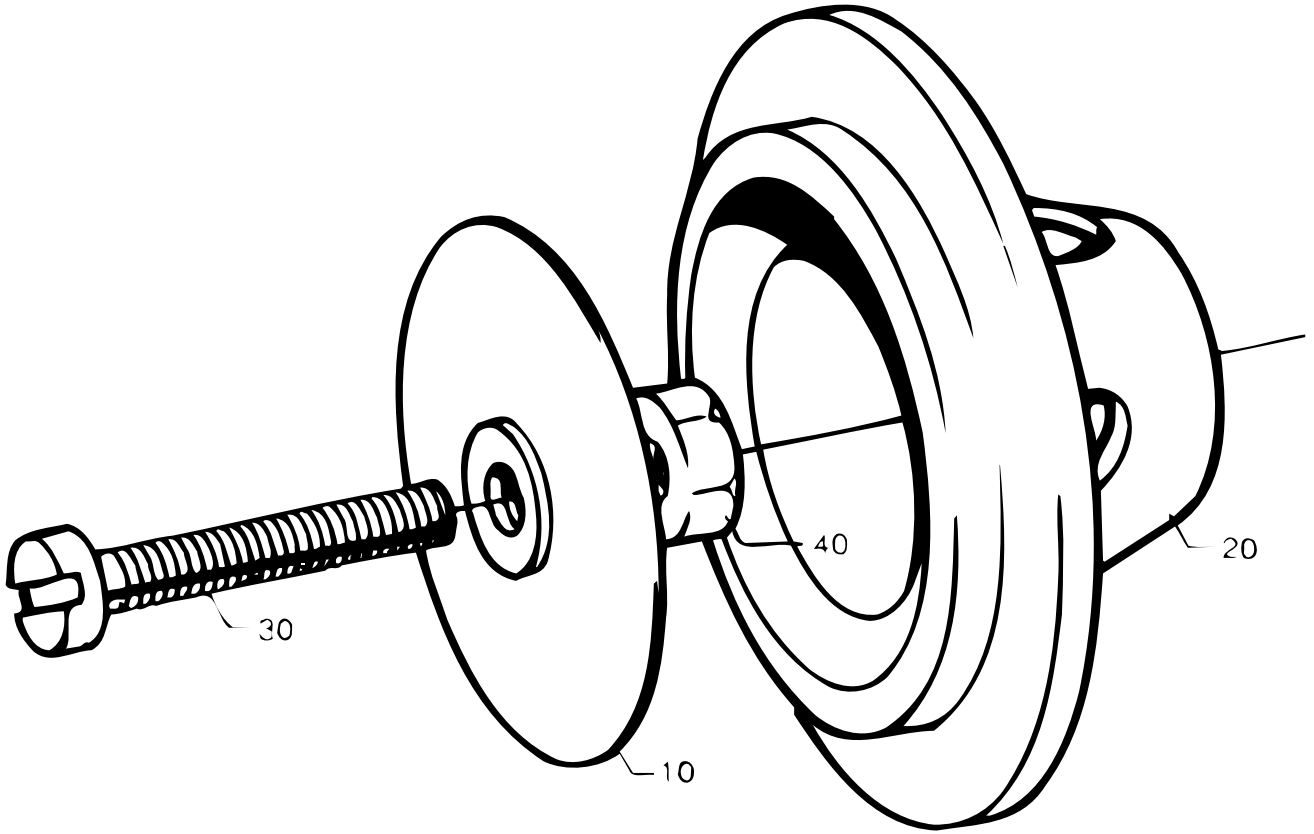
30
40
20
10

Pos	Part No	SP	UN	Qty	Description	Page No
-						
000	**C- 476849-0101**	**-**		**1**	**VALVE**	
010	273944	P		1	DIAPHRAGM	
020	273951	-		1	VALVE HOUSING	
025	90157-0016	-	ML	1	LOCKING FLUID	
030	312125-0378	-		1	SLOTTED HEMCS6X40RFR	
040	312605-0316	-		1	NUT M6M6 A280 STAINLESS	

Pos	Part No	SP	UN	Qty	Description	Page No

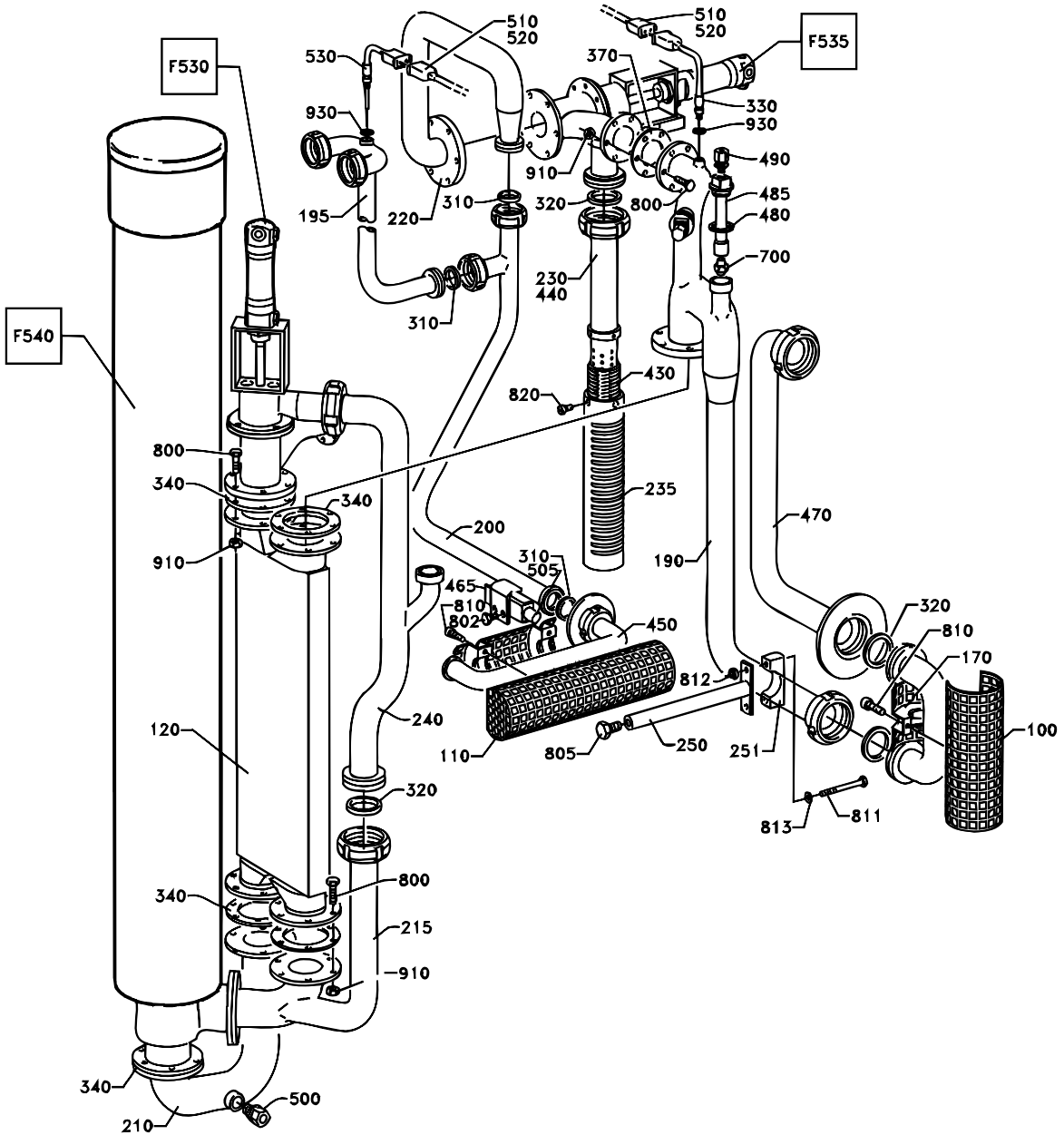
F530
F535
F540
510
520
530
370
930
330
910
490
485
480
700
195
220
310
320
800
230
440
820
430
235
200
190
470
340
465
810
802
450
812
240
110
805
250
251
120
320
215
910
500
210
170
100
811
813

Pos	Part No	SP	UN	Qty	Description	Page No
-						
000	**C- 273400-0701**	**-**		**1**	**STERILE AIR SYSTEM**	
100	273514	C		1	TOUCH GUARD	
110	273547-0002	C		1	TOUCH GUARD	
120	522090	C		1	HEAT EXCHANGER	
170	273515	C		1	TOUCH GUARD	
180	273548-0002	C		1	TOUCH GUARD	
190	434274	C		1	PIPE	
195	534426	C		1	PIPE	
200	449818	-		1	PIPE	
210	269405	C		1	PIPE	
215	276166	C		1	PIPE	
220	276167	C		1	PIPE	
230	276304	C		1	PIPE	
235	276305	C		1	PIPE	
240	544437	C		1	BRANCH PIPE	
250	566229	-		1	BRACKET	
251	476600	-		2	PIPE HOLDER	
310	12242-0001	P		3	GASKET	
320	12242-0003	P		5	GASKET	
330	90326-0052	P		1	THERMO ELEMENT	
340	531737	P		5	GASKET	
370	531742	P		1	GASKET	
430	278954	S		1	NET	
440	278955	S		1	NET	
450	449817	C		1	U-TUBE	
460	561583	-		1	U-TUBE	
465	449960	-		1	BRACKET	
470	449963	C		1	U-TUBE	
480	450022	P		2	WASHER	
485	450023	C		2	BRACKET	
490	90030-0051	S		2	PIPE CONNECTION	
500	90030-0187	S		1	PIPE CONNECTION	
505	90044-0126	-		1	INDUCTIVE SWITCH	
510	90326-0012	P		2	PROTECTIVE COVER	
520	90326-0020	P		2	PLUG,FEMALE YELLOW CR-AL	
530	90326-0053	-		1	THERMO ELEMENT	
700	90424-0031	S		2	NOZZLE	
800	312105-0370	-		30	SCREW O4017 M6X20A280	
802	312105-0447	-		2	SCREW O4017 M8X12A280	
805	312105-0489	-		1	SCREW 4017 M10X16A280	
810	312115-0331	-		6	SCREW O4762 M5X20A280	
811	312105-0382	-		2	SCREW O4014 M6X60A280	
812	312812-0316	-		2	LOCK NUT A2-M6RFR	
813	315105-0153	-		4	WASHER BRB6,4X12RFR	
820	312125-0285	-		4	SLOTTED HEMCS4X6RFR	
910	312605-0316	-		30	NUT M6M6 A280 STAINLESS	
930	315234-0110	-		1	SEAL RING R1/4"	
F530	C- 269989-0301	-		1	VALVE	**111**
F535	C- 269989-0302	-		1	VALVE	**111**
F540	C- 273402-0401	-		1	AIR SUPER-HEATER	**113**

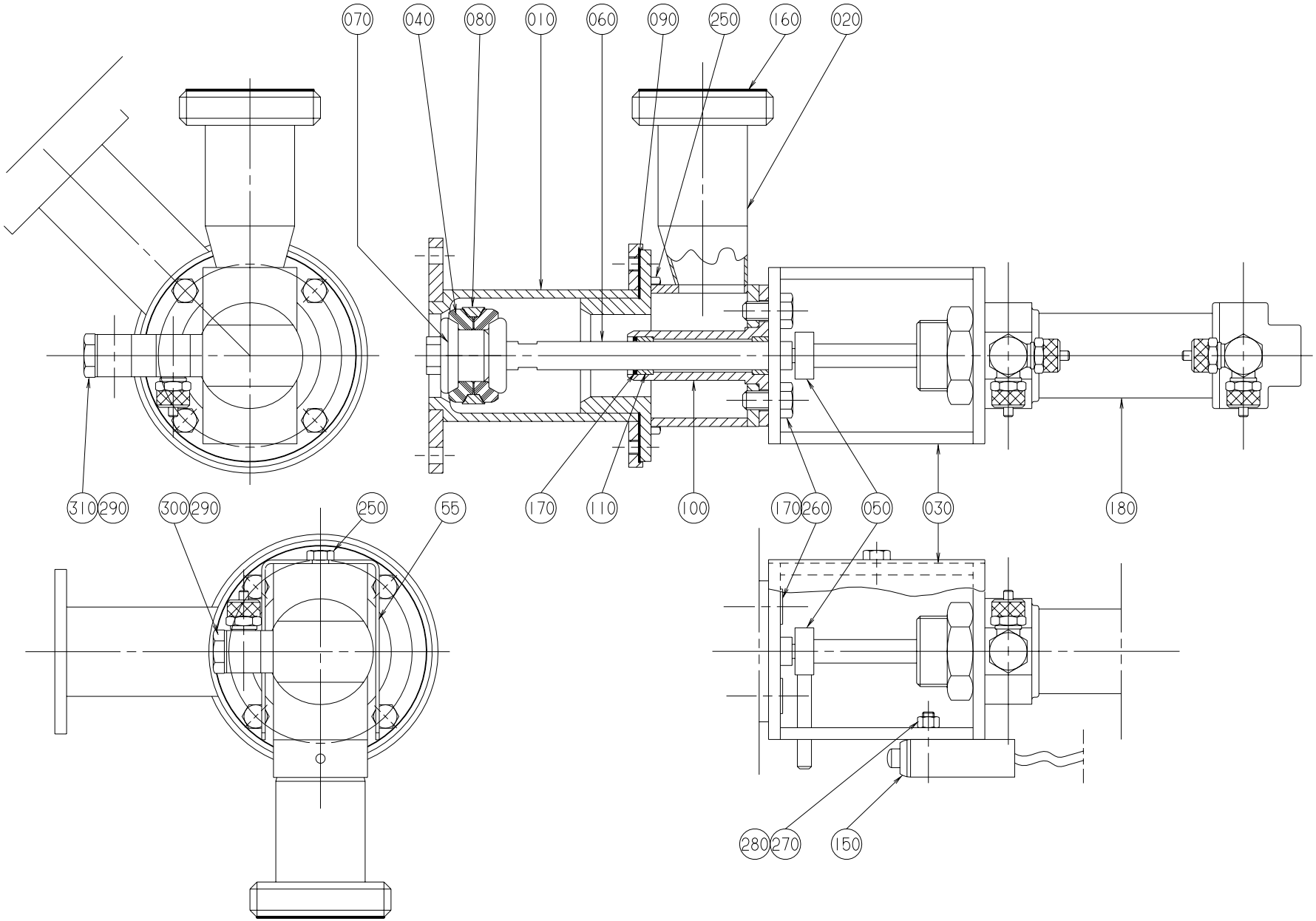

S-269989-3
ECN 19396

Pos	Part No	SP	UN	Qty	Description	Page No
WITHOUT MICRO SWITCH						
000	**C- 269989-0301**	**-**		**1**	**VALVE**	
030	266394	-		1	BRACKET	
050	37638	C		1	PENDULUM SUSPENSION	
250	312105-0366	-		6	SCREW O4017 M6X12A280	
260	312105-0449	-		2	SCREW O4017 M8X16A280	
290	342797-0122	-		4	BANJO CONN SINGLE 6-1/4	
310	342980-0314	-		2	BANJO CONN DUBBEL 1/4	
WITH MICRO SWITCH						
000	**C- 269989-0302**	**-**		**1**	**VALVE**	
030	449414	-		1	BRACKET	
050	449415	C		1	PENDULUM SUSPENSION	
055	574653	-		1	PROTECTION	
150	90044-0084	P		1	LIMITSW.14CE1-4 HONEYWELL	
250	312105-0366	-		7	SCREW O4017 M6X12A280	
260	312155-0449	-		2	SCREW MF6S8X16RFR	
270	312115-0331	-		2	SCREW O4762 M5X20A280	
280	312605-0314	-		2	NUT M6M5RFR	
290	342797-0122	-		2	BANJO CONN SINGLE 6-1/4	
300	342980-0304	-		2	BANJO CONN SINGLE 1/4"	
Common parts						
010	**276164**	**C**		**1**	**VALVE HOUSING**	
020	276165	C		1	HOUSE	
040	530588	P		2	SEAL RING	
060	266389	C		1	PISTON ROD	
070	266390	C		1	NUT	
080	266391	C		1	RING	
090	531765	P		1	GASKET	
100	532348	S		1	SPINDLE GUIDE	
110	532349	S		2	PLAIN BEARING	
160	90091-0182	P		1	GASKET	
170	90141-0022	S		1	RING	
180	90239-0166	P		1	CYLINDER	
180a	90285-0094	S		0	* SEAL	

Pos	Part No	SP	UN	Qty	Description	Page No

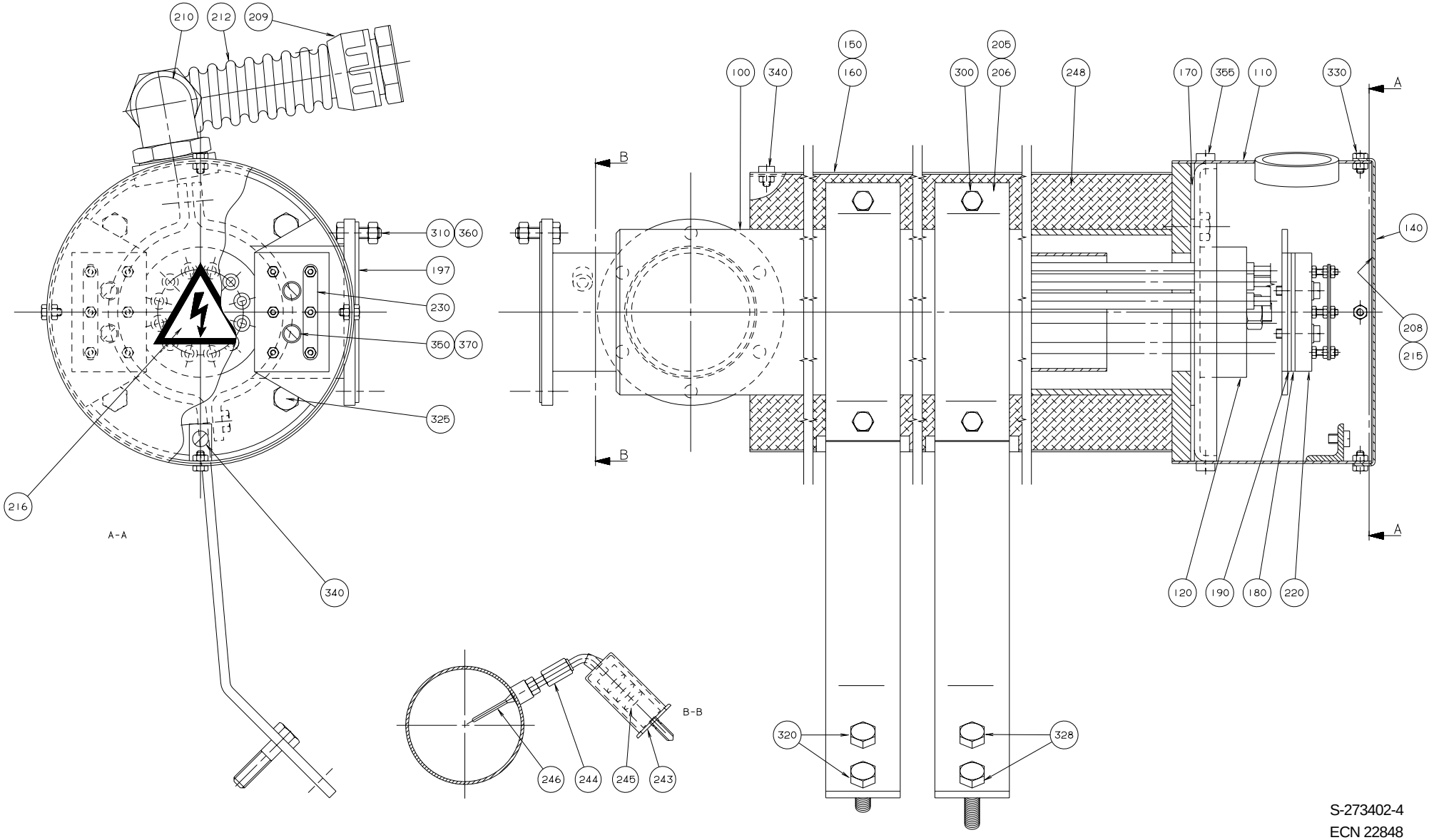

S-273402-4
ECN 22848

Pos	Part No	SP	UN	Qty	Description	Page No
-						
000	**C- 273402-0401**	**-**		**1**	**AIR SUPER-HEATER**	
100	434469	C		1	HEATING PIPE	
110	451430	C		1	CONNECTION HOUS.(MINOR)	
120	449939-0001	C		1	HEATING ELEMENT 15KW	
120a	449938-0001	S		2	* HEATING PIPE	
120b	449938-0002	S		2	* HEATING PIPE	
120c	449938-0003	S		2	* HEATING PIPE	
140	29876	-		1	COVER	
150	269577	-		1	DISCHARGE TRAY	
160	269578	-		1	DISCHARGE TRAY	
170	531731	P		1	GASKET	
180	751009	P		2	INSULATION	
190	30298	P		2	INSULATION	
197	531737	P		2	GASKET	
205	269575	-		2	HOLDER	
206	269576	-		2	CAP	
208	545995	-		1	WIRING DIAGRAM	
209	90012-0061	S		1	GLAND	
210	90012-0062	S		1	GLAND	
212	90152-0031	C	MM	500	HOSE	
215	90153-0020	P	ML	X	ADHESIVE	
216	90194-0016	-		1	SIGN "FLASH SIGN" 50X50MM	
220	90195-0028	P		2	TERM.BLOCK 6-POLE STEATIT	
230	90195-0029	P		4	CONN. LINK NO324 FOR -28	
243	90326-0012	P		1	PROTECTIVE COVER	
244	90326-0017	P		1	GLAND	
245	90326-0020	P		1	PLUG,FEMALE YELLOW CR-AL	
246	90326-0043	P		1	THERMOCOUPLE CR-ALPREM.G	
248	90411-0005	S	MM	1232	INSULATOR	
300	312105-0366	-		4	SCREW O4017 M6X12A280	
310	312105-0370	-		12	SCREW O4017 M6X20A280	
320	312105-0447	-		2	SCREW O4017 M8X12A280	
325	312105-0452	-		4	SCREW M6S8X22RFR	
328	312105-0457	-		2	SCREW O4017 M8X35A280	
330	312105-0287	-		4	SCREW O4017 M4X8A280	
340	312125-0323	-		17	SLOTTED HEMCS5X8RFR	
350	312125-0331	-		4	SLOTTED HEMCS5X20RFR	
355	312125-0364	-		4	SLOTTED HEMCS6X10RFR	
360	312605-0316	-		12	NUT M6M6 A280 STAINLESS	
370	315105-0146	-		4	WASHER BRB5,3X10RFR	

Pos	Part No	SP	UN	Qty	Description	Page No

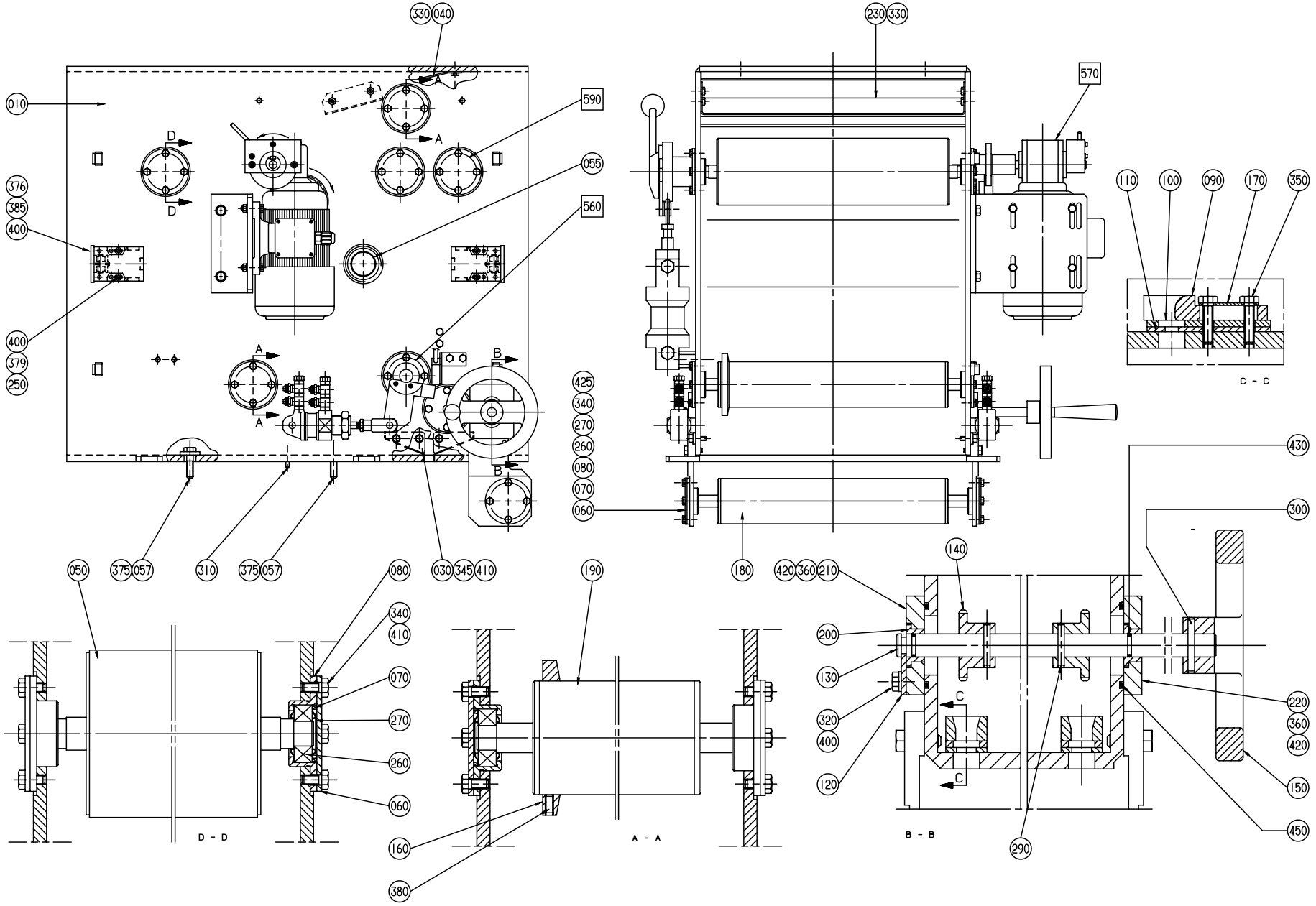

S-276373-7
ECN 20501

Pos	Part No	SP	UN	Qty	Description	Page No
-						
000	**C- 276373-0701**	**-**		**1**	**DRIER**	
010	573430	-		1	DRYING HOUSE	
030	247422	-		2	DRIP PLATE	
040	251544	-		1	SHEET	
050	543950	-		1	BENDING ROLLER	
055	12242-0003	-		1	GASKET	
057	497719	-		6	WASHER	
060	247171	-		8	BEARING COVER	
070	247172	S		8	SPACER RING	
080	247173	C		8	BEARING SEAT	
090	247349	P		2	STEERING	
100	491602	-		2	GASKET HOLDER	
110	491128	P		2	GASKET	
120	247355	-		1	LOCK WASHER	
130	531190	S		1	SHAFT	
140	247357	C		2	SPROCKET	
150	247358	C		1	SHIFTER HANDLE	
160	250588	-		2	FLANGE	
170	267033	S		2	WASHER	
180	279006	C		1	BENDING ROLLER	
190	279007	C		2	BENDING ROLLER	
200	531191	P		2	BUSHING	
210	279009	-		1	BEARING PLATE	
220	279010	-		1	BEARING PLATE	
230	279011	-		1	COVERING PLATE	
250	90044-0103	-		4	KEY SAFETY SWITCH AZ15ZVR	
260	90214-0098	P		8	BALL BEARING	
270	90214-0303	P		16	RING	
290	311103-0275	-		2	CYLINDRICACP M6 4X28 RFR	
300	311103-0278	-		1	CYLINDRICACP M6 4X35 RFR	
310	311103-0310	-		2	CYLINDRICACP M6 5X20 RFR	
320	312105-0325	-		2	SCREW M6S5X10 A2 80	
330	312105-0364	-		7	SCREW M6S6X10RFR	
340	312105-0367	-		32	SCREW M6S6X14RFR	
345	312105-0368	-		8	SCREW O4017 M6X16A280	
350	312105-0372	-		4	SCREW O4017 M6X25A280	
360	312105-0451	-		4	SCREW SO4017 8X20A280	
375	312105-0493	-		6	SCREW 4017 M10X25A280	
376	312155-0329	-		4	SCREW MF6S5X16RFR	
379	312155-0368	-		4	SCREW MF6S6X16RFR	
380	312318-0327	-		4	STOP SCREW SK6SS5X12RFR	
385	312812-0314	-		4	LOCK NUT A2-M5RFR	
400	315105-0146	-		10	WASHER BRB5,3X10RFR	
410	315105-0153	-		32	WASHER BRB6,4X12RFR	
420	315105-0165	-		4	WASHER BRB8,4X16RFR	
425	315115-0153	-		8	WASHER TBRB6,4X12RFR	
430	315204-0109	-		2	O-RING 11,1X1,6VITON	
450	315204-0221	-		2	O-RING 34,2X3VITON	
F560	C- 263391-0401	-		1	CALENDER ROLLER	**117**
F570	C- 263394-030V	-		1	BENDING ROLLER	**119**
F590	C- 276345-030V	-		1	AIR KNIFE	**121**

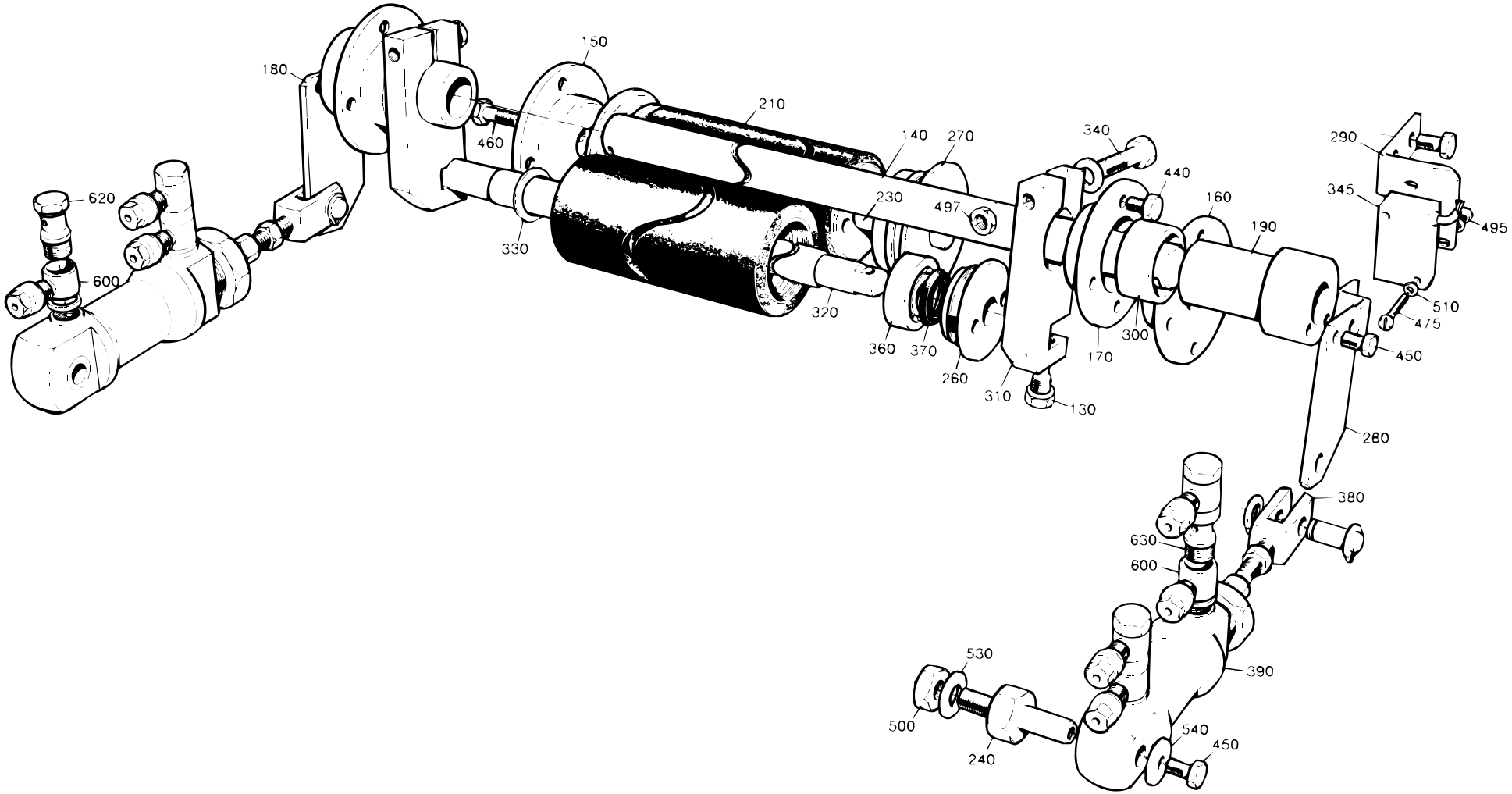

S-263391-4
ECN 9647

Pos	Part No	SP	UN	Qty	Description	Page No
-						
000	**C- 263391-0401**	**-**		**1**	**CALENDER ROLLER**	
130	246966	-		2	SCREW	
140	532145	S		1	SHAFT	
150	247159	C		1	AXLE SUPPORT	
160	247160	C		1	AXLE SUPPORT	
170	247161	C		2	AXLE SUPPORT	
180	247162	-		1	BRACKET	
190	532261	C		2	SLEEVE	
210	527750	P		2	CALENDER ROLLER	
230	532144	S		1	SHAFT	
240	247168	C		2	CYLINDER BRACKET	
260	247170	C		4	BEARING COVER	
270	247240	S		2	WHEEL	
280	282766	S		1	LINK	
290	282767	C		1	BRACKET	
300	297142	P		2	BUSHING	
310	532143	C		2	ARM	
320	532146	S		1	SHAFT	
330	532147	-		2	WASHER	
340	532148	-		2	SCREW	
345	90044-0104	P		1	PROX.SWITCH IFM IN 3002	
360	90214-0098	S		4	BALL BEARING	
370	90214-0303	S		8	RING	
380	90239-0127	S		2	BRACKET	
390	90239-0189	S		2	CYLINDER	
390a	90285-0094	S		0	* SEAL	
440	312105-0364	-		16	SCREW M6S6X10RFR	
450	312105-0366	-		6	SCREW O4017 M6X12A280	
460	312105-0370	-		1	SCREW O4017 M6X20A280	
475	312125-0230	-		2	SLOTTED HEMCS3X20RFR	
495	312605-0310	-		2	NUT M6M3RFR	
497	312605-0318	-		2	NUT M6M8RFR	
500	312605-0320	-		2	NUT M6M10RFR	
510	315105-0124	-		4	WASHER BRB3,2X6RFR	
530	315105-0173	-		2	WASHER BRB10,5X22RFR	
540	315121-0153	-		2	WASHER TBRSB6,4X22FZB	
600	342797-0122	-		7	BANJO CONN SINGLE 6-1/4	
620	342980-0304	-		1	BANJO CONN SINGLE 1/4"	
630	342980-0314	-		3	BANJO CONN DUBBEL 1/4	

Pos	Part No	SP	UN	Qty	Description	Page No

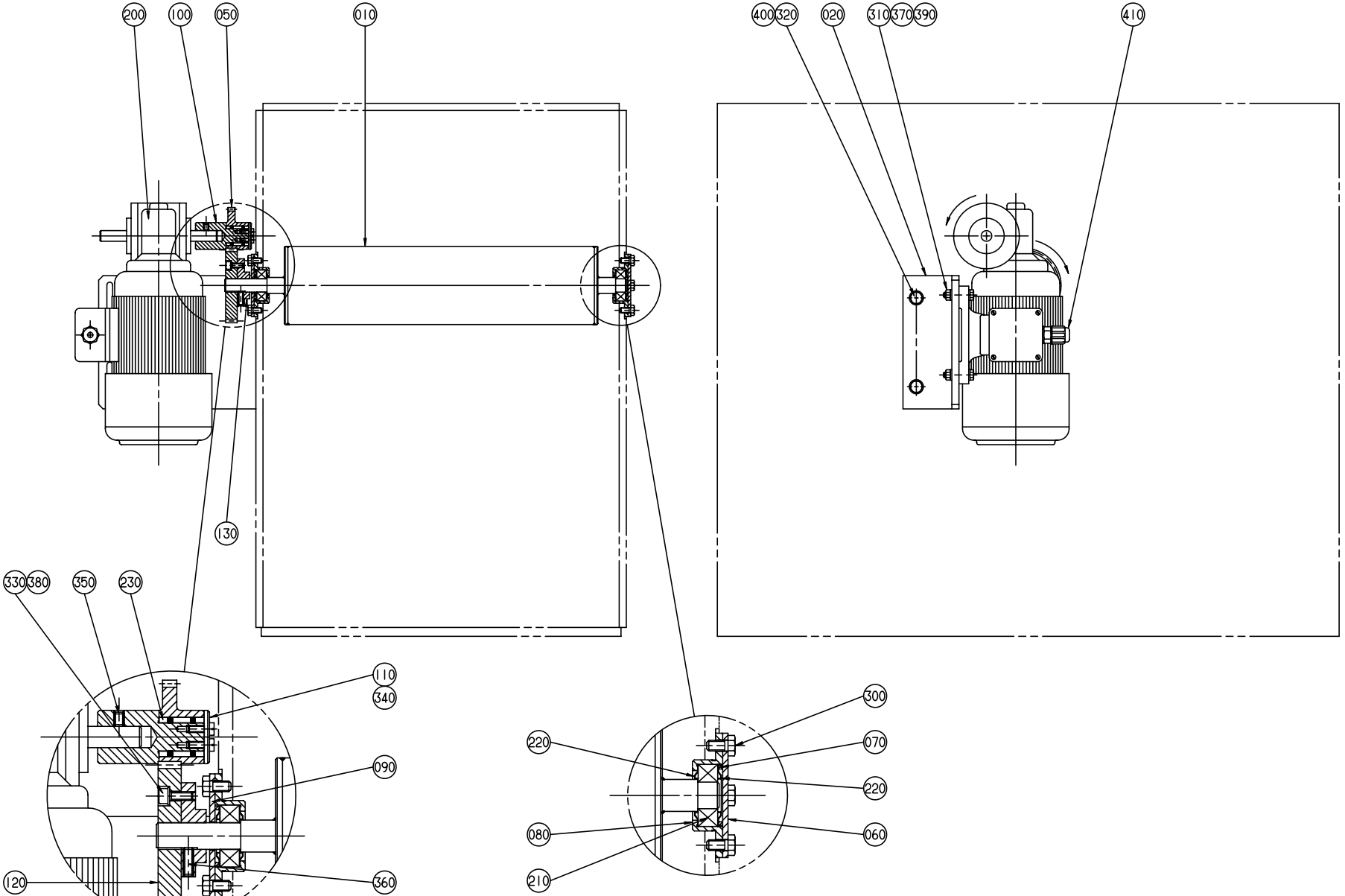

S-263394-3
ECN 21064

Pos	Part No	SP	UN	Qty	Description	Page No
VOLUMES 375 S, 500 S, 750 B						
000	**C- 263394-0301**	**-**		**1**	**BENDING ROLLER**	
050	209331-0007	S		1	GEAR WHEEL	
VOLUME 400 B						
000	**C- 263394-0303**	**-**		**1**	**BENDING ROLLER**	
050	209331-0005	S		1	GEAR WHEEL	
VOLUMES 1055 B, 1000 B, 750 S						
000	**C- 263394-0304**	**-**		**1**	**BENDING ROLLER**	
050	209331-0012	S		1	GEAR WHEEL	
VOLUMES 500 B, 355 B						
000	**C- 263394-0305**	**-**		**1**	**BENDING ROLLER**	
050	209331-0009	S		1	GEAR WHEEL	
VOLUME 1000 S						
000	**C- 263394-0307**	**-**		**1**	**BENDING ROLLER**	
050	209331-0013	S		1	GEAR WHEEL	
VOLUME 1000 Sq						
000	**C- 263394-0308**	**-**		**1**	**BENDING ROLLER**	
050	209331-0014	S		1	GEAR WHEEL	
VOLUME 500 Sq						
000	**C- 263394-0315**	**-**		**1**	**BENDING ROLLER**	
050	209331-0010	S		1	GEAR WHEEL	
Common parts						
010	573428	S		1	BENDING ROLLER	
020	573429	-		1	MOTOR PLATE	
030	927258	-		1	BRACKET	
060	247171	-		1	BEARING COVER	
070	247172	S		2	SPACER RING	
080	247173	C		2	BEARING SEAT	
090	250590	-		1	BEARING COVER	
100	250591	S		1	SHAFT	
110	250592	-		1	WASHER	
120	265872-0001	S		1	GEAR WHEEL	
130	284974	-		1	HUB	
140	795581	-		1	PLATE	
190	90044-0104	-		1	PROX.SWITCH IFM IN 3002	
200	90069-0281	C		1	WORM GEAR MOTOR	
210	90214-0098	P		2	BALL BEARING	
220	90214-0303	P		4	RING	
230	90348-0007	S		1	FREE WHEEL COUPLING	
300	312105-0366	-		8	SCREW O4017 M6X12A280	
310	312105-0374	-		4	SCREW O4017 M6X30A280	
320	312105-0451	-		2	SCREW SO4017 8X20A280	
325	312115-0232	-		2	SCREW 3X25 A4 80	
326	312115-0295	-		2	SCREW O4762 M4X20A280	
330	312115-0328	-		3	SCREW 5X14 A4 80	
340	312125-0291	-		2	SLOTTED HEMCS4X12RFR	
350	312318-0362	-		1	STOP SCREW SK6SS6X8RFR	
360	312318-0368	-		1	STOP SCREW SK6SS6X16RFR	
370	312605-0316	-		4	NUT M6M6 A280 STAINLESS	
375	315105-0136	-		4	WASHER BRB4,3X8RFR	
380	315105-0146	-		3	WASHER BRB5,3X10RFR	
390	315105-0153	-		8	WASHER BRB6,4X12RFR	
400	315105-0165	-		2	WASHER BRB8,4X16RFR	
410	90012-0137	C		1	CABLE GLAND SCREENED	

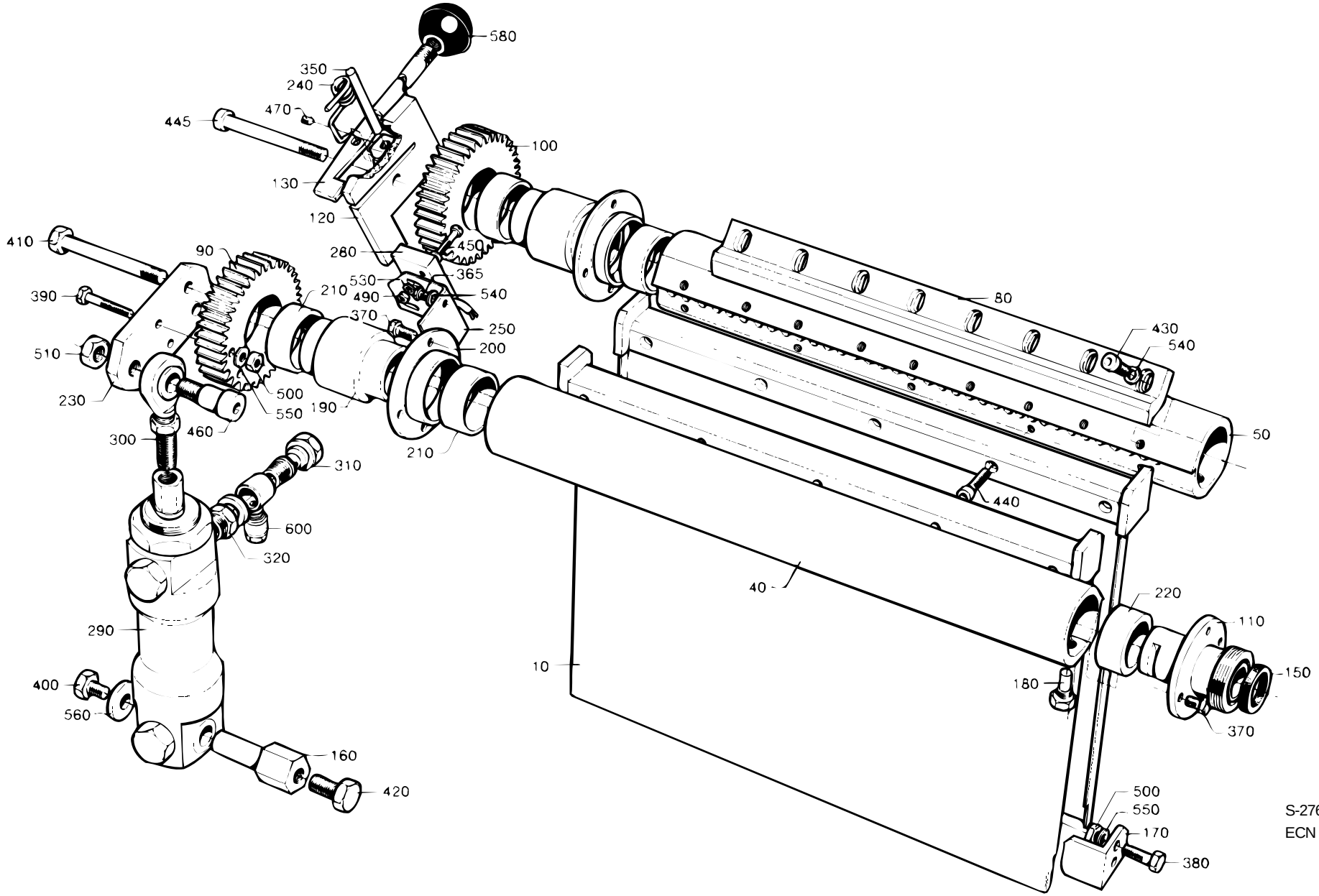

S-276345-2
ECN 5355

Pos	Part No	SP	UN	Qty	Description	Page No
VOLUMES 1055 B, 1000 B, 750 B, 568 B, 500 B						
000	**C- 276345-0301**	**-**		**1**	**AIR KNIFE**	
010	276346	C		2	AIR GUIDE	
040	276347	C		1	AIR DISTRIBUTOR	
050	276348	C		1	AIR DISTRIBUTOR	
080	526502	S		2	STEERING RAIL	
170	246965	-		2	STOP	
VOLUME 375 S						
000	**C- 276345-0302**	**-**		**1**	**AIR KNIFE**	
010	434972	-		2	AIR GUIDE	
040	434973	-		1	AIR DISTRIBUTOR	
050	434974	-		1	AIR DISTRIBUTOR	
080	527647-0001	-		2	STEERING RAIL	
170	434976	-		2	STOP	
VOLUMES 500S, 400 B, 355 B						
000	**C- 276345-0303**	**-**		**1**	**AIR KNIFE**	
010	434972	-		2	AIR GUIDE	
040	434973	-		1	AIR DISTRIBUTOR	
050	434974	-		1	AIR DISTRIBUTOR	
080	527647-0002	-		2	STEERING RAIL	
170	434976	-		2	STOP	
VOLUME 750 S						
000	**C- 276345-0304**	**-**		**1**	**AIR KNIFE**	
010	276346	C		2	AIR GUIDE	
040	276347	C		1	AIR DISTRIBUTOR	
050	276348	C		1	AIR DISTRIBUTOR	
080	544301	-		2	STEERING RAIL	
170	246965	-		2	STOP	
VOLUMES 1000 S, 1000 Sq, 500 Sq						
000	**C- 276345-0305**	**-**		**1**	**AIR KNIFE**	
010	276346	C		2	AIR GUIDE	
040	276347	C		1	AIR DISTRIBUTOR	
050	276348	C		1	AIR DISTRIBUTOR	
080	573841	-		2	STEERING RAIL	
170	246965	-		2	STOP	
Common parts						
060	292565	-		1	PROTECTION	
090	276350	C		1	GEAR WHEEL	
100	276351	C		1	GEAR WHEEL	
110	276354	C		2	ATTACHMENT	
120	297969	-		1	FASTENING PLATE	
130	297970	-		1	CATCH LEVER	
150	12242-0001	-		2	GASKET	
160	246964	-		1	CYLINDER BRACKET	
180	246966	C		2	SCREW	
190	276355	C		2	SLEEVE	
200	276356	C		2	BEARING HOUSING	
210	276357	S		4	BUSHING	
220	276358	S		2	BUSHING	
230	276359	-		1	LEVER	
240	276360	S		1	SPRING	
250	276361	-		1	BRACKET	
280	90044-0104	S		1	PROX.SWITCH IFM IN 3002	
290	90239-0196	C		1	CYLINDER	
290a	90285-0119	S		0	* SEAL AND WEAR-AND-TEAR	
300	90239-0321	-		1	BRACKET	
310	90235-0275	-		2	VALVE	
320	90330-0042	-		2	BUSHING	
350	311103-0367	-		1	CYLINDRICACP M6 6X55 RFR	
365	312105-0325	-		2	SCREW M6S5X10 A2 80	
370	312105-0364	-		14	SCREW M6S6X10RFR	
375	312105-0368	-		2	SCREW O4017 M6X16A280	
380	312105-0370	-		4	SCREW O4017 M6X20A280	
390	312105-0376	-		2	SCREW O4017 M6X35A280	
400	312105-0447	-		1	SCREW O4017 M8X12A280	
410	312105-0467	-		2	SCREW O4014 M8X80A280	
420	312105-0491	-		1	SCREW 4017 M10X20A280	
430	312115-0325	-		18	SCREW 5X10 A4 80	
440	312115-0332	-		10	SCREW 5X22 A4 80	
445	312115-0467	-		2	SCREW O4762 M8X80A280	
450	312125-0230	-		2	SLOTTED HEMCS3X20RFR	
460	312180-0530	-		1	REAMED BOL	
470	312316-0320	-		1	STOP SCREW SK6SS5X5FZB	
490	312605-0310	-		2	NUT M6M3RFR	
500	312605-0316	-		6	NUT M6M6 A280 STAINLESS	
510	312605-0320	-		1	NUT M6M10RFR	
530	315105-0124	-		4	WASHER BRB3,2X6RFR	
540	315105-0146	-		20	WASHER BRB5,3X10RFR	
550	315105-0153	-		8	WASHER BRB6,4X12RFR	
560	315121-0165	-		1	WASHER TBRSB8,4X26FZB	
580	318800-0105	-		1	HANDLE BALLA D.35-M10	
600	342797-0122	-		2	BANJO CONN SINGLE 6-1/4	

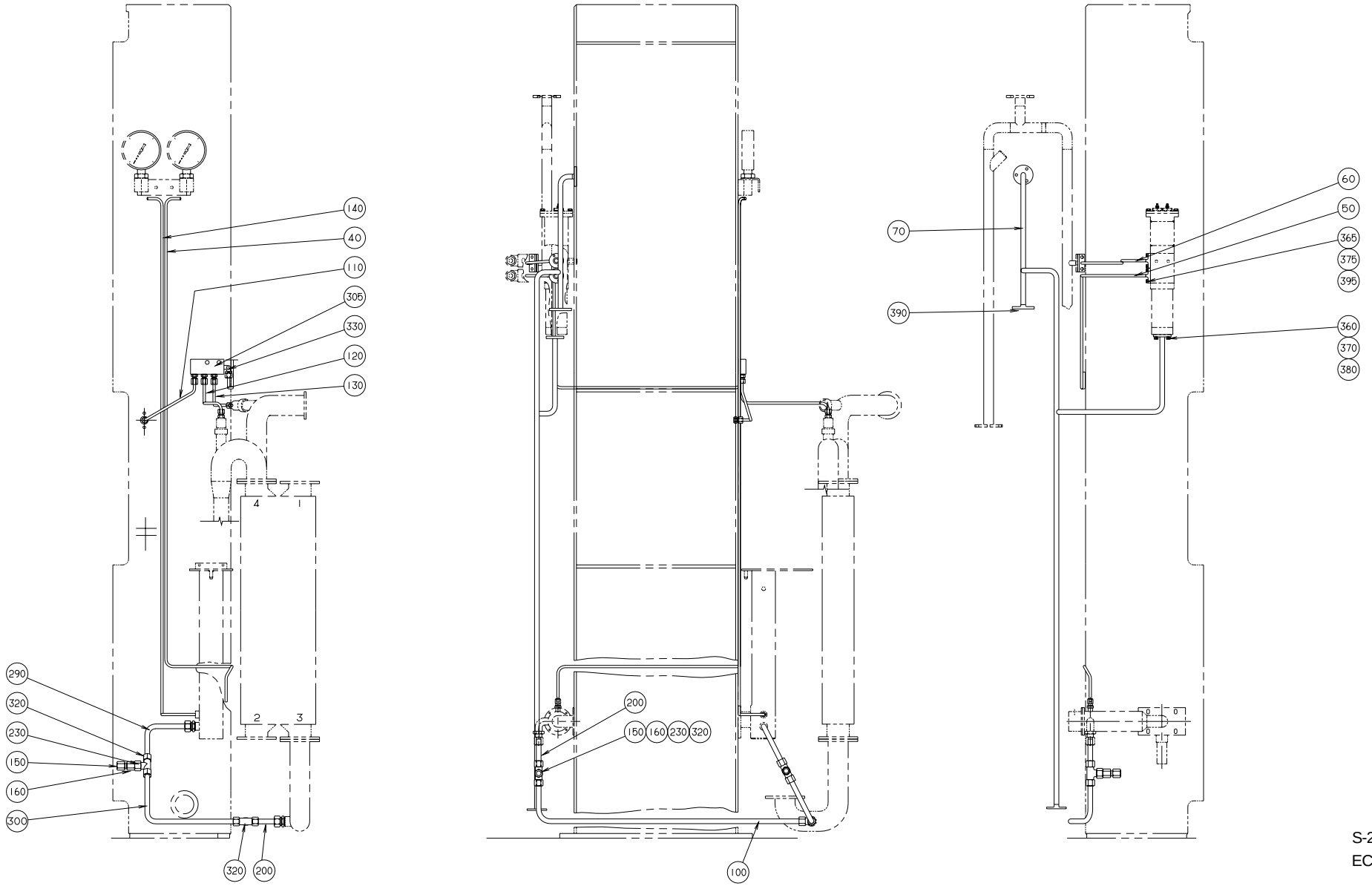

S-276480-5
ECN 17647

Pos	Part No	SP	UN	Qty	Description	Page No
-						
000	**C- 276480-0501**	**-**		**1**	**PIPE WORK**	
040	451053	-		1	PIPE	
050	554448	-		1	PIPE	
060	554449	-		1	PIPE	
070	554583	-		1	PIPE	
100	297347	-		1	PIPE	
110	464307	-		1	PIPE BEND	
120	464308	-		1	PIPE	
130	464309	-		1	PIPE	
140	479230	-		1	PIPE	
150	209145	S		2	THROTTLE SCREW	
160	209146	S		2	BARRIER NUT	
200	276490	-		2	PIPE	
230	279589	S		2	NUT	
290	479231	-		1	PIPE	
300	479232	-		1	PIPE	
305	464018	-		1	JUNCTION BLOCK	
320	90030-0058	S		3	CONNECTION	
330	90030-0137	-		1	CONNECTION	
340	90030-0184	-		3	PIPE CONNECTION	
360	312105-0366	-		2	SCREW O4017 M6X12A280	
365	312105-0327	-		4	SCREW ISO 4017 M5X12A280	
370	315105-0153	-		2	WASHER BRB6,4X12RFR	
375	315105-0146	-		4	WASHER BRB5,3X10RFR	
380	927421-0003	-		1	O-RING 13.3X2.4 SILICON	
390	927422-0004	-		1	O-RING 29.2X3 SILICON	
395	927421-0001	-		2	O-RING 9.3X2.4 SILICON	

Pos	Part No	SP	UN	Qty	Description	Page No

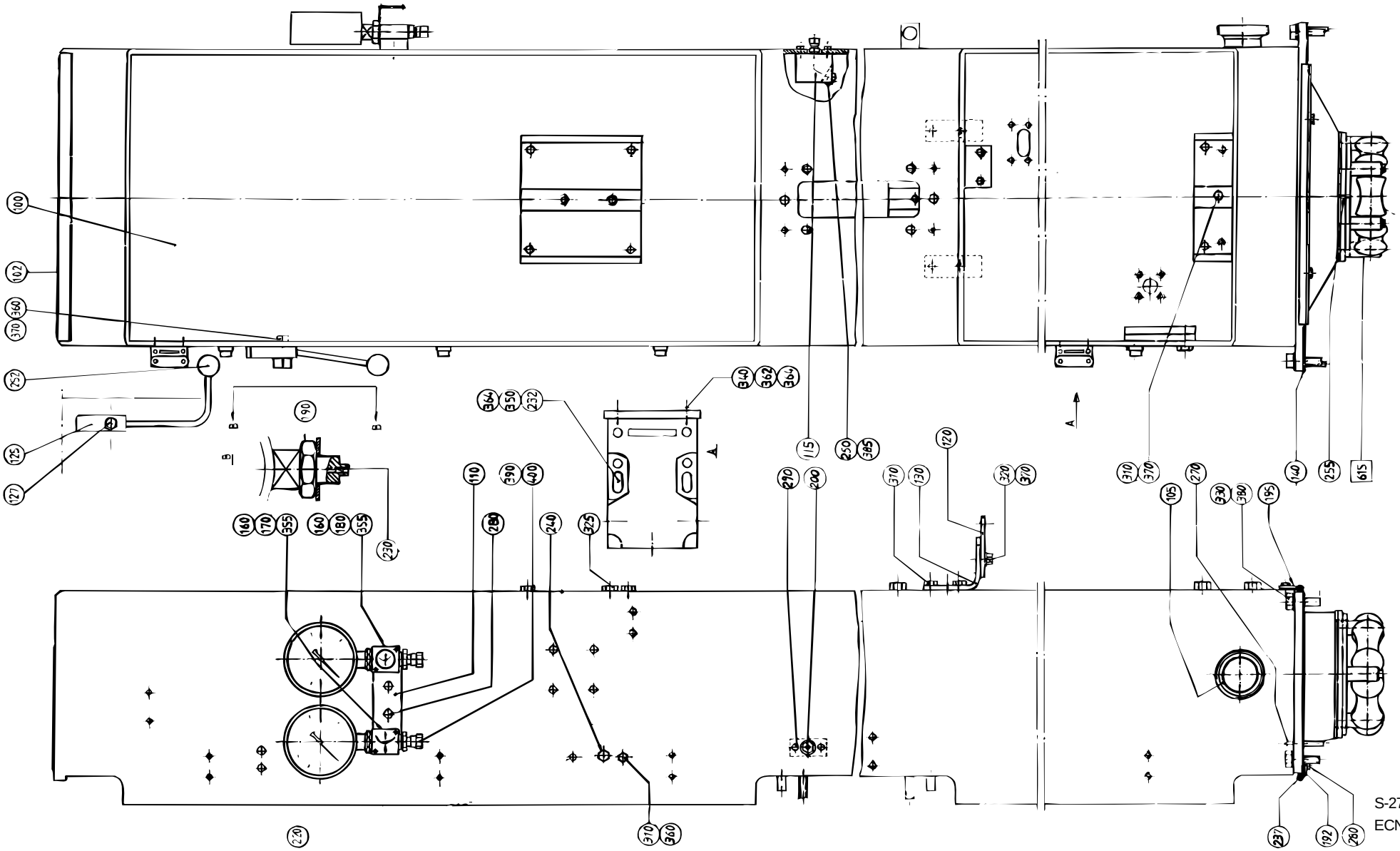
S-278956-8
ECN 19141

Pos	Part No	SP	UN	Qty	Description	Page No
-						
000	**C- 278956-0701**	**-**		**1**	**PILLAR**	
100	573619	-		1	PILLAR	
102	531309	-		1	GASKET	
105	12242-0005	P		1	GASKET	
110	33577	-		1	CANTILEVER	
115	267564	C		1	BRACKET	
120	279860	C		2	ADJUSTMENT PLATE	
125	551786	-		1	LEVER	
127	551784	-		1	FITTING BOLT	
130	282608	-		2	ANGLE	
140	458481-0001	-		1	SHIM	
140	458481-0002	-		1	SHIM	
140	458481-0003	-		1	SHIM	
160	464173	-		2	LABEL HOLDER	
170	464174	-		1	SIGN	
180	464175	-		1	SIGN	
190	90330-0105	S		2	NUT	
192	493091	-		1	CLAMP RAIL	
195	530808	-		1	CLAMP RAIL	
200	90030-0051	S		1	PIPE CONNECTION	
220	90043-0034	S		2	PRESSURE GAUGE	
230	90043-0302	S		2	SCREW	
232	90044-0103	-		2	KEY SAFETY SWITCH AZ15ZVR	
237	90143-0018	-	MM	950	STRIP	
240	90330-0066	-		1	PLUG	
250	90424-0031	S		1	NOZZLE	
252	318800-0104	-		1	HANDLE BALLA D.30-M8	
255	311103-0238	-		2	CYLINDRICACP M6 3X20 RFR	
270	311211-0299	-		2	TAPER PIN GKP6X6X55	
280	312105-0364	-		6	SCREW M6S6X10RFR	
290	312105-0366	-		2	SCREW O4017 M6X12A280	
310	312105-0447	-		6	SCREW O4017 M8X12A280	
320	312105-0449	-		2	SCREW O4017 M8X16A280	
325	312105-0532	-		1	SCREW 4017 M12X20A280	
330	312105-0540	-		4	SCREW 4017 M12X40A280	
340	312155-0329	-		4	SCREW MF6S5X16RFR	
350	312155-0368	-		4	SCREW MF6S6X16RFR	
355	312502-0120	-		4	DRIVE SCREKDS0X5FNB	
360	312605-0318	-		2	NUT M6M8RFR	
362	312812-0314	-		4	LOCK NUT A2-M5RFR	
364	315105-0146	-		8	WASHER BRB5,3X10RFR	
370	315105-0165	-		4	WASHER BRB8,4X16RFR	
380	315115-0178	-		4	WASHER TBRB13X24RFR	
385	315204-0209	S		1	O-RING 3X2,4 VITON	
390	342797-0122	-		2	BANJO CONN SINGLE 6-1/4	
400	342980-0304	-		2	BANJO CONN SINGLE 1/4"	
F615	C- 466399-010V	-		1	SEAL	**127**

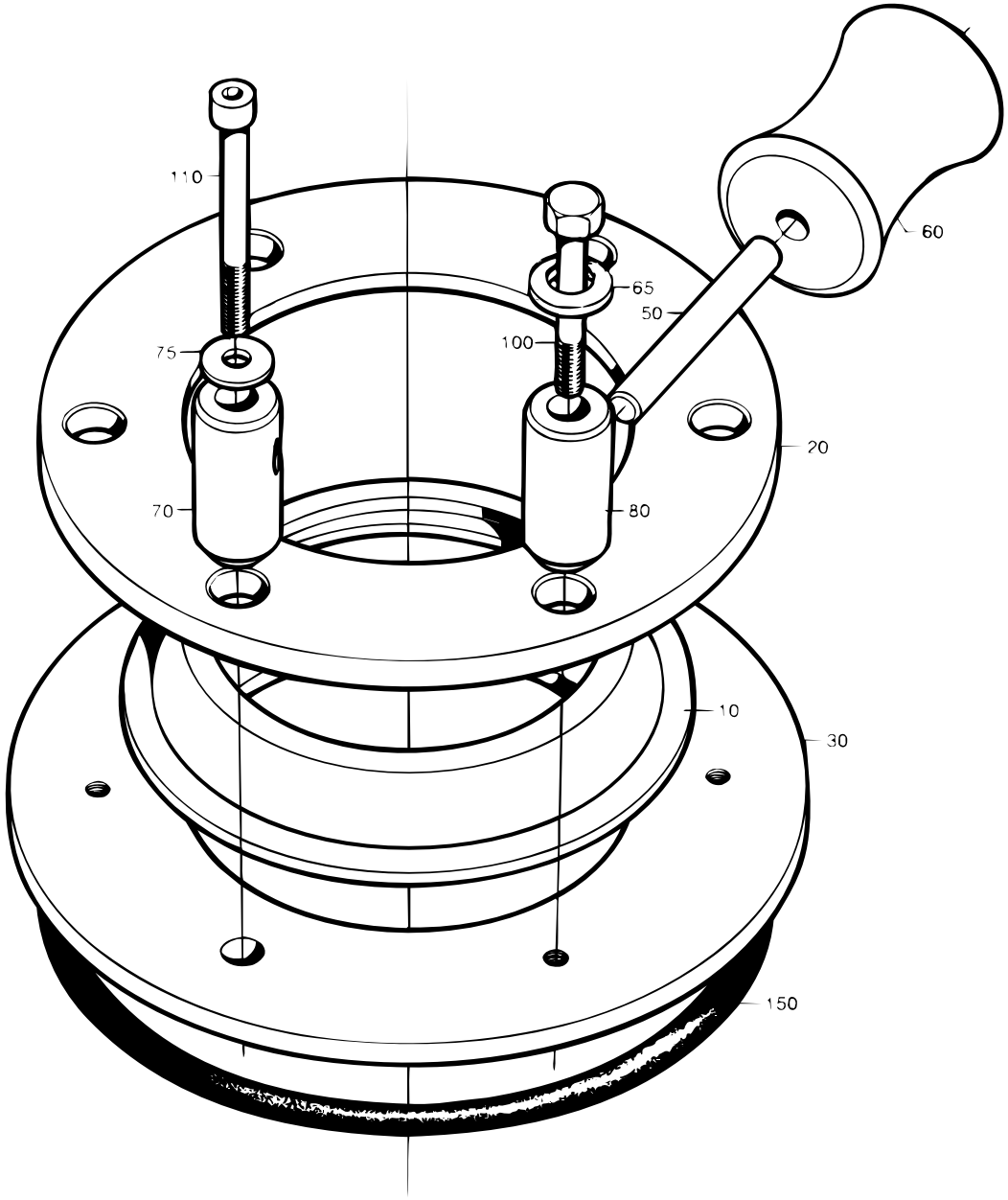

S-466399-1
ECN 20561

Pos	Part No	SP	UN	Qty	Description	Page No
VOLUMES 1055 B, 1000 B, 750 B, 568 B, 500 B						
000	**C- 466399-0101**	**-**		**1**	**SEAL**	
010	466042	PU		1	SEAL	
020	466400	-		1	RING	
030	466403	-		1	RING	
050	263655-0009	-		6	SHAFT	
060	466046	P		6	ROLL	
070	466040	-		2	AXLE SUPPORT	
080	493658	-		4	AXLE SUPPORT	
VOLUMES 500S, 400 B, 355 B						
000	**C- 466399-0102**	**-**		**1**	**SEAL**	
010	466089	PU		1	SEAL	
020	466401	-		1	RING	
030	466404	-		1	RING	
050	263655-0007	-		6	SHAFT	
060	466092	P		6	ROLL	
070	466040	-		2	AXLE SUPPORT	
080	493658	-		4	AXLE SUPPORT	
VOLUME 375 S						
000	**C- 466399-0103**	**-**		**1**	**SEAL**	
010	466099	PU		1	SEAL	
020	466402	-		1	RING	
030	466405	-		1	RING	
050	263655-0007	-		6	SHAFT	
060	466102	P		6	ROLL	
070	466040	-		2	AXLE SUPPORT	
080	493658	-		4	AXLE SUPPORT	
VOLUME 750 S						
000	**C- 466399-0104**	**-**		**1**	**SEAL**	
010	544015	PU		1	SEAL	
020	544013	-		1	RING	
030	544014	-		1	RING	
050	263655-0008	-		6	SHAFT	
060	544012	P		6	ROLL	
070	466040	-		2	AXLE SUPPORT	
080	493658	-		4	AXLE SUPPORT	
VOLUME 1000 S						
000	**C- 466399-0105**	**-**		**1**	**SEAL**	
010	567743	PU		1	SEAL	
020	466400	-		1	RING	
030	466403	-		1	RING	
050	263655-0009	-		6	SHAFT	
060	573504	P		6	ROLL	
070	466040	-		2	AXLE SUPPORT	
080	493658	-		4	AXLE SUPPORT	
VOLUME 1000 Sq, 500 Sq						
000	**C- 466399-0106**	**-**		**1**	**SEAL**	
010	579318	PU		1	SEAL	
020	466400	-		1	RING	
030	466403	-		1	RING	
050	263655-0009	-		6	SHAFT	
060	579319	P		6	ROLL	
070	580958	-		2	AXLE SUPPORT	
080	580959	-		4	AXLE SUPPORT	
Common parts						
065	6278	-		4	WASHER	
075	466041	-		2	WASHER	
100	312105-0379	-		4	SCREW O4014 M6X45A280	
110	312115-0382	-		2	SCREW O4762 M6X60A280	
150	315204-0324	S		1	O-RING ,3X5,7 VITON	

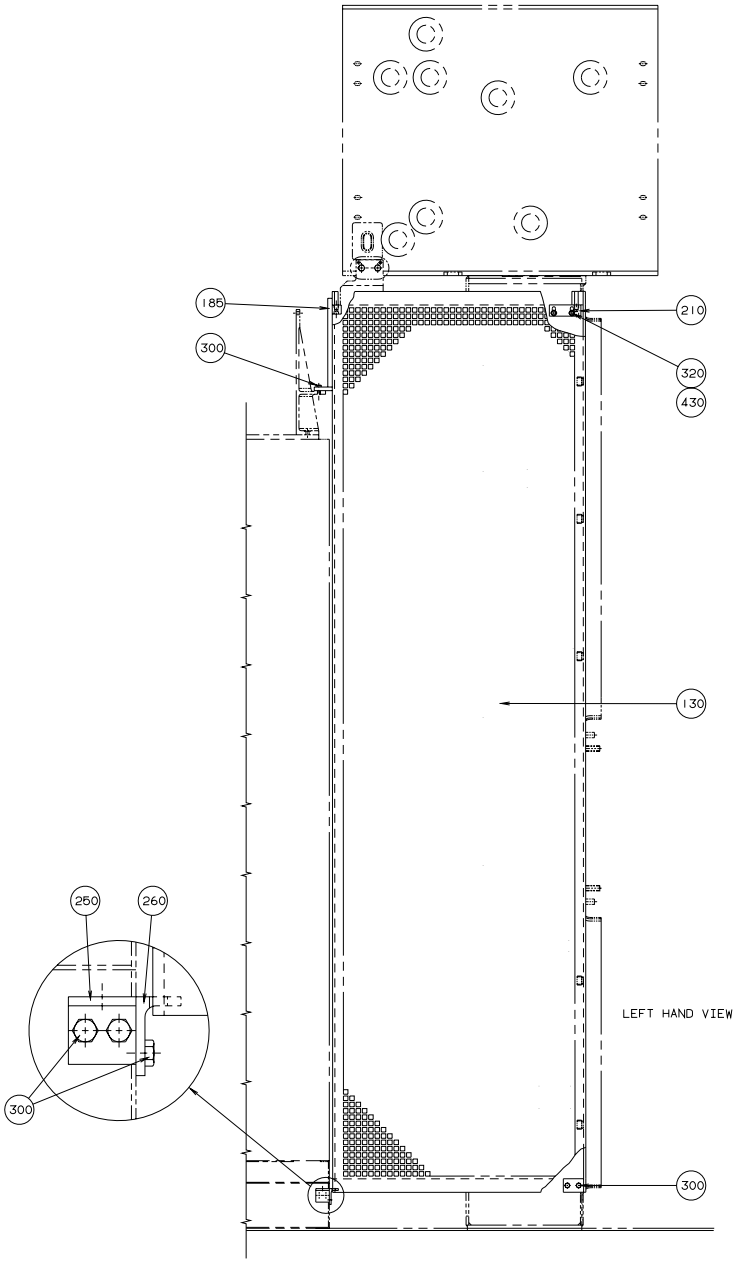

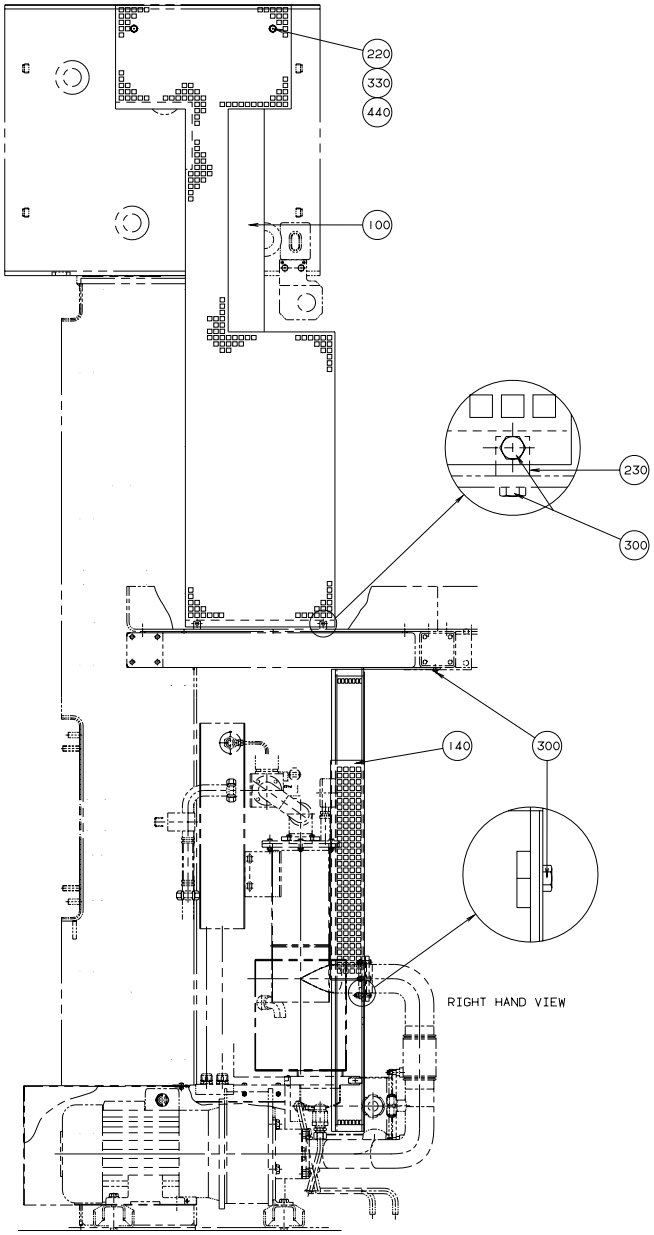

S-279651-5
ECN 19396

Pos	Part No	SP	UN	Qty	Description	Page No
-						
000	**C- 279651-0601**	**-**		**1**	**TOUCH GUARD**	
100	752771	-		1	TOUCH GUARD	
130	567023	-		1	TOUCH GUARD	
140	576738	-		1	TOUCH GUARD	
185	294472	-		1	CANTILEVER	
210	267646	-		1	BLOCKING PIECE	
220	267665	-		2	BRACKET	
230	279619	-		2	BRACKET	
250	457752	-		1	CANTILEVER	
260	457753	-		1	BRACKET	
300	312105-0366	-		15	SCREW O4017 M6X12A280	
320	312105-0372	-		2	SCREW O4017 M6X25A280	
330	312105-0447	-		2	SCREW O4017 M8X12A280	
430	315105-0153	-		2	WASHER BRB6,4X12RFR	
440	315105-0165	-		2	WASHER BRB8,4X16RFR	

Pos	Part No	SP	UN	Qty	Description	Page No

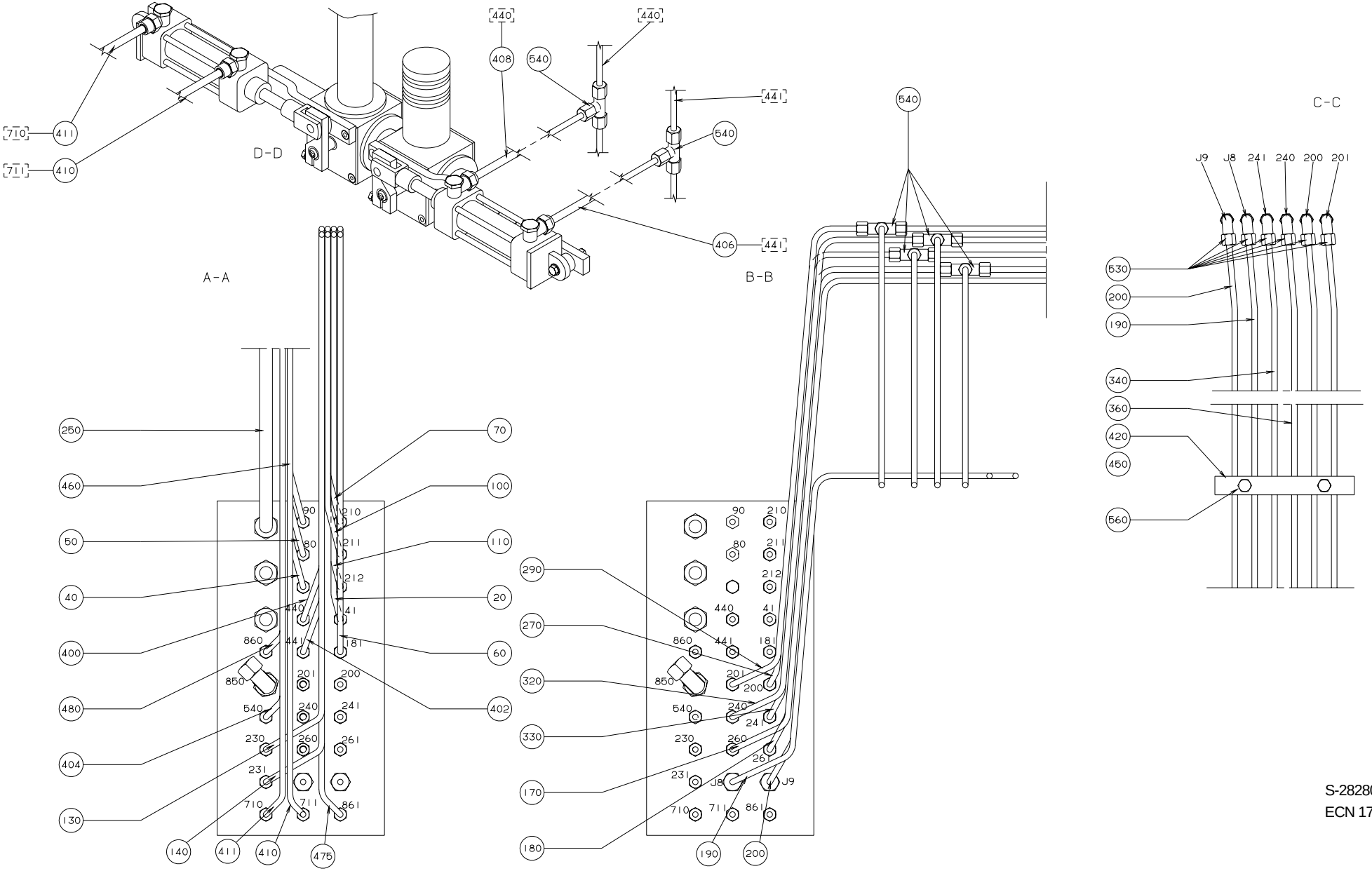

S-282805-13
ECN 17885

Pos	Part No	SP	UN	Qty	Description	Page No
PRODUCT VALVE 2"						
000	**C- 282805-0801**	**-**		**1**	**PIPE WORK-PNEUMATIC**	
010	476794-0001	-		1	PIPE	
PRODUCT VALVE 3"						
000	**C- 282805-0802**	**-**		**1**	**PIPE WORK-PNEUMATIC**	
010	476794-0002	-		1	PIPE	
Common parts						
020	532352	-		1	PIPE	
040	554850	-		1	PIPE	
050	451277	-		1	PIPE	
060	544913	-		1	PIPE	
070	532354	-		1	PIPE	
080	451280	-		1	PIPE	
090	451281	-		1	PIPE	
100	532355	-		1	PIPE	
110	532356	-		1	PIPE	
120	451284	-		1	PIPE	
130	451285	-		1	PIPE	
140	451286	-		1	PIPE	
150	451287	-		1	PIPE	
160	451288	-		1	PIPE	
170	451289	-		1	PIPE	
180	451290	-		1	PIPE	
190	451291	-		1	PIPE	
200	451292	-		1	PIPE	
230	564600	-		1	PIPE	
250	549093	-		1	PIPE	
260	560928	-		1	PIPE	
270	451296	-		1	PIPE	
280	451297	-		1	PIPE	
290	451298	-		1	PIPE	
300	451299	-		1	PIPE	
310	451300	-		1	PIPE	
320	451301	-		1	PIPE	
330	451302	-		1	PIPE	
340	451303-0001	-		1	PIPE	
350	451303-0002	-		1	PIPE	
360	451303-0003	-		1	PIPE	
370	451303-0004	-		1	PIPE	
380	451304	-		1	PIPE	
390	451305	-		1	PIPE	
396	479061	-		1	PIPE	
398	479072	-		1	PIPE	
400	479073	-		1	PIPE	
402	479074	-		1	PIPE	
404	532366	-		1	PIPE	
406	555553	-		1	PIPE	
408	555554	-		1	PIPE	
410	555547	-		1	PIPE	
411	555548	-		1	PIPE	
420	450814	-		1	HOLDER	
430	451306	-		1	PIPE	
440	451307	-		1	PIPE	
450	451326	-		1	CLAMPING PLATE	
460	554139	-		1	PIPE	
470	476796	-		1	PIPE	
475	555551	-		1	PIPE	
480	555552	-		1	PIPE	
510	90030-0096	-		1	PIPE CONNECTION	
515	90140-0021	-		1	ELBOW PIPE	
520	90166-0124	-	MM	400	HOSE	
530	90224-0309	-		12	CONNECTION	
540	90224-0310	-		7	CONNECTION	
550	90235-0048	-		1	VALVE	
553	311103-0361	-		2	CYLINDRICACP M6 6X40 RFR	
555	312105-0327	-		2	SCREW ISO 4017 M5X12A280	
560	312105-0368	-		2	SCREW O4017 M6X16A280	
562	315105-0146	-		2	WASHER BRB5,3X10RFR	
563	315204-0208	-		1	O-RING 9,3X2,4VITON	
565	315233-0109	-		1	SEAL RING R1/8"	
570	342706-0130	-		2	INSERT SLESH06	
580	90224-0307	-		1	CONNECTION	

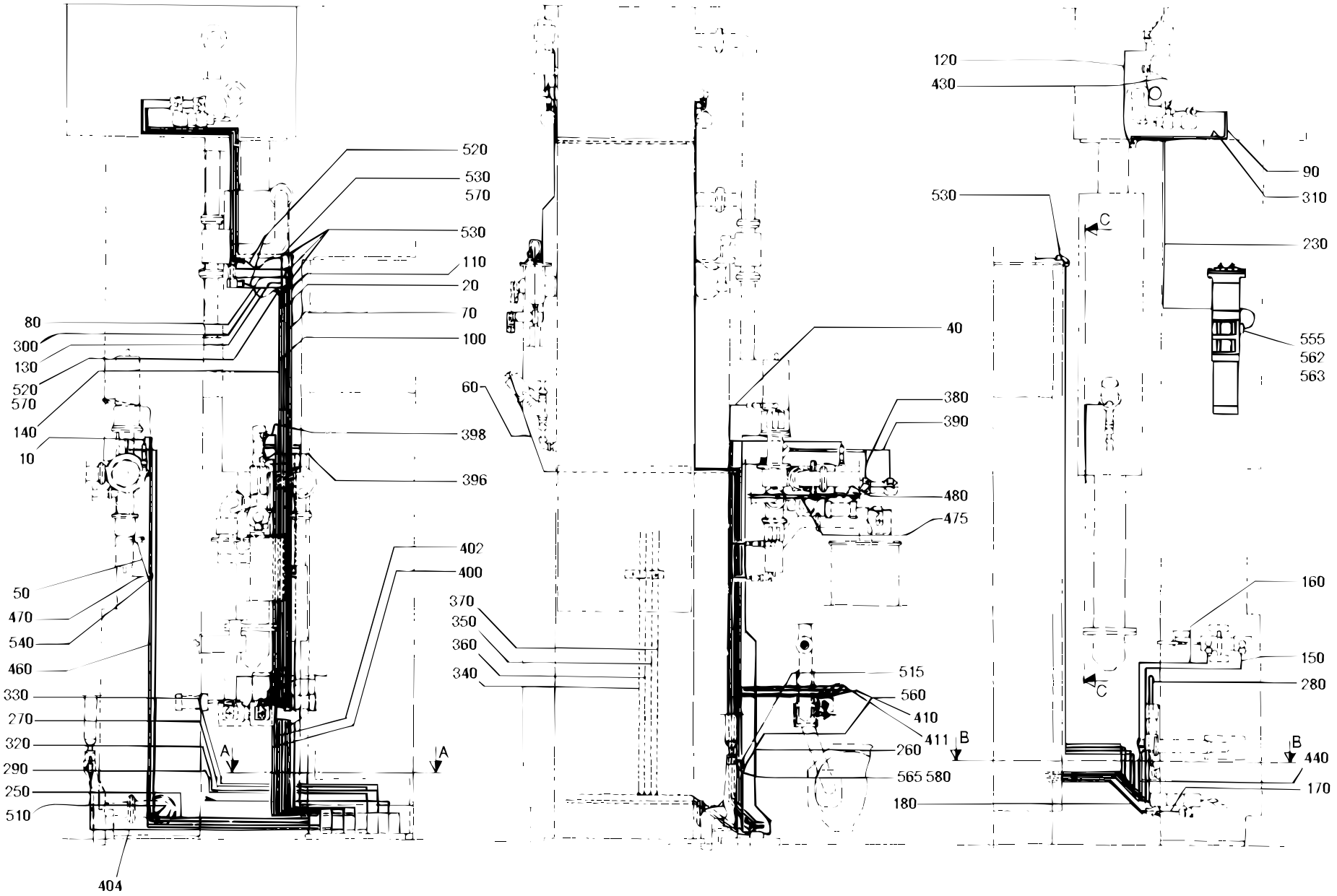

S-282805-14
ECN 20501

Pos	Part No	SP	UN	Qty	Description	Page No
PRODUCT VALVE 2"						
000	**C- 282805-0801**	**-**		**1**	**PIPE WORK-PNEUMATIC**	
010	476794-0001	-		1	PIPE	
PRODUCT VALVE 3"						
000	**C- 282805-0802**	**-**		**1**	**PIPE WORK-PNEUMATIC**	
010	476794-0002	-		1	PIPE	
Common parts						
020	532352	-		1	PIPE	
040	554850	-		1	PIPE	
050	451277	-		1	PIPE	
060	544913	-		1	PIPE	
070	532354	-		1	PIPE	
080	451280	-		1	PIPE	
090	451281	-		1	PIPE	
100	532355	-		1	PIPE	
110	532356	-		1	PIPE	
120	451284	-		1	PIPE	
130	451285	-		1	PIPE	
140	451286	-		1	PIPE	
150	451287	-		1	PIPE	
160	451288	-		1	PIPE	
170	451289	-		1	PIPE	
180	451290	-		1	PIPE	
190	451291	-		1	PIPE	
200	451292	-		1	PIPE	
230	564600	-		1	PIPE	
250	549093	-		1	PIPE	
260	560928	-		1	PIPE	
270	451296	-		1	PIPE	
280	451297	-		1	PIPE	
290	451298	-		1	PIPE	
300	451299	-		1	PIPE	
310	451300	-		1	PIPE	
320	451301	-		1	PIPE	
330	451302	-		1	PIPE	
340	451303-0001	-		1	PIPE	
350	451303-0002	-		1	PIPE	
360	451303-0003	-		1	PIPE	
370	451303-0004	-		1	PIPE	
380	451304	-		1	PIPE	
390	451305	-		1	PIPE	
396	479061	-		1	PIPE	
398	479072	-		1	PIPE	
400	479073	-		1	PIPE	
402	479074	-		1	PIPE	
404	532366	-		1	PIPE	
406	555553	-		1	PIPE	
408	555554	-		1	PIPE	
410	555547	-		1	PIPE	
411	555548	-		1	PIPE	
420	450814	-		1	HOLDER	
430	451306	-		1	PIPE	
440	451307	-		1	PIPE	
450	451326	-		1	CLAMPING PLATE	
460	554139	-		1	PIPE	
470	476796	-		1	PIPE	
475	555551	-		1	PIPE	
480	555552	-		1	PIPE	
510	90030-0096	-		1	PIPE CONNECTION	
515	90140-0021	-		1	ELBOW PIPE	
520	90166-0124	-	MM	400	HOSE	
530	90224-0309	-		12	CONNECTION	
540	90224-0310	-		7	CONNECTION	
550	90235-0048	-		1	VALVE	
553	311103-0361	-		2	CYLINDRICACP M6 6X40 RFR	
555	312105-0327	-		2	SCREW ISO 4017 M5X12A280	
560	312105-0368	-		2	SCREW O4017 M6X16A280	
562	315105-0146	-		2	WASHER BRB5,3X10RFR	
563	315204-0208	-		1	O-RING 9,3X2,4VITON	
565	315233-0109	-		1	SEAL RING R1/8"	
570	342706-0130	-		2	INSERT SLESH06	
580	90224-0307	-		1	CONNECTION	

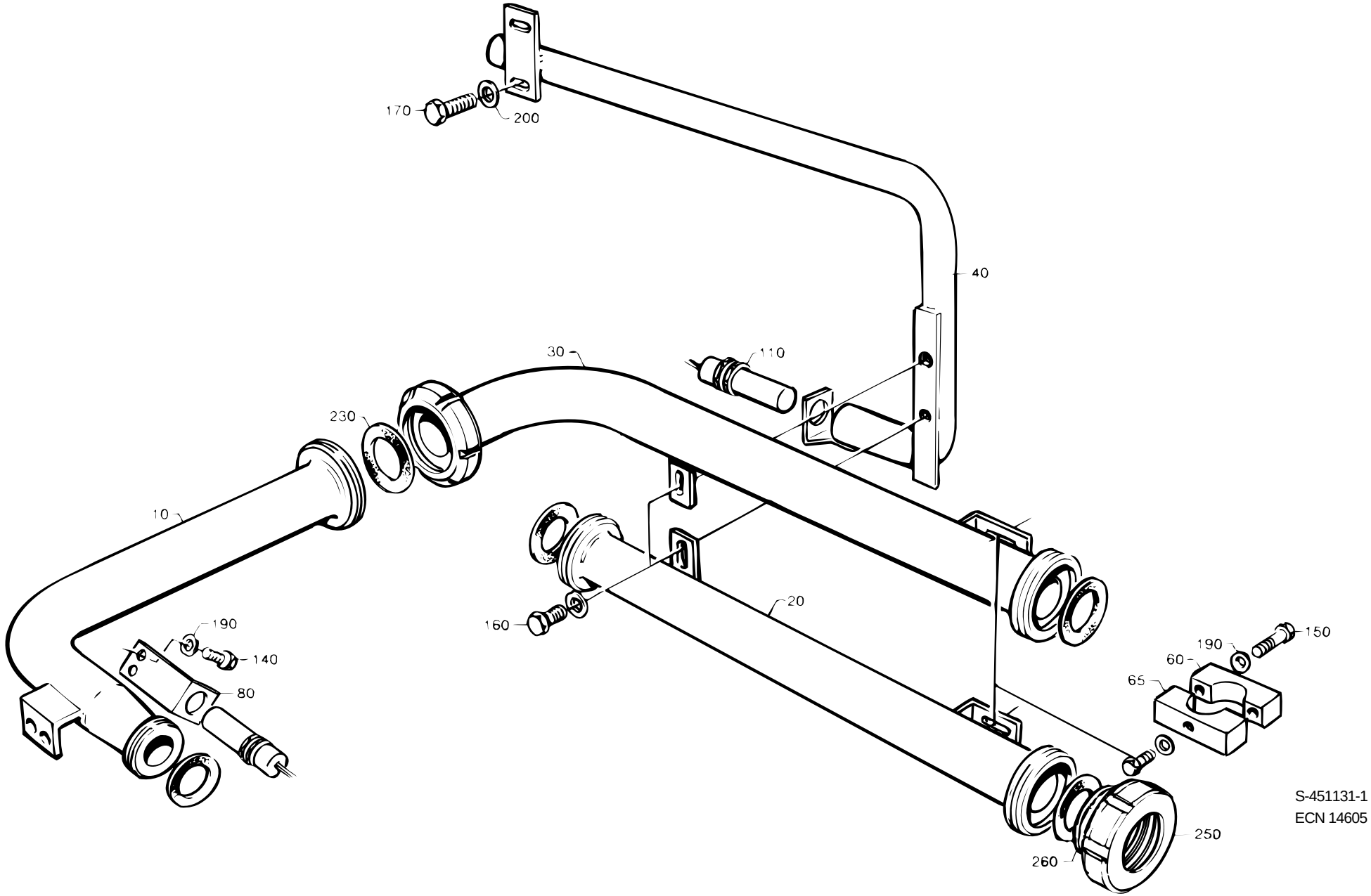
170
200
40
30
110
230
10
190
140
80
160
20
190
150
60
65
250
260
S-451131-1
ECN 14605

Pos	Part No	SP	UN	Qty	Description	Page No
-						
000	**C- 451131-0101**	**-**		**1**	**CLEANING PIPE**	
010	449964	-		1	PIPE	
020	449966	-		1	PIPE	
030	449967	-		1	PIPE	
040	450335	-		1	PIPE	
060	457614-0001	-		2	CLAMPING PIECE	
065	457614-0002	-		2	CLAMPING PIECE	
080	449960	-		1	BRACKET	
110	90044-0126	P		2	INDUCTIVE SWITCH	
140	312105-0364	-		4	SCREW M6S6X10RFR	
150	312105-0372	-		4	SCREW O4017 M6X25A280	
160	312105-0447	-		2	SCREW O4017 M8X12A280	
170	312105-0449	-		2	SCREW O4017 M8X16A280	
190	315105-0153	-		6	WASHER BRB6,4X12RFR	
200	315105-0165	-		4	WASHER BRB8,4X16RFR	
220	315250-0101	P		1	GASKET 32/25	
230	315250-0103	P		3	GASKET 48/38	
250	342803-0103	-		2	NUT 38	
260	342812-0203	-		2	SLEEVE	

Pos	Part No	SP	UN	Qty	Description	Page No

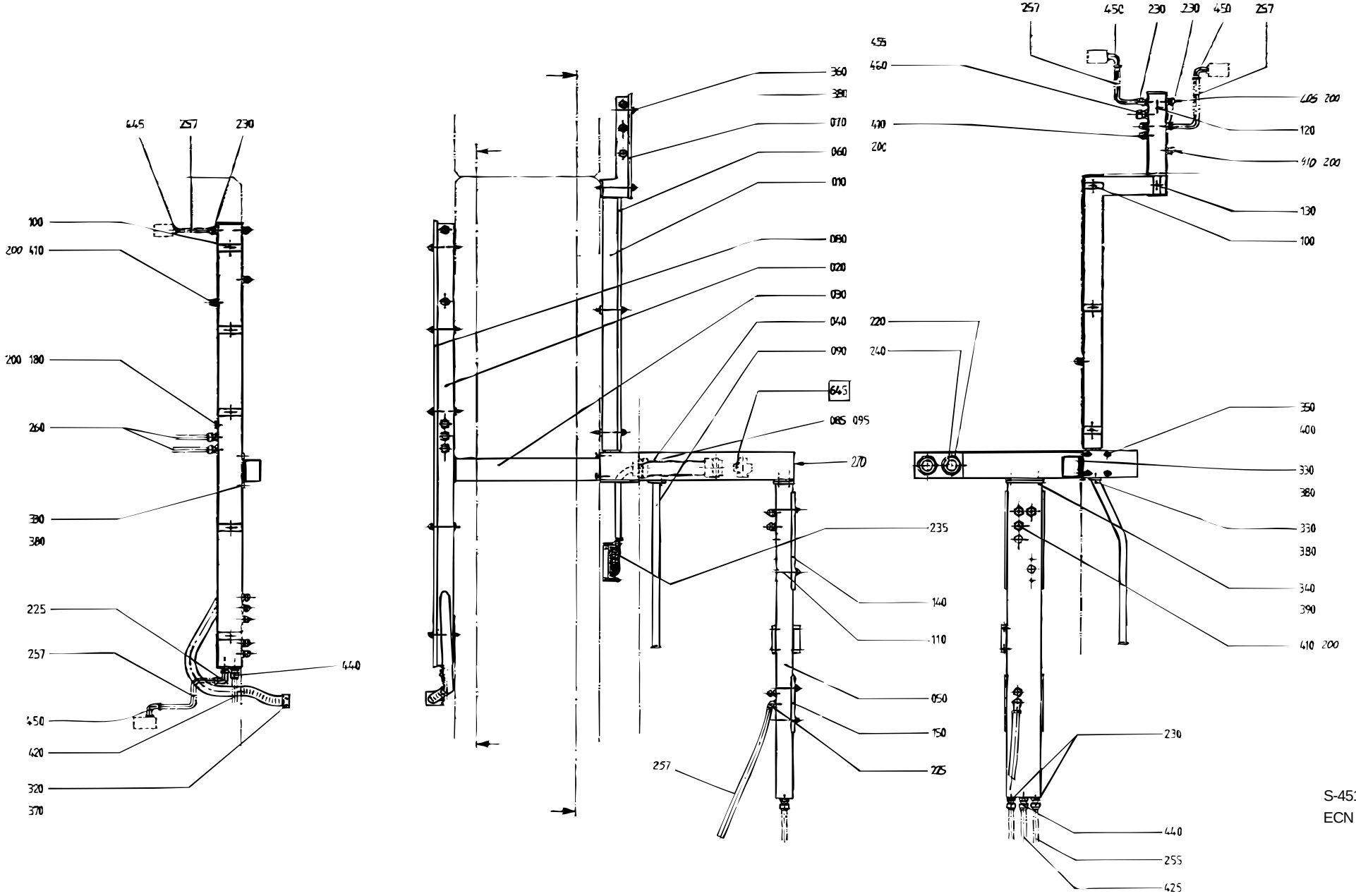

S-451342-4
ECN 22848

Pos	Part No	SP	UN	Qty	Description	Page No
-						
000	**C- 451342-0501**	**-**		**1**	**CABLE DUCT**	
010	451099	-		1	CABLE TRENCH	
020	561571	-		1	CABLE TRENCH	
030	451101	-		1	CABLE TRENCH	
030a	90143-0014	C		0	* STRIP	
030b	90153-0017	C		0	* ADHESIVE	
040	451339	-		1	BOXSTAINLESS	
040a	90143-0011	C		0	* STRIP	
040b	90153-0017	C		0	* ADHESIVE	
050	451340	-		1	CHANNELSTAINLESS	
060	451102	-		1	COVER STAINLESS	
060a	90143-0011	C		0	* STRIP	
060b	90153-0017	C		0	* ADHESIVE	
070	451103	C		1	LID	
070a	90143-0011	C		0	* STRIP	
070b	90153-0017	C		0	* ADHESIVE	
080	451104	C		1	LID	
080a	90143-0011	C		0	* STRIP	
080b	90153-0017	C		0	* ADHESIVE	
085	556682	-		1	PLATE	
090	451338	-		1	PIPE	
095	556683	-		1	GASKET	
100	451085-0002	C		8	SPACER SCREW	
110	451085-0003	C		4	SPACER SCREW	
120	451085-0004	C		1	SPACER SCREW	
130	451085-0005	C		1	SPACER SCREW	
140	451341-0001	C		1	LID	
140a	90143-0011	C		0	* STRIP	
140b	90153-0017	C		0	* ADHESIVE	
150	451341-0002	C		1	LID	
150a	90143-0011	C		0	* STRIP	
150b	90153-0017	C		0	* ADHESIVE	
180	90002-0013	-		1	BLANK-OFF PLUG 15,2	
200	90099-0001	-		22	NUT PR 15,2 BRASS	
220	90012-0059	C		4	GLAND	
225	90012-0064	-		2	GLAND	
230	90012-0063	C		7	GLAND	
235	90110-0128	-		2	PLUG 24-POL	
240	90152-0029	C	MM	500	HOSE	
255	90152-0033	C	MM	180	HOSE	
257	90152-0033	-	MM	2000	HOSE	
260	90152-0033	C	MM	480	HOSE	
270	90194-0016	-		1	SIGN "FLASH SIGN" 50X50MM	
320	312105-0287	-		2	SCREW O4017 M4X8A280	
330	312105-0364	-		6	SCREW M6S6X10RFR	
340	312115-0451	-		2	SCREW O4762 M8X20A280	
350	312105-0491	-		4	SCREW 4017 M10X20A280	
360	312705-0316	-		14	CAP NUT MHM 6 A2	
370	315105-0136	-		2	WASHER BRB4,3X8RFR	
380	315105-0153	-		20	WASHER BRB6,4X12RFR	
390	315105-0165	-		2	WASHER BRB8,4X16RFR	
400	315105-0173	-		4	WASHER BRB10,5X22RFR	
405	352103-0100	-		1	CABLE GLANR.STR 9	
410	352103-0101	C		16	CABLE GLAND ST 9	
420	352135-0106	C	MM	240	HOSE .016	
425	352135-0106	C	MM	180	HOSE .016	
440	352136-0127	C		2	GLAND FITT	
445	352136-0113	-		1	GLAND FITT	
450	352137-0113	-		3	GLAND FITTING	
455	352103-0111	-		1	CABLE GLAND ST 16;10-14MM	
460	90099-0003	-		1	NUT	
F645	C- 451365-0201	-		1	TERMINAL PLINTH	**139**

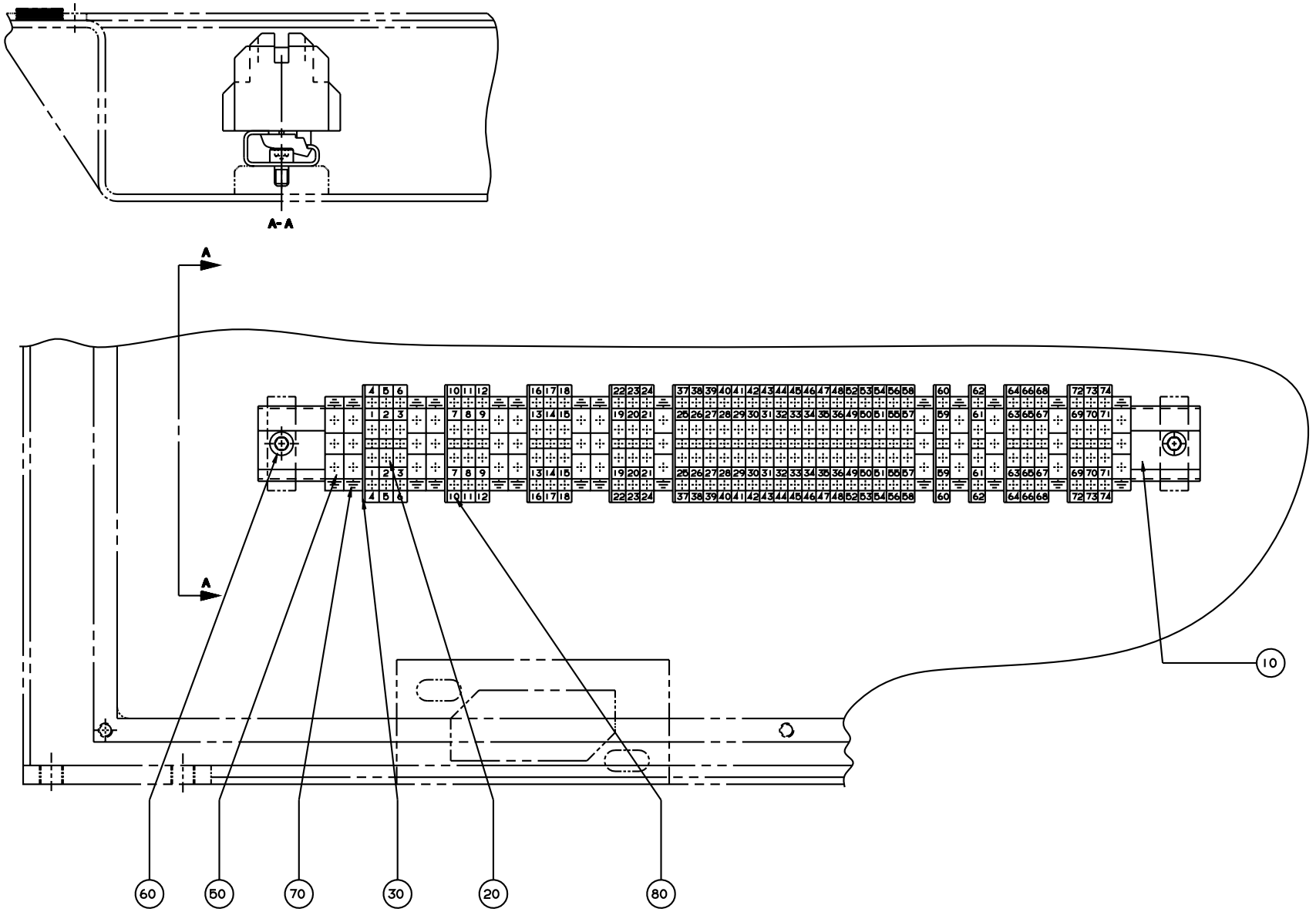

S-451365-2
ECN 14875

Pos	Part No	SP	UN	Qty	Description	Page No
-						
000	**C- 451365-0201**	**-**		**1**	**TERMINAL PLINTH**	
010	10793-0036	-		1	MOUNTINGRAIL TS32 L=400MM	
020	90077-0090	-		37	FEED THROUGH TERMINAL	
030	90077-0309	-		9	END PLATE	
050	90135-0021	-		14	EARTHING CLAMP	
060	312115-0364	-		2	SCREW 6X10 A4 80	
070	359011-0202	-		18	SIGN BOARD(GROUND)	
080	359011-0800	-		2	MARKING PLATE KITS	

Pos	Part No	SP	UN	Qty	Description	Page No

This page is intentionally left blank

Pos	Part No	SP	UN	Qty	Description	Page No
VOLUMES 1055 B, 1000 B, 750 B, 568 B, 500 B						
000	**C- 284163-0501**	**-**		**1**	**START-UP KIT**	
030	243851	-		1	GASKET	
110	232979	-		1	PRESSURE ROLLER	
115	466042	-		1	SEAL	
VOLUMES 500S, 400 B, 355 B						
000	**C- 284163-0502**	**-**		**1**	**START-UP KIT**	
030	526689	-		1	DISTRIBUTOR WING	
110	499387	-		1	PRESSURE ROLLER	
115	466089	-		1	SEAL	
VOLUME 375 S						
000	**C- 284163-0503**	**-**		**1**	**START-UP KIT**	
030	526689	-		1	DISTRIBUTOR WING	
110	499387	-		1	PRESSURE ROLLER	
115	466099	-		1	SEAL	
VOLUME 750 S						
000	**C- 284163-0504**	**-**		**1**	**START-UP KIT**	
030	526689	-		1	DISTRIBUTOR WING	
110	499387	-		1	PRESSURE ROLLER	
115	544015	-		1	SEAL	
VOLUME 1000 S						
000	**C- 284163-0505**	**-**		**1**	**START-UP KIT**	
030	569104	-		1	DISTRIBUTOR WING	
110	499387	-		1	PRESSURE ROLLER	
115	567743	-		1	SEAL	
VOLUME 1000 Sq, 500 Sq						
000	**C- 284163-0506**	**-**		**1**	**START-UP KIT**	
030	569104	-		1	DISTRIBUTOR WING	
110	499387	-		1	PRESSURE ROLLER	
115	579318	-		1	SEAL	
Common parts						
033	476358	-		1	COIL HEATER	
040	12242-0003	-		1	GASKET	
050	12242-0005	-		1	GASKET	
100	230551	-		1	GASKET	
120	531738	-		2	GASKET	
130	531739	-		1	GASKET	
140	531740	-		1	GASKET	
160	531742	-		1	GASKET	
190	531744	-		1	GASKET	
195	531745	-		1	GASKET	
200	531764	-		1	GASKET	
205	531734	-		1	GASKET	
210	90214-0138	-		2	BALL BEARING	
220	90242-0084	-		2	O-RING	
230	315204-0217	-		2	O-RING 24,2X3VITON	
F010	SP- 499255-0201	-		1	SEAL KIT **143**	

This page is intentionally left blank

Pos	Part No	SP	UN	Qty	Description	Page No
SEALING KIT, VALVE.CHANGE EVERY 1000-1200 H SERVICE						
000	**SP- 499255-0201**	**-**		**1**	**SEAL KIT**	
010	530589	-		4	SEAL RING	
020	530588	-		1	SEAL RING	
030	533169	-		1	DIAPHRAGM	
060	90207-0363	-		1	GASKET	
070	90207-0365	-		1	GASKET	
080	539212	-		1	GASKET	
100	315204-0215	-		4	O-RING 19,2X3VITON	
110	315202-0301	-		1	O-RING 49,5X3	
SEALING KIT, AIR CYLINDER "A" AND "C".NOTE! THE KIT CONTENTS SEALING FOR ONE AIR CYLINDER						
000	**SP- 499255-0202**	**-**		**1**	**SEAL KIT**	
050	90020-0028	-		2	SLEEVE	
100	315204-0215	-		4	O-RING 19,2X3VITON	
120	315202-0308	-		1	O-RING 84,5X3	
SEALING KIT, AIR CYLINDER "B"						
000	**SP- 499255-0203**	**-**		**1**	**SEAL KIT**	
040	90020-0027	-		2	SLEEVE	
090	315202-0304	-		1	O-RING 64,5X3	
100	315204-0215	-		5	O-RING 19,2X3VITON	

Pos	Part No	SP	UN	Qty	Description	Page No

Tetra Pak

SPC

Spare Parts Catalogue

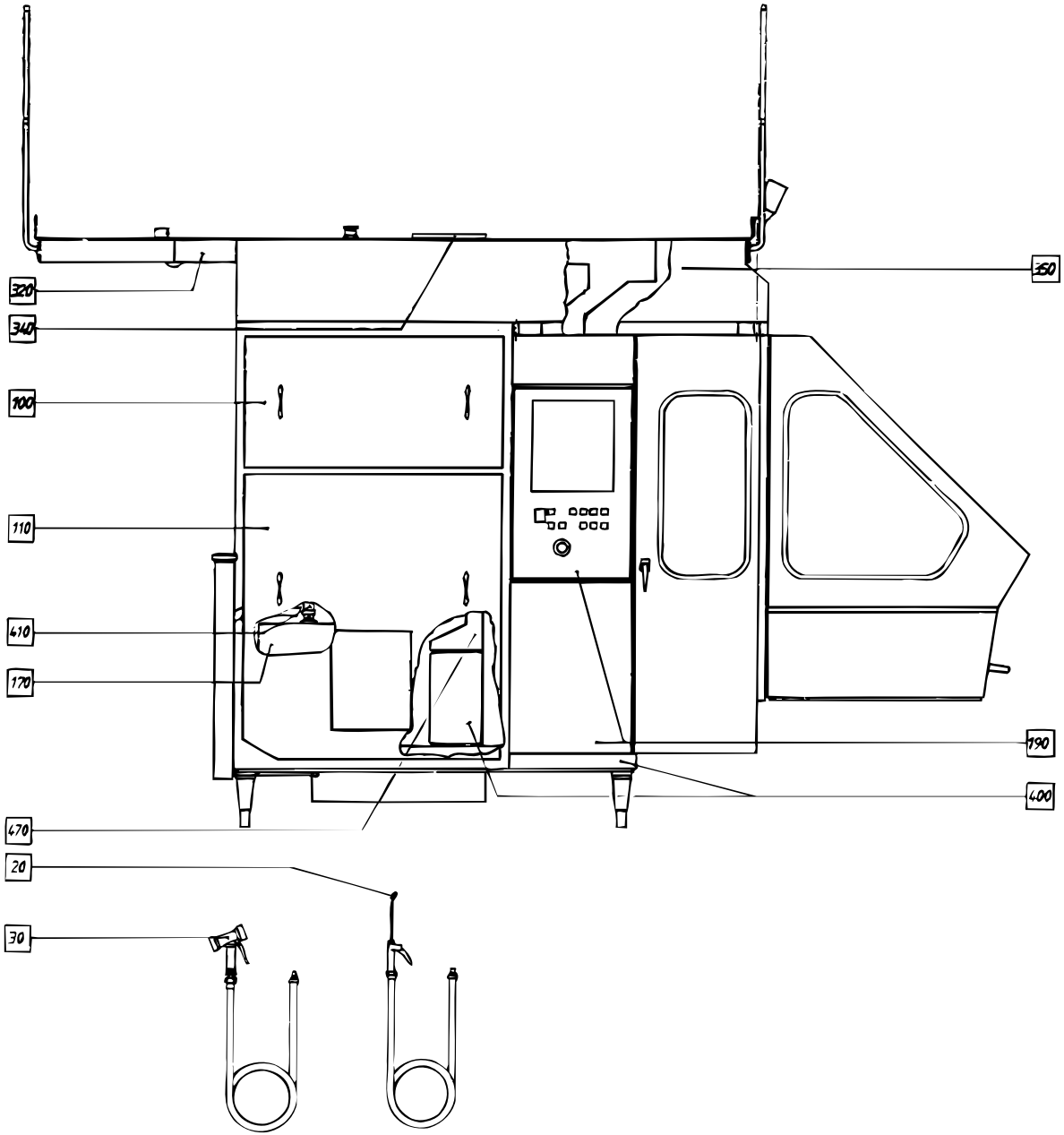
350
320
340
100
110
410
170
190
400
470
20
30

Pos	Part No	SP	UN	Qty	Description	Page No
-						
000	**B- 648012-080V**	**-**		**1**	**MACHINE BODY**	
F020	C- 230922-0101	C		1	AIR JET GUN	**151**
F030	C- 493614-0101	C		1	SPRAY GUN	**153**
F050	C- 265889-0301	-		1	SWITCH (MONITOR)	**155**
F065	C- 268015-0101	-		1	BENDING ROLLER BRACKET	**157**
F070	C- 269301-0501	-		1	BOX	**159**
F100	C- 269322-0301	-		1	COVER UPPER	**161**
F110	C- 269324-040V	-		1	HATCH	**163**
F140	C- 279979-0501	-		1	CENTRAL LUBRICATION	**165**
F160	C- 282604-0201	-		1	START-UP KIT MACHINE BODY	**167**
F170	C- 561256-0301	-		1	PEROXIDE PIPE	**169**
	C- 266550-0401	-		-	. FILTER HOUSING	**171**
	C- 527898-0101	-		-	. CONTAINER	**173**
	C- 560922-0101	-		-	. VALVE PANEL	**175**
	C- 561257-020V	-		-	. PEROXIDE TANK	**177**
	C- 292451-050V	-		-	. . PEROXIDE PUMP	**179**
	C- 566196-0101	-		-	. . LID WITH WEIGHT	**181**
	C- 561258-0201	-		-	. DRAINING PEROXIDE	**183**
	C- 566196-0101	-		-	. . LID WITH WEIGHT	**181**
	C- 561259-0101	-		-	. CONNECTION HOUSING	**185**
F190	C- 545099-0201	-		1	SIDE GUARD	**187**
F210	C- 545100-0201	-		1	SIDE GUARD, RIGHT	**189**
F230	C- 297808-0501	-		1	CLEANING EQUIPMENT	**191**
	C- 476884-0201	-		-	. CLEANING HEAD	**193**
	C- 476887-0201	-		-	. CLEANING HEAD	**197**
F260	C- 297604-0401	-		1	HOOD	**199**
	C- 476885-0201	-		-	. CLEANING HEAD	**201**
	C- 476886-0201	-		-	. CLEANING HEAD	**203**
F280	C- 434707-030V	-		1	HYDRAULIC SYSTEM	**205**
	C- 276343-0301	-		-	. LID	**207**
	C- 442077-0201	-		-	. DECREASE OF PRESSURE	**209**
F310	C- 440098-0301	-		1	CRANK BRACKET	**211**
F320	C- 440384-050V	-		1	PLATFORM	**213**
F330	C- 440415-0201	-		1	TRANSFORMER	**215**
F340	C- 440422-060V	-		1	BOTTOM PLATE	**217**
F350	C- 440437-030V	-		1	BOX LEFT	**219**
	C- 566683-0101	-		-	. AIR COOLER	**221**
F390	C- 440474-010V	-		1	TUBE FLUSHING DEVICE	**223**
F400	C- 440537-050V	-		1	MACHINE BODY	**225**
	C- 540723-010V	-		-	. CONNECTION BOX	**231**
F410	C- 442463-0401	-		1	PIPE WORK	**233**
F420	C- 445537-020V	-		1	PIPE WORK-HYDRAULIC	**235**
F430	C- 575392-010V	-		1	VALVE PANEL LOWER	**237**
F440	C- 574601-010V	-		1	VALVE PANEL	**241**
F450	C- 449930-0501	-		1	CONNECTION BOX	**245**
F455	C- 449168-0301	-		1	CLEANING SYSTEM	**247**
	C- 476885-0202	-		-	. CLEANING HEAD	**201**
F460	C- 449932-050V	-		1	PIPE WORK-WATER	**249**
F470	C- 450293-050V	-		1	CABLE DUCT	**253**
F490	C- 575797-010V	-		1	FLOWMETER GROUP	**255**
F510	C- 450788-060V	-		1	PIPE WORK-PNEUMATIC	**257**
F520	C- 450792-0101	S		1	DETERGENT PUMP	**265**
F530	C- 450824-0201	-		1	DOOR	**267**
F540	C- 450840-0401	-		1	LIFTING UNIT	**269**
	C- 476884-0202	-		-	. CLEANING HEAD	**193**
F560	C- 450883-040V	-		1	PROTECTION	**271**
	C- 543157-030V	-		-	. HOLDER	**273**
F570	C- 451348-0202	-		1	CONNECTION BOX	**275**
	C- 68917-0101	-		-	. ANGLE INDICATOR	**277**

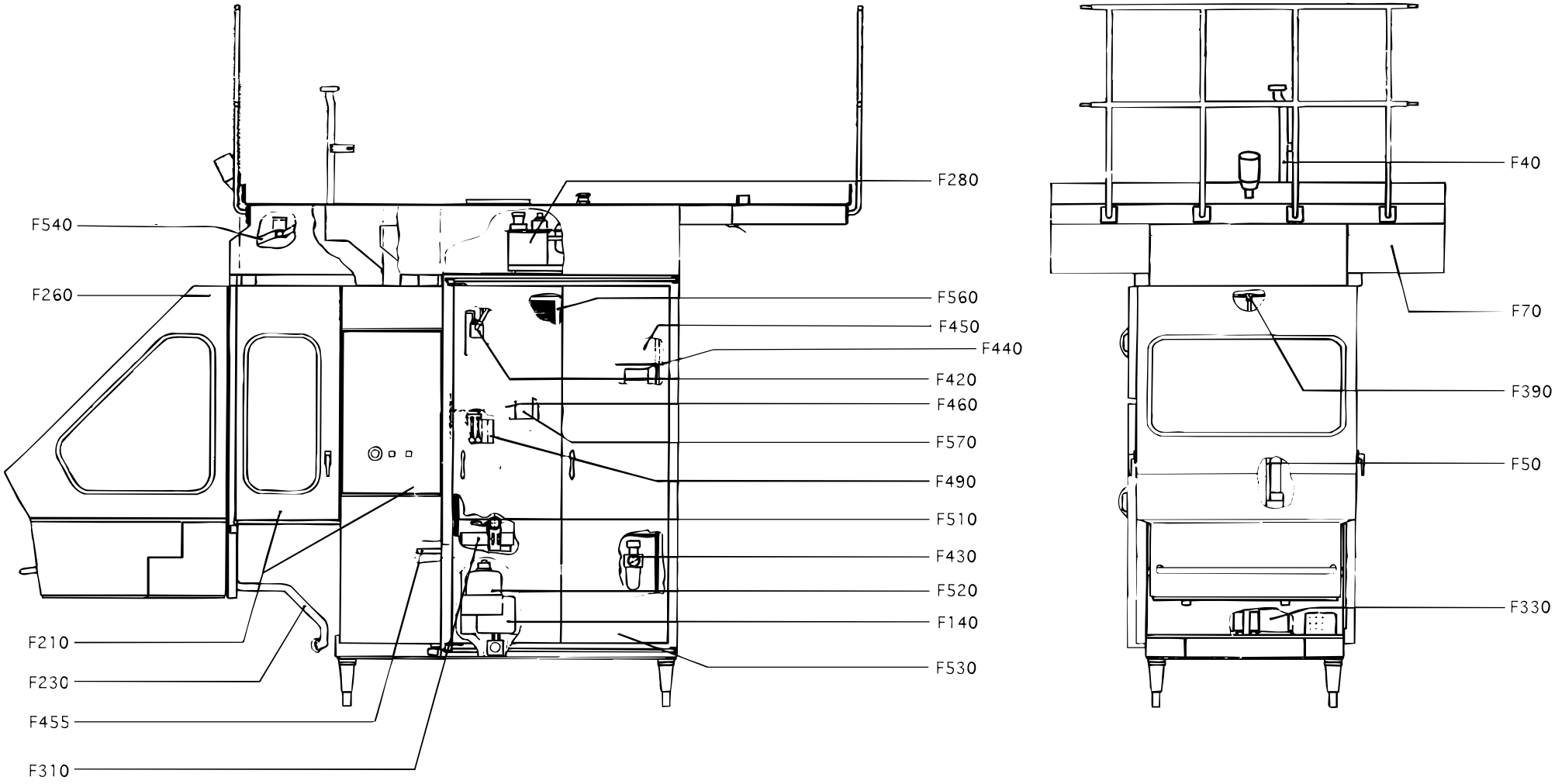

S-648012-12
ECN 22773

Pos	Part No	SP	UN	Qty	Description	Page No
-						
000	**B- 648012-080V**	**-**		**1**	**MACHINE BODY**	
F020	C- 230922-0101	C		1	AIR JET GUN	**151**
F030	C- 493614-0101	C		1	SPRAY GUN	**153**
F050	C- 265889-0301	-		1	SWITCH (MONITOR)	**155**
F065	C- 268015-0101	-		1	BENDING ROLLER BRACKET	**157**
F070	C- 269301-0501	-		1	BOX	**159**
F100	C- 269322-0301	-		1	COVER UPPER	**161**
F110	C- 269324-040V	-		1	HATCH	**163**
F140	C- 279979-0501	-		1	CENTRAL LUBRICATION	**165**
F160	C- 282604-0201	-		1	START-UP KIT MACHINE BODY	**167**
F170	C- 561256-0301	-		1	PEROXIDE PIPE	**169**
	C- 266550-0401	-		-	. FILTER HOUSING	**171**
	C- 527898-0101	-		-	. CONTAINER	**173**
	C- 560922-0101	-		-	. VALVE PANEL	**175**
	C- 561257-020V	-		-	. PEROXIDE TANK	**177**
	C- 292451-050V	-		-	. . PEROXIDE PUMP	**179**
	C- 566196-0101	-		-	. . LID WITH WEIGHT	**181**
	C- 561258-0201	-		-	. DRAINING PEROXIDE	**183**
	C- 566196-0101	-		-	. . LID WITH WEIGHT	**181**
	C- 561259-0101	-		-	. CONNECTION HOUSING	**185**
F190	C- 545099-0201	-		1	SIDE GUARD	**187**
F210	C- 545100-0201	-		1	SIDE GUARD, RIGHT	**189**
F230	C- 297808-0501	-		1	CLEANING EQUIPMENT	**191**
	C- 476884-0201	-		-	. CLEANING HEAD	**193**
	C- 476887-0201	-		-	. CLEANING HEAD	**197**
F260	C- 297604-0401	-		1	HOOD	**199**
	C- 476885-0201	-		-	. CLEANING HEAD	**201**
	C- 476886-0201	-		-	. CLEANING HEAD	**203**
F280	C- 434707-030V	-		1	HYDRAULIC SYSTEM	**205**
	C- 276343-0301	-		-	. LID	**207**
	C- 442077-0201	-		-	. DECREASE OF PRESSURE	**209**
F310	C- 440098-0301	-		1	CRANK BRACKET	**211**
F320	C- 440384-050V	-		1	PLATFORM	**213**
F330	C- 440415-0201	-		1	TRANSFORMER	**215**
F340	C- 440422-060V	-		1	BOTTOM PLATE	**217**
F350	C- 440437-030V	-		1	BOX LEFT	**219**
	C- 566683-0101	-		-	. AIR COOLER	**221**
F390	C- 440474-010V	-		1	TUBE FLUSHING DEVICE	**223**
F400	C- 440537-050V	-		1	MACHINE BODY	**225**
	C- 540723-010V	-		-	. CONNECTION BOX	**231**
F410	C- 442463-0401	-		1	PIPE WORK	**233**
F420	C- 445537-020V	-		1	PIPE WORK-HYDRAULIC	**235**
F430	C- 575392-010V	-		1	VALVE PANEL LOWER	**237**
F440	C- 574601-010V	-		1	VALVE PANEL	**241**
F450	C- 449930-0501	-		1	CONNECTION BOX	**245**
F455	C- 449168-0301	-		1	CLEANING SYSTEM	**247**
	C- 476885-0202	-		-	. CLEANING HEAD	**201**
F460	C- 449932-050V	-		1	PIPE WORK-WATER	**249**
F470	C- 450293-050V	-		1	CABLE DUCT	**253**
F490	C- 575797-010V	-		1	FLOWMETER GROUP	**255**
F510	C- 450788-060V	-		1	PIPE WORK-PNEUMATIC	**257**
F520	C- 450792-0101	S		1	DETERGENT PUMP	**265**
F530	C- 450824-0201	-		1	DOOR	**267**
F540	C- 450840-0401	-		1	LIFTING UNIT	**269**
	C- 476884-0202	-		-	. CLEANING HEAD	**193**
F560	C- 450883-040V	-		1	PROTECTION	**271**
	C- 543157-030V	-		-	. HOLDER	**273**
F570	C- 451348-0202	-		1	CONNECTION BOX	**275**
	C- 68917-0101	-		-	. ANGLE INDICATOR	**277**

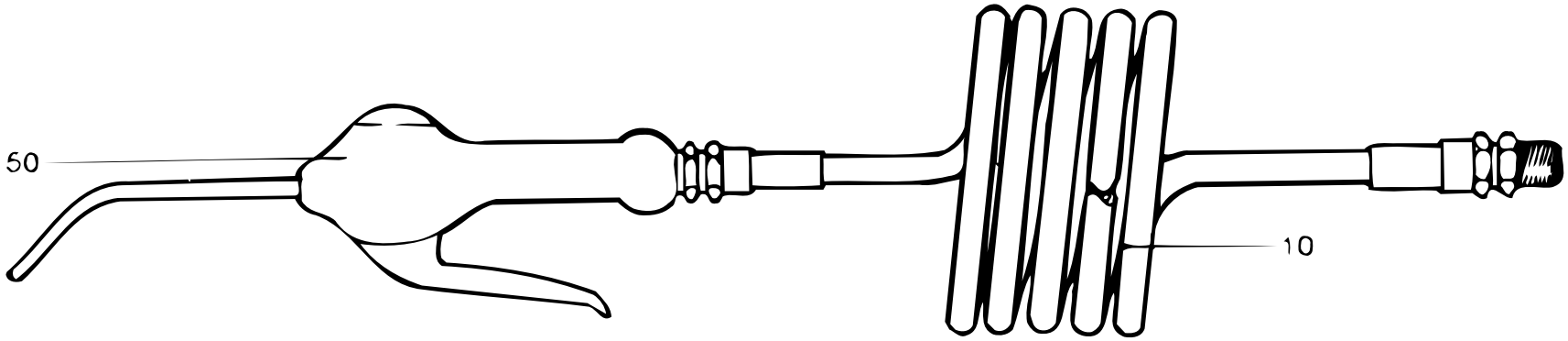
50
10

Pos	Part No	SP	UN	Qty	Description	Page No
-						
000	**C- 230922-0101**	**C**		**1**	**AIR JET GUN**	
010	90152-0016	S		1	HOSE	
050	90243-0061	S		1	FAN NOZZLE	

Pos	Part No	SP	UN	Qty	Description	Page No

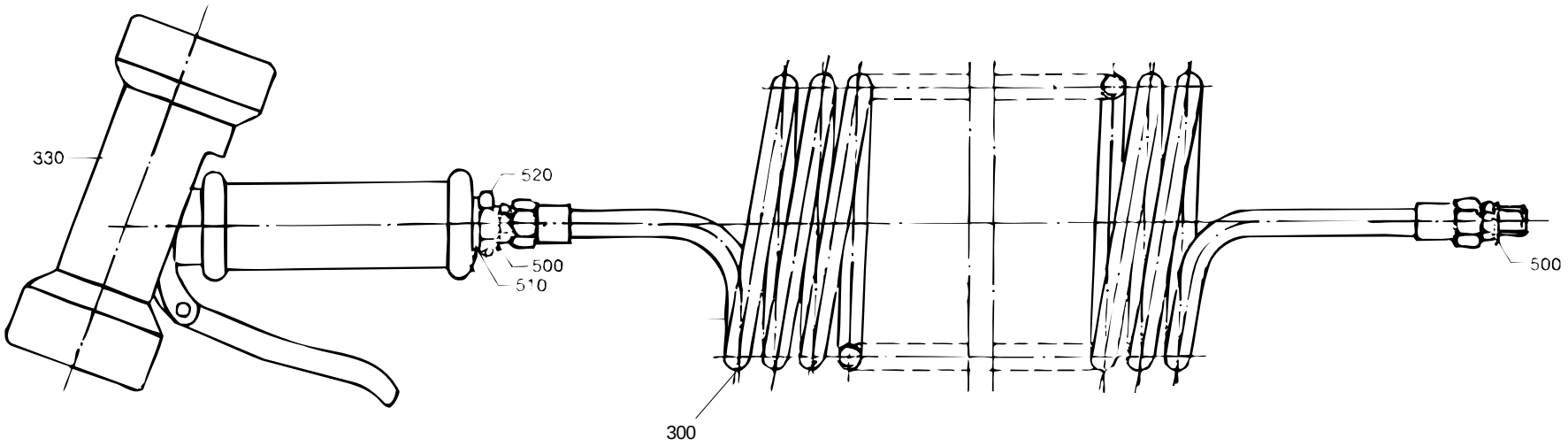
330
520
500
510
300
500

Pos	Part No	SP	UN	Qty	Description	Page No
-						
000	**C- 493614-0101**	**C**		**1**	**SPRAY GUN**	
300	90152-0017	S		1	HOSE	
330	90426-0003	S		1	HAND SHOWER	
500	315233-0110	-		2	SEAL RING R1/4"	
510	315233-0113	-		1	SEAL RING R1/2"	
520	342701-0205	-		1	BUSHING RNI1/2"-1/4"	

Pos	Part No	SP	UN	Qty	Description	Page No

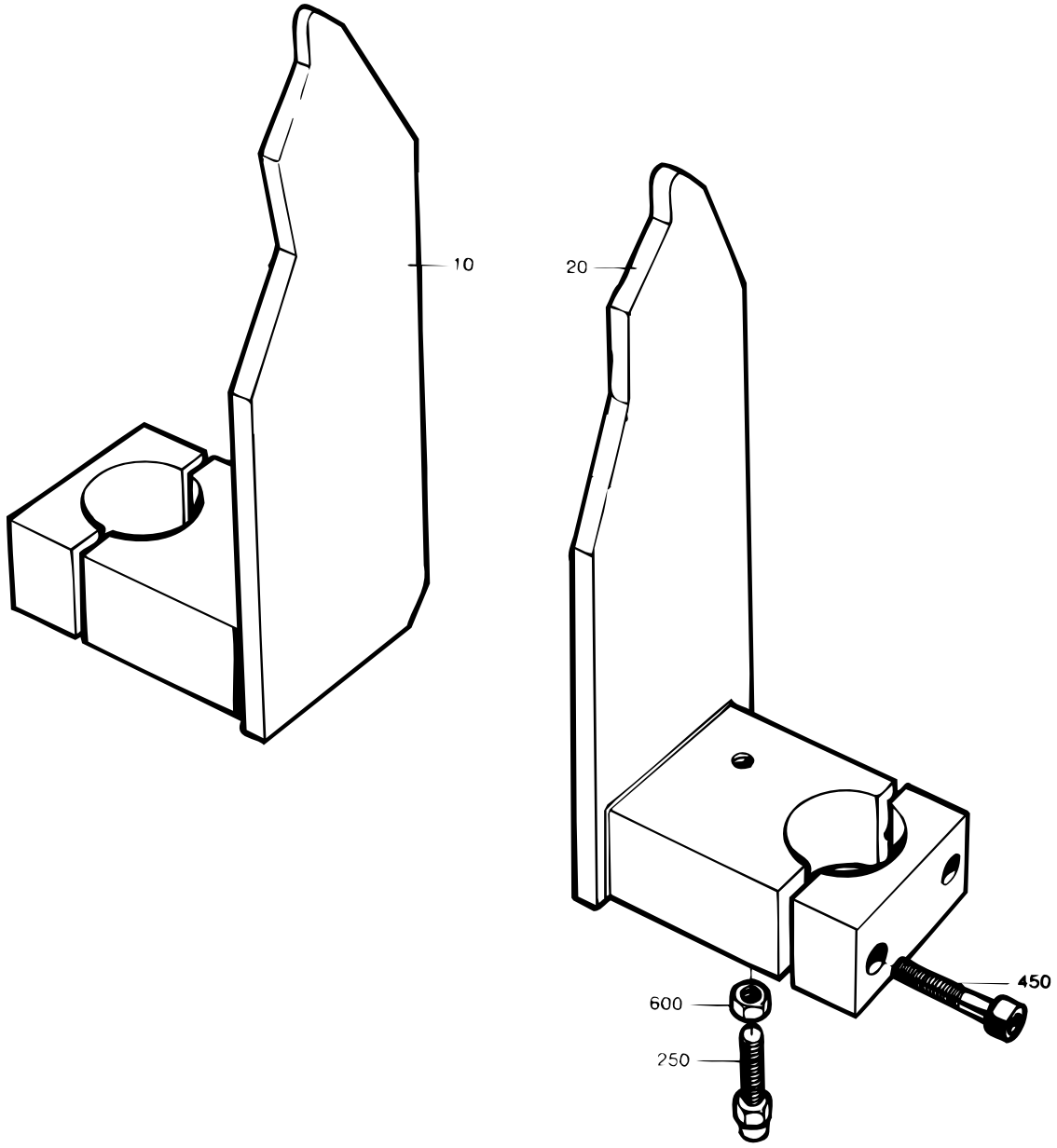

S-265889-3
ECN 12311

Pos	Part No	SP	UN	Qty	Description	Page No
-						
000	**C- 265889-0301**	**-**		**1**	**SWITCH (MONITOR)**	
010	532319	-		1	CATCH GUARD LEFT	
020	532318	-		1	CATCH GUARD RIGHT	
250	268746	-		2	SCREW	
450	312111-0459	-		4	SCREW MC6S8X40FZB	
600	312605-0318	-		2	NUT M6M8RFR	

Pos	Part No	SP	UN	Qty	Description	Page No

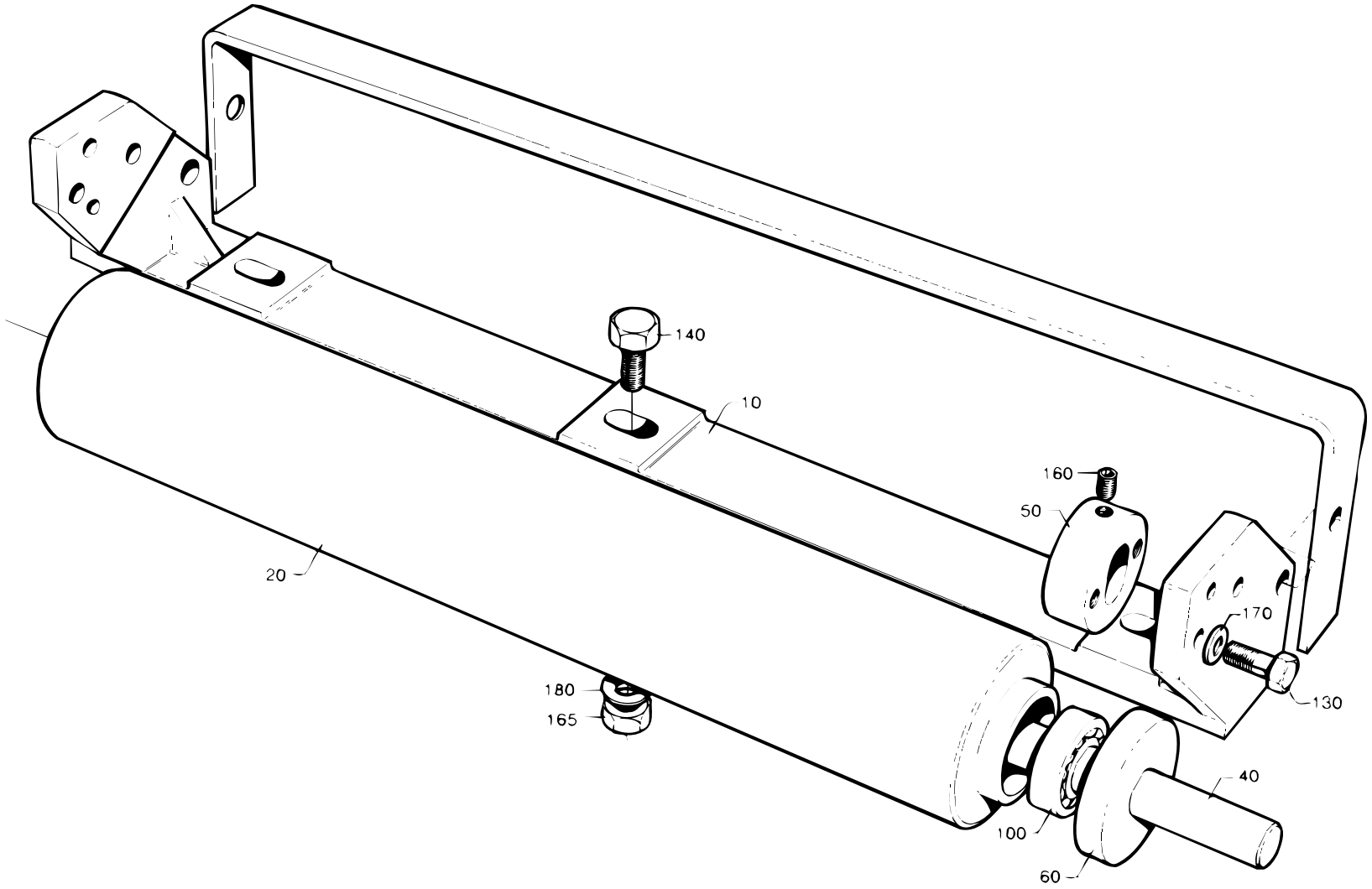

S-268015-1
ECN 20095

Pos	Part No	SP	UN	Qty	Description	Page No
-						
000	**C- 268015-0101**	**-**		**1**	**BENDING ROLLER BRACKET**	
010	259760	-		1	BENDING ROLLER BRACKET	
020	265564	-		1	BENDING ROLLER	
040	265566-0001	-		1	SHAFT	
050	265567	-		2	BEARING UNIT	
060	265568	-		2	DUST COVER	
100	90214-0098	S		2	BALL BEARING	
120	311303-0310	-		2	SLOTTED PIRPB5X20FZB	
130	312101-0370	-		4	SCREW M6S6X20FZB	
140	312101-0453	-		3	SCREW M6S8X25FZB	
160	312318-0364	-		4	STOP SCREW SK6SS6X10RFR	
165	312601-0318	-		3	NUT M6M8FZB	
170	315101-0153	-		4	WASHER BRB6,4X12FZB	
180	315101-0165	-		6	WASHER BRB8,4X16FZB	

Pos	Part No	SP	UN	Qty	Description	Page No

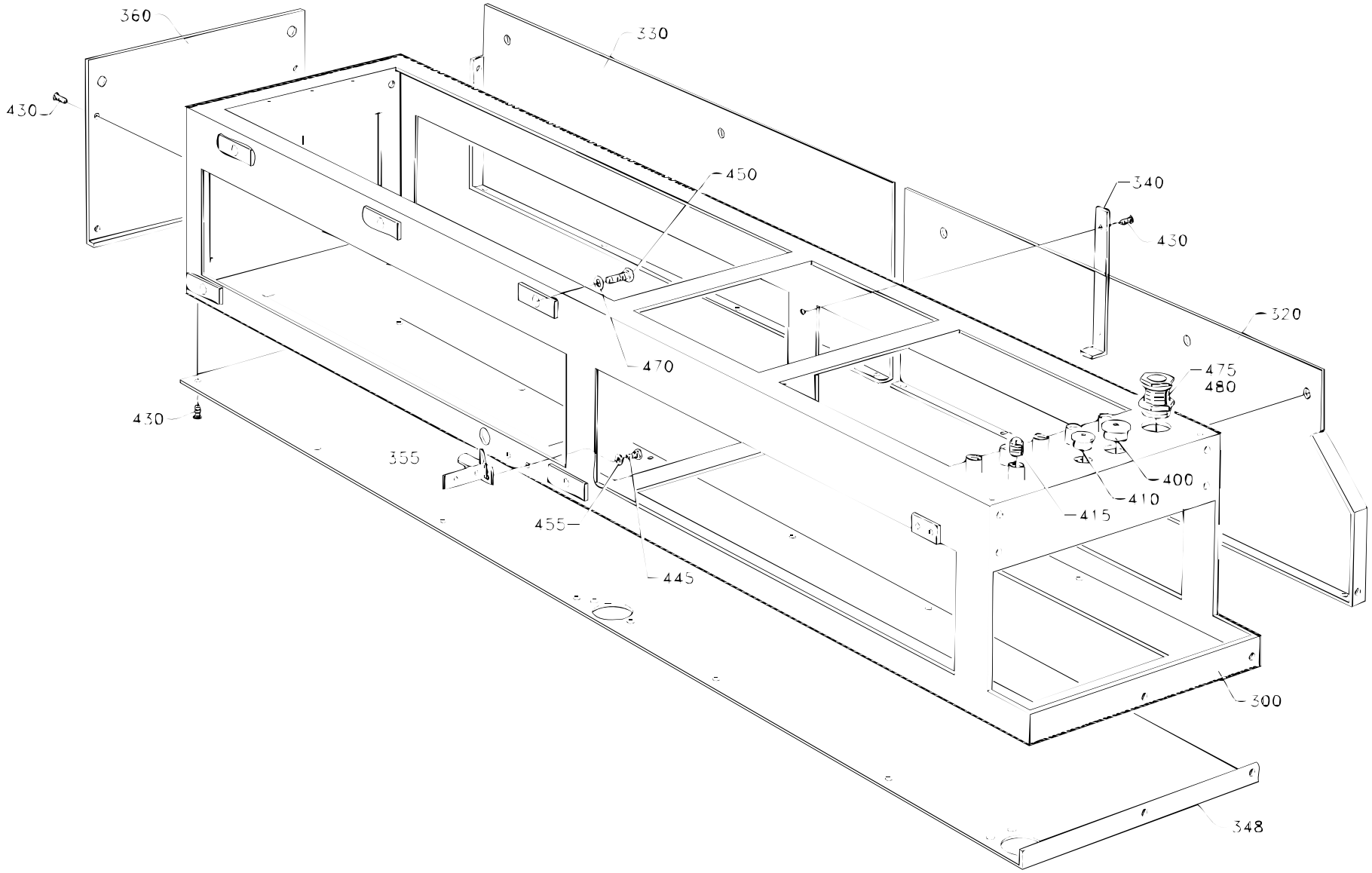

S-269301-5
ECN 16071

Pos	Part No	SP	UN	Qty	Description	Page No
-						
000	**C- 269301-0501**	**-**		**1**	**BOX**	
300	560797	-		1	SIDE PIECE	
320	564521	-		1	SIDE PLATE	
330	564522	-		1	SIDE PLATE	
340	564523	-		1	RIM	
348	548343	-		1	BOTTOM PANEL	
355	561423	-		1	BRACKET	
360	542695	-		1	COVERPLATE R	
400	90002-0010	-		1	BLANK-OFF PLUG PR37	
410	90002-0012	-		1	BLANK-OFF PLUG PR28,3	
415	90087-0002	-		3	PIPE PLUG	
430	90287-0075	-		33	SCREW	
445	312105-0366	-		2	SCREW O4017 M6X12A280	
450	312101-0540	-		5	SCREW M6S12X40FZB	
455	315101-0153	-		2	WASHER BRB6,4X12FZB	
470	315101-0178	-		5	WASHER BRB13X24FZB	
475	352100-0126	-		1	CABLE GLANR.47-32,5	
480	352100-0227	-		1	CABLE GLANR.31-34,5	

Pos	Part No	SP	UN	Qty	Description	Page No

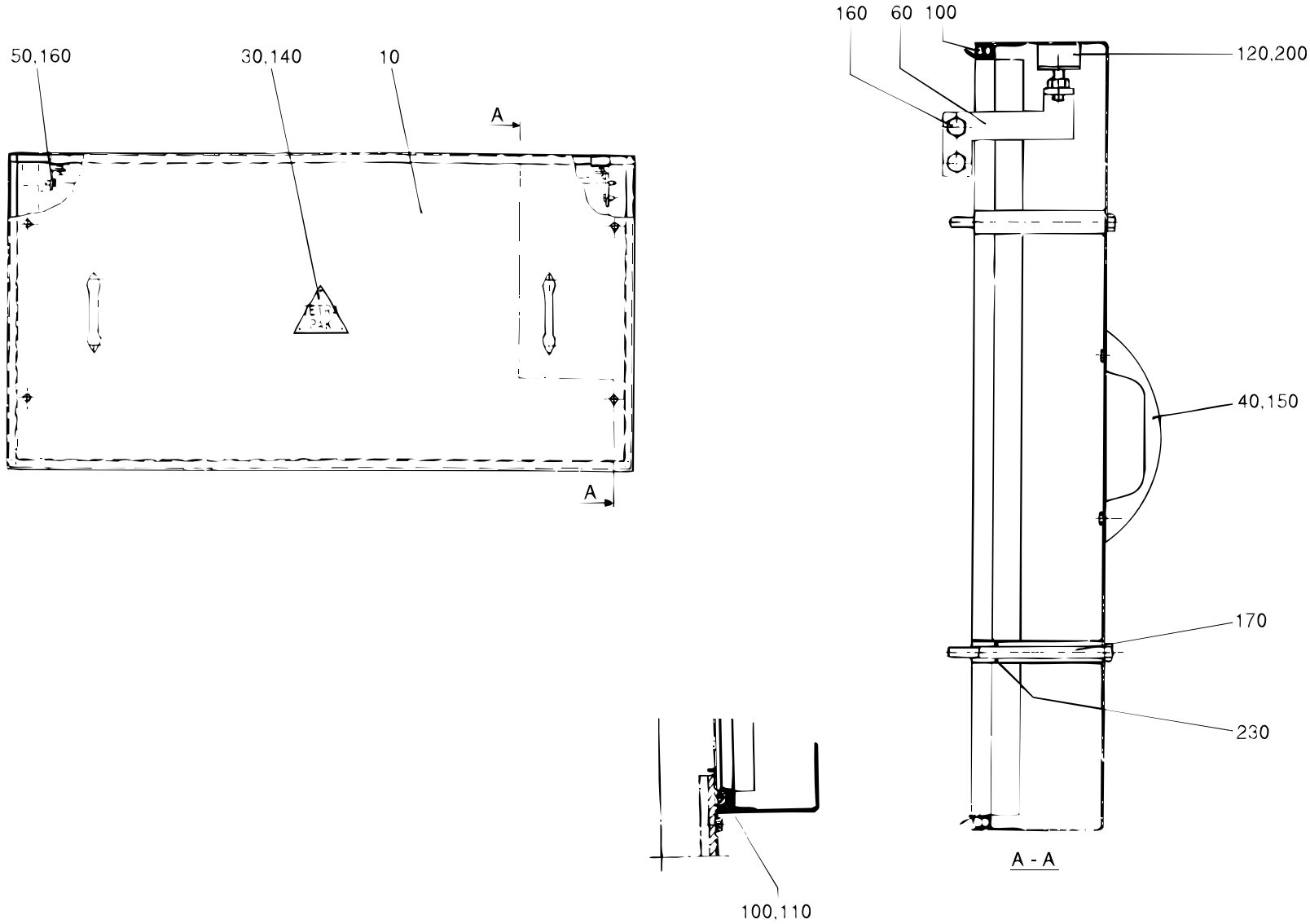
50,160
30,140
10
A
A
160
60
100
120,200
40,150
170
230
A - A
100,110

Pos	Part No	SP	UN	Qty	Description	Page No
-						
000	**C- 269322-0301**	**-**		**1**	**COVER UPPER**	
010	549045	-		1	HATCH	
030	574658	-		1	LOGOTYPE TP	
040	7309	-		2	HANDLE	
050	282507	-		1	BRACKET LEFT	
060	450869	-		1	BRACKET RIGHT	
100	90143-0049	S	MM	4000	RUBBERSTRIP 11X21MM	
120	90347-0004	-		2	VIBRATION DAMPER	
140	311520-0420	-		4	BLANK RIVE3,2X4	
150	312101-0364	-		4	SCREW	
160	312101-0449	-		4	SCREW M6S8X16FZB	
170	312101-0473	-		4	SCREW M6S8X110FZB	
200	312601-0318	-		2	NUT M6M8FZB	
230	315202-0206	-		4	O-RING 7,3X2,4	

Pos	Part No	SP	UN	Qty	Description	Page No

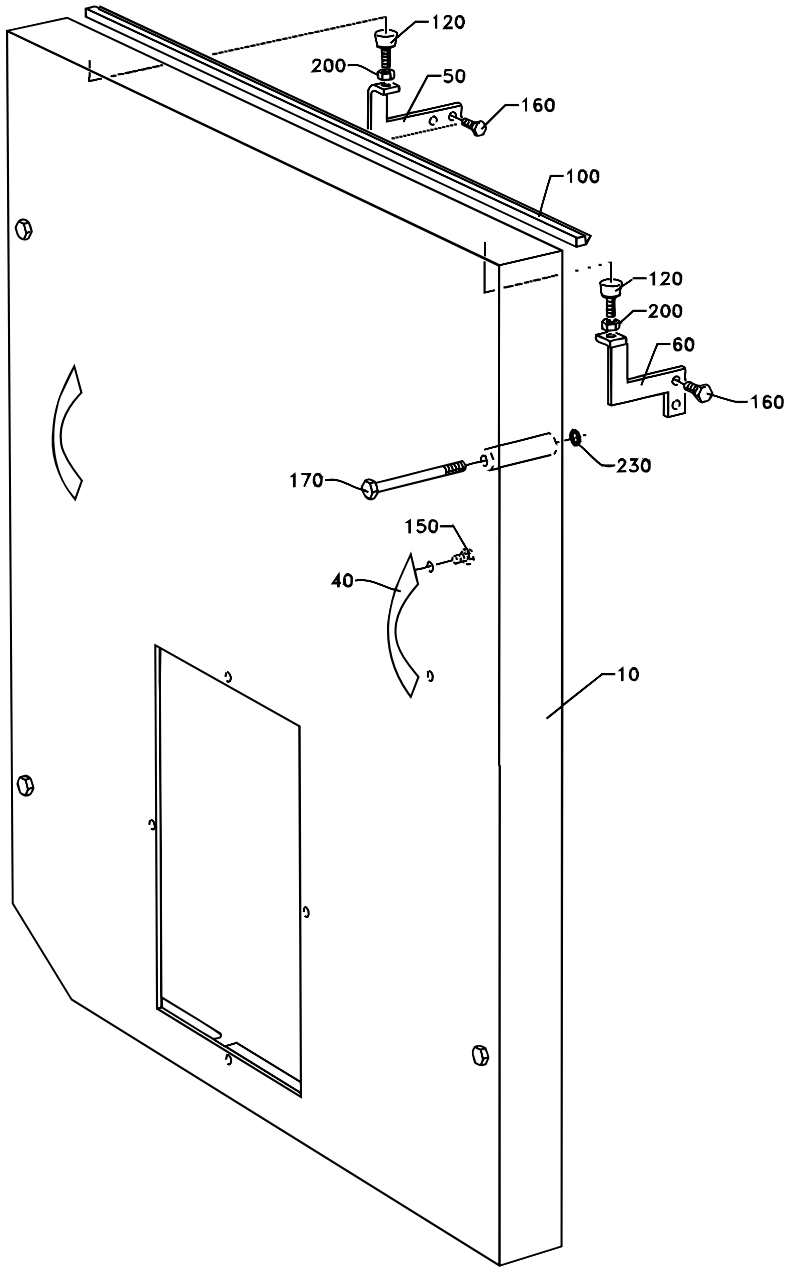
120
200
50
160
100
120
200
60
160
170
230
150
40
10

Pos	Part No	SP	UN	Qty	Description	Page No
-						
000	**C- 269324-040V**	**-**		**1**	**HATCH**	
010	560880	-		1	HATCH	
040	7309	-		2	HANDLE	
050	282507	-		1	BRACKET LEFT	
060	450869	-		1	BRACKET RIGHT	
100	90143-0049	S	MM	5000	RUBBERSTRIP 11X21MM	
120	90347-0004	-		2	VIBRATION DAMPER	
150	312101-0364	-		4	SCREW	
160	312101-0449	-		4	SCREW M6S8X16FZB	
170	312101-0473	-		4	SCREW M6S8X110FZB	
200	312601-0318	-		2	NUT M6M8FZB	
230	315202-0206	-		4	O-RING 7,3X2,4	

Pos	Part No	SP	UN	Qty	Description	Page No

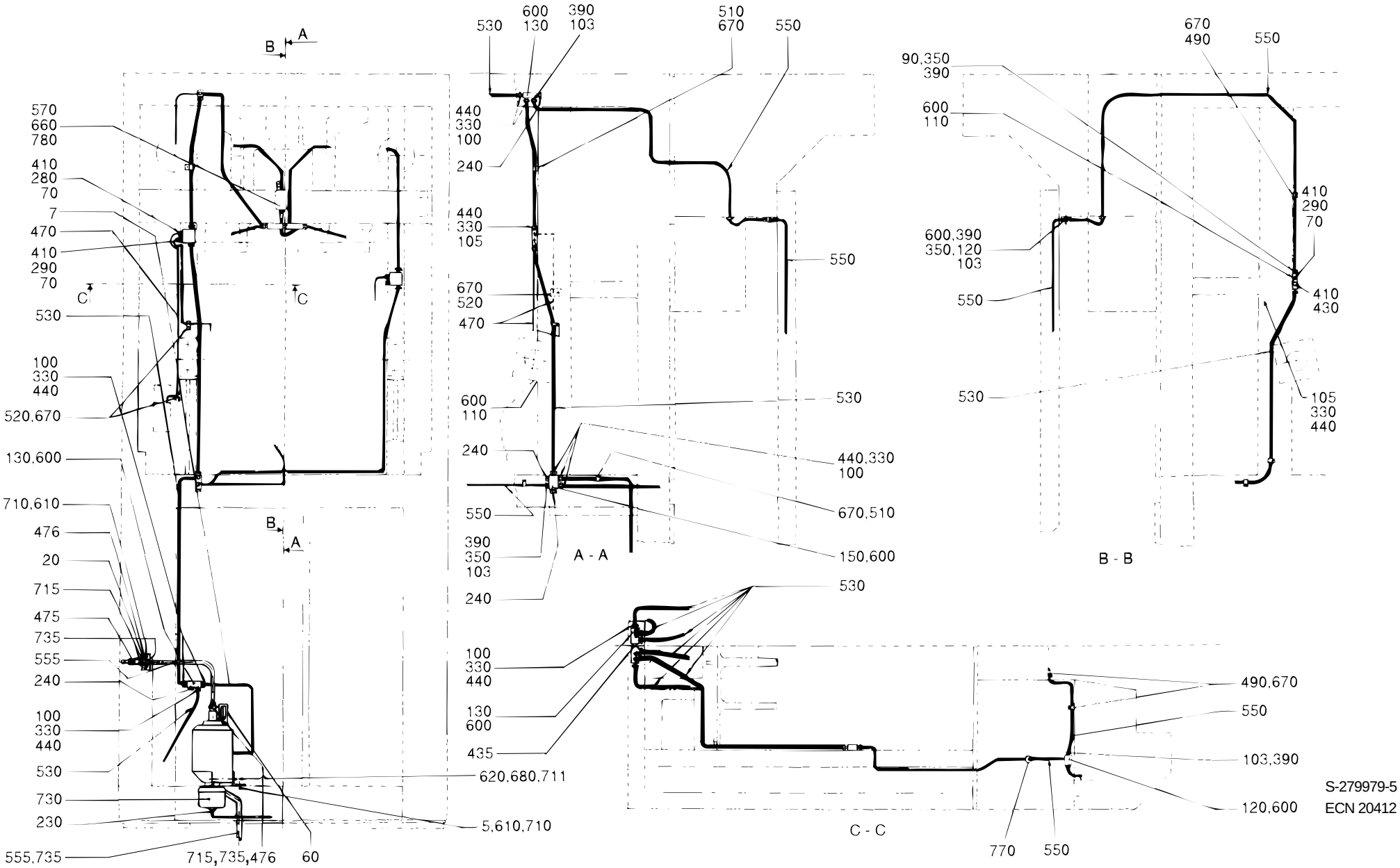
B
A
570
660
780
410
280
70
7
470
410
290
70
C
C
530
100
330
440
520,670
130,600
710,610
476
20
715
475
735
555
240
100
330
440
530
730
230
555,735
715,735,476
60
620,680,711
5,610,710
530
600
130
390
103
510
670
550
440
330
100
240
440
330
105
550
670
520
470
600
110
530
240
440,330
100
550
670,510
390
350
103
150,600
240
A - A
530
100
330
440
130
600
435
C - C
670
490
550
90,350
390
600
110
410
290
70
600,390
350,120
103
550
410
430
530
105
330
440
B - B
490,670
550
103,390
120,600
770
550
S-279979-5
ECN 20412

Pos	Part No	SP	UN	Qty	Description	Page No
-						
000	**C- 279979-0501**	**-**		**1**	**CENTRAL LUBRICATION**	
005	547902	-		1	BRACKET	
007	547904	-		1	TUBE	
020	293198-0002	-		1	BRACKET	
060	90012-0063	-		1	GLAND	
070	90028-0020	P		3	CONE	
090	90028-0021	P		1	CONE	
100	90028-0022	-		14	CONE	
103	90028-0024	-		8	CONE	
105	90028-0025	-		3	CONE	
110	90032-0038	-		2	BLOCK	
120	90032-0043	-		2	JUNKTION BLOCK	
130	90032-0044	-		4	JUNKTION BLOCK	
150	90032-0046	-		1	JUNKTION BLOCK	
230	90048-0034	-		1	OIL PUMP	
240	90087-0019	-		4	PLUG	
280	90092-0052	S		1	VALVE	
290	90092-0053	S		2	VALVE	
330	90134-0030	P		16	SLEEVE	
350	90134-0031	P		9	SLEEVE	
390	90134-0038	P		9	BUSHING	
410	90134-0039	P		4	BUSHING	
430	90134-0052	-		1	PLUG	
435	90134-0054	-		1	CONNECTION	
440	90134-0055	-		14	BUSHING	
470	90266-0019	-	MM	800	PIPE	
475	90163-0064	-		1	NIPPLE	
476	90163-0050	-		2	NIPPLE	
490	90165-0003	-		5	CLIP	
510	90165-0005	-		13	CLIP	
520	90165-0022	-		3	CLIP	
530	90166-0108	P	M	6	HOSE	
550	90166-0109	P	M	7	HOSE	
555	90166-0113	P	MM	900	HOSE	
570	90274-0084	-		1	PRESSURE SWITCH	
600	312101-0295	-		18	SCREW M6S4X20FZB	
610	312101-0366	-		6	SCREW M6S6X12FZB	
620	312101-0467	-		2	SCREW M6S8X80FZB	
660	312111-0297	-		2	SCREW MC6S4X25FZB	
670	312121-0285	-		20	SLOTTED HEMCS4X6FZB	
680	312601-0318	-		2	NUT M6M8FZB	
710	315101-0153	-		6	WASHER BRB6,4X12FZB	
711	315101-0165	-		2	WASHER BRB8,4X16FZB	
715	315233-0111	-		2	SEAL RING R3/8"	
730	342931-0113	-		1	ELBOW PIPE	
735	342991-0100	-		3	HOSE CLIP 8-14MMRFR	
770	352101-0103	-		2	CABLE GLAND 6-11MM PR18,6	

This page is intentionally left blank

Pos	Part No	SP	UN	Qty	Description	Page No
-						
000	**C- 282604-0201**	**-**		**1**	**START-UP KIT MACHINE BODY**	
010	90036-0009	-		1	BULB 24V 5W BA15D	
020	90036-0038	-		1	BULB 24V 25W E27	
030	90296-0028	-	ML	2500	OIL	
035	90296-0053	-	L	10	OIL	
040	90296-0068	-		1	GREASE	
045	90296-0075	-	ML	2500	OIL	
060	90298-0019	-		1	DETERGENT	

Pos	Part No	SP	UN	Qty	Description	Page No

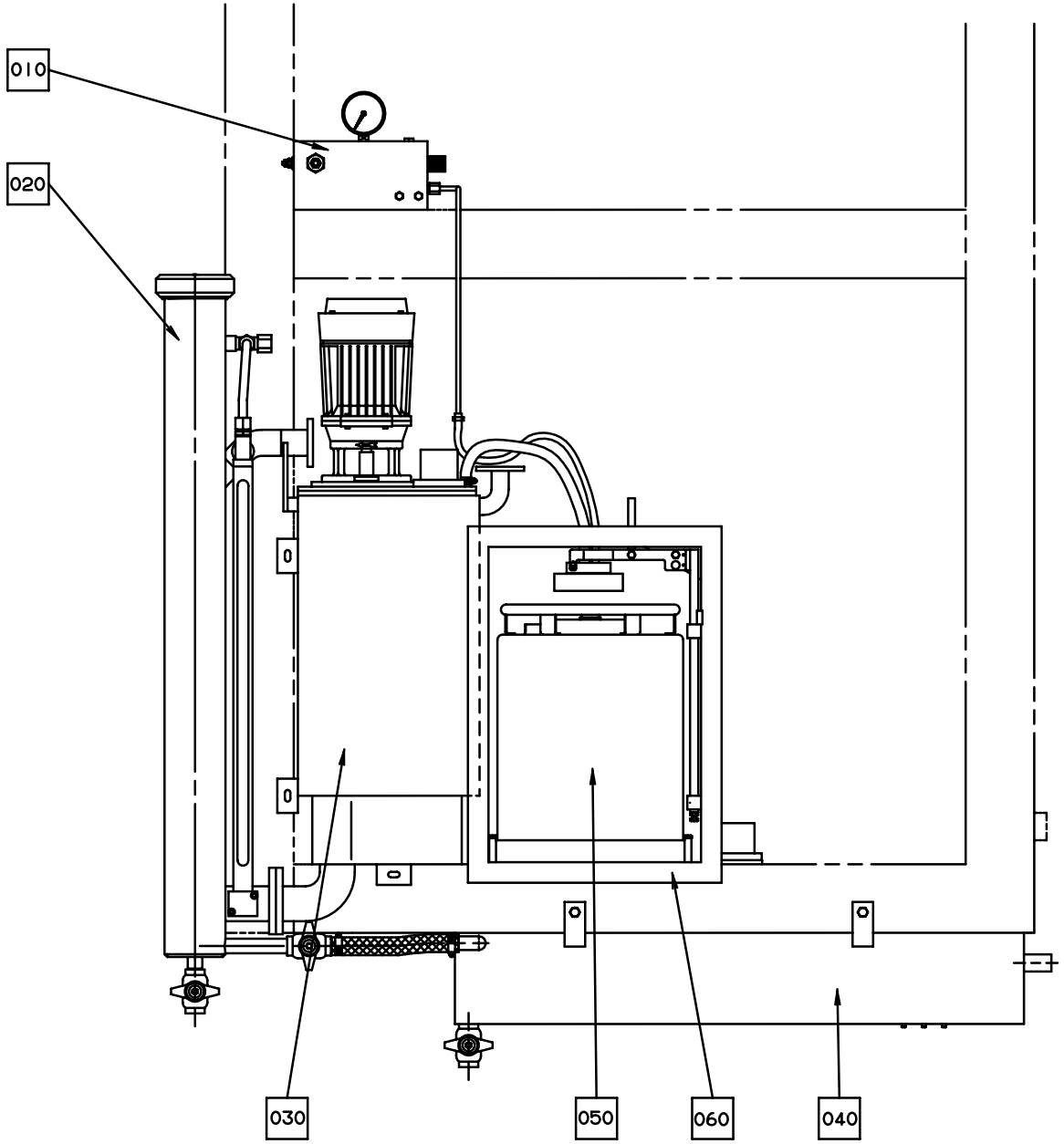

S-561256-1
ECN17024

Pos	Part No	SP	UN	Qty	Description	Page No
-						
000	**C- 561256-0301**	**-**		**1**	**PEROXIDE PIPE**	
F010	C- 560922-0101	-		1	VALVE PANEL	**175**
F020	C- 266550-0401	-		1	FILTER HOUSING	**171**
F030	C- 561257-020V	-		1	PEROXIDE TANK	**177**
F040	C- 561258-0201	-		1	DRAINING PEROXIDE	**183**
F050	C- 527898-0101	-		2	CONTAINER	**173**
F060	C- 561259-0101	-		1	CONNECTION HOUSING	**185**

Pos	Part No	SP	UN	Qty	Description	Page No

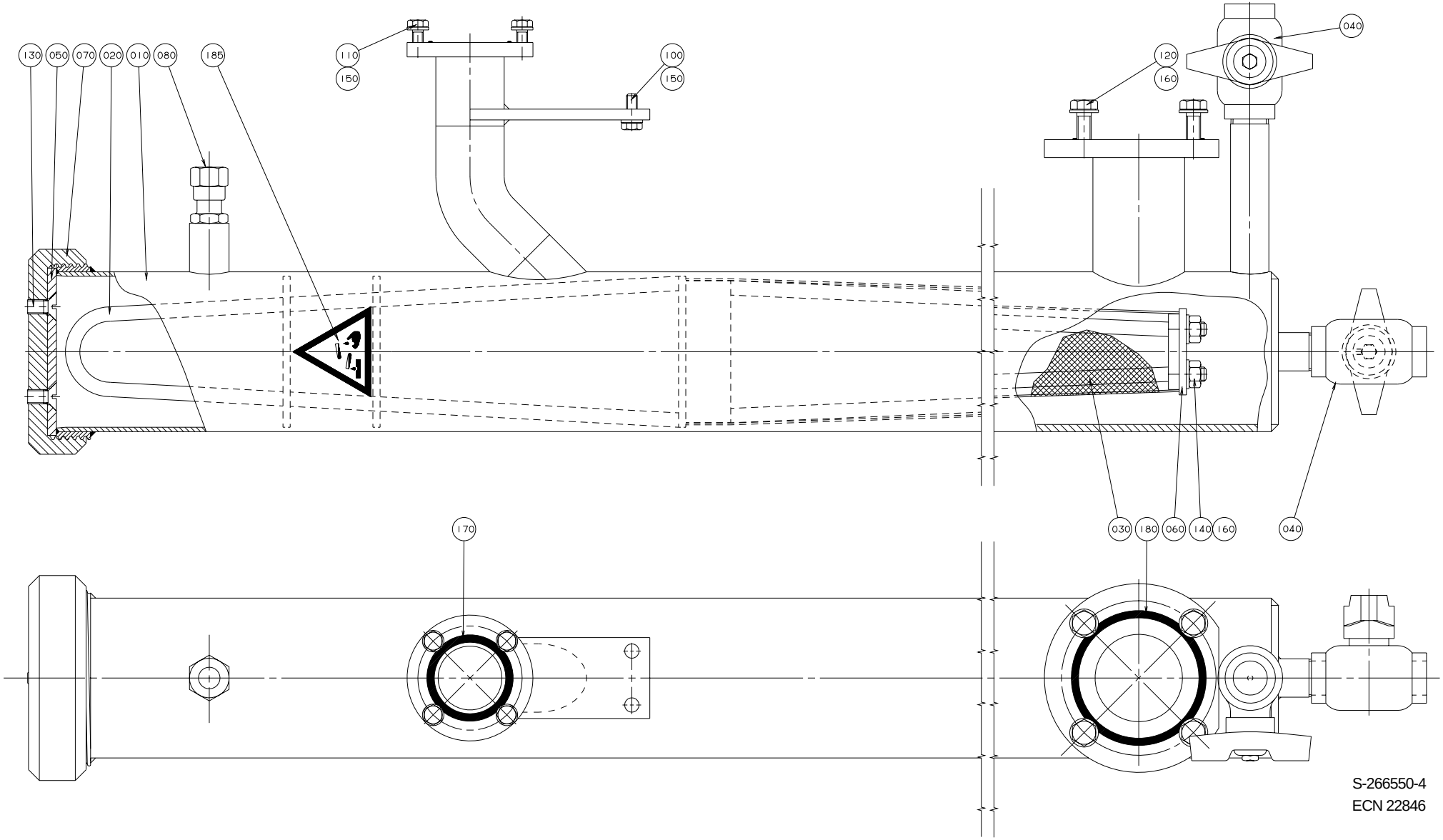

S-266550-4
ECN 22846

Pos	Part No	SP	UN	Qty	Description	Page No
-						
000	**C- 266550-0401**	**-**		**1**	**FILTER HOUSING**	
010	573445	-		1	FILTER HOUSING	
020	269903	-		1	FILTER INSERT	
030	269904	P		1	FILTER MESH	
040	484536	S		2	VALVE	
050	266557	P		1	GASKET	
060	269905	-		1	WASHER	
070	284840	-		1	NUT	
080	573446	-		1	STRAIGHT CONNECTION	
100	312105-0368	-		2	SCREW O4017 M6X16A280	
110	312105-0370	-		4	SCREW O4017 M6X20A280	
120	312105-0452	-		4	SCREW M6S8X22RFR	
130	312145-0449	-		2	SLOTTED HEMFS8X16RFR	
140	312605-0318	-		2	NUT M6M8RFR	
150	315105-0153	-		6	WASHER BRB6,4X12RFR	
160	315105-0165	-		6	WASHER BRB8,4X16RFR	
170	927422-0006	-		1	O-RING 42.2X3 SILICON	
180	927422-0011	-		1	O-RING 69.5X3 SILICON	
185	359705-0003	-		1	WARNING SIGN"CORROSION"	

Pos	Part No	SP	UN	Qty	Description	Page No

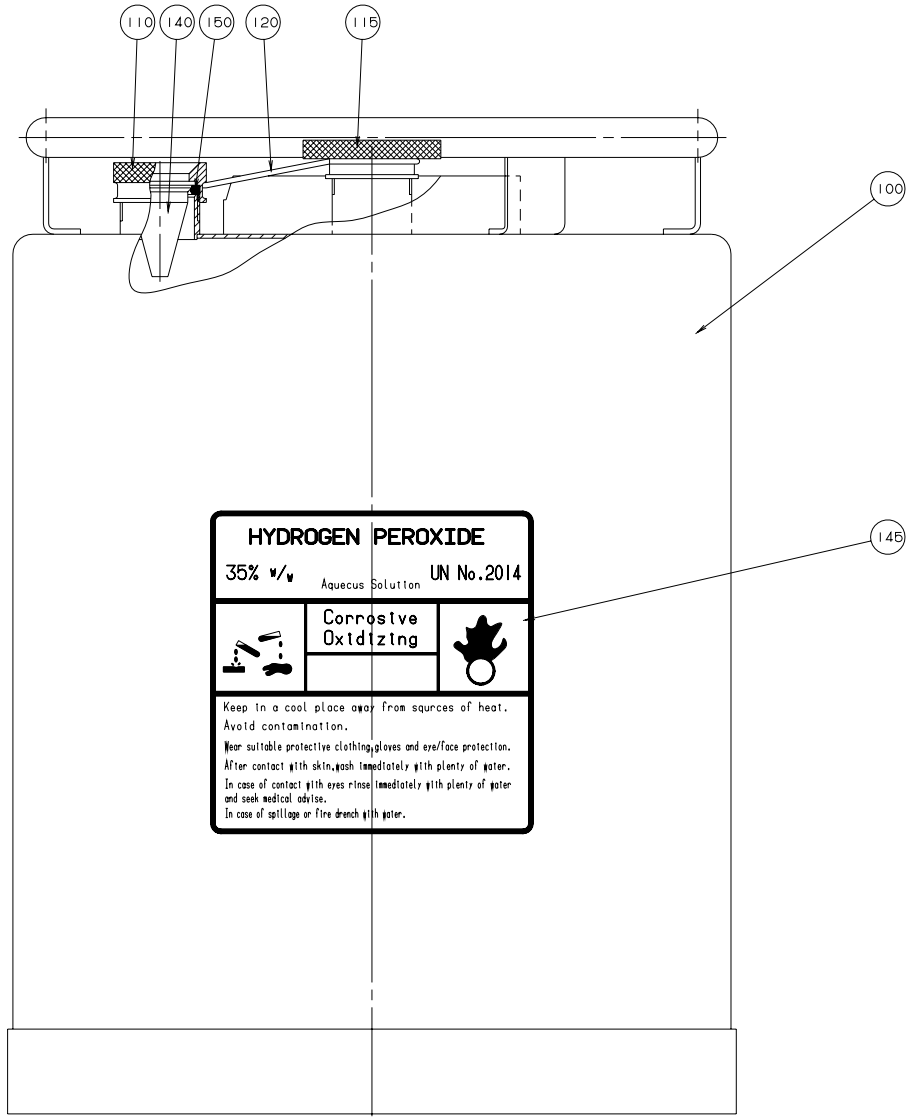
110
140
150
120
115
100
145
HYDROGEN PEROXIDE
35% w/w
Aquecus Solution
UN No.2014
Corrosive
Oxidizing
Keep in a cool place awar from saurces of heat.
Avoid contamination.
Wear suitable protective clothing,gloves and eye/face protection.
After contact with skin,wash immediately with plenty of water.
In case of contact with eyes rinse immediately with plenty of water
and seek medical advise.
In case of spillage or fire drench with water.

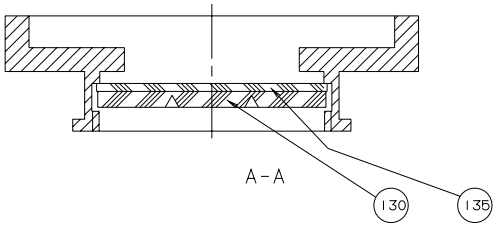
A-A
130
135

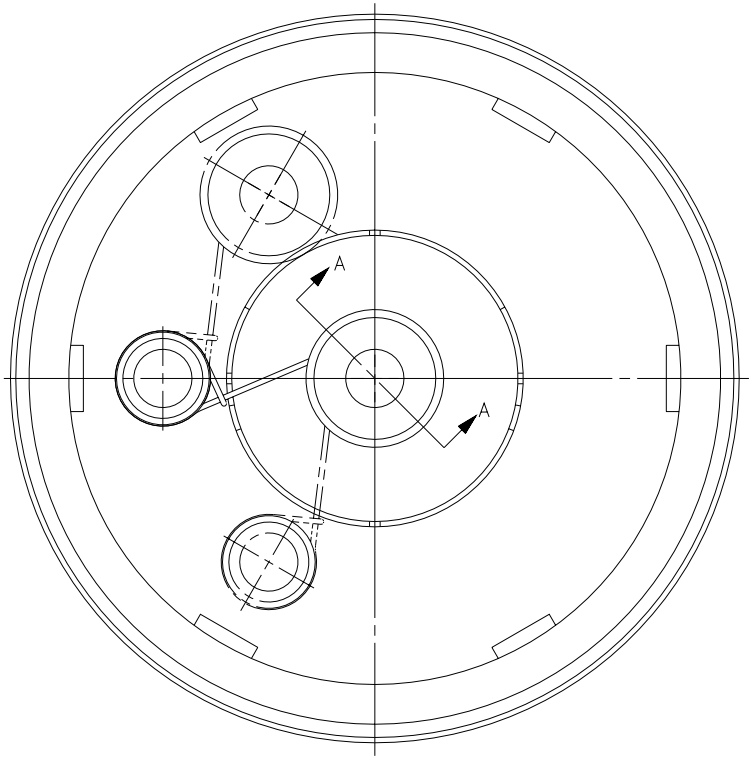
A
A

Pos	Part No	SP	UN	Qty	Description	Page No
-						
000	**C- 527898-0101**	**-**		**2**	**CONTAINER**	
100	561427	C		1	CONTAINER	
110	273977	C		1	NUT	
115	273996	C		1	NUT	
120	273980	C		1	SPRING	
130	565250	S		1	WASHER	
135	565251	S		1	VALVE	
140	273978	C		1	LEVEL GLASS	
145	532655	C		1	CAUTION SIGN	
150	927422-0003	-		1	O.RING 24.2X3 SILICON	

Pos	Part No	SP	UN	Qty	Description	Page No

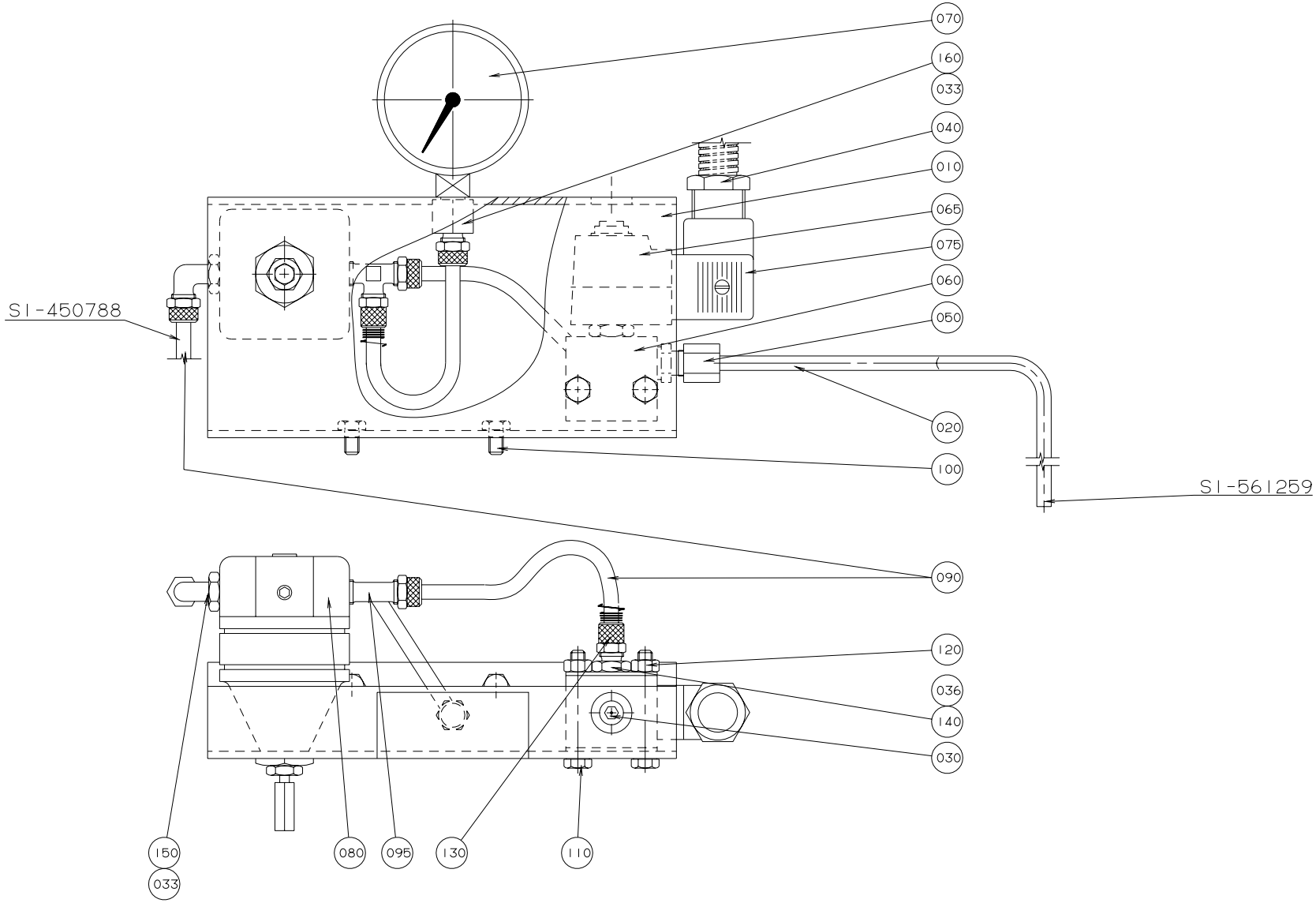
070
160
033
040
010
065
075
060
050
020
100
SI-450788
SI-561259
090
120
036
140
030
150
033
080
095
130
110

Pos	Part No	SP	UN	Qty	Description	Page No
-						
000	**C- 560922-0101**	**-**		**1**	**VALVE PANEL**	
010	527902	-		1	SHEET	
020	530550	-		1	PIPE	
030	563285	-		1	BLIND PLUG	
033	90005-0005	S		2	WASHER	
036	90005-0009	S		1	WASHER	
040	90012-0063	-		2	GLAND	
050	90030-0184	-		1	PIPE CONNECTION	
060	90042-0206	-		1	SOLENOID VALVE	
065	90042-0487	-		1	COIL	
070	90043-0004	-		1	PRESSURE GAUGE	
075	90110-0095	-		1	CONTACT 3 POLE+EARTH	
080	90113-0056	-		1	REGULATOR	
090	90166-0124	-	MM	3000	HOSE	
095	342950-0114	-		1	ELBOW FITT6/4-1/4	
100	312105-0364	-		2	SCREW M6S6X10RFR	
110	312105-0378	-		2	SCREW O4017 M6X40A280	
120	312605-0316	-		2	NUT M6M6 A280 STAINLESS	
130	342903-0111	-		2	NUT J£DER 1723-6/4	
140	342921-0113	-		1	PIPE COUPL6/4-1/8"	
150	90224-0329	-		1	ELBOW PIPE JOINT	
160	342923-0114	-		1	PIPE COUPL6/4-1/4	

Pos	Part No	SP	UN	Qty	Description	Page No

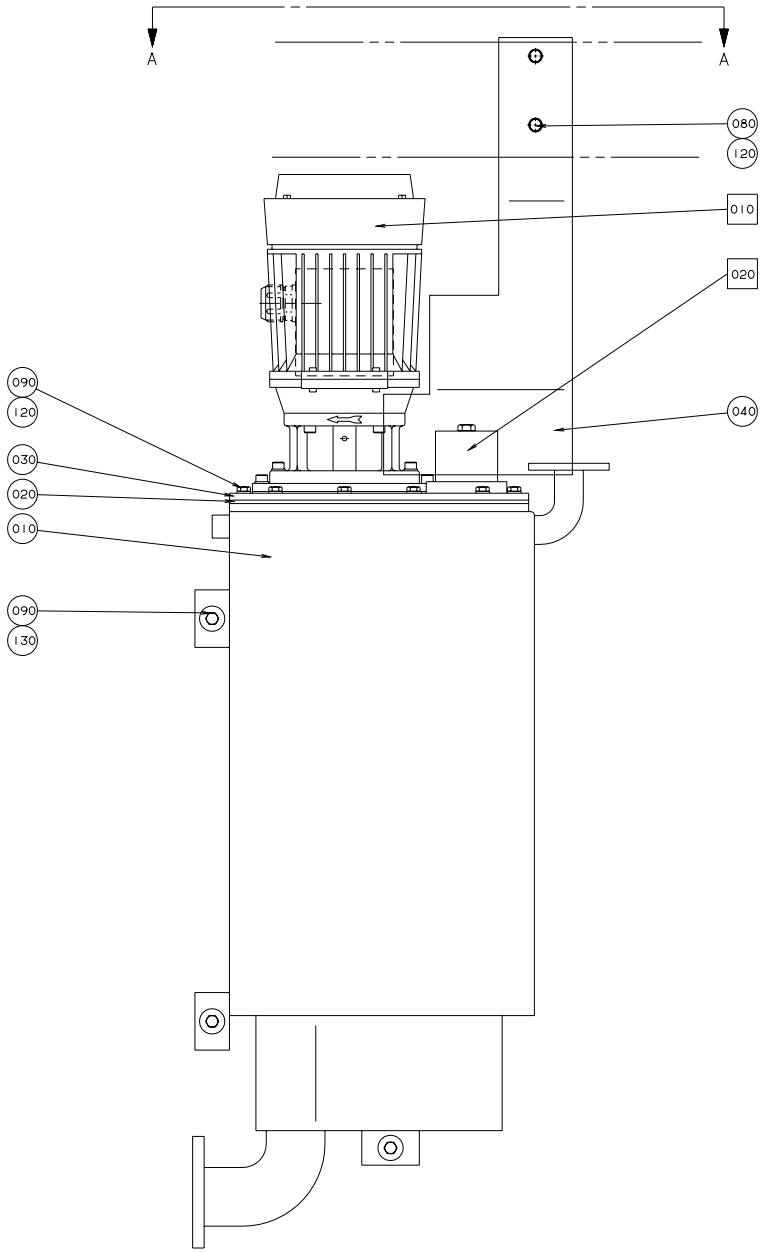

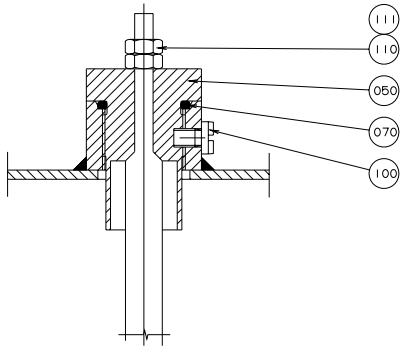

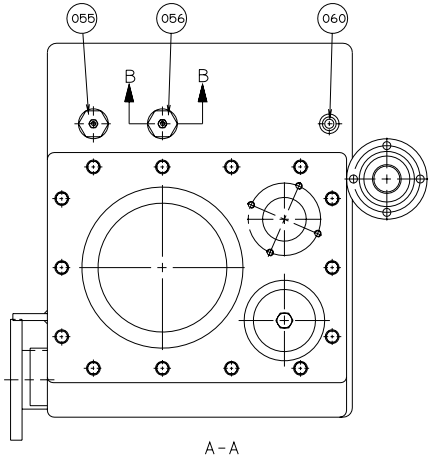

S-561257-1
ECN 16337

Pos	Part No	SP	UN	Qty	Description	Page No
VOLUMES 1055 B, 1000 B, 750 B						
000	**C- 561257-0201**	**-**		**1**	**PEROXIDE TANK**	
055	567070-0011	C		1	ELECTRODE	
056	567070-0002	-		1	ELECTRODE	
VOLUMES 568 B, 500S, 400 B, 355 B						
000	**C- 561257-0202**	**-**		**1**	**PEROXIDE TANK**	
055	567070-0006	C		1	ELECTRODE	
056	567070-0002	-		1	ELECTRODE	
VOLUMES 750 B, 500 S, 500 Sq, 375 S						
000	**C- 561257-0203**	**-**		**1**	**PEROXIDE TANK**	
055	567070-0007	C		1	ELECTRODE	
056	567070-0002	-		1	ELECTRODE	
VOLUMES 1000 S, 1000 Sq						
000	**C- 561257-0204**	**-**		**1**	**PEROXIDE TANK**	
055	567070-0011	C		1	ELECTRODE	
056	567070-0018	-		1	ELECTRODE	
Common parts						
010	540886	-		1	TANK	
020	259835	P		1	FLANGE SEAL	
030	479032	-		1	HATCH	
040	497121	-		1	SPLASH GUARD	
050	560931	C		2	BRACKET	
060	527910	-		1	PIPE	
070	927421-0004	-		2	O-RING 15.3X2.4 SILICON	
080	312105-0367	-		2	SCREW M6S6X14RFR	
090	312105-0370	-		17	SCREW O4017 M6X20A280	
100	312125-0285	-		2	SLOTTED HEMCS4X6RFR	
110	312605-0312	-		4	NUT M6M4 STAINLESS	
111	315105-0136	-		6	WASHER BRB4,3X8RFR	
120	315105-0153	-		16	WASHER BRB6,4X12RFR	
130	315125-0153	-		3	WASHER SB 6,4X22X4 RFR	
F010	C- 292451-050V	-		1	PEROXIDE PUMP	**179**
F020	C- 566196-0101	-		1	LID WITH WEIGHT	**181**

Pos	Part No	SP	UN	Qty	Description	Page No

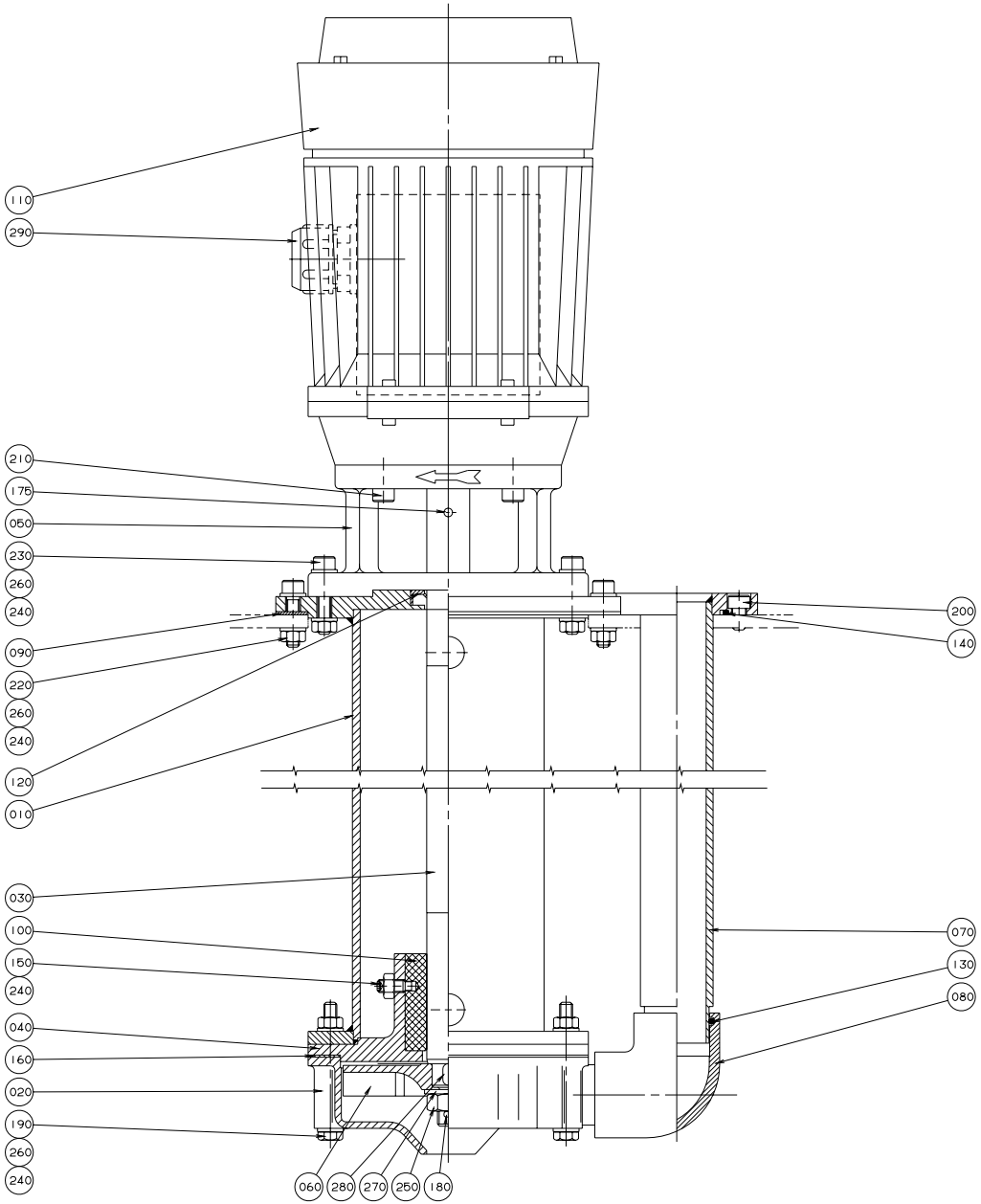

S-292451-5
ECN 14773

Pos	Part No	SP	UN	Qty	Description	Page No
HZ - 50						
000	**C- 292451-0501**	**-**		**1**	**PEROXIDE PUMP**	
020	G- 571277	-		1	PUMP HOUSING	
HZ - 60						
000	**C- 292451-0502**	**-**		**1**	**PEROXIDE PUMP**	
020	G- 292449	-		1	PUMP HOUSING	
Common parts						
010	292452	-		1	EXTENSION PIPE	
030	547793	S		1	SHAFT	
040	292456	-		1	BEARING COVER	
050	292464	-		1	FLANGE	
060	G- 491929	-		1	IMPELLER WHEEL	
070	560923	-		1	PIPE	
080	751316	-		1	ELBOW PIPE	
090	484791	P		1	GASKET	
100	491770	S		1	BUSHING	
110	90045-0087	S		1	MOTOR	
120	90091-0137	P		1	SEAL RING	
130	927422-0004	-		1	O-RING 29.2X3 SILICON	
140	927422-0006	-		1	O-RING 42.2X3 SILICON	
150	90287-0159	-		2	GRUB SCREW	
160	90321-0411	P		1	GASKET	
175	311112-0256	-		1	SLOTTED TURP 4X20 RFR	
180	311411-0169	P		1	SPLIT PIN SP2,5X25RFR	
190	312105-0382	-		5	SCREW O4014 M6X60A280	
200	312115-0364	-		4	SCREW 6X10 A4 80	
210	312115-0370	-		4	SCREW O4762 M6X20A280	
220	312105-0372	-		4	SCREW O4017 M6X25A280	
230	312105-0374	-		5	SCREW O4017 M6X30A280	
240	312605-0316	-		16	NUT M6M6 A280 STAINLESS	
250	312605-0320	-		1	NUT M6M10RFR	
260	315105-0153	-		28	WASHER BRB6,4X12RFR	
270	315105-0173	-		1	WASHER BRB10,5X22RFR	
280	315705-0196	S		1	FLAT WEDGE	
290	352136-0129	-		1	GLAND FITT	

Pos	Part No	SP	UN	Qty	Description	Page No

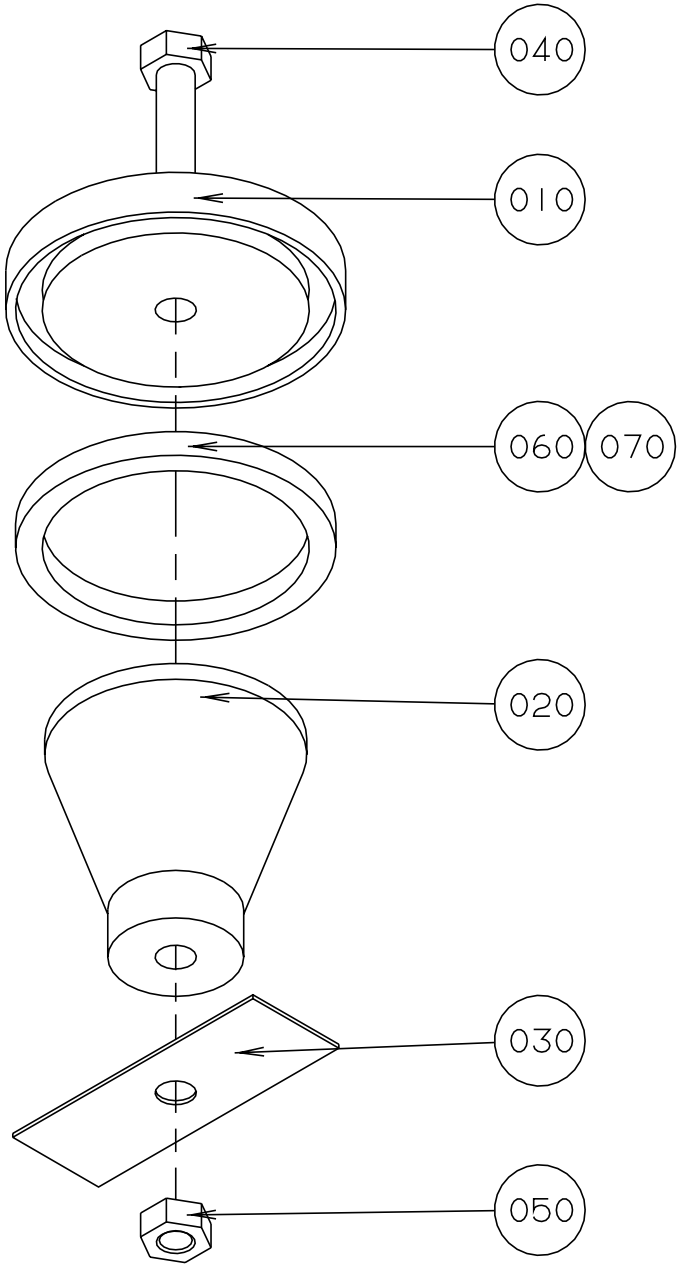
040
010
060
070
020
030
050

Pos	Part No	SP	UN	Qty	Description	Page No
-						
000	**C- 566196-0101**	**-**		**1**	**LID WITH WEIGHT**	
010	566195	-		1	LID	
020	566194	-		1	WEIGHT	
030	566171	-		1	CUP SPRING	
040	312105-0466	-		1	SCREW O4014 M8X75A280	
050	312605-0318	-		1	NUT M6M8RFR	
060	90143-0020	-	MM	190	STRIP	
070	90153-0023	-		1	ADHESIVE	

Pos	Part No	SP	UN	Qty	Description	Page No

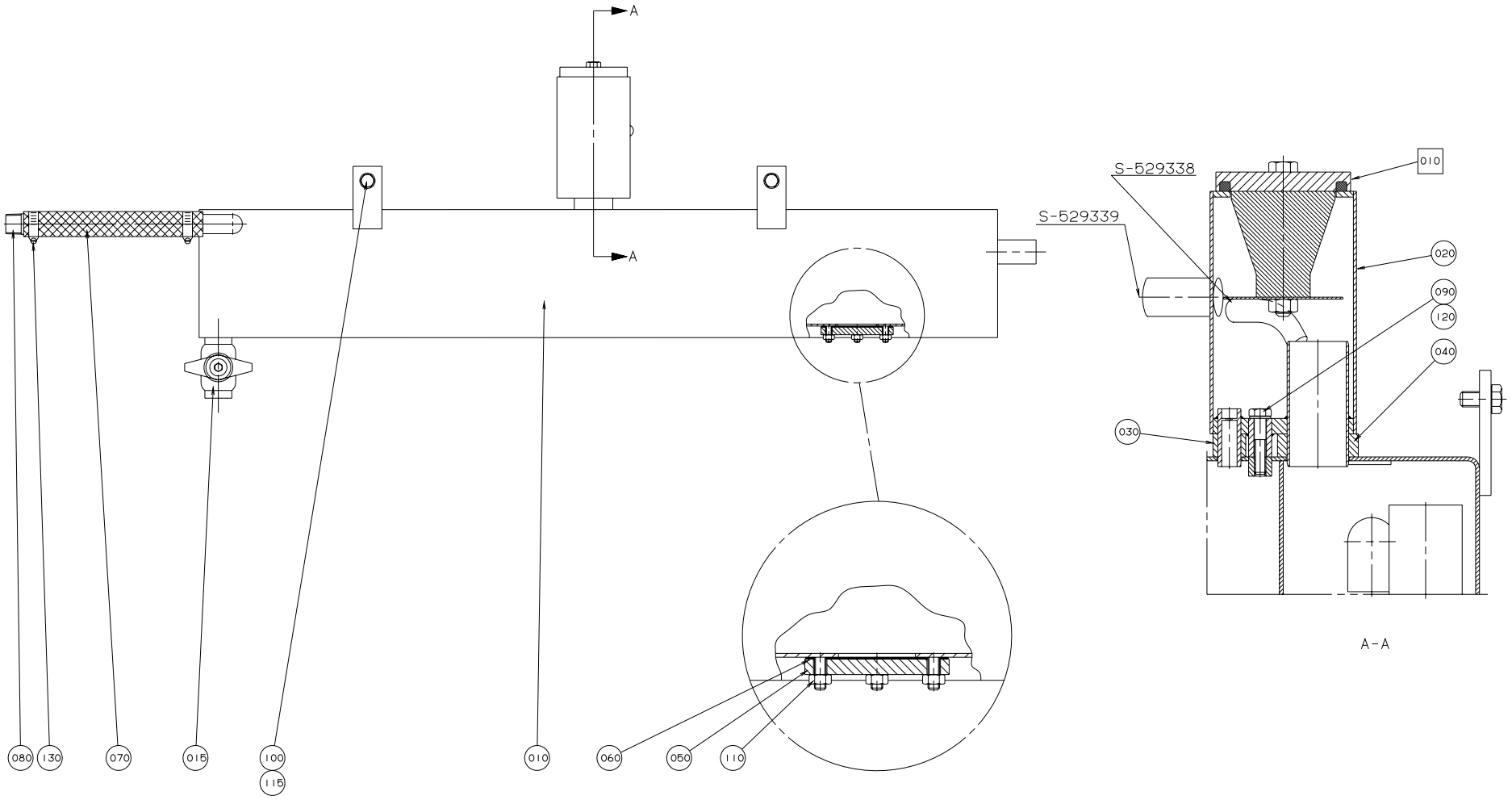
A
A
S-529338
S-529339
010
020
090
120
040
030
A-A
080
130
070
015
100
115
010
060
050
110

Pos	Part No	SP	UN	Qty	Description	Page No
-						
000	**C- 561258-0201**	**-**		**1**	**DRAINING PEROXIDE**	
010	561549	-		1	TANK	
015	484536	S		1	VALVE	
020	566192	-		1	METERING DEVICE	
030	527905	C		1	GASKET	
040	527906	C		1	GASKET	
050	532205	-		1	LID	
060	532206	S		1	GASKET	
070	90166-0060	-	MM	200	HOSE	
080	90330-0059	-		1	NIPPLE	
090	312105-0374	-		1	SCREW O4017 M6X30A280	
100	312105-0451	-		4	SCREW SO4017 8X20A280	
110	312605-0316	-		4	NUT M6M6 A280 STAINLESS	
115	315115-0165	-		4	WASHER TBRB8,4X16RFR	
120	315211-0103	-		1	SEALING WA	
130	342991-0104	-		2	HOSE CLIP 19-28MMRFR	
F010	C- 566196-0101	-		1	LID WITH WEIGHT	**181**

Pos	Part No	SP	UN	Qty	Description	Page No

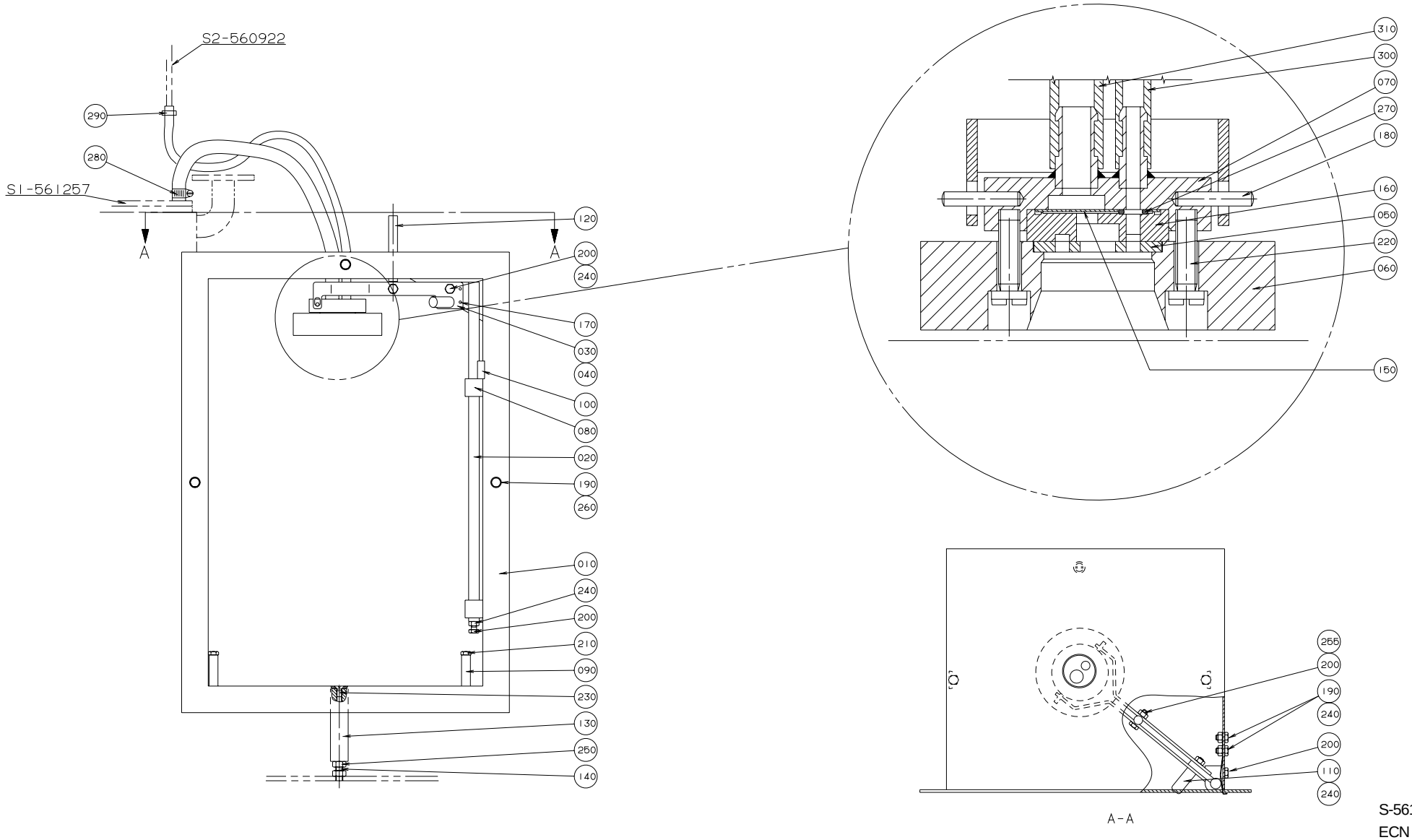

S-561259-1
ECN 14773

Pos	Part No	SP	UN	Qty	Description	Page No
-						
000	**C- 561259-0101**	**-**		**1**	**CONNECTION HOUSING**	
010	565104	-		1	SWEEP	
020	527120	-		1	STEERING	
030	527121-0001	-		1	BOW CLAMP	
040	527121-0002	-		1	BOW CLAMP	
050	273981	S		1	GASKET	
060	273982	-		1	WEIGHT	
070	527122	-		1	ATTACHMENT	
080	527124	-		2	BEARING	
090	527125	-		2	STEERING	
100	527126	C		1	LEAF SPRING	
110	527127	-		1	DOWEL	
120	527128	-		1	GUIDE PIN	
130	527129	-		1	BRACKET	
140	527130	-		1	SCREW	
150	527912	S		1	NON-RETURN VALVE	
160	530551	-		1	WASHER	
170	311103-0234	-		2	CYLINDRICACP M6 3X12 RFR	
180	311103-0273	-		2	CYLINDRICAM6 4X22 RFR	
190	312105-0362	-		6	SCREW O4017 M6X8A280	
200	312105-0370	-		5	SCREW O4017 M6X20A280	
210	312105-0378	-		2	SCREW O4017 M6X40A280	
220	312125-0370	-		2	SLOTTED HEMCS6X20RFR	
230	312155-0366	-		1	SCREW MF6S6X12RFR	
240	312605-0316	-		5	NUT M6M6 A280 STAINLESS	
250	312605-0318	-		2	NUT M6M8RFR	
255	312812-0316	-		1	LOCK NUT A2-M6RFR	
260	315105-0153	-		4	WASHER BRB6,4X12RFR	
270	315204-0103	-		1	O-RING 5,1X1,6VITON	
280	342991-0101	-		2	HOSE CLIP 11-17MMRFR	
290	90132-0021	-		2	HOSE CLIP	
300	90166-0101	-	MM	350	HOSE	
310	90166-0138	-	MM	500	HOSE	

Pos	Part No	SP	UN	Qty	Description	Page No

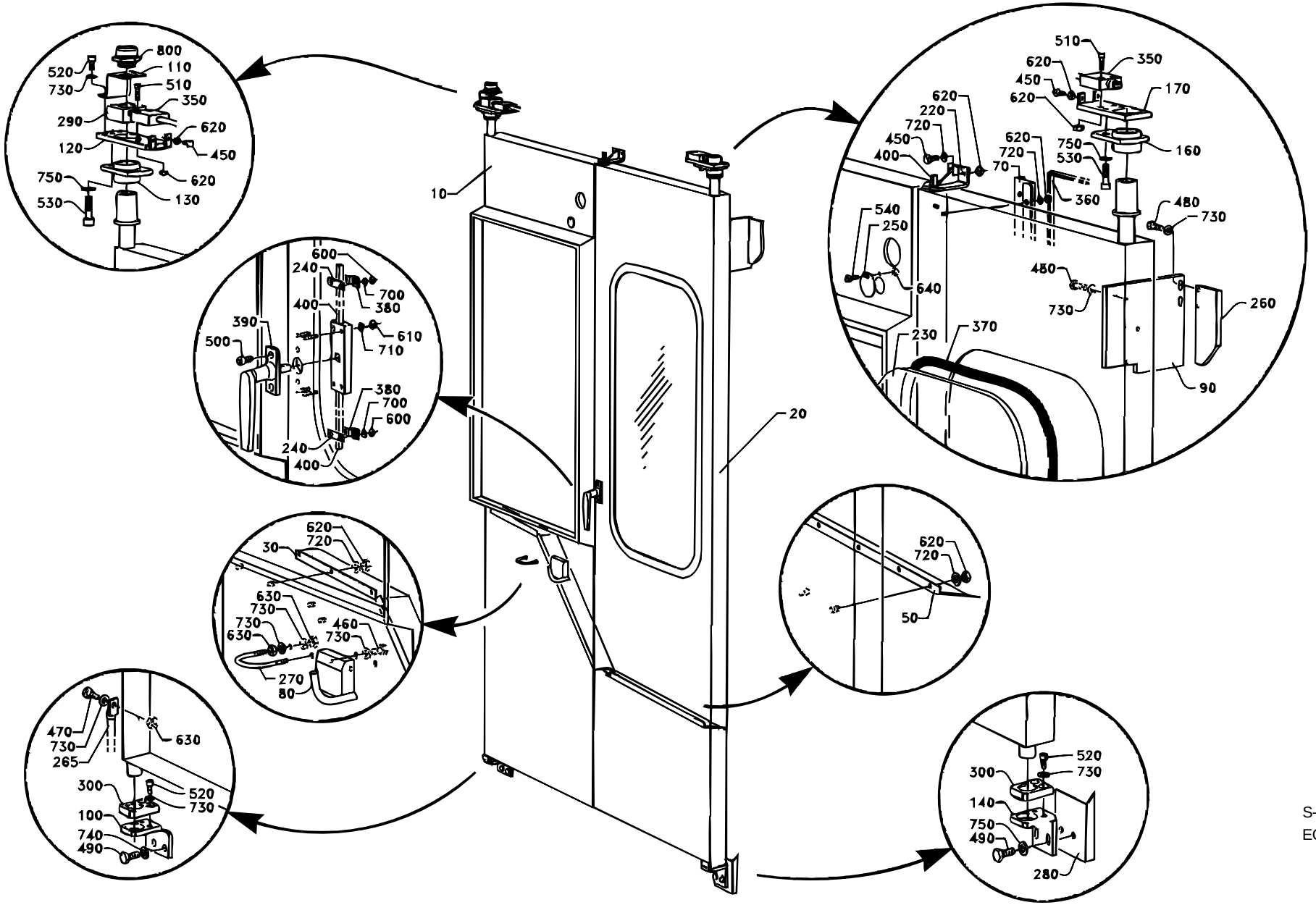

S-545099-2
ECN 14990

Pos	Part No	SP	UN	Qty	Description	Page No
-						
000	**C- 545099-0201**	**-**		**1**	**SIDE GUARD**	
010	544681	-		1	SIDEGUARD L	
020	544899	-		1	SIDECOVER LEFT FRONT	
030	545107	-		1	CHUTE LEFT	
050	451127	-		1	CHUTE, LEFT FRONT	
070	442193	-		1	PROTECTIVE CASING	
080	469795	-		1	HOLDER	
090	533426	-		1	STOP PLATE	
100	544483	-		1	BRACKET	
110	544484	-		1	HOLDER	
120	560873	-		1	PLATE	
130	544486	S		1	BEARING UNIT	
140	544510	-		1	BRACKET	
160	560800	S		1	BEARING UNIT	
170	560872	-		1	PLATE	
220	293566	-		1	MOUNTINGS	
230	293598	S		1	GLASS PANE	
240	434858	-		2	CUSHION	
250	442195	-		1	LID	
260	553162	-		1	STOP PLATE	
265	553164	-		1	LOW IMPEDANCELITZ L=150MM	
270	531616	-		1	HOLDER	
280	542860	-		1	COVER PLATE	
290	544480	S		1	NUT	
300	544481	S		2	PLATE	
350	90044-0094	S		2	LIMIT SWITCH HONEYWELL	
360	90143-0035	-	MM	5450	STRIP	
370	90143-0039	-	MM	2400	STRIP	
380	90237-0011	-		2	BAR CLAMP	
390	90237-0061	-		1	HANDLE	
400	90237-0066	-		1	LOCKING DEVICE	
450	312105-0327	-		6	SCREW ISO 4017 M5X12A280	
460	312105-0364	-		2	SCREW M6S6X10RFR	
470	312105-0368	-		1	SCREW O4017 M6X16A280	
480	312105-0370	-		3	SCREW O4017 M6X20A280	
490	312105-0451	-		4	SCREW SO4017 8X20A280	
500	312115-0325	-		2	SCREW 5X10 A4 80	
510	312115-0329	-		4	SCREW O4762 M5X16A280	
520	312115-0366	-		6	SCREW O4762 M6X12A280	
530	312115-0455	-		4	SCREW O4762 M8X30A280	
540	312125-0222	-		1	SLOTTED HEMCS3X8RFR	
600	312605-0310	-		4	NUT M6M3RFR	
610	312605-0312	-		4	NUT M6M4 STAINLESS	
620	312605-0314	-		38	NUT M6M5RFR	
630	312605-0316	-		3	NUT M6M6 A280 STAINLESS	
640	312810-0310	-		1	LOCK NUT 3FZB	
700	315105-0124	-		4	WASHER BRB3,2X6RFR	
710	315105-0136	-		4	WASHER BRB4,3X8RFR	
720	315105-0146	-		33	WASHER BRB5,3X10RFR	
730	315105-0153	-		18	WASHER BRB6,4X12RFR	
740	315105-0165	-		2	WASHER BRB8,4X16RFR	
750	315115-0165	-		6	WASHER TBRB8,4X16RFR	
800	352136-0152	S		1	GLAND FITT	

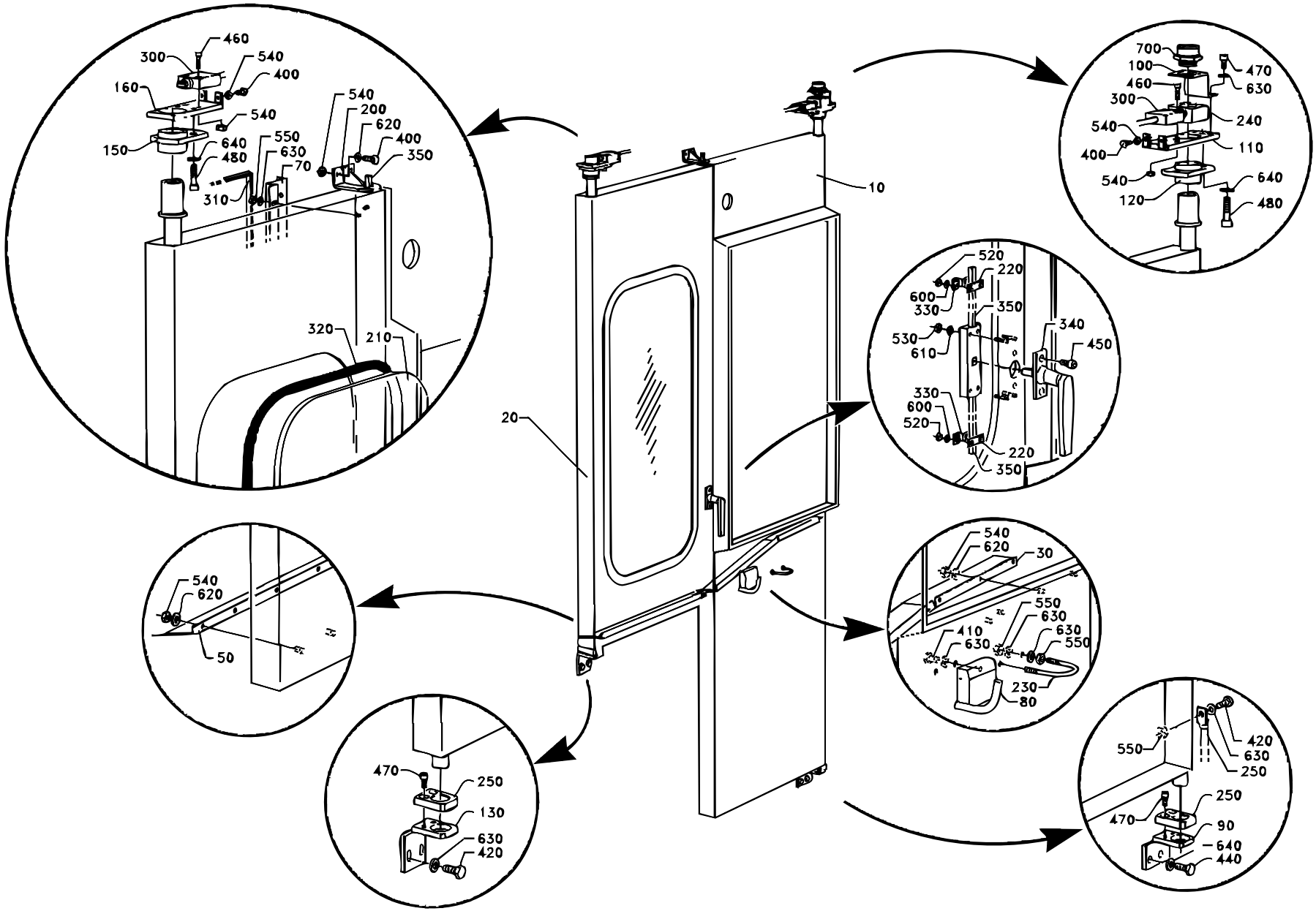

S-545100-2
ECN 22833

Pos	Part No	SP	UN	Qty	Description	Page No
-						
000	**C- 545100-0201**	**-**		**1**	**SIDE GUARD, RIGHT**	
010	544680	-		1	SIDE GUARD R	
020	544900	-		1	SIDECOVER RIGHT FRONT	
030	545108	-		1	CHUTE	
050	451128	-		1	CHUTE, RIGHT FRONT	
070	442194	-		1	PROTECTIVE CASING	
080	531761	-		1	HOLDER	
090	544482	-		1	BRACKET	
100	544484	-		1	HOLDER	
110	560873	-		1	PLATE	
120	544486	S		1	BEARING UNIT	
130	544508	-		1	BRACKET	
150	560800	S		1	BEARING UNIT	
160	560872	-		1	PLATE	
200	293566	-		1	MOUNTINGS	
210	293598	S		1	GLASS PANE	
220	434858	-		2	CUSHION	
230	531616	-		1	HOLDER	
240	544480	S		1	NUT	
250	544481	S		2	PLATE	
260	1143628	-		1	COVERING PLATE	
265	553164	-		1	LOW IMPEDANCELITZ L=150MM	
300	90044-0094	S		2	LIMIT SWITCH HONEYWELL	
310	90143-0035	-	MM	4550	STRIP	
320	90143-0039	-	MM	2400	STRIP	
330	90237-0011	-		2	BAR CLAMP	
340	90237-0061	-		1	HANDLE	
350	90237-0067	-		1	LOCKING DEVICE	
400	312105-0327	-		6	SCREW ISO 4017 M5X12A280	
410	312105-0364	-		2	SCREW M6S6X10RFR	
420	312105-0368	-		3	SCREW O4017 M6X16A280	
440	312105-0451	-		2	SCREW SO4017 8X20A280	
450	312115-0325	-		2	SCREW 5X10 A4 80	
460	312115-0329	-		4	SCREW O4762 M5X16A280	
470	312115-0366	-		9	SCREW O4762 M6X12A280	
480	312115-0455	-		4	SCREW O4762 M8X30A280	
520	312605-0310	-		4	NUT M6M3RFR	
530	312605-0312	-		4	NUT M6M4 STAINLESS	
540	312605-0314	-		35	NUT M6M5RFR	
550	312605-0316	-		10	NUT M6M6 A280 STAINLESS	
600	315105-0124	-		4	WASHER BRB3,2X6RFR	
610	315105-0136	-		4	WASHER BRB4,3X8RFR	
620	315105-0146	-		27	WASHER BRB5,3X10RFR	
630	315105-0153	-		15	WASHER BRB6,4X12RFR	
640	315105-0165	-		6	WASHER BRB8,4X16RFR	
700	352136-0152	S		1	GLAND FITT	

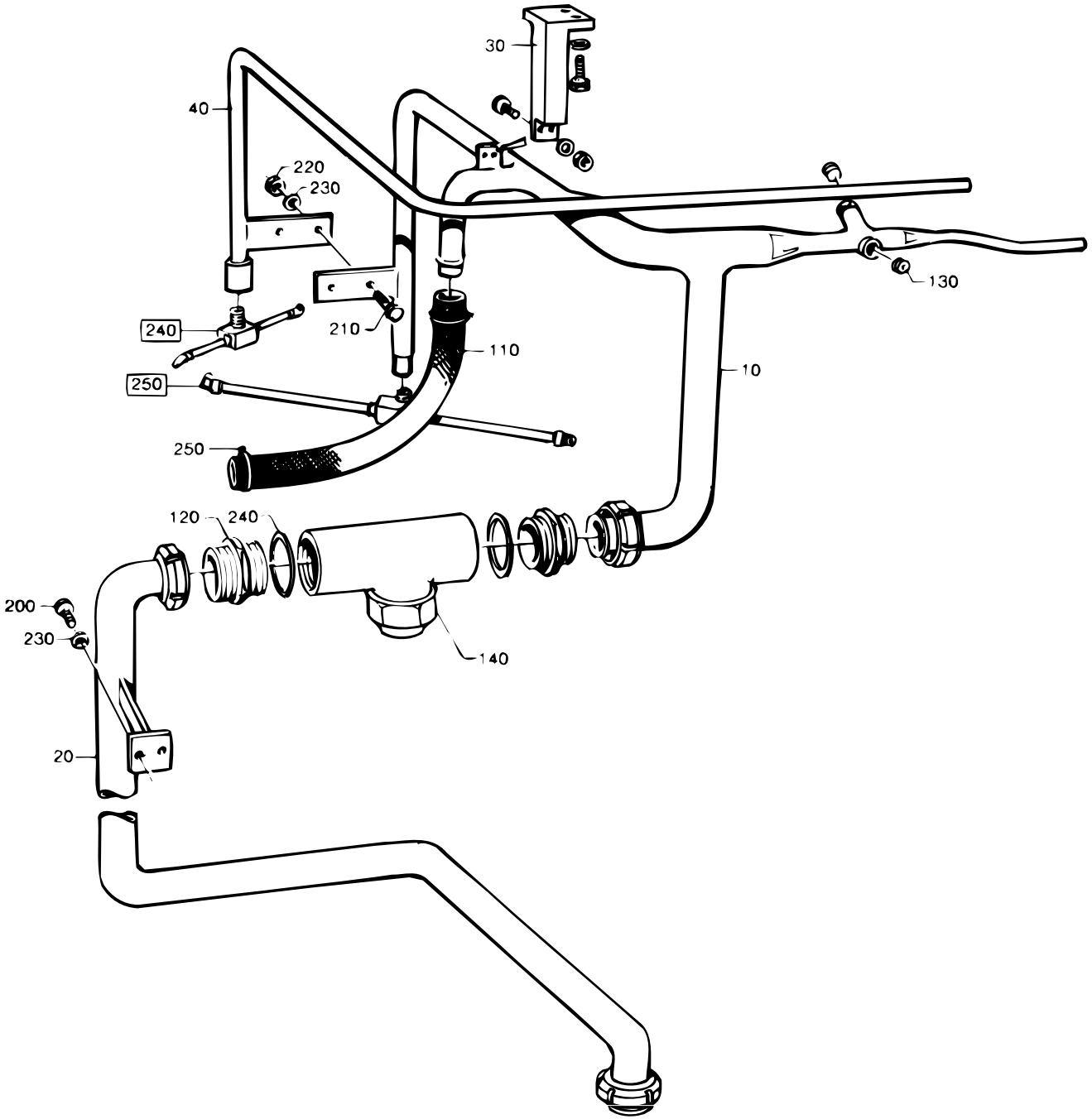

S-297808-3
ECN 8580

Pos	Part No	SP	UN	Qty	Description	Page No
-						
000	**C- 297808-0501**	**-**		**1**	**CLEANING EQUIPMENT**	
010	542706	-		1	PIPE	
020	297800	-		1	PIPE	
030	297802	-		1	BRACKET	
040	297805	-		1	PIPE	
100	90157-0016	S	ML	X	LOCKING FLUID	
110	90166-0142	S	MM	750	HOSE	
120	90217-0053	-		2	NIPPLE	
130	90330-0026	S		2	PLUG	
140	90415-0032	S		1	FILTER	
140a	90415-0328	S		1	* FILTER INSERT	
200	312105-0368	-		2	SCREW O4017 M6X16A280	
210	312105-0370	-		6	SCREW O4017 M6X20A280	
220	312605-0316	-		4	NUT M6M6 A280 STAINLESS	
230	315105-0153	-		10	WASHER BRB6,4X12RFR	
240	315250-0103	S		2	GASKET 48/38	
250	342991-0106	S		2	HOSE CLIP 26-38MMRFR	
F240	C- 476887-0201	-		1	CLEANING HEAD	**197**
F250	C- 476884-0201	-		1	CLEANING HEAD	**193**

Pos	Part No	SP	UN	Qty	Description	Page No

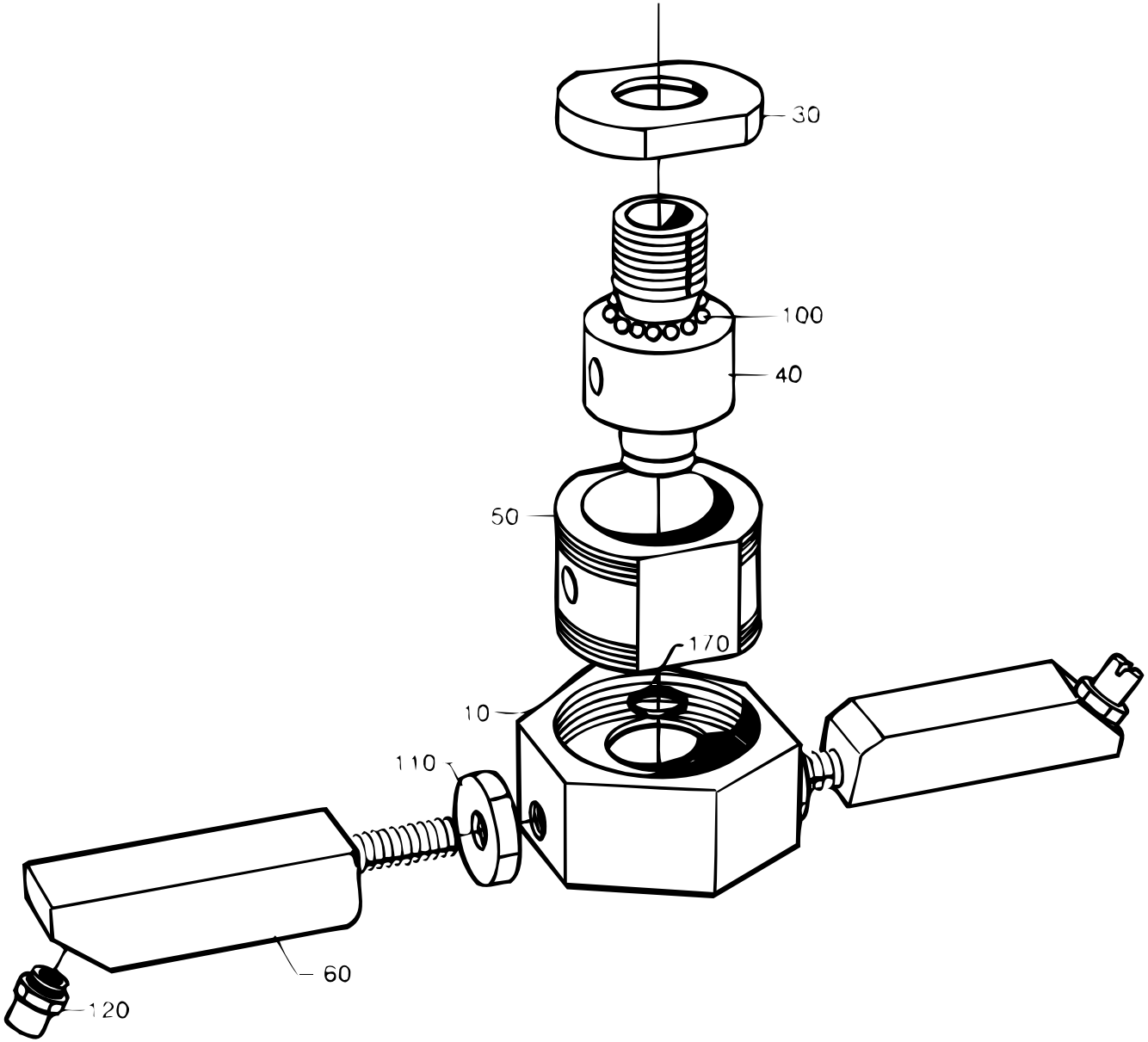

S-476884-1
ECN 8145

Pos	Part No	SP	UN	Qty	Description	Page No
45 DEGREES UP						
000	**C- 476884-0201**	**-**		**1**	**CLEANING HEAD**	
45 DEGREES DOWN						
000	**C- 476884-0202**	**-**		**1**	**CLEANING HEAD**	
Common parts						
010	440600	C		1	ROTOR	
030	534880	S		1	END SECTION	
040	534878	S		1	SHAFT	
050	534879	S		1	BEARING HOUSING	
060	440604-0001	C		2	PIPE	
100	90090-0020	S		24	BALL	
110	90330-0034	-		2	NUT	
120	90424-0026	S		2	NOZZLE	
170	315202-0211	S		1	O-RING 13,3X2,4	

Pos	Part No	SP	UN	Qty	Description	Page No

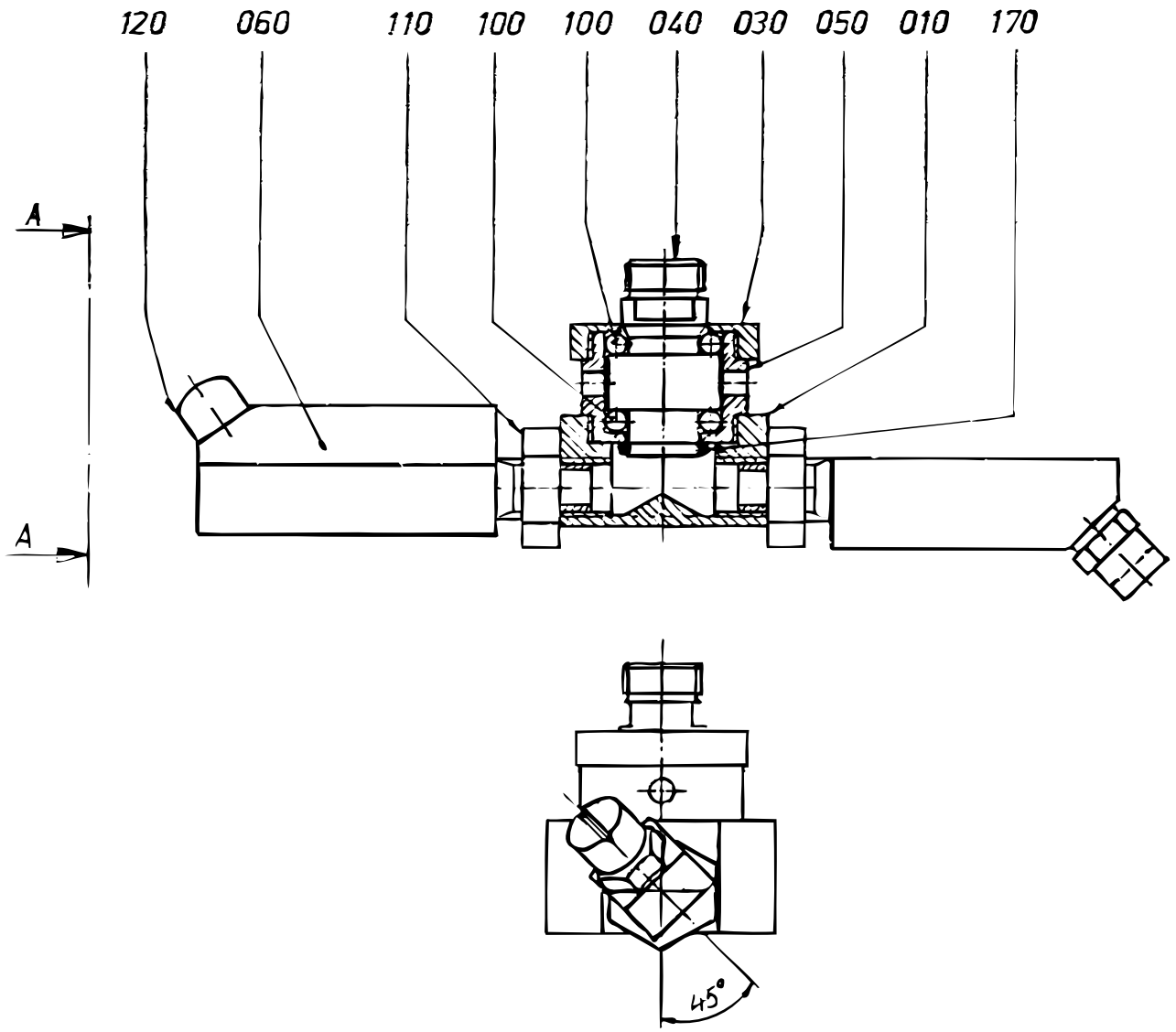
120
060
110
100
100
040
030
050
010
170
A
A
45°
A–A

Pos	Part No	SP	UN	Qty	Description	Page No
45 DEGREES UP						
000	**C- 476884-0201**	**-**		**1**	**CLEANING HEAD**	
45 DEGREES DOWN						
000	**C- 476884-0202**	**-**		**1**	**CLEANING HEAD**	
Common parts						
010	440600	C		1	ROTOR	
030	534880	S		1	END SECTION	
040	534878	S		1	SHAFT	
050	534879	S		1	BEARING HOUSING	
060	440604-0001	C		2	PIPE	
100	90090-0020	S		24	BALL	
110	90330-0034	-		2	NUT	
120	90424-0026	S		2	NOZZLE	
170	315202-0211	S		1	O-RING 13,3X2,4	

Pos	Part No	SP	UN	Qty	Description	Page No

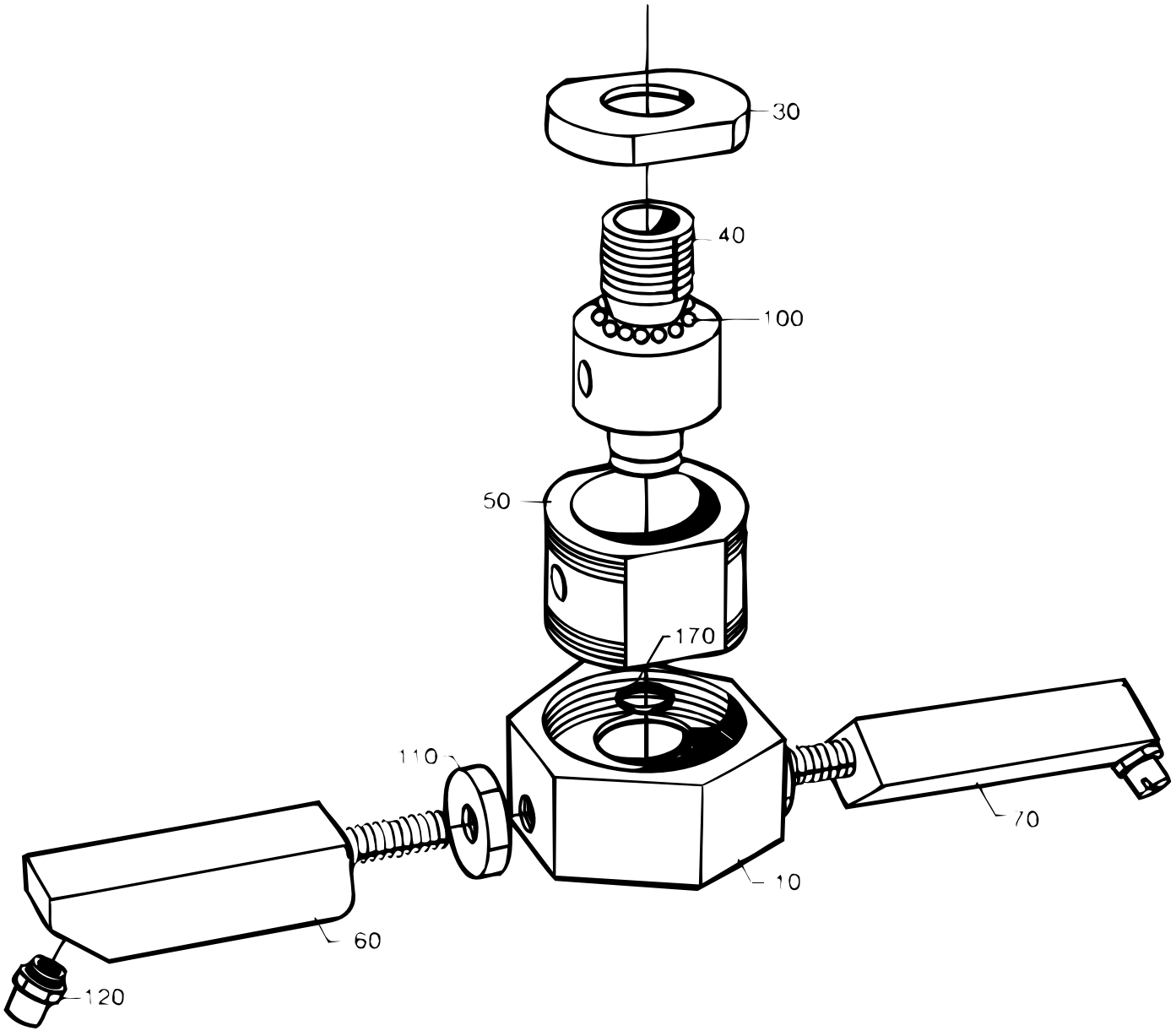

S-476887-1
ECN 14358

Pos	Part No	SP	UN	Qty	Description	Page No
-						
000	**C- 476887-0201**	**-**		**1**	**CLEANING HEAD**	
010	440600	C		1	ROTOR	
030	534880	S		1	END SECTION	
040	534878	S		1	SHAFT	
050	534879	S		1	BEARING HOUSING	
060	440604-0001	C		1	PIPE	
070	440605-0001	C		1	PIPE	
100	90090-0020	S		24	BALL	
110	90330-0034	-		2	NUT	
120	90424-0026	S		2	NOZZLE	
170	315202-0211	S		1	O-RING 13,3X2,4	

Pos	Part No	SP	UN	Qty	Description	Page No

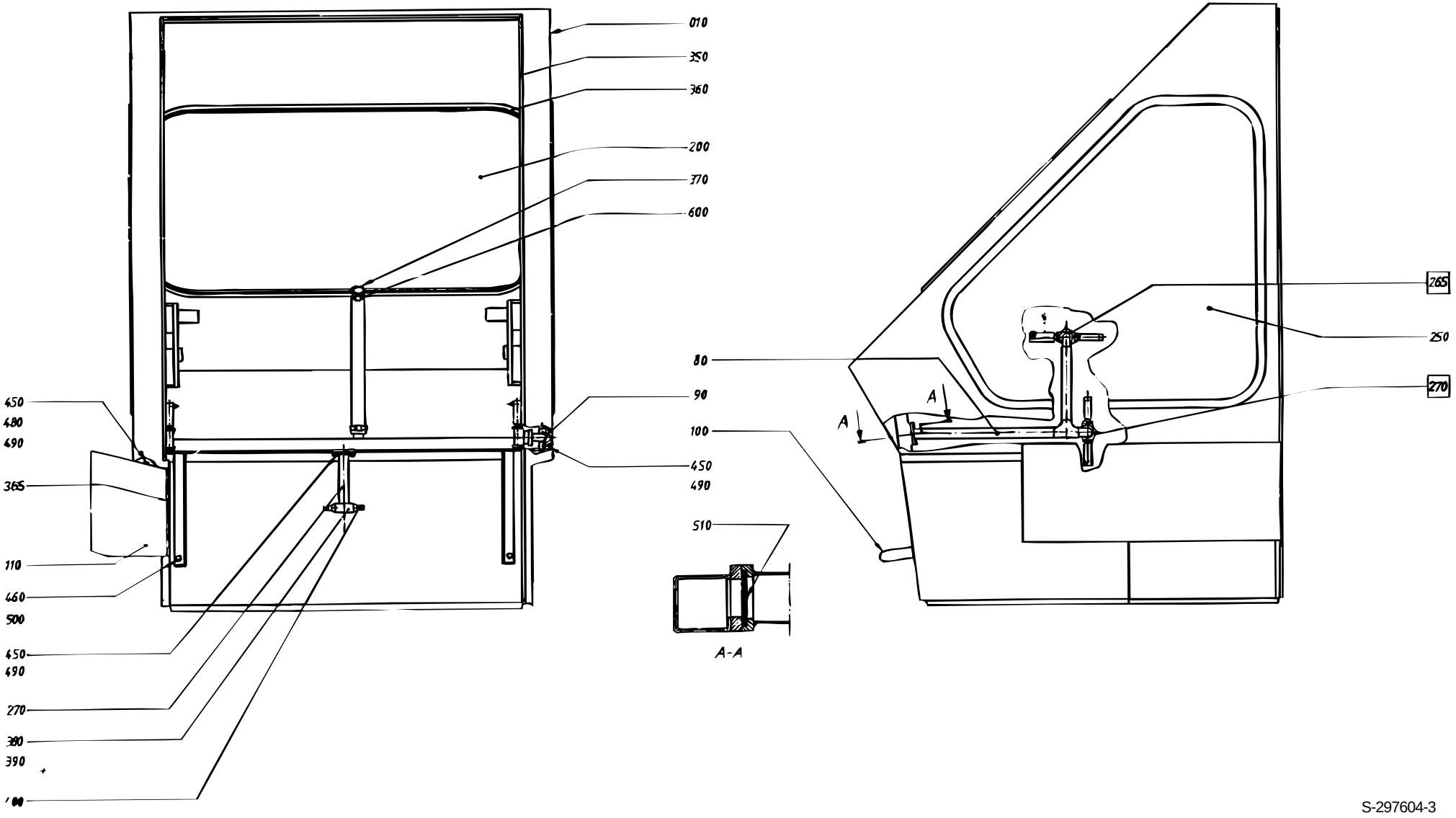
010
350
360
200
370
600
450
480
490
365
110
460
500
450
490
270
380
390
400
80
90
100
450
490
510
A-A
A
A
265
250
270

Pos	Part No	SP	UN	Qty	Description	Page No
-						
000	**C- 297604-0401**	**-**		**1**	**HOOD**	
010	543148	-		1	HOOD	
080	499833	-		1	PIPE RIGHT	
090	499834	-		1	PIPE LEFT	
100	285956	-		1	HANDLE	
110	550503	-		1	PROTECTION	
200	262774-0009	C		1	GLASS PANE	
250	297488	C		2	GLASS PANE	
270	297679	-		1	PIPE	
350	90143-0035	S	MM	4500	STRIP	
360	90143-0039	-	MM	9500	STRIP	
365	90143-0068	S	MM	200	RUBBERSTRIP EMKA 1011-06	
370	90166-0142	S	MM	600	HOSE	
380	90330-0024	-		1	T-PIECE	
390	90330-0083	-		1	NIPPLE	
400	90424-0025	S		2	NOZZLE	
450	312105-0368	-		11	SCREW O4017 M6X16A280	
460	312105-0451	-		2	SCREW SO4017 8X20A280	
480	312605-0316	-		4	NUT M6M6 A280 STAINLESS	
490	315105-0153	-		10	WASHER BRB6,4X12RFR	
500	315105-0165	-		2	WASHER BRB8,4X16RFR	
510	315202-0216	P		3	O-RING 22,2X3	
600	342991-0106	S		2	HOSE CLIP 26-38MMRFR	
F265	C- 476885-0201	-		2	CLEANING HEAD	**201**
F270	C- 476886-0201	-		2	CLEANING HEAD	**203**

Pos	Part No	SP	UN	Qty	Description	Page No

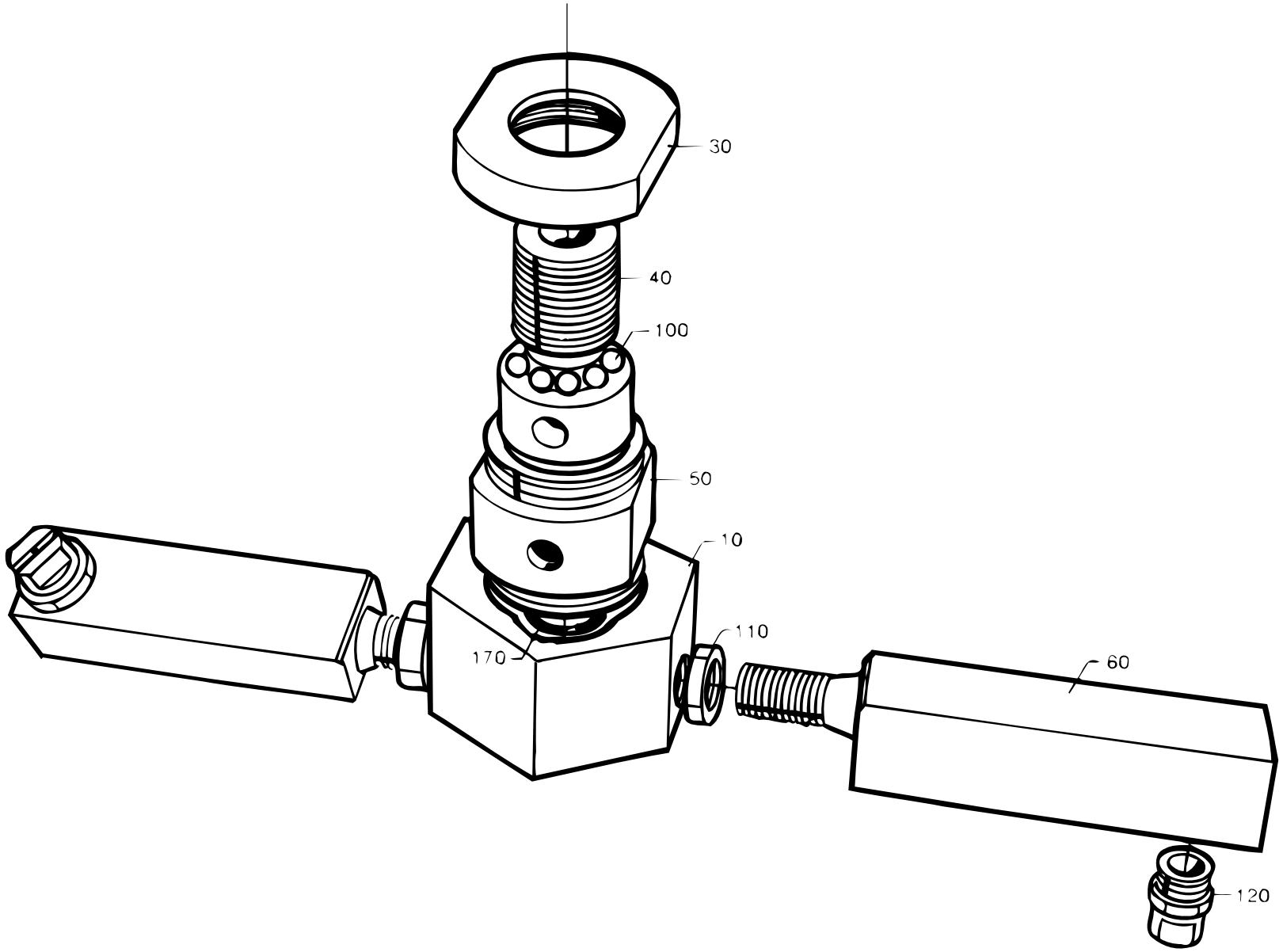

S-476885-1-2
ECN 14358

Pos	Part No	SP	UN	Qty	Description	Page No
COVER						
000	**C- 476885-0201**	**-**		**2**	**CLEANING HEAD**	
CLEANING SYSTEM MACHINE BODY						
000	**C- 476885-0202**	**-**		**1**	**CLEANING HEAD**	
Common parts						
010	440600	C		1	ROTOR	
030	534880	S		1	END SECTION	
040	534878	S		1	SHAFT	
050	534879	S		1	BEARING HOUSING	
060	440605-0001	C		2	PIPE	
100	90090-0020	S		24	BALL	
110	90330-0034	-		2	NUT	
120	90424-0026	S		2	NOZZLE	
170	315202-0211	S		1	O-RING 13,3X2,4	

Pos	Part No	SP	UN	Qty	Description	Page No

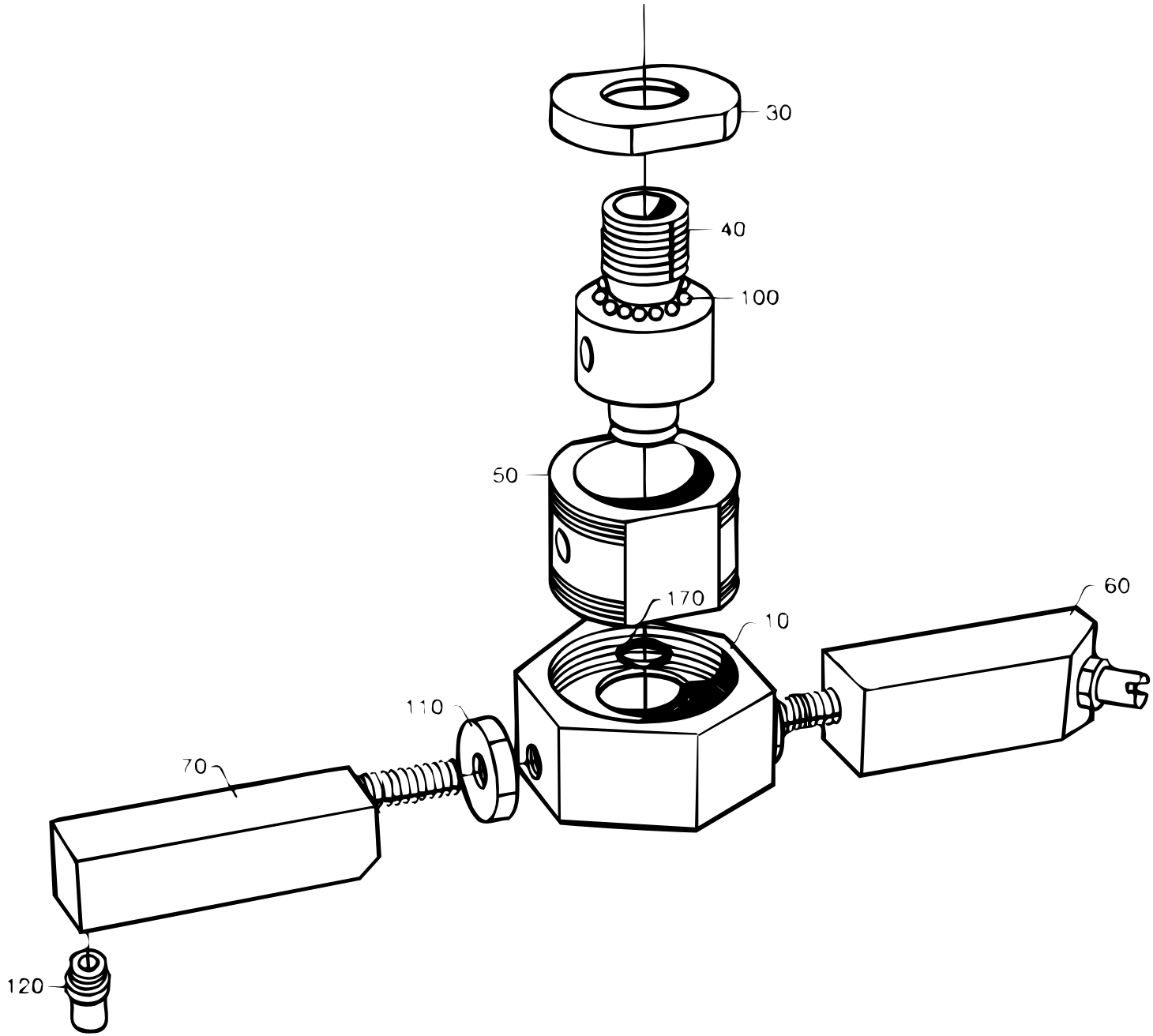

S-476886-1
ECN 14358

Pos	Part No	SP	UN	Qty	Description	Page No
-						
000	**C- 476886-0201**	**-**		**2**	**CLEANING HEAD**	
010	440600	C		1	ROTOR	
030	534880	S		1	END SECTION	
040	534878	S		1	SHAFT	
050	534879	S		1	BEARING HOUSING	
060	440604-0001	C		1	PIPE	
070	440605-0001	C		1	PIPE	
100	90090-0020	S		24	BALL	
110	90330-0034	-		2	NUT	
120	90424-0026	S		2	NOZZLE	
170	315202-0211	S		1	O-RING 13,3X2,4	

Pos	Part No	SP	UN	Qty	Description	Page No

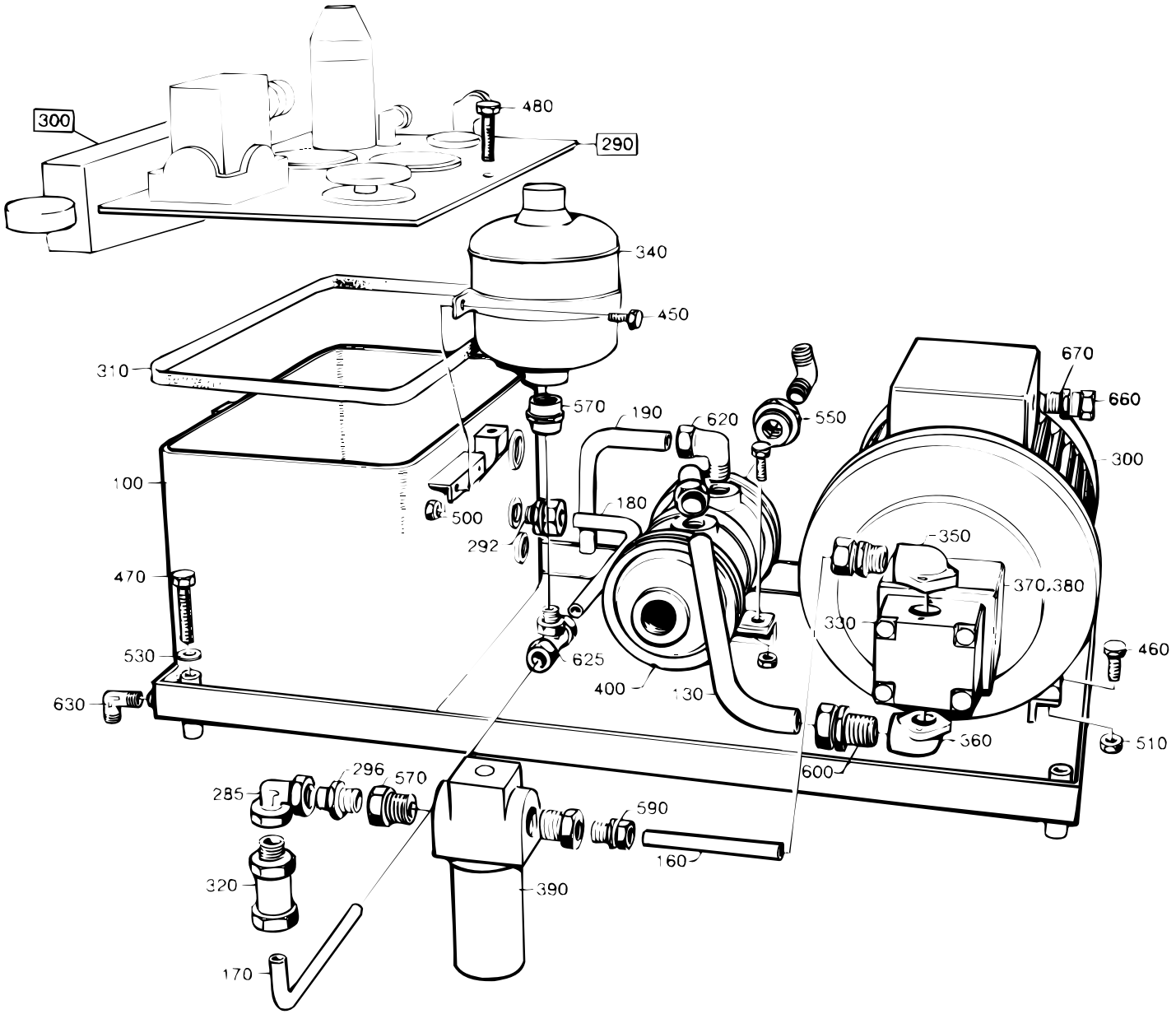

S-434707-1
ECN 15284

Pos	Part No	SP	UN	Qty	Description	Page No
-						
000	**C- 434707-0301**	**-**		**1**	**HYDRAULIC SYSTEM**	
100	252953	-		1	TANK	
130	434710	-		1	PIPE	
160	434714	-		1	PIPE	
170	434717	-		1	PIPE	
180	434718	-		1	PIPE	
190	434719	-		1	PIPE	
285	90030-0121	-		2	PIPE CONNECTION	
292	90030-0157	-		3	CONNECTION	
296	90030-0178	-		1	CONNECTION	
300	90045-0079	-		1	MOTOR	
310	90091-0159	-		1	GASKET	
320	90230-0017	-		1	NON RETURN VALVE	
330	90321-0018	-		1	PUMP	
340	90321-0381	-		1	ACCUMULATOR	
350	90321-0382	-		1	FLANGE	
360	90321-0383	-		1	FLANGE	
370	90321-0384	-		1	DISTANCE PIECE	
380	90321-0385	-		1	COUPLING	
390	90415-0029	-		1	FILTER	
390a	90415-0323	R		0	* FILTERINSERT FOR -29	
400	90422-0008	-		1	COOLER	
400a	315202-0612	P		1	* O-RING 75,80X3,53	
450	312101-0368	-		2	SCREW M6S6X16FZB	
460	312101-0453	-		4	SCREW M6S8X25FZB	
470	312101-0463	-		4	SCREW M6S8X60FZB	
480	312101-0495	-		2	SCREW M6S10X30FZB	
500	312601-0316	-		2	NUT M6M6FZB	
510	312601-0318	-		4	NUT M6M8FZB	
530	315111-0165	-		4	WASHER TBRB8,4X16FZB	
550	342701-0208	-		2	BUSHING RNI3/4"-1/4"	
570	342712-0205	-		3	REDUCER RI1/2"-1/4"	
590	342752-0104	-		1	STRAIGHT C	
600	342752-0114	-		1	STRAIGHT C	
620	342731-0114	-		3	ELBOW PIPE WE15-LRFZB	
625	342741-0108	-		1	T-CONNECTI TA10-LKFZB	
630	342930-0122	-		3	ELBOW PIPE8/6-1/4	
660	352136-0129	-		1	GLAND FITT	
670	352100-0111	-		1	CABLE GLANR.22,5-13,5	
F290	C- 276343-0301	-		1	LID	**207**

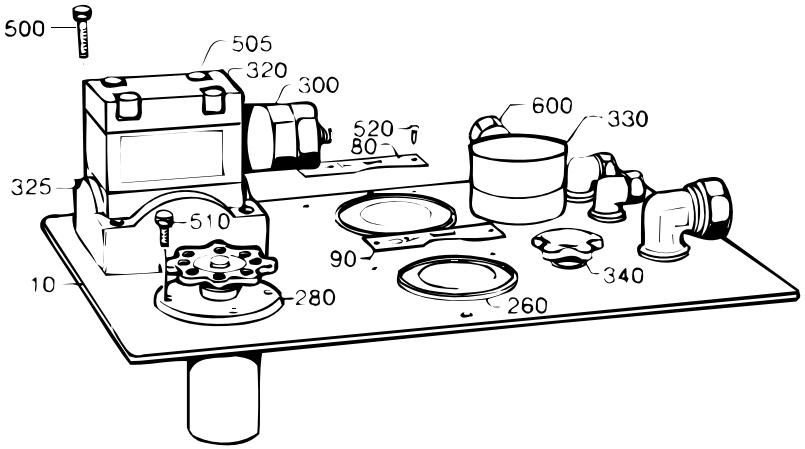
500
505
320
300
520
80
600
330
325
510
90
340
10
280
260

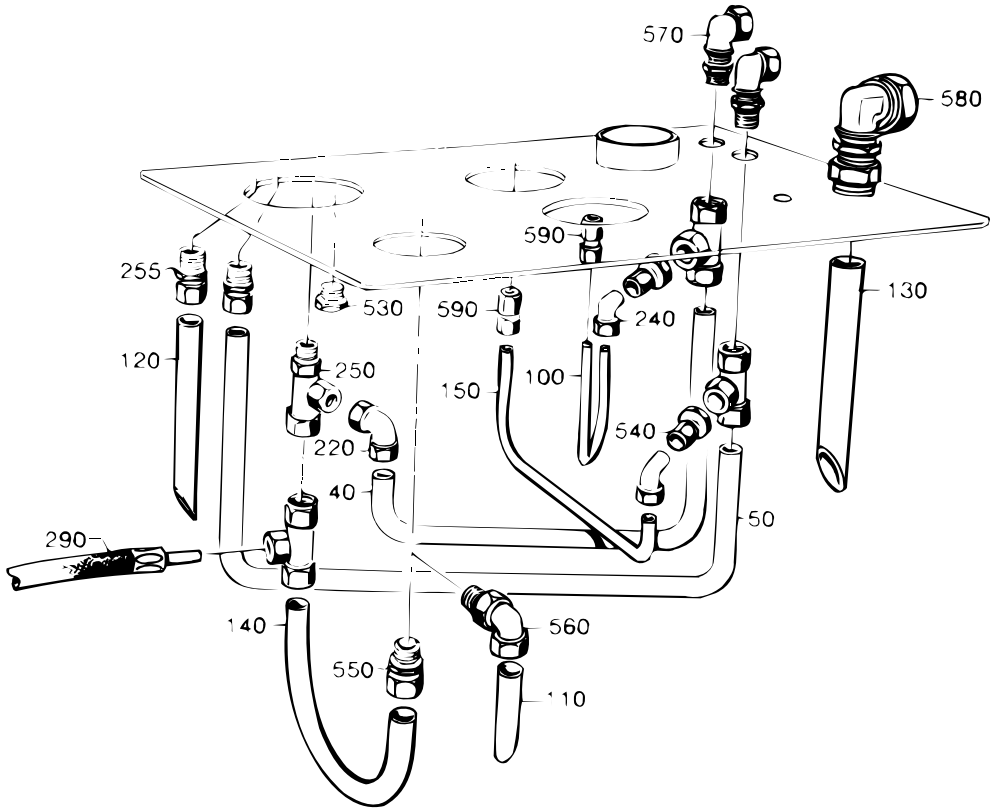
570
580
590
255
530
590
240
130
120
250
150
100
540
220
40
50
290
140
560
550
110

Pos	Part No	SP	UN	Qty	Description	Page No
-						
000	**C- 276343-0301**	**-**		**1**	**LID**	
010	442076	-		1	LID	
040	434708	-		1	PIPE	
050	434709	-		1	PIPE	
080	247385	-		1	SIGN	
090	247386	-		1	SIGN	
100	434711	-		1	PIPE	
110	434712-0001	-		1	PIPE	
120	434712-0002	-		1	PIPE	
130	434713	-		1	PIPE	
140	434715	-		1	PIPE	
150	434716	-		1	PIPE	
220	90030-0121	-		1	PIPE CONNECTION	
240	90030-0146	-		2	CONNECTION	
250	90030-0120	-		4	PIPE CONNECTION	
255	90030-0157	-		3	CONNECTION	
260	90043-0062	S		2	MANOMETER	
280	90113-0044	S		1	PRESSURE REGULATOR	
290	90148-0036	-		1	HOSE	
300	90201-0014	S		1	VALVE	
320	90201-0307	-		1	PLATE	
325	90201-0308	-		1	PLATE	
330	90274-0053	-		1	LEVEL PROBE	
340	90277-0041	-		1	FILTER	
500	312111-0333	-		4	SCREW MC6S5X25FZB	
505	312111-0343	-		4	SCREW MC6S5X60FZB	
510	312111-0368	-		4	SCREW MC6S6X16FZB	
520	312502-0171	-		4	DRIVE SCREKDS2X6FNB	
530	342713-0311	-		1	BLIND PLUG BPS38	
540	342714-0202	-		2	REDUCER KOR10/6-LFZB	
550	342752-0104	-		1	STRAIGHT C	
560	342731-0108	-		1	ELBOW PIPE WE10-LRFZB	
570	342764-0108	-		2	BULKHEAD LWSV10-LFZB	
580	342764-0114	-		1	BULKHEAD LWSV15-LFZB	
590	342790-0102	-		2	GAUGE CONN MAV6-LRFZB	
600	352136-0113	-		1	GLAND FITT	

Pos	Part No	SP	UN	Qty	Description	Page No

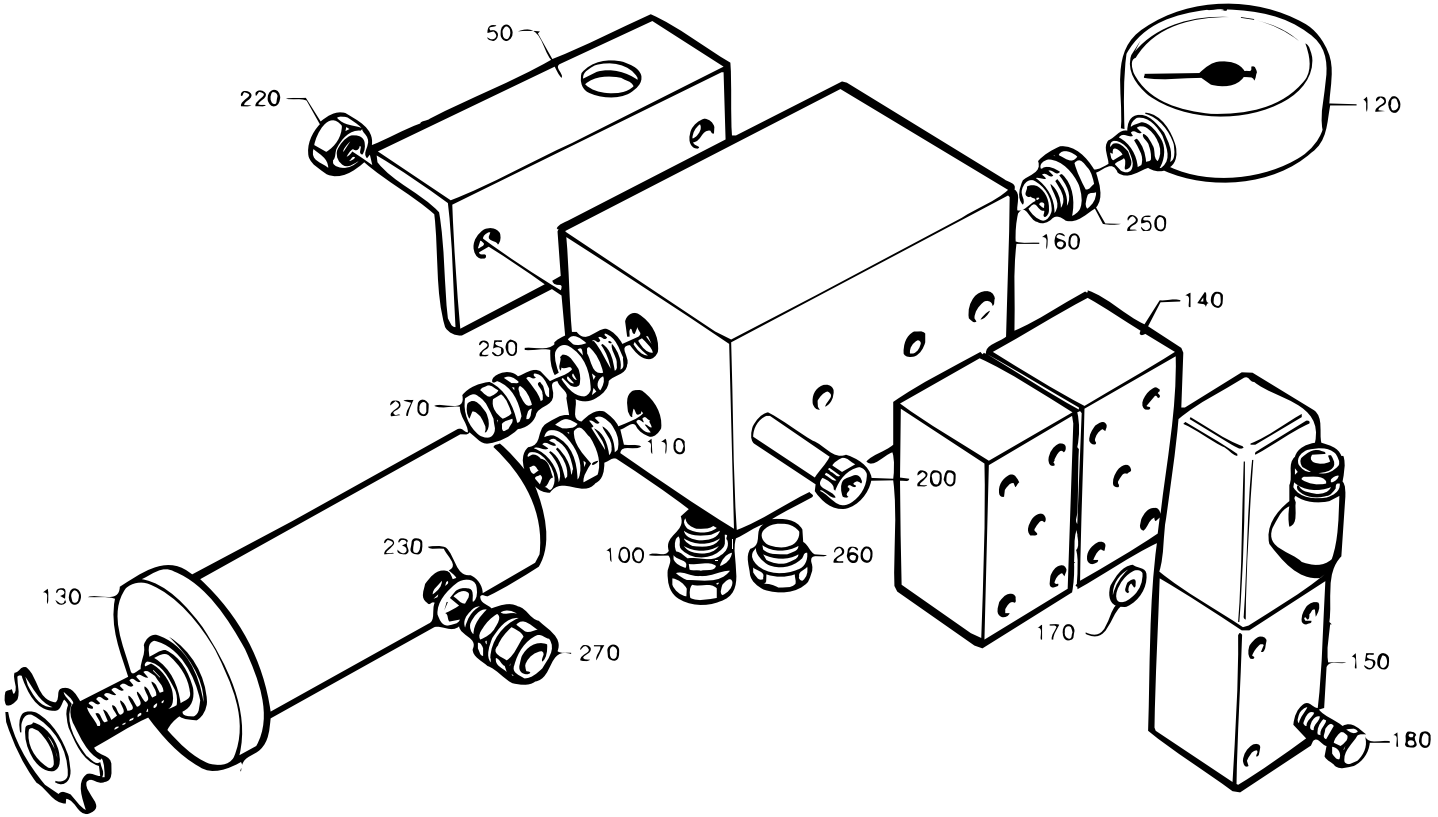
50
220
120
250
160
140
250
270
110
200
230
100
260
130
270
170
150
180

Pos	Part No	SP	UN	Qty	Description	Page No
-						
000	**C- 442077-0201**	**-**		**1**	**DECREASE OF PRESSURE**	
050	442078	-		1	CANTILEVER	
100	90030-0157	-		2	CONNECTION	
110	90030-0183	-		1	NIPPLE	
120	90043-0075	-		1	PRESSURE GAUGE	
130	90113-0044	-		1	PRESSURE REGULATOR	
140	90201-0010	-		2	VALVE	
140a	90201-0300	R		0	* PLATE	
140b	90201-0301	R		0	* SPRING	
140c	90201-0302	R		0	* WASHER	
150	90201-0058	-		2	SOLENOID VALVE	
160	90201-0309	-		1	BLOCK	
170	90201-0302	-		2	WASHER	
180	90201-0303	-		2	SPARE PARTS KIT	
200	312111-0345	-		2	SCREW MC6S5X70FZB	
220	312601-0314	-		2	NUT M6M5FZB	
230	315111-0179	-		1	WASHER	
250	342712-0205	-		2	REDUCER RI1/2"-1/4"	
260	342713-0311	-		2	BLIND PLUG BPS38	
270	342752-0104	-		2	STRAIGHT C	

Pos	Part No	SP	UN	Qty	Description	Page No

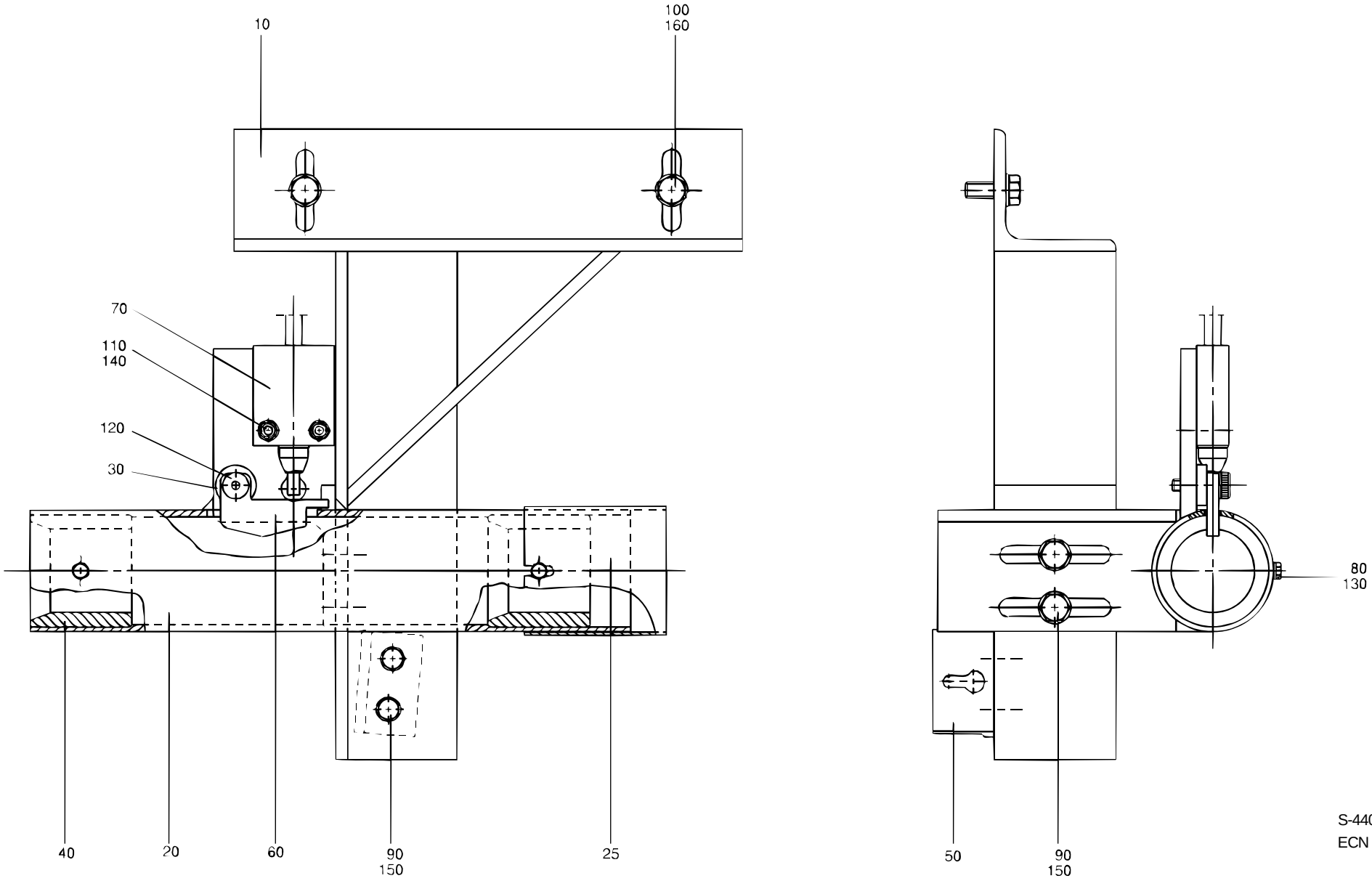

S-440098-3
ECN 19395

Pos	Part No	SP	UN	Qty	Description	Page No
-						
000	**C- 440098-0301**	**-**		**1**	**CRANK BRACKET**	
010	434659	-		1	CRANK BRACKET	
020	541009	-		1	CRANK HOLDER	
025	574652	-		1	PROTECTION	
030	20770	-		1	WASHER	
040	434661	-		2	BUSHING	
050	434664	-		1	BRACKET	
060	569163	-		1	ARM	
070	90044-0094	-		1	LIMIT SWITCH HONEYWELL	
080	312101-0289	-		2	SCREW M6S4X10FZB	
090	312101-0368	-		2	SCREW M6S6X16FZB	
100	312101-0451	-		4	SCREW M6S8X20FZB	
110	312111-0329	-		2	SCREW MC6S5X16FZB	
120	312180-0447	-		1	REAMED BOL	
130	315101-0136	-		2	WASHER BRB4,3X8FZB	
140	315101-0146	-		2	WASHER BRB5,3X10FZB	
150	315101-0153	-		2	WASHER BRB6,4X12FZB	
160	315111-0165	-		4	WASHER TBRB8,4X16FZB	

Pos	Part No	SP	UN	Qty	Description	Page No

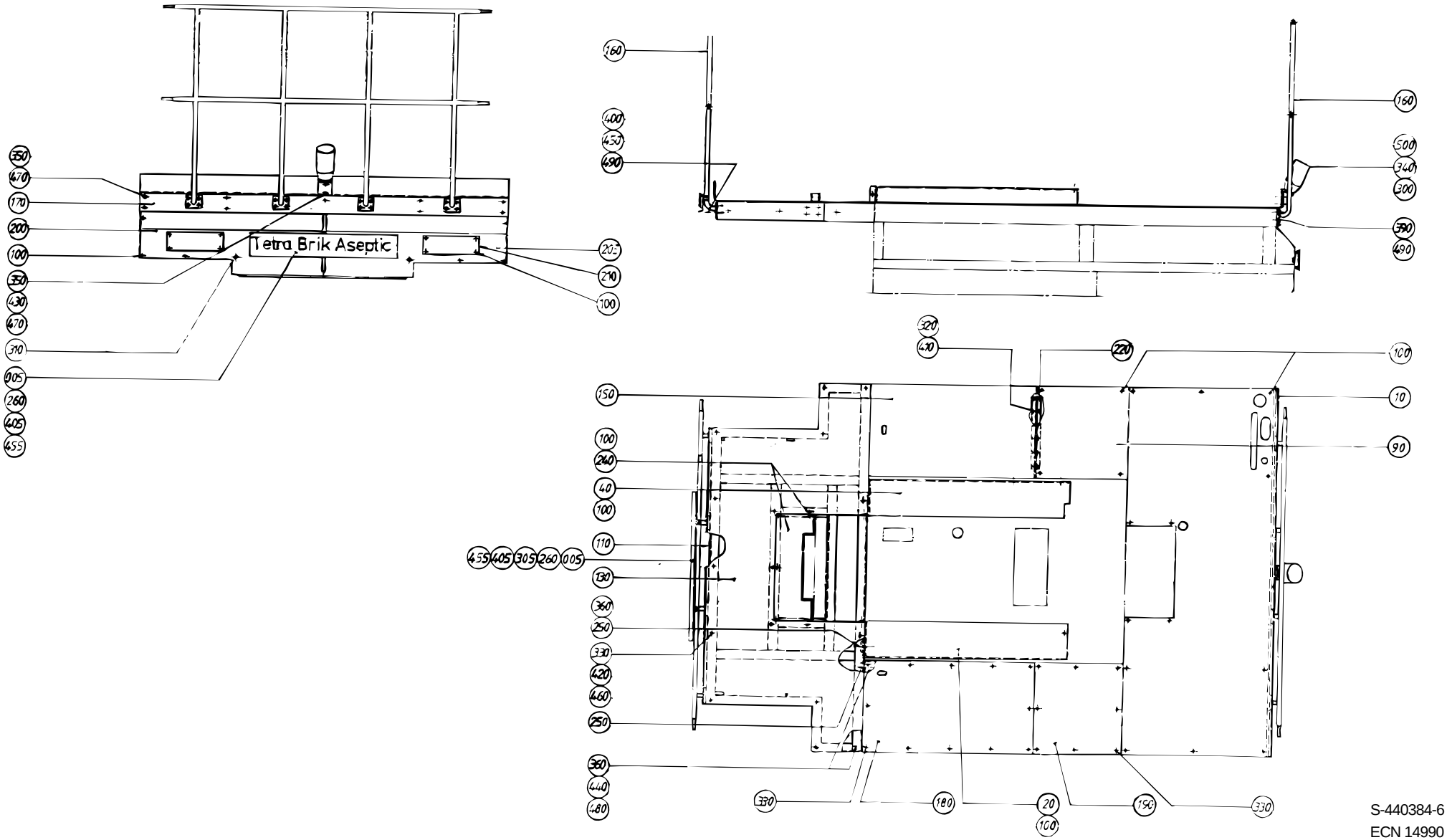

S-440384-6
ECN 14990

Pos	Part No	SP	UN	Qty	Description	Page No
-						
000	**C- 440384-0501**	**-**		**1**	**PLATFORM**	
005	544527	-		2	MACHINE PLATE TBA	
010	927319	-		1	PLATFORM	
020	279807	-		1	COVER	
040	279885	-		1	COVER	
090	576833	-		1	PLATFORM	
100	90287-0075	-		40	SCREW	
110	440385	-		1	CANTILEVER	
130	440386	-		1	PLATFORM REAR	
150	576835	-		1	PLATFORM COVER	
160	263323	-		2	RAILING	
170	263612	-		1	RAIL	
180	269274	-		1	PLATFORM COVER	
190	269275	-		1	PLATFORM COVER	
200	548346	-		1	FRONT GUARD	
205	560799	-		1	FRONT GUARD	
210	548348	-		2	HATCH	
220	239847	-		1	HINGE	
240	440389	-		1	HATCH	
250	445858	-		4	WASHER	
260	544533	-		4	PLASTIC PEHD 21172-10	
300	90036-0038	-		1	BULB 24V 25W E27	
305	90165-0086	-		2	CRAMP	
310	90287-0062	-		2	SCREW	
320	90287-0074	-		12	SCREW	
330	90287-0076	-		38	SCREW	
340	90419-0005	-		1	ALARM BEACON,RED 24V	
340a	90419-0302	S		1	* LENS RED FOR -304	
350	312101-0453	-		10	SCREW M6S8X25FZB	
360	312101-0540	-		6	SCREW M6S12X40FZB	
390	312105-0491	-		16	SCREW 4017 M10X20A280	
400	312105-0493	-		16	SCREW 4017 M10X25A280	
405	312155-0370	-		4	SCREW MF6S6X20RFR	
410	312601-0312	-		12	NUT M6M4FZB	
420	312601-0316	-		19	NUT M6M6FZB	
430	312601-0318	-		2	NUT M6M8FZB	
440	312601-0322	-		4	NUT M6M12FZB	
450	312605-0320	-		32	NUT M6M10RFR	
455	312812-0316	-		4	LOCK NUT A2-M6RFR	
460	315101-0153	-		19	WASHER BRB6,4X12FZB	
470	315101-0165	-		10	WASHER BRB8,4X16FZB	
480	315101-0178	-		6	WASHER BRB13X24FZB	
490	315105-0173	-		48	WASHER BRB10,5X22RFR	
500	352136-0113	-		1	GLAND FITT	

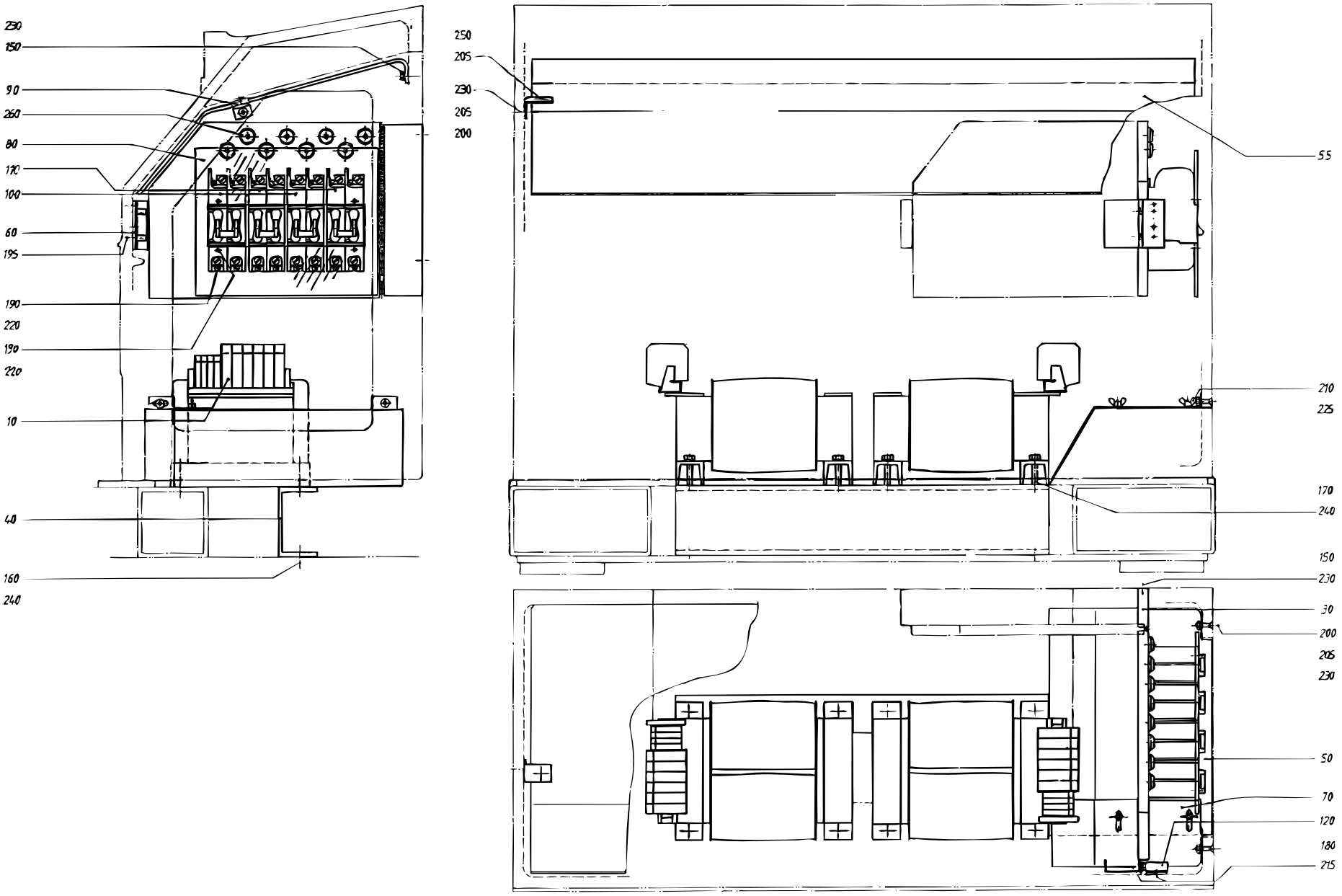

S-440415-3
ECN 20547

Pos	Part No	SP	UN	Qty	Description	Page No
-						
000	**C- 440415-0201**	**-**		**1**	**TRANSFORMER**	
010	23127-0101	-		2	TRANSFORMER	
030	450299	-		1	SWIVEL PLATE	
040	450300	-		1	BEAM	
050	450667	-		1	SPLASH GUARD	
055	451088	-		1	PROTECTION	
060	450301	-		1	FASTENING PLATE	
070	450668	-		1	SPLASH GUARD	
080	450669	-		1	TOUCH GUARD	
090	451089	-		2	BRACKET	
100	90007-0100	-		2	FUSE H.MANN 2P 60A 2	
110	90007-0101	-		2	FUSE H.MANN 2P 100A 2	
120	90237-0046	-		1	LOCK PART	
150	312105-0366	-		4	SCREW O4017 M6X12A280	
160	312101-0451	-		4	SCREW M6S8X20FZB	
170	312101-0461	-		8	SCREW M6S8X50FZB	
180	312125-0220	-		4	SLOTTED HEMCS3X6RFR	
190	312121-0291	-		20	SLOTTED HEMCS4X12FZB	
195	312145-0366	-		2	SLOTTED HEMFS6X12RFR	
200	312155-0372	-		4	SCREW MF6S6X25RFR	
205	312605-0316	-		6	NUT M6M6 A280 STAINLESS	
210	312715-0114	-		2	WING NUT MVM-K 5 A2	
215	315105-0124	-		4	WASHER BRB3,2X6RFR	
220	315101-0136	-		12	WASHER BRB4,3X8FZB	
225	315105-0146	-		2	WASHER BRB5,3X10RFR	
230	315105-0153	-		8	WASHER BRB6,4X12RFR	
240	315101-0165	-		12	WASHER BRB8,4X16FZB	
250	315121-0153	-		2	WASHER TBRSB6,4X22FZB	
260	352101-0103	-		8	CABLE GLAND 6-11MM PR18,6	

Pos	Part No	SP	UN	Qty	Description	Page No

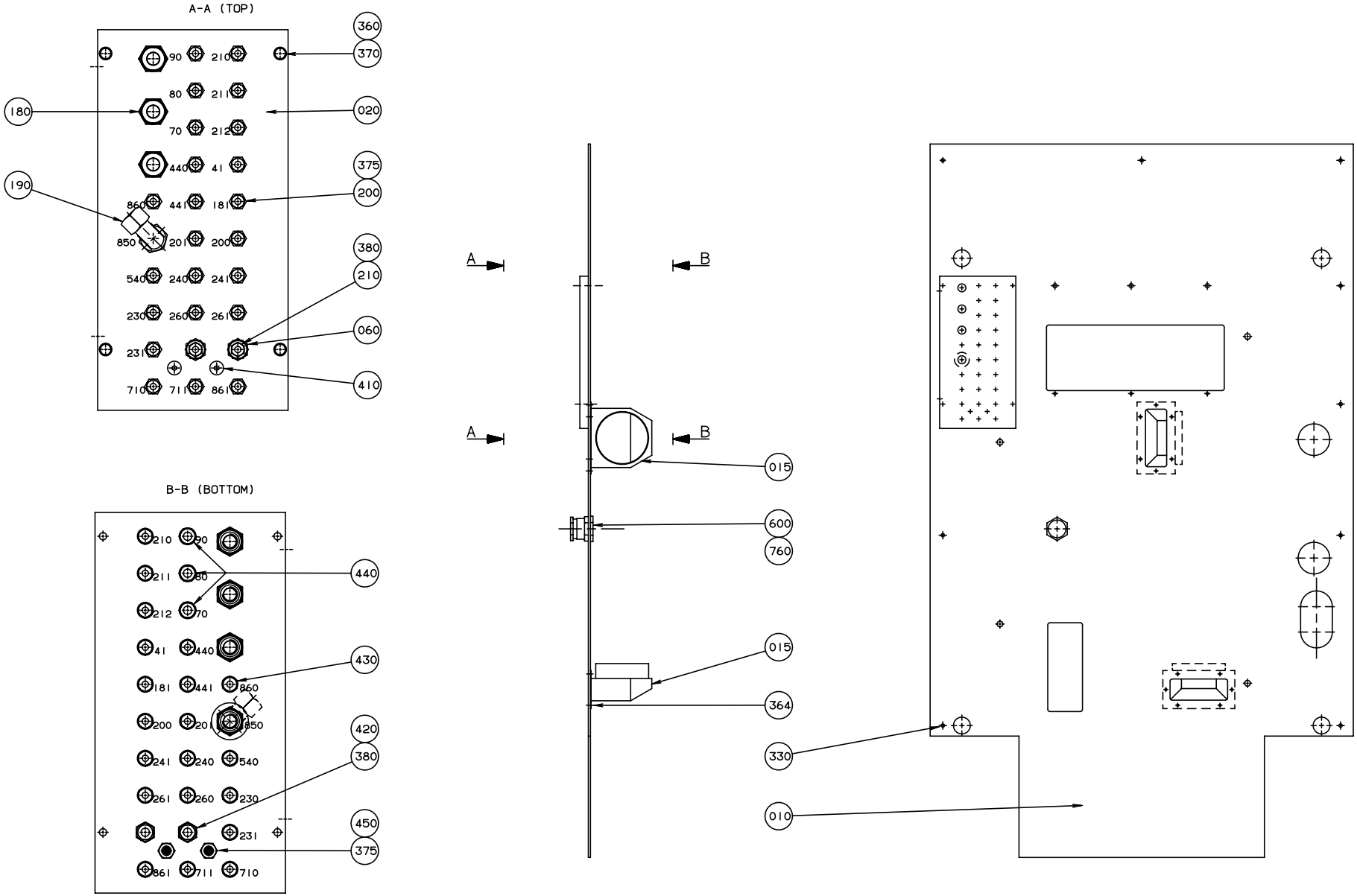

S-440422-11
ECN 19406

Pos	Part No	SP	UN	Qty	Description	Page No
-						
000	**C- 440422-0601**	**-**		**1**	**BOTTOM PLATE**	
010	553842	-		1	BOTTOM PLATE	
015	440424	-		2	DRUM	
020	553841	-		1	LEAD-IN PLATE	
060	279804	-		2	BUSHING	
180	90030-0030	-		3	PIPE CONNECTION	
190	90030-0221	-		1	BULKHEAD LEAD-IN	
200	90224-0307	-		23	CONNECTION	
210	90224-0331	-		2	CONNECTION	
330	90287-0075	-		9	SCREW	
360	312101-0378	-		4	SCREW M6S6X40FZB	
364	312121-0321	-		12	SLOTTED HEMCS5X6FZB	
370	315101-0153	-		4	WASHER BRB6,4X12FZB	
375	315233-0109	-		25	SEAL RING R1/8"	
380	315233-0110	-		4	SEAL RING R1/4"	
410	342713-0209	-		2	BLIND PLUG	
420	90224-0319	-		2	CONNECTION	
430	342722-0202	-		20	PIPE COUPLD=6-R1/8"	
440	342722-0204	-		3	PIPE COUPLD=8-R1/8"	
450	90163-0057	-		2	NIPPLE	
600	90099-0085	-		1	NUT	
760	352100-0127	-		1	CABLE GLANR.47-34,5	

Pos	Part No	SP	UN	Qty	Description	Page No

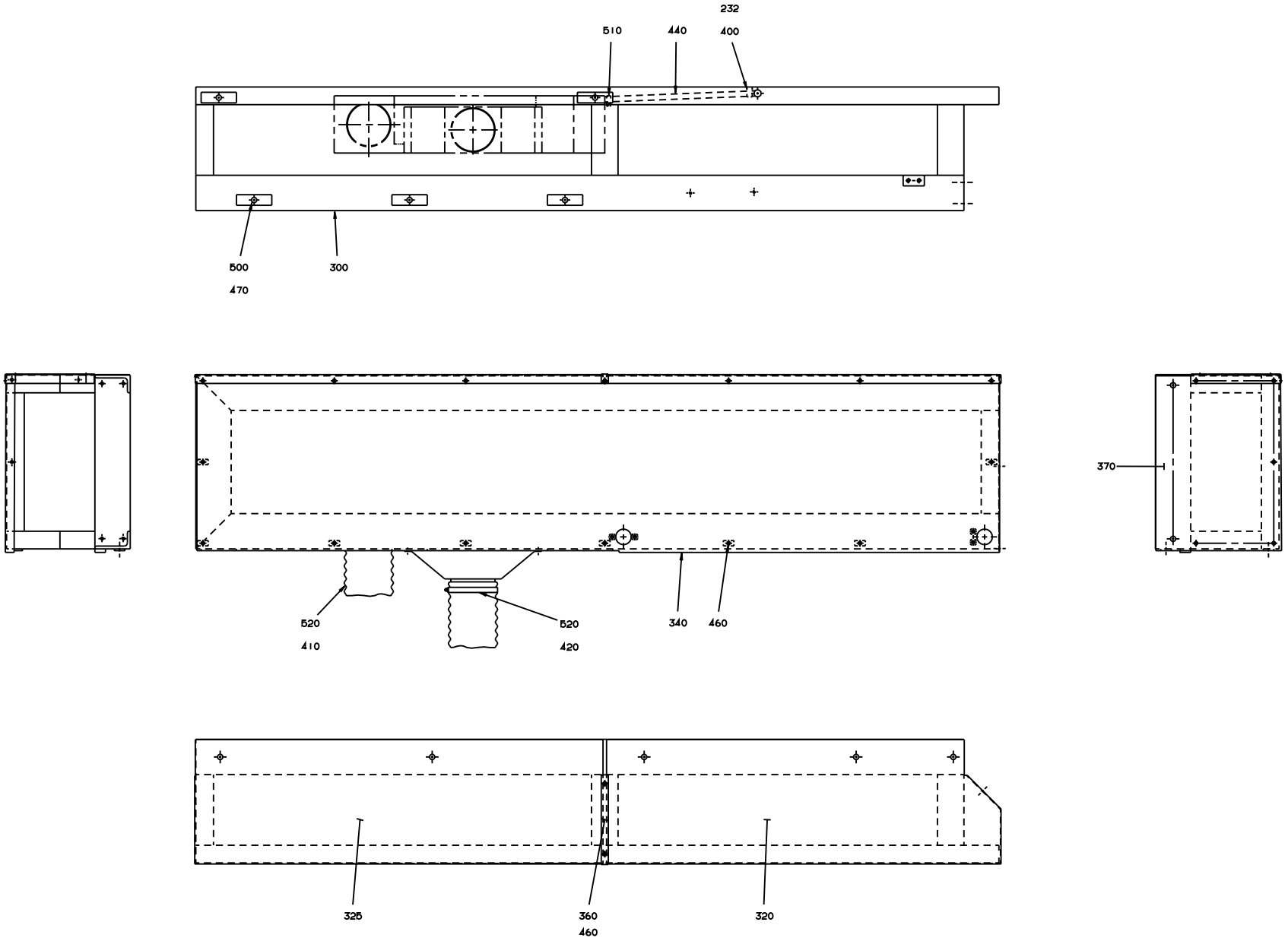

S-440437-5
ECN 16071

Pos	Part No	SP	UN	Qty	Description	Page No
-						
000	**C- 440437-0301**	**-**		**1**	**BOX LEFT**	
232	312121-0287	-		1	SLOTTED HEMCS4X8FZB	
300	560798	-		1	SIDE PIECE	
320	564519	-		1	SIDE PLATE	
325	564520	-		1	SIDE PLATE	
340	548344	-		1	BOTTOM PANEL	
360	564523	-		1	RIM	
370	542697	-		1	COVER PLATE L	
400	90074-0004	-		1	CABLE CLIP JR16 STAINLESS	
410	90152-0032	-	MM	1000	HOSE	
420	90152-0032	-	MM	1300	HOSE	
440	90166-0007	-	MM	1200	HOSE	
460	90287-0075	-		33	SCREW	
470	312101-0540	-		5	SCREW M6S12X40FZB	
500	315101-0178	-		5	WASHER BRB13X24FZB	
510	342991-0101	-		1	HOSE CLIP 11-17MMRFR	
520	342991-0115	-		4	HOSE CLIP 104-138MMRFR	
F360	C- 566683-0101	-		1	AIR COOLER	**221**

Pos	Part No	SP	UN	Qty	Description	Page No

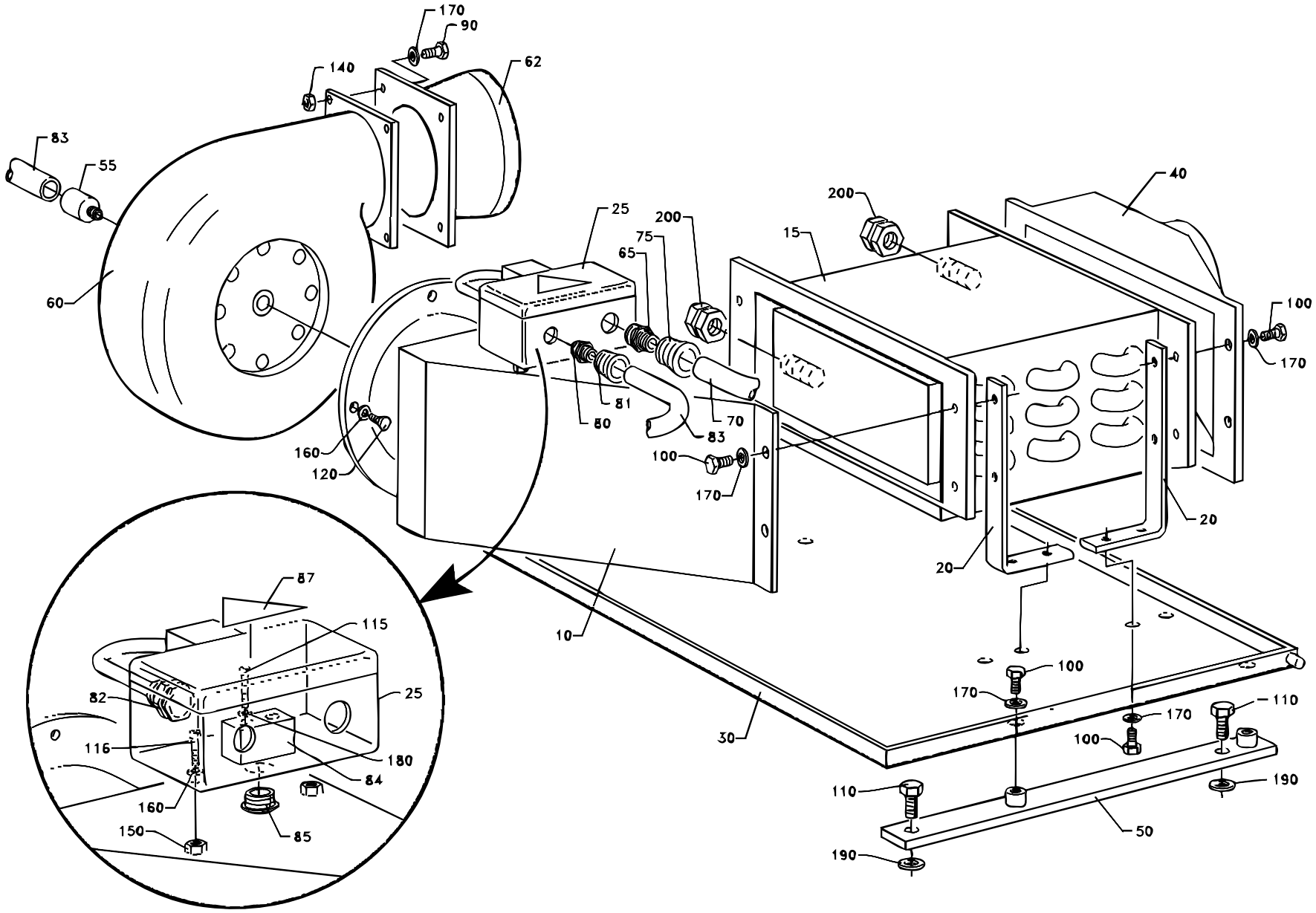

S-566683-1
ECN 20621

Pos	Part No	SP	UN	Qty	Description	Page No
-						
000	**C- 566683-0101**	**-**		**1**	**AIR COOLER**	
010	928837	C		1	AIR DISTRIBUTOR	
015	495201	-		1	COOLING ELEMENT	
020	566685	C		4	BRACKET	
025	450495	C		1	CONNECTION BOX	
030	566686	C		1	CONDENSATE TRAY	
040	566687	C		1	NOZZLE	
050	440349	C		2	FASTENING IRON	
055	456256	C		1	PROTECTIVE COVER	
058	546929	C		1	FILTER	
060	90264-0019	C		1	FAN 230V 250W 595M3/H	
062	90264-0344	-		1	FAN CASING	
065	352136-0127	-		1	GLAND FITT	
070	352135-0106	-	MM	800	HOSE .016	
075	352100-0106	-		1	CABLE GLANR.18,6-10,5	
080	90012-0063	-		1	GLAND	
081	352100-0100	-		1	CABLE GLANR.15,2-7,5	
082	352103-0101	-		1	CABLE GLAND ST 9	
083	90152-0033	-	MM	1000	HOSE	
084	90077-0102	-		1	TERMINAL BK4 KRG 4-POLE	
085	90002-0013	-		1	BLANK-OFF PLUG 15,2	
087	90194-0016	-		1	SIGN "FLASH SIGN" 50X50MM	
090	312101-0366	C		4	SCREW M6S6X12FZB	
100	312101-0364	C		20	SCREW	
110	312101-0449	C		2	SCREW M6S8X16FZB	
115	312121-0230	-		2	SLOTTED HEMCS3X20FZB	
116	312121-0293	-		2	SLOTTED HEMCS4X16FZB	
120	312101-0287	C		4	SCREW M6S4X8FZB	
140	312601-0316	C		4	NUT M6M6FZB	
150	312821-0102	C		2	HEXAGON WETSMUTTER M4 RFR	
160	315101-0136	-		6	WASHER BRB4,3X8FZB	
170	315101-0153	C		24	WASHER BRB6,4X12FZB	
180	315101-0124	-		2	WASHER BRB3,2X6FZB	
190	315101-0165	C		4	WASHER BRB8,4X16FZB	
200	342723-0114	C		2	PIPE COUPLING GI-15-1/2"	

Pos	Part No	SP	UN	Qty	Description	Page No

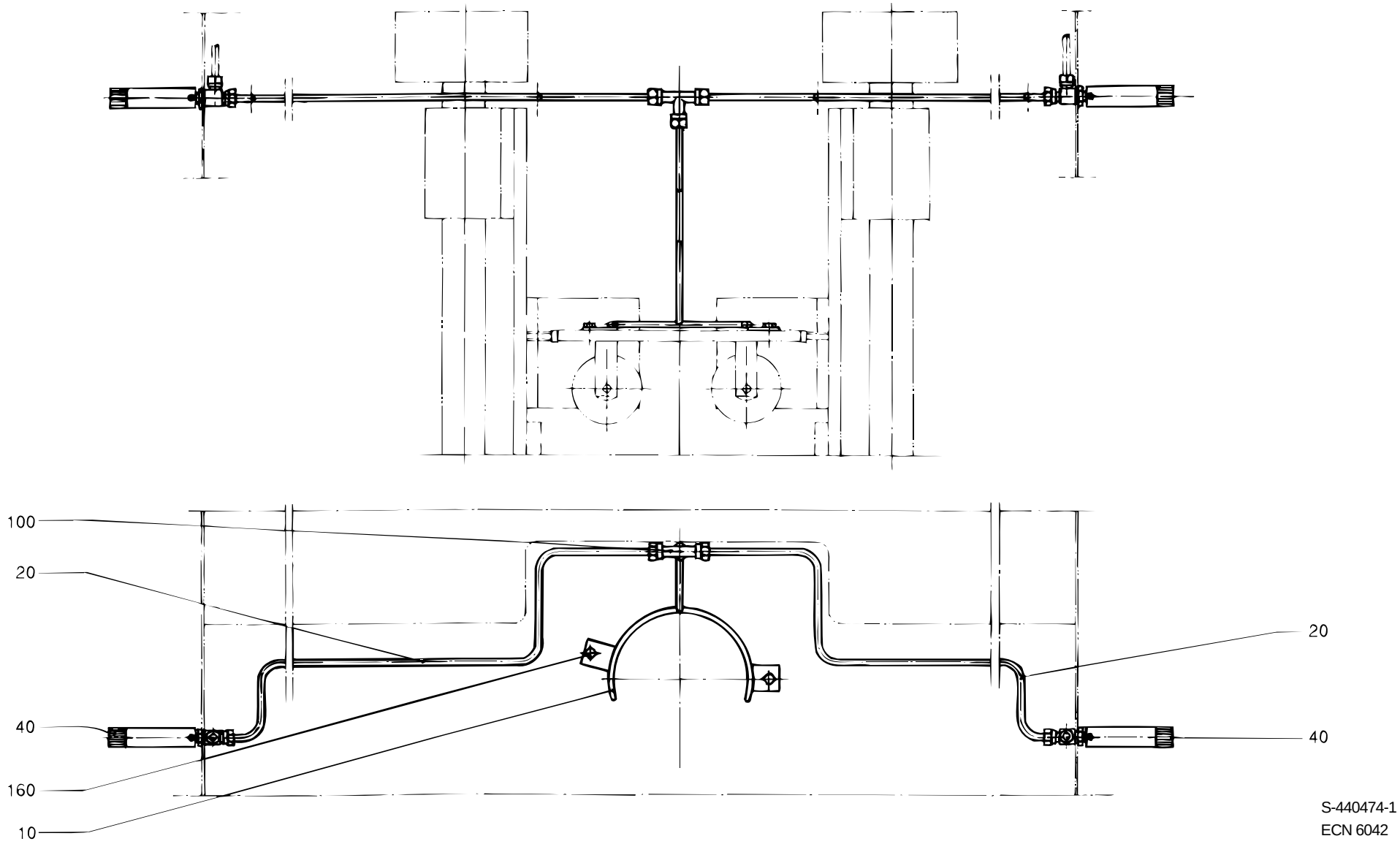

S-440474-1
ECN 6042

Pos	Part No	SP	UN	Qty	Description	Page No
VOLUMES 1055 B, 1000 B, 1000 S, 1000 Sq, 750 B, 750 S, 568 B, 500 B, 500 S, 355 S, 400 B, 500 Sq						
000	**C- 440474-0101**	**-**		**1**	**TUBE FLUSHING DEVICE**	
010	539612	-		1	SPREADER	
VOLUME 375 S						
000	**C- 440474-0102**	**-**		**1**	**TUBE FLUSHING DEVICE**	
010	539613	-		1	SPREADER	
Common parts						
020	450340	-		2	PIPE	
040	445583	-		2	VALVE	
040a	315202-0500	P		1	* O-RING ,42X1,53	
040b	315202-0501	P		1	* O-RING 2,90X1,78	
100	90030-0076	-		1	CONNECTION	
160	312105-0325	-		2	SCREW M6S5X10 A2 80	

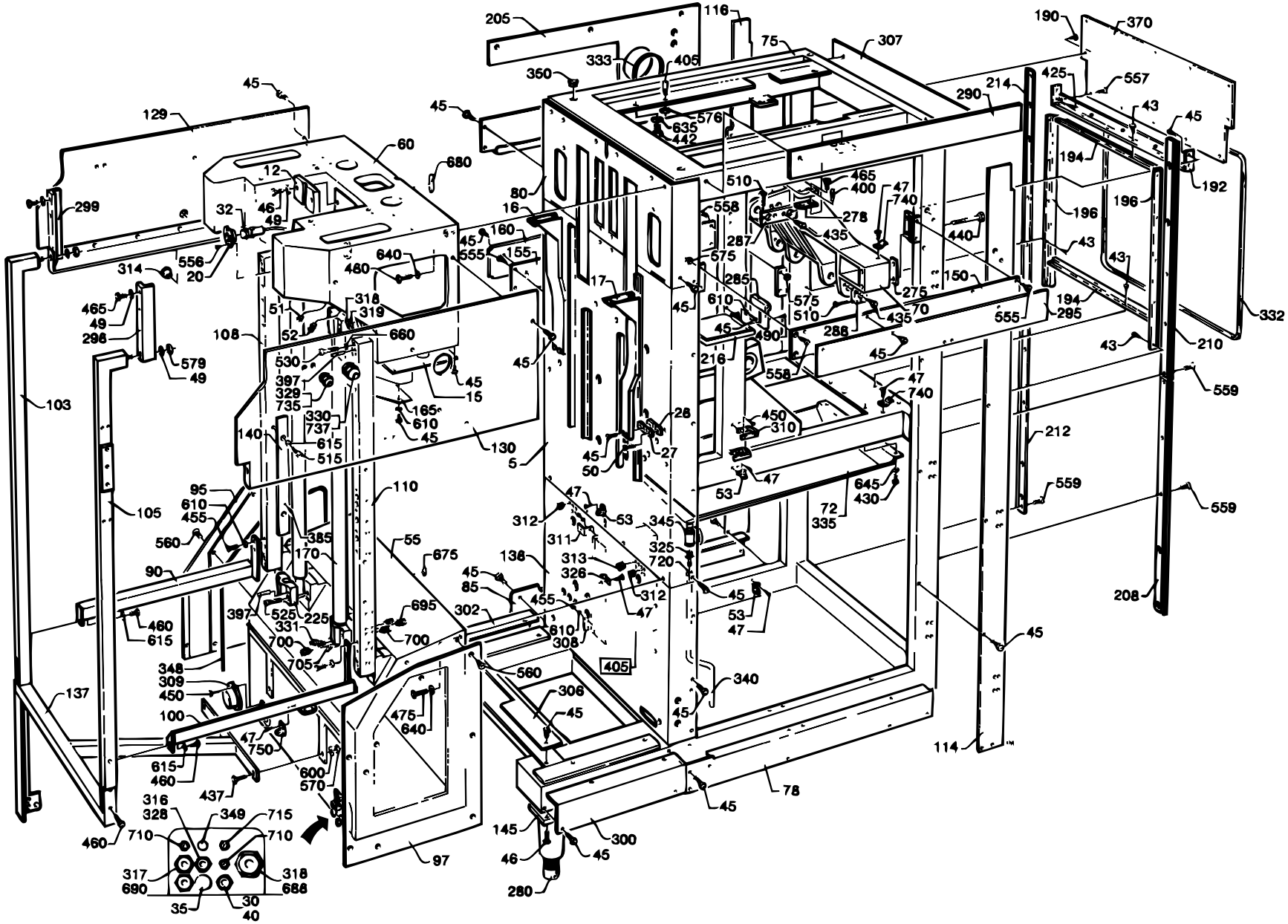

S-440537-3-6-7
ECN 16850

Pos	Part No	SP	UN	Qty	Description	Page No
HI, NORMFIN						
000	**C- 440537-0501**	**-**		**1**	**MACHINE BODY**	
005 1	530469	-		1	FRONT PLATE	
015 1	544703	-		2	MOUNTING SHEET	
016	542702	-		1	COVER PLATE L	
017	542703	-		1	COVER PLATE R	
020	450457	-		1	FLANGE	
027	542398	-		2	HOLDER	
028	542399	-		2	HOLDER	
030	90030-0030	-		1	PIPE CONNECTION	
032	90044-0095	-		1	PROX.SWITCH IFM 3010BPKG	
035	90261-0018	-		1	PIPE PLUG	
040 1	90266-0010	-	MM	35	TUBE	
043	312101-0323	-		22	SCREW M6S5X8FZB	
045	312105-0364	-		110	SCREW M6S6X10RFR	
046	312105-0493	-		16	SCREW 4017 M10X25A280	
047	312125-0287	-		13	SLOTTED HEMCS4X8RFR	
049	315105-0173	-		12	WASHER BRB10,5X22RFR	
050	312115-0368	-		4	SCREW O4762 M6X16A280	
051	352101-0103	-		5	CABLE GLAND 6-11MM PR18,6	
052	352103-0105	-		2	CABLE GLANR.STR 11	
053	352135-0202	-		4	CRAMP 16	
450	312105-0327	-		8	SCREW ISO 4017 M5X12A280	
695	342920-0113	-		2	PIPE COUPL6/4-1/8	
705	90330-0066	-		5	PLUG	
IH, REVFIN						
000	**C- 440537-0506**	**-**		**1**	**MACHINE BODY**	
005 1	530469	-		1	FRONT PLATE	
015 1	544703	-		2	MOUNTING SHEET	
016	542702	-		1	COVER PLATE L	
017	542703	-		1	COVER PLATE R	
020	450457	-		1	FLANGE	
027	542398	-		2	HOLDER	
028	542399	-		2	HOLDER	
030	90030-0030	-		1	PIPE CONNECTION	
032	90044-0095	-		1	PROX.SWITCH IFM 3010BPKG	
035	90261-0018	-		1	PIPE PLUG	
040 1	90266-0010	-	MM	35	TUBE	
043	312101-0323	-		22	SCREW M6S5X8FZB	
045	312105-0364	-		110	SCREW M6S6X10RFR	
046	312105-0493	-		16	SCREW 4017 M10X25A280	
047	312125-0287	-		13	SLOTTED HEMCS4X8RFR	
049	315105-0173	-		12	WASHER BRB10,5X22RFR	
050	312115-0368	-		4	SCREW O4762 M6X16A280	
051	352101-0103	-		5	CABLE GLAND 6-11MM PR18,6	
052	352103-0105	-		2	CABLE GLANR.STR 11	
053	352135-0202	-		4	CRAMP 16	
450	312105-0327	-		8	SCREW ISO 4017 M5X12A280	
695	342920-0113	-		10	PIPE COUPL6/4-1/8	
705	90330-0066	-		1	PLUG	
Common parts						
055	G- 543151	-		1	CANTILEVER	
060	G- 531182	-		1	CANTILEVER	
070	G- 267835	-		1	CANTILEVER	
072	283884	-		1	OIL TROUGH	
075	436776	-		1	MACHINE BODY	
078	269285	-		1	PROTECTION PLATE	
080	273751	-		1	FRONT PLATE	
085	273753	-		1	PROTECTION PLATE	
090	285801	-		1	BEAM	
095	293158	-		1	HATCH	
097	293159	-		1	HATCH	
100	297576	-		1	BEAM	
103	297669	-		1	POST	
105	297670	-		1	POST	
108	434919	-		1	COLUMN LEFT	
110	434920	-		1	COLUMN RIGHT	
114	440023	-		1	PROTECTION PLATE	
116	440024	-		1	PROTECTION PLATE	
129	566646	-		1	SIDE GUARD	
130	566645	-		1	SIDE GUARD	
137	440702	-		1	BEAM	
138	540725	-		1	FRONT PLATE, LOWER	
140	283992	-		2	RULER	
145	247080	-		4	BRACKET	
150	269291	-		1	RULER	
155	269294	-		1	RULER	
160	269295	-		1	PROTECTION PLATE	
165	476824	-		1	COVERING PLATE	
170	279370	C		2	STEERING	
190	440025	-		1	PROTECTION PLATE	
192	440026	-		1	CANTILEVER	
194	440027	-		2	RIM	
196	440028	-		2	RIM	

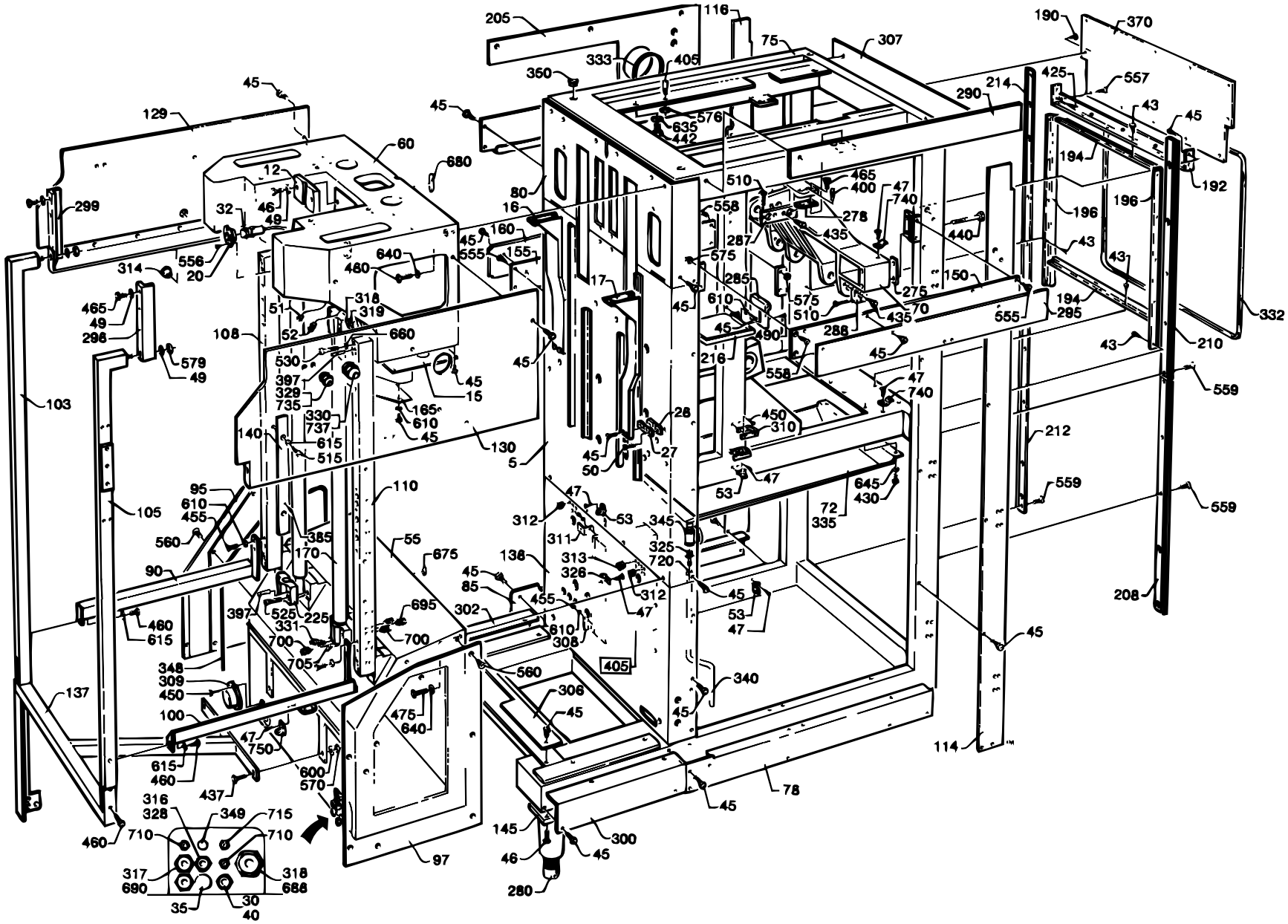
205
116
190
370
75
307
333
405
350
425
557
290
214
43
45
129
45
576
635
442
45
60
680
12
194
192
80
510
465
400
47
740
16
558
278
196
196
299
32
46
49
45
160
435
440
43
287
555
155
575
640
460
150
314
556
20
17
285
275
43
318
319
610
575
510
435
70
555
194
295
332
465
49
298
51
52
660
108
490
288
45
210
579
49
530
216
45
559
397
329
735
45
15
558
47
740
103
330
737
165
610
45
28
450
310
212
140
615
515
130
5
45
50
27
47
559
95
610
455
110
105
53
645
430
72
335
559
312
47
53
345
560
385
311
325
720
55
675
313
326
138
45
85
455
312
47
45
53
47
90
170
302
610
308
460
615
397
525
225
331
700
695
700
705
405
560
306
45
340
348
309
450
137
100
475
640
47
750
615
460
600
570
437
316
328
349
715
710
710
460
317
690
318
688
35
30
40
97
145
46
280
300
45
78
114
45
45
45

Pos	Part No	SP	UN	Qty	Description	Page No
205	440077	-		1	COVERING PLATE	
208	440203	-		1	RULER	
210	440204	-		1	RULER	
212	440205	-		1	RULER	
214	440206	-		1	RULER	
216	479374	-		1	DRIP PLATE	
225	531365	-		4	BRACKET	
275	243573	-		2	LACE	
278	538245	-		2	SHIM	
280	247082	-		4	LEG	
285	263828	-		1	JUNCTION RAIL	
287	267462	-		2	LOCK SHEET	
288	267463	-		2	LOCK SHEET	
290	269296	-		1	PROTECTION PLATE	
295	269297	-		1	PROTECTION PLATE	
298	484212	-		1	BRACKET	
299	484213	-		1	BRACKET	
300	293160	-		1	COVERING PLATE	
302	293161	-		1	COVERING PLATE	
306	450298	-		1	COVERING PLATE	
307	450342	-		1	COVERING PLATE	
308	540726	-		2	HOOK HOLDER	
309	543152	-		1	HOSE ATTACHMENT	
310	457357	-		2	BRACKET	
311	540727	-		1	FASTENING BRACKET	
312	90015-0010	-		16	BUSHING	
313	90015-0011	-		1	BUSHING	
314	90015-0021	-		1	BUSHING	
316	90030-0066	-		1	GROMMET	
317	90030-0067	-		2	GROMMET	
318	90030-0159	-		2	GROMMET	
319	90030-0179	-		1	GROMMET	
325	90055-0033	-		1	HOSE CLAMP	
326	90074-0001	-		1	CABLE CLIP JR10 STAINLESS	
328	90090-0014	-		1	STEEL BALL	
329	90099-0004	-		1	NUT	
330	90099-0011	-		1	NUT PR 37 BRASS	
331	90134-0004	-		2	PIPE CONNECTION	
332	90143-0049	-	MM	3400	RUBBERSTRIP 11X21MM	
333	90143-0054	-	MM	500	STRIP	
335	90157-0022	-	G	X	SEALING COMPOUND	
338	90194-0016	-		2	SIGN "FLASH SIGN" 50X50MM	
340	90166-0121	-	MM	1500	HOSE	
345	90187-0029	-		1	VALVE	
348	90242-0115	-	MM	3200	O-RING	
349	90261-0003	-		1	PIPE PLUG	
350	90261-0011	-		4	PIPE PLUG	
370	90287-0075	-		6	SCREW	
385	311103-0314	-		4	CYLINDRICACP M6 5X30 RFR	
397	311103-0413	-		16	CYLINDRICACP M6 8X50 RFR	
400	311202-0320	-		2	TAPER PIN KP8X35RFR	
405	311211-0267	-		2	TAPER PIN GKP5X5X30	
425	312101-0366	-		8	SCREW M6S6X12FZB	
430	312101-0368	-		8	SCREW M6S6X16FZB	
435	312101-0453	-		20	SCREW M6S8X25FZB	
437	312101-0499	-		2	SCREW M6S10X40FZB	
440	312101-0518	-		4	SCREW M6S10X140FZB	
442	312101-0538	-		4	SCREW M6S12X35FZB	
455	312105-0368	-		7	SCREW O4017 M6X16A280	
460	312105-0449	-		6	SCREW O4017 M8X16A280	
465	312105-0493	-		8	SCREW 4017 M10X25A280	
475	312105-0540	-		10	SCREW 4017 M12X40A280	
480	312105-0542	-		12	SCREW 4014 M12X50A280	
490	312111-0364	-		2	SCREW MC6S6X10FZB	
510	312115-0378	-		6	SCREW O4762 M6X40A280	
515	312115-0451	-		8	SCREW O4762 M8X20A280	
525	312115-0501	-		7	SCREW 4762 M10X50A280	
530	312115-0503	-		8	SCREW 4762 M10X60A280	
555	312151-0366	-		4	SCREW MF6S6X12FZB	
556	312155-0327	-		4	SCREW	
557	312155-0366	-		5	SCREW MF6S6X12RFR	
558	312155-0370	-		4	SCREW MF6S6X20RFR	
559	312155-0368	-		15	SCREW MF6S6X16RFR	
560	312155-0451	-		12	SCREW MF6S8X20RFR	
570	312601-0320	-		2	NUT M6M10FZB	
575	312605-0316	-		4	NUT M6M6 A280 STAINLESS	
576	312605-0314	-		2	NUT M6M5RFR	
579	312605-0320	-		2	NUT M6M10RFR	
600	315101-0173	-		2	WASHER BRB10,5X22FZB	
610	315105-0153	-		31	WASHER BRB6,4X12RFR	
615	315105-0165	-		14	WASHER BRB8,4X16RFR	
635	315111-0178	-		4	WASHER TBRB13X24FZB	
640	315115-0178	-		22	WASHER TBRB13X24RFR	
645	315121-0153	-		8	WASHER TBRSB6,4X22FZB	
660	315402-0173	-		15	WASHER FBB10,2RFR	
675	315701-0330	-		2	FLAT WEDGE12X8X32	

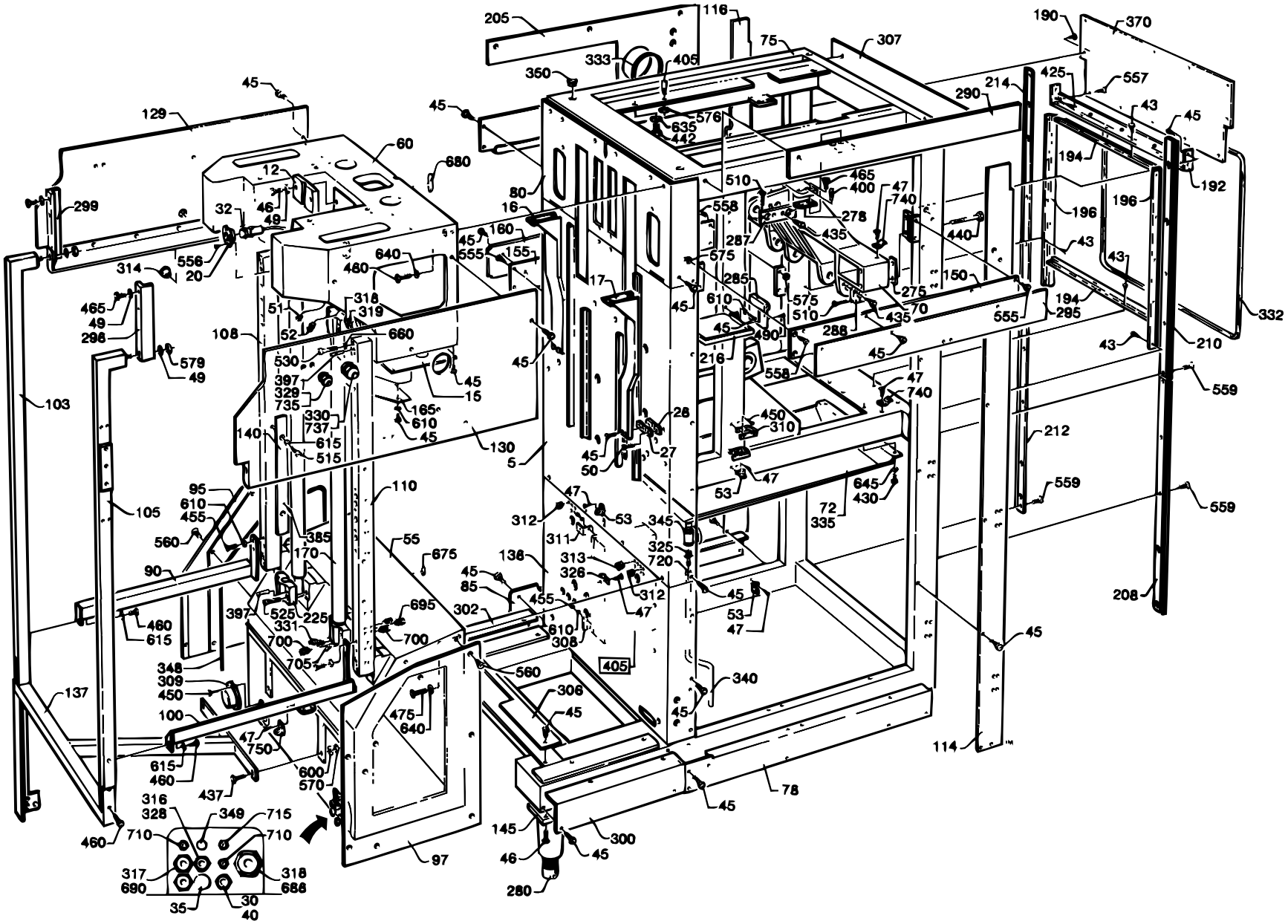
205
116
75
307
190
370
333
405
350
425
557
214
290
45
43
576
635
442
129
60
680
12
80
16
510
465
400
47
740
558
278
299
32
46
49
160
45
555
155
435
287
575
440
196
194
192
314
556
20
640
460
17
285
610
150
275
70
318
319
51
52
660
108
490
288
216
558
332
210
559
212
559
559
208
45
103
579
49
530
397
329
735
330
737
615
515
165
610
140
130
5
28
27
50
450
310
95
105
455
560
385
170
110
55
675
136
312
311
53
345
325
720
72
335
645
430
90
85
302
525
225
331
700
705
695
348
309
450
137
100
475
640
750
600
570
437
615
460
316
328
349
715
710
317
690
318
686
30
40
35
97
145
46
280
300
78
114
S-440537-3-6-7
ECN 16850

Pos	Part No	SP	UN	Qty	Description	Page No
680	315701-0336	-		3	FLAT WEDGE12X8X63	
688	341001-0228	-	MM	35	COPPER TUB	
690	342929-0121	-		2	PIPE COUPL8/6-8	
700	342920-0121	-		2	PIPE COUPL8/6-1/8	
710	342960-0112	-		2	BULKHEAD L6/4	
715	342960-0122	-		1	BULKHEAD L8/6	
720	342991-0103	-		1	HOSE CLIP 15-24MMRFR	
735	352103-0116	-		1	CABLE GLAND ST21.13-18MM	
737	352103-0121	-		1	CABLE GLANR.ST 29	
740	352110-0101	-		2	CRAMP TK 7-10	
750	352135-0201	-		1	CRAMP 12	
F405	C- 540723-010V	-		1	CONNECTION BOX	**231**

Pos	Part No	SP	UN	Qty	Description	Page No

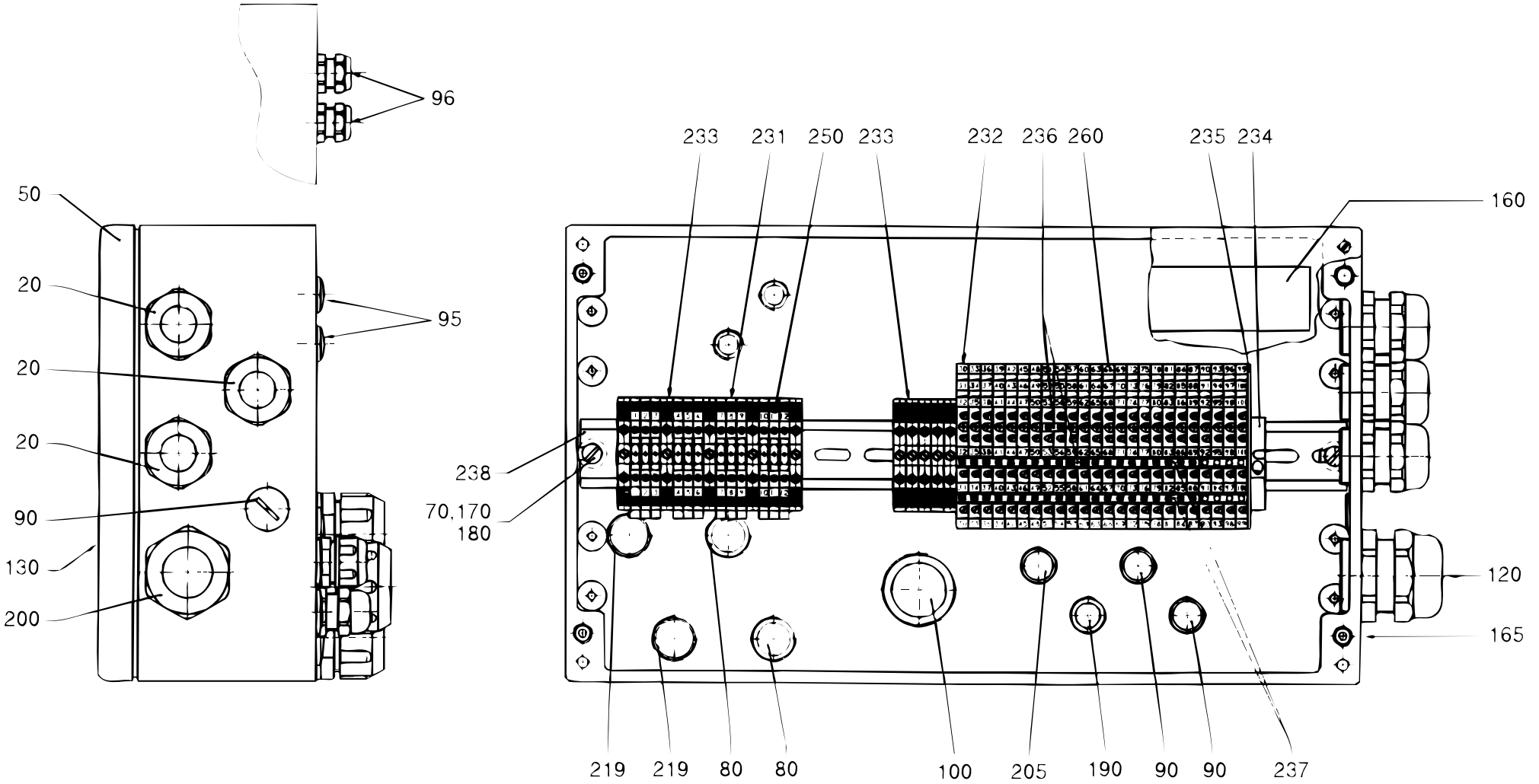

S-540723-1
ECN 22846

Pos	Part No	SP	UN	Qty	Description	Page No
-						
000	**C- 540723-0101**	**-**		**1**	**CONNECTION BOX**	
020	352103-0116	-		3	CABLE GLAND ST21.13-18MM	
050	540724	-		1	CONNECTION BOX	
070	450899-0001	-		2	SPACER	
080	90002-0004	-		2	BLANK-OFF PLUG 22,5	
090	90002-0009	-		3	BLANK-OFF PLUG 18.6	
096	90012-0063	-		2	GLAND	
100	90012-0061	-		1	GLAND	
120	90110-0128	-		2	PLUG 24-POL	
130	90194-0016	-		1	SIGN "FLASH SIGN" 50X50MM	
160	90298-0022	-		1	ZERUST CAPSULE	
165	312115-0372	-		3	SCREW O4762 M6X25A280	
170	312125-0376	-		2	SLOTTED HEMCS6X35RFR	
180	315105-0153	-		2	WASHER BRB6,4X12RFR	
190	352103-0106	-		1	CABLE GLAND ST 11	
200	352103-0120	-		1	C.GLAND PR37,STR29 UILAPP	
205	352136-0113	-		1	GLAND FITT	
219	352136-0142	-		2	GLAND FITT	
231	353021-0212	-		13	TERM.WDU 2,5 BEIGE WEIDM.	
232	353021-0302	-		24	FEED THROUKL£MMA DLD 2,5/	
233	353024-0205	-		10	EARTH TERMINAL WPE 4	
234	353031-0201	-		1	END BRACKET EW 35	
235	353032-0302	-		1	END PLATE AP	
236	353034-0401	-		3	BRIDGE CONLECK Q2	
237	353034-0404	-		4	BRIDGE CONLECK Q10	
238	353042-0005	-	MM	385	RAIL TS35/7.5	
250	359011-0807	-		2	MARKING PLATE 5-FW 1-50	
260	359011-0808	-		2	MARKING PLATE 5-FW 51-100	
270	359011-0809	-		2	FIGURES 101-150 WIDTH 5MM	

Pos	Part No	SP	UN	Qty	Description	Page No

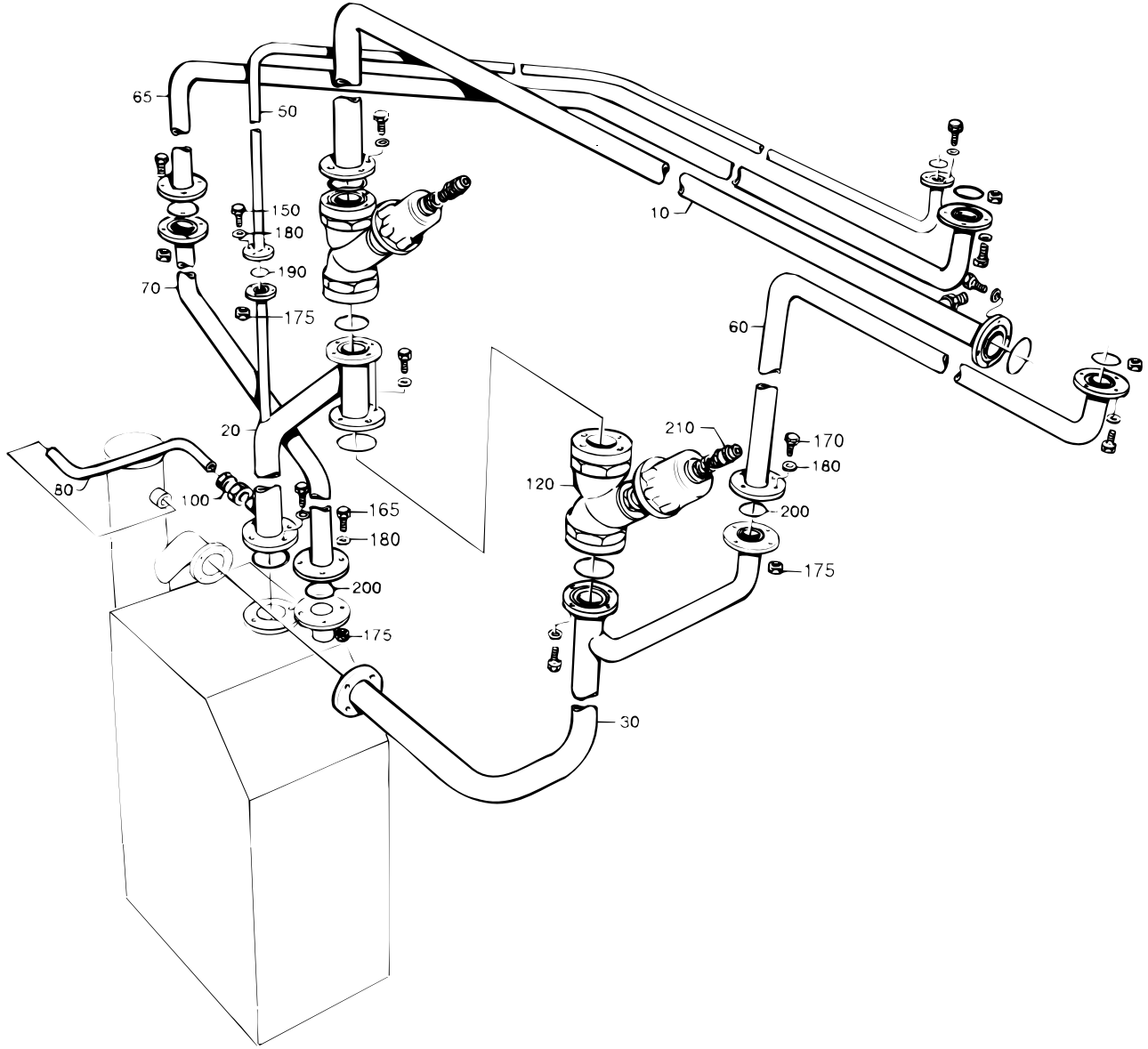
65
50
150
180
190
70
175
10
60
20
210
170
180
120
200
80
100
165
180
200
175
175
30

Pos	Part No	SP	UN	Qty	Description	Page No
-						
000	**C- 442463-0401**	**-**		**1**	**PIPE WORK**	
010	442466	-		1	PIPE CONNECTION	
020	479033	-		1	PIPE CONNECTION	
030	479034	-		1	PIPE CONNECTION	
050	479036	-		1	PIPE CONNECTION	
060	479040	-		1	PIPE CONNECTION	
065	542074	-		1	PIPE	
070	531592	-		1	PIPE	
080	531597	-		1	PIPE	
100	531595	-		1	STRAIGHT PIPE UNION	
120	484538	S		2	VALVE	
120a	90235-0460	S		1	* WEAR & TEAR PARTS KIT	
150	312105-0366	-		6	SCREW O4017 M6X12A280	
160	312105-0368	-		20	SCREW O4017 M6X16A280	
165	312105-0370	-		20	SCREW O4017 M6X20A280	
170	312105-0372	-		4	SCREW O4017 M6X25A280	
175	312605-0316	-		24	NUT M6M6 A280 STAINLESS	
180	315105-0153	-		50	WASHER BRB6,4X12RFR	
190	927421-0003	-		2	O-RING 13.3X2.4 SILICON	
200	927422-0006	-		10	O-RING 42.2X3 SILICON	
210	342920-0114	-		2	PIPE COUPL6/4-1/4	

Pos	Part No	SP	UN	Qty	Description	Page No

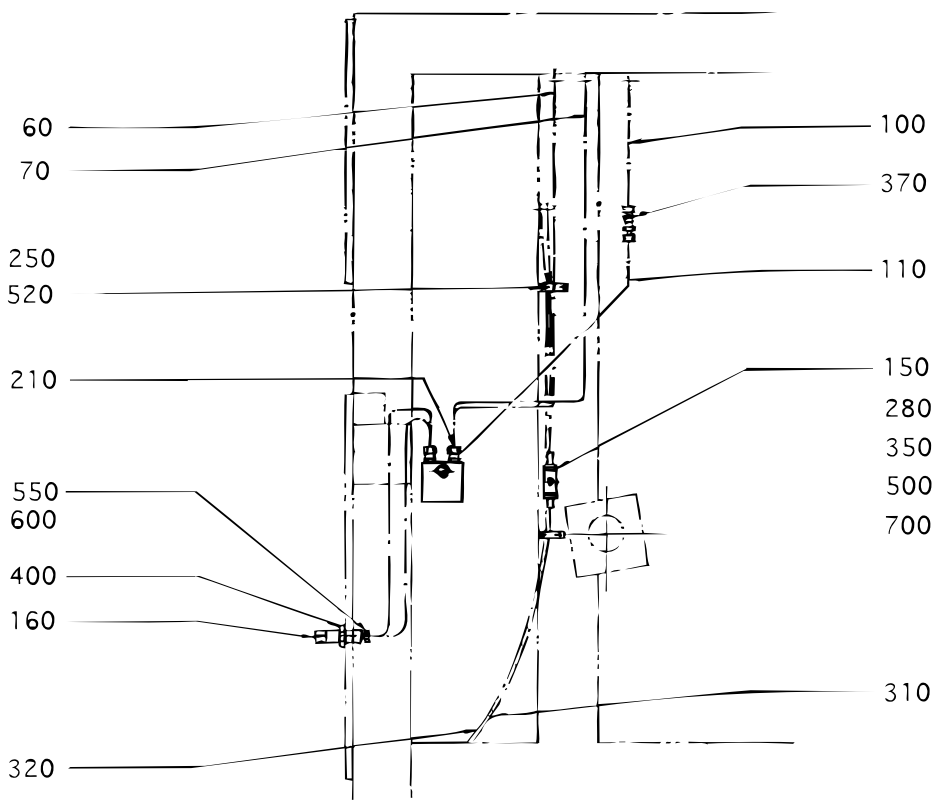
60
70
250
520
210
550
600
400
160
320
100
370
110
150
280
350
500
700
310

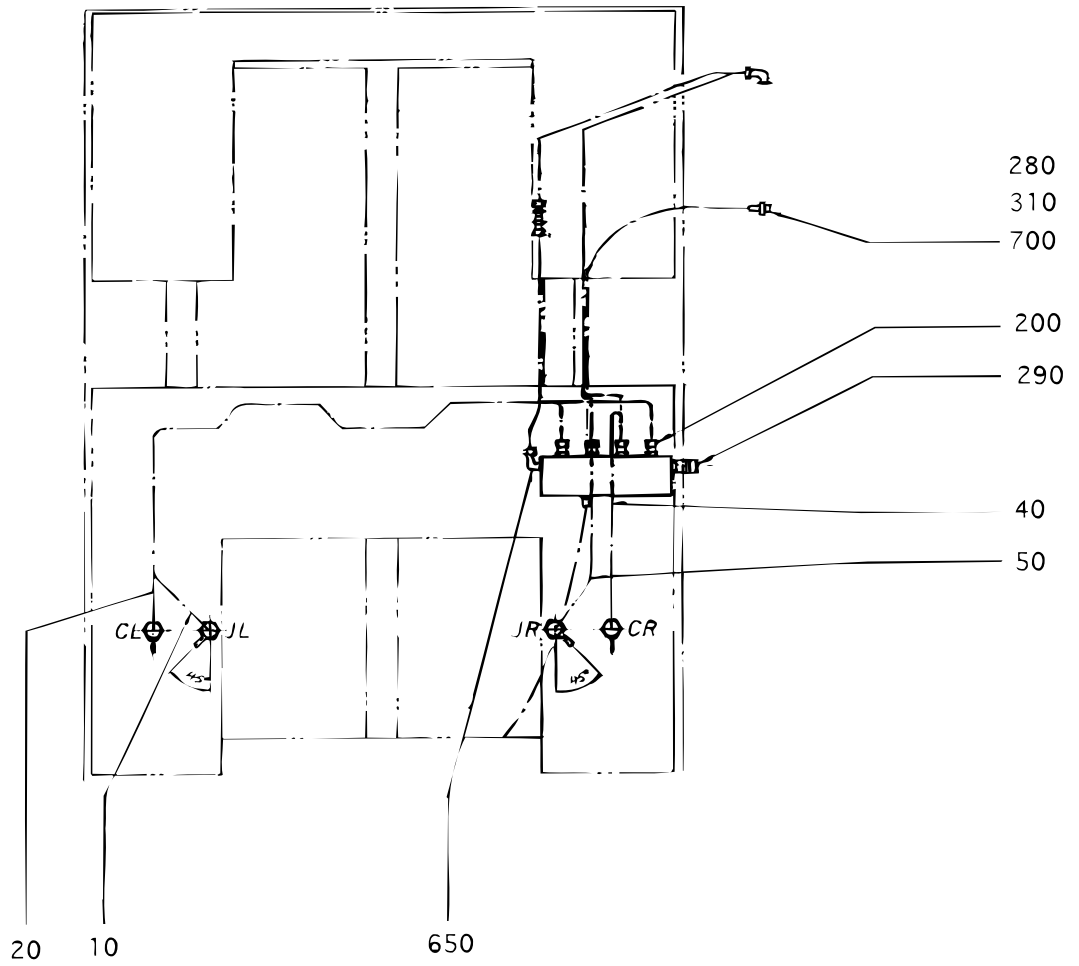
280
310
700
200
290
40
50
CL
JL
JR
CR
45°
45°
20
10
650

Pos	Part No	SP	UN	Qty	Description	Page No
-						
000	**C- 445537-0201**	**-**		**1**	**PIPE WORK-HYDRAULIC**	
010	294493	-		1	HYDRAULIC PIPE	
020	294494	-		1	HYDRAULIC PIPE	
040	294495	-		1	HYDRAULIC PIPE	
050	294496	-		1	HYDRAULIC PIPE	
060	445538	-		1	HYDRAULIC PIPE	
070	445539	-		1	HYDRAULIC PIPE	
100	445540	-		1	HYDRAULIC PIPE	
110	445541	-		1	HYDRAULIC PIPE	
150	255017	-		1	BRACKET	
160	540718	-		4	ELBOW PIPE JOINT	
200	90030-0155	-		4	CONNECTION	
210	90030-0157	-		2	CONNECTION	
250	90074-0006	-		2	CABLE CLIP JR212STAINLESS	
280	90163-0041	-		3	NIPPLE	
290	90163-0076	-		1	SLEEVE	
310	90166-0007	S	MM	2000	HOSE	
320	90166-0122	S	MM	2000	HOSE	
350	90187-0054	S		1	VALVE	
370	90230-0011	S		1	NON RETURN VALVE	
400	90330-0093	-		4	NUT	
500	312101-0331	-		2	SCREW M6S5X20FZB	
520	312125-0323	-		4	SLOTTED HEMCS5X8RFR	
550	342703-0103	-		4	NUT M8-LFZB	
600	342705-0103	-		4	CUTTING RIR8-LFZB	
650	342731-0114	-		1	ELBOW PIPE WE15-LRFZB	
700	342991-0101	P		3	HOSE CLIP 11-17MMRFR	

Pos	Part No	SP	UN	Qty	Description	Page No

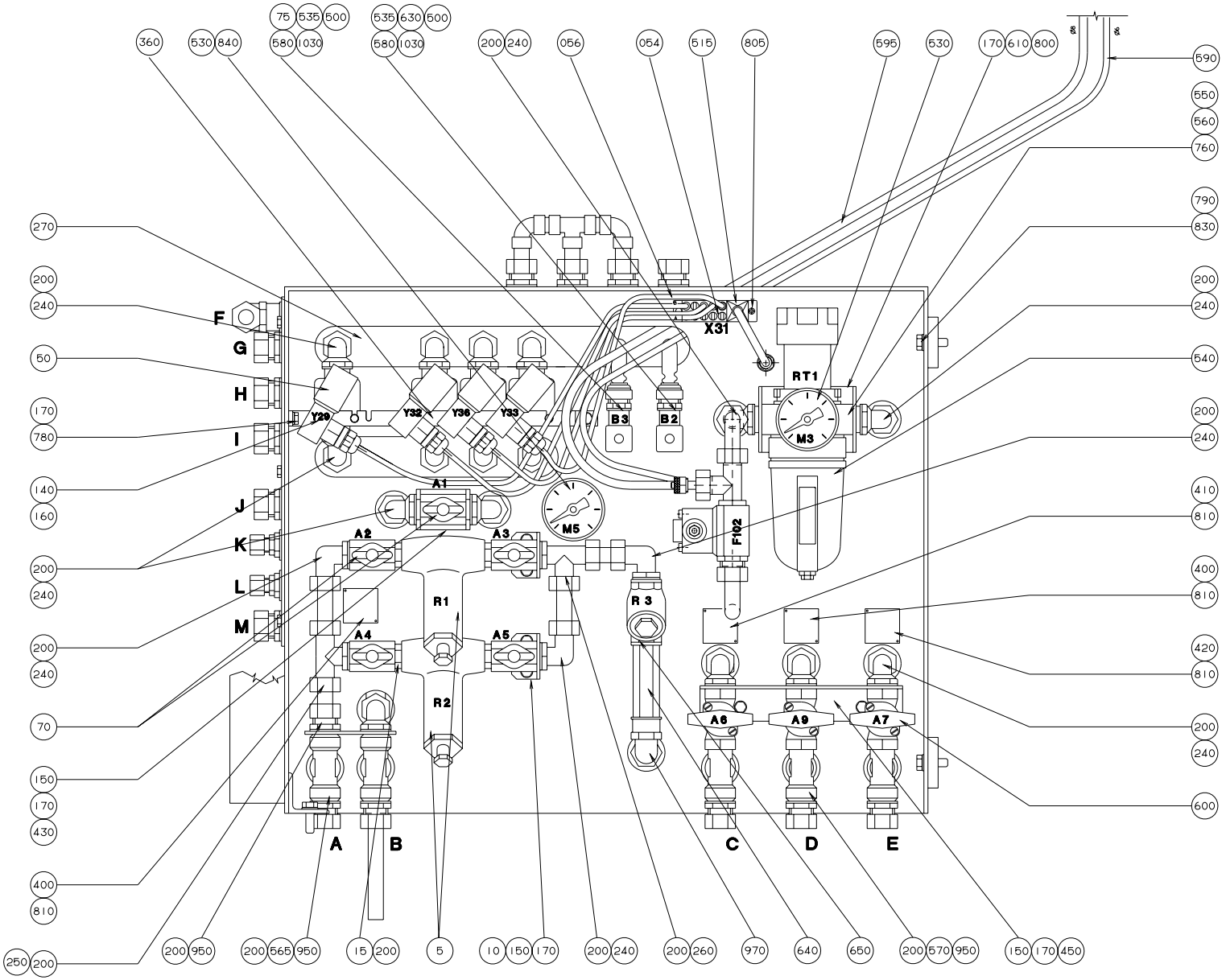
X31
RT1
M3
M5
B3
B2
Y29
Y32
Y36
Y33
A1
A2
A3
A4
A5
A6
A9
A7
R1
R2
R 3
F102
F
G
H
I
J
K
L
M
A
B
C
D
E

Pos	Part No	SP	UN	Qty	Description	Page No
IH						
000	**C- 575392-0101**	**-**		**1**	**VALVE PANEL LOWER**	
005	271823	-		2	FILTER	
005a	90415-0314	P		0	* FILTERINSERT 5594-36	
005b	90415-0325	P		0	* GASKET	
010	543127	-		2	BRACKET	
015	479261	-		4	NIPPLE	
050	90042-0172	-		4	SOLENOID VALVE 24VDC	
050a	90042-0467	P		0	* COIL	
054	90042-0550	-		1	PROTECTIVE COVER	
056	90042-0536	-		4	CONTACT FOR SOL.VALVE	
070	90187-0062	S		5	VALVE	
075	90274-0042	-		1	PRESSURE SWITCH 2BAR	
090	90418-0053	-		25	ELBOW PIPE	
100	90418-0054	-		7	PIPE FITTING	
110	90418-0063	-		13	ADAPTER	
140	312115-0333	-		8	SCREW O4762 M5X25A280	
150	312105-0362	-		11	SCREW O4017 M6X8A280	
160	312605-0314	-		16	NUT M6M5RFR	
170	315105-0153	-		29	WASHER BRB6,4X12RFR	
200	315233-0113	C		53	SEAL RING R1/2"	
240	342730-0114	-		19	ELBOW PIPE WA-15-1/2"	
250	342740-0114	-		1	T-CONNECTI TA-15-1/2"	
260	342750-0114	-		2	ELBOW FITT LA-15-1/2"	
270	352103-0100	-		4	CABLE GLANR.STR 9	
300	542700	-		1	VALVEPANEL LOWER	
330	543134	-		1	PLATE	
360	543128	-		1	VALVE BRACKET	
400	273455	-		2	LABEL (COLD WATER)	
410	273456	-		1	SIGN	
420	273458	-		1	LABEL (AIR)	
430	543130	-		1	BRACKET	
440	293201	-		1	PIPE	
450	543131	-		1	BRACKET	
460	573277	-		1	PIPE	
470	573278	-		1	PIPE	
500	90012-0063	-		2	GLAND	
510	90042-0481	-		1	CONNECTION TABLE	
515	90042-0535	-		1	TERMINAL FOR SOL.VALVE	
530	90043-0006	S		2	PRESSURE GAUGE	
535	90110-0095	-		2	CONTACT 3 POLE+EARTH	
538	90110-0128	-		1	PLUG 24-POL	
540	90113-0047	-		1	REGULATOR	
540a	90113-0349	P		0	* GASKET	
540b	90277-0314	P		0	* FILTER	
550	90113-0336	-		1	INSERT	
560	90113-0338	-		1	YOKE	
565	90140-0010	-		2	T-PIECE	
570	90140-0011	-		3	T-PIECE	
575	90140-0012	-		5	ELBOW PIPE	
580	90152-0033	-	M	6	HOSE	
590	90166-0081	-	MM	1700	HOSE	
595	90166-0013	-	MM	1700	HOSE	
600	90187-0029	S		3	VALVE	
605	90224-0319	-		2	CONNECTION	
610	90235-0767	-		1	VALVE	
620	90236-0012	-		2	BRACKET	
630	90274-0044	-		1	PRESSURE SWITCH 4BAR	
635	90328-0001	-		1	SILENCER	
640	90415-0018	-		1	FILTER	
650	90415-0019	-		1	FILTER	
660	90418-0014	-		2	ELBOW PIPE	
670	90418-0039	-		3	ELBOW PIPE	
680	90418-0048	-		3	T-PIECE	
690	90418-0050	-		1	T-PIECE	
700	90418-0055	-		2	PIPE FITTING	
710	90418-0056	-		1	T-PIECE	
720	90418-0058	-		3	ELBOW PIPE	
730	90418-0068	-		1	T-PIECE	
760	311111-0212	-		2	SLOTTED TUFRP3X24	
780	312105-0366	-		4	SCREW O4017 M6X12A280	
790	312105-0453	-		3	SCREW O4017 M8X25A280	
800	312115-0362	-		4	SCREW O4762 M6X8A280	
805	312125-0224	-		2	SLOTTED HEMCS3X10RFR	
810	312502-0120	-		8	DRIVE SCREKDS0X5FNB	
830	315105-0165	-		3	WASHER BRB8,4X16RFR	
840	315233-0110	-		1	SEAL RING R1/4"	
850	315233-0111	-		2	SEAL RING R3/8"	
880	341001-0148	-	MM	100	COPPER TUB	
890	341001-0192	-	MM	300	COPPER TUB	
900	341001-0228	-	MM	5000	COPPER TUB	
910	342701-0205	-		2	BUSHING RNI1/2"-1/4"	
920	342710-0115	-		1	REDUCER RBM16/8	
930	342711-0115	-		1	PLUG PL-16	
940	342713-0213	-		4	BLIND PLUG	
950	342720-0103	-		1	PIPE COUPLGA-8-1/8"	

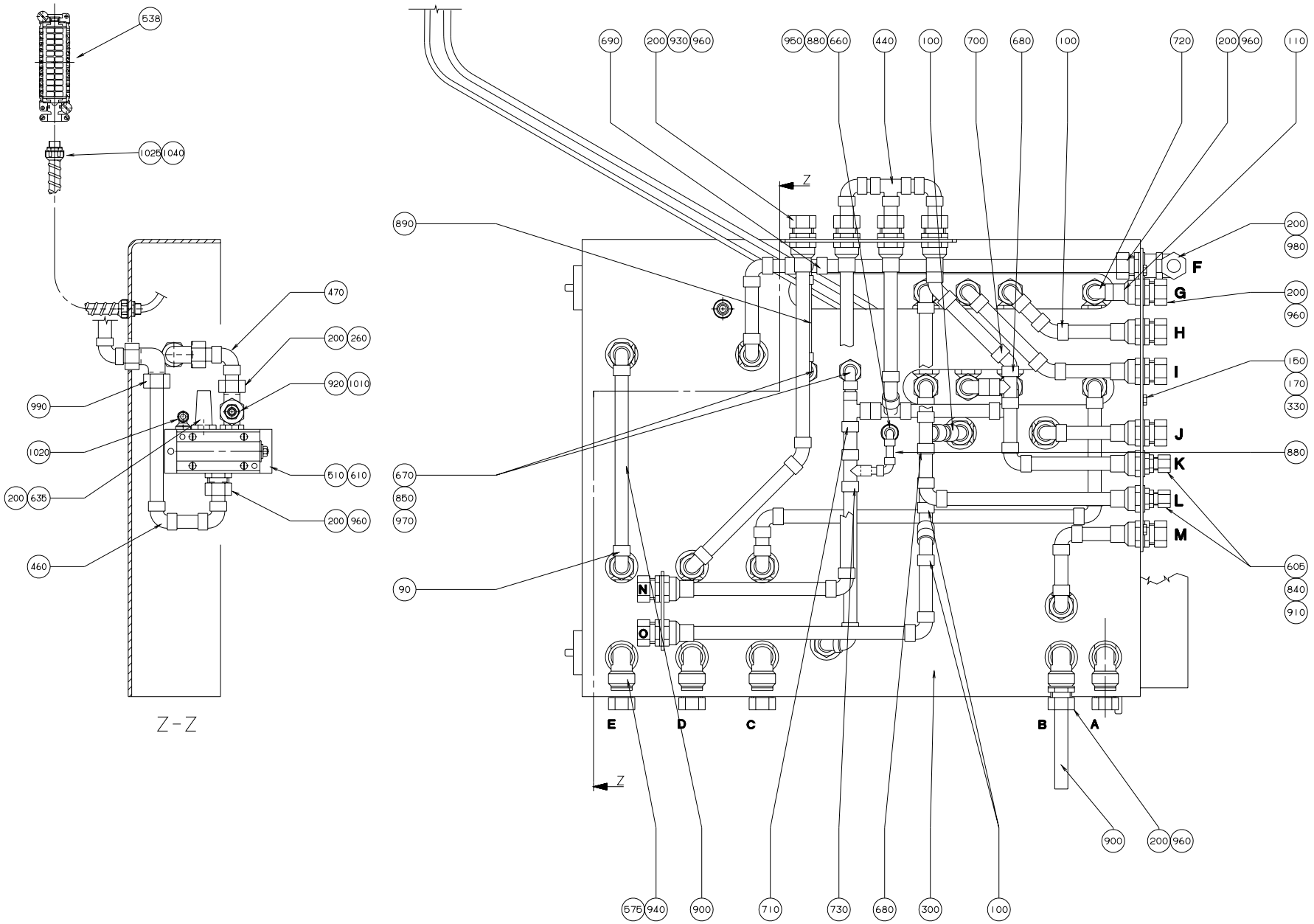

S-575392-2
ECN 19406

Pos	Part No	SP	UN	Qty	Description	Page No
960	342720-0114	-		20	PIPE COUPLGA-15-1/2"	
970	342723-0109	-		2	PIPE COUPLGI-12-3/8"	
980	342733-0114	-		2	ELBOW PIPE WI-15-1/2"	
990	342736-0114	-		1	ELBOW PIPE W-15	
1010	342929-0121	-		1	PIPE COUPL8/6-8	
1020	342930-0113	-		1	ELBOW PIPE6/4-1/8	
1025	352135-0106	-	M	3	HOSE .016	
1030	352136-0113	-		3	GLAND FITT	
1040	352136-0127	-		2	GLAND FITT	

Pos	Part No	SP	UN	Qty	Description	Page No

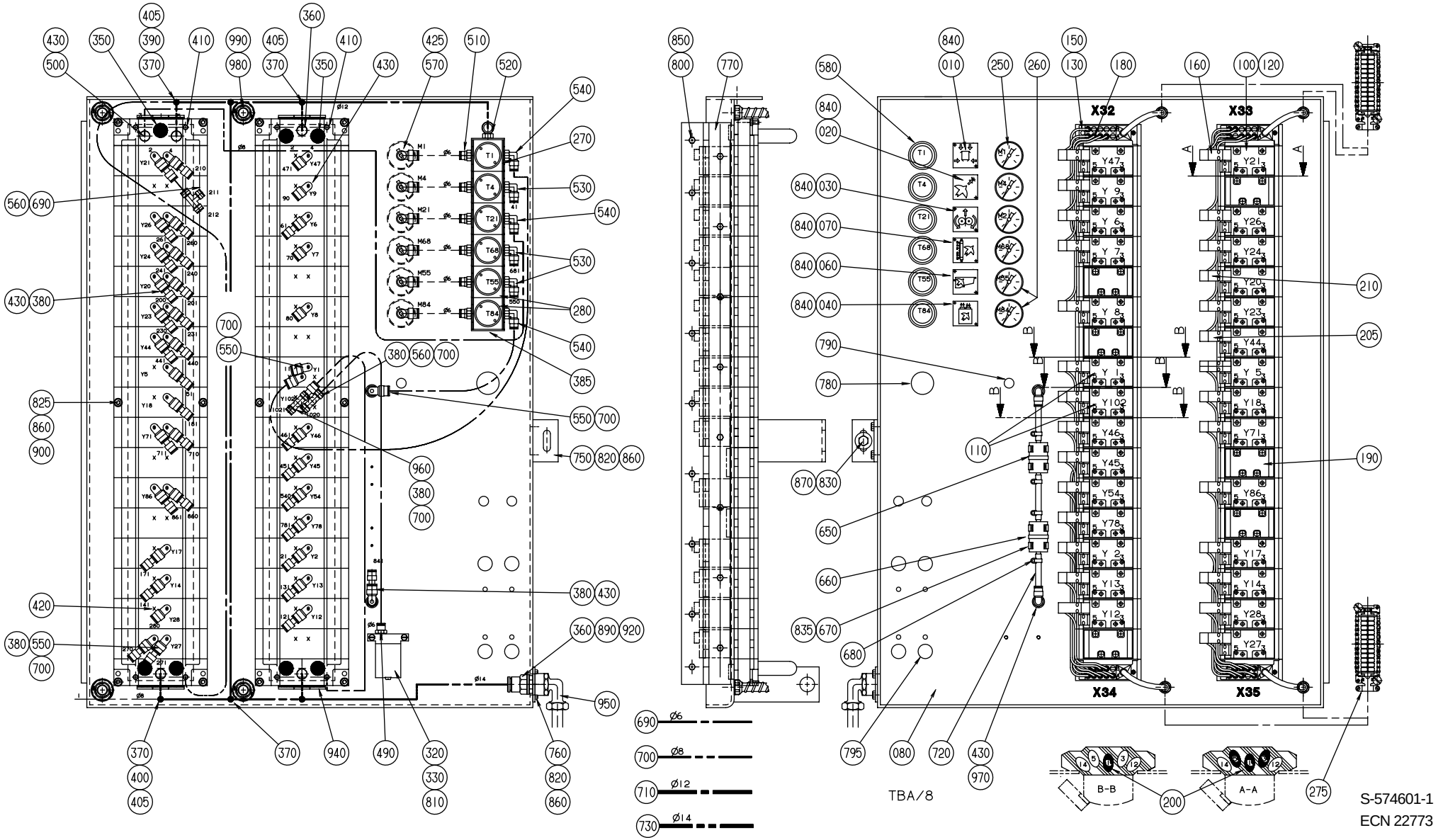

S-574601-1
ECN 22773

IH, NORMFIN

Pos	Part No	SP	UN	Qty	Description	Page No
000	**C- 574601-0101**	**-**		**1**	**VALVE PANEL**	
020	273450	-		1	SIGN	
030	273452	-		1	SIGN	
100	90042-0215	-		28	SOL.VALVE PACKAGE	
110	90042-0520	-		2	CONNECTION TABLE	
120	90042-0532	-		32	CONNECTION TABLE	
160	90042-0527	-		28	SEALING DISC	
190	90042-0519	-		6	COVER PLATE	
200	90042-0528	-		6	SEALING DISC	
205	90042-0538	-		8	EL.COIL	
210	90042-0539	-		20	EL.COIL	
250	90043-0043	C		4	PRESSURE GAUGE	
270	90113-0069	C		4	PRESSURE REGULATOR	
350	90328-0024	-		7	SILENCER	
360	90055-0096	-		5	STRAIGHT CONNECTION	
370	342748-0110	-		6	T-CONNECTI D=14	
380	342716-0203	-		33	REDUCER 6-8	
385	342713-0210	-		1	BLIND PLUG	
400	342716-0209	-		1	REDUCER 8-12	
405	342716-0211	-		3	REDUCER 12-14	
410	342715-0102	-		2	PLUG D=6	
420	342715-0103	-		35	PLUG D=8	
425	90055-0117	-		6	ELBOW PIPE JOINT	
430	90055-0118	-		39	ELBOW PIPE JOINT	
500	342722-0206	-		1	PIPE COUPLD=8-R3/8"	
510	342722-0203	-		6	PIPE COUPLD=6-R1/4"	
530	342732-0103	-		3	ELBOW PIPE D6-R1/4"	
540	342732-0104	-		3	ELBOW PIPE D8-R1/4"	
560	342748-0102	-		2	T-CONNECTI D=6	
570	342770-0105	-		6	HOSE COUPL	
580	90113-0379	-		6	NUT	
690	90166-0081	-	M	3	HOSE	
700	90166-0013	-	M	2	HOSE	
780	90261-0008	-		1	PIPE PLUG	
790	90261-0013	-		3	PLUG	
795	90261-0033	-		4	PLUG	
840	312502-0120	-		12	DRIVE SCREKDS0X5FNB	
900	312605-0316	-		12	NUT M6M6 A280 STAINLESS	
940	342713-0211	-		12	BLIND PLUG	
960	342748-0103	-		1	T-CONNECTI D=8	

IH, REVFIN

Pos	Part No	SP	UN	Qty	Description	Page No
000	**C- 574601-0105**	**-**		**1**	**VALVE PANEL**	
020	273450	-		1	SIGN	
030	273452	-		1	SIGN	
100	90042-0215	-		30	SOL.VALVE PACKAGE	
110	90042-0520	-		2	CONNECTION TABLE	
120	90042-0532	-		32	CONNECTION TABLE	
160	90042-0527	-		28	SEALING DISC	
190	90042-0519	-		4	COVER PLATE	
200	90042-0528	-		6	SEALING DISC	
205	90042-0538	-		10	EL.COIL	
210	90042-0539	-		20	EL.COIL	
250	90043-0043	C		4	PRESSURE GAUGE	
270	90113-0069	C		4	PRESSURE REGULATOR	
350	90328-0024	-		7	SILENCER	
360	90055-0096	-		5	STRAIGHT CONNECTION	
370	342748-0110	-		6	T-CONNECTI D=14	
380	342716-0203	-		37	REDUCER 6-8	
385	342713-0210	-		1	BLIND PLUG	
400	342716-0209	-		1	REDUCER 8-12	
405	342716-0211	-		3	REDUCER 12-14	
410	342715-0102	-		2	PLUG D=6	
420	342715-0103	-		35	PLUG D=8	
425	90055-0117	-		6	ELBOW PIPE JOINT	
430	90055-0118	-		43	ELBOW PIPE JOINT	
500	342722-0206	-		1	PIPE COUPLD=8-R3/8"	
510	342722-0203	-		6	PIPE COUPLD=6-R1/4"	
530	342732-0103	-		3	ELBOW PIPE D6-R1/4"	
540	342732-0104	-		3	ELBOW PIPE D8-R1/4"	
560	342748-0102	-		2	T-CONNECTI D=6	
570	342770-0105	-		6	HOSE COUPL	
580	90113-0379	-		6	NUT	
690	90166-0081	-	M	3	HOSE	
700	90166-0013	-	M	2	HOSE	
780	90261-0008	-		1	PIPE PLUG	
790	90261-0013	-		3	PLUG	
795	90261-0033	-		4	PLUG	
840	312502-0120	-		12	DRIVE SCREKDS0X5FNB	
900	312605-0316	-		12	NUT M6M6 A280 STAINLESS	
940	342713-0211	-		12	BLIND PLUG	
960	342748-0103	-		1	T-CONNECTI D=8	

Common parts

Pos	Part No	SP	UN	Qty	Description	Page No
010	273449	-		1	SIGN	

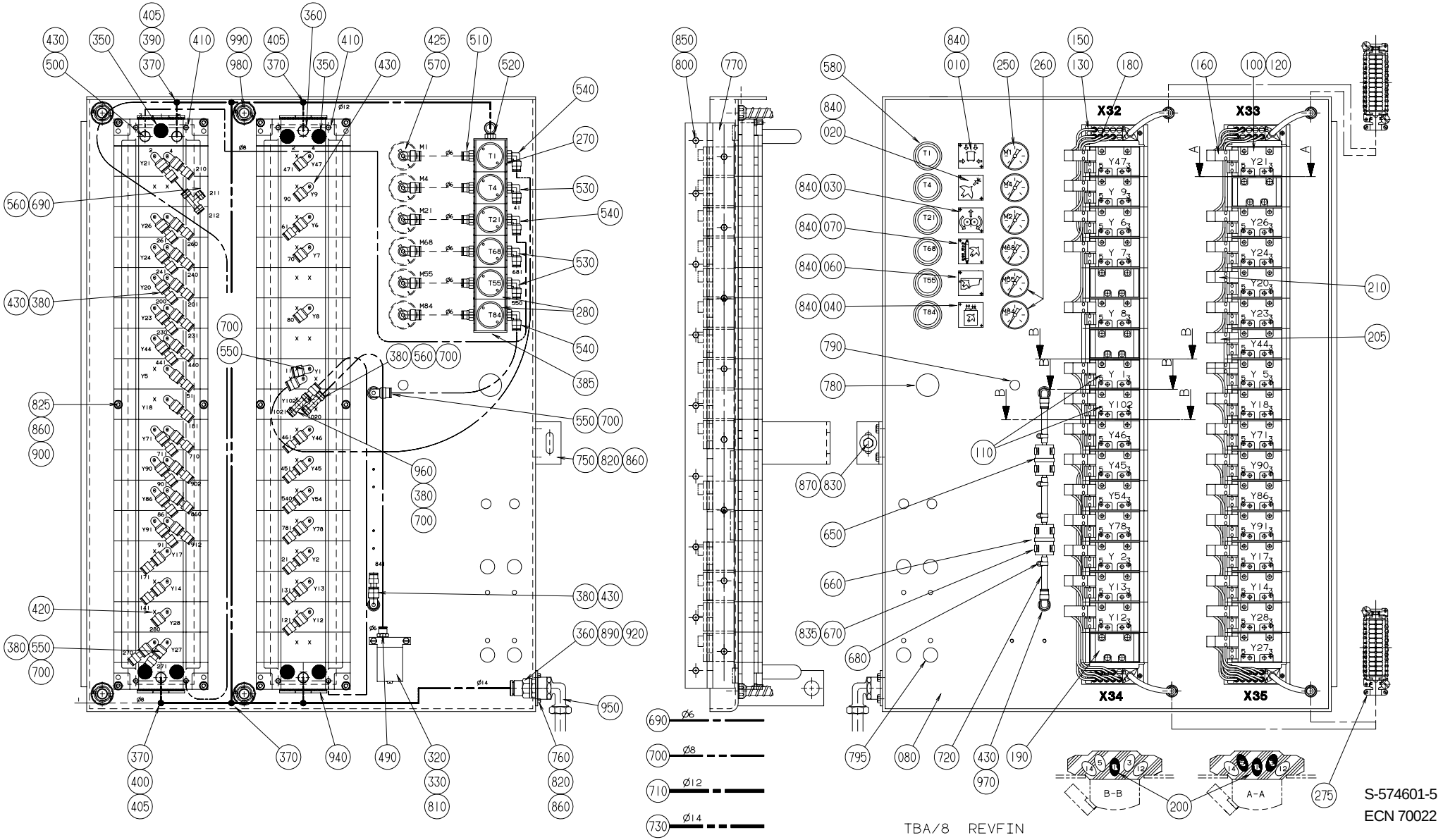

S-574601-5
ECN 70022

Pos	Part No	SP	UN	Qty	Description	Page No
040	978603	-		1	SIGN	
060	479964	-		1	SIGN	
070	561595	-		1	SIGN	
080	574602	-		1	VALVE PANEL UPPER	
130	90042-0522	-		4	END PIECE	
150	90042-0535	-		4	TERMINAL FOR SOL.VALVE	
180	90042-0550	-		2	PROTECTIVE COVER	
260	90043-0021	-		2	PRESSURE GAUGE	
275	90110-0128	-		2	PLUG 24-POL	
280	90113-0076	-		2	PRESSURE REGULATOR	
320	90235-0450	-		1	PLATE	
330	90235-0708	-		1	VALVE	
390	342716-0210	-		1	REDUCER 6-12	
490	342722-0202	-		1	PIPE COUPLD=6-R1/8"	
520	342732-0109	-		1	ELBOW PIPE D12-R1/4"	
550	342735-0103	-		3	ELBOW PIPE D=8	
650	90277-0045	-		1	FILTER	
660	90277-0046	-		1	FILTER	
670	90074-0026	-		4	CLIP	
680	90132-0021	-		4	HOSE CLIP	
710	90166-0068	-	MM	400	HOSE	
720	90166-0194	-	MM	500	PLASTIC HOSE	
730	90166-0206	-	M	2	PLASTIC HOSE	
750	574603	-		1	BRACKET	
760	574604	-		1	BRACKET	
770	445736	-		1	HINGE	
800	312105-0323	-		17	SCREW O4017 M5X8A280	
810	312105-0339	-		2	SCREW O4014 M5X40A280	
820	312105-0364	-		4	SCREW M6S6X10RFR	
825	312105-0376	-		12	SCREW O4017 M6X35A280	
830	312105-0449	-		1	SCREW O4017 M8X16A280	
835	312125-0220	-		4	SLOTTED HEMCS3X6RFR	
850	315105-0146	-		17	WASHER BRB5,3X10RFR	
860	315105-0153	-		16	WASHER BRB6,4X12RFR	
870	315125-0165	-		1	WASHER SB 8,4X26X5 RFR	
890	315233-0113	-		1	SEAL RING R1/2"	
920	342701-0206	-		1	BUSHING RNI1/2"-3/8"	
950	342733-0114	-		1	ELBOW PIPE WI-15-1/2"	
970	342768-0103	-		2	BULKHEAD LD=8	
980	352135-0106	-	M	8	HOSE .016	
990	352136-0127	-		4	GLAND FITT	

Pos	Part No	SP	UN	Qty	Description	Page No

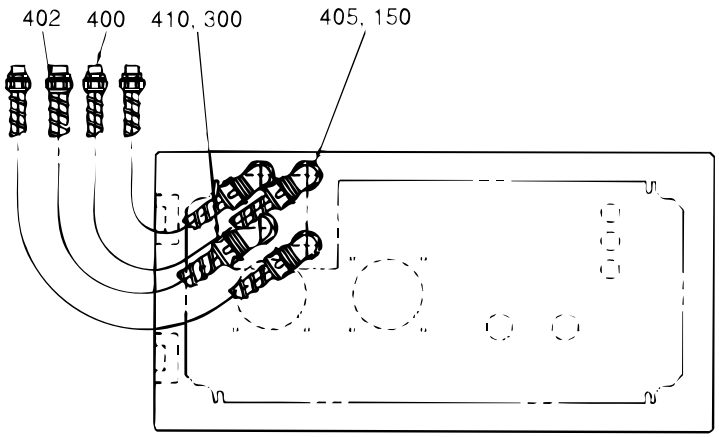
402
400
410, 300
405, 150

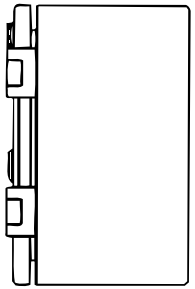

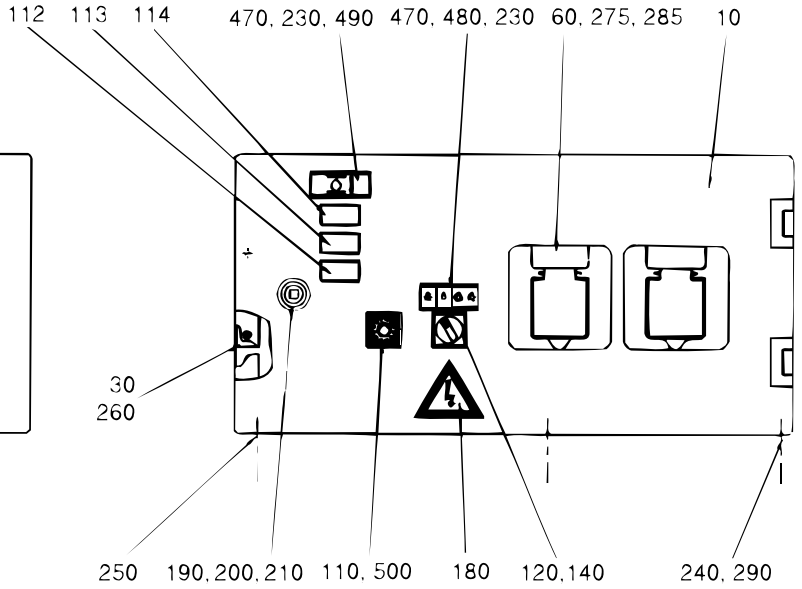
112
113
114
470, 230, 490
470, 480, 230
60, 275, 285
10
30
260
250
190, 200, 210
110, 500
180
120, 140
240, 290

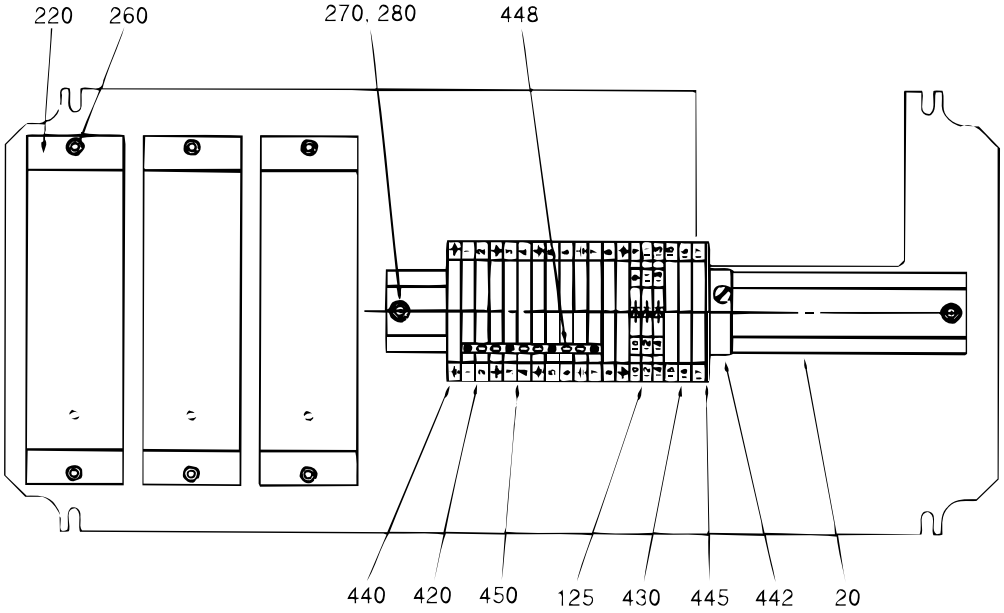
220
260
270, 280
448
440
420
450
125
430
445
442
20

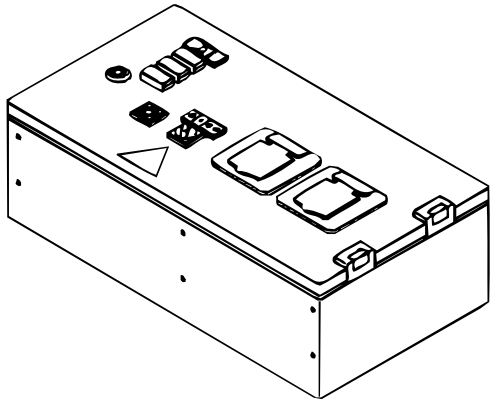

Pos	Part No	SP	UN	Qty	Description	Page No
-						
000	**C- 449930-0501**	**-**		**1**	**CONNECTION BOX**	
010	574605	-		1	CONNECTION BOX	
020	353042-0005	-	MM	250	RAIL TS35/7.5	
030	574606	-		1	SHEET	
070	90002-0009	-		2	BLANK-OFF PLUG 18.6	
110	90064-0084	-		1	PUSH BUTTON YELLOW	
112	90064-0094	-		1	PUSH BUTTON	
112a	90064-0318	S		0	* SIGNAL LAMP	
113	90064-0095	-		1	PUSH BUTTON	
113a	90064-0319	S		0	* SIGNAL LAMP	
114	90064-0096	-		1	PUSH BUTTON	
114a	90064-0320	S		0	* SIGNAL LAMP	
120	90064-0335	-		1	COVER	
125	353021-0122	-		3	FEED THROUGH TERMINAL2.5	
130	90099-0002	-		2	NUT	
140	90111-0121	-		1	SWITCH 3 POS. EA OLTEN	
150	90152-0033	-	M	5	HOSE	
180	90194-0016	-		1	SIGN "FLASH SIGN" 50X50MM	
190	90237-0319	-		1	LOCK HOUSING EMKA U134	
200	90237-0320	-		1	LOCK DETAIL EMKA U136	
210	90237-0335	-		1	LOCKING CATCH	
220	90297-0300	-		3	BALLAST COIL 50HZ	
230	311520-0329	-		4	BLANK RIVE2,4X8	
240	312105-0362	-		6	SCREW O4017 M6X8A280	
250	312105-0366	-		1	SCREW O4017 M6X12A280	
260	312115-0287	-		10	SCREW O4762 M4X8A280	
270	312121-0323	-		2	SLOTTED HEMCS5X8FZB	
280	312601-0314	-		2	NUT M6M5FZB	
290	315105-0153	-		6	WASHER BRB6,4X12RFR	
300	352135-0106	-	M	2	HOSE .016	
400	352136-0113	-		3	GLAND FITT	
402	352136-0127	-		1	GLAND FITT	
405	352137-0113	-		3	GLAND FITTING	
410	352137-0129	-		1	CABLE GLAND;PR22,5(PG16)	
420	353021-0213	-		8	FEED THROUGH TERM.WDU 4	
430	353021-0217	-		3	TERM.WDU 4 BLUE WEIDM.	
440	353024-0205	-		5	EARTH TERMINAL WPE 4	
442	353031-0201	-		1	END BRACKET EW 35	
445	353032-0005	-		1	END PLATEWAP 2,5-10	
448	353034-0404	-		1	BRIDGE CONLECK Q10	
450	359011-0807	-		2	MARKING PLATE 5-FW 1-50	
470	359240-0100	-		2	SIGN HOLDER	
480	359241-0127	-		1	SIGN "LIGHT JAWSY & MACH"	
490	359241-0158	-		1	SIGN"LEVEL HYD OIL TANK"	
500	359301-0125	-		1	SIGN "LUBRICATION"	

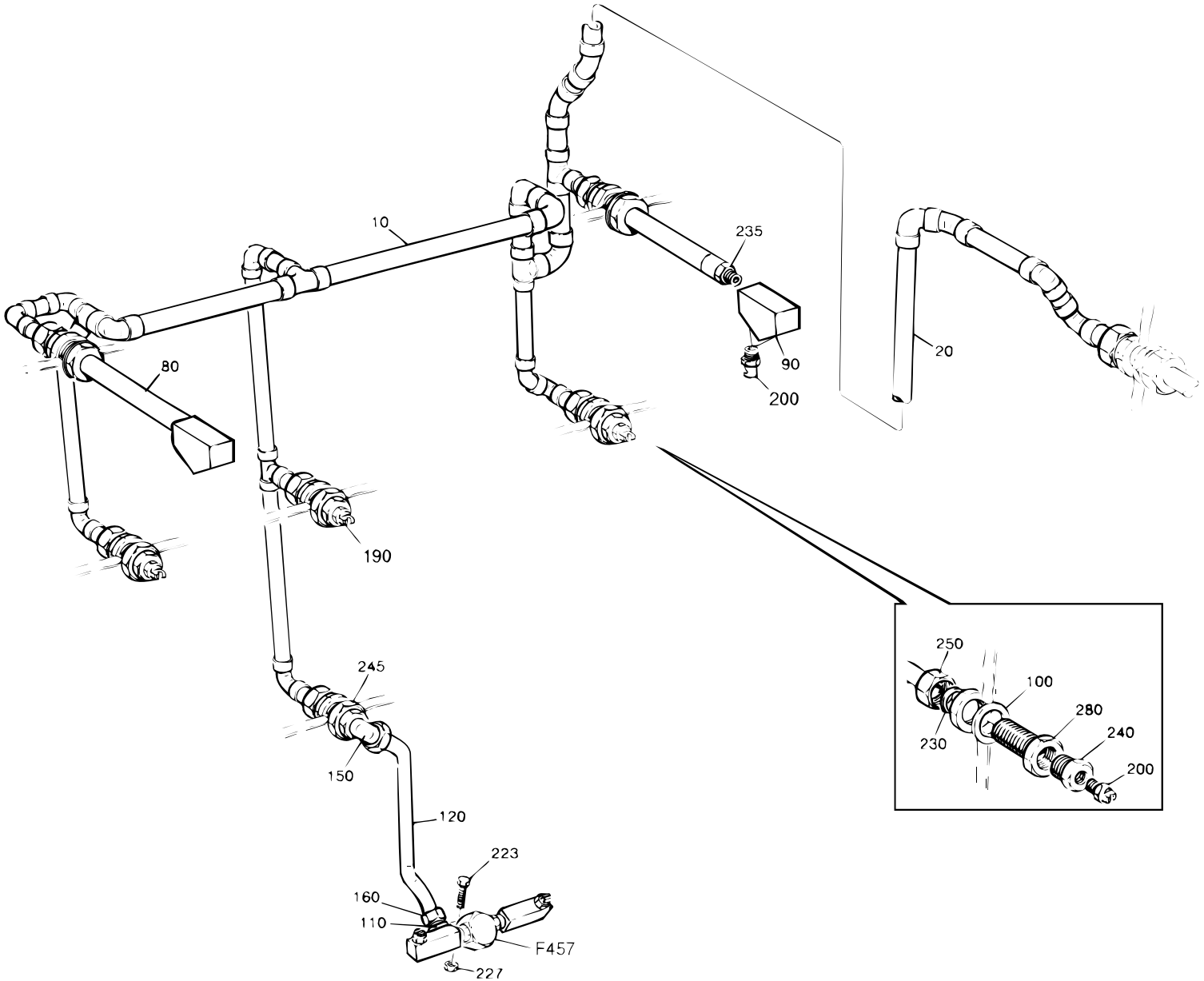
10
235
20
80
90
200
190
250
100
280
240
230
200
245
150
120
223
160
110
F457
227

Pos	Part No	SP	UN	Qty	Description	Page No
VOLUMES 1055 B, 1000 B, 750 B, 750 S, 500 B, 500 S, 500 Sq, 400 B, 375 S, 355 B						
000	**C- 449168-0301**	**-**		**1**	**CLEANING SYSTEM**	
200	90424-0035	S		7	NOZZLE	
240	342701-0205	-		3	BUSHING RNI1/2"-1/4"	
VOLUMES 1000 S, 1000 Sq						
000	**C- 449168-0302**	**-**		**1**	**CLEANING SYSTEM**	
190	571654	-		1	NOZZLE	
200	90424-0035	S		6	NOZZLE	
240	342701-0205	-		2	BUSHING RNI1/2"-1/4"	
Common parts						
010	530556	-		1	JUNCTION PIPE UPPER	
020	449170	-		1	CLEANING PIPE	
080	535016	-		2	FORCE SPRING	
090	535017	-		2	BRACKET	
100	246885	-		6	WASHER	
110	537919	-		1	PIPE HOLDER	
120	537918	-		1	PIPE	
150	90030-0115	-		1	PIPE CONNECTION	
160	90030-0187	-		1	PIPE CONNECTION	
223	312105-0372	-		1	SCREW O4017 M6X25A280	
227	312605-0316	-		2	NUT M6M6 A280 STAINLESS	
230	315234-0113	-		6	SEAL RING R1/2"	
245	342701-0206	-		1	BUSHING RNI1/2"-3/8"	
250	342720-0114	-		6	PIPE COUPLGA-15-1/2"	
280	342767-0114	-		6	BULKHEAD LR1/2	
F457	C- 476885-0202	-		1	CLEANING HEAD	**201**

Pos	Part No	SP	UN	Qty	Description	Page No

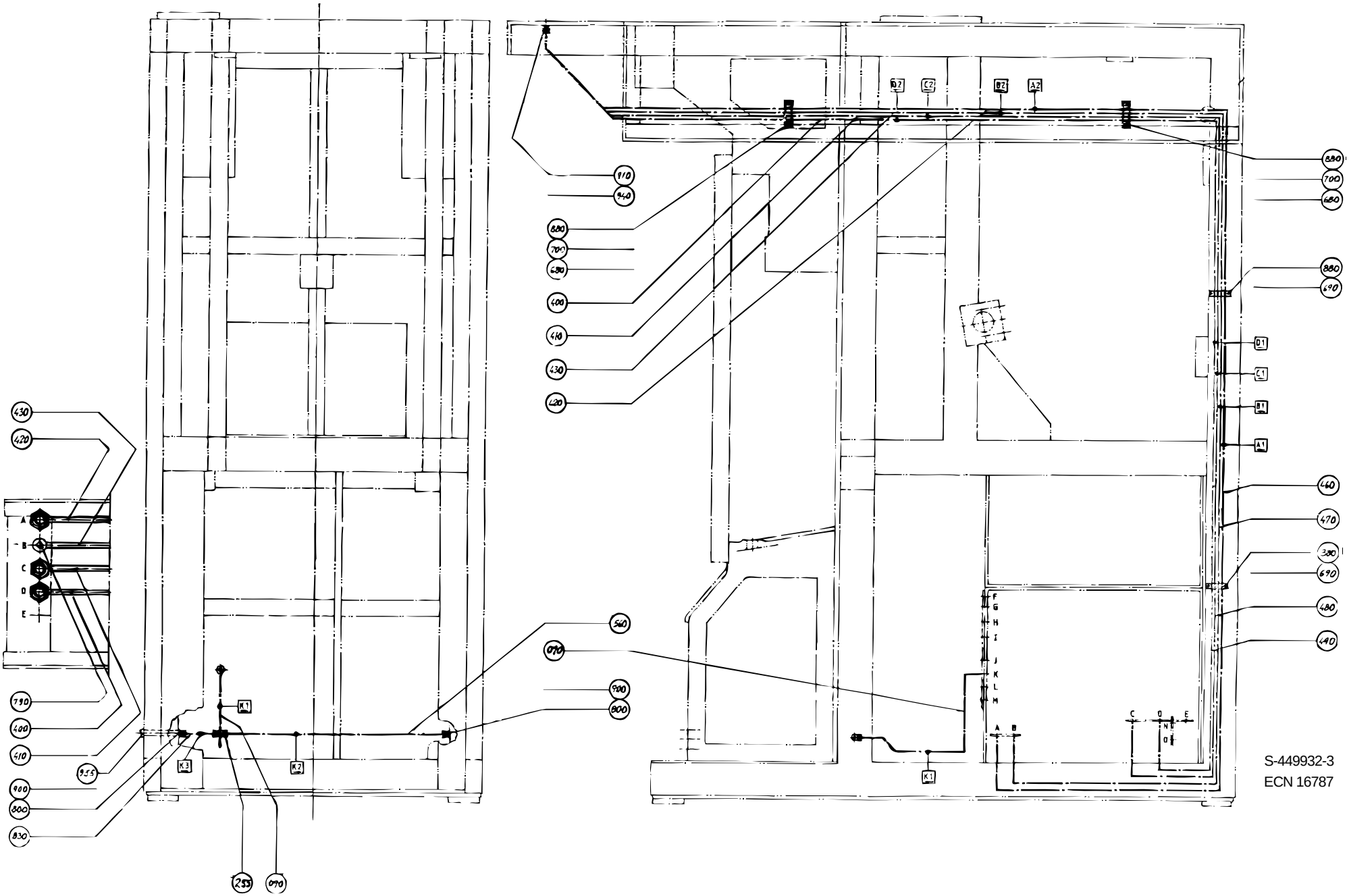

S-449932-3
ECN 16787

Pos	Part No	SP	UN	Qty	Description	Page No
IH						
000	**C- 449932-0501**	**-**		**1**	**PIPE WORK-WATER**	
010	434168	-		1	PIPE	
030	450716	-		1	PIPE	
040	450717	-		1	PIPE	
050	464520	-		1	PIPE	
060	450719	-		1	PIPE	
070	561591	-		1	PIPE	
080	561592	-		1	PIPE	
090	450735	-		1	PIPE	
105	561424	-		1	PIPE	
110	450722	-		1	PIPE	
120	450723	-		1	PIPE	
125	90166-0121	-	MM	1200	HOSE	
140	464719	-		1	SIGN	
165	90030-0106	-		1	PIPE CONNECTION	
175	342991-0102	-		2	HOSE CLIP 13-20MMRFR	
190	90030-0253	-		1	PIPE COUPLING	
195	90089-0018	-		1	TRANSITIONAL NIPPLE	
210	90224-0317	-		1	CONNECTION	
220	90224-0318	-		2	CONNECTION	
230	90224-0320	-		2	CONNECTION	
240	90224-0321	-		1	CONNECTION	
250	90224-0322	-		1	CONNECTION	
255	90224-0323	-		1	CONNECTION	
258	90274-0065	-		1	PRESSURE SWITCH	
290	312105-0327	-		2	SCREW ISO 4017 M5X12A280	
300	315105-0124	-		2	WASHER BRB3,2X6RFR	
310	315234-0113	-		1	SEAL RING R1/2"	
335	342923-0114	-		2	PIPE COUPL6/4-1/4	
350	352136-0129	-		1	GLAND FITT	
400	544688	-		1	PIPE	
410	544689	-		1	PIPE	
420	544690	-		1	PIPE	
430	544691	-		1	PIPE	
440	434171	-		1	PIPE	
450	450725	-		1	ATTACHMENT PLATE	
460	544693	-		1	PIPE	
470	544694	-		1	PIPE	
480	544695	-		1	PIPE	
490	544696	-		1	PIPE	
500	450730	-		1	PIPE	
510	450731	-		1	PIPE	
520	464431	-		1	PIPE	
530	450733	-		1	PIPE	
540	464432	-		1	PIPE	
560	450736	-		1	PIPE	
570	450737	-		1	PIPE	
580	450738	-		1	PIPE	
590	450739	-		1	PIPE	
600	450740	-		1	PIPE	
610	567266	-		1	TUBE	
620	450742	-		1	PIPE	
630	567267	-		1	TUBE	
660	276398	-		4	HEXAGON NIPPLE	
670	279105	-		2	WASHER	
680	279526	-		2	BRACKET	
690	293351	-		2	CRAMP	
700	293352	-		2	CRAMP	
705	450724	-		1	PIPE	
710	450744	-		2	CRAMP	
720	450745	-		2	SPACER	
730	450746	-		1	HOLDER	
740	450747	-		1	PIPE	
750	450748	-		1	PIPE	
760	575795	-		1	WATER PIPE	
770	341001-0228	-	MM	57	COPPER TUB	
780	90030-0091	-		1	PIPE CONNECTION	
785	90030-0159	-		2	GROMMET	
790	90087-0002	-		1	PIPE PLUG	
792	90165-0007	-		3	CLIP	
794	90166-0122	P	M	2	HOSE	
796	90166-0124	-	M	2	HOSE	
800	90224-0319	-		13	CONNECTION	
820	90230-0023	-		1	NON RETURN VALVE	
825	90235-0295	-		4	THROTTLE VALVE	
830	90266-0007	-	MM	63	TUBE	
850	312101-0327	-		4	SCREW M6S5X12FZB	
860	312101-0364	-		2	SCREW	
870	312101-0372	-		1	SCREW M6S6X25FZB	
872	312121-0287	-		3	SLOTTED HEMCS4X8FZB	
875	312125-0220	-		4	SLOTTED HEMCS3X6RFR	
880	312125-0323	-		8	SLOTTED HEMCS5X8RFR	
890	315101-0153	-		2	WASHER BRB6,4X12FZB	
900	315233-0110	-		6	SEAL RING R1/4"	
910	315233-0113	-		4	SEAL RING R1/2"	

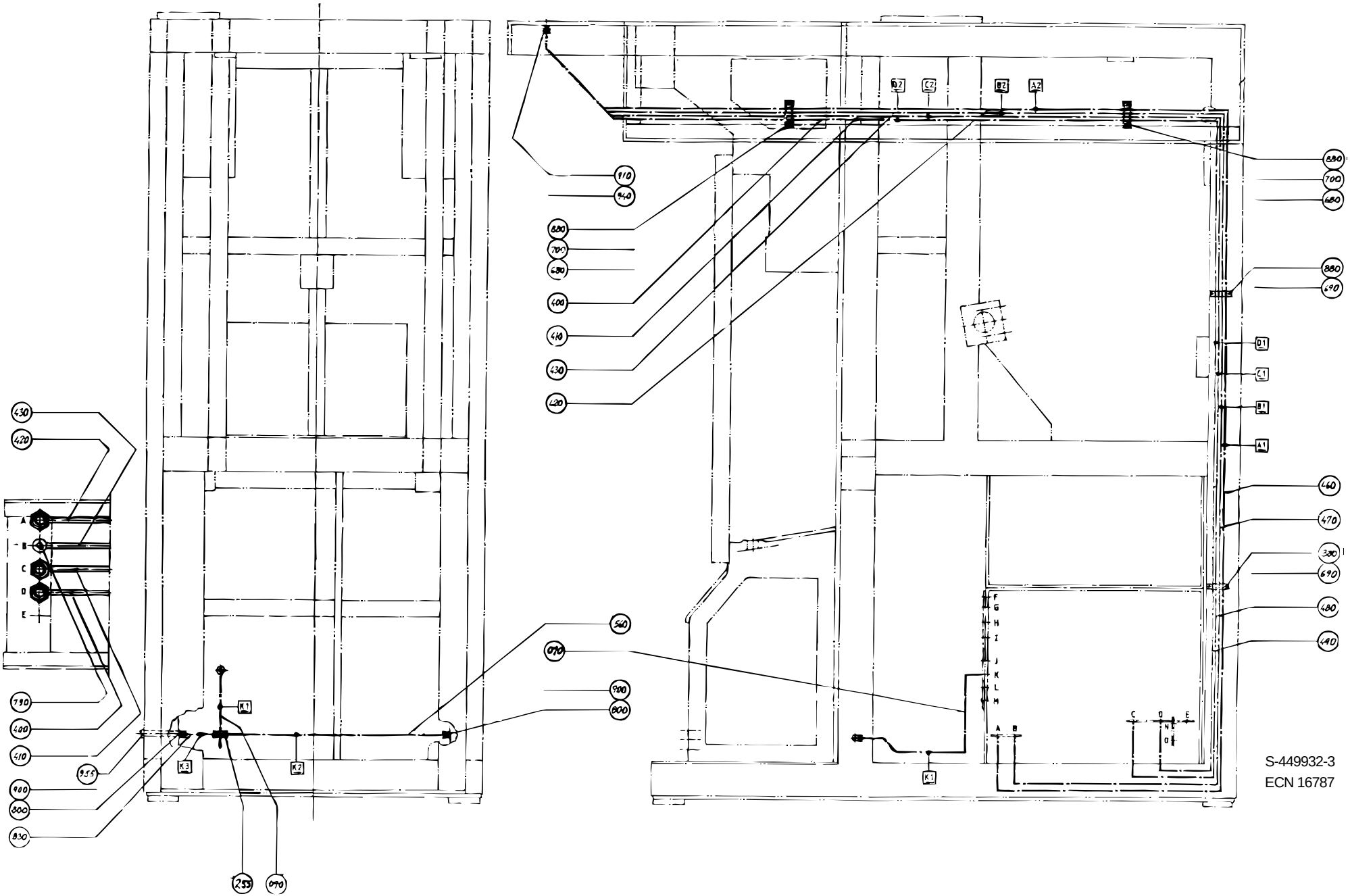
910
940
880
700
680
400
410
430
420
880
690
D1
C1
B1
A1
460
470
380
690
480
490
540
070
900
800
430
420
A
B
C
D
E
790
400
410
955
900
800
830
K1
K3
K2
253
070
D2
C2
B2
A2
F
G
H
I
J
K
L
M
K1
A
B
C
D
E
1
2
3
S-449932-3
ECN 16787

Pos	Part No	SP	UN	Qty	Description	Page No
920	341001-0228	-	MM	300	COPPER TUB	
930	341001-0228	-	MM	1792	COPPER TUB	
935	342713-0210	-		1	BLIND PLUG	
940	342720-0114	-		4	PIPE COUPLGA-15-1/2"	
950	342736-0114	-		1	ELBOW PIPE W-15	
955	342923-0122	-		6	PIPE COUPL8/6-1/4	
960	342980-0122	-		4	BANJO CONNSINGEL 8/6-1/4	

Pos	Part No	SP	UN	Qty	Description	Page No

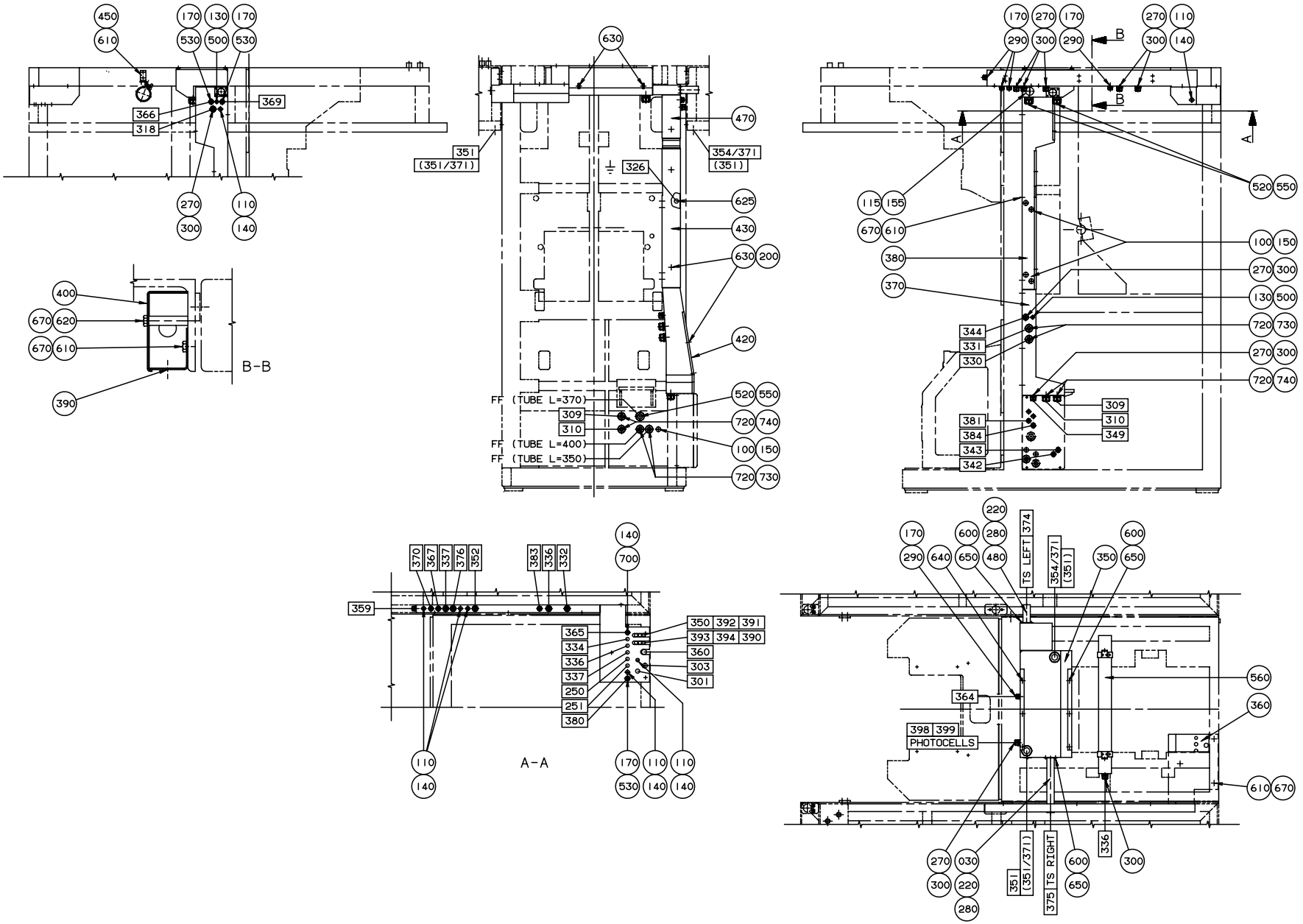

S-450293-5
ECN 20500

Pos	Part No	SP	UN	Qty	Description	Page No
IH						
000	**C- 450293-0501**	**-**		**1**	**CABLE DUCT**	
030	450292	-		1	ATTACHMENT PIPE	
100	90002-0004	-		5	BLANK-OFF PLUG 22,5	
110	90002-0009	-		8	BLANK-OFF PLUG 18.6	
115	90002-0010	-		1	BLANK-OFF PLUG PR37	
130	90099-0001	-		2	NUT PR 15,2 BRASS	
140	90099-0002	-		8	NUT	
150	90099-0003	-		6	NUT	
155	90099-0011	-		1	NUT PR 37 BRASS	
170	90152-0033	-	MM	6800	HOSE	
200	315101-0136	-		5	WASHER BRB4,3X8FZB	
220	342991-0108	-		2	HOSE CLIP 38-50MMRFR	
270	352135-0106	-	MM	6400	HOSE .016	
280	352135-0116	-	MM	3800	FLEXIBLE CG DIA 40	
290	352136-0113	-		4	GLAND FITT	
300	352136-0127	-		11	GLAND FITT	
350	547220	-		1	CABLE DUCT	
360	575464	-		1	CABLE DUCT	
370	540721	-		1	CABLE DUCT	
380	450284	-		1	CABLE DUCT	
390	450285	-		1	CABLE DUCT	
400	450286	-		1	LID	
420	540722	-		1	LID	
430	450287	-		1	LID	
450	246374	-		2	BRACKET	
470	450290	-		1	LID	
480	450291	-		1	ATTACHMENT PIPE	
500	90002-0013	-		2	BLANK-OFF PLUG 15,2	
520	90012-0061	-		3	GLAND	
530	90012-0063	-		4	GLAND	
550	90152-0031	-	MM	2270	HOSE	
560	90164-0003	-		1	LIGHT FIXTURE 1X20W IP67	
560a	90297-0002	P		0	* FLUORESCENT TUBE 18W	
600	312101-0325	-		11	SCREW M6S5X10FZB	
610	312101-0364	-		18	SCREW	
620	312101-0380	-		3	SCREW M6S6X50FZB	
625	312101-0447	-		1	SCREW M6S8X12FZB	
630	312121-0287	-		7	SLOTTED HEMCS4X8FZB	
640	312141-0325	-		3	SLOTTED HEMFS5X10FZB	
650	315101-0146	-		11	WASHER BRB5,3X10FZB	
670	315101-0153	-		15	WASHER BRB6,4X12FZB	
700	352103-0106	-		1	CABLE GLAND ST 11	
720	352135-0109	-	MM	3700	HOSE .022	
730	352136-0142	-		4	GLAND FITT	
740	352136-0143	-		4	GLAND FITT	

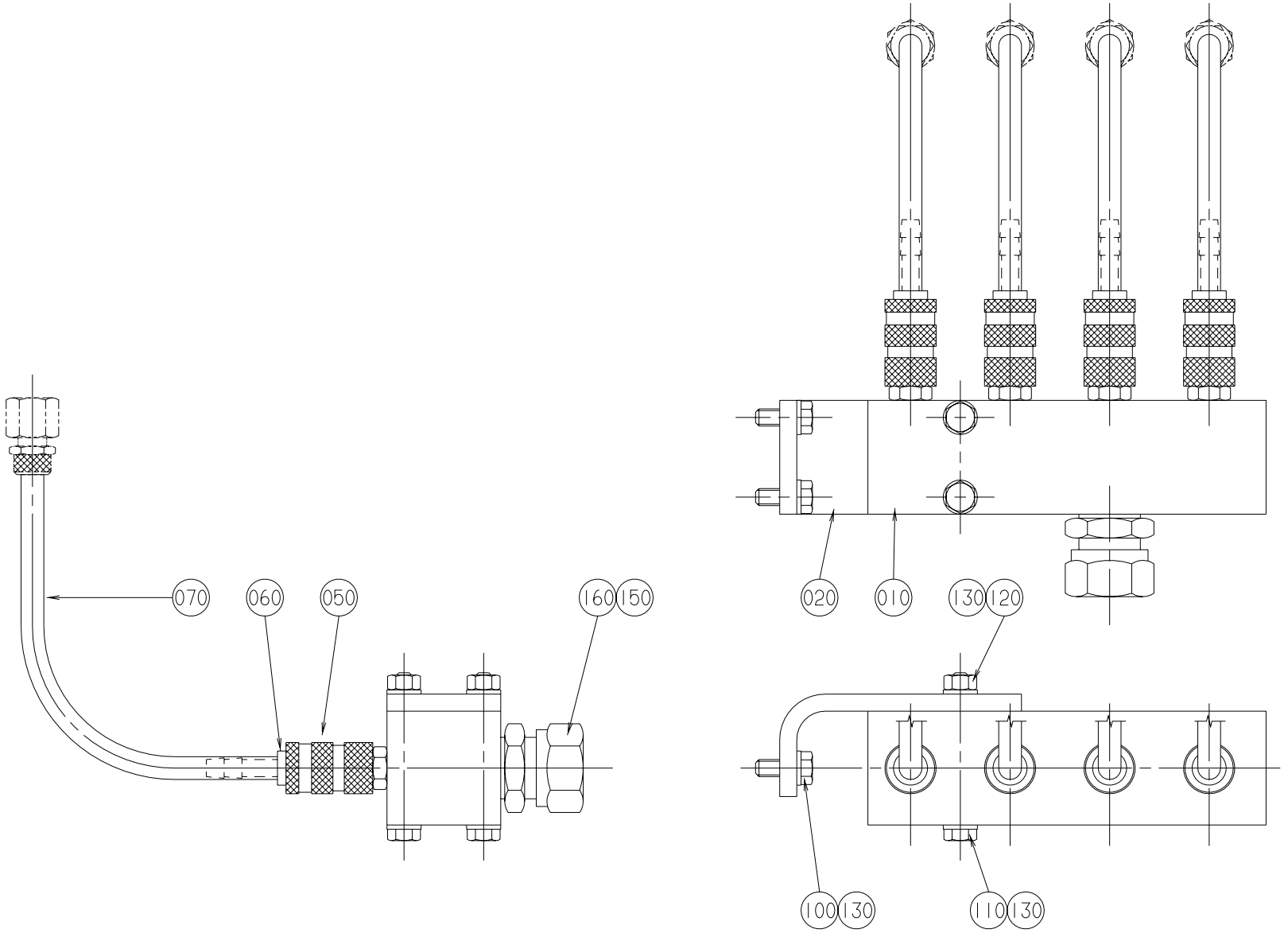

S-575797-1
ECN 20289-1

Pos	Part No	SP	UN	Qty	Description	Page No
-						
000	**C- 575797-0101**	**-**		**1**	**FLOWMETER GROUP**	
010	575791	-		1	JUNCTION BLOCK	
020	575792	-		1	ANGLE STRUT	
050	90163-0133	-		4	QUICK-RELEASE COUPLING	
060	90163-0134	-		4	COUPLING NIPPLE	
070	90166-0133	-	MM	900	HOSE	
100	312105-0368	-		2	SCREW O4017 M6X16A280	
110	312105-0381	-		2	SCREW O4014 M6X55A280	
120	312605-0316	-		2	NUT M6M6 A280 STAINLESS	
130	315105-0153	-		6	WASHER BRB6,4X12RFR	
150	315233-0113	-		1	SEAL RING R1/2"	
160	342720-0114	-		1	PIPE COUPLGA-15-1/2"	

Pos	Part No	SP	UN	Qty	Description	Page No

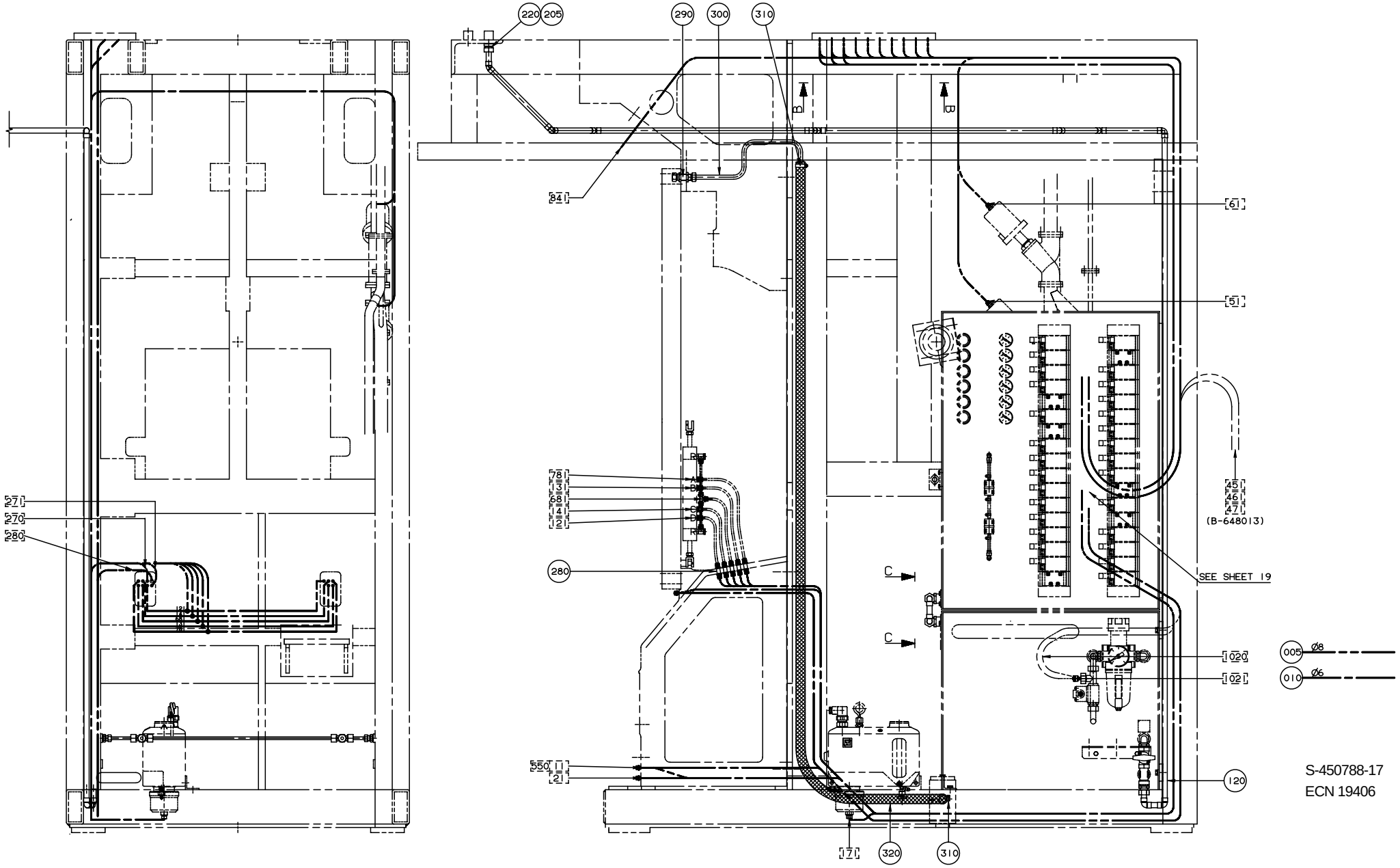

S-450788-17
ECN 19406

Pos	Part No	SP	UN	Qty	Description	Page No
IH, NORMFIN						
000	**C- 450788-0601**	**-**		**1**	**PIPE WORK-PNEUMATIC**	
005	90166-0013	-	M	19	HOSE	
010	90166-0081	-	M	105	HOSE	
115	560881	-		1	PIPE	
170	90224-0319	-		2	CONNECTION	
190 1	90266-0007	-	MM	58	TUBE	
190 2	90266-0007	-	MM	58	TUBE	
200	315233-0110	-		2	SEAL RING R1/4"	
265	342923-0114	-		1	PIPE COUPL6/4-1/4	
275	90224-0316	-		1	CONNECTION	
290	90030-0030	-		1	PIPE CONNECTION	
300	527907	-		1	PIPE	
310	342991-0104	-		2	HOSE CLIP 19-28MMRFR	
320	90166-0060	-	MM	3000	HOSE	
IH, REVFIN						
000	**C- 450788-0605**	**-**		**1**	**PIPE WORK-PNEUMATIC**	
005	90166-0013	-	M	19	HOSE	
010	90166-0081	-	M	105	HOSE	
115	560881	-		1	PIPE	
170	90224-0319	-		2	CONNECTION	
190 1	90266-0007	-	MM	58	TUBE	
190 2	90266-0007	-	MM	58	TUBE	
200	315233-0110	-		2	SEAL RING R1/4"	
265	342923-0114	-		1	PIPE COUPL6/4-1/4	
275	90224-0316	-		1	CONNECTION	
290	90030-0030	-		1	PIPE CONNECTION	
300	527907	-		1	PIPE	
310	342991-0104	-		2	HOSE CLIP 19-28MMRFR	
320	90166-0060	-	MM	3000	HOSE	
Common parts						
080	544692	-		1	PIPE	
120	544697	-		1	PIPE	
140	450791	-		1	PIPE	
180	90224-0323	-		1	CONNECTION	
205	315233-0113	-		1	SEAL RING R1/2"	
210	342713-0210	-		1	BLIND PLUG	
220	342720-0114	-		1	PIPE COUPLGA-15-1/2"	
240	342929-0121	-		1	PIPE COUPL8/6-8	
260	342946-0112	-		5	T-CONNECTI6/4	
280	342960-0112	-		10	BULKHEAD L6/4	

Pos	Part No	SP	UN	Qty	Description	Page No

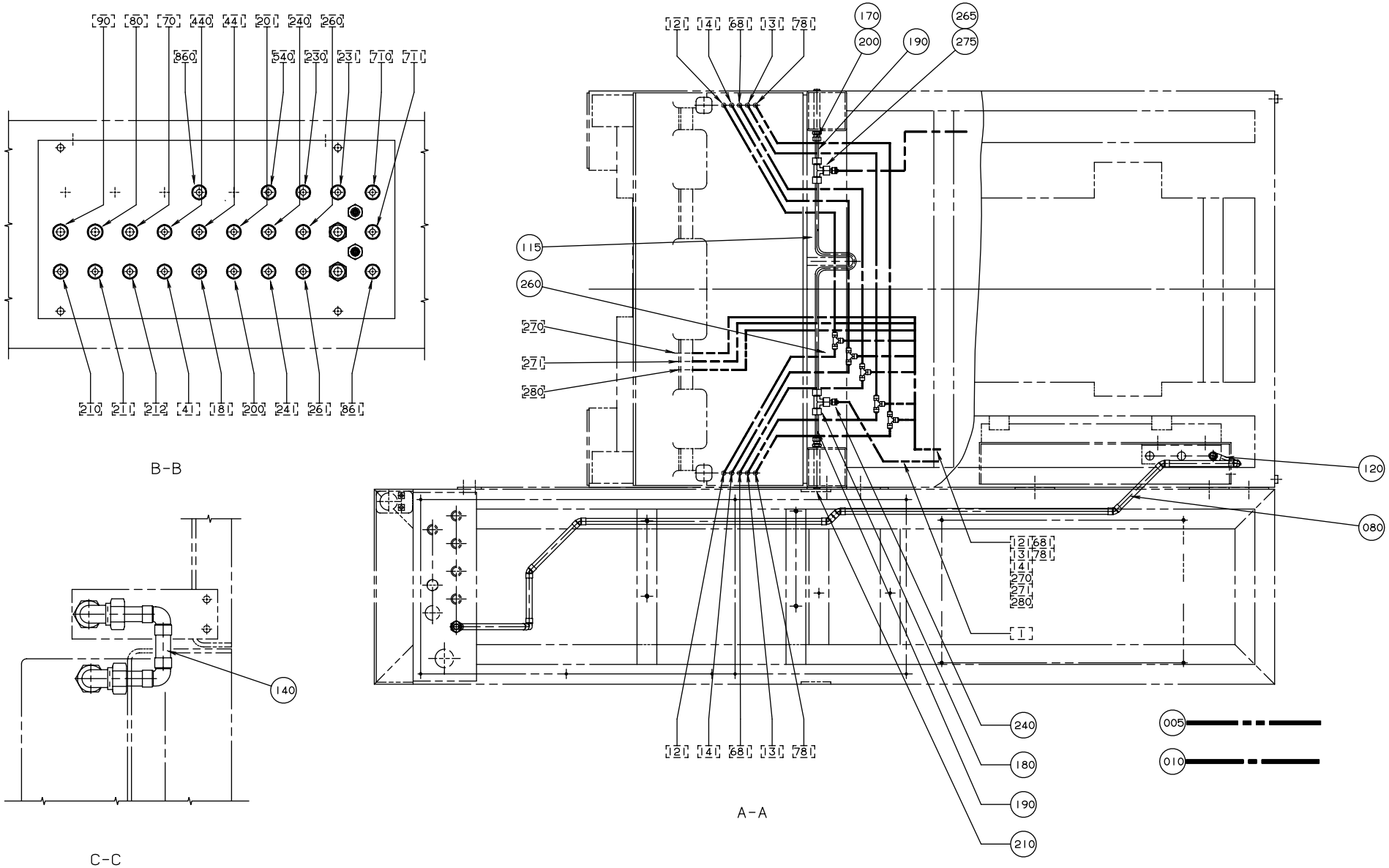

S-450788-18
ECN 19406

Pos	Part No	SP	UN	Qty	Description	Page No
IH, NORMFIN						
000	**C- 450788-0601**	**-**		**1**	**PIPE WORK-PNEUMATIC**	
005	90166-0013	-	M	19	HOSE	
010	90166-0081	-	M	105	HOSE	
115	560881	-		1	PIPE	
170	90224-0319	-		2	CONNECTION	
190 1	90266-0007	-	MM	58	TUBE	
190 2	90266-0007	-	MM	58	TUBE	
200	315233-0110	-		2	SEAL RING R1/4"	
265	342923-0114	-		1	PIPE COUPL6/4-1/4	
275	90224-0316	-		1	CONNECTION	
290	90030-0030	-		1	PIPE CONNECTION	
300	527907	-		1	PIPE	
310	342991-0104	-		2	HOSE CLIP 19-28MMRFR	
320	90166-0060	-	MM	3000	HOSE	
IH, REVFIN						
000	**C- 450788-0605**	**-**		**1**	**PIPE WORK-PNEUMATIC**	
005	90166-0013	-	M	19	HOSE	
010	90166-0081	-	M	105	HOSE	
115	560881	-		1	PIPE	
170	90224-0319	-		2	CONNECTION	
190 1	90266-0007	-	MM	58	TUBE	
190 2	90266-0007	-	MM	58	TUBE	
200	315233-0110	-		2	SEAL RING R1/4"	
265	342923-0114	-		1	PIPE COUPL6/4-1/4	
275	90224-0316	-		1	CONNECTION	
290	90030-0030	-		1	PIPE CONNECTION	
300	527907	-		1	PIPE	
310	342991-0104	-		2	HOSE CLIP 19-28MMRFR	
320	90166-0060	-	MM	3000	HOSE	
Common parts						
080	544692	-		1	PIPE	
120	544697	-		1	PIPE	
140	450791	-		1	PIPE	
180	90224-0323	-		1	CONNECTION	
205	315233-0113	-		1	SEAL RING R1/2"	
210	342713-0210	-		1	BLIND PLUG	
220	342720-0114	-		1	PIPE COUPLGA-15-1/2"	
240	342929-0121	-		1	PIPE COUPL8/6-8	
260	342946-0112	-		5	T-CONNECTI6/4	
280	342960-0112	-		10	BULKHEAD L6/4	

Pos	Part No	SP	UN	Qty	Description	Page No

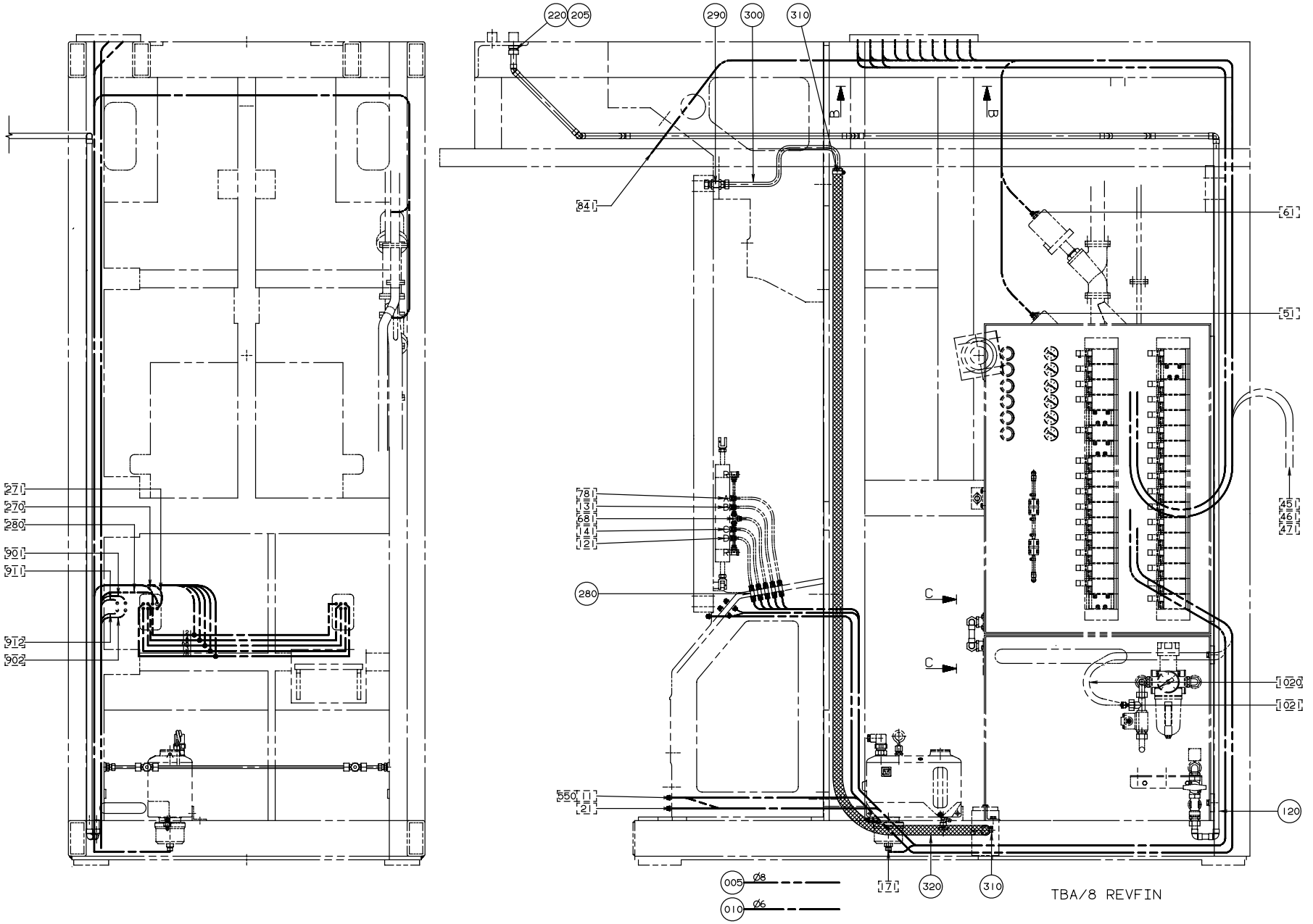

S-450788-29
ECN 70022

Pos	Part No	SP	UN	Qty	Description	Page No
IH, NORMFIN						
000	**C- 450788-0601**	**-**		**1**	**PIPE WORK-PNEUMATIC**	
005	90166-0013	-	M	19	HOSE	
010	90166-0081	-	M	105	HOSE	
115	560881	-		1	PIPE	
170	90224-0319	-		2	CONNECTION	
190 1	90266-0007	-	MM	58	TUBE	
190 2	90266-0007	-	MM	58	TUBE	
200	315233-0110	-		2	SEAL RING R1/4"	
265	342923-0114	-		1	PIPE COUPL6/4-1/4	
275	90224-0316	-		1	CONNECTION	
290	90030-0030	-		1	PIPE CONNECTION	
300	527907	-		1	PIPE	
310	342991-0104	-		2	HOSE CLIP 19-28MMRFR	
320	90166-0060	-	MM	3000	HOSE	
IH, REVFIN						
000	**C- 450788-0605**	**-**		**1**	**PIPE WORK-PNEUMATIC**	
005	90166-0013	-	M	19	HOSE	
010	90166-0081	-	M	105	HOSE	
115	560881	-		1	PIPE	
170	90224-0319	-		2	CONNECTION	
190 1	90266-0007	-	MM	58	TUBE	
190 2	90266-0007	-	MM	58	TUBE	
200	315233-0110	-		2	SEAL RING R1/4"	
265	342923-0114	-		1	PIPE COUPL6/4-1/4	
275	90224-0316	-		1	CONNECTION	
290	90030-0030	-		1	PIPE CONNECTION	
300	527907	-		1	PIPE	
310	342991-0104	-		2	HOSE CLIP 19-28MMRFR	
320	90166-0060	-	MM	3000	HOSE	
Common parts						
080	544692	-		1	PIPE	
120	544697	-		1	PIPE	
140	450791	-		1	PIPE	
180	90224-0323	-		1	CONNECTION	
205	315233-0113	-		1	SEAL RING R1/2"	
210	342713-0210	-		1	BLIND PLUG	
220	342720-0114	-		1	PIPE COUPLGA-15-1/2"	
240	342929-0121	-		1	PIPE COUPL8/6-8	
260	342946-0112	-		5	T-CONNECTI6/4	
280	342960-0112	-		10	BULKHEAD L6/4	

Pos	Part No	SP	UN	Qty	Description	Page No

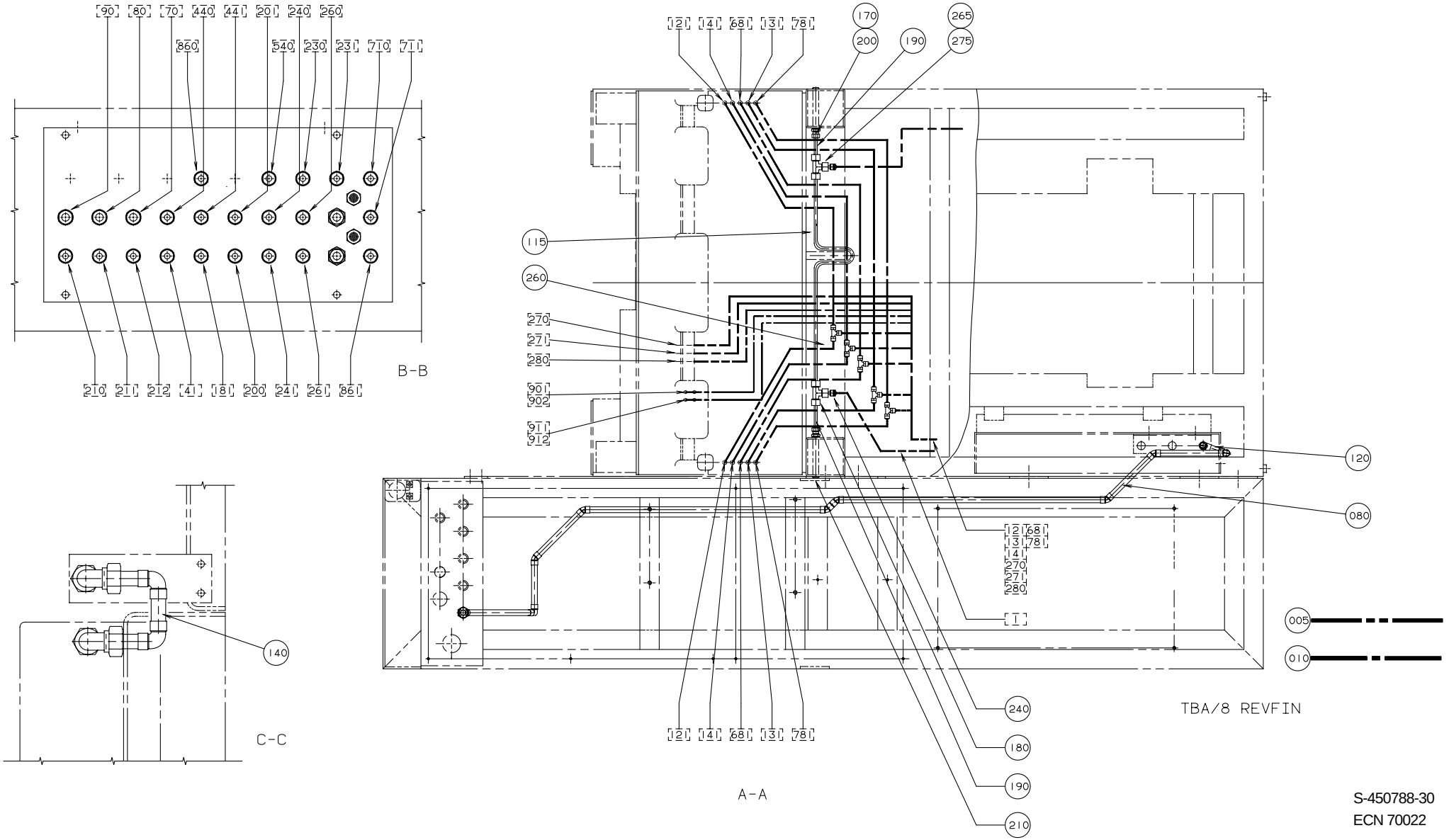

S-450788-30
ECN 70022

Pos	Part No	SP	UN	Qty	Description	Page No
IH, NORMFIN						
000	**C- 450788-0601**	**-**		**1**	**PIPE WORK-PNEUMATIC**	
005	90166-0013	-	M	19	HOSE	
010	90166-0081	-	M	105	HOSE	
115	560881	-		1	PIPE	
170	90224-0319	-		2	CONNECTION	
190 1	90266-0007	-	MM	58	TUBE	
190 2	90266-0007	-	MM	58	TUBE	
200	315233-0110	-		2	SEAL RING R1/4"	
265	342923-0114	-		1	PIPE COUPL6/4-1/4	
275	90224-0316	-		1	CONNECTION	
290	90030-0030	-		1	PIPE CONNECTION	
300	527907	-		1	PIPE	
310	342991-0104	-		2	HOSE CLIP 19-28MMRFR	
320	90166-0060	-	MM	3000	HOSE	
IH, REVFIN						
000	**C- 450788-0605**	**-**		**1**	**PIPE WORK-PNEUMATIC**	
005	90166-0013	-	M	19	HOSE	
010	90166-0081	-	M	105	HOSE	
115	560881	-		1	PIPE	
170	90224-0319	-		2	CONNECTION	
190 1	90266-0007	-	MM	58	TUBE	
190 2	90266-0007	-	MM	58	TUBE	
200	315233-0110	-		2	SEAL RING R1/4"	
265	342923-0114	-		1	PIPE COUPL6/4-1/4	
275	90224-0316	-		1	CONNECTION	
290	90030-0030	-		1	PIPE CONNECTION	
300	527907	-		1	PIPE	
310	342991-0104	-		2	HOSE CLIP 19-28MMRFR	
320	90166-0060	-	MM	3000	HOSE	
Common parts						
080	544692	-		1	PIPE	
120	544697	-		1	PIPE	
140	450791	-		1	PIPE	
180	90224-0323	-		1	CONNECTION	
205	315233-0113	-		1	SEAL RING R1/2"	
210	342713-0210	-		1	BLIND PLUG	
220	342720-0114	-		1	PIPE COUPLGA-15-1/2"	
240	342929-0121	-		1	PIPE COUPL8/6-8	
260	342946-0112	-		5	T-CONNECTI6/4	
280	342960-0112	-		10	BULKHEAD L6/4	

Pos	Part No	SP	UN	Qty	Description	Page No

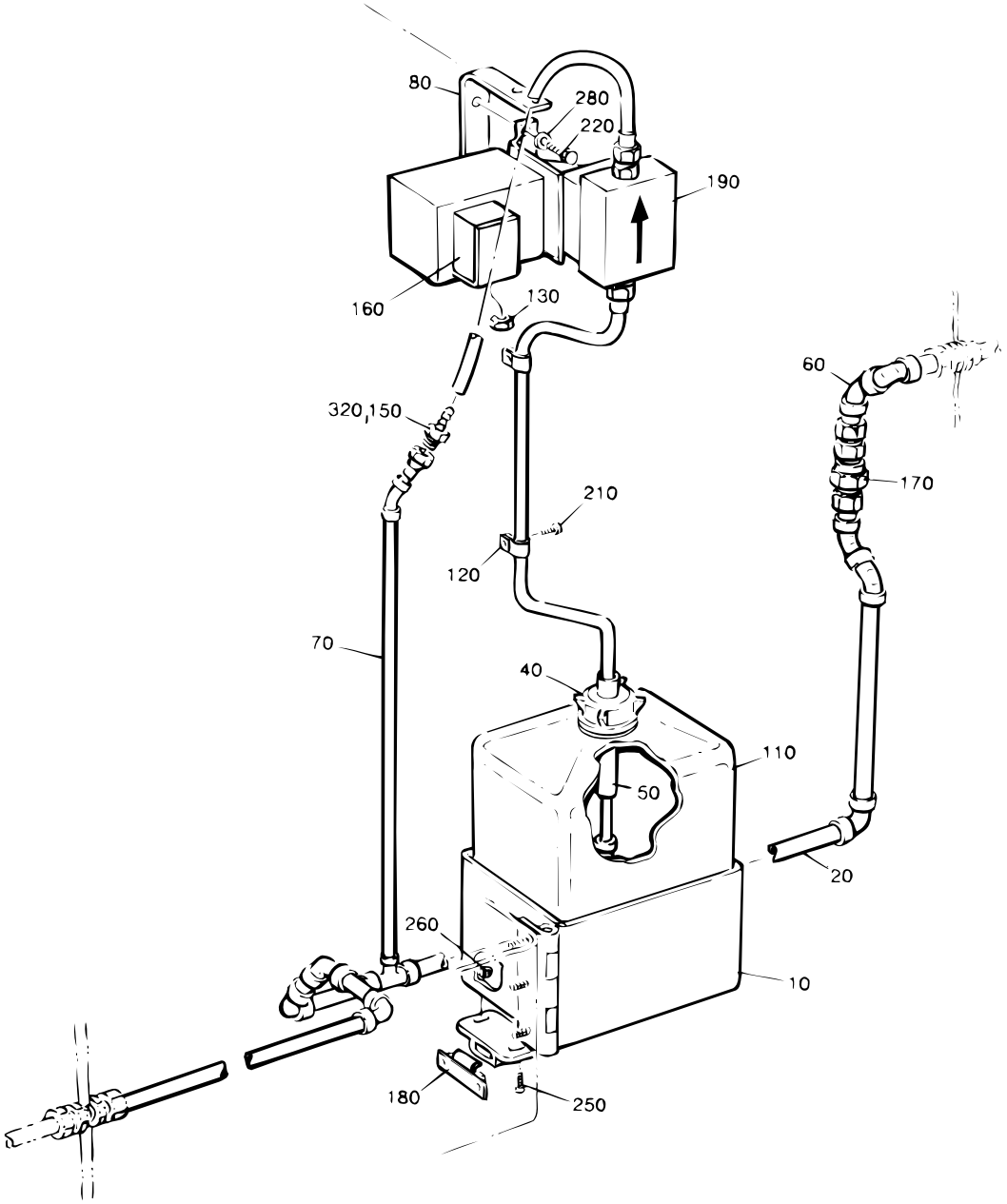
80
280
220
190
160
130
320,150
60
170
210
120
70
40
110
50
20
260
10
180
250

Pos	Part No	SP	UN	Qty	Description	Page No
-						
000	**C- 450792-0101**	**S**		**1**	**DETERGENT PUMP**	
010	547906	-		1	SHELF	
020	450793	-		1	PIPE	
040	35962	S		1	LID	
050	259867	-		1	HOSE CLAMP	
060	450794	-		1	PIPE	
070	450795	-		1	PIPE	
080	450796	-		1	BRACKET	
110	90050-0011	-		1	BOTTLE	
120	90074-0002	-		2	CABLE CLIP JR11 STAINLESS	
130	90099-0003	-		1	NUT	
150	90131-0004	-		1	HOSE COUPLING	
160	90195-0020	-		1	TERMINAL BK2 KRG 2-POLE	
170	90230-0021	-		1	NON-RETURN VALVE	
180	90237-0046	-		1	LOCK PART	
190	90321-0037	P		1	PUMP 220V 50/60 HZ	
190a	90166-0157	S	MM	1500	* HOSE	
190b	90321-0380	S		0	* DIAPHRAGM	
190c	90321-0396	S		0	* FILTER	
210	312105-0323	-		5	SCREW O4017 M5X8A280	
220	312105-0368	-		4	SCREW O4017 M6X16A280	
250	312125-0220	-		2	SLOTTED HEMCS3X6RFR	
260	312605-0310	-		2	NUT M6M3RFR	
280	315105-0153	-		3	WASHER BRB6,4X12RFR	
320	352136-0127	-		1	GLAND FITT	

Pos	Part No	SP	UN	Qty	Description	Page No

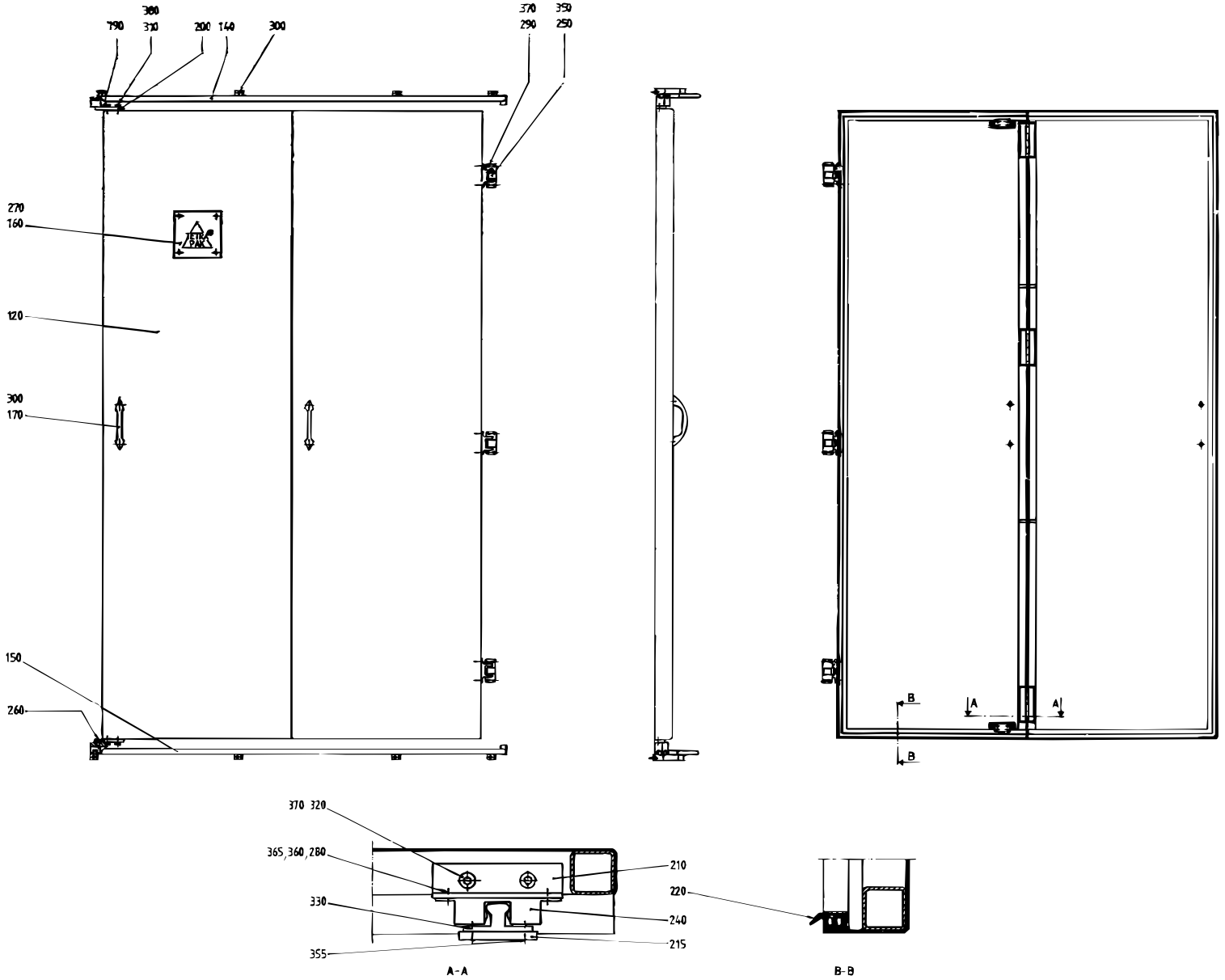
790
310
200
140
300
290
250
270
160
120
300
170
150
260
B
A
A
B
370
320
365,360,280
330
355
210
220
240
215
A-A
B-B

Pos	Part No	SP	UN	Qty	Description	Page No
-						
000	**C- 450824-0201**	**-**		**1**	**DOOR**	
120	549044	-		1	DOOR	
140	269320	-		1	RAIL	
150	269321	-		1	RAIL	
160	574658	-		1	LOGOTYPE TP	
170	7309	-		2	HANDLE	
190	230226	-		2	BLOCKING PIECE	
200	246739	-		2	BRACKET	
210	450826	-		2	BRACKET	
215	450973	-		2	BRACKET	
220	90143-0049	S	MM	6000	RUBBERSTRIP 11X21MM	
240	90237-0070	-		2	LOCK	
250	90248-0013	-		3	HINGE 3562E STUV	
260	311103-0403	-		2	CYLINDRICACP M6 8X25 RFR	
270	311520-0420	-		4	BLANK RIVE3,2X4	
280	312105-0291	-		4	SCREW O4017 M4X12A280	
290	312105-0327	-		12	SCREW ISO 4017 M5X12A280	
300	312105-0366	-		12	SCREW O4017 M6X12A280	
310	312105-0368	-		4	SCREW O4017 M6X16A280	
320	312115-0325	-		4	SCREW 5X10 A4 80	
330	312145-0285	-		4	SLOTTED HEMFS4X6RFR	
350	312145-0325	-		12	SLOTTED HEMFS5X10RFR	
355	312145-0327	-		4	SLOTTED HEMFS5X12RFR	
360	312605-0312	-		4	NUT M6M4 STAINLESS	
365	315105-0136	-		4	WASHER BRB4,3X8RFR	
370	315105-0146	-		16	WASHER BRB5,3X10RFR	
380	315105-0153	-		4	WASHER BRB6,4X12RFR	

Pos	Part No	SP	UN	Qty	Description	Page No

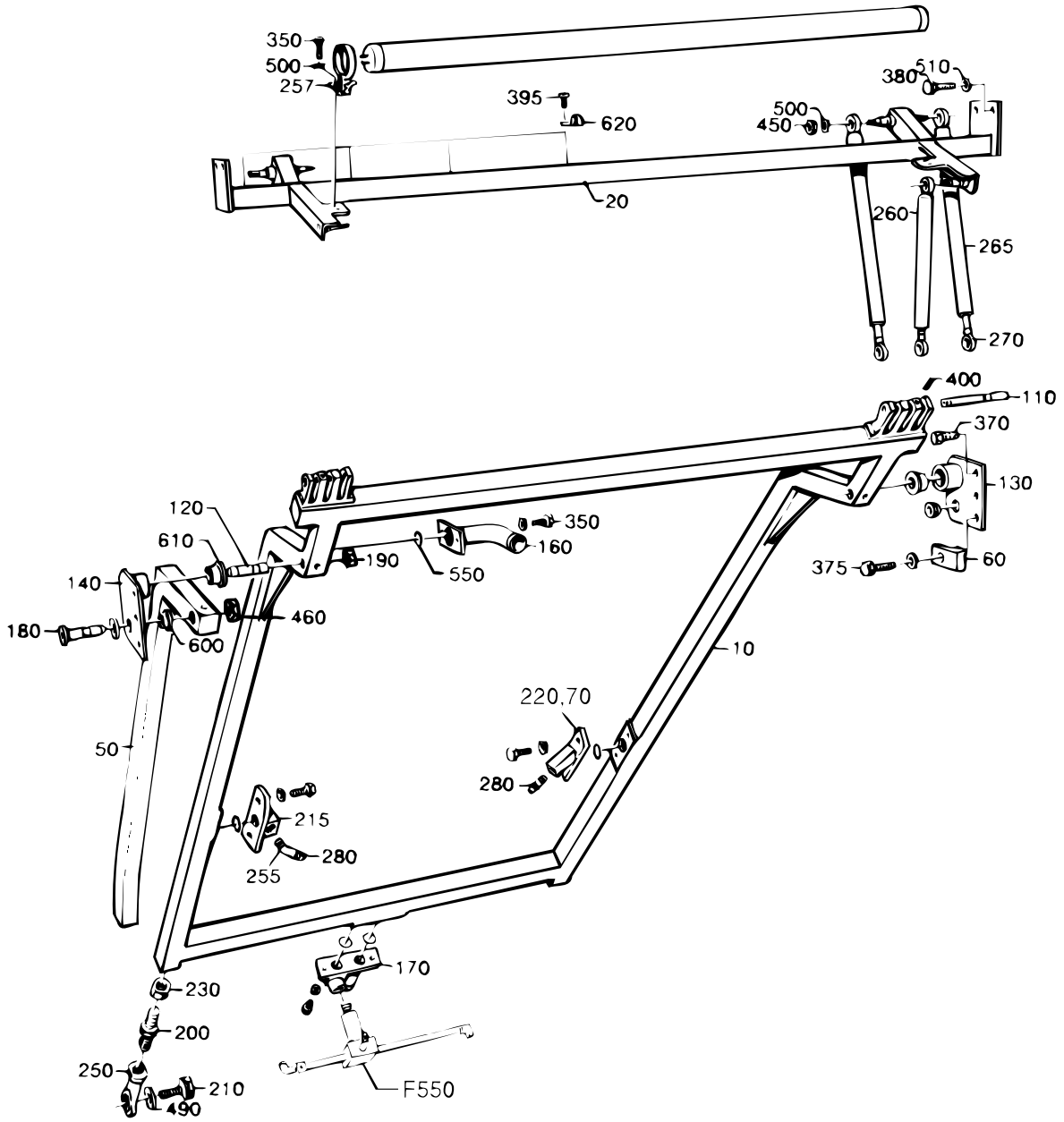
350
500
257
395
620
20
380
510
500
450
260
265
270
400
110
370
130
375
60
120
610
140
180
600
460
190
550
350
160
10
220,70
280
50
215
280
255
170
230
200
250
210
490
F550

Pos	Part No	SP	UN	Qty	Description	Page No
-						
000	**C- 450840-0401**	**-**		**1**	**LIFTING UNIT**	
010	493021	-		1	ARM	
020	450841	-		1	CANTILEVER	
050	493022	-		2	ARM	
060	532371	-		1	STOP LUG	
070	534486	-		1	PIPE HOLDER	
110	285825	S		2	SHAFT	
120	484219	S		2	SHAFT	
130	484220	C		1	BRACKET	
140	484221	C		1	BRACKET	
160	285979	-		1	PIPE	
170	476894	-		1	PIPE HOLDER	
180	484222	S		2	SHAFT	
190	484223	S		2	NUT	
200	457354	S		4	SCREW	
210	297770	-		4	SCREW	
215	442566	-		1	BRACKET	
230	457355	-		4	NUT	
250	90115-0111	-		4	JOINT	
257	90164-0003	C		1	LIGHT FIXTURE 1X20W IP67	
257a	90297-0002	P		0	* FLUORESCENT TUBE 18W	
260	90347-0036	-		2	DAMPER	
265	90347-0038	-		4	DAMPER	
270	90347-0300	-		6	BRACKET	
280	90424-0035	-		2	NOZZLE	
350	312105-0368	-		12	SCREW O4017 M6X16A280	
370	312105-0493	-		5	SCREW 4017 M10X25A280	
375	312105-0495	-		1	SCREW 4017 M10X30A280	
380	312105-0497	-		2	SCREW 4017 M10X35A280	
395	312125-0285	-		4	SLOTTED HEMCS4X6RFR	
400	312318-0362	S		2	STOP SCREW SK6SS6X8RFR	
450	312605-0316	-		6	NUT M6M6 A280 STAINLESS	
460	312605-0322	-		2	NUT M6M12RFR	
490	315103-0195	-		4	WASHER BRB23X40MSGFN	
500	315105-0153	-		18	WASHER BRB6,4X12RFR	
510	315105-0173	-		10	WASHER BRB10,5X22RFR	
550	315202-0216	P		5	O-RING 22,2X3	
600	321101-0173	-		4	FLANGE BUS 12F7X12	
610	321101-0233	S		4	FLANGE BUS 20F7X20	
620	352135-0201	-		4	CRAMP 12	
630	352136-0127	-		1	GLAND FITT	
F550	C- 476884-0202	-		1	CLEANING HEAD	**193**

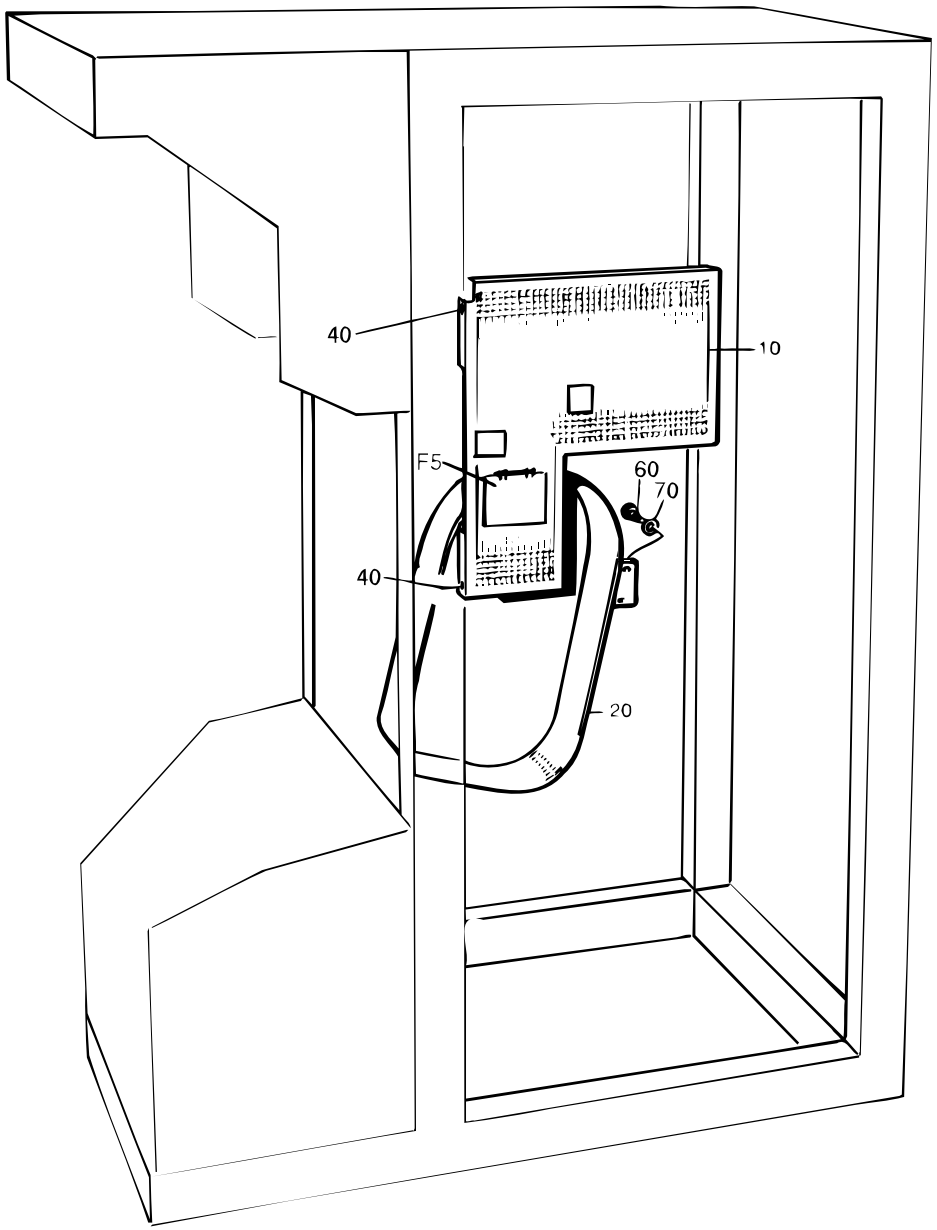
40
10
F5
60
70
40
20

Pos	Part No	SP	UN	Qty	Description	Page No
-						
000	**C- 450883-0401**	**-**		**1**	**PROTECTION**	
010	440482	-		1	PROTECTION	
020	450884	-		1	PROTECTION	
040	311211-0292	-		2	TAPER PIN GKP6X6X30	
060	312101-0366	-		6	SCREW M6S6X12FZB	
070	315101-0153	-		6	WASHER BRB6,4X12FZB	
F005	C- 543157-030V	-		1	HOLDER	**273**

Pos	Part No	SP	UN	Qty	Description	Page No

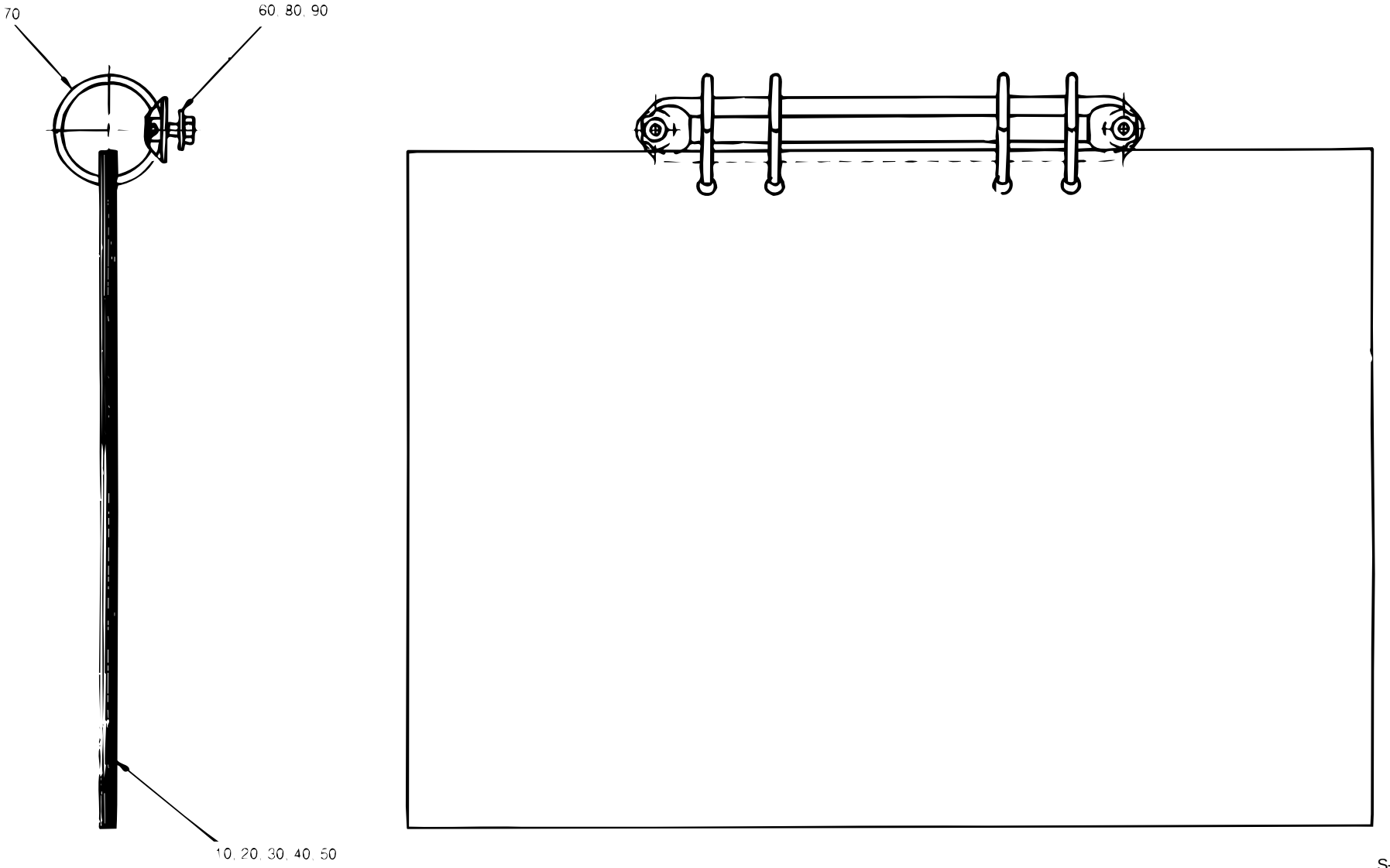

S-543457-2
ECN 15046

Pos	Part No	SP	UN	Qty	Description	Page No
-						
000	**C- 543157-0301**	**-**		**1**	**HOLDER**	
010 2	575448	-		1	VALVE PANEL	
020 2	574600	-		1	PNEUMATIC DIAGRAM	
030 1	479858	-		1	HYDRAULIC DIAGRAM	
040 1	576730	-		1	WATER DIAGRAM	
050 1	561590	-		1	CENTRAL LUBRIC. DIAGRAM	
060	38087	-		2	WASHER	
070	90243-0169	-		1	PAPER HOLDER	
080	312115-0325	-		2	SCREW 5X10 A4 80	
090	312605-0314	-		2	NUT M6M5RFR	

Pos	Part No	SP	UN	Qty	Description	Page No

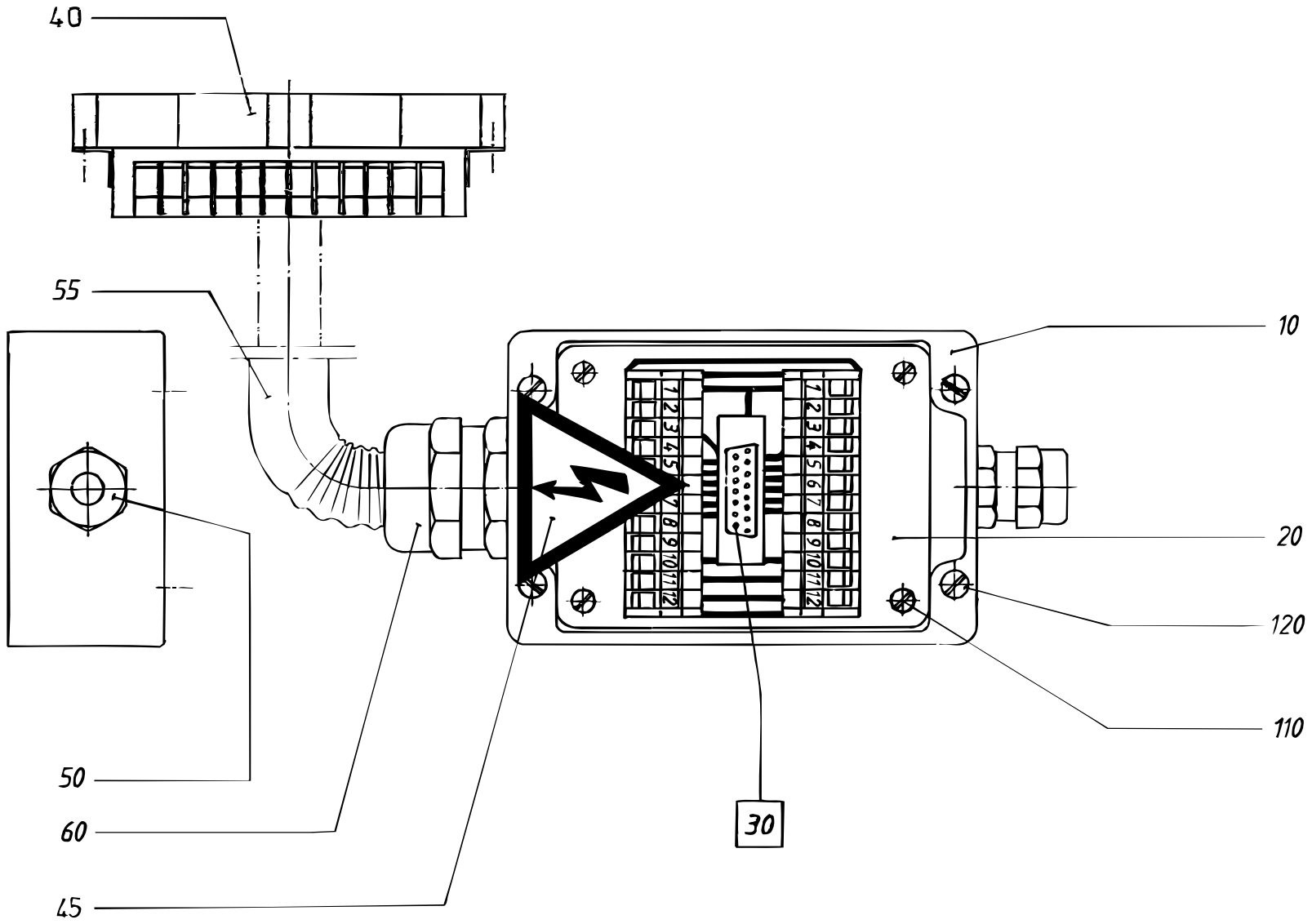
40
55
10
20
120
110
50
60
45
30

Pos	Part No	SP	UN	Qty	Description	Page No
-						
000	**C- 451348-0202**	**-**		**1**	**CONNECTION BOX**	
010	464297	C		1	CONNECTION BOX	
020	451423	S		1	CIRCUIT BOARD ANGLE ENC.	
040	90110-0128	S		1	PLUG 24-POL	
045	90194-0016	-		1	SIGN "FLASH SIGN" 50X50MM	
050	352103-0106	S		1	CABLE GLAND ST 11	
055	352135-0106	C	MM	1400	HOSE .016	
060	352136-0127	S		1	GLAND FITT	
110	312125-0220	S		4	SLOTTED HEMCS3X6RFR	
120	312125-0291	S		4	SLOTTED HEMCS4X12RFR	
F030	C- 68917-0101	C		1	ANGLE INDICATOR	**277**

Pos	Part No	SP	UN	Qty	Description	Page No

This page is intentionally left blank

Pos	Part No	SP	UN	Qty	Description	Page No
-						
000	**C- 68917-0101**	**C**		**1**	**ANGLE INDICATOR**	
010	540306-0001	-		1	COMPONENTS WITHOUT TP-NO	
020	540307	-		1	PRINTED CIRCUIT BOARD	
D001	49915-01:00	-		X	CIRCUIT DIAGRAM	
D002	49916-01:00	-		X	COMPONENT LAYOUT	
D003	57008-01:00	-		X	BACKPLANE	

Pos	Part No	SP	UN	Qty	Description	Page No

Tetra Pak

SPC

Spare Parts Catalogue

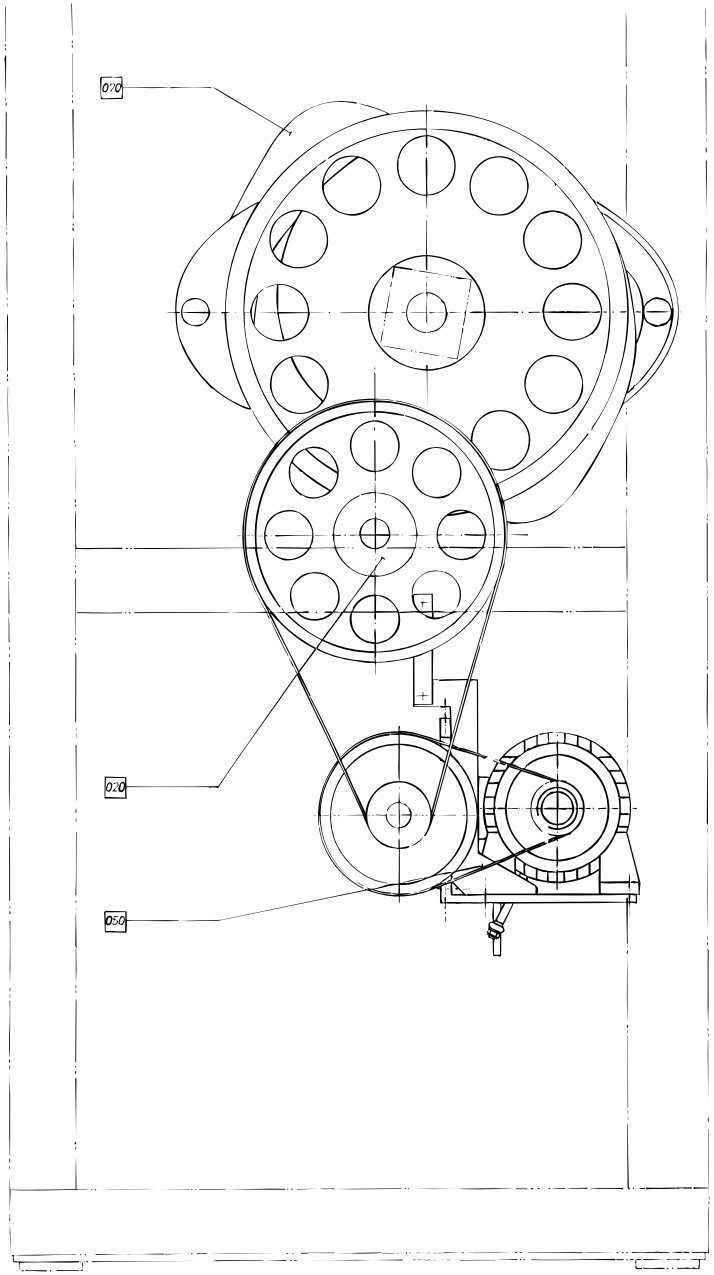
070
020
050

Pos	Part No	SP	UN	Qty	Description	Page No
000	**B- 648003-100V**	**-**		**1**	**DRIVE**	
F010	C- 440588-0201	-		1	CRANK	**287**
F020	C- 239890-0301	-		1	INTERMEDIARY SHAFT	**289**
F050	C- 434668-040V	-		1	DRIVE UNIT	**291**
F070	C- 266986-050V	-		1	CURVE SHAFT	**293**
F080	C- 243927-070V	-		2	ARM	**297**
F090	C- 476177-0201	-		1	HOLD-DOWN DEVICE	**299**
F100	C- 434669-040V	-		1	IMPULSE TRANSMITTER	**301**
	C- 273728-030V	-		-	. VALVE GROUP	**303**
	C- 442402-0101	-		-	. . VALVE	**305**
F120	C- 292071-020V	-		1	SPLASH PROTECTION	**307**
F130	C- 434670-060V	-		1	LINK SYSTEM	**309**

Pos	Part No	SP	UN	Qty	Description	Page No

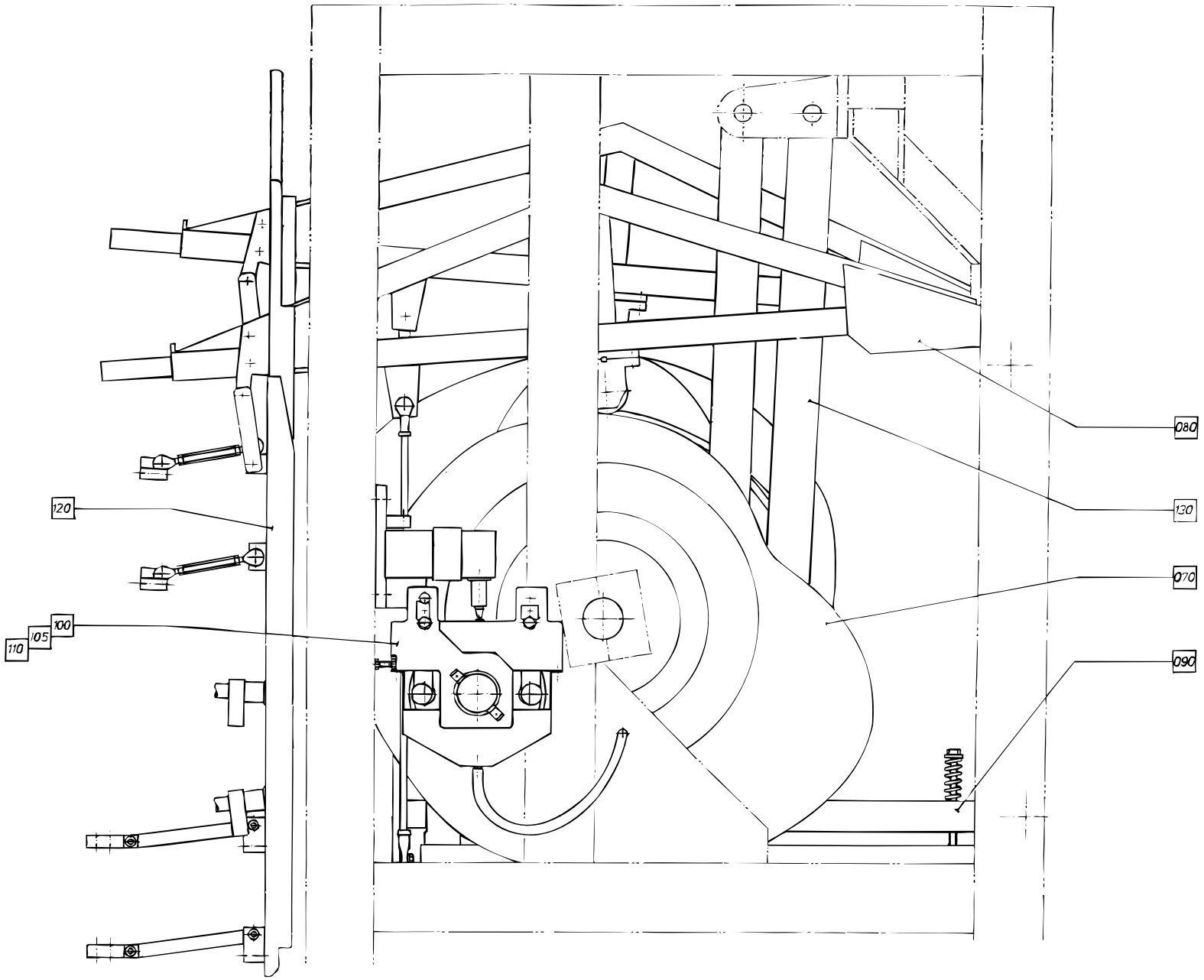

S-648003-2
ECN 5692

Pos	Part No	SP	UN	Qty	Description	Page No
000	**B- 648003-100V**	**-**		**1**	**DRIVE**	
F010	C- 440588-0201	-		1	CRANK	**287**
F020	C- 239890-0301	-		1	INTERMEDIARY SHAFT	**289**
F050	C- 434668-040V	-		1	DRIVE UNIT	**291**
F070	C- 266986-050V	-		1	CURVE SHAFT	**293**
F080	C- 243927-070V	-		2	ARM	**297**
F090	C- 476177-0201	-		1	HOLD-DOWN DEVICE	**299**
F100	C- 434669-040V	-		1	IMPULSE TRANSMITTER	**301**
	C- 273728-030V	-		-	. VALVE GROUP	**303**
	C- 442402-0101	-		-	. . VALVE	**305**
F120	C- 292071-020V	-		1	SPLASH PROTECTION	**307**
F130	C- 434670-060V	-		1	LINK SYSTEM	**309**

Pos	Part No	SP	UN	Qty	Description	Page No

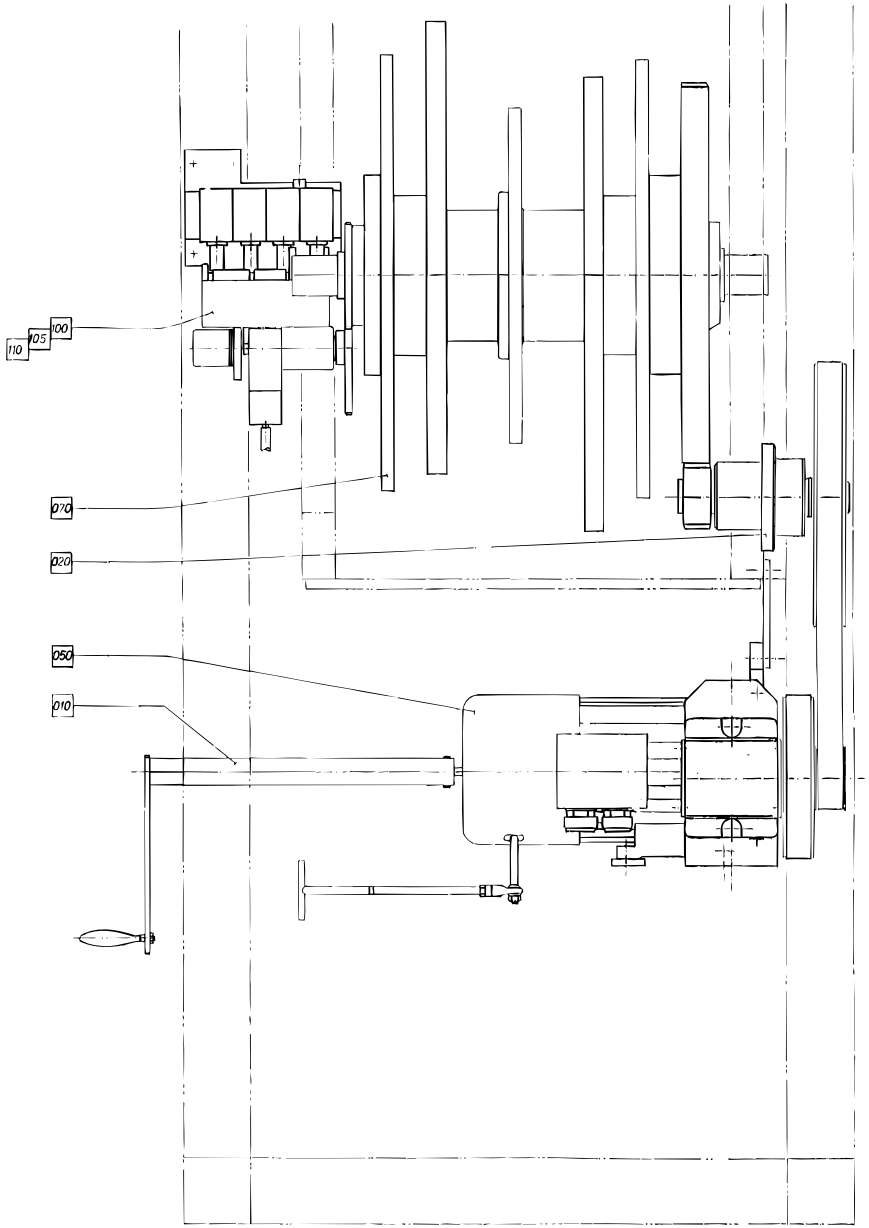
100
105
110
070
020
050
010

Pos	Part No	SP	UN	Qty	Description	Page No
-						
000	**B- 648003-100V**	**-**		**1**	**DRIVE**	
F010	C- 440588-0201	-		1	CRANK	**287**
F020	C- 239890-0301	-		1	INTERMEDIARY SHAFT	**289**
F050	C- 434668-040V	-		1	DRIVE UNIT	**291**
F070	C- 266986-050V	-		1	CURVE SHAFT	**293**
F080	C- 243927-070V	-		2	ARM	**297**
F090	C- 476177-0201	-		1	HOLD-DOWN DEVICE	**299**
F100	C- 434669-040V	-		1	IMPULSE TRANSMITTER	**301**
	C- 273728-030V	-		-	. VALVE GROUP	**303**
	C- 442402-0101	-		-	. . VALVE	**305**
F120	C- 292071-020V	-		1	SPLASH PROTECTION	**307**
F130	C- 434670-060V	-		1	LINK SYSTEM	**309**

Pos	Part No	SP	UN	Qty	Description	Page No

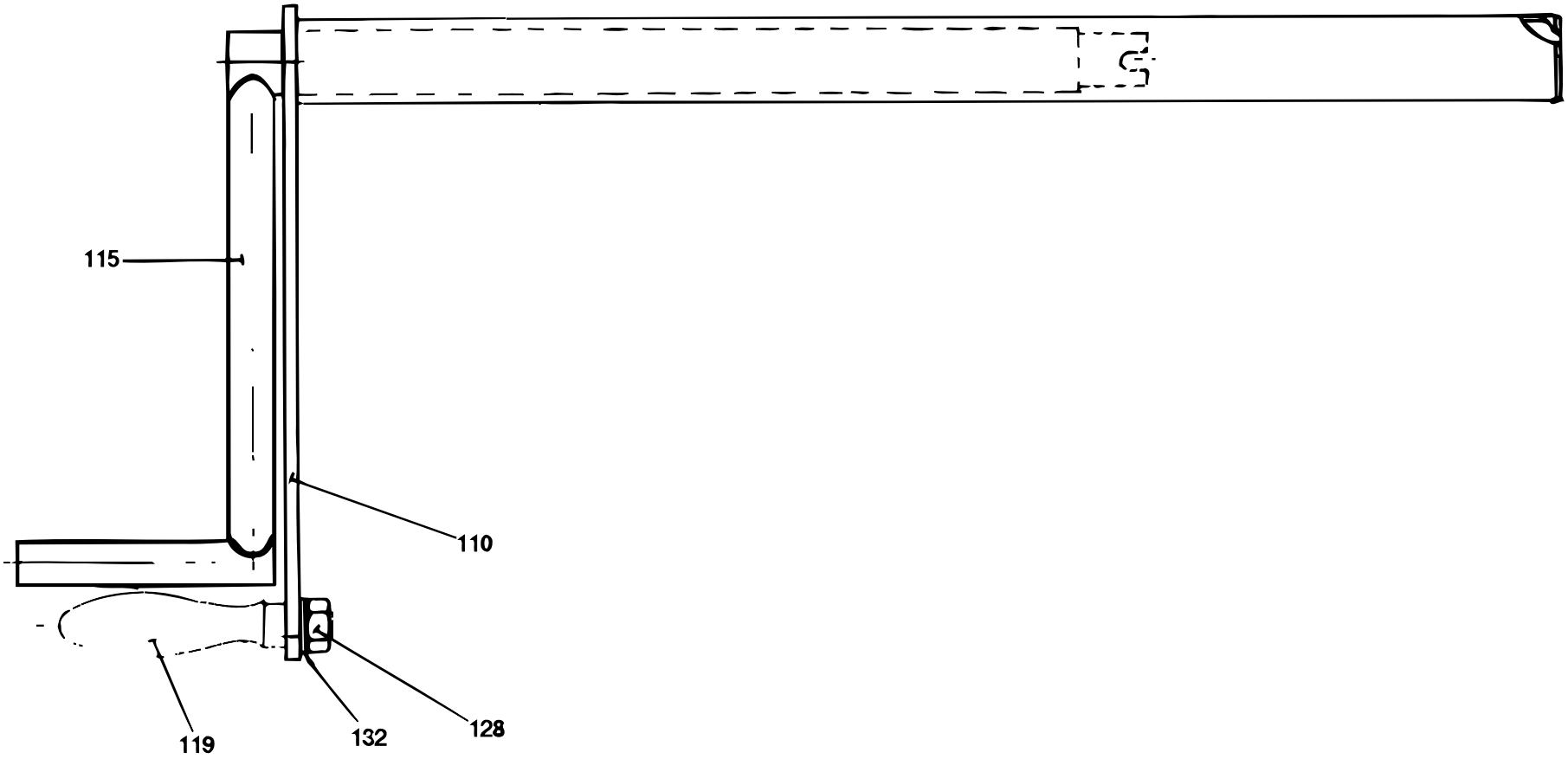
115
110
119
132
128

Pos	Part No	SP	UN	Qty	Description	Page No
-						
000	**C- 440588-0201**	**-**		**1**	**CRANK**	
110	36885	-		1	CRANK ARM	
115	542262	-		1	CRANK	
119	90017-0009	-		1	HANDLE D=25/M12 L=75MM	
128	312601-0322	-		1	NUT M6M12FZB	
132	315401-0178	-		1	WASHER FBH12,2FZB	

Pos	Part No	SP	UN	Qty	Description	Page No

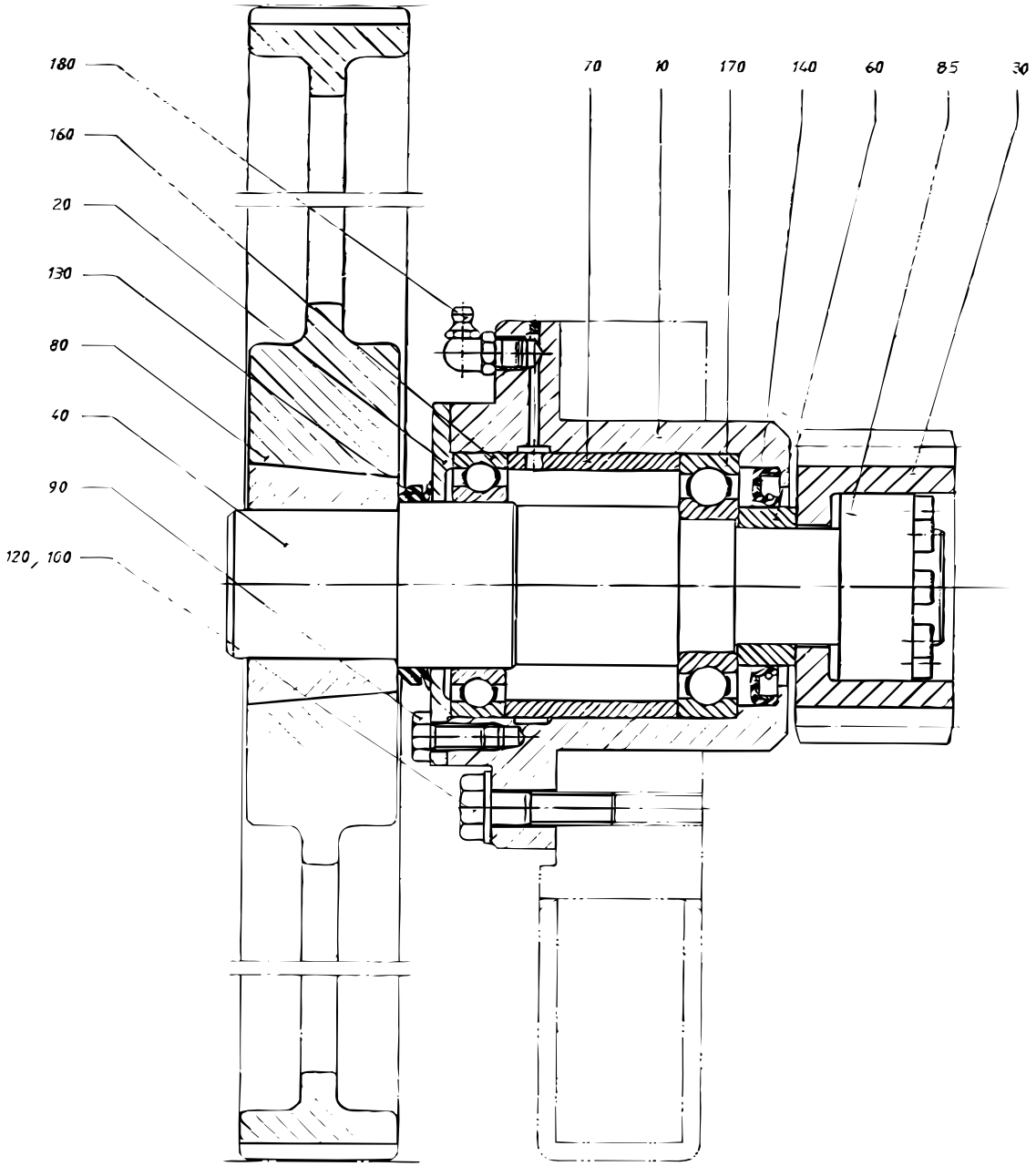
180
160
20
130
80
40
90
120, 100
70
10
170
140
60
85
30

Pos	Part No	SP	UN	Qty	Description	Page No
-						
000	**C- 239890-0301**	**-**		**1**	**INTERMEDIARY SHAFT**	
010	237725	-		1	BEARING HOUSING	
020	107095	-		1	LID	
030	499473	C		1	GEAR WHEEL	
040	499474	C		1	SHAFT	
060	111017	-		1	SPACER RING	
070	239870	-		1	SPACER SLEEVE	
080	90196-0067	-		1	PULLEY	
085	90208-0067	-		1	CLAMPING ELEMENT	
090	312101-0449	-		6	SCREW M6S8X16FZB	
100	312101-0499	-		4	SCREW M6S10X40FZB	
120	315101-0173	-		4	WASHER BRB10,5X22FZB	
130	315220-0198	S		1	SEAL RING V-50S	
140	315221-0197	S		1	SEAL RING CB48X72X8	
160	321306-0110	S		1	BALL BEARISKF6010	
170	321309-0108	S		1	BALL BEARISKF6208	
180	344502-0066	-		1	NIPPLE L CHKR1/8"	

Pos	Part No	SP	UN	Qty	Description	Page No

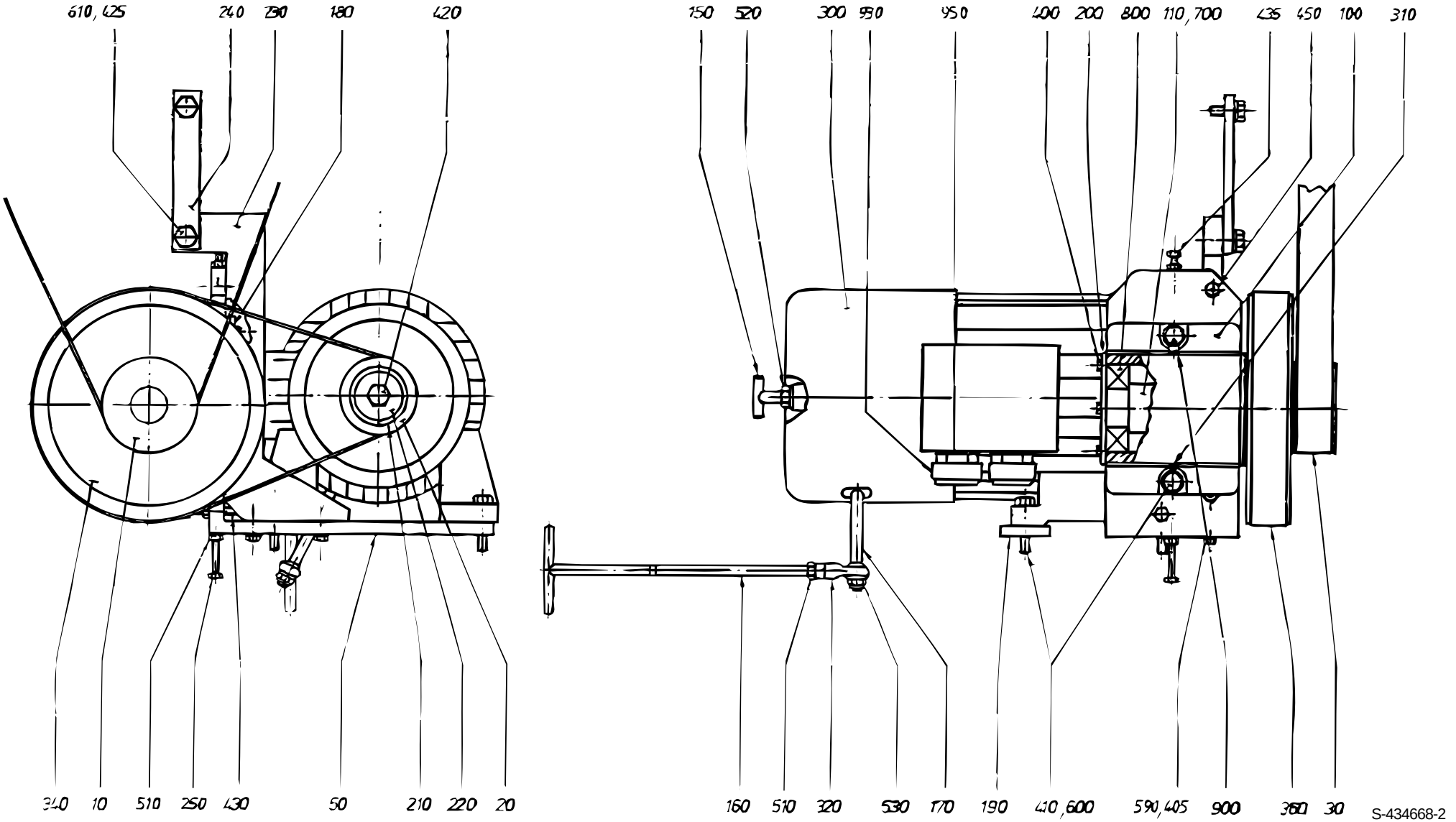

S-434668-2
ECN 10007

Pos	Part No	SP	UN	Qty	Description	Page No
IH, HZ - 50, 6000/H, VOLUMES 1055 B, 1000 B, 1000 S, 750 B, 568 B, 500 B, 500 S, 500 Sq, 400 B, 375 S, 355 B						
000	**C- 434668-0401**	**-**		**1**	**DRIVE UNIT**	
010 1	90196-0055	-		1	PULLEY	
020 2	90196-0062	-		1	PULLEY	
300 1	90046-0015	C		1	BRAKE MOTOR	
300a	90046-0304	S		1	* STATOR	
300b	90046-0312	S		1	* RECTIFIER	
300c	90046-0313	S		1	* COIL	
300d	90046-0314	S		1	* BRAKE DISC	
IH, HZ - 60, 6000/H, VOLUMES 1055 B, 1000 B, 1000 S, 750 B, 568 B, 500 B, 500 S, 500 Sq, 400 B, 375 S, 355 B						
000	**C- 434668-0402**	**-**		**1**	**DRIVE UNIT**	
010 4	90196-0065	-		1	PULLEY	
020 2	90196-0062	-		1	PULLEY	
300 2	90046-0016	C		1	BRAKE MOTOR	
300a	90046-0308	S		1	* STATOR	
300b	90046-0312	S		1	* RECTIFIER	
300c	90046-0313	S		1	* COIL	
300d	90046-0314	S		1	* BRAKE DISC	
IH, HZ - 50, 5500/H, VOLUME 1000 Sq						
000	**C- 434668-0407**	**-**		**1**	**DRIVE UNIT**	
010 5	90196-0079	-		1	TIMING BELT PULLEY	
020 2	90196-0062	-		1	PULLEY	
300 1	90046-0015	C		1	BRAKE MOTOR	
300a	90046-0304	S		1	* STATOR	
300b	90046-0312	S		1	* RECTIFIER	
300c	90046-0313	S		1	* COIL	
300d	90046-0314	S		1	* BRAKE DISC	
IH, HZ - 60, 5500/H, VOLUME 1000 Sq						
000	**C- 434668-0408**	**-**		**1**	**DRIVE UNIT**	
010 7	90196-0090	-		1	TIMING BELT PULLEY	
020 1	90196-0061	-		1	PULLEY	
300 2	90046-0016	C		1	BRAKE MOTOR	
300a	90046-0308	S		1	* STATOR	
300b	90046-0312	S		1	* RECTIFIER	
300c	90046-0313	S		1	* COIL	
300d	90046-0314	S		1	* BRAKE DISC	
Common parts						
030	90417-0134	S		1	TOOTHED BELT	

Pos	Part No	SP	UN	Qty	Description	Page No
050	530754	-		1	FASTENING BRACKET	
100	G- 436482	-		1	BEARING BRACKET	
110	436483	-		1	SHAFT	
150	37097	-		1	CARRIER	
160	434379	-		1	TIE ROD	
170	434380	-		1	SHAFT	
180	436484	-		1	BRACKET	
190	436485	-		1	LACE	
200	436486	-		2	LID	
210	436487	-		1	SPACER	
220	436488	-		1	WASHER	
230	450145	-		1	STRUT	
240	450146	-		1	STRUT	
250	530755	-		1	SCREW	
310	90087-0003	-		1	PIPE PLUG	
320	90115-0105	S		1	JOINT	
340	90196-0066	-		1	PULLEY	
360	90417-0133	S		1	TOOTHED BELT	
400	312101-0364	-		6	SCREW	
405	312101-0455	-		2	SCREW M6S8X30FZB	
410	312101-0501	-		6	SCREW M6S10X50FZB	
420	312101-0540	-		1	SCREW M6S12X40FZB	
425	312101-0536	-		2	SCREW M6S12X30FZB	
430	312104-0465	-		1	SCREW M6S8X70H8.8 FZB	
435	312105-0382	-		1	SCREW O4014 M6X60A280	
450	312111-0451	-		2	SCREW MC6S8X20FZB	
510	312601-0320	-		3	NUT M6M10FZB	
520	312601-0322	-		1	NUT M6M12FZB	
530	312812-0320	-		1	LOCK NUT A2-M10RFR	
590	315101-0165	-		2	WASHER BRB8,4X16FZB	
600	315101-0173	-		6	WASHER BRB10,5X22FZB	
610	315101-0178	-		2	WASHER BRB13X24FZB	
700	315701-0307	-		1	FLAT WEDGE10X8X70	
800	321316-0108	S		2	BALL BEARISKF6308RS	
900	344502-0046	-		1	NIPPLE L BHKR1/8"	
930	352136-0143	-		2	GLAND FITT	
950	352100-0115	-		2	CABLE GLANR.28,3-15,5	

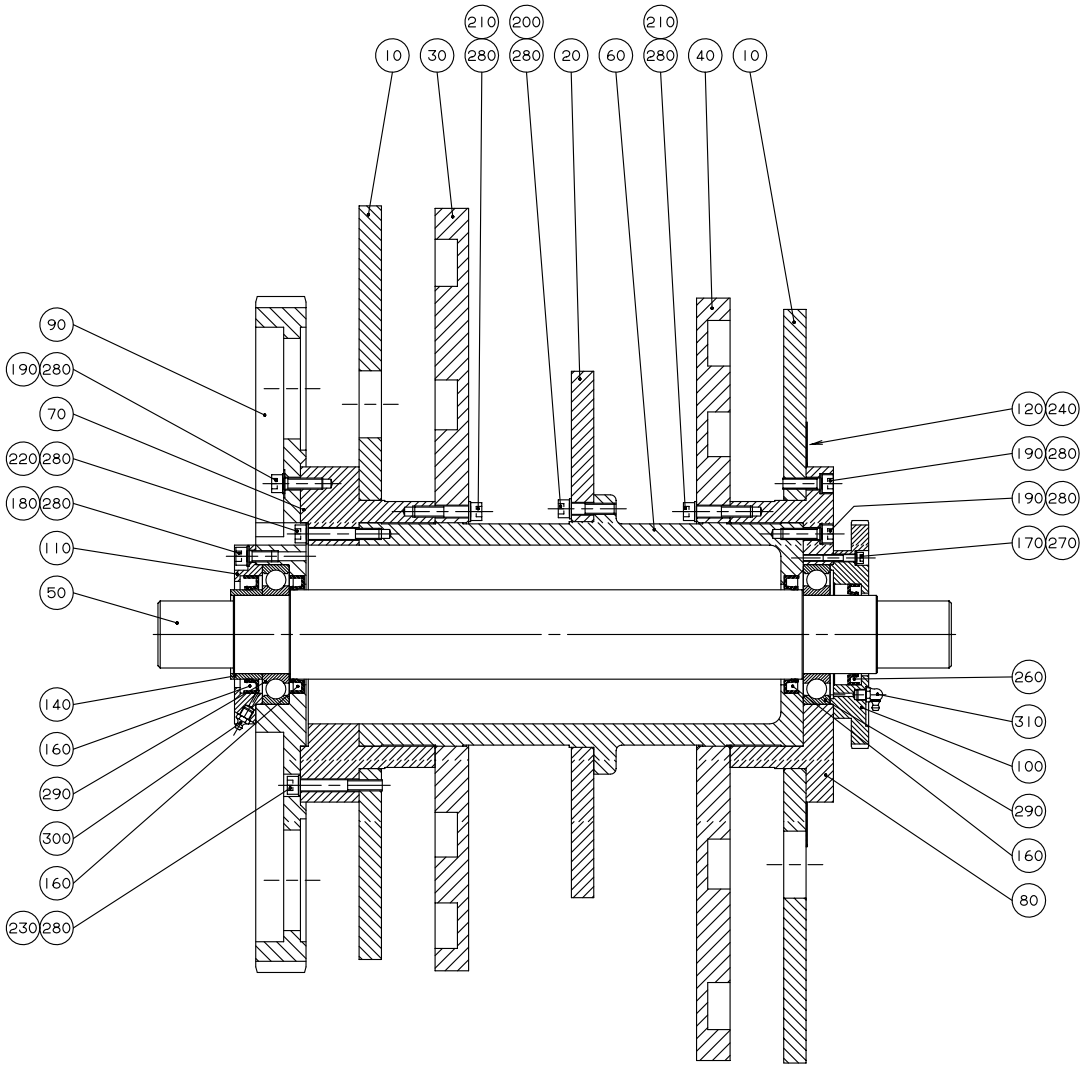

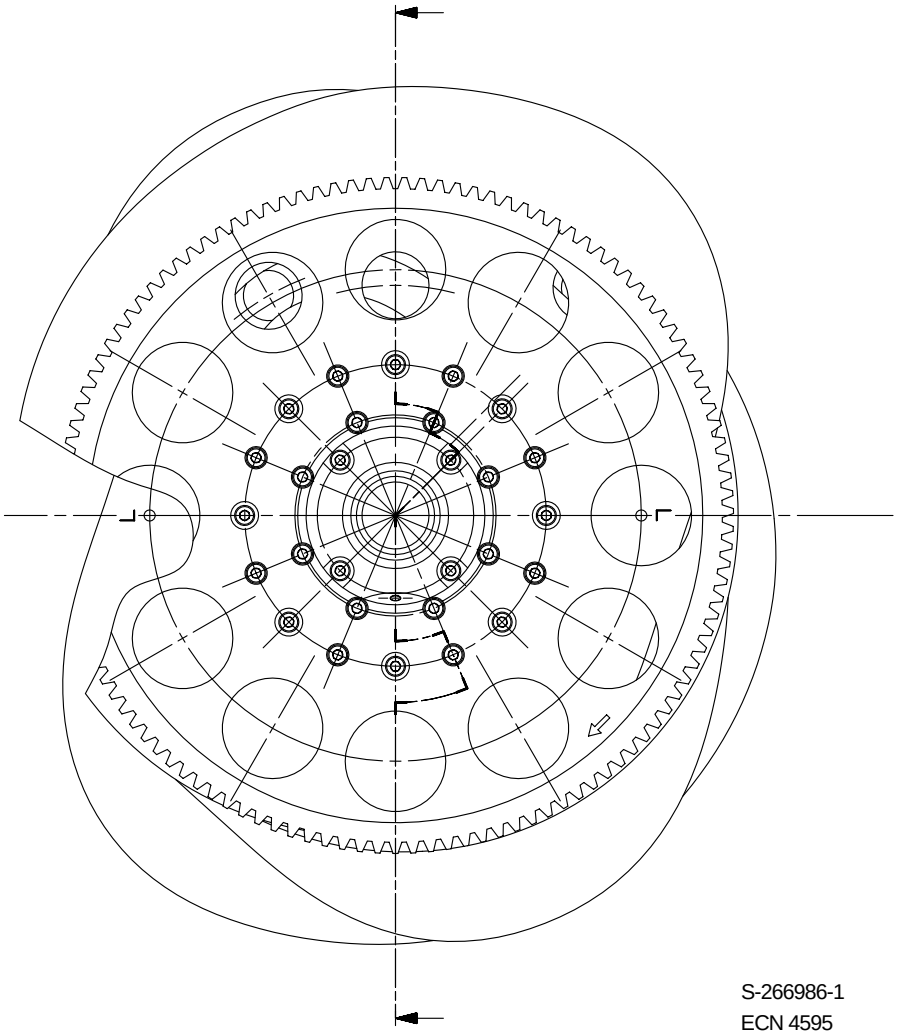

S-266986-1
ECN 4595

Pos	Part No	SP	UN	Qty	Description	Page No
VOLUME 1000 B LOFIN						
000	**C- 266986-0501**	**-**		**1**	**CURVE SHAFT**	
010	530529	C		2	MAIN CAM	
020	530532	C		1	COUNTER CAM	
030	560391	C		1	CAM LEFT	
040	560392	C		1	CAM RIGHT	
VOLUME 568 B						
000	**C- 266986-0502**	**-**		**1**	**CURVE SHAFT**	
010	539307	C		2	MAIN CAM	
020	484559	C		1	COUNTER CAM	
030	563645	C		1	CAM LEFT	
040	563646	C		1	CAM RIGHT	
VOLUME 500 B						
000	**C- 266986-0503**	**-**		**1**	**CURVE SHAFT**	
010	283157	C		2	MAIN CAM	
020	283160	C		1	COUNTER CAM	
030	563728	C		1	CAM LEFT	
040	563729	C		1	CAM RIGHT	
VOLUME 1000 B HIFIN						
000	**C- 266986-0504**	**-**		**1**	**CURVE SHAFT**	
010	540270	C		2	MAIN CAM	
020	549928	C		1	COUNTER CAM	
030	564524	C		1	CAM LEFT	
040	564525	C		1	CAM RIGHT	
VOLUME 750 B						
000	**C- 266986-0505**	**-**		**1**	**CURVE SHAFT**	
010	565668	C		2	MAIN CAM	
020	532097	C		1	COUNTER CAM	
030	564526	C		1	CAM LEFT	
040	564527	C		1	CAM RIGHT	
VOLUME 500 S						
000	**C- 266986-0506**	**-**		**1**	**CURVE SHAFT**	
010	532032	C		2	MAIN CAM	
020	532033	C		1	COUNTER CAM	
030	564621	C		1	CAM LEFT	
040	564622	C		1	CAM RIGHT	
VOLUME 375 S						
000	**C- 266986-0507**	**-**		**1**	**CURVE SHAFT**	
010	449716	C		2	MAIN CAM	
020	449719	C		1	COUNTER CAM	
030	564528	C		1	CAM LEFT	
040	564529	C		1	CAM RIGHT	
VOLUME 355 B						
000	**C- 266986-0509**	**-**		**1**	**CURVE SHAFT**	
010	551907	C		2	MAIN CAM	
020	551910	C		1	COUNTER CAM	
030	564623	C		1	CAM LEFT	
040	564624	C		1	CAM RIGHT	
VOLUME 1055 B						
000	**C- 266986-0510**	**-**		**1**	**CURVE SHAFT**	
010	533961	C		2	MAIN CAM	
020	533962	C		1	COUNTER CAM	
030	564625	C		1	CAM LEFT	
040	564626	C		1	CAM RIGHT	
VOLUME 750 S						
000	**C- 266986-0511**	**-**		**1**	**CURVE SHAFT**	
010	545101	C		2	MAIN CAM	
020	551825	C		1	COUNTER CAM	
030	564933	C		1	CAM LEFT	
040	564934	C		1	CAM RIGHT	
VOLUME 1000 S						
000	**C- 266986-0512**	**-**		**1**	**CURVE SHAFT**	
010	569049	C		2	MAIN CAM	
020	569050	C		1	COUNTER CAM	
030	569051	C		1	CAM LEFT	
040	569052	C		1	CAM RIGHT	
VOLUME 400 B						
000	**C- 266986-0513**	**-**		**1**	**CURVE SHAFT**	
010	575782	C		2	MAIN CAM	
020	575783	C		1	COUNTER CAM	
030	576836	C		1	CAM LEFT	
040	576837	C		1	CAM RIGHT	
VOLUME 1000 Sq						
000	**C- 266986-0514**	**-**		**1**	**CURVE SHAFT**	
010	579641	C		2	MAIN CAM	
020	579642	C		1	COUNTER CAM	

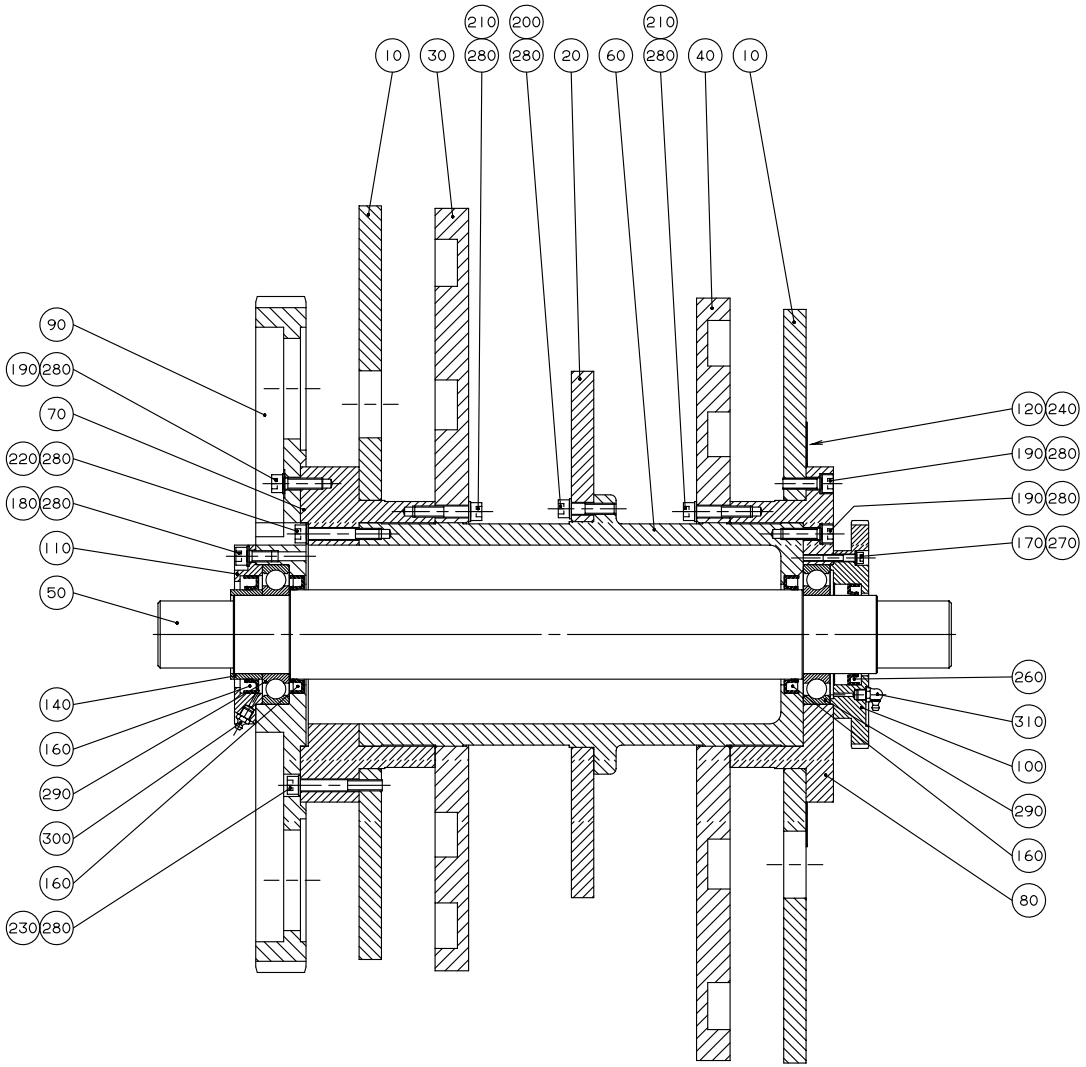

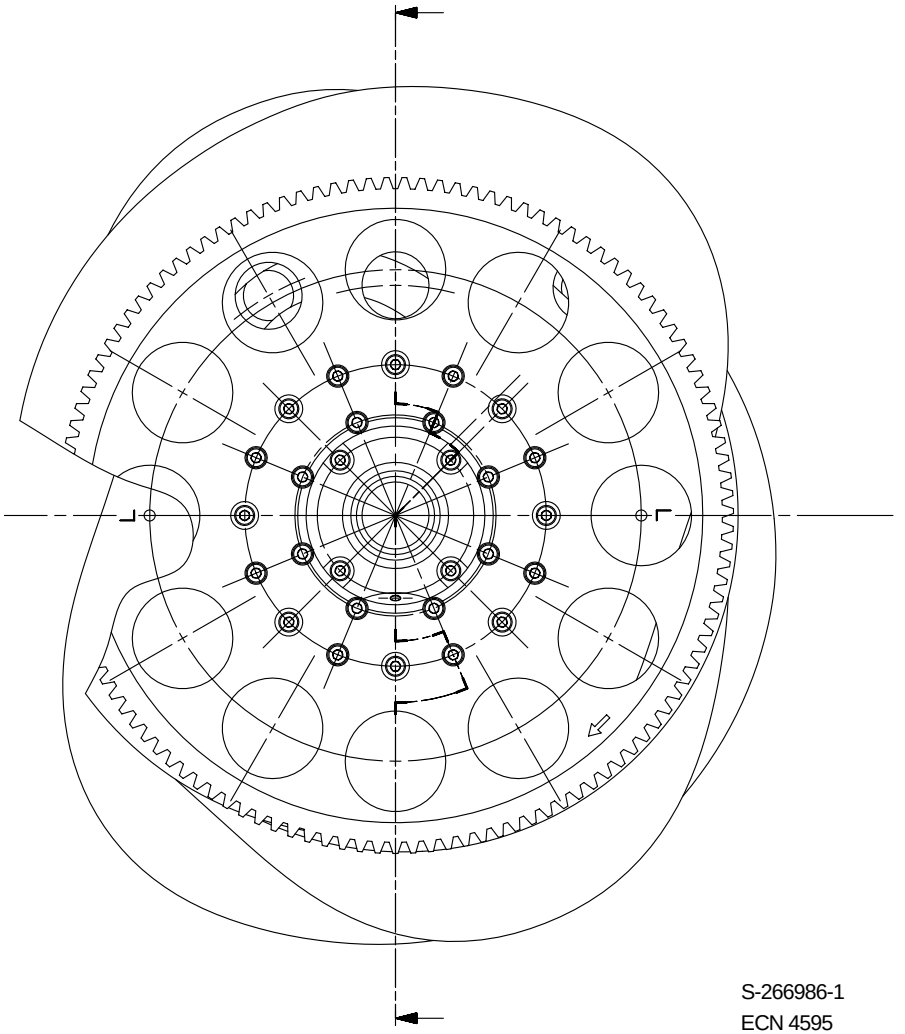

S-266986-1
ECN 4595

Pos	Part No	SP	UN	Qty	Description	Page No
030	579643	C		1	CAM LEFT	
040	579644	C		1	CAM RIGHT	
VOLUME 500 Sq						
000	**C- 266986-0520**	**-**		**1**	**CURVE SHAFT**	
010	583821	C		2	MAIN CAM	
020	583822	C		1	COUNTER CAM	
030	1361913	C		1	CAM LEFT	
040	1361914	C		1	CAM RIGHT	
Common parts						
050	23458	-		1	SHAFT	
060	239533	-		1	DRUM	
070	239534	-		1	FLANGE	
080	239535	-		1	FLANGE	
090	239536	C		1	GEAR WHEEL	
100	243016	C		1	GEARING	
110	107062	-		1	LID	
120	246982	-		1	PROTRACTOR	
140	23462	-		1	SPACER RING	
160	90091-0029	S		3	SEAL RING	
170	312111-0374	-		8	SCREW MC6S6X30FZB	
180	312111-0492	-		4	SCREW MC6S10X22FZB	
190	312111-0497	-		24	SCREW MC6S10X35FZB	
200	312111-0499	-		8	SCREW MC6S10X40FZB	
210	312111-0501	-		16	SCREW MC6S10X50FZB	
220	312111-0504	-		8	SCREW MC6S10X65 8.8FZB	
230	312111-0506	-		8	SCREW MC6S10X75FZB	
240	312121-0285	-		10	SLOTTED HEMCS4X6FZB	
260	315221-0221	S		1	SEAL RING CB70X90X10	
270	315401-0153	-		8	WASHER FBH6,1FZB	
280	315401-0173	-		68	WASHER FBH10,2FZB	
290	321309-0114	S		2	BALL BEARISKF6214	
300	344502-0026	-		1	NIPPLE L AHKR1/8"	
310	344502-0066	-		1	NIPPLE L CHKR1/8"	

Pos	Part No	SP	UN	Qty	Description	Page No

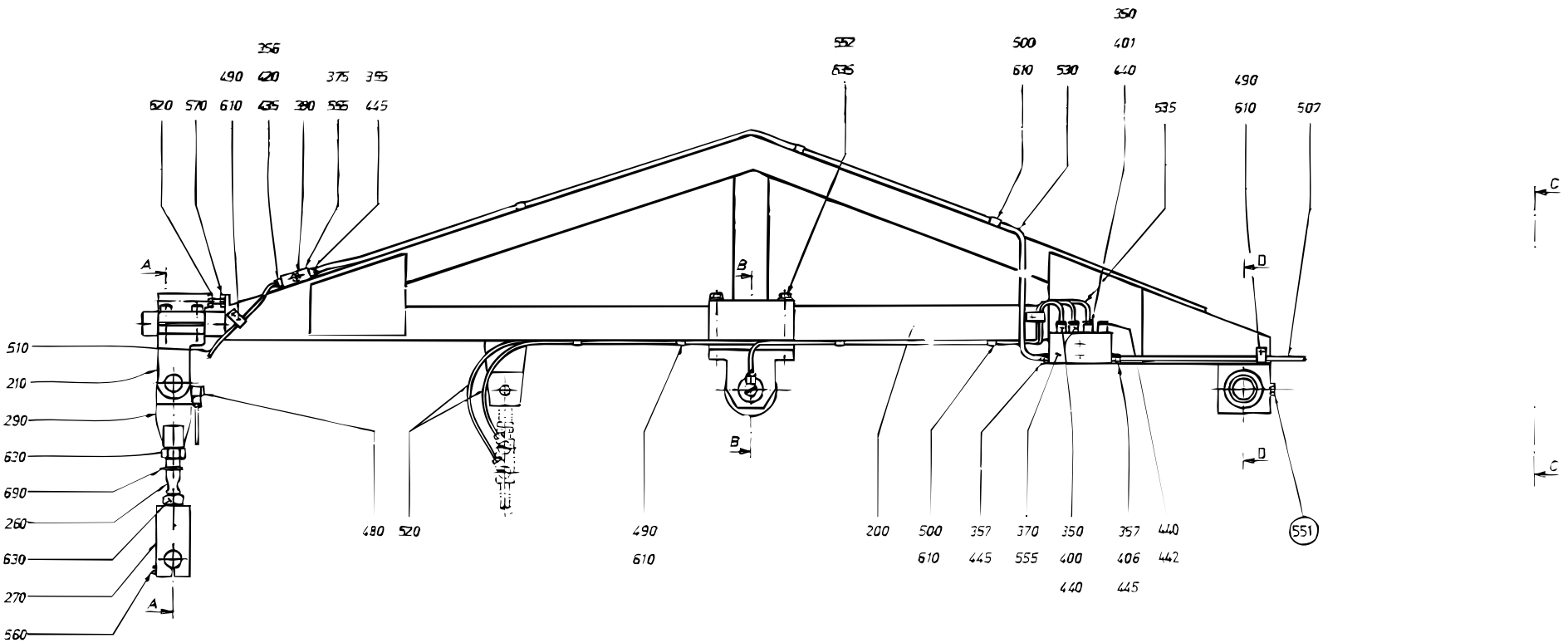

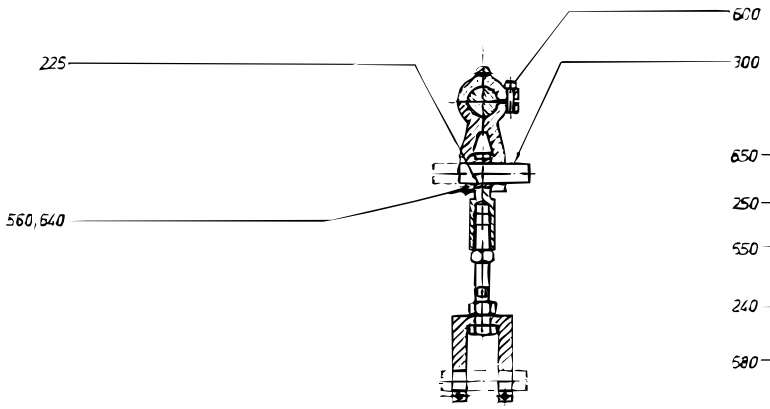

A – A

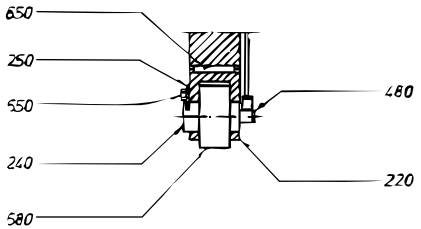

B – B

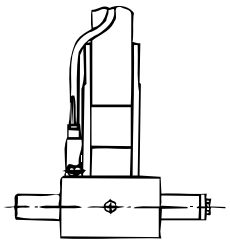

C-C

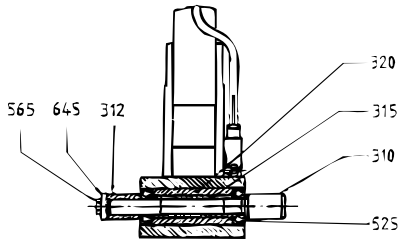

D-D

S-243927-7
ECN 19499

Pos	Part No	SP	UN	Qty	Description	Page No
IH, VOLUMES 1000 B LOFIN, 568 B, 500 B, 750 B, 375 S, 355 B, 400 B, 500 S, 500 Sq						
000	**C- 243927-0701**	**-**		**2**	**ARM**	
220 1	243928	C		1	BRACKET	
IH, VOLUMES 1000 B HIFIN, 1055 B, 1000 S, 1000 Sq						
000	**C- 243927-0702**	**-**		**2**	**ARM**	
220 2	279466	C		1	BRACKET	
Common parts						
200	530708	-		1	ARM	
210	G- 35827	C		1	BRACKET	
225	23270	S		1	BUSHING	
240	243930	S		1	SHAFT	
250	243931	-		1	SECURING PLATE	
260	246787	S		1	SCREW	
270	246790	C		1	LINK	
290	251561	C		1	LINK	
300	251562	S		1	SHAFT	
310	570066	-		1	SHAFT	
312	570067	-		1	RING	
315	570125	-		1	SLEEVE	
320	570126	-		1	SLEEVE	
350	90028-0020	-		3	CONE	
355	90028-0022	-		1	CONE	
356	90028-0024	-		1	CONE	
357	90028-0025	-		2	CONE	
370	90032-0039	-		1	BLOCK	
375	90032-0043	-		1	JUNKTION BLOCK	
380	90087-0019	-		1	PLUG	
400	90092-0053	S		2	VALVE	
401	90092-0054	S		1	VALVE	
406	90134-0030	-		1	SLEEVE	
420	90134-0031	-		1	SLEEVE	
435	90134-0038	-		1	BUSHING	
440	90134-0039	-		4	BUSHING	
442	90134-0052	-		1	PLUG	
445	90134-0055	-		3	BUSHING	
480	90134-0058	-		2	BANJO CONNECTION	
490	90165-0003	-		4	CLIP	
500	90165-0005	-		6	CLIP	
507	90166-0108	P	MM	2700	HOSE	
510	90166-0109	P	MM	2700	HOSE	
520	90166-0143	P	MM	2000	HOSE	
525	90214-0169	S		2	BALL BEARING	
530	90266-0006	-	MM	1500	TUBE	
535	90266-0019	P	MM	1000	PIPE	
550	312101-0362	-		2	SCREW M6S6X8FZB	
551	312101-0368	-		1	SCREW M6S6X16FZB	
552	312101-0465	-		2	SCREW M6S8X70FZB	
555	312101-0295	-		4	SCREW M6S4X20FZB	
560	312105-0374	-		3	SCREW O4017 M6X30A280	
565	312105-0449	-		1	SCREW O4017 M8X16A280	
570	312109-0463	-		1	SCREW M6S8X60H A4 80	
600	312115-0453	-		2	SCREW O4762 M8X25A280	
610	312121-0285	-		10	SLOTTED HEMCS4X6FZB	
620	312605-0318	-		1	NUT M6M8RFR	
630	312811-0324	-		2	LOCK NUT M16RFR	
635	315101-0165	-		2	WASHER BRB8,4X16FZB	
640	315105-0153	-		1	WASHER BRB6,4X12RFR	
645	315121-0165	-		1	WASHER TBRSB8,4X26FZB	
650	315701-0270	-		1	FLAT WEDGE8X7X40	
680	321576-0360	P		1	SUPPORT RONUTR30	
690	352113-0101	-		1	RIBBON CLA	

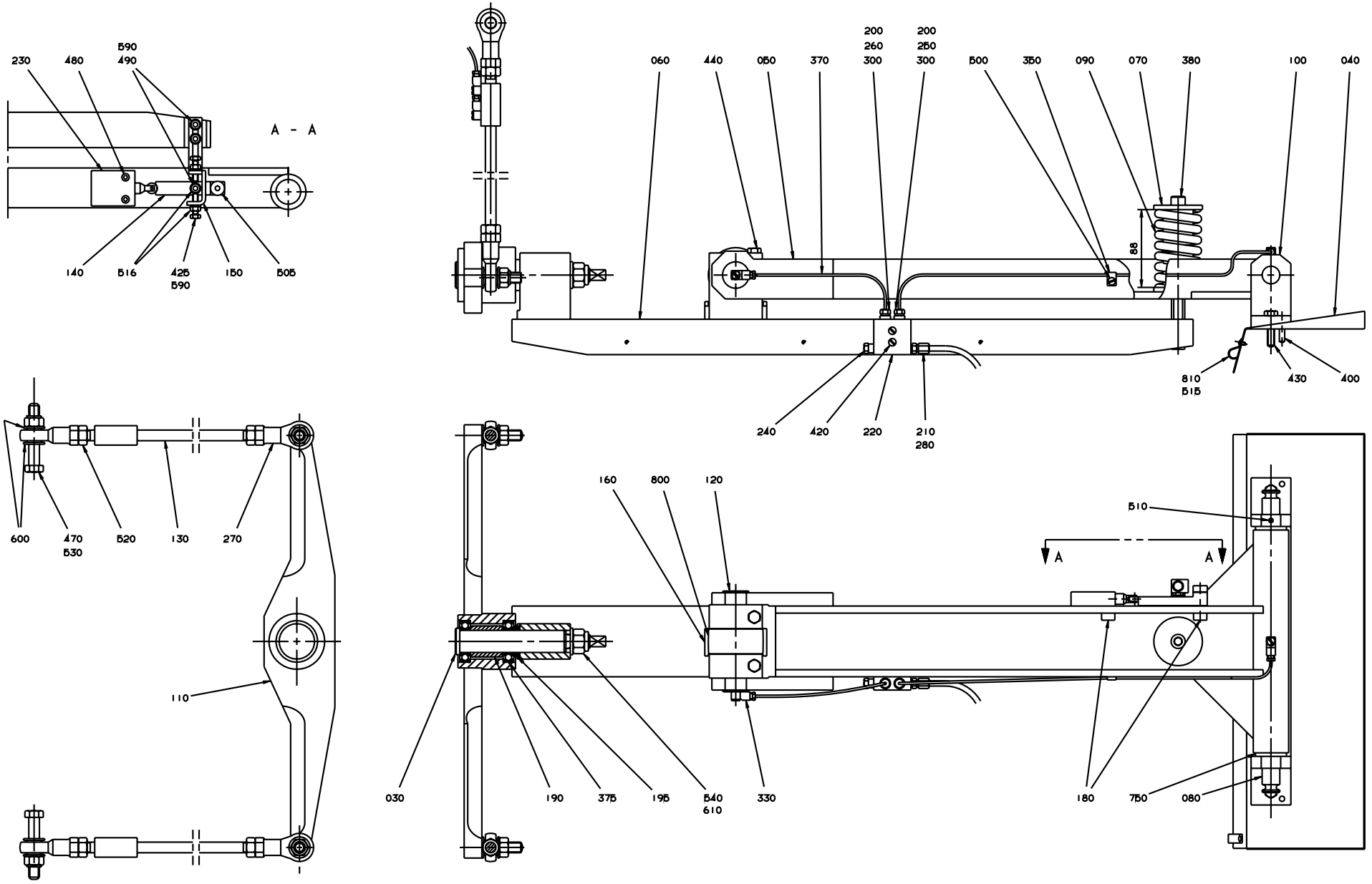

S-476177-2
ECN 20114

Pos	Part No	SP	UN	Qty	Description	Page No
-						
000	**C- 476177-0201**	**-**		**1**	**HOLD-DOWN DEVICE**	
030	560418	S		1	SHAFT	
040	279969	-		1	DRIP PLATE	
050	450670	C		1	ARM	
060	567033	C		1	ARM	
070	239383	S		2	SLEEVE	
080	563212	-		1	SHAFT	
090	243971	S		1	SPRING	
100	246948	-		1	BRACKET	
110	560417	C		1	ROCKER ARM	
120	434062	S		1	SHAFT	
130	434098	C		2	STRUT	
140	567702	-		1	CURVE	
150	567703	-		1	LINK	
160	576742	-		1	OIL TROUGH	
180	527648	-		2	WASHER	
190	568286	-		1	SLEEVE	
195	568287	-		1	RING	
200	90028-0020	P		2	CONE	
210	90134-0038	P		1	BUSHING	
220	90032-0038	-		1	BLOCK	
230	90044-0094	-		1	LIMIT SWITCH HONEYWELL	
240	90087-0019	-		1	PLUG	
250	90092-0052	S		1	VALVE	
260	90092-0053	S		1	VALVE	
270	90115-0133	S		4	JOINT	
280	90134-0031	-		1	SLEEVE	
300	90134-0039	-		2	BUSHING	
330	90134-0058	-		6	BANJO CONNECTION	
350	90165-0022	-		1	CLIP	
370	90166-0143	P	MM	1000	HOSE	
375	90214-0163	S		2	BALL BEARING	
380	90287-0136	S		1	SCREW	
400	311303-0356	-		2	SLOTTED PIRPB6X30FZB	
420	312101-0295	-		2	SCREW M6S4X20FZB	
425	312101-0372	-		2	SCREW M6S6X25FZB	
430	312101-0453	-		3	SCREW M6S8X25FZB	
440	312101-0459	-		2	SCREW M6S8X40FZB	
470	312101-0546	-		2	SCREW M6S12X70FZB	
480	312111-0335	-		2	SCREW MC6S5X30FZB	
490	312111-0368	-		3	SCREW MC6S6X16FZB	
500	312121-0285	-		1	SLOTTED HEMCS4X6FZB	
505	312180-0489	-		1	REAMED BOL	
510	312316-0327	-		1	STOP SCREW SK6SS5X12FZB	
515	312503-0275	-		2	DRIVE SCRERXKB6X6,5FZB	
516	312601-0316	-		3	NUT M6M6FZB	
520	312601-0322	-		4	NUT M6M12FZB	
530	312810-0322	-		4	LOCK NUT 12FZB	
540	312810-0324	-		1	LOCK NUT 16FZB	
590	315101-0153	-		5	WASHER BRB6,4X12FZB	
600	315101-0178	-		8	WASHER BRB13X24FZB	
610	315101-0186	-		1	WASHER BRB17X30FZB	
750	321101-0233	S		2	FLANGE BUS 20F7X20	
800	321576-0360	P		1	SUPPORT RONUTR30	
810	352110-0101	-		2	CRAMP TK 7-10	

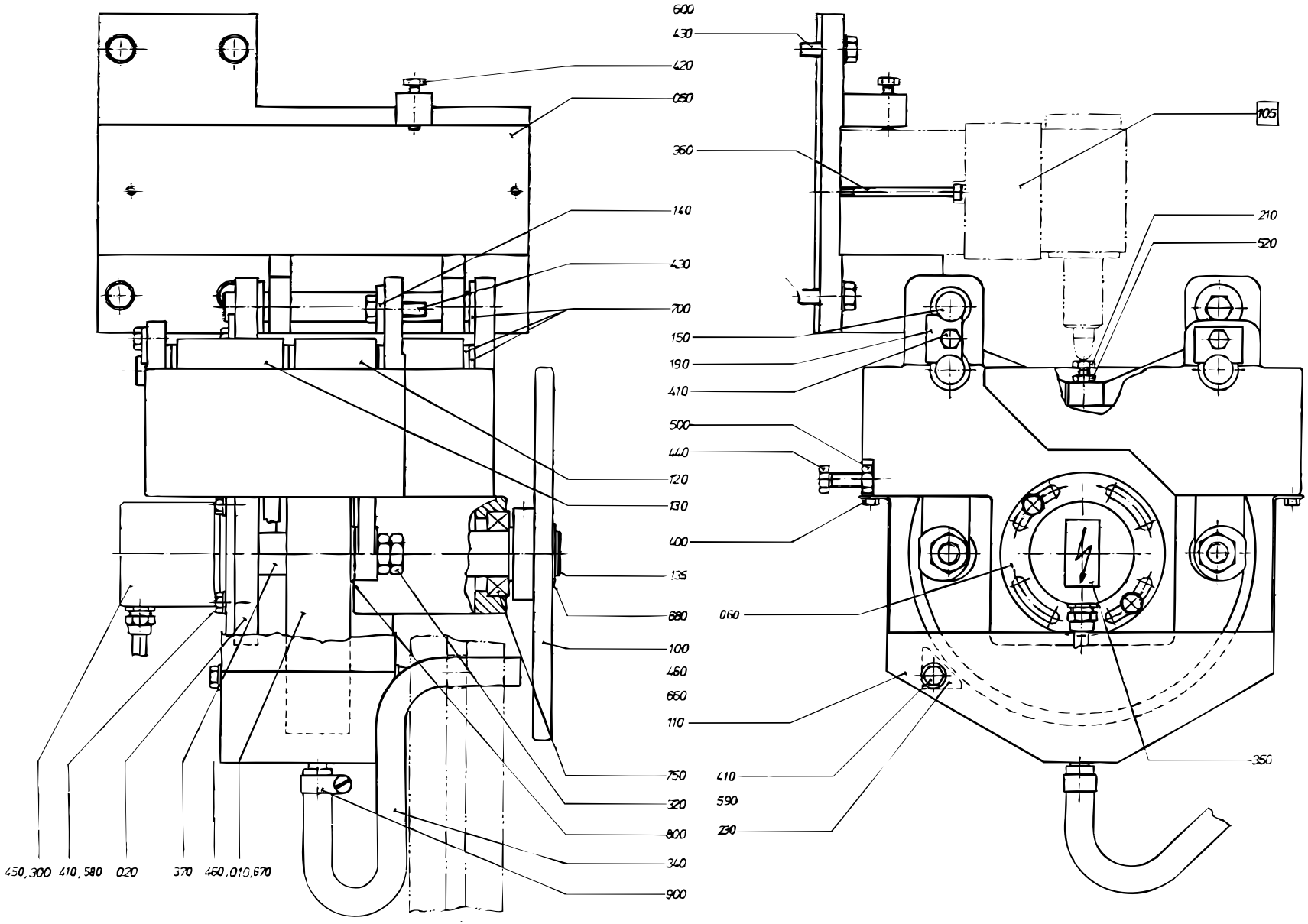

S-434669-2
ECN 11449

Pos	Part No	SP	UN	Qty	Description	Page No
IH						
000	**C- 434669-0402**	**-**		**1**	**IMPULSE TRANSMITTER**	
010	556579	C		1	CURVE	
020	G- 292473	-		1	CANTILEVER	
050	292472	-		1	HOLDER	
060	542063	C		1	FLANGE	
100	243017	C		1	GEAR WHEEL	
110	543476	-		1	TROUGH	
120	G- 297091	-		2	ARM	
130	G- 297092	-		2	ARM	
135	540949	C		1	SHAFT	
140	28036	-		1	WASHER	
150	292477	C		3	SHAFT	
190	292482	-		2	WASHER	
210	479354	C		4	SCREW	
230	479753	C		1	STRIPPER	
300	90061-0018	C		1	ANGLE ENCODER 8BIT GRAY	
320	90099-0015	-		8	NUT	
340	90166-0113	-	MM	700	HOSE	
350	90194-0039	-		1	FLASH SIGN 18X37MM	
360	90287-0073	-		2	SCREW	
370	90355-0031	C		1	FLEXIBLE COUPLING	
400	312101-0325	-		2	SCREW M6S5X10FZB	
410	312101-0366	-		6	SCREW M6S6X12FZB	
420	312101-0372	-		1	SCREW M6S6X25FZB	
430	312101-0453	-		5	SCREW M6S8X25FZB	
440	312104-0460	-		1	SCREW M6S8X45H8.8FZB	
450	312155-0289	-		3	SCREW MF6S4X10RFR	
460	312318-0360	-		2	STOP SCREW SK6SS6X6RFR	
500	312601-0318	-		1	NUT M6M8FZB	
520	312601-0316	-		4	NUT M6M6FZB	
580	315105-0153	-		2	WASHER BRB6,4X12RFR	
590	315105-0156	-		2	WASHER BRB6,7X14RFR	
600	315101-0165	-		4	WASHER BRB8,4X16FZB	
660	315701-0262	-		1	FLAT WEDGE8X7X18	
670	315701-0263	-		1	FLAT WEDGE8X7X20	
680	315750-0119	S		2	CIRCLIP SGA25	
700	321111-0240	S		14	FLANGE BUS 16E7X12	
750	321308-0205	S		2	BALL BEARISKF6005-2RS	
800	321580-0165	P		4	CURVE ROLLKR30	
900	342991-0101	-		1	HOSE CLIP 11-17MMRFR	
F105	C- 273728-030V	-		1	VALVE GROUP	**303**

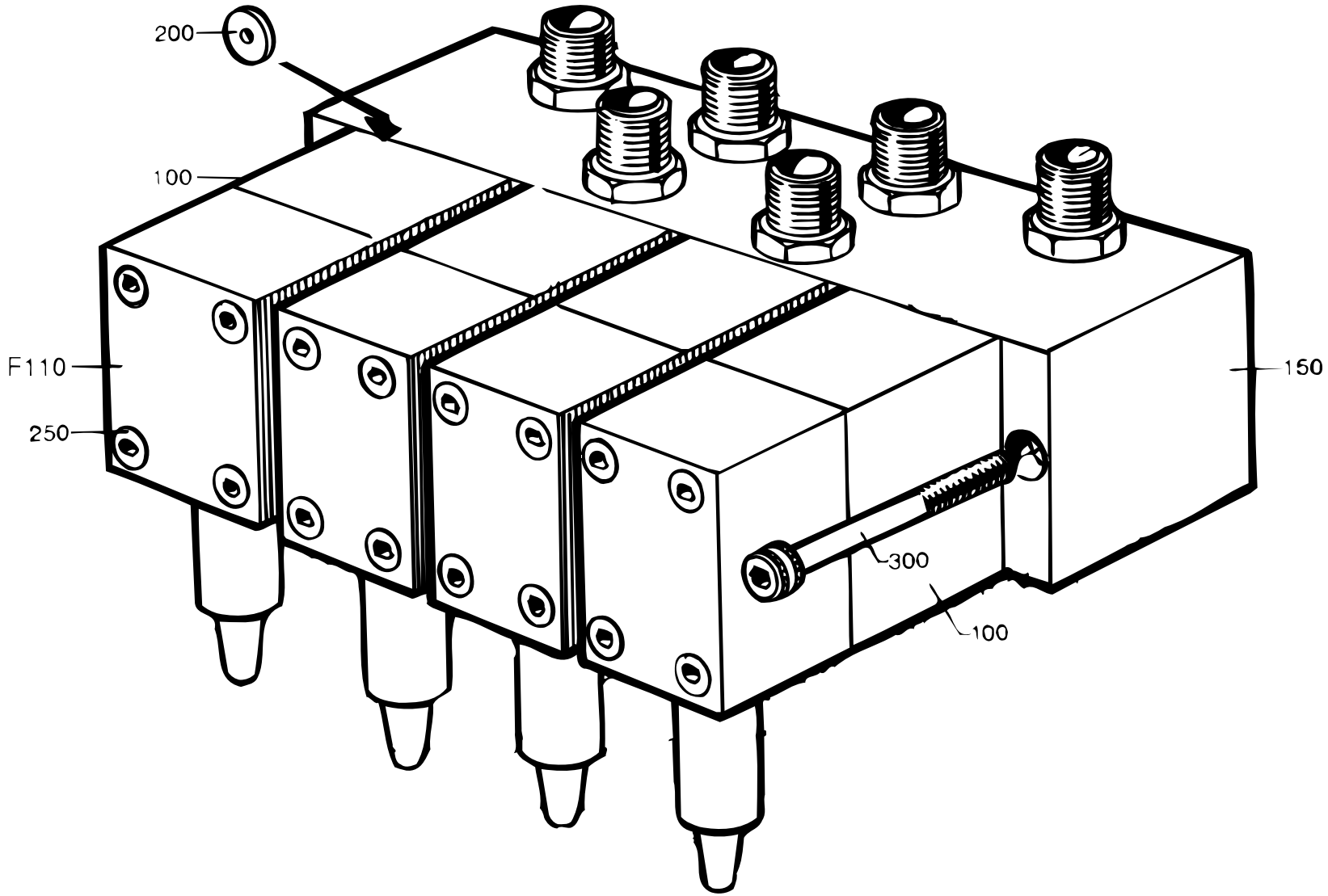
200
100
F110
250
150
300
100

Pos	Part No	SP	UN	Qty	Description	Page No
IH						
000	**C- 273728-0301**	**-**		**1**	**VALVE GROUP**	
100	90201-0010	C		4	VALVE	
100a	90201-0300	R		0	* PLATE	
100b	90201-0301	R		0	* SPRING	
100c	90201-0302	R		0	* WASHER	
150	90201-0300	C		1	PLATE	
200	295391-0003	C		2	THROTTLE SCREW	
250	90201-0303	C		4	SPARE PARTS KIT	
300	90287-0073	-		2	SCREW	
F110	C- 442402-0101	-		4	VALVE *	**305**

Pos	Part No	SP	UN	Qty	Description	Page No

*** Replaced by: Valve 90201-0016**

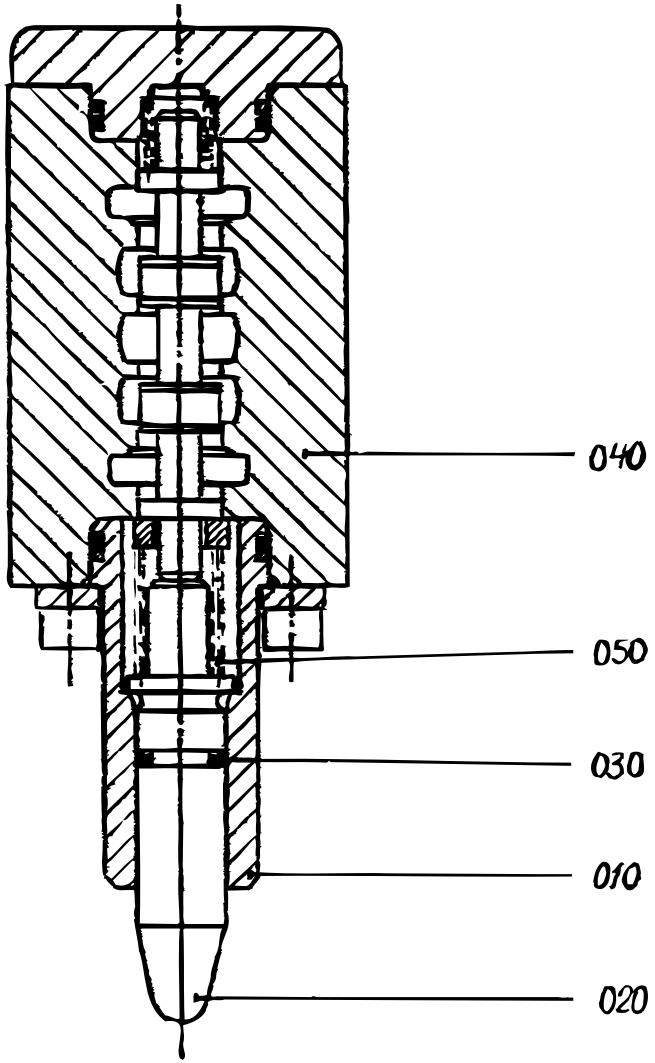
040
050
030
010
020

Pos	Part No	SP	UN	Qty	Description	Page No
000	**C- 442402-0101**	**-**		**4**	**VALVE**	
010	276235	C		1	CYLINDER	
020	276204	C		1	PLUNGER	
030	90020-0026	S		1	SLEEVER	
040	90201-0057	C		1	VALVE	
050	90201-0301	S		1	SPRING	

Pos	Part No	SP	UN	Qty	Description	Page No

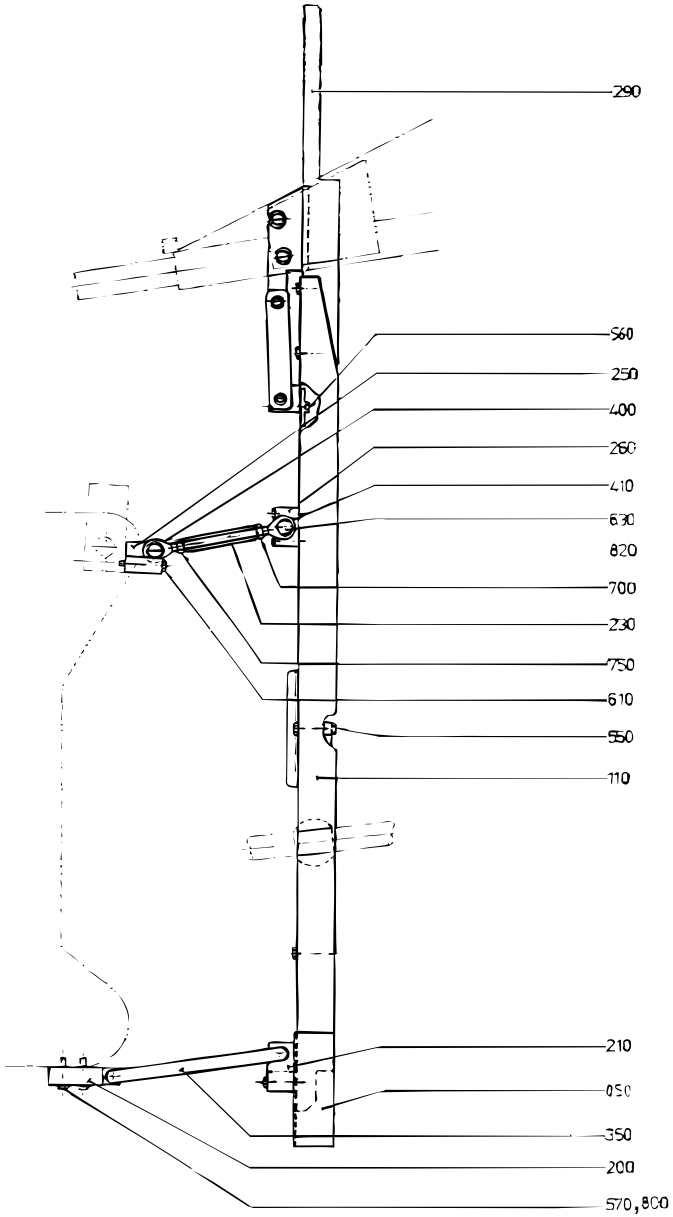
290
560
250
400
260
410
630
820
700
230
750
610
550
110
210
050
350
200
570,800

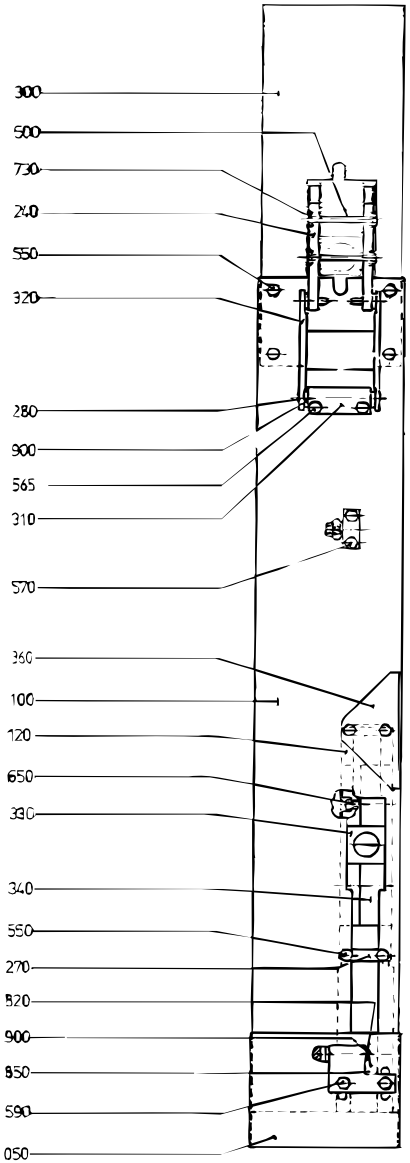
300
500
730
240
550
320
280
900
565
310
570
360
100
120
650
330
340
550
270
520
900
850
590
050

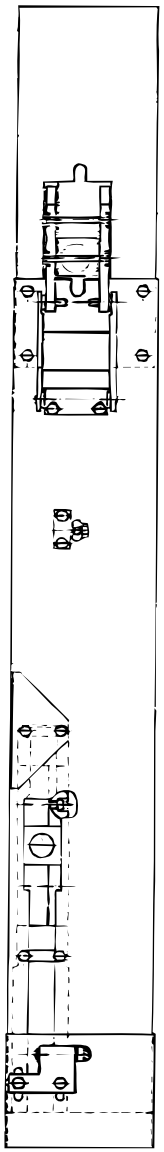

Pos	Part No	SP	UN	Qty	Description	Page No
IH						
000	**C- 292071-0201**	**-**		**1**	**SPLASH PROTECTION**	
050	436580	C		2	COVERING PLATE	
100	279983	C		1	SPLASH PROTECTION	
110	279984	C		1	SPLASH PROTECTION	
120	279985	C		2	BRACKET	
200	555888	-		2	BRACKET	
210	279987	-		2	BRACKET	
230	279989	C		2	SPACER	
240	279991	C		4	BRACKET	
250	279992	-		2	BRACKET	
260	279993	-		2	BRACKET	
270	279997	-		4	BRACKET	
280	279998	S		2	SHAFT	
290	279999	C		1	COVERING PLATE	
300	282511	C		1	COVERING PLATE	
310	282512	-		2	BRACKET	
320	282513	C		2	BRACKET	
330	283774	S		4	BEARING	
340	283775	S		4	SLIDE	
350	436672	C		2	LINK	
360	574167	-		2	LIMIT PLATE	
400	90115-0107	-		2	JOINT	
410	90115-0106	-		2	JOINT	
500	312101-0383	-		4	SCREW M6S6X65FZB	
550	312105-0364	-		24	SCREW M6S6X10RFR	
560	312105-0366	-		8	SCREW O4017 M6X12A280	
565	312105-0370	-		4	SCREW O4017 M6X20A280	
570	312105-0374	-		4	SCREW O4017 M6X30A280	
590	312105-0376	-		4	SCREW O4017 M6X35A280	
610	312105-0379	-		4	SCREW O4014 M6X45A280	
630	312105-0453	-		4	SCREW O4017 M8X25A280	
650	312115-0376	-		4	SCREW O4762 M6X35A280	
700	312605-0318	-		2	NUT M6M8RFR	
730	312811-0316	-		4	LOCK NUT M6RFR	
750	312902-0318	-		2	NUT M6M8VRFR	
800	315105-0153	-		4	WASHER BRB6,4X12RFR	
820	315105-0165	-		8	WASHER BRB8,4X16RFR	
850	315755-0109	S		4	LOCKING WAE 7 STAINLESS	
900	321111-0095	S		16	FLANGE BUS 8E7X6	

Pos	Part No	SP	UN	Qty	Description	Page No

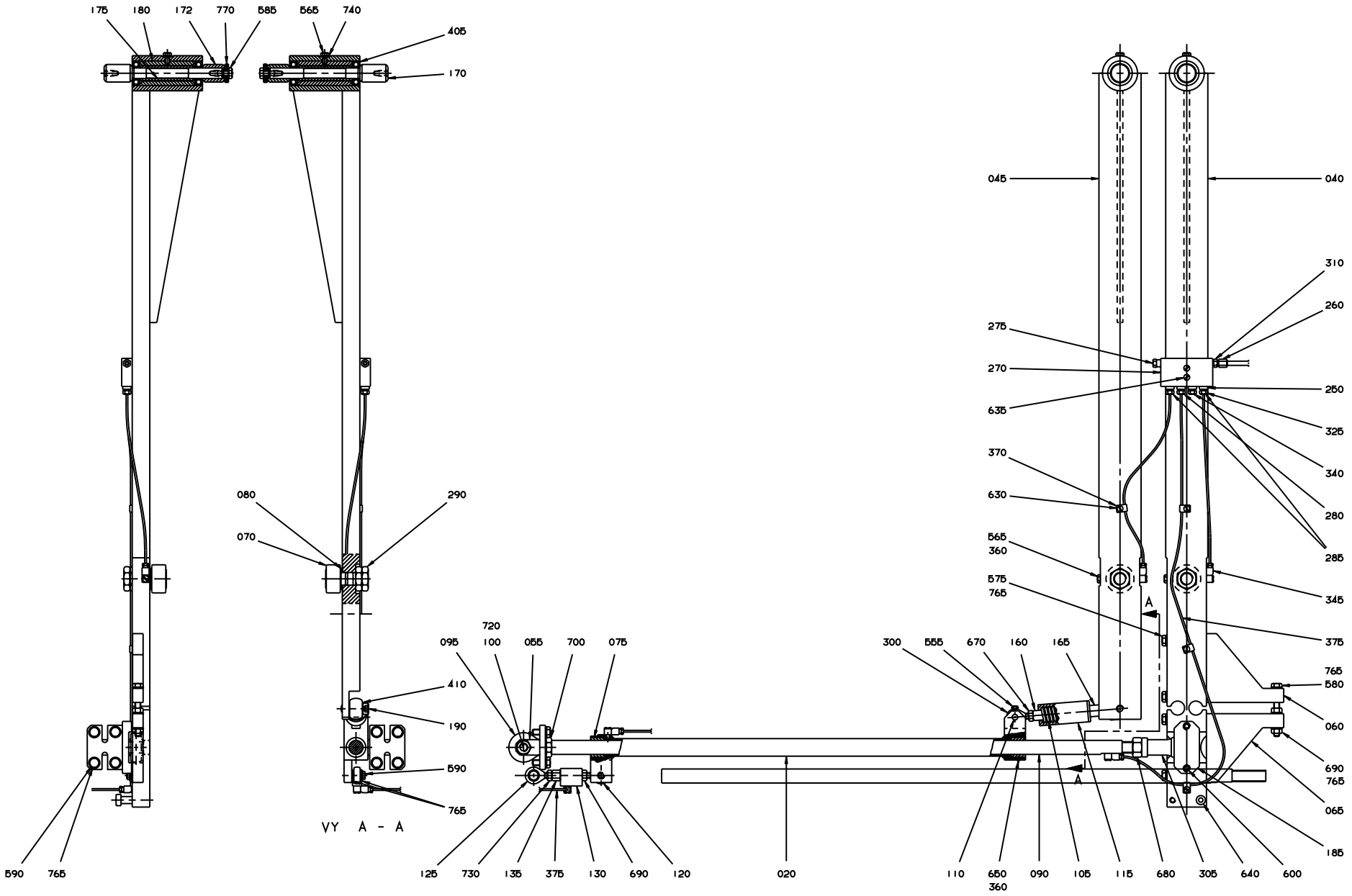

S-434670-6
ECN 19499

Pos	Part No	SP	UN	Qty	Description	Page No
IH						
000	**C- 434670-0601**	**-**		**1**	**LINK SYSTEM**	
020	540335	C		2	LINK	
040	562746	-		2	ARM	
045	562747	-		2	ARM	
055	464363	C		2	HOLDER	
060	562748	-		2	BRACKET	
065	562749	-		2	BRACKET	
070	28334	P		4	CURVE ROLLER	
075	230462	S		4	BUSHING	
080	239538	-		4	WASHER	
090	247119	C		2	ROD	
095	526904	S		2	LINK HEAD	
100	536703	S		2	SHAFT	
105	252707	C		2	SPRING	
110	255335	S		2	SHAFT	
115	255398	-		2	SLEEVE	
120	263313	S		2	LINK HEAD	
125	263314	S		2	LINK HEAD	
130	263328	-		2	SPACER	
135	263329	-		2	NUT	
160	434142	C		2	PISTON	
165	434143	-		2	END SECTION	
170	570066	-		4	SHAFT	
172	570067	-		4	RING	
175	570125	-		4	SLEEVE	
180	570126	-		4	SLEEVE	
185	562140	-		2	CAP	
190	563061	-		2	REAMED BOLT	
250	90028-0020	-		6	CONE	
260	90030-0162	-		2	CONNECTION	
270	90032-0039	-		2	BLOCK	
275	90087-0019	-		2	PLUG	
280	90092-0052	S		2	VALVE	
285	90092-0053	S		4	VALVE	
290	90099-0012	-		8	NUT	
300	90115-0122	S		2	JOINT	
305	90115-0067	S		2	JOINT	
310	90134-0030	-		2	SLEEVE	
325	90134-0039	-		8	BUSHING	
340	90134-0052	-		2	PLUG	
345	90134-0058	-		10	BANJO CONNECTION	
360	90157-0016	-	ML	X	LOCKING FLUID	
370	90165-0022	-		8	CLIP	
375	90166-0143	P	MM	2500	HOSE	
405	90214-0169	S		8	BALL BEARING	
410	90240-0097	S		4	RICTION BEARING	
555	312101-0323	-		4	SCREW M6S5X8FZB	
565	312101-0366	-		8	SCREW M6S6X12FZB	
575	312101-0465	-		8	SCREW M6S8X70FZB	
580	312104-0465	-		2	SCREW M6S8X70H8.8 FZB	
585	312105-0449	-		4	SCREW O4017 M8X16A280	
590	312105-0453	-		12	SCREW O4017 M8X25A280	
600	312111-0455	-		4	SCREW MC6S8X30FZB	
630	312121-0287	-		8	SLOTTED HEMCS4X8FZB	
635	312141-0295	-		4	SLOTTED HEMFS4X20FZB	
640	312180-0489	-		2	REAMED BOL	
650	312316-0283	-		4	STOP SCREW SK6SS4X4FZB	
670	312621-0318	-		2	NUT ML6M8FZB	
680	312601-0324	-		2	NUT M6M16FZB	
690	312605-0318	-		6	NUT M6M8RFR	
700	312621-0324	-		2	NUT ML6M16FZB	
720	312811-0322	-		2	LOCK NUT M12RFR	
730	312902-0318	-		2	NUT M6M8VRFR	
740	315101-0153	-		4	WASHER BRB6,4X12FZB	
765	315105-0165	-		30	WASHER BRB8,4X16RFR	
770	315121-0165	-		4	WASHER TBRSB8,4X26FZB	

Tetra Pak

SPC

Spare Parts Catalogue

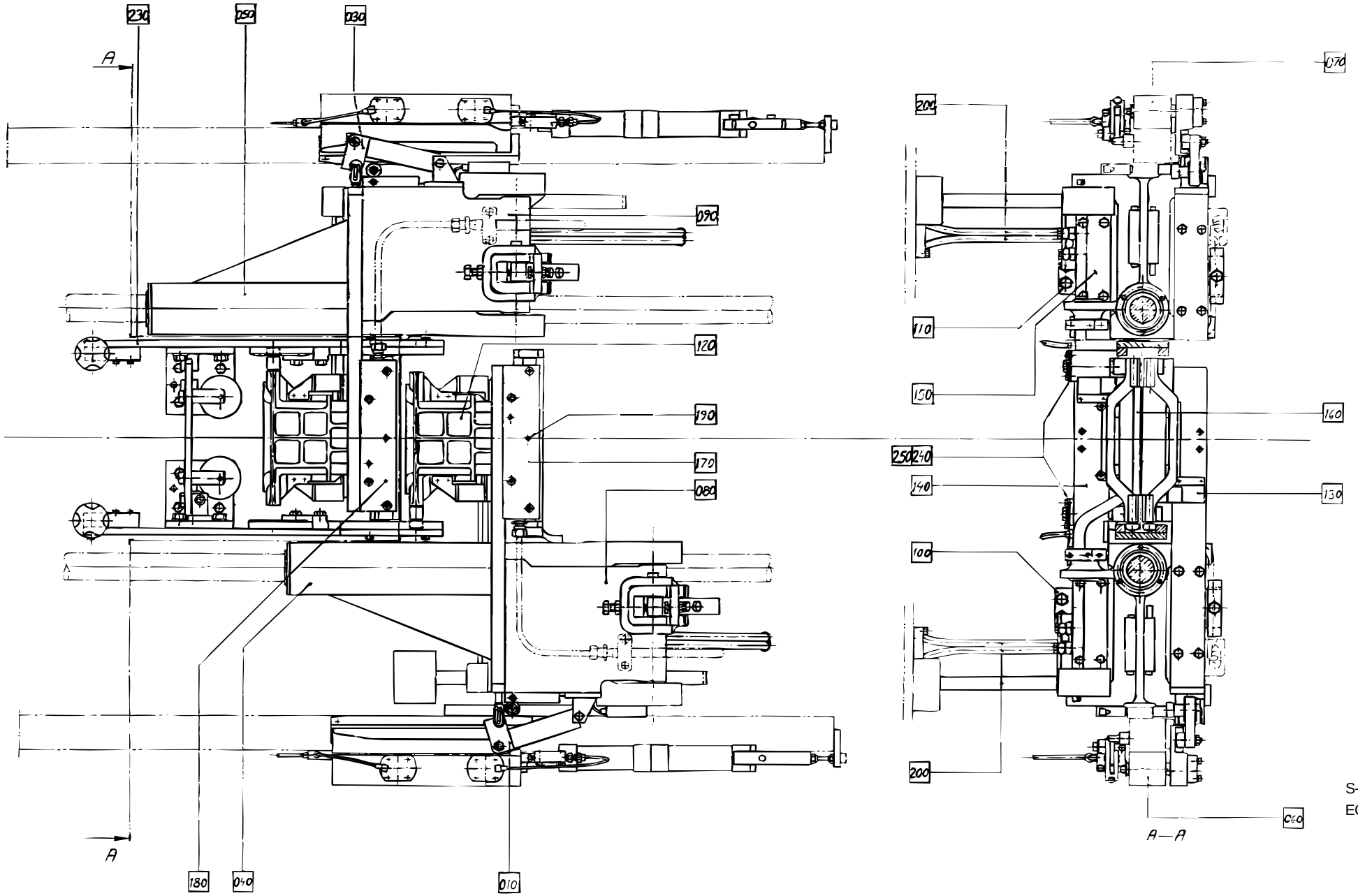

S-648004-1
ECN 9417

Pos	Part No	SP	UN	Qty	Description	Page No
-						
000	**B- 648004-090V**	**-**		**1**	**JAW SYSTEM**	
F010	CR- 279564-030V	-		1	FOLDING DEVICE	**317**
	CR- 26642-0201	-		-	. CARRIER	**319**
F030	CR- 279565-030V	-		1	FOLDING DEVICE	**321**
	CR- 26642-0201	-		-	. CARRIER	**319**
F040	CR- 243942-0402	-		1	YOKE	**323**
F050	CR- 243942-0401	-		1	YOKE	**323**
F060	CR- 266446-050V	-		1	DESIGN CORRECTION DEVICE	**325**
F070	CR- 266447-050V	-		1	DESIGN CORRECTION DEVICE	**329**
F080	CR- 246499-0601	-		1	ARM	**333**
F090	CR- 246499-0602	-		1	ARM	**333**
F100	C- 541052-0101	-		1	ARM WITH AXLE PRESSURE L	**335**
F110	C- 541053-0101	-		1	ARM WITH AXLE PRESSURE R	**337**
F120	CR- 246468-080V	-		4	VOLUME FLAP	**339**
F130	CR- 246327-040V	-		1	SHOCK ABSORBER	**345**
F140	CR- 259414-040V	-		1	CARRIER PRESSURE L IH	**365**
F150	CR- 259415-040V	-		1	CARRIER	**367**
F170	CR- 257835-030V	-		1	CUTTING JAW	**369**
F180	CR- 257835-035V	-		1	CUTTING JAW	**373**
F190	CR- 32966-040V	-		2	KNIFE HOLDER	**377**
F200	C- 279134-0501	-		1	TRANSMISSION	**379**
F230	C- 293605-050V	-		1	VOLUME CURVE PIECE	**381**
F240	CR- 259534-070V	-		1	PRESSURE JAW	**389**
F250	CR- 259534-075V	-		1	PRESSURE JAW	**395**
F270	C- 268614-050V	-		1	START-UP KIT	**401**
F280	C- 541188-020V	-		1	BAR CODE	**405**

Pos	Part No	SP	UN	Qty	Description	Page No

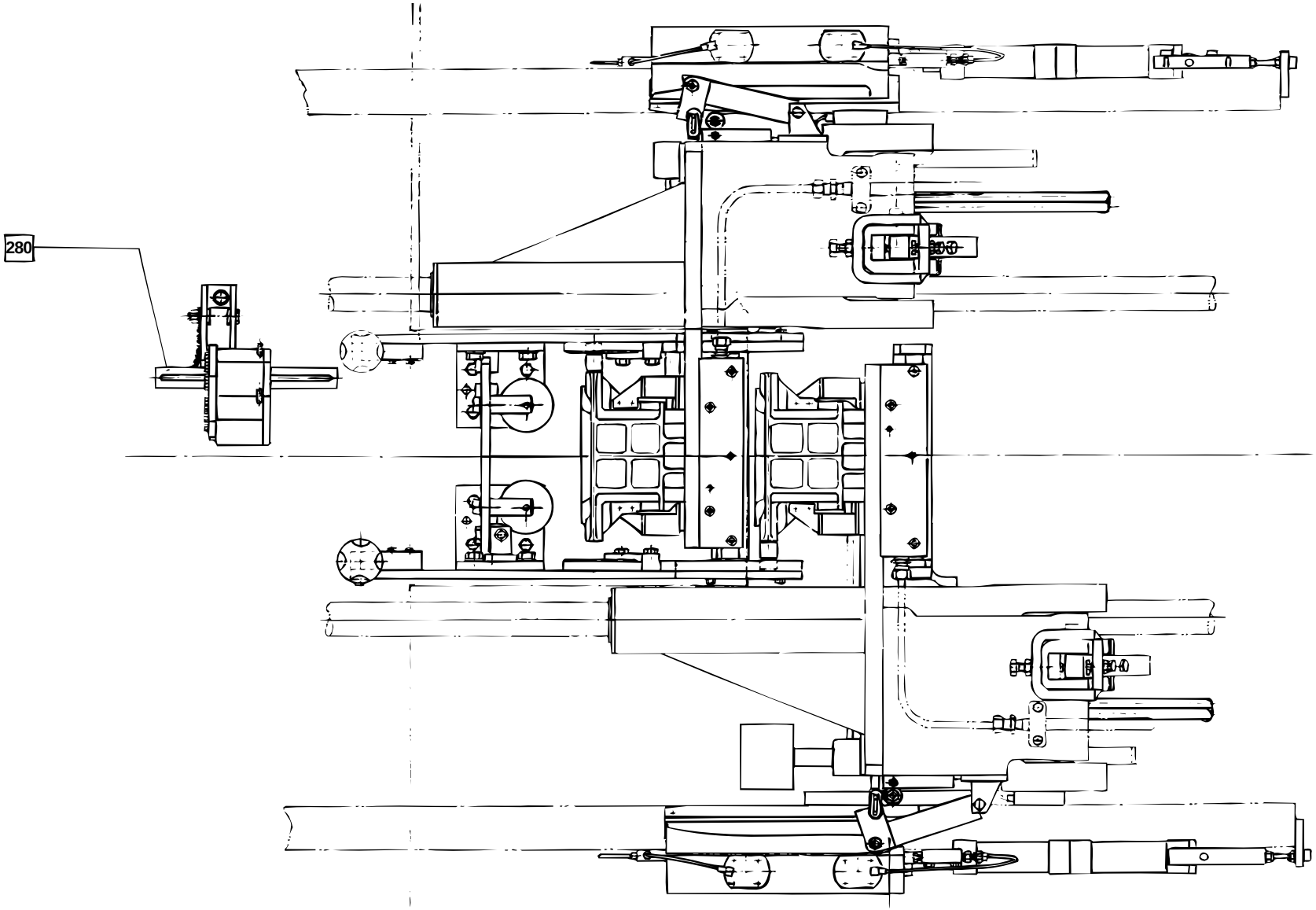
280

Pos	Part No	SP	UN	Qty	Description	Page No
-						
000	**B- 648004-090V**	**-**		**1**	**JAW SYSTEM**	
F010	CR- 279564-030V	-		1	FOLDING DEVICE	**317**
	CR- 26642-0201	-		-	. CARRIER	**319**
F030	CR- 279565-030V	-		1	FOLDING DEVICE	**321**
	CR- 26642-0201	-		-	. CARRIER	**319**
F040	CR- 243942-0402	-		1	YOKE	**323**
F050	CR- 243942-0401	-		1	YOKE	**323**
F060	CR- 266446-050V	-		1	DESIGN CORRECTION DEVICE	**325**
F070	CR- 266447-050V	-		1	DESIGN CORRECTION DEVICE	**329**
F080	CR- 246499-0601	-		1	ARM	**333**
F090	CR- 246499-0602	-		1	ARM	**333**
F100	C- 541052-0101	-		1	ARM WITH AXLE PRESSURE L	**335**
F110	C- 541053-0101	-		1	ARM WITH AXLE PRESSURE R	**337**
F120	CR- 246468-080V	-		4	VOLUME FLAP	**339**
F130	CR- 246327-040V	-		1	SHOCK ABSORBER	**345**
F140	CR- 259414-040V	-		1	CARRIER PRESSURE L IH	**365**
F150	CR- 259415-040V	-		1	CARRIER	**367**
F170	CR- 257835-030V	-		1	CUTTING JAW	**369**
F180	CR- 257835-035V	-		1	CUTTING JAW	**373**
F190	CR- 32966-040V	-		2	KNIFE HOLDER	**377**
F200	C- 279134-0501	-		1	TRANSMISSION	**379**
F230	C- 293605-050V	-		1	VOLUM CURVE PIECE	**381**
F240	CR- 259534-070V	-		1	PRESSURE JAW	**389**
F250	CR- 259534-075V	-		1	PRESSURE JAW	**395**
F270	C- 268614-050V	-		1	START-UP KIT	**401**
F280	C- 541188-020V	-		1	BAR CODE	**405**

Pos	Part No	SP	UN	Qty	Description	Page No

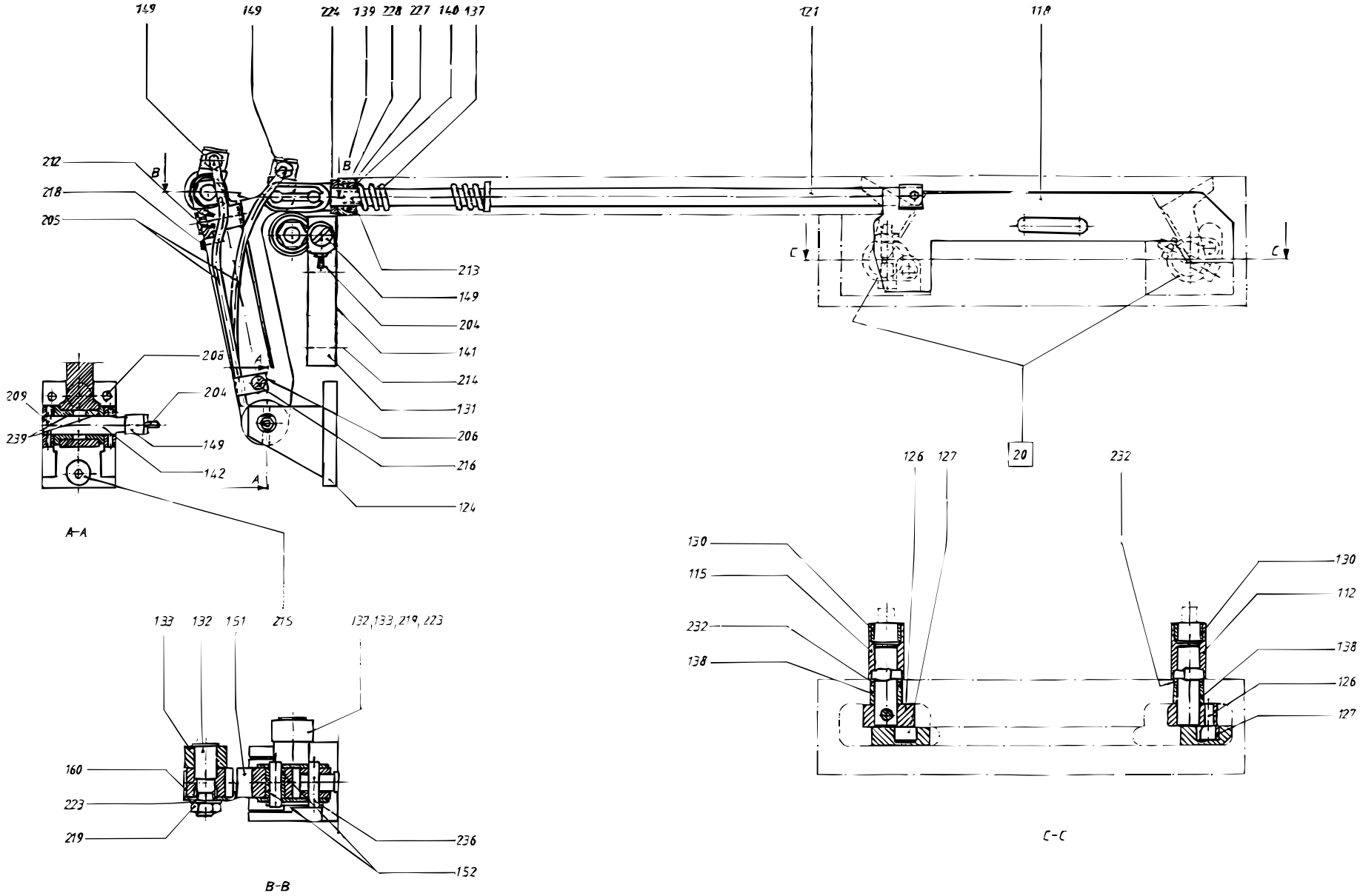
149
149
224
139
228
227
140
137
121
118
212
218
205
213
149
204
141
214
131
206
216
124
209
239
208
204
149
142
A
A
A-A
B
B
C
C
20
126
127
232
130
115
232
138
130
112
138
126
127
C-C
133
132
151
215
132,133,219,223
160
223
219
236
152
B-B

Pos	Part No	SP	UN	Qty	Description	Page No
VOLUMES 1055 B, 1000 B, 750 B, 568 B, 500 B						
000	**CR- 279564-0301**	**-**		**1**	**FOLDING DEVICE**	
112	G- 464311	S		1	FOLDING FLAP	
115	G- 464310	S		1	FOLDING FLAP	
118	G- 450505	S		1	CARRIER RULER LEFT	
121	32468	S		1	OPERATING ROD	
VOLUME 375 S						
000	**CR- 279564-0303**	**-**		**1**	**FOLDING DEVICE**	
112	G- 493711	S		1	FOLDING FLAP	
115	G- 493710	S		1	FOLDING FLAP	
118	G- 458038	S		1	CARRIER RULER	
121	32494	S		1	OPERATING ROD	
VOLUMES 500S, 400 B, 355 B						
000	**CR- 279564-0304**	**-**		**1**	**FOLDING DEVICE**	
112	G- 493711	S		1	FOLDING FLAP	
115	G- 493710	S		1	FOLDING FLAP	
118	G- 458030	S		1	CARRIER RULER	
121	32494	S		1	OPERATING ROD	
VOLUME 750 S						
000	**CR- 279564-0305**	**-**		**1**	**FOLDING DEVICE**	
112	G- 544315	S		1	FOLDING FLAP	
115	G- 544314	S		1	FOLDING FLAP	
118	G- 544319	S		1	CARRIER RULER	
121	32494	S		1	OPERATING ROD	
VOLUME 1000 S						
000	**CR- 279564-0306**	**-**		**1**	**FOLDING DEVICE**	
112	G- 569061	S		1	FOLDING FLAP	
115	G- 569060	S		1	FOLDING FLAP	
118	569062	S		1	CARRIER RULER	
121	32468	S		1	OPERATING ROD	
VOLUMES 1000 Sq, 500 Sq						
000	**CR- 279564-0307**	**-**		**1**	**FOLDING DEVICE**	
112	1317809	S		1	FOLDING FLAP	
115	1317808	-		1	FOLDING FLAP	
118	573979	S		1	CARRIER RULER	
121	32468	S		1	OPERATING ROD	
Common parts						
124	23229	C		1	BRACKET	
126	22462	S		2	SHAFT	
127	22463	S		2	ROLL	
130	32463	S		2	BEARING	
131	G- 22473	S		1	ROLLER BRACKET	
132	276172	S		2	AXLE PIN	
133	276173	S		2	CURVE ROLLER	
137	107000	S		1	SPRING	
138	33408	S		2	BEARING	
139	113653	S		1	BEARING PLATE	
140	113654	S		1	RING	
141	26423	S		2	LACE	
142	269366	S		1	DOWEL	
149	90134-0058	-		4	BANJO CONNECTION	
151	927448	S		1	LINK	
152	37258	S		2	BUSHING	
160	927449	-		1	SECURITY PLATE LEFT	
204	90266-0019	P	MM	400	PIPE	
205	90166-0143	P	MM	800	HOSE	
206	90165-0056	-		1	CLIP	
208	311103-0310	-		2	CYLINDRICACP M6 5X20 RFR	
209	90258-0001	-		1	HOLLOW PIN	
212	312155-0374	-		1	SCREW MF6S6X30RFR	
213	312115-0366	-		2	SCREW O4762 M6X12A280	
214	312115-0368	-		2	SCREW O4762 M6X16A280	
215	312115-0449	-		2	SCREW O4762 M8X16A280	
216	312125-0287	-		1	SLOTTED HEMCS4X8RFR	
218	312318-0370	-		1	STOP SCREW SK6SS6X20RFR	
219	312605-0318	-		2	NUT M6M8RFR	
223	315105-0165	-		2	WASHER BRB8,4X16RFR	
224	315115-0171	-		1	WASHER TBRB10X18RFR	
227	315202-0114	PU		1	O-RING 16,1X1,6	
228	315202-0208	PU		1	O-RING 9,3X2,4	
232	315230-0157	-		2	SEAL RING G12X16X3	
236	90288-0305	P		1	CONNECTION LINK	
239	321101-0163	S		2	FLANGE BUS 10F7X10	
F020	CR- 26642-0201	-		2	CARRIER	**319**

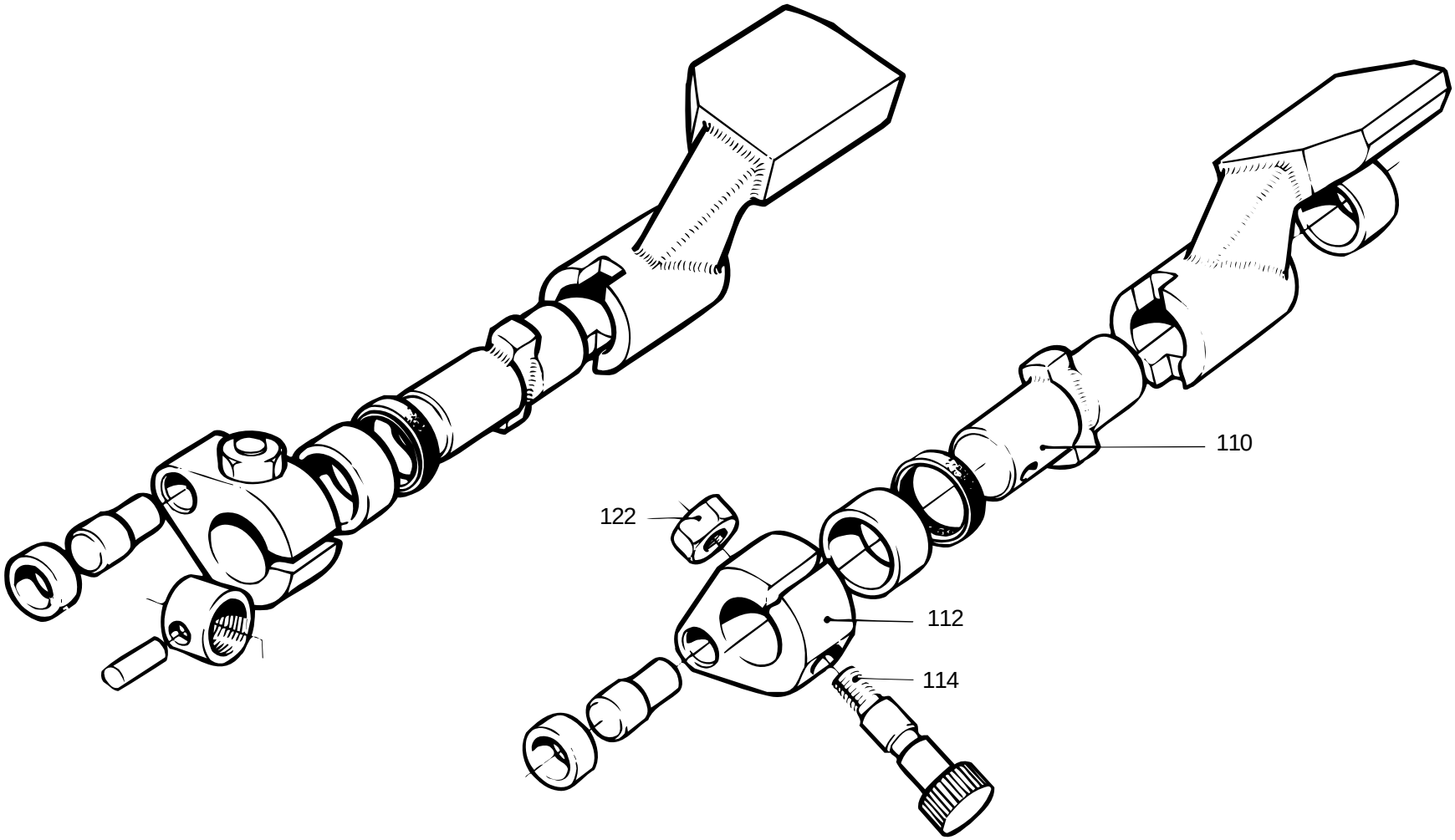
110
122
112
114

Pos	Part No	SP	UN	Qty	Description	Page No
-						
000	**CR- 26642-0201**	**-**		**2**	**CARRIER**	
110	32462	S		1	SHAFT	
112	G- 25640	S		1	CARRIER	
114	25641	S		1	REAMED BOLT	
122	312605-0314	S		1	NUT M6M5RFR	

Pos	Part No	SP	UN	Qty	Description	Page No

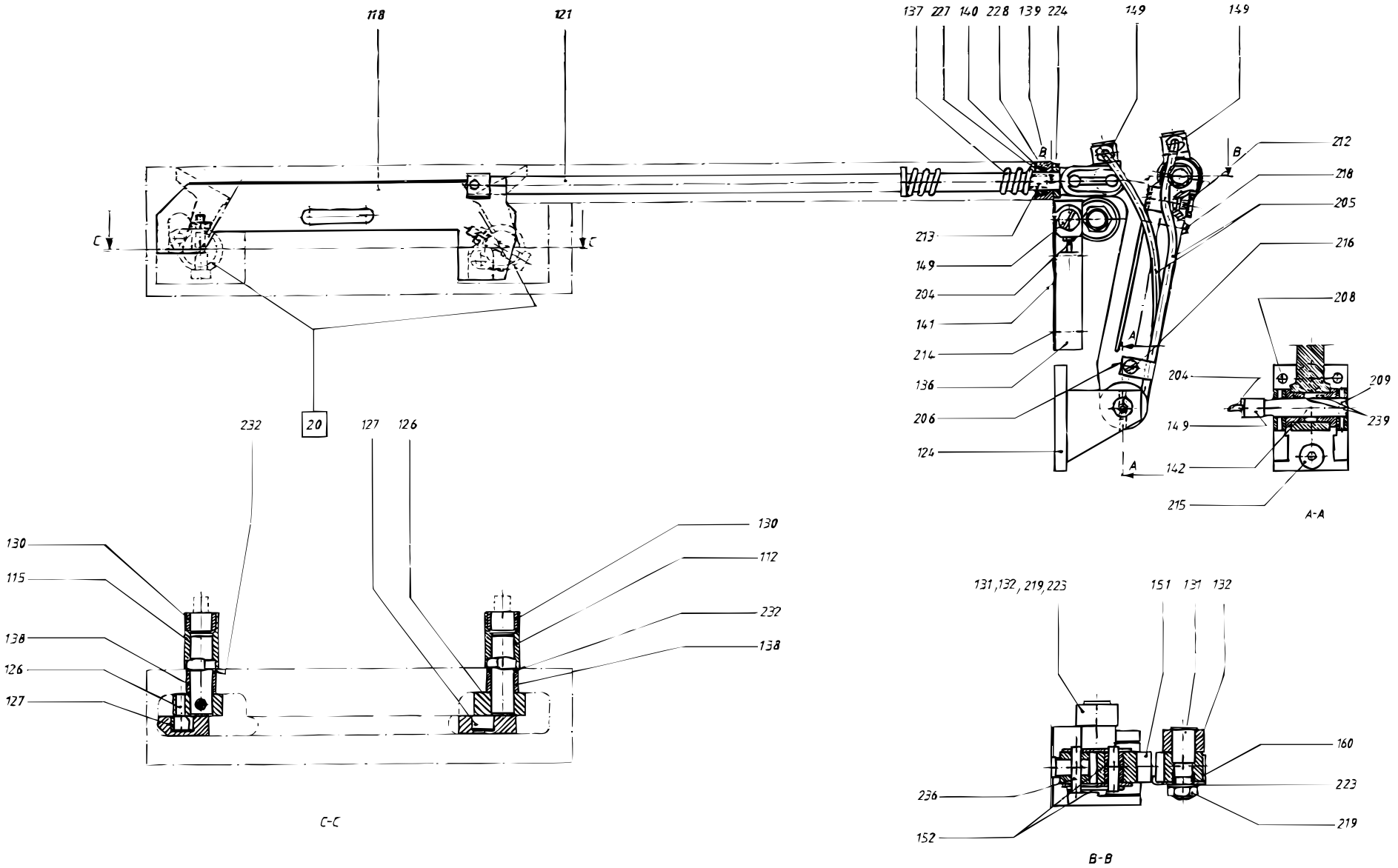
118
121
137 227 140 228 139 224
149
149
212
218
205
216
208
213
149
204
141
214
136
206
124
20
232
127
126
130
112
232
138
130
115
138
126
127
C-C
204
209
149
239
142
215
A-A
131,132, 219,223
151 131 132
160
223
219
236
152
B-B

Pos	Part No	SP	UN	Qty	Description	Page No
VOLUMES 1136 B, 1055 B, 1000 B, 750 B, 568 B, 500 B						
000	**CR- 279565-0301**	**-**		**1**	**FOLDING DEVICE**	
112	G- 464311	S		1	FOLDING FLAP	
115	G- 464310	S		1	FOLDING FLAP	
118	G- 450506	S		1	CARRIER RULER	
121	32468	S		1	OPERATING ROD	
VOLUME 375 S						
000	**CR- 279565-0303**	**-**		**1**	**FOLDING DEVICE**	
112	G- 493711	S		1	FOLDING FLAP	
115	G- 493710	S		1	FOLDING FLAP	
118	G- 458039	S		1	CARRIER RULER	
121	32494	S		1	OPERATING ROD	
VOLUMES 500S, 400 B, 355 B						
000	**CR- 279565-0304**	**-**		**1**	**FOLDING DEVICE**	
112	G- 493711	S		1	FOLDING FLAP	
115	G- 493710	S		1	FOLDING FLAP	
118	G- 458031	S		1	CARRIER RULER	
121	32494	S		1	OPERATING ROD	
VOLUME 750 S						
000	**CR- 279565-0305**	**-**		**1**	**FOLDING DEVICE**	
112	G- 544315	S		1	FOLDING FLAP	
115	G- 544314	S		1	FOLDING FLAP	
118	G- 544320	S		1	CARRIER RULER	
121	32494	S		1	OPERATING ROD	
VOLUMES 1000 S						
000	**CR- 279565-0306**	**-**		**1**	**FOLDING DEVICE**	
112	G- 569061	S		1	FOLDING FLAP	
115	G- 569060	S		1	FOLDING FLAP	
118	569063	S		1	CARRIER RULER	
121	32468	S		1	OPERATING ROD	
VOLUMES 1000 Sq, 500 Sq						
000	**CR- 279565-0307**	**-**		**1**	**FOLDING DEVICE**	
112	1317809	S		1	FOLDING FLAP	
115	1317808	S		1	FOLDING FLAP	
118	573980	S		1	CARRIER RULER	
121	32468	S		1	OPERATING ROD	
Common parts						
124	23229	C		1	BRACKET	
126	22462	S		2	SHAFT	
127	22463	S		2	ROLL	
130	32463	S		2	BEARING	
131	276172	S		2	AXLE PIN	
132	276173	S		2	CURVE ROLLER	
136	23361	S		1	ROLLER BRACKET	
137	107000	S		1	SPRING	
138	33408	S		2	BEARING	
139	113653	S		1	BEARING PLATE	
140	113654	S		1	RING	
141	26423	S		2	LACE	
142	269366	S		1	DOWEL	
149	90134-0058	-		4	BANJO CONNECTION	
151	927448	S		1	LINK	
152	37258	S		2	BUSHING	
160	927450	-		1	SECURITY PLATE RIGHT	
204	90266-0019	P	MM	400	PIPE	
205	90166-0143	P	MM	800	HOSE	
206	90165-0056	-		1	CLIP	
208	311103-0310	-		2	CYLINDRICACP M6 5X20 RFR	
209	90258-0001	-		1	HOLLOW PIN	
212	312155-0374	-		1	SCREW MF6S6X30RFR	
213	312115-0366	-		2	SCREW O4762 M6X12A280	
214	312115-0368	-		2	SCREW O4762 M6X16A280	
215	312115-0449	-		2	SCREW O4762 M8X16A280	
216	312125-0287	-		1	SLOTTED HEMCS4X8RFR	
218	312318-0370	-		1	STOP SCREW SK6SS6X20RFR	
219	312605-0318	-		2	NUT M6M8RFR	
223	315105-0165	-		2	WASHER BRB8,4X16RFR	
224	315115-0171	-		1	WASHER TBRB10X18RFR	
227	315202-0114	PU		1	O-RING 16,1X1,6	
228	315202-0208	PU		1	O-RING 9,3X2,4	
232	315230-0157	-		2	SEAL RING G12X16X3	
236	90288-0305	P		1	CONNECTION LINK	
239	321101-0163	S		2	FLANGE BUS 10F7X10	
F020	CR- 26642-0201	-		2	CARRIER	**319**

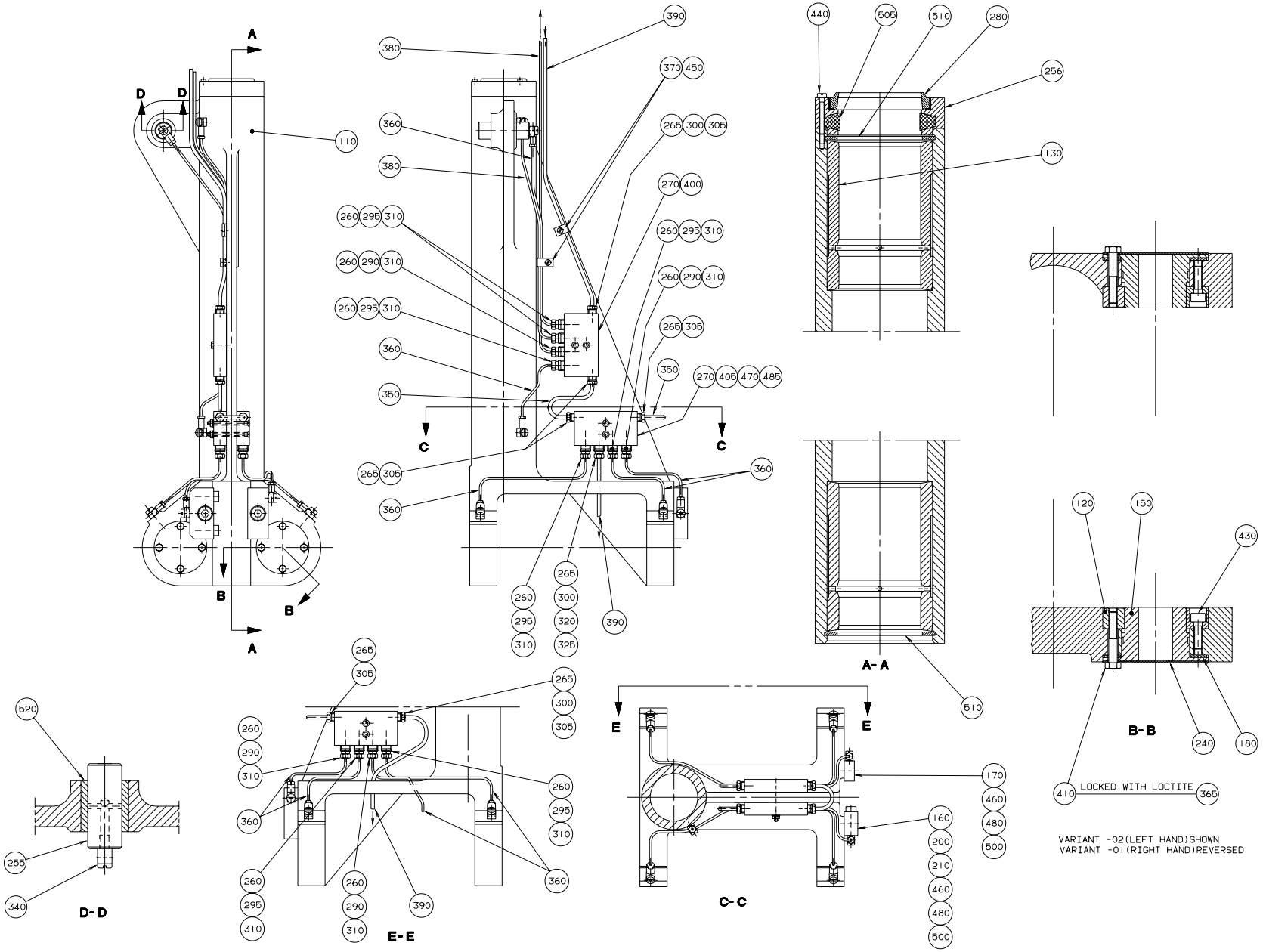

S-243942-2
ECN 16717

Pos	Part No	SP	UN	Qty	Description	Page No
RIGHT PERFORMANCE						
000	**CR- 243942-0401**	**-**		**1**	**YOKE**	
110	G- 243951	C		1	YOKE	
LEFT PERFORMANCE						
000	**CR- 243942-0402**	**-**		**1**	**YOKE**	
110	G- 243952	C		1	YOKE	
Common parts						
120	36753	C		4	RING	
130	243943	S		2	BUSHING	
150	246513	S		4	BEARING	
160	20494	S		2	COMPRESSION SPRING	
170	26760	S		1	LOCATING PIECE	
180	29886	S		4	LACE	
200	31837	S		1	SPRING HOUSING	
210	31838	S		2	PLUNGER	
240	239874	C		4	WASHER	
255	247112	S		1	SHAFT	
256	263509	S		1	LID	
260	90028-0020	-		11	CONE	
265	90028-0021	-		7	CONE	
270	90032-0039	-		3	BLOCK	
280	90091-0080	S		1	SCRAPER	
290	90092-0052	-		4	VALVE	
295	90092-0053	-		7	VALVE	
300	90134-0031	-		3	SLEEVE	
305	90134-0038	-		6	BUSHING	
310	90134-0039	-		11	BUSHING	
320	90134-0040	-		1	BUSHING	
325	90134-0051	-		1	SPACER COLLOR	
340	90134-0058	-		9	BANJO CONNECTION	
350	90151-0001	-	MM	200	BRASS PIPE	
360	90266-0019	-	MM	1400	PIPE	
365	90157-0016	-	ML	X	LOCKING FLUID	
370	90165-0060	-		4	CLAMP	
380	90166-0143	-	MM	900	HOSE	
390	90166-0109	-	MM	500	HOSE	
395	312105-0287	-		2	SCREW O4017 M4X8A280	
400	312105-0295	-		2	SCREW O4017 M4X20A280	
405	312145-0305	-		2	SLOTTED HEMFS4X50RFR	
410	312105-0335	-		16	SCREW O4017 M5X30A280	
430	312115-0329	-		4	SCREW O4762 M5X16A280	
440	312125-0232	-		3	SLOTTED HEMCS3X25RFR	
450	312125-0285	-		2	SLOTTED HEMCS4X6RFR	
460	312180-0499	-		2	REAMED BOL	
470	312605-0312	-		2	NUT M6M4 STAINLESS	
480	312811-0318	-		2	LOCK NUT M8RFR	
485	315105-0136	-		4	WASHER BRB4,3X8RFR	
500	315115-0173	-		2	WASHER B 10,5X22 RFR	
505	315259-0103	S		1	FELT SEAL SKFFI260	
510	315752-0136	S		4	CIRCLIP SGH62	
520	321105-0234	S		1	BUSHING 20F7X28X30	

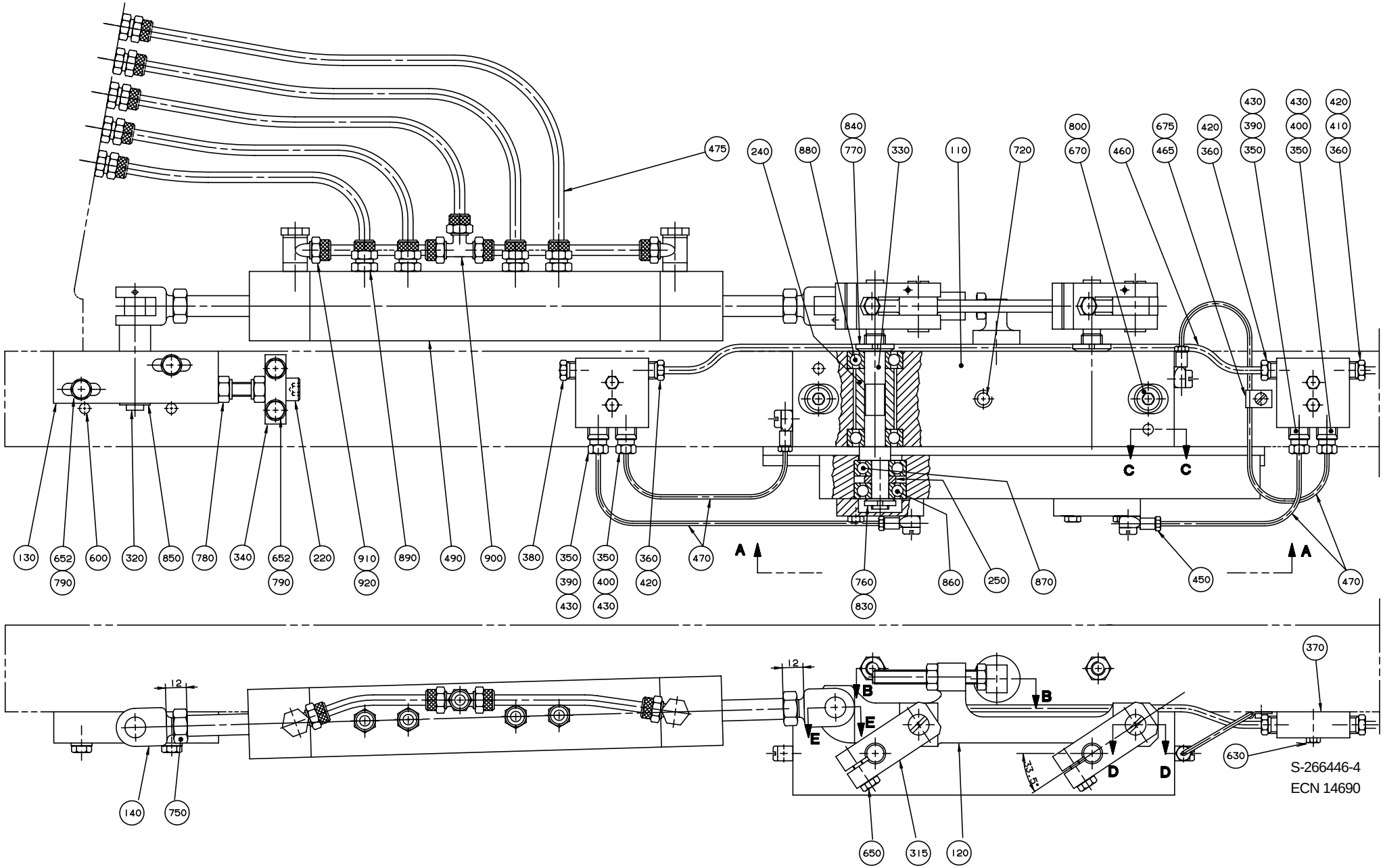

S-266446-4
ECN 14690

Pos	Part No	SP	UN	Qty	Description	Page No
VOLUMES 1000 B LOFIN, 750 S						
000	**CR- 266446-0501**	**-**		**1**	**DESIGN CORRECTION DEVICE**	
010	268954	S		1	FOLDING FLAP CAM L	
020	269059	C		1	COUNTER CAM	
VOLUME 1000 B HIFIN						
000	**CR- 266446-0502**	**-**		**1**	**DESIGN CORRECTION DEVICE**	
010	284232	S		1	FOLDING FLAP CAM L	
020	284234	C		1	COUNTER CAM	
VOLUME 500 B						
000	**CR- 266446-0503**	**-**		**1**	**DESIGN CORRECTION DEVICE**	
010	269108	S		1	FOLDING FLAP CAM L	
020	269110	C		1	COUNTER CAM	
VOLUMES 750 B, 275 S						
000	**CR- 266446-0504**	**-**		**1**	**DESIGN CORRECTION DEVICE**	
010	550337	S		1	FOLDING FLAP CAM L	
020	440510	C		1	COUNTER CAM	
VOLUME 500 S						
000	**CR- 266446-0505**	**-**		**1**	**DESIGN CORRECTION DEVICE**	
010	551285	S		1	FOLDING FLAP CAM	
020	440930	C		1	COUNTER CAM	
VOLUMES 400 B, 355 B						
000	**CR- 266446-0507**	**-**		**1**	**DESIGN CORRECTION DEVICE**	
010	537901	S		1	FOLDING FLAP CAM L	
020	529137	C		1	CURVE LEFT	
VOLUME 1055 B						
000	**CR- 266446-0508**	**-**		**1**	**DESIGN CORRECTION DEVICE**	
010	533959	S		1	FOLDING FLAP CAM L	
020	533957	C		1	CURVE LEFT	
VOLUME 568 B						
000	**CR- 266446-0509**	**-**		**1**	**DESIGN CORRECTION DEVICE**	
010	533112	S		1	FOLDING FLAP CAM L	
020	252653-0001	C		1	COUNTER CAM	
VOLUMES 1000 S, 1000 Sq						
000	**CR- 266446-0510**	**-**		**1**	**DESIGN CORRECTION DEVICE**	
010	565188	S		1	FOLDING FLAP CAM	
020	269059	C		1	COUNTER CAM	

Pos	Part No	SP	UN	Qty	Description	Page No
VOLUME 500 Sq						
000	**CR- 266446-0515**	**-**		**1**	**DESIGN CORRECTION DEVICE**	
010	583828	S		1	FOLDING FLAP CAM L	
020	252653-0002	C		1	COUNTER CAM	
Common parts						
110	23292	C		1	BEARING HOUSING	
120	G- 436740	C		1	LINK	
130	20718	-		1	BEARING	
140	22483	S		2	FORK	
150	22485	S		1	DOWEL	
160	22486	S		2	DOWEL	
170	22504	S		1	STOP LUG	
180	23291	C		2	BEARING COVER	
200	23312	S		3	BUSHING	
210	26426	P		5	LACE	
220	33409	S		1	SCREW	
240	107334	-		2	SPACER SLEEVE	
250	107335	-		2	SPACER RING	
260	107339	-		2	DOWEL	
315	434387	S		2	BRACKET	
320	434388	C		1	SHAFT	
330	436671	S		2	ECCENTRIC SHAFT	
340	561416	-		1	BRACKET	
350	90028-0020	-		4	CONE	
360	90028-0021	-		3	CONE	
370	90032-0038	-		2	BLOCK	
380	90087-0019	-		1	PLUG	
390	90092-0052	S		2	VALVE	
400	90092-0054	S		2	VALVE	
410	90134-0031	-		1	SLEEVE	
420	90134-0038	-		3	BUSHING	
430	90134-0039	-		4	BUSHING	
450	90134-0058	-		4	BANJO CONNECTION	
460	90151-0001	-	MM	400	BRASS PIPE	
465	90165-0058	-		1	CLAMP	
470	90166-0143	-	MM	700	HOSE	
475	90166-0124	-	MM	1600	HOSE	
490	90450-0105	-		1	CYLINDER	
490a	90450-0634	S		1	* OVERHAUL KIT	
500	90261-0036	-		2	PIPE PLUG	
600	311103-0357	-		4	CYLINDRICACP M6 6X30 RFR	
610	311103-0310	-		2	CYLINDRICACP M6 5X20 RFR	

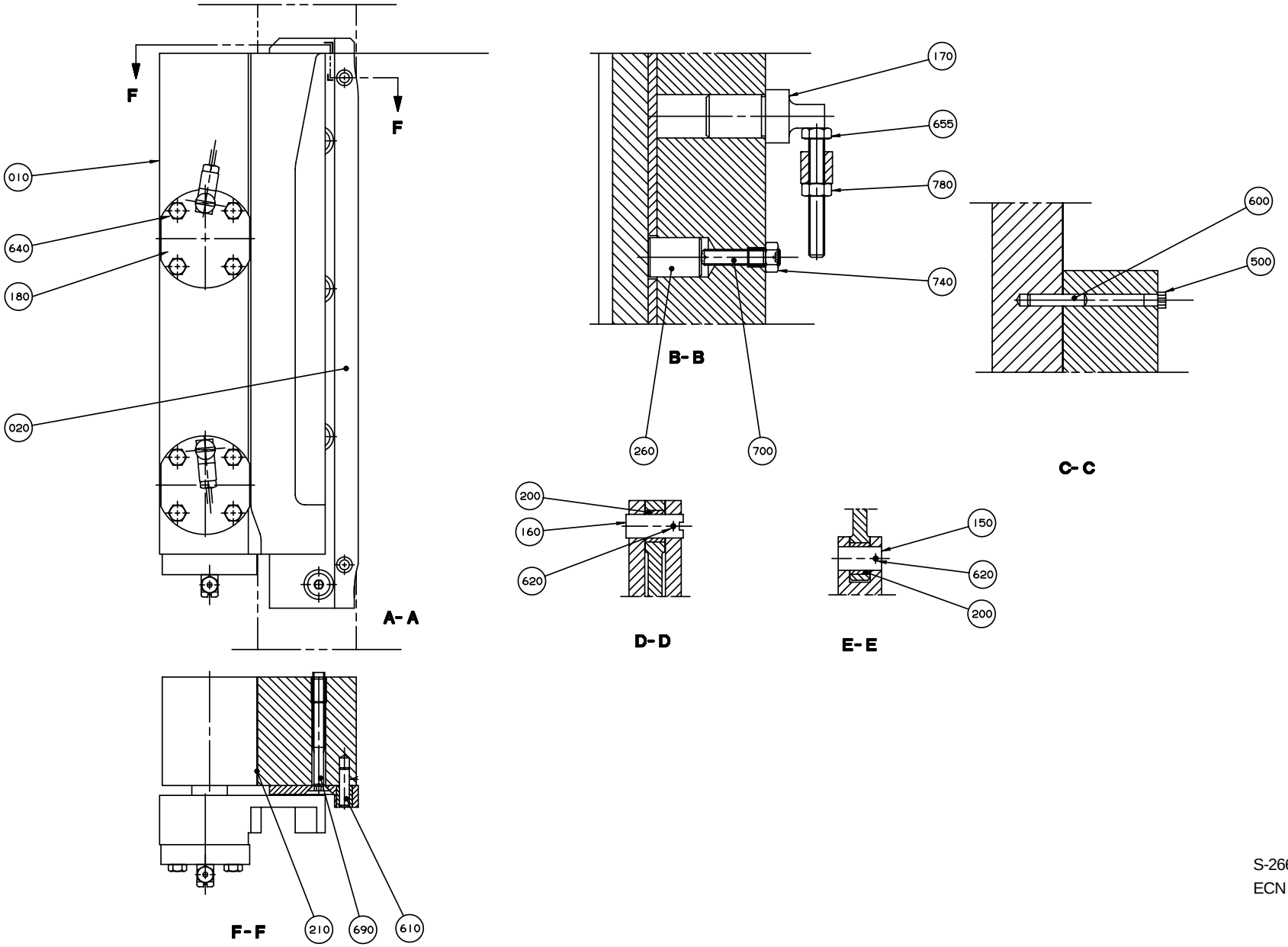

S-266446-5
ECN 20339

Pos	Part No	SP	UN	Qty	Description	Page No
620	311112-0192	S		4	SLOTTED TURP 2,5X24	
630	312105-0295	-		4	SCREW O4017 M4X20A280	
640	312105-0329	-		8	SCREW O4017 M5X16A280	
650	312105-0370	-		2	SCREW O4017 M6X20A280	
652	312105-0372	-		4	SCREW O4017 M6X25A280	
655	312109-0463	-		1	SCREW M6S8X60H A4 80	
670	312115-0461	-		2	SCREW O4762 M8X50A280	
675	312125-0285	-		1	SLOTTED HEMCS4X6RFR	
690	312155-0382	-		4	SCREW MF6S6X60 A2 70	
700	312318-0459	-		2	STOP SCREW SK6SS 8X40RFR	
720	312318-0499	-		1	STOP SCREW SK6SS10X40RFR	
740	312605-0318	-		2	NUT M6M8RFR	
750	312635-0320	-		2	NUT 10X1 RFR	
760	312805-0100	S		2	ROUND NUT KM0	
770	312805-0101	S		2	ROUND NUT KM1	
780	312811-0318	-		3	LOCK NUT M8RFR	
790	315105-0153	-		4	WASHER BRB6,4X12RFR	
800	315105-0165	-		2	WASHER BRB8,4X16RFR	
830	315410-0100	S		2	LOCK WASHESKFMB0	
840	315410-0101	S		2	LOCK WASHESKFMB1	
850	315750-0107	-		1	CIRCLIP SGA10	
860	321309-0100	S		2	BALL BEARISKF6200	
870	321312-0100	S		2	BALL BEARISKF6200RS	
880	321312-0101	S		4	BALL BEARISKF6201RS	
890	342920-0113	-		4	PIPE COUPL6/4-1/8	
900	342946-0112	-		1	T-CONNECTI6/4	
910	342980-0113	-		2	BANJO CONNSINGEL 6/4-1/8	
920	342980-0303	-		2	BANJO CONN SINGEL 1/8"	

Pos	Part No	SP	UN	Qty	Description	Page No

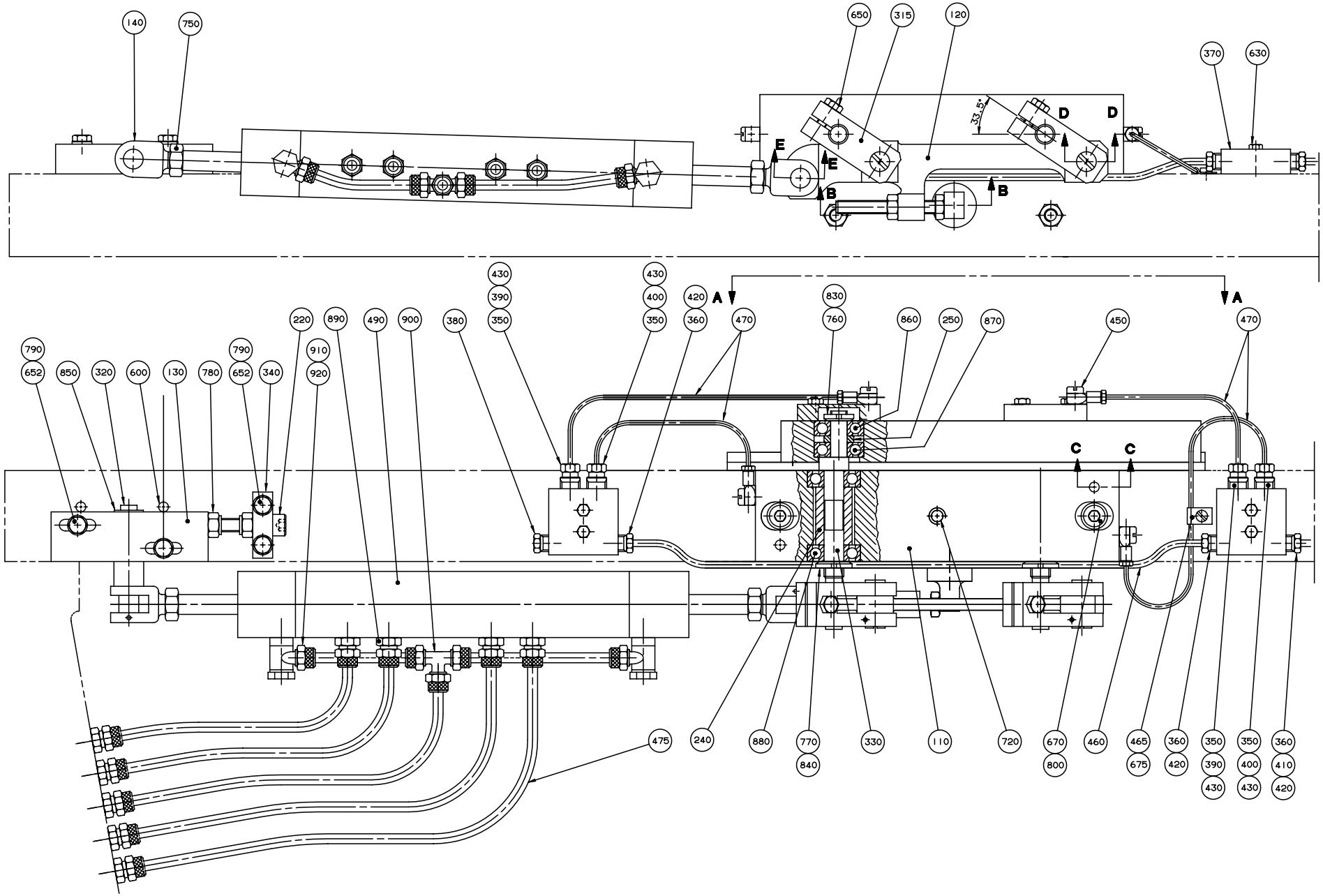

S-266447-4
ECN 14690

Pos	Part No	SP	UN	Qty	Description	Page No
VOLUMES 1000 B LOFIN, 750 S						
000	**CR- 266447-0501**	**-**		**1**	**DESIGN CORRECTION DEVICE**	
010	268955	S		1	FOLDING FLAP CAM R	
020	269060	C		1	COUNTER CAM	
VOLUME 1000 HIFIN						
000	**CR- 266447-0502**	**-**		**1**	**DESIGN CORRECTION DEVICE**	
010	284233	S		1	FOLDING FLAP CAM R	
020	284235	C		1	COUNTER CAM	
VOLUME 500 B						
000	**CR- 266447-0503**	**-**		**1**	**DESIGN CORRECTION DEVICE**	
010	269109	S		1	FOLDING FLAP CAM R	
020	269111	C		1	COUNTER CAM	
VOLUMES 750 B, 375 S						
000	**CR- 266447-0504**	**-**		**1**	**DESIGN CORRECTION DEVICE**	
010	550338	S		1	FOLDING FLAP CAM R	
020	440511	C		1	COUNTER CAM	
VOLUME 500 S						
000	**CR- 266447-0505**	**-**		**1**	**DESIGN CORRECTION DEVICE**	
010	551286	S		1	FOLDING FLAP CAM	
020	440931	C		1	COUNTER CAM	
VOLUMES 400 B, 355 B						
000	**CR- 266447-0507**	**-**		**1**	**DESIGN CORRECTION DEVICE**	
010	537902	S		1	FOLDING FLAP CAM R	
020	529138	C		1	CURVE RIGHT	
VOLUME 1055 B						
000	**CR- 266447-0508**	**-**		**1**	**DESIGN CORRECTION DEVICE**	
010	533958	S		1	FOLDING FLAP CAM R	
020	533956	C		1	CURVE RIGHT	
VOLUME 568 B						
000	**CR- 266447-0509**	**-**		**1**	**DESIGN CORRECTION DEVICE**	
010	533113	S		1	FOLDING FLAP CAM R	
020	252654-0001	C		1	COUNTER CAM	
VOLUMES 1000 S, 1000 Sq						
000	**CR- 266447-0510**	**-**		**1**	**DESIGN CORRECTION DEVICE**	
010	565189	S		1	FOLDING FLAP CAM	
020	269060	C		1	COUNTER CAM	

Pos	Part No	SP	UN	Qty	Description	Page No
VOLUME 500 Sq						
000	**CR- 266447-0515**	**-**		**1**	**DESIGN CORRECTION DEVICE**	
010	583829	S		1	FOLDING FLAP CAM R	
020	252654-0002	C		1	COUNTER CAM	
Common parts						
110	23292	C		1	BEARING HOUSING	
120	G- 436740	C		1	LINK	
130	20718	-		1	BEARING	
140	22483	S		2	FORK	
150	22485	S		1	DOWEL	
160	22486	S		2	DOWEL	
170	22504	S		1	STOP LUG	
180	23291	C		2	BEARING COVER	
200	23312	S		3	BUSHING	
210	26426	P		5	LACE	
220	33409	S		1	SCREW	
240	107334	-		2	SPACER SLEEVE	
250	107335	-		2	SPACER RING	
260	107339	-		2	DOWEL	
315	434387	S		2	BRACKET	
320	434388	C		1	SHAFT	
330	436671	S		2	ECCENTRIC SHAFT	
340	561416	-		1	BRACKET	
350	90028-0020	-		4	CONE	
360	90028-0021	-		3	CONE	
370	90032-0038	-		2	BLOCK	
380	90087-0019	-		1	PLUG	
390	90092-0052	S		2	VALVE	
400	90092-0054	S		2	VALVE	
410	90134-0031	-		1	SLEEVE	
420	90134-0038	-		3	BUSHING	
430	90134-0039	-		4	BUSHING	
450	90134-0058	-		4	BANJO CONNECTION	
460	90151-0001	-	MM	400	BRASS PIPE	
465	90165-0058	-		1	CLAMP	
470	90166-0143	-	MM	700	HOSE	
475	90166-0124	-	MM	1600	HOSE	
490	90450-0105	-		1	CYLINDER	
490a	90450-0634	S		1	* OVERHAUL KIT	
500	90261-0036	-		2	PIPE PLUG	
600	311103-0357	-		4	CYLINDRICACP M6 6X30 RFR	
610	311103-0310	-		2	CYLINDRICACP M6 5X20 RFR	

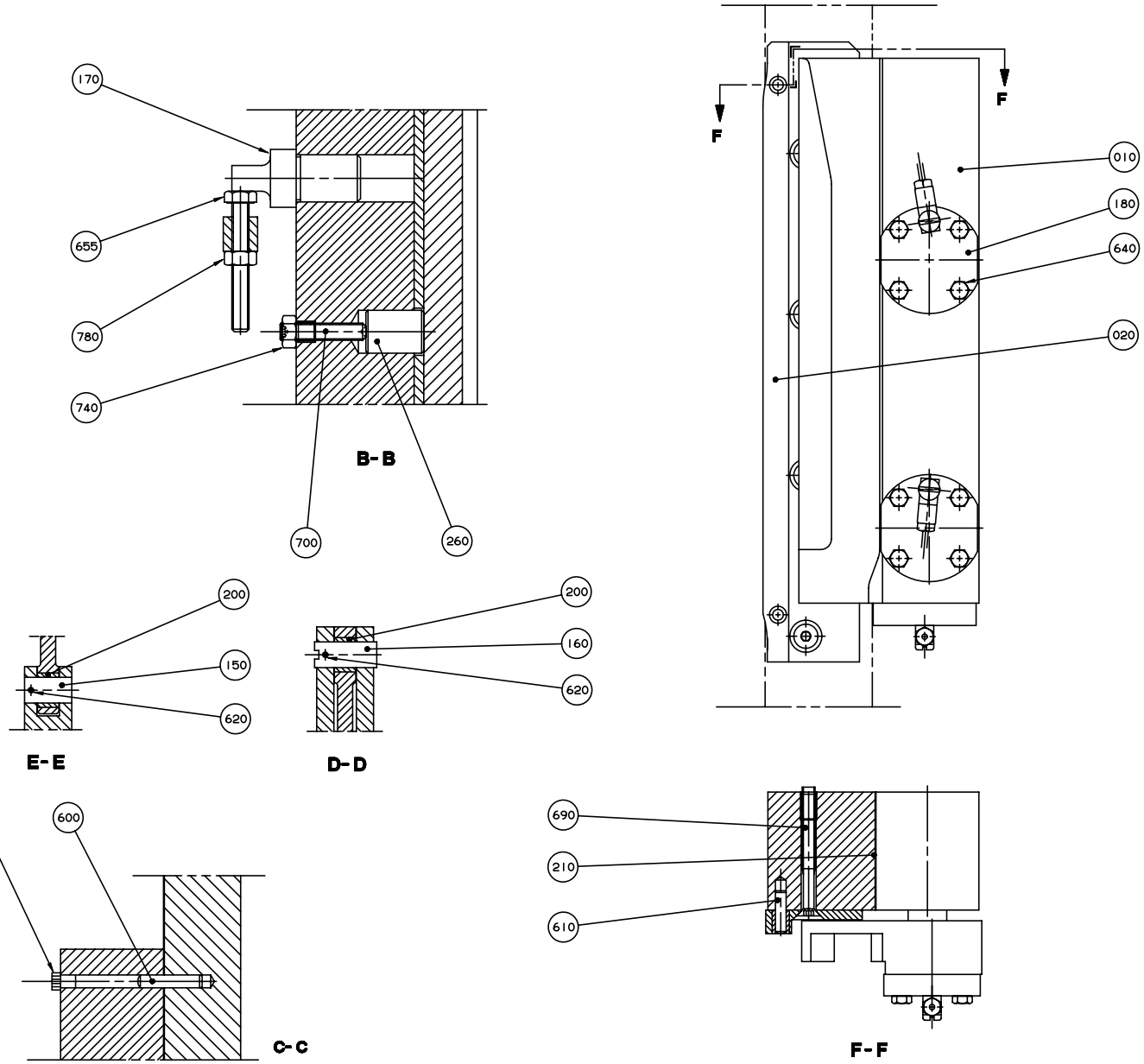
170
655
780
740
700
260
B-B
F
F
010
180
640
020
200
150
620
E-E
200
160
620
D-D
500
600
C-C
690
210
610
F-F

Pos	Part No	SP	UN	Qty	Description	Page No
620	311112-0192	S		4	SLOTTED TURP 2,5X24	
630	312105-0295	-		4	SCREW O4017 M4X20A280	
640	312105-0329	-		8	SCREW O4017 M5X16A280	
650	312105-0370	-		2	SCREW O4017 M6X20A280	
652	312105-0372	-		4	SCREW O4017 M6X25A280	
655	312109-0463	-		1	SCREW M6S8X60H A4 80	
670	312115-0461	-		2	SCREW O4762 M8X50A280	
675	312125-0285	-		1	SLOTTED HEMCS4X6RFR	
690	312155-0382	-		4	SCREW MF6S6X60 A2 70	
700	312318-0459	-		2	STOP SCREW SK6SS 8X40RFR	
720	312318-0499	-		1	STOP SCREW SK6SS10X40RFR	
740	312605-0318	-		2	NUT M6M8RFR	
750	312635-0320	-		2	NUT 10X1 RFR	
760	312805-0100	S		2	ROUND NUT KM0	
770	312805-0101	S		2	ROUND NUT KM1	
780	312811-0318	-		3	LOCK NUT M8RFR	
790	315105-0153	-		4	WASHER BRB6,4X12RFR	
800	315105-0165	-		2	WASHER BRB8,4X16RFR	
830	315410-0100	S		2	LOCK WASHESKFMB0	
840	315410-0101	S		2	LOCK WASHESKFMB1	
850	315750-0107	-		1	CIRCLIP SGA10	
860	321309-0100	S		2	BALL BEARISKF6200	
870	321312-0100	S		2	BALL BEARISKF6200RS	
880	321312-0101	S		4	BALL BEARISKF6201RS	
890	342920-0113	-		4	PIPE COUPL6/4-1/8	
900	342946-0112	-		1	T-CONNECTI6/4	
910	342980-0113	-		2	BANJO CONNSINGEL 6/4-1/8	
920	342980-0303	-		2	BANJO CONN SINGEL 1/8"	

Pos	Part No	SP	UN	Qty	Description	Page No

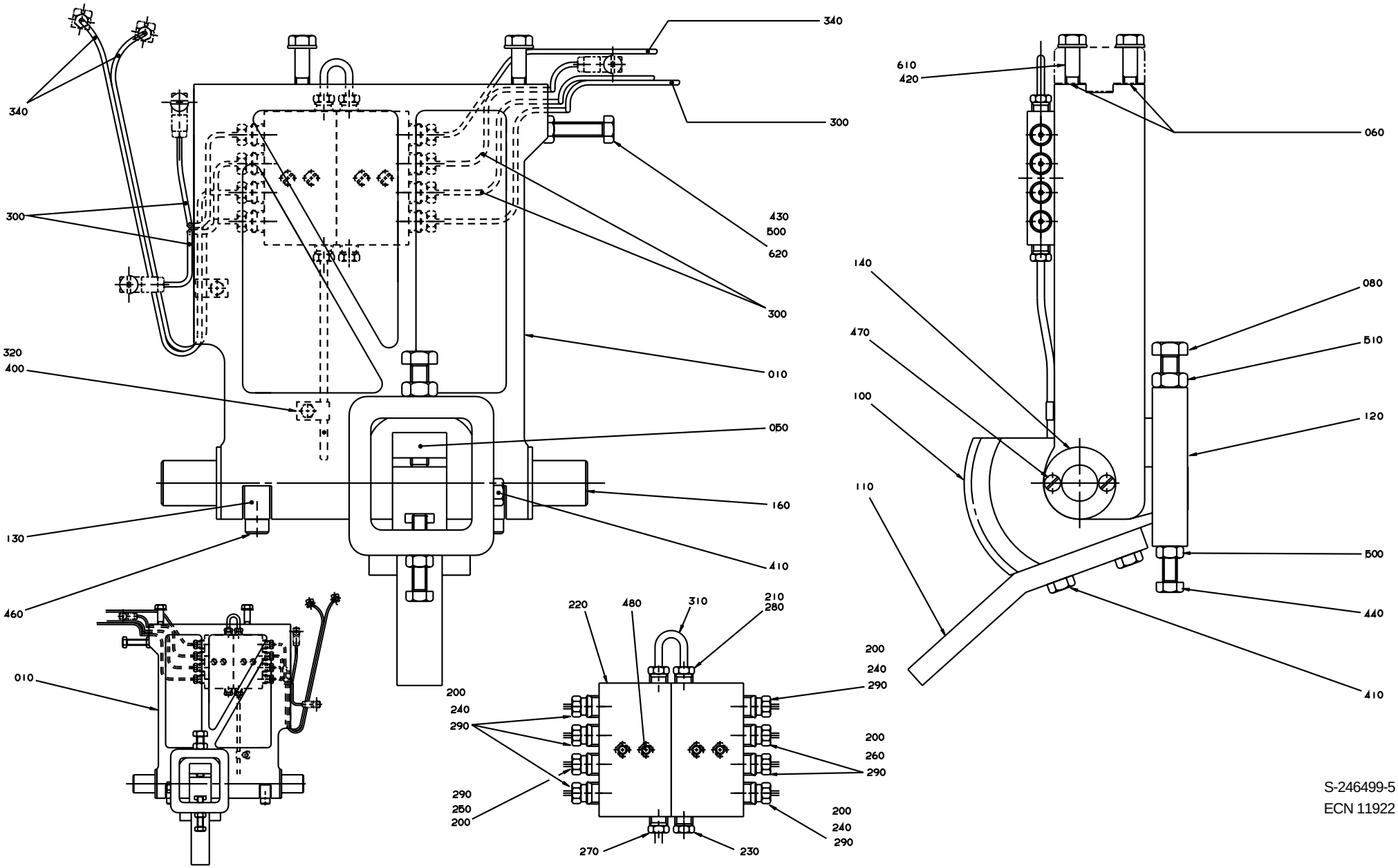

S-246499-5
ECN 11922

Pos	Part No	SP	UN	Qty	Description	Page No
LEFT						
000	**CR- 246499-0601**	**-**		**1**	**ARM**	
010	G- 538400	C		1	ARM LEFT	
RIGHT						
000	**CR- 246499-0602**	**-**		**1**	**ARM**	
010	G- 538401	C		1	ARM RIGHT	
Common parts						
050	14729	S		1	NUT	
060	26425	P		6	LACE	
080	32957	S		1	SCREW	
100	232238	C		1	TOOTH PART	
110	239476	-		1	ROD	
120	267754	S		1	BOW CLAMP	
130	533818	-		2	HOLDER	
140	536704	S		2	WASHER	
160	538399	S		1	SHAFT	
200	90028-0020	-		8	CONE	
210	90028-0021	-		3	CONE	
220	90032-0039	-		2	BLOCK	
230	90087-0019	-		1	PLUG	
240	90092-0052	S		5	VALVE	
250	90092-0053	S		1	VALVE	
260	90092-0054	S		2	VALVE	
270	90134-0031	-		1	SLEEVE	
280	90134-0038	-		3	BUSHING	
290	90134-0039	-		8	BUSHING	
300	90266-0019	-	MM	1800	PIPE	
310	90266-0165	-	MM	100	BRASS PIPE	
320	90165-0056	-		2	CLIP	
330	90166-0109	-	MM	400	HOSE	
340	90166-0143	-	MM	1100	HOSE	
400	312105-0287	-		2	SCREW O4017 M4X8A280	
410	312105-0453	-		3	SCREW O4017 M8X25A280	
420	312105-0457	-		1	SCREW O4017 M8X35A280	
430	312105-0466	-		1	SCREW O4014 M8X75A280	
440	312109-0459	-		1	SCREW M6S8X40H A4 80	
450	312115-0289	-		2	SCREW S4X10 A4 80	
460	312115-0455	-		2	SCREW O4762 M8X30A280	
470	312145-0285	-		4	SLOTTED HEMFS4X6RFR	
480	312145-0297	-		4	SLOTTED HEMFS4X25RFR	
500	312605-0318	-		2	NUT M6M8RFR	
510	312635-0320	-		1	NUT 10X1 RFR	
600	315105-0136	-		2	WASHER BRB4,3X8RFR	
610	315105-0165	-		4	WASHER BRB8,4X16RFR	
620	315115-0165	-		1	WASHER TBRB8,4X16RFR	

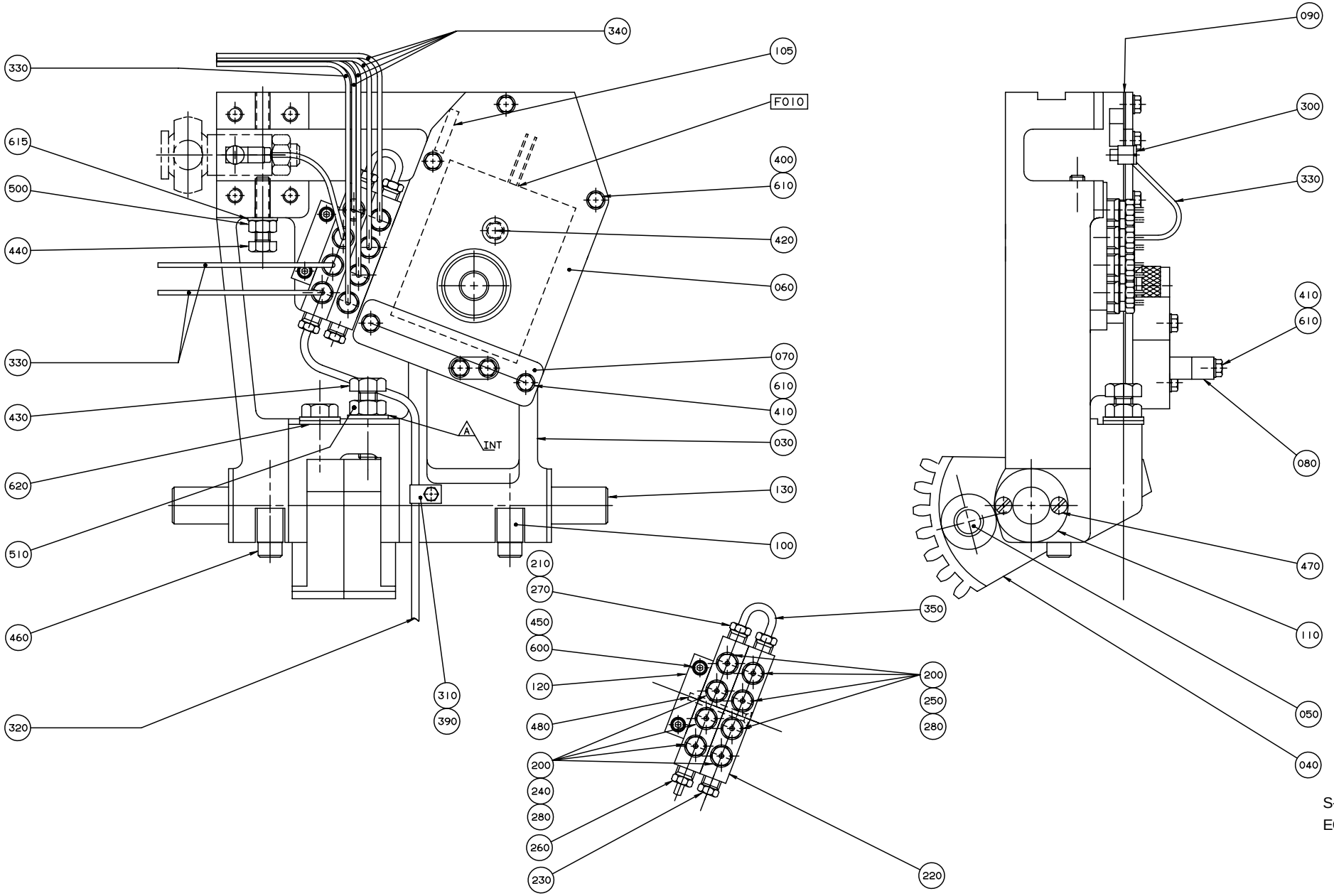

S-541052-1
ECN 70301

Pos	Part No	SP	UN	Qty	Description	Page No
VOLUMES 1055 B, 1000 B, 750 B, 568 B, 500 B, 750 S, 1000 S						
000	**C- 541052-0101**	**-**		**1**	**ARM WITH AXLE PRESSURE L**	
F010	C- 67379-0101	-		1	IH TRANSF.1.PRIM:5;21,6NF	
VOLUMES 500S, 400 B, 355 B, 375 S, 1000 Sq, 500 Sq						
000	**C- 541052-0102**	**-**		**1**	**ARM WITH AXLE PRESSURE L**	
F010 2	C- 67379-0102	-		1	IH TRANSF.1.PRIM:4;30,9NF	
Common parts						
030	G- 545410	C		1	ARM LEFT	
040	232236	C		2	TOOTH PART	
050	232237	S		1	SCREW	
060	464366	C		1	LID	
070	464367	C		1	CRAMP	
080	464368	C		2	CRAMP	
090	484843	S		1	GASKET	
100	533818	C		2	HOLDER	
105	534237	S		1	SEAL	
110	536704	P		2	WASHER	
120	536705	C		1	BRACKET	
130	538399	C		1	SHAFT	
200	90028-0020	-		8	CONE	
210	90028-0021	-		3	CONE	
220	90032-0039	-		2	BLOCK	
230	90087-0019	-		1	PLUG	
240	90092-0052	S		4	VALVE	
250	90092-0053	S		4	VALVE	
260	90134-0031	-		1	SLEEVE	
270	90134-0038	-		3	BUSHING	
280	90134-0039	-		8	BUSHING	
300	90134-0058	-		1	BANJO CONNECTION	
310	90165-0056	-		1	CLIP	
320	90166-0109	-	MM	800	HOSE	
330	90166-0143	-	MM	1200	HOSE	
340	90266-0019	-	MM	2000	PIPE	
350	90266-0165	-	MM	100	BRASS PIPE	
390	312105-0287	-		1	SCREW O4017 M4X8A280	
400	312105-0327	-		3	SCREW ISO 4017 M5X12A280	
410	312105-0335	-		4	SCREW O4017 M5X30A280	
420	312105-0343	-		1	SCREW M6S5X60 A2 80	
430	312105-0497	-		2	SCREW 4017 M10X35A280	
440	312109-0457	-		1	SCREW 8X35 H A4 80	
450	312115-0303	-		2	SCREW O4762 M4X40A280	
460	312115-0455	-		2	SCREW O4762 M8X30A280	
470	312145-0285	-		4	SLOTTED HEMFS4X6RFR	
480	312155-0301	-		1	SCREW MF6S4X35RFR	
500	312605-0318	-		1	NUT M6M8RFR	
510	312605-0320	-		1	NUT M6M10RFR	
600	315105-0136	-		2	WASHER BRB4,3X8RFR	
610	315105-0146	-		7	WASHER BRB5,3X10RFR	
615	315105-0165	-		1	WASHER BRB8,4X16RFR	
620	315105-0173	-		3	WASHER BRB10,5X22RFR	

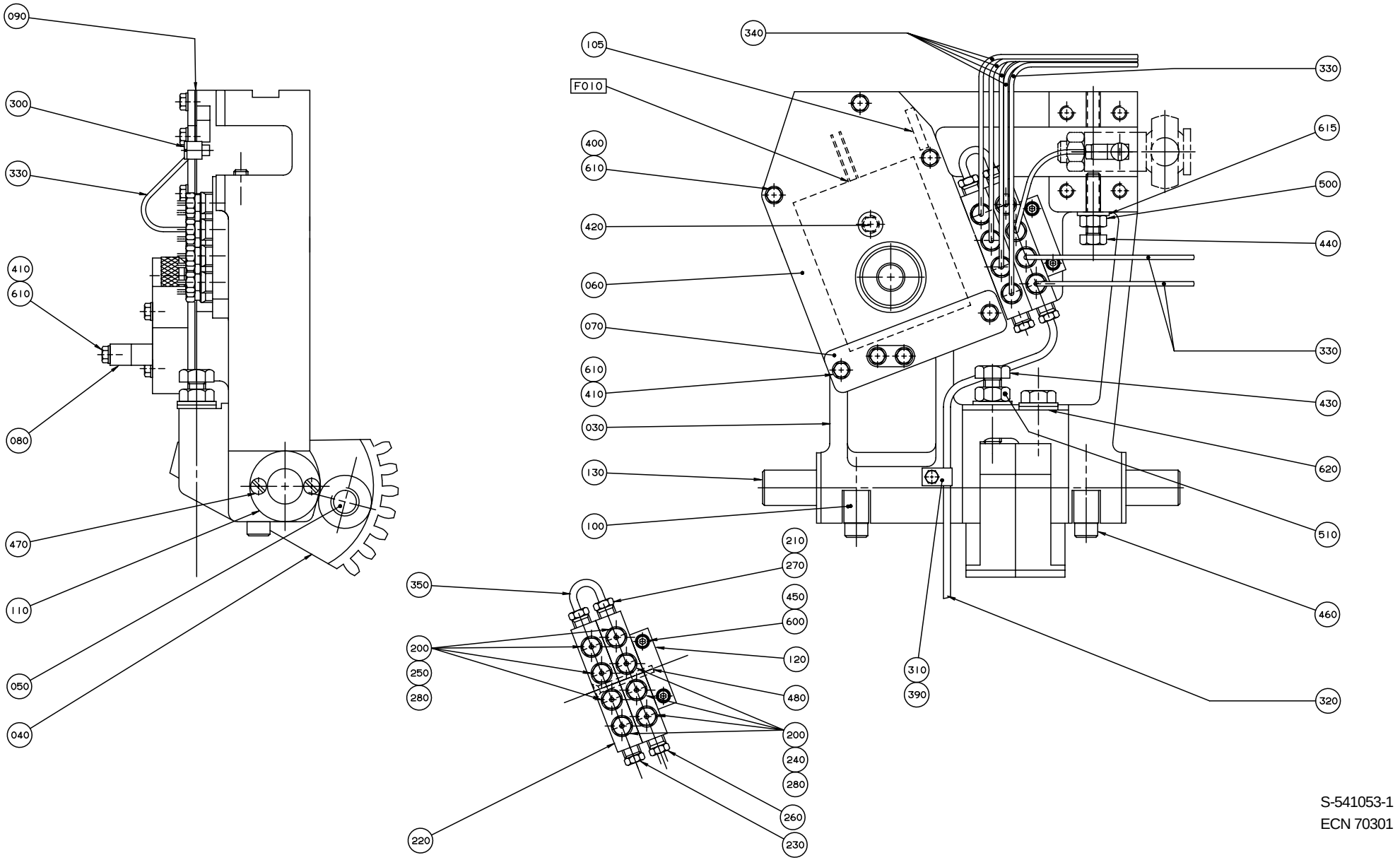

S-541053-1
ECN 70301

Pos	Part No	SP	UN	Qty	Description	Page No
VOLUMES 1055 B, 1000 B, 750 B, 568 B, 500 B, 750 S, 1000 S						
000	**C- 541053-0101**	**-**		**1**	**ARM WITH AXLE PRESSURE R**	
F010	C- 67379-0101	-		1	IH TRANSF.1.PRIM:5;21,6NF	
VOLUMES 500S, 400 B, 355 B, 375 S, 1000 Sq, 500 Sq						
000	**C- 541053-0102**	**-**		**1**	**ARM WITH AXLE PRESSURE R**	
F010 2	C- 67379-0102	-		1	IH TRANSF.1.PRIM:4;30,9NF	
Common parts						
030	G- 545409	C		1	ARM RIGHT	
040	232236	C		2	TOOTH PART	
050	232237	S		1	SCREW	
060	464366	C		1	LID	
070	464367	C		1	CRAMP	
080	464368	C		2	CRAMP	
090	484843	S		1	GASKET	
100	533818	C		2	HOLDER	
105	534237	S		1	SEAL	
110	536704	P		2	WASHER	
120	536705	C		1	BRACKET	
130	538399	C		1	SHAFT	
200	90028-0020	-		8	CONE	
210	90028-0021	-		3	CONE	
220	90032-0039	-		2	BLOCK	
230	90087-0019	-		1	PLUG	
240	90092-0052	S		4	VALVE	
250	90092-0053	S		4	VALVE	
260	90134-0031	-		1	SLEEVE	
270	90134-0038	-		3	BUSHING	
280	90134-0039	-		8	BUSHING	
300	90134-0058	-		1	BANJO CONNECTION	
310	90165-0056	-		1	CLIP	
320	90166-0109	-	MM	800	HOSE	
330	90166-0143	-	MM	1200	HOSE	
340	90266-0019	-	MM	2000	PIPE	
350	90266-0165	-	MM	100	BRASS PIPE	
390	312105-0287	-		1	SCREW O4017 M4X8A280	
400	312105-0327	-		3	SCREW ISO 4017 M5X12A280	
410	312105-0335	-		4	SCREW O4017 M5X30A280	
420	312105-0343	-		1	SCREW M6S5X60 A2 80	
430	312105-0497	-		2	SCREW 4017 M10X35A280	
440	312109-0457	-		1	SCREW 8X35 H A4 80	
450	312115-0303	-		2	SCREW O4762 M4X40A280	
460	312115-0455	-		2	SCREW O4762 M8X30A280	
470	312145-0285	-		4	SLOTTED HEMFS4X6RFR	
480	312155-0301	-		1	SCREW MF6S4X35RFR	
500	312605-0318	-		1	NUT M6M8RFR	
510	312605-0320	-		1	NUT M6M10RFR	
600	315105-0136	-		2	WASHER BRB4,3X8RFR	
610	315105-0146	-		7	WASHER BRB5,3X10RFR	
615	315105-0165	-		1	WASHER BRB8,4X16RFR	
620	315105-0173	-		3	WASHER BRB10,5X22RFR	

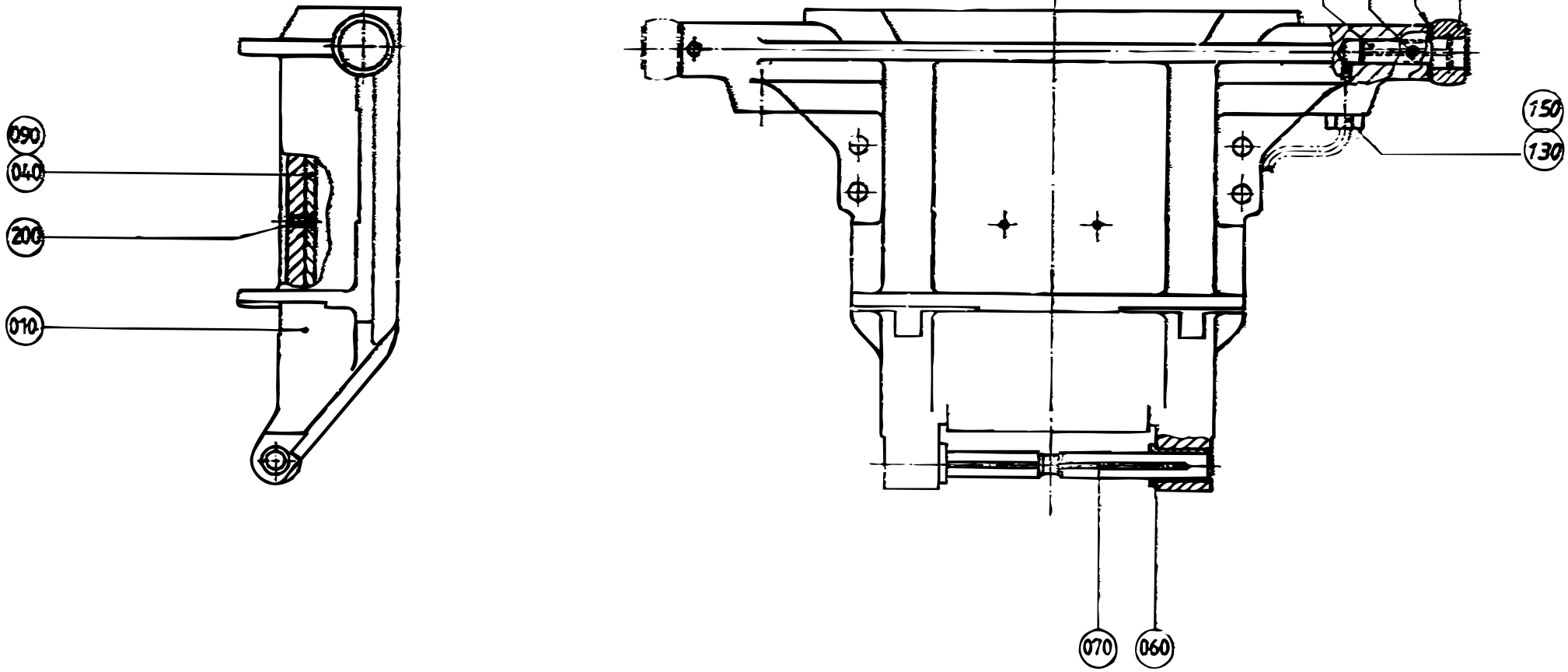
100
300
030
080
150
130
090
040
200
010
070
060

Pos	Part No	SP	UN	Qty	Description	Page No
HI, VOLUMES 1000 B HIFIN, 1000 B LOFIN						
000	**CR- 246468-0801**	**-**		**4**	**VOLUME FLAP**	
010 1	G- 532718	P		1	VOLUME FLAP	
040 1	26075	S		1	VOLUME BULGE	
060	36133	P		2	BUSHING	
070 1	458164	P		1	SHAFT	
080 1	434321	P		1	CURVE ROLLER	
090 1	208709	SU		3	VOLUME SHIM	
200	312145-0222	-		2	SLOTTED HEMFS3X8RFR	
HI, VOLUME 500 B						
000	**CR- 246468-0802**	**-**		**4**	**VOLUME FLAP**	
010 2	G- 476115	P		1	VOLUME FLAP	
040 2	458467	S		1	VOLUME BULGE	
060	36133	P		2	BUSHING	
070 1	458164	P		1	SHAFT	
080 2	436556	P		1	CURVE ROLLER	
090 2	479245	SU		3	VOLUME SHIM	
210	312145-0289	-		2	SLOTTED HEMFS4X10RFR	
HI, VOLUME 400 B						
000	**CR- 246468-0805**	**-**		**4**	**VOLUME FLAP**	
010 5	G- 575639	P		1	VOLUME FLAP	
020	449908	P		2	BUSHING	
040 4	575640	S		1	VOLUME BULGE	
070 2	458165	P		1	SHAFT	
080 2	436556	P		1	CURVE ROLLER	
090 4	575641	SU		3	VOLUME SHIM	
200	312145-0222	-		2	SLOTTED HEMFS3X8RFR	
HI, VOLUME 568 B						
000	**CR- 246468-0807**	**-**		**4**	**VOLUME FLAP**	
010 6	G- 533441	P		1	VOLUME FLAP	
040 5	541204	S		1	VOLUME BULGE	
060	36133	P		2	BUSHING	
070 1	458164	P		1	SHAFT	
080 2	436556	P		1	CURVE ROLLER	
090 5	479246	SU		3	VOLUME SHIM	
210	312145-0289	-		2	SLOTTED HEMFS4X10RFR	
HI, VOLUME 750 B						
000	**CR- 246468-0811**	**-**		**4**	**VOLUME FLAP**	
010 7	G- 544504	P		1	VOLUME FLAP	
040 6	450781	S		1	VOLUME BULGE	
060	36133	P		2	BUSHING	
070 1	458164	P		1	SHAFT	
080 2	436556	P		1	CURVE ROLLER	
090 6	450782	SU		3	VOLUME SHIM	
200	312145-0222	-		2	SLOTTED HEMFS3X8RFR	
HI, VOLUME 500 S						
000	**CR- 246468-0812**	**-**		**4**	**VOLUME FLAP**	
010 8	G- 548601	P		1	VOLUME FLAP	
020	449908	P		2	BUSHING	
040 7	464314	S		1	VOLUME BULGE	
070 2	458165	P		1	SHAFT	
080 1	434321	P		1	CURVE ROLLER	
090 7	464315	SU		3	VOLUME SHIM	
200	312145-0222	-		2	SLOTTED HEMFS3X8RFR	
HI, VOLUME 375 S						
000	**CR- 246468-0813**	**-**		**4**	**VOLUME FLAP**	
010 9	G- 571486	P		1	VOLUME FLAP	
020	449908	P		2	BUSHING	
040 8	255227-0001	S		1	VOLUME BULGE	
070 2	458165	P		1	SHAFT	
080 2	436556	P		1	CURVE ROLLER	
090 8	255228-0001	SU		3	VOLUME SHIM	
200	312145-0222	-		2	SLOTTED HEMFS3X8RFR	
HI, VOLUME 355 B						
000	**CR- 246468-0816**	**-**		**4**	**VOLUME FLAP**	
010 12	G- 529000	P		1	VOLUME FLAP	
020	449908	P		2	BUSHING	
040 10	536686	S		1	VOLUME BULGE	
070 2	458165	P		1	SHAFT	
080 2	436556	P		1	CURVE ROLLER	
090 10	536687	SU		3	VOLUME SHIM	
210	312145-0289	-		2	SLOTTED HEMFS4X10RFR	
HI, VOLUME 1055 B						
000	**CR- 246468-0817**	**-**		**4**	**VOLUME FLAP**	
010 13	G- 529002	P		1	VOLUME FLAP	
040 11	532129	S		1	VOLUME BULGE	
060	36133	P		2	BUSHING	
070 1	458164	P		1	SHAFT	
080 1	434321	P		1	CURVE ROLLER	
090 11	531320	SU		3	VOLUME SHIM	

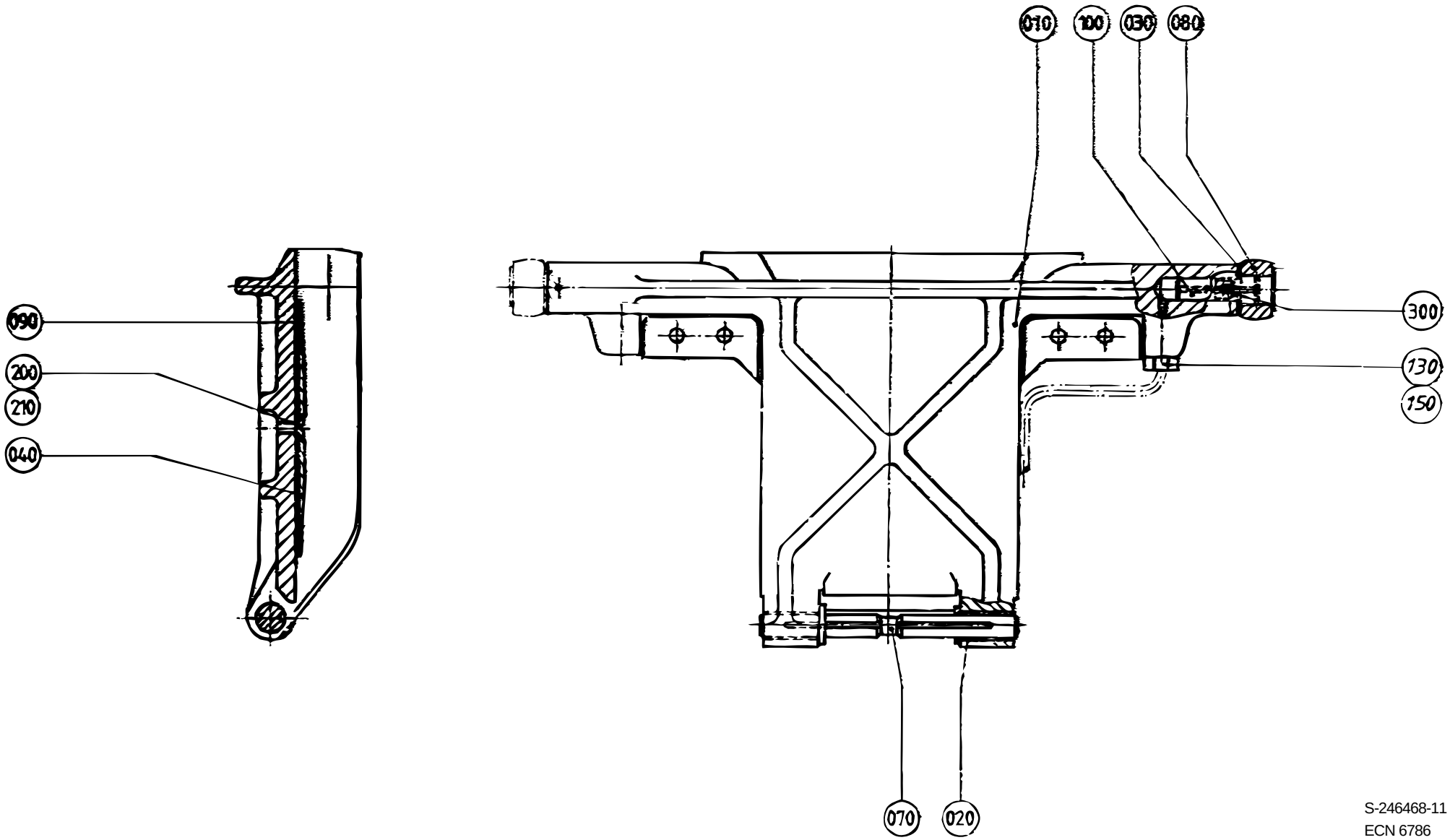

S-246468-11
ECN 6786

Pos	Part No	SP	UN	Qty	Description	Page No
200	312145-0222	-		2	SLOTTED HEMFS3X8RFR	
HI, VOLUME 750 S						
000	**CR- 246468-0818**	**-**		**4**	**VOLUME FLAP**	
010 14	G- 555926	P		1	VOLUME FLAP	
040 12	555892	S		1	VOLUME BULGE	
070 3	544292	P		1	SHAFT	
080 1	434321	P		1	CURVE ROLLER	
090 12	555928	SU		3	VOLUME SHIM	
210	312145-0289	-		2	SLOTTED HEMFS4X10RFR	
HI, VOLUME 1000 S						
000	**CR- 246468-0821**	**-**		**4**	**VOLUME FLAP**	
010 17	1195069	P		1	VOLUME FLAP	
040 14	569055	S		1	VOLUME BULGE	
060	36133	P		2	BUSHING	
070 1	458164	P		1	SHAFT	
080 1	434321	P		1	CURVE ROLLER	
090 14	569056	SU		3	VOLUME SHIM	
210	312145-0289	-		2	SLOTTED HEMFS4X10RFR	
HI, VOLUME 1000 Sq						
000	**CR- 246468-0822**	**-**		**4**	**VOLUME FLAP**	
010 18	1195070	P		1	VOLUME FLAP	
040 15	573974	S		1	VOLUME BULGE	
060	36133	P		2	BUSHING	
070 3	544292	P		1	SHAFT	
080 1	434321	P		1	CURVE ROLLER	
090 15	573975	SU		3	VOLUME SHIM	
210	312145-0289	-		2	SLOTTED HEMFS4X10RFR	
HI, VOLUME 500 Sq						
000	**CR- 246468-0830**	**-**		**4**	**VOLUME FLAP**	
010	589924	P		1	VOLUME FLAP	
040	589925	S		1	VOLUME BULGE	
060	36133	P		2	BUSHING	
070	544292	P		1	SHAFT	
080	436556	P		1	CURVE ROLLER	
090	589926	SU		3	VOLUME SHIM	
210	312145-0289	-		2	SLOTTED HEMFS4X10RFR	
Common parts						
030	19972	P		1	WASHER	
100	434320	P		1	AXLE PIN	
130	90028-0020	-		1	CONE	
150	90134-0063	-		1	BUSHING	
300	312318-0285	-		1	STOP SCREW SK6SS4X6RFR	

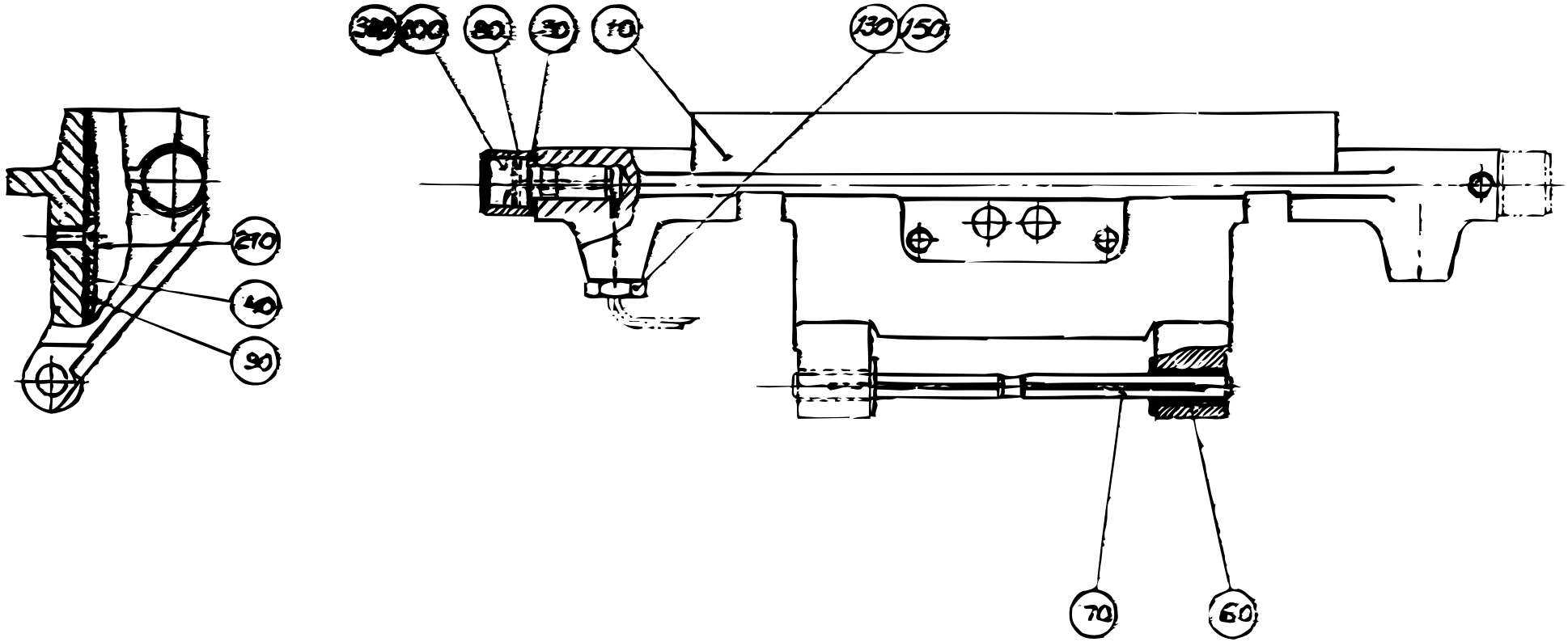
270
40
90
80
30
10
130
150
70
60

Pos	Part No	SP	UN	Qty	Description	Page No
HI, VOLUME 500 B						
000	**CR- 246468-0802**	**-**		**4**	**VOLUME FLAP**	
010 2	G- 476115	P		1	VOLUME FLAP	
040 2	458467	S		1	VOLUME BULGE	
060	36133	P		2	BUSHING	
070 1	458164	P		1	SHAFT	
080 2	436556	P		1	CURVE ROLLER	
090 2	479245	SU		3	VOLUME SHIM	
210	312145-0289	-		2	SLOTTED HEMFS4X10RFR	
HI, VOLUME 568 B						
000	**CR- 246468-0807**	**-**		**4**	**VOLUME FLAP**	
010 6	G- 533441	P		1	VOLUME FLAP	
040 5	541204	S		1	VOLUME BULGE	
060	36133	P		2	BUSHING	
070 1	458164	P		1	SHAFT	
080 2	436556	P		1	CURVE ROLLER	
090 5	479246	SU		3	VOLUME SHIM	
210	312145-0289	-		2	SLOTTED HEMFS4X10RFR	
Common parts						
030	19972	P		1	WASHER	
100	434320	P		1	AXLE PIN	
130	90028-0020	-		1	CONE	
150	90134-0063	-		1	BUSHING	
300	312318-0285	-		1	STOP SCREW SK6SS4X6RFR	

Pos	Part No	SP	UN	Qty	Description	Page No

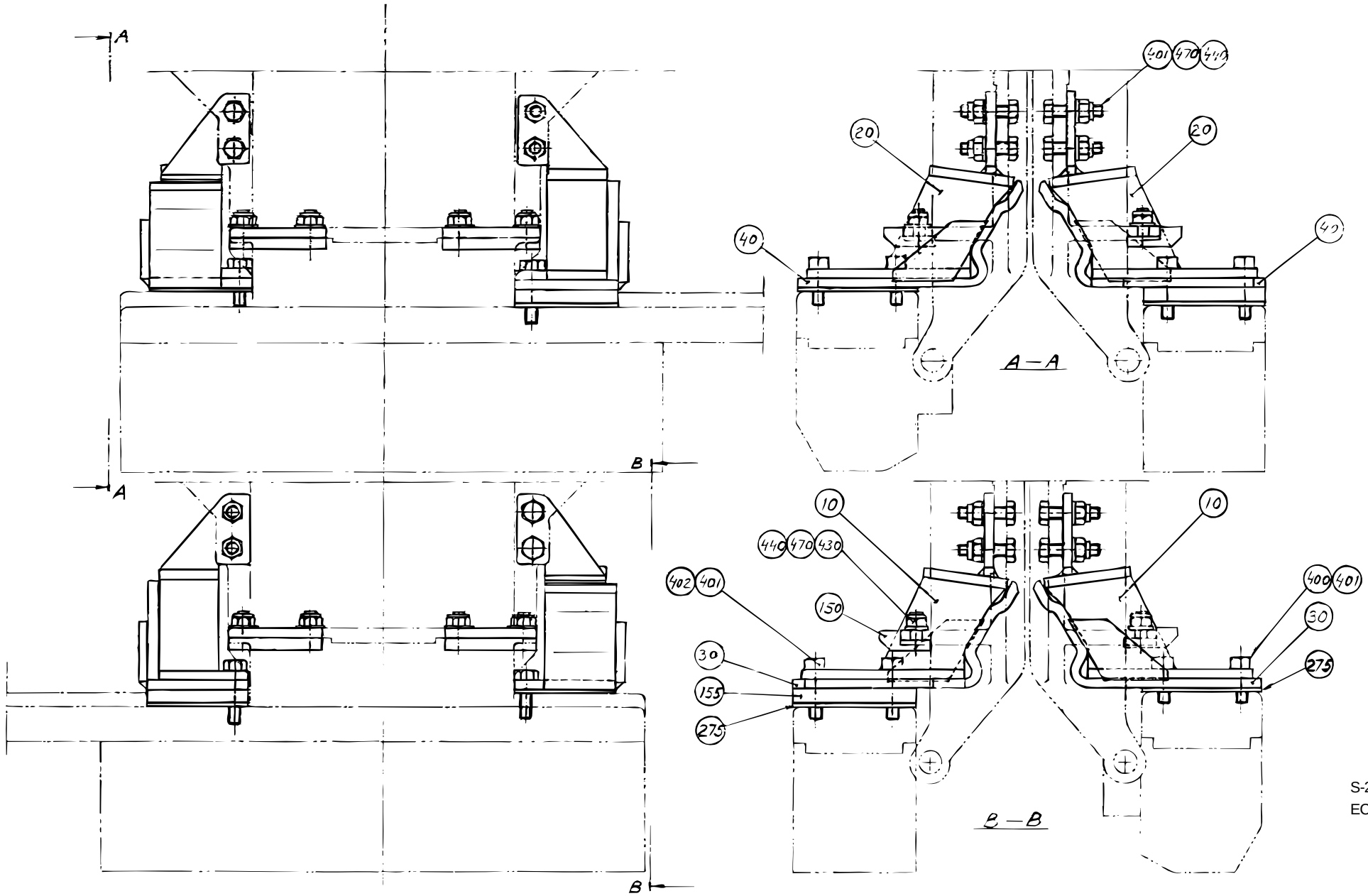

S-246327-5
ECN 5430

Pos	Part No	SP	UN	Qty	Description	Page No
HI, VOLUMES 1000 B LOFIN, 750 S, 1055 B						
000	**CR- 246327-0407**	**-**		**1**	**SHOCK ABSORBER**	
010 1	G- 252808	P		2	DAMPER LEFT	
020 1	G- 252809	P		2	DAMPER RIGHT	
030 1	255473	P		2	STOP	
040 1	255474	P		2	STOP	
150 2	251598	S		4	STOPPER	
155 1	251597	S		2	LACE	
400 1	312105-0329	-		4	SCREW O4017 M5X16A280	
401	312105-0331	-		12	SCREW O4017 M5X20A280	
430	312155-0329	-		8	SCREW MF6S5X16RFR	
440	312812-0314	S		16	LOCK NUT A2-M5RFR	
470	315105-0146	-		16	WASHER BRB5,3X10RFR	
HI, VOLUME 1000 B HIFIN						
000	**CR- 246327-0409**	**-**		**1**	**SHOCK ABSORBER**	
010 1	G- 252808	P		2	DAMPER LEFT	
020 1	G- 252809	P		2	DAMPER RIGHT	
030 1	255473	P		2	STOP	
040 1	255474	P		2	STOP	
150 2	251598	S		4	STOPPER	
155 1	251597	S		2	LACE	
275	279623	S		4	LACE	
401	312105-0331	-		12	SCREW O4017 M5X20A280	
402 1	312105-0333	-		4	SCREW O4017 M5X25A280	
430	312155-0329	-		8	SCREW MF6S5X16RFR	
440	312812-0314	S		16	LOCK NUT A2-M5RFR	
470	315105-0146	-		16	WASHER BRB5,3X10RFR	

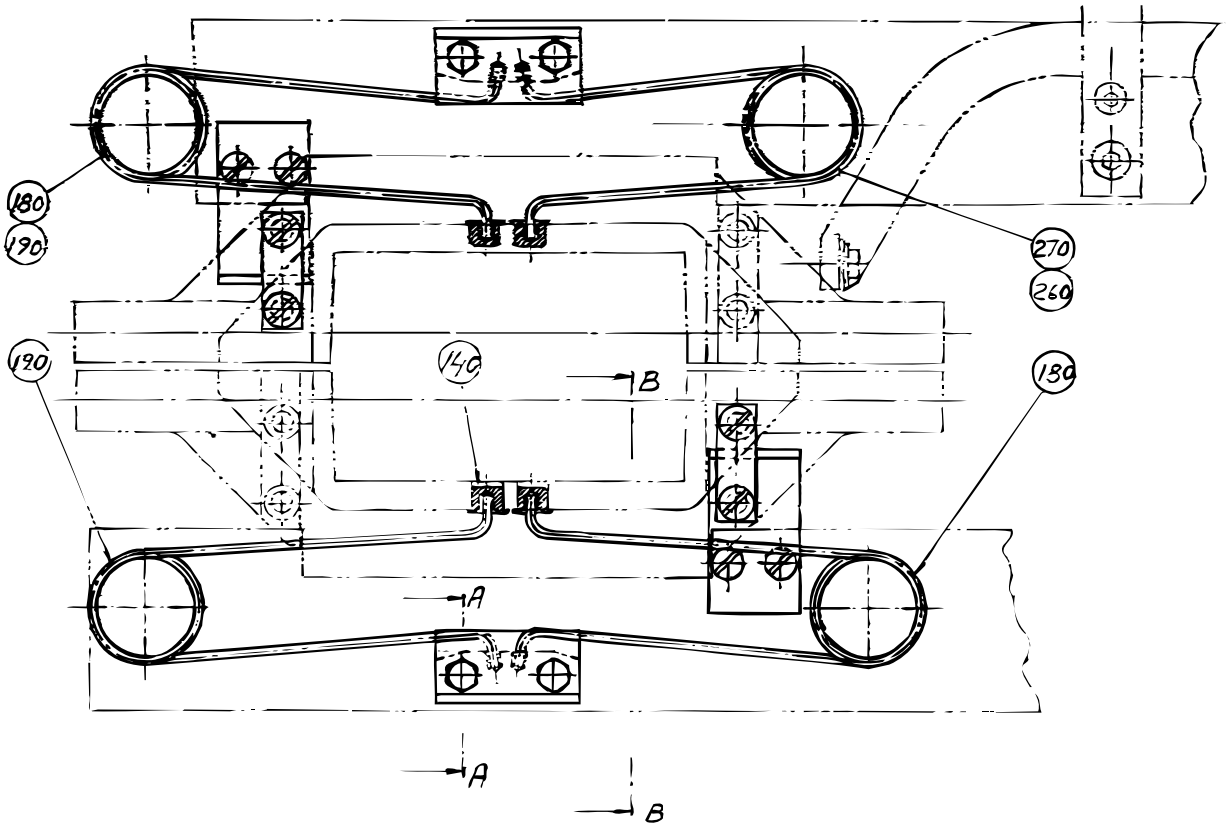

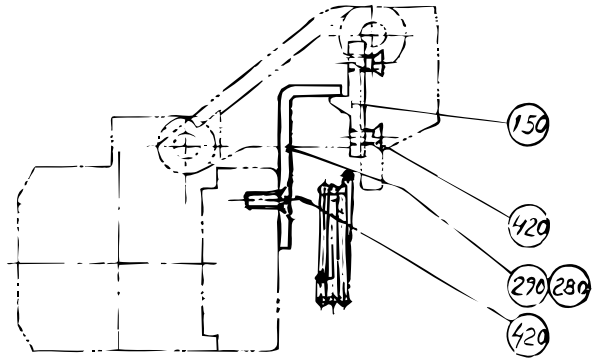

B — B

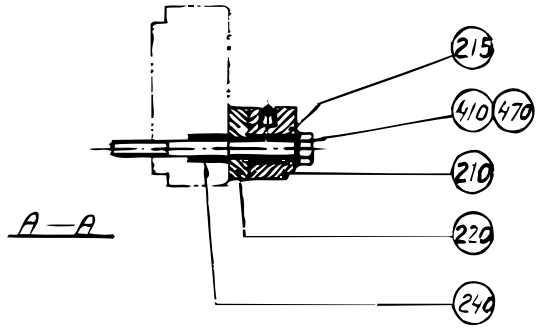

A — A

S-246327-6
ECN 4985

Pos	Part No	SP	UN	Qty	Description	Page No
HI, VOLUMES 568 B, 500 B						
000	**CR- 246327-0408**	**-**		**1**	**SHOCK ABSORBER**	
140 1	33150	P		8	GUIDE STUD	
150 1	33152	S		4	STOPPER	
180 1	246328	P		3	SPRING	
190 1	246329	P		3	SPRING	
210 1	247262	S		4	SPRING BRACKET	
215	247263	S		8	SPACER	
220 1	247271	S		2	LACE	
240	263684	S		4	SPACER	
260	554962	P		1	SPRING	
270	554963	P		1	SPRING	
280	284138	S		2	CATCH	
290	284139	S		2	CATCH	
410	312105-0340	-		8	SCREW O4014 M5X45A280	
420 1	312145-0325	-		16	SLOTTED HEMFS5X10RFR	
470	315105-0146	-		8	WASHER BRB5,3X10RFR	

Pos	Part No	SP	UN	Qty	Description	Page No

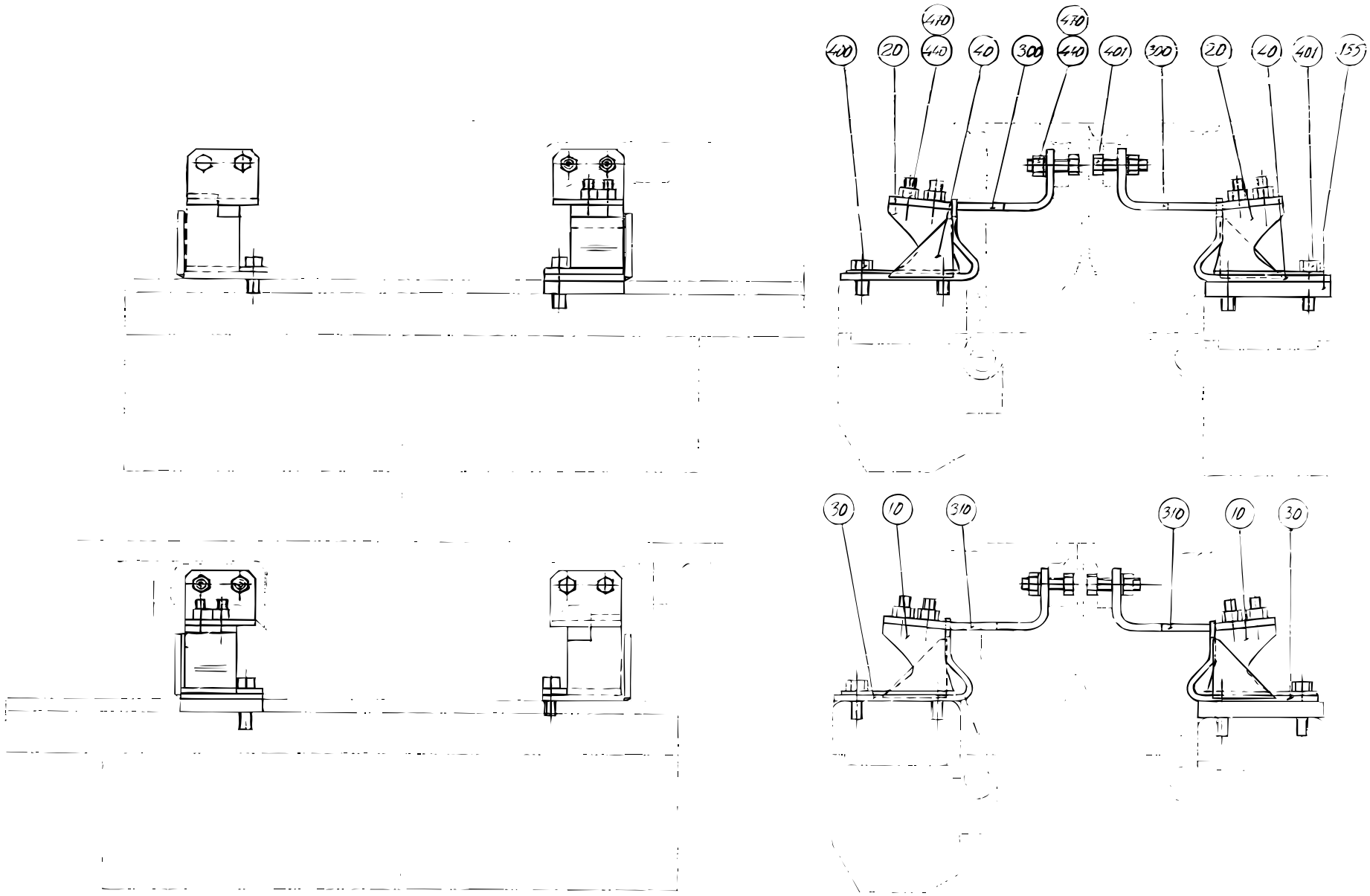

S-246327-7
ECN 5980

Pos	Part No	SP	UN	Qty	Description	Page No
HI, VOLUME 750 B						
000	**CR- 246327-0410**	**-**		**1**	**SHOCK ABSORBER**	
010 2	279505	P		2	DAMPER LEFT	
020 2	279506	P		2	DAMPER RIGHT	
030 2	445560	P		2	STOP	
040 2	445559	P		2	STOP	
155 2	445561	S		2	LACE	
300 1	445557	S		2	CANTILEVER	
310 1	445558	S		2	CANTILEVER	
400 1	312105-0329	-		4	SCREW O4017 M5X16A280	
401	312105-0331	-		12	SCREW O4017 M5X20A280	
440	312812-0314	S		16	LOCK NUT A2-M5RFR	
470	315105-0146	-		16	WASHER BRB5,3X10RFR	

Pos	Part No	SP	UN	Qty	Description	Page No

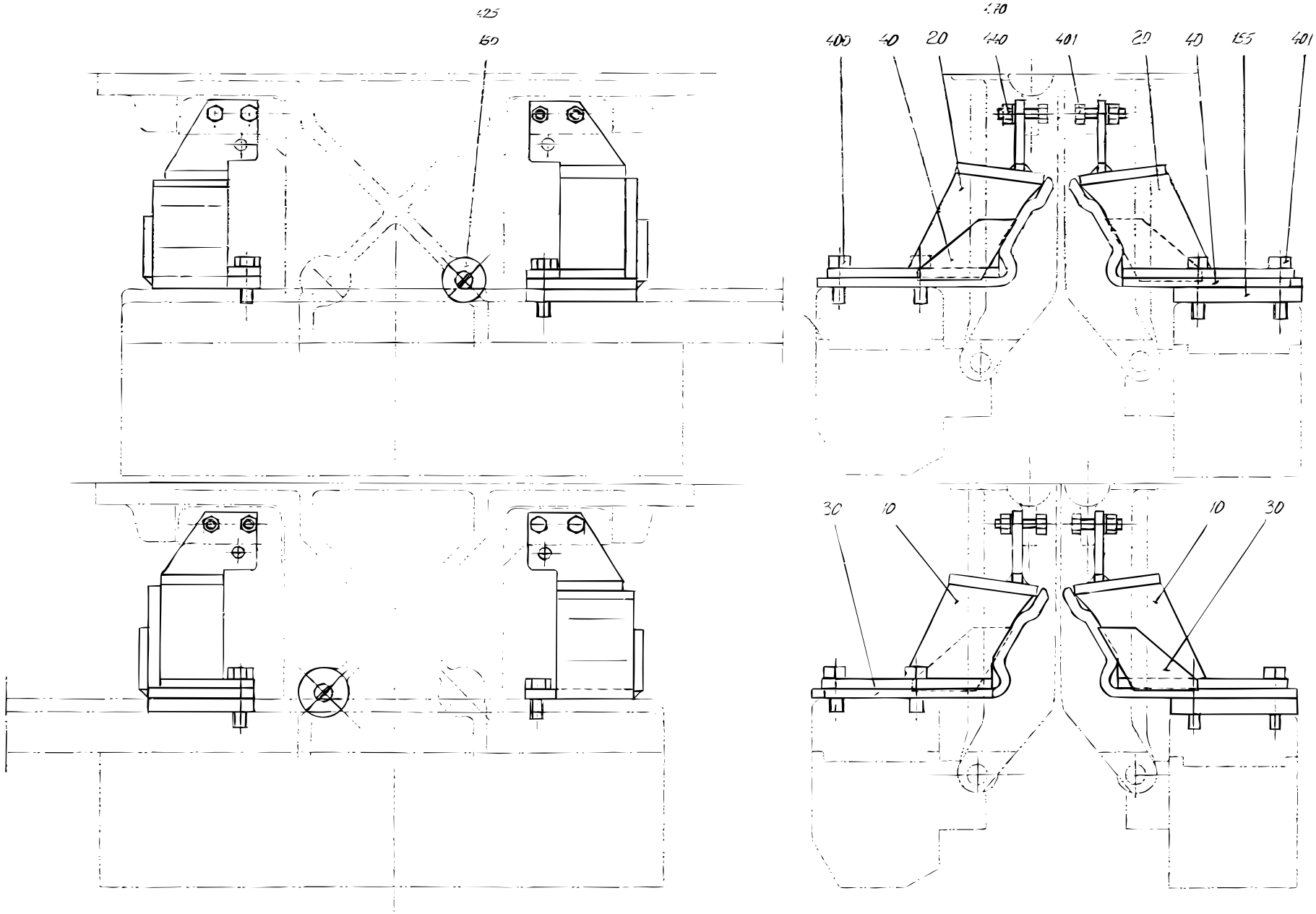

S-246327-8
ECN 5783

Pos	Part No	SP	UN	Qty	Description	Page No
HI, VOLUME 500 S						
000	**CR- 246327-0411**	**-**		**1**	**SHOCK ABSORBER**	
010 3	G- 499397	P		2	DAMPER LEFT	
020 3	G- 499398	P		2	DAMPER RIGHT	
030 3	499125	-		2	STOP	
040 3	499124	-		2	STOP	
150 3	445770	S		4	STOPPER	
155 1	251597	S		2	LACE	
400 1	312105-0329	-		4	SCREW O4017 M5X16A280	
401	312105-0331	-		12	SCREW O4017 M5X20A280	
425	312145-0289	-		4	SLOTTED HEMFS4X10RFR	
440	312812-0314	S		8	LOCK NUT A2-M5RFR	
470	315105-0146	-		8	WASHER BRB5,3X10RFR	

Pos	Part No	SP	UN	Qty	Description	Page No

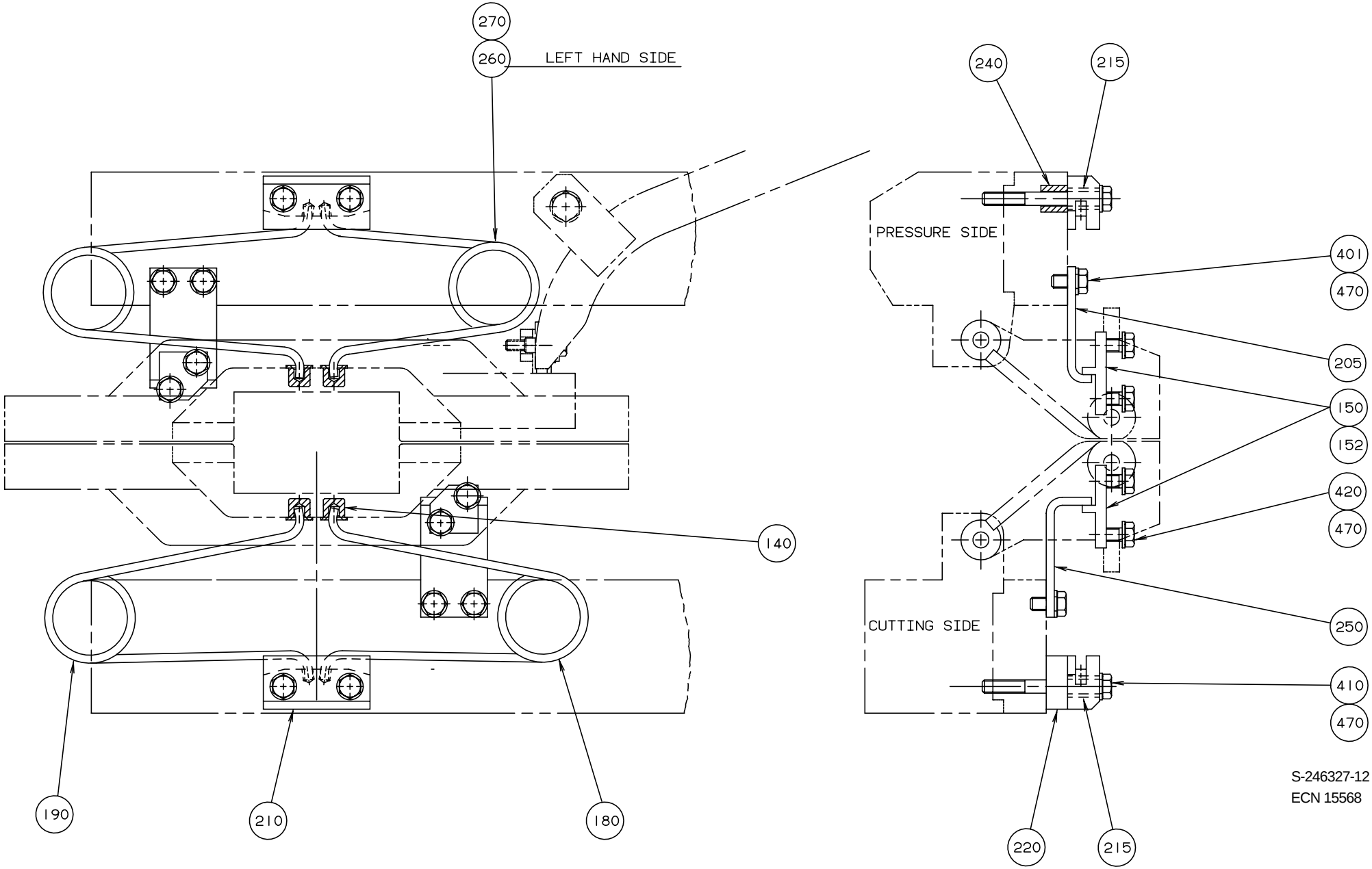
270
260
LEFT HAND SIDE
140
190
210
180
240
215
PRESSURE SIDE
401
470
205
150
152
420
470
CUTTING SIDE
250
410
470
220
215
S-246327-12
ECN 15568

Pos	Part No	SP	UN	Qty	Description	Page No
HI, VOLUME 355 B						
000	**CR- 246327-0414**	**-**		**1**	**SHOCK ABSORBER**	
140 2	545651	P		8	GUIDE STUD	
150 4	545125	S		2	STOPPER	
152	545126	S		2	STOPPER	
180 3	545801	P		3	SPRING	
190 3	545802	P		3	SPRING	
205 2	545127	S		2	CATCH	
210 1	247262	S		4	SPRING BRACKET	
215	247263	S		8	SPACER	
220 1	247271	S		2	LACE	
240	263684	S		4	SPACER	
250 2	545136	S		2	CATCH	
260	554962	P		1	SPRING	
270	554963	P		1	SPRING	
401	312105-0331	-		8	SCREW O4017 M5X20A280	
410	312105-0340	-		8	SCREW O4014 M5X45A280	
420 2	312105-0325	-		8	SCREW M6S5X10 A2 80	
470	315105-0146	-		24	WASHER BRB5,3X10RFR	

Pos	Part No	SP	UN	Qty	Description	Page No

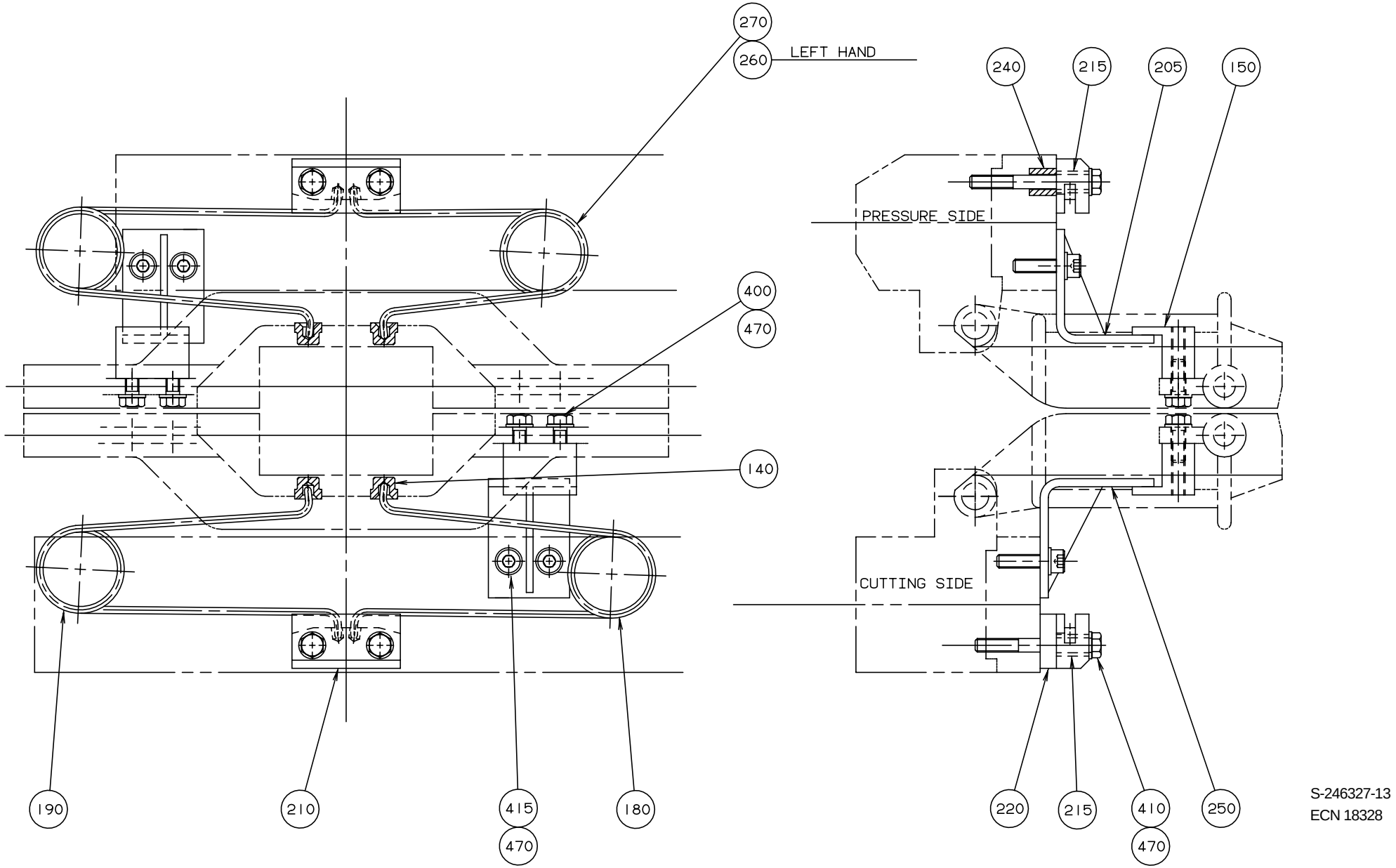

S-246327-13
ECN 18328

Pos	Part No	SP	UN	Qty	Description	Page No
HI, VOLUME 375 S						
000	**CR- 246327-0415**	**-**		**1**	**SHOCK ABSORBER**	
140 2	545651	P		8	GUIDE STUD	
150 5	548493	S		4	STOPPER	
180 4	561393	P		3	SPRING	
190 4	561394	P		3	SPRING	
205 3	562137	S		2	CATCH	
210 1	247262	S		4	SPRING BRACKET	
215	247263	S		8	SPACER	
220 1	247271	S		2	LACE	
240	263684	S		4	SPACER	
250 3	562136	S		2	CATCH	
260 2	561391	P		1	SPRING	
270 2	561392	P		1	SPRING	
400 1	312105-0329	-		8	SCREW O4017 M5X16A280	
410	312105-0340	-		8	SCREW O4014 M5X45A280	
415	312115-0331	-		8	SCREW O4762 M5X20A280	
470	315105-0146	-		24	WASHER BRB5,3X10RFR	

Pos	Part No	SP	UN	Qty	Description	Page No

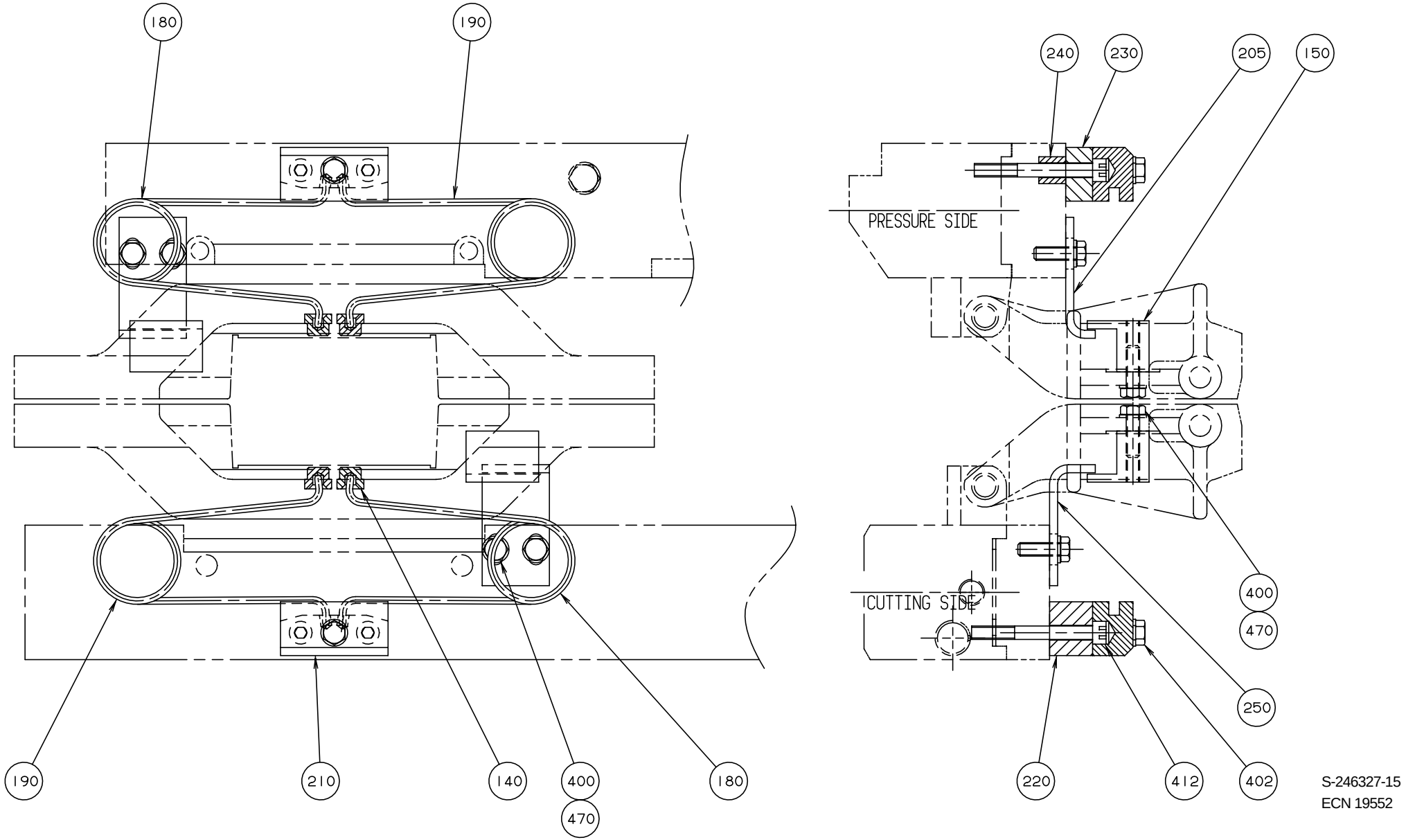

S-246327-15
ECN 19552

Pos	Part No	SP	UN	Qty	Description	Page No
HI, VOLUME 400 B						
000	**CR- 246327-0404**	**-**		**1**	**SHOCK ABSORBER**	
140 2	545651	P		8	GUIDE STUD	
150 5	548493	S		4	STOPPER	
180 3	545801	P		4	SPRING	
190 3	545802	P		4	SPRING	
205 1	246332	S		2	CATCH	
210 2	571296	S		4	SPRING BRACKET	
220 2	571298	S		2	LACE	
230 1	571297	S		2	LACE	
240	263684	S		4	SPACER	
250 1	263693	S		2	CATCH	
400 1	312105-0329	-		16	SCREW O4017 M5X16A280	
402 1	312105-0333	-		4	SCREW O4017 M5X25A280	
412 1	312115-0340	-		8	SCREW O4762 M5X45A280	
470	315105-0146	-		20	WASHER BRB5,3X10RFR	

Pos	Part No	SP	UN	Qty	Description	Page No

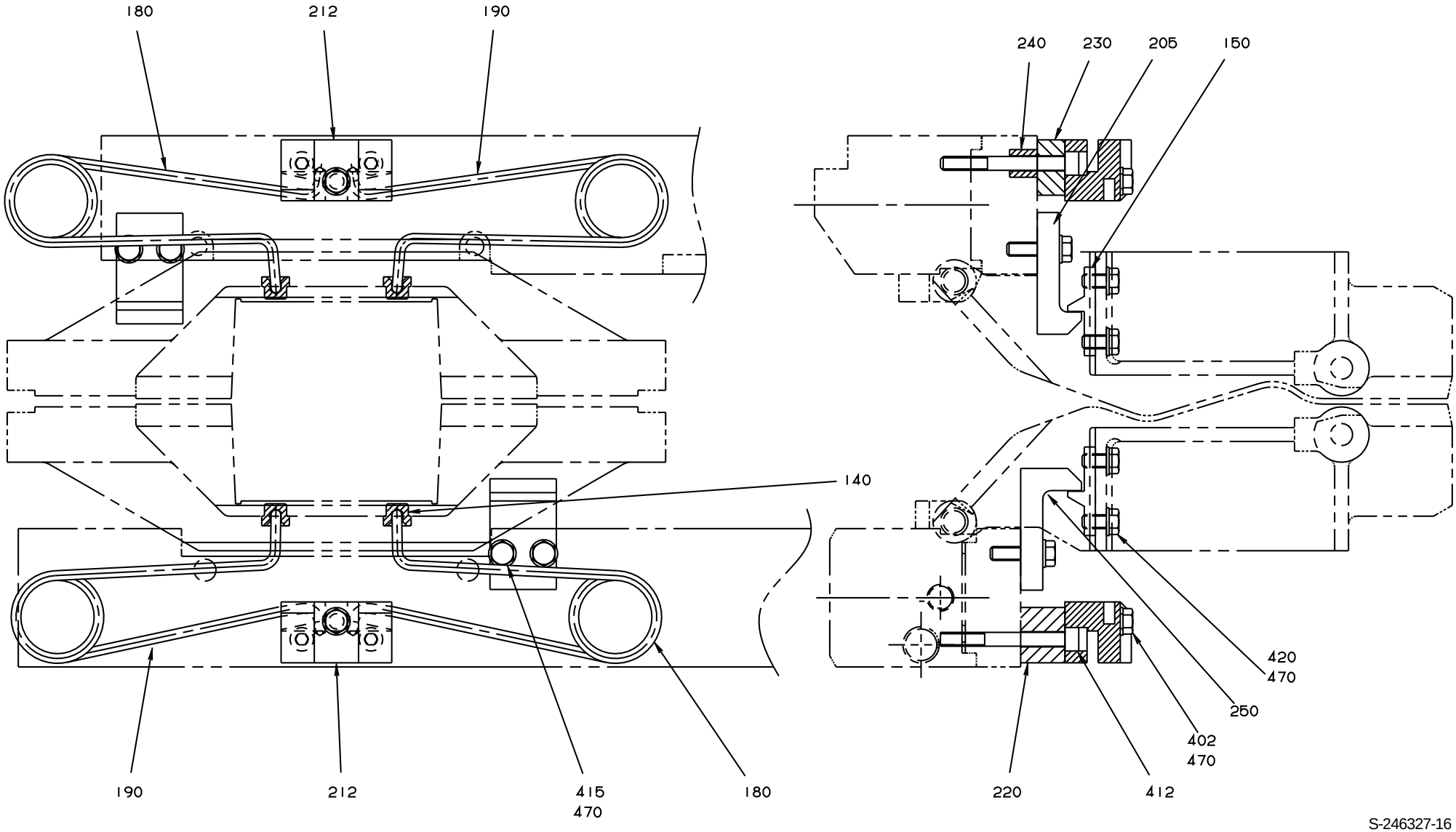

S-246327-16
ECN 22830

Pos	Part No	SP	UN	Qty	Description	Page No
HI, VOLUME 1000 Sq						
000	**CR- 246327-0417**	**-**		**1**	**SHOCK ABSORBER**	
140 2	545651	P		8	GUIDE STUD	
150 1	33152	S		4	STOPPER	
180 7	1143216	P		4	SPRING	
190 7	1143215	P		4	SPRING	
205 4	929573	S		2	CATCH	
212 2	573993	S		4	SPRING BRACKET	
220 2	571298	S		2	LACE	
230 1	571297	S		2	LACE	
240	263684	S		4	SPACER	
250 4	929574	S		2	CATCH	
402 2	312105-0335	-		4	SCREW O4017 M5X30A280	
412 1	312115-0340	-		8	SCREW O4762 M5X45A280	
415	312115-0331	-		8	SCREW O4762 M5X20A280	
420 2	312105-0325	-		8	SCREW M6S5X10 A2 80	
470	315105-0146	-		20	WASHER BRB5,3X10RFR	
215	247263	S		8	SPACER	
220 1	247271	S		2	LACE	
240	263684	S		4	SPACER	
260	554962	P		1	SPRING	
270	554963	P		1	SPRING	
280	284138	S		2	CATCH	
290	284139	S		2	CATCH	
410	312105-0340	-		8	SCREW O4014 M5X45A280	
425	312145-0289	-		4	SLOTTED HEMFS4X10RFR	
440	312812-0314	S		8	LOCK NUT A2-M5RFR	
470	315105-0146	-		8	WASHER BRB5,3X10RFR	

Pos	Part No	SP	UN	Qty	Description	Page No

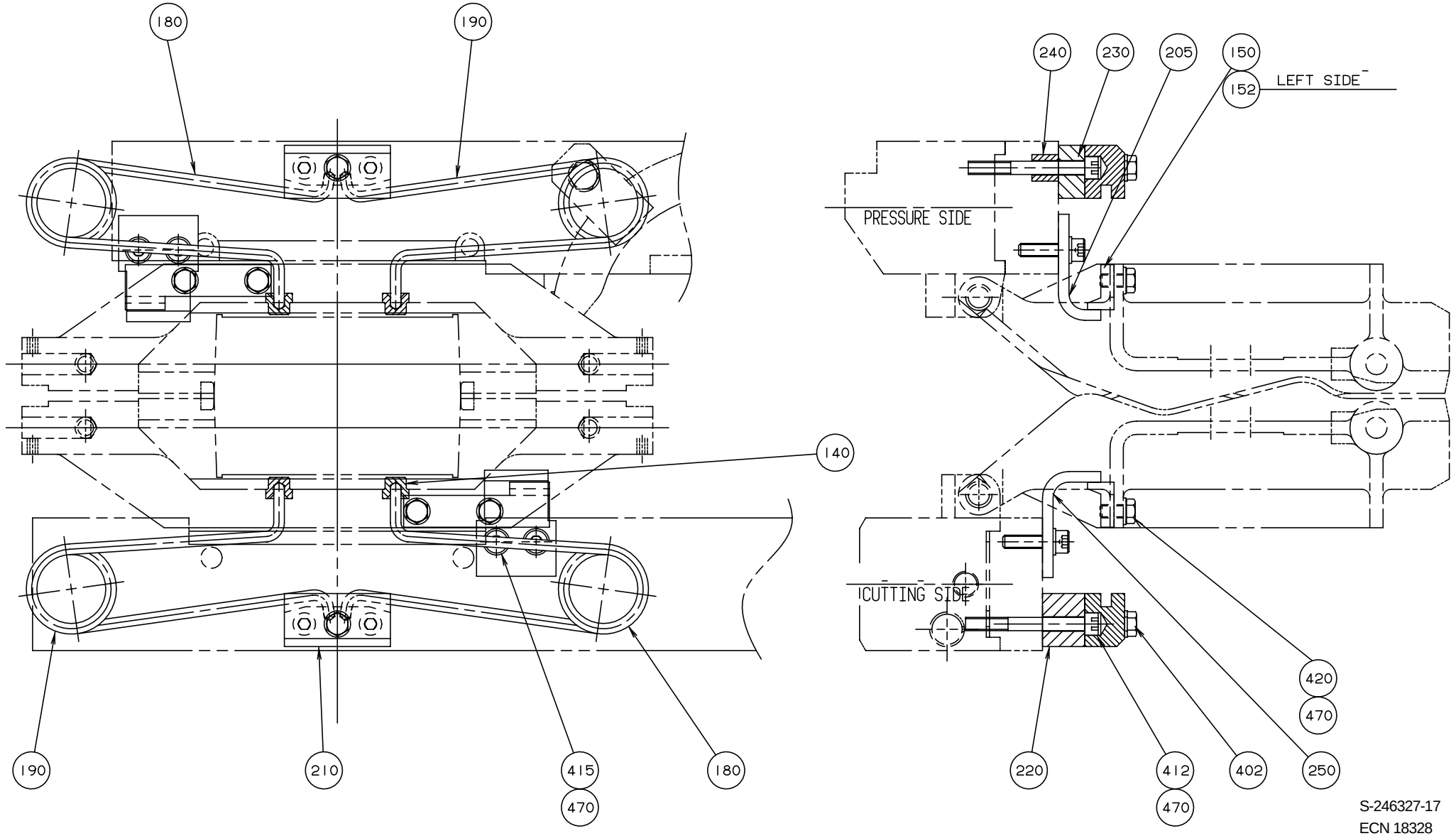

S-246327-17
ECN 18328

Pos	Part No	SP	UN	Qty	Description	Page No
HI, VOLUME 1000 S						
000	**CR- 246327-0416**	**-**		**1**	**SHOCK ABSORBER**	
140 2	545651	P		8	GUIDE STUD	
150 6	571294	S		2	STOPPER	
152 2	571295	S		2	STOPPER	
180 7	1143216	P		4	SPRING	
190 7	1143215	P		4	SPRING	
205 4	929573	S		2	CATCH	
210 2	571296	S		4	SPRING BRACKET	
220 2	571298	S		2	LACE	
230 1	571297	S		2	LACE	
240	263684	S		4	SPACER	
250 4	929574	S		2	CATCH	
402 1	312105-0333	-		4	SCREW O4017 M5X25A280	
412 1	312115-0340	-		8	SCREW O4762 M5X45A280	
415	312115-0331	-		8	SCREW O4762 M5X20A280	
420 2	312105-0325	-		8	SCREW M6S5X10 A2 80	
470	315105-0146	-		20	WASHER BRB5,3X10RFR	

Pos	Part No	SP	UN	Qty	Description	Page No

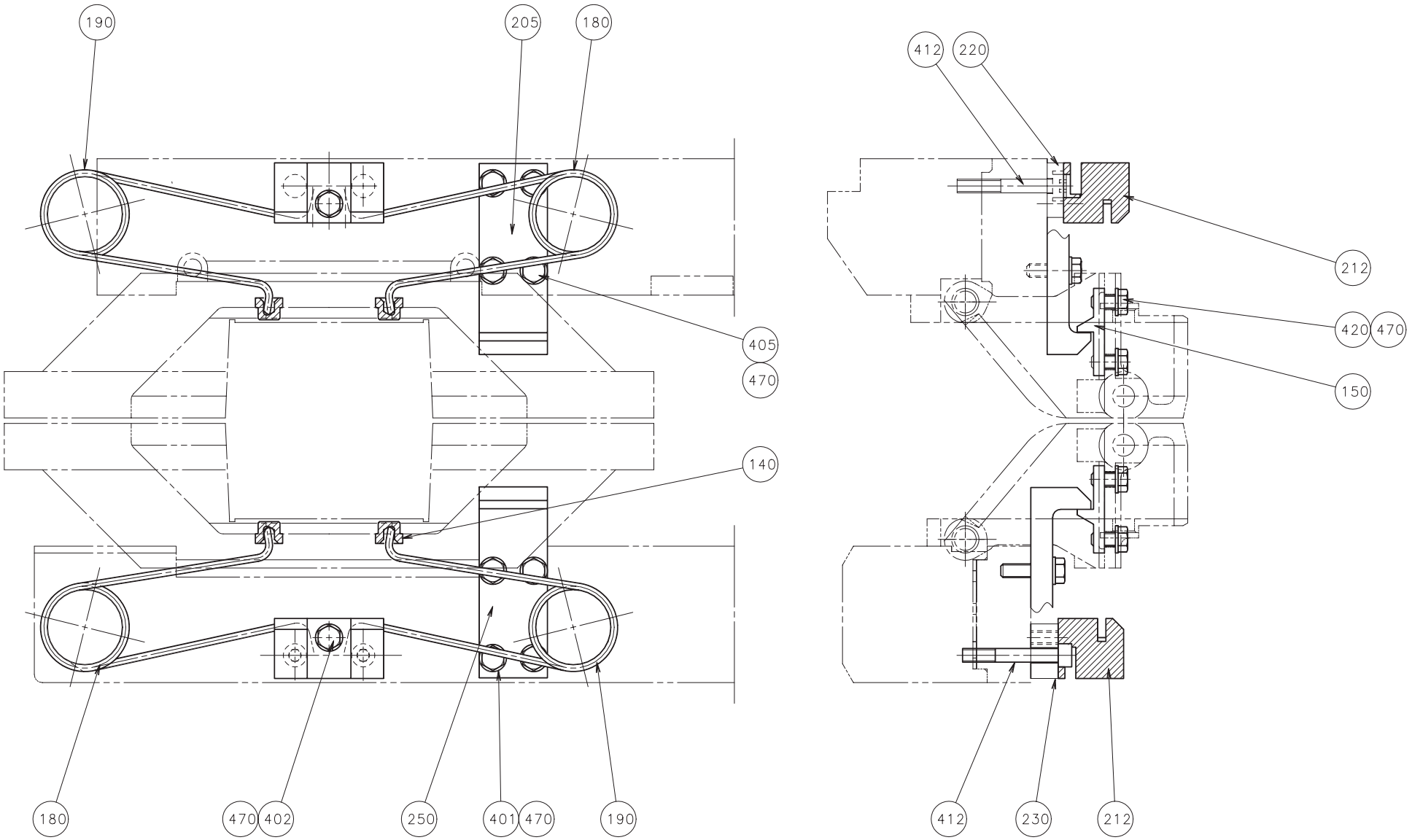

Graphic ID: 246327-20
Parent drw.: S-246327-20
ECN: 70512

Pos	Part No	SP	UN	Qty	Description	Page No
VOLUME 500 Sq						
000	**CR- 246327-0425**	**-**		**1**	**SHOCK ABSORBER**	
140	545651	P		8	GUIDE STUD	
150	33152	S		2	STOPPER	
180	1037767	P		4	SPRING	
190	1037768	P		4	SPRING	
205	593270	S		2	CATCH	
212	591080	S		4	SPRING BRACKET	
220	591078	S		2	LACE	
230	571297	S		2	LACE	
250	593271	S		2	CATCH	
401	312105-0331	-		8	SCREW O4017 M5X30A280	
402	312105-0335	-		4	SCREW O4017 M5X25A280	
405	312105-0327	-		4	SCREW O4017 M5X12A280	
412	312115-0337	-		8	SCREW O4762 M5X35A280	
415	312115-0331	-		8	SCREW O4762 M5X20A280	
420	312105-0325	-		8	SCREW M6S5X10 A2 80	
470	315105-0146	-		20	WASHER BRB5,3X10RFR	

Pos	Part No	SP	UN	Qty	Description	Page No

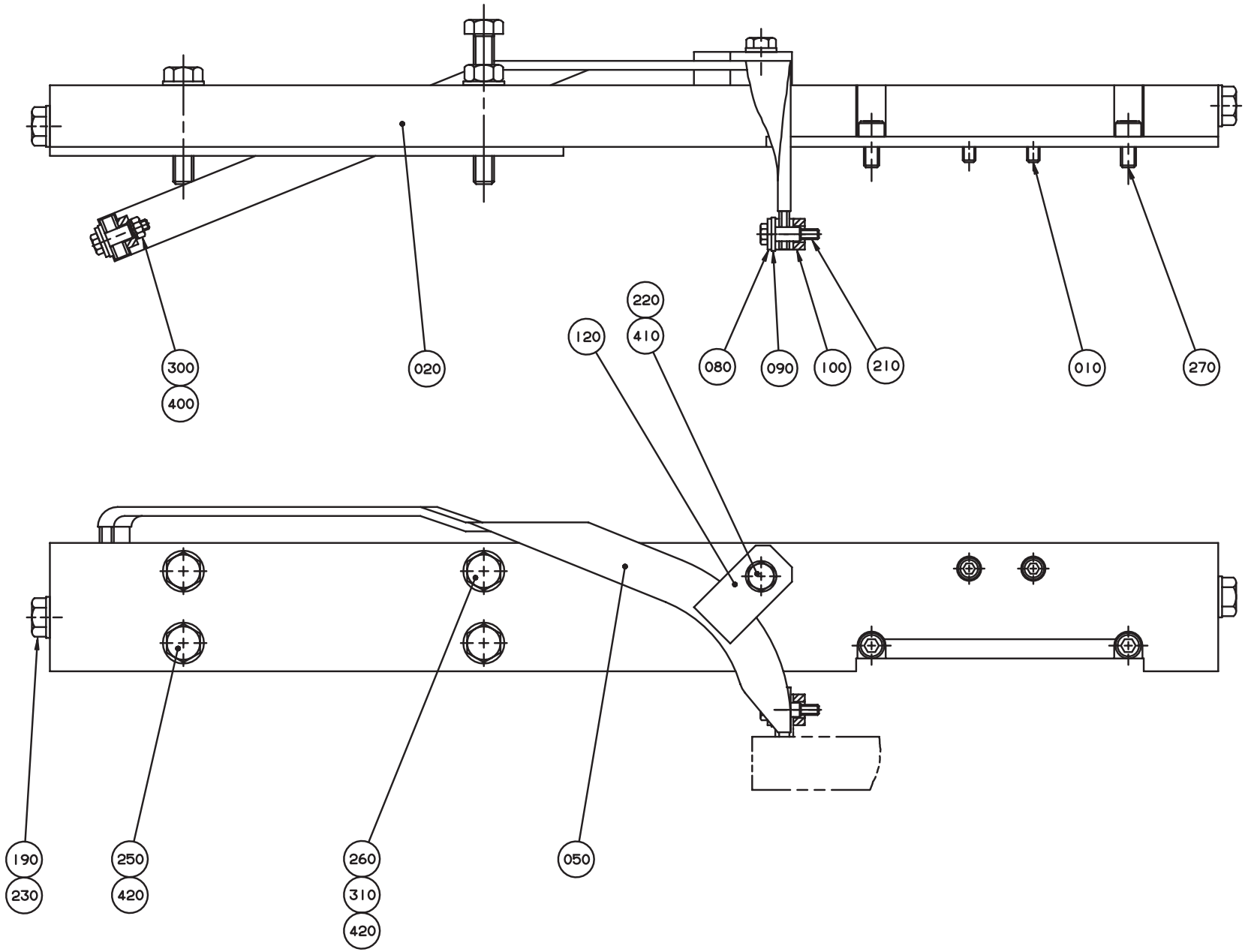

S-259414-2
ECN 10777

Pos	Part No	SP	UN	Qty	Description	Page No
VOLUMES 1055 B, 1000 B, 750 B, 400 B, 375 S, 1000 S, 750 S, 500 S, 500 Sq, 355 B, 1000 Sq						
000	**CR- 259414-0401**	**-**		**1**	**CARRIER PRESSURE L IH**	
010	312115-0331	-		2	SCREW O4762 M5X20A280	
VOLUMES 568 B, 500 B						
000	**CR- 259414-0402**	**-**		**1**	**CARRIER PRESSURE L IH**	
Common parts						
020	540368	S		1	CARRIER	
050	540744	S		1	BUSBAR	
080	28509	P		2	WASHER	
090	32544	SU		2	INSULATION NUT	
100	32644	P		2	WASHER	
120	484834	P		1	HOLDER	
190	90005-0007	-		2	WASHER	
210	312105-0295	-		2	SCREW O4017 M4X20A280	
220	312105-0370	-		1	SCREW O4017 M6X20A280	
230	312105-0447	-		2	SCREW O4017 M8X12A280	
250	312105-0457	-		3	SCREW O4017 M8X35A280	
260	312109-0463	-		1	SCREW M6S8X60H A4 80	
270	312115-0366	-		2	SCREW O4762 M6X12A280	
300	312605-0312	-		1	NUT M6M4 STAINLESS	
310	312605-0318	-		1	NUT M6M8RFR	
400	315105-0136	-		1	WASHER BRB4,3X8RFR	
410	315105-0153	-		1	WASHER BRB6,4X12RFR	
420	315105-0165	-		4	WASHER BRB8,4X16RFR	

Pos	Part No	SP	UN	Qty	Description	Page No

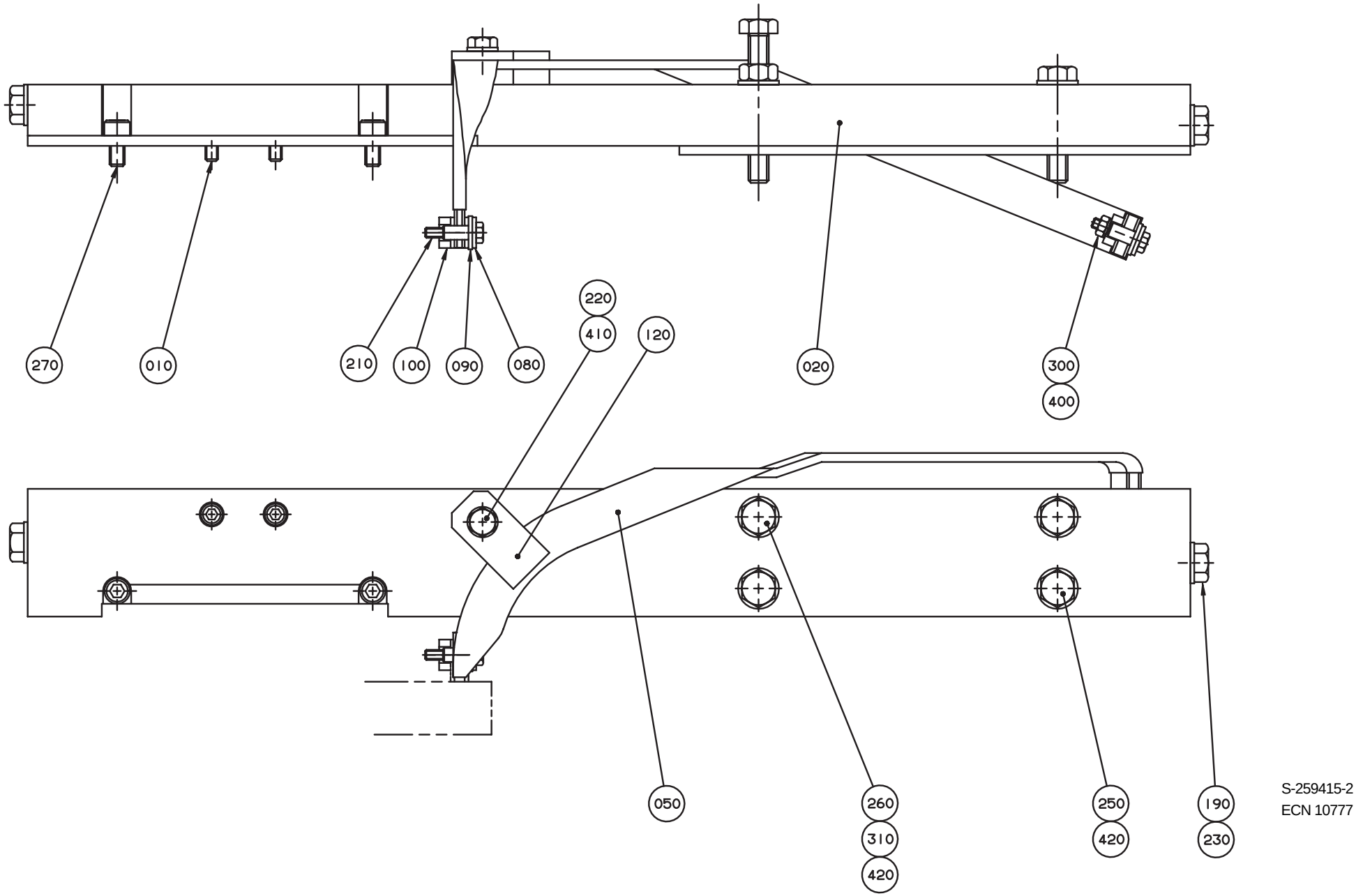

S-259415-2
ECN 10777

Pos	Part No	SP	UN	Qty	Description	Page No
VOLUMES 1055 B, 1000 B, 750 B, 400 B, 375 S, 1000 S, 750 S, 500 S, 500 Sq, 355 B, 1000 Sq						
000	**CR- 259415-0401**	**-**		**1**	**CARRIER**	
010	312115-0331	-		2	SCREW O4762 M5X20A280	
VOLUMES 568 B, 500 B						
000	**CR- 259415-0402**	**-**		**1**	**CARRIER**	
Common parts						
020	540367	S		1	CARRIER	
050	540743	S		1	BUSBAR	
080	28509	P		2	WASHER	
090	32544	SU		2	INSULATION NUT	
100	32644	P		2	WASHER	
120	484834	P		1	HOLDER	
190	90005-0007	-		2	WASHER	
210	312105-0295	-		2	SCREW O4017 M4X20A280	
220	312105-0370	-		1	SCREW O4017 M6X20A280	
230	312105-0447	-		2	SCREW O4017 M8X12A280	
250	312105-0457	-		3	SCREW O4017 M8X35A280	
260	312109-0463	-		1	SCREW M6S8X60H A4 80	
270	312115-0366	-		2	SCREW O4762 M6X12A280	
300	312605-0312	-		1	NUT M6M4 STAINLESS	
310	312605-0318	-		1	NUT M6M8RFR	
400	315105-0136	-		1	WASHER BRB4,3X8RFR	
410	315105-0153	-		1	WASHER BRB6,4X12RFR	
420	315105-0165	-		4	WASHER BRB8,4X16RFR	

Pos	Part No	SP	UN	Qty	Description	Page No

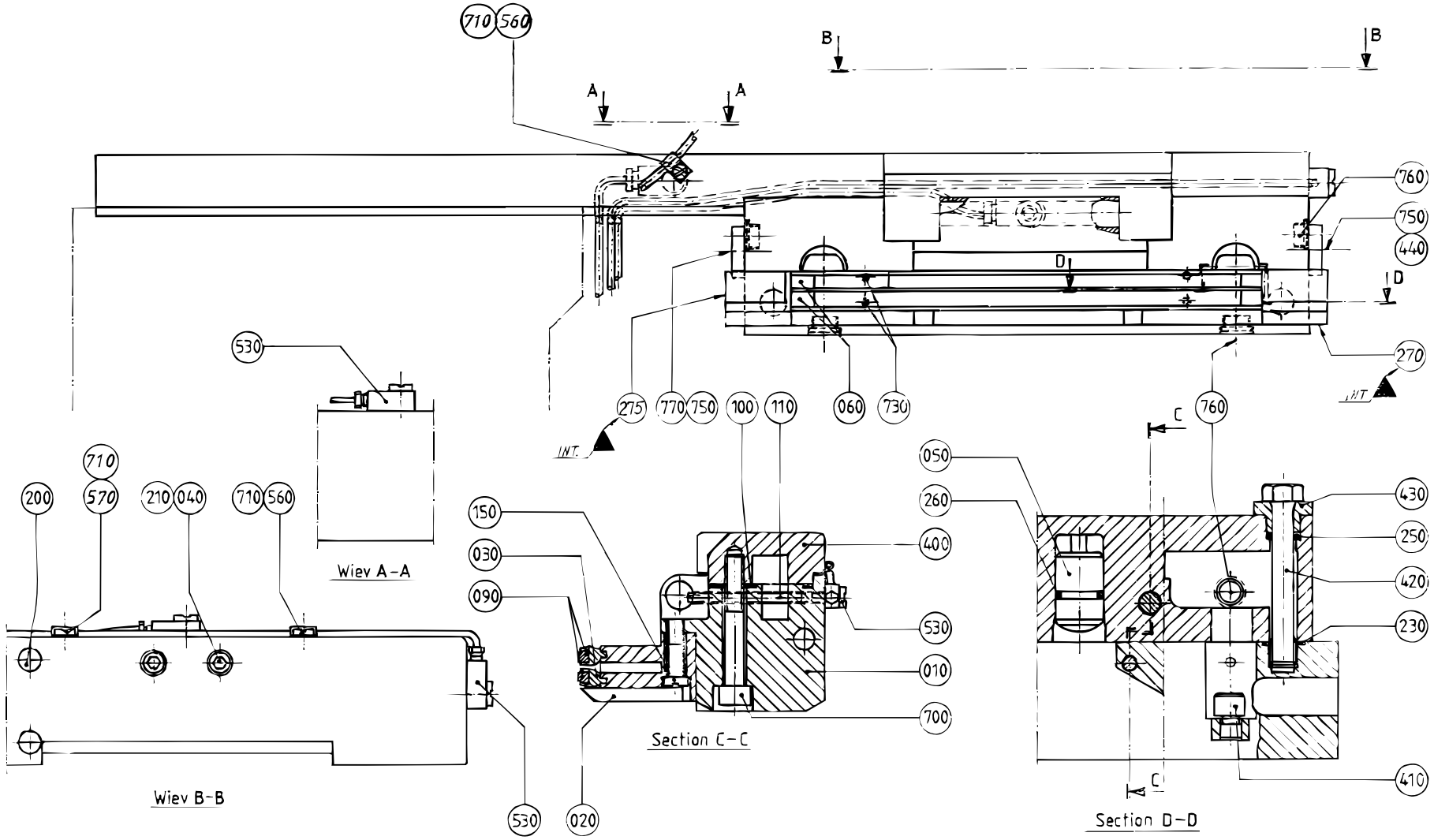

S-257835-6
ECN 21002

Pos	Part No	SP	UN	Qty	Description	Page No
VOLUMES 1000 B LOFIN, 1055 B, 750 B						
000	**CR- 257835-0301**	**-**		**1**	**CUTTING JAW**	
010	450503	S		1	BEARING HOUSING	
020	257783	S		1	CUTTING JAW	
030	497921	P		2	CUTTING RAIL	
040	12922	S		2	WASHER	
060	32116	PU		4	END PIECE	
090	G- 564533-0001	PU		2	DOLLY	
100	245271	P		1	GASKET	
110	450507-0001	-		1	SCREW	
150	90287-0070	-		2	SCREW	
210	312115-0331	-		2	SCREW O4762 M5X20A280	
230	315202-0111	PU		2	O-RING 13,1X1,6	
250	315202-0207	PU		2	O-RING 8,3X2,4	
420	243143	P		2	SCREW	
VOLUMES 568 B, 500 B						
000	**CR- 257835-0302**	**-**		**1**	**CUTTING JAW**	
010	450503	S		1	BEARING HOUSING	
020	257783	S		1	CUTTING JAW	
030	497921	P		2	CUTTING RAIL	
060	32116	PU		4	END PIECE	
090	G- 564533-0001	PU		2	DOLLY	
100	245271	P		1	GASKET	
110	450507-0001	-		1	SCREW	
150	90287-0070	-		2	SCREW	
200	311508-0416	-		1	RIVET KN4X10ALUM.	
230	315202-0111	PU		2	O-RING 13,1X1,6	
250	315202-0207	PU		2	O-RING 8,3X2,4	
420	243143	P		2	SCREW	
VOLUME 1000 B HIFIN						
000	**CR- 257835-0305**	**-**		**1**	**CUTTING JAW**	
010	497572	S		1	BEARING HOUSING	
020	284578	S		1	CUTTING JAW	
030	539761	P		2	CUTTING RAIL	
040	12922	S		2	WASHER	
060	32116	PU		4	END PIECE	
090	G- 564533-0001	PU		2	DOLLY	
100	245271	P		1	GASKET	
110	450507-0001	-		1	SCREW	
210	312115-0331	-		2	SCREW O4762 M5X20A280	
212	312115-0374	-		2	SCREW O4762 M6X30A280	
213	312318-0321	-		1	STOP SCREW SK6SS5X6RFR	
230	315202-0111	PU		2	O-RING 13,1X1,6	
250	315202-0207	PU		2	O-RING 8,3X2,4	
420	243143	P		2	SCREW	
VOLUMES 500 S, 400 B, 355 B						
000	**CR- 257835-0306**	**-**		**1**	**CUTTING JAW**	
010	466431	S		1	BEARING HOUSING	
020	464162	S		1	CUTTING JAW	
030	440925	P		2	CUTTING RAIL	
040	12922	S		2	WASHER	
060	440043	PU		4	END PIECE	
090	G- 564533-0005	PU		2	DOLLY	
100	497716	P		1	GASKET	
110	450507-0001	-		1	SCREW	
150	90287-0070	-		2	SCREW	
210	312115-0331	-		2	SCREW O4762 M5X20A280	
230	315202-0111	PU		2	O-RING 13,1X1,6	
250	315202-0207	PU		2	O-RING 8,3X2,4	
420	243143	P		2	SCREW	
VOLUME 375 S						
000	**CR- 257835-0307**	**-**		**1**	**CUTTING JAW**	
010	466432	S		1	BEARING HOUSING	
020	449727	S		1	CUTTING JAW	
030	544516	P		2	CUTTING RAIL	
060	38490	PU		4	END PIECE	
090	G- 564533-0002	PU		2	DOLLY	
100	245272	P		1	GASKET	
110	450507-0001	-		1	SCREW	
150	90287-0070	-		2	SCREW	
420	243143	P		2	SCREW	
VOLUME 750 S						
000	**CR- 257835-0308**	**-**		**1**	**CUTTING JAW**	
010	544317	S		1	BEARING HOUSING	
020	544323	S		1	CUTTING JAW	
030	544334	P		2	CUTTING RAIL	
040	12922	S		2	WASHER	
060	544337	PU		4	END PIECE	
090	G- 564533-0007	PU		2	DOLLY	
100	497716	P		1	GASKET	
110	450507-0001	-		1	SCREW	
150	90287-0070	-		2	SCREW	
210	312115-0331	-		2	SCREW O4762 M5X20A280	

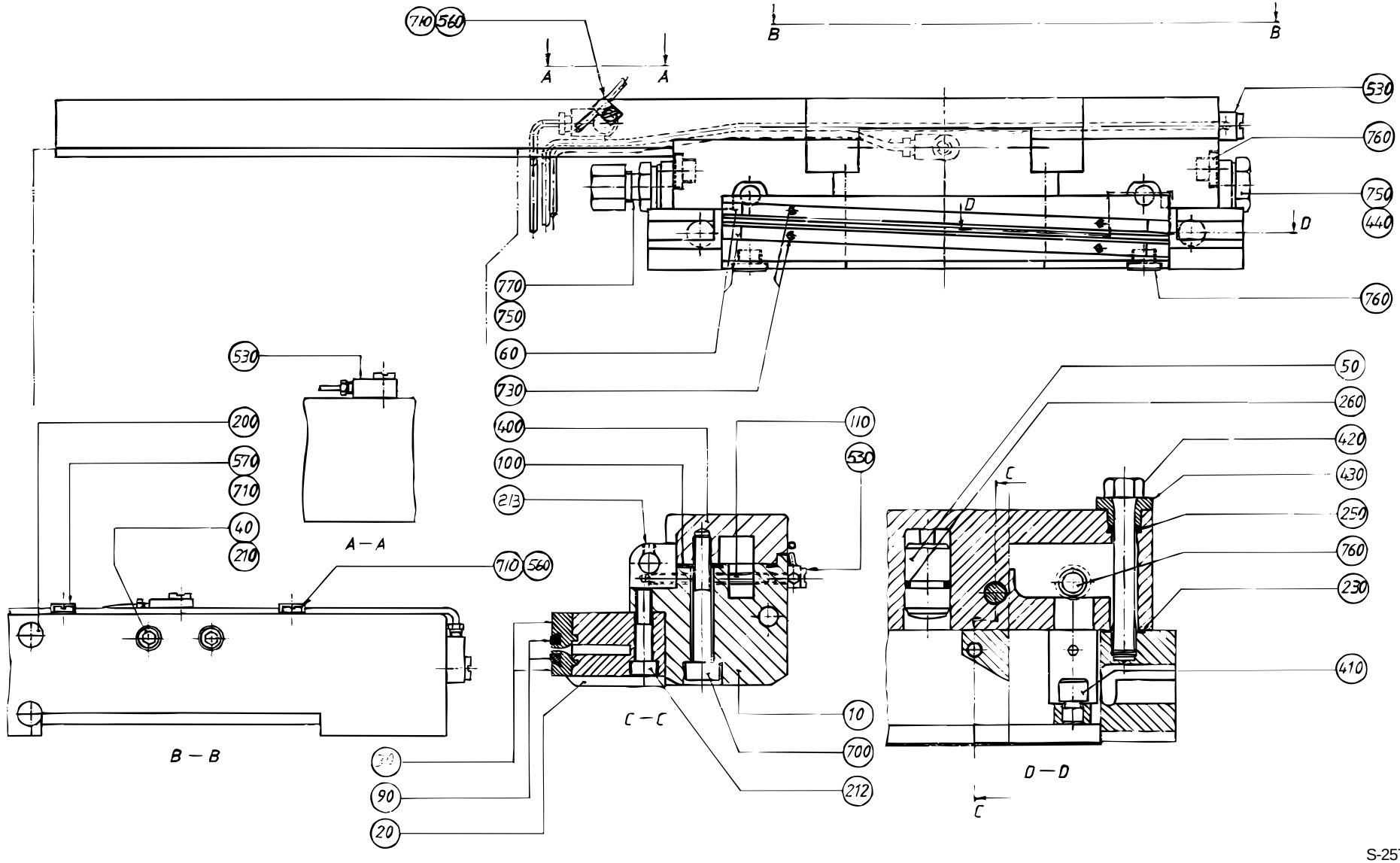

S-257835-7
ECN 16778

Pos	Part No	SP	UN	Qty	Description	Page No
230	315202-0111	PU		2	O-RING 13,1X1,6	
250	315202-0207	PU		2	O-RING 8,3X2,4	
420	243143	P		2	SCREW	
VOLUME 1000 S						
000	**CR- 257835-0309**	**-**		**1**	**CUTTING JAW**	
010	569057	S		1	BEARING HOUSING	
020	569059	S		1	CUTTING JAW	
030	544334	P		2	CUTTING RAIL	
060	32116	PU		4	END PIECE	
090	G- 564533-0001	PU		2	DOLLY	
100	245271	P		1	GASKET	
110	450507-0001	-		1	SCREW	
150	90287-0070	-		2	SCREW	
230	315202-0111	PU		2	O-RING 13,1X1,6	
250	315202-0207	PU		2	O-RING 8,3X2,4	
420	243143	P		2	SCREW	
VOLUME 1000 Sq, 500 Sq						
000	**CR- 257835-0310**	**-**		**1**	**CUTTING JAW**	
010	573985	S		1	BEARING HOUSING	
020	579772	S		1	CUTTING JAW	
030	1038517-0003	P		2	CUTTING RAIL	
060	533012-0001	PU		4	END PIECE	
090	1038128-0001	PU		2	DOLLY	
100	573988	P		1	GASKET	
110	573984	-		1	SCREW	
150	90287-0070	-		2	SCREW	
230	315202-0111	PU		2	O-RING 13,1X1,6	
250	315202-0207	PU		2	O-RING 8,3X2,4	
270	573584	P		1	CATCH	
275	573585	P		1	CATCH	
420	573583	P		2	SCREW	
Common parts						
050	28880	S		2	PLUNGER	
260	315202-0212	PU		2	O-RING 14,3X2,4	
400	464164	S		1	CARRIER CUT LEFT	
410	32464	S		2	SHAFT	
430	243144	P		2	BUSHING	
440	255278	S		1	PLUG FINISHER	
530	90134-0058	-		3	BANJO CONNECTION	
560	90165-0058	-		2	CLAMP	
570	90165-0060	-		1	CLAMP	
700	312115-0461	-		2	SCREW O4762 M8X50A280	
710	312125-0287	-		3	SLOTTED HEMCS4X8RFR	
730	312145-0238	PU		4	SLOTTED HEMFS3X40RFR	
750	315234-0110	P		2	SEAL RING R1/4"	
760	342713-0209	-		4	BLIND PLUG	
770	90030-0201	P		1	PIPE CONNECTION	

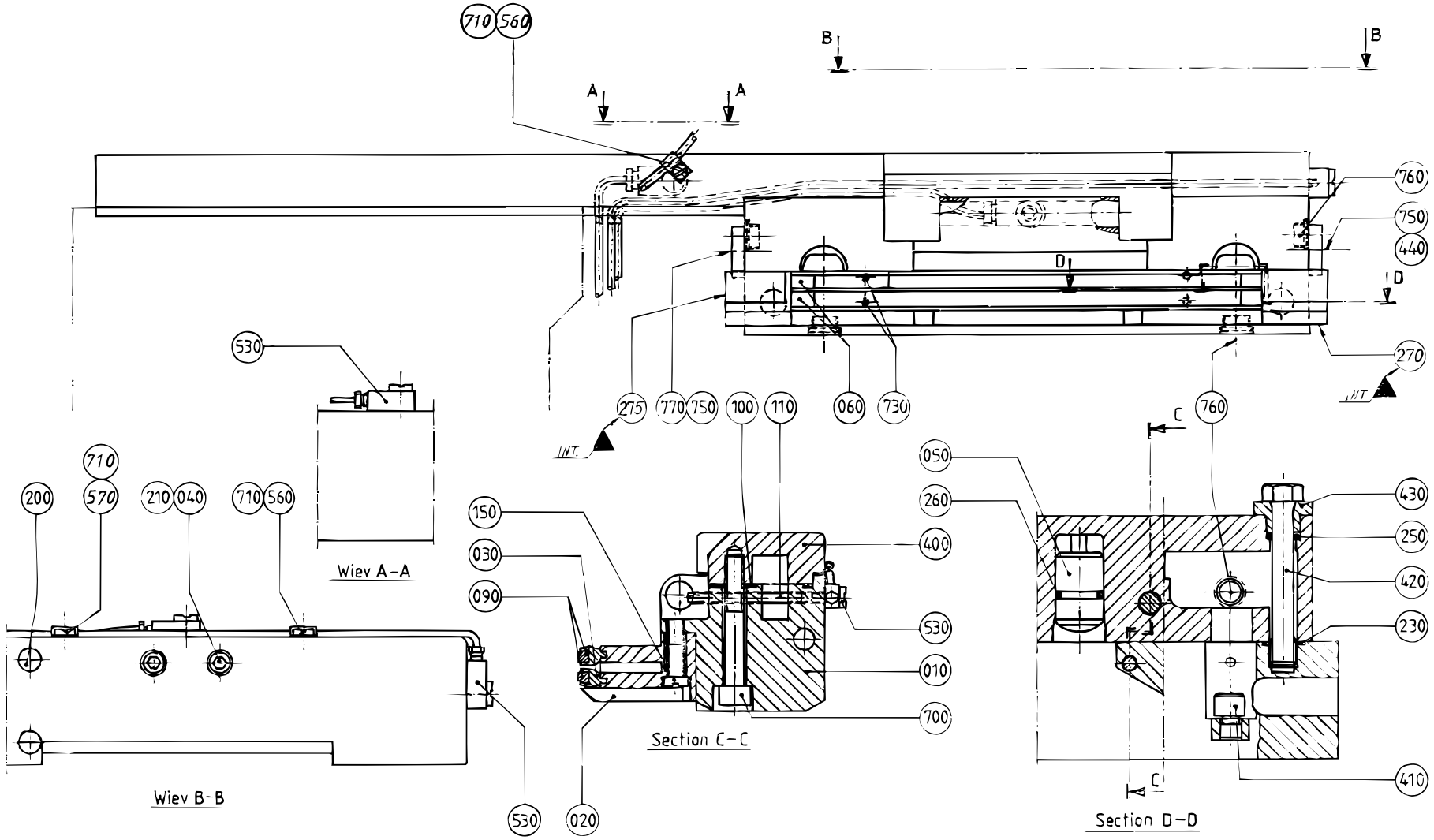

S-257835-6
ECN 21002

Pos	Part No	SP	UN	Qty	Description	Page No
VOLUMES 1000 B LOFIN, 1055 B, 750 B						
000	**CR- 257835-0351**	**-**		**1**	**CUTTING JAW**	
010	450503	S		1	BEARING HOUSING	
020	257783	S		1	CUTTING JAW	
030	497921	P		2	CUTTING RAIL	
040	12922	S		2	WASHER	
060	32116	PU		4	END PIECE	
090	G- 564533-0001	PU		2	DOLLY	
100	245271	P		1	GASKET	
110	450507-0001	-		1	SCREW	
150	90287-0070	-		2	SCREW	
210	312115-0331	-		2	SCREW O4762 M5X20A280	
230	315202-0111	PU		2	O-RING 13,1X1,6	
250	315202-0207	PU		2	O-RING 8,3X2,4	
420	243143	P		2	SCREW	
VOLUMES 568 B, 500 B						
000	**CR- 257835-0352**	**-**		**1**	**CUTTING JAW**	
010	450503	S		1	BEARING HOUSING	
020	257783	S		1	CUTTING JAW	
030	497921	P		2	CUTTING RAIL	
060	32116	PU		4	END PIECE	
090	G- 564533-0001	PU		2	DOLLY	
100	245271	P		1	GASKET	
110	450507-0001	-		1	SCREW	
150	90287-0070	-		2	SCREW	
200	311508-0416	-		1	RIVET KN4X10ALUM.	
230	315202-0111	PU		2	O-RING 13,1X1,6	
250	315202-0207	PU		2	O-RING 8,3X2,4	
420	243143	P		2	SCREW	
VOLUME 1000 B HIFIN						
000	**CR- 257835-0355**	**-**		**1**	**CUTTING JAW**	
010	497572	S		1	BEARING HOUSING	
020	284578	S		1	CUTTING JAW	
030	539761	P		2	CUTTING RAIL	
040	12922	S		2	WASHER	
060	32116	PU		4	END PIECE	
090	G- 564533-0001	PU		2	DOLLY	
100	245271	P		1	GASKET	
110	450507-0001	-		1	SCREW	
210	312115-0331	-		2	SCREW O4762 M5X20A280	
212	312115-0374	-		2	SCREW O4762 M6X30A280	
213	312318-0321	-		1	STOP SCREW SK6SS5X6RFR	
230	315202-0111	PU		2	O-RING 13,1X1,6	
250	315202-0207	PU		2	O-RING 8,3X2,4	
420	243143	P		2	SCREW	
VOLUMES 500 S, 400 B, 355 B						
000	**CR- 257835-0356**	**-**		**1**	**CUTTING JAW**	
010	466431	S		1	BEARING HOUSING	
020	464162	S		1	CUTTING JAW	
030	440925	P		2	CUTTING RAIL	
040	12922	S		2	WASHER	
060	440043	PU		4	END PIECE	
090	G- 564533-0005	PU		2	DOLLY	
100	497716	P		1	GASKET	
110	450507-0001	-		1	SCREW	
150	90287-0070	-		2	SCREW	
210	312115-0331	-		2	SCREW O4762 M5X20A280	
230	315202-0111	PU		2	O-RING 13,1X1,6	
250	315202-0207	PU		2	O-RING 8,3X2,4	
420	243143	P		2	SCREW	
VOLUME 375 S						
000	**CR- 257835-0357**	**-**		**1**	**CUTTING JAW**	
010	466432	S		1	BEARING HOUSING	
020	449727	S		1	CUTTING JAW	
030	544516	P		2	CUTTING RAIL	
060	38490	PU		4	END PIECE	
090	G- 564533-0002	PU		2	DOLLY	
100	245272	P		1	GASKET	
110	450507-0001	-		1	SCREW	
150	90287-0070	-		2	SCREW	
210	312115-0331	-		2	SCREW O4762 M5X20A280	
420	243143	P		2	SCREW	
VOLUME 750 S						
000	**CR- 257835-0358**	**-**		**1**	**CUTTING JAW**	
010	544317	S		1	BEARING HOUSING	
020	544323	S		1	CUTTING JAW	
030	544334	P		2	CUTTING RAIL	
040	12922	S		2	WASHER	
060	544337	PU		4	END PIECE	
090	G- 564533-0007	PU		2	DOLLY	
100	497716	P		1	GASKET	
110	450507-0001	-		1	SCREW	
150	90287-0070	-		2	SCREW	

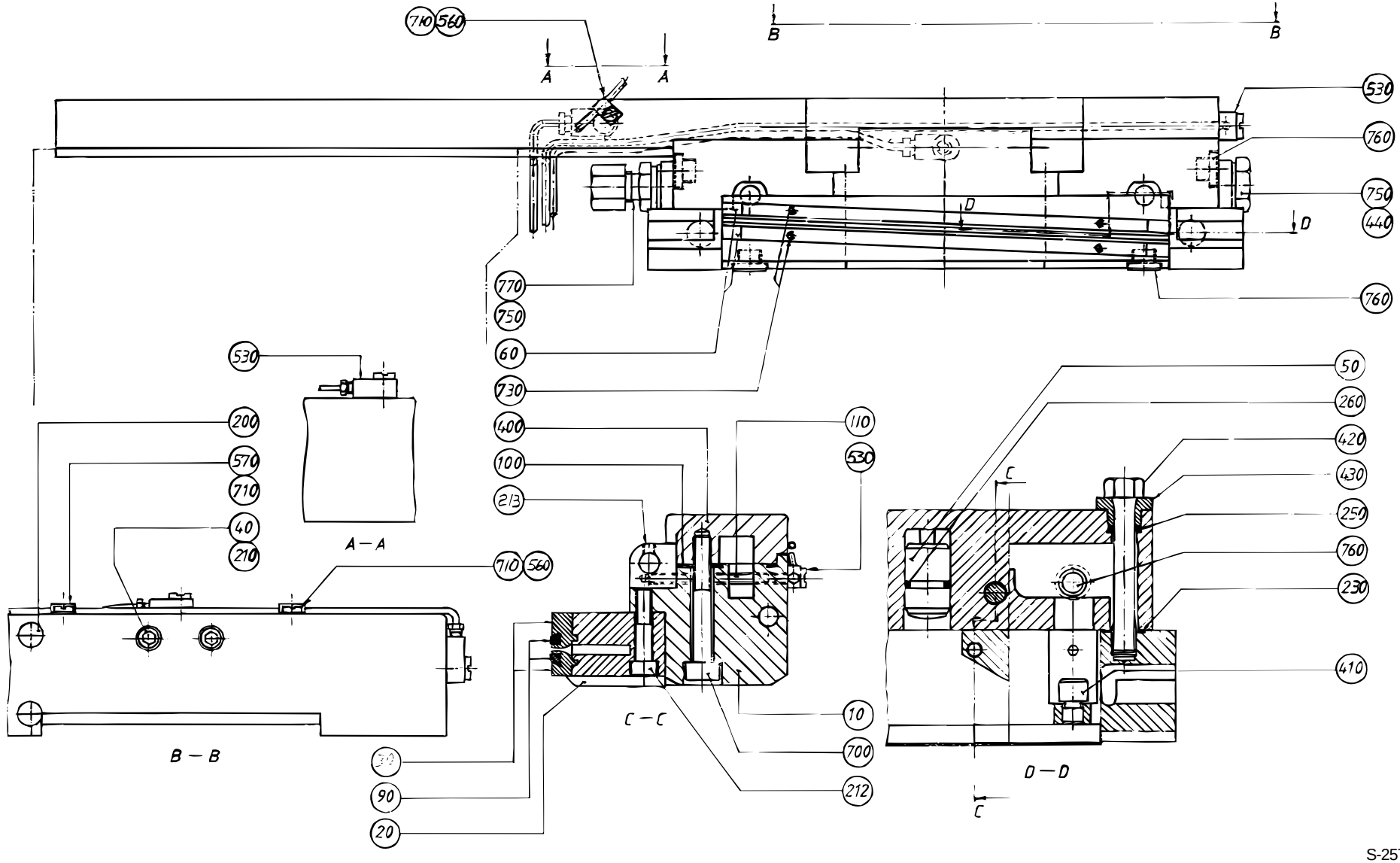

S-257835-7
ECN 16778

Pos	Part No	SP	UN	Qty	Description	Page No
210	312115-0331	-		2	SCREW O4762 M5X20A280	
230	315202-0111	PU		2	O-RING 13,1X1,6	
250	315202-0207	PU		2	O-RING 8,3X2,4	
420	243143	P		2	SCREW	
VOLUME 1000 S						
000	**CR- 257835-0359**	**-**		**1**	**CUTTING JAW**	
010	569057	S		1	BEARING HOUSING	
020	569059	S		1	CUTTING JAW	
030	544334	P		2	CUTTING RAIL	
060	32116	PU		4	END PIECE	
090	G- 564533-0001	PU		2	DOLLY	
100	245271	P		1	GASKET	
110	450507-0001	-		1	SCREW	
150	90287-0070	-		2	SCREW	
210	312115-0331	-		2	SCREW O4762 M5X20A280	
230	315202-0111	PU		2	O-RING 13,1X1,6	
250	315202-0207	PU		2	O-RING 8,3X2,4	
420	243143	P		2	SCREW	
VOLUME 1000 Sq, 500 Sq						
000	**CR- 257835-0360**	**-**		**1**	**CUTTING JAW**	
010	573985	S		1	BEARING HOUSING	
020	579772	S		1	CUTTING JAW	
030	1038517-0003	P		2	CUTTING RAIL	
060	533012-0001	PU		4	END PIECE	
090	1038128-0001	PU		2	DOLLY	
100	573988	P		1	GASKET	
110	573984	-		1	SCREW	
150	90287-0070	-		2	SCREW	
230	315202-0111	PU		2	O-RING 13,1X1,6	
250	315202-0207	PU		2	O-RING 8,3X2,4	
270	573584	P		1	CATCH	
275	573585	P		1	CATCH	
420	573583	P		2	SCREW	
Common parts						
050	28880	S		2	PLUNGER	
260	315202-0212	PU		2	O-RING 14,3X2,4	
400	464164	S		1	CARRIER CUT LEFT	
410	32464	S		2	SHAFT	
430	243144	P		2	BUSHING	
440	255278	S		1	PLUG FINISHER	
530	90134-0058	-		3	BANJO CONNECTION	
560	90165-0058	-		2	CLAMP	
570	90165-0060	-		1	CLAMP	
700	312115-0461	-		2	SCREW O4762 M8X50A280	
710	312125-0287	-		3	SLOTTED HEMCS4X8RFR	
730	312145-0238	PU		4	SLOTTED HEMFS3X40RFR	
750	315234-0110	P		2	SEAL RING R1/4"	
760	342713-0209	-		4	BLIND PLUG	
770	90030-0201	P		1	PIPE CONNECTION	

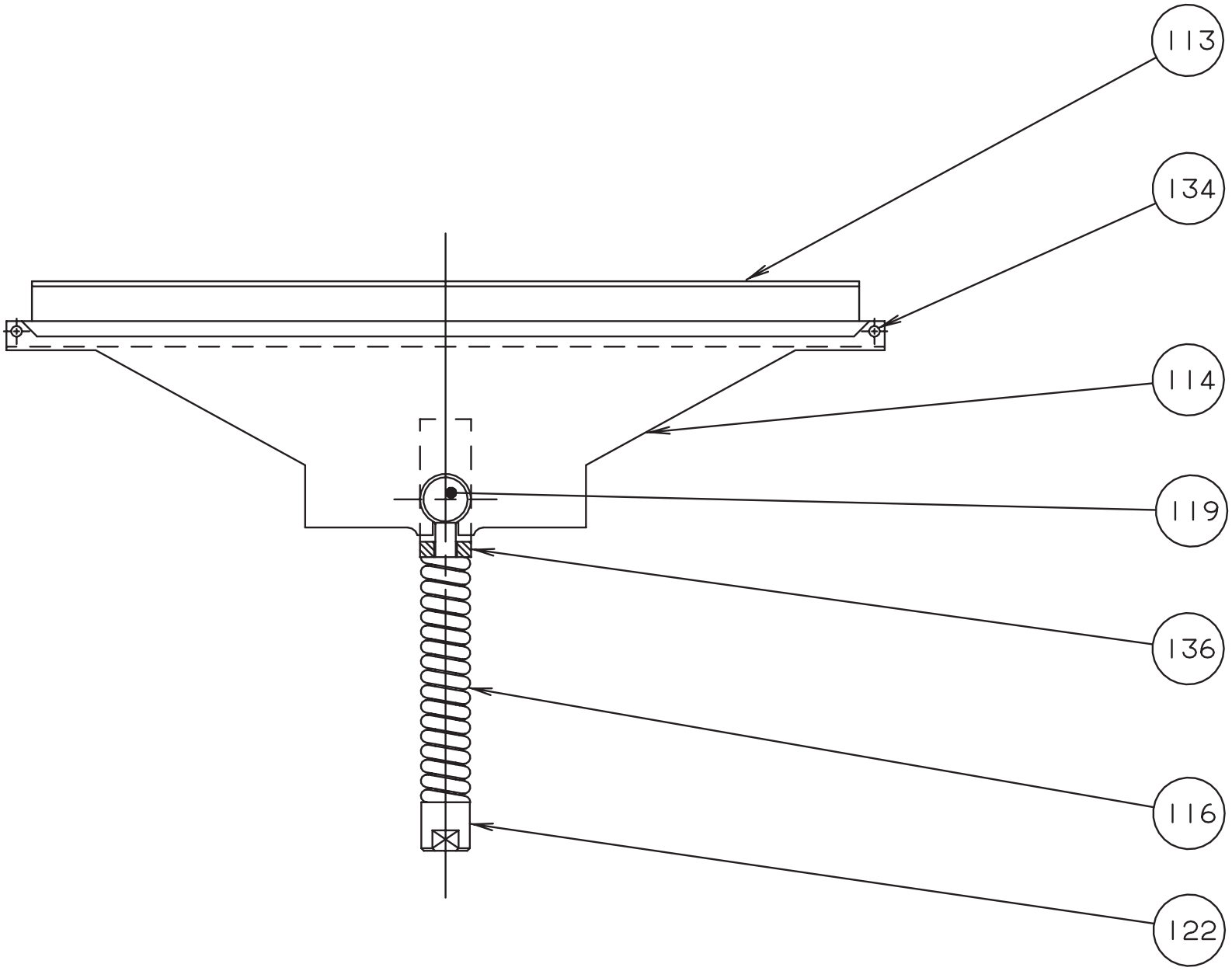

S-32966-4
ECN 20524

Pos	Part No	SP	UN	Qty	Description	Page No
VOLUMES 1136 B, 1055 B, 1000 B, 1000 S, 750 B, 568 B, 500 B						
000	**CR- 32966-0401**	**-**		**2**	**KNIFE HOLDER**	
113	436930	PU		1	KNIFE	
114	556471	P		1	KNIFE HOLDER	
VOLUMES 400 B, 375 S, 355 B, 500 S						
000	**CR- 32966-0404**	**-**		**2**	**KNIFE HOLDER**	
113	434338	PU		1	KNIFE	
114	556473	P		1	KNIFE HOLDER	
VOLUMES 750 S, 1000 Sq, 500 Sq						
000	**CR- 32966-0405**	**-**		**2**	**KNIFE HOLDER**	
113	544327	PU		1	KNIFE	
114	556472	P		1	KNIFE HOLDER	
Common parts						
116	927252	P		1	COMPRESSION SPRING	
119	927440	SU		1	LINK	
122	927441	SU		1	NUT	
134	456011	PU		2	PIN	
136	927323	P		1	SPACER	

Pos	Part No	SP	UN	Qty	Description	Page No

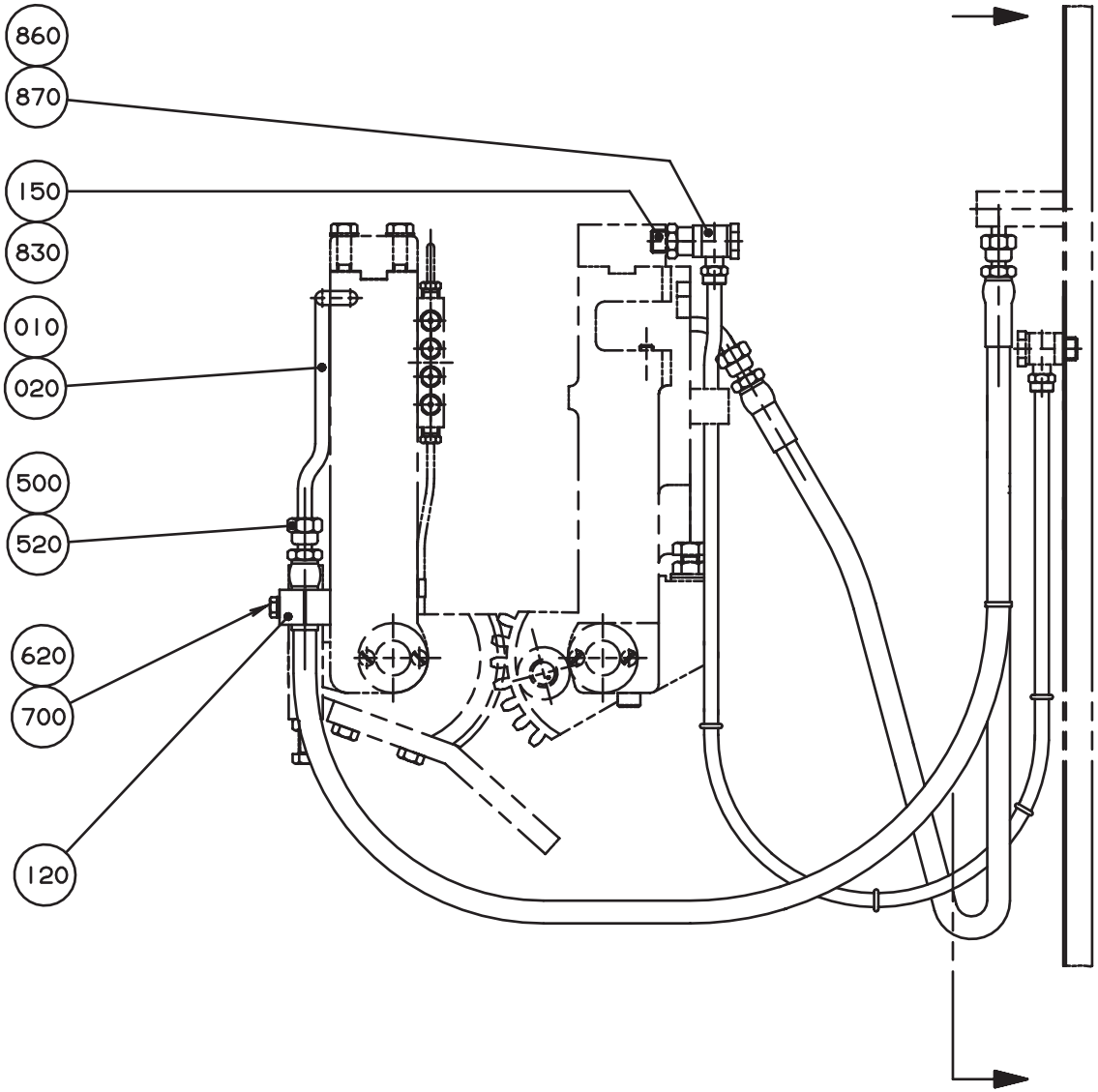

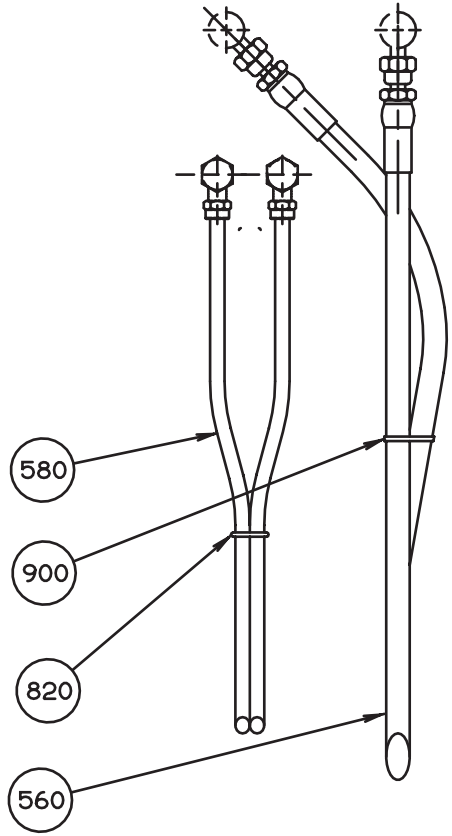

S-279134-5
ECN 11922

Pos	Part No	SP	UN	Qty	Description	Page No
-						
000	**C- 279134-0501**	**-**		**1**	**TRANSMISSION**	
010	22488	-		1	ELBOW PIPE	
020	22489	-		1	ELBOW PIPE	
120	279103	S		4	CONNECTION CLAMP	
150	464370	S		4	SPACER	
500	90030-0098	S		8	CONE	
520	90030-0172	S		8	NUT	
560	90148-0040	S		4	HOSE	
580	90166-0123	-	MM	2900	HOSE	
620	312105-0378	-		4	SCREW O4017 M6X40A280	
700	315105-0153	-		8	WASHER BRB6,4X12RFR	
820	315202-0265	S		8	O-RING 12,3X2,4	
830	315233-0110	-		4	SEAL RING R1/4"	
860	342980-0122	-		4	BANJO CONNSINGEL 8/6-1/4	
870	342980-0304	-		4	BANJO CONN SINGLE 1/4"	
900	352113-0101	P		2	RIBBON CLA	

Pos	Part No	SP	UN	Qty	Description	Page No

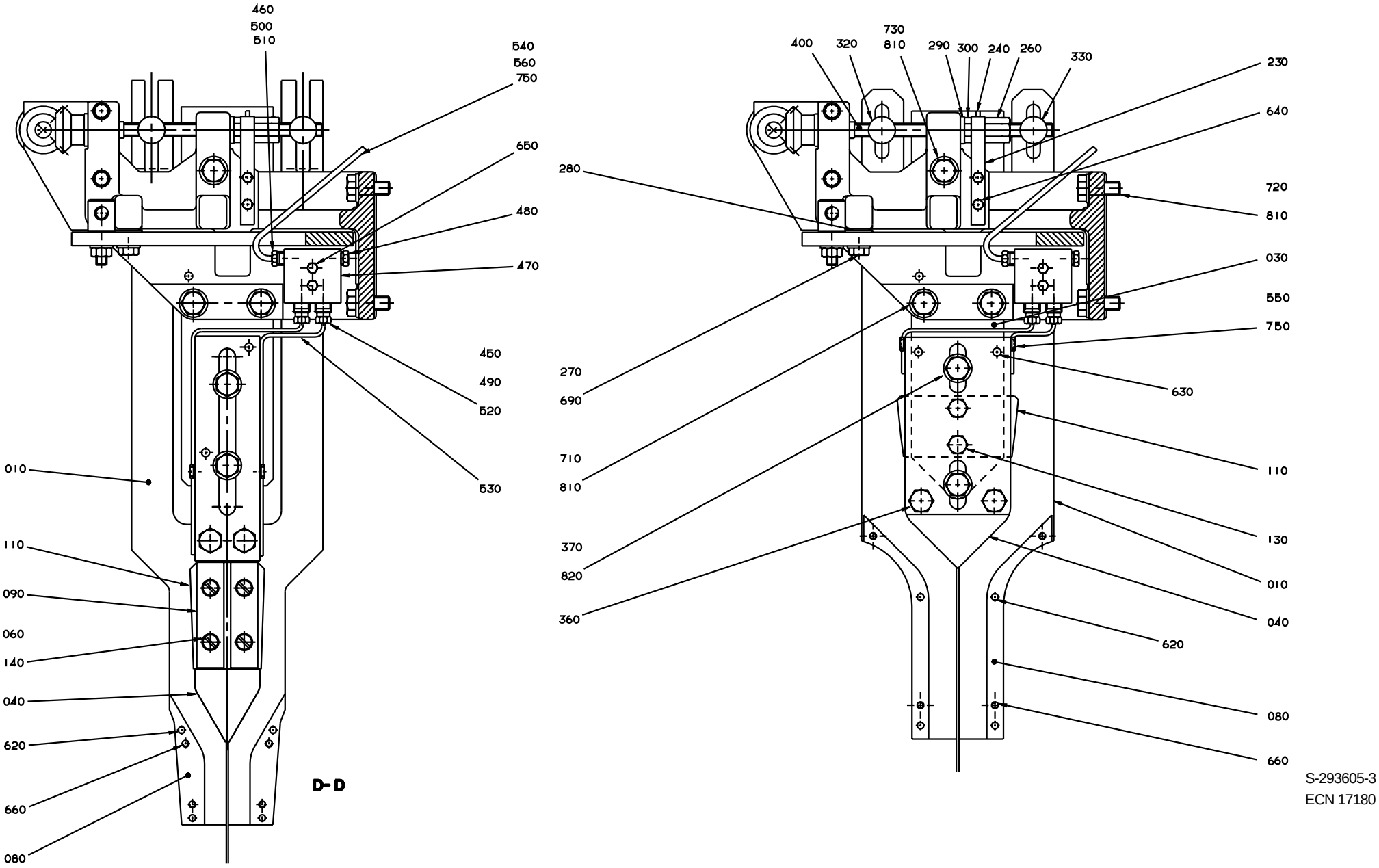

S-293605-3
ECN 17180

Pos	Part No	SP	UN	Qty	Description	Page No
VOLUME 1000 B LOFIN						
000	**C- 293605-0501**	**-**		**1**	**VOLUME CURVE PIECE**	
010 10	544342	C		4	RAIL BRACKET	
020 1	297998	C		1	ADJUSTMENT PLATE	
030 1	252773	C		2	FASTENING PLATE	
040 5	533955	C		2	CURVE	
050 1	561547	S		2	SHAFT	
070 1	560122	S		2	SUPPORT ROLLER	
080 5	531109	S		4	VOLUME CAM	
100 1	267676	-		1	HOLDER	
110 1	269792	P		2	DAMPER	
120 1	312105-0370	-		2	SCREW O4017 M6X20A280	
130	312105-0449	-		4	SCREW O4017 M8X16A280	
340 1	252793	-		2	SUPPORT	
710	312105-0493	-		8	SCREW 4017 M10X25A280	
VOLUME 400 B						
000	**C- 293605-0504**	**-**		**1**	**VOLUME CURVE PIECE**	
010 7	552158	C		4	RAIL BRACKET	
020 1	297998	C		1	ADJUSTMENT PLATE	
030 2	252774	C		2	FASTENING PLATE	
040 4	531002	C		2	CURVE	
050 1	561547	S		2	SHAFT	
060	38603-0002	C		8	SPACER	
070 3	561543	S		2	SUPPORT ROLLER	
080 7	552159	S		4	VOLUME CAM	
090	252780	-		4	RULER	
100 9	928720	-		1	HOLDER	
110 2	276189	P		2	DAMPER	
120 1	312105-0370	-		2	SCREW O4017 M6X20A280	
140	312145-0366	-		8	SLOTTED HEMFS6X12RFR	
340 1	252793	-		2	SUPPORT	
710	312105-0493	-		8	SCREW 4017 M10X25A280	
VOLUME 750 B						
000	**C- 293605-0507**	**-**		**1**	**VOLUME CURVE PIECE**	
010 6	522152	C		4	RAIL BRACKET	
020 1	297998	C		1	ADJUSTMENT PLATE	
030 3	440507	C		2	FASTENING PLATE	
040 7	550301	C		2	CURVE	
050 1	561547	S		2	SHAFT	
060	38603-0002	C		8	SPACER	
070 1	560122	S		2	SUPPORT ROLLER	
080 4	522153	S		4	VOLUME CAM	
090	252780	-		4	RULER	
100 2	267327	-		1	HOLDER	
110 2	276189	P		2	DAMPER	
120 1	312105-0370	-		2	SCREW O4017 M6X20A280	
140	312145-0366	-		8	SLOTTED HEMFS6X12RFR	
340 1	252793	-		2	SUPPORT	
710	312105-0493	-		8	SCREW 4017 M10X25A280	
VOLUME 500 S						
000	**C- 293605-0508**	**-**		**1**	**VOLUME CURVE PIECE**	
010 4	551281	C		4	RAIL BRACKET	
020 1	297998	C		1	ADJUSTMENT PLATE	
030 6	551282	C		2	FASTENING PLATE	
040 6	551283	C		2	CURVE	
050 1	561547	S		2	SHAFT	
060	38603-0002	C		8	SPACER	
070 3	561543	S		2	SUPPORT ROLLER	
080 3	551284	S		4	VOLUME CAM	
090	252780	-		4	RULER	
100 4	449926	-		1	HOLDER	
110 2	276189	P		2	DAMPER	
120 1	312105-0370	-		2	SCREW O4017 M6X20A280	
140	312145-0366	-		8	SLOTTED HEMFS6X12RFR	
340 1	252793	-		2	SUPPORT	
710	312105-0493	-		8	SCREW 4017 M10X25A280	
VOLUME 375 S						
000	**C- 293605-0509**	**-**		**1**	**VOLUME CURVE PIECE**	
010 6	522152	C		4	RAIL BRACKET	
020 2	297999	C		1	ADJUSTMENT PLATE	
030 3	440507	C		2	FASTENING PLATE	
040 2	436502	C		2	CURVE	
050 2	561545	S		2	SHAFT	
060	38603-0002	C		8	SPACER	
070 6	571942	S		2	SUPPORT ROLLER	
080 4	522153	S		4	VOLUME CAM	
090	252780	-		4	RULER	
100 5	449734	-		1	HOLDER	
110 2	276189	P		2	DAMPER	
120 1	312105-0370	-		2	SCREW O4017 M6X20A280	
140	312145-0366	-		8	SLOTTED HEMFS6X12RFR	
340 1	252793	-		2	SUPPORT	
710	312105-0493	-		8	SCREW 4017 M10X25A280	

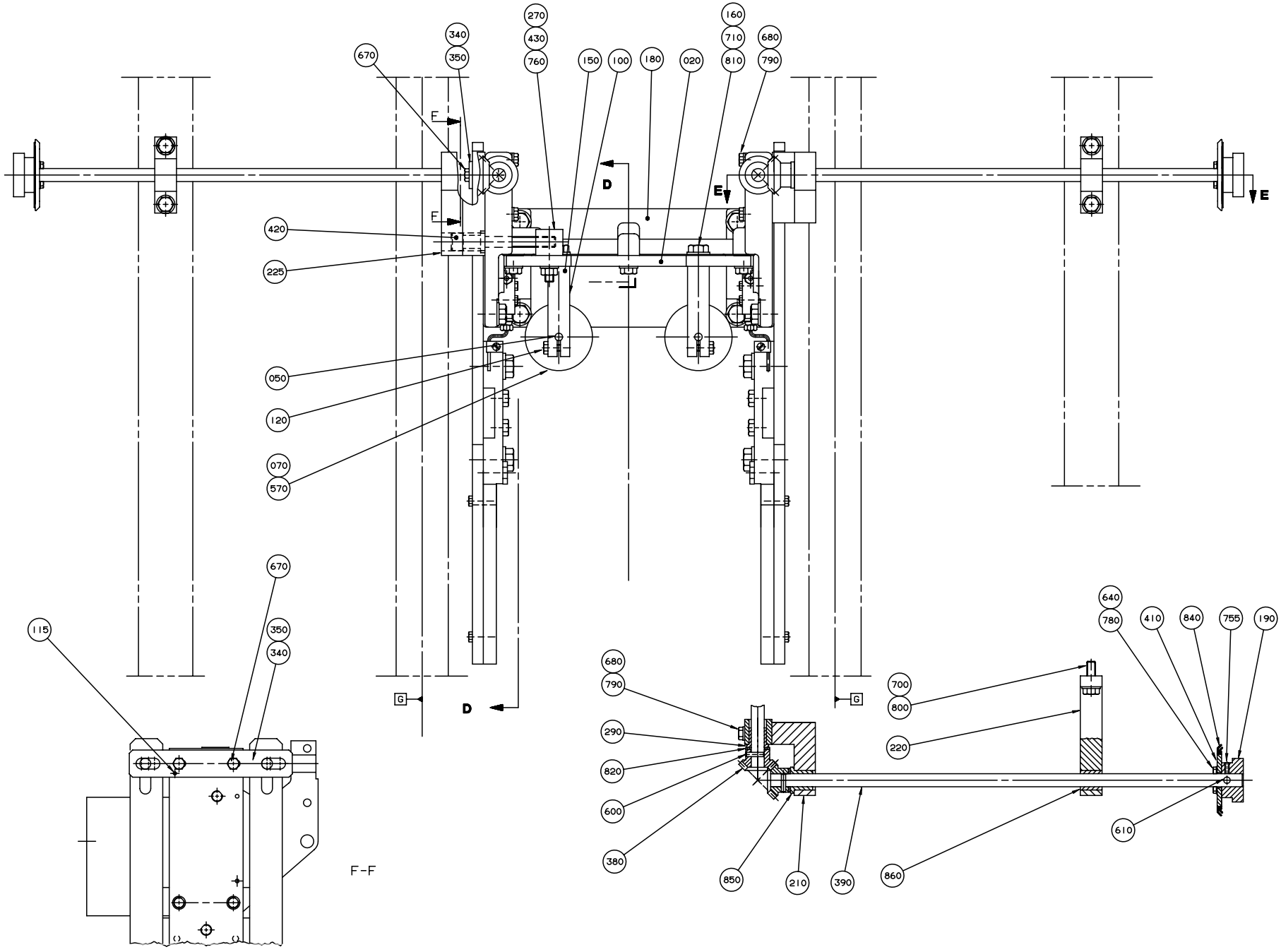

S-293605-4
ECN 70231

Pos	Part No	SP	UN	Qty	Description	Page No
VOLUMES 568 B, 500 B						
000	**C- 293605-0510**	**-**		**1**	**VOLUME CURVE PIECE**	
010 2	252770	C		4	RAIL BRACKET	
020 1	297998	C		1	ADJUSTMENT PLATE	
030 2	252774	C		2	FASTENING PLATE	
040 1	252775	C		2	CURVE	
050 1	561547	S		2	SHAFT	
060	38603-0002	C		8	SPACER	
070 1	560122	S		2	SUPPORT ROLLER	
080 2	252776	S		4	VOLUME CAM	
090	252780	-		4	RULER	
100 2	267327	-		1	HOLDER	
110 2	276189	P		2	DAMPER	
120 1	312105-0370	-		2	SCREW O4017 M6X20A280	
140	312145-0366	-		8	SLOTTED HEMFS6X12RFR	
150	476877	-		4	SPACER	
160	312105-0509	-		4	SCREW 4014 M10X90A280	
340 1	252793	-		2	SUPPORT	
710	312105-0493	-		4	SCREW 4017 M10X25A280	
VOLUME 355 B						
000	**C- 293605-0513**	**-**		**1**	**VOLUME CURVE PIECE**	
010 7	552158	C		4	RAIL BRACKET	
020 1	297998	C		1	ADJUSTMENT PLATE	
030 4	434309	-		2	FASTENING PLATE	
040 4	531002	C		2	CURVE	
050 1	561547	S		2	SHAFT	
060	38603-0002	C		8	SPACER	
070 3	561543	S		2	SUPPORT ROLLER	
080 7	552159	S		4	VOLUME CAM	
090	252780	-		4	RULER	
100 7	529196	-		1	HOLDER	
110 2	276189	P		2	DAMPER	
120 1	312105-0370	-		2	SCREW O4017 M6X20A280	
140	312145-0366	-		8	SLOTTED HEMFS6X12RFR	
340 1	252793	-		2	SUPPORT	
710	312105-0493	-		8	SCREW 4017 M10X25A280	
VOLUMES 1055 B, 1000 B HIFIN						
000	**C- 293605-0514**	**-**		**1**	**VOLUME CURVE PIECE**	
010 8	531110	C		4	RAIL BRACKET	
020 1	297998	C		1	ADJUSTMENT PLATE	
030 5	279621	C		2	FASTENING PLATE	
040 5	533955	C		2	CURVE	
050 1	561547	S		2	SHAFT	
070 1	560122	S		2	SUPPORT ROLLER	
080 5	531109	S		4	VOLUME CAM	
100 6	284124	-		1	HOLDER	
110 1	269792	P		2	DAMPER	
120 1	312105-0370	-		2	SCREW O4017 M6X20A280	
130	312105-0449	-		4	SCREW O4017 M8X16A280	
340 1	252793	-		2	SUPPORT	
710	312105-0493	-		8	SCREW 4017 M10X25A280	
VOLUME 750 S						
000	**C- 293605-0516**	**-**		**1**	**VOLUME CURVE PIECE**	
010 10	544342	C		4	RAIL BRACKET	
020 1	297998	C		1	ADJUSTMENT PLATE	
030 1	252773	C		2	FASTENING PLATE	
040 5	533955	C		2	CURVE	
050 1	561547	S		2	SHAFT	
070 4	561544	S		2	SUPPORT ROLLER	
080 8	565259	S		4	VOLUME CAM	
100 8	544303	-		1	HOLDER	
110 1	269792	P		2	DAMPER	
120 2	312105-0372	-		2	SCREW O4017 M6X25A280	
340 1	252793	-		2	SUPPORT	
710	312105-0493	-		8	SCREW 4017 M10X25A280	
VOLUME 1000 S						
000	**C- 293605-0517**	**-**		**1**	**VOLUME CURVE PIECE**	
010 8	531110	C		4	RAIL BRACKET	
020 1	297998	C		1	ADJUSTMENT PLATE	
030 5	279621	C		2	FASTENING PLATE	
040 5	533955	C		2	CURVE	
050 1	561547	S		2	SHAFT	
070 5	569058	S		2	SUPPORT ROLLER	
080 6	551626	S		4	VOLUME CAM	
100 6	284124	-		1	HOLDER	
110 1	269792	P		2	DAMPER	
120 1	312105-0370	-		2	SCREW O4017 M6X20A280	
130	312105-0449	-		4	SCREW O4017 M8X16A280	
340 1	252793	-		2	SUPPORT	
710	312105-0493	-		8	SCREW 4017 M10X25A280	
VOLUME 1000 Sq						
000	**C- 293605-0519**	**-**		**1**	**VOLUME CURVE PIECE**	
010 10	544342	C		4	RAIL BRACKET	

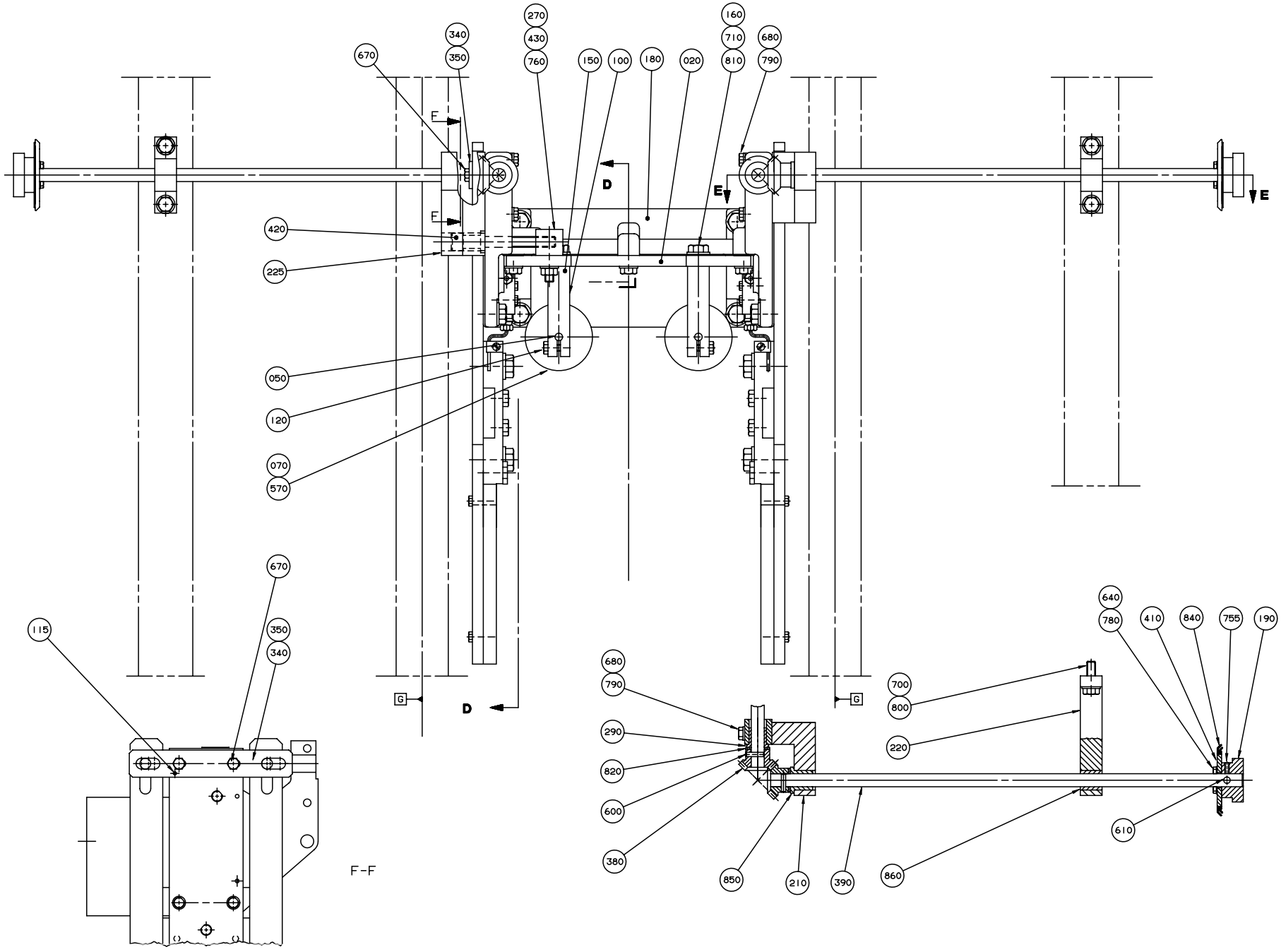

S-293605-4
ECN 70231

Pos	Part No	SP	UN	Qty	Description	Page No
020 1	297998	C		1	ADJUSTMENT PLATE	
030 5	279621	C		2	FASTENING PLATE	
040 9	579645	S		2	CURVE	
050 1	561547	S		2	SHAFT	
070 7	573976	S		2	SUPPORT ROLLER	
080 6	551626	S		4	VOLUME CAM	
100 6	284124	-		1	HOLDER	
110 3	574130	P		2	DAMPER	
120 1	312105-0370	-		2	SCREW O4017 M6X20A280	
130	312105-0449	-		4	SCREW O4017 M8X16A280	
340 1	252793	-		2	SUPPORT	
710	312105-0493	-		8	SCREW 4017 M10X25A280	
VOLUME 500 Sq						
000	**C- 293605-0525**	**-**		**1**	**VOLUME CURVE PIECE**	
010	252770	C		4	RAIL BRACKET	
020	297998	C		1	ADJUSTMENT PLATE	
030	252774	C		2	FASTENING PLATE	
040	252775	S		2	CURVE	
050	561547	S		2	SHAFT	
070	573976	S		2	SUPPORT ROLLER	
080	252776	S		4	VOLUME CAM	
100	267327	-		1	HOLDER	
110	276189	P		2	DAMPER	
120	312105-0370	-		2	SCREW O4017 M6X20A280	
140	312145-0366	-		8	SLOTTED HEMFS6X12RFR	
340	252793	-		2	SUPPORT	
710	312105-0493	-		8	SCREW 4017 M10X25A280	
Common parts						
180	G- 252768	-		1	CANTILEVER	
190	293606	-		2	SHIFTER HANDLE	
210	293608	-		1	BEARING CONSOLE	
220	293609	-		2	BEARING CONSOLE	
225	434020	-		1	BEARING CONSOLE	
230	37070	-		2	SPRING	
240	37071	-		2	WASHER	
260	252785	-		2	SCREW	
270	252786	-		4	WASHER	
280	252787	-		3	BUSHING	
290	252788	-		4	BUSHING	
300	252789	-		2	NUT	
320	252791	-		2	NUT	
330	252792	-		2	NUT	
350	252794	P		2	LACE	
360	252930	-		4	SPACER SCREW	
370	268195	-		4	SCREW	
380	293610	-		4	GEAR WHEEL	
390	293611	-		2	SHAFT	
400	293612	-		2	SCREW	
410	294042	-		2	SEALING WASHER	
420	434021	-		1	SCREW	
430	434073	-		1	NUT	
450	90028-0020	-		4	CONE	
460	90028-0021	-		2	CONE	
470	90032-0038	-		2	BLOCK	
480	90087-0019	-		2	PLUG	
490	90092-0053	S		4	VALVE	
500	90134-0031	-		2	SLEEVE	
510	90134-0038	-		2	BUSHING	
520	90134-0039	-		4	BUSHING	
530	90266-0019	-	MM	800	PIPE	
540	90165-0056	-		2	CLIP	
550	90165-0058	-		4	CLAMP	
560	90166-0109	-	MM	700	HOSE	
570	90240-0180	-		4	FLANGE BUSHING	
600	311103-0272	-		4	CYLINDRICACP M6 4X20 RFR	
610	311103-0276	-		2	CYLINDRICACP M6 4X30 RFR	
620	311103-0310	-		8	CYLINDRICACP M6 5X20 RFR	
630	311103-0357	-		12	CYLINDRICACP M6 6X30 RFR	
640	312105-0291	-		12	SCREW O4017 M4X12A280	
650	312105-0295	-		4	SCREW O4017 M4X20A280	
660	312105-0331	-		8	SCREW O4017 M5X20A280	
670	312105-0366	-		4	SCREW O4017 M6X12A280	
680	312105-0376	-		4	SCREW O4017 M6X35A280	
690	312105-0452	-		3	SCREW M6S8X22RFR	
700	312105-0453	-		4	SCREW O4017 M8X25A280	
720	312105-0495	-		8	SCREW 4017 M10X30A280	
730	312105-0499	-		2	SCREW 4017 M10X40A280	
750	312125-0287	-		4	SLOTTED HEMCS4X8RFR	
755	312318-0289	-		2	STOP SCREW SK6SS4X10RFR	
760	312605-0318	-		1	NUT M6M8RFR	
780	315105-0136	-		8	WASHER BRB4,3X8RFR	
790	315105-0153	-		4	WASHER BRB6,4X12RFR	
800	315105-0165	-		4	WASHER BRB8,4X16RFR	
810	315105-0173	-		14	WASHER BRB10,5X22RFR	
820	315105-0176	-		8	WASHER BRB12X22RFR	

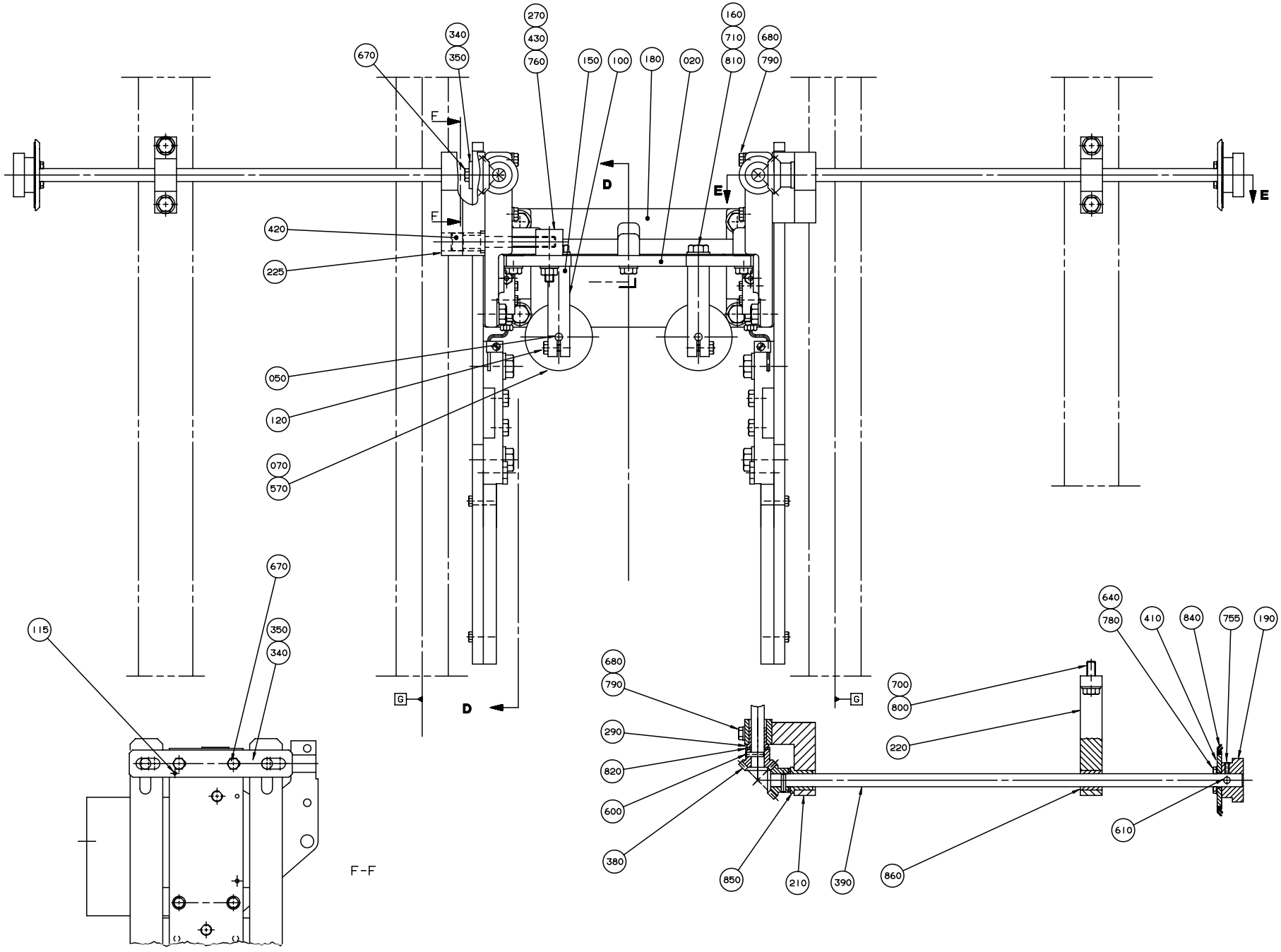

S-293605-4
ECN 70231

Pos	Part No	SP	UN	Qty	Description	Page No
840	315226-0196	-		2	SEAL RING RB48X65X4,5	
850	321111-0163	-		2	FLANGE BUS 12E7X20	
860	321116-0163	-		2	BUSHING 12E7/18X20	

Pos	Part No	SP	UN	Qty	Description	Page No

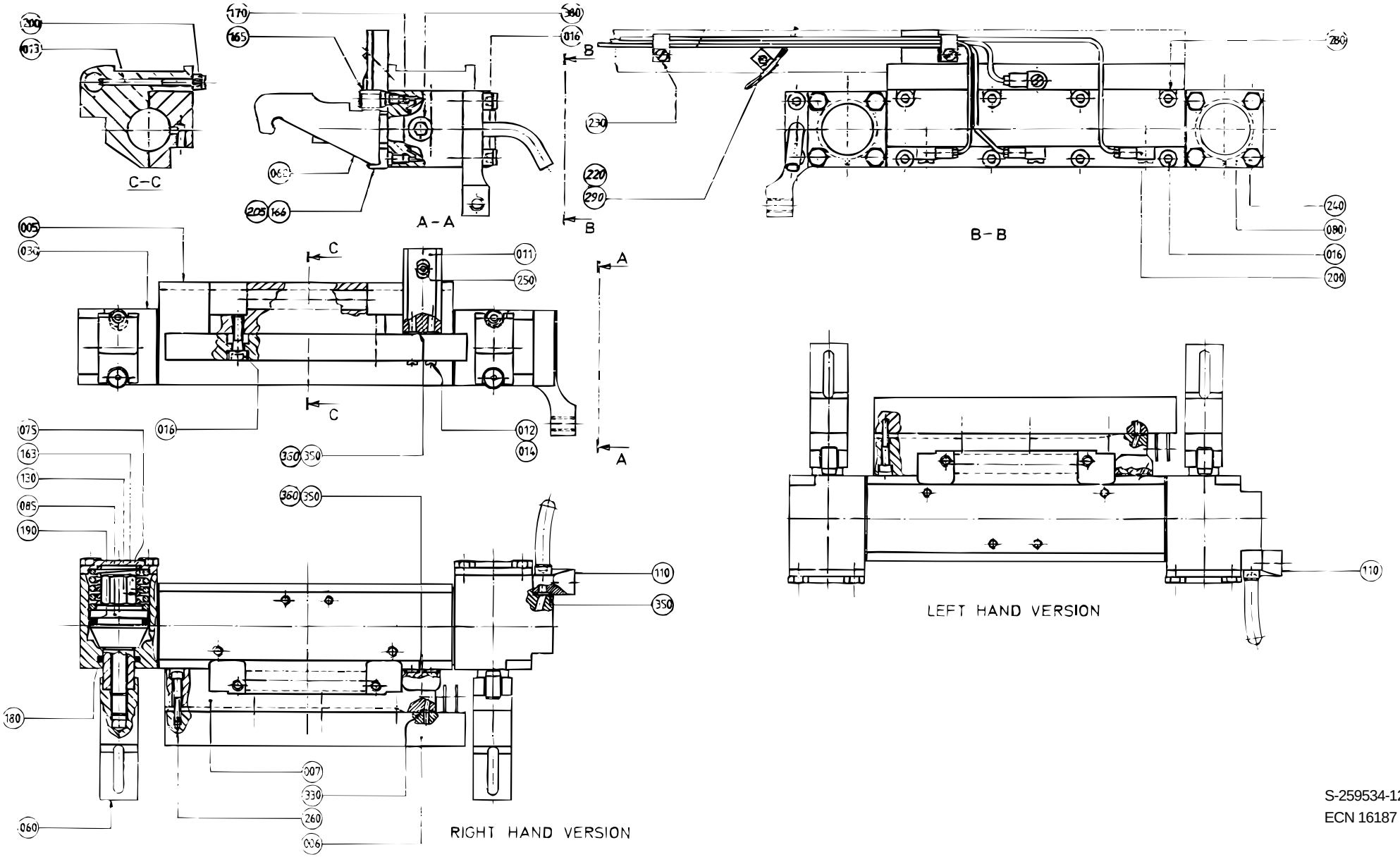

S-259534-12
ECN 16187

Pos	Part No	SP	UN	Qty	Description	Page No
VOLUMES 500 S, 355 B, 400 B						
000	**CR- 259534-0706**	**-**		**1**	**PRESSURE JAW**	
005	466395	S		1	BEARING HOUSING	
006	568983	PU		1	INDUCTOR	
007	445950	S		1	RAIL	
011	566526	C		1	CLUTCH PIECE	
012	292037	P		2	SCREW	
013	476290	-		1	SCREW	
014	90157-0021	-		X	LOCKING FLUID	
016	312115-0370	PU		8	SCREW O4762 M6X20A280	
VOLUME 375 B						
000	**CR- 259534-0707**	**-**		**1**	**PRESSURE JAW**	
005	466395	S		1	BEARING HOUSING	
006	568983	PU		1	INDUCTOR	
007	445950	S		1	RAIL	
011	566526	C		1	CLUTCH PIECE	
012	292037	P		2	SCREW	
013	476290	-		1	SCREW	
014	90157-0021	-		X	LOCKING FLUID	
016	312115-0370	PU		8	SCREW O4762 M6X20A280	
Common parts						
030	440565	S		1	CYLINDER	
060	541697	S		2	CATCH	
075	553851	P		2	SCREW	
080	284833	C		2	LID	
085	292367	S		2	PISTON	
110	246494	P		1	ATTACHMENT	
130	479744	P		2	COMPRESSION SPRING	
163	479743	P		2	COMPRESSION SPRING	
165	440491	P		2	NIPPLE	
166	497040	P		2	STEERING	
170	90090-0013	SU		2	STEEL BALL	
180	90091-0078	PU		2	SEAL	
190	90091-0079	PU		2	SEAL	
200	90134-0058	-		4	BANJO CONNECTION	
205	90157-0016	-	ML	X	LOCKING FLUID	
220	90165-0058	-		1	CLAMP	
230	316810-0106	-		2	PIPE CLAMP 8MM RFR	
240	312105-0372	-		8	SCREW O4017 M6X25A280	
250	312115-0295	-		1	SCREW O4762 M4X20A280	
260	312115-0297	PU		4	SCREW O4762 M4X25A280	
280	312115-0372	P		4	SCREW O4762 M6X25A280	
290	312125-0285	-		3	SLOTTED HEMCS4X6RFR	
330	315202-0101	PU		2	O-RING 3,1X1,6	
350	315202-0104	PU		1	O-RING 6,1X1,6	
360	315202-0203	PU		4	O-RING 4,3X2,4	
380	342713-0209	-		1	BLIND PLUG	

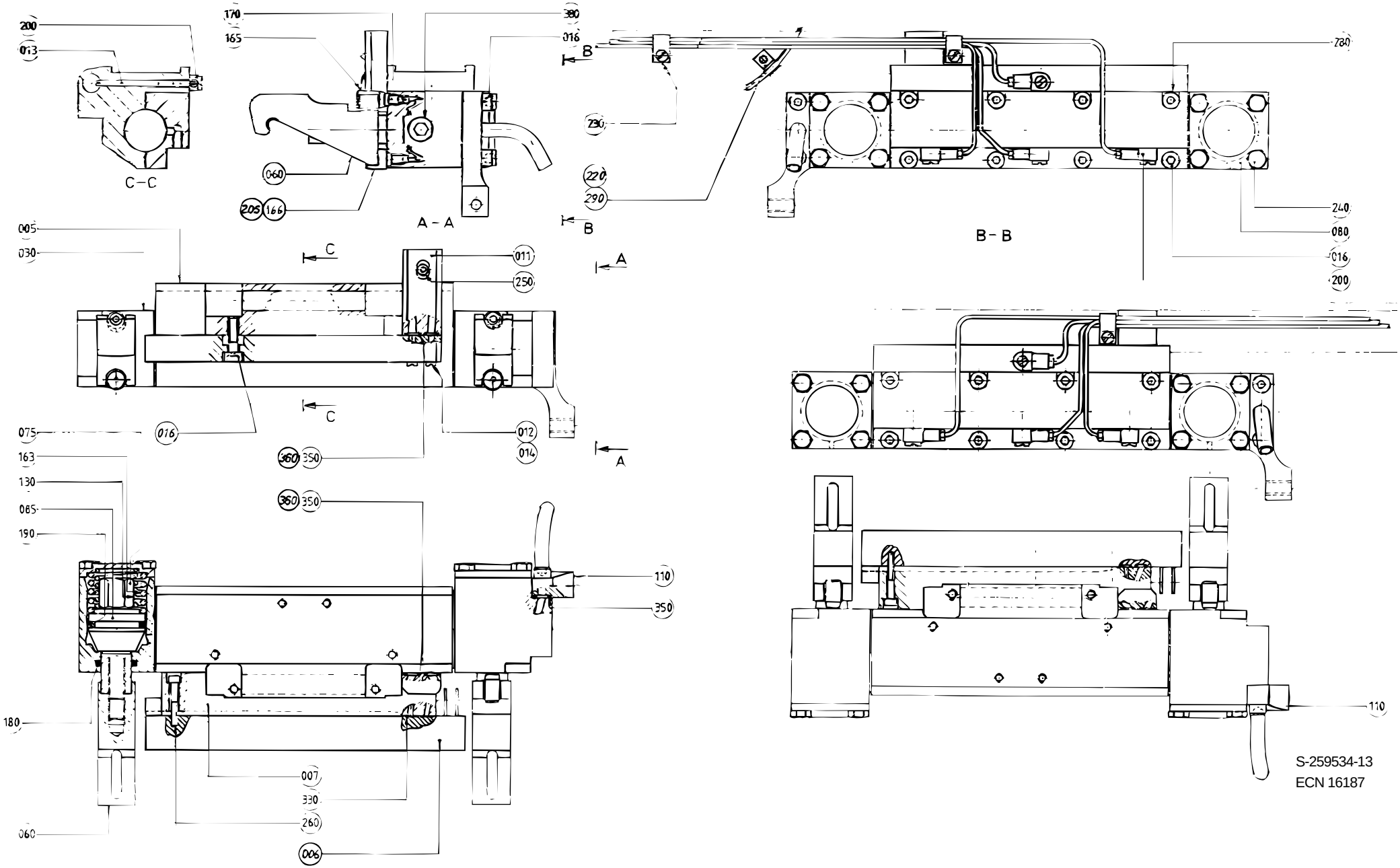
200
013
C–C
170
165
380
016
060
205
166
A – A
B
230
220
290
B
B – B
280
240
080
016
200
005
030
C
011
250
A
C
075
016
012
014
163
130
085
190
360
350
110
350
180
007
330
260
060
006
S-259534-13
ECN 16187

Pos	Part No	SP	UN	Qty	Description	Page No
VOLUMES 1000 B LOFIN, 1055 B, 750 B						
000	**CR- 259534-0701**	**-**		**1**	**PRESSURE JAW**	
005	458019	S		1	BEARING HOUSING	
006	573625	PU		1	INDUCTOR	
007	445950	S		1	RAIL	
011	566526	C		1	CLUTCH PIECE	
012	292037	P		2	SCREW	
013	476290	-		1	SCREW	
014	90157-0021	-		X	LOCKING FLUID	
016	312115-0370	PU		8	SCREW O4762 M6X20A280	
VOLUMES 568 B, 500 B						
000	**CR- 259534-0702**	**-**		**1**	**PRESSURE JAW**	
005	458019	S		1	BEARING HOUSING	
006	573625	PU		1	INDUCTOR	
007	445950	S		1	RAIL	
011	566526	C		1	CLUTCH PIECE	
012	292037	P		2	SCREW	
013	476290	-		1	SCREW	
014	90157-0021	-		X	LOCKING FLUID	
016	312115-0370	PU		8	SCREW O4762 M6X20A280	
VOLUME 750 S						
000	**CR- 259534-0708**	**-**		**1**	**PRESSURE JAW**	
005	544278	S		1	BEARING HOUSING	
006	568983	PU		1	INDUCTOR	
007	445950	S		1	RAIL	
011	566526	C		1	CLUTCH PIECE	
012	292037	P		2	SCREW	
013	476290	-		1	SCREW	
014	90157-0021	-		X	LOCKING FLUID	
016	312115-0370	PU		8	SCREW O4762 M6X20A280	
VOLUME 1000 S						
000	**CR- 259534-0709**	**-**		**1**	**PRESSURE JAW**	
005	569053	S		1	BEARING HOUSING	
006	568983	PU		1	INDUCTOR	
007	445950	S		1	RAIL	
011	566526	C		1	CLUTCH PIECE	
012	292037	P		2	SCREW	
013	476290	-		1	SCREW	
014	90157-0021	-		X	LOCKING FLUID	
016	312115-0370	PU		8	SCREW O4762 M6X20A280	

Pos	Part No	SP	UN	Qty	Description	Page No
VOLUME 1000 Sq, 500 Sq						
000	**CR- 259534-0710**	**-**		**1**	**PRESSURE JAW**	
005	579773	S		1	BEARING HOUSING	
006	927495	PU		1	INDUCTOR	
007	579898	S		1	RAIL	
011	566526	C		1	CLUTCH PIECE	
012	292037	P		2	SCREW	
013	573984	-		1	SCREW	
014	90157-0021	-		X	LOCKING FLUID	
016	312115-0370	PU		8	SCREW O4762 M6X20A280	
Common parts						
030	440565	S		1	CYLINDER	
060	541697	S		2	CATCH	
075	553851	P		2	SCREW	
080	284833	C		2	LID	
085	292367	S		2	PISTON	
110	246494	P		1	ATTACHMENT	
130	479744	P		2	COMPRESSION SPRING	
163	479743	P		2	COMPRESSION SPRING	
165	440491	P		2	NIPPLE	
166	497040	P		2	STEERING	
170	90090-0013	SU		2	STEEL BALL	
180	90091-0078	PU		2	SEAL	
190	90091-0079	PU		2	SEAL	
200	90134-0058	-		4	BANJO CONNECTION	
205	90157-0016	-	ML	X	LOCKING FLUID	
220	90165-0058	-		1	CLAMP	
230	316810-0106	-		2	PIPE CLAMP 8MM RFR	
240	312105-0372	-		8	SCREW O4017 M6X25A280	
250	312115-0295	-		1	SCREW O4762 M4X20A280	
260	312115-0297	PU		4	SCREW O4762 M4X25A280	
280	312115-0372	P		4	SCREW O4762 M6X25A280	
290	312125-0285	-		3	SLOTTED HEMCS4X6RFR	
330	315202-0101	PU		2	O-RING 3,1X1,6	
350	315202-0104	PU		1	O-RING 6,1X1,6	
360	315202-0203	PU		4	O-RING 4,3X2,4	
380	342713-0209	-		1	BLIND PLUG	

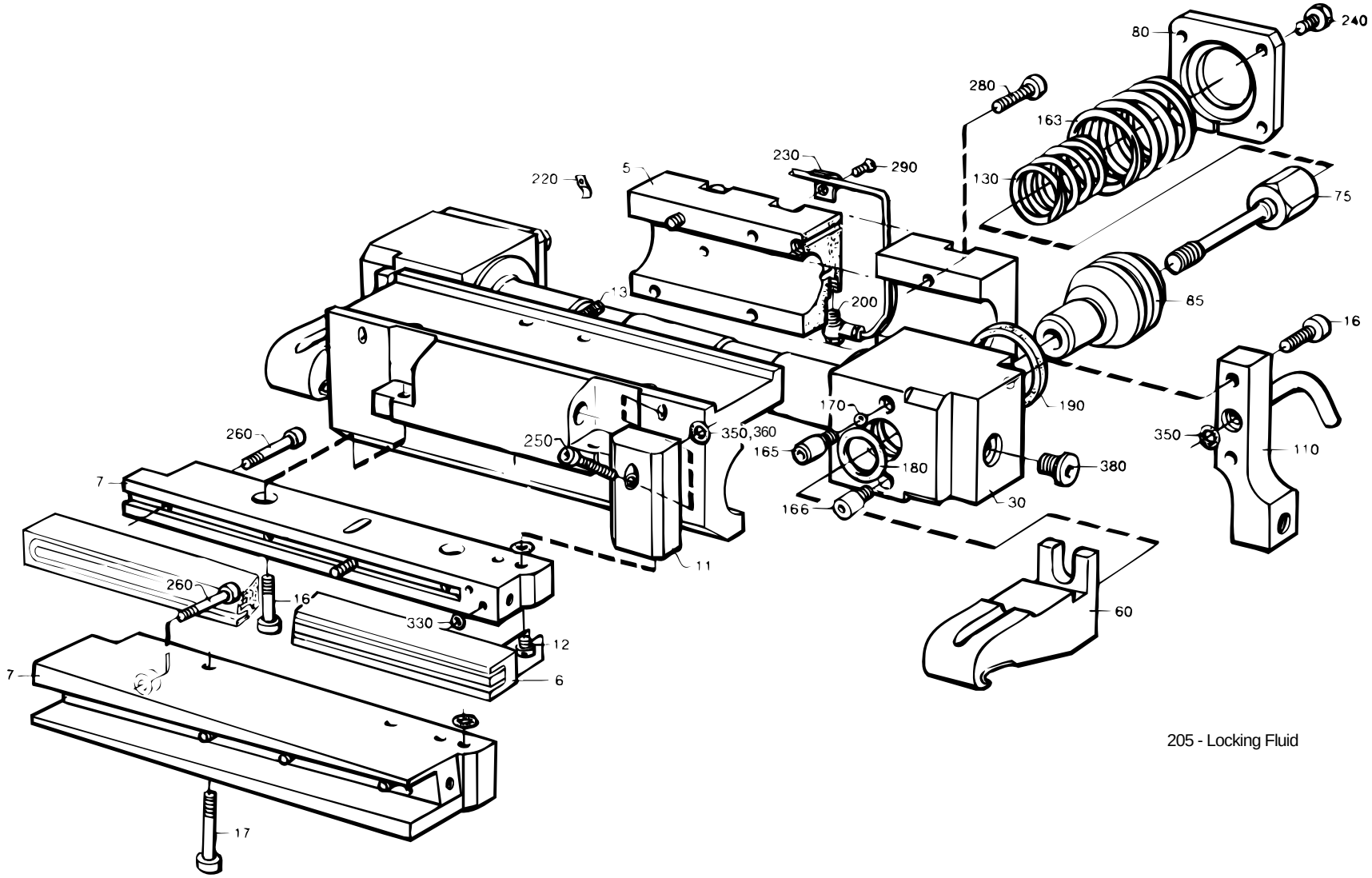

205 - Locking Fluid

Pos	Part No	SP	UN	Qty	Description	Page No
VOLUME 1000 B HIFIN						
000	**CR- 259534-0705**	**-**		**1**	**PRESSURE JAW**	
005	497583	S		1	HOUSING	
006	573625	PU		1	INDUCTOR	
007	284581	S		1	RAIL	
011	566527	C		1	CLUTCH PIECE	
013	476290	-		1	SCREW	
016	312115-0370	PU		6	SCREW O4762 M6X20A280	
017	312115-0374	PU		2	SCREW O4762 M6X30A280	
Common parts						
030	440565	S		1	CYLINDER	
060	541697	S		2	CATCH	
075	553851	P		2	SCREW	
080	284833	C		2	LID	
085	292367	S		2	PISTON	
110	246494	P		1	ATTACHMENT	
130	479744	P		2	COMPRESSION SPRING	
163	479743	P		2	COMPRESSION SPRING	
165	440491	P		2	NIPPLE	
166	497040	P		2	STEERING	
170	90090-0013	SU		2	STEEL BALL	
180	90091-0078	PU		2	SEAL	
190	90091-0079	PU		2	SEAL	
200	90134-0058	-		4	BANJO CONNECTION	
205	90157-0016	-	ML	X	LOCKING FLUID	
220	90165-0058	-		1	CLAMP	
230	316810-0106	-		2	PIPE CLAMP 8MM RFR	
240	312105-0372	-		8	SCREW O4017 M6X25A280	
250	312115-0295	-		1	SCREW O4762 M4X20A280	
260	312115-0297	PU		4	SCREW O4762 M4X25A280	
280	312115-0372	P		4	SCREW O4762 M6X25A280	
290	312125-0285	-		3	SLOTTED HEMCS4X6RFR	
330	315202-0101	PU		2	O-RING 3,1X1,6	
350	315202-0104	PU		1	O-RING 6,1X1,6	
360	315202-0203	PU		4	O-RING 4,3X2,4	
380	342713-0209	-		1	BLIND PLUG	

Pos	Part No	SP	UN	Qty	Description	Page No

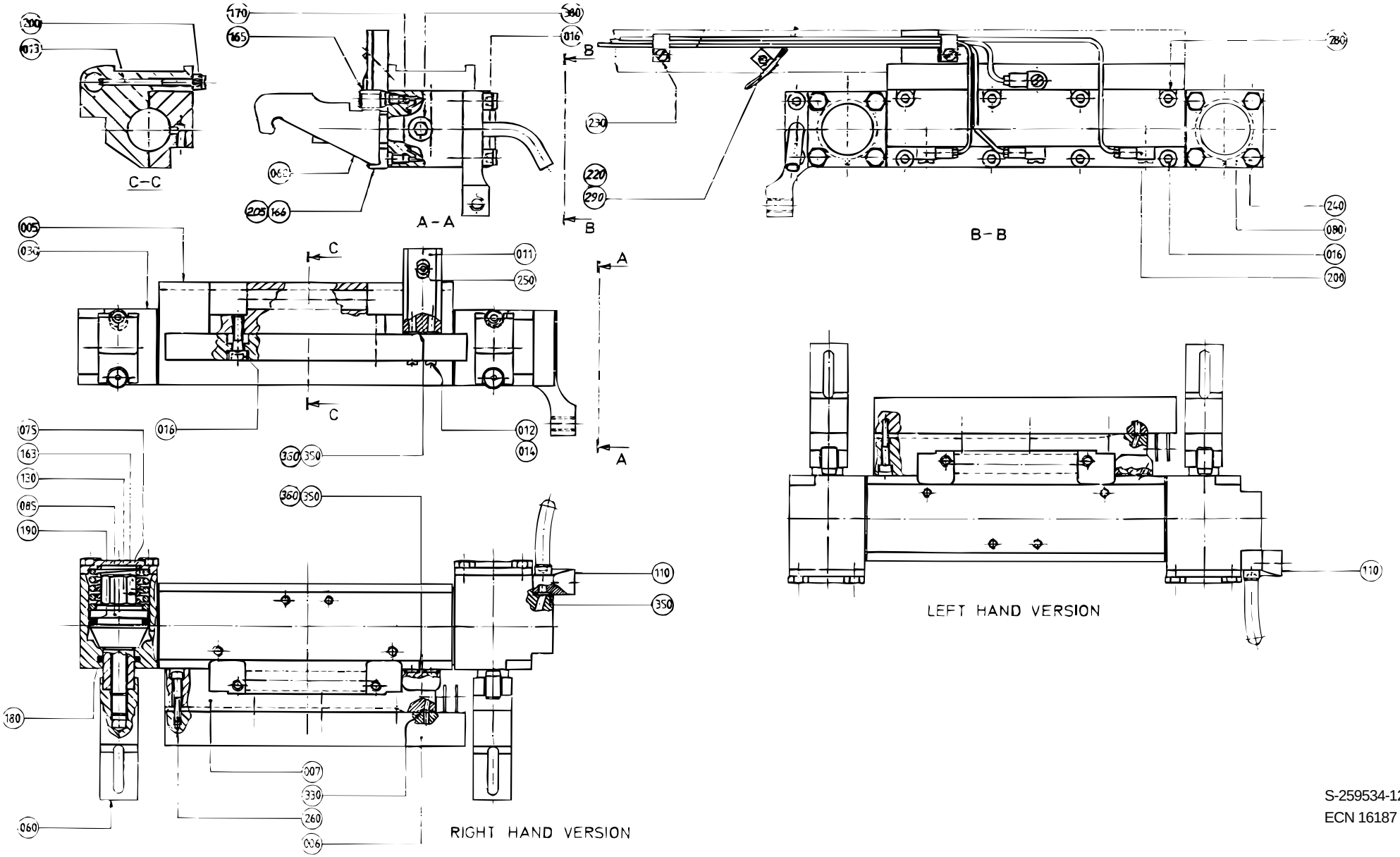

S-259534-12
ECN 16187

Pos	Part No	SP	UN	Qty	Description	Page No
VOLUMES 500 S, 355 B, 400 B						
000	**CR- 259534-0756**	**-**		**1**	**PRESSURE JAW**	
005	466395	S		1	BEARING HOUSING	
006	568983	PU		1	INDUCTOR	
007	445950	S		1	RAIL	
011	566526	C		1	CLUTCH PIECE	
012	292037	P		2	SCREW	
013	476290	-		1	SCREW	
014	90157-0021	-		X	LOCKING FLUID	
016	312115-0370	PU		8	SCREW O4762 M6X20A280	
VOLUME 375 S						
000	**CR- 259534-0757**	**-**		**1**	**PRESSURE JAW**	
005	466395	S		1	BEARING HOUSING	
006	568983	PU		1	INDUCTOR	
007	445950	S		1	RAIL	
011	566526	C		1	CLUTCH PIECE	
012	292037	P		2	SCREW	
013	476290	-		1	SCREW	
014	90157-0021	-		X	LOCKING FLUID	
016	312115-0370	PU		8	SCREW O4762 M6X20A280	
Common parts						
030	440565	S		1	CYLINDER	
060	541697	S		2	CATCH	
075	553851	P		2	SCREW	
080	284833	C		2	LID	
085	292367	S		2	PISTON	
110	246494	P		1	ATTACHMENT	
130	479744	P		2	COMPRESSION SPRING	
163	479743	P		2	COMPRESSION SPRING	
165	440491	P		2	NIPPLE	
166	497040	P		2	STEERING	
170	90090-0013	SU		2	STEEL BALL	
180	90091-0078	PU		2	SEAL	
190	90091-0079	PU		2	SEAL	
200	90134-0058	-		4	BANJO CONNECTION	
205	90157-0016	-	ML	X	LOCKING FLUID	
220	90165-0058	-		1	CLAMP	
230	316810-0106	-		2	PIPE CLAMP 8MM RFR	
240	312105-0372	-		8	SCREW O4017 M6X25A280	
250	312115-0295	-		1	SCREW O4762 M4X20A280	
260	312115-0297	PU		4	SCREW O4762 M4X25A280	
280	312115-0372	P		4	SCREW O4762 M6X25A280	
290	312125-0285	-		3	SLOTTED HEMCS4X6RFR	
330	315202-0101	PU		2	O-RING 3,1X1,6	
350	315202-0104	PU		1	O-RING 6,1X1,6	
360	315202-0203	PU		4	O-RING 4,3X2,4	
380	342713-0209	-		1	BLIND PLUG	

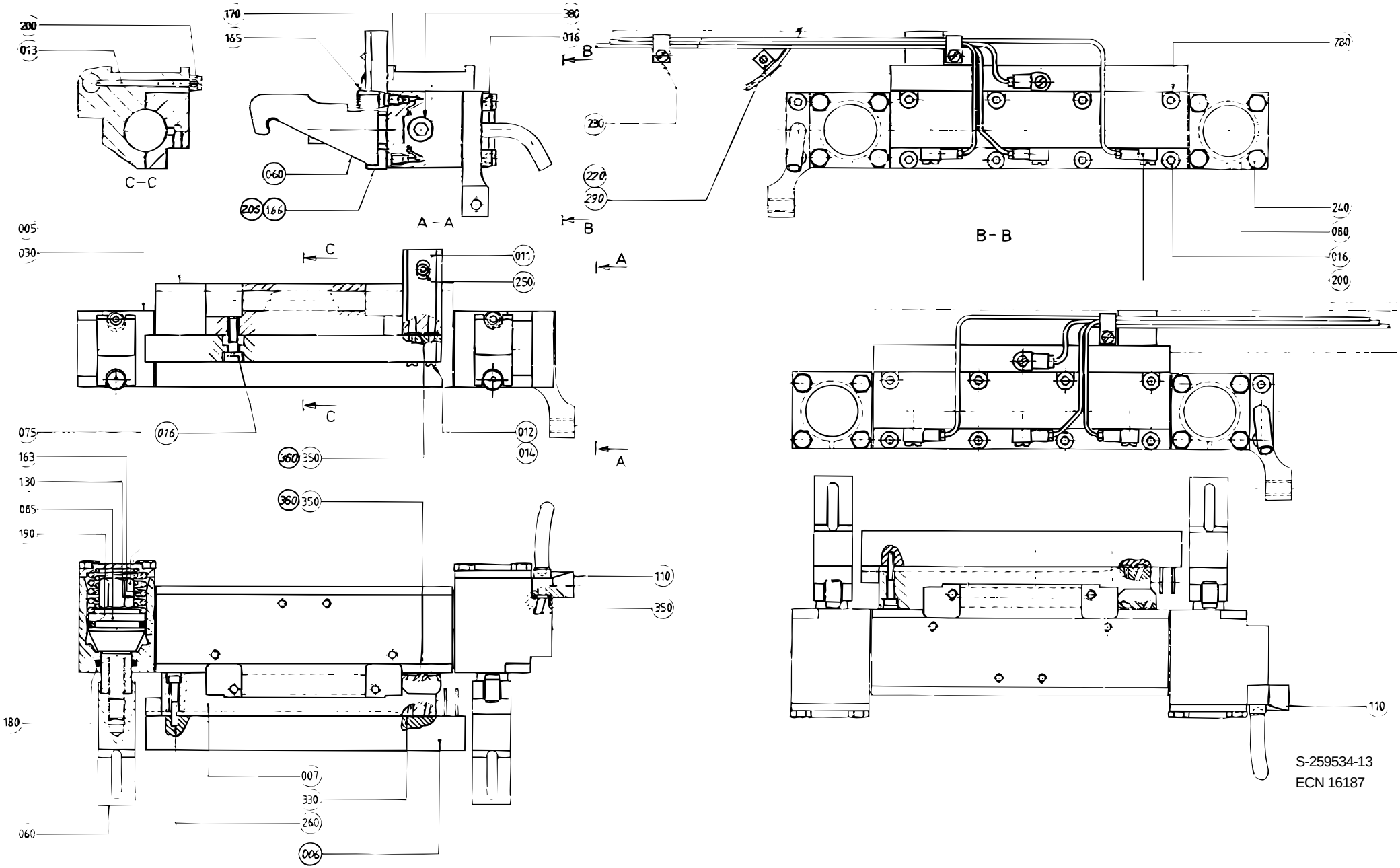
200
013
C–C
170
165
380
016
060
205
166
A – A
B
230
220
290
B
B – B
280
240
080
016
200
005
030
C
011
250
A
C
075
016
012
014
A
163
130
085
190
360
350
360
350
110
350
180
007
330
260
060
006
S-259534-13
ECN 16187

Pos	Part No	SP	UN	Qty	Description	Page No
VOLUMES 1000 B LOFIN, 1055 B, 750 B						
000	**CR- 259534-0751**	**-**		**1**	**PRESSURE JAW**	
005	458019	S		1	BEARING HOUSING	
006	573625	PU		1	INDUCTOR	
007	445950	S		1	RAIL	
011	566526	C		1	CLUTCH PIECE	
012	292037	P		2	SCREW	
013	476290	-		1	SCREW	
014	90157-0021	-		X	LOCKING FLUID	
016	312115-0370	PU		8	SCREW O4762 M6X20A280	
VOLUMES 568 B, 500 B						
000	**CR- 259534-0752**	**-**		**1**	**PRESSURE JAW**	
005	458019	S		1	BEARING HOUSING	
006	573625	PU		1	INDUCTOR	
007	445950	S		1	RAIL	
011	566526	C		1	CLUTCH PIECE	
012	292037	P		2	SCREW	
013	476290	-		1	SCREW	
014	90157-0021	-		X	LOCKING FLUID	
016	312115-0370	PU		8	SCREW O4762 M6X20A280	
VOLUME 750 S						
000	**CR- 259534-0758**	**-**		**1**	**PRESSURE JAW**	
005	544278	S		1	BEARING HOUSING	
006	568983	PU		1	INDUCTOR	
007	445950	S		1	RAIL	
011	566526	C		1	CLUTCH PIECE	
012	292037	P		2	SCREW	
013	476290	-		1	SCREW	
014	90157-0021	-		X	LOCKING FLUID	
016	312115-0370	PU		8	SCREW O4762 M6X20A280	
VOLUME 1000 S						
000	**CR- 259534-0759**	**-**		**1**	**PRESSURE JAW**	
005	569053	S		1	BEARING HOUSING	
006	568983	PU		1	INDUCTOR	
007	445950	S		1	RAIL	
011	566526	C		1	CLUTCH PIECE	
012	292037	P		2	SCREW	
013	476290	-		1	SCREW	
014	90157-0021	-		X	LOCKING FLUID	
016	312115-0370	PU		8	SCREW O4762 M6X20A280	

Pos	Part No	SP	UN	Qty	Description	Page No
VOLUME 1000 Sq, 500 Sq						
000	**CR- 259534-0760**	**-**		**1**	**PRESSURE JAW**	
005	579773	S		1	BEARING HOUSING	
006	927495	PU		1	INDUCTOR	
007	579898	S		1	RAIL	
011	566526	C		1	CLUTCH PIECE	
012	292037	P		2	SCREW	
013	573984	-		1	SCREW	
014	90157-0021	-		X	LOCKING FLUID	
016	312115-0370	PU		8	SCREW O4762 M6X20A280	
Common parts						
030	440565	S		1	CYLINDER	
060	541697	S		2	CATCH	
075	553851	P		2	SCREW	
080	284833	C		2	LID	
085	292367	S		2	PISTON	
110	246494	P		1	ATTACHMENT	
130	479744	P		2	COMPRESSION SPRING	
163	479743	P		2	COMPRESSION SPRING	
165	440491	P		2	NIPPLE	
166	497040	P		2	STEERING	
170	90090-0013	SU		2	STEEL BALL	
180	90091-0078	PU		2	SEAL	
190	90091-0079	PU		2	SEAL	
200	90134-0058	-		4	BANJO CONNECTION	
205	90157-0016	-	ML	X	LOCKING FLUID	
220	90165-0058	-		1	CLAMP	
230	316810-0106	-		2	PIPE CLAMP 8MM RFR	
240	312105-0372	-		8	SCREW O4017 M6X25A280	
250	312115-0295	-		1	SCREW O4762 M4X20A280	
260	312115-0297	PU		4	SCREW O4762 M4X25A280	
280	312115-0372	P		4	SCREW O4762 M6X25A280	
290	312125-0285	-		3	SLOTTED HEMCS4X6RFR	
330	315202-0101	PU		2	O-RING 3,1X1,6	
350	315202-0104	PU		1	O-RING 6,1X1,6	
360	315202-0203	PU		4	O-RING 4,3X2,4	
380	342713-0209	-		1	BLIND PLUG	

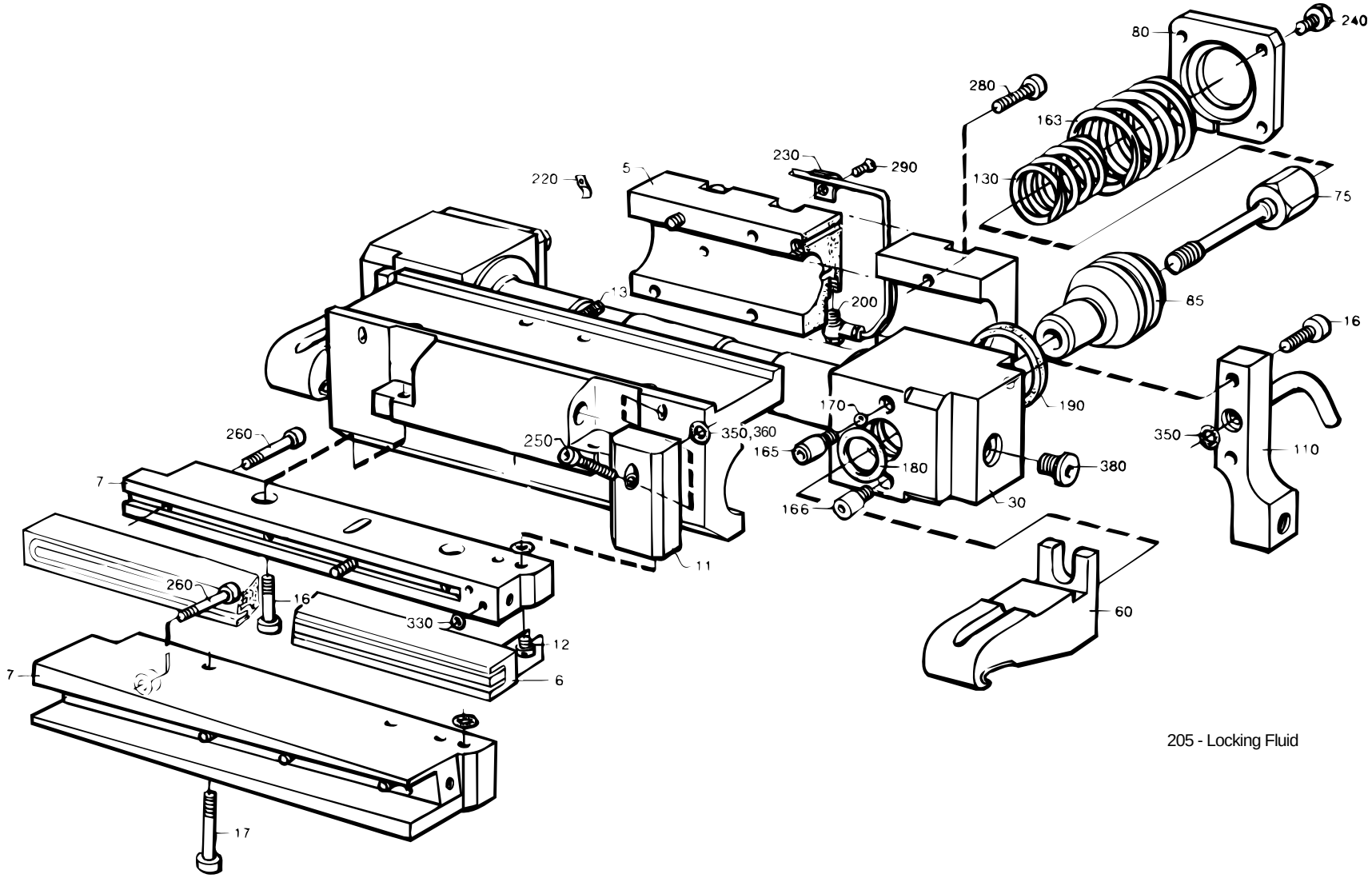

205 - Locking Fluid

Pos	Part No	SP	UN	Qty	Description	Page No
VOLUME 1000 B HIFIN						
000	**CR- 259534-0755**	**-**		**1**	**PRESSURE JAW**	
005	497583	S		1	HOUSING	
006	573625	PU		1	INDUCTOR	
007	284581	S		1	RAIL	
011	566527	C		1	CLUTCH PIECE	
013	476290	-		1	SCREW	
016	312115-0370	PU		6	SCREW O4762 M6X20A280	
017	312115-0374	PU		2	SCREW O4762 M6X30A280	
Common parts						
030	440565	S		1	CYLINDER	
060	541697	S		2	CATCH	
075	553851	P		2	SCREW	
080	284833	C		2	LID	
085	292367	S		2	PISTON	
110	246494	P		1	ATTACHMENT	
130	479744	P		2	COMPRESSION SPRING	
163	479743	P		2	COMPRESSION SPRING	
165	440491	P		2	NIPPLE	
166	497040	P		2	STEERING	
170	90090-0013	SU		2	STEEL BALL	
180	90091-0078	PU		2	SEAL	
190	90091-0079	PU		2	SEAL	
200	90134-0058	-		4	BANJO CONNECTION	
205	90157-0016	-	ML	X	LOCKING FLUID	
220	90165-0058	-		1	CLAMP	
230	316810-0106	-		2	PIPE CLAMP 8MM RFR	
240	312105-0372	-		8	SCREW O4017 M6X25A280	
250	312115-0295	-		1	SCREW O4762 M4X20A280	
260	312115-0297	PU		4	SCREW O4762 M4X25A280	
280	312115-0372	P		4	SCREW O4762 M6X25A280	
290	312125-0285	-		3	SLOTTED HEMCS4X6RFR	
330	315202-0101	PU		2	O-RING 3,1X1,6	
350	315202-0104	PU		1	O-RING 6,1X1,6	
360	315202-0203	PU		4	O-RING 4,3X2,4	
380	342713-0209	-		1	BLIND PLUG	

This page is intentionally left blank

Pos	Part No	SP	UN	Qty	Description	Page No
VOLUME 1000 B LOFIN						
000	**C- 268614-0501**	**-**		**1**	**START-UP KIT**	
200	32116	-		4	END PIECE	
210	208709	-		8	VOLUME SHIM	
260	G- 564533-0001	-		4	DOLLY	
400	315202-0111	-		10	O-RING 13,1X1,6	
420	315202-0207	-		10	O-RING 8,3X2,4	
430	315202-0212	-		5	O-RING 14,3X2,4	
450	573625	-		2	INDUCTOR	
VOLUME 568 B						
000	**C- 268614-0502**	**-**		**1**	**START-UP KIT**	
200	32116	-		4	END PIECE	
210	479246	-		8	VOLUME SHIM	
260	G- 564533-0001	-		4	DOLLY	
400	315202-0111	-		10	O-RING 13,1X1,6	
420	315202-0207	-		10	O-RING 8,3X2,4	
430	315202-0212	-		5	O-RING 14,3X2,4	
450	573625	-		2	INDUCTOR	
VOLUME 400 B						
000	**C- 268614-0504**	**-**		**1**	**START-UP KIT**	
200	440043	-		4	END PIECE	
210	575641	-		8	VOLUME SHIM	
410	315202-0206	-		5	O-RING 7,3X2,4	
450	568983	-		2	INDUCTOR	
VOLUME 1000 B HIFIN						
000	**C- 268614-0510**	**-**		**1**	**START-UP KIT**	
200	32116	-		4	END PIECE	
210	208709	-		8	VOLUME SHIM	
260	G- 564533-0001	-		4	DOLLY	
370	312115-0374	-		5	SCREW O4762 M6X30A280	
410	315202-0206	-		5	O-RING 7,3X2,4	
450	573625	-		2	INDUCTOR	
VOLUME 750 B						
000	**C- 268614-0511**	**-**		**1**	**START-UP KIT**	
200	32116	-		4	END PIECE	
210	450782	-		8	VOLUME SHIM	
260	G- 564533-0001	-		4	DOLLY	
400	315202-0111	-		10	O-RING 13,1X1,6	
420	315202-0207	-		10	O-RING 8,3X2,4	
430	315202-0212	-		5	O-RING 14,3X2,4	
450	573625	-		2	INDUCTOR	
VOLUME 500 S						
000	**C- 268614-0512**	**-**		**1**	**START-UP KIT**	
200	440043	-		4	END PIECE	
210	464315	-		8	VOLUME SHIM	
260	G- 564533-0005	-		4	DOLLY	
410	315202-0206	-		5	O-RING 7,3X2,4	
450	568983	-		2	INDUCTOR	
VOLUME 375 S						
000	**C- 268614-0513**	**-**		**1**	**START-UP KIT**	
200	440043	-		4	END PIECE	
210	255228-0001	-		8	VOLUME SHIM	
260	G- 564533-0005	-		4	DOLLY	
410	315202-0206	-		5	O-RING 7,3X2,4	
450	568983	-		2	INDUCTOR	
VOLUME 500 B						
000	**C- 268614-0514**	**-**		**1**	**START-UP KIT**	
200	32116	-		4	END PIECE	
210	479245	-		8	VOLUME SHIM	
260	G- 564533-0001	-		4	DOLLY	
400	315202-0111	-		10	O-RING 13,1X1,6	
420	315202-0207	-		10	O-RING 8,3X2,4	
430	315202-0212	-		5	O-RING 14,3X2,4	
450	573625	-		2	INDUCTOR	
VOLUME 355 B						
000	**C- 268614-0515**	**-**		**1**	**START-UP KIT**	
200	440043	-		4	END PIECE	
210	529141	-		8	VOLUME SHIM	
260	G- 564533-0005	-		4	DOLLY	
410	315202-0206	-		5	O-RING 7,3X2,4	
450	568983	-		2	INDUCTOR	
VOLUME 1055 B						
000	**C- 268614-0516**	**-**		**1**	**START-UP KIT**	
200	32116	-		4	END PIECE	
210	531320	-		8	VOLUME SHIM	
260	G- 564533-0001	-		4	DOLLY	
400	315202-0111	-		10	O-RING 13,1X1,6	
420	315202-0207	-		10	O-RING 8,3X2,4	
430	315202-0212	-		5	O-RING 14,3X2,4	

This page is intentionally left blank

Pos	Part No	SP	UN	Qty	Description	Page No
450	573625	-		2	INDUCTOR	
VOLUME 750 S						
000	**C- 268614-0517**	**-**		**1**	**START-UP KIT**	
200	544337	-		8	END PIECE	
210	544305	-		8	VOLUME SHIM	
260	G- 564533-0007	-		4	DOLLY	
450	568983	-		2	INDUCTOR	
VOLUME 1000 S						
000	**C- 268614-0518**	**-**		**1**	**START-UP KIT**	
200	32116	-		4	END PIECE	
210	569056	-		8	VOLUME SHIM	
260	G- 564533-0001	-		4	DOLLY	
400	315202-0111	-		10	O-RING 13,1X1,6	
420	315202-0207	-		10	O-RING 8,3X2,4	
430	315202-0212	-		5	O-RING 14,3X2,4	
450	568983	-		2	INDUCTOR	
VOLUME 1000 Sq						
000	**C- 268614-0519**	**-**		**1**	**START-UP KIT**	
200	533012-0001	-		4	END PIECE	
210	573975	-		8	VOLUME SHIM	
260	1038128-0001	-		4	DOLLY	
400	315202-0111	-		10	O-RING 13,1X1,6	
420	315202-0207	-		10	O-RING 8,3X2,4	
430	315202-0212	-		5	O-RING 14,3X2,4	
450	927495	-		2	INDUCTOR	
VOLUME 500 Sq						
000	**C- 268614-0519**	**-**		**1**	**START-UP KIT**	
200	533012-0001	-		4	END PIECE	
210	589926	-		8	VOLUME SHIM	
260	1038128-0001	-		4	DOLLY	
400	315202-0111	-		10	O-RING 13,1X1,6	
420	315202-0207	-		10	O-RING 8,3X2,4	
430	315202-0212	-		5	O-RING 14,3X2,4	
450	927495	-		2	INDUCTOR	
Common parts						
500	927440	-		1	LINK	
510	927441	-		1	NUT	
520	32544	-		2	INSULATION NUT	
530	250633	-		2	CABLE CLAMP	
600	90090-0013	-		10	STEEL BALL	
610	90091-0078	-		10	SEAL	
620	90091-0079	-		10	SEAL	
700	456011	-		10	PIN	
710	312115-0297	-		10	SCREW O4762 M4X25A280	
720	312115-0370	-		10	SCREW O4762 M6X20A280	
730	312145-0238	-		10	SLOTTED HEMFS3X40RFR	
740	315202-0101	-		20	O-RING 3,1X1,6	
750	315202-0102	-		20	O-RING 4,1X1,6	
760	315202-0104	-		20	O-RING 6,1X1,6	
770	315202-0114	-		10	O-RING 16,1X1,6	
780	315202-0208	-		10	O-RING 9,3X2,4	
790	315202-0702	-		10	O-RING 12,42X1,78	

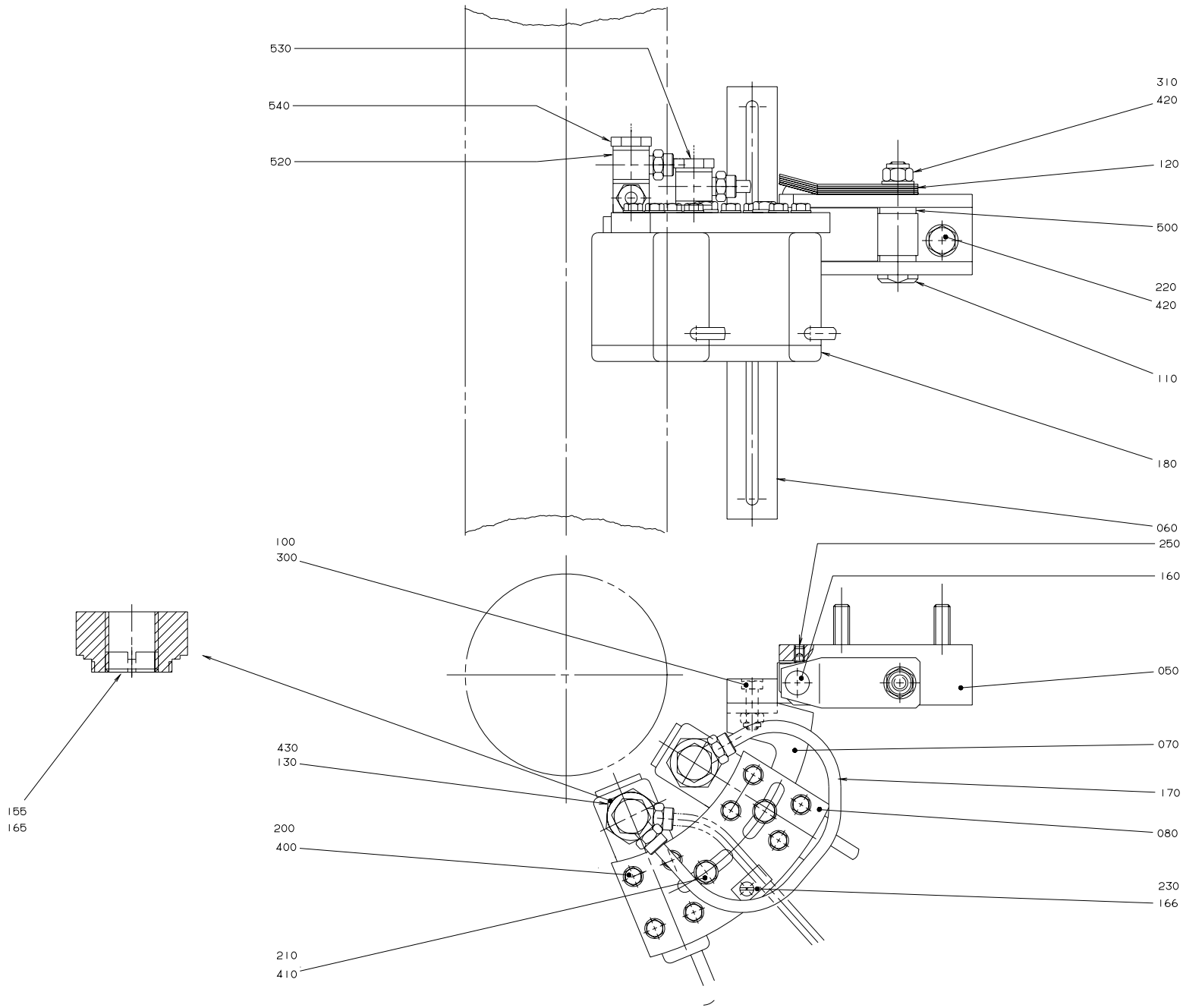

S-541188-3
ECN 14696

Pos	Part No	SP	UN	Qty	Description	Page No
NOT STRIP SIDE, VOLUMES 1136 B, 1055 B, 1000 B, 750 B, 568 B, 500 B						
000	**C- 541188-0201**	**-**		**1**	**BAR CODE**	
050	457359	C		1	BRACKET	
060	545789	C		1	HOLDER	
070	457361	C		1	CANTILEVER	
080	457364	C		1	PLATE RIGHT	
NOT STRIP SIDE, VOLUMES 500 S, 400 B, 355 B						
000	**C- 541188-0202**	**-**		**1**	**BAR CODE**	
050	457359	C		1	BRACKET	
060	545789	C		1	HOLDER	
070	526677	C		1	CANTILEVER	
080	457364	C		1	PLATE RIGHT	
NOT STRIP SIDE, VOLUME 375 S						
000	**C- 541188-0203**	**-**		**1**	**BAR CODE**	
050	457359	C		1	BRACKET	
060	545789	C		1	HOLDER	
070	562971	C		1	CANTILEVER	
080	457364	C		1	PLATE RIGHT	
NOT STRIP SIDE, VOLUMES 750 S, 1000 S, 1000 Sq, 500 Sq						
000	**C- 541188-0205**	**-**		**1**	**BAR CODE**	
050	457359	C		1	BRACKET	
060	535200	C		1	HOLDER	
070	544343	C		1	CANTILEVER	
080	457364	C		1	PLATE RIGHT	
Common parts						
100	312105-0370	C		2	SCREW O4017 M6X20A280	
110	457367	C		1	SHAFT	
120	457368	C		5	SPRING	
130	548337	C		2	BUSHING	
155	548336	C		2	WASHER	
160	90090-0016	-		1	BALL	
165	90157-0016	-		X	LOCKING FLUID	
166	90165-0057	-		1	CLIP	
170	90166-0124	-	MM	200	HOSE	
180	90232-0075	C		2	PH.CELL SICK NT6-14900S12	
200	312105-0329	-		8	SCREW O4017 M5X16A280	
210	312105-0364	-		2	SCREW M6S6X10RFR	
220	312105-0455	-		2	SCREW O4017 M8X30A280	
230	312125-0285	-		1	SLOTTED HEMCS4X6RFR	
250	312318-0323	-		1	STOP SCREW SK6SS5X8RFR	
300	312812-0316	-		2	LOCK NUT A2-M6RFR	
310	312812-0318	-		1	LOCK NUT A2-M8RFR	
400	315105-0146	-		8	WASHER BRB5,3X10RFR	
410	315105-0153	-		2	WASHER BRB6,4X12RFR	
420	315105-0165	-		3	WASHER BRB8,4X16RFR	
430	315204-0116	-		2	O-RING 18,1X1,6VITON	
500	321101-0143	-		2	FLANGE BUS 8F7X8	
520	342980-0114	-		3	BANJO CONNSINGEL 6/4-1/4	
530	90030-0265	-		1	HOLLOW SCREW	
540	90030-0266	-		1	HOLLOW SCREW	

Tetra Pak

SPC

Spare Parts Catalogue

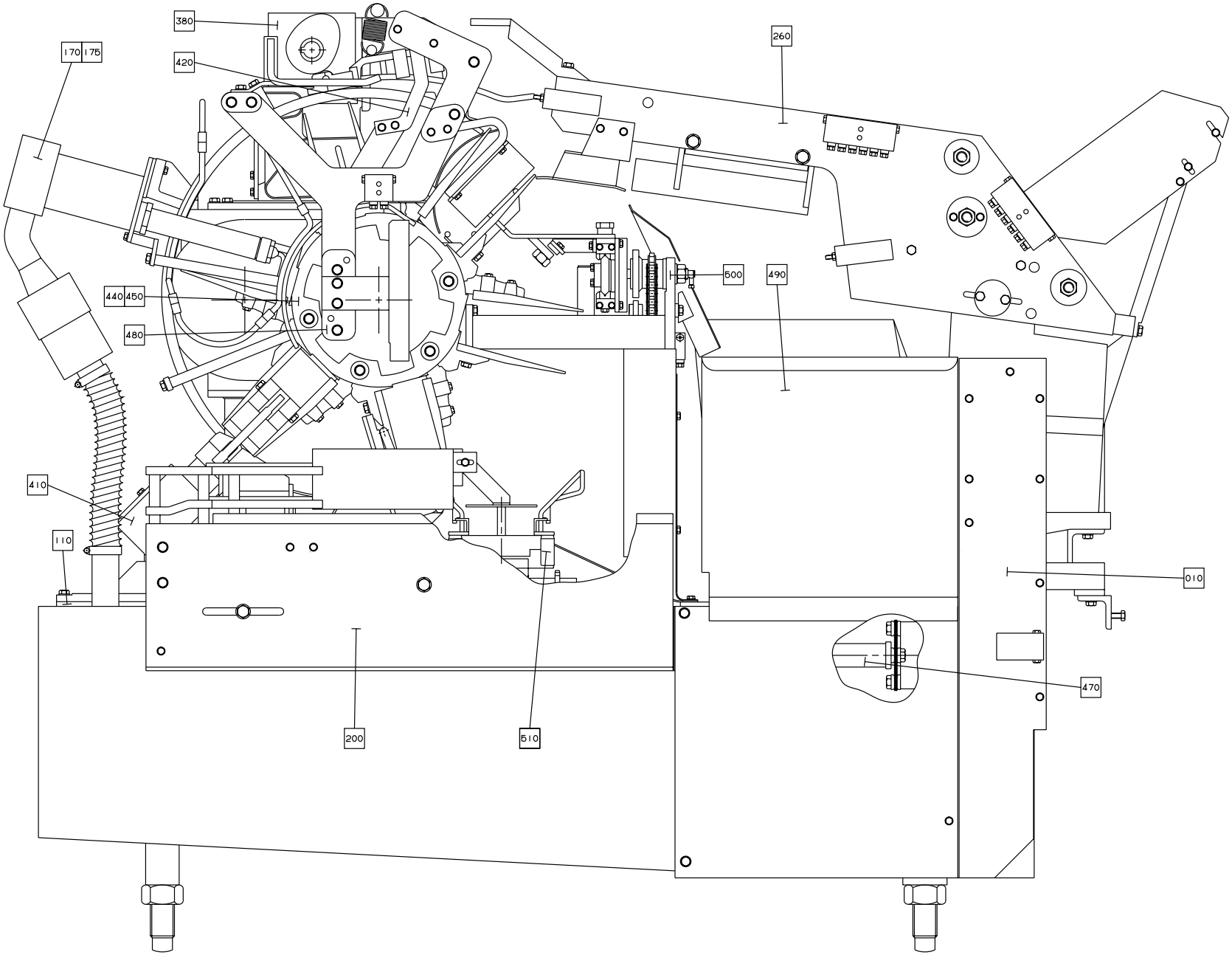

S-648035-4
ECN 11025

Pos	Part No	SP	UN	Qty	Description	Page No
-						
000	**B- 648035-0701**	**-**		**1**	**FINAL FOLDER**	
F010	C- 285592-060V	-		1	MACHINE BODY	**411**
	C- 285287-0501	-		-	. DRIVE UNIT	**415**
	C- 285861-050V	-		-	. GEAR REDUCTION	**417**
	CR- 442582-0101	-		-	. . DRIVE GEAR	**419**
	C- 297638-020V	-		-	. CHAIN TENSIONER	**421**
	C- 525110-010V	-		-	. CABLE CONDUIT	**423**
	C- 525143-0201	-		-	. BOTTOM VALVE	**425**
F110	C- 285303-0401	-		1	LOWER SECTION	**427**
	C- 285291-0401	-		-	. BEVEL GEAR	**429**
	CR- 442644-0301	-		-	. . DOUBLE GEAR	**431**
	C- 285299-010V	-		-	. PRESSURE ARM	**433**
	C- 525102-0201	-		-	. LUBRICATING SYSTEM	**435**
F170	CR- 525129-010V	-		1	ELEMENT	**437**
	CR- 31390-010V	-		-	. ELEMENT	**443**
	CR- 31390-011V	-		-	. ELEMENT	**445**
F175	CR- 525128-010V	-		1	FF-ELEMENT R	**447**
	CR- 31390-010V	-		-	. ELEMENT	**443**
	CR- 31390-011V	-		-	. ELEMENT	**445**
F200	CR- 285591-040V	-		1	STATION	**453**
F260	CR- 525085-020V	-		1	LUBRICATING SYSTEM	**455**
	CR- 525086-020V	-		-	. CONVEYING EQUIPMENT	**461**
	CR- 525087-010V	-		-	. DROP	**465**
	CR- 525088-020V	-		-	. DISCHARGE CHUTE	**469**
	CR- 525089-010V	-		-	. CHAIN RIGHT	**471**
	CR- 525090-010V	-		-	. CHAIN LEFT	**475**
	CR- 525091-010V	-		-	. CHAIN	**479**
	CR- 525092-010V	-		-	. CHAIN GUARD	**481**
	CR- 574323-0101	-		-	. CONVEYING EQUIPMENT	**483**
	CR- 574332-0101	-		-	. . BELT	**487**
	CR- 576245-0101	-		-	. . BELT RIGHT	**489**
	CR- 576246-0101	-		-	. . BELT LEFT	**491**
	C- 576247-010V	-		-	. PROTECTION	**493**
	CR- 576251-0101	-		-	. CONVEYOR	**497**
	CR- 574332-0101	-		-	. . BELT	**487**
	CR- 576252-0101	-		-	. . INFEED SECTION	**499**
	CR- 576245-0101	-		-	. . . BELT RIGHT	**489**
	CR- 576246-0101	-		-	. . . BELT LEFT	**491**
F380	C- 285479-050V	-		1	SUPERSTRUCTURE	**501**
	C- 285853-020V	-		-	. STEERING RAIL	**503**
	C- 442646-0201	-		-	. TOP GEAR	**507**
	CR- 525117-0301	-		-	. INDEXING GEAR	**509**
F410	CR- 285456-030V	-		2	PRESSURE DEVICE	**513**
F420	CR- 285736-030V	-		1	PULL-DOWN DEVICE	**519**
F440	CR- 297681-030V	-		1	WHEEL	**527**
F450	CR- 297682-030V	-		1	WHEEL	**537**
F470	C- 443173-0101	-		1	DRIVE SHAFT	**547**
F480	C- 525000-020V	-		1	FOLDING PART	**549**
F490	C- 442537-050V	-		1	WASTE CHUTE	**559**
F500	C- 525213-020V	-		1	INFEEDER	**561**
	C- 525320-010V	-		-	. CHAIN GUARD	**565**
F510	C- 525325-020V	-		1	DISCHARGER	**569**

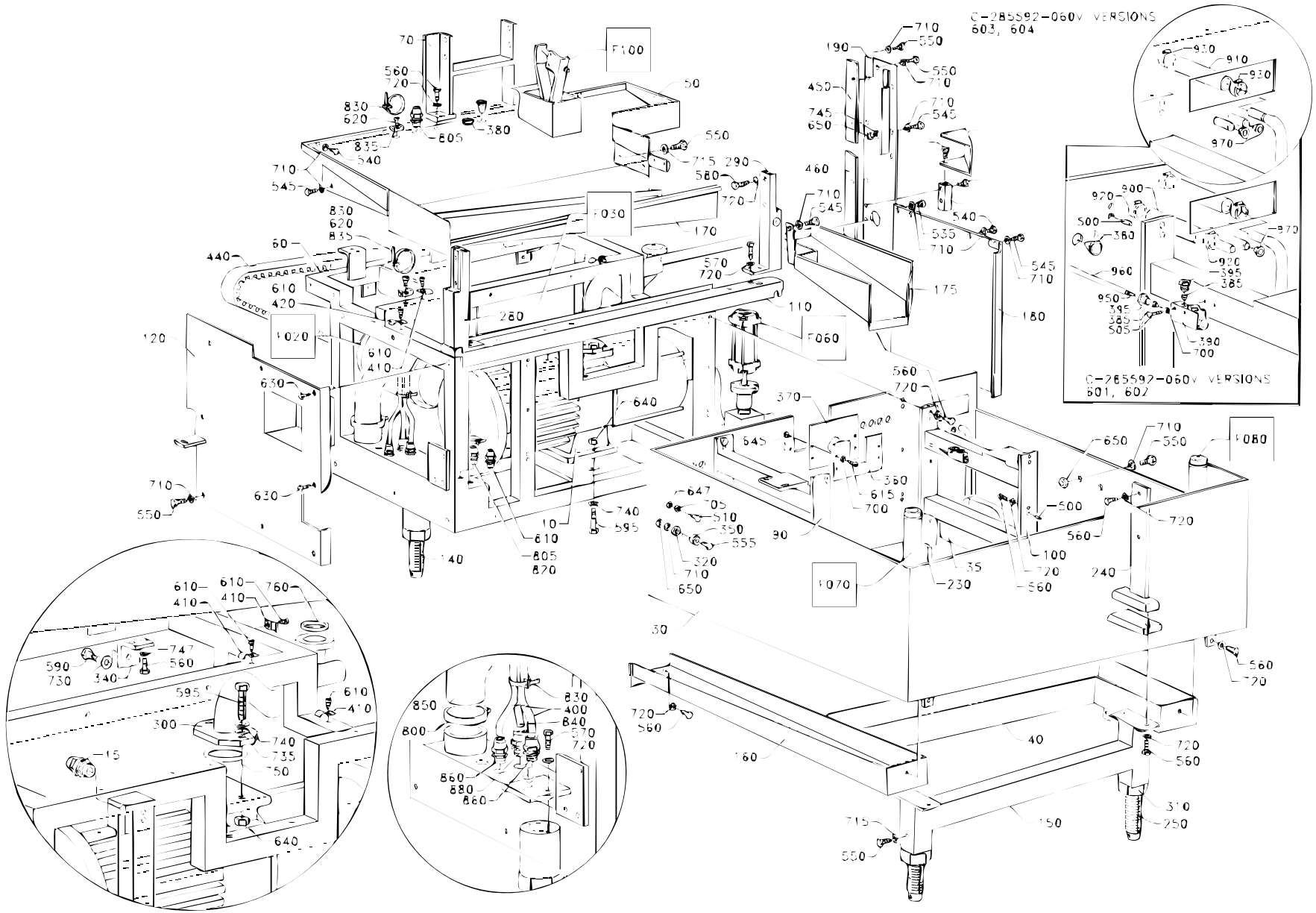
C-285592-060v VERSIONS
603, 604
C-285592-060v VERSIONS
601, 602
F100
F030
F020
F060
F080
F070

Pos	Part No	SP	UN	Qty	Description	Page No
HZ - 50						
000	**C- 285592-0601**	**-**		**1**	**MACHINE BODY**	
010	90321-0015	C		1	PUMP	
010a	90321-0466	S		1	* SPARE PART KIT	
010b	90321-0481	S		1	* GASKET	
900	90166-0059	-	MM	630	HOSE	
920	342991-0101	-		2	HOSE CLIP 11-17MMRFR	
970	90261-0004	-		1	PIPE PLUG	
HZ - 60						
000	**C- 285592-0602**	**-**		**1**	**MACHINE BODY**	
010	90321-0034	C		1	PUMP	
010a	90321-0466	S		1	* SPARE PART KIT	
010b	90321-0481	S		1	* GASKET	
900	90166-0059	-	MM	630	HOSE	
920	342991-0101	-		2	HOSE CLIP 11-17MMRFR	
970	90261-0004	-		1	PIPE PLUG	
Common parts						
015	90012-0072	P		3	GLAND FITTING	
030	525278	-		1	CLEANING TROUGH	
035	531119	-		1	STRAINER	
040	525132	-		1	CABLE TRENCH	
050	525262	-		1	COVERING PLATE	
060	525274	-		1	MACHINE BODY	
070	285330	-		1	HOLDER	
090	525272	-		1	STRUT	
100	525273	-		1	STRUT	
110	525275	-		1	COVERING PLATE	
120	525346	-		1	SIDE PLATE	
140	525268	-		2	LEG	
150	525130	-		1	LEG	
160	525277	-		1	CABLE TRENCH	
170	529331	-		1	COVERING PLATE	
175	443186	-		1	CHUTE	
180	443187	-		1	SHEET	
190	442545	-		1	SHEET	
230	525266	-		1	LEG	
240	525267	-		1	LEG	
250	285923	-		4	SCREW	
280	297663	-		1	POST HOLDER	
290	297664	-		1	POST HOLDER	
300	525271	-		1	ELBOW PIPE	
310	285994	-		4	NUT	
320	295435	-		2	WASHER	
340	297814	-		2	BRACKET	
350	297860	-		2	BUSHING	
360	525280	-		1	SHEET	
370	525281	-		1	GASKET	
380	90015-0020	P		11	BUSHING	
385	90028-0022	-		4	CONE	
390	90032-0044	-		1	JUNKTION BLOCK	
395	90134-0055	-		4	BUSHING	
400	90152-0050	-	MM	2500	FLEXIBLE CONDUIT	
405	90165-0060	-		1	CLAMP	
410	316810-0106	-		7	PIPE CLAMP 8MM RFR	
420	90165-0057	-		4	CLIP	
440	90417-0180	P		1	TIMING BELT	
450	525174	-		1	BRACKET	
460	525175	-		1	BRACKET	
470	297551	-		1	SHEET	
500	311103-0399	-		8	CYLINDRICACP M6 8X16 RFR	
505	312105-0295	-		2	SCREW O4017 M4X20A280	
510	312105-0329	-		1	SCREW O4017 M5X16A280	
535	312105-0362	-		1	SCREW O4017 M6X8A280	
540	312105-0364	-		8	SCREW M6S6X10RFR	
545	312105-0368	-		6	SCREW O4017 M6X16A280	
550	312105-0367	-		15	SCREW M6S6X14RFR	
553	312105-0370	-		1	SCREW O4017 M6X20A280	
555	312105-0376	-		2	SCREW O4017 M6X35A280	
560	312105-0451	-		23	SCREW SO4017 8X20A280	
570	312105-0453	-		8	SCREW O4017 M8X25A280	
580	312105-0455	-		4	SCREW O4017 M8X30A280	
590	312105-0495	-		2	SCREW 4017 M10X30A280	
595	312105-0542	-		4	SCREW 4014 M12X50A280	
610	312125-0287	-		9	SLOTTED HEMCS4X8RFR	
615	312125-0291	-		4	SLOTTED HEMCS4X12RFR	
620	312125-0323	-		5	SLOTTED HEMCS5X8RFR	
630	312155-0366	-		2	SCREW MF6S6X12RFR	
640	312605-0322	-		4	NUT M6M12RFR	
645	312605-0312	-		4	NUT M6M4 STAINLESS	
647	312605-0314	-		2	NUT M6M5RFR	
650	312605-0316	-		7	NUT M6M6 A280 STAINLESS	
700	315105-0136	-		11	WASHER BRB4,3X8RFR	
705	315105-0146	-		2	WASHER BRB5,3X10RFR	
710	315105-0153	-		31	WASHER BRB6,4X12RFR	
715	6278	-		3	WASHER	

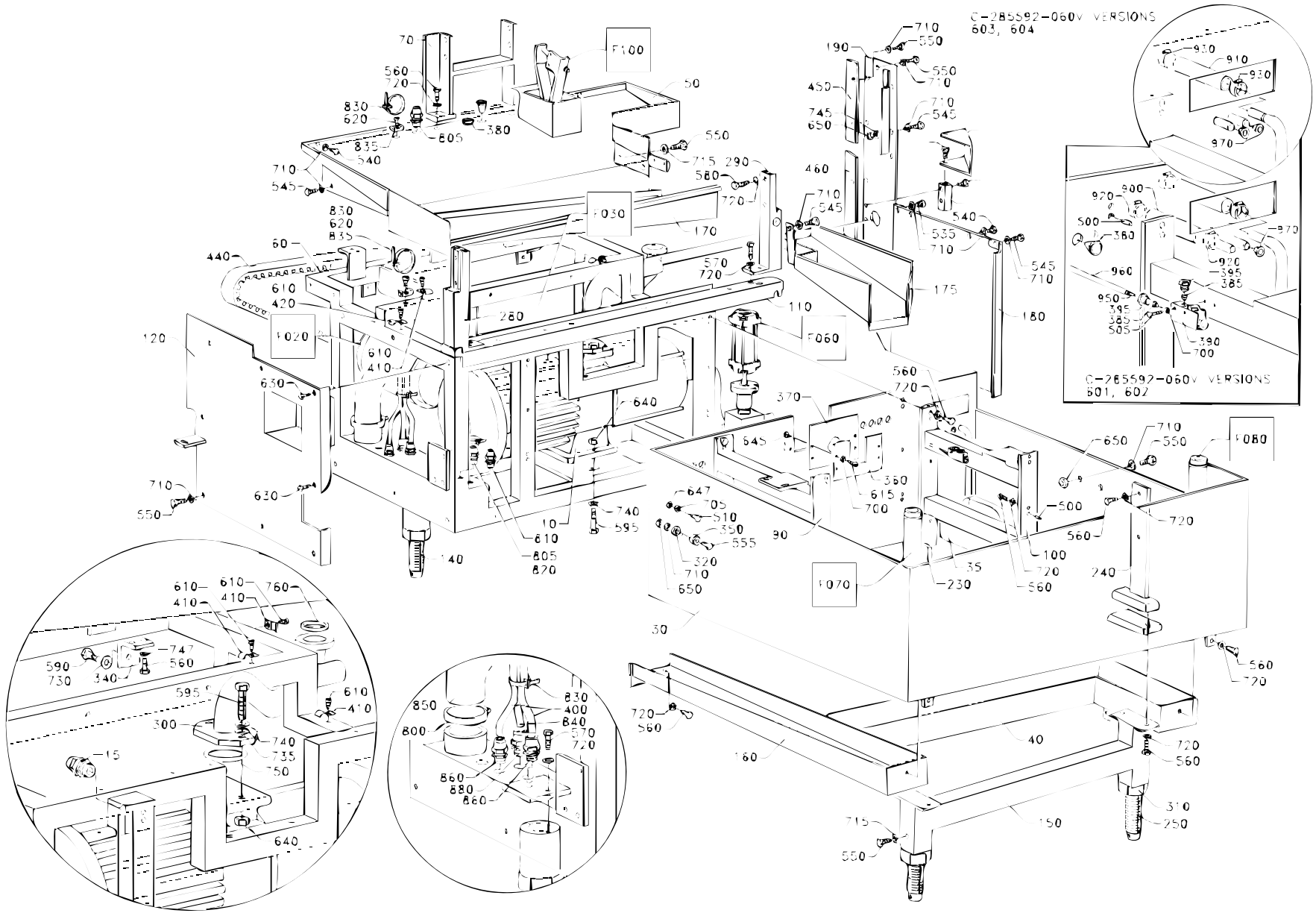

S-285592-6
ECN 22834

Pos	Part No	SP	UN	Qty	Description	Page No
720	315105-0165	-		31	WASHER BRB8,4X16RFR	
730	315105-0173	-		2	WASHER BRB10,5X22RFR	
735	315105-0178	-		2	WASHER BRB13X24RFR	
740	315115-0178	-		6	WASHER TBRB13X24RFR	
745	315115-0153	-		3	WASHER TBRB6,4X12RFR	
747	315115-0165	-		4	WASHER TBRB8,4X16RFR	
750	315202-0229	P		1	O-RING 59,2X5,7	
760	315250-0103	P		1	GASKET 48/38	
800	342991-0112	-		2	HOSE CLIP 68-85MMRFR	
805	352103-0100	-		4	CABLE GLANR.STR 9	
810	352103-0101	-		1	CABLE GLAND ST 9	
820	352113-0101	-		3	RIBBON CLA	
830	352113-0102	-		6	RIBBON CLA	
835	352113-0204	-		5	ANCHOR TM3S25-M	
840	90152-0051	-	MM	1000	FLEXIBLE CONDUIT	
850	90152-0044	-	MM	350	FLEXIBLE CONDUIT	
880	90012-0071	-		3	GLAND FITTING	
910	90166-0087	-	MM	630	HOSE	
930	342991-0103	-		2	HOSE CLIP 15-24MMRFR	
950	90134-0030	-		1	SLEEVE	
960	90166-0108	-	MM	870	HOSE	
F020	C- 285287-0501	-		1	DRIVE UNIT	**415**
F030	C- 285861-050V	-		1	GEAR REDUCTION	**417**
F060	C- 525143-0201	-		1	BOTTOM VALVE	**425**
F070	C- 525110-0101	-		1	CABLE CONDUIT	**423**
F080	C- 525110-0102	-		1	CABLE CONDUIT	**423**
F100	C- 297638-020V	-		1	CHAIN TENSIONER	**421**

Pos	Part No	SP	UN	Qty	Description	Page No

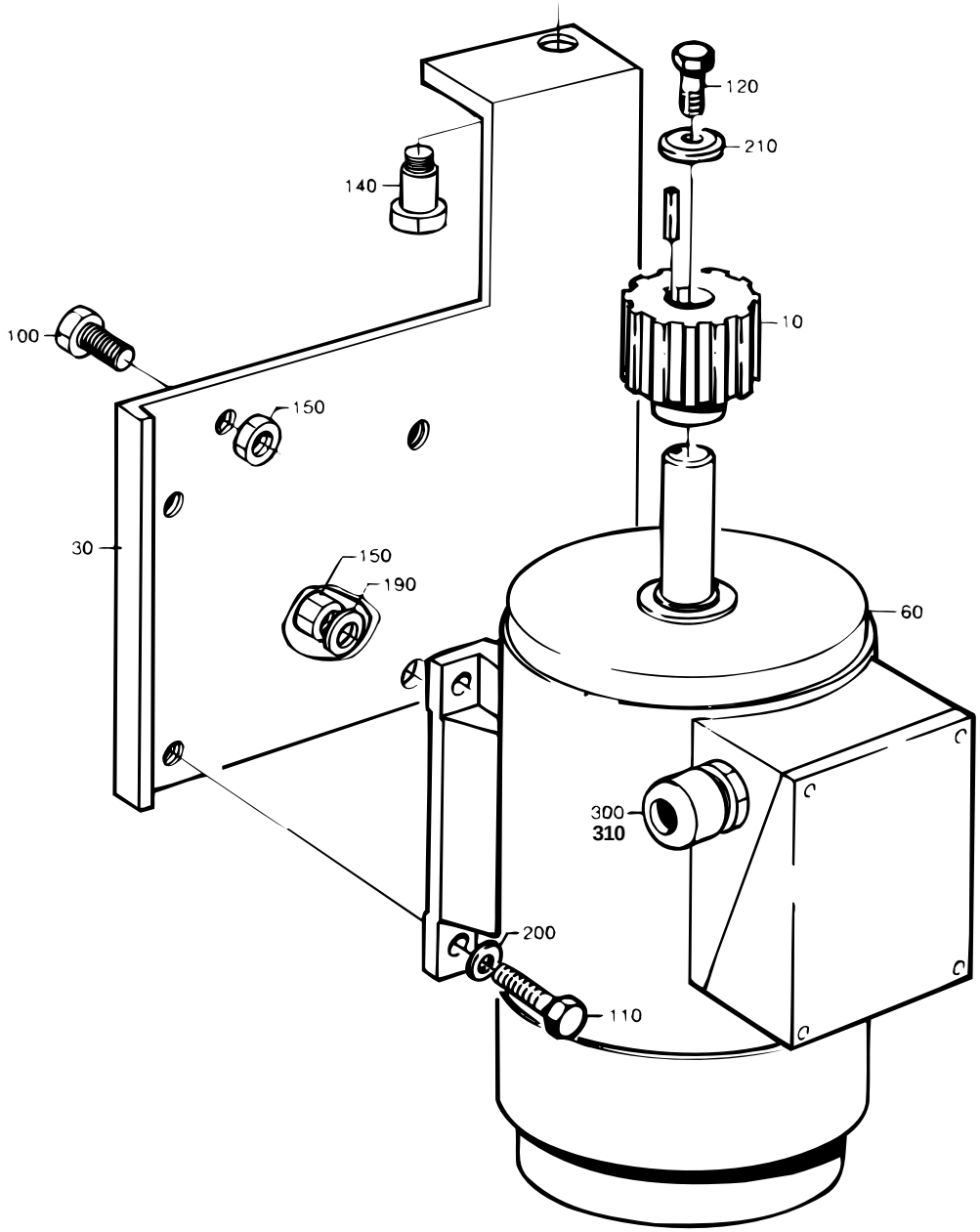

S-285287-3
ECN 22847

Pos	Part No	SP	UN	Qty	Description	Page No
-						
000	**C- 285287-0501**	**-**		**1**	**DRIVE UNIT**	
010	443336-0008	S		1	TIMING BELT PULLEY	
030	525166	-		1	MOTOR CRADLE	
060	90045-0049	S		1	MOTOR	
100	312101-0451	-		1	SCREW M6S8X20FZB	
110	312101-0453	-		3	SCREW M6S8X25FZB	
120	312101-0457	-		2	SCREW M6S8X35FZB	
140	312180-0530	-		2	REAMED BOL	
150	312601-0318	-		2	NUT M6M8FZB	
190	315101-0165	-		1	WASHER BRB8,4X16FZB	
200	315111-0165	-		4	WASHER TBRB8,4X16FZB	
210	315121-0165	-		1	WASHER TBRSB8,4X26FZB	
300	353245-0005	-		1	GLAND FITT	
310	90099-0178	-		1	LOOKING NUT PG 16	

Pos	Part No	SP	UN	Qty	Description	Page No

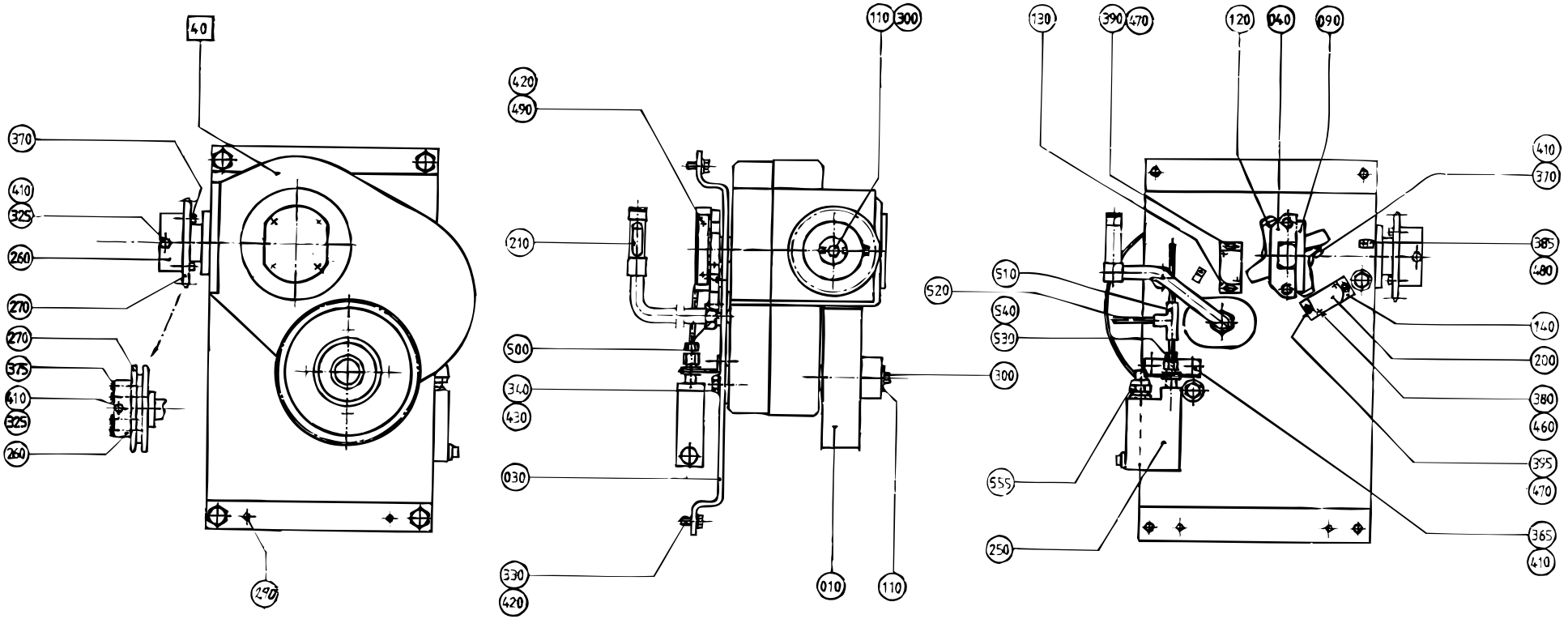

S-285861-5
ECN 70373

Pos	Part No	SP	UN	Qty	Description	Page No
VOLUMES 1136 B, 1055 B, 1000 B, 1000 S, 750 B, 750 S, 568 B, 500 B, 500 S, 400 B, 375 S, 355 B						
000	**C- 285861-0501**	**-**		**1**	**GEAR REDUCTION**	
260 1	525216	-		1	SLEEVE	
270 1	442500	S		1	SPROCKET	
370 1	312111-0370	-		7	SCREW MC6S6X20FZB	
VOLUMES 1000 Sq, 500 Sq						
000	**C- 285861-0502**	**-**		**1**	**GEAR REDUCTION**	
260 2	574081	-		1	SLEEVE	
270 2	574088	S		1	SPROCKET	
370 1	312111-0370	-		1	SCREW MC6S6X20FZB	
375	312104-0374	-		6	SCREW M6S6X30H8.8 FZB	
Common parts						
010	525215-0006	-		1	TIMING BELT PULLEY	
030	525109	-		1	BRACKET	
040	927332	-		1	BRACKET	
090	927333	-		1	BAR CLAMP	
110	285403	-		2	WASHER	
120	566775	-		1	CARRIER	
130	525337	-		1	BRACKET	
140	525232	-		1	BRACKET	
200	90044-0104	P		2	PROX.SWITCH IFM IN 3002	
210	443248	S		1	OIL PIPE	
250	90274-0002	S		1	PRESSURE SWITCH	
250a	90274-0300	R		0	* CONTACT HOUSING	
290	311112-0341	-		2	SLOTTED TURP 6X24 RFR	
300	312101-0370	-		2	SCREW M6S6X20FZB	
325	312101-0384	-		1	SCREW M6S6X70FZB	
330	312101-0451	-		4	SCREW M6S8X20FZB	
340	312101-0493	-		3	SCREW M6S10X25FZB	
365	312101-0364	-		2	SCREW	
380	312125-0228	-		2	SLOTTED HEMCS3X16RFR	
385	312125-0287	-		2	SLOTTED HEMCS4X8RFR	
390	312115-0295	-		2	SCREW O4762 M4X20A280	
395	312115-0291	-		2	SCREW O4762 M4X12A280	
410	315101-0153	-		4	WASHER BRB6,4X12FZB	
420	315101-0165	-		6	WASHER BRB8,4X16FZB	
430	315101-0173	-		3	WASHER BRB10,5X22FZB	
460	315105-0124	-		2	WASHER BRB3,2X6RFR	
470	315105-0136	-		4	WASHER BRB4,3X8RFR	
480	90165-0056	-		2	CLIP	
490	312105-0455	-		2	SCREW O4017 M8X30A280	
500	342720-0115	-		1	PIPE COUPLGA-16-1/2"	
510	342946-0112	-		1	T-CONNECTI6/4	
520	90166-0011	-	MM	3000	HOSE	
530	342706-0130	-		1	INSERT SLESH06	
540	342790-0202	-		1	GAUGE CONNMAV6-S/R3/8FZB	
555	90012-0073	-		1	GLAND FITTING	
F040	CR- 442582-0101	C		1	DRIVE GEAR **419**	
-	442581-SHEET 1	-			MEASURE DRAWING	

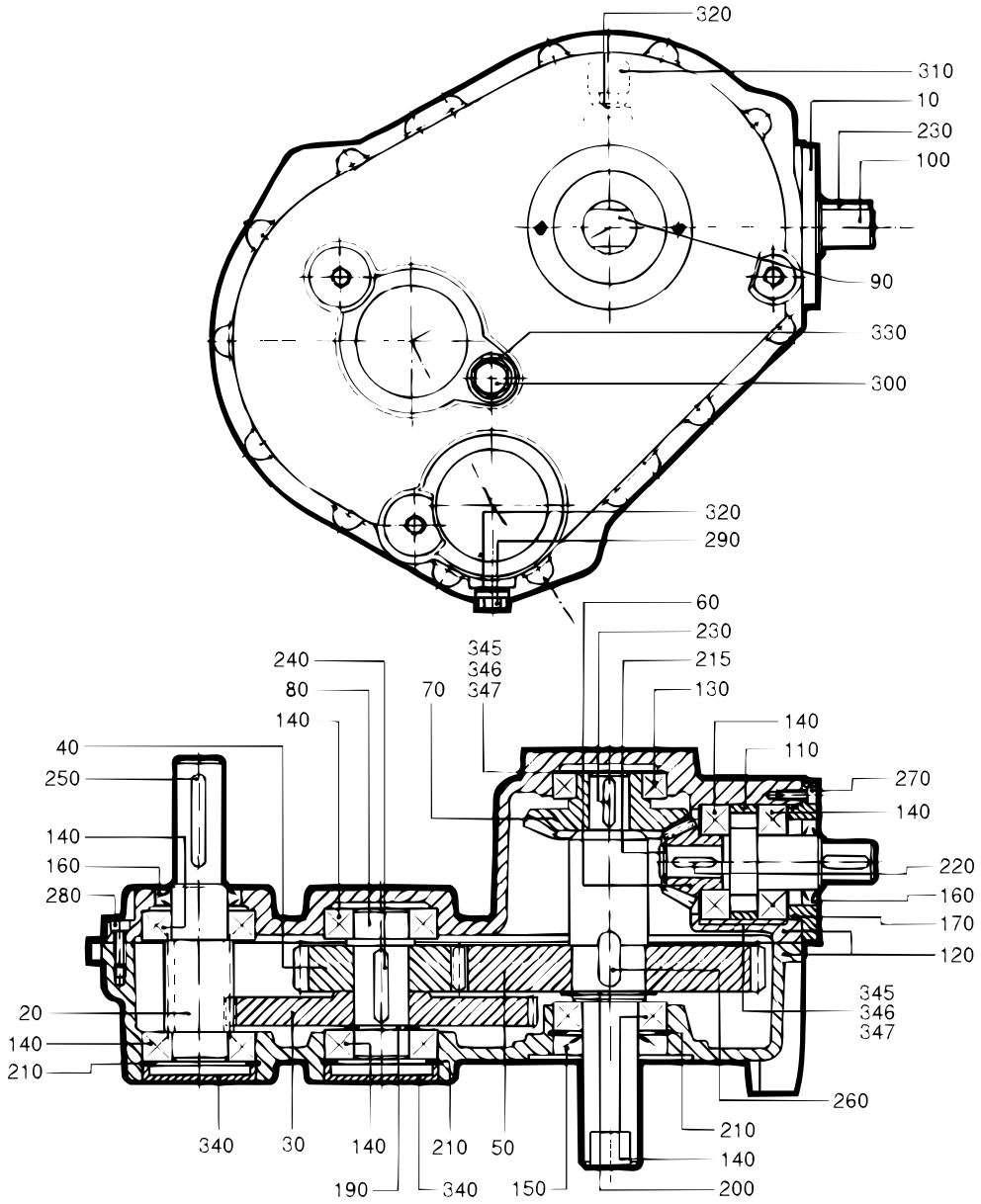

S-442582-1
ECN 5999

Pos	Part No	SP	UN	Qty	Description	Page No
-						
000	**CR- 442582-0101**	**C**		**1**	**DRIVE GEAR**	
010	567345	-		1	BEARING COVER	
020	442554	S		1	GEARING	
030	442555	S		1	GEAR WHEEL	
040	442556	S		1	GEAR WHEEL	
050	442557	S		1	GEAR WHEEL	
060	442558	S		1	GEAR WHEEL	
070	442559	S		1	GEAR WHEEL	
080	567347	S		1	SHAFT	
090	567348	S		1	SHAFT	
100	525136	S		1	SHAFT	
110	567349	S		1	SPACER	
120	567373	-		1	GEAR HOUSING	
130	321306-0107	S		1	BALL BEARISKF6007	
140	321309-0106	S		7	BALL BEARISKF6206	
150	90091-0145	S		1	SEAL RING	
160	90091-0054	S		2	SEAL RING	
170	90242-0116	S		1	O-RING	
190	315750-0122	S		1	CIRCLIP SGA30	
200	315750-0127	S		1	CIRCLIP SGA40	
210	315752-0136	S		3	CIRCLIP SGH62	
215	90141-0012	S		1	LOCK RING	
220	315701-0202	S		1	FLAT WEDGE5X5X22	
230	315701-0234	S		3	FLAT WEDGE6X6X25	
240	315701-0270	S		2	FLAT WEDGE8X7X40	
250	315701-0272	S		1	FLAT WEDGE8X7X50	
260	567350	S		2	WEDGE	
270	312111-0329	-		4	SCREW MC6S5X16FZB	
280	312111-0370	-		12	SCREW MC6S6X20FZB	
290	90330-0026	S		1	PLUG	
300	90330-0037	S		1	PLUG	
310	442841	S		1	AIR SCREW	
320	315234-0110	S		2	SEAL RING R1/4"	
330	315234-0113	S		1	SEAL RING R1/2"	
340	90214-0310	S		2	LID	
345	442903	S		X	SHIM	
346	442904	S		X	SHIM	
347	442905	S		X	SHIM	
390	90296-0075	S	ML	2400	OIL	

Pos	Part No	SP	UN	Qty	Description	Page No

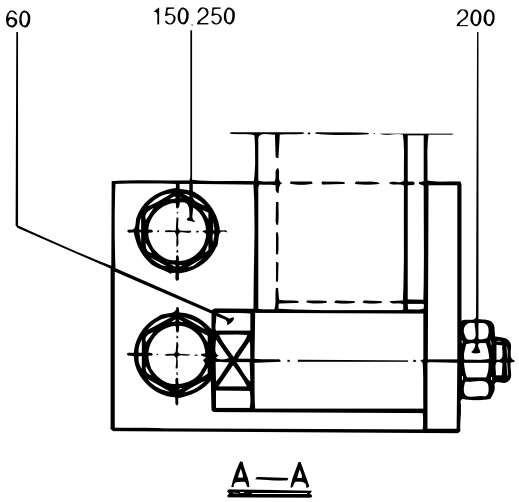
60
150 250
200
A—A

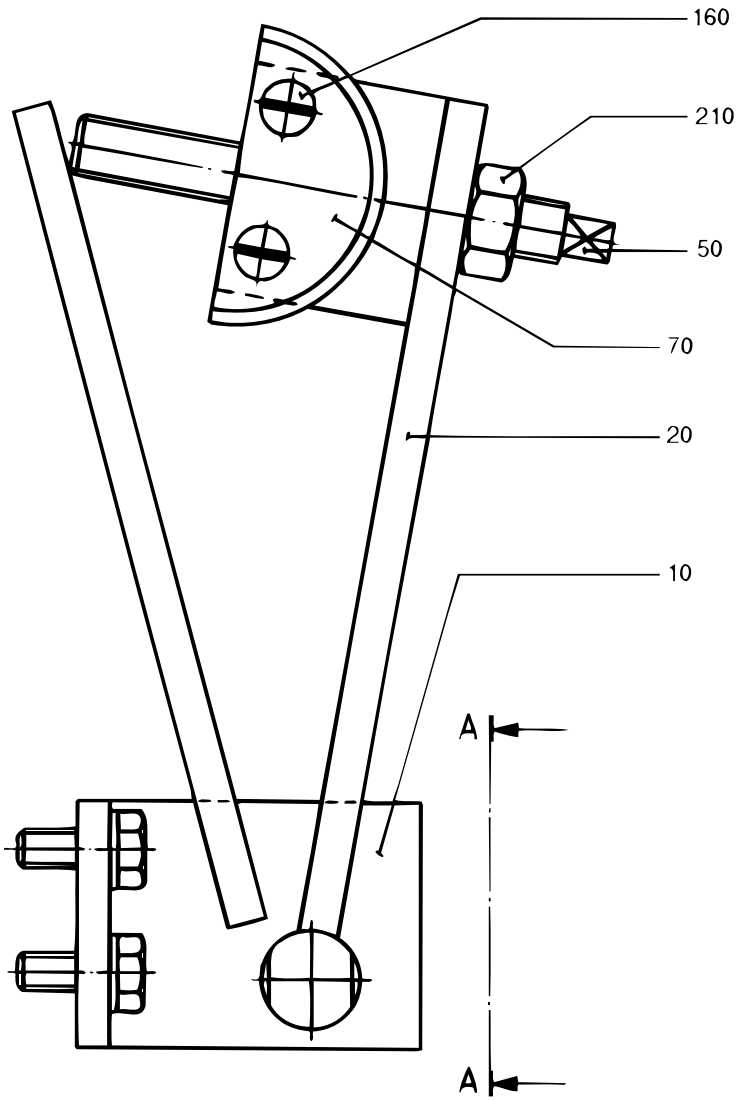
160
210
50
70
20
10
A
A

Pos	Part No	SP	UN	Qty	Description	Page No
VOLUMES 1136 B, 1055 B, 1000 B, 1000 S, 750 B, 750 S, 568 B, 500 B, 500 S, 400 B, 375 S, 355 B						
000	**C- 297638-0201**	**-**		**1**	**CHAIN TENSIONER**	
070	443367	P		1	PROFILE	
VOLUMES 1000 Sq, 500 Sq						
000	**C- 297638-0202**	**-**		**1**	**CHAIN TENSIONER**	
070	574093	P		1	PROFILE	
Common parts						
010	297608	-		1	BRACKET	
020	297609	-		1	ARM	
050	297610	-		1	SCREW	
060	297611	-		1	SHAFT	
150	312105-0451	-		2	SCREW SO4017 8X20A280	
160	312145-0378	-		2	SLOTTED HEMFS6X40RFR	
200	312605-0318	-		1	NUT M6M8RFR	
210	312605-0322	-		1	NUT M6M12RFR	
250	315105-0165	-		2	WASHER BRB8,4X16RFR	

Pos	Part No	SP	UN	Qty	Description	Page No

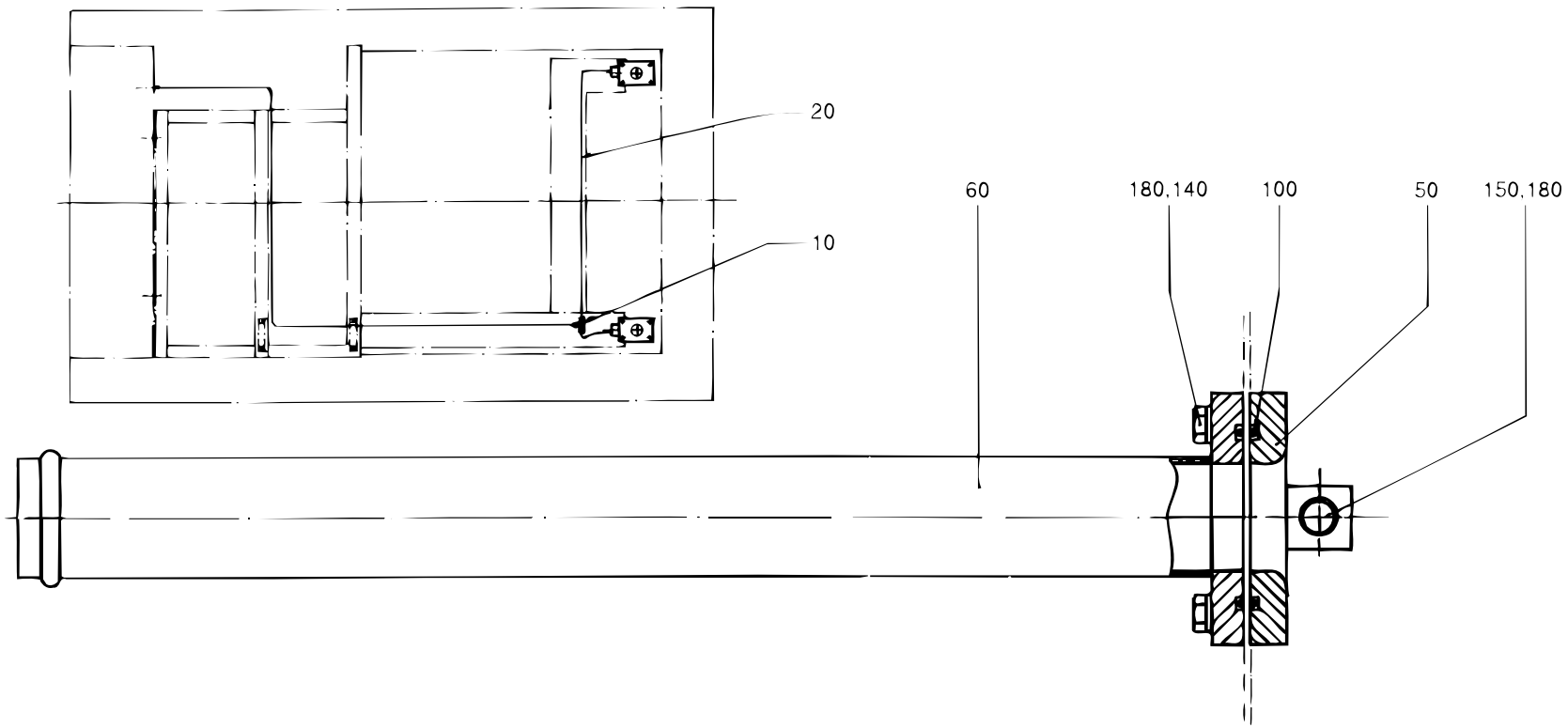
20
10
60
180,140
100
50
150,180

Pos	Part No	SP	UN	Qty	Description	Page No
LEFT						
000	**C- 525110-0101**	**-**		**1**	**CABLE CONDUIT**	
010	342946-0122	-		1	T-CONNECTI8/6	
020	90166-0122	-	MM	3150	HOSE	
RIGHT						
000	**C- 525110-0102**	**-**		**1**	**CABLE CONDUIT**	
020	90166-0122	-	MM	3600	HOSE	
Common parts						
050	525135	-		1	PLATE	
060	297413	-		1	PIPE	
090	90296-0009	S		X	GREASE	
100	315202-0301	-		2	O-RING 49,5X3	
140	312105-0370	-		4	SCREW O4017 M6X20A280	
150	312105-0364	-		1	SCREW M6S6X10RFR	
180	315105-0153	-		5	WASHER BRB6,4X12RFR	

Pos	Part No	SP	UN	Qty	Description	Page No

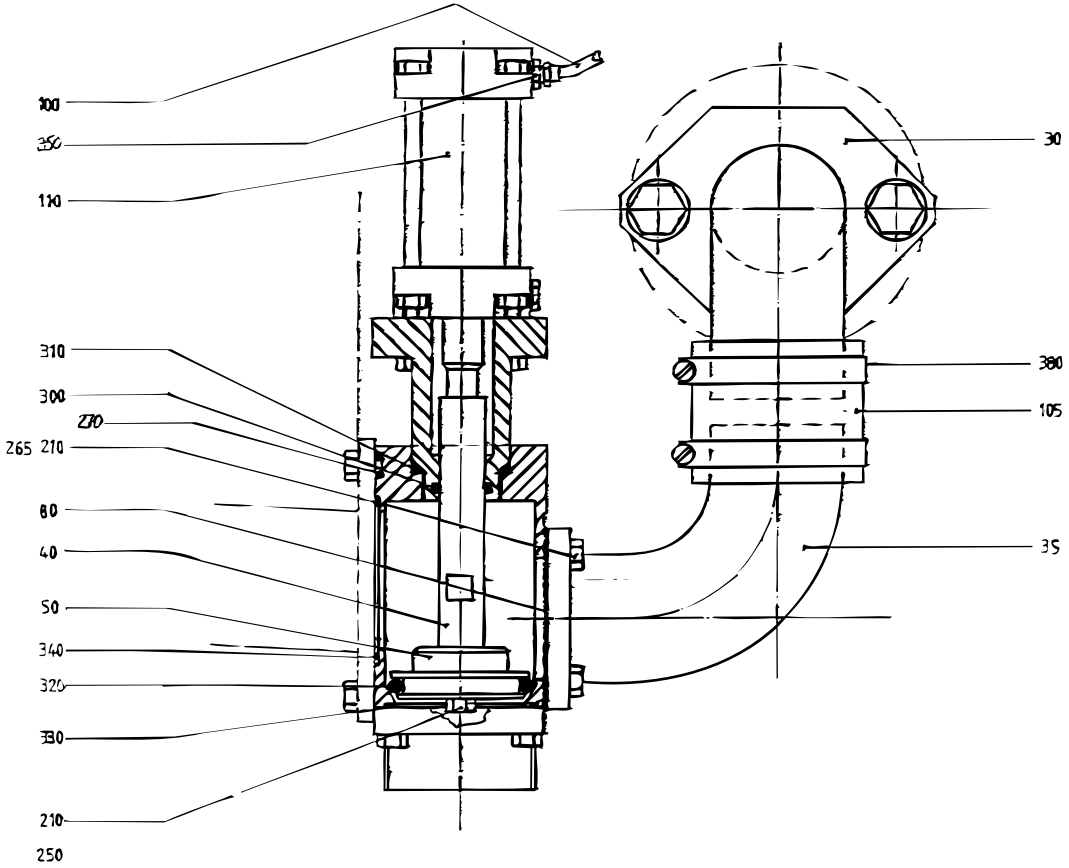
100
350
110
310
300
270
265
210
80
40
50
340
320
330
210
250
30
380
105
35

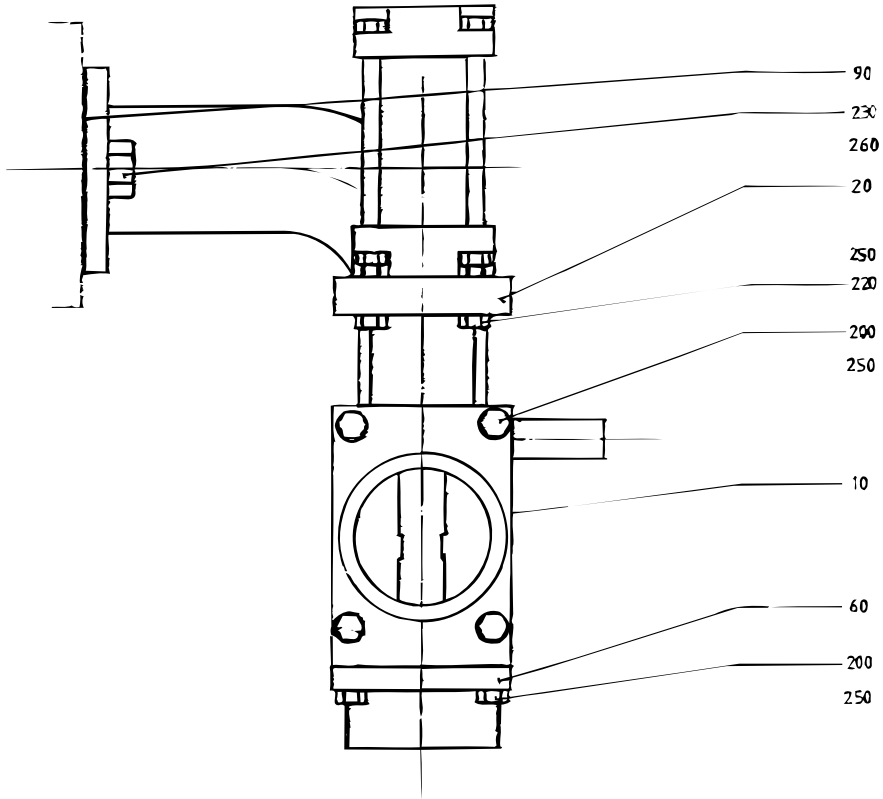
90
230
260
20
250
220
200
250
10
60
200
250

Pos	Part No	SP	UN	Qty	Description	Page No
-						
000	**C- 525143-0201**	**-**		**1**	**BOTTOM VALVE**	
010	443122	C		1	HOUSE	
020	443123	C		1	HOUSE	
030	525269	C		1	PIPE	
035	525270	C		1	PIPE	
040	442851	C		1	SHAFT	
050	442852	C		1	VALVE	
060	442853	-		1	ATTACHMENT PIPE	
080	531116	-		1	GASKET	
090	531189	-		1	GASKET	
100	90166-0124	S	MM	650	HOSE	
105	90166-0199	S	MM	80	RUBBER HOSE	
110	90239-0960	S		1	CYLINDER	
200	312105-0368	P		8	SCREW O4017 M6X16A280	
210	312105-0370	P		5	SCREW O4017 M6X20A280	
220	312105-0374	P		4	SCREW O4017 M6X30A280	
230	312105-0534	P		2	SCREW 4017 M12X25A280	
250	315105-0153	-		13	WASHER BRB6,4X12RFR	
260	315105-0178	-		2	WASHER BRB13X24RFR	
265	315115-0153	-		4	WASHER TBRB6,4X12RFR	
270	315202-0106	P		2	O-RING 8,1X1,6	
300	315202-0214	P		1	O-RING 17,3X2,4	
310	315202-0220	P		1	O-RING 32,2X3	
320	315202-0226	P		1	O-RING 44,2X5,7	
330	315202-0302	P		1	O-RING 54,5X3	
340	315202-0303	P		1	O-RING 59,5X3	
350	342920-0113	P		1	PIPE COUPL6/4-1/8	
380	342991-0111	S		2	HOSE CLIP 58-75MMRFR	

Pos	Part No	SP	UN	Qty	Description	Page No

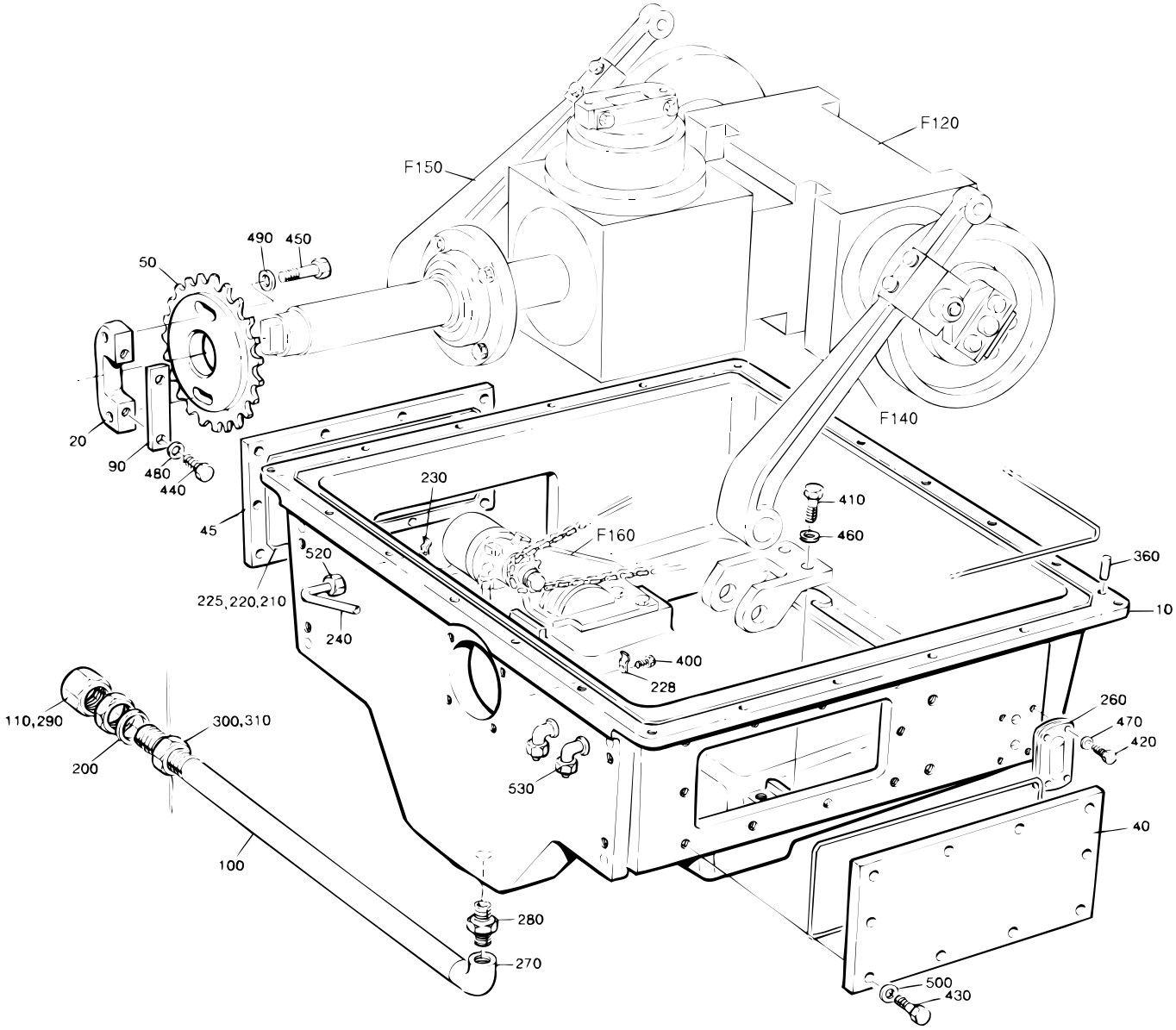
F120
F150
490
450
50
20
90
480
440
45
F140
230
410
460
F160
520
225,220,210
240
360
10
400
228
110,290
300,310
200
260
470
420
530
40
100
280
270
500
430

Pos	Part No	SP	UN	Qty	Description	Page No
-						
000	**C- 285303-0401**	**-**		**1**	**LOWER SECTION**	
010	G- 525276	-		1	HOUSE	
020	262274-0005	S		1	BRACKET	
040	525185	-		1	HATCH	
045	525377	-		1	HATCH	
050	443176	S		1	SPROCKET	
090	262275-0003	S		1	CAP	
100	443126	-		1	CONNECTION PIPE	
110	525047	-		2	GASKET	
200	525046	-		2	GASKET	
210	90296-0009	-		1	GREASE	
220	90161-0001	S	MM	3900	STRIP	
225	90153-0043	S		X	ADHESIVE	
228	90165-0003	-		2	CLIP	
230	90165-0005	-		3	CLIP	
240	90166-0124	P	MM	1500	HOSE	
260	90199-0004	S		1	LEVEL INDICATOR	
270	90330-0020	-		1	ELBOW PIPE	
280	90330-0021	-		1	NIPPLE	
290	90330-0086	-		1	COVER	
300	90330-0093	-		2	NUT	
310	90157-0034	-		1	SEALING COMPOUND	
360	311103-0399	-		2	CYLINDRICACP M6 8X16 RFR	
400	312101-0287	-		3	SCREW M6S4X8FZB	
410	312101-0453	-		4	SCREW M6S8X25FZB	
420	312105-0293	-		4	SCREW O4017 M4X16A280	
430	312105-0370	-		20	SCREW O4017 M6X20A280	
440	90287-0165	-		2	SCREW	
450	312105-0493	-		2	SCREW 4017 M10X25A280	
460	315101-0165	-		4	WASHER BRB8,4X16FZB	
470	315105-0136	-		4	WASHER BRB4,3X8RFR	
480	315105-0165	-		2	WASHER BRB8,4X16RFR	
490	315105-0173	-		2	WASHER BRB10,5X22RFR	
500	315115-0153	-		20	WASHER TBRB6,4X12RFR	
520	342920-0113	-		1	PIPE COUPL6/4-1/8	
530	342930-0113	-		4	ELBOW PIPE6/4-1/8	
F120	C- 285291-0401	-		1	BEVEL GEAR	**429**
F140	C- 285299-0101	-		1	PRESSURE ARM	**433**
F150	C- 285299-0102	-		1	PRESSURE ARM	**433**
F160	C- 525102-0201	-		1	LUBRICATING SYSTEM	**435**

Pos	Part No	SP	UN	Qty	Description	Page No

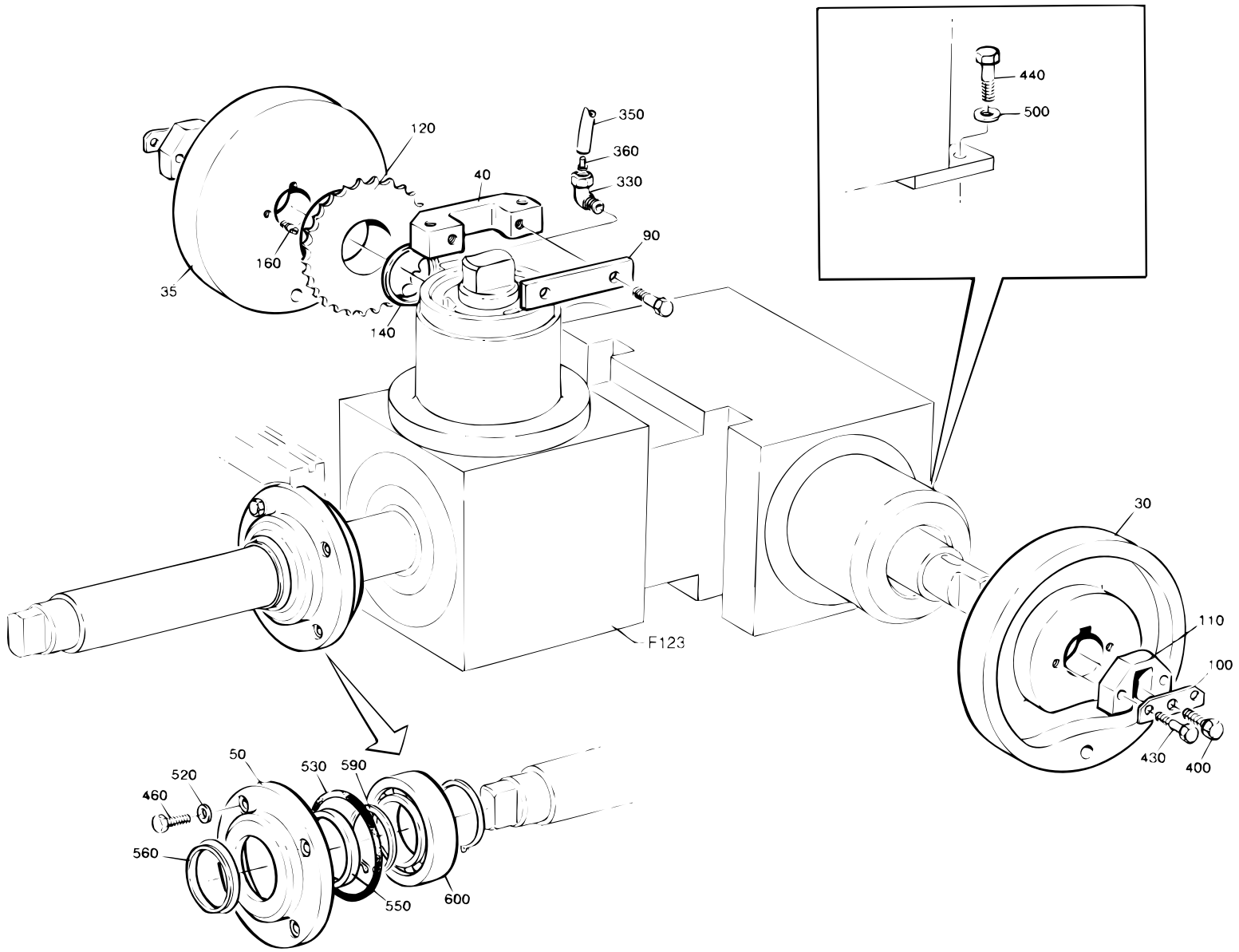
440
500
350
360
330
120
40
90
160
35
140
30
110
100
F123
430
400
50
520
530
590
460
560
550
600

Pos	Part No	SP	UN	Qty	Description	Page No
-						
000	**C- 285291-0401**	**-**		**1**	**BEVEL GEAR**	
030	285054	S		1	CURVE	
035	285055	S		1	CURVE	
040	262274-0002	S		1	BRACKET	
050	276613	-		1	LID	
090	262275-0002	S		1	CAP	
100	276636	S		2	WASHER	
110	285027	S		2	CARRIER	
120	443047	S		1	SPROCKET	
140	443052	-		1	SPACER RING	
160	443149	S		1	STUD SCREW	
330	342731-0102	S		1	ELBOW PIPE WE6-LRFZB	
350	90166-0108	S	MM	400	HOSE	
360	90134-0030	S		2	SLEEVE	
400	312101-0374	-		4	SCREW M6S6X30FZB	
430	312101-0451	-		4	SCREW M6S8X20FZB	
440	312101-0453	-		2	SCREW M6S8X25FZB	
460	312105-0371	-		4	SCREW M6S6X22RFR	
500	315101-0165	-		2	WASHER BRB8,4X16FZB	
520	315115-0153	-		4	WASHER TBRB6,4X12RFR	
530	315202-0309	S		1	O-RING 89,5X3	
550	315221-0200	S		1	SEAL RING CB50X72X8	
560	315226-0200	S		1	SEAL RING RB50X70X5,5	
590	315750-0131	S		2	CIRCLIP SGA50	
600	321309-0110	S		1	BALL BEARISKF6210	
F123	CR- 442644-0301	C		1	DOUBLE GEAR	**431**

Pos	Part No	SP	UN	Qty	Description	Page No

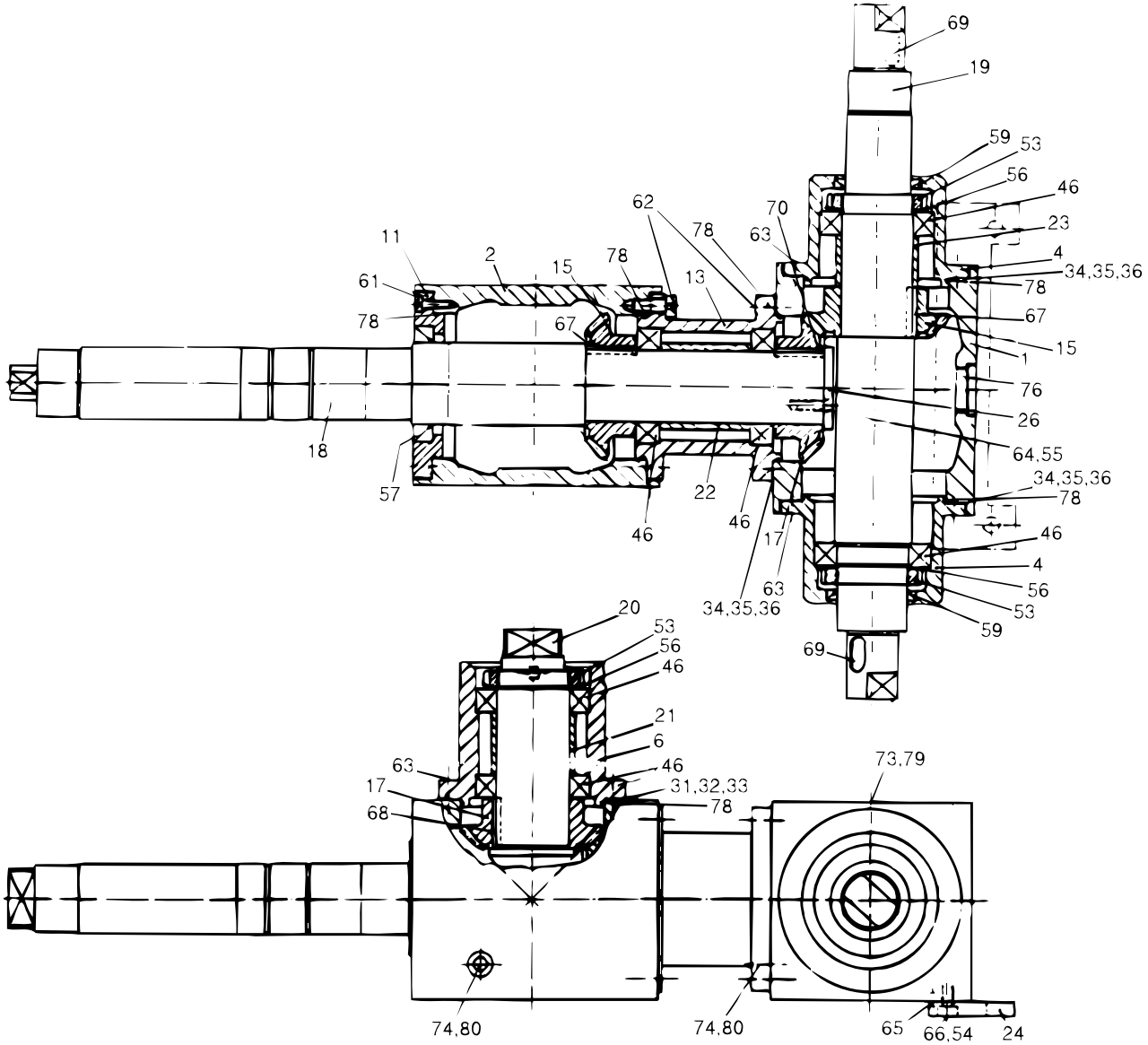
69
19
59
53
56
46
23
4
34,35,36
78
67
15
1
76
26
64,55
34,35,36
78
46
4
56
53
59
69
62
78
70
63
11
2
15
78
13
61
78
67
18
57
46
22
46
17
63
34,35,36
20
53
56
46
21
6
46
31,32,33
78
63
17
68
73,79
74,80
74,80
65
66,54
24

Pos	Part No	SP	UN	Qty	Description	Page No
-						
000	**CR- 442644-0301**	**C**		**1**	**DOUBLE GEAR**	
001	568151	-		1	GEAR HOUSING	
002	568152	-		1	GEAR HOUSING	
004	568153	-		2	BEARING SEAT	
006	568154	-		1	BEARING SEAT	
011	568155	-		1	BEARING COVER	
013	568156	-		1	FLANGE	
015	442613	S		2	GEAR WHEEL	
017	442614	S		2	GEAR WHEEL	
018	568157	S		1	SHAFT	
019	568158	S		1	SHAFT	
020	568159	S		1	SHAFT	
021	442615	S		1	SPACER	
022	442616	S		1	SPACER	
023	442617	S		1	SPACER	
024	568160	S		1	FASTENING PLATE	
026	568161	S		1	WASHER	
031	525331	S		1	SHIM	
032	443055	S		1	SHIM	
033	443056	S		1	SHIM	
034	525332	S		4	SHIM	
035	443057	S		4	SHIM	
036	443058	S		4	SHIM	
046	321306-0110	S		6	BALL BEARISKF6010	
053	312805-0110	S		3	ROUND NUT KM10	
054	315402-0173	S		2	WASHER FBB10,2RFR	
056	315410-0110	S		3	LOCK WASHESKFMB10	
057	90091-0202	S		1	SEAL RING	
059	90091-0143	S		2	SEAL RING	
061	312111-0370	S		4	SCREW MC6S6X20FZB	
062	312111-0453	S		8	SCREW MC6S8X25FZB	
063	312111-0451	S		12	SCREW MC6S8X20FZB	
064	312151-0451	S		2	SCREW MF6S8X20FZB	
065	311111-0305	S		2	SLOTTED TUFRP5X14	
066	312111-0491	S		2	SCREW MC6S10X20FZB	
067	315701-0363	S		2	FLAT WEDGE14X9X40	
068	568162	S		1	WEDGE	
069	315701-0296	S		2	FLAT WEDGE10X8X25	
070	315701-0363	S		1	FLAT WEDGE14X9X40	
078	90242-0118	S		6	O-RING	
079	90242-0120	S		1	O-RING	
080	90242-0121	S		2	O-RING	

Pos	Part No	SP	UN	Qty	Description	Page No
443174-SHEETMEASURE DRAWING		-				

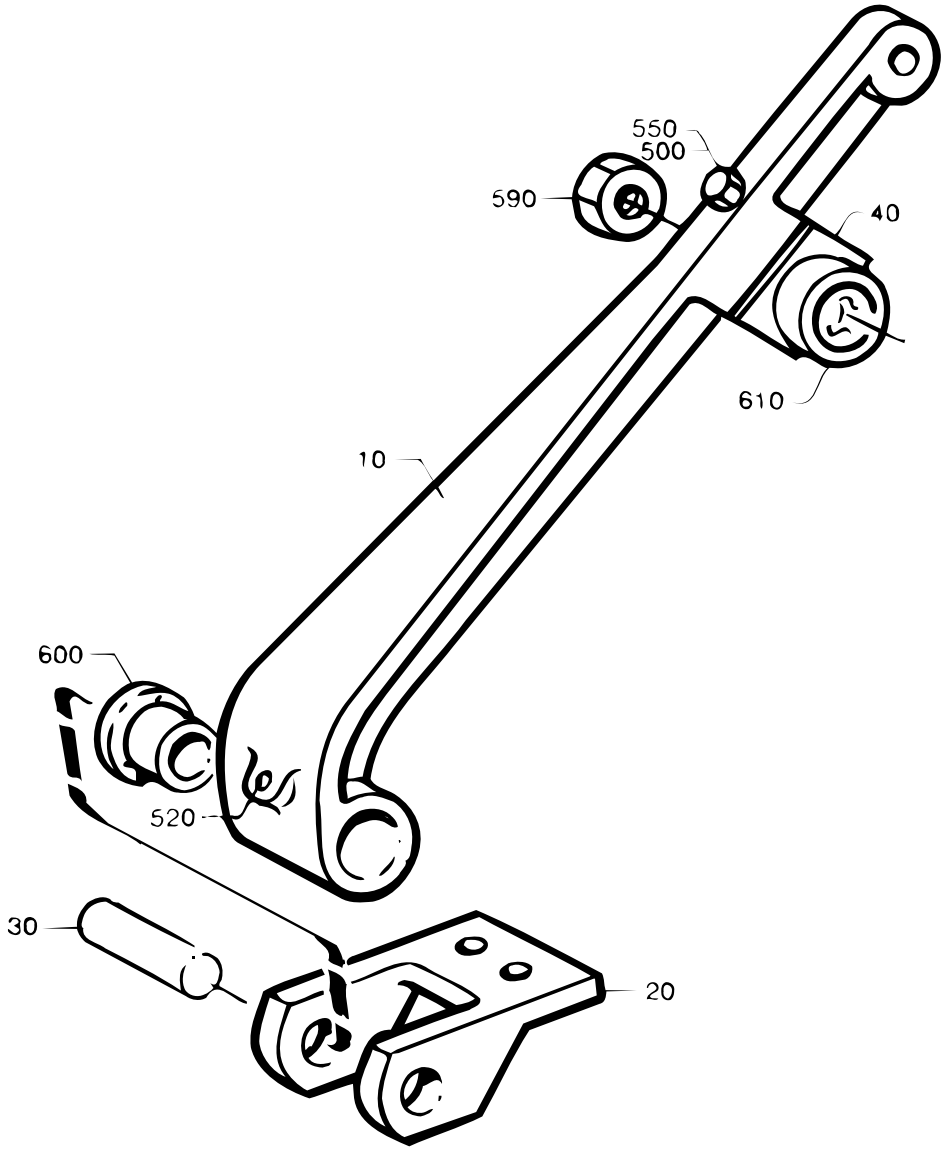
550
500
590
40
610
10
600
520
30
20

Pos	Part No	SP	UN	Qty	Description	Page No
LEFT PERFORMANCE						
000	**C- 285299-0101**	**-**		**1**	**PRESSURE ARM**	
RIGHT PERFORMANCE						
000	**C- 285299-0102**	**-**		**1**	**PRESSURE ARM**	
Common parts						
010	G- 442524	C		1	ARM	
020	285300	C		1	BRACKET	
030	262261	S		1	SHAFT	
040	442523	-		1	HOLDER	
500	312101-0379	-		2	SCREW M6S6X45FZB	
520	312311-0370	S		1	STOP SCREW T6SS6X20FZB	
550	315101-0153	-		2	WASHER BRB6,4X12FZB	
590	312631-0324	-		1	NUT M6M16X1,5FZB	
600	321101-0232	S		2	FLANGE BUS 20F7X16	
610	321582-0212	S		1	CURVE ROLLNUKR35	

Pos	Part No	SP	UN	Qty	Description	Page No

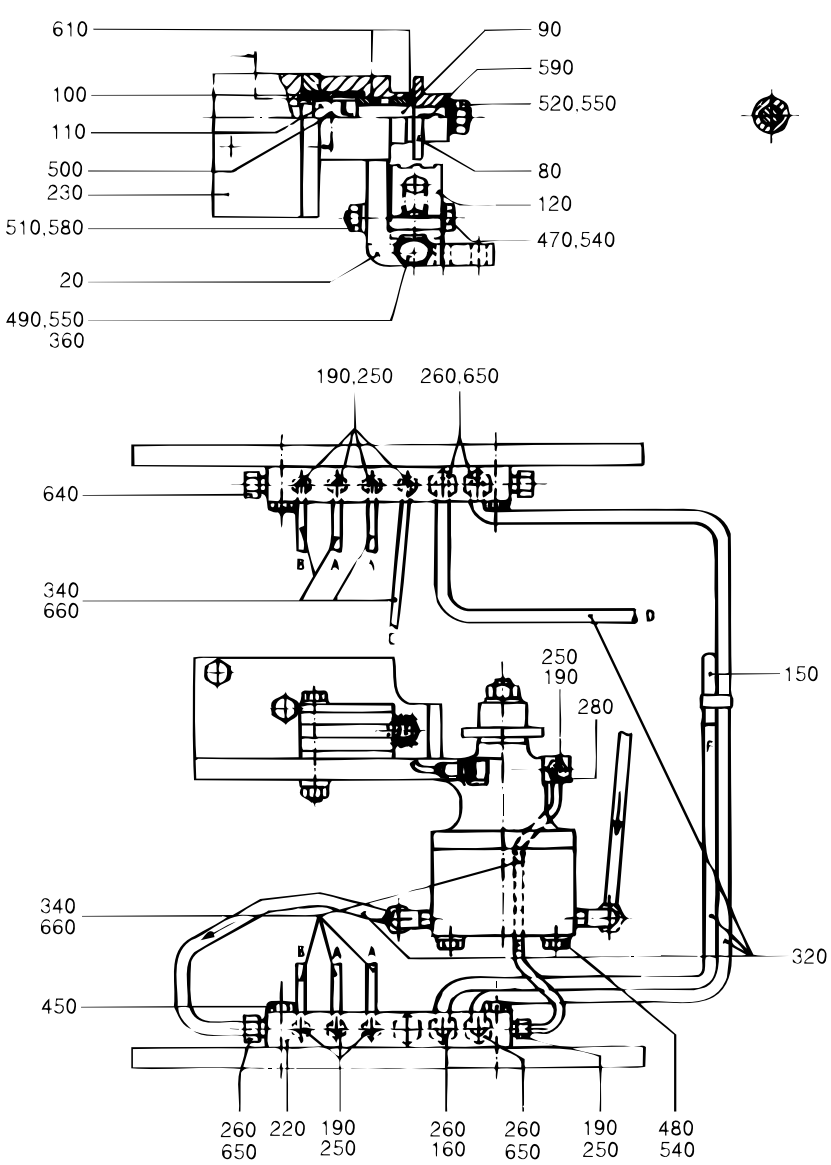
610
90
590
100
520,550
110
500
80
230
120
510,580
470,540
20
490,550
360
190,250
260,650
640
340
660
250
190
280
150
340
660
320
450
260
650
220
190
250
260
160
260
650
190
250
480
540

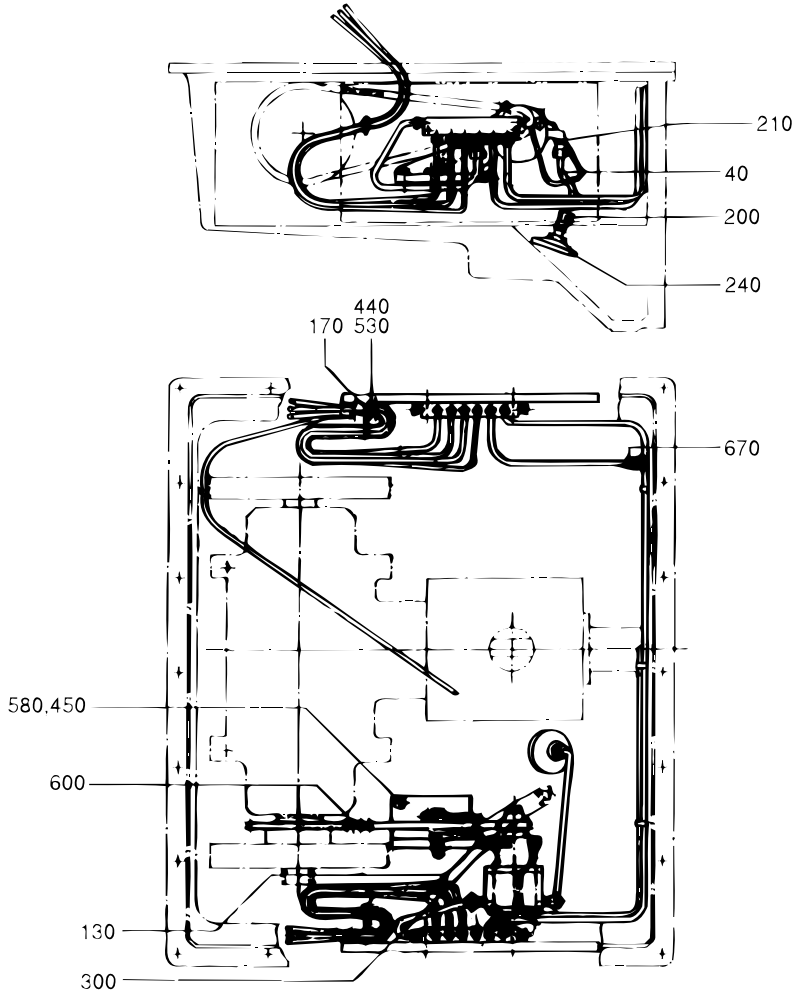
210
40
200
240
440
170
530
670
580,450
600
130
300

Pos	Part No	SP	UN	Qty	Description	Page No
-						
000	**C- 525102-0201**	**-**		**1**	**LUBRICATING SYSTEM**	
020	G- 525173	-		1	CANTILEVER	
040	443150	-		1	SUCTION TUBE	
080	443048	S		1	SPROCKET	
090	443049	S		1	SHAFT	
100	443050	-		1	GUIDE SLEEVE	
110	443051	S		1	CONNECTION	
120	443053	S		1	CHAIN GUIDE	
130	443151	S		1	PIPE	
150	525375	-		1	OIL PIPE	
170	525358	-		2	BRACKET	
180	525376	-		2	BOW CLAMP	
190	90028-0001	-		1	CONE	
200	90030-0107	-		1	PIPE CONNECTION	
210	90030-0222	-		2	ELBOW PIPE JOINT	
220	90032-0035	-		2	JUNCTION BLOCK	
230	90048-0033	-		1	GEAR PUMP	
240	90048-0420	-		1	FILTER	
250	90134-0003	-		1	BUSHING	
260	90134-0034	-		3	NIPPLE	
270	90092-0038	-		4	METERING VALVE	
275	90092-0081	-		5	METERING VALVE	
280	90137-0005	-		1	PIPE JOINT	
300	90137-0010	-		1	PIPE JOINT	
320	90166-0011	-	MM	1500	HOSE	
340	90166-0051	-	MM	4500	HOSE	
350	90230-0031	-		1	NON-RETURN VALVE	
360	90335-0012	-		1	SPRING	
370	90415-0033	-		1	OIL FILTER	
370a	90415-0330	S		1	* FILTER INSERT	
440	312101-0327	-		2	SCREW M6S5X12FZB	
450	312101-0370	-		6	SCREW M6S6X20FZB	
470	312101-0379	-		1	SCREW M6S6X45FZB	
480	312101-0380	-		2	SCREW M6S6X50FZB	
490	312101-0451	-		1	SCREW M6S8X20FZB	
495	312105-0388	-		2	SCREW O4014 M6X90A280	
500	312316-0283	-		1	STOP SCREW SK6SS4X4FZB	
510	312601-0316	-		1	NUT M6M6FZB	
520	312601-0318	-		1	NUT M6M8FZB	
530	315101-0146	-		2	WASHER BRB5,3X10FZB	
540	315101-0153	-		3	WASHER BRB6,4X12FZB	
550	315101-0165	-		2	WASHER BRB8,4X16FZB	
580	315111-0153	-		5	WASHER TBRB6,4X12FZB	
583	315233-0109	-		2	SEAL RING R1/8"	
585	315233-0110	-		2	SEAL RING R1/4"	
590	315701-0134	-		1	FLAT WEDGE3X3X10	
600	318201-0076	-		1	ROLLER CHA3/8"	
610	321101-0172	-		2	FLANGE BUS 12F7X10	
640	90136-0002	-		3	PLUG	
650	342706-0130	-		3	INSERT SLESH06	
660	342706-0114	-		16	INSERT SLESH04	
680	342921-0114	-		2	PIPE COUPL6/4-1/4"	
690	342960-0112	-		2	BULKHEAD L6/4	

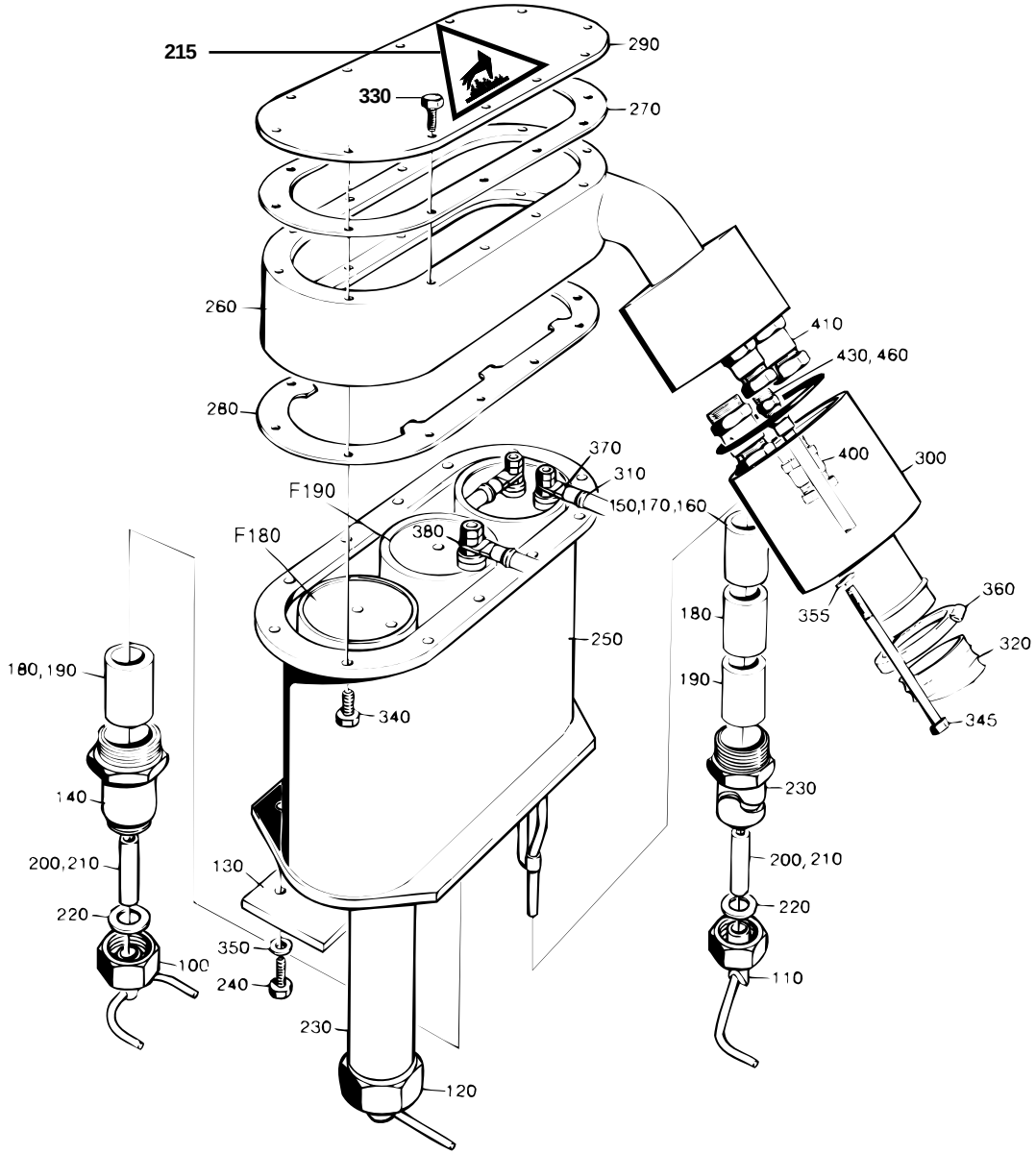
215
290
330
270
260
410
430, 460
280
370
400
300
310
F190
150,170,160
F180
380
360
355
180
320
250
180, 190
190
340
345
140
230
200, 210
200, 210
130
220
220
350
100
240
110
230
120

Pos	Part No	SP	UN	Qty	Description	Page No
VOLUME 1000 B						
000	**CR- 525129-0101**	**-**		**1**	**ELEMENT**	
100	247227-0003	S		1	AIR NOZZLE	
110	525197	S		1	BLOW-OFF NOZZLE TR	
120	525198	S		1	BLOW-OFF NOZZLE TL	
130	262290-0001	-		1	LACE	
140	23763-0004	-		1	SPACER PIPE	
150	23765-0001	S		2	INSULATING PIPE	
180	23765-0004	S		1	INSULATING PIPE	
200	252766-0001	S		3	INSULATING PIPE	
230	297499-0001	-		2	SIDE PIPE	
240	312105-0374	-		3	SCREW O4017 M6X30A280	
VOLUME 568 B						
000	**CR- 525129-0102**	**-**		**1**	**ELEMENT**	
100	247227-0003	S		1	AIR NOZZLE	
110	525197	S		1	BLOW-OFF NOZZLE TR	
120	525198	S		1	BLOW-OFF NOZZLE TL	
140	23763-0005	-		1	SPACER PIPE	
160	23765-0002	S		2	INSULATING PIPE	
190	23765-0005	S		1	INSULATING PIPE	
200	252766-0001	S		2	INSULATING PIPE	
210	252766-0002	S		1	INSULATING PIPE	
230	297499-0002	-		2	SIDE PIPE	
240	312105-0372	-		3	SCREW O4017 M6X25A280	
VOLUME 500 B						
000	**CR- 525129-0103**	**-**		**1**	**ELEMENT**	
100	247227-0003	S		1	AIR NOZZLE	
110	525197	S		1	BLOW-OFF NOZZLE TR	
120	525198	S		1	BLOW-OFF NOZZLE TL	
130	262290-0002	-		1	LACE	
140	23763-0003	-		1	SPACER PIPE	
160	23765-0002	S		2	INSULATING PIPE	
180	23765-0004	S		1	INSULATING PIPE	
200	252766-0001	S		3	INSULATING PIPE	
230	297499-0002	-		2	SIDE PIPE	
240	312105-0376	-		3	SCREW O4017 M6X35A280	
VOLUME 750 B						
000	**CR- 525129-0111**	**-**		**1**	**ELEMENT**	
100	247227-0003	S		1	AIR NOZZLE	
110	525197	S		1	BLOW-OFF NOZZLE TR	
120	525198	S		1	BLOW-OFF NOZZLE TL	
140	23763-0005	-		1	SPACER PIPE	
160	23765-0002	S		2	INSULATING PIPE	
180	23765-0004	S		1	INSULATING PIPE	
190	23765-0005	S		2	INSULATING PIPE	
210	252766-0002	S		3	INSULATING PIPE	
230	297499-0008	-		2	SIDE PIPE	
240	312105-0372	-		3	SCREW O4017 M6X25A280	
VOLUME 500 S						
000	**CR- 525129-0112**	**-**		**1**	**ELEMENT**	
100	442867	S		1	AIR NOZZLE	
110	285676	S		1	AIR NOZZLE	
120	285677	S		1	AIR NOZZLE	
140	23763-0006	-		1	SPACER PIPE	
170	23765-0003	S		2	INSULATING PIPE	
180	23765-0004	S		2	INSULATING PIPE	
190	23765-0005	S		3	INSULATING PIPE	
200	252766-0001	S		4	INSULATING PIPE	
210	252766-0002	S		1	INSULATING PIPE	
230	297499-0003	-		2	SIDE PIPE	
240	312105-0372	-		3	SCREW O4017 M6X25A280	
VOLUME 375 S						
000	**CR- 525129-0113**	**-**		**1**	**ELEMENT**	
100	247227-0002	S		1	AIR NOZZLE	
110	285507-0002	S		1	AIR NOZZLE	
120	285508-0002	S		1	AIR NOZZLE	
140	23763-0010	-		1	SPACER PIPE	
170	23765-0003	S		2	INSULATING PIPE	
180	23765-0004	S		4	INSULATING PIPE	
190	23765-0005	S		1	INSULATING PIPE	
210	252766-0002	S		3	INSULATING PIPE	
230	297499-0009	-		2	SIDE PIPE	
240	312105-0372	-		3	SCREW O4017 M6X25A280	
VOLUME 1055 B						
000	**CR- 525129-0114**	**-**		**1**	**ELEMENT**	
100	247227-0003	S		1	AIR NOZZLE	
110	525197	S		1	BLOW-OFF NOZZLE TR	
120	525198	S		1	BLOW-OFF NOZZLE TL	
130	262290-0001	-		1	LACE	
140	23763-0004	-		1	SPACER PIPE	
160	23765-0002	S		2	INSULATING PIPE	
180	23765-0004	S		5	INSULATING PIPE	

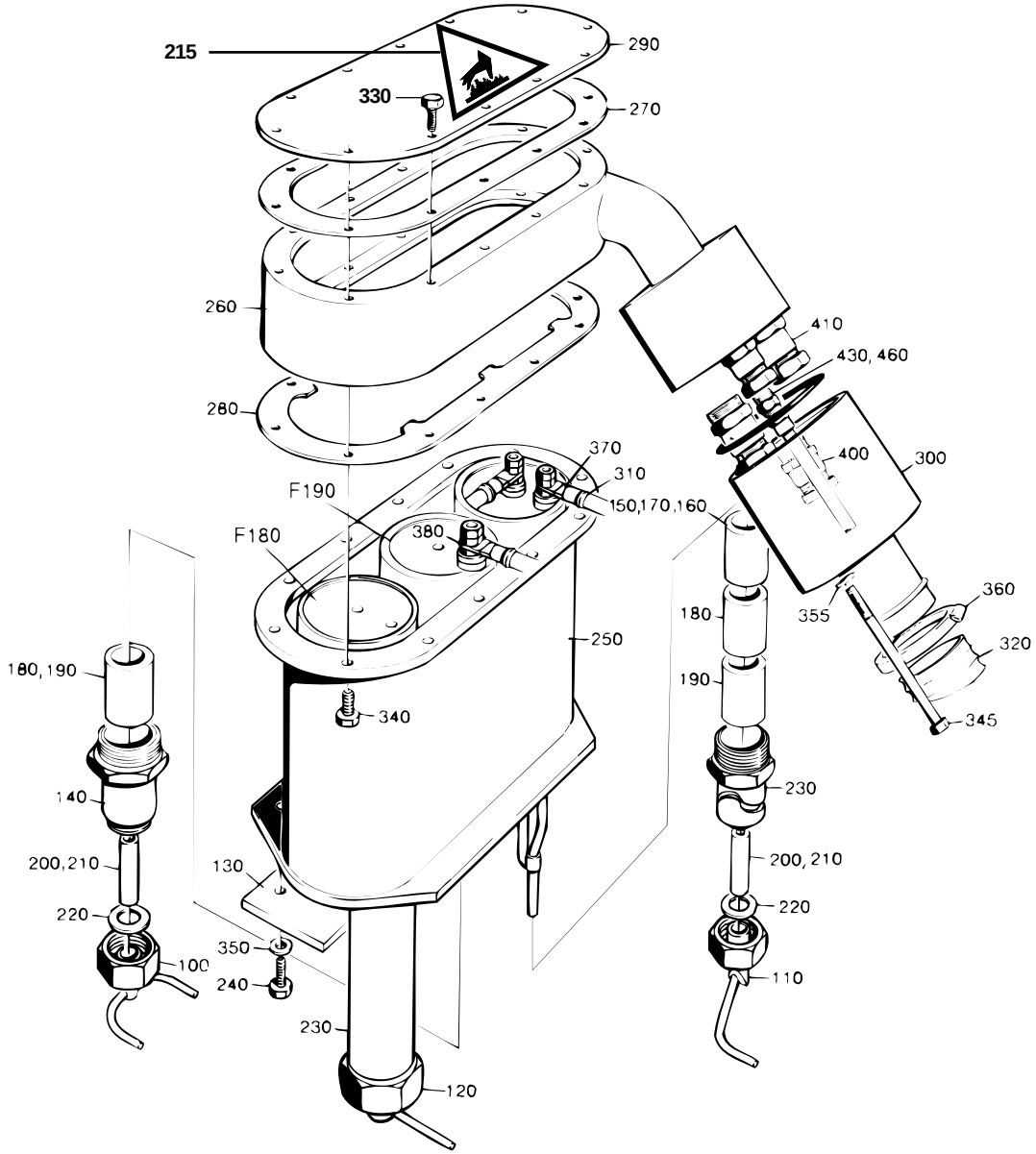
215
290
330
270
260
410
430, 460
280
370
400
300
310
F190
150,170,160
F180
380
360
355
180
320
250
180, 190
190
340
345
140
230
200, 210
200, 210
130
220
220
350
100
240
110
230
120

Pos	Part No	SP	UN	Qty	Description	Page No
200	252766-0001	S		3	INSULATING PIPE	
230	443158	-		2	SIDE PIPE	
240	312105-0374	-		3	SCREW O4017 M6X30A280	
VOLUME 355 B						
000	**CR- 525129-0115**	**-**		**1**	**ELEMENT**	
100	442867	S		1	AIR NOZZLE	
110	285676	S		1	AIR NOZZLE	
120	285677	S		1	AIR NOZZLE	
140	23763-0006	-		1	SPACER PIPE	
180	23765-0004	S		4	INSULATING PIPE	
190	23765-0005	S		1	INSULATING PIPE	
200	252766-0001	S		4	INSULATING PIPE	
210	252766-0002	S		1	INSULATING PIPE	
230	297499-0007	-		2	SIDE PIPE	
240	312105-0372	-		3	SCREW O4017 M6X25A280	
VOLUME 750 S						
000	**CR- 525129-0116**	**-**		**1**	**ELEMENT**	
100	544298	S		1	BLOWING NOZZLE B	
110	544293	S		1	BLOW-OFF NOZZLE TH	
120	544269	S		1	BLOW-OFF NOZZLE TV	
130	262290-0001	-		1	LACE	
140	23763-0004	-		1	SPACER PIPE	
160	23765-0002	S		2	INSULATING PIPE	
180	23765-0004	S		5	INSULATING PIPE	
200	252766-0001	S		3	INSULATING PIPE	
230	443158	-		2	SIDE PIPE	
240	312105-0374	-		3	SCREW O4017 M6X30A280	
VOLUME1136 B						
000	**CR- 525129-0117**	**-**		**1**	**ELEMENT**	
100	247227-0003	S		1	AIR NOZZLE	
110	525197	S		1	BLOW-OFF NOZZLE TR	
120	525198	S		1	BLOW-OFF NOZZLE TL	
130	262290-0001	-		1	LACE	
140	23763-0004	-		1	SPACER PIPE	
160	23765-0002	S		2	INSULATING PIPE	
170	23765-0003	S		2	INSULATING PIPE	
180	23765-0004	S		3	INSULATING PIPE	
200	252766-0001	S		1	INSULATING PIPE	
210	252766-0002	S		2	INSULATING PIPE	
230	548402	-		2	SIDE PIPE	
240	312105-0374	-		3	SCREW O4017 M6X30A280	
VOLUME 1000 S						
000	**CR- 525129-0118**	**-**		**1**	**ELEMENT**	
100	569124	S		1	AIR NOZZLE	
110	569125	S		1	AIR NOZZLE	
120	569126	S		1	AIR NOZZLE	
130	262290-0001	-		1	LACE	
140	23763-0004	-		1	SPACER PIPE	
160	23765-0002	S		2	INSULATING PIPE	
170	23765-0003	S		2	INSULATING PIPE	
180	23765-0004	S		3	INSULATING PIPE	
200	252766-0001	S		1	INSULATING PIPE	
210	252766-0002	S		2	INSULATING PIPE	
230	548402	-		2	SIDE PIPE	
240	312105-0374	-		3	SCREW O4017 M6X30A280	
VOLUME 400 B						
000	**CR- 525129-0119**	**-**		**1**	**ELEMENT**	
100	442867	S		1	AIR NOZZLE	
110	574676	S		1	AIR NOZZLE	
120	574677	S		1	AIR NOZZLE	
140	23763-0006	-		1	SPACER PIPE	
170	23765-0003	S		2	INSULATING PIPE	
180	23765-0004	S		2	INSULATING PIPE	
190	23765-0005	S		3	INSULATING PIPE	
210	252766-0002	S		3	INSULATING PIPE	
230	297499-0003	-		2	SIDE PIPE	
240	312105-0372	-		3	SCREW O4017 M6X25A280	
VOLUME 1000 Sq						
000	**CR- 525129-0120**	**-**		**1**	**ELEMENT**	
100	574032	S		1	BLOWING NOZZLE B	
110	574033	S		1	BLOWING NOZZLE TH	
120	574034	S		1	BLOWING NOZZLE TV	
130	262290-0001	-		1	LACE	
140	23763-0006	-		1	SPACER PIPE	
160	23765-0002	S		2	INSULATING PIPE	
180	23765-0004	S		4	INSULATING PIPE	
190	23765-0005	S		1	INSULATING PIPE	
200	252766-0001	S		3	INSULATING PIPE	
230	443158	-		2	SIDE PIPE	
240	312105-0374	-		3	SCREW O4017 M6X30A280	
VOLUME 500 Sq						
000	**CR- 525129-0121**	**-**		**1**	**ELEMENT**	

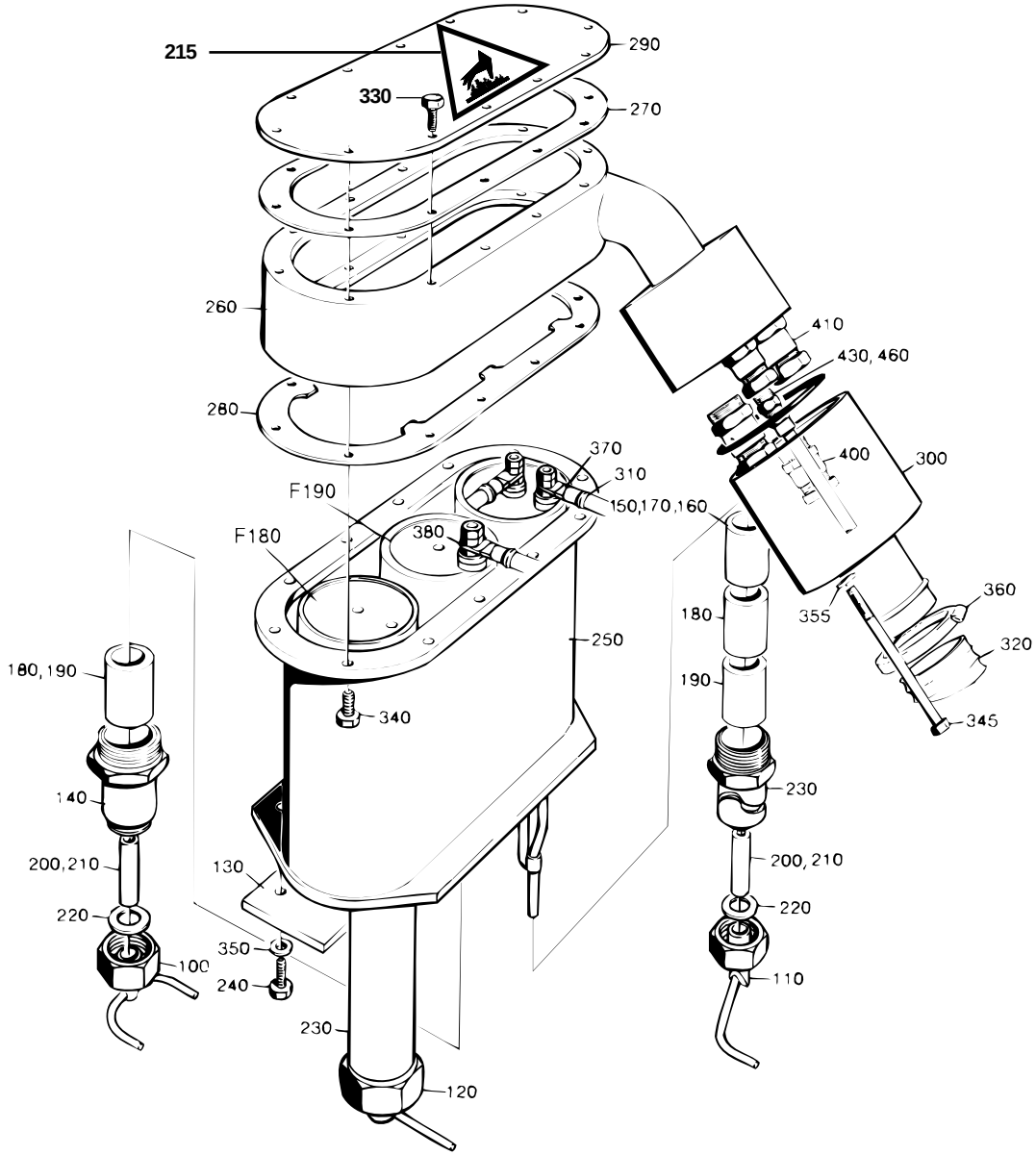
215
290
330
270
260
410
430, 460
280
370
400
300
310
F190
150,170,160
F180
380
360
355
180
320
250
180, 190
190
340
345
140
230
200, 210
130
200, 210
220
220
350
100
240
110
230
120

Pos	Part No	SP	UN	Qty	Description	Page No
100	574032	S		1	BLOWING NOZZLE B	
110	574033	S		1	BLOWING NOZZLE TH	
120	574034	S		1	BLOWING NOZZLE TV	
130	262290-0001	-		1	LACE	
140	23763-0006	-		1	SPACER PIPE	
160	23765-0003	S		2	INSULATING PIPE	
180	23765-0004	S		4	INSULATING PIPE	
190	23765-0005	S		1	INSULATING PIPE	
200	252766-0001	S		1	INSULATING PIPE	
210	252766-0002	S		2	INSULATING PIPE	
230	583448	-		2	SIDE PIPE	
240	312105-0374	-		3	SCREW O4017 M6X30A280	
Common parts						
215	359710-0002	-		1	WARNING SIGN"HOT SURFACE"	
220	263673	P		6	GASKET	
250	262272	-		1	HEATING CHAMBER	
260	525071	-		1	SPACER PIECE	
270	531730	S		3	FLANGE SEAL	
280	23769	-		1	STOP PLATE	
290	262288	-		1	LID	
300	525073	-		1	COVER	
310	525070	-		1	ELECTRICAL CONNECTION	
310a	351121-0109	S		0	* CABLE RHH 16	
310b	353102-0168	S		0	* CABLE SHYAEV16-M6	
320	352135-0116	S	MM	500	FLEXIBLE CG DIA 40	
330	312105-0325	-		12	SCREW M6S5X10 A2 80	
340	312105-0328	-		12	SCREW M6S5X14 A2 80	
345	312105-0388	-		2	SCREW O4014 M6X90A280	
350	315115-0153	-		3	WASHER TBRB6,4X12RFR	
355	315105-0153	-		2	WASHER BRB6,4X12RFR	
360	342991-0109	S		2	HOSE CLIP 44-56MMRFR	
370	353104-0168	P		2	CABLE SHOEYAV 16 M6*	
380	353104-0182	P		2	CABLE SHOEYAV 35 M6*	
400	352103-0106	-		2	CABLE GLAND ST 11	
410	352103-0111	-		2	CABLE GLAND ST 16;10-14MM	
430	342921-0121	-		1	PIPE COUPL8/6-1/8"	
460	315234-0109	-		1	SEAL RING R1/8"	
F180	CR- 31390-010V	-		2	ELEMENT	**443**
F190	CR- 31390-011V	-		1	ELEMENT	**445**

Pos	Part No	SP	UN	Qty	Description	Page No

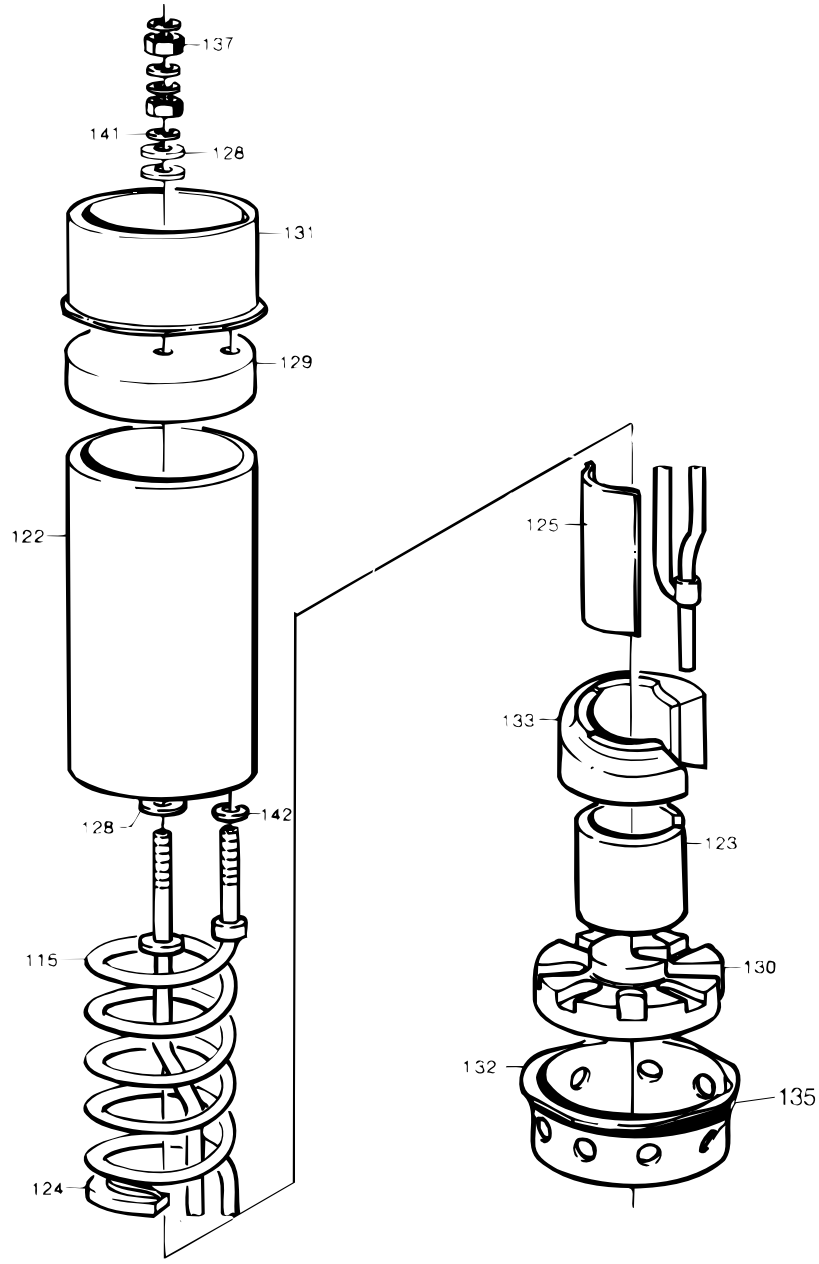

S-31390-1
ECN 13601

Pos	Part No	SP	UN	Qty	Description	Page No
VOLUMES 1136 B, 1055 B, 1000 B, 1000 S, 750 S, 1000 Sq						
000	**CR- 31390-0101**	**-**		**2**	**ELEMENT**	
115	30310-0001	S		1	HEATING ELEMENT	
VOLUMES 750 B, 568 B, 500 B, 375 S, 500 S, 400 B						
000	**CR- 31390-0102**	**-**		**2**	**ELEMENT**	
115	30310-0002	P		1	HEATING ELEMENT	
VOLUME 355 B, 500 Sq						
000	**CR- 31390-0103**	**-**		**2**	**ELEMENT**	
115	30310-0003	-		1	HEATING ELEMENT	
Common parts						
122	20705-0001	S		1	INSULATING PIPE	
123	29411	S		1	SPACER PIPE	
124	29413	S		12	LACE	
125	31653-0001	S		1	SHEET	
128	525233	S		5	GASKET	
129	20772	S		1	INSULATOR BODY	
130	37536	S		1	INSULATOR BODY	
131	23771	S		1	SPACER RING	
132	37537	S		1	SPACER RING	
133	37535	S		1	SUPPORTING PART	
135	90145-0005	-	M	1	WIRE	
137	312605-0316	-		6	NUT M6M6 A280 STAINLESS	
141	315105-0153	-		4	WASHER BRB6,4X12RFR	
142	315115-0153	-		1	WASHER TBRB6,4X12RFR	

Pos	Part No	SP	UN	Qty	Description	Page No

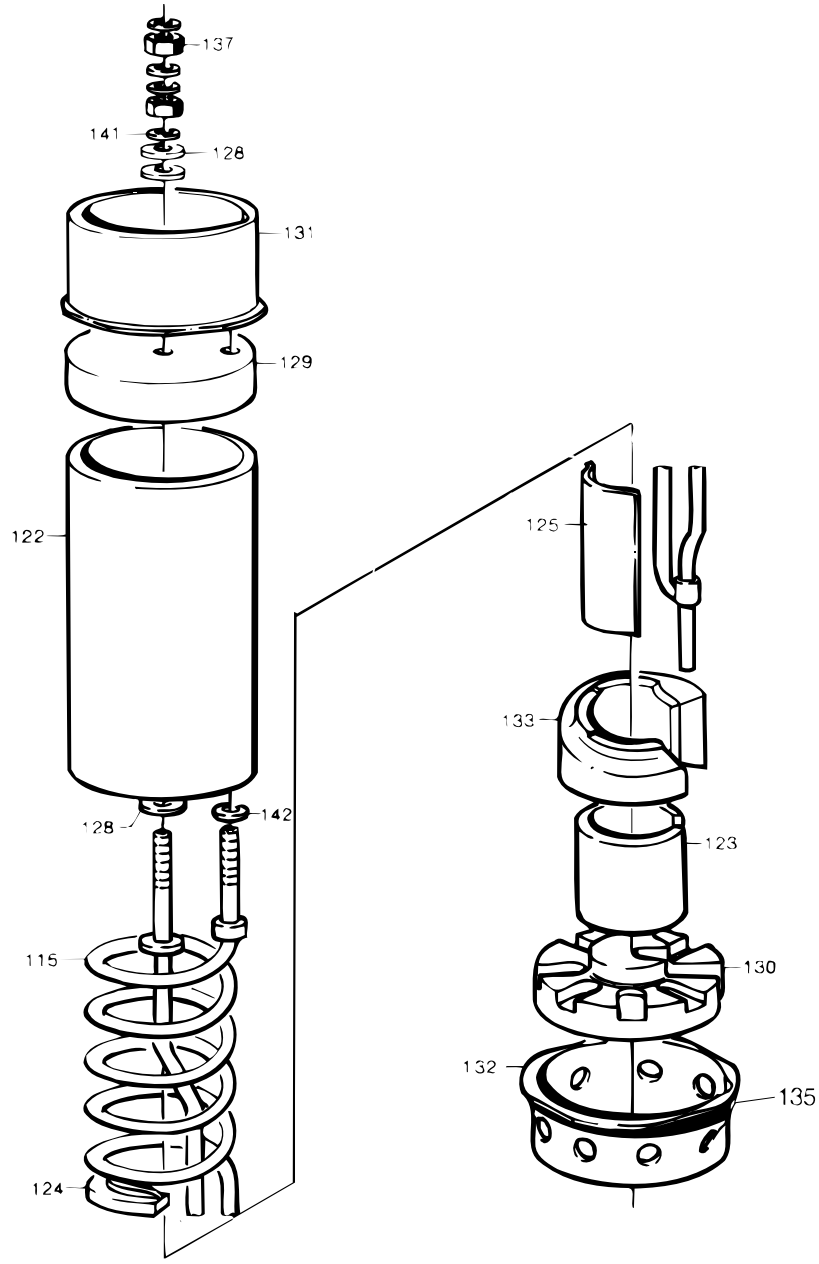
137
141
128
131
129
122
125
133
128
142
123
115
130
132
135
124

Pos	Part No	SP	UN	Qty	Description	Page No
VOLUMES 750 B, 568 B, 375 S, 500 S, 355 B, 400 B, 1000 Sq, 500 Sq						
000	**CR- 31390-0113**	**-**		**1**	**ELEMENT**	
115 1	30311-0001	P		1	HEATING ELEMENT	
VOLUMES 1136 B, 1055 B, 1000 B, 1000 S, 750 S, 500 B						
000	**CR- 31390-0114**	**-**		**1**	**ELEMENT**	
115 2	30311-0002	P		1	HEATING ELEMENT	
Common parts						
122	20705-0001	S		1	INSULATING PIPE	
124	29413	S		21	LACE	
125	31653-0002	S		1	SHEET	
128	525233	S		5	GASKET	
129	20772	S		1	INSULATOR BODY	
130	37536	S		1	INSULATOR BODY	
131	23771	S		1	SPACER RING	
132	37537	S		1	SPACER RING	
133	37535	S		1	SUPPORTING PART	
137	312605-0316	-		6	NUT M6M6 A280 STAINLESS	
141	315105-0153	-		4	WASHER BRB6,4X12RFR	
142	315115-0153	-		1	WASHER TBRB6,4X12RFR	

Pos	Part No	SP	UN	Qty	Description	Page No

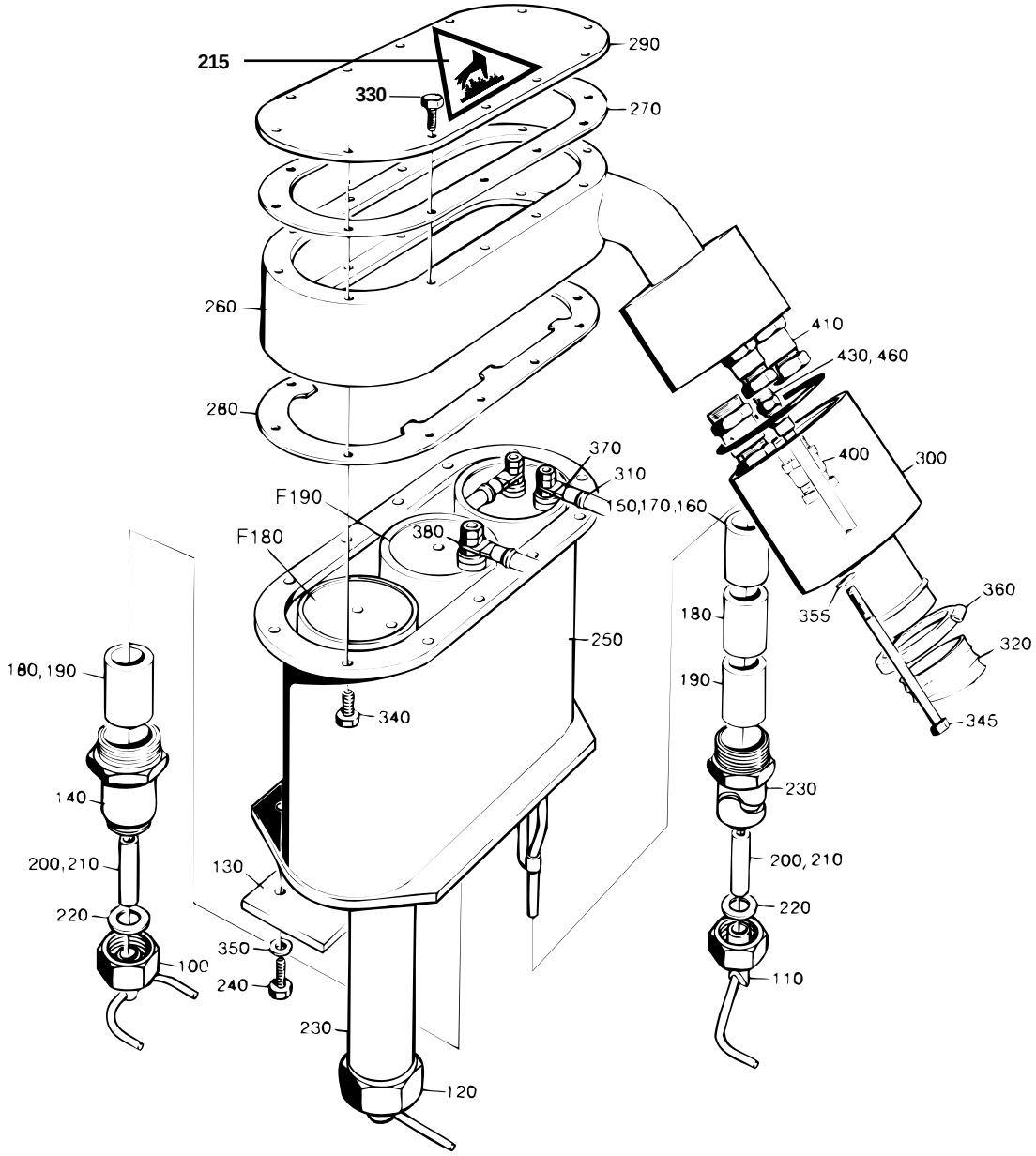
215
290
330
270
260
410
430, 460
280
370
400
300
310
F190
150,170,160
F180
380
360
355
180
320
250
180, 190
340
345
190
230
140
200, 210
200,210
130
220
220
350
100
240
110
230
120

Pos	Part No	SP	UN	Qty	Description	Page No
VOLUME 1000 B						
000	**CR- 525128-0101**	**-**		**1**	**FF-ELEMENT R**	
100	247227-0003	S		1	AIR NOZZLE	
110	525197	S		1	BLOW-OFF NOZZLE TR	
120	525198	S		1	BLOW-OFF NOZZLE TL	
130	262290-0001	-		1	LACE	
140	23763-0004	-		1	SPACER PIPE	
150	23765-0001	S		2	INSULATING PIPE	
180	23765-0004	S		1	INSULATING PIPE	
200	252766-0001	S		3	INSULATING PIPE	
230	297499-0001	-		2	SIDE PIPE	
240	312105-0374	-		3	SCREW O4017 M6X30A280	
VOLUME 568 B						
000	**CR- 525128-0102**	**-**		**1**	**FF-ELEMENT R**	
100	247227-0003	S		1	AIR NOZZLE	
110	525197	S		1	BLOW-OFF NOZZLE TR	
120	525198	S		1	BLOW-OFF NOZZLE TL	
140	23763-0005	-		1	SPACER PIPE	
160	23765-0002	S		2	INSULATING PIPE	
190	23765-0005	S		1	INSULATING PIPE	
200	252766-0001	S		2	INSULATING PIPE	
210	252766-0002	S		1	INSULATING PIPE	
230	297499-0002	-		2	SIDE PIPE	
240	312105-0372	-		3	SCREW O4017 M6X25A280	
VOLUME 500 B						
000	**CR- 525128-0103**	**-**		**1**	**FF-ELEMENT R**	
100	247227-0003	S		1	AIR NOZZLE	
110	525197	S		1	BLOW-OFF NOZZLE TR	
120	525198	S		1	BLOW-OFF NOZZLE TL	
130	262290-0002	-		1	LACE	
140	23763-0003	-		1	SPACER PIPE	
160	23765-0002	S		2	INSULATING PIPE	
180	23765-0004	S		1	INSULATING PIPE	
200	252766-0001	S		3	INSULATING PIPE	
230	297499-0002	-		2	SIDE PIPE	
240	312105-0376	-		3	SCREW O4017 M6X35A280	
VOLUME 750 B						
000	**CR- 525128-0111**	**-**		**1**	**FF-ELEMENT R**	
100	247227-0003	S		1	AIR NOZZLE	
110	525197	S		1	BLOW-OFF NOZZLE TR	
120	525198	S		1	BLOW-OFF NOZZLE TL	
140	23763-0005	-		1	SPACER PIPE	
160	23765-0002	S		2	INSULATING PIPE	
190	23765-0005	S		3	INSULATING PIPE	
210	252766-0002	S		3	INSULATING PIPE	
230	297499-0008	-		2	SIDE PIPE	
240	312105-0372	-		3	SCREW O4017 M6X25A280	
VOLUME 500 S						
000	**CR- 525128-0112**	**-**		**1**	**FF-ELEMENT R**	
100	442867	S		1	AIR NOZZLE	
110	285676	S		1	AIR NOZZLE	
120	285677	S		1	AIR NOZZLE	
140	23763-0006	-		1	SPACER PIPE	
170	23765-0003	S		2	INSULATING PIPE	
180	23765-0004	S		2	INSULATING PIPE	
190	23765-0005	S		3	INSULATING PIPE	
200	252766-0001	S		4	INSULATING PIPE	
210	252766-0002	S		1	INSULATING PIPE	
230	297499-0003	-		2	SIDE PIPE	
240	312105-0372	-		3	SCREW O4017 M6X25A280	
VOLUME 375 S						
000	**CR- 525128-0113**	**-**		**1**	**FF-ELEMENT R**	
100	247227-0002	S		1	AIR NOZZLE	
110	285507-0002	S		1	AIR NOZZLE	
120	285508-0002	S		1	AIR NOZZLE	
140	23763-0010	-		1	SPACER PIPE	
170	23765-0003	S		2	INSULATING PIPE	
180	23765-0004	S		4	INSULATING PIPE	
190	23765-0005	S		1	INSULATING PIPE	
210	252766-0002	S		3	INSULATING PIPE	
230	297499-0009	-		2	SIDE PIPE	
240	312105-0372	-		3	SCREW O4017 M6X25A280	
VOLUME 1055 B						
000	**CR- 525128-0114**	**-**		**1**	**FF-ELEMENT R**	
100	247227-0003	S		1	AIR NOZZLE	
110	525197	S		1	BLOW-OFF NOZZLE TR	
120	525198	S		1	BLOW-OFF NOZZLE TL	
130	262290-0001	-		1	LACE	
140	23763-0004	-		1	SPACER PIPE	
160	23765-0002	S		2	INSULATING PIPE	
180	23765-0004	S		5	INSULATING PIPE	
200	252766-0001	S		3	INSULATING PIPE	

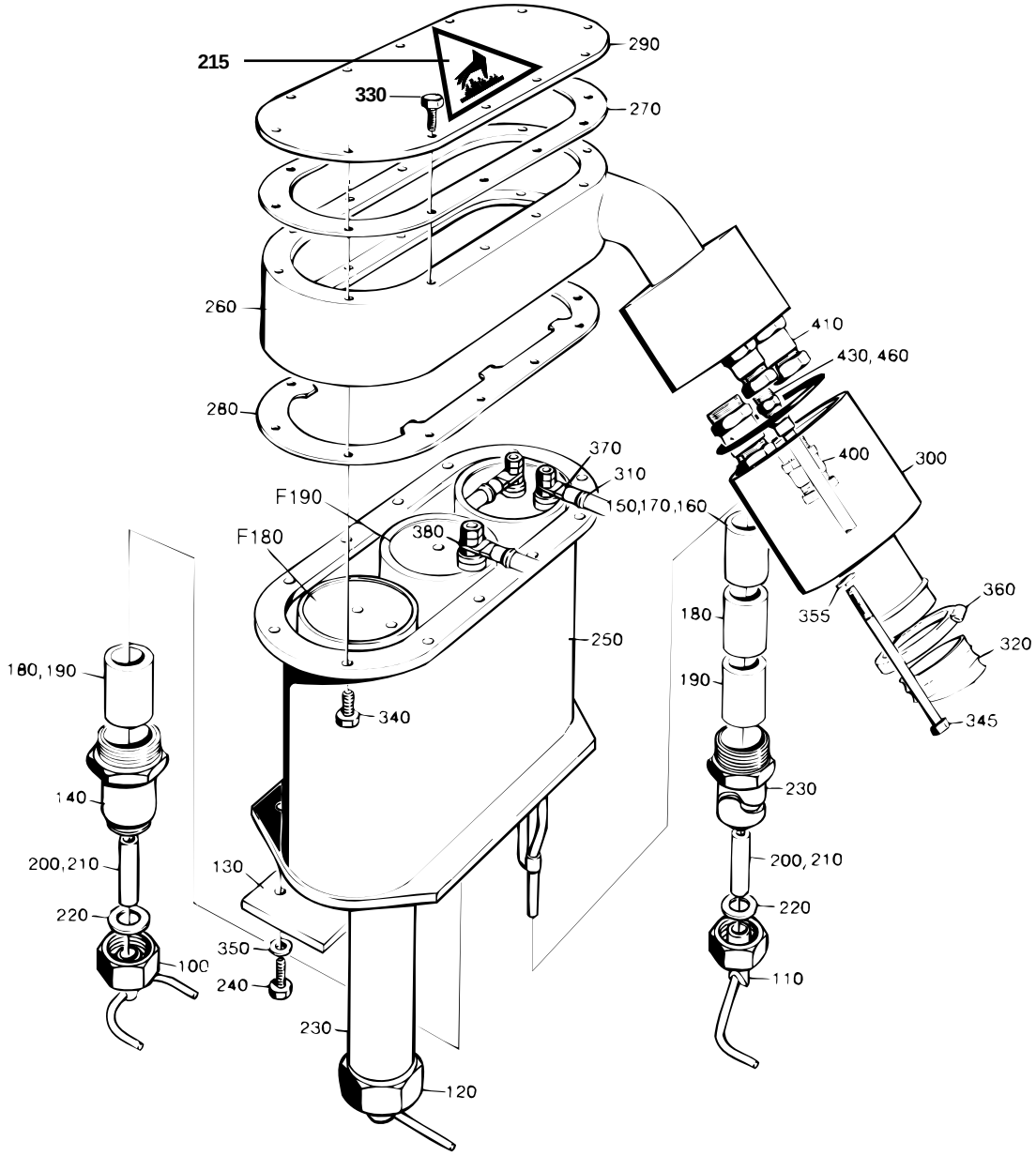
215
290
330
270
260
410
430, 460
280
370
400
300
310
F190
150,170,160
F180
380
360
355
180
320
250
180, 190
340
345
190
230
140
200, 210
200,210
130
220
220
350
100
240
110
230
120

Pos	Part No	SP	UN	Qty	Description	Page No
230	443158	-		2	SIDE PIPE	
240	312105-0374	-		3	SCREW O4017 M6X30A280	
VOLUME 355 B						
000	**CR- 525128-0115**	**-**		**1**	**FF-ELEMENT R**	
100	442867	S		1	AIR NOZZLE	
110	285676	S		1	AIR NOZZLE	
120	285677	S		1	AIR NOZZLE	
140	23763-0006	-		1	SPACER PIPE	
180	23765-0004	S		4	INSULATING PIPE	
190	23765-0005	S		1	INSULATING PIPE	
200	252766-0001	S		4	INSULATING PIPE	
210	252766-0002	S		1	INSULATING PIPE	
230	297499-0007	-		2	SIDE PIPE	
240	312105-0372	-		3	SCREW O4017 M6X25A280	
VOLUME 750 S						
000	**CR- 525128-0116**	**-**		**1**	**FF-ELEMENT R**	
100	544298	S		1	BLOWING NOZZLE B	
110	544293	S		1	BLOW-OFF NOZZLE TH	
120	544269	S		1	BLOW-OFF NOZZLE TV	
130	262290-0001	-		1	LACE	
140	23763-0004	-		1	SPACER PIPE	
160	23765-0002	S		2	INSULATING PIPE	
180	23765-0004	S		5	INSULATING PIPE	
200	252766-0001	S		3	INSULATING PIPE	
230	443158	-		2	SIDE PIPE	
240	312105-0374	-		3	SCREW O4017 M6X30A280	
VOLUME1136 B						
000	**CR- 525128-0117**	**-**		**1**	**FF-ELEMENT R**	
100	247227-0003	S		1	AIR NOZZLE	
110	525197	S		1	BLOW-OFF NOZZLE TR	
120	525198	S		1	BLOW-OFF NOZZLE TL	
130	262290-0001	-		1	LACE	
140	23763-0004	-		1	SPACER PIPE	
160	23765-0002	S		2	INSULATING PIPE	
170	23765-0003	S		2	INSULATING PIPE	
180	23765-0004	S		3	INSULATING PIPE	
200	252766-0001	S		1	INSULATING PIPE	
210	252766-0002	S		2	INSULATING PIPE	
230	548402	-		2	SIDE PIPE	
240	312105-0374	-		3	SCREW O4017 M6X30A280	
VOLUME 1000 S						
000	**CR- 525128-0118**	**-**		**1**	**FF-ELEMENT R**	
100	569124	S		1	AIR NOZZLE	
110	569125	S		1	AIR NOZZLE	
120	569126	S		1	AIR NOZZLE	
130	262290-0001	-		1	LACE	
140	23763-0004	-		1	SPACER PIPE	
160	23765-0002	S		2	INSULATING PIPE	
170	23765-0003	S		2	INSULATING PIPE	
180	23765-0004	S		3	INSULATING PIPE	
200	252766-0001	S		1	INSULATING PIPE	
210	252766-0002	S		2	INSULATING PIPE	
230	548402	-		2	SIDE PIPE	
240	312105-0374	-		3	SCREW O4017 M6X30A280	
VOLUME 400 B						
000	**CR- 525128-0119**	**-**		**1**	**FF-ELEMENT R**	
100	442867	S		1	AIR NOZZLE	
110	574676	S		1	AIR NOZZLE	
120	574677	S		1	AIR NOZZLE	
140	23763-0006	-		1	SPACER PIPE	
170	23765-0003	S		2	INSULATING PIPE	
180	23765-0004	S		2	INSULATING PIPE	
190	23765-0005	S		3	INSULATING PIPE	
210	252766-0002	S		3	INSULATING PIPE	
230	297499-0003	-		2	SIDE PIPE	
240	312105-0372	-		3	SCREW O4017 M6X25A280	
VOLUME 1000 Sq						
000	**CR- 525128-0120**	**-**		**1**	**FF-ELEMENT R**	
100	574032	S		1	BLOWING NOZZLE B	
110	574033	S		1	BLOWING NOZZLE TH	
120	574034	S		1	BLOWING NOZZLE TV	
130	262290-0001	-		1	LACE	
140	23763-0006	-		1	SPACER PIPE	
160	23765-0002	S		2	INSULATING PIPE	
180	23765-0004	S		4	INSULATING PIPE	
190	23765-0005	S		1	INSULATING PIPE	
200	252766-0001	S		3	INSULATING PIPE	
230	443158	-		2	SIDE PIPE	
240	312105-0374	-		3	SCREW O4017 M6X30A280	
VOLUME 500 Sq						
000	**CR- 525128-0121**	**-**		**1**	**FF-ELEMENT R**	

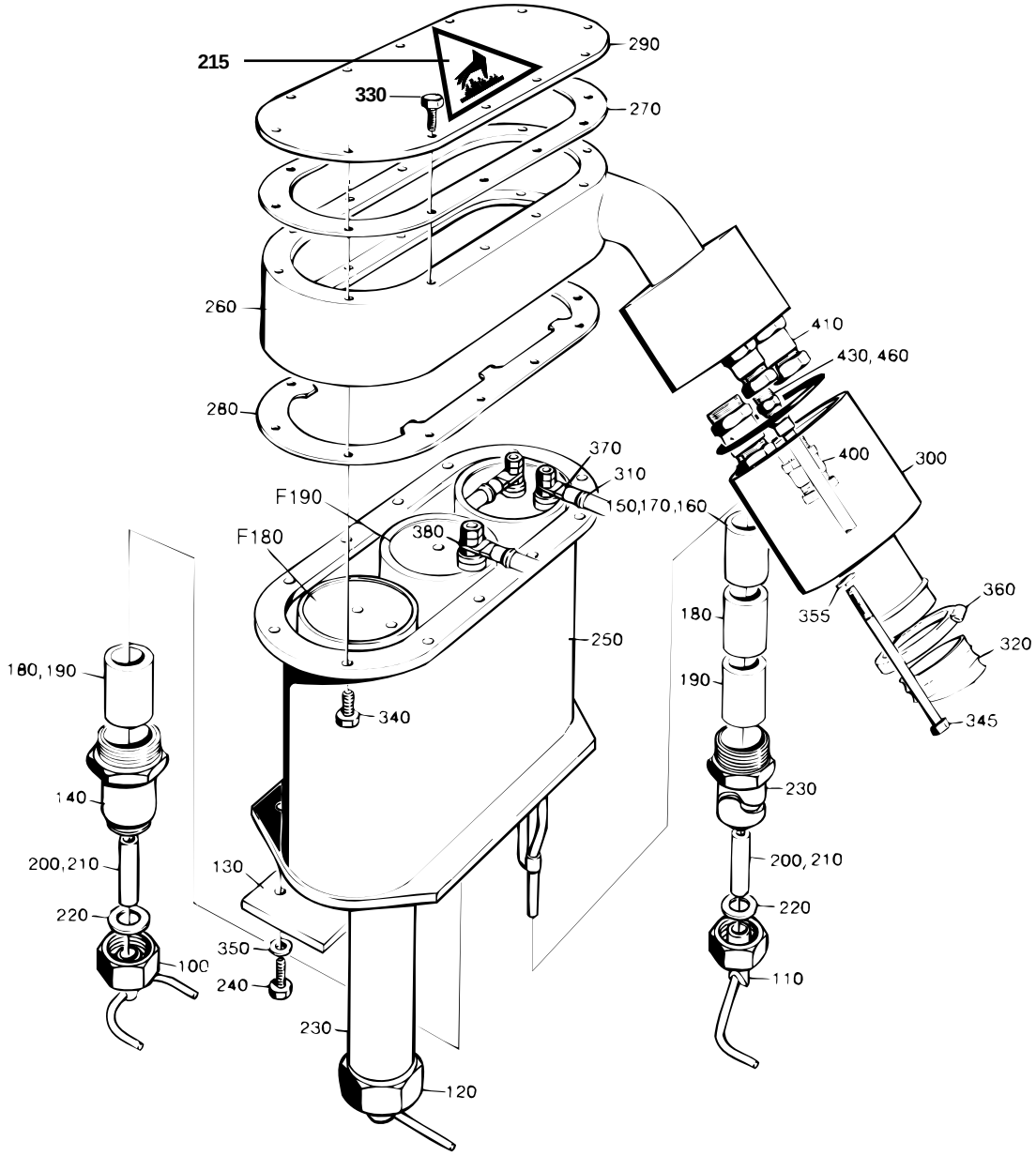
215
290
330
270
260
410
430, 460
280
370
400
300
310
F190
150,170,160
F180
380
360
355
180
320
250
180, 190
340
345
190
230
140
200, 210
200,210
130
220
220
350
100
240
110
230
120

Pos	Part No	SP	UN	Qty	Description	Page No
100	574032	S		1	BLOWING NOZZLE B	
110	574033	S		1	BLOWING NOZZLE TH	
120	574034	S		1	BLOWING NOZZLE TV	
130	262290-0001	-		1	LACE	
140	23763-0006	-		1	SPACER PIPE	
160	23765-0003	S		2	INSULATING PIPE	
180	23765-0004	S		4	INSULATING PIPE	
190	23765-0005	S		1	INSULATING PIPE	
200	252766-0001	S		1	INSULATING PIPE	
210	252766-0002	S		2	INSULATING PIPE	
230	583448	-		2	SIDE PIPE	
240	312105-0374	-		3	SCREW O4017 M6X30A280	
Common parts						
215	359710-0002	-		1	WARNING SIGN"HOT SURFACE"	
220	263673	P		6	GASKET	
250	262272	-		1	HEATING CHAMBER	
260	525134	-		1	SPACER PIECE	
270	531730	S		3	FLANGE SEAL	
280	23769	-		1	STOP PLATE	
290	262288	-		1	LID	
300	525073	-		1	COVER	
310	525070	-		1	ELECTRICAL CONNECTION	
310a	351121-0109	S		0	* CABLE RHH 16	
310b	353102-0168	S		0	* CABLE SHYAEV16-M6	
320	352135-0116	S	MM	500	FLEXIBLE CG DIA 40	
330	312105-0325	-		12	SCREW M6S5X10 A2 80	
340	312105-0328	-		12	SCREW M6S5X14 A2 80	
345	312105-0388	-		2	SCREW O4014 M6X90A280	
350	315115-0153	-		3	WASHER TBRB6,4X12RFR	
355	315105-0153	-		2	WASHER BRB6,4X12RFR	
360	342991-0109	S		2	HOSE CLIP 44-56MMRFR	
370	353104-0168	P		2	CABLE SHOEYAV 16 M6*	
380	353104-0182	P		2	CABLE SHOEYAV 35 M6*	
400	352103-0106	-		2	CABLE GLAND ST 11	
410	352103-0111	-		2	CABLE GLAND ST 16;10-14MM	
430	342921-0121	-		1	PIPE COUPL8/6-1/8"	
460	315234-0109	-		1	SEAL RING R1/8"	
F180	CR- 31390-010V	-		2	ELEMENT	**443**
F190	CR- 31390-011V	-		1	ELEMENT	**445**

Pos	Part No	SP	UN	Qty	Description	Page No

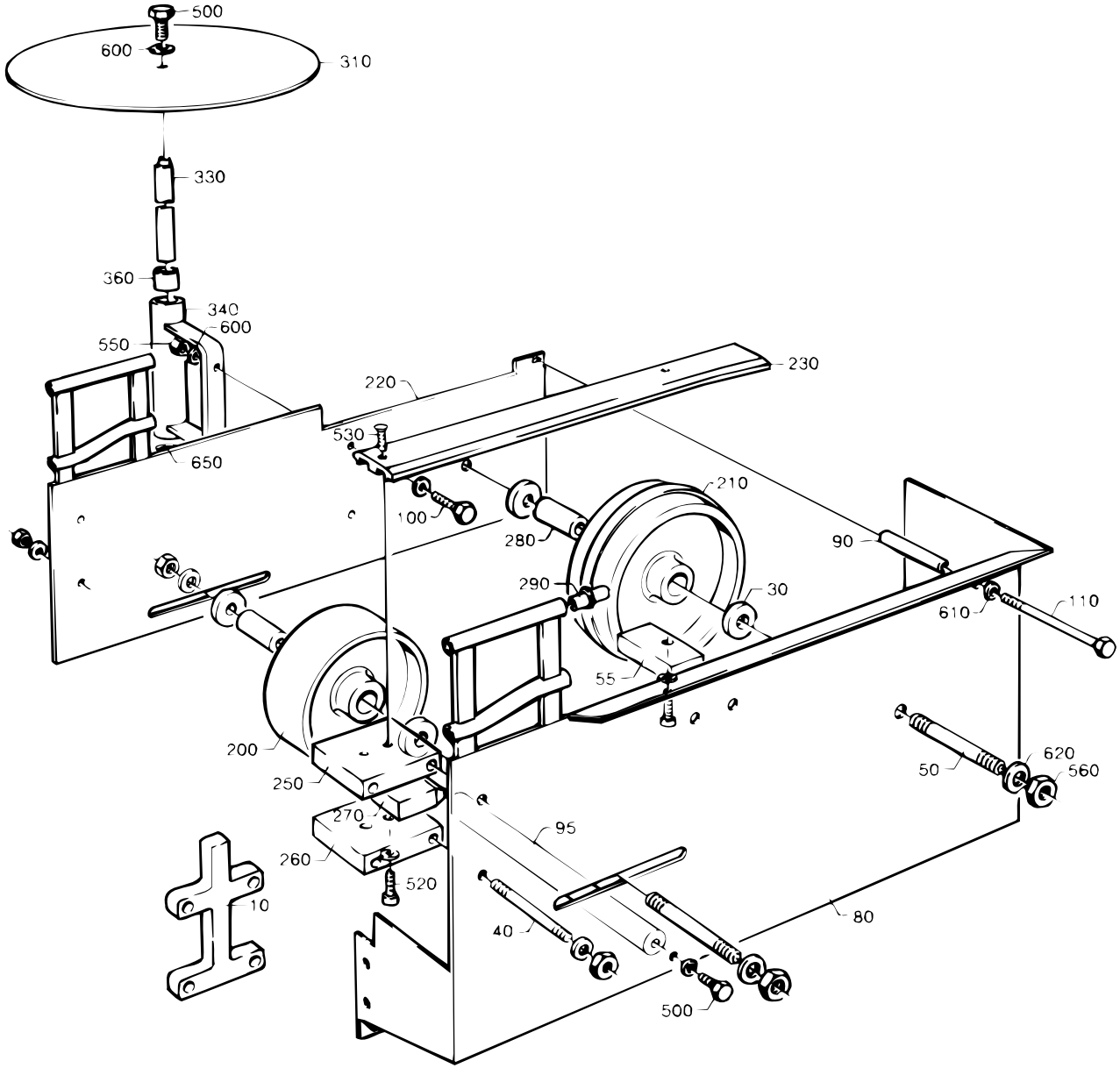
500
600
310
330
360
340
600
550
220
230
530
650
210
100
280
90
290
30
610
110
55
200
620
50
560
250
270
95
260
520
10
40
80
500

Pos	Part No	SP	UN	Qty	Description	Page No
VOLUMES 375 S, 500 S, 355 B, 400 B						
000	**CR- 285591-0401**	**-**		**1**	**STATION**	
030	229201-0001	-		4	SPACER	
040	229508-0031	-		5	STUD SCREW	
050	229760-0012	-		2	STUD SCREW	
055	237082-0001	-		1	MOUNTING BLOCK	
080	525170	-		1	SIDE PLATE	
090	297574-0001	-		1	SPACER	
095	525171-0002	-		1	BRACKET	
110	312105-0469	-		1	SCREW O4014 M8X90A280	
220	525054	-		1	SIDE PLATE	
550	312605-0316	-		12	NUT M6M6 A280 STAINLESS	
VOLUMES 1136 B, 1055 B, 1000 B, 1000 S, 1000 Sq, 750 B, 750 S, 568 B, 500 B, 500 Sq						
000	**CR- 285591-0402**	**-**		**1**	**STATION**	
010	228843-0001	-		2	SPACER	
030	229201-0002	-		4	SPACER	
040	229508-0029	-		5	STUD SCREW	
050	229760-0013	-		2	STUD SCREW	
055	237082-0002	-		1	MOUNTING BLOCK	
080	525169	-		1	SIDE PLATE	
090	297574-0002	-		1	SPACER	
095	525171-0001	-		1	BRACKET	
110	312105-0471	-		1	SCREW 4014 M8X100A280	
220	297569	-		1	SIDE PLATE	
550	312605-0316	-		14	NUT M6M6 A280 STAINLESS	
Common parts						
100	312105-0368	-		2	SCREW O4017 M6X16A280	
200	476975	S		1	WHEEL	
210	245039	S		1	GUIDE WHEEL	
230	442776	-		1	SLIDE RAIL	
250	228845	-		1	MOUNTING BLOCK	
260	229202	-		1	MOUNTING BLOCK	
270	229206	-		1	LOCATING PIECE	
280	229207	-		2	BEARING SLEEVE	
290	229516	-		8	PIN	
310	525053	-		1	PLATE (CIRCULAR)	
330	285132	-		1	SHAFT	
340	285133	-		1	CANTILEVER	
360	525252	S		2	BEARING	
490	312105-0362	-		2	SCREW O4017 M6X8A280	
500	312105-0367	-		5	SCREW M6S6X14RFR	
510	312105-0449	-		1	SCREW O4017 M8X16A280	
520	312115-0368	-		1	SCREW O4762 M6X16A280	
530	312155-0370	-		3	SCREW MF6S6X20RFR	
555	312605-0318	-		1	NUT M6M8RFR	
560	312605-0320	-		4	NUT M6M10RFR	
600	315105-0153	-		19	WASHER BRB6,4X12RFR	
610	315105-0165	-		3	WASHER BRB8,4X16RFR	
620	315105-0173	-		4	WASHER BRB10,5X22RFR	
650	315755-0113	S		1	LOCKING WAE 15 RFR	

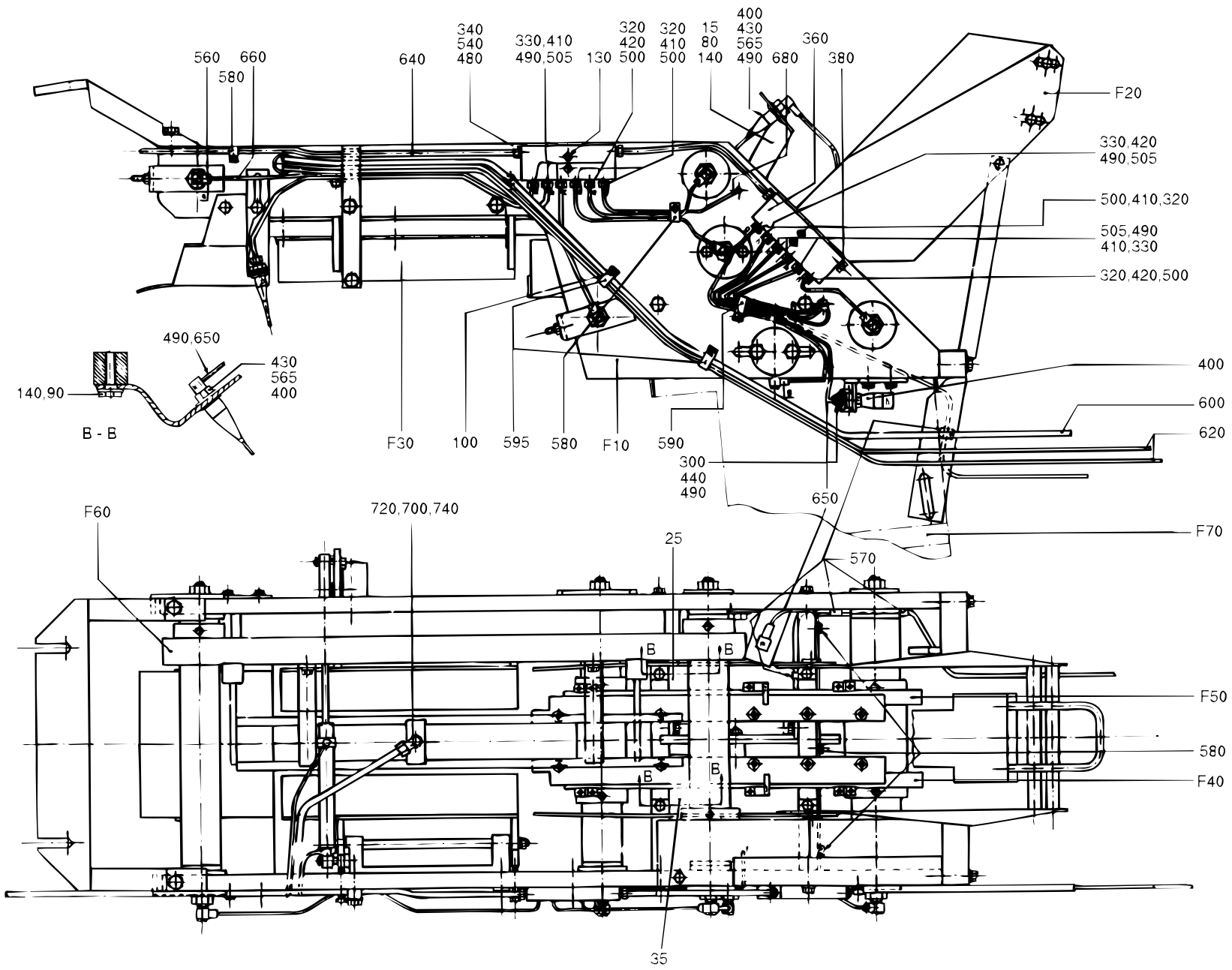
560
660
580
640
340
540
480
330,410
490,505
130
320
420
500
320
410
500
400
430
565
490
15
80
140
680
360
380
F20
330,420
490,505
500,410,320
505,490
410,330
320,420,500
400
600
620
490,650
430
565
400
140,90
B - B
F30
100
595
580
F10
590
300
440
490
650
F60
720,700,740
25
570
F70
B
B
B
B
F50
580
F40
35
S-525085-3
ECN 16630

Pos	Part No	SP	UN	Qty	Description	Page No
VOLUMES 1136 B, 1055 B, 1000 B, 1000 S, 750 B, 750 S, 568 B, 500 B, 500 S, 400 B, 375 S, 355 B						
000	**CR- 525085-0201**	**-**		**1**	**LUBRICATING SYSTEM**	
015	566313	-		1	HOLDER	
025	566316	-		1	HOLDER	
035	566317	-		1	HOLDER	
080	312105-0368	-		2	SCREW O4017 M6X16A280	
090	312105-0366	-		4	SCREW O4017 M6X12A280	
100	312125-0287	-		11	SLOTTED HEMCS4X8RFR	
140	315115-0153	-		6	WASHER TBRB6,4X12RFR	
300	90028-0001	P		2	CONE	
320	90028-0020	P		7	CONE	
330	90028-0021	P		5	CONE	
360	90032-0040	S		2	BLOCK	
400	90092-0048	P		5	OIL BRUSH	
410	90092-0052	P		7	VALVE	
420	90092-0053	P		5	VALVE	
430	90134-0002	P		3	PIPE CONNECTION	
440	90134-0003	P		2	BUSHING	
480	90134-0030	P		4	SLEEVE	
490	342706-0114	P		10	INSERT SLESH04	
500	90134-0039	P		7	BUSHING	
505	90134-0040	P		5	BUSHING	
560	90134-0058	S		6	BANJO CONNECTION	
565	90137-0002	P		3	ELBOW PIPE	
570	90165-0056	S		4	CLIP	
580	90165-0057	S		5	CLIP	
590	316810-0106	S		1	PIPE CLAMP 8MM RFR	
595	90074-0002	S		2	CABLE CLIP JR11 STAINLESS	
F010 1	CR- 525086-020V	-		1	CONVEYING EQUIPMENT	**461**
F040	CR- 525089-010V	-		1	CHAIN RIGHT	**471**
F050	CR- 525090-010V	-		1	CHAIN LEFT	**475**
F060	CR- 525091-010V	-		1	CHAIN	**479**
F070 1	CR- 525092-010V	-		1	CHAIN GUARD	**481**
VOLUMES 1000 Sq NORMFIN, 500 Sq						
000	**CR- 525085-0203**	**-**		**1**	**LUBRICATING SYSTEM**	
100	312125-0287	-		4	SLOTTED HEMCS4X8RFR	
300	90028-0001	P		1	CONE	
320	90028-0020	P		8	CONE	
330	90028-0021	P		2	CONE	
350	90032-0039	-		1	BLOCK	
360	90032-0040	S		1	BLOCK	
400	90092-0048	P		2	OIL BRUSH	
410	90092-0052	P		4	VALVE	
420	90092-0053	P		6	VALVE	
430	90134-0002	P		1	PIPE CONNECTION	
440	90134-0003	P		1	BUSHING	
480	90134-0030	P		3	SLEEVE	
490	342706-0114	P		4	INSERT SLESH04	
500	90134-0039	P		8	BUSHING	
505	90134-0040	P		2	BUSHING	
560	90134-0058	S		7	BANJO CONNECTION	
565	90137-0002	P		1	ELBOW PIPE	
570	90165-0056	S		1	CLIP	
580	90165-0057	S		1	CLIP	
590	316810-0106	S		3	PIPE CLAMP 8MM RFR	
595	90074-0002	S		2	CABLE CLIP JR11 STAINLESS	
F010 3	CR- 576251-0101	-		1	CONVEYOR	**497**
F070 2	C- 576247-010V	-		1	PROTECTION	**493**
VOLUMES 1000 Sq REVFIN						
000	**CR- 525085-0205**	**-**		**1**	**LUBRICATING SYSTEM**	
036	1143001	-		1	ATTACHMENT PLATE	
037	1143002	-		2	BRACKET	
038	1143004	-		2	CYLINDER BRACKET	
039	1143000	-		2	PUSHER	
100	312125-0287	-		6	SLOTTED HEMCS4X8RFR	
300	90028-0001	P		1	CONE	
320	90028-0020	P		8	CONE	
330	90028-0021	P		2	CONE	
350	90032-0039	-		1	BLOCK	
360	90032-0040	S		1	BLOCK	
400	90092-0048	P		2	OIL BRUSH	
410	90092-0052	P		4	VALVE	
420	90092-0053	P		6	VALVE	
430	90134-0002	P		1	PIPE CONNECTION	
440	90134-0003	P		1	BUSHING	
480	90134-0030	P		3	SLEEVE	
490	342706-0114	P		4	INSERT SLESH04	
500	90134-0039	P		8	BUSHING	
505	90134-0040	P		2	BUSHING	
560	90134-0058	S		7	BANJO CONNECTION	
565	90137-0002	P		1	ELBOW PIPE	
570	90165-0056	S		1	CLIP	
580	90165-0057	S		1	CLIP	
590	316810-0106	S		3	PIPE CLAMP 8MM RFR	

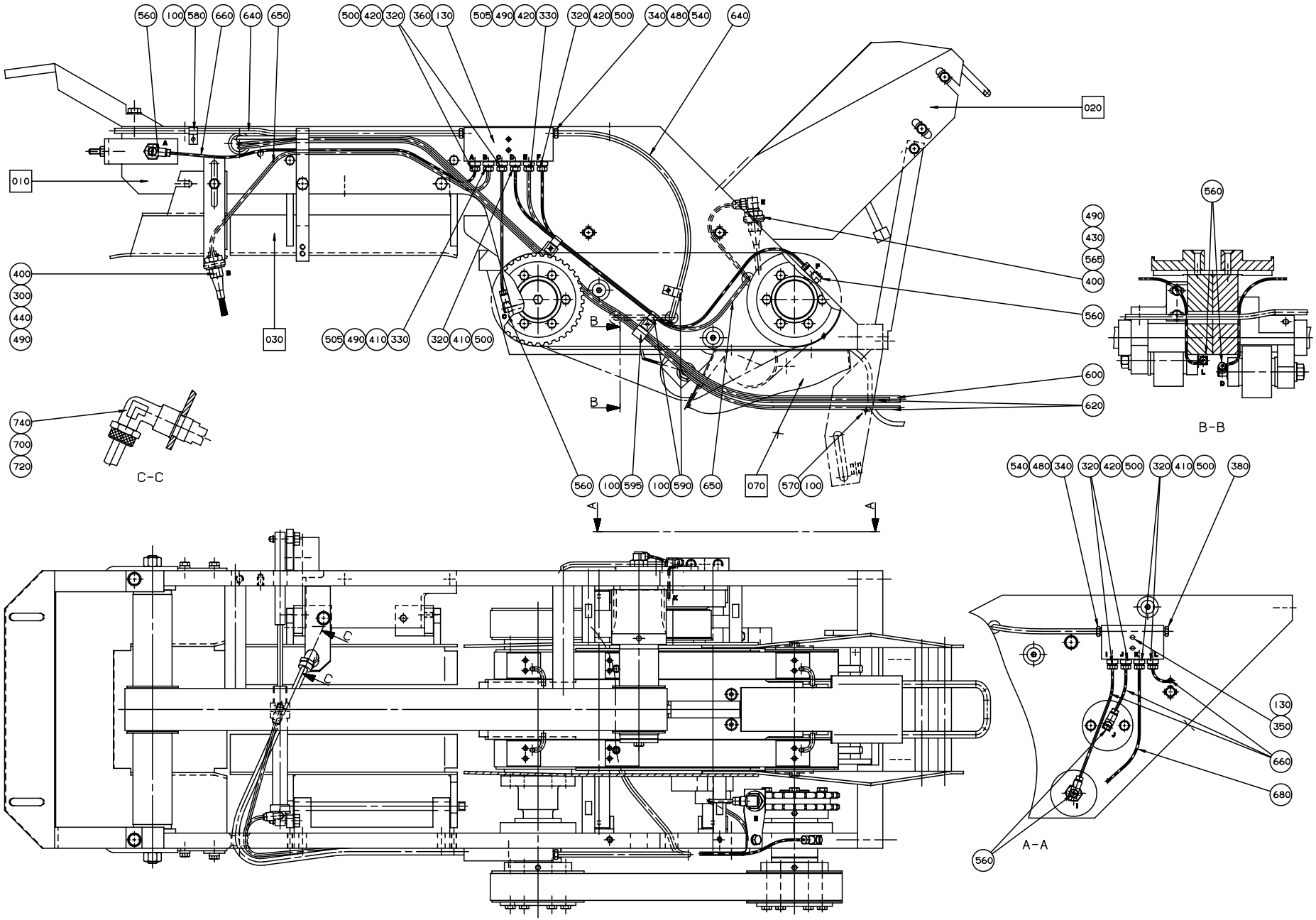

S-525085-5
ECN 70021

Pos	Part No	SP	UN	Qty	Description	Page No
591	90450-0377	S		2	CYLINDER	
592	342732-0102	-		4	ELBOW PIPE D6-R1/8"	
593	90166-0124	-	MM	6000	HOSE	
594	312631-0321	-		2	NUT TER M6M 10X1,25	
595	90074-0002	S		4	CABLE CLIP JR11 STAINLESS	
596	312105-0372	-		10	SCREW O4017 M6X25A280	
597	315101-0153	-		10	WASHER BRB6,4X12FZB	
598	352113-0101	-		3	RIBBON CLA	
599	312105-0362	-		1	SCREW O4017 M6X8A280	
F010 3	CR- 576251-0101	-		1	CONVEYOR	**497**
F070 2	C- 576247-010V	-		1	PROTECTION	**493**
Common parts						
130	312155-0295	-		4	SCREW MF6S4X20RFR	
340	90028-0025	P		3	CONE	
380	90087-0019	S		1	PLUG	
540	90134-0055	P		3	BUSHING	
600	90166-0122	P	MM	1300	HOSE	
620	90166-0095	P	MM	3000	HOSE	
640	90166-0108	P	MM	1300	HOSE	
650	90166-0051	P	MM	2600	HOSE	
660	90166-0143	P	MM	2500	HOSE	
680	90266-0019	P	MM	300	PIPE	
700	90424-0035	P		1	NOZZLE	
720	315233-0110	P		1	SEAL RING R1/4"	
740	342933-0122	P		1	ELBOW PIPE8/6-1/4	
F020	CR- 525087-010V	-		1	DROP	**465**
F030	CR- 525088-020V	-		1	DISCHARGE CHUTE	**471**

Pos	Part No	SP	UN	Qty	Description	Page No

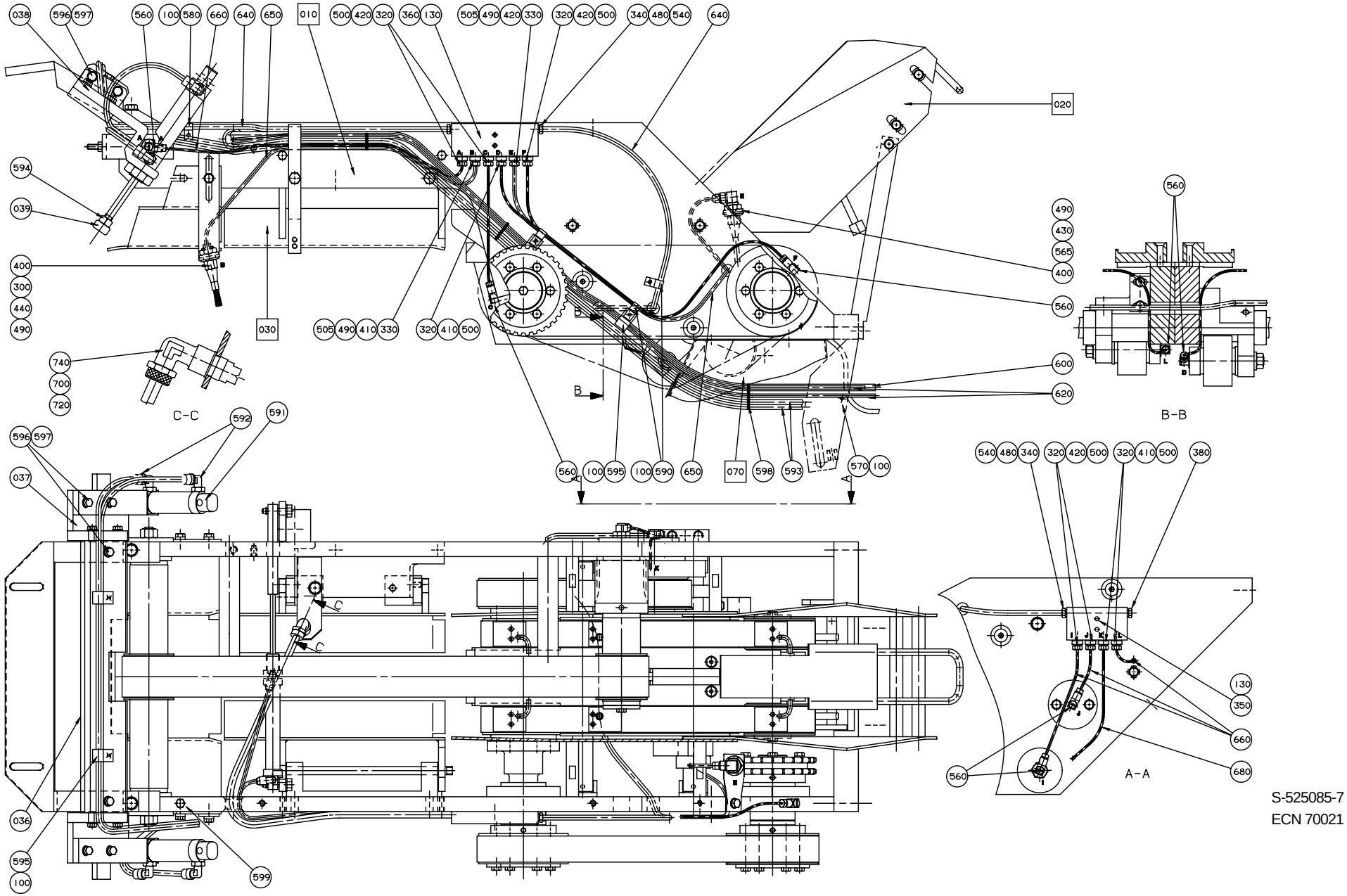

S-525085-7
ECN 70021

Pos	Part No	SP	UN	Qty	Description	Page No
VOLUMES 1000 Sq REVFIN						
000	**CR- 525085-0205**	**-**		**1**	**LUBRICATING SYSTEM**	
036	1143001	-		1	ATTACHMENT PLATE	
037	1143002	-		2	BRACKET	
038	1143004	-		2	CYLINDER BRACKET	
039	1143000	-		2	PUSHER	
100	312125-0287	-		6	SLOTTED HEMCS4X8RFR	
300	90028-0001	P		1	CONE	
320	90028-0020	P		8	CONE	
330	90028-0021	P		2	CONE	
350	90032-0039	-		1	BLOCK	
360	90032-0040	S		1	BLOCK	
400	90092-0048	P		2	OIL BRUSH	
410	90092-0052	P		4	VALVE	
420	90092-0053	P		6	VALVE	
430	90134-0002	P		1	PIPE CONNECTION	
440	90134-0003	P		1	BUSHING	
480	90134-0030	P		3	SLEEVE	
490	342706-0114	P		4	INSERT SLESH04	
500	90134-0039	P		8	BUSHING	
505	90134-0040	P		2	BUSHING	
560	90134-0058	S		7	BANJO CONNECTION	
565	90137-0002	P		1	ELBOW PIPE	
570	90165-0056	S		1	CLIP	
580	90165-0057	S		1	CLIP	
590	316810-0106	S		3	PIPE CLAMP 8MM RFR	
591	90450-0377	S		2	CYLINDER	
592	342732-0102	-		4	ELBOW PIPE D6-R1/8"	
593	90166-0124	-	MM	6000	HOSE	
594	312631-0321	-		2	NUT TER M6M 10X1,25	
595	90074-0002	S		4	CABLE CLIP JR11 STAINLESS	
596	312105-0372	-		10	SCREW O4017 M6X25A280	
597	315101-0153	-		10	WASHER BRB6,4X12FZB	
598	352113-0101	-		3	RIBBON CLA	
599	312105-0362	-		1	SCREW O4017 M6X8A280	
F010 3	CR- 576251-0101	-		1	CONVEYOR	**497**
F070 2	C- 576247-010V	-		1	PROTECTION	**493**
Common parts						
130	312155-0295	-		4	SCREW MF6S4X20RFR	
340	90028-0025	P		3	CONE	
380	90087-0019	S		1	PLUG	
540	90134-0055	P		3	BUSHING	
600	90166-0122	P	MM	1300	HOSE	
620	90166-0095	P	MM	3000	HOSE	
640	90166-0108	P	MM	1300	HOSE	
650	90166-0051	P	MM	2600	HOSE	
660	90166-0143	P	MM	2500	HOSE	
680	90266-0019	P	MM	300	PIPE	
700	90424-0035	P		1	NOZZLE	
720	315233-0110	P		1	SEAL RING R1/4"	
740	342933-0122	P		1	ELBOW PIPE8/6-1/4	
F020	CR- 525087-010V	-		1	DROP	**465**
F030	CR- 525088-020V	-		1	DISCHARGE CHUTE	**469**

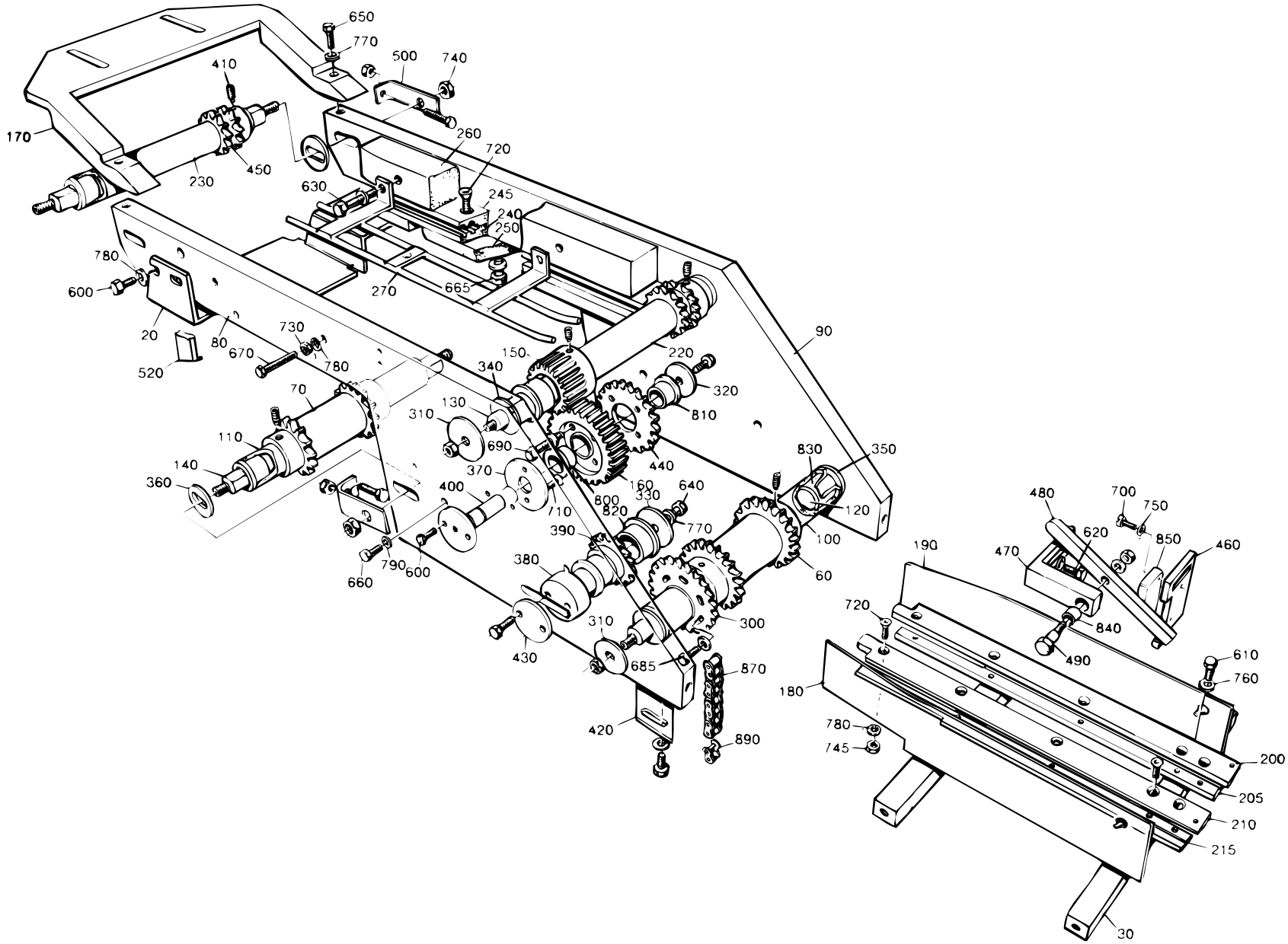

S-525086-1
ECN 16757

Pos	Part No	SP	UN	Qty	Description	Page No
VOLUMES 1055 B, 1000 B, 750 B						
000	**CR- 525086-0201**	**-**		**1**	**CONVEYING EQUIPMENT**	
020	443387	-		1	HEAD PLATE	
030	443454	-		2	BRACKET	
060	443478-0001	S		1	SPROCKET	
070	443479-0001	S		1	SPROCKET	
200	525245	S		1	PROFILE	
205	525246	S		1	PROFILE	
210	525247	S		1	PROFILE	
215	525248	S		1	PROFILE	
VOLUME 500 S						
000	**CR- 525086-0202**	**-**		**1**	**CONVEYING EQUIPMENT**	
020	443388-0001	-		1	HEAD PLATE	
030	443480	-		2	BRACKET	
060	443478-0002	S		1	SPROCKET	
070	443479-0002	S		1	SPROCKET	
200	525245	S		1	PROFILE	
205	525246	S		1	PROFILE	
210	525247	S		1	PROFILE	
215	525248	S		1	PROFILE	
VOLUME 375 S						
000	**CR- 525086-0203**	**-**		**1**	**CONVEYING EQUIPMENT**	
020	443388-0002	-		1	HEAD PLATE	
030	443481	-		2	BRACKET	
060	443478-0003	S		1	SPROCKET	
070	443479-0003	S		1	SPROCKET	
200	525245	S		1	PROFILE	
205	525246	S		1	PROFILE	
210	525247	S		1	PROFILE	
215	525248	S		1	PROFILE	
VOLUME 750 S						
000	**CR- 525086-0204**	**-**		**1**	**CONVEYING EQUIPMENT**	
020	544321	-		1	HEAD PLATE	
030	544322	-		2	BRACKET	
060	443478-0004	S		1	SPROCKET	
070	443479-0004	S		1	SPROCKET	
200	525245	S		1	PROFILE	
205	525246	S		1	PROFILE	
210	525247	S		1	PROFILE	
215	525248	S		1	PROFILE	

Pos	Part No	SP	UN	Qty	Description	Page No
VOLUME1136 B						
000	**CR- 525086-0205**	**-**		**1**	**CONVEYING EQUIPMENT**	
020	443387	-		1	HEAD PLATE	
030	443454	-		2	BRACKET	
060	443478-0001	S		1	SPROCKET	
070	443479-0001	S		1	SPROCKET	
200	525403	S		1	PROFILE	
205	525404	S		1	PROFILE	
210	525405	S		1	PROFILE	
215	525406	S		1	PROFILE	
VOLUMES 568 B, 500 B						
000	**CR- 525086-0206**	**-**		**1**	**CONVEYING EQUIPMENT**	
020	443387	-		1	HEAD PLATE	
030	443454	-		2	BRACKET	
060	443478-0001	S		1	SPROCKET	
070	443479-0001	S		1	SPROCKET	
200	525425	-		1	PROFILE	
205	525426	-		1	PROFILE	
210	525427	-		1	PROFILE	
215	525428	-		1	PROFILE	
VOLUMES 355 B, 400 B						
000	**CR- 525086-0207**	**-**		**1**	**CONVEYING EQUIPMENT**	
020	443388-0001	-		1	HEAD PLATE	
030	443480	-		2	BRACKET	
060	443478-0002	S		1	SPROCKET	
070	443479-0002	S		1	SPROCKET	
200	525425	-		1	PROFILE	
205	525426	-		1	PROFILE	
210	525427	-		1	PROFILE	
215	525428	-		1	PROFILE	
VOLUMES 1000 S						
000	**CR- 525086-0209**	**-**		**1**	**CONVEYING EQUIPMENT**	
020	569132	-		1	HEAD PLATE	
030	569133	-		2	BRACKET	
060	443478-0004	S		1	SPROCKET	
070	443479-0004	S		1	SPROCKET	
200	525403	S		1	PROFILE	
205	525404	S		1	PROFILE	
210	525405	S		1	PROFILE	
215	525406	S		1	PROFILE	

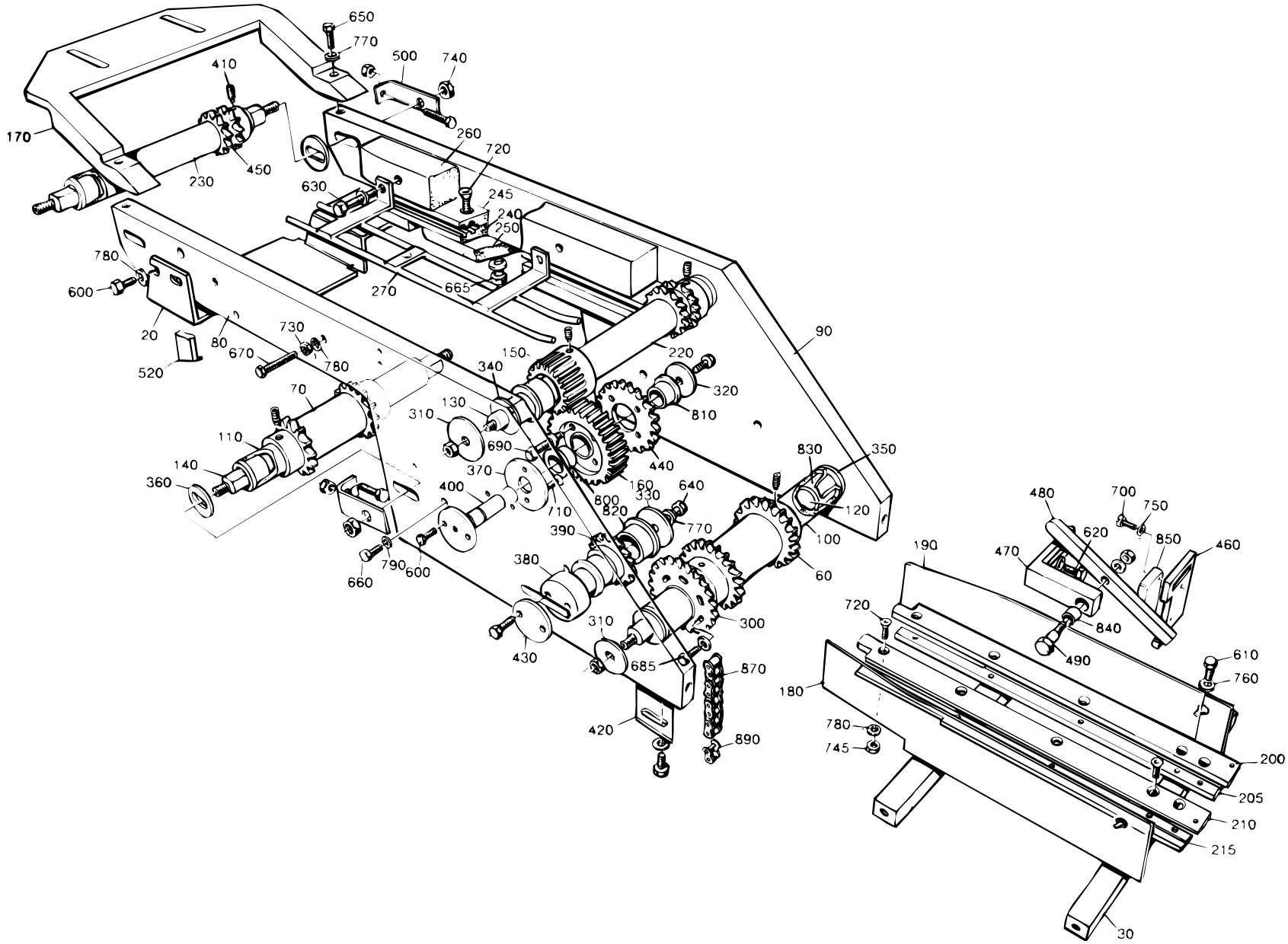

S-525086-1
ECN 16757

Pos	Part No	SP	UN	Qty	Description	Page No
Common parts						
080	443445	-		1	SIDE PLATE	
090	443446	-		1	SIDE PLATE	
100	443455	C		1	SHAFT	
110	443456	C		1	SHAFT	
120	525400	C		1	SHAFT	
130	525401	C		1	SHAFT	
140	525402	C		2	SHAFT	
150	443290	S		1	GEAR WHEEL	
160	443291	S		1	GEAR WHEEL	
170	443293	-		1	BRACKET	
180	443450	-		1	HEAD PLATE	
190	443451	-		1	HEAD PLATE	
220	443457	C		1	SHAFT	
230	443458	C		1	SHAFT	
240	525243	C		1	PROFILE	
245	525244	C		1	PROFILE	
250	525242	-		1	BRACKET	
260	443486	C		1	GUIDE	
270	525419	-		1	LEAD RAIL	
300	297899	S		1	SPROCKET	
310	443295	-		4	WASHER	
320	443296	C		1	WASHER	
330	443297	C		1	WASHER	
340	443298	C		2	WASHER	
350	443299	C		2	WASHER	
360	443300	C		4	WASHER	
370	443301	C		1	WASHER	
380	443305	C		1	SHAFT	
390	443306	S		1	SPROCKET	
400	443307	C		1	SHAFT	
410	90287-0161	S		10	STOP SCREW	
420	443350	-		1	BRACKET	
430	443414	-		1	WASHER	
440	443464	S		1	SPROCKET	
450	443467	S		2	SPROCKET	
460	443482	-		1	BRACKET	
470	443483	-		1	BRACKET	
480	443484	-		1	ARM	
490	443485	S		1	SCREW	
500	443489	-		2	BRACKET	
520	525334	-		1	BRACKET	
530	556886	-		2	BRACKET	
600	312105-0366	-		6	SCREW O4017 M6X12A280	
610	312105-0368	-		7	SCREW O4017 M6X16A280	
620	312105-0370	-		4	SCREW O4017 M6X20A280	
625	312105-0372	-		2	SCREW O4017 M6X25A280	
630	312105-0384	-		2	SCREW O4014 M6X70A280	
640	312105-0449	-		1	SCREW O4017 M8X16A280	
650	312105-0453	-		2	SCREW O4017 M8X25A280	
660	312105-0455	-		6	SCREW O4017 M8X30A280	
665	312105-0457	-		3	SCREW O4017 M8X35A280	
670	312109-0376	-		4	SCREW 6X35 H RFR	
685	312115-0370	-		6	SCREW O4762 M6X20A280	
690	312115-0374	-		4	SCREW O4762 M6X30A280	
700	312125-0230	-		2	SLOTTED HEMCS3X20RFR	
710	312155-0366	-		2	SCREW MF6S6X12RFR	
720	312155-0376	-		16	SCREW MF6X35RFR	
730	312605-0316	-		7	NUT M6M6 A280 STAINLESS	
740	312605-0322	-		8	NUT M6M12RFR	
745	312812-0316	-		6	LOCK NUT A2-M6RFR	
750	315105-0124	-		2	WASHER BRB3,2X6RFR	
760	315105-0153	-		7	WASHER BRB6,4X12RFR	
770	315105-0165	-		6	WASHER BRB8,4X16RFR	
780	315115-0153	-		28	WASHER TBRB6,4X12RFR	
790	315115-0165	-		4	WASHER TBRB8,4X16RFR	
800	321101-0252	S		1	FLANGE BUS 25F7X16	
810	321101-0253	S		7	FLANGE BUS 25F7X25	
820	321101-0272	S		2	FLANGE BUS 30F7X20	
830	321101-0283	S		2	FLANGE BUS 35F7X35	
840	321116-0128	S		1	BUSHING 10E7/14X16	
850	90044-0104	P		1	PROX.SWITCH IFM IN 3002	
870	318212-0150	S		1	ROLLER CHA	
890	318219-0187	P		1	CONNECTION	

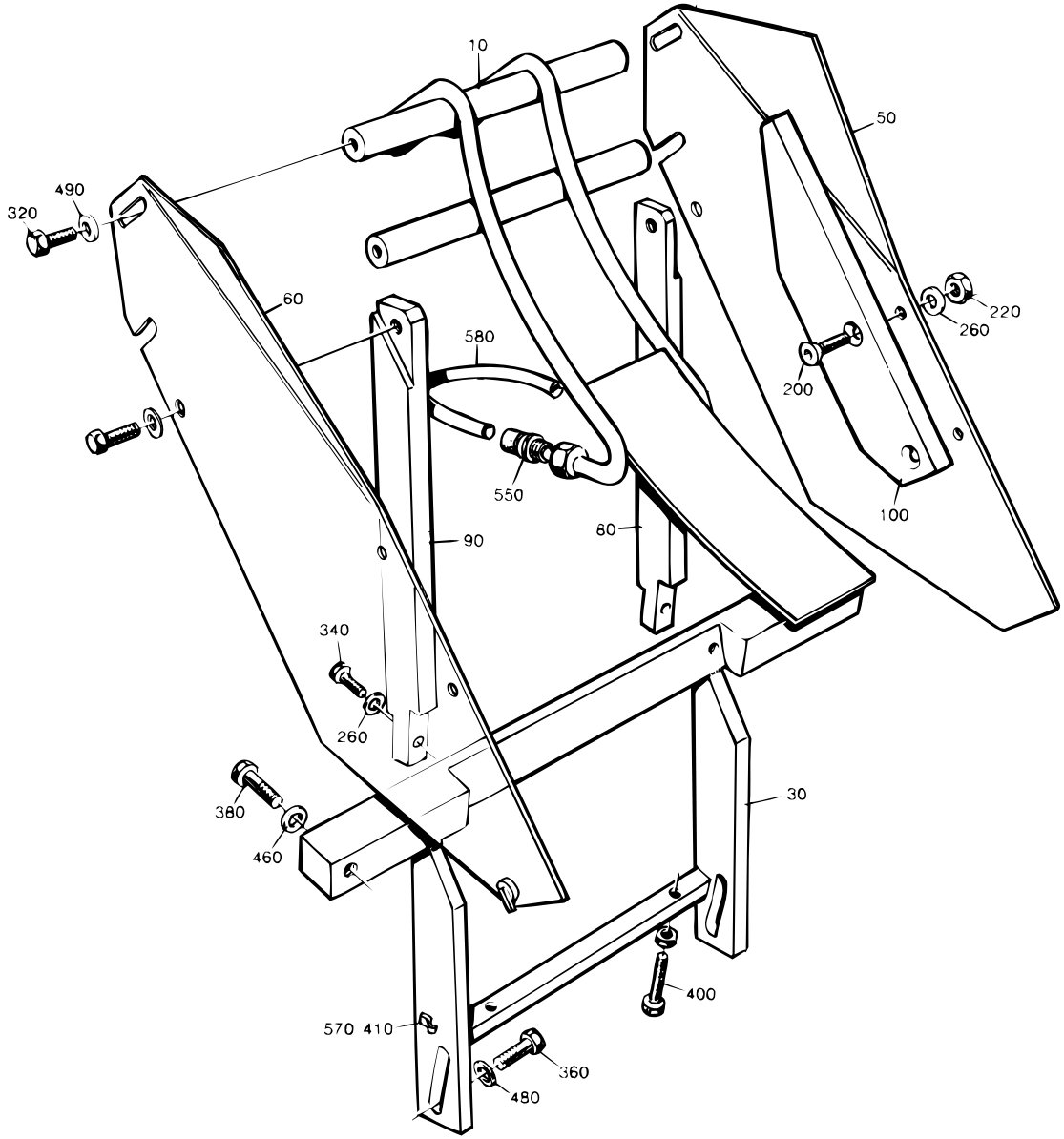
10
50
490
320
60
580
220
260
200
550
100
80
90
340
260
380
460
30
400
570
410
360
480

Pos	Part No	SP	UN	Qty	Description	Page No
VOLUMES 1055 B, 1000 B, 1136 B						
000	**CR- 525087-0101**	**-**		**1**	**DROP**	
010	544229-0001	-		1	DROP WING	
030	443447	-		1	BRACKET	
050	525255	-		1	HEAD PLATE	
060	525256	-		1	HEAD PLATE	
080	443462	-		1	SUPPORT	
090	443463	-		1	SUPPORT	
220	312605-0316	-		2	NUT M6M6 A280 STAINLESS	
260	315105-0153	-		4	WASHER BRB6,4X12RFR	
VOLUME 500 S						
000	**CR- 525087-0102**	**-**		**1**	**DROP**	
010	544229-0002	-		1	DROP WING	
030	443491	-		1	BRACKET	
050	443271	-		1	HEAD PLATE	
060	443272	-		1	HEAD PLATE	
080	443497	-		1	SUPPORT	
090	443498	-		1	SUPPORT	
220	312605-0316	-		2	NUT M6M6 A280 STAINLESS	
260	315105-0153	-		4	WASHER BRB6,4X12RFR	
VOLUMES 355 B, 400 B						
000	**CR- 525087-0103**	**-**		**1**	**DROP**	
010	544229-0002	-		1	DROP WING	
030	525259	-		1	BRACKET	
050	443271	-		1	HEAD PLATE	
060	443272	-		1	HEAD PLATE	
080	443497	-		1	SUPPORT	
090	443498	-		1	SUPPORT	
220	312605-0316	-		2	NUT M6M6 A280 STAINLESS	
260	315105-0153	-		4	WASHER BRB6,4X12RFR	
VOLUME 375 S						
000	**CR- 525087-0104**	**-**		**1**	**DROP**	
010	544229-0003	-		1	DROP WING	
030	443492	-		1	BRACKET	
050	443273	-		1	HEAD PLATE	
060	443274	-		1	HEAD PLATE	
080	443497	-		1	SUPPORT	
090	443498	-		1	SUPPORT	
220	312605-0316	-		2	NUT M6M6 A280 STAINLESS	
260	315105-0153	-		4	WASHER BRB6,4X12RFR	

Pos	Part No	SP	UN	Qty	Description	Page No
VOLUME 750 B						
000	**CR- 525087-0105**	**-**		**1**	**DROP**	
010	544229-0001	-		1	DROP WING	
030	525146	-		1	BRACKET	
050	443273	-		1	HEAD PLATE	
060	443274	-		1	HEAD PLATE	
080	443497	-		1	SUPPORT	
090	443498	-		1	SUPPORT	
220	312605-0316	-		2	NUT M6M6 A280 STAINLESS	
260	315105-0153	-		4	WASHER BRB6,4X12RFR	
VOLUME 568 B, 500 B						
000	**CR- 525087-0107**	**-**		**1**	**DROP**	
010	544229-0001	-		1	DROP WING	
030	525148	-		1	BRACKET	
050	443273	-		1	HEAD PLATE	
060	443274	-		1	HEAD PLATE	
080	443497	-		1	SUPPORT	
090	443498	-		1	SUPPORT	
100	525164	-		2	STEERING	
200	312155-0372	-		4	SCREW MF6S6X25RFR	
220	312605-0316	-		6	NUT M6M6 A280 STAINLESS	
260	315105-0153	-		8	WASHER BRB6,4X12RFR	
VOLUME 750 S						
000	**CR- 525087-0108**	**-**		**1**	**DROP**	
010	544229-0004	-		1	DROP WING	
030	443447	-		1	BRACKET	
050	525255	-		1	HEAD PLATE	
060	525256	-		1	HEAD PLATE	
080	443462	-		1	SUPPORT	
090	443463	-		1	SUPPORT	
220	312605-0316	-		2	NUT M6M6 A280 STAINLESS	
260	315105-0153	-		6	WASHER BRB6,4X12RFR	
VOLUMES 1000 S						
000	**CR- 525087-0109**	**-**		**1**	**DROP**	
010	544229-0005	-		1	DROP WING	
030	569131	-		1	BRACKET	
050	525255	-		1	HEAD PLATE	
060	525256	-		1	HEAD PLATE	
080	443462	-		1	SUPPORT	
090	443463	-		1	SUPPORT	
220	312605-0316	-		2	NUT M6M6 A280 STAINLESS	

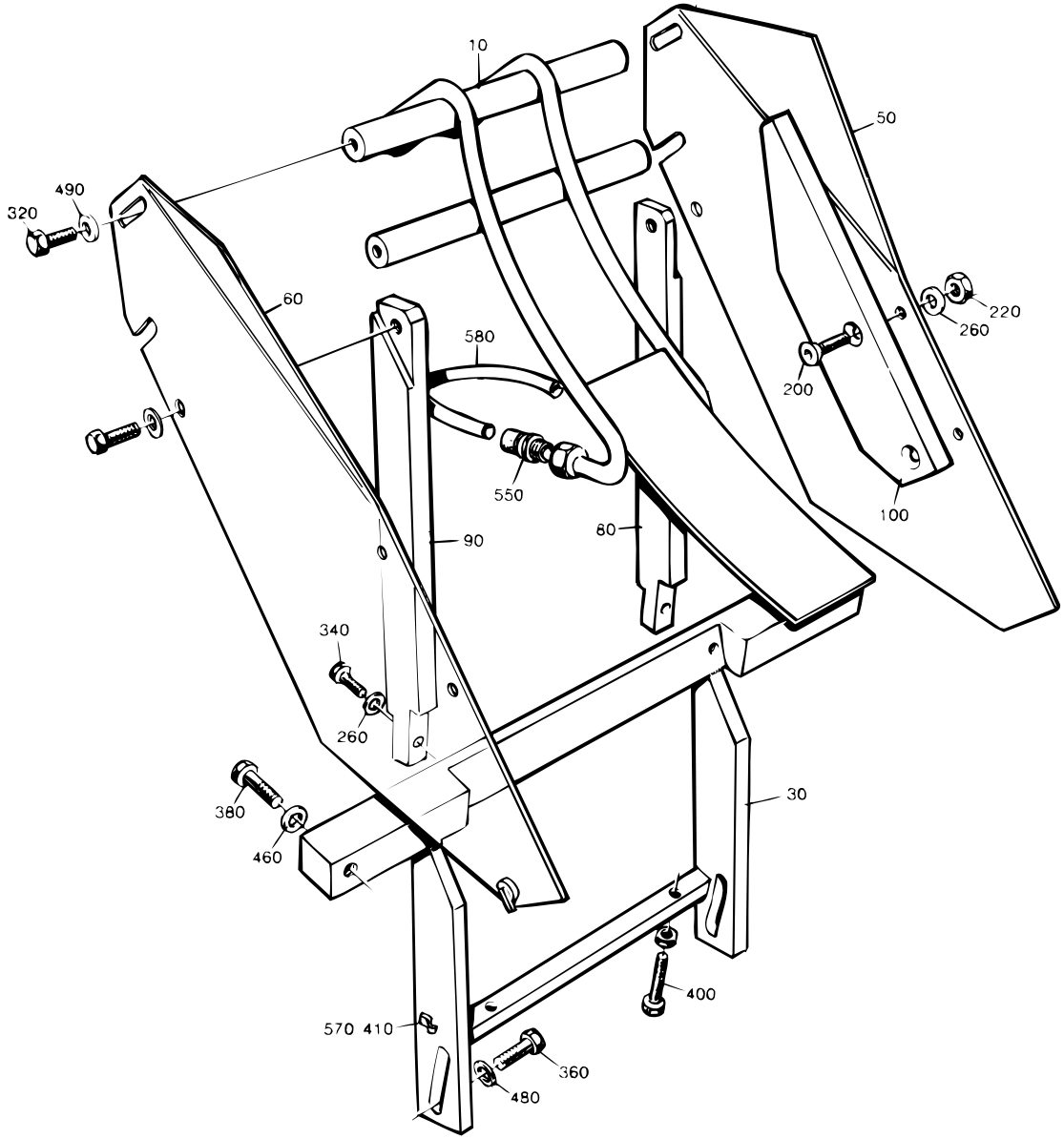
10
50
490
320
60
580
220
260
200
550
100
80
90
340
260
380
460
30
400
570
410
360
480

Pos	Part No	SP	UN	Qty	Description	Page No
260	315105-0153	-		4	WASHER BRB6,4X12RFR	
VOLUMES 1000 Sq						
000	**CR- 525087-0110**	**-**		**1**	**DROP**	
010	574166	-		1	DROP WING	
030	574080	-		1	BRACKET	
050	525255	-		1	HEAD PLATE	
060	525256	-		1	HEAD PLATE	
080	443462	-		1	SUPPORT	
090	443463	-		1	SUPPORT	
220	312605-0316	-		2	NUT M6M6 A280 STAINLESS	
260	315105-0153	-		4	WASHER BRB6,4X12RFR	
VOLUMES 500 Sq						
000	**CR- 525087-0115**	**-**		**1**	**DROP**	
010	574166	-		1	DROP WING	
030	574080	-		1	BRACKET	
050	583459	-		1	HEAD PLATE	
060	583460	-		1	HEAD PLATE	
080	443462	-		1	SUPPORT	
090	443463	-		1	SUPPORT	
220	312605-0316	-		2	NUT M6M6 A280 STAINLESS	
260	315105-0153	-		4	WASHER BRB6,4X12RFR	
Common parts						
320	312105-0366	-		6	SCREW O4017 M6X12A280	
340	312105-0368	-		2	SCREW O4017 M6X16A280	
360	312105-0449	-		4	SCREW O4017 M8X16A280	
380	312105-0459	-		2	SCREW O4017 M8X40A280	
400	312109-0381	-		2	SCREW M6S6X55HA480	
410	312125-0287	-		1	SLOTTED HEMCS4X8RFR	
460	315105-0165	-		2	WASHER BRB8,4X16RFR	
480	315115-0165	-		4	WASHER TBRB8,4X16RFR	
490	315125-0153	-		4	WASHER SB 6,4X22X4 RFR	
550	342920-0121	S		2	PIPE COUPL8/6-1/8	
570	90165-0056	-		1	CLIP	
580	90166-0122	P	MM	1500	HOSE	

Pos	Part No	SP	UN	Qty	Description	Page No

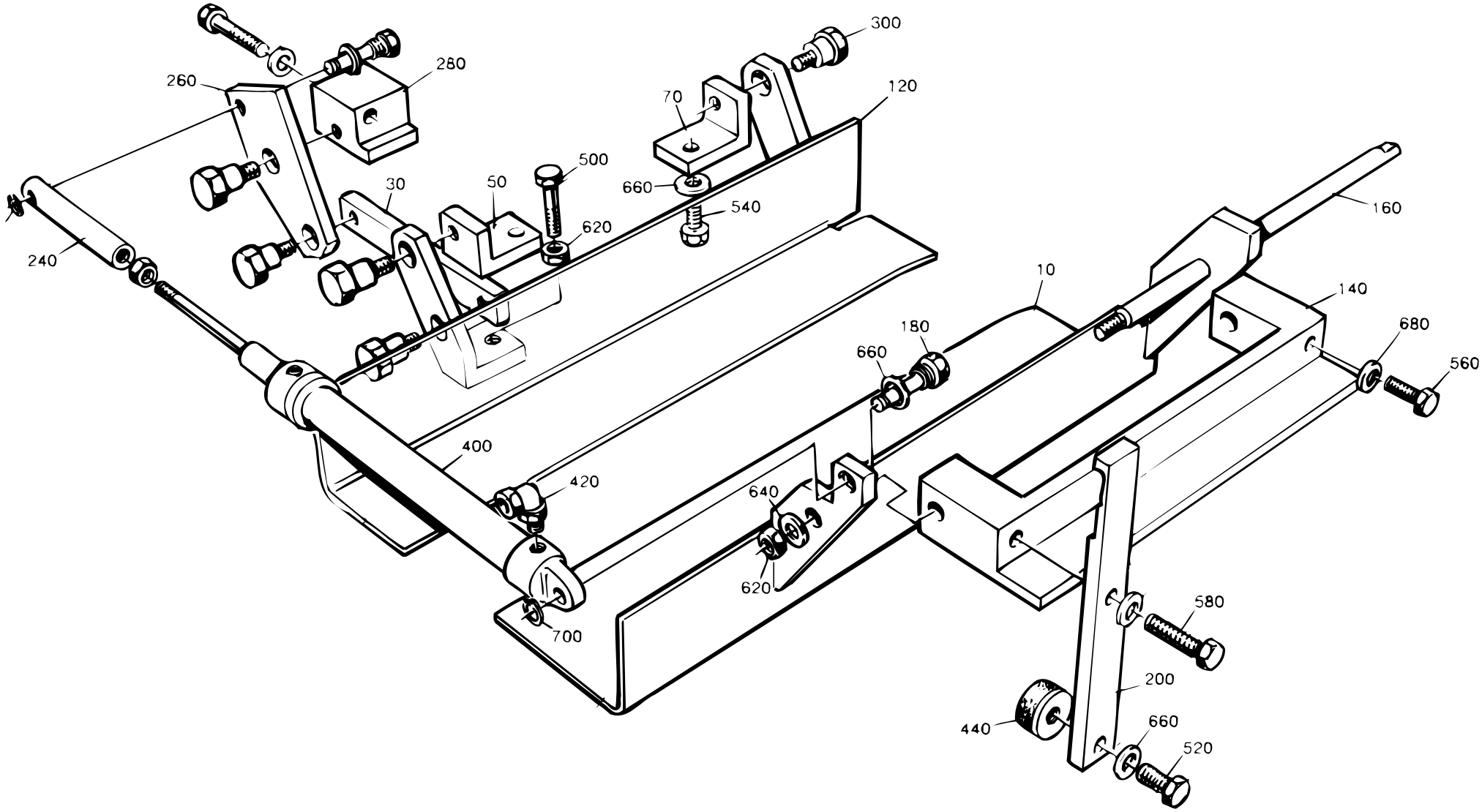

S-525088-2
ECN 15029

Pos	Part No	SP	UN	Qty	Description	Page No
VOLUMES 1136 B, 1055 B, 1000 B, 750 B, 568 B, 500 B						
000	**CR- 525088-0201**	**-**		**1**	**DISCHARGE CHUTE**	
010 1	443448	-		1	HEAD PLATE	
030 1	525075-0001	-		1	LINK	
050 1	525078	-		1	BRACKET	
070 1	525079	-		1	BRACKET	
120 1	525084	-		1	HEAD PLATE	
200 1	525416	-		1	STOP	
VOLUMES 500S, 400 B, 355 B						
000	**CR- 525088-0202**	**-**		**1**	**DISCHARGE CHUTE**	
010 2	443493	-		1	HEAD PLATE	
030 2	525075-0002	-		1	LINK	
050 2	525080	-		1	BRACKET	
070 2	525081	-		1	BRACKET	
120 1	525084	-		1	HEAD PLATE	
200 1	525416	-		1	STOP	
VOLUME 375 S						
000	**CR- 525088-0203**	**-**		**1**	**DISCHARGE CHUTE**	
010 3	443495	-		1	HEAD PLATE	
030 3	525075-0003	-		1	LINK	
050 3	525082	-		1	BRACKET	
070 3	525083	-		1	BRACKET	
120 1	525084	-		1	HEAD PLATE	
200 1	525416	-		1	STOP	
VOLUME 750 S						
000	**CR- 525088-0204**	**-**		**1**	**DISCHARGE CHUTE**	
010 4	544307	-		1	HEAD PLATE	
030 4	525075-0004	-		1	LINK	
050 4	544331	-		1	BRACKET	
070 4	544332	-		1	BRACKET	
120 1	525084	-		1	HEAD PLATE	
200 1	525416	-		1	STOP	
VOLUMES 1000 S						
000	**CR- 525088-0205**	**-**		**1**	**DISCHARGE CHUTE**	
010 5	569134	-		1	HEAD PLATE	
030 5	525075-0005	-		1	LINK	
050 5	569135	-		1	BRACKET	
070 5	569136	-		1	BRACKET	
120 1	525084	-		1	HEAD PLATE	
200 1	525416	-		1	STOP	

Pos	Part No	SP	UN	Qty	Description	Page No
VOLUMES 1000 Sq NORMFIN, 500 Sq						
000	**CR- 525088-0206**	**-**		**1**	**DISCHARGE CHUTE**	
010 6	574077	-		1	HEAD PLATE	
030 6	525075-0006	-		1	LINK	
050 6	574078	-		1	BRACKET	
070 6	574079	-		1	BRACKET	
120 2	574126	-		1	HEAD PLATE	
200 1	525416	-		1	STOP	
VOLUMES 1000 Sq REVFIN						
000	**CR- 525088-0207**	**-**		**1**	**DISCHARGE CHUTE**	
010 6	574077	-		1	HEAD PLATE	
030 6	525075-0006	-		1	LINK	
050 6	574078	-		1	BRACKET	
070 6	574079	-		1	BRACKET	
120 2	574126	-		1	HEAD PLATE	
200 2	1195333	-		1	STOP	
Common parts						
140	443365	-		1	BRACKET	
160	443309	C		1	SHAFT	
180	443310	S		2	AXLE PIN	
240	443474	-		1	BRACKET	
260	525074	-		1	ARM	
280	525465	-		1	BRACKET	
300	525077	S		5	AXLE PIN	
400	90239-0818	S		1	CYLINDER 16-80	
420	342732-0099	S		2	ELBOW PIPE D4-M5	
440	90347-0007	S		1	VIBRATION DAMPER	
500	312105-0374	-		1	SCREW O4017 M6X30A280	
540	312105-0451	-		2	SCREW SO4017 8X20A280	
560	312105-0455	-		1	SCREW O4017 M8X30A280	
580	312105-0460	-		1	SCREW O4017 M8X45A280	
600	312105-0462	-		1	SCREW O4014 M8X55A280	
620	312605-0316	-		4	NUT M6M6 A280 STAINLESS	
640	315105-0153	-		2	WASHER BRB6,4X12RFR	
660	315105-0165	-		6	WASHER BRB8,4X16RFR	
680	315115-0165	-		1	WASHER TBRB8,4X16RFR	
700	315755-0107	-		2	LOCKING WAE 5RFR	

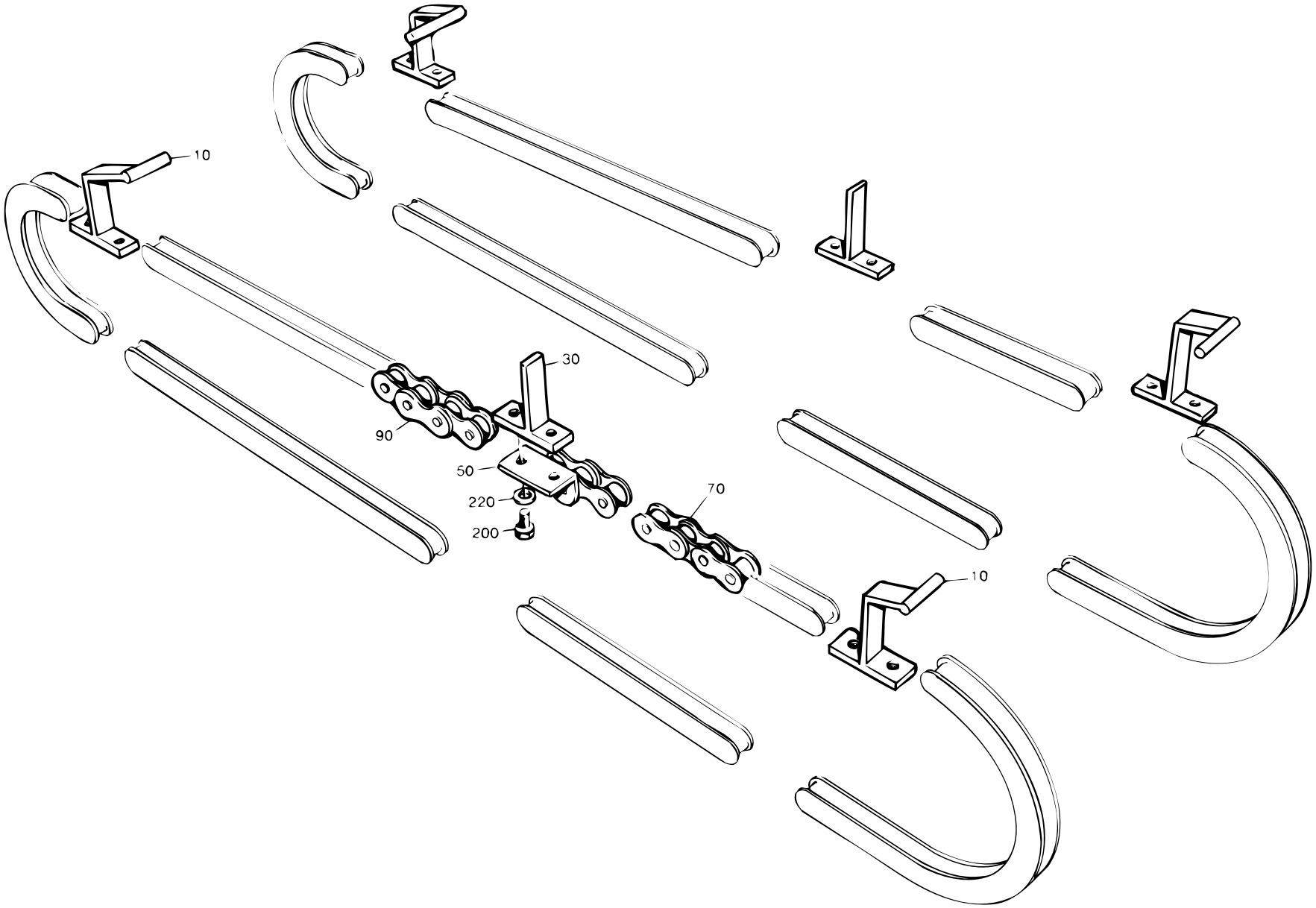

S-525089-1
ECN 10866

Pos	Part No	SP	UN	Qty	Description	Page No
VOLUMES 750 S, 500 S, 375 S, 355 B, 400 B						
000	**CR- 525089-0101**	**-**		**1**	**CHAIN RIGHT**	
010	443469	P		3	CARRIER	
070	318212-0008	S		3	ROLLER CHA1/2 RFR	
090	90288-0053	S		3	ROLLER CHAIN	
VOLUMES 1136 B, 1000 S						
000	**CR- 525089-0102**	**-**		**1**	**CHAIN RIGHT**	
010	525431	-		3	CARRIER	
070	318212-0006	S		3	ROLLER CHA1/2" RFR	
090	90288-0057	S		3	ROLLER CHAIN	
VOLUMES 1055 B, 1000 B, 750 B, 568 B, 500 B						
000	**CR- 525089-0103**	**-**		**1**	**CHAIN RIGHT**	
010	525431	-		3	CARRIER	
070	318212-0008	S		3	ROLLER CHA1/2 RFR	
090	90288-0053	S		3	ROLLER CHAIN	
Common parts						
030	443468	P		3	CARRIER	
050	90288-0311	P		6	LINK	
200	312105-0287	P		12	SCREW O4017 M4X8A280	
220	315105-0136	P		12	WASHER BRB4,3X8RFR	

Pos	Part No	SP	UN	Qty	Description	Page No

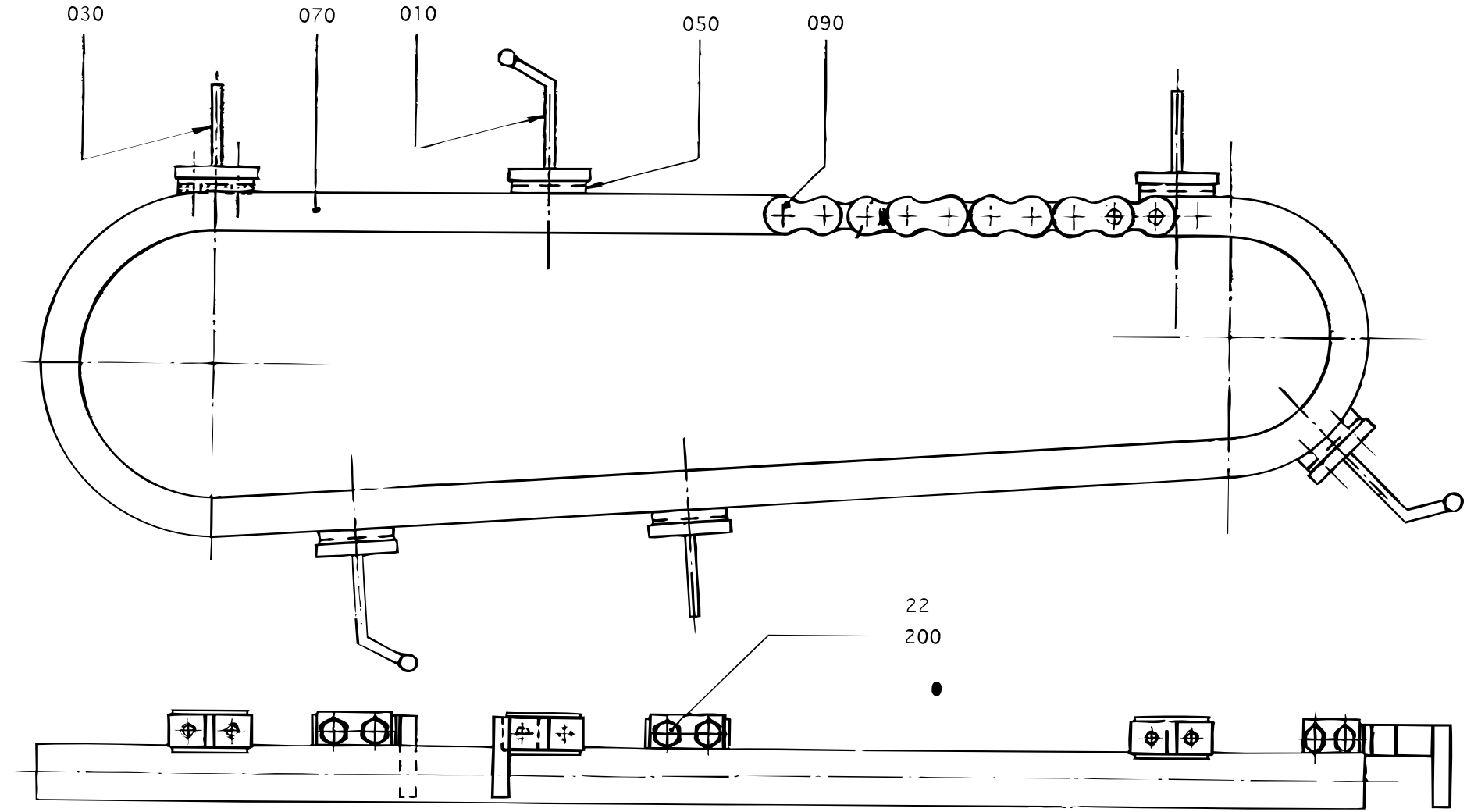
030
070
010
050
090
22
200

Pos	Part No	SP	UN	Qty	Description	Page No
VOLUMES 750 S, 500 S, 375 S, 355 B, 400 B						
000	**CR- 525089-0101**	**-**		**1**	**CHAIN RIGHT**	
010	443469	P		3	CARRIER	
070	318212-0008	S		3	ROLLER CHA1/2 RFR	
090	90288-0053	S		3	ROLLER CHAIN	
VOLUMES 1136 B, 1000 S						
000	**CR- 525089-0102**	**-**		**1**	**CHAIN RIGHT**	
010	525431	-		3	CARRIER	
070	318212-0006	S		3	ROLLER CHA1/2" RFR	
090	90288-0057	S		3	ROLLER CHAIN	
VOLUMES 1055 B, 1000 B, 750 B, 568 B, 500 B						
000	**CR- 525089-0103**	**-**		**1**	**CHAIN RIGHT**	
010	525431	-		3	CARRIER	
070	318212-0008	S		3	ROLLER CHA1/2 RFR	
090	90288-0053	S		3	ROLLER CHAIN	
Common parts						
030	443468	P		3	CARRIER	
050	90288-0311	P		6	LINK	
200	312105-0287	P		12	SCREW O4017 M4X8A280	
220	315105-0136	P		12	WASHER BRB4,3X8RFR	

Pos	Part No	SP	UN	Qty	Description	Page No

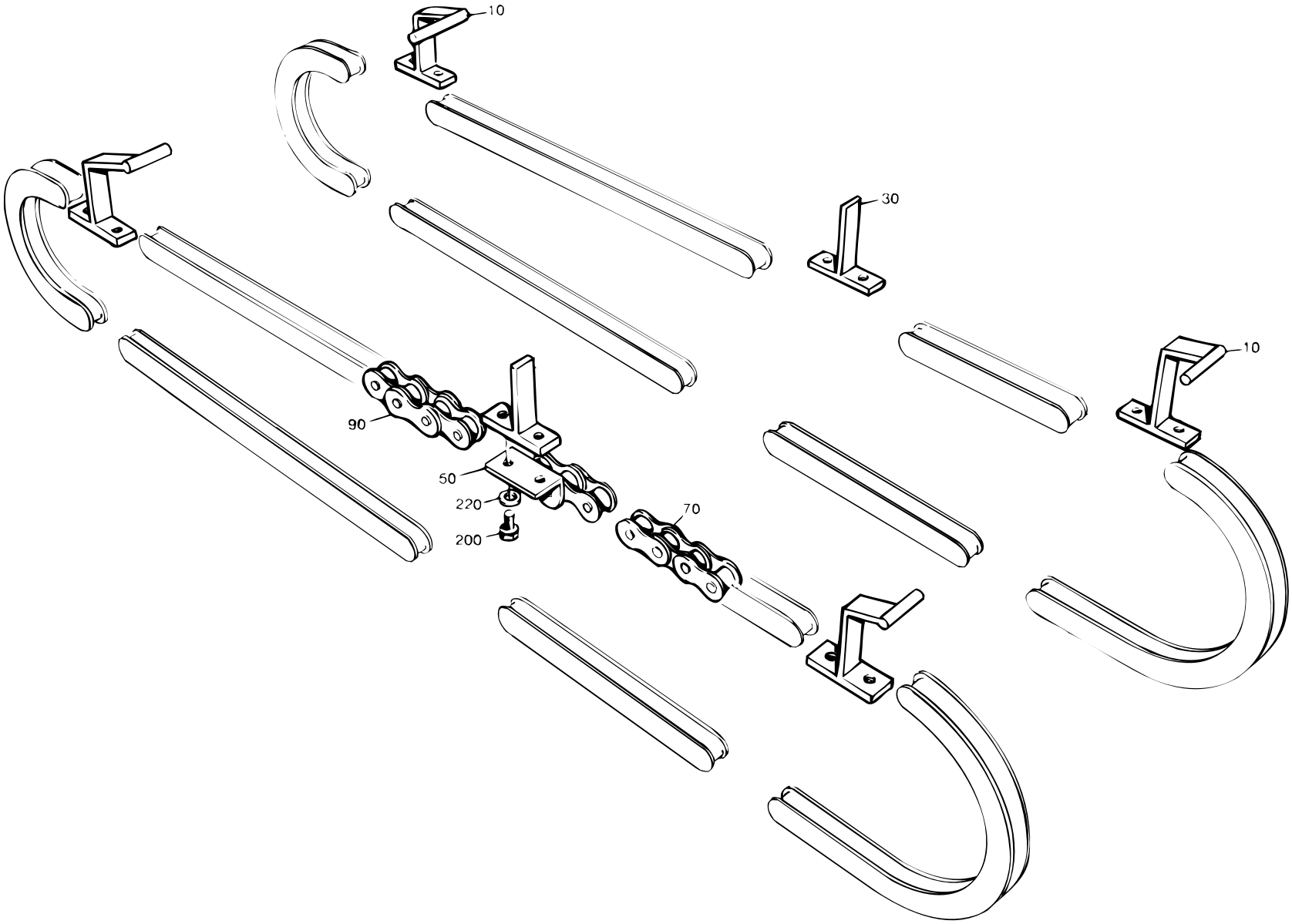

S-525090-1
ECN 10866

Pos	Part No	SP	UN	Qty	Description	Page No
VOLUMES 750 S, 500 S, 375 S, 355 B, 400 B						
000	**CR- 525090-0101**	**-**		**1**	**CHAIN LEFT**	
010	443470	P		3	CARRIER	
070	318212-0008	S		3	ROLLER CHA1/2 RFR	
090	90288-0053	S		3	ROLLER CHAIN	
VOLUMES 1136 B, 1000 S						
000	**CR- 525090-0102**	**-**		**1**	**CHAIN LEFT**	
010	525432	-		3	CARRIER	
070	318212-0006	S		3	ROLLER CHA1/2" RFR	
090	90288-0057	S		3	ROLLER CHAIN	
VOLUMES 1055 B, 1000 B, 750 B, 568 B, 500 B						
000	**CR- 525090-0103**	**-**		**1**	**CHAIN LEFT**	
010	525432	-		3	CARRIER	
070	318212-0008	S		3	ROLLER CHA1/2 RFR	
090	90288-0053	S		3	ROLLER CHAIN	
Common parts						
030	443468	P		3	CARRIER	
050	90288-0311	P		6	LINK	
200	312105-0287	P		12	SCREW O4017 M4X8A280	
220	315105-0136	P		12	WASHER BRB4,3X8RFR	

Pos	Part No	SP	UN	Qty	Description	Page No

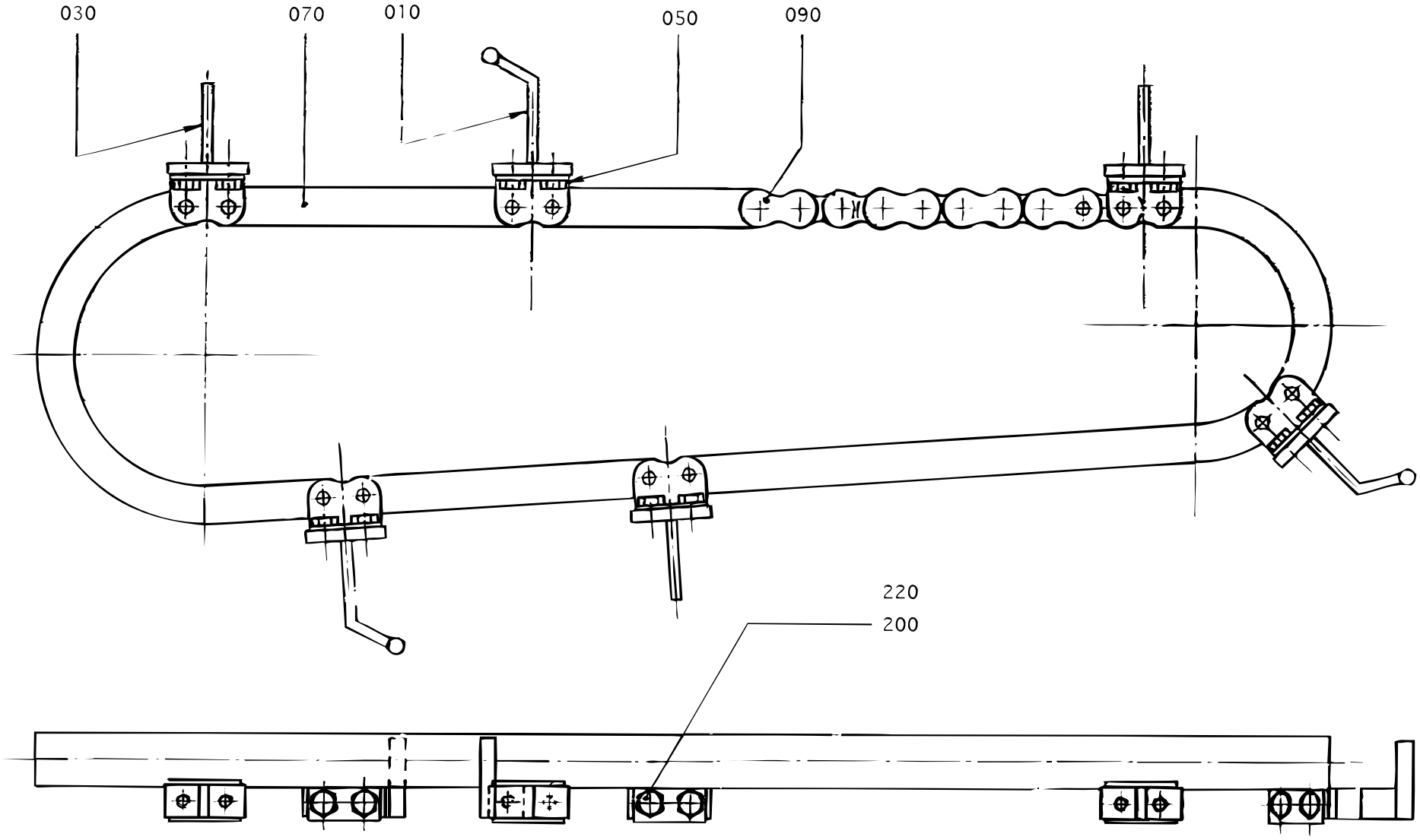

S-525090-2
ECN 13000

Pos	Part No	SP	UN	Qty	Description	Page No
VOLUMES 750 S, 500 S, 375 S, 355 B, 400 B						
000	**CR- 525090-0101**	**-**		**1**	**CHAIN LEFT**	
010	443470	P		3	CARRIER	
070	318212-0008	S		3	ROLLER CHA1/2 RFR	
090	90288-0053	S		3	ROLLER CHAIN	
VOLUMES 1136 B, 1000 S						
000	**CR- 525090-0102**	**-**		**1**	**CHAIN LEFT**	
010	525432	-		3	CARRIER	
070	318212-0006	S		3	ROLLER CHA1/2" RFR	
090	90288-0057	S		3	ROLLER CHAIN	
VOLUMES 1055 B, 1000 B, 750 B, 568 B, 500 B						
000	**CR- 525090-0103**	**-**		**1**	**CHAIN LEFT**	
010	525432	-		3	CARRIER	
070	318212-0008	S		3	ROLLER CHA1/2 RFR	
090	90288-0053	S		3	ROLLER CHAIN	
Common parts						
030	443468	P		3	CARRIER	
050	90288-0311	P		6	LINK	
200	312105-0287	P		12	SCREW O4017 M4X8A280	
220	315105-0136	P		12	WASHER BRB4,3X8RFR	

Pos	Part No	SP	UN	Qty	Description	Page No

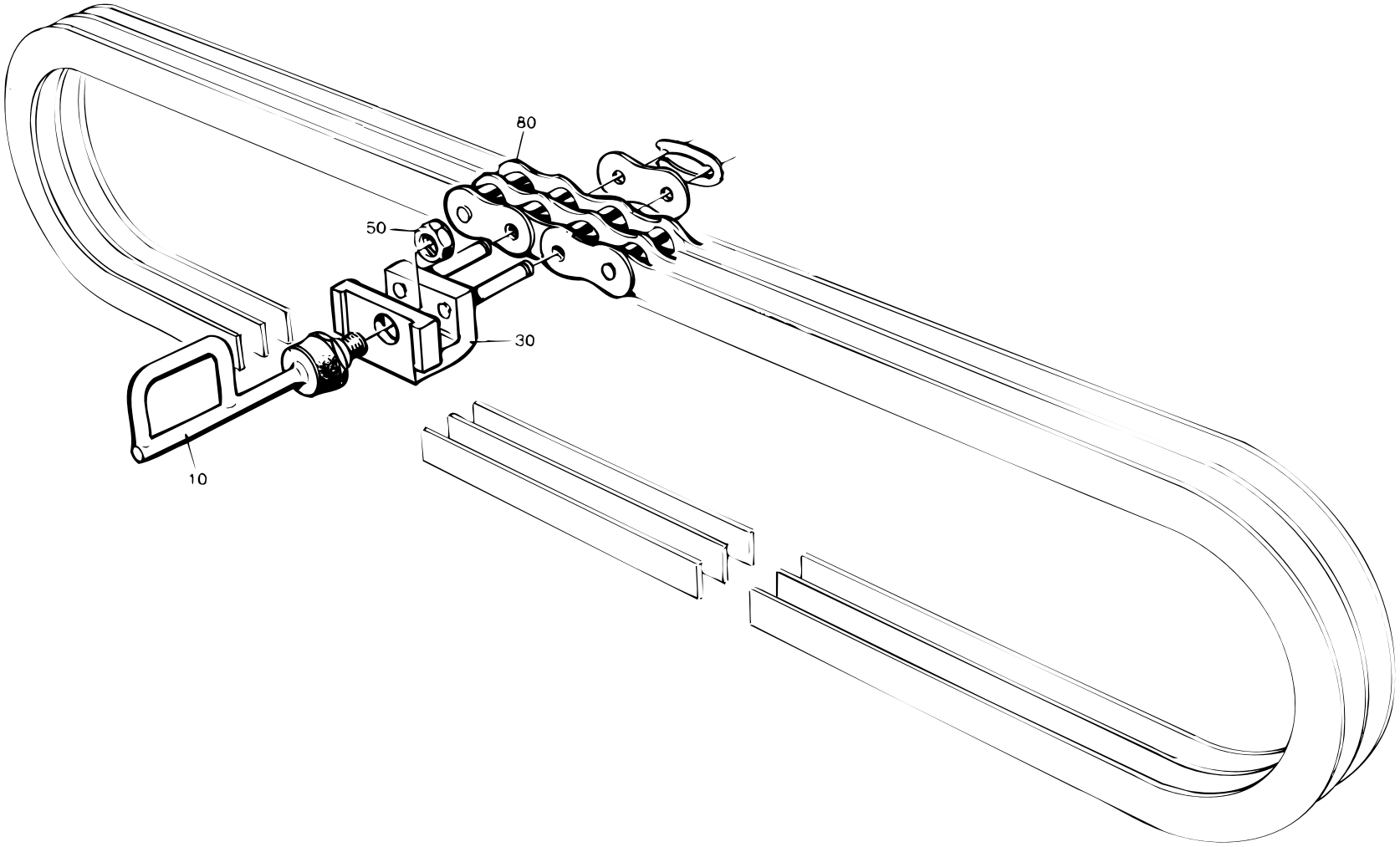
80
50
30
10

Pos	Part No	SP	UN	Qty	Description	Page No
VOLUMES 1136 B, 1055 B, 1000 B, 750 B, 568 B, 500 B						
000	**CR- 525091-0101**	**-**		**1**	**CHAIN**	
010	525208-0001	P		3	CARRIER	
VOLUMES 375 S, 355 B, 500 S, 400 B						
000	**CR- 525091-0102**	**-**		**1**	**CHAIN**	
010	525208-0002	P		3	CARRIER	
VOLUMES 1000 S, 750 S						
000	**CR- 525091-0103**	**-**		**1**	**CHAIN**	
010	525208-0003	P		3	CARRIER	
Common parts						
030	525254	P		3	LINK	
050	312605-0318	-		3	NUT M6M8RFR	
080	318242-0036	S		3	ROLLER CHA	

Pos	Part No	SP	UN	Qty	Description	Page No

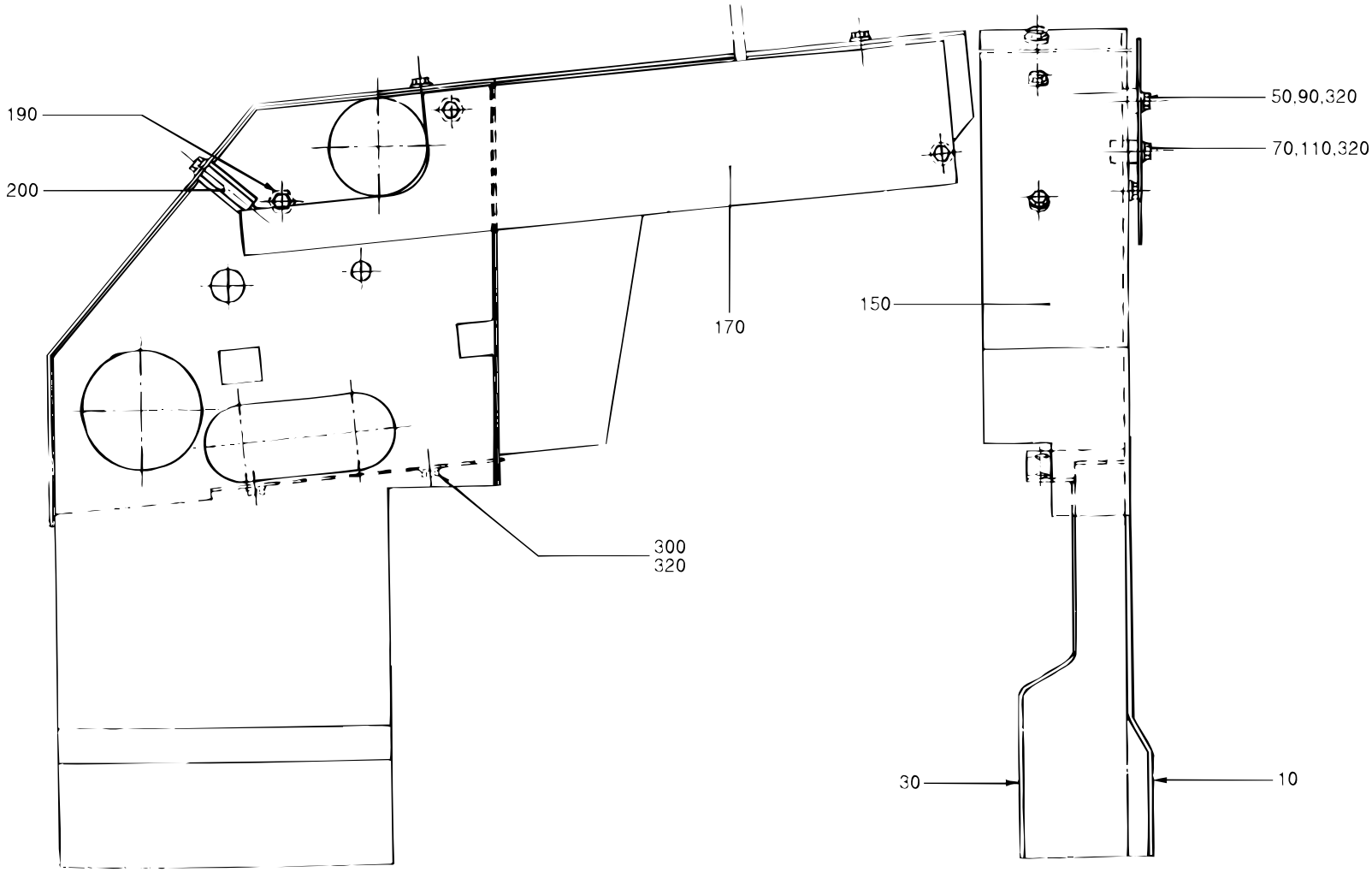
190
200
170
150
50,90,320
70,110,320
300
320
30
10

Pos	Part No	SP	UN	Qty	Description	Page No
VOLUMES 1136 B, 1055 B, 1000 B, 1000 S, 750 S						
000	**CR- 525092-0101**	**-**		**1**	**CHAIN GUARD**	
010	443476	-		1	GABLE PLATE	
030	443477	-		1	GABLE PLATE	
050	525052-0001	-		1	SPACER	
070	525052-0002	-		1	SPACER	
090	312105-0370	-		1	SCREW O4017 M6X20A280	
110	312105-0374	-		1	SCREW O4017 M6X30A280	
150	525339	-		1	COVERING PLATE	
200	525338	-		1	SPACER	
VOLUME 500 S						
000	**CR- 525092-0102**	**-**		**1**	**CHAIN GUARD**	
010	525038	-		1	GABLE PLATE	
030	525039	-		1	GABLE PLATE	
050	525052-0003	-		1	SPACER	
070	525052-0004	-		1	SPACER	
090	312105-0376	-		1	SCREW O4017 M6X35A280	
110	312105-0380	-		1	SCREW O4014 M6X50A280	
150	566416	-		1	COVERING PLATE	
200	525338	-		1	SPACER	
VOLUME 375 S						
000	**CR- 525092-0103**	**-**		**1**	**CHAIN GUARD**	
010	525038	-		1	GABLE PLATE	
030	525039	-		1	GABLE PLATE	
050	525052-0005	-		1	SPACER	
070	525052-0006	-		1	SPACER	
090	312105-0378	-		1	SCREW O4017 M6X40A280	
110	312105-0381	-		1	SCREW O4014 M6X55A280	
150	928901	-		1	COVERING PLATE	
VOLUMES 750 B, 568 B, 500 B						
000	**CR- 525092-0104**	**-**		**1**	**CHAIN GUARD**	
010	525150	-		1	GABLE PLATE	
030	525151	-		1	GABLE PLATE	
050	525052-0001	-		1	SPACER	
070	525052-0002	-		1	SPACER	
090	312105-0370	-		1	SCREW O4017 M6X20A280	
110	312105-0374	-		1	SCREW O4017 M6X30A280	
150	525339	-		1	COVERING PLATE	
200	525338	-		1	SPACER	

Pos	Part No	SP	UN	Qty	Description	Page No
VOLUMES 355 B, 400 B						
000	**CR- 525092-0105**	**-**		**1**	**CHAIN GUARD**	
010	525260	-		1	GABLE PLATE	
030	525261	-		1	GABLE PLATE	
050	525052-0003	-		1	SPACER	
070	525052-0004	-		1	SPACER	
090	312105-0376	-		1	SCREW O4017 M6X35A280	
110	312105-0380	-		1	SCREW O4014 M6X50A280	
150	566416	-		1	COVERING PLATE	
200	525338	-		1	SPACER	
Common parts						
170	525051	-		1	HEAD PLATE	
190	443419	-		2	SPACER	
300	312105-0364	-		6	SCREW M6S6X10RFR	
320	315105-0153	-		8	WASHER BRB6,4X12RFR	

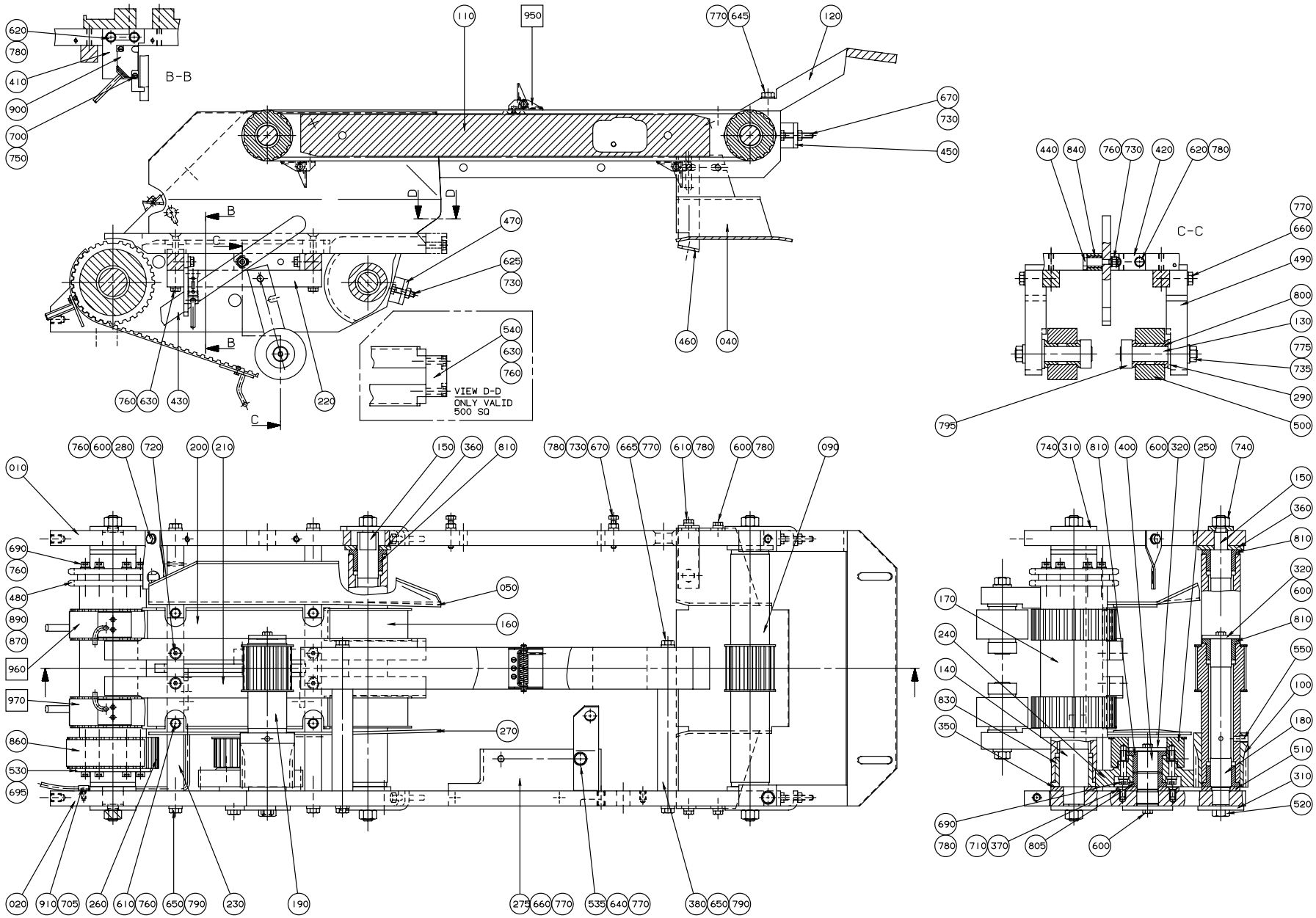

S-574323-1
ECN 70165

Pos	Part No	SP	UN	Qty	Description	Page No
VOLUMES 1000 Sq NORMFIN						
000	**CR- 574323-0101**	**-**		**1**	**CONVEYING EQUIPMENT**	
120 1	443293	-		1	BRACKET	
630	312105-0374	-		4	SCREW O4017 M6X30A280	
760	315105-0153	-		16	WASHER BRB6,4X12RFR	
VOLUMES 1000 Sq REVFIN						
000	**CR- 574323-0102**	**-**		**1**	**CONVEYING EQUIPMENT**	
120 2	1143003	-		1	BRACKET	
630	312105-0374	-		4	SCREW O4017 M6X30A280	
760	315105-0153	-		16	WASHER BRB6,4X12RFR	
VOLUME 500SQ						
000	**CR- 574323-0103**	**-**		**1**	**CONVEYING EQUIPMENT**	
120 1	443293	-		1	BRACKET	
540	591084	-		1	GUIDE LUG	
630	312105-0374	-		6	SCREW O4017 M6X30A280	
760	315105-0153	-		18	WASHER BRB6,4X12RFR	
Common parts						
010	574065	-		1	SIDE PLATE	
020	574066	-		1	SIDE PLATE	
040	574094	-		1	HEAD PLATE	
050	574119	-		1	HEAD PLATE	
090	443289	C		1	TOOTHED PULLY	
100	443290	S		1	GEAR WHEEL	
110	443292	-		1	STEERING	
130	525363-0002	S		2	SHAFT	
140	525400	C		1	SHAFT	
150	525402	C		2	SHAFT	
160	574067	C		1	TIMING BELT SHAFT	
170	574068	C		1	TIMING BELT SHAFT	
180	574069	C		1	AXLE PIN	
190	574070	C		1	TIMING BELT SHAFT	
200	574071	C		1	PROFILE	
210	574072	C		1	PROFILE	
220	574073	-		2	BRACKET	
230	574076	-		2	BRACKET	
240	574082	S		1	GEAR WHEEL	
250	574085	S		1	TIMING BELT PULLEY	
260	574086	S		1	TIMING BELT PULLEY	
270	574120	-		1	HEAD PLATE	
275	574121	-		1	BRACKET	
280	574122	-		1	BRACKET	
290	285363	-		2	WASHER	
310	443295	-		3	WASHER	
320	443296	C		2	WASHER	
350	443299	C		2	WASHER	
360	443300	C		4	WASHER	
370	443301	C		1	WASHER	
380	443312	-		2	SPACER	
400	443307	C		1	SHAFT	
410	443482	-		1	BRACKET	
420	443483	-		1	BRACKET	
430	443484	-		1	ARM	
440	443485	S		1	SCREW	
450	443489	-		2	BRACKET	
460	525334	-		1	BRACKET	
470	556886	-		2	BRACKET	
480	573353	S		1	SPROCKET	
490	574074	-		2	ROLLER BRACKET	
500	574075	C		2	ROLL	
510	574083	C		1	WASHER	
520	574084	S		1	SCREW	
530	574087	-		1	WASHER	
535	574123	-		1	BRACKET	
550	90287-0161	S		2	STOP SCREW	
600	312105-0366	-		7	SCREW O4017 M6X12A280	
610	312105-0368	-		5	SCREW O4017 M6X16A280	
620	312105-0370	-		4	SCREW O4017 M6X20A280	
625	312105-0372	-		2	SCREW O4017 M6X25A280	
640	312105-0447	-		1	SCREW O4017 M8X12A280	
645	312105-0453	-		2	SCREW O4017 M8X25A280	
650	312105-0455	-		4	SCREW O4017 M8X30A280	
660	312105-0457	-		2	SCREW O4017 M8X35A280	
665	312105-0463	-		2	SCREW O4014 M8X60A280	
670	312109-0376	-		4	SCREW 6X35 H RFR	
690	312115-0374	-		10	SCREW O4762 M6X30A280	
695	312115-0380	-		6	SCREW O4762 M6X50A280	
700	312125-0230	-		2	SLOTTED HEMCS3X20RFR	
705	312125-0287	-		2	SLOTTED HEMCS4X8RFR	
710	312155-0366	-		2	SCREW MF6S6X12RFR	
720	312155-0376	-		4	SCREW MF6X35RFR	
730	312605-0316	-		7	NUT M6M6 A280 STAINLESS	
735	312605-0320	-		2	NUT M6M10RFR	
740	312605-0322	-		6	NUT M6M12RFR	
750	315105-0124	-		2	WASHER BRB3,2X6RFR	

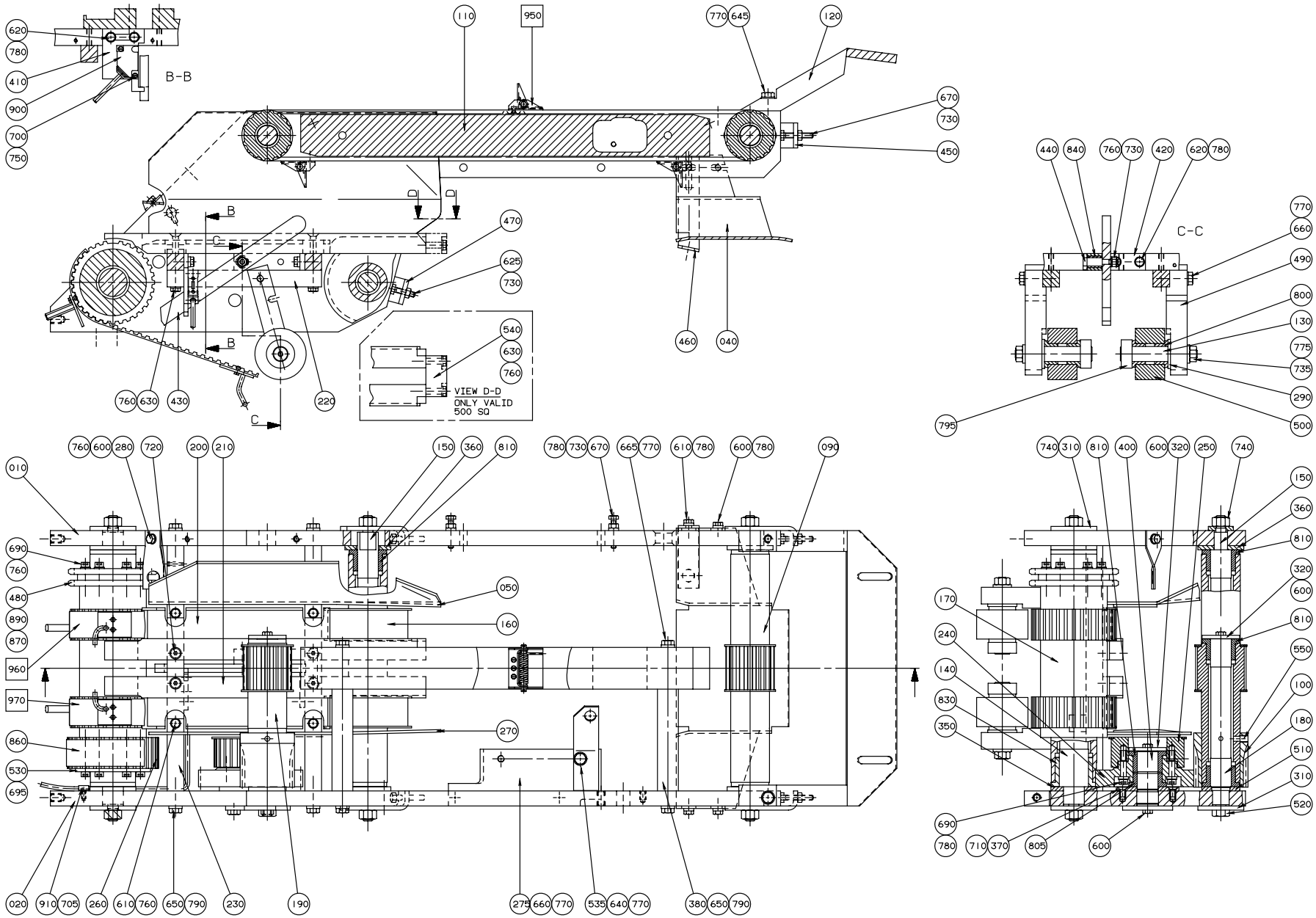

S-574323-1
ECN 70165

Pos	Part No	SP	UN	Qty	Description	Page No
770	315105-0165	-		9	WASHER BRB8,4X16RFR	
775	315105-0173	-		2	WASHER BRB10,5X22RFR	
780	315115-0153	-		14	WASHER TBRB6,4X12RFR	
790	315115-0165	-		6	WASHER TBRB8,4X16RFR	
795	315742-0114	-		2	RETAINING 18SMS199RFR	
800	321101-0223	S		4	FLANGE BUS 18F7X16	
805	321101-0252	S		1	FLANGE BUS 25F7X16	
810	321101-0253	S		7	FLANGE BUS 25F7X25	
830	321101-0283	S		2	FLANGE BUS 35F7X35	
840	321116-0128	S		1	BUSHING 10E7/14X16	
860	90417-0345	S		1	TIMING BELT	
870	318219-0487	P		1	CONNECTION	
890	318242-0108	S		1	ROLLER CHA	
900	90044-0104	P		1	PROX.SWITCH IFM IN 3002	
910	90165-0056	-		2	CLIP	
F950	CR- 574332-0101	-		1	BELT	**487**
F960	CR- 576245-0101	-		1	BELT RIGHT	**489**
F970	CR- 576246-0101	-		1	BELT LEFT	**491**

Pos	Part No	SP	UN	Qty	Description	Page No

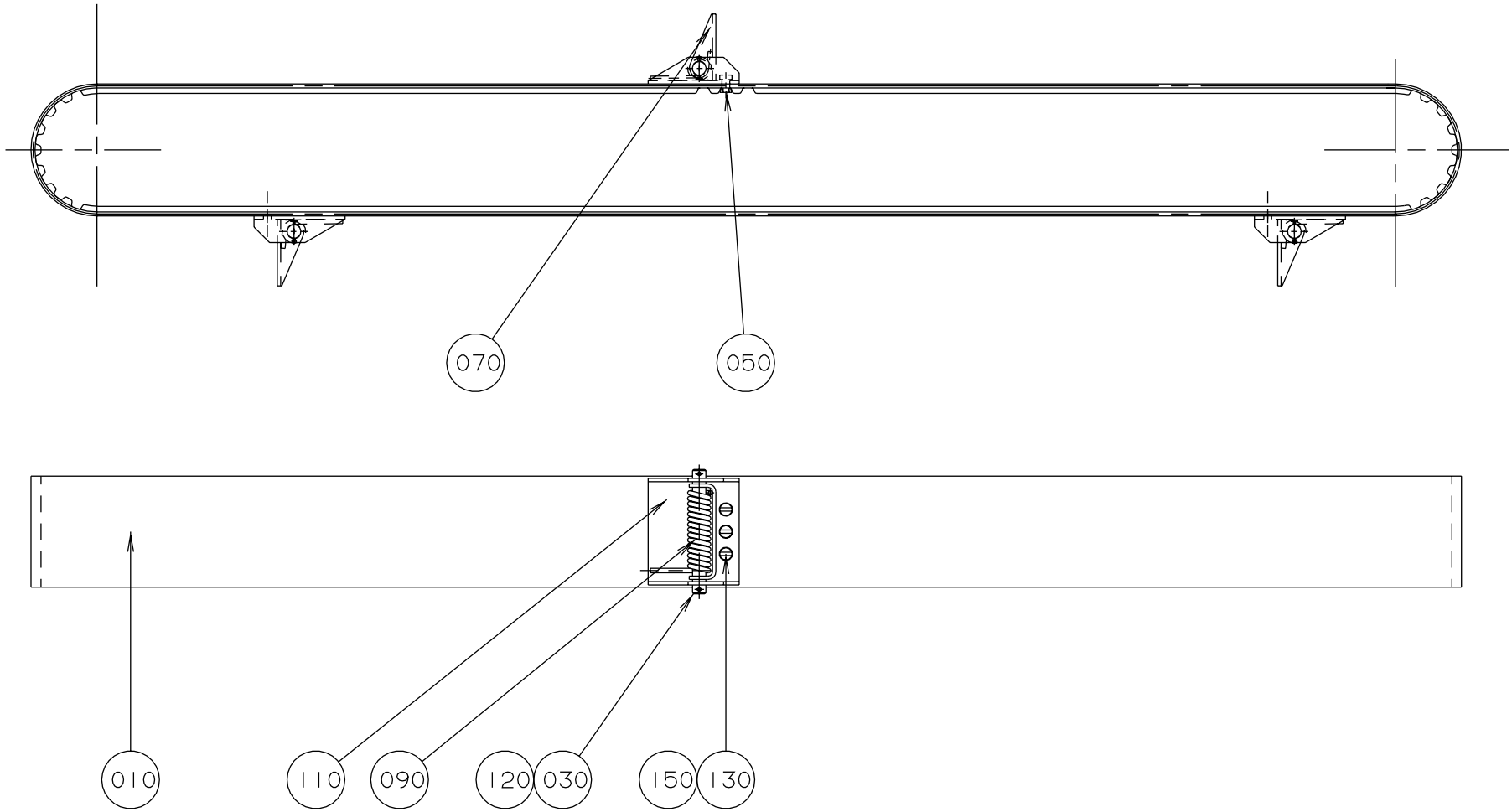
070
050
010
110
090
120
030
150
130

Pos	Part No	SP	UN	Qty	Description	Page No
-						
000	**CR- 574332-0101**	**-**		**1**	**BELT**	
010	90417-0330	S		1	TIMING BELT	
030	297751	P		3	SHAFT	
050	297755	-		3	WEDGE	
070	297794	S		3	SHEET	
090	297795	S		3	SPRING	
110	525055	-		3	BRACKET	
120	311411-0127	-		6	SPLIT PIN SP1,2X12RFR	
130	312125-0220	-		9	SLOTTED HEMCS3X6RFR	
150	315105-0124	-		9	WASHER BRB3,2X6RFR	

Pos	Part No	SP	UN	Qty	Description	Page No

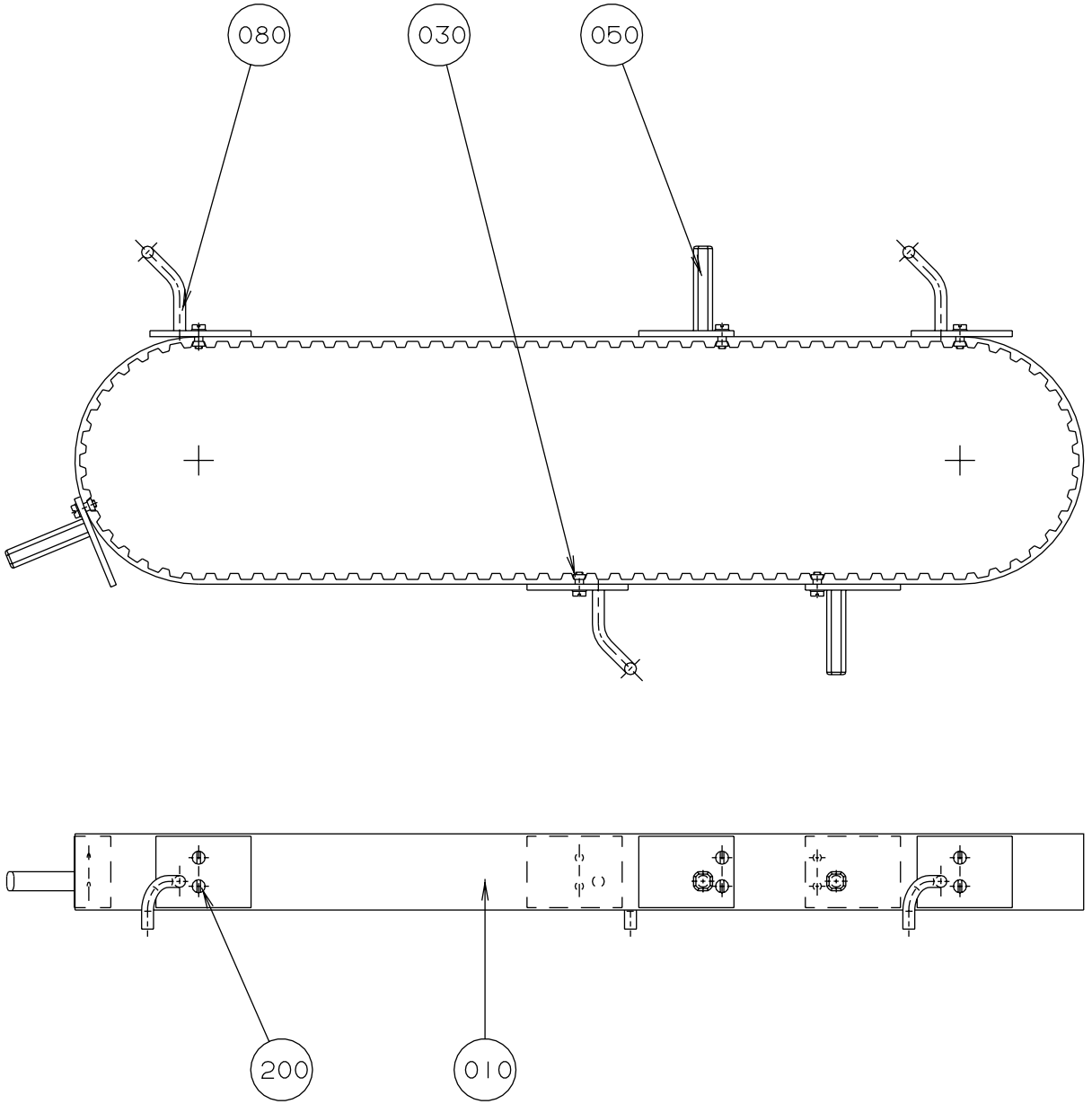

S-576245-1
ECN 19244

Pos	Part No	SP	UN	Qty	Description	Page No
-						
000	**CR- 576245-0101**	**-**		**1**	**BELT RIGHT**	
010	90417-0329	S		1	TIMING BELT	
030	285380-0002	P		6	WEDGE	
050	574090	P		3	CARRIER	
080	574091	P		3	CARRIER	
200	312125-0220	P		12	SLOTTED HEMCS3X6RFR	

Pos	Part No	SP	UN	Qty	Description	Page No

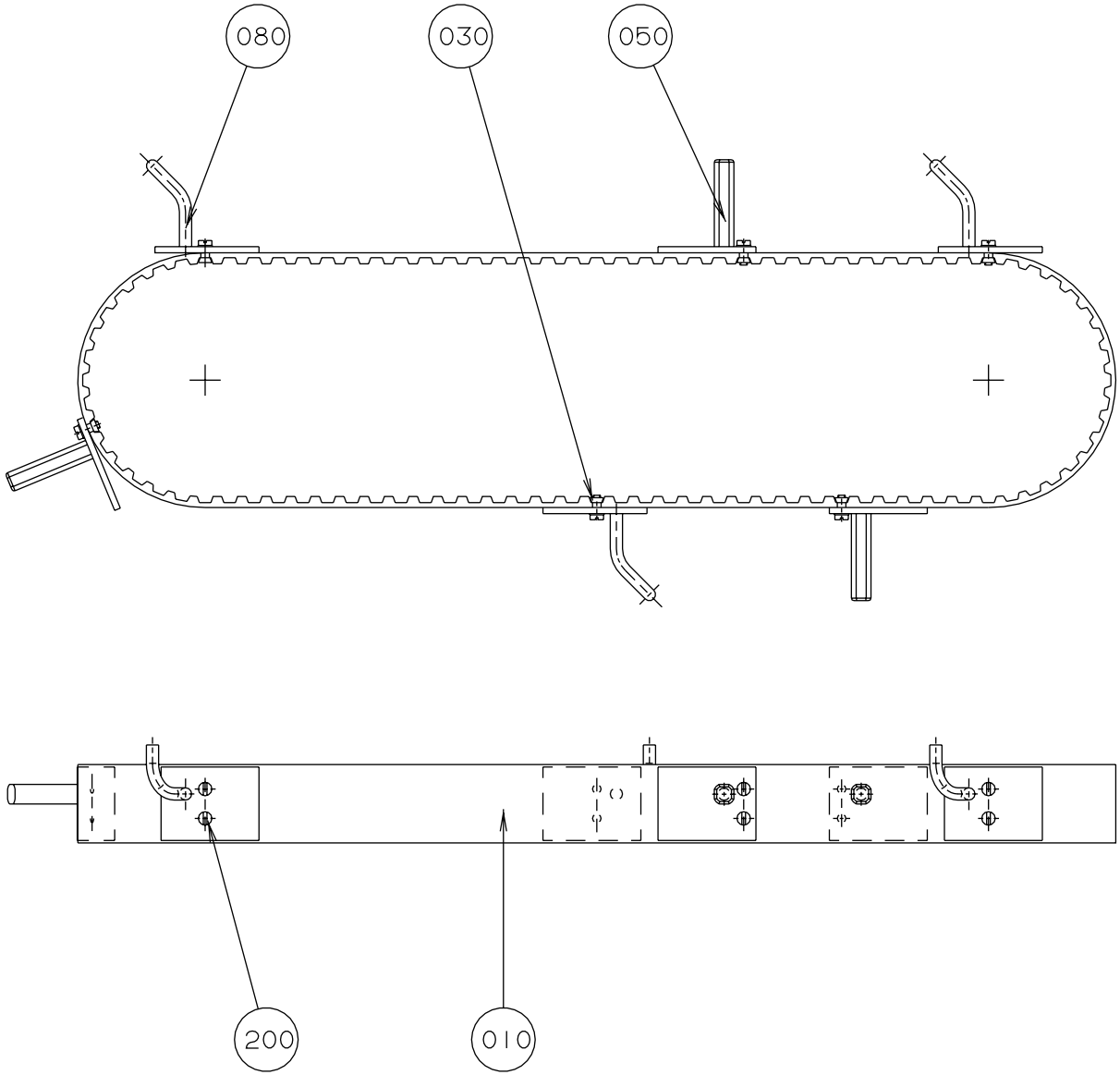
080
030
050
200
010

Pos	Part No	SP	UN	Qty	Description	Page No
-						
000	**CR- 576246-0101**	**-**		**1**	**BELT LEFT**	
010	90417-0329	S		1	TIMING BELT	
030	285380-0002	P		6	WEDGE	
050	574089	P		3	CARRIER	
080	574092	P		3	CARRIER	
200	312125-0220	P		12	SLOTTED HEMCS3X6RFR	

Pos	Part No	SP	UN	Qty	Description	Page No

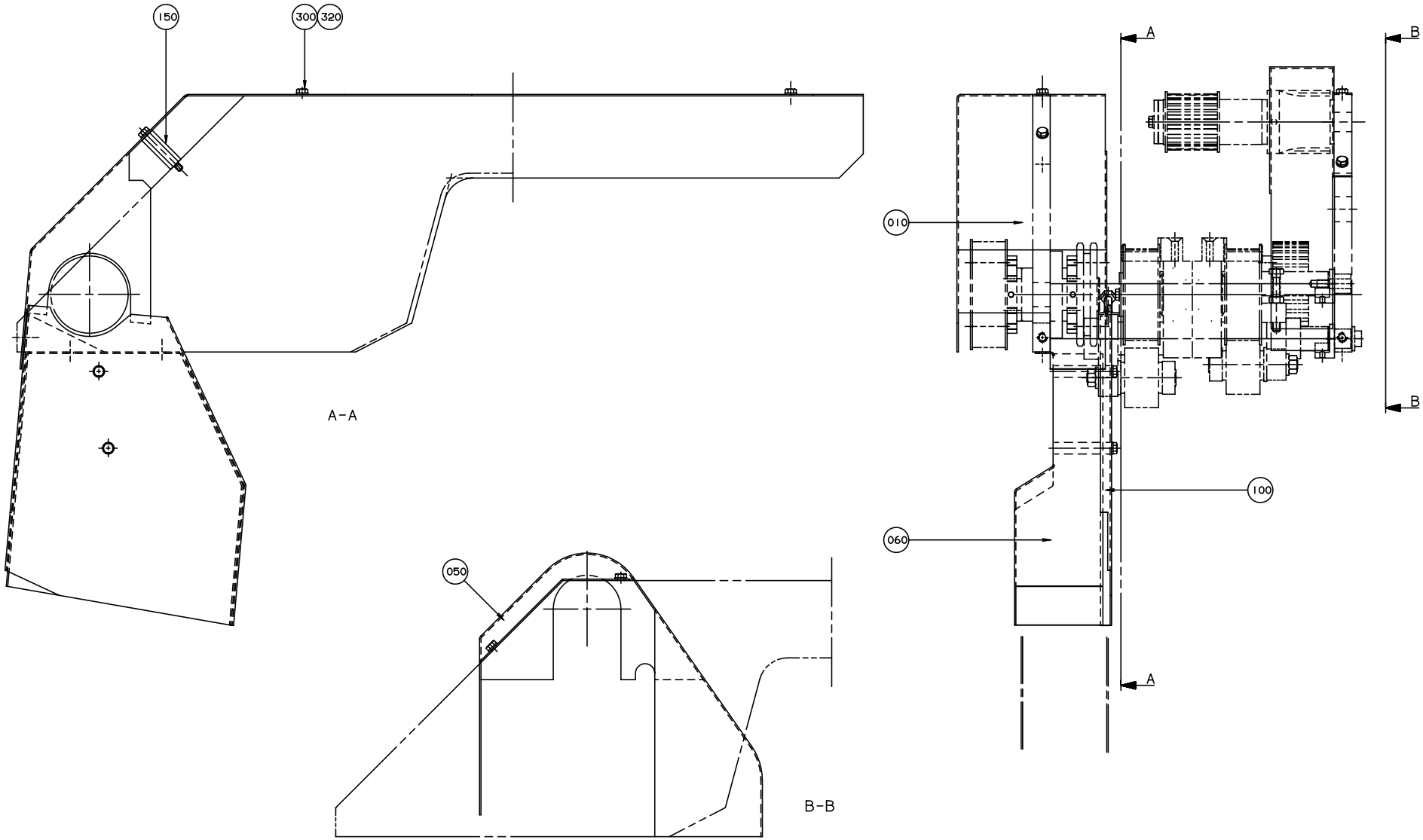

S-576247-2
ECN 19329

Pos	Part No	SP	UN	Qty	Description	Page No
1000 Sq NORMFIN						
000	**C- 576247-0101**	**-**		**1**	**PROTECTION**	
010 2	574164	-		1	PROTECTION PLATE	
050 2	574165	-		1	PROTECTIVE COVER	
060 2	580006	-		1	PROTECTION PLATE	
100 2	580007	-		1	PROTECTION PLATE	
500 Sq						
000	**C- 576247-0102**	**-**		**1**	**PROTECTION**	
010	574096	-		1	PROTECTION PLATE	
050 1	574095	-		1	PROTECTIVE COVER	
060 1	574112	-		1	PROTECTION PLATE	
100 1	574113	-		1	PROTECTION PLATE	
1000 Sq REVFIN						
000	**C- 576247-0103**	**-**		**1**	**PROTECTION**	
010 3	1195332	-		1	PROTECTION PLATE	
050 2	574165	-		1	PROTECTIVE COVER	
060 2	580006	-		1	PROTECTION PLATE	
100 2	580007	-		1	PROTECTION PLATE	
Common parts						
150	525338	-		1	SPACER	
300	312105-0364	-		9	SCREW M6S6X10RFR	
320	315105-0153	-		9	WASHER BRB6,4X12RFR	

Pos	Part No	SP	UN	Qty	Description	Page No

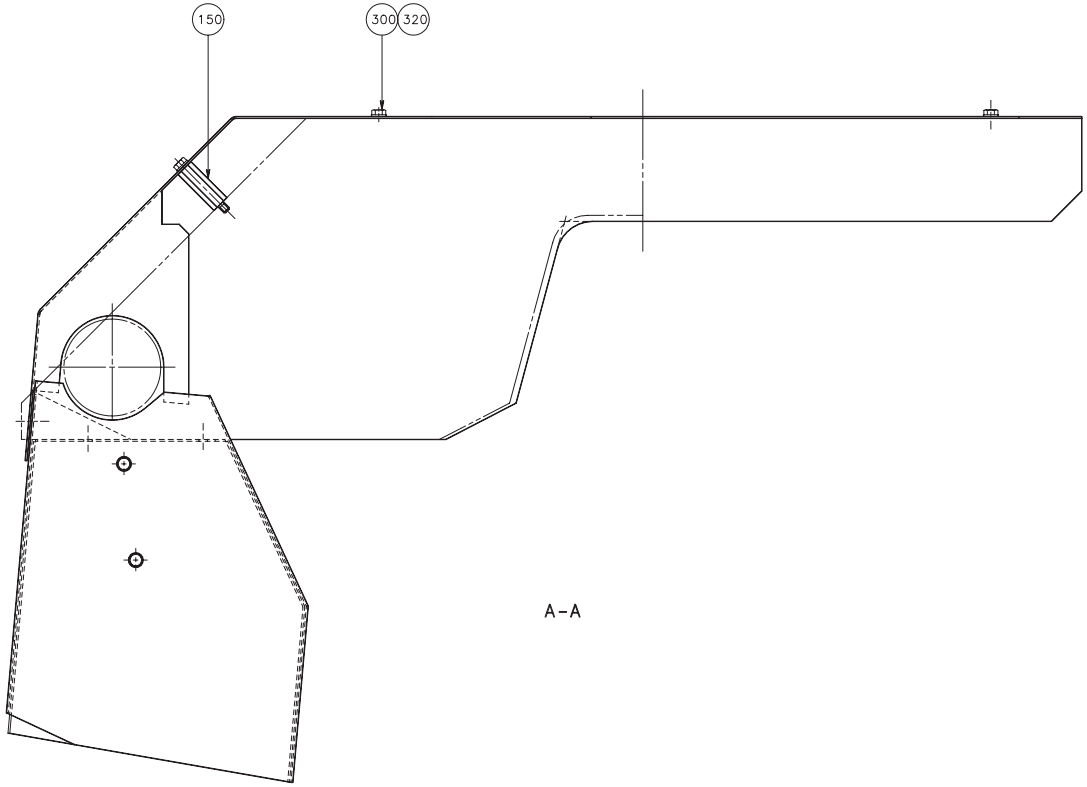

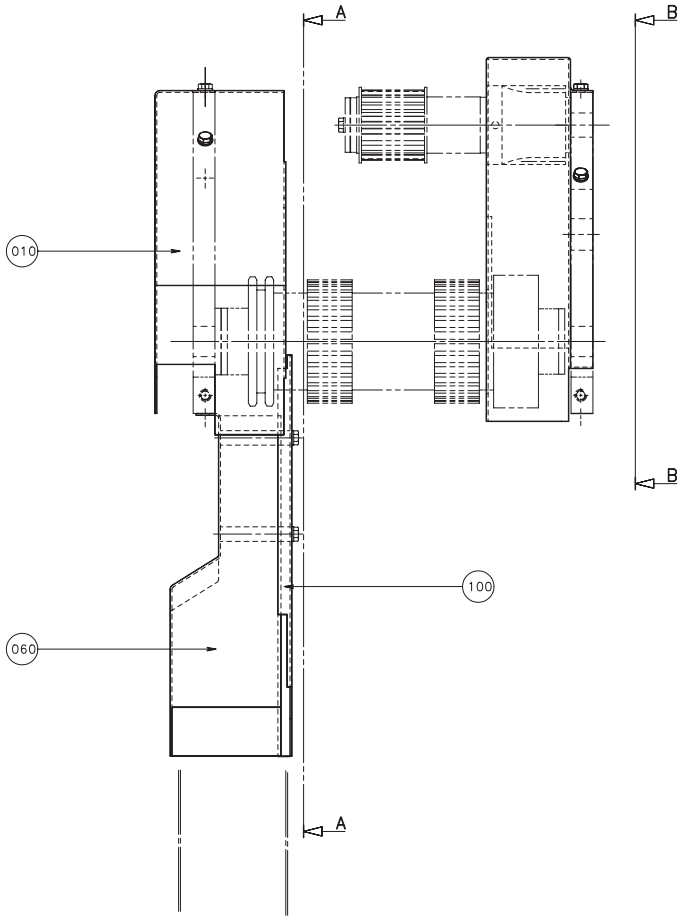

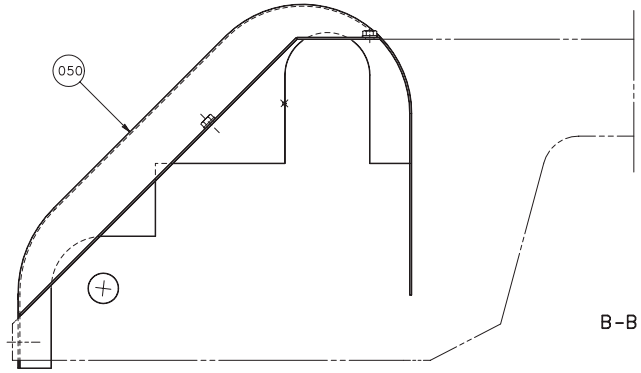

Graphic ID: 576247-1
Parent drw.: S-576247-1
ECN: 19244

Pos	Part No	SP	UN	Qty	Description	Page No
500 Sq						
000	**C- 576247-0105**	**-**		**1**	**PROTECTION**	
010	574096	-		1	PROTECTION PLATE	
050	574095	-		1	PROTECTIVE COVER	
060	574112	-		1	PROTECTION PLATE	
100	574113	-		1	PROTECTION PLATE	
Common parts						
150	525338	-		1	SPACER	
300	312105-0364	-		9	SCREW M6S6X10RFR	
320	315105-0153	-		9	WASHER BRB6,4X12RFR	

Pos	Part No	SP	UN	Qty	Description	Page No

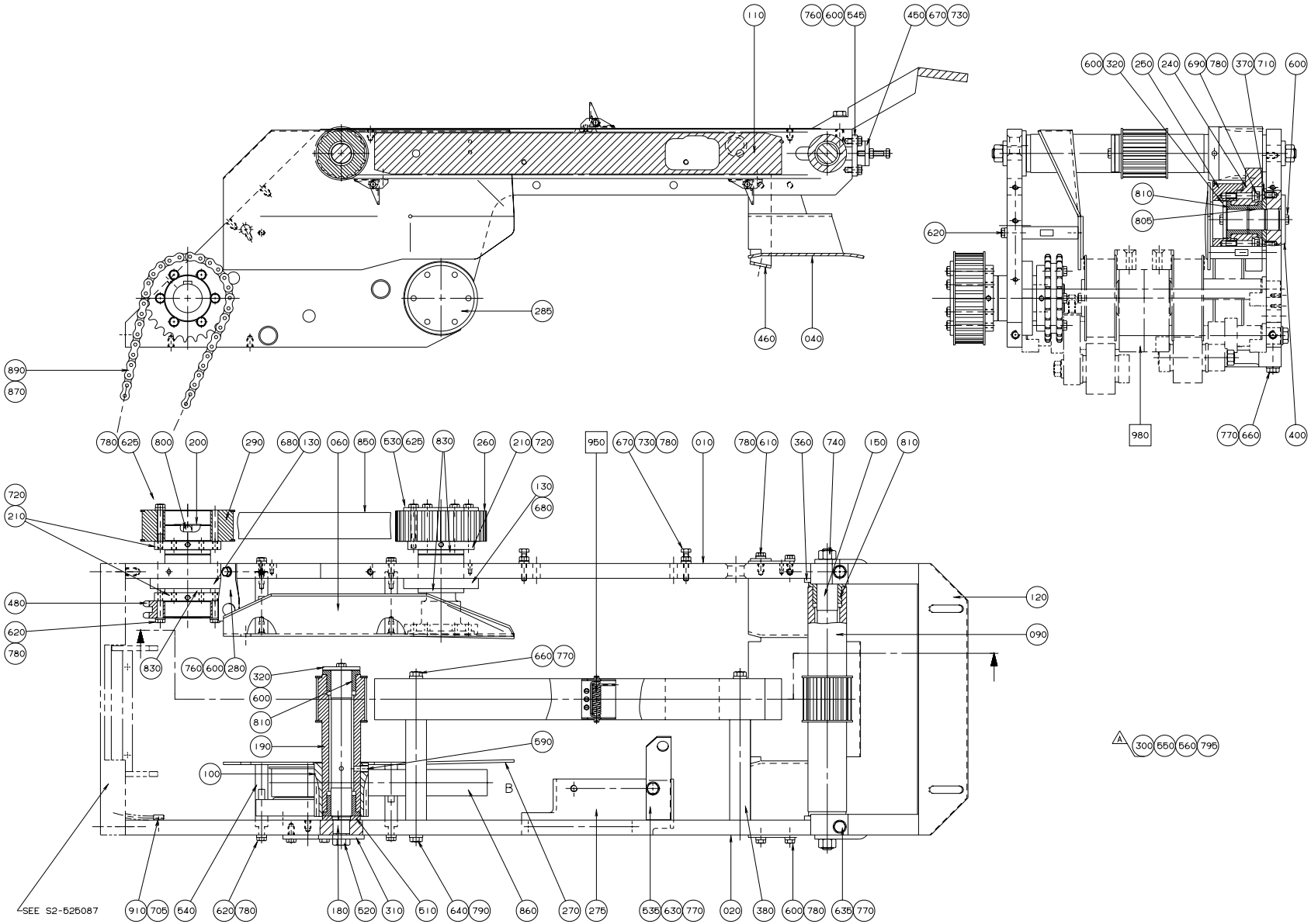

S-576251-1
ECN 20622

Pos	Part No	SP	UN	Qty	Description	Page No
VOLUME 1000 Sq NORMFIN						
000	**CR- 576251-0101**	**-**		**1**	**CONVEYOR**	
120 1	443293	-		1	BRACKET	
VOLUME 1000 Sq REVFIN						
000	**CR- 576251-0101**	**-**		**1**	**CONVEYOR**	
120 2	1143003	-		1	BRACKET	
Common parts						
010	574132	-		1	SIDE PLATE	
020	574133	-		1	SIDE PLATE	
040	574094	-		1	HEAD PLATE	
060	574145	-		1	HEAD PLATE	
090	443289	C		1	TOOTHED PULLY	
100	443290	S		1	GEAR WHEEL	
110	443292	-		1	STEERING	
130	574139	-		2	BEARING HOUSING	
150	525402	-		1	SHAFT	
180	574069	C		1	AXLE PIN	
190	574070	C		1	TIMING BELT SHAFT	
200	574140	-		1	SHAFT	
210	574150	-		3	SLEEVE	
240	574082	S		1	GEAR WHEEL	
250	574085	S		1	TIMING BELT PULLEY	
260	574086	S		1	TIMING BELT PULLEY	
270	574146	-		1	HEAD PLATE	
275	574121	-		1	BRACKET	
280	574122	-		1	BRACKET	
285	574148	-		1	SHAFT	
290	574159	-		1	TIMING BELT PULLEY	
310	443295	-		1	WASHER	
320	443296	C		2	WASHER	
360	443300	C		2	WASHER	
370	443301	C		1	WASHER	
380	443312	-		2	SPACER	
400	443307	C		1	SHAFT	
450	443489	-		2	BRACKET	
460	525334	-		1	BRACKET	
480	573353	S		1	SPROCKET	
510	574083	C		1	WASHER	
520	574084	S		1	SCREW	
530	574087	-		1	WASHER	
535	574123	-		1	BRACKET	
540	574147	-		4	HOLDER	
545	574155	-		2	PLATE	
590	90287-0161	S		2	STOP SCREW	
600	312105-0366	-		10	SCREW O4017 M6X12A280	
610	312105-0368	-		1	SCREW O4017 M6X16A280	
620	312105-0374	-		10	SCREW O4017 M6X30A280	
625	312105-0380	-		12	SCREW O4014 M6X50A280	
630	312105-0447	-		1	SCREW O4017 M8X12A280	
635	312105-0453	-		2	SCREW O4017 M8X25A280	
640	312105-0455	-		2	SCREW O4017 M8X30A280	
660	312105-0463	-		4	SCREW O4014 M8X60A280	
670	312109-0376	-		4	SCREW 6X35 H RFR	
680	312115-0366	-		8	SCREW O4762 M6X12A280	
690	312115-0374	-		4	SCREW O4762 M6X30A280	
705	312125-0287	-		2	SLOTTED HEMCS4X8RFR	
710	312155-0366	-		2	SCREW MF6S6X12RFR	
720	312318-0366	-		3	STOP SCREW SK6SS6X12RFR	
730	312605-0316	-		4	NUT M6M6 A280 STAINLESS	
740	312605-0322	-		2	NUT M6M12RFR	
760	315105-0153	-		5	WASHER BRB6,4X12RFR	
770	315105-0165	-		8	WASHER BRB8,4X16RFR	
780	315115-0153	-		26	WASHER TBRB6,4X12RFR	
790	315115-0165	-		2	WASHER TBRB8,4X16RFR	
800	315705-0298	-		3	FLAT WEDGE	
805	321101-0252	S		1	FLANGE BUS 25F7X16	
810	321101-0253	S		5	FLANGE BUS 25F7X25	
830	321101-0282	S		4	FLANGE BUS 35F7X20	
850	90417-0329	S		1	TIMING BELT	
860	90417-0345	S		1	TIMING BELT	
870	318219-0487	P		1	CONNECTION	
890	318242-0108	S		1	ROLLER CHA	
910	90165-0056	-		2	CLIP	
F950	CR- 574332-0101	-		1	BELT	**487**
F980	CR- 576252-0101	-		1	INFEED SECTION	**499**

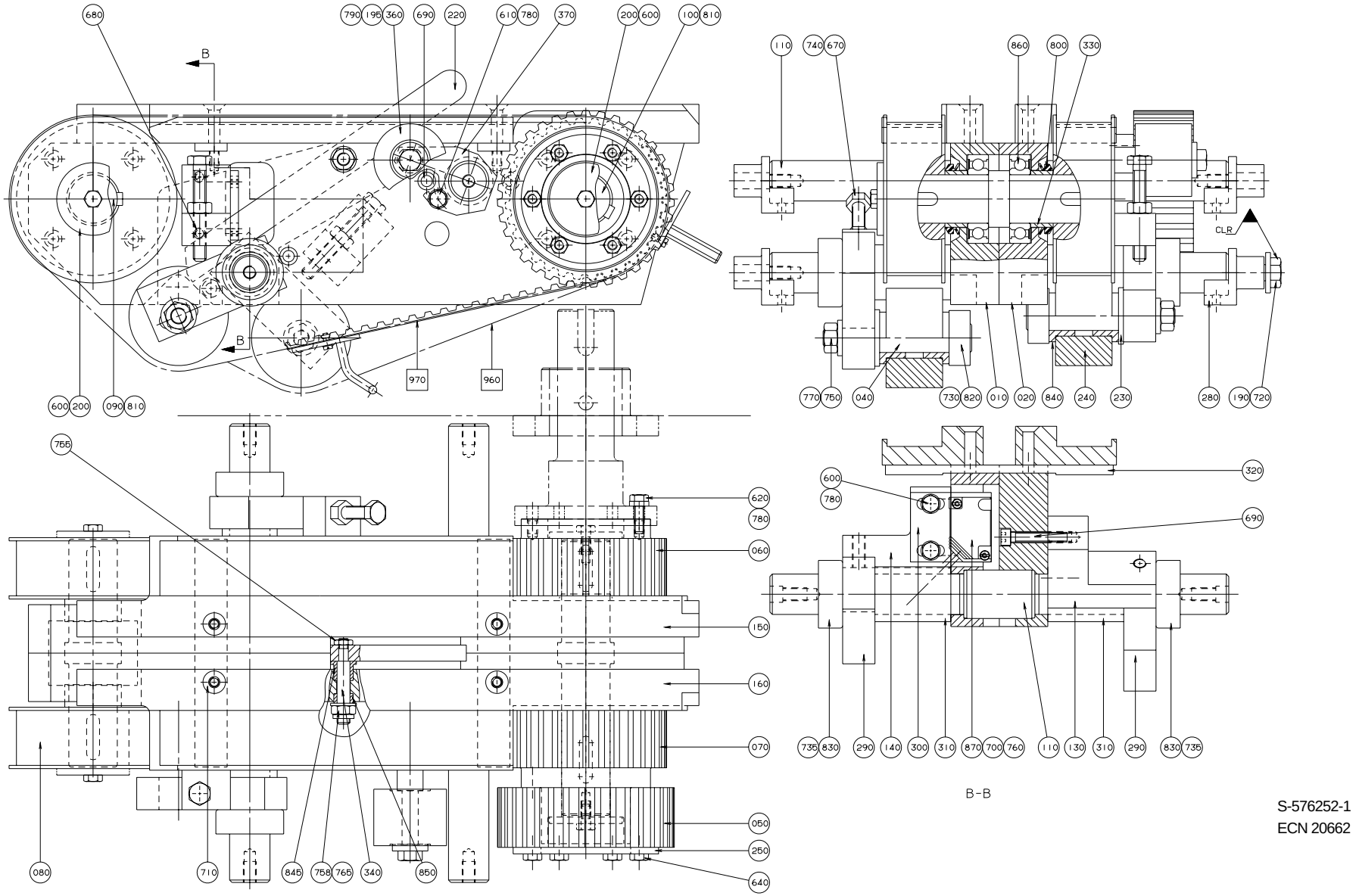

B-B

S-576252-1
ECN 20662

Pos	Part No	SP	UN	Qty	Description	Page No
-						
000	**CR- 576252-0101**	**-**		**1**	**INFEED SECTION**	
010	574134	C		1	BEARING CONSOLE	
020	574135	C		1	BEARING CONSOLE	
040	525363-0002	S		2	SHAFT	
050	574086	S		1	TIMING BELT PULLEY	
060	574136	C		1	TIMING BELT PULLEY	
070	574137	C		1	TIMING BELT PULLEY	
080	574138	C		2	TIMING BELT PULLEY	
090	574141	S		1	SHAFT	
100	574142	S		1	SHAFT	
110	574144	-		2	SHAFT	
130	574151	C		1	BRACKET	
140	574152	C		1	BRACKET	
150	574157	C		1	PROFILE	
160	574158	C		1	PROFILE	
190	26490	-		4	WASHER	
195	262028-0016	S		1	FITTING BOLT	
200	443296	C		4	WASHER	
220	443484	-		1	ARM	
230	285363	-		2	WASHER	
240	574075	C		2	ROLL	
250	574087	-		1	WASHER	
280	574143	-		4	AXLE SUPPORT	
290	574149	C		2	ARM	
300	574153	-		1	PLATE	
310	574154	-		2	SPACER	
320	574156	-		2	SUPPORT RAIL	
330	574160	-		4	SPACER	
340	574161	C		1	SHAFT	
360	580366	S		1	ROLL	
370	580996	-		1	ROLLER BRACKET	
600	312105-0366	-		6	SCREW O4017 M6X12A280	
610	312105-0368	-		1	SCREW O4017 M6X16A280	
620	312105-0370	-		6	SCREW O4017 M6X20A280	
640	312105-0380	-		6	SCREW O4014 M6X50A280	
670	312109-0463	-		2	SCREW M6S8X60H A4 80	
680	312115-0372	-		2	SCREW O4762 M6X25A280	
690	312115-0374	-		14	SCREW O4762 M6X30A280	
700	312125-0228	-		2	SLOTTED HEMCS3X16RFR	
710	312155-0376	-		4	SCREW MF6X35RFR	
720	927891	-		4	SCREW	
730	312318-0362	-		2	STOP SCREW SK6SS6X8RFR	
735	312318-0443	-		2	STOP SCREW SK6SS8X8RFR	
740	312605-0318	-		2	NUT M6M8RFR	
750	312605-0320	-		2	NUT M6M10RFR	
755	312625-0316	-		1	NUT M 6	
758	312812-0318	-		1	LOCK NUT A2-M8RFR	
760	315105-0124	-		2	WASHER BRB3,2X6RFR	
765	315105-0165	-		1	WASHER BRB8,4X16RFR	
770	315105-0173	-		2	WASHER BRB10,5X22RFR	
780	315115-0153	-		9	WASHER TBRB6,4X12RFR	
790	315115-0173	-		1	WASHER B 10,5X22 RFR	
800	315220-0175	-		4	SEAL RING V-35S	
810	315705-0266	-		4	FLAT WEDGE	
820	315742-0114	-		2	RETAINING 18SMS199RFR	
830	315742-0119	-		2	RETAINING 25SMS199RFR	
840	321101-0223	S		4	FLANGE BUS 18F7X16	
845	321111-0097	-		1	FLANGE BUS 8E7X12	
850	321116-0095	-		1	BUSHING 8E7/12X6	
860	321308-0106	S		4	BALL BEARISKF6006RS	
870	90044-0104	S		1	PROX.SWITCH IFM IN 3002	
F960	CR- 576245-0101	-		1	BELT RIGHT	**489**
F970	CR- 576246-0101	-		1	BELT LEFT	**491**

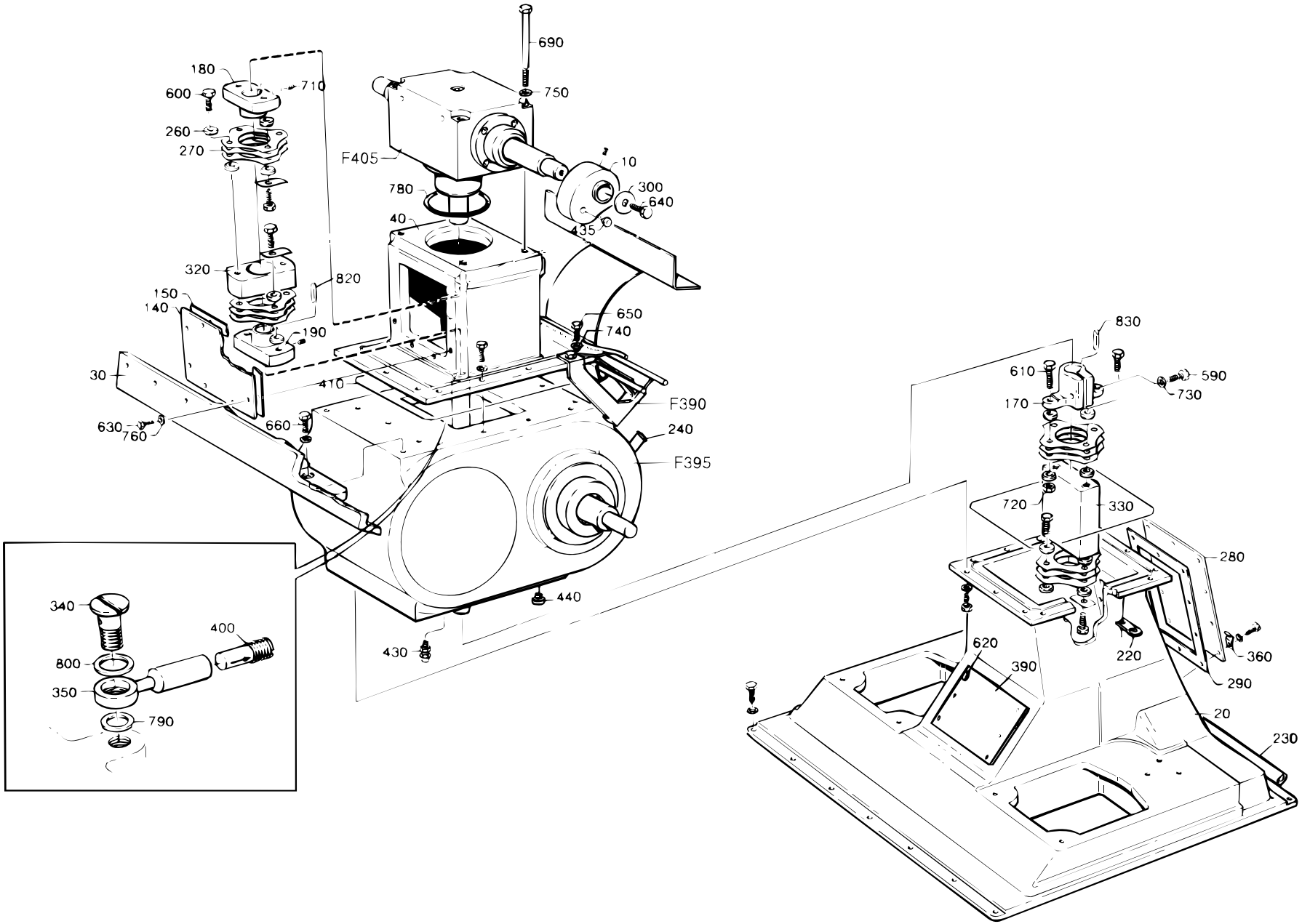

S-285479-4
ECN 12204

Pos	Part No	SP	UN	Qty	Description	Page No
VOLUMES 1136 B, 1055 B, 1000 B, 1000 S, 750 B, 750 S, 568 B, 500 B, 1000 Sq, 500 Sq						
000	**C- 285479-0501**	**-**		**1**	**SUPERSTRUCTURE**	
010	443362	C		2	CURVE	
VOLUMES 500 S, 400 B, 375 S, 355 B						
000	**C- 285479-0502**	**-**		**1**	**SUPERSTRUCTURE**	
010	525235	C		2	CURVE	
Common parts						
020	G- 443218	-		1	INTERMEDIARY SECTION	
030	G- 262264	-		1	CANTILEVER	
040	G- 262922	-		1	HOUSE	
140	262932	-		1	HATCH	
150	262933	S		1	GASKET	
170	285141-0003	S		1	CLAMPING SLEEVE	
180	285142-0002	-		1	SLEEVE	
190	285142-0003	-		1	SLEEVE	
220	525292	-		3	BRACKET	
230	525293	-		1	PIPE	
240	525294	-		1	PIPE	
260	31553-0002	S		32	WASHER	
270	33261	S		32	SPRING PLATE	
280	262252	-		1	HATCH	
290	262253	-		1	GASKET	
300	276659	-		2	WASHER	
320	285145-0002	-		1	INTERMEDIARY SECTION	
330	285147	-		1	INTERMEDIARY SECTION	
340	285891	S		1	SCREW	
350	285892	S		1	CONNECTION	
390	525279	-		1	HATCH	
400	90092-0077	S		1	METERING VALVE	
410	90143-0052	S	MM	2450	STRAP	
420	90153-0043	S		X	ADHESIVE	
425	90296-0009	-		X	GREASE	
430	90224-0066	P		1	CONNECTION	
435	90261-0032	S		4	PLUG	
440	342720-0102	S		1	PIPE COUPLGA-6-1/8"	
570	311103-0399	-		10	CYLINDRICACP M6 8X16 RFR	
590	312101-0455	-		1	SCREW M6S8X30FZB	
600	90287-0155	-		14	SCREW	
610	312101-0497	-		2	SCREW M6S10X35FZB	
620	312105-0367	-		6	SCREW M6S6X14RFR	
630	312105-0368	-		12	SCREW O4017 M6X16A280	
635	312105-0370	-		4	SCREW O4017 M6X20A280	
638	312105-0372	-		2	SCREW O4017 M6X25A280	
640	312105-0451	-		2	SCREW SO4017 8X20A280	
650	312105-0453	-		50	SCREW O4017 M8X25A280	
660	312105-0455	-		2	SCREW O4017 M8X30A280	
690	312105-0517	-		4	SCREW 014 M10X130A280	
710	312316-0362	-		2	STOP SCREW SK6SS6X8FZB	
720	312810-0320	-		2	LOCK NUT 10FZB	
730	315101-0165	-		1	WASHER BRB8,4X16FZB	
735	315105-0153	-		2	WASHER BRB6,4X12RFR	
740	315105-0165	-		10	WASHER BRB8,4X16RFR	
750	315115-0173	-		4	WASHER B 10,5X22 RFR	
760	315115-0153	-		22	WASHER TBRB6,4X12RFR	
770	315115-0165	-		42	WASHER TBRB8,4X16RFR	
780	315202-0311	S		1	O-RING 99,5X3	
790	315233-0109	S		1	SEAL RING R1/8"	
800	315233-0110	S		1	SEAL RING R1/4"	
820	315701-0270	-		1	FLAT WEDGE8X7X40	
830	315701-0274	-		1	FLAT WEDGE8X7X60	
F390	C- 285853-020V	-		1	STEERING RAIL	**503**
F395	CR- 525117-0301	-		1	INDEXING GEAR	**509**
F405	C- 442646-0201	C		1	TOP GEAR	**507**

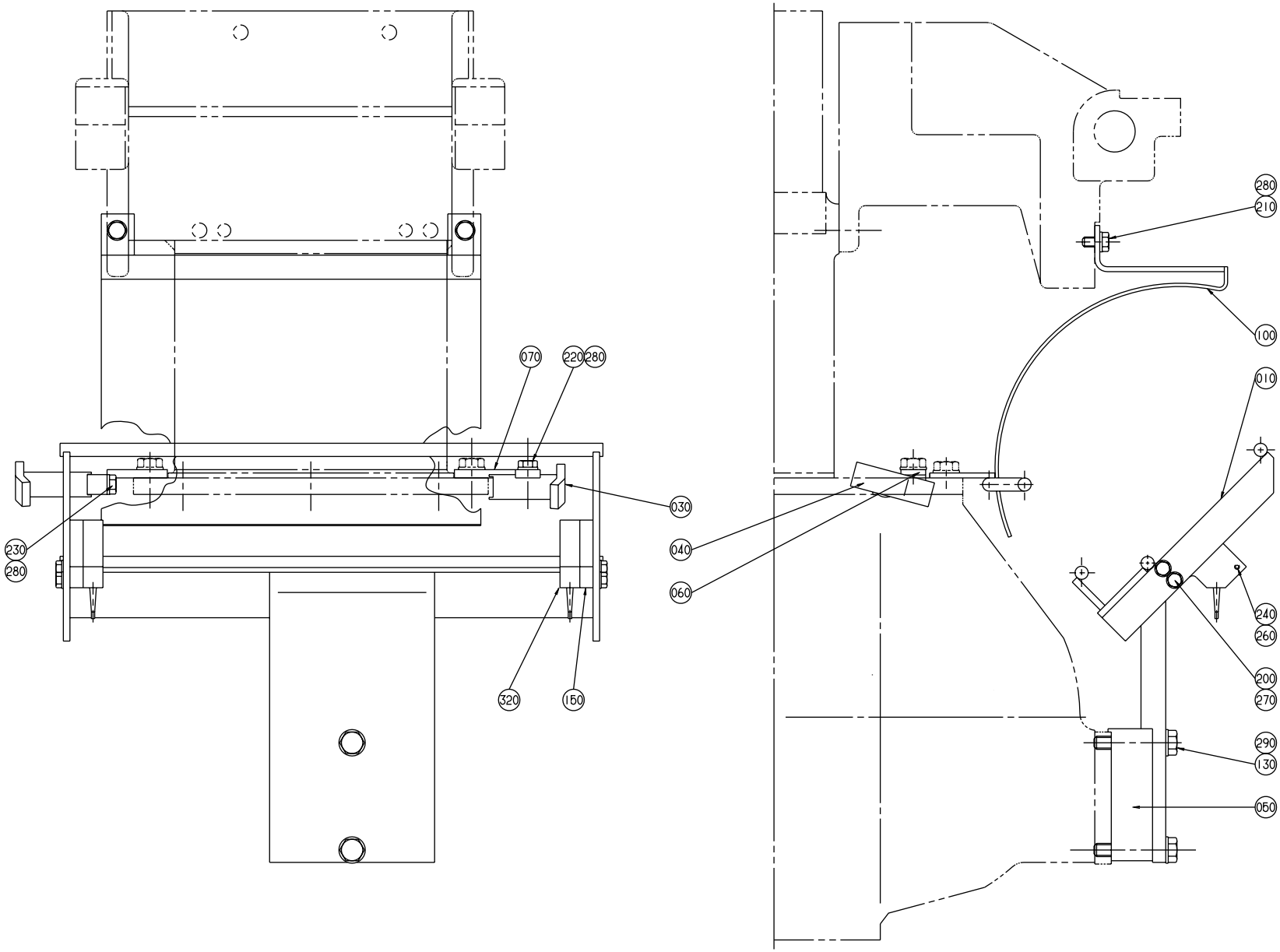

S-285853-3
ECN 19449

Pos	Part No	SP	UN	Qty	Description	Page No
VOLUME 1055 B						
000	**C- 285853-0201**	**-**		**1**	**STEERING RAIL**	
010	525347	-		1	SLIDE RAIL	
100	531328	-		1	HEAD PLATE	
130	312105-0451	-		2	SCREW SO4017 8X20A280	
280	315105-0153	-		2	WASHER BRB6,4X12RFR	
VOLUME 1000 B LOFIN						
000	**C- 285853-0202**	**-**		**1**	**STEERING RAIL**	
010	525348	-		1	SLIDE RAIL	
100	529312	-		1	HEAD PLATE	
130	312105-0451	-		2	SCREW SO4017 8X20A280	
280	315105-0153	-		2	WASHER BRB6,4X12RFR	
VOLUME 1000 B HIFIN						
000	**C- 285853-0203**	**-**		**1**	**STEERING RAIL**	
010	525349	-		1	SLIDE RAIL	
100	529312	-		1	HEAD PLATE	
130	312105-0451	-		2	SCREW SO4017 8X20A280	
280	315105-0153	-		2	WASHER BRB6,4X12RFR	
VOLUME 750 B						
000	**C- 285853-0204**	**-**		**1**	**STEERING RAIL**	
010	525350	-		1	SLIDE RAIL	
100	531314	-		1	HEAD PLATE	
130	312105-0451	-		2	SCREW SO4017 8X20A280	
280	315105-0153	-		2	WASHER BRB6,4X12RFR	
VOLUME 568 B						
000	**C- 285853-0205**	**-**		**1**	**STEERING RAIL**	
010	525351	-		1	SLIDE RAIL	
050	525357	-		1	SPACER	
100	531310	-		1	HEAD PLATE	
130	312105-0460	-		2	SCREW O4017 M8X45A280	
280	315105-0153	-		2	WASHER BRB6,4X12RFR	
VOLUME 500 B						
000	**C- 285853-0206**	**-**		**1**	**STEERING RAIL**	
010	525352	-		1	SLIDE RAIL	
050	525357	-		1	SPACER	
100	525424	-		1	HEAD PLATE	
130	312105-0460	-		2	SCREW O4017 M8X45A280	
280	315105-0153	-		2	WASHER BRB6,4X12RFR	
VOLUME 500 S						
000	**C- 285853-0207**	**-**		**1**	**STEERING RAIL**	
010	525353	-		1	SLIDE RAIL	
100	531312	-		1	HEAD PLATE	
130	312105-0451	-		2	SCREW SO4017 8X20A280	
280	315105-0153	-		2	WASHER BRB6,4X12RFR	
VOLUME 355 B						
000	**C- 285853-0208**	**-**		**1**	**STEERING RAIL**	
010	525354	-		1	SLIDE RAIL	
100	527861	-		1	HEAD PLATE	
130	312105-0451	-		2	SCREW SO4017 8X20A280	
280	315105-0153	-		2	WASHER BRB6,4X12RFR	
VOLUME 375 S						
000	**C- 285853-0209**	**-**		**1**	**STEERING RAIL**	
010	525355	-		1	SLIDE RAIL	
100	531313	-		1	HEAD PLATE	
130	312105-0451	-		2	SCREW SO4017 8X20A280	
280	315105-0153	-		2	WASHER BRB6,4X12RFR	
VOLUME 750 S						
000	**C- 285853-0211**	**-**		**1**	**STEERING RAIL**	
010	543694	-		1	SLIDE RAIL	
100	525378	-		1	HEAD PLATE	
130	312105-0451	-		2	SCREW SO4017 8X20A280	
280	315105-0153	-		2	WASHER BRB6,4X12RFR	
VOLUME1136 B						
000	**C- 285853-0212**	**-**		**1**	**STEERING RAIL**	
010	525347	-		1	SLIDE RAIL	
100	525408	-		1	HEAD PLATE	
130	312105-0451	-		2	SCREW SO4017 8X20A280	
280	315105-0153	-		2	WASHER BRB6,4X12RFR	
VOLUME 1000 S						
000	**C- 285853-0213**	**-**		**1**	**STEERING RAIL**	
010	569127	-		1	SLIDE RAIL	
030	573486	-		1	STEERING	
040	573487	-		1	STEERING	
060	573488	-		1	BRACKET	
070	573489	-		1	BRACKET	
100	569128	-		1	HEAD PLATE	
130	312105-0451	-		2	SCREW SO4017 8X20A280	

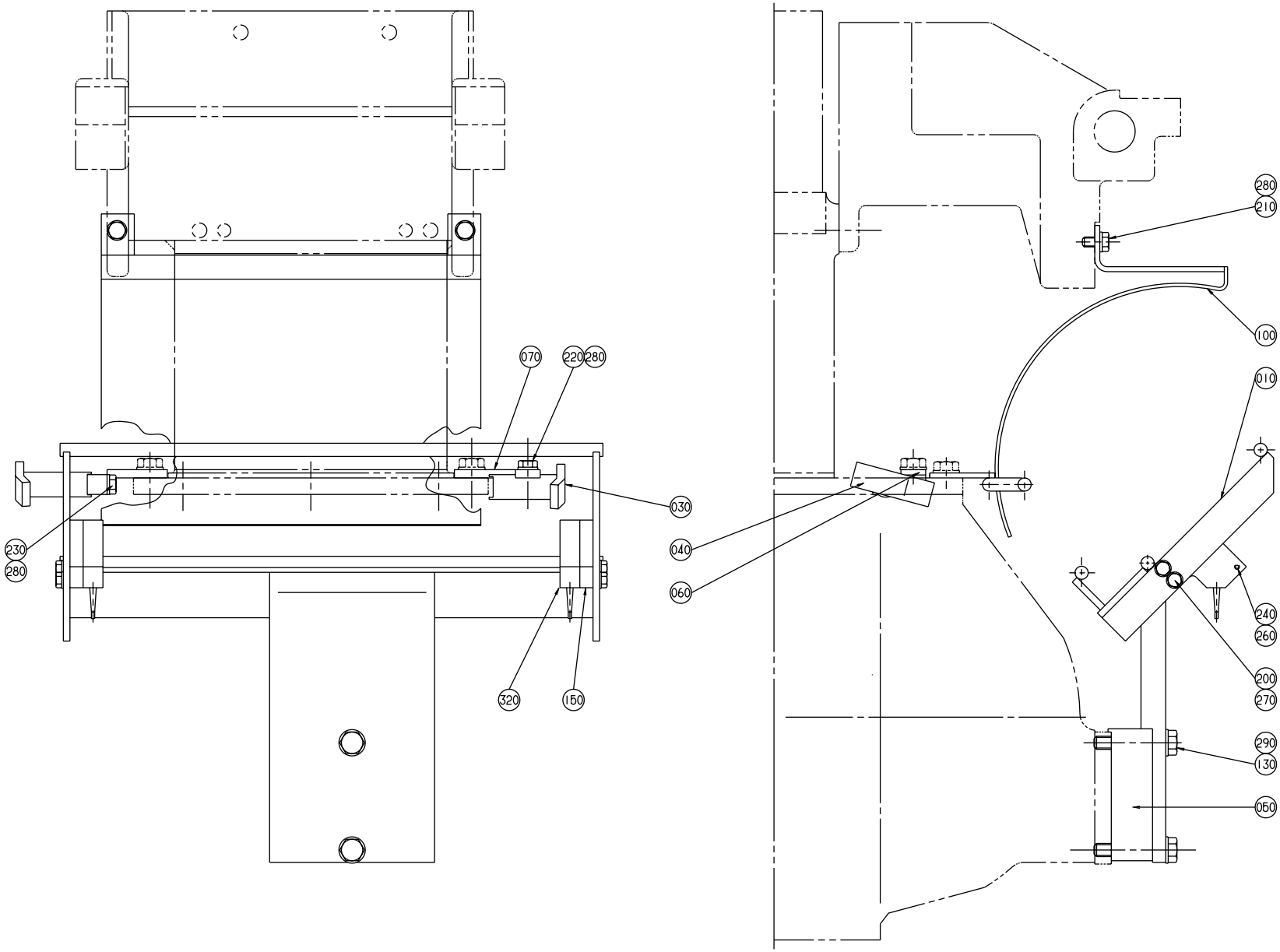

S-285853-3
ECN 19449

Pos	Part No	SP	UN	Qty	Description	Page No
220	312105-0368	-		1	SCREW O4017 M6X16A280	
230	312105-0371	-		1	SCREW M6S6X22RFR	
280	315105-0153	-		4	WASHER BRB6,4X12RFR	
VOLUME 400 B						
000	**C- 285853-0214**	**-**		**1**	**STEERING RAIL**	
010	574678	-		1	SLIDE RAIL	
100	574679	-		1	HEAD PLATE	
130	312105-0451	-		2	SCREW SO4017 8X20A280	
280	315105-0153	-		2	WASHER BRB6,4X12RFR	
VOLUME 1000 Sq NORMFIN						
000	**C- 285853-0215**	**-**		**1**	**STEERING RAIL**	
010	574053	-		1	SLIDE RAIL	
030	574097	-		1	STEERING	
040	574098	-		1	STEERING	
060	573488	-		1	BRACKET	
070	573489	-		1	BRACKET	
100	574054	-		1	HEAD PLATE	
130	312105-0451	-		2	SCREW SO4017 8X20A280	
220	312105-0368	-		1	SCREW O4017 M6X16A280	
230	312105-0371	-		1	SCREW M6S6X22RFR	
280	315105-0153	-		4	WASHER BRB6,4X12RFR	
VOLUME 500 Sq						
000	**C- 285853-0216**	**-**		**1**	**STEERING RAIL**	
010	583446	-		1	SLIDE RAIL	
050	525357	-		1	SPACER	
100	583450	-		1	HEAD PLATE	
130	312105-0460	-		2	SCREW O4017 M8X45A280	
280	315105-0153	-		2	WASHER BRB6,4X12RFR	
VOLUME 1000 Sq REVFIN						
000	**C- 285853-0217**	**-**		**1**	**STEERING RAIL**	
010	574053	-		1	SLIDE RAIL	
030	1143007	-		1	STEERING	
040	1143006	-		1	STEERING	
060	1143008	-		1	BRACKET	
070	1143009	-		1	BRACKET	
100	574054	-		1	HEAD PLATE	
130	312105-0451	-		2	SCREW SO4017 8X20A280	
220	312105-0368	-		1	SCREW O4017 M6X16A280	
230	312105-0371	-		1	SCREW M6S6X22RFR	
280	315105-0153	-		4	WASHER BRB6,4X12RFR	

Pos	Part No	SP	UN	Qty	Description	Page No
Common parts						
150	525172	-		2	SPACER	
200	312105-0328	-		4	SCREW M6S5X14 A2 80	
210	312105-0366	-		2	SCREW O4017 M6X12A280	
240	312125-0230	-		4	SLOTTED HEMCS3X20RFR	
260	315105-0124	-		4	WASHER BRB3,2X6RFR	
270	315105-0146	-		4	WASHER BRB5,3X10RFR	
290	315105-0165	-		2	WASHER BRB8,4X16RFR	
320	90044-0104	-		2	PROX.SWITCH IFM IN 3002	

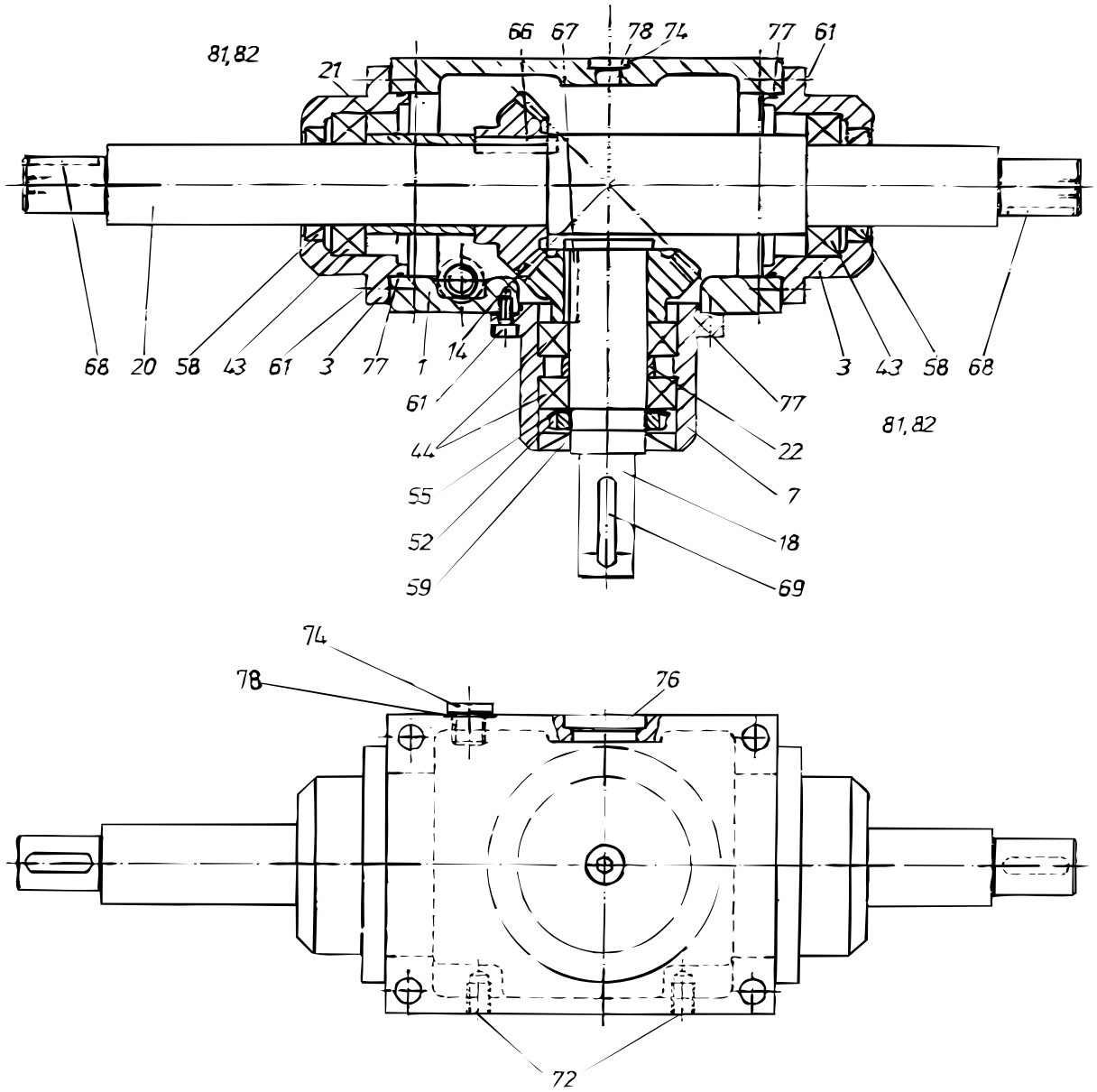
81,82
21
66
67
78
74
77
61
68
20
58
43
61
3
77
1
14
61
44
55
52
59
77
22
7
18
69
3
43
58
68
81,82
74
78
76
72

Pos	Part No	SP	UN	Qty	Description	Page No
-						
000	**C- 442646-0201**	**C**		**1**	**TOP GEAR**	
001	568070	-		1	GEAR HOUSING	
003	568071	-		2	BEARING SEAT	
007	568072	-		1	BEARING SEAT	
014	443188	S		1	GEAR WHEEL	
018	568073	S		1	SHAFT	
020	568074	S		1	SHAFT	
021	442621	S		1	SPACER	
022	442622	S		1	SPACER	
043	321306-0107	S		2	BALL BEARISKF6007	
044	321306-0107	S		2	BALL BEARISKF6007	
052	312805-0107	S		1	ROUND NUT KM7	
055	315410-0107	S		1	LOCK WASHESKFMB7	
058	90091-0142	S		2	SEAL RING	
059	315221-0171	S		1	SEAL RING CB30X62X7	
061	312111-0368	S		12	SCREW MC6S6X16FZB	
066	315701-0802	S		1	FLAT WEDGE10X8X36	
067	315701-0299	S		1	FLAT WEDGE10X8X32	
068	315701-0268	S		2	FLAT WEDGE8X7X32	
069	315701-0270	S		1	FLAT WEDGE8X7X40	
072	312910-0126	S		2	THREADED I M8X1,5D	
077	90242-0117	S		3	O-RING	
078	90242-0121	S		2	O-RING	
081	443193	S		3	SHIM	
082	443194	S		3	SHIM	
	442844-SHEET 1				MEASURE DRAWING	

Pos	Part No	SP	UN	Qty	Description	Page No

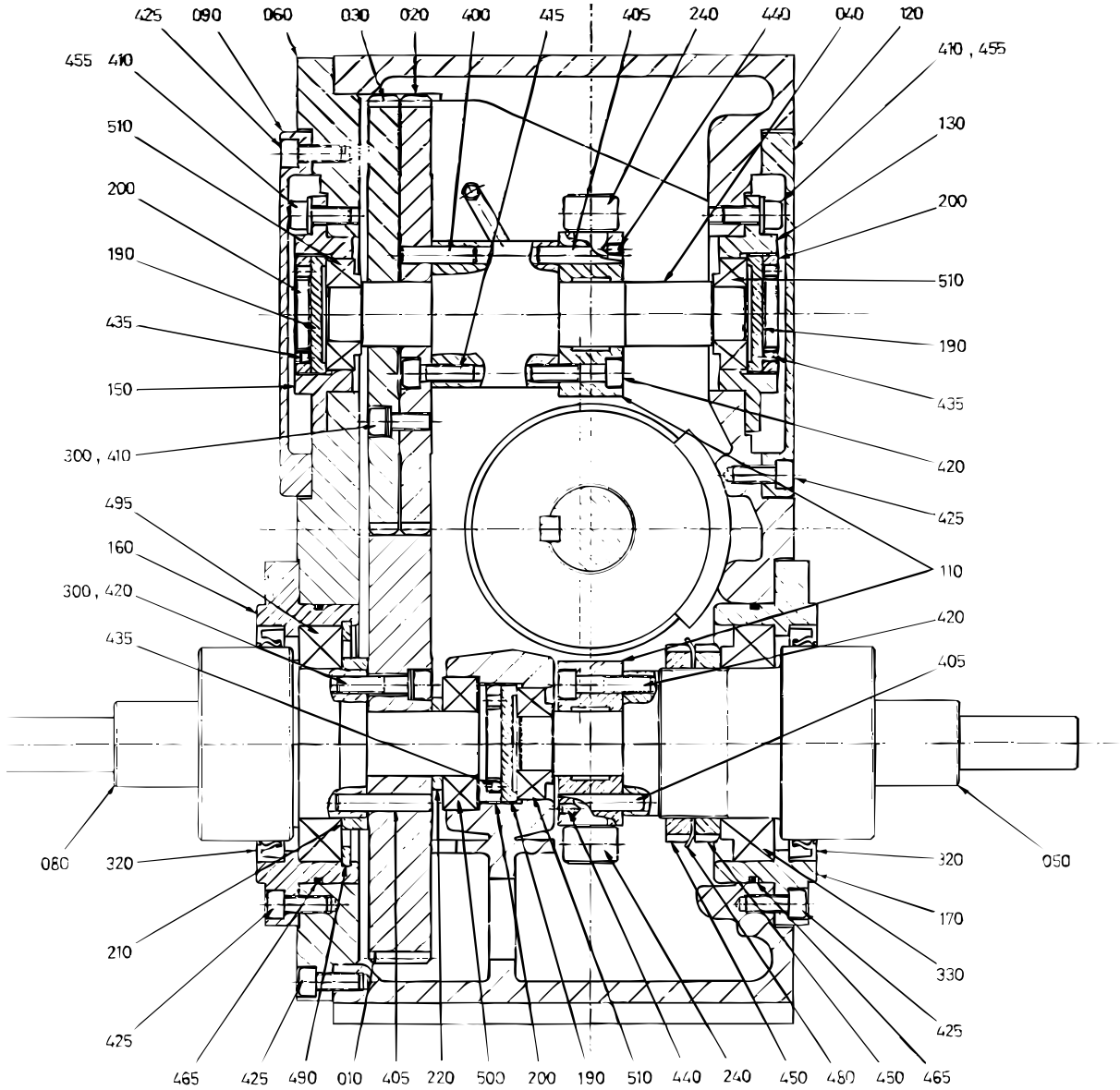
425
090
060
030
020
400
415
405
240
440
040
120
455
410
410 , 455
510
130
200
200
190
510
435
190
150
435
300 , 410
420
495
425
160
110
300 , 420
420
435
405
080
320
320
050
170
210
330
425
425
465
425
490
010
405
220
500
200
190
510
440
240
450
480
450
465

Pos	Part No	SP	UN	Qty	Description	Page No
-						
000	**CR- 525117-0301**	**-**		**1**	**INDEXING GEAR**	
010	543705	S		1	GEAR WHEEL WIDE	
020	543706	S		1	GEAR WHEEL SLIM , INNER	
030	543707	S		1	GEAR WHEEL SLIM , OUTER	
040	565322	S		1	INTERMEDIARY SHAFT	
050	565323	S		1	OUTPUT SHAFT, LONG	
060	565324	C		1	LID	
070	565325	S		1	INPUT SHAFT	
080	565336	S		1	OUTPUT SHAFT SHORT	
090	565338	C		1	GEAR HOUSING	
100	927314	S		1	CAM	
110	927315	S		2	TURRET	
120	565326	C		2	LID	
130	565331	C		1	BEARING HOLDER	
140	565332	C		2	BEARING HOLDER	
150	565333	C		1	BEARING HOLDER	
160	565334	C		1	BEARING HOLDER	
170	565335	C		1	BEARING HOLDER	
180	565339	C		1	OIL PIPE	
190	565327	C		3	RING NUT	
200	565328	C		3	SCREW RING	
210	565329	C		1	SPACER	
220	565330	C		1	SPACER	
230	565340	C		1	OIL LEVEL TUBE	
240	927318	S		12	ROLLER	
300	90062-0049	-		18	LOCK WASHER	
310	90087-0015	-		1	PIPE PLUG	
320	90091-0130	S		2	SEAL RING	
330	90214-0087	S		1	TAPER ROLLER BEARING	
400	311103-0407	-		3	CYLINDRICACP M6 8X35 RFR	
405	311103-0411	-		9	CYLINDRICACP M6 8X45 RFR	
410	312111-0451	-		12	SCREW MC6S8X20FZB	
415	312111-0453	-		3	SCREW MC6S8X25FZB	
420	312111-0457	-		9	SCREW MC6S8X35FZB	
425	312115-0451	-		40	SCREW O4762 M8X20A280	
430	312115-0453	-		12	SCREW O4762 M8X25A280	
435	312316-0320	-		3	STOP SCREW SK6SS5X5FZB	
440	312316-0323	-		12	STOP SCREW SK6SS5X8FZB	
445	312805-0108	-		4	ROUND NUT KM8	
450	312805-0114	-		2	ROUND NUT KM14	
455	315101-0165	-		8	WASHER BRB8,4X16FZB	
460	315105-0165	-		12	WASHER BRB8,4X16RFR	
465	315202-0316	S		2	O-RING 124,5X3	
470	315221-0171	S		1	SEAL RING CB30X62X7	
475	315410-0108	S		2	LOCK WASHESKFMB8	
480	315410-0114	S		1	LOCK WASHESKFMB14	
485	315701-0338	S		1	FLAT WEDGE12X8X70	
490	315752-0149	S		1	CIRCLIP SGH110	
495	321306-0114	S		1	BALL BEARISKF6014	
500	321309-0106	S		1	BALL BEARISKF6206	
505	321364-0106	S		2	ROLLER BEASKF31306	
510	321361-0105	S		3	ROLLER BEASKF30205	
515	342720-0104	-		1	PIPE COUPLGA-8-1/4"	
520	342730-0104	-		2	ELBOW PIPE WA-8-1/4"	

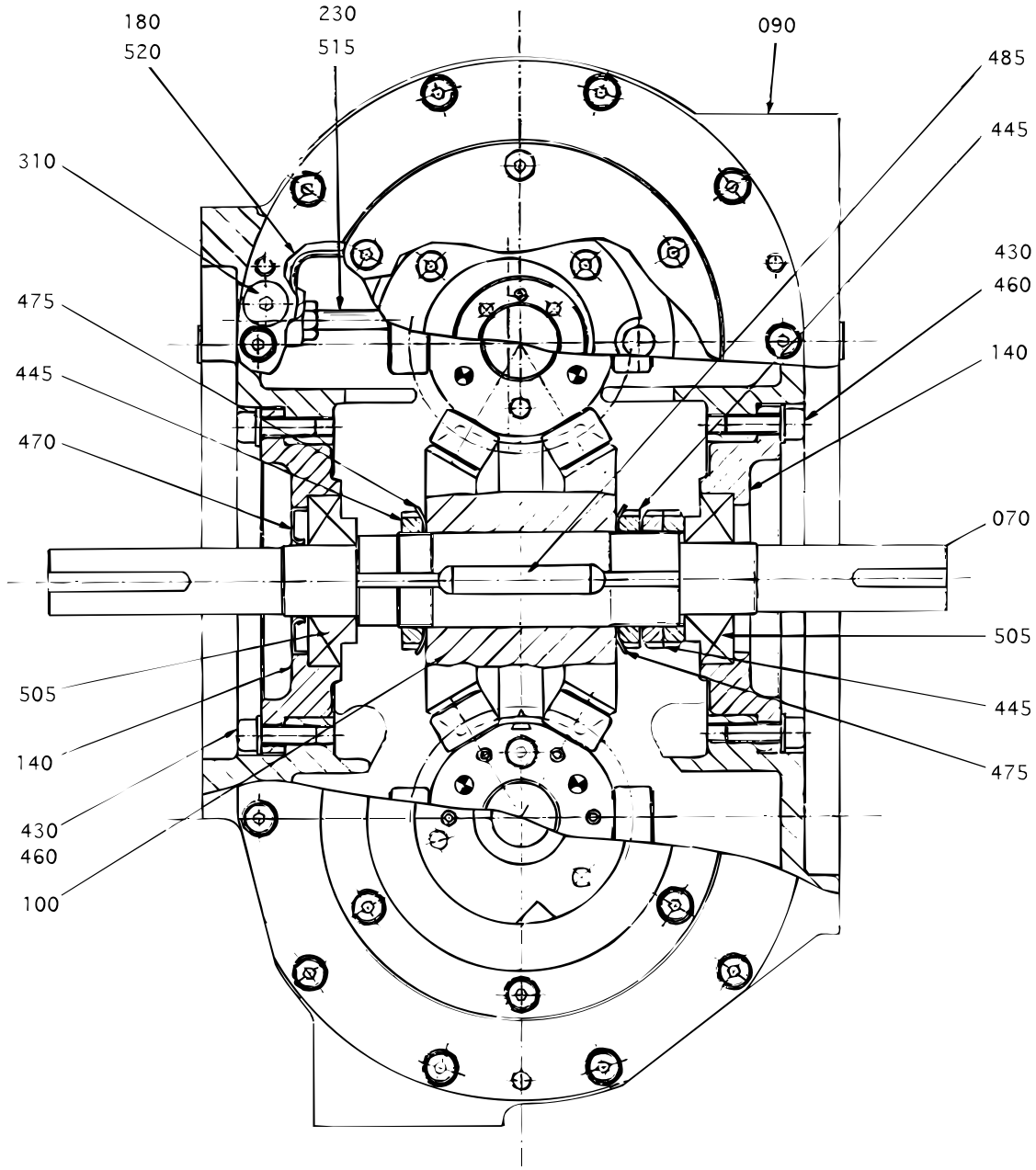
180
520
230
515
090
485
445
310
430
460
475
140
445
470
070
505
505
445
140
475
430
460
100

Pos	Part No	SP	UN	Qty	Description	Page No
-						
000	**CR- 525117-0301**	**-**		**1**	**INDEXING GEAR**	
010	543705	S		1	GEAR WHEEL WIDE	
020	543706	S		1	GEAR WHEEL SLIM , INNER	
030	543707	S		1	GEAR WHEEL SLIM , OUTER	
040	565322	S		1	INTERMEDIARY SHAFT	
050	565323	S		1	OUTPUT SHAFT, LONG	
060	565324	C		1	LID	
070	565325	S		1	INPUT SHAFT	
080	565336	S		1	OUTPUT SHAFT SHORT	
090	565338	C		1	GEAR HOUSING	
100	927314	S		1	CAM	
110	927315	S		2	TURRET	
120	565326	C		2	LID	
130	565331	C		1	BEARING HOLDER	
140	565332	C		2	BEARING HOLDER	
150	565333	C		1	BEARING HOLDER	
160	565334	C		1	BEARING HOLDER	
170	565335	C		1	BEARING HOLDER	
180	565339	C		1	OIL PIPE	
190	565327	C		3	RING NUT	
200	565328	C		3	SCREW RING	
210	565329	C		1	SPACER	
220	565330	C		1	SPACER	
230	565340	C		1	OIL LEVEL TUBE	
240	927318	S		12	ROLLER	
300	90062-0049	-		18	LOCK WASHER	
310	90087-0015	-		1	PIPE PLUG	
320	90091-0130	S		2	SEAL RING	
330	90214-0087	S		1	TAPER ROLLER BEARING	
400	311103-0407	-		3	CYLINDRICACP M6 8X35 RFR	
405	311103-0411	-		9	CYLINDRICACP M6 8X45 RFR	
410	312111-0451	-		12	SCREW MC6S8X20FZB	
415	312111-0453	-		3	SCREW MC6S8X25FZB	
420	312111-0457	-		9	SCREW MC6S8X35FZB	
425	312115-0451	-		40	SCREW O4762 M8X20A280	
430	312115-0453	-		12	SCREW O4762 M8X25A280	
435	312316-0320	-		3	STOP SCREW SK6SS5X5FZB	
440	312316-0323	-		12	STOP SCREW SK6SS5X8FZB	
445	312805-0108	-		4	ROUND NUT KM8	
450	312805-0114	-		2	ROUND NUT KM14	
455	315101-0165	-		8	WASHER BRB8,4X16FZB	
460	315105-0165	-		12	WASHER BRB8,4X16RFR	
465	315202-0316	S		2	O-RING 124,5X3	
470	315221-0171	S		1	SEAL RING CB30X62X7	
475	315410-0108	S		2	LOCK WASHESKFMB8	
480	315410-0114	S		1	LOCK WASHESKFMB14	
485	315701-0338	S		1	FLAT WEDGE12X8X70	
490	315752-0149	S		1	CIRCLIP SGH110	
495	321306-0114	S		1	BALL BEARISKF6014	
500	321309-0106	S		1	BALL BEARISKF6206	
505	321364-0106	S		2	ROLLER BEASKF31306	
510	321361-0105	S		3	ROLLER BEASKF30205	
515	342720-0104	-		1	PIPE COUPLGA-8-1/4"	
520	342730-0104	-		2	ELBOW PIPE WA-8-1/4"	

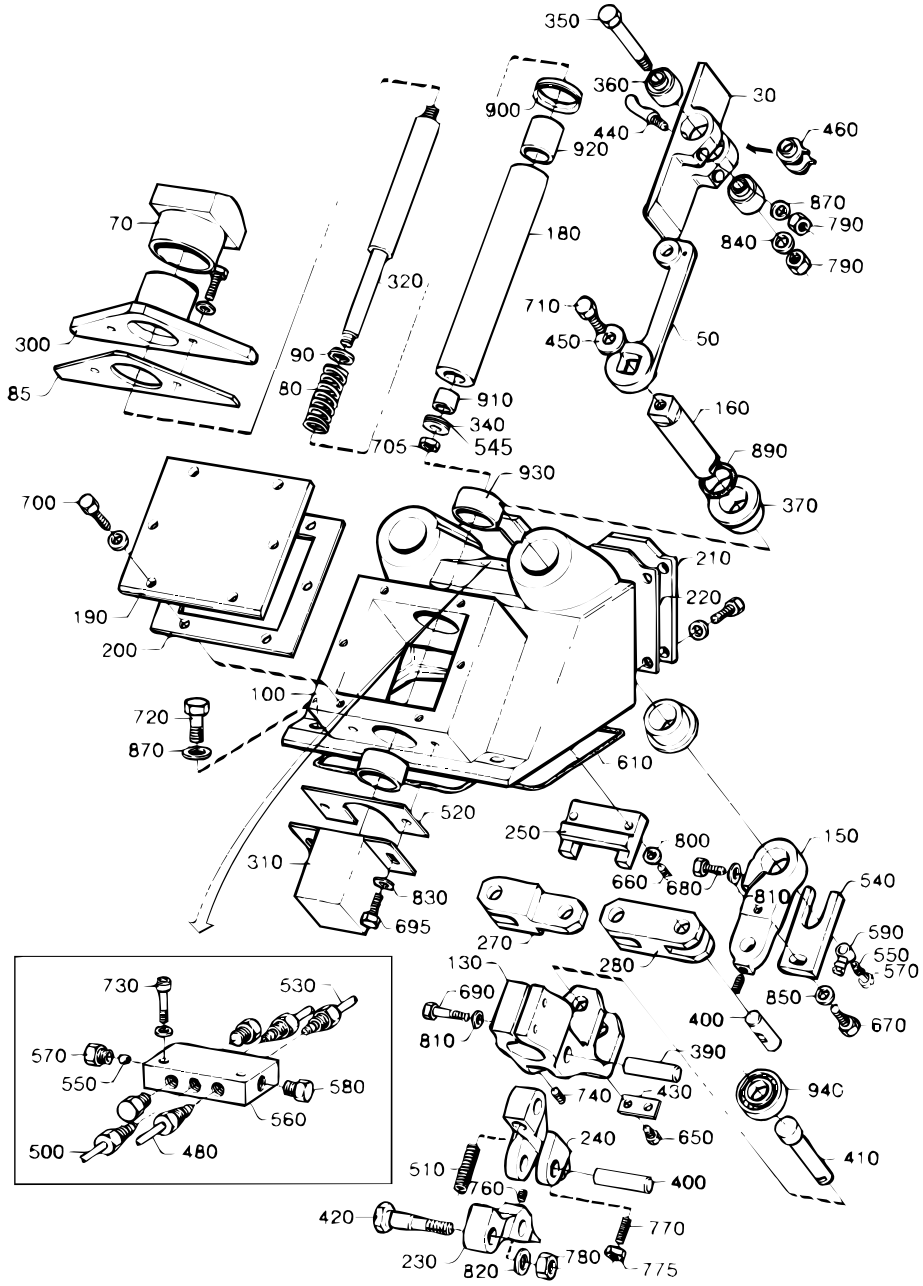
350
360
30
900
440
460
920
870
790
180
840
790
70
320
710
450
50
300
90
80
910
160
85
340
545
705
890
930
370
700
210
220
190
200
100
720
870
610
520
250
800
150
310
660
680
540
830
810
695
590
270
280
550
570
130
690
850
670
810
400
390
740
430
940
240
650
410
510
760
400
420
770
230
820
780
775
730
530
570
550
580
560
500
480

Pos	Part No	SP	UN	Qty	Description	Page No
VOLUME 1055 B						
000	**CR- 285456-0301**	**-**		**2**	**PRESSURE DEVICE**	
030	443114	S		2	FLAP	
050	262906	S		2	ARM	
070	525100	C		1	BLOCKING PIECE	
080	525379	P		1	COMPRESSION SPRING	
085	297496	-		1	LACE	
095	312105-0372	-		2	SCREW O4017 M6X25A280	
440	262350-0001	-		4	PIN	
VOLUME 1000 B						
000	**CR- 285456-0302**	**-**		**2**	**PRESSURE DEVICE**	
030	443182	S		2	FLAP	
050	262906	S		2	ARM	
070	525100	C		1	BLOCKING PIECE	
080	525379	P		1	COMPRESSION SPRING	
085	297496	-		1	LACE	
095	312105-0372	-		2	SCREW O4017 M6X25A280	
440	262350-0001	-		4	PIN	
VOLUME 750 B						
000	**CR- 285456-0303**	**-**		**2**	**PRESSURE DEVICE**	
030	442984	S		2	FLAP	
050	262906	S		2	ARM	
070	525100	C		1	BLOCKING PIECE	
080	525379	P		1	COMPRESSION SPRING	
085	297496	-		1	LACE	
095	312105-0372	-		2	SCREW O4017 M6X25A280	
440	262350-0001	-		4	PIN	
VOLUME 568 B						
000	**CR- 285456-0304**	**-**		**2**	**PRESSURE DEVICE**	
030	442885	S		2	FLAP	
050	262907	S		2	ARM	
070	525100	C		1	BLOCKING PIECE	
080	525379	P		1	COMPRESSION SPRING	
085	297496	-		1	LACE	
095	312105-0372	-		2	SCREW O4017 M6X25A280	
440	262350-0001	-		4	PIN	
VOLUME 500 B						
000	**CR- 285456-0305**	**-**		**2**	**PRESSURE DEVICE**	
030	442886	S		2	FLAP	
050	262907	S		2	ARM	
070	525100	C		1	BLOCKING PIECE	
080	525379	P		1	COMPRESSION SPRING	
085	297496	-		1	LACE	
095	312105-0372	-		2	SCREW O4017 M6X25A280	
440	262350-0001	-		4	PIN	
VOLUME 500 S						
000	**CR- 285456-0306**	**-**		**2**	**PRESSURE DEVICE**	
030	443038	S		2	FLAP	
050	262906	S		2	ARM	
070	525101-0001	C		1	BLOCKING PIECE	
080	268830	P		1	COMPRESSION SPRING	
095	312105-0370	-		2	SCREW O4017 M6X20A280	
440	525125	P		4	PIN	
VOLUME 375 S						
000	**CR- 285456-0307**	**-**		**2**	**PRESSURE DEVICE**	
030	443249	S		2	FLAP	
050	G- 442589	S		2	ARM	
070	525101-0002	C		1	BLOCKING PIECE	
080	268830	P		1	COMPRESSION SPRING	
095	312105-0370	-		2	SCREW O4017 M6X20A280	
440	262350-0001	-		4	PIN	
VOLUME 355 B						
000	**CR- 285456-0309**	**-**		**2**	**PRESSURE DEVICE**	
030	531628	S		2	PRESSURE DEVICE FLAP	
050	285449	S		2	ARM	
070	525101-0001	C		1	BLOCKING PIECE	
080	268830	P		1	COMPRESSION SPRING	
095	312105-0370	-		2	SCREW O4017 M6X20A280	
440	525125	P		4	PIN	
VOLUME 750 S						
000	**CR- 285456-0310**	**-**		**2**	**PRESSURE DEVICE**	
030	544289	-		2	FLAP	
050	262906	S		2	ARM	
070	544255	-		1	BLOCKING PIECE	
080	268830	P		1	COMPRESSION SPRING	
085	297496	-		1	LACE	
095	312105-0372	-		2	SCREW O4017 M6X25A280	
440	525125	P		4	PIN	

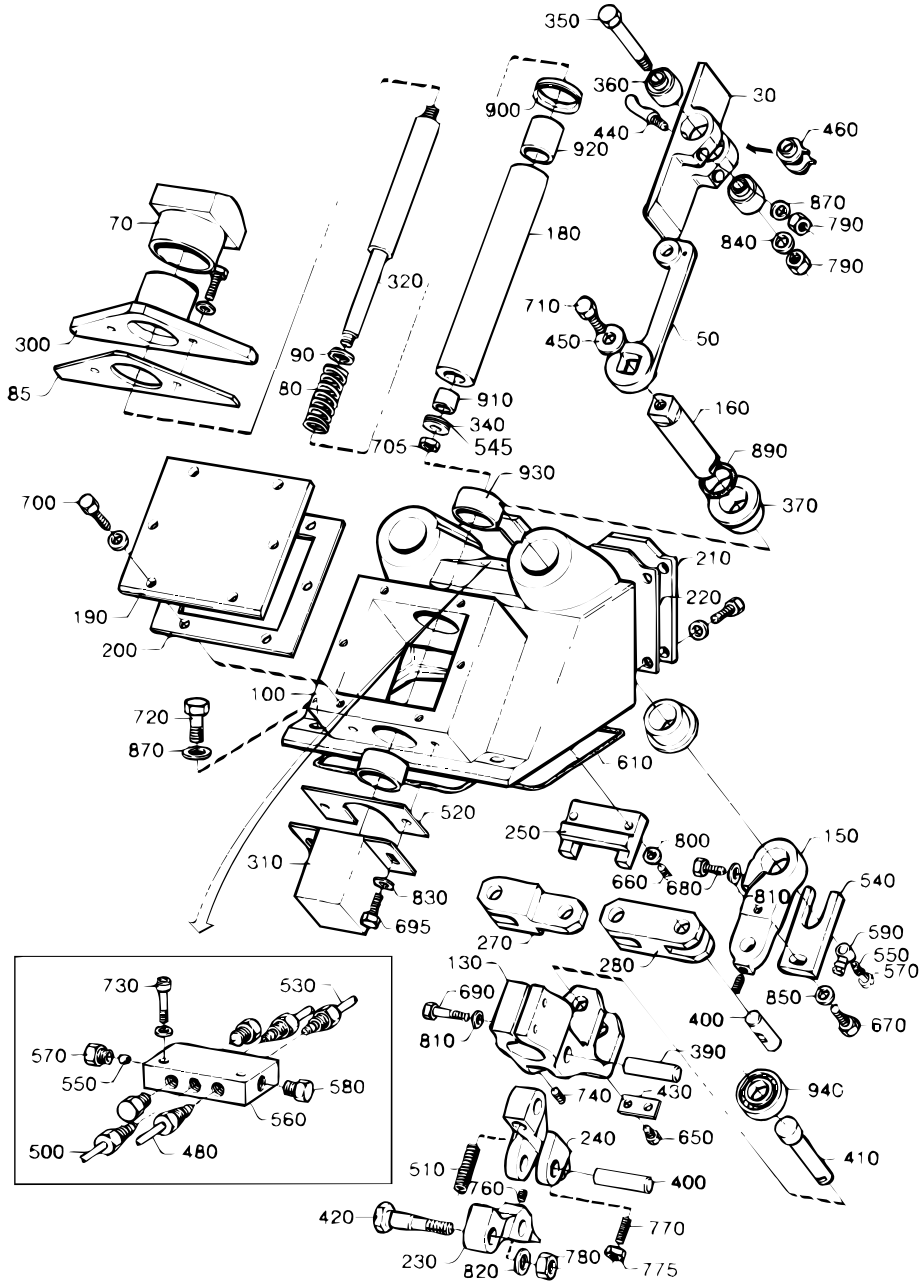
350
360
30
900
440
460
920
870
790
180
840
790
70
320
710
450
50
300
90
80
910
160
85
340
545
705
890
930
370
700
210
220
190
200
100
720
870
610
520
250
800
150
310
660
680
540
830
810
270
590
550
570
695
280
130
690
850
670
810
400
390
740
430
940
240
650
410
510
760
400
420
770
230
820
780
775
730
530
570
550
580
560
500
480

Pos	Part No	SP	UN	Qty	Description	Page No
VOLUME 1136 B						
000	**CR- 285456-0311**	**-**		**2**	**PRESSURE DEVICE**	
030	548406	S		2	FLAP	
050	262906	S		2	ARM	
070	525100	C		1	BLOCKING PIECE	
080	525379	P		1	COMPRESSION SPRING	
085	297496	-		1	LACE	
095	312105-0372	-		2	SCREW O4017 M6X25A280	
440	262350-0001	-		4	PIN	
VOLUME 1000 S						
000	**CR- 285456-0312**	**-**		**2**	**PRESSURE DEVICE**	
030	569111	S		2	FLAP	
050	262906	S		2	ARM	
070	569112	C		1	BLOCKING PIECE	
080	268830	P		1	COMPRESSION SPRING	
085	297496	-		1	LACE	
095	312105-0372	-		2	SCREW O4017 M6X25A280	
440	262350-0001	-		4	PIN	
VOLUME 400 B						
000	**CR- 285456-0313**	**-**		**2**	**PRESSURE DEVICE**	
030	574680	S		2	FLAP	
050	G- 442589	S		2	ARM	
070	525101-0001	C		1	BLOCKING PIECE	
080	268830	P		1	COMPRESSION SPRING	
095	312105-0370	-		2	SCREW O4017 M6X20A280	
440	525125	P		4	PIN	
VOLUME 1000 Sq						
000	**CR- 285456-0314**	**-**		**2**	**PRESSURE DEVICE**	
030	583451	S		2	FLAP	
050	285449	S		2	ARM	
070	574036	C		1	BLOCKING PIECE	
080	268830	P		1	COMPRESSION SPRING	
085	297496	-		1	LACE	
095	312105-0372	-		2	SCREW O4017 M6X25A280	
440	262350-0001	-		4	PIN	
VOLUME 500 Sq						
000	**CR- 285456-0315**	**-**		**2**	**PRESSURE DEVICE**	
030	574035	S		2	FLAP	
050	262906	S		2	ARM	
070	574036	C		1	BLOCKING PIECE	
080	268830	P		1	COMPRESSION SPRING	
085	297496	-		1	LACE	
095	312105-0372	-		2	SCREW O4017 M6X25A280	
440	262350-0001	-		4	PIN	
Common parts						
090	442883	-		2	SPACING WASHER	
100	G- 525335	-		1	HOUSE	
130	262234	S		1	BRACKET	
150	262235	S		2	ARM	
160	262266	S		2	SHAFT	
180	262309	S		1	SLEEVE	
190	262313	-		1	LID	
200	262314	S		1	RUBBER GASKET	
210	262315	-		1	LID	
220	262316	S		1	RUBBER GASKET	
230	262415	S		1	LINK	
240	G- 262610	S		1	LINK	
250	262720	-		1	STEERING	
270	285157	S		1	LINK	
280	285158	S		1	LINK	
300	285448	-		1	PROTECTIVE CASING	
310	442532	-		1	COVER	
320	442882	S		1	SPINDLE	
340	28037	-		1	WASHER	
350	262028-0011	S		2	FITTING BOLT	
360	525367	S		4	SLEEVE	
370	262267	S		4	BUSHING	
390	262322	S		1	SHAFT	
400	262323	S		3	SHAFT	
410	262324	S		1	SHAFT	
420	262325	S		1	SHAFT	
430	262343	S		1	SECURING PLATE	
450	276659	-		2	WASHER	
460	311103-0306	-		4	CYLINDRICACP M6 5X12 RFR	
480	285162	S		1	LUBRICATING PIPE	
500	285164	S		2	LUBRICATING PIPE	
510	285970	P		1	COMPRESSION SPRING	
520	442533	S		1	RUBBER GASKET	
530	442560	S		1	LUBR.OIL PIPE	
540	442884	S		2	LOCK PLATE	
545	566016	-		1	WASHER	
550	90028-0001	P		3	CONE	

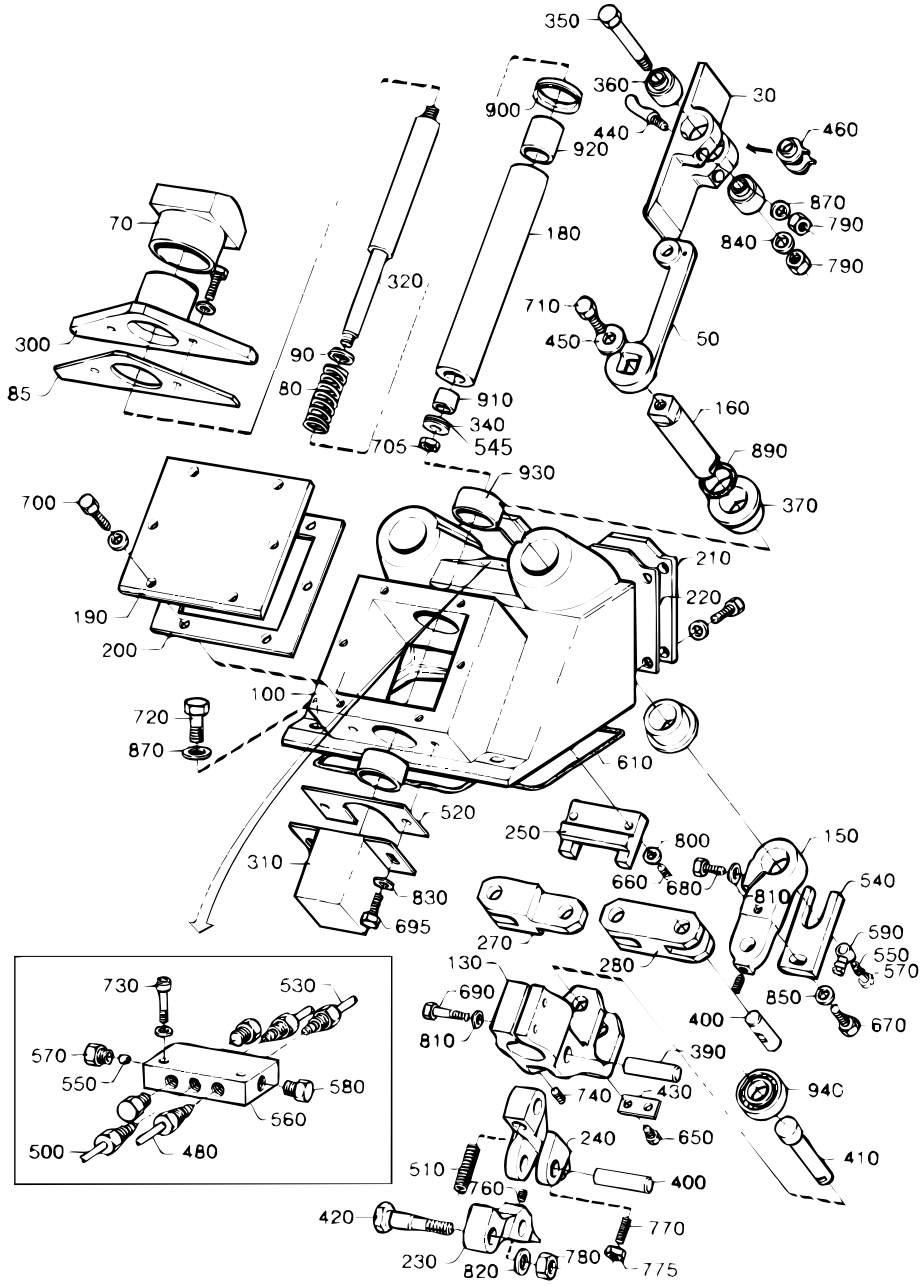
350
360
30
900
440
460
920
870
790
180
840
790
70
320
710
450
50
300
90
80
910
160
85
340
545
705
890
930
370
700
210
220
190
200
100
720
870
610
520
250
800
150
310
660
680
540
830
810
695
590
550
570
270
280
130
690
850
670
810
400
390
740
430
940
240
650
410
510
760
400
420
770
230
820
780
775
730
530
570
550
580
560
500
480

Pos	Part No	SP	UN	Qty	Description	Page No
560	90032-0034	P		1	JUNCTION BLOCK	
570	90134-0003	P		3	BUSHING	
580	90136-0002	P		3	PLUG	
590	90137-0005	P		2	PIPE JOINT	
600	90153-0043	-		X	ADHESIVE	
605	90157-0022	S	G	X	SEALING COMPOUND	
610	90161-0001	-	MM	900	STRIP	
620	90296-0009	S		X	GREASE	
650	312101-0362	-		2	SCREW M6S6X8FZB	
660	312101-0372	-		2	SCREW M6S6X25FZB	
670	312101-0453	-		2	SCREW M6S8X25FZB	
680	312101-0457	-		2	SCREW M6S8X35FZB	
690	312101-0459	-		2	SCREW M6S8X40FZB	
695	312105-0368	-		2	SCREW O4017 M6X16A280	
700	312105-0368	-		14	SCREW O4017 M6X16A280	
705	312105-0447	-		1	SCREW O4017 M8X12A280	
710	312105-0449	-		2	SCREW O4017 M8X16A280	
720	312105-0453	-		3	SCREW O4017 M8X25A280	
730	312111-0293	-		2	SCREW MC6S4X16FZB	
740	312316-0287	-		1	STOP SCREW SK6SS4X8FZB	
760	312316-0362	-		3	STOP SCREW SK6SS6X8FZB	
770	312316-0372	S		1	STOP SCREW SK6SS6X25FZB	
775	312601-0316	-		1	NUT M6M6FZB	
780	312601-0322	-		1	NUT M6M12FZB	
790	312605-0318	-		6	NUT M6M8RFR	
800	315101-0153	-		2	WASHER BRB6,4X12FZB	
810	315101-0165	-		4	WASHER BRB8,4X16FZB	
820	315101-0178	-		1	WASHER BRB13X24FZB	
830	315105-0153	-		20	WASHER BRB6,4X12RFR	
840	315105-0165	-		2	WASHER BRB8,4X16RFR	
850	315111-0165	-		2	WASHER TBRB8,4X16FZB	
870	315115-0165	-		7	WASHER TBRB8,4X16RFR	
890	315202-0217	S		2	O-RING 24,2X3	
900	315220-0175	S		1	SEAL RING V-35S	
910	321120-0122	S		1	BUSHING 15/17X15	
920	321120-0160	S		1	BUSHING 25/28X30	
930	321120-0183	S		2	BUSHING 35/39X20	
940	321306-0104	S		1	BALL BEARISKF6004	

Pos	Part No	SP	UN	Qty	Description	Page No

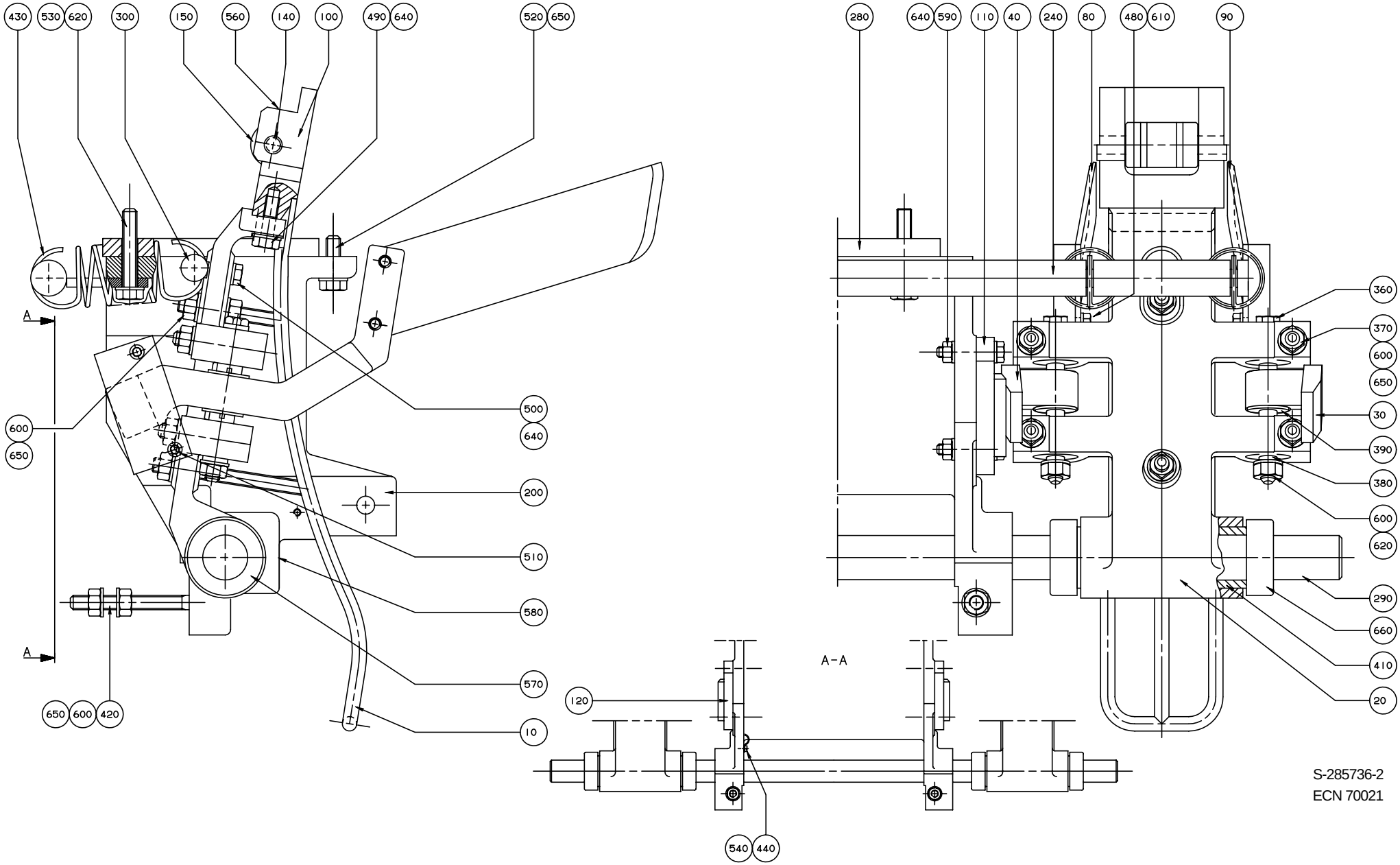
430
530
620
300
150
560
140
100
490
640
520
650
280
640
590
110
40
240
80
480
610
90
360
370
600
650
30
390
380
600
620
290
660
410
20
500
640
200
510
580
570
10
600
650
650
600
420
A
A
A-A
120
540
440
S-285736-2
ECN 70021

Pos	Part No	SP	UN	Qty	Description	Page No
VOLUME 1000 B LOFIN						
000	**CR- 285736-0301**	**-**		**1**	**PULL-DOWN DEVICE**	
010 1	262970	C		2	RAIL	
020 1	285655	C		2	ARM	
030 1	285656	C		2	ARM	
040 1	285657	C		2	ARM	
080 1	443021	C		2	SHEET	
090 1	443022	C		2	SHEET	
100 1	525211	C		2	PLATE	
140 1	262427-0001	S		2	SHAFT	
150 1	443487	S		2	ROLL	
150a	90242-0054	-		2	* O-RING	
300 1	297644	-		2	SHAFT	
600	312605-0318	-		24	NUT M6M8RFR	
610	315105-0153	-		8	WASHER BRB6,4X12RFR	
VOLUME 568 B						
000	**CR- 285736-0302**	**-**		**1**	**PULL-DOWN DEVICE**	
010 1	262970	C		2	RAIL	
020 1	285655	C		2	ARM	
030 1	285656	C		2	ARM	
040 1	285657	C		2	ARM	
080 2	442909-0001	C		2	SHEET	
090 2	442910-0001	C		2	SHEET	
100 7	525429	-		2	PLATE	
140 1	262427-0001	S		2	SHAFT	
150 1	443487	S		2	ROLL	
150a	90242-0054	-		2	* O-RING	
300 1	297644	-		2	SHAFT	
600	312605-0318	-		24	NUT M6M8RFR	
610	315105-0153	-		8	WASHER BRB6,4X12RFR	
VOLUME 500 B						
000	**CR- 285736-0303**	**-**		**1**	**PULL-DOWN DEVICE**	
010 1	262970	C		2	RAIL	
020 1	285655	C		2	ARM	
030 1	285656	C		2	ARM	
040 1	285657	C		2	ARM	
080 3	525066	C		2	SHEET	
090 3	525067	C		2	SHEET	
100 7	525429	-		2	PLATE	
140 1	262427-0001	S		2	SHAFT	
150 1	443487	S		2	ROLL	
150a	90242-0054	-		2	* O-RING	
300 1	297644	-		2	SHAFT	
600	312605-0318	-		24	NUT M6M8RFR	
610	315105-0153	-		8	WASHER BRB6,4X12RFR	
VOLUME 500 S						
000	**CR- 285736-0311**	**-**		**1**	**PULL-DOWN DEVICE**	
010 4	285712	C		2	RAIL	
020 2	285723	C		2	ARM	
030 1	285656	C		2	ARM	
040 1	285657	C		2	ARM	
080 6	443023	C		2	SHEET	
090 6	443024	C		2	SHEET	
100 4	525212	C		2	PLATE	
140 3	262427-0005	S		2	SHAFT	
150 1	443487	S		2	ROLL	
150a	90242-0054	-		2	* O-RING	
300 1	297644	-		2	SHAFT	
600	312605-0318	-		24	NUT M6M8RFR	
610	315105-0153	-		8	WASHER BRB6,4X12RFR	
VOLUME 375 S						
000	**CR- 285736-0312**	**-**		**1**	**PULL-DOWN DEVICE**	
010 3	285724-0002	C		2	RAIL	
020 2	285723	C		2	ARM	
030 2	285660	C		2	ARM	
040 2	285661	C		2	ARM	
080 7	443027	C		2	SHEET	
090 7	443028	C		2	SHEET	
100 3	525234-0002	C		2	PLATE	
140 2	262427-0002	S		2	SHAFT	
150 2	443488	S		2	ROLL	
150a	90242-0054	-		2	* O-RING	
300 1	297644	-		2	SHAFT	
600	312605-0318	-		24	NUT M6M8RFR	
610	315105-0153	-		8	WASHER BRB6,4X12RFR	
VOLUME 750 B						
000	**CR- 285736-0313**	**-**		**1**	**PULL-DOWN DEVICE**	
010 1	262970	C		2	RAIL	
020 1	285655	C		2	ARM	
030 1	285656	C		2	ARM	
040 1	285657	C		2	ARM	
080 8	442979	C		2	SHEET	
090 8	442980	C		2	SHEET	

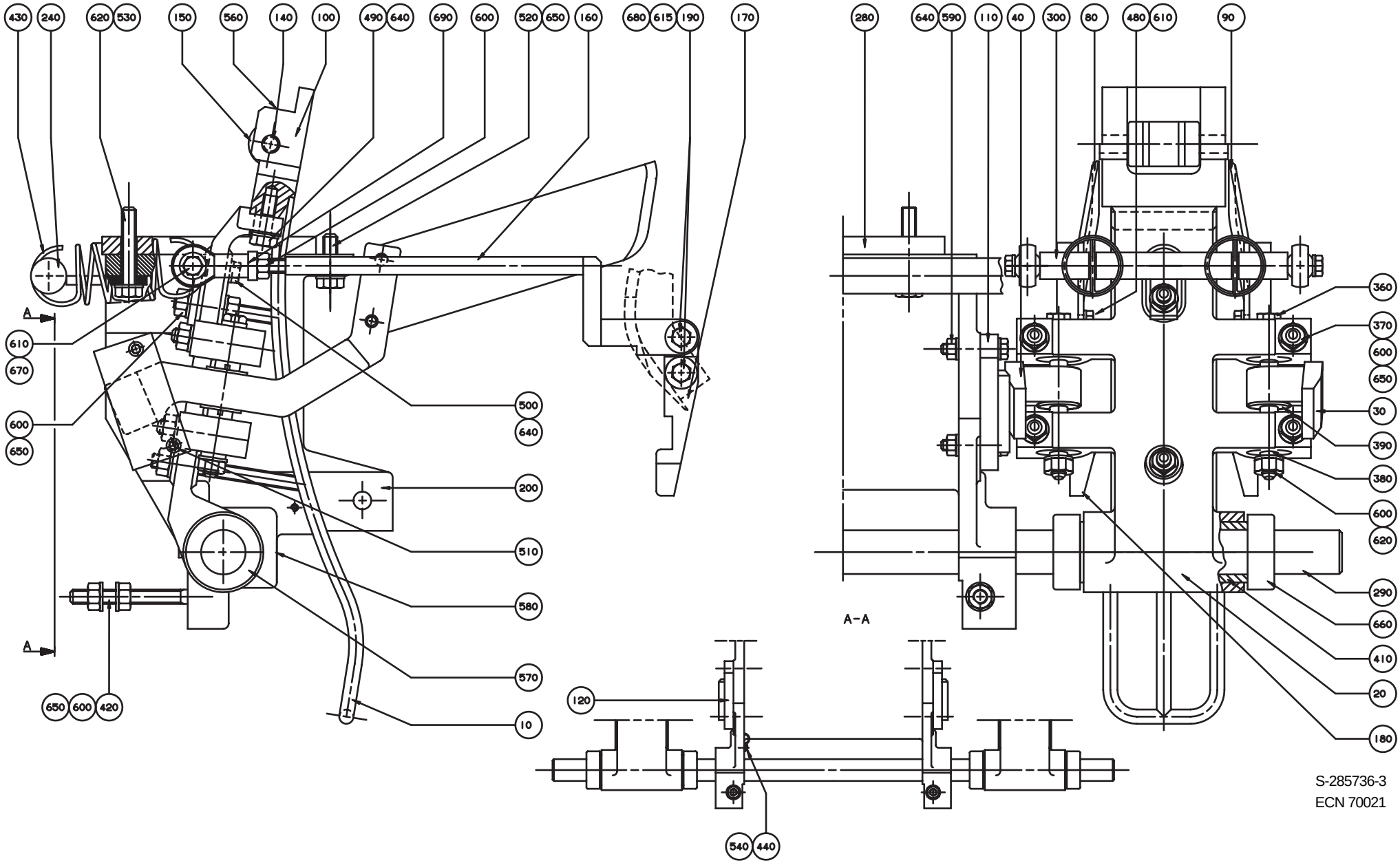

S-285736-3
ECN 70021

Pos	Part No	SP	UN	Qty	Description	Page No
100 7	525429	-		2	PLATE	
140 1	262427-0001	S		2	SHAFT	
150 1	443487	S		2	ROLL	
150a	90242-0054	-		2	* O-RING	
300 1	297644	-		2	SHAFT	
600	312605-0318	-		24	NUT M6M8RFR	
610	315105-0153	-		8	WASHER BRB6,4X12RFR	
VOLUME 1055 B						
000	**CR- 285736-0314**	**-**		**1**	**PULL-DOWN DEVICE**	
010 1	262970	C		2	RAIL	
020 1	285655	C		2	ARM	
030 1	285656	C		2	ARM	
040 1	285657	C		2	ARM	
080 9	443137	C		2	SHEET	
090 9	443138	C		2	SHEET	
100 1	525211	C		2	PLATE	
140 1	262427-0001	S		2	SHAFT	
150 1	443487	S		2	ROLL	
150a	90242-0054	-		2	* O-RING	
300 1	297644	-		2	SHAFT	
600	312605-0318	-		24	NUT M6M8RFR	
610	315105-0153	-		8	WASHER BRB6,4X12RFR	
VOLUME 1000 B HIFIN						
000	**CR- 285736-0315**	**-**		**1**	**PULL-DOWN DEVICE**	
010 1	262970	C		2	RAIL	
020 1	285655	C		2	ARM	
030 1	285656	C		2	ARM	
040 1	285657	C		2	ARM	
080 1	443021	C		2	SHEET	
090 1	443022	C		2	SHEET	
100 5	443348	C		2	PLATE	
140 1	262427-0001	S		2	SHAFT	
150 1	443487	S		2	ROLL	
150a	90242-0054	-		2	* O-RING	
300 1	297644	-		2	SHAFT	
600	312605-0318	-		24	NUT M6M8RFR	
610	315105-0153	-		8	WASHER BRB6,4X12RFR	
VOLUME 355 B						
000	**CR- 285736-0316**	**-**		**1**	**PULL-DOWN DEVICE**	
010 4	285712	C		2	RAIL	
020 2	285723	C		2	ARM	
030 1	285656	C		2	ARM	
040 1	285657	C		2	ARM	
080 5	527854	C		2	PLATE RIGHT	
090 5	527856	C		2	PLATE LEFT	
100 4	525212	C		2	PLATE	
140 3	262427-0005	S		2	SHAFT	
150 1	443487	S		2	ROLL	
150a	90242-0054	-		2	* O-RING	
300 1	297644	-		2	SHAFT	
600	312605-0318	-		24	NUT M6M8RFR	
610	315105-0153	-		8	WASHER BRB6,4X12RFR	
VOLUME 750 S						
000	**CR- 285736-0317**	**-**		**1**	**PULL-DOWN DEVICE**	
010 5	544290	C		2	RAIL	
020 2	285723	C		2	ARM	
030 1	285656	C		2	ARM	
040 1	285657	C		2	ARM	
080 10	544288	-		2	SHEET	
090 10	544280	-		2	SHEET	
100 6	544291	-		2	PLATE	
140 4	262427-0006	-		2	SHAFT	
150 1	443487	S		2	ROLL	
150a	90242-0054	-		2	* O-RING	
300 1	297644	-		2	SHAFT	
600	312605-0318	-		24	NUT M6M8RFR	
610	315105-0153	-		8	WASHER BRB6,4X12RFR	
VOLUME1136 B						
000	**CR- 285736-0318**	**-**		**1**	**PULL-DOWN DEVICE**	
010 1	262970	C		2	RAIL	
020 1	285655	C		2	ARM	
030 1	285656	C		2	ARM	
040 1	285657	C		2	ARM	
080 11	543701	-		2	SHEET	
090 11	543702	-		2	SHEET	
100 1	525211	C		2	PLATE	
140 1	262427-0001	S		2	SHAFT	
150 1	443487	S		2	ROLL	
150a	90242-0054	-		2	* O-RING	
300 1	297644	-		2	SHAFT	
600	312605-0318	-		24	NUT M6M8RFR	
610	315105-0153	-		8	WASHER BRB6,4X12RFR	

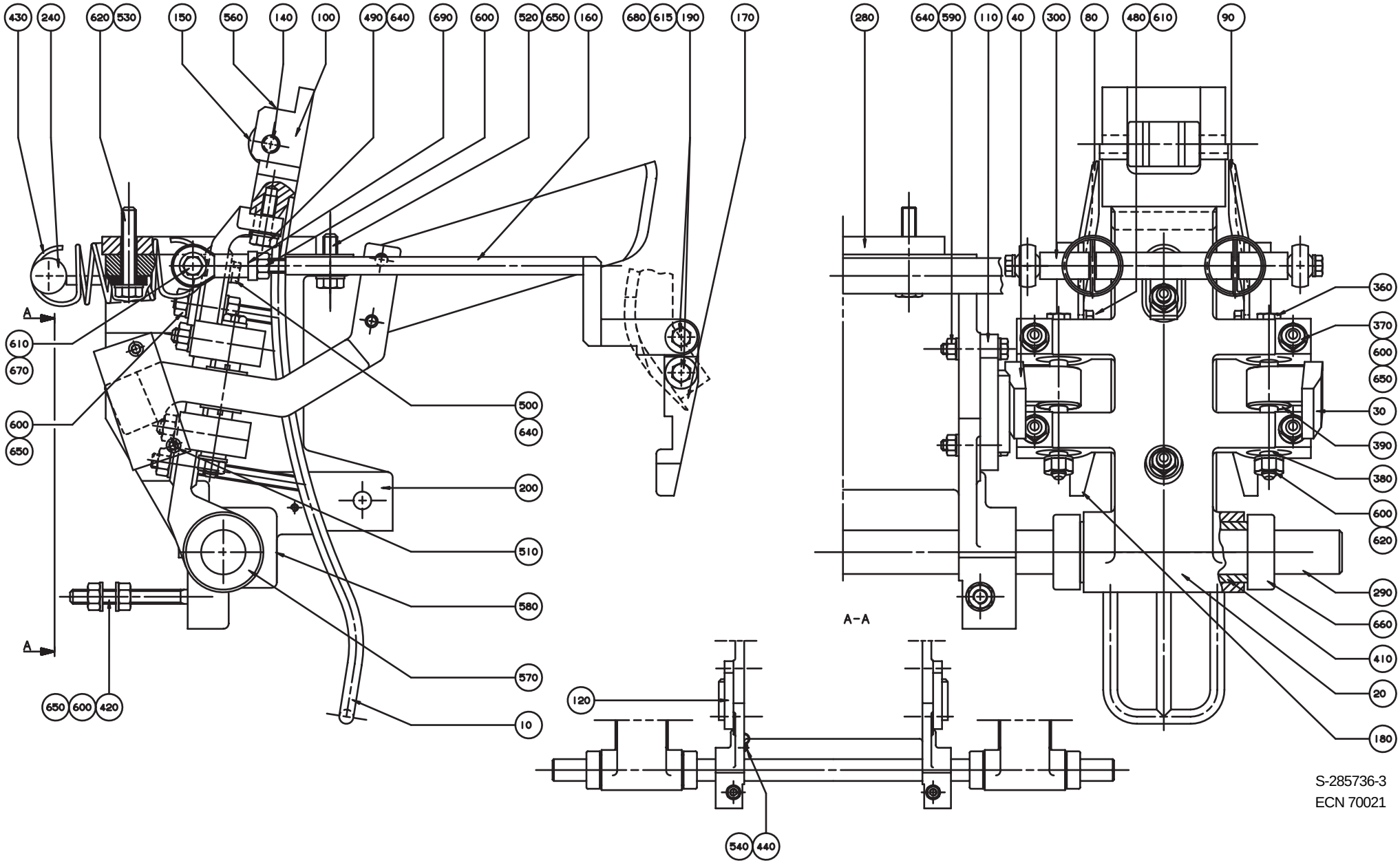

S-285736-3
ECN 70021

Pos	Part No	SP	UN	Qty	Description	Page No
VOLUME 1000 S						
000	**CR- 285736-0319**	**-**		**1**	**PULL-DOWN DEVICE**	
010 5	544290	C		2	RAIL	
020 2	285723	C		2	ARM	
030 1	285656	C		2	ARM	
040 1	285657	C		2	ARM	
080 12	569115	C		2	SHEET	
090 12	569116	C		2	SHEET	
100 8	569114	C		2	PLATE	
140 5	262427-0007	S		2	SHAFT	
150 1	443487	S		2	ROLL	
150a	90242-0054	-		2	* O-RING	
300 1	297644	-		2	SHAFT	
600	312605-0318	-		24	NUT M6M8RFR	
610	315105-0153	-		8	WASHER BRB6,4X12RFR	
VOLUME 400 B						
000	**CR- 285736-0320**	**-**		**1**	**PULL-DOWN DEVICE**	
010 4	285712	C		2	RAIL	
020 2	285723	C		2	ARM	
030 1	285656	C		2	ARM	
040 1	285657	C		2	ARM	
080 13	574681	C		2	SHEET	
090 13	574682	C		2	SHEET	
100 4	525212	C		2	PLATE	
140 3	262427-0005	S		2	SHAFT	
150 1	443487	S		2	ROLL	
150a	90242-0054	-		2	* O-RING	
300 1	297644	-		2	SHAFT	
600	312605-0318	-		24	NUT M6M8RFR	
610	315105-0153	-		8	WASHER BRB6,4X12RFR	
VOLUME 1000 Sq NORMFIN						
000	**CR- 285736-0321**	**-**		**1**	**PULL-DOWN DEVICE**	
010 6	574039	C		2	RAIL	
020 2	285723	C		2	ARM	
030 2	285660	C		2	ARM	
040 2	285661	C		2	ARM	
080 14	574040	C		2	SHEET	
090 14	574041	C		2	SHEET	
100 9	574042	C		2	PLATE	
140 6	262427-0008	S		2	SHAFT	
150 1	443487	S		2	ROLL	
150a	90242-0054	-		2	* O-RING	
300 1	297644	-		2	SHAFT	
600	312605-0318	-		24	NUT M6M8RFR	
610	315105-0153	-		8	WASHER BRB6,4X12RFR	
VOLUME 500 Sq						
000	**CR- 285736-0322**	**-**		**1**	**PULL-DOWN DEVICE**	
010 6	574039	C		2	RAIL	
020 2	285723	C		2	ARM	
030 2	285660	C		2	ARM	
040 2	285661	C		2	ARM	
080 15	574047	C		2	SHEET	
090 15	574055	C		2	SHEET	
100 9	574042	C		2	PLATE	
140 6	262427-0008	S		2	SHAFT	
150 1	443487	S		2	ROLL	
150a	90242-0054	-		2	* O-RING	
300 1	297644	-		2	SHAFT	
600	312605-0318	-		24	NUT M6M8RFR	
610	315105-0153	-		8	WASHER BRB6,4X12RFR	
VOLUME 1000 Sq REVFIN						
000	**CR- 285736-0323**	**-**		**1**	**PULL-DOWN DEVICE**	
010 6	574039	C		2	RAIL	
020 2	285723	C		2	ARM	
030 2	285660	C		2	ARM	
040 2	285661	C		2	ARM	
080 14	574040	C		2	SHEET	
090 14	574041	C		2	SHEET	
100 9	574042	C		2	PLATE	
140 6	262427-0008	S		2	SHAFT	
150 1	443487	S		2	ROLL	
150a	90242-0054	-		2	* O-RING	
160	1143688	C		4	ARM	
170	1143017	C		2	ROCKER ARM	
180	1143018	C		2	ROCKER ARM	
190	1143015	S		8	BUSHING	
300 2	1143016	S		2	AXLE PIN	
600	312605-0318	-		28	NUT M6M8RFR	
610	315105-0153	-		12	WASHER BRB6,4X12RFR	
615	1143223	C		8	WASHER	
670	312105-0370	-		4	SCREW O4017 M6X20A280	
680	312105-0362	-		8	SCREW O4017 M6X8A280	
690	90115-0139	S		4	LINK HEAD	

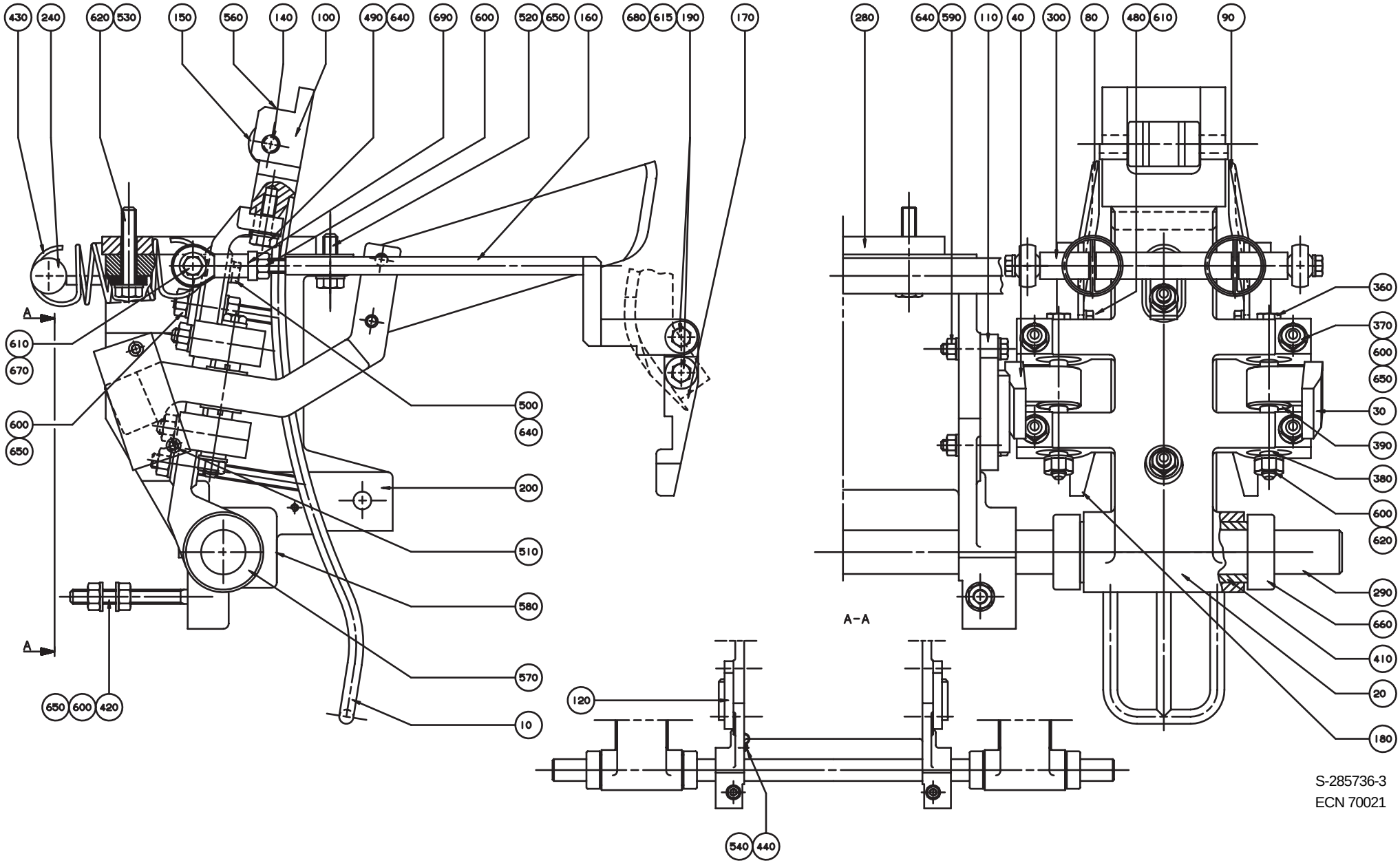

S-285736-3
ECN 70021

Pos	Part No	SP	UN	Qty	Description	Page No
Common parts						
110	442564	S		1	CURVE	
120	442565	S		1	CURVE	
200	262924	-		1	CANTILEVER	
240	297643	-		1	BRACKET	
280	285444	-		1	SPACER	
290	285664	-		1	SHAFT	
360	262028-0002	S		4	FITTING BOLT	
370	262179-0001	-		8	PIN	
380	262183	S		8	BUSHING	
390	276664	-		8	WASHER	
410	285729	S		2	BUSHING	
420	443313	-		2	STUD SCREW	
430	297567	S		4	TENSION SPRING	
440	90165-0057	-		1	CLIP	
480	312105-0366	-		8	SCREW O4017 M6X12A280	
490	312105-0372	-		4	SCREW O4017 M6X25A280	
500	312105-0374	-		2	SCREW O4017 M6X30A280	
510	312105-0376	-		4	SCREW O4017 M6X35A280	
520	312105-0453	-		2	SCREW O4017 M8X25A280	
530	312105-0460	-		2	SCREW O4017 M8X45A280	
540	312125-0291	-		1	SLOTTED HEMCS4X12RFR	
560	312318-0370	-		2	STOP SCREW SK6SS6X20RFR	
570	312318-0443	-		4	STOP SCREW SK6SS8X8RFR	
580	312318-0449	-		2	STOP SCREW SK6SS8X16RFR	
590	312605-0316	-		4	NUT M6M6 A280 STAINLESS	
620	315105-0165	-		6	WASHER BRB8,4X16RFR	
640	315115-0153	-		14	WASHER TBRB6,4X12RFR	
650	315115-0165	-		22	WASHER TBRB8,4X16RFR	
660	315742-0119	-		4	RETAINING 25SMS199RFR	

Pos	Part No	SP	UN	Qty	Description	Page No

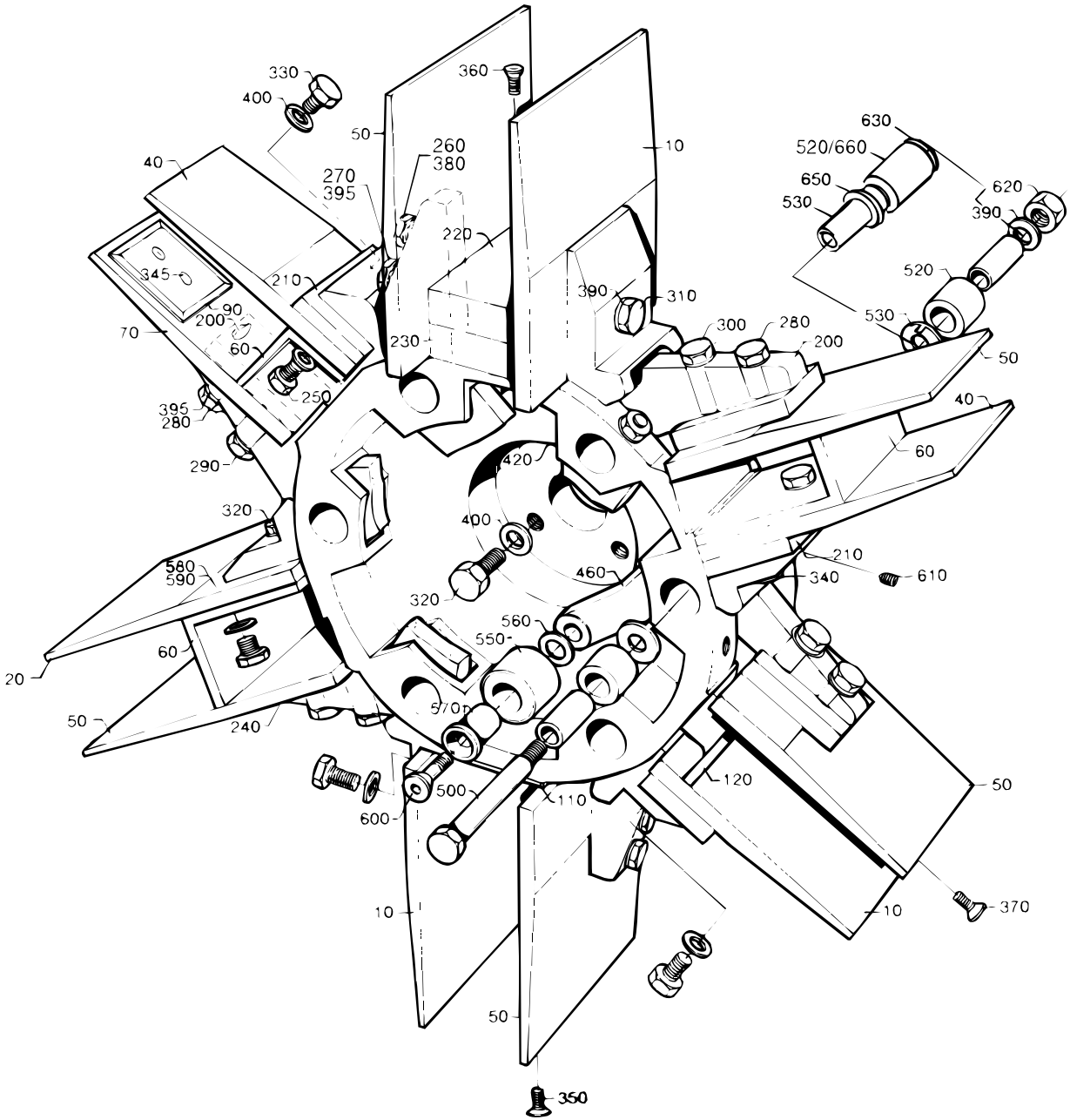
330
400
360
50
260
380
10
630
520/660
650
530
620
390
40
270
395
220
345
210
90
200
70
60
230
390
310
300
280
200
520
530
50
250
395
280
40
290
420
60
320
400
210
580
590
460
340
610
320
560
550
60
20
570
50
240
120
50
500
110
600
10
10
370
50
350

Pos	Part No	SP	UN	Qty	Description	Page No
VOLUME 1000 B LOFIN						
000	**CR- 297681-0301**	**-**		**1**	**WHEEL**	
010 1	525453	S		6	FLAP	
050 1	285310-0001	S		6	FLAP	
110 1	443076	C		6	BOTTOM	
260 2	312105-0374	P		6	SCREW O4017 M6X30A280	
270	312105-0376	P		6	SCREW O4017 M6X35A280	
310 2	312105-0453	P		6	SCREW O4017 M8X25A280	
320	312105-0457	P		3	SCREW O4017 M8X35A280	
350 2	312155-0368	P		6	SCREW MF6S6X16RFR	
380	315105-0153	P		12	WASHER BRB6,4X12RFR	
390	315105-0165	P		30	WASHER BRB8,4X16RFR	
400	315115-0165	P		3	WASHER TBRB8,4X16RFR	
420 1	G- 525450	C		1	HUB	
460 1	G- 565967	S		6	ARM	
510	262179-0001	S		12	PIN	
520	525329	S		12	SLEEVE	
610 1	312109-0459	S		2	SCREW M6S8X40H A4 80	
620	312605-0318	-		18	NUT M6M8RFR	
650	321111-0185	S		24	FLANGE BUS 14E7X14	
VOLUME 750 B						
000	**CR- 297681-0302**	**-**		**1**	**WHEEL**	
010 1	525453	S		6	FLAP	
050 1	285310-0001	S		6	FLAP	
220	525264	C		6	BOTTOM	
230	297650	C		6	BOTTOM	
240	442981	-		6	SHIM	
260 2	312105-0374	P		6	SCREW O4017 M6X30A280	
270	312105-0376	P		6	SCREW O4017 M6X35A280	
310 2	312105-0453	P		6	SCREW O4017 M8X25A280	
320	312105-0457	P		3	SCREW O4017 M8X35A280	
360	312155-0376	P		18	SCREW MF6X35RFR	
380	315105-0153	P		12	WASHER BRB6,4X12RFR	
390	315105-0165	P		30	WASHER BRB8,4X16RFR	
400	315115-0165	P		3	WASHER TBRB8,4X16RFR	
420 1	G- 525450	C		1	HUB	
460 1	G- 565967	S		6	ARM	
510	262179-0001	S		12	PIN	
520	525329	S		12	SLEEVE	
610 1	312109-0459	S		2	SCREW M6S8X40H A4 80	
620	312605-0318	-		18	NUT M6M8RFR	
650	321111-0185	S		24	FLANGE BUS 14E7X14	

Pos	Part No	SP	UN	Qty	Description	Page No
VOLUME 568 B						
000	**CR- 297681-0303**	**-**		**1**	**WHEEL**	
020	525455	S		6	FLAP	
050 1	285310-0001	S		6	FLAP	
060 2	525368	C		6	BOTTOM	
240	442981	-		6	SHIM	
250	312105-0368	P		6	SCREW O4017 M6X16A280	
260 2	312105-0374	P		6	SCREW O4017 M6X30A280	
280	312105-0378	P		6	SCREW O4017 M6X40A280	
320	312105-0457	P		9	SCREW O4017 M8X35A280	
380	315105-0153	P		18	WASHER BRB6,4X12RFR	
390	315105-0165	P		24	WASHER BRB8,4X16RFR	
400	315115-0165	P		9	WASHER TBRB8,4X16RFR	
420 1	G- 525450	C		1	HUB	
460 1	G- 565967	S		6	ARM	
510	262179-0001	S		12	PIN	
520	525329	S		12	SLEEVE	
610 1	312109-0459	S		2	SCREW M6S8X40H A4 80	
620	312605-0318	-		18	NUT M6M8RFR	
650	321111-0185	S		24	FLANGE BUS 14E7X14	
VOLUME 500 B						
000	**CR- 297681-0304**	**-**		**1**	**WHEEL**	
020	525455	S		6	FLAP	
050 1	285310-0001	S		6	FLAP	
060 1	525369	C		6	BOTTOM	
240	442981	-		6	SHIM	
250	312105-0368	P		6	SCREW O4017 M6X16A280	
260 2	312105-0374	P		6	SCREW O4017 M6X30A280	
280	312105-0378	P		6	SCREW O4017 M6X40A280	
320	312105-0457	P		9	SCREW O4017 M8X35A280	
380	315105-0153	P		18	WASHER BRB6,4X12RFR	
390	315105-0165	P		24	WASHER BRB8,4X16RFR	
400	315115-0165	P		9	WASHER TBRB8,4X16RFR	
420 1	G- 525450	C		1	HUB	
460 1	G- 565967	S		6	ARM	
510	262179-0001	S		12	PIN	
520	525329	S		12	SLEEVE	
610 1	312109-0459	S		2	SCREW M6S8X40H A4 80	
620	312605-0318	-		18	NUT M6M8RFR	
650	321111-0185	S		24	FLANGE BUS 14E7X14	

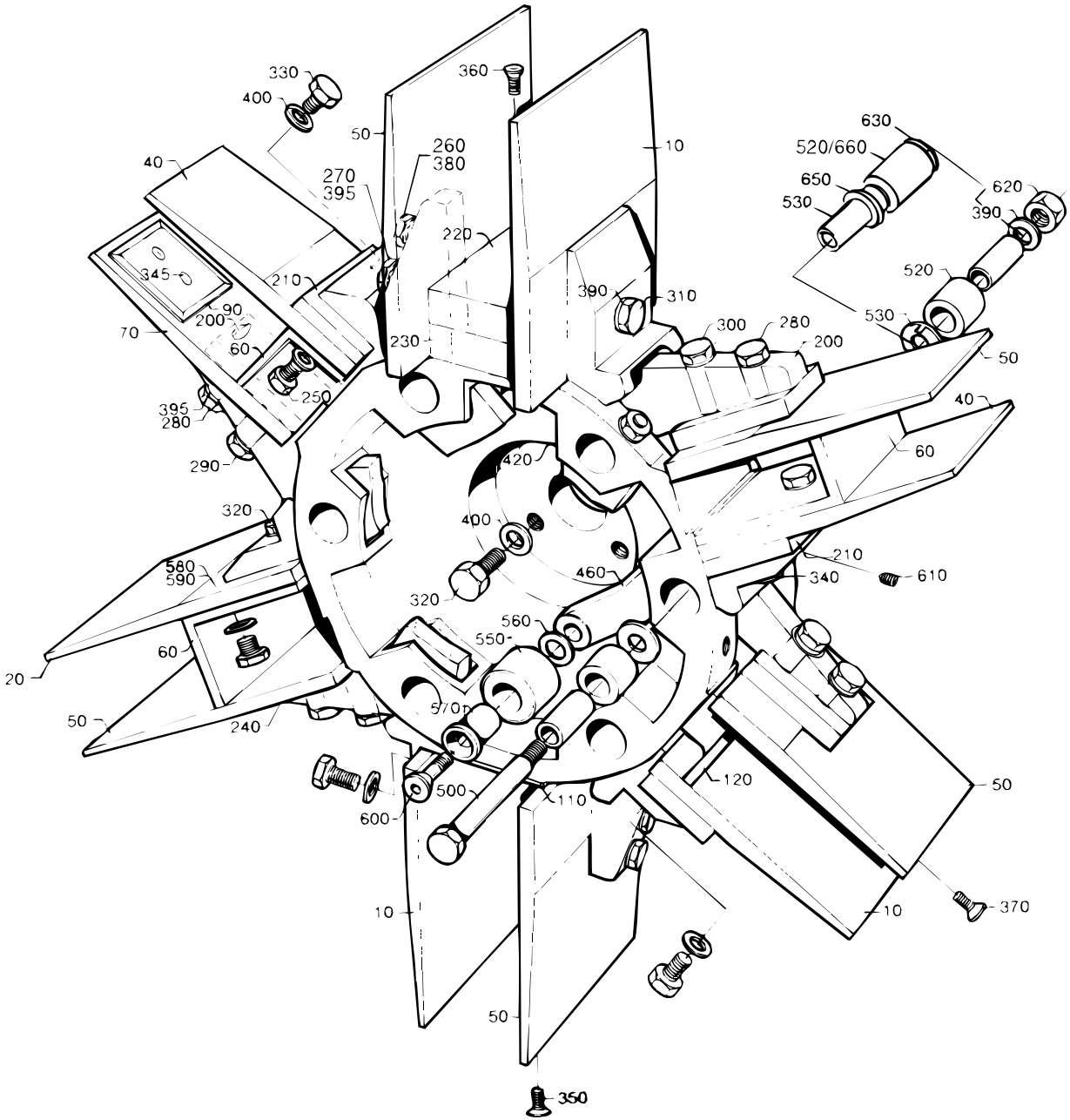
330
400
360
50
260
380
10
630
520/660
650
530
620
390
40
270
395
220
345
210
90
200
70
60
230
390
310
300
280
200
520
530
50
250
395
280
40
290
420
60
320
400
210
580
590
460
340
610
320
560
550
60
20
570
50
240
120
50
500
110
600
10
10
370
50
350

Pos	Part No	SP	UN	Qty	Description	Page No
VOLUME 500 S						
000	**CR- 297681-0305**	**-**		**1**	**WHEEL**	
010 2	525456	S		6	FLAP	
050 2	285310-0002	S		6	FLAP	
120 1	525370	C		6	BOTTOM	
200 1	285316-0002	S		6	SPACER PIECE	
210 1	525461	S		6	SPACER PIECE	
280	312105-0378	P		6	SCREW O4017 M6X40A280	
290	312105-0379	P		6	SCREW O4014 M6X45A280	
320	312105-0457	P		9	SCREW O4017 M8X35A280	
370	312155-0378	P		6	SCREW MF6S6X40RFR	
380	315105-0153	P		12	WASHER BRB6,4X12RFR	
390	315105-0165	P		24	WASHER BRB8,4X16RFR	
395	315115-0153	P		6	WASHER TBRB6,4X12RFR	
400	315115-0165	P		9	WASHER TBRB8,4X16RFR	
420 1	G- 525450	C		1	HUB	
460 1	G- 565967	S		6	ARM	
510	262179-0001	S		12	PIN	
520	525329	S		12	SLEEVE	
610 1	312109-0459	S		2	SCREW M6S8X40H A4 80	
620	312605-0318	-		18	NUT M6M8RFR	
650	321111-0185	S		24	FLANGE BUS 14E7X14	
VOLUME 375 S						
000	**CR- 297681-0313**	**-**		**1**	**WHEEL**	
040 3	525430	-		6	FLAP	
060 4	525372	-		6	BOTTOM	
070	297646	S		6	FLAP	
200 1	285316-0002	S		6	SPACER PIECE	
210 1	525461	S		6	SPACER PIECE	
250	312105-0368	P		12	SCREW O4017 M6X16A280	
280	312105-0378	P		6	SCREW O4017 M6X40A280	
290	312105-0379	P		6	SCREW O4014 M6X45A280	
320	312105-0457	P		3	SCREW O4017 M8X35A280	
330 1	312105-0459	P		6	SCREW O4017 M8X40A280	
380	315105-0153	P		18	WASHER BRB6,4X12RFR	
390	315105-0165	P		24	WASHER BRB8,4X16RFR	
395	315115-0153	P		6	WASHER TBRB6,4X12RFR	
400	315115-0165	P		9	WASHER TBRB8,4X16RFR	
420 1	G- 525450	C		1	HUB	
460 1	G- 565967	S		6	ARM	
510	262179-0001	S		12	PIN	
520	525329	S		12	SLEEVE	
610 1	312109-0459	S		2	SCREW M6S8X40H A4 80	
620	312605-0318	-		18	NUT M6M8RFR	
650	321111-0185	S		24	FLANGE BUS 14E7X14	
VOLUME 1055 B						
000	**CR- 297681-0314**	**-**		**1**	**WHEEL**	
010 3	525452	S		6	FLAP	
050 5	443116	S		6	FLAP	
110 1	443076	C		6	BOTTOM	
260 2	312105-0374	P		6	SCREW O4017 M6X30A280	
270	312105-0376	P		6	SCREW O4017 M6X35A280	
310 2	312105-0453	P		6	SCREW O4017 M8X25A280	
320	312105-0457	P		3	SCREW O4017 M8X35A280	
350 2	312155-0368	P		6	SCREW MF6S6X16RFR	
380	315105-0153	P		12	WASHER BRB6,4X12RFR	
390	315105-0165	P		30	WASHER BRB8,4X16RFR	
400	315115-0165	P		3	WASHER TBRB8,4X16RFR	
420 2	G- 525448	C		1	HUB	
460 1	G- 565967	S		6	ARM	
510	262179-0001	S		12	PIN	
520	525329	S		12	SLEEVE	
610 1	312109-0459	S		2	SCREW M6S8X40H A4 80	
620	312605-0318	-		18	NUT M6M8RFR	
650	321111-0185	S		24	FLANGE BUS 14E7X14	
VOLUME 1000 B HIFIN						
000	**CR- 297681-0315**	**-**		**1**	**WHEEL**	
010 1	525453	S		6	FLAP	
050 1	285310-0001	S		6	FLAP	
110 2	525063	C		6	BOTTOM	
260 2	312105-0374	P		6	SCREW O4017 M6X30A280	
270	312105-0376	P		6	SCREW O4017 M6X35A280	
310 2	312105-0453	P		6	SCREW O4017 M8X25A280	
320	312105-0457	P		3	SCREW O4017 M8X35A280	
350 2	312155-0368	P		6	SCREW MF6S6X16RFR	
380	315105-0153	P		12	WASHER BRB6,4X12RFR	
390	315105-0165	P		30	WASHER BRB8,4X16RFR	
400	315115-0165	P		3	WASHER TBRB8,4X16RFR	
420 1	G- 525450	C		1	HUB	
460 1	G- 565967	S		6	ARM	
510	262179-0001	S		12	PIN	
520	525329	S		12	SLEEVE	
610 1	312109-0459	S		2	SCREW M6S8X40H A4 80	

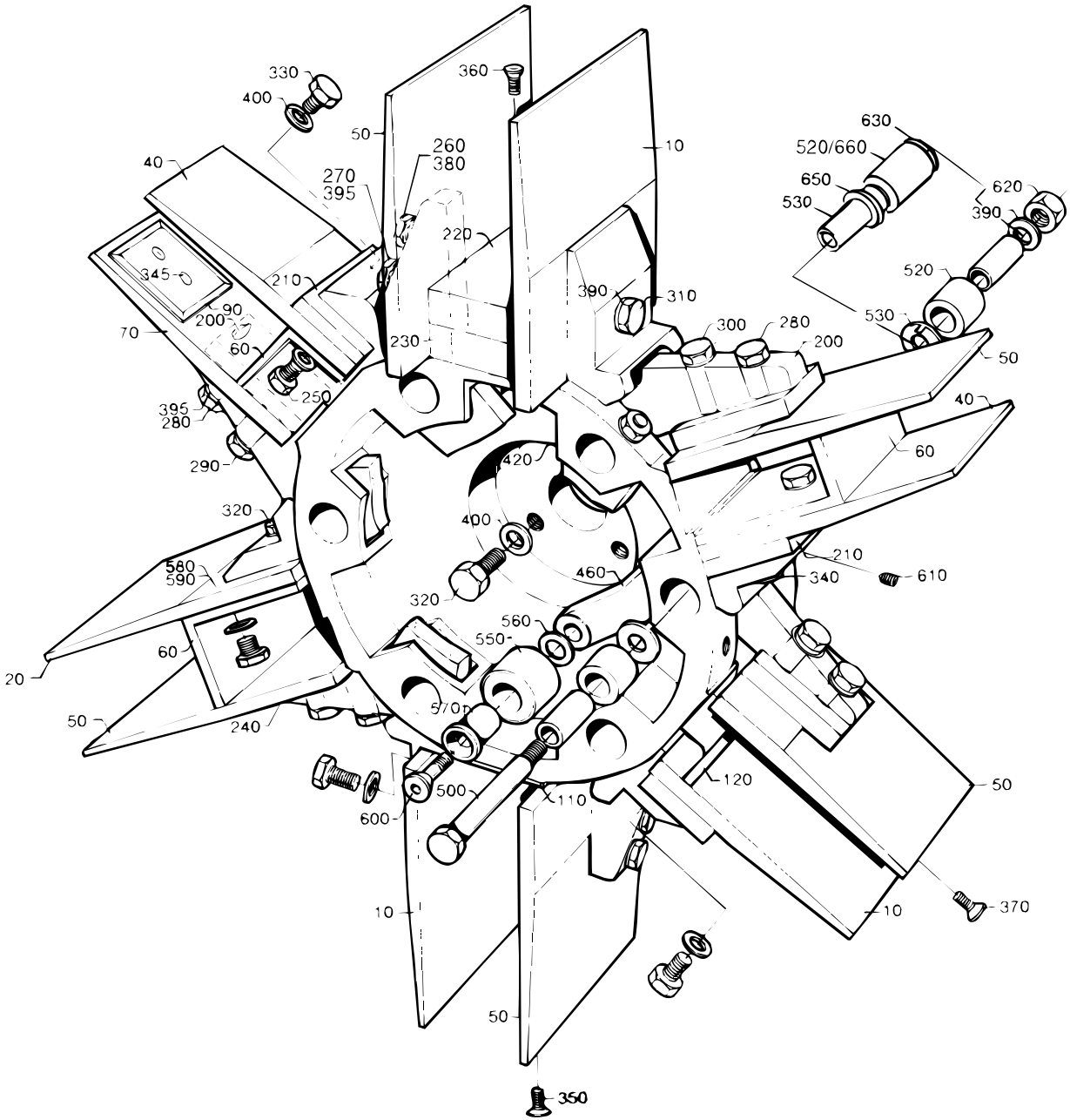
330
400
360
50
260
380
10
630
520/660
650
530
620
390
40
270
395
220
345
210
90
200
70
60
250
390
310
300
280
200
520
530
50
40
395
280
290
420
60
320
400
210
580
590
460
340
610
320
560
550
60
20
570
50
240
120
50
500
110
600
10
10
370
50
350

Pos	Part No	SP	UN	Qty	Description	Page No
620	312605-0318	-		18	NUT M6M8RFR	
650	321111-0185	S		24	FLANGE BUS 14E7X14	
VOLUME 355 B						
000	**CR- 297681-0316**	**-**		**1**	**WHEEL**	
010 4	525458	S		6	FLAP	
050 2	285310-0002	S		6	FLAP	
120 2	525371	C		6	BOTTOM	
200 1	285316-0002	S		6	SPACER PIECE	
210 1	525461	S		6	SPACER PIECE	
250	312105-0368	P		6	SCREW O4017 M6X16A280	
280	312105-0378	P		6	SCREW O4017 M6X40A280	
290	312105-0379	P		6	SCREW O4014 M6X45A280	
320	312105-0457	P		9	SCREW O4017 M8X35A280	
380	315105-0153	P		12	WASHER BRB6,4X12RFR	
390	315105-0165	P		24	WASHER BRB8,4X16RFR	
395	315115-0153	P		6	WASHER TBRB6,4X12RFR	
400	315115-0165	P		9	WASHER TBRB8,4X16RFR	
420 1	G- 525450	C		1	HUB	
460 1	G- 565967	S		6	ARM	
510	262179-0001	S		12	PIN	
520	525329	S		12	SLEEVE	
610 1	312109-0459	S		2	SCREW M6S8X40H A4 80	
620	312605-0318	-		18	NUT M6M8RFR	
650	321111-0185	S		24	FLANGE BUS 14E7X14	
VOLUME 750 S						
000	**CR- 297681-0317**	**-**		**1**	**WHEEL**	
010 5	525454	-		6	FLAP	
050 6	544252	S		6	FLAP	
110 3	544254	C		6	PLATE	
200 2	543697	-		6	SPACER PIECE	
210 2	525460	-		6	SPACER PIECE	
270	312105-0376	P		6	SCREW O4017 M6X35A280	
280	312105-0378	P		6	SCREW O4017 M6X40A280	
315	312105-0455	P		6	SCREW O4017 M8X30A280	
320	312105-0457	P		3	SCREW O4017 M8X35A280	
350 2	312155-0368	P		6	SCREW MF6S6X16RFR	
380	315105-0153	P		12	WASHER BRB6,4X12RFR	
390	315105-0165	P		30	WASHER BRB8,4X16RFR	
400	315115-0165	P		3	WASHER TBRB8,4X16RFR	
420 2	G- 525448	C		1	HUB	
460 1	G- 565967	S		6	ARM	
510	262179-0001	S		12	PIN	
520	525329	S		12	SLEEVE	
610 1	312109-0459	S		2	SCREW M6S8X40H A4 80	
620	312605-0318	-		18	NUT M6M8RFR	
650	321111-0185	S		24	FLANGE BUS 14E7X14	
VOLUME 1136 B						
000	**CR- 297681-0318**	**-**		**1**	**WHEEL**	
010 6	525451	S		6	FLAP	
050 7	550149	S		6	FLAP	
110 4	550235	C		6	BOTTOM	
260 2	312105-0374	P		6	SCREW O4017 M6X30A280	
270	312105-0376	P		6	SCREW O4017 M6X35A280	
310 2	312105-0453	P		6	SCREW O4017 M8X25A280	
320	312105-0457	P		3	SCREW O4017 M8X35A280	
350 2	312155-0368	P		6	SCREW MF6S6X16RFR	
380	315105-0153	P		12	WASHER BRB6,4X12RFR	
390	315105-0165	P		30	WASHER BRB8,4X16RFR	
400	315115-0165	P		3	WASHER TBRB8,4X16RFR	
420 3	G- 525446	C		1	HUB	
460 1	G- 565967	S		6	ARM	
510	262179-0001	S		12	PIN	
520	525329	S		12	SLEEVE	
610 1	312109-0459	S		2	SCREW M6S8X40H A4 80	
620	312605-0318	-		18	NUT M6M8RFR	
650	321111-0185	S		24	FLANGE BUS 14E7X14	
VOLUME 1000 S						
000	**CR- 297681-0319**	**-**		**1**	**WHEEL**	
010 7	569117	S		6	FLAP	
050 8	569118	S		6	FLAP	
110 5	569119	C		6	BOTTOM	
270	312105-0376	P		6	SCREW O4017 M6X35A280	
280	312105-0378	P		6	SCREW O4017 M6X40A280	
310 2	312105-0453	P		6	SCREW O4017 M8X25A280	
350 2	312155-0368	P		6	SCREW MF6S6X16RFR	
390	315105-0165	P		30	WASHER BRB8,4X16RFR	
395	315115-0153	P		12	WASHER TBRB6,4X12RFR	
420 3	G- 525446	C		1	HUB	
460 1	G- 565967	S		6	ARM	
510	262179-0001	S		12	PIN	
520	525329	S		12	SLEEVE	
610 1	312109-0459	S		2	SCREW M6S8X40H A4 80	
620	312605-0318	-		18	NUT M6M8RFR	

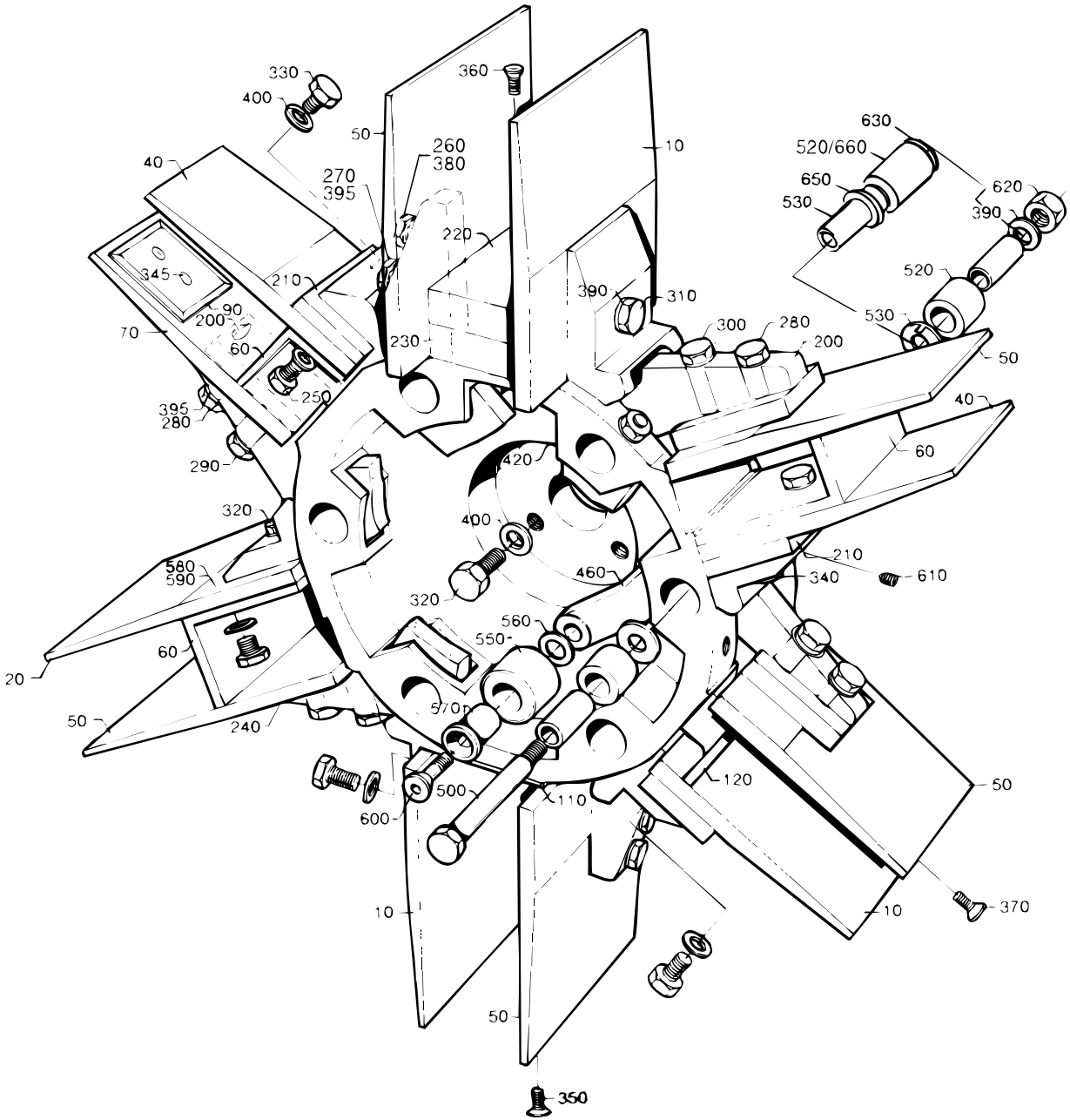
330
400
360
50
260
380
10
630
520/660
650
530
620
390
40
270
395
220
345
210
90
200
70
60
230
390
310
300
280
200
520
530
50
250
395
280
40
290
420
60
320
400
210
580
590
460
340
610
320
560
550
60
20
570
50
240
120
50
500
110
600
10
10
370
50
350

Pos	Part No	SP	UN	Qty	Description	Page No
650	321111-0185	S		24	FLANGE BUS 14E7X14	
VOLUME 400 B						
000	**CR- 297681-0320**	**-**		**1**	**WHEEL**	
010 8	574684	S		6	FLAP	
050 2	285310-0002	S		6	FLAP	
120 3	574683	C		6	BOTTOM	
200 1	285316-0002	S		6	SPACER PIECE	
210 1	525461	S		6	SPACER PIECE	
250	312105-0368	P		12	SCREW O4017 M6X16A280	
280	312105-0378	P		6	SCREW O4017 M6X40A280	
290	312105-0379	P		6	SCREW O4014 M6X45A280	
320	312105-0457	P		9	SCREW O4017 M8X35A280	
380	315105-0153	P		18	WASHER BRB6,4X12RFR	
390	315105-0165	P		24	WASHER BRB8,4X16RFR	
395	315115-0153	P		6	WASHER TBRB6,4X12RFR	
400	315115-0165	P		9	WASHER TBRB8,4X16RFR	
420 1	G- 525450	C		1	HUB	
460 1	G- 565967	S		6	ARM	
510	262179-0001	S		12	PIN	
520	525329	S		12	SLEEVE	
610 1	312109-0459	S		2	SCREW M6S8X40H A4 80	
620	312605-0318	-		18	NUT M6M8RFR	
650	321111-0185	S		24	FLANGE BUS 14E7X14	
VOLUME 1000 Sq NORMFIN						
000	**CR- 297681-0321**	**-**		**1**	**WHEEL**	
010 9	574029	S		6	FLAP	
050 9	574030	-		6	FLAP	
110 6	574031	C		6	BOTTOM	
260 1	312105-0372	P		6	SCREW O4017 M6X25A280	
270	312105-0376	P		6	SCREW O4017 M6X35A280	
310 1	312105-0451	P		6	SCREW SO4017 8X20A280	
320	312105-0457	P		3	SCREW O4017 M8X35A280	
350 1	312155-0364	P		6	SCREW MF6S6X10RFR	
380	315105-0153	P		6	WASHER BRB6,4X12RFR	
390	315105-0165	P		12	WASHER BRB8,4X16RFR	
395	315115-0153	P		6	WASHER TBRB6,4X12RFR	
400	315115-0165	P		3	WASHER TBRB8,4X16RFR	
420 4	G- 574026	C		1	HUB	
460 2	G- 574028	S		6	ARM	
610 1	312109-0459	S		2	SCREW M6S8X40H A4 80	
620	312605-0318	-		6	NUT M6M8RFR	
650	321111-0185	S		12	FLANGE BUS 14E7X14	
660	90240-0233	S		12	BUSHING	
VOLUME 500 Sq						
000	**CR- 297681-0322**	**-**		**1**	**WHEEL**	
010 9	574029	S		6	FLAP	
050 9	574030	-		6	FLAP	
060 5	583449	C		6	BOTTOM	
130	583454	-		6	SUPPORT	
140	583631	-		6	BOTTOM PANEL	
260 1	312105-0372	P		6	SCREW O4017 M6X25A280	
350 2	312155-0368	P		6	SCREW MF6S6X16RFR	
380	315105-0153	P		6	WASHER BRB6,4X12RFR	
390	315105-0165	P		12	WASHER BRB8,4X16RFR	
395	315115-0153	P		6	WASHER TBRB6,4X12RFR	
400	315115-0165	P		3	WASHER TBRB8,4X16RFR	
420 4	G-574026	C		1	HUB	
460 2	G- 574028	S		6	ARM	
610 1	312109-0459	-		2	SCREW M6S8X40H A4 80	
620	312605-0318	-		6	NUT M6M8RFR	
650	321111-0185	S		12	FLANGE BUS 14E7X14	
660	90240-0233	S		12	BUSHING	
VOLUME 1000 Sq REVFIN						
000	**CR- 297681-0323**	**-**		**1**	**WHEEL**	
010 9	574029	S		6	FLAP	
050 9	574030	-		6	FLAP	
110 6	574031	C		6	BOTTOM	
260 1	312105-0372	P		6	SCREW O4017 M6X25A280	
270	312105-0376	P		6	SCREW O4017 M6X35A280	
310 1	312105-0451	P		6	SCREW SO4017 8X20A280	
320	312105-0457	P		3	SCREW O4017 M8X35A280	
350 1	312155-0364	P		6	SCREW MF6S6X10RFR	
380	315105-0153	P		6	WASHER BRB6,4X12RFR	
390	315105-0165	P		12	WASHER BRB8,4X16RFR	
395	315115-0153	P		6	WASHER TBRB6,4X12RFR	
400	315115-0165	P		3	WASHER TBRB8,4X16RFR	
420 5	G-1143022	C		1	HUB	
460 2	G- 574028	S		6	ARM	
610 2	312318-0459	-		2	STOP SCREW SK6SS 8X40RFR	
620	312605-0318	-		6	NUT M6M8RFR	
650	321111-0185	S		12	FLANGE BUS 14E7X14	
660	90240-0233	S		12	BUSHING	

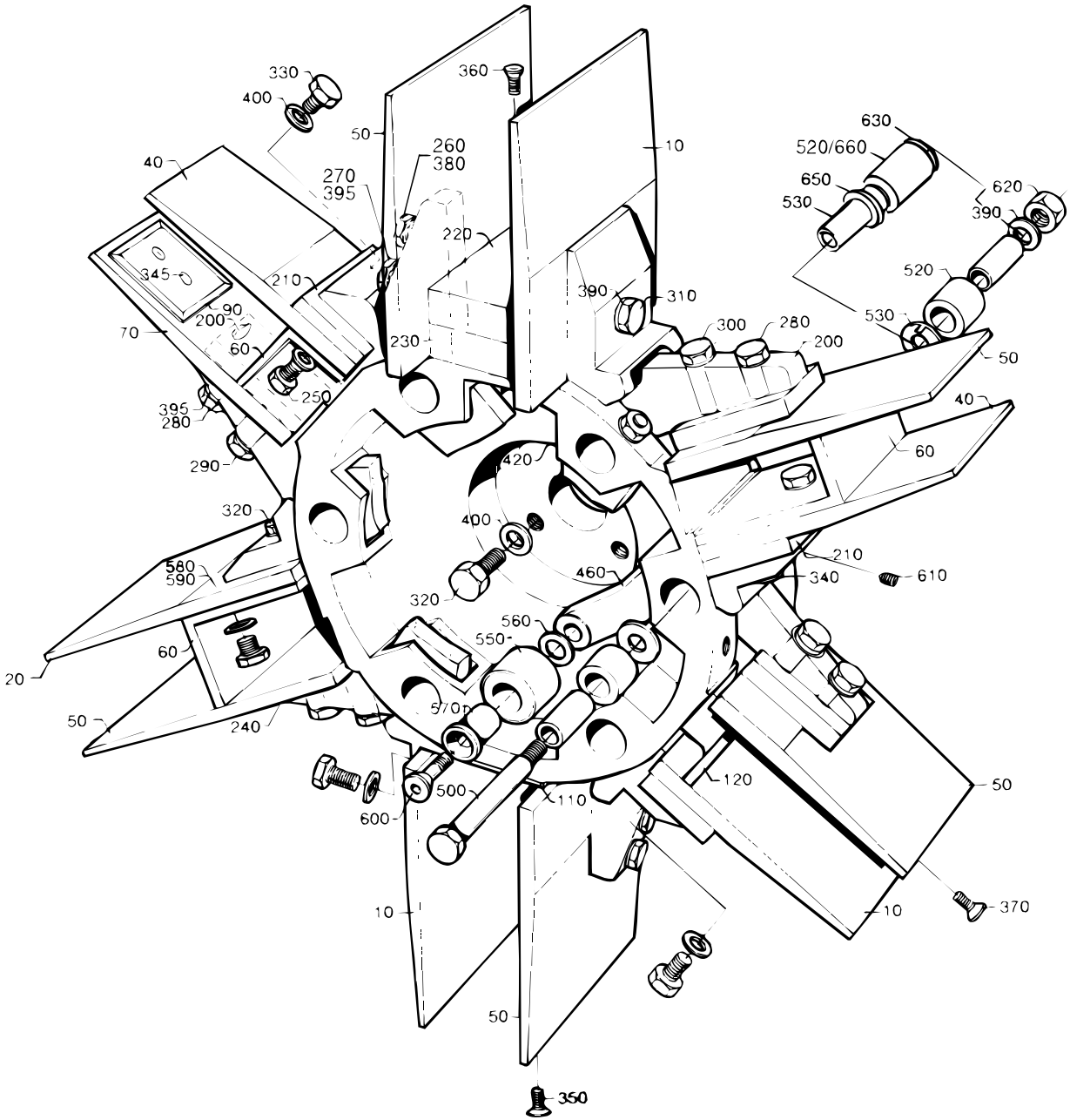
330
400
360
50
260
380
10
630
520/660
650
530
620
390
40
270
395
220
345
210
90
200
70
60
250
390
310
300
280
200
520
530
50
40
60
395
280
290
420
320
400
210
340
610
460
580
590
320
560
550
60
20
50
570
240
120
50
500
110
600
10
10
370
50
350

Pos	Part No	SP	UN	Qty	Description	Page No
Common parts						
500	262028-0001	S		6	FITTING BOLT	
530	525330	S		12	SHAFT	
550	285321	S		6	ROLL	
560	285322	S		6	WASHER	
570	442563	S		6	AXLE PIN	
580	442894	-		X	SHIM	
590	442939	-		X	SHIM	
600	312155-0499	-		6	SCREW MF6S10X40RFR	
630	315105-0173	-		12	WASHER BRB10,5X22RFR	

Pos	Part No	SP	UN	Qty	Description	Page No

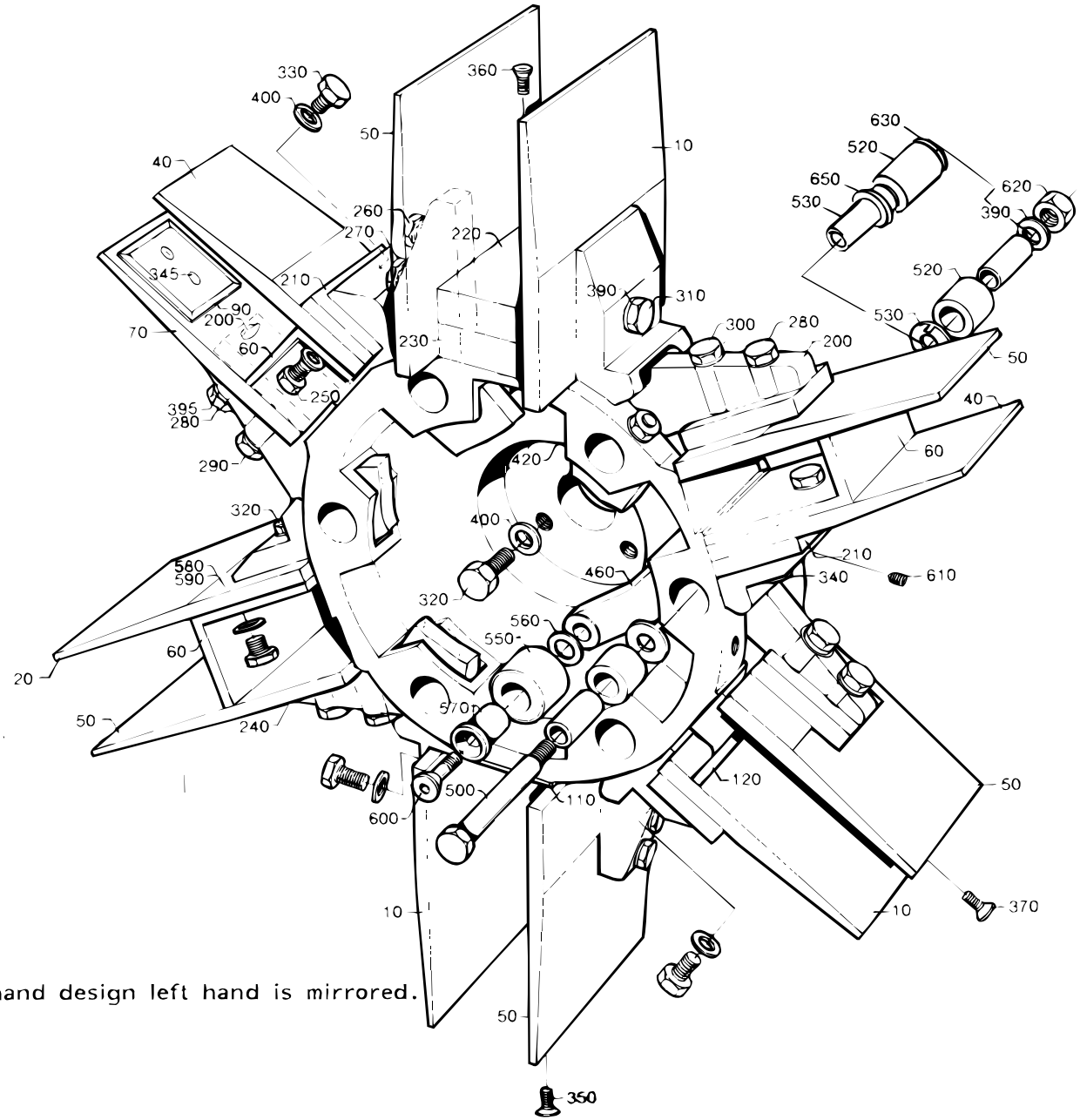

The Illustration shows right hand design left hand is mirrored.

Pos	Part No	SP	UN	Qty	Description	Page No
VOLUME 1000 B LOFIN						
000	**CR- 297682-0301**	**-**		**1**	**WHEEL**	
010 1	525453	S		6	FLAP	
050 1	285310-0001	S		6	FLAP	
110 1	443076	C		6	BOTTOM	
260 2	312105-0374	-		6	SCREW O4017 M6X30A280	
270	312105-0376	P		6	SCREW O4017 M6X35A280	
310 2	312105-0453	P		6	SCREW O4017 M8X25A280	
320	312105-0457	P		3	SCREW O4017 M8X35A280	
350 2	312155-0368	P		6	SCREW MF6S6X16RFR	
380	315105-0153	P		12	WASHER BRB6,4X12RFR	
390	315105-0165	P		30	WASHER BRB8,4X16RFR	
400	315115-0165	P		3	WASHER TBRB8,4X16RFR	
420 1	G- 525449	C		1	HUB	
460 1	G- 565967	S		6	ARM	
510	262179-0001	S		12	PIN	
520	525329	S		12	SLEEVE	
610 1	312109-0459	S		2	SCREW M6S8X40H A4 80	
620	312605-0318	-		18	NUT M6M8RFR	
650	321111-0185	S		24	FLANGE BUS 14E7X14	
VOLUME 750 B						
000	**CR- 297682-0302**	**-**		**1**	**WHEEL**	
010 1	525453	S		6	FLAP	
050 1	285310-0001	S		6	FLAP	
220	525264	C		6	BOTTOM	
230	297650	C		6	BOTTOM	
240	442981	-		6	SHIM	
260 2	312105-0374	-		6	SCREW O4017 M6X30A280	
270	312105-0376	P		6	SCREW O4017 M6X35A280	
310 2	312105-0453	P		6	SCREW O4017 M8X25A280	
320	312105-0457	P		3	SCREW O4017 M8X35A280	
360	312155-0376	P		18	SCREW MF6X35RFR	
380	315105-0153	P		12	WASHER BRB6,4X12RFR	
390	315105-0165	P		30	WASHER BRB8,4X16RFR	
400	315115-0165	P		3	WASHER TBRB8,4X16RFR	
420 1	G- 525449	C		1	HUB	
460 1	G- 565967	S		6	ARM	
510	262179-0001	S		12	PIN	
520	525329	S		12	SLEEVE	
610 1	312109-0459	S		2	SCREW M6S8X40H A4 80	
620	312605-0318	-		18	NUT M6M8RFR	
650	321111-0185	S		24	FLANGE BUS 14E7X14	

Pos	Part No	SP	UN	Qty	Description	Page No
VOLUME 568 B						
000	**CR- 297682-0303**	**-**		**1**	**WHEEL**	
020	525455	S		6	FLAP	
050 1	285310-0001	S		6	FLAP	
060 2	525368	C		6	BOTTOM	
240	442981	-		6	SHIM	
250	312105-0368	P		6	SCREW O4017 M6X16A280	
260 2	312105-0374	-		6	SCREW O4017 M6X30A280	
280	312105-0378	P		6	SCREW O4017 M6X40A280	
320	312105-0457	P		9	SCREW O4017 M8X35A280	
380	315105-0153	P		18	WASHER BRB6,4X12RFR	
390	315105-0165	P		24	WASHER BRB8,4X16RFR	
400	315115-0165	P		9	WASHER TBRB8,4X16RFR	
420 1	G- 525449	C		1	HUB	
460 1	G- 565967	S		6	ARM	
510	262179-0001	S		12	PIN	
520	525329	S		12	SLEEVE	
610 1	312109-0459	S		2	SCREW M6S8X40H A4 80	
620	312605-0318	-		18	NUT M6M8RFR	
650	321111-0185	S		24	FLANGE BUS 14E7X14	
VOLUME 500 B						
000	**CR- 297682-0304**	**-**		**1**	**WHEEL**	
020	525455	S		6	FLAP	
050 1	285310-0001	S		6	FLAP	
060 1	525369	C		6	BOTTOM	
240	442981	-		6	SHIM	
250	312105-0368	P		6	SCREW O4017 M6X16A280	
260 2	312105-0374	-		6	SCREW O4017 M6X30A280	
280	312105-0378	P		6	SCREW O4017 M6X40A280	
320	312105-0457	P		9	SCREW O4017 M8X35A280	
380	315105-0153	P		18	WASHER BRB6,4X12RFR	
390	315105-0165	P		24	WASHER BRB8,4X16RFR	
400	315115-0165	P		9	WASHER TBRB8,4X16RFR	
420 1	G- 525449	C		1	HUB	
460 1	G- 565967	S		6	ARM	
510	262179-0001	S		12	PIN	
520	525329	S		12	SLEEVE	
610 1	312109-0459	S		2	SCREW M6S8X40H A4 80	
620	312605-0318	-		18	NUT M6M8RFR	
650	321111-0185	S		24	FLANGE BUS 14E7X14	

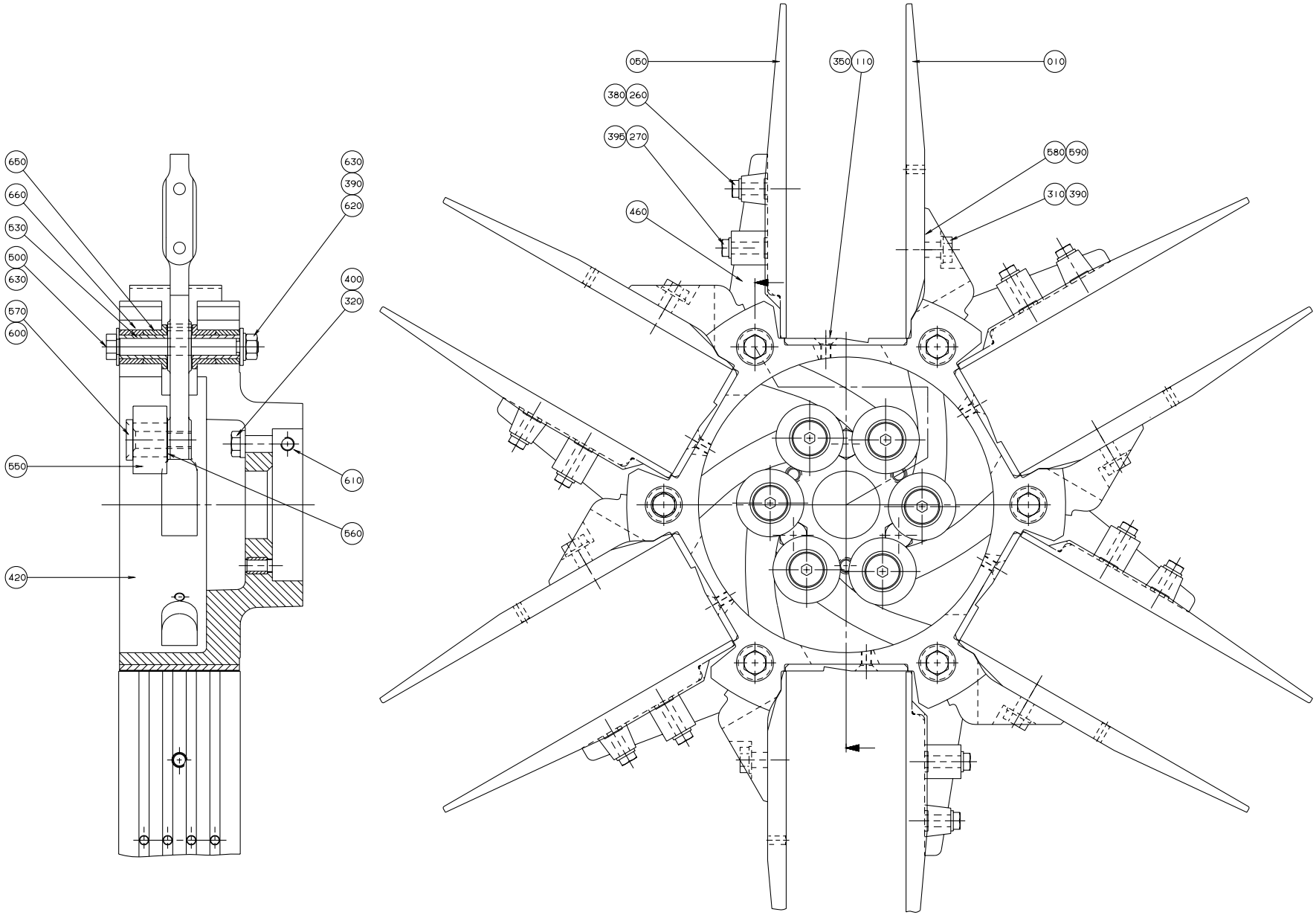

S-297682-3
ECN 19244

Pos	Part No	SP	UN	Qty	Description	Page No
VOLUME 500 S						
000	**CR- 297682-0305**	**-**		**1**	**WHEEL**	
010 2	525456	S		6	FLAP	
050 2	285310-0002	S		6	FLAP	
120 1	525370	C		6	BOTTOM	
200 1	285316-0002	S		6	SPACER PIECE	
210 1	525461	S		6	SPACER PIECE	
280	312105-0378	P		6	SCREW O4017 M6X40A280	
290	312105-0379	P		6	SCREW O4014 M6X45A280	
320	312105-0457	P		9	SCREW O4017 M8X35A280	
370	312155-0378	P		6	SCREW MF6S6X40RFR	
380	315105-0153	P		12	WASHER BRB6,4X12RFR	
390	315105-0165	P		24	WASHER BRB8,4X16RFR	
395	315115-0153	P		6	WASHER TBRB6,4X12RFR	
400	315115-0165	P		9	WASHER TBRB8,4X16RFR	
420 1	G- 525449	C		1	HUB	
460 1	G- 565967	S		6	ARM	
510	262179-0001	S		12	PIN	
520	525329	S		12	SLEEVE	
610 1	312109-0459	S		2	SCREW M6S8X40H A4 80	
620	312605-0318	-		18	NUT M6M8RFR	
650	321111-0185	S		24	FLANGE BUS 14E7X14	
VOLUME 375 S						
000	**CR- 297682-0313**	**-**		**1**	**WHEEL**	
040 3	525430	-		6	FLAP	
060 4	525372	-		6	BOTTOM	
070	297646	S		6	FLAP	
200 1	285316-0002	S		6	SPACER PIECE	
210 1	525461	S		6	SPACER PIECE	
250	312105-0368	P		12	SCREW O4017 M6X16A280	
280	312105-0378	P		6	SCREW O4017 M6X40A280	
290	312105-0379	P		6	SCREW O4014 M6X45A280	
320	312105-0457	P		3	SCREW O4017 M8X35A280	
330	312105-0459	P		6	SCREW O4017 M8X40A280	
380	315105-0153	P		18	WASHER BRB6,4X12RFR	
390	315105-0165	P		24	WASHER BRB8,4X16RFR	
395	315115-0153	P		6	WASHER TBRB6,4X12RFR	
400	315115-0165	P		9	WASHER TBRB8,4X16RFR	
420 1	G- 525449	C		1	HUB	
460 1	G- 565967	S		6	ARM	
510	262179-0001	S		12	PIN	
520	525329	S		12	SLEEVE	
610 1	312109-0459	S		2	SCREW M6S8X40H A4 80	
620	312605-0318	-		18	NUT M6M8RFR	
650	321111-0185	S		24	FLANGE BUS 14E7X14	
VOLUME 1055 B						
000	**CR- 297682-0314**	**-**		**1**	**WHEEL**	
010 3	525452	S		6	FLAP	
050 5	443116	S		6	FLAP	
110 1	443076	C		6	BOTTOM	
260 2	312105-0374	-		6	SCREW O4017 M6X30A280	
270	312105-0376	P		6	SCREW O4017 M6X35A280	
310 2	312105-0453	P		6	SCREW O4017 M8X25A280	
320	312105-0457	P		3	SCREW O4017 M8X35A280	
350 2	312155-0368	P		6	SCREW MF6S6X16RFR	
380	315105-0153	P		12	WASHER BRB6,4X12RFR	
390	315105-0165	P		30	WASHER BRB8,4X16RFR	
400	315115-0165	P		3	WASHER TBRB8,4X16RFR	
420 2	G- 525447	C		1	HUB	
460 1	G- 565967	S		6	ARM	
510	262179-0001	S		12	PIN	
520	525329	S		12	SLEEVE	
610 1	312109-0459	S		2	SCREW M6S8X40H A4 80	
620	312605-0318	-		18	NUT M6M8RFR	
650	321111-0185	S		24	FLANGE BUS 14E7X14	
VOLUME 1000 B HIFIN						
000	**CR- 297682-0315**	**-**		**1**	**WHEEL**	
010 1	525453	S		6	FLAP	
050 1	285310-0001	S		6	FLAP	
110 2	525063	C		6	BOTTOM	
260 2	312105-0374	-		6	SCREW O4017 M6X30A280	
270	312105-0376	P		6	SCREW O4017 M6X35A280	
310 2	312105-0453	P		6	SCREW O4017 M8X25A280	
320	312105-0457	P		3	SCREW O4017 M8X35A280	
350 2	312155-0368	P		6	SCREW MF6S6X16RFR	
380	315105-0153	P		12	WASHER BRB6,4X12RFR	
390	315105-0165	P		30	WASHER BRB8,4X16RFR	
400	315115-0165	P		3	WASHER TBRB8,4X16RFR	
420 1	G- 525449	C		1	HUB	
460 1	G- 565967	S		6	ARM	
510	262179-0001	S		12	PIN	
520	525329	S		12	SLEEVE	
610 1	312109-0459	S		2	SCREW M6S8X40H A4 80	

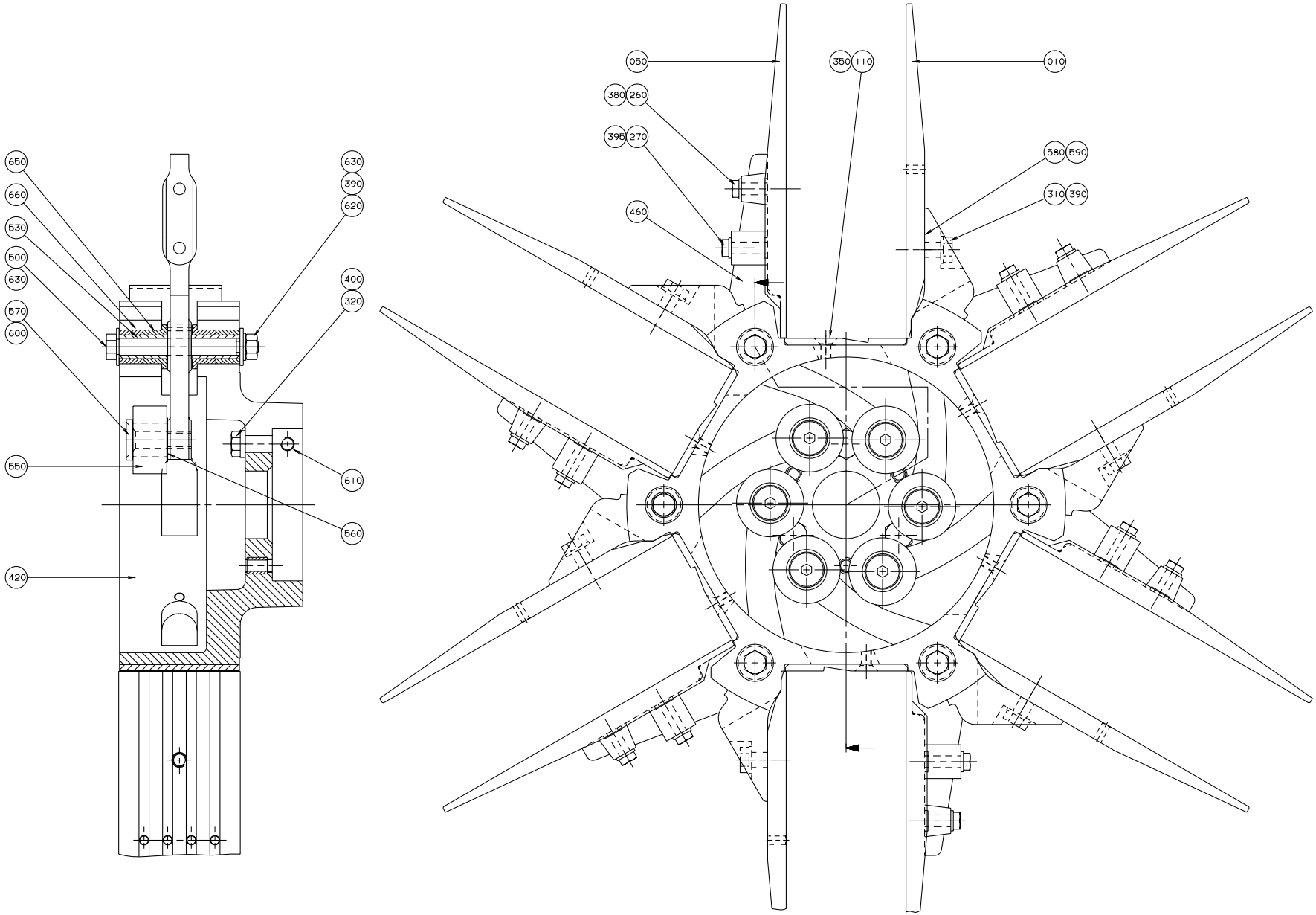

S-297682-3
ECN 19244

Pos	Part No	SP	UN	Qty	Description	Page No
620	312605-0318	-		18	NUT M6M8RFR	
650	321111-0185	S		24	FLANGE BUS 14E7X14	
VOLUME 355 B						
000	**CR- 297682-0316**	**-**		**1**	**WHEEL**	
010 4	525458	S		6	FLAP	
050 2	285310-0002	S		6	FLAP	
120 2	525371	C		6	BOTTOM	
200 1	285316-0002	S		6	SPACER PIECE	
210 1	525461	S		6	SPACER PIECE	
250	312105-0368	P		6	SCREW O4017 M6X16A280	
280	312105-0378	P		6	SCREW O4017 M6X40A280	
290	312105-0379	P		6	SCREW O4014 M6X45A280	
320	312105-0457	P		9	SCREW O4017 M8X35A280	
380	315105-0153	P		12	WASHER BRB6,4X12RFR	
390	315105-0165	P		24	WASHER BRB8,4X16RFR	
395	315115-0153	P		6	WASHER TBRB6,4X12RFR	
400	315115-0165	P		9	WASHER TBRB8,4X16RFR	
420 1	G- 525449	C		1	HUB	
460 1	G- 565967	S		6	ARM	
510	262179-0001	S		12	PIN	
520	525329	S		12	SLEEVE	
610 1	312109-0459	S		2	SCREW M6S8X40H A4 80	
620	312605-0318	-		18	NUT M6M8RFR	
650	321111-0185	S		24	FLANGE BUS 14E7X14	
VOLUME 750 S						
000	**CR- 297682-0317**	**-**		**1**	**WHEEL**	
010 5	525454	-		6	FLAP	
050 6	544252	-		6	FLAP	
110 3	544254	C		6	PLATE	
200 2	543697	-		6	SPACER PIECE	
210 2	525460	-		6	SPACER PIECE	
270	312105-0376	P		6	SCREW O4017 M6X35A280	
280	312105-0378	P		6	SCREW O4017 M6X40A280	
315	312105-0455	P		6	SCREW O4017 M8X30A280	
320	312105-0457	P		3	SCREW O4017 M8X35A280	
350 2	312155-0368	P		6	SCREW MF6S6X16RFR	
380	315105-0153	P		12	WASHER BRB6,4X12RFR	
390	315105-0165	P		30	WASHER BRB8,4X16RFR	
400	315115-0165	P		3	WASHER TBRB8,4X16RFR	
420 2	G- 525447	C		1	HUB	
460 1	G- 565967	S		6	ARM	
510	262179-0001	S		12	PIN	
520	525329	S		12	SLEEVE	
610 1	312109-0459	S		2	SCREW M6S8X40H A4 80	
620	312605-0318	-		18	NUT M6M8RFR	
650	321111-0185	S		24	FLANGE BUS 14E7X14	
VOLUME1136 B						
000	**CR- 297682-0318**	**-**		**1**	**WHEEL**	
010 6	525451	S		6	FLAP	
050 7	550149	S		6	FLAP	
110 4	550235	C		6	BOTTOM	
260 2	312105-0374	-		6	SCREW O4017 M6X30A280	
270	312105-0376	P		6	SCREW O4017 M6X35A280	
310 2	312105-0453	P		6	SCREW O4017 M8X25A280	
320	312105-0457	P		3	SCREW O4017 M8X35A280	
350 2	312155-0368	P		6	SCREW MF6S6X16RFR	
380	315105-0153	P		12	WASHER BRB6,4X12RFR	
390	315105-0165	P		30	WASHER BRB8,4X16RFR	
400	315115-0165	P		3	WASHER TBRB8,4X16RFR	
420 3	G- 525445	C		1	HUB	
460 1	G- 565967	S		6	ARM	
510	262179-0001	S		12	PIN	
520	525329	S		12	SLEEVE	
610 1	312109-0459	S		2	SCREW M6S8X40H A4 80	
620	312605-0318	-		18	NUT M6M8RFR	
650	321111-0185	S		24	FLANGE BUS 14E7X14	
VOLUME 1000 S						
000	**CR- 297682-0319**	**-**		**1**	**WHEEL**	
010 7	569117	S		6	FLAP	
050 8	569118	S		6	FLAP	
110 5	569119	C		6	BOTTOM	
270	312105-0376	P		6	SCREW O4017 M6X35A280	
280	312105-0378	P		6	SCREW O4017 M6X40A280	
310 2	312105-0453	P		6	SCREW O4017 M8X25A280	
390	315105-0165	P		30	WASHER BRB8,4X16RFR	
395	315115-0153	P		12	WASHER TBRB6,4X12RFR	
420 3	G- 525445	C		1	HUB	
460 1	G- 565967	S		6	ARM	
510	262179-0001	S		12	PIN	
520	525329	S		12	SLEEVE	
610 1	312109-0459	S		2	SCREW M6S8X40H A4 80	
620	312605-0318	-		18	NUT M6M8RFR	
650	321111-0185	S		24	FLANGE BUS 14E7X14	

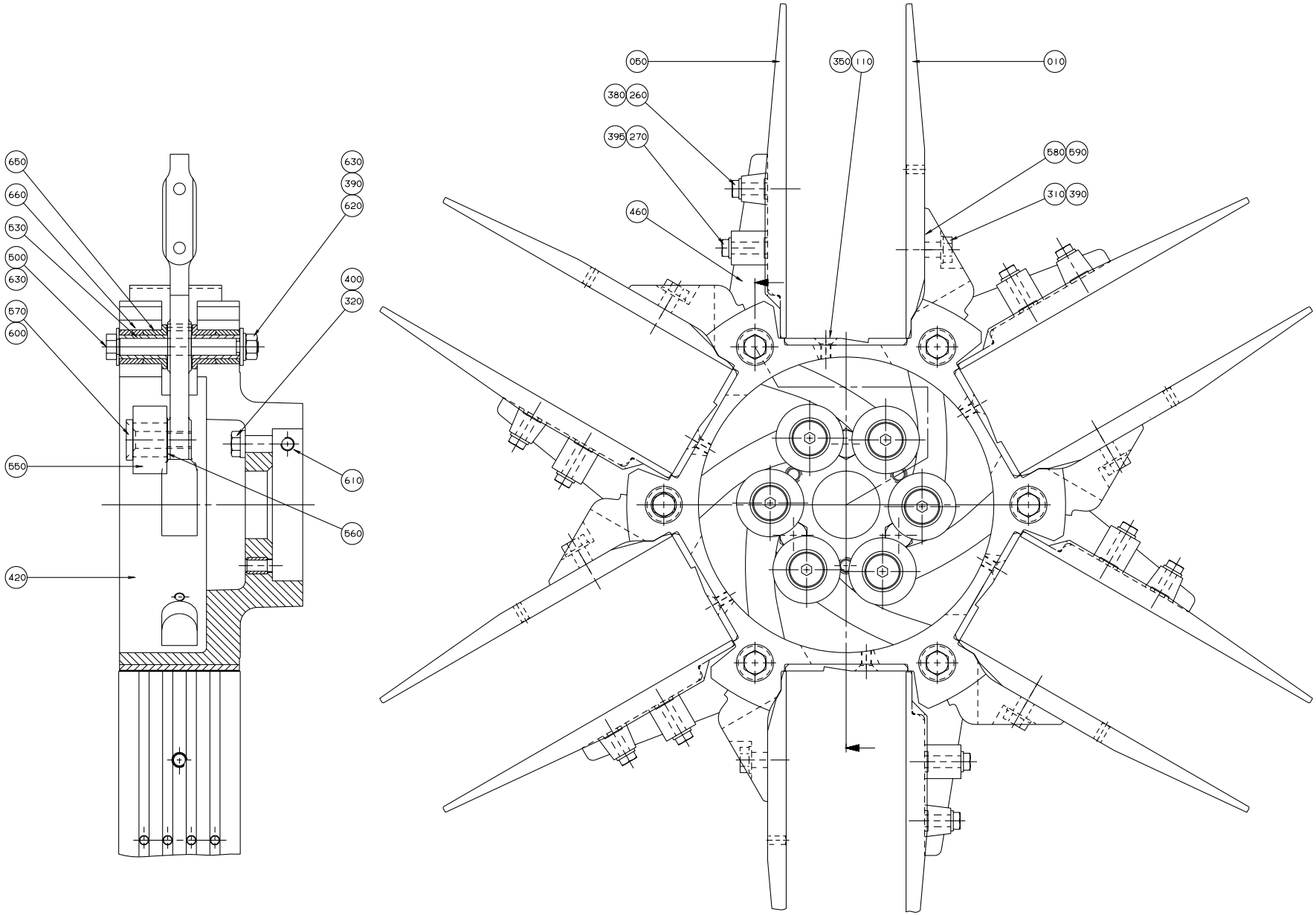

S-297682-3
ECN 19244

Pos	Part No	SP	UN	Qty	Description	Page No
VOLUME 400 B						
000	**CR- 297682-0320**	**-**		**1**	**WHEEL**	
010 8	574684	S		6	FLAP	
050 2	285310-0002	S		6	FLAP	
120 3	574683	C		6	BOTTOM	
200 1	285316-0002	S		6	SPACER PIECE	
210 1	525461	S		6	SPACER PIECE	
250	312105-0368	P		12	SCREW O4017 M6X16A280	
280	312105-0378	P		6	SCREW O4017 M6X40A280	
290	312105-0379	P		6	SCREW O4014 M6X45A280	
320	312105-0457	P		9	SCREW O4017 M8X35A280	
380	315105-0153	P		18	WASHER BRB6,4X12RFR	
390	315105-0165	P		24	WASHER BRB8,4X16RFR	
395	315115-0153	P		6	WASHER TBRB6,4X12RFR	
400	315115-0165	P		9	WASHER TBRB8,4X16RFR	
420 1	G- 525449	C		1	HUB	
460 1	G- 565967	S		6	ARM	
510	262179-0001	S		12	PIN	
520	525329	S		12	SLEEVE	
610 1	312109-0459	S		2	SCREW M6S8X40H A4 80	
620	312605-0318	-		18	NUT M6M8RFR	
650	321111-0185	S		24	FLANGE BUS 14E7X14	
VOLUME 1000 Sq NORMFIN						
000	**CR- 297682-0321**	**-**		**1**	**WHEEL**	
010 9	574029	S		6	FLAP	
050 9	574030	S		6	FLAP	
110 6	574031	S		6	BOTTOM	
260 1	312105-0372	P		6	SCREW O4017 M6X25A280	
270	312105-0376	P		6	SCREW O4017 M6X35A280	
310 1	312105-0451	P		6	SCREW SO4017 8X20A280	
350 1	312155-0364	P		6	SCREW MF6S6X10RFR	
380	315105-0153	P		6	WASHER BRB6,4X12RFR	
390	315105-0165	P		12	WASHER BRB8,4X16RFR	
395	315115-0153	P		6	WASHER TBRB6,4X12RFR	
400	315115-0165	P		3	WASHER TBRB8,4X16RFR	
420 4	G- 574027	C		1	HUB	
460 2	G- 574028	S		6	ARM	
610 1	312109-0459	S		2	SCREW M6S8X40H A4 80	
620	312605-0318	-		6	NUT M6M8RFR	
650	321111-0185	S		12	FLANGE BUS 14E7X14	
660	90240-0233	S		12	BUSHING	

Pos	Part No	SP	UN	Qty	Description	Page No
VOLUME 500 Sq						
000	**CR- 297682-0322**	**-**		**1**	**WHEEL**	
010 9	574029	S		6	FLAP	
050 9	574030	S		6	FLAP	
060 5	583449	S		6	BOTTOM	
130	583454	-		6	SUPPORT	
140	583631	-		6	BOTTOM PANEL	
260 1	312105-0372	P		6	SCREW O4017 M6X25A280	
350 2	312155-0368	P		6	SCREW MF6S6X16RFR	
380	315105-0153	P		6	WASHER BRB6,4X12RFR	
390	315105-0165	P		12	WASHER BRB8,4X16RFR	
395	315115-0153	P		6	WASHER TBRB6,4X12RFR	
400	315115-0165	P		3	WASHER TBRB8,4X16RFR	
420 4	G- 574027	C		1	HUB	
460 2	G- 574028	S		6	ARM	
610 1	312109-0459	S		2	SCREW M6S8X40H A4 80	
620	312605-0318	-		6	NUT M6M8RFR	
650	321111-0185	S		12	FLANGE BUS 14E7X14	
660	90240-0233	S		12	BUSHING	
VOLUME 1000 Sq REVFIN						
000	**CR- 297682-0323**	**-**		**1**	**WHEEL**	
010 9	574029	S		6	FLAP	
050 9	574030	S		6	FLAP	
110 6	574031	S		6	BOTTOM	
260 1	312105-0372	P		6	SCREW O4017 M6X25A280	
270	312105-0376	P		6	SCREW O4017 M6X35A280	
310 1	312105-0451	P		6	SCREW SO4017 8X20A280	
350 1	312155-0364	P		6	SCREW MF6S6X10RFR	
380	315105-0153	P		6	WASHER BRB6,4X12RFR	
390	315105-0165	P		12	WASHER BRB8,4X16RFR	
395	315115-0153	P		6	WASHER TBRB6,4X12RFR	
400	315115-0165	P		3	WASHER TBRB8,4X16RFR	
420 5	G-1143023	C		1	HUB	
460 2	G- 574028	S		6	ARM	
610 2	312318-0459	-		2	STOP SCREW SK6SS 8X40RFR	
620	312605-0318	-		6	NUT M6M8RFR	
650	321111-0185	S		12	FLANGE BUS 14E7X14	
660	90240-0233	S		12	BUSHING	
Common parts						
500	262028-0001	S		6	FITTING BOLT	
530	525330	S		12	SHAFT	

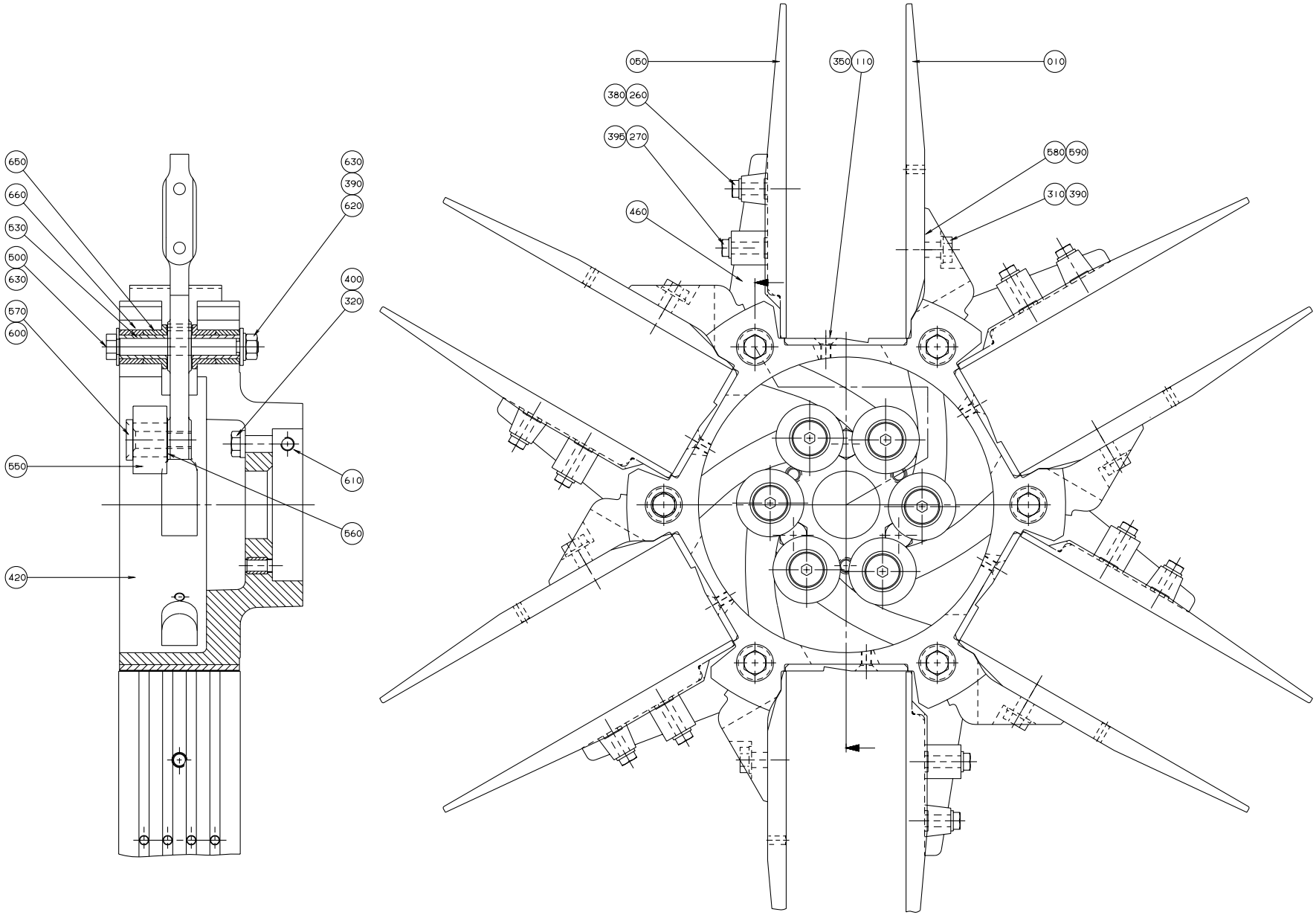

S-297682-3
ECN 19244

Pos	Part No	SP	UN	Qty	Description	Page No
550	285321	S		6	ROLL	
560	285322	S		6	WASHER	
570	442563	S		6	AXLE PIN	
580	442894	-		X	SHIM	
590	442939	-		X	SHIM	
600	312155-0499	-		6	SCREW MF6S10X40RFR	
630	315105-0173	-		12	WASHER BRB10,5X22RFR	

Pos	Part No	SP	UN	Qty	Description	Page No

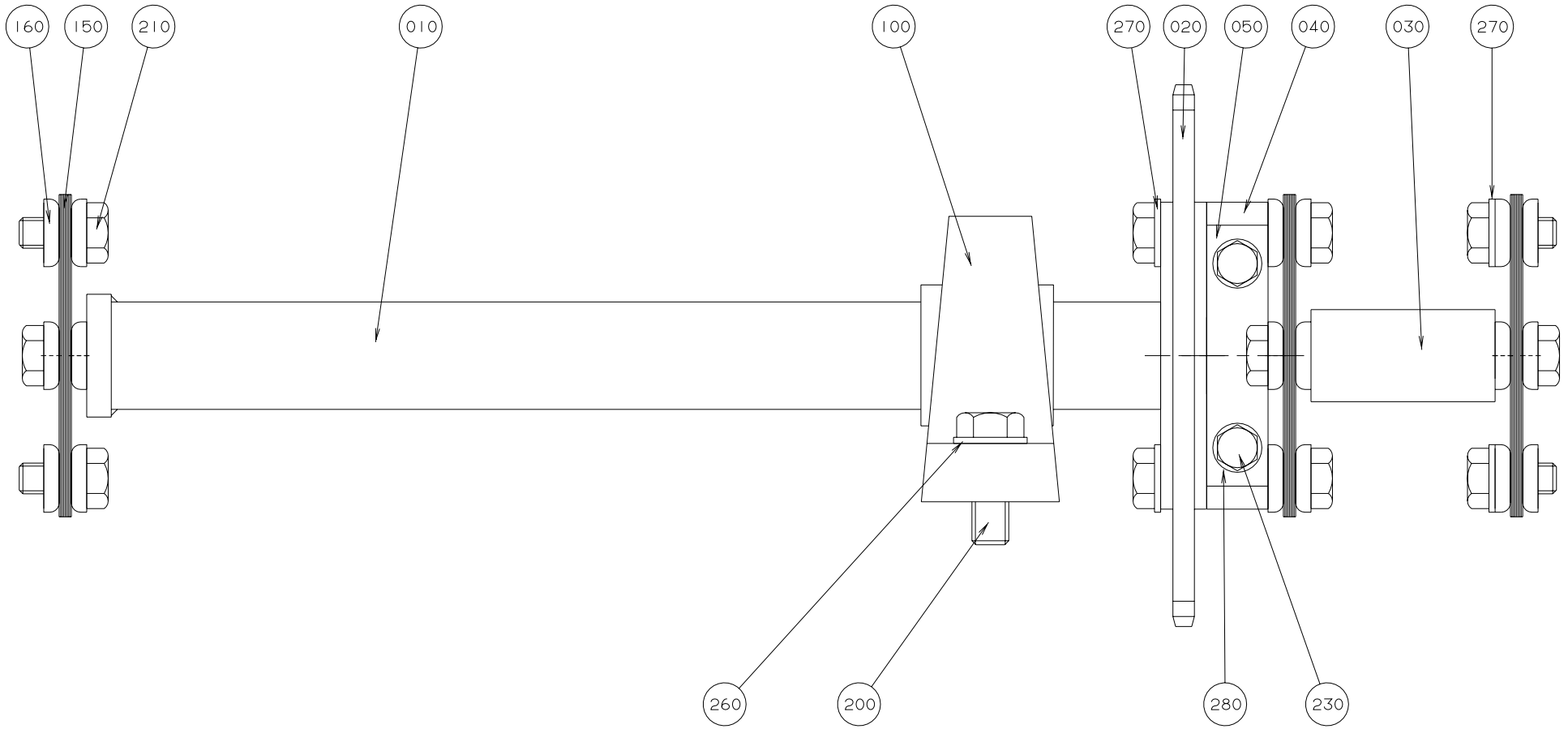

S-443173-1
ECN 10204

Pos	Part No	SP	UN	Qty	Description	Page No
-						
000	**C- 443173-0101**	**-**		**1**	**DRIVE SHAFT**	
010	443175	C		1	SHAFT	
020	443177	C		1	SPROCKET	
030	443179	-		1	SPACER	
040	443178	C		1	BRACKET	
050	262275-0003	C		1	CAP	
100	90345-0038	-		1	BEARING HOUSING	
150	33261	S		24	SPRING PLATE	
160	31553-0002	S		24	WASHER	
200	312105-0538	-		2	SCREW 4017 M12X35A280	
210	90287-0164	-		14	SCREW	
230	90287-0165	-		2	SCREW	
260	315105-0178	-		2	WASHER BRB13X24RFR	
270	315105-0173	-		4	WASHER BRB10,5X22RFR	
280	315105-0165	-		2	WASHER BRB8,4X16RFR	

Pos	Part No	SP	UN	Qty	Description	Page No

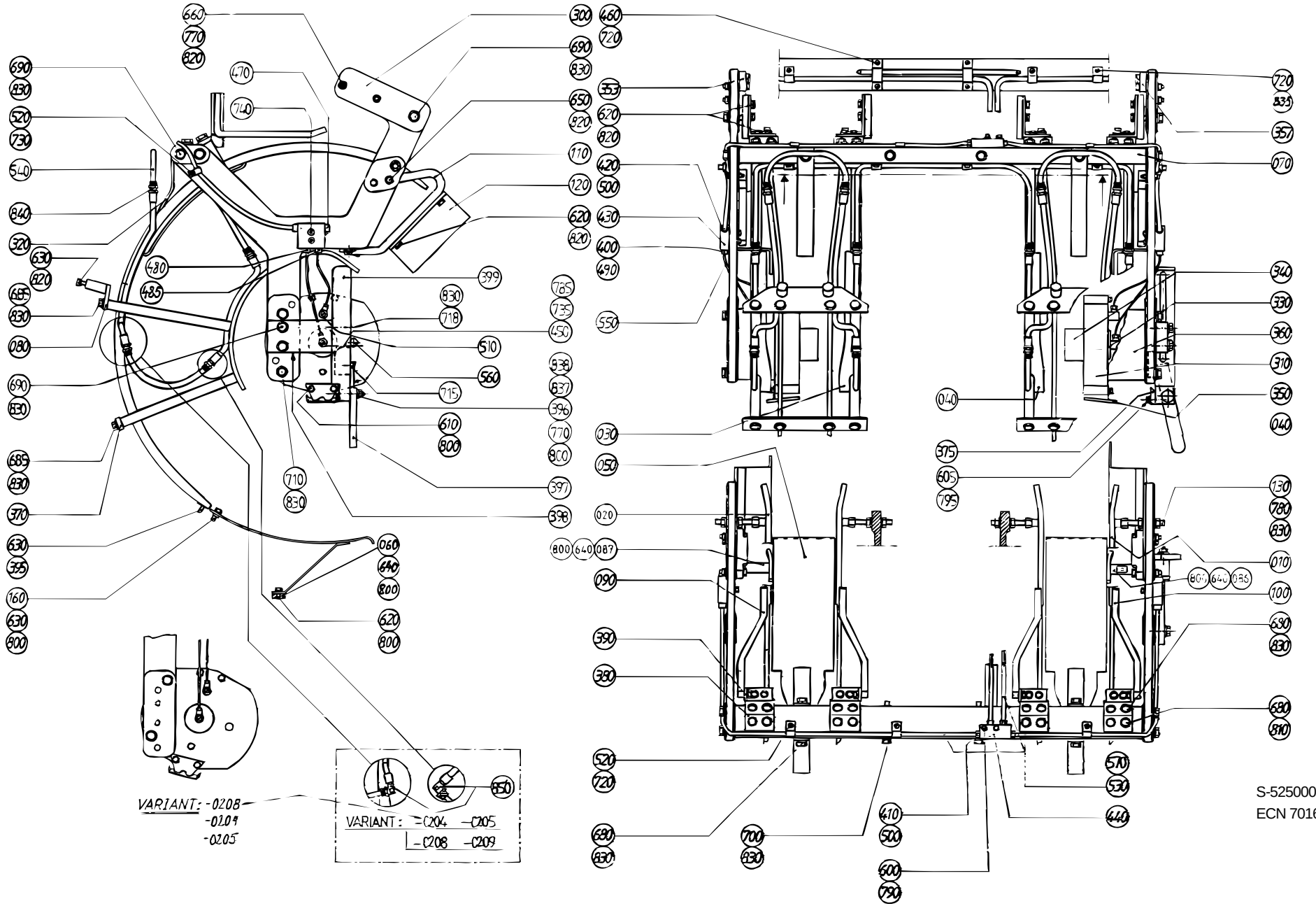
VARIANT: -0208
-0209
-0205
VARIANT: -0204 -0205
-0208 -0209
S-525000-2
ECN 70165

Pos	Part No	SP	UN	Qty	Description	Page No
VOLUME 1055 B						
000	**C- 525000-0201**	**-**		**1**	**FOLDING PART**	
010 1	525001	-		2	FOLDING BAR	
020 1	525003	-		2	FOLDING BAR	
030 1	525005-0001	-		2	FOLDING BAR	
040 1	525006-0001	-		2	FOLDING BAR	
050 1	525341-0001	-		2	LEAD RAIL	
070 1	525007-0001	-		1	CANTILEVER	
080 1	525008-0001	-		2	BRACKET	
090 1	525180-0001	-		2	FOLDING ARM	
100 1	525179-0001	-		2	FOLDING ARM	
110 1	525011-0001	-		2	BRACKET	
120 1	525012-0001	-		2	COUNTER PLATE	
130 1	525015-0001	-		4	SCREW	
310 1	574050	-		2	CURVE	
397 1	525295	-		1	ARM	
399 1	525297	-		1	BRACKET	
800	315105-0153	-		17	WASHER BRB6,4X12RFR	
840	342920-0121	-		16	PIPE COUPL8/6-1/8	
VOLUME 1000 B						
000	**C- 525000-0202**	**-**		**1**	**FOLDING PART**	
010 1	525001	-		2	FOLDING BAR	
020 1	525003	-		2	FOLDING BAR	
030 2	525005-0002	-		2	FOLDING BAR	
040 2	525006-0002	-		2	FOLDING BAR	
050 1	525341-0001	-		2	LEAD RAIL	
070 1	525007-0001	-		1	CANTILEVER	
080 1	525008-0001	-		2	BRACKET	
090 1	525180-0001	-		2	FOLDING ARM	
100 1	525179-0001	-		2	FOLDING ARM	
110 2	525011-0002	-		2	BRACKET	
120 2	525012-0002	-		2	COUNTER PLATE	
130 1	525015-0001	-		4	SCREW	
310 1	574050	-		2	CURVE	
397 1	525295	-		1	ARM	
399 1	525297	-		1	BRACKET	
800	315105-0153	-		17	WASHER BRB6,4X12RFR	
840	342920-0121	-		16	PIPE COUPL8/6-1/8	
VOLUME 750 B						
000	**C- 525000-0203**	**-**		**1**	**FOLDING PART**	
010 1	525001	-		2	FOLDING BAR	
020 1	525003	-		2	FOLDING BAR	
030 3	525005-0003	-		2	FOLDING BAR	
040 3	525006-0003	-		2	FOLDING BAR	
050 1	525341-0001	-		2	LEAD RAIL	
070 1	525007-0001	-		1	CANTILEVER	
080 2	525008-0002	-		2	BRACKET	
090 1	525180-0001	-		2	FOLDING ARM	
100 1	525179-0001	-		2	FOLDING ARM	
110 3	525011-0003	-		2	BRACKET	
120 3	525012-0003	-		2	COUNTER PLATE	
130 1	525015-0001	-		4	SCREW	
310 1	574050	-		2	CURVE	
397 1	525295	-		1	ARM	
399 1	525297	-		1	BRACKET	
800	315105-0153	-		17	WASHER BRB6,4X12RFR	
840	342920-0121	-		16	PIPE COUPL8/6-1/8	
VOLUME 568 B						
000	**C- 525000-0204**	**-**		**1**	**FOLDING PART**	
010 1	525001	-		2	FOLDING BAR	
020 1	525003	-		2	FOLDING BAR	
030 4	525005-0004	-		2	FOLDING BAR	
040 4	525006-0004	-		2	FOLDING BAR	
050 1	525341-0001	-		2	LEAD RAIL	
070 1	525007-0001	-		1	CANTILEVER	
080 2	525008-0002	-		2	BRACKET	
090 1	525180-0001	-		2	FOLDING ARM	
100 1	525179-0001	-		2	FOLDING ARM	
110 4	525011-0004	-		2	BRACKET	
120 4	525012-0004	-		2	COUNTER PLATE	
130 1	525015-0001	-		4	SCREW	
310 1	574050	-		2	CURVE	
397 1	525295	-		1	ARM	
399 1	525297	-		1	BRACKET	
800	315105-0153	-		17	WASHER BRB6,4X12RFR	
840	342920-0121	-		8	PIPE COUPL8/6-1/8	
850	342930-0121	-		8	ELBOW PIPE8/6-1/8	
VOLUME 500 B						
000	**C- 525000-0205**	**-**		**1**	**FOLDING PART**	
010 1	525001	-		2	FOLDING BAR	
020 1	525003	-		2	FOLDING BAR	
030 5	525005-0005	-		2	FOLDING BAR	
040 5	525006-0005	-		2	FOLDING BAR	

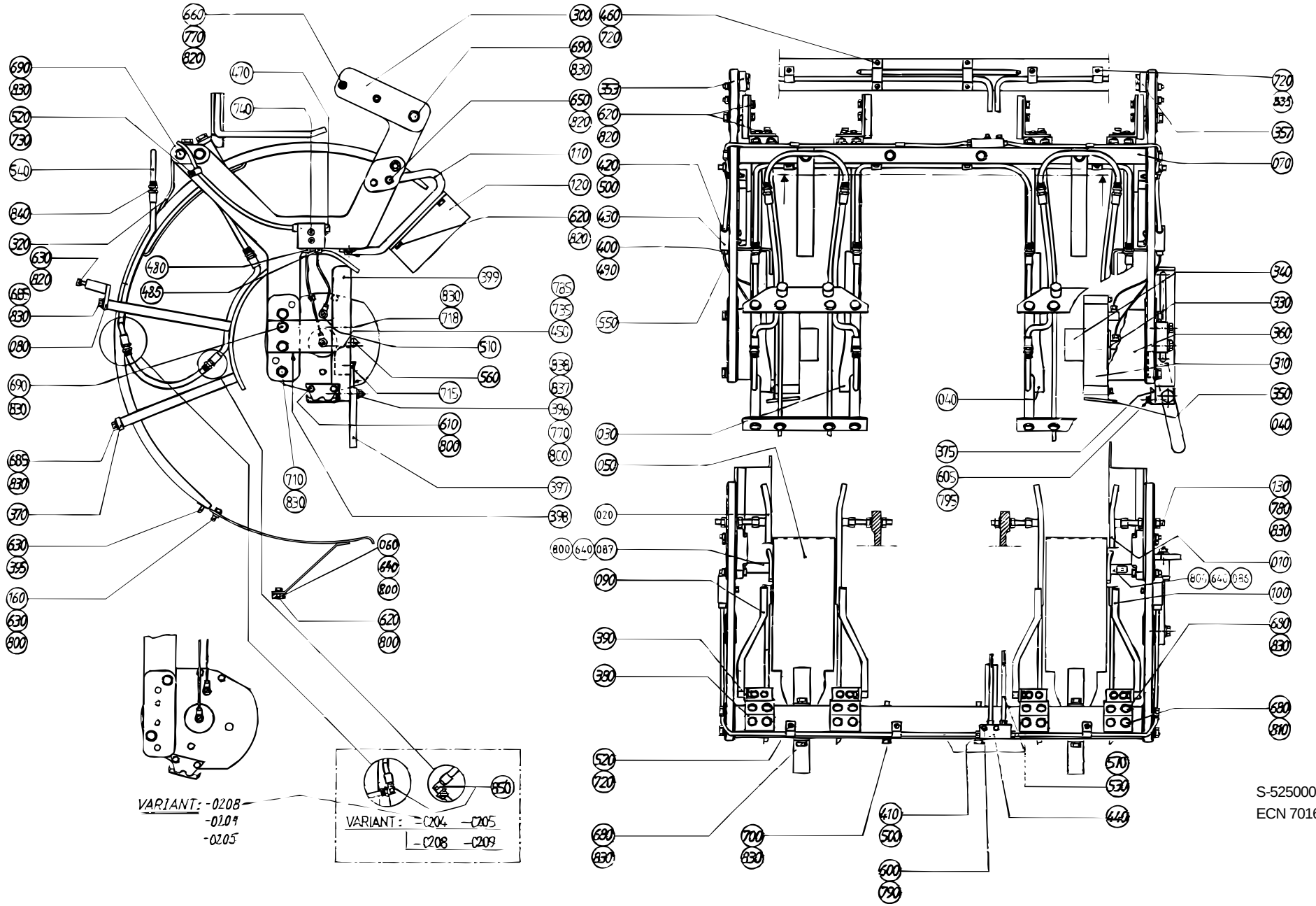
VARIANT: -0208
-0209
-0205
VARIANT: -0204 -0205
-0208 -0209
S-525000-2
ECN 70165

Pos	Part No	SP	UN	Qty	Description	Page No
050 1	525341-0001	-		2	LEAD RAIL	
070 1	525007-0001	-		1	CANTILEVER	
080 3	525008-0003	-		2	BRACKET	
090 1	525180-0001	-		2	FOLDING ARM	
100 1	525179-0001	-		2	FOLDING ARM	
110 5	525011-0005	-		2	BRACKET	
120 5	525012-0005	-		2	COUNTER PLATE	
130 1	525015-0001	-		4	SCREW	
310 1	574050	-		2	CURVE	
397 1	525295	-		1	ARM	
399 1	525297	-		1	BRACKET	
800	315105-0153	-		17	WASHER BRB6,4X12RFR	
840	342920-0121	-		8	PIPE COUPL8/6-1/8	
850	342930-0121	-		8	ELBOW PIPE8/6-1/8	
VOLUME 500 S						
000	**C- 525000-0206**	**-**		**1**	**FOLDING PART**	
010 2	525002	-		2	FOLDING BAR	
020 2	525004	-		2	FOLDING BAR	
030 6	525005-0006	-		2	FOLDING BAR	
040 6	525006-0006	-		2	FOLDING BAR	
050 2	525341-0002	-		2	LEAD RAIL	
070 2	525007-0002	-		1	CANTILEVER	
080 2	525008-0002	-		2	BRACKET	
090 2	525180-0002	-		2	FOLDING ARM	
100 2	525179-0002	-		2	FOLDING ARM	
110 6	525011-0006	-		2	BRACKET	
120 6	525182-0001	-		2	COUNTER PLATE	
130 2	525015-0002	-		4	SCREW	
160	315115-0153	-		2	WASHER TBRB6,4X12RFR	
310 1	574050	-		2	CURVE	
397 1	525295	-		1	ARM	
399 1	525297	-		1	BRACKET	
800	315105-0153	-		17	WASHER BRB6,4X12RFR	
840	342920-0121	-		16	PIPE COUPL8/6-1/8	
VOLUME 375 S						
000	**C- 525000-0207**	**-**		**1**	**FOLDING PART**	
010 2	525002	-		2	FOLDING BAR	
020 2	525004	-		2	FOLDING BAR	
030 7	525005-0007	-		2	FOLDING BAR	
040 7	525006-0007	-		2	FOLDING BAR	
050 2	525341-0002	-		2	LEAD RAIL	
070 3	525007-0003	-		1	CANTILEVER	
080 2	525008-0002	-		2	BRACKET	
090 2	525180-0002	-		2	FOLDING ARM	
100 2	525179-0002	-		2	FOLDING ARM	
110 7	525011-0007	-		2	BRACKET	
120 7	525014-0001	-		2	COUNTER PLATE	
130 3	525015-0003	-		4	SCREW	
160	315115-0153	-		2	WASHER TBRB6,4X12RFR	
310 1	574050	-		2	CURVE	
397 1	525295	-		1	ARM	
399 1	525297	-		1	BRACKET	
800	315105-0153	-		17	WASHER BRB6,4X12RFR	
840	342920-0121	-		16	PIPE COUPL8/6-1/8	
VOLUME 355 B						
000	**C- 525000-0209**	**-**		**1**	**FOLDING PART**	
010 2	525002	-		2	FOLDING BAR	
020 2	525004	-		2	FOLDING BAR	
030 9	525005-0009	-		2	FOLDING BAR	
040 9	525006-0009	-		2	FOLDING BAR	
050 2	525341-0002	-		2	LEAD RAIL	
070 2	525007-0002	-		1	CANTILEVER	
080 2	525008-0002	-		2	BRACKET	
090 2	525180-0002	-		2	FOLDING ARM	
100 2	525179-0002	-		2	FOLDING ARM	
110 9	525011-0009	-		2	BRACKET	
120 9	525182-0002	-		2	COUNTER PLATE	
130 2	525015-0002	-		4	SCREW	
160	315115-0153	-		2	WASHER TBRB6,4X12RFR	
310 1	574050	-		2	CURVE	
397 1	525295	-		1	ARM	
399 1	525297	-		1	BRACKET	
800	315105-0153	-		17	WASHER BRB6,4X12RFR	
840	342920-0121	-		8	PIPE COUPL8/6-1/8	
850	342930-0121	-		8	ELBOW PIPE8/6-1/8	
VOLUME 750 S						
000	**C- 525000-0210**	**-**		**1**	**FOLDING PART**	
010 1	525001	-		2	FOLDING BAR	
020 1	525003	-		2	FOLDING BAR	
030 1	525005-0001	-		2	FOLDING BAR	
040 1	525006-0001	-		2	FOLDING BAR	
050 1	525341-0001	-		2	LEAD RAIL	
070 4	525007-0004	-		1	CANTILEVER	

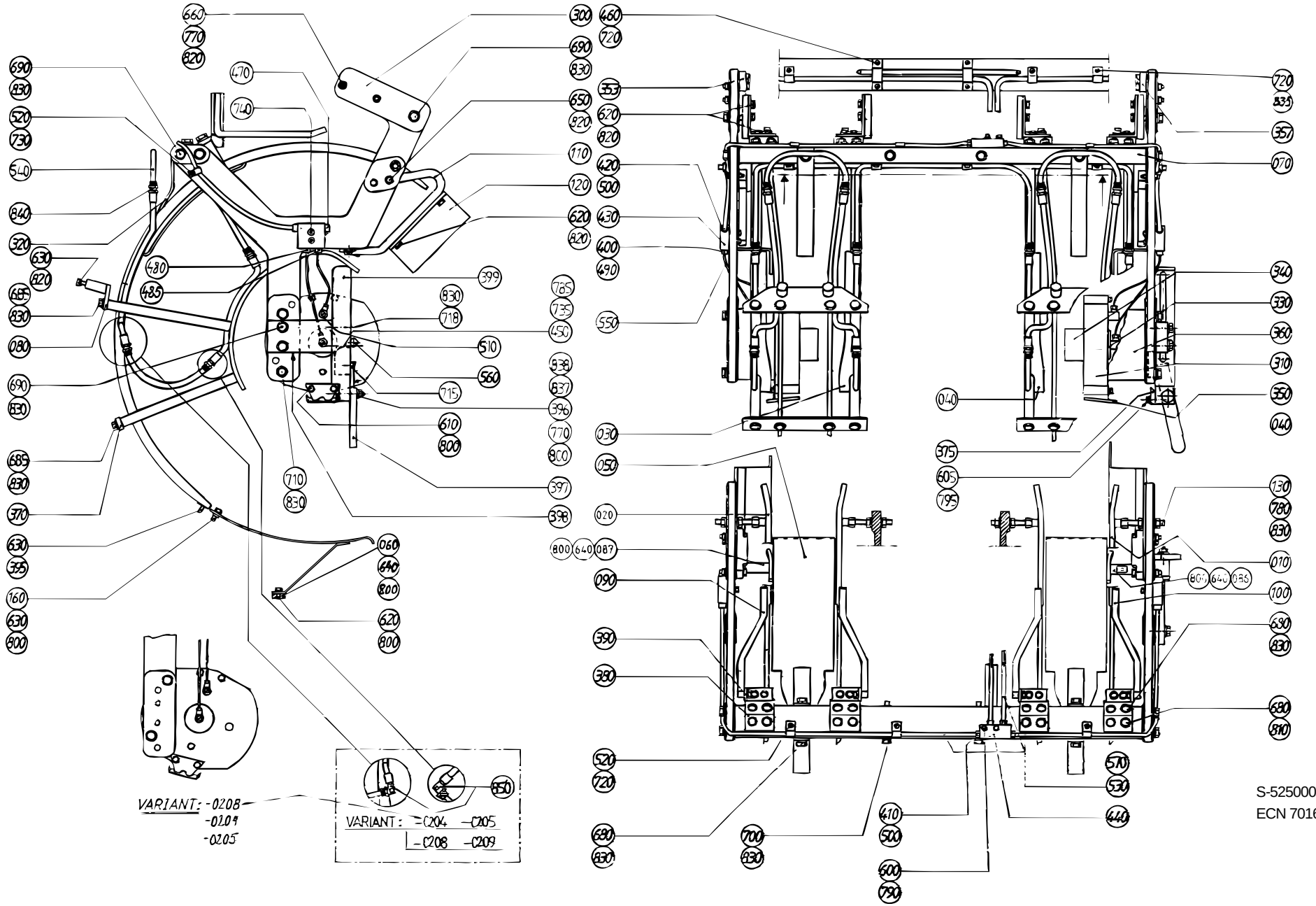
VARIANT: -0208
-0209
-0205
VARIANT: -0204 -0205
-0208 -0209
S-525000-2
ECN 70165

Pos	Part No	SP	UN	Qty	Description	Page No
080 1	525008-0001	-		2	BRACKET	
090 2	525180-0002	-		2	FOLDING ARM	
100 2	525179-0002	-		2	FOLDING ARM	
110 2	525011-0002	-		2	BRACKET	
120 10	525438	-		2	COUNTER PLATE	
130 2	525015-0002	-		4	SCREW	
310 1	574050	-		2	CURVE	
397 1	525295	-		1	ARM	
399 1	525297	-		1	BRACKET	
800	315105-0153	-		17	WASHER BRB6,4X12RFR	
840	342920-0121	-		16	PIPE COUPL8/6-1/8	
VOLUME1136 B						
000	**C- 525000-0211**	**-**		**1**	**FOLDING PART**	
010 1	525001	-		2	FOLDING BAR	
020 1	525003	-		2	FOLDING BAR	
030 11	548397	-		2	FOLDING BAR	
040 11	548398	-		2	FOLDING BAR	
050 3	525410	-		2	LEAD RAIL	
070 1	525007-0001	-		1	CANTILEVER	
080 1	525008-0001	-		2	BRACKET	
090 1	525180-0001	-		2	FOLDING ARM	
100 1	525179-0001	-		2	FOLDING ARM	
110 1	525011-0001	-		2	BRACKET	
120 1	525012-0001	-		2	COUNTER PLATE	
130 1	525015-0001	-		4	SCREW	
310 1	574050	-		2	CURVE	
397 2	550359	-		1	ARM	
399 1	525297	-		1	BRACKET	
800	315105-0153	-		17	WASHER BRB6,4X12RFR	
840	342920-0121	-		16	PIPE COUPL8/6-1/8	
VOLUME 1000 S						
000	**C- 525000-0212**	**-**		**1**	**FOLDING PART**	
010 1	525001	-		2	FOLDING BAR	
020 1	525003	-		2	FOLDING BAR	
030 12	569120	-		2	FOLDING BAR	
040 12	569121	-		2	FOLDING BAR	
050 3	525410	-		2	LEAD RAIL	
070 1	525007-0001	-		1	CANTILEVER	
080 1	525008-0001	-		2	BRACKET	
086 1	573486	-		1	STEERING	
087 1	573487	-		1	STEERING	
090 3	569122	-		2	FOLDING ARM	
100 3	569123	-		2	FOLDING ARM	
110 10	573485	-		2	BRACKET	
120 1	525012-0001	-		2	COUNTER PLATE	
130 1	525015-0001	-		4	SCREW	
310 1	574050	-		2	CURVE	
397 2	550359	-		1	ARM	
399 1	525297	-		1	BRACKET	
640	312105-0370	-		2	SCREW O4017 M6X20A280	
800	315105-0153	-		19	WASHER BRB6,4X12RFR	
840	342920-0121	-		16	PIPE COUPL8/6-1/8	
VOLUME 400 B						
000	**C- 525000-0213**	**-**		**1**	**FOLDING PART**	
010 2	525002	-		2	FOLDING BAR	
020 2	525004	-		2	FOLDING BAR	
030 13	525005-0010	-		2	FOLDING BAR	
040 13	525006-0010	-		2	FOLDING BAR	
050 2	525341-0002	-		2	LEAD RAIL	
070 2	525007-0002	-		1	CANTILEVER	
080 2	525008-0002	-		2	BRACKET	
090 2	525180-0002	-		2	FOLDING ARM	
100 2	525179-0002	-		2	FOLDING ARM	
110 11	525011-0010	-		2	BRACKET	
120 11	525182-0003	-		2	COUNTER PLATE	
130 2	525015-0002	-		4	SCREW	
310 1	574050	-		2	CURVE	
397 1	525295	-		1	ARM	
399 1	525297	-		1	BRACKET	
800	315105-0153	-		17	WASHER BRB6,4X12RFR	
840	342920-0121	-		8	PIPE COUPL8/6-1/8	
850	342930-0121	-		8	ELBOW PIPE8/6-1/8	
VOLUME 1000 Sq NORMFIN						
000	**C- 525000-0214**	**-**		**1**	**FOLDING PART**	
010 1	525001	-		2	FOLDING BAR	
020 1	525003	-		2	FOLDING BAR	
030 14	574045	-		2	FOLDING BAR	
040 14	574046	-		2	FOLDING BAR	
050 4	574047	-		2	LEAD RAIL	
070 2	525007-0002	-		1	CANTILEVER	
080 1	525008-0001	-		2	BRACKET	
086 2	574097	-		1	STEERING	
087 2	574098	-		1	STEERING	

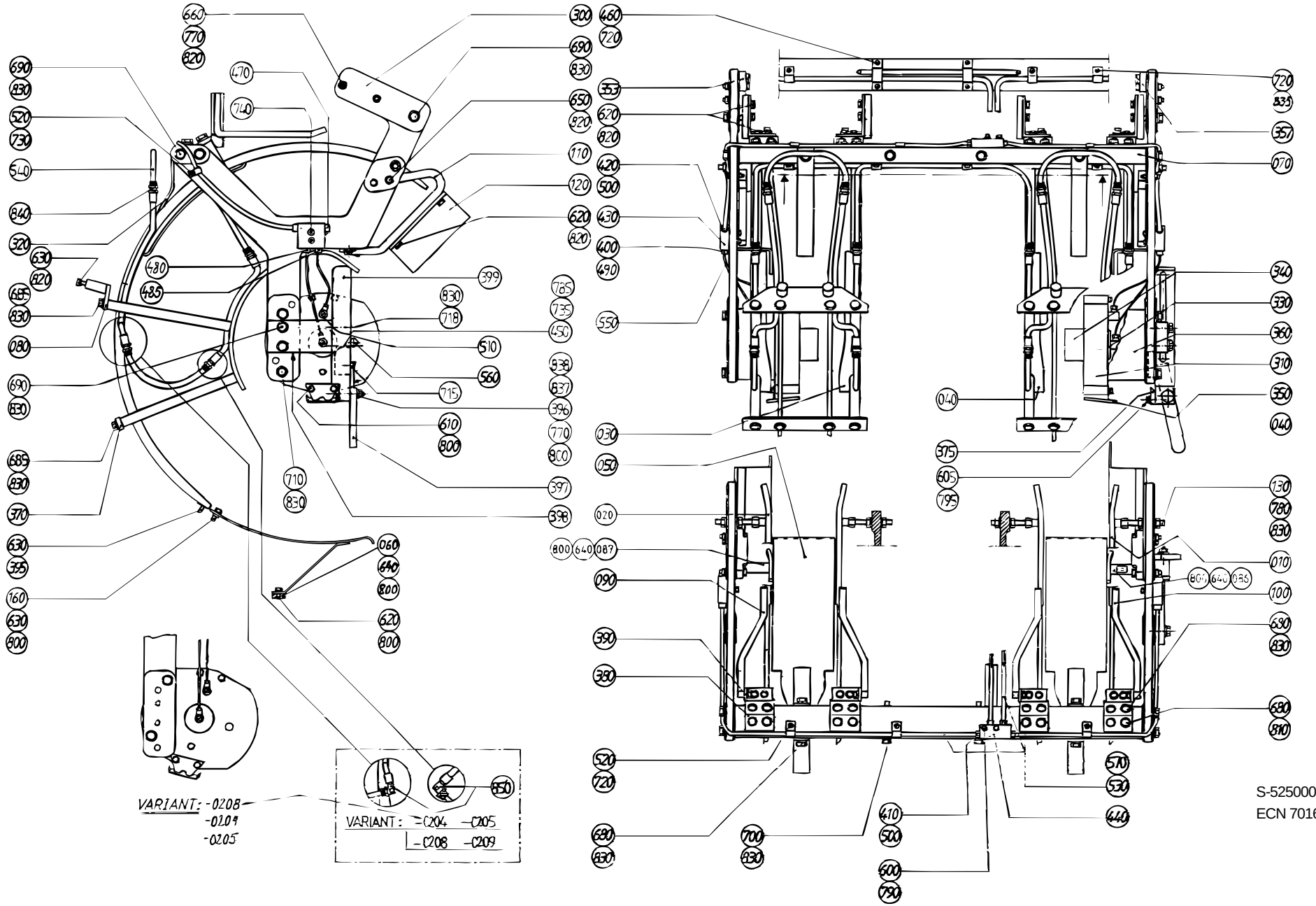
VARIANT: -0208
-0209
-0205
VARIANT: -0204 -0205
-0208 -0209
S-525000-2
ECN 70165

Pos	Part No	SP	UN	Qty	Description	Page No
090 3	569122	-		2	FOLDING ARM	
100 3	569123	-		2	FOLDING ARM	
110 12	574048	-		2	BRACKET	
120 12	574049	-		2	COUNTER PLATE	
130 2	525015-0002	-		4	SCREW	
310 2	574050	-		2	CURVE	
397 2	550359	-		1	ARM	
399 2	574125	-		1	BRACKET	
640	312105-0370	-		2	SCREW O4017 M6X20A280	
800	315105-0153	-		19	WASHER BRB6,4X12RFR	
840	342920-0121	-		16	PIPE COUPL8/6-1/8	
VOLUME 500 Sq						
000	**C- 525000-0215**	**-**		**1**	**FOLDING PART**	
010 1	525001	-		2	FOLDING BAR	
020 1	525003	-		2	FOLDING BAR	
030 15	583453	-		2	FOLDING BAR	
040 15	583458	-		2	FOLDING BAR	
050 4	574047	-		2	LEAD RAIL	
060	591085	-		2	SPACER	
070 2	525007-0002	-		1	CANTILEVER	
080 1	525008-0001	-		2	BRACKET	
090 3	569122	-		2	FOLDING ARM	
100 3	569123	-		2	FOLDING ARM	
110 13	583456	-		2	BRACKET	
120 13	583457	-		2	COUNTER PLATE	
130 2	525015-0002	-		4	SCREW	
310 2	574050	-		2	CURVE	
397 1	525295	-		1	ARM	
399 1	525297	-		1	BRACKET	
640	312105-0370	-		2	SCREW O4017 M6X20A280	
800	315105-0153	-		19	WASHER BRB6,4X12RFR	
840	342920-0121	-		8	PIPE COUPL 8/6-1/8	
850	342930-0121	-		8	ELBOW PIPE 8/6-1/8	
VOLUME 1000 Sq REVFIN						
000	**C- 525000-0216**	**-**		**1**	**FOLDING PART**	
010 1	525001	-		2	FOLDING BAR	
020 1	525003	-		2	FOLDING BAR	
030 16	1143020	-		2	FOLDING BAR	
040 16	1143021	-		2	FOLDING BAR	
050 4	574047	-		2	LEAD RAIL	
070 2	525007-0002	-		1	CANTILEVER	
080 1	525008-0001	-		2	BRACKET	
086 2	574097	-		1	STEERING	
087 2	574098	-		1	STEERING	
090 3	569122	-		2	FOLDING ARM	
100 3	569123	-		2	FOLDING ARM	
110 12	574048	-		2	BRACKET	
120 12	574049	-		2	COUNTER PLATE	
130 2	525015-0002	-		4	SCREW	
310 2	574050	-		2	CURVE	
397 2	550359	-		1	ARM	
399 2	574125	-		1	BRACKET	
640	312105-0370	-		2	SCREW O4017 M6X20A280	
800	315105-0153	-		19	WASHER BRB6,4X12RFR	
840	342920-0121	-		16	PIPE COUPL8/6-1/8	
Common parts						
300	G- 525016	-		2	FASTENING PLATE	
320	525017	-		2	STEERING GUIDE	
330	285168	-		2	BUSHING	
340	285851	-		2	BEARING	
350	443240	-		2	DRIP PLATE	
353	442564	S		1	CURVE	
357	442565	S		1	CURVE	
360	525018	-		2	SPACER	
370	525019	-		2	BRACKET	
375	525360	-		1	BRACKET	
380	525340	-		4	BRACKET	
390	525178	-		4	BRACKET	
395	525181	-		2	WASHER	
396	525321	S		1	SCREW	
398	525296	-		1	BRACKET	
400	90028-0020	-		4	CONE	
410	90028-0022	-		4	CONE	
420	90028-0025	-		2	CONE	
430	90032-0038	-		2	BLOCK	
440	90032-0044	-		1	JUNKTION BLOCK	
450	90044-0104	P		1	PROX.SWITCH IFM IN 3002	
460	90074-0018	-		2	CLIP	
470	90087-0019	-		2	PLUG	
480	90092-0052	-		2	VALVE	
485	90092-0053	-		2	VALVE	
490	90134-0039	-		4	BUSHING	
500	90134-0055	-		6	BUSHING	
510	90134-0058	-		4	BANJO CONNECTION	

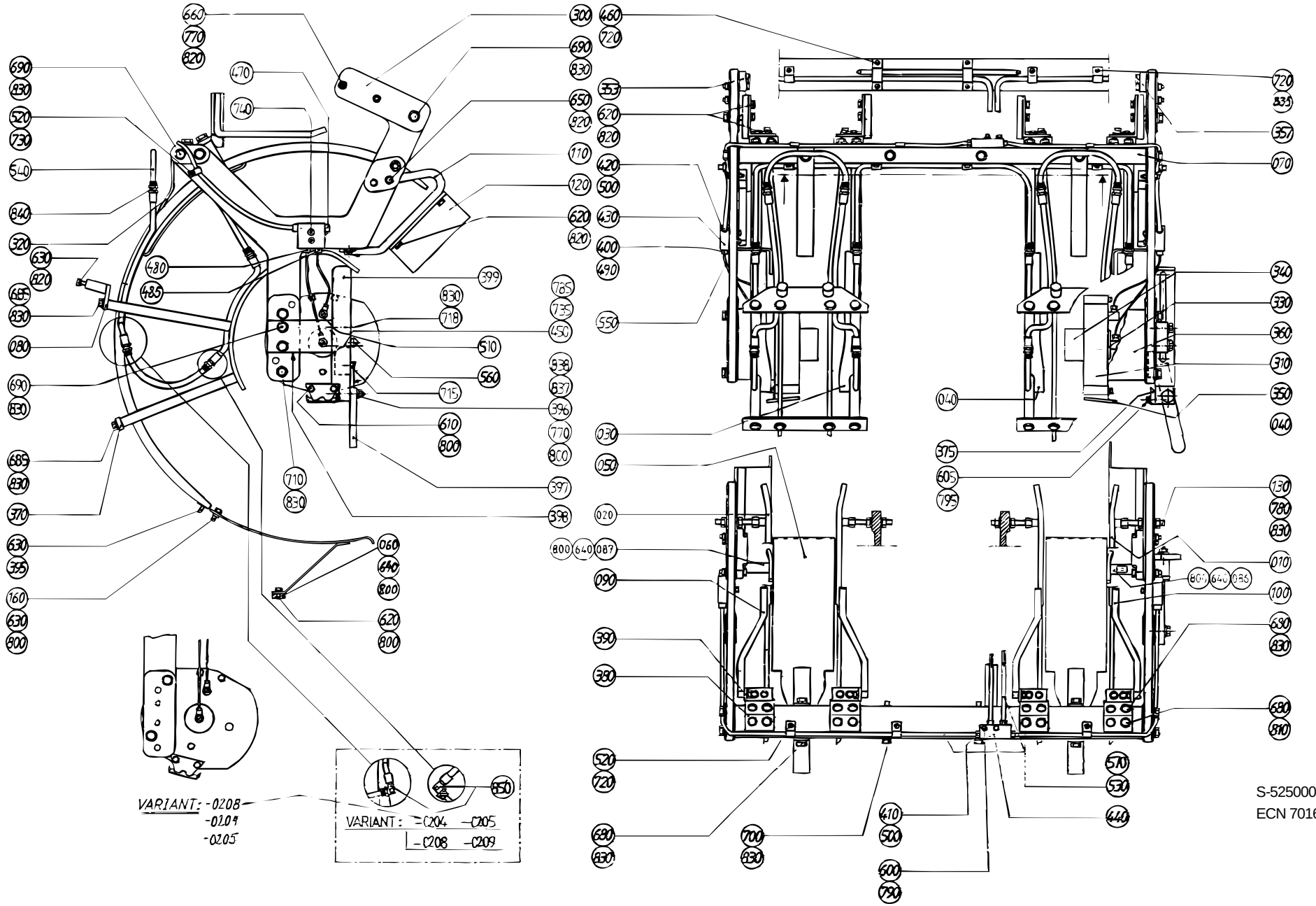
VARIANT: -0208
-0209
-0205
VARIANT: -0204 -0205
-0208 -0209
S-525000-2
ECN 70165

Pos	Part No	SP	UN	Qty	Description	Page No
520	90165-0057	-		5	CLIP	
530	90166-0108	-	MM	5200	HOSE	
540	90166-0122	-	MM	6000	HOSE	
550	90166-0143	-	MM	2000	HOSE	
560	90261-0032	-		4	PLUG	
570	90134-0030	-		6	SLEEVE	
600	312105-0295	-		2	SCREW O4017 M4X20A280	
605	312105-0327	-		2	SCREW ISO 4017 M5X12A280	
610	312105-0364	-		10	SCREW M6S6X10RFR	
620	312105-0366	-		24	SCREW O4017 M6X12A280	
630	312105-0368	-		10	SCREW O4017 M6X16A280	
650	312105-0374	-		4	SCREW O4017 M6X30A280	
660	312105-0378	-		4	SCREW O4017 M6X40A280	
680	312105-0449	-		20	SCREW O4017 M8X16A280	
685	312105-0451	-		16	SCREW SO4017 8X20A280	
690	312105-0455	-		8	SCREW O4017 M8X30A280	
700	312105-0464	-		2	SCREW O4014 M8X65A280	
710	312105-0469	-		4	SCREW O4014 M8X90A280	
715	312115-0323	-		1	SCREW O4762 M5X8A280	
718	312115-0455	-		2	SCREW O4762 M8X30A280	
720	312125-0287	-		10	SLOTTED HEMCS4X8RFR	
730	312125-0291	-		2	SLOTTED HEMCS4X12RFR	
735	312125-0230	-		2	SLOTTED HEMCS3X20RFR	
740	312155-0297	-		4	SCREW MF6S4X25RFR	
770	312605-0316	-		5	NUT M6M6 A280 STAINLESS	
780	312605-0318	-		8	NUT M6M8RFR	
785	315105-0124	-		2	WASHER BRB3,2X6RFR	
790	315105-0136	-		2	WASHER BRB4,3X8RFR	
795	315105-0146	-		2	WASHER BRB5,3X10RFR	
810	315105-0165	-		8	WASHER BRB8,4X16RFR	
820	315115-0153	-		40	WASHER TBRB6,4X12RFR	
830	315115-0165	-		52	WASHER TBRB8,4X16RFR	
835	316810-0106	-		3	PIPE CLAMP 8MM RFR	
837	321116-0127	S		1	BUSHING 10E7/14X10	
838	321116-0128	S		1	BUSHING 10E7/14X16	

Pos	Part No	SP	UN	Qty	Description	Page No

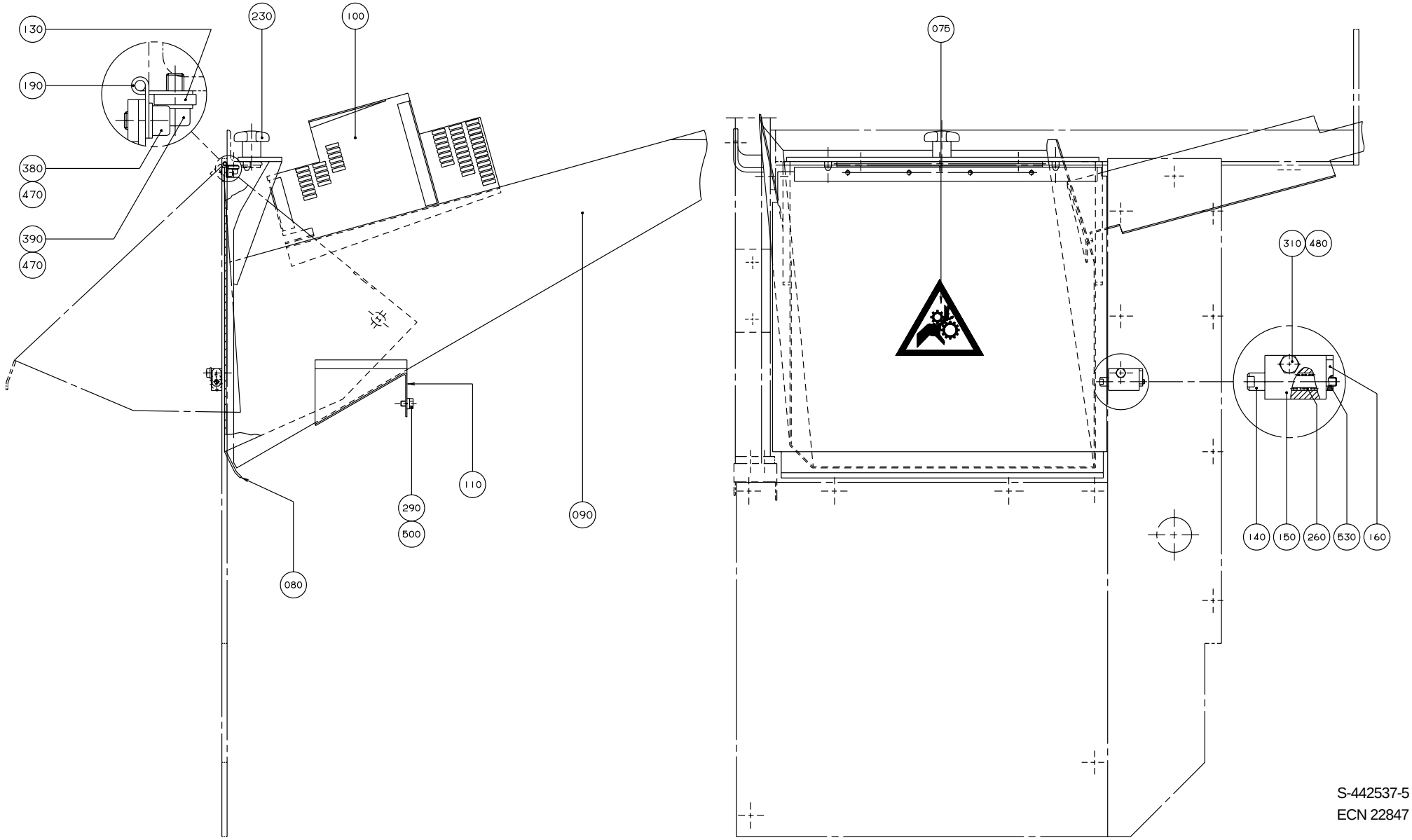

S-442537-5
ECN 22847

Pos	Part No	SP	UN	Qty	Description	Page No
VOLUMES 1136 B, 1055 B, 1000 B, 1000 S, 750 B, 750 S, 568 B, 500 B, 500 S, 400 B, 375 S, 355 B						
000	**C- 442537-0501**	**-**		**1**	**WASTE CHUTE**	
090	525409	-		1	WASTE CHUTE	
VOLUME 1000 Sq, 500 Sq						
000	**C- 442537-0502**	**-**		**1**	**WASTE CHUTE**	
090	574124	-		1	WASTE CHUTE	
Common parts						
075	359705-0002	-		1	WARNING SIGN"ENTANGLEMENT	
080	525380	-		1	HATCH	
100	525423	-		1	COVERING PLATE	
110	525439	-		1	DRIP PLATE	
130	525381	-		1	BRACKET	
140	525382	-		1	SHAFT	
150	525383	-		1	BRACKET	
160	525384	-		1	DOWEL	
190	525394	-		1	HINGE	
230	90051-0025	-		1	HANDLE	
260	90335-0005	-		1	SPRING	
290	312105-0364	-		1	SCREW M6S6X10RFR	
310	312105-0372	-		1	SCREW O4017 M6X25A280	
380	312115-0323	-		4	SCREW O4762 M5X8A280	
390	312115-0325	-		3	SCREW 5X10 A4 80	
470	315105-0146	-		7	WASHER BRB5,3X10RFR	
480	315105-0153	-		1	WASHER BRB6,4X12RFR	
500	315115-0153	-		1	WASHER TBRB6,4X12RFR	
530	90157-0002	-		X	SEALING COMPOUND	

Pos	Part No	SP	UN	Qty	Description	Page No

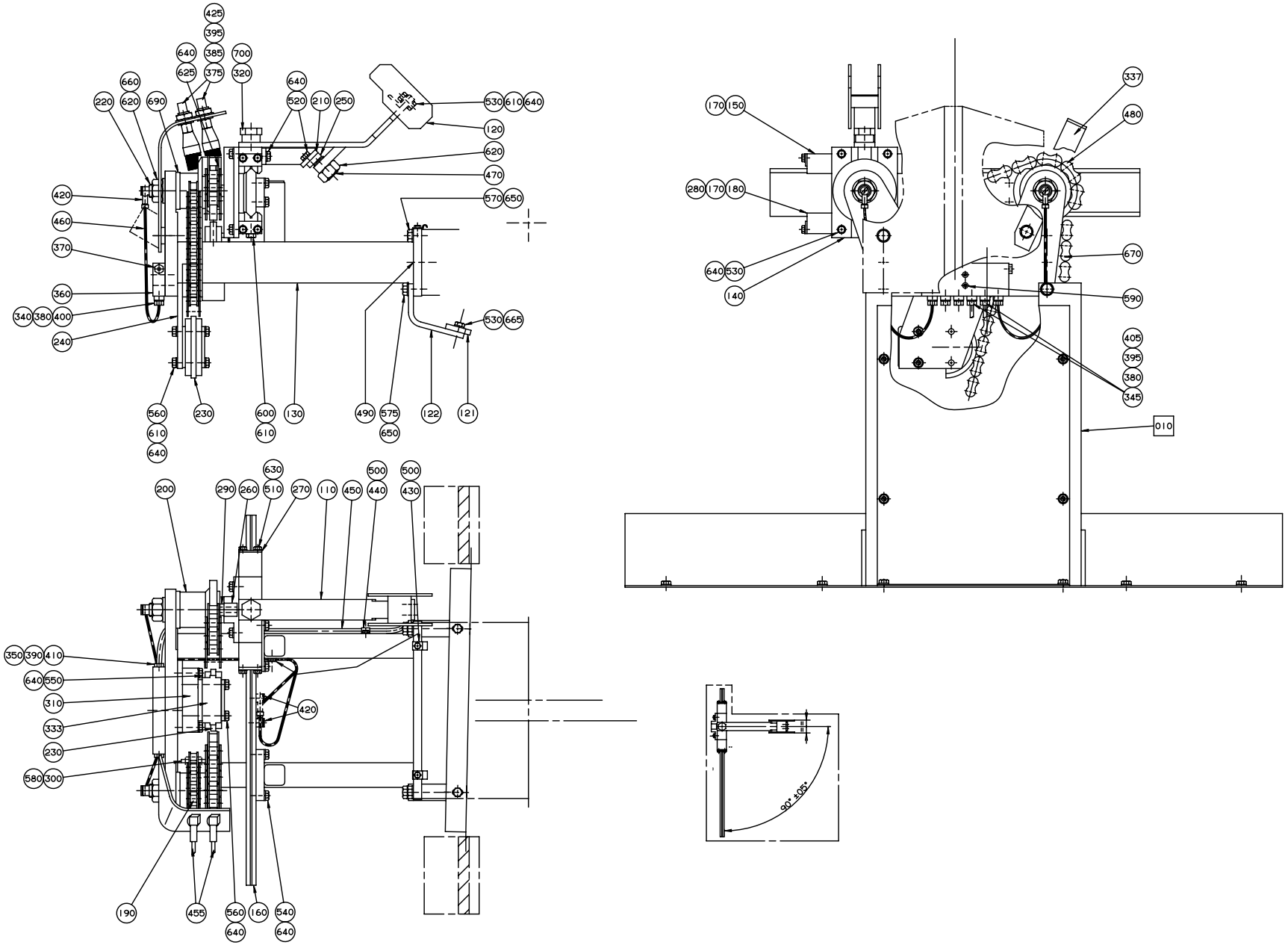

S-525213-2
ECN 14321

Pos	Part No	SP	UN	Qty	Description	Page No
VOLUME 1055 B, 1000 B						
000	**C- 525213-0201**	**-**		**1**	**INFEEDER**	
110 1	525301	-		1	ARM	
120 1	525305	-		1	DISTRIBUTOR	
530	312105-0368	-		6	SCREW O4017 M6X16A280	
570	312105-0453	-		4	SCREW O4017 M8X25A280	
VOLUME 750 B						
000	**C- 525213-0202**	**-**		**1**	**INFEEDER**	
110 2	525302	-		1	ARM	
120 2	525306	-		1	DISTRIBUTOR	
530	312105-0368	-		6	SCREW O4017 M6X16A280	
570	312105-0453	-		4	SCREW O4017 M8X25A280	
VOLUME 568 B, 500 B						
000	**C- 525213-0203**	**-**		**1**	**INFEEDER**	
110 3	525303	-		1	ARM	
120 3	525307	-		1	DISTRIBUTOR	
530	312105-0368	-		6	SCREW O4017 M6X16A280	
570	312105-0453	-		4	SCREW O4017 M8X25A280	
VOLUME 500 S						
000	**C- 525213-0204**	**-**		**1**	**INFEEDER**	
110 2	525302	-		1	ARM	
110 4	525304	-		1	ARM	
120 4	525308	-		1	DISTRIBUTOR	
530	312105-0368	-		6	SCREW O4017 M6X16A280	
570	312105-0453	-		4	SCREW O4017 M8X25A280	
VOLUME 375 S						
000	**C- 525213-0205**	**-**		**1**	**INFEEDER**	
110 2	525302	-		1	ARM	
120 5	525309	-		1	DISTRIBUTOR	
530	312105-0368	-		6	SCREW O4017 M6X16A280	
570	312105-0453	-		4	SCREW O4017 M8X25A280	
VOLUME 355 B, 400 B						
000	**C- 525213-0206**	**-**		**1**	**INFEEDER**	
110 4	525304	-		1	ARM	
120 4	525308	-		1	DISTRIBUTOR	
530	312105-0368	-		6	SCREW O4017 M6X16A280	
570	312105-0453	-		4	SCREW O4017 M8X25A280	
VOLUME 750 S						
000	**C- 525213-0208**	**-**		**1**	**INFEEDER**	
110 1	525301	-		1	ARM	
120 6	544318	-		1	DISTRIBUTOR	
530	312105-0368	-		6	SCREW O4017 M6X16A280	
570	312105-0453	-		4	SCREW O4017 M8X25A280	
VOLUME1136 B						
000	**C- 525213-0209**	**-**		**1**	**INFEEDER**	
110 1	525301	-		1	ARM	
120 1	525305	-		1	DISTRIBUTOR	
121 1	525417	-		1	STEERING	
122 1	525418	-		2	HOLDER	
530	312105-0368	-		8	SCREW O4017 M6X16A280	
570	312105-0453	-		2	SCREW O4017 M8X25A280	
575	312105-0455	-		2	SCREW O4017 M8X30A280	
665	315115-0153	-		2	WASHER TBRB6,4X12RFR	
VOLUME 1000 S						
000	**C- 525213-0210**	**-**		**1**	**INFEEDER**	
110 1	525301	-		1	ARM	
120 7	569129	-		1	DISTRIBUTOR	
121 1	525417	-		1	STEERING	
122 1	525418	-		2	HOLDER	
530	312105-0368	-		8	SCREW O4017 M6X16A280	
570	312105-0453	-		2	SCREW O4017 M8X25A280	
575	312105-0455	-		2	SCREW O4017 M8X30A280	
665	315115-0153	-		2	WASHER TBRB6,4X12RFR	
VOLUME 1000 Sq						
000	**C- 525213-0211**	**-**		**1**	**INFEEDER**	
110 1	525301	-		1	ARM	
120 8	574056	-		1	DISTRIBUTOR	
121 2	574099	-		1	STEERING	
122 2	574058	-		2	HOLDER	
530	312105-0368	-		8	SCREW O4017 M6X16A280	
570	312105-0453	-		2	SCREW O4017 M8X25A280	
575	312105-0455	-		2	SCREW O4017 M8X30A280	
665	315115-0153	-		2	WASHER TBRB6,4X12RFR	
VOLUME 500 Sq						
000	**C- 525213-0212**	**-**		**1**	**INFEEDER**	
110 4	525304	-		1	ARM	
120 9	583630	-		1	DISTRIBUTOR	
530	312105-0368	-		8	SCREW O4017 M6X16A280	
570	312105-0453	-		2	SCREW O4017 M8X25A280	

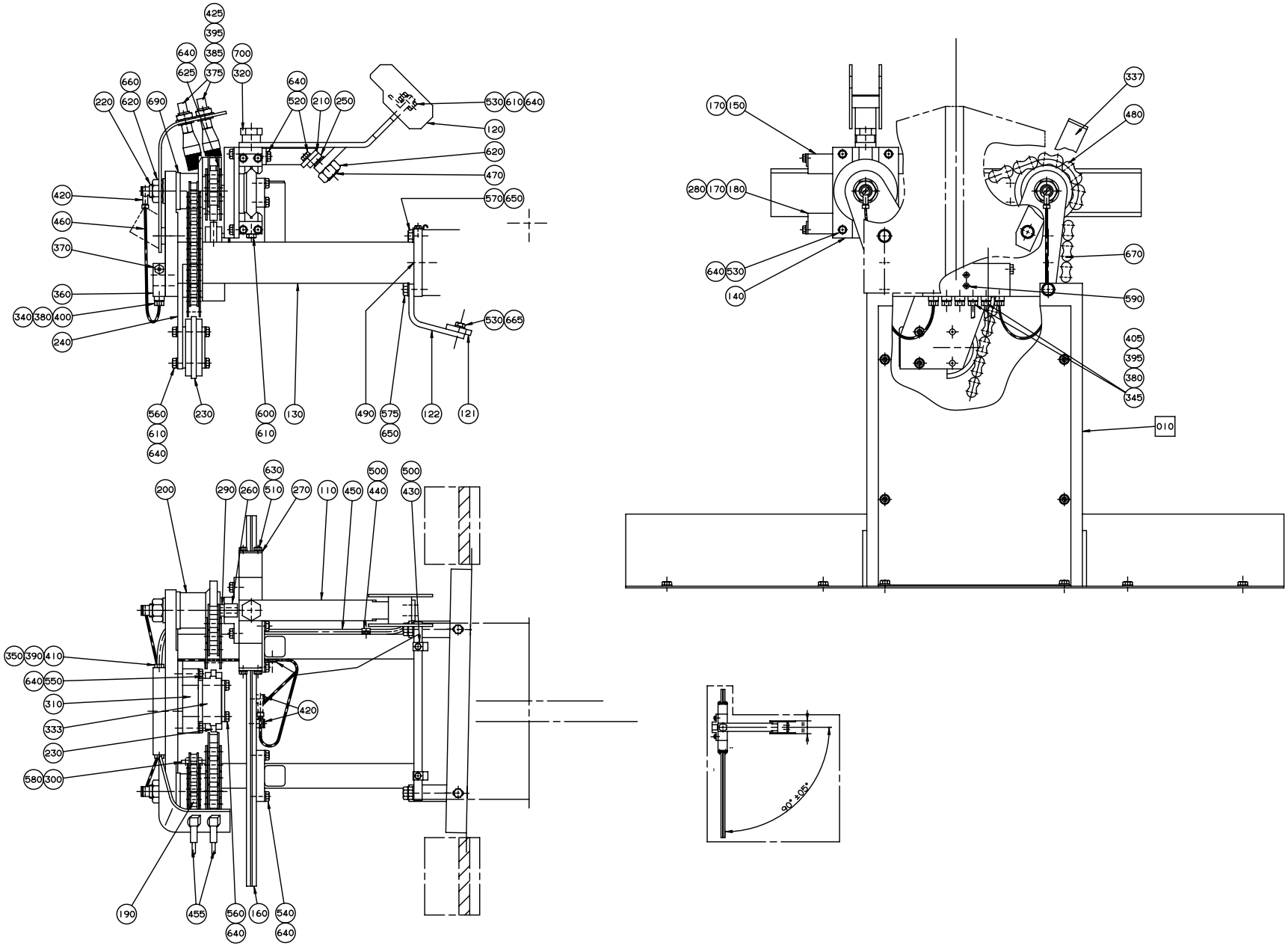

S-525213-2
ECN 14321

Pos	Part No	SP	UN	Qty	Description	Page No
Common parts						
130	525310	-		1	BRACKET	
140	443229	C		1	BRACKET	
150	525140	-		1	HOLDER	
160	525311	C		1	GUIDE	
170	442931	S		2	SLIDE RAIL	
180	443232	-		1	HOLDER	
190	443235	S		1	SPROCKET	
200	525194	S		1	SPROCKET	
210	525200	C		1	BRACKET	
220	525312	C		2	SHAFT	
230	90344-0049	S		2	CHAIN TENSIONER	
240	566533	-		1	BRACKET	
250	285074	S		1	PLATE	
260	443237	S		1	SLIDER	
270	443239	-		4	WASHER	
280	525138	-		1	SHEET	
290	525195	-		1	WASHER	
300	525315	S		1	SLIDER	
310	566312	-		1	BRACKET	
320	525317	S		1	FITTING BOLT	
333	566311	-		1	PROFILE	
337	566315	-		1	HOLDER	
340	90028-0020	P		4	CONE	
345	90028-0021	-		2	CONE	
350	90028-0025	P		1	CONE	
360	90032-0040	S		1	BLOCK	
370	90087-0019	S		1	PLUG	
375	90092-0048	P		2	OIL BRUSH	
380	90092-0052	P		6	VALVE	
385	90134-0002	P		2	PIPE CONNECTION	
390	90134-0030	P		2	SLEEVE	
395	342706-0114	P		4	INSERT SLESH04	
400	90134-0039	P		4	BUSHING	
405	90134-0040	P		2	BUSHING	
410	90134-0055	P		1	BUSHING	
420	90134-0058	S		4	BANJO CONNECTION	
425	90137-0002	P		2	ELBOW PIPE	
430	90165-0056	S		3	CLIP	
440	90165-0057	S		2	CLIP	
450	90166-0108	P	MM	1400	HOSE	
455	90166-0051	P	MM	600	HOSE	
460	90166-0143	P	MM	1200	HOSE	
470	90287-0109	P		1	SPRINGLOADED SCREW	
480	90288-0055	S		1	ROLLER CHAIN	
480a	90288-0317	S		1	* CONNECTION LINK	
480b	90288-0324	S		1	* CARRIER	
490	311103-0399	-		2	CYLINDRICACP M6 8X16 RFR	
500	312105-0287	-		5	SCREW O4017 M4X8A280	
510	312105-0325	-		8	SCREW M6S5X10 A2 80	
520	312105-0366	-		4	SCREW O4017 M6X12A280	
540	312105-0370	-		8	SCREW O4017 M6X20A280	
550	312105-0376	-		2	SCREW O4017 M6X35A280	
560	312105-0379	-		4	SCREW O4014 M6X45A280	
580	312155-0291	-		4	SCREW MF6S4X12RFR	
590	312155-0297	-		2	SCREW MF6S4X25RFR	
600	312318-0368	-		2	STOP SCREW SK6SS6X16RFR	
610	312605-0316	-		4	NUT M6M6 A280 STAINLESS	
620	312605-0324	-		3	NUT M6M16RFR	
625	312812-0316	-		2	LOCK NUT A2-M6RFR	
630	315105-0146	-		8	WASHER BRB5,3X10RFR	
640	315105-0153	-		28	WASHER BRB6,4X12RFR	
650	315105-0165	-		4	WASHER BRB8,4X16RFR	
660	315105-0186	-		2	WASHER BRB17X30RFR	
670	318212-0119	S		1	ROLLER CHA1/2"	
690	321101-0252	S		4	FLANGE BUS 25F7X16	
700	321120-0122	S		1	BUSHING 15/17X15	
F010	C- 525320-010V	-		1	CHAIN GUARD	**565**

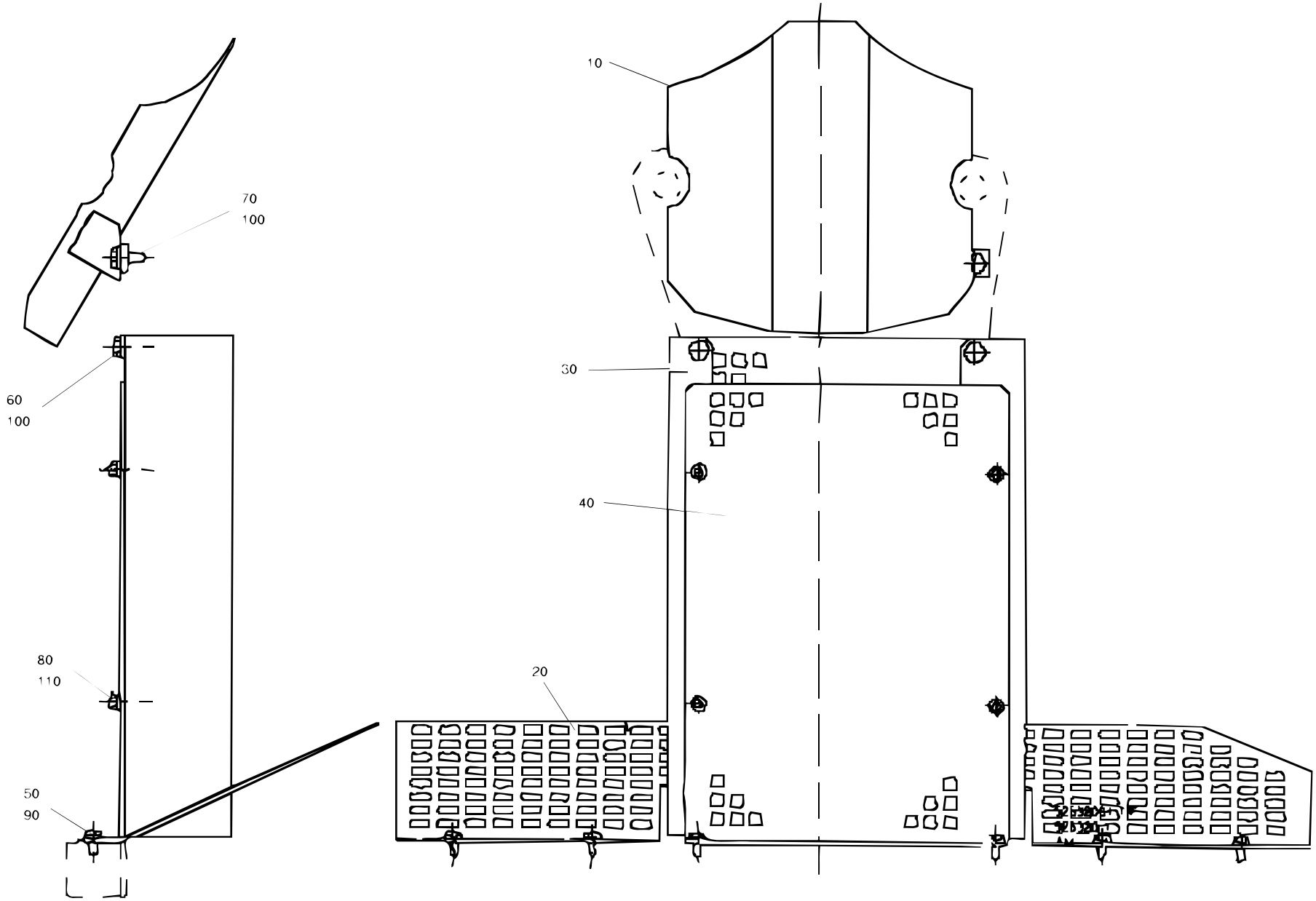

S-535320-1
ECN 11872

Pos	Part No	SP	UN	Qty	Description	Page No
VOLUMES 1136 B, 1055 B, 1000 B, 1000 S, 750 S						
000	**C- 525320-0101**	**-**		**1**	**CHAIN GUARD**	
010	525265-0001	-		1	LEAD PLATE	
VOLUMES 750 B, 500 S,						
000	**C- 525320-0102**	**-**		**1**	**CHAIN GUARD**	
010	525265-0002	-		1	LEAD PLATE	
VOLUME 375 S						
000	**C- 525320-0103**	**-**		**1**	**CHAIN GUARD**	
010	525265-0003	-		1	LEAD PLATE	
VOLUMES 568 B, 500 B, 355 B, 400 B						
000	**C- 525320-0104**	**-**		**1**	**CHAIN GUARD**	
010	525265-0004	-		1	LEAD PLATE	
VOLUME 1000 Sq, 500 Sq						
000	**C- 525320-0105**	**-**		**1**	**CHAIN GUARD**	
010	574131	-		1	LEAD PLATE	
Common parts						
020	525326	-		1	CHAIN GUARD	
030	525327	-		1	CHAIN GUARD	
040	525328	-		1	CHAIN GUARD	
050	312105-0368	-		6	SCREW O4017 M6X16A280	
060	312105-0449	-		2	SCREW O4017 M8X16A280	
070	312105-0451	-		2	SCREW SO4017 8X20A280	
080	312605-0316	-		4	NUT M6M6 A280 STAINLESS	
090	315105-0153	-		6	WASHER BRB6,4X12RFR	
100	315105-0165	-		4	WASHER BRB8,4X16RFR	
110	315115-0153	-		4	WASHER TBRB6,4X12RFR	

Pos	Part No	SP	UN	Qty	Description	Page No

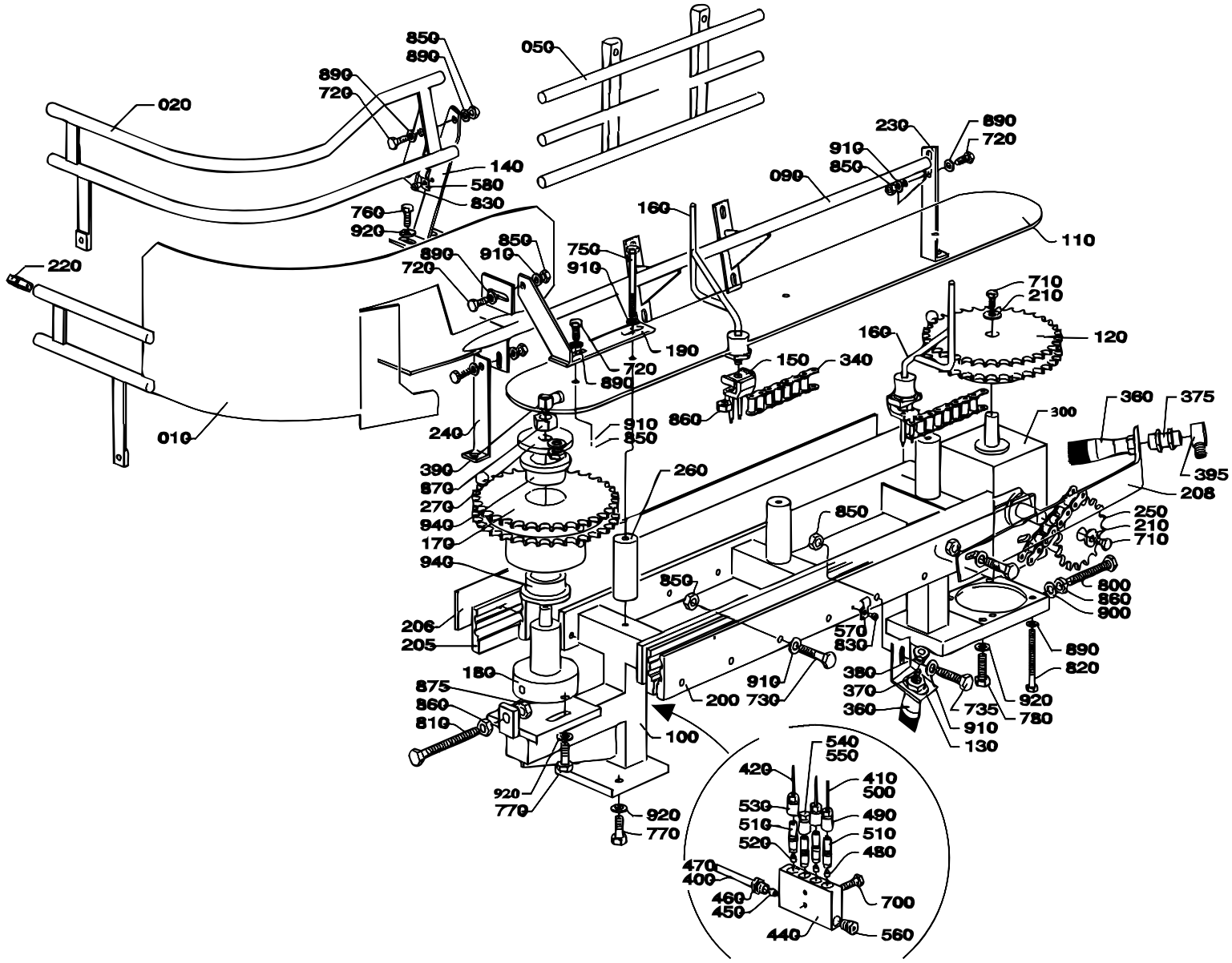

S-525325-2
ECN 17168

Pos	Part No	SP	UN	Qty	Description	Page No
VOLUME 1055 B, 1000 B						
000	**C- 525325-0201**	**-**		**1**	**DISCHARGER**	
010	525437	-		1	ARCH	
020	443206-0001	-		1	ARCH	
050	525322-0001	-		1	LEAD RAIL	
140	443217	-		1	BRACKET	
160	525414	P		4	CARRIER	
VOLUME 750 B						
000	**C- 525325-0202**	**-**		**1**	**DISCHARGER**	
010	442811-0001	-		1	ARCH	
020	443206-0001	-		1	ARCH	
050	525322-0001	-		1	LEAD RAIL	
140	443217	-		1	BRACKET	
160	525374	P		4	CARRIER	
VOLUME 568 B, 500 B						
000	**C- 525325-0204**	**-**		**1**	**DISCHARGER**	
010	442811-0001	-		1	ARCH	
020	443207-0001	-		1	ARCH	
050	525322-0001	-		1	LEAD RAIL	
140	443217	-		1	BRACKET	
160	525374	P		4	CARRIER	
VOLUME 500 S						
000	**C- 525325-0206**	**-**		**1**	**DISCHARGER**	
010	525466	-		1	ARCH	
020	443206-0002	-		1	ARCH	
050	525322-0002	-		1	LEAD RAIL	
140	443217	-		1	BRACKET	
160	525414	P		4	CARRIER	
VOLUME 355 B, 400 B						
000	**C- 525325-0207**	**-**		**1**	**DISCHARGER**	
010	442811-0002	-		1	ARCH	
020	443207-0002	-		1	ARCH	
050	525322-0002	-		1	LEAD RAIL	
140	443217	-		1	BRACKET	
160	525374	P		4	CARRIER	
VOLUME 375 S						
000	**C- 525325-0208**	**-**		**1**	**DISCHARGER**	
010	442811-0002	-		1	ARCH	
020	443206-0003	-		1	ARCH	
050	525322-0003	-		1	LEAD RAIL	
140	443217	-		1	BRACKET	
160	525374	P		4	CARRIER	
VOLUME 750 S						
000	**C- 525325-0210**	**-**		**1**	**DISCHARGER**	
010	525437	-		1	ARCH	
020	443206-0004	-		1	ARCH	
050	525322-0004	-		1	LEAD RAIL	
140	443217	-		1	BRACKET	
160	525414	P		4	CARRIER	
VOLUME1136 B						
000	**C- 525325-0211**	**-**		**1**	**DISCHARGER**	
010	525437	-		1	ARCH	
020	443206-0001	-		1	ARCH	
050	525413	-		1	LEAD RAIL	
140	443217	-		1	BRACKET	
160	525414	P		4	CARRIER	
VOLUME 1000 S						
000	**C- 525325-0212**	**-**		**1**	**DISCHARGER**	
010	525437	-		1	ARCH	
020	443206-0001	-		1	ARCH	
050	569130	-		1	LEAD RAIL	
140	443217	-		1	BRACKET	
160	525414	P		4	CARRIER	
VOLUME 1000 Sq						
000	**C- 525325-0213**	**-**		**1**	**DISCHARGER**	
010	525437	-		1	ARCH	
020	574055	-		1	ARCH	
050	574057	-		1	LEAD RAIL	
140	443217	-		1	BRACKET	
160	525414	P		4	CARRIER	
VOLUME 500 Sq						
000	**C- 525325-0214**	**-**		**1**	**DISCHARGER**	
010	525437	-		1	ARCH	
020	583628	-		1	ARCH	
050	583452	-		1	LEAD RAIL	
140	583629	-		1	BRACKET	
160	525374	P		4	CARRIER	

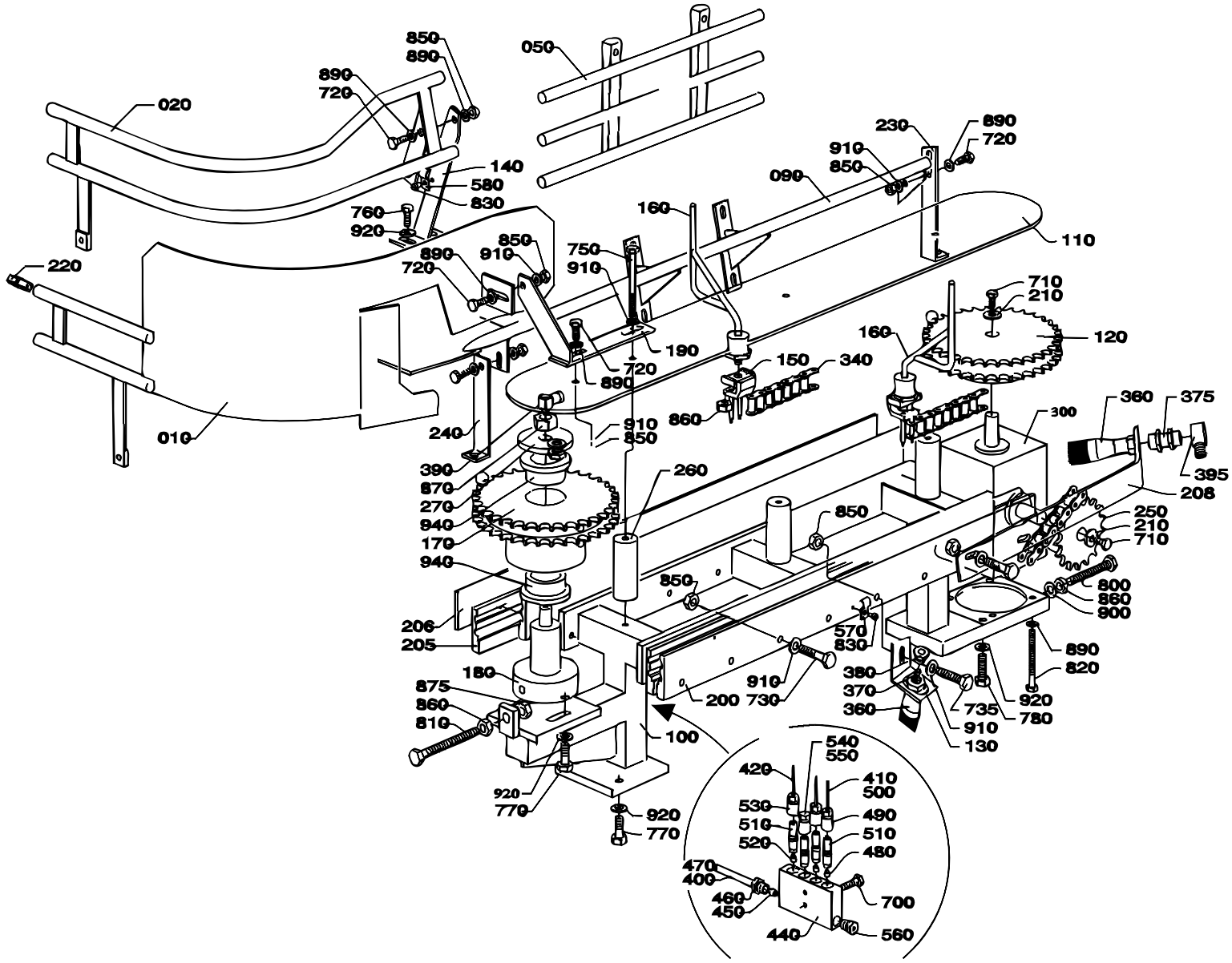

S-525325-2
ECN 17168

Pos	Part No	SP	UN	Qty	Description	Page No
Common parts						
090	442809	-		1	LEAD RAIL	
100	525300	-		1	MACHINE BODY	
110	443210	-		1	PLATE STAINLESS	
120	443081	S		1	SPROCKET	
130	443213	-		1	BRACKET	
150	525254	P		4	LINK	
170	525298	S		1	SPROCKET	
180	525299	C		1	SHAFT	
190	525323	-		1	BRACKET	
200	525324	S		3	PROFILE	
205	525411	S		1	PROFILE	
206	525412	-		1	RULER	
208	566314	-		1	HOLDER	
210	6278	-		2	WASHER	
220	229516	-		4	PIN	
230	442829	-		1	BRACKET	
240	442830	-		1	BRACKET	
250	442836	S		1	SPROCKET	
260	443215	-		3	SPACER	
270	443295	-		1	WASHER	
300	90056-0099	C		1	BEVEL GEAR	
320	318212-0066	S		1	ROLLER CHA	
340	318242-0034	S		4	ROLLER CHA	
360	90092-0048	P		2	OIL BRUSH	
370	90028-0001	P		1	CONE	
375	90134-0002	P		1	PIPE CONNECTION	
380	90134-0003	P		1	BUSHING	
390	90134-0058	S		1	BANJO CONNECTION	
395	90137-0002	P		1	ELBOW PIPE	
400	90166-0108	P	MM	1300	HOSE	
410	90166-0051	P	MM	1100	HOSE	
420	90166-0143	P	MM	200	HOSE	
440	90032-0039	S		1	BLOCK	
450	90028-0025	P		1	CONE	
460	90134-0055	P		1	BUSHING	
470	90134-0030	P		2	SLEEVE	
480	90028-0021	P		2	CONE	
490	90134-0040	P		2	BUSHING	
500	342706-0114	P		4	INSERT SLESH04	
510	90092-0052	P		3	VALVE	
520	90028-0020	P		1	CONE	
530	90134-0039	P		1	BUSHING	
540	90134-0045	S		1	PLUG	
550	90134-0052	S		1	PLUG	
560	90087-0019	S		1	PLUG	
570	90165-0056	S		1	CLIP	
580	90165-0060	S		1	CLAMP	
700	312155-0295	-		2	SCREW MF6S4X20RFR	
710	312105-0366	-		2	SCREW O4017 M6X12A280	
720	312105-0368	-		6	SCREW O4017 M6X16A280	
730	312105-0376	-		7	SCREW O4017 M6X35A280	
735	312105-0378	-		9	SCREW O4017 M6X40A280	
750	312105-0386	-		3	SCREW O4014 M6X80A280	
760	312105-0449	-		2	SCREW O4017 M8X16A280	
770	312105-0451	-		4	SCREW SO4017 8X20A280	
780	312105-0453	-		2	SCREW O4017 M8X25A280	
800	312109-0457	-		1	SCREW 8X35 H A4 80	
810	312109-0461	-		1	SCREW M6S8X50H A4 80	
820	312115-0368	-		4	SCREW O4762 M6X16A280	
830	312125-0285	-		2	SLOTTED HEMCS4X6RFR	
840	312125-0289	-		1	SLOTTED HEMCS4X10RFR	
850	312605-0316	-		22	NUT M6M6 A280 STAINLESS	
860	312605-0318	-		6	NUT M6M8RFR	
870	312605-0322	-		1	NUT M6M12RFR	
875	312625-0318	-		1	NUT M 8	
890	315105-0153	-		14	WASHER BRB6,4X12RFR	
900	315105-0165	-		1	WASHER BRB8,4X16RFR	
910	315115-0153	-		21	WASHER TBRB6,4X12RFR	
920	315115-0165	-		8	WASHER TBRB8,4X16RFR	
940	321101-0272	S		2	FLANGE BUS 30F7X20	

Tetra Pak

SPC

Spare Parts Catalogue

This page is intentionally left blank

Pos	Part No	SP	UN	Qty	Description	Page No
VOLUMES 355 B, 375 S, 400 B, 500 S, 750 S						
000	**B- 648009-0910**	**-**		**1**	**REGULAR ACCESSORIES**	
F560	C- 499082-0403	-		1	ADAPTER, TYPE 1	**597**
VOLUMES 500 B, 500 Sq, 750 B, 1000 B, 1000 S, 1000 Sq, 1055 B						
000	**B- 648009-0911**	**-**		**1**	**REGULAR ACCESSORIES**	
F560	C- 499082-0404	-		1	ADAPTER, TYPE 1	**597**
Common parts						
030	561590	-		1	CENTRAL LUBRIC. DIAGRAM *	
080	576730	-		1	WATER DIAGRAM *	
490	90243-0133	-		1	CONTAINER	
500	90347-0111	-		4	MACHINE SHOE	
502	90347-0110	-		4	MACHINE SHOE	
510	436407	-		2	BEAM	
540	436512	-		2	PIPE	
600	579765	-		1	MACHINE SIGN CE	
F240	C- 250610-0201	-		1	TOOL KIT	**575**
F300	C- 554171-030V	-		1	PLATFORM ADDITION	**577**
	C- 266755-020V	-		1	. PLATFORM	**579**
	C- 266756-050V	-		1	. PLATFORM	**581**
	C- 243171-0201	-		1	. . LADDER	**585**
F330	C- 284953-0101	-		1	HOSE	**587**
F340	C- 292445-0101	-		1	LIFTING UNIT	**589**
F360	C- 531345-0101	-		1	PERSONAL PROTECT. EQ H2O2	**591**
F370	C- 551997-010V	-		1	LIFTING UNIT	**593**
F480	C- 554172-010V	-		1	HYDRAULIC DIAGRAM	**595**
	263617-SHEET 1	-			PLATFORM VERSIONS	
	449880-SHEET 6	-			INSTALLATION DRAW. TBA/8	

Pos	Part No	SP	UN	Qty	Description	Page No

* “NOTE! IN THE FORM OF DRAWING COPY”.

This page is intentionally left blank

Pos	Part No	SP	UN	Qty	Description	Page No
-						
000	**C- 250610-0201**	**-**		**1**	**TOOL KIT**	
015	283084	-		1	GUIDE SHAFT	
020	283085	-		1	SLEEVE	
040	72947	-		1	HOOK SPANNER	
045	74387	-		1	HOOK SPANNER	
050	245165	-		1	ASSEMBLY TOOL	
055	442173	-		2	GAUGE BLOCK	
070	76138	-		1	LOCKING LOOP	
075	434841	-		1	GAUGE	
100	90278-0001	-		1	PUMP	
110	90279-0001	-		1	OIL CAN	
125	315202-0224	-		1	O-RING 42,2X3	
130	318301-0130	-		4	LIFTING EYLTM30FZB	
150	776422-0101	-		2	BRASS WIRESTE	
160	777100-0113	-		1	SCREWDRIVEL	
170	777100-0184	-		1	SCREWDRIVEL	
180	777120-0215	-		2	C-SPANNER	
190	777120-0220	-		2	C-SPANNER	
200	777120-0232	-		2	C-SPANNER	
204	777121-0137	-		1	OPEN SPANNKEL	
210	777150-0100	-		2	HEXAGON SPKEL N=2,5	
220	777150-0101	-		2	HEXAGON SPKEL N=3	
230	777150-0104	-		2	HEXAGON SPKEL N=4	
240	777150-0106	-		2	HEXAGON SPKEL N=5	
250	777150-0108	-		2	HEXAGON SPKEL N=6	
260	777150-0110	-		2	HEXAGON SPKEL N=8	
270	777150-0112	-		2	HEXAGON SPKEL N=10	
280	777150-0114	-		2	HEXAGON SPKEL N=12	
290	777150-0199	-		2	HEXAGON SPKEL N=2	
300	777150-0491	-		2	HEXAGON SPKEL N=1,3	
310	777155-0492	-		2	ALLEN KEY KEL N=1/16"	
320	777200-0101	-		1	PIPE WRENCEL	
330	777510-0101	-		1	SCISSORS	

Pos	Part No	SP	UN	Qty	Description	Page No

This page is intentionally left blank

Pos	Part No	SP	UN	Qty	Description	Page No
PLATFORM VERSION PFV 1, PFV 2, PFV 3						
000	**C- 554171-0301**	**-**		**1**	**PLATFORM ADDITION**	
F010	C- 266755-020V	-		1	PLATFORM	**579**
PLATFORM VERSION PFV 11, PFV 12, PFV 13, PFV 14						
000	**C- 554171-0302**	**-**		**1**	**PLATFORM ADDITION**	
F020	C- 266756-050V	-		1	PLATFORM	**581**

VARIANT 01



VARIANT 02

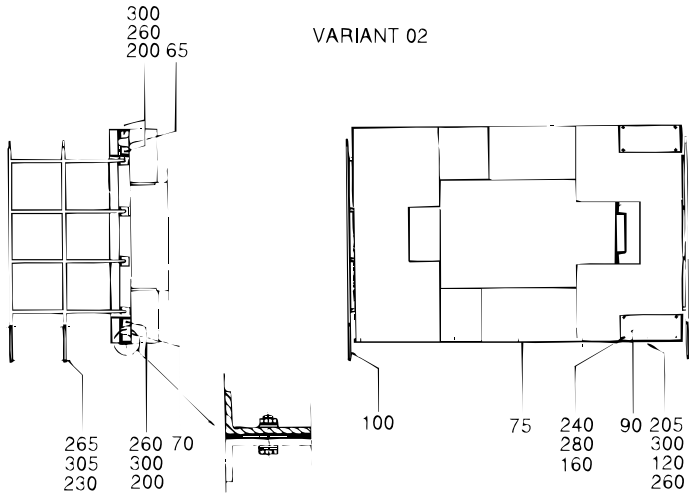

VARIANT 03

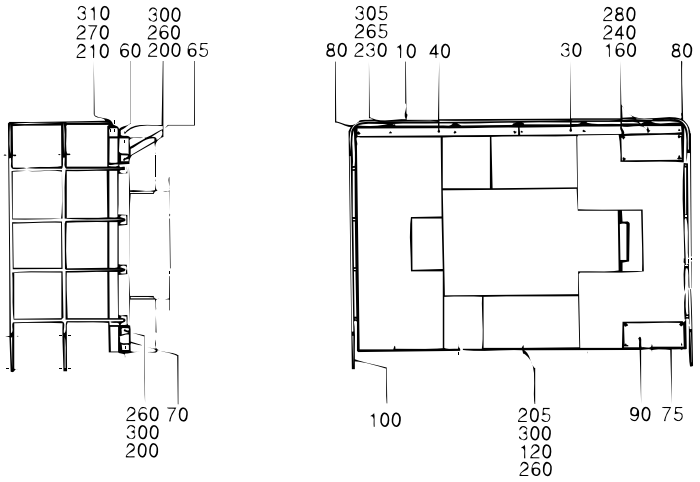

S-266755-2
ECN 6045

Pos	Part No	SP	UN	Qty	Description	Page No
PLATFORM VERSION PFV 1						
000	**C- 266755-0201**	**-**		**1**	**PLATFORM**	
010	257845	-		1	RAILING	
030	247146	-		1	PLATFORM	
040	257852	-		1	PLATFORM	
060	257854	-		1	CANTILEVER	
080	257859	-		4	RAILING	
160	90287-0076	-		16	SCREW	
200	312101-0495	-		13	SCREW M6S10X30FZB	
210	312105-0493	-		20	SCREW 4017 M10X25A280	
230	312115-0453	-		8	SCREW O4762 M8X25A280	
240	312601-0316	-		16	NUT M6M6FZB	
260	312601-0320	-		10	NUT M6M10FZB	
265	312605-0318	-		8	NUT M6M8RFR	
270	312605-0320	-		20	NUT M6M10RFR	
280	315101-0153	-		16	WASHER BRB6,4X12FZB	
300	315101-0173	-		23	WASHER BRB10,5X22FZB	
305	315105-0165	-		8	WASHER BRB8,4X16RFR	
310	315105-0173	-		20	WASHER BRB10,5X22RFR	
PLATFORM VERSION PFV 2						
000	**C- 266755-0202**	**-**		**1**	**PLATFORM**	
075	451406	-		1	VIBRATION DAMPER	
100	451407	-		4	RAILING	
120	451408	-		14	BUFFER RING	
160	90287-0076	-		8	SCREW	
205	312101-0500	-		7	SCREW M6S10X45FZB	
230	312115-0453	-		8	SCREW O4762 M8X25A280	
240	312601-0316	-		8	NUT M6M6FZB	
260	312601-0320	-		13	NUT M6M10FZB	
265	312605-0318	-		8	NUT M6M8RFR	
280	315101-0153	-		8	WASHER BRB6,4X12FZB	
300	315101-0173	-		26	WASHER BRB10,5X22FZB	
305	315105-0165	-		8	WASHER BRB8,4X16RFR	
PLATFORM VERSION PFV 3						
000	**C- 266755-0203**	**-**		**1**	**PLATFORM**	
010	257845	-		1	RAILING	
030	247146	-		1	PLATFORM	
040	257852	-		1	PLATFORM	
060	257854	-		1	CANTILEVER	
075	451406	-		1	VIBRATION DAMPER	
080	257859	-		4	RAILING	
100	451407	-		4	RAILING	
120	451408	-		14	BUFFER RING	
160	90287-0076	-		16	SCREW	
200	312101-0495	-		13	SCREW M6S10X30FZB	
205	312101-0500	-		7	SCREW M6S10X45FZB	
210	312105-0493	-		20	SCREW 4017 M10X25A280	
230	312115-0453	-		16	SCREW O4762 M8X25A280	
240	312601-0316	-		16	NUT M6M6FZB	
260	312601-0320	-		17	NUT M6M10FZB	
265	312605-0318	-		16	NUT M6M8RFR	
270	312605-0320	-		20	NUT M6M10RFR	
280	315101-0153	-		16	WASHER BRB6,4X12FZB	
300	315101-0173	-		37	WASHER BRB10,5X22FZB	
305	315105-0165	-		16	WASHER BRB8,4X16RFR	
310	315105-0173	-		20	WASHER BRB10,5X22RFR	
Common parts						
065	269339	-		1	CANTILEVER	
070	269340	-		1	CANTILEVER	
090	257862	-		2	PLATFORM	

VARIANT 11

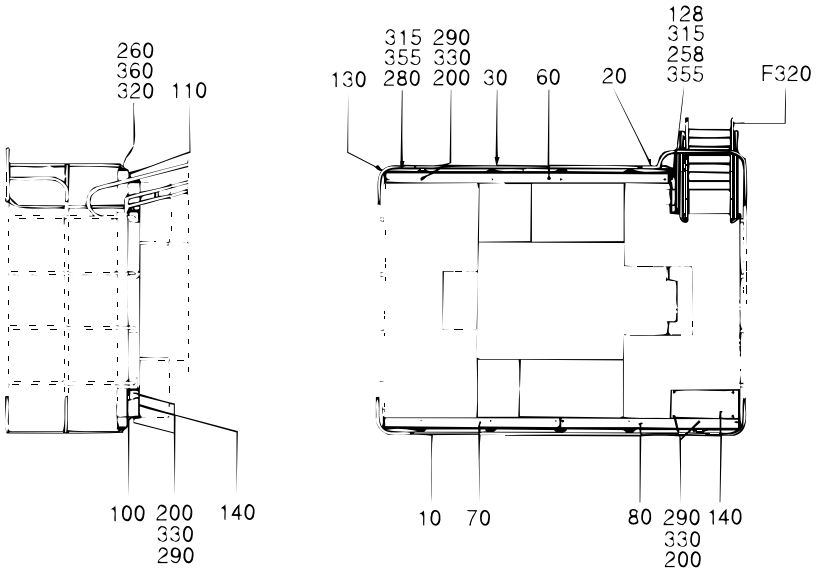

VARIANT 12

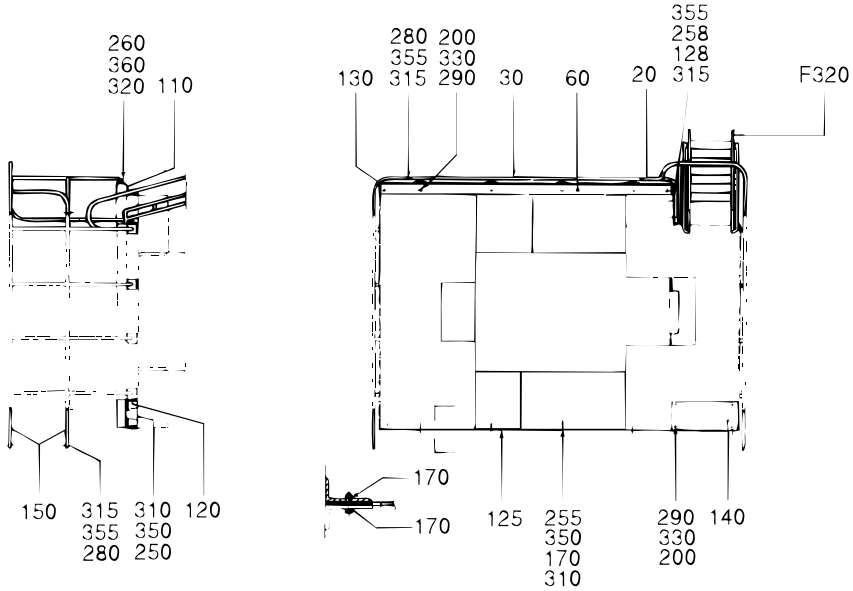

VARIANT 13

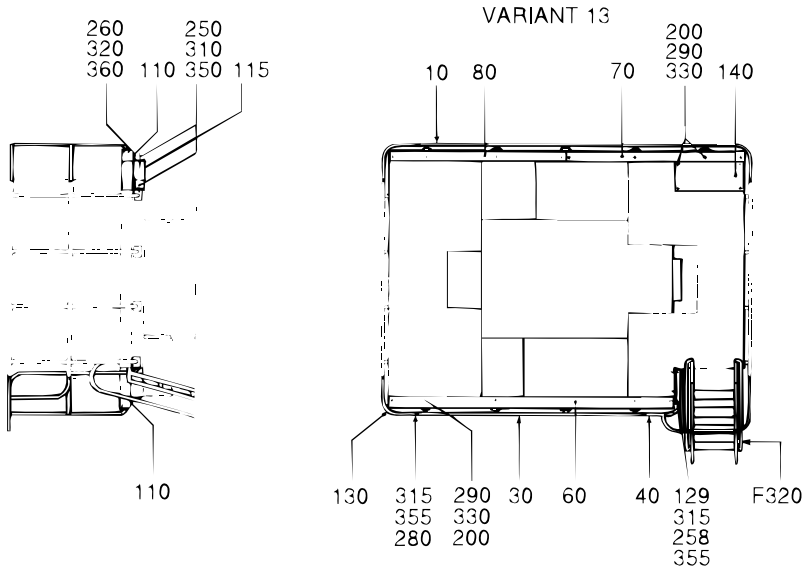

VARIANT 14

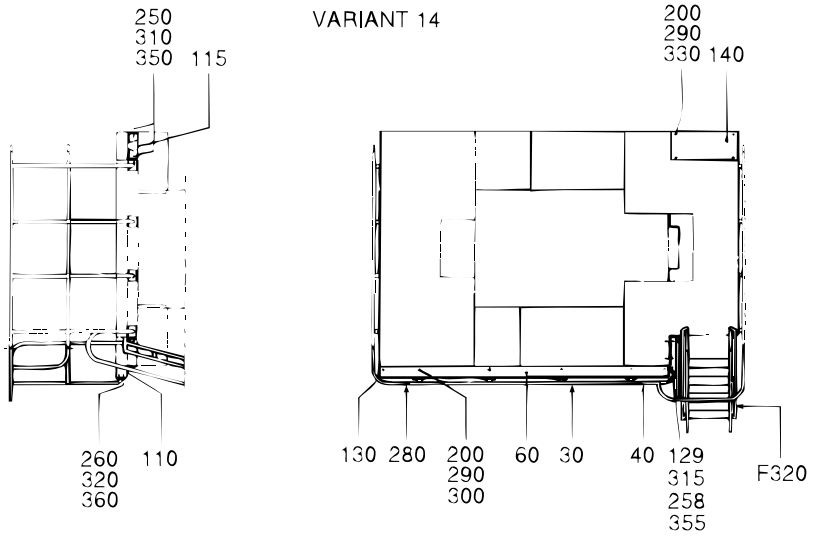

S-256756-4
ECN 19452

Pos	Part No	SP	UN	Qty	Description	Page No
PLATFORM VERSION PFV 11						
000	**C- 266756-0501**	**-**		**1**	**PLATFORM**	
010	257845	-		1	RAILING	
020	257846	-		1	RAILING	
070	247146	-		1	PLATFORM	
080	257852	-		1	PLATFORM	
100	257854	-		1	CANTILEVER	
120	269340	-		1	CANTILEVER	
128	551903	-		1	KICKPLATE,LEFT	
130	257859	-		6	RAILING	
200	90287-0076	-		18	SCREW	
250	312101-0495	-		16	SCREW M6S10X30FZB	
260	312105-0493	-		40	SCREW 4017 M10X25A280	
280	312115-0453	-		16	SCREW O4762 M8X25A280	
290	312601-0316	-		18	NUT M6M6FZB	
310	312601-0320	-		10	NUT M6M10FZB	
315	312605-0318	-		18	NUT M6M8RFR	
320	312605-0320	-		40	NUT M6M10RFR	
330	315101-0153	-		18	WASHER BRB6,4X12FZB	
350	315101-0173	-		26	WASHER BRB10,5X22FZB	
355	315105-0165	-		20	WASHER BRB8,4X16RFR	
360	315105-0173	-		40	WASHER BRB10,5X22RFR	
PLATFORM VERSION PFV 12						
000	**C- 266756-0502**	**-**		**1**	**PLATFORM**	
020	257846	-		1	RAILING	
120	269340	-		1	CANTILEVER	
125	451406	-		1	VIBRATION DAMPER	
128	551903	-		1	KICKPLATE,LEFT	
130	257859	-		2	RAILING	
150	451407	-		4	RAILING	
170	451408	-		8	BUFFER RING	
200	90287-0076	-		10	SCREW	
250	312101-0495	-		9	SCREW M6S10X30FZB	
255	312101-0500	-		7	SCREW M6S10X45FZB	
260	312105-0493	-		20	SCREW 4017 M10X25A280	
280	312115-0453	-		16	SCREW O4762 M8X25A280	
290	312601-0316	-		10	NUT M6M6FZB	
310	312601-0320	-		13	NUT M6M10FZB	
315	312605-0318	-		18	NUT M6M8RFR	
320	312605-0320	-		20	NUT M6M10RFR	
330	315101-0153	-		10	WASHER BRB6,4X12FZB	
350	315101-0173	-		29	WASHER BRB10,5X22FZB	
355	315105-0165	-		20	WASHER BRB8,4X16RFR	
360	315105-0173	-		20	WASHER BRB10,5X22RFR	
PLATFORM VERSION PFV 13						
000	**C- 266756-0503**	**-**		**1**	**PLATFORM**	
010	257845	-		1	RAILING	
040	263619	-		1	RAILING	
070	247146	-		1	PLATFORM	
080	257852	-		1	PLATFORM	
100	257854	-		1	CANTILEVER	
115	269339	-		1	CANTILEVER	
129	565961	-		1	KICKPLATE,RIGHT	
130	257859	-		6	RAILING	
200	90287-0076	-		18	SCREW	
250	312101-0495	-		16	SCREW M6S10X30FZB	
260	312105-0493	-		40	SCREW 4017 M10X25A280	
280	312115-0453	-		16	SCREW O4762 M8X25A280	
290	312601-0316	-		18	NUT M6M6FZB	
310	312601-0320	-		10	NUT M6M10FZB	
315	312605-0318	-		18	NUT M6M8RFR	
320	312605-0320	-		40	NUT M6M10RFR	
330	315101-0153	-		18	WASHER BRB6,4X12FZB	
350	315101-0173	-		26	WASHER BRB10,5X22FZB	
355	315105-0165	-		20	WASHER BRB8,4X16RFR	
360	315105-0173	-		40	WASHER BRB10,5X22RFR	
PLATFORM VERSION PFV 14						
000	**C- 266756-0504**	**-**		**1**	**PLATFORM**	
040	263619	-		1	RAILING	
115	269339	-		1	CANTILEVER	
129	565961	-		1	KICKPLATE,RIGHT	
130	257859	-		2	RAILING	
200	90287-0076	-		10	SCREW	
250	312101-0495	-		9	SCREW M6S10X30FZB	
260	312105-0493	-		20	SCREW 4017 M10X25A280	
280	312115-0453	-		8	SCREW O4762 M8X25A280	
290	312601-0316	-		10	NUT M6M6FZB	
310	312601-0320	-		6	NUT M6M10FZB	
315	312605-0318	-		10	NUT M6M8RFR	
320	312605-0320	-		20	NUT M6M10RFR	
330	315101-0153	-		10	WASHER BRB6,4X12FZB	
350	315101-0173	-		15	WASHER BRB10,5X22FZB	
355	315105-0165	-		12	WASHER BRB8,4X16RFR	

VARIANT 11

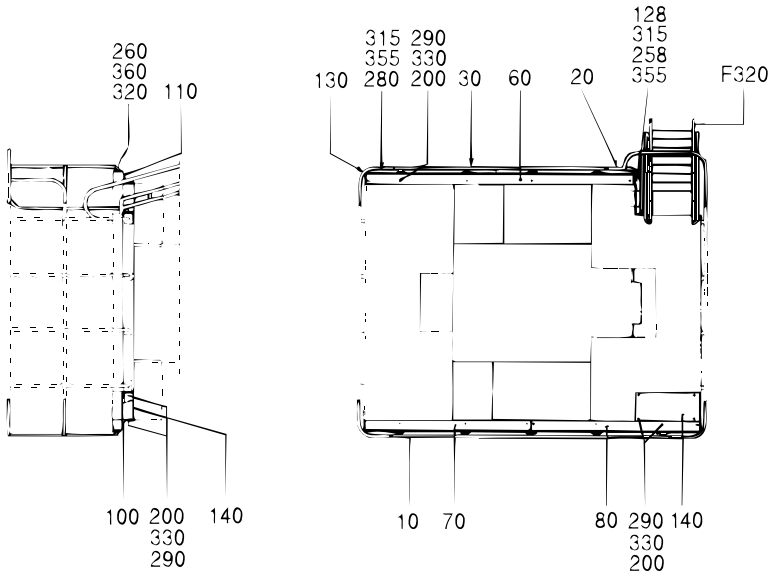

VARIANT 12

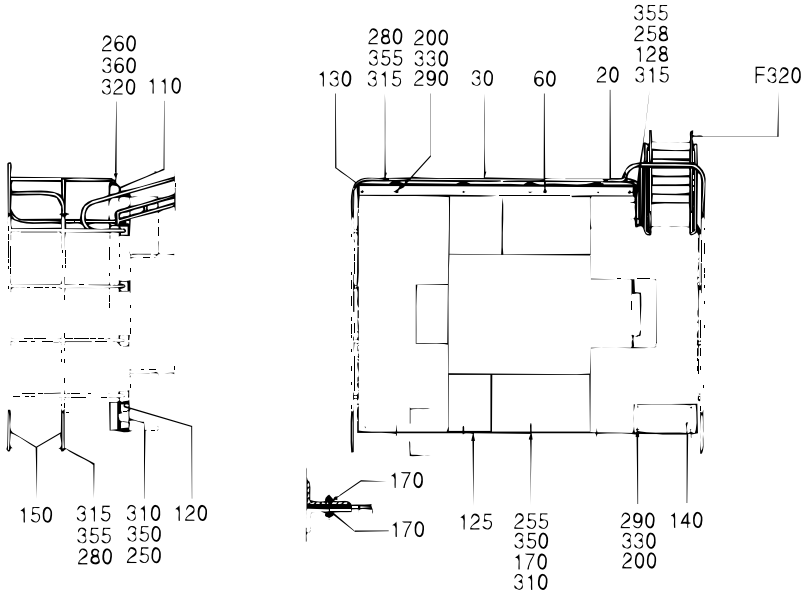

VARIANT 13

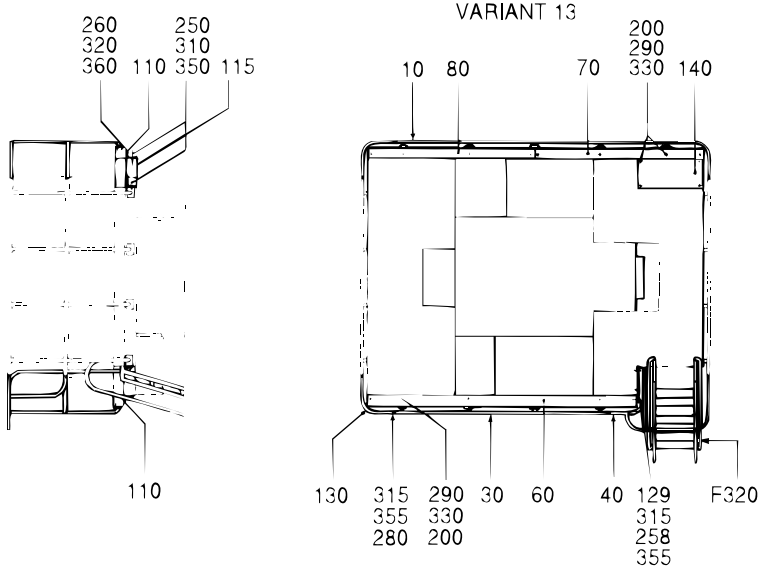

VARIANT 14

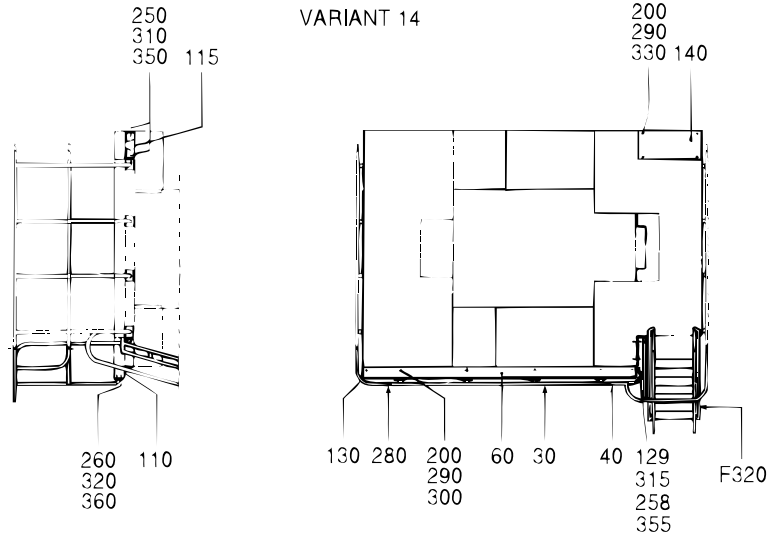

S-256756-4
ECN 19452

Pos	Part No	SP	UN	Qty	Description	Page No
360	315105-0173	-		20	WASHER BRB10,5X22RFR	
Common parts						
030	263322	-		1	RAILING	
060	247145	-		1	PLATFORM	
110	257855	-		1	CANTILEVER	
140	257862	-		1	PLATFORM	
258	312105-0453	-		2	SCREW O4017 M8X25A280	
F320	C- 243171-0201	-		1	LADDER	**585**

Pos	Part No	SP	UN	Qty	Description	Page No

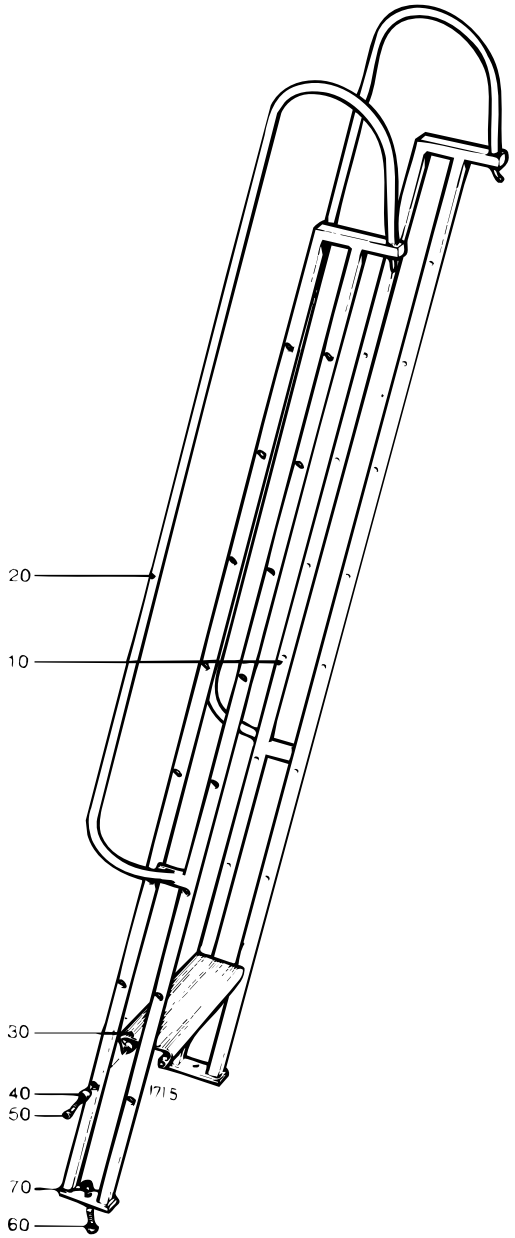
20
10
30
40
50
70
60
1715

Pos	Part No	SP	UN	Qty	Description	Page No
-						
000	**C- 243171-0201**	**-**		**1**	**LADDER**	
010	243172-0001	-		1	SIDE PIECE	
020	243172-0002	-		1	SIDE PIECE	
030	208361-0001	-		8	STAIR	
040	208658-0001	-		32	SPACER	
050	90287-0056	-		32	SCREW	
060	312101-0495	-		2	SCREW M6S10X30FZB	
070	312601-0320	-		2	NUT M6M10FZB	

Pos	Part No	SP	UN	Qty	Description	Page No

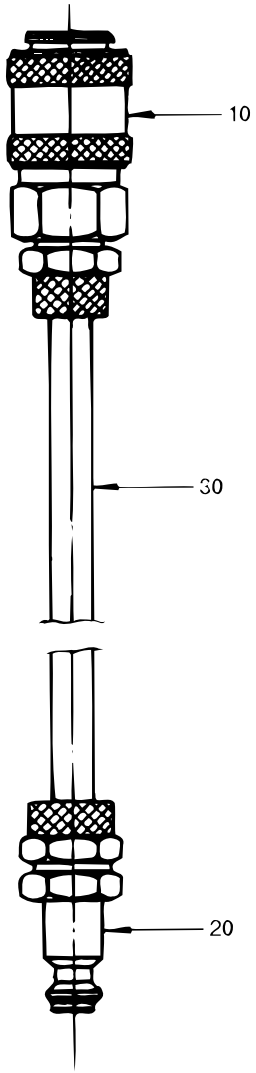
10
30
20

Pos	Part No	SP	UN	Qty	Description	Page No
-						
000	**C- 284953-0101**	**-**		**1**	**HOSE**	
010	90163-0056	-		1	SLEEVE	
020	90163-0063	-		1	NIPPLE	
030	90166-0124	-	MM	1500	HOSE	

Pos	Part No	SP	UN	Qty	Description	Page No

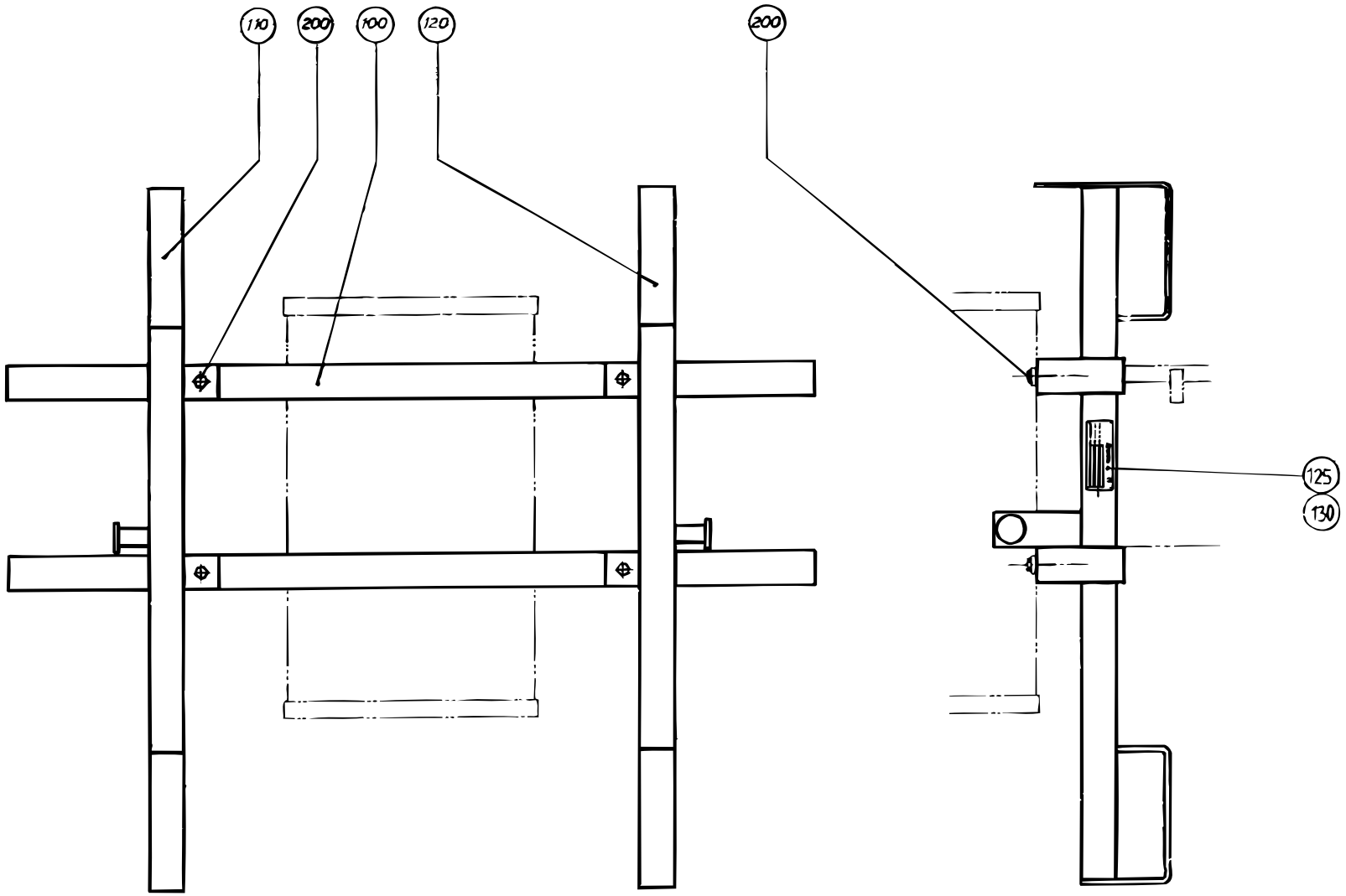

S-292445-1
ECN 22850

Pos	Part No	SP	UN	Qty	Description	Page No
-						
000	**C- 292445-0101**	**-**		**1**	**LIFTING UNIT**	
100	292313	-		2	BEAM	
110	292314	-		1	BEAM	
120	292315	-		1	BEAM	
125	1143455	-		1	MACHINE SIGN CE	
130	311521-0144	-		4	BLANK RIVE2X10,0 RFR	
200	312101-0491	-		8	SCREW M6S10X20FZB	

Pos	Part No	SP	UN	Qty	Description	Page No

This page is intentionally left blank

Pos	Part No	SP	UN	Qty	Description	Page No
-						
000	**C- 531345-0101**	**-**		**1**	**PERSONAL PROTECT. EQ H_2O_2**	
010	90303-0004	-		1	GLOVES	
020	90303-0005	-		1	PROTECTIVE EQUIPMENT	
030	779130-0102	-		1	PROTECTIVE	

Pos	Part No	SP	UN	Qty	Description	Page No

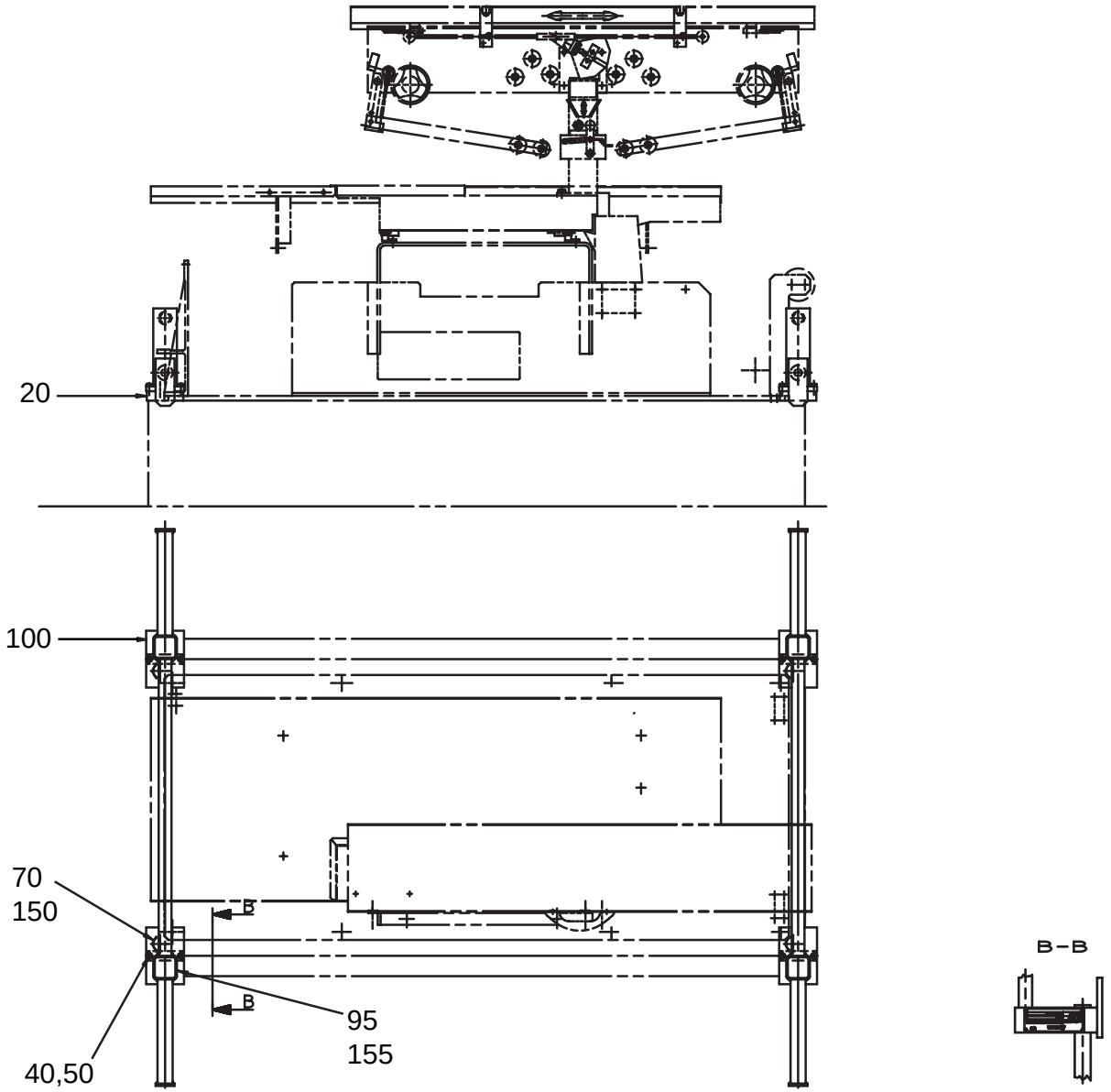

S-551997-1
ECN 22850

Pos	Part No	SP	UN	Qty	Description	Page No
-						
000	**C- 551997-0102**	**-**		**1**	**LIFTING UNIT**	
020	551998	-		4	SUPPORT LUG	
040	312101-0370	-		8	SCREW M6S6X20FZB	
050	315101-0153	-		8	WASHER BRB6,4X12FZB	
070	90287-0127	-		4	SCREW	
095	1143456	-		1	MACHINE SIGN CE	
100	548778	-		2	LIFTING UNIT	
150	315102-0192	-		4	WASHER BRFB21X36FZB	
155	311521-0144	-		4	BLANK RIVE2X10,0 RFR	

Pos	Part No	SP	UN	Qty	Description	Page No

This page is intentionally left blank

Pos	Part No	SP	UN	Qty	Description	Page No
-						
000	**C- 554172-0101**	**-**		**1**	**HYDRAULIC DIAGRAM**	
010	479858	-		1	HYDRAULIC DIAGRAM *	

Pos	Part No	SP	UN	Qty	Description	Page No

* “NOTE! IN THE FORME OF DRAWING COPY”.

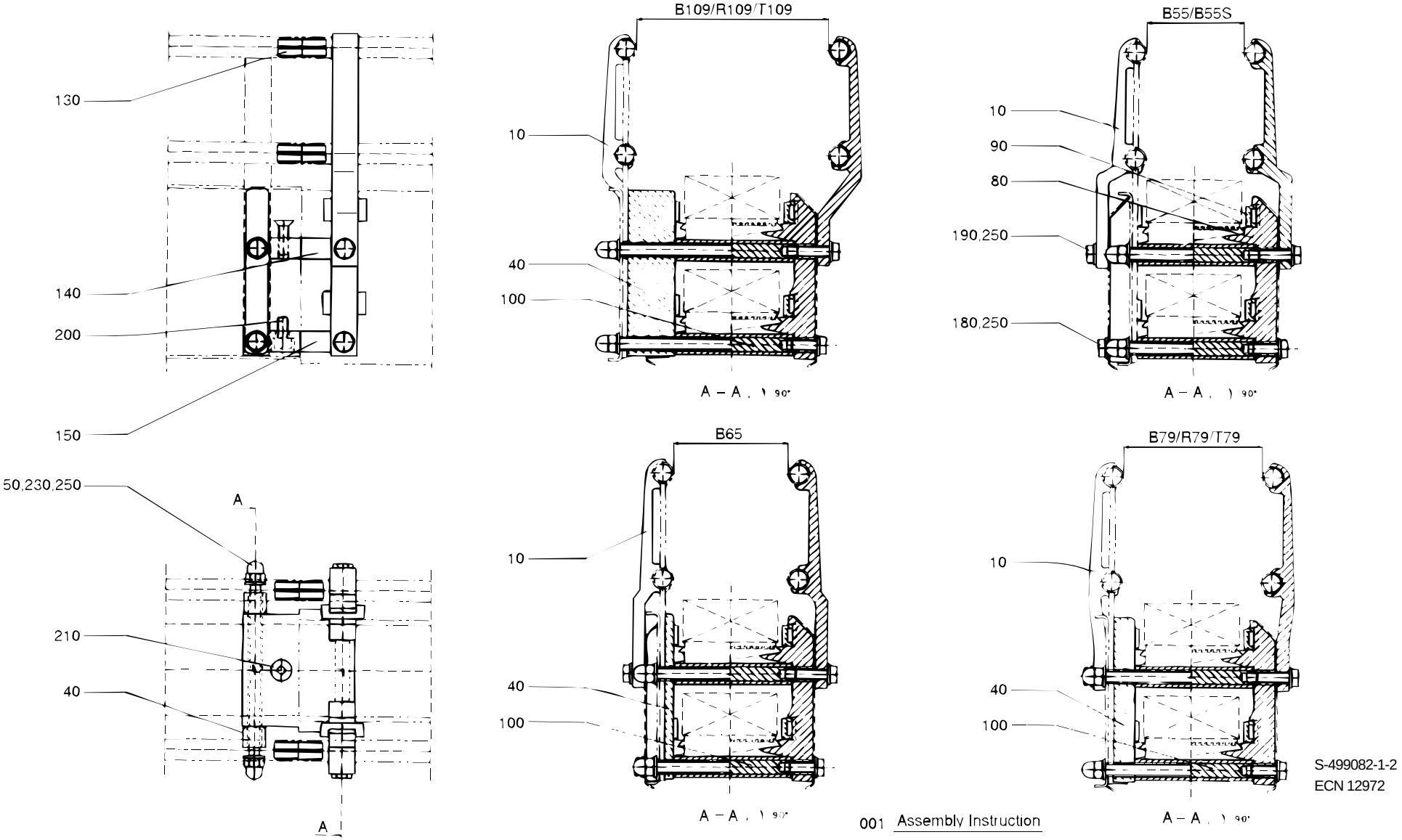

001 Assembly Instruction

S-499082-1-2
ECN 12972

Pos	Part No	SP	UN	Qty	Description	Page No
CONWEYOR WIDTH B40						
000	**C- 499082-0101**	**-**		**1**	**ADAPTER, TYPE 1**	
010	1020141-0001	-		2	HOLDER	
050	229508-0001	-		2	STUD SCREW	
CONWEYOR WIDTH B55, B55S						
000	**C- 499082-0102**	**-**		**1**	**ADAPTER, TYPE 1**	
010	1020142-0001	-		2	HOLDER	
050	229508-0001	-		2	STUD SCREW	
CONWEYOR WIDTH B65						
000	**C- 499082-0103**	**-**		**1**	**ADAPTER, TYPE 1**	
010	1020143-0001	-		2	HOLDER	
040	228846-0003	-		2	SPACER	
050	229508-0014	-		2	STUD SCREW	
CONWEYOR WIDTH B79, R79, T79						
000	**C- 499082-0104**	**-**		**1**	**ADAPTER, TYPE 1**	
010	1020144-0001	-		2	HOLDER	
040	228846-0001	-		2	SPACER	
050	229508-0002	-		2	STUD SCREW	
CONWEYOR WIDTH B109, R109, T109						
000	**C- 499082-0106**	**-**		**1**	**ADAPTER, TYPE 1**	
010	1020145-0001	-		2	HOLDER	
040	228846-0002	-		2	SPACER	
050	229508-0003	-		2	STUD SCREW	
Common parts						
001	543275	-		1	ASSEMBLY INSTRUCTION	
080	464072	-		2	CLAMPING PART	
090	466074-0001	-		4	SLIDER	
100	476220	-		2	SPACER	
130	229516	-		4	PIN	
140	499746	-		1	MOUNTING BLOCK	
150	499747	-		1	MOUNTING BLOCK	
180	312105-0368	-		2	SCREW O4017 M6X16A280	
190	312105-0370	-		2	SCREW O4017 M6X20A280	
200	312115-0366	-		1	SCREW O4762 M6X12A280	
210	312155-0370	-		1	SCREW MF6S6X20RFR	
230	312705-0316	-		4	CAP NUT MHM 6 A2	
250	315105-0153	-		8	WASHER BRB6,4X12RFR	
	542648-SHEET 1	-			PACKING DESCRIPTION	

Tetra Pak

SPC

Spare Parts Catalogue

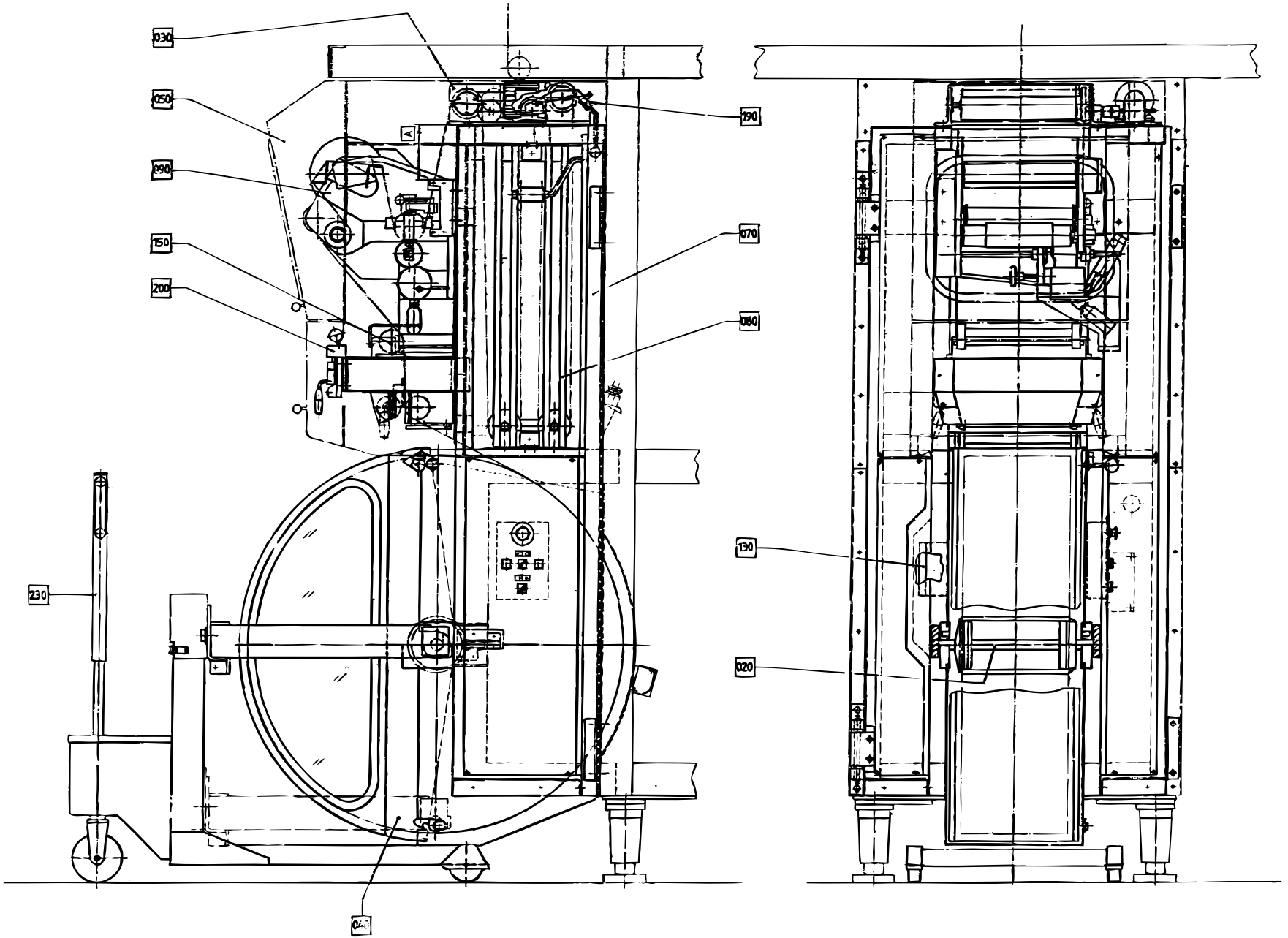

S-648013-6
ECN 20106

Pos	Part No	SP	UN	Qty	Description	Page No
-						
000	**B- 648013-060V**	**-**		**1**	**AUTOMATIC SPLICING UNIT**	
F020	C- 440285-010V	-		2	PAPER REEL HOLDER	**603**
F030	C- 445840-010V	-		1	DRIVE UNIT	**607**
F040	C- 556875-0101	-		1	COVER	**609**
F050	C- 530745-0401	-		1	SIDE GUARD	**611**
F070	C- 440133-0401	-		1	MACHINE BODY	**615**
F080	C- 440210-020V	-		1	ROLL	**617**
F090	C- 486958-020V	-		1	DATING UNIT	**619**
	C- 293684-020V	-		-	. PRINTING WHEEL	**631**
	C- 440286-0301	-		-	. INK UNIT	**635**
	C- 543143-0101	-		-	. ADJUSTMENTMENT DEVICE	**637**
F130	C- 445920-060V	-		1	EL-PNEUMATIC EQUIPMENT	**639**
	C- 532151-0301	-		-	. CONNECTION BOX	**643**
F150	C- 445880-060V	-		1	SPLICING DEVICE	**645**
	C- 440135-0101	-		-	. BENDING ROLLER	**649**
	C- 440184-010V	-		-	. BENDING ROLLER	**651**
	C- 449630-030V	-		-	. PAPER HOLDER	**653**
	C- 522410-0201	-		-	. BENDING ROLLER	**655**
F190	C- 445930-010V	-		1	BENDING UNIT	**657**
	C- 440135-0101	-		-	. BENDING ROLLER	**649**
F200	C- 522121-020V	-		1	CUTTING TABLE	**659**
F220	C- 440132-0201	-		1	START-UP KIT	**661**
F230	C- 576739-0201	C		1	(PAPER)REEL TROLLEY	**663**

Pos	Part No	SP	UN	Qty	Description	Page No

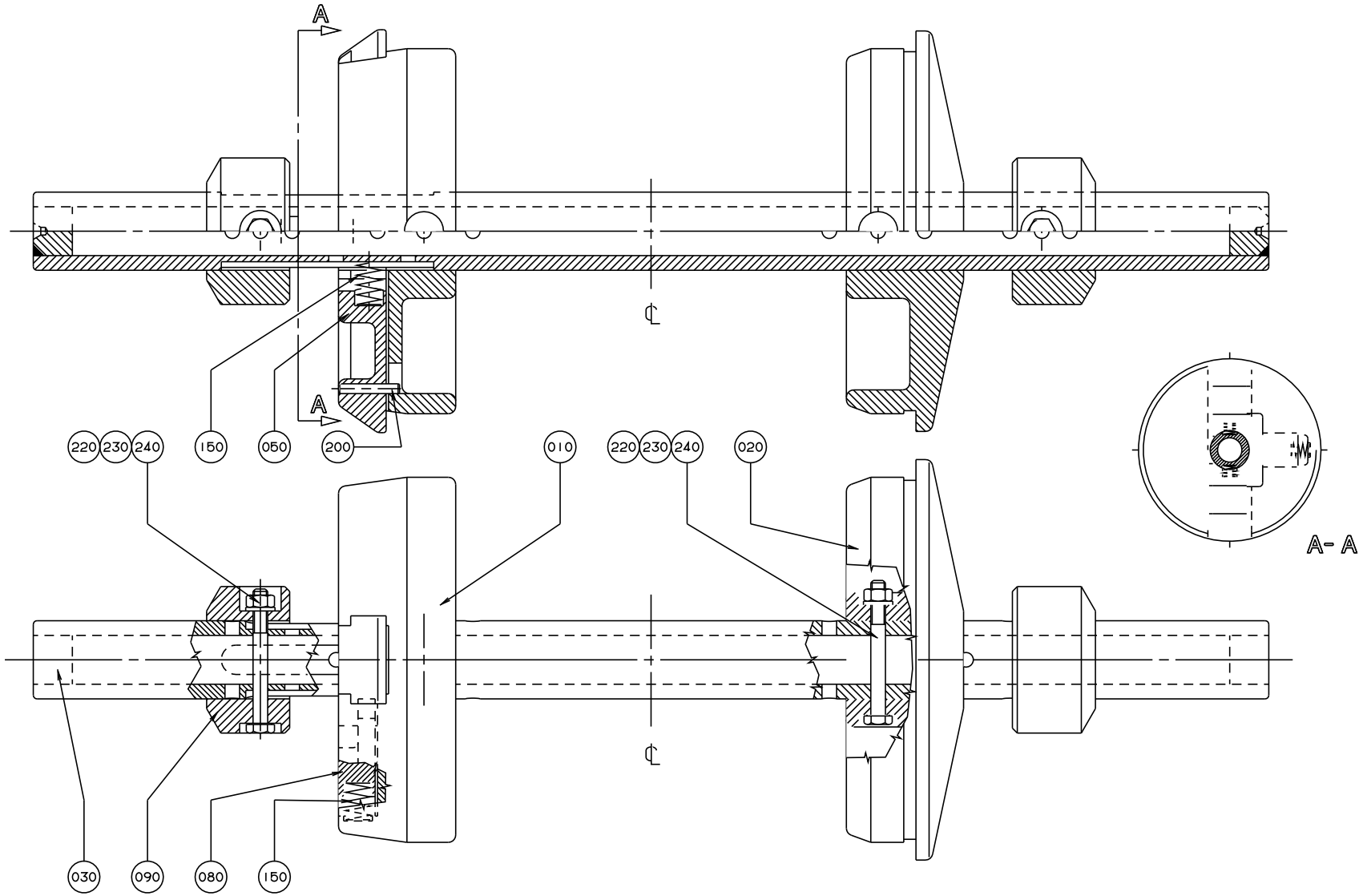

S-440285-1
ECN 19398

Pos	Part No	SP	UN	Qty	Description	Page No
VOLUMES 1136 B, 1055 B, 1000 B, 750 B, 568 B, 500 B						
000	**C- 440285-0101**	**-**		**2**	**PAPER REEL HOLDER**	
010	G- 272814	C		1	SLEEVE	
020	G- 272815-0001	C		1	SLEEVE	
050	G- 575002	S		2	PLUNGER	
220	312101-0381	-		2	SCREW M6S6X55FZB	
230	312812-0316	-		2	LOCK NUT A2-M6RFR	
240	315101-0153	-		2	WASHER BRB6,4X12FZB	
VOLUMES 375 S, 355 B, 500 S						
000	**C- 440285-0102**	**-**		**2**	**PAPER REEL HOLDER**	
010	G- 272814	C		1	SLEEVE	
020	G- 272815-0001	C		1	SLEEVE	
050	G- 575002	S		2	PLUNGER	
090	440259	C		2	RETAINING RING	
220	312101-0381	-		4	SCREW M6S6X55FZB	
230	312812-0316	-		4	LOCK NUT A2-M6RFR	
240	315101-0153	-		4	WASHER BRB6,4X12FZB	
VOLUME 750 S						
000	**C- 440285-0103**	**-**		**2**	**PAPER REEL HOLDER**	
010	G- 272814	C		1	SLEEVE	
020	G- 272815-0001	C		1	SLEEVE	
050	G- 575002	S		2	PLUNGER	
090	544277	C		2	RETAINING RING	
210	311112-0350	-		2	SLOTTED TURP 6X55 RFR	
220	312101-0381	-		2	SCREW M6S6X55FZB	
230	312812-0316	-		2	LOCK NUT A2-M6RFR	
240	315101-0153	-		2	WASHER BRB6,4X12FZB	
VOLUMES 1000 S						
000	**C- 440285-0104**	**-**		**2**	**PAPER REEL HOLDER**	
010	G- 569944	C		1	SLEEVE	
020	G- 569945	C		1	SLEEVE	
050	G- 575003	S		2	PLUNGER	
220	312101-0381	-		2	SCREW M6S6X55FZB	
230	312812-0316	-		2	LOCK NUT A2-M6RFR	
240	315101-0153	-		2	WASHER BRB6,4X12FZB	
VOLUMES 1000 Sq, 500 Sq						
000	**C- 440285-0105**	**-**		**2**	**PAPER REEL HOLDER**	
010	G- 272814	C		1	SLEEVE	
020	G- 272815-0001	C		1	SLEEVE	
050	G- 575002	S		2	PLUNGER	
090	574051	-		2	RETAINING RING	
Common parts						
030	440260	C		1	SHAFT	
080	G- 272728	S		1	BARRIER	
150	90335-0025	P		3	SPRING	
200	311103-0274	-		2	CYLINDRICACP 4X25 RFR	

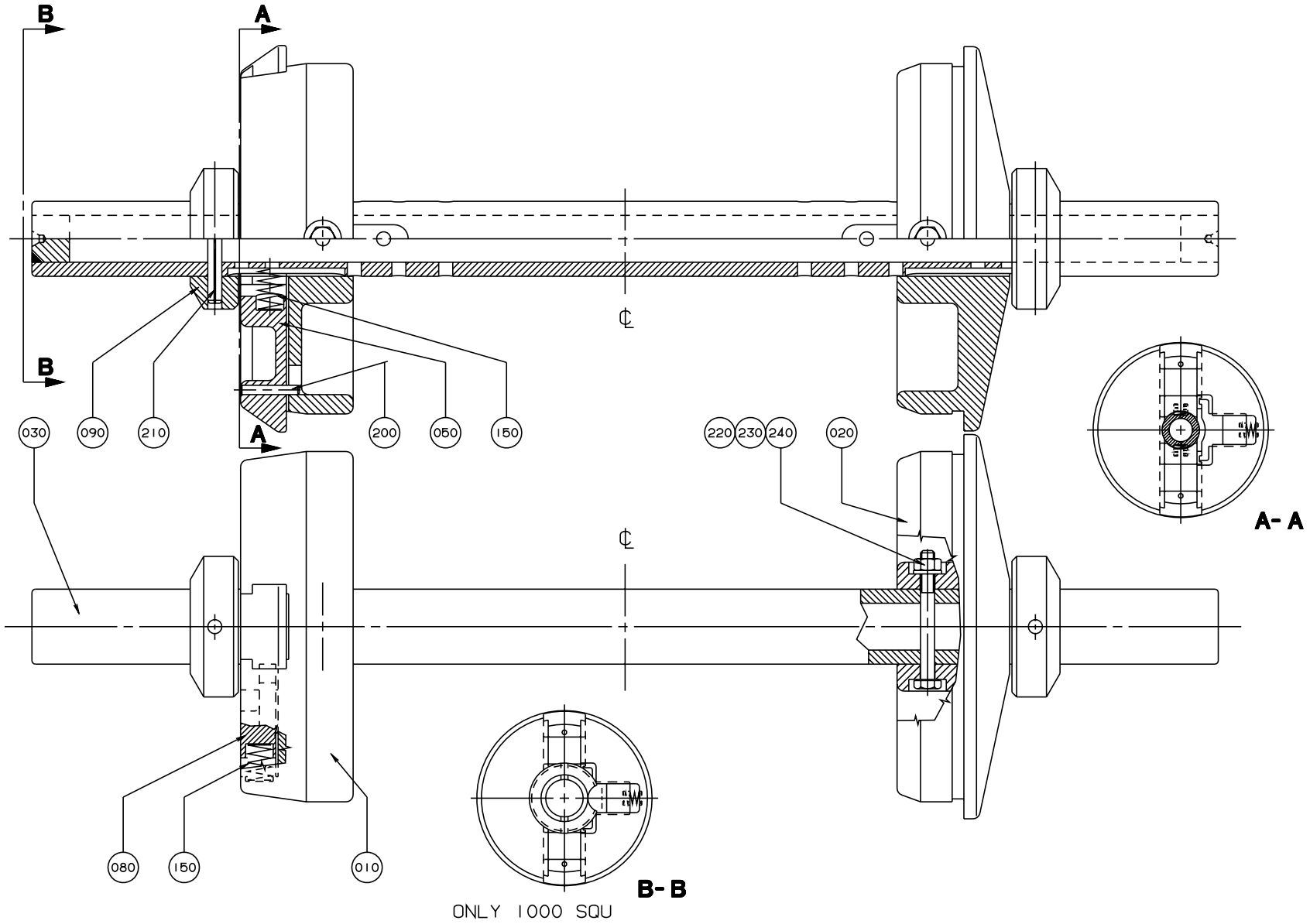

S-440285-2
ECN 20830

Pos	Part No	SP	UN	Qty	Description	Page No
VOLUMES 1136 B, 1055 B, 1000 B, 750 B, 568 B, 500 B						
000	**C- 440285-0101**	**-**		**2**	**PAPER REEL HOLDER**	
010	G- 272814	C		1	SLEEVE	
020	G- 272815-0001	C		1	SLEEVE	
050	G- 575002	S		2	PLUNGER	
220	312101-0381	-		2	SCREW M6S6X55FZB	
230	312812-0316	-		2	LOCK NUT A2-M6RFR	
240	315101-0153	-		2	WASHER BRB6,4X12FZB	
VOLUMES 375 S, 355 B, 500 S						
000	**C- 440285-0102**	**-**		**2**	**PAPER REEL HOLDER**	
010	G- 272814	C		1	SLEEVE	
020	G- 272815-0001	C		1	SLEEVE	
050	G- 575002	S		2	PLUNGER	
090	440259	C		2	RETAINING RING	
220	312101-0381	-		4	SCREW M6S6X55FZB	
230	312812-0316	-		4	LOCK NUT A2-M6RFR	
240	315101-0153	-		4	WASHER BRB6,4X12FZB	
VOLUME 750 S						
000	**C- 440285-0103**	**-**		**2**	**PAPER REEL HOLDER**	
010	G- 272814	C		1	SLEEVE	
020	G- 272815-0001	C		1	SLEEVE	
050	G- 575002	S		2	PLUNGER	
090	544277	C		2	RETAINING RING	
210	311112-0350	-		2	SLOTTED TURP 6X55 RFR	
220	312101-0381	-		2	SCREW M6S6X55FZB	
230	312812-0316	-		2	LOCK NUT A2-M6RFR	
240	315101-0153	-		2	WASHER BRB6,4X12FZB	
VOLUMES 1000 S						
000	**C- 440285-0104**	**-**		**2**	**PAPER REEL HOLDER**	
010	G- 569944	C		1	SLEEVE	
020	G- 569945	C		1	SLEEVE	
050	G- 575003	S		2	PLUNGER	
220	312101-0381	-		2	SCREW M6S6X55FZB	
230	312812-0316	-		2	LOCK NUT A2-M6RFR	
240	315101-0153	-		2	WASHER BRB6,4X12FZB	
VOLUMES 1000 Sq, 500 Sq						
000	**C- 440285-0105**	**-**		**2**	**PAPER REEL HOLDER**	
010	G- 272814	C		1	SLEEVE	
020	G- 272815-0001	C		1	SLEEVE	
050	G- 575002	S		2	PLUNGER	
090	574051	-		2	RETAINING RING	
Common parts						
030	440260	C		1	SHAFT	
080	G- 272728	S		1	BARRIER	
150	90335-0025	P		3	SPRING	
200	311103-0274	-		2	CYLINDRICACP 4X25 RFR	

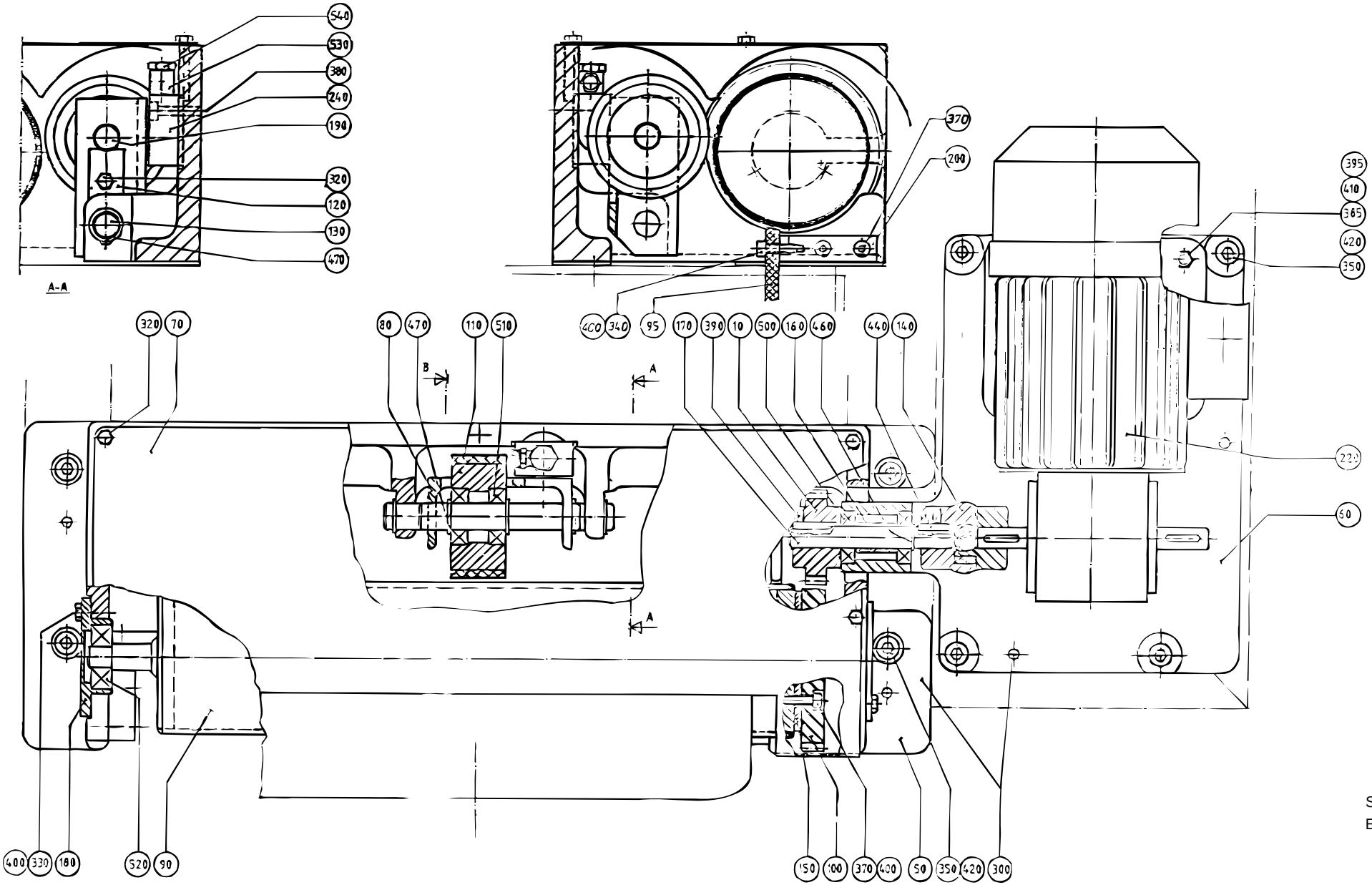

S-445840-1
ECN 9113

Pos	Part No	SP	UN	Qty	Description	Page No
-						
000	**C- 445840-0101**	**-**		**1**	**DRIVE UNIT**	
010	445854-0002	C		1	GEAR WHEEL	
050	G- 445841	C		1	CANTILEVER	
060	G- 445842	C		1	MOTOR PLATE	
070	450363	-		1	LID	
080	445837	C		1	CANTILEVER	
090	445845	C		1	DRIVE ROLLER	
095	526680	-		1	FENDER WALING	
100	207019-0003	C		1	GEAR WHEEL	
110	266710	C		1	WHEEL	
120	445839	-		1	SECURING PLATE	
130	445847	-		1	SHAFT	
140	445848	C		1	ELASTIC COUPLING	
150	445849	-		1	SPACER DISC	
160	445850	C		1	SPACER SLEEVE	
170	445851	C		1	SHAFT	
180	445852	C		2	LID	
190	445838	-		1	SHAFT	
200	476503	-		2	BRACKET	
220	90069-0281	S		1	WORM GEAR MOTOR	
240	90239-0259	S		1	CYLINDER	
300	311102-0353	-		4	CYLINDRICACP M6 6X20	
320	312101-0323	-		6	SCREW M6S5X8FZB	
330	312101-0329	-		6	SCREW M6S5X16FZB	
340	312105-0331	-		2	SCREW O4017 M5X20A280	
350	312111-0449	-		8	SCREW MC6S8X16FZB	
370	312111-0331	-		7	SCREW MC6S5X20FZB	
380	312111-0333	-		2	SCREW MC6S5X25FZB	
385	312111-0371	-		4	SCREW MC6S6X22FZB	
390	312316-0285	-		1	STOP SCREW SK6SS4X6FZB	
395	312601-0316	-		4	NUT M6M6FZB	
400	315101-0146	-		11	WASHER BRB5,3X10FZB	
410	315101-0153	-		4	WASHER BRB6,4X12FZB	
420	315101-0165	-		8	WASHER BRB8,4X16FZB	
440	315701-0169	-		2	FLAT WEDGE4X4X18	
460	315750-0109	-		1	CIRCLIP SGA12	
470	315750-0112	-		4	CIRCLIP SGA15	
500	321308-0201	-		2	BALL BEARISKF6001-2RS	
510	321308-0202	-		2	BALL BEARISKF6002-2RS	
520	321316-0201	-		2	BALL BEARISKF6301-2RS	
530	342980-0113	-		1	BANJO CONNSINGEL 6/4-1/8	
540	342980-0303	-		1	BANJO CONN SINGEL 1/8"	

Pos	Part No	SP	UN	Qty	Description	Page No
-	S- 556875-SHEET 1	-		-	COVER,COMPENSATING	

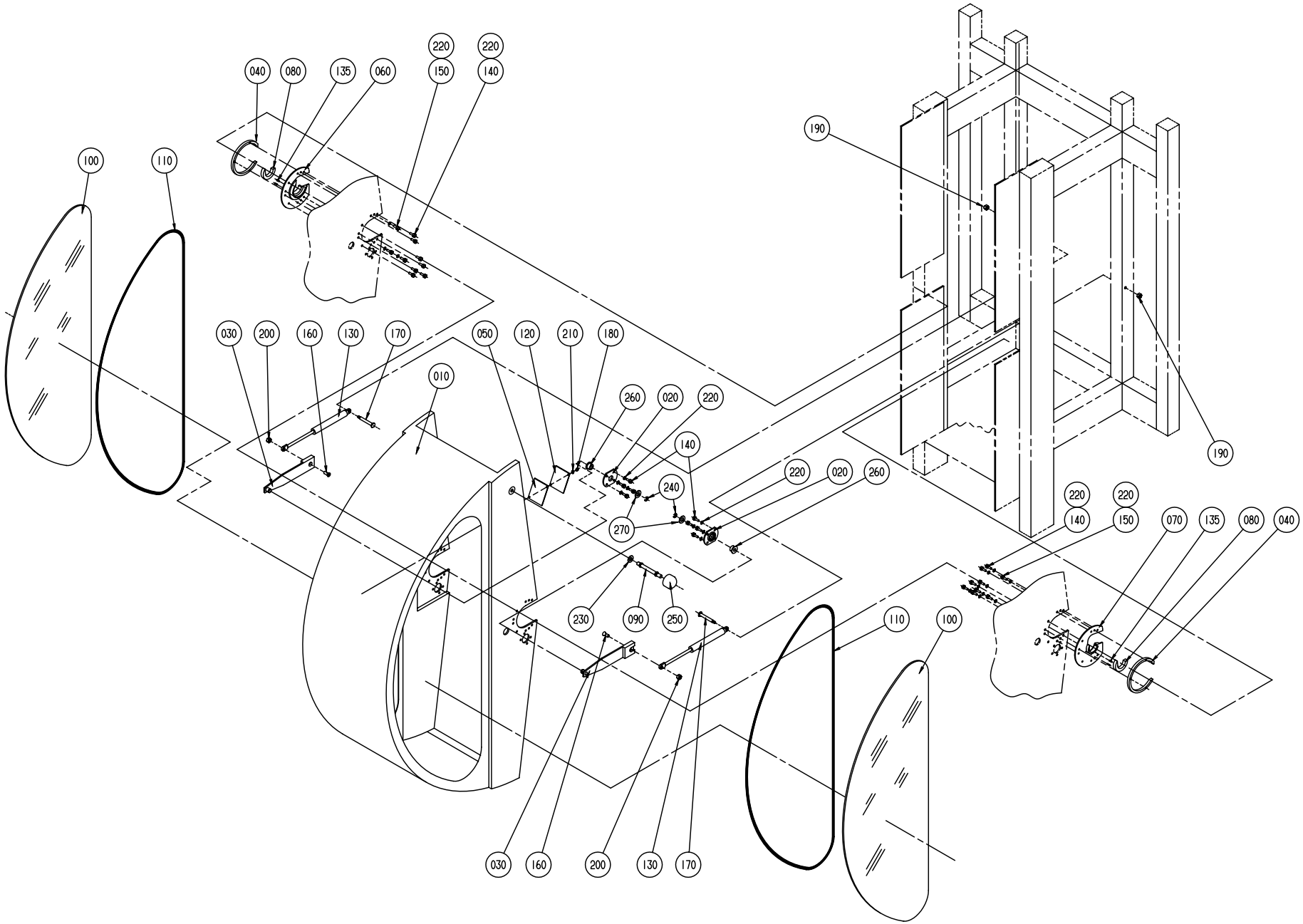

S-556875-1
ECN 70071

Pos	Part No	SP	UN	Qty	Description	Page No
-						
000	**C- 556875-0101**	**-**		**1**	**COVER**	
010	556879	-		1	COVER	
020	556872	-		2	BEARING UNIT	
030	556873	-		2	EXTENSION PIECE	
040	556874	-		2	BLOCKING RING	
050	1143605	-		1	SPACER	
060	440247	-		1	HOLDER	
070	440248	-		1	HOLDER	
080	440249	P		2	SLIDE BELT	
090	440250	-		1	AXLE PIN	
100	440251	C		2	GLASS PANE	
110	90143-0039	C	MM	5200	STRIP	
120	90232-0333	C		1	REFLECTOR	
130	90347-0108	-		2	DAMPER	
135	311103-0233	-		4	CYLINDRICACP M6 3X10 RFR	
140	312105-0323	-		22	SCREW O4017 M5X8A280	
150	312105-0331	-		6	SCREW O4017 M5X20A280	
160	312155-0453	-		2	SCREW MF6S8X25RFR	
170	568166	-		2	REAMED BOLT	
180	312605-0310	-		2	NUT M6M3RFR	
190	312605-0316	-		2	NUT M6M6 A280 STAINLESS	
200	312811-0318	-		2	LOCK NUT M8RFR	
210	315105-0124	-		2	WASHER BRB3,2X6RFR	
220	315105-0146	-		28	WASHER BRB5,3X10RFR	
230	315105-0173	-		1	WASHER BRB10,5X22RFR	
240	315755-0111	-		2	LOCKING WAE 10 RFR	
250	318800-0106	-		1	HANDLE BALLA D.40-M10	
260	321111-0157	-		2	FLANGE BUS 12E7X8	
270	321129-0104	-		2	THRUST WAS12/24X1,5	

Pos	Part No	SP	UN	Qty	Description	Page No

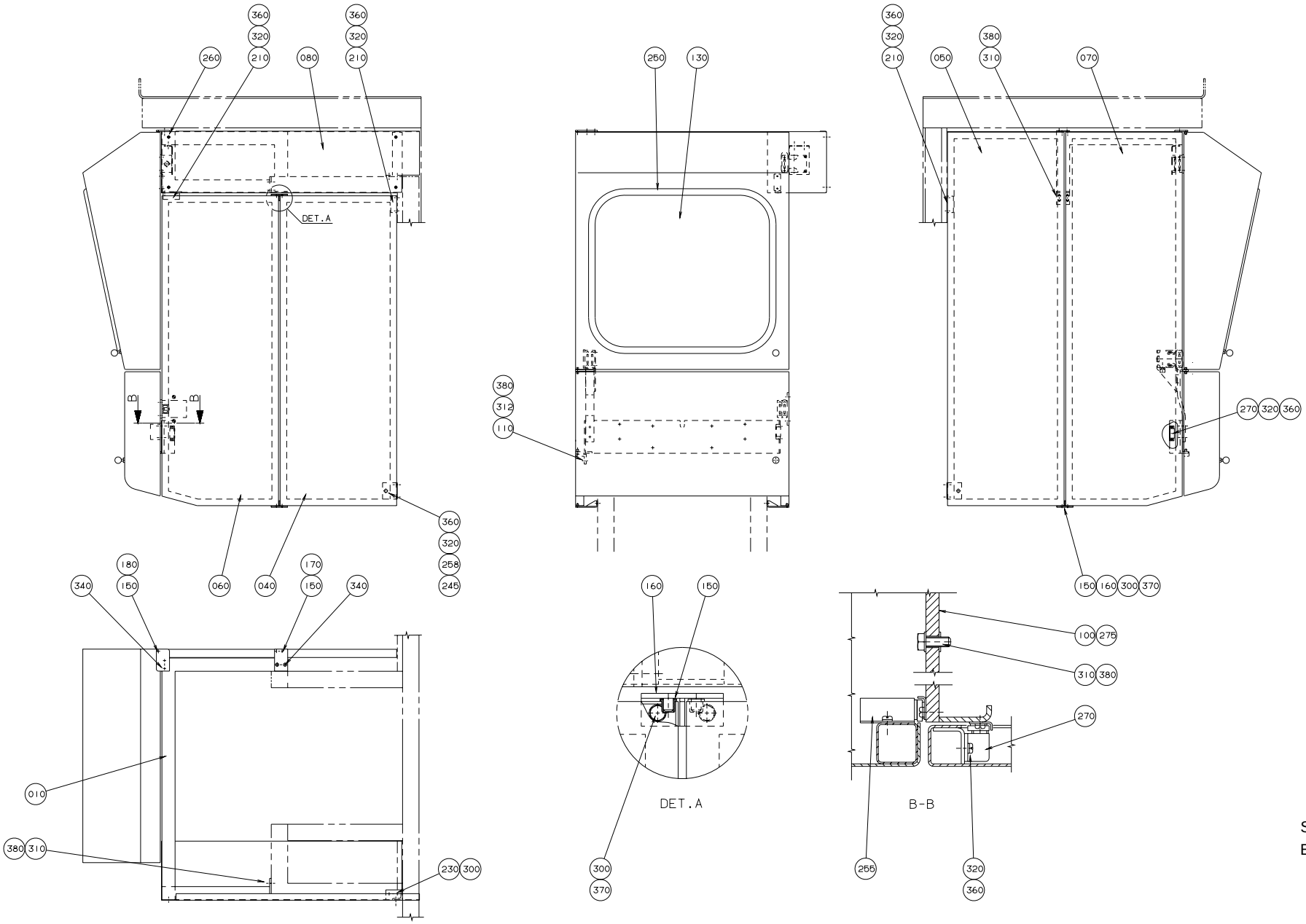

S-530745-4
ECN 20082

Pos	Part No	SP	UN	Qty	Description	Page No
-						
000	**C- 530745-0401**	**-**		**1**	**SIDE GUARD**	
010	445861	-		1	FRAME	
020	571418	-		1	HOOD	
030	571419	-		1	HOOD	
040	445863	-		1	PROTECTION	
050	529498	-		1	SIDE GUARD RIGHT	
060	573507	-		1	SIDE GUARD	
070	529476	-		1	SIDE GUARD	
080	571421	-		1	COVER	
100	573508	-		1	MOUNTING BAR	
110	556868	-		1	ANGLE	
115	571424	-		1	HINGE	
120	571425	-		1	BRACKET	
125	572246	-		1	BRACKET	
130	571423	-		1	GLASS PANE	
135	576410	-		1	BRACKET	
150	436991	S		10	BEARING	
160	445872	-		3	HINGE	
170	445873	-		1	HINGE	
180	445874	-		1	HINGE	
210	445877	-		3	SUPPORT	
230	445879	-		1	SUPPORT	
245	525385	-		2	BRACKET	
247	90044-0103	-		2	KEY SAFETY SWITCH AZ15ZVR	
248	90044-0139	-		1	KEY SAFETY SWITCH	
250	90143-0039	-	MM	2000	STRIP	
255	90237-0046	-		2	LOCK PART	
258	90237-0075	-		2	SNAP LOCK	
260	90287-0075	-		6	SCREW	
265	90287-0076	-		2	SCREW	
270	90339-0011	-		2	LOCK	
275	311102-0350	-		2	CYLINDRICACP M6 6X14	
278	311103-0270	-		2	CYLINDRICACP M6 4X16 RFR	
300	312105-0327	-		12	SCREW ISO 4017 M5X12A280	
310	312105-0368	-		10	SCREW O4017 M6X16A280	
312	312105-0370	-		1	SCREW O4017 M6X20A280	
315	312105-0455	-		2	SCREW O4017 M8X30A280	
320	312125-0222	-		28	SLOTTED HEMCS3X8RFR	
330	312125-0329	-		6	SLOTTED HEMCS5X16RFR	
335	312145-0323	-		6	SLOTTED HEMFS5X8RFR	
340	312155-0327	-		4	SCREW	
345	312605-0314	-		4	NUT M6M5RFR	
355	312605-0318	-		2	NUT M6M8RFR	
358	312812-0316	-		2	LOCK NUT A2-M6RFR	
360	315105-0124	-		28	WASHER BRB3,2X6RFR	
370	315105-0146	-		18	WASHER BRB5,3X10RFR	
380	315105-0153	-		17	WASHER BRB6,4X12RFR	
390	318800-0104	-		2	HANDLE BALLA D.30-M8	

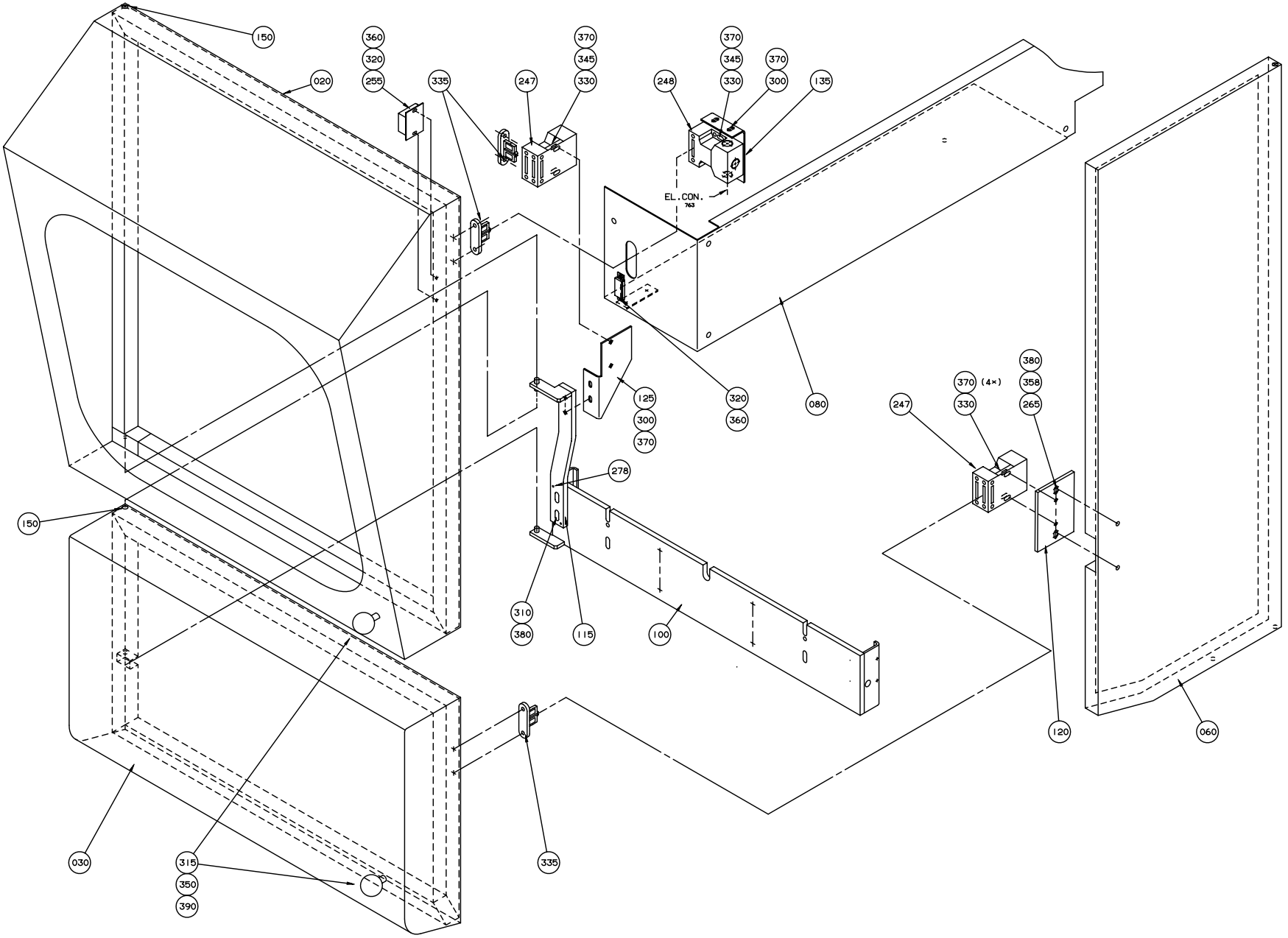

S-530745-5
ECN 70050

Pos	Part No	SP	UN	Qty	Description	Page No
-						
000	**C- 530745-0401**	**-**		**1**	**SIDE GUARD**	
010	445861	-		1	FRAME	
020	571418	-		1	HOOD	
030	571419	-		1	HOOD	
040	445863	-		1	PROTECTION	
050	529498	-		1	SIDE GUARD RIGHT	
060	573507	-		1	SIDE GUARD	
070	529476	-		1	SIDE GUARD	
080	571421	-		1	COVER	
100	573508	-		1	MOUNTING BAR	
110	556868	-		1	ANGLE	
115	571424	-		1	HINGE	
120	571425	-		1	BRACKET	
125	572246	-		1	BRACKET	
130	571423	-		1	GLASS PANE	
135	576410	-		1	BRACKET	
150	436991	S		10	BEARING	
160	445872	-		3	HINGE	
170	445873	-		1	HINGE	
180	445874	-		1	HINGE	
210	445877	-		3	SUPPORT	
230	445879	-		1	SUPPORT	
245	525385	-		2	BRACKET	
247	90044-0103	-		2	KEY SAFETY SWITCH AZ15ZVR	
248	90044-0139	-		1	KEY SAFETY SWITCH	
250	90143-0039	-	MM	2000	STRIP	
255	90237-0046	-		2	LOCK PART	
258	90237-0075	-		2	SNAP LOCK	
260	90287-0075	-		6	SCREW	
265	90287-0076	-		2	SCREW	
270	90339-0011	-		2	LOCK	
275	311102-0350	-		2	CYLINDRICACP M6 6X14	
278	311103-0270	-		2	CYLINDRICACP M6 4X16 RFR	
300	312105-0327	-		12	SCREW ISO 4017 M5X12A280	
310	312105-0368	-		10	SCREW O4017 M6X16A280	
312	312105-0370	-		1	SCREW O4017 M6X20A280	
315	312105-0455	-		2	SCREW O4017 M8X30A280	
320	312125-0222	-		28	SLOTTED HEMCS3X8RFR	
330	312125-0329	-		6	SLOTTED HEMCS5X16RFR	
335	312145-0323	-		6	SLOTTED HEMFS5X8RFR	
340	312155-0327	-		4	SCREW	
345	312605-0314	-		4	NUT M6M5RFR	
355	312605-0318	-		2	NUT M6M8RFR	
358	312812-0316	-		2	LOCK NUT A2-M6RFR	
360	315105-0124	-		28	WASHER BRB3,2X6RFR	
370	315105-0146	-		18	WASHER BRB5,3X10RFR	
380	315105-0153	-		17	WASHER BRB6,4X12RFR	
390	318800-0104	-		2	HANDLE BALLA D.30-M8	

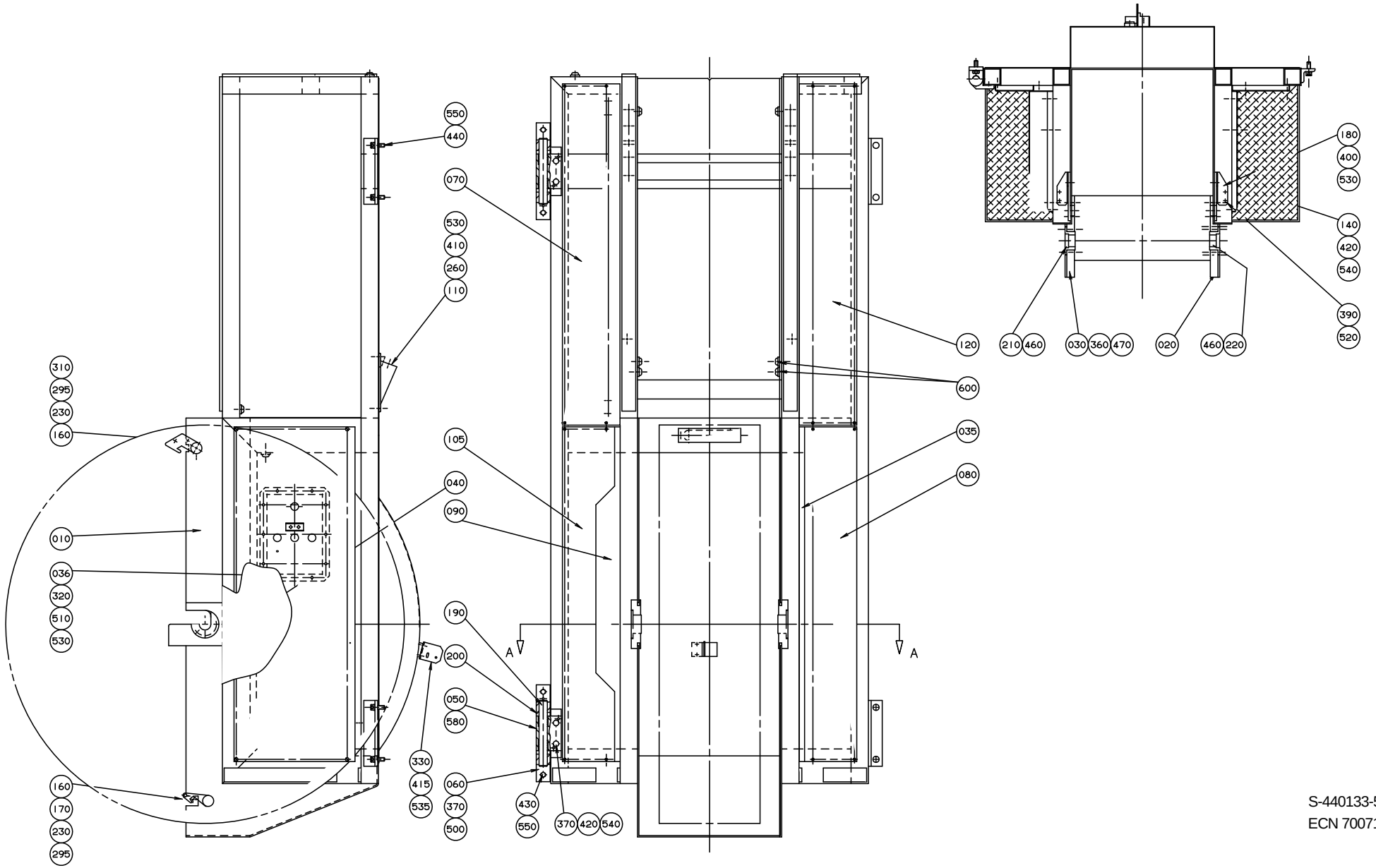

S-440133-5
ECN 70071

Pos	Part No	SP	UN	Qty	Description	Page No
-						
000	**C- 440133-0401**	**-**		**1**	**MACHINE BODY**	
010 1	531337	-		1	MACHINE BODY	
020	440185	-		1	HOLDER	
030	440186	-		1	HOLDER	
035	549830	-		1	PROTECTION PLATE	
036	532026	-		1	SEAL COVER	
040	440192	-		2	BRACKET	
050	440195	-		2	JOINT	
060	440196	-		2	HANGER	
070	440199	-		1	PROTECTION PLATE	
080	440200	-		1	PROTECTION PLATE	
090	440202	-		1	PROTECTION PLATE	
105	445857	-		1	PROTECTION PLATE	
110	G- 464141	-		1	LEAD-IN PLATE	
120	445935	-		1	PROTECTION PLATE	
140	445937	-		2	STAIRCASE	
160	1013	-		2	SHAFT	
170	476117	-		1	CATCH	
180	440193	-		2	HOLDER	
190	440197	-		2	SHAFT	
200	440198	S		4	WASHER	
210	440252	P		1	SLEEVE	
220	440253	P		1	SLEEVE	
230	440271	-		2	SCREW	
240	445934	-		1	LID	
260	445929	C		1	GASKET	
295	457358	-		2	SLEEVE	
310	568167	-		1	CATCH	
320	532024	-		1	GASKET	
330	1195094	-		1	BRACKET	
340	540729	-		1	FASTENING BRACKET	
360	311103-0353	-		4	CYLINDRICACP M6 6X20 RFR	
370	311103-0355	-		6	CYLINDRICACP M6 6X25 RFR	
390	312105-0293	-		4	SCREW O4017 M4X16A280	
400	312105-0325	-		6	SCREW M6S5X10 A2 80	
410	312105-0329	-		4	SCREW O4017 M5X16A280	
415	312105-0368	-		2	SCREW O4017 M6X16A280	
420	312105-0451	-		10	SCREW SO4017 8X20A280	
430	312105-0495	-		4	SCREW 4017 M10X30A280	
440	312115-0495	-		4	SCREW 4762 M10X30A280	
450	312125-0323	-		2	SLOTTED HEMCS5X8RFR	
460	312155-0327	-		4	SCREW	
470	312155-0451	-		8	SCREW MF6S8X20RFR	
500	312318-0362	-		4	STOP SCREW SK6SS6X8RFR	
510	312605-0314	-		10	NUT M6M5RFR	
520	315105-0136	-		4	WASHER BRB4,3X8RFR	
530	315105-0146	-		18	WASHER BRB5,3X10RFR	
535	315105-0153	-		2	WASHER BRB6,4X12RFR	
540	315105-0165	-		10	WASHER BRB8,4X16RFR	
550	315105-0173	-		8	WASHER BRB10,5X22RFR	
580	321105-0234	-		4	BUSHING 20F7X28X30	
600	352101-0103	-		18	CABLE GLAND 6-11MM PR18,6	

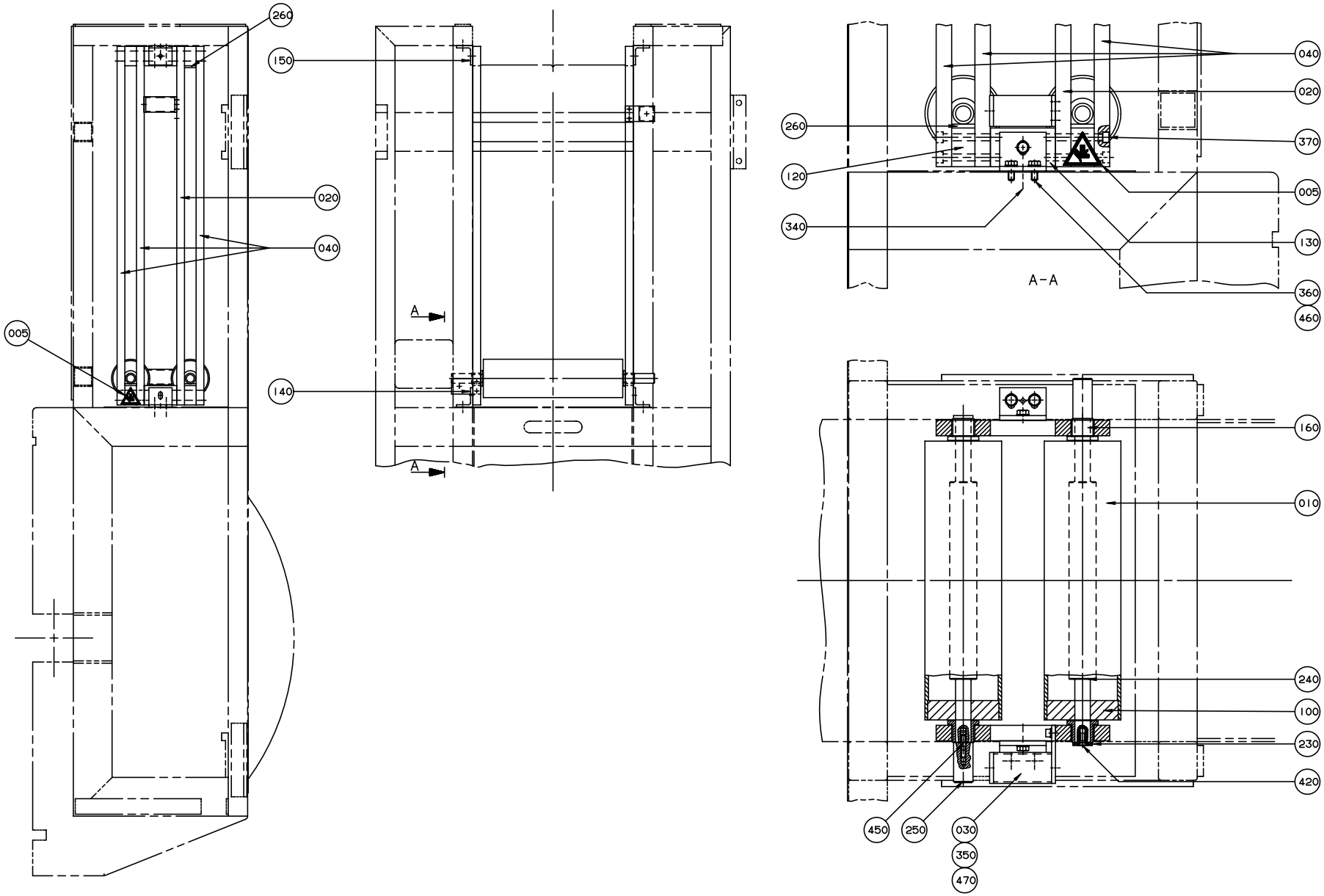

S-440210-1
ECN 70286

Pos	Part No	SP	UN	Qty	Description	Page No
VOLUMES 1055 B, 1000 B, 1000 S, 750 S, 750 B, 568 B, 500 B, 1000 Sq, 500 Sq						
000	**C- 440210-0201**	**-**		**1**	**ROLL**	
130	440213	-		4	LUG	
240 1	476401	C		2	SHAFT	
460	315105-0165	-		12	WASHER BRB8,4X16RFR	
VOLUMES 375 S, 500 S, 355 B, 400 B						
000	**C- 440210-0202**	**-**		**1**	**ROLL**	
130	440213	-		4	LUG	
240 2	466086	C		2	SHAFT	
460	315105-0165	-		12	WASHER BRB8,4X16RFR	
Common parts						
005	359705-0005	-		2	WARNING SIGN"MOVING PART"	
010	226097-0002	-		2	BENDING ROLLER	
020	440211	-		2	GUIDE	
030	445927	-		2	HOLDER	
040	476556	-		6	GUIDE	
100	226098	S		4	BEARING	
120	440212	-		8	LUG	
140	440214	-		2	HOLDER	
150	440215	-		2	HOLDER	
160	440217	S		4	BUSHING	
230	445926	-		2	WASHER	
250	476015	-		2	DOWEL	
260	476016	-		6	RUBBER	
340	311103-0350	-		4	CYLINDRICACP M6 6X14 RFR	
350	312115-0370	-		4	SCREW O4762 M6X20A280	
360	312105-0451	-		12	SCREW SO4017 8X20A280	
370	312111-0467	-		16	SCREW MC6S8X80FZB	
420	312155-0368	-		2	SCREW MF6S6X16RFR	
450	312303-0374	-		2	STUD SCREWMPS 6X25 RFR	
470	315105-0153	-		4	WASHER BRB6,4X12RFR	

Pos	Part No	SP	UN	Qty	Description	Page No

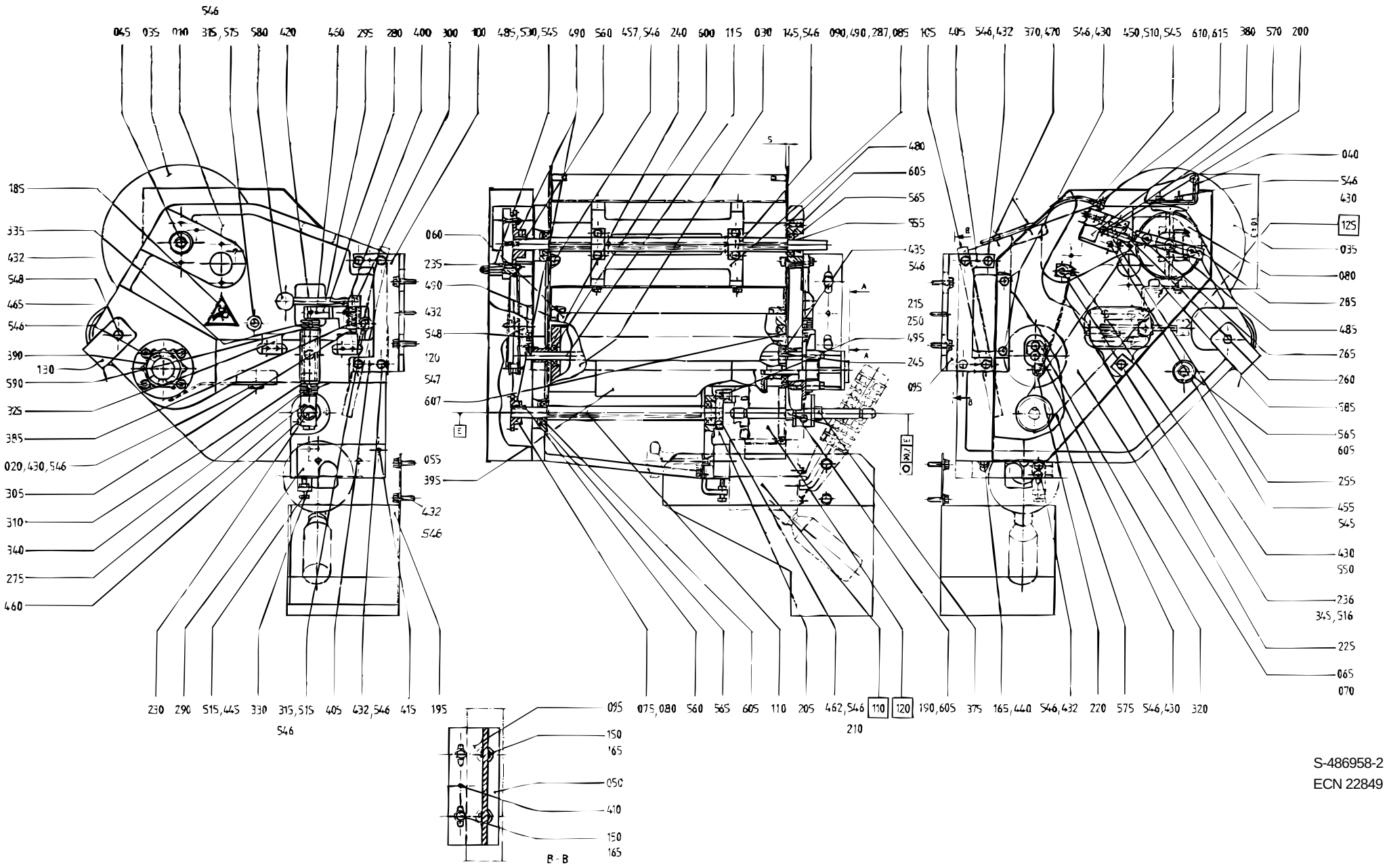
S-486958-2
ECN 22849

Pos	Part No	SP	UN	Qty	Description	Page No
VOLUME 1055 B						
000	**C- 486958-0201**	**-**		**1**	**DATING UNIT**	
010	G- 484848-0001	-		1	MACHINE BODY	
020	573827-0001	-		1	PROTECTION	
030	293621-0001	C		1	BENDING ROLLER	
035	293624-0001	-		2	PROTECTION PLATE	
040	458105	S		2	CREASE FORMER	
045	486960-0001	C		1	SHAFT	
055	532719-0001	C		1	FEEDING ROLLER	
060	533449-0001	C		1	BENDING ROLLER	
065	533453	-		1	LID	
070	533454	-		1	FRAME	
075	32629	S		1	SPROCKET	
080	32630	S		1	SPROCKET	
085	G- 538241-0001	-		1	SPACER	
090	539338	-		2	CAP	
095	486962-0001	-		2	FASTENING BRACKET	
105	486964	-		1	HEAD PLATE	
110	486966-0001	-		1	SHAFT	
115	486968-0001	-		1	SHAFT FOR BENDINGROLLER	
120	533457-0001	-		1	SHAFT	
130	575786	-		1	PAPER SUPPORT	
150	312105-0451	-		4	SCREW SO4017 8X20A280	
165	315105-0165	-		5	WASHER BRB8,4X16RFR	
490	312318-0323	-		8	STOP SCREW SK6SS5X8RFR	
546	315105-0153	-		42	WASHER BRB6,4X12RFR	
VOLUME 1000 B LOFIN						
000	**C- 486958-0202**	**-**		**1**	**DATING UNIT**	
010	G- 484848-0001	-		1	MACHINE BODY	
020	573827-0001	-		1	PROTECTION	
030	293621-0001	C		1	BENDING ROLLER	
035	293624-0001	-		2	PROTECTION PLATE	
040	458105	S		2	CREASE FORMER	
045	486960-0001	C		1	SHAFT	
055	532719-0001	C		1	FEEDING ROLLER	
060	533449-0001	C		1	BENDING ROLLER	
065	533453	-		1	LID	
070	533454	-		1	FRAME	
075	32629	S		1	SPROCKET	
080	32630	S		1	SPROCKET	
085	G- 538241-0002	-		1	SPACER	
090	539338	-		2	CAP	
095	486962-0001	-		2	FASTENING BRACKET	
105	486964	-		1	HEAD PLATE	
110	486966-0001	-		1	SHAFT	
115	486968-0001	-		1	SHAFT FOR BENDINGROLLER	
120	533457-0001	-		1	SHAFT	
130	575786	-		1	PAPER SUPPORT	
150	312105-0451	-		4	SCREW SO4017 8X20A280	
165	315105-0165	-		5	WASHER BRB8,4X16RFR	
490	312318-0323	-		8	STOP SCREW SK6SS5X8RFR	
546	315105-0153	-		42	WASHER BRB6,4X12RFR	
VOLUME 1000 B HIFIN						
000	**C- 486958-0203**	**-**		**1**	**DATING UNIT**	
010	G- 484848-0001	-		1	MACHINE BODY	
020	573827-0001	-		1	PROTECTION	
030	293621-0001	C		1	BENDING ROLLER	
035	293624-0001	-		2	PROTECTION PLATE	
040	458104	S		2	CREASE FORMER	
045	486960-0001	C		1	SHAFT	
055	532719-0001	C		1	FEEDING ROLLER	
060	533449-0001	C		1	BENDING ROLLER	
065	533453	-		1	LID	
070	533454	-		1	FRAME	
075	32629	S		1	SPROCKET	
080	32630	S		1	SPROCKET	
085	G- 538241-0003	-		1	SPACER	
090	539338	-		2	CAP	
095	486962-0001	-		2	FASTENING BRACKET	
105	486964	-		1	HEAD PLATE	
110	486966-0001	-		1	SHAFT	
115	486968-0001	-		1	SHAFT FOR BENDINGROLLER	
120	533457-0001	-		1	SHAFT	
130	575786	-		1	PAPER SUPPORT	
150	312105-0451	-		4	SCREW SO4017 8X20A280	
165	315105-0165	-		5	WASHER BRB8,4X16RFR	
490	312318-0323	-		8	STOP SCREW SK6SS5X8RFR	
546	315105-0153	-		42	WASHER BRB6,4X12RFR	
VOLUME 750 B						
000	**C- 486958-0204**	**-**		**1**	**DATING UNIT**	
010	G- 484848-0002	-		1	MACHINE BODY	
020	573827-0002	-		1	PROTECTION	
030	293621-0001	C		1	BENDING ROLLER	

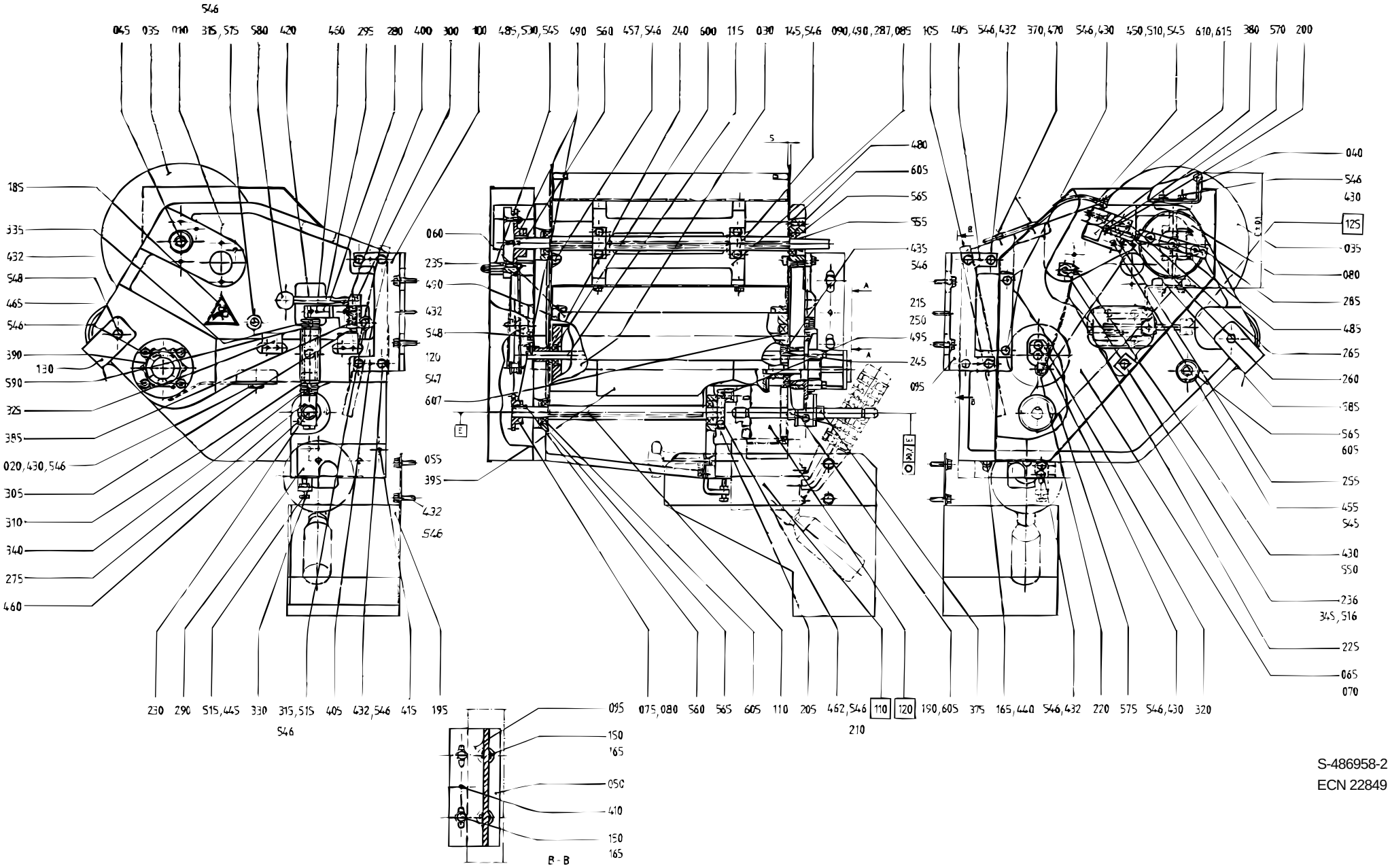

S-486958-2
ECN 22849

Pos	Part No	SP	UN	Qty	Description	Page No
035	293624-0001	-		2	PROTECTION PLATE	
040	458105	S		2	CREASE FORMER	
045	486960-0001	C		1	SHAFT	
055	532719-0001	C		1	FEEDING ROLLER	
060	533449-0001	C		1	BENDING ROLLER	
065	533453	-		1	LID	
070	533454	-		1	FRAME	
075	32629	S		1	SPROCKET	
080	32630	S		1	SPROCKET	
085	G- 543137-0001	-		1	SPACER	
090	539338	-		2	CAP	
095	486962-0001	-		2	FASTENING BRACKET	
105	486964	-		1	HEAD PLATE	
110	486966-0001	-		1	SHAFT	
115	486968-0001	-		1	SHAFT FOR BENDINGROLLER	
120	533457-0001	-		1	SHAFT	
130	575786	-		1	PAPER SUPPORT	
150	312105-0451	-		4	SCREW SO4017 8X20A280	
165	315105-0165	-		5	WASHER BRB8,4X16RFR	
490	312318-0323	-		8	STOP SCREW SK6SS5X8RFR	
546	315105-0153	-		42	WASHER BRB6,4X12RFR	
VOLUME 568 B						
000	**C- 486958-0205**	**-**		**1**	**DATING UNIT**	
010	G- 484848-0003	-		1	MACHINE BODY	
020	573827-0003	-		1	PROTECTION	
030	293621-0001	C		1	BENDING ROLLER	
035	293624-0002	-		2	PROTECTION PLATE	
040	458106	S		2	CREASE FORMER	
045	544367	C		1	SHAFT	
055	532719-0001	C		1	FEEDING ROLLER	
060	533449-0001	C		1	BENDING ROLLER	
065	533453	-		1	LID	
070	533454	-		1	FRAME	
080	32630	S		2	SPROCKET	
085	440282-0003	-		2	SPACER	
095	486962-0001	-		2	FASTENING BRACKET	
105	486964	-		1	HEAD PLATE	
110	486966-0001	-		1	SHAFT	
115	486968-0001	-		1	SHAFT FOR BENDINGROLLER	
120	533457-0001	-		1	SHAFT	
130	576217	-		1	PAPER SUPPORT	
150	312105-0451	-		4	SCREW SO4017 8X20A280	
165	315105-0165	-		5	WASHER BRB8,4X16RFR	
490	312318-0323	-		6	STOP SCREW SK6SS5X8RFR	
546	315105-0153	-		42	WASHER BRB6,4X12RFR	
VOLUME 500 B						
000	**C- 486958-0206**	**-**		**1**	**DATING UNIT**	
010	G- 484848-0003	-		1	MACHINE BODY	
020	573827-0003	-		1	PROTECTION	
030	293621-0001	C		1	BENDING ROLLER	
035	293624-0002	-		2	PROTECTION PLATE	
040	458106	S		2	CREASE FORMER	
045	544367	C		1	SHAFT	
055	532719-0001	C		1	FEEDING ROLLER	
060	533449-0001	C		1	BENDING ROLLER	
065	533453	-		1	LID	
070	533454	-		1	FRAME	
080	32630	S		2	SPROCKET	
085	440282-0004	-		2	SPACER	
095	486962-0001	-		2	FASTENING BRACKET	
105	486964	-		1	HEAD PLATE	
110	486966-0001	-		1	SHAFT	
115	486968-0001	-		1	SHAFT FOR BENDINGROLLER	
120	533457-0001	-		1	SHAFT	
130	576217	-		1	PAPER SUPPORT	
150	312105-0451	-		4	SCREW SO4017 8X20A280	
165	315105-0165	-		5	WASHER BRB8,4X16RFR	
490	312318-0323	-		6	STOP SCREW SK6SS5X8RFR	
546	315105-0153	-		42	WASHER BRB6,4X12RFR	
VOLUME 500 S						
000	**C- 486958-0207**	**-**		**1**	**DATING UNIT**	
010	G- 484848-0002	-		1	MACHINE BODY	
020	573827-0002	-		1	PROTECTION	
030	293621-0001	C		1	BENDING ROLLER	
035	293624-0001	-		2	PROTECTION PLATE	
040	458108	S		2	CREASE FORMER	
045	486960-0001	C		1	SHAFT	
050	486961	-		1	PLATE	
055	532719-0001	C		1	FEEDING ROLLER	
060	533449-0001	C		1	BENDING ROLLER	
065	533453	-		1	LID	
070	533454	-		1	FRAME	
075	32629	S		1	SPROCKET	

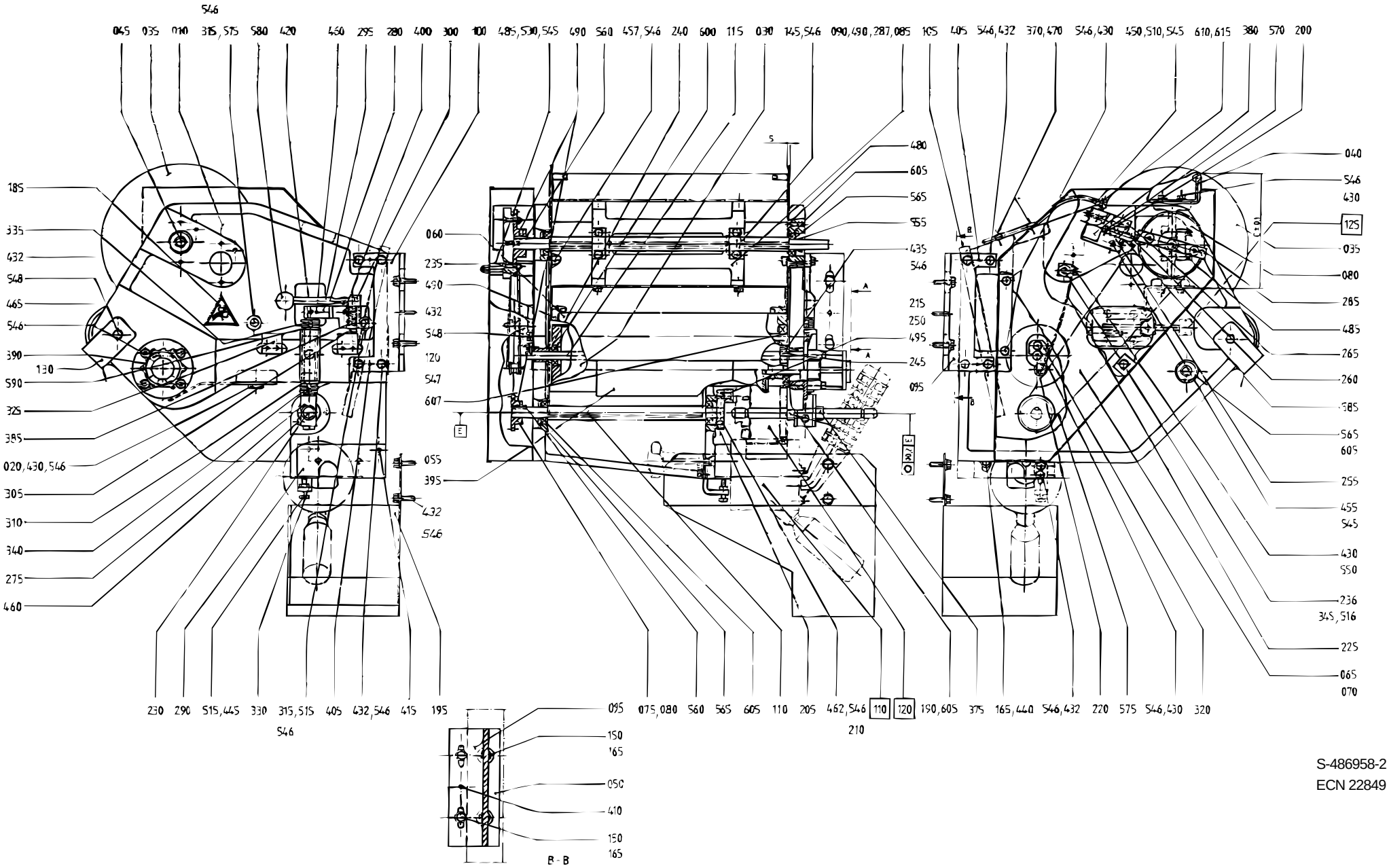

S-486958-2
ECN 22849

Pos	Part No	SP	UN	Qty	Description	Page No
080	32630	S		1	SPROCKET	
085	G- 538241-0004	-		1	SPACER	
090	539338	-		2	CAP	
095	486962-0002	-		1	FASTENING BRACKET	
100	486962-0004	-		1	FASTENING BRACKET	
105	486964	-		1	HEAD PLATE	
110	486966-0001	-		1	SHAFT	
115	486968-0001	-		1	SHAFT FOR BENDINGROLLER	
120	533457-0001	-		1	SHAFT	
130	575786	-		1	PAPER SUPPORT	
150	312105-0451	-		6	SCREW SO4017 8X20A280	
165	315105-0165	-		7	WASHER BRB8,4X16RFR	
490	312318-0323	-		8	STOP SCREW SK6SS5X8RFR	
546	315105-0153	-		42	WASHER BRB6,4X12RFR	
VOLUME 375 S						
000	**C- 486958-0208**	**-**		**1**	**DATING UNIT**	
010	G- 533448	-		1	MACHINE BODY	
030	293621-0002	C		1	BENDING ROLLER	
035	293624-0002	-		2	PROTECTION PLATE	
040	458109	S		2	CREASE FORMER	
045	486960-0002	C		1	SHAFT	
055	532719-0002	C		1	FEEDING ROLLER	
060	533449-0002	C		1	BENDING ROLLER	
065	533455	-		1	LID	
070	533456	-		1	FRAME	
075	32629	S		1	SPROCKET	
080	32630	S		1	SPROCKET	
085	G- 543138	-		1	SPACER	
090	539338	-		2	CAP	
095	486962-0003	-		2	FASTENING BRACKET	
105	486965	-		1	HEAD PLATE	
110	486966-0002	-		1	SHAFT FOR CARRIER	
115	486968-0002	-		1	SHAFT FOR BENDINGROLLER	
120	533457-0002	-		1	SHAFT	
130	576218	-		1	PAPER SUPPORT	
150	312105-0451	-		4	SCREW SO4017 8X20A280	
165	315105-0165	-		5	WASHER BRB8,4X16RFR	
490	312318-0323	-		8	STOP SCREW SK6SS5X8RFR	
546	315105-0153	-		40	WASHER BRB6,4X12RFR	
VOLUME 355 B						
000	**C- 486958-0209**	**-**		**1**	**DATING UNIT**	
010	G- 484848-0002	-		1	MACHINE BODY	
020	573827-0002	-		1	PROTECTION	
030	293621-0001	C		1	BENDING ROLLER	
035	293624-0001	-		2	PROTECTION PLATE	
040	529139	S		2	CREASE FORMER	
045	486960-0001	C		1	SHAFT	
050	486961	-		1	PLATE	
055	532719-0001	C		1	FEEDING ROLLER	
060	533449-0001	C		1	BENDING ROLLER	
065	533453	-		1	LID	
070	533454	-		1	FRAME	
075	32629	S		1	SPROCKET	
080	32630	S		1	SPROCKET	
085	G- 543137-0002	-		1	SPACER	
090	539338	-		2	CAP	
095	486962-0002	-		1	FASTENING BRACKET	
100	486962-0004	-		1	FASTENING BRACKET	
105	486964	-		1	HEAD PLATE	
110	486966-0001	-		1	SHAFT	
115	486968-0001	-		1	SHAFT FOR BENDINGROLLER	
120	533457-0001	-		1	SHAFT	
130	575786	-		1	PAPER SUPPORT	
150	312105-0451	-		6	SCREW SO4017 8X20A280	
165	315105-0165	-		7	WASHER BRB8,4X16RFR	
490	312318-0323	-		8	STOP SCREW SK6SS5X8RFR	
546	315105-0153	-		42	WASHER BRB6,4X12RFR	
VOLUME 750 S						
000	**C- 486958-0210**	**-**		**1**	**DATING UNIT**	
010	G- 484848-0001	-		1	MACHINE BODY	
020	573827-0001	-		1	PROTECTION	
030	293621-0001	C		1	BENDING ROLLER	
035	293624-0001	-		2	PROTECTION PLATE	
040	544279	S		2	CREASE FORMER	
045	486960-0001	C		1	SHAFT	
050	486961	-		1	PLATE	
055	532719-0001	C		1	FEEDING ROLLER	
060	533449-0001	C		1	BENDING ROLLER	
065	533453	-		1	LID	
070	533454	-		1	FRAME	
075	32629	S		1	SPROCKET	
080	32630	S		1	SPROCKET	
085	G- 538241-0005	-		1	SPACER	
090	539338	-		2	CAP	

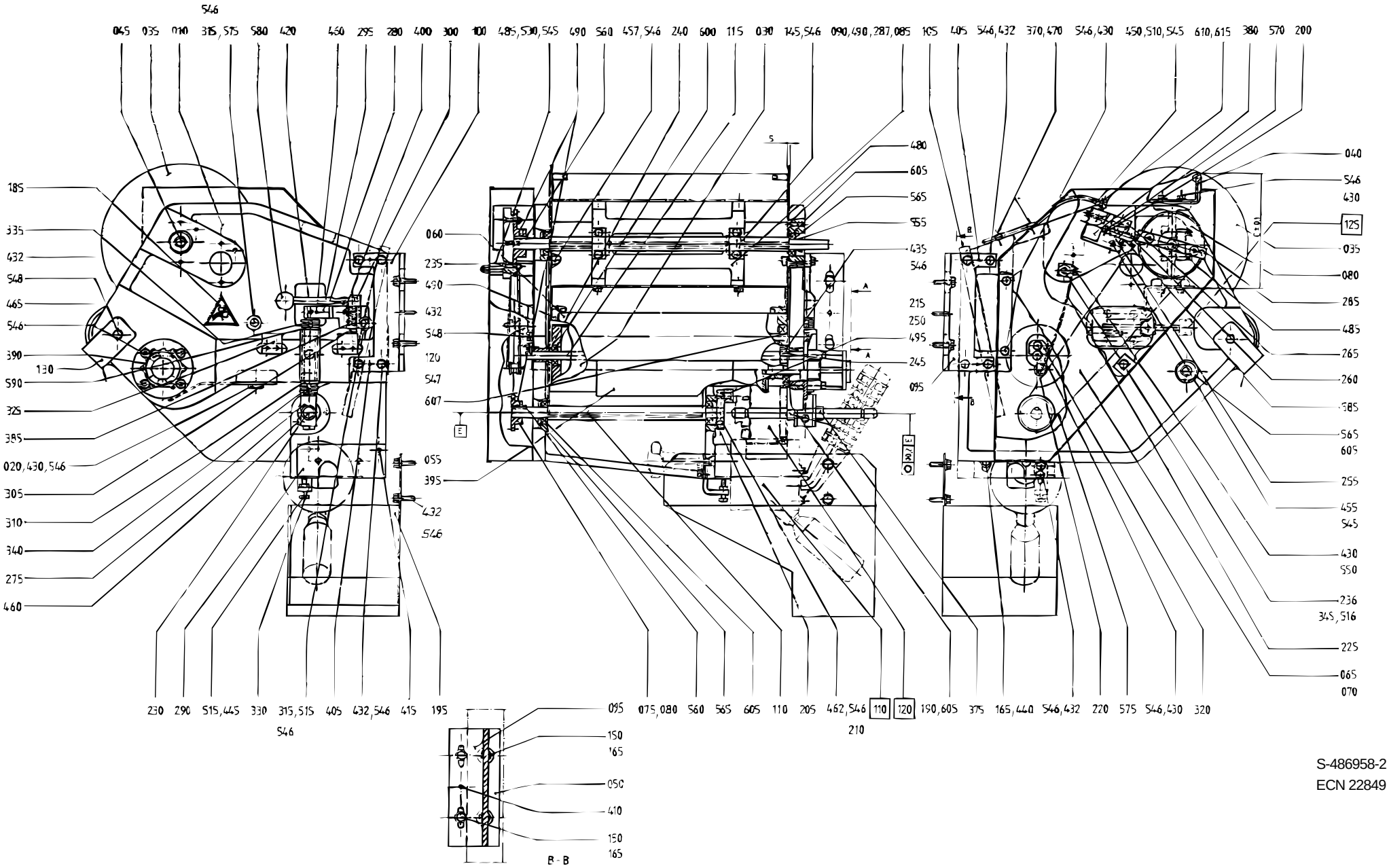

S-486958-2
ECN 22849

Pos	Part No	SP	UN	Qty	Description	Page No
095	486962-0007	-		1	FASTENING BRACKET	
100	486962-0008	-		1	FASTENING BRACKET	
105	486964	-		1	HEAD PLATE	
110	486966-0001	-		1	SHAFT	
115	486968-0001	-		1	SHAFT FOR BENDINGROLLER	
120	533457-0001	-		1	SHAFT	
130	575786	-		1	PAPER SUPPORT	
150	312105-0451	-		6	SCREW SO4017 8X20A280	
165	315105-0165	-		7	WASHER BRB8,4X16RFR	
490	312318-0323	-		8	STOP SCREW SK6SS5X8RFR	
546	315105-0153	-		42	WASHER BRB6,4X12RFR	
VOLUME 1136 B						
000	**C- 486958-0211**	**-**		**1**	**DATING UNIT**	
010	G- 484848-0001	-		1	MACHINE BODY	
020	573827-0001	-		1	PROTECTION	
030	293621-0001	C		1	BENDING ROLLER	
035	293624-0001	-		2	PROTECTION PLATE	
040	458105	S		2	CREASE FORMER	
045	486960-0001	C		1	SHAFT	
055	532719-0001	C		1	FEEDING ROLLER	
060	533449-0001	C		1	BENDING ROLLER	
065	533453	-		1	LID	
070	533454	-		1	FRAME	
075	32629	S		1	SPROCKET	
080	32630	S		1	SPROCKET	
085	G- 569652-0001	-		1	SPACER	
090	539338	-		2	CAP	
095	486962-0001	-		2	FASTENING BRACKET	
105	486964	-		1	HEAD PLATE	
110	486966-0001	-		1	SHAFT	
115	486968-0001	-		1	SHAFT FOR BENDINGROLLER	
120	533457-0001	-		1	SHAFT	
130	575786	-		1	PAPER SUPPORT	
150	312105-0451	-		4	SCREW SO4017 8X20A280	
165	315105-0165	-		5	WASHER BRB8,4X16RFR	
490	312318-0323	-		8	STOP SCREW SK6SS5X8RFR	
546	315105-0153	-		42	WASHER BRB6,4X12RFR	
VOLUME 1000 S						
000	**C- 486958-0212**	**-**		**1**	**DATING UNIT**	
010	G- 484848-0001	-		1	MACHINE BODY	
020	573827-0001	-		1	PROTECTION	
030	293621-0001	C		1	BENDING ROLLER	
035	293624-0001	-		2	PROTECTION PLATE	
040	569651	S		2	CREASE FORMER	
045	486960-0001	C		1	SHAFT	
055	532719-0001	C		1	FEEDING ROLLER	
060	533449-0001	C		1	BENDING ROLLER	
065	533453	-		1	LID	
070	533454	-		1	FRAME	
075	32629	S		1	SPROCKET	
080	32630	S		1	SPROCKET	
085	G- 569652-0002	-		1	SPACER	
090	539338	-		2	CAP	
095	486962-0010	-		1	FASTENING BRACKET	
100	486962-0009	-		1	FASTENING BRACKET	
105	486964	-		1	HEAD PLATE	
110	486966-0001	-		1	SHAFT	
115	486968-0001	-		1	SHAFT FOR BENDINGROLLER	
120	533457-0001	-		1	SHAFT	
130	575786	-		1	PAPER SUPPORT	
150	312105-0451	-		4	SCREW SO4017 8X20A280	
165	315105-0165	-		5	WASHER BRB8,4X16RFR	
490	312318-0323	-		8	STOP SCREW SK6SS5X8RFR	
546	315105-0153	-		42	WASHER BRB6,4X12RFR	
VOLUME 1000 Sq						
000	**C- 486958-0213**	**-**		**1**	**DATING UNIT**	
010	G- 484848-0001	-		1	MACHINE BODY	
020	573827-0001	-		1	PROTECTION	
030	293621-0001	C		1	BENDING ROLLER	
035	293624-0001	-		2	PROTECTION PLATE	
040	574043	-		2	CREASE FORMER	
045	486960-0001	C		1	SHAFT	
055	532719-0001	C		1	FEEDING ROLLER	
060	533449-0001	C		1	BENDING ROLLER	
065	533453	-		1	LID	
070	533454	-		1	FRAME	
075	32629	S		1	SPROCKET	
080	32630	S		1	SPROCKET	
085	G- 569652-0003	-		1	SPACER	
090	539338	-		2	CAP	
095	486962-0011	-		1	FASTENING BRACKET	
100	574044	-		1	FASTENING BRACKET	
105	486964	-		1	HEAD PLATE	
110	486966-0001	-		1	SHAFT	

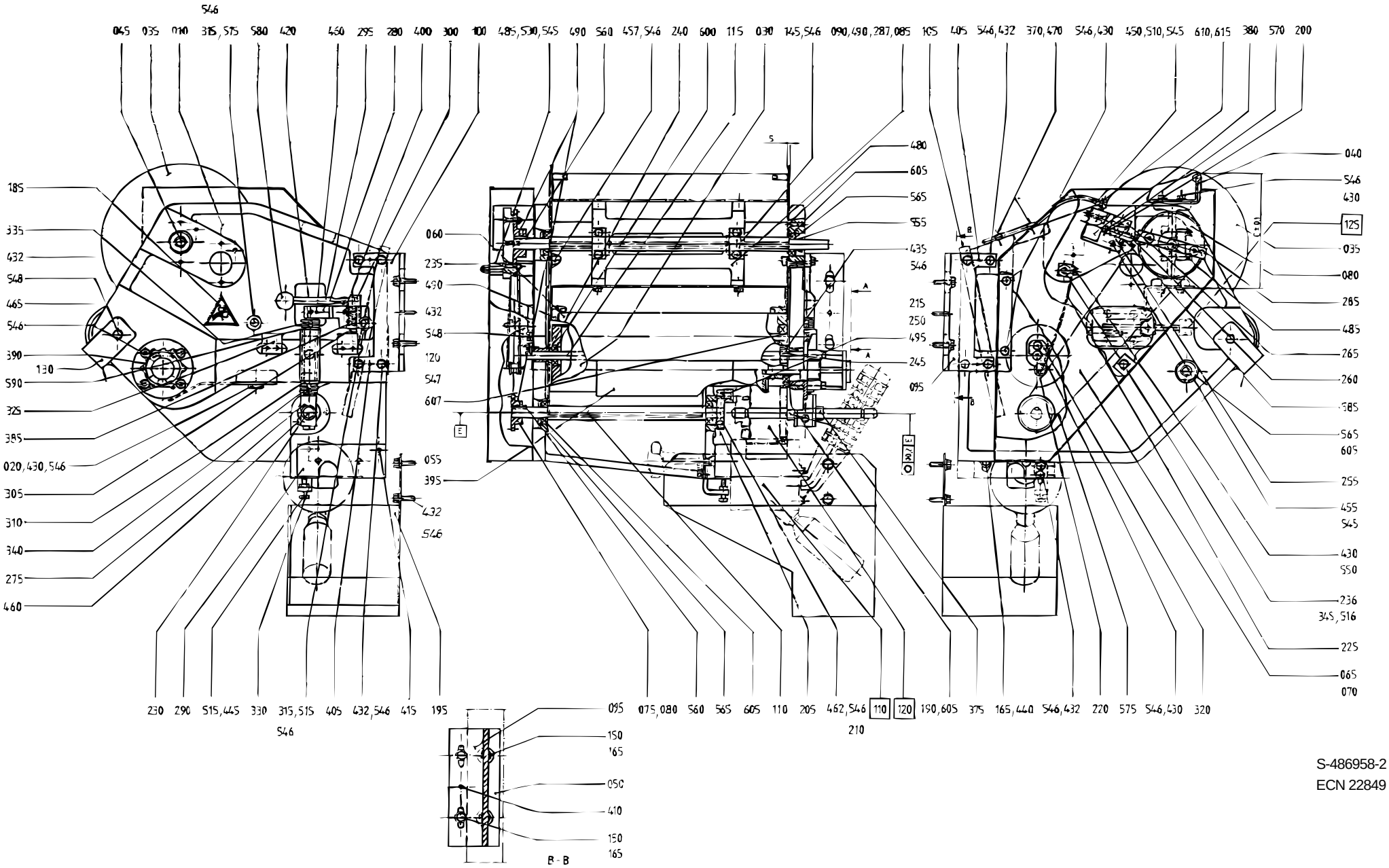

S-486958-2
ECN 22849

Pos	Part No	SP	UN	Qty	Description	Page No
115	486968-0001	-		1	SHAFT FOR BENDINGROLLER	
120	533457-0001	-		1	SHAFT	
130	575786	-		1	PAPER SUPPORT	
150	312105-0451	-		4	SCREW SO4017 8X20A280	
165	315105-0165	-		5	WASHER BRB8,4X16RFR	
490	312318-0323	-		8	STOP SCREW SK6SS5X8RFR	
546	315105-0153	-		42	WASHER BRB6,4X12RFR	
VOLUME 400 B						
000	**C- 486958-0214**	**-**		**1**	**DATING UNIT**	
010	G- 484848-0002	-		1	MACHINE BODY	
020	573827-0002	-		1	PROTECTION	
030	293621-0001	C		1	BENDING ROLLER	
035	293624-0001	-		2	PROTECTION PLATE	
040	458108	S		2	CREASE FORMER	
045	486960-0001	C		1	SHAFT	
050	486961	-		1	PLATE	
055	532719-0001	C		1	FEEDING ROLLER	
060	533449-0001	C		1	BENDING ROLLER	
065	533453	-		1	LID	
070	533454	-		1	FRAME	
075	32629	S		1	SPROCKET	
080	32630	S		1	SPROCKET	
085	G- 543137-0003	-		1	SPACER	
090	539338	-		2	CAP	
095	486962-0002	-		1	FASTENING BRACKET	
100	486962-0004	-		1	FASTENING BRACKET	
105	486964	-		1	HEAD PLATE	
110	486966-0001	-		1	SHAFT	
115	486968-0001	-		1	SHAFT FOR BENDINGROLLER	
120	533457-0001	-		1	SHAFT	
130	575786	-		1	PAPER SUPPORT	
150	312105-0451	-		6	SCREW SO4017 8X20A280	
165	315105-0165	-		7	WASHER BRB8,4X16RFR	
490	312318-0323	-		8	STOP SCREW SK6SS5X8RFR	
546	315105-0153	-		40	WASHER BRB6,4X12RFR	
VOLUME 500 Sq						
000	**C- 486958-0215**	**-**		**1**	**DATING UNIT**	
010	G- 484848-0001	-		1	MACHINE BODY	
020	573827-0001	-		1	PROTECTION	
030	293621-0001	C		1	BENDING ROLLER	
035	293624-0001	-		2	PROTECTION PLATE	
040	574043	S		2	CREASE FORMER	
045	486960-0001	C		1	SHAFT	
055	532719-0001	C		1	FEEDING ROLLER	
060	533449-0001	C		1	BENDING ROLLER	
065	533453	-		1	LID	
070	533454	-		1	FRAME	
075	32629	S		1	SPROCKET	
080	32630	S		1	SPROCKET	
085	G- 543137-0002	-		1	SPACER	
090	539338	-		2	CAP	
095	486962-0011	-		1	FASTENING BRACKET	
100	574044	-		1	FASTENING BRACKET	
105	486964	-		1	HEAD PLATE	
110	486966-0001	-		1	SHAFT	
115	486968-0001	-		1	SHAFT FOR BENDINGROLLER	
120	533457-0001	-		1	SHAFT	
130	575786	-		1	PAPER SUPPORT	
150	312105-0451	-		6	SCREW SO4017 8X20A280	
165	315105-0165	-		7	WASHER BRB8,4X16RFR	
490	312318-0323	-		8	STOP SCREW SK6SS5X8RFR	
546	315105-0153	-		42	WASHER BRB6,4X12RFR	
Common parts						
145	312105-0372	-		4	SCREW O4017 M6X25A280	
185	359705-0001	-		1	WARNING SIGN"ENTANGLEMENT	
190	522408	-		1	BEARING HOUSING	
195	549832	-		1	WASTE CHUTE	
200	10258	P		1	COMPRESSION SPRING	
205	533458	-		1	WASHER	
210	32925	S		1	CARRIER	
215	32926	P		1	ROLL	
220	33182	P		1	ROLL	
225	33183	S		1	SPRING	
230	228653	S		1	SHAFT	
235	544706	-		2	FLANGE	
236	293645	C		1	BRACKET	
240	293646-0001	S		1	WASHER	
245	293646-0002	S		1	WASHER	
250	293674	S		1	DOWEL	
255	436939	C		1	CYLINDER BRACKET	
260	436940	C		1	SHAFT	
265	440277	C		1	LACE	
275	450497	S		1	SHAFT	
280	450500	-		1	DOWEL	

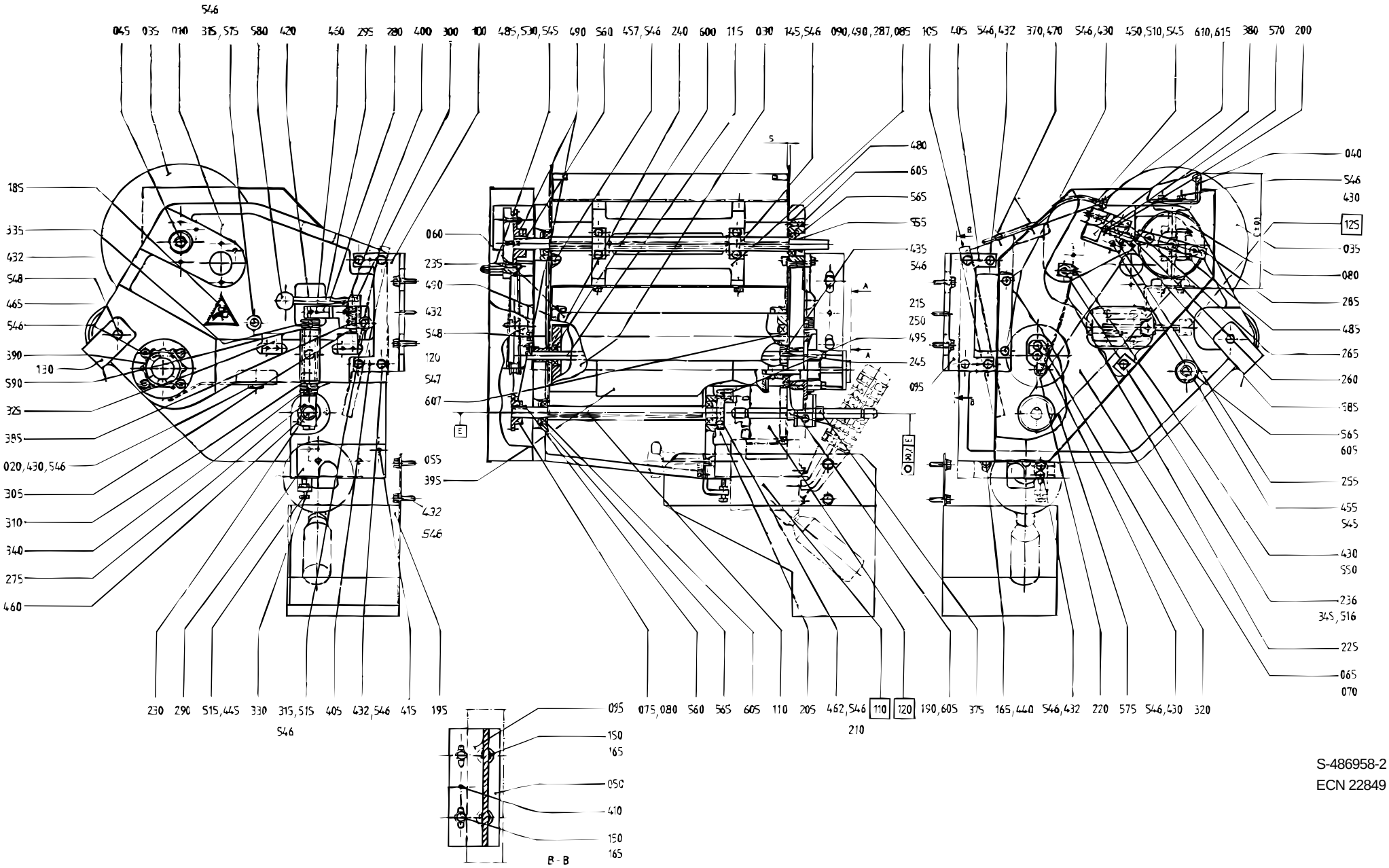

S-486958-2
ECN 22849

Pos	Part No	SP	UN	Qty	Description	Page No
285	457430	-		1	BEATER	
287	458193-0001	P		4	WASHER	
287	458193-0002	P		4	WASHER	
287	458193-0003	P		4	WASHER	
290	458489	-		1	CANTILEVER	
295	464010	-		1	ARM	
300	464012	C		1	CURVE	
305	464011	P		1	LOCK STUD	
310	466430	-		1	BUSHING	
315	476377	-		2	SCREW	
320	486967	-		1	SHEET	
325	486969	-		2	GUIDE LUG	
330	486971	-		1	ANGLE	
335	532082	-		2	ROUND NUT	
340	532083	-		2	ROUND NUT	
345	533459	-		1	SCREW	
370	90165-0057	-		2	CLIP	
375	90166-0059	S	MM	18	HOSE	
380	90239-0259	S		1	CYLINDER	
385	90335-0064	-		1	SPRING	
390	90347-0054	C		1	DAMPER	
395	311103-0273	-		1	CYLINDRICAM6 4X22 RFR	
400	311103-0274	-		1	CYLINDRICACP 4X25 RFR	
405	311103-0310	-		4	CYLINDRICACP M6 5X20 RFR	
410	311103-0353	-		2	CYLINDRICACP M6 6X20 RFR	
415	311103-0357	-		1	CYLINDRICACP M6 6X30 RFR	
420	311202-0241	-		1	TAPER PIN KP4X25RFR	
430	312105-0366	-		15	SCREW O4017 M6X12A280	
432	312105-0368	-		14	SCREW O4017 M6X16A280	
435	312105-0370	-		4	SCREW O4017 M6X20A280	
440	312105-0457	-		1	SCREW O4017 M8X35A280	
445	312109-0374	-		1	SCREW M6S6X30HRFR	
450	312111-0333	-		2	SCREW MC6S5X25FZB	
455	312111-0335	-		2	SCREW MC6S5X30FZB	
457	312111-0364	-		3	SCREW MC6S6X10FZB	
460	312115-0370	-		2	SCREW O4762 M6X20A280	
462	312115-0372	-		1	SCREW O4762 M6X25A280	
465	312115-0376	-		4	SCREW O4762 M6X35A280	
470	312125-0285	-		2	SLOTTED HEMCS4X6RFR	
480	312155-0329	-		4	SCREW MF6S5X16RFR	
485	312155-0333	-		3	SCREW MF6S5X25RFR	
495	312318-0362	-		1	STOP SCREW SK6SS6X8RFR	
510	312605-0314	-		2	NUT M6M5RFR	
515	312605-0316	-		3	NUT M6M6 A280 STAINLESS	
516	312705-0316	-		1	CAP NUT MHM 6 A2	
530	312812-0314	-		2	LOCK NUT A2-M5RFR	
545	315105-0146	-		10	WASHER BRB5,3X10RFR	
547	315105-0173	-		2	WASHER BRB10,5X22RFR	
548	315115-0153	-		4	WASHER TBRB6,4X12RFR	
550	315121-0153	-		1	WASHER TBRSB6,4X22FZB	
555	315220-0121	P		1	SEAL RING V-14S	
560	315701-0201	S		2	FLAT WEDGE5X5X20	
565	315752-0123	P		5	CIRCLIP SGH32	
570	315755-0801	P		1	LOCKING WAE 8RFR	
575	318207-0168	S		1	ROLLER CHA6MM	
580	318800-0103	-		1	HANDLE BALLA D.25-M6	
585	321111-0135	S		1	FLANGE BUS 10E7X10	
590	321111-0212	S		1	FLANGE BUS 15E7X15	
600	321308-0101	S		2	BALL BEARISKF6001RS	
605	321308-0202	S		6	BALL BEARISKF6002-2RS	
607	321316-0200	S		2	BALL BEARISKF6300-2RS	
610	342980-0113	-		1	BANJO CONNSINGEL 6/4-1/8	
615	342980-0303	-		1	BANJO CONN SINGEL 1/8"	
F110	C- 440286-0301	-		1	INK UNIT	**635**
F120	C- 293684-020V	-		2	PRINTING WHEEL	**631**
F125	C- 543143-0101	-		1	ADJUSTMENTMENT DEVICE	**637**

1000ml Slim
1000ml Square
1000ml

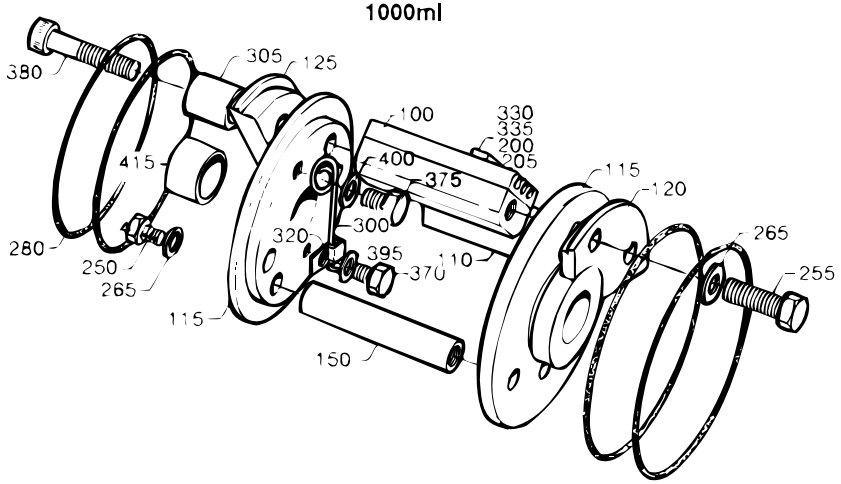

500ml Slim

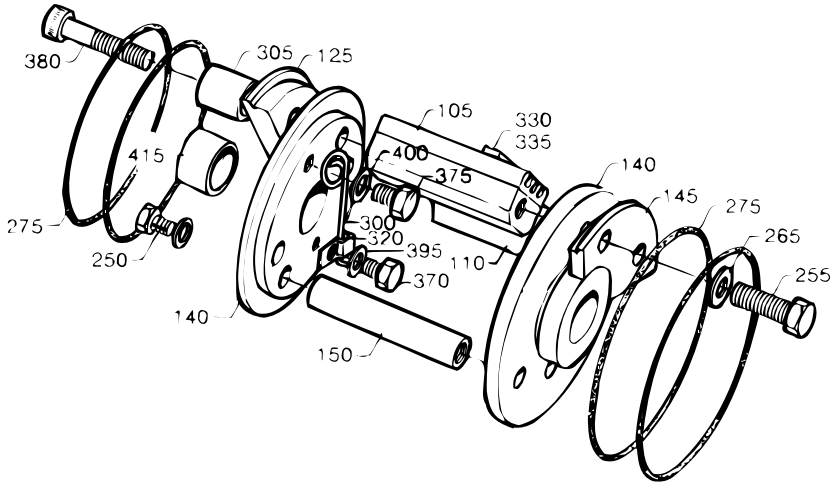

500ml-568ml

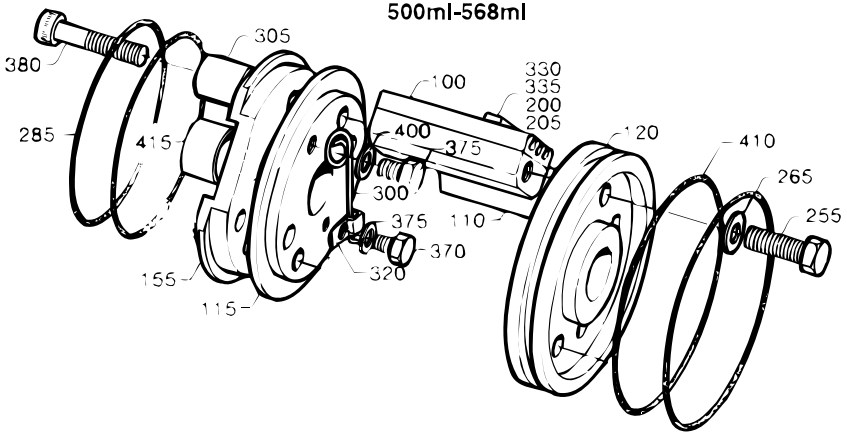

300ml

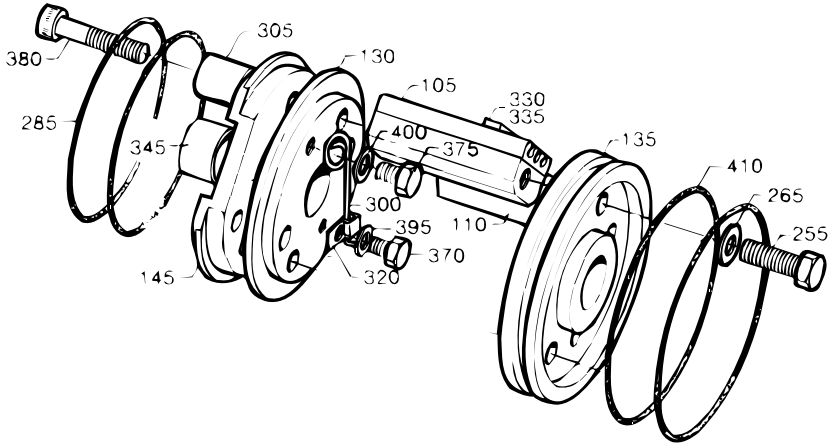

S-293684-3
ECN 20648

Pos	Part No	SP	UN	Qty	Description	Page No
VOLUMES 1000 B LOFIN, 1136 B, 1055 B, 750 B, 1000 S, 1000 Sq, 500 Sq						
000	**C- 293684-0201**	**-**		**2**	**PRINTING WHEEL**	
100	293395-0003	P		1	TYPE HOLDER	
110	293395-0001	P		1	TYPE HOLDER	
115	292409	C		2	END SECTION	
120	442072	C		1	CARRIER	
125	292411	C		1	CARRIER	
150	293671	C		1	SPACER	
200	90413-0048	P		1	CODE INSERT SET	
205	90413-0049	P		1	CODE INSERT SET	
250	312101-0329	-		2	SCREW M6S5X16FZB	
255	312101-0331	-		3	SCREW M6S5X20FZB	
265	315101-0146	-		5	WASHER BRB5,3X10FZB	
280	315202-0301	P		4	O-RING 49,5X3	
VOLUMES 568 B, 500 B						
000	**C- 293684-0202**	**-**		**2**	**PRINTING WHEEL**	
100	293395-0003	P		2	TYPE HOLDER	
110	293395-0001	P		2	TYPE HOLDER	
115	434787	C		1	END SECTION	
120	292410	C		1	END SECTION	
155	293676	C		1	CARRIER	
200	90413-0048	P		1	CODE INSERT SET	
205	90413-0049	P		1	CODE INSERT SET	
255	312101-0331	-		7	SCREW M6S5X20FZB	
265	315101-0146	-		7	WASHER BRB5,3X10FZB	
285	315202-0304	P		2	O-RING 64,5X3	
410	315202-0305	P		2	O-RING 69,5X3	
VOLUMES 500 S, 375 S, 355 B, 750 S, 400 B						
000	**C- 293684-0203**	**-**		**2**	**PRINTING WHEEL**	
105	293395-0002	P		1	TYPE HOLDER	
110	293395-0001	P		1	TYPE HOLDER	
125	479237	C		1	CARRIER	
140	479236	C		2	END SECTION	
145	479238	C		1	CARRIER	
150	293671	C		1	SPACER	
250	312101-0329	-		2	SCREW M6S5X16FZB	
255	312101-0331	-		3	SCREW M6S5X20FZB	
265	315101-0146	-		5	WASHER BRB5,3X10FZB	
275	315202-0224	P		4	O-RING 42,2X3	
VOLUMES 1000 B HIFIN						
000	**C- 293684-0205**	**-**		**2**	**PRINTING WHEEL**	
100	293395-0003	P		1	TYPE HOLDER	
110	293395-0001	P		1	TYPE HOLDER	
115	293690	C		2	END SECTION	
120	442431	C		1	CARRIER	
125	293688	C		1	CARRIER	
150	293671	C		1	SPACER	
200	90413-0048	P		1	CODE INSERT SET	
205	90413-0049	P		1	CODE INSERT SET	
250	312101-0329	-		2	SCREW M6S5X16FZB	
255	312101-0331	-		3	SCREW M6S5X20FZB	
265	315101-0146	-		5	WASHER BRB5,3X10FZB	
280	315202-0301	P		4	O-RING 49,5X3	
Common parts						
000	539347-SHEET 1	-		-	STAMPING SUMMARY	
300	32691	P		1	LOCKING SPRING	
305	33011	S		1	SLEEVE	
320	90165-0010	-		1	CLIP	
330	90413-0033	P		1	CODE INSERT SET 0-9	
330	90413-0043	P		1	CODE INSERT SET	
335	90413-0047	P		1	CODE INSERT SET	
335	90413-0044	P		1	CODE INSERT SET	
370	312101-0287	-		1	SCREW M6S4X8FZB	
375	312101-0364	-		1	SCREW	
380	312111-0335	-		1	SCREW MC6S5X30FZB	
395	315101-0136	-		2	WASHER BRB4,3X8FZB	
400	315111-0153	-		1	WASHER TBRB6,4X12FZB	
415	321120-0122	S		2	BUSHING 15/17X15	

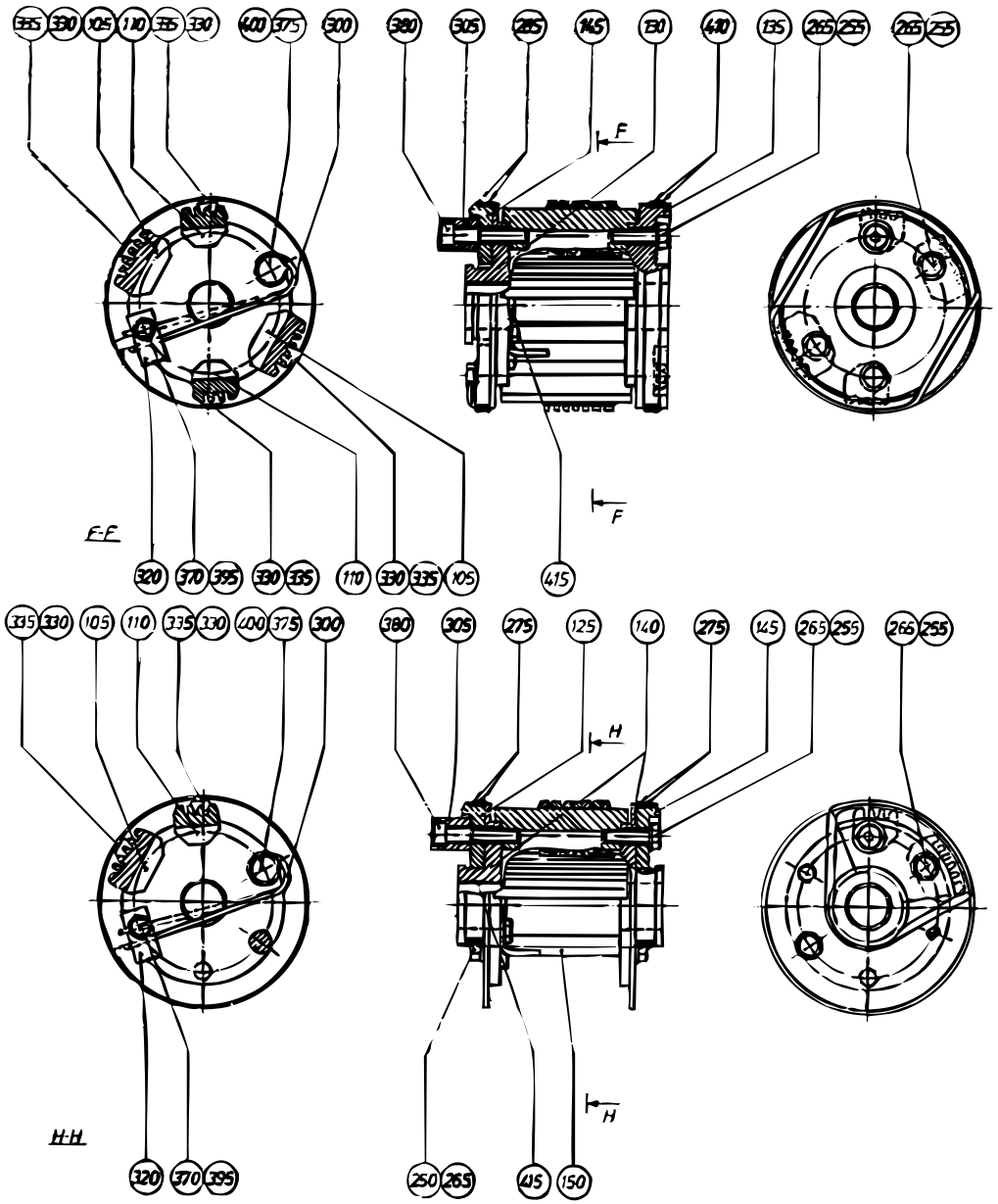
335 330 105 110 335 330 400 375 300
380 305 285 145 130 410 135 265 255 265 255
F
F
F-F
320 370 395 330 335 110 330 335 105 415
335 330 105 110 335 330 400 375 300
380 305 275 125 140 275 145 265 255 266 255
H
H
H-H
320 370 395
250 265 415 150

Pos	Part No	SP	UN	Qty	Description	Page No
VOLUMES 1000 B LOFIN, 1136 B, 1055 B, 750 B, 1000 S, 1000 Sq, 500 Sq						
000	**C- 293684-0201**	**-**		**2**	**PRINTING WHEEL**	
100	293395-0003	P		1	TYPE HOLDER	
110	293395-0001	P		1	TYPE HOLDER	
115	292409	C		2	END SECTION	
120	442072	C		1	CARRIER	
125	292411	C		1	CARRIER	
150	293671	C		1	SPACER	
200	90413-0048	P		1	CODE INSERT SET	
205	90413-0049	P		1	CODE INSERT SET	
250	312101-0329	-		2	SCREW M6S5X16FZB	
255	312101-0331	-		3	SCREW M6S5X20FZB	
265	315101-0146	-		5	WASHER BRB5,3X10FZB	
280	315202-0301	P		4	O-RING 49,5X3	
VOLUMES 568 B, 500 B						
000	**C- 293684-0202**	**-**		**2**	**PRINTING WHEEL**	
100	293395-0003	P		2	TYPE HOLDER	
110	293395-0001	P		2	TYPE HOLDER	
115	434787	C		1	END SECTION	
120	292410	C		1	END SECTION	
155	293676	C		1	CARRIER	
200	90413-0048	P		1	CODE INSERT SET	
205	90413-0049	P		1	CODE INSERT SET	
255	312101-0331	-		7	SCREW M6S5X20FZB	
265	315101-0146	-		7	WASHER BRB5,3X10FZB	
285	315202-0304	P		2	O-RING 64,5X3	
410	315202-0305	P		2	O-RING 69,5X3	
VOLUMES 500 S, 375 S, 355 B, 750 S, 400 B						
000	**C- 293684-0203**	**-**		**2**	**PRINTING WHEEL**	
105	293395-0002	P		1	TYPE HOLDER	
110	293395-0001	P		1	TYPE HOLDER	
125	479237	C		1	CARRIER	
140	479236	C		2	END SECTION	
145	479238	C		1	CARRIER	
150	293671	C		1	SPACER	
250	312101-0329	-		2	SCREW M6S5X16FZB	
255	312101-0331	-		3	SCREW M6S5X20FZB	
265	315101-0146	-		5	WASHER BRB5,3X10FZB	
275	315202-0224	P		4	O-RING 42,2X3	
VOLUMES 1000 B HIFIN						
000	**C- 293684-0205**	**-**		**2**	**PRINTING WHEEL**	
100	293395-0003	P		1	TYPE HOLDER	
110	293395-0001	P		1	TYPE HOLDER	
115	293690	C		2	END SECTION	
120	442431	C		1	CARRIER	
125	293688	C		1	CARRIER	
150	293671	C		1	SPACER	
200	90413-0048	P		1	CODE INSERT SET	
205	90413-0049	P		1	CODE INSERT SET	
250	312101-0329	-		2	SCREW M6S5X16FZB	
255	312101-0331	-		3	SCREW M6S5X20FZB	
265	315101-0146	-		5	WASHER BRB5,3X10FZB	
280	315202-0301	P		4	O-RING 49,5X3	
Common parts						
000	539347-SHEET 1	-		-	STAMPING SUMMARY	
300	32691	P		1	LOCKING SPRING	
305	33011	S		1	SLEEVE	
320	90165-0010	-		1	CLIP	
330	90413-0033	P		1	CODE INSERT SET 0-9	
330	90413-0043	P		1	CODE INSERT SET	
335	90413-0047	P		1	CODE INSERT SET	
335	90413-0044	P		1	CODE INSERT SET	
370	312101-0287	-		1	SCREW M6S4X8FZB	
375	312101-0364	-		1	SCREW	
380	312111-0335	-		1	SCREW MC6S5X30FZB	
395	315101-0136	-		2	WASHER BRB4,3X8FZB	
400	315111-0153	-		1	WASHER TBRB6,4X12FZB	
415	321120-0122	S		2	BUSHING 15/17X15	

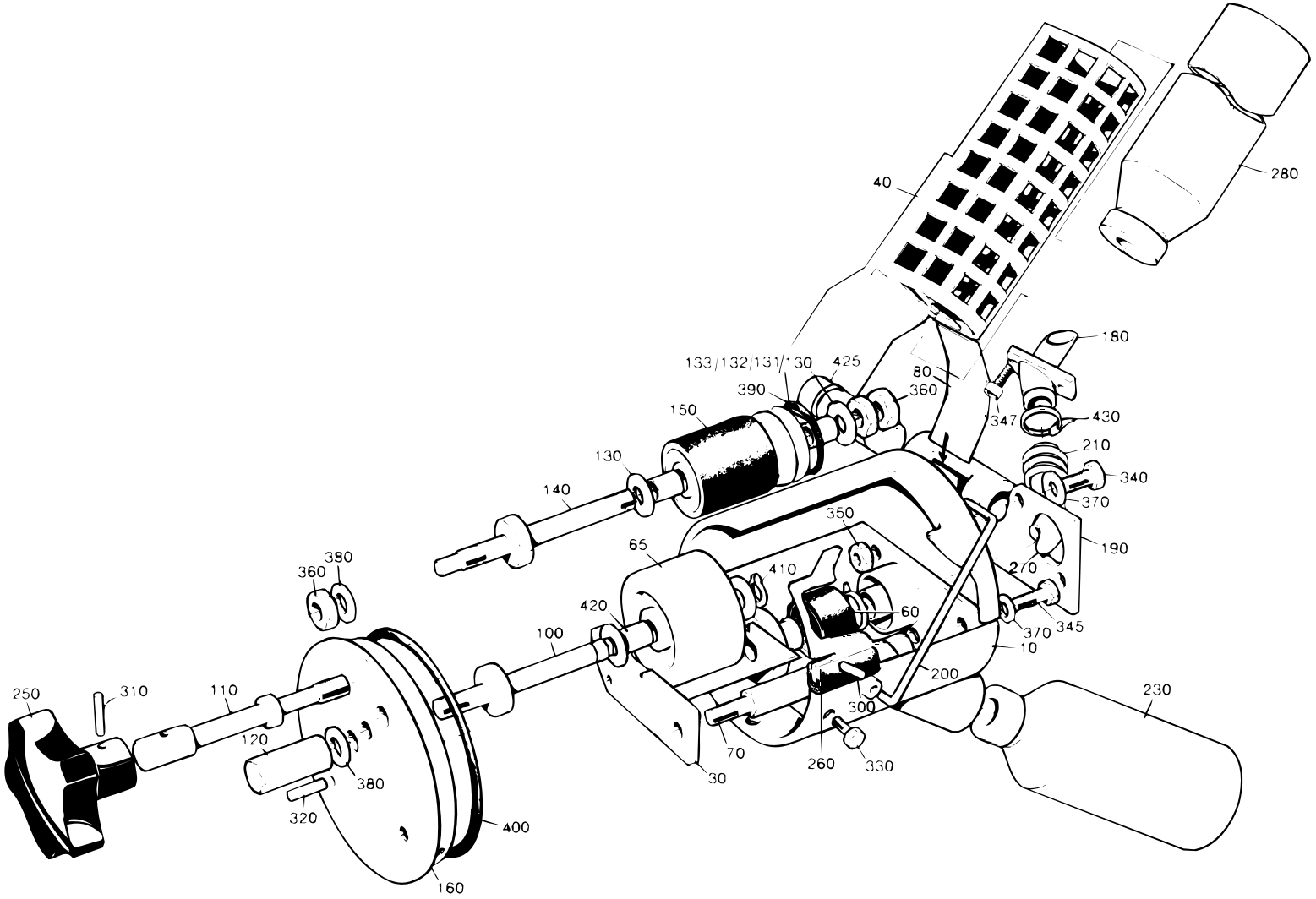
40
280
180
133/132/131/130
425
80
390
360
347
430
150
210
130
340
140
370
350
190
65
380
360
410
270
420
60
370
345
100
10
200
250
310
110
300
230
120
380
70
260
330
320
30
400
160

Pos	Part No	SP	UN	Qty	Description	Page No
-						
000	**C- 440286-0301**	**-**		**1**	**INK UNIT**	
010	440287	-		1	COVER	
030	297211	-		1	INK WELL	
040	476356	C		1	HOLDER FOR INK BOTTLE	
060	445542	P		1	MANTEL RUBBER	
065	450355	S		1	INK ROLLER	
070	33010	-		1	SCREW	
080	35547	S		1	SPRING	
100	292044	P		1	SHAFT	
110	293667	S		1	DOWEL	
120	436927	C		1	NUT	
130	293669-0001	P		4	WASHER	
131	293669-0002	P		2	WASHER	
132	293669-0003	P		2	WASHER	
133	293669-0004	P		2	WASHER	
140	293670	P		1	SHAFT	
150	543135	P		1	INK TRANSFER ROLLER	
160	293697	S		1	END SECTION	
180	476354	S		1	CANNULAR TUBE	
190	456773	C		1	PIVOT BRACKET	
200	434747	S		1	BOW CLAMP	
210	537308	-		1	SPRING	
230	90050-0008	P		1	BOTTLE	
250	90051-0077	S		1	HANDLE	
260	90143-0029	S	MM	295	STRIP	
270	90166-0138	P	MM	100	HOSE	
280	90299-0072	P		X	INK	
300	311103-0236	-		2	CYLINDRICACP M6 3X16 RFR	
310	311103-0238	-		1	CYLINDRICACP M6 3X20 RFR	
320	311103-0270	-		1	CYLINDRICACP M6 4X16 RFR	
330	312105-0291	-		3	SCREW O4017 M4X12A280	
340	312105-0327	-		2	SCREW ISO 4017 M5X12A280	
345	312105-0329	-		1	SCREW O4017 M5X16A280	
347	312115-0287	-		2	SCREW O4762 M4X8A280	
350	312605-0314	-		2	NUT M6M5RFR	
360	312605-0318	-		3	NUT M6M8RFR	
370	315105-0146	-		3	WASHER BRB5,3X10RFR	
380	315105-0165	-		2	WASHER BRB8,4X16RFR	
390	315202-0218	P		1	O-RING 26,2X3	
400	315202-0309	P		1	O-RING 89,5X3	
410	315750-0105	P		1	CIRCLIP SGA8	
420	321120-0100	S		2	BUSHING 8/10X12	
425	321120-0109	S		2	BUSHING 12/14X10	
430	352113-0101	-		1	RIBBON CLA	

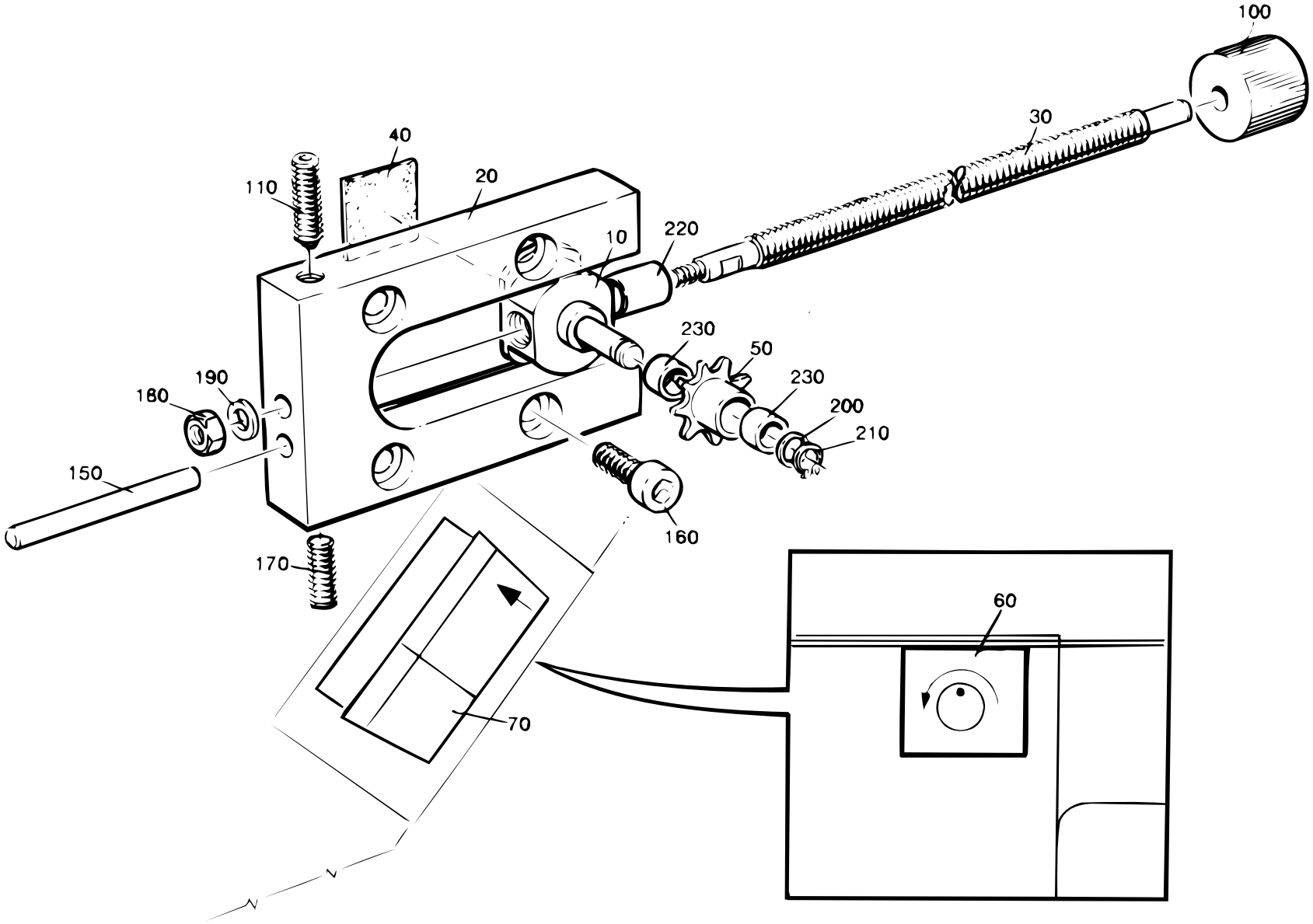
100
30
40
20
110
10
220
230
50
230
200
210
190
180
150
160
170
60
70

Pos	Part No	SP	UN	Qty	Description	Page No
-						
000	**C- 543143-0101**	**-**		**1**	**ADJUSTMENTMENT DEVICE**	
010	526984	-		1	SADDLE	
020	526985	-		1	PLATE	
030	526986-0001	-		1	SHAFT	
040	527649	-		1	DISTANCE RUBBER	
050	529362	-		1	SPROCKET	
060	543141	-		1	SIGN	
070	543142	-		1	SIGN	
100	90051-0089	-		1	SHIFTER HANDLE	
110	90287-0167	-		1	SPRINGLOADED SCREW	
150	311103-0365	-		1	CYLINDRICACP M6 6X50 RFR	
160	312115-0368	-		2	SCREW O4762 M6X16A280	
170	312318-0368	-		1	STOP SCREW SK6SS6X16RFR	
180	312605-0312	-		1	NUT M6M4 STAINLESS	
190	315105-0136	-		1	WASHER BRB4,3X8RFR	
200	315105-0153	-		1	WASHER BRB6,4X12RFR	
210	315751-0103	-		1	CIRCLIP SGA 6 RFR	
220	321120-0100	-		1	BUSHING 8/10X12	
230	321120-0101	-		2	BUSHING 6/8X6	

Pos	Part No	SP	UN	Qty	Description	Page No

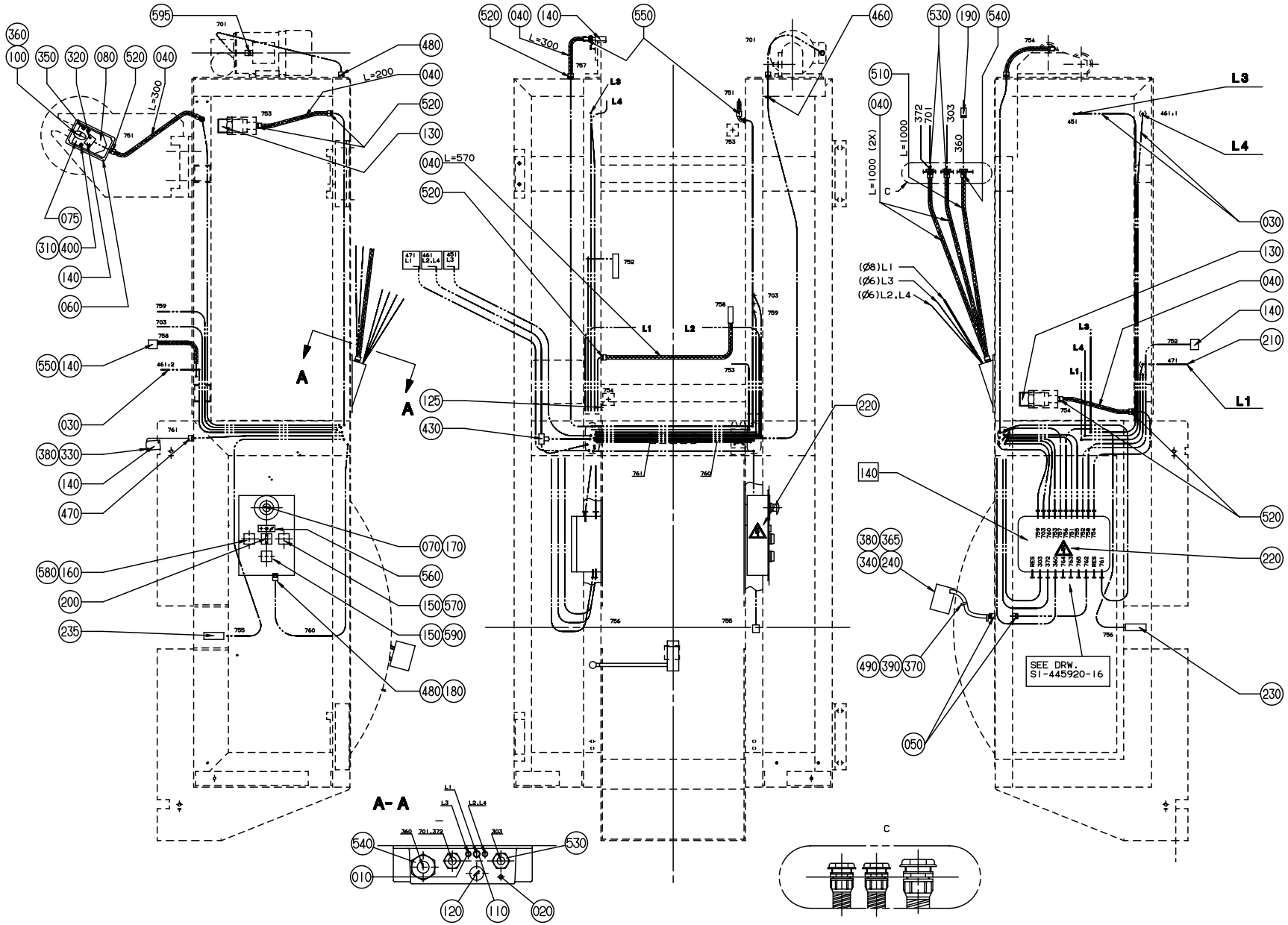

S-445920-14
ECN 70071

Pos	Part No	SP	UN	Qty	Description	Page No
-						
000	**C- 445920-0601**	**-**		**1**	**EL-PNEUMATIC EQUIPMENT**	
010	445844	-		2	SLEEVE	
020	458362	-		1	PLUG	
030	90166-0081	-	MM	7800	HOSE	
040	352135-0106	C	MM	4100	HOSE .016	
050	352101-0103	-		4	CABLE GLAND 6-11MM PR18,6	
060	466337	-		1	CONNECTION BOX	
070	486826-0001	C		1	SIGN "EMERGENCY STOP" YL	
075	529456	-		1	PLATE	
080	529455	-		1	PLATE	
100	440256	-		1	ARM	
110	445846	-		1	SLEEVE	
120	90002-0004	-		1	BLANK-OFF PLUG 22,5	
125	90002-0009	-		1	BLANK-OFF PLUG 18.6	
130	90044-0122	S		2	INDUCTIVE SWITCH	
140	90044-0104	S		5	PROX.SWITCH IFM IN 3002	
150	90064-0084	C		2	PUSH BUTTON YELLOW	
160	90064-0085	C		1	PUSH BUTTON RED	
170	90064-0124	C		1	EMERGENCY STOP BUTTON	
180	90099-0003	-		1	NUT	
190	90110-0128	S		1	PLUG 24-POL	
200	90111-0150	C		1	SWITCH GEAR	
205	90152-0033	-	DM	30	HOSE	
210	90166-0013	S	DM	25	HOSE	
220	90194-0016	-		2	SIGN "FLASH SIGN" 50X50MM	
230	90232-0103	S		1	PH.CELL OMRON E3SCT61L 5M	
235	90232-0104	S		1	RECEIVER OMRON E3SCT61D5M	
240	90232-0106	-		1	PH.CELL OMRON E3S-CR11-5M	
310	312111-0323	-		2	SCREW MC6S5X8FZB	
320	312121-0228	-		2	SLOTTED HEMCS3X16FZB	
330	312125-0228	-		2	SLOTTED HEMCS3X16RFR	
340	312125-0234	-		2	SLOTTED HEMCS3X30RFR	
345	312125-0323	-		2	SLOTTED HEMCS5X8RFR	
350	312155-0329	-		3	SCREW MF6S5X16RFR	
360	312316-0360	-		1	STOP SCREW SK6SS6X6FZB	
365	312605-0310	-		2	NUT M6M3RFR	
370	312605-0312	-		3	NUT M6M4 STAINLESS	
380	315105-0124	-		6	WASHER BRB3,2X6RFR	
390	315101-0136	-		2	WASHER BRB4,3X8FZB	
400	315105-0146	-		2	WASHER BRB5,3X10RFR	
430	342946-0112	-		1	T-CONNECTI6/4	
460	352101-0105	-		1	CABLE GLAND PR 22,5	
470	352103-0100	C		1	CABLE GLANR.STR 9	
480	352103-0111	C		2	CABLE GLAND ST 16;10-14MM	
490	352110-0099	C		3	CRAMP TK 3-5	
500	352113-0204	-		2	ANCHOR TM3S25-M	
510	352135-0109	C	DM	10	HOSE .022	
515	352136-0113	-		5	GLAND FITT	
520	352136-0127	S		7	GLAND FITT	
530	352136-0129	S		4	GLAND FITT	
540	352136-0143	S		2	GLAND FITT	
545	352137-0113	-		1	GLAND FITTING	
550	352137-0127	S		3	GLAND FITT	
560	359241-0269	C		1	SIGN	
570	359301-0100	C		1	SIGN	
580	359301-0110	C		1	SIGN "SHORT STOP"	
590	359301-0335	C		1	SIGN T	
595	90012-0137	-		1	CABLE GLAND SCREENED	
F140	C- 532151-0301	-		1	CONNECTION BOX	**643**

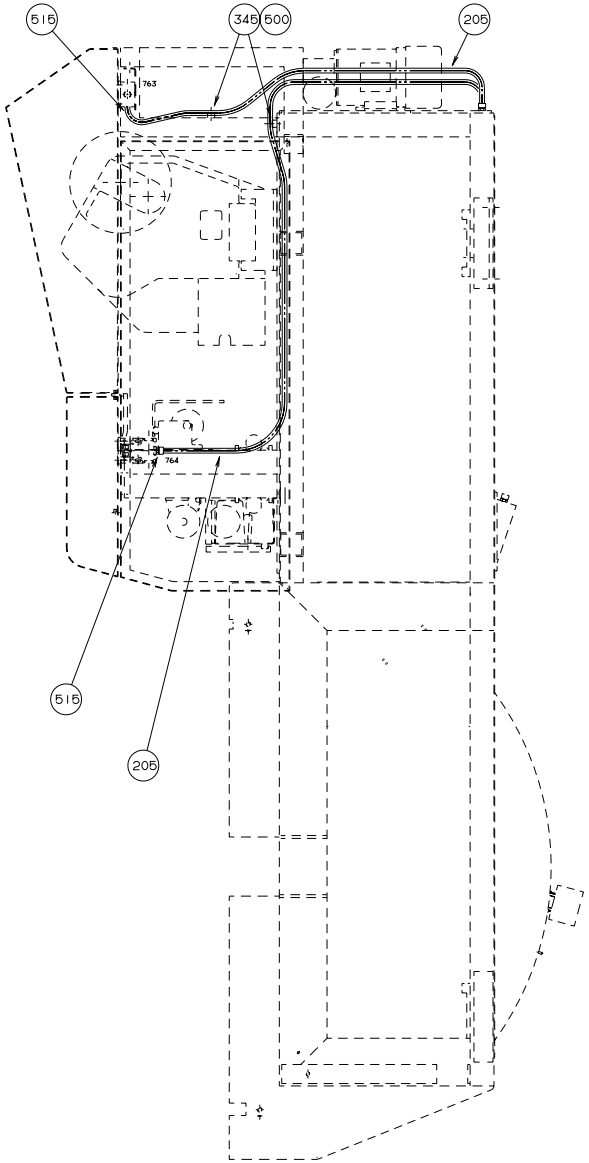

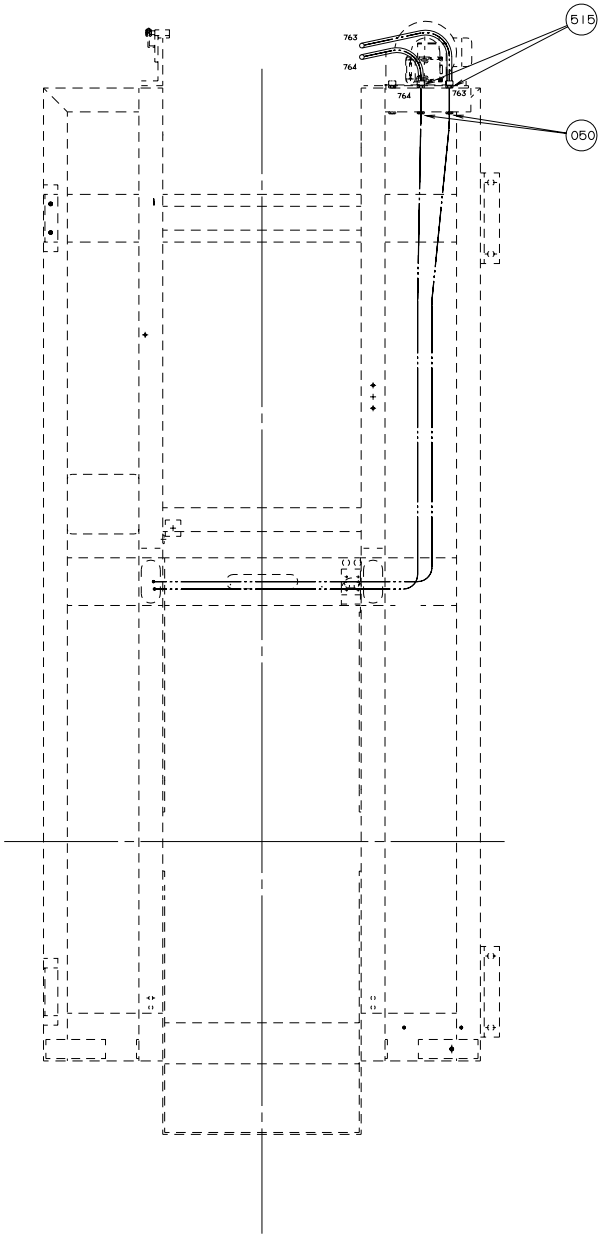

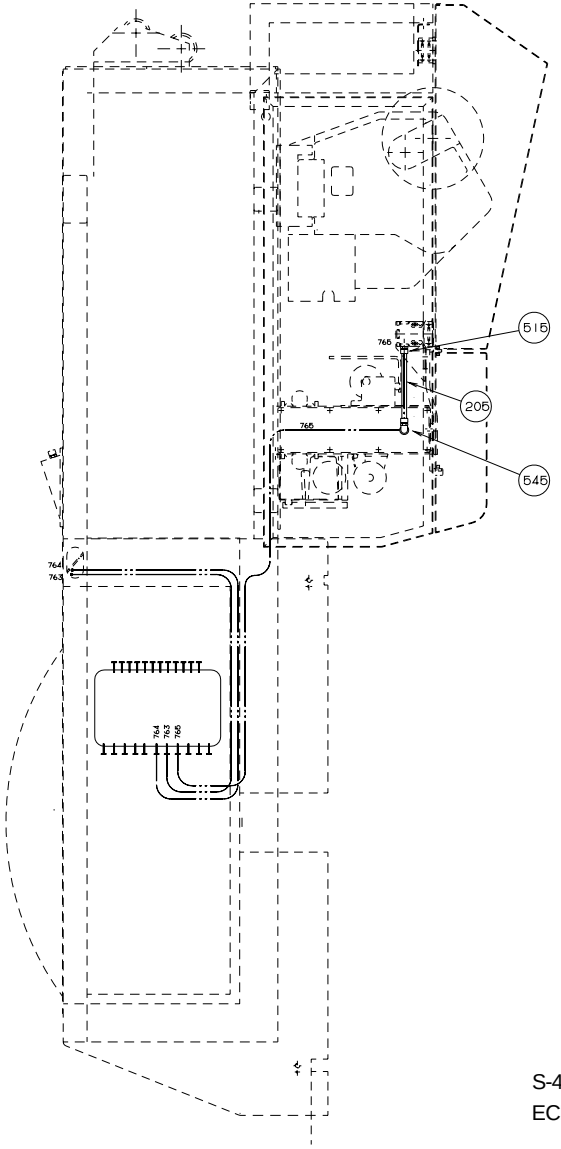

S-445920-16
ECN 20082

EC No: 70071 - 960514
Group number: C- 445920-060V
Assembly Drawing: 445920-14-16

Issue date: 9810

Pos	Part No	SP	UN	Qty	Description	Page No
-						
000	**C- 445920-0601**	**-**		**1**	**EL-PNEUMATIC EQUIPMENT**	
010	445844	-		2	SLEEVE	
020	458362	-		1	PLUG	
030	90166-0081	-	MM	7800	HOSE	
040	352135-0106	C	MM	4100	HOSE .016	
050	352101-0103	-		4	CABLE GLAND 6-11MM PR18,6	
060	466337	-		1	CONNECTION BOX	
070	486826-0001	C		1	SIGN "EMERGENCY STOP" YL	
075	529456	-		1	PLATE	
080	529455	-		1	PLATE	
100	440256	-		1	ARM	
110	445846	-		1	SLEEVE	
120	90002-0004	-		1	BLANK-OFF PLUG 22,5	
125	90002-0009	-		1	BLANK-OFF PLUG 18.6	
130	90044-0122	S		2	INDUCTIVE SWITCH	
140	90044-0104	S		5	PROX.SWITCH IFM IN 3002	
150	90064-0084	C		2	PUSH BUTTON YELLOW	
160	90064-0085	C		1	PUSH BUTTON RED	
170	90064-0124	C		1	EMERGENCY STOP BUTTON	
180	90099-0003	-		1	NUT	
190	90110-0128	S		1	PLUG 24-POL	
200	90111-0150	C		1	SWITCH GEAR	
205	90152-0033	-	DM	30	HOSE	
210	90166-0013	S	DM	25	HOSE	
220	90194-0016	-		2	SIGN "FLASH SIGN" 50X50MM	
230	90232-0103	S		1	PH.CELL OMRON E3SCT61L 5M	
235	90232-0104	S		1	RECEIVER OMRON E3SCT61D5M	
240	90232-0106	-		1	PH.CELL OMRON E3S-CR11-5M	
310	312111-0323	-		2	SCREW MC6S5X8FZB	
320	312121-0228	-		2	SLOTTED HEMCS3X16FZB	
330	312125-0228	-		2	SLOTTED HEMCS3X16RFR	
340	312125-0234	-		2	SLOTTED HEMCS3X30RFR	
345	312125-0323	-		2	SLOTTED HEMCS5X8RFR	
350	312155-0329	-		3	SCREW MF6S5X16RFR	
360	312316-0360	-		1	STOP SCREW SK6SS6X6FZB	
365	312605-0310	-		2	NUT M6M3RFR	
370	312605-0312	-		3	NUT M6M4 STAINLESS	
380	315105-0124	-		6	WASHER BRB3,2X6RFR	
390	315101-0136	-		2	WASHER BRB4,3X8FZB	
400	315105-0146	-		2	WASHER BRB5,3X10RFR	
430	342946-0112	-		1	T-CONNECTI6/4	
460	352101-0105	-		1	CABLE GLAND PR 22,5	
470	352103-0100	C		1	CABLE GLANR.STR 9	
480	352103-0111	C		2	CABLE GLAND ST 16;10-14MM	
490	352110-0099	C		3	CRAMP TK 3-5	
500	352113-0204	-		2	ANCHOR TM3S25-M	
510	352135-0109	C	DM	10	HOSE .022	
515	352136-0113	-		5	GLAND FITT	
520	352136-0127	S		7	GLAND FITT	
530	352136-0129	S		4	GLAND FITT	
540	352136-0143	S		2	GLAND FITT	
545	352137-0113	-		1	GLAND FITTING	
550	352137-0127	S		3	GLAND FITT	
560	359241-0269	C		1	SIGN	
570	359301-0100	C		1	SIGN	
580	359301-0110	C		1	SIGN "SHORT STOP"	
590	359301-0335	C		1	SIGN T	
595	90012-0137	-		1	CABLE GLAND SCREENED	
F140	C- 532151-0301	-		1	CONNECTION BOX	**643**

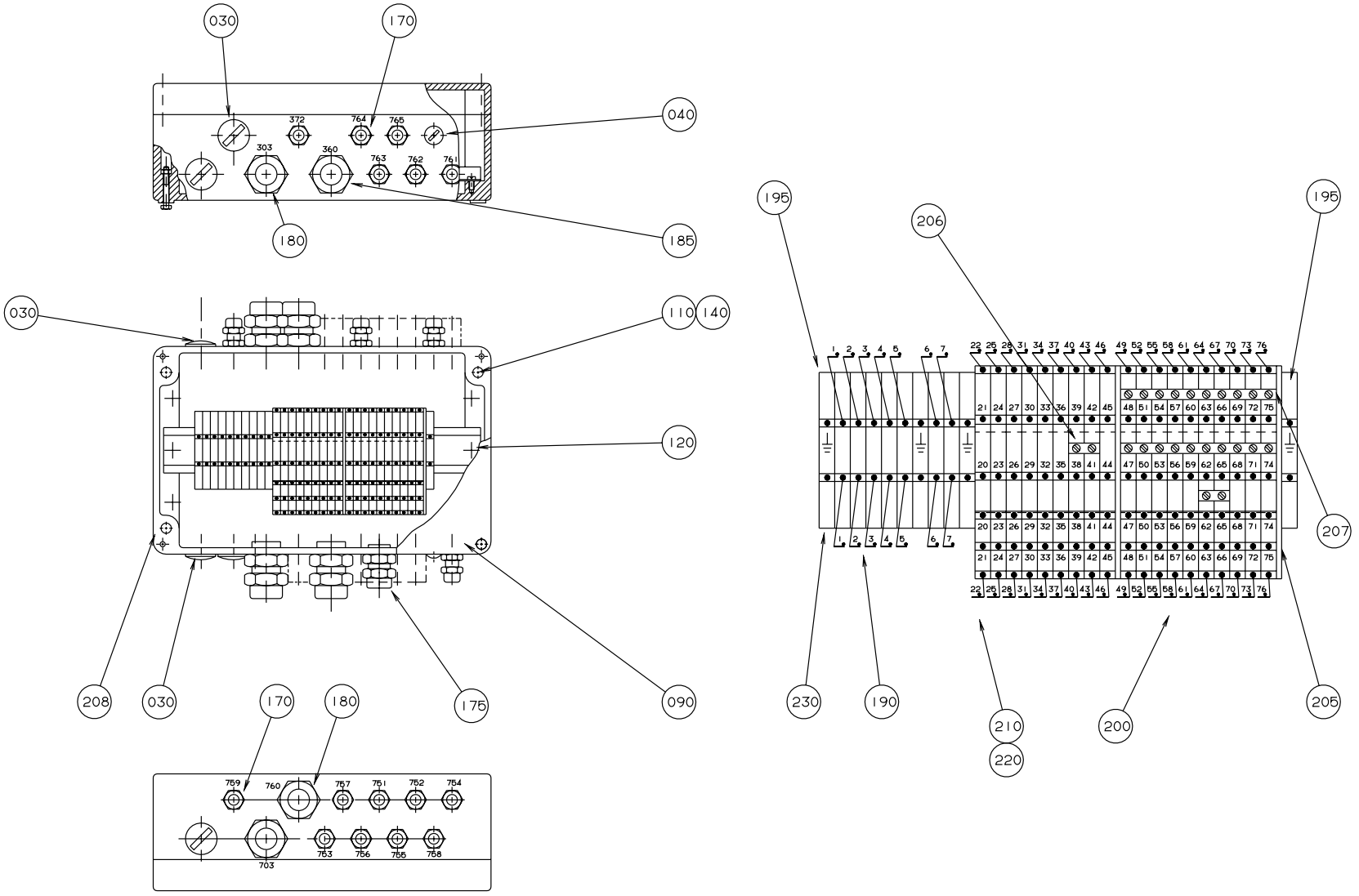
030
170
040
372
764
765
303
360
763
762
761
180
185
030
110
140
120
208
030
170
180
175
090
759
760
757
751
752
754
703
763
756
755
758
195
206
195
207
230
190
210
220
200
205

Pos	Part No	SP	UN	Qty	Description	Page No
-						
000	**C- 532151-0301**	**-**		**1**	**CONNECTION BOX**	
030	90002-0012	-		3	BLANK-OFF PLUG PR28,3	
040	90002-0013	-		1	BLANK-OFF PLUG 15,2	
090	90265-0081	-		1	CONNECTION BOX	
110	312111-0372	-		4	SCREW MC6S6X25FZB	
120	312121-0364	-		2	SLOTTED HEMCS6X10FZB	
140	312601-0316	-		4	NUT M6M6FZB	
170	352103-0101	-		14	CABLE GLAND ST 9	
175	352103-0106	-		1	CABLE GLAND ST 11	
180	352103-0115	-		3	CABLE GLAND STR 21;7-16MM	
185	352103-0116	-		1	CABLE GLAND ST21.13-18MM	
190	353021-0213	-		7	FEED THROUGH TERM.WDU 4	
195	353024-0205	-		4	EARTH TERMINAL WPE 4	
200	353021-0302	-		19	FEED THROUKL£MMA DLD 2,5/	
205	353032-0302	-		2	END PLATE AP	
206	353034-0401	-		2	BRIDGE CONLECK Q2	
207	353034-0404	-		2	BRIDGE CONLECK Q10	
208	353042-0005	-	MM	240	RAIL TS35/7.5	
210	359011-0807	-		2	MARKING PLATE 5-FW 1-50	
220	359011-0808	-		2	MARKING PLATE 5-FW 51-100	
230	359011-0819	-		1	MARKING PLATE 5-GW EARTH	

Pos	Part No	SP	UN	Qty	Description	Page No

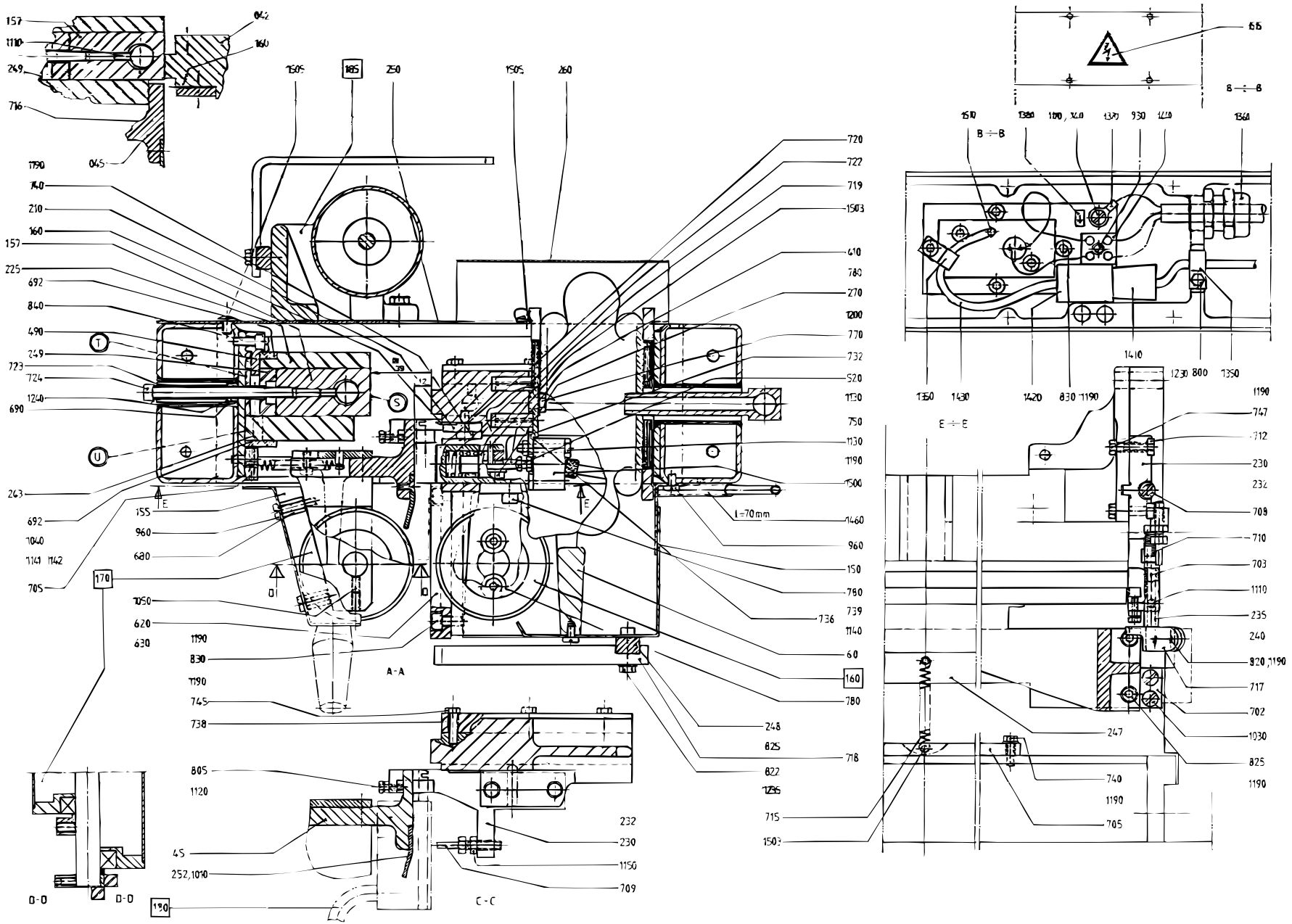
A-A
B-B
C-C
D-D
D-D
E-E
I=70mm

Pos	Part No	SP	UN	Qty	Description	Page No
VOLUMES 1136 B, 1055 B, 1000 B, 750 B, 568 B, 500 B						
000	**C- 445880-0601**	**-**		**1**	**SPLICING DEVICE**	
042	553770-0001	C		1	PRESSURE JAW	
252	484895-0001	-		1	SHEET	
VOLUMES 500S, 400 B, 355 B						
000	**C- 445880-0602**	**-**		**1**	**SPLICING DEVICE**	
042	553770-0002	C		1	PRESSURE JAW	
252	484895-0002	-		1	SHEET	
VOLUME 375 S						
000	**C- 445880-0604**	**-**		**1**	**SPLICING DEVICE**	
042	553770-0002	C		1	PRESSURE JAW	
252	484895-0003	-		1	SHEET	
VOLUME 750 S						
000	**C- 445880-0605**	**-**		**1**	**SPLICING DEVICE**	
042	553770-0001	C		1	PRESSURE JAW	
252	484895-0005	-		1	SHEET	
VOLUME 1000 S						
000	**C- 445880-0606**	**-**		**1**	**SPLICING DEVICE**	
042	553770-0001	C		1	PRESSURE JAW	
252	484895-0006	-		1	SHEET	
VOLUME 1000 Sq, 500 Sq						
000	**C- 445880-0607**	**-**		**1**	**SPLICING DEVICE**	
042	553770-0001	C		1	PRESSURE JAW	
252	484895-0007	-		1	SHEET	
Common parts						
010	G- 445881	C		1	BRACKET LEFT	
020	G- 445882	C		1	BRACKET RIGHT	
045	G- 457627	C		1	DOLLY	
060	G- 445911	-		1	CANTILEVER	
080	445885	-		1	BEAM	
090	445886	-		1	BEAM	
1010	312145-0289	-		7	SLOTTED HEMFS4X10RFR	
1020	312145-0327	-		8	SLOTTED HEMFS5X12RFR	
1021	312145-0335	-		2	SLOTTED HEMFS5X30RFR	
1030	312145-0329	-		4	SLOTTED HEMFS5X16RFR	
1035	312151-0368	-		4	SCREW MF6S6X16FZB	
1040	312151-0384	-		6	SCREW MF6S6X70FZB	
1050	312306-0287	-		2	STOP SCREW P6SS4X8FZB	
1110	312318-0321	S		7	STOP SCREW SK6SS5X6RFR	
1120	312601-0312	-		2	NUT M6M4FZB	
1130	312601-0314	-		3	NUT M6M5FZB	
1140	312601-0316	-		6	NUT M6M6FZB	
1141	312811-0316	-		6	LOCK NUT M6RFR	
1142	319030-0125	-		40	DISC SPRIN	
1150	312605-0316	-		2	NUT M6M6 A280 STAINLESS	
1180	315101-0136	-		2	WASHER BRB4,3X8FZB	
1190	315101-0146	-		43	WASHER BRB5,3X10FZB	
1200	315101-0153	-		16	WASHER BRB6,4X12FZB	
1210	315101-0173	-		2	WASHER BRB10,5X22FZB	
1230	315105-0136	-		2	WASHER BRB4,3X8RFR	
1235	315105-0146	-		10	WASHER BRB5,3X10RFR	
1240	315105-0153	-		2	WASHER BRB6,4X12RFR	
1250	316810-0106	-		1	PIPE CLAMP 8MM RFR	
1270	321116-0179	S		4	BUSHING 14E7/18X14	
1295	342713-0210	C		2	BLIND PLUG	
1300	342722-0205	-		1	PIPE COUPLD=8-R1/4"	
1310	342980-0113	-		1	BANJO CONNSINGEL 6/4-1/8	
1320	342980-0303	-		1	BANJO CONN SINGEL 1/8"	
1350	352110-0099	-		2	CRAMP TK 3-5	
1360	352103-0108	-		1	CABLE GLAND ST13;6-12MM	
1370	353101-0132	-		1	CABLE SHOE	
1380	359020-0012	-		1	SIGN "EARTHSYMBOL" 4X6MM	
1410	90326-0020	-		1	PLUG,FEMALE YELLOW CR-AL	
1420	90326-0022	-		1	PLUG,MALE YELLOW CR-AL	
1430	90326-0060	-		1	THERMOCOUPLE CR-AL	
1440	90195-0020	C		1	TERMINAL BK2 KRG 2-POLE	
1460	90166-0122	S	MM	100	HOSE	
1480	90206-0097	S		1	HEATING CARTRIDGE	
1490	90239-0231	C		1	BELLOWS	
150	449751	-		1	PROTECTION	
1500	90239-0259	C		1	CYLINDER	
1503	90258-0031	-		2	HOLLOW PIN	
1505	90287-0075	-		3	SCREW	
1508	312155-0449	-		4	SCREW MF6S8X16RFR	
1510	90296-0051	-		X	PASTE	
1515	90194-0016	-		1	SIGN "FLASH SIGN" 50X50MM	
155	450853	-		1	PROTECTION	
157	548794	C		1	HEATING JAW	
160	294009	PU		2	KNIFE	
210	539052	C		1	KNIFE HOLDER	
225	449770	C		1	INSULATION	

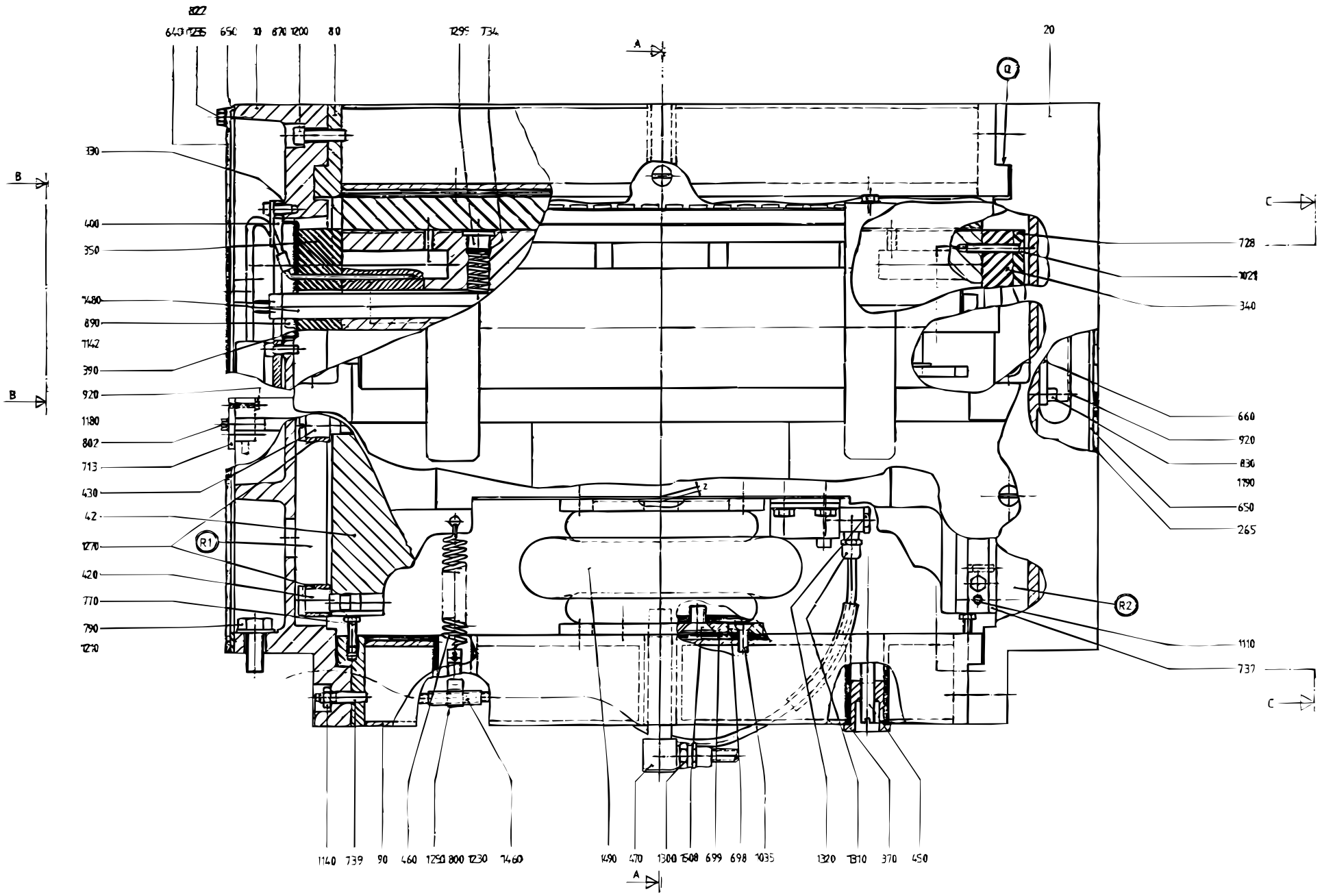

S-445880-9
ECN 20521

Pos	Part No	SP	UN	Qty	Description	Page No
230	458908	C		1	BRACKET	
232	458909	C		1	BRACKET	
235	466618	S		1	CATCH	
240	466619	S		1	CATCH	
243	457658	C		1	INSULATION	
247	458912	-		1	BRACKET	
248	479223	-		1	RAIL	
249	484844	C		1	INSULATION	
250	531886	-		1	PROTECTION PLATE	
260	531887	-		1	PROTECTION PLATE	
265	573828	-		1	COVERING PLATE	
270	32079	-		1	WASHER	
330	445894	C		1	SEAL	
340	556316	-		1	INSULATION	
350	556317	C		1	INSULATION	
370	445898	-		2	NUT	
390	556318	C		1	INSULATION	
400	445901	-		1	FRAME	
410	445902	-		1	ARM	
420	445903	C		2	ECCENTRIC SHAFT	
430	445904	C		2	SHAFT	
450	445907	-		2	SCREW	
460	458062	S		2	TENSION SPRING	
470	445909	-		1	NIPPLE	
490	445915	-		1	STEERING	
520	445918	-		1	SCREW	
620	449623	C		1	STEERING	
630	449624	C		1	STEERING	
640	927428	-		1	COVERING PLATE	
650	449626	C		2	SEAL	
660	449629	-		1	BRACKET	
680	449753	-		4	SCREW	
690	449761	C		1	WASHER	
692	450017	C		2	PLATE	
698	451412	-		2	WASHER	
699	451413	-		2	WASHER	
702	458915	S		2	HEAD RAIL	
703	458916	C		2	SHAFT	
705	458917	-		1	SUPPORT	
708	553763	C		2	ADJUSTING SCREW	
709	464983	C		2	SCREW	
710	458929	S		2	TURN SPRING	
712	464547	C		4	NUT	
713	464548	-		1	BRACKET	
715	464854	S		1	TENSION SPRING	
716	561426	S		1	LACE	
717	466446	-		2	HANDLE	
718	479224	C		2	STEERING	
719	466620	C		1	PISTON	
720	466621	C		1	PISTON	
722	466623	C		1	COMPRESSION SPRING	
723	476288	-		1	PIPE	
724	476289	-		1	SCREW	
728	479188	C		1	INSULATION	
732	484529	C		1	CYLINDER BRACKET	
734	484682	S		2	COMPRESSION SPRING	
736	484783	C		2	RAIL	
737	484877	S		2	STEERING	
738	484878	-		2	HOLDER	
739	311211-0292	S		6	TAPER PIN GKP6X6X30	
740	312101-0329	-		8	SCREW M6S5X16FZB	
745	312101-0331	-		6	SCREW M6S5X20FZB	
747	312101-0333	-		4	SCREW M6S5X25FZB	
750	312101-0335	-		2	SCREW M6S5X30FZB	
770	312101-0366	-		4	SCREW M6S6X12FZB	
780	312101-0368	-		9	SCREW M6S6X16FZB	
790	312101-0493	-		2	SCREW M6S10X25FZB	
800	312105-0287	-		2	SCREW O4017 M4X8A280	
802	312101-0289	-		2	SCREW M6S4X10FZB	
805	312101-0291	-		2	SCREW M6S4X12FZB	
820	312101-0323	-		4	SCREW M6S5X8FZB	
822	312105-0329	-		10	SCREW O4017 M5X16A280	
825	312111-0325	-		6	SCREW MC6S5X10FZB	
830	312111-0327	-		10	SCREW MC6S5X12FZB	
840	312111-0329	-		2	SCREW MC6S5X16FZB	
870	312111-0372	-		8	SCREW MC6S6X25FZB	
890	312115-0340	-		2	SCREW O4762 M5X45A280	
920	312121-0228	-		4	SLOTTED HEMCS3X16FZB	
930	312121-0230	-		1	SLOTTED HEMCS3X20FZB	
940	312121-0321	-		1	SLOTTED HEMCS5X6FZB	
960	312132-0323	S		8	SLOTTED HEMSCS5X8MSGFN	
F160	C- 440135-0101	-		1	BENDING ROLLER	**649**
F170	C- 440184-010V	-		1	BENDING ROLLER	**651**
F180	C- 449630-030V	C		1	PAPER HOLDER	**653**
F185	C- 522410-0201	-		1	BENDING ROLLER	**655**

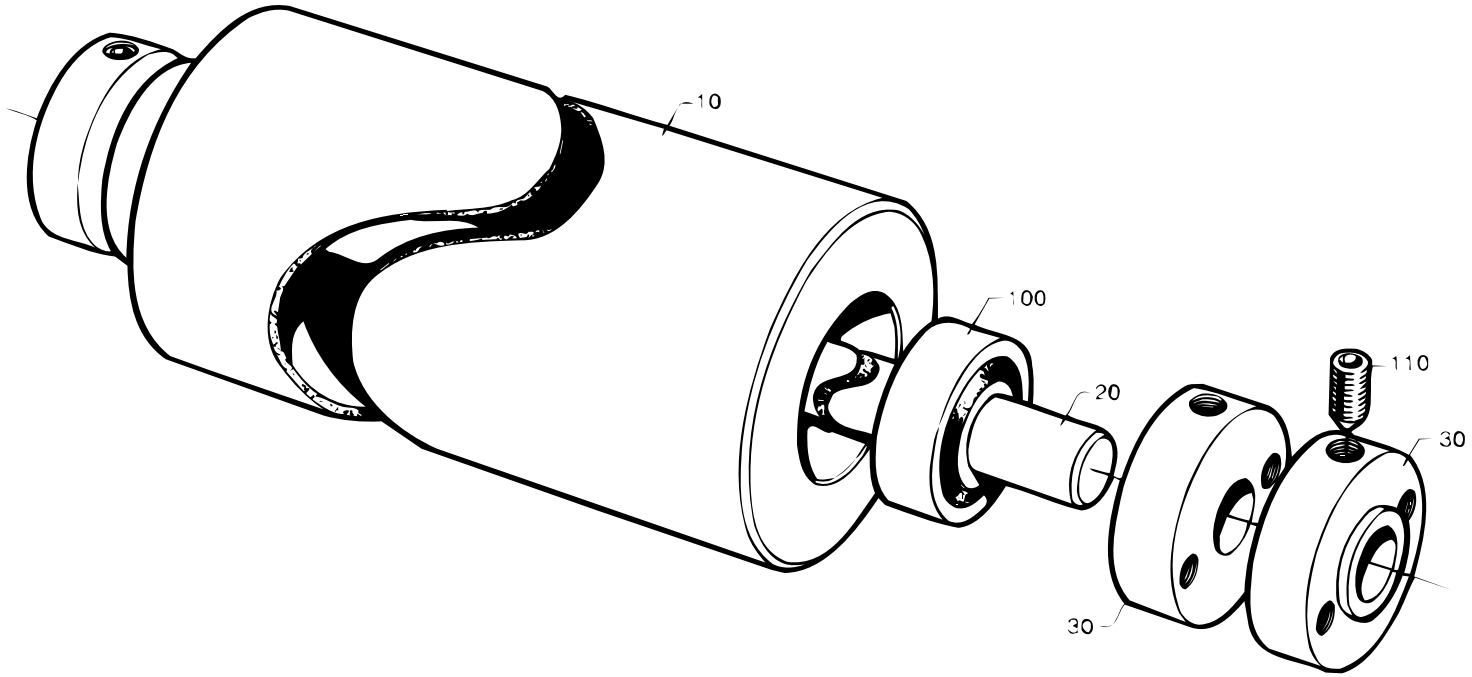

S-440135-1
ECN 5832

Pos	Part No	SP	UN	Qty	Description	Page No
-						
000	**C- 440135-0101**	**-**		**1**	**BENDING ROLLER**	
010	440136-0001	C		1	ROLL	
020	440137-0001	-		1	SHAFT	
030	440138	-		4	LOCKING CIRCLIP	
100	321313-0102	S		2	BALL BEARISKF6202-2RS	
110	312306-0366	-		4	STOP SCREW P6SS6X12FZB	

Pos	Part No	SP	UN	Qty	Description	Page No

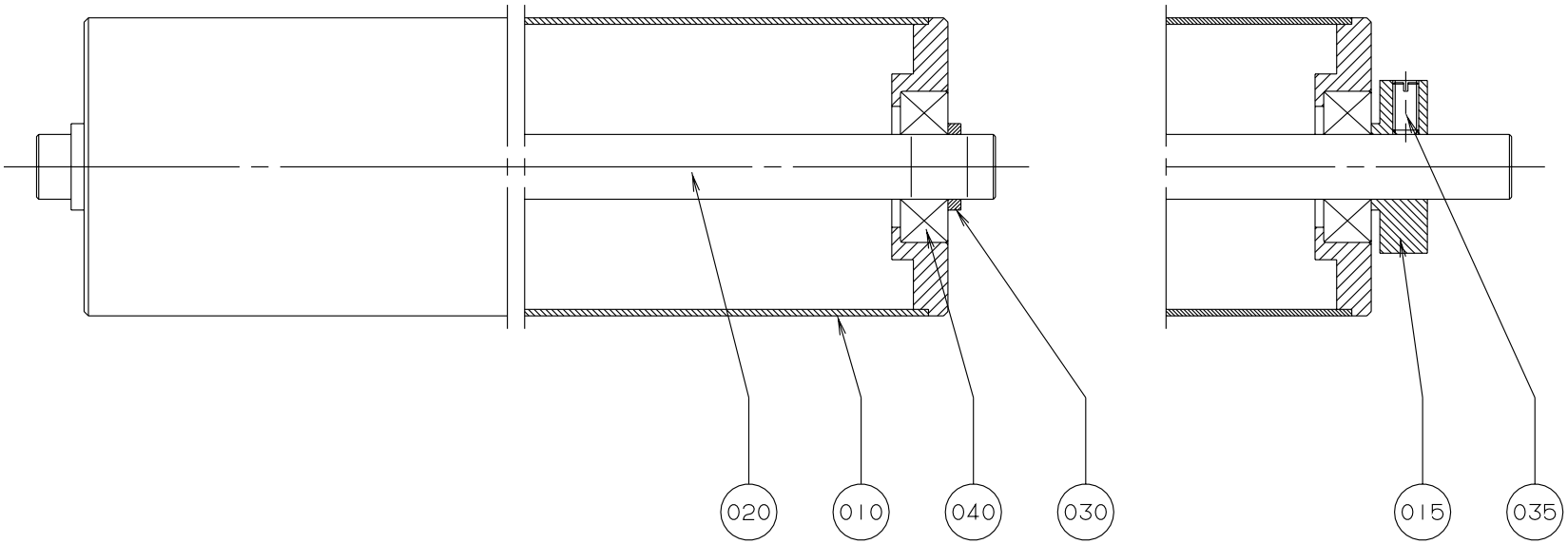
020
010
040
030
015
035

Pos	Part No	SP	UN	Qty	Description	Page No
VOLUMES 1136 B, 1055 B, 1000 B, 750 B, 568 B, 500 B						
000	**C- 440184-0101**	**-**		**1**	**BENDING ROLLER**	
010	440136-0002	C		1	ROLL	
030	440194	P		2	WASHER	
VOLUMES 500S, 400 B, 355 B						
000	**C- 440184-0102**	**-**		**1**	**BENDING ROLLER**	
010	440136-0003	C		1	ROLL	
015	440138	-		2	LOCKING CIRCLIP	
035	312306-0366	-		2	STOP SCREW P6SS6X12FZB	
VOLUME 375 S						
000	**C- 440184-0103**	**-**		**1**	**BENDING ROLLER**	
010	440136-0004	C		1	ROLL	
015	440138	-		2	LOCKING CIRCLIP	
035	312306-0366	-		2	STOP SCREW P6SS6X12FZB	
VOLUME 750 S						
000	**C- 440184-0105**	**-**		**1**	**BENDING ROLLER**	
010	440136-0006	C		1	ROLL	
015	440138	-		2	LOCKING CIRCLIP	
035	312306-0366	-		2	STOP SCREW P6SS6X12FZB	
VOLUME 1000 S						
000	**C- 440184-0106**	**-**		**1**	**BENDING ROLLER**	
010	440136-0007	C		1	ROLL	
015	569917	-		2	LOCKING CIRCLIP	
035	312306-0366	-		2	STOP SCREW P6SS6X12FZB	
VOLUME 1000 Sq, 500 Sq						
000	**C- 440184-0107**	**-**		**1**	**BENDING ROLLER**	
010	440136-0008	-		1	ROLL	
015	440138	-		2	LOCKING CIRCLIP	
035	312306-0366	-		2	STOP SCREW P6SS6X12FZB	
Common parts						
020	440137-0002	-		1	SHAFT	
040	321313-0102	S		2	BALL BEARISKF6202-2RS	

Pos	Part No	SP	UN	Qty	Description	Page No

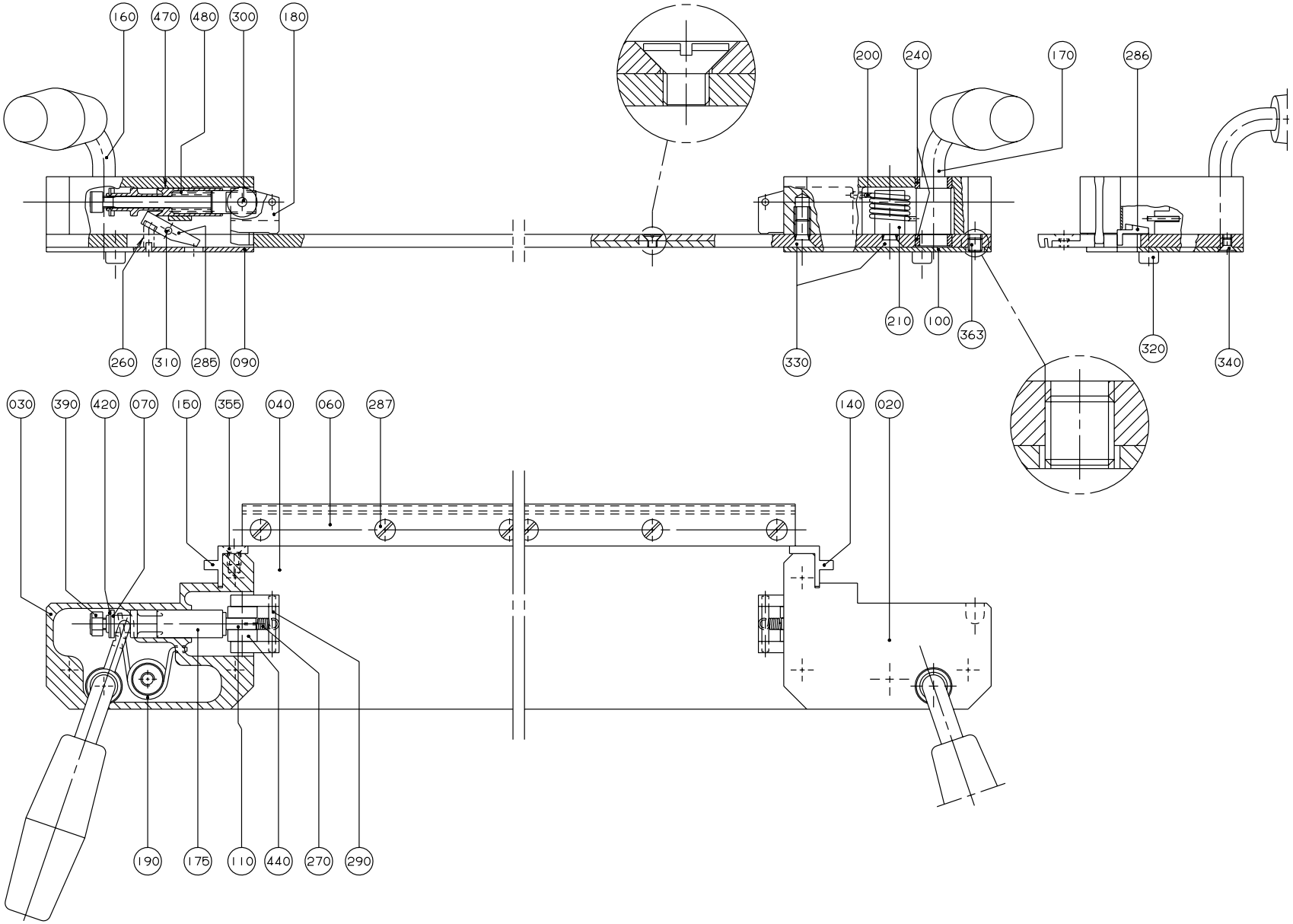

S-449630-3
ECN 19242

Pos	Part No	SP	UN	Qty	Description	Page No
VOLUMES 1136 B, 1055 B, 1000 B, 750 B, 568 B, 500 B						
000	**C- 449630-0301**	**C**		**1**	**PAPER HOLDER**	
020	449631	C		1	BEARING HOUSING	
030	449632	C		1	BEARING HOUSING	
040	549834	C		1	CUTTING RAIL	
090	449634	C		1	COVERING PLATE	
100	449635	C		1	COVERING PLATE	
110	556322	-		2	SHAFT	
VOLUMES 500S, 400 B, 355 B						
000	**C- 449630-0302**	**C**		**1**	**PAPER HOLDER**	
020	457486	C		1	BEARING HOUSING	
030	457488	C		1	BEARING HOUSING	
040	556394	C		1	CUTTING RAIL	
090	457492	C		1	COVERING PLATE	
100	457494	C		1	COVERING PLATE	
110	556324	-		2	SHAFT	
VOLUME 375 S						
000	**C- 449630-0303**	**C**		**1**	**PAPER HOLDER**	
020	457487	C		1	BEARING HOUSING	
030	457489	C		1	BEARING HOUSING	
040	556395	C		1	CUTTING RAIL	
090	457493	C		1	COVERING PLATE	
100	457495	C		1	COVERING PLATE	
110	556325	-		2	SHAFT	
VOLUME 750 S						
000	**C- 449630-0305**	**C**		**1**	**PAPER HOLDER**	
020	544272	C		1	BEARING HOUSING	
030	544273	C		1	BEARING HOUSING	
040	556393	C		1	CUTTING RAIL	
090	544274	C		1	COVERING PLATE	
100	544275	C		1	COVERING PLATE	
110	556323	-		2	SHAFT	
VOLUMES 1000 S						
000	**C- 449630-0306**	**C**		**1**	**PAPER HOLDER**	
020	569921	C		1	BEARING HOUSE L.	
030	569922	C		1	BEARING HOUSE R.	
040	569923	C		1	CUTTING RAIL	
090	569919	C		1	COVER PLATE R.	
100	569918	C		1	COVER PLATE L.	
110	569920	-		2	SHAFT	

Pos	Part No	SP	UN	Qty	Description	Page No
VOLUMES 1000 Sq, 500 Sq						
000	**C- 449630-0307**	**C**		**1**	**PAPER HOLDER**	
020	574059	-		1	BEARING HOUSING	
030	574060	-		1	BEARING HOUSING	
040	574061	-		1	CUTTING RAIL	
090	574062	-		1	COVERING PLATE	
100	574063	-		1	COVERING PLATE	
110	574064	-		2	SHAFT	
Common parts						
060	549835	C		1	CUTTING RAIL	
070	556319	C		2	WASHER	
140	522474	S		1	BLOCK L	
150	522475	S		1	BLOCK R	
160	556391	C		1	HANDLE	
170	556392	C		1	HANDLE	
175	556320	C		2	SLEEVE	
180	556321	-		2	CLAMPING PIECE	
190	449744	C		1	TURN SPRING	
200	449745	C		1	TURN SPRING	
210	449746	-		2	STEERING	
240	449748	S		4	BEARING	
260	458041	C		2	COMPRESSION SPRING	
270	458042	C		2	SPRING	
285	457370	C		2	CATCH	
286	457586	C		1	SLIDE	
287	90287-0206	-		7	SLOTTED SCREW	
290	90258-0030	-		2	HOLLOW PIN	
300	311101-0274	S		2	CYLINDRICACP4H6X25	
310	311102-0236	S		2	CYLINDRICACP M6 3X16	
320	312115-0323	-		2	SCREW O4762 M5X8A280	
330	312141-0366	-		8	SLOTTED HEMFS6X12FZB	
340	312145-0285	-		6	SLOTTED HEMFS4X6RFR	
355	312145-0323	-		4	SLOTTED HEMFS5X8RFR	
363	312306-0360	-		1	STOP SCREW P6SS6X6FZB	
390	312812-0314	-		2	LOCK NUT A2-M5RFR	
420	315755-0108	S		2	LOCKING WAE 6RFR	
440	321300-0094	S		4	BALL BEARISKF624	
470	90296-0009	-	ML	2	GREASE	
480	90335-0027	C		2	SPRING	

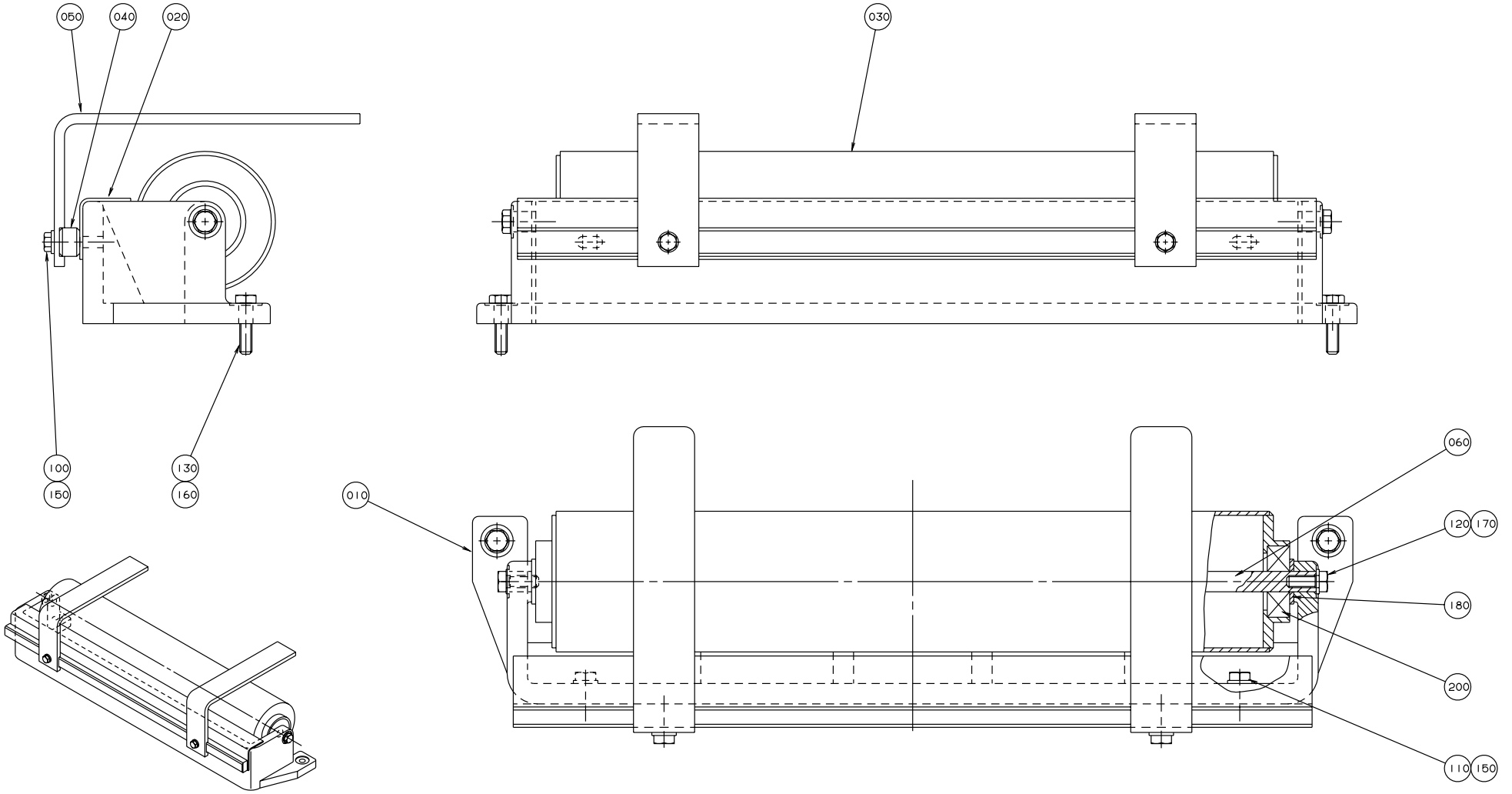

S-522410-2
ECN 19252

Pos	Part No	SP	UN	Qty	Description	Page No
-						
000	**C- 522410-0201**	**-**		**1**	**BENDING ROLLER**	
010	G- 522173	-		1	CANTILEVER	
020	574651	-		1	SHEET	
030	265564	C		1	BENDING ROLLER	
040	479223	-		1	RAIL	
050	531885	-		2	STEERING	
060	499132-0002	-		1	SHAFT	
100	312105-0327	-		2	SCREW ISO 4017 M5X12A280	
110	312105-0331	-		2	SCREW O4017 M5X20A280	
120	312105-0368	-		2	SCREW O4017 M6X16A280	
130	312105-0372	-		2	SCREW O4017 M6X25A280	
150	315105-0146	-		4	WASHER BRB5,3X10RFR	
160	315105-0153	-		2	WASHER BRB6,4X12RFR	
170	315115-0153	-		2	WASHER TBRB6,4X12RFR	
180	315105-0173	-		2	WASHER BRB10,5X22RFR	
200	321316-0200	S		2	BALL BEARISKF6300-2RS	

Pos	Part No	SP	UN	Qty	Description	Page No

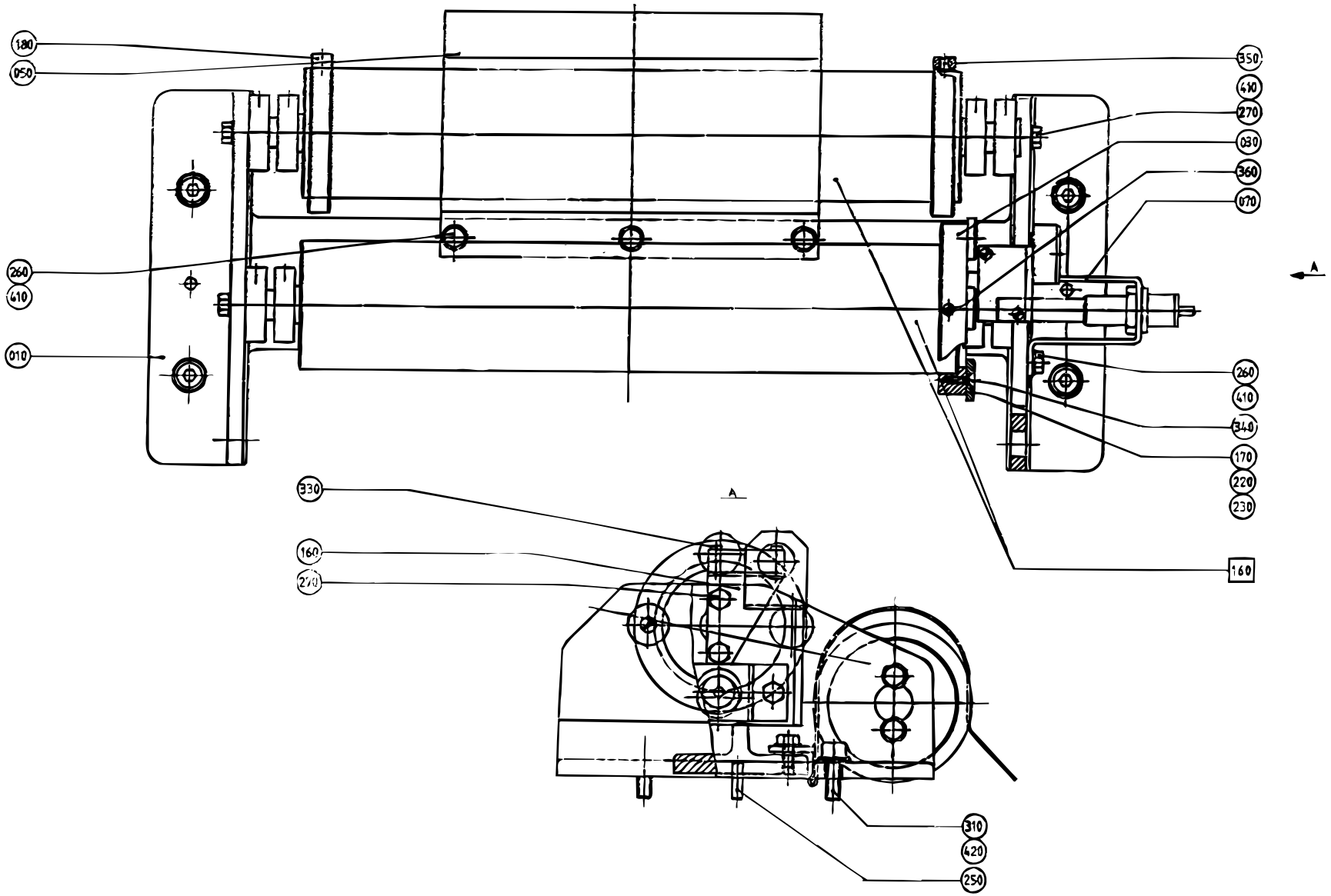
180
050
260
410
010
350
410
270
030
360
070
260
410
340
170
220
230
160
330
160
240
310
420
250
A
A

Pos	Part No	SP	UN	Qty	Description	Page No
-						
000	**C- 445930-0101**	**-**		**1**	**BENDING UNIT**	
010	G- 445931	C		1	CANTILEVER	
030	440157	C		1	MAGNET BRACKET	
050	476403	-		1	HEAD PLATE	
160	466469	C		1	HOLDER	
170	440180	C		4	WASHER	
180	250588	-		2	FLANGE	
250	311102-0353	-		2	CYLINDRICACP M6 6X20	
260	312105-0366	-		3	SCREW O4017 M6X12A280	
270	312105-0368	-		8	SCREW O4017 M6X16A280	
310	312115-0451	-		4	SCREW O4762 M8X20A280	
330	312125-0228	-		2	SLOTTED HEMCS3X16RFR	
340	312145-0287	-		4	SLOTTED HEMFS4X8RFR	
350	312316-0323	-		4	STOP SCREW SK6SS5X8FZB	
360	312316-0362	-		3	STOP SCREW SK6SS6X8FZB	
410	315105-0153	-		9	WASHER BRB6,4X12RFR	
420	315105-0165	-		4	WASHER BRB8,4X16RFR	
F160	C- 440135-0101	-		2	BENDING ROLLER	**649**

Pos	Part No	SP	UN	Qty	Description	Page No

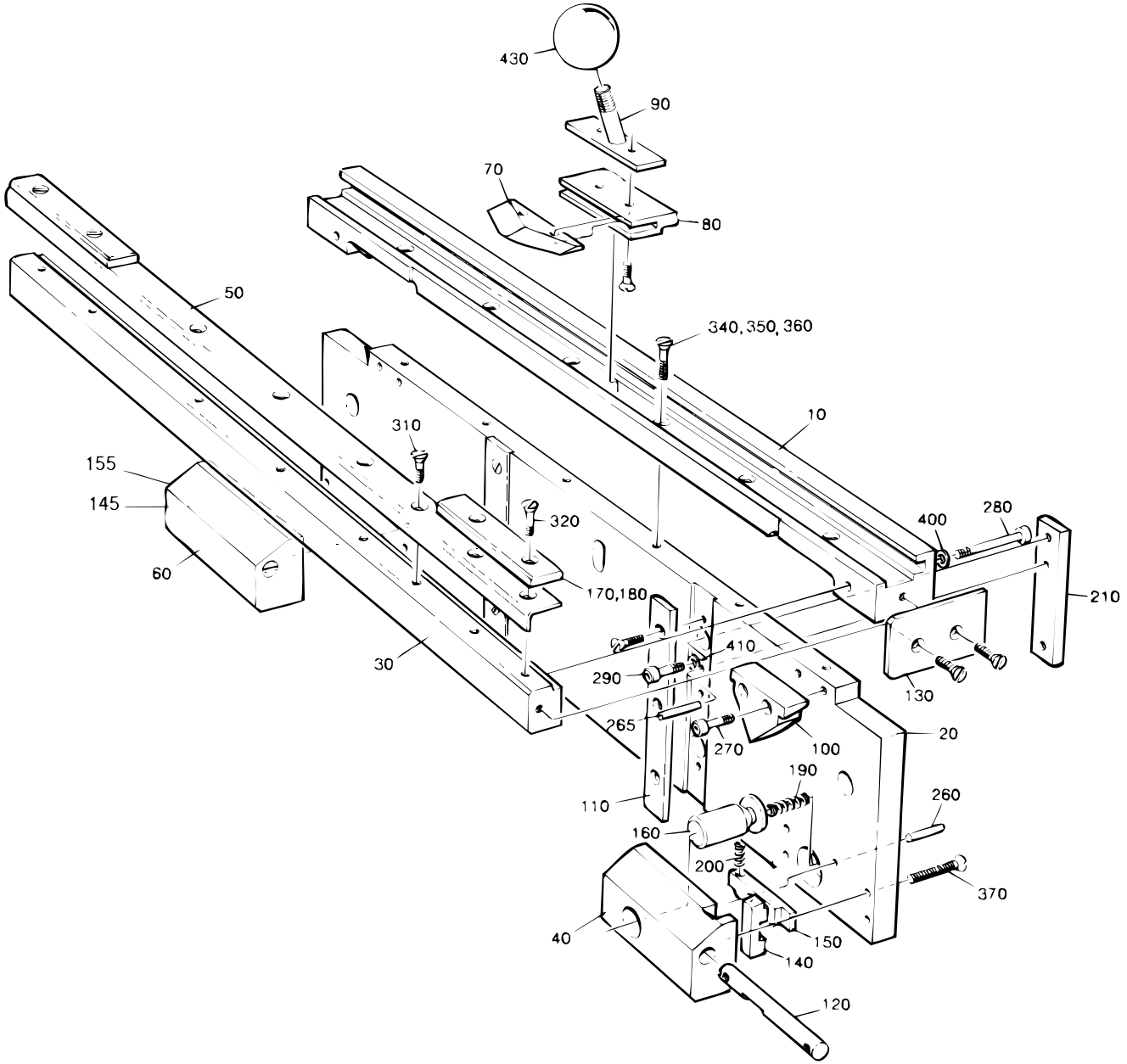
430
90
70
80
50
340, 350, 360
10
310
155
145
320
400
280
60
170,180
210
410
30
290
130
265
270
100
20
190
110
260
160
200
370
40
150
140
120

Pos	Part No	SP	UN	Qty	Description	Page No
VOLUMES 1136 B, 1055 B, 1000 B, 750 B, 568 B, 500 B						
000	**C- 522121-0201**	**-**		**1**	**CUTTING TABLE**	
010	522122-0001	-		1	RAIL	
170	522138	C		1	STOPPER	
340	312145-0327	-		6	SLOTTED HEMFS5X12RFR	
360	312145-0331	-		6	SLOTTED HEMFS5X20RFR	
VOLUMES 500S, 400 B, 355 B						
000	**C- 522121-0202**	**-**		**1**	**CUTTING TABLE**	
010	522122-0002	-		1	RAIL	
180	522139-0001	C		1	STOPPER	
340	312145-0327	-		6	SLOTTED HEMFS5X12RFR	
350	312145-0329	-		6	SLOTTED HEMFS5X16RFR	
VOLUME 375 S						
000	**C- 522121-0203**	**-**		**1**	**CUTTING TABLE**	
010	522122-0002	-		1	RAIL	
180	522139-0002	C		1	STOPPER	
340	312145-0327	-		6	SLOTTED HEMFS5X12RFR	
350	312145-0329	-		6	SLOTTED HEMFS5X16RFR	
VOLUME 750 S						
000	**C- 522121-0205**	**-**		**1**	**CUTTING TABLE**	
010	522122-0001	-		1	RAIL	
170	544270	C		1	STOPPER	
340	312145-0327	-		6	SLOTTED HEMFS5X12RFR	
360	312145-0331	-		6	SLOTTED HEMFS5X20RFR	
VOLUMES 1000 S						
000	**C- 522121-0206**	**-**		**1**	**CUTTING TABLE**	
010	522122-0001	-		1	RAIL	
170	569924	C		1	STOPPER	
340	312145-0327	-		6	SLOTTED HEMFS5X12RFR	
360	312145-0331	-		6	SLOTTED HEMFS5X20RFR	
VOLUMES 1000 Sq, 500 Sq						
000	**C- 522121-0207**	**-**		**1**	**CUTTING TABLE**	
010	522122-0001	-		1	RAIL	
170	574052	-		1	STOPPER	
340	312145-0327	-		6	SLOTTED HEMFS5X12RFR	
360	312145-0331	-		6	SLOTTED HEMFS5X20RFR	
Common parts						
020	522123	-		1	PLATE	
030	522124	-		1	RULER	
040	522125	C		1	BEARING HOUSING	
050	522126	-		1	SHEET	
060	556443	C		1	BEARING HOUSING	
070	522128	S		1	KNIFE	
080	522129	C		1	KNIFE HOLDER	
090	522130	-		1	HANDLE	
100	522131	C		2	STEERING	
110	522132	C		2	SLIDE BELT	
120	522133	-		2	SHAFT	
130	522134	-		2	END PLATE	
140	556439	C		1	BARRIER	
145	556440	C		1	BARRIER	
150	556441	-		1	ARM	
155	556442	-		1	ARM	
160	522137	C		2	PUSH BUTTON	
190	522158	C		2	COMPRESSION SPRING	
200	458041	C		2	COMPRESSION SPRING	
210	530778	-		2	LACE	
250	311103-0272	-		2	CYLINDRICACP M6 4X20 RFR	
260	311112-0256	-		4	SLOTTED TURP 4X20 RFR	
265	311112-0258	-		2	SLOTTED TURP 4X24 RFR	
270	312115-0329	-		4	SCREW O4762 M5X16A280	
280	312115-0339	-		2	SCREW O4762 M5X40A280	
290	312115-0370	-		4	SCREW O4762 M6X20A280	
310	312145-0289	-		8	SLOTTED HEMFS4X10RFR	
320	312145-0291	-		6	SLOTTED HEMFS4X12RFR	
370	312105-0337	-		4	SCREW O4014 M5X35A280	
400	315105-0146	-		6	WASHER BRB5,3X10RFR	
410	315105-0153	-		4	WASHER BRB6,4X12RFR	
430	318800-0107	-		1	HANDLE BALLA D45-M10	

This page is intentionally left blank

Pos	Part No	SP	UN	Qty	Description	Page No
-						
000	**C- 440132-0201**	**-**		**1**	**START-UP KIT**	
030	294009	-		2	KNIFE	

Pos	Part No	SP	UN	Qty	Description	Page No

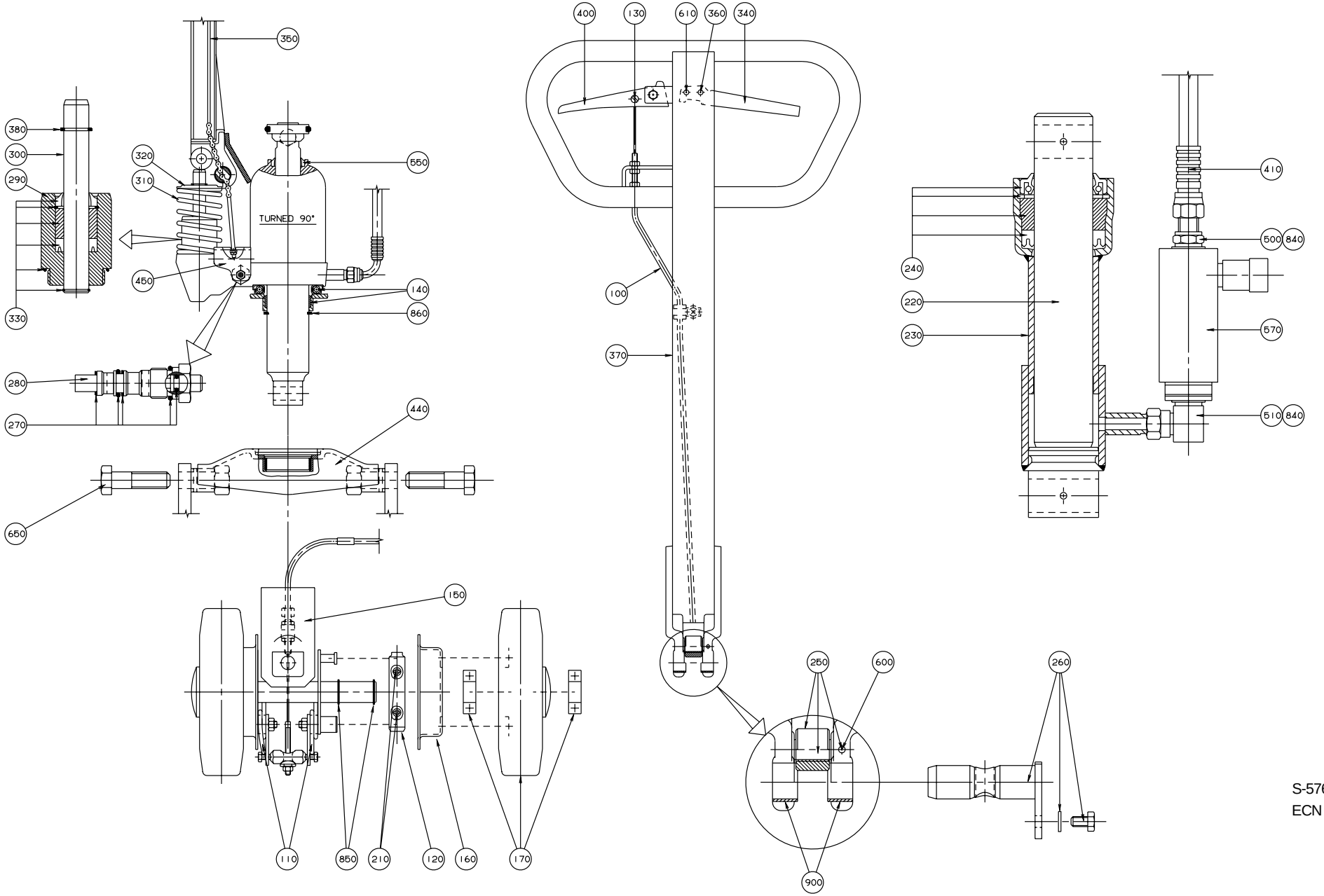

S-576739-3
ECN 20487

Pos	Part No	SP	UN	Qty	Description	Page No
(PAPER) REEL TROLLEY						
000	**C- 576739-0201**	**C**		**1**	**(PAPER)REEL TROLLEY**	
010	574658	-		1	LOGOTYPE TP	
020	522308	-		2	SIGN	
030	90067-0021	-		1	CARRIAGE	
040	311521-0143	-		4	BLANK RIVE2X8,0 RFR	
SPARE PARTS FOR (PAPER) REEL TROLLEY						
000	**C- 576739-0202**	**C**		**1**	**(PAPER)REEL TROLLEY**	
100	90067-0301	S		1	BRAKE WIRE	
110	90067-0302	C		2	TORSION SPRING	
120	90067-0317	C		2	BRAKE LINING	
130	90067-0320	S		1	COTTER	
140	90067-0334	C		1	AXIAL BEARING KIT	
150	90067-0336	C		1	GUIDE SHAFT UNIT	
160	90067-0337	C		2	BRAKE DRUM	
170	90067-0338	S		2	GUIDE ROLLER	
180	90067-0370	S		2	WHEEL	
190	90067-0371	C		4	WASHER	
200	90067-0372	C		2	SHAFT	
210	90067-0342	C		4	TENSION SPRING	
220	90067-0346	S		1	PISTON ROD	
230	90067-0347	S		1	CYLINDER SHELL	
240	90067-0348	S		1	REPAIR KIT	
250	90067-0349	S		1	ROLL	
260	90067-0350	C		1	AXLE PIN	
270	90067-0351	S		1	SEAL KIT	
280	90067-0352	S		1	SINK VALVE COMPL.	
290	90067-0353	S		1	PUMP CYLINDER	
300	90067-0354	S		1	PUMP PISTON	
310	90067-0355	C		1	COMPRESSION SPRING	
320	90067-0356	C		1	TOP WASHER	
330	90067-0357	S		1	REPAIR KIT	
340	90067-0358	C		1	SINK HANDLE	
350	90067-0359	C		1	SINK ROD	
360	90067-0360	S		1	POSITIONING DEVICE	
370	90067-0361	C		1	TIE ROD	
380	90067-0362	S		1	CIRCLIP	
390	90067-0363	S		4	SLIDER	
400	90067-0364	C		1	BRAKE HANDLE	
410	90067-0365	S		1	HYDRAULIC HOSE	
420	90067-0366	C		1	INDICATOR	
430	90067-0367	C		1	INDICATOR	
440	90067-0368	C		1	YOKE	
450	90067-0369	C		1	VALVE ARM	
500	90055-0042	S		1	NIPPLE	
510	90055-0145	S		1	ELBOW ADAPTOR	
550	90091-0106	-		1	SEALED RING	
570	90201-0098	S		1	REGULATING VALVE	
600	311111-0251	-		1	SLOTTED TUFRP4X10	
610	311111-0345	-		1	SLOTTED TUFRP6X32	
620	311303-0271	-		2	SLOTTED PIRPB4X18FZB	
650	312101-0678	-		2	SCREW M6S20X70 8.8FZB	
670	312104-0501	-		2	SCREW M6S10X50H8.8FZB	
680	312151-0451	-		4	SCREW MF6S8X20FZB	
690	312151-0455	-		4	SCREW MF6S8X30FZB	
750	312601-0318	-		4	NUT M6M8FZB	
760	312601-0320	-		2	NUT M6M10FZB	
800	315101-0165	-		4	WASHER BRB8,4X16FZB	
840	315234-0110	S		2	SEAL RING R1/4"	
850	315750-0119	S		4	CIRCLIP SGA25	
860	315750-0131	S		1	CIRCLIP SGA50	
900	321120-0137	C		2	BUSHING 20/23X15	

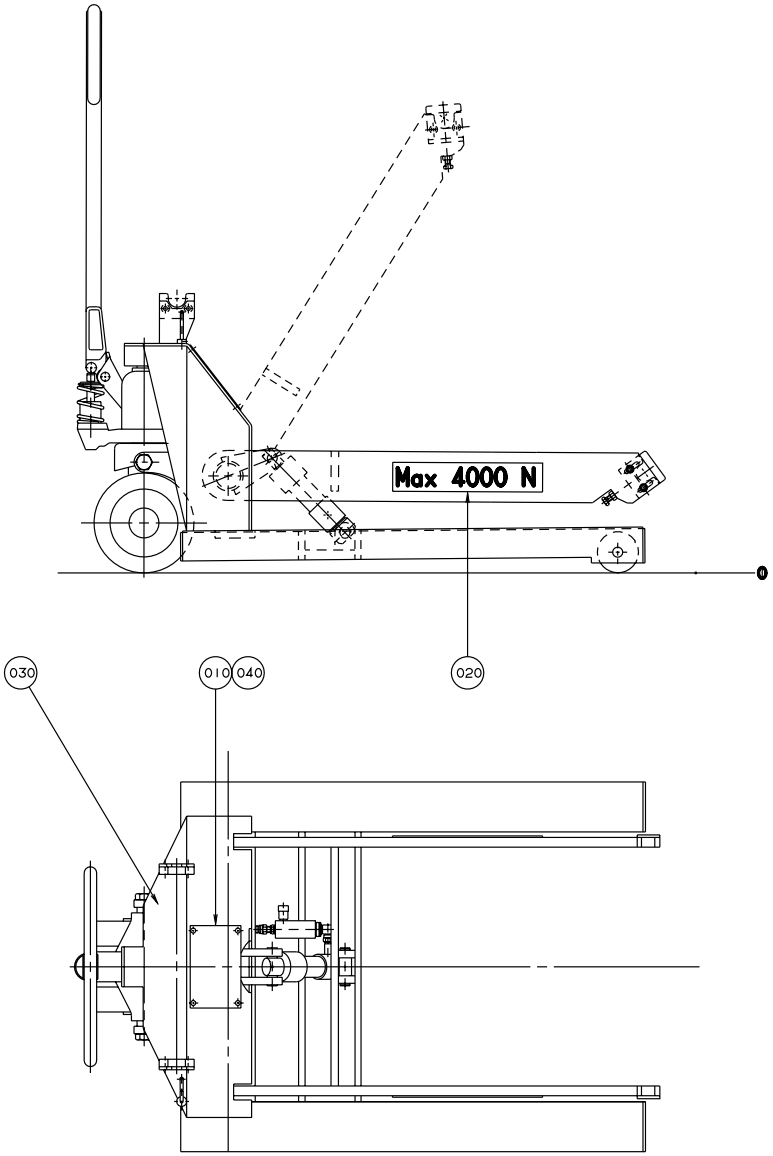

SPAREPARTS FOR (030) SEE SHEET 3 AND 5

Pos	Part No	SP	UN	Qty	Description	Page No
(PAPER) REEL TROLLEY						
000	**C- 576739-0201**	**C**		**1**	**(PAPER)REEL TROLLEY**	
010	574658	-		1	LOGOTYPE TP	
020	522308	-		2	SIGN	
030	90067-0021	-		1	CARRIAGE	
040	311521-0143	-		4	BLANK RIVE2X8,0 RFR	
SPARE PARTS FOR (PAPER) REEL TROLLEY						
000	**C- 576739-0202**	**C**		**1**	**(PAPER)REEL TROLLEY**	
100	90067-0301	S		1	BRAKE WIRE	
110	90067-0302	C		2	TORSION SPRING	
120	90067-0317	C		2	BRAKE LINING	
130	90067-0320	S		1	COTTER	
140	90067-0334	C		1	AXIAL BEARING KIT	
150	90067-0336	C		1	GUIDE SHAFT UNIT	
160	90067-0337	C		2	BRAKE DRUM	
170	90067-0338	S		2	GUIDE ROLLER	
180	90067-0370	S		2	WHEEL	
190	90067-0371	C		4	WASHER	
200	90067-0372	C		2	SHAFT	
210	90067-0342	C		4	TENSION SPRING	
220	90067-0346	S		1	PISTON ROD	
230	90067-0347	S		1	CYLINDER SHELL	
240	90067-0348	S		1	REPAIR KIT	
250	90067-0349	S		1	ROLL	
260	90067-0350	C		1	AXLE PIN	
270	90067-0351	S		1	SEAL KIT	
280	90067-0352	S		1	SINK VALVE COMPL.	
290	90067-0353	S		1	PUMP CYLINDER	
300	90067-0354	S		1	PUMP PISTON	
310	90067-0355	C		1	COMPRESSION SPRING	
320	90067-0356	C		1	TOP WASHER	
330	90067-0357	S		1	REPAIR KIT	
340	90067-0358	C		1	SINK HANDLE	
350	90067-0359	C		1	SINK ROD	
360	90067-0360	S		1	POSITIONING DEVICE	
370	90067-0361	C		1	TIE ROD	
380	90067-0362	S		1	CIRCLIP	
390	90067-0363	S		4	SLIDER	
400	90067-0364	C		1	BRAKE HANDLE	
410	90067-0365	S		1	HYDRAULIC HOSE	
420	90067-0366	C		1	INDICATOR	
430	90067-0367	C		1	INDICATOR	
440	90067-0368	C		1	YOKE	
450	90067-0369	C		1	VALVE ARM	
500	90055-0042	S		1	NIPPLE	
510	90055-0145	S		1	ELBOW ADAPTOR	
550	90091-0106	-		1	SEALED RING	
570	90201-0098	S		1	REGULATING VALVE	
600	311111-0251	-		1	SLOTTED TUFRP4X10	
610	311111-0345	-		1	SLOTTED TUFRP6X32	
620	311303-0271	-		2	SLOTTED PIRPB4X18FZB	
650	312101-0678	-		2	SCREW M6S20X70 8.8FZB	
670	312104-0501	-		2	SCREW M6S10X50H8.8FZB	
680	312151-0451	-		4	SCREW MF6S8X20FZB	
690	312151-0455	-		4	SCREW MF6S8X30FZB	
750	312601-0318	-		4	NUT M6M8FZB	
760	312601-0320	-		2	NUT M6M10FZB	
800	315101-0165	-		4	WASHER BRB8,4X16FZB	
840	315234-0110	S		2	SEAL RING R1/4"	
850	315750-0119	S		4	CIRCLIP SGA25	
860	315750-0131	S		1	CIRCLIP SGA50	
900	321120-0137	C		2	BUSHING 20/23X15	

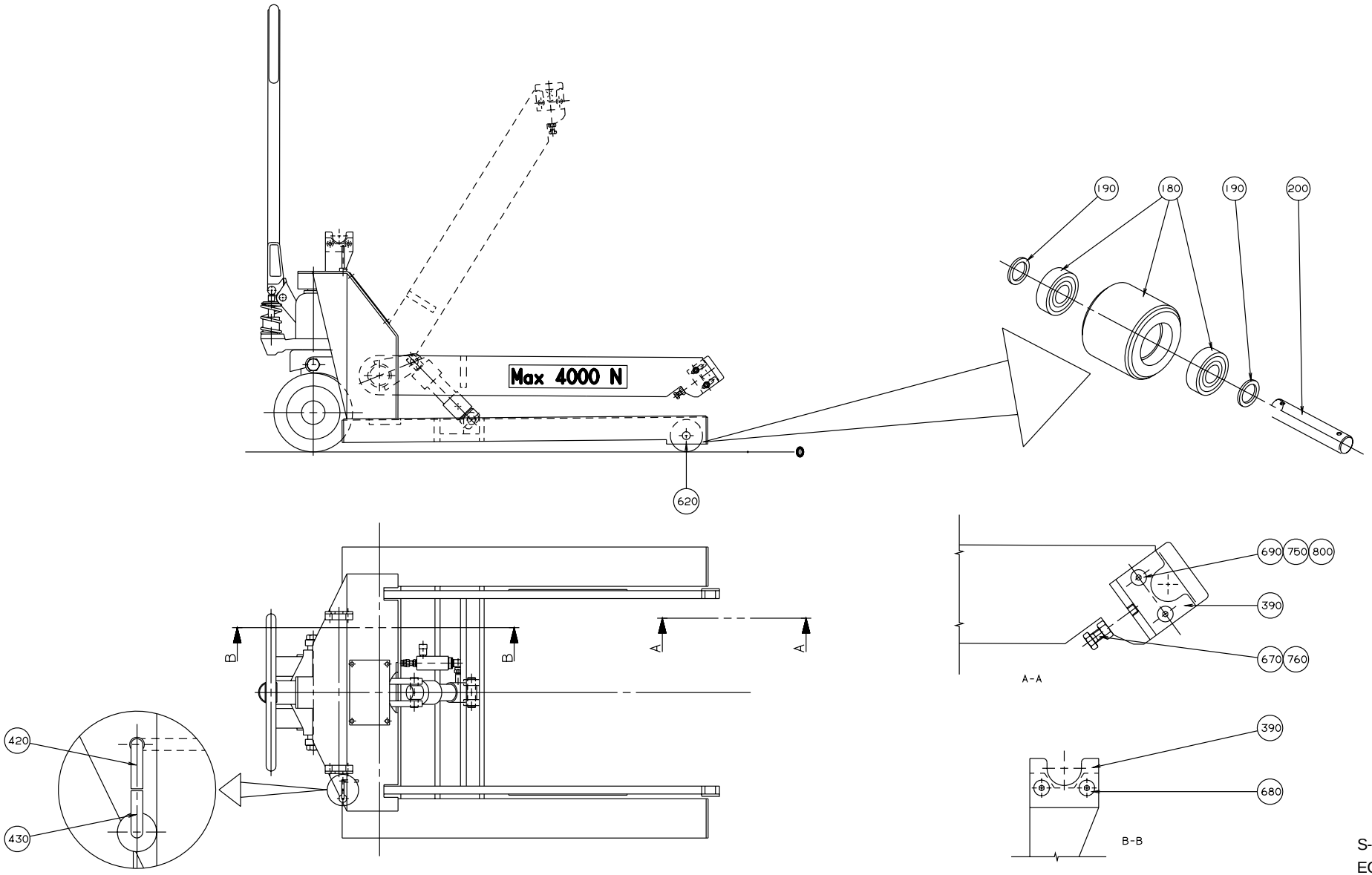

S-576739-5
ECN 20648

Pos	Part No	SP	UN	Qty	Description	Page No
(PAPER) REEL TROLLEY						
000	**C- 576739-0201**	**C**		**1**	**(PAPER)REEL TROLLEY**	
010	574658	-		1	LOGOTYPE TP	
020	522308	-		2	SIGN	
030	90067-0021	-		1	CARRIAGE	
040	311521-0143	-		4	BLANK RIVE2X8,0 RFR	
SPARE PARTS FOR (PAPER) REEL TROLLEY						
000	**C- 576739-0202**	**C**		**1**	**(PAPER)REEL TROLLEY**	
100	90067-0301	S		1	BRAKE WIRE	
110	90067-0302	C		2	TORSION SPRING	
120	90067-0317	C		2	BRAKE LINING	
130	90067-0320	S		1	COTTER	
140	90067-0334	C		1	AXIAL BEARING KIT	
150	90067-0336	C		1	GUIDE SHAFT UNIT	
160	90067-0337	C		2	BRAKE DRUM	
170	90067-0338	S		2	GUIDE ROLLER	
180	90067-0370	S		2	WHEEL	
190	90067-0371	C		4	WASHER	
200	90067-0372	C		2	SHAFT	
210	90067-0342	C		4	TENSION SPRING	
220	90067-0346	S		1	PISTON ROD	
230	90067-0347	S		1	CYLINDER SHELL	
240	90067-0348	S		1	REPAIR KIT	
250	90067-0349	S		1	ROLL	
260	90067-0350	C		1	AXLE PIN	
270	90067-0351	S		1	SEAL KIT	
280	90067-0352	S		1	SINK VALVE COMPL.	
290	90067-0353	S		1	PUMP CYLINDER	
300	90067-0354	S		1	PUMP PISTON	
310	90067-0355	C		1	COMPRESSION SPRING	
320	90067-0356	C		1	TOP WASHER	
330	90067-0357	S		1	REPAIR KIT	
340	90067-0358	C		1	SINK HANDLE	
350	90067-0359	C		1	SINK ROD	
360	90067-0360	S		1	POSITIONING DEVICE	
370	90067-0361	C		1	TIE ROD	
380	90067-0362	S		1	CIRCLIP	
390	90067-0363	S		4	SLIDER	
400	90067-0364	C		1	BRAKE HANDLE	
410	90067-0365	S		1	HYDRAULIC HOSE	
420	90067-0366	C		1	INDICATOR	
430	90067-0367	C		1	INDICATOR	
440	90067-0368	C		1	YOKE	
450	90067-0369	C		1	VALVE ARM	
500	90055-0042	S		1	NIPPLE	
510	90055-0145	S		1	ELBOW ADAPTOR	
550	90091-0106	-		1	SEALED RING	
570	90201-0098	S		1	REGULATING VALVE	
600	311111-0251	-		1	SLOTTED TUFRP4X10	
610	311111-0345	-		1	SLOTTED TUFRP6X32	
620	311303-0271	-		2	SLOTTED PIRPB4X18FZB	
650	312101-0678	-		2	SCREW M6S20X70 8.8FZB	
670	312104-0501	-		2	SCREW M6S10X50H8.8FZB	
680	312151-0451	-		4	SCREW MF6S8X20FZB	
690	312151-0455	-		4	SCREW MF6S8X30FZB	
750	312601-0318	-		4	NUT M6M8FZB	
760	312601-0320	-		2	NUT M6M10FZB	
800	315101-0165	-		4	WASHER BRB8,4X16FZB	
840	315234-0110	S		2	SEAL RING R1/4"	
850	315750-0119	S		4	CIRCLIP SGA25	
860	315750-0131	S		1	CIRCLIP SGA50	
900	321120-0137	C		2	BUSHING 20/23X15	

Tetra Pak

SPC

Spare Parts Catalogue

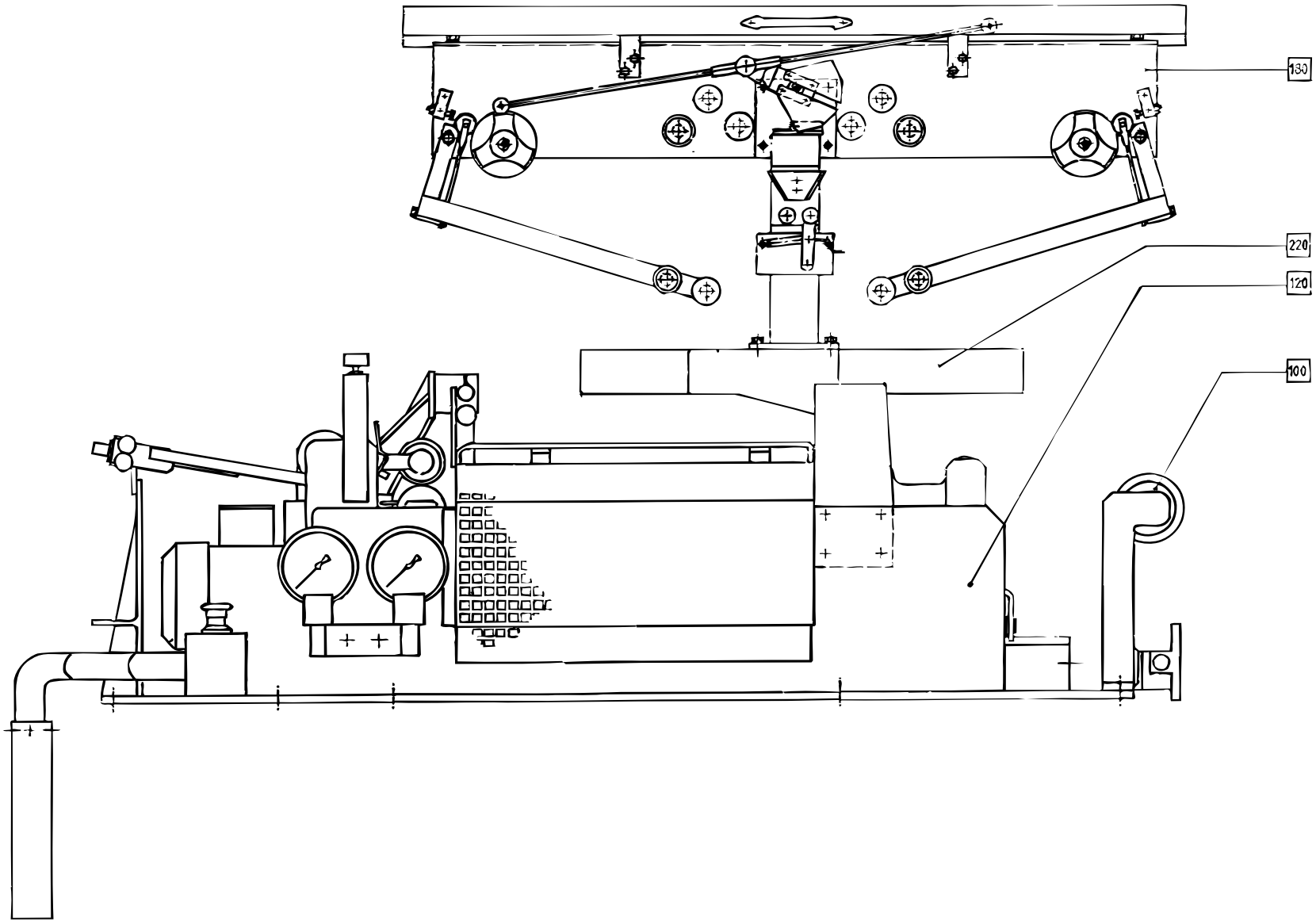

S-648007-5
ECN 11854

Pos	Part No	SP	UN	Qty	Description	Page No
-						
000	**B- 648007-040V**	**-**		**1**	**STRIP APPLICATOR**	
F040	C- 282509-030V	-		1	BENDING ROLLER	**675**
F065	C- 573663-010V	-		1	SUPPORT ROLLER	**677**
F070	C- 450862-0301	-		1	CONNECTION BOX	**679**
F080	C- 526931-030V	-		1	BOTTOM PLATE	**681**
F090	C- 526932-030V	-		1	PIPE WORK	**683**
F095	C- 279210-010V	-		1	PAPER GUIDE	**685**
F100	C- 265565-0201	-		1	BENDING ROLLER BRACKET	**687**
F110	C- 266726-0301	-		1	PRESSURE ROLLER	**689**
F120	C- 269112-060V	-		1	STRIP APPLICATOR	**691**
F130	C- 282528-020V	-		1	PRESSURE ROLLER	**693**
F135	C- 282634-030V	-		1	STRIP GUIDE	**695**
F160	C- 546180-010V	-		1	SPLICE DETECTOR	**697**
F170	C- 526954-010V	-		1	START-UP KIT	**699**
F180	C- 543823-0101	-		1	STRIP MAGAZINE	**701**
	C- 537329-0101	-		-	. HUB JUMBO	**703**
	C- 543821-0101	-		-	. LEVEL PROBE	**705**
	C- 543822-0101	-		-	. BRAKE ARM	**707**
	C- 543822-0102	-		-	. BRAKE ARM	**709**
F220	C- 544973-010V	-		1	PILLAR	**711**

Pos	Part No	SP	UN	Qty	Description	Page No

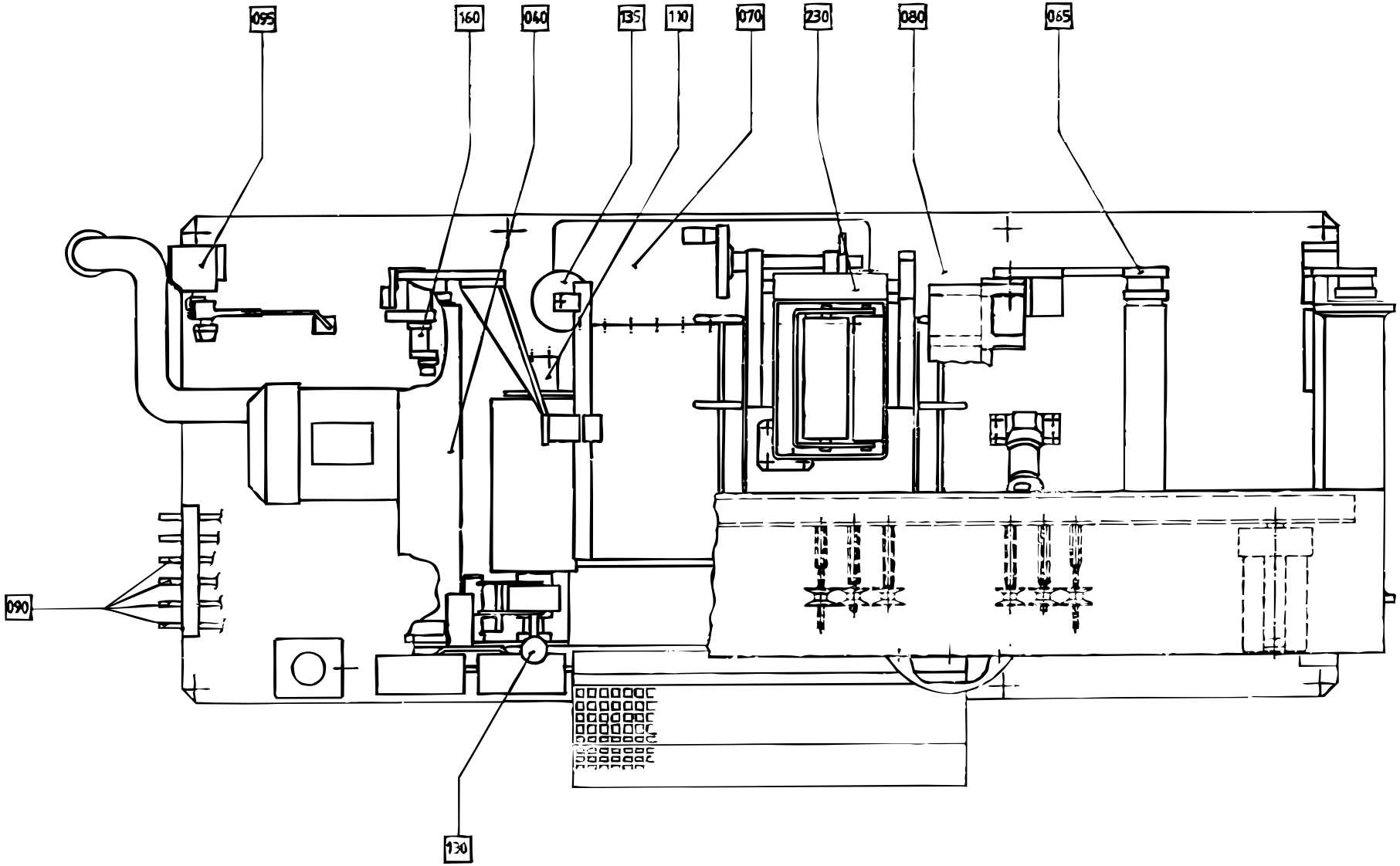

S-648007-6
ECN 11854

Pos	Part No	SP	UN	Qty	Description	Page No
-						
000	**B- 648007-040V**	**-**		**1**	**STRIP APPLICATOR**	
F040	C- 282509-030V	-		1	BENDING ROLLER	**675**
F065	C- 573663-010V	-		1	SUPPORT ROLLER	**677**
F070	C- 450862-0301	-		1	CONNECTION BOX	**679**
F080	C- 526931-030V	-		1	BOTTOM PLATE	**681**
F090	C- 526932-030V	-		1	PIPE WORK	**683**
F095	C- 279210-010V	-		1	PAPER GUIDE	**685**
F100	C- 265565-0201	-		1	BENDING ROLLER BRACKET	**687**
F110	C- 266726-0301	-		1	PRESSURE ROLLER	**689**
F120	C- 269112-060V	-		1	STRIP APPLICATOR	**691**
F130	C- 282528-020V	-		1	PRESSURE ROLLER	**693**
F135	C- 282634-030V	-		1	STRIP GUIDE	**695**
F160	C- 546180-010V	-		1	SPLICE DETECTOR	**697**
F170	C- 526954-010V	-		1	START-UP KIT	**699**
F180	C- 543823-0101	-		1	STRIP MAGAZINE	**701**
	C- 537329-0101	-		-	. HUB JUMBO	**703**
	C- 543821-0101	-		-	. LEVEL PROBE	**705**
	C- 543822-0101	-		-	. BRAKE ARM	**707**
	C- 543822-0102	-		-	. BRAKE ARM	**709**
F220	C- 544973-010V	-		1	PILLAR	**711**

Pos	Part No	SP	UN	Qty	Description	Page No

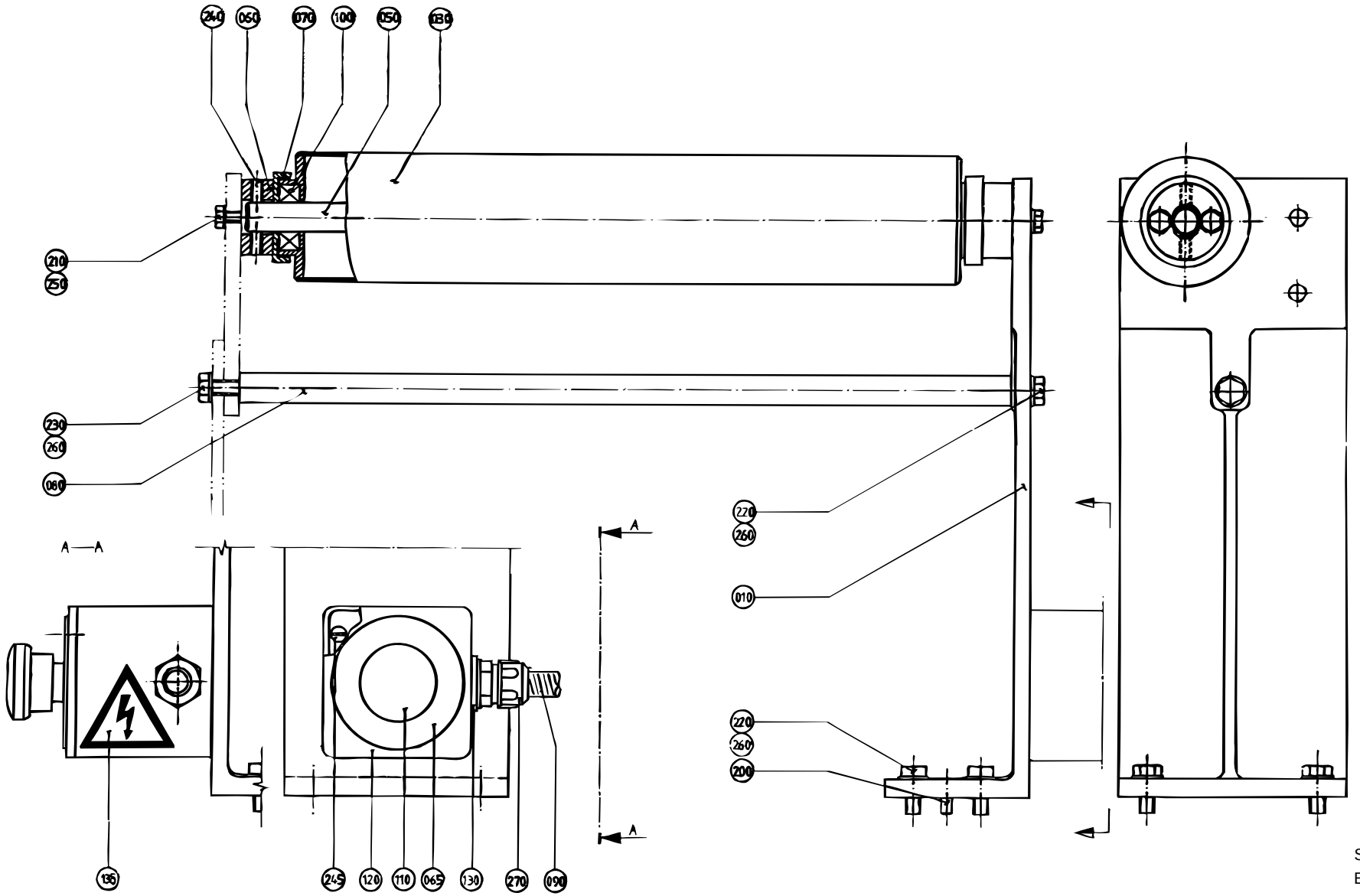

S-282509-2
ECN 22872

Pos	Part No	SP	UN	Qty	Description	Page No
VOLUMES 1055 B, 1000 B, 750 B, 568 B, 500 B, 1000 S						
000	**C- 282509-0301**	**-**		**1**	**BENDING ROLLER**	
030	449843-0001	C		1	BENDING ROLLER	
050	265566-0001	S		1	SHAFT	
080	265569-0001	-		1	STRUT	
VOLUMES 375 S, 500 S, 355 B, 400 B						
000	**C- 282509-0302**	**-**		**1**	**BENDING ROLLER**	
030	449843-0002	C		1	BENDING ROLLER	
050	265566-0003	S		1	SHAFT	
080	265569-0003	-		1	STRUT	
VOLUME 750 S						
000	**C- 282509-0303**	**-**		**1**	**BENDING ROLLER**	
030	449843-0003	C		1	BENDING ROLLER	
050	265566-0004	S		1	SHAFT	
080	265569-0005	-		1	STRUT	
VOLUME 1000 Sq, 500 Sq						
000	**C- 282509-0304**	**-**		**1**	**BENDING ROLLER**	
030	449843-0004	-		1	BENDING ROLLER	
050	265566-0005	-		1	SHAFT	
080	265569-0006	-		1	STRUT	
Common parts						
010	265756	-		1	CANTILEVER	
060	265567	C		2	BEARING UNIT	
065	486826-0001	-		1	SIGN "EMERGENCY STOP" YL	
070	265568	-		2	DUST COVER	
090	90152-0033	-	M	1	HOSE	
100	90214-0098	P		2	BALL BEARING	
110	90064-0124	-		1	EMERGENCY STOP BUTTON	
120	90066-0021	-		1	PUSH BUTTON BOX	
130	90089-0003	-		1	SLEEVE	
135	90194-0016	-		1	SIGN "FLASH SIGN" 50X50MM	
200	311305-0308	-		2	SLOTTED PIRPC5X16FZB	
210	312105-0370	-		4	SCREW O4017 M6X20A280	
220	312105-0451	-		5	SCREW SO4017 8X20A280	
230	312105-0453	-		1	SCREW O4017 M8X25A280	
240	312318-0364	-		4	STOP SCREW SK6SS6X10RFR	
245	312125-0333	-		2	SLOTTED HEMCS5X25RFR	
250	315105-0153	-		4	WASHER BRB6,4X12RFR	
260	315105-0165	-		6	WASHER BRB8,4X16RFR	
270	352136-0113	-		1	GLAND FITT	

Pos	Part No	SP	UN	Qty	Description	Page No

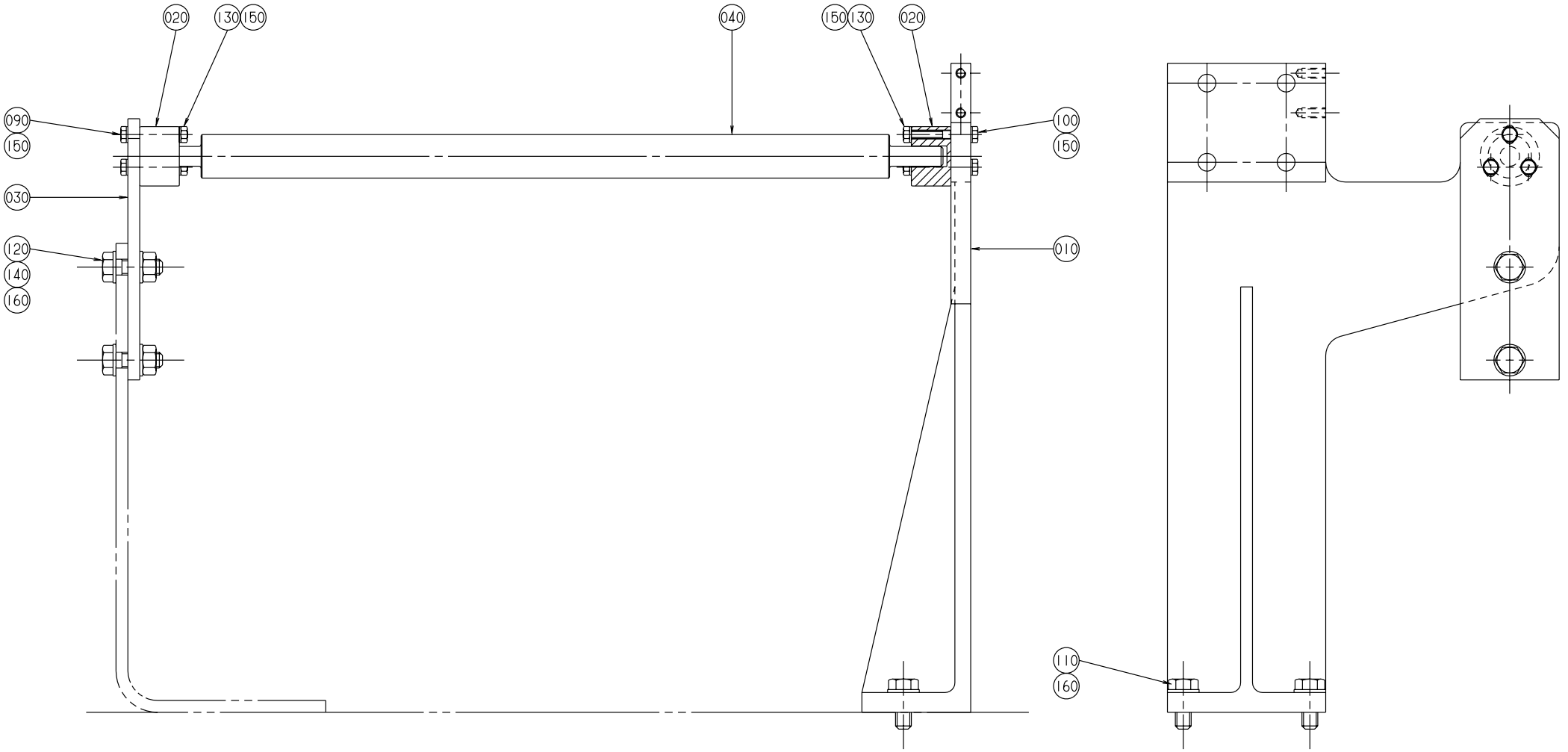

S-573663-1
ECN 19587

Pos	Part No	SP	UN	Qty	Description	Page No
VOLUMES 1136 B, 1055 B, 1000 B, 1000 S, 750 B, 568 B, 500 B						
000	**C- 573663-0101**	**-**		**1**	**SUPPORT ROLLER**	
040	573666	-		1	SUPPORT ROLLER	
VOLUMES 500S, 400 B, 355 B, 375 S						
000	**C- 573663-0102**	**-**		**1**	**SUPPORT ROLLER**	
040	573667	-		1	SUPPORT ROLLER	
VOLUME 750 S						
000	**C- 573663-0103**	**-**		**1**	**SUPPORT ROLLER**	
040	573668	-		1	SUPPORT ROLLER	
VOLUME 1000 Sq, 500 Sq						
000	**C- 573663-0104**	**-**		**1**	**SUPPORT ROLLER**	
040	574038	-		1	SUPPORT ROLLER	
Common parts						
010	G- 573664	-		1	CANTILEVER	
020	24206	-		2	BEARING	
030	573665	-		1	FASTENING PLATE	
090	312105-0299	-		3	STAINLESS STEEL	
100	312105-0301	-		3	SCREW O4014 M4X35A280	
110	312105-0451	-		2	SCREW SO4017 8X20A280	
120	312105-0453	-		2	SCREW O4017 M8X25A280	
130	312605-0312	-		6	NUT M6M4 STAINLESS	
140	312605-0318	-		2	NUT M6M8RFR	
150	315105-0136	-		12	WASHER BRB4,3X8RFR	
160	315105-0165	-		6	WASHER BRB8,4X16RFR	

Pos	Part No	SP	UN	Qty	Description	Page No

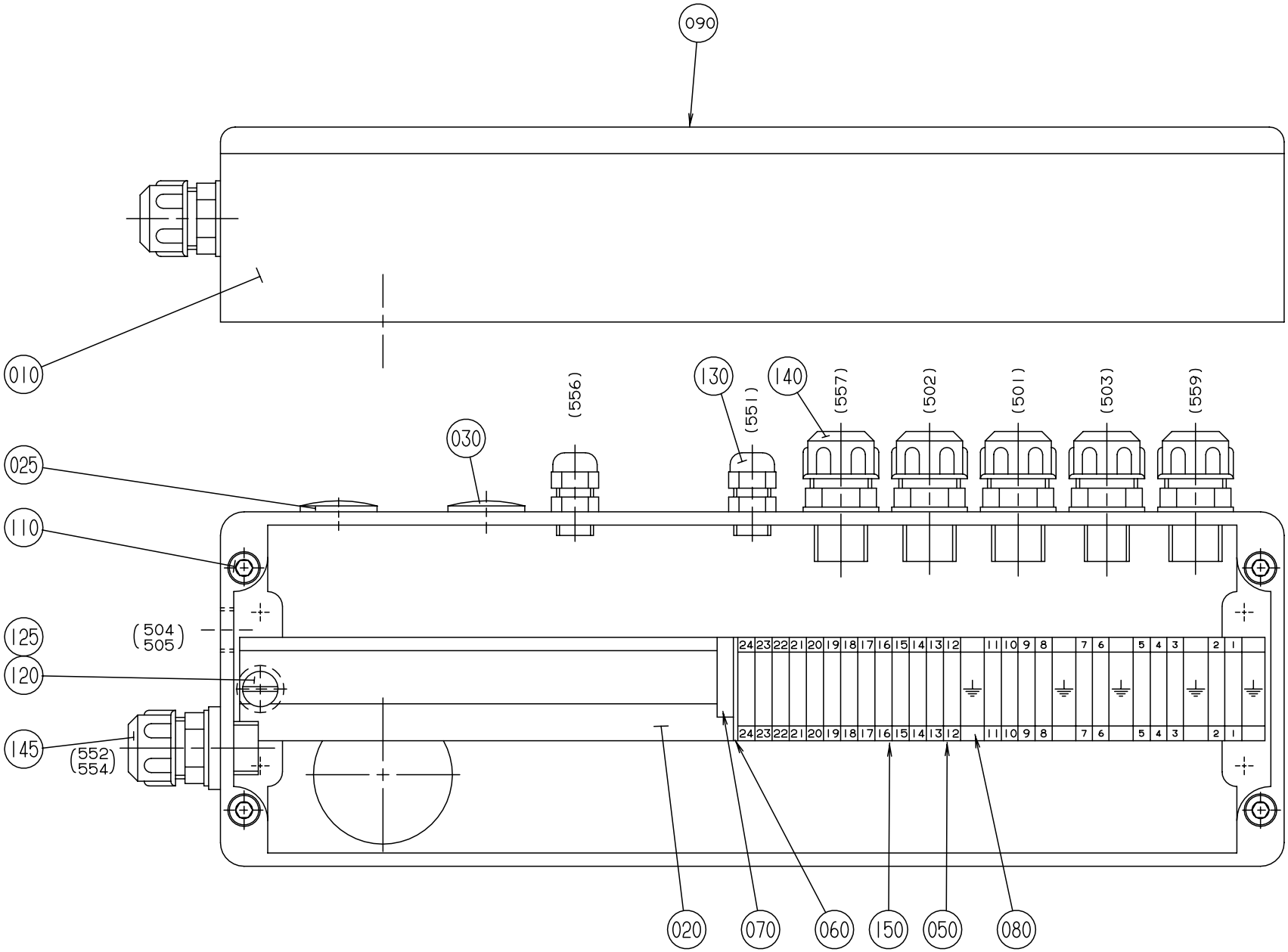

S-450862-3
ECN 17189

Pos	Part No	SP	UN	Qty	Description	Page No
-						
000	**C- 450862-0301**	**-**		**1**	**CONNECTION BOX**	
010	553156	-		1	CONNECTION BOX	
020	282549	-		1	MOUNTING RAIL	
025	90002-0009	-		2	BLANK-OFF PLUG 18.6	
030	90002-0013	-		1	BLANK-OFF PLUG 15,2	
050	90077-0064	-		24	FEED THROUGH TERMINAL	
060	90077-0300	-		1	END PLATE	
070	90094-0004	-		1	END SUPPORT EWK 2061.6 WM	
080	90135-0022	-		4	EARTHING CLAMP	
090	90194-0016	-		1	SIGN "FLASH SIGN" 50X50MM	
110	312115-0372	-		4	SCREW O4762 M6X25A280	
120	312145-0364	-		2	SLOTTED HEMFS6X10RFR	
125	315115-0165	-		2	WASHER TBRB8,4X16RFR	
130	352103-0100	-		2	CABLE GLANR.STR 9	
140	352136-0113	-		5	GLAND FITT	
145	352136-0129	-		1	GLAND FITT	
150	359011-0821	-		2	SET OF SIGNS 6-FW 1-50	

Pos	Part No	SP	UN	Qty	Description	Page No

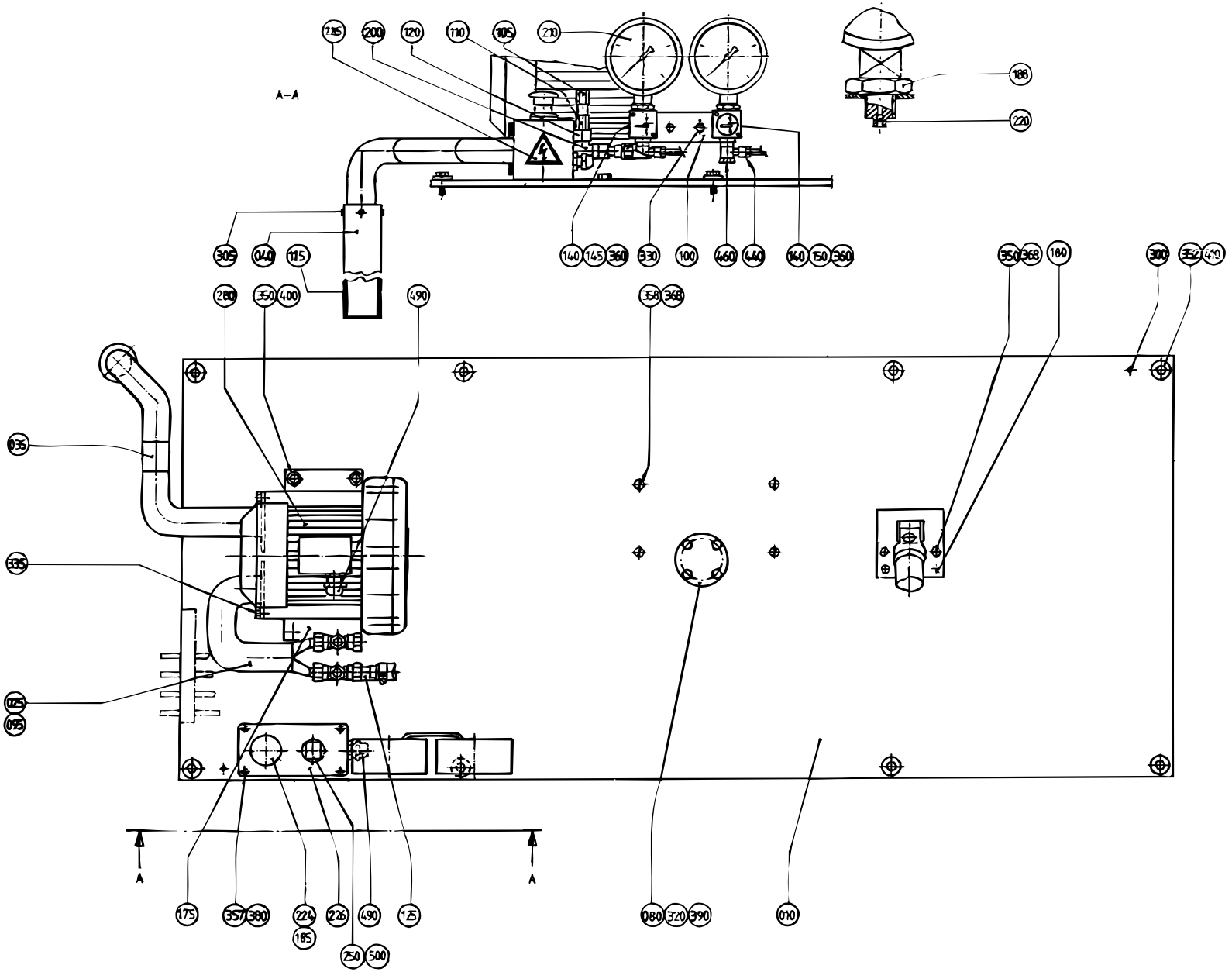

S-526931-3
ECN 22872

Pos	Part No	SP	UN	Qty	Description	Page No
VOLUMES 1055 B, 1000 B, 750 B, 568 B, 500 B						
000	**C- 526931-0301**	**-**		**1**	**BOTTOM PLATE**	
010	450850-0001	-		1	SHEET	
VOLUMES 500S, 400 B, 355 B						
000	**C- 526931-0302**	**-**		**1**	**BOTTOM PLATE**	
010	450850-0002	-		1	SHEET	
VOLUME 375 S						
000	**C- 526931-0303**	**-**		**1**	**BOTTOM PLATE**	
010	450850-0003	-		1	SHEET	
VOLUME 750 S						
000	**C- 526931-0304**	**-**		**1**	**BOTTOM PLATE**	
010	450850-0004	-		1	SHEET	
VOLUME 1000 S						
000	**C- 526931-0305**	**-**		**1**	**BOTTOM PLATE**	
010	450850-0005	-		1	SHEET	
VOLUME 1000 Sq, 500 Sq						
000	**C- 526931-0306**	**-**		**1**	**BOTTOM PLATE**	
010	450850-0006	-		1	SHEET	
Common parts						
025	535613	-		1	BRANCH	
035	535614	-		1	INNER PIPE	
040	450882	-		1	OUTER PIPE	
080	247171	-		1	BEARING COVER	
095	535608	-		1	GASKET	
100	33577	-		1	CANTILEVER	
105	209145	S		2	THROTTLE SCREW	
110	209146	S		2	BARRIER NUT	
115	526582	S		1	NET	
120	279589	-		2	NUT	
125	279590	-		1	REDUCTION	
140	464173	-		2	LABEL HOLDER	
145	464176	-		1	SIGN	
150	464177	-		1	SIGN	
175	450812	-		2	SPACER	
180	556549	-		1	FASTENING PLATE	
185	486826-0001	-		1	SIGN "EMERGENCY STOP" YL	
188	90330-0105	-		2	NUT	
200	90030-0058	-		2	CONNECTION	
210	90043-0034	-		2	PRESSURE GAUGE	
220	90043-0302	-		2	SCREW	
224	90064-0124	-		1	EMERGENCY STOP BUTTON	
226	90066-0029	-		1	PUSH BUTTON BOX	
250	90064-0084	C		1	PUSH BUTTON YELLOW	
280	90264-0042	C		1	FAN SIEMENS 2BH1 300-1AH	
285	90194-0016	-		1	SIGN "FLASH SIGN" 50X50MM	
300	311305-0308	-		2	SLOTTED PIRPC5X16FZB	
305	312105-0287	-		4	SCREW O4017 M4X8A280	
320	312105-0325	-		4	SCREW M6S5X10 A2 80	
330	312105-0364	-		2	SCREW M6S6X10RFR	
335	312105-0368	-		4	SCREW O4017 M6X16A280	
350	312105-0451	-		8	SCREW SO4017 8X20A280	
352	312105-0455	-		8	SCREW O4017 M8X30A280	
357	312125-0289	-		5	SLOTTED HEMCS4X10RFR	
358	312125-0447	-		4	SLOTTED HEMCS8X12RFR	
360	312502-0120	-		4	DRIVE SCREKDS0X5FNB	
368	315111-0165	-		8	WASHER TBRB8,4X16FZB	
380	315105-0136	-		4	WASHER BRB4,3X8RFR	
390	315105-0146	-		4	WASHER BRB5,3X10RFR	
400	315105-0165	-		4	WASHER BRB8,4X16RFR	
410	315121-0165	-		8	WASHER TBRSB8,4X26FZB	
440	342797-0122	-		2	BANJO CONN SINGLE 6-1/4	
460	342980-0304	-		2	BANJO CONN SINGLE 1/4"	
490	352136-0113	-		3	GLAND FITT	
500	359301-0051	-		1	SIGN"STRIP SPLICE"	

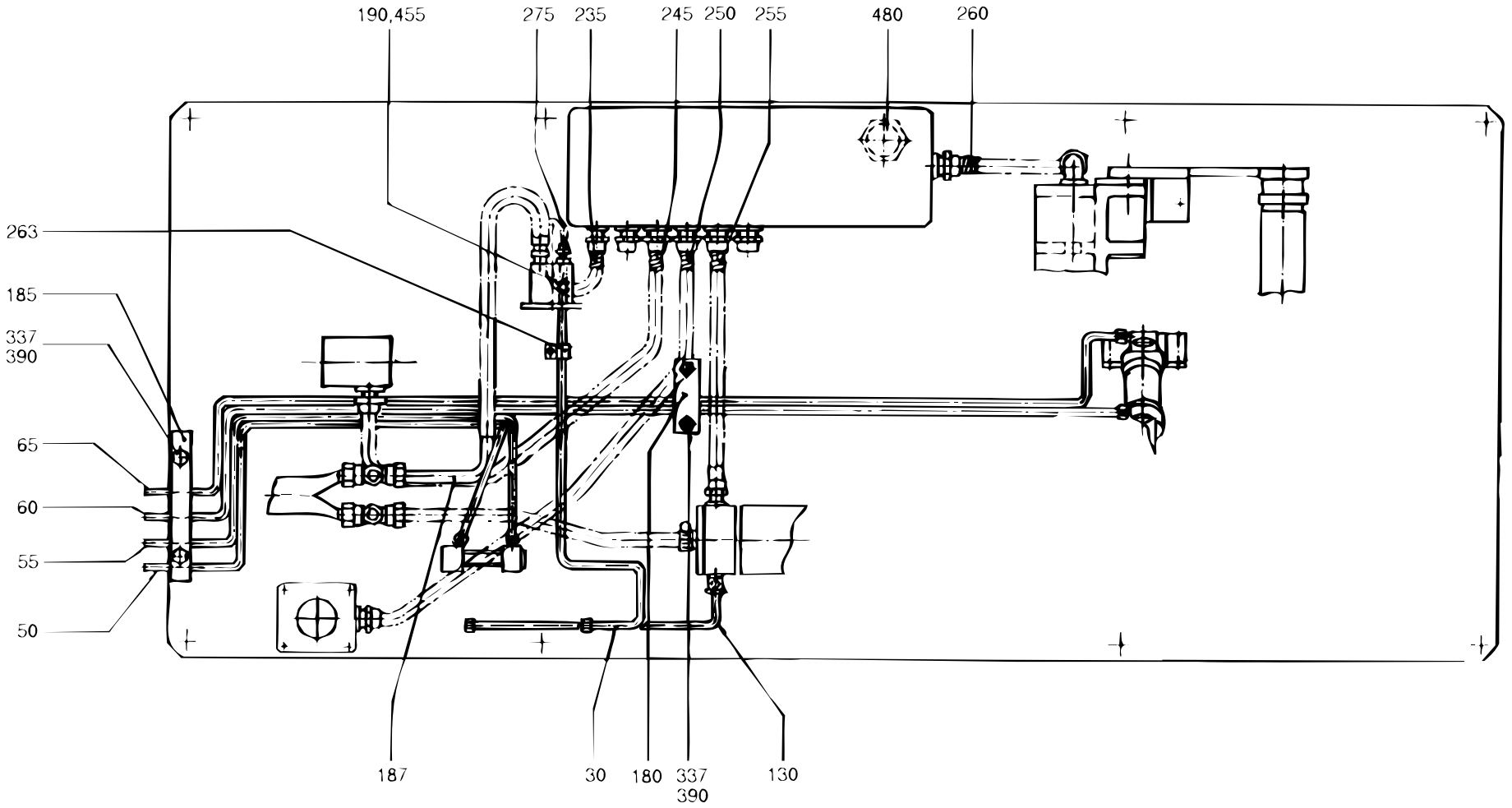
190,455
275
235
245
250
255
480
260
263
185
337
390
65
60
55
50
187
30
180
337
390
130

Pos	Part No	SP	UN	Qty	Description	Page No
VOLUMES 1055 B, 1000 B, 750 B, 568 B, 500 B						
000	**C- 526932-0301**	**-**		**1**	**PIPE WORK**	
030	458199-0001	-		1	PIPE	
050	556557-0001	-		1	PIPE	
055	556558-0001	-		1	PIPE	
060	556559-0001	-		1	PIPE	
065	556560-0001	-		1	PIPE	
VOLUMES 500S, 400 B, 355 B						
000	**C- 526932-0302**	**-**		**1**	**PIPE WORK**	
030	458199-0002	-		1	PIPE	
050	556557-0002	-		1	PIPE	
055	556558-0002	-		1	PIPE	
060	556559-0002	-		1	PIPE	
065	556560-0002	-		1	PIPE	
VOLUME 375 S						
000	**C- 526932-0303**	**-**		**1**	**PIPE WORK**	
030	458199-0003	-		1	PIPE	
050	556557-0003	-		1	PIPE	
055	556558-0003	-		1	PIPE	
060	556559-0003	-		1	PIPE	
065	556560-0003	-		1	PIPE	
VOLUME 750 S						
000	**C- 526932-0304**	**-**		**1**	**PIPE WORK**	
030	458199-0001	-		1	PIPE	
050	556557-0004	-		1	PIPE	
055	556558-0004	-		1	PIPE	
060	556559-0004	-		1	PIPE	
065	556560-0004	-		1	PIPE	
VOLUME 1000 S						
000	**C- 526932-0305**	**-**		**1**	**PIPE WORK**	
030	458199-0001	-		1	PIPE	
050	556557-0005	-		1	PIPE	
055	556558-0005	-		1	PIPE	
060	556559-0005	-		1	PIPE	
065	556560-0005	-		1	PIPE	
VOLUME 1000 Sq, 500 Sq						
000	**C- 526932-0306**	**-**		**1**	**PIPE WORK**	
050	556557-0006	-		1	PIPE	
055	556558-0006	-		1	PIPE	
060	556559-0006	-		1	PIPE	
065	556560-0006	-		1	PIPE	
Common parts						
130	282802	-		1	PIPE	
180	450813	-		1	HOLDER	
185	450814	-		1	HOLDER	
187	535612	-		1	PIPE	
190	90224-0304	-		1	CONNECTION	
235	90152-0033	-	MM	450	HOSE	
245	90152-0033	-	MM	800	HOSE	
250	90152-0033	-	MM	500	HOSE	
255	90152-0033	-	MM	250	HOSE	
260	90152-0033	-	MM	265	HOSE	
263	90165-0005	-		1	CLIP	
275	90166-0124	-	MM	200	HOSE	
337	312105-0370	-		6	SCREW O4017 M6X20A280	
390	315105-0153	-		8	WASHER BRB6,4X12RFR	
455	342706-0130	-		1	INSERT SLESH06	
480	352101-0107	-		1	CABLE GLAND 16-24MM,PR37	

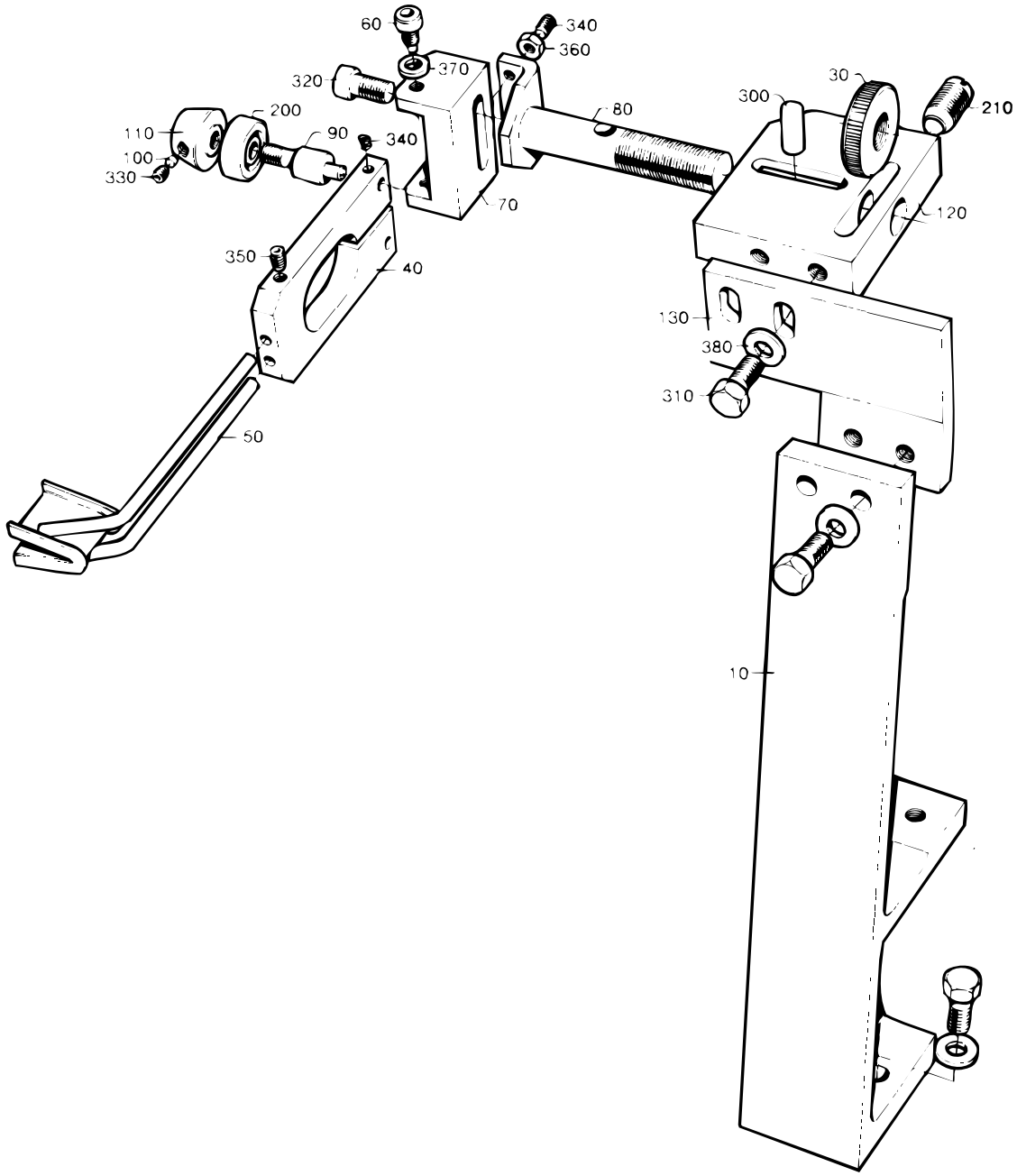

S-279210-1
ECN 13150

Pos	Part No	SP	UN	Qty	Description	Page No
VOLUMES 1055 B, 1000 B, 750 B, 568 B, 500 B						
000	**C- 279210-0101**	**-**		**1**	**PAPER GUIDE**	
010	279211	-		1	CANTILEVER	
130	450127-0001	-		1	BRACKET	
310	312105-0368	-		6	SCREW O4017 M6X16A280	
VOLUMES 500S, 400 B, 355 B						
000	**C- 279210-0102**	**-**		**1**	**PAPER GUIDE**	
010	279211	-		1	CANTILEVER	
130	450127-0002	-		1	BRACKET	
310	312105-0368	-		6	SCREW O4017 M6X16A280	
VOLUME 375 S						
000	**C- 279210-0103**	**-**		**1**	**PAPER GUIDE**	
010	279211	-		1	CANTILEVER	
130	450127-0003	-		1	BRACKET	
310	312105-0368	-		6	SCREW O4017 M6X16A280	
VOLUMES 750 S, 1000 Sq, 500 Sq						
000	**C- 279210-0105**	**-**		**1**	**PAPER GUIDE**	
010	279211	-		1	CANTILEVER	
130	450127-0004	-		1	BRACKET	
310	312105-0368	-		6	SCREW O4017 M6X16A280	
VOLUME 1000 S						
000	**C- 279210-0106**	**-**		**1**	**PAPER GUIDE**	
010	279211	-		1	CANTILEVER	
130	450127-0005	-		1	BRACKET	
310	312105-0368	-		6	SCREW O4017 M6X16A280	
Common parts						
030	23580	C		1	SHIFTER HANDLE	
040	23582	-		1	HOLDER	
050	23583	S		1	GUIDE FINGER	
060	23584	S		2	SCREW	
070	24351	-		1	BOW CLAMP	
080	24352	-		1	SHAFT	
090	24355	S		2	DOWEL	
100	24356	S		4	PIECE	
110	111543	-		2	GUIDE CONE	
120	245210	-		1	BODY	
200	90214-0138	P		2	BALL BEARING	
210	90287-0009	P		1	SPRINGLOADED SCREW	
300	311103-0350	-		1	CYLINDRICACP M6 6X14 RFR	
320	312115-0366	-		1	SCREW O4762 M6X12A280	
330	312316-0283	P		4	STOP SCREW SK6SS4X4FZB	
340	312316-0291	P		3	STOP SCREW SK6SS4X12FZB	
350	312318-0285	P		2	STOP SCREW SK6SS4X6RFR	
360	312605-0312	P		3	NUT M6M4 STAINLESS	
370	315105-0146	-		2	WASHER BRB5,3X10RFR	
380	315105-0153	-		4	WASHER BRB6,4X12RFR	

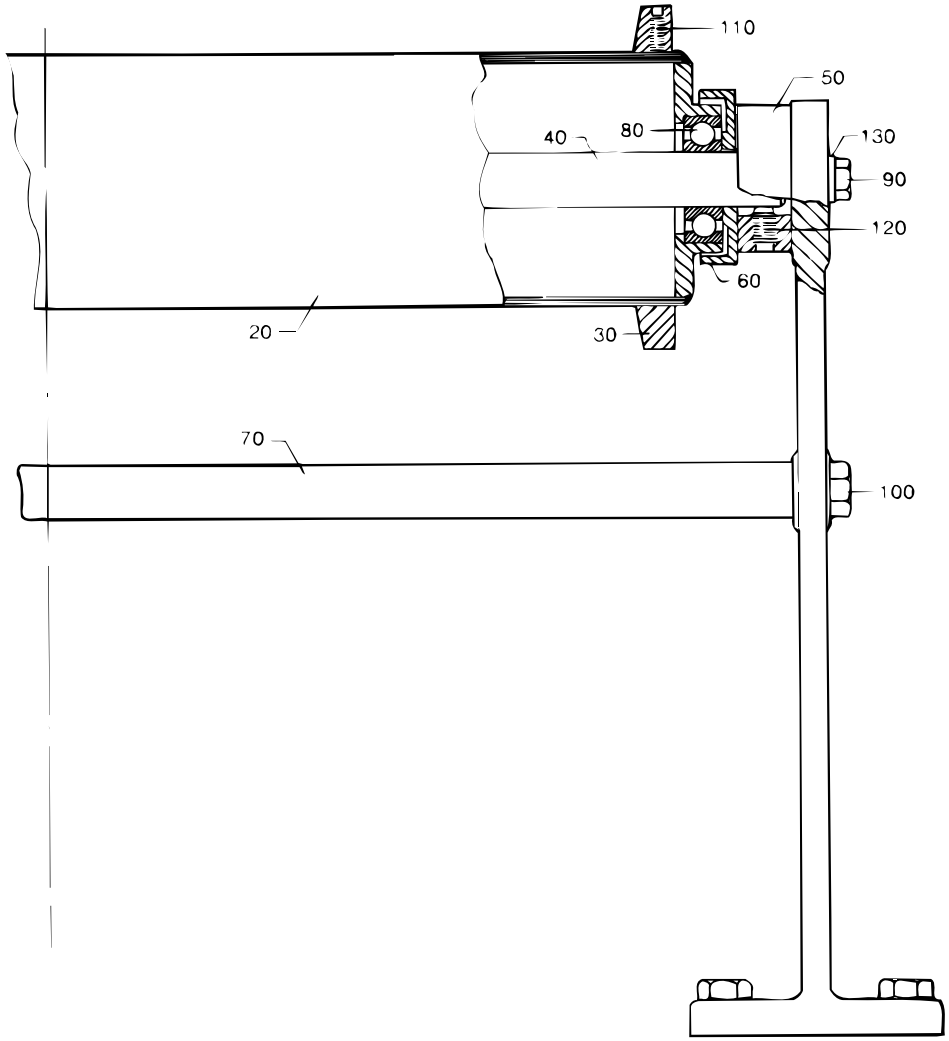

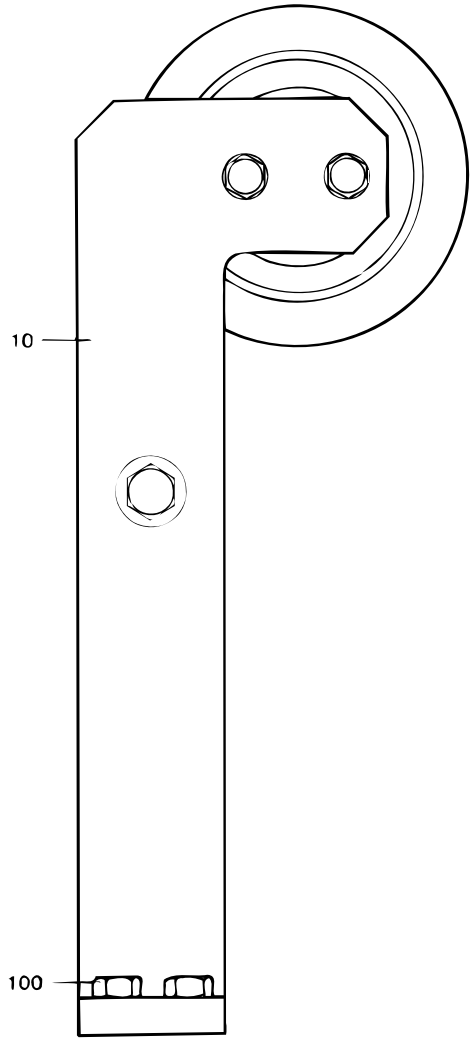

S-265565-1
ECN 4745

Pos	Part No	SP	UN	Qty	Description	Page No
-						
000	**C- 265565-0201**	**-**		**1**	**BENDING ROLLER BRACKET**	
010	546116	-		2	CANTILEVER	
020	265564	C		1	BENDING ROLLER	
030	250588	C		2	FLANGE	
040	265566-0001	S		1	SHAFT	
050	265567	C		2	BEARING UNIT	
060	265568	-		2	DUST COVER	
070	265569-0001	-		1	STRUT	
080	90214-0098	S		2	BALL BEARING	
085	311305-0308	-		4	SLOTTED PIRPC5X16FZB	
090	312105-0370	-		4	SCREW O4017 M6X20A280	
100	312105-0451	-		10	SCREW SO4017 8X20A280	
110	312318-0289	P		4	STOP SCREW SK6SS4X10RFR	
120	312318-0364	P		4	STOP SCREW SK6SS6X10RFR	
130	315105-0153	-		4	WASHER BRB6,4X12RFR	

Pos	Part No	SP	UN	Qty	Description	Page No

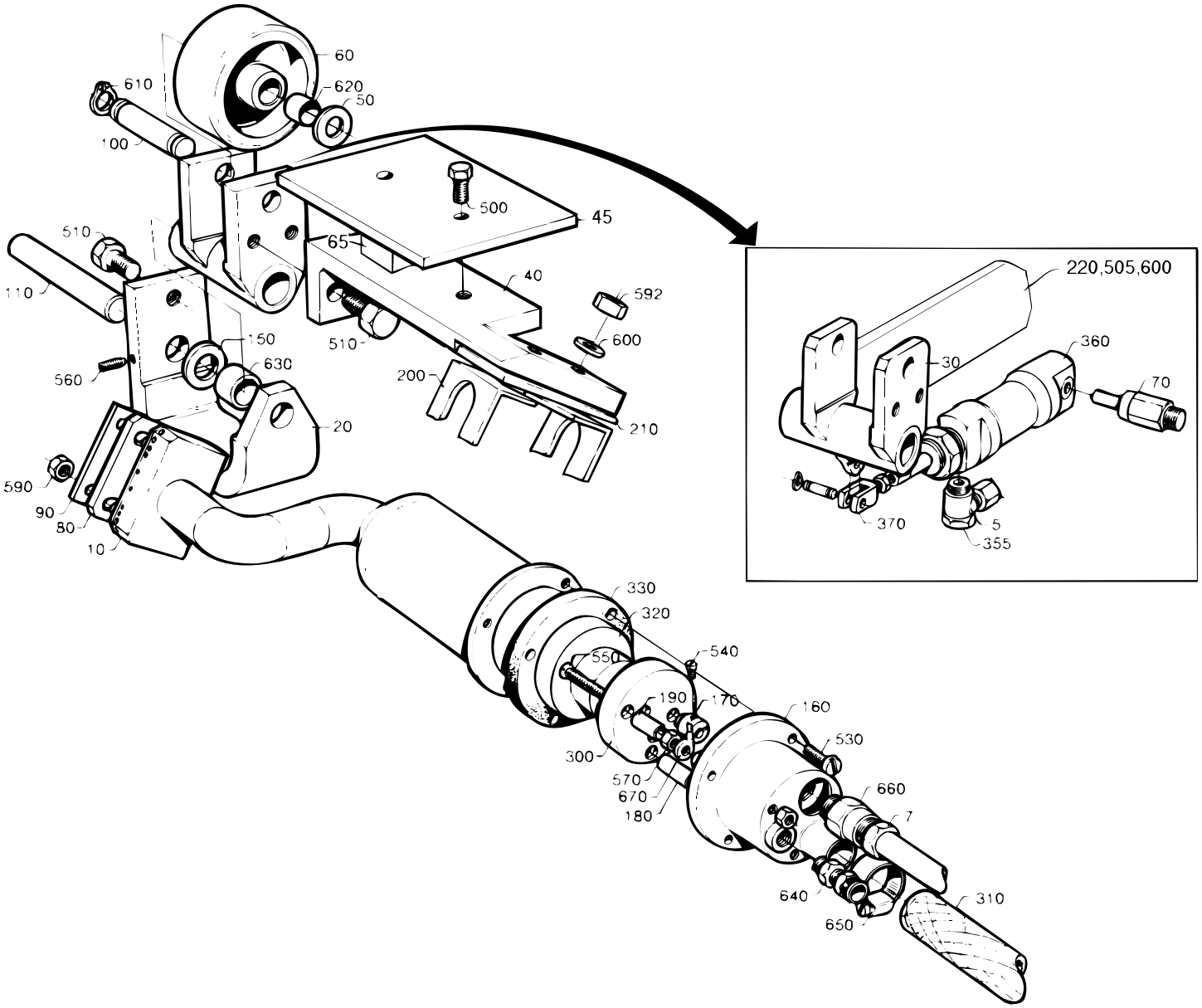
60
610
620
50
100
500
45
65
40
592
600
510
510
110
150
630
560
200
210
20
590
90
80
10
220,505,600
30
360
70
370
5
355
330
320
550
540
190
170
160
530
300
570
670
180
660
7
640
650
310

Pos	Part No	SP	UN	Qty	Description	Page No
-						
000	**C- 266726-0301**	**-**		**1**	**PRESSURE ROLLER**	
005	342797-0121	-		2	BANJO CONNSINGEL 6-1/8	
007	352136-0113	-		1	GLAND FITT	
010	464197	C		1	AIR NOZZLE	
020	266728	-		1	CANTILEVER	
030	556565	-		1	ROCKER ARM	
040	266730	-		1	HOLDER	
045	542090	-		1	HEAT GUARD	
050	2033-0009	P		2	WASHER	
060	21903	PU		1	ROLL	
065	242954	-		2	WASHER	
070	556551	C		1	CYLINDER BRACKET	
080	466412	S		1	PLATE	
090	255417	S		1	WASHER	
100	266731	C		1	SHAFT	
110	266732	C		1	SHAFT	
150	266737	S		2	WASHER	
160	266738	-		1	COVER	
170	266739	-		3	CABLE GLAND	
180	266740-0001	-		2	SPACER	
190	266740-0002	-		1	SPACER	
200	450887	-		1	CRAMP	
210	450888	-		1	INSULATING PLATE	
220	556552	-		1	BRACKET	
300	90125-0020	S		1	PLATE	
300a	270926	S		6	* NUT	
300b	270927	S		3	* SCREW	
300c	294464	S		1	* BASE PLATE	
310	90166-0087	P	MM	600	HOSE	
320	90206-0085	P		1	HEATING CARTRIDGE	
330	90206-0322	P		1	GASKET	
355	90235-0274	S		2	VALVE	
360	90239-0821	S		1	CYLINDER 20-25	
370	90239-0532	C		1	PISTON ROD HEAD	
500	312105-0370	-		2	SCREW O4017 M6X20A280	
505	312105-0447	-		2	SCREW O4017 M8X12A280	
510	312105-0451	-		4	SCREW SO4017 8X20A280	
530	312125-0291	-		4	SLOTTED HEMCS4X12RFR	
540	312125-0220	-		3	SLOTTED HEMCS3X6RFR	
550	312145-0238	-		3	SLOTTED HEMFS3X40RFR	
560	312311-0292	-		1	STOP SCREW T6SS4X14FZB	
570	312605-0310	-		7	NUT M6M3RFR	
590	312605-0314	-		2	NUT M6M5RFR	
592	312605-0318	-		2	NUT M6M8RFR	
595	315105-0153	-		2	WASHER BRB6,4X12RFR	
600	315105-0165	-		4	WASHER BRB8,4X16RFR	
610	315750-0107	P		2	CIRCLIP SGA10	
620	321120-0104	S		2	BUSHING 10/12X10	
630	321120-0110	S		2	BUSHING 12/14X12	
640	342921-0113	-		1	PIPE COUPL6/4-1/8"	
650	342991-0103	P		2	HOSE CLIP 15-24MMRFR	
660	352100-0106	-		1	CABLE GLANR.18,6-10,5	
670	353101-0130	-		1	CABLE SHOE	

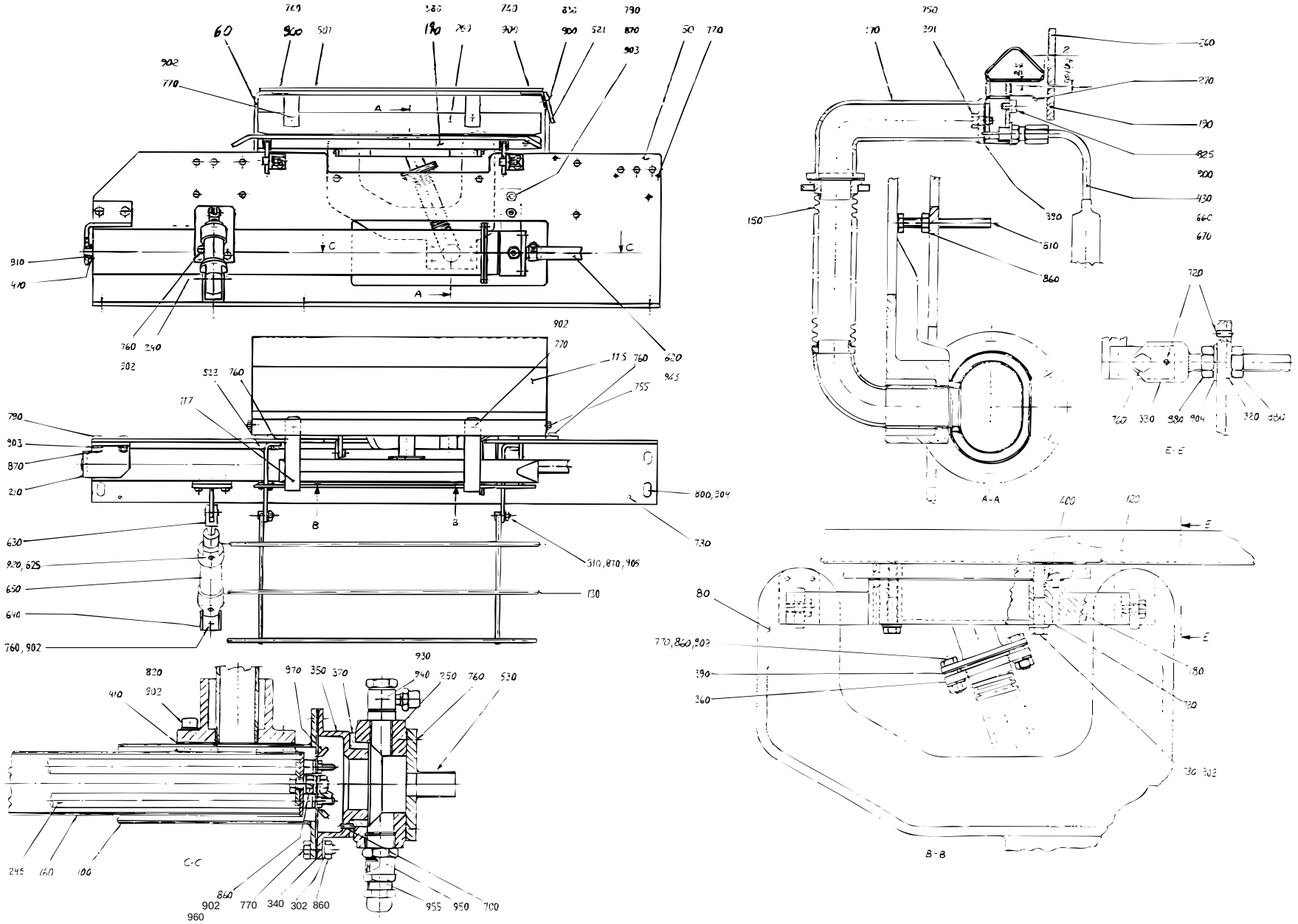

S-269112-5
ECN 19587

Pos	Part No	SP	UN	Qty	Description	Page No
-						
000	**C- 269112-0601**	**-**		**1**	**STRIP APPLICATOR**	
050	526948	-		1	MOUNTING SHEET	
060	442480	-		1	BOW CLAMP	
080	32668	-		1	ARM	
100	36749	-		1	MANTLE	
115	571428	-		1	TOUCH GUARD	
117	445669	-		1	HOLDER	
120	283361	S		1	AIR NOZZLE	
130	22560	-		1	PAPER SUPPORT	
150	32451	C		1	AIR DUCT	
160	32453	-		1	MANTLE	
170	32474	-		1	ATTACHMENT	
180	245189-0001	-		1	ATTACHMENT	
190	246342	-		1	PAPER SUPPORT	
210	251490	C		1	FASTENING BRACKET	
240	556550	C		1	BRACKET	
245	267494	PU		1	COIL HEATER	
250	283172	-		1	BEARING HOUSING	
260	445670	-		1	PAPER SUPPORT	
270	445688	-		1	AIR GUIDE	
310	22559	P		4	GRUB SCREW	
320	32213	-		2	WASHER	
330	32215	C		2	HOLDER	
340	531733	PU		1	GASKET	
350	32217	-		1	BOTTOM SECTION	
360	32219	-		1	WASHER	
370	32223	S		1	BEARING	
380	32400	-		2	HOLDER	
390	531734	PU		2	GASKET	
400	531735	PU		1	GASKET	
410	531736	PU		1	GASKET	
430	37768	P		1	THERMOCOUPLE CR-AL	
470	230107	P		1	WASHER	
501	246344	-		1	HEAT GUARD	
521	251502	-		1	HEAT GUARD	
522	251503	-		2	HOLDER	
530	279672	-		1	ATTACHMENT	
620	90166-0087	-	MM	600	HOSE	
625	90235-0274	P		2	VALVE	
630	90239-0516	C		1	PISTON ROD HEAD	
640	90239-0487	C		1	BRACKET	
650	90239-0829	S		1	CYLINDER 25-50	
660	90326-0012	P		1	PROTECTIVE COVER	
670	90326-0020	P		1	PLUG,FEMALE YELLOW CR-AL	
700	311103-0232	-		1	CYLINDRICACP M6 3X8 RFR	
720	311103-0267	-		10	CYLINDRICACP M6 4X10 RFR	
730	311305-0308	-		2	SLOTTED PIRPC5X16FZB	
740	312105-0291	-		4	SCREW O4017 M4X12A280	
750	312105-0325	-		2	SCREW M6S5X10 A2 80	
755	312105-0364	-		4	SCREW M6S6X10RFR	
760	312105-0366	-		18	SCREW O4017 M6X12A280	
770	312105-0368	-		16	SCREW O4017 M6X16A280	
780	312105-0378	-		2	SCREW O4017 M6X40A280	
790	312105-0451	-		4	SCREW SO4017 8X20A280	
800	312105-0489	-		6	SCREW 4017 M10X16A280	
810	312109-0381	-		2	SCREW M6S6X55HA480	
820	312115-0368	-		4	SCREW O4762 M6X16A280	
825	312125-0285	-		1	SLOTTED HEMCS4X6RFR	
830	312125-0287	-		2	SLOTTED HEMCS4X8RFR	
860	312605-0316	-		12	NUT M6M6 A280 STAINLESS	
870	312605-0318	-		8	NUT M6M8RFR	
880	312605-0320	-		4	NUT M6M10RFR	
900	315105-0136	-		7	WASHER BRB4,3X8RFR	
901	315105-0146	-		2	WASHER BRB5,3X10RFR	
902	315105-0153	-		27	WASHER BRB6,4X12RFR	
903	315105-0165	-		4	WASHER BRB8,4X16RFR	
904	315105-0173	-		6	WASHER BRB10,5X22RFR	
905	315121-0165	-		4	WASHER TBRSB8,4X26FZB	
910	321101-0173	P		1	FLANGE BUS 12F7X12	
920	342797-0121	-		2	BANJO CONNSINGEL 6-1/8	
930	342797-0122	-		2	BANJO CONN SINGLE 6-1/4	
940	342980-0304	-		1	BANJO CONN SINGLE 1/4"	
945	342991-0103	-		2	HOSE CLIP 15-24MMRFR	
950	352100-0106	-		1	CABLE GLANR.18,6-10,5	
955	352136-0113	-		1	GLAND FITT	
960	353101-0134	-		1	CABLE SHOE	
970	353104-0130	-		2	CABLE SHOEYAV 025 M 4*	

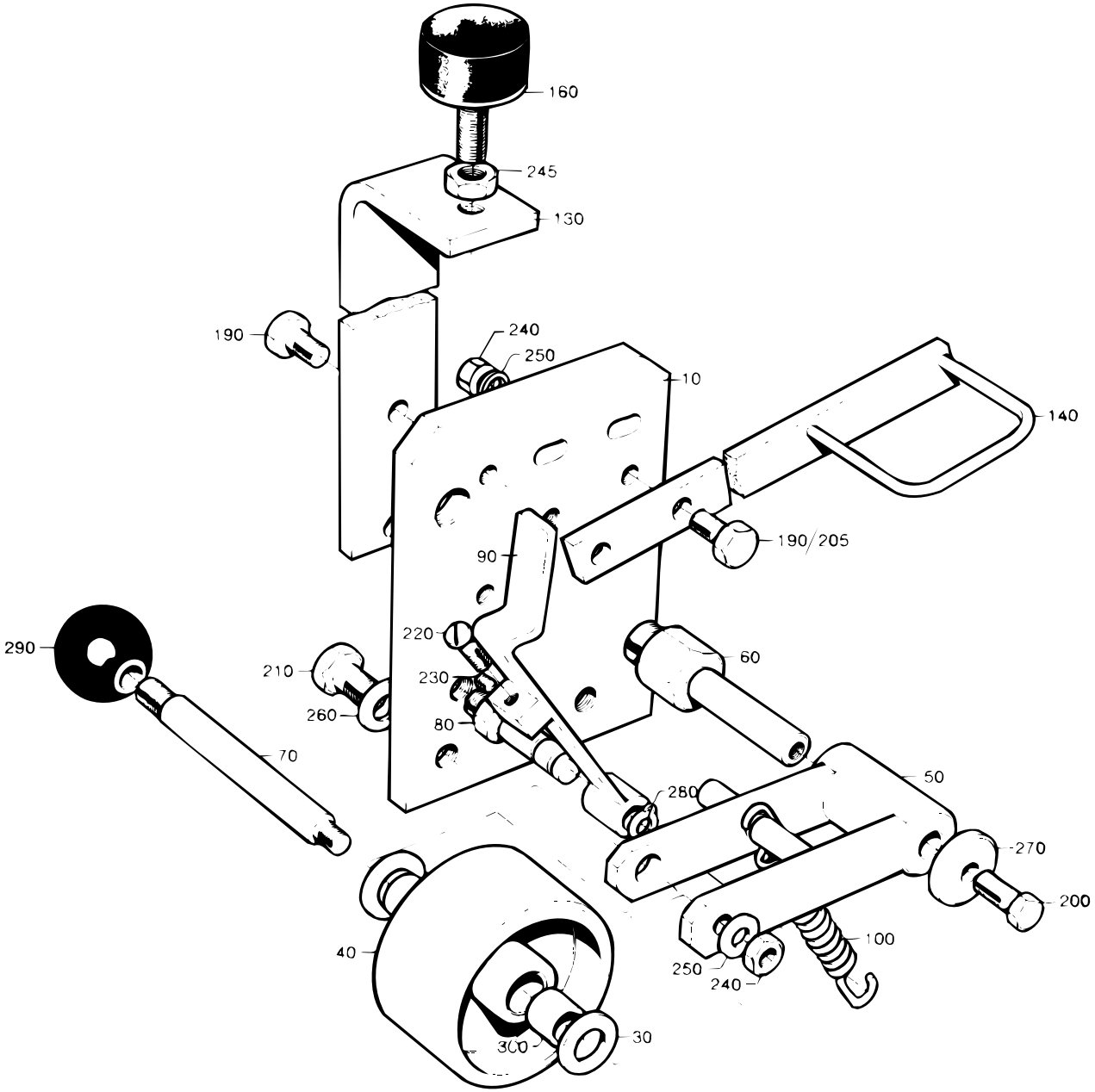

S-282529-1
ECN 8264

Pos	Part No	SP	UN	Qty	Description	Page No
-						
000	**C- 282528-0201**	**-**		**1**	**PRESSURE ROLLER**	
010	526947	-		1	MOUNTING SHEET	
030	2033-0009	-		2	WASHER	
040	21903	S		1	ROLL	
050	251493	-		1	FORK	
060	251494	-		1	SHAFT	
070	251495	-		1	SHAFT	
080	251496	-		1	SHAFT	
090	251498	-		1	BARRIER	
100	279074	S		1	TENSION SPRING	
130	282596	C		1	SUPPORT	
140	282625	C		1	EYELET	
160	90347-0004	S		1	VIBRATION DAMPER	
190	312105-0366	-		3	SCREW O4017 M6X12A280	
200	312105-0368	-		1	SCREW O4017 M6X16A280	
205	312105-0370	-		1	SCREW O4017 M6X20A280	
210	312105-0449	-		2	SCREW O4017 M8X16A280	
220	312125-0329	-		1	SLOTTED HEMCS5X16RFR	
230	312318-0285	-		1	STOP SCREW SK6SS4X6RFR	
240	312605-0316	-		2	NUT M6M6 A280 STAINLESS	
245	312605-0318	-		1	NUT M6M8RFR	
250	315105-0153	-		3	WASHER BRB6,4X12RFR	
260	315105-0165	-		2	WASHER BRB8,4X16RFR	
270	315121-0153	-		1	WASHER TBRSB6,4X22FZB	
280	315750-0105	-		1	CIRCLIP SGA8	
290	318800-0104	-		1	HANDLE BALLA D.30-M8	
300	321120-0104	S		2	BUSHING 10/12X10	

Pos	Part No	SP	UN	Qty	Description	Page No

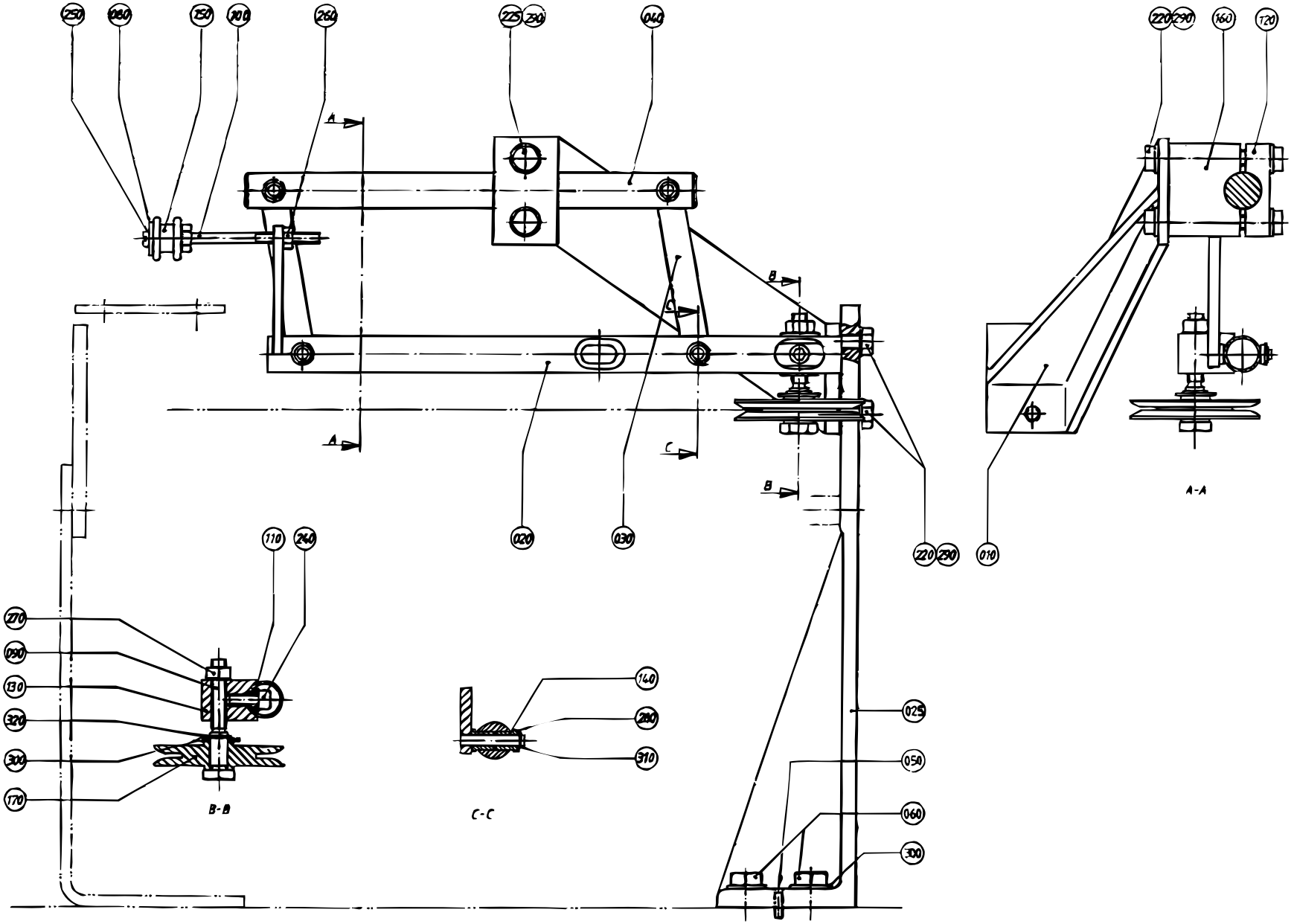

S-282634-2
ECN 8264

Pos	Part No	SP	UN	Qty	Description	Page No
VOLUMES 1055 B, 1000 B, 1000 S, 750 B, 568 B, 500 B						
000	**C- 282634-0301**	**-**		**1**	**STRIP GUIDE**	
020	239665	C		1	GUIDE SHAFT	
040	243151	C		1	SHAFT	
300	315105-0173	-		1	WASHER BRB10,5X22RFR	
VOLUMES 500S, 400 B, 355 B						
000	**C- 282634-0302**	**-**		**1**	**STRIP GUIDE**	
020	450460-0001	C		1	GUIDE SHAFT	
040	450461	C		1	SHAFT	
300	315105-0173	-		1	WASHER BRB10,5X22RFR	
VOLUME 375 S						
000	**C- 282634-0303**	**-**		**1**	**STRIP GUIDE**	
020	450460-0002	-		1	GUIDE SHAFT	
040	450461	C		1	SHAFT	
300	315105-0173	-		1	WASHER BRB10,5X22RFR	
VOLUME 750 S						
000	**C- 282634-0305**	**-**		**1**	**STRIP GUIDE**	
020	450460-0003	C		1	GUIDE SHAFT	
040	450461	C		1	SHAFT	
300	315105-0173	-		1	WASHER BRB10,5X22RFR	
VOLUME 1000 Sq, 500 Sq						
000	**C- 282634-0307**	**-**		**1**	**STRIP GUIDE**	
020	450460-0003	C		1	GUIDE SHAFT	
040	450461	C		1	SHAFT	
300	315105-0173	-		1	WASHER BRB10,5X22RFR	
Common parts						
010	243218	-		1	CANTILEVER	
030	31417	S		2	LINK	
080	19262	S		1	WASHER	
090	31418	P		1	SHAFT	
100	31419	S		1	SHAFT	
110	31420	P		1	WASHER	
120	31423	-		1	MOUNTING LUG	
130	31424	C		1	ROLLER BRACKET	
140	255064	P		8	BUSHING	
150	257923	P		1	GUIDE WHEEL	
160	266761	-		1	MOUNTING LUG	
170	282635	-		1	GUIDE WHEEL	
215	90194-0016	-		1	SIGN "FLASH SIGN" 50X50MM	
220	312105-0451	-		4	SCREW SO4017 8X20A280	
225	312105-0455	-		2	SCREW O4017 M8X30A280	
240	312115-0368	-		1	SCREW O4762 M6X16A280	
250	312125-0323	-		1	SLOTTED HEMCS5X8RFR	
260	312605-0316	P		1	NUT M6M6 A280 STAINLESS	
270	312605-0318	P		1	NUT M6M8RFR	
280	315105-0153	P		4	WASHER BRB6,4X12RFR	
290	315105-0165	-		6	WASHER BRB8,4X16RFR	
310	315754-0107	P		4	LOCKING WAE 5	
320	315754-0110	P		1	LOCKING WAE 9	

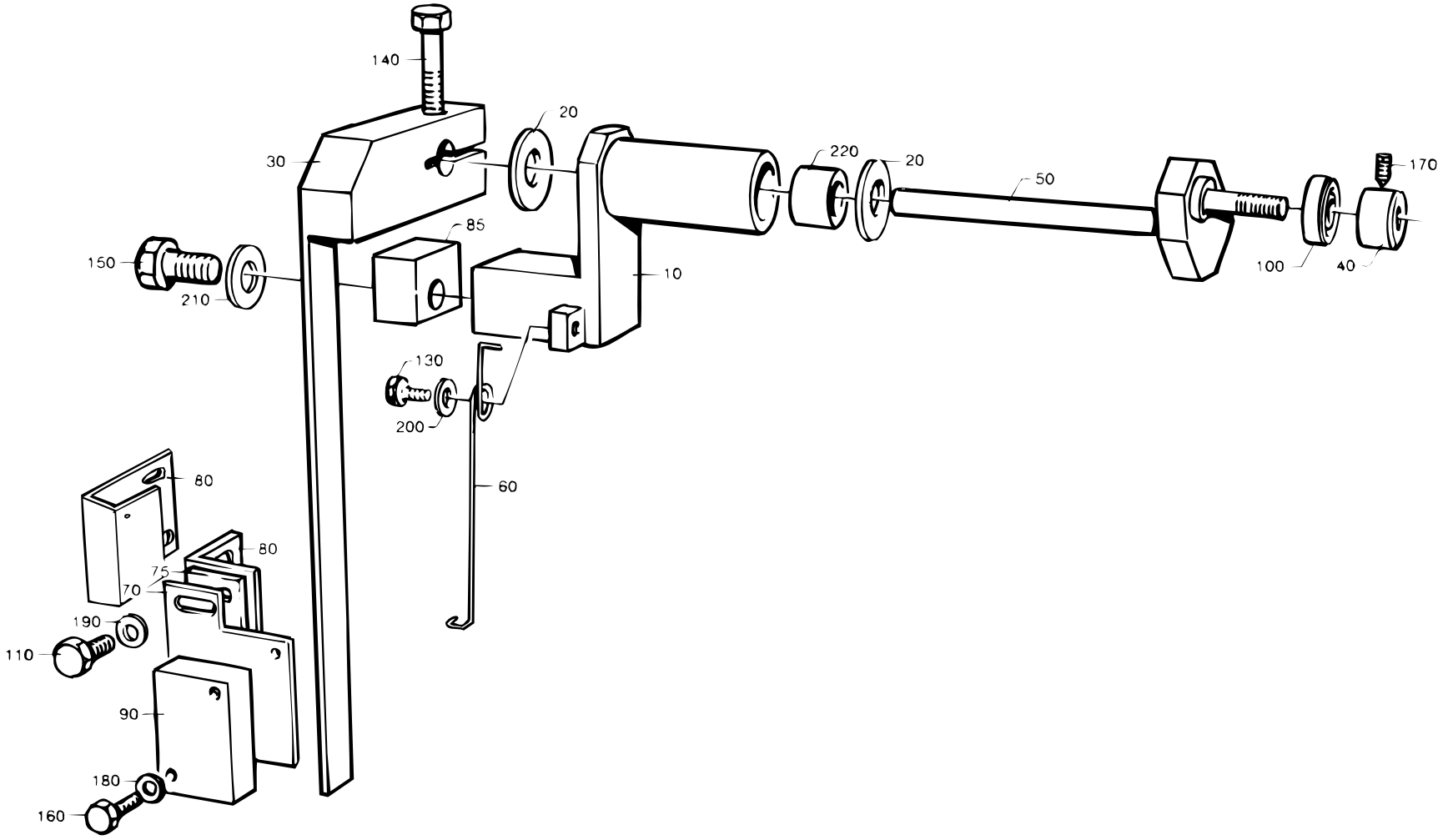

S-546180-1
ECN 12133

Pos	Part No	SP	UN	Qty	Description	Page No
-						
000	**C- 546180-0101**	**-**		**1**	**SPLICE DETECTOR**	
010	450116	-		1	CANTILEVER	
020	271211	-		2	WASHER	
030	271653	-		1	ARM	
040	271654	-		1	RETAINING RING	
050	271655	-		1	HOLDER	
060	272466	-		1	SPRING	
070	450117	-		1	HOLDER	
090	90044-0104	-		1	PROX.SWITCH IFM IN 3002	
100	90214-0138	-		1	BALL BEARING	
110	312105-0287	-		2	SCREW O4017 M4X8A280	
130	312105-0327	-		1	SCREW ISO 4017 M5X12A280	
140	312105-0370	-		1	SCREW O4017 M6X20A280	
150	312105-0372	-		2	SCREW O4017 M6X25A280	
160	312115-0228	-		2	SCREW O4762 M3X16A280	
170	312318-0283	-		1	STOP SCREW SK6SS4X4RFR	
180	315105-0124	-		2	WASHER BRB3,2X6RFR	
190	315105-0136	-		2	WASHER BRB4,3X8RFR	
200	315105-0146	-		1	WASHER BRB5,3X10RFR	
210	315105-0153	-		2	WASHER BRB6,4X12RFR	
220	321127-0100	-		2	BUSHING 10/13X10	

Pos	Part No	SP	UN	Qty	Description	Page No

This page is intentionally left blank

Pos	Part No	SP	UN	Qty	Description	Page No
-						
000	**C- 526954-0101**	**-**		**1**	**START-UP KIT**	
010	267494	-		1	COIL HEATER	
020	21903	-		1	ROLL	
030	531733	-		1	GASKET	
040	531734	-		2	GASKET	
050	531735	-		1	GASKET	
060	531736	-		1	GASKET	

Pos	Part No	SP	UN	Qty	Description	Page No

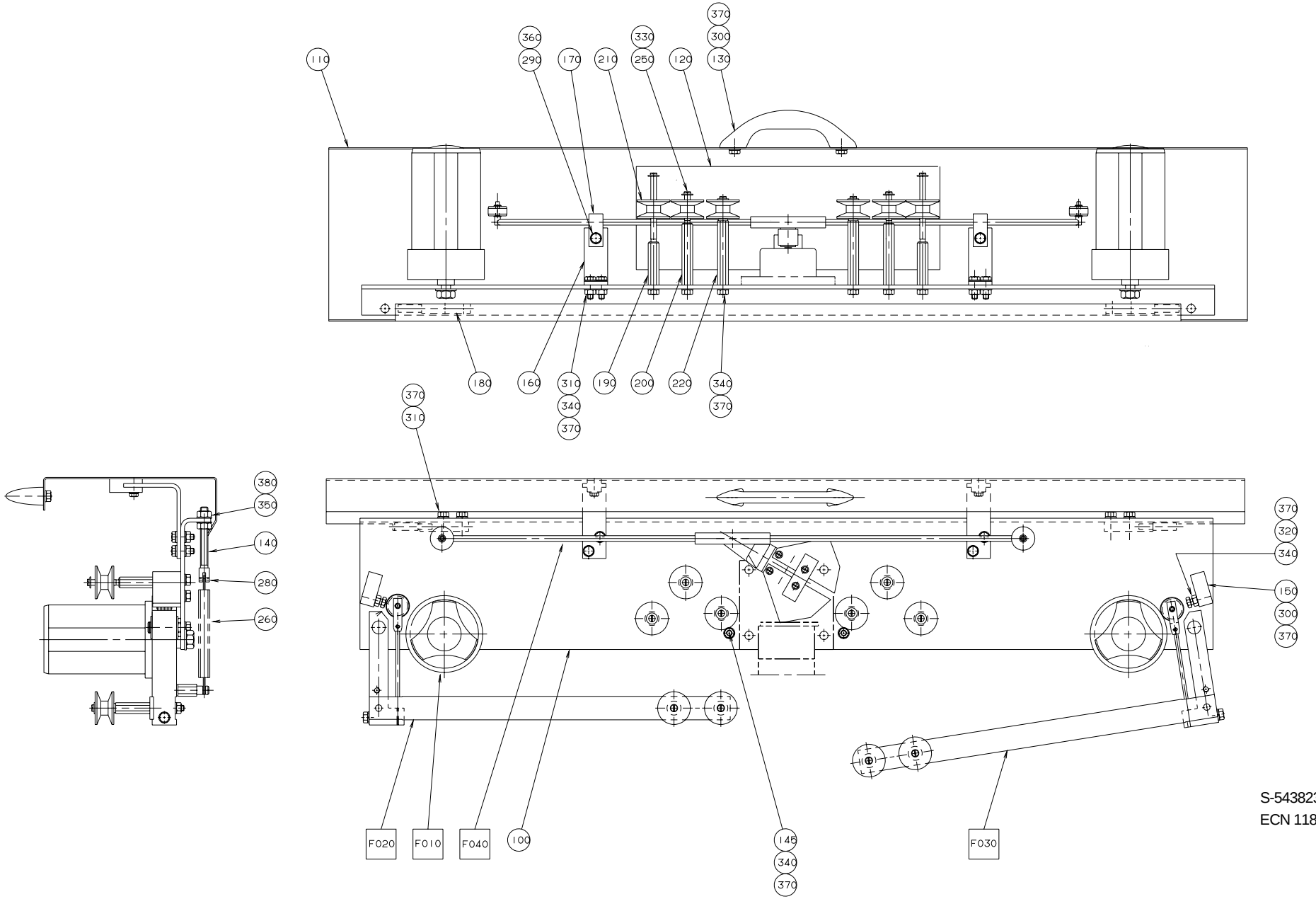

S-543823-1
ECN 11854

Pos	Part No	SP	UN	Qty	Description	Page No
-						
000	**C- 543823-0101**	**-**		**1**	**STRIP MAGAZINE**	
010	C- 537329-0101	-		2	HUB JUMBO	**703**
020	C- 543822-0101	-		1	BRAKE ARM	**707**
030	C- 543822-0102	-		1	BRAKE ARM	**709**
040	C- 543821-0101	-		1	LEVEL PROBE	**705**
100	540869	-		1	SHEET	
110	543818	-		1	PROTECTION PLATE	
120	545113	-		1	SIGN	
130	7309	-		1	HANDLE	
140	541068	C		2	SPRING HOLDER	
145	541172	-		2	SET SCREW	
150	541173	-		2	STOP	
160	543125	-		2	ANGLE	
170	543126	-		2	STOP LUG	
180	543819	-		2	HINGE	
190	544725	S		2	AXLE PIN	
200	544727	S		2	AXLE PIN	
210	544730	P		6	ROLL	
220	536916	S		2	AXLE PIN	
250	90005-0082	-		6	WASHER	
260	90335-0015	S		2	SPRING	
280	311112-0205	-		2	SLOTTED TURP 3X10 RFR	
290	312105-0327	-		2	SCREW ISO 4017 M5X12A280	
300	312105-0366	-		6	SCREW O4017 M6X12A280	
310	312105-0368	-		8	SCREW O4017 M6X16A280	
320	312109-0374	-		2	SCREW M6S6X30HRFR	
330	312125-0287	-		6	SLOTTED HEMCS4X8RFR	
340	312605-0316	-		14	NUT M6M6 A280 STAINLESS	
350	312605-0318	-		4	NUT M6M8RFR	
360	315105-0146	-		2	WASHER BRB5,3X10RFR	
370	315105-0153	-		24	WASHER BRB6,4X12RFR	
380	315105-0165	-		4	WASHER BRB8,4X16RFR	

Pos	Part No	SP	UN	Qty	Description	Page No

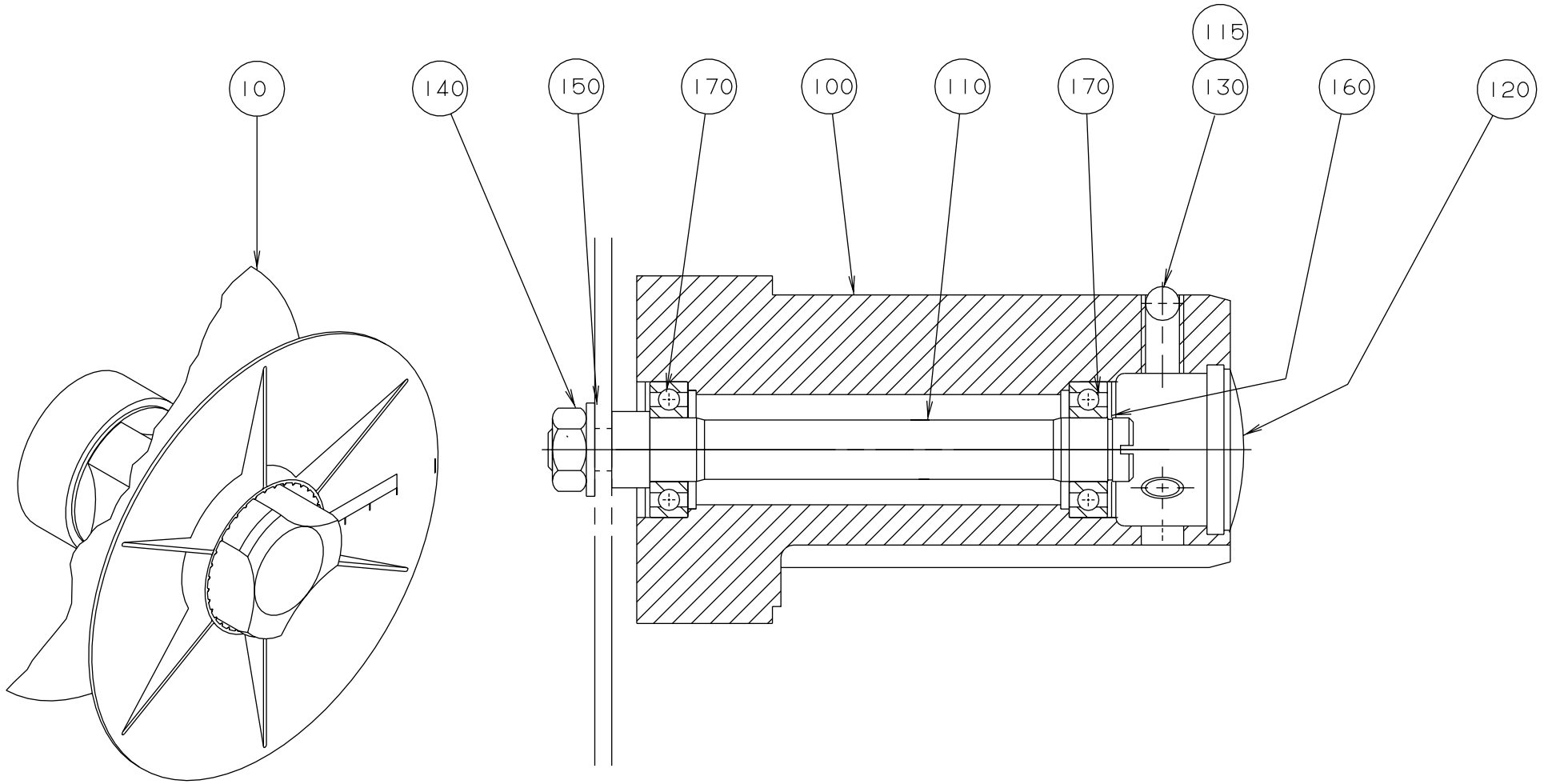

S-537329-1
ECN 12660

Pos	Part No	SP	UN	Qty	Description	Page No
-						
000	**C- 537329-0101**	**-**		**2**	**HUB JUMBO**	
010	541751	-		X	CONICAL BOBBIN	
100	536913	-		1	HUB	
110	537327	-		1	SHAFT	
115	90157-0016	-		X	LOCKING FLUID	
120	90261-0049	-		1	PLASTIC PLUG	
130	90287-0106	S		3	SPRINGLOADED SCREW	
140	312605-0320	-		1	NUT M6M10RFR	
150	315105-0173	-		1	WASHER BRB10,5X22RFR	
160	315751-0112	S		1	CIRCLIP SGA15 RFR	
170	321308-0202	S		2	BALL BEARISKF6002-2RS	

Pos	Part No	SP	UN	Qty	Description	Page No

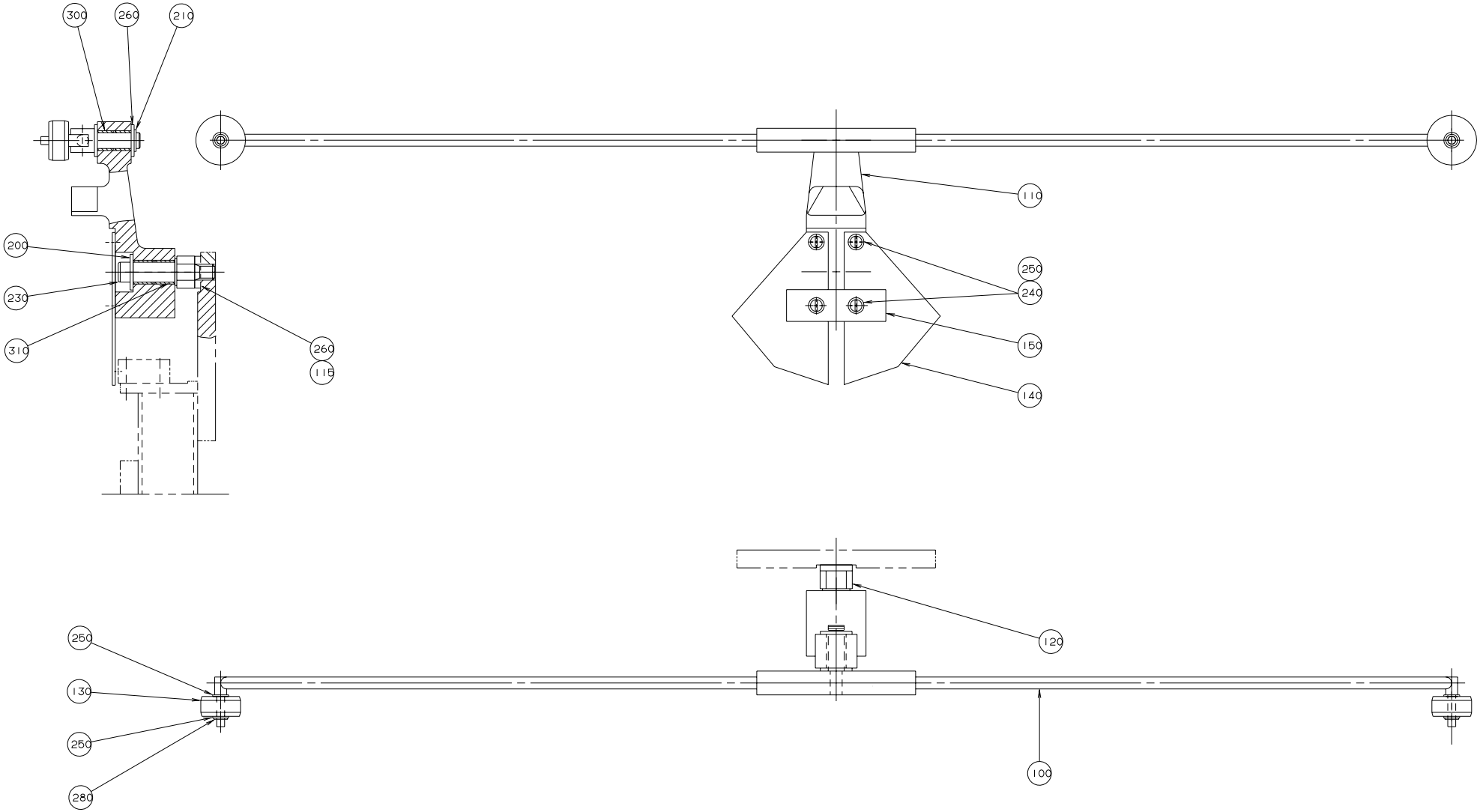

S-543821-1
ECN 11854

Pos	Part No	SP	UN	Qty	Description	Page No
-						
000	**C- 543821-0101**	**-**		**1**	**LEVEL PROBE**	
100	542781	C		1	ARM	
110	G- 542784	C		1	LINK ARM	
115	2033-0008	C		3	WASHER	
120	542782	C		1	AXLE PIN	
130	542785	S		2	ROLL	
140	542786	C		2	FLAG	
150	543575	C		1	LOCK SHEET	
200	90005-0060	-		1	WASHER	
210	90141-0015	S		1	LOCK RING	
230	312115-0366	-		1	SCREW O4762 M6X12A280	
240	312125-0287	-		4	SLOTTED HEMCS4X8RFR	
250	315105-0136	-		8	WASHER BRB4,3X8RFR	
260	315105-0165	-		3	WASHER BRB8,4X16RFR	
280	315755-0105	S		2	LOCKING WAE 3,2 RFR	
300	321120-0103	S		2	BUSHING 8/10X8	
310	321120-0104	S		2	BUSHING 10/12X10	

Pos	Part No	SP	UN	Qty	Description	Page No

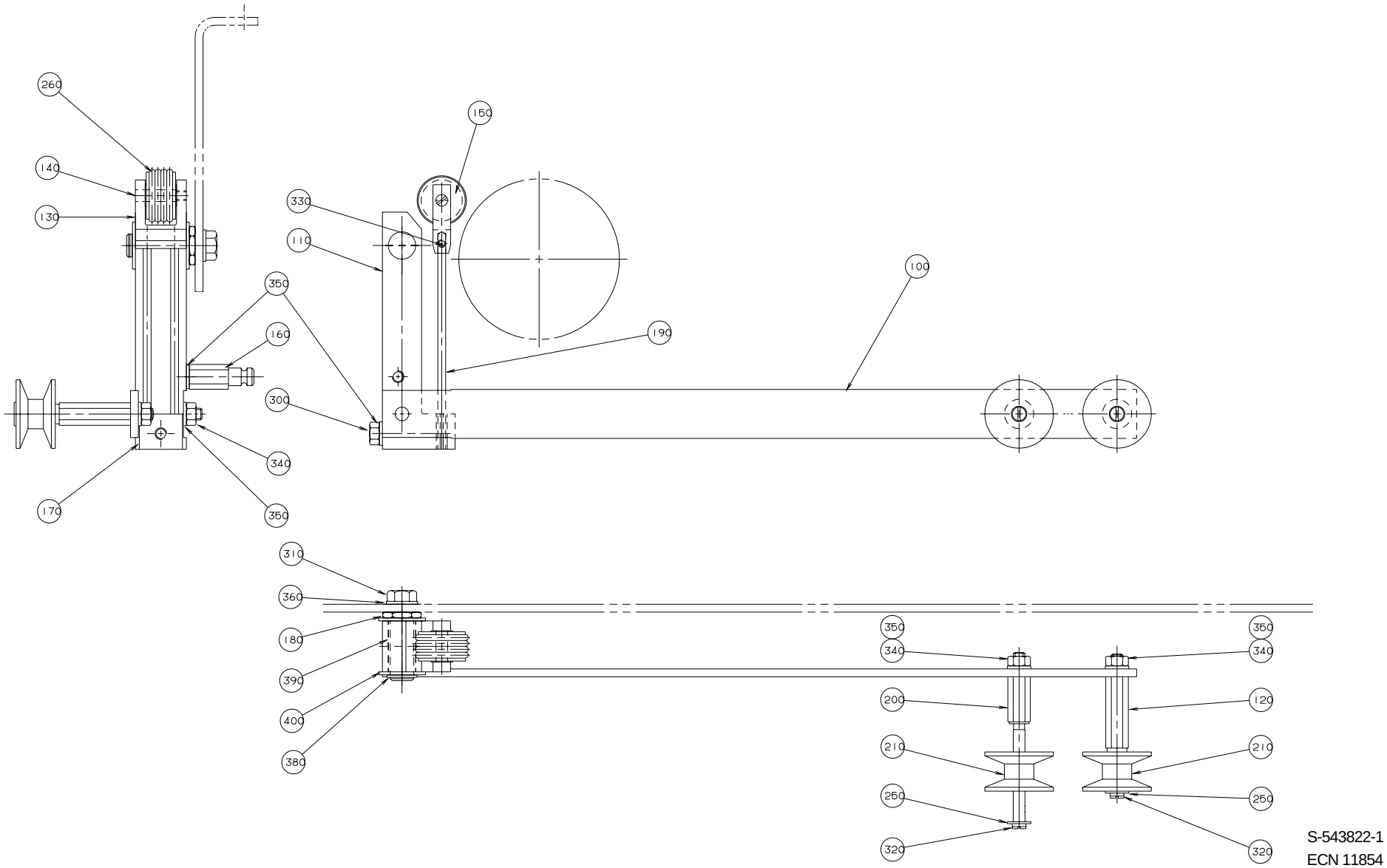

S-543822-1
ECN 11854

Pos	Part No	SP	UN	Qty	Description	Page No
LEFT						
000	**C- 543822-0101**	**-**		**1**	**BRAKE ARM**	
RIGHT						
000	**C- 543822-0102**	**-**		**1**	**BRAKE ARM**	
Common parts						
100	540870	C		1	ARM	
110	541057	C		1	ARM	
120	536917	S		1	AXLE PIN	
130	541064	C		1	FORK	
140	541065	C		1	SHAFT	
150	541066	S		1	ROLL	
160	541067	C		1	SPRING BRACKET	
170	541069	C		1	SPRING BRACKET	
180	541070	S		1	SHAFT	
190	543820	S		2	SPRING	
200	544726	S		1	AXLE PIN	
210	544730	S		2	ROLL	
250	90005-0082	-		2	WASHER	
260	90242-0148	S		4	O-RING	
300	312105-0378	-		1	SCREW O4017 M6X40A280	
310	312105-0449	-		1	SCREW O4017 M8X16A280	
320	312125-0287	-		2	SLOTTED HEMCS4X8RFR	
330	312318-0283	-		2	STOP SCREW SK6SS4X4RFR	
340	312605-0316	-		3	NUT M6M6 A280 STAINLESS	
350	315105-0153	-		5	WASHER BRB6,4X12RFR	
360	315105-0165	-		1	WASHER BRB8,4X16RFR	
380	315751-0109	S		1	CIRCLIP SGA12 RFR	
390	321120-0113	S		1	BUSHING 12/14X25	
400	321129-0104	S		1	THRUST WAS12/24X1,5	

Pos	Part No	SP	UN	Qty	Description	Page No

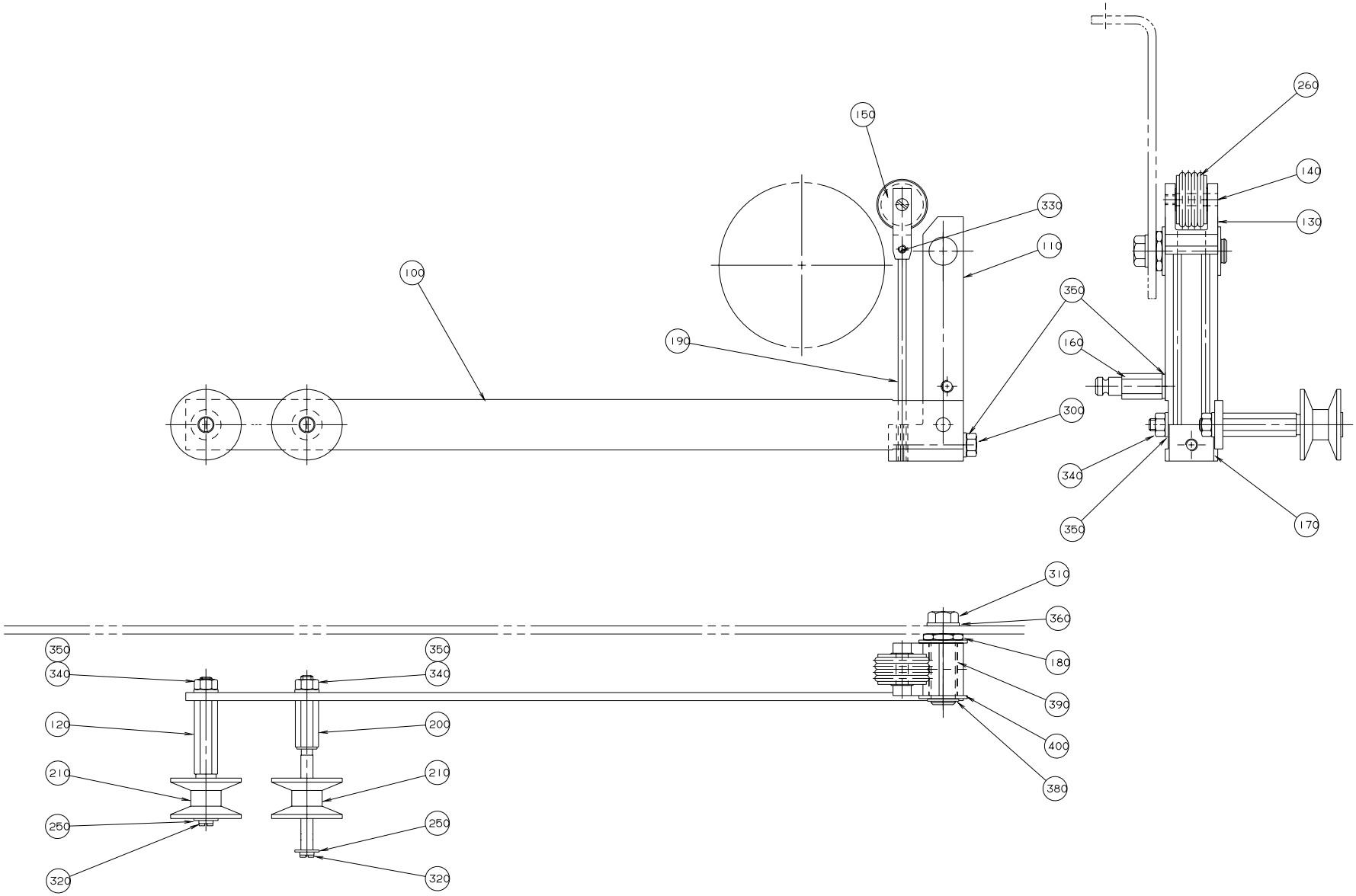

S-543822-2
ECN 11854

Pos	Part No	SP	UN	Qty	Description	Page No
LEFT						
000	**C- 543822-0101**	**-**		**1**	**BRAKE ARM**	
RIGHT						
000	**C- 543822-0102**	**-**		**1**	**BRAKE ARM**	
Common parts						
100	540870	C		1	ARM	
110	541057	C		1	ARM	
120	536917	S		1	AXLE PIN	
130	541064	C		1	FORK	
140	541065	C		1	SHAFT	
150	541066	S		1	ROLL	
160	541067	C		1	SPRING BRACKET	
170	541069	C		1	SPRING BRACKET	
180	541070	S		1	SHAFT	
190	543820	S		2	SPRING	
200	544726	S		1	AXLE PIN	
210	544730	S		2	ROLL	
250	90005-0082	-		2	WASHER	
260	90242-0148	S		4	O-RING	
300	312105-0378	-		1	SCREW O4017 M6X40A280	
310	312105-0449	-		1	SCREW O4017 M8X16A280	
320	312125-0287	-		2	SLOTTED HEMCS4X8RFR	
330	312318-0283	-		2	STOP SCREW SK6SS4X4RFR	
340	312605-0316	-		3	NUT M6M6 A280 STAINLESS	
350	315105-0153	-		5	WASHER BRB6,4X12RFR	
360	315105-0165	-		1	WASHER BRB8,4X16RFR	
380	315751-0109	S		1	CIRCLIP SGA12 RFR	
390	321120-0113	S		1	BUSHING 12/14X25	
400	321129-0104	S		1	THRUST WAS12/24X1,5	

Pos	Part No	SP	UN	Qty	Description	Page No

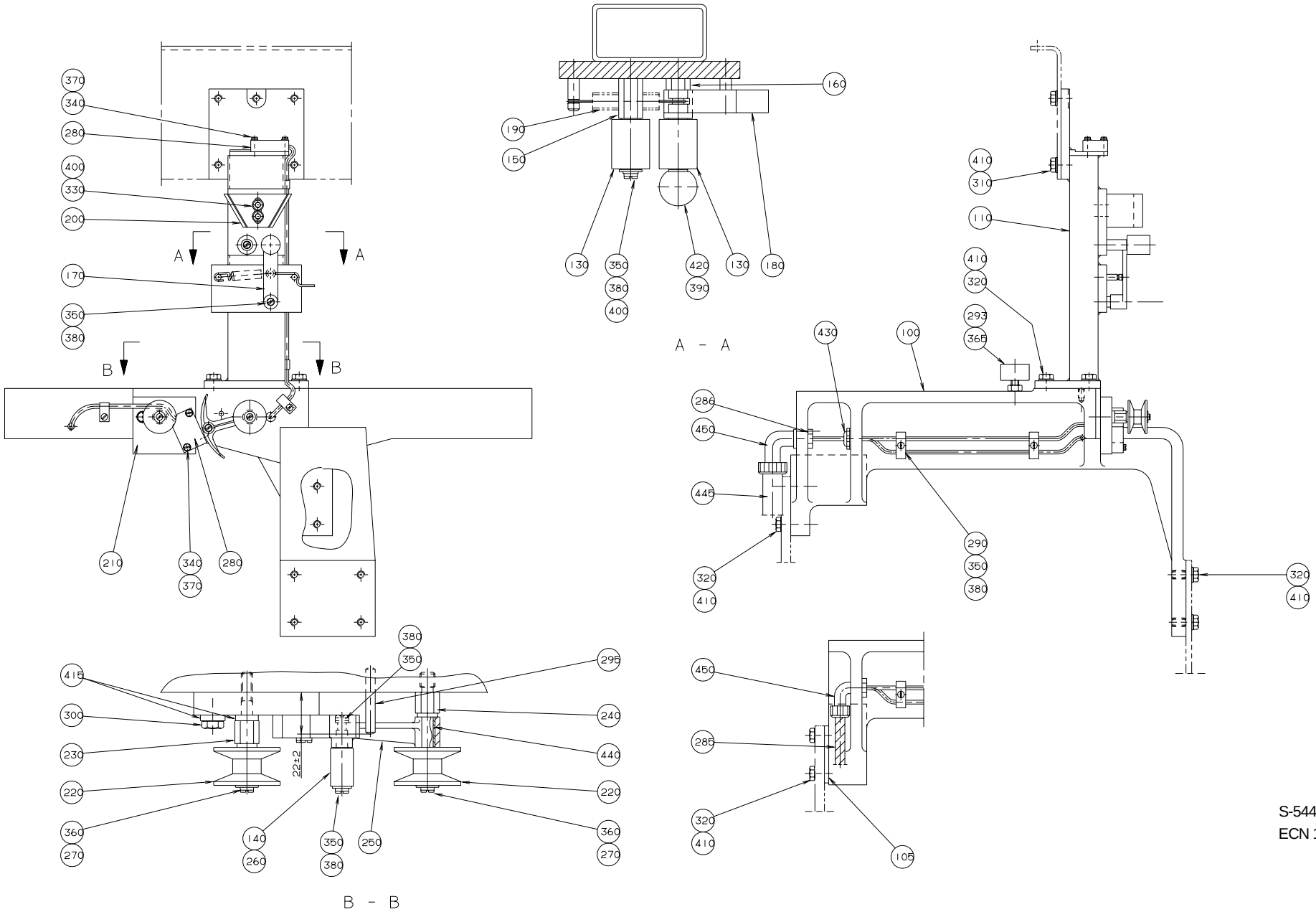

S-544973-1
ECN 17189

Pos	Part No	SP	UN	Qty	Description	Page No
VOLUMES 1055 B, 1000 B, 1000 S, 750 B, 568 B, 500 B						
000	**C- 544973-0101**	**-**		**1**	**PILLAR**	
100	G- 545138	C		1	CANTILEVER	
430	352101-0103	-		1	CABLE GLAND 6-11MM PR18,6	
VOLUME 375 S						
000	**C- 544973-0104**	**-**		**1**	**PILLAR**	
100	G- 546030-0001	C		1	CANTILEVER	
VOLUMES 500S, 400 B, 355 B						
000	**C- 544973-0105**	**-**		**1**	**PILLAR**	
100	G- 546030-0001	C		1	CANTILEVER	
VOLUME 750 S						
000	**C- 544973-0106**	**-**		**1**	**PILLAR**	
100	G- 546030-0002	C		1	CANTILEVER	
105	546031	C		1	SPACER	
VOLUME 1000 Sq, 500 Sq						
000	**C- 544973-0108**	**-**		**1**	**PILLAR**	
100	G- 546030-0002	C		1	CANTILEVER	
105	574037	-		1	SPACER	
Common parts						
110	544974	C		1	PILLAR	
130	232979	P		2	PRESSURE ROLLER	
140	249298	P		1	ROLL	
150	269053-0001	S		1	SHAFT	
160	269053-0003	S		1	SHAFT	
170	269054	S		1	ARM	
180	269056	S		1	CATCH	
190	269057	S		1	TENSION SPRING	
200	279480	C		1	STEERING RAIL	
210	547571	-		1	PLATE	
220	544730	P		2	ROLL	
230	547924	S		1	AXLE PIN	
240	547925	S		1	AXLE PIN	
250	G- 545111	S		1	ARM	
260	545112	S		1	SHAFT	
270	90005-0082	-		2	WASHER	
280	90044-0104	P		2	PROX.SWITCH IFM IN 3002	
286	90099-0002	-		1	NUT	
290	90165-0060	-		11	CLAMP	
293	90347-0004	-		1	VIBRATION DAMPER	
295	311103-0316	-		1	CYLINDRICACP M6 5X35 RFR	
300	312105-0372	-		1	SCREW O4017 M6X25A280	
310	312105-0449	-		4	SCREW O4017 M8X16A280	
320	312105-0452	-		10	SCREW M6S8X22RFR	
330	312115-0366	-		2	SCREW O4762 M6X12A280	
340	312125-0228	-		4	SLOTTED HEMCS3X16RFR	
350	312125-0285	-		12	SLOTTED HEMCS4X6RFR	
360	312125-0287	-		2	SLOTTED HEMCS4X8RFR	
365	312605-0318	-		1	NUT M6M8RFR	
370	315105-0124	-		4	WASHER BRB3,2X6RFR	
380	315105-0136	-		12	WASHER BRB4,3X8RFR	
390	315105-0146	-		1	WASHER BRB5,3X10RFR	
400	315105-0153	-		3	WASHER BRB6,4X12RFR	
410	315105-0165	-		14	WASHER BRB8,4X16RFR	
415	315115-0153	-		2	WASHER TBRB6,4X12RFR	
420	318800-0102	-		1	HANDLE BALLA D.20-M5	
440	321120-0101	-		2	BUSHING 6/8X6	
445	352135-0106	-	MM	430	HOSE .016	
450	352137-0127	-		1	GLAND FITT	

Tetra Pak

SPC

Spare Parts Catalogue

Part No	Description	Page No
1013	SHAFT	615
10-14MM		63, 137, 441, 451, 639, 641
1020141-0001	HOLDER	597
1020142-0001	HOLDER	597
1020143-0001	HOLDER	597
1020144-0001	HOLDER	597
1020145-0001	HOLDER	597
10258	COMPRESSION SPRING	627
1038128-0001	DOLLY	371, 375, 403
1038517-0003	CUTTING RAIL	371, 375
107000	SPRING	317, 321
107062	LID	295
107095	LID	289
107334	SPACER SLEEVE	325, 329
107335	SPACER RING	325, 329
107339	DOWEL	325, 329
10793-0036	MOUNTINGRAIL TS32 L=400MM	139
111017	SPACER RING	289
111543	GUIDE CONE	17, 21, 685
113653	BEARING PLATE	317, 321
113654	RING	317, 321
1143000	PUSHER	455, 459
1143001	ATTACHMENT PLATE	455, 459
1143002	BRACKET	455, 459
1143003	BRACKET	483, 497
1143004	CYLINDER BRACKET	455, 459
1143006	STEERING	505
1143007	STEERING	505
1143008	BRACKET	505
1143009	BRACKET	505
1143015	BUSHING	523
1143016	AXLE PIN	523
1143017	ROCKER ARM	523
1143018	ROCKER ARM	523
1143020	FOLDING BAR	555
1143021	FOLDING BAR	555
1143215	SPRING	359, 361, 363
1143216	SPRING	359, 361, 363
1143223	WASHER	523
1143455	MACHINE SIGN CE	589
1143456	MACHINE SIGN CE	593
1143605	SPACER	609
1143628	COVERING PLATE	189
1143688	ARM	523
1195069	VOLUME FLAP	341
1195070	VOLUME FLAP	341
1195094	BRACKET	615
1195332	PROTECTION PLATE	493
1195333	STOP	469
12242-0001	GASKET	47, 109, 121
12242-0003	GASKET	75, 81, 83, 85, 103, 105, 109, 115, 141
12242-0005	GASKET	75, 81, 83, 85, 103, 125, 141
12922	WASHER	369, 373
14600	HOOD	49
14729	NUT	333
1881-0001	COMPRESSION SPRING	17, 21
19262	WASHER	695
19972	WASHER	341, 343
2033-0008	WASHER	17, 21, 27, 31, 35, 37, 39, 705
2033-0009	WASHER	689, 693
20494	COMPRESSION SPRING	323
207019-0003	GEAR WHEEL	607
20705-0001	INSULATING PIPE	443, 445
20718	BEARING	325, 329
20770	WASHER	211
20772	INSULATOR BODY	443, 445
208361-0001	STAIR	585
208361-0002	STAIR	101
208658-0001	SPACER	101, 585
208709	VOLUME SHIM	339, 401
208843	ANGLE BRACKET	41
209145	THROTTLE SCREW	123, 681
209146	BARRIER NUT	123, 681
209331-0005	GEAR WHEEL	119
209331-0007	GEAR WHEEL	119
209331-0009	GEAR WHEEL	119
209331-0012	GEAR WHEEL	119
209331-0013	GEAR WHEEL	119
209331-0014	GEAR WHEEL	119
21,6NF		335, 337
21521	COMPRESSION SPRING	65, 67, 69
21903	ROLL	689, 693, 699
22462	SHAFT	317, 321
22463	ROLL	317, 321
22483	FORK	325, 329
22485	DOWEL	325, 329

Part No	Description	Page No
22486	DOWEL	325, 329
22488	ELBOW PIPE	379
22489	ELBOW PIPE	379
22504	STOP LUG	325, 329
22559	GRUB SCREW	691
22560	PAPER SUPPORT	691
226097-0002	BENDING ROLLER	617
226098	BEARING	617
228653	SHAFT	627
228843-0001	SPACER	453
228845	MOUNTING BLOCK	453
228846-0001	SPACER	597
228846-0002	SPACER	597
228846-0003	SPACER	597
228943	THROTTLE	55
229201-0001	SPACER	453
229201-0002	SPACER	453
229202	MOUNTING BLOCK	453
229206	LOCATING PIECE	453
229207	BEARING SLEEVE	453
229508-0001	STUD SCREW	597
229508-0002	STUD SCREW	597
229508-0003	STUD SCREW	597
229508-0014	STUD SCREW	597
229508-0029	STUD SCREW	453
229508-0031	STUD SCREW	453
229516	PIN	453, 569, 597
229760-0012	STUD SCREW	453
229760-0013	STUD SCREW	453
230107	WASHER	691
230226	BLOCKING PIECE	267
230462	BUSHING	309
230551	GASKET	63, 141
23127-0101	TRANSFORMER	215
232236	TOOTH PART	335, 337
232237	SCREW	335, 337
232238	TOOTH PART	333
23229	BRACKET	317, 321
23270	BUSHING	297
23291	BEARING COVER	325, 329
23292	BEARING HOUSING	325, 329
232979	PRESSURE ROLLER	49, 141, 711
23312	BUSHING	325, 329

Part No	Description	Page No
23361	ROLLER BRACKET	321
23458	SHAFT	295
23462	SPACER RING	295
23580	SHIFTER HANDLE	685
23582	HOLDER	17, 21, 685
23583	GUIDE FINGER	17, 21, 685
23584	SCREW	17, 21, 685
237082-0001	MOUNTING BLOCK	453
237082-0002	MOUNTING BLOCK	453
23763-0003	SPACER PIPE	437, 447
23763-0004	SPACER PIPE	437, 439, 447, 449
23763-0005	SPACER PIPE	437, 447
23763-0006	SPACER PIPE	437, 439, 441, 447, 449, 451
23763-0010	SPACER PIPE	437, 447
23765-0001	INSULATING PIPE	437, 447
23765-0002	INSULATING PIPE	437, 439, 441, 447, 449, 451
23765-0003	INSULATING PIPE	437, 439, 447, 449
23765-0004	INSULATING PIPE	437, 439, 441, 447, 449, 451
23765-0005	INSULATING PIPE	437, 439, 441, 447, 449, 451
23769	STOP PLATE	441, 451
23771	SPACER RING	443, 445
237725	BEARING HOUSING	289
239383	SLEEVE	299
239440	SHAFT	43
239441	BRACKET	43
239476	ROD	333
239533	DRUM	295
239534	FLANGE	295
239535	FLANGE	295
239536	GEAR WHEEL	295
239538	WASHER	309
239665	GUIDE SHAFT	695
239847	HINGE	213
239870	SPACER SLEEVE	289
239874	WASHER	323
24206	BEARING	677
242954	WASHER	689
243016	GEARING	295
243017	GEAR WHEEL	301
243143	SCREW	369, 371, 373, 375
243144	BUSHING	371, 375
243151	SHAFT	695
243172-0001	SIDE PIECE	585

Part No	Description	Page No
243172-0002	SIDE PIECE	585
243218	CANTILEVER	695
24351	BOW CLAMP	17, 21, 685
24352	SHAFT	685
24355	DOWEL	17, 21, 685
24356	PIECE	17, 21, 685
243573	LACE	227
243846	ATTACHMENT	61
243851	GASKET	141
243928	BRACKET	297
243930	SHAFT	297
243931	SECURING PLATE	297
243943	BUSHING	323
243971	SPRING	299
245039	GUIDE WHEEL	453
245165	ASSEMBLY TOOL	575
245189-0001	ATTACHMENT	691
245190	FLOAT	55, 57
245210	BODY	685
245271	GASKET	369, 371, 373, 375
245272	GASKET	369, 373
246328	SPRING	347
246329	SPRING	347
246332	CATCH	357
246342	PAPER SUPPORT	691
246344	HEAT GUARD	691
246374	BRACKET	253
246494	ATTACHMENT	389, 391, 393, 395, 397, 399
246513	BEARING	323
246739	BRACKET	267
246787	SCREW	297
246790	LINK	297
246885	WASHER	247
246948	BRACKET	299
246964	CYLINDER BRACKET	121
246965	STOP	121
246966	SCREW	117, 121
246982	PROTRACTOR	295
247080	BRACKET	225
247082	LEG	227
247112	SHAFT	323
247119	ROD	309
247145	PLATFORM	583
247146	PLATFORM	579, 581
247159	AXLE SUPPORT	117
247160	AXLE SUPPORT	75, 117
247161	AXLE SUPPORT	117
247162	BRACKET	117
247168	CYLINDER BRACKET	117
247170	BEARING COVER	117
247171	BEARING COVER	115, 119, 681
247172	SPACER RING	115, 119
247173	BEARING SEAT	115, 119
247227-0002	AIR NOZZLE	437, 447
247227-0003	AIR NOZZLE	437, 439, 447, 449
247236	CARRIER	75
247240	WHEEL	117
247241	AXLE SUPPORT	75
247248	PIN	75
247252	GASKET	75
247262	SPRING BRACKET	347, 353, 355
247263	SPACER	347, 353, 355, 359
247271	LACE	347, 353, 355, 359
247296-0001	SIDE PIECE	101
247296-0002	SIDE PIECE	101
247349	STEERING	115
247355	LOCK WASHER	115
247357	SPROCKET	79, 115
247358	SHIFTER HANDLE	115
247385	SIGN	207
247386	SIGN	207
247422	DRIP PLATE	115
24928	LOCKING RUBBER	49
249298	ROLL	711
250588	FLANGE	115, 657, 687
250590	BEARING COVER	119
250591	SHAFT	119
250592	WASHER	119
250594	FORMING RING	35, 37, 39
250633	CABLE CLAMP	403
250654	PIVOT ARM	59
250656	ATTACHMENT PIPE	59
250660	BEARING CONSOLE	59
250662	LEVER	59
250663	BEARING	43, 59
250664	TIE ROD	59

Part No	Description	Page No
250668	SPACER	59
251454	LID	105
251455	SEAL	105
251490	FASTENING BRACKET	691
251493	FORK	693
251494	SHAFT	693
251495	SHAFT	693
251496	SHAFT	693
251498	BARRIER	693
251502	HEAT GUARD	691
251503	HOLDER	691
251544	SHEET	115
251561	LINK	297
251562	SHAFT	297
251597	LACE	345, 351
251598	STOPPER	345
252653-0001	COUNTER CAM	325
252654-0001	COUNTER CAM	329
252707	SPRING	309
252732	GLASS PANE	51, 53
252733	GLASS PANE	51, 53
252766-0001	INSULATING PIPE	437, 439, 441, 447, 449, 451
252766-0002	INSULATING PIPE	437, 439, 447, 449
252770	RAIL BRACKET	383
252773	FASTENING PLATE	381, 383
252774	FASTENING PLATE	381, 383
252775	CURVE	383
252776	VOLUME CAM	383
252780	RULER	381, 383
252785	SCREW	385
252786	WASHER	385
252787	BUSHING	385
252788	BUSHING	385
252789	NUT	385
252791	NUT	385
252792	NUT	385
252793	SUPPORT	381, 383, 385
252794	LACE	385
252797	RUBBER STRIP	51, 53
252798	RUBBER STRIP	51, 53
252930	SPACER SCREW	385
252953	TANK	205
252972	SHOULDER SCREW	25

Part No	Description	Page No
255017	BRACKET	235
255064	BUSHING	695
255227-0001	VOLUME BULGE	339
255228-0001	VOLUME SHIM	339, 401
255278	PLUG FINISHER	371, 375
255335	SHAFT	309
255368	PRESSURE GAUGE TUBE	81, 83, 85
255398	SLEEVE	309
255417	WASHER	689
255473	STOP	345
255474	STOP	345
255874	BEARING COVER	65, 67, 69
255875	BUSHING	65, 67, 69
25641	REAMED BOLT	319
257090	SHIFTER HANDLE	17, 21
257783	CUTTING JAW	369, 373
257845	RAILING	579, 581
257846	RAILING	581
257852	PLATFORM	579, 581
257854	CANTILEVER	579, 581
257855	CANTILEVER	583
257859	RAILING	579, 581
257862	PLATFORM	579, 583
257903	AIR NOZZLE	43
257904	HEAT GUARD	43
257923	GUIDE WHEEL	695
257987	AXLE SUPPORT	17, 35, 37, 39
257988	AXLE SUPPORT	17
259760	BENDING ROLLER BRACKET	157
259835	FLANGE SEAL	177
259867	HOSE CLAMP	265
259902	FLOAT	55
26075	VOLUME BULGE	339
262028-0001	FITTING BOLT	535, 543
262028-0002	FITTING BOLT	525
262028-0011	FITTING BOLT	515
262028-0016	FITTING BOLT	499
262179-0001	PIN	525, 527, 529, 531, 533, 537, 539, 541, 543
262183	BUSHING	525
262234	BRACKET	515
262235	ARM	515
262252	HATCH	501
262253	GASKET	501

Part No	Description	Page No
262261	SHAFT	433
262266	SHAFT	515
262267	BUSHING	515
262272	HEATING CHAMBER	441, 451
262274-0002	BRACKET	429
262274-0005	BRACKET	427
262275-0002	CAP	429
262275-0003	CAP	427, 547
262288	LID	441, 451
262290-0001	LACE	437, 439, 441, 447, 449, 451
262290-0002	LACE	437, 447
262309	SLEEVE	515
262313	LID	515
262314	RUBBER GASKET	515
262315	LID	515
262316	RUBBER GASKET	515
262322	SHAFT	515
262323	SHAFT	515
262324	SHAFT	515
262325	SHAFT	515
262343	SECURING PLATE	515
262350-0001	PIN	513, 515
262415	LINK	515
262427-0001	SHAFT	519, 521
262427-0002	SHAFT	519
262427-0005	SHAFT	519, 521, 523
262427-0006	SHAFT	521
262427-0007	SHAFT	523
262427-0008	SHAFT	523
262720	STEERING	515
262774-0009	GLASS PANE	199
262906	ARM	513, 515
262907	ARM	513
262924	CANTILEVER	525
262932	HATCH	501
262933	GASKET	501
262970	RAIL	519, 521
263249	PIVOT ARM	43
263250	TOOTH PART	43
263251	GEAR WHEEL	43
263252	SHAFT	43
263254	BRACKET	43
263256	ROCKER ARM	43
263257	CYLINDER BRACKET	27, 31, 43
263262	BUSHING	27, 31
263313	LINK HEAD	309
263314	LINK HEAD	309
263322	RAILING	583
263323	RAILING	213
263328	SPACER	309
263329	NUT	309
263509	LID	323
263572	CANTILEVER	79
263574	BEARING CONSOLE	79
263575	GASKET	79
263576	GUIDE STUD	79
263579	WASHER	79
263585	BUSHING	79
263586	BUSHING	79
263587	CRANK	79
263588	JOINT	79
263589	RATCHET	79
263590	BARRIER	79
263592	WHEEL	79
263593	SHAFT	79
263612	RAIL	213
263617-SHEET	PLATFORM VERSIONS	573
263619	RAILING	581
263655-0002	SHAFT	17
263655-0003	SHAFT	17
263655-0004	SHAFT	17
263655-0006	SHAFT	21
263655-0007	SHAFT	127
263655-0008	SHAFT	17, 35, 37, 39, 127
263655-0009	SHAFT	27, 31, 35, 37, 39, 127
263655-0010	SHAFT	35, 37, 39
263655-0012	SHAFT	17
263655-0018	SHAFT	21
263655-0021	SHAFT	17
263655-0022	SHAFT	27, 31
263655-0023	SHAFT	17
263655-0024	SHAFT	17
263656-0002	SHAFT	17
263673	GASKET	441, 451
263684	SPACER	347, 353, 355, 357, 359, 361
263693	CATCH	357

Part No	Description	Page No
263828	JUNCTION RAIL	227
26423	LACE	317, 321
26425	LACE	333
26426	LACE	325, 329
26490	WASHER	499
265564	BENDING ROLLER	157, 655, 687
265566-0001	SHAFT	157, 675, 687
265566-0003	SHAFT	675
265566-0004	SHAFT	675
265566-0005	SHAFT	675
265567	BEARING UNIT	157, 675, 687
265568	DUST COVER	157, 675, 687
265569-0001	STRUT	675, 687
265569-0003	STRUT	675
265569-0005	STRUT	675
265569-0006	STRUT	675
265756	CANTILEVER	675
265872-0001	GEAR WHEEL	119
265957	SHAFT	61
266182	BUSHING	105
266389	PISTON ROD	111
266390	NUT	111
266391	RING	111
266394	BRACKET	111
266557	GASKET	171
266710	WHEEL	607
266728	CANTILEVER	689
266730	HOLDER	689
266731	SHAFT	689
266732	SHAFT	689
266737	WASHER	65, 67, 69, 689
266738	COVER	689
266739	CABLE GLAND	43, 689
266740-0001	SPACER	689
266740-0002	SPACER	689
266761	MOUNTING LUG	695
266797-0002	PAPER GUARD	25
267033	WASHER	115
267056	BEARING CONSOLE	75
267327	HOLDER	381, 383
267462	LOCK SHEET	227
267463	LOCK SHEET	227
267494	COIL HEATER	691, 699
267564	BRACKET	125
26760	LOCATING PIECE	323
267646	BLOCKING PIECE	129
267665	BRACKET	129
267676	HOLDER	381
267727	FORK	49
267728	SHAFT	49
267754	BOW CLAMP	333
268195	SCREW	385
268746	SCREW	155
268830	COMPRESSION SPRING	513, 515
268954	FOLDING FLAP CAM L	325
268955	FOLDING FLAP CAM R	329
269053-0001	SHAFT	711
269053-0003	SHAFT	711
269054	ARM	711
269056	CATCH	711
269057	TENSION SPRING	711
269059	COUNTER CAM	325
269060	COUNTER CAM	329
269108	FOLDING FLAP CAM L	325
269109	FOLDING FLAP CAM R	329
269110	COUNTER CAM	325
269111	COUNTER CAM	329
269146	FORK	27, 31
269147	SHAFT	27, 31
269152	ROCKER ARM	27, 31
269153	STOP	27, 31
269154	BUSHING	27, 31, 43
269242	BEARING HOUSING	43
269274	PLATFORM COVER	213
269275	PLATFORM COVER	213
269285	PROTECTION PLATE	225
269291	RULER	225
269294	RULER	225
269295	PROTECTION PLATE	225
269296	PROTECTION PLATE	227
269297	PROTECTION PLATE	227
269313	FASTENING PLATE	43
269314	CANTILEVER	43
269315	WASHER	43
269316	BEARING HOUSING	43
269320	RAIL	267

Part No	Description	Page No
269321	RAIL	267
269339	CANTILEVER	579, 581
269340	CANTILEVER	579, 581
269366	DOWEL	317, 321
269405	PIPE	109
269522	PIPE	103
269575	HOLDER	113
269576	CAP	113
269577	DISCHARGE TRAY	113
269578	DISCHARGE TRAY	113
269716	FASTENING PLATE	47
269717	GASKET HOLDER	47
269718	GASKET	47
269719	SCREW	47
269792	DAMPER	381, 383
269827-0001	FILLER TUBE	55
269827-0002	FILLER TUBE	57
269859	BRACKET	63
269903	FILTER INSERT	171
269904	FILTER MESH	171
269905	WASHER	171
269913	STOPPER	59
269914	SHOULDER SCREW	59
269929	COVER	79
269930	SCREW	79
269931	NUT	75
270926	* NUT	43, 689
270927	* SCREW	43, 689
271211	WASHER	697
271653	ARM	697
271654	RETAINING RING	697
271655	HOLDER	697
271823	FILTER	237
272466	SPRING	697
273429	WASHER	59, 75
273449	SIGN	241
273450	SIGN	241
273452	SIGN	241
273455	LABEL (COLD WATER)	237
273456	SIGN	237
273458	LABEL (AIR)	237
273514	TOUCH GUARD	109
273515	TOUCH GUARD	109
273547-0001	TOUCH GUARD	81, 83, 85
273547-0002	TOUCH GUARD	109
273548-0001	TOUCH GUARD	81, 83, 85
273548-0002	TOUCH GUARD	109
273751	FRONT PLATE	225
273753	PROTECTION PLATE	225
273934	LID	75
273937	DIAPHRAGM	75
273938	WASHER	75
273944	DIAPHRAGM	107
273950	FILTER	103
273951	VALVE HOUSING	107
273961	SEAL	75
273977	NUT	173
273978	LEVEL GLASS	173
273980	SPRING	173
273981	GASKET	185
273982	WEIGHT	185
273996	NUT	173
276164	VALVE HOUSING	111
276165	HOUSE	111
276166	PIPE	109
276167	PIPE	109
276172	AXLE PIN	317, 321
276173	CURVE ROLLER	317, 321
276189	DAMPER	381, 383
276204	PLUNGER	305
276235	CYLINDER	305
276304	PIPE	109
276305	PIPE	109
276346	AIR GUIDE	121
276347	AIR DISTRIBUTOR	121
276348	AIR DISTRIBUTOR	121
276350	GEAR WHEEL	121
276351	GEAR WHEEL	121
276354	ATTACHMENT	121
276355	SLEEVE	121
276356	BEARING HOUSING	121
276357	BUSHING	121
276358	BUSHING	121
276359	LEVER	121
276360	SPRING	121
276361	BRACKET	121

Part No	Description	Page No
276398	HEXAGON NIPPLE	249
276490	PIPE	123
276613	LID	429
276636	WASHER	429
276659	WASHER	501, 515
276664	WASHER	525
278954	NET	109
278955	NET	109
279006	BENDING ROLLER	115
279007	BENDING ROLLER	115
279009	BEARING PLATE	115
279010	BEARING PLATE	115
279011	COVERING PLATE	115
279074	TENSION SPRING	693
279103	CONNECTION CLAMP	379
279105	WASHER	249
279208	BEARING HOUSING	59
279209	ROCKER ARM	59
279211	CANTILEVER	685
279213	DOWEL	59
279370	STEERING	225
279466	BRACKET	297
279471	CANTILEVER	75
279472	FASTENING BRACKET	75
279478	BEARING PLATE	75
279480	STEERING RAIL	711
279505	DAMPER LEFT	349
279506	DAMPER RIGHT	349
279526	BRACKET	249
279589	NUT	123, 681
279590	REDUCTION	681
279619	BRACKET	129
279621	FASTENING PLATE	383, 385
279623	LACE	345
279672	ATTACHMENT	691
279804	BUSHING	217
279807	COVER	213
279860	ADJUSTMENT PLATE	125
279885	COVER	213
279969	DRIP PLATE	299
279983	SPLASH PROTECTION	307
279984	SPLASH PROTECTION	307
279985	BRACKET	307
279987	BRACKET	307
279989	SPACER	307
279991	BRACKET	307
279992	BRACKET	307
279993	BRACKET	307
279997	BRACKET	307
279998	SHAFT	307
279999	COVERING PLATE	307
28036	WASHER	35, 37, 39, 301
28037	WASHER	17, 21, 59, 515
282507	BRACKET LEFT	161, 163
282511	COVERING PLATE	307
282512	BRACKET	307
282513	BRACKET	307
282549	MOUNTING RAIL	679
282596	SUPPORT	693
282608	ANGLE	125
282625	EYELET	693
282635	GUIDE WHEEL	695
282682	BRACKET	63
282683	BRACKET	63
282766	LINK	117
282767	BRACKET	117
282802	PIPE	683
282893	SAFETY GUARD	99
283084	GUIDE SHAFT	575
283085	SLEEVE	575
283157	MAIN CAM	293
283160	COUNTER CAM	293
283172	BEARING HOUSING	691
283271	BRACKET	25
28334	CURVE ROLLER	309
283361	AIR NOZZLE	691
283774	BEARING	307
283775	SLIDE	307
283884	OIL TROUGH	225
283992	RULER	225
284124	HOLDER	383, 385
284138	CATCH	347, 359
284139	CATCH	347, 359
284232	FOLDING FLAP CAM L	325
284233	FOLDING FLAP CAM R	329
284234	COUNTER CAM	325

Part No	Description	Page No
284235	COUNTER CAM	329
284578	CUTTING JAW	369, 373
284581	RAIL	393, 399
284833	LID	389, 391, 393, 395, 397, 399
284840	NUT	171
284973	SHAFT	27, 31
284974	HUB	119
285027	CARRIER	429
285054	CURVE	429
285055	CURVE	429
285074	PLATE	563
28509	WASHER	365, 367
285132	SHAFT	453
285133	CANTILEVER	453
285141-0003	CLAMPING SLEEVE	501
285142-0002	SLEEVE	501
285142-0003	SLEEVE	501
285145-0002	INTERMEDIARY SECTION	501
285147	INTERMEDIARY SECTION	501
285157	LINK	515
285158	LINK	515
285162	LUBRICATING PIPE	515
285164	LUBRICATING PIPE	515
285168	BUSHING	555
285300	BRACKET	433
285310-0001	FLAP	527, 529, 537, 539
285310-0002	FLAP	529, 531, 533, 539, 541, 543
285316-0002	SPACER PIECE	529, 531, 533, 539, 541, 543
285321	ROLL	535, 545
285322	WASHER	535, 545
285330	HOLDER	411
285363	WASHER	483, 499
285380-0002	WEDGE	489, 491
285403	WASHER	417
285444	SPACER	525
285448	PROTECTIVE CASING	515
285449	ARM	513
285507-0002	AIR NOZZLE	437, 447
285508-0002	AIR NOZZLE	437, 447
285655	ARM	519, 521
285656	ARM	519, 521, 523
285657	ARM	519, 521, 523
285660	ARM	519, 523
285661	ARM	519, 523
285664	SHAFT	525
285676	AIR NOZZLE	437, 439, 447, 449
285677	AIR NOZZLE	437, 439, 447, 449
285712	RAIL	519, 521, 523
285723	ARM	519, 521, 523
285724-0002	RAIL	519
285729	BUSHING	525
285801	BEAM	225
285825	SHAFT	269
285851	BEARING	555
285891	SCREW	501
285892	CONNECTION	501
285923	SCREW	411
285956	HANDLE	199
285970	COMPRESSION SPRING	515
285979	PIPE	269
285994	NUT	411
28880	PLUNGER	371, 375
292037	SCREW	389, 391, 395, 397
292044	SHAFT	635
292313	BEAM	589
292314	BEAM	589
292315	BEAM	589
292367	PISTON	389, 391, 393, 395, 397, 399
292409	END SECTION	631, 633
292410	END SECTION	631, 633
292411	CARRIER	631, 633
292452	EXTENSION PIPE	179
292456	BEARING COVER	179
292464	FLANGE	179
292472	HOLDER	301
292477	SHAFT	301
292482	WASHER	301
292565	PROTECTION	121
293158	HATCH	225
293159	HATCH	225
293160	COVERING PLATE	227
293161	COVERING PLATE	227
293198-0002	BRACKET	165
293201	PIPE	237
293351	CRAMP	249
293352	CRAMP	249

Part No	Description	Page No
293395-0001	TYPE HOLDER	631, 633
293395-0002	TYPE HOLDER	631, 633
293395-0003	TYPE HOLDER	631, 633
293405	GASKET	75
293566	MOUNTINGS	187, 189
293598	GLASS PANE	187, 189
293606	SHIFTER HANDLE	385
293608	BEARING CONSOLE	385
293609	BEARING CONSOLE	385
293610	GEAR WHEEL	385
293611	SHAFT	385
293612	SCREW	385
293621-0001	BENDING ROLLER	619, 621, 623, 625, 627
293621-0002	BENDING ROLLER	623
293624-0001	PROTECTION PLATE	619, 621, 623, 625, 627
293624-0002	PROTECTION PLATE	621, 623
293645	BRACKET	627
293646-0001	WASHER	627
293646-0002	WASHER	627
293667	DOWEL	635
293669-0001	WASHER	635
293669-0002	WASHER	635
293669-0003	WASHER	635
293669-0004	WASHER	635
293670	SHAFT	635
293671	SPACER	631, 633
293674	DOWEL	627
293676	CARRIER	631, 633
293688	CARRIER	631, 633
293690	END SECTION	631, 633
293697	END SECTION	635
294009	KNIFE	645, 661
294042	SEALING WASHER	385
29411	SPACER PIPE	443
29413	LACE	443, 445
294464	* BASE PLATE	43, 689
294472	CANTILEVER	129
294474	ROLL	17
294475	ROLL	17
294476	ROLL	17
294477	ROLL	17
294480	ROLL	17
294493	HYDRAULIC PIPE	235
294494	HYDRAULIC PIPE	235
294495	HYDRAULIC PIPE	235
294496	HYDRAULIC PIPE	235
295391-0003	THROTTLE SCREW	303
295435	WASHER	411
295878	THROTTLE SCREW	63
295879	NUT	63
297054	WASHER	59
297142	BUSHING	117
297163	CARRIER	79
297195	SPACER	81, 83, 85
297211	INK WELL	635
297309	PIPE-LINE	43
297310	FLANGE	43
297311	COVER	43
297347	PIPE	123
297413	PIPE	423
297488	GLASS PANE	199
297496	LACE	513, 515
297499-0001	SIDE PIPE	437, 447
297499-0002	SIDE PIPE	437, 447
297499-0003	SIDE PIPE	437, 439, 447, 449
297499-0007	SIDE PIPE	439, 449
297499-0008	SIDE PIPE	437, 447
297499-0009	SIDE PIPE	437, 447
297551	SHEET	411
297567	TENSION SPRING	525
297569	SIDE PLATE	453
297574-0001	SPACER	453
297574-0002	SPACER	453
297576	BEAM	225
297608	BRACKET	421
297609	ARM	421
297610	SCREW	421
297611	SHAFT	421
297643	BRACKET	525
297644	SHAFT	519, 521, 523
297646	FLAP	529, 539
297650	BOTTOM	527, 537
297663	POST HOLDER	411
297664	POST HOLDER	411
297669	POST	225
297670	POST	225

Part No	Description	Page No
297679	PIPE	199
297751	SHAFT	487
297755	WEDGE	487
297770	SCREW	269
297794	SHEET	487
297795	SPRING	487
297800	PIPE	191
297802	BRACKET	191
297805	PIPE	191
297814	BRACKET	411
297860	BUSHING	411
297899	SPROCKET	463
297969	FASTENING PLATE	121
297970	CATCH LEVER	121
297998	ADJUSTMENT PLATE	381, 383, 385
297999	ADJUSTMENT PLATE	381
29876	COVER	113
29886	LACE	323
30,9NF		335, 337
30298	INSULATION	113
30310-0001	HEATING ELEMENT	443
30310-0002	HEATING ELEMENT	443
30310-0003	HEATING ELEMENT	443
30311-0001	HEATING ELEMENT	445
30311-0002	HEATING ELEMENT	445
311101-0274	CYLINDRICACP4H6X25	653
311102-0236	CYLINDRICACP M6 3X16	653
311102-0350	CYLINDRICACP M6 6X14	611, 613
311102-0353	CYLINDRICACP M6 6X20	607, 657
311103-0209	CYLINDRICACP M6 2,5X14RFR	43
311103-0212	CYLINDRICACP M6 2,5X20RFR	29, 33
311103-0232	CYLINDRICACP M6 3X8 RFR	691
311103-0233	CYLINDRICACP M6 3X10 RFR	29, 33, 59, 609
311103-0234	CYLINDRICACP M6 3X12 RFR	185
311103-0235	CYLINDRICACP M6 3X14 RFR	35, 37, 39
311103-0236	CYLINDRICACP M6 3X16 RFR	17, 21, 105, 635
311103-0238	CYLINDRICACP M6 3X20 RFR	125, 635
311103-0267	CYLINDRICACP M6 4X10 RFR	691
311103-0270	CYLINDRICACP M6 4X16 RFR	611, 613, 635
311103-0272	CYLINDRICACP M6 4X20 RFR	29, 33, 385, 659
311103-0273	CYLINDRICAM6 4X22 RFR	185, 629
311103-0274	CYLINDRICACP 4X25 RFR	43, 603, 605, 629
311103-0275	CYLINDRICACP M6 4X28 RFR	115
311103-0276	CYLINDRICACP M6 4X30 RFR	29, 33, 79, 385
311103-0278	CYLINDRICACP M6 4X35 RFR	115
311103-0306	CYLINDRICACP M6 5X12 RFR	515
311103-0310	CYLINDRICACP M6 5X20 RFR	75, 79, 115, 317, 321, 325, 329, 385, 629
311103-0314	CYLINDRICACP M6 5X30 RFR	227
311103-0316	CYLINDRICACP M6 5X35 RFR	711
311103-0350	CYLINDRICACP M6 6X14 RFR	617, 685
311103-0353	CYLINDRICACP M6 6X20 RFR	615, 629
311103-0355	CYLINDRICACP M6 6X25 RFR	615
311103-0357	CYLINDRICACP M6 6X30 RFR	79, 325, 329, 385, 629
311103-0361	CYLINDRICACP M6 6X40 RFR	131, 133
311103-0365	CYLINDRICACP M6 6X50 RFR	637
311103-0367	CYLINDRICACP M6 6X55 RFR	121
311103-0399	CYLINDRICACP M6 8X16 RFR	411, 427, 501, 563
311103-0401	CYLINDRICACP M6 8X20 RFR	79
311103-0403	CYLINDRICACP M6 8X25 RFR	267
311103-0407	CYLINDRICACP M6 8X35 RFR	509, 511
311103-0411	CYLINDRICACP M6 8X45 RFR	509, 511
311103-0413	CYLINDRICACP M6 8X50 RFR	51, 53, 227
311111-0212	SLOTTED TUFRP3X24	237
311111-0251	SLOTTED TUFRP4X10	663, 665, 667
311111-0305	SLOTTED TUFRP5X14	431
311111-0345	SLOTTED TUFRP6X32	663, 665, 667
311112-0192	SLOTTED TURP 2,5X24	327, 331
311112-0205	SLOTTED TURP 3X10 RFR	701
311112-0256	SLOTTED TURP 4X20 RFR	179, 659
311112-0258	SLOTTED TURP 4X24 RFR	659
311112-0341	SLOTTED TURP 6X24 RFR	417
311112-0350	SLOTTED TURP 6X55 RFR	603, 605
311202-0241	TAPER PIN KP4X25RFR	629
311202-0320	TAPER PIN KP8X35RFR	227
311211-0267	TAPER PIN GKP5X5X30	227
311211-0292	TAPER PIN GKP6X6X30	271, 647
311211-0299	TAPER PIN GKP6X6X55	125
311303-0271	SLOTTED PIRPB4X18FZB	663, 665, 667
311303-0310	SLOTTED PIRPB5X20FZB	157
311303-0356	SLOTTED PIRPB6X30FZB	299
311305-0308	SLOTTED PIRPC5X16FZB	675, 681, 687, 691
311411-0127	SPLIT PIN SP1,2X12RFR	487
311411-0140	SPLIT PIN SP1,6X16RFR	43
311411-0169	SPLIT PIN SP2,5X25RFR	179
311508-0416	RIVET KN4X10ALUM.	369, 373
311520-0329	BLANK RIVE2,4X8	245

Part No	Description	Page No
311520-0420	BLANK RIVE3,2X4	161, 267
311521-0143	BLANK RIVE2X8,0 RFR	663, 665, 667
311521-0144	BLANK RIVE2X10,0 RFR	589, 593
312101-0287	SCREW M6S4X8FZB	221, 427, 631, 633
312101-0289	SCREW M6S4X10FZB	211, 647
312101-0291	SCREW M6S4X12FZB	647
312101-0295	SCREW M6S4X20FZB	165, 297, 299
312101-0323	SCREW M6S5X8FZB	225, 309, 607, 647
312101-0325	SCREW M6S5X10FZB	253, 301
312101-0327	SCREW M6S5X12FZB	249, 435
312101-0329	SCREW M6S5X16FZB	607, 631, 633, 647
312101-0331	SCREW M6S5X20FZB	235, 631, 633, 647
312101-0333	SCREW M6S5X25FZB	647
312101-0335	SCREW M6S5X30FZB	647
312101-0362	SCREW M6S6X8FZB	297, 517
312101-0364	SCREW	161, 163, 221, 249, 253, 291, 417, 631, 633
312101-0366	SCREW M6S6X12FZB	165, 221, 227, 271, 301, 309, 647
312101-0368	SCREW M6S6X16FZB	205, 211, 227, 297, 647
312101-0370	SCREW M6S6X20FZB	157, 417, 435, 593
312101-0372	SCREW M6S6X25FZB	249, 299, 301, 517
312101-0374	SCREW M6S6X30FZB	429
312101-0378	SCREW M6S6X40FZB	217
312101-0379	SCREW M6S6X45FZB	433, 435
312101-0380	SCREW M6S6X50FZB	253, 435
312101-0381	SCREW M6S6X55FZB	603, 605
312101-0383	SCREW M6S6X65FZB	307
312101-0384	SCREW M6S6X70FZB	417
312101-0447	SCREW M6S8X12FZB	253
312101-0449	SCREW M6S8X16FZB	161, 163, 221, 289
312101-0451	SCREW M6S8X20FZB	211, 215, 415, 417, 429, 435
312101-0453	SCREW M6S8X25FZB	157, 205, 213, 227, 299, 301, 415, 427, 429, 517
312101-0455	SCREW M6S8X30FZB	291, 501
312101-0457	SCREW M6S8X35FZB	415, 517
312101-0459	SCREW M6S8X40FZB	299, 517
312101-0461	SCREW M6S8X50FZB	215
312101-0463	SCREW M6S8X60FZB	205
312101-0465	SCREW M6S8X70FZB	297, 309
312101-0467	SCREW M6S8X80FZB	165
312101-0473	SCREW M6S8X110FZB	161, 163
312101-0491	SCREW M6S10X20FZB	589
312101-0493	SCREW M6S10X25FZB	99, 417, 647
312101-0495	SCREW M6S10X30FZB	205, 579, 581, 585
312101-0497	SCREW M6S10X35FZB	501
312101-0499	SCREW M6S10X40FZB	227, 289
312101-0500	SCREW M6S10X45FZB	579, 581
312101-0501	SCREW M6S10X50FZB	291
312101-0518	SCREW M6S10X140FZB	227
312101-0536	SCREW M6S12X30FZB	291
312101-0538	SCREW M6S12X35FZB	227
312101-0540	SCREW M6S12X40FZB	159, 213, 219, 291
312101-0546	SCREW M6S12X70FZB	299
312101-0678	SCREW M6S20X70 8.8FZB	663, 665, 667
312104-0374	SCREW M6S6X30H8.8 FZB	417
312104-0460	SCREW M6S8X45H8.8FZB	301
312104-0465	SCREW M6S8X70H8.8 FZB	291, 309
312104-0501	SCREW M6S10X50H8.8FZB	663, 665, 667
312105-0287	SCREW O4017 M4X8A280	113, 137, 323, 333, 335, 337, 471, 473, 475, 477, 563, 647, 681, 697
312105-0289	SCREW M6S4X10 A2 80	59
312105-0291	SCREW O4017 M4X12A280	43, 267, 385, 635, 691
312105-0293	SCREW O4017 M4X16A280	427, 615
312105-0295	SCREW O4017 M4X20A280	323, 327, 331, 365, 367, 385, 411, 557
312105-0299	STAINLESS STEEL	677
312105-0301	SCREW O4014 M4X35A280	677
312105-0323	SCREW O4017 M5X8A280	243, 265, 609
312105-0325	SCREW M6S5X10 A2 80	59, 75, 105, 115, 121, 223, 353, 359, 361, 363, 441, 451, 563, 615, 681, 691
312105-0327	SCREW ISO 4017 M5X12A280	59, 123, 131, 133, 187, 189, 225, 249, 267, 335, 337, 557, 611, 613, 635, 655, 697, 701
312105-0328	SCREW M6S5X14 A2 80	441, 451, 505
312105-0329	SCREW O4017 M5X16A280	79, 327, 331, 345, 349, 351, 355, 357, 405, 411, 615, 635, 647
312105-0331	SCREW O4017 M5X20A280	51, 53, 81, 83, 85, 345, 349, 351, 353, 363, 385, 607, 609, 655
312105-0332	SCREW M6S5X22RFR	75
312105-0333	SCREW O4017 M5X25A280	345, 357, 361, 363
312105-0335	SCREW O4017 M5X30A280	323, 335, 337, 359
312105-0337	SCREW O4014 M5X35A280	659
312105-0339	SCREW O4014 M5X40A280	243
312105-0340	SCREW O4014 M5X45A280	347, 353, 355, 359
312105-0343	SCREW M6S5X60 A2 80	335, 337
312105-0362	SCREW O4017 M6X8A280	25, 103, 185, 237, 245, 411, 453, 457, 459, 523
312105-0364	SCREW M6S6X10RFR	29, 33, 43, 59, 65, 67, 69, 75, 81, 83, 85, 103, 105, 115, 117, 121, 125, 135, 137, 175, 187, 189, 225, 243, 307, 405, 411, 423, 481, 493, 495, 557, 559, 681, 691
312105-0366	SCREW O4017 M6X12A280	17, 25, 41, 43, 63, 75, 79, 111, 113, 117, 119,

Part No	Description	Page No
		123, 125, 129, 159, 215, 233, 237, 245, 267, 307, 385, 455, 463, 467, 483, 497, 499, 505, 525, 557, 563, 569, 629, 657, 691, 693, 701
312105-0367	SCREW M6S6X14RFR	75, 115, 177, 411, 453, 501
312105-0368	SCREW O4017 M6X16A280	45, 47, 59, 63, 65, 67, 69, 75, 79, 115, 121, 131, 133, 171, 187, 189, 191, 199, 227, 233, 255, 265, 267, 269, 411, 425, 453, 455, 463, 467, 483, 497, 499, 501, 505, 517, 527, 529, 531, 533, 537, 539, 541, 543, 557, 561, 565, 569, 597, 611, 613, 615, 629, 655, 657, 681, 685, 691, 693, 701
312105-0370	SCREW O4017 M6X20A280	29, 33, 41, 59, 63, 65, 67, 69, 75, 105, 109, 113, 117, 121, 171, 177, 185, 187, 191, 233, 307, 327, 331, 365, 367, 381, 383, 385, 405, 411, 423, 425, 427, 463, 481, 483, 499, 501, 513, 515, 523, 553, 555, 563, 597, 611, 613, 629, 675, 683, 687, 689, 693, 697
312105-0371	SCREW M6S6X22RFR	75, 429, 505
312105-0372	SCREW O4017 M6X25A280	59, 63, 71, 79, 115, 129, 135, 179, 233, 247, 327, 331, 383, 389, 391, 393, 395, 397, 399, 437, 439, 447, 449, 457, 459, 463, 483, 501, 513, 515, 525, 533, 543, 559, 627, 655, 697, 711
312105-0374	SCREW O4017 M6X30A280	483
312105-0374	SCREW O4017 M6X30A280	43, 63, 119, 179, 183, 297, 307, 425, 437, 439, 441, 447, 449, 451, 469, 481, 483, 497, 525, 527, 529, 531, 537, 539, 541, 557
312105-0376	SCREW O4017 M6X35A280	29, 33, 61, 75, 121, 243, 307, 385, 411, 437, 447, 481, 525, 527, 529, 531, 533, 537, 539, 541, 543, 563, 569
312105-0378	SCREW O4017 M6X40A280	175, 185, 379, 481, 527, 529, 531, 533, 537, 539, 541, 543, 557, 569, 691, 707, 709
312105-0379	SCREW O4014 M6X45A280	.. 127, 307, 529, 531, 533, 539, 541, 543, 563
312105-0380	SCREW O4014 M6X50A280	29, 33, 43, 481, 497, 499
312105-0381	SCREW O4014 M6X55A280	255, 481
312105-0382	SCREW O4014 M6X60A280	103, 109, 179, 291
312105-0384	SCREW O4014 M6X70A280	99, 463
312105-0386	SCREW O4014 M6X80A280	569
312105-0388	SCREW O4014 M6X90A280	435, 441, 451
312105-0447	SCREW O4017 M8X12A280	63, 109, 113, 121, 125, 129, 135, 365, 367, 483, 497, 517, 689
312105-0449	SCREW O4017 M8X16A280	29, 33, 59, 99, 111, 125, 135, 227, 243, 297, 309, .. 381, 383, 385, 453, 463, 467, 517, 557, 565, 569, 693, 707, 709, 711
312105-0451	SCREW SO4017 8X20A280	17, 21, 29, 33, 43, 51, 53, 77, 81, 83, 85, 115, 119, 183, 187, 189, 199, 411, 421, 469, 501, 503, 505, 533, 543, 557, 565, 569, .. 615, 617, 619, 621, 623, 625, 627, 675, 677, 681, 687, 689, 691, 695
312105-0452	SCREW M6S8X22RFR	77, 113, 171, 385, 711
312105-0453	SCREW O4017 M8X25A280	21, 35, 37, 39, 43, 59, 99, 237, 307, 309, 333, 385, 411, 463, 483, 497, 501, 517, 525, 527, 529, 531, 537, 539, 541, 561, 569, 583, 675, 677
312105-0455	SCREW O4017 M8X30A280	43, 59, 405, 411, 417, 463, 469, 483, 497, 501, 531, 541, 557, 561, 611, 613, 681, 695
312105-0457	SCREW O4017 M8X35A280	113, 333, 365, 367, 463, 483, 527, 529, 531, 533, 537, 539, 541, 543, 629
312105-0459	SCREW O4017 M8X40A280	467, 529, 539
312105-0460	SCREW O4017 M8X45A280	469, 503, 505, 525
312105-0462	SCREW O4014 M8X55A280	17, 35, 37, 39, 469
312105-0463	SCREW O4014 M8X60A280	17, 483, 497
312105-0464	SCREW O4014 M8X65A280	21, 35, 37, 39, 557
312105-0466	SCREW O4014 M8X75A280	181, 333
312105-0467	SCREW O4014 M8X80A280	121
312105-0469	SCREW O4014 M8X90A280	453, 557
312105-0471	SCREW 4014 M8X100A280	453
312105-0489	SCREW 4017 M10X16A280	109, 691
312105-0491	SCREW 4017 M10X20A280	63, 99, 121, 137, 213
312105-0493	SCREW 4017 M10X25A280	43, 115, 213, 225, 227, 269, 381, 383, 385, 427, 579, 581
312105-0495	SCREW 4017 M10X30A280	269, 385, 411, 615
312105-0497	SCREW 4017 M10X35A280	29, 33, 63, 269, 335, 337
312105-0499	SCREW 4017 M10X40A280	385
312105-0509	SCREW 4014 M10X90A280	383
312105-0517	SCREW 014 M10X130A280	501
312105-0532	SCREW 4017 M12X20A280	125
312105-0534	SCREW 4017 M12X25A280	425
312105-0536	SCREW 4017 M12X30A280	43
312105-0538	SCREW 4017 M12X35A280	547
312105-0540	SCREW 4017 M12X40A280	17, 21, 35, 37, 39, 125, 227
312105-0542	SCREW 4014 M12X50A280	227, 411
312109-0374	SCREW M6S6X30HRFR	45, 629, 701
312109-0376	SCREW 6X35 H RFR	463, 483, 497
312109-0381	SCREW M6S6X55HA480	467, 691
312109-0457	SCREW 8X35 H A4 80	335, 337, 569
312109-0459	SCREW M6S8X40H A4 80	..... 333, 527, 529, 531, 533, 537, 539, 541, 543
312109-0461	SCREW M6S8X50H A4 80	569
312109-0463	SCREW M6S8X60H A4 80	297, 327, 331, 365, 367, 499
312111-0293	SCREW MC6S4X16FZB	517
312111-0297	SCREW MC6S4X25FZB	165
312111-0323	SCREW MC6S5X8FZB	639, 641
312111-0325	SCREW MC6S5X10FZB	647
312111-0327	SCREW MC6S5X12FZB	647
312111-0329	SCREW MC6S5X16FZB	211, 419, 647
312111-0331	SCREW MC6S5X20FZB	607
312111-0333	SCREW MC6S5X25FZB	207, 607, 629
312111-0335	SCREW MC6S5X30FZB	299, 629, 631, 633
312111-0343	SCREW MC6S5X60FZB	207

Part No	Description	Page No
312111-0345	SCREW MC6S5X70FZB	209
312111-0364	SCREW MC6S6X10FZB	227, 629
312111-0368	SCREW MC6S6X16FZB	207, 299, 507
312111-0370	SCREW MC6S6X20FZB	417, 419, 431
312111-0371	SCREW MC6S6X22FZB	607
312111-0372	SCREW MC6S6X25FZB	643, 647
312111-0374	SCREW MC6S6X30FZB	295
312111-0449	SCREW MC6S8X16FZB	607
312111-0451	SCREW MC6S8X20FZB	291, 431, 509, 511
312111-0453	SCREW MC6S8X25FZB	431, 509, 511
312111-0455	SCREW MC6S8X30FZB	309
312111-0457	SCREW MC6S8X35FZB	509, 511
312111-0459	SCREW MC6S8X40FZB	155
312111-0467	SCREW MC6S8X80FZB	617
312111-0491	SCREW MC6S10X20FZB	431
312111-0492	SCREW MC6S10X22FZB	295
312111-0497	SCREW MC6S10X35FZB	295
312111-0499	SCREW MC6S10X40FZB	295
312111-0501	SCREW MC6S10X50FZB	295
312111-0504	SCREW MC6S10X65 8.8FZB	295
312111-0506	SCREW MC6S10X75FZB	295
312115-0224	SCREW S 3X10 A4 80	65, 67, 69
312115-0228	SCREW O4762 M3X16A280	81, 83, 85, 697
312115-0232	SCREW 3X25 A4 80	119
312115-0287	SCREW O4762 M4X8A280	245, 635
312115-0289	SCREW S4X10 A4 80	333
312115-0291	SCREW O4762 M4X12A280	91, 417
312115-0295	SCREW O4762 M4X20A280	119, 389, 391, 393, 395, 397, 399, 417
312115-0297	SCREW O4762 M4X25A280	389, 391, 393, 395, 397, 399, 403
312115-0303	SCREW O4762 M4X40A280	335, 337
312115-0305	SCREW O4762 M4X50A280	81, 83, 85
312115-0323	SCREW O4762 M5X8A280	557, 559, 653
312115-0325	SCREW 5X10 A4 80	121, 187, 189, 267, 273, 559
312115-0328	SCREW 5X14 A4 80	119
312115-0329	SCREW O4762 M5X16A280	77, 81, 83, 85, 105, 187, 189, 323, 659
312115-0331	SCREW O4762 M5X20A280	109, 111, 355, 359, 361, 363, 365, 367, 369, 373, 375
312115-0332	SCREW 5X22 A4 80	121
312115-0333	SCREW O4762 M5X25A280	237
312115-0339	SCREW O4762 M5X40A280	659
312115-0340	SCREW O4762 M5X45A280	357, 359, 361, 363, 647
312115-0362	SCREW O4762 M6X8A280	237
312115-0364	SCREW 6X10 A4 80	65, 67, 69, 139, 179
312115-0366	SCREW O4762 M6X12A280	19, 21, 187, 189, 317, 321, 365, 367, 497, 597, 685, 705, 711
312115-0368	SCREW O4762 M6X16A280	225, 317, 321, 453, 569, 637, 691, 695
312115-0370	SCREW O4762 M6X20A280	179, 389, 391, 393, 395, 397, 399, 403, 463, 617, 629, 659
312115-0372	SCREW O4762 M6X25A280	231, 389, 391, 393, 395, 397, 399, 499, 629, 679
312115-0374	SCREW O4762 M6X30A280	369, 373, 393, 399, 401, 463, 483, 497, 499
312115-0376	SCREW O4762 M6X35A280	307, 629
312115-0378	SCREW O4762 M6X40A280	227
312115-0380	SCREW O4762 M6X50A280	483
312115-0382	SCREW O4762 M6X60A280	127
312115-0449	SCREW O4762 M8X16A280	317, 321
312115-0451	SCREW O4762 M8X20A280	137, 227, 509, 511, 657
312115-0453	SCREW O4762 M8X25A280	297, 509, 511, 579, 581
312115-0455	SCREW O4762 M8X30A280	47, 187, 189, 333, 335, 337, 557
312115-0459	SCREW O4762 M8X40A280	95, 97
312115-0461	SCREW O4762 M8X50A280	327, 331, 371, 375
312115-0467	SCREW O4762 M8X80A280	121
312115-0495	SCREW 4762 M10X30A280	615
312115-0501	SCREW 4762 M10X50A280	227
312115-0503	SCREW 4762 M10X60A280	227
312121-0228	SLOTTED HEMCS3X16FZB	639, 641, 647
312121-0230	SLOTTED HEMCS3X20FZB	221, 647
312121-0285	SLOTTED HEMCS4X6FZB	165, 295, 297, 299
312121-0287	SLOTTED HEMCS4X8FZB	219, 249, 253, 309
312121-0291	SLOTTED HEMCS4X12FZB	215
312121-0293	SLOTTED HEMCS4X16FZB	221
312121-0321	SLOTTED HEMCS5X6FZB	217, 647
312121-0323	SLOTTED HEMCS5X8FZB	245
312121-0364	SLOTTED HEMCS6X10FZB	643
312125-0220	SLOTTED HEMCS3X6RFR	43, 77, 215, 243, 249, 265, 275, 487, 489, 491, 689
312125-0222	SLOTTED HEMCS3X8RFR	187, 611, 613
312125-0224	SLOTTED HEMCS3X10RFR	237
312125-0228	SLOTTED HEMCS3X16RFR	417, 499, 639, 641, 657, 711
312125-0230	SLOTTED HEMCS3X20RFR	117, 121, 463, 483, 505, 557
312125-0232	SLOTTED HEMCS3X25RFR	323
312125-0234	SLOTTED HEMCS3X30RFR	639, 641
312125-0285	SLOTTED HEMCS4X6RFR	45, 71, 77, 109, 177, 269, 323, 327, 331, 389, 391, 393, 395, 397, 399, 405, 569, 629, 691, 711
312125-0287	SLOTTED HEMCS4X8RFR	225, 317, 321, 371, 375, 385, 411, 417, 455, 459, 467, 483, 497, 557, 691, 701, 705, 707, 709, 711
312125-0289	SLOTTED HEMCS4X10RFR	569, 681
312125-0291	SLOTTED HEMCS4X12RFR	119, 275, 411, 525, 557, 689

Part No	Description	Page No
312125-0295	SLOTTED HEMCS4X20RFR	43
312125-0323	SLOTTED HEMCS5X8RFR	89, 91, 93, 113, 235, 249, 411, 615, 639, 641, 695
312125-0327	SLOTTED HEMCS5X12RFR	59, 73
312125-0329	SLOTTED HEMCS5X16RFR	611, 613, 693
312125-0331	SLOTTED HEMCS5X20RFR	113
312125-0333	SLOTTED HEMCS5X25RFR	675
312125-0364	SLOTTED HEMCS6X10RFR	113
312125-0370	SLOTTED HEMCS6X20RFR	185
312125-0376	SLOTTED HEMCS6X35RFR	231
312125-0378	SLOTTED HEMCS6X40RFR	107
312125-0447	SLOTTED HEMCS8X12RFR	681
312132-0323	SLOTTED HEMSCS5X8MSGFN	647
312141-0295	SLOTTED HEMFS4X20FZB	309
312141-0325	SLOTTED HEMFS5X10FZB	253
312141-0366	SLOTTED HEMFS6X12FZB	653
312145-0222	SLOTTED HEMFS3X8RFR	339, 341
312145-0228	SLOTTED HEMFS3X16RFR	43
312145-0238	SLOTTED HEMFS3X40RFR	371, 375, 403, 689
312145-0285	SLOTTED HEMFS4X6RFR	267, 333, 335, 337, 653
312145-0287	SLOTTED HEMFS4X8RFR	657
312145-0289	SLOTTED HEMFS4X10RFR	339, 341, 343, 351, 359, 645, 659
312145-0291	SLOTTED HEMFS4X12RFR	659
312145-0297	SLOTTED HEMFS4X25RFR	333
312145-0305	SLOTTED HEMFS4X50RFR	323
312145-0323	SLOTTED HEMFS5X8RFR	611, 613, 653
312145-0325	SLOTTED HEMFS5X10RFR	267, 347
312145-0327	SLOTTED HEMFS5X12RFR	267, 645, 659
312145-0329	SLOTTED HEMFS5X16RFR	645, 659
312145-0331	SLOTTED HEMFS5X20RFR	659
312145-0335	SLOTTED HEMFS5X30RFR	645
312145-0364	SLOTTED HEMFS6X10RFR	679
312145-0366	SLOTTED HEMFS6X12RFR	215, 381, 383, 385
312145-0378	SLOTTED HEMFS6X40RFR	421
312145-0449	SLOTTED HEMFS8X16RFR	171
312151-0366	SCREW MF6S6X12FZB	227
312151-0368	SCREW MF6S6X16FZB	645
312151-0384	SCREW MF6S6X70FZB	645
312151-0451	SCREW MF6S8X20FZB	431, 663, 665, 667
312151-0455	SCREW MF6S8X30FZB	663, 665, 667
312155-0289	SCREW MF6S4X10RFR	301
312155-0291	SCREW MF6S4X12RFR	563
312155-0295	SCREW MF6S4X20RFR	457, 459, 569
312155-0297	SCREW MF6S4X25RFR	557, 563
312155-0301	SCREW MF6S4X35RFR	335, 337
312155-0327	SCREW	227, 611, 613, 615
312155-0329	SCREW MF6S5X16RFR	25, 115, 125, 345, 629, 639, 641
312155-0333	SCREW MF6S5X25RFR	629
312155-0364	SCREW MF6S6X10RFR	65, 67, 69, 533, 543
312155-0366	SCREW MF6S6X12RFR	185, 227, 411, 463, 483, 497
312155-0368	SCREW MF6S6X16RFR	115, 125, 227, 527, 529, 531, 537, 539, 541, 617
312155-0370	SCREW MF6S6X20RFR	65, 67, 69, 213, 227, 453, 597
312155-0372	SCREW MF6S6X25RFR	215, 465
312155-0374	SCREW MF6S6X30RFR	317, 321
312155-0376	SCREW MF6X35RFR	463, 483, 499, 527, 537
312155-0378	SCREW MF6S6X40RFR	529, 539
312155-0382	SCREW MF6S6X60 A2 70	327, 331
312155-0449	SCREW MF6S8X16RFR	111, 645
312155-0451	SCREW MF6S8X20RFR	227, 615
312155-0453	SCREW MF6S8X25RFR	609
312155-0499	SCREW MF6S10X40RFR	535, 545
312155-0532	SCREW MF6S12X20RFR	81, 83, 85
312180-0447	REAMED BOL	211
312180-0489	REAMED BOL	299, 309
312180-0493	REAMED BOL	79
312180-0499	REAMED BOL	323
312180-0530	REAMED BOL	121, 415
312303-0374	STUD SCREWMPS 6X25 RFR	617
312303-0497	STUD SCREWMPS 10X25 RFR	63
312306-0287	STOP SCREW P6SS4X8FZB	645
312306-0360	STOP SCREW P6SS6X6FZB	653
312306-0366	STOP SCREW P6SS6X12FZB	649, 651
312311-0292	STOP SCREW T6SS4X14FZB	689
312311-0370	STOP SCREW T6SS6X20FZB	433
312316-0283	STOP SCREW SK6SS4X4FZB	309, 435, 685
312316-0285	STOP SCREW SK6SS4X6FZB	607
312316-0287	STOP SCREW SK6SS4X8FZB	517
312316-0291	STOP SCREW SK6SS4X12FZB	685
312316-0320	STOP SCREW SK6SS5X5FZB	121, 509, 511
312316-0323	STOP SCREW SK6SS5X8FZB	509, 511, 657
312316-0327	STOP SCREW SK6SS5X12FZB	299
312316-0360	STOP SCREW SK6SS6X6FZB	639, 641
312316-0362	STOP SCREW SK6SS6X8FZB	501, 517, 657
312316-0372	STOP SCREW SK6SS6X25FZB	517
312318-0283	STOP SCREW SK6SS4X4RFR	19, 21, 697, 707, 709
312318-0285	STOP SCREW SK6SS4X6RFR	19, 21, 341, 343, 685, 693
312318-0289	STOP SCREW SK6SS4X10RFR	385, 687

Part No	Description	Page No
312318-0291	STOP SCREW SK6SS4X12RFR	19, 21
312318-0321	STOP SCREW SK6SS5X6RFR	369, 373, 645
312318-0323	STOP SCREW SK6SS5X8RFR	405, 619, 621, 623, 625, 627
312318-0325	STOP SCREW SK6SS5X10RFR	79
312318-0327	STOP SCREW SK6SS5X12RFR	115
312318-0360	STOP SCREW SK6SS6X6RFR	301
312318-0362	STOP SCREW SK6SS6X8RFR	59, 119, 269, 499, 615, 629
312318-0364	STOP SCREW SK6SS6X10RFR	157, 675, 687
312318-0366	STOP SCREW SK6SS6X12RFR	497
312318-0368	STOP SCREW SK6SS6X16RFR	119, 563, 637
312318-0370	STOP SCREW SK6SS6X20RFR	317, 321, 525
312318-0443	STOP SCREW SK6SS8X8RFR	499, 525
312318-0449	STOP SCREW SK6SS8X16RFR	525
312318-0459	STOP SCREW SK6SS 8X40RFR	327, 331, 533, 543
312318-0499	STOP SCREW SK6SS10X40RFR	327, 331
312502-0120	DRIVE SCREKDS0X5FNB	125, 237, 241, 681
312502-0171	DRIVE SCREKDS2X6FNB	207
312503-0275	DRIVE SCRERXKB6X6,5FZB	299
312601-0312	NUT M6M4FZB	213, 645
312601-0314	NUT M6M5FZB	209, 245, 645
312601-0316	NUT M6M6FZB	205, 213, 221, 299, 301, 435, 517, 579, 581, 607, 643, 645
312601-0318	NUT M6M8FZB	157, 161, 163, 165, 205, 213, 301, 415, 435, 663, 665, 667
312601-0320	NUT M6M10FZB	227, 291, 579, 581, 585, 663, 665, 667
312601-0322	NUT M6M12FZB	213, 287, 291, 299, 517
312601-0324	NUT M6M16FZB	309
312605-0310	NUT M6M3RFR	43, 117, 121, 187, 189, 265, 609, 639, 641, 689
312605-0312	NUT M6M4 STAINLESS	19, 21, 29, 33, 45, 71, 77, 177, 187, 189, 267, 323, 365, 367, 411, 637, 639, 641, 677, 685
312605-0314	NUT M6M5RFR	45, 51, 53, 59, 79, 111, 187, 189, 227, 237, 273, 319, 411, 611, 613, 615, 629, 635, 689
312605-0316	NUT M6M6 A280 STAINLESS	19, 21, 29, 33, 41, 59, 63, 71, 77, 99, 105, 107, 109, 113, 119, 121, 175, 179, 183, 185, 187, 189, 191, 199, 215, 227, 233, 241, 247, 255, 269, 411, 443, 445, 453, 463, 465, 467, 469, 483, 497, 525, 557, 563, 565, 569, 609, 629, 645, 691, 693, 695, 701, 707, 709
312605-0318	NUT M6M8RFR	21, 47, 59, 79, 117, 125, 155, 171, 181, 185, 297, 307, 309, 317, 321, 327, 331, 333, 335, 337, 365, 367, 385, 421, 453, 479, 499, 517, 519, 521, 523, 527, 529, 531, 533, 537, 539, 541, 543, 557, 569, 579, 581, 611, 613, 635, 677, 689, 691, 693, 695, 701, 711
312605-0320	NUT M6M10RFR	43, 59, 63, 117, 121, 179, 213, 227, 335, 337, 453, 483, 499, 579, 581, 691, 703
312605-0322	NUT M6M12RFR	47, 269, 411, 421, 463, 483, 497, 569
312605-0324	NUT M6M16RFR	563
312621-0318	NUT ML6M8FZB	309
312621-0324	NUT ML6M16FZB	309
312625-0316	NUT M 6	499
312625-0318	NUT M 8	569
312631-0321	NUT TER M6M 10X1,25	457, 459
312631-0324	NUT M6M16X1,5FZB	433
312635-0320	NUT 10X1 RFR	327, 331, 333
312705-0316	CAP NUT MHM 6 A2	137, 597, 629
312715-0114	WING NUT MVM-K 5 A2	215
312805-0100	ROUND NUT KM0	327, 331
312805-0101	ROUND NUT KM1	327, 331
312805-0107	ROUND NUT KM7	507
312805-0108	ROUND NUT KM8	509, 511
312805-0110	ROUND NUT KM10	431
312805-0114	ROUND NUT KM14	509, 511
312810-0310	LOCK NUT 3FZB	187
312810-0320	LOCK NUT 10FZB	501
312810-0322	LOCK NUT 12FZB	299
312810-0324	LOCK NUT 16FZB	299
312811-0316	LOCK NUT M6RFR	105, 307, 645
312811-0318	LOCK NUT M8RFR	323, 327, 331, 609
312811-0322	LOCK NUT M12RFR	309
312811-0324	LOCK NUT M16RFR	297
312812-0314	LOCK NUT A2-M5RFR	115, 125, 345, 349, 351, 359, 629, 653
312812-0316	LOCK NUT A2-M6RFR	103, 105, 109, 185, 213, 405, 463, 563, 603, 605, 611, 613
312812-0318	LOCK NUT A2-M8RFR	405, 499
312812-0320	LOCK NUT A2-M10RFR	291
312821-0102	HEXAGON WETSMUTTER M4 RFR	221
312902-0318	NUT M6M8VRFR	307, 309
312910-0126	THREADED I M8X1,5D	507
31417	LINK	695
31418	SHAFT	695
31419	SHAFT	695
31420	WASHER	695
31423	MOUNTING LUG	695
31424	ROLLER BRACKET	695
315101-0124	WASHER BRB3,2X6FZB	221
315101-0136	WASHER BRB4,3X8FZB	211, 215, 221, 253, 631, 633, 639, 641, 645
315101-0146	WASHER BRB5,3X10FZB	211, 253, 435, 607, 631, 633, 645
315101-0153	WASHER BRB6,4X12FZB	157, 159, 165, 211, 213, 217, 221, 249, 253, 271, 299, 309, 417, 433, 435, 457, 459, 517, 579, 581, 593, 603, 605, 607, 645
315101-0165	WASHER BRB8,4X16FZB	157, 165, 213, 215, 221, 291, 297, 301, 415, 417, 427, 429, 435, 501, 509, 511, 517, 607, 663, 665, 667

Part No	Description	Page No
315101-0173	WASHER BRB10,5X22FZB	227, 289, 291, 417, 579, 581, 645
315101-0178	WASHER BRB13X24FZB	159, 213, 219, 291, 299, 517
315101-0186	WASHER BRB17X30FZB	299
315102-0192	WASHER BRFB21X36FZB	593
315103-0195	WASHER BRB23X40MSGFN	269
315105-0124	WASHER BRB3,2X6RFR	81, 83, 85, 117, 121, 187, 189, 215, 249, 417, 463, 483, 487, 499, 505, 557, 609, 611, 613, 639, 641, 697, 711
315105-0136	WASHER BRB4,3X8RFR	45, 61, 71, 77, 81, 83, 85, 119, 137, 177, 187, 189, 267, 323, 333, 335, 337, 365, 367, 385, 411, 417, 427, 471, 473, 475, 477, 557, 615, 637, 645, 677, 681, 691, 697, 705, 711
315105-0146	WASHER BRB5,3X10RFR	19, 21, 45, 59, 77, 81, 83, 85, 113, 115, 119, 121, 123, 125, 131, 133, 187, 189, 215, 243, 267, 335, 337, 345, 347, 349, 351, 353, 355, 357, 359, 361, 363, 405, 411, 505, 557, 559, 563, 609, 611, 613, 615, 629, 635, 639, 641, 645, 655, 659, 681, 685, 691, 697, 701, 711
315105-0153	WASHER BRB6,4X12RFR	483
315105-0153	WASHER BRB6,4X12RFR	25, 29, 33, 41, 43, 45, 59, 63, 65, 67, 69, 71, 77, 103, 109, 115, 119, 121, 123, 129, 135, 137, 171, 177, 179, 185, 187, 189, 191, 199, 215, 227, 231, 233, 237, 243, 245, 255, 265, 267, 269, 297, 301, 307, 327, 331, 365, 367, 379, 385, 405, 411, 423, 425, 441, 443, 445, 451, 453, 463, 465, 467, 469, 481, 483, 493, 495, 497, 501, 503, 505, 517, 519, 521, 523, 527, 529, 531, 533, 537, 539, 541, 543, 549, 551, 553, 555, 559, 563, 565, 569, 597, 611, 613, 615, 617, 619, 621, 623, 625, 627, 637, 645, 655, 657, 659, 675, 683, 685, 687, 689, 691, 693, 695, 697, 701, 707, 709, 711
315105-0156	WASHER BRB6,7X14RFR	99, 301
315105-0165	WASHER BRB8,4X16RFR	19, 21, 29, 33, 43, 59, 63, 77, 79, 99, 115, 119, 125, 129, 135, 137, 171, 187, 189, 199, 227, 237, 307, 309, 317, 321, 327, 331, 333, 335, 337, 365, 367, 385, 405, 413, 421, 427, 453, 463, 467, 469, 485, 497, 499, 501, 505, 509, 511, 517, 525, 527, 529, 531, 533, 537, 539, 541, 543, 547, 557, 563, 565, 569, 579, 581, 615, 617, 619, 621, 623, 625, 627, 635, 657, 675, 677, 681, 689, 691, 693, 695, 701, 705, 707, 709, 711
315105-0173	WASHER BRB10,5X22RFR	29, 33, 43, 59, 63, 79, 117, 137, 179, 213, 225, 269, 335, 337, 385, 413, 427, 453, 485, 499, 535, 545, 547, 579, 581, 583, 609, 615, 629, 655, 691, 695, 703
315105-0176	WASHER BRB12X22RFR	385
315105-0178	WASHER BRB13X24RFR	19, 21, 35, 37, 39, 43, 413, 425, 547
315105-0186	WASHER BRB17X30RFR	563
315105-0192	WASHER BRB21X36RFR	47
315111-0153	WASHER TBRB6,4X12FZB	435, 631, 633
315111-0165	WASHER TBRB8,4X16FZB	205, 211, 415, 517, 681
315111-0178	WASHER TBRB13X24FZB	227
315111-0179	WASHER	209
315115-0153	WASHER TBRB6,4X12RFR	115, 413, 425, 427, 429, 441, 443, 445, 451, 455, 463, 485, 497, 499, 501, 525, 529, 531, 533, 539, 541, 543, 551, 557, 559, 561, 565, 569, 629, 655, 711
315115-0165	WASHER TBRB8,4X16RFR	19, 21, 35, 37, 39, 183, 187, 333, 413, 463, 467, 469, 485, 497, 501, 517, 525, 527, 529, 531, 533, 537, 539, 541, 543, 557, 569, 679
315115-0171	WASHER TBRB10X18RFR	317, 321
315115-0173	WASHER B 10,5X22 RFR	323, 499, 501
315115-0178	WASHER TBRB13X24RFR	125, 227, 413
315121-0153	WASHER TBRSB6,4X22FZB	117, 215, 227, 629, 693
315121-0165	WASHER TBRSB8,4X26FZB	121, 297, 309, 415, 681, 691
315125-0153	WASHER SB 6,4X22X4 RFR	177, 467
315125-0165	WASHER SB 8,4X26X5 RFR	243
315202-0101	O-RING 3,1X1,6	389, 391, 393, 395, 397, 399, 403
315202-0102	O-RING 4,1X1,6	403
315202-0104	O-RING 6,1X1,6	389, 391, 393, 395, 397, 399, 403
315202-0106	O-RING 8,1X1,6	425
315202-0111	O-RING 13,1X1,6	369, 371, 373, 375, 401, 403
315202-0114	O-RING 16,1X1,6	317, 321, 403
315202-0119	O-RING 25,1X1,6	63
315202-0203	O-RING 4,3X2,4	389, 391, 393, 395, 397, 399
315202-0206	O-RING 7,3X2,4	161, 163, 401
315202-0207	O-RING 8,3X2,4	369, 371, 373, 375, 401, 403
315202-0208	O-RING 9,3X2,4	317, 321, 403
315202-0211	O-RING 13,3X2,4	193, 195, 197, 201, 203
315202-0212	O-RING 14,3X2,4	371, 375, 401, 403
315202-0214	O-RING 17,3X2,4	425
315202-0216	O-RING 22,2X3	199, 269
315202-0217	O-RING 24,2X3	517
315202-0218	O-RING 26,2X3	635
315202-0220	O-RING 32,2X3	425
315202-0224	O-RING 42,2X3	575, 631, 633
315202-0226	O-RING 44,2X5,7	425
315202-0229	O-RING 59,2X5,7	413
315202-0244	O-RING 134,3X5,7	71
315202-0265	O-RING 12,3X2,4	379
315202-0301	O-RING 49,5X3	143, 423, 631, 633
315202-0302	O-RING 54,5X3	425
315202-0303	O-RING 59,5X3	425
315202-0304	O-RING 64,5X3	93, 143, 631, 633
315202-0305	O-RING 69,5X3	631, 633
315202-0308	O-RING 84,5X3	89, 91, 143
315202-0309	O-RING 89,5X3	429, 635
315202-0311	O-RING 99,5X3	501

Part No	Description	Page No
315202-0316	O-RING 124,5X3	509, 511
315202-0317	O-RING 129,5X3	73
315202-0500	* O-RING ,42X1,53	223
315202-0501	* O-RING 2,90X1,78	223
315202-0612	* O-RING 75,80X3,53	205
315202-0702	O-RING 12,42X1,78	403
315204-0103	O-RING 5,1X1,6VITON	185
315204-0109	O-RING 11,1X1,6VITON	115
315204-0110	O-RING 1X1,6 VITON	65, 67, 69
315204-0111	O-RING 1X1,6 VITON	105
315204-0116	O-RING 18,1X1,6VITON	405
315204-0208	O-RING 9,3X2,4VITON	131, 133
315204-0209	O-RING 3X2,4 VITON	125
315204-0213	O-RING 15,3X2,4VITON	71
315204-0215	O-RING 19,2X3VITON	89, 91, 93, 143
315204-0217	O-RING 24,2X3VITON	49, 141
315204-0221	O-RING 34,2X3VITON	115
315204-0222	O-RING 36,2X3VITON	63, 65, 67, 69, 103
315204-0223	O-RING 39,2X3 MM VITON	63
315204-0301	O-RING 49,5X3VITON	93
315204-0302	O-RING 54,5X3VITON	63, 65, 67, 69
315204-0304	O-RING 64,5X3 VITON	63
315204-0324	O-RING ,3X5,7 VITON	127
315211-0103	SEALING WA	183
315220-0121	SEAL RING V-14S	629
315220-0175	SEAL RING V-35S	499, 517
315220-0198	SEAL RING V-50S	289
315221-0171	SEAL RING CB30X62X7	507, 509, 511
315221-0197	SEAL RING CB48X72X8	289
315221-0200	SEAL RING CB50X72X8	429
315221-0221	SEAL RING CB70X90X10	295
315226-0196	SEAL RING RB48X65X4,5	387
315226-0200	SEAL RING RB50X70X5,5	429
315230-0157	SEAL RING G12X16X3	317, 321
315233-0101	SEAL RING M5	89, 91, 93
315233-0109	SEAL RING R1/8"	131, 133, 217, 435, 501
315233-0110	SEAL RING R1/4"	103, 153, 217, 237, 249, 257, 259, 261, 263, 379, 435, 457, 459, 501
315233-0111	SEAL RING R3/8"	165, 237
315233-0113	SEAL RING R1/2"	23, 63, 153, 237, 243, 249, 255, 257, 259, 261, 263
315234-0109	SEAL RING R1/8"	441, 451
315234-0110	SEAL RING R1/4"	109, 371, 375, 419, 663, 665, 667
315234-0113	SEAL RING R1/2"	247, 249, 419
315237-0109	SEAL RING 1/8"	43
315250-0101	GASKET 32/25	63, 135
315250-0103	GASKET 48/38	103, 135, 191, 413
315259-0103	FELT SEAL SKFFI260	323
315401-0153	WASHER FBH6,1FZB	295
315401-0173	WASHER FBH10,2FZB	295
315401-0178	WASHER FBH12,2FZB	287
315402-0136	WASHER FBB4,1RFR	91
315402-0173	WASHER FBB10,2RFR	227, 431
315410-0100	LOCK WASHESKFMB0	327, 331
315410-0101	LOCK WASHESKFMB1	327, 331
315410-0107	LOCK WASHESKFMB7	507
315410-0108	LOCK WASHESKFMB8	509, 511
315410-0110	LOCK WASHESKFMB10	431
315410-0114	LOCK WASHESKFMB14	509, 511
31553-0002	WASHER	501, 547
315701-0134	FLAT WEDGE3X3X10	435
315701-0169	FLAT WEDGE4X4X18	607
315701-0201	FLAT WEDGE5X5X20	629
315701-0202	FLAT WEDGE5X5X22	419
315701-0234	FLAT WEDGE6X6X25	419
315701-0262	FLAT WEDGE8X7X18	301
315701-0263	FLAT WEDGE8X7X20	301
315701-0268	FLAT WEDGE8X7X32	507
315701-0270	FLAT WEDGE8X7X40	297, 419, 501, 507
315701-0272	FLAT WEDGE8X7X50	419
315701-0274	FLAT WEDGE8X7X60	501
315701-0296	FLAT WEDGE10X8X25	431
315701-0299	FLAT WEDGE10X8X32	507
315701-0307	FLAT WEDGE10X8X70	291
315701-0330	FLAT WEDGE12X8X32	227
315701-0336	FLAT WEDGE12X8X63	229
315701-0338	FLAT WEDGE12X8X70	509, 511
315701-0363	FLAT WEDGE14X9X40	431
315701-0802	FLAT WEDGE10X8X36	507
315705-0196	FLAT WEDGE	179
315705-0266	FLAT WEDGE	499
315705-0298	FLAT WEDGE	497
315742-0114	RETAINING 18SMS199RFR	485, 499
315742-0119	RETAINING 25SMS199RFR	499, 525
315750-0105	CIRCLIP SGA8	635, 693
315750-0107	CIRCLIP SGA10	327, 331, 689
315750-0109	CIRCLIP SGA12	607

Part No	Description	Page No
315750-0112	CIRCLIP SGA15	607
315750-0119	CIRCLIP SGA25	301, 663, 665, 667
315750-0122	CIRCLIP SGA30	419
315750-0127	CIRCLIP SGA40	419
315750-0131	CIRCLIP SGA50	429, 663, 665, 667
315751-0103	CIRCLIP SGA 6 RFR	637
315751-0109	CIRCLIP SGA12 RFR	707, 709
315751-0112	CIRCLIP SGA15 RFR	703
315752-0123	CIRCLIP SGH32	629
315752-0136	CIRCLIP SGH62	323, 419
315752-0149	CIRCLIP SGH110	509, 511
315754-0107	LOCKING WAE 5	695
315754-0110	LOCKING WAE 9	695
315754-0113	LOCKING WAE 15	89, 91, 93
315755-0105	LOCKING WAE 3,2 RFR	705
315755-0107	LOCKING WAE 5RFR	469
315755-0108	LOCKING WAE 6RFR	653
315755-0109	LOCKING WAE 7 STAINLESS	307
315755-0111	LOCKING WAE 10 RFR	609
315755-0113	LOCKING WAE 15 RFR	453
315755-0801	LOCKING WAE 8RFR	629
31653-0001	SHEET	443
31653-0002	SHEET	445
316810-0106	PIPE CLAMP 8MM RFR	389, 391, 393, 395, 397, 399, 411, 455, 459, 557, 645
318201-0076	ROLLER CHA3/8"	435
318207-0168	ROLLER CHA6MM	629
318212-0006	ROLLER CHA1/2" RFR	471, 473, 475, 477
318212-0008	ROLLER CHA1/2 RFR	471, 473, 475, 477
318212-0066	ROLLER CHA	569
318212-0119	ROLLER CHA1/2"	563
318212-0150	ROLLER CHA	463
318219-0187	CONNECTION	463
318219-0487	CONNECTION	485, 497
318242-0034	ROLLER CHA	569
318242-0036	ROLLER CHA	479
318242-0108	ROLLER CHA	485, 497
318301-0130	LIFTING EYLTM30FZB	575
31837	SPRING HOUSING	323
31838	PLUNGER	323
318800-0102	HANDLE BALLA D.20-M5	711
318800-0103	HANDLE BALLA D.25-M6	629
318800-0104	HANDLE BALLA D.30-M8	125, 611, 613, 693
318800-0105	HANDLE BALLA D.35-M10	121
318800-0106	HANDLE BALLA D.40-M10	609
318800-0107	HANDLE BALLA D45-M10	659
319030-0125	DISC SPRIN	645
32079	WASHER	647
321101-0143	FLANGE BUS 8F7X8	405
321101-0163	FLANGE BUS 10F7X10	317, 321
321101-0172	FLANGE BUS 12F7X10	435
321101-0173	FLANGE BUS 12F7X12	269, 691
321101-0223	FLANGE BUS 18F7X16	485, 499
321101-0232	FLANGE BUS 20F7X16	433
321101-0233	FLANGE BUS 20F7X20	269, 299
321101-0252	FLANGE BUS 25F7X16	463, 485, 497, 563
321101-0253	FLANGE BUS 25F7X25	463, 485, 497
321101-0272	FLANGE BUS 30F7X20	463, 569
321101-0282	FLANGE BUS 35F7X20	497
321101-0283	FLANGE BUS 35F7X35	463, 485
321105-0234	BUSHING 20F7X28X30	323, 615
321111-0095	FLANGE BUS 8E7X6	307
321111-0097	FLANGE BUS 8E7X12	499
321111-0135	FLANGE BUS 10E7X10	629
321111-0157	FLANGE BUS 12E7X8	609
321111-0159	FLANGE BUS 12E7X12	59
321111-0163	FLANGE BUS 12E7X20	387
321111-0185	FLANGE BUS 14E7X14	527, 529, 531, 533, 537, 539, 541, 543
321111-0212	FLANGE BUS 15E7X15	629
321111-0240	FLANGE BUS 16E7X12	301
321116-0095	BUSHING 8E7/12X6	499
321116-0127	BUSHING 10E7/14X10	557
321116-0128	BUSHING 10E7/14X16	463, 485, 557
321116-0163	BUSHING 12E7/18X20	387
321116-0179	BUSHING 14E7/18X14	645
321120-0100	BUSHING 8/10X12	635, 637
321120-0101	BUSHING 6/8X6	637, 711
321120-0103	BUSHING 8/10X8	705
321120-0104	BUSHING 10/12X10	689, 693, 705
321120-0109	BUSHING 12/14X10	635
321120-0110	BUSHING 12/14X12	689
321120-0113	BUSHING 12/14X25	707, 709
321120-0122	BUSHING 15/17X15	517, 563, 631, 633
321120-0137	BUSHING 20/23X15	663, 665, 667
321120-0160	BUSHING 25/28X30	517
321120-0183	BUSHING 35/39X20	517
321127-0100	BUSHING 10/13X10	697

Part No	Description	Page No
321129-0104	THRUST WAS12/24X1,5	609, 707, 709
32116	END PIECE	369, 371, 373, 375, 401, 403
321300-0094	BALL BEARISKF624	653
321306-0104	BALL BEARISKF6004	517
321306-0107	BALL BEARISKF6007	419, 507
321306-0110	BALL BEARISKF6010	289, 431
321306-0114	BALL BEARISKF6014	509, 511
321308-0101	BALL BEARISKF6001RS	629
321308-0106	BALL BEARISKF6006RS	499
321308-0201	BALL BEARISKF6001-2RS	607
321308-0202	BALL BEARISKF6002-2RS	607, 629, 703
321308-0205	BALL BEARISKF6005-2RS	301
321309-0100	BALL BEARISKF6200	327, 331
321309-0106	BALL BEARISKF6206	419, 509, 511
321309-0108	BALL BEARISKF6208	289
321309-0110	BALL BEARISKF6210	429
321309-0114	BALL BEARISKF6214	295
321312-0100	BALL BEARISKF6200RS	327, 331
321312-0101	BALL BEARISKF6201RS	327, 331
321313-0102	BALL BEARISKF6202-2RS	649, 651
321316-0108	BALL BEARISKF6308RS	291
321316-0200	BALL BEARISKF6300-2RS	629, 655
321316-0201	BALL BEARISKF6301-2RS	607
321361-0105	ROLLER BEASKF30205	509, 511
321364-0106	ROLLER BEASKF31306	509, 511
321576-0360	SUPPORT RONUTR30	297, 299
321580-0165	CURVE ROLLKR30	301
321582-0212	CURVE ROLLNUKR35	433
32213	WASHER	691
32215	HOLDER	59, 691
32217	BOTTOM SECTION	691
32219	WASHER	691
32223	BEARING	691
32400	HOLDER	691
32451	AIR DUCT	691
32453	MANTLE	691
32462	SHAFT	319
32463	BEARING	317, 321
32464	SHAFT	371, 375
32468	OPERATING ROD	317, 321
32474	ATTACHMENT	691
32494	OPERATING ROD	317, 321
32544	INSULATION NUT	365, 367, 403
32629	SPROCKET	619, 621, 623, 625, 627
32630	SPROCKET	619, 621, 623, 625, 627
32644	WASHER	365, 367
32668	ARM	691
32691	LOCKING SPRING	631, 633
32925	CARRIER	627
32926	ROLL	627
32957	SCREW	333
33010	SCREW	635
33011	SLEEVE	631, 633
33150	GUIDE STUD	347
33152	STOPPER	347, 359
33182	ROLL	627
33183	SPRING	627
33261	SPRING PLATE	501, 547
33408	BEARING	317, 321
33409	SCREW	325, 329
33442	ROLL	43
33577	CANTILEVER	125, 681
33648	HOLDER	17, 21
341001-0148	COPPER TUB	237
341001-0192	COPPER TUB	237
341001-0228	COPPER TUB	229, 237, 249, 251
342701-0205	BUSHING RNI1/2"-1/4"	153, 237, 247
342701-0206	BUSHING RNI1/2"-3/8"	243, 247
342701-0208	BUSHING RNI3/4"-1/4"	205
342703-0103	NUT M8-LFZB	235
342705-0103	CUTTING RIR8-LFZB	235
342706-0114	INSERT SLESH04	435, 455, 459, 563, 569
342706-0130	INSERT SLESH06	131, 133, 417, 435, 683
342710-0115	REDUCER RBM16/8	237
342711-0115	PLUG PL-16	237
342712-0205	REDUCER RI1/2"-1/4"	205, 209
342713-0209	BLIND PLUG	217, 371, 375, 389, 391, 393, 395, 397, 399
342713-0210	BLIND PLUG	241, 251, 257, 259, 261, 263, 645
342713-0211	BLIND PLUG	241
342713-0213	BLIND PLUG	63, 237
342713-0311	BLIND PLUG BPS38	207, 209
342714-0202	REDUCER KOR10/6-LFZB	207
342715-0102	PLUG D=6	241
342715-0103	PLUG D=8	241
342716-0203	REDUCER 6-8	241
342716-0209	REDUCER 8-12	241

Part No	Description	Page No
342716-0210	REDUCER 6-12	243
342716-0211	REDUCER 12-14	241
342720-0102	PIPE COUPLGA-6-1/8"	501
342720-0103	PIPE COUPLGA-8-1/8"	237
342720-0104	PIPE COUPLGA-8-1/4"	509, 511
342720-0114	PIPE COUPLGA-15-1/2"	239, 247, 251, 255, 257, 259, 261, 263
342720-0115	PIPE COUPLGA-16-1/2"	417
342722-0202	PIPE COUPLD=6-R1/8"	217, 243
342722-0203	PIPE COUPLD=6-R1/4"	241
342722-0204	PIPE COUPLD=8-R1/8"	217
342722-0205	PIPE COUPLD=8-R1/4"	645
342722-0206	PIPE COUPLD=8-R3/8"	241
342723-0109	PIPE COUPLGI-12-3/8"	239
342723-0114	PIPE COUPLING GI-15-1/2"	221
342727-0208	PIPE COUPLG 10-L/SY	81, 83, 85
342730-0104	ELBOW PIPE WA-8-1/4"	509, 511
342730-0114	ELBOW PIPE WA-15-1/2"	237
342731-0102	ELBOW PIPE WE6-LRFZB	429
342731-0108	ELBOW PIPE WE10-LRFZB	207
342731-0114	ELBOW PIPE WE15-LRFZB	205, 235
342732-0099	ELBOW PIPE D4-M5	469
342732-0102	ELBOW PIPE D6-R1/8"	457, 459
342732-0103	ELBOW PIPE D6-R1/4"	241
342732-0104	ELBOW PIPE D8-R1/4"	241
342732-0109	ELBOW PIPE D12-R1/4"	243
342733-0114	ELBOW PIPE WI-15-1/2"	239, 243
342735-0103	ELBOW PIPE D=8	243
342736-0114	ELBOW PIPE W-15	239, 251
342737-0212	ELBOW PIPE W 10-L RFR	81, 83, 85
342739-0108	BULKHEAD L	81, 83, 85
342740-0114	T-CONNECTI TA-15-1/2"	237
342741-0108	T-CONNECTI TA10-LKFZB	205
342748-0102	T-CONNECTI D=6	241
342748-0103	T-CONNECTI D=8	241
342748-0110	T-CONNECTI D=14	241
342750-0114	ELBOW FITT LA-15-1/2"	237
342752-0104	STRAIGHT C	205, 207, 209
342752-0114	STRAIGHT C	205
342764-0108	BULKHEAD LWSV10-LFZB	207
342764-0114	BULKHEAD LWSV15-LFZB	207
342767-0114	BULKHEAD LR1/2	247
342768-0103	BULKHEAD LD=8	243
342770-0105	HOSE COUPL	241
342790-0102	GAUGE CONN MAV6-LRFZB	207
342790-0202	GAUGE CONNMAV6-S/R3/8FZB	417
342797-0121	BANJO CONNSINGEL 6-1/8	63, 65, 67, 69, 689, 691
342797-0122	BANJO CONN SINGLE 6-1/4	29, 33, 43, 59, 77, 111, 117, 121, 125, 681, 691
342803-0103	NUT 38	135
342803-0104	NUT 51	81, 83, 85
342803-0106	NUT 76	81, 83, 85
342812-0203	SLEEVE	135
342903-0111	NUT J£DER 1723-6/4	175
342920-0113	PIPE COUPL6/4-1/8	225, 327, 331, 425, 427
342920-0114	PIPE COUPL6/4-1/4	233
342920-0121	PIPE COUPL8/6-1/8	229, 467, 549, 551, 553, 555
342921-0113	PIPE COUPL6/4-1/8"	175, 689
342921-0114	PIPE COUPL6/4-1/4"	435
342921-0121	PIPE COUPL8/6-1/8"	441, 451
342923-0114	PIPE COUPL6/4-1/4	175, 249, 257, 259, 261, 263
342923-0122	PIPE COUPL8/6-1/4	251
342929-0121	PIPE COUPL8/6-8	229, 239, 257, 259, 261, 263
342930-0113	ELBOW PIPE6/4-1/8	239, 427
342930-0121	ELBOW PIPE8/6-1/8	549, 551, 553
342930-0122	ELBOW PIPE8/6-1/4	205
342931-0113	ELBOW PIPE	165
342933-0122	ELBOW PIPE8/6-1/4	457, 459
342946-0112	T-CONNECTI6/4	257, 259, 261, 263, 327, 331, 417, 639, 641
342946-0122	T-CONNECTI8/6	423
342950-0114	ELBOW FITT6/4-1/4	175
342960-0112	BULKHEAD L6/4	229, 257, 259, 261, 263, 435
342960-0122	BULKHEAD L8/6	229
342980-0113	BANJO CONNSINGEL 6/4-1/8	105, 327, 331, 607, 629, 645
342980-0114	BANJO CONNSINGEL 6/4-1/4	405
342980-0122	BANJO CONNSINGEL 8/6-1/4	251, 379
342980-0303	BANJO CONN SINGEL 1/8"	63, 65, 67, 69, 81, 83, 85, 327, 331, 607, 629, 645
342980-0304	BANJO CONN SINGLE 1/4"	29, 33, 43, 77, 111, 117, 125, 379, 681, 691
342980-0314	BANJO CONN DUBBEL 1/4	111, 117
342991-0100	HOSE CLIP 8-14MMRFR	165
342991-0101	HOSE CLIP 11-17MMRFR	185, 219, 235, 301, 411
342991-0102	HOSE CLIP 13-20MMRFR	249
342991-0103	HOSE CLIP 15-24MMRFR	229, 413, 689, 691
342991-0104	HOSE CLIP 19-28MMRFR	23, 183, 257, 259, 261, 263
342991-0106	HOSE CLIP 26-38MMRFR	191, 199
342991-0108	HOSE CLIP 38-50MMRFR	253
342991-0109	HOSE CLIP 44-56MMRFR	441, 451
342991-0111	HOSE CLIP 58-75MMRFR	425

Part No	Description	Page No
342991-0112	HOSE CLIP 68-85MMRFR	413
342991-0115	HOSE CLIP 104-138MMRFR	219
344502-0026	NIPPLE L AHKR1/8"	295
344502-0046	NIPPLE L BHKR1/8"	291
344502-0066	NIPPLE L CHKR1/8"	289, 295
346800-0109	SILENCER FILTER R1/8"	81, 83, 85
351121-0109	* CABLE RHH 16	441, 451
352100-0100	CABLE GLANR.15,2-7,5	221
352100-0106	CABLE GLANR.18,6-10,5	43, 59, 221, 689, 691
352100-0111	CABLE GLANR.22,5-13,5	205
352100-0115	CABLE GLANR.28,3-15,5	291
352100-0126	CABLE GLANR.47-32,5	159
352100-0127	CABLE GLANR.47-34,5	217
352100-0227	CABLE GLANR.31-34,5	159
352101-0103	CABLE GLAND 6-11MM PR18,6	165, 215, 225, 615, 639, 641, 711
352101-0105	CABLE GLAND PR 22,5	639, 641
352101-0107	CABLE GLAND 16-24MM,PR37	683
352103-0100	CABLE GLANR.STR 9	137, 237, 413, 639, 641, 679
352103-0101	CABLE GLAND ST 9	137, 221, 413, 643
352103-0105	CABLE GLANR.STR 11	225
352103-0106	CABLE GLAND ST 11	231, 253, 275, 441, 451, 643
352103-0108	CABLE GLAND ST13	645
352103-0111	CABLE GLAND ST 16	63, 137, 441, 451, 639, 641
352103-0115	CABLE GLAND STR 21	643
352103-0116	CABLE GLAND ST21.13-18MM	229, 231, 643
352103-0120	C.GLAND PR37,STR29 UILAPP	231
352103-0121	CABLE GLANR.ST 29	229
352110-0099	CRAMP TK 3-5	639, 641, 645
352110-0101	CRAMP TK 7-10	229, 299
352113-0101	RIBBON CLA	297, 379, 413, 457, 459, 635
352113-0102	RIBBON CLA	413
352113-0204	ANCHOR TM3S25-M	413, 639, 641
352135-0106	HOSE .016	137, 221, 239, 243, 245, 253, 275, 639, 641, 711
352135-0109	HOSE .022	253, 639, 641
352135-0116	FLEXIBLE CG DIA 40	253, 441, 451
352135-0201	CRAMP 12	229, 269
352135-0202	CRAMP 16	225
352136-0113	GLAND FITT	59, 73, 137, 207, 213, 231, 239, 245, 253, 639, 641, 675, 679, 681, 689, 691
352136-0127	GLAND FITT	43, 63, 137, 221, 239, 243, 245, 253, 265, 269, 275, 639, 641
352136-0129	GLAND FITT	179, 205, 249, 639, 641, 679
352136-0142	GLAND FITT	231, 253
352136-0143	GLAND FITT	253, 291, 639, 641
352136-0152	GLAND FITT	187, 189
352137-0113	GLAND FITTING	137, 245, 639, 641
352137-0127	GLAND FITT	639, 641, 711
352137-0129	CABLE GLAND	245
353021-0122	FEED THROUGH TERMINAL2.5	245
353021-0212	TERM.WDU 2,5 BEIGE WEIDM.	231
353021-0213	FEED THROUGH TERM.WDU 4	245, 643
353021-0217	TERM.WDU 4 BLUE WEIDM.	245
353021-0302	FEED THROUKL£MMA DLD 2,5/	231, 643
353024-0205	EARTH TERMINAL WPE 4	231, 245, 643
353031-0201	END BRACKET EW 35	231, 245
353032-0005	END PLATEWAP 2,5-10	245
353032-0302	END PLATE AP	231, 643
353034-0401	BRIDGE CONLECK Q2	231, 643
353034-0404	BRIDGE CONLECK Q10	231, 245, 643
353042-0005	RAIL TS35/7.5	231, 245, 643
353101-0130	CABLE SHOE	689
353101-0132	CABLE SHOE	645
353101-0134	CABLE SHOE	691
353102-0168	* CABLE SHYAEV16-M6	441, 451
353104-0129	CABLE SHOEAV 025 M 35*	43
353104-0130	CABLE SHOEYAV 025 M 4*	59, 691
353104-0168	CABLE SHOEYAV 16 M6*	441, 451
353104-0182	CABLE SHOEYAV 35 M6*	441, 451
353245-0005	GLAND FITT	415
35547	SPRING	635
359011-0202	SIGN BOARD(GROUND)	139
359011-0800	MARKING PLATE KITS	139
359011-0807	MARKING PLATE 5-FW 1-50	231, 245, 643
359011-0808	MARKING PLATE 5-FW 51-100	231, 643
359011-0809	FIGURES 101-150 WIDTH 5MM	231
359011-0819	MARKING PLATE 5-GW EARTH	643
359011-0821	SET OF SIGNS 6-FW 1-50	679
359020-0012	SIGN "EARTHSYMBOL" 4X6MM	645
359240-0100	SIGN HOLDER	245
359241-0127	SIGN "LIGHT JAWSY & MACH"	245
359241-0158	SIGN"LEVEL HYD OIL TANK"	245
359241-0269	SIGN	639, 641
359301-0051	SIGN"STRIP SPLICE"	681
359301-0100	SIGN	639, 641
359301-0110	SIGN "SHORT STOP"	639, 641
359301-0125	SIGN "LUBRICATION"	245
359301-0335	SIGN T	639, 641

Part No	Description	Page No
35962	LID	265
359705-0001	WARNING SIGN"ENTANGLEMENT	627
359705-0002	WARNING SIGN"ENTANGLEMENT	559
359705-0003	WARNING SIGN"CORROSION"	23, 45, 75, 171
359705-0005	WARNING SIGN"MOVING PART"	617
359710-0002	WARNING SIGN"HOT SURFACE"	441, 451
36133	BUSHING	339, 341, 343
36749	MANTLE	691
36753	RING	323
36804	ARM	55, 57
36805	LINK	55, 57
36806	CLAMPING ELEMENT	55, 57
36816	LINK	55
36817	CLAMPING ELEMENT	55, 57
36821-0001	SHEAR PIN	55, 57
36821-0002	SHEAR PIN	55, 57
36885	CRANK ARM	287
36953-0001	ROLL	27, 31
36953-0010	ROLL	41
37070	SPRING	385
37071	WASHER	385
37097	CARRIER	291
37258	BUSHING	317, 321
37296	ARM	55
37535	SUPPORTING PART	443, 445
37536	INSULATOR BODY	443, 445
37537	SPACER RING	443, 445
37638	PENDULUM SUSPENSION	111
37768	THERMOCOUPLE CR-AL	81, 83, 85, 691
37782	THROTTLE	55, 57
38087	WASHER	79, 273
38490	END PIECE	369, 373
38603-0002	SPACER	381, 383
38630-0001	COUNTER ROLLER	27, 31
434020	BEARING CONSOLE	385
434021	SCREW	385
434062	SHAFT	299
434073	NUT	385
434098	STRUT	299
434101	WASHER	27, 31
434142	PISTON	309
434143	END SECTION	309
434168	PIPE	249
434171	PIPE	249
434222	FILLER TUBE	49
434270	RAILING	99
434273	STRUT	99
434274	PIPE	109
434309	FASTENING PLATE	383
434320	AXLE PIN	341, 343
434321	CURVE ROLLER	339, 341
434338	KNIFE	377
434379	TIE ROD	291
434380	SHAFT	291
434387	BRACKET	325, 329
434388	SHAFT	325, 329
434469	HEATING PIPE	113
434490-0001	SHAFT	21
434490-0002	SHAFT	21
434490-0003	SHAFT	21
434493	FORMING RING	35, 37, 39
434499	FORK	27, 31
434500	SHAFT	27, 31
434504	SHAFT	27, 31
434507	SHAFT	27, 31
434659	CRANK BRACKET	211
434661	BUSHING	211
434664	BRACKET	211
434665	HOOD	49
434708	PIPE	207
434709	PIPE	207
434710	PIPE	205
434711	PIPE	207
434712-0001	PIPE	207
434712-0002	PIPE	207
434713	PIPE	207
434714	PIPE	205
434715	PIPE	207
434716	PIPE	207
434717	PIPE	205
434718	PIPE	205
434719	PIPE	205
434747	BOW CLAMP	635
434749	FLOAT	55, 57
434750	PRESSURE FLANGE	55, 57
434751	ARM	55, 57

Part No	Description	Page No
434752	LINK	55, 57
434787	END SECTION	631, 633
434829	LEAD	59
434841	GAUGE	575
434858	CUSHION	187, 189
434919	COLUMN LEFT	225
434920	COLUMN RIGHT	225
434972	AIR GUIDE	121
434973	AIR DISTRIBUTOR	121
434974	AIR DISTRIBUTOR	121
434976	STOP	121
436302	ROLL	17, 21
436342	SPACER	27, 31
436355	REAMED BOLT	17, 21
436356	BUSHING	17, 21
436357	NUT	17, 21
436377	JOINT	17
436378	SHAFT	17
436395	CANTILEVER	17, 21
436403	WASHER	17, 21
436404	BOW CLAMP	17
436405	FORK	17, 21
436407	BEAM	573
436483	SHAFT	291
436484	BRACKET	291
436485	LACE	291
436486	LID	291
436487	SPACER	291
436488	WASHER	291
436502	CURVE	381
436512	PIPE	573
436556	CURVE ROLLER	339, 343
436580	COVERING PLATE	307
436648	CANTILEVER	35, 37, 39
436671	ECCENTRIC SHAFT	325, 329
436672	LINK	307
436776	MACHINE BODY	225
436778	PIPE	81, 83, 85
436779	PRESSURE GAUGE TUBE	81, 83, 85
436781	GASKET	81, 83, 85
436927	NUT	635
436930	KNIFE	377
436939	CYLINDER BRACKET	627
436940	SHAFT	627
436991	BEARING	611, 613
440023	PROTECTION PLATE	225
440024	PROTECTION PLATE	225
440025	PROTECTION PLATE	225
440026	CANTILEVER	225
440027	RIM	225
440028	RIM	225
440043	END PIECE	369, 373, 401
440068	ROLL	35, 37, 39
440077	COVERING PLATE	227
440136-0001	ROLL	649
440136-0002	ROLL	651
440136-0003	ROLL	651
440136-0004	ROLL	651
440136-0006	ROLL	651
440136-0007	ROLL	651
440136-0008	ROLL	651
440137-0001	SHAFT	649
440137-0002	SHAFT	651
440138	LOCKING CIRCLIP	649, 651
440157	MAGNET BRACKET	657
440180	WASHER	657
440185	HOLDER	615
440186	HOLDER	615
440192	BRACKET	615
440193	HOLDER	615
440194	WASHER	651
440195	JOINT	615
440196	HANGER	615
440197	SHAFT	615
440198	WASHER	615
440199	PROTECTION PLATE	615
440200	PROTECTION PLATE	615
440202	PROTECTION PLATE	615
440203	RULER	227
440204	RULER	227
440205	RULER	227
440206	RULER	227
440211	GUIDE	617
440212	LUG	617
440213	LUG	617
440214	HOLDER	617

Part No	Description	Page No
440215	HOLDER	617
440217	BUSHING	617
440247	HOLDER	609
440248	HOLDER	609
440249	SLIDE BELT	609
440250	AXLE PIN	609
440251	GLASS PANE	609
440252	SLEEVE	615
440253	SLEEVE	615
440256	ARM	639, 641
440259	RETAINING RING	603, 605
440260	SHAFT	603, 605
440271	SCREW	615
440277	LACE	627
440282-0003	SPACER	621
440282-0004	SPACER	621
440287	COVER	635
440349	FASTENING IRON	221
440385	CANTILEVER	213
440386	PLATFORM REAR	213
440389	HATCH	213
440424	DRUM	217
440482	PROTECTION	271
440491	NIPPLE	389, 391, 393, 395, 397, 399
440507	FASTENING PLATE	381
440510	COUNTER CAM	325
440511	COUNTER CAM	329
440565	CYLINDER	389, 391, 393, 395, 397, 399
440600	ROTOR	193, 195, 197, 201, 203
440604-0001	PIPE	193, 195, 197, 203
440605-0001	PIPE	197, 201, 203
440631	VALVE BODY 51	87
440632	CYLINDER HOUSING	89, 91
440633	CYLINDER HOUSING	93
440634	HOUSE	87
440635	PISTON ROD	91
440636	PISTON ROD	93
440637	PISTON ROD	89
440638	PISTON	89, 91
440646	PISTON	93
440647	SLEEVE	81, 83, 85
440648	SEALING WASHER	91
440650	WASHER	91
440651	WASHER	89, 91
440652	WASHER	93
440654	SPACER SLEEVE	93
440655	RING	89
440656	WASHER	93
440659	CYLINDRICAL PIN	91
440660	COMPRESSION SPRING	91
440661	COMPRESSION SPRING	91
440662	COMPRESSION SPRING	93
440663	COMPRESSION SPRING	89, 91
440664	SEALING WASHER	93
440695	END SECTION	93
440702	BEAM	225
440731	PLATE	81, 83, 85
440925	CUTTING RAIL	369, 373
440930	COUNTER CAM	325
440931	COUNTER CAM	329
440977	ATTACHMENT PIPE	81, 83, 85
440978	PIPE BEND	81, 83, 85
441483	CYLINDER BRACKET	65, 67, 69
441718	SPACER	51, 53
441737	WASHER	51, 53
441739	WASHER	51, 53
442072	CARRIER	631, 633
442076	LID	207
442078	CANTILEVER	209
442173	GAUGE BLOCK	575
442193	PROTECTIVE CASING	187
442194	PROTECTIVE CASING	189
442195	LID	187
442236	THROTTLE SCREW	63
442237	NUT	63
442431	CARRIER	631, 633
442466	PIPE CONNECTION	233
442480	BOW CLAMP	691
442500	SPROCKET	417
442523	HOLDER	433
442532	COVER	515
442533	RUBBER GASKET	515
442545	SHEET	411
442554	GEARING	419
442555	GEAR WHEEL	419
442556	GEAR WHEEL	419

Part No	Description	Page No
442557	GEAR WHEEL	419
442558	GEAR WHEEL	419
442559	GEAR WHEEL	419
442560	LUBR.OIL PIPE	515
442563	AXLE PIN	535, 545
442564	CURVE	525, 555
442565	CURVE	525, 555
442566	BRACKET	269
442581-SHEET 1	MEASURE DRAWING	417
442613	GEAR WHEEL	431
442614	GEAR WHEEL	431
442615	SPACER	431
442616	SPACER	431
442617	SPACER	431
442621	SPACER	507
442622	SPACER	507
442776	SLIDE RAIL	453
442809	LEAD RAIL	569
442811-0001	ARCH	567
442811-0002	ARCH	567
442829	BRACKET	569
442830	BRACKET	569
442836	SPROCKET	569
442841	AIR SCREW	419
442851	SHAFT	425
442852	VALVE	425
442853	ATTACHMENT PIPE	425
442867	AIR NOZZLE	437, 439, 447, 449
442882	SPINDLE	515
442883	SPACING WASHER	515
442884	LOCK PLATE	515
442885	FLAP	513
442886	FLAP	513
442894	SHIM	535, 545
442903	SHIM	419
442904	SHIM	419
442905	SHIM	419
442909-0001	SHEET	519
442910-0001	SHEET	519
442931	SLIDE RAIL	563
442939	SHIM	535, 545
442979	SHEET	519
442980	SHEET	519
442981	SHIM	527, 537
442984	FLAP	513
443021	SHEET	519, 521
443022	SHEET	519, 521
443023	SHEET	519
443024	SHEET	519
443027	SHEET	519
443028	SHEET	519
443038	FLAP	513
443047	SPROCKET	429
443048	SPROCKET	435
443049	SHAFT	435
443050	GUIDE SLEEVE	435
443051	CONNECTION	435
443052	SPACER RING	429
443053	CHAIN GUIDE	435
443055	SHIM	431
443056	SHIM	431
443057	SHIM	431
443058	SHIM	431
443076	BOTTOM	527, 529, 537, 539
443081	SPROCKET	569
443114	FLAP	513
443116	FLAP	529, 539
443122	HOUSE	425
443123	HOUSE	425
443126	CONNECTION PIPE	427
443137	SHEET	521
443138	SHEET	521
443149	STUD SCREW	429
443150	SUCTION TUBE	435
443151	PIPE	435
443158	SIDE PIPE	439, 441, 449, 451
443175	SHAFT	547
443176	SPROCKET	427
443177	SPROCKET	547
443178	BRACKET	547
443179	SPACER	547
443182	FLAP	513
443186	CHUTE	411
443187	SHEET	411
443188	GEAR WHEEL	507
443193	SHIM	507

Part No	Description	Page No
443194	SHIM	507
443206-0001	ARCH	567
443206-0002	ARCH	567
443206-0003	ARCH	567
443206-0004	ARCH	567
443207-0001	ARCH	567
443207-0002	ARCH	567
443210	PLATE STAINLESS	569
443213	BRACKET	569
443215	SPACER	569
443217	BRACKET	567
443229	BRACKET	563
443232	HOLDER	563
443235	SPROCKET	563
443237	SLIDER	563
443239	WASHER	563
443240	DRIP PLATE	555
443248	OIL PIPE	417
443249	FLAP	513
443271	HEAD PLATE	465
443272	HEAD PLATE	465
443273	HEAD PLATE	465
443274	HEAD PLATE	465
443289	TOOTHED PULLY	483, 497
443290	GEAR WHEEL	463, 483, 497
443291	GEAR WHEEL	463
443292	STEERING	483, 497
443293	BRACKET	483
443293	BRACKET	463, 483, 497
443295	WASHER	463, 483, 497, 569
443296	WASHER	463, 483, 497, 499
443297	WASHER	463
443298	WASHER	463
443299	WASHER	463, 483
443300	WASHER	463, 483, 497
443301	WASHER	463, 483, 497
443305	SHAFT	463
443306	SPROCKET	463
443307	SHAFT	463, 483, 497
443309	SHAFT	469
443310	AXLE PIN	469
443312	SPACER	483, 497
443313	STUD SCREW	525
443336-0008	TIMING BELT PULLEY	415
443348	PLATE	521
443350	BRACKET	463
443362	CURVE	501
443365	BRACKET	469
443367	PROFILE	421
443387	HEAD PLATE	461
443388-0001	HEAD PLATE	461
443388-0002	HEAD PLATE	461
443414	WASHER	463
443419	SPACER	481
443445	SIDE PLATE	463
443446	SIDE PLATE	463
443447	BRACKET	465
443448	HEAD PLATE	469
443450	HEAD PLATE	463
443451	HEAD PLATE	463
443454	BRACKET	461
443455	SHAFT	463
443456	SHAFT	463
443457	SHAFT	463
443458	SHAFT	463
443462	SUPPORT	465, 467
443463	SUPPORT	465, 467
443464	SPROCKET	463
443467	SPROCKET	463
443468	CARRIER	471, 473, 475, 477
443469	CARRIER	471, 473
443470	CARRIER	475, 477
443474	BRACKET	469
443476	GABLE PLATE	481
443477	GABLE PLATE	481
443478-0001	SPROCKET	461
443478-0002	SPROCKET	461
443478-0003	SPROCKET	461
443478-0004	SPROCKET	461
443479-0001	SPROCKET	461
443479-0002	SPROCKET	461
443479-0003	SPROCKET	461
443479-0004	SPROCKET	461
443480	BRACKET	461
443481	BRACKET	461
443482	BRACKET	463, 483

Part No	Description	Page No
443483	BRACKET	463, 483
443484	ARM	463, 483, 499
443485	SCREW	463, 483
443486	GUIDE	463
443487	ROLL	519, 521, 523
443488	ROLL	519
443489	BRACKET	463, 483, 497
443491	BRACKET	465
443492	BRACKET	465
443493	HEAD PLATE	469
443495	HEAD PLATE	469
443497	SUPPORT	465
443498	SUPPORT	465
445502	LOCKING PIN LOWER	55, 57
445503	LOCKING PIN LOWER	55
445504	LOCKING PIN UPPER	55, 57
445515	PIPE BEND	81, 83, 85
445538	HYDRAULIC PIPE	235
445539	HYDRAULIC PIPE	235
445540	HYDRAULIC PIPE	235
445541	HYDRAULIC PIPE	235
445542	MANTEL RUBBER	635
445557	CANTILEVER	349
445558	CANTILEVER	349
445559	STOP	349
445560	STOP	349
445561	LACE	349
445583	VALVE	223
445669	HOLDER	691
445670	PAPER SUPPORT	691
445688	AIR GUIDE	691
445736	HINGE	243
445770	STOPPER	351
445776	ROLL	21
445777	ROLL	21
445778	ROLL	21
445779	ROLL	21
445780	ROLL	21
445781	ROLL	21
445782	ROLL	21
445783	ROLL	21
445784	ROLL	21
445785	ROLL	21
445786	ROLL	21
445787	ROLL	21
445788-0002	SHAFT	21
445788-0003	SHAFT	21
445788-0005	SHAFT	21
445788-0006	SHAFT	21
445790	AXLE SUPPORT	21
445791	AXLE SUPPORT	21
445837	CANTILEVER	607
445838	SHAFT	607
445839	SECURING PLATE	607
445844	SLEEVE	639, 641
445845	DRIVE ROLLER	607
445846	SLEEVE	639, 641
445847	SHAFT	607
445848	ELASTIC COUPLING	607
445849	SPACER DISC	607
445850	SPACER SLEEVE	607
445851	SHAFT	607
445852	LID	607
445854-0002	GEAR WHEEL	607
445857	PROTECTION PLATE	615
445858	WASHER	213
445861	FRAME	611, 613
445863	PROTECTION	611, 613
445872	HINGE	611, 613
445873	HINGE	611, 613
445874	HINGE	611, 613
445877	SUPPORT	611, 613
445879	SUPPORT	611, 613
445885	BEAM	645
445886	BEAM	645
445894	SEAL	647
445898	NUT	647
445901	FRAME	647
445902	ARM	647
445903	ECCENTRIC SHAFT	647
445904	SHAFT	647
445907	SCREW	647
445909	NIPPLE	647
445915	STEERING	647
445918	SCREW	647
445926	WASHER	617

Part No	Description	Page No
445927	HOLDER	617
445929	GASKET	615
445934	LID	615
445935	PROTECTION PLATE	615
445937	STAIRCASE	615
445950	RAIL	389, 391, 395, 397
449000	BRACKET	25
449130	CONNECTING PIPE	63
449170	CLEANING PIPE	247
449190	SHAFT	23
449414	BRACKET	111
449415	PENDULUM SUSPENSION	111
449586	ROLL	35, 37, 39
449589-0001	ROLLER, (STD.SIZE)	27, 31
449623	STEERING	647
449624	STEERING	647
449626	SEAL	647
449629	BRACKET	647
449631	BEARING HOUSING	653
449632	BEARING HOUSING	653
449634	COVERING PLATE	653
449635	COVERING PLATE	653
449678	VALVE BODY 76	87
449716	MAIN CAM	293
449719	COUNTER CAM	293
449727	CUTTING JAW	369, 373
449734	HOLDER	381
449744	TURN SPRING	653
449745	TURN SPRING	653
449746	STEERING	653
449748	BEARING	653
449751	PROTECTION	645
449753	SCREW	647
449761	WASHER	647
449770	INSULATION	645
449817	U-TUBE	109
449818	PIPE	109
449840-0001	ROLLER, (STD.SIZE)	27, 31
449843-0001	BENDING ROLLER	675
449843-0002	BENDING ROLLER	675
449843-0003	BENDING ROLLER	675
449843-0004	BENDING ROLLER	675
449853	BOW CLAMP	23
449854	CUP	23
449855	CUP	23
449880-SHEET	INSTALLATION DRAW. TBA/8	573
449908	BUSHING	339
449926	HOLDER	381
449938-0001	* HEATING PIPE	113
449938-0002	* HEATING PIPE	113
449938-0003	* HEATING PIPE	113
449939-0001	HEATING ELEMENT 15KW	113
449960	BRACKET	109, 135
449963	U-TUBE	109
449964	PIPE	135
449966	PIPE	135
449967	PIPE	135
449991	BRACKET	23
449992	GASKET	23
449993	GASKET	23
450010	FILLER TUBE	49
450017	PLATE	647
450022	WASHER	109
450023	BRACKET	109
450116	CANTILEVER	697
450117	HOLDER	697
450127-0001	BRACKET	685
450127-0002	BRACKET	685
450127-0003	BRACKET	685
450127-0004	BRACKET	685
450127-0005	BRACKET	685
450145	STRUT	291
450146	STRUT	291
450284	CABLE DUCT	253
450285	CABLE DUCT	253
450286	LID	253
450287	LID	253
450290	LID	253
450291	ATTACHMENT PIPE	253
450292	ATTACHMENT PIPE	253
450298	COVERING PLATE	227
450299	SWIVEL PLATE	215
450300	BEAM	215
450301	FASTENING PLATE	215
450335	PIPE	135
450340	PIPE	223

Part No	Description	Page No
450342	COVERING PLATE	227
450355	INK ROLLER	635
450363	LID	607
450457	FLANGE	225
450459-0001	FORMING RING	27, 31
450459-0002	FORMING RING	27, 31
450460-0001	GUIDE SHAFT	695
450460-0002	GUIDE SHAFT	695
450460-0003	GUIDE SHAFT	695
450461	SHAFT	695
450491	BOW CLAMP	21
450492	BOW CLAMP	21
450493	BOW CLAMP	21
450495	CONNECTION BOX	221
450497	SHAFT	627
450500	DOWEL	627
450503	BEARING HOUSING	369, 373
450507-0001	SCREW	369, 371, 373, 375
450509	PIPE	75
450512	COVER	75
450667	SPLASH GUARD	215
450668	SPLASH GUARD	215
450669	TOUCH GUARD	215
450670	ARM	299
450716	PIPE	249
450717	PIPE	249
450719	PIPE	249
450722	PIPE	249
450723	PIPE	249
450724	PIPE	249
450725	ATTACHMENT PLATE	249
450730	PIPE	249
450731	PIPE	249
450733	PIPE	249
450735	PIPE	249
450736	PIPE	249
450737	PIPE	249
450738	PIPE	249
450739	PIPE	249
450740	PIPE	249
450742	PIPE	249
450744	CRAMP	249
450745	SPACER	249
450746	HOLDER	249
450747	PIPE	249
450748	PIPE	249
450781	VOLUME BULGE	339
450782	VOLUME SHIM	339, 401
450791	PIPE	257, 259, 261, 263
450793	PIPE	265
450794	PIPE	265
450795	PIPE	265
450796	BRACKET	265
450812	SPACER	681
450813	HOLDER	683
450814	HOLDER	131, 133, 683
450826	BRACKET	267
450841	CANTILEVER	269
450846	CANTILEVER	79
450850-0001	SHEET	681
450850-0002	SHEET	681
450850-0003	SHEET	681
450850-0004	SHEET	681
450850-0005	SHEET	681
450850-0006	SHEET	681
450853	PROTECTION	645
450869	BRACKET RIGHT	161, 163
450882	OUTER PIPE	681
450884	PROTECTION	271
450887	CRAMP	689
450888	INSULATING PLATE	689
450899-0001	SPACER	231
450973	BRACKET	267
451053	PIPE	123
451085-0002	SPACER SCREW	137
451085-0003	SPACER SCREW	137
451085-0004	SPACER SCREW	137
451085-0005	SPACER SCREW	137
451088	PROTECTION	215
451089	BRACKET	215
451099	CABLE TRENCH	137
451101	CABLE TRENCH	137
451102	COVER STAINLESS	137
451103	LID	137
451104	LID	137
451127	CHUTE, LEFT FRONT	187

Part No	Description	Page No
451128	CHUTE, RIGHT FRONT	189
451277	PIPE	131, 133
451280	PIPE	131, 133
451281	PIPE	131, 133
451284	PIPE	131, 133
451285	PIPE	131, 133
451286	PIPE	131, 133
451287	PIPE	131, 133
451288	PIPE	131, 133
451289	PIPE	131, 133
451290	PIPE	131, 133
451291	PIPE	131, 133
451292	PIPE	131, 133
451296	PIPE	131, 133
451297	PIPE	131, 133
451298	PIPE	131, 133
451299	PIPE	131, 133
451300	PIPE	131, 133
451301	PIPE	131, 133
451302	PIPE	131, 133
451303-0001	PIPE	131, 133
451303-0002	PIPE	131, 133
451303-0003	PIPE	131, 133
451303-0004	PIPE	131, 133
451304	PIPE	131, 133
451305	PIPE	131, 133
451306	PIPE	131, 133
451307	PIPE	131, 133
451321	COVER	63
451323	SHEET	63
451324	PIPE	63
451326	CLAMPING PLATE	131, 133
451338	PIPE	137
451339	BOXSTAINLESS	137
451340	CHANNELSTAINLESS	137
451341-0001	LID	137
451341-0002	LID	137
451389	PLATFORM	99
451390	PLATFORM	99
451391	PLATFORM	99
451406	VIBRATION DAMPER	579, 581
451407	RAILING	579, 581
451408	BUFFER RING	579, 581
451412	WASHER	647
451413	WASHER	647
451423	CIRCUIT BOARD ANGLE ENC.	275
451430	CONNECTION HOUS.(MINOR)	113
456011	PIN	377, 403
456256	PROTECTIVE COVER	221
456773	PIVOT BRACKET	635
457354	SCREW	269
457355	NUT	269
457357	BRACKET	227
457358	SLEEVE	615
457359	BRACKET	405
457361	CANTILEVER	405
457364	PLATE RIGHT	405
457367	SHAFT	405
457368	SPRING	405
457370	CATCH	653
457430	BEATER	629
457486	BEARING HOUSING	653
457487	BEARING HOUSING	653
457488	BEARING HOUSING	653
457489	BEARING HOUSING	653
457492	COVERING PLATE	653
457493	COVERING PLATE	653
457494	COVERING PLATE	653
457495	COVERING PLATE	653
457586	SLIDE	653
457614-0001	CLAMPING PIECE	135
457614-0002	CLAMPING PIECE	135
457658	INSULATION	647
457752	CANTILEVER	129
457753	BRACKET	129
458019	BEARING HOUSING	391, 397
458041	COMPRESSION SPRING	653, 659
458042	SPRING	653
458046	PIPE	43
458062	TENSION SPRING	647
458104	CREASE FORMER	619
458105	CREASE FORMER	619, 621, 625
458106	CREASE FORMER	621
458108	CREASE FORMER	621, 627
458109	CREASE FORMER	623
458164	SHAFT	339, 341, 343

Part No	Description	Page No
458165	SHAFT	339
458193-0001	WASHER	629
458193-0002	WASHER	629
458193-0003	WASHER	629
458199-0001	PIPE	683
458199-0002	PIPE	683
458199-0003	PIPE	683
458362	PLUG	639, 641
458467	VOLUME BULGE	339, 343
458481-0001	SHIM	125
458481-0002	SHIM	125
458481-0003	SHIM	125
458489	CANTILEVER	629
458783	BOW CLAMP	23
458784	CUP	23
458785	BRACKET	23
458786	GASKET	23
458787	BUSHING	23
458788	NUT	23
458791	SHAFT	41
458908	BRACKET	647
458909	BRACKET	647
458912	BRACKET	647
458915	HEAD RAIL	647
458916	SHAFT	647
458917	SUPPORT	647
458929	TURN SPRING	647
464010	ARM	629
464011	LOCK STUD	629
464012	CURVE	629
464018	JUNCTION BLOCK	123
464072	CLAMPING PART	597
464162	CUTTING JAW	369, 373
464164	CARRIER CUT LEFT	371, 375
464173	LABEL HOLDER	125, 681
464174	SIGN	125
464175	SIGN	125
464176	SIGN	681
464177	SIGN	681
464197	AIR NOZZLE	689
464297	CONNECTION BOX	275
464307	PIPE BEND	123
464308	PIPE	123
464309	PIPE	123
464314	VOLUME BULGE	339
464315	VOLUME SHIM	339, 401
464363	HOLDER	309
464366	LID	335, 337
464367	CRAMP	335, 337
464368	CRAMP	335, 337
464370	SPACER	379
464431	PIPE	249
464432	PIPE	249
464520	PIPE	249
464547	NUT	647
464548	BRACKET	647
464719	SIGN	249
464854	TENSION SPRING	647
464983	SCREW	647
466040	AXLE SUPPORT	127
466041	WASHER	127
466042	SEAL	127, 141
466046	ROLL	127
466074-0001	SLIDER	597
466086	SHAFT	617
466089	SEAL	127, 141
466092	ROLL	127
466099	SEAL	127, 141
466102	ROLL	127
466337	CONNECTION BOX	639, 641
466395	BEARING HOUSING	389, 395
466400	RING	127
466401	RING	127
466402	RING	127
466403	RING	127
466404	RING	127
466405	RING	127
466412	PLATE	689
466430	BUSHING	629
466431	BEARING HOUSING	369, 373
466432	BEARING HOUSING	369, 373
466446	HANDLE	647
466463	PRESSURE FLANGE	55, 57
466469	HOLDER	657
466471	PIPE	103
466474	VALVE HOUSING	65, 67, 69

Part No	Description	Page No
466477	INNER PIPE	65, 67, 69
466478	OUTER PIPE	65, 67, 69
466479	PIECE	65, 67, 69
466483	CLAMPING PIECE	65, 67, 69
466484	NET	65, 67, 69
466618	CATCH	647
466619	CATCH	647
466620	PISTON	647
466621	PISTON	647
466623	COMPRESSION SPRING	647
469463	SHAFT	27, 31
469464	ROLL	27, 31
469795	HOLDER	187
476015	DOWEL	617
476016	RUBBER	617
476087	LID	75
476117	CATCH	615
476185	VALVE CONE	93
476203	PROTECTION	89
476220	SPACER	597
476288	PIPE	647
476289	SCREW	647
476290	SCREW	389, 391, 393, 395, 397, 399
476354	CANNULAR TUBE	635
476356	HOLDER FOR INK BOTTLE	635
476358	COIL HEATER	141
476360	LID	59
476377	SCREW	629
476398	LID	75
476400	PIPE	75
476401	SHAFT	617
476403	HEAD PLATE	657
476449	PIPE	103
476503	BRACKET	607
476556	GUIDE	617
476599	PLATFORM	99
476600	PIPE HOLDER	99, 103, 109
476794-0001	PIPE	131, 133
476794-0002	PIPE	131, 133
476796	PIPE	131, 133
476824	COVERING PLATE	225
476877	SPACER	383
476878	FILLER TUBE	55
476879	PRESSURE FLANGE	55
476894	PIPE HOLDER	269
476975	WHEEL	453
479025	WASHER	75
479032	HATCH	177
479033	PIPE CONNECTION	233
479034	PIPE CONNECTION	233
479036	PIPE CONNECTION	233
479040	PIPE CONNECTION	233
479061	PIPE	131, 133
479072	PIPE	131, 133
479073	PIPE	131, 133
479074	PIPE	131, 133
479176	PIPE	59
479188	INSULATION	647
479223	RAIL	647, 655
479224	STEERING	647
479230	PIPE	123
479231	PIPE	123
479232	PIPE	123
479234	WASHER	63
479236	END SECTION	631, 633
479237	CARRIER	631, 633
479238	CARRIER	631, 633
479245	VOLUME SHIM	339, 343, 401
479246	VOLUME SHIM	339, 343, 401
479261	NIPPLE	237
479354	SCREW	301
479374	DRIP PLATE	227
479743	COMPRESSION SPRING	389, 391, 393, 395, 397, 399
479744	COMPRESSION SPRING	389, 391, 393, 395, 397, 399
479753	STRIPPER	301
479858	HYDRAULIC DIAGRAM	273, 595
479964	SIGN	243
484047	PIPE	81, 83, 85
484189	HIGH PRESSURE HOSE	79
484212	BRACKET	227
484213	BRACKET	227
484219	SHAFT	269
484220	BRACKET	269
484221	BRACKET	269
484222	SHAFT	269
484223	NUT	269

Part No	Description	Page No
484529	CYLINDER BRACKET	647
484536	VALVE	171, 183
484538	VALVE	233
484559	COUNTER CAM	293
484682	COMPRESSION SPRING	647
484783	RAIL	647
484791	GASKET	179
484834	HOLDER	365, 367
484843	GASKET	335, 337
484844	INSULATION	647
484877	STEERING	647
484878	HOLDER	647
484895-0001	SHEET	645
484895-0002	SHEET	645
484895-0003	SHEET	645
484895-0005	SHEET	645
484895-0006	SHEET	645
484895-0007	SHEET	645
484975	WASHER	89, 91
484998	END SECTION	89, 91
486803	BEARING HOUSING	27, 31
486826-0001	SIGN "EMERGENCY STOP" YL	639, 641, 675, 681
486960-0001	SHAFT	619, 621, 623, 625, 627
486960-0002	SHAFT	623
486961	PLATE	621, 623, 627
486962-0001	FASTENING BRACKET	619, 621, 625
486962-0002	FASTENING BRACKET	623, 627
486962-0003	FASTENING BRACKET	623
486962-0004	FASTENING BRACKET	623, 627
486962-0007	FASTENING BRACKET	625
486962-0008	FASTENING BRACKET	625
486962-0009	FASTENING BRACKET	625
486962-0010	FASTENING BRACKET	625
486962-0011	FASTENING BRACKET	625
486964	HEAD PLATE	619, 621, 623, 625, 627
486965	HEAD PLATE	623
486966-0001	SHAFT	619, 621, 623, 625, 627
486966-0002	SHAFT FOR CARRIER	623
486967	SHEET	629
486968-0001	SHAFT FOR BENDINGROLLER	619, 621, 623, 625, 627
486968-0002	SHAFT FOR BENDINGROLLER	623
486969	GUIDE LUG	629
486971	ANGLE	629

Part No	Description	Page No
491126	SCREW	75
491128	GASKET	115
491602	GASKET HOLDER	115
491770	BUSHING	179
493021	ARM	269
493022	ARM	269
493091	CLAMP RAIL	125
493653	GASKET	103
493658	AXLE SUPPORT	127
493733	LOCKING PIN UPPER	55, 57
493734	LOCKING PIN LOWER	55, 57
493747	GUIDE STUD	21
493875	FILLING TUBE LOWER	55
493886	SHAFT	21
493948	CANTILEVER	35, 37, 39
495201	COOLING ELEMENT	221
497040	STEERING	389, 391, 393, 395, 397, 399
497121	SPLASH GUARD	177
497131	FILLER TUBE	49
497572	BEARING HOUSING	369, 373
497579	CLAMP HALF	43
497580	CLAMP HALF	43
497583	HOUSING	393, 399
497716	GASKET	369, 373
497719	WASHER	115
497720	WASHER	17, 21
497748	PIN	95, 97
497921	CUTTING RAIL	369, 373
497933	BUSHING	89, 91, 93
499011	SHAFT	49
499016	FORK	49
499124	STOP	351
499125	STOP	351
499132-0002	SHAFT	655
49915-01:00	CIRCUIT DIAGRAM	277
49916-01:00	COMPONENT LAYOUT	277
499181	WASHER	103
499387	PRESSURE ROLLER	49, 141
499473	GEAR WHEEL	289
499474	SHAFT	289
499746	MOUNTING BLOCK	597
499747	MOUNTING BLOCK	597
499825	GASKET	103

Part No	Description	Page No
499826	PIPE	103
499833	PIPE RIGHT	199
499834	PIPE LEFT	199
522090	HEAT EXCHANGER	109
522122-0001	RAIL	659
522122-0002	RAIL	659
522123	PLATE	659
522124	RULER	659
522125	BEARING HOUSING	659
522126	SHEET	659
522128	KNIFE	659
522129	KNIFE HOLDER	659
522130	HANDLE	659
522131	STEERING	659
522132	SLIDE BELT	659
522133	SHAFT	659
522134	END PLATE	659
522137	PUSH BUTTON	659
522138	STOPPER	659
522139-0001	STOPPER	659
522139-0002	STOPPER	659
522152	RAIL BRACKET	381
522153	VOLUME CAM	381
522158	COMPRESSION SPRING	659
522308	SIGN	663, 665, 667
522408	BEARING HOUSING	627
522474	BLOCK L	653
522475	BLOCK R	653
525001	FOLDING BAR	549, 551, 553, 555
525002	FOLDING BAR	551, 553
525003	FOLDING BAR	549, 551, 553, 555
525004	FOLDING BAR	551, 553
525005-0001	FOLDING BAR	549, 551
525005-0002	FOLDING BAR	549
525005-0003	FOLDING BAR	549
525005-0004	FOLDING BAR	549
525005-0005	FOLDING BAR	549
525005-0006	FOLDING BAR	551
525005-0007	FOLDING BAR	551
525005-0009	FOLDING BAR	551
525005-0010	FOLDING BAR	553
525006-0001	FOLDING BAR	549, 551
525006-0002	FOLDING BAR	549
525006-0003	FOLDING BAR	549
525006-0004	FOLDING BAR	549
525006-0005	FOLDING BAR	549
525006-0006	FOLDING BAR	551
525006-0007	FOLDING BAR	551
525006-0009	FOLDING BAR	551
525006-0010	FOLDING BAR	553
525007-0001	CANTILEVER	549, 551, 553
525007-0002	CANTILEVER	551, 553, 555
525007-0003	CANTILEVER	551
525007-0004	CANTILEVER	551
525008-0001	BRACKET	549, 553, 555
525008-0002	BRACKET	549, 551, 553
525008-0003	BRACKET	551
525011-0001	BRACKET	549, 553
525011-0002	BRACKET	549, 553
525011-0003	BRACKET	549
525011-0004	BRACKET	549
525011-0005	BRACKET	551
525011-0006	BRACKET	551
525011-0007	BRACKET	551
525011-0009	BRACKET	551
525011-0010	BRACKET	553
525012-0001	COUNTER PLATE	549, 553
525012-0002	COUNTER PLATE	549
525012-0003	COUNTER PLATE	549
525012-0004	COUNTER PLATE	549
525012-0005	COUNTER PLATE	551
525014-0001	COUNTER PLATE	551
525015-0001	SCREW	549, 551, 553
525015-0002	SCREW	551, 553, 555
525015-0003	SCREW	551
525017	STEERING GUIDE	555
525018	SPACER	555
525019	BRACKET	555
525038	GABLE PLATE	481
525039	GABLE PLATE	481
525046	GASKET	427
525047	GASKET	427
525051	HEAD PLATE	481
525052-0001	SPACER	481
525052-0002	SPACER	481
525052-0003	SPACER	481

Part No	Description	Page No
525052-0004	SPACER	481
525052-0005	SPACER	481
525052-0006	SPACER	481
525053	PLATE (CIRCULAR)	453
525054	SIDE PLATE	453
525055	BRACKET	487
525063	BOTTOM	529, 539
525066	SHEET	519
525067	SHEET	519
525070	ELECTRICAL CONNECTION	441, 451
525071	SPACER PIECE	441
525073	COVER	441, 451
525074	ARM	469
525075-0001	LINK	469
525075-0002	LINK	469
525075-0003	LINK	469
525075-0004	LINK	469
525075-0005	LINK	469
525075-0006	LINK	469
525077	AXLE PIN	469
525078	BRACKET	469
525079	BRACKET	469
525080	BRACKET	469
525081	BRACKET	469
525082	BRACKET	469
525083	BRACKET	469
525084	HEAD PLATE	469
525100	BLOCKING PIECE	513, 515
525101-0001	BLOCKING PIECE	513, 515
525101-0002	BLOCKING PIECE	513
525109	BRACKET	417
525125	PIN	513, 515
525130	LEG	411
525132	CABLE TRENCH	411
525134	SPACER PIECE	451
525135	PLATE	423
525136	SHAFT	419
525138	SHEET	563
525140	HOLDER	563
525146	BRACKET	465
525148	BRACKET	465
525150	GABLE PLATE	481
525151	GABLE PLATE	481
525164	STEERING	465
525166	MOTOR CRADLE	415
525169	SIDE PLATE	453
525170	SIDE PLATE	453
525171-0001	BRACKET	453
525171-0002	BRACKET	453
525172	SPACER	505
525174	BRACKET	411
525175	BRACKET	411
525178	BRACKET	555
525179-0001	FOLDING ARM	549, 551, 553
525179-0002	FOLDING ARM	551, 553
525180-0001	FOLDING ARM	549, 551, 553
525180-0002	FOLDING ARM	551, 553
525181	WASHER	555
525182-0001	COUNTER PLATE	551
525182-0002	COUNTER PLATE	551
525182-0003	COUNTER PLATE	553
525185	HATCH	427
525194	SPROCKET	563
525195	WASHER	563
525197	BLOW-OFF NOZZLE TR	437, 439, 447, 449
525198	BLOW-OFF NOZZLE TL	437, 439, 447, 449
525200	BRACKET	563
525208-0001	CARRIER	479
525208-0002	CARRIER	479
525208-0003	CARRIER	479
525211	PLATE	519, 521
525212	PLATE	519, 521, 523
525215-0006	TIMING BELT PULLEY	417
525216	SLEEVE	417
525232	BRACKET	417
525233	GASKET	443, 445
525234-0002	PLATE	519
525235	CURVE	501
525242	BRACKET	463
525243	PROFILE	463
525244	PROFILE	463
525245	PROFILE	461
525246	PROFILE	461
525247	PROFILE	461
525248	PROFILE	461
525252	BEARING	453

Part No	Description	Page No
525254	LINK	479, 569
525255	HEAD PLATE	465, 467
525256	HEAD PLATE	465, 467
525259	BRACKET	465
525260	GABLE PLATE	481
525261	GABLE PLATE	481
525262	COVERING PLATE	411
525264	BOTTOM	527, 537
525265-0001	LEAD PLATE	565
525265-0002	LEAD PLATE	565
525265-0003	LEAD PLATE	565
525265-0004	LEAD PLATE	565
525266	LEG	411
525267	LEG	411
525268	LEG	411
525269	PIPE	425
525270	PIPE	425
525271	ELBOW PIPE	411
525272	STRUT	411
525273	STRUT	411
525274	MACHINE BODY	411
525275	COVERING PLATE	411
525277	CABLE TRENCH	411
525278	CLEANING TROUGH	411
525279	HATCH	501
525280	SHEET	411
525281	GASKET	411
525292	BRACKET	501
525293	PIPE	501
525294	PIPE	501
525295	ARM	549, 551, 553
525296	BRACKET	555
525297	BRACKET	549, 551, 553
525298	SPROCKET	569
525299	SHAFT	569
525300	MACHINE BODY	569
525301	ARM	561
525302	ARM	561
525303	ARM	561
525304	ARM	561
525305	DISTRIBUTOR	561
525306	DISTRIBUTOR	561
525307	DISTRIBUTOR	561
525308	DISTRIBUTOR	561
525309	DISTRIBUTOR	561
525310	BRACKET	563
525311	GUIDE	563
525312	SHAFT	563
525315	SLIDER	563
525317	FITTING BOLT	563
525321	SCREW	555
525322-0001	LEAD RAIL	567
525322-0002	LEAD RAIL	567
525322-0003	LEAD RAIL	567
525322-0004	LEAD RAIL	567
525323	BRACKET	569
525324	PROFILE	569
525326	CHAIN GUARD	565
525327	CHAIN GUARD	565
525328	CHAIN GUARD	565
525329	SLEEVE	527, 529, 531, 533, 537, 539, 541, 543
525330	SHAFT	535, 543
525331	SHIM	431
525332	SHIM	431
525334	BRACKET	463, 483, 497
525337	BRACKET	417
525338	SPACER	481, 493, 495
525339	COVERING PLATE	481
525340	BRACKET	555
525341-0001	LEAD RAIL	549, 551
525341-0002	LEAD RAIL	551, 553
525346	SIDE PLATE	411
525347	SLIDE RAIL	503
525348	SLIDE RAIL	503
525349	SLIDE RAIL	503
525350	SLIDE RAIL	503
525351	SLIDE RAIL	503, 505
525352	SLIDE RAIL	503
525353	SLIDE RAIL	503
525354	SLIDE RAIL	503
525355	SLIDE RAIL	503
525357	SPACER	503, 505
525358	BRACKET	435
525360	BRACKET	555
525363-0002	SHAFT	483, 499
525367	SLEEVE	515

Part No	Description	Page No
525368	BOTTOM	527, 537
525369	BOTTOM	527, 537
525370	BOTTOM	529, 539
525371	BOTTOM	531, 541
525372	BOTTOM	529, 539
525374	CARRIER	567
525375	OIL PIPE	435
525376	BOW CLAMP	435
525377	HATCH	427
525378	HEAD PLATE	503
525379	COMPRESSION SPRING	513, 515
525380	HATCH	559
525381	BRACKET	559
525382	SHAFT	559
525383	BRACKET	559
525384	DOWEL	559
525385	BRACKET	611, 613
525394	HINGE	559
525400	SHAFT	463, 483
525401	SHAFT	463
525402	SHAFT	463, 483, 497
525403	PROFILE	461
525404	PROFILE	461
525405	PROFILE	461
525406	PROFILE	461
525408	HEAD PLATE	503
525409	WASTE CHUTE	559
525410	LEAD RAIL	553
525411	PROFILE	569
525412	RULER	569
525413	LEAD RAIL	567
525414	CARRIER	567
525416	STOP	469
525417	STEERING	561
525418	HOLDER	561
525419	LEAD RAIL	463
525423	COVERING PLATE	559
525424	HEAD PLATE	503
525425	PROFILE	461
525426	PROFILE	461
525427	PROFILE	461
525428	PROFILE	461
525429	PLATE	519, 521
525430	FLAP	529, 539
525431	CARRIER	471, 473
525432	CARRIER	475, 477
525437	ARCH	567
525438	COUNTER PLATE	553
525439	DRIP PLATE	559
525451	FLAP	531, 541
525452	FLAP	529, 539
525453	FLAP	527, 529, 537, 539
525454	FLAP	531, 541
525455	FLAP	527, 537
525456	FLAP	529, 539
525458	FLAP	531, 541
525460	SPACER PIECE	531, 541
525461	SPACER PIECE	529, 531, 533, 539, 541, 543
525465	BRACKET	469
525466	ARCH	567
526502	STEERING RAIL	121
526582	NET	681
526587	AIR NOZZLE	61
526677	CANTILEVER	405
526680	FENDER WALING	607
526682	HOOD	49
526687	ATTACHMENT	61
526688	HEAD PLATE	61
526689	DISTRIBUTOR WING	61, 141
526690	SHAFT	61
526691	ROLL	61
526692	ROLL	61
526696	AIR NOZZLE	43
526697	HEAT GUARD	43
526782	COVERING PLATE	63
526904	LINK HEAD	309
526947	MOUNTING SHEET	693
526948	MOUNTING SHEET	691
526958	AXLE SUPPORT	35, 37, 39
526960	PRESSURE FLANGE	55
526984	SADDLE	637
526985	PLATE	637
526986-0001	SHAFT	637
527120	STEERING	185
527121-0001	BOW CLAMP	185
527121-0002	BOW CLAMP	185

Part No	Description	Page No
527122	ATTACHMENT	185
527124	BEARING	185
527125	STEERING	185
527126	LEAF SPRING	185
527127	DOWEL	185
527128	GUIDE PIN	185
527129	BRACKET	185
527130	SCREW	185
527647-0001	STEERING RAIL	121
527647-0002	STEERING RAIL	121
527648	WASHER	299
527649	DISTANCE RUBBER	637
527750	CALENDER ROLLER	117
527854	PLATE RIGHT	521
527856	PLATE LEFT	521
527861	HEAD PLATE	503
527902	SHEET	175
527905	GASKET	183
527906	GASKET	183
527907	PIPE	257, 259, 261, 263
527910	PIPE	177
527912	NON-RETURN VALVE	185
529033	FILLING TUBE LOWER	55
529039	EDGE ROLLER	35, 37, 39
529040	GUIDE ROLLER	35, 37, 39
529041	GUIDE ROLLER	35, 37, 39
529137	CURVE LEFT	325
529138	CURVE RIGHT	329
529139	CREASE FORMER	623
529141	VOLUME SHIM	401
529180	FORK	49
529181	COUNTER ROLLER	27, 31
529184	HOLDER	27, 31
529196	HOLDER	383
529312	HEAD PLATE	503
529331	COVERING PLATE	411
529362	SPROCKET	637
529376	ARM	55
529377	CLAMP	55
529378	LINK	55
529455	PLATE	639, 641
529456	PLATE	639, 641
529476	SIDE GUARD	611, 613
529498	SIDE GUARD RIGHT	611, 613
530469	FRONT PLATE	225
530529	MAIN CAM	293
530532	COUNTER CAM	293
530550	PIPE	175
530551	WASHER	185
530556	JUNCTION PIPE UPPER	247
530566	EDGE ROLLER	35, 37, 39
530567	GUIDE ROLLER	35, 37, 39
530568	GUIDE ROLLER	35, 37, 39
530587	WASHER	93
530588	SEAL RING	93, 111, 143
530589	SEAL RING	89, 91, 143
530590	VALVE CONE	89, 91
530591	HOLDER	91
530592	SEAL RING HOLDER	89
530595	SEAL RING HOLDER	89
530597	WASHER	91
530598	WASHER	91
530599	RING	91
530622	BUSHING	59
530708	ARM	297
530754	FASTENING BRACKET	291
530755	SCREW	291
530778	LACE	659
530808	CLAMP RAIL	125
530826	FILLING TUBE LOWER	55
531002	CURVE	381, 383
531034	VALVE HOUSING	105
531035	ARM	105
531036	SHAFT	105
531037	FLAP	105
531038	GASKET	105
531039	WASHER	105
531040	BRACKET	105
531041	WEDGE	105
531109	VOLUME CAM	381, 383
531110	RAIL BRACKET	383
531116	GASKET	425
531119	STRAINER	411
531167	SHAFT	75
531168	WHEEL	75
531169	WASHER	75

Part No	Description	Page No
531189	GASKET	425
531190	SHAFT	115
531191	BUSHING	115
531309	GASKET	125
531310	HEAD PLATE	503, 505
531312	HEAD PLATE	503
531313	HEAD PLATE	503
531314	HEAD PLATE	503
531320	VOLUME SHIM	339, 401
531328	HEAD PLATE	503
531337	MACHINE BODY	615
531365	BRACKET	227
531592	PIPE	233
531595	STRAIGHT PIPE UNION	233
531597	PIPE	233
531616	HOLDER	187, 189
531628	PRESSURE DEVICE FLAP	513
531730	FLANGE SEAL	441, 451
531731	GASKET	113
531733	GASKET	691, 699
531734	GASKET	59, 141, 691, 699
531735	GASKET	691, 699
531736	GASKET	691, 699
531737	GASKET	109, 113
531738	GASKET	59, 141
531739	GASKET	59, 141
531740	GASKET	59, 141
531741	GASKET	43
531742	GASKET	63, 109, 141
531744	GASKET	59, 141
531745	GASKET	59, 141
531761	HOLDER	189
531764	GASKET	59, 141
531765	GASKET	111
531885	STEERING	655
531886	PROTECTION PLATE	647
531887	PROTECTION PLATE	647
532024	GASKET	615
532026	SEAL COVER	615
532032	MAIN CAM	293, 295
532033	COUNTER CAM	293, 295
532082	ROUND NUT	629
532083	ROUND NUT	629

Part No	Description	Page No
532097	COUNTER CAM	293
532129	VOLUME BULGE	339
532143	ARM	117
532144	SHAFT	117
532145	SHAFT	117
532146	SHAFT	117
532147	WASHER	117
532148	SCREW	117
532205	LID	183
532206	GASKET	183
532261	SLEEVE	117
532318	CATCH GUARD RIGHT	155
532319	CATCH GUARD LEFT	155
532348	SPINDLE GUIDE	111
532349	PLAIN BEARING	111
532352	PIPE	131, 133
532354	PIPE	131, 133
532355	PIPE	131, 133
532356	PIPE	131, 133
532366	PIPE	131, 133
532371	STOP LUG	269
532655	CAUTION SIGN	173
532719-0001	FEEDING ROLLER	619, 621, 623, 625, 627
532719-0002	FEEDING ROLLER	623
533012-0001	END PIECE	371, 375, 403
533112	FOLDING FLAP CAM L	325
533113	FOLDING FLAP CAM R	329
533169	DIAPHRAGM	89, 143
533195	MANTLE	59
533196	FASTENING PLATE	59
533426	STOP PLATE	187
533442	COUNTER ROLLER	27, 31
533449-0001	BENDING ROLLER	619, 621, 623, 625, 627
533449-0002	BENDING ROLLER	623
533453	LID	619, 621, 623, 625, 627
533454	FRAME	619, 621, 623, 625, 627
533455	LID	623
533456	FRAME	623
533457-0001	SHAFT	619, 621, 623, 625, 627
533457-0002	SHAFT	623
533458	WASHER	627
533459	SCREW	629
533818	HOLDER	333, 335, 337

Part No	Description	Page No
533955	CURVE	381, 383
533956	CURVE RIGHT	329
533957	CURVE LEFT	325
533958	FOLDING FLAP CAM R	329
533959	FOLDING FLAP CAM L	325
533961	MAIN CAM	293
533962	COUNTER CAM	293
534176	AIR NOZZLE	43
534177	HOLDER	27, 31
534237	SEAL	335, 337
534426	PIPE	109
534486	PIPE HOLDER	269
534878	SHAFT	193, 195, 197, 201, 203
534879	BEARING HOUSING	193, 195, 197, 201, 203
534880	END SECTION	193, 195, 197, 201, 203
535016	FORCE SPRING	247
535017	BRACKET	247
535200	HOLDER	405
535608	GASKET	681
535612	PIPE	683
535613	BRANCH	681
535614	INNER PIPE	681
536686	VOLUME BULGE	339
536687	VOLUME SHIM	339
536703	SHAFT	309
536704	WASHER	333, 335, 337
536705	BRACKET	335, 337
536913	HUB	703
536916	AXLE PIN	701
536917	AXLE PIN	707, 709
536987	WASHER	21
537308	SPRING	635
537327	SHAFT	703
537901	FOLDING FLAP CAM L	325
537902	FOLDING FLAP CAM R	329
537918	PIPE	247
537919	PIPE HOLDER	247
538245	SHIM	227
538399	SHAFT	333, 335, 337
539052	KNIFE HOLDER	645
539212	GASKET	87, 143
539307	MAIN CAM	293
539338	CAP	619, 621, 623, 625, 627
539347-SHEET 1	STAMPING SUMMARY	631, 633
539612	SPREADER	223
539613	SPREADER	223
539761	CUTTING RAIL	369, 373
540270	MAIN CAM	293
540306-0001	COMPONENTS WITHOUT TP-NO	277
540307	PRINTED CIRCUIT BOARD	277
540335	LINK	309
540367	CARRIER	367
540368	CARRIER	365
540718	ELBOW PIPE JOINT	235
540721	CABLE DUCT	253
540722	LID	253
540724	CONNECTION BOX	231
540725	FRONT PLATE, LOWER	225
540726	HOOK HOLDER	227
540727	FASTENING BRACKET	227
540729	FASTENING BRACKET	615
540743	BUSBAR	367
540744	BUSBAR	365
540869	SHEET	701
540870	ARM	707, 709
540886	TANK	177
540949	SHAFT	301
541009	CRANK HOLDER	211
541057	ARM	707, 709
541064	FORK	707, 709
541065	SHAFT	707, 709
541066	ROLL	707, 709
541067	SPRING BRACKET	707, 709
541068	SPRING HOLDER	701
541069	SPRING BRACKET	707, 709
541070	SHAFT	707, 709
541165	WASHER	95, 97
541166	WASHER	89
541167	SPACER SLEEVE	89
541172	SET SCREW	701
541173	STOP	701
541177	BENDING ROLLER	75
541204	VOLUME BULGE	339, 343
541697	CATCH	389, 391, 393, 395, 397, 399
541751	CONICAL BOBBIN	703
542063	FLANGE	301

Part No	Description	Page No
542074	PIPE	233
542075	PIPE	75
542090	HEAT GUARD	689
542262	CRANK	287
542398	HOLDER	225
542399	HOLDER	225
542648-SHEET	PACKING DESCRIPTION	597
542695	COVERPLATE R	159
542697	COVER PLATE L	219
542700	VALVEPANEL LOWER	237
542702	COVER PLATE L	225
542703	COVER PLATE R	225
542706	PIPE	191
542781	ARM	705
542782	AXLE PIN	705
542785	ROLL	705
542786	FLAG	705
542847	PAPER GUARD	25
542848	HATCH	25
542849	CANTILEVER	25
542850	COVERING PLATE	25
542851	HINGE	25
542852	CANTILEVER	99
542860	COVER PLATE	187
543125	ANGLE	701
543126	STOP LUG	701
543127	BRACKET	237
543128	VALVE BRACKET	237
543130	BRACKET	237
543131	BRACKET	237
543134	PLATE	237
543135	INK TRANSFER ROLLER	635
543141	SIGN	637
543142	SIGN	637
543148	HOOD	199
543152	HOSE ATTACHMENT	227
543275	ASSEMBLY INSTRUCTION	597
543470	LEVEL GLASS	75
543471	ROLL	35, 37, 39
543476	TROUGH	301
543575	LOCK SHEET	705
543694	SLIDE RAIL	503
543697	SPACER PIECE	531, 541
543701	SHEET	521
543702	SHEET	521
543705	GEAR WHEEL WIDE	509, 511
543706	GEAR WHEEL SLIM , INNER	509, 511
543707	GEAR WHEEL SLIM , OUTER	509, 511
543818	PROTECTION PLATE	701
543819	HINGE	701
543820	SPRING	707, 709
543950	BENDING ROLLER	115
544012	ROLL	127
544013	RING	127
544014	RING	127
544015	SEAL	127, 141
544229-0001	DROP WING	465
544229-0002	DROP WING	465
544229-0003	DROP WING	465
544229-0004	DROP WING	465
544229-0005	DROP WING	465
544252	FLAP	531, 541
544254	PLATE	531, 541
544255	BLOCKING PIECE	513
544263	FORMING RING	35, 37, 39
544269	BLOW-OFF NOZZLE TV	439, 449
544270	STOPPER	659
544272	BEARING HOUSING	653
544273	BEARING HOUSING	653
544274	COVERING PLATE	653
544275	COVERING PLATE	653
544277	RETAINING RING	603, 605
544278	BEARING HOUSING	391, 397
544279	CREASE FORMER	623
544280	SHEET	521
544286	BOW CLAMP	17
544287	FILLER TUBE	49
544288	SHEET	521
544289	FLAP	513
544290	RAIL	521, 523
544291	PLATE	521
544292	SHAFT	341
544293	BLOW-OFF NOZZLE TH	439, 449
544294	FILLER TUBE	55, 57
544295	FLOAT	55, 57
544298	BLOWING NOZZLE B	439, 449

Part No	Description	Page No
544299	CUP	23
544300	GASKET	23
544301	STEERING RAIL	121
544303	HOLDER	383
544305	VOLUME SHIM	403
544306	BEARING HOUSING	27, 31
544307	HEAD PLATE	469
544317	BEARING HOUSING	369, 373
544318	DISTRIBUTOR	561
544321	HEAD PLATE	461
544322	BRACKET	461
544323	CUTTING JAW	369, 373
544327	KNIFE	377
544331	BRACKET	469
544332	BRACKET	469
544333	FORMING RING	27, 31
544334	CUTTING RAIL	369, 371, 373, 375
544335	FORK	27, 31
544336	SHAFT	27, 31
544337	END PIECE	369, 373, 403
544342	RAIL BRACKET	381, 383, 385
544343	CANTILEVER	405
544367	SHAFT	621
544435	PIPE	103
544436	FILTER PIPE	103
544437	BRANCH PIPE	109
544439	INTERMEDIATE PIPE	103
544445	SPACER	27, 31
544480	NUT	187, 189
544481	PLATE	187, 189
544482	BRACKET	189
544483	BRACKET	187
544484	HOLDER	187, 189
544486	BEARING UNIT	187, 189
544506	PIPE	103
544508	BRACKET	189
544510	BRACKET	187
544516	CUTTING RAIL	369, 373
544527	MACHINE PLATE TBA	213
544533	PLASTIC PEHD 21172-10	213
544680	SIDE GUARD R	189
544681	SIDEGUARD L	187
544688	PIPE	249
544689	PIPE	249
544690	PIPE	249
544691	PIPE	249
544692	PIPE	257, 259, 261, 263
544693	PIPE	249
544694	PIPE	249
544695	PIPE	249
544696	PIPE	249
544697	PIPE	257, 259, 261, 263
544703	MOUNTING SHEET	225
544706	FLANGE	627
544725	AXLE PIN	701
544726	AXLE PIN	707, 709
544727	AXLE PIN	701
544730	ROLL	701, 707, 709, 711
544892	SPRING	49
544893	SPRING	49
544896	VALVE	75
544899	SIDECOVER LEFT FRONT	187
544900	SIDECOVER RIGHT FRONT	189
544913	PIPE	131, 133
544974	PILLAR	711
545101	MAIN CAM	293
545107	CHUTE LEFT	187
545108	CHUTE	189
545112	SHAFT	711
545113	SIGN	701
545125	STOPPER	353
545126	STOPPER	353
545127	CATCH	353
545136	CATCH	353
545651	GUIDE STUD	353, 355, 357, 359, 361, 363
545789	HOLDER	405
545801	SPRING	353, 357
545802	SPRING	353, 357
545995	WIRING DIAGRAM	113
546031	SPACER	711
546116	CANTILEVER	687
546929	FILTER	71, 73, 221
547220	CABLE DUCT	253
547567	SHAFT	79
547568	SPACER	79
547571	PLATE	711

Part No	Description	Page No
547793	SHAFT	179
547902	BRACKET	165
547904	TUBE	165
547906	SHELF	265
547924	AXLE PIN	711
547925	AXLE PIN	711
548336	WASHER	405
548337	BUSHING	405
548343	BOTTOM PANEL	159
548344	BOTTOM PANEL	219
548346	FRONT GUARD	213
548348	HATCH	213
548397	FOLDING BAR	553
548398	FOLDING BAR	553
548402	SIDE PIPE	439, 449
548406	FLAP	515
548493	STOPPER	355, 357
548778	LIFTING UNIT	593
548794	HEATING JAW	645
549044	DOOR	267
549045	HATCH	161
549093	PIPE	131, 133
549263	BLOCK	45
549264	CONTAINER	45
549267	LID	45
549830	PROTECTION PLATE	615
549832	WASTE CHUTE	627
549834	CUTTING RAIL	653
549835	CUTTING RAIL	653
549928	COUNTER CAM	293
550149	FLAP	531, 541
550235	BOTTOM	531, 541
550301	CURVE	381
550337	FOLDING FLAP CAM L	325
550338	FOLDING FLAP CAM R	329
550359	ARM	553, 555
550503	PROTECTION	199
551281	RAIL BRACKET	381
551282	FASTENING PLATE	381
551283	CURVE	381
551284	VOLUME CAM	381
551285	FOLDING FLAP CAM	325
551286	FOLDING FLAP CAM	329
551340	FILLER TUBE	75
551626	VOLUME CAM	383, 385
551784	FITTING BOLT	125
551786	LEVER	125
551825	COUNTER CAM	293
551903	KICKPLATE,LEFT	581
551907	MAIN CAM	293
551910	COUNTER CAM	293
551998	SUPPORT LUG	593
552158	RAIL BRACKET	381, 383
552159	VOLUME CAM	381, 383
553156	CONNECTION BOX	679
553162	STOP PLATE	187
553164	LOW IMPEDANCELITZ L=150MM	187, 189
553763	ADJUSTING SCREW	647
553770-0001	PRESSURE JAW	645
553770-0002	PRESSURE JAW	645
553841	LEAD-IN PLATE	217
553842	BOTTOM PLATE	217
553851	SCREW	389, 391, 393, 395, 397, 399
554139	PIPE	131, 133
554141	FILTER	45
554142	FILTER HOUSING	45
554448	PIPE	123
554449	PIPE	123
554582	CANTILEVER	81, 83, 85
554583	PIPE	123
554585	STUD SCREW	45
554850	PIPE	131, 133
554962	SPRING	347, 353, 359
554963	SPRING	347, 353, 359
555540	SPACER	65, 67, 69
555541	BRACKET	65, 67, 69
555542	BRACKET	65, 67, 69
555544	PIPE	63
555545	COIL HEATER	59
555546	INSULATING PLATE	59
555547	PIPE	131, 133
555548	PIPE	131, 133
555551	PIPE	131, 133
555552	PIPE	131, 133
555553	PIPE	131, 133
555554	PIPE	131, 133

Part No	Description	Page No
555888	BRACKET	307
555892	VOLUME BULGE	341
555928	VOLUME SHIM	341
556139	ROLL	27, 31
556316	INSULATION	647
556317	INSULATION	647
556318	INSULATION	647
556319	WASHER	653
556320	SLEEVE	653
556321	CLAMPING PIECE	653
556322	SHAFT	653
556323	SHAFT	653
556324	SHAFT	653
556325	SHAFT	653
556391	HANDLE	653
556392	HANDLE	653
556393	CUTTING RAIL	653
556394	CUTTING RAIL	653
556395	CUTTING RAIL	653
556439	BARRIER	659
556440	BARRIER	659
556441	ARM	659
556442	ARM	659
556443	BEARING HOUSING	659
556471	KNIFE HOLDER	377
556472	KNIFE HOLDER	377
556473	KNIFE HOLDER	377
556549	FASTENING PLATE	681
556550	BRACKET	691
556551	CYLINDER BRACKET	689
556552	BRACKET	689
556557-0001	PIPE	683
556557-0002	PIPE	683
556557-0003	PIPE	683
556557-0004	PIPE	683
556557-0005	PIPE	683
556557-0006	PIPE	683
556558-0001	PIPE	683
556558-0002	PIPE	683
556558-0003	PIPE	683
556558-0004	PIPE	683
556558-0005	PIPE	683
556558-0006	PIPE	683
556559-0001	PIPE	683
556559-0002	PIPE	683
556559-0003	PIPE	683
556559-0004	PIPE	683
556559-0005	PIPE	683
556559-0006	PIPE	683
556560-0001	PIPE	683
556560-0002	PIPE	683
556560-0003	PIPE	683
556560-0004	PIPE	683
556560-0005	PIPE	683
556560-0006	PIPE	683
556565	ROCKER ARM	689
556579	CURVE	301
556682	PLATE	137
556683	GASKET	137
556868	ANGLE	611, 613
556872	BEARING UNIT	609
556873	EXTENSION PIECE	609
556874	BLOCKING RING	609
556879	COVER	609
556886	BRACKET	463, 483
560122	SUPPORT ROLLER	381, 383
560391	CAM LEFT	293
560392	CAM RIGHT	293
560417	ROCKER ARM	299
560418	SHAFT	299
560472	PIPE	75
560614	BATH	75
560615	PIPE	75
560616	PILLAR	79
560617	ROLLER CHAIN	75
560797	SIDE PIECE	159
560798	SIDE PIECE	219
560799	FRONT GUARD	213
560800	BEARING UNIT	187, 189
560872	PLATE	187, 189
560873	PLATE	187, 189
560880	HATCH	163
560881	PIPE	257, 259, 261, 263
560923	PIPE	179
560927	PIPE	81, 83, 85
560928	PIPE	131, 133

Part No	Description	Page No
560929	TOUCH GUARD	81, 83, 85
560931	BRACKET	45, 71, 75, 177
560932	INTERMEDIATE PART	45
560933	ELECTRODE	45
560934	ELECTRODE	45
561391	SPRING	355
561392	SPRING	355
561393	SPRING	355
561394	SPRING	355
561416	BRACKET	325, 329
561420	OVERFLOW TUBE	75
561421	OVERFLOW TUBE	75
561422	OVERFLOW TUBE	75
561423	BRACKET	159
561424	PIPE	249
561426	LACE	647
561427	CONTAINER	173
561543	SUPPORT ROLLER	381, 383
561544	SUPPORT ROLLER	383
561545	SHAFT	381
561547	SHAFT	381, 383, 385
561549	TANK	183
561571	CABLE TRENCH	137
561583	U-TUBE	109
561590	CENTRAL LUBRIC. DIAGRAM	273, 573
561591	PIPE	249
561592	PIPE	249
561595	SIGN	243
562136	CATCH	355
562137	CATCH	355
562140	CAP	309
562746	ARM	309
562747	ARM	309
562748	BRACKET	309
562749	BRACKET	309
562971	CANTILEVER	405
563061	REAMED BOLT	309
563212	SHAFT	299
563285	BLIND PLUG	175
563645	CAM LEFT	293
563646	CAM RIGHT	293
563728	CAM LEFT	293
563729	CAM RIGHT	293

Part No	Description	Page No
564519	SIDE PLATE	219
564520	SIDE PLATE	219
564521	SIDE PLATE	159
564522	SIDE PLATE	159
564523	RIM	159, 219
564524	CAM LEFT	293
564525	CAM RIGHT	293
564526	CAM LEFT	293
564527	CAM RIGHT	293
564528	CAM LEFT	293
564529	CAM RIGHT	293
564600	PIPE	131, 133
564621	CAM LEFT	293, 295
564622	CAM RIGHT	293, 295
564623	CAM LEFT	293
564624	CAM RIGHT	293
564625	CAM LEFT	293
564626	CAM RIGHT	293
564933	CAM LEFT	293
564934	CAM RIGHT	293
565104	SWEEP	185
565188	FOLDING FLAP CAM	325
565189	FOLDING FLAP CAM	329
565250	WASHER	173
565251	VALVE	173
565259	VOLUME CAM	383
565322	INTERMEDIARY SHAFT	509, 511
565323	OUTPUT SHAFT, LONG	509, 511
565324	LID	509, 511
565325	INPUT SHAFT	509, 511
565326	LID	509, 511
565327	RING NUT	509, 511
565328	SCREW RING	509, 511
565329	SPACER	509, 511
565330	SPACER	509, 511
565331	BEARING HOLDER	509, 511
565332	BEARING HOLDER	509, 511
565333	BEARING HOLDER	509, 511
565334	BEARING HOLDER	509, 511
565335	BEARING HOLDER	509, 511
565336	OUTPUT SHAFT SHORT	509, 511
565338	GEAR HOUSING	509, 511
565339	OIL PIPE	509, 511

Part No	Description	Page No
565340	OIL LEVEL TUBE	509, 511
565668	MAIN CAM	293
565961	KICKPLATE,RIGHT	581
566016	WASHER	515
566171	CUP SPRING	181
566192	METERING DEVICE	183
566194	WEIGHT	181
566195	LID	181
566228	BRACKET	103
566229	BRACKET	109
566311	PROFILE	563
566312	BRACKET	563
566313	HOLDER	455
566314	HOLDER	569
566315	HOLDER	563
566316	HOLDER	455
566317	HOLDER	455
566416	COVERING PLATE	481
566526	CLUTCH PIECE	389, 391, 395, 397
566527	CLUTCH PIECE	393, 399
566533	BRACKET	563
566645	SIDE GUARD	225
566646	SIDE GUARD	225
566685	BRACKET	221
566686	CONDENSATE TRAY	221
566687	NOZZLE	221
566775	CARRIER	417
567023	TOUCH GUARD	129
567033	ARM	299
567070-0002	ELECTRODE	177
567070-0006	ELECTRODE	177
567070-0007	ELECTRODE	177
567070-0011	ELECTRODE	177
567070-0012	ELECTRODE	71, 75
567070-0018	ELECTRODE	177
567266	TUBE	249
567267	TUBE	249
567345	BEARING COVER	419
567347	SHAFT	419
567348	SHAFT	419
567349	SPACER	419
567350	WEDGE	419
567373	GEAR HOUSING	419
567702	CURVE	299
567703	LINK	299
567734	AIR NOZZLE	61
567735	HEAD PLATE	61
567736	EDGE ROLLER	35, 37, 39
567737	GUIDE ROLLER	35, 37, 39
567738	GUIDE ROLLER	35, 37, 39
567743	SEAL	127, 141
567744	FORMING RING	27, 31
567746-0001	ROLLER, (STD.SIZE)	27, 31
567747	ROLL	27, 31
567748	FORK	27, 31
568070	GEAR HOUSING	507
568071	BEARING SEAT	507
568072	BEARING SEAT	507
568073	SHAFT	507
568074	SHAFT	507
568151	GEAR HOUSING	431
568152	GEAR HOUSING	431
568153	BEARING SEAT	431
568154	BEARING SEAT	431
568155	BEARING COVER	431
568156	FLANGE	431
568157	SHAFT	431
568158	SHAFT	431
568159	SHAFT	431
568160	FASTENING PLATE	431
568161	WASHER	431
568162	WEDGE	431
568166	REAMED BOLT	609
568167	CATCH	615
568286	SLEEVE	299
568287	RING	299
568802	CONTAINER	71
568803	CONTAINER	73
568804	PIPE	63
568805	PIPE	63
568806	LID	73
568807	PIPE	63
568808	PIPE	63
568809	PIPE	63
568810	PIPE	63
568827	LID	71

Part No	Description	Page No
568828	FLOAT GUARD	71
568983	INDUCTOR	389, 391, 395, 397, 401, 403
569016	GASKET	75
569049	MAIN CAM	293
569050	COUNTER CAM	293
569051	CAM LEFT	293
569052	CAM RIGHT	293
569053	BEARING HOUSING	391, 397
569055	VOLUME BULGE	341
569056	VOLUME SHIM	341, 403
569057	BEARING HOUSING	371, 375
569058	SUPPORT ROLLER	383
569059	CUTTING JAW	371, 375
569062	CARRIER RULER	317
569063	CARRIER RULER	321
569085	SHAFT	27, 31
569086	ROLL	35, 37, 39
569087	ROLL	35, 37, 39
569088	ROLL	35, 37, 39
569089	ROLL	35, 37, 39
569090	FORMING RING	35, 37, 39
569091	SHAFT	17
569092	ROLL	17
569093	ROLL	17
569094	ROLL	17
569095	ROLL	17
569096	BOW CLAMP	17
569097	FILLER TUBE	49
569098	PRESSURE FLANGE	57
569099	HOLDER	27, 31
569100	SHAFT	27, 31
569104	DISTRIBUTOR WING	61, 141
569105	CUP	23
569106	GASKET	23
569111	FLAP	515
569112	BLOCKING PIECE	515
569114	PLATE	523
569115	SHEET	523
569116	SHEET	523
569117	FLAP	531, 541
569118	FLAP	531, 541
569119	BOTTOM	531, 541
569120	FOLDING BAR	553
569121	FOLDING BAR	553
569122	FOLDING ARM	553, 555
569123	FOLDING ARM	553, 555
569124	AIR NOZZLE	439, 449
569125	AIR NOZZLE	439, 449
569126	AIR NOZZLE	439, 449
569127	SLIDE RAIL	503
569128	HEAD PLATE	503
569129	DISTRIBUTOR	561
569130	LEAD RAIL	567
569131	BRACKET	465
569132	HEAD PLATE	461
569133	BRACKET	461
569134	HEAD PLATE	469
569135	BRACKET	469
569136	BRACKET	469
569163	ARM	211
569651	CREASE FORMER	625
569917	LOCKING CIRCLIP	651
569918	COVER PLATE L.	653
569919	COVER PLATE R.	653
569920	SHAFT	653
569921	BEARING HOUSE L.	653
569922	BEARING HOUSE R.	653
569923	CUTTING RAIL	653
569924	STOPPER	659
570066	SHAFT	297, 309
570067	RING	297, 309
57008-01:00	BACKPLANE	277
570125	SLEEVE	297, 309
570126	SLEEVE	297, 309
571086	BRACKET	63
571087	RETAINING RING	73
571088	DRAINING	71
571294	STOPPER	361, 363
571295	STOPPER	361
571296	SPRING BRACKET	357, 361, 363
571297	LACE	357, 359, 361, 363
571298	LACE	357, 359, 361, 363
571418	HOOD	611, 613
571419	HOOD	611, 613
571421	COVER	611, 613
571423	GLASS PANE	611, 613

Part No	Description	Page No
571424	HINGE	611, 613
571425	BRACKET	611, 613
571428	TOUCH GUARD	691
571654	NOZZLE	247
571942	SUPPORT ROLLER	381
571945	FASTENING BRACKET	27, 31
572246	BRACKET	611, 613
573058	AIR NOZZLE	61
573277	PIPE	237
573278	PIPE	237
573353	SPROCKET	483, 497
573428	BENDING ROLLER	119
573429	MOTOR PLATE	119
573430	DRYING HOUSE	115
573445	FILTER HOUSING	171
573446	STRAIGHT CONNECTION	171
573485	BRACKET	553
573486	STEERING	503, 553
573487	STEERING	503, 553
573488	BRACKET	503, 505
573489	BRACKET	503, 505
573504	ROLL	127
573507	SIDE GUARD	611, 613
573508	MOUNTING BAR	611, 613
573583	SCREW	371, 375
573584	CATCH	371, 375
573585	CATCH	371, 375
573613	DOOR	51, 53
573614	DOOR	51, 53
573615	COVER SLIP	51, 53
573616	COVER SLIP	51, 53
573617	COVER SLIP	51, 53
573619	PILLAR	125
573625	INDUCTOR	391, 393, 397, 399, 401, 403
573665	FASTENING PLATE	677
573666	SUPPORT ROLLER	677
573667	SUPPORT ROLLER	677
573668	SUPPORT ROLLER	677
573827-0001	PROTECTION	619, 623, 625
573827-0002	PROTECTION	619, 621, 623, 627
573827-0003	PROTECTION	621
573828	COVERING PLATE	647
573841	STEERING RAIL	121
573974	VOLUME BULGE	341
573975	VOLUME SHIM	341, 403
573976	SUPPORT ROLLER	385
573977	FOLDING FLAP	317, 321
573978	FOLDING FLAP	317, 321
573979	CARRIER RULER	317
573980	CARRIER RULER	321
573984	SCREW	371, 375, 391, 397
573985	BEARING HOUSING	371, 375
573988	GASKET	371, 375
573993	SPRING BRACKET	359
574006	PRESSURE FLANGE	57
574013	FILLING PIPE LOWER	57
574029	FLAP	533, 543
574030	FLAP	533, 543
574031	BOTTOM	533, 543
574032	BLOWING NOZZLE B	439, 441, 449, 451
574033	BLOWING NOZZLE TH	439, 441, 449, 451
574034	BLOWING NOZZLE TV	439, 441, 449, 451
574035	FLAP	515
574036	BLOCKING PIECE	515
574037	SPACER	711
574038	SUPPORT ROLLER	677
574039	RAIL	523
574040	SHEET	523
574041	SHEET	523
574042	PLATE	523
574043	CREASE FORMER	625
574044	FASTENING BRACKET	625
574045	FOLDING BAR	553
574046	FOLDING BAR	553
574047	LEAD RAIL	553, 555
574048	BRACKET	555
574049	COUNTER PLATE	555
574050	CURVE	549, 551, 553, 555
574051	RETAINING RING	603, 605
574052	STOPPER	659
574053	SLIDE RAIL	505
574054	HEAD PLATE	505
574055	ARCH	567
574056	DISTRIBUTOR	561
574057	LEAD RAIL	567
574058	HOLDER	561

Part No	Description	Page No
574059	BEARING HOUSING	653
574060	BEARING HOUSING	653
574061	CUTTING RAIL	653
574062	COVERING PLATE	653
574063	COVERING PLATE	653
574064	SHAFT	653
574065	SIDE PLATE	483
574066	SIDE PLATE	483
574067	TIMING BELT SHAFT	483
574068	TIMING BELT SHAFT	483
574069	AXLE PIN	483, 497
574070	TIMING BELT SHAFT	483, 497
574071	PROFILE	483
574072	PROFILE	483
574073	BRACKET	483
574074	ROLLER BRACKET	483
574075	ROLL	483, 499
574076	BRACKET	483
574077	HEAD PLATE	469
574078	BRACKET	469
574079	BRACKET	469
574080	BRACKET	467
574081	SLEEVE	417
574082	GEAR WHEEL	483, 497
574083	WASHER	483, 497
574084	SCREW	483, 497
574085	TIMING BELT PULLEY	483, 497
574086	TIMING BELT PULLEY	483, 497, 499
574087	WASHER	483, 497, 499
574088	SPROCKET	417
574089	CARRIER	491
574090	CARRIER	489
574091	CARRIER	489
574092	CARRIER	491
574093	PROFILE	421
574094	HEAD PLATE	483, 497
574095	PROTECTIVE COVER	493
574096	PROTECTION PLATE	493
574097	STEERING	505, 553, 555
574098	STEERING	505, 553, 555
574099	STEERING	561
574112	PROTECTION PLATE	493
574113	PROTECTION PLATE	493

Part No	Description	Page No
574119	HEAD PLATE	483
574120	HEAD PLATE	483
574121	BRACKET	483, 497
574122	BRACKET	483, 497
574123	BRACKET	483, 497
574124	WASTE CHUTE	559
574125	BRACKET	555
574126	HEAD PLATE	469
574130	DAMPER	385
574131	LEAD PLATE	565
574132	SIDE PLATE	497
574133	SIDE PLATE	497
574134	BEARING CONSOLE	499
574135	BEARING CONSOLE	499
574136	TIMING BELT PULLEY	499
574137	TIMING BELT PULLEY	499
574138	TIMING BELT PULLEY	499
574139	BEARING HOUSING	497
574140	SHAFT	497
574141	SHAFT	499
574142	SHAFT	499
574143	AXLE SUPPORT	499
574144	SHAFT	499
574145	HEAD PLATE	497
574146	HEAD PLATE	497
574147	HOLDER	497
574148	SHAFT	497
574149	ARM	499
574150	SLEEVE	497
574151	BRACKET	499
574152	BRACKET	499
574153	PLATE	499
574154	SPACER	499
574155	PLATE	497
574156	SUPPORT RAIL	499
574157	PROFILE	499
574158	PROFILE	499
574159	TIMING BELT PULLEY	497
574160	SPACER	499
574161	SHAFT	499
574164	PROTECTION PLATE	493, 495
574165	PROTECTIVE COVER	493, 495
574166	DROP WING	467

Part No	Description	Page No
574167	LIMIT PLATE	307
574600	PNEUMATIC DIAGRAM	273
574602	VALVE PANEL UPPER	243
574603	BRACKET	243
574604	BRACKET	243
574605	CONNECTION BOX	245
574606	SHEET	245
574651	SHEET	655
574652	PROTECTION	211
574653	PROTECTION	111
574654	PIPE	103
574658	LOGOTYPE TP	161, 267, 663, 665, 667
574676	AIR NOZZLE	439, 449
574677	AIR NOZZLE	439, 449
574678	SLIDE RAIL	505
574679	HEAD PLATE	505
574680	FLAP	515
574681	SHEET	523
574682	SHEET	523
574683	BOTTOM	533, 543
574684	FLAP	533, 543
575448	VALVE PANEL	273
575464	CABLE DUCT	253
575640	VOLUME BULGE	339
575641	VOLUME SHIM	339, 401
575782	MAIN CAM	293
575783	COUNTER CAM	293
575786	PAPER SUPPORT	619, 621, 623, 625, 627
575791	JUNCTION BLOCK	255
575792	ANGLE STRUT	255
575795	WATER PIPE	249
576217	PAPER SUPPORT	621
576218	PAPER SUPPORT	623
576410	BRACKET	611, 613
576730	WATER DIAGRAM	273, 573
576738	TOUCH GUARD	129
576742	OIL TROUGH	299
576833	PLATFORM	213
576835	PLATFORM COVER	213
576836	CAM LEFT	293
576837	CAM RIGHT	293
579010	THROTTLE	57
579306	ROLL	17
579307	ROLL	17
579308	ROLL	17
579309	ROLL	17
579310-0001	ROLLER, (STD.SIZE)	27, 31
579311	COUNTER ROLLER	27, 31
579316	FILLER TUBE	49
579318	SEAL	127, 141
579319	ROLL	127
579641	MAIN CAM	293
579642	COUNTER CAM	293
579643	CAM LEFT	295
579644	CAM RIGHT	295
579645	CURVE	385
579765	MACHINE SIGN CE	573
579772	CUTTING JAW	371, 375
579773	BEARING HOUSING	391, 397
579898	RAIL	391, 397
579951	BOW CLAMP	23
580006	PROTECTION PLATE	493, 495
580007	PROTECTION PLATE	493, 495
580366	ROLL	499
580958	AXLE SUPPORT	127
580959	AXLE SUPPORT	127
580996	ROLLER BRACKET	499
591084	GUIDE LUG	483
6-12MM		645
6161	ROLL	61
6278	WASHER	43, 127, 411, 569
7-16MM		643
72947	HOOK SPANNER	575
7309	HANDLE	25, 161, 163, 267, 701
74387	HOOK SPANNER	575
751009	INSULATION	113
751316	ELBOW PIPE	179
752156	FLANGE BUSHING	17
752176	PROTECTIVE CASING	81, 83, 85
752578-0001	ROLLER, (STD.SIZE)	27, 31
752583	ROLL	17
752584	ROLL	17
752585	ROLL	17
752586	ROLL	17
752587	LINK	55
752590	THROTTLE	57

Part No	Description	Page No
752711	PIPE	81, 83, 85
752718	ROLL	35, 37, 39
752719	ROLL	35, 37, 39
752720	ROLL	35, 37, 39
752721	ROLL	35, 37, 39
752740	ROLL	41
752771	TOUCH GUARD	129
752860	PRESSURE FLANGE	55
76138	LOCKING LOOP	575
776422-0101	BRASS WIRESTE	575
777100-0113	SCREWDRIVEL	575
777100-0184	SCREWDRIVEL	575
777120-0215	C-SPANNER	575
777120-0220	C-SPANNER	575
777120-0232	C-SPANNER	575
777121-0137	OPEN SPANNKEL	575
777150-0100	HEXAGON SPKEL N=2,5	575
777150-0101	HEXAGON SPKEL N=3	575
777150-0104	HEXAGON SPKEL N=4	575
777150-0106	HEXAGON SPKEL N=5	575
777150-0108	HEXAGON SPKEL N=6	575
777150-0110	HEXAGON SPKEL N=8	575
777150-0112	HEXAGON SPKEL N=10	575
777150-0114	HEXAGON SPKEL N=12	575
777150-0199	HEXAGON SPKEL N=2	575
777150-0491	HEXAGON SPKEL N=1,3	575
777155-0492	ALLEN KEY KEL N=1/16"	575
777200-0101	PIPE WRENCEL	575
777510-0101	SCISSORS	575
779130-0102	PROTECTIVE	591
795581	PLATE	119
90002-0004	BLANK-OFF PLUG 22,5	231, 253, 639, 641
90002-0009	BLANK-OFF PLUG 18.6	231, 245, 253, 639, 641, 679
90002-0010	BLANK-OFF PLUG PR37	159, 253
90002-0012	BLANK-OFF PLUG PR28,3	159, 643
90002-0013	BLANK-OFF PLUG 15,2	137, 221, 253, 643, 679
90005-0005	WASHER	175
90005-0007	WASHER	365, 367
90005-0009	WASHER	175
90005-0060	WASHER	705
90005-0082	WASHER	701, 707, 709, 711
90007-0100	FUSE H.MANN 2P 60A 2	215
90007-0101	FUSE H.MANN 2P 100A 2	215

Part No	Description	Page No
90012-0059	GLAND	137
90012-0061	GLAND	113, 231, 253
90012-0062	GLAND	113
90012-0063	GLAND	63, 137, 165, 175, 221, 231, 237, 253
90012-0064	GLAND	137
90012-0071	GLAND FITTING	413
90012-0072	GLAND FITTING	411
90012-0073	GLAND FITTING	417
90012-0137	CABLE GLAND SCREENED	119, 639, 641
90015-0010	BUSHING	227
90015-0011	BUSHING	227
90015-0020	BUSHING	411
90015-0021	BUSHING	227
90017-0009	HANDLE D=25/M12 L=75MM	287
90020-0026	SLEEVER	305
90020-0027	SLEEVE	93, 143
90020-0028	SLEEVE	89, 91, 143
90028-0001	CONE	435, 455, 459, 515, 569
90028-0020	CONE 165, 297, 299, 309, 323, 325, 329, 333, 335, 337, 341, 343, 385, 455,	459, 555, 563, 569
90028-0021	CONE	165, 323, 325, 329, 333, 335, 337, 385, 455, 459, 563, 569
90028-0022	CONE	165, 297, 411, 555
90028-0024	CONE	165, 297
90028-0025	CONE	165, 297, 457, 459, 555, 563, 569
90030-0030	PIPE CONNECTION	217, 225, 257, 259, 261, 263
90030-0051	PIPE CONNECTION	109, 125
90030-0058	CONNECTION	123, 681
90030-0066	GROMMET	227
90030-0067	GROMMET	227
90030-0070	CONNECTION	81, 83, 85
90030-0076	CONNECTION	223
90030-0088	PIPE CONNECTION	81, 83, 85
90030-0091	PIPE CONNECTION	249
90030-0092	PIPE CONNECTION	59
90030-0096	PIPE CONNECTION	81, 83, 85, 131, 133
90030-0098	CONE	379
90030-0106	PIPE CONNECTION	249
90030-0107	PIPE CONNECTION	435
90030-0109	PIPE CONNECTION	75, 81, 83, 85
90030-0115	PIPE CONNECTION	63, 75, 247
90030-0120	PIPE CONNECTION	207
90030-0121	PIPE CONNECTION	205, 207
90030-0137	CONNECTION	123

Part No	Description	Page No
90030-0146	CONNECTION	207
90030-0155	CONNECTION	235
90030-0157	CONNECTION	205, 207, 209, 235
90030-0159	GROMMET	227, 249
90030-0162	CONNECTION	309
90030-0172	NUT	379
90030-0178	CONNECTION	205
90030-0179	GROMMET	227
90030-0180	PIPE CONNECTION	81, 83, 85
90030-0183	NIPPLE	209
90030-0184	PIPE CONNECTION	123, 175
90030-0186	PIPE CONNECTION	81, 83, 85
90030-0187	PIPE CONNECTION	59, 63, 81, 83, 85, 109, 247
90030-0201	PIPE CONNECTION	371, 375
90030-0207	NIPPLE	103
90030-0221	BULKHEAD LEAD-IN	217
90030-0222	ELBOW PIPE JOINT	435
90030-0253	PIPE COUPLING	249
90030-0265	HOLLOW SCREW	405
90030-0266	HOLLOW SCREW	405
90032-0034	JUNCTION BLOCK	517
90032-0035	JUNCTION BLOCK	435
90032-0038	BLOCK	165, 299, 325, 329, 385, 555
90032-0039	BLOCK	297, 309, 323, 333, 335, 337, 455, 459, 569
90032-0040	BLOCK	455, 459, 563
90032-0043	JUNKTION BLOCK	165, 297
90032-0044	JUNKTION BLOCK	165, 411, 555
90032-0046	JUNKTION BLOCK	165
90036-0009	BULB 24V 5W BA15D	167
90036-0038	BULB 24V 25W E27	167, 213
90042-0172	SOLENOID VALVE 24VDC	237
90042-0187	SOLENOID VALVE	73
90042-0203	SOLENOID VALVE	45
90042-0206	SOLENOID VALVE	175
90042-0215	SOL.VALVE PACKAGE	241
90042-0467	* COIL	237
90042-0481	CONNECTION TABLE	237
90042-0487	COIL	175
90042-0519	COVER PLATE	241
90042-0520	CONNECTION TABLE	241
90042-0522	END PIECE	243
90042-0527	SEALING DISC	241
90042-0528	SEALING DISC	241
90042-0532	CONNECTION TABLE	241
90042-0535	TERMINAL FOR SOL.VALVE	237, 243
90042-0536	CONTACT FOR SOL.VALVE	237
90042-0538	EL.COIL	241
90042-0539	EL.COIL	241
90042-0550	PROTECTIVE COVER	237, 243
90043-0004	PRESSURE GAUGE	175
90043-0006	PRESSURE GAUGE	237
90043-0021	PRESSURE GAUGE	243
90043-0034	PRESSURE GAUGE	125, 681
90043-0043	PRESSURE GAUGE	241
90043-0062	MANOMETER	207
90043-0075	PRESSURE GAUGE	209
90043-0095	PRESSURE GAUGE	71
90043-0302	SCREW	125, 681
90044-0084	LIMITSW.14CE1-4 HONEYWELL	75, 111
90044-0094	LIMIT SWITCH HONEYWELL	187, 189, 211, 299
90044-0095	PROX.SWITCH IFM 3010BPKG	225
90044-0103	KEY SAFETY SWITCH AZ15ZVR	115, 125, 611, 613
90044-0104	PROX.SWITCH IFM IN 3002	81, 83, 85, 117, 119, 121, 417, 463, 485, 499, 505, 555, 639, 641, 697, 711
90044-0122	INDUCTIVE SWITCH	639, 641
90044-0126	INDUCTIVE SWITCH	103, 109, 135
90044-0139	KEY SAFETY SWITCH	611, 613
90045-0049	MOTOR	415
90045-0079	MOTOR	205
90045-0087	MOTOR	179
90046-0015	BRAKE MOTOR	291
90046-0016	BRAKE MOTOR	291
90046-0304	* STATOR	291
90046-0308	* STATOR	291
90046-0312	* RECTIFIER	291
90046-0313	* COIL	291
90046-0314	* BRAKE DISC	291
90048-0033	GEAR PUMP	435
90048-0034	OIL PUMP	165
90048-0420	FILTER	435
90050-0008	BOTTLE	635
90050-0011	BOTTLE	265
90051-0025	HANDLE	559
90051-0053	HANDLE	103
90051-0065	HANDLE	79
90051-0077	HANDLE	635

Part No	Description	Page No
90051-0089	SHIFTER HANDLE	637
90055-0033	HOSE CLAMP	227
90055-0042	NIPPLE	663, 665, 667
90055-0071	HOSE NIPPLE	23
90055-0096	STRAIGHT CONNECTION	241
90055-0117	ELBOW PIPE JOINT	241
90055-0118	ELBOW PIPE JOINT	241
90055-0145	ELBOW ADAPTOR	663, 665, 667
90056-0099	BEVEL GEAR	569
90061-0018	ANGLE ENCODER 8BIT GRAY	301
90062-0049	LOCK WASHER	509, 511
90064-0084	PUSH BUTTON YELLOW	245, 639, 641, 681
90064-0085	PUSH BUTTON RED	639, 641
90064-0094	PUSH BUTTON	245
90064-0095	PUSH BUTTON	245
90064-0096	PUSH BUTTON	245
90064-0124	EMERGENCY STOP BUTTON	639, 641, 675, 681
90064-0318	* SIGNAL LAMP	245
90064-0319	* SIGNAL LAMP	245
90064-0320	* SIGNAL LAMP	245
90064-0335	COVER	245
90066-0021	PUSH BUTTON BOX	675
90066-0029	PUSH BUTTON BOX	681
90067-0021	CARRIAGE	663, 665, 667
90067-0301	BRAKE WIRE	663, 665, 667
90067-0302	TORSION SPRING	663, 665, 667
90067-0317	BRAKE LINING	663, 665, 667
90067-0320	COTTER	663, 665, 667
90067-0334	AXIAL BEARING KIT	663, 665, 667
90067-0336	GUIDE SHAFT UNIT	663, 665, 667
90067-0337	BRAKE DRUM	663, 665, 667
90067-0338	GUIDE ROLLER	663, 665, 667
90067-0342	TENSION SPRING	663, 665, 667
90067-0346	PISTON ROD	663, 665, 667
90067-0347	CYLINDER SHELL	663, 665, 667
90067-0348	REPAIR KIT	663, 665, 667
90067-0349	ROLL	663, 665, 667
90067-0350	AXLE PIN	663, 665, 667
90067-0351	SEAL KIT	663, 665, 667
90067-0352	SINK VALVE COMPL.	663, 665, 667
90067-0353	PUMP CYLINDER	663, 665, 667
90067-0354	PUMP PISTON	663, 665, 667
90067-0355	COMPRESSION SPRING	663, 665, 667
90067-0356	TOP WASHER	663, 665, 667
90067-0357	REPAIR KIT	663, 665, 667
90067-0358	SINK HANDLE	663, 665, 667
90067-0359	SINK ROD	663, 665, 667
90067-0360	POSITIONING DEVICE	663, 665, 667
90067-0361	TIE ROD	663, 665, 667
90067-0362	CIRCLIP	663, 665, 667
90067-0363	SLIDER	663, 665, 667
90067-0364	BRAKE HANDLE	663, 665, 667
90067-0365	HYDRAULIC HOSE	663, 665, 667
90067-0366	INDICATOR	663, 665, 667
90067-0367	INDICATOR	663, 665, 667
90067-0368	YOKE	663, 665, 667
90067-0369	VALVE ARM	663, 665, 667
90067-0370	WHEEL	663, 665, 667
90067-0371	WASHER	663, 665, 667
90067-0372	SHAFT	663, 665, 667
90069-0281	WORM GEAR MOTOR	119, 607
90074-0001	CABLE CLIP JR10 STAINLESS	227
90074-0002	CABLE CLIP JR11 STAINLESS	265, 455, 457, 459
90074-0004	CABLE CLIP JR16 STAINLESS	219
90074-0006	CABLE CLIP JR212STAINLESS	235
90074-0018	CLIP	555
90074-0026	CLIP	243
90077-0064	FEED THROUGH TERMINAL	679
90077-0090	FEED THROUGH TERMINAL	139
90077-0102	TERMINAL BK4 KRG 4-POLE	221
90077-0300	END PLATE	679
90077-0309	END PLATE	139
90087-0002	PIPE PLUG	159, 249
90087-0003	PIPE PLUG	291
90087-0015	PIPE PLUG	509, 511
90087-0019	PLUG 165, 297, 299, 309, 325, 329, 333, 335, 337, 385, 457, 459, 555, 563,	569
90089-0003	SLEEVE	675
90089-0018	TRANSITIONAL NIPPLE	249
90090-0013	STEEL BALL	389, 391, 393, 395, 397, 399, 403
90090-0014	STEEL BALL	227
90090-0016	BALL	405
90090-0020	BALL	193, 195, 197, 201, 203
90091-0029	SEAL RING	295
90091-0054	SEAL RING	419
90091-0078	SEAL	389, 391, 393, 395, 397, 399, 403

Part No	Description	Page No
90091-0079	SEAL	389, 391, 393, 395, 397, 399, 403
90091-0080	SCRAPER	323
90091-0106	SEALED RING	663, 665, 667
90091-0130	SEAL RING	509, 511
90091-0137	SEAL RING	179
90091-0142	SEAL RING	507
90091-0143	SEAL RING	431
90091-0145	SEAL RING	419
90091-0159	GASKET	205
90091-0182	GASKET	111
90091-0202	SEAL RING	431
90092-0038	METERING VALVE	435
90092-0048	OIL BRUSH	455, 459, 563, 569
90092-0052	VALVE	165, 299, 309, 323, 325, 329, 333, 335, 337, 455, 459, 555, 563, 569
90092-0053	VALVE	165, 297, 299, 309, 323, 333, 335, 337, 385, 455, 459, 555
90092-0054	VALVE	297, 325, 329, 333
90092-0077	METERING VALVE	501
90092-0081	METERING VALVE	435
90094-0004	END SUPPORT EWK 2061.6 WM	679
90097-0017	FLAT PIN PLUG	59
90099-0001	NUT PR 15,2 BRASS	137, 253
90099-0002	NUT	245, 253, 711
90099-0003	NUT	137, 253, 265, 639, 641
90099-0004	NUT	227
90099-0011	NUT PR 37 BRASS	227, 253
90099-0012	NUT	309
90099-0015	NUT	301
90099-0085	NUT	217
90099-0178	LOOKING NUT PG 16	415
90110-0095	CONTACT 3 POLE+EARTH	175, 237
90110-0128	PLUG 24-POL	137, 231, 237, 243, 275, 639, 641
90111-0121	SWITCH 3 POS. EA OLTEN	245
90111-0150	SWITCH GEAR	639, 641
90113-0044	PRESSURE REGULATOR	207, 209
90113-0047	REGULATOR	237
90113-0056	REGULATOR	175
90113-0069	PRESSURE REGULATOR	241
90113-0076	PRESSURE REGULATOR	243
90113-0336	INSERT	237
90113-0338	YOKE	237
90113-0349	* GASKET	237
90113-0379	NUT	241
90115-0067	JOINT	309
90115-0105	JOINT	291
90115-0106	JOINT	307
90115-0107	JOINT	307
90115-0111	JOINT	269
90115-0122	JOINT	309
90115-0133	JOINT	299
90115-0139	LINK HEAD	523
90117-0008	HANDLE	73
90125-0020	PLATE	43, 689
90131-0004	HOSE COUPLING	265
90132-0021	HOSE CLIP	185, 243
90134-0002	PIPE CONNECTION	455, 459, 563, 569
90134-0003	BUSHING	435, 455, 459, 517, 569
90134-0004	PIPE CONNECTION	227
90134-0030	SLEEVE	165, 297, 309, 413, 429, 455, 459, 557, 563, 569
90134-0031	SLEEVE	165, 297, 299, 323, 325, 329, 333, 335, 337, 385
90134-0034	NIPPLE	435
90134-0038	BUSHING	165, 297, 299, 323, 325, 329, 333, 335, 337, 385
90134-0039	BUSHING	165, 297, 299, 309, 323, 325, 329, 333, 335, 337, 385, 455, 459, 555, 563, 569
90134-0040	BUSHING	323, 455, 459, 563, 569
90134-0045	PLUG	569
90134-0051	SPACER COLLOR	323
90134-0052	PLUG	165, 297, 309, 569
90134-0054	CONNECTION	165
90134-0055	BUSHING	165, 297, 411, 457, 459, 555, 563, 569
90134-0058	BANJO CONNECTION	297, 299, 309, 317, 321, 323, 325, 329, 335, 337, 371, 375, 389, 391, 393, 395, 397, 399, 455, 459, 555, 563, 569
90134-0063	BUSHING	341, 343
90135-0021	EARTHING CLAMP	139
90135-0022	EARTHING CLAMP	679
90136-0002	PLUG	435, 517
90137-0002	ELBOW PIPE	455, 459, 563, 569
90137-0005	PIPE JOINT	435, 517
90137-0010	PIPE JOINT	435
90140-0010	T-PIECE	237
90140-0011	T-PIECE	237
90140-0012	ELBOW PIPE	237
90140-0021	ELBOW PIPE	131, 133
90141-0012	LOCK RING	419
90141-0015	LOCK RING	705
90141-0022	RING	111
90143-0011	* STRIP	137

Part No	Description	Page No
90143-0014	* STRIP	137
90143-0018	STRIP	125
90143-0020	STRIP	75, 181
90143-0029	STRIP	635
90143-0035	STRIP	187, 189, 199
90143-0039	STRIP	187, 189, 199, 609, 611, 613
90143-0049	RUBBERSTRIP 11X21MM	161, 163, 227, 267
90143-0052	STRAP	501
90143-0054	STRIP	227
90143-0068	RUBBERSTRIP EMKA 1011-06	199
90144-0004	TAPE	75
90145-0005	WIRE	443
90148-0021	HOSE	23
90148-0036	HOSE	207
90148-0040	HOSE	379
90151-0001	BRASS PIPE	323, 325, 329
90152-0016	HOSE	151
90152-0017	HOSE	153
90152-0029	HOSE	137
90152-0031	HOSE	113, 253
90152-0032	HOSE	219
90152-0033	HOSE	59, 137, 221, 237, 245, 253, 639, 641, 675, 683
90152-0044	FLEXIBLE CONDUIT	413
90152-0050	FLEXIBLE CONDUIT	411
90152-0051	FLEXIBLE CONDUIT	413
90153-0016	ADHESIVE	75
90153-0017	* ADHESIVE	137
90153-0020	ADHESIVE	113
90153-0023	ADHESIVE	181
90153-0043	ADHESIVE	427, 501, 517
90157-0002	SEALING COMPOUND	559
90157-0016	LOCKING FLUID	107, 191, 309, 323, 389, 391, 393, 395, 397, 399, 405, 703
90157-0021	LOCKING FLUID	389, 391, 395, 397
90157-0022	SEALING COMPOUND	227, 517
90157-0034	SEALING COMPOUND	427
90161-0001	STRIP	427, 517
90163-0041	NIPPLE	235
90163-0050	NIPPLE	165
90163-0056	SLEEVE	587
90163-0057	NIPPLE	81, 83, 85, 217
90163-0062	SLEEVE	81, 83, 85
90163-0063	NIPPLE	587
90163-0064	NIPPLE	165
90163-0076	SLEEVE	235
90163-0133	QUICK-RELEASE COUPLING	255
90163-0134	COUPLING NIPPLE	255
90164-0003	LIGHT FIXTURE 1X20W IP67	253, 269
90165-0003	CLIP	165, 297, 427
90165-0005	CLIP	165, 297, 427, 683
90165-0007	CLIP	249
90165-0010	CLIP	631, 633
90165-0022	CLIP	165, 299, 309
90165-0056	CLIP	317, 321, 333, 335, 337, 385, 417, 455, 459, 467, 485, 497, 563, 569
90165-0057	CLIP	405, 411, 455, 459, 525, 557, 563, 629
90165-0058	CLAMP	325, 329, 371, 375, 385, 389, 391, 393, 395, 397, 399
90165-0060	CLAMP	323, 371, 375, 411, 569, 711
90165-0086	CRAMP	213
90166-0007	HOSE	219, 235
90166-0011	HOSE	417, 435
90166-0013	HOSE	237, 241, 257, 259, 261, 263, 639, 641
90166-0051	HOSE	435, 457, 459, 563, 569
90166-0059	HOSE	411, 629
90166-0060	HOSE	183, 257, 259, 261, 263
90166-0068	HOSE	243
90166-0081	HOSE	237, 241, 257, 259, 261, 263, 639, 641
90166-0087	HOSE	413, 689, 691
90166-0095	HOSE	457, 459
90166-0101	HOSE	185
90166-0108	HOSE	165, 297, 413, 429, 457, 459, 557, 563, 569
90166-0109	HOSE	165, 297, 323, 333, 335, 337, 385
90166-0113	HOSE	165, 301
90166-0121	HOSE	227, 249
90166-0122	HOSE	235, 249, 423, 457, 459, 467, 557, 645
90166-0123	HOSE	379
90166-0124	HOSE	131, 133, 175, 249, 325, 329, 405, 425, 427, 457, 459, 587, 683
90166-0133	HOSE	255
90166-0138	HOSE	185, 635
90166-0142	HOSE	191, 199
90166-0143	HOSE	297, 299, 309, 317, 321, 323, 325, 329, 333, 335, 337, 457, 459, 557, 563, 569
90166-0157	* HOSE	265
90166-0194	PLASTIC HOSE	243
90166-0199	RUBBER HOSE	425
90166-0206	PLASTIC HOSE	243
90187-0029	VALVE	227, 237
90187-0054	VALVE	235

Part No	Description	Page No
90187-0062	VALVE	237
90187-0081	BALL VALVE	75
90187-0082	BALL VALVE	23, 81, 83, 85
90194-0016	SIGN "FLASH SIGN" 50X50MM	75, 113, 137, 221, 227, 231, 245, 275, 639, 641, 645, 675, 679, 681, 695
90194-0039	FLASH SIGN 18X37MM	301
90195-0020	TERMINAL BK2 KRG 2-POLE	265, 645
90195-0028	TERM.BLOCK 6-POLE STEATIT	113
90195-0029	CONN. LINK NO324 FOR -28	113
90196-0055	PULLEY	291
90196-0061	PULLEY	291
90196-0062	PULLEY	291
90196-0065	PULLEY	291
90196-0066	PULLEY	291
90196-0067	PULLEY	289
90196-0079	TIMING BELT PULLEY	291
90196-0090	TIMING BELT PULLEY	291
90199-0004	LEVEL INDICATOR	427
90199-0010	LEVEL GLASS	75
90201-0010	VALVE	209, 303
90201-0014	VALVE	207
90201-0057	VALVE	305
90201-0058	SOLENOID VALVE	209
90201-0098	REGULATING VALVE	663, 665, 667
90201-0300	* PLATE	209, 303
90201-0300	PLATE	303
90201-0301	* SPRING	209, 303
90201-0301	SPRING	305
90201-0302	* WASHER	209, 303
90201-0302	WASHER	209
90201-0303	SPARE PARTS KIT	209, 303
90201-0307	PLATE	207
90201-0308	PLATE	207
90201-0309	BLOCK	209
90206-0070	HEATING ELEMENT	75
90206-0085	HEATING CARTRIDGE	43, 689
90206-0097	HEATING CARTRIDGE	645
90206-0322	GASKET	43, 689
90207-0363	GASKET	87, 143
90207-0365	GASKET	87, 143
90208-0067	CLAMPING ELEMENT	289
90214-0087	TAPER ROLLER BEARING	509, 511
90214-0098	BALL BEARING	115, 117, 119, 157, 675, 687
90214-0138	BALL BEARING	17, 21, 141, 685, 697
90214-0163	BALL BEARING	299
90214-0169	BALL BEARING	297, 309
90214-0303	RING	115, 117, 119
90214-0310	LID	419
90217-0026	NUT	63
90217-0053	NIPPLE	191
90217-0312	CRAMP	71
90217-0313	SEAL	71
90224-0066	CONNECTION	501
90224-0078	CONNECTION	75
90224-0284	SWIVEL	29, 33, 43
90224-0301	CONNECTION	43
90224-0304	CONNECTION	683
90224-0307	CONNECTION	43, 81, 83, 85, 131, 133, 217
90224-0308	BANJO CONNECTION	81, 83, 85
90224-0309	CONNECTION	131, 133
90224-0310	CONNECTION	131, 133
90224-0316	CONNECTION	257, 259, 261, 263
90224-0317	CONNECTION	249
90224-0318	CONNECTION	249
90224-0319	CONNECTION	217, 237, 249, 257, 259, 261, 263
90224-0320	CONNECTION	249
90224-0321	CONNECTION	249
90224-0322	CONNECTION	249
90224-0323	CONNECTION	249, 257, 259, 261, 263
90224-0329	ELBOW PIPE JOINT	175
90224-0331	CONNECTION	217
90230-0011	NON RETURN VALVE	235
90230-0017	NON RETURN VALVE	205
90230-0021	NON-RETURN VALVE	265
90230-0023	NON RETURN VALVE	249
90230-0031	NON-RETURN VALVE	435
90232-0075	PH.CELL SICK NT6-14900S12	405
90232-0103	PH.CELL OMRON E3SCT61L 5M	639, 641
90232-0104	RECEIVER OMRON E3SCT61D5M	639, 641
90232-0106	PH.CELL OMRON E3S-CR11-5M	639, 641
90232-0333	REFLECTOR	609
90235-0048	VALVE	131, 133
90235-0259	VALVE	81, 83, 85
90235-0274	VALVE	81, 83, 85, 105, 689, 691
90235-0275	VALVE	29, 33, 43, 59, 121
90235-0295	THROTTLE VALVE	249

Part No	Description	Page No
90235-0450	PLATE	243
90235-0460	* WEAR & TEAR PARTS KIT	233
90235-0708	VALVE	243
90235-0767	VALVE	237
90236-0012	BRACKET	237
90237-0011	BAR CLAMP	187, 189
90237-0046	LOCK PART	215, 265, 611, 613
90237-0061	HANDLE	187, 189
90237-0066	LOCKING DEVICE	187
90237-0067	LOCKING DEVICE	189
90237-0070	LOCK	267
90237-0075	SNAP LOCK	611, 613
90237-0319	LOCK HOUSING EMKA U134	245
90237-0320	LOCK DETAIL EMKA U136	245
90237-0335	LOCKING CATCH	245
90239-0127	BRACKET	29, 33, 43, 117
90239-0166	CYLINDER	29, 33, 43, 111
90239-0189	CYLINDER	117
90239-0196	CYLINDER	121
90239-0231	BELLOWS	645
90239-0259	CYLINDER	607, 629, 645
90239-0321	BRACKET	121
90239-0346	BRACKET	59
90239-0442	* SEAL KIT	65, 67, 69
90239-0443	* SEAL KIT	59
90239-0453	BRACKET	65, 67, 69
90239-0487	BRACKET	691
90239-0490	BRACKET	105
90239-0516	PISTON ROD HEAD	65, 67, 69, 691
90239-0532	PISTON ROD HEAD	689
90239-0779	CYLINDER	65, 67, 69
90239-0818	CYLINDER 16-80	469
90239-0821	CYLINDER 20-25	689
90239-0822	CYLINDER 20-50	105
90239-0829	CYLINDER 25-50	691
90239-0951	CYLINDER	59
90239-0960	CYLINDER	425
90240-0097	RICTION BEARING	309
90240-0146	FLANGE BUSHING	75
90240-0172	FLANGE BUSHING	17, 27, 31, 35, 37, 39, 41
90240-0180	FLANGE BUSHING	385
90240-0233	BUSHING	533, 543
90242-0054	* O-RING	519, 521, 523
90242-0084	O-RING	141
90242-0115	O-RING	227
90242-0116	O-RING	419
90242-0117	O-RING	507
90242-0118	O-RING	431
90242-0120	O-RING	431
90242-0121	O-RING	431, 507
90242-0148	O-RING	707, 709
90243-0061	FAN NOZZLE	151
90243-0133	CONTAINER	573
90243-0169	PAPER HOLDER	273
90248-0013	HINGE 3562E STUV	267
90258-0001	HOLLOW PIN	317, 321
90258-0030	HOLLOW PIN	653
90258-0031	HOLLOW PIN	645
90261-0003	PIPE PLUG	227
90261-0004	PIPE PLUG	411
90261-0008	PIPE PLUG	241
90261-0011	PIPE PLUG	227
90261-0013	PLUG	241
90261-0018	PIPE PLUG	225
90261-0032	PLUG	501, 557
90261-0033	PLUG	241
90261-0036	PIPE PLUG	325, 329
90261-0049	PLASTIC PLUG	703
90264-0019	FAN 230V 250W 595M3/H	221
90264-0042	FAN SIEMENS 2BH1 300-1AH	681
90264-0344	FAN CASING	221
90265-0081	CONNECTION BOX	643
90266-0006	TUBE	297
90266-0007	TUBE	249, 257, 259, 261, 263
90266-0010	TUBE	225
90266-0019	PIPE	165, 297, 317, 321, 323, 333, 335, 337, 385, 457, 459
90266-0165	BRASS PIPE	333, 335, 337
90270-0011	COMPRESSOR ELMO RA112	63
90270-0338	* SPARE PARTS KIT	63
90270-0345	* SHIMS	63
90270-0346	* GASKET	63
90270-0347	VALVE	63
90270-0348	* MOTOR ELMO RA112/MB4208	63
90274-0002	PRESSURE SWITCH	417
90274-0042	PRESSURE SWITCH 2BAR	237
90274-0044	PRESSURE SWITCH 4BAR	237

Part No	Description	Page No
90274-0045	GUARD	63
90274-0053	LEVEL PROBE	207
90274-0065	PRESSURE SWITCH	249
90274-0084	PRESSURE SWITCH	165
90274-0300	* CONTACT HOUSING	417
90277-0041	FILTER	207
90277-0045	FILTER	243
90277-0046	FILTER	243
90277-0055	FILTER	81, 83, 85
90277-0314	* FILTER	237
90278-0001	PUMP	575
90279-0001	OIL CAN	575
90285-0094	* SEAL	29, 33, 43, 111, 117
90285-0119	* SEAL AND WEAR-AND-TEAR	121
90287-0009	SPRINGLOADED SCREW	685
90287-0056	SCREW	101, 585
90287-0062	SCREW	213
90287-0070	SCREW	369, 371, 373, 375
90287-0073	SCREW	301, 303
90287-0074	SCREW	213
90287-0075	SCREW	99, 159, 213, 217, 219, 227, 611, 613, 645
90287-0076	SCREW	213, 579, 581, 611, 613
90287-0106	SPRINGLOADED SCREW	703
90287-0109	SPRINGLOADED SCREW	563
90287-0127	SCREW	593
90287-0136	SCREW	299
90287-0155	SCREW	501
90287-0159	GRUB SCREW	179
90287-0161	STOP SCREW	463, 483, 497
90287-0164	SCREW	547
90287-0165	SCREW	427, 547
90287-0167	SPRINGLOADED SCREW	637
90287-0206	SLOTTED SCREW	653
90288-0053	ROLLER CHAIN	471, 473, 475, 477
90288-0055	ROLLER CHAIN	563
90288-0057	ROLLER CHAIN	471, 473, 475, 477
90288-0062	ROLLER CHAIN	79
90288-0305	CONNECTION LINK	317, 321
90288-0311	LINK	471, 473, 475, 477
90288-0317	* CONNECTION LINK	563
90288-0324	* CARRIER	563
90296-0009	GREASE	423, 427, 501, 517, 653
90296-0028	OIL	167
90296-0051	PASTE	645
90296-0053	OIL	167
90296-0068	GREASE	167
90296-0075	OIL	167, 419
90297-0002	* FLUORESCENT TUBE 18W	253, 269
90297-0300	BALLAST COIL 50HZ	245
90298-0019	DETERGENT	167
90298-0022	ZERUST CAPSULE	231
90299-0072	INK	635
90303-0004	GLOVES	591
90303-0005	PROTECTIVE EQUIPMENT	591
90321-0015	PUMP	411
90321-0018	PUMP	205
90321-0034	PUMP	411
90321-0037	PUMP 220V 50/60 HZ	265
90321-0380	* DIAPHRAGM	265
90321-0381	ACCUMULATOR	205
90321-0382	FLANGE	205
90321-0383	FLANGE	205
90321-0384	DISTANCE PIECE	205
90321-0385	COUPLING	205
90321-0396	* FILTER	265
90321-0411	GASKET	179
90321-0466	* SPARE PART KIT	411
90321-0481	* GASKET	411
90326-0012	PROTECTIVE COVER	59, 75, 81, 83, 85, 109, 113, 691
90326-0017	GLAND	59, 75, 113
90326-0019	THERMOELEMENT	75
90326-0020	PLUG,FEMALE YELLOW CR-AL	59, 75, 81, 83, 85, 109, 113, 645, 691
90326-0022	PLUG,MALE YELLOW CR-AL	645
90326-0043	THERMOCOUPLE CR-ALPREM.G	75, 113
90326-0048	THERMOELEMENT	59
90326-0052	THERMO ELEMENT	109
90326-0053	THERMO ELEMENT	109
90326-0060	THERMOCOUPLE CR-AL	645
90326-0304	LEAD IN	59
90328-0001	SILENCER	237
90328-0003	SILENCER	81, 83, 85
90328-0024	SILENCER	241
90330-0012	REDUCTION SLEEVE	63
90330-0020	ELBOW PIPE	427
90330-0021	NIPPLE	81, 83, 85, 427
90330-0024	T-PIECE	199

Part No	Description	Page No
90330-0026	PLUG	103, 191, 419
90330-0032	NIPPLE	81, 83, 85
90330-0034	NUT	193, 195, 197, 201, 203
90330-0037	PLUG	419
90330-0042	BUSHING	71, 121
90330-0048	BUSHING	75
90330-0059	NIPPLE	183
90330-0066	PLUG	75, 125, 225
90330-0078	BUSHING	63
90330-0083	NIPPLE	199
90330-0086	COVER	427
90330-0093	NUT	235, 427
90330-0105	NUT	125, 681
90330-0106	PIPE COUPLING	81, 83, 85
90335-0005	SPRING	559
90335-0012	SPRING	435
90335-0015	SPRING	701
90335-0025	SPRING	603, 605
90335-0027	SPRING	653
90335-0034	SPRING	73
90335-0064	SPRING	629
90337-0315	FILTER	81, 83, 85
90339-0011	LOCK	611, 613
90344-0049	CHAIN TENSIONER	563
90345-0038	BEARING HOUSING	547
90347-0004	VIBRATION DAMPER	161, 163, 693, 711
90347-0007	VIBRATION DAMPER	469
90347-0026	DAMPER	63
90347-0036	DAMPER	269
90347-0038	DAMPER	269
90347-0054	DAMPER	629
90347-0108	DAMPER	609
90347-0110	MACHINE SHOE	573
90347-0111	MACHINE SHOE	573
90347-0300	BRACKET	269
90348-0007	FREE WHEEL COUPLING	119
90355-0031	FLEXIBLE COUPLING	301
90360-0009	STEAM TRAP	81, 83, 85
90360-0011	STEAM TRAP	81, 83, 85
90360-0304	* SPARE PART KIT	71
90360-0305	FLOAT	71
90411-0005	INSULATOR	113
90413-0033	CODE INSERT SET 0-9	631, 633
90413-0043	CODE INSERT SET	631, 633
90413-0044	CODE INSERT SET	631, 633
90413-0047	CODE INSERT SET	631, 633
90413-0048	CODE INSERT SET	631, 633
90413-0049	CODE INSERT SET	631, 633
90415-0018	FILTER	237
90415-0019	FILTER	237
90415-0029	FILTER	205
90415-0032	FILTER	191
90415-0033	OIL FILTER	435
90415-0314	* FILTERINSERT 5594-36	237
90415-0323	* FILTERINSERT FOR -29	205
90415-0325	* GASKET	237
90415-0328	* FILTER INSERT	191
90415-0330	* FILTER INSERT	435
90417-0133	TOOTHED BELT	291
90417-0134	TOOTHED BELT	291
90417-0180	TIMING BELT	411
90417-0329	TIMING BELT	489, 491, 497
90417-0330	TIMING BELT	487
90417-0345	TIMING BELT	485, 497
90418-0014	ELBOW PIPE	237
90418-0039	ELBOW PIPE	237
90418-0048	T-PIECE	237
90418-0050	T-PIECE	237
90418-0053	ELBOW PIPE	237
90418-0054	PIPE FITTING	237
90418-0055	PIPE FITTING	237
90418-0056	T-PIECE	237
90418-0058	ELBOW PIPE	237
90418-0063	ADAPTER	237
90418-0068	T-PIECE	237
90419-0005	ALARM BEACON,RED 24V	213
90419-0302	* LENS RED FOR -304	213
90422-0008	COOLER	205
90424-0025	NOZZLE	199
90424-0026	NOZZLE	193, 195, 197, 201, 203
90424-0031	NOZZLE	109, 125
90424-0035	NOZZLE	247, 269, 457, 459
90424-0054	NOZZLE	73
90425-0009	EJECTOR	103
90426-0003	HAND SHOWER	153
90450-0105	CYLINDER	325, 329

Part No	Description	Page No
90450-0377	CYLINDER	457, 459
90450-0634	* OVERHAUL KIT	325, 329
927085	OVERFLOW TUBE	75
927195	PIPE	81, 83, 85
927196	PIPE	81, 83, 85
927197	PIPE	81, 83, 85
927198	PIPE	81, 83, 85
927199	CLAMP BRACKET	81, 83, 85
927200	PIPE	81, 83, 85
927226	PIPE	81, 83, 85
927252	COMPRESSION SPRING	377
927258	BRACKET	119
927311	PIPE	81, 83, 85
927314	CAM	509, 511
927315	TURRET	509, 511
927318	ROLLER	509, 511
927319	PLATFORM	213
927323	SPACER	377
927332	BRACKET	417
927333	BAR CLAMP	417
927420-0001	O-RING 5.1X1.6 SILICON	45
927421-0001	O-RING 9.3X2.4 SILICON	77, 123
927421-0002	O-RING 12.3X2.4 SILICON	45
927421-0003	O-RING 13.3X2.4 SILICON	77, 123, 233
927421-0004	O-RING 15.3X2.4 SILICON	45, 177
927422-0001	O-RING 19.2X3 SILICON	45, 77
927422-0003	O.RING 24.2X3 SILICON	173
927422-0004	O-RING 29.2X3 SILICON	77, 123, 179
927422-0006	O-RING 42.2X3 SILICON	77, 171, 179, 233
927422-0007	O-RING 44.2X3 SILICON	45
927422-0009	O-RING 54.5X3 SILICON	45, 77
927422-0011	O-RING 69.5X3 SILICON	171
927428	COVERING PLATE	647
927440	LINK	377, 403
927441	NUT	377, 403
927448	LINK	317, 321
927449	SECURITY PLATE LEFT	317
927450	SECURITY PLATE RIGHT	321
927495	INDUCTOR	391, 397, 403
927891	SCREW	499
928720	HOLDER	381
928837	AIR DISTRIBUTOR	221
928901	COVERING PLATE	481
929573	CATCH	359, 361, 363
929574	CATCH	359, 361, 363
978603	SIGN	243
B		
B- 648003-100V	DRIVE	281, 283, 285
B- 648004-090V	JAW SYSTEM	313, 315
B- 648007-040V	STRIP APPLICATOR	671, 673
B- 648009-0902	REGULAR ACCESSORIES	573
B- 648009-0906	REGULAR ACCESSORIES	573
B- 648011-0801	SUPERSTRUCTURE	15
B- 648011-0802	SUPERSTRUCTURE	15
B- 648012-080V	MACHINE BODY	147, 149
B- 648013-060V	AUTOMATIC SPLICING UNIT	601
B- 648035-0701	FINAL FOLDER	409
C		
C- 230922-0101	AIR JET GUN	147, 149, 151
C- 239890-0301	INTERMEDIARY SHAFT	281, 283, 285, 289
C- 243171-0201	. . LADDER	573
C- 243171-0201	LADDER	583, 585
C- 243927-0701	ARM	297
C- 243927-0702	ARM	297
C- 243927-070V	ARM	281, 283, 285
C- 250610-0201	TOOL KIT	573, 575
C- 263391-0401	. CALENDER ROLLER	15
C- 263391-0401	CALENDER ROLLER	115, 117
C- 263394-0301	BENDING ROLLER	119
C- 263394-0303	BENDING ROLLER	119
C- 263394-0304	BENDING ROLLER	119
C- 263394-0305	BENDING ROLLER	119
C- 263394-0307	BENDING ROLLER	119
C- 263394-0308	BENDING ROLLER	119
C- 263394-030V	. BENDING ROLLER	15
C- 263394-030V	BENDING ROLLER	115
C- 263805-0201	FORM CLAMP	17
C- 263805-0202	FORM CLAMP	17
C- 263805-0203	FORM CLAMP	17
C- 263805-0204	FORM CLAMP	17
C- 263805-020V	FORM CLAMP	15
C- 263948-0301	CUP	23
C- 263948-0302	CUP	23
C- 263948-0303	CUP	23
C- 263948-0304	CUP	23

Part No	Description	Page No
C- 263948-0305	CUP	23
C- 263948-030V	CUP	15
C- 265565-0201	BENDING ROLLER BRACKET	671, 673, 687
C- 265809-0301	PAPER GUARD	15, 25
C- 265889-0301	SWITCH (MONITOR)	147, 149, 155
C- 266550-0401	. FILTER HOUSING	147, 149
C- 266550-0401	FILTER HOUSING	169, 171
C- 266726-0301	PRESSURE ROLLER	671, 673, 689
C- 266755-0201	PLATFORM	579
C- 266755-0202	PLATFORM	579
C- 266755-0203	PLATFORM	579
C- 266755-020V	. PLATFORM	573
C- 266755-020V	PLATFORM	577
C- 266756-0501	PLATFORM	581
C- 266756-0502	PLATFORM	581
C- 266756-0503	PLATFORM	581
C- 266756-0504	PLATFORM	581
C- 266756-050V	. PLATFORM	573
C- 266756-050V	PLATFORM	577
C- 266986-0501	CURVE SHAFT	293
C- 266986-0502	CURVE SHAFT	293
C- 266986-0503	CURVE SHAFT	293
C- 266986-0504	CURVE SHAFT	293
C- 266986-0505	CURVE SHAFT	293
C- 266986-0506	CURVE SHAFT	293, 295
C- 266986-0507	CURVE SHAFT	293
C- 266986-0509	CURVE SHAFT	293
C- 266986-050V	CURVE SHAFT	281, 283, 285
C- 266986-0510	CURVE SHAFT	293
C- 266986-0511	CURVE SHAFT	293
C- 266986-0512	CURVE SHAFT	293
C- 266986-0513	CURVE SHAFT	293
C- 266986-0514	CURVE SHAFT	293
C- 268015-0101	BENDING ROLLER BRACKET	147, 149, 157
C- 268614-0501	START-UP KIT	401
C- 268614-0502	START-UP KIT	401
C- 268614-0504	START-UP KIT	401
C- 268614-050V	START-UP KIT	313, 315
C- 268614-0510	START-UP KIT	401
C- 268614-0511	START-UP KIT	401
C- 268614-0512	START-UP KIT	401
C- 268614-0513	START-UP KIT	401
C- 268614-0514	START-UP KIT	401
C- 268614-0515	START-UP KIT	401
C- 268614-0516	START-UP KIT	401
C- 268614-0517	START-UP KIT	403
C- 268614-0518	START-UP KIT	403
C- 268614-0519	START-UP KIT	403
C- 269112-0601	STRIP APPLICATOR	691
C- 269112-060V	STRIP APPLICATOR	671, 673
C- 269113-0601	LOWER FORMING RING	27, 31
C- 269113-0602	LOWER FORMING RING	27, 31
C- 269113-0603	LOWER FORMING RING	27, 31
C- 269113-0604	LOWER FORMING RING	27, 31
C- 269113-0605	LOWER FORMING RING	27, 31
C- 269113-0606	LOWER FORMING RING	27, 31
C- 269113-060V	LOWER FORMING RING	15
C- 269115-0501	UPPER FORMING RING	35, 37, 39
C- 269115-0502	UPPER FORMING RING	35, 37, 39
C- 269115-0503	UPPER FORMING RING	35, 37, 39
C- 269115-0504	UPPER FORMING RING	35, 37, 39
C- 269115-0505	UPPER FORMING RING	35, 37, 39
C- 269115-050V	UPPER FORMING RING	15
C- 269136-0201	EDGE ROLLER	15, 41
C- 269136-0202	EDGE ROLLER	41
C- 269158-0401	HOT AIR ELEMENT	43
C- 269158-0402	HOT AIR ELEMENT	43
C- 269158-0403	HOT AIR ELEMENT	43
C- 269158-040V	HOT AIR ELEMENT	15
C- 269301-0501	BOX	147, 149, 159
C- 269322-0301	COVER UPPER	147, 149, 161
C- 269324-040V	HATCH	147, 149, 163
C- 269715-0101	PIPE HOLDER	15, 47
C- 269720-0301	FILLER TUBE	49
C- 269720-0302	FILLER TUBE	49
C- 269720-0303	FILLER TUBE	49
C- 269720-0304	FILLER TUBE	49
C- 269720-0305	FILLER TUBE	49
C- 269720-0306	FILLER TUBE	49
C- 269720-030V	FILLER TUBE	15
C- 269828-0501	FILLER TUBE	55
C- 269828-0502	FILLER TUBE	55
C- 269828-0503	FILLER TUBE	55
C- 269828-0504	FILLER TUBE	55
C- 269828-0505	FILLER TUBE	55
C- 269828-0506	FILLER TUBE	55

Part No	Description	Page No
C- 269828-0507	FILLER TUBE	55
C- 269828-0508	FILLER TUBE	57
C- 269828-0509	FILLER TUBE	57
C- 269828-050V	FILLER TUBE	15
C- 269828-0510	FILLER TUBE	57
C- 269828-0511	FILLER TUBE	57
C- 269915-0701	HOT AIR ELEMENT	59
C- 269915-070V	HOT AIR ELEMENT	15
C- 269932-0501	. COVER	15
C- 269932-0501	COVER	77, 79
C- 269941-0601	BATH	75
C- 269941-0602	BATH	75
C- 269941-0603	BATH	75
C- 269941-0604	BATH	75
C- 269941-060V	BATH	15
C- 269970-0501	PLATFORM	15, 99
C- 269971-0201	. LADDER	15
C- 269971-0201	LADDER	99, 101
C- 269988-0601	VENTILATION SYSTEM	15, 103
C- 269989-0301	. VALVE	15
C- 269989-0301	VALVE	109, 111
C- 269989-0302	. VALVE	15
C- 269989-0302	VALVE	109, 111
C- 273400-0701	STERILE AIR SYSTEM	15, 109
C- 273401-0301	. CHANGE-OVER VALVE	15
C- 273401-0301	CHANGE-OVER VALVE	103, 105
C- 273402-0401	. AIR SUPER-HEATER	15
C- 273402-0401	AIR SUPER-HEATER	109, 113
C- 273728-0301	VALVE GROUP	303, 305
C- 273728-030V	. VALVE GROUP	281, 283, 285
C- 273728-030V	VALVE GROUP	301
C- 276343-0301	. LID	147, 149
C- 276343-0301	LID	205, 207
C- 276345-0301	AIR KNIFE	121
C- 276345-0302	AIR KNIFE	121
C- 276345-0303	AIR KNIFE	121
C- 276345-0304	AIR KNIFE	121
C- 276345-0305	AIR KNIFE	121
C- 276345-030V	. AIR KNIFE	15
C- 276345-030V	AIR KNIFE	115
C- 276373-0701	DRIER	15, 115
C- 276480-0501	PIPE WORK	15, 123
C- 278956-0701	PILLAR	15, 125

Part No	Description	Page No
C- 279134-0501	TRANSMISSION	313, 315, 379
C- 279210-0101	PAPER GUIDE	685
C- 279210-0102	PAPER GUIDE	685
C- 279210-0103	PAPER GUIDE	685
C- 279210-0105	PAPER GUIDE	685
C- 279210-0106	PAPER GUIDE	685
C- 279210-010V	PAPER GUIDE	671, 673
C- 279651-0601	TOUCH GUARD	15, 129
C- 279979-0501	CENTRAL LUBRICATION	147, 149, 165
C- 282509-0301	BENDING ROLLER	675
C- 282509-0302	BENDING ROLLER	675
C- 282509-0303	BENDING ROLLER	675
C- 282509-0304	BENDING ROLLER	675
C- 282509-030V	BENDING ROLLER	671, 673
C- 282528-0201	PRESSURE ROLLER	693
C- 282528-020V	PRESSURE ROLLER	671, 673
C- 282604-0201	START-UP KIT MACHINE BODY	147, 149, 167
C- 282634-0301	STRIP GUIDE	695
C- 282634-0302	STRIP GUIDE	695
C- 282634-0303	STRIP GUIDE	695
C- 282634-0305	STRIP GUIDE	695
C- 282634-0307	STRIP GUIDE	695
C- 282634-030V	STRIP GUIDE	671, 673
C- 282805-0801	PIPE WORK-PNEUMATIC	131, 133
C- 282805-0802	PIPE WORK-PNEUMATIC	131, 133
C- 282805-080V	PIPE WORK-PNEUMATIC	15
C- 283926-0301	AIR NOZZLE	61
C- 283926-0302	AIR NOZZLE	61
C- 283926-0303	AIR NOZZLE	61
C- 283926-030V	. AIR NOZZLE	15
C- 283926-030V	AIR NOZZLE	59
C- 284163-0501	START-UP KIT	141
C- 284163-0502	START-UP KIT	141
C- 284163-0503	START-UP KIT	141
C- 284163-0504	START-UP KIT	141
C- 284163-0505	START-UP KIT	141
C- 284163-0506	START-UP KIT	141
C- 284163-050V	START-UP KIT	15
C- 284953-0101	HOSE	573, 587
C- 285287-0501	. DRIVE UNIT	409
C- 285287-0501	DRIVE UNIT	413, 415
C- 285291-0401	. BEVEL GEAR	409
C- 285291-0401	BEVEL GEAR	427, 429

Part No	Description	Page No
C- 285299-0101	. PRESSURE ARM	409
C- 285299-0101	PRESSURE ARM	427, 433
C- 285299-0102	PRESSURE ARM	427, 433
C- 285303-0401	LOWER SECTION	409, 427
C- 285479-0501	SUPERSTRUCTURE	501
C- 285479-0502	SUPERSTRUCTURE	501
C- 285479-050V	SUPERSTRUCTURE	409
C- 285592-0601	MACHINE BODY	411
C- 285592-0602	MACHINE BODY	411
C- 285592-060V	MACHINE BODY	409
C- 285853-0201	STEERING RAIL	503
C- 285853-0202	STEERING RAIL	503
C- 285853-0203	STEERING RAIL	503
C- 285853-0204	STEERING RAIL	503
C- 285853-0205	STEERING RAIL	503
C- 285853-0206	STEERING RAIL	503
C- 285853-0207	STEERING RAIL	503
C- 285853-0208	STEERING RAIL	503
C- 285853-0209	STEERING RAIL	503
C- 285853-020V	. STEERING RAIL	409
C- 285853-020V	STEERING RAIL	501
C- 285853-0211	STEERING RAIL	503
C- 285853-0212	STEERING RAIL	503
C- 285853-0213	STEERING RAIL	503
C- 285853-0214	STEERING RAIL	505
C- 285853-0215	STEERING RAIL	505
C- 285853-0217	STEERING RAIL	505
C- 285861-0501	GEAR REDUCTION	417
C- 285861-0502	GEAR REDUCTION	417
C- 285861-050V	. GEAR REDUCTION	409
C- 285861-050V	GEAR REDUCTION	413
C- 292071-0201	SPLASH PROTECTION	307
C- 292071-020V	SPLASH PROTECTION	281, 283, 285
C- 292445-0101	LIFTING UNIT	573, 589
C- 292451-0501	PEROXIDE PUMP	179
C- 292451-0502	PEROXIDE PUMP	179
C- 292451-050V	. . PEROXIDE PUMP	147, 149
C- 292451-050V	PEROXIDE PUMP	177
C- 293605-0501	VOLUM CURVE PIECE	381
C- 293605-0504	VOLUM CURVE PIECE	381
C- 293605-0507	VOLUM CURVE PIECE	381
C- 293605-0508	VOLUM CURVE PIECE	381
C- 293605-0509	VOLUM CURVE PIECE	381
C- 293605-050V	VOLUM CURVE PIECE	313, 315
C- 293605-0510	VOLUM CURVE PIECE	383
C- 293605-0513	VOLUM CURVE PIECE	383
C- 293605-0514	VOLUM CURVE PIECE	383
C- 293605-0516	VOLUM CURVE PIECE	383
C- 293605-0517	VOLUM CURVE PIECE	383
C- 293605-0519	VOLUM CURVE PIECE	383, 385
C- 293684-0201	PRINTING WHEEL	631, 633
C- 293684-0202	PRINTING WHEEL	631, 633
C- 293684-0203	PRINTING WHEEL	631, 633
C- 293684-0205	PRINTING WHEEL	631, 633
C- 293684-020V	. PRINTING WHEEL	601
C- 293684-020V	PRINTING WHEEL	629
C- 297604-0401	HOOD	147, 149, 199
C- 297638-0201	CHAIN TENSIONER	421
C- 297638-0202	CHAIN TENSIONER	421
C- 297638-020V	. CHAIN TENSIONER	409
C- 297638-020V	CHAIN TENSIONER	413
C- 297808-0501	CLEANING EQUIPMENT	147, 149, 191
C- 434668-0401	DRIVE UNIT	291
C- 434668-0402	DRIVE UNIT	291
C- 434668-0407	DRIVE UNIT	291
C- 434668-0408	DRIVE UNIT	291
C- 434668-040V	DRIVE UNIT	281, 283, 285
C- 434669-0402	IMPULSE TRANSMITTER	301
C- 434669-040V	IMPULSE TRANSMITTER	281, 283, 285
C- 434670-0601	LINK SYSTEM	309
C- 434670-060V	LINK SYSTEM	281, 283, 285
C- 434707-0301	HYDRAULIC SYSTEM	205
C- 434707-030V	HYDRAULIC SYSTEM	147, 149
C- 440098-0301	CRANK BRACKET	147, 149, 211
C- 440132-0201	START-UP KIT	601, 661
C- 440133-0401	MACHINE BODY	601, 615
C- 440135-0101	. BENDING ROLLER	601
C- 440135-0101	BENDING ROLLER	647, 649, 657
C- 440184-0101	BENDING ROLLER	651
C- 440184-0102	BENDING ROLLER	651
C- 440184-0103	BENDING ROLLER	651
C- 440184-0105	BENDING ROLLER	651
C- 440184-0106	BENDING ROLLER	651
C- 440184-0107	BENDING ROLLER	651
C- 440184-010V	. BENDING ROLLER	601
C- 440184-010V	BENDING ROLLER	647

Part No	Description	Page No
C- 440210-0201	ROLL	617
C- 440210-0202	ROLL	617
C- 440210-020V	ROLL	601
C- 440285-0101	PAPER REEL HOLDER	603, 605
C- 440285-0102	PAPER REEL HOLDER	603, 605
C- 440285-0103	PAPER REEL HOLDER	603, 605
C- 440285-0104	PAPER REEL HOLDER	603, 605
C- 440285-0105	PAPER REEL HOLDER	603, 605
C- 440285-010V	PAPER REEL HOLDER	601
C- 440286-0301	. INK UNIT	601
C- 440286-0301	INK UNIT	629, 635
C- 440384-0501	PLATFORM	213
C- 440384-050V	PLATFORM	147, 149
C- 440415-0201	TRANSFORMER	147, 149, 215
C- 440422-0601	BOTTOM PLATE	217
C- 440422-060V	BOTTOM PLATE	147, 149
C- 440437-0301	BOX LEFT	219
C- 440437-030V	BOX LEFT	147, 149
C- 440474-0101	TUBE FLUSHING DEVICE	223
C- 440474-0102	TUBE FLUSHING DEVICE	223
C- 440474-010V	TUBE FLUSHING DEVICE	147, 149
C- 440537-0501	MACHINE BODY	225
C- 440537-0506	MACHINE BODY	225
C- 440537-050V	MACHINE BODY	147, 149
C- 440588-0201	CRANK	281, 283, 285, 287
C- 440630-0201	AP-VALVE	87
C- 440630-0202	AP-VALVE	87
C- 440630-020V	. AP-VALVE	15
C- 440630-020V	AP-VALVE	81, 83, 85
C- 442077-0201	. DECREASE OF PRESSURE	147, 149
C- 442077-0201	DECREASE OF PRESSURE	209
C- 442402-0101	. . VALVE	281, 283, 285
C- 442402-0101	VALVE	303, 305
C- 442463-0401	PIPE WORK	147, 149, 233
C- 442537-0501	WASTE CHUTE	559
C- 442537-0502	WASTE CHUTE	559
C- 442537-050V	WASTE CHUTE	409
C- 442646-0201	. TOP GEAR	409
C- 442646-0201	TOP GEAR	501, 507
C- 443173-0101	DRIVE SHAFT	409, 547
C- 445537-0201	PIPE WORK-HYDRAULIC	235
C- 445537-020V	PIPE WORK-HYDRAULIC	147, 149
C- 445840-0101	DRIVE UNIT	607
C- 445840-010V	DRIVE UNIT	601
C- 445880-0601	SPLICING DEVICE	645
C- 445880-0602	SPLICING DEVICE	645
C- 445880-0604	SPLICING DEVICE	645
C- 445880-0605	SPLICING DEVICE	645
C- 445880-0606	SPLICING DEVICE	645
C- 445880-0607	SPLICING DEVICE	645
C- 445880-060V	SPLICING DEVICE	601
C- 445920-0601	EL-PNEUMATIC EQUIPMENT	639, 641
C- 445920-060V	EL-PNEUMATIC EQUIPMENT	601
C- 445930-0101	BENDING UNIT	657
C- 445930-010V	BENDING UNIT	601
C- 449168-0301	CLEANING SYSTEM	147, 149, 247
C- 449168-0302	CLEANING SYSTEM	247
C- 449630-0301	PAPER HOLDER	653
C- 449630-0302	PAPER HOLDER	653
C- 449630-0303	PAPER HOLDER	653
C- 449630-0305	PAPER HOLDER	653
C- 449630-0306	PAPER HOLDER	653
C- 449630-0307	PAPER HOLDER	653
C- 449630-030V	. PAPER HOLDER	601
C- 449630-030V	PAPER HOLDER	647
C- 449930-0501	CONNECTION BOX	147, 149, 245
C- 449932-0501	PIPE WORK-WATER	249
C- 449932-050V	PIPE WORK-WATER	147, 149
C- 450293-0501	CABLE DUCT	253
C- 450293-050V	CABLE DUCT	147, 149
C- 450490-0101	FORM CLAMP	21
C- 450490-0102	FORM CLAMP	21
C- 450490-0103	FORM CLAMP	21
C- 450490-010V	FORM CLAMP	15
C- 450788-0601	PIPE WORK-PNEUMATIC	257, 259, 261, 263
C- 450788-0605	PIPE WORK-PNEUMATIC	257, 259, 261, 263
C- 450788-060V	PIPE WORK-PNEUMATIC	147, 149
C- 450792-0101	DETERGENT PUMP	147, 149, 265
C- 450824-0201	DOOR	147, 149, 267
C- 450840-0401	LIFTING UNIT	147, 149, 269
C- 450862-0301	CONNECTION BOX	671, 673, 679
C- 450883-0401	PROTECTION	271
C- 450883-040V	PROTECTION	147, 149
C- 451131-0101	CLEANING PIPE	15, 135
C- 451342-0501	CABLE DUCT	15, 137
C- 451348-0202	CONNECTION BOX	147, 149, 275

Part No	Description	Page No
C- 451365-0201	. TERMINAL PLINTH	15
C- 451365-0201	TERMINAL PLINTH	137, 139
C- 466399-0101	SEAL	127
C- 466399-0102	SEAL	127
C- 466399-0103	SEAL	127
C- 466399-0104	SEAL	127
C- 466399-0105	SEAL	127
C- 466399-0106	SEAL	127
C- 466399-010V	. SEAL	15
C- 466399-010V	SEAL	125
C- 476177-0201	HOLD-DOWN DEVICE	281, 283, 285, 299
C- 476849-0101	. VALVE	15
C- 476849-0101	VALVE	103, 107
C- 476859-0201	. CHANGE-OVER VALVE	15
C- 476859-0201	CHANGE-OVER VALVE	65, 67, 69, 103
C- 476859-0202	. CHANGE-OVER VALVE	15
C- 476859-0202	CHANGE-OVER VALVE	65, 67, 69, 103
C- 476859-0203	. CHANGE-OVER VALVE	15
C- 476859-0203	CHANGE-OVER VALVE	63, 65, 67, 69
C- 476884-0201	. CLEANING HEAD	147, 149
C- 476884-0201	CLEANING HEAD	191, 193, 195
C- 476884-0202	. CLEANING HEAD	147, 149
C- 476884-0202	CLEANING HEAD	193, 195, 269
C- 476885-0201	. CLEANING HEAD	147, 149
C- 476885-0201	CLEANING HEAD	199, 201
C- 476885-0202	. CLEANING HEAD	147, 149
C- 476885-0202	CLEANING HEAD	201, 247
C- 476886-0201	. CLEANING HEAD	147, 149
C- 476886-0201	CLEANING HEAD	199, 203
C- 476887-0201	. CLEANING HEAD	147, 149
C- 476887-0201	CLEANING HEAD	191, 197
C- 486958-0201	DATING UNIT	619
C- 486958-0202	DATING UNIT	619
C- 486958-0203	DATING UNIT	619
C- 486958-0204	DATING UNIT	619
C- 486958-0205	DATING UNIT	621
C- 486958-0206	DATING UNIT	621
C- 486958-0207	DATING UNIT	621
C- 486958-0208	DATING UNIT	623
C- 486958-0209	DATING UNIT	623
C- 486958-020V	DATING UNIT	601
C- 486958-0210	DATING UNIT	623
C- 486958-0211	DATING UNIT	625
C- 486958-0212	DATING UNIT	625
C- 486958-0213	DATING UNIT	625
C- 486958-0214	DATING UNIT	627
C- 493614-0101	SPRAY GUN	147, 149, 153
C- 499082-0101	ADAPTER, TYPE 1	597
C- 499082-0102	ADAPTER, TYPE 1	597
C- 499082-0103	ADAPTER, TYPE 1	597
C- 499082-0104	ADAPTER, TYPE 1	597
C- 499082-0106	ADAPTER, TYPE 1	597
C- 499082-010V	ADAPTER, TYPE 1	573
C- 522121-0201	CUTTING TABLE	659
C- 522121-0202	CUTTING TABLE	659
C- 522121-0203	CUTTING TABLE	659
C- 522121-0205	CUTTING TABLE	659
C- 522121-0206	CUTTING TABLE	659
C- 522121-0207	CUTTING TABLE	659
C- 522121-020V	CUTTING TABLE	601
C- 522410-0201	. BENDING ROLLER	601
C- 522410-0201	BENDING ROLLER	647, 655
C- 525000-0201	FOLDING PART	549
C- 525000-0202	FOLDING PART	549
C- 525000-0203	FOLDING PART	549
C- 525000-0204	FOLDING PART	549
C- 525000-0205	FOLDING PART	549
C- 525000-0206	FOLDING PART	551
C- 525000-0207	FOLDING PART	551
C- 525000-0209	FOLDING PART	551
C- 525000-020V	FOLDING PART	409
C- 525000-0210	FOLDING PART	551
C- 525000-0211	FOLDING PART	553
C- 525000-0212	FOLDING PART	553
C- 525000-0213	FOLDING PART	553
C- 525000-0214	FOLDING PART	553
C- 525000-0216	FOLDING PART	555
C- 525102-0201	. LUBRICATING SYSTEM	409
C- 525102-0201	LUBRICATING SYSTEM	427, 435
C- 525110-0101	. CABLE CONDUIT	409
C- 525110-0101	CABLE CONDUIT	413, 423
C- 525110-0102	CABLE CONDUIT	413, 423
C- 525143-0201	. BOTTOM VALVE	409
C- 525143-0201	BOTTOM VALVE	413, 425
C- 525213-0201	INFEEDER	561
C- 525213-0202	INFEEDER	561

Part No	Description	Page No
C- 525213-0203	INFEEDER	561
C- 525213-0204	INFEEDER	561
C- 525213-0205	INFEEDER	561
C- 525213-0206	INFEEDER	561
C- 525213-0208	INFEEDER	561
C- 525213-0209	INFEEDER	561
C- 525213-020V	INFEEDER	409
C- 525213-0210	INFEEDER	561
C- 525213-0211	INFEEDER	561
C- 525320-0101	CHAIN GUARD	565
C- 525320-0102	CHAIN GUARD	565
C- 525320-0103	CHAIN GUARD	565
C- 525320-0104	CHAIN GUARD	565
C- 525320-0105	CHAIN GUARD	565
C- 525320-010V	. CHAIN GUARD	409
C- 525320-010V	CHAIN GUARD	563
C- 525325-0201	DISCHARGER	567
C- 525325-0202	DISCHARGER	567
C- 525325-0204	DISCHARGER	567
C- 525325-0206	DISCHARGER	567
C- 525325-0207	DISCHARGER	567
C- 525325-0208	DISCHARGER	567
C- 525325-020V	DISCHARGER	409
C- 525325-0210	DISCHARGER	567
C- 525325-0211	DISCHARGER	567
C- 525325-0212	DISCHARGER	567
C- 525325-0213	DISCHARGER	567
C- 526931-0301	BOTTOM PLATE	681
C- 526931-0302	BOTTOM PLATE	681
C- 526931-0303	BOTTOM PLATE	681
C- 526931-0304	BOTTOM PLATE	681
C- 526931-0305	BOTTOM PLATE	681
C- 526931-0306	BOTTOM PLATE	681
C- 526931-030V	BOTTOM PLATE	671, 673
C- 526932-0301	PIPE WORK	683
C- 526932-0302	PIPE WORK	683
C- 526932-0303	PIPE WORK	683
C- 526932-0304	PIPE WORK	683
C- 526932-0305	PIPE WORK	683
C- 526932-0306	PIPE WORK	683
C- 526932-030V	PIPE WORK	671, 673
C- 526954-0101	START-UP KIT	699
C- 526954-010V	START-UP KIT	671, 673
C- 527898-0101	. CONTAINER	147, 149
C- 527898-0101	CONTAINER	169, 173
C- 530745-0401	SIDE GUARD	601, 611, 613
C- 531345-0101	PERSONAL PROTECT. EQ H2O2	573, 591
C- 532151-0301	. CONNECTION BOX	601
C- 532151-0301	CONNECTION BOX	639, 641, 643
C- 537329-0101	. HUB JUMBO	671, 673
C- 537329-0101	HUB JUMBO	701, 703
C- 539209-0101	. . A-CYLINDER	15
C- 539209-0101	A-CYLINDER	87, 89
C- 539209-0102	. . A-CYLINDER	15
C- 539209-0102	A-CYLINDER	87, 89
C- 539210-0101	. . C-CYLINDER	15
C- 539210-0101	C-CYLINDER	87, 91
C- 539211-0101	. . B-CYLINDER	15
C- 539211-0101	B-CYLINDER	87, 93
C- 540723-0101	CONNECTION BOX	231
C- 540723-010V	. CONNECTION BOX	147, 149
C- 540723-010V	CONNECTION BOX	229
C- 541052-0101	ARM WITH AXLE PRESSURE L	313, 315, 335
C- 541052-0102	ARM WITH AXLE PRESSURE L	335
C- 541053-0101	ARM WITH AXLE PRESSURE R	313, 315, 337
C- 541053-0102	ARM WITH AXLE PRESSURE R	337
C- 541163-0101	. . CLAMP RING	15
C- 541163-0101	CLAMP RING	87, 95
C- 541164-0101	. . CLAMP RING	15
C- 541164-0101	CLAMP RING	87, 97
C- 541188-0201	BAR CODE	405
C- 541188-0202	BAR CODE	405
C- 541188-0203	BAR CODE	405
C- 541188-0205	BAR CODE	405
C- 541188-020V	BAR CODE	313, 315
C- 543143-0101	. ADJUSTMENTMENT DEVICE	601
C- 543143-0101	ADJUSTMENTMENT DEVICE	629, 637
C- 543157-0301	HOLDER	273
C- 543157-030V	. HOLDER	147, 149
C- 543157-030V	HOLDER	271
C- 543821-0101	. LEVEL PROBE	671, 673
C- 543821-0101	LEVEL PROBE	701, 705
C- 543822-0101	. BRAKE ARM	671, 673
C- 543822-0101	BRAKE ARM	701, 707, 709
C- 543822-0102	. BRAKE ARM	671, 673
C- 543822-0102	BRAKE ARM	701, 707, 709

Part No	Description	Page No
C- 543823-0101	STRIP MAGAZINE	671, 673, 701
C- 544973-0101	PILLAR	711
C- 544973-0104	PILLAR	711
C- 544973-0105	PILLAR	711
C- 544973-0106	PILLAR	711
C- 544973-0108	PILLAR	711
C- 544973-010V	PILLAR	671, 673
C- 545099-0201	SIDE GUARD	147, 149, 187
C- 545100-0201	SIDE GUARD, RIGHT	147, 149, 189
C- 546180-0101	SPLICE DETECTOR	697
C- 546180-010V	SPLICE DETECTOR	671, 673
C- 551997-0102	LIFTING UNIT	593
C- 551997-010V	LIFTING UNIT	573
C- 554171-0301	PLATFORM ADDITION	577
C- 554171-0302	PLATFORM ADDITION	577
C- 554171-030V	PLATFORM ADDITION	573
C- 554172-0101	HYDRAULIC DIAGRAM	595
C- 554172-010V	HYDRAULIC DIAGRAM	573
C- 556875-0101	COVER	601, 609
C- 560922-0101	. VALVE PANEL	147, 149
C- 560922-0101	VALVE PANEL	169, 175
C- 560930-0101	CONTAINER	15, 45
C- 561256-0301	PEROXIDE PIPE	147, 149, 169
C- 561257-0201	PEROXIDE TANK	177
C- 561257-0202	PEROXIDE TANK	177
C- 561257-0203	PEROXIDE TANK	177
C- 561257-0204	PEROXIDE TANK	177
C- 561257-020V	. PEROXIDE TANK	147, 149
C- 561257-020V	PEROXIDE TANK	169
C- 561258-0201	. DRAINING PEROXIDE	147, 149
C- 561258-0201	DRAINING PEROXIDE	169, 183
C- 561259-0101	. CONNECTION HOUSING	147, 149
C- 561259-0101	CONNECTION HOUSING	169, 185
C- 561268-0201	CONNECTION ASSEMBLY	81, 83, 85
C- 561268-0202	CONNECTION ASSEMBLY	81, 83, 85
C- 561268-020V	CONNECTION ASSEMBLY	15
C- 566196-0101	. . LID WITH WEIGHT	147, 149
C- 566196-0101	LID WITH WEIGHT	177, 181, 183
C- 566683-0101	. AIR COOLER	147, 149
C- 566683-0101	AIR COOLER	219, 221
C- 569003-0101	. SEPARATION INSERT	15
C- 569003-0101	SEPARATION INSERT	63, 71
C- 573612-0101	DOOR	15, 51, 53
C- 573612-0102	DOOR	15, 51, 53
C- 573663-0101	SUPPORT ROLLER	677
C- 573663-0102	SUPPORT ROLLER	677
C- 573663-0103	SUPPORT ROLLER	677
C- 573663-0104	SUPPORT ROLLER	677
C- 573663-010V	SUPPORT ROLLER	671, 673
C- 574601-0101	VALVE PANEL	241
C- 574601-0105	VALVE PANEL	241
C- 574601-010V	VALVE PANEL	147, 149
C- 575392-0101	VALVE PANEL LOWER	237
C- 575392-010V	VALVE PANEL LOWER	147, 149
C- 575474-0101	COMPRESSOR	63
C- 575474-0102	COMPRESSOR	63
C- 575474-010V	COMPRESSOR	15
C- 575475-0101	. SCRUBBER	15
C- 575475-0101	SCRUBBER	63, 73
C- 575797-0101	FLOWMETER GROUP	255
C- 575797-010V	FLOWMETER GROUP	147, 149
C- 576247-0101	PROTECTION	493
C- 576247-0101	PROTECTION	493, 495
C- 576247-0103	PROTECTION	493
C- 576247-010V	. PROTECTION	409
C- 576247-010V	PROTECTION	455, 457, 459
C- 576739-0201	(PAPER)REEL TROLLEY	601, 663, 665, 667
C- 576739-0202	(PAPER)REEL TROLLEY	663, 665, 667
C- 67379-0101	IH TRANSF.1.PRIM 5	335, 337
C- 67379-0102	IH TRANSF.1.PRIM 4	335, 337
C- 68917-0101	. ANGLE INDICATOR	147, 149
C- 68917-0101	ANGLE INDICATOR	275, 277
CR- 243942-0401	YOKE	313, 315, 323
CR- 243942-0402	YOKE	313, 315, 323
CR- 246327-0404	SHOCK ABSORBER	357
CR- 246327-0407	SHOCK ABSORBER	345
CR- 246327-0408	SHOCK ABSORBER	347
CR- 246327-0409	SHOCK ABSORBER	345
CR- 246327-040V	SHOCK ABSORBER	313, 315
CR- 246327-0410	SHOCK ABSORBER	349
CR- 246327-0411	SHOCK ABSORBER	351
CR- 246327-0414	SHOCK ABSORBER	353
CR- 246327-0415	SHOCK ABSORBER	355
CR- 246327-0416	SHOCK ABSORBER	361, 363
CR- 246327-0417	SHOCK ABSORBER	359
CR- 246468-0801	VOLUME FLAP	339

Part No	Description	Page No
CR- 246468-0802	VOLUME FLAP	339, 343
CR- 246468-0805	VOLUME FLAP	339
CR- 246468-0807	VOLUME FLAP	339, 343
CR- 246468-080V	VOLUME FLAP	313, 315
CR- 246468-0811	VOLUME FLAP	339
CR- 246468-0812	VOLUME FLAP	339
CR- 246468-0813	VOLUME FLAP	339
CR- 246468-0816	VOLUME FLAP	339
CR- 246468-0817	VOLUME FLAP	339
CR- 246468-0818	VOLUME FLAP	341
CR- 246468-0821	VOLUME FLAP	341
CR- 246468-0822	VOLUME FLAP	341
CR- 246499-0601	ARM	313, 315, 333
CR- 246499-0602	ARM	313, 315, 333
CR- 257835-0301	CUTTING JAW	369
CR- 257835-0302	CUTTING JAW	369
CR- 257835-0305	CUTTING JAW	369
CR- 257835-0306	CUTTING JAW	369
CR- 257835-0307	CUTTING JAW	369
CR- 257835-0308	CUTTING JAW	369
CR- 257835-0309	CUTTING JAW	371
CR- 257835-030V	CUTTING JAW	313, 315
CR- 257835-0310	CUTTING JAW	371
CR- 257835-0351	CUTTING JAW	373
CR- 257835-0352	CUTTING JAW	373
CR- 257835-0355	CUTTING JAW	373
CR- 257835-0356	CUTTING JAW	373
CR- 257835-0357	CUTTING JAW	373
CR- 257835-0358	CUTTING JAW	373
CR- 257835-0359	CUTTING JAW	375
CR- 257835-035V	CUTTING JAW	313, 315
CR- 257835-0360	CUTTING JAW	375
CR- 259414-0401	CARRIER PRESSURE L IH	365
CR- 259414-0402	CARRIER PRESSURE L IH	365
CR- 259414-040V	CARRIER PRESSURE L IH	313, 315
CR- 259415-0401	CARRIER	367
CR- 259415-0402	CARRIER	367
CR- 259415-040V	CARRIER	313, 315
CR- 259534-0701	PRESSURE JAW	391
CR- 259534-0702	PRESSURE JAW	391
CR- 259534-0705	PRESSURE JAW	393
CR- 259534-0706	PRESSURE JAW	389
CR- 259534-0707	PRESSURE JAW	389
CR- 259534-0708	PRESSURE JAW	391
CR- 259534-0709	PRESSURE JAW	391
CR- 259534-070V	PRESSURE JAW	313, 315
CR- 259534-0710	PRESSURE JAW	391
CR- 259534-0751	PRESSURE JAW	397
CR- 259534-0752	PRESSURE JAW	397
CR- 259534-0755	PRESSURE JAW	399
CR- 259534-0756	PRESSURE JAW	395
CR- 259534-0757	PRESSURE JAW	395
CR- 259534-0758	PRESSURE JAW	397
CR- 259534-0759	PRESSURE JAW	397
CR- 259534-075V	PRESSURE JAW	313, 315
CR- 259534-0760	PRESSURE JAW	397
CR- 26642-0201	. CARRIER	313, 315
CR- 26642-0201	CARRIER	317, 319, 321
CR- 266446-0501	DESIGN CORRECTION DEVICE	325
CR- 266446-0502	DESIGN CORRECTION DEVICE	325
CR- 266446-0503	DESIGN CORRECTION DEVICE	325
CR- 266446-0504	DESIGN CORRECTION DEVICE	325
CR- 266446-0505	DESIGN CORRECTION DEVICE	325
CR- 266446-0507	DESIGN CORRECTION DEVICE	325
CR- 266446-0508	DESIGN CORRECTION DEVICE	325
CR- 266446-0509	DESIGN CORRECTION DEVICE	325
CR- 266446-050V	DESIGN CORRECTION DEVICE	313, 315
CR- 266446-0510	DESIGN CORRECTION DEVICE	325
CR- 266447-0501	DESIGN CORRECTION DEVICE	329
CR- 266447-0502	DESIGN CORRECTION DEVICE	329
CR- 266447-0503	DESIGN CORRECTION DEVICE	329
CR- 266447-0504	DESIGN CORRECTION DEVICE	329
CR- 266447-0505	DESIGN CORRECTION DEVICE	329
CR- 266447-0507	DESIGN CORRECTION DEVICE	329
CR- 266447-0508	DESIGN CORRECTION DEVICE	329
CR- 266447-0509	DESIGN CORRECTION DEVICE	329
CR- 266447-050V	DESIGN CORRECTION DEVICE	313, 315
CR- 266447-0510	DESIGN CORRECTION DEVICE	329
CR- 279564-0301	FOLDING DEVICE	317
CR- 279564-0303	FOLDING DEVICE	317
CR- 279564-0304	FOLDING DEVICE	317
CR- 279564-0305	FOLDING DEVICE	317
CR- 279564-0306	FOLDING DEVICE	317
CR- 279564-0307	FOLDING DEVICE	317
CR- 279564-030V	FOLDING DEVICE	313, 315
CR- 279565-0301	FOLDING DEVICE	321

Part No	Description	Page No
CR- 279565-0303	FOLDING DEVICE	321
CR- 279565-0304	FOLDING DEVICE	321
CR- 279565-0305	FOLDING DEVICE	321
CR- 279565-0306	FOLDING DEVICE	321
CR- 279565-0307	FOLDING DEVICE	321
CR- 279565-030V	FOLDING DEVICE	313, 315
CR- 285456-0301	PRESSURE DEVICE	513
CR- 285456-0302	PRESSURE DEVICE	513
CR- 285456-0303	PRESSURE DEVICE	513
CR- 285456-0304	PRESSURE DEVICE	513
CR- 285456-0305	PRESSURE DEVICE	513
CR- 285456-0306	PRESSURE DEVICE	513
CR- 285456-0307	PRESSURE DEVICE	513
CR- 285456-0309	PRESSURE DEVICE	513
CR- 285456-030V	PRESSURE DEVICE	409
CR- 285456-0310	PRESSURE DEVICE	513
CR- 285456-0311	PRESSURE DEVICE	515
CR- 285456-0312	PRESSURE DEVICE	515
CR- 285456-0313	PRESSURE DEVICE	515
CR- 285456-0314	PRESSURE DEVICE	515
CR- 285591-0401	STATION	453
CR- 285591-0402	STATION	453
CR- 285591-040V	STATION	409
CR- 285736-0301	PULL-DOWN DEVICE	519
CR- 285736-0302	PULL-DOWN DEVICE	519
CR- 285736-0303	PULL-DOWN DEVICE	519
CR- 285736-030V	PULL-DOWN DEVICE	409
CR- 285736-0311	PULL-DOWN DEVICE	519
CR- 285736-0312	PULL-DOWN DEVICE	519
CR- 285736-0313	PULL-DOWN DEVICE	519
CR- 285736-0314	PULL-DOWN DEVICE	521
CR- 285736-0315	PULL-DOWN DEVICE	521
CR- 285736-0316	PULL-DOWN DEVICE	521
CR- 285736-0317	PULL-DOWN DEVICE	521
CR- 285736-0318	PULL-DOWN DEVICE	521
CR- 285736-0319	PULL-DOWN DEVICE	523
CR- 285736-0320	PULL-DOWN DEVICE	523
CR- 285736-0321	PULL-DOWN DEVICE	523
CR- 285736-0323	PULL-DOWN DEVICE	523
CR- 297681-0301	WHEEL	527
CR- 297681-0302	WHEEL	527
CR- 297681-0303	WHEEL	527
CR- 297681-0304	WHEEL	527
CR- 297681-0305	WHEEL	529
CR- 297681-030V	WHEEL	409
CR- 297681-0313	WHEEL	529
CR- 297681-0314	WHEEL	529
CR- 297681-0315	WHEEL	529
CR- 297681-0316	WHEEL	531
CR- 297681-0317	WHEEL	531
CR- 297681-0318	WHEEL	531
CR- 297681-0319	WHEEL	531
CR- 297681-0320	WHEEL	533
CR- 297681-0321	WHEEL	533
CR- 297681-0323	WHEEL	533
CR- 297682-0301	WHEEL	537
CR- 297682-0302	WHEEL	537
CR- 297682-0303	WHEEL	537
CR- 297682-0304	WHEEL	537
CR- 297682-0305	WHEEL	539
CR- 297682-030V	WHEEL	409
CR- 297682-0313	WHEEL	539
CR- 297682-0314	WHEEL	539
CR- 297682-0315	WHEEL	539
CR- 297682-0316	WHEEL	541
CR- 297682-0317	WHEEL	541
CR- 297682-0318	WHEEL	541
CR- 297682-0319	WHEEL	541
CR- 297682-0320	WHEEL	543
CR- 297682-0321	WHEEL	543
CR- 297682-0323	WHEEL	543
CR- 31390-010V	. ELEMENT	409
CR- 31390-010V	ELEMENT	441, 443, 451
CR- 31390-011V	. ELEMENT	409
CR- 31390-011V	ELEMENT	441, 445, 451
CR- 32966-0401	KNIFE HOLDER	377
CR- 32966-0404	KNIFE HOLDER	377
CR- 32966-0405	KNIFE HOLDER	377
CR- 32966-040V	KNIFE HOLDER	313, 315
CR- 442582-0101	. . DRIVE GEAR	409
CR- 442582-0101	DRIVE GEAR	417, 419
CR- 442644-0301	. . DOUBLE GEAR	409
CR- 442644-0301	DOUBLE GEAR	429, 431
CR- 525085-0201	LUBRICATING SYSTEM	455
CR- 525085-0203	LUBRICATING SYSTEM	455
CR- 525085-0205	LUBRICATING SYSTEM	455, 459

Part No	Description	Page No
CR- 525085-020V	LUBRICATING SYSTEM	409
CR- 525086-0201.....	CONVEYING EQUIPMENT	461
CR- 525086-0202.....	CONVEYING EQUIPMENT	461
CR- 525086-0203.....	CONVEYING EQUIPMENT	461
CR- 525086-0204.....	CONVEYING EQUIPMENT	461
CR- 525086-0205.....	CONVEYING EQUIPMENT	461
CR- 525086-0206.....	CONVEYING EQUIPMENT	461
CR- 525086-0207.....	CONVEYING EQUIPMENT	461
CR- 525086-0209.....	CONVEYING EQUIPMENT	461
CR- 525086-020V	. CONVEYING EQUIPMENT	409
CR- 525086-020V	CONVEYING EQUIPMENT	455
CR- 525087-0101.....	DROP	465
CR- 525087-0102.....	DROP	465
CR- 525087-0103.....	DROP	465
CR- 525087-0104.....	DROP	465
CR- 525087-0105.....	DROP	465
CR- 525087-0107.....	DROP	465
CR- 525087-0108.....	DROP	465
CR- 525087-0109.....	DROP	465
CR- 525087-010V	. DROP	409
CR- 525087-010V	DROP	457, 459
CR- 525087-0110.....	DROP	467
CR- 525088-0201.....	DISCHARGE CHUTE	469
CR- 525088-0202.....	DISCHARGE CHUTE	469
CR- 525088-0203.....	DISCHARGE CHUTE	469
CR- 525088-0204.....	DISCHARGE CHUTE	469
CR- 525088-0205.....	DISCHARGE CHUTE	469
CR- 525088-0206.....	DISCHARGE CHUTE	469
CR- 525088-0207.....	DISCHARGE CHUTE	469
CR- 525088-020V	. DISCHARGE CHUTE	409
CR- 525088-020V	DISCHARGE CHUTE	457, 459
CR- 525089-0101.....	CHAIN RIGHT	471, 473
CR- 525089-0102.....	CHAIN RIGHT	471, 473
CR- 525089-0103.....	CHAIN RIGHT	471, 473
CR- 525089-010V	. CHAIN RIGHT	409
CR- 525089-010V	CHAIN RIGHT	455
CR- 525090-0101.....	CHAIN LEFT	475, 477
CR- 525090-0102.....	CHAIN LEFT	475, 477
CR- 525090-0103.....	CHAIN LEFT	475, 477
CR- 525090-010V	. CHAIN LEFT	409
CR- 525090-010V	CHAIN LEFT	455
CR- 525091-0101.....	CHAIN	479
CR- 525091-0102.....	CHAIN	479
CR- 525091-0103	CHAIN	479
CR- 525091-010V	. CHAIN	409
CR- 525091-010V	CHAIN	455
CR- 525092-0101	CHAIN GUARD	481
CR- 525092-0102	CHAIN GUARD	481
CR- 525092-0103	CHAIN GUARD	481
CR- 525092-0104	CHAIN GUARD	481
CR- 525092-0105	CHAIN GUARD	481
CR- 525092-010V	. CHAIN GUARD	409
CR- 525092-010V	CHAIN GUARD	455
CR- 525117-0301	. INDEXING GEAR	409
CR- 525117-0301	INDEXING GEAR	501, 509, 511
CR- 525128-0101	FF-ELEMENT R	447
CR- 525128-0102	FF-ELEMENT R	447
CR- 525128-0103	FF-ELEMENT R	447
CR- 525128-010V	FF-ELEMENT R	409
CR- 525128-0111	FF-ELEMENT R	447
CR- 525128-0112	FF-ELEMENT R	447
CR- 525128-0113	FF-ELEMENT R	447
CR- 525128-0114	FF-ELEMENT R	447
CR- 525128-0115	FF-ELEMENT R	449
CR- 525128-0116	FF-ELEMENT R	449
CR- 525128-0117	FF-ELEMENT R	449
CR- 525128-0118	FF-ELEMENT R	449
CR- 525128-0119	FF-ELEMENT R	449
CR- 525128-0120	FF-ELEMENT R	449
CR- 525129-0101	ELEMENT	437
CR- 525129-0102	ELEMENT	437
CR- 525129-0103	ELEMENT	437
CR- 525129-010V	ELEMENT	409
CR- 525129-0111	ELEMENT	437
CR- 525129-0112	ELEMENT	437
CR- 525129-0113	ELEMENT	437
CR- 525129-0114	ELEMENT	437
CR- 525129-0115	ELEMENT	439
CR- 525129-0116	ELEMENT	439
CR- 525129-0117	ELEMENT	439
CR- 525129-0118	ELEMENT	439
CR- 525129-0119	ELEMENT	439
CR- 525129-0120	ELEMENT	439
CR- 574323-0101	. CONVEYING EQUIPMENT	409
CR- 574323-0101	CONVEYING EQUIPMENT	483
CR- 574323-0102	CONVEYING EQUIPMENT	483

Part No	Description	Page No
CR- 574323-0103	CONVEYING EQUIPMENT	483
CR- 574332-0101	. . BELT	409
CR- 574332-0101	BELT	485, 487, 497
CR- 576245-0101	. . . BELT RIGHT	409
CR- 576245-0101	. . BELT RIGHT	409
CR- 576245-0101	BELT RIGHT	485, 489, 499
CR- 576246-0101	. . . BELT LEFT	409
CR- 576246-0101	. . BELT LEFT	409
CR- 576246-0101	BELT LEFT	485, 491, 499
CR- 576251-0101	. CONVEYOR	409
CR- 576251-0101	CONVEYOR	455, 457, 459, 497
CR- 576252-0101	. . INFEED SECTION	409
CR- 576252-0101	INFEED SECTION	497, 499
G		
G- 22473	ROLLER BRACKET	317
G- 243951	YOKE	323
G- 243952	YOKE	323
G- 252768	CANTILEVER	385
G- 252808	DAMPER LEFT	345
G- 252809	DAMPER RIGHT	345
G- 25640	CARRIER	319
G- 262264	CANTILEVER	501
G- 262610	LINK	515
G- 262922	HOUSE	501
G- 267835	CANTILEVER	225
G- 272728	BARRIER	603, 605
G- 272814	SLEEVE	603, 605
G- 272815-0001	SLEEVE	603, 605
G- 292449	PUMP HOUSING	179
G- 292473	CANTILEVER	301
G- 297091	ARM	301
G- 297092	ARM	301
G- 35827	BRACKET	297
G- 436482	BEARING BRACKET	291
G- 436740	LINK	325, 329
G- 441740	HINGE FLANGE	51, 53
G- 441741	HINGE FLANGE	51, 53
G- 442524	ARM	433
G- 442589	ARM	513, 515
G- 443218	INTERMEDIARY SECTION	501
G- 445841	CANTILEVER	607
G- 445842	MOTOR PLATE	607
G- 445881	BRACKET LEFT	645
G- 445882	BRACKET RIGHT	645
G- 445911	CANTILEVER	645
G- 445931	CANTILEVER	657
G- 450505	CARRIER RULER LEFT	317
G- 450506	CARRIER RULER	321
G- 457627	DOLLY	645
G- 458030	CARRIER RULER	317
G- 458031	CARRIER RULER	321
G- 458038	CARRIER RULER	317
G- 458039	CARRIER RULER	321
G- 464141	LEAD-IN PLATE	615
G- 464310	FOLDING FLAP	317, 321
G- 464311	FOLDING FLAP	317, 321
G- 476115	VOLUME FLAP	339, 343
G- 484848-0001	MACHINE BODY	619, 623, 625
G- 484848-0002	MACHINE BODY	619, 621, 623, 627
G- 484848-0003	MACHINE BODY	621
G- 491929	IMPELLER WHEEL	179
G- 493710	FOLDING FLAP	317, 321
G- 493711	FOLDING FLAP	317, 321
G- 499397	DAMPER LEFT	351
G- 499398	DAMPER RIGHT	351
G- 522173	CANTILEVER	655
G- 525016	FASTENING PLATE	555
G- 525173	CANTILEVER	435
G- 525276	HOUSE	427
G- 525335	HOUSE	515
G- 525445	HUB	541
G- 525446	HUB	531
G- 525447	HUB	539, 541
G- 525448	HUB	529, 531
G- 525449	HUB	537, 539, 541, 543
G- 525450	HUB	527, 529, 531, 533
G- 529000	VOLUME FLAP	339
G- 529002	VOLUME FLAP	339
G- 531182	CANTILEVER	225
G- 532117	CLAMP RING	95
G- 532118	CLAMP RING	97
G- 532718	VOLUME FLAP	339
G- 533441	VOLUME FLAP	339, 343
G- 533448	MACHINE BODY	623
G- 538241-0001	SPACER	619
G- 538241-0002	SPACER	619

Part No	Description	Page No
G- 538241-0003	SPACER	619
G- 538241-0004	SPACER	623
G- 538241-0005	SPACER	623
G- 538400	ARM LEFT	333
G- 538401	ARM RIGHT	333
G- 542784	LINK ARM	705
G- 543137-0001	SPACER	621
G- 543137-0002	SPACER	623
G- 543137-0003	SPACER	627
G- 543138	SPACER	623
G- 543151	CANTILEVER	225
G- 544314	FOLDING FLAP	317, 321
G- 544315	FOLDING FLAP	317, 321
G- 544319	CARRIER RULER	317
G- 544320	CARRIER RULER	321
G- 544504	VOLUME FLAP	339
G- 545111	ARM	711
G- 545138	CANTILEVER	711
G- 545409	ARM RIGHT	337
G- 545410	ARM LEFT	335
G- 546030-0001	CANTILEVER	711
G- 546030-0002	CANTILEVER	711
G- 548601	VOLUME FLAP	339
G- 555926	VOLUME FLAP	341
G- 564533-0001	DOLLY	369, 371, 373, 375, 401, 403
G- 564533-0002	DOLLY	369, 373
G- 564533-0005	DOLLY	369, 373, 401
G- 564533-0007	DOLLY	369, 373, 403
G- 565967	ARM	527, 529, 531, 533, 537, 539, 541, 543
G- 569060	FOLDING FLAP	317, 321
G- 569061	FOLDING FLAP	317, 321
G- 569652-0001	SPACER	625
G- 569652-0002	SPACER	625
G- 569652-0003	SPACER	625
G- 569944	SLEEVE	603, 605
G- 569945	SLEEVE	603, 605
G- 571277	PUMP HOUSING	179
G- 571486	VOLUME FLAP	339
G- 573664	CANTILEVER	677
G- 574026	HUB	533
G- 574027	HUB	543
G- 574028	ARM	533, 543
G- 575002	PLUNGER	603, 605
G- 575003	PLUNGER	603, 605
G- 575639	VOLUME FLAP	339
G-1143022	HUB	533
G-1143023	HUB	543

M

MEASURE DRAWING		431, 507

P

PR22,5(PG16)		245

S

S- 556875-SHEET 1	COVER,COMPENSATING	607
SP- 499255-0201	* SEAL KIT	81, 83, 85
SP- 499255-0201	. SEAL KIT	15
SP- 499255-0201	SEAL KIT	141, 143
SP- 499255-0202	* SEAL KIT	81, 83, 85
SP- 499255-0202	SEAL KIT	143
SP- 499255-0203	* SEAL KIT	81, 83, 85
SP- 499255-0203	SEAL KIT	143

Part No	Description	Page No

Part No	Description	Page No

Tetra Pak