*MM binder labels. 40 mm Full width Note! This page is generated **automatically**. using the **variable definitions** made in the **front page** file!!*

2.2

TBA/8 110V
648022-110V Binder 1

Issue 0401 Doc No. SPC-81524-0105

TBA/8 110V
648022-110V Binder 1

Issue 0401 Doc No. SPC-81524-0105

TBA/8 110V
648022-110V Binder 1

Issue 0401 Doc No. SPC-81524-0105

TBA/8 110V
648022-110V Binder 1

Issue 0401 Doc No. SPC-81524-0105

TBA/8 110V
648022-110V Binder 1

Issue 0401 Doc No. SPC-81524-0105

TBA/8 110V
648022-110V Binder 1

Issue 0401 Doc No. SPC-81524-0105

TBA/8 110V
648022-110V Binder 1

Issue 0401 Doc No. SPC-81524-0105

TBA/8 110V
648022-110V Binder 1

Issue 0401 Doc No. SPC-81524-0105

TBA/8 110V
648022-110V Binder 1

Issue 0401 Doc No. SPC-81524-0105

TBA/8 110V
648022-110V Binder 1

Issue 0401 Doc No. SPC-81524-0105

TBA/8 110V
648022-110V Binder 1

Issue 0401 Doc No. SPC-81524-0105

! If the text does not fit; **change the font on "B TitleFull" to min 18 p, and the left indent to 0.5 cm** (**on all three components**). **Make "Update All"**



*MM binder labels. 30mm Halfwidth Note! This page is generated **automatically**. using the **variable definitions** made in the **front page** file!!*

TBA/8 110V
648022-110V Binder 1

Issue 0401 Doc No. SPC-81524-0105

TBA/8 110V
648022-110V Binder 1

Issue 0401 Doc No. SPC-81524-0105

TBA/8 110V
648022-110V Binder 1

Issue 0401 Doc No. SPC-81524-0105

TBA/8 110V
648022-110V Binder 1

Issue 0401 Doc No. SPC-81524-0105

TBA/8 110V
648022-110V Binder 1

Issue 0401 Doc No. SPC-81524-0105

TBA/8 110V
648022-110V Binder 1

Issue 0401 Doc No. SPC-81524-0105

TBA/8 110V
648022-110V Binder 1

Issue 0401 Doc No. SPC-81524-0105

TBA/8 110V
648022-110V Binder 1

Issue 0401 Doc No. SPC-81524-0105

TBA/8 110V
648022-110V Binder 1

Issue 0401 Doc No. SPC-81524-0105

TBA/8 110V
648022-110V Binder 1

Issue 0401 Doc No. SPC-81524-0105

TBA/8 110V
648022-110V Binder 1

Issue 0401 Doc No. SPC-81524-0105

TBA/8 110V
648022-110V Binder 1

Issue 0401 Doc No. SPC-81524-0105

TBA/8 110V
648022-110V Binder 1

Issue 0401 Doc No. SPC-81524-0105

If the text does not fit; **change the font on “B TitleHalf” to min 18 p, and the left indent to 0.5 cm (on all three components)**. **Make “Update All”**



*MM binder labels. 40 mm Full width Note! This page is generated **automatically**. using the **variable definitions** made in the **front page** file!!*

2.2

TBA/8 110V

648022-110V Binder 2

Issue 0401 Doc No. SPC-81524-0105

TBA/8 110V

648022-110V Binder 2

Issue 0401 Doc No. SPC-81524-0105

TBA/8 110V

648022-110V Binder 2

Issue 0401 Doc No. SPC-81524-0105

TBA/8 110V

648022-110V Binder 2

Issue 0401 Doc No. SPC-81524-0105

TBA/8 110V

648022-110V Binder 2

Issue 0401 Doc No. SPC-81524-0105

TBA/8 110V

648022-110V Binder 2

Issue 0401 Doc No. SPC-81524-0105

TBA/8 110V

648022-110V Binder 2

Issue 0401 Doc No. SPC-81524-0105

TBA/8 110V

648022-110V Binder 2

Issue 0401 Doc No. SPC-81524-0105

TBA/8 110V

648022-110V Binder 2

Issue 0401 Doc No. SPC-81524-0105

TBA/8 110V

648022-110V Binder 2

Issue 0401 Doc No. SPC-81524-0105

TBA/8 110V

648022-110V Binder 2

Issue 0401 Doc No. SPC-81524-0105

! If the text does not fit; **change the font on "B TitleFull" to min 18 p, and the left indent to 0.5 cm** (**on all three components**). **Make "Update All"**



*MM binder labels. 30mm Halfwidth Note! This page is generated **automatically**. using the **variable definitions** made in the **front page** file!!*

TBA/8 110V
648022-110V Binder 2

Issue 0401 Doc No. SPC-81524-0105

TBA/8 110V
648022-110V Binder 2

Issue 0401 Doc No. SPC-81524-0105

TBA/8 110V
648022-110V Binder 2

Issue 0401 Doc No. SPC-81524-0105

TBA/8 110V
648022-110V Binder 2

Issue 0401 Doc No. SPC-81524-0105

TBA/8 110V
648022-110V Binder 2

Issue 0401 Doc No. SPC-81524-0105

TBA/8 110V
648022-110V Binder 2

Issue 0401 Doc No. SPC-81524-0105

TBA/8 110V
648022-110V Binder 2

Issue 0401 Doc No. SPC-81524-0105

TBA/8 110V
648022-110V Binder 2

Issue 0401 Doc No. SPC-81524-0105

TBA/8 110V
648022-110V Binder 2

Issue 0401 Doc No. SPC-81524-0105

TBA/8 110V
648022-110V Binder 2

Issue 0401 Doc No. SPC-81524-0105

TBA/8 110V
648022-110V Binder 2

Issue 0401 Doc No. SPC-81524-0105

TBA/8 110V
648022-110V Binder 2

Issue 0401 Doc No. SPC-81524-0105

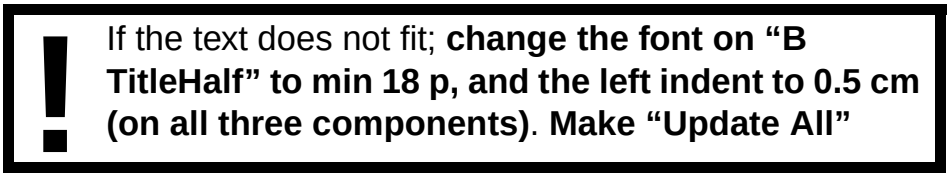

SPC
Spare Parts Catalogue

TBA/8 110V
648022-1100

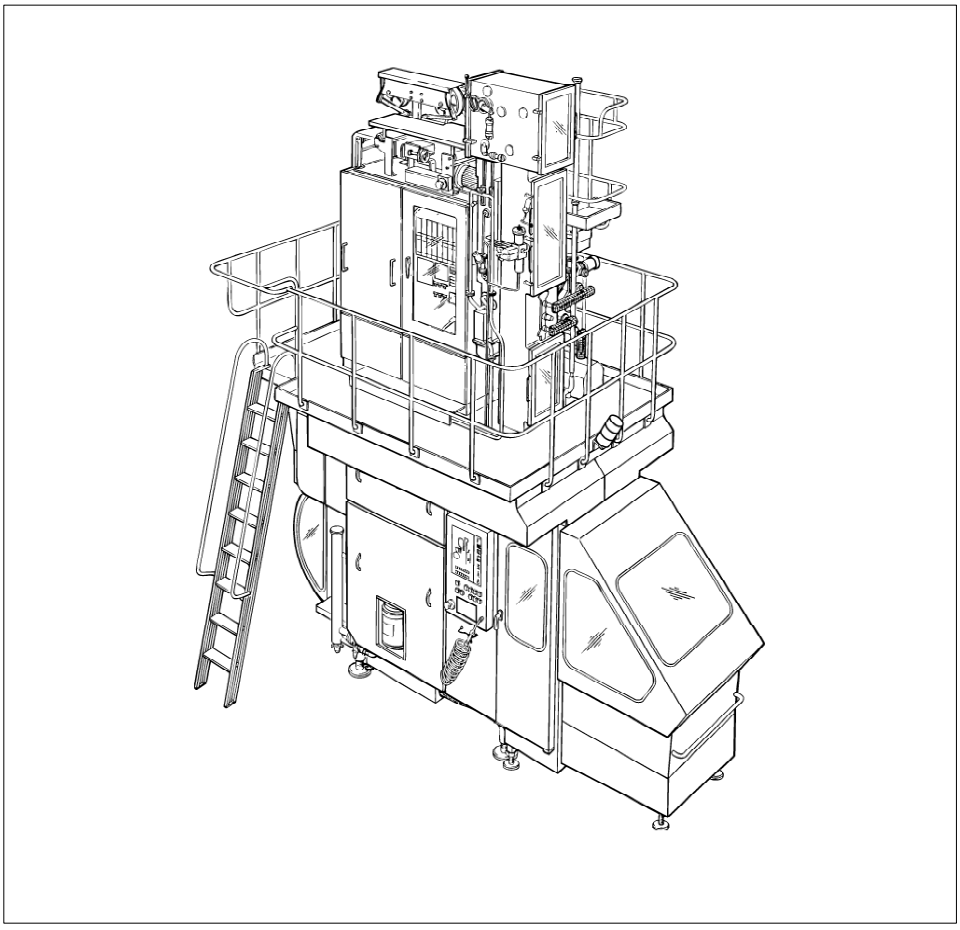

Tetra Pak

Doc. No: SPC-81524-0105

Main Groups of the Machine

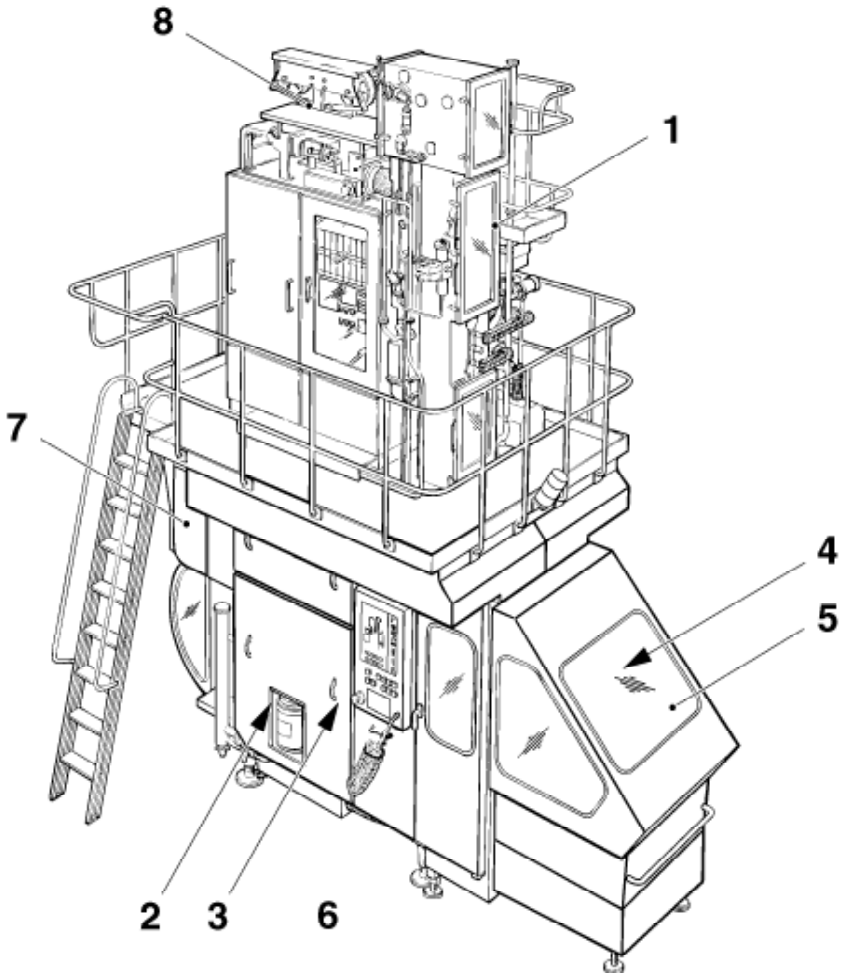

1 - Superstructure
2 - Machine Body
3 - Drive
4 - Jaw System
5 - Final Folder
6 - Regular Accessories
7 - Automatic Splicing Unit
8 - Strip Applicator
9 - Electric Equipment
10 - Optional Equipment

For the correct machine data, check your machine specification, supplied with the machine!

This document is valid for:

Series No/Machine No Sign.

SPC
Spare Parts Catalogue

TBA/8 110V
648022-1100

Valid from machine series No.:
15010/01569

Doc. No: SPC-81524-0105

Issue 200401

Tetra Pak

Tetra Pak Carton Ambient AB

Table of Content:

BINDER 1

Introduction ..... , **i-5**

Superstructure TBA/8
B-648011-0900 ..... , **1-1**

Machine Body TB/TBA/8
B-648012-0900 ..... , **2-1**

Drive TBA/8
B-648003-1100 ..... , **3-1**

Jaw System TB/TBA/8
B-648004-1000 ..... , **4-1**

Final Folder TBA/8
B-648035-0800 ..... , **5-1**

Regular Accessories
B-648009-0900 ..... , **6-1**

Automatic Splicing Unit
B-648013-0700 ..... , **7-1**

BINDER 2

Strip Applicator TBA/8
B-648007-0500 ..... , **8-1**

Electric Equipment
B-649171-1100 ..... , **9-1**

Optional Equipment TBA/8
B-648026-0200 ..... , **10-1**

Part Number Index
..... , **ii-1**

Electrical Parts Index
..... , **iii-1**

General information

Manufacturer

This machine is produced by:
Tetra Pak Carton Ambient AB
Ruben Rausings gata
221 86 LUND / Sweden

Document producer

This document has been produced by:
Tetra Pak Carton Ambient AB
Ruben Rausings gata
221 86 LUND / Sweden

Number of pages

This document contains totally **1286 pages**, including the first **8** introduction pages.

Copyright © 2004 Tetra Pak Carton Ambient AB

All rights reserved. No parts of this document may be reproduced or copied in any forms or by any means, without written permission from Tetra Pak Carton Ambient AB.

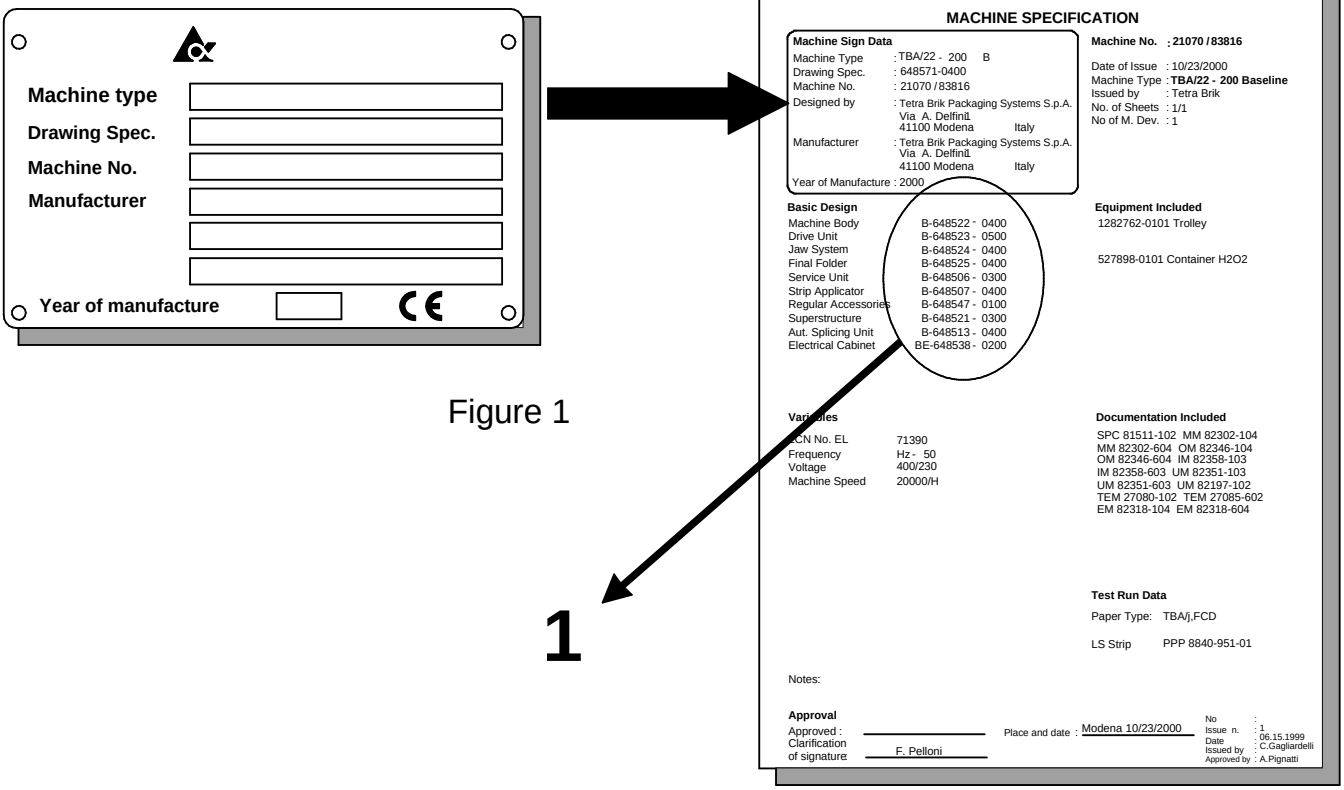

Figure 1

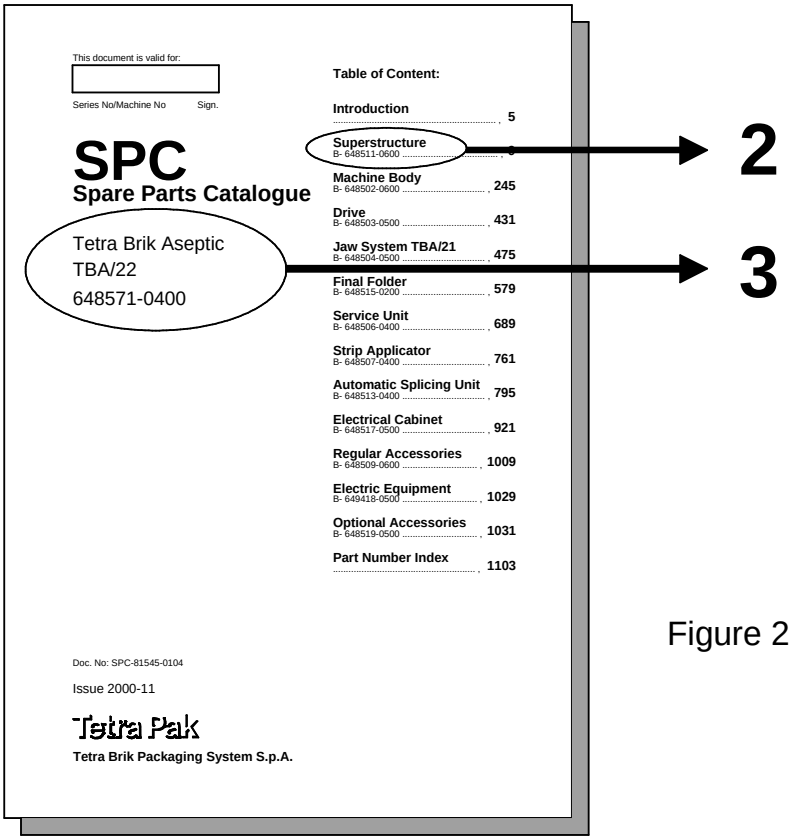

Figure 2

Figure 3 A-648571-0400

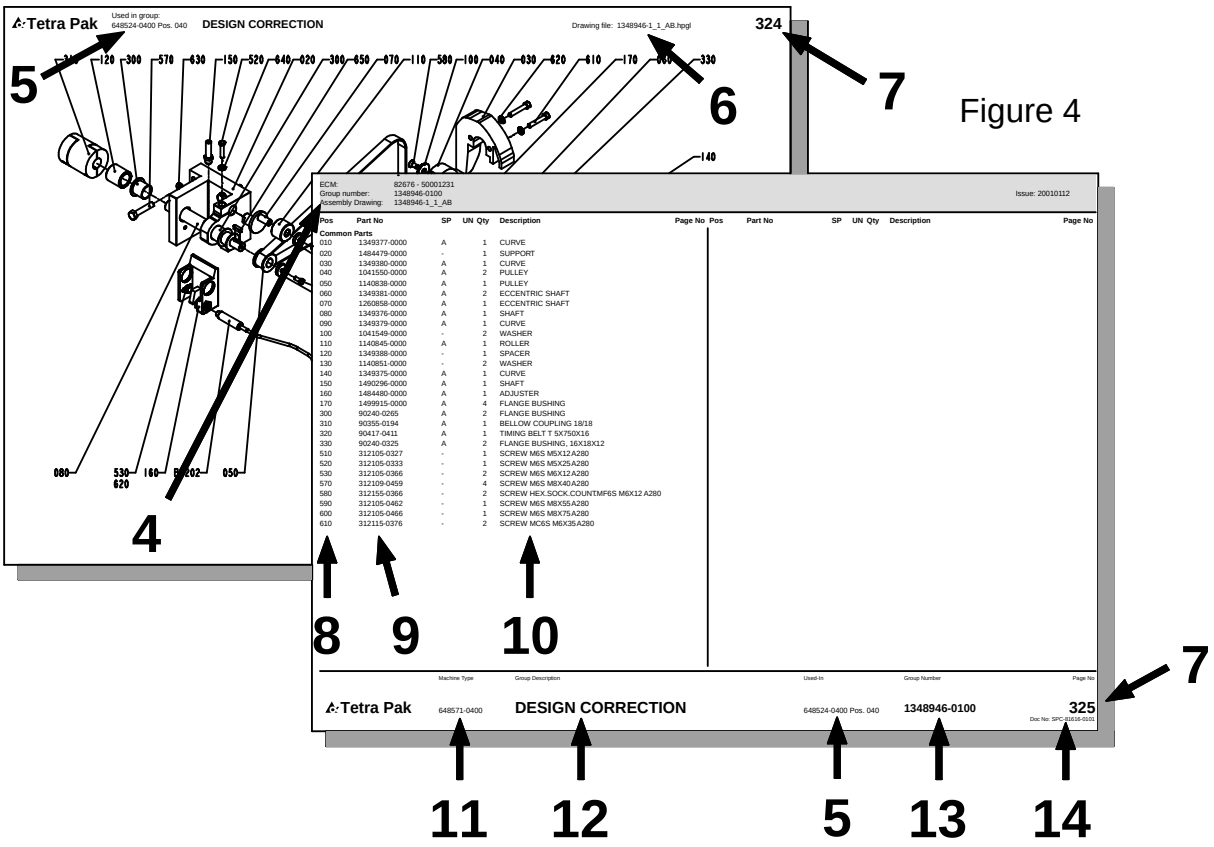

Figure 4

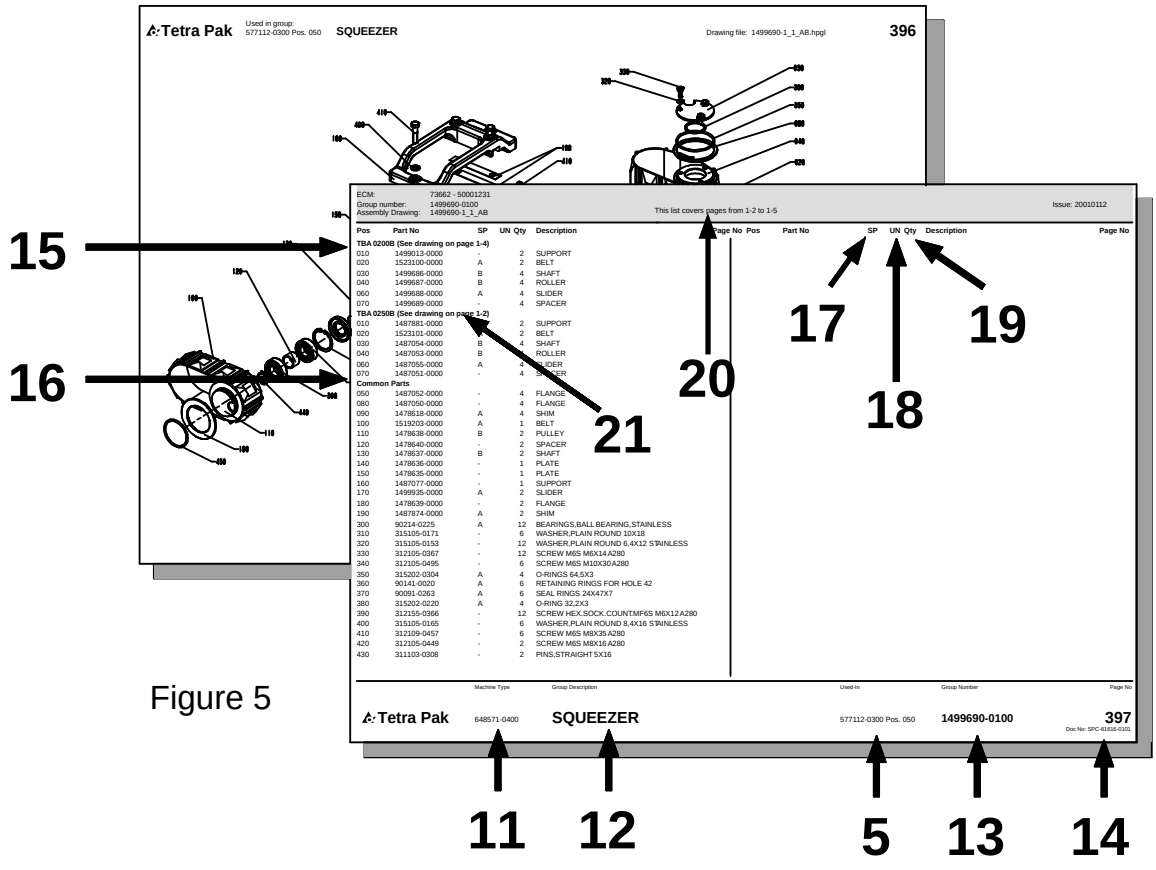

Figure 5

General information

Service

When ordering spare parts for your machine, contact the nearest Tetra Pak service station.

Machine identification

This machine plate is an example of the type of machine plate, attached to the machine frame. The plate carries data needed when contacting Tetra Pak concerning this particular machine **(see Figure 1)**.

Purpose of the Spare Parts Catalogue.

The purpose of the Spare Parts Catalogue (SPC) is to provide the technicians and contact personnel with information on how to find and order spare parts for maintenance and service of the machine.
For instructions of how to replace parts and adjust machine setup, see the Maintenance Manual (MM).

Delivered documentation

The technical documentation delivered with this machine is stated in the Machine Specification.
Note! If any of these documents is missing, it must be reported in the document **Start Up Machine Quality Report**. For more information, see chapter 8 Preparation for Commissioning in the Installation Manual.
It is important that you keep these documents for the life of the equipment, and pass the documents on to any subsequent holder or user of the equipment.

Design modification

The content of this document is in accordance with the design and construction of the machine at the time it was delivered from the Tetra Pak machine production facility.

Further copies

Additional copies can be ordered from the nearest Tetra Pak service station. When ordering technical publications, always quote the document number printed on the front cover of the document concerned.

Tetra Pak Part numbering system

The third and forth digits in the sub-number, specify one unique group which can be ordered. If the forth digit is replaced by a "0", the number combination only points to a bill-of-material document.
The first and second digits in the sub-number, specify the development step (model) of the machine or group. **(see fig. 3)**
Main number of machine /group /article, depending on level.
Prefix, giving information about level, eg.
A = Machine
B = Main section (*)
C = Groups and subgroups
*) Customized distribution machines are registered as B-level as well.

How to find the correct Spare Part Number

A. Check that the data on your machine sign, and /or machine specification, corresponds with the catalogue. **(see fig.1)**

1) Main groups of the machine

B. The second catalogue sheet contains a table of content for the main groups, included in the catalogue. The information regarding machine and main group status MUST correspond with your machine specification.
Locate and choose the main groups page number (1), in which you want to search for spare parts.
(see fig. 2)

2) Main group
3) Machine type

C. Search in the main group illustration, the item number, which may hold your wanted spare part. Go to the text page below and find the page number for the actual group. **(see fig. 4)**

4) Internal information, such as latest Engineering Change, Bill-of-Material included in the catalogue page and the Assembly Drawing required
5) Used-In reference to next higher level in the machine structure
6) Assembly drawing number including the archive file extension
7) Continuous page numbering through the document
8) Pos number corresponding to illustration
9) Group or article number.
10) Group or article description. The letter “B” in front of some article numbers indicates that this article contains other parts, directly listed below the B-article. Letter “A” indicates a subgroup number with an own page directly after the actual page.
11) Machine type including development status
12) Group description
13) Group number (bill-of-material) including development status
14) Document number

D. Continue to the found page number, and search in the illustration for your spare part. Go to the text row for the found item number, and read the part number. Take eventual variant headings in consideration; if you are unsure, read your machine specification. **(see fig. 5)**

15) Variant heading, eg volume, left /right etc.
16) Heading for common parts

17a) SP = Code for articles, which are included into various spare part kits. (from R3 source)
A = Critical Spare Part
B = Non - Critical Spares Part
C = Don't stop function, can bypassed
D = Seldom break, long time production

17b) SP = Code for articles, which are included into various spare part kits. (from AS400 source)
U = Starting-up kit supplied on machine delivery
P = Production kit to be held at production site workshop
S = Sevice kit to be held at service stations store
C = Central depot kit to be available at the central store

18) UN = Short code for measure units, eg mm, kg etc.
19) Qty = Number of items needed in the complete assembly.

E. Some Groups in the Catalogue may span over multiple pages, due to long text pages and/ or need of multiple drawings. When this occurs, a note (*This list covers pages from x-2 to x-5*) is written in the text page header.

20) List length information

F. When the list has more then one variant, a page reference to the right drawing is given by the note *(See drawing on page: x-2)* after the variant heading.

21) Drawing reference information

SPC
Spare Parts Catalogue

Total pages in this module: 134

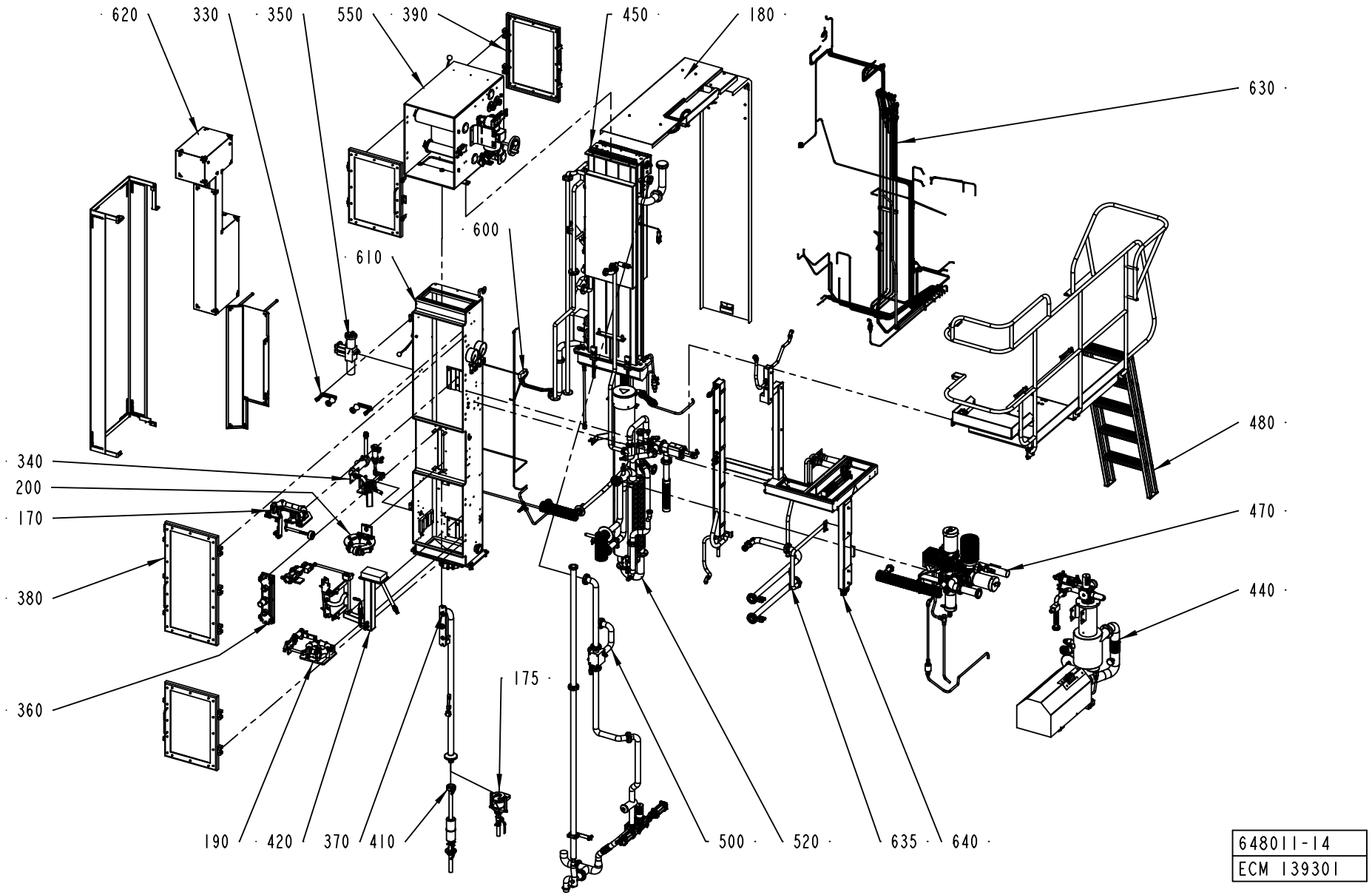

648011-14
ECM 139301

ECM: 139305 - 20030815
Group number: 648011-0900
Assembly Drawing: 648011-14_1_AD

Pos	Part No	SP	UN	Qty	Description	Page No
0375S, 0355B, 0500S						
170	A450490-0100	-		1	FORM CLAMP	**1-5**
0500B, 0750B, 0750S, 1000B						
170	A263805-0200	-		1	FORM CLAMP	**1-7, 1-9**
1000SQ, 1000S						
170	A1361730-0100	-		1	FORM CLAMP TBA/8	**1-11**
Common Parts						
175	A263948-0400	-		1	CUP	**1-13**
180	A265809-0300	-		1	PAPER GUARD	**1-15**
190	A269113-0600	-		1	LOWER FORMING RING	**1-17, 1-19, 1-21**
200	A269115-0500	-		1	UPPER FORMING RING	**1-23, 1-25, 1-27**
330	A269136-0200	-		2	EDGE ROLLER	**1-29**
340	A269158-0400	-		1	HOT AIR ELEMENT	**1-31**
350	A560930-0100	-		1	CONTAINER	**1-33**
360	A269715-0100	-		1	PIPE HOLDER	**1-35**
370	A269720-0300	-		1	FILLER TUBE	**1-37**
380	A573612-0100	-		1	DOOR	**1-39**
390	A594617-0100	-		3	DOOR	**1-41**
410	A269828-0600	A		1	FILLER TUBE	**1-43, 1-45**
420	A269915-0700	-		1	HOT AIR ELEMENT	**1-47**
440	A575474-0100	-		1	COMPRESSOR	**1-51**
450	A269941-0600	-		1	BATH	**1-59, 1-61**
470	A1362608-0100	-		1	PRODUCT VALVE	**1-65**
480	A269970-0500	-		1	PLATFORM	**1-79**
500	A269988-0600	-		1	VENTILATION SYSTEM	**1-83**
520	A273400-0700	-		1	STERILE AIR SYSTEM	**1-93**
550	A276373-0700	-		1	DRIER	**1-101**
600	A276480-0500	-		1	PIPE WORK	**1-109**
610	A278956-0700	-		1	PILLAR	**1-111**
620	A279651-0600	-		1	TOUCH GUARD	**1-115**
630	A282805-0900	-		1	PIPE WORK-PNEUMATIC TBA/8	**1-117, 1-119**
635	A451131-0100	-		1	CLEANING PIPE	**1-121**
640	A451342-0500	-		1	CABLE DUCT	**1-123**
650	A284163-0500	-		1	START-UP KIT	**1-131**

Pos	Part No	SP	UN	Qty	Description	Page No

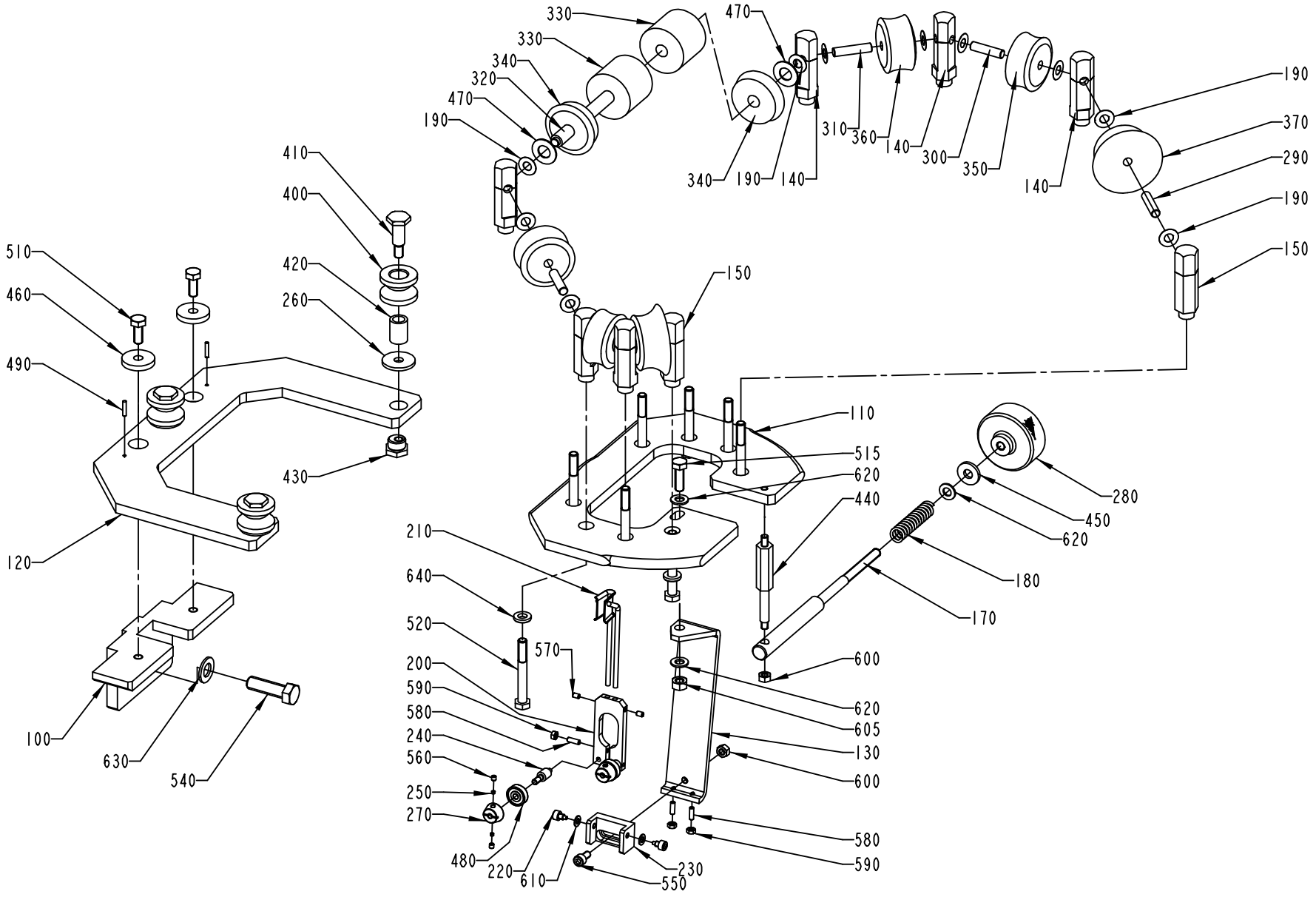
330
330
340
320
470
190
470
190
340
190
140
310
360
140
300
350
140
190
370
290
190
150
410
400
420
260
510
460
490
430
120
100
630
540
150
110
515
620
440
280
450
620
180
170
210
640
520
570
200
590
580
240
560
250
270
480
220
610
550
230
600
620
605
130
600
580
590

ECM: 72268 - 20000407
Group number: 450490-0100
Assembly Drawing: 450490-1_1_AF

Pos	Part No	SP	UN	Qty	Description	Page No
0375S						
110	450493-0000	-		1	BOW CLAMP	
290	445788-0005	C		2	SHAFT	
300	445788-0006	C		2	SHAFT	
310	445788-0005	C		2	SHAFT	
320	434490-0003	D		1	SHAFT	
330	445777-0000	C		2	ROLL	
340	445780-0000	C		2	ROLL	
350	445784-0000	C		2	ROLL	
360	445783-0000	C		2	ROLL	
370	445787-0000	C		2	ROLL	
0355B, 0500S						
110	450492-0000	-		1	BOW CLAMP	
290	263655-0018	C		2	SHAFT	
300	445788-0005	C		2	SHAFT	
310	445788-0003	C		2	SHAFT	
320	434490-0002	D		1	SHAFT	
330	445777-0000	C		2	ROLL	
340	445779-0000	C		2	ROLL	
350	445783-0000	C		2	ROLL	
360	445782-0000	C		2	ROLL	
370	445786-0000	C		2	ROLL	
0500B, 0750B, 1000B						
110	450491-0000	-		1	BOW CLAMP	
290	445788-0002	C		2	SHAFT	
300	445788-0003	C		2	SHAFT	
310	263655-0006	C		2	SHAFT	
320	434490-0001	D		1	SHAFT	
330	445776-0000	C		2	ROLL	
340	445778-0000	C		2	ROLL	
350	445782-0000	C		2	ROLL	
360	445781-0000	C		2	ROLL	
370	445785-0000	C		2	ROLL	
Common Parts						
100	436395-0000	-		1	CANTILEVER	
120	436405-0000	-		1	FORK	
130	33648-0000	-		1	HOLDER	
140	445790-0000	C		6	AXLE SUPPORT	
150	445791-0000	C		2	AXLE SUPPORT	
170	493886-0000	C		1	SHAFT	
180	1881-0001	C		1	COMPRESSION SPRING	
190	2033-0008	-		14	WASHER	
200	23582-0000	D		1	HOLDER	
210	23583-0000	D		1	GUIDE FINGER	
220	23584-0000	D		2	SCREW	
230	24351-0000	D		1	BOW CLAMP	
240	24355-0000	C		2	DOWEL	
250	24356-0000	-		4	PIECE	
260	28037-0000	D		3	WASHER	
270	111543-0000	C		2	GUIDE CONE	
280	257090-0000	D		1	SHIFTER HANDLE	
400	436302-0000	D		3	ROLLER	
410	436355-0000	D		3	REAMED BOLT	
420	436356-0000	D		3	BUSHING	
430	436357-0000	D		1	NUT	
440	493747-0000	D		1	GUIDE STUD	
450	436403-0000	D		1	WASHER	
460	497720-0000	-		2	WASHER	
470	536987-0000	-		1	WASHER	
480	90214-0138	C		2	BALL BEARING, 5X19X6 MM	
490	311103-0236	-		2	PARALLEL PIN ISO 2338 3M6X16 A1	
510	312105-0451	-		2	SCREW M6S ISO 4017 M8X20 A480	
515	312105-0453	-		1	SCREW M6S ISO 4017 M8X25 A480	
520	312105-0464	-		8	SCREW M6S ISO 4014 M8X65 A480	
540	312105-0540	-		1	SCREW M6S ISO 4017 M12X40 A480	
550	312115-0366	-		1	SCREW ISO4762 M6X12 A4	
560	312318-0283	-		4	SCREW ISO4029 M4X4 A4	
570	312318-0285	-		2	SCREW ISO4029 M4X6 A4	
580	312318-0291	-		3	SCREW ISO4029 M4X12 A4	
590	312605-0312	-		3	HEXAGON NUT, M6M M4 A280	
600	312605-0316	-		2	HEXAGON NUT, M6M M6 A280	
605	312605-0318	-		1	HEXAGON NUT, M6M M8 A280	
610	315105-0146	-		2	BRICKA BRB5,3X10RFR	
620	315105-0165	-		3	WASHER BRB8,4X16RFR	
630	315105-0178	-		1	WASHER BRB13X24RFR	
640	315115-0165	-		8	WASHER PLAIN, TBRB 8,4/16 H=3	

Machine Type Group Description Used-In Group Number Page No

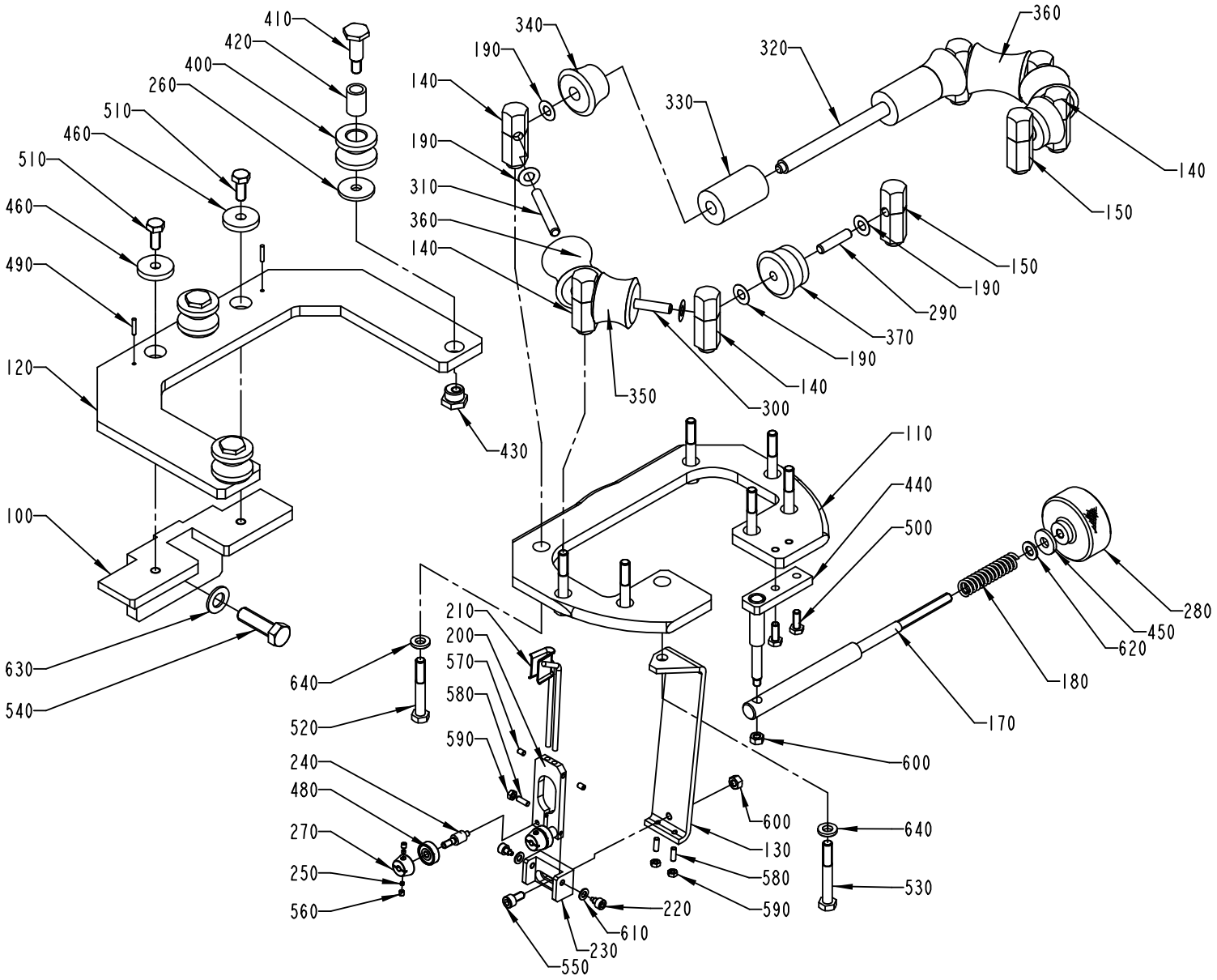
410
420
400
260
510
460
510
460
490
120
100
630
540
340
190
140
190
310
360
140
330
320
360
140
150
150
190
290
370
190
140
300
350
430
110
440
500
280
450
620
180
170
600
640
210
200
570
580
590
240
480
270
250
560
520
640
600
130
580
590
530
220
610
230
550

ECM: 72268 - 20000407
Group number: 263805-0200
Assembly Drawing: 263805-2_1_AE

This list covers pages from 1-6 to 1-9

Pos	Part No	SP	UN	Qty	Description	Page No
TBA 0500B, TBA 0750B, TBA 1000B (See drawing on page: 1-6)						
110	436404-0000	-		1	BOW CLAMP	
290	263655-0003	C		2	SHAFT	
300	263655-0004	C		2	SHAFT	
310	263655-0008	C		2	SHAFT	
320	263656-0002	D		1	SHAFT	
330	294474-0000	D		2	ROLL	
340	294475-0000	D		2	ROLL	
350	294476-0000	C		2	ROLL	
360	294477-0000	C		2	ROLL	
370	294480-0000	C		2	ROLL	
TBA 1000SQ (See drawing on page: 1-8)						
110	569096-0000	-		1	BOW CLAMP	
290	263655-0002	C		2	SHAFT	
300	569091-0000	C		2	SHAFT	
310	263655-0012	C		2	SHAFT	
320	263655-0024	D		1	SHAFT	
340	579306-0000	D		1	ROLLER	
350	579307-0000	C		2	ROLL	
360	579308-0000	C		2	ROLLER	
370	579309-0000	C		2	ROLL	
380	90240-0172	C		10	FLANGE BUSHING, 8X12X10 MM	
390	752156-0000	C		4	FLANGE BUSHING	
TBA 0750S (See drawing on page: 1-8)						
110	544286-0000	-		1	BOW CLAMP	
290	263655-0021	C		2	SHAFT	
300	263655-0023	C		2	SHAFT	
310	263655-0012	C		2	SHAFT	
320	263655-0024	D		1	SHAFT	
340	752583-0000	D		1	ROLLER	
350	752585-0000	C		2	ROLL	
360	752584-0000	C		2	ROLLER	
370	752586-0000	C		2	ROLL	
380	90240-0172	C		10	FLANGE BUSHING, 8X12X10 MM	
390	752156-0000	C		4	FLANGE BUSHING	
TBA 1000S (See drawing on page: 1-8)						
110	569096-0000	-		1	BOW CLAMP	
290	263655-0002	C		2	SHAFT	
300	569091-0000	C		2	SHAFT	
310	263655-0012	C		2	SHAFT	
320	263655-0024	D		1	SHAFT	
340	569095-0000	D		1	ROLLER	
350	569093-0000	C		2	ROLL	
360	569094-0000	C		2	ROLLER	
370	569092-0000	C		2	ROLL	
380	90240-0172	C		10	FLANGE BUSHING, 8X12X10 MM	
390	752156-0000	C		4	FLANGE BUSHING	
Common Parts						
100	436395-0000	-		1	CANTILEVER	
120	436405-0000	-		1	FORK	
130	33648-0000	-		1	HOLDER	
140	257987-0000	C		6	AXLE SUPPORT	
150	257988-0000	C		2	AXLE SUPPORT	
170	436378-0000	C		1	SHAFT	
180	1881-0001	C		1	COMPRESSION SPRING	
190	2033-0008	-		14	WASHER	
200	23582-0000	D		1	HOLDER	
210	23583-0000	D		1	GUIDE FINGER	
220	23584-0000	D		2	SCREW	
230	24351-0000	D		1	BOW CLAMP	
240	24355-0000	C		2	DOWEL	
250	24356-0000	-		4	PIECE	
260	28037-0000	D		3	WASHER	
270	111543-0000	C		2	GUIDE CONE	
280	257090-0000	D		1	SHIFTER HANDLE	
400	436302-0000	D		3	ROLLER	
410	436355-0000	D		3	REAMED BOLT	
420	436356-0000	D		3	BUSHING	
430	436357-0000	D		1	NUT	
440	436377-0000	D		1	JOINT	
450	436403-0000	D		1	WASHER	
460	497720-0000	-		2	WASHER	
480	90214-0138	C		2	BALL BEARING, 5X19X6 MM	
490	311103-0236	-		2	PARALLEL PIN ISO 2338 3M6X16 A1	
500	312105-0368	-		2	SCREW M6S M6X16 A280	
510	312105-0451	-		2	SCREW M6S ISO 4017 M8X20 A480	
520	312105-0462	-		7	SCREW M6S ISO 4014 M8X55 A480	
530	312105-0463	-		1	SCREW M6S ISO 4014 M8X60 A480	
540	312105-0540	-		1	SCREW M6S ISO 4017 M12X40 A480	
550	312115-0366	-		1	SCREW ISO4762 M6X12 A4	

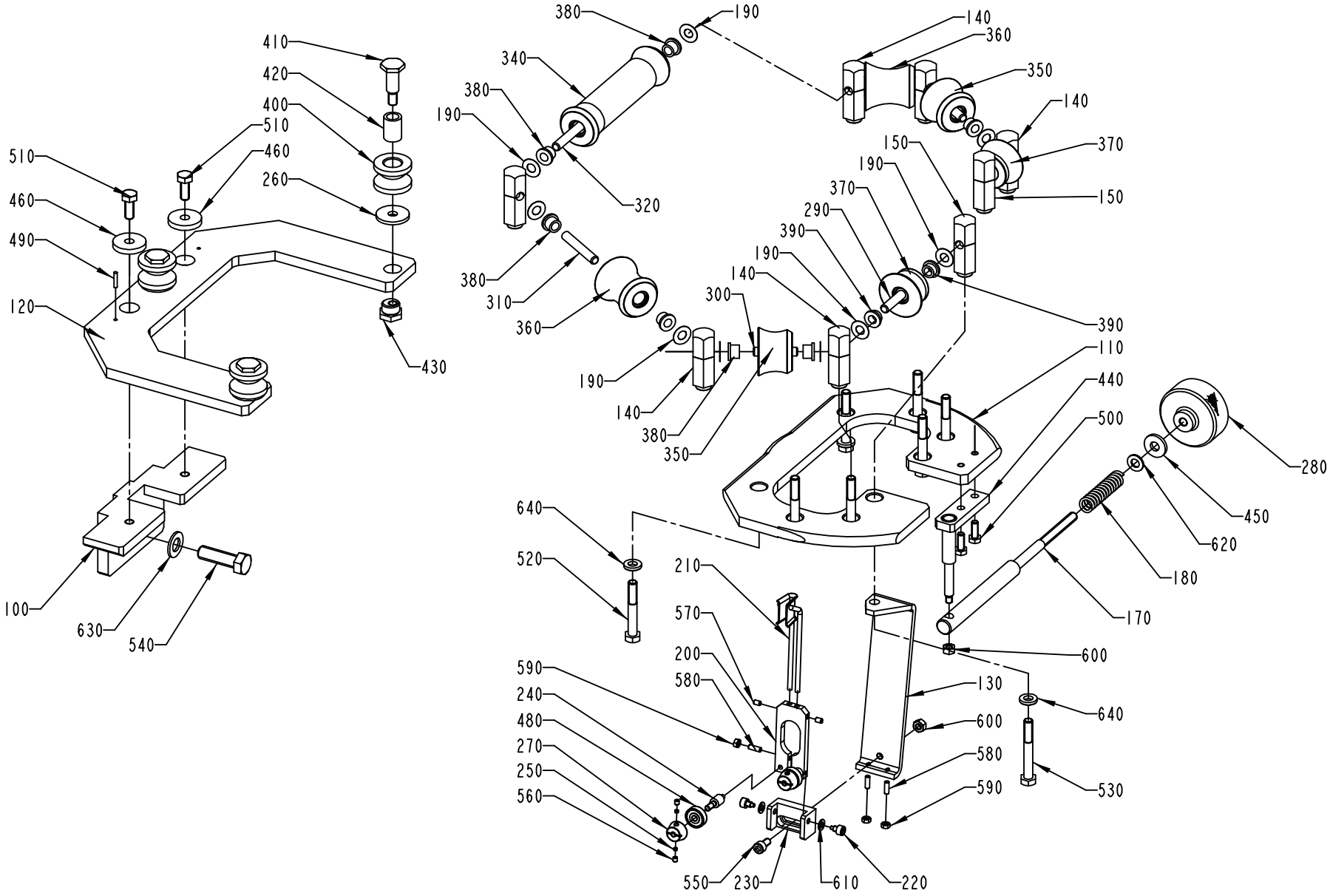
410
420
400
510
460
260
510
460
490
120
430
100
630
540
380
190
340
380
190
320
380
310
360
190
140
380
350
140
360
350
140
370
150
150
190
370
290
390
190
140
300
390
110
440
500
280
450
620
180
170
640
520
210
570
200
580
590
240
480
270
250
560
550
230
610
220
600
130
600
580
590
640
530

ECM: 72268 - 20000407
Group number: 263805-0200
Assembly Drawing: 263805-3_1_AC

This list covers pages from 1-6 to 1-9

Pos	Part No	SP	UN	Qty	Description	Page No
Common Parts (Cont'd)						
560	312318-0283	-		4	SCREW ISO4029 M4X4 A4	
570	312318-0285	-		2	SCREW ISO4029 M4X6 A4	
580	312318-0291	-		3	SCREW ISO4029 M4X12 A4	
590	312605-0312	-		3	HEXAGON NUT, M6M M4 A280	
600	312605-0316	-		2	HEXAGON NUT, M6M M6 A280	
610	315105-0146	-		2	BRICKA BRB5,3X10RFR	
620	315105-0165	-		1	WASHER BRB8,4X16RFR	
630	315105-0178	-		1	WASHER BRB13X24RFR	
640	315115-0165	-		8	WASHER PLAIN, TBRB 8,4/16 H=3	

Pos	Part No	SP	UN	Qty	Description	Page No

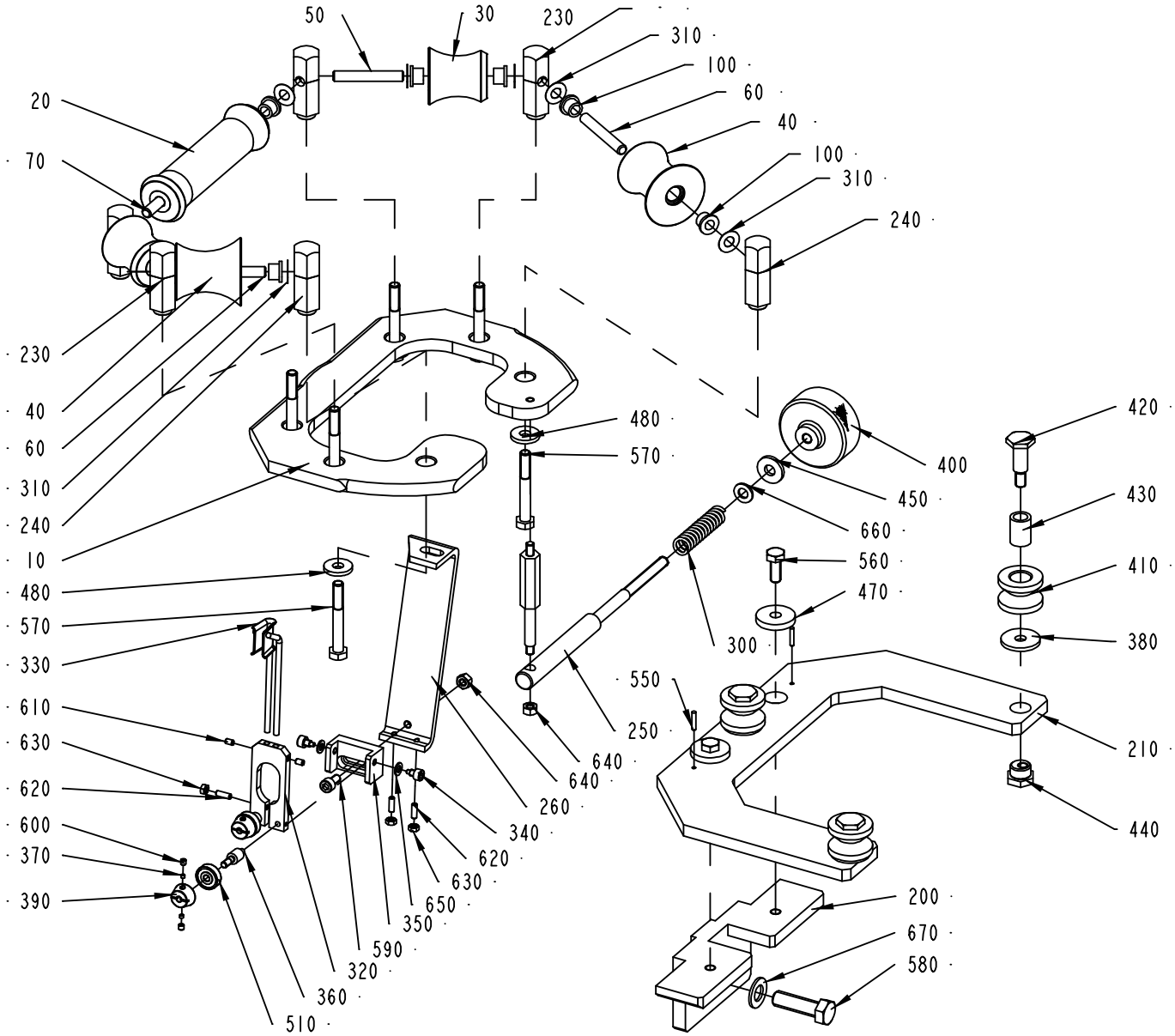
50
30
230
310
100
60
40
100
310
240
20
70
230
40
60
310
240
10
480
570
330
610
630
620
600
370
390
510
360
320
590
350
650
630
620
340
260
640
640
480
570
400
450
660
560
470
300
550
250
420
430
410
380
210
440
200
670
580

ECM: 72268 - 20000407
Group number: 1361730-0100
Assembly Drawing: 1361730-2_1_AB

Pos	Part No	SP	UN	Qty	Description	Page No
TBA 1000SQ						
010	1361731-0000	-		1	BOW	
020	579306-0000	D		1	ROLLER	
030	579308-0000	C		2	ROLLER	
040	1361733-0000	C		2	ROLL	
050	263655-0012	C		2	SHAFT	
060	263655-0022	C		2	SHAFT	
070	263655-0024	C		1	SHAFT	
100	90240-0172	C		10	FLANGE BUSHING, 8X12X10 MM	
TBA 1000S						
010	1361731-0000	-		1	BOW	
020	569095-0000	D		1	ROLLER	
030	569094-0000	C		2	ROLLER	
040	1361732-0000	C		2	ROLL	
050	263655-0012	C		2	SHAFT	
060	263655-0022	C		2	SHAFT	
070	263655-0024	C		1	SHAFT	
100	90240-0172	C		10	FLANGE BUSHING, 8X12X10 MM	
Common Parts						
200	436395-0000	-		1	CANTILEVER	
210	436405-0000	-		1	FORK	
230	257987-0000	C		4	AXLE SUPPORT	
240	257988-0000	C		2	AXLE SUPPORT	
250	493886-0000	D		1	SHAFT	
260	597545-0000	D		1	HOLDER	
300	1881-0001	C		1	COMPRESSION SPRING	
310	2033-0008	-		10	WASHER	
320	23582-0000	D		1	HOLDER	
330	23583-0000	D		1	GUIDE FINGER	
340	23584-0000	D		2	SCREW	
350	24351-0000	D		1	BOW CLAMP	
360	24355-0000	C		2	DOWEL	
370	24356-0000	-		4	PIECE	
380	28037-0000	D		3	WASHER	
390	111543-0000	C		2	GUIDE CONE	
400	257090-0000	D		1	SHIFTER HANDLE	
410	436302-0000	D		3	ROLLER	
420	436355-0000	D		3	REAMED BOLT	
430	436356-0000	D		3	BUSHING	
440	436357-0000	D		1	NUT	
450	436403-0000	D		1	WASHER	
460	493747-0000	D		1	GUIDE STUD	
470	497720-0000	-		2	WASHER	
480	1361734-0000	-		6	WASHER	
510	90214-0138	C		2	BALL BEARING, 5X19X6 MM	
550	311103-0236	-		2	PARALLEL PIN ISO 2338 3M6X16 A1	
560	312105-0451	-		2	SCREW M6S ISO 4017 M8X20 A480	
570	312105-0463	-		8	SCREW M6S ISO 4014 M8X60 A480	
580	312105-0540	-		1	SCREW M6S ISO 4017 M12X40 A480	
590	312115-0366	-		1	SCREW ISO4762 M6X12 A4	
600	312318-0283	-		4	SCREW ISO4029 M4X4 A4	
610	312318-0285	-		2	SCREW ISO4029 M4X6 A4	
620	312318-0291	-		3	SCREW ISO4029 M4X12 A4	
630	312605-0312	-		3	HEXAGON NUT, M6M M4 A280	
640	312605-0316	-		2	HEXAGON NUT, M6M M6 A280	
650	315105-0146	-		2	BRICKA BRB5,3X10RFR	
660	315105-0165	-		1	WASHER BRB8,4X16RFR	
670	315105-0178	-		1	WASHER BRB13X24RFR	

Machine Type	Group Description	Used-In	Group Number	Page No

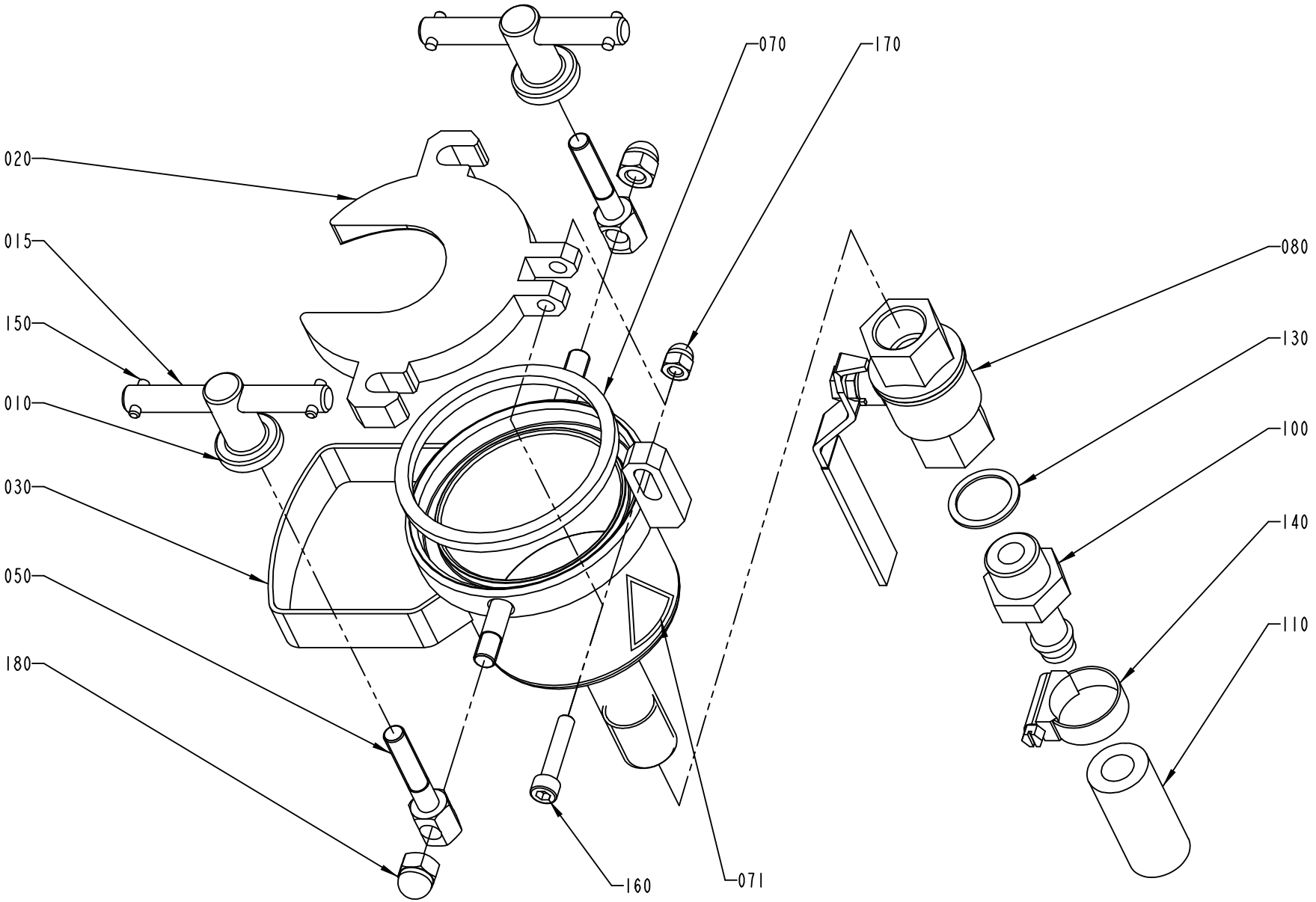
070
170
020
015
150
010
030
050
180
080
130
100
140
110
160
071

ECM: 89195 - 20010409
Group number: 263948-0400
Assembly Drawing: 263948-4_1_AA

Pos	Part No	SP	UN	Qty	Description	Page No
TBA 0375S						
020	1367798-0000	-		1	LID	
030	1367799-0000	-		1	CUP	
070	1367800-0000	A		1	GASKET	
TBA 0500B, TBA 0750B, TBA 1000B						
020	1367794-0000	-		1	LID	
030	1367795-0000	-		1	CUP	
070	1367796-0000	A		1	GASKET	
TBA 0500S, TBA 0355B						
020	1367802-0000	-		1	LID	
030	1367803-0000	-		1	CUP	
070	1367804-0000	A		1	GASKET	
TBA 1000S, TBA 1000SQ						
020	1348115-0000	-		1	LID	
030	1348113-0000	-		1	CUP	
070	1478137-0000	A		1	GASKET	
TBA 0750S						
020	1367806-0000	-		1	LID	
030	1367807-0000	-		1	CUP	
070	1367808-0000	A		1	GASKET	
Common Parts						
010	1478135-0000	-		2	NUT	
015	1478136-0000	-		2	PIN	
050	924641-0000	-		2	SCREW	
071	359705-0003	-		1	WARNING SIGN ISO, DANGEROUS CHEMICALS	
080	90187-0082	A		1	BALL VALVE G1/2	
100	90055-0071	-		1	HOSE NIPPLE, EXT.THR. R1/2X13 MM	
110	90148-0021	-	MM	2500	HOSE	
130	315233-0113	-		1	WASHER CAPTIVE SEALING G1/2	
140	342991-0104	-		1	HOSE CLIP,WORM DRIVE TYPE (23)-27	
150	311103-0270	-		4	PARALLEL PIN ISO 2338 4M6X16 A1	
160	312111-0374	-		1	SCREW HEX.SOCK.HD.MC6S-TT 6X30 88 FZB	
170	312705-0316	-		1	NUT HEX. DOMED CAP MHM-6 M6 A280	
180	312705-0318	-		2	NUT HEX. DOMED CAP MHM-6 M8 A280	

Pos	Part No	SP	UN	Qty	Description	Page No

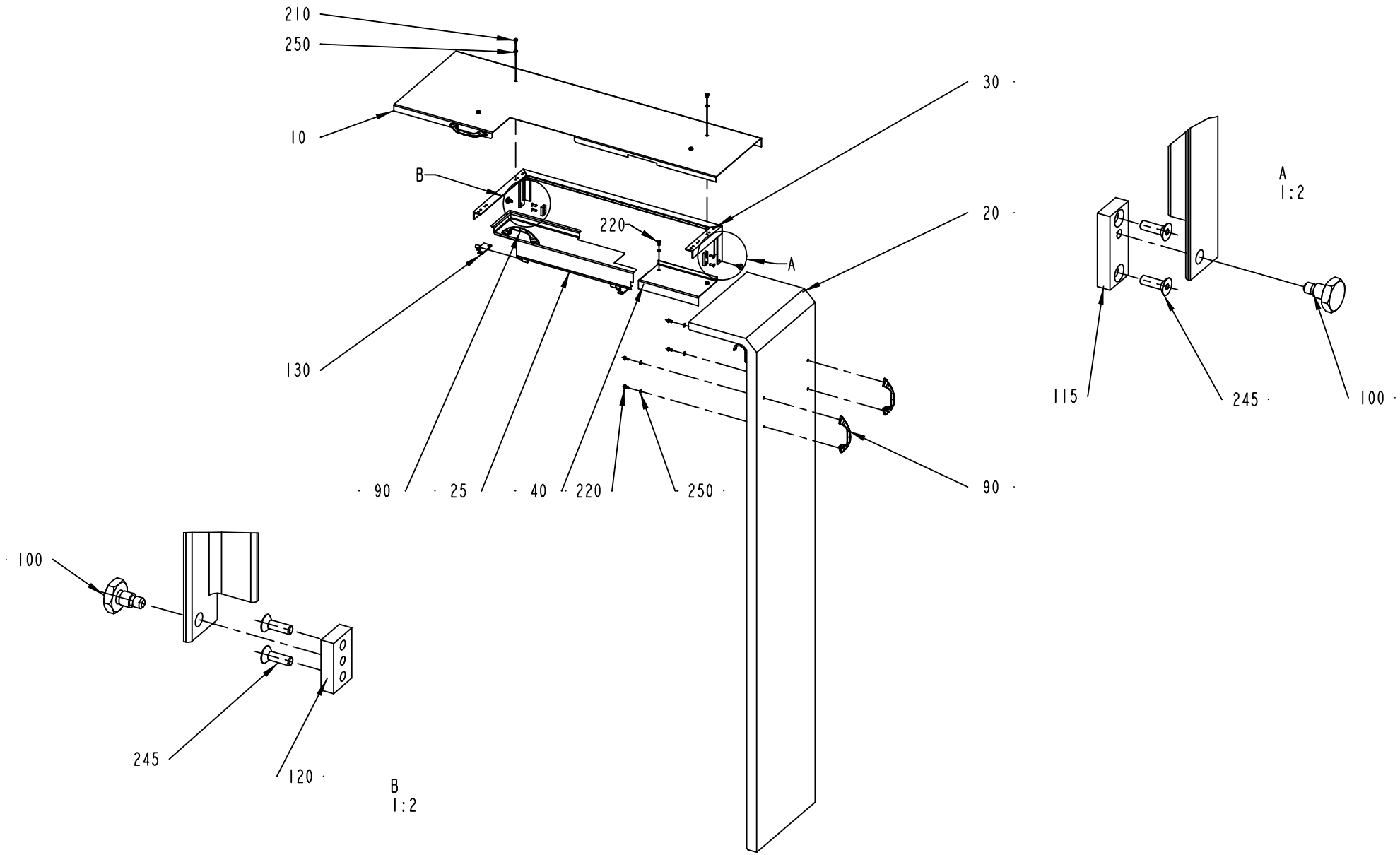
210
250
10
B
220
A
30
20
130
90
25
40
220
250
90
A
1:2
115
245
100
100
245
120
B
1:2

ECM: 104995 - 20020215
Group number: 265809-0300
Assembly Drawing: 265809-3_1_AB

Pos	Part No	SP	UN	Qty	Description	Page No
-						
010	542847-0000	-		1	PAPER GUARD	
020	266797-0002	-		1	PAPER GUARD	
025	542848-0000	-		1	HATCH	
030	542849-0000	-		1	CANTILEVER	
040	542850-0000	-		1	COVERING PLATE	
090	7309-0000	-		4	HANDLE	
100	252972-0000	-		2	SHOULDER SCREW	
115	283271-0000	-		1	BRACKET	
120	449000-0000	-		1	BRACKET	
130	542851-0000	-		2	HINGE	
210	312105-0362	-		4	SCREW M6S ISO 4017 M6X8 A480	
220	312105-0366	-		10	SCREW M6S M6X12 A280	
245	312155-0329	-		4	SCREW EN 10642 MF6S M5X16 A480	
250	315105-0153	-		12	WASHER BRB6,4X12RFR	

Pos	Part No	SP	UN	Qty	Description	Page No

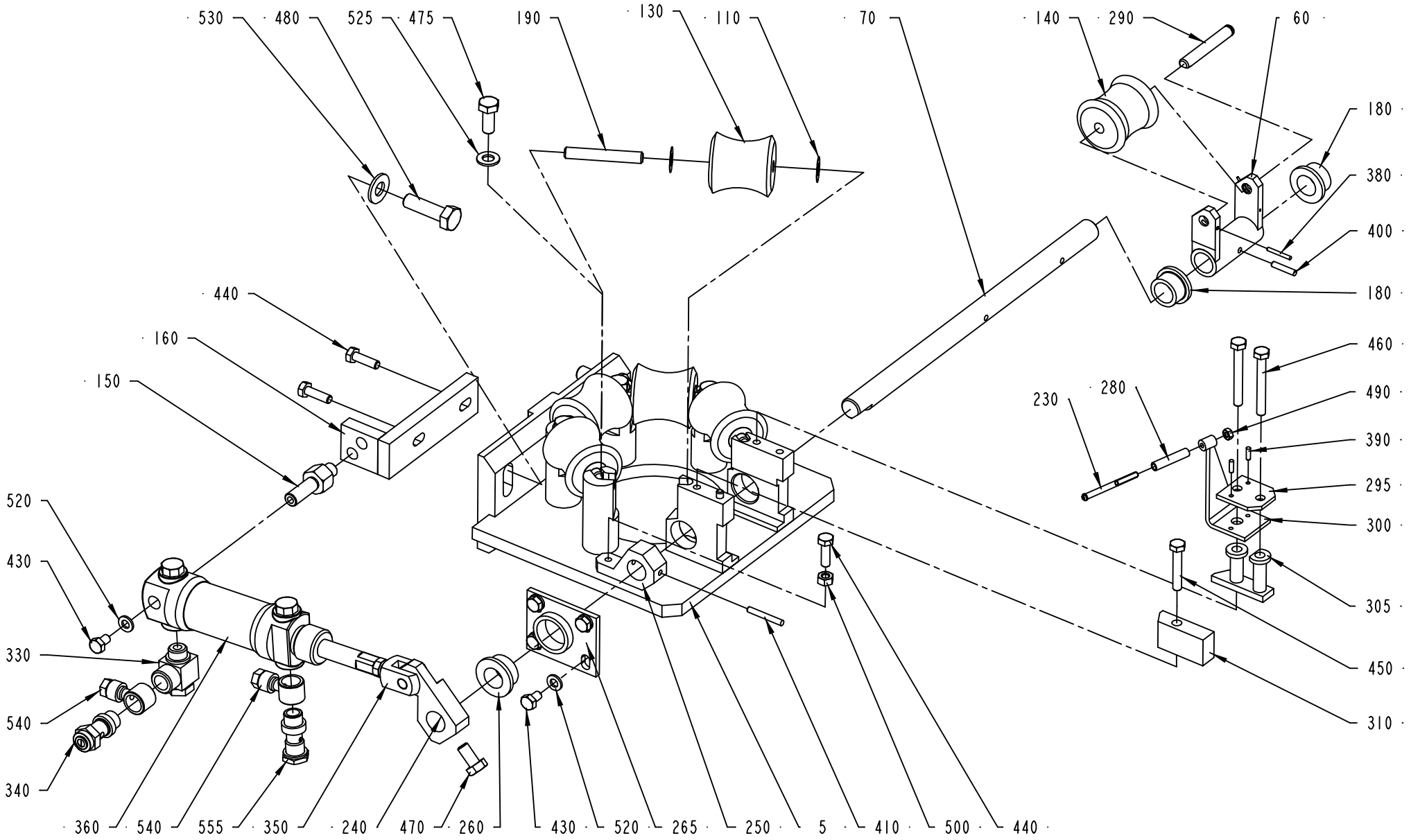
530
480
525
475
190
130
110
70
140
290
60
180
380
400
180
440
160
150
460
490
390
295
300
305
450
310
230
280
520
430
330
540
340
360
540
555
350
240
470
260
430
520
265
250
5
410
500
440

ECM: 104996 - 20020215
Group number: 269113-0600
Assembly Drawing: 269113-3_1_AE

This list covers pages from 1-16 to 1-21

Pos	Part No	SP	UN	Qty	Description	Page No
0375S (See drawing on page: 1-16)						
005	450459-0002	-		1	FORMING RING	
060	434499-0000	A		1	FORK	
070	434500-0000	A		1	SHAFT	
130	449589-0001	A		5	ROLLER, (STD.SIZE)	
140	529181-0000	A		1	COUNTER ROLLER	
190	434504-0000	A		5	SHAFT	
265	486803-0000	A		1	BEARING HOUSING	
290	434507-0000	A		1	SHAFT	
300	529184-0000	D		1	HOLDER	
380	311103-0212	-		1	PARALLEL PIN ISO 2338 2,5M6X20 A1	
0355B, 0500S (See drawing on page: 1-16)						
005	450459-0002	-		1	FORMING RING	
060	434499-0000	A		1	FORK	
070	434500-0000	A		1	SHAFT	
130	449840-0001	A		5	ROLLER, (STD.SIZE)	
140	533442-0000	A		1	COUNTER ROLLER	
190	434504-0000	A		5	SHAFT	
265	486803-0000	A		1	BEARING HOUSING	
290	434507-0000	A		1	SHAFT	
300	534177-0000	A		1	HOLDER	
380	311103-0212	-		1	PARALLEL PIN ISO 2338 2,5M6X20 A1	
0500B, 0750B, 1000B (See drawing on page: 1-20)						
005	450459-0001	-		1	FORMING RING	
060	1364976-0000	A		1	FORK	
070	269147-0000	A		1	SHAFT	
130	36953-0001	A		5	ROLL	
140	38630-0001	A		1	COUNTER ROLLER	
190	263655-0009	A		5	SHAFT	
265	486803-0000	A		1	BEARING HOUSING	
290	1364979-0000	A		1	SHAFT	
300	569099-0000	A		1	HOLDER	
0750S (See drawing on page: 1-18)						
005	544333-0000	-		1	FORMING RING	
060	544335-0000	A		1	FORK	
070	269147-0000	A		1	SHAFT	
130	752578-0001	A		5	ROLLER, (STD.SIZE)	
140	556139-0000	A		1	ROLL	
190	263655-0022	A		5	SHAFT	
200	90240-0172	A		12	FLANGE BUSHING, 8X12X10 MM	
265	544306-0000	A		1	BEARING HOUSING	
290	544336-0000	A		1	SHAFT	
300	534177-0000	A		1	HOLDER	
1000S (See drawing on page: 1-18)						
005	567744-0000	-		1	FORMING RING	
060	567748-0000	A		1	FORK	
070	269147-0000	A		1	SHAFT	
130	567746-0001	A		5	ROLLER, (STD.SIZE)	
140	567747-0000	A		1	ROLL	
190	569100-0000	A		5	SHAFT	
200	90240-0172	A		12	FLANGE BUSHING, 8X12X10 MM	
265	544306-0000	A		1	BEARING HOUSING	
290	569085-0000	A		1	SHAFT	
300	569099-0000	A		1	HOLDER	
1000SQ (See drawing on page: 1-18)						
005	567744-0000	-		1	FORMING RING	
060	567748-0000	A		1	FORK	
070	269147-0000	A		1	SHAFT	
130	579310-0001	A		5	ROLLER, (STD.SIZE)	
140	579311-0000	A		1	COUNTER ROLLER	
190	569100-0000	A		5	SHAFT	
200	90240-0172	A		12	FLANGE BUSHING, 8X12X10 MM	
265	544306-0000	A		1	BEARING HOUSING	
290	569085-0000	A		1	SHAFT	
300	569099-0000	A		1	HOLDER	
Common Parts						
110	2033-0008	-		10	WASHER	
150	263257-0000	A		1	CYLINDER BRACKET	
160	571945-0000	A		1	FASTENING BRACKET	
180	263262-0000	A		2	BUSHING	
230	469463-0000	A		1	SHAFT	
240	269152-0000	A		1	ROCKER ARM	
250	269153-0000	A		1	STOP	
260	269154-0000	A		1	BUSHING	
280	469464-0000	A		1	ROLL	
295	434101-0000	A		1	WASHER	
305	544445-0000	A		1	SPACER	
310	436342-0000	A		1	SPACER	

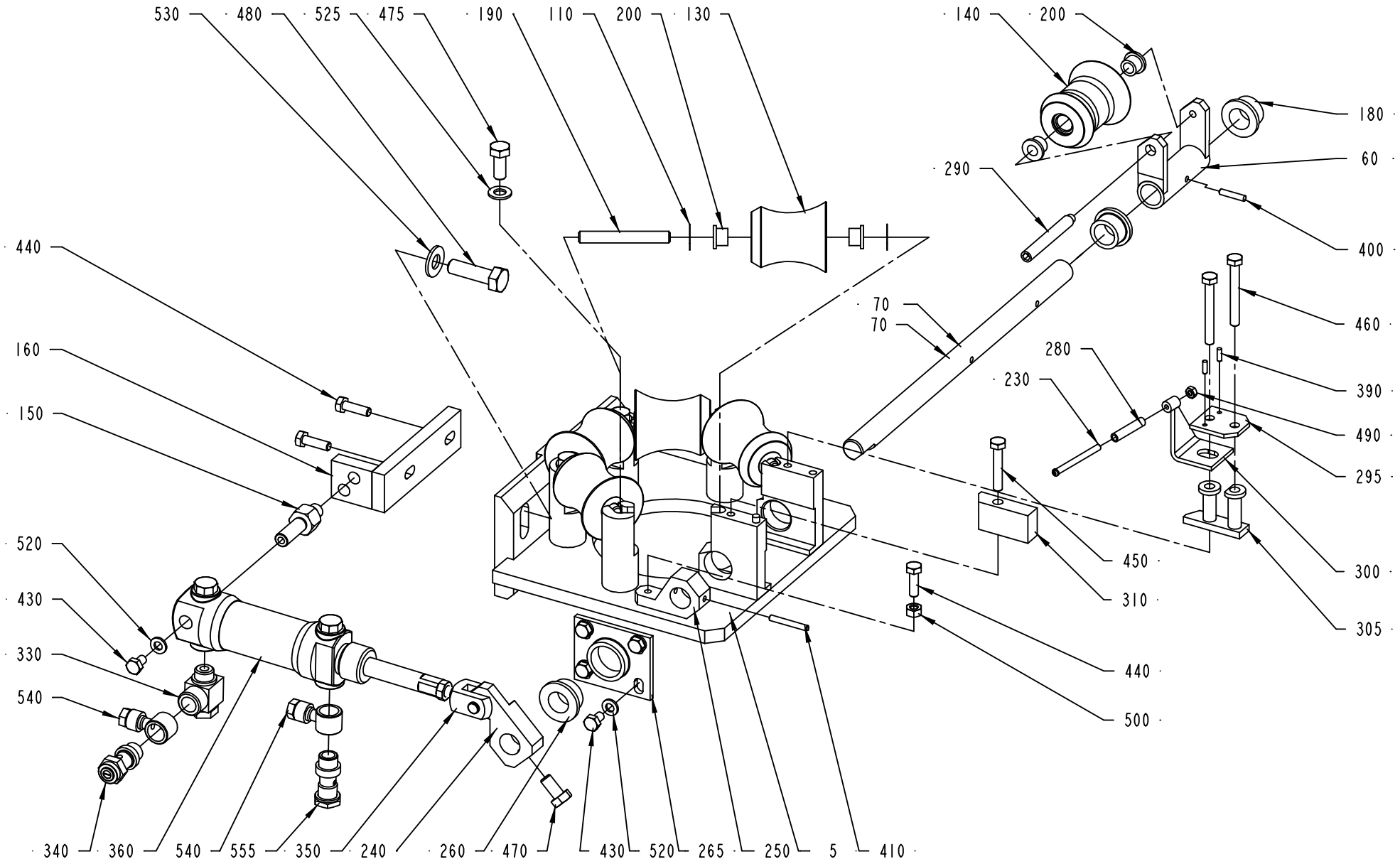
530
480
525
475
190
110
200
130
140
200
180
60
290
400
440
70
70
460
160
280
230
390
150
490
295
520
450
430
310
300
330
305
440
540
500
340
360
540
555
350
240
260
470
430
520
265
250
5
410

Pos	Part No	SP	UN	Qty	Description	Page No
Common Parts (Cont'd)						
330	90224-0284	A		1	CONN. BANJO, ART. NO LJK-1/4	
340	90235-0275	A		1	THROTTLE CHECK VALVES,G1/4"	
350	90239-0127	A		1	BRACKET	
360	B90239-0166	A		1	CYLINDER	
	90285-0094	*C*		*1*	*SEAL KIT*	
390	311103-0233	-		2	PARALLEL PIN ISO 2338 3M6X10 A1	
400	311103-0272	-		1	PARALLEL PIN ISO 2338 4M6X20 A1	
410	311103-0276	-		1	PARALLEL PIN ISO 2338 4M6X30 A1	
430	312105-0364	-		5	SCREW M6S ISO 4017 M6X10 A480	
440	312105-0370	-		3	SCREW M6S ISO 4017 M6X20 A480	
450	312105-0376	-		1	SCREW M6S ISO 4014 M6X35 A480	
460	312105-0380	-		2	SCREW M6S ISO 4014 M6X50 A480	
470	312105-0449	-		1	SCREW M6S ISO 4017 M8X16 A480	
475	312105-0451	-		4	SCREW M6S ISO 4017 M8X20 A480	
480	312105-0497	-		2	SCREW M6S ISO 4017 M10X35 A480	
490	312605-0312	-		1	HEXAGON NUT, M6M M4 A280	
500	312605-0316	-		1	HEXAGON NUT, M6M M6 A280	
520	315105-0153	-		5	WASHER BRB6,4X12RFR	
525	315105-0165	-		4	WASHER BRB8,4X16RFR	
530	315105-0173	-		2	WASHER BRB10,5X22RFR	
540	342797-0122	-		2	CONN. BANJO, RINGPIECE 6-1/4	
555	342980-0304	-		1	BANJO-HOLLOW BOLT COUPL,EXT.THR.01-G1/4"	

Pos	Part No	SP	UN	Qty	Description	Page No

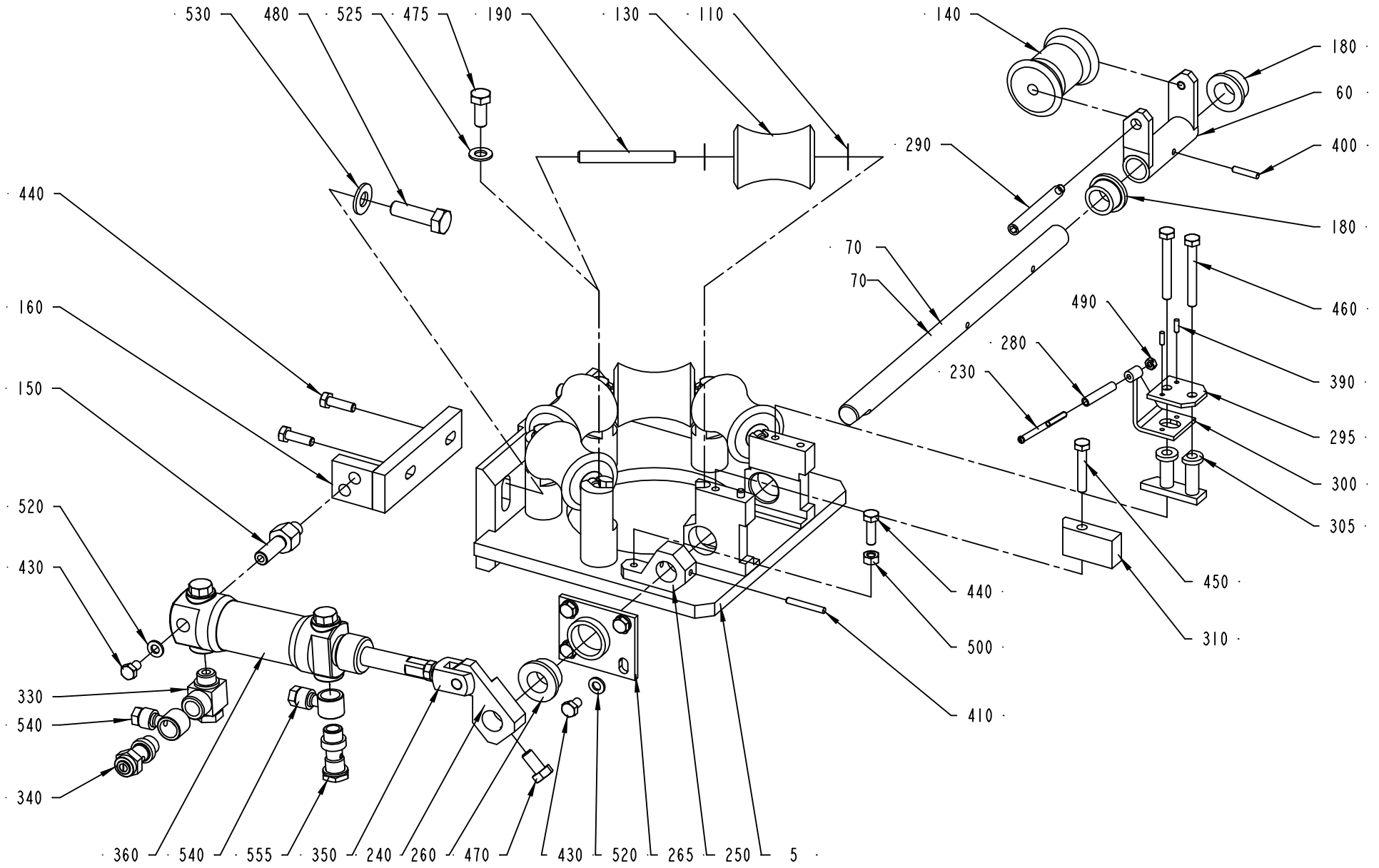
530
480
525
475
190
130
110
140
180
60
400
290
180
440
70
70
160
490
460
280
230
390
150
295
520
300
305
430
450
440
310
500
330
410
540
340
360
540
555
350
240
260
470
430
520
265
250
5

Pos	Part No	SP	UN	Qty	Description	Page No	Pos	Part No	SP	UN	Qty	Description	Page No

SEE PREVIOUS LISTS PAGES: 1-17, 1-19.

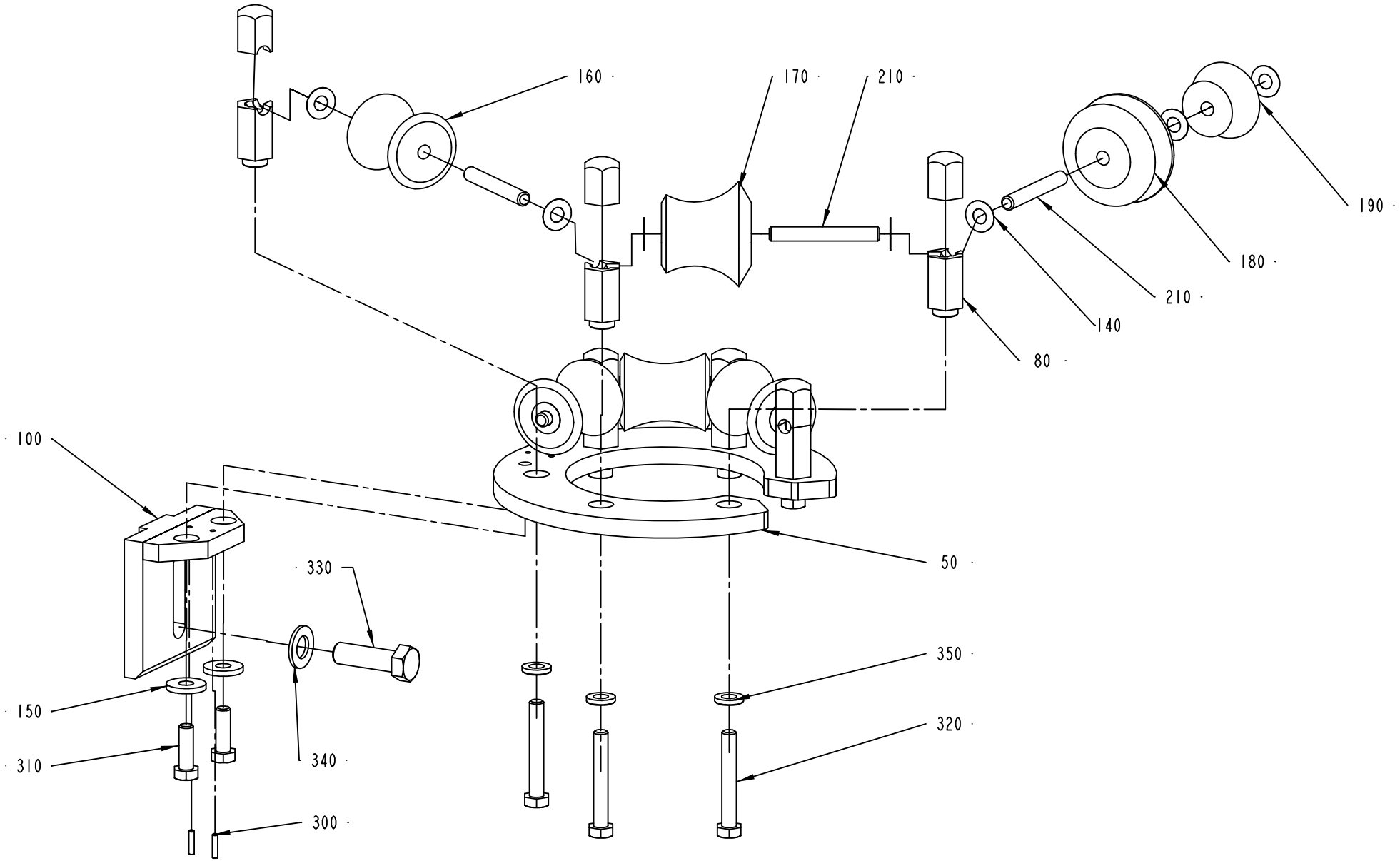
160
170
210
190
180
210
140
80
100
50
330
350
150
320
310
340
300

ECM: 128382 - 20030410
Group number: 269115-0500
Assembly Drawing: 269115-3_1_AB

This list covers pages from 1-22 to 1-27

Pos	Part No	SP	UN	Qty	Description	Page No
TBA 0375S (See drawing on page: 1-22)						
050	434493-0000	-		1	FORMING RING	
080	526958-0000	C		6	AXLE SUPPORT	
100	493948-0000	-		1	CANTILEVER	
140	2033-0008	-		13	WASHER	
160	449586-0000	C		4	ROLL	
170	529039-0000	C		1	EDGE ROLLER	
180	529040-0000	C		1	GUIDE ROLLER	
190	529041-0000	C		1	GUIDE ROLLER	
210	263655-0008	C		6	SHAFT	
320	312105-0464	-		6	SCREW M6S ISO 4014 M8X65 A480	
TBA 0500B, TBA 0750B, TBA 1000B (See drawing on page: 1-26)						
050	250594-0000	-		1	FORMING RING	
080	257987-0000	C		6	AXLE SUPPORT	
100	436648-0000	-		1	CANTILEVER	
140	2033-0008	-		13	WASHER	
160	543471-0000	C		4	ROLL	
170	567736-0000	C		1	EDGE ROLLER	
180	567737-0000	C		1	GUIDE ROLLER	
190	567738-0000	C		1	GUIDE ROLLER	
210	263655-0010	C		6	SHAFT	
320	312105-0462	-		6	SCREW M6S ISO 4014 M8X55 A480	
TBA 0500S, TBA 0355B (See drawing on page: 1-22)						
050	434493-0000	-		1	FORMING RING	
080	257987-0000	C		6	AXLE SUPPORT	
100	493948-0000	-		1	CANTILEVER	
140	2033-0008	-		13	WASHER	
160	440068-0000	C		4	ROLL	
170	530566-0000	C		1	EDGE ROLLER	
180	530567-0000	C		1	GUIDE ROLLER	
190	530568-0000	C		1	GUIDE ROLLER	
210	263655-0008	C		6	SHAFT	
320	312105-0462	-		6	SCREW M6S ISO 4014 M8X55 A480	
TBA 1000SQ (See drawing on page: 1-24)						
050	569090-0000	-		1	FORMING RING	
080	257987-0000	C		6	AXLE SUPPORT	
100	2594035-0000	-		1	CANTILEVER	
130	90240-0172	C		14	FLANGE BUSHING, 8X12X10 MM	
140	2033-0008	-		13	WASHER	
160	569087-0000	C		4	ROLL	
170	569086-0000	C		1	ROLL	
180	569089-0000	C		1	ROLL	
190	569088-0000	C		1	ROLL	
210	263655-0009	C		6	SHAFT	
320	312105-0462	-		6	SCREW M6S ISO 4014 M8X55 A480	
TBA 0750S (See drawing on page: 1-24)						
050	544263-0000	-		1	FORMING RING	
080	257987-0000	C		6	AXLE SUPPORT	
100	493948-0000	-		1	CANTILEVER	
130	90240-0172	C		14	FLANGE BUSHING, 8X12X10 MM	
140	2033-0008	-		12	WASHER	
160	752719-0000	C		4	ROLL	
170	752721-0000	C		1	ROLL	
180	752720-0000	C		1	ROLL	
190	752718-0000	C		1	ROLL	
210	263655-0009	C		6	SHAFT	
320	312105-0462	-		6	SCREW M6S ISO 4014 M8X55 A480	
TBA 1000S (See drawing on page: 1-24)						
050	569090-0000	-		1	FORMING RING	
080	257987-0000	C		6	AXLE SUPPORT	
100	493948-0000	-		1	CANTILEVER	
130	90240-0172	C		14	FLANGE BUSHING, 8X12X10 MM	
140	2033-0008	-		13	WASHER	
160	569087-0000	C		4	ROLL	
170	569086-0000	C		1	ROLL	
180	569089-0000	C		1	ROLL	
190	569088-0000	C		1	ROLL	
210	263655-0009	C		6	SHAFT	
320	312105-0462	-		6	SCREW M6S ISO 4014 M8X55 A480	
Common Parts						
150	28036-0000	-		2	WASHER	
300	311103-0235	-		2	PARALLEL PIN ISO 2338 3M6X14	
310	312105-0453	-		2	SCREW M6S ISO 4017 M8X25 A480	
330	312105-0540	-		1	SCREW M6S ISO 4017 M12X40 A480	
340	315105-0178	-		1	WASHER BRB13X24RFR	
350	315115-0165	-		6	WASHER PLAIN, TBRB 8,4/16 H=3	

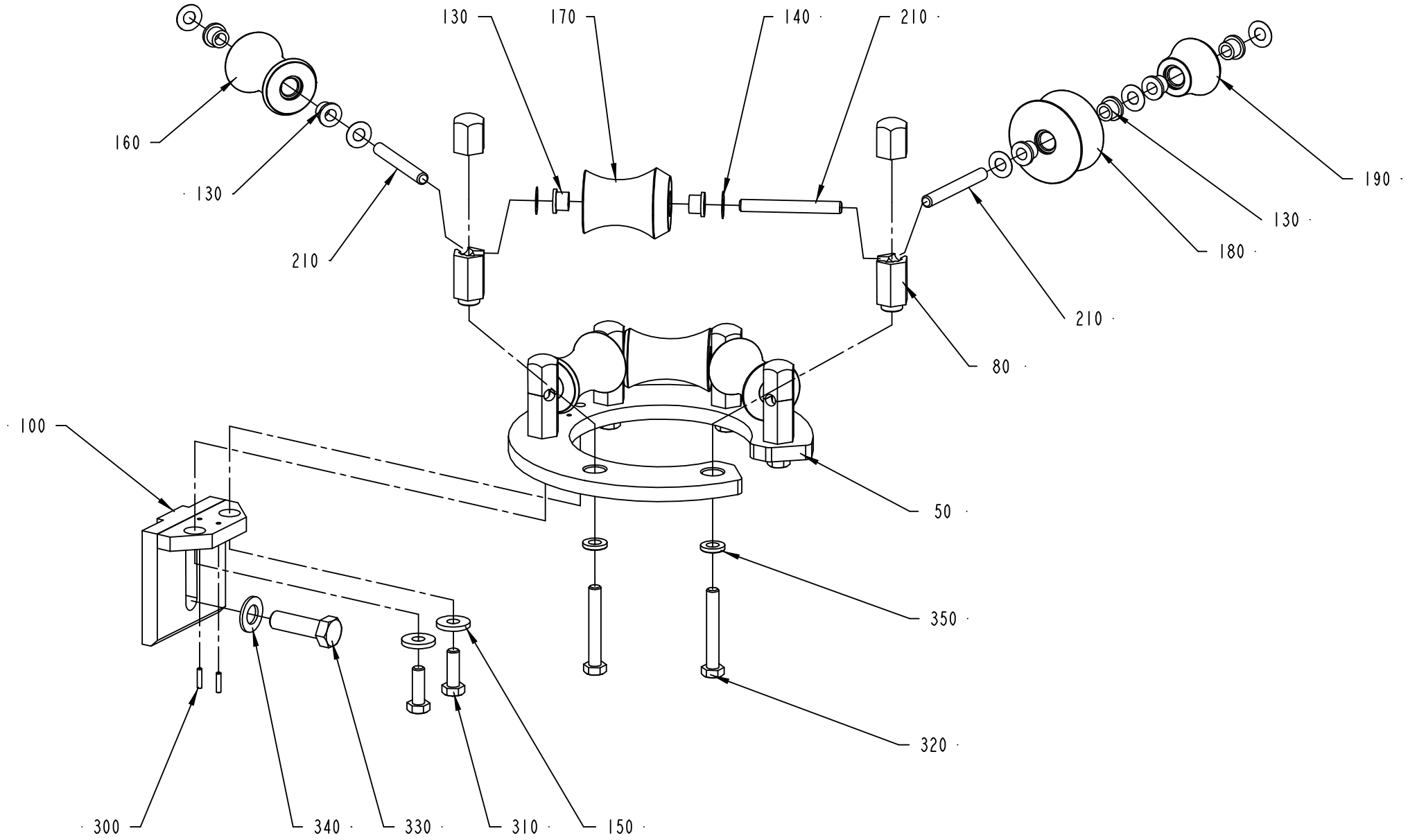
130
170
140
210
160
130
210
190
130
180
210
80
100
50
350
320
300
340
330
310
150

ECM: 128382 - 20030410
Group number: 269115-0500
Assembly Drawing: 269115-4_1_AB

This list covers pages from 1-22 to 1-27

Pos	Part No	SP	UN	Qty	Description	Page No
TBA 0375S (See drawing on page: 1-22)						
050	434493-0000	-		1	FORMING RING	
080	526958-0000	C		6	AXLE SUPPORT	
100	493948-0000	-		1	CANTILEVER	
140	2033-0008	-		13	WASHER	
160	449586-0000	C		4	ROLL	
170	529039-0000	C		1	EDGE ROLLER	
180	529040-0000	C		1	GUIDE ROLLER	
190	529041-0000	C		1	GUIDE ROLLER	
210	263655-0008	C		6	SHAFT	
320	312105-0464	-		6	SCREW M6S ISO 4014 M8X65 A480	
TBA 0500B, TBA 0750B, TBA 1000B (See drawing on page: 1-26)						
050	250594-0000	-		1	FORMING RING	
080	257987-0000	C		6	AXLE SUPPORT	
100	436648-0000	-		1	CANTILEVER	
140	2033-0008	-		13	WASHER	
160	543471-0000	C		4	ROLL	
170	567736-0000	C		1	EDGE ROLLER	
180	567737-0000	C		1	GUIDE ROLLER	
190	567738-0000	C		1	GUIDE ROLLER	
210	263655-0010	C		6	SHAFT	
320	312105-0462	-		6	SCREW M6S ISO 4014 M8X55 A480	
TBA 0500S, TBA 0355B (See drawing on page: 1-22)						
050	434493-0000	-		1	FORMING RING	
080	257987-0000	C		6	AXLE SUPPORT	
100	493948-0000	-		1	CANTILEVER	
140	2033-0008	-		13	WASHER	
160	440068-0000	C		4	ROLL	
170	530566-0000	C		1	EDGE ROLLER	
180	530567-0000	C		1	GUIDE ROLLER	
190	530568-0000	C		1	GUIDE ROLLER	
210	263655-0008	C		6	SHAFT	
320	312105-0462	-		6	SCREW M6S ISO 4014 M8X55 A480	
TBA 1000SQ (See drawing on page: 1-24)						
050	569090-0000	-		1	FORMING RING	
080	257987-0000	C		6	AXLE SUPPORT	
100	2594035-0000	-		1	CANTILEVER	
130	90240-0172	C		14	FLANGE BUSHING, 8X12X10 MM	
140	2033-0008	-		13	WASHER	
160	569087-0000	C		4	ROLL	
170	569086-0000	C		1	ROLL	
180	569089-0000	C		1	ROLL	
190	569088-0000	C		1	ROLL	
210	263655-0009	C		6	SHAFT	
320	312105-0462	-		6	SCREW M6S ISO 4014 M8X55 A480	
TBA 0750S (See drawing on page: 1-24)						
050	544263-0000	-		1	FORMING RING	
080	257987-0000	C		6	AXLE SUPPORT	
100	493948-0000	-		1	CANTILEVER	
130	90240-0172	C		14	FLANGE BUSHING, 8X12X10 MM	
140	2033-0008	-		12	WASHER	
160	752719-0000	C		4	ROLL	
170	752721-0000	C		1	ROLL	
180	752720-0000	C		1	ROLL	
190	752718-0000	C		1	ROLL	
210	263655-0009	C		6	SHAFT	
320	312105-0462	-		6	SCREW M6S ISO 4014 M8X55 A480	
TBA 1000S (See drawing on page: 1-24)						
050	569090-0000	-		1	FORMING RING	
080	257987-0000	C		6	AXLE SUPPORT	
100	493948-0000	-		1	CANTILEVER	
130	90240-0172	C		14	FLANGE BUSHING, 8X12X10 MM	
140	2033-0008	-		13	WASHER	
160	569087-0000	C		4	ROLL	
170	569086-0000	C		1	ROLL	
180	569089-0000	C		1	ROLL	
190	569088-0000	C		1	ROLL	
210	263655-0009	C		6	SHAFT	
320	312105-0462	-		6	SCREW M6S ISO 4014 M8X55 A480	
Common Parts						
150	28036-0000	-		2	WASHER	
300	311103-0235	-		2	PARALLEL PIN ISO 2338 3M6X14	
310	312105-0453	-		2	SCREW M6S ISO 4017 M8X25 A480	
330	312105-0540	-		1	SCREW M6S ISO 4017 M12X40 A480	
340	315105-0178	-		1	WASHER BRB13X24RFR	
350	315115-0165	-		6	WASHER PLAIN, TBRB 8,4/16 H=3	

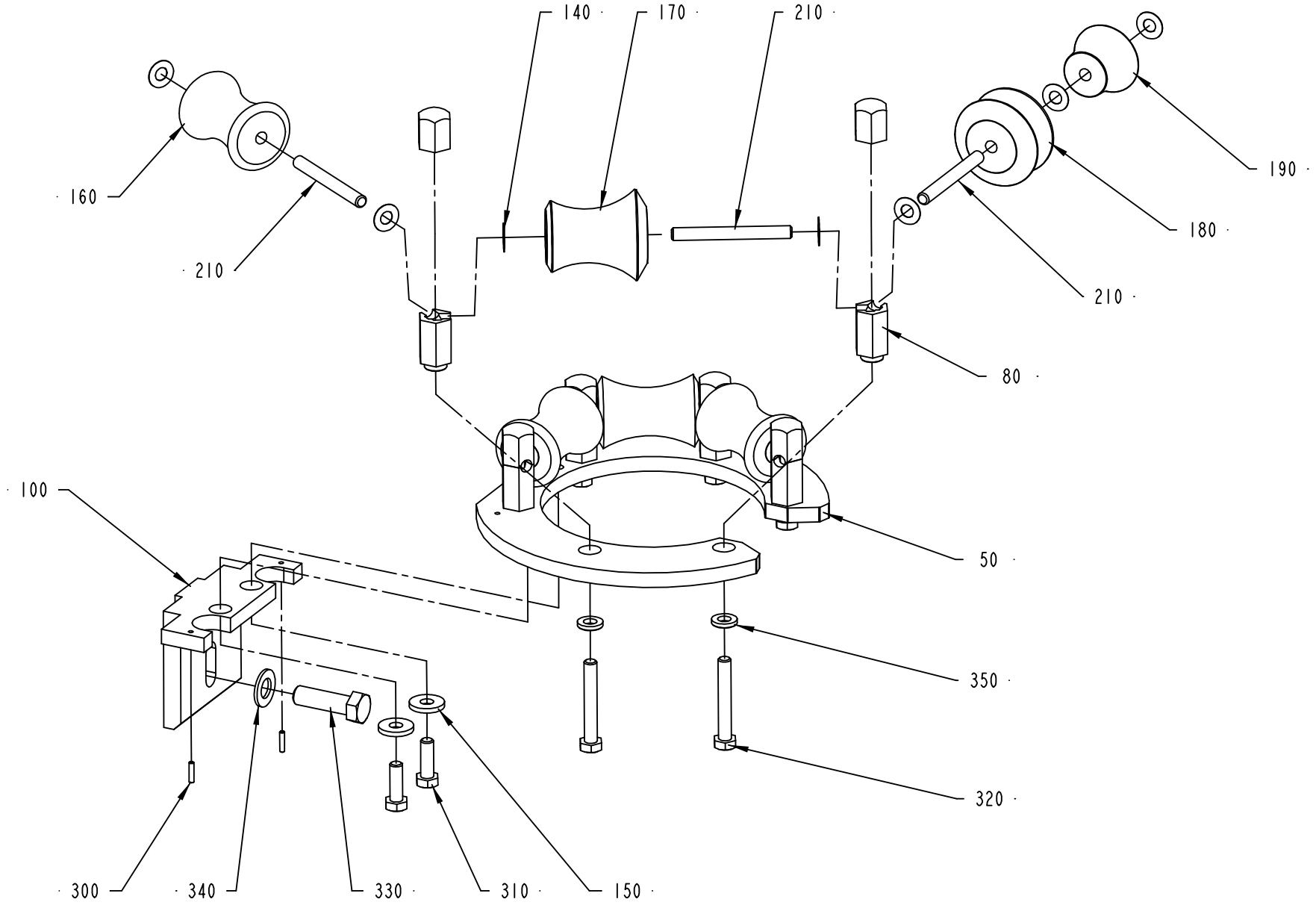
140
170
210
160
210
190
180
210
80
100
50
350
320
300
340
330
310
150

ECM: 128382 - 20030410
Group number: 269115-0500
Assembly Drawing: 269115-5_1_AB

This list covers pages from 1-22 to 1-27

Pos	Part No	SP	UN	Qty	Description	Page No
TBA 0375S (See drawing on page: 1-22)						
050	434493-0000	-		1	FORMING RING	
080	526958-0000	C		6	AXLE SUPPORT	
100	493948-0000	-		1	CANTILEVER	
140	2033-0008	-		13	WASHER	
160	449586-0000	C		4	ROLL	
170	529039-0000	C		1	EDGE ROLLER	
180	529040-0000	C		1	GUIDE ROLLER	
190	529041-0000	C		1	GUIDE ROLLER	
210	263655-0008	C		6	SHAFT	
320	312105-0464	-		6	SCREW M6S ISO 4014 M8X65 A480	
TBA 0500B, TBA 0750B, TBA 1000B (See drawing on page: 1-26)						
050	250594-0000	-		1	FORMING RING	
080	257987-0000	C		6	AXLE SUPPORT	
100	436648-0000	-		1	CANTILEVER	
140	2033-0008	-		13	WASHER	
160	543471-0000	C		4	ROLL	
170	567736-0000	C		1	EDGE ROLLER	
180	567737-0000	C		1	GUIDE ROLLER	
190	567738-0000	C		1	GUIDE ROLLER	
210	263655-0010	C		6	SHAFT	
320	312105-0462	-		6	SCREW M6S ISO 4014 M8X55 A480	
TBA 0500S, TBA 0355B (See drawing on page: 1-22)						
050	434493-0000	-		1	FORMING RING	
080	257987-0000	C		6	AXLE SUPPORT	
100	493948-0000	-		1	CANTILEVER	
140	2033-0008	-		13	WASHER	
160	440068-0000	C		4	ROLL	
170	530566-0000	C		1	EDGE ROLLER	
180	530567-0000	C		1	GUIDE ROLLER	
190	530568-0000	C		1	GUIDE ROLLER	
210	263655-0008	C		6	SHAFT	
320	312105-0462	-		6	SCREW M6S ISO 4014 M8X55 A480	
TBA 1000SQ (See drawing on page: 1-24)						
050	569090-0000	-		1	FORMING RING	
080	257987-0000	C		6	AXLE SUPPORT	
100	2594035-0000	-		1	CANTILEVER	
130	90240-0172	C		14	FLANGE BUSHING, 8X12X10 MM	
140	2033-0008	-		13	WASHER	
160	569087-0000	C		4	ROLL	
170	569086-0000	C		1	ROLL	
180	569089-0000	C		1	ROLL	
190	569088-0000	C		1	ROLL	
210	263655-0009	C		6	SHAFT	
320	312105-0462	-		6	SCREW M6S ISO 4014 M8X55 A480	
TBA 0750S (See drawing on page: 1-24)						
050	544263-0000	-		1	FORMING RING	
080	257987-0000	C		6	AXLE SUPPORT	
100	493948-0000	-		1	CANTILEVER	
130	90240-0172	C		14	FLANGE BUSHING, 8X12X10 MM	
140	2033-0008	-		12	WASHER	
160	752719-0000	C		4	ROLL	
170	752721-0000	C		1	ROLL	
180	752720-0000	C		1	ROLL	
190	752718-0000	C		1	ROLL	
210	263655-0009	C		6	SHAFT	
320	312105-0462	-		6	SCREW M6S ISO 4014 M8X55 A480	
TBA 1000S (See drawing on page: 1-24)						
050	569090-0000	-		1	FORMING RING	
080	257987-0000	C		6	AXLE SUPPORT	
100	493948-0000	-		1	CANTILEVER	
130	90240-0172	C		14	FLANGE BUSHING, 8X12X10 MM	
140	2033-0008	-		13	WASHER	
160	569087-0000	C		4	ROLL	
170	569086-0000	C		1	ROLL	
180	569089-0000	C		1	ROLL	
190	569088-0000	C		1	ROLL	
210	263655-0009	C		6	SHAFT	
320	312105-0462	-		6	SCREW M6S ISO 4014 M8X55 A480	
Common Parts						
150	28036-0000	-		2	WASHER	
300	311103-0235	-		2	PARALLEL PIN ISO 2338 3M6X14	
310	312105-0453	-		2	SCREW M6S ISO 4017 M8X25 A480	
330	312105-0540	-		1	SCREW M6S ISO 4017 M12X40 A480	
340	315105-0178	-		1	WASHER BRB13X24RFR	
350	315115-0165	-		6	WASHER PLAIN, TBRB 8,4/16 H=3	

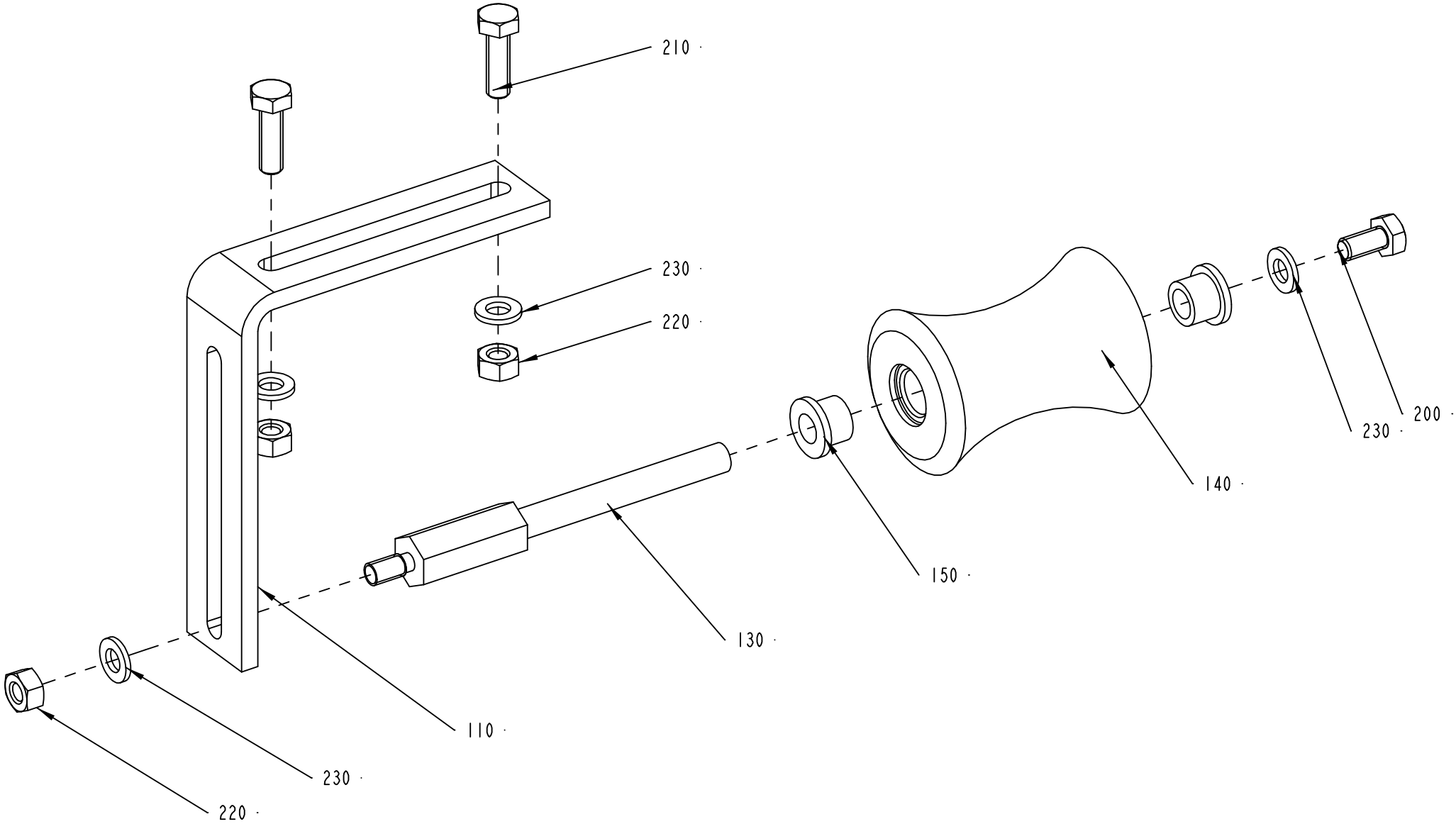
210
230
220
110
230
220
130
150
140
230
200

ECM: 83662 - 20000928
Group number: 269136-0200
Assembly Drawing: 269136-1_1_AD

Pos	Part No	SP	UN	Qty	Description	Page No
0375S, 0500B, 0355B, 0500S, 0750B, 1000B						
140	36953-0010	C		1	ROLL	
1000SQ, 1000S, 0750S						
140	752740-0000	C		1	ROLLER	
150	90240-0172	C		2	FLANGE BUSHING, 8X12X10 MM	
Common Parts						
110	208843-0000	-		1	ANGLE BRACKET	
130	458791-0000	C		1	SHAFT	
200	312105-0366	-		1	SCREW M6S M6X12 A280	
210	312105-0370	-		2	SCREW M6S ISO 4017 M6X20 A480	
220	312605-0316	-		3	HEXAGON NUT, M6M M6 A280	
230	315105-0153	-		4	WASHER BRB6,4X12RFR	

Pos	Part No	SP	UN	Qty	Description	Page No

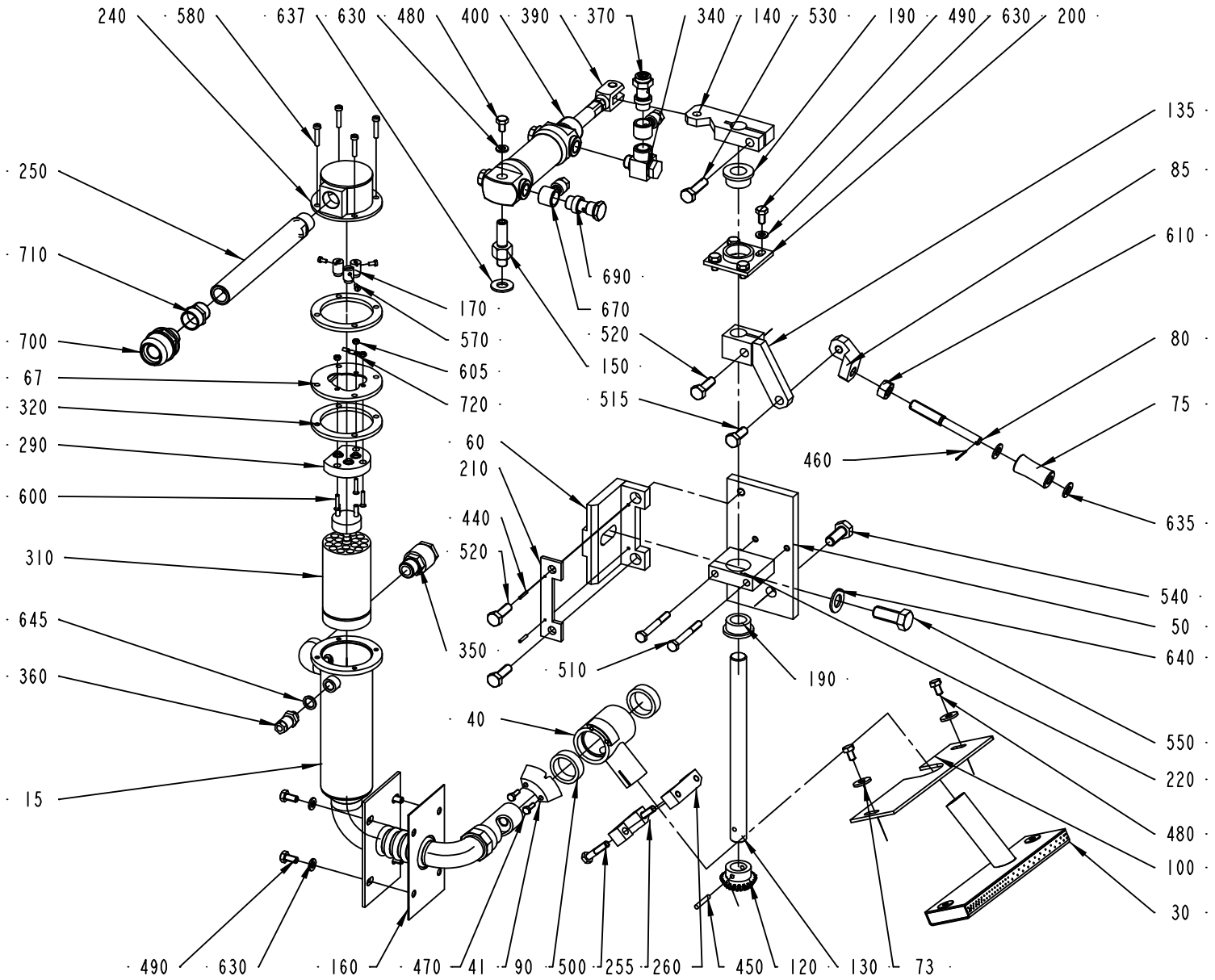
240
580
637
630
480
400
390
370
340
140
530
190
490
630
200
135
85
610
80
75
635
540
50
640
550
220
480
100
30
250
710
700
67
320
290
600
310
645
360
15
170
570
605
720
690
670
520
150
515
460
60
210
440
520
350
510
190
40
490
630
160
470
41
90
500
255
260
450
120
130
73

ECM: 107113 - 20020405
Group number: 269158-0400
Assembly Drawing: 269158-2_1_AF

Pos	Part No	SP	UN	Qty	Description	Page No
0375S						
030	526696-0000	A		1	AIR NOZZLE	
100	526697-0000	A		1	HEAT GUARD	
0355B, 0500S, 0750S						
030	534176-0000	A		1	AIR NOZZLE	
100	526697-0000	A		1	HEAT GUARD	
0500B, 1000SQ, 1000S, 0750B, 1000B						
030	257903-0000	A		1	AIR NOZZLE	
100	257904-0000	A		1	HEAT GUARD	
Common Parts						
015	297309-0000	A		1	PIPE-LINE	
040	263249-0000	A		1	PIVOT ARM	
041	263250-0000	A		1	TOOTH PART	
050	269313-0000	A		1	FASTENING PLATE	
060	269314-0000	A		1	CANTILEVER	
067	297310-0000	-		1	FLANGE	
073	6278-0000	-		2	WASHER	
075	33442-0000	A		1	ROLL	
080	239440-0000	A		1	SHAFT	
085	239441-0000	-		1	BRACKET	
090	250663-0000	A		2	BEARING	
120	263251-0000	A		1	GEAR WHEEL	
130	263252-0000	-		1	SHAFT	
135	263254-0000	-		1	BRACKET	
140	263256-0000	A		1	ROCKER ARM	
150	263257-0000	A		1	CYLINDER BRACKET	
160	531741-0000	A		1	GASKET	
170	266739-0000	A		3	CABLE GLAND	
190	269154-0000	A		2	BUSHING	
200	269242-0000	A		1	BEARING HOUSING	
210	269315-0000	A		1	WASHER	
220	269316-0000	A		1	BEARING HOUSING	
240	297311-0000	-		1	COVER	
250	458046-0000	-		1	PIPE	
255	497579-0000	A		1	CLAMP HALF	
260	497580-0000	A		1	CLAMP HALF	
290	B90125-0020	-		1	PLATE	
	270926-0000	*A*		*6*	*NUT*	
	270927-0000	*A*		*3*	*SCREW*	
	294464-0000	*A*		*1*	*BASE PLATE*	
310	90206-0085	A		1	HEATING CARTRIDGE 460W 105 OHM	
320	90206-0322	A		2	GASKET	
340	90224-0284	A		1	CONN. BANJO, ART. NO LJK-1/4	
350	90224-0301	A		1	CONNECTION	
360	90458-1849	A		1	CONN. STR., 6-R1/8, EXT. THREAD	
370	90235-0275	-		1	THROTTLE CHECK VALVES,G1/4"	
390	90239-0127	A		1	BRACKET	
400	B90239-0166	A		1	CYLINDER	
	90285-0094	*C*		*1*	*SEAL KIT*	
440	311103-0209	-		2	PARALLEL PIN ISO 2338 2,5M6X14 A1	
450	311103-0274	-		1	PARALLELL PIN, M6, 4X25 MM	
460	311411-0140	-		1	SPLIT PIN SP1,6X16RFR	
470	312105-0291	-		2	SCREW M6S ISO 4017 M4X12 A480	
480	312105-0364	-		3	SCREW M6S ISO 4017 M6X10 A480	
490	312105-0366	-		8	SCREW M6S M6X12 A280	
500	312105-0374	-		2	SCREW M6S ISO 4014 M6X30 A480	
510	312105-0380	-		2	SCREW M6S ISO 4014 M6X50 A480	
515	312105-0451	-		1	SCREW M6S ISO 4017 M8X20 A480	
520	312105-0453	-		3	SCREW M6S ISO 4017 M8X25 A480	
530	312105-0455	-		1	SCREW M6S ISO 4017 M8X30 A480	
540	312105-0493	-		1	SCREW M6S ISO 4017 M10X25 A480	
550	312105-0536	-		1	SCREW M6S ISO 4017 M12X30 A480	
570	312125-0220	-		3	SLOTTED CHEESE HEAD SCREW MCS 3X6 SS	
580	312125-0295	-		4	SLOTTED CHEESE HEAD SCREW MCS 4X20 SS	
600	312145-0228	-		3	SCREW COUNTERS.SLOT.HD. MFS 3X16 SS	
605	312605-0310	-		3	HEXAGON NUT, M6M M3 A280	
610	312605-0320	-		1	HEXAGON NUT, M6M M10 A280	
630	315105-0153	-		9	WASHER BRB6,4X12RFR	
635	315105-0165	-		2	WASHER BRB8,4X16RFR	
637	315105-0173	-		1	WASHER BRB10,5X22RFR	
640	315105-0178	-		1	WASHER BRB13X24RFR	
645	315237-0109	-		1	WASHER,PL.RND.AL.10/14,H=1,5	
670	342797-0122	-		2	CONN. BANJO, RINGPIECE 6-1/4	
690	342980-0304	-		1	BANJO-HOLLOW BOLT COUPL,EXT.THR.01-G1/4"	
700	352136-0127	-		1	GLAND FITTING PR 18,6	
710	352100-0106	-		1	CABLE GLANR.18,6-10,5	
720	353104-0129	-		1	CABLE SHOEYAV 025 M 35*	

Machine Type | Group Description | Used-In | Group Number | Page No

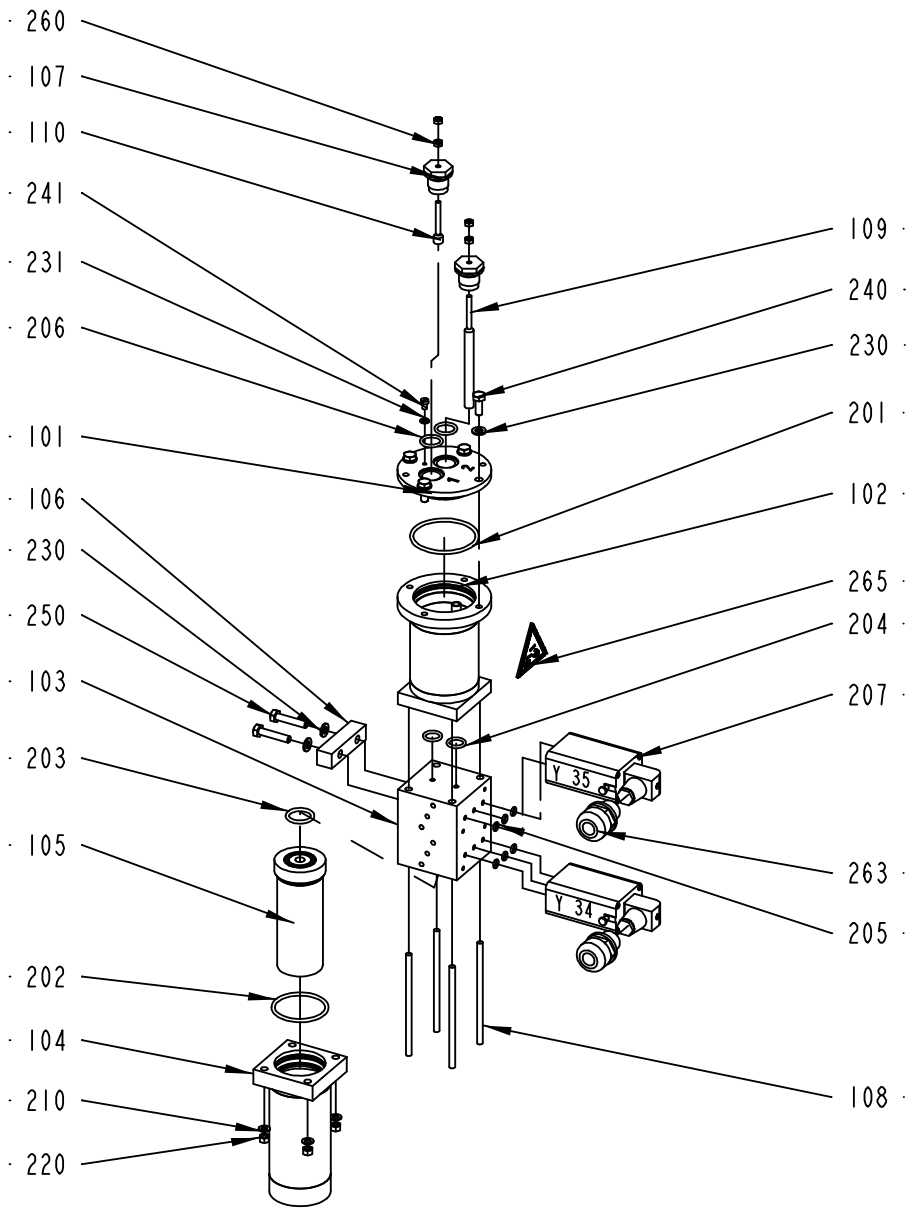
260
107
110
241
231
206
101
106
230
250
103
203
105
202
104
210
220
109
240
230
201
102
265
204
207
263
205
108
Y 35
Y 34

ECM: 72447 - 20001113
Group number: 560930-0100
Assembly Drawing: 560930-1_1_AE

Pos	Part No	SP	UN	Qty	Description	Page No
-						
101	549267-0000	-		1	LID	
102	549264-0000	-		1	CONTAINER	
103	549263-0000	-		1	BLOCK	
104	554142-0000	-		1	FILTER HOUSING	
105	554141-0000	D		1	FILTER	
106	560932-0000	-		1	INTERMEDIATE PART	
107	560931-0000	D		2	BRACKET	
108	554585-0000	-		4	STUD SCREW	
109	560934-0000	D		1	ELECTRODE	
110	560933-0000	D		1	ELECTRODE	
201	927422-0009	C		1	O-RING 54.5X3 SILICON	
202	927422-0007	C		1	O-RING 44.2X3 SILICON	
203	927422-0001	C		1	O-RING 19.2X3 SILICON	
204	927421-0002	C		2	O-RING 12.3X2.4 SILICON	
205	927420-0001	C		6	O-RING 5.1X1.6 SILICON	
206	927421-0004	C		2	O-RING 15.3X2.4 SILICON	
207	90042-0203	C		2	SOLENOID VALVE BURKERT	
210	315105-0146	-		4	BRICKA BRB5,3X10RFR	
220	312605-0314	-		4	HEXAGON NUT, M6M M5 A280	
230	315105-0153	-		6	WASHER BRB6,4X12RFR	
231	315105-0136	-		3	WASHER BRB4,3XRFR	
240	312105-0368	-		4	SCREW M6S M6X16 A280	
241	312125-0285	-		1	SLOTTED CHEESE HEAD SCREW MCS 4X6 SS	
250	312109-0374	-		2	SCREW M6S ISO 4017 M6X30 A480	
260	312605-0312	-		4	HEXAGON NUT, M6M M4 A280	
263	352136-0113	-		2	GLAND FITTING PR18,6/PG11 DI=12MM	
265	359705-0003	-		1	WARNING SIGN ISO, DANGEROUS CHEMICALS	

Pos	Part No	SP	UN	Qty	Description	Page No

Machine Type | Group Description | Used-In | Group Number | Page No

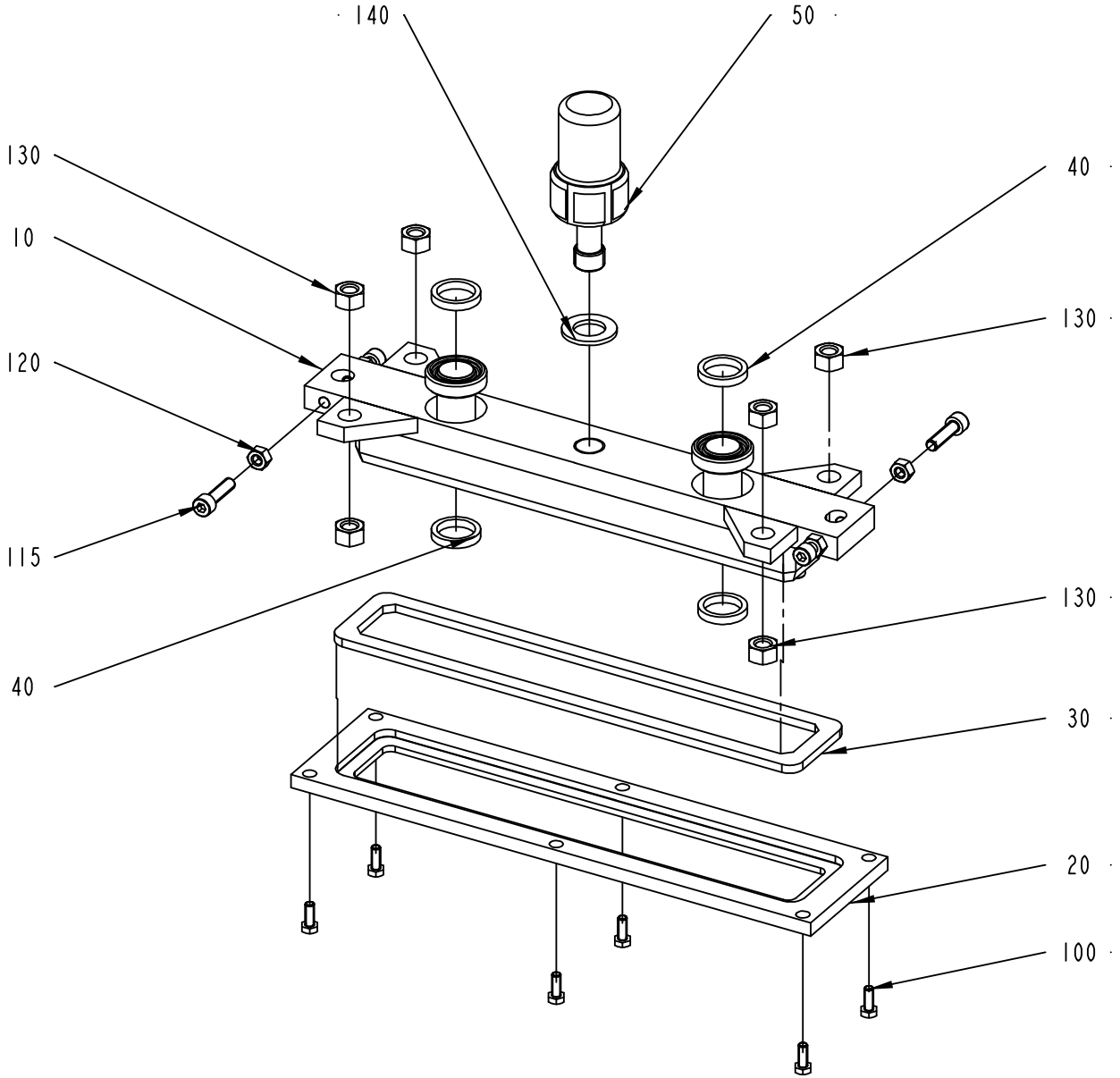
140
50
130
10
120
115
40
40
130
130
30
20
100

ECM: 72447 - 20001113
Group number: 269715-0100
Assembly Drawing: 269715-1_1_AC

Pos	Part No	SP	UN	Qty	Description	Page No
-						
010	269716-0000	D		1	FASTENING PLATE	
020	269717-0000	D		1	GASKET HOLDER	
030	269718-0000	C		1	GASKET	
040	12242-0001	C		4	GASKET 32X25X5,5	
050	269719-0000	D		1	SCREW	
100	312105-0368	-		6	SCREW M6S M6X16 A280	
115	312115-0455	-		4	SCREW ISO4762 M8X30 A4	
120	312605-0318	-		4	HEXAGON NUT, M6M M8 A280	
130	312605-0322	-		8	HEXAGON NUT, M6M M12 A280	
140	315105-0192	-		1	WASHER BRB21X36RFR	

Pos	Part No	SP	UN	Qty	Description	Page No

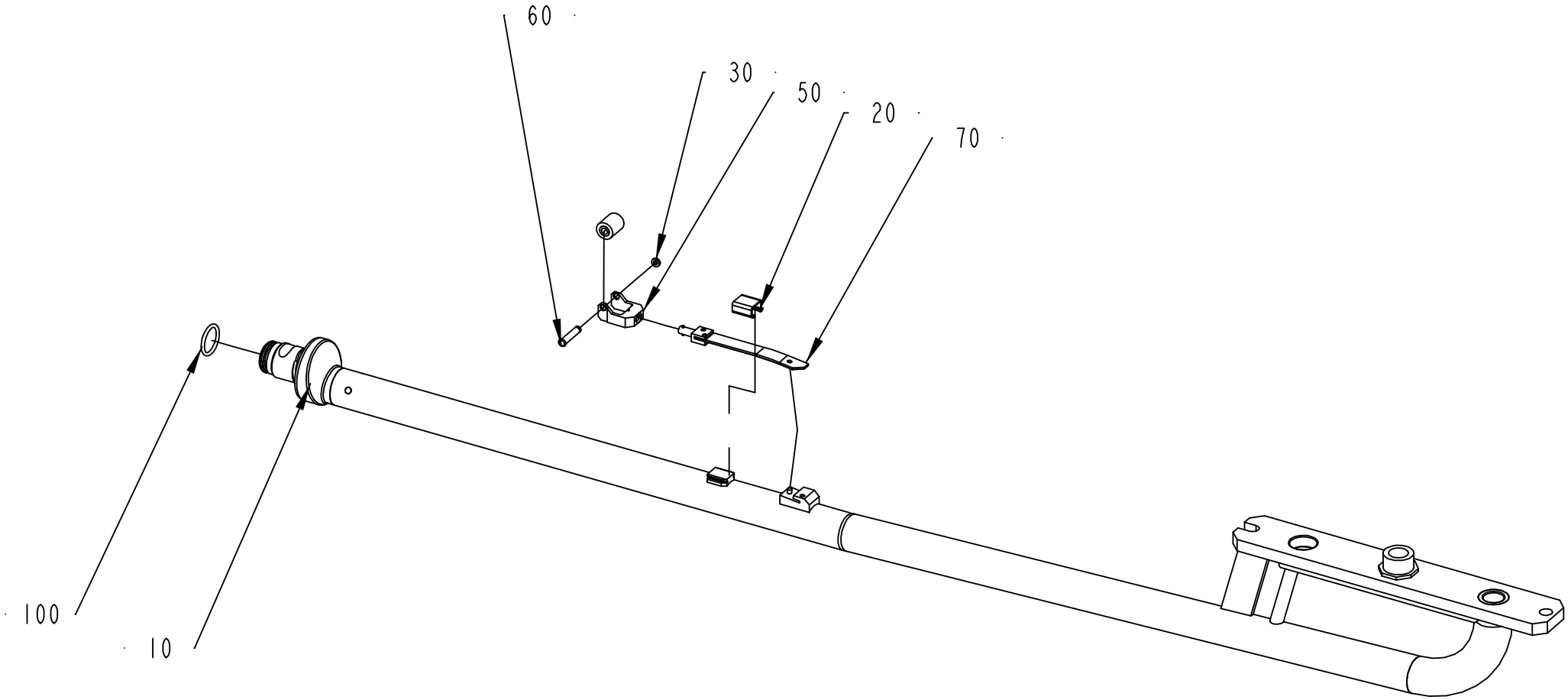
60
30
50
20
70
100
10

ECM: 72447 - 20001113
Group number: 269720-0300
Assembly Drawing: 269720-2_1_AB

Pos	Part No	SP	UN	Qty	Description	Page No
TBA 0375S						
010	497131-0000	D		1	FILLER TUBE	
020	526682-0000	C		1	HOOD	
040	499387-0000	C		1	PRESSURE ROLLER	
050	529180-0000	C		1	FORK	
060	499011-0000	C		1	SHAFT	
070	544893-0000	C		1	SPRING	
TBA 0500B, TBA 0750B, TBA 1000B						
010	434222-0000	D		1	FILLER TUBE	
020	14600-0000	C		1	HOOD	
040	232979-0000	C		1	PRESSURE ROLLER	
050	267727-0000	C		1	FORK	
060	267728-0000	C		1	SHAFT	
070	544892-0000	C		1	SPRING	
TBA 0500S, TBA 0355B						
010	450010-0000	D		1	FILLER TUBE	
020	434665-0000	C		1	HOOD	
040	499387-0000	C		1	PRESSURE ROLLER	
050	499016-0000	C		1	FORK	
060	499011-0000	C		1	SHAFT	
070	544892-0000	C		1	SPRING	
TBA 1000SQ						
010	579316-0000	D		1	FILLER TUBE	
020	434665-0000	C		1	HOOD	
040	499387-0000	C		1	PRESSURE ROLLER	
050	499016-0000	C		1	FORK	
060	499011-0000	C		1	SHAFT	
070	544892-0000	C		1	SPRING	
TBA 0750S						
010	544287-0000	D		1	FILLER TUBE	
020	434665-0000	C		1	HOOD	
040	499387-0000	C		1	PRESSURE ROLLER	
050	499016-0000	C		1	FORK	
060	499011-0000	C		1	SHAFT	
070	544892-0000	C		1	SPRING	
TBA 1000S						
010	569097-0000	D		1	FILLER TUBE	
020	434665-0000	C		1	HOOD	
040	499387-0000	C		1	PRESSURE ROLLER	
050	499016-0000	C		1	FORK	
060	499011-0000	C		1	SHAFT	
070	574214-0000	C		1	SPRING	
Common Parts						
030	24928-0000	C		1	LOCKING RUBBER	
100	315204-0217	C		1	O-RING 24,2X3 MM	

Machine Type | Group Description | Used-In | Group Number | Page No

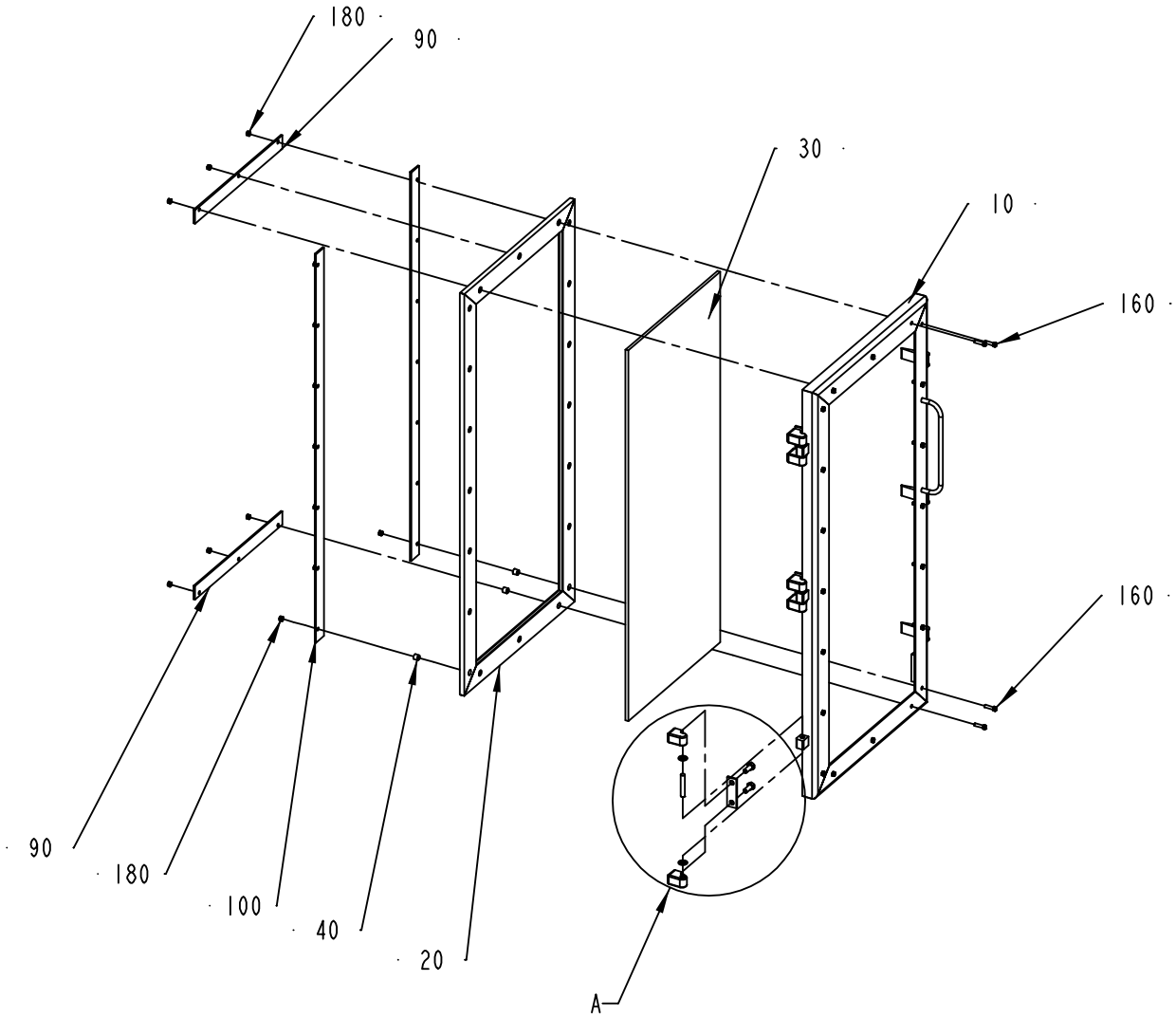
180
90
30
10
160
160
90
180
100
40
20
A

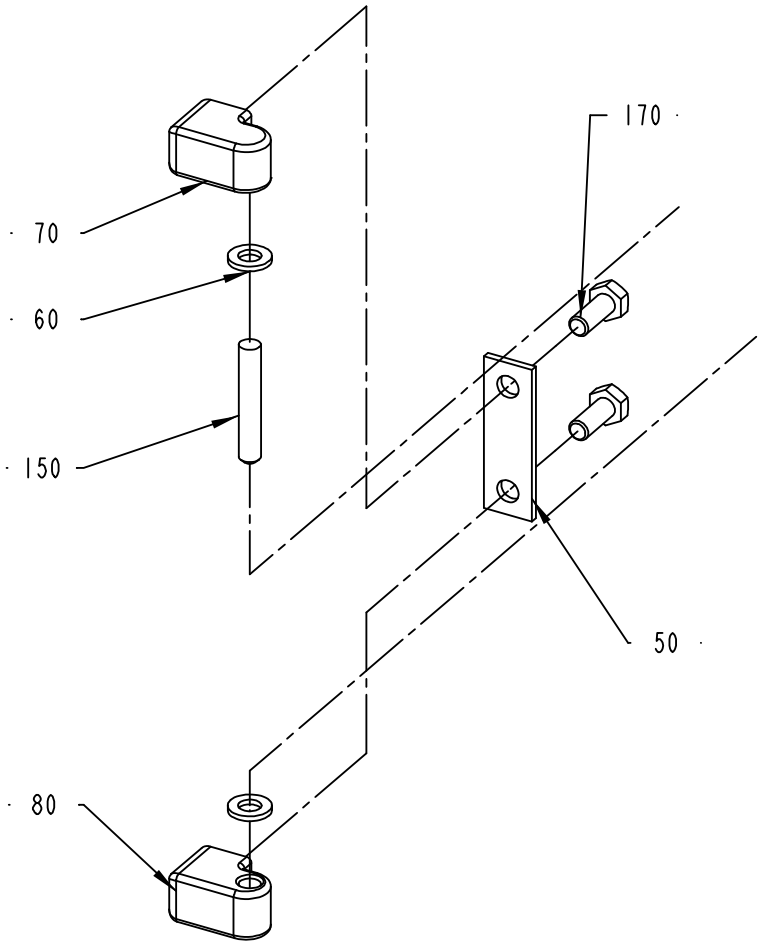
170
70
60
150
50
80

ECM: 72447 - 20001113
Group number: 573612-0100
Assembly Drawing: 573612-1_1_AB

Pos	Part No	SP	UN	Qty	Description	Page No
-						
010	573613-0000	-		1	DOOR	
020	252797-0000	-		1	RUBBER STRIP	
030	252732-0000	-		1	GLASS PANE	
040	441718-0000	-		20	SPACER	
050	441737-0000	-		3	WASHER	
060	441739-0000	-		6	WASHER	
070	441740-0000	-		3	HINGE FLANGE	
080	441741-0000	-		3	HINGE FLANGE	
090	573615-0000	-		2	COVER SLIP	
100	573616-0000	-		2	COVER SLIP	
150	311103-0413	-		3	PARALLEL PIN ISO 2338 8M6X50 A1	
160	312105-0331	-		20	SCREW M6S ISO 4017 M5X20 A480	
170	312105-0451	-		6	SCREW M6S ISO 4017 M8X20 A480	
180	312605-0314	-		20	HEXAGON NUT, M6M M5 A280	

Pos	Part No	SP	UN	Qty	Description	Page No

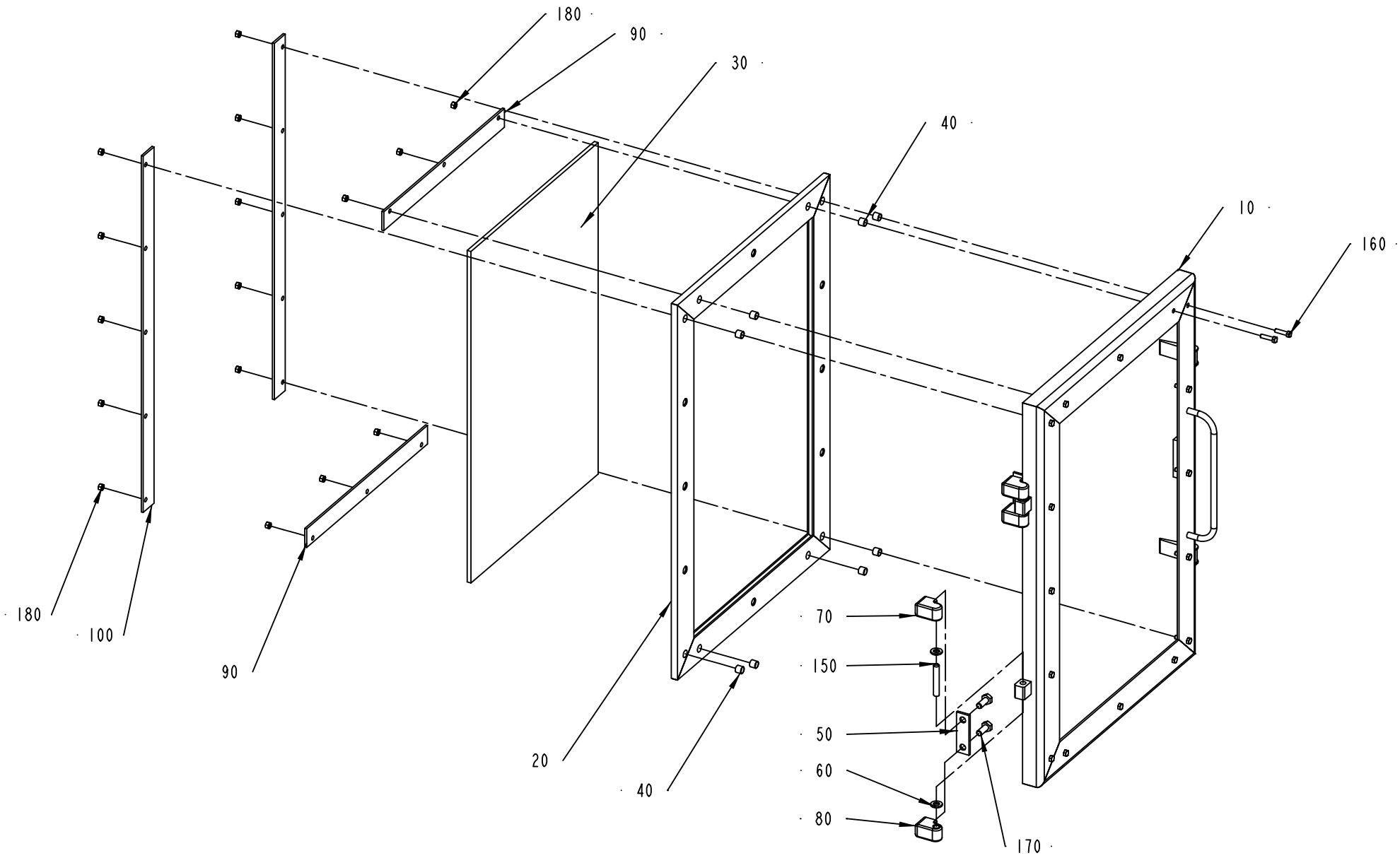
180
90
30
40
10
160
180
100
90
20
40
70
150
50
60
80
170

ECM: 72447 - 20001113
Group number: 594617-0100
Assembly Drawing: 594617-1_1_AB

Pos	Part No	SP	UN	Qty	Description	Page No
-						
010	573614-0000	-		1	DOOR	
020	252798-0000	-		1	RUBBER STRIP	
030	252733-0000	-		1	GLASS PANE	
040	441718-0000	-		16	SPACER	
050	441737-0000	-		2	WASHER	
060	441739-0000	-		4	WASHER	
070	441740-0000	-		2	HINGE FLANGE	
080	441741-0000	-		2	HINGE FLANGE	
090	573615-0000	-		2	COVER SLIP	
100	573617-0000	-		2	COVER SLIP	
150	311103-0413	-		2	PARALLEL PIN ISO 2338 8M6X50 A1	
160	312105-0331	-		16	SCREW M6S ISO 4017 M5X20 A480	
170	312105-0451	-		4	SCREW M6S ISO 4017 M8X20 A480	
180	312605-0314	-		16	HEXAGON NUT, M6M M5 A280	

Pos	Part No	SP	UN	Qty	Description	Page No

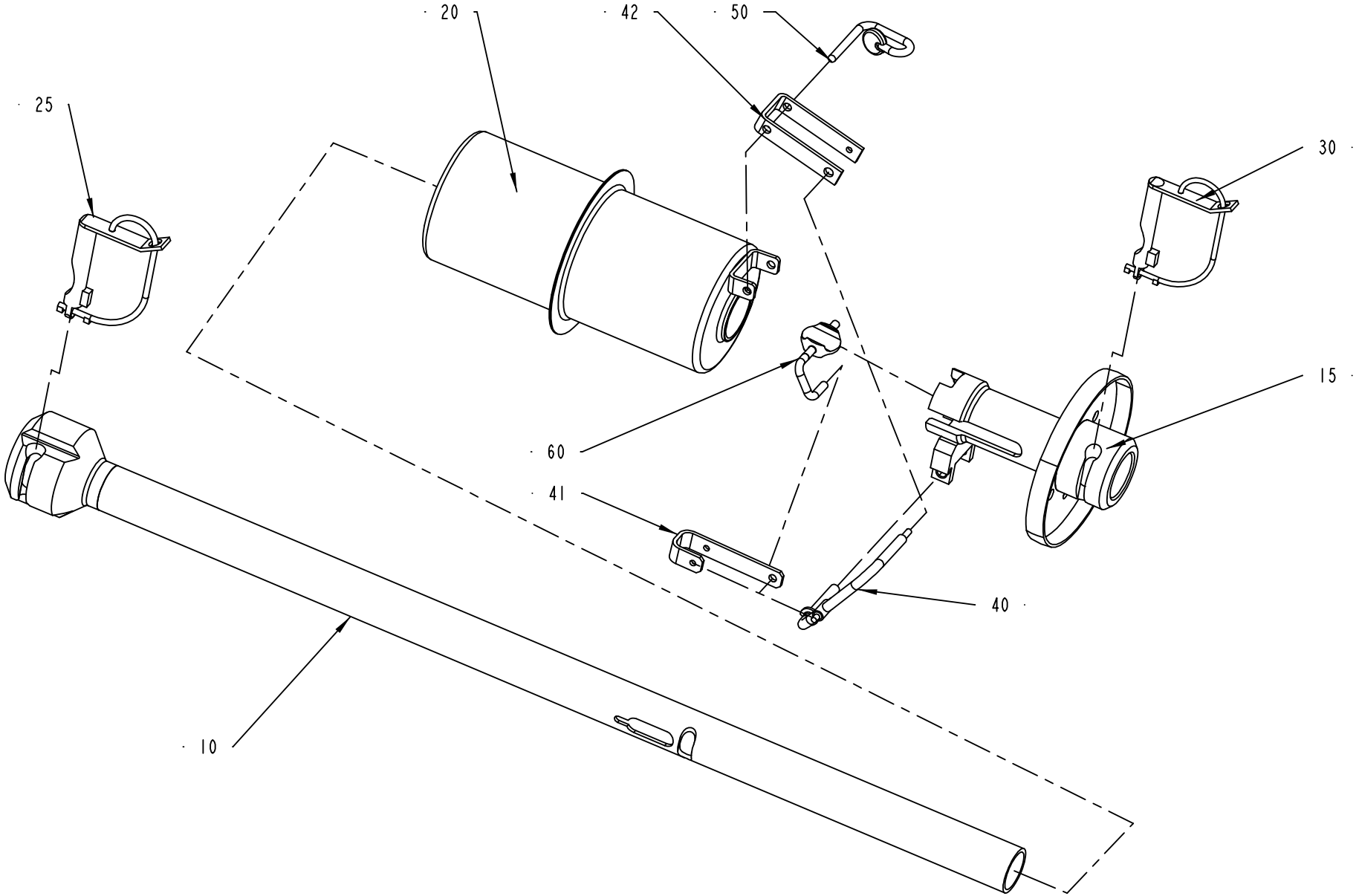
20
42
50
25
30
15
60
41
40
10

ECM: 81795 - 20000908
Group number: 269828-0600
Assembly Drawing: 269828-2_1_AB

This list covers pages from 1-42 to 1-45

Pos	Part No	SP	UN	Qty	Description	Page No
0355B (See drawing on page: 1-44)						
010	1478883-0000	C		1	FILLING PIPE	
015	1478887-0000	C		1	PRESSURE FLANGE	
020	434749-0000	C		1	FLOAT	
025	1478893-0000	C		2	LOCKING PIN	
040	434751-0000	C		1	ARM	
041	752587-0000	C		1	LINK	
042	36817-0000	C		1	CLAMPING ELEMENT	
060	37782-0000	C		1	THROTTLE	
0375S (See drawing on page: 1-44)						
010	1478882-0000	C		1	FILLING PIPE	
015	1478886-0000	C		1	PRESSURE FLANGE	
020	259902-0000	C		1	FLOAT	
025	1478894-0000	C		2	LOCKING PIN	
040	37296-0000	C		1	ARM	
041	36816-0000	C		1	LINK	
042	36817-0000	C		1	CLAMPING ELEMENT	
060	228943-0000	C		1	THROTTLE	
0500B (See drawing on page: 1-44)						
010	1478888-0000	C		1	FILLING PIPE	
015	1478889-0000	C		1	PRESSURE FLANGE	
020	245190-0000	C		1	FLOAT	
025	1478893-0000	C		2	LOCKING PIN	
040	36804-0000	C		1	ARM	
041	36805-0000	C		1	LINK	
042	36806-0000	C		1	CLAMPING ELEMENT	
060	37782-0000	C		1	THROTTLE	
0500S (See drawing on page: 1-44)						
010	1478885-0000	C		1	FILLING PIPE	
015	1478887-0000	C		1	PRESSURE FLANGE	
020	434749-0000	C		1	FLOAT	
025	1478893-0000	C		2	LOCKING PIN	
040	434751-0000	C		1	ARM	
041	434752-0000	C		1	LINK	
042	36817-0000	C		1	CLAMPING ELEMENT	
060	37782-0000	C		1	THROTTLE	
0750B (See drawing on page: 1-44)						
010	1478891-0000	C		1	FILLING PIPE	
015	1348199-0000	C		1	PRESSURE FLANGE	
020	245190-0000	C		1	FLOAT	
025	1478893-0000	C		2	LOCKING PIN	
040	36804-0000	C		1	ARM	
041	36805-0000	C		1	LINK	
042	36806-0000	C		1	CLAMPING ELEMENT	
060	37782-0000	C		1	THROTTLE	
0750S (See drawing on page: 1-44)						
010	1260493-0000	C		1	FILLING PIPE	
015	1478890-0000	C		1	PRESSURE FLANGE	
020	544295-0000	C		1	FLOAT	
025	1478893-0000	C		2	LOCKING PIN	
040	434751-0000	C		1	ARM	
041	434752-0000	C		1	LINK	
042	36817-0000	C		1	CLAMPING ELEMENT	
060	752590-0000	C		1	THROTTLE	
1000B LOFIN (See drawing on page: 1-44)						
010	1348200-0000	C		1	FILLING PIPE	
015	1348199-0000	C		1	PRESSURE FLANGE	
020	245190-0000	C		1	FLOAT	
025	1478893-0000	C		2	LOCKING PIN	
040	36804-0000	C		1	ARM	
041	36805-0000	C		1	LINK	
042	36806-0000	C		1	CLAMPING ELEMENT	
060	37782-0000	C		1	THROTTLE	
1000S (See drawing on page: 1-44)						
010	1260493-0000	C		1	FILLING PIPE	
015	1260492-0000	C		1	PRESSURE FLANGE	
020	544295-0000	C		1	FLOAT	
025	1478893-0000	C		2	LOCKING PIN	
040	434751-0000	C		1	ARM	
041	434752-0000	C		1	LINK	
042	36817-0000	C		1	CLAMPING ELEMENT	
060	752590-0000	C		1	THROTTLE	
1000SQ (See drawing on page: 1-44)						
010	1260493-0000	C		1	FILLING PIPE	
015	1348201-0000	C		1	PRESSURE FLANGE	
020	544295-0000	C		1	FLOAT	

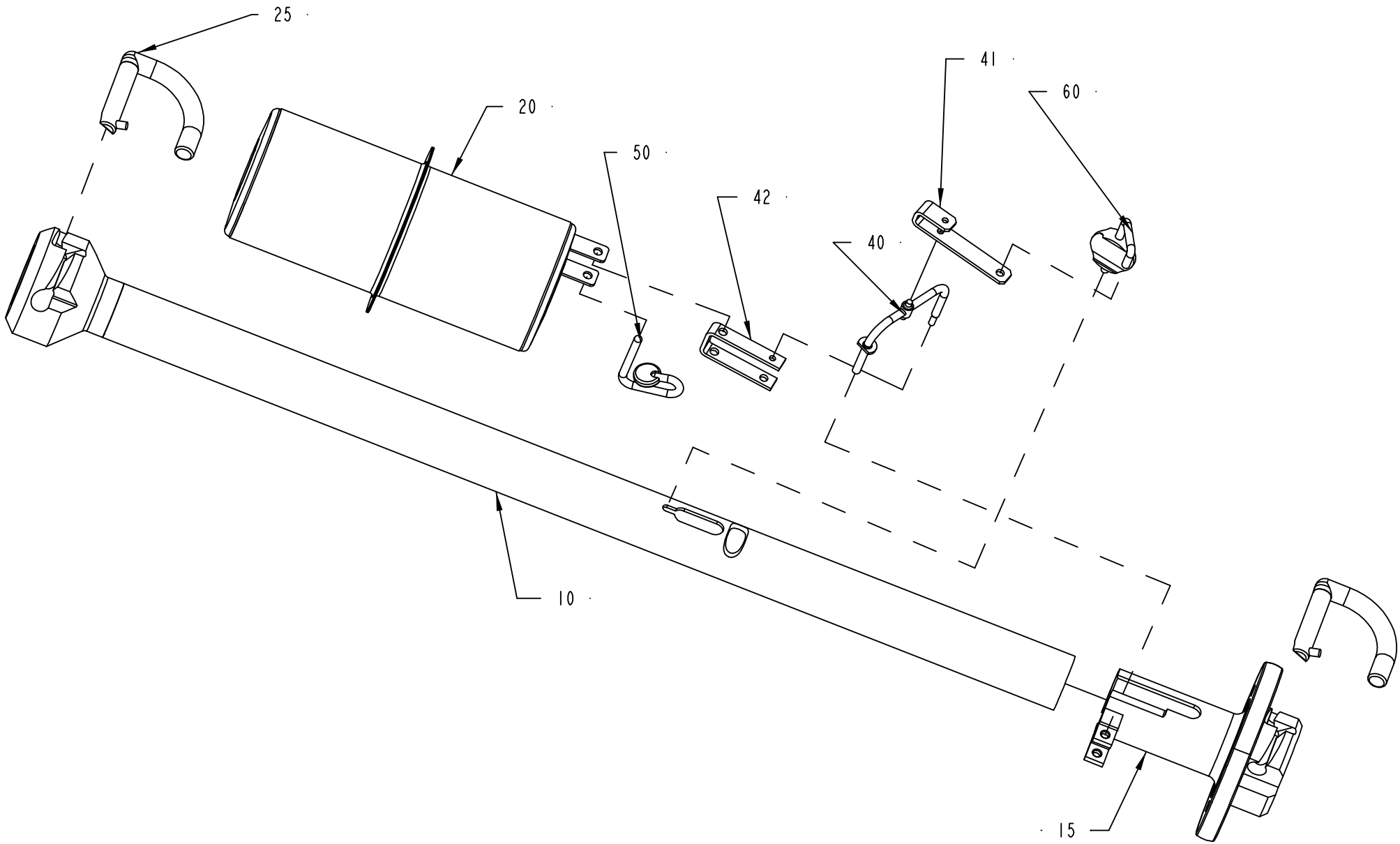
25
20
50
42
41
60
40
10
15

ECM: 81795 - 20000908
Group number: 269828-0600
Assembly Drawing: 269828-3_1_AB

This list covers pages from 1-42 to 1-45

Pos	Part No	SP	UN	Qty	Description	Page No
1000SQ (Cont'd) (See drawing on page: 1-44)						
025	1478893-0000	C		2	LOCKING PIN	
040	434751-0000	C		1	ARM	
041	434752-0000	C		1	LINK	
042	36817-0000	C		1	CLAMPING ELEMENT	
060	752590-0000	C		1	THROTTLE	
1000B HIFIN (See drawing on page: 1-42)						
010	544294-0000	C		1	FILLER TUBE	
015	466463-0000	C		1	PRESSURE FLANGE	
020	245190-0000	C		1	FLOAT	
025	445504-0000	C		1	LOCKING PIN UPPER	
030	445502-0000	C		1	LOCKING PIN LOWER	
040	529376-0000	C		1	ARM	
041	529378-0000	C		1	LINK	
042	529377-0000	C		1	CLAMP	
060	37782-0000	C		1	THROTTLE	
Common Parts						
050	1490099-0000	C		1	PIN	

Pos	Part No	SP	UN	Qty	Description	Page No

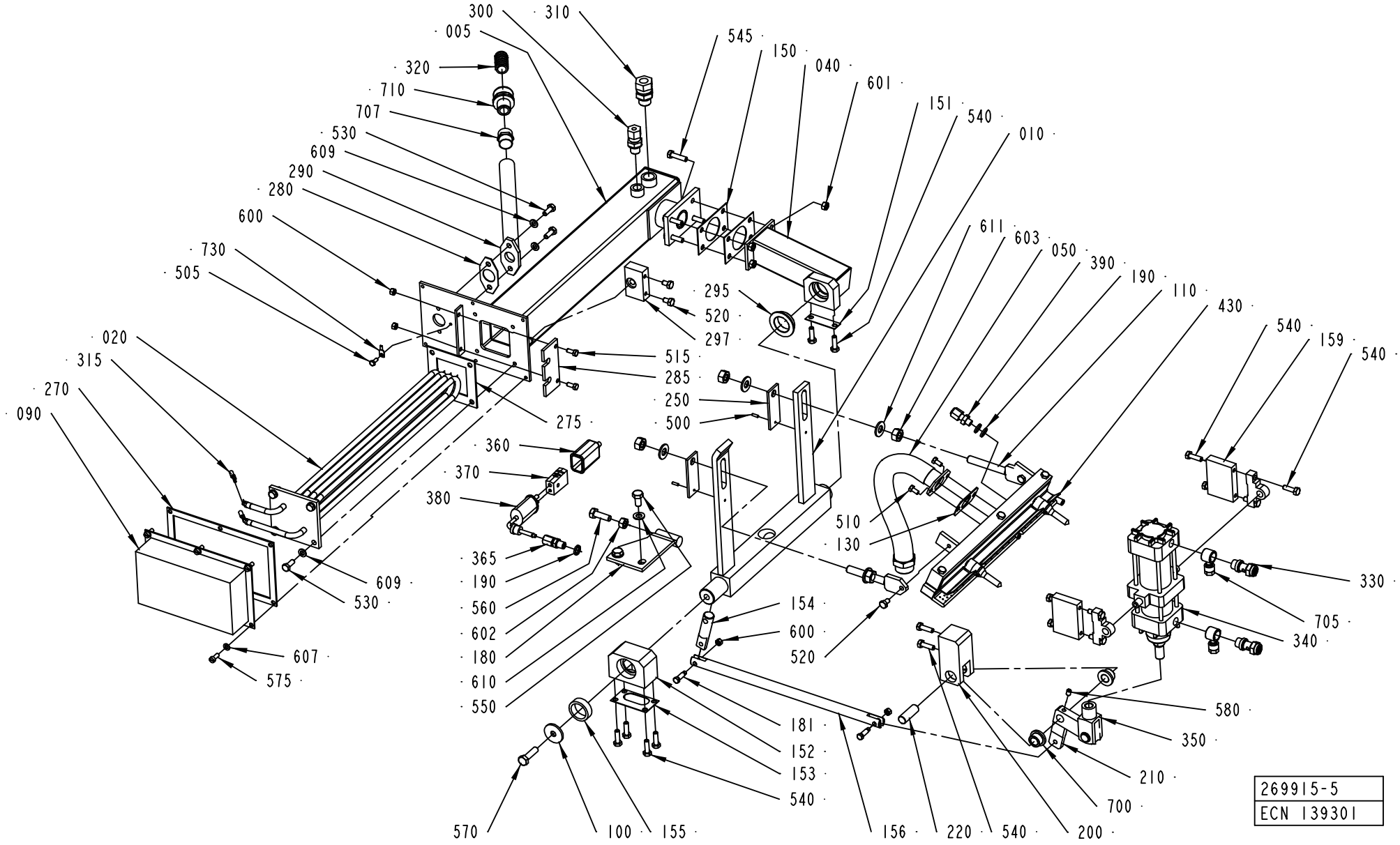
300
310
005
320
710
707
530
609
290
280
600
730
505
020
315
270
090
545
150
040
601
151
540
010
611
603
050
390
190
110
430
540
159
540
295
520
297
515
285
250
500
275
360
370
380
365
190
560
602
180
610
550
609
530
607
575
510
130
154
600
520
181
152
153
540
570
100
155
156
220
540
200
700
210
350
580
330
705
340
269915-5
ECN 139301

ECM: 139306 - 20030815
Group number: 269915-0700
Assembly Drawing: 269915-5_1_AE

Pos	Part No	SP	UN	Qty	Description	Page No
-						
005	533195-0000	-		1	MANTLE	
010	250654-0000	-		1	PIVOT ARM	
020	555545-0000	D		1	COIL HEATER	
040	250656-0000	-		1	ATTACHMENT PIPE	
050	434829-0000	-		1	LEAD	
090	476360-0000	-		1	LID	
100	28037-0000	-		1	WASHER	
110	32215-0000	D		2	HOLDER	
130	531734-0000	C		1	GASKET	
150	531738-0000	C		2	GASKET	
151	531739-0000	C		1	GASKET	
152	250660-0000	D		1	BEARING CONSOLE	
153	531740-0000	C		1	GASKET	
154	250662-0000	-		1	LEVER	
155	250663-0000	C		1	BEARING	
156	250664-0000	D		1	TIE ROD	
159	250668-0000	-		2	SPACER	
180	269913-0000	D		1	STOPPER	
181	269914-0000	D		2	SHOULDER SCREW	
190	273429-0000	D		3	WASHER	
200	279208-0000	D		1	BEARING HOUSING	
210	279209-0000	D		1	ROCKER ARM	
220	279213-0000	D		1	DOWEL	
250	297054-0000	-		2	WASHER	
270	531744-0000	C		1	GASKET	
275	531745-0000	C		1	GASKET	
280	531764-0000	C		1	GASKET	
285	555546-0000	D		1	INSULATING PLATE	
290	479176-0000	-		1	PIPE	
295	530622-0000	C		1	BUSHING	
297	533196-0000	D		1	FASTENING PLATE	
300	90030-0092	-		1	STRAIGHT CONN., 6-R1/4,EXT. TAPPERED	
310	90030-0187	-		1	CONN. STR. GA-12-G3/8	
315	90097-0017	-		2	FLAT PIN PLUG 6,3MM	
320	90152-0033	-	MM	500	SPIRAL CONDUIT FOR PR 15,2(PG 9)	
330	90235-0275	D		2	THROTTLE CHECK VALVES,G1/4"	
340	B90239-0951	C		1	CYLINDER	
	90239-0443	*C*		*1*	*SEAL KIT*	
350	90239-0346	C		1	ROD END,CLEVIS W.AXLE M12X1,25	
360	90326-0012	C		1	PROTECTIVE COVER, T31A4618	
365	90326-0306	-		1	GLAND FITTING 9041-45-KS-KR.1/8" D=4,5MM	
370	90326-0020	-		1	PLUG, FEMALE YELLOW CR-AL	
380	B90326-0048	C		1	THERMOCOUPLE, 12826-31	
	90326-0304	*-*		*1*	*LEAD IN, 9041-15-KS-UB60*	
390	90326-0304	C		1	LEAD IN, 9041-15-KS-UB60	
430	A283926-0300	-		1	AIR NOZZLE	**1-49**
500	311103-0233	-		2	PARALLEL PIN ISO 2338 3M6X10 A1	
505	312105-0289	-		1	SCREW M6S ISO 4017 M4X10 A480	
510	312105-0325	-		2	SCREW M6S ISO 4017 M5X10 A480	
515	312105-0327	-		2	SCREW M6S ISO 4017 M5X12 A480	
520	312105-0364	-		4	SCREW M6S ISO 4017 M6X10 A480	
530	312105-0368	-		6	SCREW M6S M6X16 A280	
540	312105-0370	-		16	SCREW M6S ISO 4017 M6X20 A480	
545	312105-0372	-		4	SCREW M6S ISO 4017 M6X25 A480	
550	312105-0449	-		2	SCREW M6S ISO 4017 M8X16 A480	
560	312105-0453	-		1	SCREW M6S ISO 4017 M8X25 A480	
570	312105-0455	-		1	SCREW M6S ISO 4017 M8X30 A480	
575	312125-0327	-		6	SLOTTED CHEESE HEAD SCREW MCS 5X12 SS	
580	312318-0362	-		1	SCREW ISO4029 M6X8 A4	
600	312605-0314	-		4	HEXAGON NUT, M6M M5 A280	
601	312605-0316	-		4	HEXAGON NUT, M6M M6 A280	
602	312605-0318	-		1	HEXAGON NUT, M6M M8 A280	
603	312605-0320	-		4	HEXAGON NUT, M6M M10 A280	
607	315105-0146	-		6	BRICKA BRB5,3X10RFR	
609	315105-0153	-		6	WASHER BRB6,4X12RFR	
610	315105-0165	-		2	WASHER BRB8,4X16RFR	
611	315105-0173	-		4	WASHER BRB10,5X22RFR	
700	321111-0159	-		2	FLANGE BUSHING, 12X18X12 MM	
705	342797-0122	-		2	CONN. BANJO, RINGPIECE 6-1/4	
707	352100-0106	-		1	CABLE GLANR.18,6-10,5	
710	352136-0113	-		1	GLAND FITTING PR18,6/PG11 DI=12MM	
730	353104-0130	-		1	CABLE SHOEYAV 025 M 4*	

Machine Type | Group Description | Used-In | Group Number | Page No

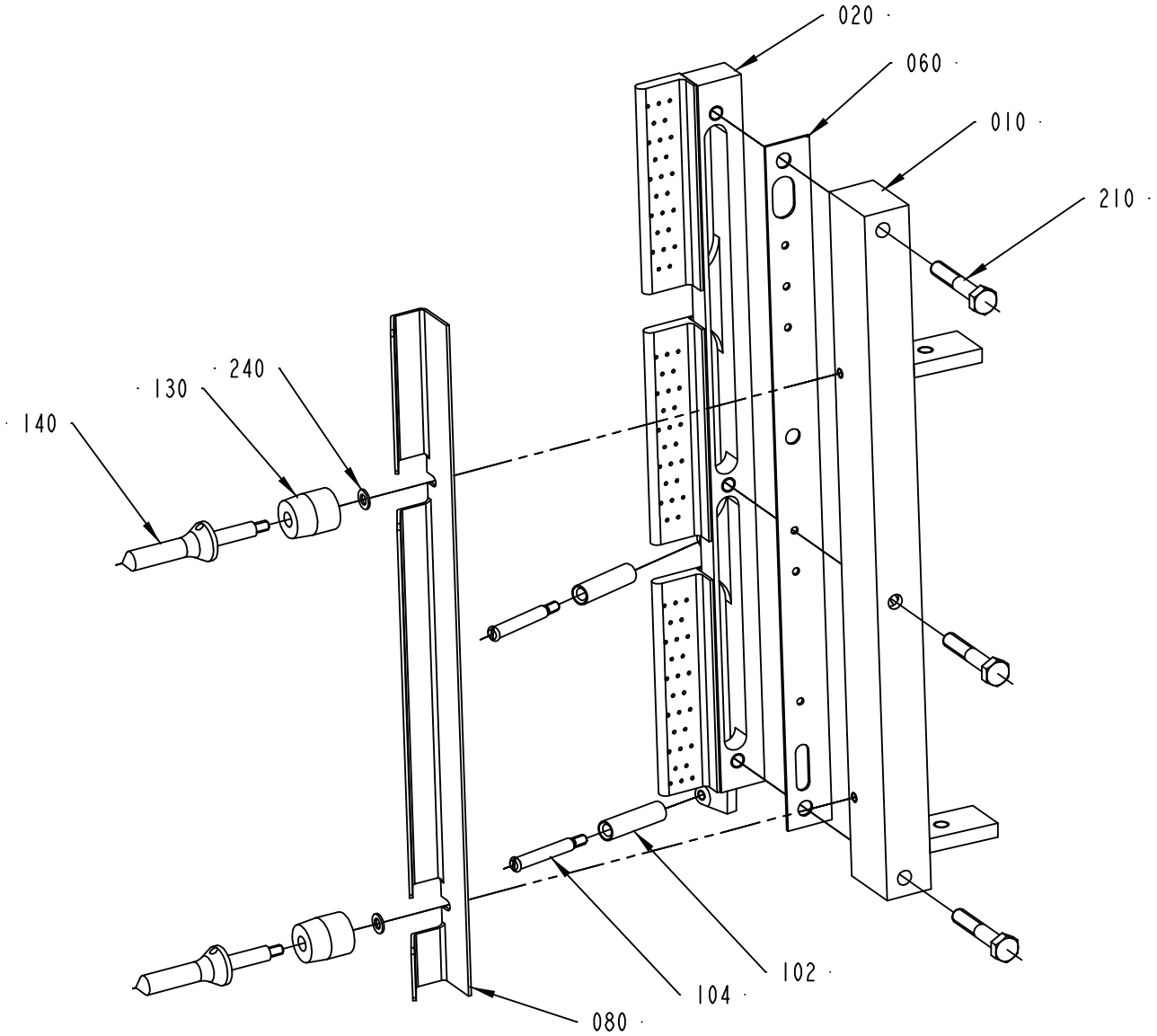

283926-3
ECM 139301

ECM: 139309 - 20030815
Group number: 283926-0300
Assembly Drawing: 283926-3_1_AC

Pos	Part No	SP	UN	Qty	Description	Page No
0375S, 0355B, 0500S, 0750S						
010	526687-0000	D		1	ATTACHMENT	
020	526587-0000	D		1	AIR NOZZLE	
060	526689-0000	D		1	DISTRIBUTOR WING	
080	526688-0000	D		1	HEAD PLATE	
130	526692-0000	C		2	ROLL	
0500B, 0750B, 1000B						
010	243846-0000	D		1	ATTACHMENT	
020	567734-0000	D		1	AIR NOZZLE	
060	569104-0000	D		1	DISTRIBUTOR WING	
080	567735-0000	D		1	HEAD PLATE	
130	6161-0000	C		2	ROLL	
1000SQ, 1000S						
010	243846-0000	D		1	ATTACHMENT	
020	573058-0000	D		1	AIR NOZZLE	
060	569104-0000	D		1	DISTRIBUTOR WING	
080	567735-0000	D		1	HEAD PLATE	
130	6161-0000	C		2	ROLL	
Common Parts						
102	526691-0000	C		2	ROLL	
104	526690-0000	C		2	SHAFT	
140	265957-0000	C		2	SHAFT	
210	312105-0376	-		3	SCREW M6S ISO 4014 M6X35 A480	
240	315105-0136	-		2	WASHER BRB4,3XRFR	

Pos	Part No	SP	UN	Qty	Description	Page No

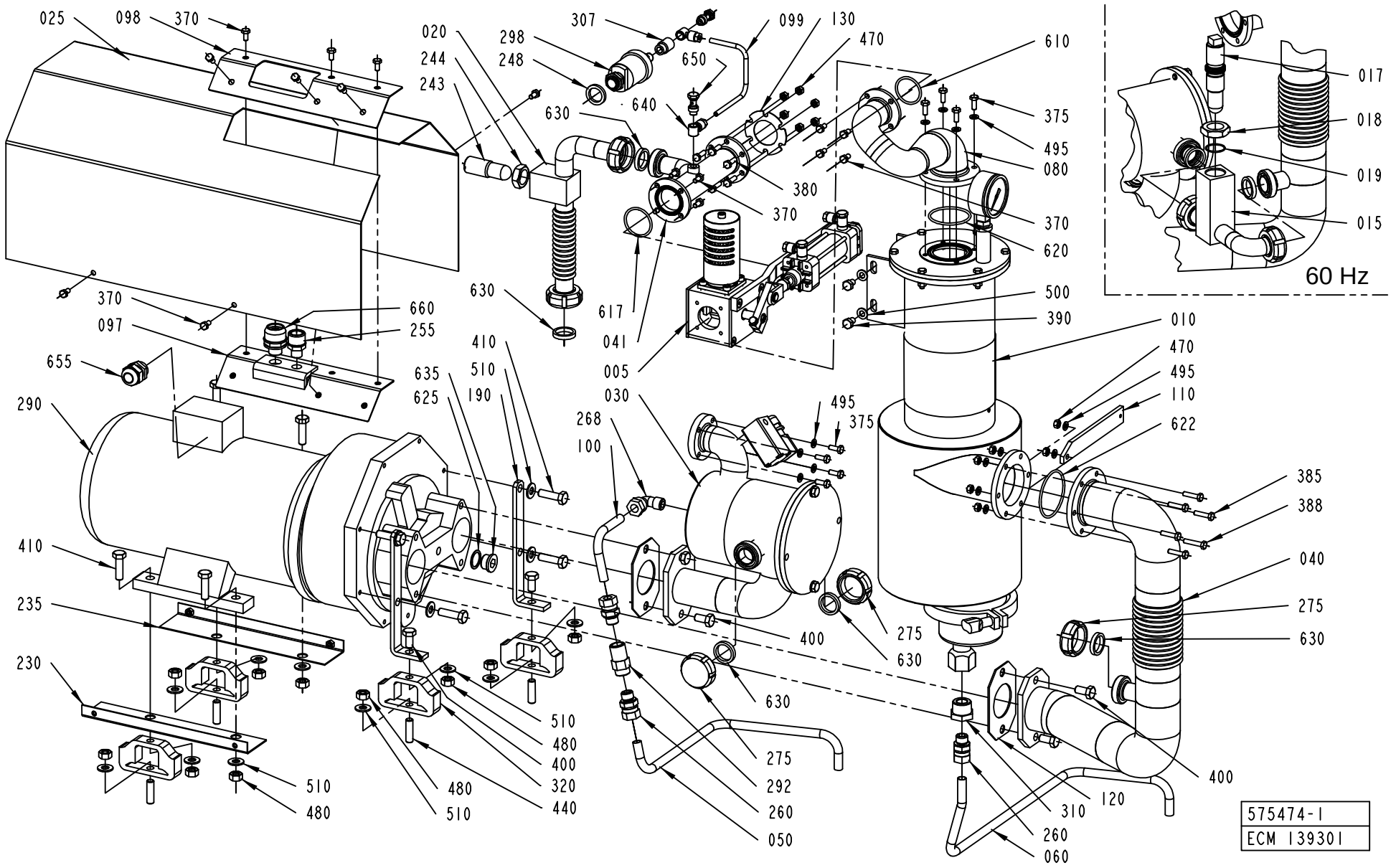
025
098
370
020
244
243
298
248
307
650
640
630
099
130
470
610
375
495
080
380
370
370
620
500
390
017
018
019
015
60 Hz
630
617
041
005
370
097
660
255
655
290
635
625
410
510
190
030
268
100
495
375
010
470
495
110
622
385
388
040
275
630
410
235
230
400
275
630
630
510
480
400
320
440
510
480
510
480
275
292
260
050
310
120
260
060
400
575474-1
ECM 139301

ECM: 139308 - 20030815
Group number: 575474-0100
Assembly Drawing: 575474-1_1_AD

Pos	Part No	SP	UN	Qty	Description	Page No
50HZ						
275	90217-0026	-		3	NUT	
60HZ						
015	568805-0000	-		1	PIPE	
017	442236-0000	-		1	THROTTLE SCREW	
018	442237-0000	A		1	NUT	
019	315202-0119	A		1	O-RING 25,1X1,6 MM	
275	90217-0026	-		1	NUT	
Common Parts						
005	A594619-0100	-		1	CHANGE-OVER VALVE	**1-53**
010	A569003-0100	-		1	SEPARATION INSERT	**1-55**
020	449130-0000	A		1	CONNECTING PIPE	
025	451321-0000	-		1	COVER	
030	A575475-0100	-		1	SCRUBBER	**1-57**
040	568804-0000	A		1	PIPE	
041	555544-0000	-		1	PIPE	
050	568807-0000	-		1	PIPE	
060	568808-0000	-		1	PIPE	
080	568809-0000	-		1	PIPE	
097	526782-0000	-		1	COVERING PLATE	
098	451323-0000	-		1	SHEET	
099	451324-0000	-		1	PIPE	
100	568810-0000	-		1	PIPE	
110	571086-0000	-		1	BRACKET	
120	230551-0000	A		2	GASKET	
130	531742-0000	A		1	GASKET	
190	269859-0000	-		2	BRACKET	
230	282682-0000	-		1	BRACKET	
235	282683-0000	-		1	BRACKET	
243	295878-0000	A		1	THROTTLE SCREW	
244	295879-0000	A		1	NUT	
248	479234-0000	A		1	WASHER	
255	90012-0063	-		1	CABLE GLAND PR 15,2	
260	90030-0187	-		3	CONN. STR. GA-12-G3/8	
268	90030-0115	-		1	CONN. ELBOW WA 12-R3/8	
290	90270-0017	A		1	COMPRESSOR NASH/ELMO 112 MB/4-2083	
292	90270-0347	A		1	VALVE	
298	90274-0045	A		1	PRESSURE GUARD, 14 KPA	
307	90330-0012	-		1	SLEEVE, REDUCTION, INT, R-2021/4X1/8	
310	90330-0078	-		1	BUSHING, INT/EXT. THR. R3/4-RP3/8	
320	90347-0026	A		4	DAMPER	
370	312105-0366	-		18	SCREW M6S M6X12 A280	
375	312105-0368	-		8	SCREW M6S M6X16 A280	
380	312105-0370	-		6	SCREW M6S ISO 4017 M6X20 A480	
385	312105-0372	-		5	SCREW M6S ISO 4017 M6X25 A480	
388	312105-0374	-		1	SCREW M6S ISO 4014 M6X30 A480	
390	312105-0447	-		4	SCREW M6S ISO 4017 M8X12 A480	
400	312105-0491	-		6	SCREW M6S ISO 4017 M10X20 A480	
410	312105-0497	-		8	SCREW M6S ISO 4017 M10X35 A480	
440	312303-0497	-		4	SCREW DIN 938 PS M10X25 A4 80	
470	312605-0316	-		12	HEXAGON NUT, M6M M6 A280	
480	312605-0320	-		10	HEXAGON NUT, M6M M10 A280	
495	315105-0153	-		14	WASHER BRB6,4X12RFR	
500	315105-0165	-		4	WASHER BRB8,4X16RFR	
510	315105-0173	-		14	WASHER BRB10,5X22RFR	
610	315204-0222	A		2	O-RING 36,2X3 MM	
617	315204-0223	A		2	O-RING 39,2X3 MM	
620	315204-0302	A		1	O-RING 54,5X3 MM	
622	315204-0304	A		1	O-RING 64,5X3 MM	
625	315239-0113	-		1	NYLON WASHER G1/2	
630	315250-0101	-		5	GASKET 32X25X5,5 MM	
635	342713-0213	-		1	PLUG, EXT THREAD HEX SOCKET 8638-00-120	
640	342797-0121	-		2	CONN. BANJO, RINGPIECE 6-1/8	
650	342980-0303	-		2	BANJO-HOLLOW BOLT COUPL,EXT.THR.01-G1/8"	
655	352103-0111	-		1	CABLE GLAND, ST 16, PR22,5/PG16	
660	352136-0127	-		1	GLAND FITTING PR 18,6	

Machine Type | Group Description | Used-In | Group Number | Page No

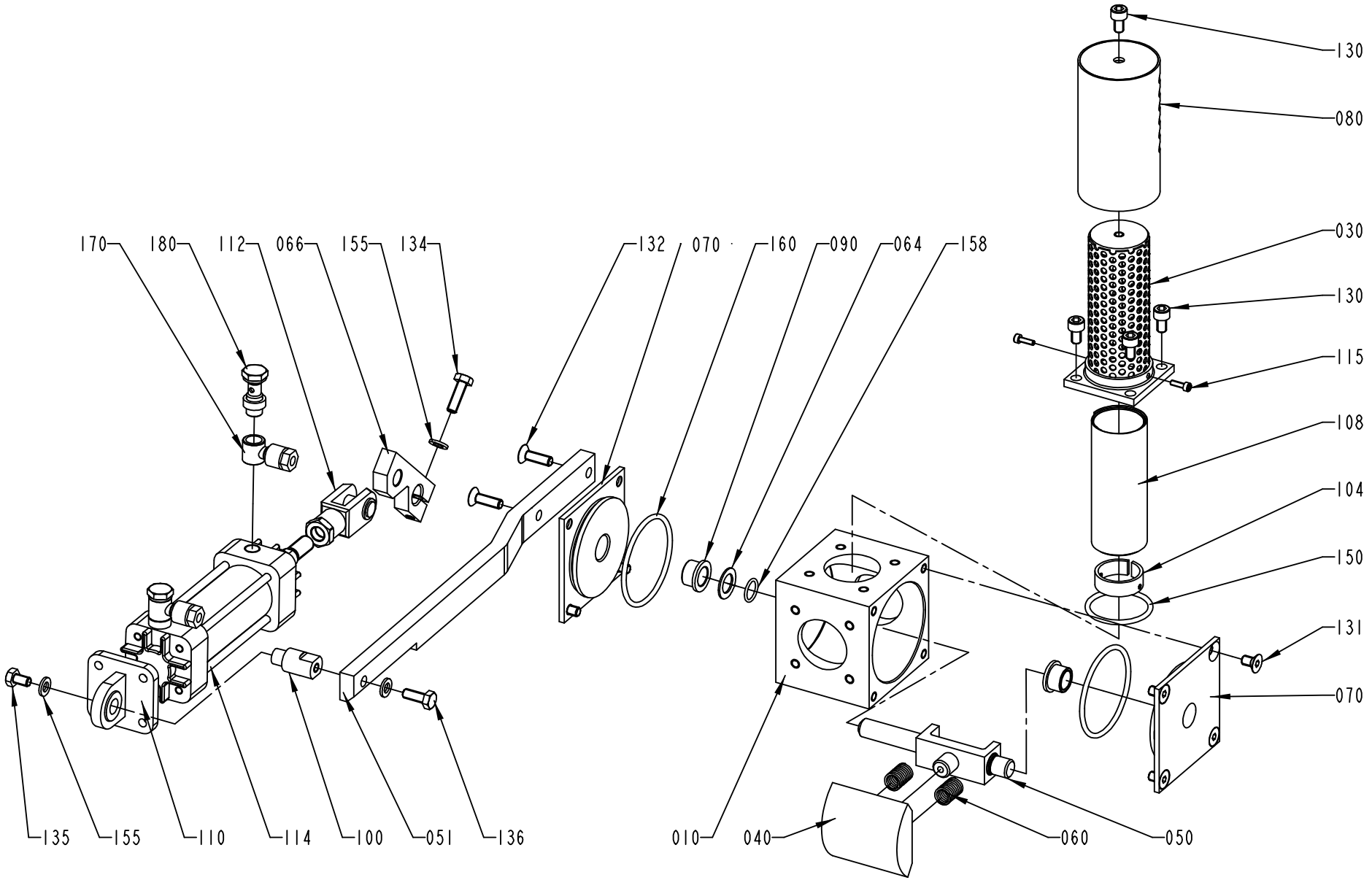
130
080
030
130
115
108
104
150
131
070
170
180
112
066
155
134
132
070
160
090
064
158
135
155
110
114
100
051
136
010
040
060
050

ECM: 103112 - 20020115
Group number: 594619-0100
Assembly Drawing: 594619-1_1_AC

Pos	Part No	SP	UN	Qty	Description	Page No
-						
010	466474-0000	-		1	VALVE HOUSING	
030	466477-0000	-		1	INNER PIPE	
040	466479-0000	B		1	PIECE	
050	555541-0000	B		1	BRACKET	
051	555542-0000	B		1	BRACKET	
060	21521-0000	A		2	COMPRESSION SPRING	
064	266737-0000	B		1	WASHER	
066	441483-0000	B		1	CYLINDER BRACKET	
070	255874-0000	-		2	BEARING COVER	
080	466478-0000	-		1	OUTER PIPE	
090	255875-0000	A		2	BUSHING	
100	555540-0000	B		1	SPACER	
104	466483-0000	-		1	CLAMPING PIECE	
108	466484-0000	-		1	NET	
110	90239-0453	B		1	BRACKET	
112	90239-0516	B		1	ROD END, CLEVIS WITH AXLE M10X1,25	
114	B90239-0779	A		1	CYLINDER	
	90239-0442	*C*		*1*	*SEAL KIT*	
115	312115-0224	-		2	SCREW ISO4762 M3X10 A4	
130	312115-0364	-		5	SCREW ISO4762 M6X10 A4	
131	312155-0364	-		6	SCREW EN 10642 MF6S M6X10 A480	
132	312155-0370	-		2	SCREW EN 10642 MF6S M6X20 A480	
134	312105-0370	-		1	SCREW M6S ISO 4017 M6X20 A480	
135	312105-0364	-		2	SCREW M6S ISO 4017 M6X10 A480	
136	312105-0368	-		1	SCREW M6S M6X16 A280	
150	315204-0222	A		1	O-RING 36,2X3 MM	
155	315105-0153	-		3	WASHER BRB6,4X12RFR	
158	315204-0110	A		1	O-RING 12,1X1,6 MM	
160	315204-0302	A		2	O-RING 54,5X3 MM	
170	342797-0121	-		2	CONN. BANJO, RINGPIECE 6-1/8	
180	342980-0303	-		2	BANJO-HOLLOW BOLT COUPL,EXT.THR.01-G1/8"	

Pos	Part No	SP	UN	Qty	Description	Page No

Machine Type | Group Description | Used-In | Group Number | Page No

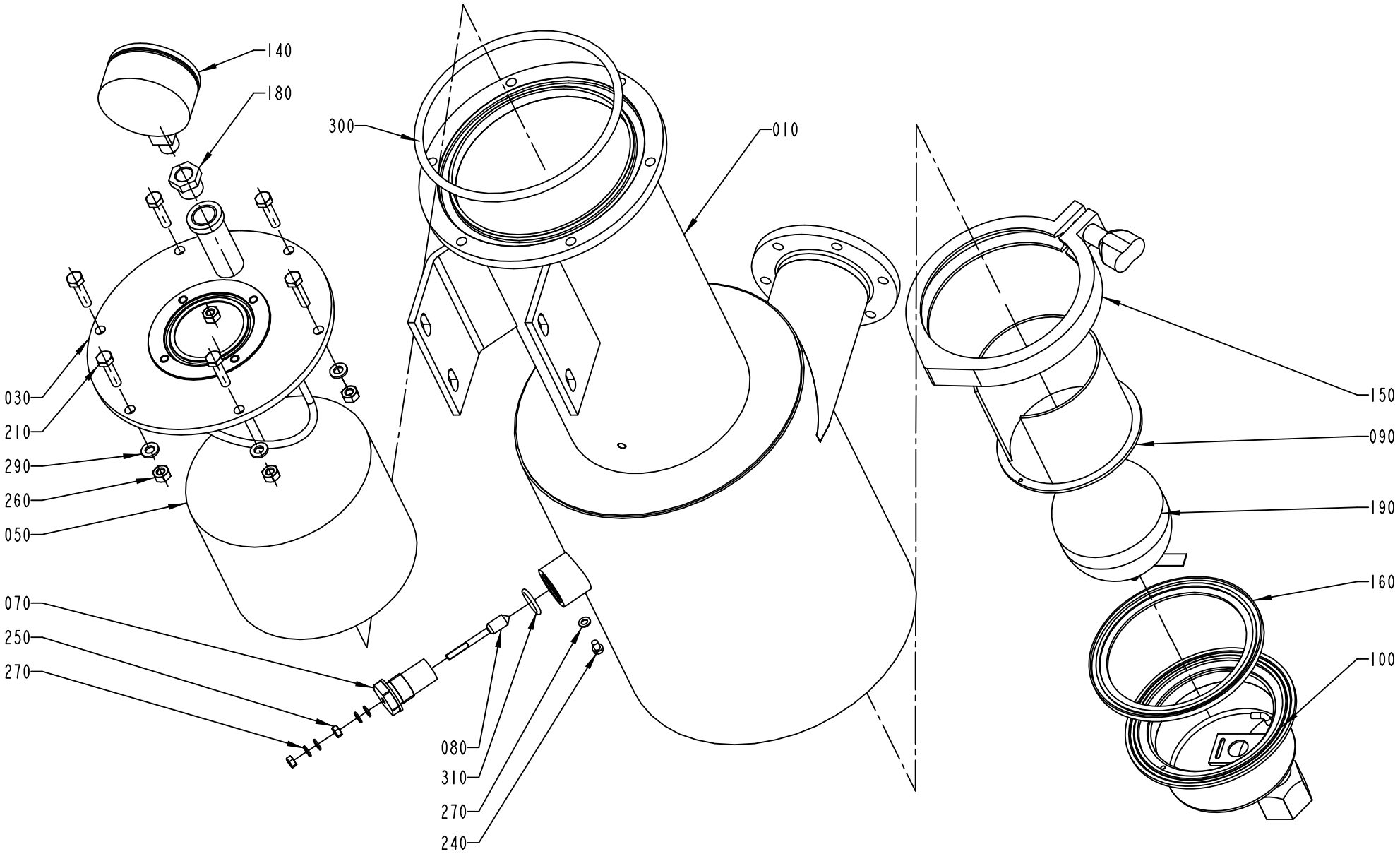
140
180
300
010
030
210
290
260
050
150
090
190
160
100
070
250
270
080
310
270
240

ECM: 104999 - 20020215
Group number: 569003-0100
Assembly Drawing: 569003-1_1_AC

Pos	Part No	SP	UN	Qty	Description	Page No
-						
010	568802-0000	-		1	CONTAINER	
030	568827-0000	-		1	LID	
050	546929-0000	C		1	FILTER	
070	1279457-0000	D		1	BRACKET	
080	567070-0013	C		1	ELECTRODE	
090	568828-0000	D		1	FLOAT GUARD	
100	B571088-0000	D		1	DRAINING	
	90360-0304	*D*		*1*	*SPARE PART KIT*	
140	90043-0095	D		1	PRESSURE GAUGE, 2740, D=63 MM, GLYC.	
150	90217-0312	-		1	CLAMP, ISO2852 FOR PIPE 101,6 MM	
160	90217-0313	C		1	GASKET 97,8X119X5,5 MM	
180	90330-0042	-		1	BUSHING, INT/EXT. THR. R3/8-RP1/4	
190	90360-0305	D		1	FLOAT, ART NO 10739920	
210	312105-0372	-		6	SCREW M6S ISO 4017 M6X25 A480	
240	312125-0285	-		1	SLOTTED CHEESE HEAD SCREW MCS 4X6 SS	
250	312605-0312	-		2	HEXAGON NUT, M6M M4 A280	
260	312605-0316	-		6	HEXAGON NUT, M6M M6 A280	
270	315105-0136	-		5	WASHER BRB4,3XRFR	
290	315105-0153	-		6	WASHER BRB6,4X12RFR	
300	315202-0244	C		1	O-RING 134,3X5,7 MM	
310	315204-0213	C		1	O-RING 15,2X2,4 MM	

Pos	Part No	SP	UN	Qty	Description	Page No

Machine Type | Group Description | Used-In | Group Number | Page No

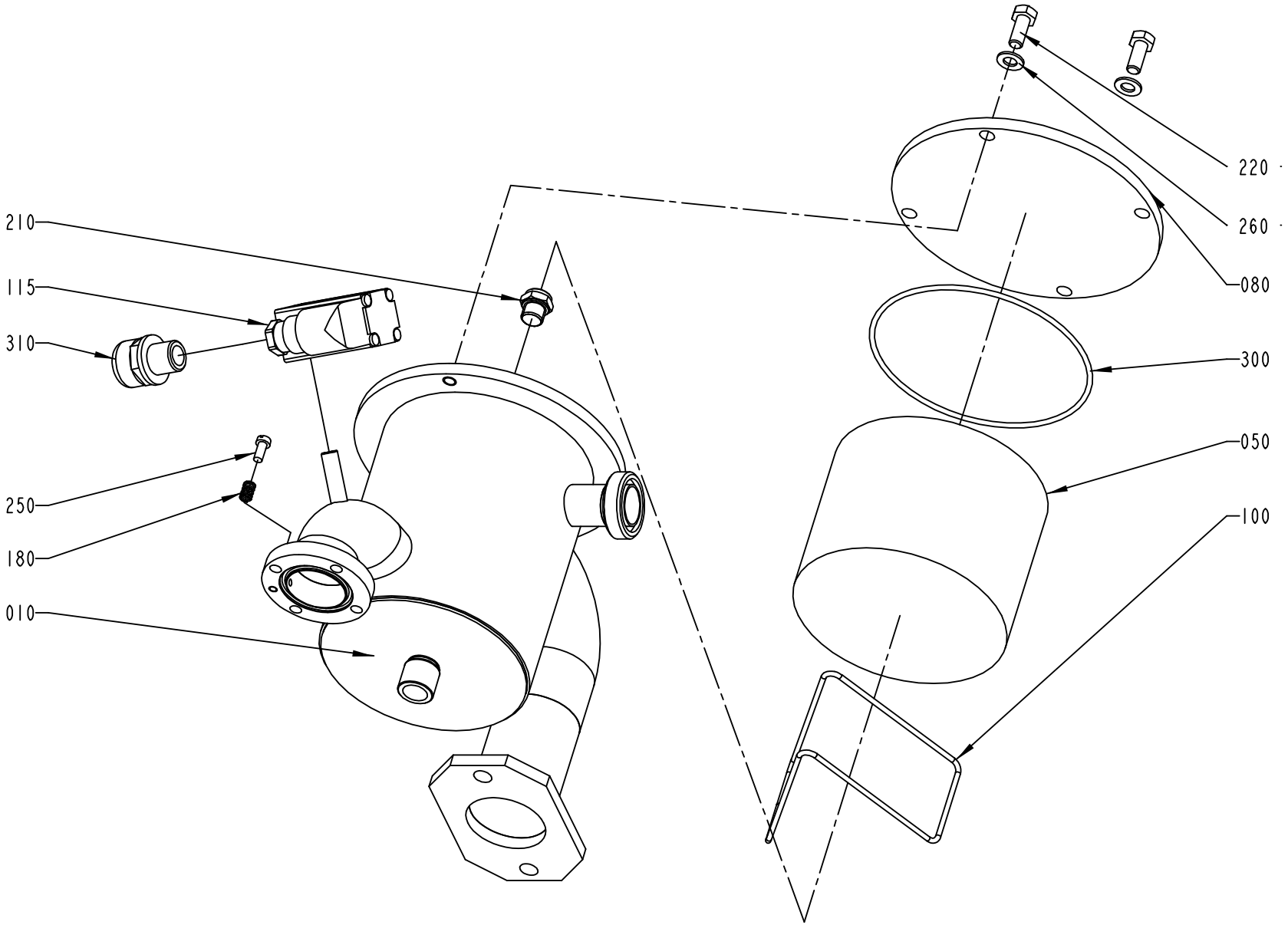
220
260
080
300
050
100
210
115
310
250
180
010

ECM: 103113 - 20020115
Group number: 575475-0100
Assembly Drawing: 575475-1_1_AC

Pos	Part No	SP	UN	Qty	Description	Page No
-						
010	568803-0000	-		1	CONTAINER	
050	546929-0000	A		1	FILTER	
080	568806-0000	-		1	LID	
100	571087-0000	-		1	RETAINING RING	
115	90042-0187	B		1	SOLENOID VALVE BUERKERT	
180	90335-0034	B		1	COMP. SPRING 21700, 0,8X7,1X10,5	
210	90424-0054	B		1	SPRAY NOZZLE 120 DEG	
220	312105-0451	-		2	SCREW M6S ISO 4017 M8X20 A480	
250	312125-0327	-		1	SLOTTED CHEESE HEAD SCREW MCS 5X12 SS	
260	315105-0165	-		2	WASHER BRB8,4X16RFR	
300	315202-0317	A		1	O-RING 129,5X3 MM	
310	352136-0113	-		1	GLAND FITTING PR18,6/PG11 DI=12MM	

Pos	Part No	SP	UN	Qty	Description	Page No

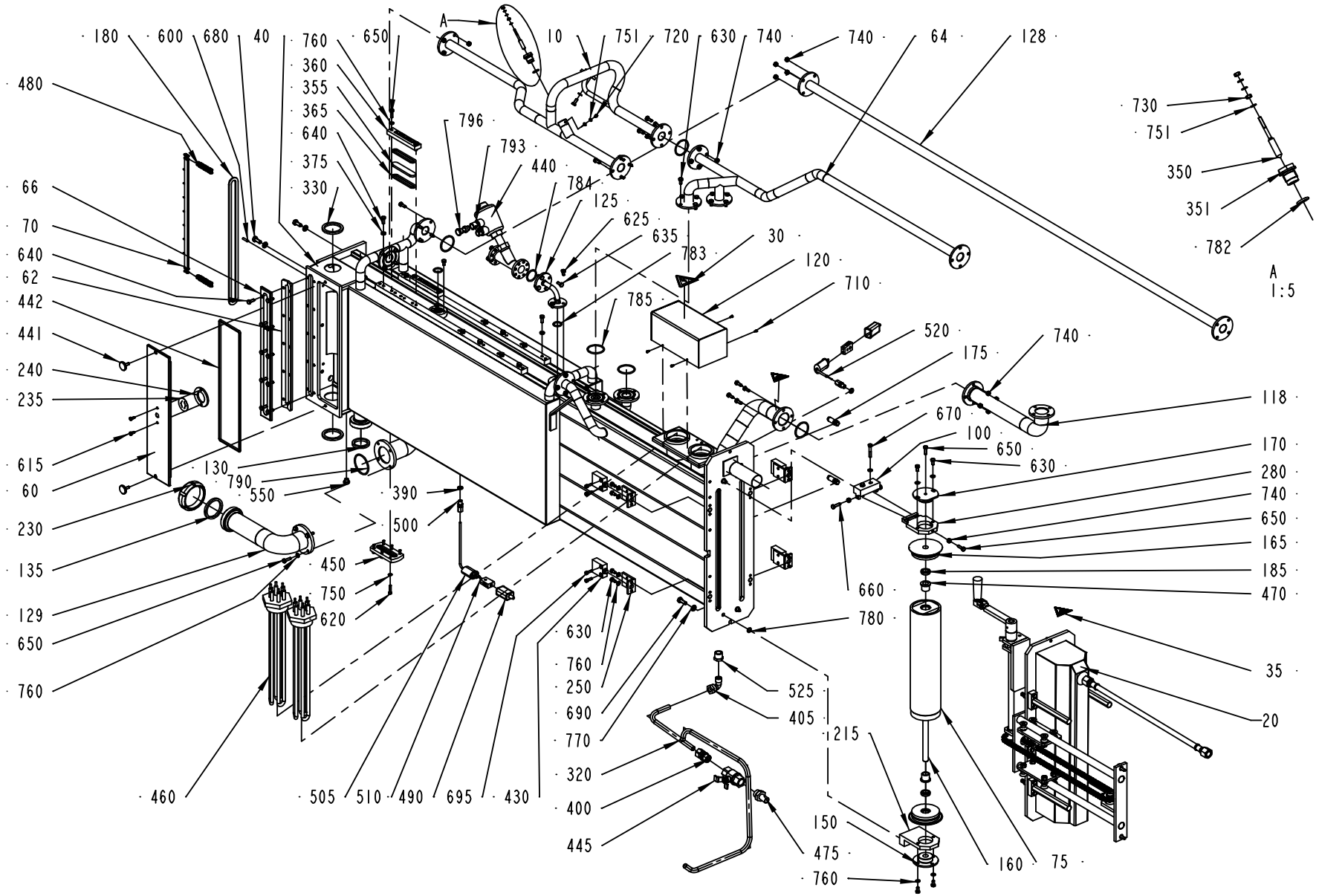
180
600
680
40
760
650
A
10
751
720
630
740
740
64
128
480
360
355
365
640
375
330
796
793
440
784
125
625
635
783
30
120
710
785
66
70
640
62
442
441
240
235
615
60
230
135
129
650
760
130
790
550
390
500
450
750
620
460
505
510
490
695
430
630
760
250
690
770
320
400
445
525
405
215
150
475
760
160
75
520
175
740
670
100
650
630
118
170
280
740
650
165
185
470
660
780
35
20
730
751
350
351
782
A
1:5

ECM: 102597 - 20020115
Group number: 269941-0600
Assembly Drawing: 269941-6_1_AP

This list covers pages from 1-58 to 1-61

Pos	Part No	SP	UN	Qty	Description	Page No
0375S, 0750B						
010	561422-0000	A		1	OVERFLOW TUBE	
0500B, 0355B						
010	561421-0000	A		1	OVERFLOW TUBE	
0500S						
010	1282391-0000	A		1	OVERFLOW TUBE	
1000SQ, 1000S						
010	927085-0000	A		1	OVERFLOW TUBE	
0750S, 1000B						
010	561420-0000	A		1	OVERFLOW TUBE	
Common Parts						
020	A269932-0600	-		1	BOTTOM COVER	**1-63**
030	90194-0016	-		1	WARNING SIGN, RISK OF ELECTRIC SHOCK	
035	359705-0003	-		2	WARNING SIGN ISO, DANGEROUS CHEMICALS	
040	560614-0000	A		1	BATH	
060	273934-0000	A		1	LID	
062	273961-0000	A		1	SEAL	
064	450509-0000	-		1	PIPE	
066	476087-0000	A		1	LID	
070	247236-0000	A		1	CARRIER	
075	541177-0000	A		1	BENDING ROLLER	
100	279471-0000	-		1	CANTILEVER	
118	560615-0000	-		1	PIPE	
120	450512-0000	-		1	COVER	
125	476400-0000	-		1	PIPE	
128	542075-0000	-		1	PIPE	
129	551340-0000	-		1	FILLER TUBE	
130	12242-0003	A		1	GASKET 48X38X5,5	
135	12242-0005	A		1	GASKET 61X51X5,5	
150	247160-0000	A		1	AXLE SUPPORT	
160	531167-0000	A		1	SHAFT	
165	531168-0000	A		2	WHEEL	
170	247241-0000	A		1	AXLE SUPPORT	
175	247248-0000	-		2	PIN	
180	247252-0000	A		1	GASKET	
185	531169-0000	A		2	WASHER	
215	267056-0000	A		1	BEARING CONSOLE	
230	90217-0047	A		1	BLANKING OFF NUT, RD 70-6 (SMS 51)	
235	273937-0000	A		1	DIAPHRAGM	
240	273938-0000	A		1	WASHER	
250	279472-0000	-		4	FASTENING BRACKET	
280	279478-0000	-		1	BEARING PLATE	
320	560472-0000	-		1	PIPE	
330	293405-0000	A		2	GASKET	
350	567070-0012	A		1	ELECTRODE	
351	560931-0000	A		1	BRACKET	
355	543470-0000	A		2	LEVEL GLASS	
360	476398-0000	A		2	LID	
365	569016-0000	A		4	GASKET	
375	479025-0000	-		10	WASHER	
390	273429-0000	-		2	WASHER	
400	90030-0109	-		1	CONN. STR., 12-R1/2, EXT. THREAD	
405	90030-0115	-		1	CONN. ELBOW WA 12-R3/8	
430	90044-0084	A		4	LIMIT SW. 14 CE1-4	
440	B2510374-0000	A		1	SEAT VALVE	
010	*90458-2604*	-		*1*	*ANGLE SEAT VALVE W. FLANGES, N.O. D=13*	
020	*6-990416 20*	-		*1*	*SPARE PART KIT ACTUATOR BUERKERT PA D (5*	
441	491126-0000	A		2	SCREW	
442	90143-0020	-	MM	900	STRIP	
443	90144-0073	-	MM	1	TREBOFLON-TAPE W=13MM	
444	90153-0016	-	ML	1	ADHESIVE,TUBE 100G RHODORSIL CAF 3	
445	90187-0081	-		1	BALL VALVE G1/2	
450	90199-0010	A		1	LEVEL GLASS	
460	B90206-0070	A		2	HEATING ELEMENT 6000W 380/220V	
	90206-0326	-		*1*	*JUNCTION BOX FOR 90206-56*	
	90269-0308	-		*1*	*GASKET 59X68X3 MM*	
470	90240-0146	A		2	FLANGE BUSHING,15X21X20 MM	
475	90224-0078	-		1	PIPE SOCKET, ART.NO RAN 1612	
480	560617-0000	A		2	ROLLER CHAIN	
490	90326-0012	-		2	PROTECTIVE COVER, T31A4618	
500	90326-0306	-		2	GLAND FITTING 9041-45-KS-KR.1/8" D=4,5MM	
505	90326-0019	A		1	THERMOELEMENT	
510	90326-0020	-		2	PLUG, FEMALE YELLOW CR-AL	
520	90326-0043	A		1	THERMOCOUPLE, CR-ALPREM.G	
525	90330-0048	-		1	BUSHING, INT/EXT. THR. R1/2-RP3/8	
550	90330-0066	-		1	PLUG, EXT. G-THREAD, G1/8	
600	311103-0310	-		2	PARALLEL PIN ISO 2338 5M6X20 A1	
615	312105-0325	-		2	SCREW M6S ISO 4017 M5X10 A480	
620	312105-0332	-		6	SCREW M6S ISO 4017 M5X22 A480	

Machine Type | Group Description | Used-In | Group Number | Page No

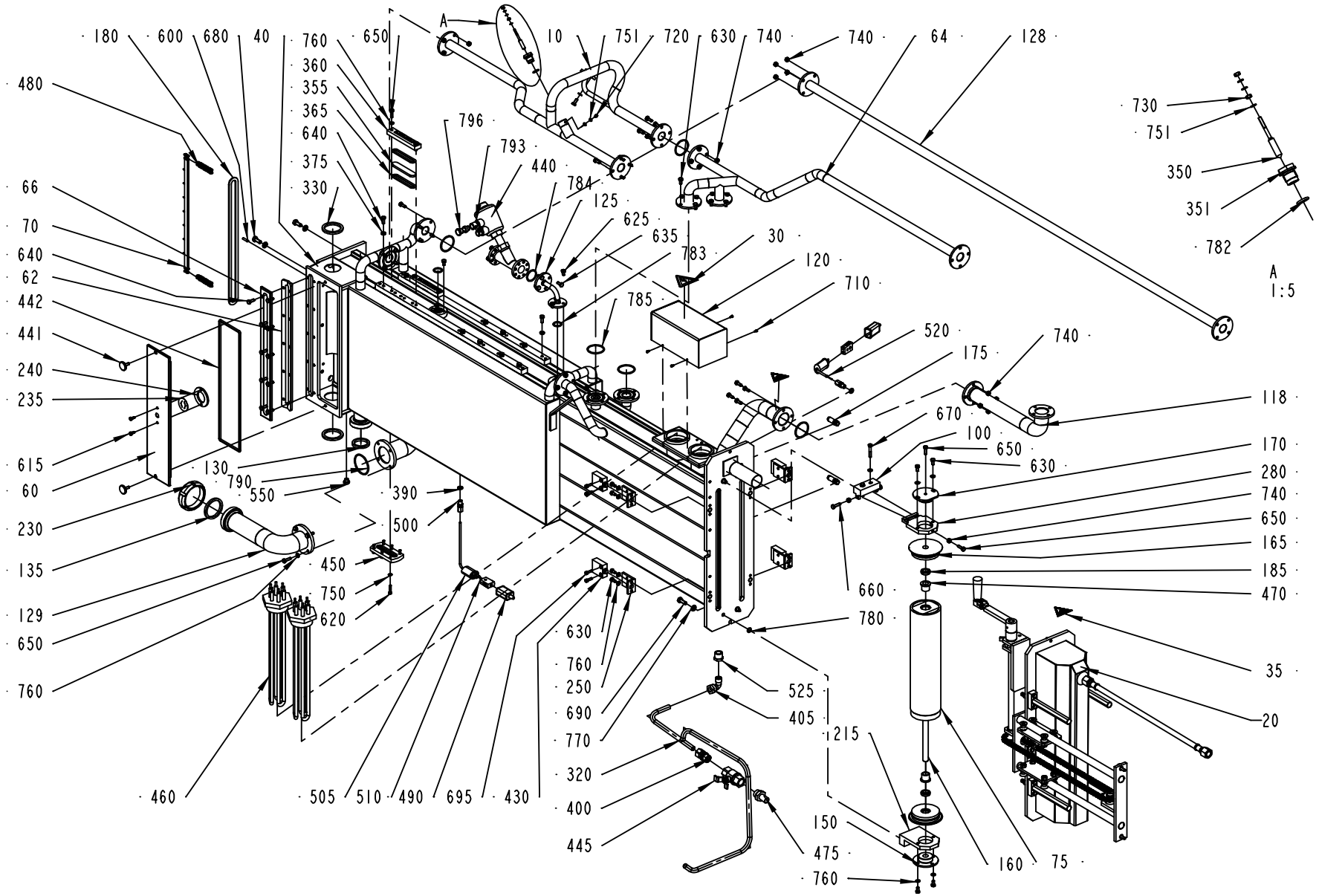
180
600
680
40
760
650
A
10
751
720
630
740
740
64
128
480
360
355
365
640
375
330
796
793
440
784
125
625
635
783
30
120
710
785
66
70
640
62
442
441
240
235
615
60
230
135
129
650
760
130
790
550
390
500
450
750
620
460
505
510
490
695
430
630
760
250
690
770
320
400
445
525
405
215
150
475
760
160
75
520
175
740
670
100
650
630
118
170
280
740
650
165
185
470
660
780
35
20
730
751
350
351
782
A
1:5

Pos	Part No	SP	UN	Qty	Description	Page No
Common Parts (Cont'd)						
625	312105-0364	-		6	SCREW M6S ISO 4017 M6X10 A480	
630	312105-0366	-		20	SCREW M6S M6X12 A280	
635	312105-0367	-		10	SCREW M6S M6X14 A280	
640	312105-0368	-		40	SCREW M6S M6X16 A280	
650	312105-0370	-		10	SCREW M6S ISO 4017 M6X20 A480	
660	312105-0371	-		2	SCREW M6S ISO 4017 M6X22 A480	
670	312105-0376	-		2	SCREW M6S ISO 4014 M6X35 A480	
680	312105-0451	-		6	SCREW M6S ISO 4017 M8X20 A480	
690	312105-0452	-		4	SCREW M6S ISO 4017 M8X22 A480	
695	312115-0329	-		8	SCREW ISO4762 M5X16 A4	
710	312125-0220	-		4	SLOTTED CHEESE HEAD SCREW MCS 3X6 SS	
720	312125-0285	-		1	SLOTTED CHEESE HEAD SCREW MCS 4X6 SS	
730	312605-0312	-		2	HEXAGON NUT, M6M M4 A280	
740	312605-0316	-		23	HEXAGON NUT, M6M M6 A280	
750	315105-0146	-		6	BRICKA BRB5,3X10RFR	
751	315105-0136	-		5	WASHER BRB4,3XRFR	
760	315105-0153	-		22	WASHER BRB6,4X12RFR	
770	315105-0165	-		10	WASHER BRB8,4X16RFR	
780	927421-0001	A		5	O-RING 9.3X2.4 SILICON	
782	927421-0003	A		1	O-RING 13.3X2.4 SILICON	
783	927422-0001	A		1	O-RING 19.2X3 SILICON	
784	927422-0004	A		1	O-RING 29.2X3 SILICON	
785	927422-0006	A		7	O-RING 42.2X3 SILICON	
790	927422-0009	A		1	O-RING 54.5X3 SILICON	
793	342797-0122	-		1	CONN. BANJO, RINGPIECE 6-1/4	
796	342980-0304	-		1	BANJO-HOLLOW BOLT COUPL,EXT.THR.01-G1/4"	

Pos	Part No	SP	UN	Qty	Description	Page No

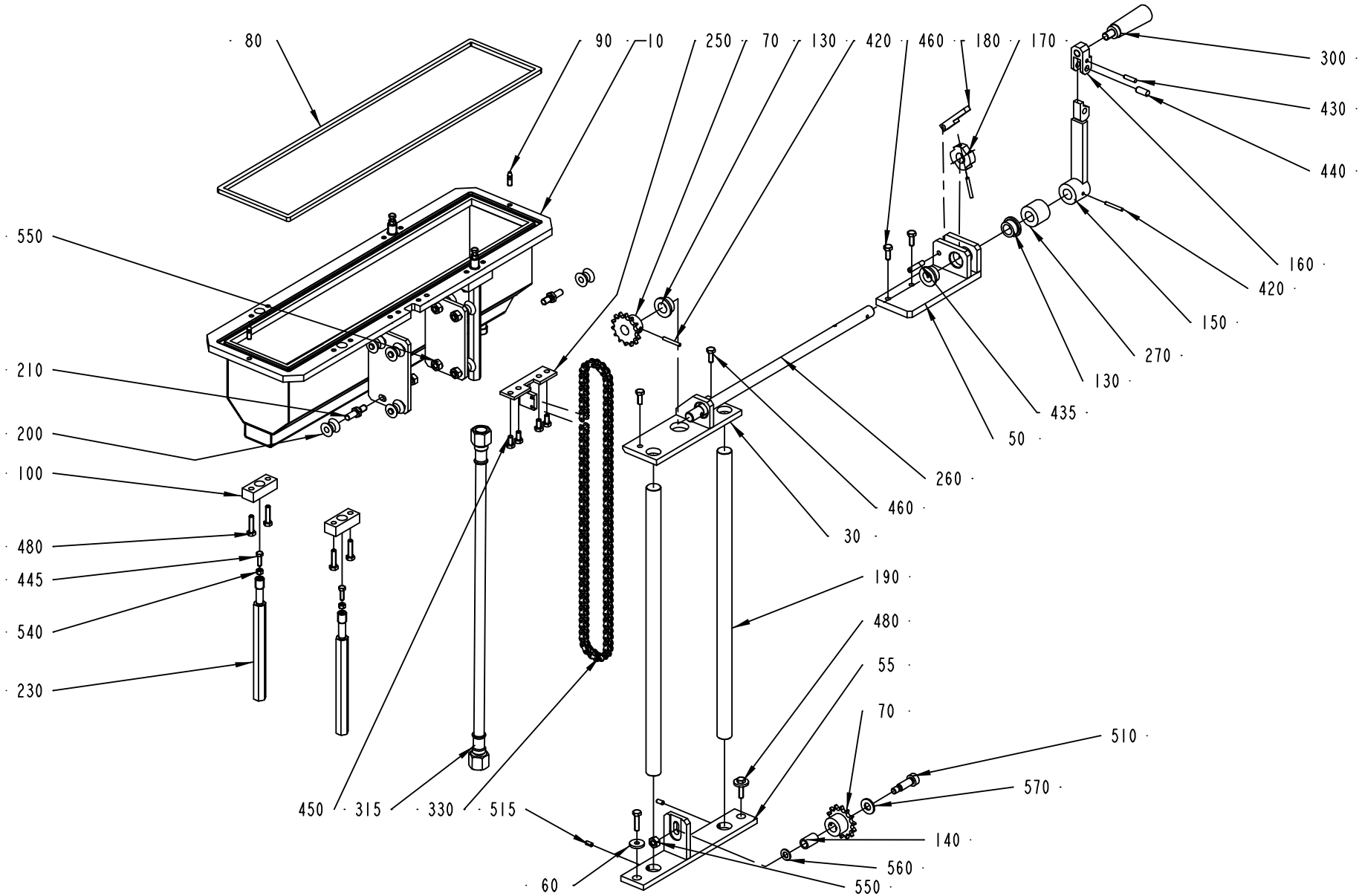
80
90
10
250
70
130
420
460
180
170
300
430
440
160
420
150
270
130
435
50
550
210
200
100
480
445
540
230
260
460
30
190
480
55
70
510
570
140
560
550
60
450
315
330
515

ECM: 94714 - 20010619
Group number: 269932-0600
Assembly Drawing: 269932-5_1_AA

Pos	Part No	SP	UN	Qty	Description	Page No
-						
010	1349007-0000	-		1	COVER	
030	263572-0000	-		1	CANTILEVER	
050	263574-0000	-		1	BEARING CONSOLE	
055	450846-0000	-		1	CANTILEVER	
060	38087-0000	-		2	WASHER	
070	247357-0000	D		2	SPROCKET	
080	263575-0000	C		1	GASKET	
090	263576-0000	-		2	GUIDE STUD	
100	263579-0000	D		4	WASHER	
130	263585-0000	D		3	BUSHING	
140	263586-0000	D		1	BUSHING	
150	263587-0000	-		1	CRANK	
160	263588-0000	-		1	JOINT	
170	263589-0000	-		1	RATCHET	
180	263590-0000	-		1	BARRIER	
190	560616-0000	-		2	PILLAR	
200	263592-0000	C		8	WHEEL	
210	263593-0000	C		8	SHAFT	
230	269930-0000	D		4	SCREW	
250	297163-0000	-		1	CARRIER	
260	547567-0000	D		1	SHAFT	
270	547568-0000	-		1	SPACER	
300	90051-0065	-		1	HANDLE, THREADED TAP. NO. 8305-2151	
315	484189-0000	D		1	HIGH PRESSURE HOSE	
330	90288-0062	D		1	ROLLER CHAIN, SINGLE 3/8 -100	
420	311103-0276	-		3	PARALLEL PIN ISO 2338 4M6X30 A1	
430	311103-0310	-		1	PARALLEL PIN ISO 2338 5M6X20 A1	
435	311103-0357	-		1	PARALLEL PIN ISO 2338 6M6X30 A1	
440	311103-0401	-		1	PARALLEL PIN ISO 2338 8M6X20 A1	
445	312105-0329	-		4	SCREW M6S ISO 4017 M5X16 A480	
450	312105-0366	-		4	SCREW M6S M6X12 A280	
460	312105-0368	-		4	SCREW M6S M6X16 A280	
480	312105-0372	-		10	SCREW M6S ISO 4017 M6X25 A480	
510	312180-0493	-		1	SCREW ISO7379 H10X25	
515	312318-0325	-		2	SCREW ISO4029 M5X10 A4	
540	312605-0314	-		4	HEXAGON NUT, M6M M5 A280	
550	312605-0318	-		9	HEXAGON NUT, M6M M8 A280	
560	315105-0165	-		1	WASHER BRB8,4X16RFR	
570	315105-0173	-		1	WASHER BRB10,5X22RFR	

Pos	Part No	SP	UN	Qty	Description	Page No

Machine Type | Group Description | Used-In | Group Number | Page No

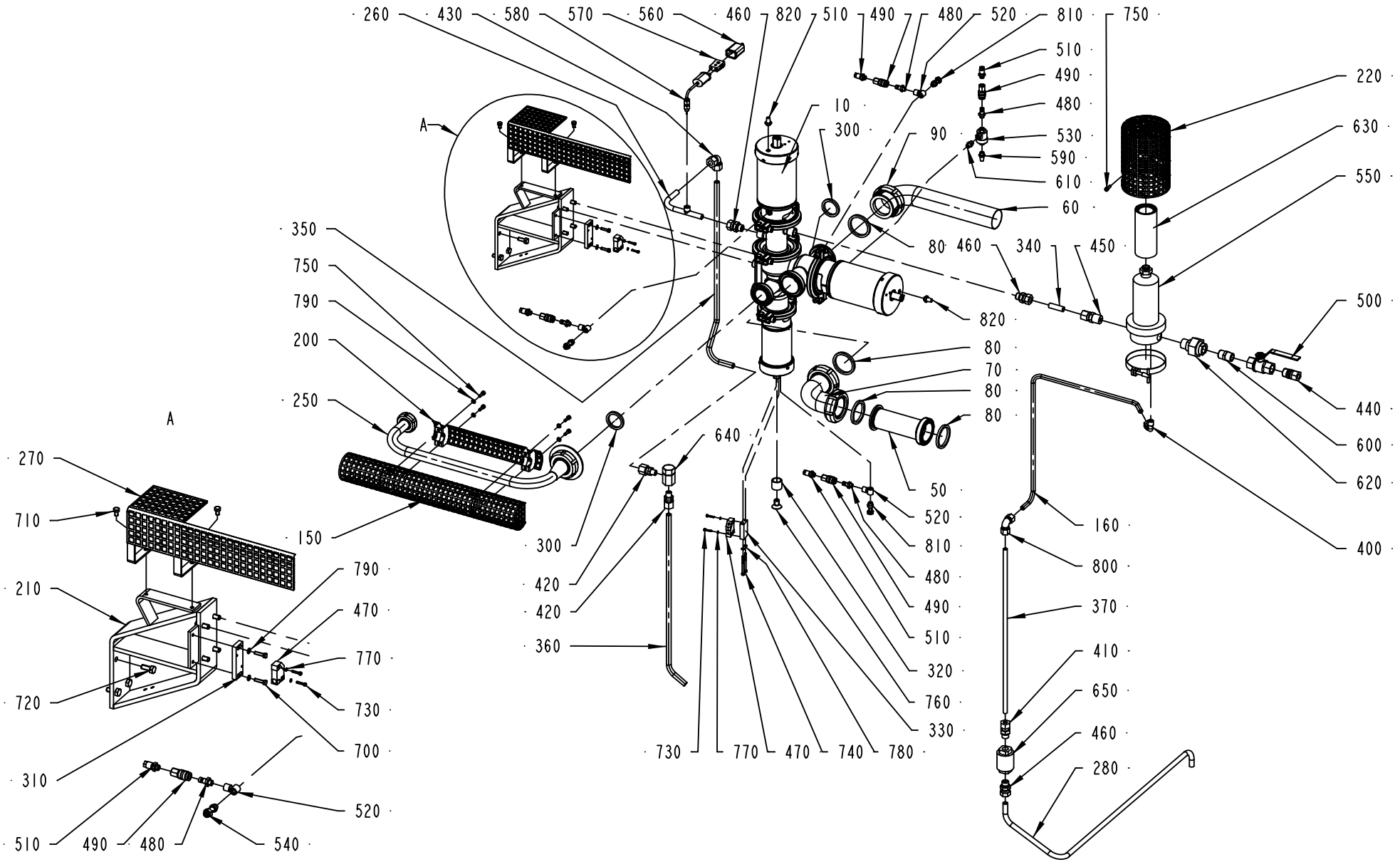
260
430
580
570
560
460
820
510
490
480
520
810
750
510
490
480
530
590
610
60
220
630
550
500
440
600
620
400
160
800
370
410
650
460
280
10
300
90
80
460
340
450
820
80
70
80
80
50
520
810
480
490
510
320
760
330
730
770
470
740
780
640
300
420
420
360
350
750
790
200
250
150
A
A
270
710
210
720
310
510
490
480
540
790
470
770
730
700
520

ECM: 82954 - 20000915
Group number: 1362608-0100
Assembly Drawing: 1362608-1_1_AC

Pos	Part No	SP	UN	Qty	Description	Page No
2"						
050	255368-0000	D		1	PRESSURE GAUGE TUBE	
060	440977-0000	D		1	ATTACHMENT PIPE	
070	440978-0000	D		1	PIPE BEND	
080	12242-0005	C		4	GASKET 61X51X5,5	
090	342803-0104	-		1	UNION NUT, RD 70-6 (SMS 51)	
3"						
050	436779-0000	D		1	PRESSURE GAUGE TUBE	
060	436778-0000	D		1	PIPE	
070	445515-0000	D		1	PIPE BEND	
080	436781-0000	C		4	GASKET	
090	342803-0106	-		1	UNION NUT, RD 98-6 (SMS 76)	
Common Parts						
010	A440630-0200	D		1	AP-VALVE	**1-67**
150	273547-0001	D		1	TOUCH GUARD	
160	927198-0000	-		1	PIPE	
200	273548-0001	D		1	TOUCH GUARD	
210	554582-0000	-		1	CANTILEVER	
220	752176-0000	-		1	PROTECTIVE CASING	
250	484047-0000	D		1	PIPE	
260	560927-0000	-		1	PIPE	
270	560929-0000	D		1	TOUCH GUARD	
280	1347213-0000	-		1	PIPE	
300	12242-0003	C		2	GASKET 48X38X5,5	
310	297195-0000	D		1	SPACER	
320	440647-0000	D		1	SLEEVE	
330	440731-0000	D		1	PLATE	
340	752711-0000	D		1	PIPE	
350	927200-0000	-		1	PIPE	
360	927226-0000	-		1	PIPE	
370	927311-0000	-		1	PIPE	
400	90030-0070	-		1	CONN. ELBOW WA 10-R1/4	
410	90030-0119	-		1	PIPE CONNECTION	
420	90030-0088	-		2	CONN. STR., 12-R1/4, EXT. THREAD	
430	90030-0096	-		1	CONN. ELBOW W-12	
440	90030-0109	-		1	CONN. STR., 12-R1/2, EXT. THREAD	
450	90030-0180	-		1	CONN. STR. GE 12-1/2-14 NPTF	
460	90030-0187	D		3	CONN. STR. GA-12-G3/8	
470	90044-0104	C		2	PROX.SWITCH IFM IN 3002	
480	90163-0057	-		4	NIPPLE 1/8" BRASS	
490	90163-0062	-		4	QUICK COUPLING, (F) 5053-1/8	
500	90187-0082	D		1	BALL VALVE G1/2	
510	90224-0307	D		4	STRAIGHT FITTING, 6MM, 1/8",	
520	90224-0308	-		3	CONN. BANJO, ART. NO. 2023-1/8-1/8	
530	90235-0259	-		1	VALVE	
540	90235-0274	C		1	THROTTLE CHECK VALVES,G1/8"	
550	B90277-0055	D		1	FILTER HOUSING / MDS 4463 G 08 H	
	90277-0339	-		*1*	*O-RING, ACS0272 EU FOR PALL FILTER*	
560	90326-0012	C		1	PROTECTIVE COVER, T31A4618	
570	90326-0020	C		1	PLUG, FEMALE YELLOW CR-AL	
580	90326-0089	C		1	THERMOCOUPLE, 5110-089-000	
590	90328-0003	-		1	SILENCER	
600	90330-0021	-		1	NIPPLES, EXT. THREAD. R-207R1/2	
610	90330-0032	-		1	NIPPLES, EXT. THREAD. ISO 7/1 R1/8-R1/8	
620	90330-0106	-		1	PIPE COUPLING	
630	90337-0315	C		1	FILTERINSERT / MCS 4463	
640	90360-0009	C		1	STEAM TRAP / 1/4 BSP TD 18	
650	B90360-0020	C		1	STEAM TRAP / MK36/51 3/8"	
	90360-0309	-		*1*	*STRAINER, FOR STEAM TRAP 90360-20*	
	90360-0310	-		*1*	*CAPSULE, FOR STEAM TRAP 90360-20*	
700	312105-0331	-		2	SCREW M6S ISO 4017 M5X20 A480	
710	312105-0364	-		2	SCREW M6S ISO 4017 M6X10 A480	
720	312105-0451	-		8	SCREW M6S ISO 4017 M8X20 A480	
730	312115-0228	-		4	SCREW ISO4762 M3X16 A4	
740	312115-0305	-		2	SCREW ISO4762 M4X50 A4	
750	312115-0329	-		4	SCREW ISO4762 M5X16 A4	
760	312155-0532	-		1	SCREW EN 10642 MF6S M12X20 A480	
770	315105-0124	-		4	BRICKA BRB3,2X6RFR	
780	315105-0136	-		2	WASHER BRB4,3XRFR	
790	315105-0146	-		6	BRICKA BRB5,3X10RFR	
800	342737-0212	-		1	CONN. ELBOW W-10 LRFR	
810	342980-0303	-		2	BANJO-HOLLOW BOLT COUPL,EXT.THR.01-G1/8"	
820	346800-0109	D		2	SILENCER FILTER R1/8"	

Machine Type | Group Description | Used-In | Group Number | Page No

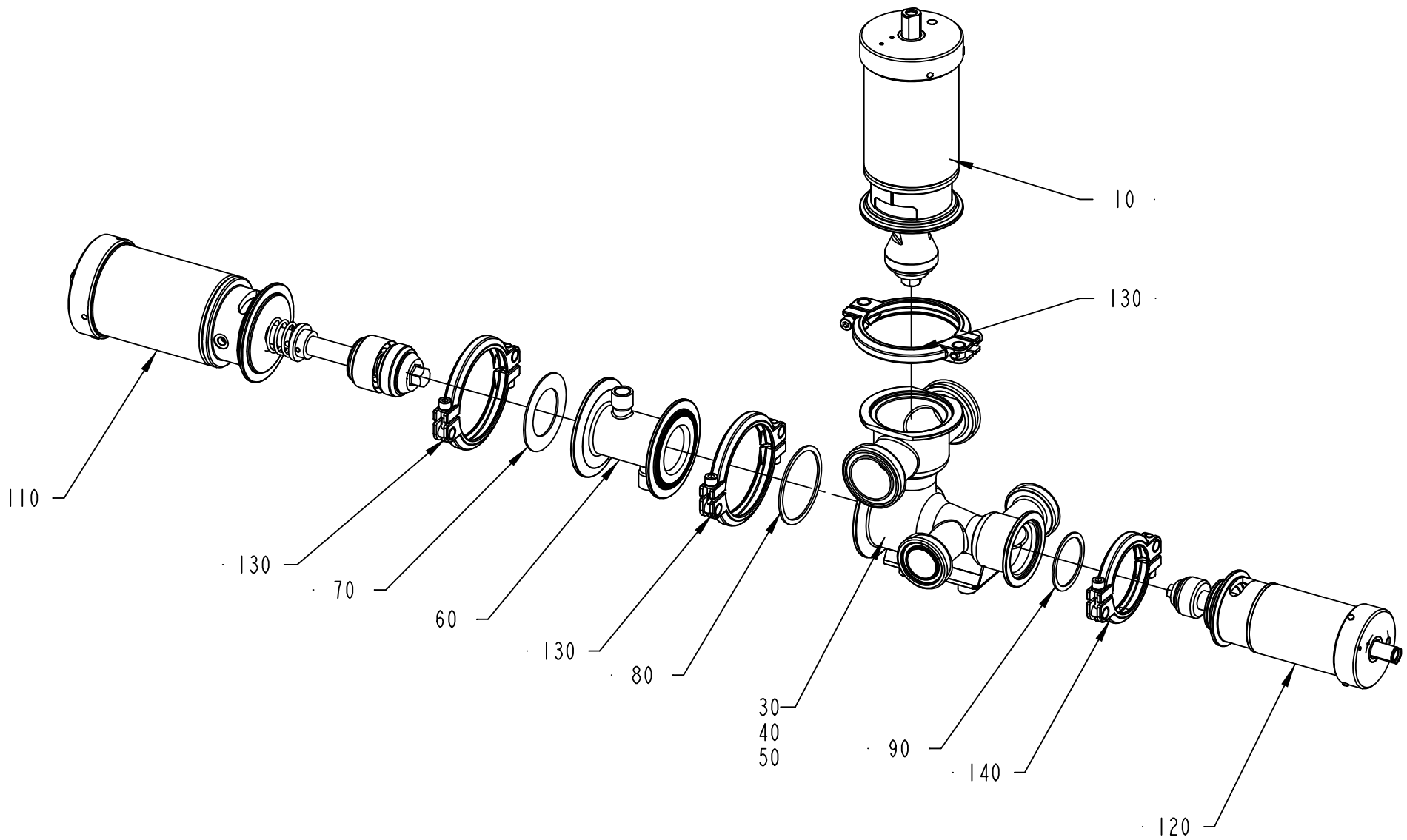
10
130
110
130
70
60
130
80
30
40
50
90
140
120

ECM: 102729 - 20020207
Group number: 440630-0200
Assembly Drawing: 440630-3_1_AC

Pos	Part No	SP	UN	Qty	Description	Page No
TBA/8 2"						
030	440631-0000	B		1	VALVE BODY 51	
TBA/8 3"						
050	449678-0000	B		1	VALVE BODY 76	
Common Parts						
010	A539209-0100	B		1	A-CYLINDER	**1-69**
060	440634-0000	B		1	HOUSE	
070	539212-0000	A		1	GASKET	
080	90207-0363	A		1	GASKET	
090	90207-0365	A		1	GASKET	
110	A539210-0100	B		1	C-CYLINDER	**1-71**
120	A539211-0100	B		1	B-CYLINDER	**1-73**
130	A541163-0100	B		3	CLAMP RING	**1-75, 10-87**
140	A541164-0100	B		1	CLAMP RING	**1-77, 10-89**

Pos	Part No	SP	UN	Qty	Description	Page No

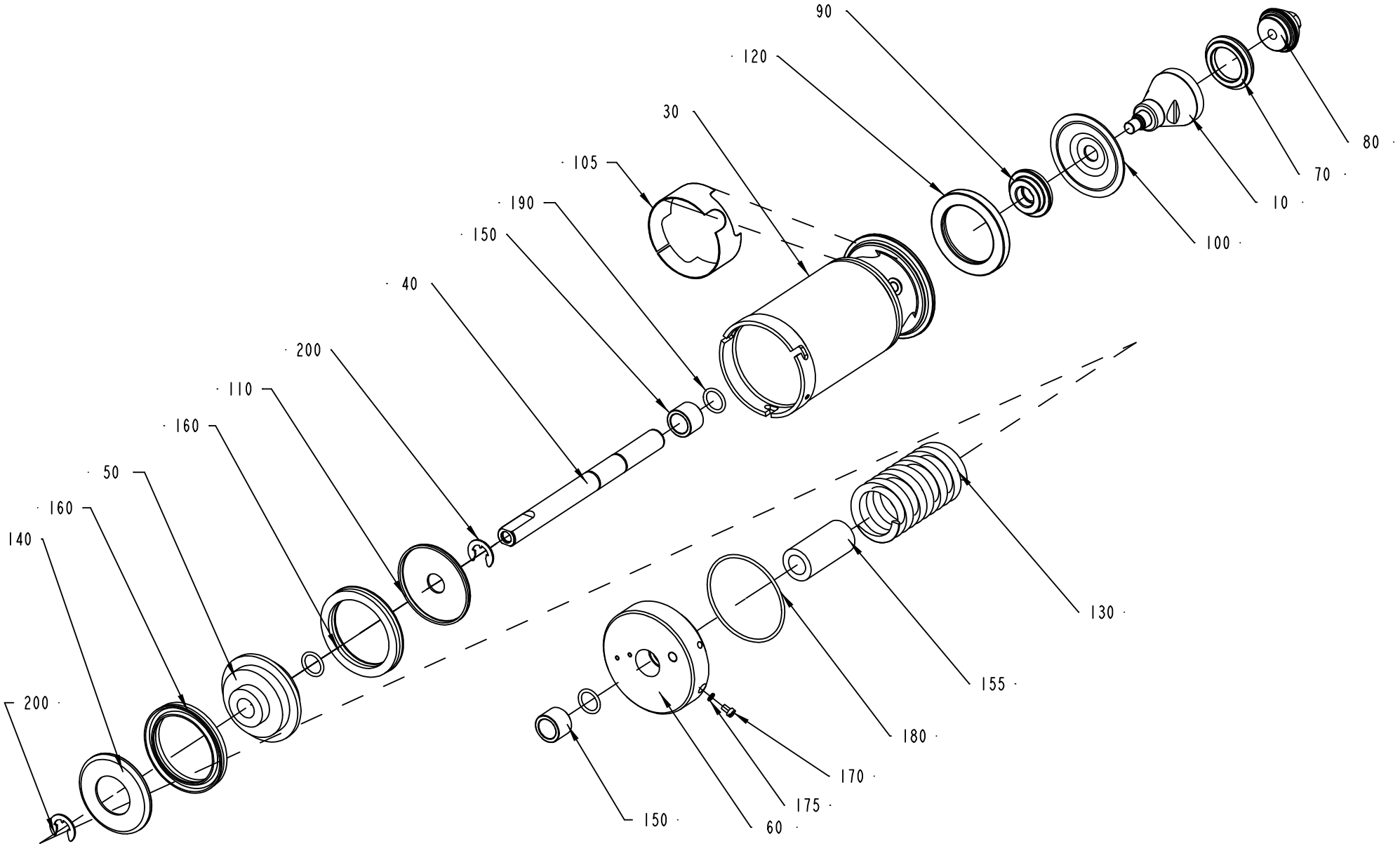
90
120
30
105
190
150
40
200
110
160
50
160
140
200
80
70
10
100
130
155
180
170
175
150
60

ECM: 102727 - 20020207
Group number: 539209-0100
Assembly Drawing: 539209-1_1_AB

Pos	Part No	SP	UN	Qty	Description	Page No
2"						
010	530592-0000	B		1	SEAL RING HOLDER	
3"						
010	530595-0000	B		1	SEAL RING HOLDER	
Common Parts						
030	440632-0000	B		1	CYLINDER HOUSING	
040	440637-0000	B		1	PISTON ROD	
050	440638-0000	B		1	PISTON	
060	484998-0000	B		1	END SECTION	
070	530589-0000	A		1	SEAL RING	
080	530590-0000	A		1	VALVE CONE	
090	541166-0000	B		1	WASHER	
100	533169-0000	A		1	DIAPHRAGM	
105	476203-0000	-		1	PROTECTION	
110	440651-0000	B		1	WASHER	
120	440655-0000	B		1	RING	
130	440663-0000	A		1	COMPRESSION SPRING	
140	484975-0000	B		1	WASHER	
150	497933-0000	A		2	BUSHING	
155	541167-0000	B		1	SPACER SLEEVE	
160	90020-0028	A		2	SLEEVE	
170	312125-0323	-		1	SLOTTED CHEESE HEAD SCREW MCS 5X8 SS	
175	315233-0101	-		1	WASHER CAPTIVE SEALING M5	
180	315202-0308	A		1	O-RING 84,5X3 MM	
190	315204-0215	A		3	O-RING 19,2X3 MM	
200	315754-0113	-		2	LOCKING WAE 15	

Pos	Part No	SP	UN	Qty	Description	Page No

Machine Type | Group Description | Used-In | Group Number | Page No

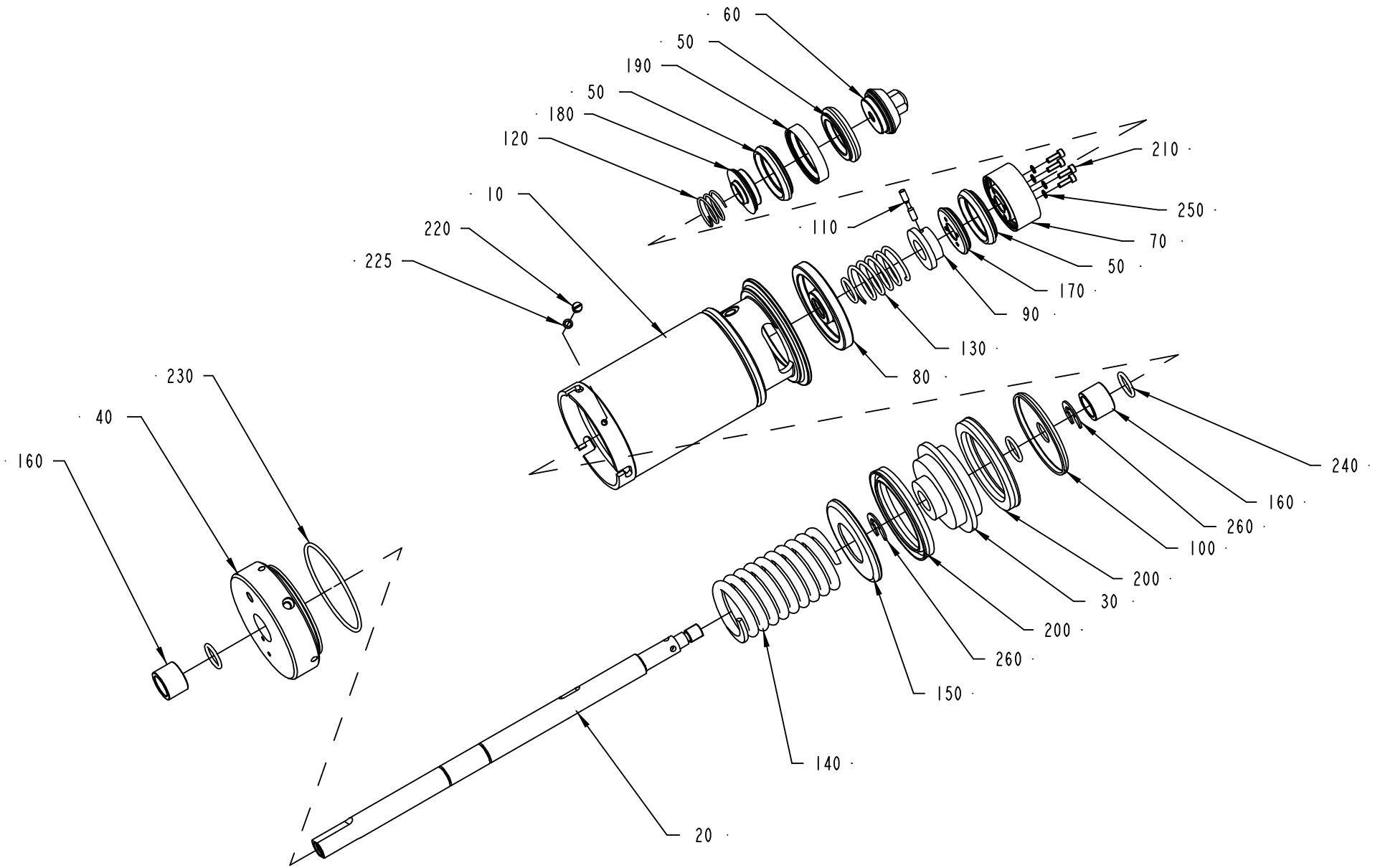
60
50
190
50
180
120
10
220
225
110
210
250
70
50
170
90
130
80
230
40
160
240
160
260
100
200
30
200
260
150
140
20

ECM: 105000 - 20020215
Group number: 539210-0100
Assembly Drawing: 539210-1_1_AB

Pos	Part No	SP	UN	Qty	Description	Page No
-						
010	440632-0000	B		1	CYLINDER HOUSING	
020	440635-0000	B		1	PISTON ROD	
030	440638-0000	B		1	PISTON	
040	484998-0000	B		1	END SECTION	
050	530589-0000	A		3	SEAL RING	
060	530590-0000	A		1	VALVE CONE	
070	530591-0000	B		1	HOLDER	
080	440648-0000	B		1	SEALING WASHER	
090	440650-0000	B		1	WASHER	
100	440651-0000	B		1	WASHER	
110	440659-0000	-		1	CYLINDRICAL PIN	
120	440660-0000	A		1	COMPRESSION SPRING	
130	440661-0000	A		1	COMPRESSION SPRING	
140	440663-0000	A		1	COMPRESSION SPRING	
150	484975-0000	B		1	WASHER	
160	497933-0000	A		2	BUSHING	
170	530597-0000	B		1	WASHER	
180	530598-0000	B		1	WASHER	
190	530599-0000	A		1	RING	
200	90020-0028	A		2	SLEEVE	
210	312115-0291	-		4	SCREW ISO4762 M4X12 A4	
220	312125-0323	-		1	SLOTTED CHEESE HEAD SCREW MCS 5X8 SS	
225	315233-0101	-		1	WASHER CAPTIVE SEALING M5	
230	315202-0308	A		1	O-RING 84,5X3 MM	
240	315204-0215	A		4	O-RING 19,2X3 MM	
250	315402-0136	-		4	LOCK WASHER FBB 4,1	
260	315754-0113	-		2	LOCKING WAE 15	

Pos	Part No	SP	UN	Qty	Description	Page No

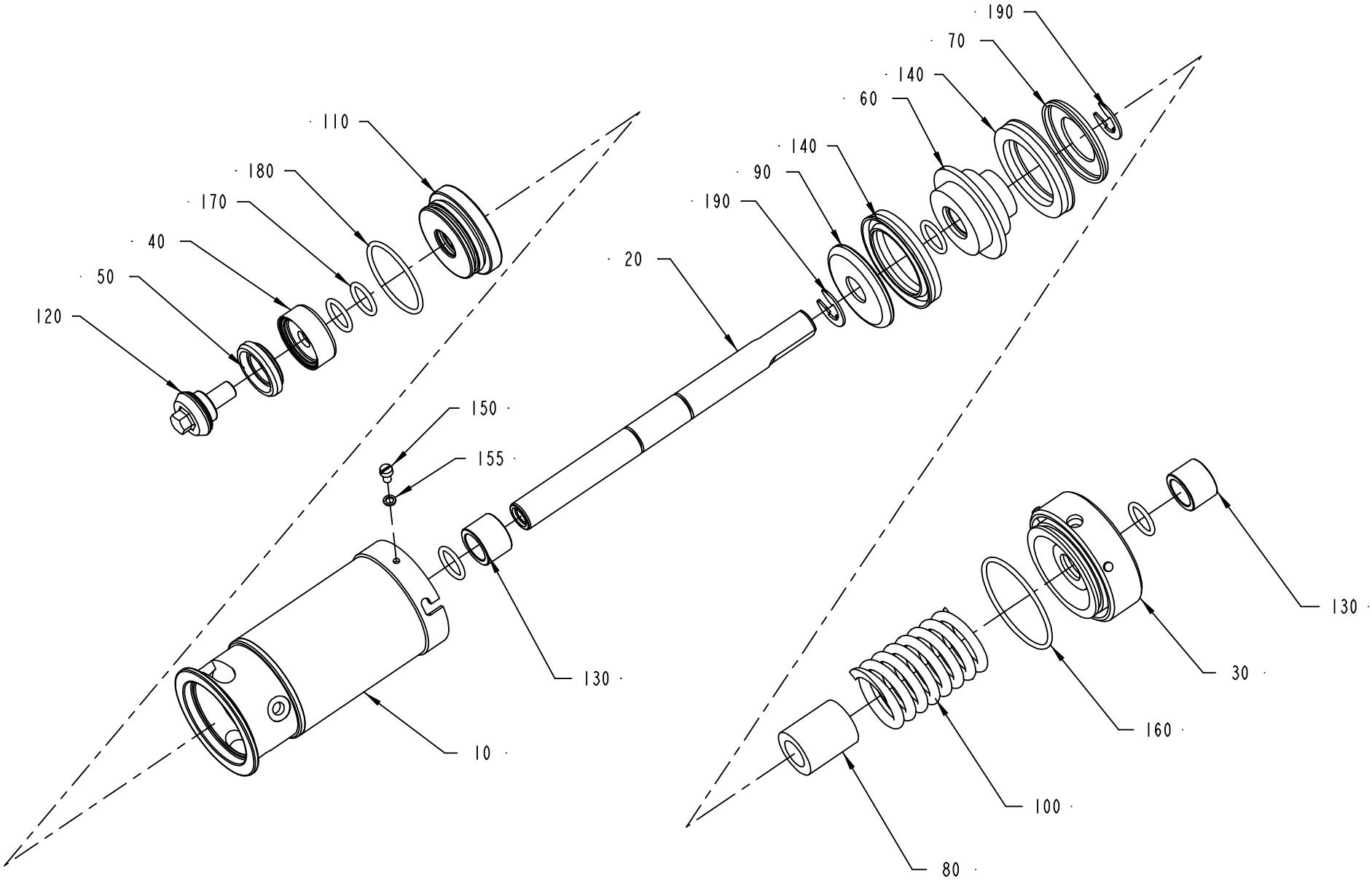
190
70
140
60
140
90
190
110
180
170
40
50
120
20
150
155
130
10
130
30
160
100
80

ECM: 105001 - 20020215
Group number: 539211-0100
Assembly Drawing: 539211-1_1_AB

Pos	Part No	SP	UN	Qty	Description	Page No
-						
010	440633-0000	B		1	CYLINDER HOUSING	
020	440636-0000	B		1	PISTON ROD	
030	440695-0000	B		1	END SECTION	
040	530587-0000	B		1	WASHER	
050	530588-0000	A		1	SEAL RING	
060	440646-0000	B		1	PISTON	
070	440652-0000	B		1	WASHER	
080	440654-0000	B		1	SPACER SLEEVE	
090	440656-0000	B		1	WASHER	
100	440662-0000	A		1	COMPRESSION SPRING	
110	440664-0000	B		1	SEALING WASHER	
120	476185-0000	A		1	VALVE CONE	
130	497933-0000	A		2	BUSHING	
140	90020-0027	A		2	SLEEVE	
150	312125-0323	-		1	SLOTTED CHEESE HEAD SCREW MCS 5X8 SS	
155	315233-0101	-		1	WASHER CAPTIVE SEALING M5	
160	315202-0304	A		1	O-RING 64,5X3 MM	
170	315204-0215	A		5	O-RING 19,2X3 MM	
180	315204-0301	A		1	O-RING 49,5X3 MM	
190	315754-0113	-		2	LOCKING WAE 15	

Pos	Part No	SP	UN	Qty	Description	Page No

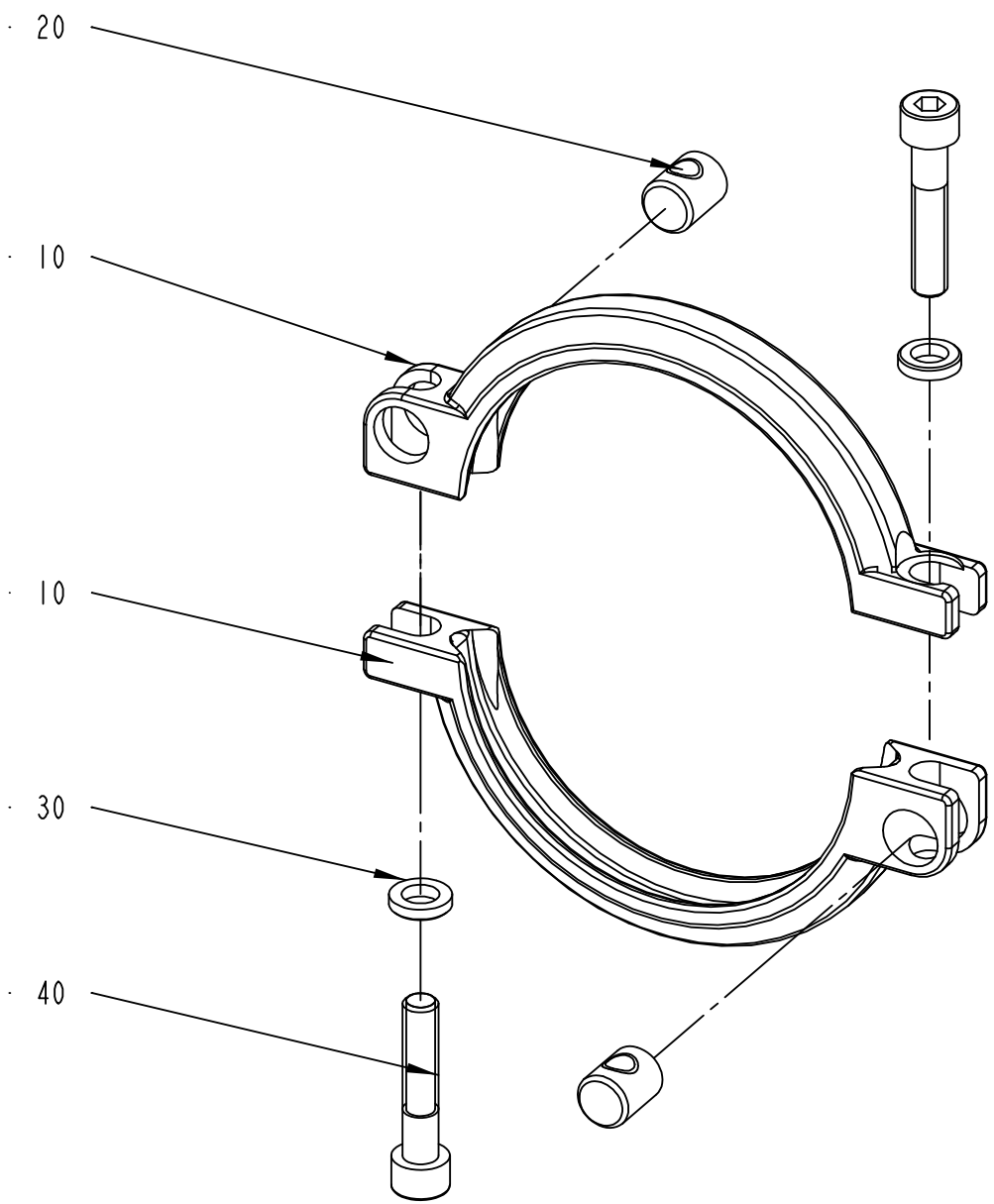
· 20
· 10
· 10
· 30
· 40

ECM: 105002 - 20020215
Group number: 541163-0100
Assembly Drawing: 541163-1_1_AB

Pos	Part No	SP	UN	Qty	Description	Page No
-						
010	532117-0000	B		2	CLAMP RING	
020	497748-0000	B		2	PIN	
030	541165-0000	B		2	WASHER	
040	312115-0459	-		2	SCREW ISO4762 M8X40 A4	

Pos	Part No	SP	UN	Qty	Description	Page No

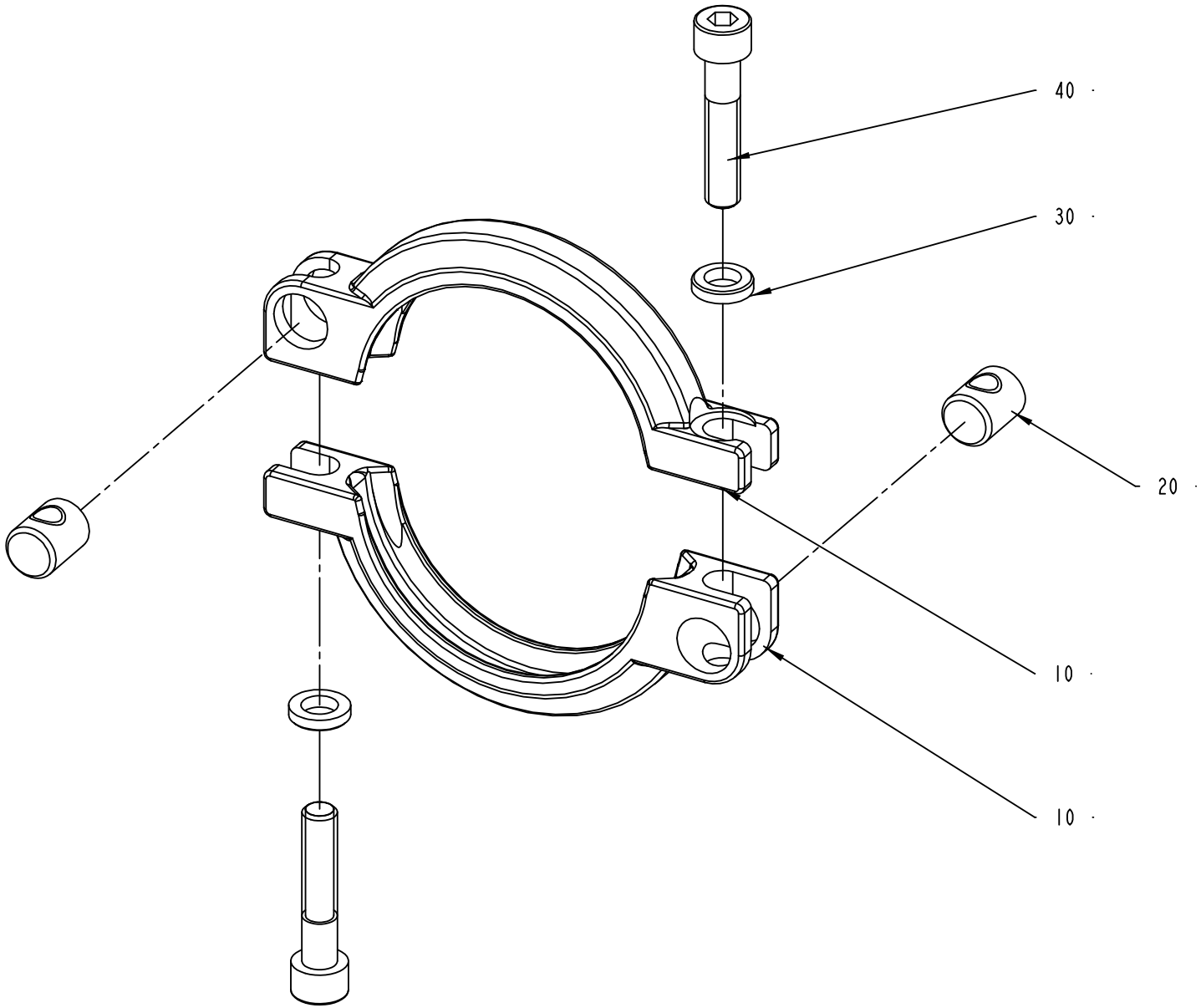
40
30
20
10
10

ECM: 102718 - 20020207
Group number: 541164-0100
Assembly Drawing: 541164-1_1_AB

Pos	Part No	SP	UN	Qty	Description	Page No
-						
010	532118-0000	B		2	CLAMP RING	
020	497748-0000	B		2	PIN	
030	541165-0000	B		2	WASHER	
040	312115-0459	-		2	SCREW ISO4762 M8X40 A4	

Pos	Part No	SP	UN	Qty	Description	Page No

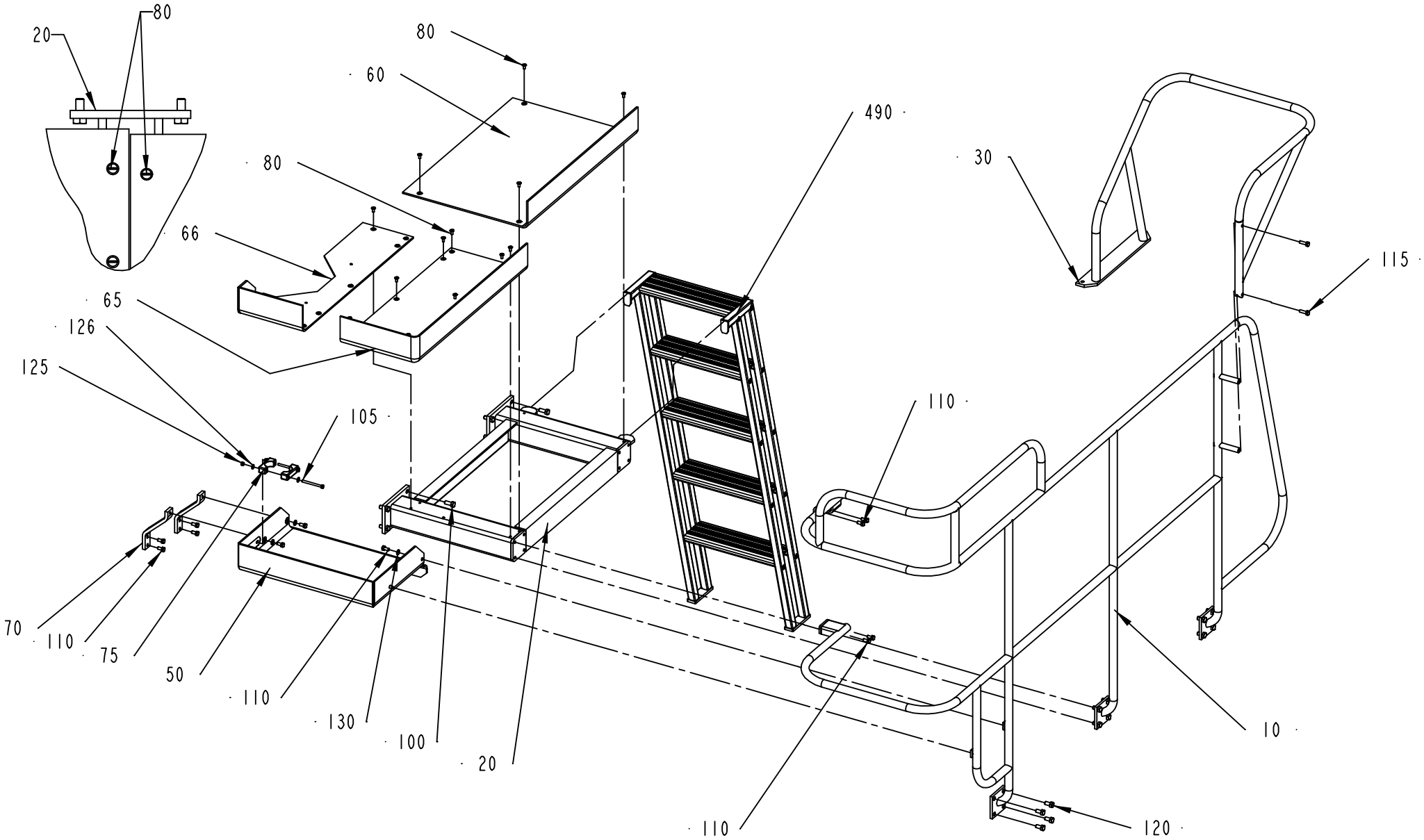
20
80
80
60
80
66
65
126
125
105
490
30
115
110
70
110
75
50
110
130
100
20
110
10
120

ECM: 105003 - 20020215
Group number: 269970-0500
Assembly Drawing: 269970-4_1_AB

Pos	Part No	SP	UN	Qty	Description	Page No
TBA/8						
030	282893-0000	-		1	SAFETY GUARD	
Common Parts						
010	434270-0000	-		1	RAILING	
020	542852-0000	-		1	CANTILEVER	
050	476599-0000	-		1	PLATFORM	
060	451389-0000	-		1	PLATFORM	
065	451390-0000	-		1	PLATFORM	
066	451391-0000	-		1	PLATFORM	
070	434273-0000	-		2	STRUT	
075	476600-0000	-		2	PIPE HOLDER	
080	90287-0075	-		20	SCREW SLOT. PAN HEAD LKCS M6X12	
100	312101-0493	-		8	SCREW M6S M10X25 FZB	
105	312105-0384	-		2	SCREW M6S ISO 4014 M6X70 A480	
110	312105-0449	-		12	SCREW M6S ISO 4017 M8X16 A480	
115	312105-0453	-		2	SCREW M6S ISO 4017 M8X25 A480	
120	312105-0491	-		12	SCREW M6S ISO 4017 M10X20 A480	
125	312605-0316	-		2	HEXAGON NUT, M6M M6 A280	
126	315105-0156	-		4	WASHER BRB 6.7X14 RFR	
130	315105-0165	-		4	WASHER BRB8,4X16RFR	
F490	A269971-0200	-		1	LADDER	**1-81**

Pos	Part No	SP	UN	Qty	Description	Page No

Machine Type | Group Description | Used-In | Group Number | Page No

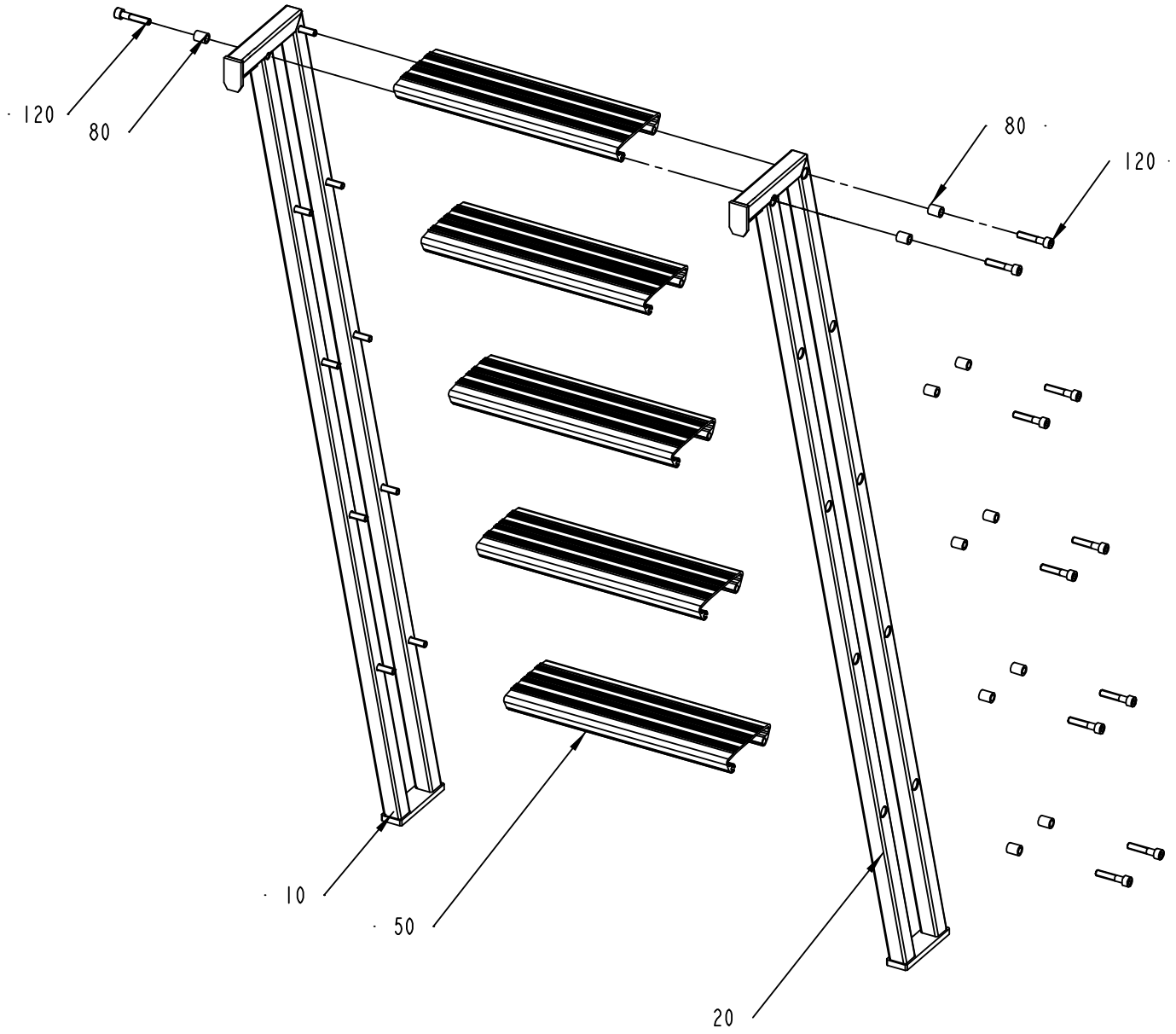
120
80
80
120
10
50
20

ECM: 81081 - 20000804
Group number: 269971-0200
Assembly Drawing: 269971-2_1_AB

Pos	Part No	SP	UN	Qty	Description	Page No
-						
010	247296-0001	-		1	SIDE PIECE	
020	247296-0002	-		1	SIDE PIECE	
050	208361-0002	-		5	STAIR	
080	208658-0001	-		20	SPACER	
120	90287-0056	-		20	SCREW MC6S-TT M8X40	

Pos	Part No	SP	UN	Qty	Description	Page No

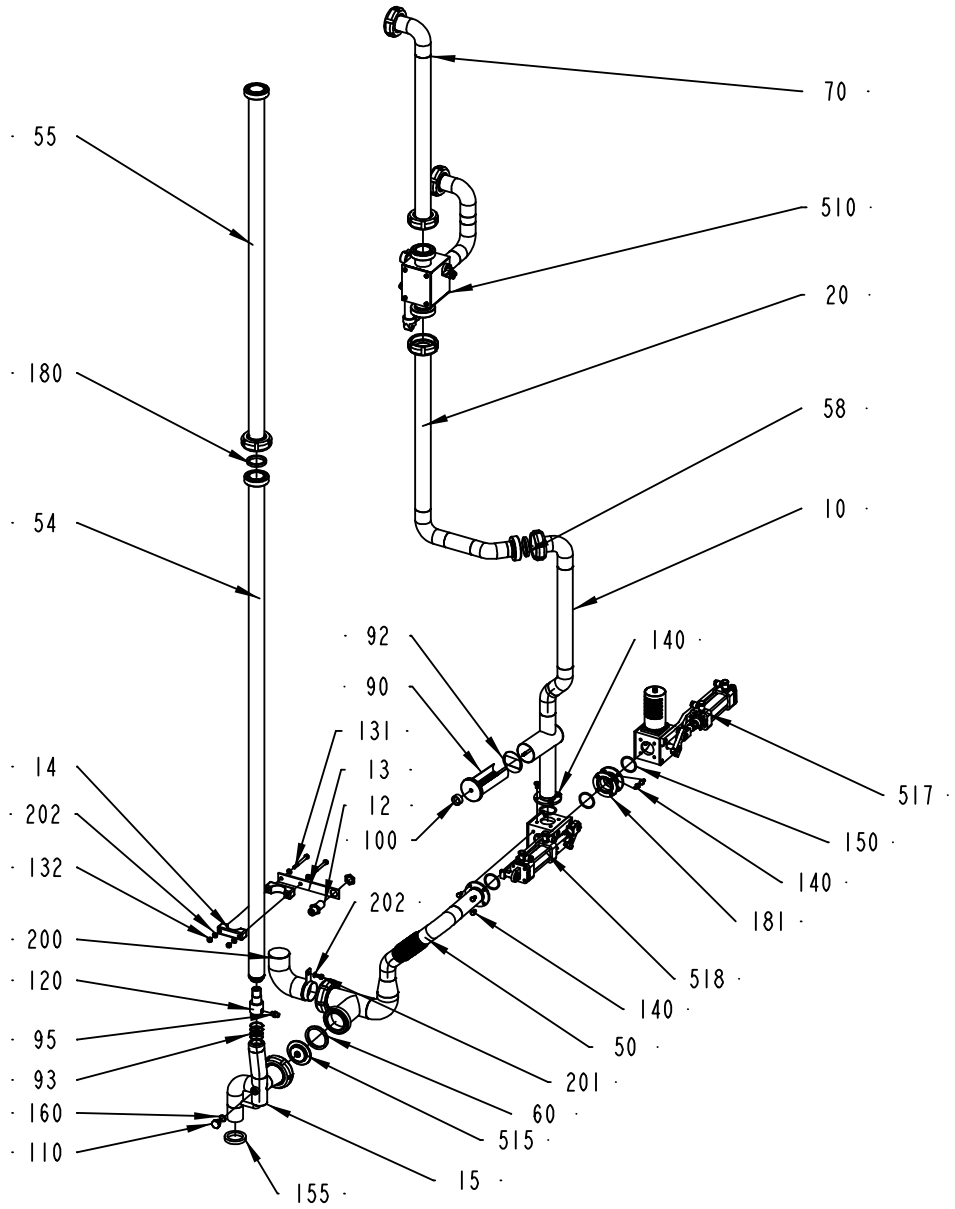
70
55
510
20
180
58
54
10
92
140
90
131
13
12
100
517
150
140
181
14
202
132
200
120
95
93
160
110
155
15
515
60
201
50
140
518
202

ECM: 105004 - 20020215
Group number: 269988-0600
Assembly Drawing: 269988-5_1_AB

Pos	Part No	SP	UN	Qty	Description	Page No
-						
010	544436-0000	-		1	FILTER PIPE	
012	90044-0099	C		1	PROXIMITY SWITCH IG REPL.BY 90044-126	
013	566228-0000	-		1	BRACKET	
014	476600-0000	D		2	PIPE HOLDER	
015	476449-0000	-		1	PIPE	
020	466471-0000	-		1	PIPE	
050	544435-0000	-		1	PIPE	
054	499826-0000	-		1	PIPE	
055	574654-0000	-		1	PIPE	
058	12242-0003	C		1	GASKET 48X38X5,5	
060	12242-0005	C		1	GASKET 61X51X5,5	
070	269522-0000	-		1	PIPE	
090	273950-0000	D		1	FILTER	
092	493653-0000	C		1	GASKET	
093	499181-0000	-		4	WASHER	
095	90030-0207	-		1	NIPPLE	
100	90051-0053	-		1	KNOB, INTERNAL THREAD, M6 24X17	
110	90330-0026	-		1	PLUG, EXT. G-THREAD, G1/4	
120	90425-0009	D		1	HESKEL ENERGY SYSTEM 27238	
131	312105-0382	-		2	SCREW M6S ISO 4014 M6X60 A480	
132	312812-0316	-		2	HEXAGON NUT, NY-LOCK M6 A480	
140	312105-0364	-		16	SCREW M6S ISO 4017 M6X10 A480	
150	315204-0222	C		4	O-RING 36,2X3 MM	
155	499825-0000	D		1	GASKET	
160	315233-0110	-		1	WASHER CAPTIVE SEALING G1/4	
180	315250-0103	C		1	GASKET 48X38X5,5 MM	
181	544439-0000	-		1	INTERMEDIATE PIPE	
200	544506-0000	-		1	PIPE	
201	312105-0362	-		1	SCREW M6S ISO 4017 M6X8 A480	
202	315105-0153	-		5	WASHER BRB6,4X12RFR	
F510	A273401-0300	-		1	CHANGE-OVER VALVE	**1-85**
F515	A476849-0100	-		1	VALVE	**1-87**
F517	A476859-0200	-		1	CHANGE-OVER VALVE	**1-89**
F518	A594618-0100	-		1	CHANGE-OVER VALVE	**1-91**

Pos	Part No	SP	UN	Qty	Description	Page No

Machine Type | Group Description | Used-In | Group Number | Page No

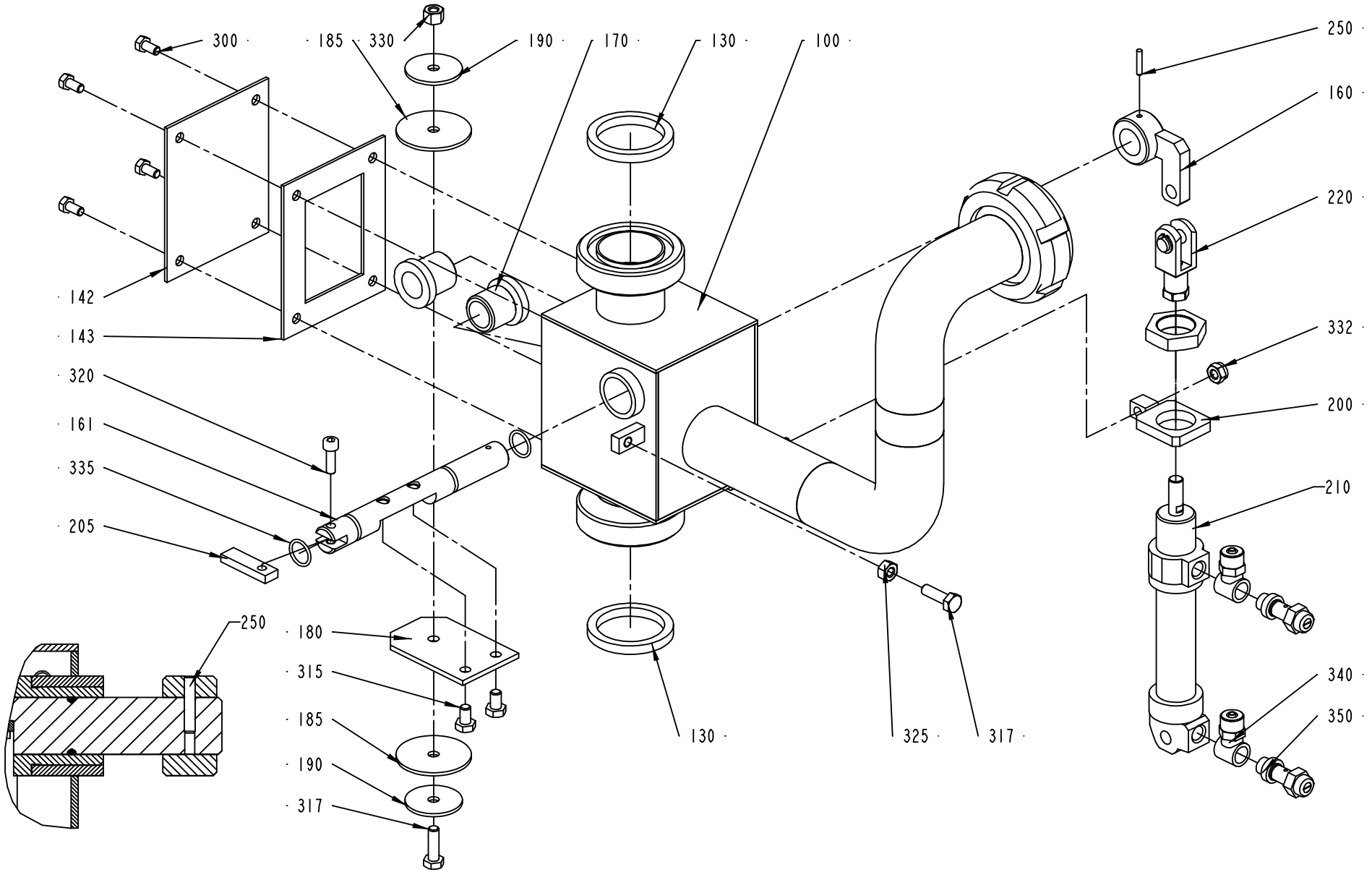
300
185
330
190
170
130
100
250
160
220
142
143
320
161
335
205
332
200
210
250
180
315
185
190
317
130
325
317
340
350

ECM: 105005 - 20020215
Group number: 273401-0300
Assembly Drawing: 273401-3_1_AB

Pos	Part No	SP	UN	Qty	Description	Page No
-						
100	531034-0000	-		1	VALVE HOUSING	
130	12242-0003	C		2	GASKET 48X38X5,5	
142	251454-0000	-		1	LID	
143	251455-0000	C		1	SEAL	
160	531035-0000	-		1	ARM	
161	531036-0000	D		1	SHAFT	
170	266182-0000	C		2	BUSHING	
180	531037-0000	-		1	FLAP	
185	531038-0000	C		2	GASKET	
190	531039-0000	D		2	WASHER	
200	531040-0000	-		1	BRACKET	
205	531041-0000	-		1	WEDGE	
210	90239-0822	C		1	DOUBLE ACTING, MINI-ISO, CYL.20-50	
220	90239-0490	D		1	ROD END, CLEVIS WITH AXLE M8X1,25	
250	311103-0236	-		1	PARALLEL PIN ISO 2338 3M6X16 A1	
300	312105-0325	-		4	SCREW M6S ISO 4017 M5X10 A480	
315	312105-0364	-		2	SCREW M6S ISO 4017 M6X10 A480	
317	312105-0370	-		2	SCREW M6S ISO 4017 M6X20 A480	
320	312115-0329	-		1	SCREW ISO4762 M5X16 A4	
325	312605-0316	-		1	HEXAGON NUT, M6M M6 A280	
330	312811-0316	-		1	NUT HEX.LOCK HELI COIL MID GRIP M6 SS	
332	312812-0316	-		1	HEXAGON NUT, NY-LOCK M6 A480	
335	315204-0111	C		2	O-RING 13,1X1,6 MM	
340	342980-0113	-		2	BANJO-CONNECTION,RING 6/4-G1/8"	
350	90235-0274	-		2	THROTTLE CHECK VALVES,G1/8"	

Pos	Part No	SP	UN	Qty	Description	Page No

Machine Type | Group Description | Used-In | Group Number | Page No

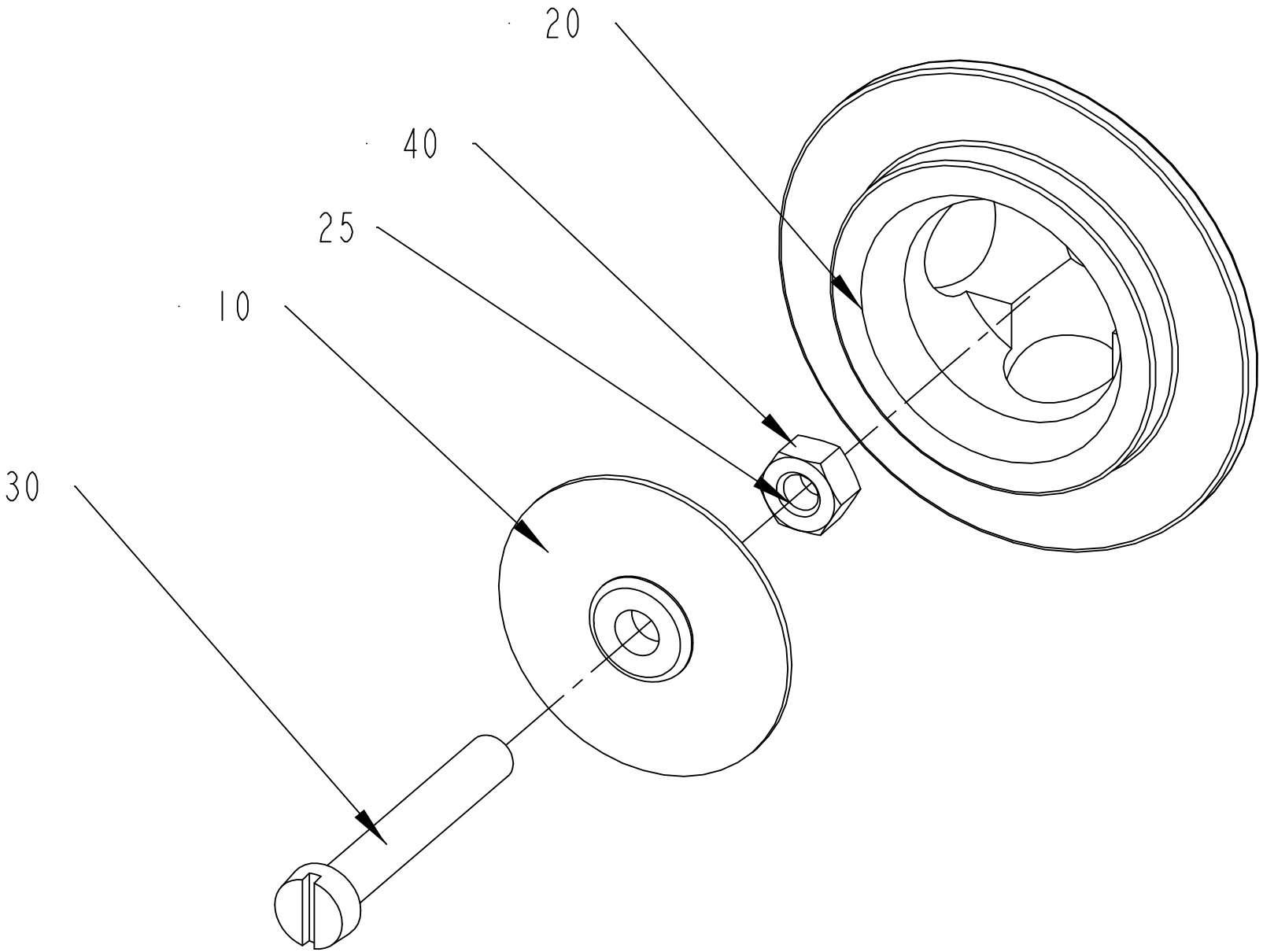
20
40
25
10
30

ECM: 81404 - 20000804
Group number: 476849-0100
Assembly Drawing: 476849-1_1_AC

Pos	Part No	SP	UN	Qty	Description	Page No
-						
010	273944-0000	C		1	DIAPHRAGM	
020	273951-0000	D		1	VALVE HOUSING	
025	90157-0016	-	ML	1	LOCKING FLUID	
030	312125-0378	-		1	SLOTTED CHEESE HEAD SCREW MCS 6X40 SS	
040	312605-0316	-		1	HEXAGON NUT, M6M M6 A280	

Pos	Part No	SP	UN	Qty	Description	Page No

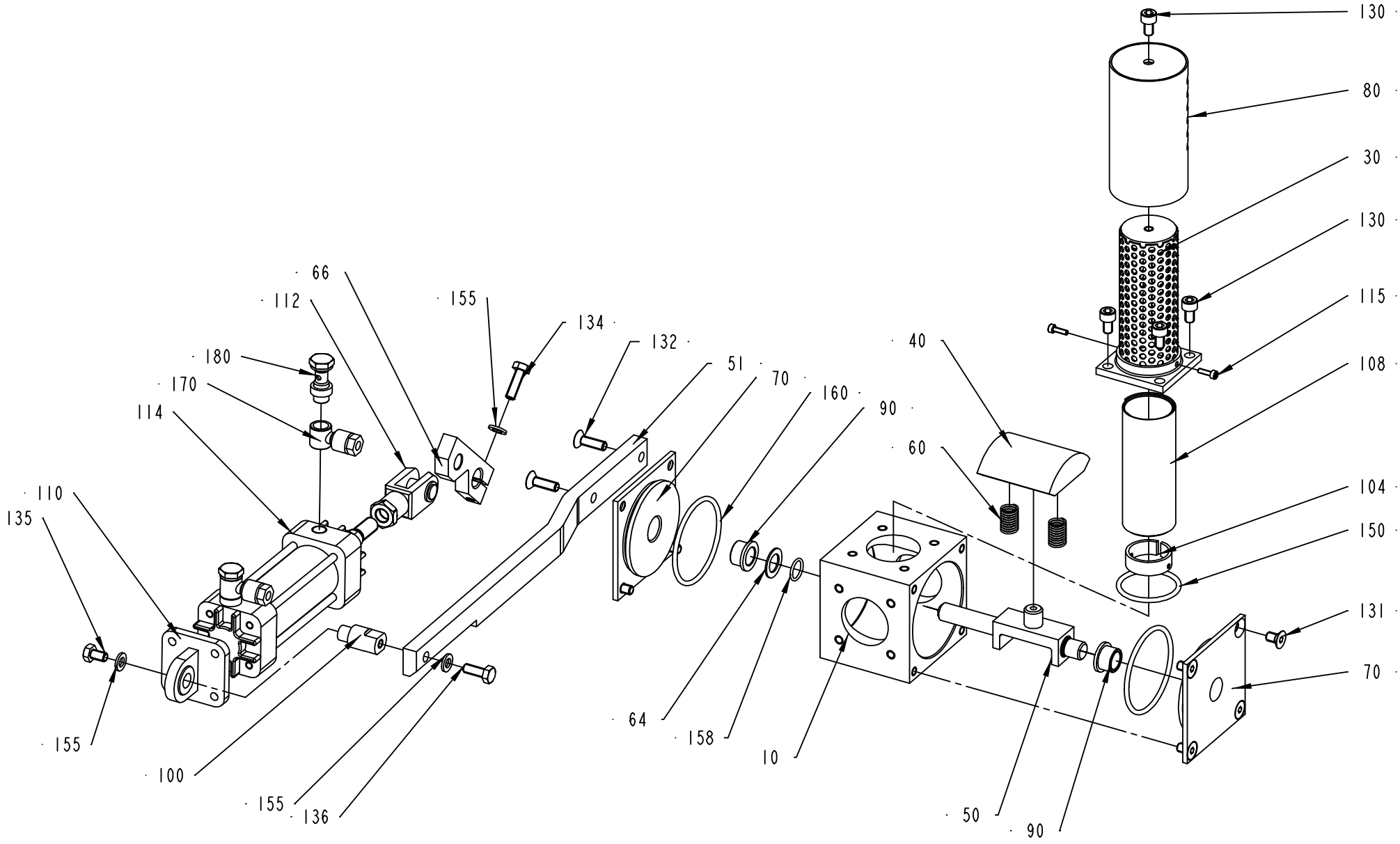
130
80
30
130
115
108
104
150
131
70
40
90
60
160
70
51
132
134
155
66
112
180
170
114
110
135
155
100
155
136
64
158
10
50
90

ECM: 102740 - 20020207
Group number: 476859-0200
Assembly Drawing: 476859-3_1_AD

Pos	Part No	SP	UN	Qty	Description	Page No
-						
010	466474-0000	-		1	VALVE HOUSING	
030	466477-0000	-		1	INNER PIPE	
040	466479-0000	B		1	PIECE	
050	555541-0000	B		1	BRACKET	
051	555542-0000	B		1	BRACKET	
060	21521-0000	A		2	COMPRESSION SPRING	
064	266737-0000	B		1	WASHER	
066	441483-0000	B		1	CYLINDER BRACKET	
070	255874-0000	-		2	BEARING COVER	
080	466478-0000	-		1	OUTER PIPE	
090	255875-0000	A		2	BUSHING	
100	555540-0000	B		1	SPACER	
104	466483-0000	-		1	CLAMPING PIECE	
108	466484-0000	-		1	NET	
110	90239-0453	B		1	BRACKET	
112	90239-0516	B		1	ROD END, CLEVIS WITH AXLE M10X1,25	
114	B90239-0779	A		1	CYLINDER	
	90239-0442	*C*		*1*	*SEAL KIT*	
115	312115-0224	-		2	SCREW ISO4762 M3X10 A4	
130	312115-0364	-		5	SCREW ISO4762 M6X10 A4	
131	312155-0364	-		6	SCREW EN 10642 MF6S M6X10 A480	
132	312155-0370	-		2	SCREW EN 10642 MF6S M6X20 A480	
134	312105-0370	-		1	SCREW M6S ISO 4017 M6X20 A480	
135	312105-0364	-		2	SCREW M6S ISO 4017 M6X10 A480	
136	312105-0368	-		1	SCREW M6S M6X16 A280	
150	315204-0222	A		1	O-RING 36,2X3 MM	
155	315105-0153	-		3	WASHER BRB6,4X12RFR	
158	315204-0110	A		1	O-RING 12,1X1,6 MM	
160	315204-0302	A		2	O-RING 54,5X3 MM	
170	342797-0121	-		2	CONN. BANJO, RINGPIECE 6-1/8	
180	342980-0303	-		2	BANJO-HOLLOW BOLT COUPL,EXT.THR.01-G1/8"	

Pos	Part No	SP	UN	Qty	Description	Page No

Machine Type	Group Description	Used-In	Group Number	Page No

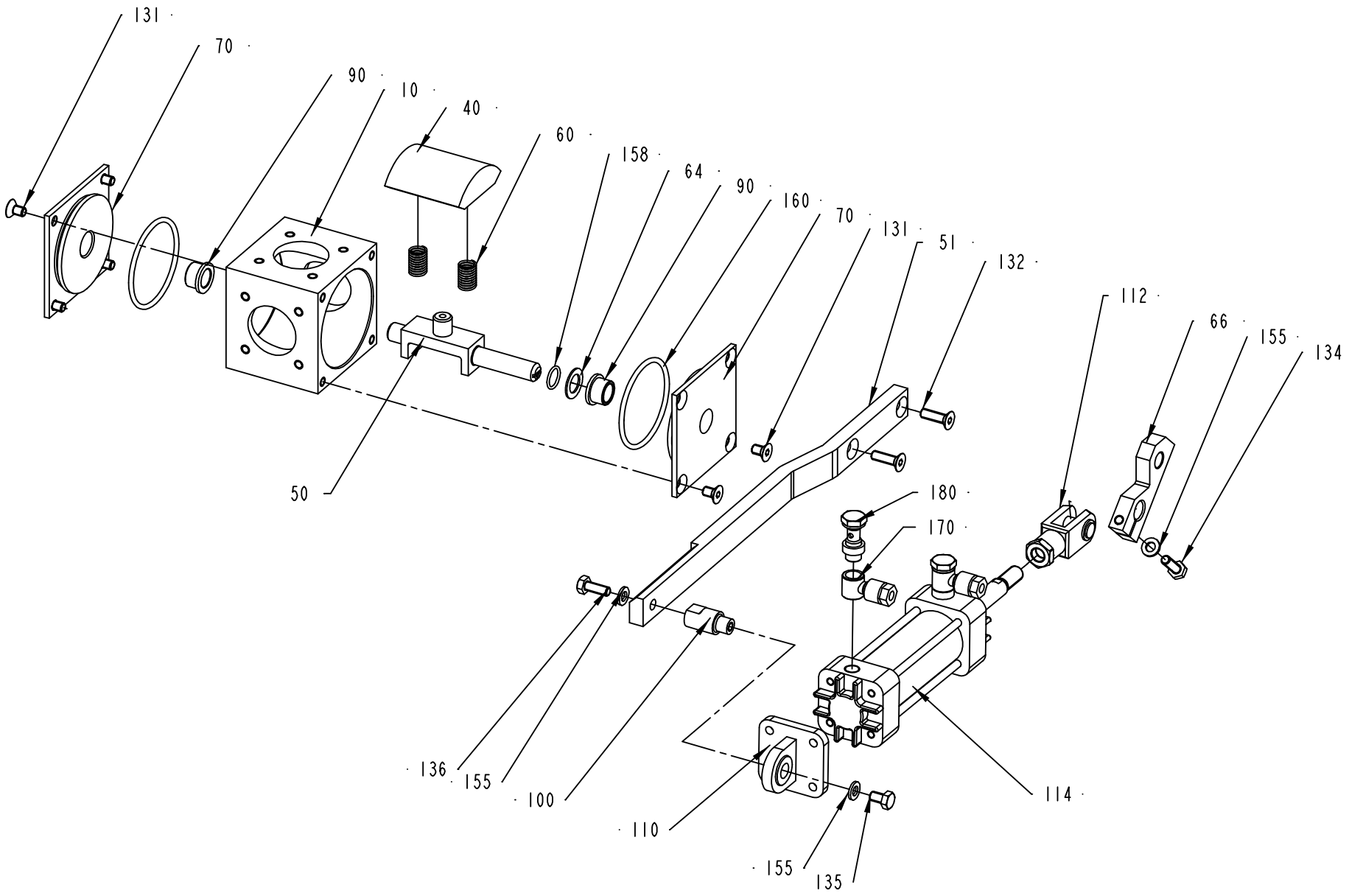
131
70
90
10
40
60
158
64
90
160
70
131
51
132
112
66
155
134
50
180
170
136
155
100
110
155
135
114

ECM: 102928 - 20020115
Group number: 594618-0100
Assembly Drawing: 594618-1_1_AC

Pos	Part No	SP	UN	Qty	Description	Page No
-						
010	466474-0000	-		1	VALVE HOUSING	
040	466479-0000	B		1	PIECE	
050	555541-0000	B		1	BRACKET	
051	555542-0000	A		1	BRACKET	
060	21521-0000	A		2	COMPRESSION SPRING	
064	266737-0000	B		1	WASHER	
066	441483-0000	B		1	CYLINDER BRACKET	
070	255874-0000	-		2	BEARING COVER	
090	255875-0000	A		2	BUSHING	
100	555540-0000	B		1	SPACER	
110	90239-0453	B		1	BRACKET	
112	90239-0516	B		1	ROD END, CLEVIS WITH AXLE M10X1,25	
114	B90239-0779	A		1	CYLINDER	
	90239-0442	*C*		*1*	*SEAL KIT*	
131	312155-0364	-		6	SCREW EN 10642 MF6S M6X10 A480	
132	312155-0370	-		2	SCREW EN 10642 MF6S M6X20 A480	
134	312105-0370	-		1	SCREW M6S ISO 4017 M6X20 A480	
135	312105-0364	-		2	SCREW M6S ISO 4017 M6X10 A480	
136	312105-0368	-		1	SCREW M6S M6X16 A280	
155	315105-0153	-		3	WASHER BRB6,4X12RFR	
158	315204-0110	A		1	O-RING 12,1X1,6 MM	
160	315204-0302	A		2	O-RING 54,5X3 MM	
170	342797-0121	-		2	CONN. BANJO, RINGPIECE 6-1/8	
180	342980-0303	-		2	BANJO-HOLLOW BOLT COUPL,EXT.THR.01-G1/8"	

Pos	Part No	SP	UN	Qty	Description	Page No

Machine Type | Group Description | Used-In | Group Number | Page No

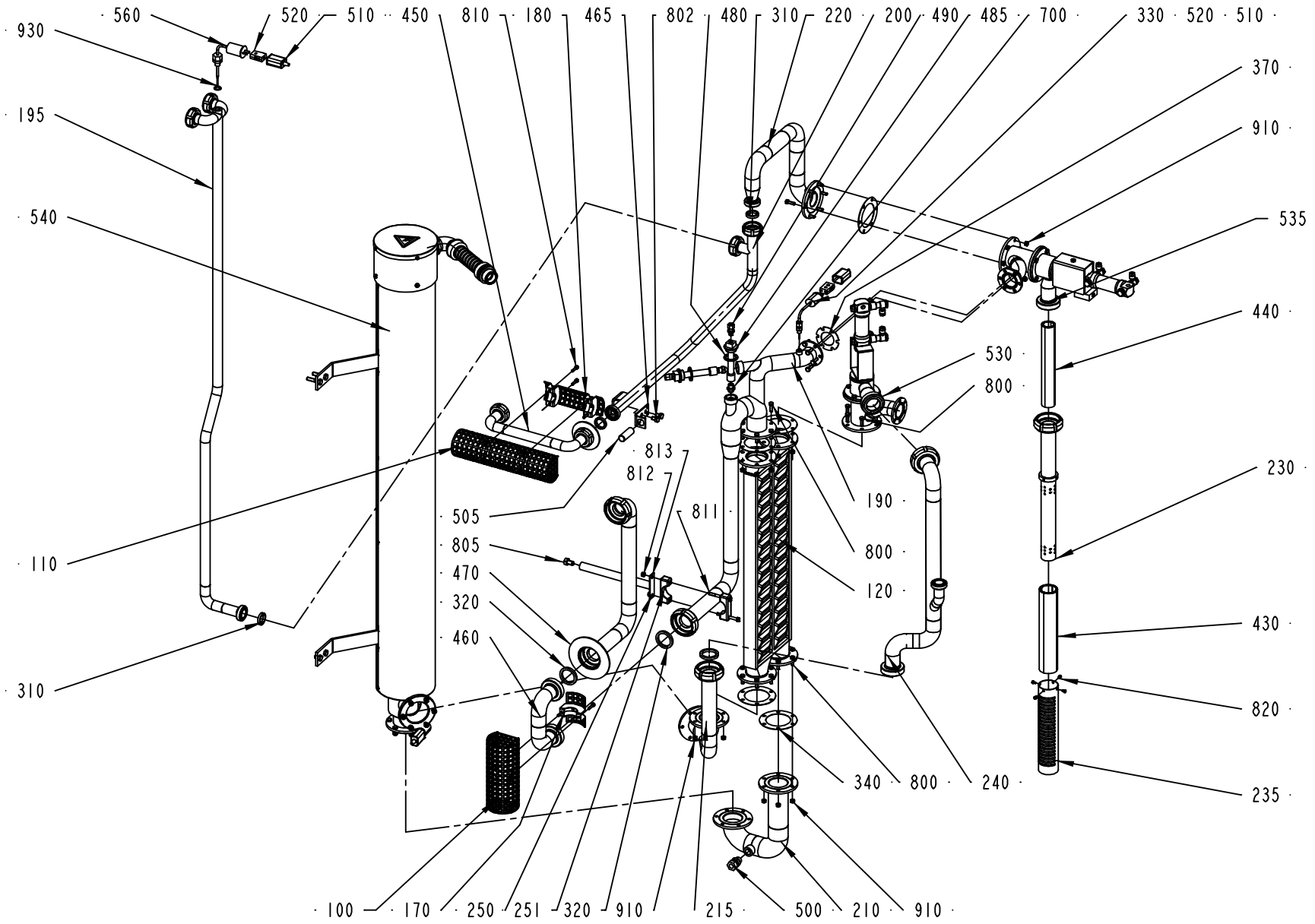
560
520
510
450
810
180
465
802
480
310
220
200
490
485
700
330
520
510
930
370
195
910
540
535
440
530
800
813
812
230
505
811
190
805
800
470
120
320
460
430
310
820
340
800
240
235
100
170
250
251
320
910
215
500
210
910

ECM: 72606 - 20001113
Group number: 273400-0700
Assembly Drawing: 273400-5_1_AC

Pos	Part No	SP	UN	Qty	Description	Page No
-						
100	273514-0000	D		1	TOUCH GUARD	
110	273547-0002	D		1	TOUCH GUARD	
120	522090-0000	C		1	HEAT EXCHANGER	
170	273515-0000	D		1	TOUCH GUARD	
180	273548-0002	D		1	TOUCH GUARD	
190	434274-0000	D		1	PIPE	
195	534426-0000	D		1	PIPE	
200	449818-0000	D		1	PIPE	
210	269405-0000	D		1	PIPE	
215	276166-0000	D		1	PIPE	
220	276167-0000	D		1	PIPE	
230	276304-0000	D		1	PIPE	
235	276305-0000	D		1	PIPE	
240	544437-0000	D		1	BRANCH PIPE	
250	566229-0000	-		1	BRACKET	
251	476600-0000	-		2	PIPE HOLDER	
310	12242-0001	C		3	GASKET 32X25X5,5	
320	12242-0003	C		3	GASKET 48X38X5,5	
330	90326-0052	C		1	THERMO ELEMENT	
340	531737-0000	C		5	GASKET	
370	531742-0000	C		1	GASKET	
430	278954-0000	D		1	NET	
440	278955-0000	D		1	NET	
450	449817-0000	D		1	U-TUBE	
460	561583-0000	D		1	U-TUBE	
465	449960-0000	-		1	BRACKET	
470	449963-0000	D		1	U-TUBE	
480	450022-0000	C		2	WASHER	
485	450023-0000	D		2	BRACKET	
490	90030-0051	-		2	CONN. STR., 6-R1/8, EXT. THREAD	
500	90030-0187	-		1	CONN. STR. GA-12-G3/8	
505	90044-0126	-		1	PROX.SW. 922AA3XM-A9P-060-LZ876	
510	90326-0012	C		2	PROTECTIVE COVER, T31A4618	
520	90326-0020	C		2	PLUG, FEMALE YELLOW CR-AL	
530	90326-0053	C		1	THERMOCOUPLE, 12826-35	
700	90424-0031	C		2	SPRAY NOZZLE 60 DEG	
800	312105-0370	-		30	SCREW M6S ISO 4017 M6X20 A480	
802	312105-0447	-		2	SCREW M6S ISO 4017 M8X12 A480	
805	312105-0489	-		1	SCREW M6S ISO 4017 M10X16 A480	
810	312115-0331	-		6	SCREW ISO4762 M5X20 A4	
811	312105-0382	-		2	SCREW M6S ISO 4014 M6X60 A480	
812	312812-0316	-		2	HEXAGON NUT, NY-LOCK M6 A480	
813	315105-0153	-		2	WASHER BRB6,4X12RFR	
820	312125-0285	-		4	SLOTTED CHEESE HEAD SCREW MCS 4X6 SS	
910	312605-0316	-		30	HEXAGON NUT, M6M M6 A280	
930	315234-0110	-		1	WASHER,PL.RND.CU.13,5/18 H=1,5	
F530	A269989-0300	-		1	VALVE	**1-95**
F535	A594616-0100	-		1	VALVE	**1-97**
F540	A273402-0400	-		1	AIR SUPER-HEATER	**1-99**

Machine Type | Group Description | Used-In | Group Number | Page No

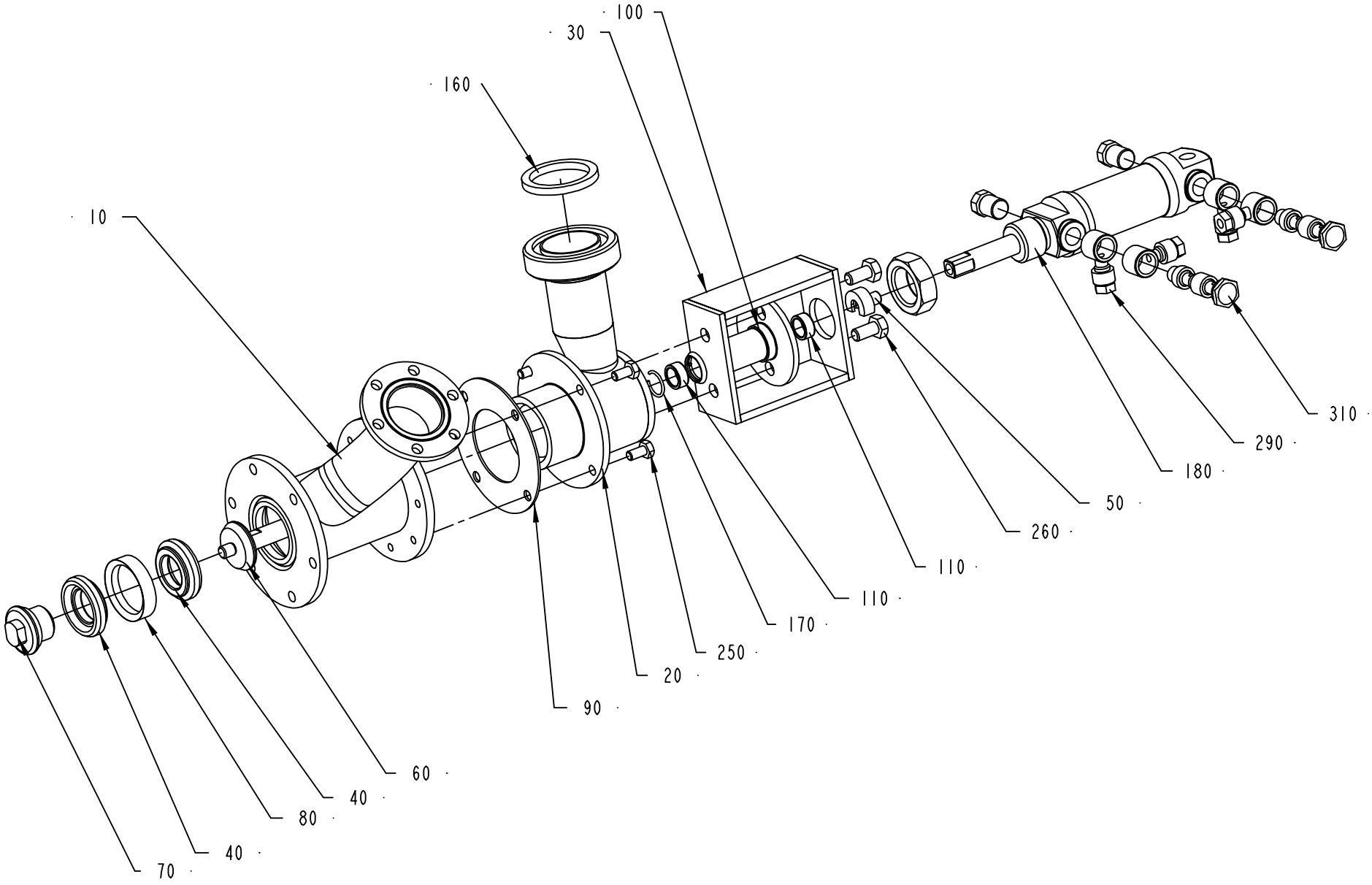
100
30
160
10
310
290
180
50
260
110
110
170
250
20
90
60
40
80
40
70

ECM: 72606 - 20001113
Group number: 269989-0300
Assembly Drawing: 269989-3_1_AB

Pos	Part No	SP	UN	Qty	Description	Page No
-						
010	276164-0000	D		1	VALVE HOUSING	
020	276165-0000	D		1	HOUSE	
030	266394-0000	-		1	BRACKET	
040	530588-0000	C		2	SEAL RING	
050	37638-0000	D		1	PENDULUM SUSPENSION	
060	266389-0000	C		1	PISTON ROD	
070	266390-0000	C		1	NUT	
080	266391-0000	C		1	RING	
090	531765-0000	C		1	GASKET	
100	532348-0000	C		1	SPINDLE GUIDE	
110	532349-0000	C		2	PLAIN BEARING	
160	90091-0182	C		1	GASKET 48X38X4,8 MM	
170	90141-0022	C		1	SNAP RING B 16	
180	B90239-0166	C		1	CYLINDER	
	90285-0094	*C*		*1*	*SEAL KIT*	
250	312105-0366	-		4	SCREW M6S M6X12 A280	
260	312105-0449	-		2	SCREW M6S ISO 4017 M8X16 A480	
290	342797-0122	-		4	CONN. BANJO, RINGPIECE 6-1/4	
310	342980-0314	-		2	BANJO-HOLLOW BOLT COUPL,EXT.THR.02-G1/4"	

Pos	Part No	SP	UN	Qty	Description	Page No

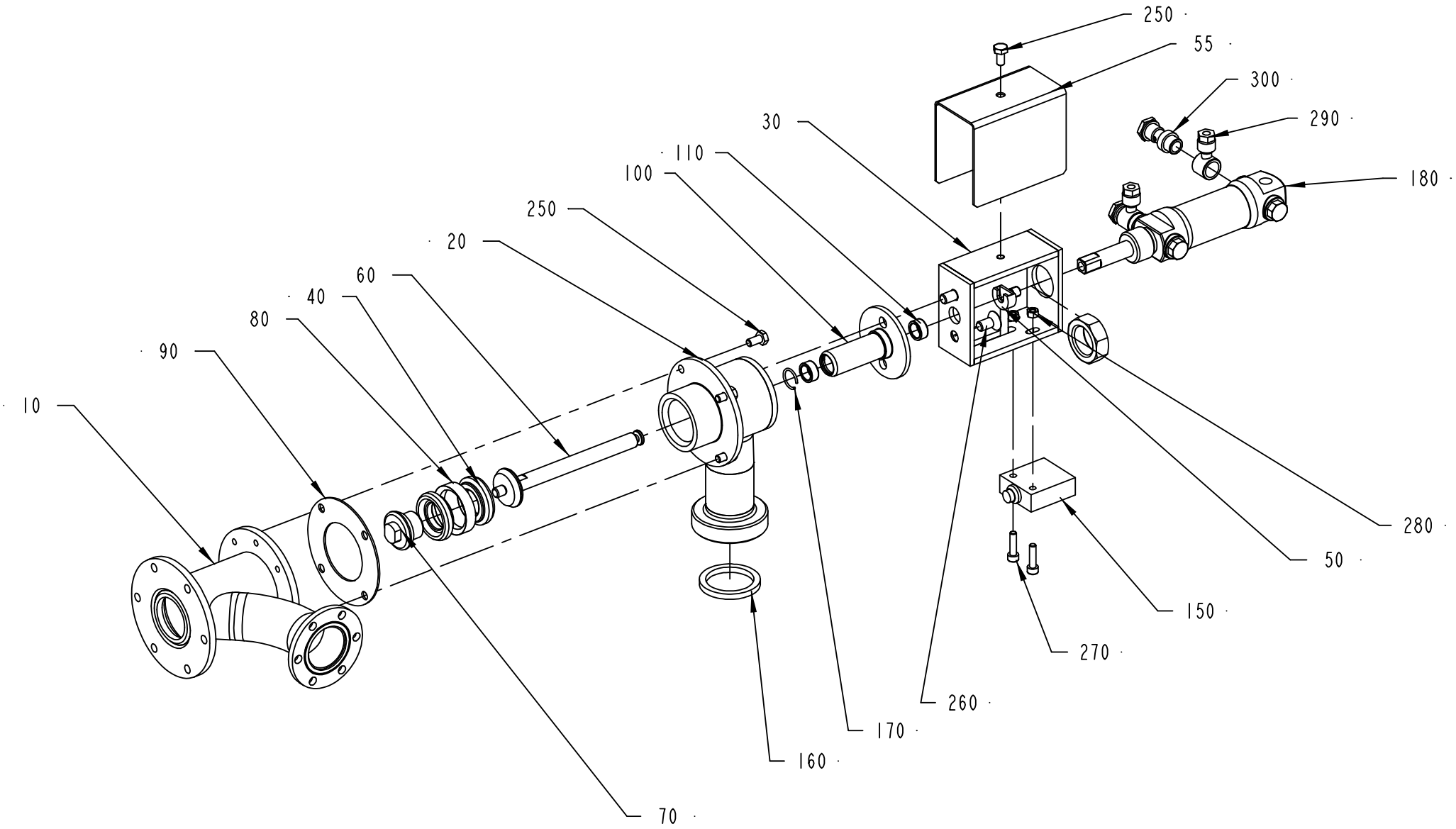
250
55
300
290
30
110
100
180
250
20
60
40
80
90
10
280
50
150
270
260
170
160
70

ECM: 72606 - 20001113
Group number: 594616-0100
Assembly Drawing: 594616-1_1_AB

Pos	Part No	SP	UN	Qty	Description	Page No
-						
010	276164-0000	D		1	VALVE HOUSING	
020	276165-0000	D		1	HOUSE	
030	449414-0000	-		1	BRACKET	
040	530588-0000	C		2	SEAL RING	
050	449415-0000	D		1	PENDULUM SUSPENSION	
055	574653-0000	-		1	PROTECTION	
060	266389-0000	C		1	PISTON ROD	
070	266390-0000	C		1	NUT	
080	266391-0000	C		1	RING	
090	531765-0000	C		1	GASKET	
100	532348-0000	C		1	SPINDLE GUIDE	
110	532349-0000	C		2	PLAIN BEARING	
150	90044-0084	C		1	LIMIT SW. 14 CE1-4	
160	90091-0182	C		1	GASKET 48X38X4,8 MM	
170	90141-0022	C		1	SNAP RING B 16	
180	B90239-0166	C		1	CYLINDER	
	90285-0094	*C*		*1*	*SEAL KIT*	
250-02	312105-0366	-		7	SCREW M6S M6X12 A280	
260	312155-0449	-		2	SCREW EN 10642 MF6S M8X16 A480	
270	312115-0331	-		2	SCREW ISO4762 M5X20 A4	
280	312605-0314	-		2	HEXAGON NUT, M6M M5 A280	
290	342797-0122	-		2	CONN. BANJO, RINGPIECE 6-1/4	
300	342980-0304	-		2	BANJO-HOLLOW BOLT COUPL,EXT.THR.01-G1/4"	

Pos	Part No	SP	UN	Qty	Description	Page No

Machine Type | Group Description | Used-In | Group Number | Page No

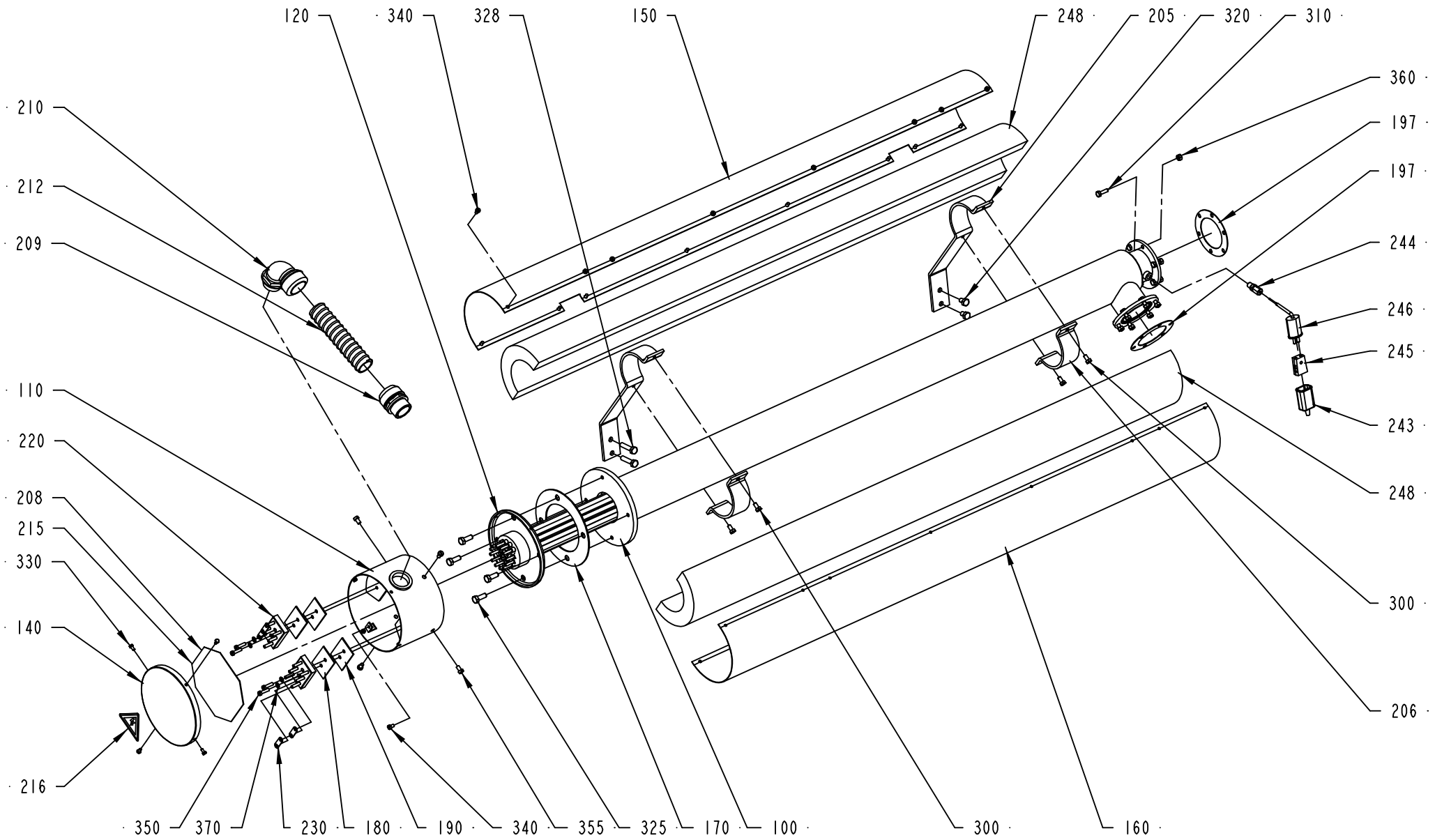
120
340
328
150
248
205
320
310
360
197
197
244
246
245
243
248
300
206
160
300
210
212
209
110
220
208
215
330
140
216
350
370
230
180
190
340
355
325
170
100

ECM: 72606 - 20001113
Group number: 273402-0400
Assembly Drawing: 273402-4_1_AC

Pos	Part No	SP	UN	Qty	Description	Page No
-						
100	434469-0000	-		1	HEATING PIPE	
110	451430-0000	-		1	CONNECTION HOUS.(MINOR)	
120	B449939-0001	C		1	HEATING ELEMENT 15KW	
	449938-0001	*C*		*2*	*HEATING PIPE*	
	449938-0002	*C*		*2*	*HEATING PIPE*	
	449938-0003	*C*		*2*	*HEATING PIPE*	
140	29876-0000	-		1	COVER	
150	269577-0000	-		1	DISCHARGE TRAY	
160	269578-0000	-		1	DISCHARGE TRAY	
170	531731-0000	C		1	GASKET	
180	751009-0000	C		2	INSULATION	
190	30298-0000	C		2	INSULATION	
197	531737-0000	C		2	GASKET	
205	269575-0000	-		2	HOLDER	
206	269576-0000	-		2	CAP	
208	545995-0000	-		1	WIRING DIAGRAM	
209	90012-0061	-		1	GLAND	
210	90012-0062	-		1	GLAND	
212	90152-0031	-	MM	500	HOSE	
215	90153-0020	-	ML	1	ADHESIVE, BOSTIK 1782 125ML	
216	90194-0016	-		1	WARNING SIGN, RISK OF ELECTRIC SHOCK	
220	90195-0028	-		2	TERM.BLOCK 6-POLE STEATIT	
230	90195-0029	-		4	CONN. LINK NO324 FOR -28	
243	90326-0012	-		1	PROTECTIVE COVER, T31A4618	
244	90326-0017	-		1	GLAND 1/8".REPL.BY 90326-306	
245	90326-0020	C		1	PLUG, FEMALE YELLOW CR-AL	
246	90326-0043	C		1	THERMOCOUPLE, CR-ALPREM.G	
248	90411-0005	D	MM	1232	INSULATOR	
300	312105-0366	-		4	SCREW M6S M6X12 A280	
310	312105-0370	-		12	SCREW M6S ISO 4017 M6X20 A480	
320	312105-0447	-		2	SCREW M6S ISO 4017 M8X12 A480	
325	312105-0452	-		4	SCREW M6S ISO 4017 M8X22 A480	
328	312105-0457	-		2	SCREW M6S ISO 4014 M8X35 A480	
330	312105-0287	-		4	SCREW M6S ISO4017 M4X8 A480	
340	312125-0323	-		17	SLOTTED CHEESE HEAD SCREW MCS 5X8 SS	
350	312125-0331	-		4	SLOTTED CHEESE HEAD SCREW MCS 5X20 SS	
355	312125-0364	-		4	SLOTTED CHEESE HEAD SCREW MCS 6X10 SS	
360	312605-0316	-		12	HEXAGON NUT, M6M M6 A280	
370	315105-0146	-		4	BRICKA BRB5,3X10RFR	

Pos	Part No	SP	UN	Qty	Description	Page No

Machine Type | Group Description | Used-In | Group Number | Page No

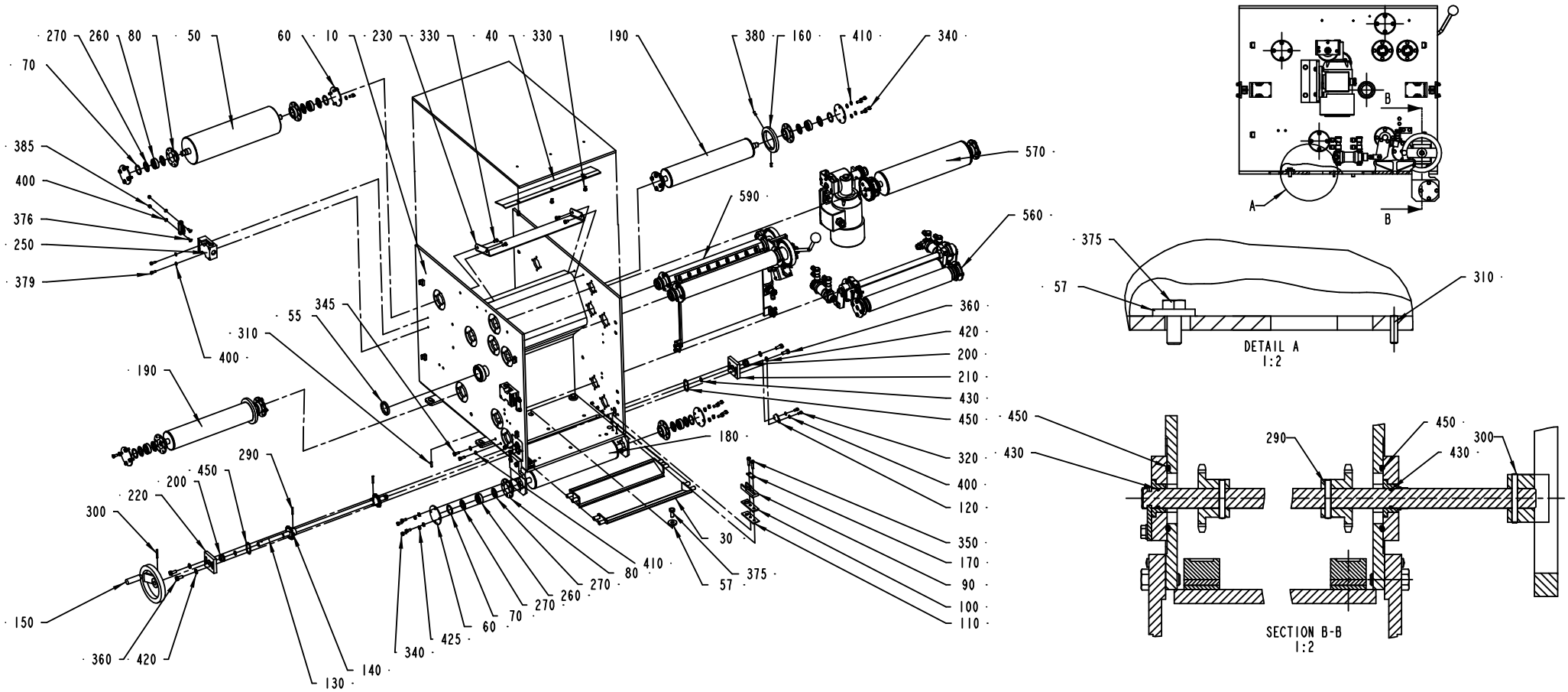
270 260 80 50 60 10 230 330 40 330 190 380 160 410 340
70
385
400
376
250
379
570
590
560
360
420
200
210
430
450
320
400
120
350
170
90
100
110
55
345
310
190
180
290
450
200
220
300
150
360 420
130
140
340
425
60
70
270
260
270
80
410
30
57
375
A
B
DETAIL A
1:2
375
57
310
450
430
290
450
430
300
SECTION B-B
1:2

ECM: 104516 - 20020611
Group number: 276373-0700
Assembly Drawing: 276373-7_1_AC

Pos	Part No	SP	UN	Qty	Description	Page No
-						
010	573430-0000	-		1	DRYING HOUSE	
030	247422-0000	-		2	DRIP PLATE	
040	251544-0000	-		1	SHEET	
050	543950-0000	A		1	BENDING ROLLER	
055	12242-0003	A		1	GASKET 48X38X5,5	
057	497719-0000	-		6	WASHER	
060	247171-0000	A		8	BEARING COVER	
070	247172-0000	A		8	SPACER RING	
080	247173-0000	A		8	BEARING SEAT	
090	247349-0000	A		2	STEERING	
100	491602-0000	A		2	GASKET HOLDER	
110	491128-0000	A		2	GASKET	
120	247355-0000	-		1	LOCK WASHER	
130	531190-0000	A		1	SHAFT	
140	247357-0000	A		2	SPROCKET	
150	247358-0000	A		1	SHIFTER HANDLE	
160	250588-0000	A		2	FLANGE	
170	267033-0000	A		2	WASHER	
180	279006-0000	A		1	BENDING ROLLER	
190	279007-0000	A		2	BENDING ROLLER	
200	531191-0000	A		2	BUSHING	
210	279009-0000	-		1	BEARING PLATE	
220	279010-0000	-		1	BEARING PLATE	
230	279011-0000	-		1	COVERING PLATE	
250	B90044-0103	-		2	KEY SAFETY SWITCH AZ 15 ZVR	
	90044-0310	*A*		*1*	*KEY FOR SAFETY SWITCH, AZ 15/16 B1*	
260	90458-1704	A		8	BALL BEARING, 15X35X11 MM	
270	90214-0303	A		16	SEALING RING, 18,6X35X2 MM	
290	311103-0275	-		2	PARALLEL PIN ISO 2338 4M6X28 A1	
300	311103-0278	-		1	PARALLEL PIN ISO 2338 4M6X35 A1	
310	311103-0310	-		2	PARALLEL PIN ISO 2338 5M6X20 A1	
320	312105-0325	-		2	SCREW M6S ISO 4017 M5X10 A480	
330	312105-0364	-		7	SCREW M6S ISO 4017 M6X10 A480	
340	312105-0367	-		32	SCREW M6S M6X14 A280	
345	312105-0368	-		8	SCREW M6S M6X16 A280	
350	312105-0372	-		4	SCREW M6S ISO 4017 M6X25 A480	
360	312105-0451	-		4	SCREW M6S ISO 4017 M8X20 A480	
375	312105-0493	-		6	SCREW M6S ISO 4017 M10X25 A480	
376	312155-0329	-		4	SCREW EN 10642 MF6S M5X16 A480	
379	312115-0328	-		4	SCREW ISO4762 M5X14 A4	
380	312318-0327	-		4	SCREW ISO4029 M5X12 A4	
385	312812-0314	-		4	HEXAGON NUT, NY-LOCK M5 A480	
400	315105-0146	-		10	BRICKA BRB5,3X10RFR	
410	315105-0153	-		32	WASHER BRB6,4X12RFR	
420	315105-0165	-		4	WASHER BRB8,4X16RFR	
425	315115-0153	-		8	WASHER PLAIN, TBRB 6,4/12 H=3	
430	315204-0109	A		2	O-RING 11,1X1,6 MM	
450	315204-0221	A		2	O-RING 34,2X3 MM	
F560	A263391-0400	-		1	CALENDER ROLLER	**1-103**
F570	A263394-0300	-		1	BENDING ROLLER	**1-105**
F590	A276345-0300	-		1	AIR KNIFE	**1-107**

Machine Type | Group Description | Used-In | Group Number | Page No

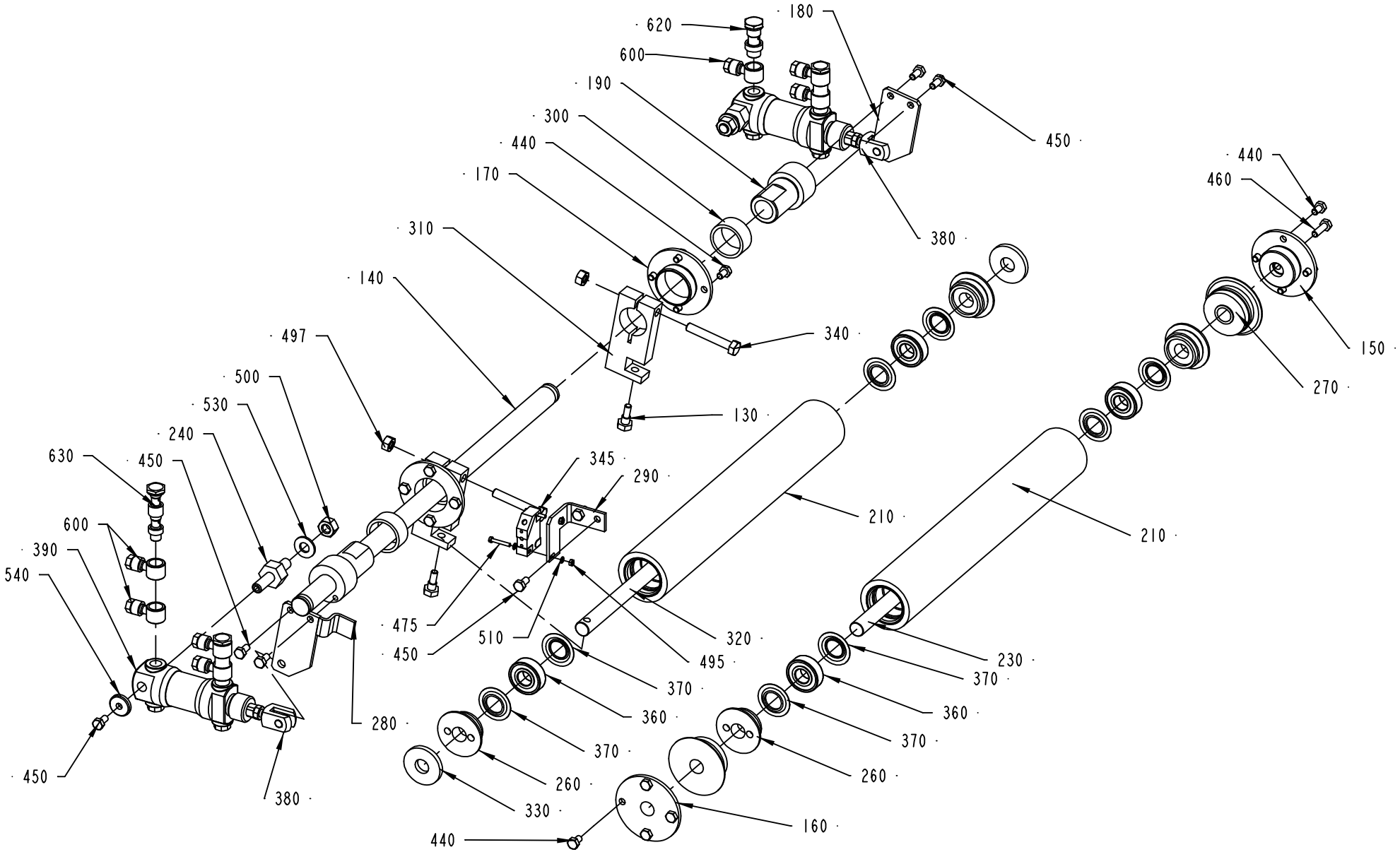
620
600
180
190
300
440
170
310
140
497
500
530
240
630
450
600
390
540
450
475
450
510
345
290
320
495
370
360
370
280
380
450
260
330
440
160
210
230
370
360
370
260
210
440
460
150
270
380
450
340
130

ECM: 106182 - 20020611
Group number: 263391-0400
Assembly Drawing: 263391-4_1_AC

Pos	Part No	SP	UN	Qty	Description	Page No
-						
130	246966-0000	A		2	SCREW	
140	532145-0000	A		1	SHAFT	
150	247159-0000	A		1	AXLE SUPPORT	
160	247160-0000	A		1	AXLE SUPPORT	
170	247161-0000	A		2	AXLE SUPPORT	
180	247162-0000	-		1	BRACKET	
190	532261-0000	A		2	SLEEVE	
210	527750-0000	A		2	CALENDER ROLLER	
230	532144-0000	A		1	SHAFT	
240	247168-0000	A		2	CYLINDER BRACKET	
260	247170-0000	A		4	BEARING COVER	
270	247240-0000	A		2	WHEEL	
280	282766-0000	A		1	LINK	
290	282767-0000	-		1	BRACKET	
300	297142-0000	A		2	BUSHING	
310	532143-0000	A		2	ARM	
320	532146-0000	A		1	SHAFT	
330	532147-0000	A		2	WASHER	
340	532148-0000	-		2	SCREW	
345	90044-0104	A		1	PROX.SWITCH IFM IN 3002	
360	90458-1704	A		4	BALL BEARING, 15X35X11 MM	
370	90214-0303	A		8	SEALING RING, 18,6X35X2 MM	
380	90239-0127	A		2	BRACKET	
390	B90239-0189	A		2	CYLINDER	
	90285-0094	*C*		*1*	*SEAL KIT*	
440	312105-0364	-		16	SCREW M6S ISO 4017 M6X10 A480	
450	312105-0366	-		6	SCREW M6S M6X12 A280	
460	312105-0370	-		1	SCREW M6S ISO 4017 M6X20 A480	
475	312125-0230	-		2	SLOTTED CHEESE HEAD SCREW MCS 3X20 SS	
495	312605-0310	-		2	HEXAGON NUT, M6M M3 A280	
497	312605-0318	-		2	HEXAGON NUT, M6M M8 A280	
500	312605-0320	-		2	HEXAGON NUT, M6M M10 A280	
510	315105-0124	-		4	BRICKA BRB3,2X6RFR	
530	315105-0173	-		2	WASHER BRB10,5X22RFR	
540	315121-0153	-		2	WASHER PLAIN, TBRSB 6,4/22 H=4	
600	342797-0122	-		7	CONN. BANJO, RINGPIECE 6-1/4	
620	342980-0304	-		1	BANJO-HOLLOW BOLT COUPL,EXT.THR.01-G1/4"	
630	342980-0314	-		3	BANJO-HOLLOW BOLT COUPL,EXT.THR.02-G1/4"	

Pos	Part No	SP	UN	Qty	Description	Page No

Machine Type | Group Description | Used-In | Group Number | Page No

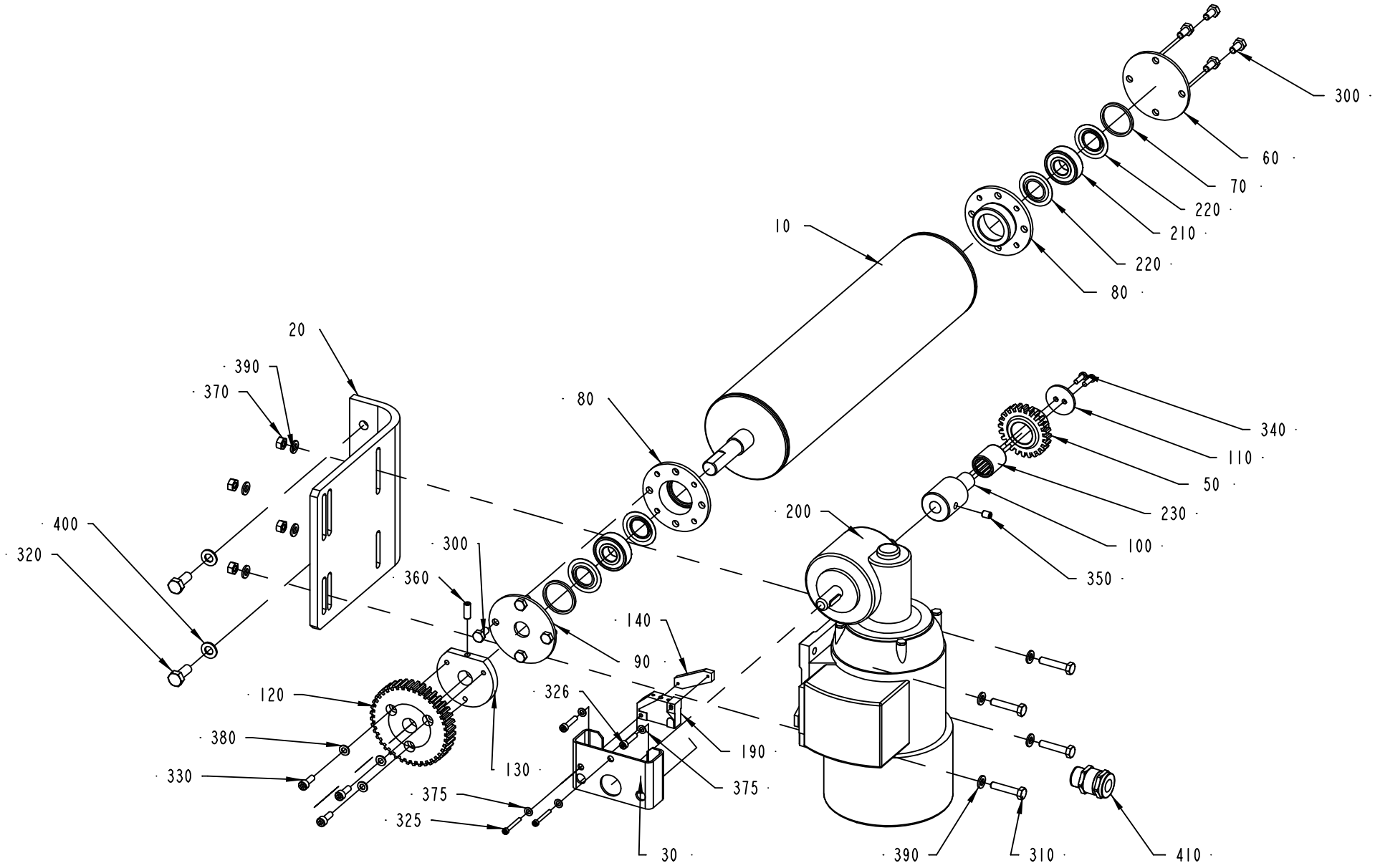
300
60
70
220
210
220
80
10
20
390
370
80
340
110
50
230
100
350
200
400
320
300
360
140
90
120
326
380
330
130
190
375
375
325
30
390
310
410

ECM: 104515 - 20020611
Group number: 263394-0300
Assembly Drawing: 263394-3_1_AE

Pos	Part No	SP	UN	Qty	Description	Page No
0375S, 0500S, 0750B						
050	209331-0007	A		1	GEAR WHEEL	
0500B, 0355B						
050	209331-0009	A		1	GEAR WHEEL	
1000S						
050	209331-0013	A		1	GEAR WHEEL	
1000SQ						
050	209331-0014	A		1	GEAR WHEEL	
0750S, 1000B						
050	209331-0012	A		1	GEAR WHEEL	
Common Parts						
010	573428-0000	A		1	BENDING ROLLER	
020	573429-0000	-		1	MOTOR PLATE	
030	927258-0000	-		1	BRACKET	
060	247171-0000	A		1	BEARING COVER	
070	247172-0000	A		2	SPACER RING	
080	247173-0000	A		2	BEARING SEAT	
090	250590-0000	A		1	BEARING COVER	
100	250591-0000	A		1	SHAFT	
110	250592-0000	A		1	WASHER	
120	265872-0001	A		1	GEAR WHEEL	
130	284974-0000	-		1	HUB	
140	795581-0000	A		1	PLATE	
190	90044-0104	A		1	PROX.SWITCH IFM IN 3002	
200	B90069-0281	A		1	GEAR WORM MOTOR OKM87-60E3	
	90069-0359	*-*		*1*	*CARBON BRUSH*	
210	90458-1704	A		2	BALL BEARING, 15X35X11 MM	
220	90214-0303	A		4	SEALING RING, 18,6X35X2 MM	
230	90348-0007	A		1	FREE WHEEL COUPLING	
300	312105-0366	-		8	SCREW M6S M6X12 A280	
310	312105-0374	-		4	SCREW M6S ISO 4014 M6X30 A480	
320	312105-0451	-		2	SCREW M6S ISO 4017 M8X20 A480	
325	312115-0232	-		2	SCREW ISO4762 M3X25 A4	
326	312115-0295	-		2	SCREW ISO4762 M4X20 A4	
330	312115-0328	-		3	SCREW ISO4762 M5X14 A4	
340	312125-0291	-		2	SLOTTED CHEESE HEAD SCREW MCS 4X12 SS	
350	312318-0362	-		1	SCREW ISO4029 M6X8 A4	
360	312318-0368	-		1	SCREW ISO4029 M6X16 A4	
370	312605-0316	-		4	HEXAGON NUT, M6M M6 A280	
375	315105-0136	-		4	WASHER BRB4,3XRFR	
380	315105-0146	-		3	BRICKA BRB5,3X10RFR	
390	315105-0153	-		8	WASHER BRB6,4X12RFR	
400	315105-0165	-		2	WASHER BRB8,4X16RFR	
410	90012-0137	-		1	GLAND, EXTENDED WITH INSERT, PG11	

Machine Type Group Description Used-In Group Number Page No

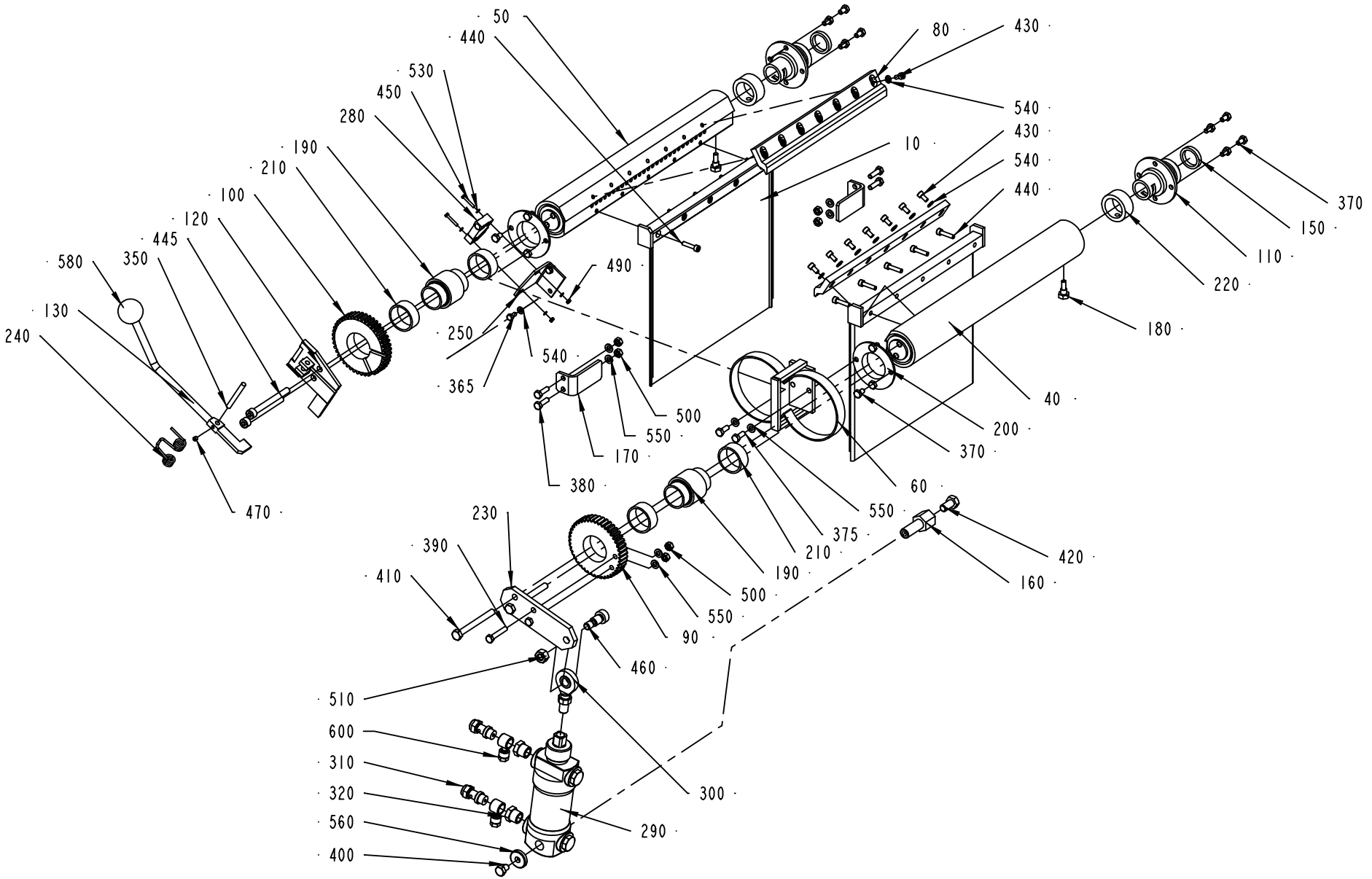
50
440
530
450
280
190
210
100
120
445
350
580
130
240
470
490
250
365
540
500
550
170
380
10
430
80
540
430
540
440
370
150
110
220
180
40
200
370
60
550
375
210
190
500
550
90
460
510
600
310
320
560
400
300
290
230
390
410
420
160

ECM: 81485 - 20000804
Group number: 276345-0300
Assembly Drawing: 276345-2_1_AB

Pos	Part No	SP	UN	Qty	Description	Page No
TBA 0375S						
010	434972-0000	D		2	AIR GUIDE	
040	434973-0000	D		1	AIR DISTRIBUTOR	
050	434974-0000	D		1	AIR DISTRIBUTOR	
080	527647-0001	C		2	STEERING RAIL	
170	434976-0000	-		2	STOP	
TBA 0500B, TBA 0750B, TBA 1000B						
010	276346-0000	D		2	AIR GUIDE	
040	276347-0000	D		1	AIR DISTRIBUTOR	
050	276348-0000	D		1	AIR DISTRIBUTOR	
080	526502-0000	C		2	STEERING RAIL	
170	246965-0000	-		2	STOP	
TBA 0500S, TBA 0355B						
010	434972-0000	D		2	AIR GUIDE	
040	434973-0000	D		1	AIR DISTRIBUTOR	
050	434974-0000	D		1	AIR DISTRIBUTOR	
080	527647-0002	C		2	STEERING RAIL	
170	434976-0000	-		2	STOP	
TBA 1000S, TBA 1000SQ						
010	276346-0000	D		2	AIR GUIDE	
040	276347-0000	D		1	AIR DISTRIBUTOR	
050	276348-0000	D		1	AIR DISTRIBUTOR	
080	573841-0000	C		2	STEERING RAIL	
170	246965-0000	-		2	STOP	
TBA 0750S						
010	276346-0000	D		2	AIR GUIDE	
040	276347-0000	D		1	AIR DISTRIBUTOR	
050	276348-0000	D		1	AIR DISTRIBUTOR	
080	544301-0000	C		2	STEERING RAIL	
170	246965-0000	-		2	STOP	
Common Parts						
060	292565-0000	-		1	PROTECTION	
090	276350-0000	D		1	GEAR WHEEL	
100	276351-0000	D		1	GEAR WHEEL	
110	276354-0000	D		2	ATTACHMENT	
120	297969-0000	-		1	FASTENING PLATE	
130	297970-0000	-		1	CATCH LEVER	
150	12242-0001	C		2	GASKET 32X25X5,5	
160	246964-0000	-		1	CYLINDER BRACKET	
180	246966-0000	D		2	SCREW	
190	276355-0000	D		2	SLEEVE	
200	276356-0000	D		2	BEARING HOUSING	
210	276357-0000	C		4	BUSHING	
220	276358-0000	C		2	BUSHING	
230	276359-0000	-		1	LEVER	
240	276360-0000	D		1	SPRING	
250	276361-0000	-		1	BRACKET	
280	90044-0104	C		1	PROX.SWITCH IFM IN 3002	
290	B90239-0196	C		1	CYLINDER	
	90285-0119	*C*		*1*	*SEAL AND WEAR-AND-TEAR PA*	
300	90239-0321	D		1	BRACKET	
310	90235-0275	C		2	THROTTLE CHECK VALVES,G1/4"	
320	90330-0042	D		2	BUSHING, INT/EXT. THR. R3/8-RP1/4	
350	311103-0367	-		1	PARALLEL PIN ISO 2338 6M6X55 A1	
365	312105-0325	-		2	SCREW M6S ISO 4017 M5X10 A480	
370	312105-0364	-		14	SCREW M6S ISO 4017 M6X10 A480	
375	312105-0368	-		2	SCREW M6S M6X16 A280	
380	312105-0370	-		4	SCREW M6S ISO 4017 M6X20 A480	
390	312105-0376	-		2	SCREW M6S ISO 4014 M6X35 A480	
400	312105-0447	-		1	SCREW M6S ISO 4017 M8X12 A480	
410	312105-0467	-		2	SCREW M6S ISO 4014 M8X80 A480	
420	312105-0491	-		1	SCREW M6S ISO 4017 M10X20 A480	
430	312115-0325	-		18	SCREW ISO4762 M5X10 A4	
440	312115-0332	-		10	SCREW ISO4762 M5X22 A4	
445	312115-0467	-		2	SCREW ISO4762 M8X80 A4	
450	312125-0230	-		2	SLOTTED CHEESE HEAD SCREW MCS 3X20 SS	
460	312180-0530	-		1	SCREW ISO7379 H10X16	
470	312316-0320	-		1	SCREW HEX.SOCK.SET CUP P.MSK6SS5X5 FZB	
490	312605-0310	-		2	HEXAGON NUT, M6M M3 A280	
500	312605-0316	-		6	HEXAGON NUT, M6M M6 A280	
510	312605-0320	-		1	HEXAGON NUT, M6M M10 A280	
530	315105-0124	-		4	BRICKA BRB3,2X6RFR	
540	315105-0146	-		20	BRICKA BRB5,3X10RFR	
550	315105-0153	-		8	WASHER BRB6,4X12RFR	
560	315121-0165	-		1	WASHER PLAIN, TBRSB 8,4/26 H=5	
580	318800-0105	-		1	HANDLE,SPHERICAL KNOB,INT.THRE.,D.35-M10	
600	342797-0122	-		2	CONN. BANJO, RINGPIECE 6-1/4	

Machine Type | Group Description | Used-In | Group Number | Page No

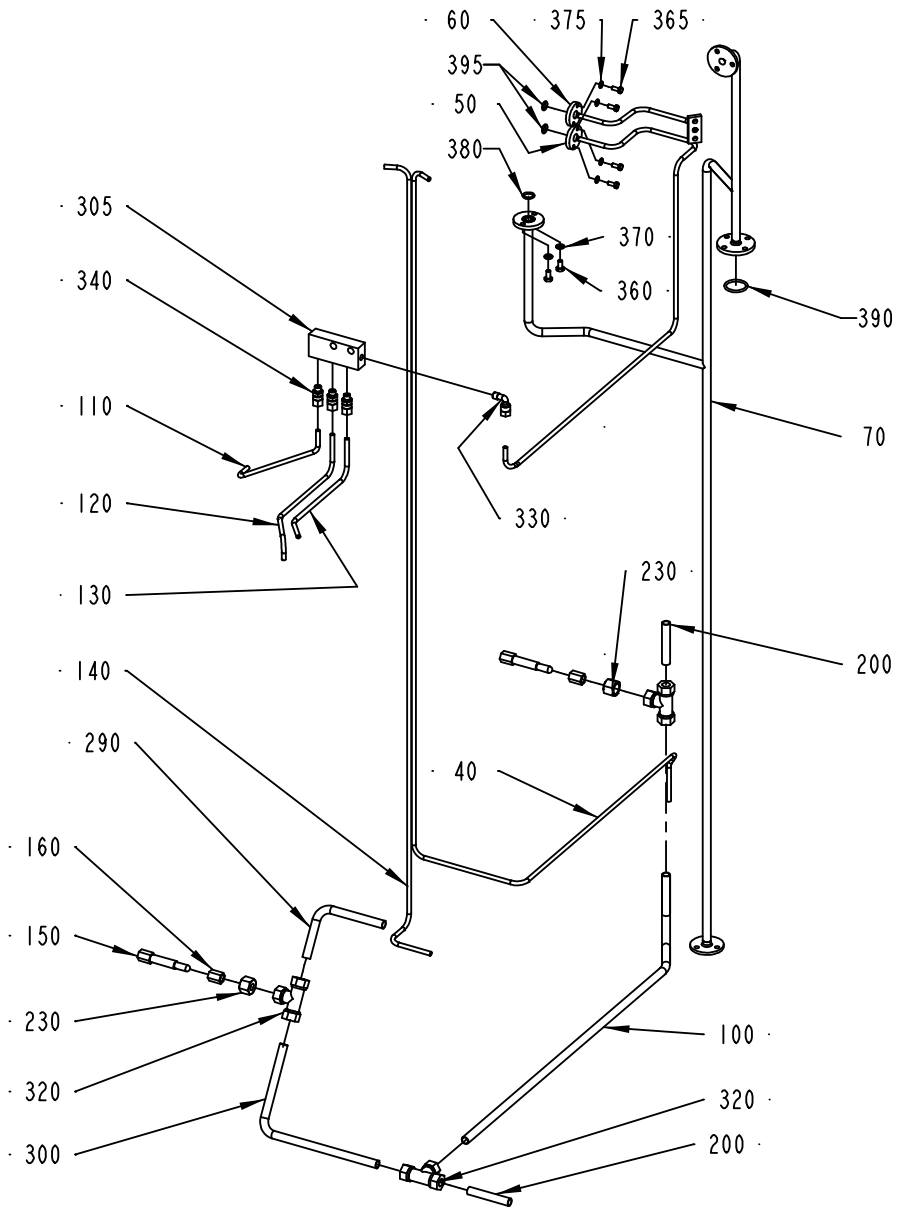
60
375
365
395
50
380
305
340
370
360
390
110
70
120
330
130
230
200
140
290
40
160
150
230
100
320
320
300
200

ECM: 81503 - 20000907
Group number: 276480-0500
Assembly Drawing: 276480-5_1_AB

Pos	Part No	SP	UN	Qty	Description	Page No
-						
040	451053-0000	-		1	PIPE	
050	554448-0000	-		1	PIPE	
060	554449-0000	-		1	PIPE	
070	554583-0000	-		1	PIPE	
100	297347-0000	-		1	PIPE	
110	464307-0000	-		1	PIPE BEND	
120	464308-0000	D		1	PIPE	
130	464309-0000	D		1	PIPE	
140	479230-0000	-		1	PIPE	
150	209145-0000	C		2	THROTTLE SCREW	
160	209146-0000	C		2	BARRIER NUT	
200	276490-0000	-		2	PIPE	
230	279589-0000	C		2	NUT	
290	479231-0000	-		1	PIPE	
300	479232-0000	-		1	PIPE	
305	464018-0000	-		1	JUNCTION BLOCK	
320	90030-0058	-		3	CONN. T-PIPE T-12	
330	90030-0137	-		1	CONN. ELBOW WA 6-R1/8	
340	90030-0184	-		3	CONN. STR. GA-6-G1/8	
360	312105-0366	-		2	SCREW M6S M6X12 A280	
365	312105-0327	-		4	SCREW M6S ISO 4017 M5X12 A480	
370	315105-0153	-		2	WASHER BRB6,4X12RFR	
375	315105-0146	-		4	BRICKA BRB5,3X10RFR	
380	927421-0003	C		1	O-RING 13.3X2.4 SILICON	
390	927422-0004	C		1	O-RING 29.2X3 SILICON	
395	927421-0001	C		2	O-RING 9.3X2.4 SILICON	

Pos	Part No	SP	UN	Qty	Description	Page No

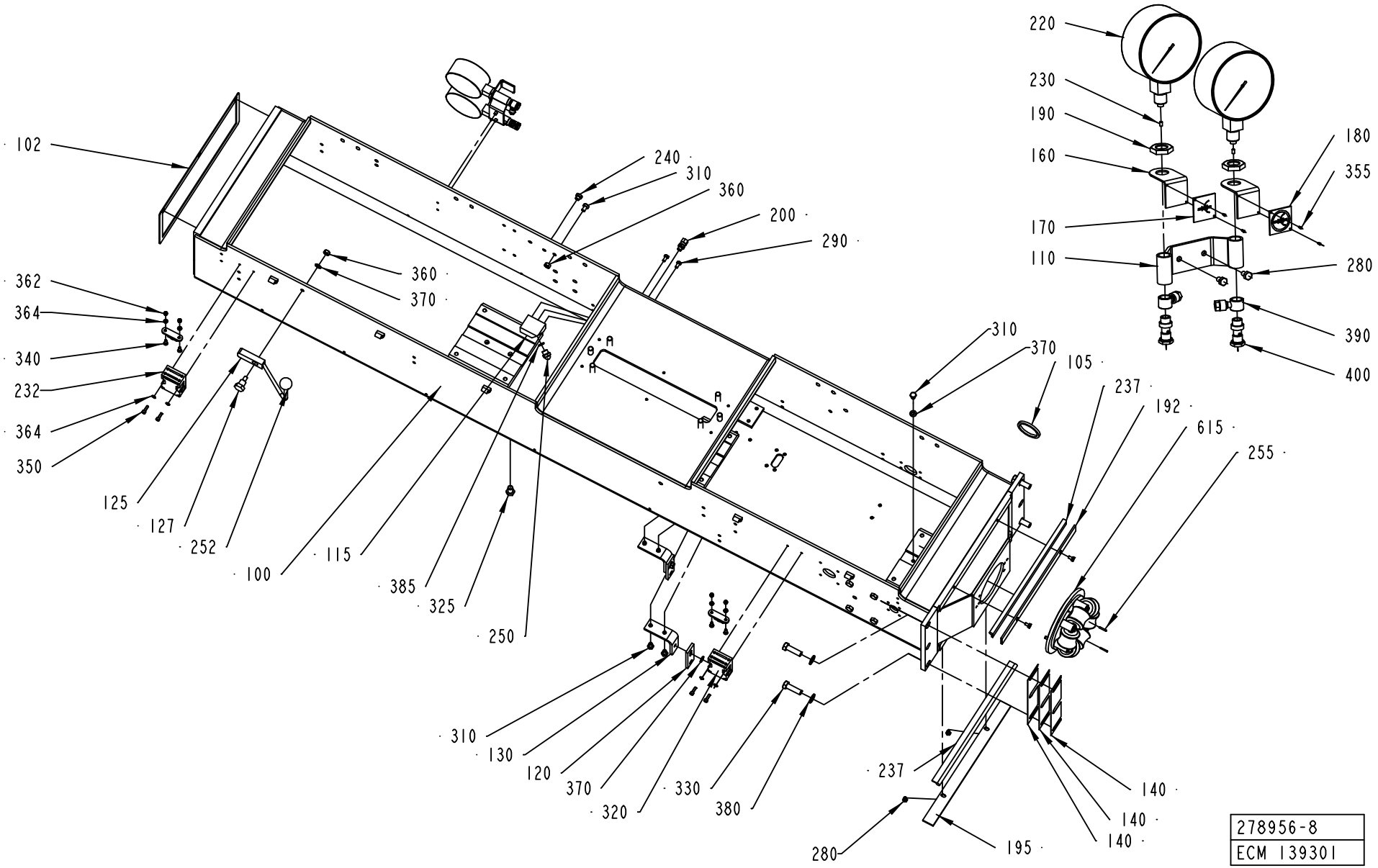
102
362
364
340
232
364
350
125
127
252
100
115
385
325
250
360
370
240
310
360
200
290
220
230
190
160
170
110
180
355
280
390
400
310
370
105
237
192
615
255
310
130
120
370
320
330
380
237
140
140
140
280
195
278956-8
ECM 139301

ECM: 139307 - 20030815
Group number: 278956-0700
Assembly Drawing: 278956-8_1_AE

Pos	Part No	SP	UN	Qty	Description	Page No
-						
100	573619-0000	-		1	PILLAR	
102	531309-0000	A		1	GASKET	
105	12242-0005	A		1	GASKET 61X51X5,5	
110	33577-0000	-		1	CANTILEVER	
115	267564-0000	-		1	BRACKET	
120	279860-0000	-		2	ADJUSTMENT PLATE	
125	551786-0000	-		1	LEVER	
127	551784-0000	-		1	FITTING BOLT	
130	282608-0000	-		2	ANGLE	
140	458481-0002	A		1	SHIM	
140	458481-0001	A		1	SHIM	
140	458481-0003	A		1	SHIM	
160	464173-0000	-		2	LABEL HOLDER	
170	464174-0000	-		1	SIGN	
180	464175-0000	-		1	SIGN	
190	90330-0105	-		2	NUT, HEXAGON, R3/8	
192	493091-0000	-		1	CLAMP RAIL	
195	530808-0000	-		1	CLAMP RAIL	
200	90030-0051	-		1	CONN. STR., 6-R1/8, EXT. THREAD	
220	90043-0034	A		2	PRESSURE GAUGE	
230	90043-0302	A		2	SCREW	
232	B90044-0103	A		2	KEY SAFETY SWITCH AZ 15 ZVR	
	90044-0310	*A*		*1*	*KEY FOR SAFETY SWITCH, AZ 15/16 B1*	
237	90143-0018	-	MM	950	STRIP	
240	90330-0066	-		1	PLUG, EXT. G-THREAD, G1/8	
250	90424-0031	A		1	SPRAY NOZZLE 60 DEG	
252	318800-0104	-		1	HANDLE,SPHERICAL KNOB,INT.THRE.,D.30-M8	
255	311103-0238	-		2	PARALLEL PIN ISO 2338 3M6X20 A1	
280	312105-0364	-		6	SCREW M6S ISO 4017 M6X10 A480	
290	312105-0366	-		2	SCREW M6S M6X12 A280	
310	312105-0447	-		7	SCREW M6S ISO 4017 M8X12 A480	
320	312105-0449	-		2	SCREW M6S ISO 4017 M8X16 A480	
325	312105-0532	-		1	SCREW M6S ISO 4017 M12X20 A480	
330	312105-0540	-		4	SCREW M6S ISO 4017 M12X40 A480	
340	312155-0329	-		4	SCREW EN 10642 MF6S M5X16 A480	
350	312115-0329	-		4	SCREW ISO4762 M5X16 A4	
355	312502-0120	-		4	DRIVE SCREW ROUND HEAD KDS 0X5	
360	312605-0318	-		3	HEXAGON NUT, M6M M8 A280	
362	312812-0314	-		4	HEXAGON NUT, NY-LOCK M5 A480	
364	315105-0146	-		8	BRICKA BRB5,3X10RFR	
370	315105-0165	-		4	WASHER BRB8,4X16RFR	
380	315115-0178	-		4	WASHER PLAIN, TBRB 13/24 H=4	
385	315204-0209	A		1	O-RING 10,3X2,4 MM	
390	342797-0122	-		2	CONN. BANJO, RINGPIECE 6-1/4	
400	342980-0304	-		2	BANJO-HOLLOW BOLT COUPL,EXT.THR.01-G1/4"	
615	A466399-0100	-		1	SEAL	**1-113**

Machine Type	Group Description	Used-In	Group Number	Page No

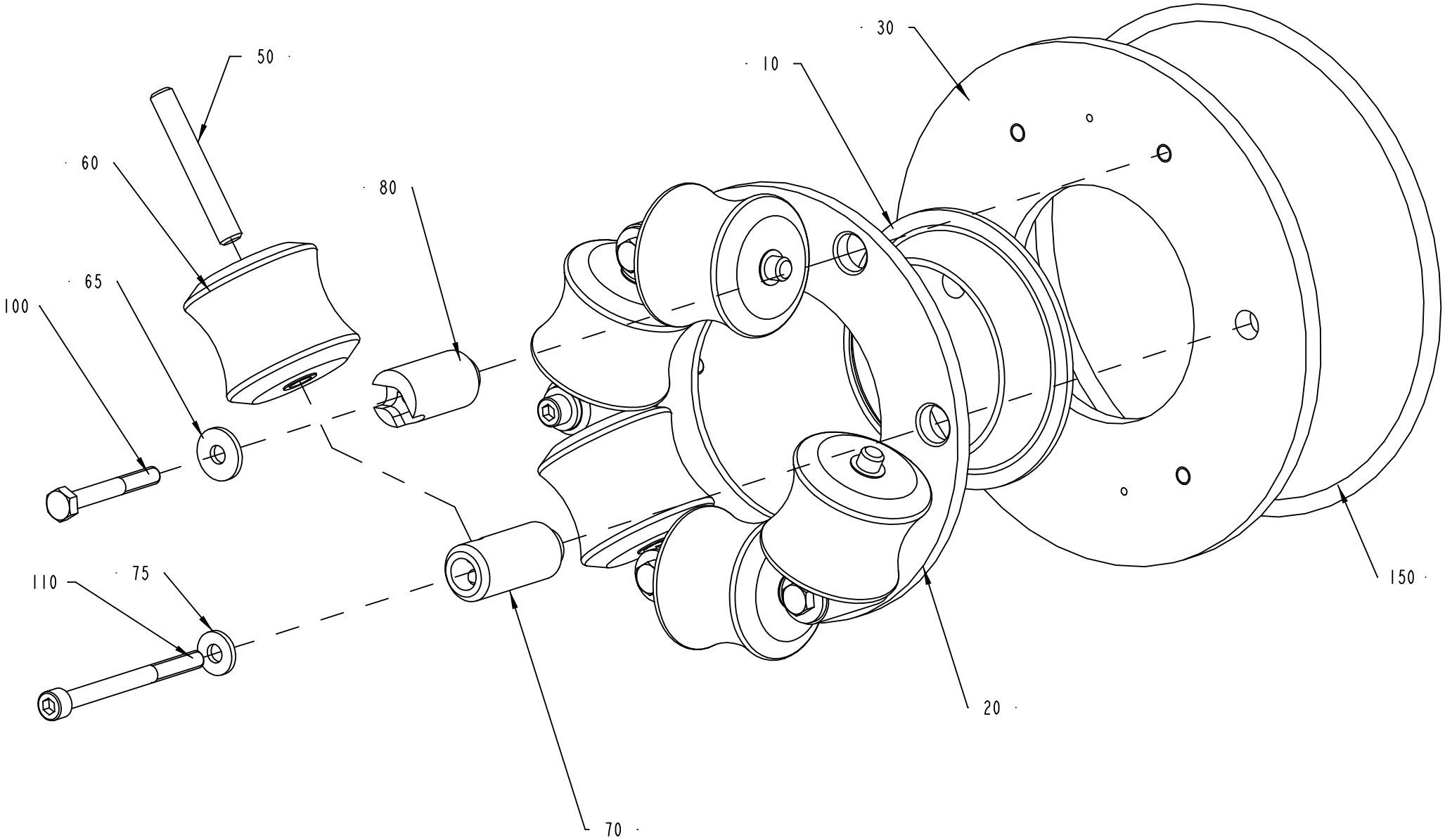
50
60
65
100
80
30
10
150
110
75
70
20

ECM: 128488 - 20030410
Group number: 466399-0100
Assembly Drawing: 466399-1_1_AD

Pos	Part No	SP	UN	Qty	Description	Page No
TBA 0375S						
010	466099-0000	A		1	SEAL	
020	466402-0000	-		1	RING	
030	466405-0000	-		1	RING	
050	263655-0007	A		6	SHAFT	
060	466102-0000	A		6	ROLL	
070	466040-0000	A		2	AXLE SUPPORT	
080	493658-0000	A		4	AXLE SUPPORT	
110	312115-0384	-		2	SCREW ISO4762 M6X70 A4	
TBA 0500B, TBA 0750B, TBA 1000B						
010	466042-0000	A		1	SEAL	
020	466400-0000	-		1	RING	
030	466403-0000	-		1	RING	
050	263655-0009	A		6	SHAFT	
060	466046-0000	A		6	ROLLER	
070	466040-0000	A		2	AXLE SUPPORT	
080	493658-0000	A		4	AXLE SUPPORT	
110	312115-0384	-		2	SCREW ISO4762 M6X70 A4	
TBA 0500S, TBA 0355B						
010	466089-0000	A		1	SEAL	
020	466401-0000	-		1	RING	
030	466404-0000	-		1	RING	
050	263655-0007	A		6	SHAFT	
060	466092-0000	A		6	ROLL	
070	466040-0000	A		2	AXLE SUPPORT	
080	493658-0000	A		4	AXLE SUPPORT	
110	312115-0384	-		2	SCREW ISO4762 M6X70 A4	
TBA 1000SQ						
010	579318-0000	A		1	SEAL	
020	466400-0000	-		1	RING	
030	466403-0000	-		1	RING	
050	263655-0009	A		6	SHAFT	
060	579319-0000	A		6	ROLL	
070	580958-0000	A		2	AXLE SUPPORT	
080	580959-0000	A		4	AXLE SUPPORT	
110	312115-0386	-		2	SCREW ISO4762 M6X80 A4	
TBA 0750S						
010	544015-0000	A		1	SEAL	
020	544013-0000	-		1	RING	
030	544014-0000	-		1	RING	
050	263655-0008	A		6	SHAFT	
060	544012-0000	A		6	ROLLER	
070	466040-0000	A		2	AXLE SUPPORT	
080	493658-0000	A		4	AXLE SUPPORT	
110	312115-0384	-		2	SCREW ISO4762 M6X70 A4	
TBA 1000S						
010	567743-0000	A		1	SEAL	
020	466400-0000	-		1	RING	
030	466403-0000	-		1	RING	
050	263655-0009	A		6	SHAFT	
060	573504-0000	A		6	ROLLER	
070	466040-0000	A		2	AXLE SUPPORT	
080	493658-0000	A		4	AXLE SUPPORT	
110	312115-0384	-		2	SCREW ISO4762 M6X70 A4	
Common Parts						
065	6278-0000	A		4	WASHER	
075	466041-0000	-		2	WASHER	
100	312105-0379	-		4	SCREW M6S ISO 4014 M6X45 A480	
150	315204-0324	C		1	O-RING 164,3X5,7 MM	

Machine Type | Group Description | Used-In | Group Number | Page No

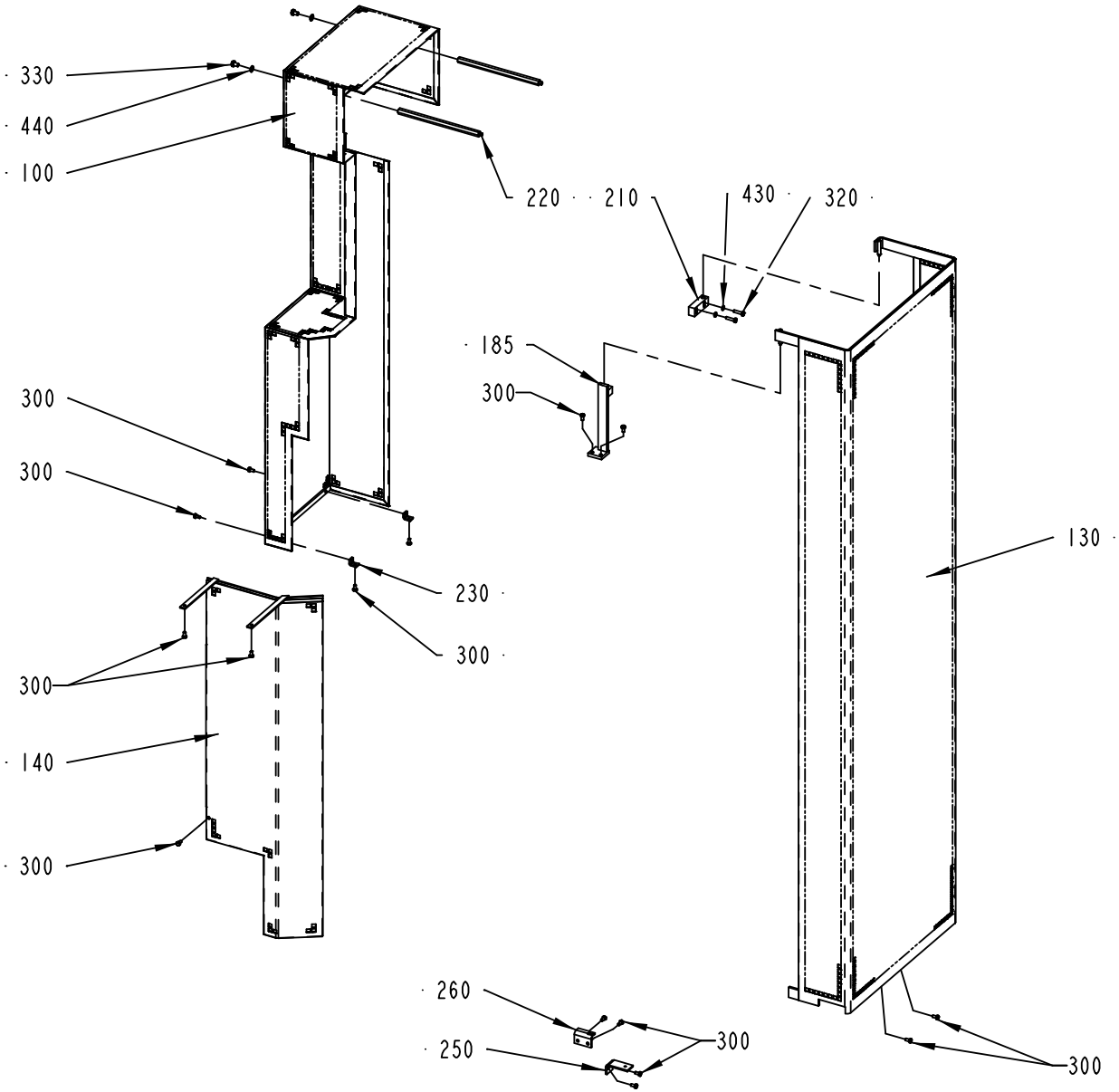
330
440
100
220
210
430
320
185
300
300
300
230
300
300
140
300
130
260
250
300
300

ECM: 81506 - 20000907
Group number: 279651-0600
Assembly Drawing: 279651-5_1_AB

Pos	Part No	SP	UN	Qty	Description	Page No
-						
100	752771-0000	-		1	TOUCH GUARD	
130	567023-0000	-		1	TOUCH GUARD	
140	576738-0000	-		1	TOUCH GUARD	
185	294472-0000	-		1	CANTILEVER	
210	267646-0000	-		1	BLOCKING PIECE	
220	267665-0000	-		2	BRACKET	
230	279619-0000	-		2	BRACKET	
250	457752-0000	-		1	CANTILEVER	
260	457753-0000	-		1	BRACKET	
300	312105-0366	-		15	SCREW M6S M6X12 A280	
320	312105-0372	-		2	SCREW M6S ISO 4017 M6X25 A480	
330	312105-0447	-		2	SCREW M6S ISO 4017 M8X12 A480	
430	315105-0153	-		2	WASHER BRB6,4X12RFR	
440	315105-0165	-		2	WASHER BRB8,4X16RFR	

Pos	Part No	SP	UN	Qty	Description	Page No

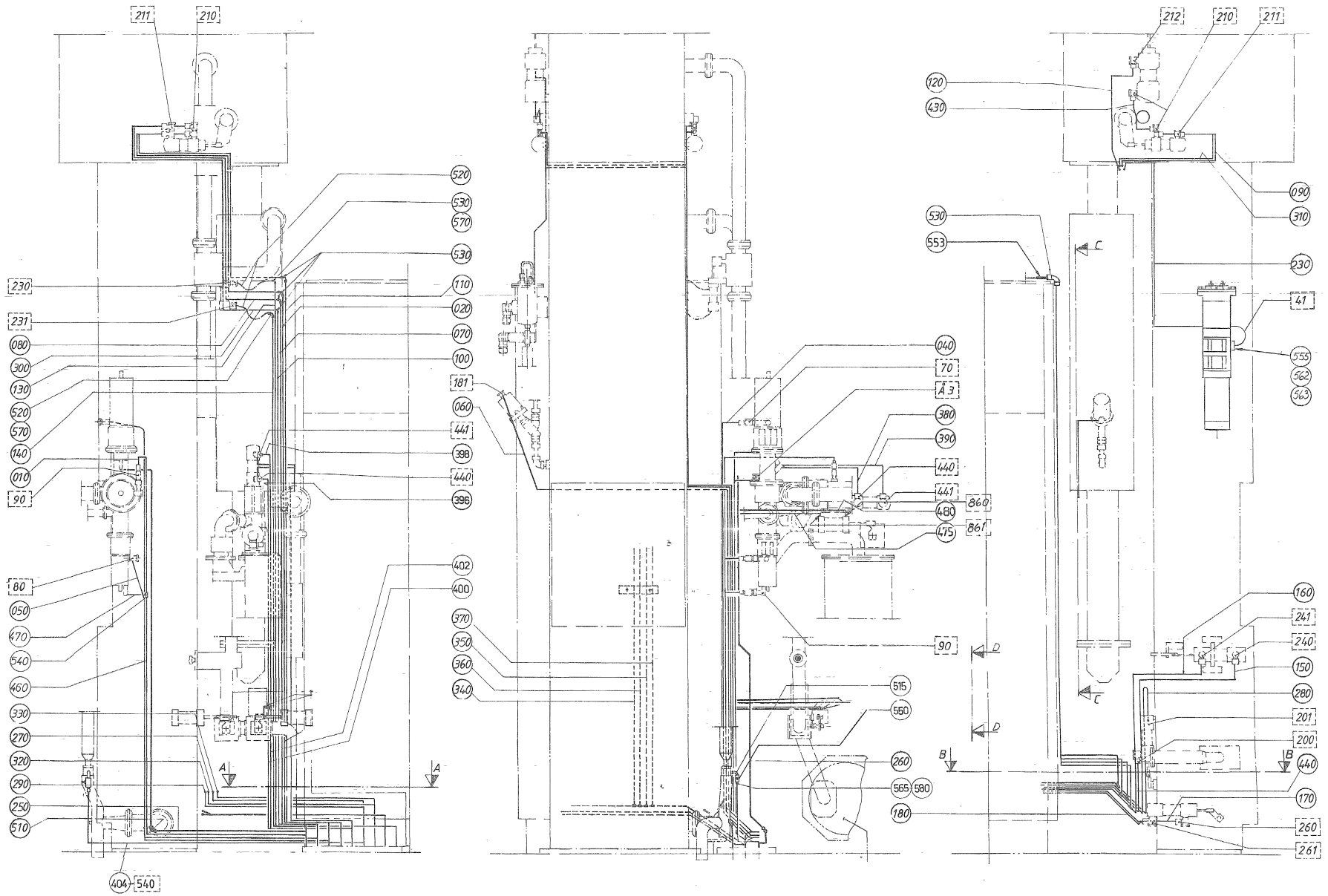
211
210
520
530
570
530
230
110
231
020
080
070
300
100
130
181
520
060
570
441
140
398
010
440
90
396
80
402
050
400
470
370
540
350
460
360
330
340
270
320
290
250
510
404
540
A
A
212
210
211
120
430
090
530
310
553
230
C
41
555
562
563
040
70
A 3
380
390
440
441
860
480
861
475
90
D
D
515
550
260
565
580
180
B
B
160
241
240
150
280
201
200
440
170
260
261
C

ECM: 102694 - 20020115
Group number: 282805-0900
Assembly Drawing: 282805-14_1_AA

This list covers pages from 1-116 to 1-119

Pos	Part No	SP	UN	Qty	Description	Page No
2"						
010	476794-0001	-		1	PIPE	
3"						
010	476794-0002	-		1	PIPE	
Common Parts						
020	532352-0000	-		1	PIPE	
040	554850-0000	-		1	PIPE	
050	451277-0000	-		1	PIPE	
060	2525464-0000	-		1	PIPE	
070	532354-0000	-		1	PIPE	
080	451280-0000	-		1	PIPE	
090	451281-0000	-		1	PIPE	
100	532355-0000	-		1	PIPE	
110	532356-0000	-		1	PIPE	
120	451284-0000	-		1	PIPE	
130	451285-0000	-		1	PIPE	
140	451286-0000	-		1	PIPE	
150	451287-0000	-		1	PIPE	
160	451288-0000	-		1	PIPE	
170	451289-0000	-		1	PIPE	
180	451290-0000	-		1	PIPE	
230	564600-0000	-		1	PIPE	
250	549093-0000	-		1	PIPE	
260	560928-0000	-		1	PIPE	
270	451296-0000	-		1	PIPE	
280	451297-0000	-		1	PIPE	
290	451298-0000	-		1	PIPE	
300	451299-0000	-		1	PIPE	
310	451300-0000	-		1	PIPE	
320	451301-0000	-		1	PIPE	
330	451302-0000	-		1	PIPE	
340	451303-0001	-		1	PIPE	
350	451303-0002	-		1	PIPE	
360	451303-0003	-		1	PIPE	
370	451303-0004	-		1	PIPE	
380	451304-0000	-		1	PIPE	
390	451305-0000	-		1	PIPE	
396	479061-0000	-		1	PIPE	
398	479072-0000	-		1	PIPE	
400	479073-0000	-		1	PIPE	
402	479074-0000	-		1	PIPE	
404	532366-0000	-		1	PIPE	
406	555553-0000	-		1	PIPE	
408	555554-0000	-		1	PIPE	
410	555547-0000	-		1	PIPE	
411	555548-0000	-		1	PIPE	
420	450814-0000	-		1	HOLDER	
430	451306-0000	-		1	PIPE	
440	451307-0000	-		1	PIPE	
450	451326-0000	-		1	CLAMPING PLATE	
460	554139-0000	-		1	PIPE	
470	476796-0000	-		1	PIPE	
475	555551-0000	-		1	PIPE	
480	555552-0000	-		1	PIPE	
510	90030-0096	-		1	CONN. ELBOW W-12	
515	90140-0021	-		1	ELBOW, 90 INT/EXT, 20201/8-1/8	
520	90166-0132	-	MM	520	TUBE 6 MM PA,TRANSP.	
530	90224-0309	-		10	CONNECTION	
540	90224-0310	-		7	CONNECTION	
550	90235-0048	A		1	VALVE	
555	312105-0327	-		2	SCREW M6S ISO 4017 M5X12 A480	
560	312105-0368	-		2	SCREW M6S M6X16 A280	
562	315105-0146	-		2	BRICKA BRB5,3X10RFR	
563	315204-0208	A		1	O-RING 9,3X2,4 MM	
570	342706-0130	-		2	ACCESSORIES, INSERT SLEEVE 6 MM	
580	90458-1849	-		1	CONN. STR., 6-R1/8, EXT. THREAD	

Machine Type | Group Description | Used-In | Group Number | Page No

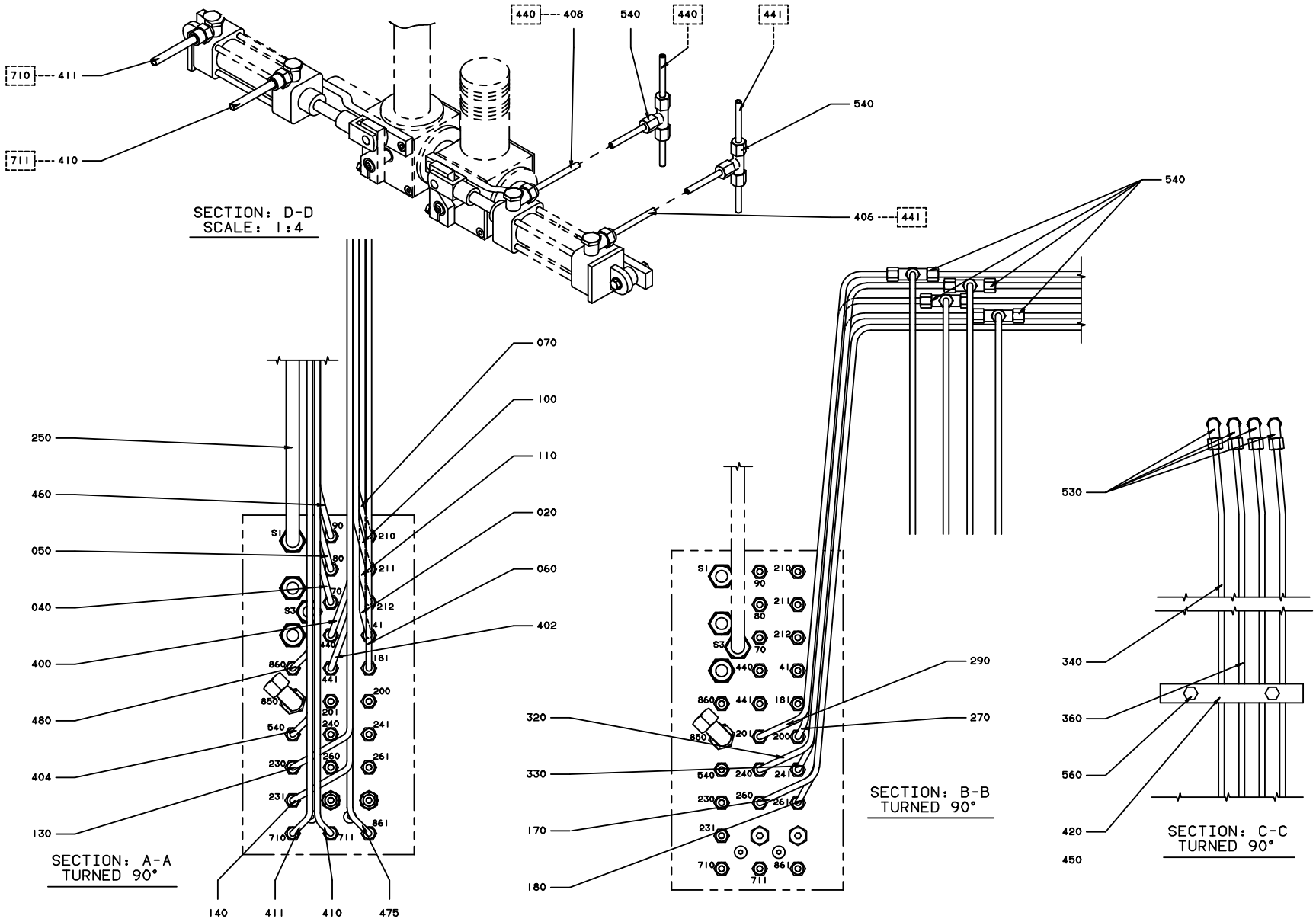
710 411
711 410
440 408
540
440
441
540
406 441
SECTION: D-D
SCALE: 1:4
250
460
050
040
400
480
404
130
070
100
110
020
060
402
140 411 410 475
SECTION: A-A
TURNED 90°
320
330
170
180
290
270
SECTION: B-B
TURNED 90°
530
340
360
560
420
450
SECTION: C-C
TURNED 90°

ECM: 102694 - 20020115
Group number: 282805-0900
Assembly Drawing: 282805-16_1_AB

This list covers pages from 1-116 to 1-119

Pos	Part No	SP	UN	Qty	Description	Page No
2"						
010	476794-0001	-		1	PIPE	
3"						
010	476794-0002	-		1	PIPE	
Common Parts						
020	532352-0000	-		1	PIPE	
040	554850-0000	-		1	PIPE	
050	451277-0000	-		1	PIPE	
060	2525464-0000	-		1	PIPE	
070	532354-0000	-		1	PIPE	
080	451280-0000	-		1	PIPE	
090	451281-0000	-		1	PIPE	
100	532355-0000	-		1	PIPE	
110	532356-0000	-		1	PIPE	
120	451284-0000	-		1	PIPE	
130	451285-0000	-		1	PIPE	
140	451286-0000	-		1	PIPE	
150	451287-0000	-		1	PIPE	
160	451288-0000	-		1	PIPE	
170	451289-0000	-		1	PIPE	
180	451290-0000	-		1	PIPE	
230	564600-0000	-		1	PIPE	
250	549093-0000	-		1	PIPE	
260	560928-0000	-		1	PIPE	
270	451296-0000	-		1	PIPE	
280	451297-0000	-		1	PIPE	
290	451298-0000	-		1	PIPE	
300	451299-0000	-		1	PIPE	
310	451300-0000	-		1	PIPE	
320	451301-0000	-		1	PIPE	
330	451302-0000	-		1	PIPE	
340	451303-0001	-		1	PIPE	
350	451303-0002	-		1	PIPE	
360	451303-0003	-		1	PIPE	
370	451303-0004	-		1	PIPE	
380	451304-0000	-		1	PIPE	
390	451305-0000	-		1	PIPE	
396	479061-0000	-		1	PIPE	
398	479072-0000	-		1	PIPE	
400	479073-0000	-		1	PIPE	
402	479074-0000	-		1	PIPE	
404	532366-0000	-		1	PIPE	
406	555553-0000	-		1	PIPE	
408	555554-0000	-		1	PIPE	
410	555547-0000	-		1	PIPE	
411	555548-0000	-		1	PIPE	
420	450814-0000	-		1	HOLDER	
430	451306-0000	-		1	PIPE	
440	451307-0000	-		1	PIPE	
450	451326-0000	-		1	CLAMPING PLATE	
460	554139-0000	-		1	PIPE	
470	476796-0000	-		1	PIPE	
475	555551-0000	-		1	PIPE	
480	555552-0000	-		1	PIPE	
510	90030-0096	-		1	CONN. ELBOW W-12	
515	90140-0021	-		1	ELBOW, 90 INT/EXT, 20201/8-1/8	
520	90166-0132	-	MM	520	TUBE 6 MM PA,TRANSP.	
530	90224-0309	-		10	CONNECTION	
540	90224-0310	-		7	CONNECTION	
550	90235-0048	A		1	VALVE	
555	312105-0327	-		2	SCREW M6S ISO 4017 M5X12 A480	
560	312105-0368	-		2	SCREW M6S M6X16 A280	
562	315105-0146	-		2	BRICKA BRB5,3X10RFR	
563	315204-0208	A		1	O-RING 9,3X2,4 MM	
570	342706-0130	-		2	ACCESSORIES, INSERT SLEEVE 6 MM	
580	90458-1849	-		1	CONN. STR., 6-R1/8, EXT. THREAD	

Machine Type | Group Description | Used-In | Group Number | Page No

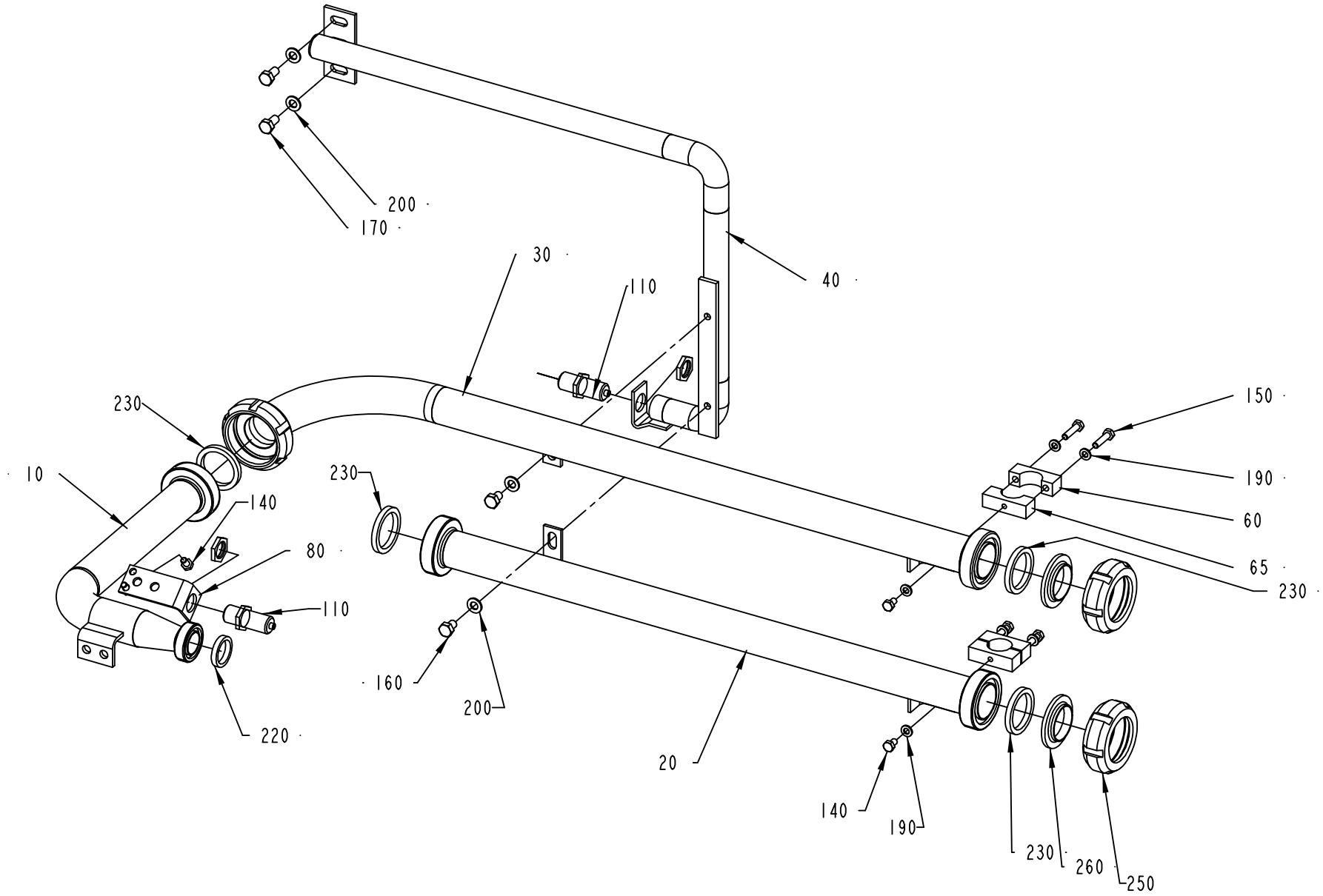
200
170
30
110
40
230
10
140
80
110
230
160
200
220
20
150
190
60
65
230
140
190
230
260
250

ECM: 106882 - 20020405
Group number: 451131-0100
Assembly Drawing: 451131-1_1_AE

Pos	Part No	SP	UN	Qty	Description	Page No
-						
010	449964-0000	A		1	PIPE	
020	449966-0000	A		1	PIPE	
030	449967-0000	A		1	PIPE	
040	450335-0000	A		1	PIPE	
060	457614-0001	A		2	CLAMPING PIECE	
065	457614-0002	A		2	CLAMPING PIECE	
080	449960-0000	-		1	BRACKET	
110	90044-0099	A		2	PROXIMITY SWITCH IG REPL.BY 90044-126	
140	312105-0364	-		4	SCREW M6S ISO 4017 M6X10 A480	
150	312105-0372	-		4	SCREW M6S ISO 4017 M6X25 A480	
160	312105-0447	-		2	SCREW M6S ISO 4017 M8X12 A480	
170	312105-0449	-		2	SCREW M6S ISO 4017 M8X16 A480	
190	315105-0153	-		6	WASHER BRB6,4X12RFR	
200	315105-0165	-		4	WASHER BRB8,4X16RFR	
220	315250-0101	A		1	GASKET 32X25X5,5 MM	
230	315250-0103	A		4	GASKET 48X38X5,5 MM	
250	342803-0103	-		2	UNION NUT, RD 60-6 (SMS 38)	
260	342812-0203	-		2	FERRULE, SMS 1145, 2343, NO.190996	

Pos	Part No	SP	UN	Qty	Description	Page No

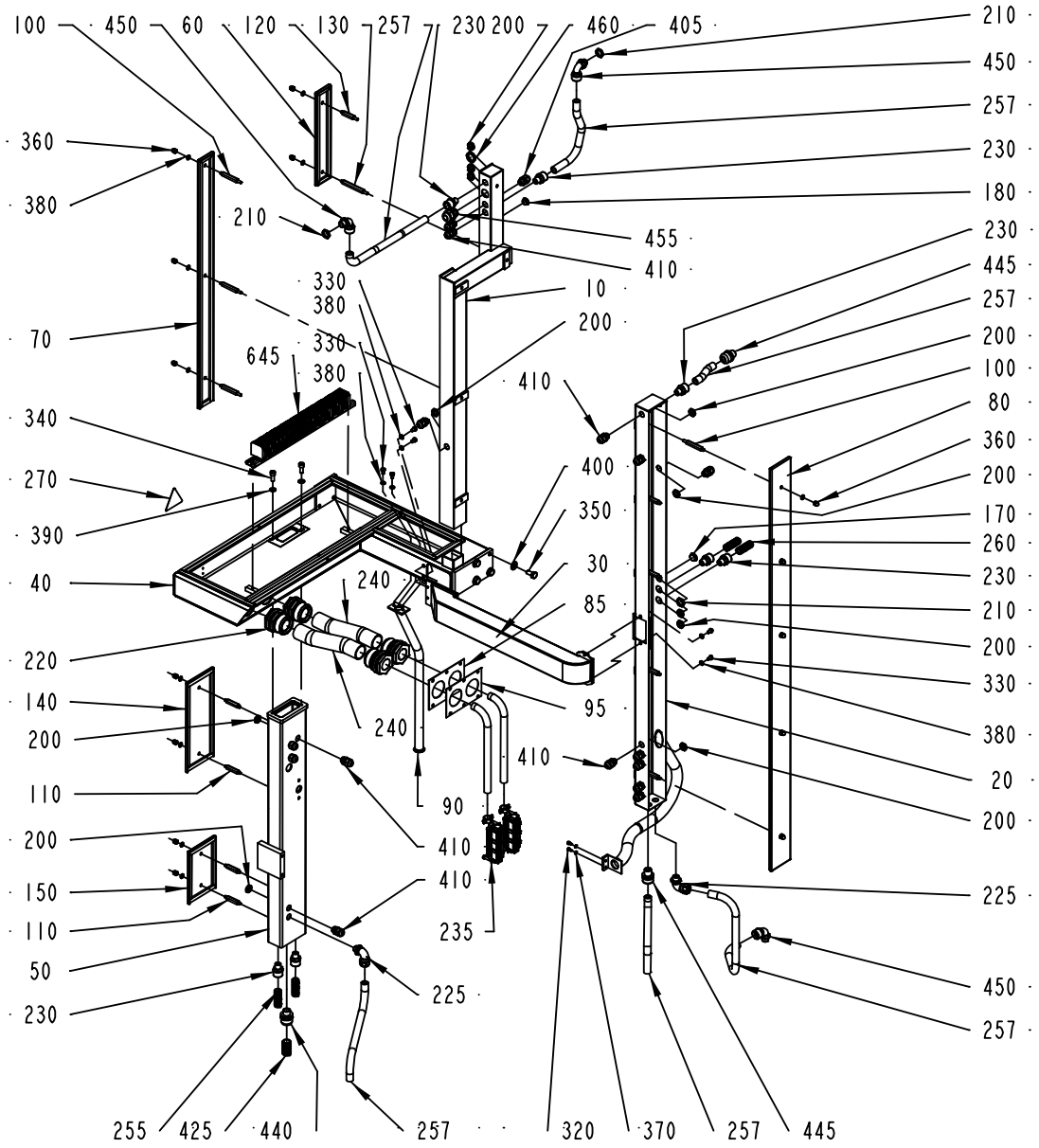
100
450
60
120
130
257
230
200
460
405
210
450
257
230
180
360
380
210
455
410
330
380
10
200
70
645
330
380
410
340
270
390
40
400
350
30
85
240
220
140
200
110
200
150
110
50
230
240
95
410
90
410
410
235
225
210
450
257
230
445
257
200
100
80
360
200
170
260
230
210
200
330
380
20
200
225
450
257
255
425
440
257
320
370
257
445

ECM: 72761 - 20000328
Group number: 451342-0500
Assembly Drawing: 451342-4_1_AD

Pos	Part No	SP	UN	Qty	Description	Page No
-						
010	451099-0000	-		1	CABLE TRENCH	
020	561571-0000	-		1	CBLE TRENCH	
030	B451101-0000	-		1	CABLE TRENCH	
	90143-0014	*D*	*M*	*1*	*STRIP*	
	90153-0017	*D*	*KG*	*1*	*ADHESIVE, 2963 TUBE 160G*	
040	B451339-0000	-		1	BOXSTAINLESS	
	90143-0011	*D*	*M*	*1*	*STRIP*	
	90153-0017	*D*	*KG*	*1*	*ADHESIVE, 2963 TUBE 160G*	
050	451340-0000	-		1	CHANNELSTAINLESS	
060	B451102-0000	-		1	COVER STAINLESS	
	90143-0011	*D*	*M*	*1*	*STRIP*	
	90153-0017	*D*	*KG*	*1*	*ADHESIVE, 2963 TUBE 160G*	
070	B451103-0000	-		1	LID	
	90153-0017	*D*	*KG*	*1*	*ADHESIVE, 2963 TUBE 160G*	
	90143-0011	*D*	*M*	*1*	*STRIP*	
080	B451104-0000	-		1	LID	
	90143-0011	*D*	*M*	*1*	*STRIP*	
	90153-0017	*D*	*KG*	*1*	*ADHESIVE, 2963 TUBE 160G*	
085	556682-0000	-		1	CABLE INLET PLATE 93X140MM	
090	451338-0000	-		1	PIPE	
095	556683-0000	-		1	RUBBERGASKET 90X140MM	
100	451085-0002	-		8	SPACER SCREW	
110	451085-0003	-		4	SPACER SCREW	
120	451085-0004	-		1	SPACER SCREW	
130	451085-0005	-		1	SPACER SCREW	
140	A451341-0001	-		1	LID	**1-125**
150	A451341-0002	-		1	LID	**1-127**
170	90002-0009	-		1	BLANK-OFF PLUG, PR 18.6 SKINDICHT-BLK11	
180	90002-0013	-		1	BLANK-OFF PLUG, PR 15,2 SKINDICHT-BLK9	
200	90099-0001	-		21	NUT PR 15,2 MäSSING	
210	90099-0002	-		3	NUT PR 18,6 BRASS	
220	90012-0059	D		4	GLAND	
225	90012-0064	-		2	GLAND	
230	90012-0063	-		7	CABLE GLAND PR 15,2	
235	90110-0128	-		2	MALE INSERT, HAN 24 E-M 933 024 2631	
240	90152-0029	-	MM	500	HOSE 35/41	
255	90152-0033	-	MM	180	SPIRAL CONDUIT FOR PR 15,2(PG 9)	
257	90152-0033	-	MM	2300	SPIRAL CONDUIT FOR PR 15,2(PG 9)	
260	90152-0033	-	MM	600	SPIRAL CONDUIT FOR PR 15,2(PG 9)	
270	90194-0016	-		1	WARNING SIGN, RISK OF ELECTRIC SHOCK	
320	312105-0287	-		2	SCREW M6S ISO4017 M4X8 A480	
330	312105-0364	-		6	SCREW M6S ISO 4017 M6X10 A480	
340	312115-0451	-		2	SCREW ISO4762 M8X20 A4	
350	312105-0491	-		4	SCREW M6S ISO 4017 M10X20 A480	
360	312705-0316	-		14	NUT HEX. DOMED CAP MHM-6 M6 A280	
370	315105-0136	-		2	WASHER BRB4,3XRFR	
380	315105-0153	-		20	WASHER BRB6,4X12RFR	
390	315105-0165	-		2	WASHER BRB8,4X16RFR	
400	315105-0173	-		4	WASHER BRB10,5X22RFR	
405	352103-0100	-		1	CABLE GLAND, STR 9, PR15,2/PG9	
410	352103-0101	-		15	CABLE GLAND, ST 9, PR15,2/PG9	
425	352135-0106	-	MM	180	SPIRAL CONDUIT DI=16 MM	
440	352136-0127	-		2	GLAND FITTING PR 18,6	
445	352136-0113	-		2	GLAND FITTING PR18,6/PG11 DI=12MM	
450	352137-0113	-		3	COND.FITTING PR 18,6 DI=12MM	
455	352103-0111	-		1	CABLE GLAND, ST 16, PR22,5/PG16	
460	90099-0003	-		1	NUT	
645	A451365-0200	-		1	TERMINAL PLINTH	**1-129**

Machine Type | Group Description | Used-In | Group Number | Page No

This page is intentionally left blank.

ECM: - -
Group number: 451341-0001
Assembly Drawing:

Pos	Part No	SP	UN	Qty	Description	Page No
-						
	90153-0017	D	KG	1	ADHESIVE, 2963 TUBE 160G	
	90143-0011	D	M	1	STRIP	

Pos	Part No	SP	UN	Qty	Description	Page No

This page is intentionally left blank.

ECM: - -
Group number: 451341-0002
Assembly Drawing:

Pos	Part No	SP	UN	Qty	Description	Page No
-						
	90143-0011	D	M	1	STRIP	
	90153-0017	D	KG	1	ADHESIVE, 2963 TUBE 160G	

Pos	Part No	SP	UN	Qty	Description	Page No

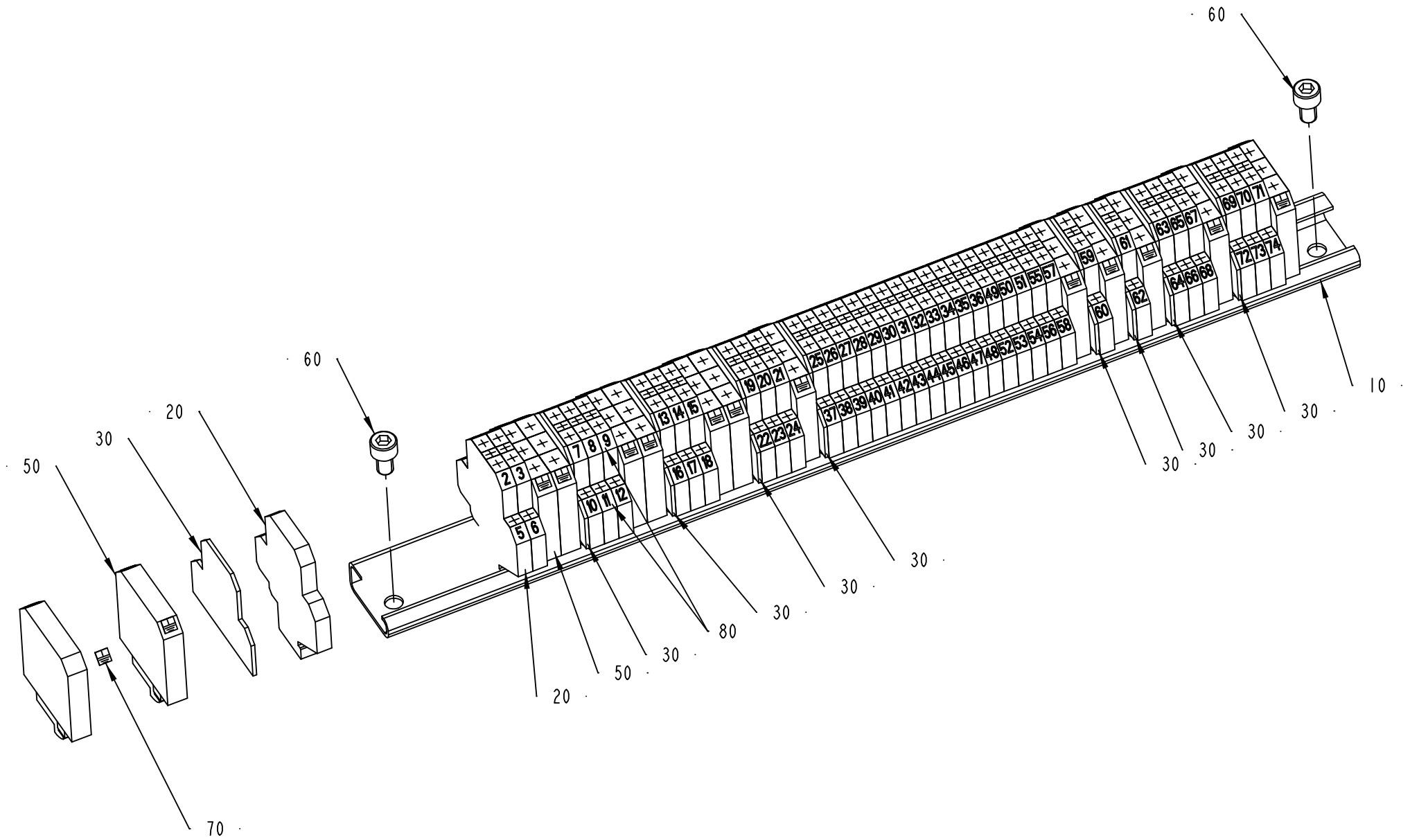
60
60
20
30
50
70
10
30
30
30
30
30
80
30
50
20
1 2 3 4 5 6 7 8 9 10 11 12 13 14 15 16 17 18 19 20 21 22 23 24 25 26 27 28 29 30 31 32 33 34 35 36 37 38 39 40 41 42 43 44 45 46 47 48 49 50 51 52 53 54 55 56 57 58 59 60 61 62 63 64 65 66 67 68 69 70 71 72 73 74

ECM: 72761 - 20000328
Group number: 451365-0200
Assembly Drawing: 451365-2_1_AB

Pos	Part No	SP	UN	Qty	Description	Page No
-						
010	10793-0036	-		1	MOUNTINGRAIL TS32 L=400MM	
020	90077-0090	-		37	FEED THROUGH TERMINAL, 10-00035546-1	
030	90077-0309	-		9	END PLATE	
050	90135-0021	-		14	EARTH CLAMP	
060	312115-0364	-		2	SCREW ISO4762 M6X10 A4	
070	359011-0202	-		18	SIGN BOARD(GROUND)	
080	359011-0800	-		2	MARKING PLATES BSFW 51-100	

Pos	Part No	SP	UN	Qty	Description	Page No

This page is intentionally left blank.

ECM: 128383 - 20030410
Group number: 284163-0500
Assembly Drawing:

Pos	Part No	SP	UN	Qty	Description	Page No
0375S						
030	526689-0000	-		1	DISTRIBUTOR WING	
110	499387-0000	-		1	PRESSURE ROLLER	
115	466099-0000	-		1	SEAL	
0355B, 0500S						
030	526689-0000	-		1	DISTRIBUTOR WING	
110	499387-0000	-		1	PRESSURE ROLLER	
115	466089-0000	-		1	SEAL	
0500B, 0750B, 1000B						
030	243851-0000	-		1	GASKET	
110	232979-0000	-		1	PRESSURE ROLLER	
115	466042-0000	-		1	SEAL	
0750S						
030	526689-0000	-		1	DISTRIBUTOR WING	
110	499387-0000	-		1	PRESSURE ROLLER	
115	544015-0000	-		1	SEAL	
1000S						
030	569104-0000	-		1	DISTRIBUTOR WING	
110	499387-0000	-		1	PRESSURE ROLLER	
115	567743-0000	-		1	SEAL	
1000SQ						
030	569104-0000	-		1	DISTRIBUTOR WING	
110	499387-0000	-		1	PRESSURE ROLLER	
115	579318-0000	-		1	SEAL	
Common Parts						
033	555545-0000	-		1	COIL HEATER	
040	12242-0003	-		1	GASKET 48X38X5,5	
050	12242-0005	-		1	GASKET 61X51X5,5	
100	230551-0000	-		1	GASKET	
120	531738-0000	-		2	GASKET	
130	531739-0000	-		1	GASKET	
140	531740-0000	-		1	GASKET	
160	531742-0000	-		1	GASKET	
190	531744-0000	-		1	GASKET	
195	531745-0000	-		1	GASKET	
200	531764-0000	-		1	GASKET	
205	531734-0000	-		1	GASKET	
210	90214-0138	-		2	BALL BEARING, 5X19X6 MM	
220	90242-0084	-		2	O-RING 203,0X3 MM	
230	315204-0217	-		2	O-RING 24,2X3 MM	
F010	A499255-0200	-		1	SEAL KIT	**1-133**

Machine Type | Group Description | Used-In | Group Number | Page No

This page is intentionally left blank.

ECM: 70777 - 19970414
Group number: 499255-0200
Assembly Drawing:

Pos	Part No	SP	UN	Qty	Description	Page No
-						
010	530589-0000	-		4	SEAL RING	
020	530588-0000	-		1	SEAL RING	
030	533169-0000	-		1	DIAPHRAGM	
060	90207-0363	-		1	GASKET	
070	90207-0365	-		1	GASKET	
080	539212-0000	-		1	GASKET	
100	315204-0215	-		4	O-RING 19,2X3 MM	
110	315202-0301	-		1	O-RING 49,5X3 MM	

Pos	Part No	SP	UN	Qty	Description	Page No

Tetra Pak

SPC
Spare Parts Catalogue

Total pages in this module: 144

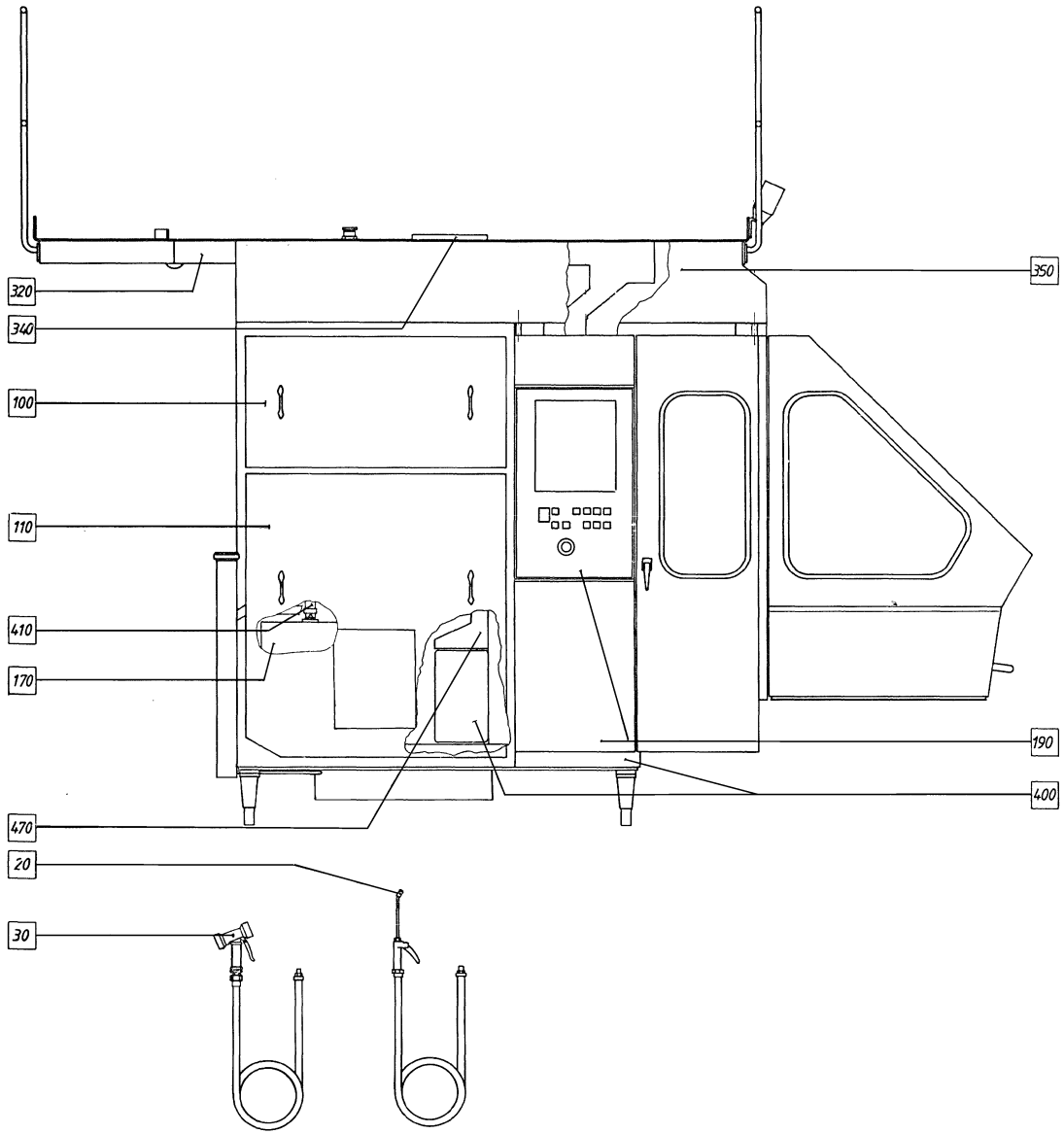
320
340
100
110
410
170
470
20
30
350
190
400

ECM: 72467 - 19990429
Group number: 648012-0900
Assembly Drawing: 648012-11_1_AA

This list covers pages from 2-2 to 2-5

Pos	Part No	SP	UN	Qty	Description	Page No
TBA/8 (See drawing on page: 2-2)						
050	A265889-0300	-		1	SWITCH (MONITOR)	**2-7**
065	A268015-0100	-		1	BENDING ROLLER BRACKET	**2-9**
070	A1360906-0100	-		1	SIDE BOX RIGHT	**2-11**
170	A561256-0300	-		1	PEROXIDE PIPE	**2-13**
190	A1360889-0100	-		1	SIDE GUARD LEFT	**2-31**
210	A1360898-0100	-		1	SIDE GUARD, RIGHT	**2-33**
230	A297808-0500	-		1	CLEANING EQUIPMENT	**2-35**
260	A297604-0400	-		1	HOOD	**2-41, 2-43**
330	A440415-0200	-		1	TRANSFORMER	**2-49**
340	A1362426-0100	-		1	BOTTOM PLATE	**2-51**
350	A1360903-0100	-		1	SIDE BOX LEFT	**2-53**
400	A440537-0500	-		1	MACHINE BODY	**2-57, 2-59, 2-61**
410	A442463-0400	-		1	PIPE WORK	**2-65**
420	A445537-0200	-		1	PIPE WORK-HYDRAULIC	**2-67**
455	A449168-0300	-		1	CLEANING SYSTEM	**2-69**
460	A1362427-0100	-		1	PIPE WORK-WATER TBA/8	**2-73, 2-75, 2-77, 2-79**
490	A575797-0100	-		1	FLOWMETER GROUP	**2-81**
510	A450788-0600	-		1	PIPE WORK-PNEUMATIC	**2-83, 2-85, 2-87, 2-89**
540	A450840-0400	-		1	LIFTING UNIT	**2-91**
Common Parts						
020	A230922-0100	-		1	AIR JET GUN	**2-95**
030	A493614-0100	-		1	SPRAY GUN	**2-97**
100	A269322-0300	-		1	COVER UPPER	**2-99**
110	A269324-0400	-		1	HATCH	**2-101**
140	A279979-0500	-		1	CENTRAL LUBRICATION	**2-103**
280	A434707-0300	-		1	HYDRAULIC SYSTEM	**2-105**
310	A440098-0300	-		1	CRANK BRACKET	**2-109**
320	A440384-0600	-		1	PLATFORM	**2-111**
390	A440474-0100	-		1	TUBE FLUSHING DEVICE	**2-115**
430	A575392-0100	-		1	VALVE PANEL LOWER	**2-117, 2-119**
440	A1487413-0100	-		1	VALVE PANEL	**2-121, 2-123, 2-125, 2-127**
450	A449930-0500	-		1	CONNECTION BOX	**2-129**
470	A1361566-0100	-		1	PLACING OF CABLE DUCT	**2-131**
520	A450792-0100	-		1	DETERGENT PUMP	**2-133**
530	A450824-0200	-		1	DOOR	**2-135**
560	A450883-0400	-		1	PROTECTION	**2-137**
570	A451348-0200	-		1	CONNECTION BOX	**2-141**

Pos	Part No	SP	UN	Qty	Description	Page No

Machine Type | Group Description | Used-In | Group Number | Page No

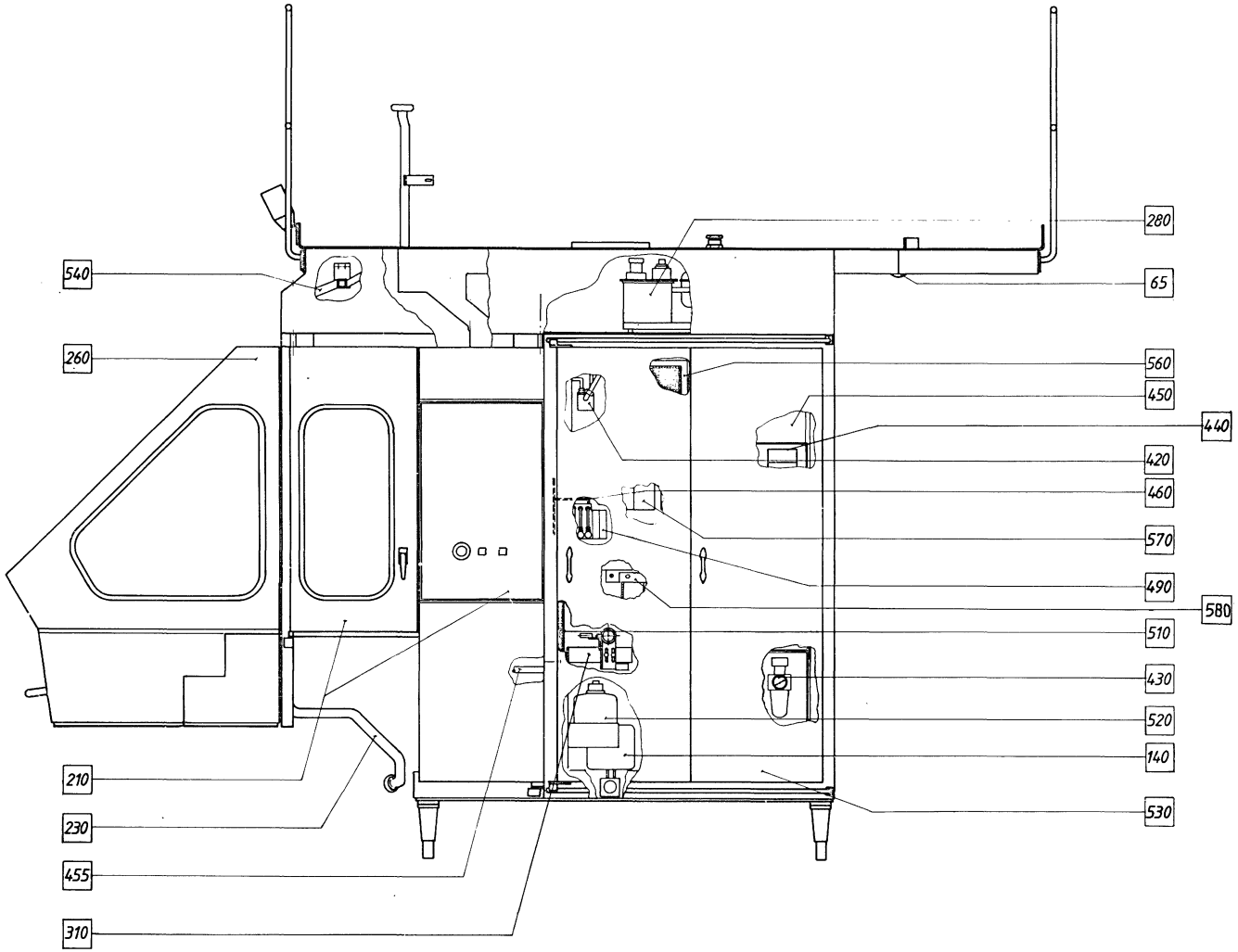
280
65
540
260
560
450
440
420
460
570
490
580
510
430
520
140
530
210
230
455
310

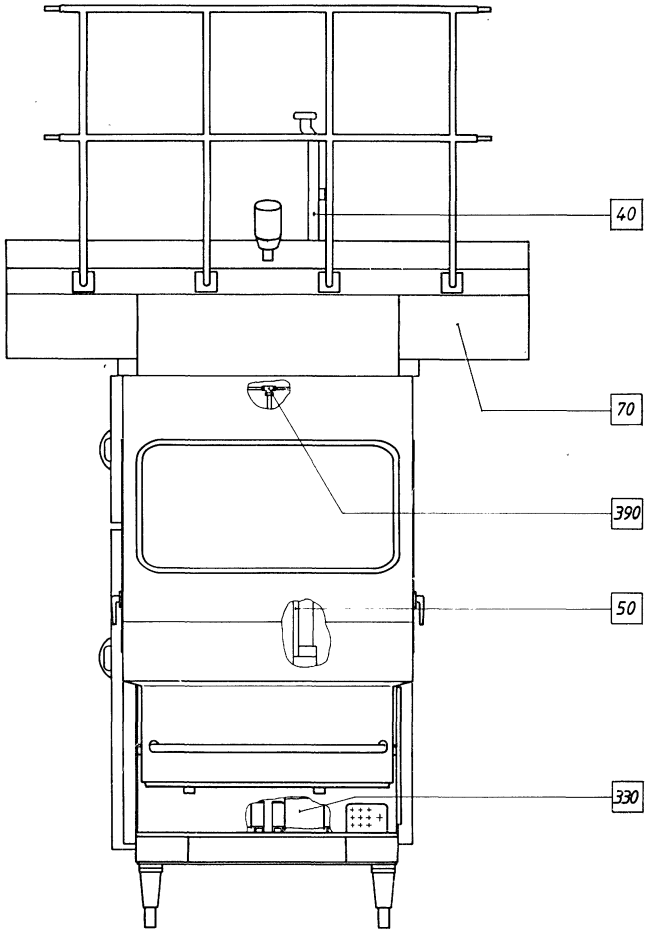
40
70
390
50
330

ECM: 72467 - 19990429
Group number: 648012-0900
Assembly Drawing: 648012-12_1_AA

This list covers pages from 2-2 to 2-5

Pos	Part No	SP	UN	Qty	Description	Page No
TBA/8 (See drawing on page: 2-2)						
050	A265889-0300	-		1	SWITCH (MONITOR)	**2-7**
065	A268015-0100	-		1	BENDING ROLLER BRACKET	**2-9**
070	A1360906-0100	-		1	SIDE BOX RIGHT	**2-11**
170	A561256-0300	-		1	PEROXIDE PIPE	**2-13**
190	A1360889-0100	-		1	SIDE GUARD LEFT	**2-31**
210	A1360898-0100	-		1	SIDE GUARD, RIGHT	**2-33**
230	A297808-0500	-		1	CLEANING EQUIPMENT	**2-35**
260	A297604-0400	-		1	HOOD	**2-41, 2-43**
330	A440415-0200	-		1	TRANSFORMER	**2-49**
340	A1362426-0100	-		1	BOTTOM PLATE	**2-51**
350	A1360903-0100	-		1	SIDE BOX LEFT	**2-53**
400	A440537-0500	-		1	MACHINE BODY	**2-57, 2-59, 2-61**
410	A442463-0400	-		1	PIPE WORK	**2-65**
420	A445537-0200	-		1	PIPE WORK-HYDRAULIC	**2-67**
455	A449168-0300	-		1	CLEANING SYSTEM	**2-69**
460	A1362427-0100	-		1	PIPE WORK-WATER TBA/8	**2-73, 2-75, 2-77, 2-79**
490	A575797-0100	-		1	FLOWMETER GROUP	**2-81**
510	A450788-0600	-		1	PIPE WORK-PNEUMATIC	**2-83, 2-85, 2-87, 2-89**
540	A450840-0400	-		1	LIFTING UNIT	**2-91**
Common Parts						
020	A230922-0100	-		1	AIR JET GUN	**2-95**
030	A493614-0100	-		1	SPRAY GUN	**2-97**
100	A269322-0300	-		1	COVER UPPER	**2-99**
110	A269324-0400	-		1	HATCH	**2-101**
140	A279979-0500	-		1	CENTRAL LUBRICATION	**2-103**
280	A434707-0300	-		1	HYDRAULIC SYSTEM	**2-105**
310	A440098-0300	-		1	CRANK BRACKET	**2-109**
320	A440384-0600	-		1	PLATFORM	**2-111**
390	A440474-0100	-		1	TUBE FLUSHING DEVICE	**2-115**
430	A575392-0100	-		1	VALVE PANEL LOWER	**2-117, 2-119**
440	A1487413-0100	-		1	VALVE PANEL	**2-121, 2-123, 2-125, 2-127**
450	A449930-0500	-		1	CONNECTION BOX	**2-129**
470	A1361566-0100	-		1	PLACING OF CABLE DUCT	**2-131**
520	A450792-0100	-		1	DETERGENT PUMP	**2-133**
530	A450824-0200	-		1	DOOR	**2-135**
560	A450883-0400	-		1	PROTECTION	**2-137**
570	A451348-0200	-		1	CONNECTION BOX	**2-141**

Pos	Part No	SP	UN	Qty	Description	Page No

Machine Type | Group Description | Used-In | Group Number | Page No

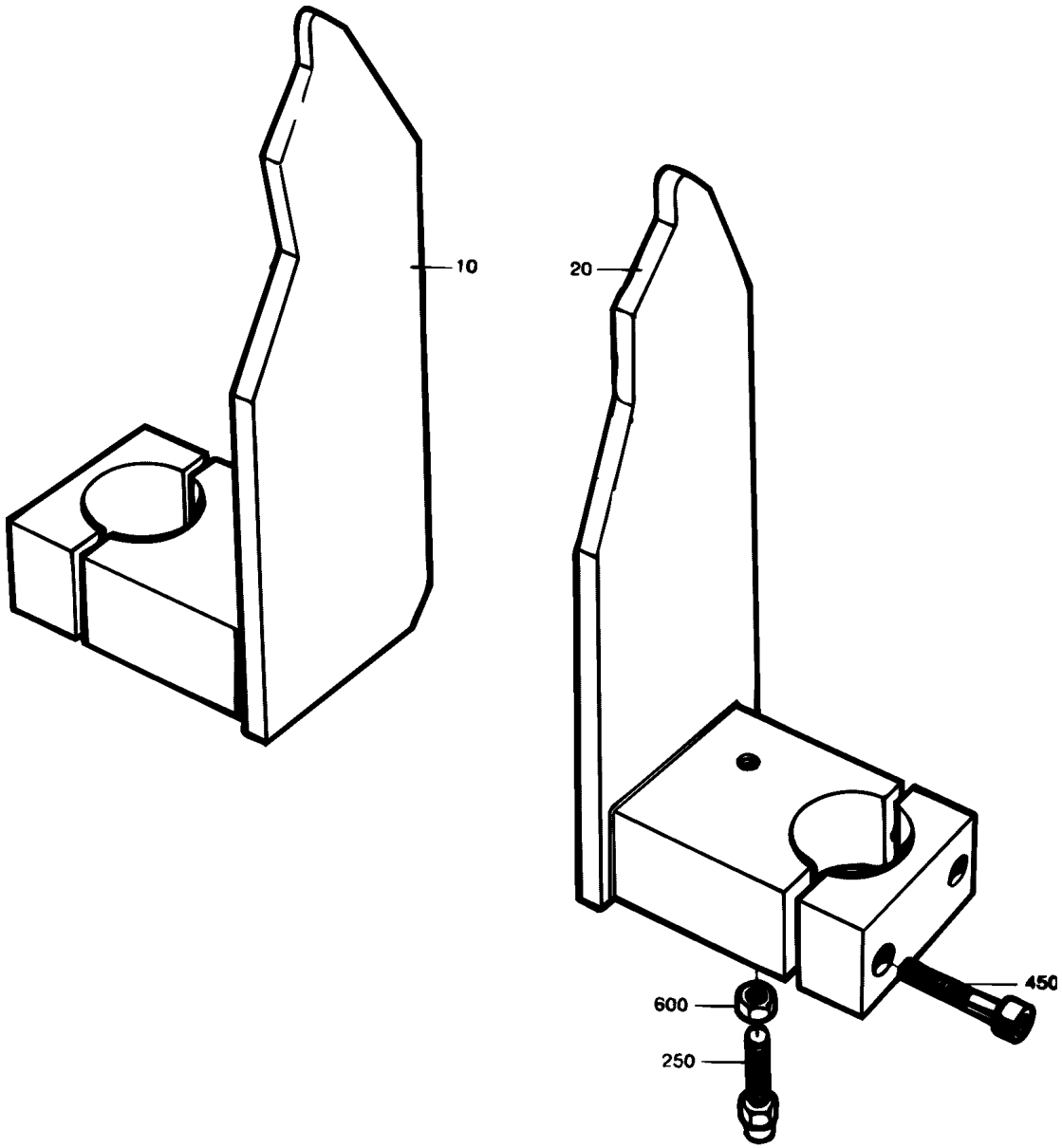
10
20
450
600
250

ECM: - -
Group number: 265889-0300
Assembly Drawing: 265889-3_1_AA

Pos	Part No	SP	UN	Qty	Description	Page No
-						
010	532319-0000	-		1	CATCH GUARD LEFT	
020	532318-0000	-		1	CATCH GUARD RIGHT	
250	268746-0000	-		2	SCREW	
450	312111-0459	-		4	SCREW HEX.SOCK.HD.MC6S-TT 8X40 88 FZB	
600	312605-0318	-		2	HEXAGON NUT, M6M M8 A280	

Pos	Part No	SP	UN	Qty	Description	Page No

BENDING ROLLER BRACKET

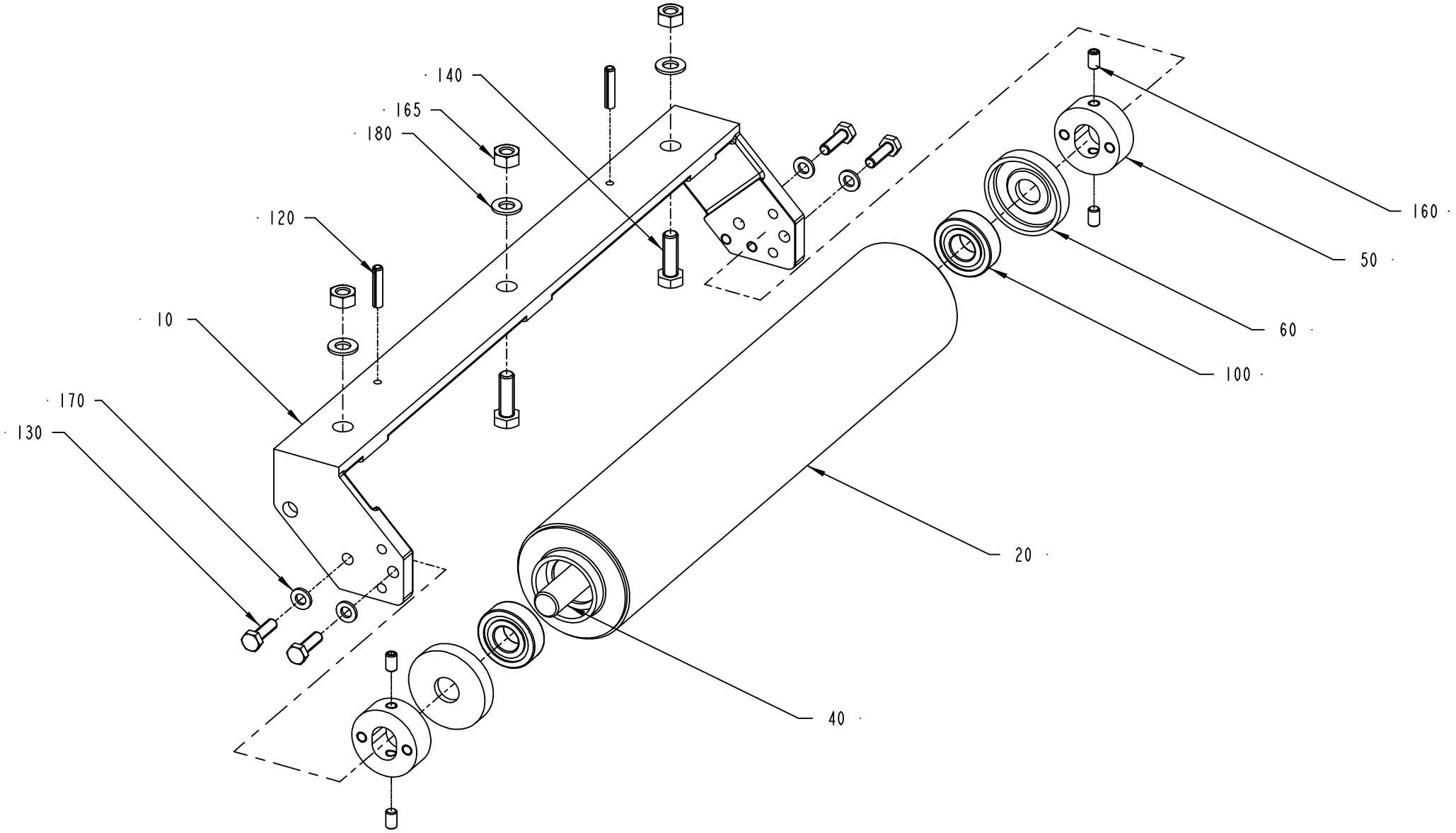

ECM: 82448 - 20020212
Group number: 268015-0100
Assembly Drawing: 268015-1_1_AB

Pos	Part No	SP	UN	Qty	Description	Page No
-						
010	259760-0000	-		1	BENDING ROLLER BRACKET	
020	265564-0000	C		1	BENDING ROLLER	
040	265566-0001	D		1	SHAFT	
050	265567-0000	D		2	BEARING UNIT	
060	265568-0000	C		2	DUST COVER	
100	90214-0098	C		2	BALL BEARING, 15X35X11 MM	
120	311112-0310	-		2	SPRING PIN, ISO 8752 5X24-C	
130	312101-0370	-		4	SCREW M6S M6X20 FZB	
140	312101-0453	-		3	SCREW M6S M8X25 FZB	
160	312318-0364	-		4	SCREW ISO4029 M6X10 A4	
165	312601-0318	-		3	NUT M6M8FZB	
170	315101-0153	-		4	WASHER PLAIN, BRB, 6,4/12 H=1,5	
180	315101-0165	-		6	WASHER PLAIN, BRB, 8,4/16 H=1,5	

Pos	Part No	SP	UN	Qty	Description	Page No

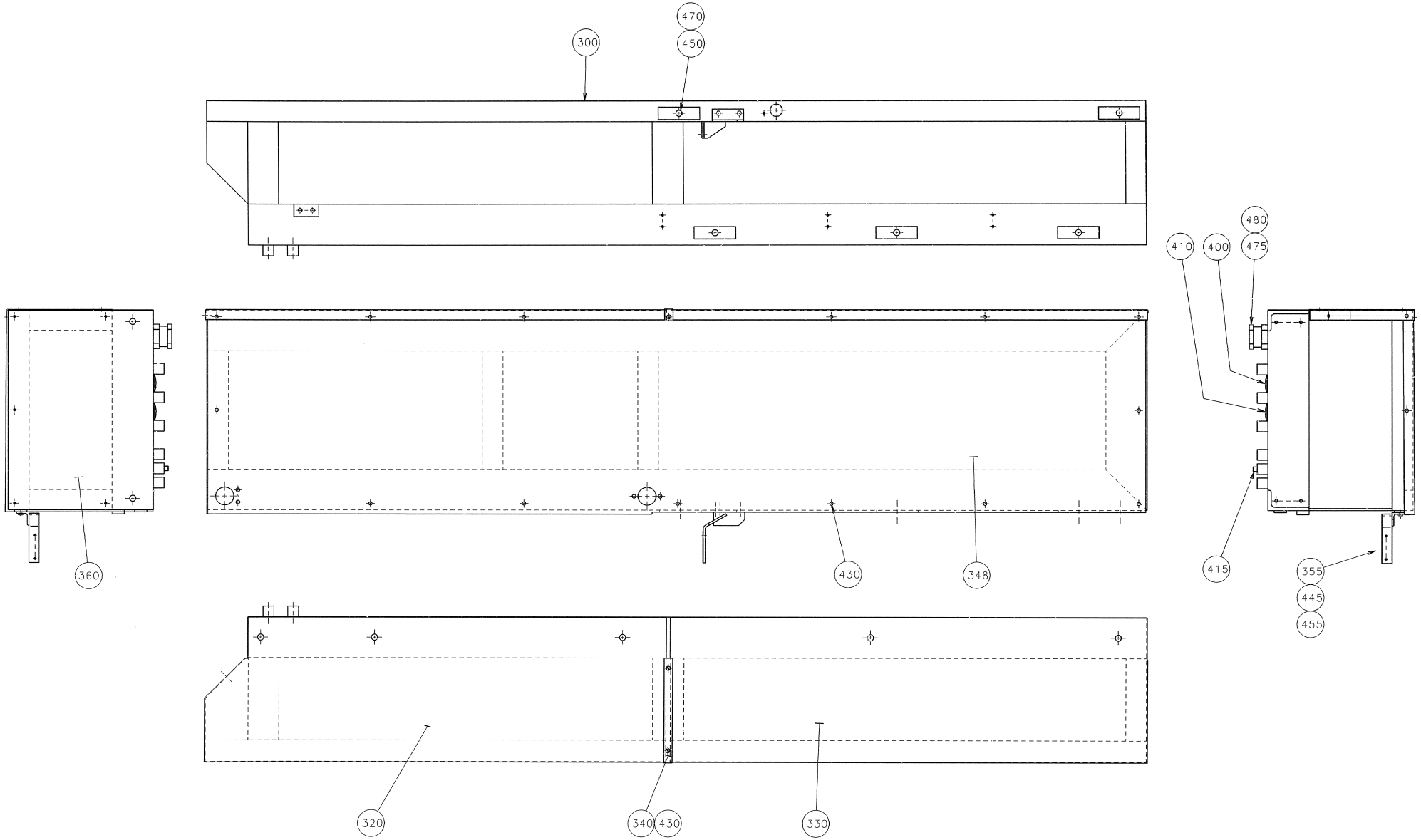
470
450
300
480
410
400
475
360
430
348
415
355
445
455
320
340
430
330

ECM: 71596 - 19981215
Group number: 1360906-0100
Assembly Drawing: 1360906-1_1_AA

Pos	Part No	SP	UN	Qty	Description	Page No
-						
300	1360907-0000	-		1	SIDE BOX RIGHT	
320	564521-0000	-		1	SIDE PLATE	
330	564522-0000	-		1	SIDE PLATE	
340	564523-0000	-		1	RIM	
348	1360908-0000	-		1	BOTTOM PLATE	
355	561423-0000	-		1	BRACKET	
360	542695-0000	-		1	COVERPLATE R	
400	90002-0010	-		1	BLANK-OFF PLUG, PR 37 SKINDICHT-BLK29	
410	90002-0012	-		1	BLANK-OFF PLUG, PR 28,3 SKINDICHT-BLK21	
415	90087-0002	-		3	PIPE PLUG	
430	90287-0075	-		33	SCREW SLOT. PAN HEAD LKCS M6X12	
445	312105-0366	-		2	SCREW M6S M6X12 A280	
450	312101-0540	-		5	SCREW M6S M12X40 FZB	
455	315101-0153	-		2	WASHER PLAIN, BRB, 6,4/12 H=1,5	
470	315101-0178	-		5	WASHER PLAIN, BRB, 13/24 H=2	
475	352100-0126	-		1	CABLE GLANR.47-32,5	
480	352100-0227	-		1	CABLE GLANR.31-34,5	

Pos	Part No	SP	UN	Qty	Description	Page No

Machine Type | Group Description | Used-In | Group Number | Page No

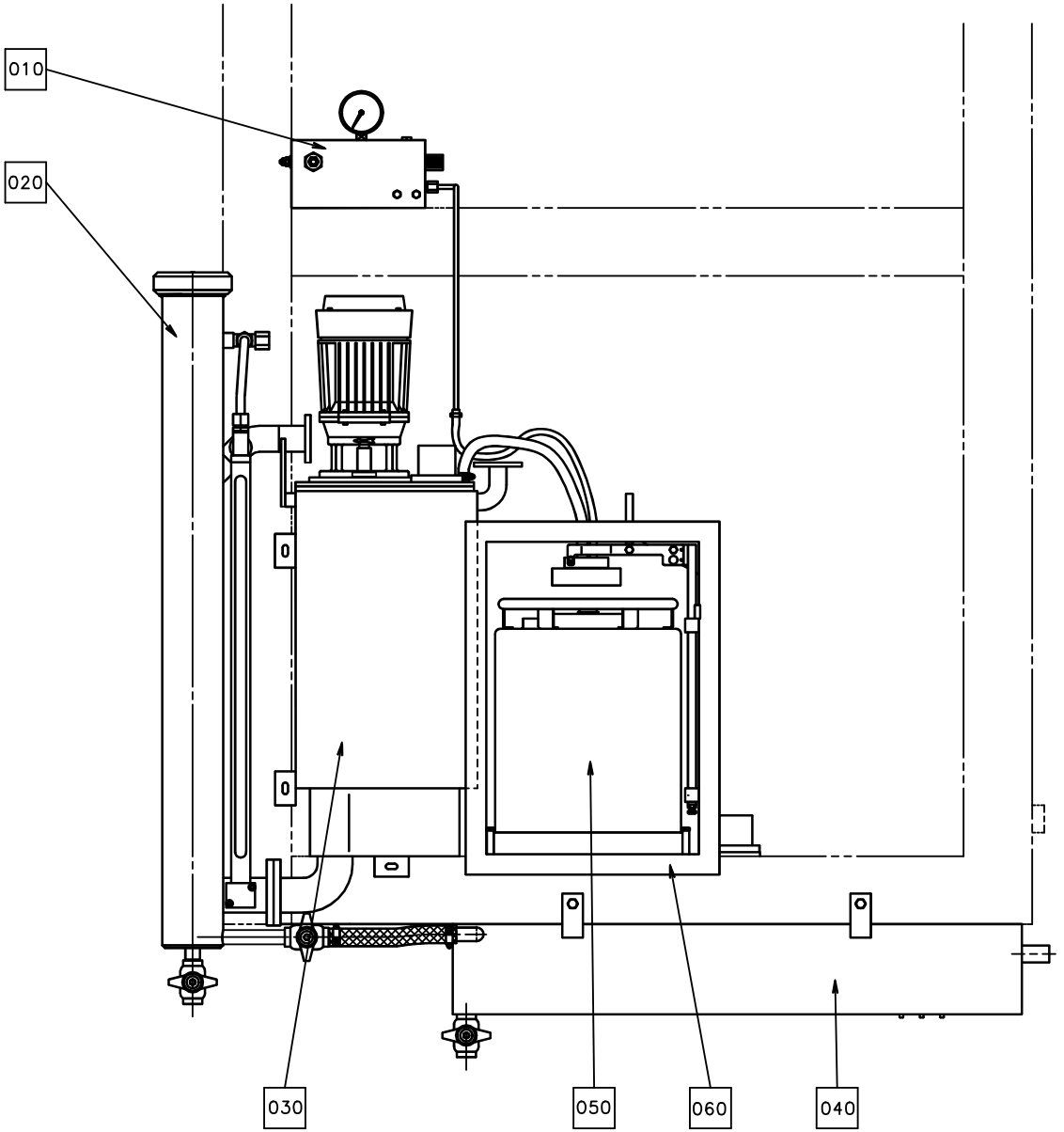
010
020
030
050
060
040

ECM: 70670 - 19970220
Group number: 561256-0300
Assembly Drawing: 561256-1_1_AA

Pos	Part No	SP	UN	Qty	Description	Page No
-						
F010	A560922-0100	-		1	VALVE PANEL	**2-15**
F020	A266550-0400	-		1	FILTER HOUSING	**2-17**
F030	A561257-0200	-		1	PEROXIDE TANK	**2-19**
F040	A561258-0200	-		1	DRAINING PEROXIDE	**2-25**
F050	A527898-0100	-		2	CONTAINER H2O2	**2-27**
F060	A561259-0100	-		1	CONNECTION HOUSING	**2-29**

Pos	Part No	SP	UN	Qty	Description	Page No

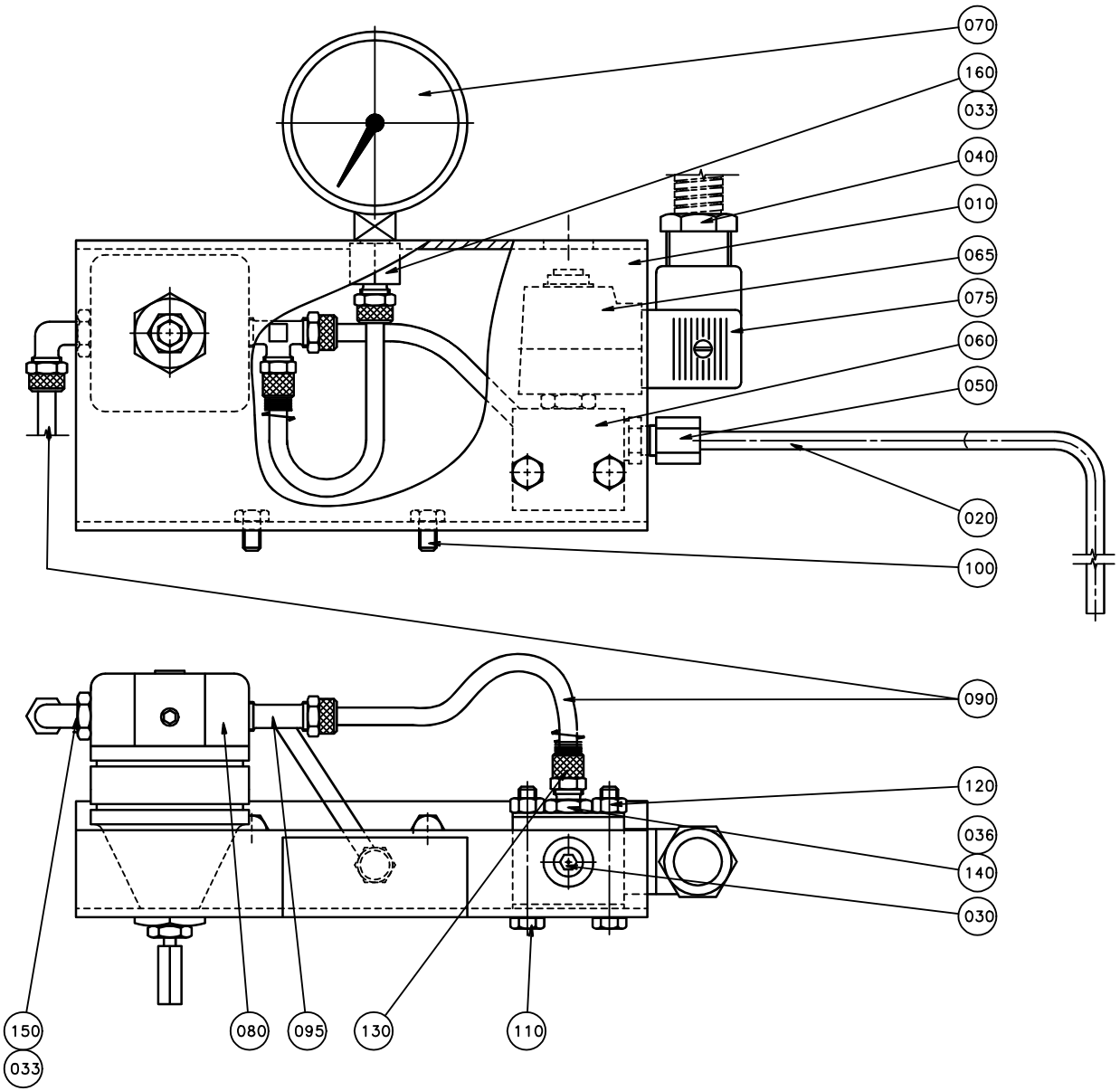
070
160
033
040
010
065
075
060
050
020
100
090
120
036
140
030
150
033
080
095
130
110

ECM: 72091 - 19981216
Group number: 560922-0100
Assembly Drawing: 560922-1_1_AA

Pos	Part No	SP	UN	Qty	Description	Page No
-						
010	527902-0000	-		1	SHEET	
020	530550-0000	-		1	PIPE	
030	563285-0000	-		1	BLIND PLUG	
033	90005-0005	-		2	SEAL WASHER, 13,7X20,6X2,1 MM G1/4"	
036	90005-0009	-		1	SEAL WASHER,10,4X15,9X2,1 MM G1/8"	
040	90012-0063	-		2	CABLE GLAND PR 15,2	
050	90030-0184	-		1	CONN. STR. GA-6-G1/8	
060	90042-0206	C		1	SOLENOID VALVE 444-111-000-1	
065	90042-0487	C		1	COIL 24 VDC MECMAN	
070	90043-0004	C		1	PRESSURE GAUGE, 2040 D=63 MM	
075	90110-0095	-		1	CONNECTOR 3 POLE + EARTH	
080	90113-0056	D		1	REGULATOR	
090	90166-0124	-	MM	3000	TUBE 6 MM PA,TRANSP.	
095	342950-0114	-		1	L-COUPLING,EXT.THREAD 6/4-R1/4"	
100	312105-0364	-		2	SCREW M6S ISO 4017 M6X10 A480	
110	312105-0378	-		2	SCREW M6S ISO 4014 M6X40 A480	
120	312605-0316	-		2	HEXAGON NUT, M6M M6 A280	
130	342903-0111	-		2	NUT WITH SPRING 6/4-M10X1	
140	342921-0113	-		1	STRAIGHT COUPLING,EXT.THREADED 6/4-G1/8"	
150	90224-0329	-		1	ELBOW 90 COUPL.,EXT.THREAD 6/4-G1/4"	
160	342923-0114	-		1	STRAIGHT COUPL.,INT.THREADED 6/4-G1/4"	

Pos	Part No	SP	UN	Qty	Description	Page No

Machine Type | Group Description | Used-In | Group Number | Page No

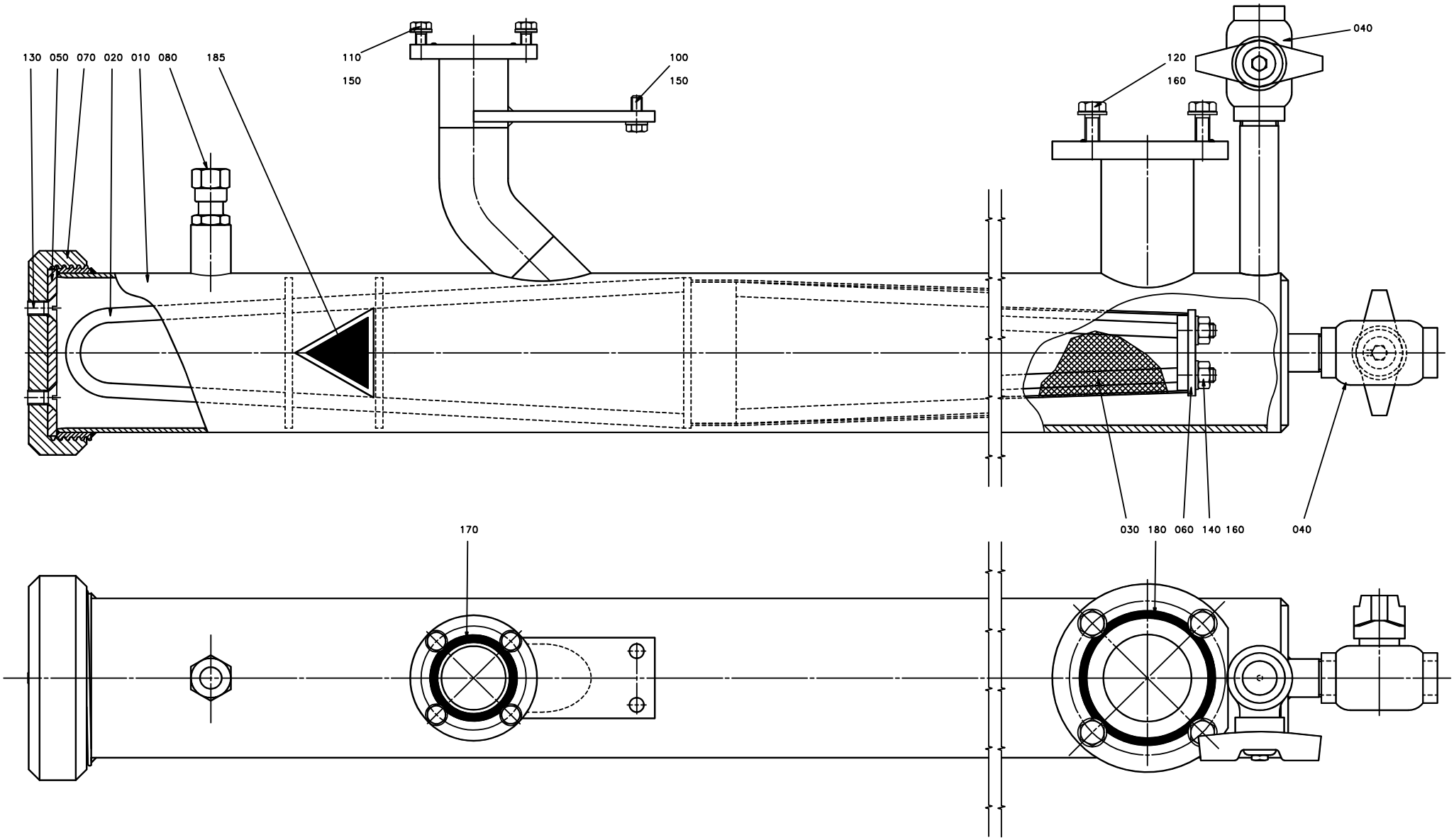
130
050
070
020
010
080
185
110
150
100
150
040
120
160
170
030
180
060
140
160
040

ECM: 72091 - 19981216
Group number: 266550-0400
Assembly Drawing: 266550-4_1_AA

Pos	Part No	SP	UN	Qty	Description	Page No
-						
010	573445-0000	D		1	FILTER HOUSING	
020	269903-0000	-		1	FILTER INSERT	
030	269904-0000	D		1	FILTER MESH	
040	484536-0000	D		2	VALVE	
050	266557-0000	C		1	GASKET	
060	269905-0000	-		1	WASHER	
070	284840-0000	-		1	NUT	
080	573446-0000	-		1	STRAIGHT CONNECTION	
100	312105-0368	-		2	SCREW M6S M6X16 A280	
110	312105-0370	-		4	SCREW M6S ISO 4017 M6X20 A480	
120	312105-0452	-		4	SCREW M6S ISO 4017 M8X22 A480	
130	312145-0449	-		2	SCREW COUNTERS.SLOT.HD. MFS 8X16 SS	
140	312605-0318	-		2	HEXAGON NUT, M6M M8 A280	
150	315105-0153	-		6	WASHER BRB6,4X12RFR	
160	315105-0165	-		6	WASHER BRB8,4X16RFR	
170	927422-0006	C		1	O-RING 42.2X3 SILICON	
180	927422-0011	C		1	O-RING 69.5X3 SILICON	
185	359705-0003	-		1	WARNING SIGN ISO, DANGEROUS CHEMICALS	

Pos	Part No	SP	UN	Qty	Description	Page No

Machine Type | Group Description | Used-In | Group Number | Page No

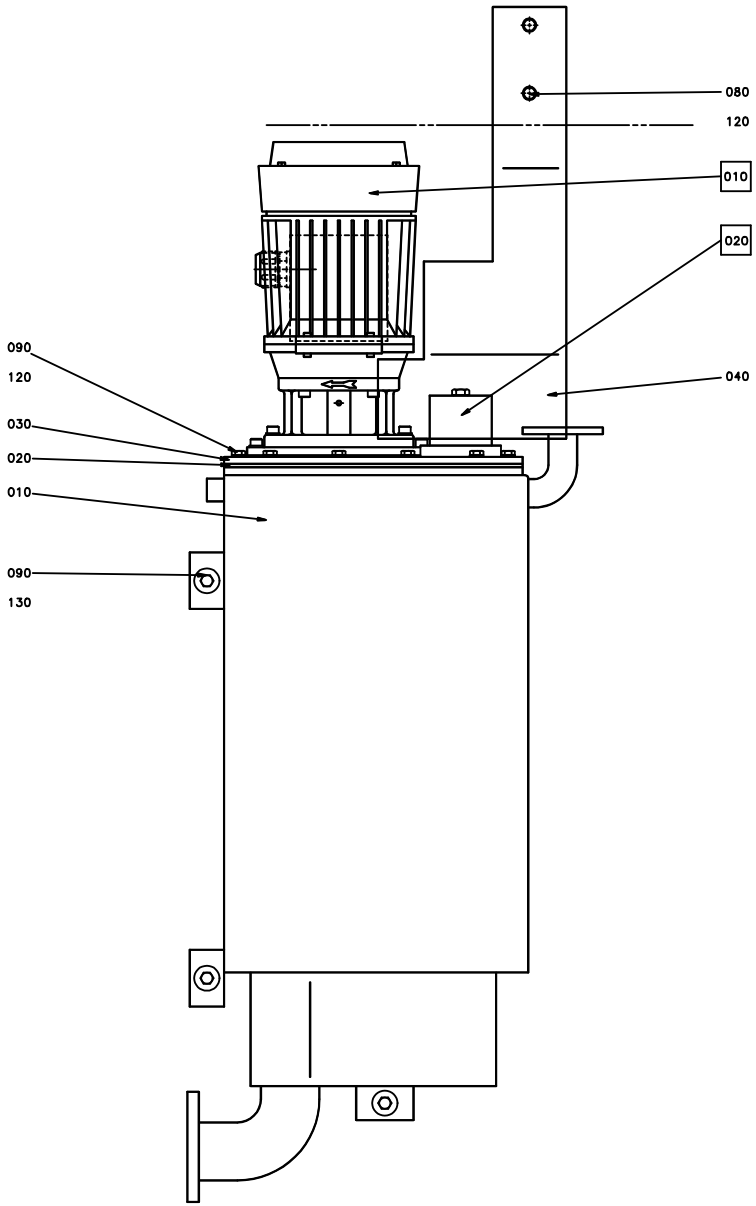
080
120
010
020
040
090
120
030
020
010
090
130

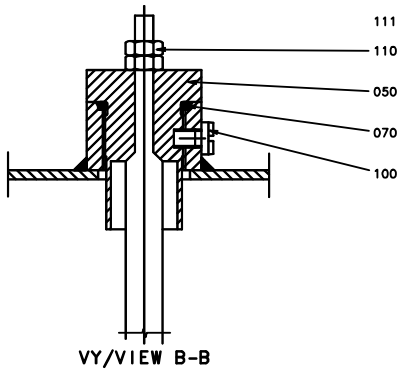
111
110
050
070
100
VY/VIEW B-B

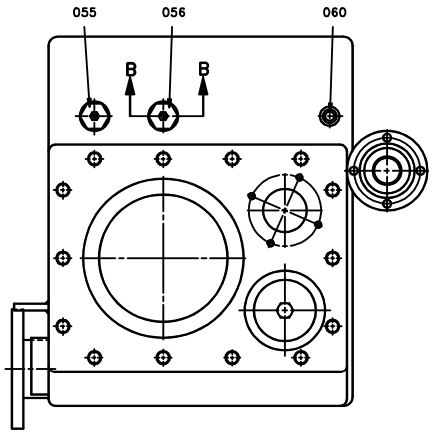
055
056
060
B
B

ECM: 145143 - 20031107
Group number: 561257-0200
Assembly Drawing: 561257-1_1_AA

Pos	Part No	SP	UN	Qty	Description	Page No
0375S, 0500S, 0750B						
055	567070-0007	B		1	ELECTRODE	
056	567070-0002	B		1	ELECTRODE	
0500B, 0355B						
055	567070-0006	B		1	ELECTRODE	
056	567070-0002	B		1	ELECTRODE	
1000SQ, 1000S						
055	567070-0011	B		1	ELECTRODE	
056	567070-0018	B		1	ELECTRODE	
0750S, 1000B						
055	567070-0011	B		1	ELECTRODE	
056	567070-0002	B		1	ELECTRODE	
Common Parts						
010	A292451-0500	-		1	PEROXIDE PUMP	**2-21**
010	540886-0000	-		1	TANK	
020	A566196-0100	-		1	LID WITH WEIGHT	**2-23**
020	259835-0000	B		1	FLANGE SEAL	
030	479032-0000	-		1	HATCH	
040	497121-0000	-		1	SPLASH GUARD	
050	560931-0000	B		2	BRACKET	
060	527910-0000	-		1	PIPE	
070	927421-0004	B		2	O-RING 15.3X2.4 SILICON	
080	312105-0367	-		2	SCREW M6S M6X14 A280	
090	312105-0370	-		17	SCREW M6S ISO 4017 M6X20 A480	
100	312125-0285	-		2	SLOTTED CHEESE HEAD SCREW MCS 4X6 SS	
110	312605-0312	-		4	HEXAGON NUT, M6M M4 A280	
111	315105-0136	-		6	WASHER BRB4,3XRFR	
120	315105-0153	-		16	WASHER BRB6,4X12RFR	
130	315125-0153	-		3	WASHER TBRSB 6,4X22X4 A4	

Pos	Part No	SP	UN	Qty	Description	Page No

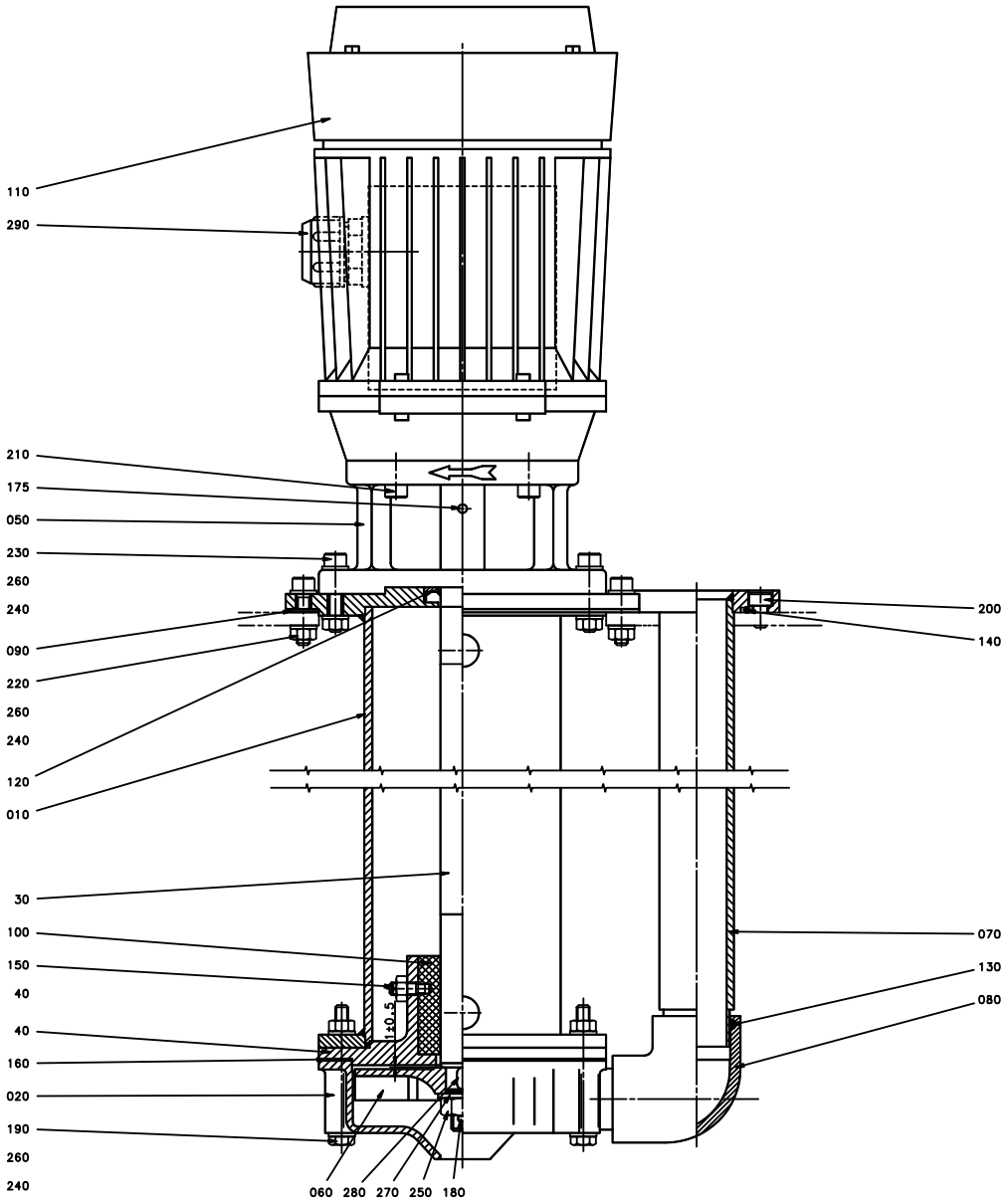
110
290
210
175
050
230
260
240
090
220
260
240
120
010
30
100
150
40
40
160
020
190
260
240
060
280
270
250
180
200
140
070
130
080
1±0.5

ECM: 105564 - 20020403
Group number: 292451-0500
Assembly Drawing: 292451-5_1_AA

Pos	Part No	SP	UN	Qty	Description	Page No
50HZ						
020	571277-0000	A		1	PUMP HOUSING	
60HZ						
020	292449-0000	A		1	PUMP HOUSING	
Common Parts						
010	292452-0000	A		1	EXTENSION PIPE	
030	2525466-0000	A		1	SHAFT	
040	292456-0000	A		1	BEARING COVER	
050	292464-0000	A		1	FLANGE	
060	491929-0000	A		1	IMPELLER WHEEL	
070	560923-0000	A		1	PIPE	
080	751316-0000	A		1	ELBOW PIPE	
090	484791-0000	A		1	GASKET	
100	2510372-0000	A		1	BUSHING	
110	90458-2466	A		1	MOTOR 3GVA071002-CSB	
120	90091-0412	A		1	SEAL RING	
130	927422-0004	A		1	O-RING 29.2X3 SILICON	
140	927422-0006	A		1	O-RING 42.2X3 SILICON	
150	90287-0159	-		2	SCREW, SOCK.SET DOGPOINT M6X16	
160	1349920-0000	A		1	GASKET	
175	311112-0256	-		1	SPRING PIN, ISO 8752 4X20-C	
180	311411-0169	-		1	SPLIT PIN SP2,5X25RFR	
190	312105-0382	-		5	SCREW M6S ISO 4014 M6X60 A480	
200	312115-0364	-		4	SCREW ISO4762 M6X10 A4	
210	312115-0370	-		4	SCREW ISO4762 M6X20 A4	
220	312105-0372	-		4	SCREW M6S ISO 4017 M6X25 A480	
230	312105-0374	-		5	SCREW M6S ISO 4014 M6X30 A480	
240	312605-0316	-		16	HEXAGON NUT, M6M M6 A280	
250	312605-0320	-		1	HEXAGON NUT, M6M M10 A280	
260	315105-0153	-		28	WASHER BRB6,4X12RFR	
270	315105-0173	-		1	WASHER BRB10,5X22RFR	
280	315705-0196	-		1	PARALLEL KEY W.ROUND ENDS 5X5X10	
290	352136-0129	-		1	GLAND FITTING PR22,5/PG16 DI=16MM	

Pos	Part No	SP	UN	Qty	Description	Page No

Machine Type | Group Description | Used-In | Group Number | Page No

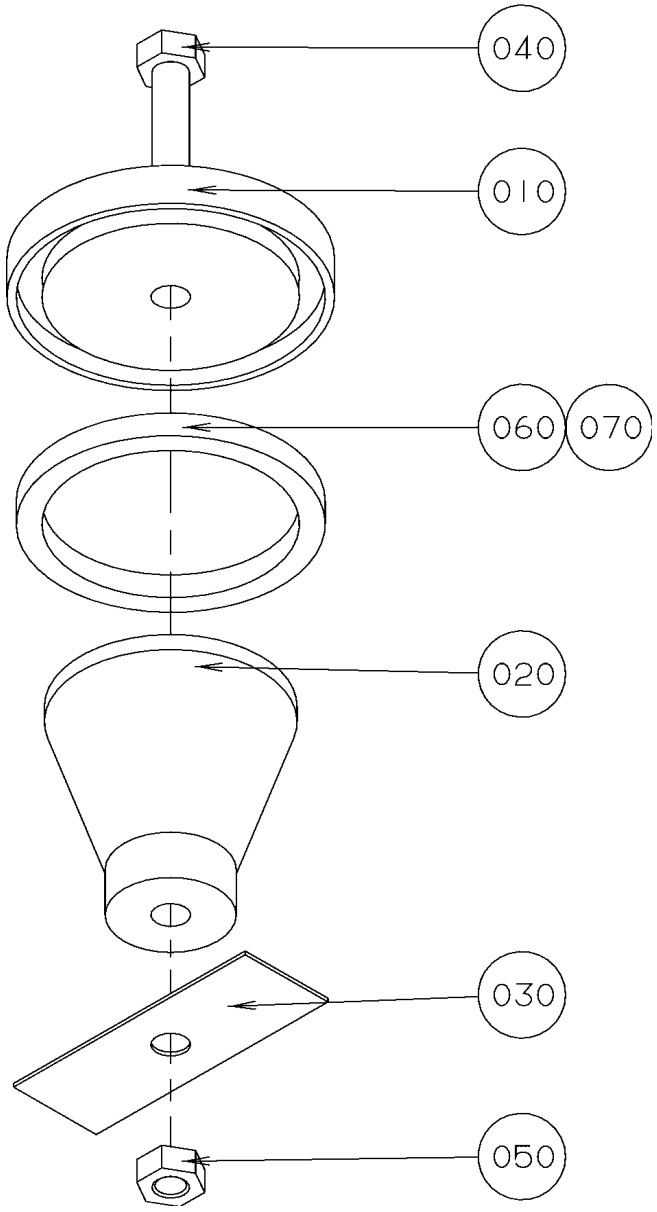
040
010
060
070
020
030
050

ECM: 72091 - 19981216
Group number: 566196-0100
Assembly Drawing: 566196-1_1_AA

Pos	Part No	SP	UN	Qty	Description	Page No
-						
010	566195-0000	-		1	LID	
020	566194-0000	-		1	WEIGHT	
030	566171-0000	-		1	CUP SPRING	
040	312105-0466	-		1	SCREW M6S ISO 4014 M8X75 A480	
050	312605-0318	-		1	HEXAGON NUT, M6M M8 A280	
060	90143-0020	-	MM	190	STRIP	
070	90153-0023	-		1	ADHESIVE, SILICON 251470 TUB 90CC	

Pos	Part No	SP	UN	Qty	Description	Page No

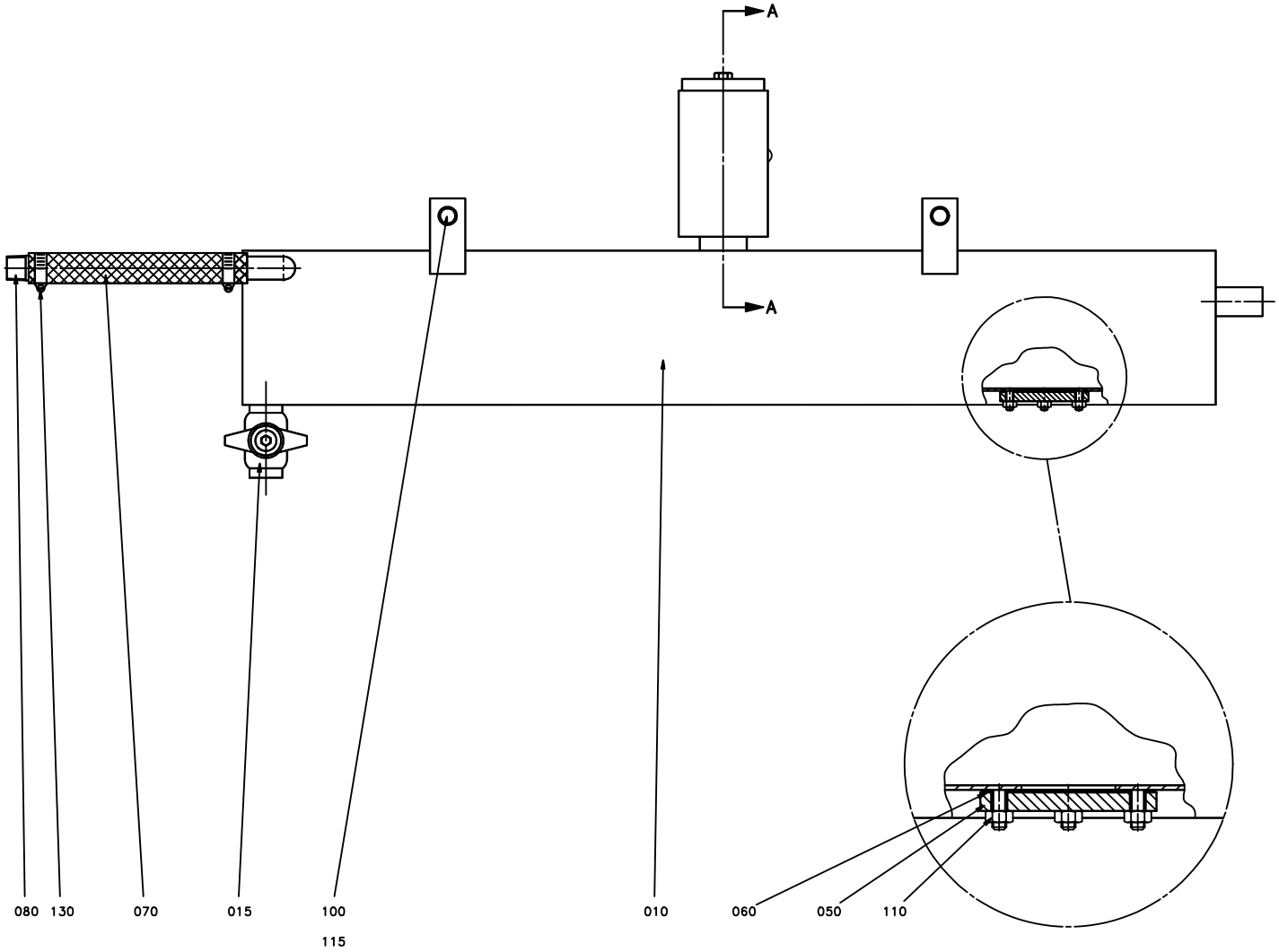
A
A
080
130
070
015
100
115
010
060
050
110

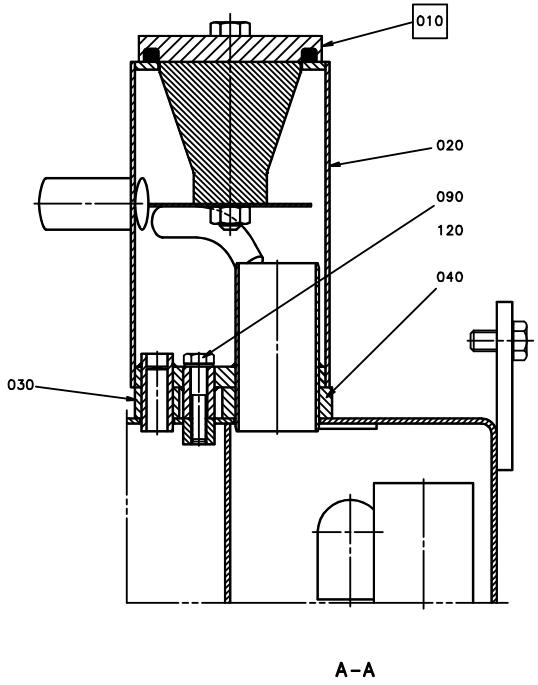
010
020
090
120
040
030

A–A

ECM: 72091 - 19981216
Group number: 561258-0200
Assembly Drawing: 561258-2_1_AA

Pos	Part No	SP	UN	Qty	Description	Page No
-						
010	561549-0000	D		1	TANK	
015	484536-0000	C		1	VALVE	
020	566192-0000	-		1	METERING DEVICE	
030	527905-0000	D		1	GASKET	
040	527906-0000	D		1	GASKET	
050	532205-0000	-		1	LID	
060	532206-0000	D		1	GASKET	
070	90166-0060	-	MM	200	HOSE 19/26-27 REINF.PVC	
080	90330-0059	-		1	NIPPLES, EXT. THREAD WELD. R-208/KR1/2	
090	312105-0374	-		1	SCREW M6S ISO 4014 M6X30 A480	
100	312105-0451	-		4	SCREW M6S ISO 4017 M8X20 A480	
110	312605-0316	-		4	HEXAGON NUT, M6M M6 A280	
115	315115-0165	-		4	WASHER PLAIN, TBRB 8,4/16 H=3	
120	315211-0103	-		1	BONDED SEAL SS/NBR90 M6	
130	342991-0104	-		2	HOSE CLIP,WORM DRIVE TYPE (23)-27	
F010	A566196-0100	-		1	LID WITH WEIGHT	**2-23**

Pos	Part No	SP	UN	Qty	Description	Page No

Machine Type | Group Description | Used-In | Group Number | Page No

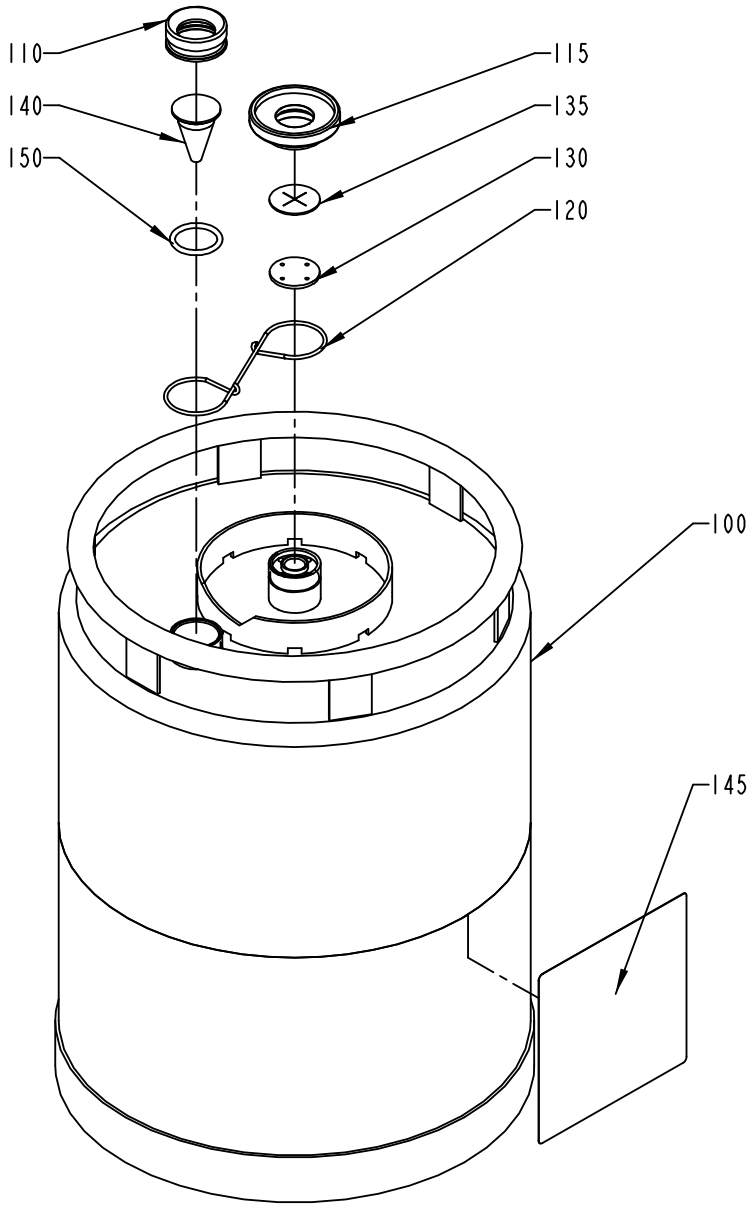
110
140
150
115
135
130
120
100
145

ECM: 115873 - 20020930
Group number: 527898-0100
Assembly Drawing: 527898-1_1_AB

Pos	Part No	SP	UN	Qty	Description	Page No
-						
100	561427-0000	-		1	CONTAINER	
110	273977-0000	-		1	NUT	
115	273996-0000	-		1	NUT	
120	273980-0000	-		1	SPRING	
130	565250-0000	B		1	WASHER	
135	565251-0000	B		1	VALVE	
140	273978-0000	-		1	LEVEL GLASS	
145	532655-0000	A		1	CAUTION SIGN	
150	927422-0003	B		1	O.RING 24.2X3 SILICON	

Pos	Part No	SP	UN	Qty	Description	Page No

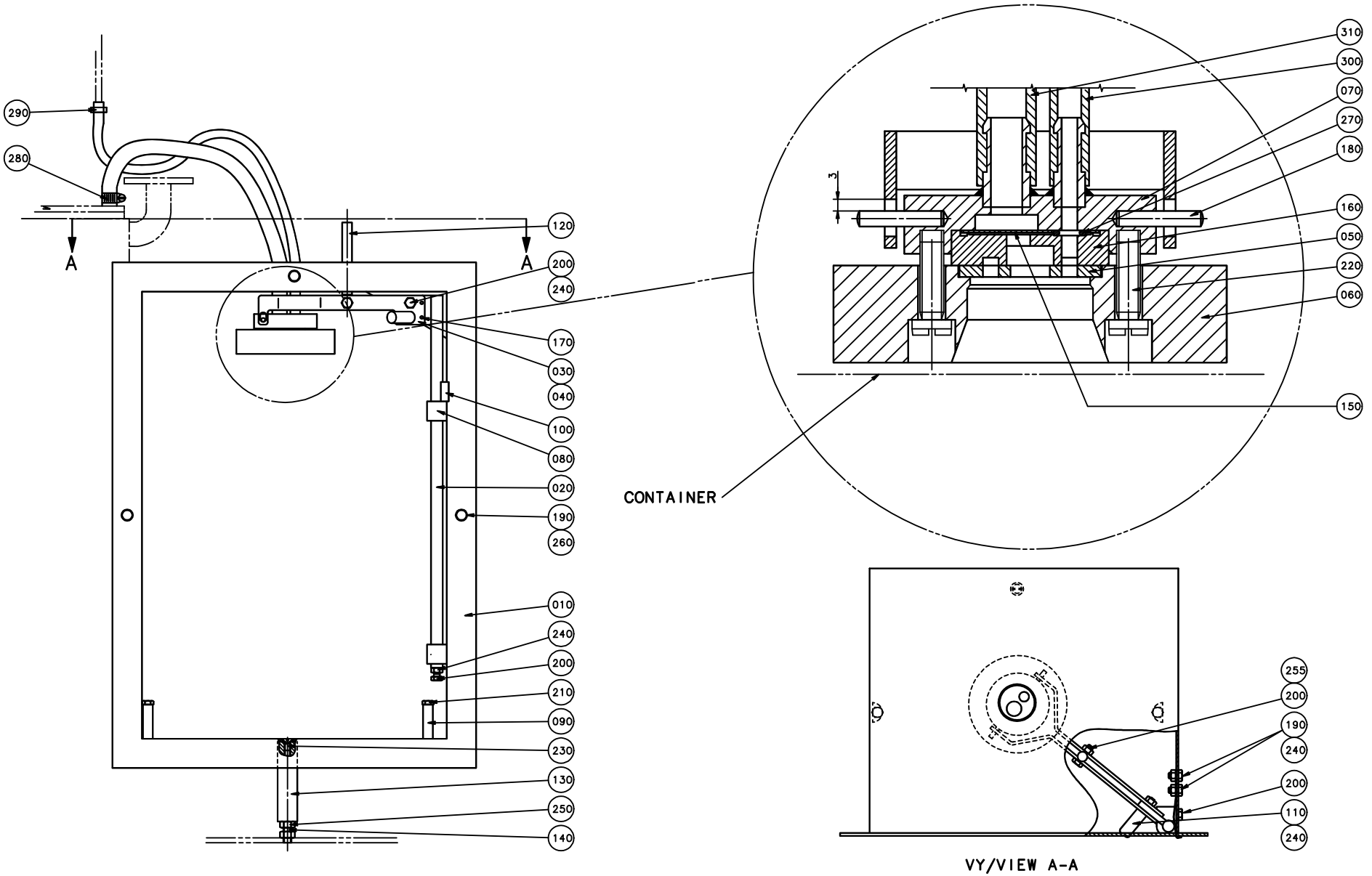
290
280
A
A
120
200
240
170
030
040
100
080
020
190
260
010
240
200
210
090
230
130
250
140
CONTAINER
310
300
070
270
180
160
050
220
060
150
3
255
200
190
240
200
110
240
VY/VIEW A-A

ECM: 146471 - 20031107
Group number: 561259-0100
Assembly Drawing: 561259-1_1_AB

Pos	Part No	SP	UN	Qty	Description	Page No
-						
010	565104-0000	-		1	SWEEP	
020	527120-0000	-		1	STEERING	
030	527121-0001	-		1	BOW CLAMP	
040	527121-0002	-		1	BOW CLAMP	
050	273981-0000	C		1	GASKET	
060	273982-0000	-		1	WEIGHT	
070	527122-0000	-		1	ATTACHMENT	
080	527124-0000	C		2	BEARING	
090	527125-0000	-		2	STEERING	
100	527126-0000	D		1	LEAF SPRING	
110	527127-0000	-		1	DOWEL	
120	527128-0000	-		1	GUIDE PIN	
130	527129-0000	-		1	BRACKET	
140	527130-0000	-		1	SCREW	
150	527912-0000	C		1	NON-RETURN VALVE	
160	530551-0000	D		1	WASHER	
180	311103-0273	-		2	ARALLEL PIN ISO 2338 4M6X22 A1	
190	312105-0368	-		6	SCREW M6S M6X16 A280	
200	312105-0370	-		5	SCREW M6S ISO 4017 M6X20 A480	
210	312105-0378	-		2	SCREW M6S ISO 4014 M6X40 A480	
220	312125-0370	-		2	SLOTTED CHEESE HEAD SCREW MCS 6X20 SS	
230	312155-0366	-		1	SCREW EN 10642 MF6S M6X12 A480	
240	312605-0316	-		5	HEXAGON NUT, M6M M6 A280	
250	312605-0318	-		2	HEXAGON NUT, M6M M8 A280	
255	312812-0316	-		1	HEXAGON NUT, NY-LOCK M6 A480	
260	315105-0153	-		4	WASHER BRB6,4X12RFR	
270	90242-0163	C		1	O-RING	
280	342991-0101	-		2	HOSE CLIP,WORM DRIVE TYPE (13)-16	
290	90132-0021	-		2	HOSE CLIP 6-10MM	
300	90166-0101	-	MM	350	HOSE, SILICONE, 60 SHORE, 6/10 MM	
310	90166-0138	-	MM	500	HOSE	

Pos	Part No	SP	UN	Qty	Description	Page No

Machine Type | Group Description | Used-In | Group Number | Page No

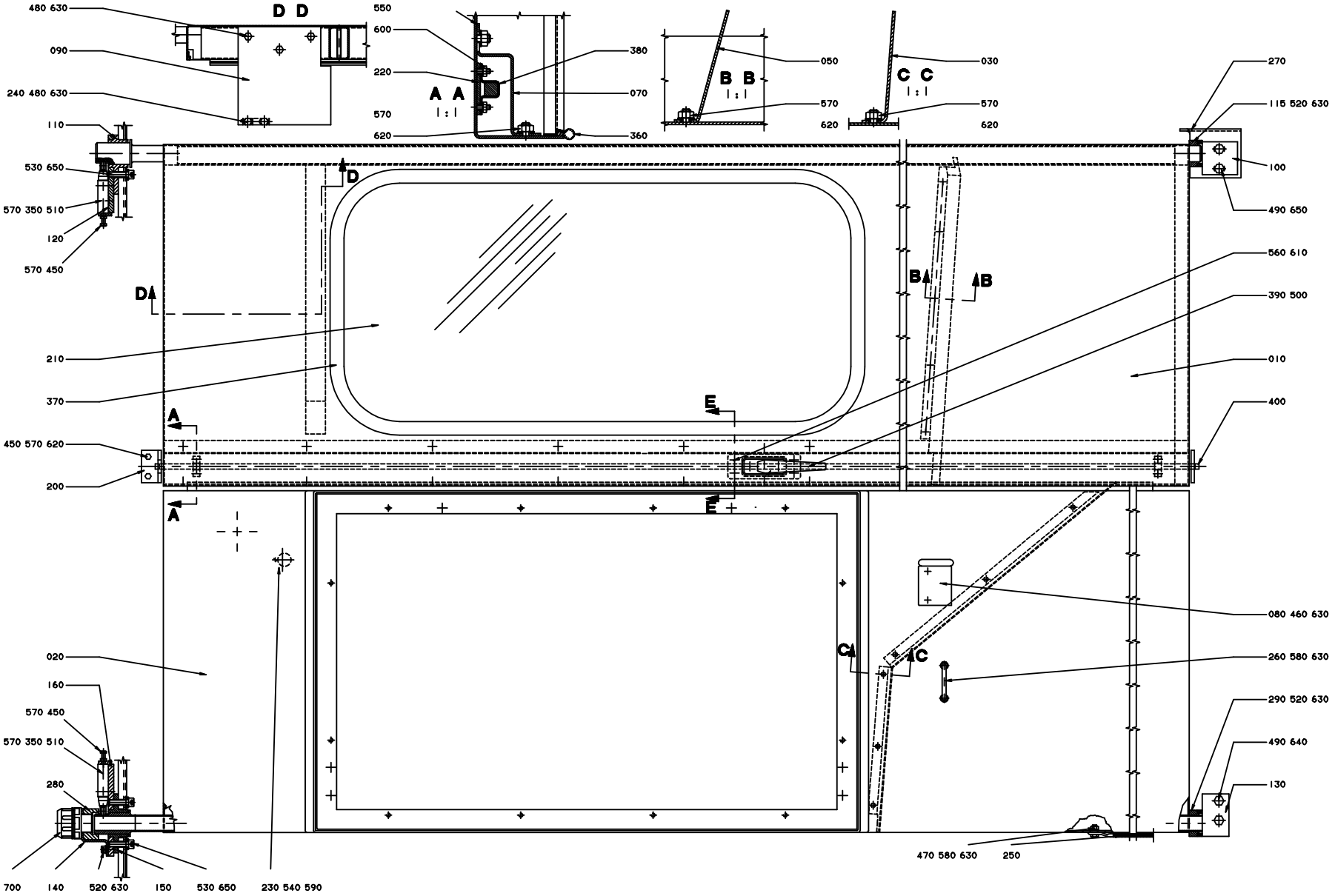
D D
A A
1 : 1
B B
1 : 1
C C
1 : 1
480 630
090
240 480 630
110
530 650
570 350 510
120
570 450
550
600
220
570
620
380
070
360
050
570
620
030
570
620
270
115 520 630
100
490 650
560 610
390 500
010
400
D
B
E
A
210
370
450 570 620
200
020
160
570 450
570 350 510
280
700
140
520 630
150
530 650
230 540 590
080 460 630
C
260 580 630
290 520 630
490 640
130
470 580 630
250

ECM: 147637 - 20031107
Group number: 1360889-0100
Assembly Drawing: 1360889-1_1_AB

Pos	Part No	SP	UN	Qty	Description	Page No
TBA/8						
020	1360890-0000	-		1	SIDEGUARD LEFT	
050	451127-0000	-		1	CHUTE, LEFT FRONT	
100	544510-0000	-		1	BRACKET	
270	542860-0000	-		1	COVER PLATE	
Common Parts						
010	544899-0000	-		1	SIDECOVER LEFT FRONT	
030	1360896-0000	-		1	CHUTE LEFT	
070	442193-0000	-		1	PROTECTIVE CASING	
080	469795-0000	-		1	HOLDER	
090	533426-0000	A		1	STOP PLATE	
110	560800-0000	-		1	BEARING UNIT	
115	544481-0000	A		1	PLATE	
120	560872-0000	-		1	PLATE	
130	1360893-0000	-		1	BRACKET LEFT	
140	1360894-0000	-		1	HOLDER	
150	1360895-0000	-		1	BEARING	
160	1360897-0000	-		1	PLATE	
200	293566-0000	-		1	MOUNTINGS	
210	293598-0000	A		1	GLASS PANE	
220	434858-0000	A		2	CUSHION	
230	442195-0000	-		1	LID	
240	553162-0000	A		1	STOP PLATE	
250	553164-0000	-		1	LOW IMPEDANCELITZ L=150MM	
260	531616-0000	-		1	HOLDER	
280	1360891-0000	-		1	NUT	
290	1360892-0000	A		1	PLATE	
350	90044-0094	A		2	LIMIT SW. 924 CE31-Y20-X5	
360	90143-0035	A	MM	5450	STRIP	
370	90143-0039	A	MM	2400	STRIP	
380	90237-0011	-		2	BAR CLAMP	
390	90458-2621	-		1	HANDLE, FIX 8307-0230	
400	90237-0066	-		1	LOCK, FIX 590, L=1820 MM	
450	312105-0327	-		6	SCREW M6S ISO 4017 M5X12 A480	
460	312105-0364	-		2	SCREW M6S ISO 4017 M6X10 A480	
470	312105-0368	-		1	SCREW M6S M6X16 A280	
480	312105-0370	-		3	SCREW M6S ISO 4017 M6X20 A480	
490	312105-0451	-		4	SCREW M6S ISO 4017 M8X20 A480	
500	312115-0325	-		2	SCREW ISO4762 M5X10 A4	
510	312115-0329	-		4	SCREW ISO4762 M5X16 A4	
520	312115-0366	-		6	SCREW ISO4762 M6X12 A4	
530	312115-0455	-		4	SCREW ISO4762 M8X30 A4	
540	312125-0222	-		1	SLOTTED CHEESE HEAD SCREW MCS 3X8 SS	
550	312605-0310	-		4	HEXAGON NUT, M6M M3 A280	
560	312605-0312	-		4	HEXAGON NUT, M6M M4 A280	
570	312605-0314	-		38	HEXAGON NUT, M6M M5 A280	
580	312605-0316	-		3	HEXAGON NUT, M6M M6 A280	
590	312810-0310	-		1	HEXAGON NUT, NY-LOCK M3 FZB	
600	315105-0124	-		4	BRICKA BRB3,2X6RFR	
610	315105-0136	-		4	WASHER BRB4,3XRFR	
620	315105-0146	-		33	BRICKA BRB5,3X10RFR	
630	315105-0153	-		18	WASHER BRB6,4X12RFR	
640	315105-0165	-		2	WASHER BRB8,4X16RFR	
650	315115-0165	-		6	WASHER PLAIN, TBRB 8,4/16 H=3	
700	352136-0167	-		1	GLAND FITTING	

Machine Type | Group Description | Used-In | Group Number | Page No

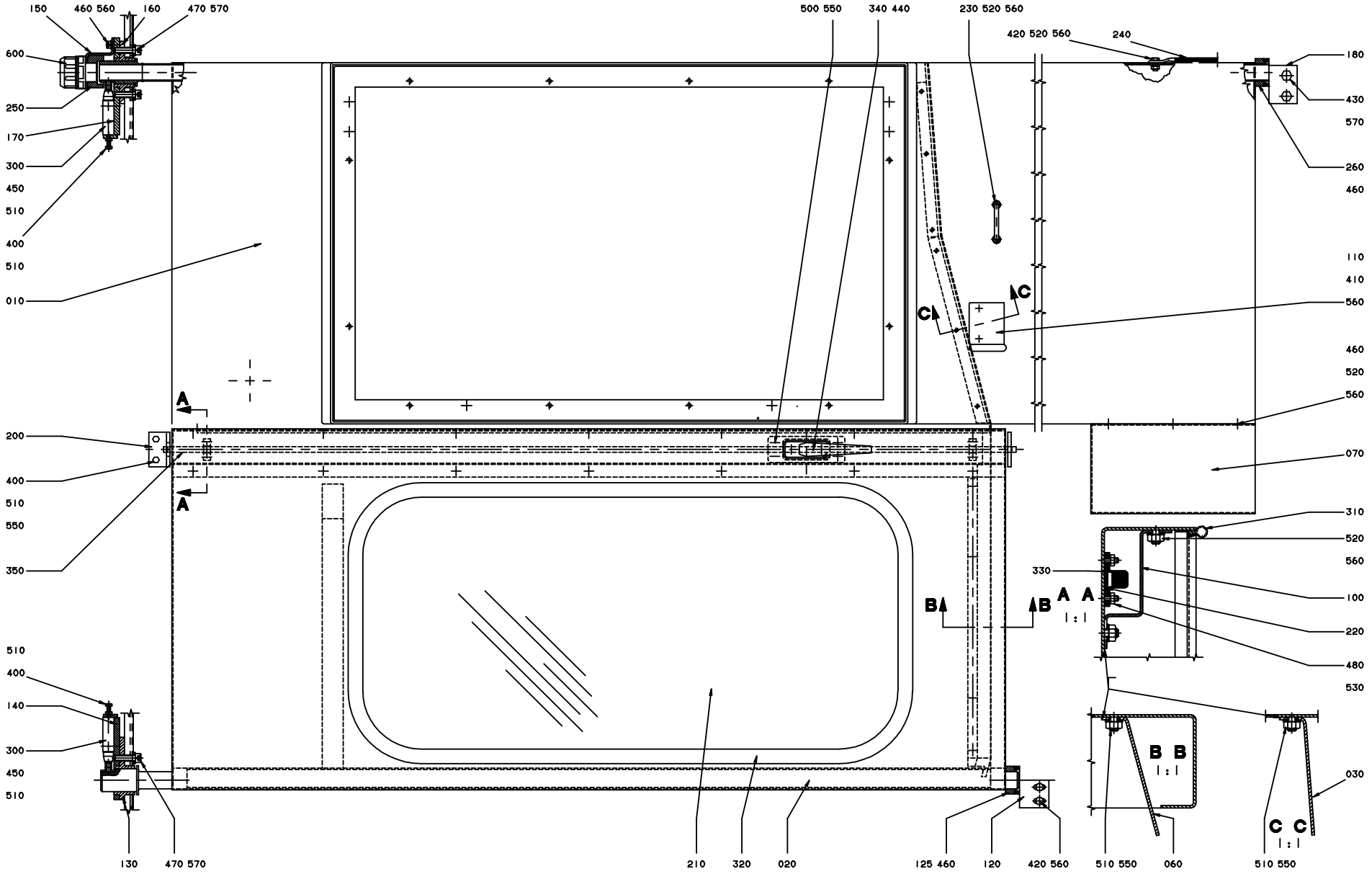
150
460 560
160
470 570
600
250
170
300
450
510
400
510
010
500 550
340 440
230 520 560
420 520 560
240
180
430
570
260
460
110
410
560
460
520
560
070
310
520
560
100
220
480
530
030
200
400
510
550
350
510
400
140
300
450
510
130
470 570
210
320
020
125 460
120
420 560
510 550
060
510 550
A
A
B
B
C
C
330
A A
1 : 1
B B
1 : 1
C C
1 : 1

ECM: 106593 - 20020405
Group number: 1360898-0100
Assembly Drawing: 1360898-1_1_AB

Pos	Part No	SP	UN	Qty	Description	Page No
TBA/8						
020	1360899-0000	-		1	SIDE GUARD RIGHT	
070	1360902-0000	-		1	COVER	
Common Parts						
010	544900-0000	-		1	SIDECOVER RIGHT FRONT	
030	1360901-0000	-		1	CHUTE RIGHT	
060	451128-0000	-		1	CHUTE, RIGHT FRONT	
100	442194-0000	-		1	PROTECTIVE CASING	
110	531761-0000	-		1	HOLDER	
120	544508-0000	-		1	BRACKET	
125	544481-0000	A		1	PLATE	
130	560800-0000	-		1	BEARING UNIT	
140	560872-0000	-		1	PLATE	
150	1360894-0000	-		1	HOLDER	
160	1360895-0000	-		1	BEARING	
170	1360897-0000	-		1	PLATE	
180	1360900-0000	-		1	BRACKET RIGHT	
200	293566-0000	-		1	MOUNTINGS	
210	293598-0000	A		1	GLASS PANE	
220	434858-0000	A		2	CUSHION	
230	531616-0000	-		1	HOLDER	
240	553164-0000	-		1	LOW IMPEDANCELITZ L=150MM	
250	1360891-0000	-		1	NUT	
260	1360892-0000	A		1	PLATE	
300	90044-0094	A		2	LIMIT SW. 924 CE31-Y20-X5	
310	90143-0035	A	MM	4550	STRIP	
320	90143-0039	A	MM	2400	STRIP	
330	90237-0011	-		2	BAR CLAMP	
340	90458-2621	-		1	HANDLE, FIX 8307-0230	
350	90237-0067	-		1	LOCK, FIX 590, L=1198 MM	
400	312105-0327	-		6	SCREW M6S ISO 4017 M5X12 A480	
410	312105-0364	-		2	SCREW M6S ISO 4017 M6X10 A480	
420	312105-0368	-		3	SCREW M6S M6X16 A280	
430	312105-0451	-		2	SCREW M6S ISO 4017 M8X20 A480	
440	312115-0325	-		2	SCREW ISO4762 M5X10 A4	
450	312115-0329	-		4	SCREW ISO4762 M5X16 A4	
460	312115-0366	-		9	SCREW ISO4762 M6X12 A4	
470	312115-0455	-		4	SCREW ISO4762 M8X30 A4	
480	312605-0310	-		4	HEXAGON NUT, M6M M3 A280	
500	312605-0312	-		4	HEXAGON NUT, M6M M4 A280	
510	312605-0314	-		35	HEXAGON NUT, M6M M5 A280	
520	312605-0316	-		10	HEXAGON NUT, M6M M6 A280	
530	315105-0124	-		4	BRICKA BRB3,2X6RFR	
540	315105-0136	-		4	WASHER BRB4,3XRFR	
550	315105-0146	-		27	BRICKA BRB5,3X10RFR	
560	315105-0153	-		15	WASHER BRB6,4X12RFR	
570	315105-0165	-		6	WASHER BRB8,4X16RFR	
600	352136-0167	-		1	GLAND FITTING	

Machine Type	Group Description	Used-In	Group Number	Page No

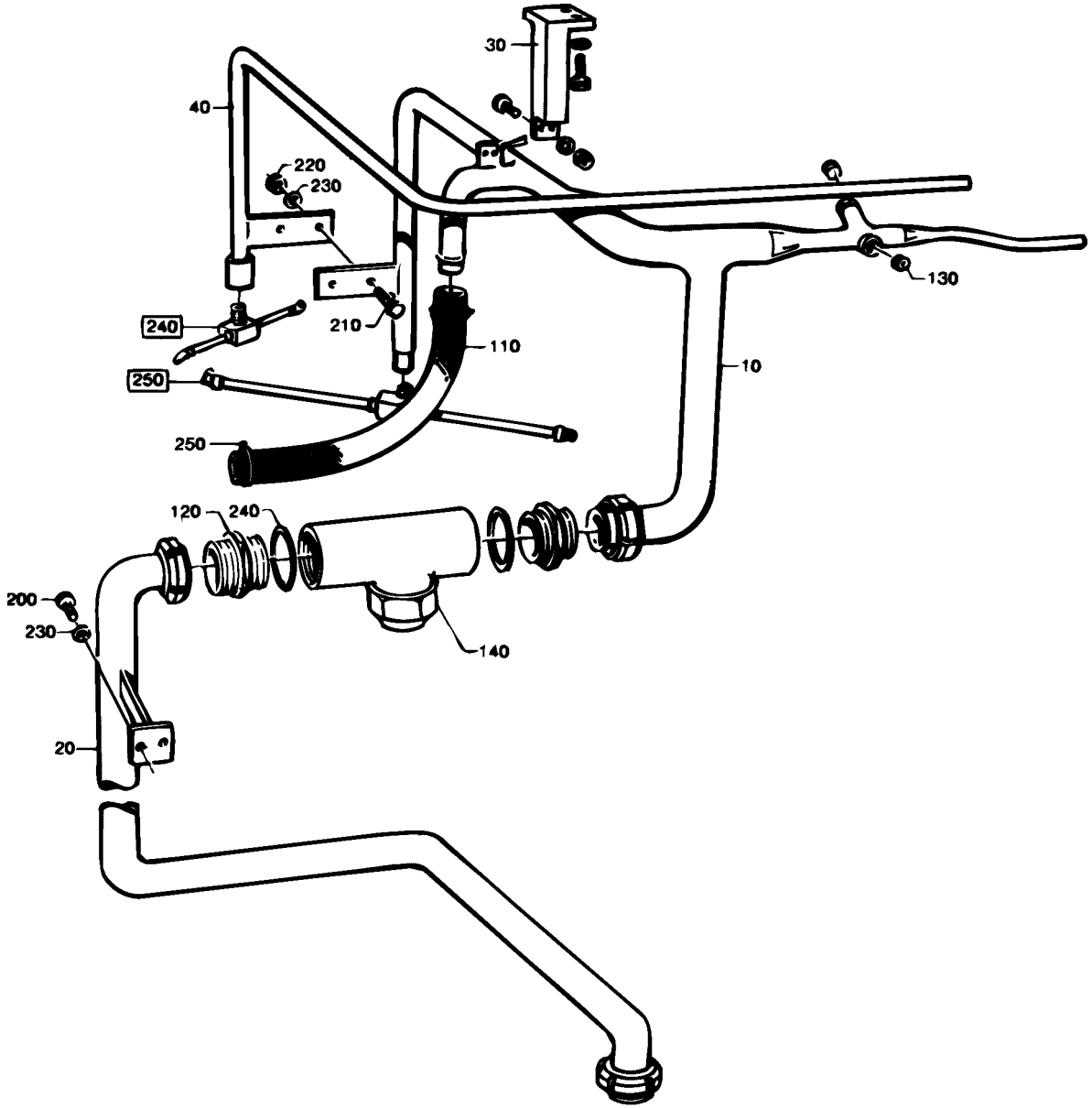
30
40
220
230
130
240
210
110
10
250
250
120
240
200
230
140
20

ECM: 72091 - 19981216
Group number: 297808-0500
Assembly Drawing: 297808-3_1_AA

Pos	Part No	SP	UN	Qty	Description	Page No
-						
010	542706-0000	-		1	PIPE	
020	297800-0000	-		1	PIPE	
030	297802-0000	-		1	BRACKET	
040	297805-0000	-		1	PIPE	
100	90157-0016	-	ML	1	LOCKING FLUID	
110	90166-0142	C	MM	750	HOSE	
120	90217-0053	-		2	NIPPLE, RD 60-6 - R1 1/2 M	
130	90330-0026	C		2	PLUG, EXT. G-THREAD, G1/4	
140	B90415-0032	C		1	FILTER / 3-02-00-1 1/2"	
	90415-0328	*C*		*1*	*FILTER INSERT*	
200	312105-0368	-		2	SCREW M6S M6X16 A280	
210	312105-0370	-		6	SCREW M6S ISO 4017 M6X20 A480	
220	312605-0316	-		4	HEXAGON NUT, M6M M6 A280	
230	315105-0153	-		10	WASHER BRB6,4X12RFR	
240	315250-0103	C		2	GASKET 48X38X5,5 MM	
250	342991-0106	-		2	HOSE CLIP,WORM DRIVE TYPE (30)-36	
F240	A476887-0200	D		1	CLEANING HEAD	**2-37**
F250	A476884-0200	D		1	CLEANING HEAD	**2-39**

Pos	Part No	SP	UN	Qty	Description	Page No

Machine Type | Group Description | Used-In | Group Number | Page No

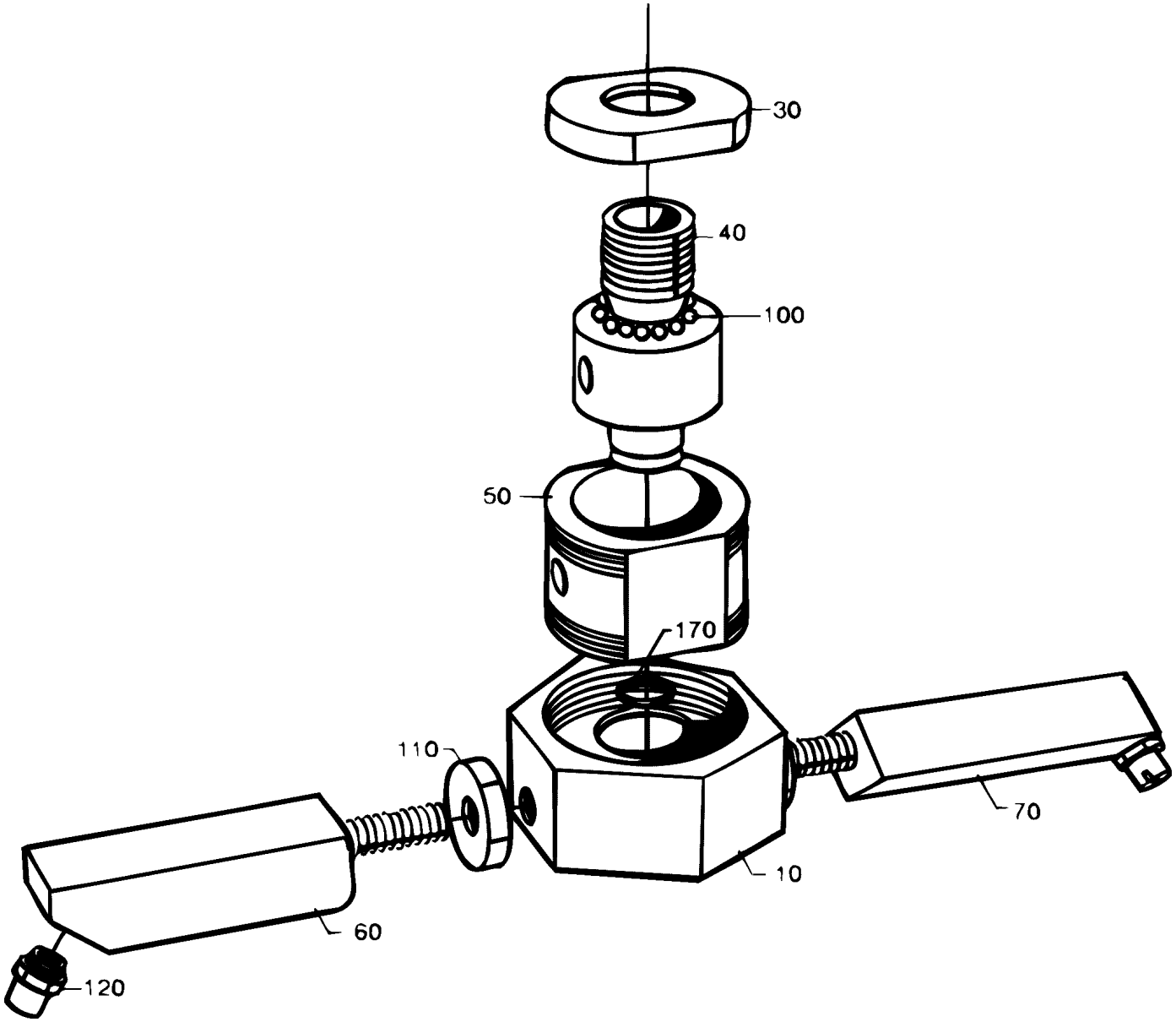
30
40
100
50
170
110
70
10
60
120

ECM: 72091 - 19981216
Group number: 476887-0200
Assembly Drawing: 476887-1_1_AA

Pos	Part No	SP	UN	Qty	Description	Page No
-						
010	440600-0000	C		1	ROTOR	
030	534880-0000	C		1	END SECTION	
040	534878-0000	C		1	SHAFT	
050	534879-0000	C		1	BEARING HOUSING	
060	440604-0001	C		1	PIPE	
070	440605-0001	C		1	PIPE	
100	90090-0020	C		24	BALL, D=5 MM	
110	90330-0034	-		2	NUT, HEXAGON, G1/4	
120	90424-0026	C		2	SPRAY NOZZLE 95 DEG	
170	315202-0211	C		1	O-RING 13,3X2,4 MM	

Pos	Part No	SP	UN	Qty	Description	Page No

Machine Type | Group Description | Used-In | Group Number | Page No

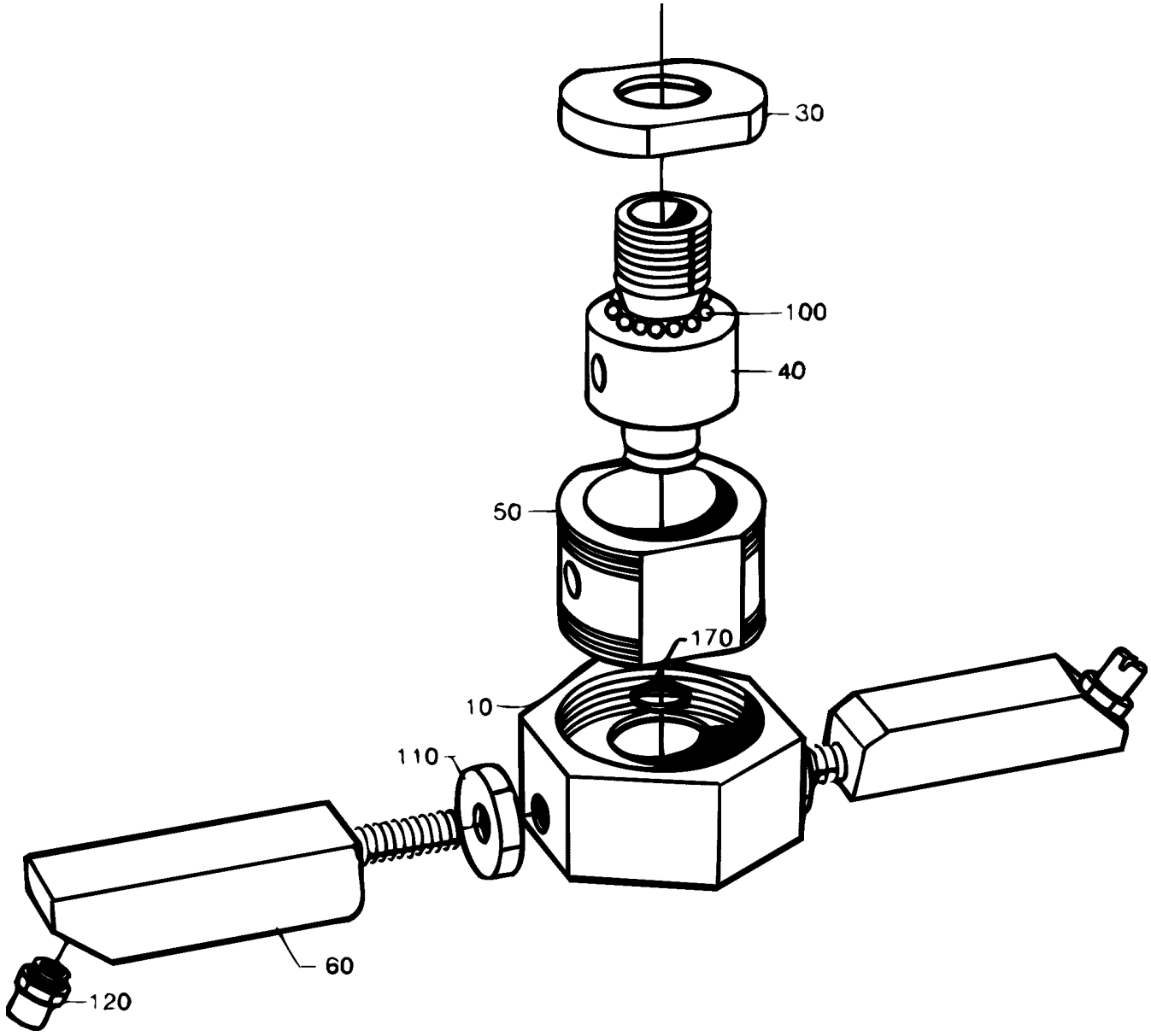
30
100
40
50
170
10
110
60
120

ECM: 72091 - 19981216
Group number: 476884-0200
Assembly Drawing: 476884-1_1_AA

Pos	Part No	SP	UN	Qty	Description	Page No
-						
010	440600-0000	C		1	ROTOR	
030	534880-0000	C		1	END SECTION	
040	534878-0000	C		1	SHAFT	
050	534879-0000	C		1	BEARING HOUSING	
060	440604-0001	C		2	PIPE	
100	90090-0020	C		24	BALL, D=5 MM	
110	90330-0034	-		2	NUT, HEXAGON, G1/4	
120	90424-0026	C		2	SPRAY NOZZLE 95 DEG	
170	315202-0211	C		1	O-RING 13,3X2,4 MM	

Pos	Part No	SP	UN	Qty	Description	Page No

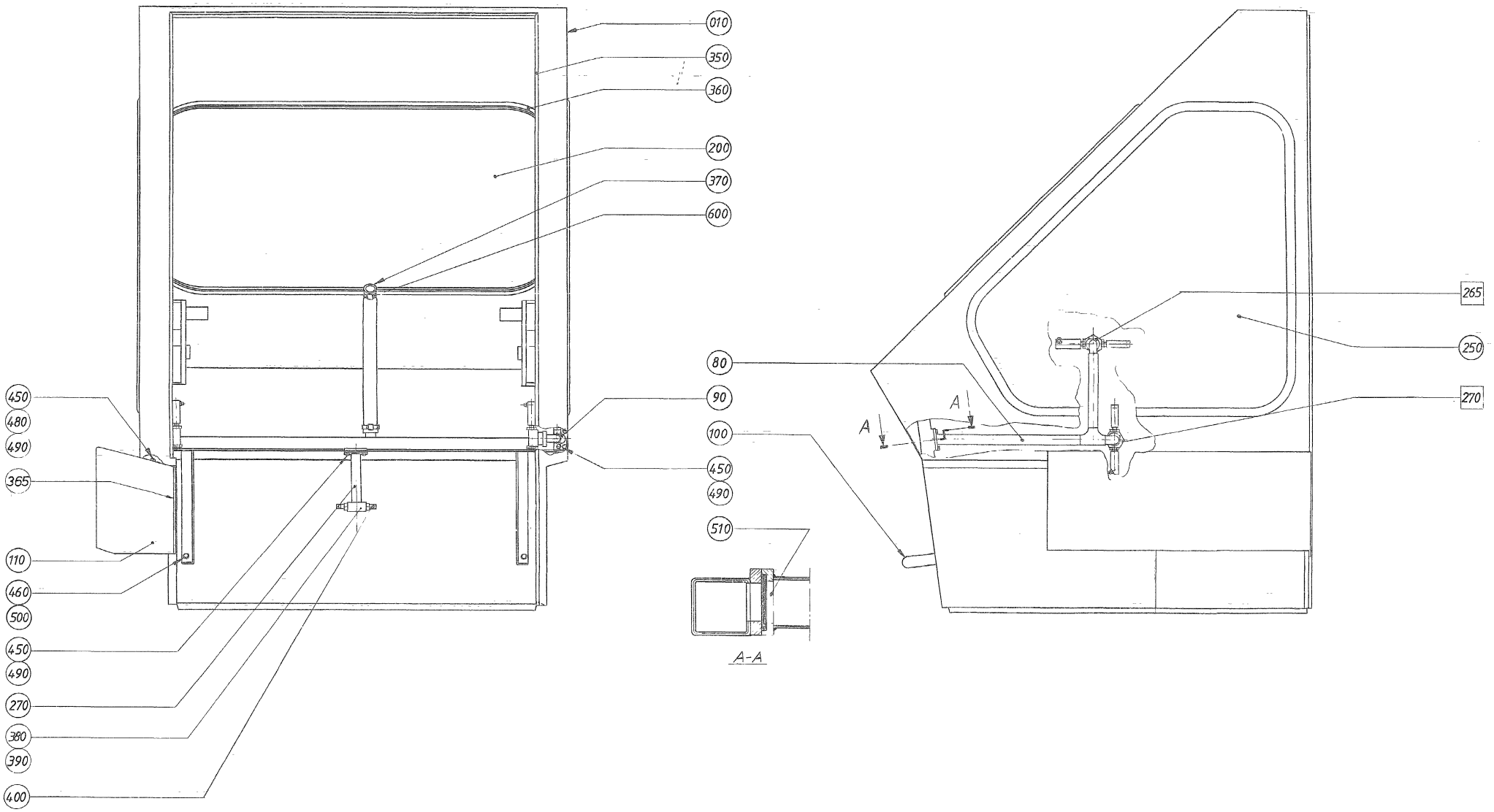
010
350
360
200
370
600
80
90
100
450
490
510
265
250
270
A
A
450
480
490
365
110
460
500
450
490
270
380
390
400
A-A

ECM: 72091 - 19981216
Group number: 297604-0400
Assembly Drawing: 297604-3_1_AA

This list covers pages from 2-40 to 2-43

Pos	Part No	SP	UN	Qty	Description	Page No
LEFT OUT (See drawing on page: 2-42)						
010	594588-0000	-		1	HOOD	
110	595054-0000	-		1	PROTECTION	
RIGHT OUT (See drawing on page: 2-40)						
010	543148-0000	-		1	HOOD	
110	550503-0000	-		1	PROTECTION	
Common Parts						
080	499833-0000	-		1	PIPE RIGHT	
090	499834-0000	-		1	PIPE LEFT	
100	285956-0000	-		1	HANDLE	
200	262774-0009	D		1	GLASS PANE	
250	297488-0000	D		2	GLASS PANE	
270	297679-0000	-		1	PIPE	
350	90143-0035	D	MM	4500	STRIP	
360	90143-0039	D	MM	9500	STRIP	
365	90143-0068	D	MM	200	RUBBERSTRIP EMKA 1011-06	
370	90166-0142	-	MM	600	HOSE	
380	90330-0024	-		1	T-PIPE, INT. THREAD, RP1/4	
390	90330-0083	-		1	NIPPLES, EXT. THREAD. R3/8-R1/4	
400	90424-0025	C		2	SPRAY NOZZLE 145 DEG	
450	312105-0368	-		11	SCREW M6S M6X16 A280	
460	312105-0451	-		2	SCREW M6S ISO 4017 M8X20 A480	
480	312605-0316	-		4	HEXAGON NUT, M6M M6 A280	
490	315105-0153	-		10	WASHER BRB6,4X12RFR	
500	315105-0165	-		2	WASHER BRB8,4X16RFR	
510	315202-0216	D		3	O-RING 22,2X3 MM	
600	342991-0106	-		2	HOSE CLIP,WORM DRIVE TYPE (30)-36	
F265	A476885-0200	-		2	CLEANING HEAD	**2-45**
F270	A476886-0200	-		2	CLEANING HEAD	**2-47**

Pos	Part No	SP	UN	Qty	Description	Page No

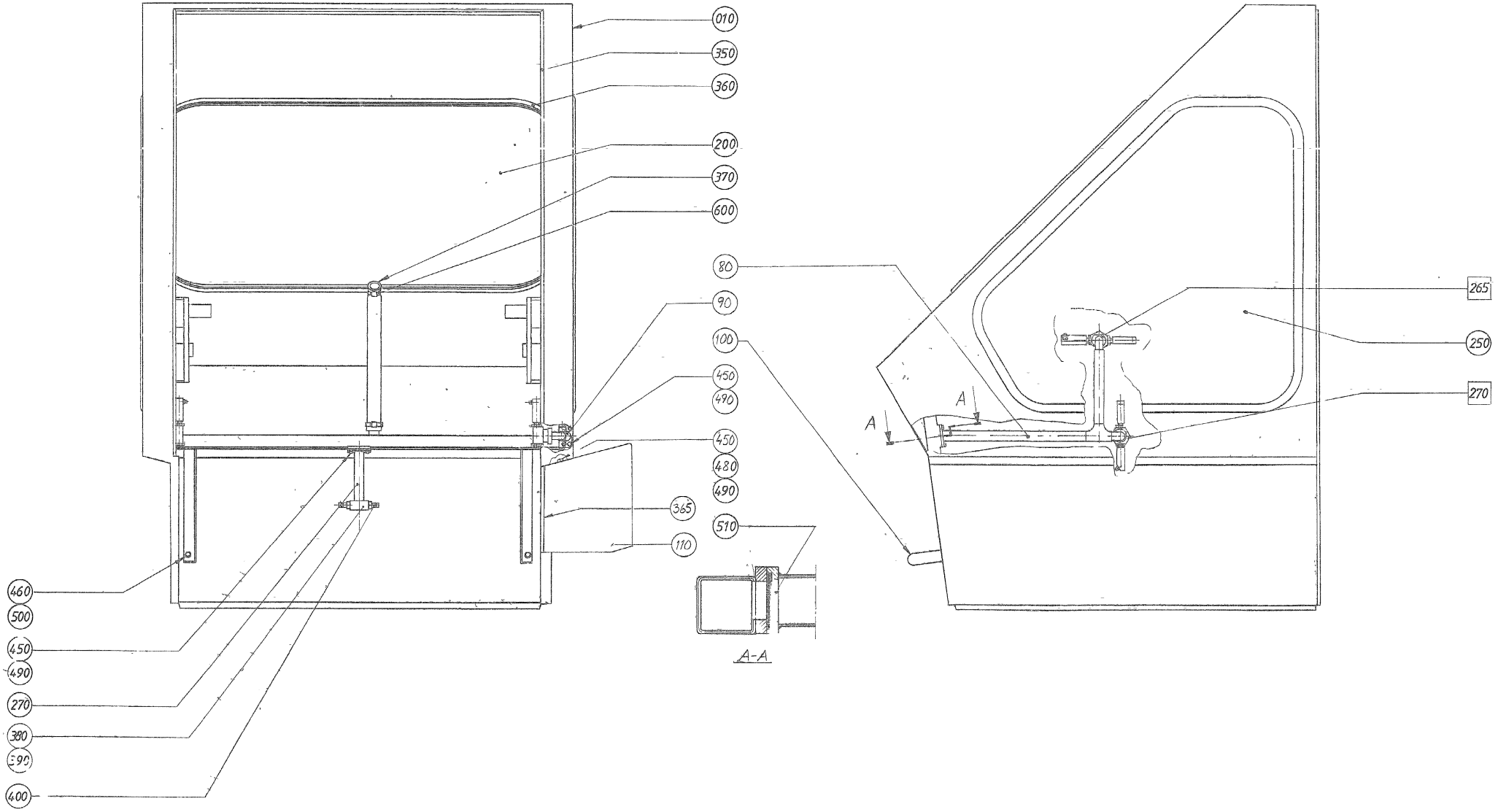
010
350
360
200
370
600
80
90
100
450
490
450
480
490
365
110
510
460
500
450
490
270
380
390
400
A
A
265
250
270
A-A

ECM: 72091 - 19981216
Group number: 297604-0400
Assembly Drawing: 297604-4_1_AA

This list covers pages from 2-40 to 2-43

Pos	Part No	SP	UN	Qty	Description	Page No
LEFT OUT (See drawing on page: 2-42)						
010	594588-0000	-		1	HOOD	
110	595054-0000	-		1	PROTECTION	
RIGHT OUT (See drawing on page: 2-40)						
010	543148-0000	-		1	HOOD	
110	550503-0000	-		1	PROTECTION	
Common Parts						
080	499833-0000	-		1	PIPE RIGHT	
090	499834-0000	-		1	PIPE LEFT	
100	285956-0000	-		1	HANDLE	
200	262774-0009	D		1	GLASS PANE	
250	297488-0000	D		2	GLASS PANE	
270	297679-0000	-		1	PIPE	
350	90143-0035	D	MM	4500	STRIP	
360	90143-0039	D	MM	9500	STRIP	
365	90143-0068	D	MM	200	RUBBERSTRIP EMKA 1011-06	
370	90166-0142	-	MM	600	HOSE	
380	90330-0024	-		1	T-PIPE, INT. THREAD, RP1/4	
390	90330-0083	-		1	NIPPLES, EXT. THREAD. R3/8-R1/4	
400	90424-0025	C		2	SPRAY NOZZLE 145 DEG	
450	312105-0368	-		11	SCREW M6S M6X16 A280	
460	312105-0451	-		2	SCREW M6S ISO 4017 M8X20 A480	
480	312605-0316	-		4	HEXAGON NUT, M6M M6 A280	
490	315105-0153	-		10	WASHER BRB6,4X12RFR	
500	315105-0165	-		2	WASHER BRB8,4X16RFR	
510	315202-0216	D		3	O-RING 22,2X3 MM	
600	342991-0106	-		2	HOSE CLIP,WORM DRIVE TYPE (30)-36	
F265	A476885-0200	-		2	CLEANING HEAD	**2-45**
F270	A476886-0200	-		2	CLEANING HEAD	**2-47**

Pos	Part No	SP	UN	Qty	Description	Page No

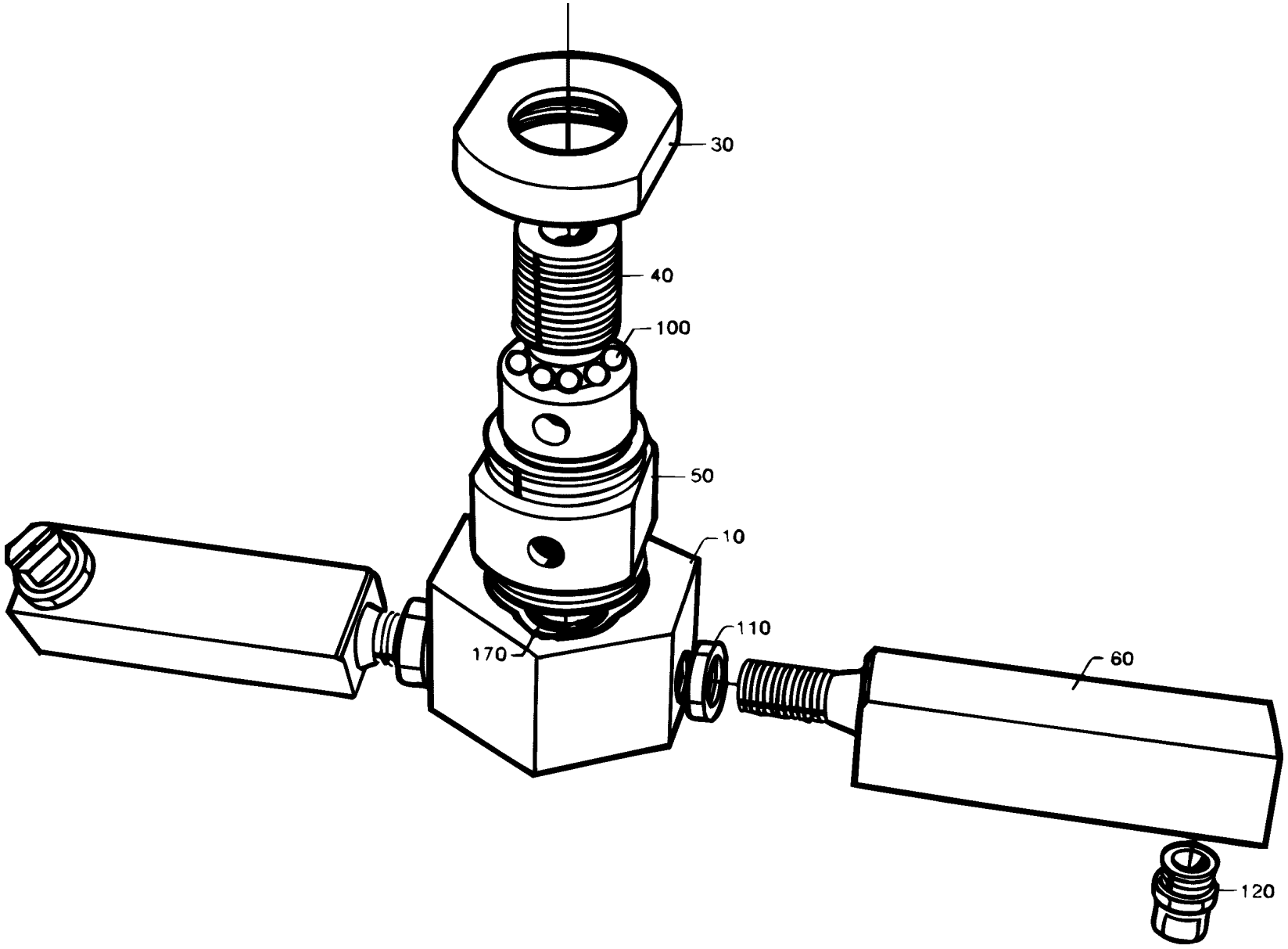
30
40
100
50
10
110
170
60
120

ECM: 72091 - 19981216
Group number: 476885-0200
Assembly Drawing: 476885-1_1_AA

Pos	Part No	SP	UN	Qty	Description	Page No
-						
010	440600-0000	C		1	ROTOR	
030	534880-0000	C		1	END SECTION	
040	534878-0000	C		1	SHAFT	
050	534879-0000	C		1	BEARING HOUSING	
060	440605-0001	C		2	PIPE	
100	90090-0020	C		24	BALL, D=5 MM	
110	90330-0034	-		2	NUT, HEXAGON, G1/4	
120	90424-0026	C		2	SPRAY NOZZLE 95 DEG	
170	315202-0211	C		1	O-RING 13,3X2,4 MM	

Pos	Part No	SP	UN	Qty	Description	Page No

Machine Type | Group Description | Used-In | Group Number | Page No

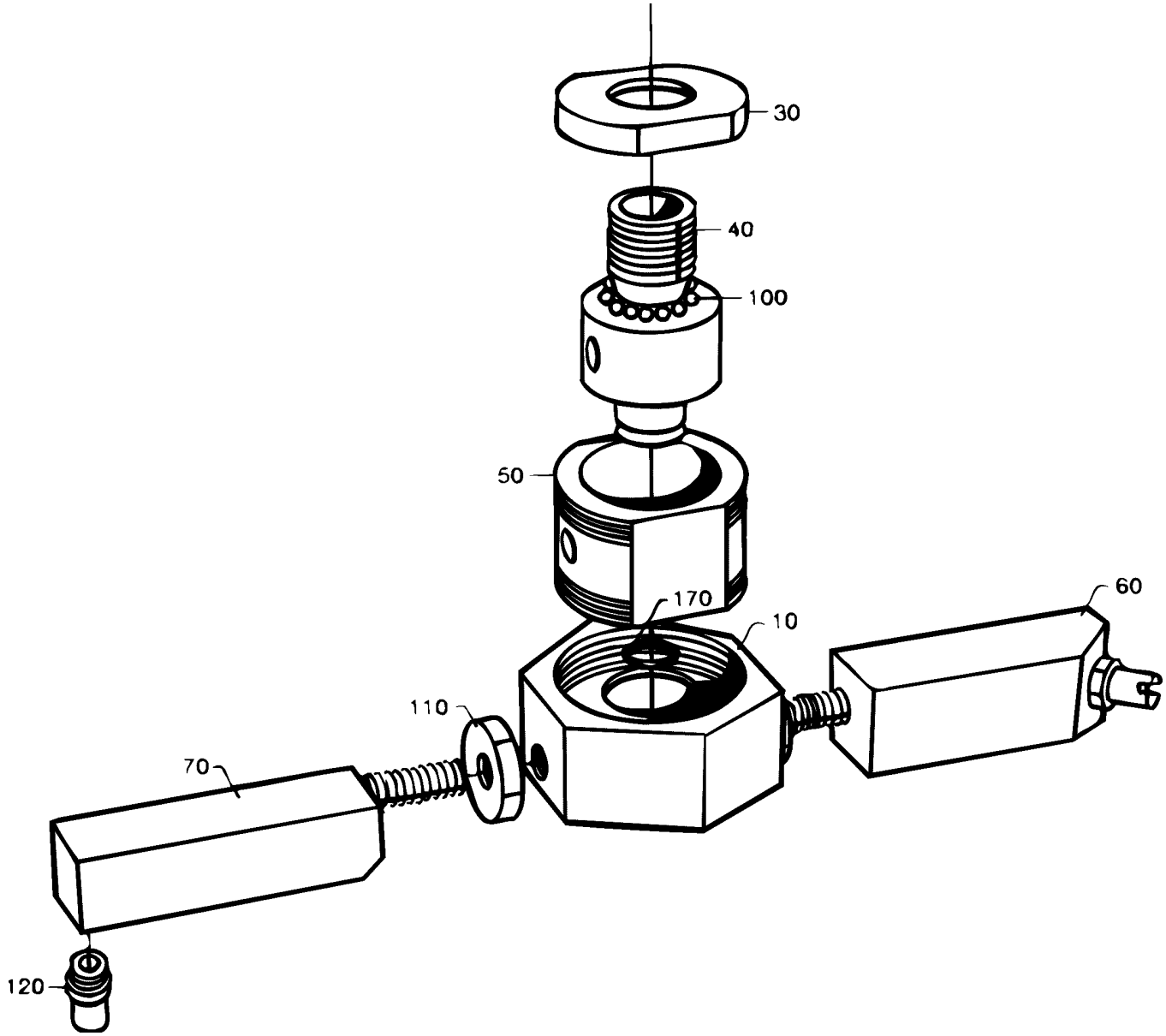
30
40
100
50
170
10
60
110
70
120

ECM: 72091 - 19981216
Group number: 476886-0200
Assembly Drawing: 476886-1_1_AA

Pos	Part No	SP	UN	Qty	Description	Page No
-						
010	440600-0000	C		1	ROTOR	
030	534880-0000	C		1	END SECTION	
040	534878-0000	C		1	SHAFT	
050	534879-0000	C		1	BEARING HOUSING	
060	440604-0001	C		1	PIPE	
070	440605-0001	C		1	PIPE	
100	90090-0020	C		24	BALL, D=5 MM	
110	90330-0034	-		2	NUT, HEXAGON, G1/4	
120	90424-0026	C		2	SPRAY NOZZLE 95 DEG	
170	315202-0211	C		1	O-RING 13,3X2,4 MM	

Pos	Part No	SP	UN	Qty	Description	Page No

Machine Type | Group Description | Used-In | Group Number | Page No

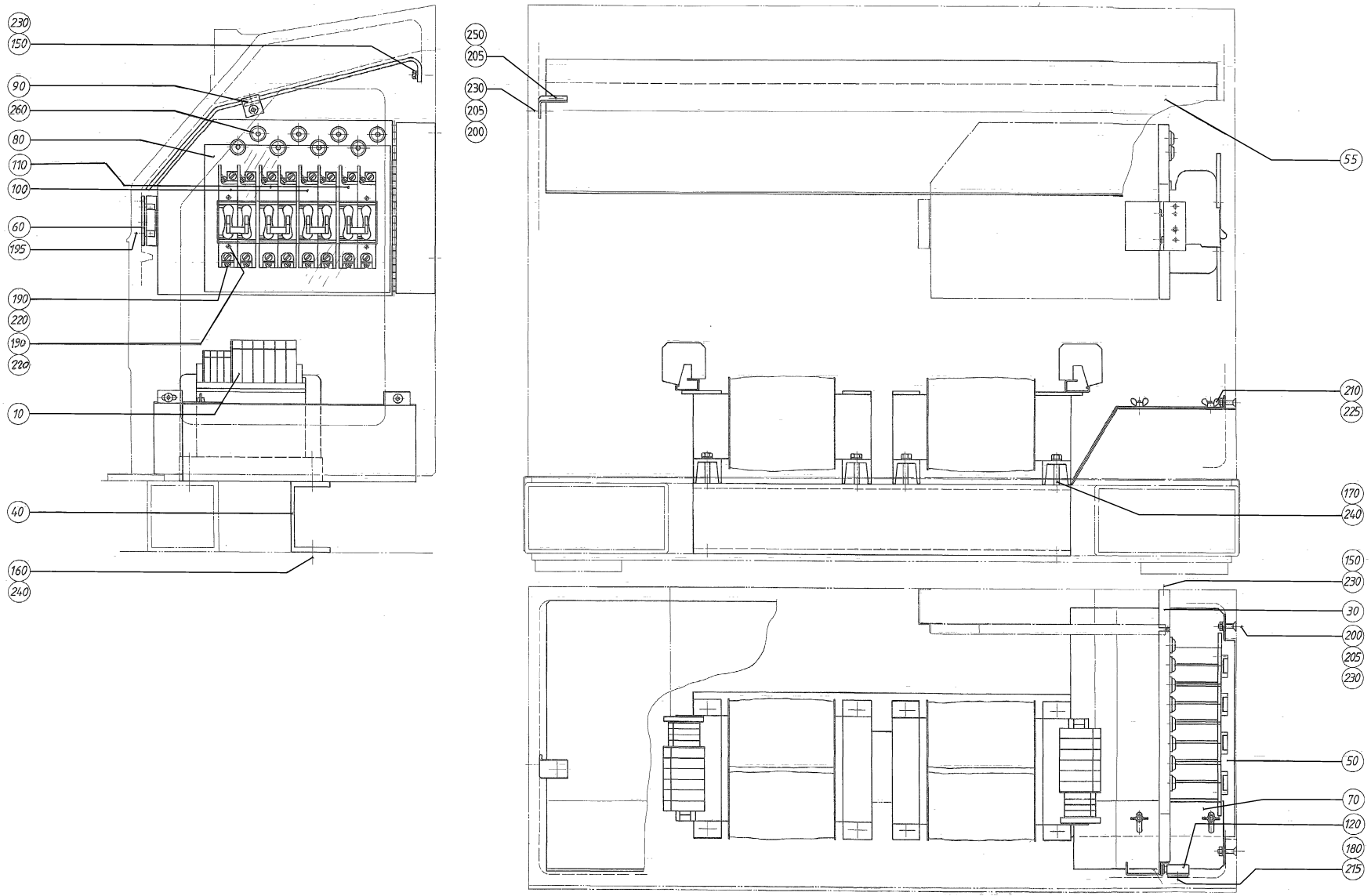
230
150
90
260
80
110
100
60
195
190
220
190
220
10
40
160
240
250
205
230
205
200
55
210
225
170
240
150
230
30
200
205
230
50
70
120
180
215

ECM: 72091 - 19981216
Group number: 440415-0200
Assembly Drawing: 440415-3_1_AA

Pos	Part No	SP	UN	Qty	Description	Page No
-						
010	23127-0101	D		2	TRANSFORMER	
030	450299-0000	-		1	SWIVEL PLATE	
040	450300-0000	-		1	BEAM	
050	450667-0000	-		1	SPLASH GUARD	
055	451088-0000	-		1	PROTECTION	
060	450301-0000	-		1	FASTENING PLATE	
070	450668-0000	-		1	SPLASH GUARD	
080	450669-0000	-		1	TOUCH GUARD	
090	451089-0000	-		2	BRACKET	
100	90007-0100	-		2	FUSE,	
110	90007-0101	-		2	FUSE,	
120	90237-0046	-		1	MAGNETIC LOCK, 46X33X15 MM	
150	312105-0366	-		4	SCREW M6S M6X12 A280	
160	312101-0451	-		4	SCREW M6S M8X20 FZB	
170	312101-0461	-		8	SCREW M6S M8X50 FZB	
180	312125-0220	-		4	SLOTTED CHEESE HEAD SCREW MCS 3X6 SS	
190	312121-0291	-		20	SLOTTED CHEESE HEAD SCREW MCS 4X12 FZB	
195	312145-0366	-		2	SCREW COUNTERS.SLOT.HD. MFS 6X12 SS	
200	312155-0372	-		4	SCREW EN 10642 MF6S M6X25 A480	
205	312605-0316	-		6	HEXAGON NUT, M6M M6 A280	
210	312715-0114	-		2	NUT WING COLD WORK.MVM-K M5 A280	
215	315105-0124	-		4	BRICKA BRB3,2X6RFR	
220	315101-0136	-		12	BRICKA BRB, 4,3/8 H=0,8	
225	315105-0146	-		2	BRICKA BRB5,3X10RFR	
230	315105-0153	-		8	WASHER BRB6,4X12RFR	
240	315101-0165	-		12	WASHER PLAIN, BRB, 8,4/16 H=1,5	
250	315121-0153	-		2	WASHER PLAIN, TBRSB 6,4/22 H=4	
260	352101-0103	-		8	LEAD-IN, PR18,6/PG11, E-1457518	

Pos	Part No	SP	UN	Qty	Description	Page No

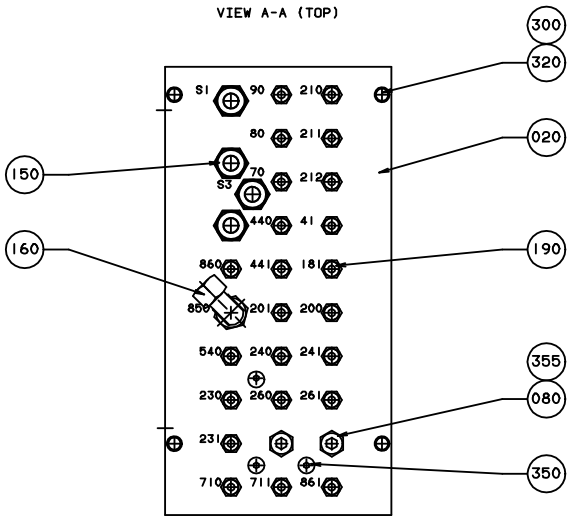
VIEW A-A (TOP)
300
320
020
150
160
190
355
080
350
S1
90
210
80
211
70
S3
212
440
41
860
441
181
850
201
200
540
240
241
230
260
261
231
710
711
861

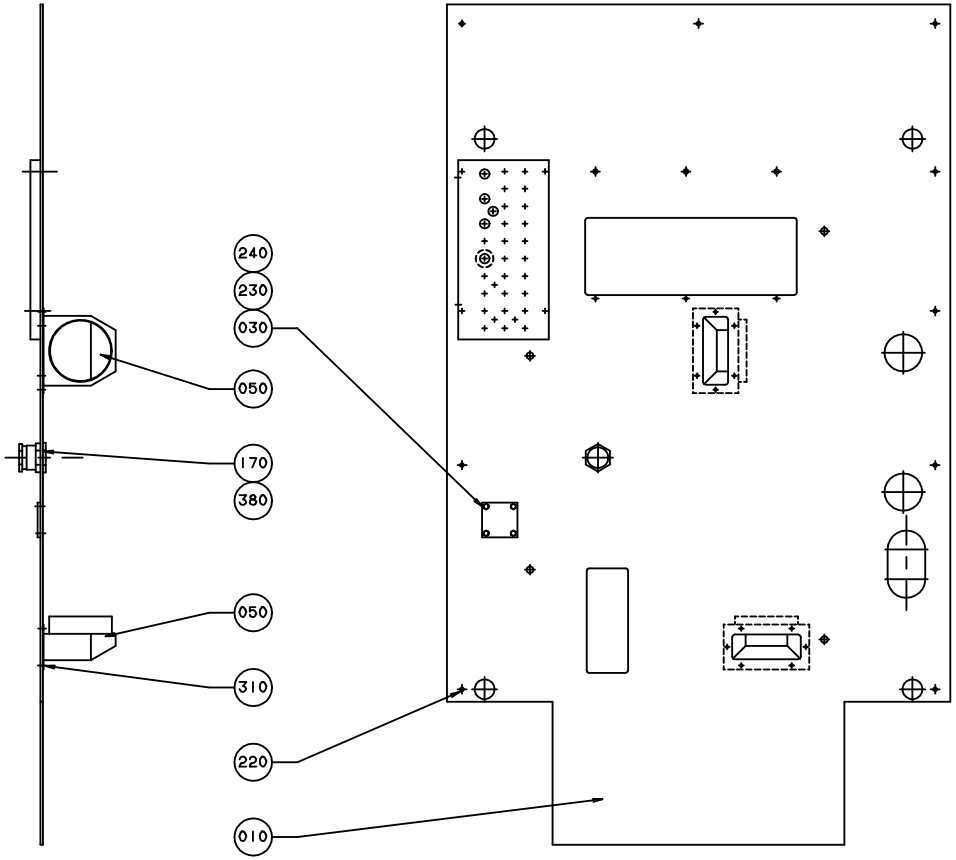
240
230
030
050
170
380
050
310
220
010

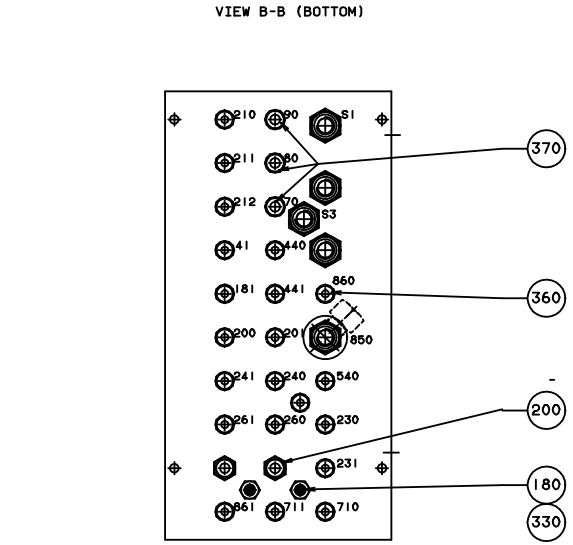
VIEW B-B (BOTTOM)
370
360
200
180
330
210
90
S1
211
80
212
70
S3
41
440
181
441
860
200
201
850
241
240
540
261
260
230
231
861
711
710

ECM: 113841 - 20021003
Group number: 1362426-0100
Assembly Drawing: 1362426-1_1_AC

Pos	Part No	SP	UN	Qty	Description	Page No
TBA/8						
030	1511688-0000	-		1	PLATE	
050	440424-0000	-		2	DRUM	
230	312105-0333	-		4	SCREW M6S ISO 4017 M5X25 A480	
240	315105-0146	-		4	BRICKA BRB5,3X10RFR	
Common Parts						
010	553842-0000	-		1	BOTTOM PLATE	
020	1362425-0000	-		1	LEAD-IN PLATE	
080	279804-0000	-		2	BUSHING	
150	90030-0030	-		4	CONN. BULKHEAD SV 12-L/SY	
160	90030-0221	-		1	CONN. ELBOW BULKHEAD WSV 12	
170	90099-0085	-		1	NUT	
180	90163-0057	-		2	NIPPLE 1/8" BRASS	
190	90458-1849	-		23	CONN. STR., 6-R1/8, EXT. THREAD	
200	90458-1851	-		2	CONN. STR., 8-R1/4, EXT. THREAD	
220	90287-0075	-		9	SCREW SLOT. PAN HEAD LKCS M6X12	
300	312101-0378	-		4	SCREW M6S M6X40 FZB	
310	312121-0321	-		12	SLOTTED CHEESE HEAD SCREW MCS 5X6 FZB	
320	315101-0153	-		4	WASHER PLAIN, BRB, 6,4/12 H=1,5	
330	315233-0109	-		2	WASHER CAPTIVE SEALING G1/8	
350	342713-0209	-		3	PLUG, EXT THREAD HEX SOCKET 8638-00-180	
355	342713-0210	-		2	PLUG, EXT THREAD HEX SOCKET 8638-00-140	
360	342722-0202	-		21	PIPE COUPLING 1/8" D=6MM	
370	342722-0204	-		3	PIPE COUPLING	
380	352100-0127	-		1	CABLE GLANR.47-34,5	

Pos	Part No	SP	UN	Qty	Description	Page No

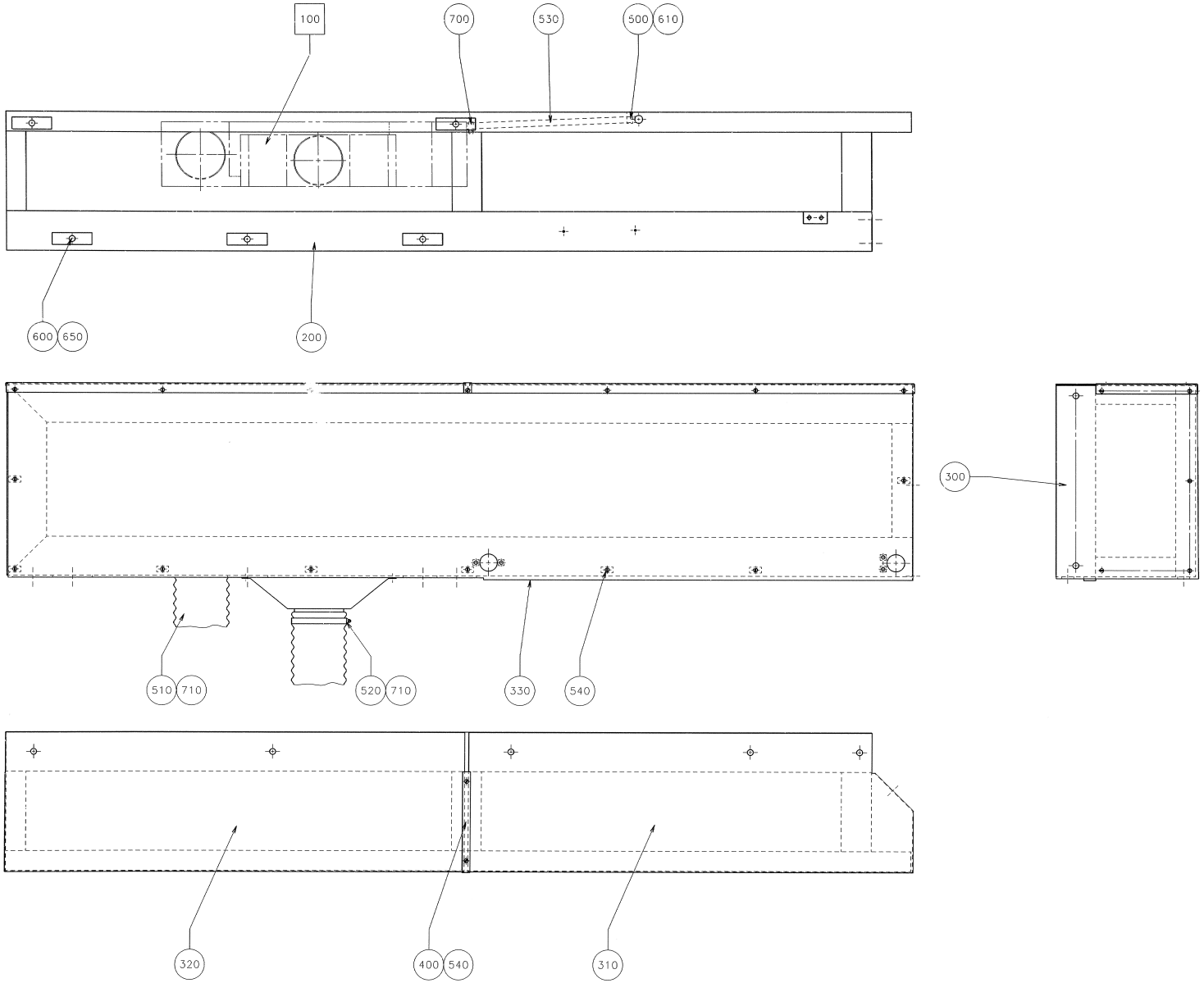
100
700
530
500
610
600
650
200
300
510
710
520
710
330
540
320
400
540
310

ECM: 71596 - 19981215
Group number: 1360903-0100
Assembly Drawing: 1360903-1_1_AA

Pos	Part No	SP	UN	Qty	Description	Page No
-						
100	A566683-0100	-		1	AIR COOLER	**2-55**
200	1360904-0000	-		1	SIDE BOX LEFT	
300	542697-0000	-		1	COVER PLATE L	
310	564519-0000	-		1	SIDE PLATE	
320	564520-0000	-		1	SIDE PLATE	
330	1360905-0000	-		1	BOTTOM PLATE LEFT	
400	564523-0000	-		1	RIM	
500	90074-0004	-		1	CABLE CLIPS, D=16 MM	
510	90152-0032	-	MM	1000	HOSE 5"=127MM	
520	90152-0032	-	MM	1300	HOSE 5"=127MM	
530	90166-0007	-	MM	1200	HOSE PVC 10/14 TRANSP.	
540	90287-0075	-		33	SCREW SLOT. PAN HEAD LKCS M6X12	
600	312101-0540	-		5	SCREW M6S M12X40 FZB	
610	312121-0287	-		1	SLOTTED CHEESE HEAD SCREW MCS 4X8 FZB	
650	315101-0178	-		5	WASHER PLAIN, BRB, 13/24 H=2	
700	342991-0101	-		1	HOSE CLIP,WORM DRIVE TYPE (13)-16	
710	342991-0115	-		4	HOSE CLIP,WORM DRIVE TYPE (110)-136	

Pos	Part No	SP	UN	Qty	Description	Page No

Machine Type | Group Description | Used-In | Group Number | Page No

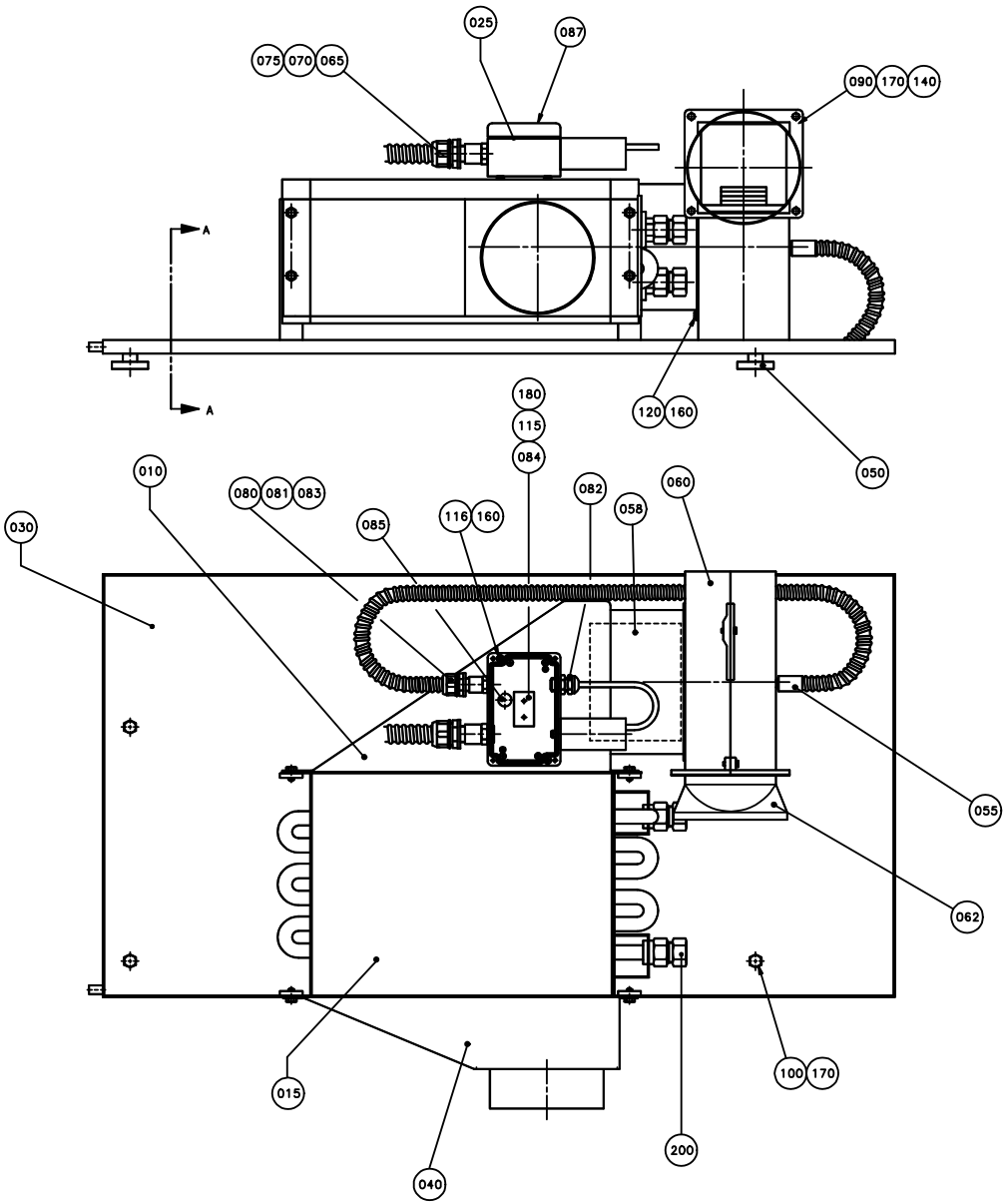
025
087
075
070
065
090
170
140
A
A
180
115
084
120
160
050
010
080
081
083
085
116
160
082
058
060
030
055
062
015
040
100
170
200

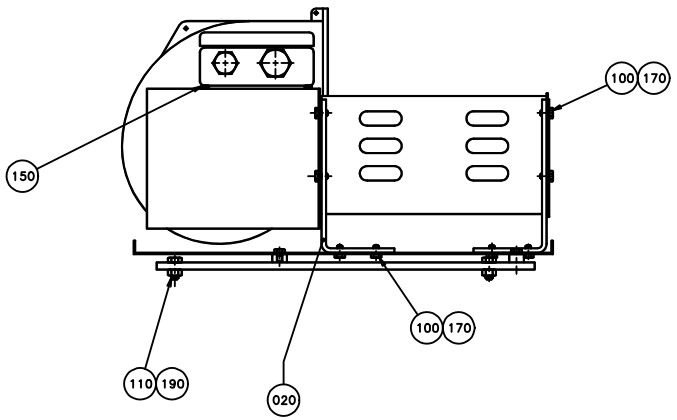
100
170
150
100
170
110
190
020

SECTION A-A

ECM: 72091 - 19981216
Group number: 566683-0100
Assembly Drawing: 566683-1_1_AA

Pos	Part No	SP	UN	Qty	Description	Page No
-						
010	928837-0000	D		1	AIR DISTRIBUTOR	
015	495201-0000	C		1	COOLING ELEMENT	
020	566685-0000	-		4	BRACKET	
025	450495-0000	-		1	CONNECTION BOX	
030	566686-0000	-		1	CONDENSATE TRAY	
040	566687-0000	-		1	NOZZLE	
050	440349-0000	-		2	FASTENING IRON	
055	456256-0000	-		1	PROTECTIVE COVER	
058	546929-0000	C		1	FILTER	
060	B90264-0019	C		1	FAN ZIEHL 230V 250W 1,15A 595 M3/H	
	90159-0061	*-*		*1*	*CAPACITOR, 6 æF 400 V*	
062	90264-0344	-		1	FAN CASING, US 1412	
065	352136-0127	-		1	GLAND FITTING PR 18,6	
070	352135-0106	-	MM	800	SPIRAL CONDUIT DI=16 MM	
075	352100-0106	-		1	CABLE GLANR.18,6-10,5	
080	90012-0063	-		1	CABLE GLAND PR 15,2	
081	352100-0100	-		1	CABLE GLANR.15,2-7,5	
082	352103-0101	-		1	CABLE GLAND, ST 9, PR15,2/PG9	
083	90152-0033	-	MM	1000	SPIRAL CONDUIT FOR PR 15,2(PG 9)	
084	90077-0102	-		1	TERMINAL BLOCK, 1952.2	
085	90002-0013	-		1	BLANK-OFF PLUG, PR 15,2 SKINDICHT-BLK9	
087	90194-0016	-		1	WARNING SIGN, RISK OF ELECTRIC SHOCK	
090	312101-0366	-		4	SCREW M6S M6X12 FZB	
100	312101-0364	-		20	SCREW M6S M6X10 FZB	
110	312101-0449	-		2	SCREW M6S M8X16 FZB	
115	312121-0230	-		2	SLOTTED CHEESE HEAD SCREW MCS 3X20 FZB	
116	312121-0293	-		2	SLOTTED CHEESE HEAD SCREW MCS 4X16 FZB	
120	312101-0287	-		4	SCREW M6S M4X8 FZB	
140	312601-0316	-		4	NUT M6M 6-8 FZB	
150	312821-0102	-		2	HEXAGON WELDING NUT M4 RFR	
160	315101-0136	-		6	BRICKA BRB, 4,3/8 H=0,8	
170	315101-0153	-		24	WASHER PLAIN, BRB, 6,4/12 H=1,5	
180	315101-0124	-		2	WASHER PLAIN, BRB, 3,2/6 H=0,5	
190	315101-0165	-		4	WASHER PLAIN, BRB, 8,4/16 H=1,5	
200	342723-0114	-		2	CONN. STR. PIPE GI-15-G1/2	

Pos	Part No	SP	UN	Qty	Description	Page No

Machine Type | Group Description | Used-In | Group Number | Page No

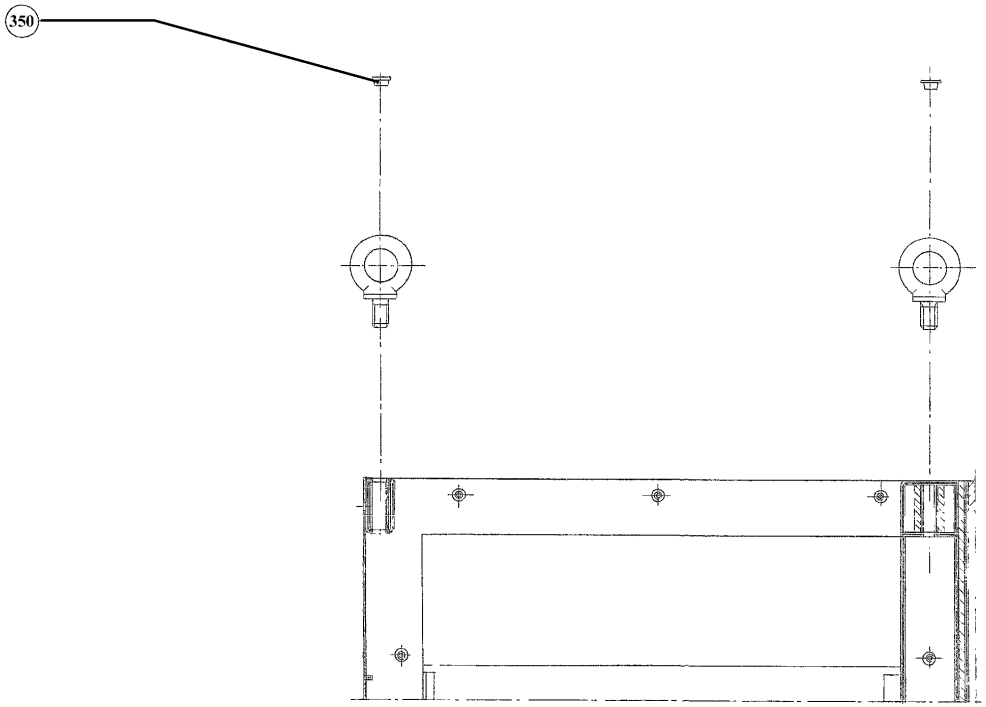

A-A

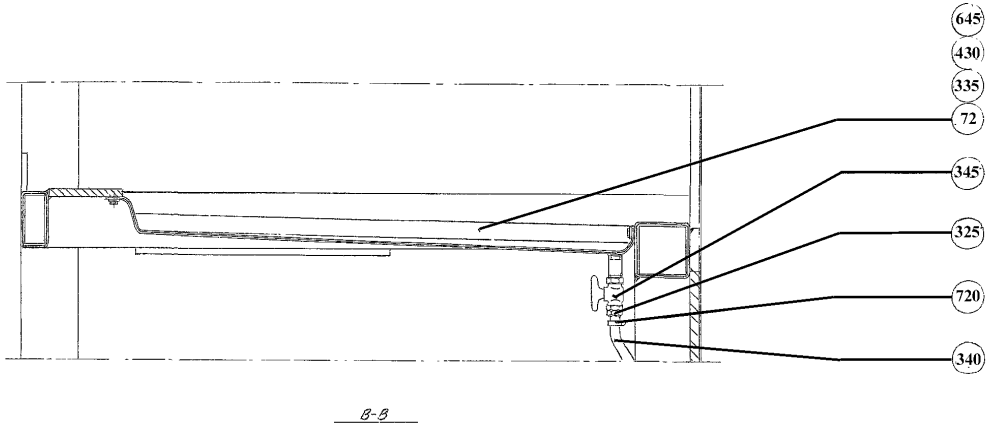

B-B

ECM: 101831 - 20020405
Group number: 440537-0500
Assembly Drawing: 440537-3_1_AA

This list covers pages from 2-56 to 2-61

Pos	Part No	SP	UN	Qty	Description	Page No
TBA/8 NORMFIN (See drawing on page: 2-60)						
005	530469-0000	-		1	FRONT PLATE	
007	1037761-0000	-		2	PIN	
015	544703-0000	-		2	MOUNTING SHEET	
016	542702-0000	-		1	COVER PLATE L	
017	542703-0000	-		1	COVER PLATE R	
020	450457-0000	-		1	FLANGE	
027	542398-0000	-		2	HOLDER	
028	542399-0000	-		2	HOLDER	
030	90030-0030	-		2	CONN. BULKHEAD SV 12-L/SY	
032	90458-0256	A		1	PROXIMITY SWITCH IIA 3010-BPKG/6M	
035	90261-0018	-		1	PLUG, BLIND, PLASTIC GPN300F-183	
040	90266-0010	-	MM	35	TUBE	
045	312105-0364	-		110	SCREW M6S ISO 4017 M6X10 A480	
046	312105-0493	-		16	SCREW M6S ISO 4017 M10X25 A480	
047	312125-0287	-		13	SLOTTED CHEESE HEAD SCREW MCS 4X8 SS	
049	315105-0173	-		12	WASHER BRB10,5X22RFR	
050	312115-0368	-		4	SCREW ISO4762 M6X16 A4	
051	352101-0103	-		5	LEAD-IN, PR18,6/PG11, E-1457518	
052	352103-0105	-		2	CABLE GLAND, STR 11, PR 18,6/PG11	
053	352135-0202	-		4	CLIP, 16 MM, 913.016	
450	312105-0327	-		8	SCREW M6S ISO 4017 M5X12 A480	
695	342920-0113	-		2	STRAIGHT COUPLING,EXT.THREADED 6/4-R1/8"	
705	90330-0066	-		7	PLUG, EXT. G-THREAD, G1/8	
TBA/8 REVFIN (See drawing on page: 2-60)						
005	530469-0000	-		1	FRONT PLATE	
007	1037761-0000	-		2	PIN	
015	544703-0000	-		2	MOUNTING SHEET	
016	542702-0000	-		1	COVER PLATE L	
017	542703-0000	-		1	COVER PLATE R	
020	450457-0000	-		1	FLANGE	
027	542398-0000	-		2	HOLDER	
028	542399-0000	-		2	HOLDER	
030	90030-0030	-		2	CONN. BULKHEAD SV 12-L/SY	
032	90458-0256	A		1	PROXIMITY SWITCH IIA 3010-BPKG/6M	
035	90261-0018	-		1	PLUG, BLIND, PLASTIC GPN300F-183	
040	90266-0010	-	MM	35	TUBE	
045	312105-0364	-		110	SCREW M6S ISO 4017 M6X10 A480	
046	312105-0493	-		16	SCREW M6S ISO 4017 M10X25 A480	
047	312125-0287	-		13	SLOTTED CHEESE HEAD SCREW MCS 4X8 SS	
049	315105-0173	-		12	WASHER BRB10,5X22RFR	
050	312115-0368	-		4	SCREW ISO4762 M6X16 A4	
051	352101-0103	-		5	LEAD-IN, PR18,6/PG11, E-1457518	
052	352103-0105	-		2	CABLE GLAND, STR 11, PR 18,6/PG11	
053	352135-0202	-		4	CLIP, 16 MM, 913.016	
450	312105-0327	-		8	SCREW M6S ISO 4017 M5X12 A480	
692	342732-0102	-		4	ELBOW PIPE JOINT, EXT.THREAD, D=6MM-G1/8	
695	342920-0113	-		6	STRAIGHT COUPLING,EXT.THREADED 6/4-R1/8"	
705	90330-0066	-		3	PLUG, EXT. G-THREAD, G1/8	
Common Parts						
055	543151-0000	-		1	CANTILEVER	
060	531182-0000	-		1	CANTILEVER	
070	267835-0000	-		1	CANTILEVER	
072	283884-0000	-		1	OIL TROUGH	
075	436776-0000	-		1	MACHINE BODY	
078	269285-0000	-		1	PROTECTION PLATE	
080	273751-0000	-		1	FRONT PLATE	
085	273753-0000	-		1	PROTECTION PLATE	
090	285801-0000	-		1	BEAM	
095	293158-0000	-		1	HATCH	
097	293159-0000	-		1	HATCH	
100	297576-0000	-		1	BEAM	
103	297669-0000	-		1	POST	
105	297670-0000	-		1	POST	
108	434919-0000	-		1	COLUMN LEFT	
110	434920-0000	-		1	COLUMN RIGHT	
114	440023-0000	-		1	PROTECTION PLATE	
116	440024-0000	-		1	PROTECTION PLATE	
129	566646-0000	-		1	SIDE GUARD	
130	566645-0000	-		1	SIDE GUARD	
137	440702-0000	-		1	BEAM	
138	540725-0000	-		1	FRONT PLATE, LOWER	
140	283992-0000	A		2	RULER	
145	247080-0000	-		4	BRACKET	
150	269291-0000	-		1	RULER	
155	269294-0000	-		1	RULER	
160	269295-0000	-		1	PROTECTION PLATE	
165	476824-0000	-		1	COVERING PLATE	
170	279370-0000	A		2	STEERING	
190	440025-0000	-		1	PROTECTION PLATE	
192	440026-0000	-		1	CANTILEVER	
205	440077-0000	-		1	COVERING PLATE	

Machine Type | Group Description | Used-In | Group Number | Page No

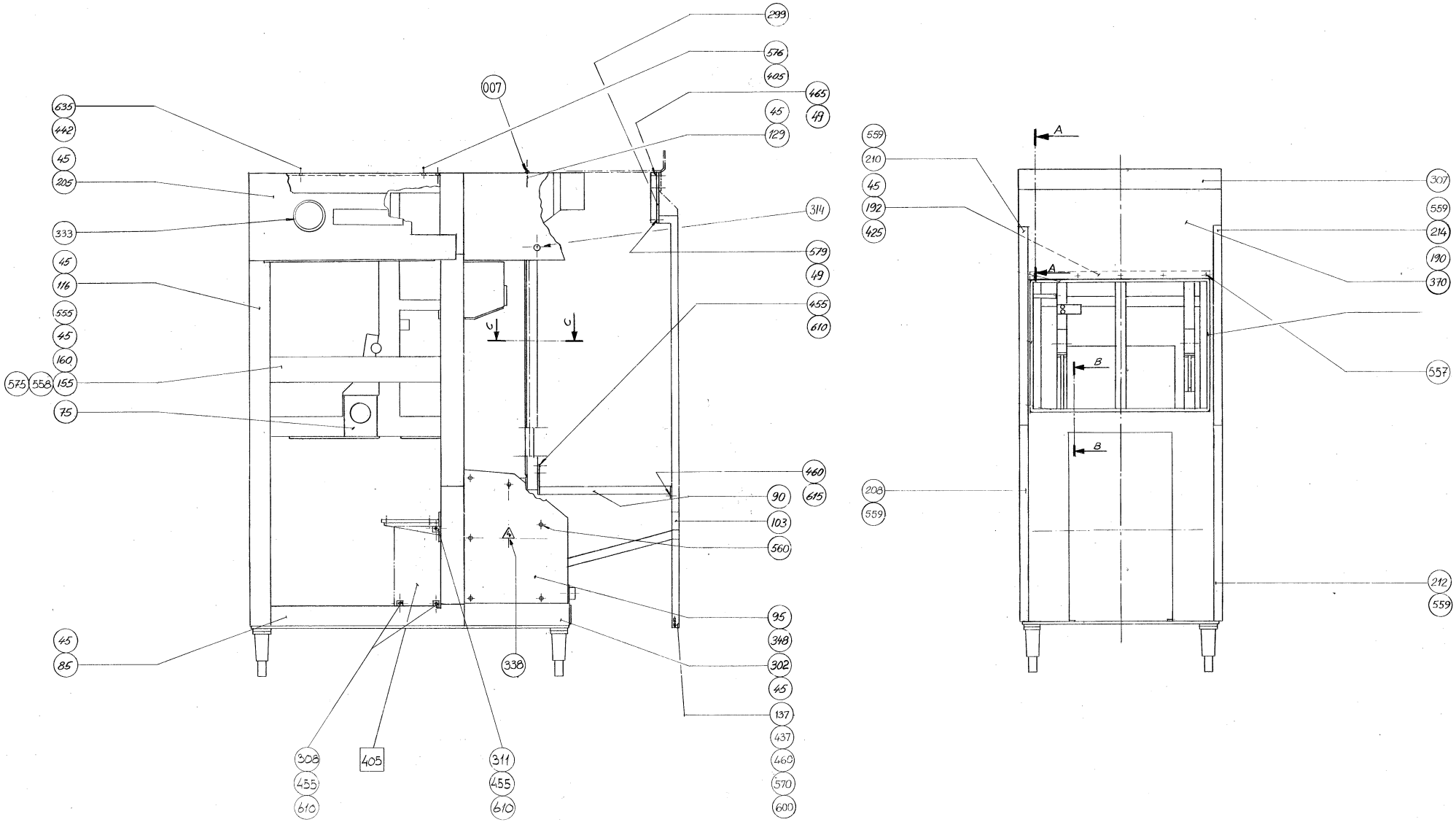
299
576
405
007
465
45
49
129
635
442
45
205
314
333
579
45
49
116
455
555
610
45
160
575
558
155
75
460
615
90
103
560
95
348
302
45
137
437
460
570
600
45
85
338
308
455
610
405
311
455
610
559
210
45
192
425
A
307
559
214
190
370
557
B
208
559
212
559

ECM: 101831 - 20020405
Group number: 440537-0500
Assembly Drawing: 440537-6_1_AC

This list covers pages from 2-56 to 2-61

Pos	Part No	SP	UN	Qty	Description	Page No
Common Parts (Cont'd)						
208	440203-0000	-		1	RULER	
210	440204-0000	-		1	RULER	
212	440205-0000	-		1	RULER	
214	440206-0000	-		1	RULER	
216	479374-0000	-		1	DRIP PLATE	
225	531365-0000	A		4	BRACKET	
275	243573-0000	-		2	LACE	
278	538245-0000	-		2	SHIM	
280	247082-0000	-		4	LEG	
285	263828-0000	-		1	JUNCTION RAIL	
287	267462-0000	-		2	LOCK SHEET	
288	267463-0000	-		2	LOCK SHEET	
290	269296-0000	-		1	PROTECTION PLATE	
295	269297-0000	-		1	PROTECTION PLATE	
298	484212-0000	-		1	BRACKET	
299	484213-0000	-		1	BRACKET	
300	293160-0000	-		1	COVERING PLATE	
302	293161-0000	-		1	COVERING PLATE	
306	450298-0000	-		1	COVERING PLATE	
307	450342-0000	-		1	COVERING PLATE	
308	540726-0000	-		2	HOOK HOLDER	
309	543152-0000	-		1	HOSE ATTACHMENT	
310	457357-0000	-		2	BRACKET	
311	540727-0000	-		1	FASTENING BRACKET	
312	90015-0010	-		16	BUSHING	
313	90015-0011	-		1	BUSHING	
314	90015-0021	-		1	LEAD-IN, TET10-14, E-1458023	
316	90030-0066	-		1	CONN. BULKHEAD SV 6-L/SY	
317	90030-0067	-		2	CONN. BULKHEAD SV 8-L/SY	
318	90030-0159	-		2	CONN. BULKHEAD SV 15-L/SY	
319	90030-0179	-		1	CONN. BULKHEAD SV 22-L/SY	
325	90055-0033	-		1	HOSE NIPPLE, EXT.THR. R1/2-13 MM	
326	90074-0001	-		1	CABLE CLIPS, D=10 MM	
328	90090-0014	-		1	BALL, D=7,938 MM	
329	90099-0004	-		1	NUT	
330	90099-0011	-		1	NUT PR 37 BRASS	
331	90134-0004	-		2	PIPE CONNECTION R1/8	
333	90143-0054	-	MM	500	STRIP	
335	90157-0022	-	L	1	SEALING COMPOUND	
338	90194-0016	-		2	WARNING SIGN, RISK OF ELECTRIC SHOCK	
340	90166-0121	-	MM	1500	HOSE	
345	90187-0029	-		1	BALL VALVE G1/2, NPBR	
348	90242-0115	-	MM	3200	O-RING MATERIAL 5,7 MM	
349	90261-0003	-		1	PLUG, BLIND, PLASTIC GPN300V-10	
350	90261-0011	-		4	PLUG, BLIND, PLASTIC GPN300F233	
370	90287-0075	-		6	SCREW SLOT. PAN HEAD LKCS M6X12	
385	311103-0314	-		4	PARALLEL PIN ISO 2338 5M6X30 A1	
397	311103-0413	-		16	PARALLEL PIN ISO 2338 8M6X50 A1	
400	311202-0320	-		2	TAPER PIN EN 22339 A 8X35 SS	
405	311211-0267	-		2	TAPER PIN THREADED ISO 8737 M5X30 SS	
425	312101-0366	-		8	SCREW M6S M6X12 FZB	
430	312101-0368	-		8	SCREW M6S M6X16 FZB	
435	312101-0453	-		20	SCREW M6S M8X25 FZB	
437	312101-0499	-		2	SCREW M6S M10X40 FZB	
440	312101-0518	-		4	SCREW M6S M10X140 FZB	
442	312101-0538	-		4	SCREW M6S M12X35 FZB	
455	312105-0368	-		7	SCREW M6S M6X16 A280	
460	312105-0449	-		6	SCREW M6S ISO 4017 M8X16 A480	
465	312105-0493	-		8	SCREW M6S ISO 4017 M10X25 A480	
475	312105-0540	-		10	SCREW M6S ISO 4017 M12X40 A480	
480	312105-0542	-		12	SCREW M6S ISO 4014 M12X50 A480	
490	312111-0364	-		2	SCREW HEX.SOCK.HD.MC6S-TT 6X10 88 FZB	
510	312115-0378	-		6	SCREW ISO4762 M6X40 A4	
515	312115-0451	-		8	SCREW ISO4762 M8X20 A4	
525	312115-0501	-		7	SCREW ISO4762 M10X50 A4	
530	312115-0503	-		8	SCREW ISO4762 M10X60 A4	
555	312151-0366	-		4	SCREW HEX.SOCK.COUNT.MF6S 6X12 FZB	
556	312155-0327	-		4	SCREW EN 10642 MF6S M5X12 A480	
557	312155-0366	-		5	SCREW EN 10642 MF6S M6X12 A480	
558	312155-0370	-		4	SCREW EN 10642 MF6S M6X20 A480	
559	312155-0368	-		15	SCREW EN 10642 MF6S M6X16 A480	
560	312155-0451	-		12	SCREW EN 10642 MF6S M8X20 A480	
570	312601-0320	-		2	NUT M6M 10-8 FZB	
575	312605-0316	-		4	HEXAGON NUT, M6M M6 A280	
576	312605-0314	-		2	HEXAGON NUT, M6M M5 A280	
579	312605-0320	-		2	HEXAGON NUT, M6M M10 A280	
600	315101-0173	-		2	WASHER PLAIN, BRB, 10,5/22 H=2	
610	315105-0153	-		31	WASHER BRB6,4X12RFR	
615	315105-0165	-		14	WASHER BRB8,4X16RFR	
635	315111-0178	-		4	WASHER PLAIN, TBRB 13/24 H=4	
640	315115-0178	-		22	WASHER PLAIN, TBRB 13/24 H=4	
645	315121-0153	-		8	WASHER PLAIN, TBRSB 6,4/22 H=4	
660	315402-0173	-		15	LOCK WASHER FBB 10,2	

Machine Type | Group Description | Used-In | Group Number | Page No

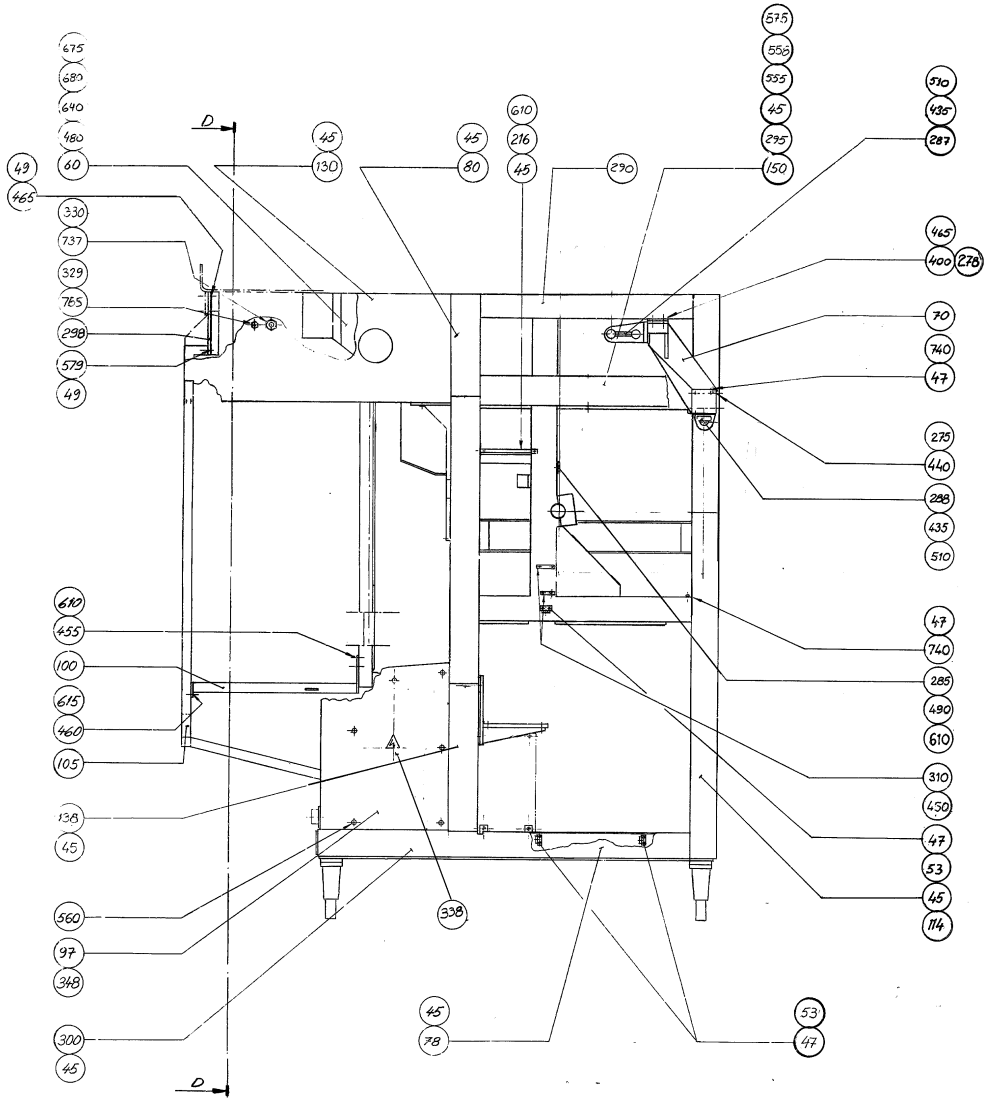
D
D
575
555
355
45
295
150
610
216
45
290
45
130
45
80
510
435
287
465
400
278
70
740
47
275
440
288
435
510
47
740
285
490
610
310
450
47
53
45
114
675
680
640
480
60
49
465
330
737
329
765
298
579
49
610
455
100
615
460
105
138
45
560
97
348
300
45
338
45
78
53
47

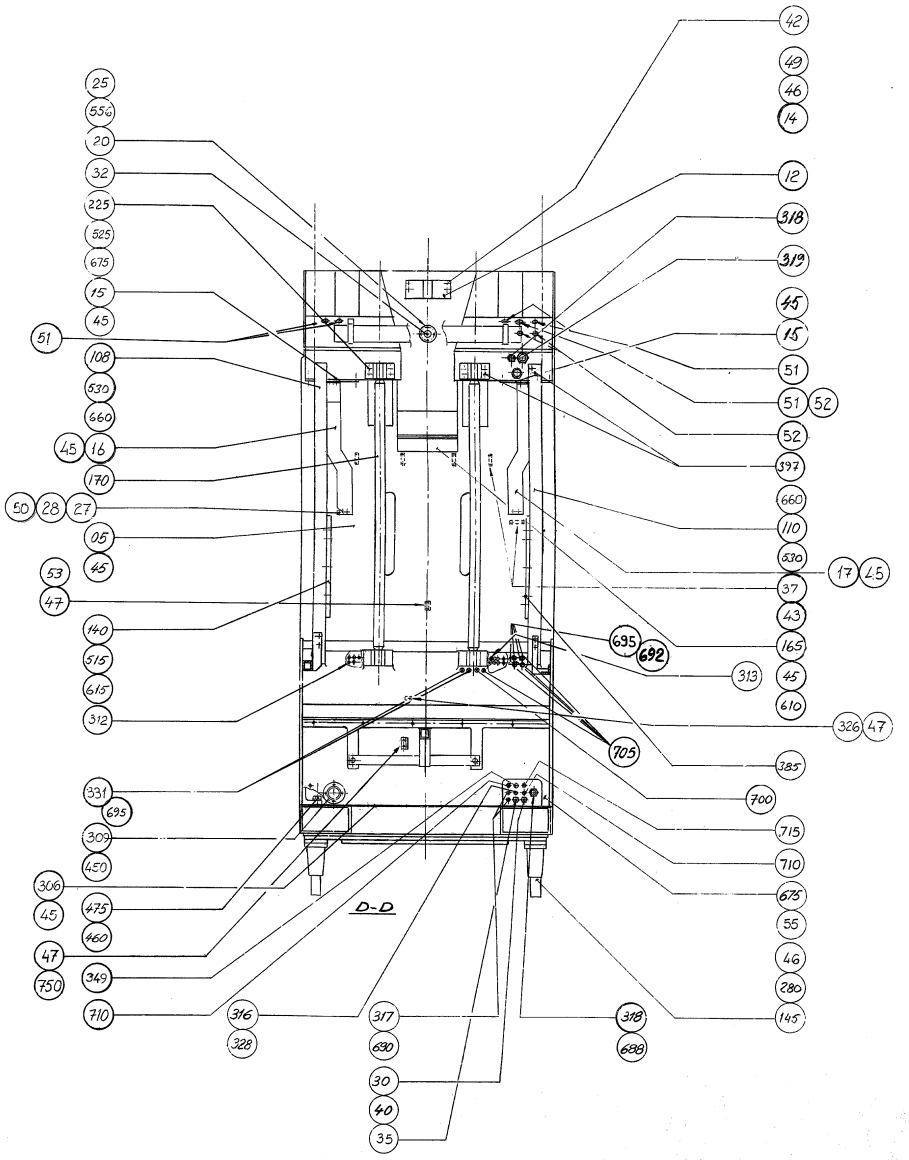
D-D
42
49
46
14
12
318
319
45
15
51
51
52
52
397
660
110
330
17
45
37
43
165
45
610
326
47
385
700
715
710
675
55
46
280
145
25
554
20
32
225
525
675
15
45
51
108
530
660
45
16
170
50
28
27
05
45
53
47
140
515
615
312
331
695
309
450
306
45
475
460
47
750
710
695
692
313
705
316
328
317
690
318
688
30
40
35

Pos	Part No	SP	UN	Qty	Description	Page No
Common Parts (Cont'd)						
675	315701-0330	-		2	PARALLEL KEY W. ROUND ENDS 12X8X32 MM	
680	315701-0336	-		3	PARALLEL KEY W. ROUND ENDS 12X8X63 MM	
688	341001-0228	-	MM	35	COPPER TUBE	
690	342929-0121	-		2	STRAIGHT COUPLING,SOLDER 8/6-8	
700	342920-0121	-		2	STRAIGHT COUPLING,EXT.THREADED 8/6-R1/8"	
710	342960-0112	-		2	BULKHEAD COUPLING 6/4	
715	342960-0122	-		1	BULKHEAD COUPLING 8/6	
720	342991-0103	-		1	HOSE CLIP,WORM DRIVE TYPE (19)-23	
735	352103-0116	-		1	CABLE GLAND, ST 21, PR28,3/PG21	
737	352103-0121	-		1	CABLE GLAND, ST 29, PR37,0/PG29	
740	352110-0101	-		2	CABLE CLIPS, D=7-10 MM	
750	352135-0201	-		1	CLIP, 12 MM, 913.012	
F405	A540723-0100	-		1	CONNECTION BOX	**2-63**

Pos	Part No	SP	UN	Qty	Description	Page No

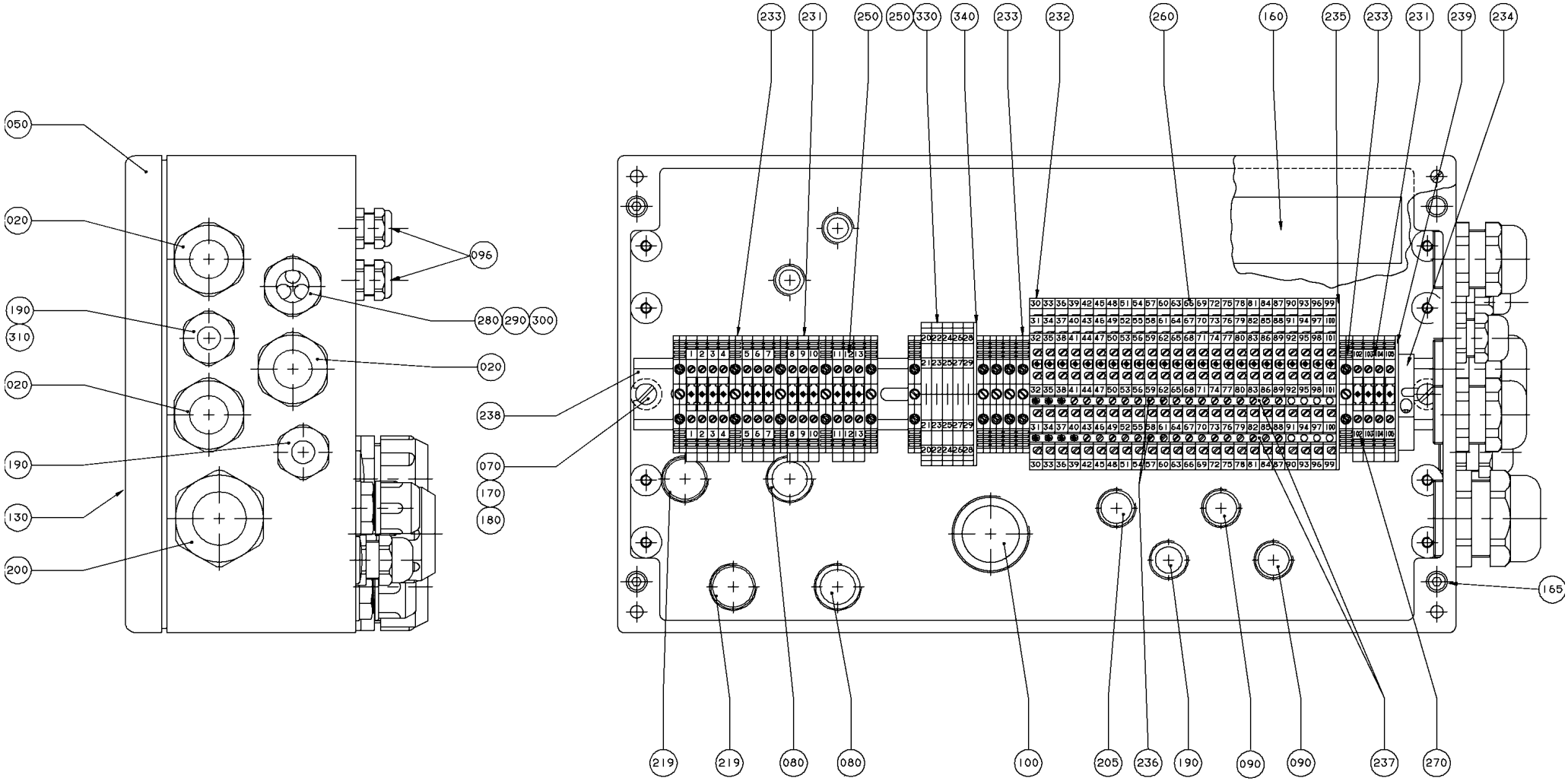
050
020
190
310
020
190
130
200
096
280
290
300
020
238
070
170
180
233
231
250
250
330
340
233
232
260
160
235
233
231
239
234
165
219
219
080
080
100
205
236
190
090
090
237
270

ECM: 73197 - 19991201
Group number: 540723-0100
Assembly Drawing: 540723-2_1_AA

Pos	Part No	SP	UN	Qty	Description	Page No
TBA/8						
080	90002-0004	-		2	BLANK-OFF PLUG, PR 22,5 SKINDICHT-BLK16	
090	90002-0009	-		2	BLANK-OFF PLUG, PR 18.6 SKINDICHT-BLK11	
096	90012-0063	-		2	CABLE GLAND PR 15,2	
190	352103-0106	-		3	CABLE GLAND, ST 11, PR18,6/PG11	
219	352136-0142	-		2	GLAND FITTING	
231	353021-0212	-		17	FEED THROUGH TERMINAL, 10200.0	
233	353024-0205	D		11	EARTH TERMINAL, 1010.1	
236	353034-0401	D		2	BRIDGE CONNECTOR Q2, 13125.0	
239	353032-0004	-		1	END PLATE WAP 2,5-10 BEIGE	
250	359011-0807	-		4	MARKING PLATES 5-FW 1-50	
330	90077-0113	-		5	FEED THROUGH TERMINAL, 10-00102150-1	
340	353032-0009	-		1	END PLATE, WAP 16/35	
Common Parts						
020	352103-0116	-		3	CABLE GLAND, ST 21, PR28,3/PG21	
050	540724-0000	-		1	CONNECTION BOX	
070	450899-0001	-		2	SPACER	
100	90012-0061	-		1	GLAND	
130	90194-0016	-		1	WARNING SIGN, RISK OF ELECTRIC SHOCK	
160	90298-0022	-		1	ZERUST CAPSULE	
165	312115-0372	-		3	SCREW ISO4762 M6X25 A4	
170	312125-0376	-		2	SLOTTED CHEESE HEAD SCREW MCS 6X35 SS	
180	315105-0153	-		2	WASHER BRB6,4X12RFR	
200	352103-0120	-		1	CABLE GLAND, STR 29, PR37,0/PG29	
205	352136-0113	-		1	GLAND FITTING PR18,6/PG11 DI=12MM	
232	353021-0302	-		24	TERMINALS,TRIPLE-LEVEL, DLD 2,5/35 PA	
234	353031-0201	-		1	END BRACKET EW35	
235	353032-0302	-		1	END PLATE WAP	
237	353034-0404	-		4	BRIDGE CONNECTOR Q10, 13131.0	
238	353042-0004	-	MM	385	RAIL TS 35/7,5	
260	359011-0808	-		2	MARKING PLATES 5-FW 51-100	
270	359011-0809	-		2	MARKING PLATES 5-FW 101-150	
280	353240-0004	-		1	NORMAL WITHOUT INSERT, PG 16	
290	353249-0027	-		1	INSERT, MULTI HOLE, E153M3X7	
300	353249-0306	-		3	SEALING PIN, 7X25	
310	1487685-0000	-		1	PLUG	

Pos	Part No	SP	UN	Qty	Description	Page No

Machine Type | Group Description | Used-In | Group Number | Page No

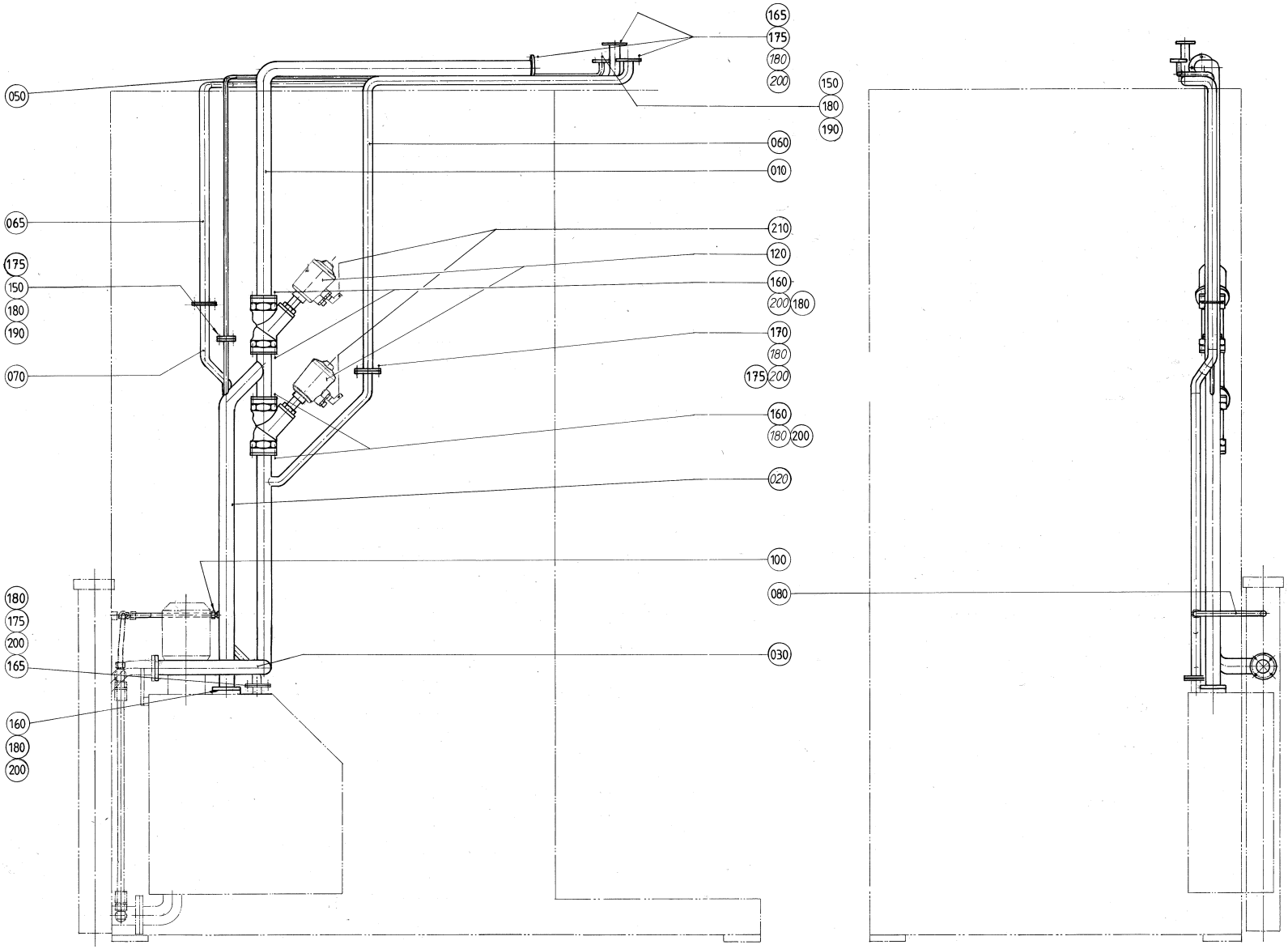
165
175
180
200
150
180
190
050
060
010
065
210
120
175
150
160
180
190
200
180
170
180
070
175
200
160
180
200
020
100
180
175
200
165
080
030
160
180
200

ECM: 106942 - 20020405
Group number: 442463-0400
Assembly Drawing: 442463-3_1_AC

Pos	Part No	SP	UN	Qty	Description	Page No
-						
010	442466-0000	-		1	PIPE CONNECTION	
020	479033-0000	-		1	PIPE CONNECTION	
030	479034-0000	-		1	PIPE CONNECTION	
050	479036-0000	-		1	PIPE CONNECTION	
060	479040-0000	-		1	PIPE CONNECTION	
065	542074-0000	-		1	PIPE	
070	531592-0000	-		1	PIPE	
080	531597-0000	-		1	PIPE	
100	531595-0000	-		1	STRAIGHT PIPE UNION	
120	B2525460-0000	A		2	SEAT VALVE	
	90235-0476	*-*		*1*	*SEALING*	
	90458-2603	*-*		*1*	*ANGLE SEAT VALVE W. FLANGES, N.O. D=40*	
	6-990413 78	*-*		*1*	*SP.P KIT ACTUATOR BUERKERT PA E (63) SS*	
150	312105-0366	-		6	SCREW M6S M6X12 A280	
160	312105-0368	-		20	SCREW M6S M6X16 A280	
165	312105-0370	-		20	SCREW M6S ISO 4017 M6X20 A480	
170	312105-0372	-		4	SCREW M6S ISO 4017 M6X25 A480	
175	312605-0316	-		24	HEXAGON NUT, M6M M6 A280	
180	315105-0153	-		50	WASHER BRB6,4X12RFR	
190	927422-0001	A		2	O-RING 19.2X3 SILICON	
200	927422-0006	A		12	O-RING 42.2X3 SILICON	
210	90458-2957	-		2	ELBOW PIPE JOINT, EXT.THREAD, D=6MM-G1/4	

Pos	Part No	SP	UN	Qty	Description	Page No

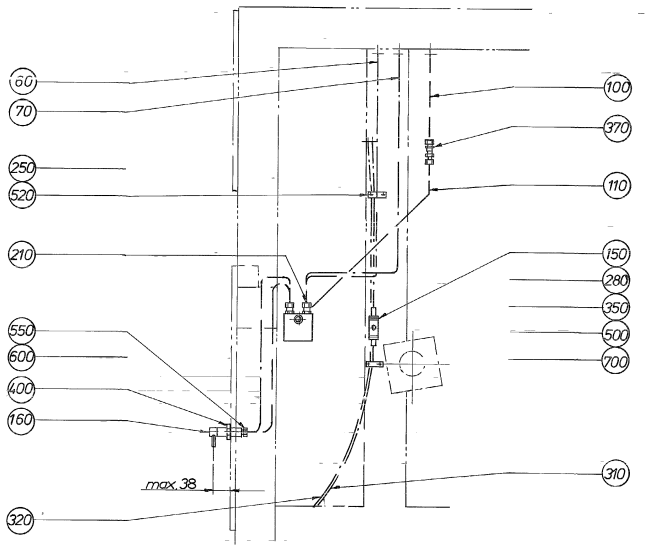

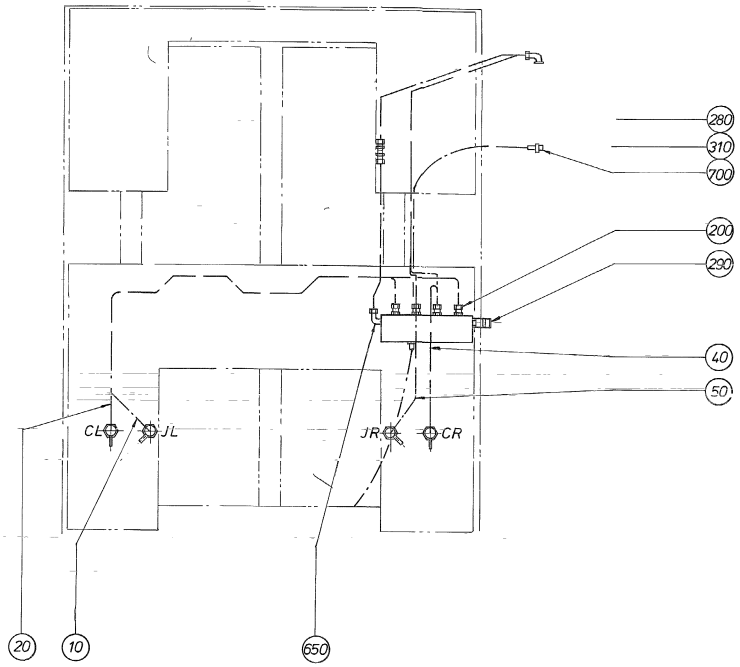

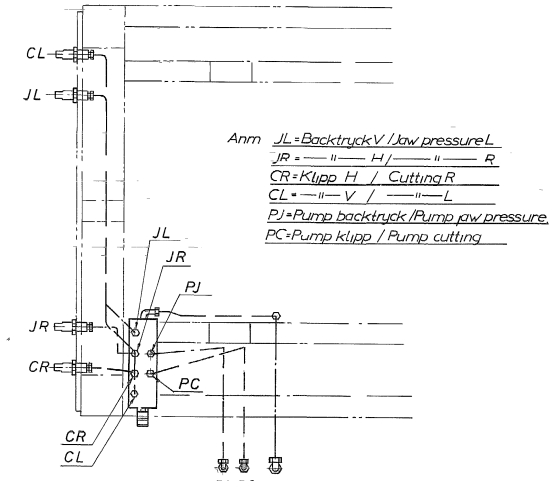

Anm JL = Backtryck V / Jaw pressure L
JR = —"— H / —"— R
CR = Klipp H / Cutting R
CL = —"— V / —"— L
PJ = Pump backtryck / Pump jaw pressure.
PC = Pump klipp / Pump cutting

ECM: 72091 - 19981216
Group number: 445537-0200
Assembly Drawing: 445537-3_1_AA

Pos	Part No	SP	UN	Qty	Description	Page No
TBA/8						
060	445538-0000	-		1	HYDRAULIC PIPE	
100	445540-0000	-		1	HYDRAULIC PIPE	
210	90030-0157	-		2	CONN. STR. 10-R3/8, EXT. THREAD	
Common Parts						
010	294493-0000	-		1	HYDRAULIC PIPE	
020	294494-0000	-		1	HYDRAULIC PIPE	
040	294495-0000	-		1	HYDRAULIC PIPE	
050	294496-0000	-		1	HYDRAULIC PIPE	
070	445539-0000	-		1	HYDRAULIC PIPE	
110	445541-0000	-		1	HYDRAULIC PIPE	
150	255017-0000	-		1	BRACKET	
160	540718-0000	-		4	ELBOW PIPE JOINT	
200	90030-0155	-		4	CONN. STR., 8-R3/8, EXT. THREAD	
250	90074-0006	-		2	CABLE CLIPS, D=2X12 MM	
280	90163-0041	-		3	HOSE NIPPLE, EXT.THR. 3/8-12 MM	
290	90163-0076	-		1	QUICK COUPLING, (F) LP-006-0-WR021	
310	90166-0007	-	MM	2000	HOSE PVC 10/14 TRANSP.	
320	90166-0122	-	MM	2000	TUBE 8 MM PA,TRANSP.	
350	90187-0054	C		1	BALL VALVE G3/8	
370	90230-0011	C		1	NON RETURN VALVE RHD-115L	
400	90330-0093	-		4	NUT, HEXAGON, G1/2	
500	312101-0331	-		2	SCREW M6S M5X20 FZB	
520	312125-0323	-		4	SLOTTED CHEESE HEAD SCREW MCS 5X8 SS	
550	342703-0103	-		4	NUT, PIPES & CONNECTORS,NUT M-8 FE	
600	342705-0103	-		4	ACCESSORIES, FERRULE 8-LFZB	
650	342731-0114	-		1	CONN. ELBOW WE 15-LRFZB	
700	342991-0101	-		3	HOSE CLIP,WORM DRIVE TYPE (13)-16	

Pos	Part No	SP	UN	Qty	Description	Page No

Machine Type | Group Description | Used-In | Group Number | Page No

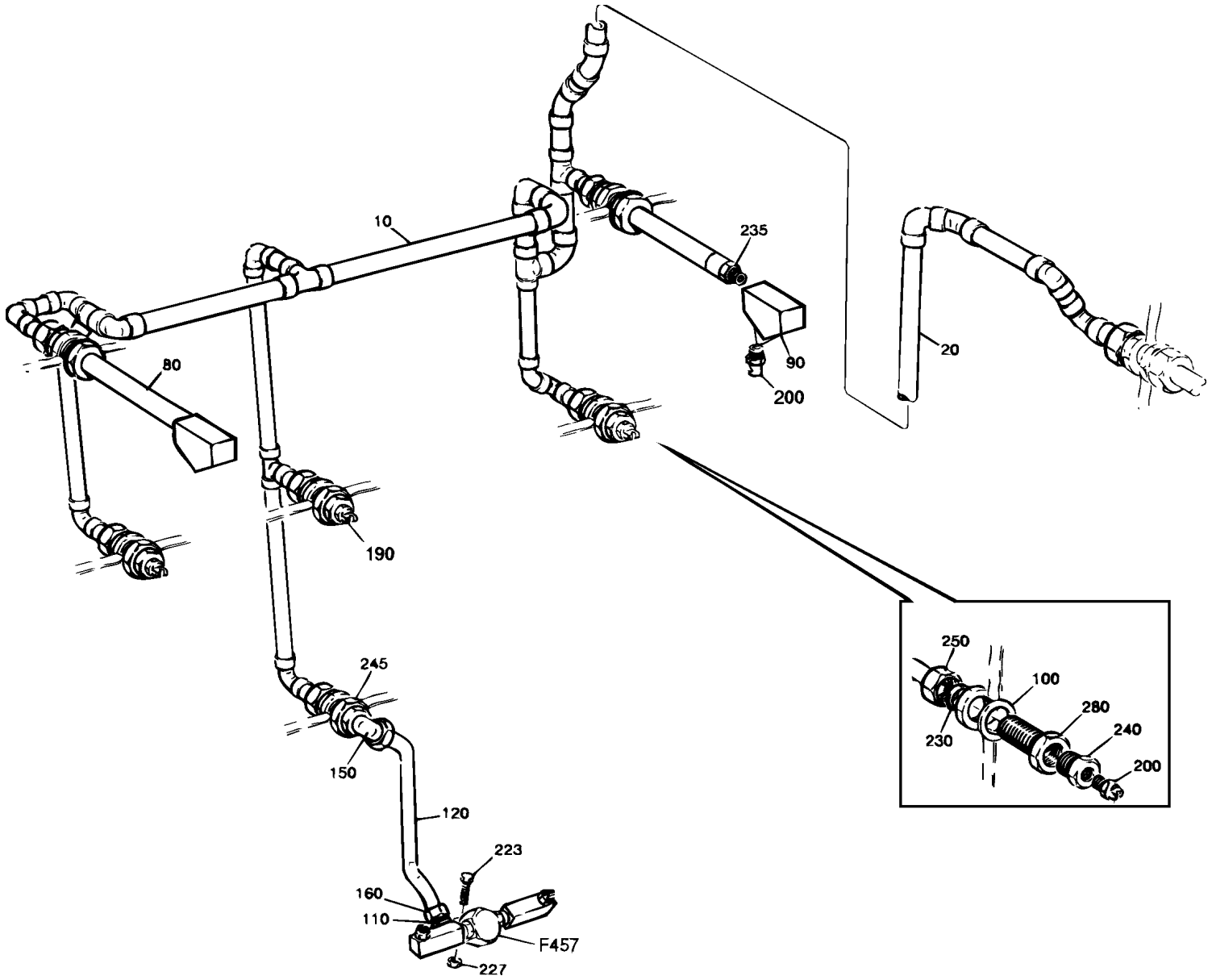
10
235
20
80
90
200
190
250
100
280
240
230
200
245
150
120
223
160
110
F457
227

ECM: 72091 - 19981216
Group number: 449168-0300
Assembly Drawing: 449168-3_1_AA

Pos	Part No	SP	UN	Qty	Description	Page No
TBA/8 0500B, TBA/8 0375S, TBA/8 0500S, TBA/8 0355B, TBA/8 1000B, TBA/8 0750S, TBA/8 0750B						
200	90424-0035	C		7	SPRAY NOZZLE 95 DEG	
240	342701-0205	-		3	BUSHING,INT./EXT.G-THREAD G1/2"-G1/4"	
TBA/8 1000SQ, TBA/8 1000S						
190	571654-0000	C		1	NOZZLE	
200	90424-0035	C		6	SPRAY NOZZLE 95 DEG	
240	342701-0205	-		2	BUSHING,INT./EXT.G-THREAD G1/2"-G1/4"	
Common Parts						
010	530556-0000	-		1	JUNCTION PIPE UPPER	
020	449170-0000	-		1	CLEANING PIPE	
080	535016-0000	-		2	FORCE SPRING	
090	535017-0000	D		2	BRACKET	
100	246885-0000	-		6	WASHER	
110	537919-0000	-		1	PIPE HOLDER	
120	537918-0000	-		1	PIPE	
150	90030-0115	-		1	CONN. ELBOW WA 12-R3/8	
160	90030-0187	-		1	CONN. STR. GA-12-G3/8	
223	312105-0372	-		1	SCREW M6S ISO 4017 M6X25 A480	
227	312605-0316	-		2	HEXAGON NUT, M6M M6 A280	
230	315234-0113	-		6	WASHER PL.RND.CU.21,3//26 H=1,5	
245	342701-0206	-		1	BUSHING,INT./EXT.G-THREAD G1/2"-G3/8"	
250	342720-0114	-		6	CONN. STR. GA-15-G1/2	
280	342767-0114	-		6	CONN. BULKHEAD G1/2	
457	A594614-0100	-		1	CLEANING HEAD	**2-71**

Pos	Part No	SP	UN	Qty	Description	Page No

Machine Type | Group Description | Used-In | Group Number | Page No

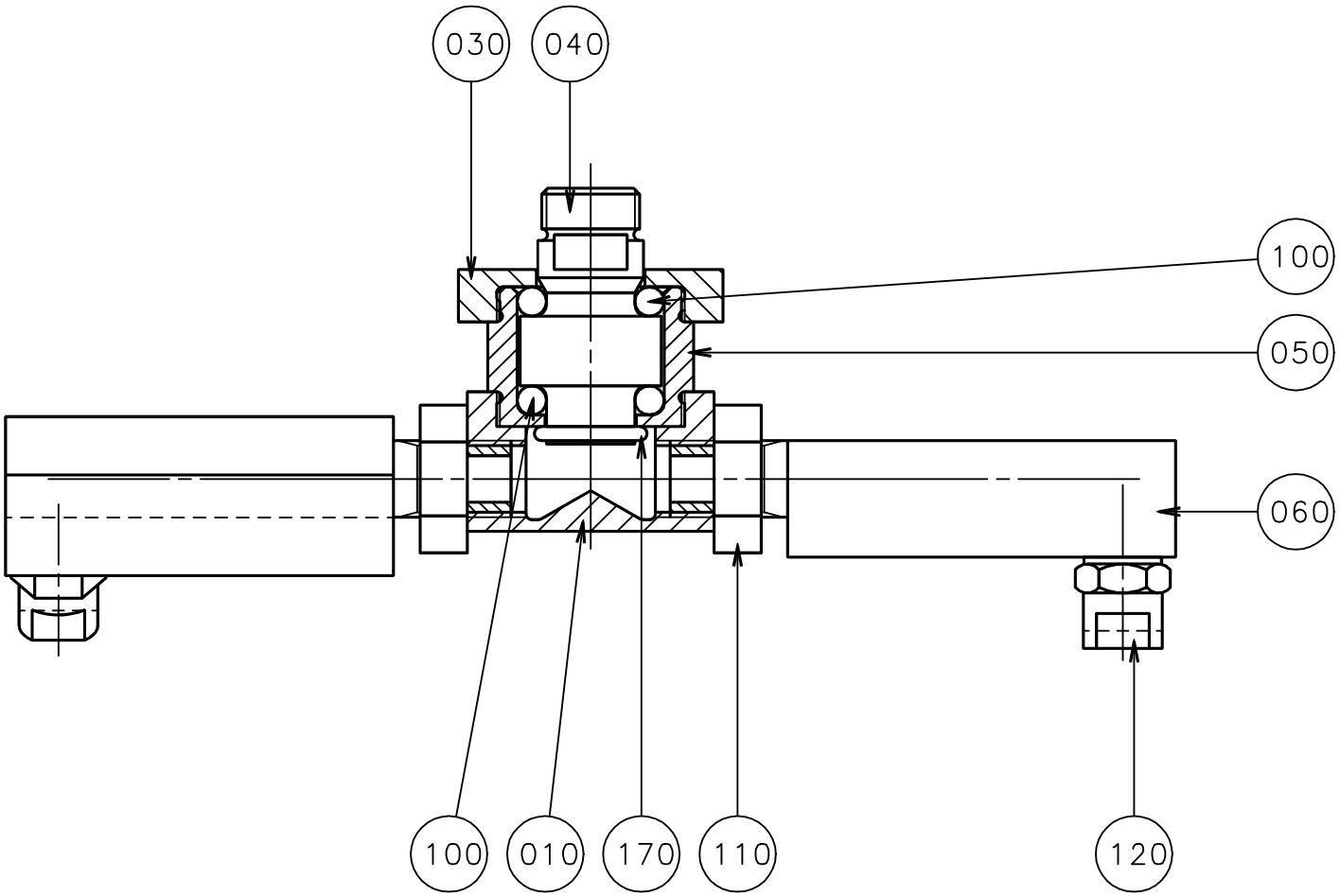
030
040
100
050
060
100
010
170
110
120

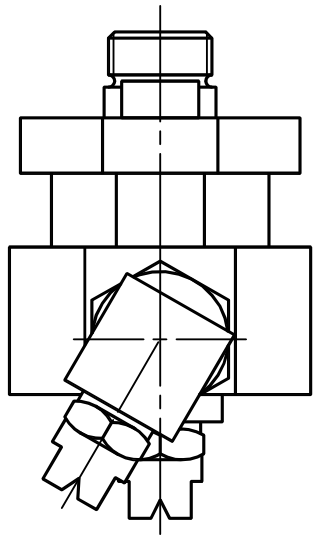

ECM: 72091 - 19981216
Group number: 594614-0100
Assembly Drawing: 594614-1_1_AA

Pos	Part No	SP	UN	Qty	Description	Page No
-						
010	440600-0000	C		1	ROTOR	
030	534880-0000	C		1	END SECTION	
040	534878-0000	C		1	SHAFT	
050	534879-0000	C		1	BEARING HOUSING	
060	440605-0001	C		2	PIPE	
100	90090-0020	C		24	BALL, D=5 MM	
110	90330-0034	-		2	NUT, HEXAGON, G1/4	
120	90424-0026	C		2	SPRAY NOZZLE 95 DEG	
170	315202-0211	C		1	O-RING 13,3X2,4 MM	

Pos	Part No	SP	UN	Qty	Description	Page No

Machine Type | Group Description | Used-In | Group Number | Page No

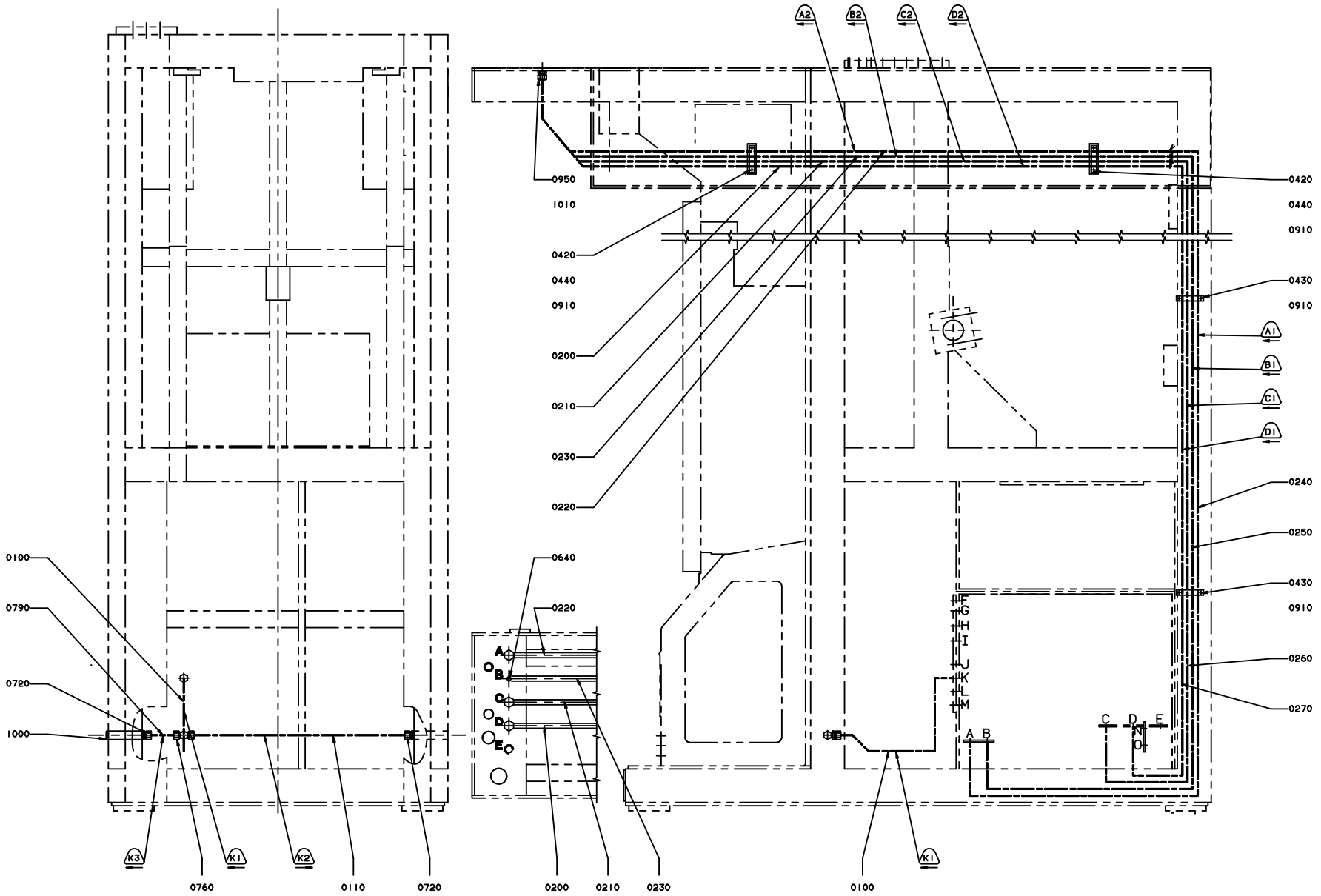
A2
B2
C2
D2
0950
1010
0420
0440
0910
0200
0210
0230
0220
0640
0100
0790
0720
1000
0760
0110
0720
0200
0210
0230
0100
K3
K1
K2
K1
A1
B1
C1
D1
0240
0250
0260
0270
A
B
C
D
E
A B
C D E
NOT

ECM: 106815 - 20020405
Group number: 1362427-0100
Assembly Drawing: 1362427-1_1_AB

This list covers pages from 2-72 to 2-79

Pos	Part No	SP	UN	Qty	Description	Page No
-						
0010	434168-0000	-		1	PIPE	
0020	434171-0000	-		1	PIPE	
0030	450716-0000	-		1	PIPE	
0040	450717-0000	-		1	PIPE	
0050	450719-0000	-		1	PIPE	
0060	450725-0000	-		1	ATTACHMENT PLATE	
0070	450730-0000	-		1	PIPE	
0080	450731-0000	-		1	PIPE	
0090	450733-0000	-		1	PIPE	
0100	450735-0000	-		1	PIPE	
0110	450736-0000	-		1	PIPE	
0120	450737-0000	-		1	PIPE	
0130	450738-0000	-		1	PIPE	
0140	450739-0000	-		1	PIPE	
0150	450740-0000	-		1	PIPE	
0160	450742-0000	-		1	PIPE	
0170	464431-0000	-		1	PIPE	
0180	464432-0000	-		1	PIPE	
0190	464520-0000	-		1	PIPE	
0200	544688-0000	-		1	PIPE	
0210	544689-0000	-		1	PIPE	
0220	544690-0000	-		1	PIPE	
0230	544691-0000	-		1	PIPE	
0240	544693-0000	-		1	PIPE	
0250	544694-0000	-		1	PIPE	
0260	544695-0000	-		1	PIPE	
0270	544696-0000	-		1	PIPE	
0280	561424-0000	-		1	PIPE	
0290	561591-0000	-		1	PIPE	
0300	561592-0000	-		1	PIPE	
0310	567266-0000	-		1	TUBE	
0320	567267-0000	-		1	TUBE	
0330	1347214-0000	-		1	HOSE	
0400	276398-0000	-		4	HEXAGON NIPPLE	
0410	279105-0000	-		2	WASHER	
0420	279526-0000	-		2	BRACKET	
0430	293351-0000	-		2	CRAMP	
0440	293352-0000	-		2	CRAMP	
0450	450722-0000	-		1	PIPE	
0460	450723-0000	-		1	PIPE	
0470	450724-0000	-		1	PIPE	
0480	450744-0000	-		2	CRAMP	
0490	450745-0000	-		2	SPACER	
0500	450746-0000	-		1	HOLDER	
0510	450747-0000	-		1	PIPE	
0520	450748-0000	-		1	PIPE	
0530	464719-0000	-		1	SIGN	
0540	575795-0000	-		1	WATER PIPE	
0600	90030-0091	-		1	CONN. PIPE G-8	
0610	90030-0106	-		1	CONN. PIPE G-12	
0620	90030-0159	-		2	CONN. BULKHEAD SV 15-L/SY	
0630	90030-0253	-		1	CONN. STR. 12-1/4 NPT, EXT. TAPPERED	
0640	90087-0002	-		1	PIPE PLUG	
0650	90089-0018	-		1	REDUCING SLEEVE, 3/4NPT /PR22,5	
0660	90165-0007	-		3	PIPE CLIP FOR TUBE D=8 MM	
0670	90166-0121	-	MM	1200	HOSE	
0680	90166-0122	-	M	2	TUBE 8 MM PA,TRANSP.	
0690	90166-0132	-	M	2	TUBE 6 MM PA,TRANSP.	
0700	342746-0109	-		1	CONN. T-PIPE T-12	
0710	90224-0318	-		1	CONNECTION	
0720	90458-1851	-		13	CONN. STR., 8-R1/4, EXT. THREAD	
0730	90224-0302	-		2	CONNECTION	
0740	90459-0335	-		1	CONN. STR. 12-R1/2, EXT. TAPERED	
0750	342710-0203	-		1	REDUCTION RBM 12/8	
0760	90224-0323	-		1	CONNECTION	
0770	90230-0023	-		1	NON RETURN VALVE	
0780	90235-0295	-		4	THROTTLE CHECK VALVES,G1/4"	
0790	90266-0007	-	MM	63	TUBE	
0800	90274-0065	-		1	PRESSURE SWITCH, 7 - 200 KPA	
0850	312101-0327	-		4	SCREW M6S M5X12 FZB	
0860	312101-0364	-		2	SCREW M6S M6X10 FZB	
0870	312101-0372	-		1	SCREW M6S M6X25 FZB	
0880	312105-0327	-		2	SCREW M6S ISO 4017 M5X12 A480	
0890	312121-0287	-		3	SLOTTED CHEESE HEAD SCREW MCS 4X8 FZB	
0900	312125-0220	-		4	SLOTTED CHEESE HEAD SCREW MCS 3X6 SS	
0910	312125-0323	-		8	SLOTTED CHEESE HEAD SCREW MCS 5X8 SS	
0920	315101-0153	-		2	WASHER PLAIN, BRB, 6,4/12 H=1,5	
0930	315105-0124	-		2	BRICKA BRB3,2X6RFR	
0950	315233-0113	-		4	WASHER CAPTIVE SEALING G1/2	
0960	315234-0113	-		1	WASHER PL.RND.CU.21,3//26 H=1,5	
0970	341001-0228	-	MM	80	COPPER TUBE	
0980	341001-0228	-	MM	300	COPPER TUBE	
0990	341001-0228	-	MM	1792	COPPER TUBE	

Machine Type | Group Description | Used-In | Group Number | Page No

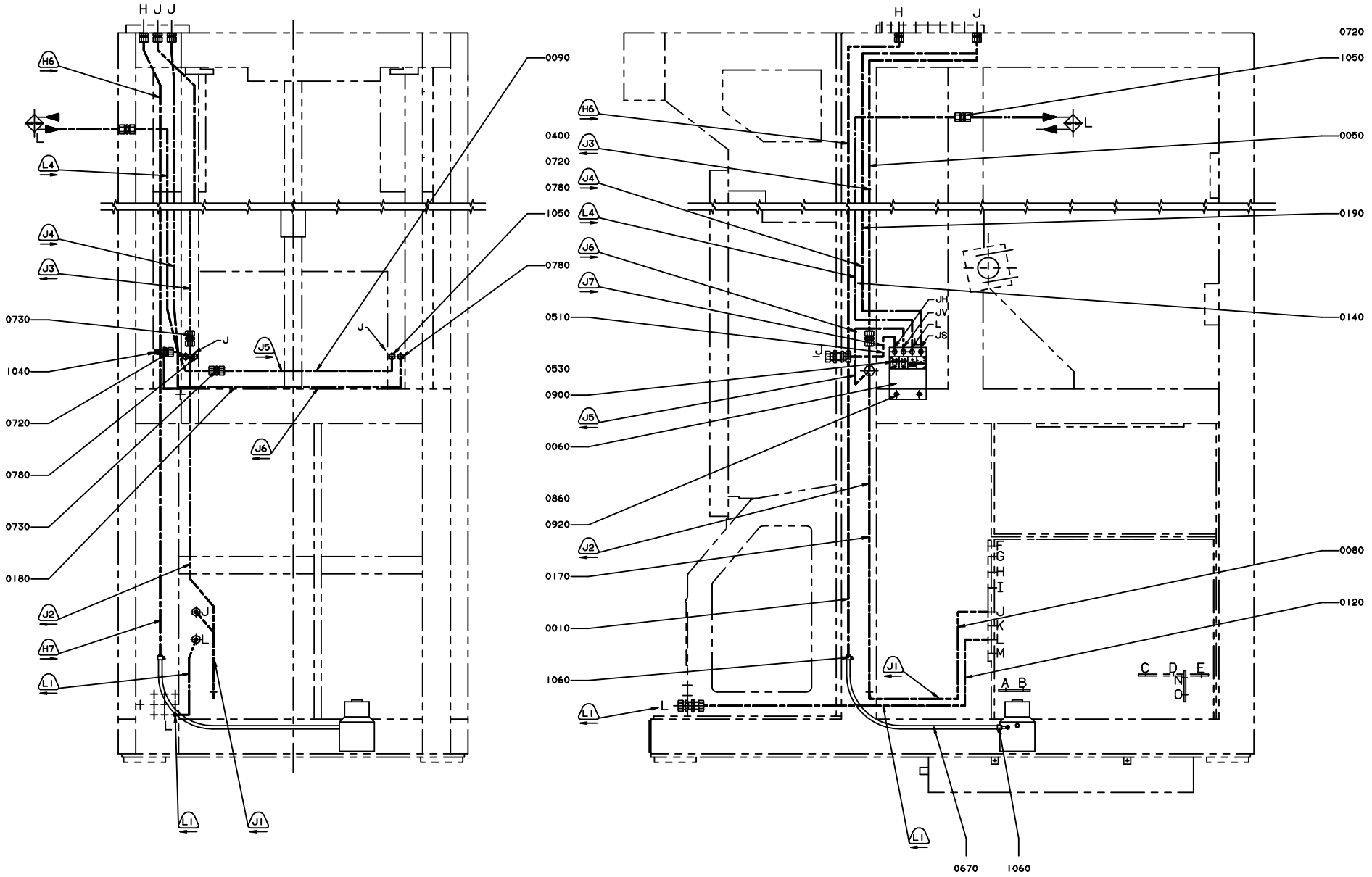
H J J
H6
L
L4
J4
J3
0730
1040
0720
0780
0730
0180
J2
H7
L1
J5
J6
J1
0090
1050
0780
J
H J
H6
0400
J3
0720
0780
J4
L4
J6
J7
0510
0530
0900
J5
0060
0860
0920
J2
0170
0010
1060
L1
0720
1050
0050
0190
0140
0080
0120
JH
JV
L
JS
A B
C D E
N
O
0670
1060

Pos	Part No	SP	UN	Qty	Description	Page No
- (Cont'd)						
1000	342713-0210	-		1	PLUG, EXT THREAD HEX SOCKET 8638-00-140	
1010	342720-0114	-		4	CONN. STR. GA-15-G1/2	
1020	342736-0114	-		1	CONN. ELBOW W-15	
1030	342923-0114	-		2	STRAIGHT COUPL.,INT.THREADED 6/4-G1/4"	
1040	342923-0122	-		6	STRAIGHT COUPL.,INT.THREADED 8/6-G1/4"	
1050	342980-0122	-		4	BANJO-CONNECTION,RING 8/6-G1/4"	
1060	342991-0102	-		2	HOSE CLIP,WORM DRIVE TYPE (16)-19	
1070	352136-0129	-		1	GLAND FITTING PR22,5/PG16 DI=16MM	

Pos	Part No	SP	UN	Qty	Description	Page No

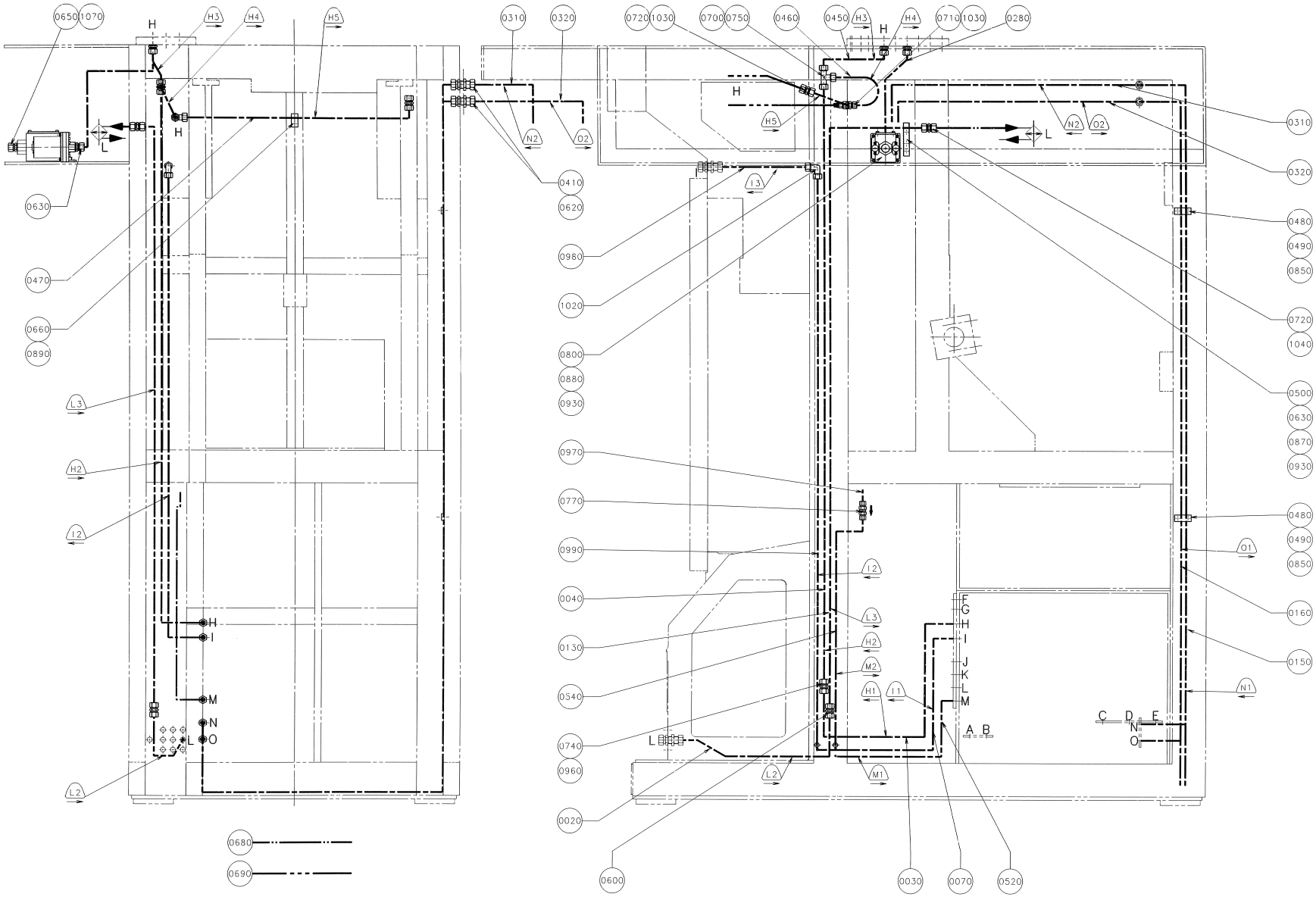
0650 1070
H
H3
H4
H5
L
0630
0470
0660
0890
L3
H2
I2
H
I
M
N
L
O
L2
0680
0690
0310
0320
0720 1030
0700 0750
0460
0450
0710 1030
0280
N2
O2
0410
0620
I3
0980
1020
0800
0880
0930
0970
0770
0990
0040
0130
0540
0740
0960
0020
0600
0030
0070
0520
I2
L3
H2
M2
H1
I1
M1
L2
F
G
H
I
J
K
L
M
A B
C D E
N
O
0480
0490
0850
0720
1040
0500
0630
0870
0930
O1
0160
0150
N1

Pos	Part No	SP	UN	Qty	Description	Page No	Pos	Part No	SP	UN	Qty	Description	Page No

SEE PREVIOUS LISTS PAGES: 2-73, 2-75.

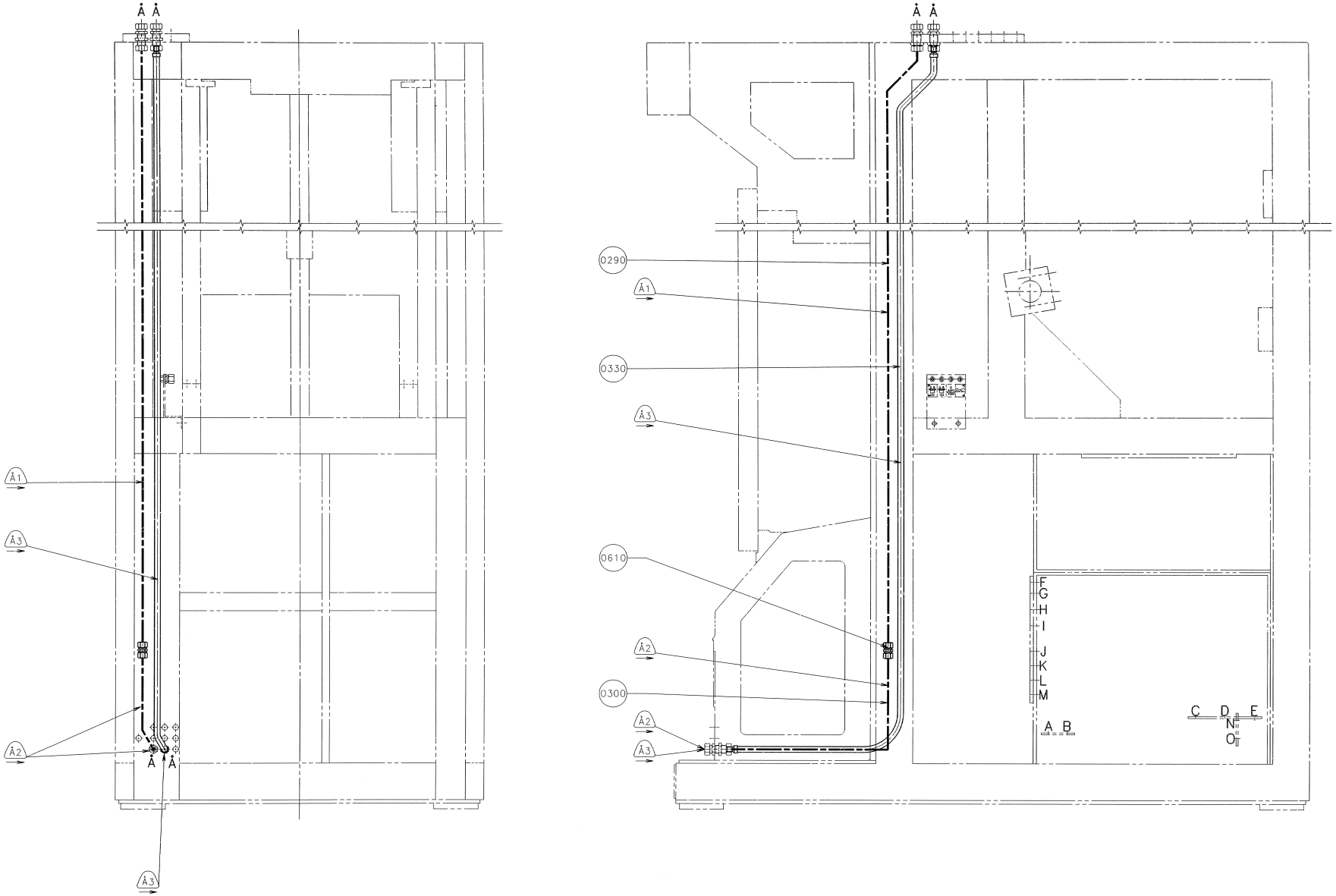
Å Å
Å1
Å3
Å2
Å Å
Å3
Å Å
0290
Å1
0330
Å3
0610
Å2
0300
Å2
Å3
F
G
H
I
J
K
L
M
A B
C D E
N
O

Pos	Part No	SP	UN	Qty	Description	Page No	Pos	Part No	SP	UN	Qty	Description	Page No

SEE PREVIOUS LISTS PAGES: 2-73, 2-75.

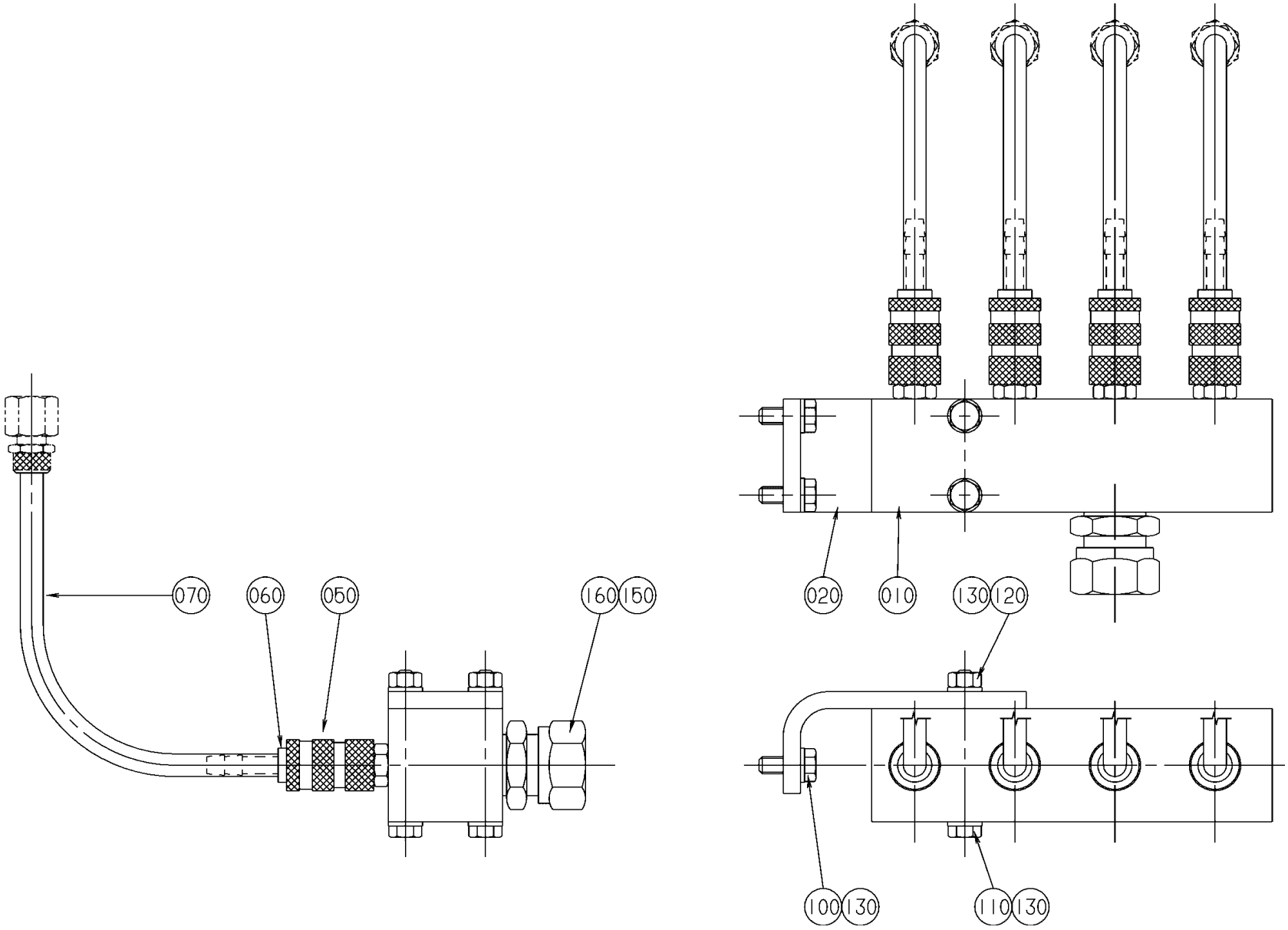
070
060
050
160
150
020
010
130
120
100
130
110
130

ECM: 72091 - 19981216
Group number: 575797-0100
Assembly Drawing: 575797-1_1_AA

Pos	Part No	SP	UN	Qty	Description	Page No
TBA/8						
010	575791-0000	D		1	JUNCTION BLOCK	
050-02	90163-0133	D		4	QUICK COUPLING, (F) LP-004-0-WR013-21-1	
060-02	90163-0134	-		4	QUICK COUPLING, LP-004-1-SL006-21	
070-02	90166-0133	-	MM	900	TUBE 8 MM PA,TRANSP.	
Common Parts						
020	575792-0000	-		1	ANGLE STRUT	
100	312105-0368	-		2	SCREW M6S M6X16 A280	
110	312105-0381	-		2	SCREW M6S ISO 4014 M6X55 A480	
120	312605-0316	-		2	HEXAGON NUT, M6M M6 A280	
130	315105-0153	-		6	WASHER BRB6,4X12RFR	
150	315233-0113	-		1	WASHER CAPTIVE SEALING G1/2	
160	342720-0114	-		1	CONN. STR. GA-15-G1/2	

Pos	Part No	SP	UN	Qty	Description	Page No

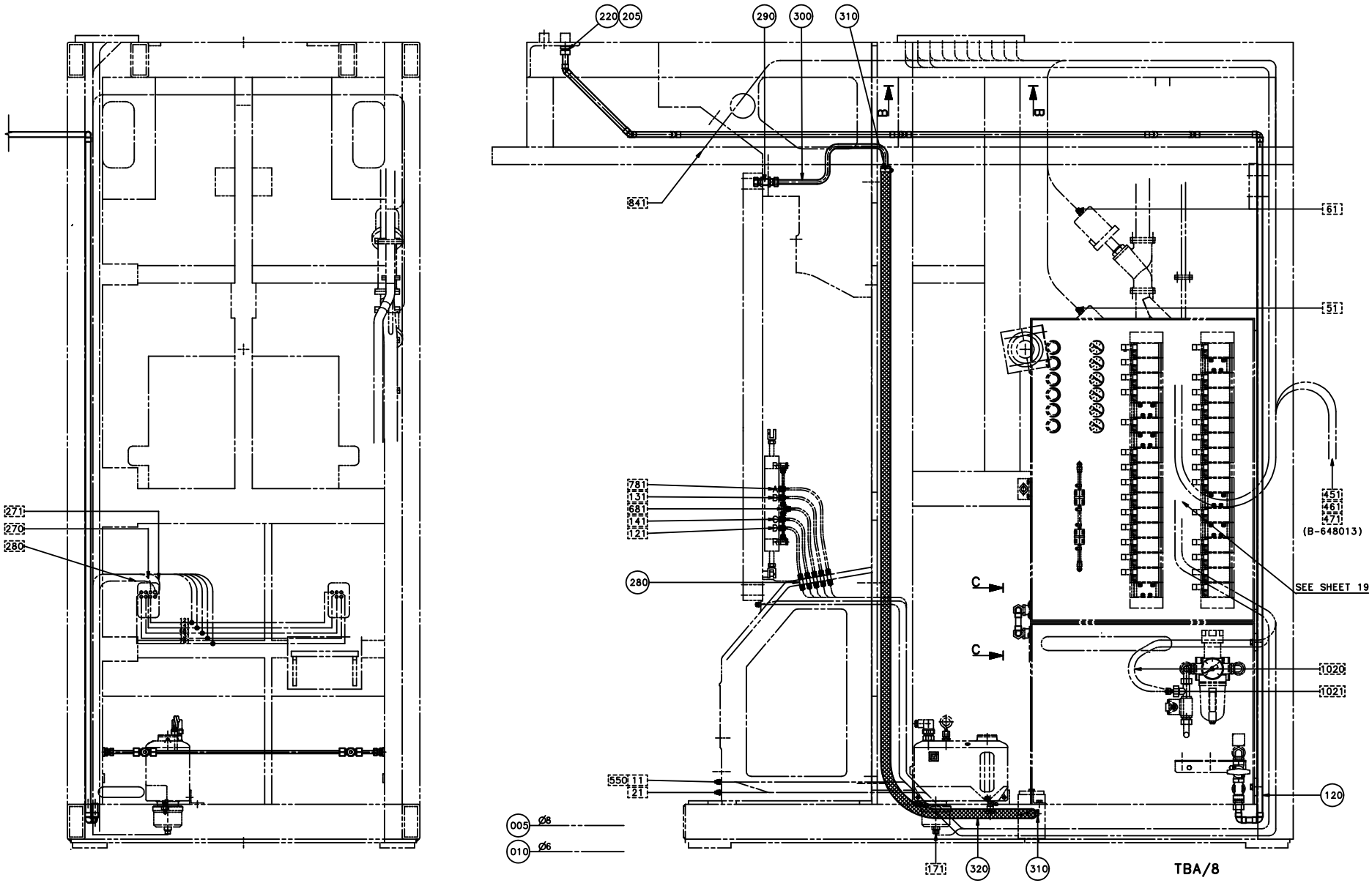
220
205
290
300
310
B
B
841
61
51
781
131
681
141
121
271
270
280
280
C
C
451
461
471
(B-648013)
SEE SHEET 19
1020
1021
120
550
11
21
005
Ø8
010
Ø6
171
320
310
TBA/8

ECM: 72533 - 19990617
Group number: 450788-0600
Assembly Drawing: 450788-17_1_AA

This list covers pages from 2-82 to 2-89

Pos	Part No	SP	UN	Qty	Description	Page No
TBA/8 NORMFIN (See drawing on pages: 2-82, 2-84)						
005	90166-0013	-	M	19	TUBE 8 MM PA BLUE	
010	90166-0081	-	M	105	TUBE 6 MM PA BLUE	
115	560881-0000	-		1	PIPE	
170	90224-0319	-		2	CONN. STR., 8-R1/4, EXT. THREAD	
190	90266-0007	-	MM	58	TUBE	
200	315233-0110	-		2	WASHER CAPTIVE SEALING G1/4	
265	342923-0114	-		1	STRAIGHT COUPL.,INT.THREADED 6/4-G1/4"	
275	90224-0316	-		1	CONNECTION	
290	90030-0030	-		1	CONN. BULKHEAD SV 12-L/SY	
300	527907-0000	-		1	PIPE	
310	342991-0104	-		2	HOSE CLIP,WORM DRIVE TYPE (23)-27	
320	90166-0060	-	MM	3000	HOSE 19/26-27 REINF.PVC	
TBA/8 REVFIN (See drawing on pages: 2-86, 2-88)						
005	90166-0013	-	M	19	TUBE 8 MM PA BLUE	
010	90166-0081	-	M	105	TUBE 6 MM PA BLUE	
115	560881-0000	-		1	PIPE	
170	90224-0319	-		2	CONN. STR., 8-R1/4, EXT. THREAD	
190	90266-0007	-	MM	58	TUBE	
200	315233-0110	-		2	WASHER CAPTIVE SEALING G1/4	
265	342923-0114	-		1	STRAIGHT COUPL.,INT.THREADED 6/4-G1/4"	
275	90224-0316	-		1	CONNECTION	
290	90030-0030	-		1	CONN. BULKHEAD SV 12-L/SY	
300	527907-0000	-		1	PIPE	
310	342991-0104	-		2	HOSE CLIP,WORM DRIVE TYPE (23)-27	
320	90166-0060	-	MM	3000	HOSE 19/26-27 REINF.PVC	
Common Parts						
080	544692-0000	-		1	PIPE	
120	544697-0000	-		1	PIPE	
140	450791-0000	-		1	PIPE	
180	90224-0323	-		1	CONNECTION	
205	315233-0113	-		1	WASHER CAPTIVE SEALING G1/2	
210	342713-0210	-		1	PLUG, EXT THREAD HEX SOCKET 8638-00-140	
220	342720-0114	-		1	CONN. STR. GA-15-G1/2	
240	342929-0121	-		1	STRAIGHT COUPLING,SOLDER 8/6-8	
260	90055-0100	-		5	Y-CONNECTION, 6-6	
280	342960-0112	-		10	BULKHEAD COUPLING 6/4	

Pos	Part No	SP	UN	Qty	Description	Page No

Machine Type | Group Description | Used-In | Group Number | Page No

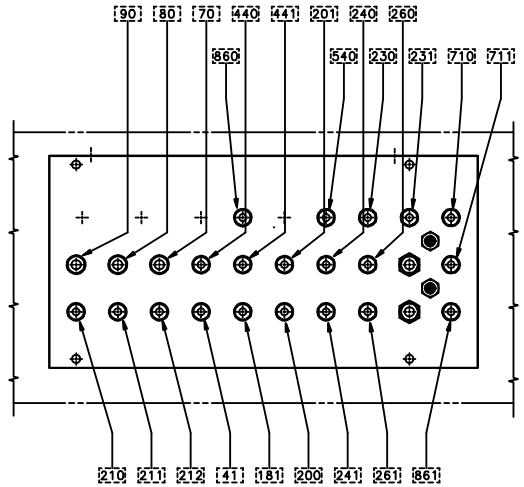

B-B SCALE 1:2

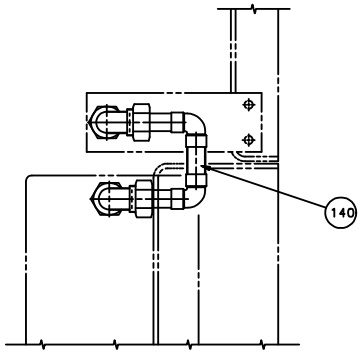

C-C SCALE 1:2

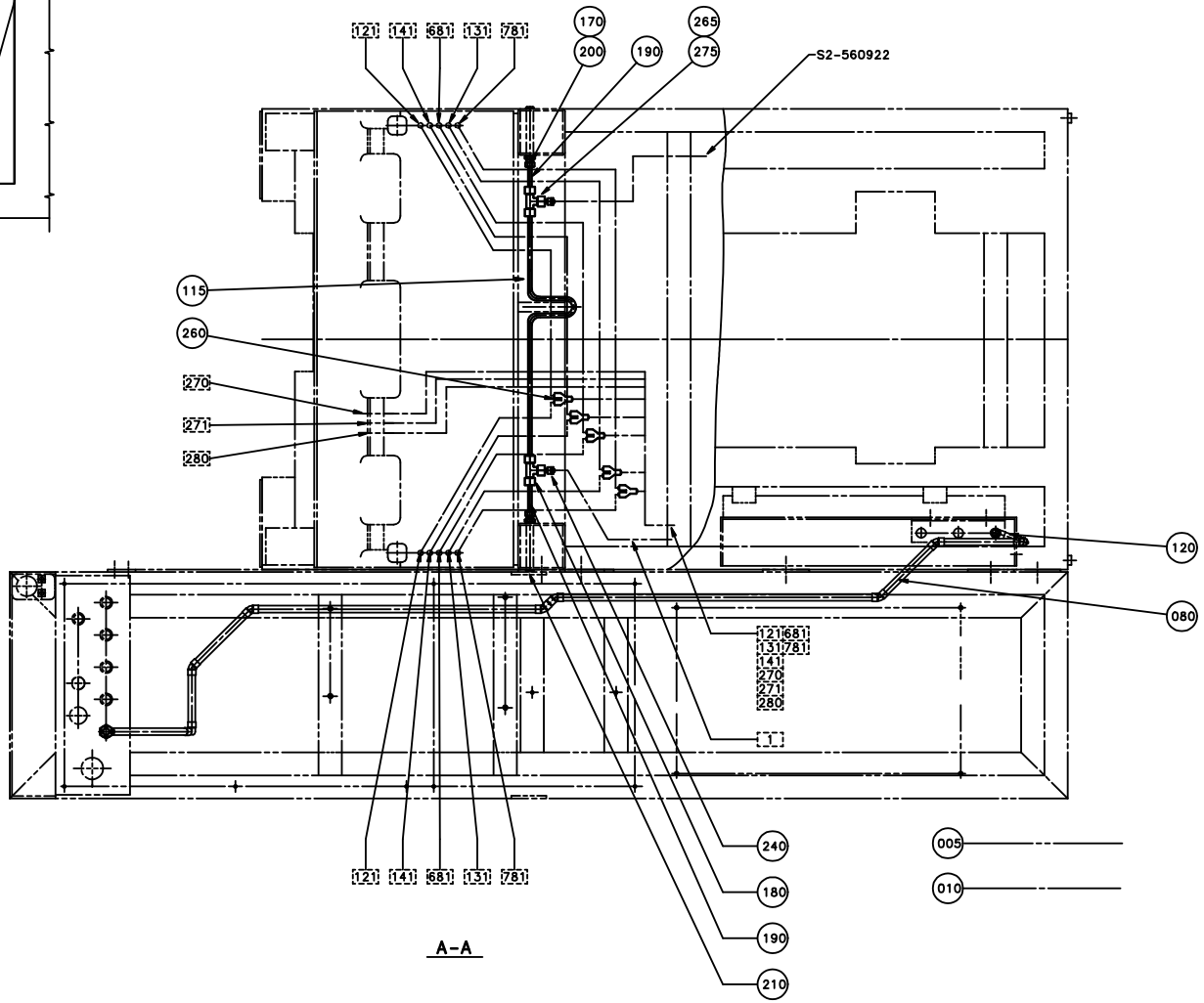

A-A

Pos	Part No	SP	UN	Qty	Description	Page No
TBA/8 NORMFIN (See drawing on pages: 2-82, 2-84)						
005	90166-0013	-	M	19	TUBE 8 MM PA BLUE	
010	90166-0081	-	M	105	TUBE 6 MM PA BLUE	
115	560881-0000	-		1	PIPE	
170	90224-0319	-		2	CONN. STR., 8-R1/4, EXT. THREAD	
190	90266-0007	-	MM	58	TUBE	
200	315233-0110	-		2	WASHER CAPTIVE SEALING G1/4	
265	342923-0114	-		1	STRAIGHT COUPL.,INT.THREADED 6/4-G1/4"	
275	90224-0316	-		1	CONNECTION	
290	90030-0030	-		1	CONN. BULKHEAD SV 12-L/SY	
300	527907-0000	-		1	PIPE	
310	342991-0104	-		2	HOSE CLIP,WORM DRIVE TYPE (23)-27	
320	90166-0060	-	MM	3000	HOSE 19/26-27 REINF.PVC	
TBA/8 REVFIN (See drawing on pages: 2-86, 2-88)						
005	90166-0013	-	M	19	TUBE 8 MM PA BLUE	
010	90166-0081	-	M	105	TUBE 6 MM PA BLUE	
115	560881-0000	-		1	PIPE	
170	90224-0319	-		2	CONN. STR., 8-R1/4, EXT. THREAD	
190	90266-0007	-	MM	58	TUBE	
200	315233-0110	-		2	WASHER CAPTIVE SEALING G1/4	
265	342923-0114	-		1	STRAIGHT COUPL.,INT.THREADED 6/4-G1/4"	
275	90224-0316	-		1	CONNECTION	
290	90030-0030	-		1	CONN. BULKHEAD SV 12-L/SY	
300	527907-0000	-		1	PIPE	
310	342991-0104	-		2	HOSE CLIP,WORM DRIVE TYPE (23)-27	
320	90166-0060	-	MM	3000	HOSE 19/26-27 REINF.PVC	
Common Parts						
080	544692-0000	-		1	PIPE	
120	544697-0000	-		1	PIPE	
140	450791-0000	-		1	PIPE	
180	90224-0323	-		1	CONNECTION	
205	315233-0113	-		1	WASHER CAPTIVE SEALING G1/2	
210	342713-0210	-		1	PLUG, EXT THREAD HEX SOCKET 8638-00-140	
220	342720-0114	-		1	CONN. STR. GA-15-G1/2	
240	342929-0121	-		1	STRAIGHT COUPLING,SOLDER 8/6-8	
260	90055-0100	-		5	Y-CONNECTION, 6-6	
280	342960-0112	-		10	BULKHEAD COUPLING 6/4	

Pos	Part No	SP	UN	Qty	Description	Page No

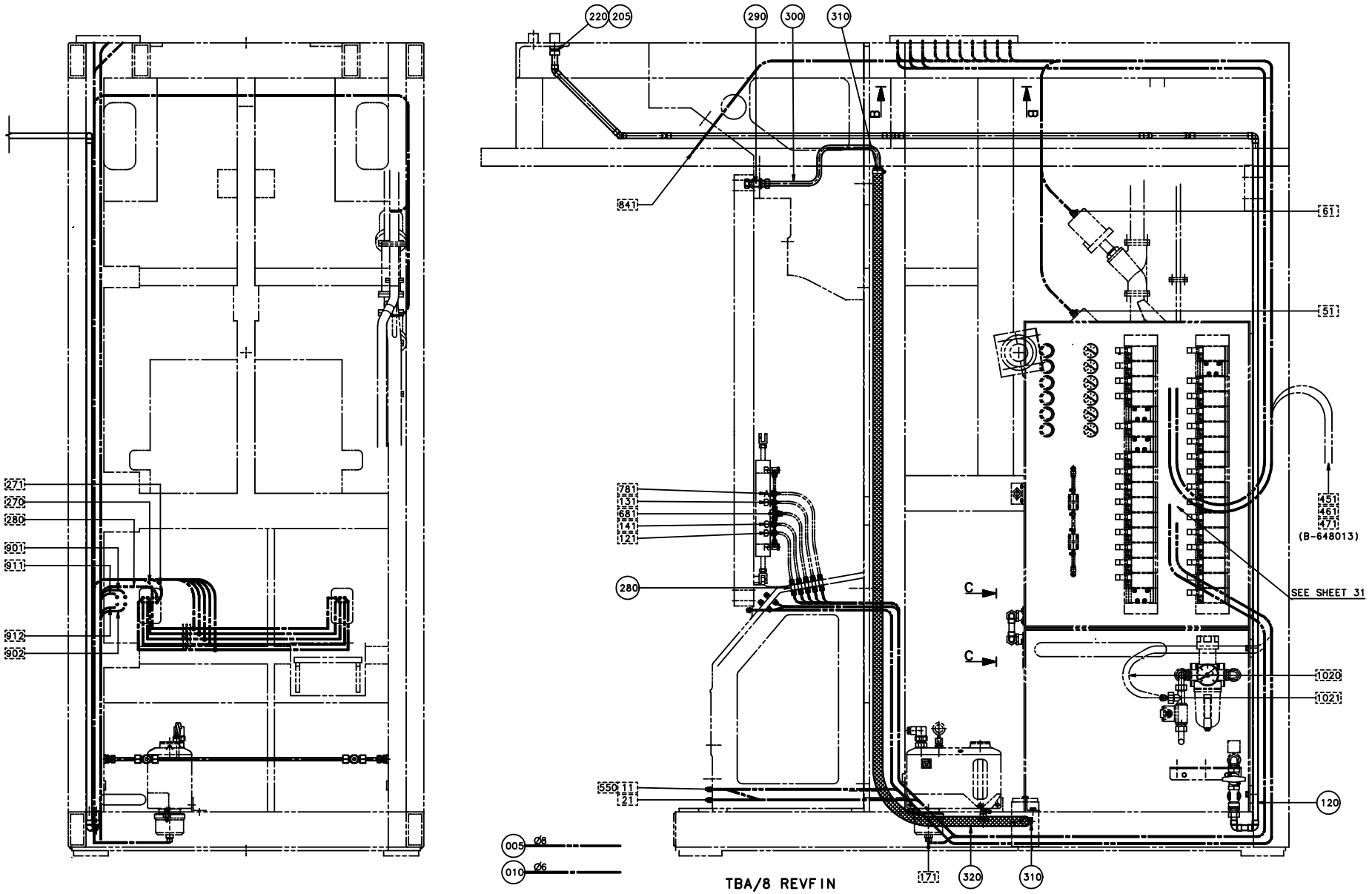
220
205
290
300
310
B
B
641
61
51
781
131
681
141
121
280
451
461
471
(B-648013)
SEE SHEET 31
C
C
1020
1021
120
550
11
21
005
Ø8
010
Ø6
171
320
310
TBA/8 REVFIN
271
270
280
901
911
912
902

ECM: 72533 - 19990617
Group number: 450788-0600
Assembly Drawing: 450788-29_1_AA

This list covers pages from 2-82 to 2-89

Pos	Part No	SP	UN	Qty	Description	Page No
TBA/8 NORMFIN (See drawing on pages: 2-82, 2-84)						
005	90166-0013	-	M	19	TUBE 8 MM PA BLUE	
010	90166-0081	-	M	105	TUBE 6 MM PA BLUE	
115	560881-0000	-		1	PIPE	
170	90224-0319	-		2	CONN. STR., 8-R1/4, EXT. THREAD	
190	90266-0007	-	MM	58	TUBE	
200	315233-0110	-		2	WASHER CAPTIVE SEALING G1/4	
265	342923-0114	-		1	STRAIGHT COUPL.,INT.THREADED 6/4-G1/4"	
275	90224-0316	-		1	CONNECTION	
290	90030-0030	-		1	CONN. BULKHEAD SV 12-L/SY	
300	527907-0000	-		1	PIPE	
310	342991-0104	-		2	HOSE CLIP,WORM DRIVE TYPE (23)-27	
320	90166-0060	-	MM	3000	HOSE 19/26-27 REINF.PVC	
TBA/8 REVFIN (See drawing on pages: 2-86, 2-88)						
005	90166-0013	-	M	19	TUBE 8 MM PA BLUE	
010	90166-0081	-	M	105	TUBE 6 MM PA BLUE	
115	560881-0000	-		1	PIPE	
170	90224-0319	-		2	CONN. STR., 8-R1/4, EXT. THREAD	
190	90266-0007	-	MM	58	TUBE	
200	315233-0110	-		2	WASHER CAPTIVE SEALING G1/4	
265	342923-0114	-		1	STRAIGHT COUPL.,INT.THREADED 6/4-G1/4"	
275	90224-0316	-		1	CONNECTION	
290	90030-0030	-		1	CONN. BULKHEAD SV 12-L/SY	
300	527907-0000	-		1	PIPE	
310	342991-0104	-		2	HOSE CLIP,WORM DRIVE TYPE (23)-27	
320	90166-0060	-	MM	3000	HOSE 19/26-27 REINF.PVC	
Common Parts						
080	544692-0000	-		1	PIPE	
120	544697-0000	-		1	PIPE	
140	450791-0000	-		1	PIPE	
180	90224-0323	-		1	CONNECTION	
205	315233-0113	-		1	WASHER CAPTIVE SEALING G1/2	
210	342713-0210	-		1	PLUG, EXT THREAD HEX SOCKET 8638-00-140	
220	342720-0114	-		1	CONN. STR. GA-15-G1/2	
240	342929-0121	-		1	STRAIGHT COUPLING,SOLDER 8/6-8	
260	90055-0100	-		5	Y-CONNECTION, 6-6	
280	342960-0112	-		10	BULKHEAD COUPLING 6/4	

Pos	Part No	SP	UN	Qty	Description	Page No

Machine Type | Group Description | Used-In | Group Number | Page No

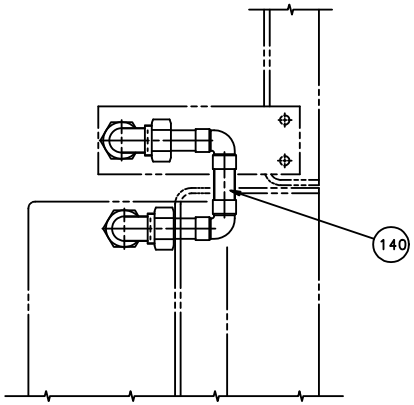

C-C SCALE 1:2

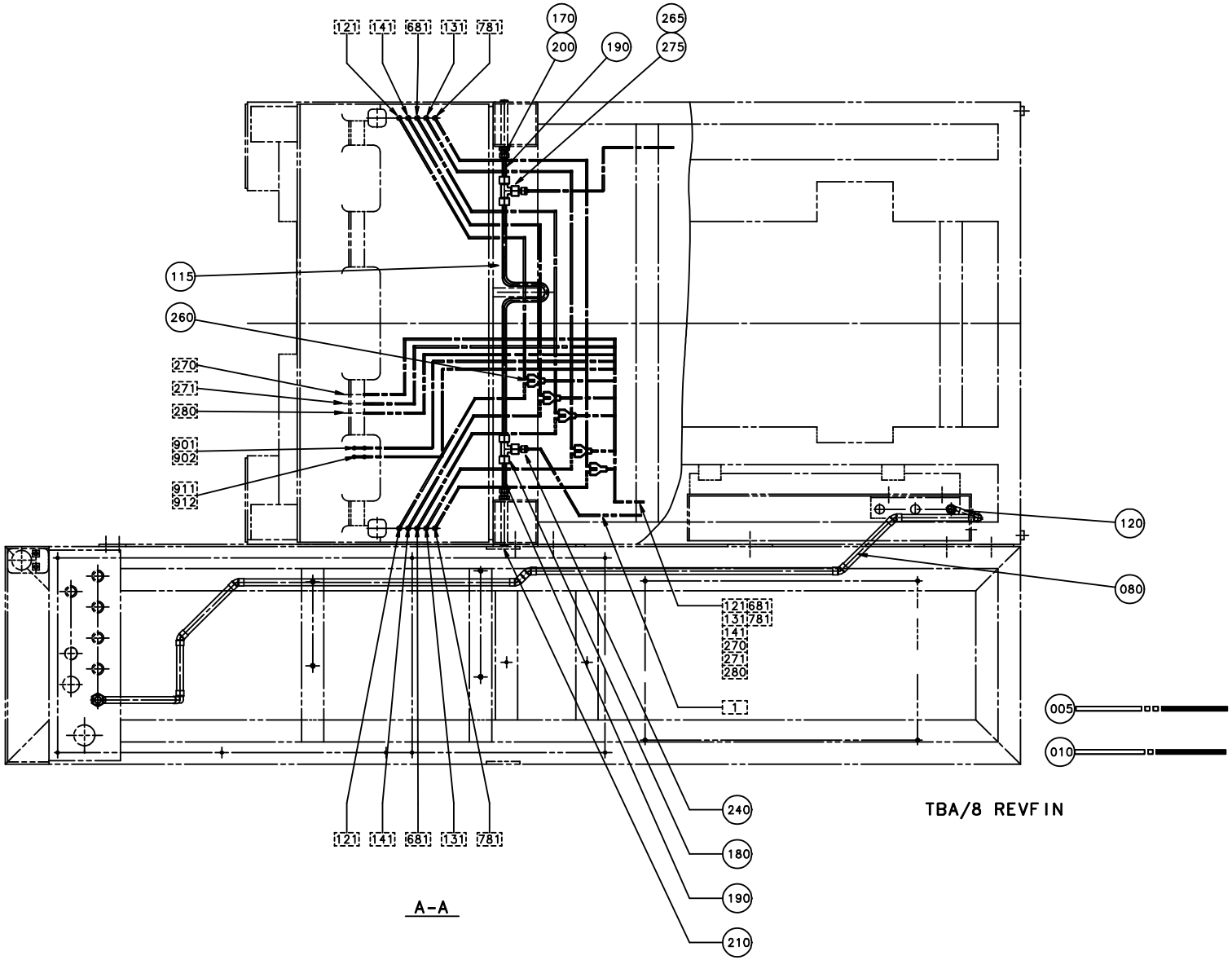

A-A

ECM: 72533 - 19990617
Group number: 450788-0600
Assembly Drawing: 450788-30_1_AA

This list covers pages from 2-82 to 2-89

Pos	Part No	SP	UN	Qty	Description	Page No
TBA/8 NORMFIN (See drawing on pages: 2-82, 2-84)						
005	90166-0013	-	M	19	TUBE 8 MM PA BLUE	
010	90166-0081	-	M	105	TUBE 6 MM PA BLUE	
115	560881-0000	-		1	PIPE	
170	90224-0319	-		2	CONN. STR., 8-R1/4, EXT. THREAD	
190	90266-0007	-	MM	58	TUBE	
200	315233-0110	-		2	WASHER CAPTIVE SEALING G1/4	
265	342923-0114	-		1	STRAIGHT COUPL.,INT.THREADED 6/4-G1/4"	
275	90224-0316	-		1	CONNECTION	
290	90030-0030	-		1	CONN. BULKHEAD SV 12-L/SY	
300	527907-0000	-		1	PIPE	
310	342991-0104	-		2	HOSE CLIP,WORM DRIVE TYPE (23)-27	
320	90166-0060	-	MM	3000	HOSE 19/26-27 REINF.PVC	
TBA/8 REVFIN (See drawing on pages: 2-86, 2-88)						
005	90166-0013	-	M	19	TUBE 8 MM PA BLUE	
010	90166-0081	-	M	105	TUBE 6 MM PA BLUE	
115	560881-0000	-		1	PIPE	
170	90224-0319	-		2	CONN. STR., 8-R1/4, EXT. THREAD	
190	90266-0007	-	MM	58	TUBE	
200	315233-0110	-		2	WASHER CAPTIVE SEALING G1/4	
265	342923-0114	-		1	STRAIGHT COUPL.,INT.THREADED 6/4-G1/4"	
275	90224-0316	-		1	CONNECTION	
290	90030-0030	-		1	CONN. BULKHEAD SV 12-L/SY	
300	527907-0000	-		1	PIPE	
310	342991-0104	-		2	HOSE CLIP,WORM DRIVE TYPE (23)-27	
320	90166-0060	-	MM	3000	HOSE 19/26-27 REINF.PVC	
Common Parts						
080	544692-0000	-		1	PIPE	
120	544697-0000	-		1	PIPE	
140	450791-0000	-		1	PIPE	
180	90224-0323	-		1	CONNECTION	
205	315233-0113	-		1	WASHER CAPTIVE SEALING G1/2	
210	342713-0210	-		1	PLUG, EXT THREAD HEX SOCKET 8638-00-140	
220	342720-0114	-		1	CONN. STR. GA-15-G1/2	
240	342929-0121	-		1	STRAIGHT COUPLING,SOLDER 8/6-8	
260	90055-0100	-		5	Y-CONNECTION, 6-6	
280	342960-0112	-		10	BULKHEAD COUPLING 6/4	

Pos	Part No	SP	UN	Qty	Description	Page No

Machine Type | Group Description | Used-In | Group Number | Page No

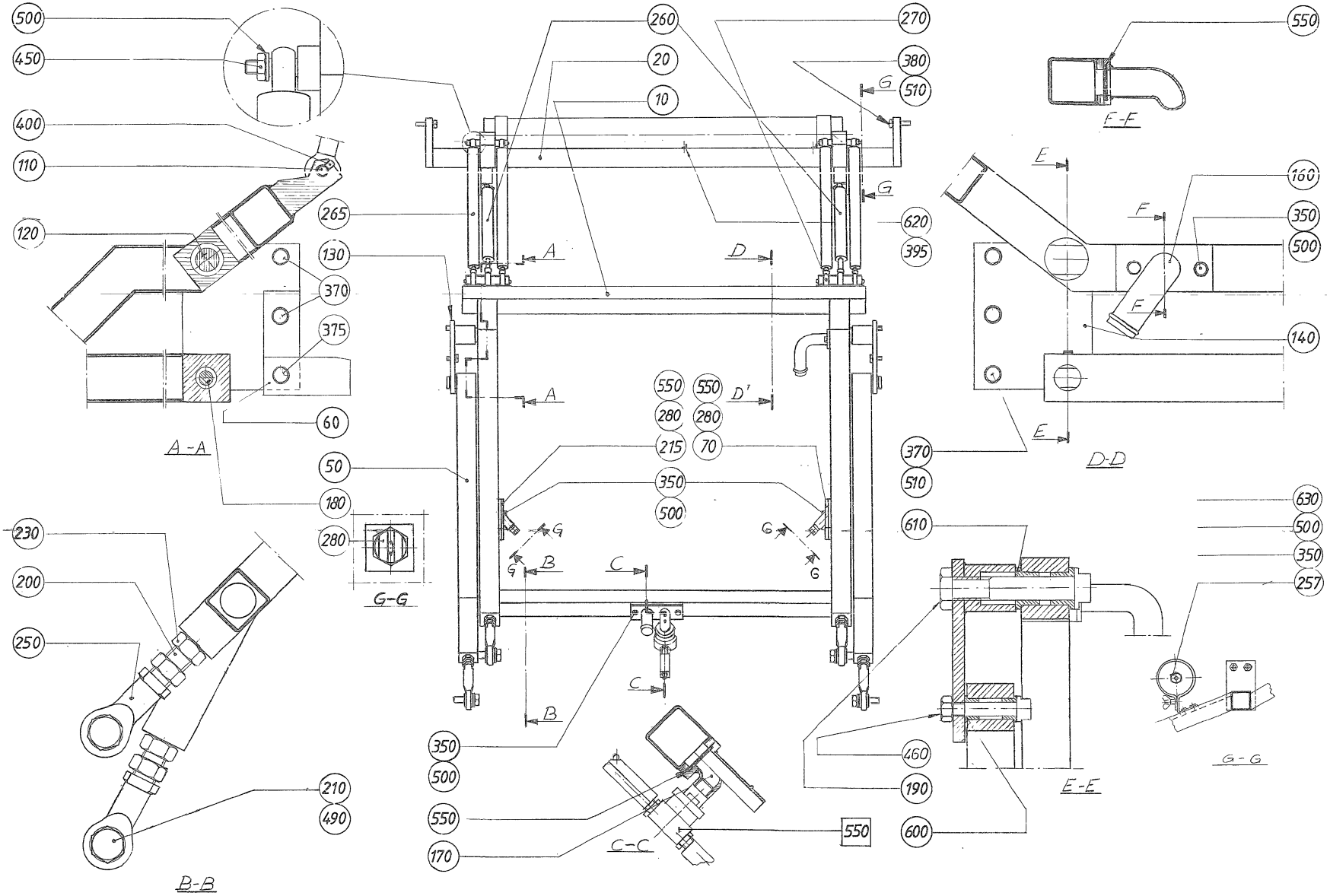
500
450
400
110
120
265
130
370
375
60
A-A
50
180
280
G-G
230
200
250
210
490
B-B
260
20
10
270
380
510
620
395
A
D
A
D'
550
280
215
70
350
500
G
B
C
C
B
350
500
550
170
C-C
550
460
190
600
E-E
550
F-F
160
350
500
140
E
F
D-D
370
510
610
630
500
350
257
G-G

ECM: 72091 - 19981216
Group number: 450840-0400
Assembly Drawing: 450840-4_1_AA

Pos	Part No	SP	UN	Qty	Description	Page No
-						
010	493021-0000	-		1	ARM	
020	450841-0000	-		1	CANTILEVER	
050	493022-0000	-		2	ARM	
060	532371-0000	-		1	STOP LUG	
070	534486-0000	-		1	PIPE HOLDER	
110	285825-0000	D		2	SHAFT	
120	484219-0000	D		2	SHAFT	
130	484220-0000	D		1	BRACKET	
140	484221-0000	D		1	BRACKET	
160	285979-0000	-		1	PIPE	
170	476894-0000	-		1	PIPE HOLDER	
180	484222-0000	D		2	SHAFT	
190	484223-0000	D		2	NUT	
200	457354-0000	D		4	SCREW	
210	297770-0000	D		4	SCREW	
215	442566-0000	-		1	BRACKET	
230	457355-0000	-		4	NUT	
250	90115-0111	-		4	ROD END, ID=22 MM, M22X1,5 LH	
257	B90164-0003	D		1	LIGHT FIXTURE	
	90297-0002	*C*		*1*	*FLUORESCENT TUBE, TLD 18/33*	
260	90347-0036	C		2	GAS SPRING E0A1-52-195-460--001/900N	
265	90347-0038	C		4	GAS SPRINGE 0A1-52-195-460--002/1075N	
270	90347-0300	-		6	ROD END, ID=10 MM, M10 FOR 90347-36;-38	
280	90424-0035	C		2	SPRAY NOZZLE 95 DEG	
350	312105-0368	-		12	SCREW M6S M6X16 A280	
370	312105-0493	-		5	SCREW M6S ISO 4017 M10X25 A480	
375	312105-0495	-		1	SCREW M6S ISO 4017 M10X30 A480	
380	312105-0497	-		2	SCREW M6S ISO 4017 M10X35 A480	
395	312125-0285	-		4	SLOTTED CHEESE HEAD SCREW MCS 4X6 SS	
400	312318-0362	-		2	SCREW ISO4029 M6X8 A4	
450	312605-0316	-		6	HEXAGON NUT, M6M M6 A280	
460	312605-0322	-		2	HEXAGON NUT, M6M M12 A280	
490	315103-0195	-		4	WASHER PLAIN, BRB, 23/40,H=3 NI PL BR	
500	315105-0153	-		18	WASHER BRB6,4X12RFR	
510	315105-0173	-		10	WASHER BRB10,5X22RFR	
550	315202-0216	C		5	O-RING 22,2X3 MM	
600	321101-0173	-		4	FLANGE BUS 12F7X12	
610	321101-0233	D		4	FLANGE BUSHING, 20X28X20 MM	
620	352135-0201	-		4	CLIP, 12 MM, 913.012	
630	352136-0127	-		1	GLAND FITTING PR 18,6	
F550	A594613-0100	D		1	CLEANING HEAD	**2-93**

Machine Type	Group Description	Used-In	Group Number	Page No

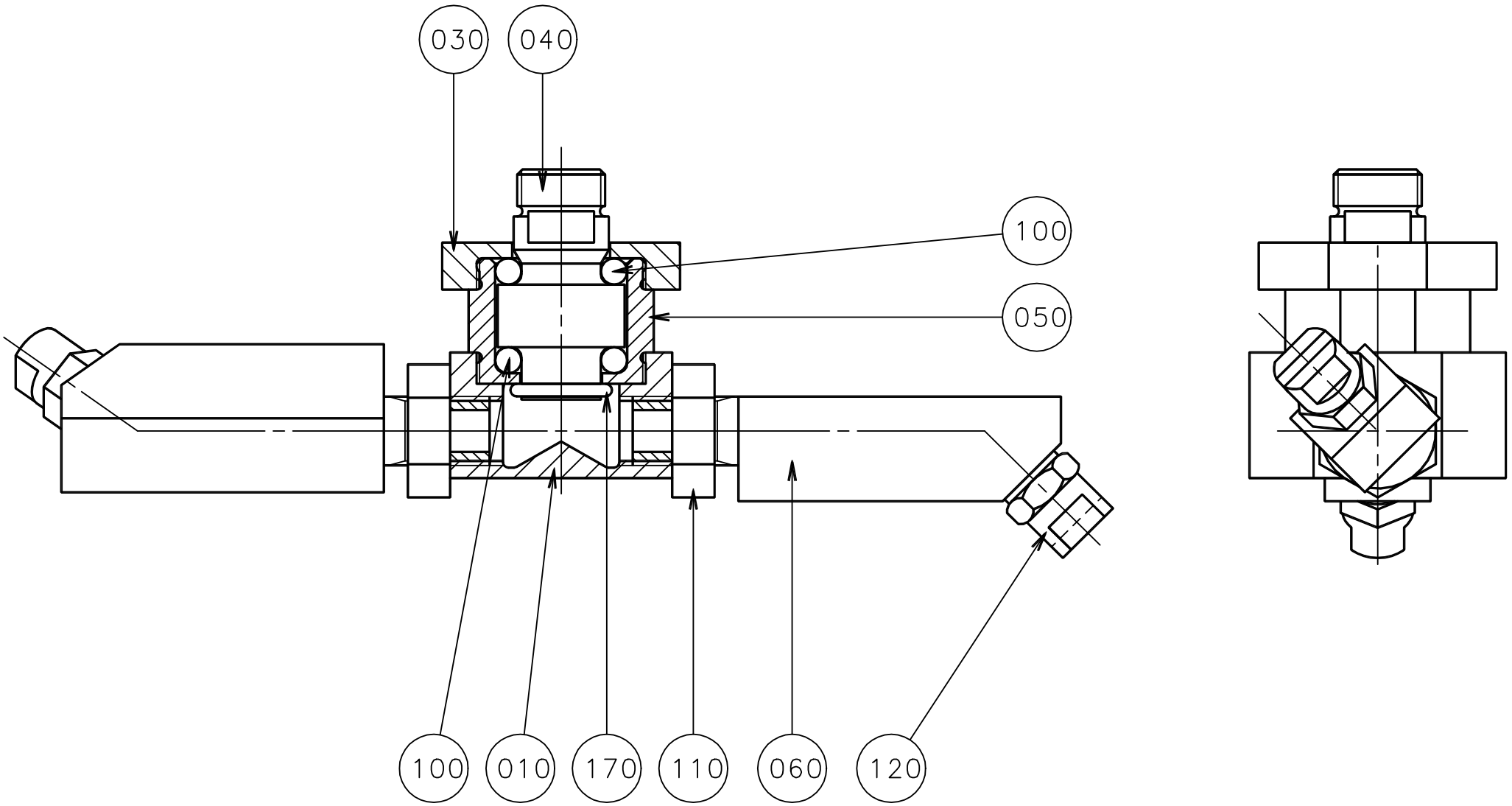
030
040
100
050
100
010
170
110
060
120

ECM: 72091 - 19981216
Group number: 594613-0100
Assembly Drawing: 594613-1_1_AA

Pos	Part No	SP	UN	Qty	Description	Page No
-						
010	440600-0000	C		1	ROTOR	
030	534880-0000	C		1	END SECTION	
040	534878-0000	C		1	SHAFT	
050	534879-0000	C		1	BEARING HOUSING	
060	440604-0001	C		2	PIPE	
100	90090-0020	C		24	BALL, D=5 MM	
110	90330-0034	-		2	NUT, HEXAGON, G1/4	
120	90424-0026	C		2	SPRAY NOZZLE 95 DEG	
170	315202-0211	C		1	O-RING 13,3X2,4 MM	

Pos	Part No	SP	UN	Qty	Description	Page No

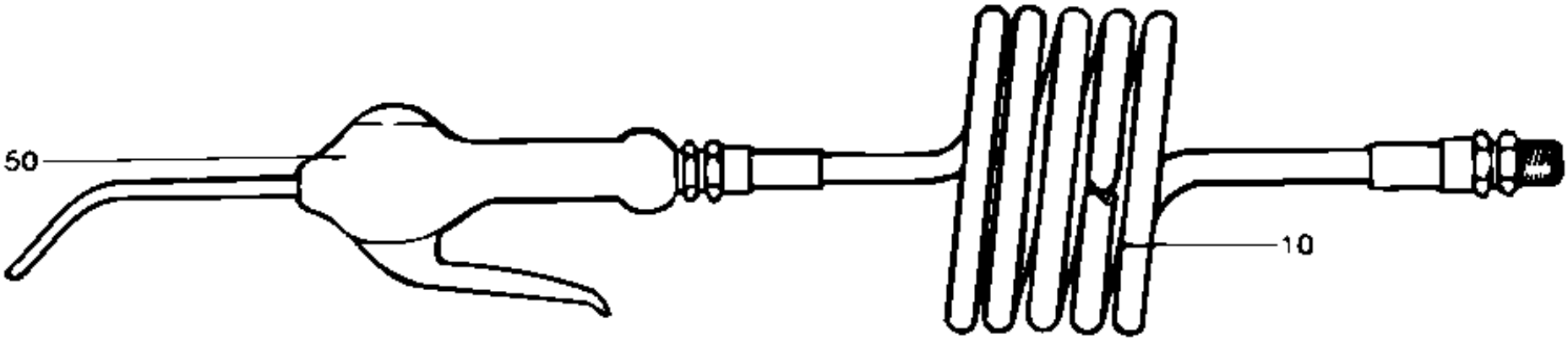
50
10

ECM: 72091 - 19981216
Group number: 230922-0100
Assembly Drawing: 230922-1_1_AA

Pos	Part No	SP	UN	Qty	Description	Page No
-						
010	90152-0016	C		1	HOSE (SPIRAL)	
050	90243-0061	C		1	AIR GUN, CEJN SERIE 204 ED: 90459-0173	

Pos	Part No	SP	UN	Qty	Description	Page No

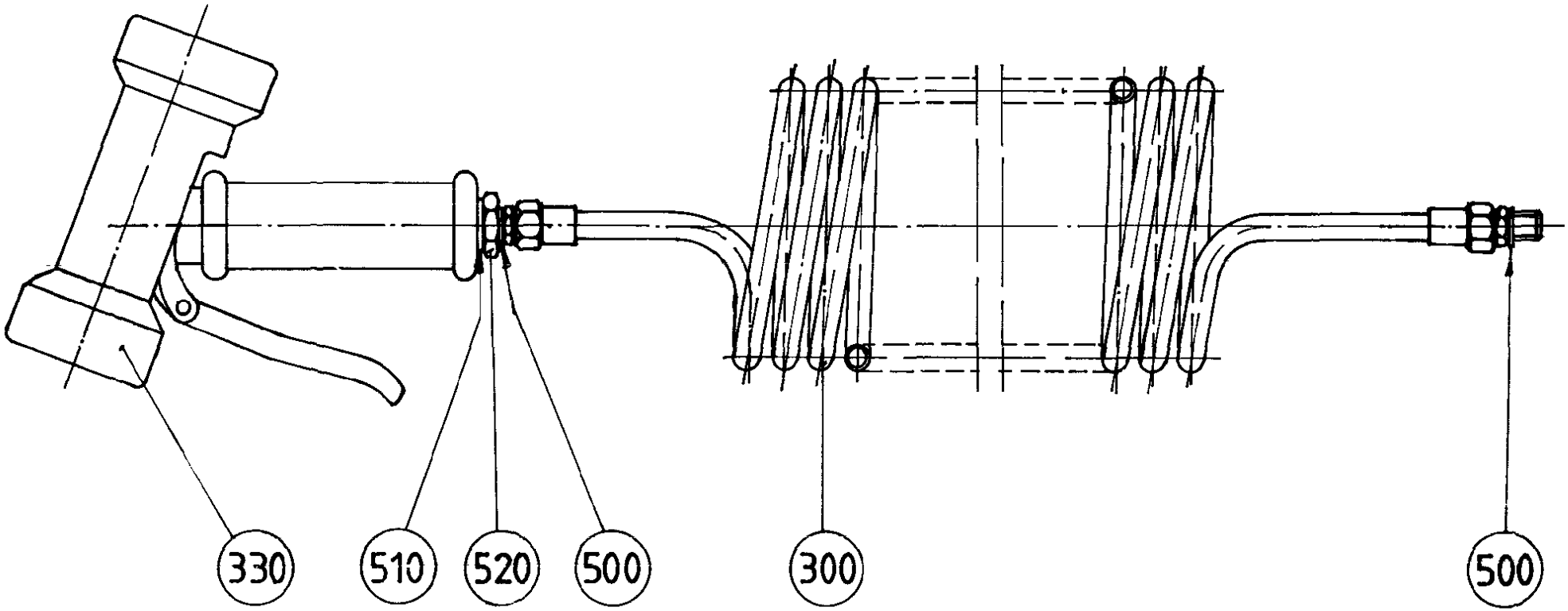
330
510
520
500
300
500

ECM: - -
Group number: 493614-0100
Assembly Drawing: 493614-1_1_AA

Pos	Part No	SP	UN	Qty	Description	Page No
-						
300	90152-0017	C		1	HOSE (SPIRAL)	
330	90426-0003	C		1	HAND SHOWER	
500	315233-0110	-		2	WASHER CAPTIVE SEALING G1/4	
510	315233-0113	-		1	WASHER CAPTIVE SEALING G1/2	
520	342701-0205	-		1	BUSHING,INT./EXT.G-THREAD G1/2"-G1/4"	

Pos	Part No	SP	UN	Qty	Description	Page No

Machine Type | Group Description | Used-In | Group Number | Page No

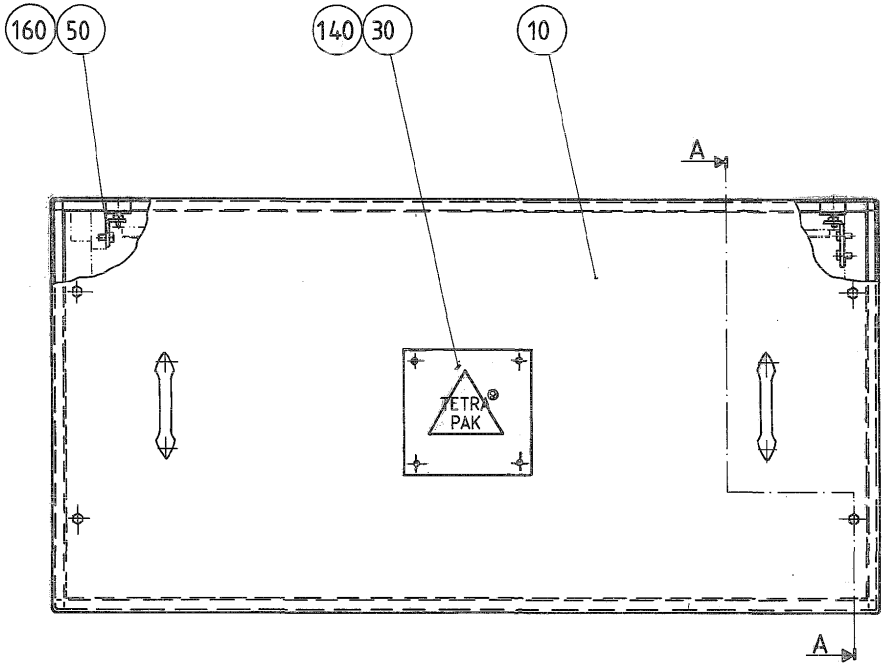

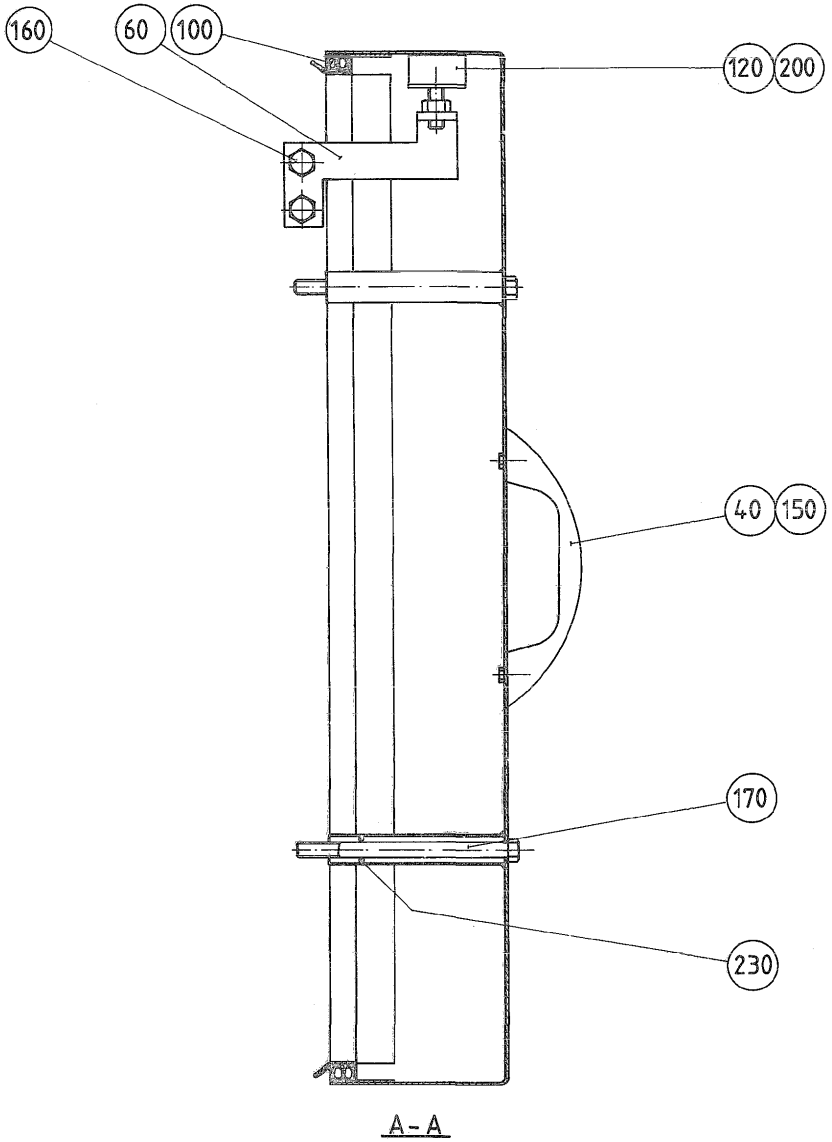

A - A

ECM: 72091 - 19981216
Group number: 269322-0300
Assembly Drawing: 269322-3_1_AA

Pos	Part No	SP	UN	Qty	Description	Page No
-						
010	549045-0000	-		1	HATCH	
030	544539-0000	D		1	HOUSEMARK REPBY 0574658-0000	
040	7309-0000	-		2	HANDLE	
050	282507-0000	-		1	BRACKET LEFT	
060	450869-0000	-		1	BRACKET RIGHT	
100	90143-0049	D	MM	4000	RUBBERSTRIP 11X21MM	
120	90347-0004	-		2	VIBRATION DAMPER D=30 TH=M8 H=17 H2=21MM	
140	311520-0420	-		4	RIVET, BLANK 3,2X4	
150	312101-0364	-		4	SCREW M6S M6X10 FZB	
160	312101-0449	-		4	SCREW M6S M8X16 FZB	
170	312101-0473	-		4	SCREW M6S M8X110 FZB	
200	312601-0318	-		2	NUT M6M8FZB	
230	315202-0206	-		4	O-RING 7,3X2,4 MM	

Pos	Part No	SP	UN	Qty	Description	Page No

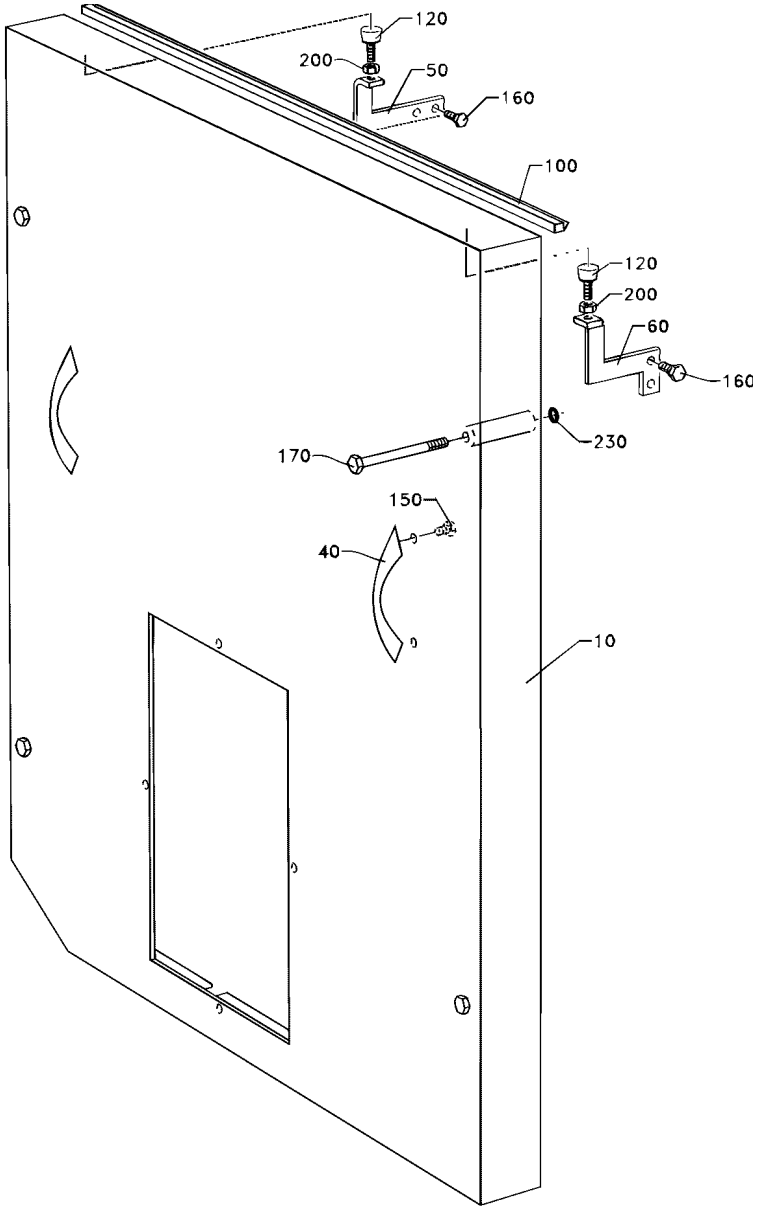
120
200
50
160
100
120
200
60
160
170
230
150
40
10

ECM: 72091 - 19981216
Group number: 269324-0400
Assembly Drawing: 269324-4_1_AA

Pos	Part No	SP	UN	Qty	Description	Page No
TBA/8						
010	560880-0000	-		1	HATCH	
Common Parts						
040	7309-0000	-		2	HANDLE	
050	282507-0000	-		1	BRACKET LEFT	
060	450869-0000	-		1	BRACKET RIGHT	
100	90143-0049	D	MM	5000	RUBBERSTRIP 11X21MM	
120	90347-0004	-		2	VIBRATION DAMPER D=30 TH=M8 H=17 H2=21MM	
150	312101-0364	-		4	SCREW M6S M6X10 FZB	
160	312101-0449	-		4	SCREW M6S M8X16 FZB	
170	312101-0473	-		4	SCREW M6S M8X110 FZB	
200	312601-0318	-		2	NUT M6M8FZB	
230	315202-0206	-		4	O-RING 7,3X2,4 MM	

Pos	Part No	SP	UN	Qty	Description	Page No

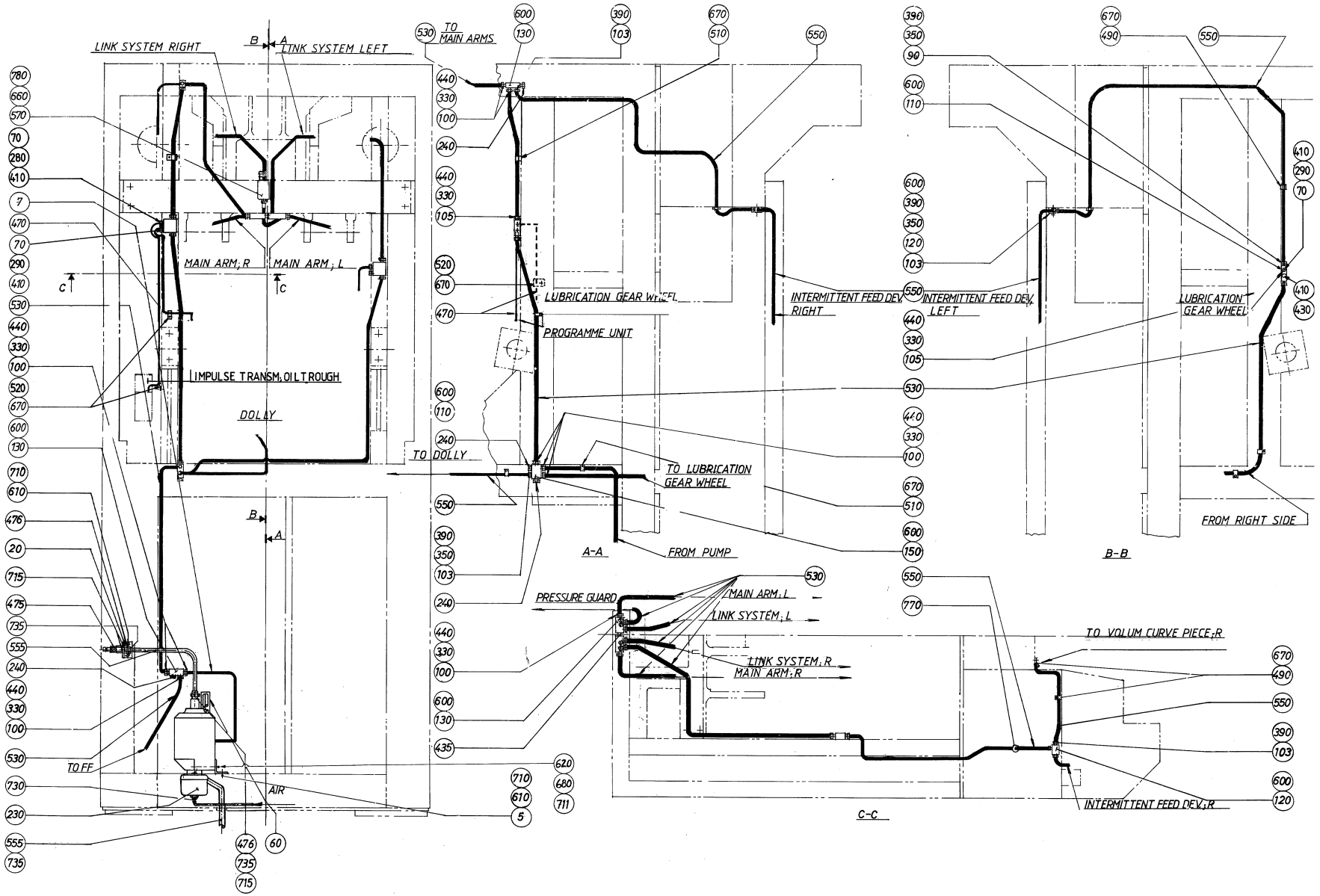
LINK SYSTEM RIGHT
LINK SYSTEM LEFT
TO MAIN ARMS
MAIN ARM;R
MAIN ARM;L
IMPULSE TRANSM.OIL TROUGH
DOLLY
TO DOLLY
LUBRICATION GEAR WHEEL
PROGRAMME UNIT
INTERMITTENT FEED DEV. RIGHT
INTERMITTENT FEED DEV. LEFT
TO LUBRICATION GEAR WHEEL
FROM PUMP
FROM RIGHT SIDE
A-A
B-B
C-C
PRESSURE GUARD
MAIN ARM;L
LINK SYSTEM;L
LINK SYSTEM;R
MAIN ARM;R
TO VOLUM CURVE PIECE;R
INTERMITTENT FEED DEV;R
TO FF
AIR

ECM: 72091 - 19981216
Group number: 279979-0500
Assembly Drawing: 279979-5_1_AA

Pos	Part No	SP	UN	Qty	Description	Page No
-						
005	547902-0000	-		1	BRACKET	
007	547904-0000	-		1	TUBE	
020	293198-0002	-		1	BRACKET	
060	90012-0063	-		1	CABLE GLAND PR 15,2	
070	90028-0020	C		3	CONE TUBE 2,5MM	
090	90028-0021	C		1	CONE TUBE 4 MM	
100	90028-0022	C		14	CONE TUBE 6 MM	
103	90028-0024	C		8	CONE TUBE 4 MM	
105	90028-0025	C		3	CONE TUBE 6 MM	
110	90032-0038	-		2	BLOCK 2 WAYS	
120	90032-0043	-		2	DISTRIBUTION BLOCK 3 WAYS	
130	90032-0044	-		4	DISTRIBUTION BLOCK 4 WAYS	
150	90032-0046	-		1	DISTRIBUTION BLOCK 6 WAYS	
230	B90048-0034	C		1	OIL PUMP INCL. CONTAINER 4,5 L	
	90048-0450	*-*		*1*	*SPARE PARTS KIT*	
	90274-0052	*-*		*1*	*LEVEL GUARD, 10VA/250VDC/0,5A*	
240	90087-0019	-		4	PLUG M10X1 STAINLESS	
280	90092-0052	C		1	METERING VALVE 10 MM3	
290	90092-0053	C		2	METERING VALVE 30 MM3	
330	90134-0030	C		16	SLEEVE FOR PLASTIC TUBE	
350	90134-0031	C		9	SLEEVE FOR PLASTIC TUBE	
390	90134-0038	C		9	BUSHING/NUT INLET/OUTLET 4 MM	
410	90134-0039	C		4	BUSHING VALVE CONNECTION 2,5 MM	
430	90134-0052	-		1	PLUG DOSING BLOCK	
435	90134-0054	-		1	BLOCK CONNECTION M10X1	
440	90134-0055	C		14	BUSHING/NUT INLET/OUTLET 6 MM	
470	90266-0019	-	MM	800	PIPE	
475	90163-0064	-		1	QUICK COUPLING, (M) LP-006-2-WR517	
476	90163-0050	-		2	QUICK COUPLING, (M) 5089 / 9	
490	90165-0003	-		5	PIPE CLIP FOR TUBE D=4 MM	
510	90165-0005	-		13	PIPE CLIP FOR TUBE D=6 MM	
520	90165-0022	-		3	PIPE CLIP, FOR TUBE D=2,5 MM, B-3570	
530	90166-0108	-	M	6	TUBE 6 MM PA,TRANSP.	
550	90166-0109	-	M	7	TUBE 4 MM PA,TRANSP.	
555	90166-0113	-	MM	900	HOSE	
570	90274-0084	C		1	PRESSURE GUARD, 1800 KPA	
600	312101-0295	-		18	SCREW M6S M4X20 FZB	
610	312101-0366	-		6	SCREW M6S M6X12 FZB	
620	312101-0467	-		2	SCREW M6S M8X80 FZB	
660	312111-0297	-		2	SCREW HEX.SOCK.HD.MC6S-TT 4X25 88 FZB	
670	312121-0285	-		20	SLOTTED CHEESE HEAD SCREW MCS 4X6 FZB	
680	312601-0318	-		2	NUT M6M8FZB	
710	315101-0153	-		6	WASHER PLAIN, BRB, 6,4/12 H=1,5	
711	315101-0165	-		2	WASHER PLAIN, BRB, 8,4/16 H=1,5	
715	315233-0111	-		2	WASHER CAPTIVE SEALING G3/8	
730	342931-0113	-		1	ELBOW 90 COUPL.,EXT.THREAD 6/4-G1/8"	
735	342991-0100	-		3	HOSE CLIP,WORM DRIVE TYPE 10-13	
770	352101-0103	-		2	LEAD-IN, PR18,6/PG11, E-1457518	

Machine Type | Group Description | Used-In | Group Number | Page No

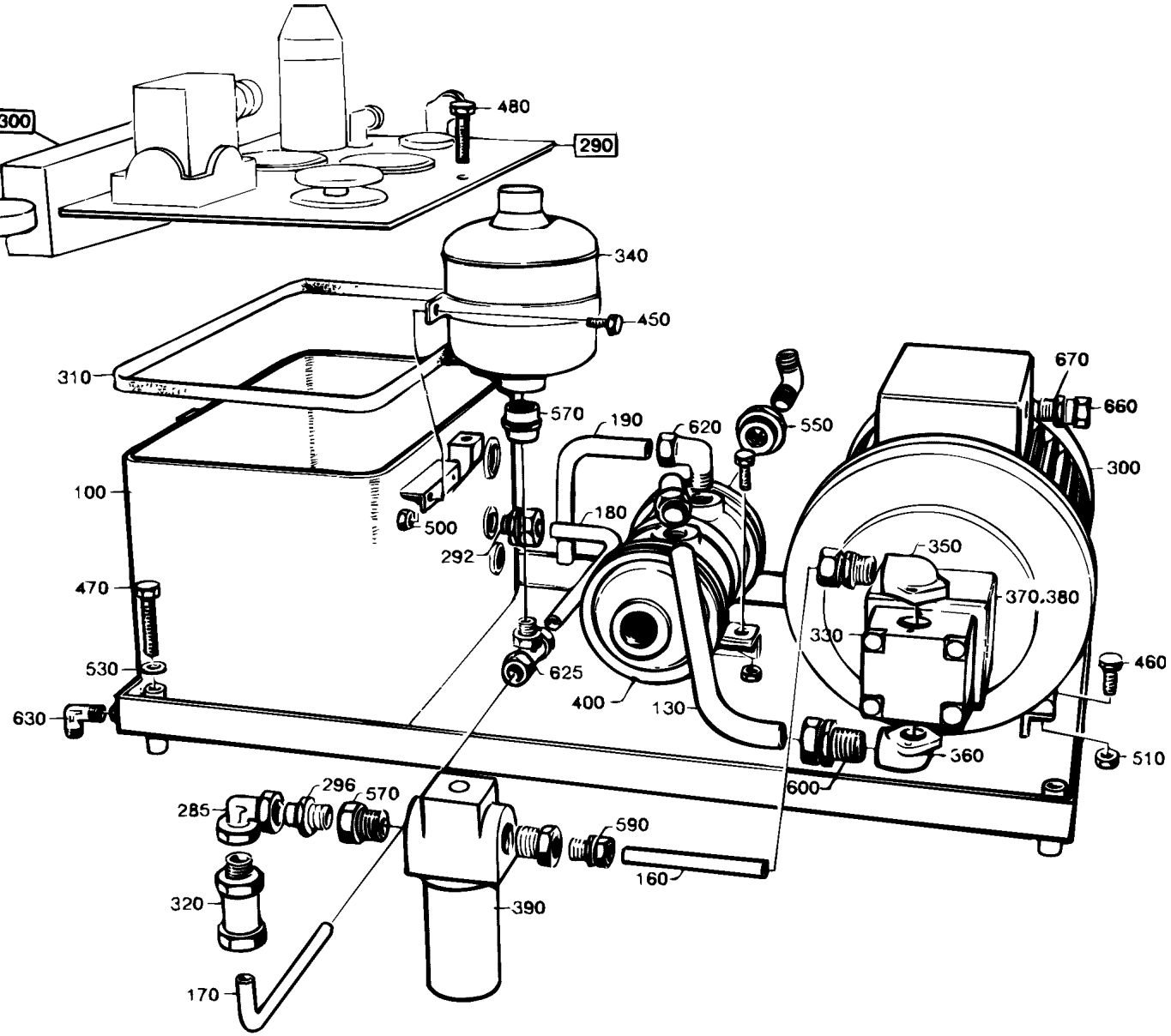
300
480
290
340
450
310
570
190
620
550
670
660
300
100
500
180
292
350
470
370.380
330
460
530
625
400
130
630
360
510
600
296
570
285
590
160
320
390
170

ECM: 92593 - 20011213
Group number: 434707-0300
Assembly Drawing: 434707-1_1_AA

Pos	Part No	SP	UN	Qty	Description	Page No
TBA/8						
F290	A276343-0300	-		1	LID	**2-107**
Common Parts						
100	252953-0000	-		1	TANK	
130	434710-0000	-		1	PIPE	
160	434714-0000	-		1	PIPE	
170	434717-0000	-		1	PIPE	
180	434718-0000	-		1	PIPE	
190	434719-0000	-		1	PIPE	
285	90030-0121	-		2	CONN. ELBOW ADJ.,INT 10	
292	90030-0157	-		3	CONN. STR. 10-R3/8, EXT. THREAD	
296	90030-0178	-		1	CONN. STR., 10-R1/4, EXT. THREAD	
300	90457-0036	A		1	3-PHASE MOTOR,FOOT MOUNT.1,1KW,1410 RPM	
310	90091-0159	B		1	GASKET 330X308X9 MM	
320	90230-0017	A		1	NON RETURN VALVE RHD 10-L	
330	90321-0018	A		1	GEAR PUMP MLPS/T124D	
340	90321-0381	A		1	HYDRACCU SBO-210-0.75E1/112	
350	90321-0382	A		1	FLANGE, RG 26/12-3/8 FOR 90321-18	
360	90321-0383	A		1	PUMP CONN. ELBOW FLANGE RG 26/12-1/2	
370	90321-0384	-		1	DISTANCE PIECE	
380	90321-0385	A		1	COUPLING	
390	B90415-0029	A		1	FULL PR. FILTER / MDF BN 30 G 10 B1-BYP	
	90415-0323	*-*		*1*	*FILTER INSERT 0030D010BN*	
400	B90422-0008	A		1	COOLER	
	315202-0612	*C*		*1*	*O-RING 75,80X3,53 MM*	
450	312101-0368	-		2	SCREW M6S M6X16 FZB	
460	312101-0453	-		4	SCREW M6S M8X25 FZB	
470	312101-0463	-		4	SCREW M6S M8X60 FZB	
480	312101-0495	-		2	SCREW M6S M10X30 FZB	
500	312601-0316	-		2	NUT M6M 6-8 FZB	
510	312601-0318	-		4	NUT M6M8FZB	
530	315111-0165	-		4	WASHER PLAIN, TBRB 8,4/16 H=3	
550	342701-0208	-		2	BUSHING, INT/EXT. G-THREAD NO. 3/4-1/4	
570	342712-0205	-		3	BUSHING, INT/EXT. G-THREAD NO. 1/2X1/4	
590	342721-0108	-		1	PIPE COUPLGA10-LRFZB REPBY 0342752-0104	
600	342721-0114	-		1	PIPE COUPLGA15-LRFZB REPBY 0342752-0114	
620	342731-0114	-		3	CONN. ELBOW WE 15-LRFZB	
625	342741-0108	-		1	CONN. T-PIPE TA-10-R1/4	
630	342930-0122	-		3	ELBOW 90 COUPL.,EXT.THREAD 8/6-R1/4"	
660	352136-0128	-		1	GLAND FITTING	
670	352100-0108	-		1	CABLE GLANR.20,4-12	

Machine Type	Group Description	Used-In	Group Number	Page No

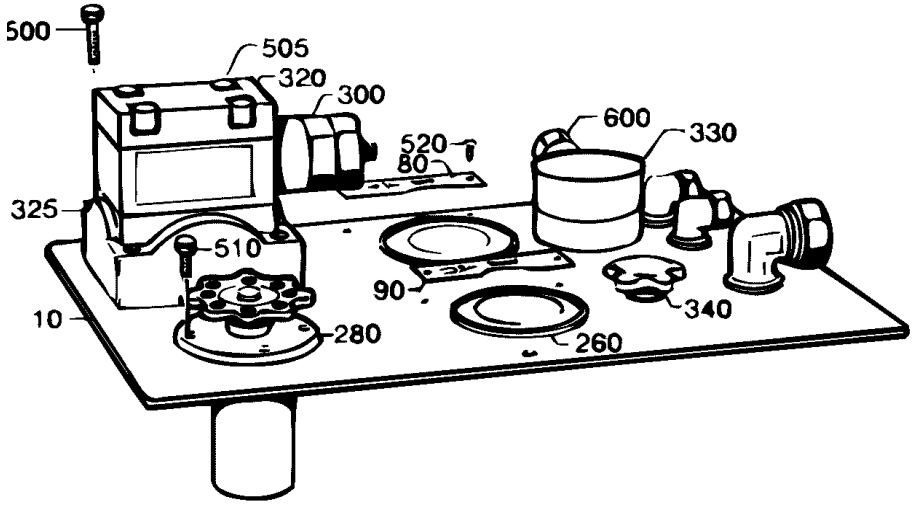
500
505
320
300
520
80
600
330
325
510
90
340
10
280
260

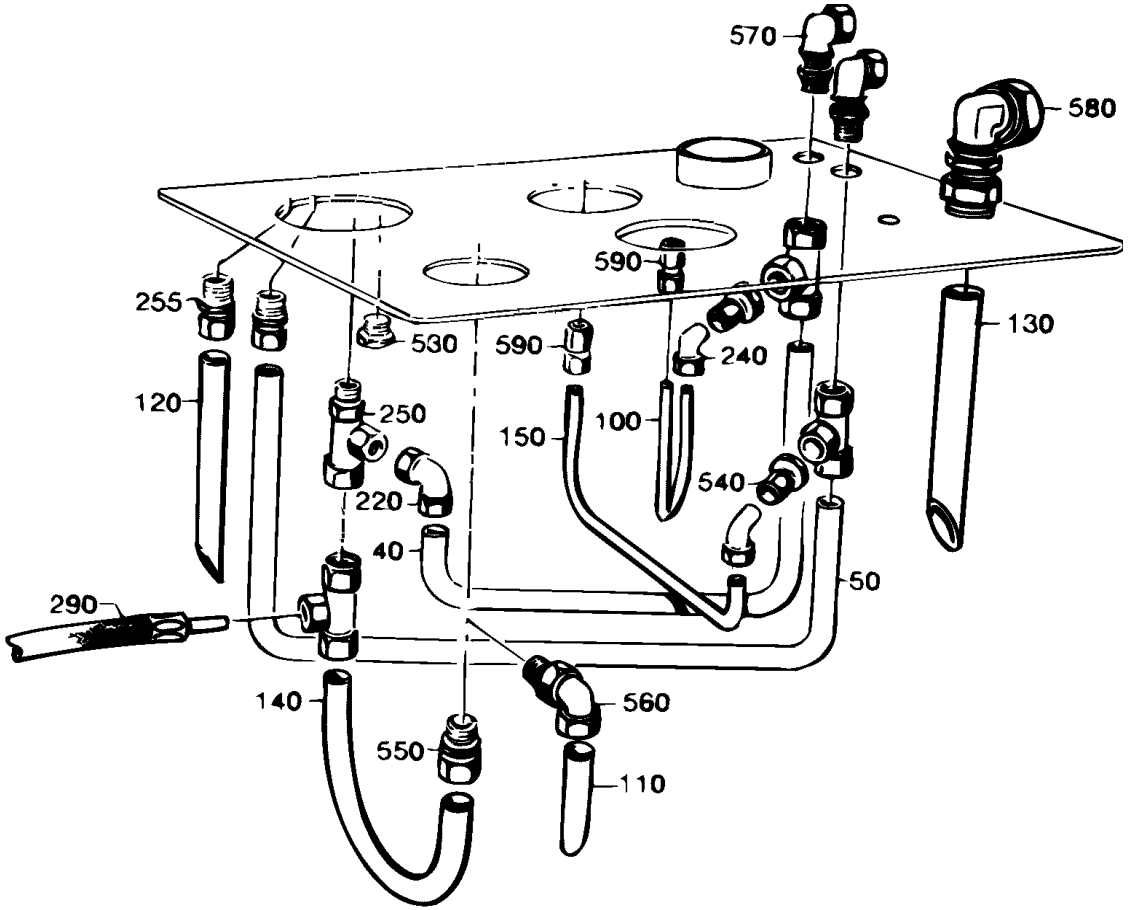
570
580
590
255
530
590
240
130
120
250
150
100
540
220
40
50
290
140
560
550
110

ECM: 72091 - 19981216
Group number: 276343-0300
Assembly Drawing: 276343-2_1_AA

Pos	Part No	SP	UN	Qty	Description	Page No
-						
010	442076-0000	-		1	LID	
040	434708-0000	-		1	PIPE	
050	434709-0000	-		1	PIPE	
080	247385-0000	-		1	SIGN	
090	247386-0000	-		1	SIGN	
100	434711-0000	-		1	PIPE	
110	434712-0001	-		1	PIPE	
120	434712-0002	-		1	PIPE	
130	434713-0000	-		1	PIPE	
140	434715-0000	-		1	PIPE	
150	434716-0000	-		1	PIPE	
220	90030-0121	-		1	CONN. ELBOW ADJ.,INT 10	
240	90030-0146	-		2	ADJUSTABLE ELBOW CONNECTION,EXT 6-G1/8	
250	90030-0120	-		4	ADJ. L-PIPE CONNECTION EVL, INT.T-10	
255	90030-0157	-		3	CONN. STR. 10-R3/8, EXT. THREAD	
260	90043-0062	C		2	MANOMETER	
280	90113-0044	C		1	PRESSURE REGULATOR	
290	90148-0036	-		1	HOSE	
300	90201-0014	C		1	VALVE	
320	90201-0307	-		1	BLANKING, NO. DGMA-3-C1-10	
325	90201-0308	-		1	BLANKING, NO. DGVM-3-10-R	
330	90274-0053	D		1	LEVEL GUARD, 40VA/250V AC/DC	
340	90277-0041	D		1	TANK BREATH. FILTER / UC-SAB-3101 UCC	
500	312111-0333	-		4	SCREW HEX.SOCK.HD.MC6S-TT 5X25 88 FZB	
505	312111-0343	-		4	SCREW HEX.SOCK.HD.MC6S-TT 5X60 88 FZB	
510	312111-0368	-		4	SCREW HEX.SOCK.HD.MC6S-TT 6X16 88 FZB	
520	312502-0171	-		4	DRIVE SCREW ROUND HEAD KDS 2X6	
530	342713-0311	-		1	PLUG, EXT. THREAD HEX. SOCKET. BPS38	
540	342714-0202	-		2	REDUCTION KOR 10/6-LFZB	
550	342721-0108	-		1	PIPE COUPLGA10-LRFZB REPBY 0342752-0104	
560	342731-0108	-		1	CONN. ELBOW WE 10-LRFZB	
570	342764-0108	-		2	CONN. ELBOW BULKHEAD LWSV10-LFZB	
580	342764-0114	-		1	CONN. ELBOW BULKHEAD LWSV15-LFZB	
590	342790-0102	-		2	CONN. PRESS. GAUGE MAV6-LRFZB	
600	352136-0113	-		1	GLAND FITTING PR18,6/PG11 DI=12MM	

Pos	Part No	SP	UN	Qty	Description	Page No

Machine Type | Group Description | Used-In | Group Number | Page No

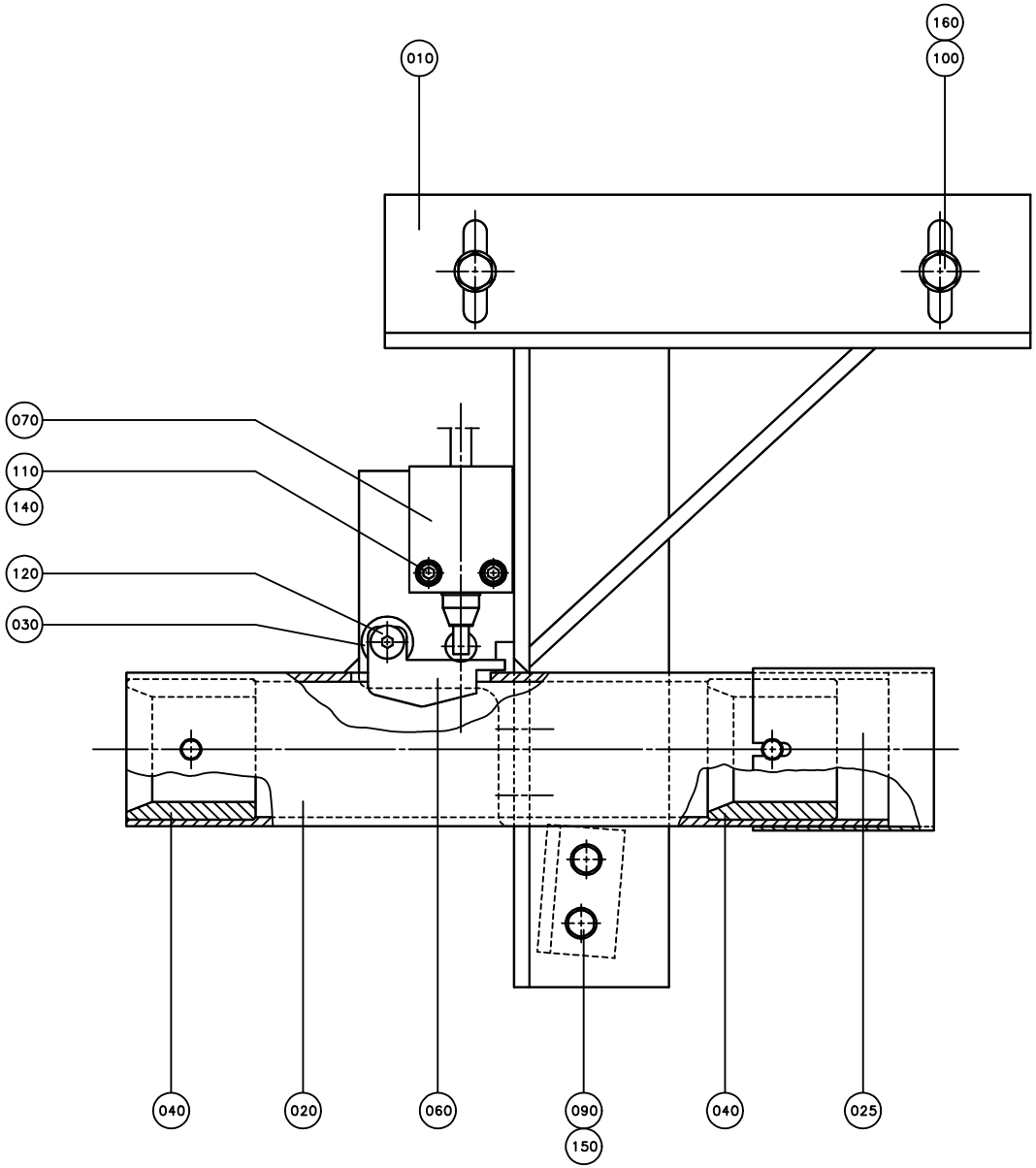
160
100
010
070
110
140
120
030
040
020
060
090
150
040
025

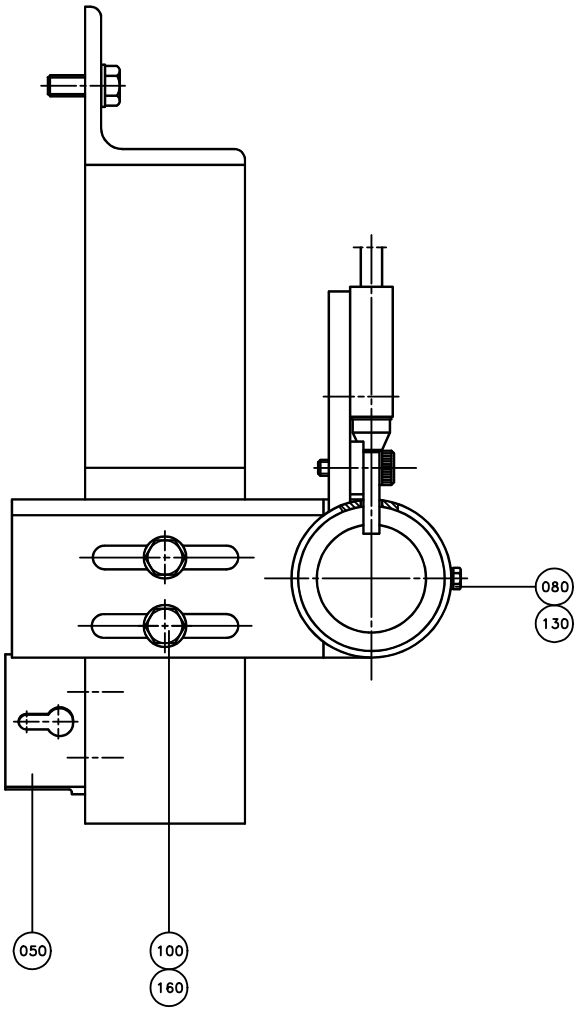
080
130
050
100
160

ECM: 72091 - 19981216
Group number: 440098-0300
Assembly Drawing: 440098-3_1_AA

Pos	Part No	SP	UN	Qty	Description	Page No
-						
010	434659-0000	-		1	CRANK BRACKET	
020	541009-0000	-		1	CRANK HOLDER	
025	574652-0000	-		1	PROTECTION	
030	20770-0000	-		1	WASHER	
040	434661-0000	D		2	BUSHING	
050	434664-0000	-		1	BRACKET	
060	569163-0000	D		1	ARM	
070	90044-0094	C		1	LIMIT SW. 924 CE31-Y20-X5	
080	312101-0289	-		2	SCREW M6S M4X10 FZB	
090	312101-0368	-		2	SCREW M6S M6X16 FZB	
100	312101-0451	-		4	SCREW M6S M8X20 FZB	
110	312111-0329	-		2	SCREW HEX.SOCK.HD.MC6S-TT 5X16 88 FZB	
120	312180-0447	-		1	SCREW ISO7379 H8X12	
130	315101-0136	-		2	BRICKA BRB, 4,3/8 H=0,8	
140	315101-0146	-		2	WASHER PLAIN, BRB, 5,3/10 H=1	
150	315101-0153	-		2	WASHER PLAIN, BRB, 6,4/12 H=1,5	
160	315111-0165	-		4	WASHER PLAIN, TBRB 8,4/16 H=3	

Pos	Part No	SP	UN	Qty	Description	Page No

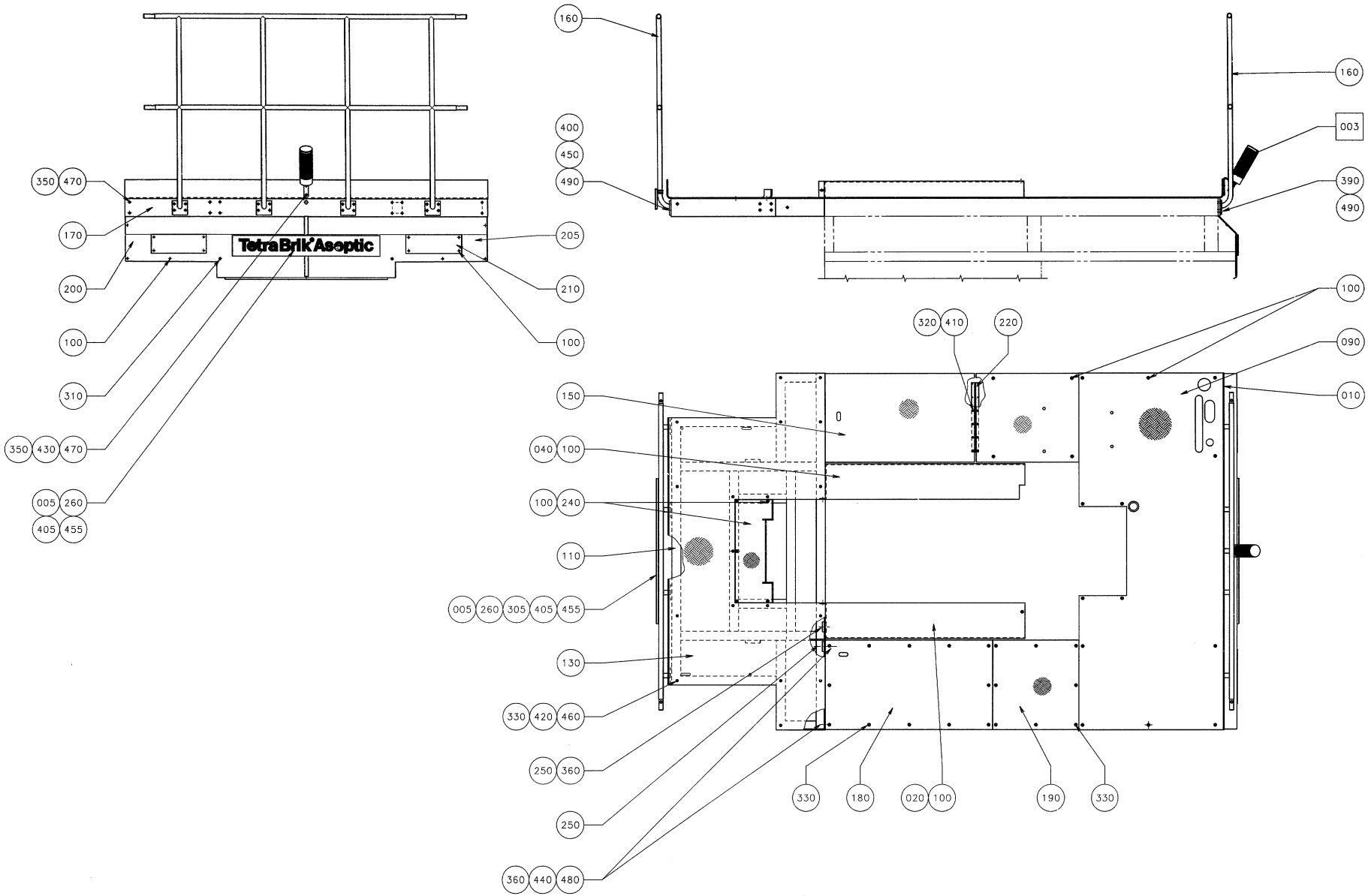
160
400
450
490
350
470
170
205
TetraBrik Aseptic
200
210
100
100
310
350
430
470
005
260
405
455
160
003
390
490
100
320
410
220
090
010
150
040
100
100
240
110
005
260
305
405
455
130
330
420
460
250
360
250
360
440
480
330
180
020
100
190
330

ECM: 146470 - 20031107
Group number: 440384-0600
Assembly Drawing: 440384-8_1_AA

Pos	Part No	SP	UN	Qty	Description	Page No
TBA/8						
003	A1285923-0100	-		1	WARNING BEACON	**2-113**
005	544527-0000	-		2	MACHINE PLATE TBA	
010	927319-0000	-		1	PLATFORM	
020	279807-0000	-		1	COVER	
040	279885-0000	-		1	COVER	
090	576833-0000	-		1	PLATFORM	
100	90287-0075	-		40	SCREW SLOT. PAN HEAD LKCS M6X12	
Common Parts						
110	440385-0000	-		1	CANTILEVER	
130	440386-0000	-		1	PLATFORM REAR	
150	576835-0000	-		1	PLATFORM COVER	
160	263323-0000	-		2	RAILING	
170	263612-0000	-		1	RAIL	
180	269274-0000	-		1	PLATFORM COVER	
190	269275-0000	-		1	PLATFORM COVER	
200	548346-0000	-		1	FRONT GUARD	
205	560799-0000	-		1	FRONT GUARD	
210	548348-0000	-		2	HATCH	
220	239847-0000	-		1	HINGE	
240	440389-0000	-		1	HATCH	
250	445858-0000	-		4	WASHER	
260	544533-0000	-		4	PLASTIC PEHD 21172-10	
305	90165-0086	-		2	PIPE CLAMP, RSGU 1.24/15-V4, D=24 MM	
310	90287-0062	-		2	SCREW M6	
320	90287-0074	-		12	SCREW SLOT. PAN HEAD LKCS M4X12	
330	90287-0076	-		38	SCREW SLOT. PAN HEAD LKCS M6X20	
350	312101-0453	-		10	SCREW M6S M8X25 FZB	
360	312101-0540	-		6	SCREW M6S M12X40 FZB	
390	312105-0491	-		16	SCREW M6S ISO 4017 M10X20 A480	
400	312105-0495	-		16	SCREW M6S ISO 4017 M10X30 A480	
405	312155-0370	-		4	SCREW EN 10642 MF6S M6X20 A480	
410	312601-0312	-		12	MUTTER M6M 4-8 FZB	
420	312601-0316	-		19	NUT M6M 6-8 FZB	
430	312601-0318	-		2	NUT M6M8FZB	
440	312601-0322	-		4	NUT M6M 12-8 FZB	
450	312605-0320	-		32	HEXAGON NUT, M6M M10 A280	
455	312812-0316	-		4	HEXAGON NUT, NY-LOCK M6 A480	
460	315101-0153	-		19	WASHER PLAIN, BRB, 6,4/12 H=1,5	
470	315101-0165	-		10	WASHER PLAIN, BRB, 8,4/16 H=1,5	
480	315101-0178	-		6	WASHER PLAIN, BRB, 13/24 H=2	
490	315105-0173	-		48	WASHER BRB10,5X22RFR	

Machine Type | Group Description | Used-In | Group Number | Page No

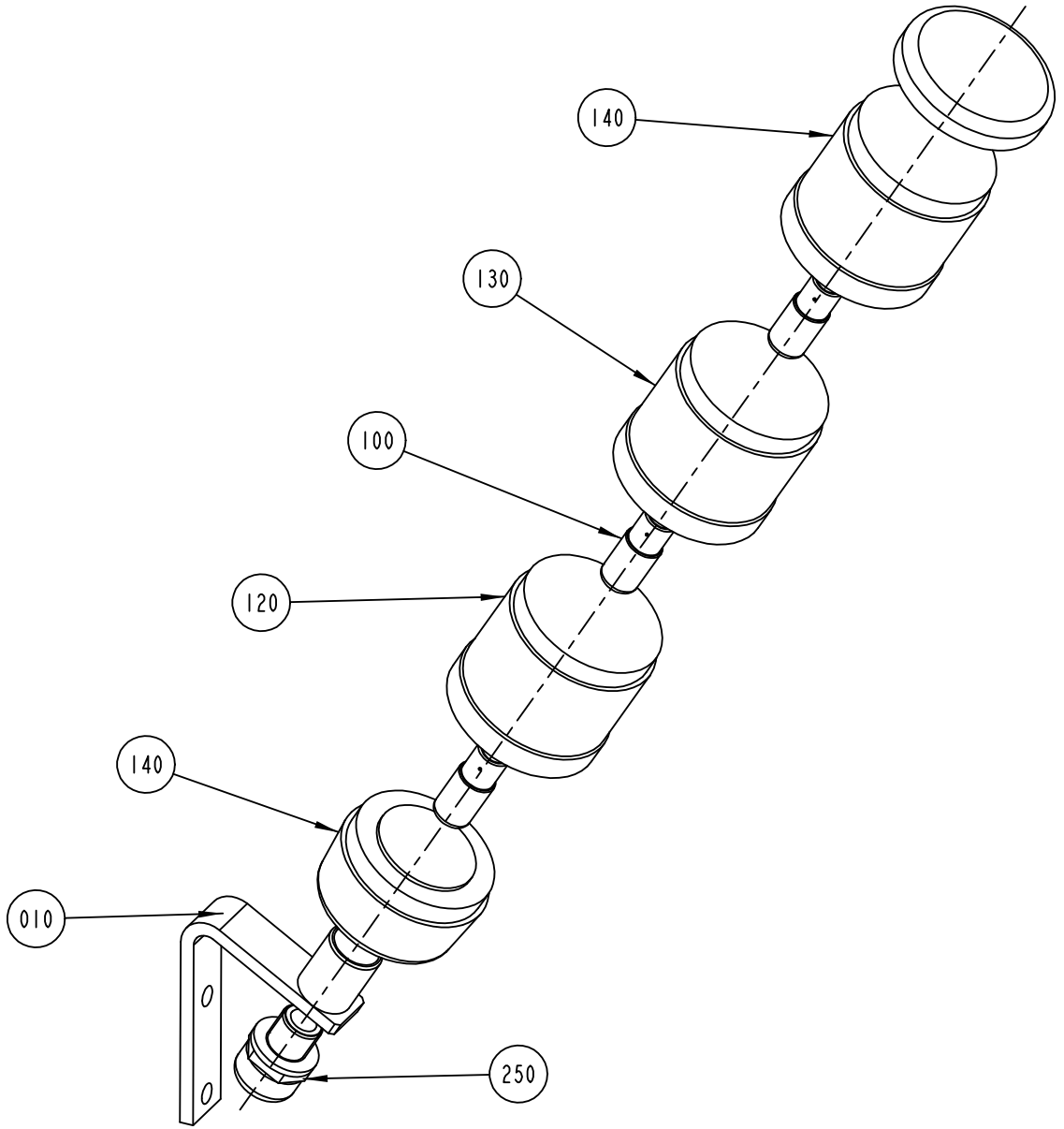
140
130
100
120
140
010
250

ECM: 83154 - 20010206
Group number: 1285923-0100
Assembly Drawing: 1285923-1_1_AB

Pos	Part No	SP	UN	Qty	Description	Page No
-						
010	1285924-0000	-		1	HOLDER	
100	90036-0068	C		3	BULB 6.5W 24V	
110	90458-0293	D		1	LIGHT ELEMENT, RED, KL70-401R	
120	90458-0295	D		1	LIGHT ELEMENT, BLUE, KL70-401L	
130	90458-0294	D		1	LIGHT ELEMENT, YELLOW, KL70-401Y	
140	90458-0292	-		1	BASE, KT70-1001	
250	352136-0113	-		1	GLAND FITTING PR18,6/PG11 DI=12MM	

Pos	Part No	SP	UN	Qty	Description	Page No

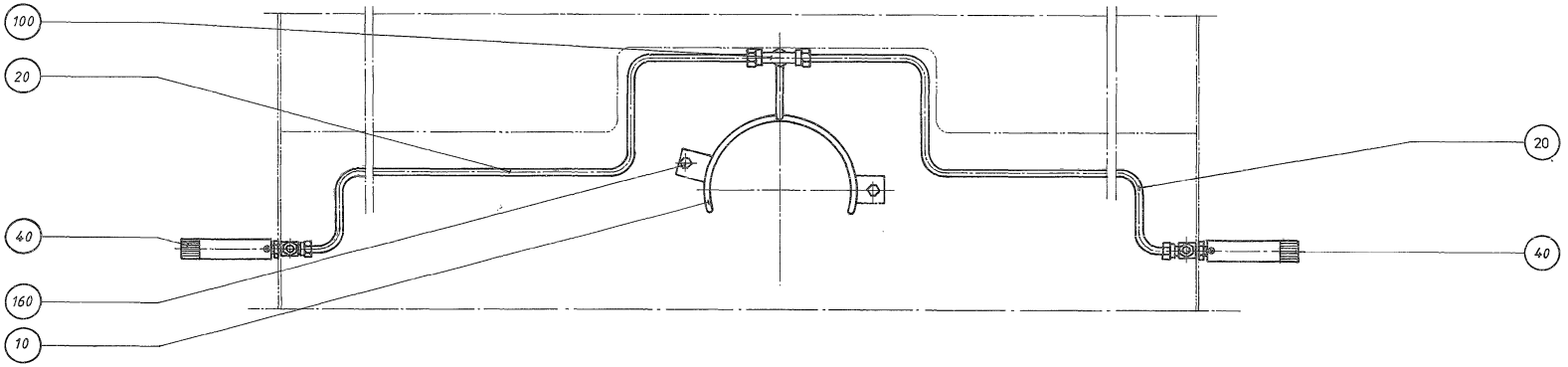
100
20
40
160
10
20
40

ECM: 145744 - 20031107
Group number: 440474-0100
Assembly Drawing: 440474-1_1_AA

Pos	Part No	SP	UN	Qty	Description	Page No
0375S						
010	539613-0000	D		1	SPREADER	
0500B, 1000SQ, 0500S, 1000S, 0750B, 0750S, 1000B						
010	1362505-0000	D		1	SPREADER	
Common Parts						
020	450340-0000	-		2	PIPE	
040	B445583-0000	C		2	VALVE	
	315202-0500	*C*		*1*	*O-RING 42X1,53 MM*	
	315202-0501	*C*		*1*	*O-RING 2,90X1,78 MM*	
100	90030-0076	-		1	CONN. T-PIPE T-6	
160	312105-0325	-		2	SCREW M6S ISO 4017 M5X10 A480	

Pos	Part No	SP	UN	Qty	Description	Page No

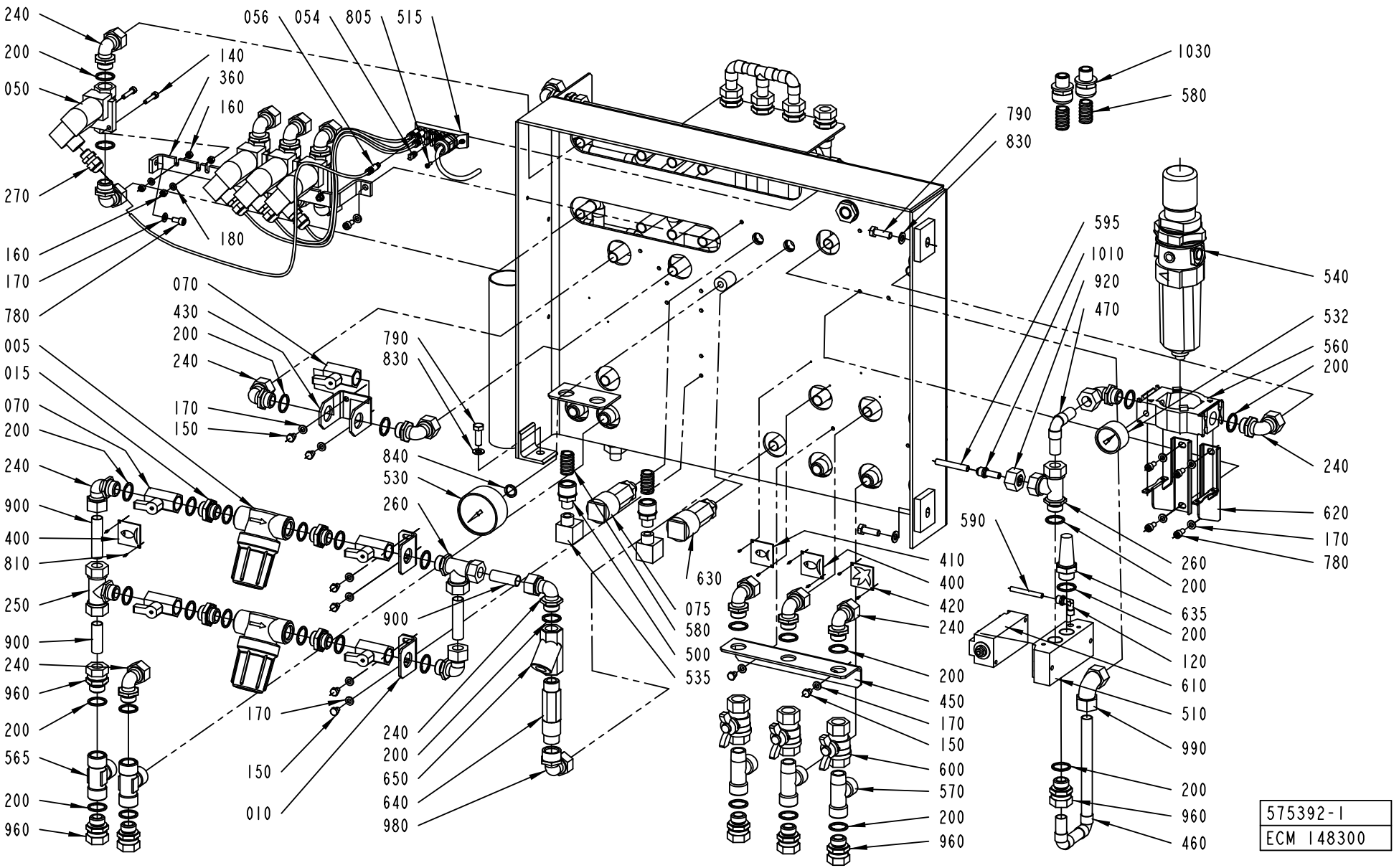
240
200
050
270
160
170
780
056
054
805
515
140
360
160
180
070
430
200
240
170
150
790
830
840
530
260
630
075
580
500
535
005
015
070
200
240
900
400
810
250
900
240
960
200
565
200
960
170
150
010
900
240
200
650
640
980
410
400
420
240
200
450
170
150
600
570
200
960
1030
580
790
830
595
1010
920
470
590
540
532
560
200
240
620
170
780
260
200
635
200
120
610
510
990
200
960
460
575392-1
ECM 148300

ECM: 148302 - 20031112
Group number: 575392-0100
Assembly Drawing: 575392-1_1_AD

This list covers pages from 2-116 to 2-119

Pos	Part No	SP	UN	Qty	Description	Page No
TBA/8 (See drawing on pages: 2-116, 2-118)						
005	B90458-0921	A		2	FILTER SP 122-200	
	90458-2541	*-*		*1*	*FILTER, CP23174-7-304SS*	
010	543127-0000	-		2	BRACKET	
015	479261-0000	-		4	NIPPLE	
050	B90042-0172	A		4	SOLENOID VALVE 4023/1005/1032 24VDC	
	90042-0467	*A*		*1*	*COIL 24VDC GSR*	
056	B90042-0536	A		4	PILOT CABLE MECMAN 440-728-000-1	
	90042-0594	*-*		*1*	*ADAPTER 04938-328-08*	
070	90187-0062	A		5	BALL VALVE G1/2, NPBR	
075	90274-0042	A		1	PRESSURE GUARD, 200 KPA	
090	90418-0053	-		25	ELBOW, 90, INT. CONN. NO. 7090-15	
100	90418-0054	-		7	ELBOW, 45, INT. CONN. NO. 7041-15	
1030	352136-0113	-		2	GLAND FITTING PR18,6/PG11 DI=12MM	
110	90418-0063	-		13	ADAPTER, INT. CONN. NO. 7272CU/15-G1/2	
140	312115-0333	-		8	SCREW ISO4762 M5X25 A4	
150	312105-0362	-		11	SCREW M6S ISO 4017 M6X8 A480	
160	312605-0314	-		16	HEXAGON NUT, M6M M5 A280	
170	315105-0153	-		29	WASHER BRB6,4X12RFR	
180	315105-0146	-		8	BRICKA BRB5,3X10RFR	
200	315239-0113	-		54	NYLON WASHER G1/2	
240	342730-0114	-		19	CONN. ELBOW WA-15-1/2	
250	342740-0114	-		1	CONN. T-PIPE TA-15-G1/2	
260	342750-0114	-		2	CONN. L-PIPE, EXT. LA-15-G1/2	
270	352103-0100	-		4	CABLE GLAND, STR 9, PR15,2/PG9	
410	273456-0000	-		1	SIGN	
430	543130-0000	-		1	BRACKET	
440	293201-0000	-		1	PIPE	
670	90418-0039	-		2	ELBOW PIPE	
680	90418-0048	-		3	T-PIPE, INT. CONN. NO. 7130-15	
720	90418-0058	-		2	ELBOW, 90, INT/EXT. CONN. NO. 7092-15	
740	342407-0102	-		1	ELBOW 2	
780	312115-0366	-		6	SCREW ISO4762 M6X12 A4	
920	342710-0115	-		1	REDUCTION RBM 16/8	
930	342711-0115	-		1	ACCESSORIES, PLUG PL-15 AND 16	
960	342720-0114	-		20	CONN. STR. GA-15-G1/2	
Common Parts						
054	90042-0550	-		1	PROTECTION PLUG FOR UNUSED CONNECTION	
1010	342929-0121	-		1	STRAIGHT COUPLING,SOLDER 8/6-8	
1020	342930-0113	-		1	ELBOW 90 COUPL.,EXT.THREAD 6/4-R1/8"	
1025	352135-0106	-	M	3	SPIRAL CONDUIT DI=16 MM	
1040	352136-0127	-		2	GLAND FITTING PR 18,6	
300	542700-0000	-		1	VALVEPANEL LOWER	
330	543134-0000	-		1	PLATE	
360	543128-0000	-		1	VALVE BRACKET	
400	273455-0000	-		2	LABEL (COLD WATER)	
420	273458-0000	-		1	LABEL (AIR)	
450	543131-0000	-		1	BRACKET	
460	573277-0000	-		1	PIPE	
470	573278-0000	-		1	PIPE	
500	90012-0063	-		2	CABLE GLAND PR 15,2	
510	90042-0481	-		1	CONNECTION TABLE 583-471-000 MECMAN	
515	90042-0535	-		1	TERMINAL BOARD 19 CORDS	
530	90043-0006	A		1	PRESSURE GAUGE, 2041 D=63 MM	
532	90043-0043	A		1	PRESSURE GAUGE WIEGAND 0-10 BAR 1/8"	
535	90110-0095	-		2	CONNECTOR 3 POLE + EARTH	
538	90110-0128	-		1	MALE INSERT, HAN 24 E-M 933 024 2631	
540	90113-0114	A		1	REGULATOR	
560	90113-0407	-		1	YOKE, SINGLE	
565	90140-0010	-		2	T-PIPE, INT. THREAD, 20031/2	
570	90140-0011	-		3	T-PIPE, INT. THREAD, NO. 2070-1/2-1/2	
575	90140-0012	-		5	ELBOW, 90 INT/EXT, 2020-1/2-1/2	
580	90152-0033	-	M	6	SPIRAL CONDUIT FOR PR 15,2(PG 9)	
590	90166-0081	-	MM	1700	TUBE 6 MM PA BLUE	
595	90166-0013	-	MM	1700	TUBE 8 MM PA BLUE	
600	90187-0029	A		3	BALL VALVE G1/2, NPBR	
605	90458-1851	-		2	CONN. STR., 8-R1/4, EXT. THREAD	
610	90235-0767	A		1	VALVE	
620	90236-0041	-		2	BRACKET	
630	90274-0044	A		1	PRESSURE GUARD, 400 KPA	
635	90328-0001	A		1	SILENCER	
640	90415-0018	A		1	FILTER FOR LIME SEPARATING / D MOD.AD	
650	90415-0019	A		1	FILTER / ART.NO. HH-M15-RG	
660	90418-0014	-		2	ELBOW PIPE	
690	90418-0050	-		1	T-PIPE, REDUCTION, INT, NO. 7130-15X12X1	
700	90418-0055	-		2	ELBOW, 45, INT/EXT. CONN. NO. 7040-15	
710	90418-0056	-		1	T-PIPE, REDUCTION, INT, NO. 7130-15X15X1	
730	90418-0068	-		1	T-PIPE, REDUCTION, INT, NO. 7130-15X8X15	
790	312105-0453	-		3	SCREW M6S ISO 4017 M8X25 A480	
805	312125-0224	-		2	SLOTTED CHEESE HEAD SCREW MCS 3X10 SS	
810	312502-0120	-		8	DRIVE SCREW ROUND HEAD KDS 0X5	
830	315105-0165	-		3	WASHER BRB8,4X16RFR	
840	315239-0110	-		1	NYLON WASHER G1/4	

Machine Type | Group Description | Used-In | Group Number | Page No

VALVE PANEL LOWER

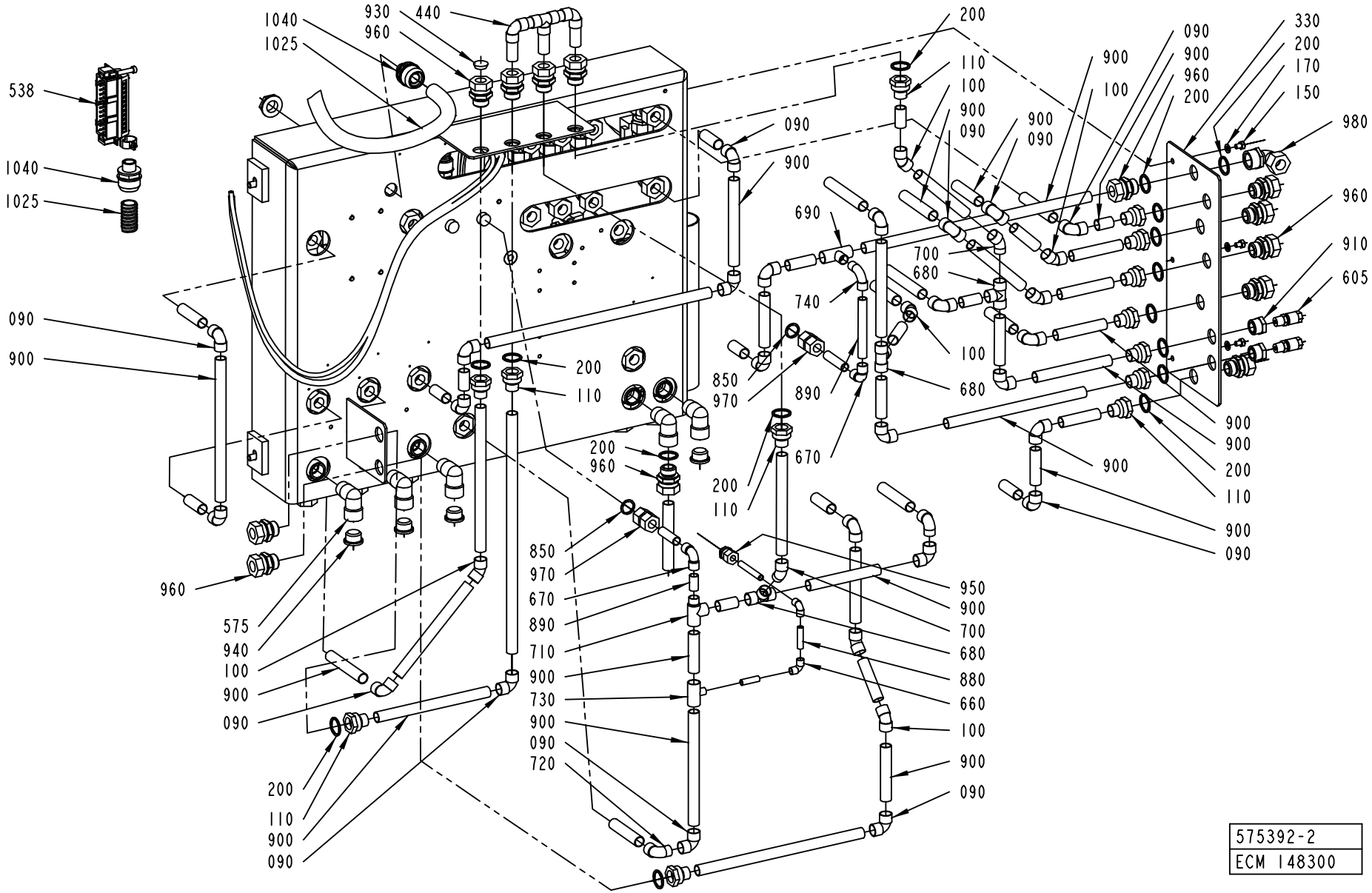

575392-2
ECM 148300

Pos	Part No	SP	UN	Qty	Description	Page No
Common Parts (Cont'd)						
850	315239-0111	-		2	NYLON WASHER G3/8	
880	341001-0148	-	MM	100	COPPER TUBE	
890	341001-0192	-	MM	300	COPPER TUBE	
900	341001-0228	-	MM	5000	COPPER TUBE	
910	342701-0205	-		2	BUSHING,INT./EXT.G-THREAD G1/2"-G1/4"	
940	342713-0213	-		4	PLUG, EXT THREAD HEX SOCKET 8638-00-120	
950	342720-0103	-		1	CONN. STR. GA-8-G1/8	
970	342723-0109	-		2	CONN. STR. PIPE GI-12-G3/8	
980	342733-0114	-		2	CONN. ELBOW WI-15-G1/2	
990	342736-0114	-		1	CONN. ELBOW W-15	

Pos	Part No	SP	UN	Qty	Description	Page No

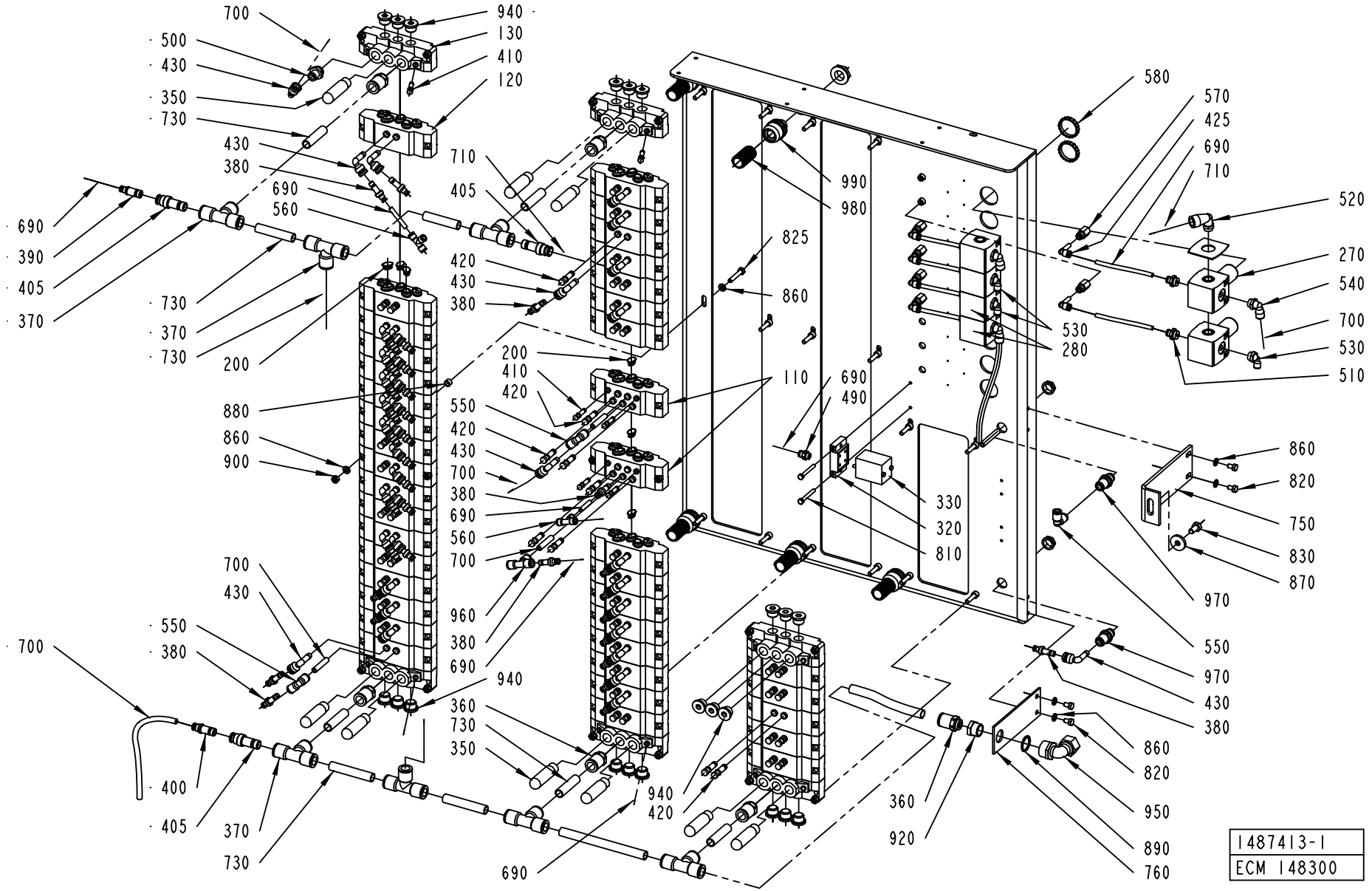
700
940
500
130
430
410
350
120
730
430
380
710
690
405
560
990
980
825
690
390
405
370
730
370
730
200
420
430
380
860
530
280
200
410
420
110
690
490
880
860
900
550
420
430
700
380
690
560
700
330
320
810
700
430
960
380
690
940
550
380
700
360
730
350
940
420
690
400
405
370
730
360
920
580
570
425
690
710
520
270
540
700
530
510
860
820
750
830
870
970
550
970
430
380
860
820
950
890
760
1487413-1
ECM 148300

ECM: 148303 - 20031112
Group number: 1487413-0100
Assembly Drawing: 1487413-1_1_AB

This list covers pages from 2-120 to 2-127

Pos	Part No	SP	UN	Qty	Description	Page No
TBA/8 NORMFIN (See drawing on pages: 2-120, 2-124)						
100	90042-0215	C		28	VALVE BODY 5/2 UNISTABLE	
160	90042-0527	-		28	SEAL KIT PILOT VALVE	
180	90042-0550	-		22	PROTECTION PLUG FOR UNUSED CONNECTION	
190	90042-0519	-		11	BLANK PLATE ISO SIZE 1	
205	90042-0538	C		8	PILOT VALVE L=500MM	
210	90042-0539	C		20	PILOT VALVE L=350MM	
380	342716-0203	-		33	REDUCER 6-8	
420	342715-0103	-		45	BLIND PLUG 8 MM	
430	90055-0118	-		39	ELBOW PIPE JOINT -8MM	
TBA/8 REVFIN (See drawing on pages: 2-122, 2-126)						
100	90042-0215	C		30	VALVE BODY 5/2 UNISTABLE	
160	90042-0527	-		30	SEAL KIT PILOT VALVE	
180	90042-0550	-		20	PROTECTION PLUG FOR UNUSED CONNECTION	
190	90042-0519	-		9	BLANK PLATE ISO SIZE 1	
205	90042-0538	C		9	PILOT VALVE L=500MM	
210	90042-0539	-		21	PILOT VALVE L=350MM	
380	342716-0203	-		37	REDUCER 6-8	
420	342715-0103	-		41	BLIND PLUG 8 MM	
430	90055-0118	-		43	ELBOW PIPE JOINT -8MM	
Common Parts						
010	273449-0000	-		1	SIGN	
020	273450-0000	-		1	SIGN	
030	273452-0000	-		1	SIGN	
040	978603-0000	-		1	SIGN	
060	479964-0000	-		1	SIGN	
070	561595-0000	-		1	SIGN MULTISTEP 35X35MM	
080	1487412-0000	-		1	VALVE PANEL	
110	90042-0520	C		2	BASE PLATE ISO SIZE 1	
120	90042-0532	C		37	BASE PLATE ISO SIZE 1	
130	90042-0522	C		6	PORTED END PIECE ISO SIZE 1	
150	90042-0535	-		5	TERMINAL BOARD 19 CORDS	
200	90042-0528	-		6	BLANKING KIT SEALS ISO SIZE 1	
250	90043-0043	D		4	PRESSURE GAUGE WIEGAND 0-10 BAR 1/8"	
260	90043-0021	D		2	PRESSURE GAUGE WIEGAND 0-1 BAR 1/8"	
270	90113-0069	C		4	PRESSURE REGULATOR	
275	90110-0128	-		2	MALE INSERT, HAN 24 E-M 933 024 2631	
280	90113-0076	D		2	PRESSURE REGULATOR	
320	90235-0450	-		1	PLATE	
330	90235-0708	-		1	VALVE	
350	90328-0024	C		9	SILENCER G3/8	
360	90055-0096	-		6	STRAIGHT COUPLING	
370	342748-0110	-		7	T-CONNECTION 14MM	
385	342713-0210	-		1	PLUG, EXT THREAD HEX SOCKET 8638-00-140	
390	342716-0210	-		1	REDUCER 6-12	
400	342716-0209	-		1	REDUCER 8-12	
405	342716-0211	-		3	REDUCER 12-14	
410	342715-0102	-		6	BLIND PLUG 6 MM	
425	90055-0217	-		6	ELBOW PIPE JOINT	
490	342722-0202	-		1	PIPE COUPLING 1/8" D=6MM	
500	342722-0206	-		1	STRAIGHT COUPLING D=8-G3/8"	
510	342722-0203	-		6	STRAIGHT COUPLING	
520	90458-2959	-		1	ELBOW PIPE JOINT, EXT.THREAD,D=12MM-G1/4	
530	90458-2957	-		3	ELBOW PIPE JOINT, EXT.THREAD, D=6MM-G1/4	
540	90458-2958	-		3	ELBOW PIPE JOINT, EXT.THREAD, D=8MM-G1/4	
550	342735-0103	-		3	ELBOW PIPE JOINT	
560	342748-0102	-		2	T-CONNECTION 6MM	
570	342770-0105	-		6	STRAIGHT COUPLING INT, D=6 MM - G1/8	
580	90113-0379	-		6	NUT	
650	90277-0045	C		1	FILTER / 9900-05-BK	
660	90277-0046	C		1	FILTER / 9933-05-101	
670	90074-0026	-		4	PIPE CLIP FOR TUBE D=24-35 MM	
680	90132-0021	-		4	HOSE CLIP 6-10MM	
690	90166-0081	-	M	3	TUBE 6 MM PA BLUE	
700	90166-0013	-	M	2	TUBE 8 MM PA BLUE	
710	90166-0068	-	MM	400	TUBE 12 MM PA BLUE	
720	90166-0194	-	MM	500	TUBE 8 MM PUR BLUE	
730	90166-0206	-	M	2	TUBE 14 MM PUR BLUE	
750	574603-0000	-		1	BRACKET	
760	574604-0000	-		1	BRACKET	
770	445736-0000	-		1	HINGE	
780	90261-0008	-		3	PLUG, BLIND, PLASTIC GPN300F26	
790	90261-0035	-		3	PLUG, BLIND, PLASTIC, F7	
800	312105-0323	-		17	SKRUV M6S ISO 4017 M5X8 A480	
810	312105-0339	-		2	SCREW M6S ISO 4014 M5X40 A480	
820	312105-0364	-		4	SCREW M6S ISO 4017 M6X10 A480	
825	312105-0376	-		16	SCREW M6S ISO 4014 M6X35 A480	
830	312105-0449	-		1	SCREW M6S ISO 4017 M8X16 A480	
835	312125-0220	-		4	SLOTTED CHEESE HEAD SCREW MCS 3X6 SS	
840	312502-0120	-		12	DRIVE SCREW ROUND HEAD KDS 0X5	
850	315105-0146	-		17	BRICKA BRB5,3X10RFR	
860	315105-0153	-		36	WASHER BRB6,4X12RFR	

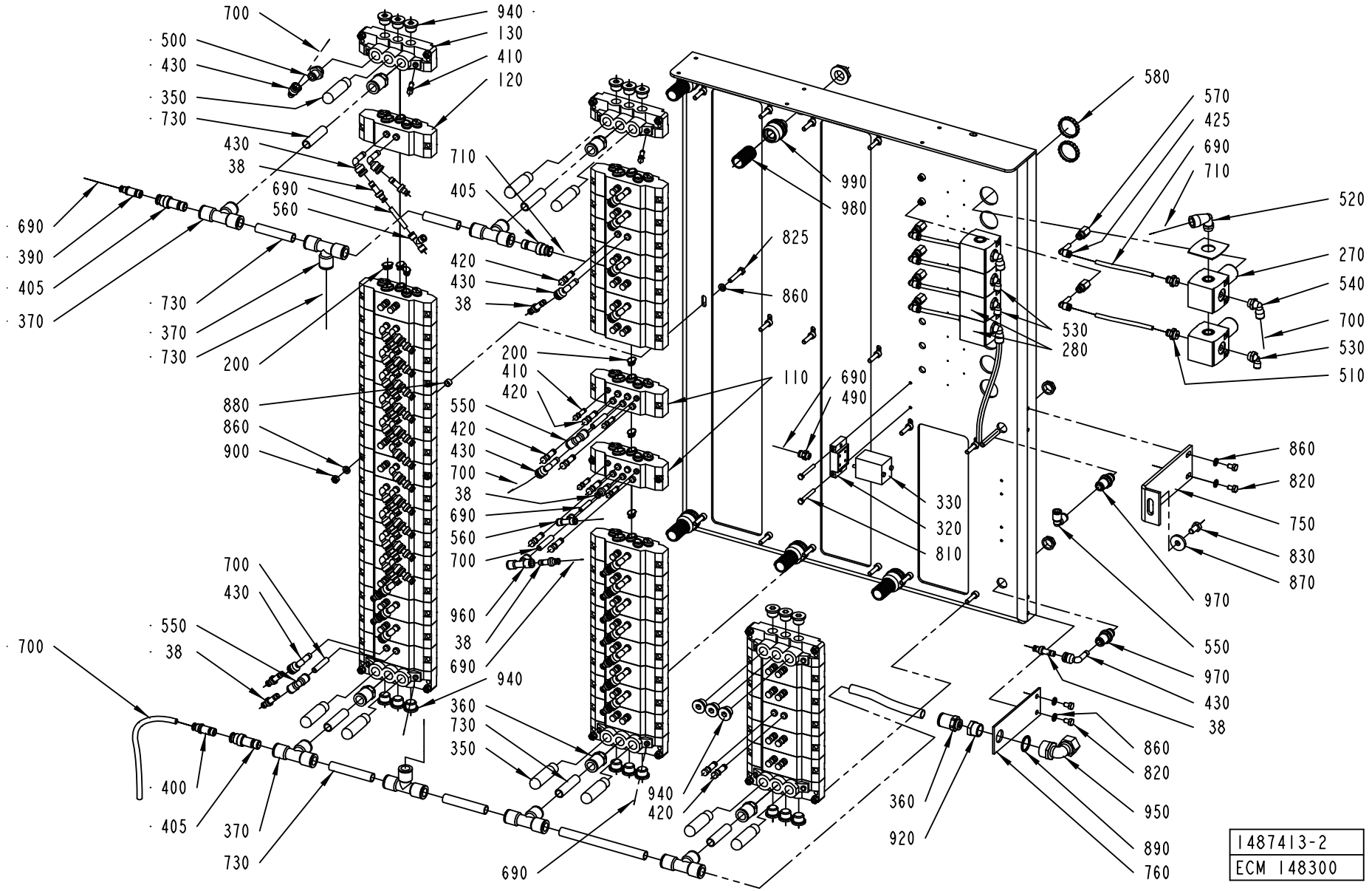
700
940
500
130
430
410
350
120
730
430
710
38
405
690
560
690
390
405
370
730
370
730
200
420
430
38
825
860
990
980
580
570
425
690
710
520
270
540
700
530
510
530
280
200
410
420
110
690
490
880
860
900
550
420
430
700
38
690
560
700
330
320
810
860
820
750
830
870
970
700
430
550
38
960
38
690
940
360
730
350
940
420
400
405
370
730
690
550
970
430
38
860
820
950
890
760
360
920
1487413-2
ECM 148300

Pos	Part No	SP	UN	Qty	Description	Page No
Common Parts (Cont'd)						
870	315125-0165	-		1	WASHER TBRSB 8,4X26X5 A4	
880	979219-0000	-		16	SPACER PIPE	
890	315239-0113	-		1	NYLON WASHER G1/2	
900	312605-0316	-		16	HEXAGON NUT, M6M M6 A280	
920	342701-0206	-		1	BUSHING,INT./EXT.G-THREAD G1/2"-G3/8"	
940	342713-0211	-		21	PLUG, EXT THREAD HEX SOCKET 8638-00-380	
950	342733-0114	-		1	CONN. ELBOW WI-15-G1/2	
960	342748-0103	-		1	T-CONNECTION 8MM	
970	342768-0103	-		2	BULKHEAD CONNECTOR, 8 MM	
980	352135-0106	-	M	10	SPIRAL CONDUIT DI=16 MM	
990	352136-0127	-		10	GLAND FITTING PR 18,6	

Pos	Part No	SP	UN	Qty	Description	Page No

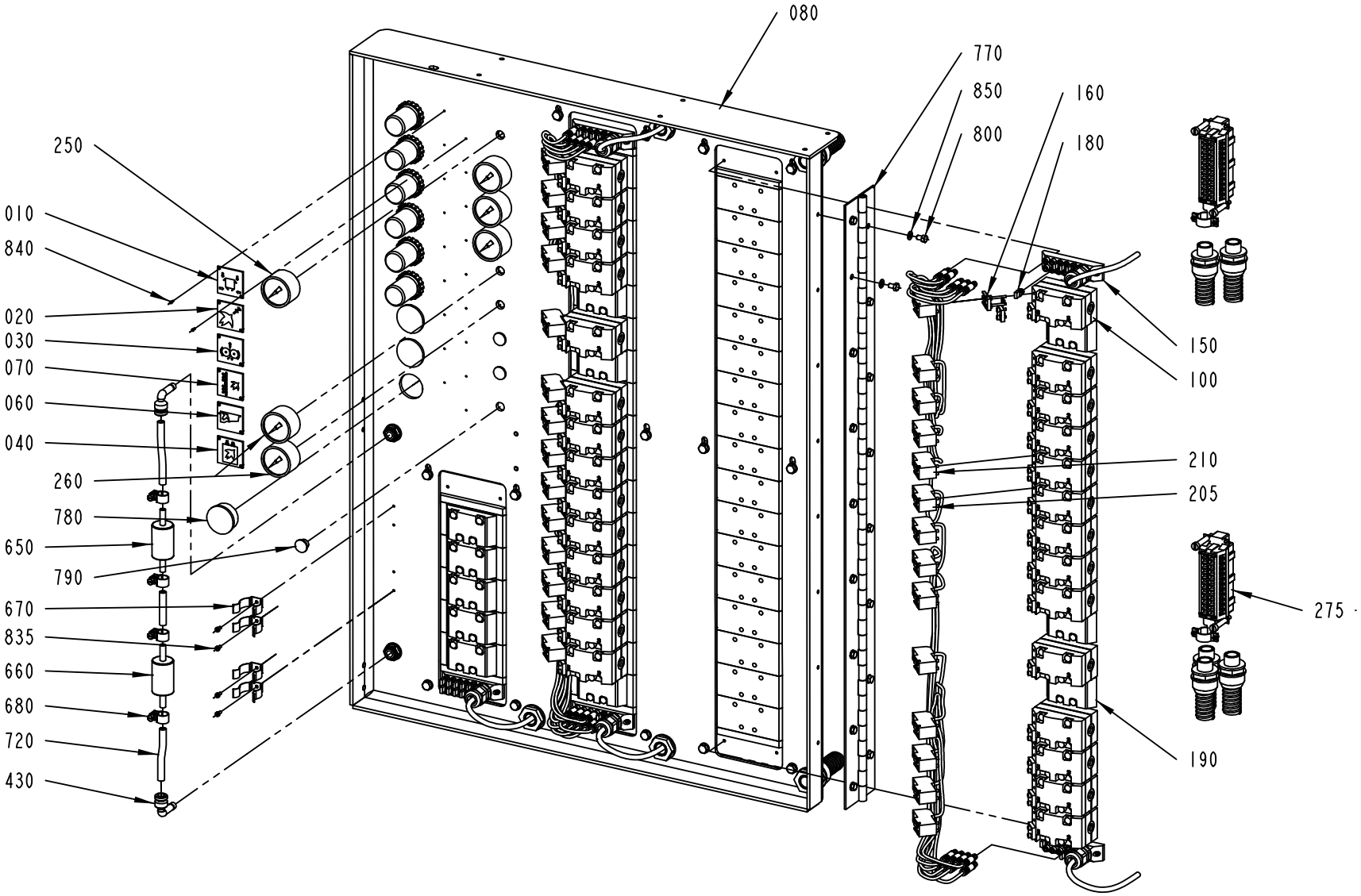

1487413-3
ECM 148300

Pos	Part No	SP	UN	Qty	Description	Page No
SEE PREVIOUS LISTS PAGES: 2-121, 2-123.						

Pos	Part No	SP	UN	Qty	Description	Page No

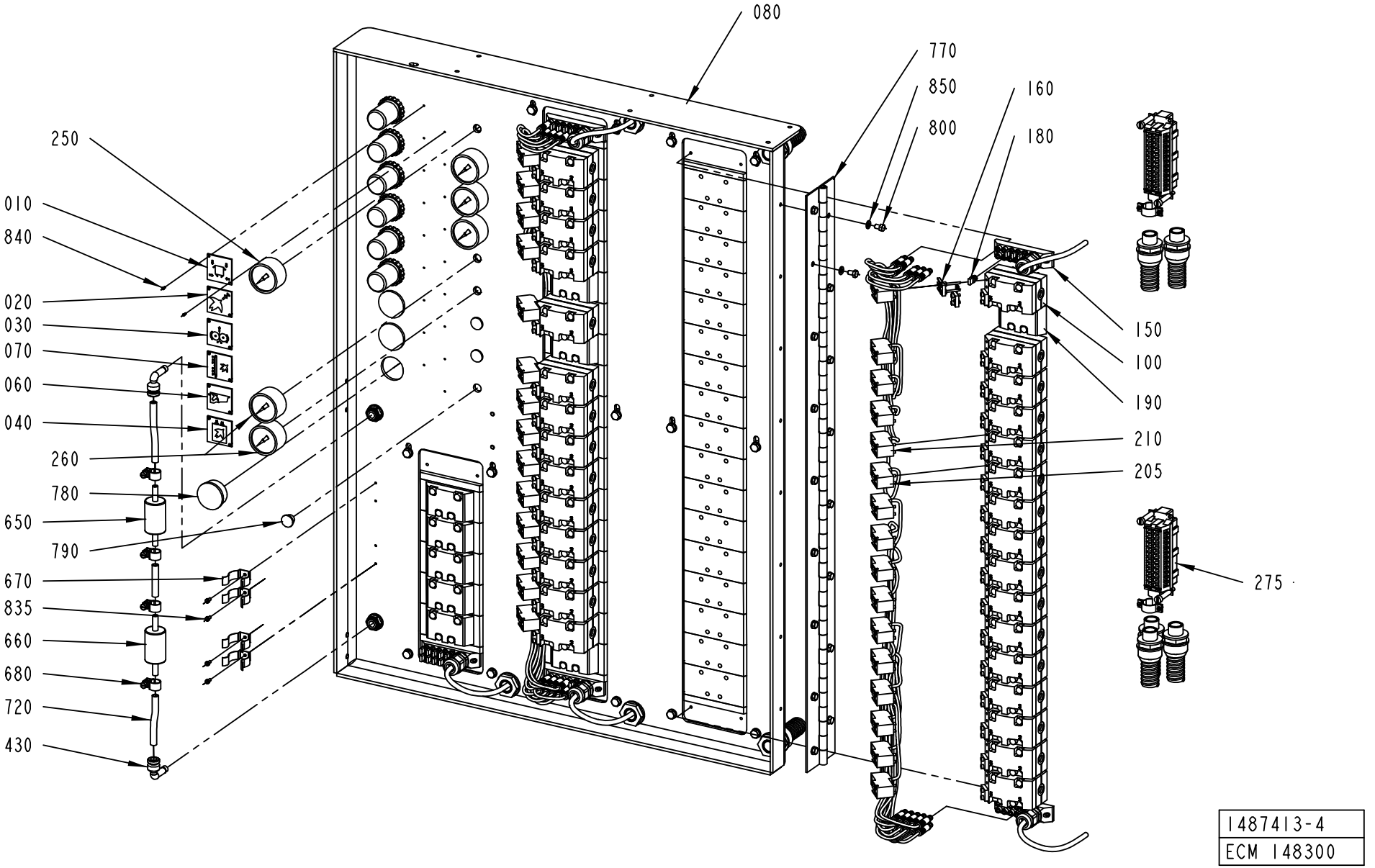
080
770
850
800
160
180
250
010
840
020
030
070
060
040
260
780
650
790
670
835
660
680
720
430
150
100
190
210
205
275
1487413-4
ECM 148300

ECM: 148303 - 20031112
Group number: 1487413-0100
Assembly Drawing: 1487413-4_1_AB

This list covers pages from 2-120 to 2-127

Pos	Part No	SP	UN	Qty	Description	Page No	Pos	Part No	SP	UN	Qty	Description	Page No

SEE PREVIOUS LISTS PAGES: 2-121, 2-123.

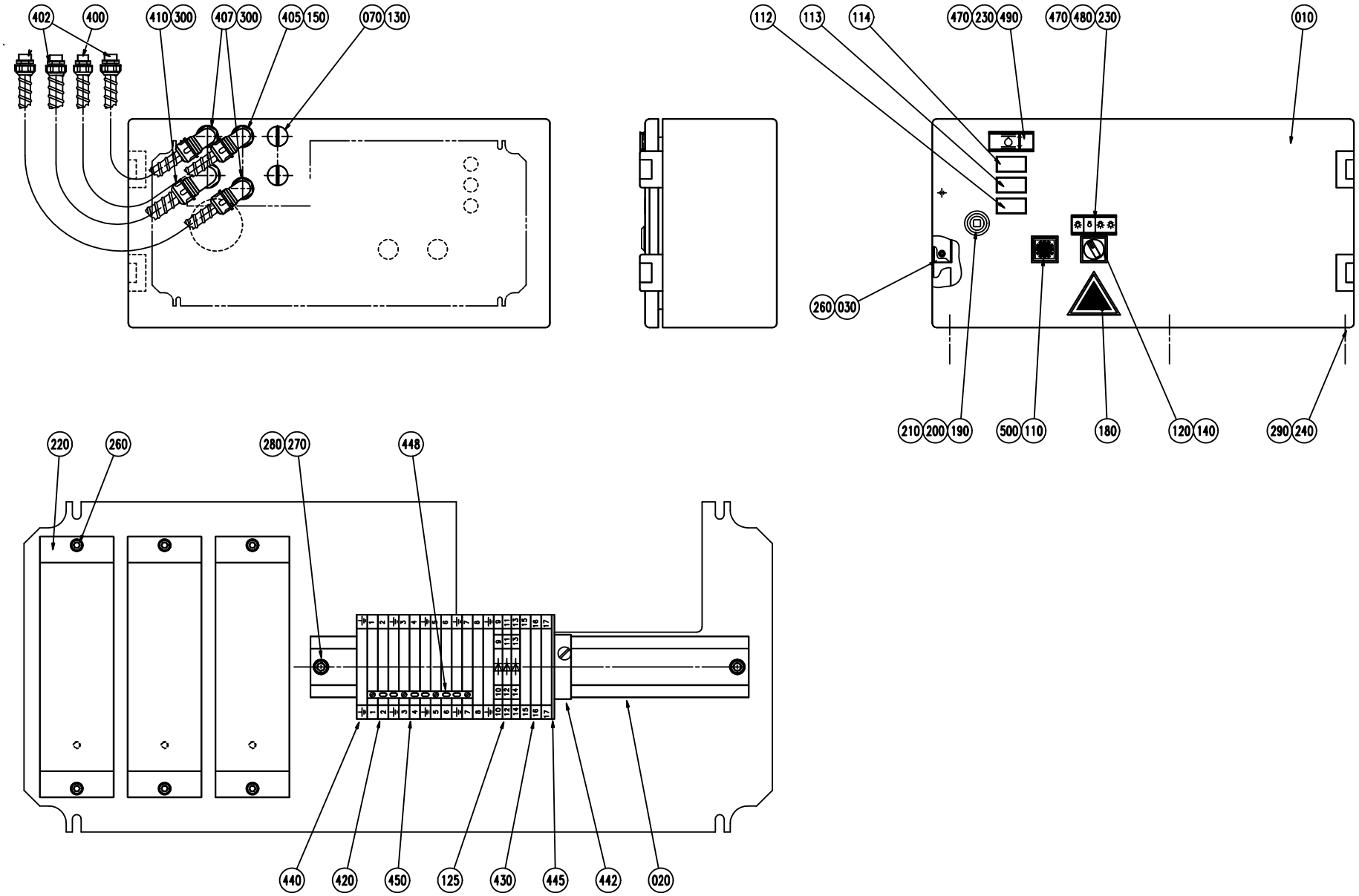
402
400
410
300
407
300
405
150
070
130
112
113
114
470
230
490
470
480
230
010
260
030
210
200
190
500
110
180
120
140
290
240
220
260
280
270
448
440
420
450
125
430
445
442
020

ECM: 72091 - 19981216
Group number: 449930-0500
Assembly Drawing: 449930-5_1_AA

Pos	Part No	SP	UN	Qty	Description	Page No
-						
010	574605-0000	-		1	CONNECTION BOX	
020	90077-0302	-	MM	250	RAIL TS/35X7,5	
030	574606-0000	-		1	SHEET	
070	90002-0009	-		2	BLANK-OFF PLUG, PR 18.6 SKINDICHT-BLK11	
110	90064-0084	D		1	PUSH BUTTON, YELLOW	
112	B90064-0094	D		1	PUSH BUTTON, RED	
	90064-0318	*C*		*1*	*SIGNAL LAMP LED RED*	
113	B90064-0095	D		1	PUSH BUTTON, YELLOW	
	90064-0319	*C*		*1*	*SIGNAL LAMP LED YELLOW*	
114	B90064-0096	D		1	PUSH BUTTON, GREEN	
	90064-0320	*C*		*1*	*SIGNAL LAMP LED GREEN*	
120	90064-0317	D		1	TOUCHGUARD, REPL.BY 90064-335	
125	90077-0115	-		3	TERMINALS, DISCONNECTABLE	
130	90099-0002	-		2	NUT PR 18,6 BRASS	
140	90111-0121	D		1	SWITCH, 3 POS.704.502.0A+2 PCE 704.901.3	
150	90152-0033	-	M	1	SPIRAL CONDUIT FOR PR 15,2(PG 9)	
180	90194-0016	-		1	WARNING SIGN, RISK OF ELECTRIC SHOCK	
190	90237-0319	-		1	LOCK HOUSING, 1000-U134	
200	90237-0320	-		1	LOCK HOUSING, 1000-U136	
210	90237-0335	-		1	LOCKING CATCH	
220	90297-0300	D		3	BALLAST COIL 50HZ	
230	311520-0329	-		4	RIVET, BLANK 2,4X8	
240	312105-0362	-		6	SCREW M6S ISO 4017 M6X8 A480	
260	312115-0287	-		10	SCREW ISO4762 M4X8 A4	
270	312121-0323	-		2	SLOTTED CHEESE HEAD SCREW MCS 5X8 FZB	
280	312601-0314	-		2	MUTTER M6M5FZB	
290	315105-0153	-		6	WASHER BRB6,4X12RFR	
300	352135-0106	-	M	3	SPIRAL CONDUIT DI=16 MM	
400	352136-0113	-		1	GLAND FITTING PR18,6/PG11 DI=12MM	
402	352136-0127	-		3	GLAND FITTING PR 18,6	
405	352137-0113	-		1	COND.FITTING PR 18,6 DI=12MM	
407	352137-0127	-		2	COND.FITTING PR 18,6 DI=16MM	
410	352137-0129	-		1	CABLE GLAND;PR22,5(PG16)	
420	353021-0213	-		8	FEED THROUGH TERMINAL, 10201.0	
430	353021-0217	-		3	FEED THROUGH TERMINAL, 10201.8	
440	353024-0205	-		5	EARTH TERMINAL, 1010.1	
442	353031-0201	-		1	END BRACKET EW35	
445	353032-0005	-		1	END PLATE WAP 2,5-10 BLUE	
448	353034-0031	-		1	BRIDGE CONNECTOR, WQV 4/10, 10520.6	
450	359011-0807	-		2	MARKING PLATES 5-FW 1-50	
470	359240-0100	-		2	SIGN HOLDER FOR 359240-0001	
480	359241-0127	-		1	SIGN, LIGHT, JAW SYSTEM & MACHINE	
490	359241-0158	-		1	SIGN "LEVEL HYDR.OIL TANK"	
500	359301-0125	-		1	SIGN "LUBRICATION"	

Machine Type | Group Description | Used-In | Group Number | Page No

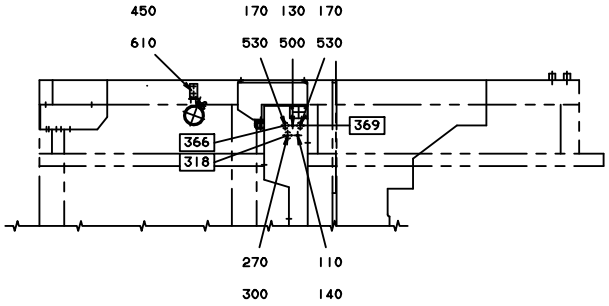

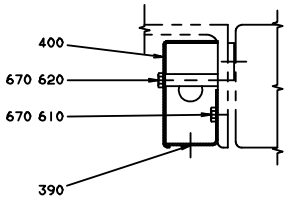

SECTION B-B

(SCALE 1:2)

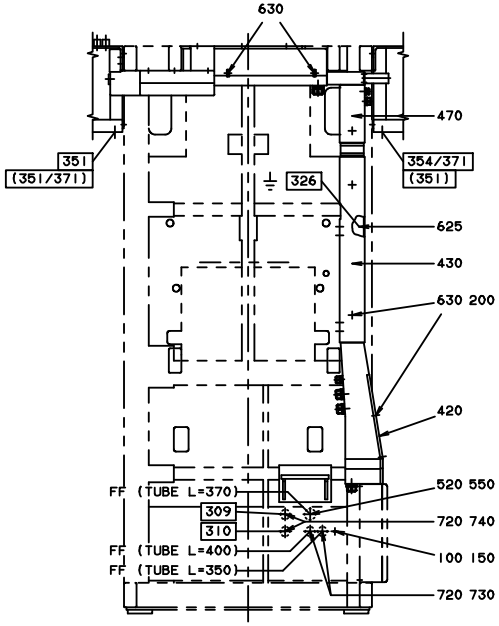

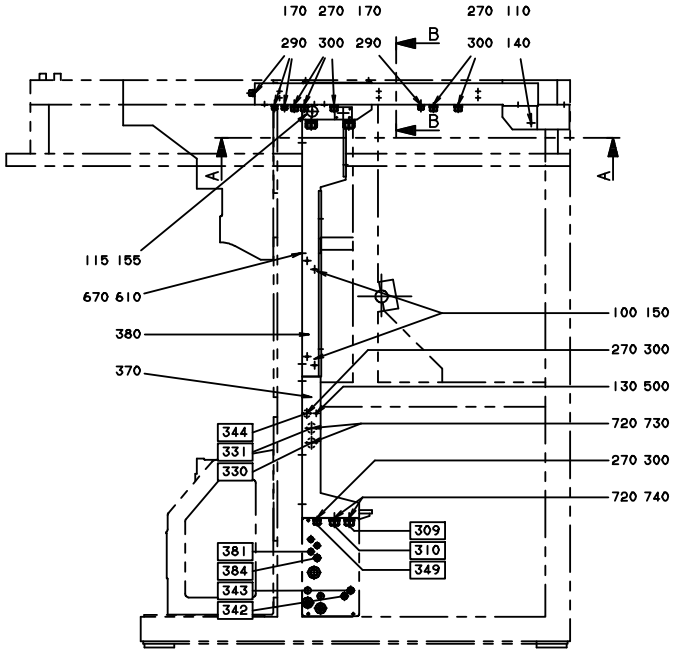

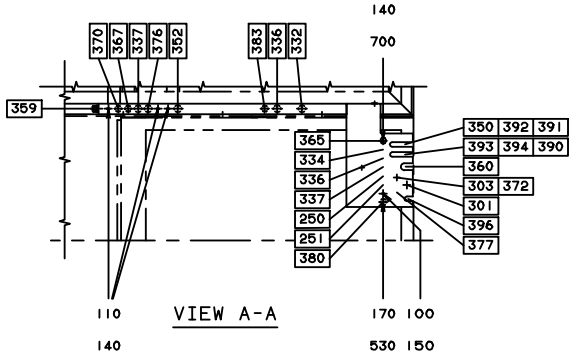

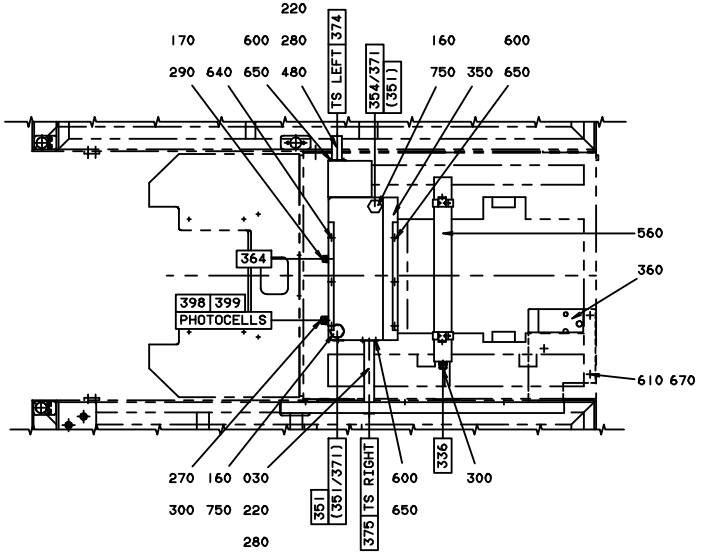

ECM: 98174 - 20011213
Group number: 1361566-0100
Assembly Drawing: 1361566-1_1_AC

Pos	Part No	SP	UN	Qty	Description	Page No
-						
030	450292-0000	-		1	ATTACHMENT PIPE	
100	90002-0004	-		6	BLANK-OFF PLUG, PR 22,5 SKINDICHT-BLK16	
110	90002-0009	-		6	BLANK-OFF PLUG, PR 18.6 SKINDICHT-BLK11	
115	90002-0010	-		1	BLANK-OFF PLUG, PR 37 SKINDICHT-BLK29	
130	90099-0001	-		2	NUT PR 15,2 MäSSING	
140	90099-0002	-		6	NUT PR 18,6 BRASS	
150	90099-0003	-		7	NUT	
155	90099-0011	-		1	NUT PR 37 BRASS	
160	90152-0029	-	M	2	HOSE 35/41	
170	90152-0033	-	MM	6800	SPIRAL CONDUIT FOR PR 15,2(PG 9)	
200	315101-0136	-		5	BRICKA BRB, 4,3/8 H=0,8	
220	342991-0108	-		2	HOSE CLIP 38-50MMRFR	
270	352135-0106	-	MM	6400	SPIRAL CONDUIT DI=16 MM	
280	352135-0116	-	MM	3800	FLEXIBLE CONDUIT DIA. 40	
290	352136-0113	-		4	GLAND FITTING PR18,6/PG11 DI=12MM	
300	352136-0127	-		11	GLAND FITTING PR 18,6	
350	547220-0000	-		1	CABLE DUCT	
360	575464-0000	-		1	CABLE DUCT	
370	540721-0000	-		1	CABLE DUCT	
380	450284-0000	-		1	CABLE DUCT	
390	450285-0000	-		1	CABLE DUCT	
400	450286-0000	-		1	LID	
420	540722-0000	-		1	LID	
430	450287-0000	-		1	LID	
450	246374-0000	-		2	BRACKET	
470	450290-0000	-		1	LID	
480	450291-0000	-		1	ATTACHMENT PIPE	
500	90002-0013	-		2	BLANK-OFF PLUG, PR 15,2 SKINDICHT-BLK9	
520	90012-0061	-		1	GLAND	
530	90012-0063	-		4	CABLE GLAND PR 15,2	
550	90152-0031	-	MM	370	HOSE	
560	B90164-0016	-		1	LIGHT FIXTURE, DWD118B	
	90297-0002	*-*		*1*	*FLUORESCENT TUBE, TLD 18/33*	
600	312101-0325	-		11	SCREW M6S M5X10 FZB	
610	312101-0364	-		18	SCREW M6S M6X10 FZB	
620	312101-0380	-		3	SCREW M6S M6X50 FZB	
625	312101-0447	-		1	SCREW M6S M8X12 FZB	
630	312121-0287	-		7	SLOTTED CHEESE HEAD SCREW MCS 4X8 FZB	
640	312141-0325	-		3	SCREW COUNTERS.SLOT.HD. MFS 5X10 FZB	
650	315101-0146	-		11	WASHER PLAIN, BRB, 5,3/10 H=1	
670	315101-0153	-		15	WASHER PLAIN, BRB, 6,4/12 H=1,5	
700	352103-0106	-		1	CABLE GLAND, ST 11, PR18,6/PG11	
720	352135-0109	-	MM	3700	HOSE .022	
730	352136-0142	-		4	GLAND FITTING	
740	352136-0143	-		4	GLAND FITTING	
750	352136-0167	-		2	GLAND FITTING	

Machine Type	Group Description	Used-In	Group Number	Page No

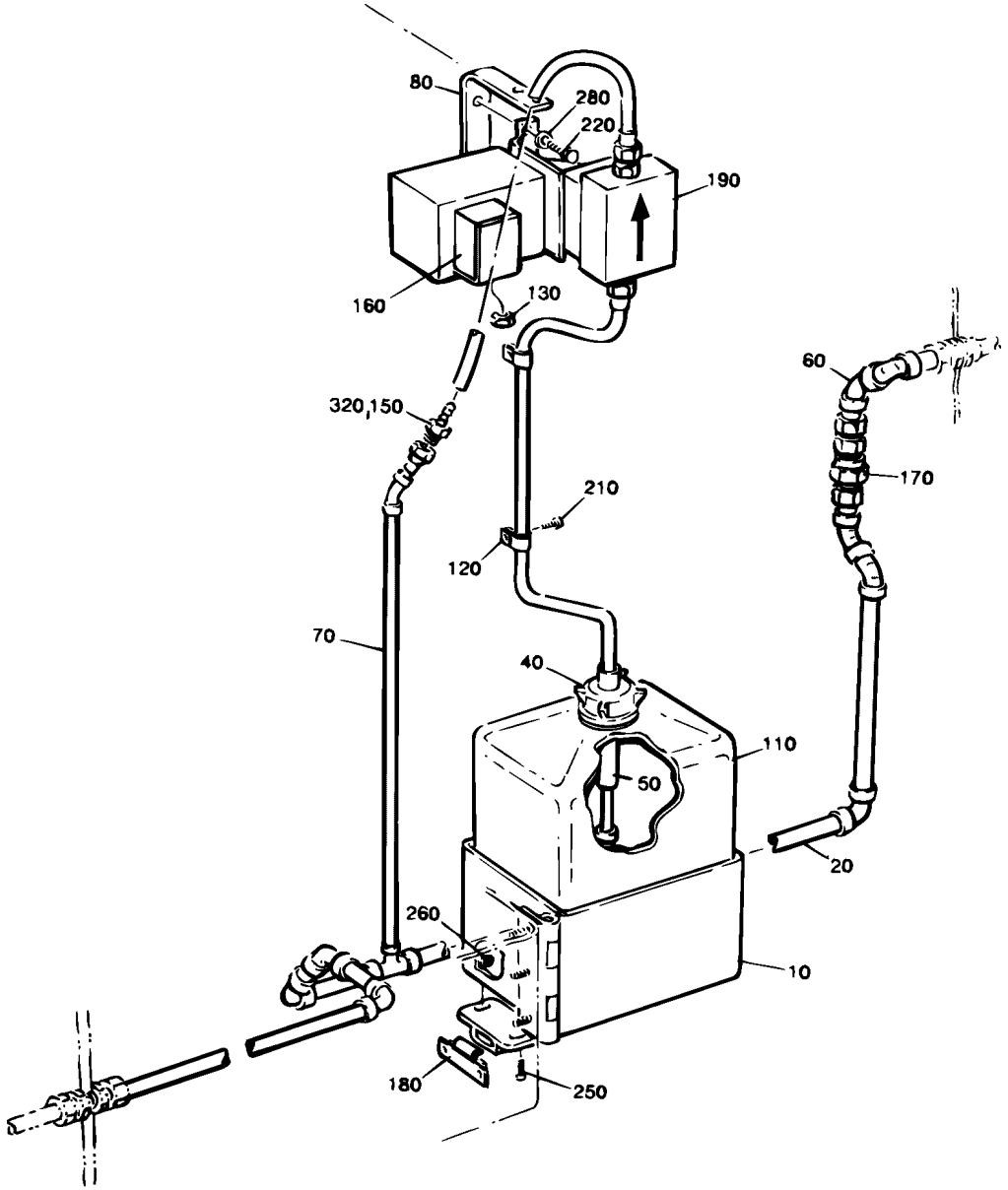
80
280
220
190
160
130
60
320,150
170
210
120
70
40
110
50
20
260
10
180
250

ECM: 72091 - 19981216
Group number: 450792-0100
Assembly Drawing: 450792-1_1_AA

Pos	Part No	SP	UN	Qty	Description	Page No
-						
010	547906-0000	-		1	SHELF	
020	450793-0000	-		1	PIPE	
040	35962-0000	C		1	LID	
050	259867-0000	D		1	HOSE CLAMP	
060	450794-0000	-		1	PIPE	
070	450795-0000	-		1	PIPE	
080	450796-0000	-		1	BRACKET	
110	90050-0011	-		1	BOTTLE	
120	90074-0002	-		2	CABLE CLIPS, D=11 MM	
130	90099-0003	-		1	NUT	
150	90131-0004	-		1	HOSE COUPLING	
160	90195-0020	-		1	TERMINAL BLOCK, 1977.2	
170	90230-0021	C		1	NON RETURN VALVE, NO. RHD-15-L/MS 59	
180	90237-0046	-		1	MAGNETIC LOCK, 46X33X15 MM	
190	B90321-0037	C		1	PUMP C-6125P EP 220V;50HZ	
	90321-0396	*C*		*1*	*FILTER*	
	90321-0380	*C*		*1*	*DIAPHRAGM*	
	90166-0157	*C*	*MM*	*1500*	*HOSE*	
210	312105-0323	-		5	SKRUV M6S ISO 4017 M5X8 A480	
220	312105-0368	-		4	SCREW M6S M6X16 A280	
250	312125-0220	-		2	SLOTTED CHEESE HEAD SCREW MCS 3X6 SS	
260	312605-0310	-		2	HEXAGON NUT, M6M M3 A280	
280	315105-0153	-		3	WASHER BRB6,4X12RFR	
320	352136-0127	-		1	GLAND FITTING PR 18,6	

Pos	Part No	SP	UN	Qty	Description	Page No

Machine Type | Group Description | Used-In | Group Number | Page No

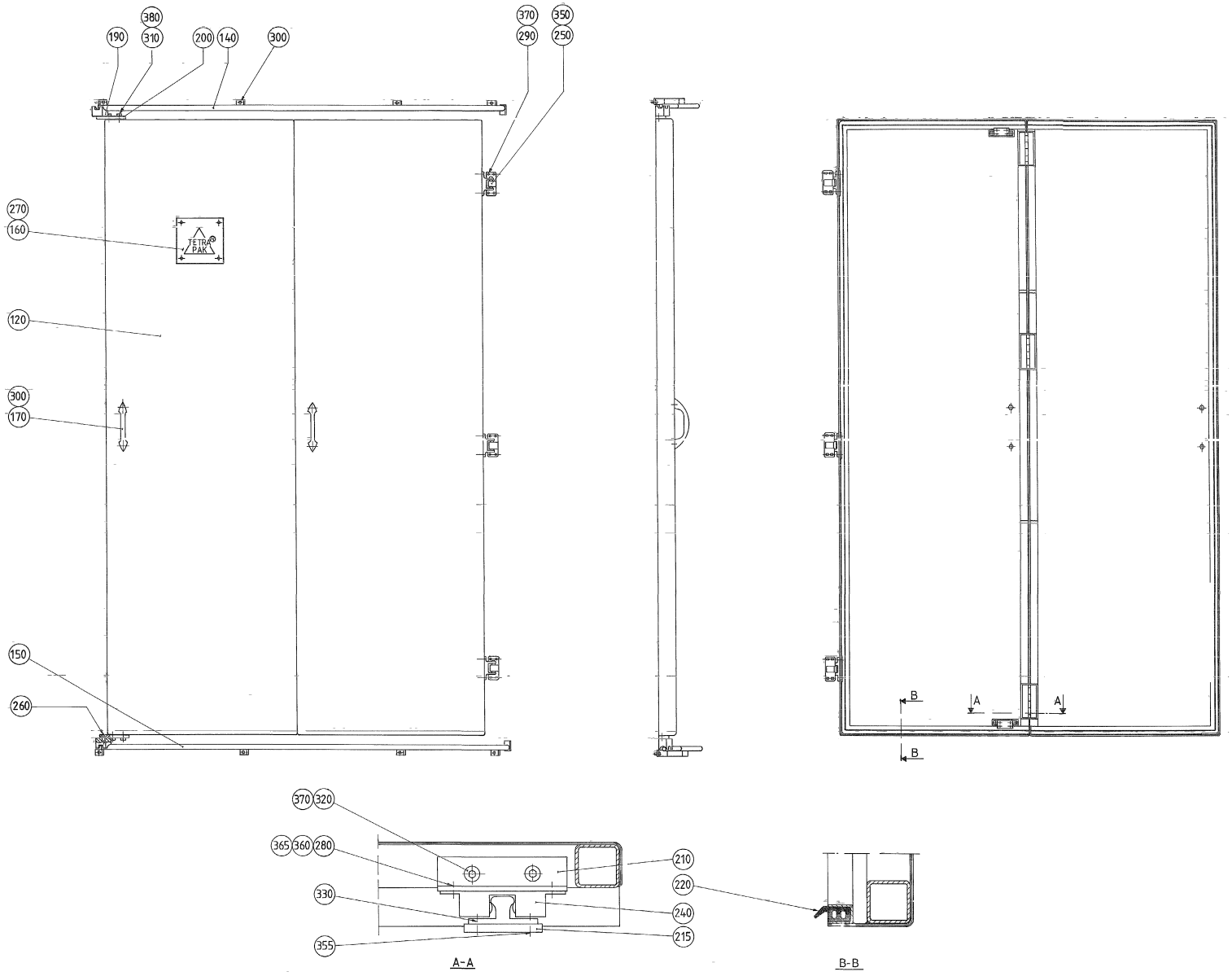
380
190
310
200
140
300
370
290
350
250
270
160
120
300
170
150
260
TETRA PAK
B
A
A
B
370
320
365
360
280
330
355
210
220
240
215
A-A
B-B

ECM: 72091 - 19981216
Group number: 450824-0200
Assembly Drawing: 450824-2_1_AA

Pos	Part No	SP	UN	Qty	Description	Page No
-						
120	549044-0000	-		1	DOOR	
140	269320-0000	-		1	RAIL	
150	269321-0000	-		1	RAIL	
160	544539-0000	-		1	HOUSEMARK REPBY 0574658-0000	
170	7309-0000	-		2	HANDLE	
190	230226-0000	C		2	BLOCKING PIECE	
200	246739-0000	D		2	BRACKET	
210	450826-0000	D		2	BRACKET	
215	450973-0000	D		2	BRACKET	
220	90143-0049	D	MM	6000	RUBBERSTRIP 11X21MM	
240	90237-0070	-		2	SNAP-IN BALL LOCK, 69X19 MM	
250	90248-0013	-		3	HINGE 3562E STUV	
260	311103-0403	-		2	PARALLELL PIN, M6, 8X25 MM	
270	311520-0420	-		4	RIVET, BLANK 3,2X4	
280	312105-0291	-		4	SCREW M6S ISO 4017 M4X12 A480	
290	312105-0327	-		12	SCREW M6S ISO 4017 M5X12 A480	
300	312105-0366	-		12	SCREW M6S M6X12 A280	
310	312105-0368	-		4	SCREW M6S M6X16 A280	
320	312115-0325	-		4	SCREW ISO4762 M5X10 A4	
330	312145-0285	-		4	SCREW COUNTERS.SLOT.HD. MFS 4X6 SS	
350	312145-0325	-		12	SCREW COUNTERS.SLOT.HD. MFS 5X10 SS	
355	312145-0327	-		4	SCREW COUNTERS.SLOT.HD. MFS 5X12 SS	
360	312605-0312	-		4	HEXAGON NUT, M6M M4 A280	
365	315105-0136	-		4	WASHER BRB4,3XRFR	
370	315105-0146	-		16	BRICKA BRB5,3X10RFR	
380	315105-0153	-		4	WASHER BRB6,4X12RFR	

Pos	Part No	SP	UN	Qty	Description	Page No

Machine Type | Group Description | Used-In | Group Number | Page No

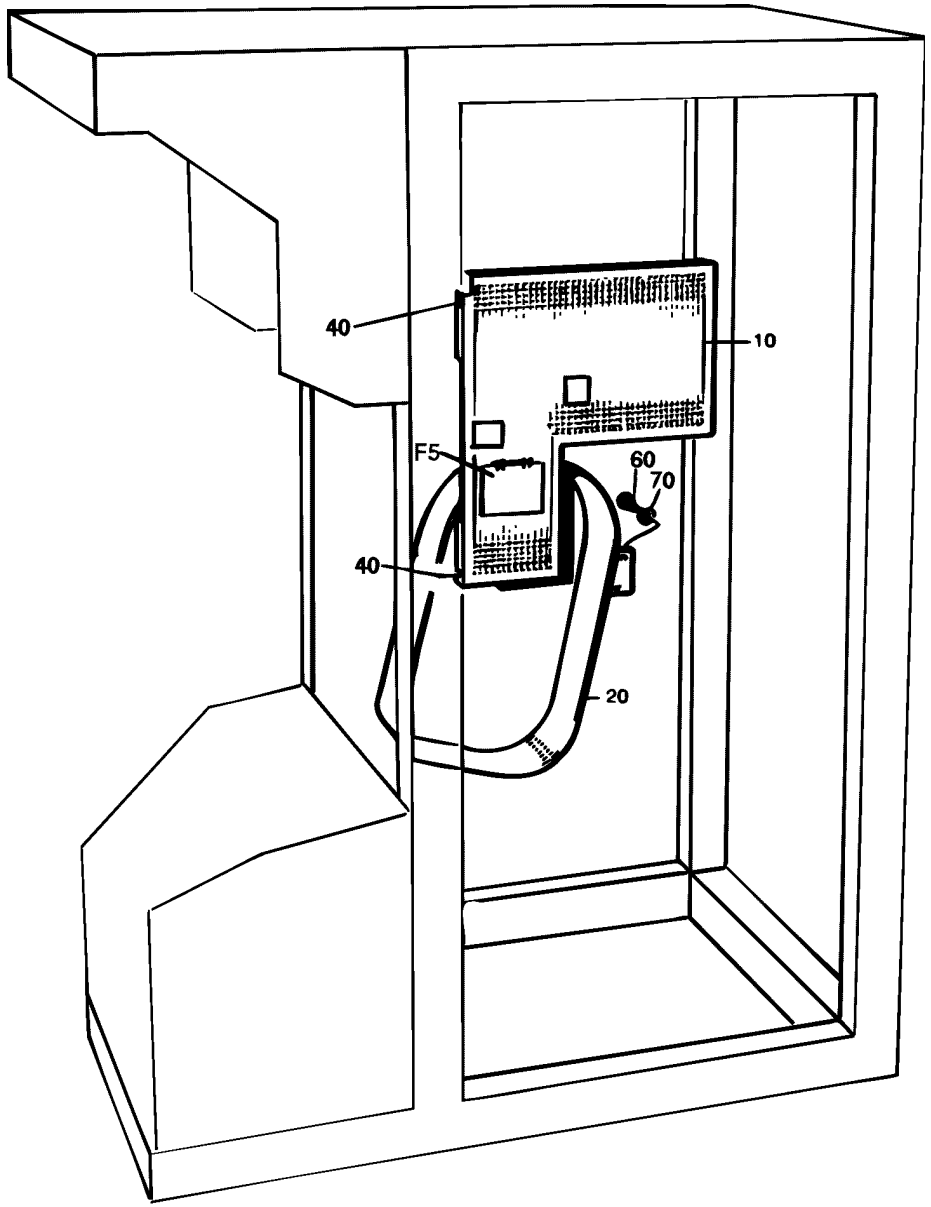
40
10
F5
60
70
40
20

ECM: 72467 - 19990429
Group number: 450883-0400
Assembly Drawing: 450883-2_1_AA

Pos	Part No	SP	UN	Qty	Description	Page No
TBA/8						
F005	A1487414-0100	-		1	HOLDER	**2-139**
Common Parts						
010	440482-0000	-		1	PROTECTION	
020	450884-0000	-		1	PROTECTION	
040	311211-0292	-		2	TAPER PIN THREADED ISO 8737 M6X30 SS	
060	312101-0366	-		6	SCREW M6S M6X12 FZB	
070	315101-0153	-		6	WASHER PLAIN, BRB, 6,4/12 H=1,5	

Pos	Part No	SP	UN	Qty	Description	Page No

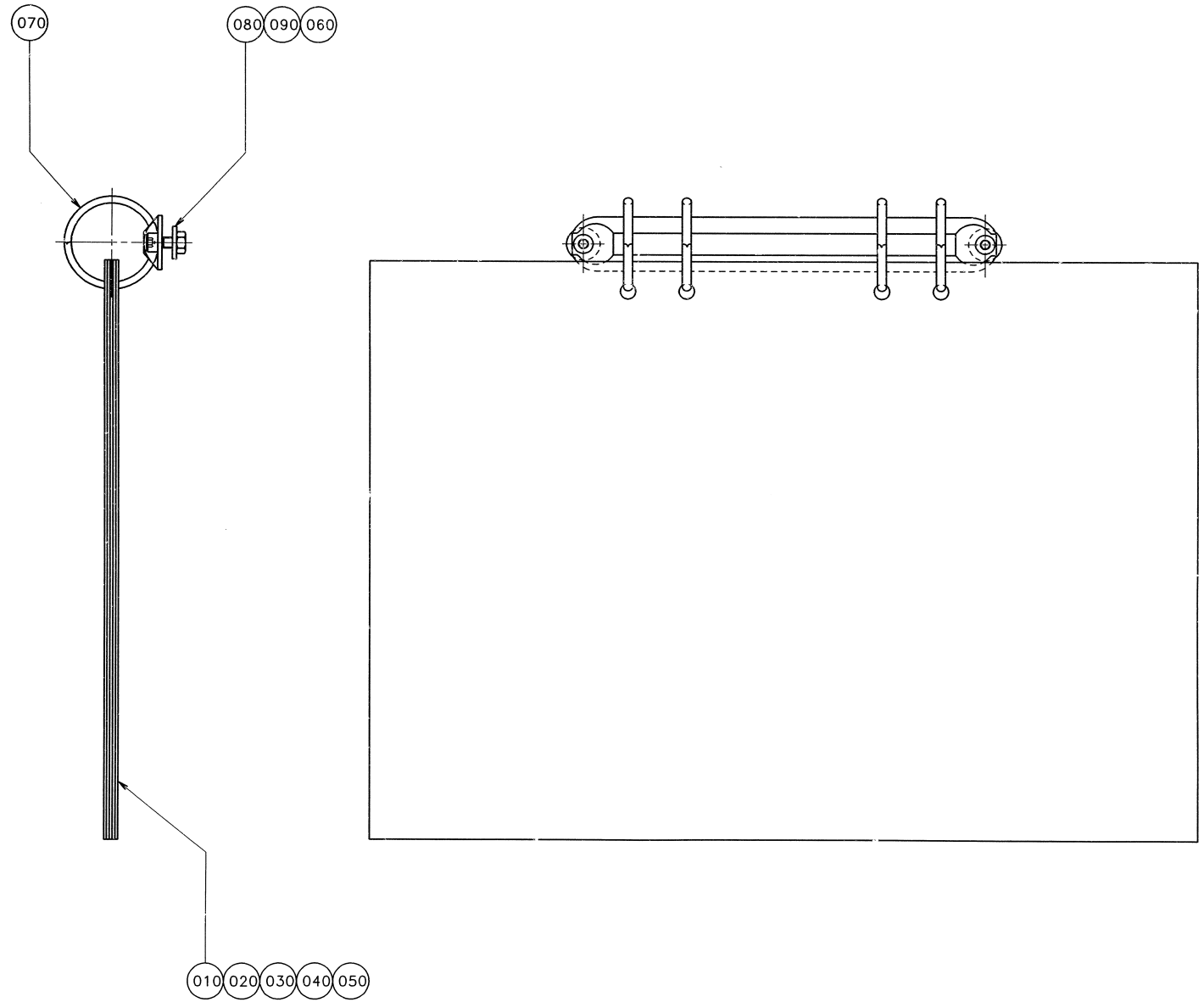
070
080
090
060
010
020
030
040
050

ECM: 72628 - 19990615
Group number: 1487414-0100
Assembly Drawing: 1487414-1_1_AA

Pos	Part No	SP	UN	Qty	Description	Page No
TBA/8 NORMFIN						
010	1487415-0000	-		1	VALVE PANEL	
020	574600-0000	-		1	PNEUMATIC DIAGRAM	
TBA/8 REVFIN						
010	1487416-0000	-		1	VALVE PANEL	
020	1195327-0000	-		1	PNEUMATIC DIAGRAM	
Common Parts						
030	479858-0000	-		1	HYDRAULIC DIAGRAM	
040	576730-0000	-		1	WATER DIAGRAM	
050	561590-0000	-		1	CENTRAL LUBRIC. DIAGRAM	
060	38087-0000	-		2	WASHER	
070	90243-0169	-		1	BINDER CLIP, DIAM.29 MM, NO. 4670819	
080	312115-0325	-		2	SCREW ISO4762 M5X10 A4	
090	312605-0314	-		2	HEXAGON NUT, M6M M5 A280	

Pos	Part No	SP	UN	Qty	Description	Page No

Machine Type | Group Description | Used-In | Group Number | Page No

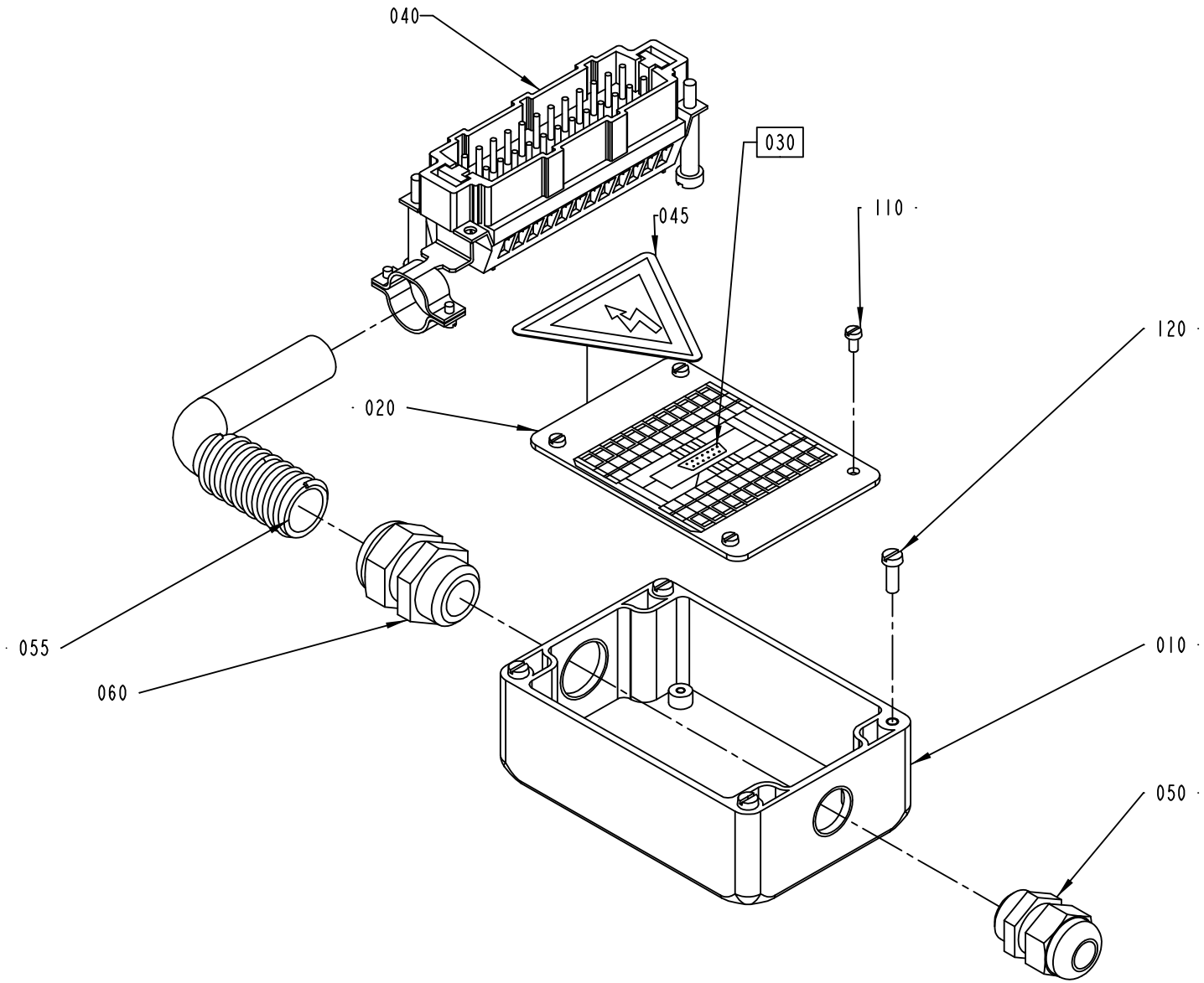

451348-2
ECM 104645

ECM: 110093 - 20020905
Group number: 451348-0200
Assembly Drawing: 451348-2_1_AB

Pos	Part No	SP	UN	Qty	Description	Page No
TBA/8						
010	464297-0000	B		1	CONNECTION BOX	
040	90110-0128	-		1	MALE INSERT, HAN 24 E-M 933 024 2631	
045	90194-0016	-		1	WARNING SIGN, RISK OF ELECTRIC SHOCK	
050	352103-0106	-		1	CABLE GLAND, ST 11, PR18,6/PG11	
055	352135-0106	-	MM	1400	SPIRAL CONDUIT DI=16 MM	
060	352136-0127	-		1	GLAND FITTING PR 18,6	
F030	A68917-0100	B		1	ANGLE INDICATOR	**2-143**
Common Parts						
020	451423-0000	A		1	CIRCUIT BOARD	
110	312125-0220	-		4	SLOTTED CHEESE HEAD SCREW MCS 3X6 SS	
120	312125-0291	-		4	SLOTTED CHEESE HEAD SCREW MCS 4X12 SS	

Pos	Part No	SP	UN	Qty	Description	Page No

This page is intentionally left blank.

ECM: - -
Group number: 68917-0100
Assembly Drawing:

Pos	Part No	SP	UN	Qty	Description	Page No
-						
010	540306-0001	-		1	COMPONENTS WITHOUT TP-NO	
020	540307-0000	-		1	PRINTED CIRCUIT BOARD	

Pos	Part No	SP	UN	Qty	Description	Page No

Machine Type | Group Description | Used-In | Group Number | Page No

Tetra Pak

SPC
Spare Parts Catalogue

Total pages in this module: 26

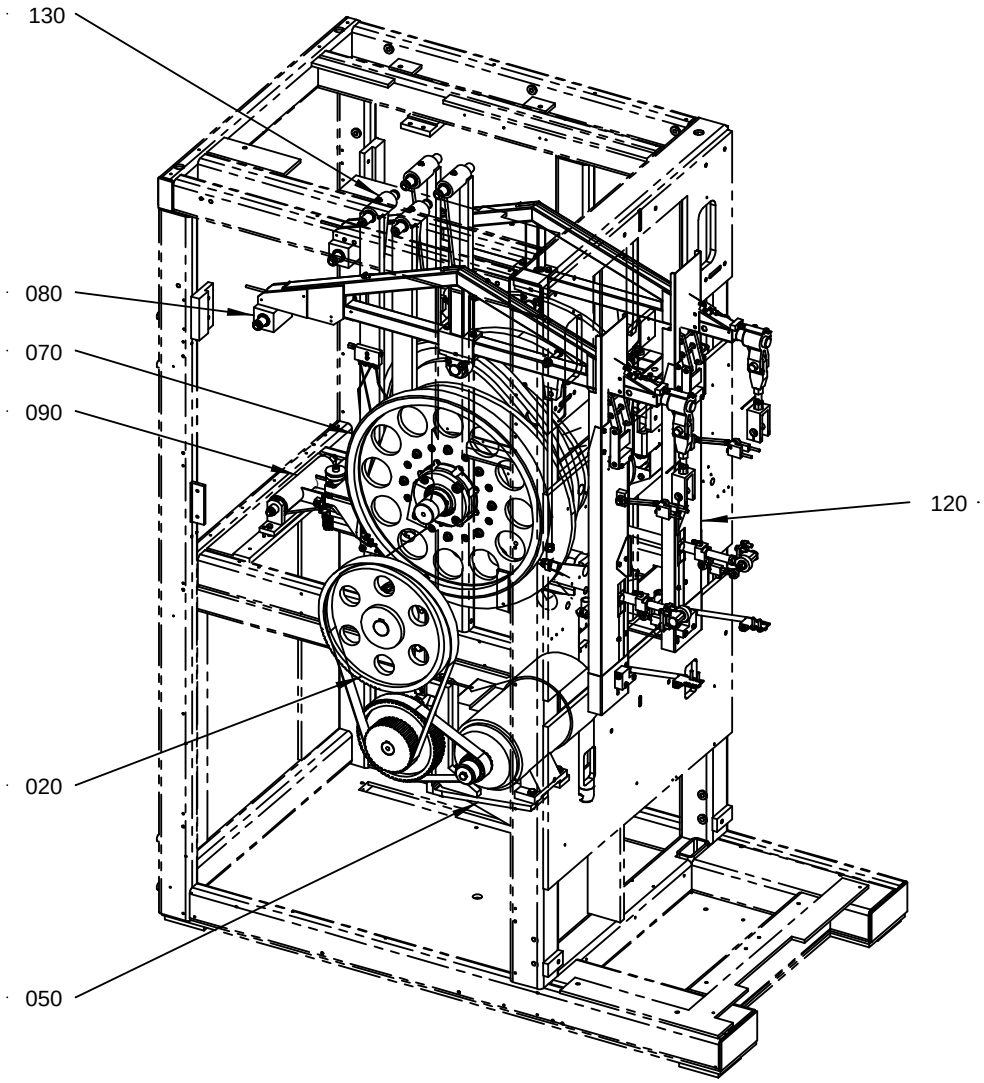

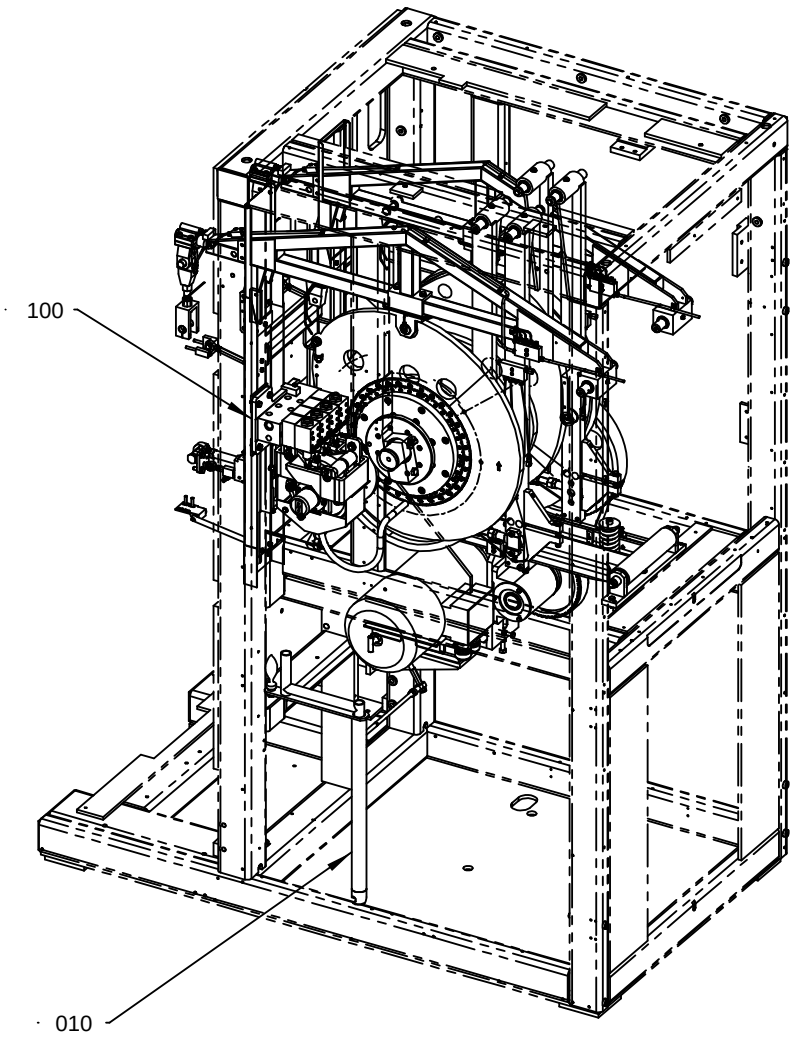

648003-4
ECM | 11500

ECM: 111505 - 20020708
Group number: 648003-1100
Assembly Drawing: 648003-4_1_AA

Pos	Part No	SP	UN	Qty	Description	Page No
-						
F010	A440588-0200	-		1	CRANK	**3-5**
F020	A239890-0300	-		1	INTERMEDIARY SHAFT	**3-7**
F050	A434668-0400	-		1	DRIVE UNIT	**3-9**
F070	A266986-0500	-		1	CURVE SHAFT	**3-11, 3-13**
F080	A243927-0700	-		2	ARM	**3-15**
F090	A593763-0100	-		1	HOLD-DOWN DEVICE	**3-17**
F100	A434669-0400	-		1	IMPULSE TRANSMITTER	**3-19**
F120	A292071-0200	-		1	SPLASH PROTECTION	**3-23**
F130	A434670-0600	-		1	LINK SYSTEM	**3-25**

Pos	Part No	SP	UN	Qty	Description	Page No

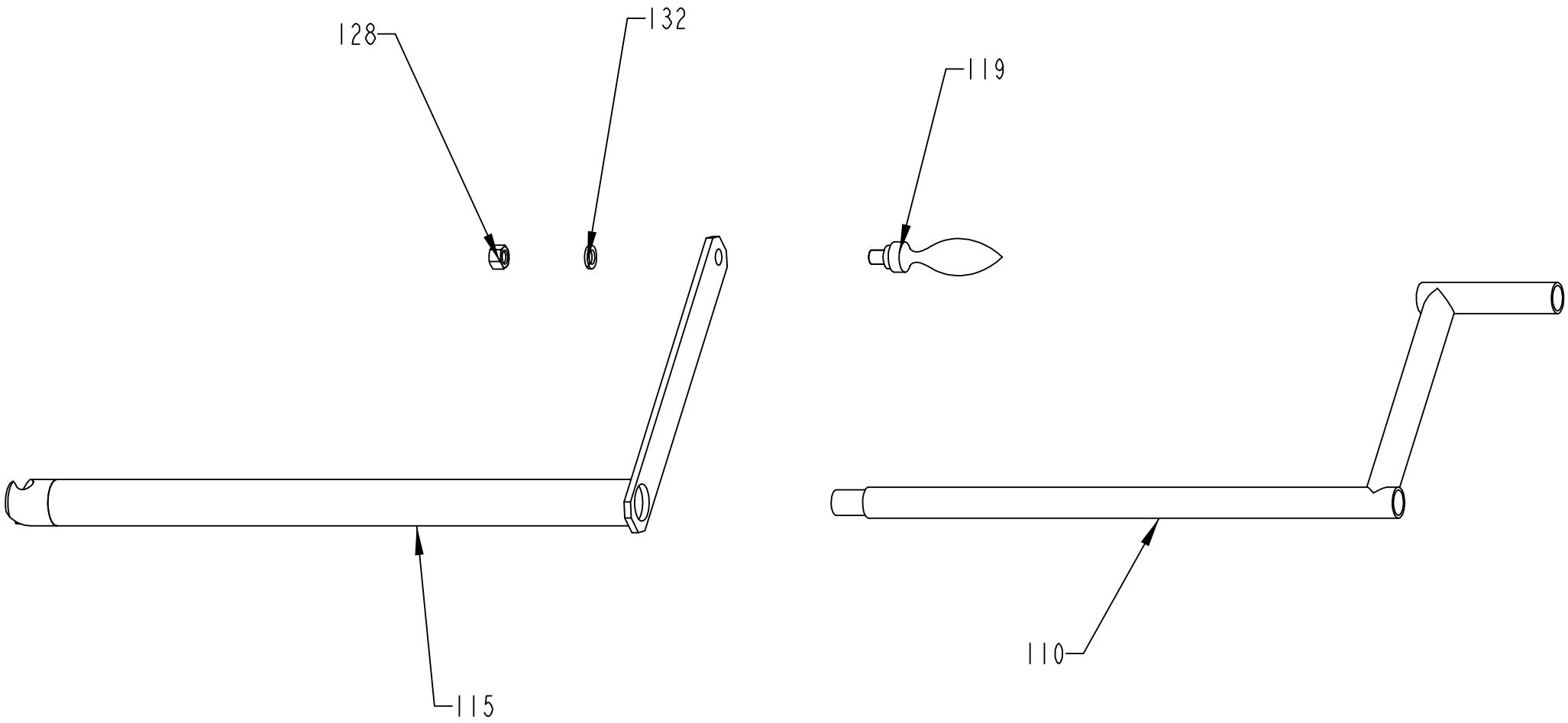
128
132
119
115
110

ECM: 73116 - 20000203
Group number: 440588-0200
Assembly Drawing: 440588-1_1_AB

Pos	Part No	SP	UN	Qty	Description	Page No
-						
110	36885-0000	-		1	CRANK ARM	
115	542262-0000	-		1	CRANK	
119	90017-0009	-		1	HANDLE, SWIVWLLING, SIZE32 /M12 THREAD	
128	312601-0322	-		1	NUT M6M 12-8 FZB	
132	315401-0178	-		1	WASHER FBH12,2FZB	

Pos	Part No	SP	UN	Qty	Description	Page No

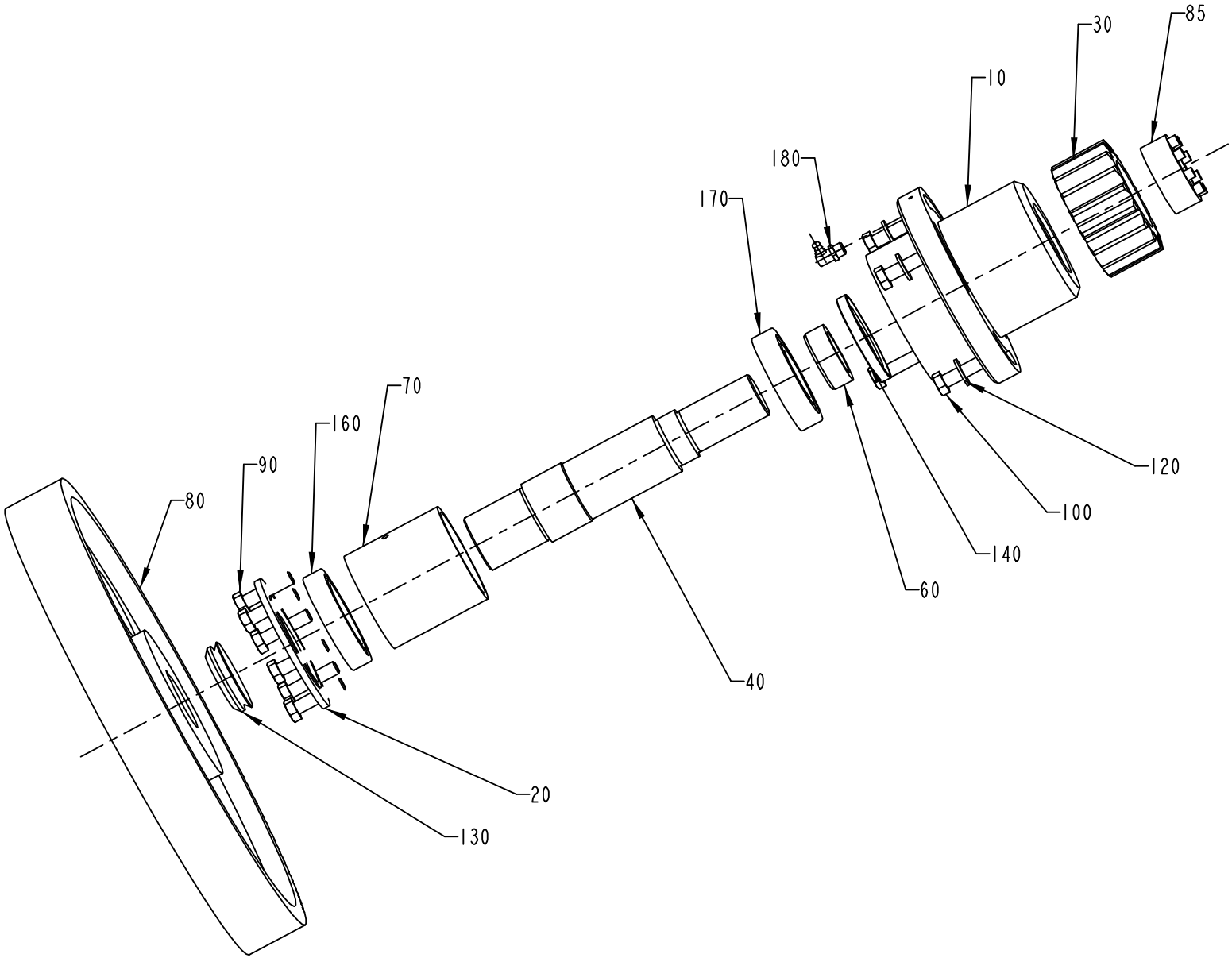
85
30
10
180
170
70
160
90
80
120
100
140
60
40
20
130

ECM: 72907 - 20000117
Group number: 239890-0300
Assembly Drawing: 239890-2_1_AB

Pos	Part No	SP	UN	Qty	Description	Page No
-						
010	237725-0000	-		1	BEARING HOUSING	
020	107095-0000	-		1	LID	
030	499473-0000	D		1	GEAR WHEEL	
040	499474-0000	D		1	SHAFT	
060	111017-0000	-		1	SPACER RING	
070	239870-0000	-		1	SPACER SLEEVE	
080	90196-0067	-		1	PULLEY	
085	90208-0067	-		1	CLAMPING ELEMENT	
090	312101-0449	-		6	SCREW M6S M8X16 FZB	
100	312101-0499	-		4	SCREW M6S M10X40 FZB	
120	315101-0173	-		4	WASHER PLAIN, BRB, 10,5/22 H=2	
130	315220-0198	C		1	V-RINGS 45X55X13 MM V-50S	
140	315221-0197	C		1	RADIAL SEAL 48X72X8 MM	
160	321306-0110	C		1	BALL BEARING, 50X80X16 MM	
170	321309-0108	C		1	BALL BEARING, 40X80X18 MM	
180	344502-0066	-		1	GREASE NIPPLE 90§ R1/8 CON.	

Pos	Part No	SP	UN	Qty	Description	Page No

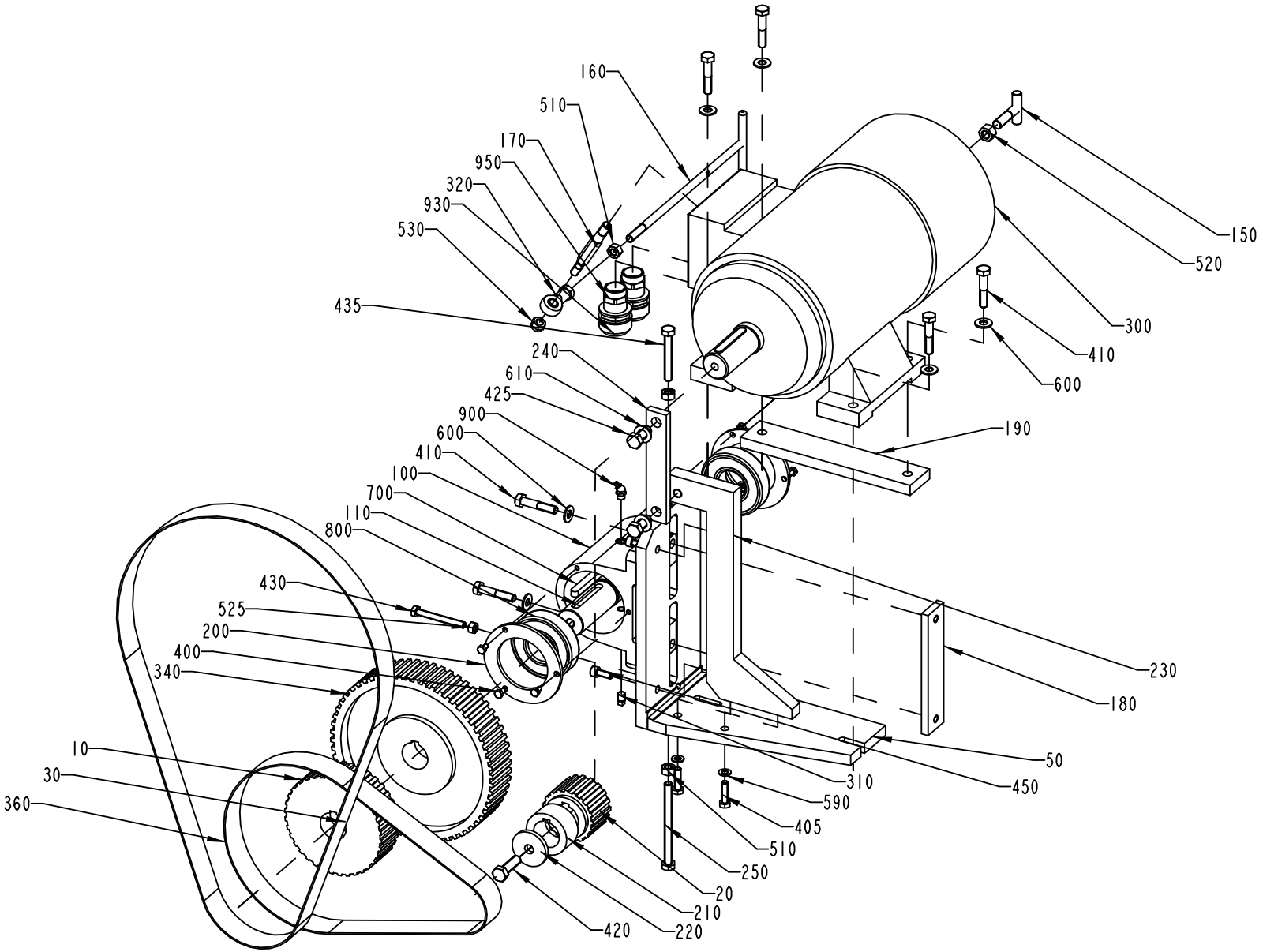
160
510
170
950
320
930
530
435
240
610
425
900
600
410
100
700
110
800
430
525
200
400
340
10
30
360
150
520
300
410
600
190
230
180
50
450
310
590
405
510
250
20
210
220
420

ECM: 72982 - 20000131
Group number: 434668-0400
Assembly Drawing: 434668-2_1_AB

Pos	Part No	SP	UN	Qty	Description	Page No
0355B IH 60HZ, 0375S IH 60HZ, 0500B IH 60HZ, 0500S IH 60HZ, 1000B IH 60HZ, 1000S IH 60HZ, 0750S IH 60HZ, 0750B IH 60HZ						
010	90196-0065	-		1	PULLEY	
020	90196-0062	-		1	PULLEY	
300	B90046-0016	C		1	DRIVE BRAKE MOTOR 60HZ	
	90046-0308	*C*		*1*	*STATOR*	
	90046-0312	*C*		*1*	*RECTIFIER, 1,5A BGE-148/500VAC*	
	90046-0313	*C*		*1*	*BRAKECOIL*	
	90046-0314	*C*		*1*	*BRAKE DISC*	
0375S IH 50HZ, 0355B IH 50HZ, 0500B IH 50HZ, 0500S IH 50HZ, 1000B IH 50HZ, 0750S IH 50HZ, 0750B IH 50HZ, 1000S IH 50HZ						
010	90196-0055	-		1	PULLEY	
020	90196-0062	-		1	PULLEY	
300	B90046-0015	C		1	DRIVE BRAKE MOTOR 50HZ	
	90046-0304	*C*		*1*	*STATOR*	
	90046-0312	*C*		*1*	*RECTIFIER, 1,5A BGE-148/500VAC*	
	90046-0313	*C*		*1*	*BRAKECOIL*	
	90046-0314	*C*		*1*	*BRAKE DISC*	
1000SQ IH 50HZ						
010	90196-0079	-		1	TIMING BELT PULLEY	
020	90196-0062	-		1	PULLEY	
300	B90046-0015	C		1	DRIVE BRAKE MOTOR 50HZ	
	90046-0304	*C*		*1*	*STATOR*	
	90046-0312	*C*		*1*	*RECTIFIER, 1,5A BGE-148/500VAC*	
	90046-0313	*C*		*1*	*BRAKECOIL*	
	90046-0314	*C*		*1*	*BRAKE DISC*	
1000SQ IH 60HZ						
010	90196-0090	-		1	TIMING BELT PULLEY	
020	90196-0061	-		1	PULLEY	
300	B90046-0016	C		1	DRIVE BRAKE MOTOR 60HZ	
	90046-0308	*C*		*1*	*STATOR*	
	90046-0312	*C*		*1*	*RECTIFIER, 1,5A BGE-148/500VAC*	
	90046-0313	*C*		*1*	*BRAKECOIL*	
	90046-0314	*C*		*1*	*BRAKE DISC*	
Common Parts						
030	90417-0134	C		1	TIMING BELT 12,7X1600,2X38,1	
050	530754-0000	-		1	FASTENING BRACKET	
100	436482-0000	-		1	BEARING BRACKET	
110	436483-0000	D		1	SHAFT	
150	37097-0000	D		1	CARRIER	
160	434379-0000	D		1	TIE ROD	
170	434380-0000	D		1	SHAFT	
180	436484-0000	-		1	BRACKET	
190	436485-0000	-		1	LACE	
200	436486-0000	-		2	LID	
210	436487-0000	-		1	SPACER	
220	436488-0000	-		1	WASHER	
230	450145-0000	-		1	STRUT	
240	450146-0000	-		1	STRUT	
250	530755-0000	-		1	SCREW	
310	90087-0003	-		1	PIPE PLUG	
320	90115-0105	D		1	ROD END, ID=10 MM, M10X1,5	
340	90196-0066	-		1	PULLEY	
360	90417-0133	C		1	TIMING BELT 12,7X990,6X38,1	
400	312101-0364	-		6	SCREW M6S M6X10 FZB	
405	312101-0455	-		2	SCREW M6S M8X30 FZB	
410	312101-0501	-		6	SCREW M6S M10X50 FZB	
420	312101-0540	-		1	SCREW M6S M12X40 FZB	
425	312101-0536	-		2	SCREW M6S M12X30 FZB	
430	312104-0465	-		1	SCREW M6S M8X70H FZB	
435	312104-0505	-		1	SCREW M6S M10X70H FZB	
450	312111-0451	-		2	SCREW HEX.SOCK.HD.MC6S-TT 8X20 88 FZB	
510	312601-0320	-		3	NUT M6M 10-8 FZB	
520	312601-0322	-		1	NUT M6M 12-8 FZB	
525	312601-0318	-		1	NUT M6M8FZB	
530	312812-0320	-		1	HEXAGON NUT, NY-LOCK M10 A480	
590	315101-0165	-		2	WASHER PLAIN, BRB, 8,4/16 H=1,5	
600	315101-0173	-		6	WASHER PLAIN, BRB, 10,5/22 H=2	
610	315101-0178	-		2	WASHER PLAIN, BRB, 13/24 H=2	
700	315701-0307	-		1	PARALLEL KEY W. ROUND ENDS 10X8X70 MM	
800	321316-0108	C		2	BALL BEARING, 40X90X23 MM	
900	344502-0046	-		1	GREASE NIPPLE 45§ R1/8 CON.	
930	352136-0143	-		2	GLAND FITTING	
950	352100-0115	-		2	CABLE GLANR.28,3-15,5	

Machine Type Group Description Used-In Group Number Page No

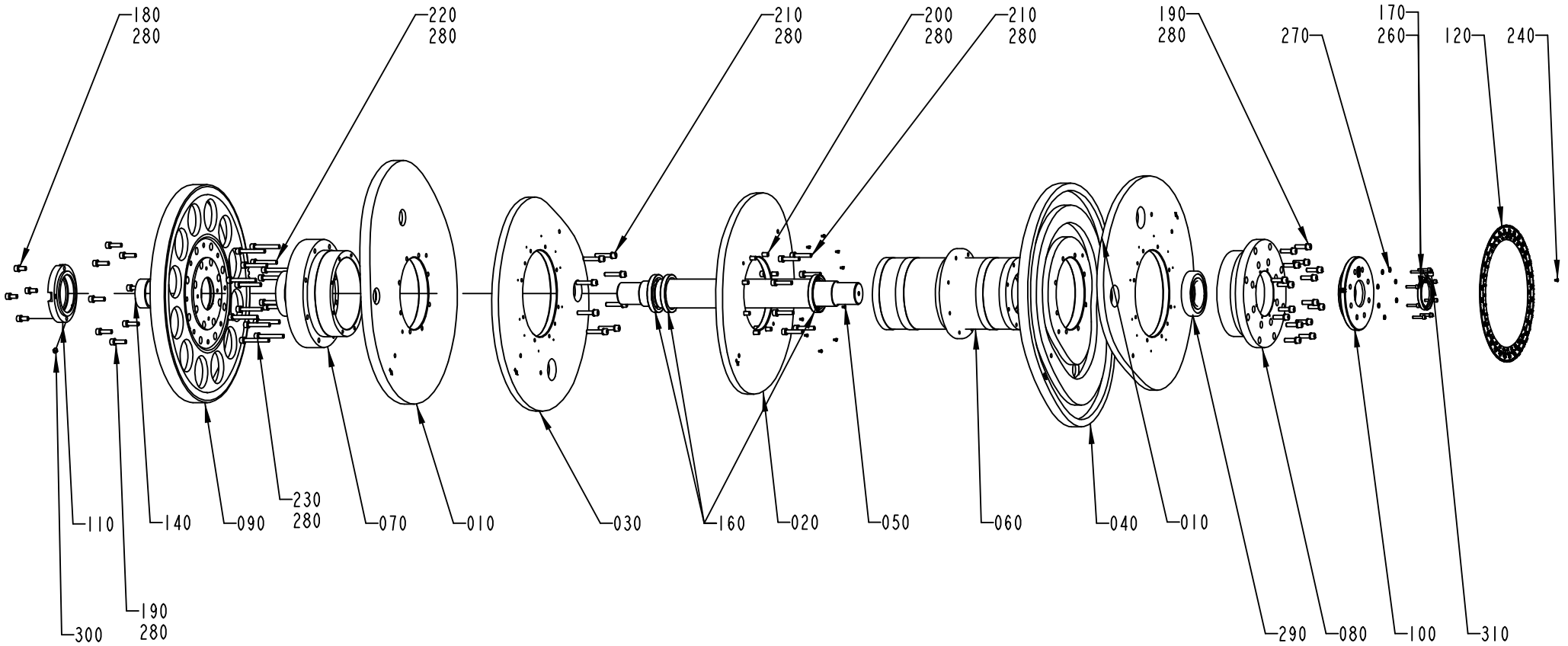
180
280
220
280
210
280
200
280
210
280
190
280
270
170
260
120
240
110
140
090
230
280
070
010
030
160
020
050
060
040
010
290
080
100
310
300
190
280

ECM: 73060 - 20000411
Group number: 266986-0500
Assembly Drawing: 266986-1_1_AB

This list covers pages from 3-10 to 3-13

Pos	Part No	SP	UN	Qty	Description	Page No
0355B						
010	551907-0000	D		2	MAIN CAM	
020	551910-0000	D		1	COUNTER CAM	
030	564623-0000	D		1	CAM LEFT	
040	564624-0000	D		1	CAM RIGHT	
0375S						
010	449716-0000	D		2	MAIN CAM	
020	449719-0000	D		1	COUNTER CAM	
030	564528-0000	D		1	CAM LEFT	
040	564529-0000	D		1	CAM RIGHT	
0500B						
010	283157-0000	D		2	MAIN CAM	
020	283160-0000	D		1	COUNTER CAM	
030	563728-0000	D		1	CAM LEFT	
040	563729-0000	D		1	CAM RIGHT	
0500S						
010	532032-0000	D		2	MAIN CAM	
020	532033-0000	D		1	COUNTER CAM	
030	564621-0000	D		1	CAM LEFT	
040	564622-0000	D		1	CAM RIGHT	
0750B						
010	565668-0000	D		2	MAIN CAM	
020	532097-0000	D		1	COUNTER CAM	
030	564526-0000	D		1	CAM LEFT	
040	564527-0000	D		1	CAM RIGHT	
0750S						
010	545101-0000	D		2	MAIN CAM	
020	551825-0000	D		1	COUNTER CAM	
030	564933-0000	D		1	CAM LEFT	
040	564934-0000	D		1	CAM RIGHT	
1000B HIFIN						
010	540270-0000	D		2	MAIN CAM	
020	549928-0000	D		1	COUNTER CAM	
030	564524-0000	D		1	CAM LEFT	
040	564525-0000	D		1	CAM RIGHT	
1000B LOFIN						
010	530529-0000	D		2	MAIN CAM	
020	530532-0000	D		1	COUNTER CAM	
030	560391-0000	D		1	CAM LEFT	
040	560392-0000	D		1	CAM RIGHT	
1000S						
010	569049-0000	D		2	MAIN CAM	
020	569050-0000	D		1	COUNTER CAM	
030	569051-0000	D		1	CAM LEFT	
040	569052-0000	D		1	CAM RIGHT	
1000SQ						
010	579641-0000	D		2	MAIN CAM	
020	579642-0000	D		1	COUNTER CAM	
030	579643-0000	D		1	CAM LEFT	
040	579644-0000	D		1	CAM RIGHT	
Common Parts						
050	23458-0000	D		1	SHAFT	
060	239533-0000	-		1	DRUM	
070	239534-0000	-		1	FLANGE	
080	239535-0000	-		1	FLANGE	
090	239536-0000	D		1	GEAR WHEEL	
100	243016-0000	D		1	GEARING	
110	107062-0000	-		1	LID	
120	246982-0000	-		1	PROTRACTOR	
140	23462-0000	D		1	SPACER RING	
160	90091-0029	C		3	RADIAL SEAL 80X105X13 MM	
170	312111-0374	-		8	SCREW HEX.SOCK.HD.MC6S-TT 6X30 88 FZB	
180	312111-0492	-		4	SCREW HEX.SOCK.HD.MC6S-TT 10X22 88 FZ	
190	312111-0497	-		24	SCREW HEX.SOCK.HD.MC6S-TT 10X35 88 FZ	
200	312111-0499	-		8	SCREW HEX.SOCK.HD.MC6S-TT 10X40 88 FZ	
210	312111-0501	-		16	SCREW HEX.SOCK.HD.MC6S-TT 10X50 88 FZ	
220	312111-0504	-		8	SCREW HEX.SOCK.HD.MC6S-TT 10X65 88 FZ	
230	312111-0506	-		8	SCREW HEX.SOCK.HD.MC6S-TT 10X75 88 FZ	
240	312121-0285	-		10	SLOTTED CHEESE HEAD SCREW MCS 4X6 FZB	
260	315221-0221	C		1	RADIAL SEAL 70X90X10 MM	
270	315401-0153	-		8	WASHER FBH6,1FZB	
280	315401-0173	-		68	WASHER FBH10,2FZB	
290	321309-0114	C		2	BALL BEARING, 70X125X24 MM	
300	344502-0026	-		1	GREASE NIPPLE STRAIGHT R1/8 CON.	

Machine Type | Group Description | Used-In | Group Number | Page No

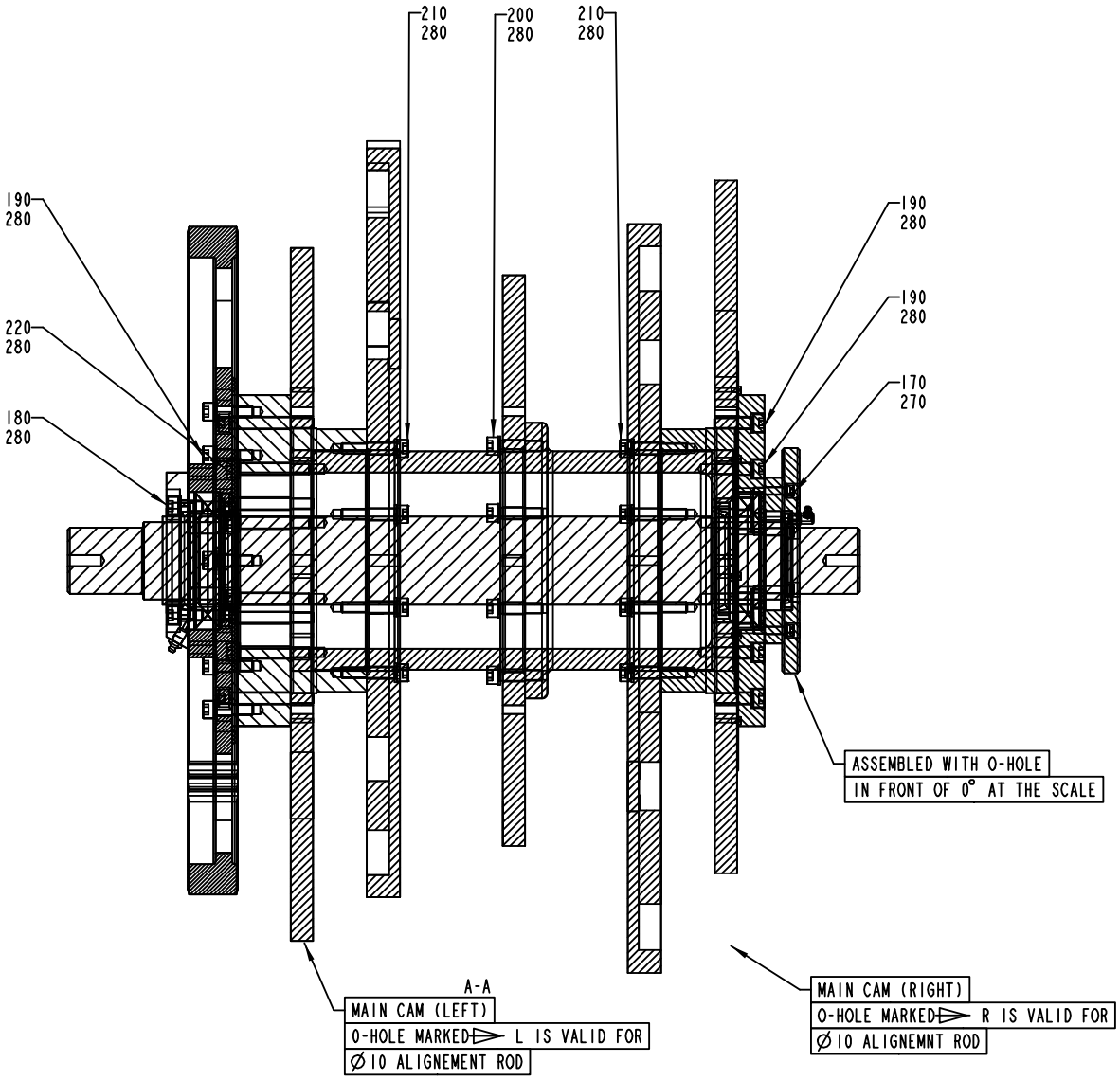

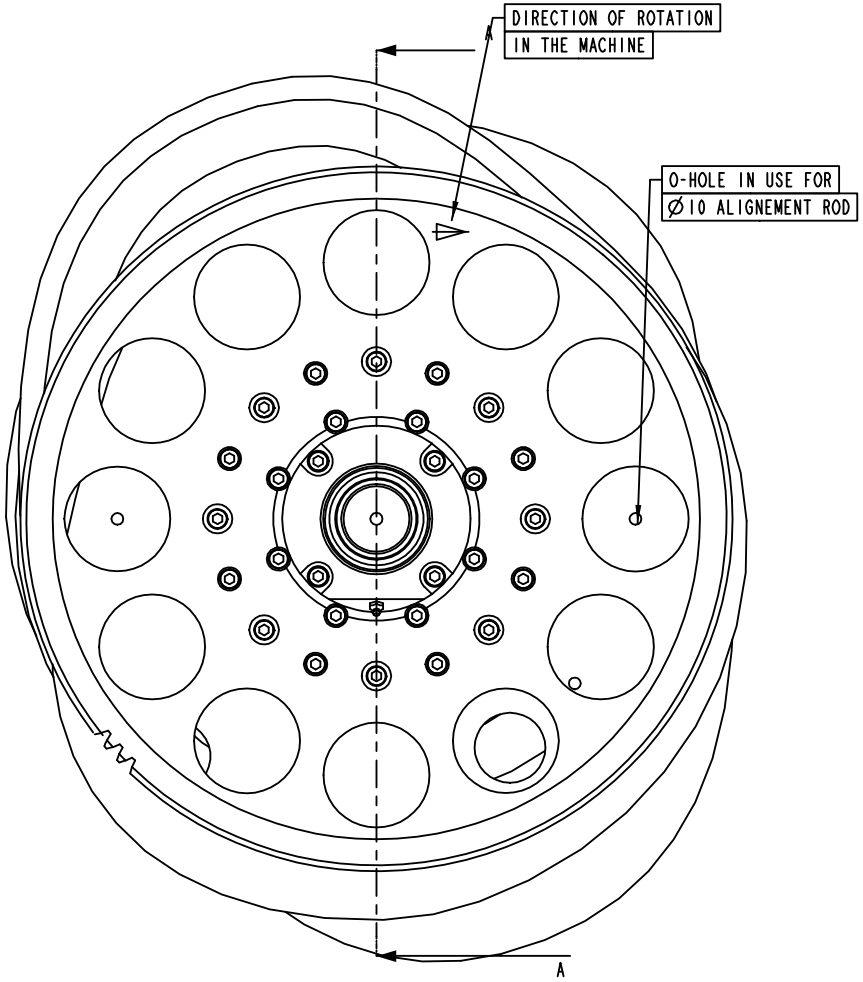

FOR M10 SCREWS TIGHTENED TORQUE: 30 Nm

Pos	Part No	SP	UN	Qty	Description	Page No
Common Parts (Cont'd)						
310	344502-0066	-		1	GREASE NIPPLE 90§ R1/8 CON.	

Pos	Part No	SP	UN	Qty	Description	Page No

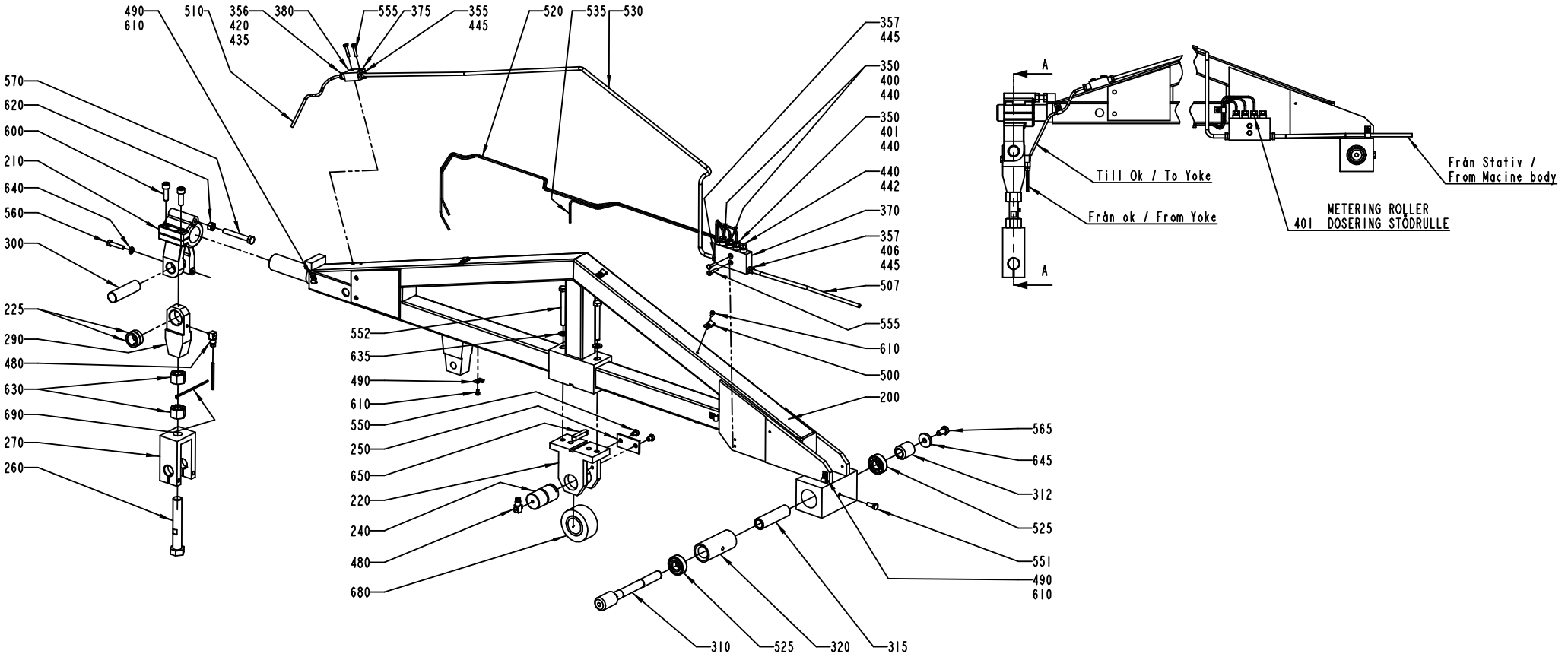
490
610
510
356
420
435
380
555
375
355
445
520
535
530
357
445
350
400
440
350
401
440
440
442
370
357
406
445
507
555
610
500
200
565
645
312
525
551
490
610
570
620
600
210
640
560
300
225
290
480
630
690
270
260
552
635
490
610
550
250
650
220
240
480
680
310
525
320
315
A
A
Till Ok / To Yoke
Från ok / From Yoke
Från Stativ /
From Macine body
METERING ROLLER
401 DOSERING STÖDRULLE

ECM: 110655 - 20020619
Group number: 243927-0700
Assembly Drawing: 243927-7_1_AC

Pos	Part No	SP	UN	Qty	Description	Page No
0375S, 0500B, 0355B, 0500S, 1000B LOFIN, 0750B, 0750S						
220	243928-0000	D		1	BRACKET	
1000SQ, 1000S, 1000B HIFIN						
220	279466-0000	D		1	BRACKET	
Common Parts						
200	530708-0000	C		1	ARM	
210	35827-0000	C		1	BRACKET	
225	23270-0000	C		1	BUSHING	
240	243930-0000	C		1	SHAFT	
250	243931-0000	D		1	SECURING PLATE	
260	246787-0000	D		1	SCREW	
270	246790-0000	D		1	LINK	
290	251561-0000	D		1	LINK	
300	251562-0000	C		1	SHAFT	
310	570066-0000	C		1	SHAFT	
312	570067-0000	C		1	RING	
315	570125-0000	C		1	SLEEVE	
320	570126-0000	C		1	SLEEVE	
350	90028-0020	C		3	CONE TUBE 2,5MM	
355	90028-0022	C		1	CONE TUBE 6 MM	
356	90028-0024	C		1	CONE TUBE 4 MM	
357	90028-0025	C		2	CONE TUBE 6 MM	
370	90032-0039	-		1	BLOCK 4 WAYS	
375	90032-0043	-		1	DISTRIBUTION BLOCK 3 WAYS	
380	90087-0019	-		1	PLUG M10X1 STAINLESS	
400	90092-0053	C		2	METERING VALVE 30 MM3	
401	90092-0054	C		1	METERING VALVE 50 MM3	
406	90134-0030	C		1	SLEEVE FOR PLASTIC TUBE	
420	90134-0031	C		1	SLEEVE FOR PLASTIC TUBE	
435	90134-0038	C		1	BUSHING/NUT INLET/OUTLET 4 MM	
440	90134-0039	C		4	BUSHING VALVE CONNECTION 2,5 MM	
442	90134-0052	-		1	PLUG DOSING BLOCK	
445	90134-0055	C		3	BUSHING/NUT INLET/OUTLET 6 MM	
480	90134-0058	-		2	CONNECTION	
490	90165-0003	-		4	PIPE CLIP FOR TUBE D=4 MM	
500	90165-0005	-		6	PIPE CLIP FOR TUBE D=6 MM	
507	90166-0108	-	MM	2700	TUBE 6 MM PA,TRANSP.	
510	90166-0109	-	MM	2700	TUBE 4 MM PA,TRANSP.	
520	90166-0143	-	MM	2000	TUBE 2,5 MM PA,TRANSP.	
525	90214-0169	C		2	BALL BEARING SOLID OIL 15X35X11 MM	
530	90266-0006	-	MM	1500	TUBE	
535	90266-0019	-	MM	1000	PIPE	
550	312101-0362	-		2	SCREW M6S M6X8 FZB	
551	312101-0368	-		1	SCREW M6S M6X16 FZB	
552	312101-0465	-		2	SCREW M6S M8X70 FZB	
555	312101-0295	-		4	SCREW M6S M4X20 FZB	
560	312105-0374	-		1	SCREW M6S ISO 4014 M6X30 A480	
565	312105-0449	-		1	SCREW M6S ISO 4017 M8X16 A480	
570	312109-0463	-		1	SCREW M6S ISO 4017 M8X60 A480	
600	312115-0453	-		2	SCREW ISO4762 M8X25 A4	
610	312121-0285	-		10	SLOTTED CHEESE HEAD SCREW MCS 4X6 FZB	
620	312605-0318	-		1	HEXAGON NUT, M6M M8 A280	
630	312811-0324	-		2	NUT HEX.LOCK HELI COIL MID GRIP M16 SS	
635	315101-0165	-		2	WASHER PLAIN, BRB, 8,4/16 H=1,5	
640	315105-0153	-		1	WASHER BRB6,4X12RFR	
645	315121-0165	-		1	WASHER PLAIN, TBRSB 8,4/26 H=5	
650	315701-0270	-		1	PARALLEL KEY W. ROUND ENDS 8X7X40 MM	
680	321576-0360	C		1	BEARING ROLLER, 30X62X29 MM	
690	352113-0101	-		1	CLIP STRIP, 92X2,5 MM	

Machine Type	Group Description	Used-In	Group Number	Page No

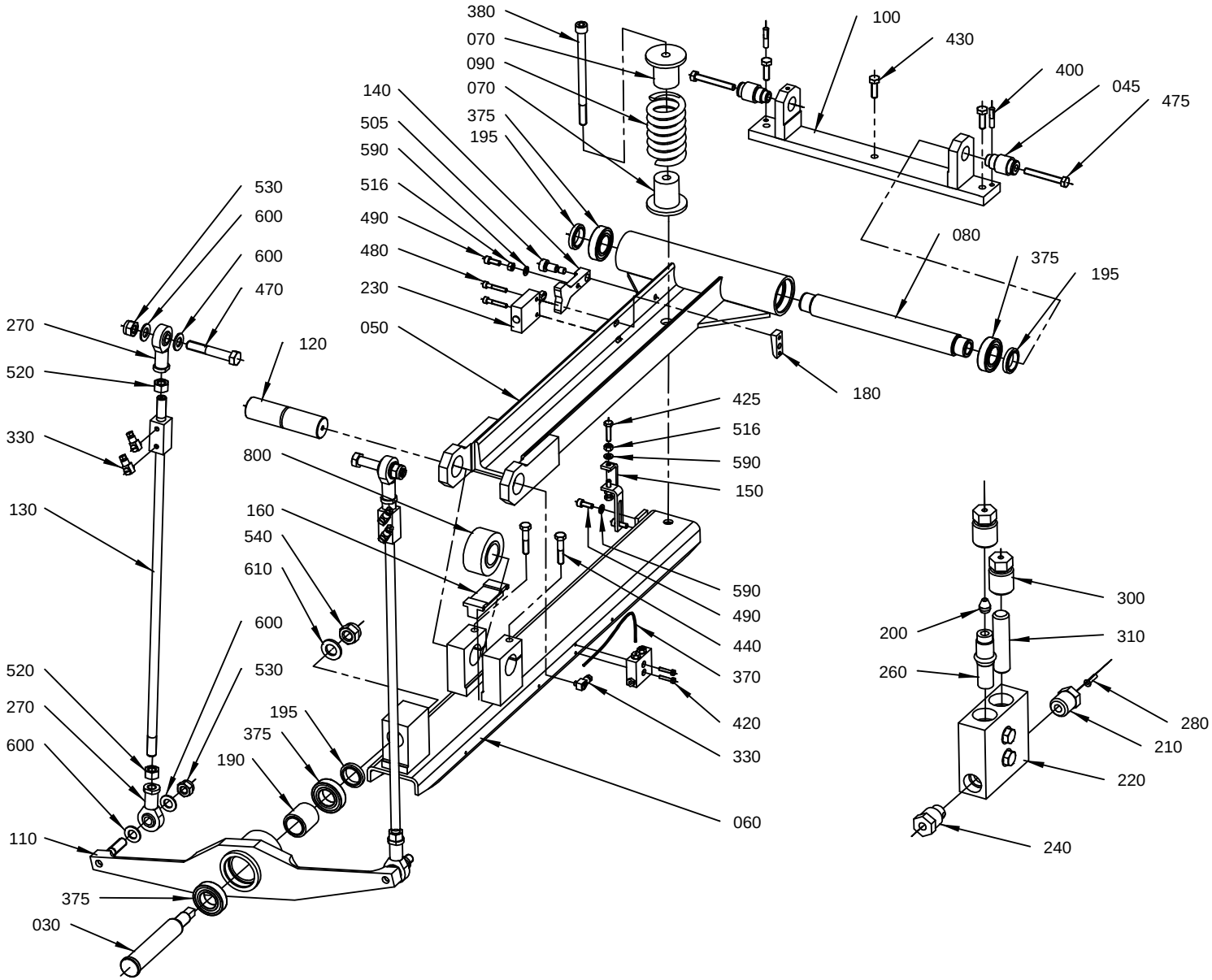

593763-1
ECM 139709

ECM: 141837 - 20031127
Group number: 593763-0100
Assembly Drawing: 593763-1_1_AD

Pos	Part No	SP	UN	Qty	Description	Page No
TBA/8						
110	560417-0000	C		1	ROCKER ARM	
Common Parts						
030	560418-0000	C		1	SHAFT	
045	591247-0000	-		2	SLEEVE	
050	591245-0000	D		1	ARM	
060	567033-0000	C		1	ARM	
070	239383-0000	D		2	SLEEVE	
080	591246-0000	C		1	SHAFT	
090	243971-0000	C		1	SPRING	
100	246948-0000	D		1	BRACKET	
120	434062-0000	C		1	SHAFT	
130	434098-0000	D		2	STRUT	
140	1346316-0000	D		1	CURVE	
150	567703-0000	D		1	LINK	
160	576742-0000	C		1	OIL TROUGH	
180	527648-0000	-		2	WASHER	
190	568286-0000	C		1	SLEEVE	
195	568287-0000	C		3	RING	
200	90028-0020	C		2	CONE TUBE 2,5MM	
210	90134-0038	C		1	BUSHING/NUT INLET/OUTLET 4 MM	
220	90032-0038	-		1	BLOCK 2 WAYS	
230	90044-0094	C		1	LIMIT SW. 924 CE31-Y20-X5	
240	90087-0019	-		1	PLUG M10X1 STAINLESS	
260	90092-0053	C		1	METERING VALVE 30 MM3	
270	90115-0133	C		4	ROD END, ID=12 MM, M12X1,25	
280	90134-0031	C		1	SLEEVE FOR PLASTIC TUBE	
300	90134-0039	C		2	BUSHING VALVE CONNECTION 2,5 MM	
310	90134-0052	-		1	PLUG DOSING BLOCK	
330	90134-0058	C		5	CONNECTION	
370	90166-0143	-	MM	600	TUBE 2,5 MM PA,TRANSP.	
375	90214-0163	C		4	BALL BEARING SOLID OIL 25X47X12 MM	
380	90287-0136	C		1	SCREW MC6S M10X150 129	
400	311303-0356	-		2	SLOTTED PIN RPB 6X30 ZINC COATED	
420	312101-0295	-		2	SCREW M6S M4X20 FZB	
425	312101-0372	-		2	SCREW M6S M6X25 FZB	
430	312101-0453	-		3	SCREW M6S M8X25 FZB	
440	312101-0459	-		2	SCREW M6S M8X40 FZB	
470	312101-0546	-		2	SCREW M6S M12X70 FZB	
475	312109-0463	-		2	SCREW M6S ISO 4017 M8X60 A480	
480	312111-0335	-		2	SCREW HEX.SOCK.HD.MC6S-TT 5X30 88 FZB	
490	312111-0368	-		3	SCREW HEX.SOCK.HD.MC6S-TT 6X16 88 FZB	
505	312180-0489	-		1	SCREW ISO7379 H10X16	
516	312601-0316	-		3	NUT M6M 6-8 FZB	
520	312601-0322	-		4	NUT M6M 12-8 FZB	
530	312810-0322	C		4	HEXAGON NUT, NY-LOCK M12 FZB	
540	312810-0324	C		1	HEXAGON NUT, NY-LOCK M16 FZB	
590	315101-0153	-		5	WASHER PLAIN, BRB, 6,4/12 H=1,5	
600	315101-0178	-		8	WASHER PLAIN, BRB, 13/24 H=2	
610	315101-0186	-		1	WASHER PLAIN, BRB, 17/30 H=3	
800	321576-0360	C		1	BEARING ROLLER, 30X62X29 MM	

Machine Type | Group Description | Used-In | Group Number | Page No

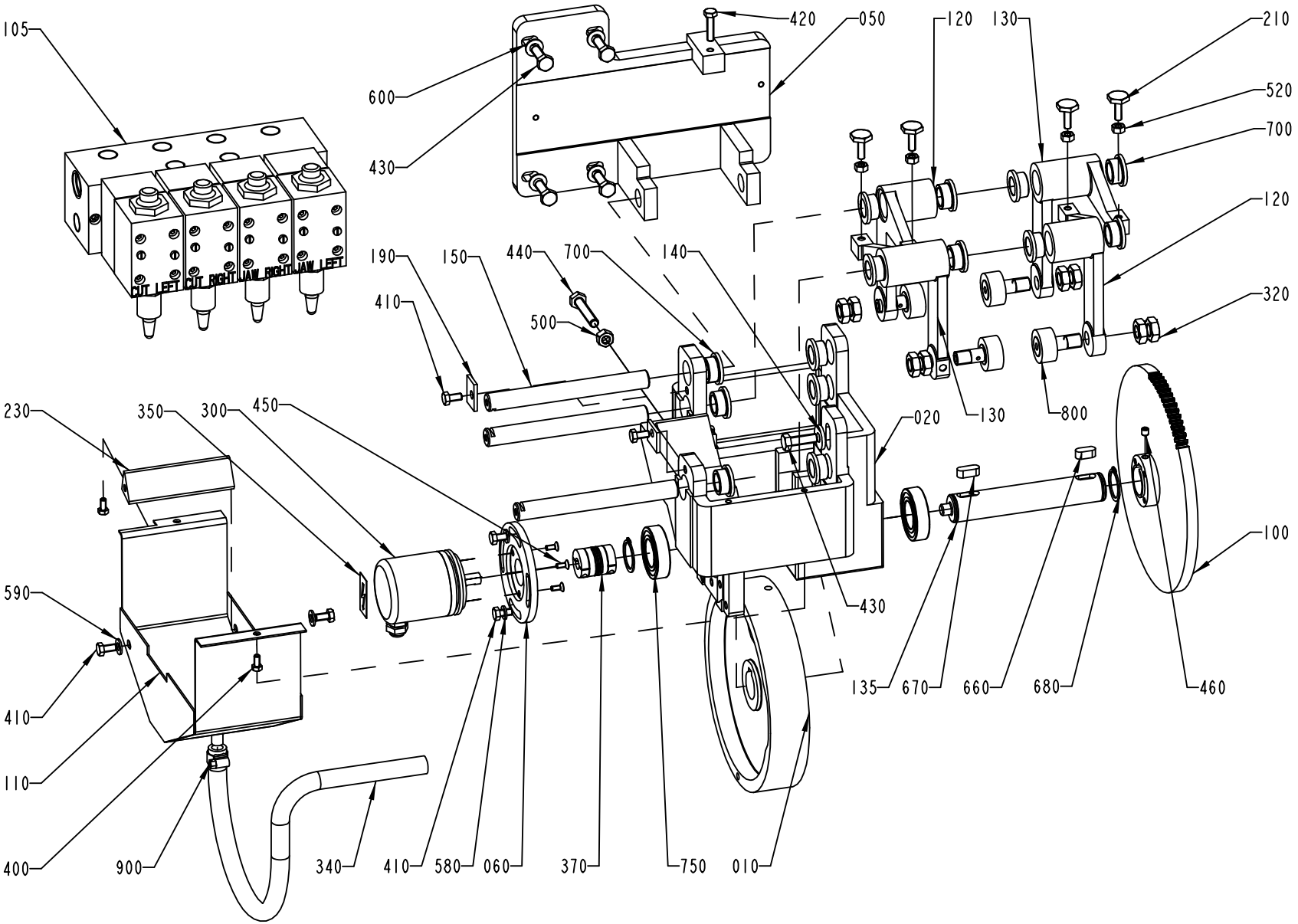
105
420
050
600
430
120
130
210
520
700
120
320
190
150
440
700
140
410
500
230
350
300
450
020
130
800
590
410
110
400
900
340
410
580
060
370
750
010
430
135
670
660
680
460
100
CUT_LEFT
CUT_RIGHT
JAW_RIGHT
JAW_LEFT

ECM: 72907 - 20000117
Group number: 434669-0400
Assembly Drawing: 434669-2_1_AB

Pos	Part No	SP	UN	Qty	Description	Page No
IH						
010	556579-0000	C		1	CURVE	
Common Parts						
020	292473-0000	-		1	CANTILEVER	
050	292472-0000	-		1	HOLDER	
060	542063-0000	D		1	FLANGE	
100	243017-0000	D		1	GEAR WHEEL	
110	543476-0000	-		1	TROUGH	
120	297091-0000	-		2	ARM	
130	297092-0000	-		2	ARM	
135	540949-0000	C		1	SHAFT	
140	28036-0000	C		1	WASHER	
150	292477-0000	C		3	SHAFT	
190	292482-0000	-		2	WASHER	
210	479354-0000	C		4	SCREW	
230	479753-0000	D		1	STRIPPER	
300	90061-0018	C		1	ANGLE ENC 8BIT GRAY (REPL BY 90061-27)	
320	90099-0015	-		8	NUT HEX. ML6M, M12X1,5, FE	
340	90166-0113	-	MM	700	HOSE	
350	90194-0039	-		1	WARNING SIGN, RISK OF ELECTRIC SHOCK	
370	90355-0031	C		1	TORQUE RIGID COUPLING, 10X10 MM	
400	312101-0325	-		2	SCREW M6S M5X10 FZB	
410	312101-0366	-		6	SCREW M6S M6X12 FZB	
420	312101-0372	-		1	SCREW M6S M6X25 FZB	
430	312101-0453	-		5	SCREW M6S M8X25 FZB	
440	312104-0460	-		1	SCREW M6S M8X45H FZB	
450	312155-0289	-		3	SCREW EN 10642 MF6S M4X10 A480	
460	312318-0360	-		2	SCREW ISO4029 M6X6 A4	
500	312601-0318	-		1	NUT M6M8FZB	
520	312601-0316	-		4	NUT M6M 6-8 FZB	
580	315105-0153	-		2	WASHER BRB6,4X12RFR	
590	315105-0156	-		2	WASHER BRB 6.7X14 RFR	
600	315101-0165	-		4	WASHER PLAIN, BRB, 8,4/16 H=1,5	
660	315701-0262	-		1	PARALLEL KEY W.ROUND ENDS 8X7X18	
670	315701-0263	-		1	PARALLEL KEY W.ROUND ENDS 8X7X20	
680	315750-0119	-		2	RETAIN. RING, 25	
700	321111-0240	C		14	FLANGE BUSHING, 16X22X12	
750	321308-0205	C		2	BALL BEARING, 25X47X12MM	
800	321580-0165	C		4	CAM ROLLER, 12X30X40 MM	
900	342991-0101	-		1	HOSE CLIP,WORM DRIVE TYPE (13)-16	
F105	A273728-0300	-		1	VALVE GROUP	**3-21**

Machine Type	Group Description	Used-In	Group Number	Page No

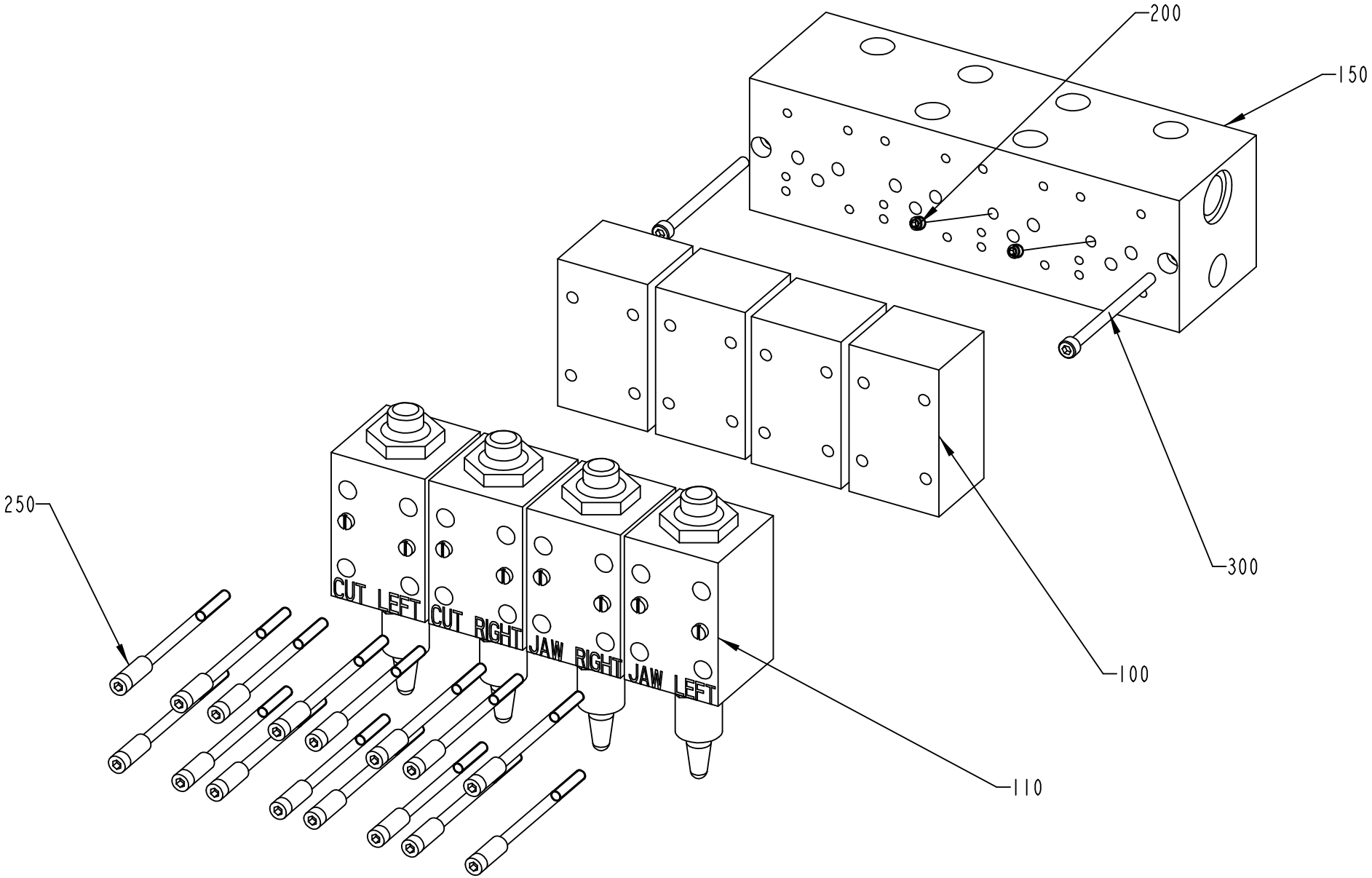
200
150
250
300
100
110
CUT LEFT
CUT RIGHT
JAW RIGHT
JAW LEFT

ECM: 72907 - 20000117
Group number: 273728-0300
Assembly Drawing: 273728-4_1_AC

Pos	Part No	SP	UN	Qty	Description	Page No
0375S, 0500B, 0355B, 1000SQ, 0500S, 1000S, 0750B, 0750S, 1000B						
100	B90201-0010	D		4	DIRECT CHECK VALVE, NO. DGMDC-3-Y-PK-41	
	90201-0303	-		*1*	*SPARE PARTS KIT*	
	90201-0302	-		*1*	*WASHER*	
	90201-0301	-		*1*	*SPRING*	
	90201-0300	-		*1*	*MOUNTING PLATE, NO. A1-89 57B*	
150	90201-0300	D		1	MOUNTING PLATE, NO. A1-89 57B	
200	295391-0003	C		2	THROTTLE SCREW	
Common Parts						
110	90201-0057	D		4	VALVE	
250	90201-0303	C		4	SPARE PARTS KIT	
300	90287-0073	-		2	SCREW MC6S M5X70 129	

Pos	Part No	SP	UN	Qty	Description	Page No

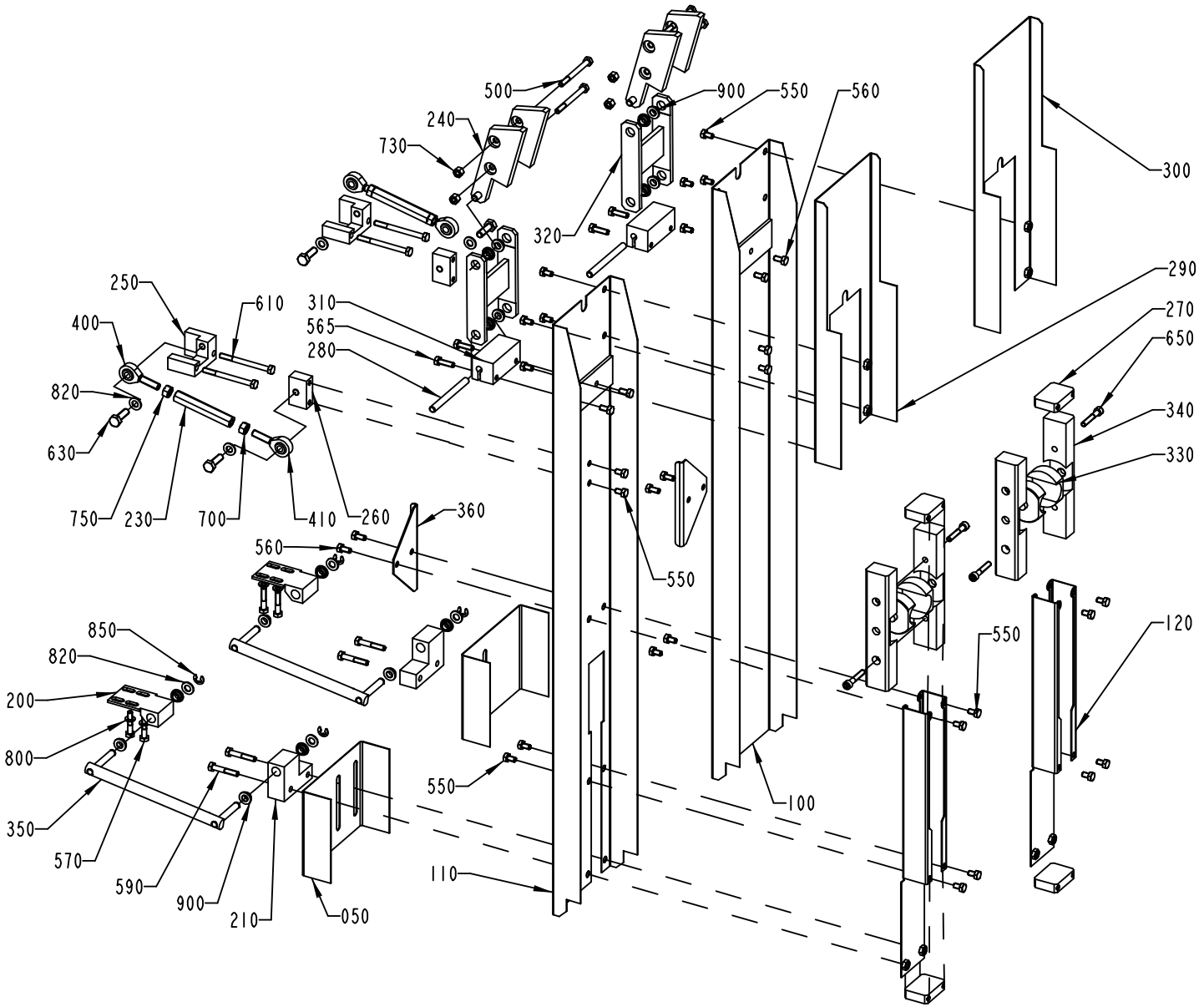
500
240
730
900
550
560
300
320
290
270
650
340
330
250
610
310
565
280
400
820
630
750
230
700
410
260
360
560
550
850
820
200
800
350
570
590
900
210
050
110
550
100
550
120

ECM: 72982 - 20000131
Group number: 292071-0200
Assembly Drawing: 292071-2_1_AB

Pos	Part No	SP	UN	Qty	Description	Page No
IH						
050	436580-0000	D		2	COVERING PLATE	
330	283774-0000	C		4	BEARING	
Common Parts						
100	279983-0000	D		1	SPLASH PROTECTION	
110	279984-0000	D		1	SPLASH PROTECTION	
120	279985-0000	D		2	BRACKET	
200	555888-0000	C		2	BRACKET	
210	279987-0000	D		2	BRACKET	
230	279989-0000	D		2	SPACER	
240	279991-0000	C		4	BRACKET	
250	279992-0000	-		2	BRACKET	
260	279993-0000	-		2	BRACKET	
270	279997-0000	-		4	BRACKET	
280	279998-0000	C		2	SHAFT	
290	279999-0000	D		1	COVERING PLATE	
300	282511-0000	D		1	COVERING PLATE	
310	282512-0000	-		2	BRACKET	
320	282513-0000	C		2	BRACKET	
340	283775-0000	D		4	SLIDE	
350	436672-0000	C		2	LINK	
360	574167-0000	-		2	LIMIT PLATE	
400	90115-0107	C		2	ROD END, ID=8 MM, M8X1,25 LH	
410	90115-0106	C		2	ROD END, ID=8 MM, M8X1,25	
500	312101-0383	-		4	SCREW M6S M6X65 FZB	
550	312105-0364	-		24	SCREW M6S ISO 4017 M6X10 A480	
560	312105-0366	-		8	SCREW M6S M6X12 A280	
565	312105-0370	-		4	SCREW M6S ISO 4017 M6X20 A480	
570	312105-0374	-		4	SCREW M6S ISO 4014 M6X30 A480	
590	312105-0376	-		4	SCREW M6S ISO 4014 M6X35 A480	
610	312105-0384	-		4	SCREW M6S ISO 4014 M6X70 A480	
630	312105-0453	-		4	SCREW M6S ISO 4017 M8X25 A480	
650	312115-0376	-		4	SCREW ISO4762 M6X35 A4	
700	312605-0318	-		2	HEXAGON NUT, M6M M8 A280	
730	312811-0316	-		4	NUT HEX.LOCK HELI COIL MID GRIP M6 SS	
750	312902-0318	-		2	NUT HEX. LEFT THREAD, M8 A280	
800	315105-0153	-		4	WASHER BRB6,4X12RFR	
820	315105-0165	-		8	WASHER BRB8,4X16RFR	
850	315755-0109	-		4	LOCKING WASHER 7	
900	321111-0095	C		16	FLANGE BUSHING, 8X12X6MM	

Pos	Part No	SP	UN	Qty	Description	Page No

Machine Type | Group Description | Used-In | Group Number | Page No

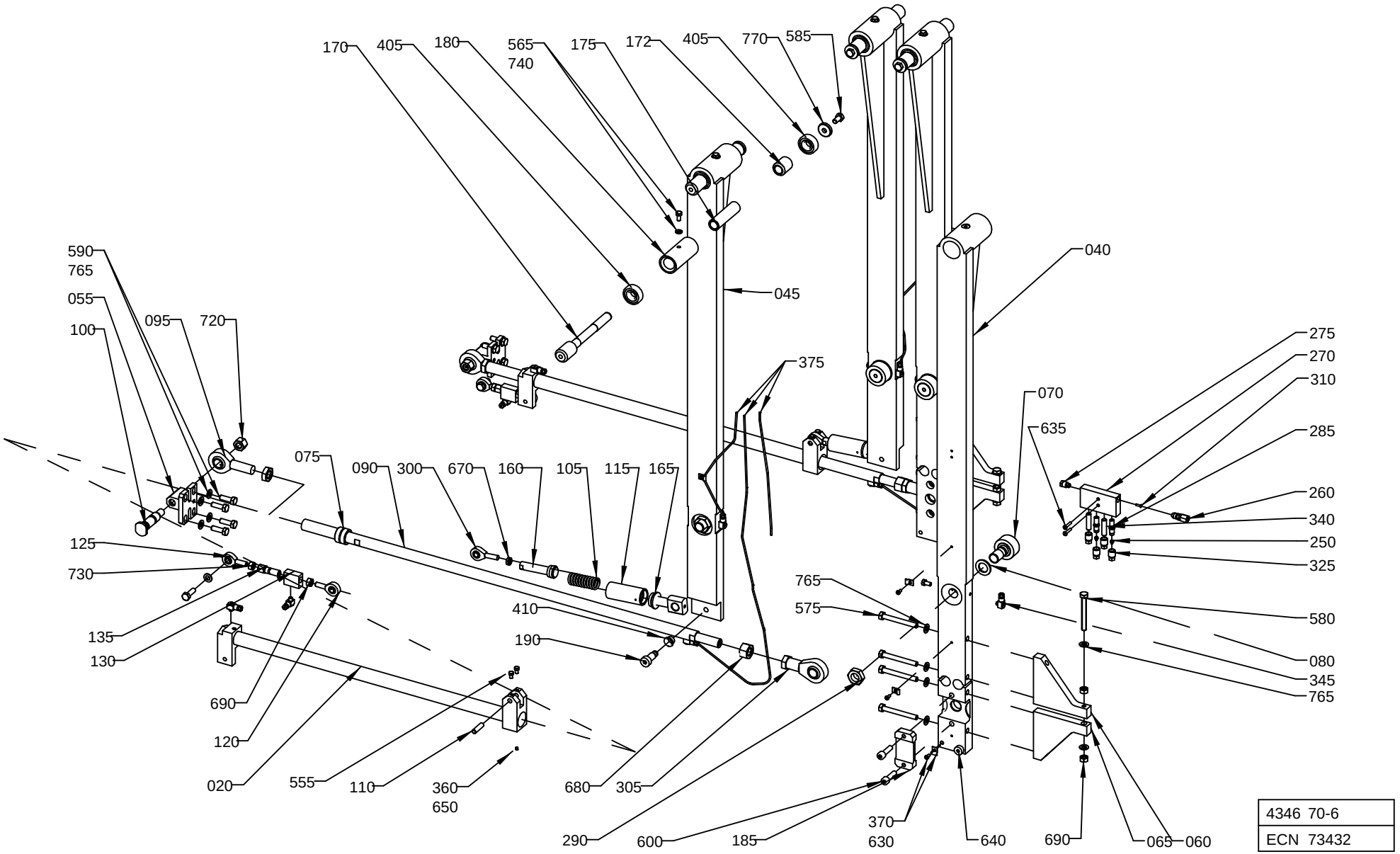

4346 70-6
ECN 73432

ECM: 111520 - 20020708
Group number: 434670-0600
Assembly Drawing: 434670-6_1_AC

Pos	Part No	SP	UN	Qty	Description	Page No
IH						
020	540335-0000	C		2	LINK	
045	562747-0000	D		2	ARM	
070	28334-0000	C		4	CURVE ROLLER	
075	230462-0000	C		4	BUSHING	
080	239538-0000	C		4	WASHER	
105	252707-0000	C		2	SPRING	
110	255335-0000	C		2	SHAFT	
115	255398-0000	C		2	SLEEVE	
120	263313-0000	C		2	LINK HEAD	
125	263314-0000	C		2	LINK HEAD	
130	263328-0000	C		2	SPACER	
135	263329-0000	C		2	NUT	
160	434142-0000	C		2	PISTON	
165	434143-0000	C		2	END SECTION	
170	570066-0000	C		4	SHAFT	
172	570067-0000	C		4	RING	
175	570125-0000	C		4	SLEEVE	
180	570126-0000	C		4	SLEEVE	
190	563061-0000	C		2	REAMED BOLT	
250	90028-0020	C		6	CONE TUBE 2,5MM	
285	90092-0053	C		4	METERING VALVE 30 MM3	
290	90099-0012	-		8	NUT HEX. M18X1,5, FE	
300	90115-0122	C		2	ROD END, ID=8 MM, M8X1,25	
340	90134-0052	-		2	PLUG DOSING BLOCK	
370	90165-0022	-		8	PIPE CLIP, FOR TUBE D=2,5 MM, B-3570	
405	90214-0169	C		8	BALL BEARING SOLID OIL 15X35X11 MM	
410	90240-0097	C		4	FLANGE BUSHING, 12X14X9 MM	
555	312101-0323	-		4	SCREW M6S M5X8 FZB	
565	312101-0366	-		8	SCREW M6S M6X12 FZB	
585	312105-0449	-		4	SCREW M6S ISO 4017 M8X16 A480	
590	312105-0453	-		12	SCREW M6S ISO 4017 M8X25 A480	
630	312121-0287	-		8	SLOTTED CHEESE HEAD SCREW MCS 4X8 FZB	
650	312316-0283	-		4	SCREW HEX.SOCK.SET CUP P.MSK6SS4X4 FZB	
670	312621-0318	-		2	ROD END,NUT M8	
690	312605-0318	-		6	HEXAGON NUT, M6M M8 A280	
730	312902-0318	-		2	NUT HEX. LEFT THREAD, M8 A280	
740	315101-0153	-		4	WASHER PLAIN, BRB, 6,4/12 H=1,5	
765	315105-0165	-		30	WASHER BRB8,4X16RFR	
770	315121-0165	-		4	WASHER PLAIN, TBRSB 8,4/26 H=5	
040	562746-0000	C		2	ARM	
055	464363-0000	D		2	HOLDER	
060	562748-0000	-		2	BRACKET	
065	562749-0000	-		2	BRACKET	
090	247119-0000	C		2	ROD	
095	526904-0000	C		2	LINK HEAD	
100	536703-0000	C		2	SHAFT	
185	562140-0000	-		2	CAP	
260	90030-0162	-		2	CONN. STR. 6-M10X1, EXT. THREAD	
270	90032-0039	-		2	BLOCK 4 WAYS	
275	90087-0019	-		2	PLUG M10X1 STAINLESS	
280	90092-0052	C		2	METERING VALVE 10 MM3	
305	90115-0067	C		2	ROD END, ID=16 MM, M16X2	
310	90134-0030	C		2	SLEEVE FOR PLASTIC TUBE	
325	90134-0039	C		8	BUSHING VALVE CONNECTION 2,5 MM	
345	90134-0058	C		10	CONNECTION	
360	90157-0016	-	ML	1	LOCKING FLUID	
375	90166-0143	-	MM	2500	TUBE 2,5 MM PA,TRANSP.	
575	312101-0465	-		8	SCREW M6S M8X70 FZB	
580	312104-0465	-		2	SCREW M6S M8X70H FZB	
600	312111-0455	-		4	SCREW HEX.SOCK.HD.MC6S-TT 8X30 88 FZB	
635	312141-0295	-		4	SCREW COUNTERS.SLOT.HD. MFS 4X20 FZB	
640	312180-0489	-		2	SCREW ISO7379 H10X16	
680	312601-0324	C		2	NUT M6M 16-8 FZB	
700	312621-0324	-		2	NUT ML6M16FZB	
720	312811-0322	-		2	NUT HEX.LOCK HELI COIL MID GRIP M12 SS	

Common Parts

Machine Type	Group Description	Used-In	Group Number	Page No

Tetra Pak

SPC
Spare Parts Catalogue

Total pages in this module: 94

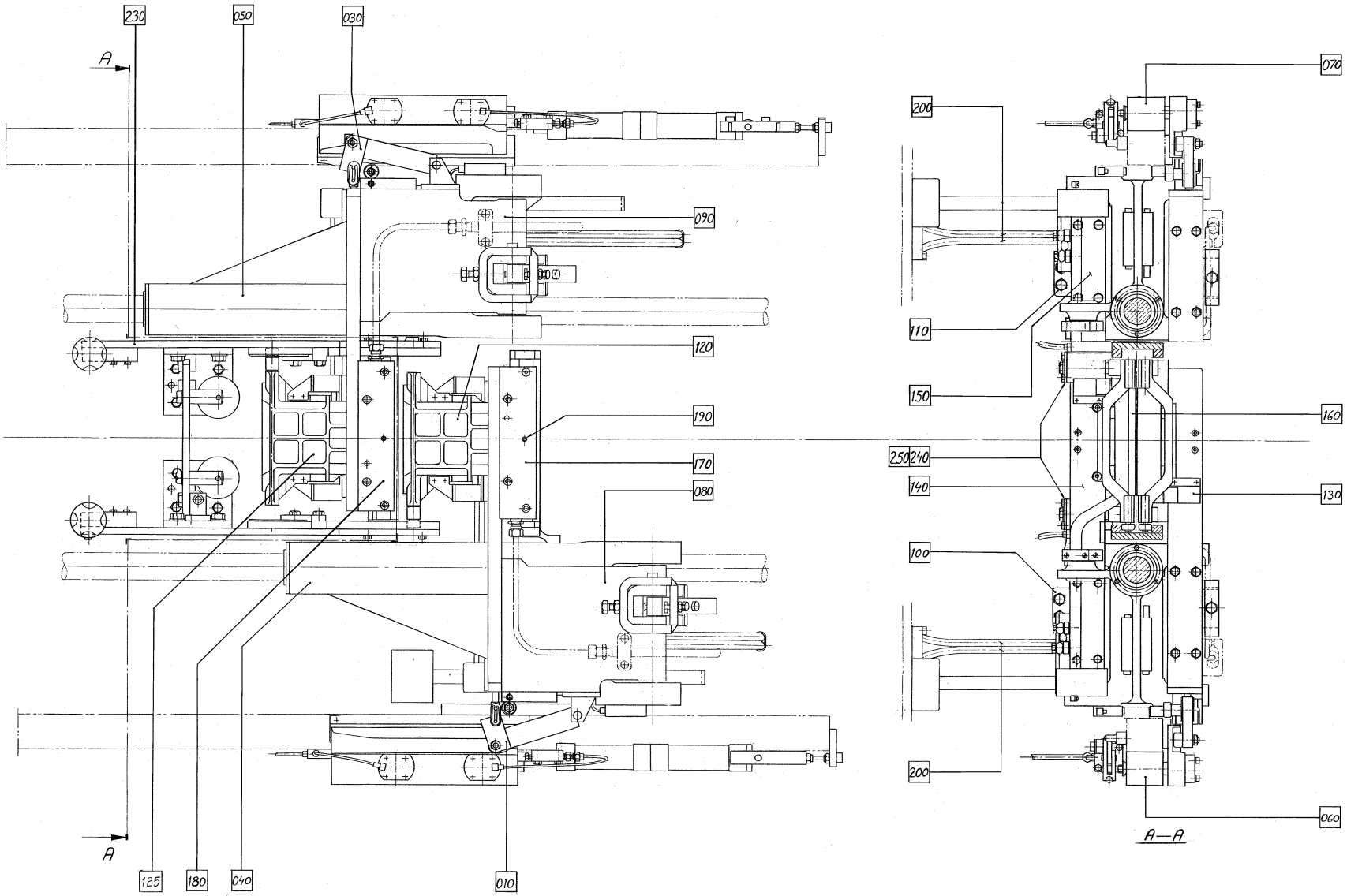
230
050
030
A
090
120
190
170
080
125
180
040
010
A
070
200
110
150
160
250
240
140
130
100
200
060
A—A

ECM: 99300 - 20011026
Group number: 648004-1000
Assembly Drawing: 648004-1_1_AB

This list covers pages from 4-2 to 4-5

Pos	Part No	SP	UN	Qty	Description	Page No
IH (See drawing on pages: 4-2, 4-4)						
060	A266446-0500	-		1	DESIGN CORRECTION DEVICE	**4-7, 4-9**
070	A266447-0500	-		1	DESIGN CORRECTION DEVICE	**4-11, 4-13**
100	A541052-0100	-		1	ARM WITH AXLE PRESSURE L	**4-15**
110	A541053-0100	-		1	ARM WITH AXLE PRESSURE R	**4-17**
120	A1487405-0100	-		2	VOLUME FLAP	**4-19, 4-21**
125	A1367814-0100	-		2	VOLUME FLAP	**4-23**
140	A259414-0500	-		1	CARRIER PRESSURE L IH	**4-25**
150	A259415-0500	-		1	CARRIER PRESSURE R IH	**4-27**
170	A257835-0300	-		1	CUTTING JAW,LEFT IH	**4-29, 4-31**
180	A257835-0350	-		1	CUTTING JAW, RIHGT IH	**4-33, 4-35**
190	A1487404-0200	-		2	KNIFE HOLDER	**4-37**
200	A279134-0500	-		1	TRANSMISSION	**4-39**
240	A259534-0700	-		1	PRESSURE JAW LEFT IH	**4-41, 4-43**
250	A259534-0750	-		1	PRESSURE JAW RIGHT IH	**4-45, 4-47**
270	A268614-0500	-		1	START-UP KIT IH	**4-49, 4-51**
Common Parts						
010	A279564-0300	-		1	FOLDING DEVICE	**4-53**
030	A279565-0300	-		1	FOLDING DEVICE	**4-57**
040	A243942-0400	-		1	YOKE	**4-59**
050	A593749-0100	-		1	YOKE	**4-61**
080	A246499-0600	-		1	ARM WITH AXLE,CUT L	**4-63**
090	A593750-0100	-		1	ARM WITH AXLE,CUT R	**4-65**
130	A246327-0500	-		1	SHOCK ABSORBER	**4-67, 4-69, 4-71, 4-73, 4-75, 4-77, 4-79, 4-81**
230	A293605-0600	-		1	VOLUM CURVE PIECE	**4-83, 4-85, 4-87, 4-89, 4-91**
280	A541188-0300	-		1	BAR CODE	**4-93**

Machine Type | Group Description | Used-In | Group Number | Page No

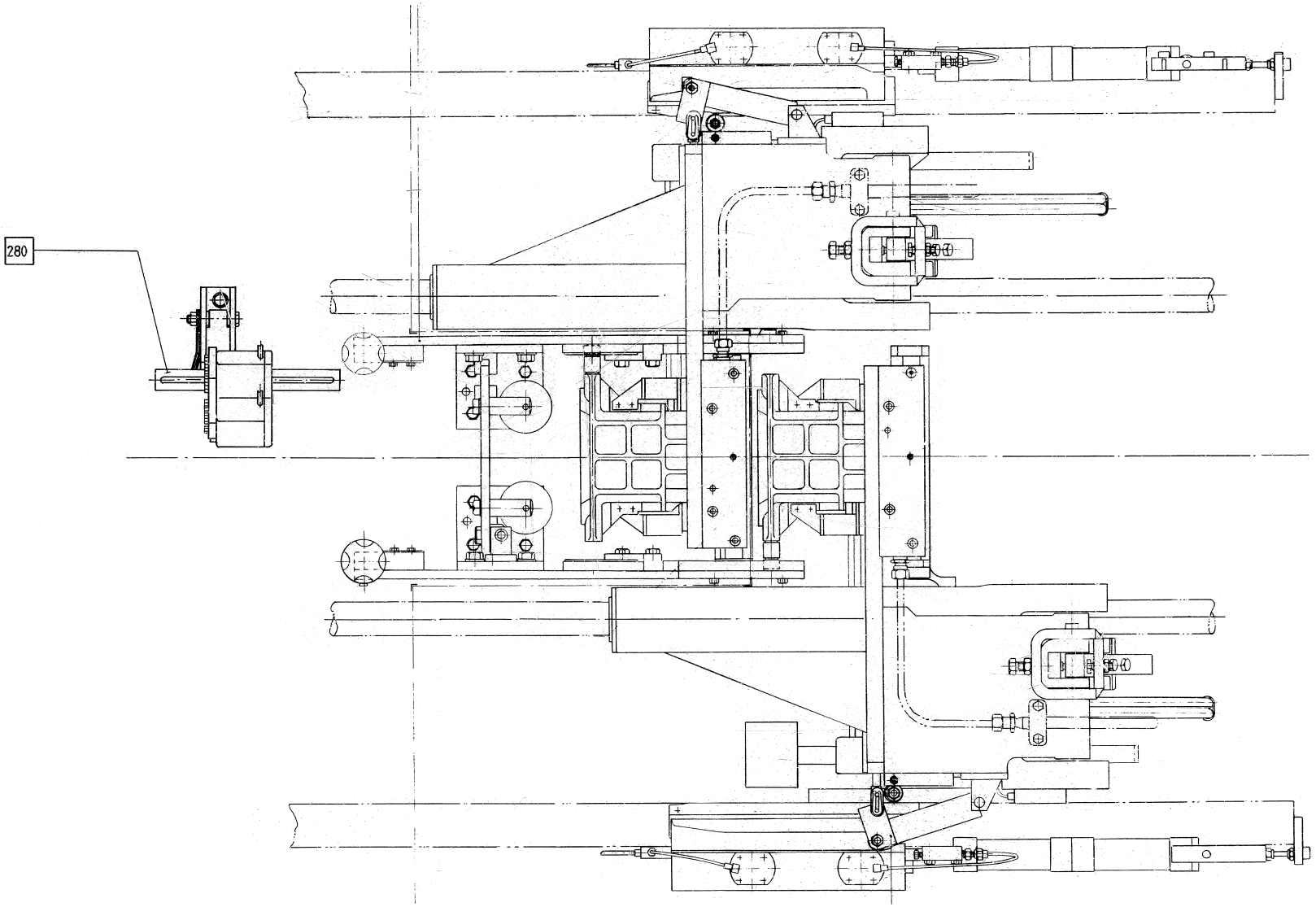
280

Pos	Part No	SP	UN	Qty	Description	Page No
IH (See drawing on pages: 4-2, 4-4)						
060	A266446-0500	-		1	DESIGN CORRECTION DEVICE	**4-7, 4-9**
070	A266447-0500	-		1	DESIGN CORRECTION DEVICE	**4-11, 4-13**
100	A541052-0100	-		1	ARM WITH AXLE PRESSURE L	**4-15**
110	A541053-0100	-		1	ARM WITH AXLE PRESSURE R	**4-17**
120	A1487405-0100	-		2	VOLUME FLAP	**4-19, 4-21**
125	A1367814-0100	-		2	VOLUME FLAP	**4-23**
140	A259414-0500	-		1	CARRIER PRESSURE L IH	**4-25**
150	A259415-0500	-		1	CARRIER PRESSURE R IH	**4-27**
170	A257835-0300	-		1	CUTTING JAW,LEFT IH	**4-29, 4-31**
180	A257835-0350	-		1	CUTTING JAW, RIHGT IH	**4-33, 4-35**
190	A1487404-0200	-		2	KNIFE HOLDER	**4-37**
200	A279134-0500	-		1	TRANSMISSION	**4-39**
240	A259534-0700	-		1	PRESSURE JAW LEFT IH	**4-41, 4-43**
250	A259534-0750	-		1	PRESSURE JAW RIGHT IH	**4-45, 4-47**
270	A268614-0500	-		1	START-UP KIT IH	**4-49, 4-51**
Common Parts						
010	A279564-0300	-		1	FOLDING DEVICE	**4-53**
030	A279565-0300	-		1	FOLDING DEVICE	**4-57**
040	A243942-0400	-		1	YOKE	**4-59**
050	A593749-0100	-		1	YOKE	**4-61**
080	A246499-0600	-		1	ARM WITH AXLE,CUT L	**4-63**
090	A593750-0100	-		1	ARM WITH AXLE,CUT R	**4-65**
130	A246327-0500	-		1	SHOCK ABSORBER	**4-67, 4-69, 4-71, 4-73, 4-75, 4-77, 4-79, 4-81**
230	A293605-0600	-		1	VOLUM CURVE PIECE	**4-83, 4-85, 4-87, 4-89, 4-91**
280	A541188-0300	-		1	BAR CODE	**4-93**

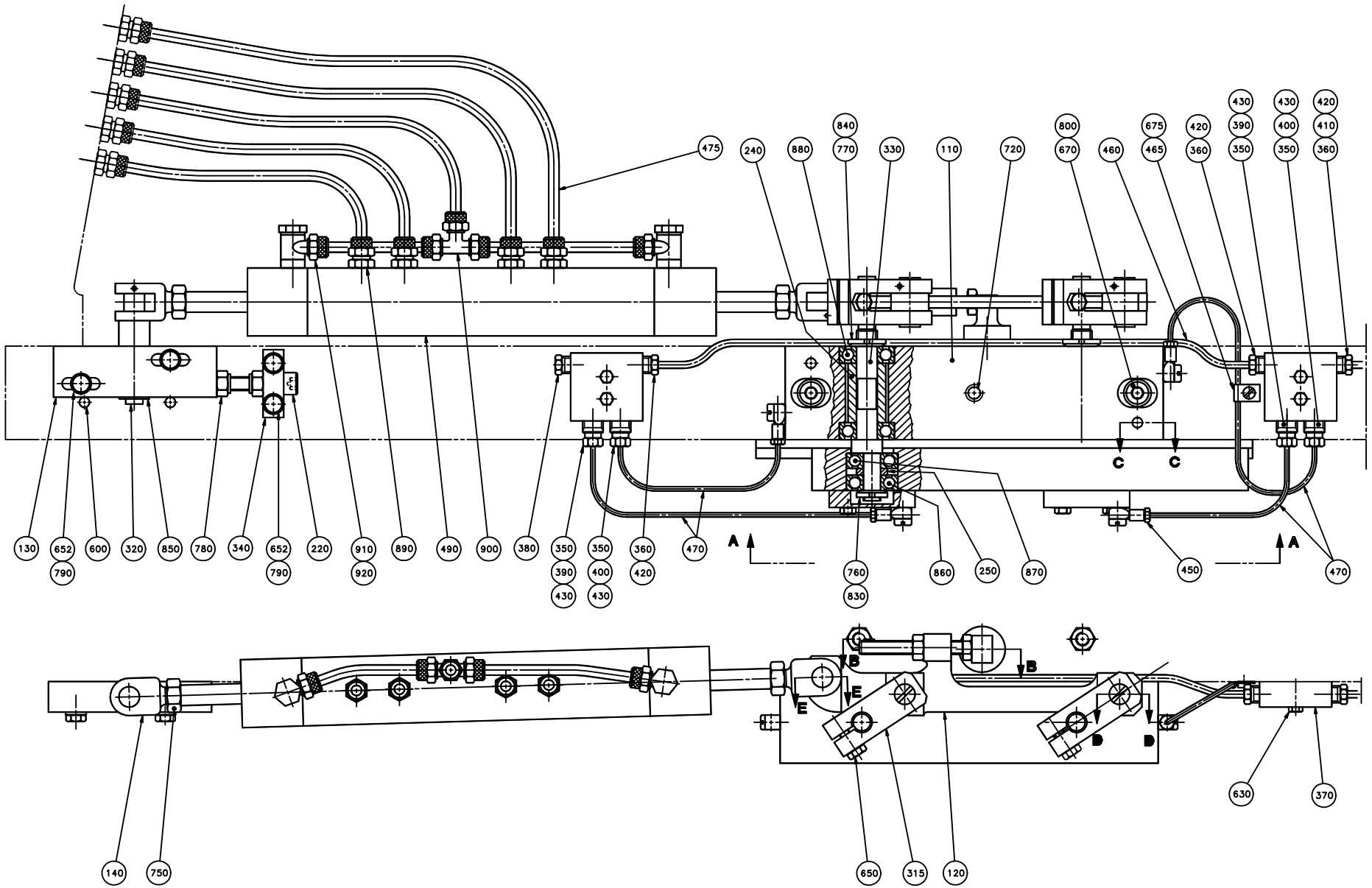
475
240
880
840
770
330
110
720
800
670
460
675
465
420
360
430
390
350
430
400
350
420
410
360
130
652
790
600
320
850
780
340
652
790
220
910
920
890
490
900
380
350
390
430
350
400
430
360
420
470
760
830
860
250
870
450
470
A
A
C
C
B
B
E
E
B
B
140
750
650
315
120
630
370

ECM: 72090 - 19981214
Group number: 266446-0500
Assembly Drawing: 266446-4_1_AA

This list covers pages from 4-6 to 4-9

Pos	Part No	SP	UN	Qty	Description	Page No
0375S, 0750B						
010	550337-0000	C		1	FOLDING FLAP CAM L	
020	440510-0000	C		1	COUNTER CAM	
0355B						
010	537901-0000	C		1	FOLDING FLAP CAM L	
020	529137-0000	C		1	CURVE LEFT	
0500B						
010	269108-0000	C		1	FOLDING FLAP CAM L	
020	269110-0000	C		1	COUNTER CAM	
0500S						
010	551285-0000	C		1	FOLDING FLAP CAM	
020	440930-0000	C		1	COUNTER CAM	
1000B HIFIN						
010	284232-0000	C		1	FOLDING FLAP CAM L	
020	284234-0000	C		1	COUNTER CAM	
1000B LOFIN, 0750S						
010	268954-0000	C		1	FOLDING FLAP CAM L	
020	269059-0000	C		1	COUNTER CAM	
1000SQ, 1000S						
010	565188-0000	C		1	FOLDING FLAP CAM	
020	269059-0000	C		1	COUNTER CAM	
Common Parts						
110	23292-0000	C		1	BEARING HOUSING	
120	436740-0000	C		1	LINK	
130	20718-0000	D		1	BEARING	
140	22483-0000	C		2	FORK	
150	22485-0000	C		1	DOWEL	
160	22486-0000	C		2	DOWEL	
170	22504-0000	C		1	STOP LUG	
180	23291-0000	C		2	BEARING COVER	
200	23312-0000	C		3	BUSHING	
210	26426-0000	C		5	LACE	
220	33409-0000	C		1	SCREW	
240	107334-0000	C		2	SPACER SLEEVE	
250	107335-0000	C		2	SPACER RING	
260	107339-0000	C		2	DOWEL	
315	434387-0000	C		2	BRACKET	
320	434388-0000	C		1	SHAFT	
330	436671-0000	C		2	ECCENTRIC SHAFT	
340	561416-0000	C		1	BRACKET	
350	90028-0020	C		4	CONE TUBE 2,5MM	
360	90028-0021	C		3	CONE TUBE 4 MM	
370	90032-0038	-		2	BLOCK 2 WAYS	
380	90087-0019	-		1	PLUG M10X1 STAINLESS	
390	90092-0052	C		2	METERING VALVE 10 MM3	
400	90092-0054	C		2	METERING VALVE 50 MM3	
410	90134-0031	C		1	SLEEVE FOR PLASTIC TUBE	
420	90134-0038	C		3	BUSHING/NUT INLET/OUTLET 4 MM	
430	90134-0039	C		4	BUSHING VALVE CONNECTION 2,5 MM	
450	90134-0058	C		4	CONNECTION	
460	90151-0001	-	MM	400	BRASS PIPE DI=2,6 MM	
465	90165-0058	-		1	PIPE CLIP FOR TUBE D=25 MM	
470	90166-0143	-	MM	700	TUBE 2,5 MM PA,TRANSP.	
475	90166-0124	-	MM	1600	TUBE 6 MM PA,TRANSP.	
490	B90450-0105	C		1	5 STEPS CYLINDER MECMAN	
	90450-0634	*C*		*1*	*OVERHAUL KIT*	
500	90261-0036	-		2	PIPE PLUG "REPL.BY 90261-71"	
600	311103-0357	-		4	PARALLEL PIN ISO 2338 6M6X30 A1	
610	311103-0310	-		2	PARALLEL PIN ISO 2338 5M6X20 A1	
620	311112-0192	C		4	SPRING PIN, ISO 8752 2,5X24-C	
630	312105-0295	-		4	SCREW M6S ISO4017 M4X20 A480	
640	312105-0329	-		8	SCREW M6S ISO 4017 M5X16 A480	
650	312105-0370	-		2	SCREW M6S ISO 4017 M6X20 A480	
652	312105-0372	-		4	SCREW M6S ISO 4017 M6X25 A480	
655	312109-0463	-		1	SCREW M6S ISO 4017 M8X60 A480	
670	312115-0461	-		2	SCREW ISO4762 M8X50 A4	
675	312125-0285	-		1	SLOTTED CHEESE HEAD SCREW MCS 4X6 SS	
690	312155-0382	-		4	SCREW EN 10642 MF6S M6X60 A480	
700	312318-0459	-		2	SCREW ISO4029 M8X40 A4	
720	312318-0499	-		1	SCREW ISO4029 M10X40 A4	
740	312605-0318	-		2	HEXAGON NUT, M6M M8 A280	
750	312635-0320	-		2	NUT M6M 10X1 STAINLESS A2 80	
760	312805-0100	C		2	NUT ROUND WITH SLOTS M10X0,75 FE	
770	312805-0101	C		2	NUT ROUND WITH SLOTS M12X1 FE	
780	312811-0318	-		3	NUT HEX.LOCK HELI COIL M8 SS	
790	315105-0153	-		4	WASHER BRB6,4X12RFR	
800	315105-0165	-		2	WASHER BRB8,4X16RFR	

Machine Type | Group Description | Used-In | Group Number | Page No

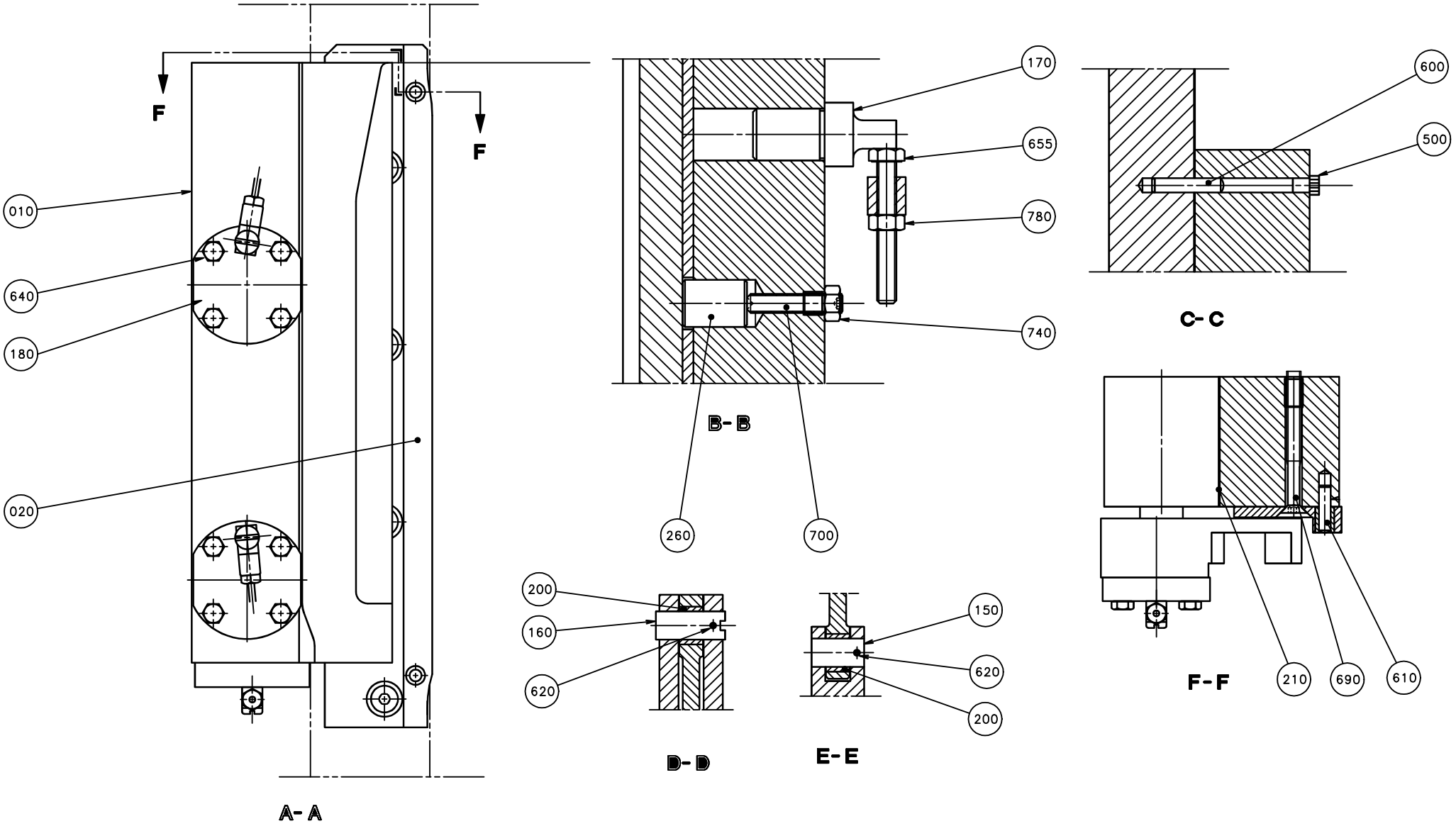
F
F
010
640
180
020
A- A
170
655
780
740
260
700
B- B
200
160
620
D- D
150
620
200
E- E
600
500
C- C
210
690
610
F- F

Pos	Part No	SP	UN	Qty	Description	Page No
Common Parts (Cont'd)						
830	315410-0100	C		2	LOCK WASHER MB 0 D=10 H=1	
840	315410-0101	C		2	LOCK WASHER MB 1 D=12 H=1	
850	315750-0107	-		1	RETAIN. RING, 10	
860	321309-0100	C		2	BALL BEARING, 10X30X9 MM	
870	321312-0100	C		2	BALL BEARING, 10X30X9 MM	
880	321312-0101	C		4	BALL BEARING, 12X32X10 MM	
890	342920-0113	-		4	STRAIGHT COUPLING,EXT.THREADED 6/4-R1/8"	
900	342946-0112	-		1	T-COUPLING,UNION 6/4	
910	342980-0113	-		2	BANJO-CONNECTION,RING 6/4-G1/8"	
920	342980-0303	-		2	BANJO-HOLLOW BOLT COUPL,EXT.THR.01-G1/8"	

Pos	Part No	SP	UN	Qty	Description	Page No

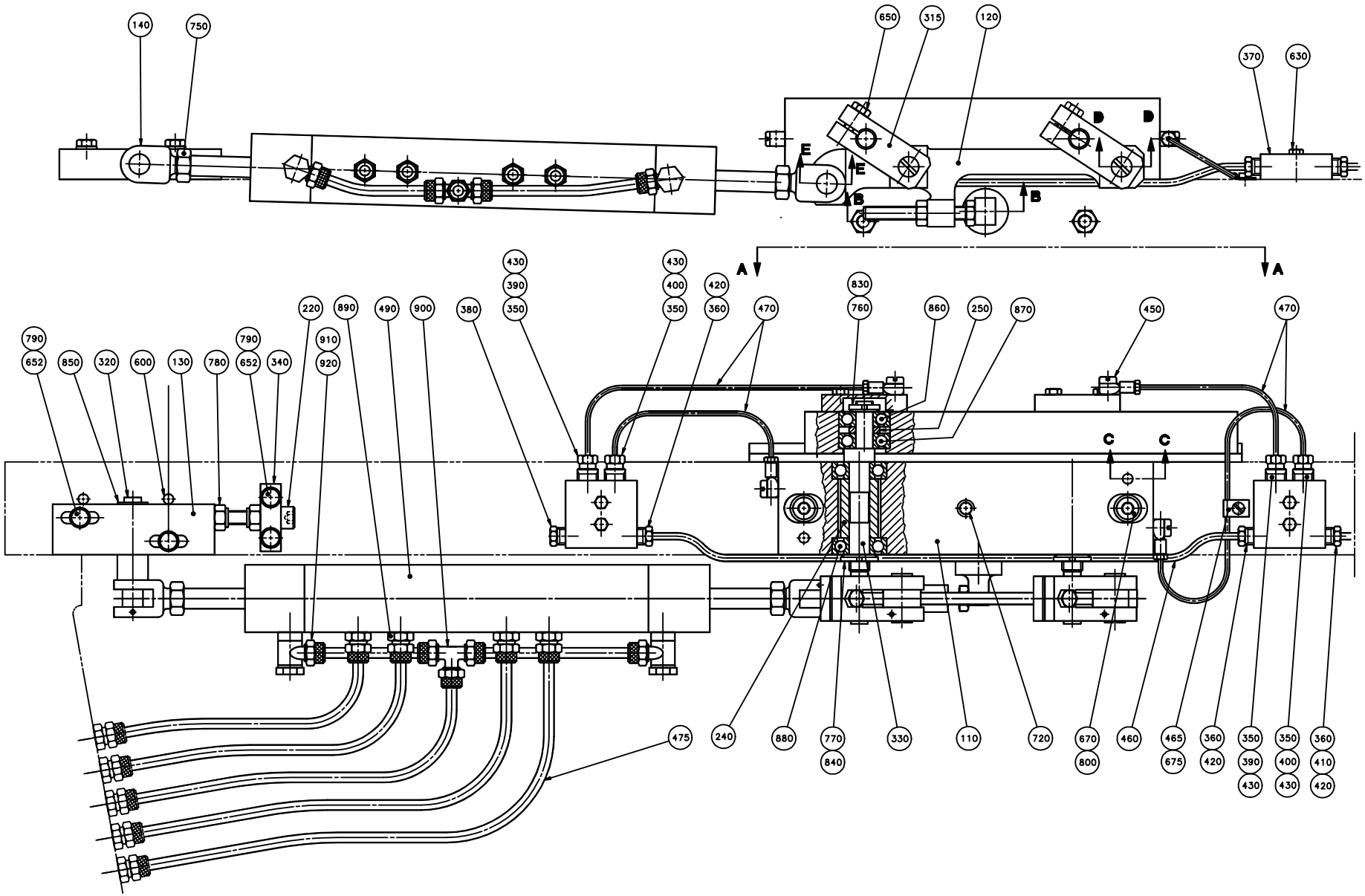
140
750
650
315
120
370
630
A
A
B
B
C
C
D
D
E
E
430
390
350
430
400
350
420
360
470
830
760
860
250
870
450
470
790
652
850
320
600
130
780
790
652
340
910
920
220
890
490
900
380
475
240
880
770
840
330
110
720
670
800
460
465
675
360
420
350
390
430
350
400
430
360
410
420

ECM: 72090 - 19981214
Group number: 266447-0500
Assembly Drawing: 266447-4_1_AA

This list covers pages from 4-10 to 4-13

Pos	Part No	SP	UN	Qty	Description	Page No
0375S, 0750B						
010	550338-0000	C		1	FOLDING FLAP CAM R	
020	440511-0000	C		1	COUNTER CAM	
0355B						
010	537902-0000	C		1	FOLDING FLAP CAM R	
020	529138-0000	C		1	CURVE RIGHT	
0500B						
010	269109-0000	C		1	FOLDING FLAP CAM R	
020	269111-0000	C		1	COUNTER CAM	
0500S						
010	551286-0000	C		1	FOLDING FLAP CAM	
020	440931-0000	C		1	COUNTER CAM	
1000B HIFIN						
010	284233-0000	C		1	FOLDING FLAP CAM R	
020	284235-0000	C		1	COUNTER CAM	
1000B LOFIN, 0750S						
010	268955-0000	C		1	FOLDING FLAP CAM R	
020	269060-0000	C		1	COUNTER CAM	
1000SQ, 1000S						
010	565189-0000	C		1	FOLDING FLAP CAM	
020	269060-0000	C		1	COUNTER CAM	
Common Parts						
110	23292-0000	C		1	BEARING HOUSING	
120	436740-0000	C		1	LINK	
130	20718-0000	D		1	BEARING	
140	22483-0000	C		2	FORK	
150	22485-0000	C		1	DOWEL	
160	22486-0000	C		2	DOWEL	
170	22504-0000	C		1	STOP LUG	
180	23291-0000	C		2	BEARING COVER	
200	23312-0000	C		3	BUSHING	
210	26426-0000	C		5	LACE	
220	33409-0000	C		1	SCREW	
240	107334-0000	C		2	SPACER SLEEVE	
250	107335-0000	C		2	SPACER RING	
260	107339-0000	C		2	DOWEL	
315	434387-0000	C		2	BRACKET	
320	434388-0000	C		1	SHAFT	
330	436671-0000	C		2	ECCENTRIC SHAFT	
340	561416-0000	C		1	BRACKET	
350	90028-0020	C		4	CONE TUBE 2,5MM	
360	90028-0021	C		3	CONE TUBE 4 MM	
370	90032-0038	-		2	BLOCK 2 WAYS	
380	90087-0019	-		1	PLUG M10X1 STAINLESS	
390	90092-0052	C		2	METERING VALVE 10 MM3	
400	90092-0054	C		2	METERING VALVE 50 MM3	
410	90134-0031	C		1	SLEEVE FOR PLASTIC TUBE	
420	90134-0038	C		3	BUSHING/NUT INLET/OUTLET 4 MM	
430	90134-0039	C		4	BUSHING VALVE CONNECTION 2,5 MM	
450	90134-0058	C		4	CONNECTION	
460	90151-0001	-	MM	400	BRASS PIPE DI=2,6 MM	
465	90165-0058	-		1	PIPE CLIP FOR TUBE D=25 MM	
470	90166-0143	-	MM	700	TUBE 2,5 MM PA,TRANSP.	
475	90166-0124	-	MM	1600	TUBE 6 MM PA,TRANSP.	
490	B90450-0105	C		1	5 STEPS CYLINDER MECMAN	
	90450-0634	*C*		*1*	*OVERHAUL KIT*	
500	90261-0036	-		2	PIPE PLUG "REPL.BY 90261-71"	
600	311103-0357	-		4	PARALLEL PIN ISO 2338 6M6X30 A1	
610	311103-0310	-		2	PARALLEL PIN ISO 2338 5M6X20 A1	
620	311112-0192	C		4	SPRING PIN, ISO 8752 2,5X24-C	
630	312105-0295	-		4	SCREW M6S ISO4017 M4X20 A480	
640	312105-0329	-		8	SCREW M6S ISO 4017 M5X16 A480	
650	312105-0370	-		2	SCREW M6S ISO 4017 M6X20 A480	
652	312105-0372	-		4	SCREW M6S ISO 4017 M6X25 A480	
655	312109-0463	-		1	SCREW M6S ISO 4017 M8X60 A480	
670	312115-0461	-		2	SCREW ISO4762 M8X50 A4	
675	312125-0285	-		1	SLOTTED CHEESE HEAD SCREW MCS 4X6 SS	
690	312155-0382	-		4	SCREW EN 10642 MF6S M6X60 A480	
700	312318-0459	-		2	SCREW ISO4029 M8X40 A4	
720	312318-0499	-		1	SCREW ISO4029 M10X40 A4	
740	312605-0318	-		2	HEXAGON NUT, M6M M8 A280	
750	312635-0320	-		2	NUT M6M 10X1 STAINLESS A2 80	
760	312805-0100	C		2	NUT ROUND WITH SLOTS M10X0,75 FE	
770	312805-0101	C		2	NUT ROUND WITH SLOTS M12X1 FE	
780	312811-0318	-		3	NUT HEX.LOCK HELI COIL M8 SS	
790	315105-0153	-		4	WASHER BRB6,4X12RFR	
800	315105-0165	-		2	WASHER BRB8,4X16RFR	

Machine Type | Group Description | Used-In | Group Number | Page No

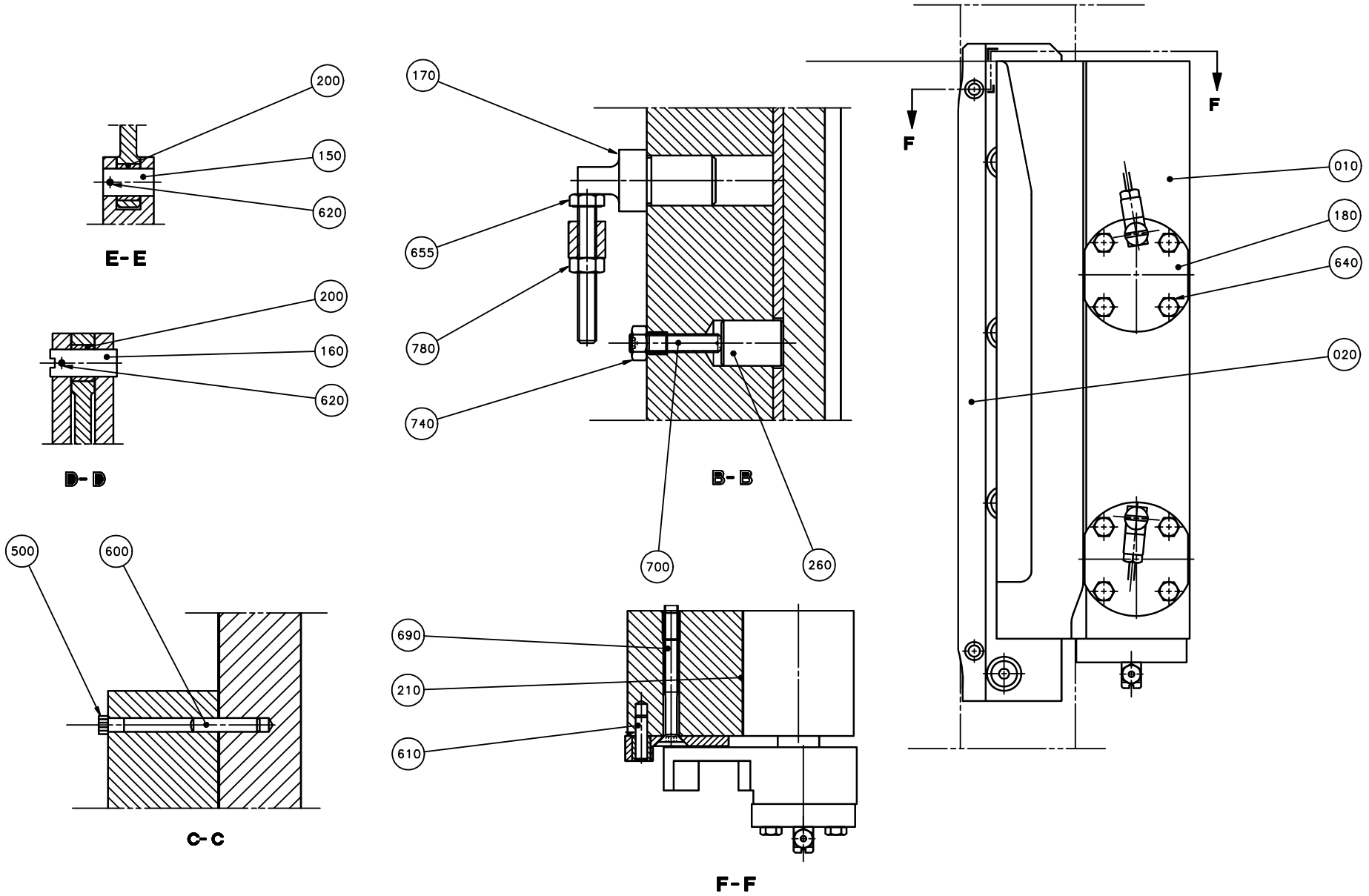
200
150
620
E-E
200
160
620
D-D
500
600
C-C
170
655
780
740
B-B
700
260
690
210
610
F-F
F
F
010
180
640
020

Pos	Part No	SP	UN	Qty	Description	Page No
Common Parts (Cont'd)						
830	315410-0100	C		2	LOCK WASHER MB 0 D=10 H=1	
840	315410-0101	C		2	LOCK WASHER MB 1 D=12 H=1	
850	315750-0107	-		1	RETAIN. RING, 10	
860	321309-0100	C		2	BALL BEARING, 10X30X9 MM	
870	321312-0100	C		2	BALL BEARING, 10X30X9 MM	
880	321312-0101	C		4	BALL BEARING, 12X32X10 MM	
890	342920-0113	-		4	STRAIGHT COUPLING,EXT.THREADED 6/4-R1/8"	
900	342946-0112	-		1	T-COUPLING,UNION 6/4	
910	342980-0113	-		2	BANJO-CONNECTION,RING 6/4-G1/8"	
920	342980-0303	-		2	BANJO-HOLLOW BOLT COUPL,EXT.THR.01-G1/8"	

Pos	Part No	SP	UN	Qty	Description	Page No

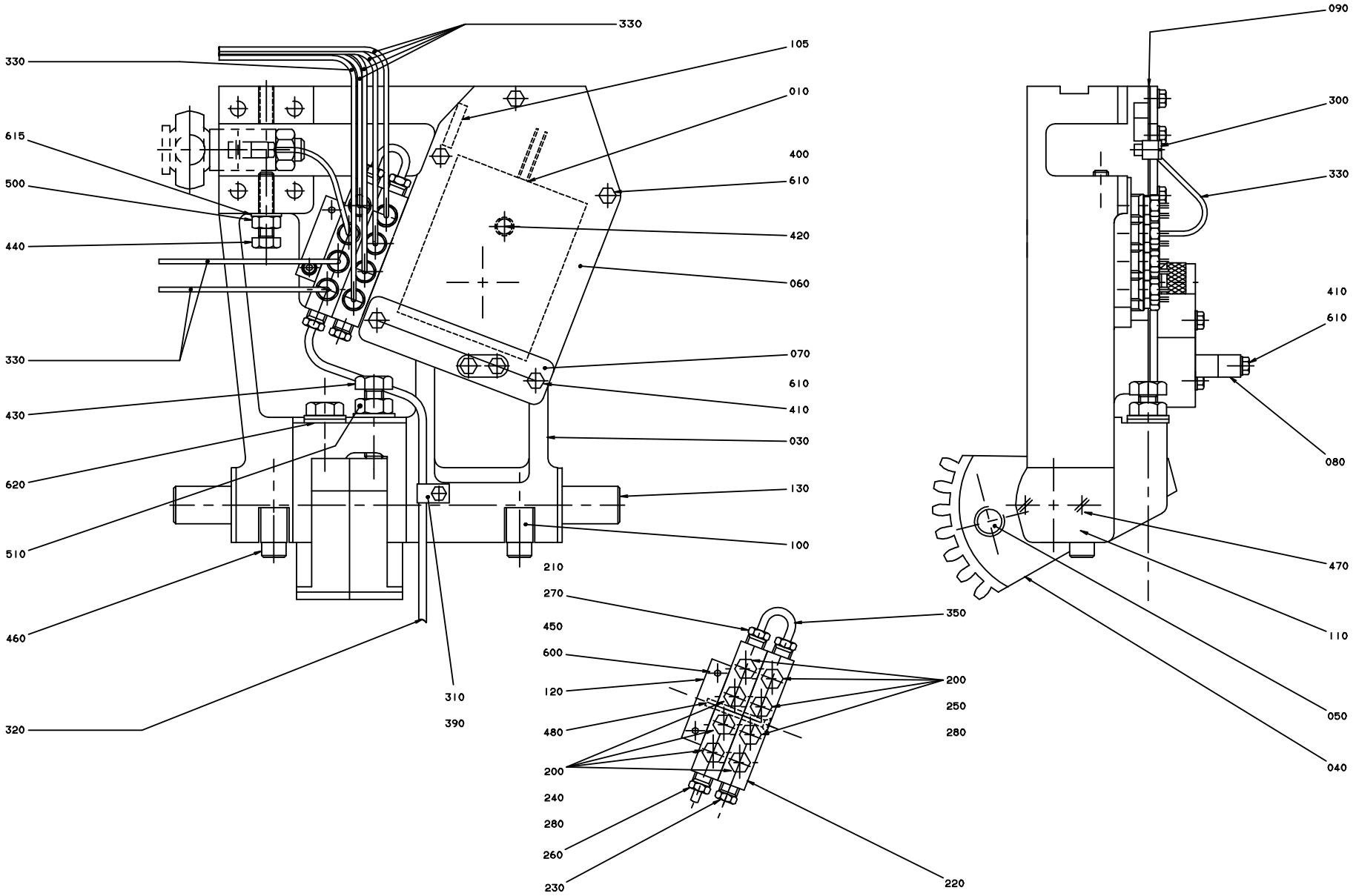
330
330
105
010
615
400
500
610
440
420
060
330
070
610
410
430
030
620
130
510
100
460
210
270
450
600
120
480
200
240
280
260
230
350
200
250
280
220
310
390
320
090
300
330
410
610
080
470
110
050
040

ECM: 86996 - 20001215
Group number: 541052-0100
Assembly Drawing: 541052-1_1_AC

Pos	Part No	SP	UN	Qty	Description	Page No
TBA 0500B, TBA 0750B, TBA 1000S, TBA 1000B, TBA 0750S						
010	A67379-0101	C		1	TRANSFORMER	
010	67379-0101	C		1	TRANSFORMER	
TBA 0500S, TBA 0355B, TBA 0375S, TBA 1000SQ						
010	A67379-0102	C		1	TRANSFORMER	
010	67379-0102	C		1	TRANSFORMER	
Common Parts						
030	545410-0000	C		1	ARM LEFT	
040	232236-0000	C		2	TOOTH PART	
050	232237-0000	C		1	SCREW	
060	464366-0000	D		1	LID	
070	464367-0000	C		1	CRAMP	
080	464368-0000	C		2	CRAMP	
090	484843-0000	C		1	GASKET	
100	533818-0000	C		2	HOLDER	
105	534237-0000	C		1	SEAL	
110	536704-0000	C		2	WASHER	
120	536705-0000	D		1	BRACKET	
130	538399-0000	C		1	SHAFT	
200	90028-0020	C		8	CONE TUBE 2,5MM	
210	90028-0021	C		3	CONE TUBE 4 MM	
220	90032-0039	-		2	BLOCK 4 WAYS	
230	90087-0019	-		1	PLUG M10X1 STAINLESS	
240	90092-0052	C		4	METERING VALVE 10 MM3	
250	90092-0053	C		4	METERING VALVE 30 MM3	
260	90134-0031	C		1	SLEEVE FOR PLASTIC TUBE	
270	90134-0038	C		3	BUSHING/NUT INLET/OUTLET 4 MM	
280	90134-0039	C		8	BUSHING VALVE CONNECTION 2,5 MM	
300	90134-0058	C		1	CONNECTION	
310	90165-0056	-		1	PIPE CLIP FOR TUBE D=4 MM	
320	90166-0109	-	MM	800	TUBE 4 MM PA,TRANSP.	
330	90166-0143	-	MM	3000	TUBE 2,5 MM PA,TRANSP.	
350	90266-0165	-	MM	100	BRASS PIPE	
390	312105-0287	-		1	SCREW M6S ISO4017 M4X8 A480	
400	312105-0327	-		3	SCREW M6S ISO 4017 M5X12 A480	
410	312105-0335	-		4	SCREW M6S ISO 4014 M5X30 A480	
420	312105-0343	-		1	SCREW M6S ISO 4014 M5X60 A480	
430	312105-0497	-		2	SCREW M6S ISO 4017 M10X35 A480	
440	312109-0457	-		1	SCREW M6S ISO 4017 M8X35 A480	
450	312115-0303	-		2	SCREW ISO4762 M4X40 A4	
460	312115-0455	-		2	SCREW ISO4762 M8X30 A4	
470	312145-0285	-		4	SCREW COUNTERS.SLOT.HD. MFS 4X6 SS	
480	312155-0301	-		1	SCREW EN 10642 MF6S M4X35 A480	
500	312605-0318	-		1	HEXAGON NUT, M6M M8 A280	
510	312605-0320	-		1	HEXAGON NUT, M6M M10 A280	
600	315105-0136	-		2	WASHER BRB4,3XRFR	
610	315105-0146	-		7	BRICKA BRB5,3X10RFR	
615	315105-0165	-		1	WASHER BRB8,4X16RFR	
620	315105-0173	-		3	WASHER BRB10,5X22RFR	

Machine Type Group Description Used-In Group Number Page No

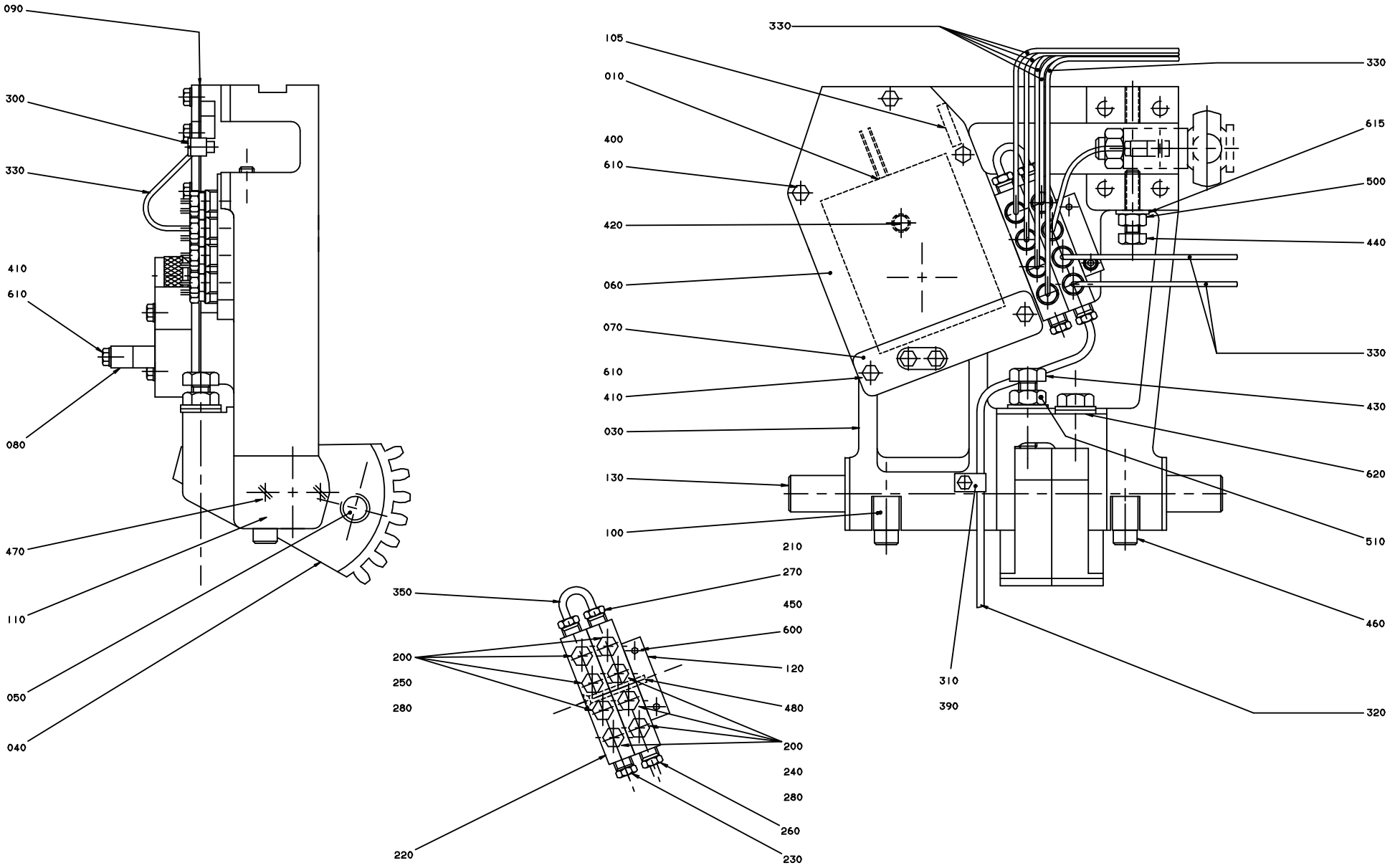
090
300
330
410
610
080
470
110
050
040
105
010
400
610
420
060
070
610
410
030
130
100
330
330
615
500
440
330
430
620
510
460
320
310
390
210
270
450
600
120
480
200
240
280
260
230
350
200
250
280
220

ECM: 86997 - 20001215
Group number: 541053-0100
Assembly Drawing: 541053-1_1_AC

Pos	Part No	SP	UN	Qty	Description	Page No
TBA 0500B, TBA 0750B, TBA 1000S, TBA 1000B, TBA 0750S						
010	A67379-0101	C		1	TRANSFORMER	
010	67379-0101	C		1	TRANSFORMER	
TBA 0500S, TBA 0355B, TBA 0375S, TBA 1000SQ						
010	A67379-0102	C		1	TRANSFORMER	
010	67379-0102	C		1	TRANSFORMER	
Common Parts						
030	545409-0000	C		1	ARM RIGHT	
040	232236-0000	C		2	TOOTH PART	
050	232237-0000	C		1	SCREW	
060	464366-0000	D		1	LID	
070	464367-0000	C		1	CRAMP	
080	464368-0000	C		2	CRAMP	
090	484843-0000	C		1	GASKET	
100	533818-0000	C		2	HOLDER	
105	534237-0000	C		1	SEAL	
110	536704-0000	C		2	WASHER	
120	536705-0000	D		1	BRACKET	
130	538399-0000	C		1	SHAFT	
200	90028-0020	C		8	CONE TUBE 2,5MM	
210	90028-0021	C		3	CONE TUBE 4 MM	
220	90032-0039	-		2	BLOCK 4 WAYS	
230	90087-0019	-		1	PLUG M10X1 STAINLESS	
240	90092-0052	C		4	METERING VALVE 10 MM3	
250	90092-0053	C		4	METERING VALVE 30 MM3	
260	90134-0031	C		1	SLEEVE FOR PLASTIC TUBE	
270	90134-0038	C		3	BUSHING/NUT INLET/OUTLET 4 MM	
280	90134-0039	C		8	BUSHING VALVE CONNECTION 2,5 MM	
300	90134-0058	C		1	CONNECTION	
310	90165-0056	-		1	PIPE CLIP FOR TUBE D=4 MM	
320	90166-0109	-	MM	800	TUBE 4 MM PA,TRANSP.	
330	90166-0143	-	MM	3000	TUBE 2,5 MM PA,TRANSP.	
350	90266-0165	-	MM	100	BRASS PIPE	
390	312105-0287	-		1	SCREW M6S ISO4017 M4X8 A480	
400	312105-0327	-		3	SCREW M6S ISO 4017 M5X12 A480	
410	312105-0335	-		4	SCREW M6S ISO 4014 M5X30 A480	
420	312105-0343	-		1	SCREW M6S ISO 4014 M5X60 A480	
430	312105-0497	-		2	SCREW M6S ISO 4017 M10X35 A480	
440	312109-0457	-		1	SCREW M6S ISO 4017 M8X35 A480	
450	312115-0303	-		2	SCREW ISO4762 M4X40 A4	
460	312115-0455	-		2	SCREW ISO4762 M8X30 A4	
470	312145-0285	-		4	SCREW COUNTERS.SLOT.HD. MFS 4X6 SS	
480	312155-0301	-		1	SCREW EN 10642 MF6S M4X35 A480	
500	312605-0318	-		1	HEXAGON NUT, M6M M8 A280	
510	312605-0320	-		1	HEXAGON NUT, M6M M10 A280	
600	315105-0136	-		2	WASHER BRB4,3XRFR	
610	315105-0146	-		7	BRICKA BRB5,3X10RFR	
615	315105-0165	-		1	WASHER BRB8,4X16RFR	
620	315105-0173	-		3	WASHER BRB10,5X22RFR	

Machine Type | Group Description | Used-In | Group Number | Page No

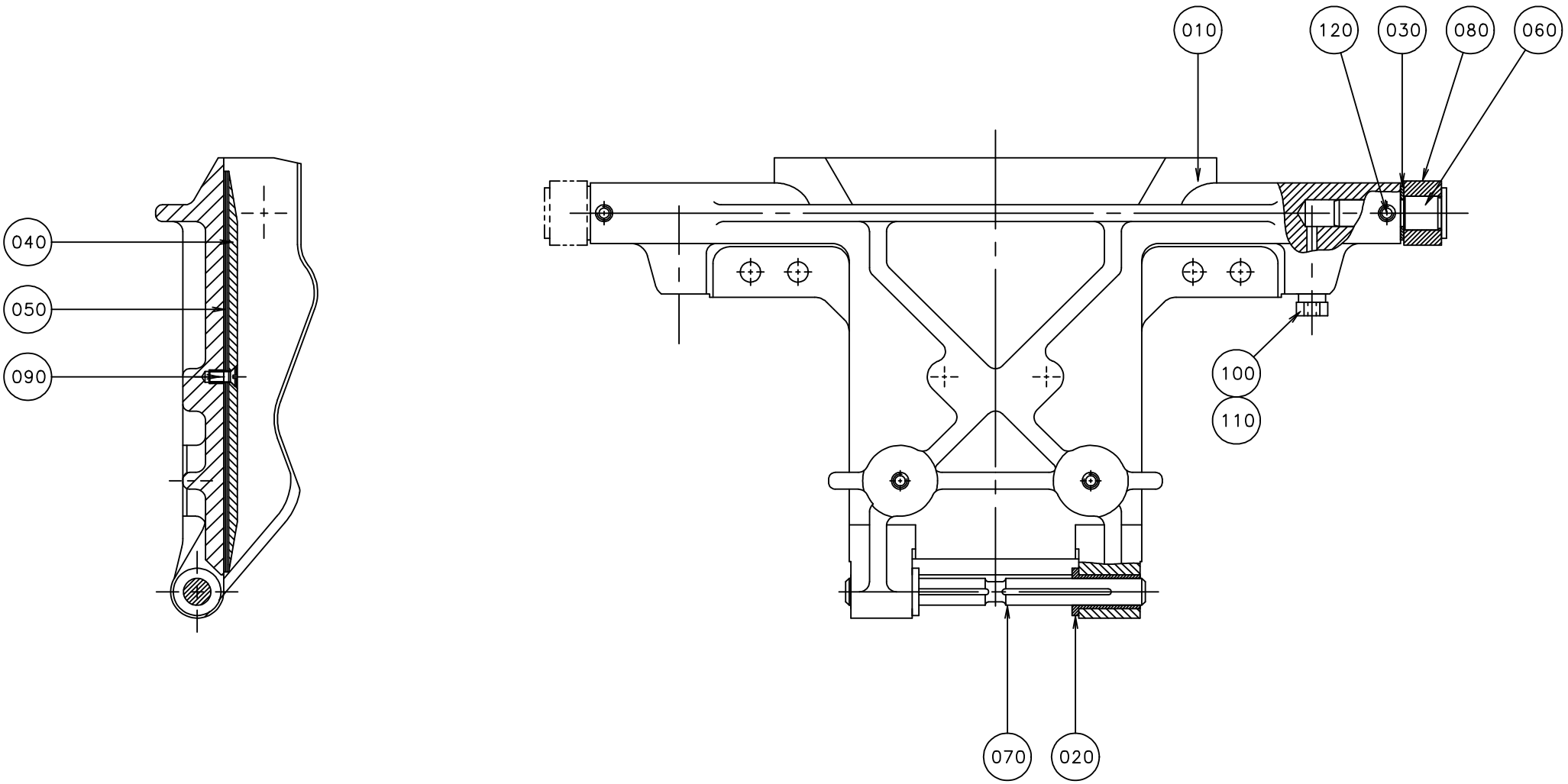
010
120
030
080
060
040
050
090
100
110
070
020

ECM: 102945 - 20020102
Group number: 1487405-0100
Assembly Drawing: 1487405-1_1_AA

This list covers pages from 4-18 to 4-21

Pos	Part No	SP	UN	Qty	Description	Page No
TBA/8 0355B IH						
010	529000-0000	A		2	VOLUME FLAP	
020	449908-0000	A		4	BUSHING	
040	536686-0000	B		2	VOLUME BULGE	
050	536687-0000	B		6	VOLUME SHIM	
070	458165-0000	A		2	SHAFT	
080	436556-0000	A		2	CURVE ROLLER	
090	312145-0289	-		4	SCREW COUNTERS.SLOT.HD. MFS 4X10 SS	
TBA/8 0375S IH						
010	571486-0000	A		2	VOLUME FLAP	
020	449908-0000	A		4	BUSHING	
040	255227-0001	B		2	VOLUME BULGE	
050	255228-0001	B		6	VOLUME SHIM	
070	458165-0000	A		2	SHAFT	
080	436556-0000	A		2	CURVE ROLLER	
090	312145-0222	-		4	SCREW COUNTERS.SLOT.HD. MFS 3X8 SS	
TBA/8 0500B IH						
010	476115-0000	A		2	VOLUME FLAP	
020	36133-0000	A		4	BUSHING	
040	458467-0000	B		2	VOLUME BULGE	
050	479245-0000	B		6	VOLUME SHIM	
070	458164-0000	A		2	SHAFT	
080	436556-0000	A		2	CURVE ROLLER	
090	312145-0289	-		4	SCREW COUNTERS.SLOT.HD. MFS 4X10 SS	
TBA/8 0500S IH						
010	592923-0000	A		2	VOLUME FLAP	
020	449908-0000	A		4	BUSHING	
040	464314-0000	B		2	VOLUME BULGE	
050	464315-0000	B		6	VOLUME SHIM	
070	458165-0000	A		2	SHAFT	
080	434321-0000	A		2	CURVE ROLLER	
090	312145-0222	-		4	SCREW COUNTERS.SLOT.HD. MFS 3X8 SS	
TBA/8 0750B IH						
010	544504-0000	A		2	VOLUME FLAP	
020	36133-0000	A		4	BUSHING	
040	450781-0000	B		2	VOLUME BULGE	
050	450782-0000	B		6	VOLUME SHIM	
070	458164-0000	A		2	SHAFT	
080	436556-0000	A		2	CURVE ROLLER	
090	312145-0222	-		4	SCREW COUNTERS.SLOT.HD. MFS 3X8 SS	
TBA/8 0750S IH						
010	555926-0000	A		2	VOLUME FLAP	
020	36133-0000	A		4	BUSHING	
040	555892-0000	B		2	VOLUME BULGE	
050	555928-0000	B		6	VOLUME SHIM	
070	544292-0000	A		2	SHAFT	
080	434321-0000	A		2	CURVE ROLLER	
090	312145-0222	-		4	SCREW COUNTERS.SLOT.HD. MFS 3X8 SS	
TBA/8 1000B HIFIN IH, TBA/8 1000B LOFIN IH						
010	1484831-0000	A		1	VOLUME FLAP	
020	36133-0000	A		2	BUSHING	
040	26075-0000	B		1	VOLUME BULGE	
050	208709-0000	B		3	VOLUME SHIM	
070	458164-0000	A		1	SHAFT	
080	434321-0000	A		1	CURVE ROLLER	
090	312145-0222	-		2	SCREW COUNTERS.SLOT.HD. MFS 3X8 SS	
TBA/8 1000S IH						
010	1512506-0000	A		1	VOLUME FLAP	
020	36133-0000	A		2	BUSHING	
040	569055-0000	B		1	VOLUME BULGE	
050	569056-0000	B		3	VOLUME SHIM	
070	458164-0000	A		1	SHAFT	
080	434321-0000	A		1	CURVE ROLLER	
090	312145-0289	-		2	SCREW COUNTERS.SLOT.HD. MFS 4X10 SS	
TBA/8 1000SQ IH						
010	1519643-0000	A		1	VOLUME FLAP	
020	36133-0000	A		2	BUSHING	
040	1143049-0000	B		1	VOLUME BULGE	
050	1143050-0000	B		3	VOLUME SHIM	
070	544292-0000	A		1	SHAFT	
080	434321-0000	A		1	CURVE ROLLER	
090	312145-0289	-		2	SCREW COUNTERS.SLOT.HD. MFS 4X10 SS	
Common Parts						
030	19972-0000	B		1	WASHER	
060	434320-0000	A		1	AXLE PIN	

Machine Type | Group Description | Used-In | Group Number | Page No

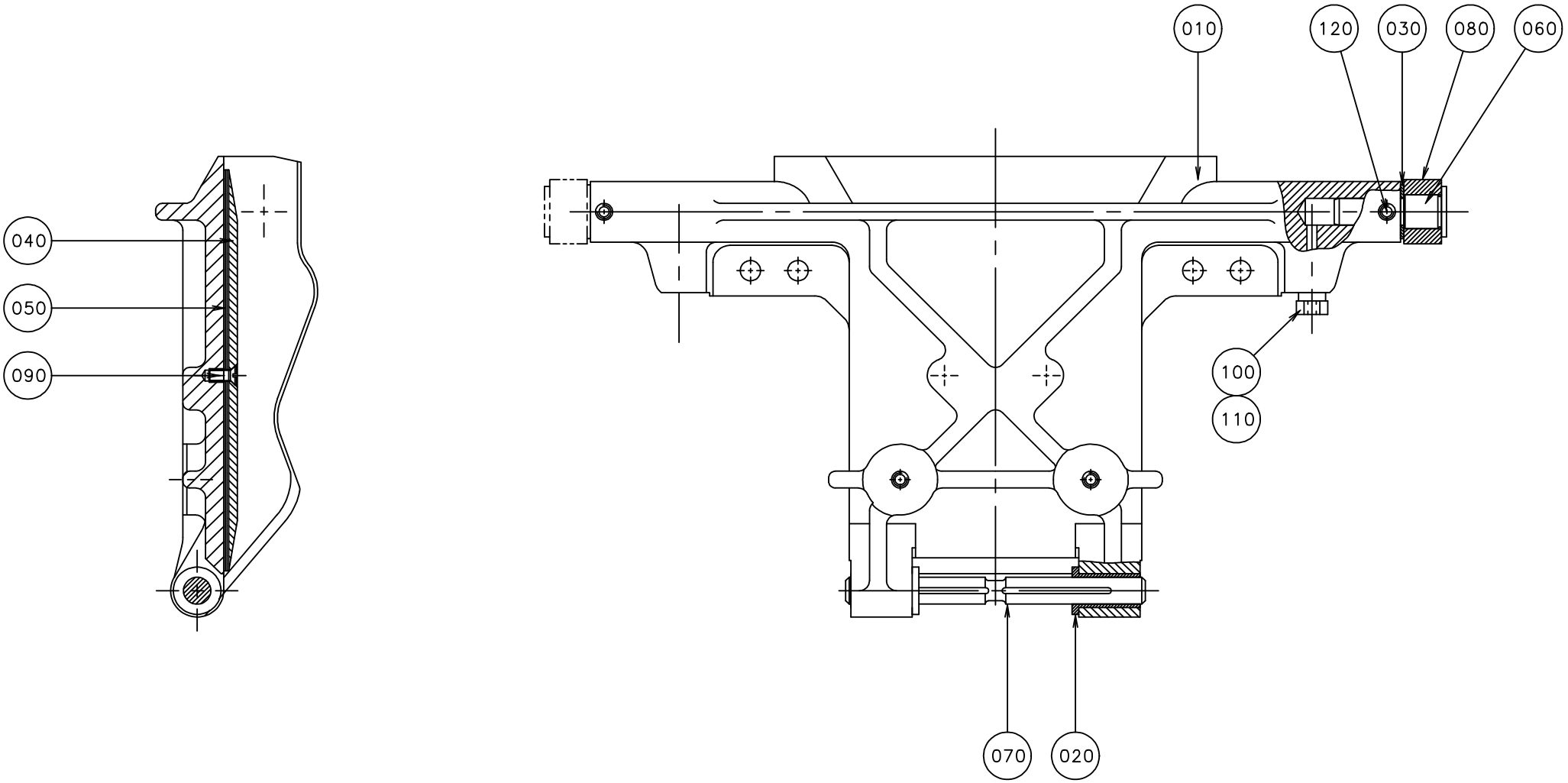
010
120
030
080
060
040
050
090
100
110
070
020

ECM: 102945 - 20020102
Group number: 1487405-0100
Assembly Drawing: 1487405-1_1_AA

This list covers pages from 4-18 to 4-21

Pos	Part No	SP	UN	Qty	Description	Page No
Common Parts (Cont'd)						
100	90028-0020	B		1	CONE TUBE 2,5MM	
110	90134-0063	B		1	BUSHING/NUT M8X1, D=2,5 MM	
120	312318-0285	-		1	SCREW ISO4029 M4X6 A4	

Pos	Part No	SP	UN	Qty	Description	Page No

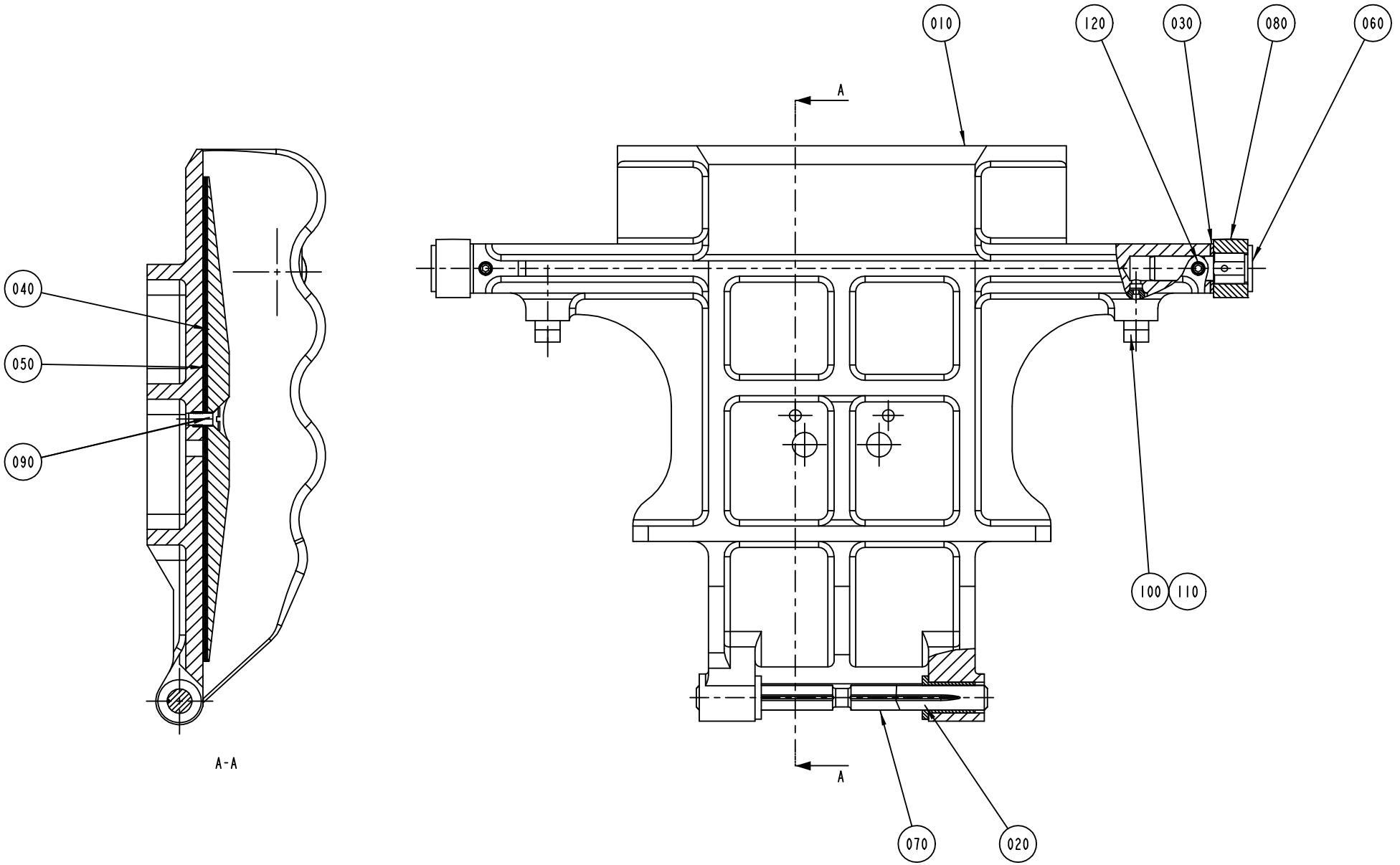
010
120
030
080
060
A
040
050
090
100
110
A-A
A
070
020

ECM: 102944 - 20020102
Group number: 1367814-0100
Assembly Drawing: 1367814-1_1_AA

Pos	Part No	SP	UN	Qty	Description	Page No
TBA/8 1000B IH						
010	1484832-0000	A		1	VOLUME FLAP	
040	26075-0000	B		1	VOLUME BULGE	
050	208709-0000	B		3	VOLUME SHIM	
070	458164-0000	A		1	SHAFT	
TBA/8 1000S IH						
010	1512505-0000	A		1	VOLUME FLAP	
040	569055-0000	B		1	VOLUME BULGE	
050	569056-0000	B		3	VOLUME SHIM	
070	458164-0000	A		1	SHAFT	
TBA/8 1000SQ IH						
010	1519645-0000	A		1	VOLUME FLAP	
040	1143049-0000	B		1	VOLUME BULGE	
050	1143050-0000	B		3	VOLUME SHIM	
070	544292-0000	A		1	SHAFT	
Common Parts						
020	36133-0000	A		2	BUSHING	
030	19972-0000	B		1	WASHER	
060	434320-0000	A		1	AXLE PIN	
080	434321-0000	A		1	CURVE ROLLER	
090	312145-0289	-		2	SCREW COUNTERS.SLOT.HD. MFS 4X10 SS	
100	90028-0020	B		1	CONE TUBE 2,5MM	
110	90134-0063	B		1	BUSHING/NUT M8X1, D=2,5 MM	
120	312318-0285	-		1	SCREW ISO4029 M4X6 A4	

Pos	Part No	SP	UN	Qty	Description	Page No

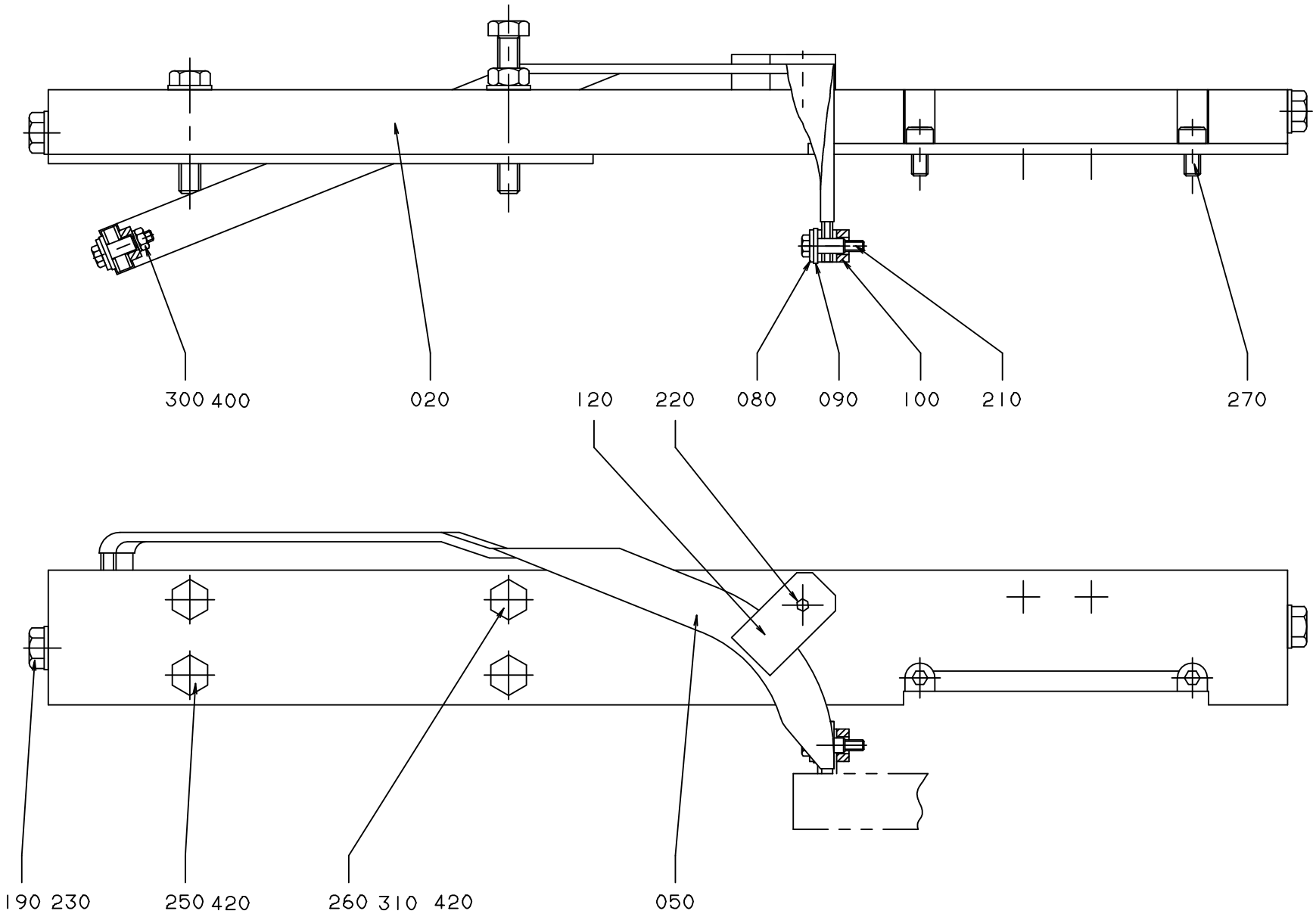
300 400
020
120
220
080
090
100
210
270
190 230
250 420
260 310 420
050

ECM: 95688 - 20010906
Group number: 259414-0500
Assembly Drawing: 259414-3_1_AB

Pos	Part No	SP	UN	Qty	Description	Page No
-						
020	540368-0000	C		1	CARRIER	
050	540744-0000	C		1	BUSBAR	
080	28509-0000	C		2	BRICKA	
090	32544-0000	C		2	INSULATION NUT	
100	32644-0000	C		2	WASHER	
120	1285367-0000	C		1	HOLDER	
190	90005-0007	-		2	SEAL WASHER, 8,7X14X1 MM M8	
210	312105-0295	-		2	SCREW M6S ISO4017 M4X20 A480	
220	312155-0372	-		1	SCREW EN 10642 MF6S M6X25 A480	
230	312105-0447	-		2	SCREW M6S ISO 4017 M8X12 A480	
250	312105-0457	-		3	SCREW M6S ISO 4014 M8X35 A480	
260	312109-0463	-		1	SCREW M6S ISO 4017 M8X60 A480	
270	312115-0366	-		2	SCREW ISO4762 M6X12 A4	
300	312605-0312	-		1	HEXAGON NUT, M6M M4 A280	
310	312605-0318	-		1	HEXAGON NUT, M6M M8 A280	
400	315105-0136	-		1	WASHER BRB4,3XRFR	
420	315105-0165	-		4	WASHER BRB8,4X16RFR	

Pos	Part No	SP	UN	Qty	Description	Page No

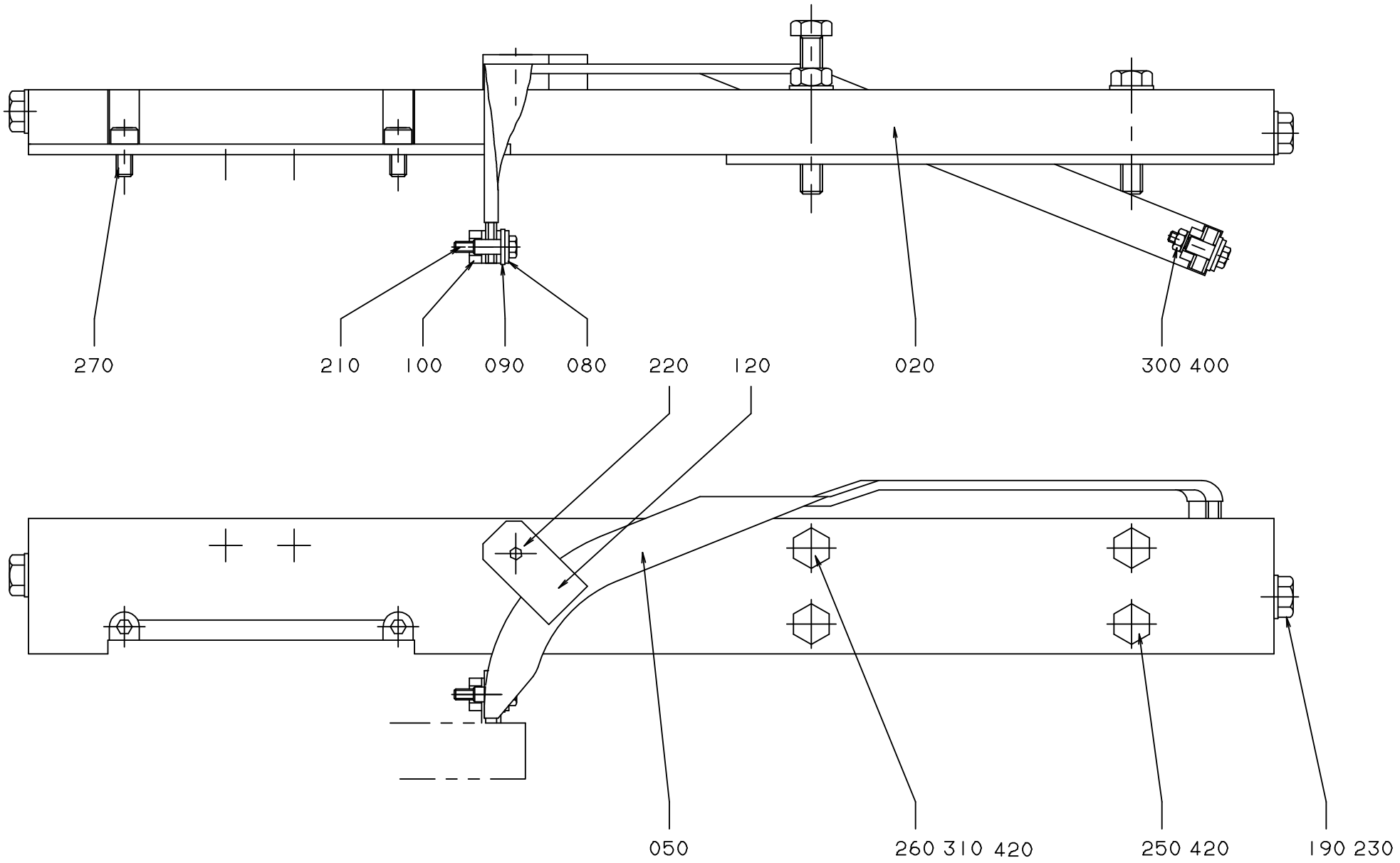
270
210
100
090
080
220
120
020
300 400
050
260 310 420
250 420
190 230

ECM: 95689 - 20010906
Group number: 259415-0500
Assembly Drawing: 259415-3_1_AB

Pos	Part No	SP	UN	Qty	Description	Page No
-						
020	540367-0000	C		1	CARRIER	
050	540743-0000	C		1	BUSBAR	
080	28509-0000	C		2	BRICKA	
090	32544-0000	C		2	INSULATION NUT	
100	32644-0000	C		2	WASHER	
120	1285367-0000	C		1	HOLDER	
190	90005-0007	-		2	SEAL WASHER, 8,7X14X1 MM M8	
210	312105-0295	-		2	SCREW M6S ISO4017 M4X20 A480	
220	312155-0372	-		1	SCREW EN 10642 MF6S M6X25 A480	
230	312105-0447	-		2	SCREW M6S ISO 4017 M8X12 A480	
250	312105-0457	-		3	SCREW M6S ISO 4014 M8X35 A480	
260	312109-0463	-		1	SCREW M6S ISO 4017 M8X60 A480	
270	312115-0366	-		2	SCREW ISO4762 M6X12 A4	
300	312605-0312	-		1	HEXAGON NUT, M6M M4 A280	
310	312605-0318	-		1	HEXAGON NUT, M6M M8 A280	
400	315105-0136	-		1	WASHER BRB4,3XRFR	
420	315105-0165	-		4	WASHER BRB8,4X16RFR	

Pos	Part No	SP	UN	Qty	Description	Page No

Machine Type | Group Description | Used-In | Group Number | Page No

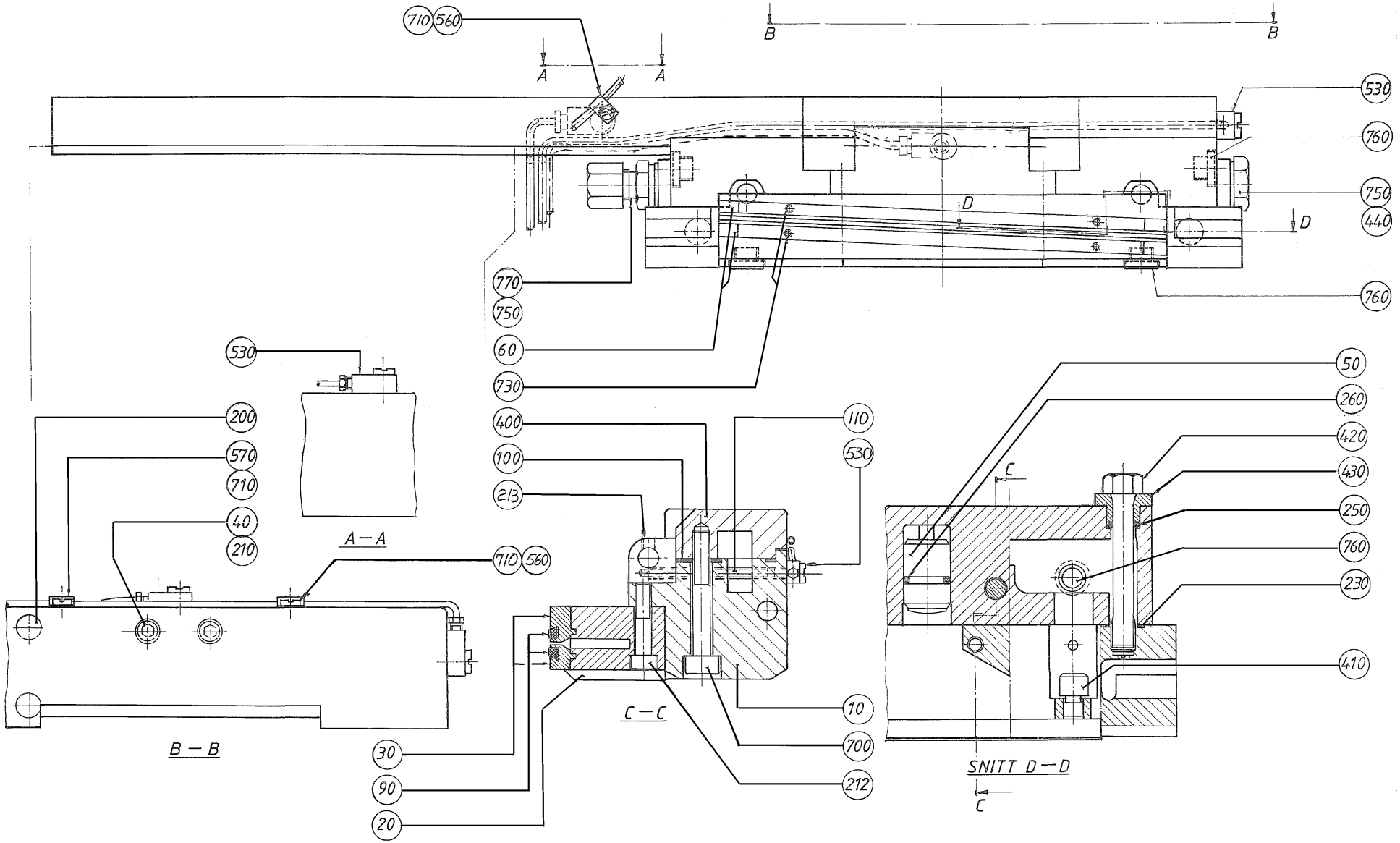
710
560
A
A
B
B
530
760
750
440
D
D
770
750
760
60
730
530
200
570
710
40
210
A — A
710
560
400
100
213
110
530
50
260
420
430
250
760
230
C
410
10
700
212
30
90
20
C — C
B — B
SNITT D — D
C

ECM: 89848 - 20020508
Group number: 257835-0300
Assembly Drawing: 257835-7_1_AA

This list covers pages from 4-28 to 4-31

Pos	Part No	SP	UN	Qty	Description	Page No
0375S (See drawing on pages: 4-30, 4-34)						
010	466432-0000	A		1	BEARING HOUSING	
020	449727-0000	A		1	CUTTING JAW	
030	1520490-0000	A		2	CUTTING RAIL	
090	A1110083-0002	A		2	DOLLY	
090	1110083-0002	A		2	DOLLY	
100	245272-0000	A		1	GASKET	
110	1296886-0000	A		1	SCREW	
150	90287-0070	A		2	SCREW MLC6S M6X23	
420	243143-0000	A		2	SCREW	
0355B, 0500S (See drawing on pages: 4-30, 4-34)						
010	466431-0000	A		1	BEARING HOUSING	
020	464162-0000	A		1	CUTTING JAW	
030	1520490-0000	A		2	CUTTING RAIL	
090	A1110083-0002	A		2	DOLLY	
090	1110083-0002	A		2	DOLLY	
100	497716-0000	A		1	GASKET	
110	1296886-0000	A		1	SCREW	
150	90287-0070	A		2	SCREW MLC6S M6X23	
230	315202-0111	A		2	O-RING 13,1X1,6 MM	
250	315202-0207	A		2	O-RING 8,3X2,4 MM	
420	243143-0000	A		2	SCREW	
0500B, 1000B LOFIN, 0750B (See drawing on pages: 4-30, 4-34)						
010	450503-0000	A		1	BEARING HOUSING	
020	257783-0000	A		1	CUTTING JAW	
030	1520442-0000	A		2	CUTTING RAIL	
090	A1110083-0002	A		2	DOLLY	
090	1110083-0002	A		2	DOLLY	
100	245271-0000	A		1	GASKET	
110	1296982-0000	A		1	SCREW	
150	90287-0070	A		2	SCREW MLC6S M6X23	
230	315202-0111	A		2	O-RING 13,1X1,6 MM	
250	315202-0207	A		2	O-RING 8,3X2,4 MM	
420	243143-0000	A		2	SCREW	
1000SQ NO OPENING (See drawing on pages: 4-30, 4-34)						
010	573985-0000	A		1	BEARING HOUSING	
020	579772-0000	A		1	CUTTING JAW	
030	1520491-0000	A		2	CUTTING RAIL	
090	A1110083-0002	A		2	DOLLY	
090	1110083-0002	A		2	DOLLY	
100	573988-0000	A		1	GASKET	
110	1296981-0000	A		1	SCREW	
150	90287-0070	A		2	SCREW MLC6S M6X23	
230	315202-0111	A		2	O-RING 13,1X1,6 MM	
250	315202-0207	A		2	O-RING 8,3X2,4 MM	
270	591981-0000	A		1	CATCH	
275	591982-0000	A		1	CATCH	
420	573583-0000	A		2	SCREW	
0750S (See drawing on pages: 4-30, 4-34)						
010	544317-0000	A		1	BEARING HOUSING	
020	544323-0000	A		1	CUTTING JAW	
030	1520491-0000	A		2	CUTTING RAIL	
090	A1110083-0002	A		2	DOLLY	
090	1110083-0002	A		2	DOLLY	
100	497716-0000	A		1	GASKET	
110	1296885-0000	A		1	SCREW	
150	90287-0070	A		2	SCREW MLC6S M6X23	
230	315202-0111	A		2	O-RING 13,1X1,6 MM	
250	315202-0207	A		2	O-RING 8,3X2,4 MM	
420	243143-0000	A		2	SCREW	
1000B HIFIN (See drawing on pages: 4-28, 4-32)						
010	497572-0000	A		1	BEARING HOUSING	
020	284578-0000	A		1	CUTTING JAW	
030	539761-0000	A		2	CUTTING RAIL	
060	32116-0000	A		4	END PIECE	
090	A564533-0001	A		2	DOLLY	
090	564533-0001	A		2	DOLLY	
100	245271-0000	A		1	GASKET	
110	1296982-0000	A		1	SCREW	
212	312115-0374	-		2	SCREW ISO4762 M6X30 A4	
213	312318-0321	-		1	SCREW ISO4029 M5X6 A4	
230	315202-0111	A		2	O-RING 13,1X1,6 MM	
250	315202-0207	A		2	O-RING 8,3X2,4 MM	
420	243143-0000	A		2	SCREW	
1000S (See drawing on pages: 4-30, 4-34)						
010	569057-0000	A		1	BEARING HOUSING	
020	569059-0000	A		1	CUTTING JAW	
030	1520491-0000	A		2	CUTTING RAIL	

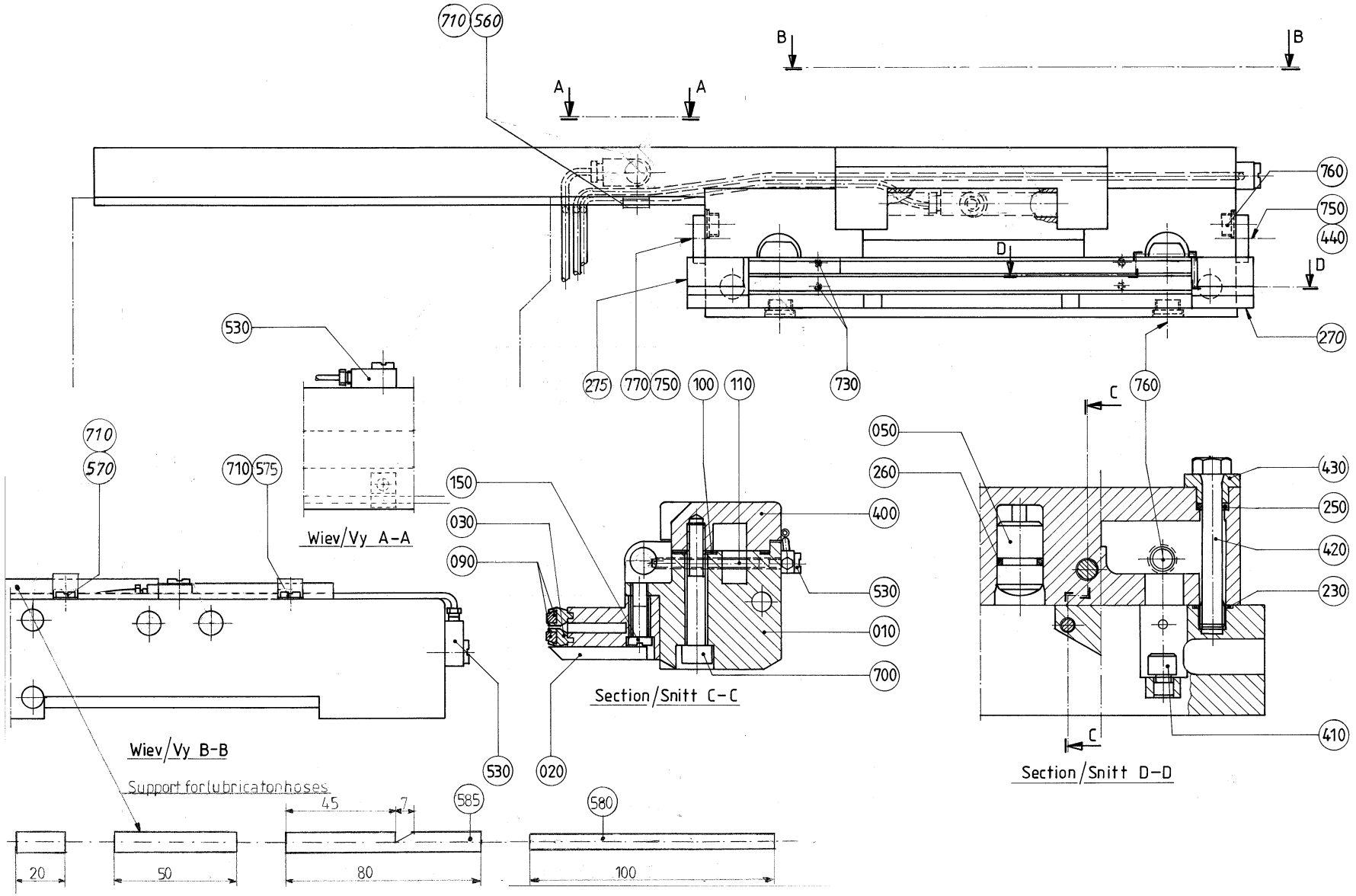
710
560
A
A
B
B
760
750
440
D
D
270
530
275
770
750
100
110
730
760
C
710
570
710
575
150
030
090
050
260
400
530
010
700
430
250
420
230
410
Wiev/Vy A-A
Section/Snitt C-C
Section/Snitt D-D
C
Wiev/Vy B-B
Support for lubrication hoses
530
020
585
580
45
7
20
50
80
100

ECM: 89848 - 20020508
Group number: 257835-0300
Assembly Drawing: 257835-8_1_AA

This list covers pages from 4-28 to 4-31

Pos	Part No	SP	UN	Qty	Description	Page No
1000S (Cont'd) (See drawing on pages: 4-30, 4-34)						
090	A1110083-0002	A		2	DOLLY	
090	1110083-0002	A		2	DOLLY	
100	245271-0000	A		1	GASKET	
110	1296884-0000	A		1	SCREW	
150	90287-0070	A		2	SCREW MLC6S M6X23	
230	315202-0111	A		2	O-RING 13,1X1,6 MM	
250	315202-0207	A		2	O-RING 8,3X2,4 MM	
420	243143-0000	A		2	SCREW	
1000SQ SPINCAP OPENING (See drawing on pages: 4-30, 4-34)						
010	573985-0000	A		1	BEARING HOUSING	
020	579772-0000	A		1	CUTTING JAW	
030	1520491-0000	A		2	CUTTING RAIL	
090	A1520633-0002	A		2	DOLLY	
090	1520633-0002	A		2	DOLLY	
100	573988-0000	A		1	GASKET	
110	1296981-0000	A		1	SCREW	
150	90287-0070	A		2	SCREW MLC6S M6X23	
230	315202-0111	A		2	O-RING 13,1X1,6 MM	
250	315202-0207	A		2	O-RING 8,3X2,4 MM	
270	591981-0000	A		1	CATCH	
275	591982-0000	A		1	CATCH	
420	573583-0000	A		2	SCREW	
Common Parts						
050	28880-0000	A		2	PLUNGER	
260	315202-0212	A		2	O-RING 14,3X2,4 MM	
400	464164-0000	A		1	CARRIER CUT LEFT	
410	32464-0000	A		2	SHAFT	
430	243144-0000	A		2	BUSHING	
440	255278-0000	A		1	PLUG FINISHER	
530	90134-0058	A		3	CONNECTION	
560	90165-0058	-		1	PIPE CLIP FOR TUBE D=25 MM	
570	316810-0106	-		1	PIPE CLIP FOR TUBE D=8 MM	
575	90165-0057	-		1	PIPE CLIP FOR TUBE D=6 MM	
580	90166-0132	-	MM	100	TUBE 6 MM PA,TRANSP.	
585	90166-0133	-	MM	150	TUBE 8 MM PA,TRANSP.	
700	312115-0461	-		2	SCREW ISO4762 M8X50 A4	
710	312125-0287	-		3	SLOTTED CHEESE HEAD SCREW MCS 4X8 SS	
730	312145-0238	-		4	SCREW COUNTERS.SLOT.HD. MFS 3X40 SS	
750	315234-0110	A		2	WASHER,PL.RND.CU.13,5/18 H=1,5	
760	342713-0209	-		4	PLUG, EXT THREAD HEX SOCKET 8638-00-180	
770	90030-0201	A		1	CONN. STR., 8-R1/4, EXT. THREAD	

Machine Type | Group Description | Used-In | Group Number | Page No

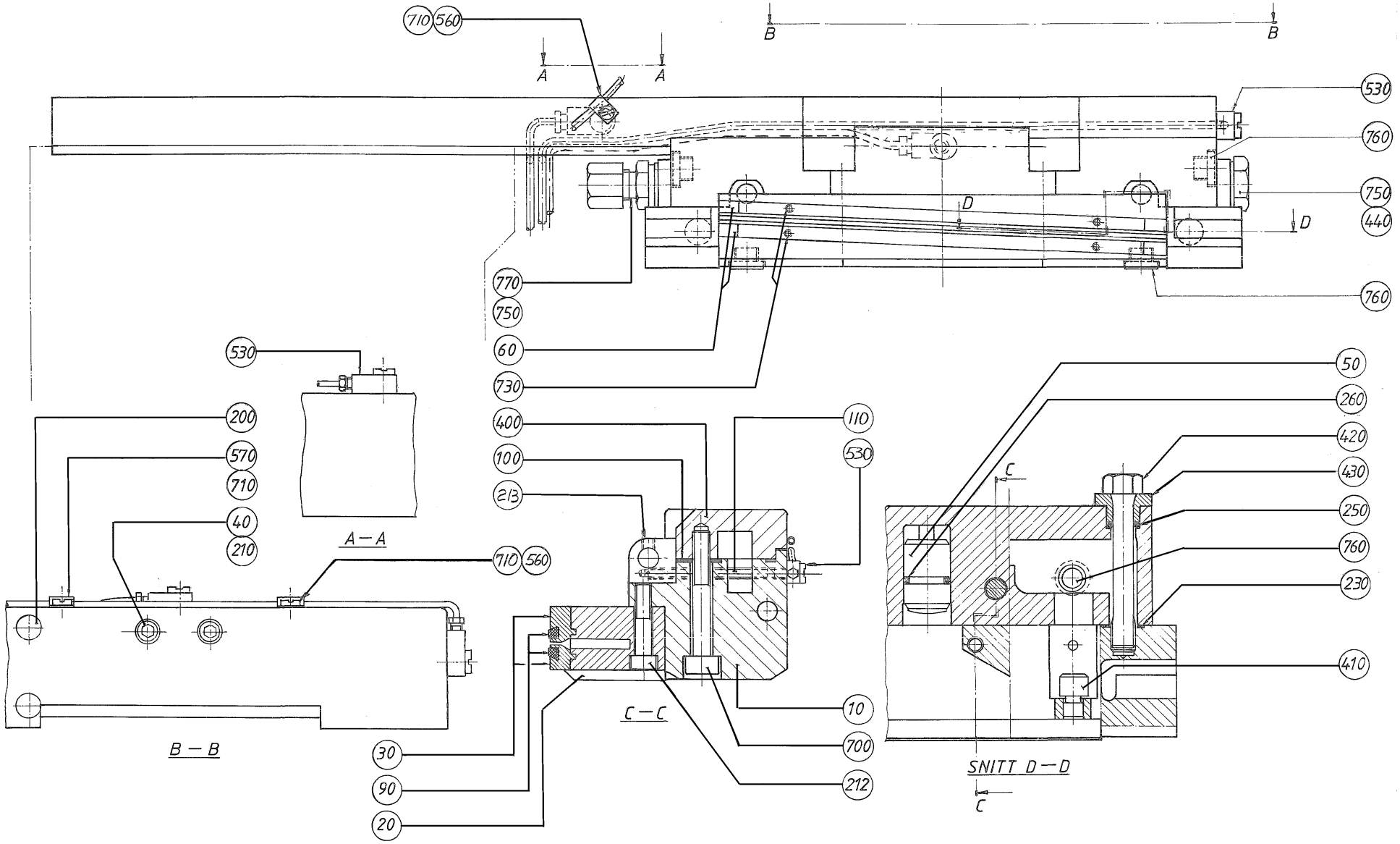
710
560
A
A
B
B
530
760
750
440
D
D
770
750
760
60
730
530
200
570
710
40
210
A — A
710
560
400
100
213
110
530
50
260
420
430
250
760
230
C
C
410
10
700
212
30
90
20
B — B
C — C
SNITT D — D
C

ECM: 89849 - 20020508
Group number: 257835-0350
Assembly Drawing: 257835-7_1_AA

This list covers pages from 4-32 to 4-35

Pos	Part No	SP	UN	Qty	Description	Page No
0375S (See drawing on pages: 4-30, 4-34)						
010	466432-0000	A		1	BEARING HOUSING	
020	449727-0000	A		1	CUTTING JAW	
030	1520490-0000	A		2	CUTTING RAIL	
090	A1110083-0002	A		2	DOLLY	
090	1110083-0002	A		2	DOLLY	
100	245272-0000	A		1	GASKET	
110	1296886-0000	A		1	SCREW	
150	90287-0070	A		2	SCREW MLC6S M6X23	
420	243143-0000	A		2	SCREW	
0355B, 0500S (See drawing on pages: 4-30, 4-34)						
010	466431-0000	A		1	BEARING HOUSING	
020	464162-0000	A		1	CUTTING JAW	
030	1520490-0000	A		2	CUTTING RAIL	
090	A1110083-0002	A		2	DOLLY	
090	1110083-0002	A		2	DOLLY	
100	497716-0000	A		1	GASKET	
110	1296886-0000	A		1	SCREW	
150	90287-0070	A		2	SCREW MLC6S M6X23	
230	315202-0111	A		2	O-RING 13,1X1,6 MM	
250	315202-0207	A		2	O-RING 8,3X2,4 MM	
420	243143-0000	A		2	SCREW	
0500B, 1000B LOFIN, 0750B (See drawing on pages: 4-30, 4-34)						
010	450503-0000	A		1	BEARING HOUSING	
020	257783-0000	A		1	CUTTING JAW	
030	1520442-0000	A		2	CUTTING RAIL	
090	A1110083-0002	A		2	DOLLY	
090	1110083-0002	A		2	DOLLY	
100	245271-0000	A		1	GASKET	
110	1296982-0000	A		1	SCREW	
150	90287-0070	A		2	SCREW MLC6S M6X23	
230	315202-0111	A		2	O-RING 13,1X1,6 MM	
250	315202-0207	A		2	O-RING 8,3X2,4 MM	
420	243143-0000	A		2	SCREW	
1000SQ NO OPENING (See drawing on pages: 4-30, 4-34)						
010	573985-0000	A		1	BEARING HOUSING	
020	579772-0000	A		1	CUTTING JAW	
030	1520491-0000	A		2	CUTTING RAIL	
090	A1110083-0002	A		2	DOLLY	
090	1110083-0002	A		2	DOLLY	
100	573988-0000	A		1	GASKET	
110	1296981-0000	A		1	SCREW	
150	90287-0070	A		2	SCREW MLC6S M6X23	
230	315202-0111	A		2	O-RING 13,1X1,6 MM	
250	315202-0207	A		2	O-RING 8,3X2,4 MM	
270	591981-0000	A		1	CATCH	
275	591982-0000	A		1	CATCH	
420	573583-0000	A		2	SCREW	
0750S (See drawing on pages: 4-30, 4-34)						
010	544317-0000	A		1	BEARING HOUSING	
020	544323-0000	A		1	CUTTING JAW	
030	1520491-0000	A		2	CUTTING RAIL	
090	A1110083-0002	A		2	DOLLY	
090	1110083-0002	A		2	DOLLY	
100	497716-0000	A		1	GASKET	
110	1296885-0000	A		1	SCREW	
150	90287-0070	A		2	SCREW MLC6S M6X23	
230	315202-0111	A		2	O-RING 13,1X1,6 MM	
250	315202-0207	A		2	O-RING 8,3X2,4 MM	
420	243143-0000	A		2	SCREW	
1000B HIFIN (See drawing on pages: 4-28, 4-32)						
010	497572-0000	A		1	BEARING HOUSING	
020	284578-0000	A		1	CUTTING JAW	
030	539761-0000	A		2	CUTTING RAIL	
060	32116-0000	A		4	END PIECE	
090	A564533-0001	A		1	DOLLY	
090	564533-0001	A		1	DOLLY	
100	245271-0000	A		1	GASKET	
110	1296982-0000	A		1	SCREW	
212	312115-0374	-		2	SCREW ISO4762 M6X30 A4	
213	312318-0321	-		1	SCREW ISO4029 M5X6 A4	
230	315202-0111	A		2	O-RING 13,1X1,6 MM	
250	315202-0207	A		2	O-RING 8,3X2,4 MM	
420	243143-0000	A		2	SCREW	
1000S (See drawing on pages: 4-30, 4-34)						
010	569057-0000	A		1	BEARING HOUSING	
020	569059-0000	A		1	CUTTING JAW	
030	1520491-0000	A		2	CUTTING RAIL	

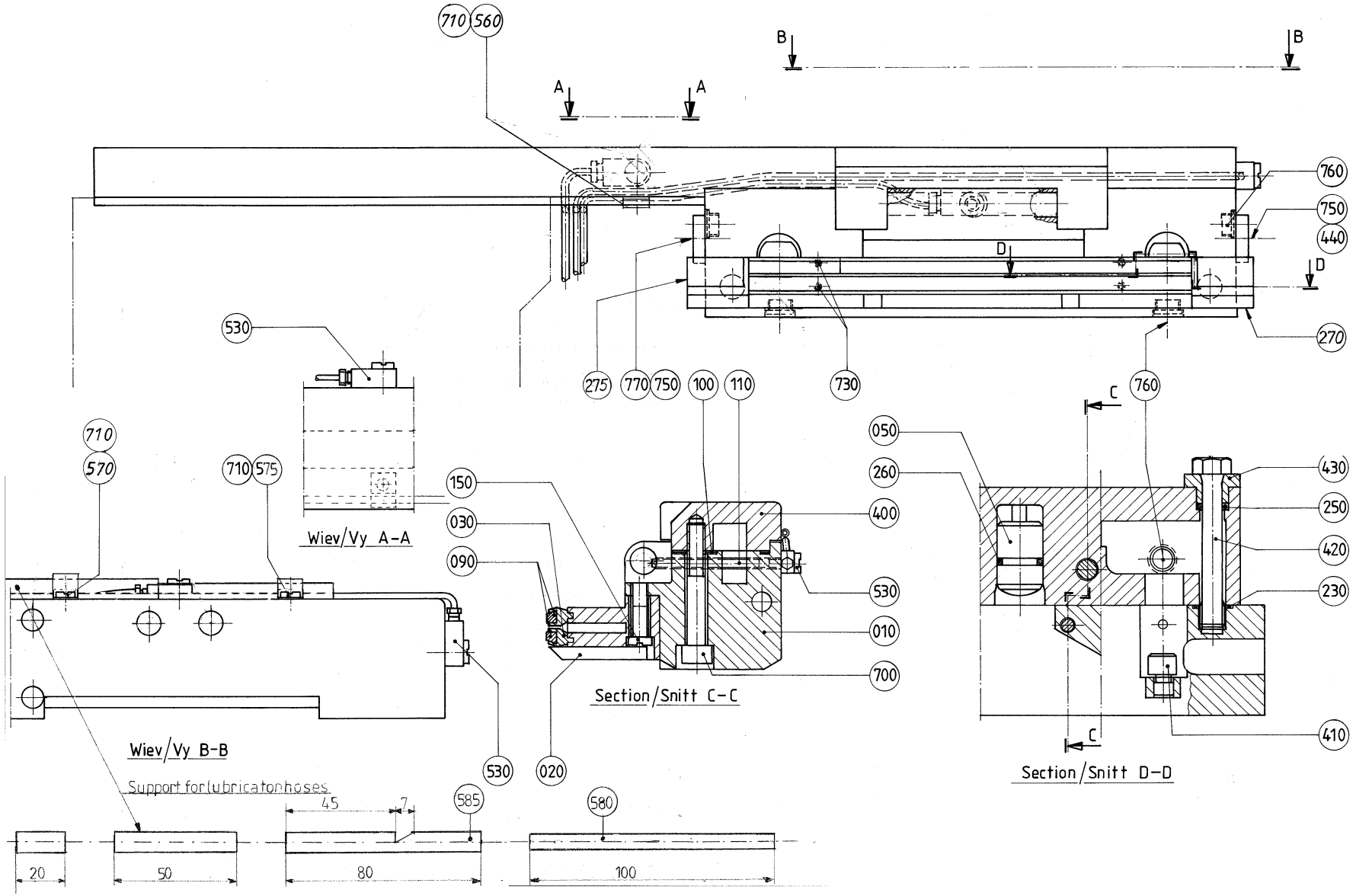
710
560
A
A
B
B
760
750
440
D
D
270
530
275
770
750
100
110
730
760
C
710
570
710
575
150
030
090
050
260
400
530
010
700
430
250
420
230
410
Wiev/Vy A-A
Section/Snitt C-C
Section/Snitt D-D
C
Wiev/Vy B-B
Support for lubrication hoses
530
020
585
580
45
7
20
50
80
100

ECM: 89849 - 20020508
Group number: 257835-0350
Assembly Drawing: 257835-8_1_AA

This list covers pages from 4-32 to 4-35

Pos	Part No	SP	UN	Qty	Description	Page No
1000S (Cont'd) (See drawing on pages: 4-30, 4-34)						
090	A1110083-0002	A		2	DOLLY	
090	1110083-0002	A		2	DOLLY	
100	245271-0000	A		1	GASKET	
110	1296884-0000	A		1	SCREW	
150	90287-0070	A		2	SCREW MLC6S M6X23	
230	315202-0111	A		2	O-RING 13,1X1,6 MM	
250	315202-0207	A		2	O-RING 8,3X2,4 MM	
420	243143-0000	A		2	SCREW	
1000SQ SPINCAP OPENING (See drawing on pages: 4-30, 4-34)						
010	573985-0000	A		1	BEARING HOUSING	
020	579772-0000	A		1	CUTTING JAW	
030	1520491-0000	A		2	CUTTING RAIL	
090	A1520633-0002	A		2	DOLLY	
090	1520633-0002	A		2	DOLLY	
100	573988-0000	A		1	GASKET	
110	1296981-0000	A		1	SCREW	
150	90287-0070	A		2	SCREW MLC6S M6X23	
230	315202-0111	A		2	O-RING 13,1X1,6 MM	
250	315202-0207	A		2	O-RING 8,3X2,4 MM	
270	591981-0000	A		1	CATCH	
275	591982-0000	A		1	CATCH	
420	573583-0000	A		2	SCREW	
Common Parts						
050	28880-0000	A		2	PLUNGER	
260	315202-0212	A		2	O-RING 14,3X2,4 MM	
400	464171-0000	A		1	CARRIER CUT RIGHT	
410	32464-0000	A		2	SHAFT	
430	243144-0000	A		2	BUSHING	
440	255278-0000	A		1	PLUG FINISHER	
530	90134-0058	A		3	CONNECTION	
560	90165-0058	-		1	PIPE CLIP FOR TUBE D=25 MM	
570	316810-0106	-		1	PIPE CLIP FOR TUBE D=8 MM	
575	90165-0057	-		1	PIPE CLIP FOR TUBE D=6 MM	
580	90166-0132	-	MM	100	TUBE 6 MM PA,TRANSP.	
585	90166-0133	-	MM	150	TUBE 8 MM PA,TRANSP.	
700	312115-0461	-		2	SCREW ISO4762 M8X50 A4	
710	312125-0287	-		3	SLOTTED CHEESE HEAD SCREW MCS 4X8 SS	
730	312145-0238	-		4	SCREW COUNTERS.SLOT.HD. MFS 3X40 SS	
750	315234-0110	A		2	WASHER,PL.RND.CU.13,5/18 H=1,5	
760	342713-0209	-		4	PLUG, EXT THREAD HEX SOCKET 8638-00-180	
770	90030-0201	A		1	CONN. STR., 8-R1/4, EXT. THREAD	

Machine Type | Group Description | Used-In | Group Number | Page No

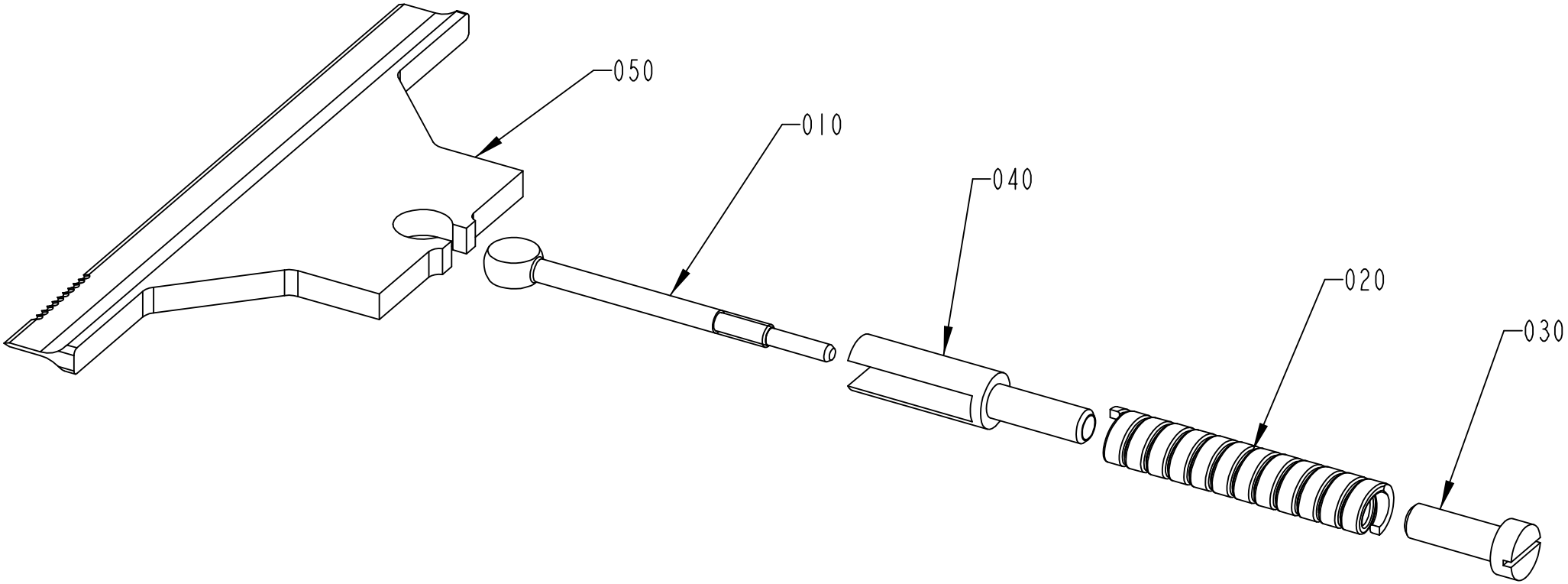
050
010
040
020
030

ECM: 80675 - 20000831
Group number: 1487404-0200
Assembly Drawing: 1487404-2_1_AA

Pos	Part No	SP	UN	Qty	Description	Page No
TBA/8 0375S, TBA/8 0500S, TBA/8 0355B						
050	1484163-0000	A		1	KNIFE	
TBA/8 0500B, TBA/8 1000B, TBA/8 0750B, TBA/8 1000S						
050	1348955-0000	A		1	KNIFE	
TBA/8 0750S, TBA/8 1000SQ						
050	1348956-0000	A		1	KNIFE	
Common Parts						
010	1285003-0000	A		1	LINK	
020	1538109-0000	A		1	COMPRESSION SPRING	
030	1285005-0000	A		1	NUT	
040	1285006-0000	A		1	SPACER	

Pos	Part No	SP	UN	Qty	Description	Page No

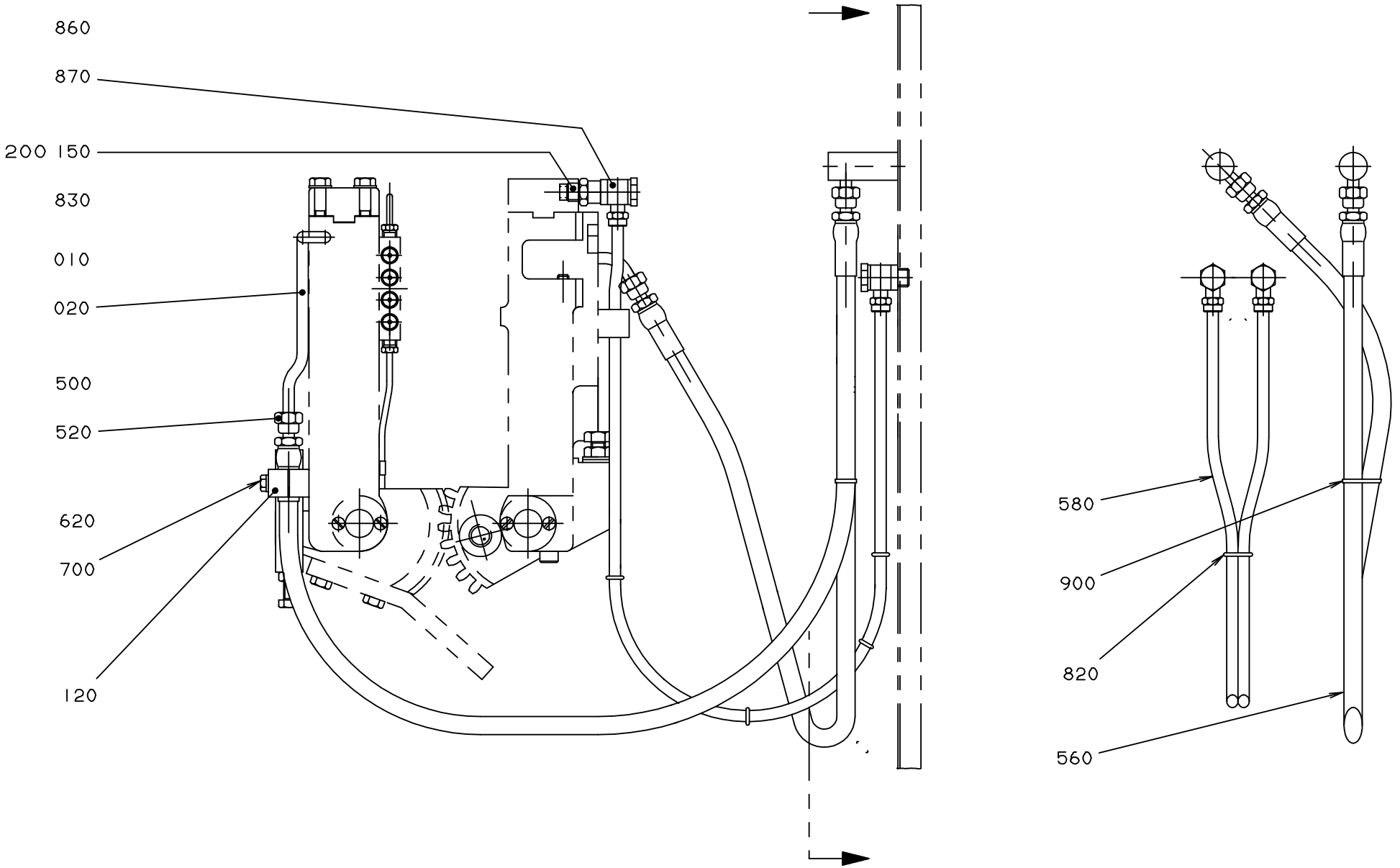
860
870
200 150
830
010
020
500
520
620
700
120
580
900
820
560

ECM: 87003 - 20001215
Group number: 279134-0500
Assembly Drawing: 279134-5_1_AB

Pos	Part No	SP	UN	Qty	Description	Page No
-						
010	22488-0000	C		1	ELBOW PIPE	
020	22489-0000	C		1	ELBOW PIPE	
120	279103-0000	C		4	CONNECTION CLAMP	
150	464370-0000	C		4	SPACER	
200	1369843-0001	-		4	SLEEVE	
500	90030-0098	C		8	ACCESSORIES, FERRULE 8	
520	342703-0208	C		8	NUT, PIPES & CONNECTORS,NUT M-8 SS	
560	90148-0040	C		4	HOSE	
580	90166-0123	-	MM	2900	HOSE	
620	312105-0378	-		4	SCREW M6S ISO 4014 M6X40 A480	
700	315105-0153	-		8	WASHER BRB6,4X12RFR	
820	315202-0265	-		8	O-RING 12,3X2,4 MM	
830	315233-0110	-		4	WASHER CAPTIVE SEALING G1/4	
860	342980-0122	-		4	BANJO-CONNECTION,RING 8/6-G1/4"	
870	342980-0304	-		4	BANJO-HOLLOW BOLT COUPL,EXT.THR.01-G1/4"	
900	352113-0101	-		2	CLIP STRIP, 92X2,5 MM	

Pos	Part No	SP	UN	Qty	Description	Page No

Machine Type | Group Description | Used-In | Group Number | Page No

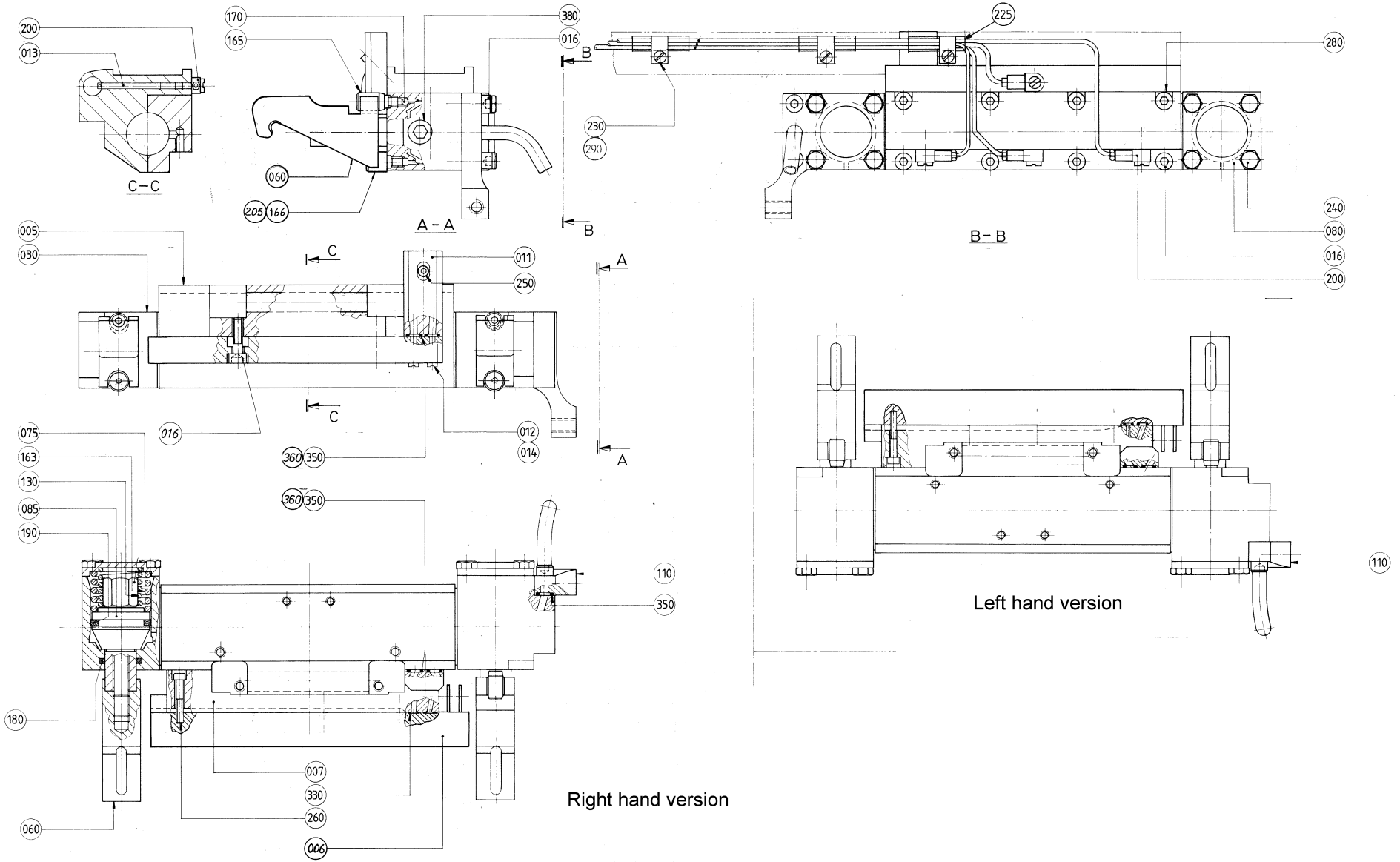
200
013
C–C
170
165
380
016
060
205
166
A – A
B
225
280
230
290
B – B
240
080
016
200
005
030
C
011
250
A
075
163
130
085
190
016
012
014
360
350
110
350
180
007
330
260
006
060
Right hand version
110
Left hand version

ECM: 89850 - 20020508
Group number: 259534-0700
Assembly Drawing: 259534-13_1_AB

This list covers pages from 4-40 to 4-43

Pos	Part No	SP	UN	Qty	Description	Page No
0375S (See drawing on pages: 4-40, 4-44)						
005	466395-0000	A		1	BEARING HOUSING	
006	A1110974-0000	A		1	INDUCTOR	
006	1110974-0000	A		1	INDUCTOR	
007	445950-0000	A		1	HOLDER	
011	566526-0000	A		1	CLUTCH PIECE	
012	292037-0000	A		2	SCREW	
013	1296886-0000	A		1	SCREW	
014	90157-0021	-	KG	1	LOCKING FLUID	
016	312115-0370	-		8	SCREW ISO4762 M6X20 A4	
0355B, 0500S (See drawing on pages: 4-40, 4-44)						
005	466395-0000	A		1	BEARING HOUSING	
006	A1110975-0000	A		1	INDUCTOR	
006	1110975-0000	A		1	INDUCTOR	
007	445950-0000	A		1	HOLDER	
011	566526-0000	A		1	CLUTCH PIECE	
012	292037-0000	A		2	SCREW	
013	1296886-0000	A		1	SCREW	
014	90157-0021	-	KG	1	LOCKING FLUID	
016	312115-0370	-		8	SCREW ISO4762 M6X20 A4	
0500B, 1000B LOFIN, 0750B (See drawing on pages: 4-40, 4-44)						
005	458019-0000	A		1	BEARING HOUSING	
006	A1110972-0000	A		1	INDUCTOR	
006	1110972-0000	A		1	INDUCTOR	
007	445950-0000	A		1	HOLDER	
011	566526-0000	A		1	CLUTCH PIECE	
012	292037-0000	A		2	SCREW	
013	1296982-0000	A		1	SCREW	
014	90157-0021	-	KG	1	LOCKING FLUID	
016	312115-0370	-		8	SCREW ISO4762 M6X20 A4	
0750S (See drawing on pages: 4-40, 4-44)						
005	544278-0000	A		1	BEARING HOUSING	
006	A1110976-0000	A		1	INDUCTOR	
006	1110976-0000	A		1	INDUCTOR	
007	445950-0000	A		1	HOLDER	
011	566526-0000	A		1	CLUTCH PIECE	
012	292037-0000	A		2	SCREW	
013	1296885-0000	A		1	SCREW	
014	90157-0021	-	KG	1	LOCKING FLUID	
016	312115-0370	-		8	SCREW ISO4762 M6X20 A4	
1000B HIFIN (See drawing on pages: 4-42, 4-46)						
005	497583-0000	A		1	HOUSING	
006	573625-0000	A		1	INDUCTOR	
007	284581-0000	A		1	RAIL	
011	566527-0000	A		1	CLUTCH PIECE	
013	1296982-0000	A		1	SCREW	
016	312115-0370	-		6	SCREW ISO4762 M6X20 A4	
017	312115-0374	-		2	SCREW ISO4762 M6X30 A4	
1000S (See drawing on pages: 4-40, 4-44)						
005	569053-0000	A		1	BEARING HOUSING	
006	A1110973-0000	A		1	INDUCTOR	
006	1110973-0000	A		1	INDUCTOR	
007	445950-0000	A		1	HOLDER	
011	566526-0000	A		1	CLUTCH PIECE	
012	292037-0000	A		2	SCREW	
013	1296884-0000	A		1	SCREW	
014	90157-0021	-	KG	1	LOCKING FLUID	
016	312115-0370	-		8	SCREW ISO4762 M6X20 A4	
1000SQ (See drawing on pages: 4-40, 4-44)						
005	579773-0000	A		1	BEARING HOUSING	
006	A1110761-0000	A		1	INDUCTOR	
006	1110761-0000	A		1	INDUCTOR	
007	1484847-0000	A		1	RAIL	
011	566526-0000	A		1	CLUTCH PIECE	
012	292037-0000	A		2	SCREW	
013	1296981-0000	A		1	SCREW	
014	90157-0021	-	KG	1	LOCKING FLUID	
016	312115-0370	-		8	SCREW ISO4762 M6X20 A4	
Common Parts						
030	440565-0000	A		1	CYLINDER	
060	541697-0000	A		2	CATCH	
075	553851-0000	A		2	SCREW	
080	284833-0000	A		2	LID	
085	292367-0000	A		2	PISTON	
110	246494-0000	A		1	ATTACHMENT	
130	479744-0000	A		2	COMPRESSION SPRING	
163	479743-0000	A		2	COMPRESSION SPRING	

Machine Type | Group Description | Used-In | Group Number | Page No

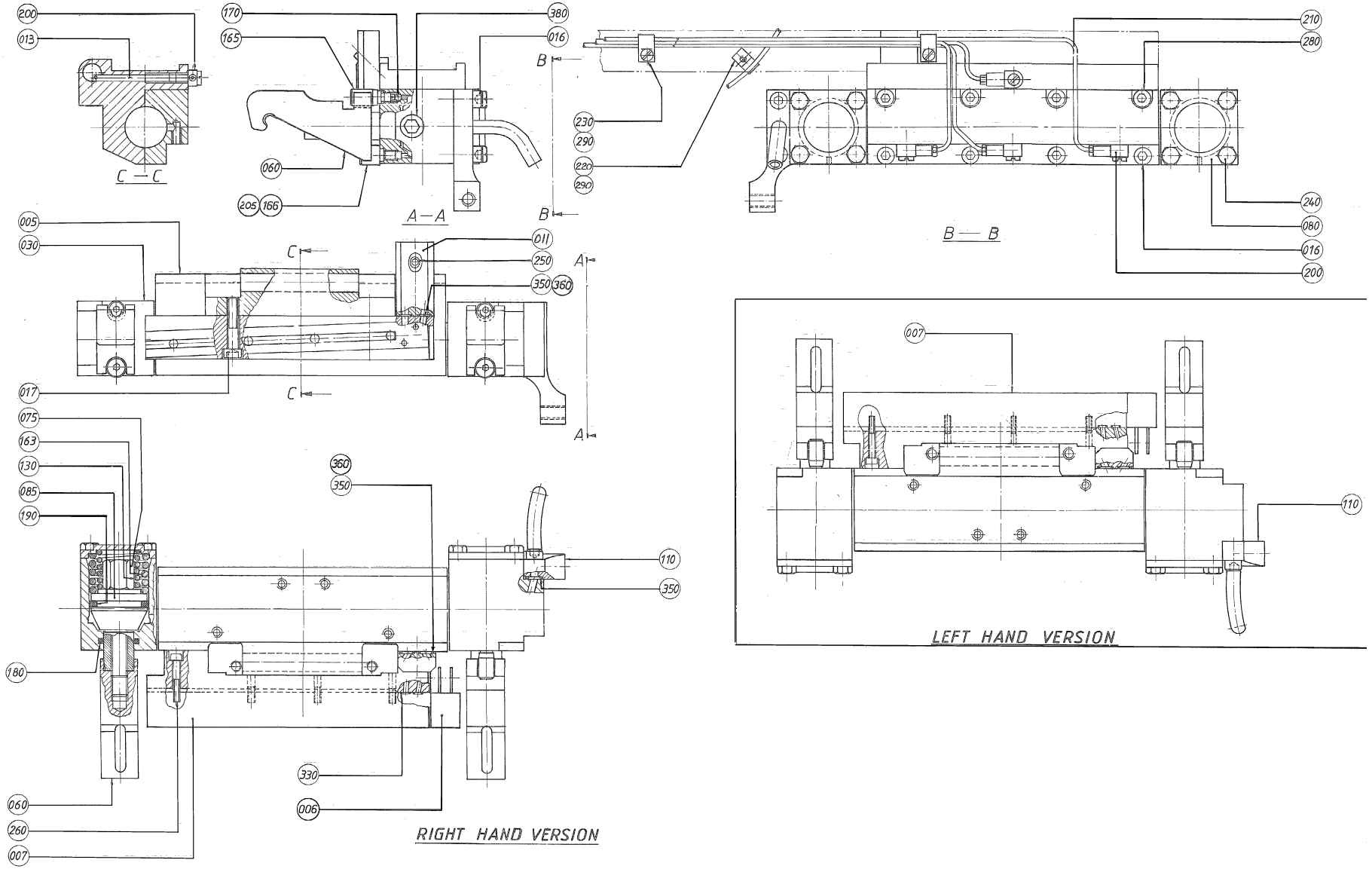
200
013
C — C
170
165
380
016
060
205
166
A — A
B
230
290
220
290
210
280
240
080
016
200
B — B
005
030
011
250
350
360
C
A
017
075
163
130
085
190
180
060
260
007
330
006
110
RIGHT HAND VERSION
007
LEFT HAND VERSION

Pos	Part No	SP	UN	Qty	Description	Page No
Common Parts (Cont'd)						
165	440491-0000	A		2	NIPPLE	
166	497040-0000	A		2	STEERING	
170	90090-0013	A		2	BALL, D=4 MM	
180	90091-0078	A		2	ROD SEAL, O-RING 18X25X3 MM	
190	90091-0079	A		2	PISTON SEAL, GLIDORING 27X35X3,5MM	
200	90134-0058	A		4	CONNECTION	
205	90157-0016	-	ML	1	LOCKING FLUID	
225	90166-0133	-	MM	100	TUBE 8 MM PA,TRANSP.	
230	316810-0106	-		3	PIPE CLIP FOR TUBE D=8 MM	
240	312105-0372	-		8	SCREW M6S ISO 4017 M6X25 A480	
250	312115-0297	-		1	SCREW ISO4762 M4X25 A4	
260	312115-0297	-		4	SCREW ISO4762 M4X25 A4	
280	312115-0372	-		4	SCREW ISO4762 M6X25 A4	
290	312125-0285	-		3	SLOTTED CHEESE HEAD SCREW MCS 4X6 SS	
330	315202-0101	A		2	O-RING 3,1X1,6 MM	
350	315202-0104	A		1	O-RING 6,1X1,6 MM	
360	315202-0203	A		4	O-RING 4,3X2,4 MM	
380	342713-0209	-		1	PLUG, EXT THREAD HEX SOCKET 8638-00-180	

Pos	Part No	SP	UN	Qty	Description	Page No

PRESSURE JAW RIGHT IH

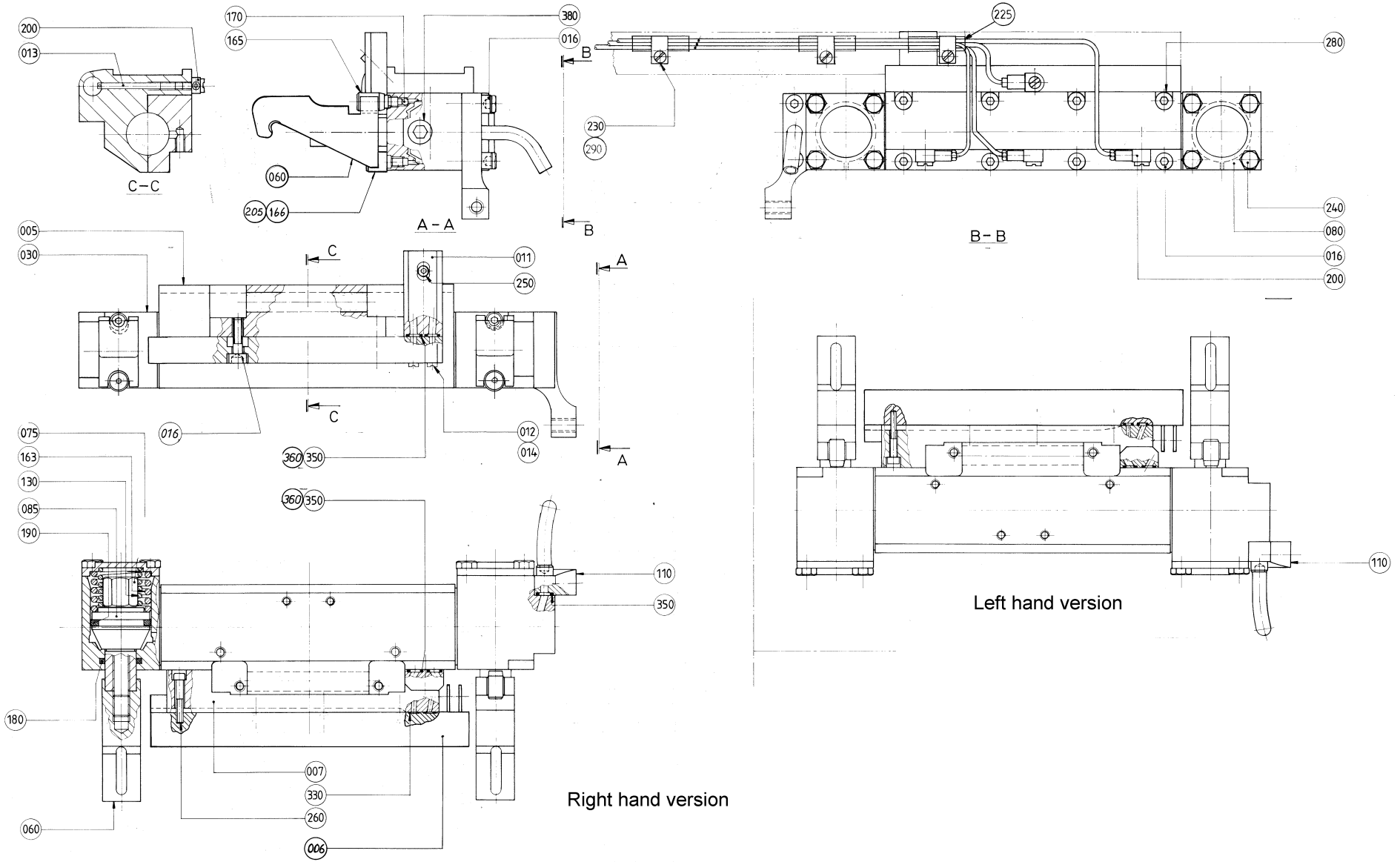

ECM: 89851 - 20020508
Group number: 259534-0750
Assembly Drawing: 259534-13_1_AB

This list covers pages from 4-44 to 4-47

Pos	Part No	SP	UN	Qty	Description	Page No
0375S (See drawing on pages: 4-40, 4-44)						
005	466395-0000	A		1	BEARING HOUSING	
006	A1110974-0000	A		1	INDUCTOR	
006	1110974-0000	A		1	INDUCTOR	
007	445950-0000	A		1	HOLDER	
011	566526-0000	A		1	CLUTCH PIECE	
012	292037-0000	A		2	SCREW	
013	1296886-0000	A		1	SCREW	
014	90157-0021	-	KG	1	LOCKING FLUID	
016	312115-0370	-		8	SCREW ISO4762 M6X20 A4	
0355B, 0500S (See drawing on pages: 4-40, 4-44)						
005	466395-0000	A		1	BEARING HOUSING	
006	A1110975-0000	A		1	INDUCTOR	
006	1110975-0000	A		1	INDUCTOR	
007	445950-0000	A		1	HOLDER	
011	566526-0000	A		1	CLUTCH PIECE	
012	292037-0000	A		2	SCREW	
013	1296886-0000	A		1	SCREW	
014	90157-0021	-	KG	1	LOCKING FLUID	
016	312115-0370	-		8	SCREW ISO4762 M6X20 A4	
0500B, 1000B LOFIN, 0750B (See drawing on pages: 4-40, 4-44)						
005	458019-0000	A		1	BEARING HOUSING	
006	A1110972-0000	A		1	INDUCTOR	
006	1110972-0000	A		1	INDUCTOR	
007	445950-0000	A		1	HOLDER	
011	566526-0000	A		1	CLUTCH PIECE	
012	292037-0000	A		2	SCREW	
013	1296982-0000	A		1	SCREW	
014	90157-0021	-	KG	1	LOCKING FLUID	
016	312115-0370	-		8	SCREW ISO4762 M6X20 A4	
0750S (See drawing on pages: 4-40, 4-44)						
005	544278-0000	A		1	BEARING HOUSING	
006	A1110976-0000	A		1	INDUCTOR	
006	1110976-0000	A		1	INDUCTOR	
007	445950-0000	A		1	HOLDER	
011	566526-0000	A		1	CLUTCH PIECE	
012	292037-0000	A		2	SCREW	
013	1296885-0000	A		1	SCREW	
014	90157-0021	-	KG	1	LOCKING FLUID	
016	312115-0370	-		8	SCREW ISO4762 M6X20 A4	
1000B HIFIN (See drawing on pages: 4-42, 4-46)						
005	497583-0000	A		1	HOUSING	
006	573625-0000	A		1	INDUCTOR	
007	284582-0000	A		1	RAIL	
011	566527-0000	A		1	CLUTCH PIECE	
013	1296982-0000	A		1	SCREW	
016	312115-0370	-		6	SCREW ISO4762 M6X20 A4	
017	312115-0374	-		2	SCREW ISO4762 M6X30 A4	
1000S (See drawing on pages: 4-40, 4-44)						
005	569053-0000	A		1	BEARING HOUSING	
006	A1110973-0000	A		1	INDUCTOR	
006	1110973-0000	A		1	INDUCTOR	
007	445950-0000	A		1	HOLDER	
011	566526-0000	A		1	CLUTCH PIECE	
012	292037-0000	A		2	SCREW	
013	1296884-0000	A		1	SCREW	
014	90157-0021	-	KG	1	LOCKING FLUID	
016	312115-0370	-		8	SCREW ISO4762 M6X20 A4	
1000SQ (See drawing on pages: 4-40, 4-44)						
005	579773-0000	A		1	BEARING HOUSING	
006	A1110761-0000	A		1	INDUCTOR	
006	1110761-0000	A		1	INDUCTOR	
007	1484846-0000	A		1	RAIL	
011	566526-0000	A		1	CLUTCH PIECE	
012	292037-0000	A		2	SCREW	
013	1296981-0000	A		1	SCREW	
014	90157-0021	-	KG	1	LOCKING FLUID	
016	312115-0370	-		8	SCREW ISO4762 M6X20 A4	
Common Parts						
030	440565-0000	A		1	CYLINDER	
060	541697-0000	A		2	CATCH	
075	553851-0000	A		2	SCREW	
080	284833-0000	A		2	LID	
085	292367-0000	A		2	PISTON	
110	246495-0000	A		1	ATTACHMENT	
130	479744-0000	A		2	COMPRESSION SPRING	
163	479743-0000	A		2	COMPRESSION SPRING	

Machine Type | Group Description | Used-In | Group Number | Page No

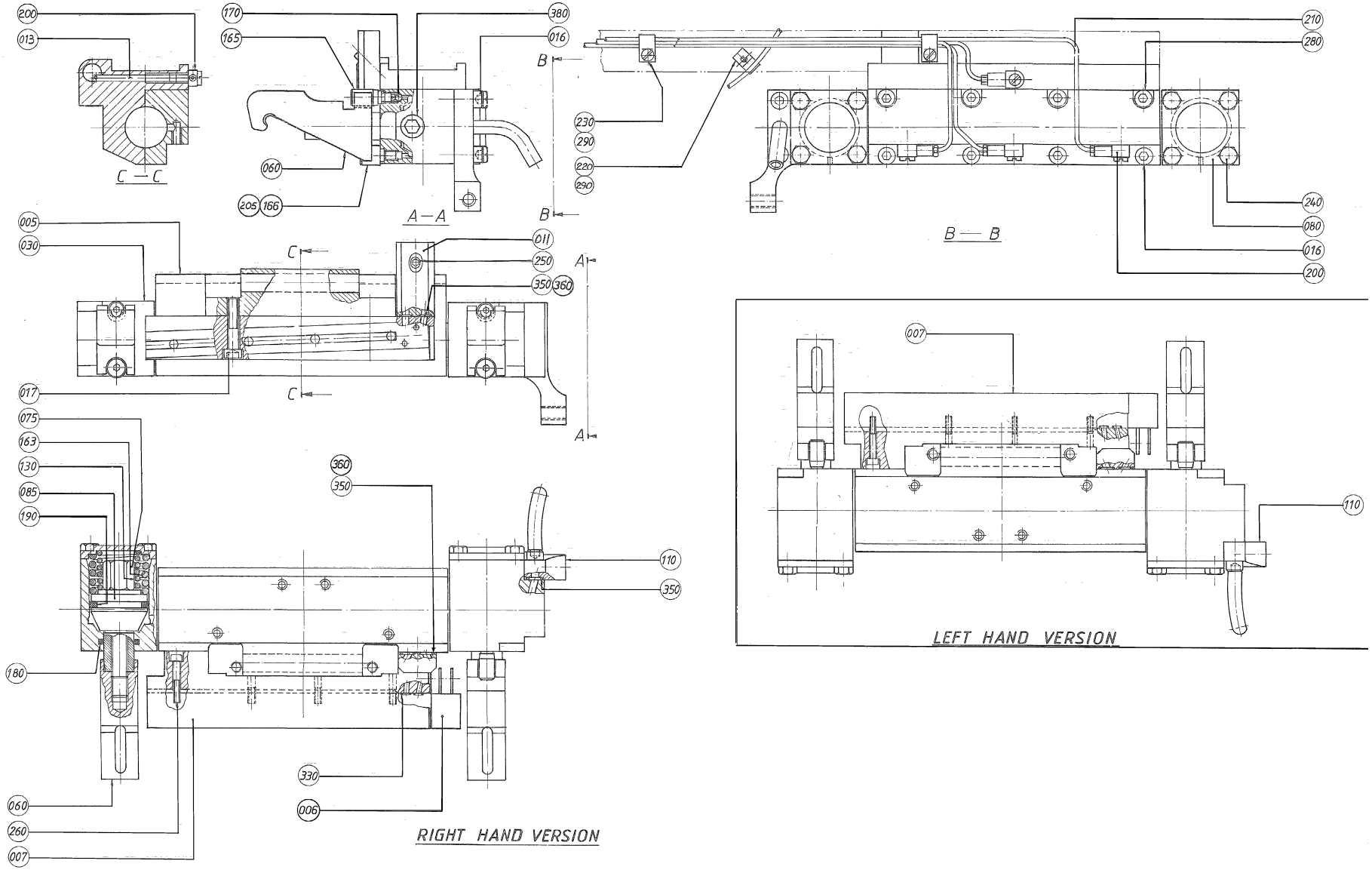
200
013
C — C
170
165
380
016
060
205
166
A — A
B
230
290
220
290
210
280
240
080
016
200
B — B
005
030
011
250
350
360
C
A
017
075
163
130
085
190
180
060
260
007
330
006
110
350
RIGHT HAND VERSION
007
110
LEFT HAND VERSION

Pos	Part No	SP	UN	Qty	Description	Page No
Common Parts (Cont'd)						
165	440491-0000	A		2	NIPPLE	
166	497040-0000	A		2	STEERING	
170	90090-0013	A		2	BALL, D=4 MM	
180	90091-0078	A		2	ROD SEAL, O-RING 18X25X3 MM	
190	90091-0079	A		2	PISTON SEAL, GLIDORING 27X35X3,5MM	
200	90134-0058	A		4	CONNECTION	
205	90157-0016	-	ML	1	LOCKING FLUID	
225	90166-0133	-	MM	100	TUBE 8 MM PA,TRANSP.	
230	316810-0106	-		3	PIPE CLIP FOR TUBE D=8 MM	
240	312105-0372	-		8	SCREW M6S ISO 4017 M6X25 A480	
250	312115-0297	-		1	SCREW ISO4762 M4X25 A4	
260	312115-0297	-		4	SCREW ISO4762 M4X25 A4	
280	312115-0372	-		4	SCREW ISO4762 M6X25 A4	
290	312125-0285	-		3	SLOTTED CHEESE HEAD SCREW MCS 4X6 SS	
330	315202-0101	A		2	O-RING 3,1X1,6 MM	
350	315202-0104	A		1	O-RING 6,1X1,6 MM	
360	315202-0203	A		4	O-RING 4,3X2,4 MM	
380	342713-0209	-		1	PLUG, EXT THREAD HEX SOCKET 8638-00-180	

Pos	Part No	SP	UN	Qty	Description	Page No

This page is intentionally left blank.

ECM: 89852 - 20020508
Group number: 268614-0500
Assembly Drawing:

This list covers pages from 4-48 to 4-51

Pos	Part No	SP	UN	Qty	Description	Page No
0355B						
210	529141-0000	-		8	VOLUME SHIM	
260	A1110083-0002	-		100	DOLLY	
260	1110083-0002	-		100	DOLLY	
410	315202-0206	-		5	O-RING 7,3X2,4 MM	
450	A1110975-0000	-		2	INDUCTOR	
450	1110975-0000	-		2	INDUCTOR	
0375S						
210	255228-0001	-		8	VOLUME SHIM	
260	A1110083-0002	-		100	DOLLY	
260	1110083-0002	-		100	DOLLY	
410	315202-0206	-		5	O-RING 7,3X2,4 MM	
450	A1110974-0000	-		2	INDUCTOR	
450	1110974-0000	-		2	INDUCTOR	
0500B						
210	479245-0000	-		8	VOLUME SHIM	
260	A1110083-0002	-		100	DOLLY	
260	1110083-0002	-		100	DOLLY	
400	315202-0111	-		10	O-RING 13,1X1,6 MM	
420	315202-0207	-		10	O-RING 8,3X2,4 MM	
430	315202-0212	-		5	O-RING 14,3X2,4 MM	
450	A1110972-0000	-		2	INDUCTOR	
450	1110972-0000	-		2	INDUCTOR	
0500S						
210	464315-0000	-		8	VOLUME SHIM	
260	A1110083-0002	-		100	DOLLY	
260	1110083-0002	-		100	DOLLY	
410	315202-0206	-		5	O-RING 7,3X2,4 MM	
450	A1110975-0000	-		2	INDUCTOR	
450	1110975-0000	-		2	INDUCTOR	
0750B						
210	450782-0000	-		8	VOLUME SHIM	
260	A1110083-0002	-		100	DOLLY	
260	1110083-0002	-		100	DOLLY	
400	315202-0111	-		10	O-RING 13,1X1,6 MM	
420	315202-0207	-		10	O-RING 8,3X2,4 MM	
430	315202-0212	-		5	O-RING 14,3X2,4 MM	
450	A1110972-0000	-		2	INDUCTOR	
450	1110972-0000	-		2	INDUCTOR	
0750S						
210	544305-0000	-		8	VOLUME SHIM	
260	A1110083-0002	-		100	DOLLY	
260	1110083-0002	-		100	DOLLY	
450	A1110976-0000	-		2	INDUCTOR	
450	1110976-0000	-		2	INDUCTOR	
1000B HIFIN						
200	32116-0000	-		4	END PIECE	
210	208709-0000	-		8	VOLUME SHIM	
260	A564533-0001	-		4	DOLLY	
260	564533-0001	-		4	DOLLY	
370	312115-0374	-		5	SCREW ISO4762 M6X30 A4	
410	315202-0206	-		5	O-RING 7,3X2,4 MM	
450	573625-0000	-		2	INDUCTOR	
1000B LOFIN						
210	208709-0000	-		8	VOLUME SHIM	
260	A1110083-0002	-		100	DOLLY	
260	1110083-0002	-		100	DOLLY	
400	315202-0111	-		10	O-RING 13,1X1,6 MM	
420	315202-0207	-		10	O-RING 8,3X2,4 MM	
430	315202-0212	-		5	O-RING 14,3X2,4 MM	
450	A1110972-0000	-		2	INDUCTOR	
450	1110972-0000	-		2	INDUCTOR	
1000S						
210	569056-0000	-		8	VOLUME SHIM	
260	A1110083-0002	-		100	DOLLY	
260	1110083-0002	-		100	DOLLY	
400	315202-0111	-		10	O-RING 13,1X1,6 MM	
420	315202-0207	-		10	O-RING 8,3X2,4 MM	
430	315202-0212	-		5	O-RING 14,3X2,4 MM	
450	A1110973-0000	-		2	INDUCTOR	
450	1110973-0000	-		2	INDUCTOR	
1000SQ NO OPENING						
210	1143050-0000	-		8	VOLUME SHIM	
260	A1110083-0002	-		100	DOLLY	
260	1110083-0002	-		100	DOLLY	

Machine Type | Group Description | Used-In | Group Number | Page No

This page is intentionally left blank.

Pos	Part No	SP	UN	Qty	Description	Page No
1000SQ NO OPENING (Cont'd)						
400	315202-0111	-		10	O-RING 13,1X1,6 MM	
420	315202-0207	-		10	O-RING 8,3X2,4 MM	
430	315202-0212	-		5	O-RING 14,3X2,4 MM	
450	A1110761-0000	-		2	INDUCTOR	
450	1110761-0000	-		2	INDUCTOR	
1000SQ SPINCAP OPENING						
210	1143050-0000	-		8	VOLUME SHIM	
260	A1520633-0002	-		100	DOLLY	
260	1520633-0002	-		100	DOLLY	
400	315202-0111	-		10	O-RING 13,1X1,6 MM	
420	315202-0207	-		10	O-RING 8,3X2,4 MM	
430	315202-0212	-		5	O-RING 14,3X2,4 MM	
450	A1110761-0000	-		2	INDUCTOR	
450	1110761-0000	-		2	INDUCTOR	
Common Parts						
500	1285003-0000	-		1	LINK	
510	1285005-0000	-		1	NUT	
515	1538109-0000	-		2	COMPRESSION SPRING	
520	32544-0000	-		2	INSULATION NUT	
530	250633-0000	-		2	CABLE CLAMP	
600	90090-0013	-		10	BALL, D=4 MM	
610	90091-0078	-		10	ROD SEAL, O-RING 18X25X3 MM	
620	90091-0079	-		10	PISTON SEAL, GLIDORING 27X35X3,5MM	
700	456011-0000	-		10	PIN	
710	312115-0297	-		10	SCREW ISO4762 M4X25 A4	
720	312115-0370	-		10	SCREW ISO4762 M6X20 A4	
730	312145-0238	-		10	SCREW COUNTERS.SLOT.HD. MFS 3X40 SS	
740	315202-0101	-		20	O-RING 3,1X1,6 MM	
750	315202-0102	-		20	O-RING 4,1X1,6 MM	
760	315202-0104	-		20	O-RING 6,1X1,6 MM	
770	315202-0114	-		10	O-RING 16,1X1,6 MM	
780	315202-0208	-		10	O-RING 9,3X2,4 MM	
790	315202-0702	-		10	O-RING 12,42X1,78 MM	

Pos	Part No	SP	UN	Qty	Description	Page No

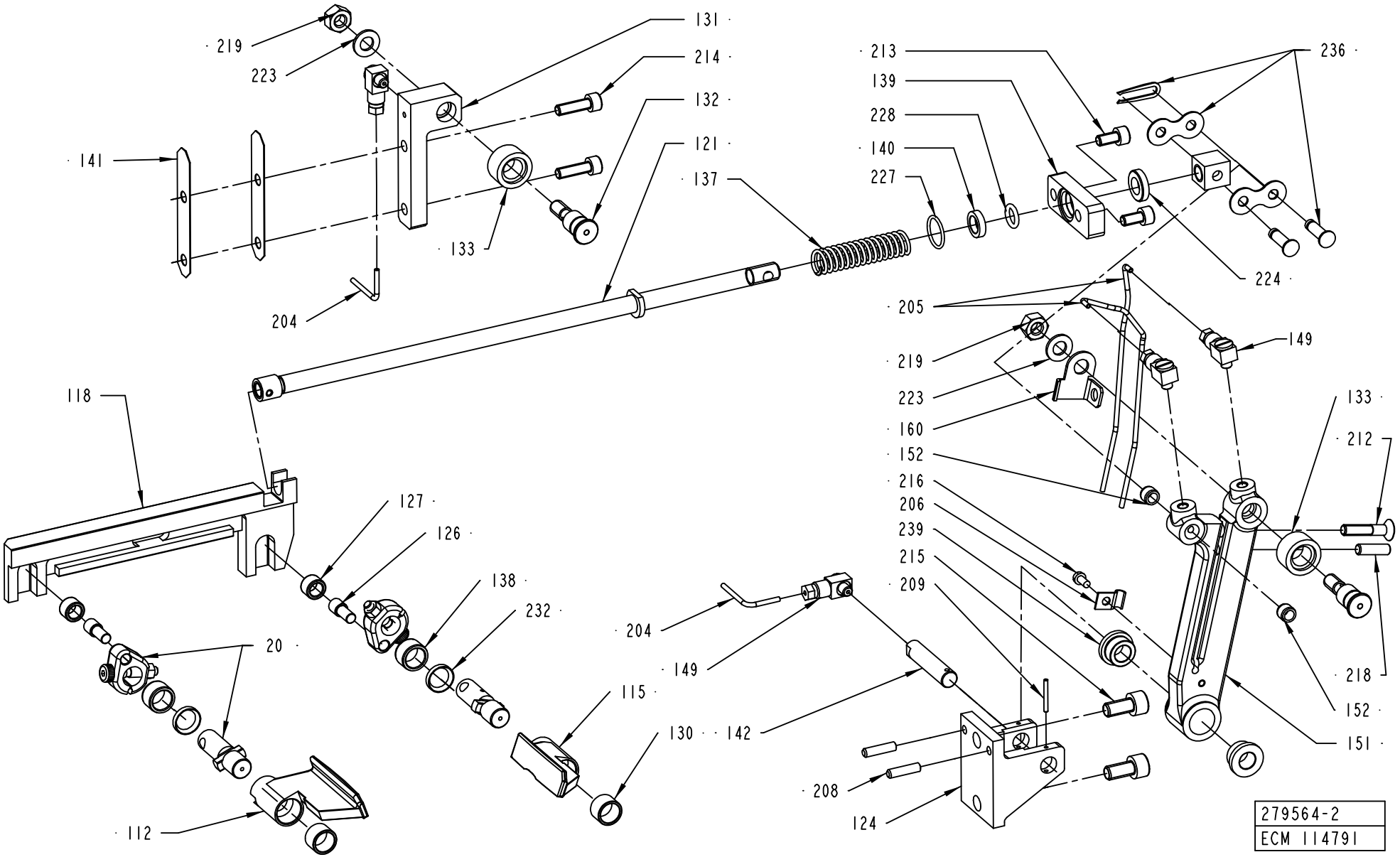
219
223
131
214
132
121
137
141
133
204
213
139
228
140
227
236
224
205
219
223
160
152
216
206
239
215
209
149
133
212
218
152
151
118
127
126
138
232
20
112
204
149
115
130
142
208
124
279564-2
ECM 114791

ECM: 114816 - 20021004
Group number: 279564-0300
Assembly Drawing: 279564-2_1_AD

Pos	Part No	SP	UN	Qty	Description	Page No
0375S						
112	493711-0000	A		1	FOLDING FLAP	
115	493710-0000	A		1	FOLDING FLAP	
118	458038-0000	A		1	CARRIER RULER	
121	32494-0000	A		1	OPERATING ROD	
0355B, 0500S						
112	493711-0000	A		1	FOLDING FLAP	
115	493710-0000	A		1	FOLDING FLAP	
118	458030-0000	A		1	CARRIER RULER	
121	32494-0000	A		1	OPERATING ROD	
0500B, 0750B, 1000B						
112	464311-0000	A		1	FOLDING FLAP	
115	464310-0000	A		1	FOLDING FLAP	
118	450505-0000	A		1	CARRIER RULER LEFT	
121	32468-0000	A		1	OPERATING ROD	
0750S						
112	544315-0000	A		1	FOLDING FLAP	
115	544314-0000	A		1	FOLDING FLAP	
118	544319-0000	A		1	CARRIER RULER	
121	32494-0000	A		1	OPERATING ROD	
1000S						
112	569061-0000	A		1	FOLDING FLAP	
115	569060-0000	A		1	FOLDING FLAP	
118	569062-0000	A		1	CARRIER RULER	
121	32468-0000	A		1	OPERATING ROD	
1000SQ						
112	1317809-0000	A		1	FOLDING FLAP	
115	1317808-0000	A		1	FOLDING FLAP	
118	573979-0000	A		1	CARRIER RULER	
121	32468-0000	A		1	OPERATING ROD	
Common Parts						
020	A26642-0200	A		2	CARRIER	**4-55**
124	23229-0000	A		1	BRACKET	
126	22462-0000	A		2	SHAFT	
127	22463-0000	A		2	ROLL	
130	32463-0000	A		2	BEARING	
131	22473-0000	A		1	ROLLER BRACKET	
132	276172-0000	A		2	AXLE PIN	
133	276173-0000	A		2	CURVE ROLLER	
137	2525463-0000	A		1	COMPRESSION SPRING	
138	33408-0000	A		2	BEARING	
139	113653-0000	A		1	BEARING PLATE	
140	113654-0000	A		1	RING	
141	26423-0000	A		2	LACE	
142	269366-0000	A		1	DOWEL	
149	90134-0058	A		4	CONNECTION	
151	927448-0000	A		1	LINK	
152	37258-0000	A		2	BUSHING	
160	927449-0000	A		1	SECURITY PLATE LEFT	
204	90266-0019	-	MM	400	PIPE	
205	90166-0143	-	MM	800	TUBE 2,5 MM PA,TRANSP.	
206	90165-0056	-		1	PIPE CLIP FOR TUBE D=4 MM	
208	311103-0310	-		2	PARALLEL PIN ISO 2338 5M6X20 A1	
209	90258-0001	-		1	PIN, STRAIGHT SLOTTED SPRING FRP 2X20	
212	312155-0374	-		1	SCREW EN 10642 MF6S M6X30 A480	
213	312115-0366	-		2	SCREW ISO4762 M6X12 A4	
214	312115-0370	-		2	SCREW ISO4762 M6X20 A4	
215	312115-0449	-		2	SCREW ISO4762 M8X16 A4	
216	312125-0287	-		1	SLOTTED CHEESE HEAD SCREW MCS 4X8 SS	
218	312318-0370	-		1	SCREW ISO4029 M6X20 A4	
219	312605-0318	-		2	HEXAGON NUT, M6M M8 A280	
223	315105-0165	-		2	WASHER BRB8,4X16RFR	
224	315115-0171	-		1	WASHER PLAIN, TBRB 10/18 H=4	
227	315202-0114	A		1	O-RING 16,1X1,6 MM	
228	315202-0208	A		1	O-RING 9,3X2,4 MM	
232	315230-0157	-		2	BEARING SEAL 12X16X3 MM	
236	90288-0305	A		1	CONNECTING LINK SINGLE 3/4",SS	
239	321101-0163	A		2	FLANGE BUSHING, 10X16X10 MM	

Machine Type | Group Description | Used-In | Group Number | Page No

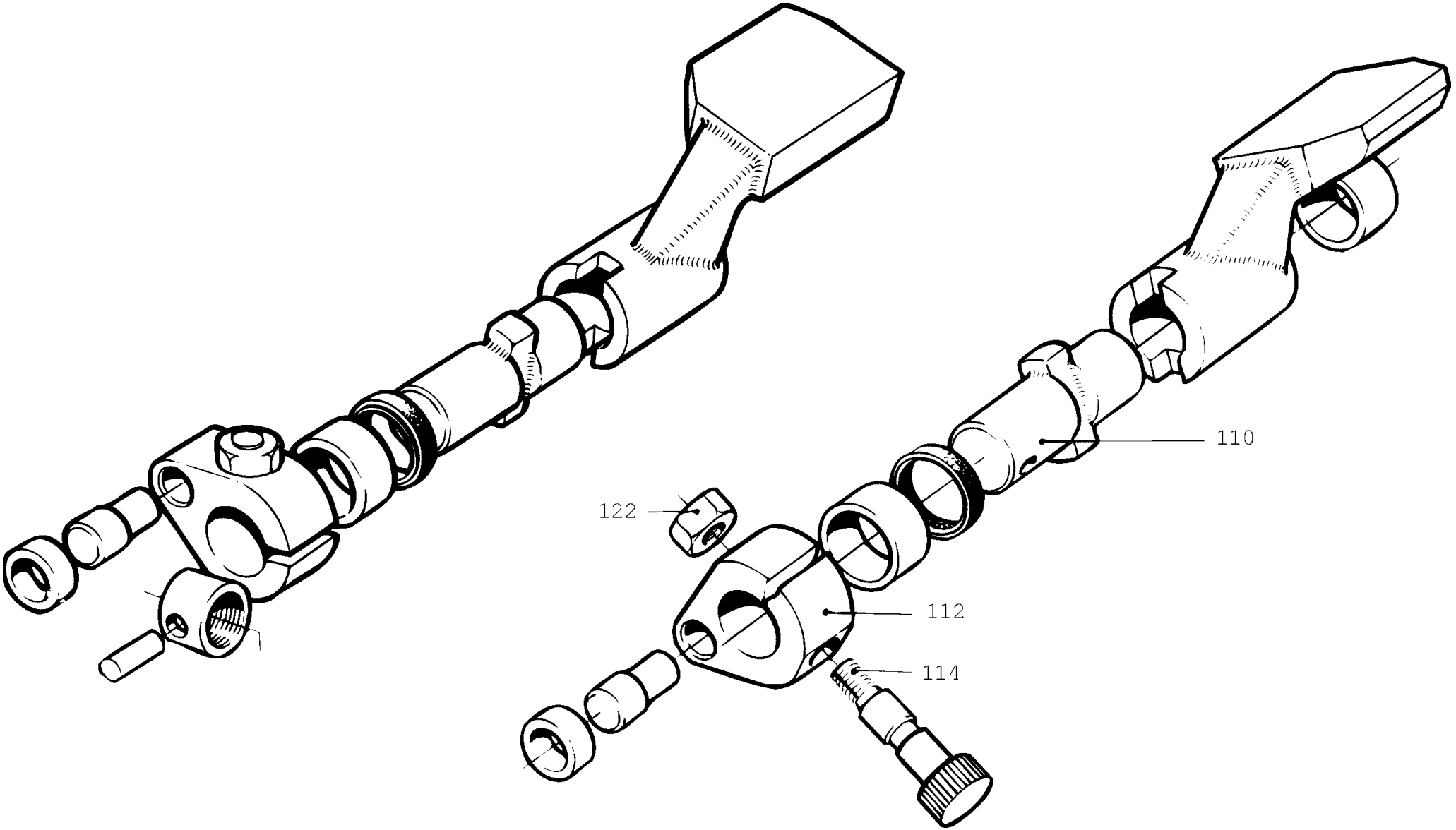
110
122
112
114

ECM: 72090 - 19981214
Group number: 26642-0200
Assembly Drawing: 26642-2_1_AA

Pos	Part No	SP	UN	Qty	Description	Page No
-						
110	32462-0000	-		1	SHAFT	
112	25640-0000	-		1	CARRIER	
114	25641-0000	C		1	REAMED BOLT	
122	312605-0314	C		1	HEXAGON NUT, M6M M5 A280	

Pos	Part No	SP	UN	Qty	Description	Page No

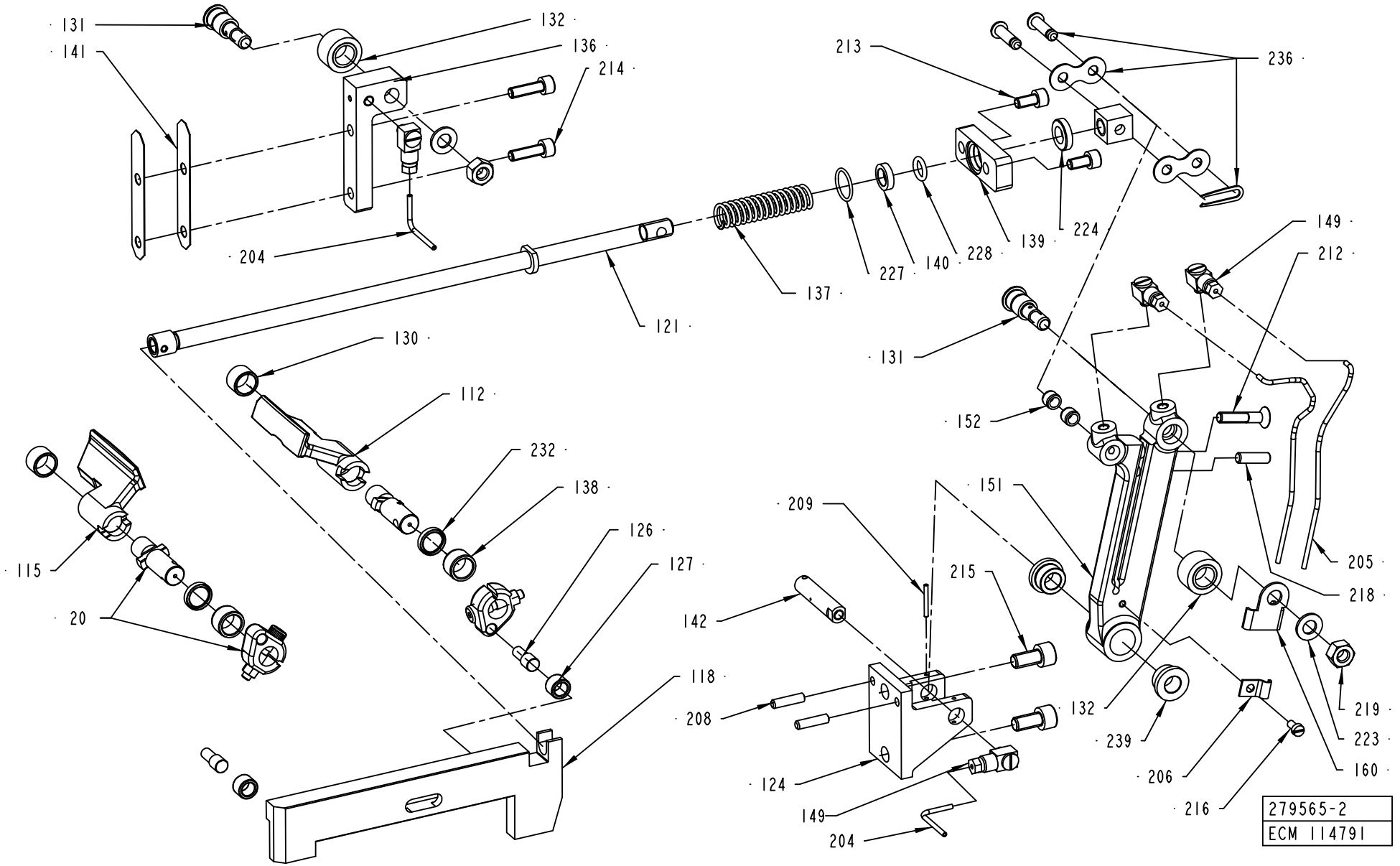
131
141
132
136
214
204
213
236
121
137
227
140
228
139
224
149
212
130
112
232
138
126
127
115
20
209
142
118
208
124
149
204
151
215
205
218
132
239
206
216
219
223
160
152
279565-2
ECM 114791

ECM: 114817 - 20021004
Group number: 279565-0300
Assembly Drawing: 279565-2_1_AC

Pos	Part No	SP	UN	Qty	Description	Page No
0375S						
112	493711-0000	A		1	FOLDING FLAP	
115	493710-0000	A		1	FOLDING FLAP	
118	458039-0000	A		1	CARRIER RULER	
121	32494-0000	A		1	OPERATING ROD	
0355B, 0500S						
112	493711-0000	A		1	FOLDING FLAP	
115	493710-0000	A		1	FOLDING FLAP	
118	458031-0000	A		1	CARRIER RULER	
121	32494-0000	A		1	OPERATING ROD	
0500B, 0750B, 1000B						
112	464311-0000	A		1	FOLDING FLAP	
115	464310-0000	A		1	FOLDING FLAP	
118	450506-0000	A		1	CARRIER RULER	
121	32468-0000	A		1	OPERATING ROD	
0750S						
112	544315-0000	A		1	FOLDING FLAP	
115	544314-0000	A		1	FOLDING FLAP	
118	544320-0000	A		1	CARRIER RULER	
121	32494-0000	A		1	OPERATING ROD	
1000S						
112	569061-0000	A		1	FOLDING FLAP	
115	569060-0000	A		1	FOLDING FLAP	
118	569063-0000	A		1	CARRIER RULER	
121	32468-0000	A		1	OPERATING ROD	
1000SQ						
112	1317809-0000	A		1	FOLDING FLAP	
115	1317808-0000	A		1	FOLDING FLAP	
118	573980-0000	A		1	CARRIER RULER	
121	32468-0000	A		1	OPERATING ROD	
Common Parts						
020	A26642-0200	A		2	CARRIER	**4-55**
124	23229-0000	A		1	BRACKET	
126	22462-0000	A		2	SHAFT	
127	22463-0000	A		2	ROLL	
130	32463-0000	A		2	BEARING	
131	276172-0000	A		2	AXLE PIN	
132	276173-0000	A		2	CURVE ROLLER	
136	23361-0000	A		1	ROLLER BRACKET	
137	2525463-0000	A		1	COMPRESSION SPRING	
138	33408-0000	A		2	BEARING	
139	113653-0000	A		1	BEARING PLATE	
140	113654-0000	A		1	RING	
141	26423-0000	A		2	LACE	
142	269366-0000	A		1	DOWEL	
149	90134-0058	A		4	CONNECTION	
151	927448-0000	A		1	LINK	
152	37258-0000	A		2	BUSHING	
160	927450-0000	A		1	SECURITY PLATE RIGHT	
204	90266-0019	-	MM	400	PIPE	
205	90166-0143	-	MM	800	TUBE 2,5 MM PA,TRANSP.	
206	90165-0056	-		1	PIPE CLIP FOR TUBE D=4 MM	
208	311103-0310	-		2	PARALLEL PIN ISO 2338 5M6X20 A1	
209	90258-0001	-		1	PIN, STRAIGHT SLOTTED SPRING FRP 2X20	
212	312155-0374	-		1	SCREW EN 10642 MF6S M6X30 A480	
213	312115-0366	-		2	SCREW ISO4762 M6X12 A4	
214	312115-0370	-		2	SCREW ISO4762 M6X20 A4	
215	312115-0449	-		2	SCREW ISO4762 M8X16 A4	
216	312125-0287	-		1	SLOTTED CHEESE HEAD SCREW MCS 4X8 SS	
218	312318-0370	-		1	SCREW ISO4029 M6X20 A4	
219	312605-0318	-		2	HEXAGON NUT, M6M M8 A280	
223	315105-0165	-		2	WASHER BRB8,4X16RFR	
224	315115-0171	-		1	WASHER PLAIN, TBRB 10/18 H=4	
227	315202-0114	A		1	O-RING 16,1X1,6 MM	
228	315202-0208	A		1	O-RING 9,3X2,4 MM	
232	315230-0157	-		2	BEARING SEAL 12X16X3 MM	
236	90288-0305	A		1	CONNECTING LINK SINGLE 3/4",SS	
239	321101-0163	A		2	FLANGE BUSHING, 10X16X10 MM	

Machine Type | Group Description | Used-In | Group Number | Page No

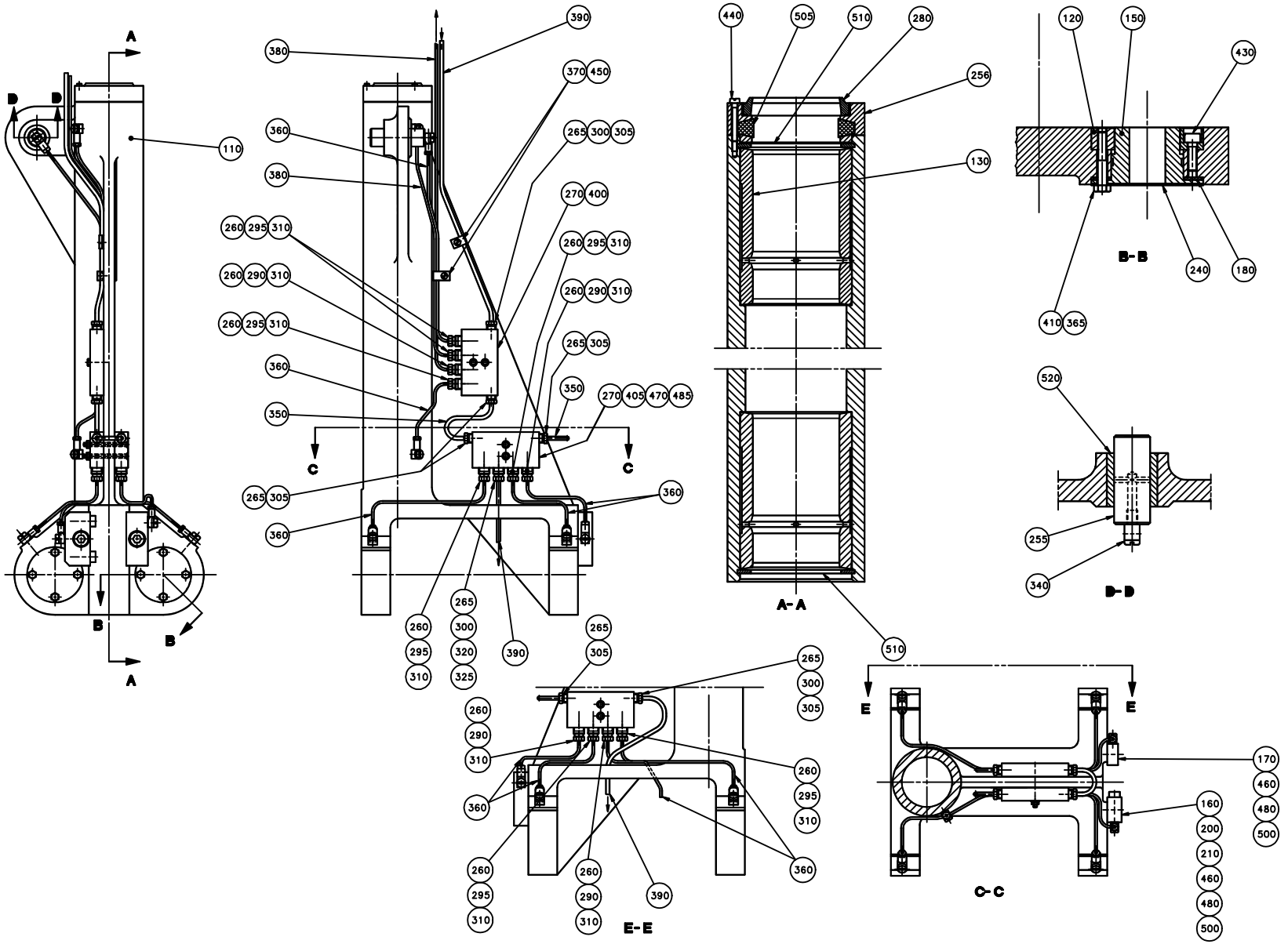
A
B
B
110
380
360
380
260 295 310
260 290 310
260 295 310
360
350
265 305
360
390
370 450
265 300 305
270 400
260 295 310
260 290 310
265 305
350
270 405 470 485
C
C
360
265
300
320
325
260
295
310
390
265
305
440
505
510
280
256
130
A-A
120
150
430
240
180
410
365
B-B
520
255
340
D-D
510
E
E
265
300
305
260
290
310
360
260
295
310
260
295
310
260
290
310
390
E-E
170
460
480
500
160
200
210
460
480
500
C-C

ECM: 72090 - 19981214
Group number: 243942-0400
Assembly Drawing: 243942-2_1_AA

Pos	Part No	SP	UN	Qty	Description	Page No
-						
110	243952-0000	D		1	YOKE	
120	36753-0000	C		4	RING	
130	243943-0000	C		2	BUSHING	
150	246513-0000	C		4	BEARING	
160	20494-0000	C		2	COMPRESSION SPRING	
170	26760-0000	C		1	LOCATING PIECE	
180	29886-0000	C		4	LACE	
200	31837-0000	C		1	SPRING HOUSING	
210	31838-0000	C		2	PLUNGER	
240	239874-0000	D		4	WASHER	
255	247112-0000	C		1	SHAFT	
256	263509-0000	C		1	LID	
260	90028-0020	C		11	CONE TUBE 2,5MM	
265	90028-0021	C		7	CONE TUBE 4 MM	
270	90032-0039	-		3	BLOCK 4 WAYS	
280	90091-0080	C		1	SCRAPER 48X60X10 MM	
290	90092-0052	C		4	METERING VALVE 10 MM3	
295	90092-0053	C		7	METERING VALVE 30 MM3	
300	90134-0031	C		3	SLEEVE FOR PLASTIC TUBE	
305	90134-0038	C		6	BUSHING/NUT INLET/OUTLET 4 MM	
310	90134-0039	C		11	BUSHING VALVE CONNECTION 2,5 MM	
320	90134-0040	C		1	BUSHING VALVE CONNECTION 4 MM	
325	90134-0051	-		1	SPACING COLLAR DOSING BLOCK	
340	90134-0058	C		9	CONNECTION	
350	90151-0001	-	MM	200	BRASS PIPE DI=2,6 MM	
360	90266-0019	-	MM	1400	PIPE	
365	90157-0016	-	ML	1	LOCKING FLUID	
370	90165-0060	-		4	PIPE CLIP FOR TUBE D=5 MM	
380	90166-0143	-	MM	900	TUBE 2,5 MM PA,TRANSP.	
390	90166-0109	-	MM	500	TUBE 4 MM PA,TRANSP.	
395	312105-0287	-		2	SCREW M6S ISO4017 M4X8 A480	
400	312105-0295	-		2	SCREW M6S ISO4017 M4X20 A480	
405	312145-0305	-		2	SCREW COUNTERS.SLOT.HD. MFS 4X50 SS	
410	312105-0335	-		16	SCREW M6S ISO 4014 M5X30 A480	
430	312115-0329	-		4	SCREW ISO4762 M5X16 A4	
440	312125-0232	-		3	SLOTTED CHEESE HEAD SCREW MCS 3X25 SS	
450	312125-0285	-		2	SLOTTED CHEESE HEAD SCREW MCS 4X6 SS	
460	312180-0499	-		2	SCREW ISO7379 H10X40	
470	312605-0312	-		2	HEXAGON NUT, M6M M4 A280	
480	312811-0318	-		2	NUT HEX.LOCK HELI COIL M8 SS	
485	315105-0136	-		4	WASHER BRB4,3XRFR	
500	315115-0173	-		2	WASHER PLAIN, TBRB 10,5/22 H=4	
505	315259-0103	C		1	FELT SEAL 47-67 MM	
510	315752-0136	-		4	RETAIN. RING, 62	
520	321105-0234	C		1	BEAR. BUSH. WITHOUT FL, 20X28X30 MM	

Machine Type	Group Description	Used-In	Group Number	Page No

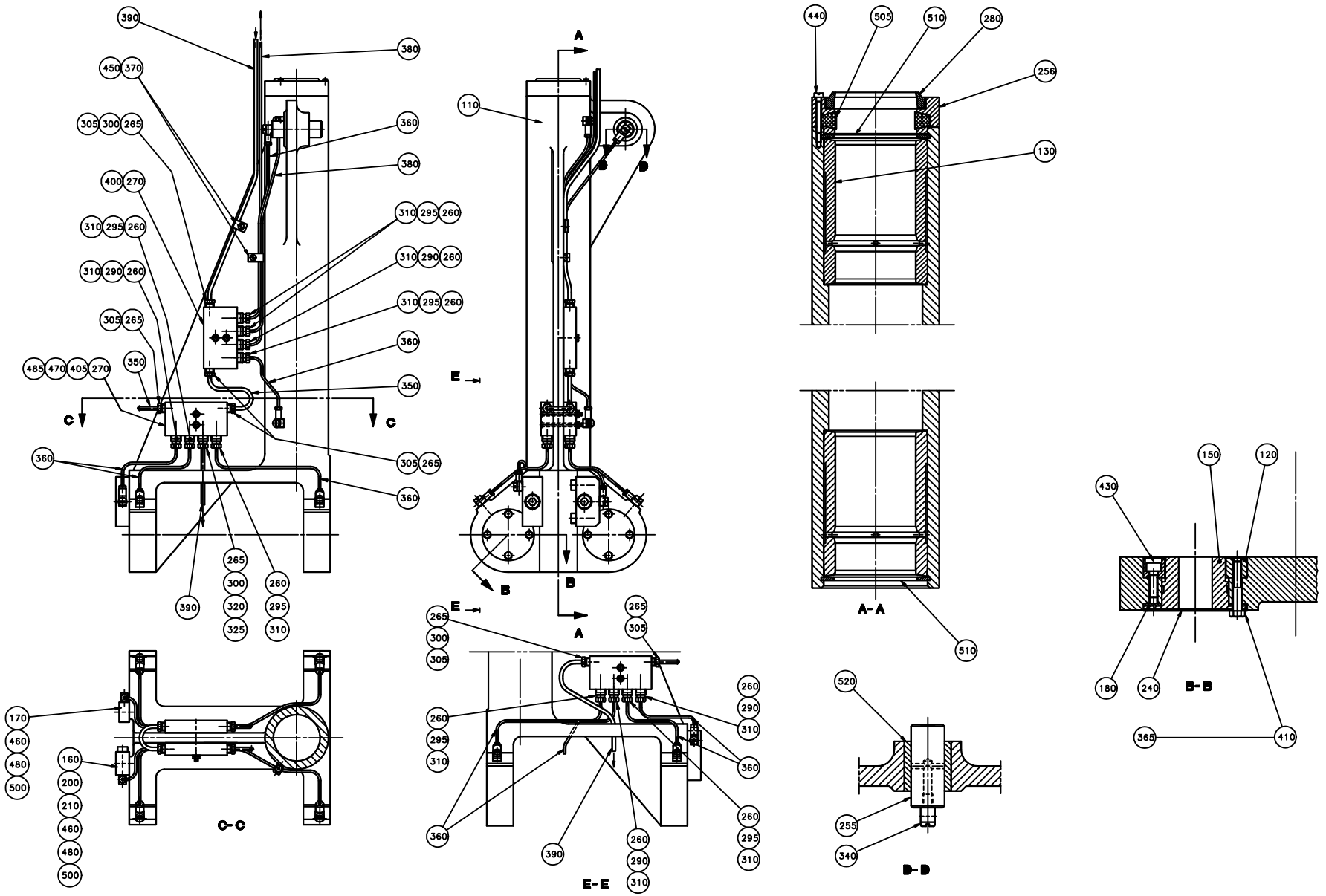
C-C
E-E
A-A
B-B
D-D

ECM: 72090 - 19981214
Group number: 593749-0100
Assembly Drawing: 593749-1_1_AA

Pos	Part No	SP	UN	Qty	Description	Page No
-						
110	243951-0000	D		1	YOKE	
120	36753-0000	C		4	RING	
130	243943-0000	C		2	BUSHING	
150	246513-0000	C		4	BEARING	
160	20494-0000	C		2	COMPRESSION SPRING	
170	26760-0000	C		1	LOCATING PIECE	
180	29886-0000	C		4	LACE	
200	31837-0000	C		1	SPRING HOUSING	
210	31838-0000	C		2	PLUNGER	
240	239874-0000	D		4	WASHER	
255	247112-0000	C		1	SHAFT	
256	263509-0000	C		1	LID	
260	90028-0020	C		11	CONE TUBE 2,5MM	
265	90028-0021	C		7	CONE TUBE 4 MM	
270	90032-0039	-		3	BLOCK 4 WAYS	
280	90091-0080	C		1	SCRAPER 48X60X10 MM	
290	90092-0052	C		4	METERING VALVE 10 MM3	
295	90092-0053	C		7	METERING VALVE 30 MM3	
300	90134-0031	C		3	SLEEVE FOR PLASTIC TUBE	
305	90134-0038	C		6	BUSHING/NUT INLET/OUTLET 4 MM	
310	90134-0039	C		11	BUSHING VALVE CONNECTION 2,5 MM	
320	90134-0040	C		1	BUSHING VALVE CONNECTION 4 MM	
325	90134-0051	-		1	SPACING COLLAR DOSING BLOCK	
340	90134-0058	C		9	CONNECTION	
350	90151-0001	-	MM	200	BRASS PIPE DI=2,6 MM	
360	90266-0019	-	MM	1400	PIPE	
365	90157-0016	-	ML	1	LOCKING FLUID	
370	90165-0060	-		4	PIPE CLIP FOR TUBE D=5 MM	
380	90166-0143	-	MM	900	TUBE 2,5 MM PA,TRANSP.	
390	90166-0109	-	MM	500	TUBE 4 MM PA,TRANSP.	
395	312105-0287	-		2	SCREW M6S ISO4017 M4X8 A480	
400	312105-0295	-		2	SCREW M6S ISO4017 M4X20 A480	
405	312145-0305	-		2	SCREW COUNTERS.SLOT.HD. MFS 4X50 SS	
410	312105-0335	-		16	SCREW M6S ISO 4014 M5X30 A480	
430	312115-0329	-		4	SCREW ISO4762 M5X16 A4	
440	312125-0232	-		3	SLOTTED CHEESE HEAD SCREW MCS 3X25 SS	
450	312125-0285	-		2	SLOTTED CHEESE HEAD SCREW MCS 4X6 SS	
460	312180-0499	-		2	SCREW ISO7379 H10X40	
470	312605-0312	-		2	HEXAGON NUT, M6M M4 A280	
480	312811-0318	-		2	NUT HEX.LOCK HELI COIL M8 SS	
485	315105-0136	-		4	WASHER BRB4,3XRFR	
500	315115-0173	-		2	WASHER PLAIN, TBRB 10,5/22 H=4	
505	315259-0103	C		1	FELT SEAL 47-67 MM	
510	315752-0136	-		4	RETAIN. RING, 62	
520	321105-0234	C		1	BEAR. BUSH. WITHOUT FL, 20X28X30 MM	

Machine Type	Group Description	Used-In	Group Number	Page No

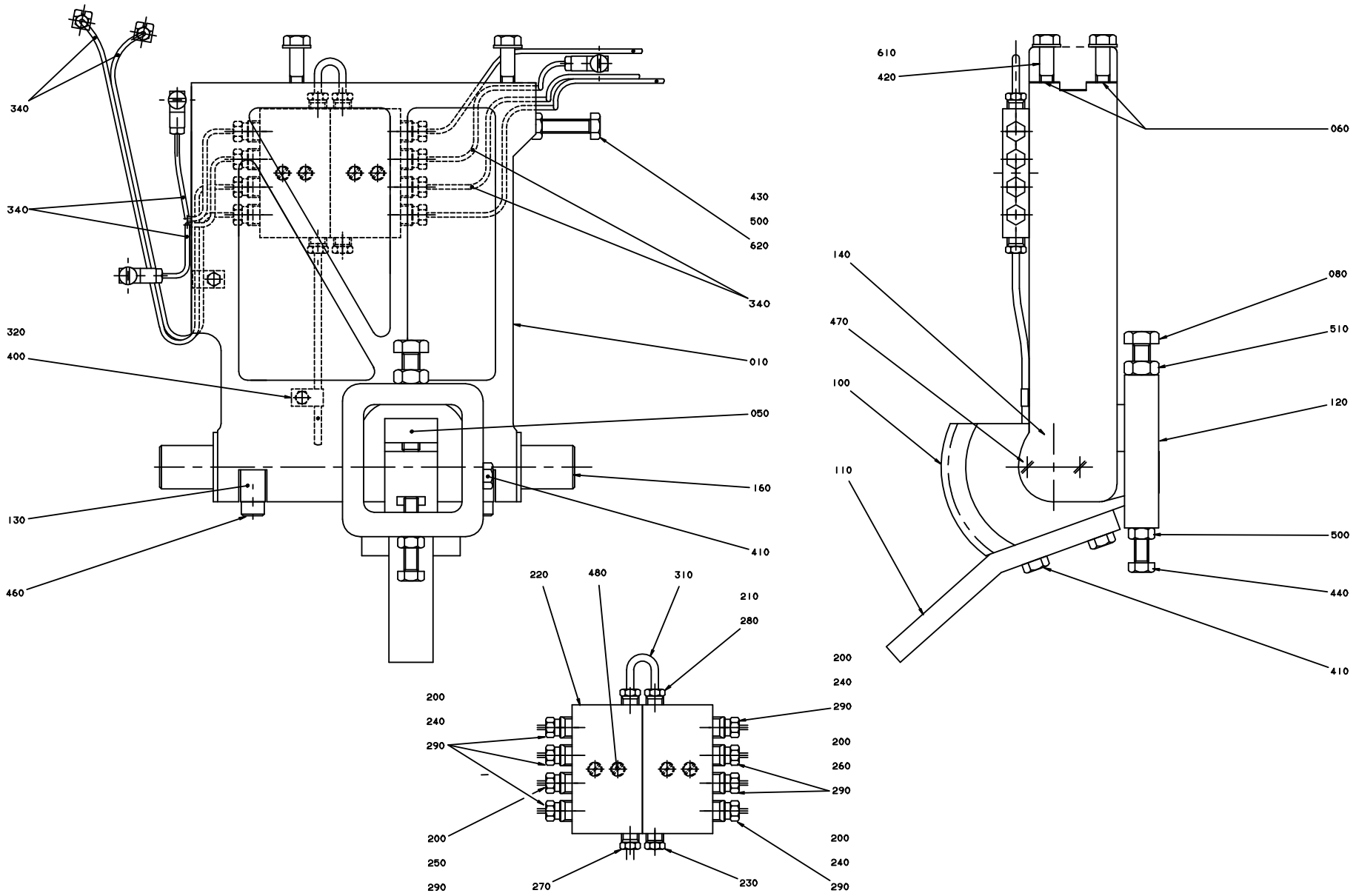
340
340
320
400
130
460
430
500
620
340
010
050
160
410
220
480
310
210
280
200
240
290
200
250
290
270
230
200
240
290
200
260
290
200
240
290
610
420
060
140
470
100
110
080
510
120
500
440
410

ECM: 86995 - 20001215
Group number: 246499-0600
Assembly Drawing: 246499-5_1_AC

Pos	Part No	SP	UN	Qty	Description	Page No
IH						
200	90028-0020	-		8	CONE TUBE 2,5MM	
220	90032-0039	-		2	BLOCK 4 WAYS	
240	90092-0052	C		5	METERING VALVE 10 MM3	
290	90134-0039	-		8	BUSHING VALVE CONNECTION 2,5 MM	
Common Parts						
010	538400-0000	C		1	ARM LEFT	
050	14729-0000	C		1	NUT	
060	26425-0000	C		6	LACE	
080	32957-0000	C		1	SCREW	
100	232238-0000	C		1	TOOTH PART	
110	239476-0000	C		1	ROD	
120	267754-0000	C		1	BOW CLAMP	
130	533818-0000	C		2	HOLDER	
140	536704-0000	C		2	WASHER	
160	538399-0000	C		1	SHAFT	
210	90028-0021	C		3	CONE TUBE 4 MM	
230	90087-0019	-		1	PLUG M10X1 STAINLESS	
250	90092-0053	C		1	METERING VALVE 30 MM3	
260	90092-0054	C		2	METERING VALVE 50 MM3	
270	90134-0031	C		1	SLEEVE FOR PLASTIC TUBE	
280	90134-0038	C		3	BUSHING/NUT INLET/OUTLET 4 MM	
310	90266-0165	-	MM	100	BRASS PIPE	
320	90165-0056	-		2	PIPE CLIP FOR TUBE D=4 MM	
330	90166-0109	-	MM	400	TUBE 4 MM PA,TRANSP.	
340	90166-0143	-	MM	2500	TUBE 2,5 MM PA,TRANSP.	
400	312105-0287	-		2	SCREW M6S ISO4017 M4X8 A480	
410	312105-0453	-		3	SCREW M6S ISO 4017 M8X25 A480	
420	312105-0457	-		1	SCREW M6S ISO 4014 M8X35 A480	
430	312105-0466	-		1	SCREW M6S ISO 4014 M8X75 A480	
440	312109-0459	-		1	SCREW M6S ISO 4017 M8X40 A480	
450	312115-0289	-		2	SCREW ISO4762 M4X10 A4	
460	312115-0455	-		2	SCREW ISO4762 M8X30 A4	
470	312145-0285	-		4	SCREW COUNTERS.SLOT.HD. MFS 4X6 SS	
480	312145-0297	-		4	SCREW COUNTERS.SLOT.HD. MFS 4X25 SS	
500	312605-0318	-		2	HEXAGON NUT, M6M M8 A280	
510	312635-0320	-		1	NUT M6M 10X1 STAINLESS A2 80	
600	315105-0136	-		2	WASHER BRB4,3XRFR	
610	315105-0165	-		4	WASHER BRB8,4X16RFR	
620	315115-0165	-		1	WASHER PLAIN, TBRB 8,4/16 H=3	

Pos	Part No	SP	UN	Qty	Description	Page No

Machine Type | Group Description | Used-In | Group Number | Page No

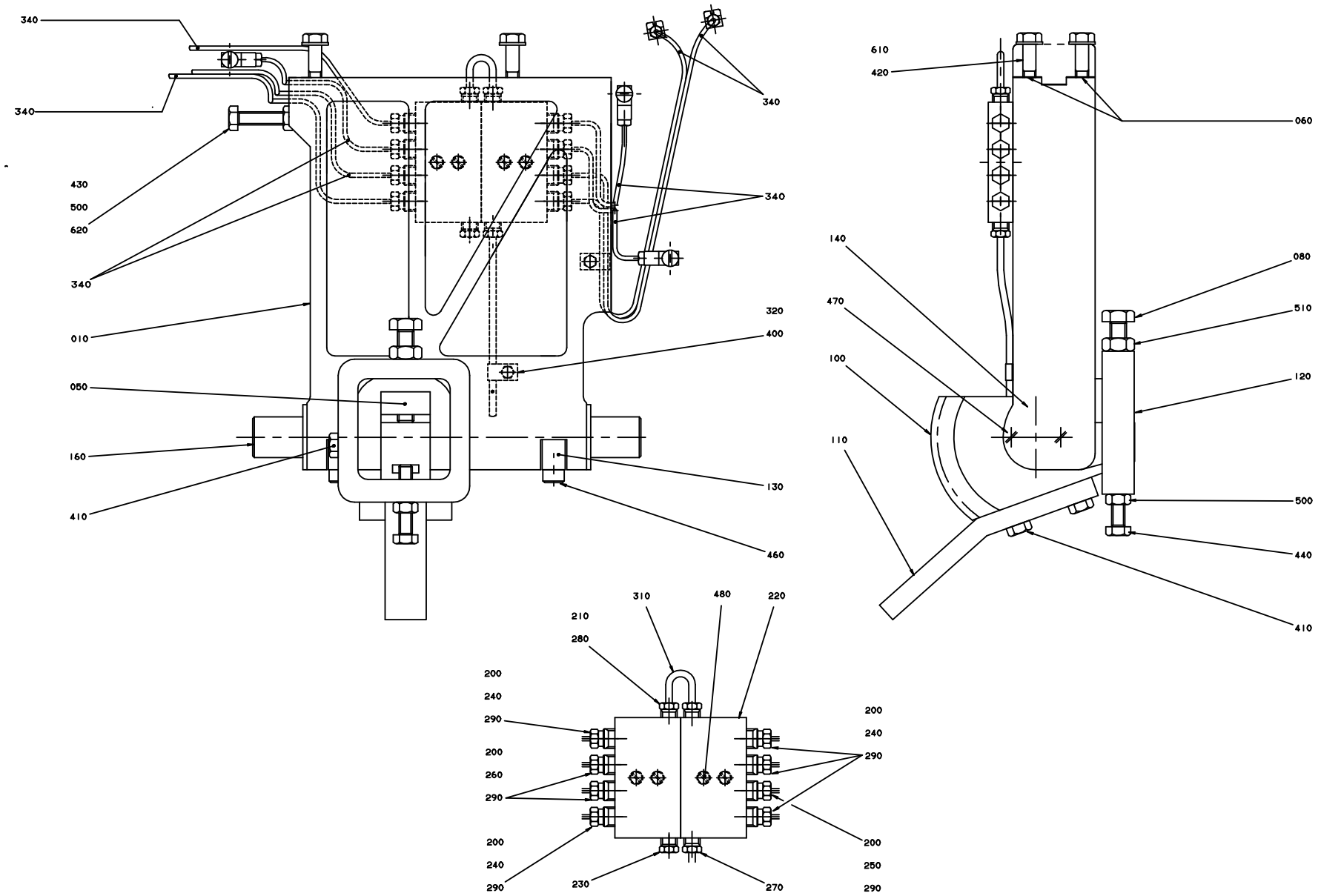
340
340
340
340
430
500
620
340
010
050
160
410
320
400
130
460
610
420
060
140
470
100
110
080
510
120
500
440
410
310
480
220
210
280
200
240
290
200
260
290
200
240
290
200
240
290
230
270
200
240
290
200
250
290

ECM: 86998 - 20001215
Group number: 593750-0100
Assembly Drawing: 593750-1_1_AB

Pos	Part No	SP	UN	Qty	Description	Page No
IH						
200	90028-0020	-		8	CONE TUBE 2,5MM	
220	90032-0039	-		2	BLOCK 4 WAYS	
240	90092-0052	C		5	METERING VALVE 10 MM3	
290	90134-0039	-		8	BUSHING VALVE CONNECTION 2,5 MM	
Common Parts						
010	538401-0000	C		1	ARM RIGHT	
050	14729-0000	C		1	NUT	
060	26425-0000	C		6	LACE	
080	32957-0000	C		1	SCREW	
100	232238-0000	C		1	TOOTH PART	
110	239476-0000	C		1	ROD	
120	267754-0000	C		1	BOW CLAMP	
130	533818-0000	C		2	HOLDER	
140	536704-0000	C		2	WASHER	
160	538399-0000	C		1	SHAFT	
210	90028-0021	C		3	CONE TUBE 4 MM	
230	90087-0019	-		1	PLUG M10X1 STAINLESS	
250	90092-0053	C		1	METERING VALVE 30 MM3	
260	90092-0054	C		2	METERING VALVE 50 MM3	
270	90134-0031	C		1	SLEEVE FOR PLASTIC TUBE	
280	90134-0038	C		3	BUSHING/NUT INLET/OUTLET 4 MM	
310	90266-0165	-	MM	100	BRASS PIPE	
320	90165-0056	-		2	PIPE CLIP FOR TUBE D=4 MM	
330	90166-0109	-	MM	400	TUBE 4 MM PA,TRANSP.	
340	90166-0143	-	MM	2500	TUBE 2,5 MM PA,TRANSP.	
400	312105-0287	-		2	SCREW M6S ISO4017 M4X8 A480	
410	312105-0453	-		3	SCREW M6S ISO 4017 M8X25 A480	
420	312105-0457	-		1	SCREW M6S ISO 4014 M8X35 A480	
430	312105-0466	-		1	SCREW M6S ISO 4014 M8X75 A480	
440	312109-0459	-		1	SCREW M6S ISO 4017 M8X40 A480	
450	312115-0289	-		2	SCREW ISO4762 M4X10 A4	
460	312115-0455	-		2	SCREW ISO4762 M8X30 A4	
470	312145-0285	-		4	SCREW COUNTERS.SLOT.HD. MFS 4X6 SS	
480	312145-0297	-		4	SCREW COUNTERS.SLOT.HD. MFS 4X25 SS	
500	312605-0318	-		2	HEXAGON NUT, M6M M8 A280	
510	312635-0320	-		1	NUT M6M 10X1 STAINLESS A2 80	
600	315105-0136	-		2	WASHER BRB4,3XRFR	
610	315105-0165	-		4	WASHER BRB8,4X16RFR	
620	315115-0165	-		1	WASHER PLAIN, TBRB 8,4/16 H=3	

Pos	Part No	SP	UN	Qty	Description	Page No

Machine Type | Group Description | Used-In | Group Number | Page No

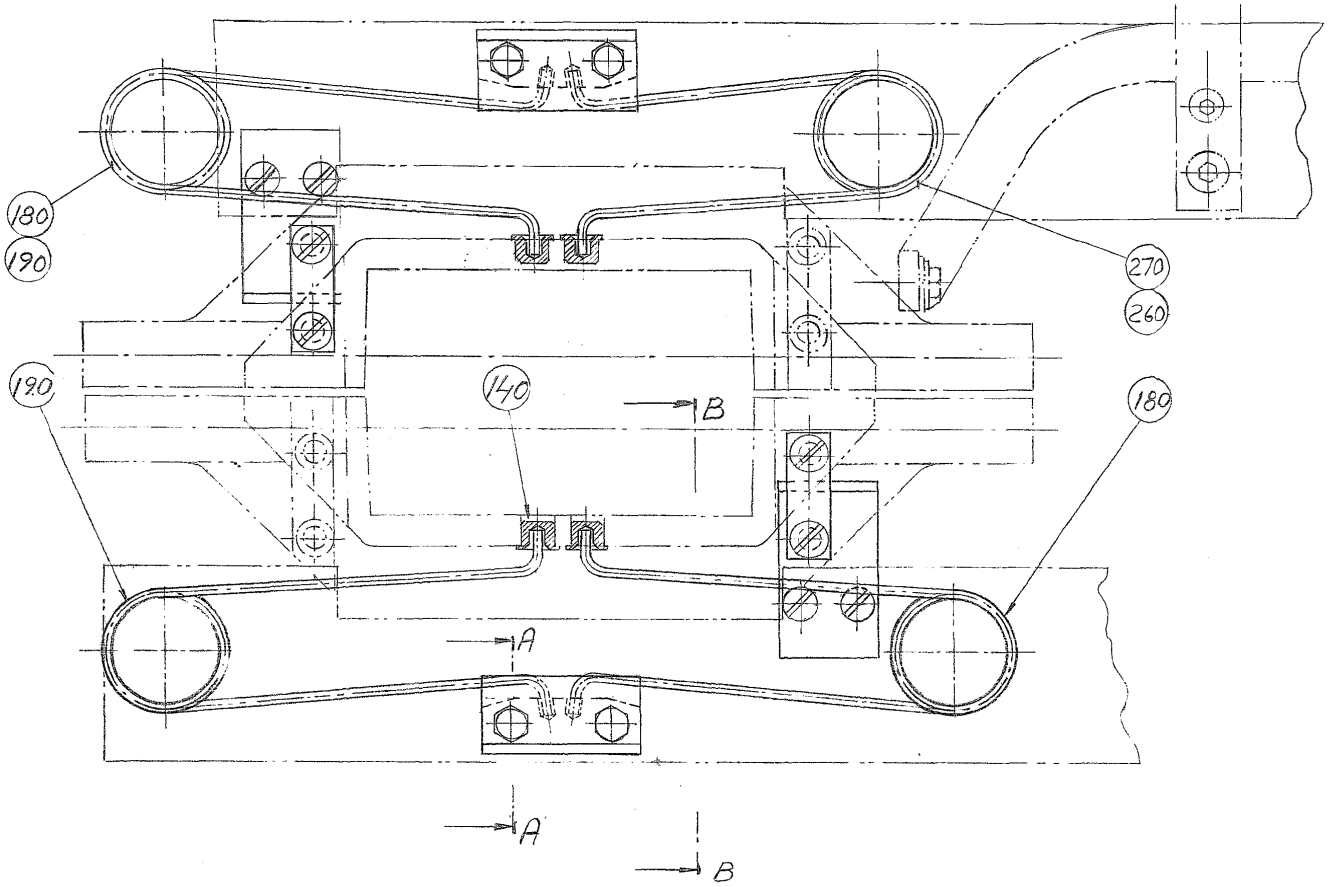
180
190
190
140
B
270
260
180
A
A
B

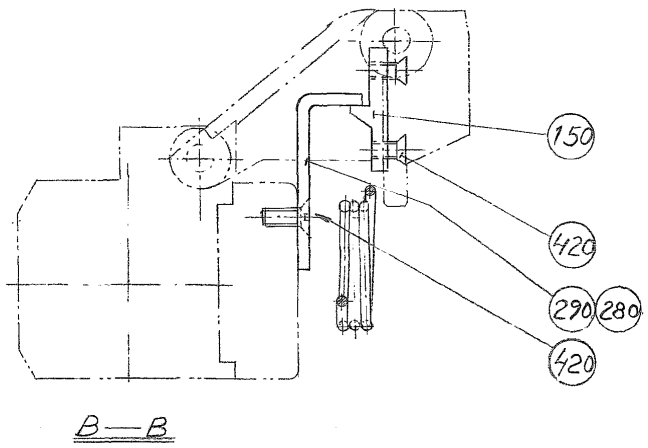
150
420
290
280
420
B—B

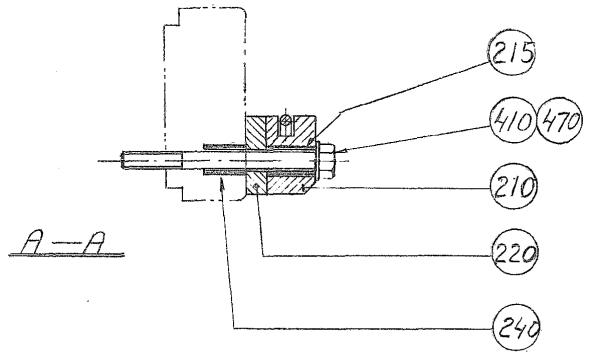
215
410
470
210
220
240
A—A

Pos	Part No	SP	UN	Qty	Description	Page No
TBA/8 0355B IH (See drawing on page: 4-68)						
140	545651-0000	B		8	GUIDE STUD	
150	545125-0000	A		2	STOPPER	
152	545126-0000	A		2	STOPPER	
180	545801-0000	A		3	SPRING	
190	545802-0000	A		3	SPRING	
205	545127-0000	A		2	CATCH	
210	247262-0000	A		4	SPRING BRACKET	
215	247263-0000	B		8	SPACER	
220	247271-0000	A		2	LACE	
240	263684-0000	B		4	SPACER	
250	545136-0000	A		2	CATCH	
260	554962-0000	A		1	SPRING	
270	554963-0000	A		1	SPRING	
401	312105-0331	-		8	SCREW M6S ISO 4017 M5X20 A480	
410	312105-0340	-		8	SCREW M6S ISO 4014 M5X45 A480	
420	312105-0325	-		8	SCREW M6S ISO 4017 M5X10 A480	
470	315105-0146	-		24	BRICKA BRB5,3X10RFR	
TBA/8 0375S IH (See drawing on page: 4-70)						
140	545651-0000	B		8	GUIDE STUD	
150	548493-0000	A		4	STOPPER	
180	561393-0000	A		3	SPRING	
190	561394-0000	A		3	SPRING	
205	562137-0000	A		2	CATCH	
210	247262-0000	A		4	SPRING BRACKET	
215	247263-0000	B		8	SPACER	
220	247271-0000	A		2	LACE	
240	263684-0000	B		4	SPACER	
250	562136-0000	A		2	CATCH	
260	561391-0000	A		1	SPRING	
270	561392-0000	A		1	SPRING	
400	312105-0329	-		8	SCREW M6S ISO 4017 M5X16 A480	
401	312105-0331	-		8	SCREW M6S ISO 4017 M5X20 A480	
410	312105-0340	-		8	SCREW M6S ISO 4014 M5X45 A480	
470	315105-0146	-		24	BRICKA BRB5,3X10RFR	
TBA/8 0500B IH (See drawing on page: 4-66)						
140	33150-0000	B		8	GUIDE STUD	
150	33152-0000	A		4	STOPPER	
180	246328-0000	A		3	SPRING	
190	246329-0000	A		3	SPRING	
210	247262-0000	A		4	SPRING BRACKET	
215	247263-0000	B		8	SPACER	
220	247271-0000	A		2	LACE	
240	263684-0000	B		4	SPACER	
260	1296222-0000	A		1	SPRING	
270	1296223-0000	A		1	SPRING	
280	284138-0000	A		2	CATCH	
290	284139-0000	A		2	CATCH	
410	312105-0340	-		8	SCREW M6S ISO 4014 M5X45 A480	
420	312145-0325	-		16	SCREW COUNTERS.SLOT.HD. MFS 5X10 SS	
470	315105-0146	-		8	BRICKA BRB5,3X10RFR	
TBA/8 0500S IH (See drawing on page: 4-78)						
140	545651-0000	B		8	GUIDE STUD	
150	1348692-0000	A		4	STOPPER	
180	561393-0000	A		4	SPRING	
190	561394-0000	A		4	SPRING	
205	2501271-0000	A		2	CATCH	
210	571296-0000	A		4	SPRING BRACKET	
220	571298-0000	A		2	LACE	
230	571297-0000	A		2	LACE	
250	2501272-0000	A		2	CATCH	
400	312105-0329	-		24	SCREW M6S ISO 4017 M5X16 A480	
402	312105-0333	-		4	SCREW M6S ISO 4017 M5X25 A480	
412	312115-0340	-		8	SCREW ISO4762 M5X45 A4	
470	315105-0146	-		28	BRICKA BRB5,3X10RFR	
TBA/8 0750B IH (See drawing on page: 4-80)						
140	545651-0000	B		8	GUIDE STUD	
150	548493-0000	A		4	STOPPER	
180	561393-0000	A		4	SPRING	
190	561394-0000	A		4	SPRING	
205	1348697-0000	A		2	CATCH	
210	571296-0000	A		4	SPRING BRACKET	
220	571298-0000	A		2	LACE	
230	571297-0000	A		2	LACE	
250	1348696-0000	A		2	CATCH	
400	312105-0329	-		24	SCREW M6S ISO 4017 M5X16 A480	
402	312105-0333	-		4	SCREW M6S ISO 4017 M5X25 A480	
412	312115-0340	-		8	SCREW ISO4762 M5X45 A4	
470	315105-0146	-		28	BRICKA BRB5,3X10RFR	

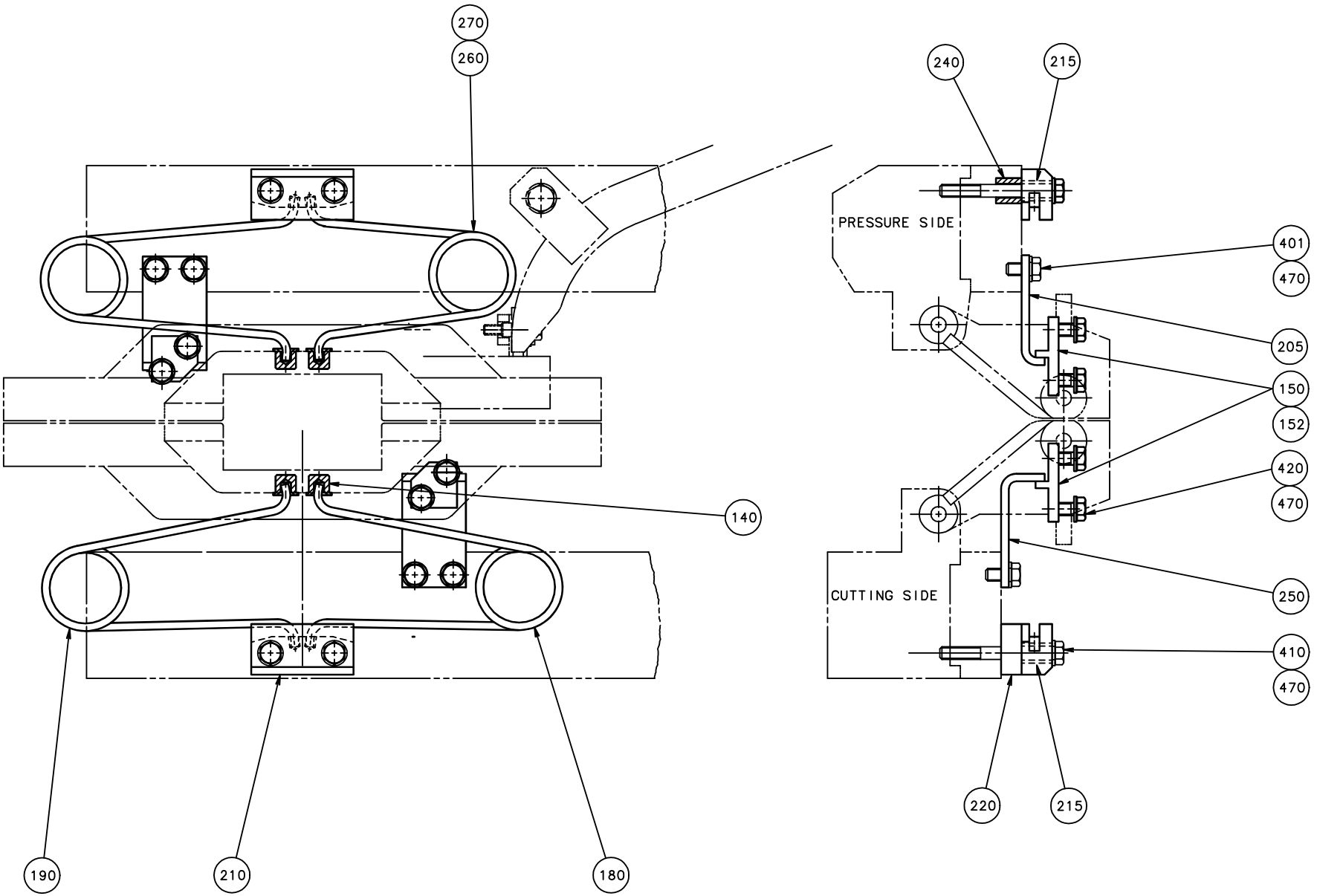
270
260
240
215
PRESSURE SIDE
401
470
205
150
152
420
470
140
CUTTING SIDE
250
410
470
190
210
180
220
215

Pos	Part No	SP	UN	Qty	Description	Page No
TBA/8 0750S IH (Cont'd) (See drawing on page: 4-74)						
140	545651-0000	B		8	GUIDE STUD	
150	1282592-0000	A		2	STOPPER	
152	1282593-0000	A		2	STOPPER	
180	1143216-0000	A		4	SPRING	
190	1143215-0000	A		4	SPRING	
205	1282595-0000	A		2	CATCH	
210	1317955-0000	A		4	SPRING BRACKET	
220	571298-0000	A		2	LACE	
230	571297-0000	A		2	LACE	
240	263684-0000	B		4	SPACER	
245	1361801-0000	B		4	SPACER	
250	1282596-0000	A		2	CATCH	
402	312105-0333	-		4	SCREW M6S ISO 4017 M5X25 A480	
411	312115-0329	-		16	SCREW ISO4762 M5X16 A4	
412	312115-0340	-		8	SCREW ISO4762 M5X45 A4	
420	312105-0325	-		8	SCREW M6S ISO 4017 M5X10 A480	
470	315105-0146	-		12	BRICKA BRB5,3X10RFR	
TBA/8 1000B IH (See drawing on page: 4-76)						
140	545651-0000	B		8	GUIDE STUD	
150	1512513-0000	A		4	STOP	
180	1143216-0000	A		4	SPRING	
190	1143215-0000	A		4	SPRING	
210	1519658-0000	A		2	CANTILEVER	
212	1519657-0000	A		2	CANTILEVER	
240	263684-0000	B		4	SPACER	
402	312105-0337	-		8	SCREW M6S ISO 4014 M5X35 A480	
405	312105-0327	-		8	SCREW M6S ISO 4017 M5X12 A480	
408	312105-0339	-		4	SCREW M6S ISO 4014 M5X40 A480	
411	312105-0325	-		16	SCREW M6S ISO 4017 M5X10 A480	
435	312155-0366	-		4	SCREW EN 10642 MF6S M6X12 A480	
470	315105-0146	-		16	BRICKA BRB5,3X10RFR	
490	1369869-0000	A		4	SCREW	
500	312605-0320	-		4	HEXAGON NUT, M6M M10 A280	
TBA/8 1000S IH (See drawing on page: 4-76)						
140	545651-0000	B		8	GUIDE STUD	
150	1512513-0000	A		4	STOP	
180	1143216-0000	A		4	SPRING	
190	1143215-0000	A		4	SPRING	
210	1519658-0000	A		2	CANTILEVER	
212	1519657-0000	A		2	CANTILEVER	
240	263684-0000	B		4	SPACER	
402	312105-0337	-		8	SCREW M6S ISO 4014 M5X35 A480	
405	312105-0327	-		8	SCREW M6S ISO 4017 M5X12 A480	
408	312105-0339	-		4	SCREW M6S ISO 4014 M5X40 A480	
411	312105-0325	-		16	SCREW M6S ISO 4017 M5X10 A480	
435	312155-0366	-		4	SCREW EN 10642 MF6S M6X12 A480	
470	315105-0146	-		16	BRICKA BRB5,3X10RFR	
490	1369869-0000	A		4	SCREW	
500	312605-0320	-		4	HEXAGON NUT, M6M M10 A280	
TBA/8 1000SQ IH (See drawing on page: 4-72)						
140	545651-0000	B		8	GUIDE STUD	
150	33152-0000	A		4	STOPPER	
180	1143216-0000	A		4	SPRING	
190	1143215-0000	A		4	SPRING	
205	593270-0000	A		2	CATCH	
212	597574-0000	A		4	SPRING BRACKET	
220	571298-0000	A		2	LACE	
230	571297-0000	A		2	LACE	
240	263684-0000	B		4	SPACER	
250	593271-0000	A		2	CATCH	
401	312105-0331	-		8	SCREW M6S ISO 4017 M5X20 A480	
402	312115-0327	-		4	SCREW ISO4762 M5X12 A4	
412	312115-0340	-		8	SCREW ISO4762 M5X45 A4	
420	312105-0325	-		8	SCREW M6S ISO 4017 M5X10 A480	
470	315105-0146	-		16	BRICKA BRB5,3X10RFR	

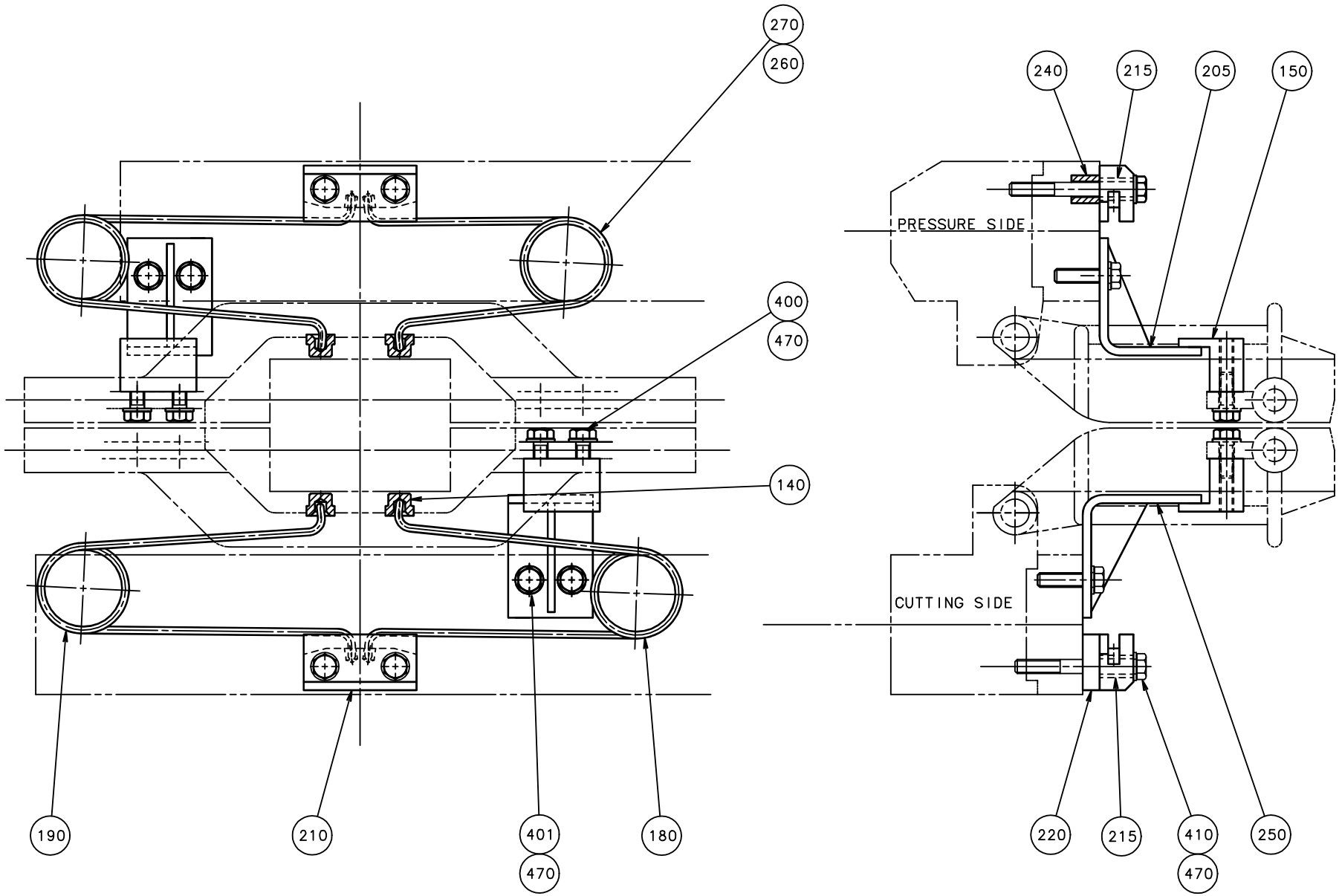
270
260
400
470
140
190
210
401
470
180
240
215
205
150
PRESSURE SIDE
CUTTING SIDE
220
215
410
470
250

Pos	Part No	SP	UN	Qty	Description	Page No	Pos	Part No	SP	UN	Qty	Description	Page No

SEE PREVIOUS LISTS PAGES: 4-67, 4-69.

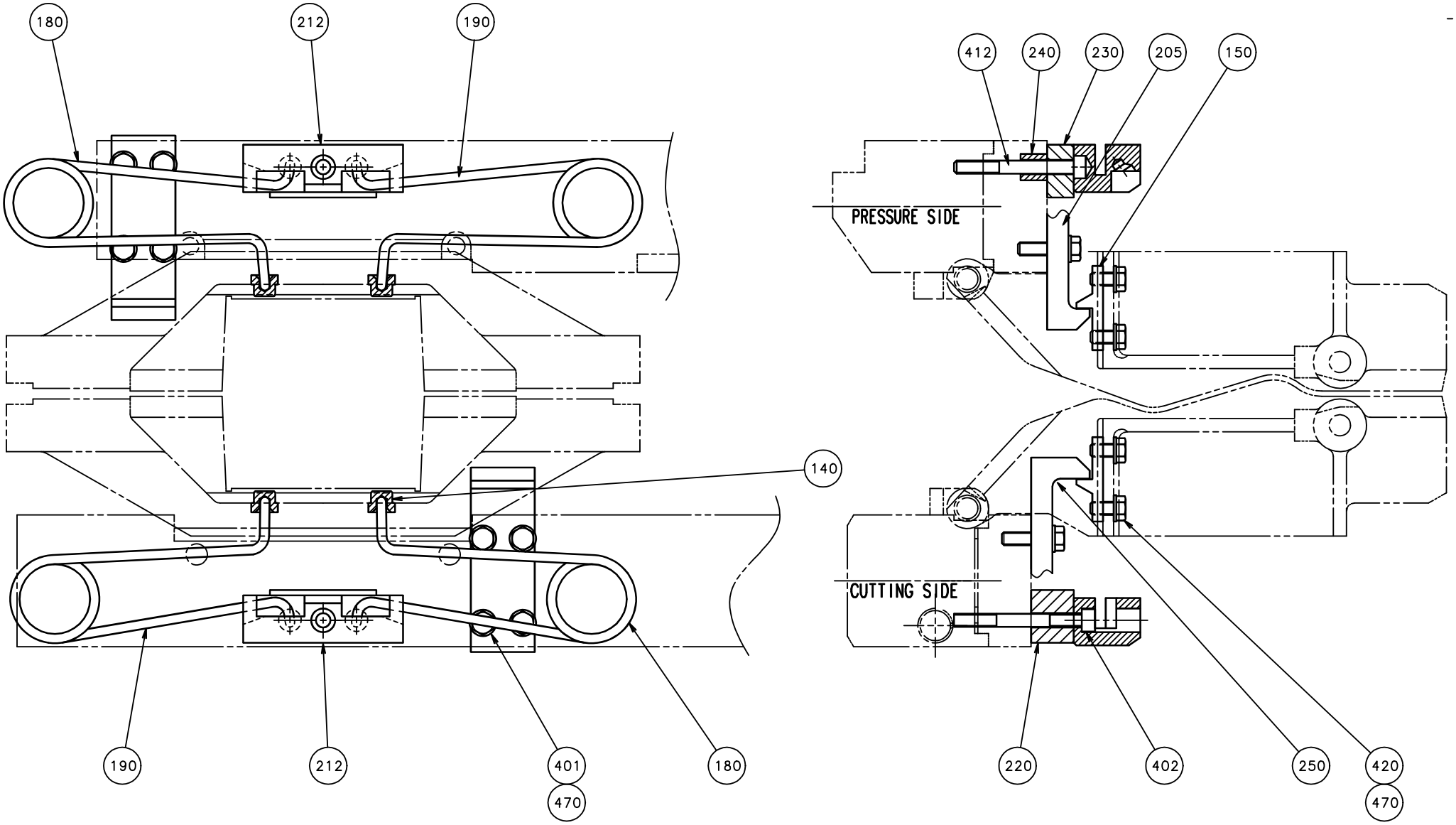
180
212
190
140
190
212
401
470
180
412
240
230
205
150
PRESSURE SIDE
CUTTING SIDE
220
402
250
420
470

Pos	Part No	SP	UN	Qty	Description	Page No	Pos	Part No	SP	UN	Qty	Description	Page No

SEE PREVIOUS LISTS PAGES: 4-67, 4-69.

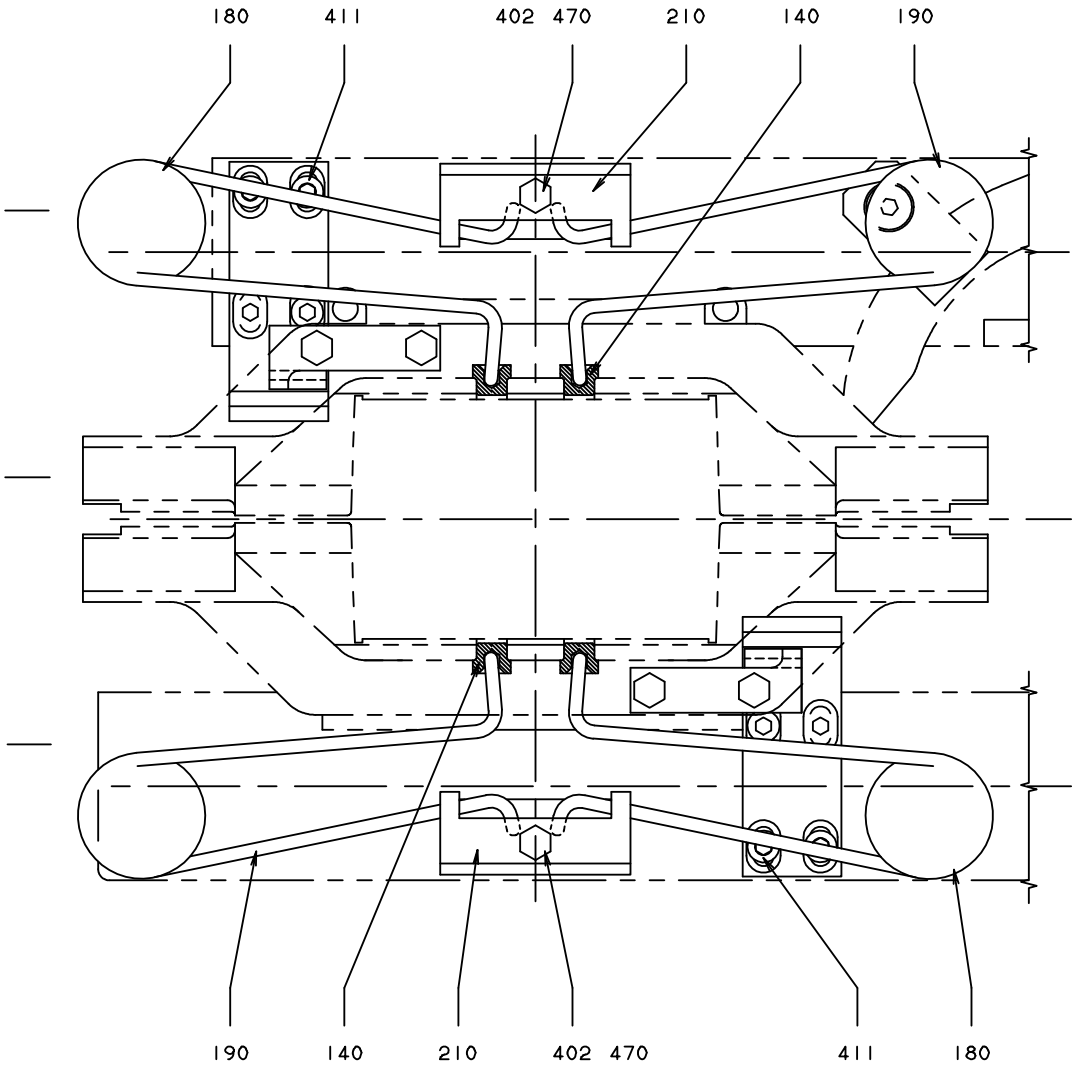
180
411
402 470
210
140
190
190
140
210
402 470
411
180

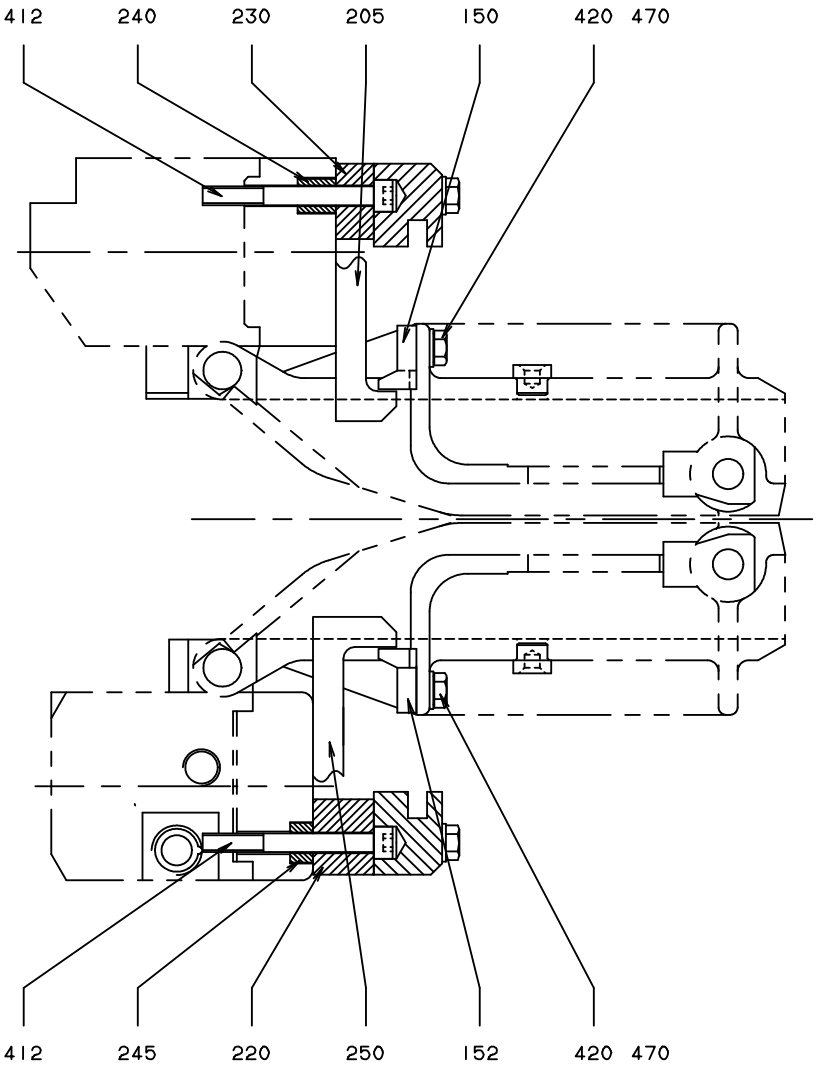
412
240
230
205
150
420 470
412
245
220
250
152
420 470

Pos	Part No	SP	UN	Qty	Description	Page No
SEE PREVIOUS LISTS PAGES: 4-67, 4-69.						

Pos	Part No	SP	UN	Qty	Description	Page No

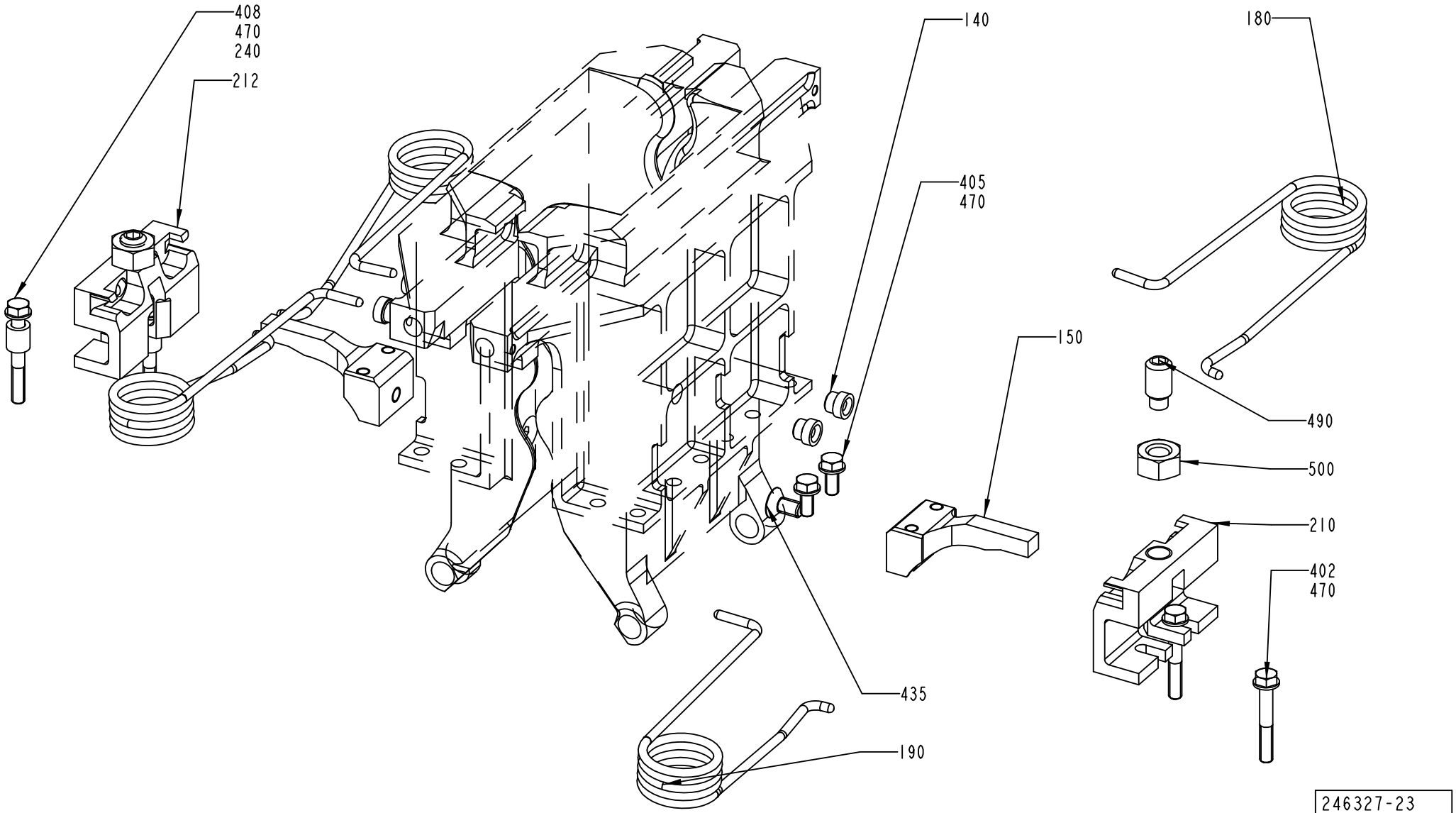

246327-23
ECN 87166

Pos	Part No	SP	UN	Qty	Description	Page No	Pos	Part No	SP	UN	Qty	Description	Page No

SEE PREVIOUS LISTS PAGES: 4-67, 4-69.

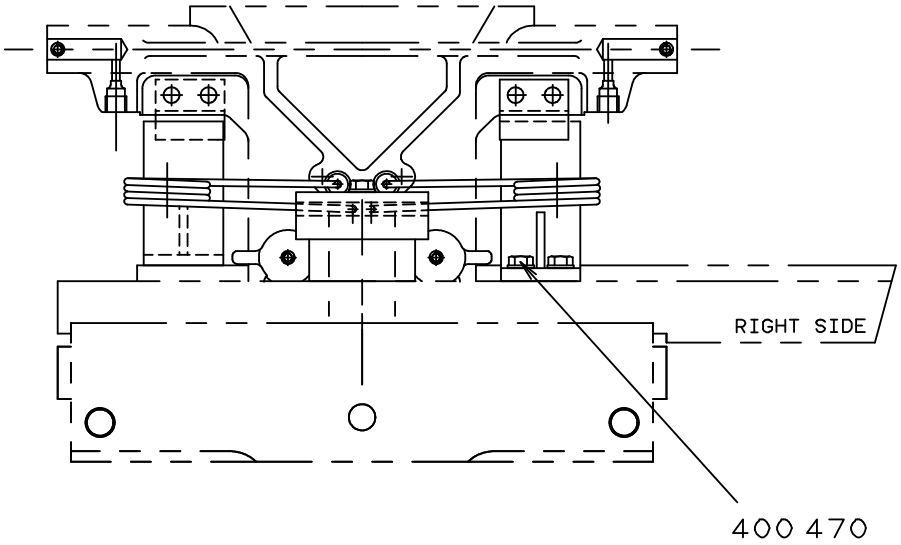
RIGHT SIDE
400 470

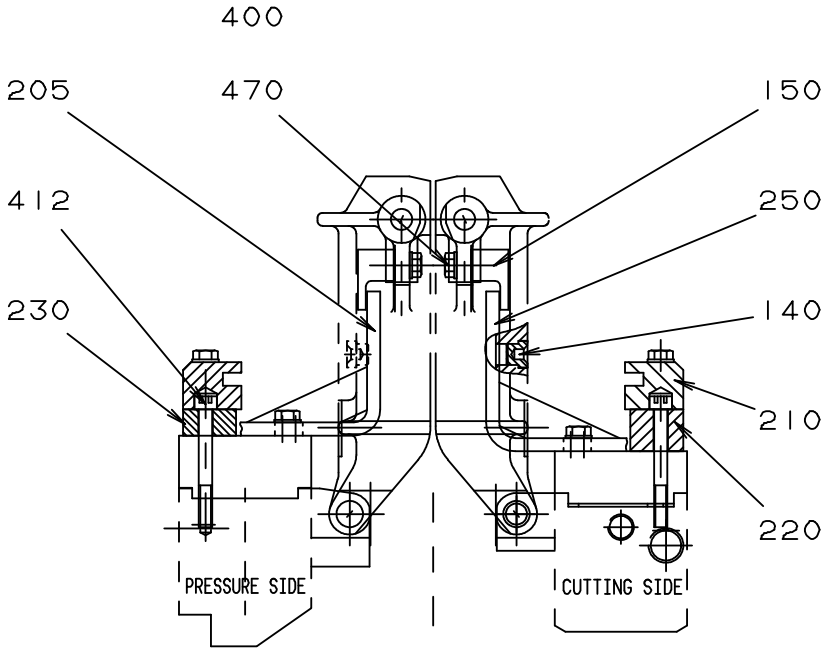
400
205
470
150
412
250
230
140
210
220
PRESSURE SIDE
CUTTING SIDE

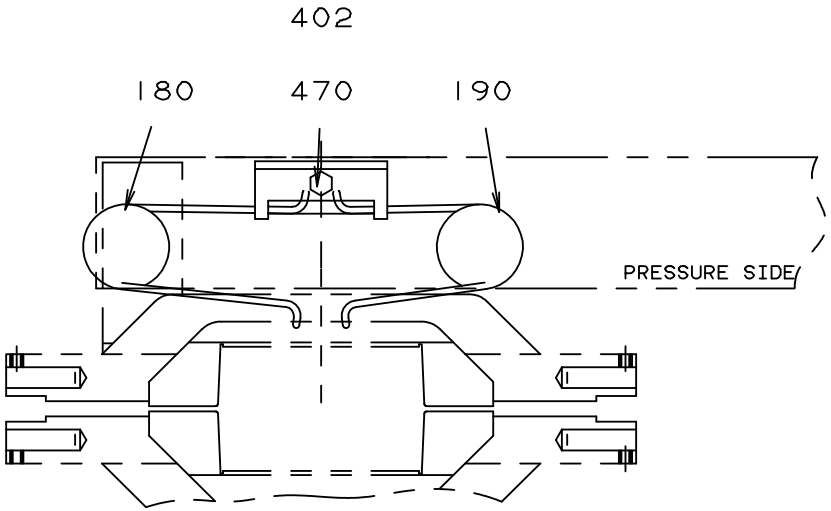
402
180
470
190
PRESSURE SIDE

Pos	Part No	SP	UN	Qty	Description	Page No	Pos	Part No	SP	UN	Qty	Description	Page No

SEE PREVIOUS LISTS PAGES: 4-67, 4-69.

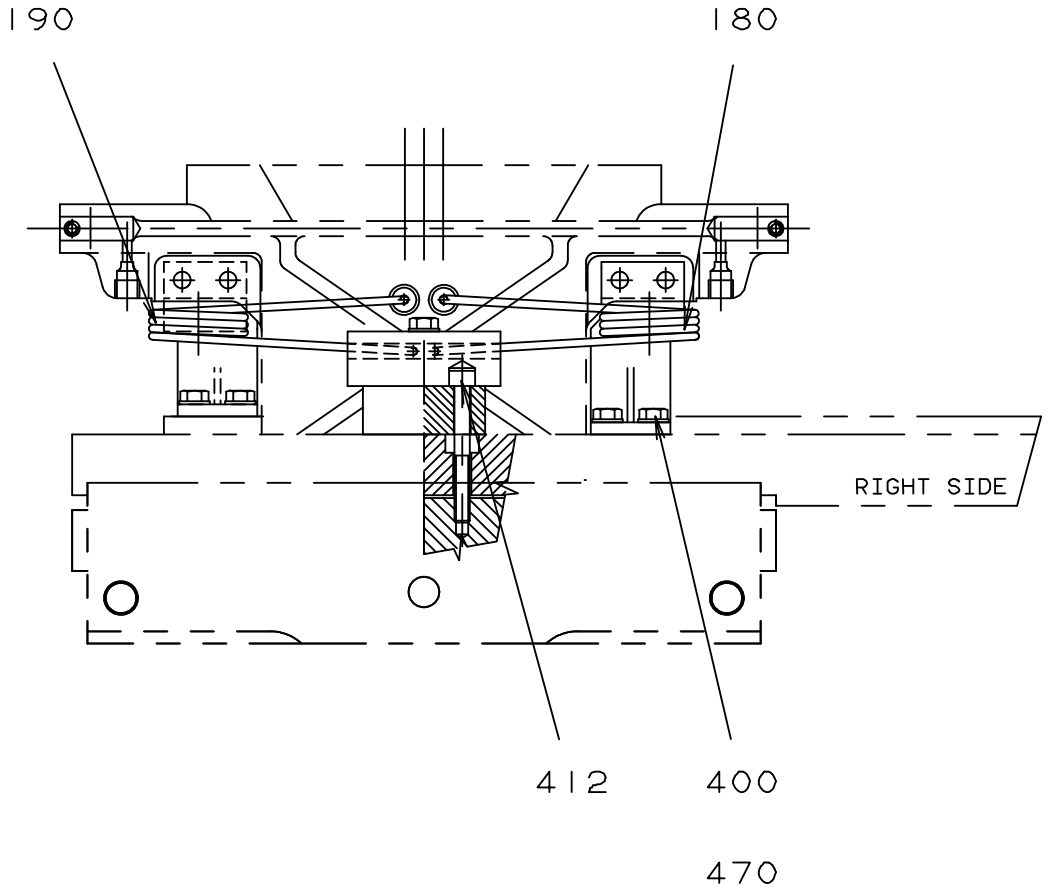
190
180
RIGHT SIDE
412
400
470

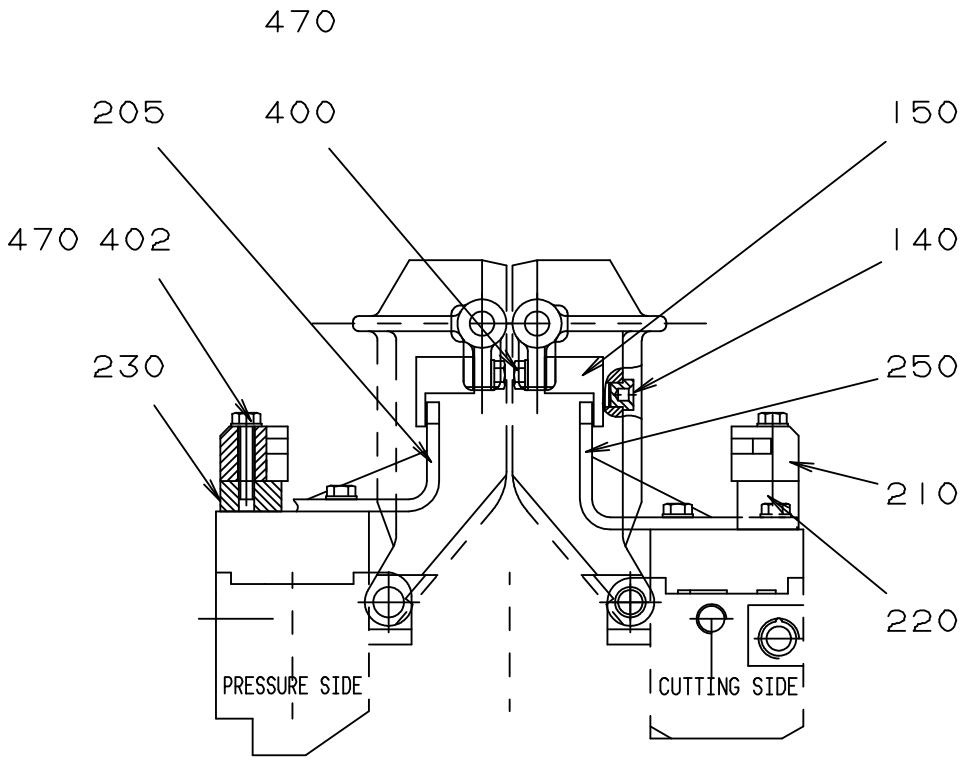
470
205
400
150
470 402
140
230
250
210
220
PRESSURE SIDE
CUTTING SIDE

Pos	Part No	SP	UN	Qty	Description	Page No
SEE PREVIOUS LISTS PAGES: 4-67, 4-69.						

Pos	Part No	SP	UN	Qty	Description	Page No

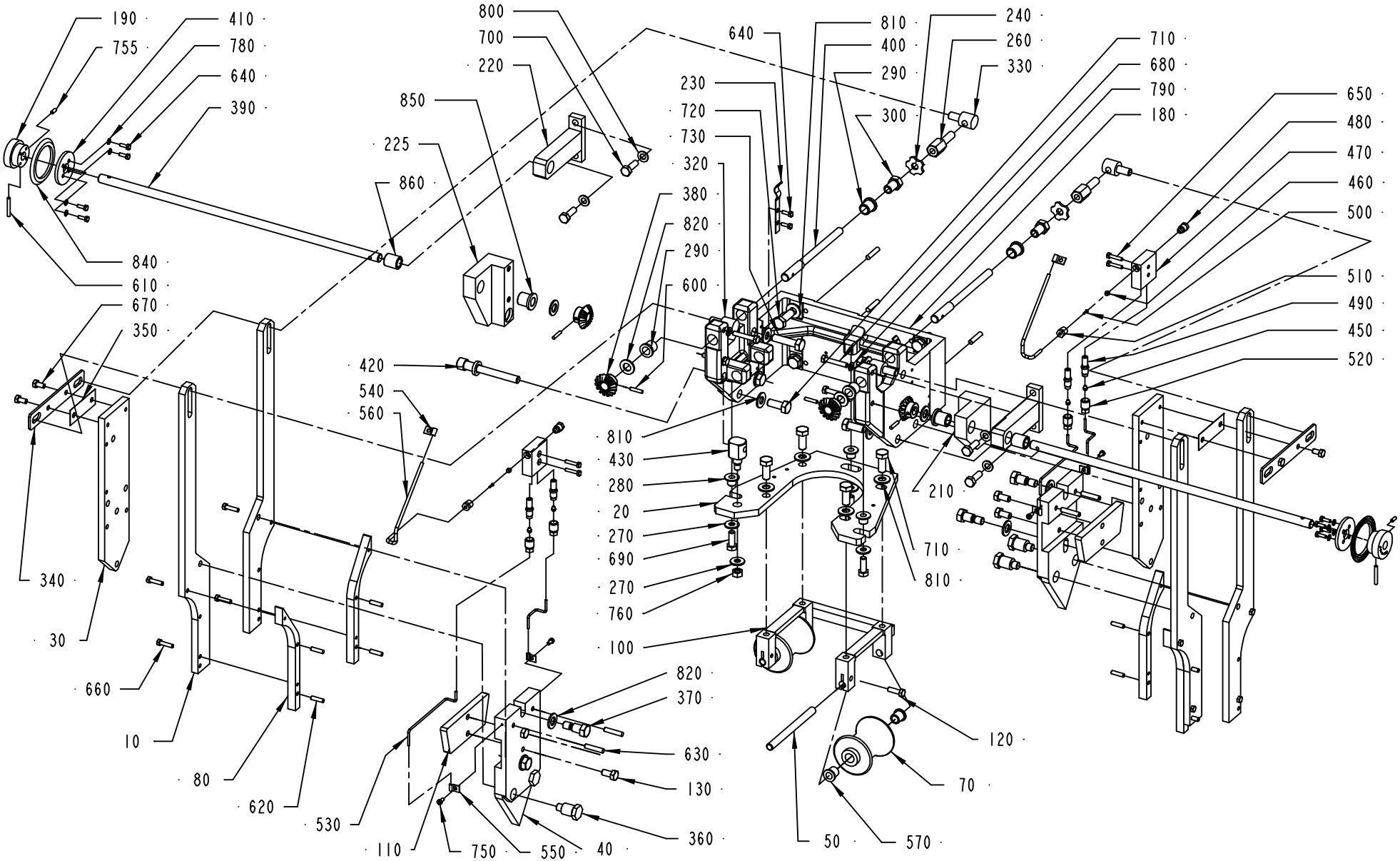
190
755
410
780
640
390
800
700
220
850
225
860
640
810
400
290
240
260
330
300
230
720
730
320
380
820
290
600
710
680
790
180
650
480
470
460
500
510
490
450
520
840
610
670
350
420
540
560
810
430
280
20
270
690
270
760
100
210
710
810
340
30
660
10
80
620
530
110
750
550
40
360
820
370
630
130
50
570
120
70

ECM: 81516 - 20001114
Group number: 293605-0600
Assembly Drawing: 293605-3_1_AF

This list covers pages from 4-82 to 4-91

Pos	Part No	SP	UN	Qty	Description	Page No
1000B HIFIN IH (See drawing on page: 4-90)						
010	531110-0000	D		4	RAIL BRACKET	
020	297998-0000	D		1	ADJUSTMENT PLATE	
030	279621-0000	D		2	FASTENING PLATE	
040	533955-0000	C		2	CURVE	
050	561547-0000	C		2	SHAFT	
070	560122-0000	C		2	SUPPORT ROLLER	
080	531109-0000	C		4	VOLUME CAM	
100	284124-0000	D		1	HOLDER	
110	269792-0000	C		2	DAMPER	
120	312105-0370	-		2	SCREW M6S ISO 4017 M6X20 A480	
130	312105-0449	-		4	SCREW M6S ISO 4017 M8X16 A480	
180	252768-0000	D		1	CANTILEVER	
190	293606-0000	-		2	SHIFTER HANDLE	
340	252793-0000	-		2	SUPPORT	
390	1360909-0000	-		2	SHAFT	
710	312105-0493	-		8	SCREW M6S ISO 4017 M10X25 A480	
720	312105-0495	-		8	SCREW M6S ISO 4017 M10X30 A480	
730	312105-0499	-		2	SCREW M6S ISO 4014 M10X40 A480	
0355B IH (See drawing on page: 4-90)						
010	552158-0000	D		4	RAIL BRACKET	
020	297998-0000	D		1	ADJUSTMENT PLATE	
030	434309-0000	D		2	FASTENING PLATE	
040	531002-0000	C		2	CURVE	
050	561547-0000	C		2	SHAFT	
060	38603-0002	C		8	SPACER	
070	561543-0000	C		2	SUPPORT ROLLER	
080	552159-0000	C		4	VOLUME CAM	
090	252780-0000	C		4	RULER	
100	529196-0000	D		1	HOLDER	
110	276189-0000	C		2	DAMPER	
120	312105-0370	-		2	SCREW M6S ISO 4017 M6X20 A480	
140	312145-0366	-		8	SCREW COUNTERS.SLOT.HD. MFS 6X12 SS	
180	252768-0000	D		1	CANTILEVER	
190	293606-0000	-		2	SHIFTER HANDLE	
340	252793-0000	-		2	SUPPORT	
390	1360909-0000	-		2	SHAFT	
710	312105-0493	-		8	SCREW M6S ISO 4017 M10X25 A480	
720	312105-0495	-		8	SCREW M6S ISO 4017 M10X30 A480	
730	312105-0499	-		2	SCREW M6S ISO 4014 M10X40 A480	

Pos	Part No	SP	UN	Qty	Description	Page No
0375S IH (See drawing on page: 4-90)						
010	522152-0000	D		4	RAIL BRACKET	
020	297999-0000	D		1	ADJUSTMENT PLATE	
030	440507-0000	D		2	FASTENING PLATE	
040	436502-0000	C		2	CURVE	
050	561545-0000	C		2	SHAFT	
060	38603-0002	C		8	SPACER	
070	571942-0000	C		2	SUPPORT ROLLER	
080	522153-0000	C		4	VOLUME CAM	
090	252780-0000	C		4	RULER	
100	449734-0000	D		1	HOLDER	
110	276189-0000	C		2	DAMPER	
120	312105-0370	-		2	SCREW M6S ISO 4017 M6X20 A480	
140	312145-0366	-		8	SCREW COUNTERS.SLOT.HD. MFS 6X12 SS	
180	252768-0000	D		1	CANTILEVER	
190	293606-0000	-		2	SHIFTER HANDLE	
340	252793-0000	-		2	SUPPORT	
390	1360909-0000	-		2	SHAFT	
710	312105-0493	-		8	SCREW M6S ISO 4017 M10X25 A480	
720	312105-0495	-		8	SCREW M6S ISO 4017 M10X30 A480	
730	312105-0499	-		2	SCREW M6S ISO 4014 M10X40 A480	
0500B IH (See drawing on page: 4-90)						
010	252770-0000	D		4	RAIL BRACKET	
020	297998-0000	D		1	ADJUSTMENT PLATE	
030	252774-0000	D		2	FASTENING PLATE	
040	252775-0000	C		2	CURVE	
050	561547-0000	C		2	SHAFT	
060	38603-0002	C		8	SPACER	
070	560122-0000	C		2	SUPPORT ROLLER	
080	252776-0000	C		4	VOLUME CAM	
090	252780-0000	C		4	RULER	
100	267327-0000	D		1	HOLDER	
110	276189-0000	C		2	DAMPER	
120	312105-0370	-		2	SCREW M6S ISO 4017 M6X20 A480	
140	312145-0366	-		8	SCREW COUNTERS.SLOT.HD. MFS 6X12 SS	
150	476877-0000	C		4	SPACER	
160	312105-0509	-		4	SCREW M6S ISO 4014 M10X90 A480	
180	252768-0000	D		1	CANTILEVER	
190	293606-0000	-		2	SHIFTER HANDLE	
340	252793-0000	-		2	SUPPORT	
390	1360909-0000	-		2	SHAFT	

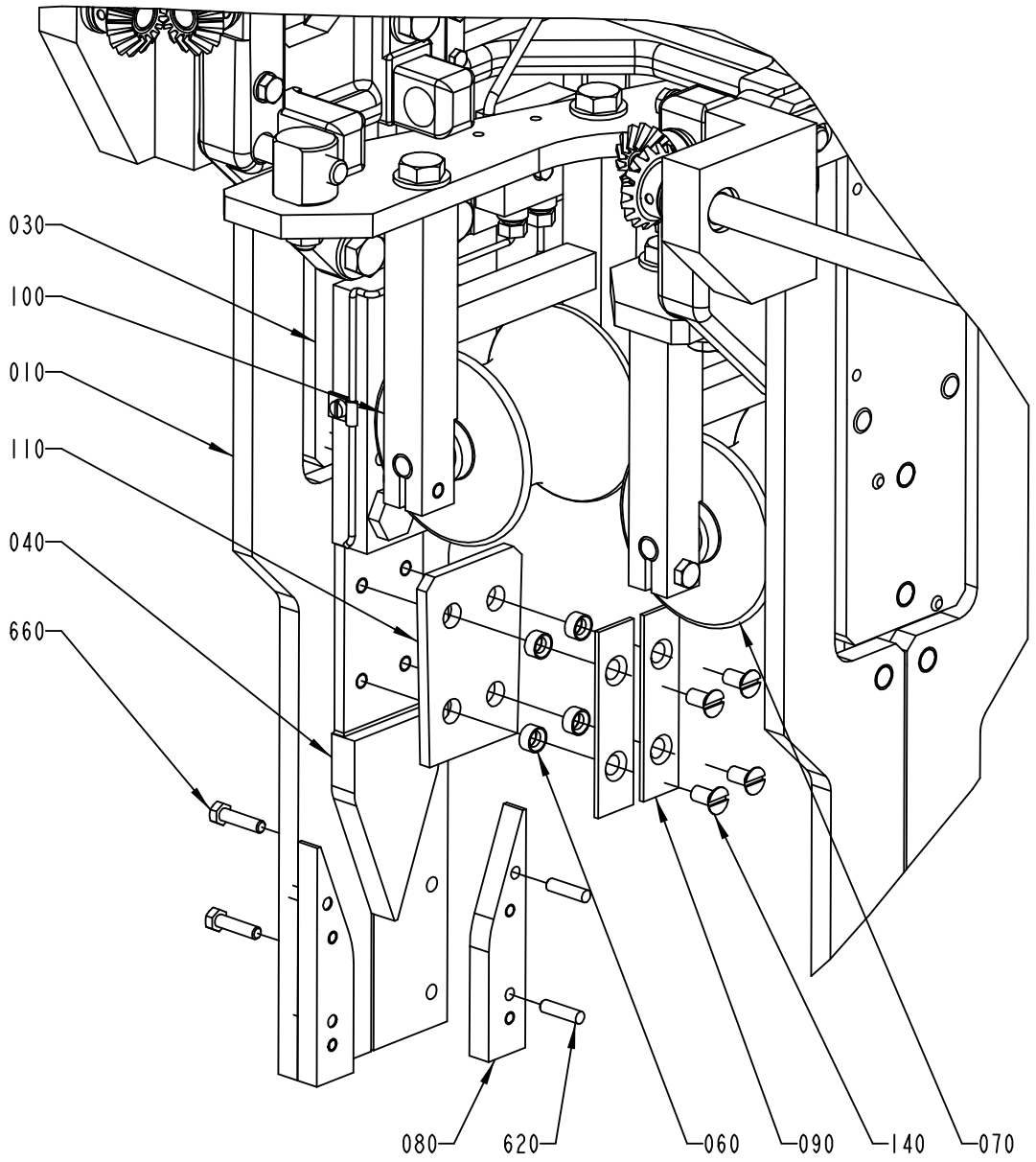
030
100
010
110
040
660
080
620
060
090
140
070

Pos	Part No	SP	UN	Qty	Description	Page No
0500B IH (Cont'd) (See drawing on page: 4-90)						
710	312105-0493	-		4	SCREW M6S ISO 4017 M10X25 A480	
720	312105-0495	-		8	SCREW M6S ISO 4017 M10X30 A480	
730	312105-0499	-		2	SCREW M6S ISO 4014 M10X40 A480	
0500S IH (See drawing on page: 4-90)						
010	551281-0000	D		4	RAIL BRACKET	
020	297998-0000	D		1	ADJUSTMENT PLATE	
030	551282-0000	D		2	FASTENING PLATE	
040	551283-0000	C		2	CURVE	
050	561547-0000	C		2	SHAFT	
060	38603-0002	C		8	SPACER	
070	561543-0000	C		2	SUPPORT ROLLER	
080	551284-0000	C		4	VOLUME CAM	
090	252780-0000	C		4	RULER	
100	449926-0000	D		1	HOLDER	
110	276189-0000	C		2	DAMPER	
120	312105-0370	-		2	SCREW M6S ISO 4017 M6X20 A480	
140	312145-0366	-		8	SCREW COUNTERS.SLOT.HD. MFS 6X12 SS	
180	252768-0000	D		1	CANTILEVER	
190	293606-0000	-		2	SHIFTER HANDLE	
340	252793-0000	-		2	SUPPORT	
390	1360909-0000	-		2	SHAFT	
710	312105-0493	-		8	SCREW M6S ISO 4017 M10X25 A480	
720	312105-0495	-		8	SCREW M6S ISO 4017 M10X30 A480	
730	312105-0499	-		2	SCREW M6S ISO 4014 M10X40 A480	
0750B IH (See drawing on page: 4-90)						
010	522152-0000	D		4	RAIL BRACKET	
020	297998-0000	D		1	ADJUSTMENT PLATE	
030	440507-0000	D		2	FASTENING PLATE	
040	550301-0000	C		2	CURVE	
050	561547-0000	C		2	SHAFT	
060	38603-0002	C		8	SPACER	
070	560122-0000	C		2	SUPPORT ROLLER	
080	522153-0000	C		4	VOLUME CAM	
090	252780-0000	C		4	RULER	
100	267327-0000	D		1	HOLDER	
110	276189-0000	C		2	DAMPER	
120	312105-0370	-		2	SCREW M6S ISO 4017 M6X20 A480	
140	312145-0366	-		8	SCREW COUNTERS.SLOT.HD. MFS 6X12 SS	
180	252768-0000	D		1	CANTILEVER	
190	293606-0000	-		2	SHIFTER HANDLE	
340	252793-0000	-		2	SUPPORT	
390	1360909-0000	-		2	SHAFT	
710	312105-0493	-		8	SCREW M6S ISO 4017 M10X25 A480	
720	312105-0495	-		8	SCREW M6S ISO 4017 M10X30 A480	
730	312105-0499	-		2	SCREW M6S ISO 4014 M10X40 A480	
0750S IH (See drawing on page: 4-90)						
010	544342-0000	D		4	RAIL BRACKET	
020	297998-0000	D		1	ADJUSTMENT PLATE	
030	252773-0000	D		2	FASTENING PLATE	
040	533955-0000	C		2	CURVE	
050	561547-0000	C		2	SHAFT	
070	561544-0000	C		2	SUPPORT ROLLER	
080	565259-0000	C		4	VOLUME CAM	
100	544303-0000	D		1	HOLDER	
110	269792-0000	C		2	DAMPER	
120	312105-0372	-		2	SCREW M6S ISO 4017 M6X25 A480	
180	252768-0000	D		1	CANTILEVER	
190	293606-0000	-		2	SHIFTER HANDLE	
340	252793-0000	-		2	SUPPORT	
390	1360909-0000	-		2	SHAFT	
710	312105-0493	-		8	SCREW M6S ISO 4017 M10X25 A480	
720	312105-0495	-		8	SCREW M6S ISO 4017 M10X30 A480	
730	312105-0499	-		2	SCREW M6S ISO 4014 M10X40 A480	
1000B LOFIN IH (See drawing on page: 4-90)						
010	544342-0000	D		4	RAIL BRACKET	
020	297998-0000	D		1	ADJUSTMENT PLATE	
030	252773-0000	D		2	FASTENING PLATE	
040	533955-0000	C		2	CURVE	
050	561547-0000	C		2	SHAFT	
070	560122-0000	C		2	SUPPORT ROLLER	
080	531109-0000	C		4	VOLUME CAM	
100	267676-0000	D		1	HOLDER	
110	269792-0000	C		2	DAMPER	
120	312105-0370	-		2	SCREW M6S ISO 4017 M6X20 A480	
130	312105-0449	-		4	SCREW M6S ISO 4017 M8X16 A480	
180	252768-0000	D		1	CANTILEVER	
190	293606-0000	-		2	SHIFTER HANDLE	
340	252793-0000	-		2	SUPPORT	
390	1360909-0000	-		2	SHAFT	

VOLUM CURVE PIECE

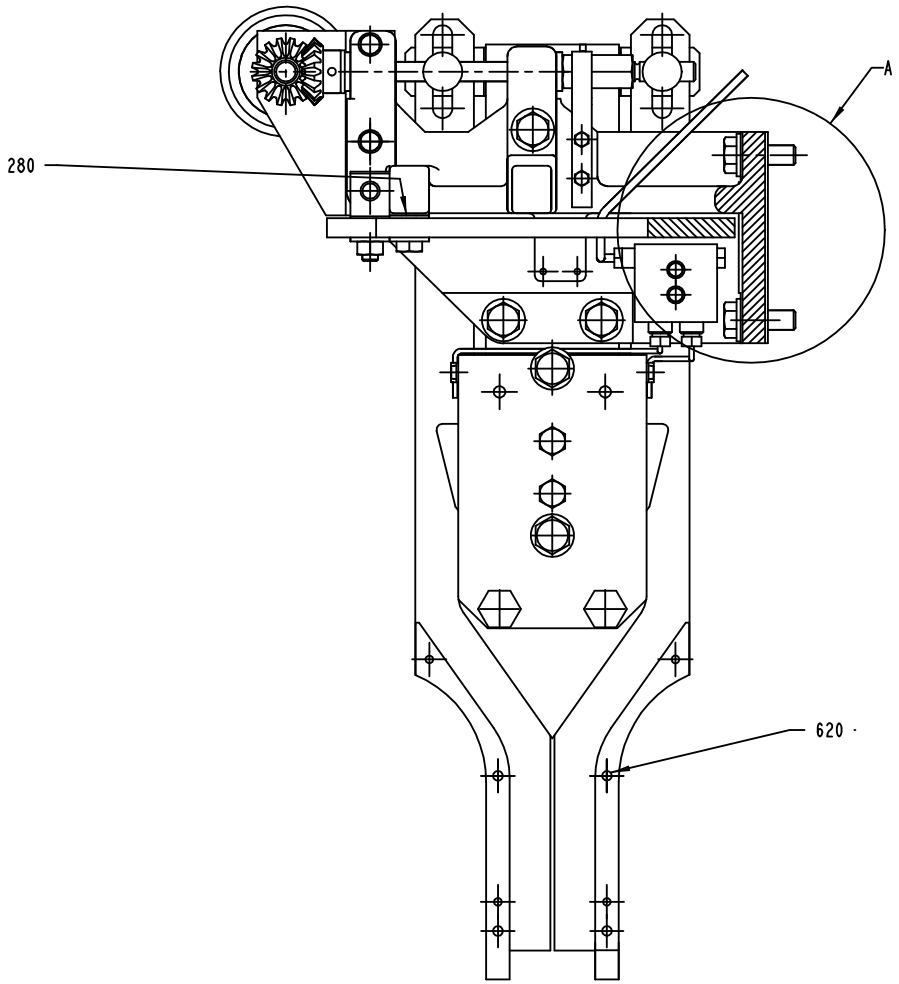

D-D

Pos	Part No	SP	UN	Qty	Description	Page No
1000B LOFIN IH (Cont'd) (See drawing on page: 4-90)						
710	312105-0493	-		8	SCREW M6S ISO 4017 M10X25 A480	
720	312105-0495	-		8	SCREW M6S ISO 4017 M10X30 A480	
730	312105-0499	-		2	SCREW M6S ISO 4014 M10X40 A480	
1000S IH (See drawing on page: 4-90)						
010	531110-0000	D		4	RAIL BRACKET	
020	297998-0000	D		1	ADJUSTMENT PLATE	
030	279621-0000	D		2	FASTENING PLATE	
040	533955-0000	C		2	CURVE	
050	561547-0000	C		2	SHAFT	
070	569058-0000	C		2	SUPPORT ROLLER	
080	551626-0000	C		4	VOLUME CAM	
100	284124-0000	D		1	HOLDER	
110	269792-0000	C		2	DAMPER	
120	312105-0370	-		2	SCREW M6S ISO 4017 M6X20 A480	
130	312105-0449	-		4	SCREW M6S ISO 4017 M8X16 A480	
180	252768-0000	D		1	CANTILEVER	
190	293606-0000	-		2	SHIFTER HANDLE	
340	252793-0000	-		2	SUPPORT	
390	1360909-0000	-		2	SHAFT	
710	312105-0493	-		8	SCREW M6S ISO 4017 M10X25 A480	
720	312105-0495	-		8	SCREW M6S ISO 4017 M10X30 A480	
730	312105-0499	-		2	SCREW M6S ISO 4014 M10X40 A480	
1000SQ IH (See drawing on page: 4-90)						
010	544342-0000	D		4	RAIL BRACKET	
020	297998-0000	D		1	ADJUSTMENT PLATE	
030	279621-0000	D		2	FASTENING PLATE	
040	579645-0000	C		2	CURVE	
050	561547-0000	C		2	SHAFT	
070	573976-0000	C		2	SUPPORT ROLLER	
080	551626-0000	C		4	VOLUME CAM	
100	284124-0000	D		1	HOLDER	
110	574130-0000	C		2	DAMPER	
120	312105-0370	-		2	SCREW M6S ISO 4017 M6X20 A480	
130	312105-0449	-		4	SCREW M6S ISO 4017 M8X16 A480	
180	252768-0000	D		1	CANTILEVER	
190	293606-0000	-		2	SHIFTER HANDLE	
340	252793-0000	-		2	SUPPORT	
390	1360909-0000	-		2	SHAFT	
710	312105-0493	-		8	SCREW M6S ISO 4017 M10X25 A480	
720	312105-0495	-		8	SCREW M6S ISO 4017 M10X30 A480	
730	312105-0499	-		2	SCREW M6S ISO 4014 M10X40 A480	
Common Parts						
210	293608-0000	-		1	BEARING CONSOLE	
220	293609-0000	-		2	BEARING CONSOLE	
225	434020-0000	-		1	BEARING CONSOLE	
230	37070-0000	D		2	SPRING	
240	37071-0000	-		2	WASHER	
260	252785-0000	C		2	SCREW	
270	252786-0000	D		4	WASHER	
280	252787-0000	C		3	BUSHING	
290	252788-0000	C		4	BUSHING	
300	252789-0000	D		2	NUT	
320	252791-0000	D		2	NUT	
330	252792-0000	D		2	NUT	
350	252794-0000	D		2	LACE	
360	252930-0000	D		4	SPACER SCREW	
370	268195-0000	D		4	SCREW	
380	293610-0000	C		4	GEAR WHEEL	
400	293612-0000	C		2	SCREW	
410	294042-0000	-		2	SEALING WASHER	
420	434021-0000	D		1	SCREW	
430	434073-0000	C		1	NUT	
450	90028-0020	C		4	CONE TUBE 2,5MM	
460	90028-0021	C		2	CONE TUBE 4 MM	
470	90032-0038	-		2	BLOCK 2 WAYS	
480	90087-0019	-		2	PLUG M10X1 STAINLESS	
490	90092-0053	C		4	METERING VALVE 30 MM3	
500	90134-0031	C		2	SLEEVE FOR PLASTIC TUBE	
510	90134-0038	C		2	BUSHING/NUT INLET/OUTLET 4 MM	
520	90134-0039	C		4	BUSHING VALVE CONNECTION 2,5 MM	
530	90266-0019	-	MM	800	PIPE	
540	90165-0056	-		2	PIPE CLIP FOR TUBE D=4 MM	
550	90165-0058	-		4	PIPE CLIP FOR TUBE D=25 MM	
560	90166-0109	-	MM	700	TUBE 4 MM PA,TRANSP.	
570	90240-0180	-		4	FLANGE BUSHING 10X14X15MM	
600	311103-0272	-		4	PARALLEL PIN ISO 2338 4M6X20 A1	
610	311103-0276	-		2	PARALLEL PIN ISO 2338 4M6X30 A1	
620	311103-0310	-		8	PARALLEL PIN ISO 2338 5M6X20 A1	
630	311103-0357	-		12	PARALLEL PIN ISO 2338 6M6X30 A1	
640	312105-0291	-		12	SCREW M6S ISO 4017 M4X12 A480	

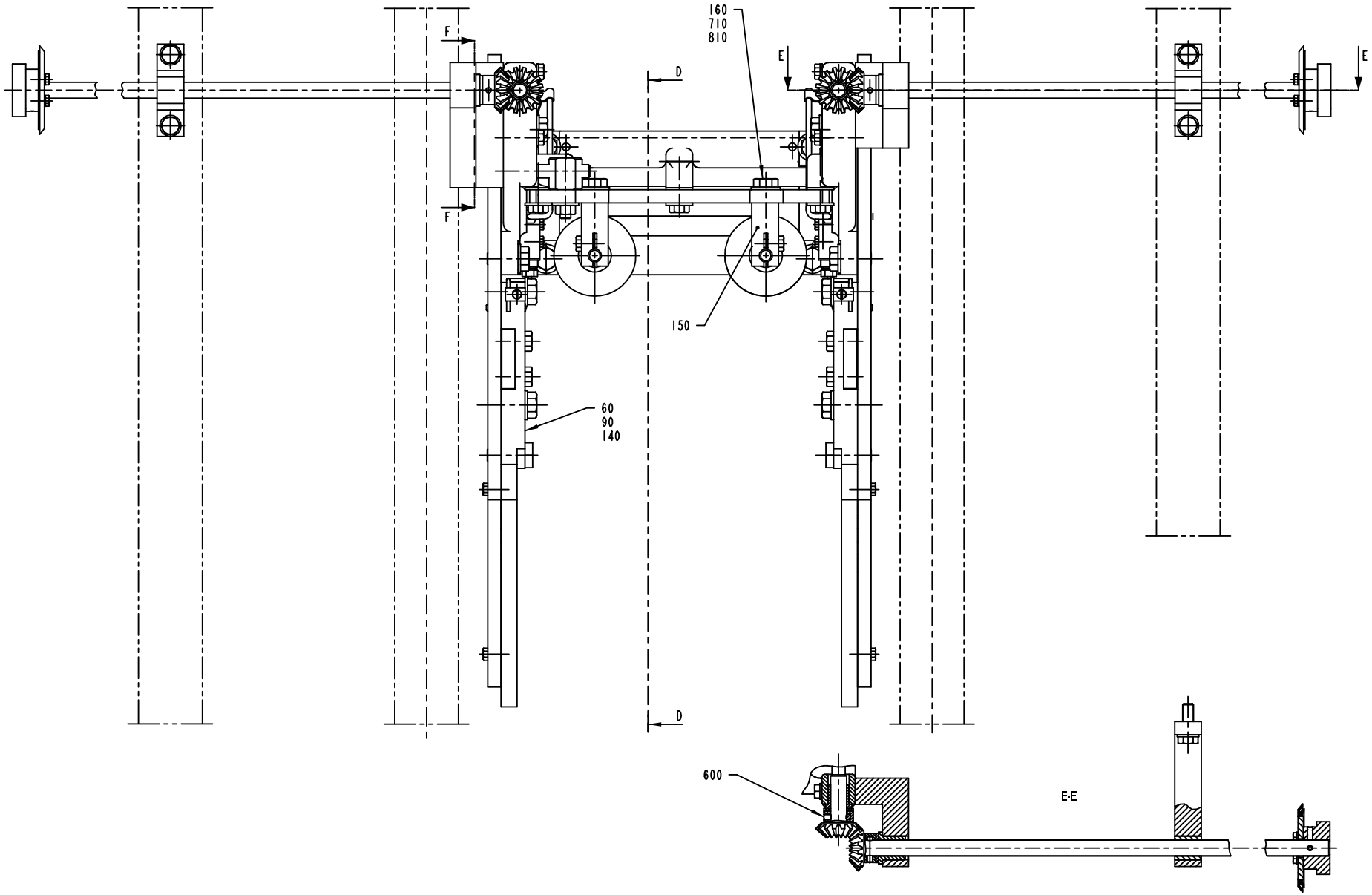
160
710
810
F
F
D
D
E
E
150
60
90
140
600
E-E

Pos	Part No	SP	UN	Qty	Description	Page No
Common Parts (Cont'd)						
650	312105-0295	-		4	SCREW M6S ISO4017 M4X20 A480	
660	312105-0331	-		8	SCREW M6S ISO 4017 M5X20 A480	
670	312105-0366	-		4	SCREW M6S M6X12 A280	
680	312105-0376	-		4	SCREW M6S ISO 4014 M6X35 A480	
690	312105-0452	-		3	SCREW M6S ISO 4017 M8X22 A480	
700	312105-0453	-		4	SCREW M6S ISO 4017 M8X25 A480	
750	312125-0287	-		4	SLOTTED CHEESE HEAD SCREW MCS 4X8 SS	
755	312318-0289	-		2	SCREW ISO4029 M4X10 A4	
760	312605-0318	-		1	HEXAGON NUT, M6M M8 A280	
780	315105-0136	-		8	WASHER BRB4,3XRFR	
790	315105-0153	-		4	WASHER BRB6,4X12RFR	
800	315105-0165	-		4	WASHER BRB8,4X16RFR	
810	315105-0173	-		14	WASHER BRB10,5X22RFR	
820	315105-0176	-		8	WASHER BRB 12X22 RFR	
840	315226-0196	-		2	AXIAL SEAL WITH STEEL COVER 48X65X4,5 MM	
850	321111-0163	-		2	FLANGE BUSHING, 12X18X20 MM	
860	321116-0163	-		2	BEAR. BUSH. WITHOUT FL, 12X18X20 MM	

Pos	Part No	SP	UN	Qty	Description	Page No

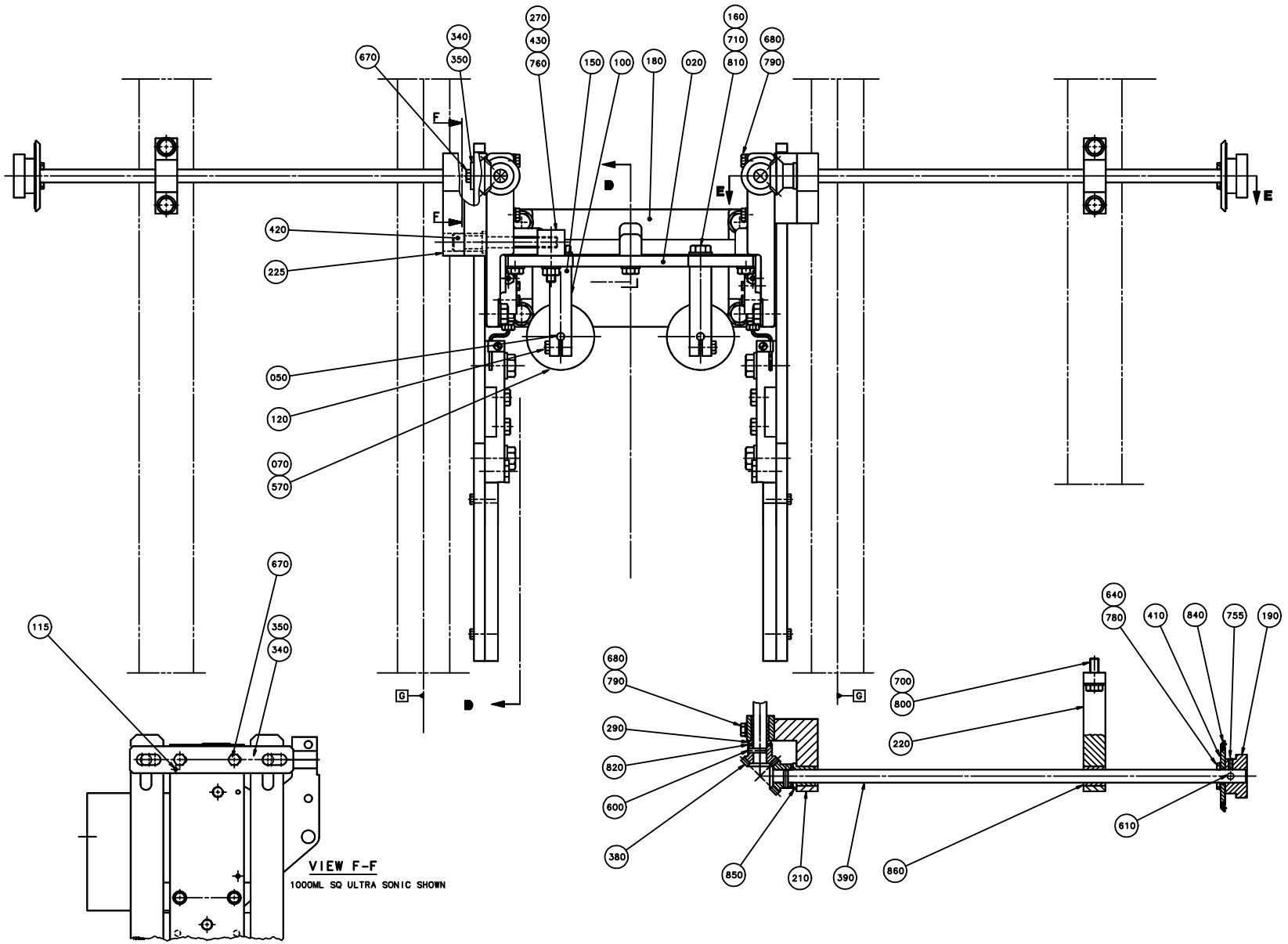
270
430
760
340
350
670
150
100
180
020
160
710
810
680
790
F
F
D
E
E
420
225
050
120
070
570
G
D
G
670
350
340
115
680
790
290
820
600
380
700
800
220
640
780
410
840
755
190
610
850
210
390
860
VIEW F-F
1000ML SQ ULTRA SONIC SHOWN

Pos	Part No	SP	UN	Qty	Description	Page No
SEE PREVIOUS LISTS PAGES: 4-83, 4-85, 4-87, 4-89.						

Pos	Part No	SP	UN	Qty	Description	Page No

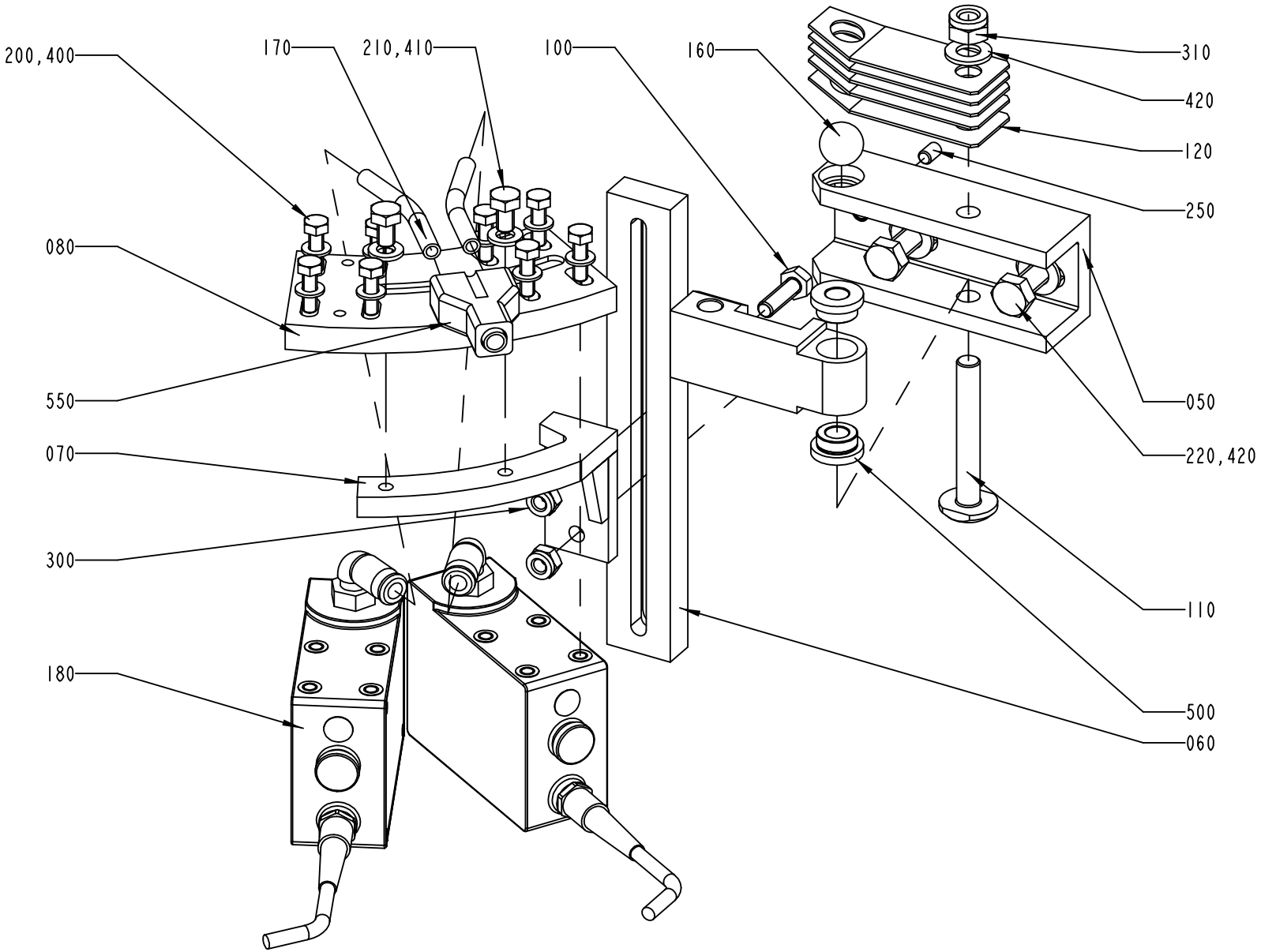
200,400
170
210,410
100
160
310
420
120
250
080
550
070
300
180
050
220,420
110
500
060

ECM: 99299 - 20011026
Group number: 541188-0300
Assembly Drawing: 541188-5_1_AA

Pos	Part No	SP	UN	Qty	Description	Page No
0355B ST-ER, 0500S ST-ER (See drawing on page: 4-92)						
050	457359-0000	B		1	BRACKET	
060	545789-0000	B		1	HOLDER	
070	526677-0000	B		1	CANTILEVER	
080	457364-0000	B		1	PLATE RIGHT	
0375S ST-ER (See drawing on page: 4-92)						
050	457359-0000	B		1	BRACKET	
060	545789-0000	B		1	HOLDER	
070	562971-0000	B		1	CANTILEVER	
080	457364-0000	B		1	PLATE RIGHT	
1000SQ ST-ER, 1000S ST-ER, 0750S ST-ER (See drawing on page: 4-92)						
050	457359-0000	B		1	BRACKET	
060	535200-0000	B		1	HOLDER	
070	544343-0000	B		1	CANTILEVER	
080	457364-0000	B		1	PLATE RIGHT	
0500B ST-ER, 1000B ST-ER, 0750B ST-ER (See drawing on page: 4-92)						
050	457359-0000	B		1	BRACKET	
060	545789-0000	B		1	HOLDER	
070	457361-0000	B		1	CANTILEVER	
080	457364-0000	B		1	PLATE RIGHT	
Common Parts						
100	312105-0370	-		2	SCREW M6S ISO 4017 M6X20 A480	
110	457367-0000	A		1	SHAFT	
120	457368-0000	A		5	SPRING	
160	90090-0016	A		1	BALL, D=15 MM	
170	90166-0132	-	MM	200	TUBE 6 MM PA,TRANSP.	
180	B90458-0601	A		2	PHOTOCELL, SICK PHOTOCELL 1	
	342732-0102	*-*		*1*	*ELBOW PIPE JOINT, EXT.THREAD, D=6MM-G1/8*	
200	312105-0329	-		8	SCREW M6S ISO 4017 M5X16 A480	
210	312105-0364	-		2	SCREW M6S ISO 4017 M6X10 A480	
220	312105-0455	-		2	SCREW M6S ISO 4017 M8X30 A480	
250	312318-0323	-		1	SCREW ISO4029 M5X8 A4	
300	312812-0316	-		2	HEXAGON NUT, NY-LOCK M6 A480	
310	312812-0318	-		1	HEXAGON NUT, NY-LOCK M8 A480	
400	315105-0146	-		8	BRICKA BRB5,3X10RFR	
410	315105-0153	-		2	WASHER BRB6,4X12RFR	
420	315105-0165	-		3	WASHER BRB8,4X16RFR	
500	321101-0143	A		2	FLANGE BUSHING, 8X14X8 MM	
550	90055-0100	-		1	Y-CONNECTION, 6-6	

Machine Type | Group Description | Used-In | Group Number | Page No

Tetra Pak

SPC
Spare Parts Catalogue

Total pages in this module: 164

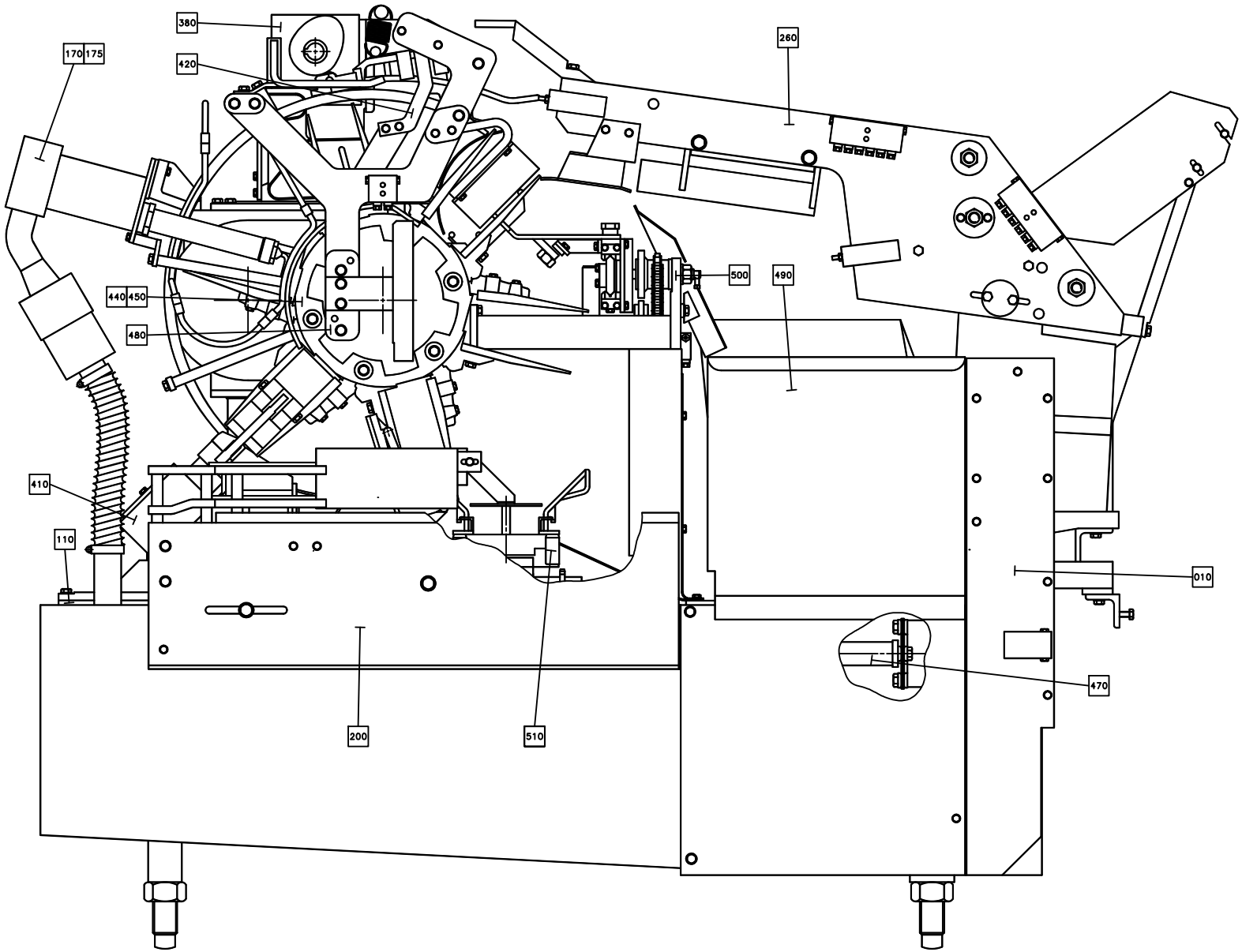
380
420
170
175
260
500
490
440
450
480
410
110
010
470
200
510

ECM: 72353 - 19990525
Group number: 648035-0800
Assembly Drawing: 648035-4_1_AA

This list covers pages from 5-2 to 5-5

Pos	Part No	SP	UN	Qty	Description	Page No
LEFT OUT (See drawing on page: 5-4)						
F010	A1362066-0100	-		1	MACHINE BODY FF LEFT OUT	**5-7, 5-9**
F200	A595087-0100	-		1	STATION	**5-23**
F480	A595088-0200	-		1	FOLDING PART	**5-25, 5-27**
F500	A595089-0100	-		1	INFEEDER	**5-29**
F510	A595090-0100	-		1	DISCHARGER	**5-33**
RIGHT OUT (See drawing on page: 5-2)						
F010	A1362065-0100	-		1	MACHINE BODY RIGHT OUT	**5-35, 5-37**
F200	A285591-0400	-		1	STATION	**5-39**
F480	A525000-0300	-		1	FOLDING PART	**5-41, 5-43, 5-45, 5-47**
F500	A525213-0200	-		1	INFEEDER	**5-49, 5-51**
F510	A525325-0200	-		1	DISCHARGER	**5-53, 5-55**
Common Parts						
F110	A285303-0400	-		1	LOWER SECTION	**5-57**
F170	A525129-0100	-		1	ELEMENT	**5-69, 5-71**
F175	A525128-0100	-		1	FF-ELEMENT R	**5-83, 5-85**
F260	A525085-0300	-		1	LUBRICATING SYSTEM	**5-87, 5-89, 5-91**
F380	A285479-0600	-		1	SUPERSTRUCTURE	**5-127**
F410	A285456-0300	-		2	PRESSURE DEVICE	**5-139, 5-141**
F420	A285736-0300	-		1	PULL-DOWN DEVICE	**5-143, 5-145, 5-147**
F440	A297681-0400	-		1	WHEEL LEFT	**5-149, 5-151, 5-153**
F450	A297682-0400	-		1	WHEEL RIGHT	**5-155, 5-157, 5-159**
F470	A443173-0100	-		1	DRIVE SHAFT	**5-161**
F490	A442537-0500	-		1	WASTE CHUTE	**5-163**

Pos	Part No	SP	UN	Qty	Description	Page No

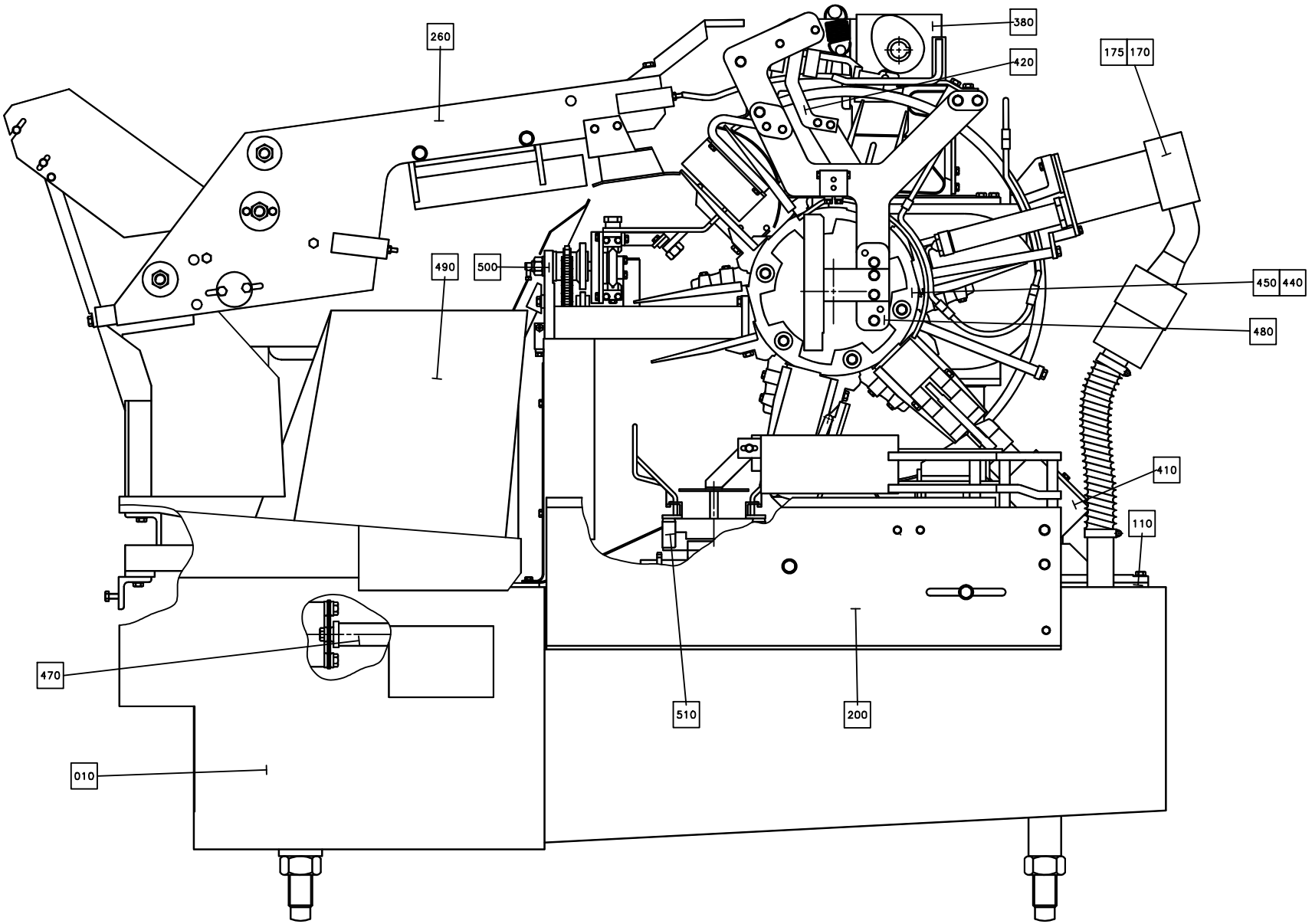
260
380
420
175
170
490
500
450
440
480
410
110
470
510
200
010

ECM: 72353 - 19990525
Group number: 648035-0800
Assembly Drawing: 648035-5_1_AA

This list covers pages from 5-2 to 5-5

Pos	Part No	SP	UN	Qty	Description	Page No
LEFT OUT (See drawing on page: 5-4)						
F010	A1362066-0100	-		1	MACHINE BODY FF LEFT OUT	**5-7, 5-9**
F200	A595087-0100	-		1	STATION	**5-23**
F480	A595088-0200	-		1	FOLDING PART	**5-25, 5-27**
F500	A595089-0100	-		1	INFEEDER	**5-29**
F510	A595090-0100	-		1	DISCHARGER	**5-33**
RIGHT OUT (See drawing on page: 5-2)						
F010	A1362065-0100	-		1	MACHINE BODY RIGHT OUT	**5-35, 5-37**
F200	A285591-0400	-		1	STATION	**5-39**
F480	A525000-0300	-		1	FOLDING PART	**5-41, 5-43, 5-45, 5-47**
F500	A525213-0200	-		1	INFEEDER	**5-49, 5-51**
F510	A525325-0200	-		1	DISCHARGER	**5-53, 5-55**
Common Parts						
F110	A285303-0400	-		1	LOWER SECTION	**5-57**
F170	A525129-0100	-		1	ELEMENT	**5-69, 5-71**
F175	A525128-0100	-		1	FF-ELEMENT R	**5-83, 5-85**
F260	A525085-0300	-		1	LUBRICATING SYSTEM	**5-87, 5-89, 5-91**
F380	A285479-0600	-		1	SUPERSTRUCTURE	**5-127**
F410	A285456-0300	-		2	PRESSURE DEVICE	**5-139, 5-141**
F420	A285736-0300	-		1	PULL-DOWN DEVICE	**5-143, 5-145, 5-147**
F440	A297681-0400	-		1	WHEEL LEFT	**5-149, 5-151, 5-153**
F450	A297682-0400	-		1	WHEEL RIGHT	**5-155, 5-157, 5-159**
F470	A443173-0100	-		1	DRIVE SHAFT	**5-161**
F490	A442537-0500	-		1	WASTE CHUTE	**5-163**

Pos	Part No	SP	UN	Qty	Description	Page No

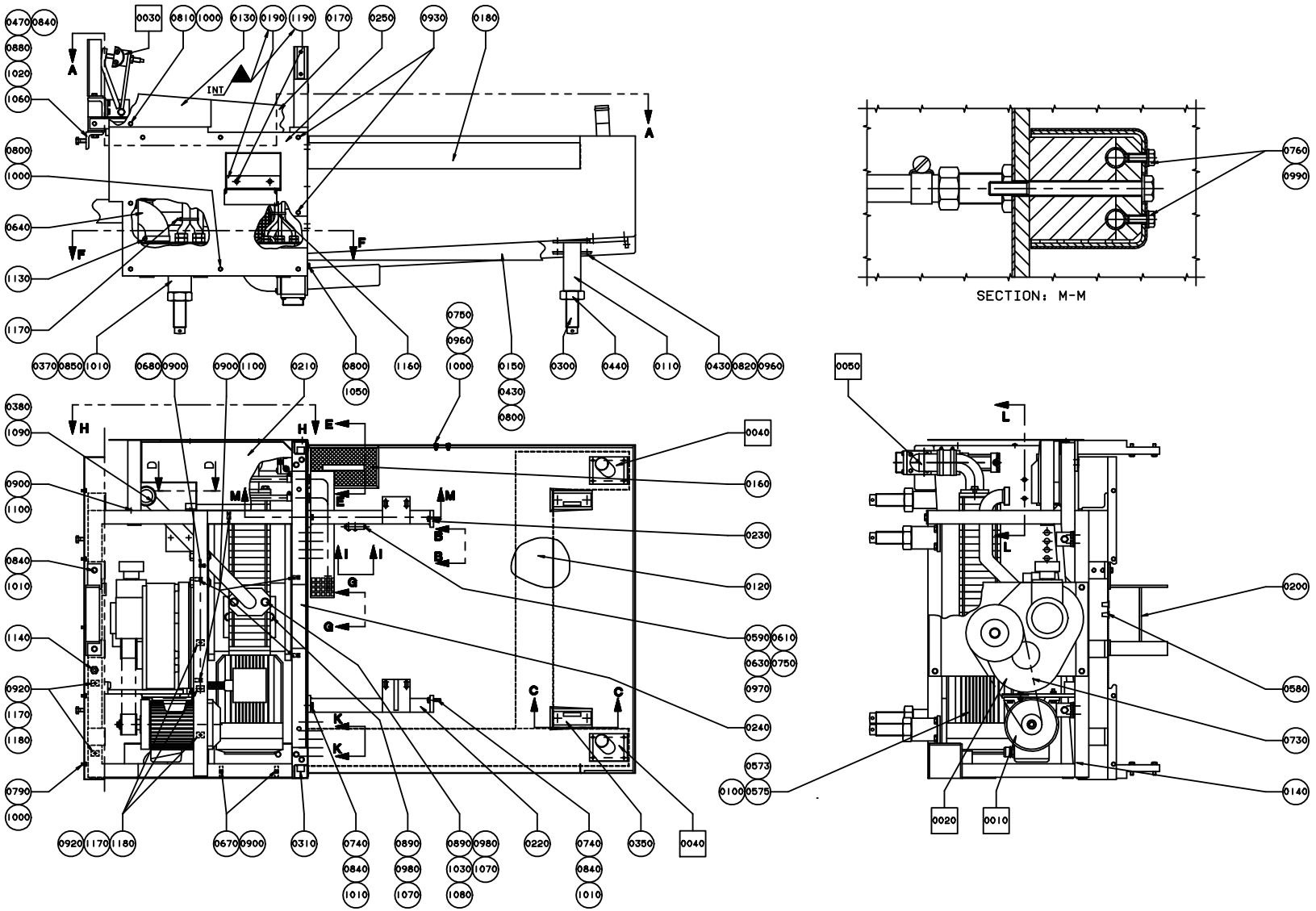
SECTION: M-M

ECM: 139060 - 20030709
Group number: 1362066-0100
Assembly Drawing: 1362066-1_1_AC

This list covers pages from 5-6 to 5-9

Pos	Part No	SP	UN	Qty	Description	Page No
TBA/8 50HZ						
0100	B90321-0015	A		1	PUMP 502 CFX 7ETV 302 50HZ IP55	
	90321-0481	*C*		*1*	*GASKET*	
	90321-0466	*C*		*1*	*SPARE PART KIT*	
TBA/8 60HZ						
0100	B90321-0034	A		1	PUMP 502 CFX 5ETV 362 60HZ IP55	
	90321-0481	*C*		*1*	*GASKET*	
	90321-0466	*C*		*1*	*SPARE PART KIT*	
Common Parts						
0010	A285287-0500	-		1	DRIVE UNIT	**5-11**
0020	A285861-0500	A		1	GEAR REDUCTION	**5-13**
0030	A297638-0200	-		1	CHAIN TENSIONER	**5-17**
0040	A525110-0100	-		1	CABLE CONDUIT	**5-19**
0050	A525143-0200	A		1	BOTTOM VALVE	**5-21**
0110	525130-0000	-		1	LEG	
0120	525132-0000	-		1	CABLE TRENCH	
0130	525262-0000	-		1	COVERING PLATE	
0140	525274-0000	-		1	FINISH FRAME	
0150	525277-0000	-		1	CABLE TRENCH	
0160	531119-0000	-		1	STRAINER	
0170	595066-0000	-		1	COVERING PLATE	
0180	1362221-0000	-		1	CLEANING TROUGH	
0200	285330-0000	-		1	HOLDER	
0210	443186-0000	-		1	CHUTE	
0220	525272-0000	-		1	STRUT	
0230	525273-0000	-		1	STRUT	
0240	525275-0000	-		1	COVERING PLATE	
0250	525346-0000	-		1	SIDE PLATE	
0300	285923-0000	-		4	SCREW	
0310	297663-0000	-		1	POST HOLDER	
0320	297664-0000	-		1	POST HOLDER	
0330	442545-0000	-		1	SHEET	
0340	443187-0000	-		1	SHEET	
0350	525266-0000	-		1	LEG	
0360	525267-0000	-		1	LEG	
0370	525268-0000	-		2	LEG	
0380	525271-0000	-		1	ELBOW PIPE	
0390	1347210-0000	-		1	HOSE HOLDER	
0400	1347211-0000	-		1	PIPE	
0410	1347212-0000	-		1	PIPE	
0420	1347217-0000	-		1	TOUCH GUARD	
0430	6278-0000	-		3	WASHER	
0440	285994-0000	-		4	NUT	
0450	295435-0000	-		2	WASHER	
0460	297551-0000	-		1	SHEET	
0470	297814-0000	-		2	BRACKET	
0480	297860-0000	-		2	BUSHING	
0490	525174-0000	-		1	BRACKET	
0500	525175-0000	-		1	BRACKET	
0510	525280-0000	-		1	SHEET	
0520	525281-0000	-		1	GASKET	
0530	1347209-0000	-		1	HOSE HOLDER	
0540	1347216-0000	-		1	PIPE	
0560	90012-0071	-		3	GLAND FITTING	
0570	90012-0072	-		2	GLAND FITTING **	
0573	90458-0430	-		1	EXTENDED WITHOUT INSERT, M20X1,5	
0575	353249-0014	-		1	INSERT, SINGEL HOLE, EK 154/16	
0580	90015-0020	-		11	LEAD-IN, TET5-7, E-1458016	
0590	90028-0022	-		4	CONE TUBE 6 MM	
0600	90030-0030	-		4	CONN. BULKHEAD SV 12-L/SY	
0610	90032-0044	-		1	DISTRIBUTION BLOCK 4 WAYS	
0620	90134-0030	-		1	SLEEVE FOR PLASTIC TUBE	
0630	90134-0055	-		4	BUSHING/NUT INLET/OUTLET 6 MM	
0640	90152-0044	-	MM	350	FLEXIBLE CONDUIT 3641-0070	
0650	90152-0050	-	MM	2500	SPIRAL CONDUIT, 20X13, UL 1313	
0660	90152-0051	-	MM	1000	SPIRAL CONDUIT, 25X18, UL 1816	
0670	90165-0057	-		4	PIPE CLIP FOR TUBE D=6 MM	
0680	90165-0060	-		1	PIPE CLIP FOR TUBE D=5 MM	
0690	90166-0059	-	M	1180	HOSE PVC 12/16MM TRANSP.	
0700	90166-0087	-	MM	660	HOSE 15/23 REINF.PVC TRANSP.	
0710	90166-0108	-	MM	870	TUBE 6 MM PA,TRANSP.	
0730	90417-0180	A		1	TIMING BELT T10X920X40 POLYURETH	
0740	311103-0399	-		8	PARALLEL PIN ISO 2338 8M6X16 A1	
0750	312105-0295	-		2	SCREW M6S ISO4017 M4X20 A480	
0760	312105-0327	-		2	SCREW M6S ISO 4017 M5X12 A480	
0770	312105-0329	-		1	SCREW M6S ISO 4017 M5X16 A480	
0780	312105-0362	-		1	SCREW M6S ISO 4017 M6X8 A480	
0790	312105-0364	-		8	SCREW M6S ISO 4017 M6X10 A480	
0800	312105-0367	-		15	SCREW M6S M6X14 A280	
0810	312105-0368	-		6	SCREW M6S M6X16 A280	
0820	312105-0370	-		1	SCREW M6S ISO 4017 M6X20 A480	
0830	312105-0376	-		2	SCREW M6S ISO 4014 M6X35 A480	

Machine Type | Group Description | Used-In | Group Number | Page No

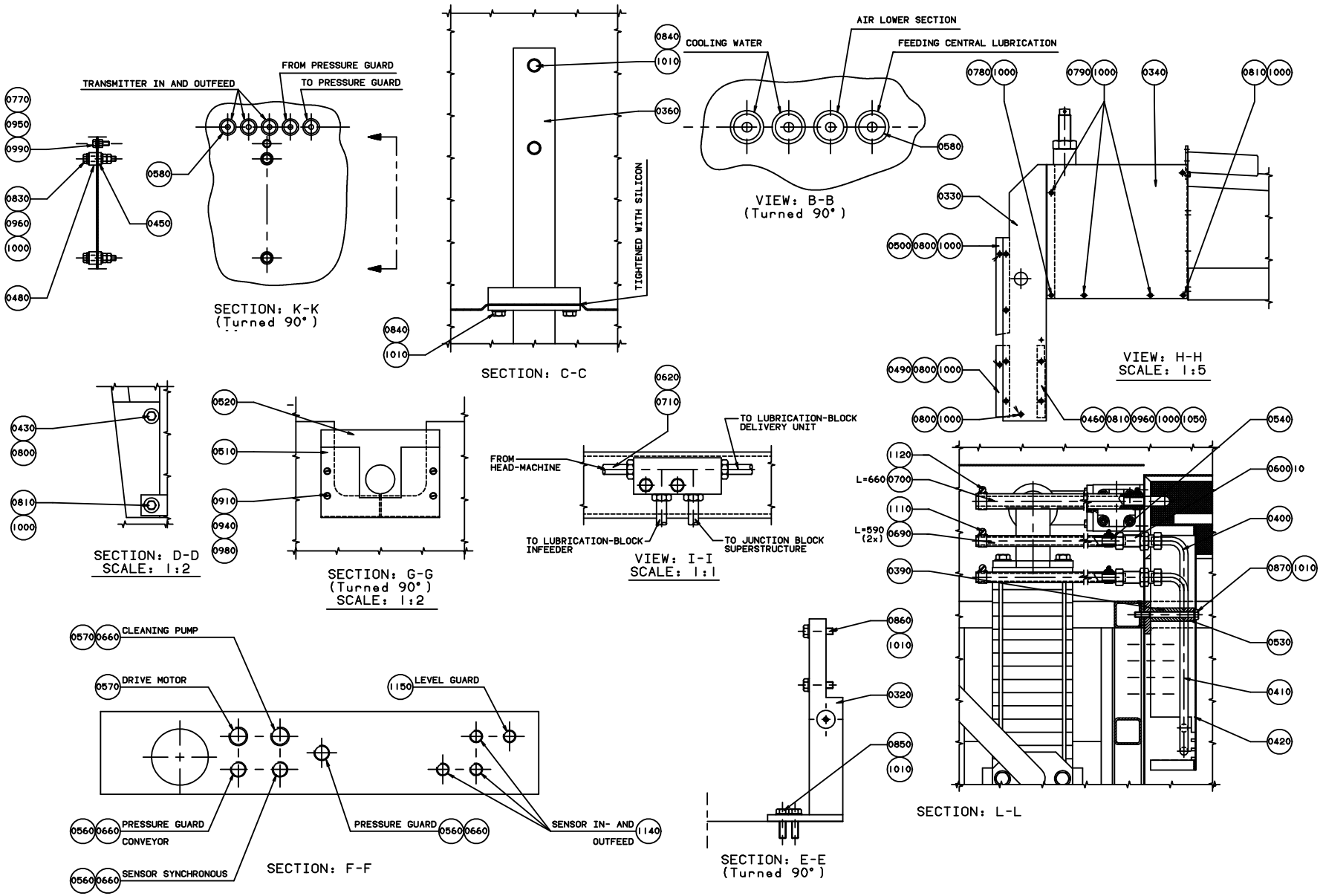
TRANSMITTER IN AND OUTFEED
FROM PRESSURE GUARD
TO PRESSURE GUARD
0770
0950
0990
0830
0960
1000
0480
0580
0450
SECTION: K-K
(Turned 90°)
0840
1010
0360
TIGHTENED WITH SILICON
0840
1010
SECTION: C-C
COOLING WATER
AIR LOWER SECTION
FEEDING CENTRAL LUBRICATION
0580
VIEW: B-B
(Turned 90°)
0780 1000
0790 1000
0340
0810 1000
0330
0500 0800 1000
0490 0800 1000
0800 1000
0460 0810 0960 1000 1050
VIEW: H-H
SCALE: 1:5
0540
0600 10
0400
0870 1010
0530
0410
0420
0430
0800
0810
1000
SECTION: D-D
SCALE: 1:2
0520
0510
0910
0940
0980
SECTION: G-G
(Turned 90°)
SCALE: 1:2
0620
0710
TO LUBRICATION-BLOCK
DELIVERY UNIT
FROM
HEAD-MACHINE
TO LUBRICATION-BLOCK
INFEEDER
TO JUNCTION BLOCK
SUPERSTRUCTURE
VIEW: I-I
SCALE: 1:1
1120
L=660 0700
1110
L=590 (2x) 0690
0390
0860
1010
0320
0850
1010
SECTION: E-E
(Turned 90°)
SECTION: L-L
0570 0660
CLEANING PUMP
0570
DRIVE MOTOR
1150
LEVEL GUARD
0560 0660
PRESSURE GUARD
CONVEYOR
0560 0660
SENSOR SYNCHRONOUS
PRESSURE GUARD
0560 0660
SENSOR IN- AND
OUTFEED
1140
SECTION: F-F

ECM: 139060 - 20030709
Group number: 1362066-0100
Assembly Drawing: 1362066-2_1_AD

This list covers pages from 5-6 to 5-9

Pos	Part No	SP	UN	Qty	Description	Page No
Common Parts (Cont'd)						
0840	312105-0451	-		23	SCREW M6S ISO 4017 M8X20 A480	
0850	312105-0453	-		8	SCREW M6S ISO 4017 M8X25 A480	
0860	312105-0455	-		4	SCREW M6S ISO 4017 M8X30 A480	
0870	312105-0469	-		1	SCREW M6S ISO 4014 M8X90 A480	
0880	312105-0495	-		2	SCREW M6S ISO 4017 M10X30 A480	
0890	312105-0542	-		4	SCREW M6S ISO 4014 M12X50 A480	
0900	312125-0287	-		9	SLOTTED CHEESE HEAD SCREW MCS 4X8 SS	
0910	312125-0291	-		4	SLOTTED CHEESE HEAD SCREW MCS 4X12 SS	
0920	312125-0323	-		5	SLOTTED CHEESE HEAD SCREW MCS 5X8 SS	
0930	312155-0366	-		2	SCREW EN 10642 MF6S M6X12 A480	
0940	312605-0312	-		4	HEXAGON NUT, M6M M4 A280	
0950	312605-0314	-		2	HEXAGON NUT, M6M M5 A280	
0960	312605-0316	-		7	HEXAGON NUT, M6M M6 A280	
0970	312605-0322	-		4	HEXAGON NUT, M6M M12 A280	
0980	315105-0136	-		11	WASHER BRB4,3XRFR	
0990	315105-0146	-		4	BRICKA BRB5,3X10RFR	
1000	315105-0153	-		31	WASHER BRB6,4X12RFR	
1010	315105-0165	-		32	WASHER BRB8,4X16RFR	
1020	315105-0173	-		2	WASHER BRB10,5X22RFR	
1030	315105-0178	-		2	WASHER BRB13X24RFR	
1040	315105-0192	-		2	WASHER BRB21X36RFR	
1050	315115-0153	-		3	WASHER PLAIN, TBRB 6,4/12 H=3	
1060	315115-0165	-		4	WASHER PLAIN, TBRB 8,4/16 H=3	
1070	315115-0178	-		6	WASHER PLAIN, TBRB 13/24 H=4	
1080	315202-0229	A		1	O-RING 59,2X5,7 MM	
1090	315250-0103	A		1	GASKET 48X38X5,5 MM	
1100	316810-0106	-		7	PIPE CLIP FOR TUBE D=8 MM	
1110	342991-0101	-		5	HOSE CLIP,WORM DRIVE TYPE (13)-16	
1120	342991-0103	-		2	HOSE CLIP,WORM DRIVE TYPE (19)-23	
1130	342991-0112	-		2	HOSE CLIP,WORM DRIVE TYPE (73)-83	
1140	352103-0100	-		4	CABLE GLAND, STR 9, PR15,2/PG9	
1150	352103-0101	-		1	CABLE GLAND, ST 9, PR15,2/PG9	
1160	352113-0101	-		3	CLIP STRIP, 92X2,5 MM	
1170	352113-0102	-		6	CLIP-STRIP, BLACK 188X4,8 MM	
1180	352113-0204	-		5	ANCHOR PLATES FOR STRIPS, TYPE TM3S25-M	

Pos	Part No	SP	UN	Qty	Description	Page No

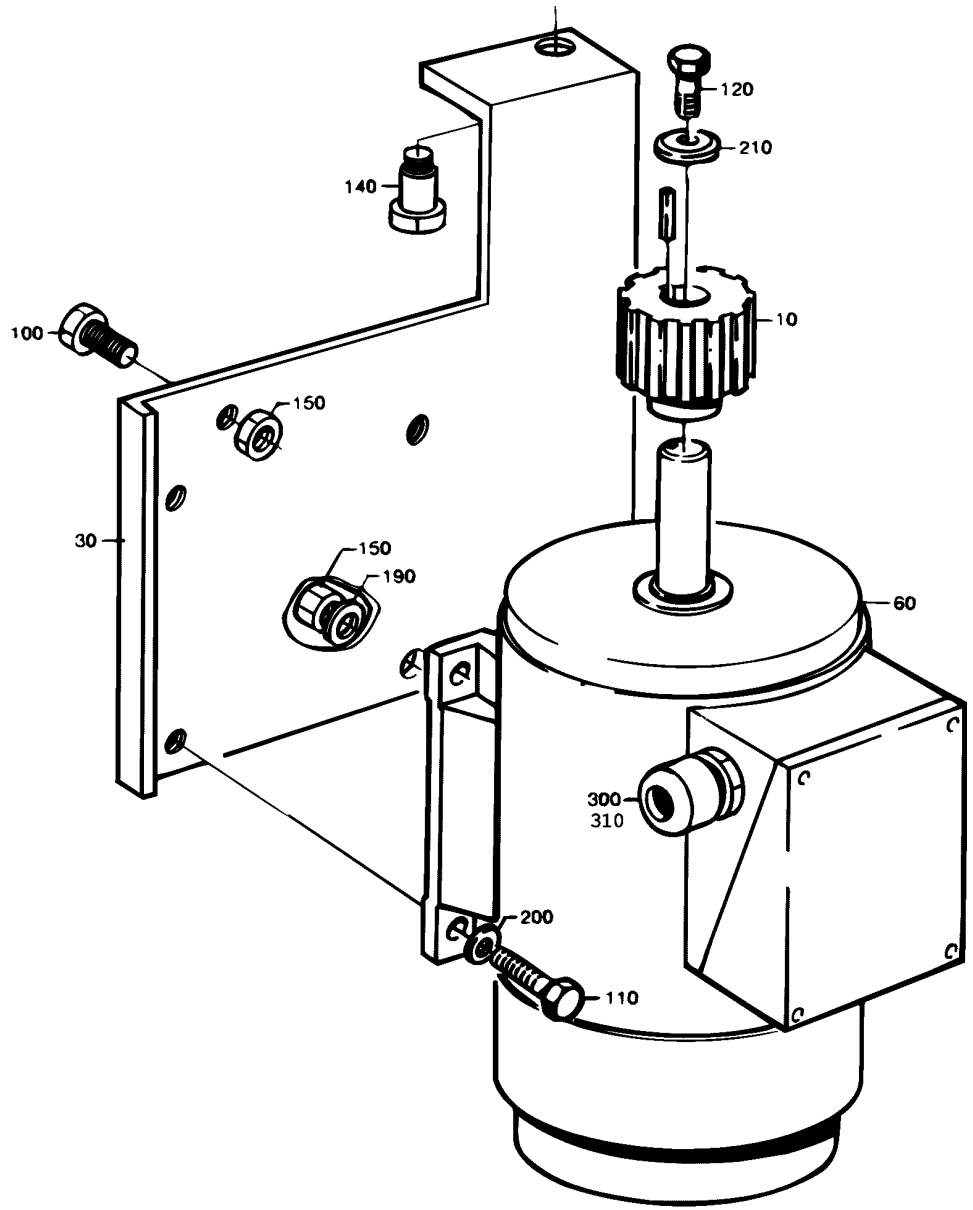
120
210
140
10
100
150
30
150
190
60
300
310
200
110

ECM: 72437 - 19990426
Group number: 285287-0500
Assembly Drawing: 285287-3_1_AA

Pos	Part No	SP	UN	Qty	Description	Page No
-						
010	443336-0008	C		1	TIMING BELT PULLEY	
030	525166-0000	-		1	MOTOR CRADLE	
060	90045-0049	C		1	MOTOR 3GAA 082002-ASA	
100	312105-0451	-		1	SCREW M6S ISO 4017 M8X20 A480	
110	312105-0453	-		3	SCREW M6S ISO 4017 M8X25 A480	
120	312105-0457	-		2	SCREW M6S ISO 4014 M8X35 A480	
140	312180-0530	-		2	SCREW ISO7379 H10X16	
150	312605-0318	-		2	HEXAGON NUT, M6M M8 A280	
190	315105-0165	-		1	WASHER BRB8,4X16RFR	
200	315115-0165	-		4	WASHER PLAIN, TBRB 8,4/16 H=3	
210	315125-0165	-		1	WASHER TBRSB 8,4X26X5 A4	
300	353245-0005	-		1	GLAND, EXTENDED WITH INSERT, PG16/PR 22,	
310	90099-0178	-		1	GLAND, LOCKNUT, PG 16	

Pos	Part No	SP	UN	Qty	Description	Page No

Machine Type | Group Description | Used-In | Group Number | Page No

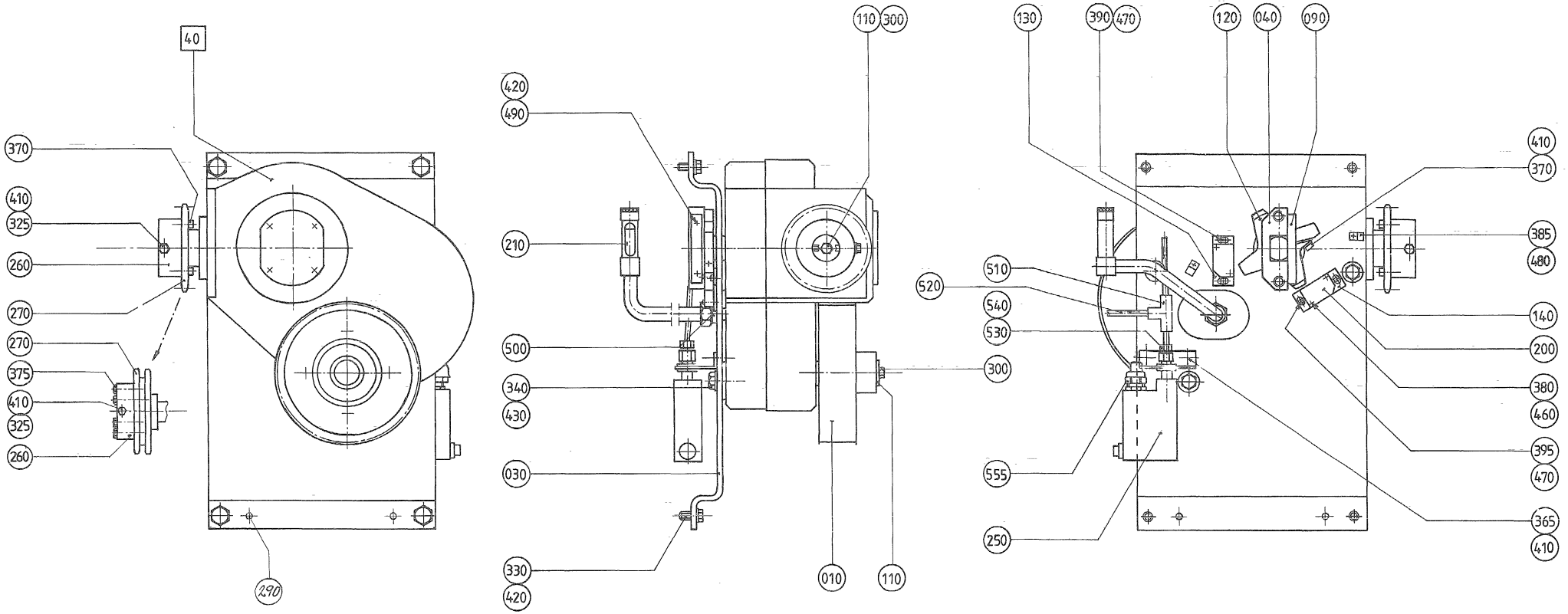
40
370
410
325
260
270
270
375
410
325
260
290
110
300
420
490
210
500
340
430
030
330
420
010
110
130
390
470
120
040
090
410
370
385
480
510
520
540
530
300
140
200
380
460
395
470
555
250
365
410

ECM: 72437 - 19990426
Group number: 285861-0500
Assembly Drawing: 285861-5_1_AB

Pos	Part No	SP	UN	Qty	Description	Page No
0375S, 0500B, 0355B, 0500S, 1000S, 0750B, 0750S, 1000B						
260	525216-0000	D		1	SLEEVE	
270	442500-0000	-		1	SPROCKET	
370	312115-0370	-		7	SCREW ISO4762 M6X20 A4	
1000SQ						
260	574081-0000	D		1	SLEEVE	
270	574088-0000	-		1	SPROCKET	
370	312115-0370	-		1	SCREW ISO4762 M6X20 A4	
375	312109-0374	-		6	SCREW M6S ISO 4017 M6X30 A480	
Common Parts						
010	525215-0006	D		1	TIMING BELT PULLEY	
030	525109-0000	-		1	BRACKET	
040	927332-0000	C		1	BRACKET	
090	927333-0000	C		1	BAR CLAMP	
110	285403-0000	-		2	WASHER	
120	566775-0000	-		1	CARRIER	
130	525337-0000	-		1	BRACKET	
140	525232-0000	-		1	BRACKET	
200	90044-0104	C		2	PROX.SWITCH IFM IN 3002	
210	443248-0000	D		1	OIL PIPE	
250	B90274-0002	C		1	PRESSURE SWITCH XMJ, REPBY 90458-0844	
	90274-0300	*-*		*1*	*CONTACT HOUSING*	
290	311112-0341	-		2	SPRING PIN, ISO 8752 6X24-C	
300	312105-0370	-		2	SCREW M6S ISO 4017 M6X20 A480	
325	312105-0384	-		1	SCREW M6S ISO 4014 M6X70 A480	
330	312105-0451	-		4	SCREW M6S ISO 4017 M8X20 A480	
340	312105-0493	-		3	SCREW M6S ISO 4017 M10X25 A480	
365	312105-0364	-		2	SCREW M6S ISO 4017 M6X10 A480	
380	312125-0228	-		2	SLOTTED CHEESE HEAD SCREW MCS 3X16 SS	
385	312125-0287	-		2	SLOTTED CHEESE HEAD SCREW MCS 4X8 SS	
390	312115-0295	-		2	SCREW ISO4762 M4X20 A4	
395	312115-0291	-		2	SCREW ISO4762 M4X12 A4	
410	315105-0153	-		4	WASHER BRB6,4X12RFR	
420	315105-0165	-		6	WASHER BRB8,4X16RFR	
430	315105-0173	-		3	WASHER BRB10,5X22RFR	
460	315105-0124	-		2	BRICKA BRB3,2X6RFR	
470	315105-0136	-		4	WASHER BRB4,3XRFR	
480	90165-0056	-		2	PIPE CLIP FOR TUBE D=4 MM	
490	312105-0455	-		2	SCREW M6S ISO 4017 M8X30 A480	
500	342720-0115	-		1	CONN. STR. GA-16-G1/2	
510	342946-0112	-		1	T-COUPLING,UNION 6/4	
520	90166-0011	-	MM	3000	TUBE 6 MM PA,TRANSP.	
530	342706-0130	-		1	ACCESSORIES, INSERT SLEEVE 6 MM	
540	342790-0202	-		1	CONN. PRESS. GAUGE MAV6-S/R3/8FZB	
555	90012-0073	-		1	GLAND FITTING	
F040	A442582-0100	D		1	DRIVE GEAR	**5-15**

Machine Type	Group Description	Used-In	Group Number	Page No

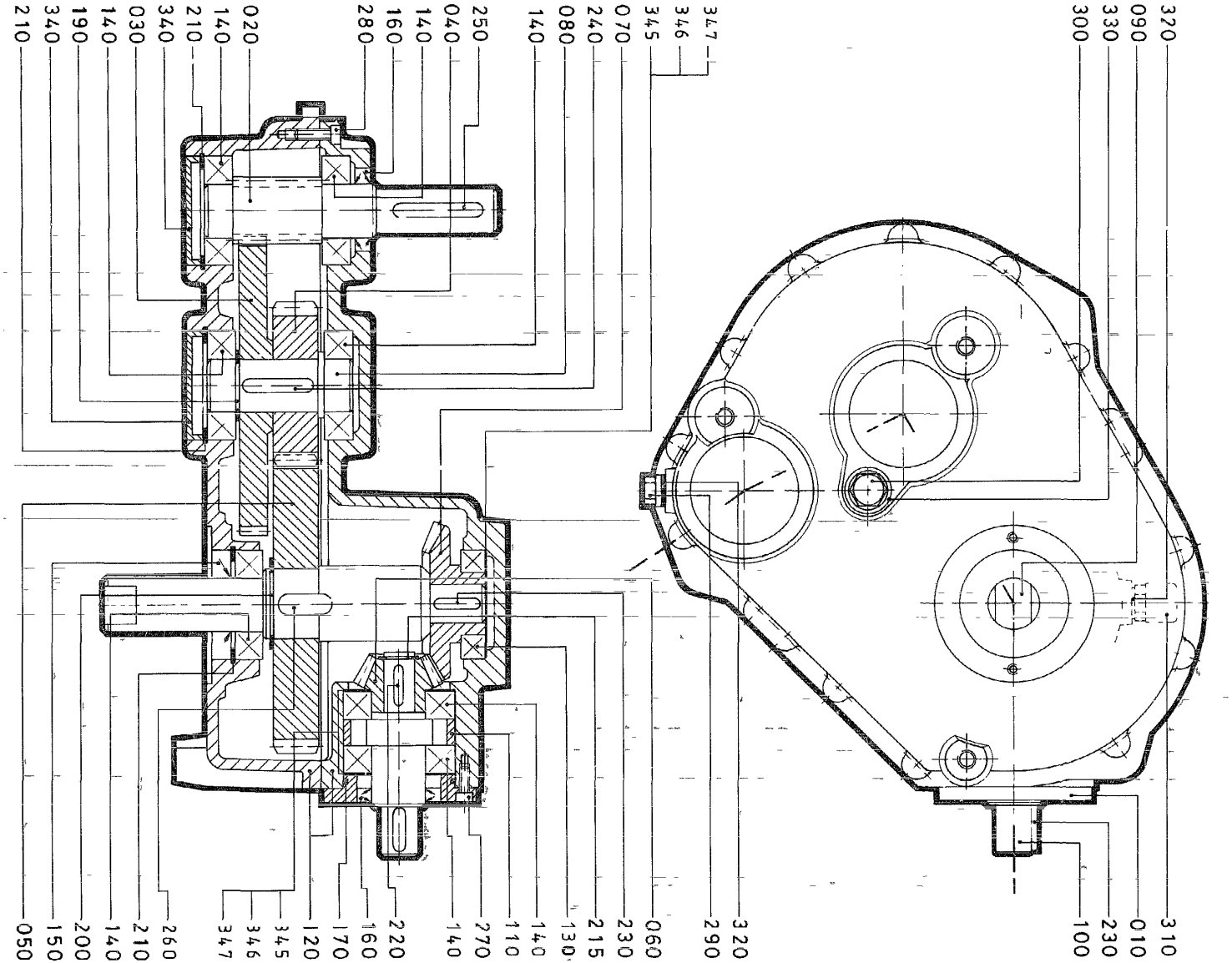
210
340
190
140
030
340
210
140
020
280
160
140
040
250
140
080
240
070
345
346
347
320
090
330
300
050
150
200
140
210
260
347
346
345
120
170
160
220
140
270
110
140
130
215
230
060
290
320
100
230
010
310

ECM: 72197 - 19990215
Group number: 442582-0100
Assembly Drawing: 442582-1_1_AA

Pos	Part No	SP	UN	Qty	Description	Page No
-						
010	567345-0000	D		1	BEARING COVER	
020	442554-0000	C		1	GEARING	
030	442555-0000	D		1	GEAR WHEEL	
040	442556-0000	D		1	GEAR WHEEL	
050	442557-0000	C		1	GEAR WHEEL	
060	442558-0000	C		1	GEAR WHEEL	
070	442559-0000	C		1	GEAR WHEEL	
080	567347-0000	D		1	SHAFT	
090	567348-0000	C		1	SHAFT	
100	525136-0000	C		1	SHAFT	
110	567349-0000	D		1	SPACER	
120	567373-0000	D		1	GEAR HOUSING	
130	321306-0107	C		1	BALL BEARING, 35X62X14 MM	
140	321309-0106	C		7	BALL BEARING, 30X62X16 MM	
150	90091-0145	C		1	RADIAL SEAL 30X62X10 MM	
160	90091-0054	C		2	RADIAL SEAL 30X47X8 MM DUST LIP	
170	90242-0116	C		1	O-RING 55X2,5 MM	
190	315750-0122	-		1	RETAIN. RING, 30	
200	315750-0127	-		1	RETAIN. RING, 40	
210	315752-0136	-		3	RETAIN. RING, 62	
215	90141-0012	-		1	RETAINING RING FOR SHAFT,17X1,5MM	
220	315701-0202	-		1	PARALLEL KEY W. ROUND ENDS 5X5X22 MM	
230	315701-0234	-		3	PARALLEL KEY W. ROUND ENDS 6X6X25 MM	
240	315701-0270	-		2	PARALLEL KEY W. ROUND ENDS 8X7X40 MM	
250	315701-0272	-		1	PARALLEL KEY W. ROUND ENDS 8X7X50 MM	
260	567350-0000	D		2	WEDGE	
270	312111-0329	-		4	SCREW HEX.SOCK.HD.MC6S-TT 5X16 88 FZB	
280	312111-0370	-		12	SCREW HEX.SOCK.HD.MC6S-TT 6X20 88 FZB	
290	90330-0026	-		1	PLUG, EXT. G-THREAD, G1/4	
300	90330-0037	-		1	PLUG, EXT. G-THREAD, G1/2	
310	442841-0000	D		1	AIR SCREW	
320	315234-0110	-		2	WASHER,PL.RND.CU.13,5/18 H=1,5	
330	315234-0113	-		1	WASHER PL.RND.CU.21,3//26 H=1,5	
340	90214-0310	-		2	SEALING LID, 62X8 MM	
345	442903-0000	D		1	SHIM	
346	442904-0000	D		1	SHIM	
347	442905-0000	D		1	SHIM	
390	90296-0075	D	ML	2400	OIL 54322-320 ACC TO M 1254.322	

Pos	Part No	SP	UN	Qty	Description	Page No

Machine Type | Group Description | Used-In | Group Number | Page No

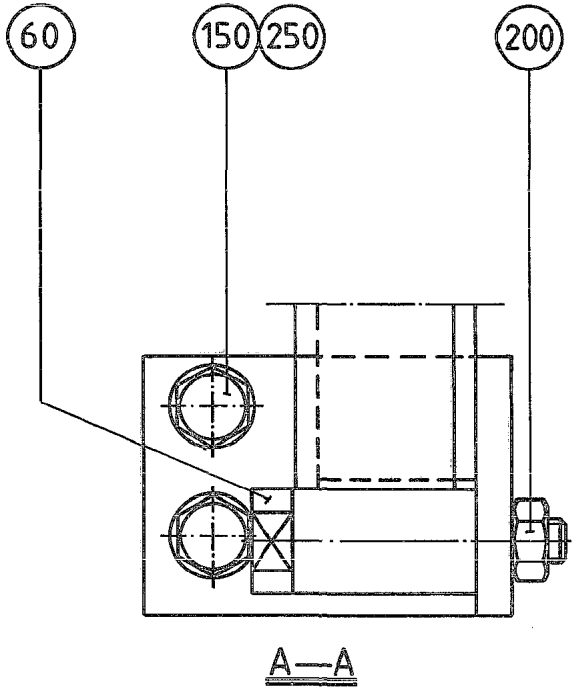
60
150
250
200
A—A

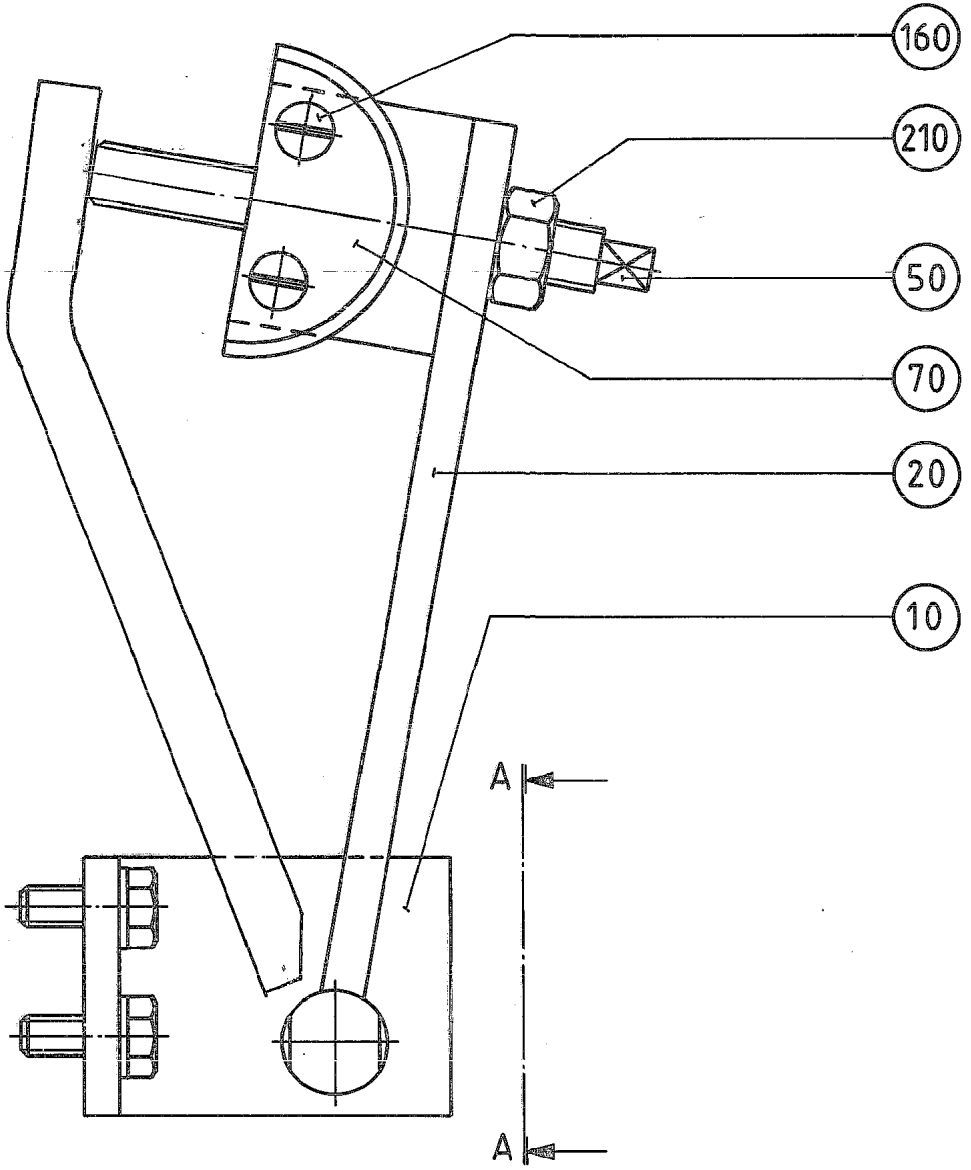
160
210
50
70
20
10
A
A

ECM: 72197 - 19990215
Group number: 297638-0200
Assembly Drawing: 297638-1_1_AA

Pos	Part No	SP	UN	Qty	Description	Page No
0375S, 0500B, 0355B, 0500S, 1000S, 0750B, 0750S, 1000B						
070	443367-0000	D		1	PROFILE	
1000SQ						
070	574093-0000	D		1	PROFILE	
Common Parts						
010	297608-0000	-		1	BRACKET	
020	297609-0000	-		1	ARM	
050	297610-0000	-		1	SCREW	
060	297611-0000	D		1	SHAFT	
150	312105-0451	-		2	SCREW M6S ISO 4017 M8X20 A480	
160	312145-0378	-		2	SCREW COUNTERS.SLOT.HD. MFS 6X40 SS	
200	312605-0318	-		1	HEXAGON NUT, M6M M8 A280	
210	312605-0322	-		1	HEXAGON NUT, M6M M12 A280	
250	315105-0165	-		2	WASHER BRB8,4X16RFR	

Pos	Part No	SP	UN	Qty	Description	Page No

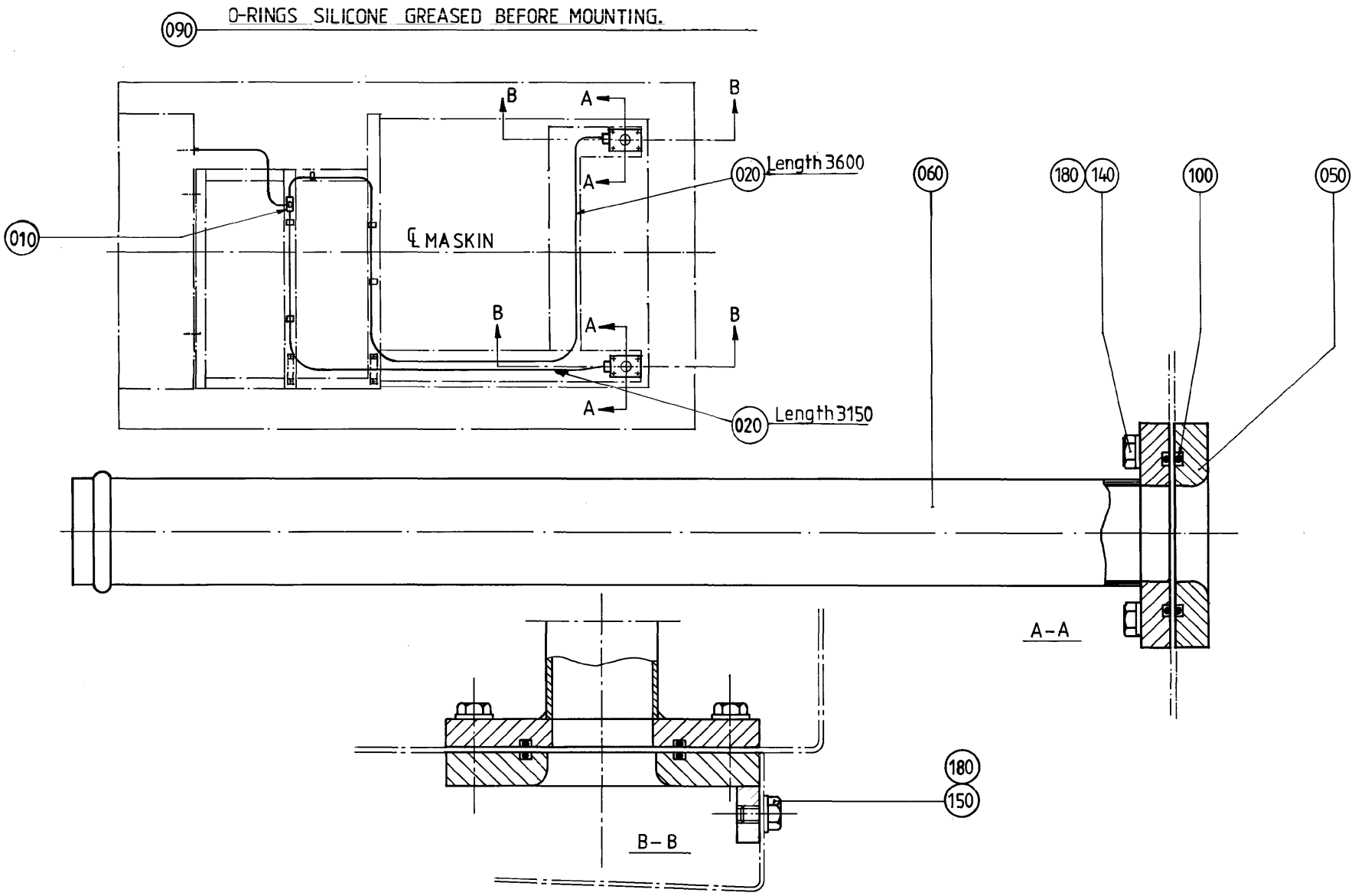
090
O-RINGS SILICONE GREASED BEFORE MOUNTING.
010
020
Length 3600
020
Length 3150
℄ MA SKIN
060
180
140
100
050
A-A
180
150
B-B

ECM: 72197 - 19990215
Group number: 525110-0100
Assembly Drawing: 525110-1_1_AA

Pos	Part No	SP	UN	Qty	Description	Page No
-						
010	342946-0122	-		1	T-COUPLING,UNION 8/6	
020	90166-0122	-	MM	6750	TUBE 8 MM PA,TRANSP.	
050	525135-0000	-		2	PLATE	
060	297413-0000	-		2	PIPE	
090	90296-0009	-	L	1	SILICONE GREASE TUBE 100 GR.	
100	315202-0301	-		4	O-RING 49,5X3 MM	
140	312105-0370	-		8	SCREW M6S ISO 4017 M6X20 A480	
150	312105-0364	-		2	SCREW M6S ISO 4017 M6X10 A480	
180	315105-0153	-		10	WASHER BRB6,4X12RFR	

Pos	Part No	SP	UN	Qty	Description	Page No

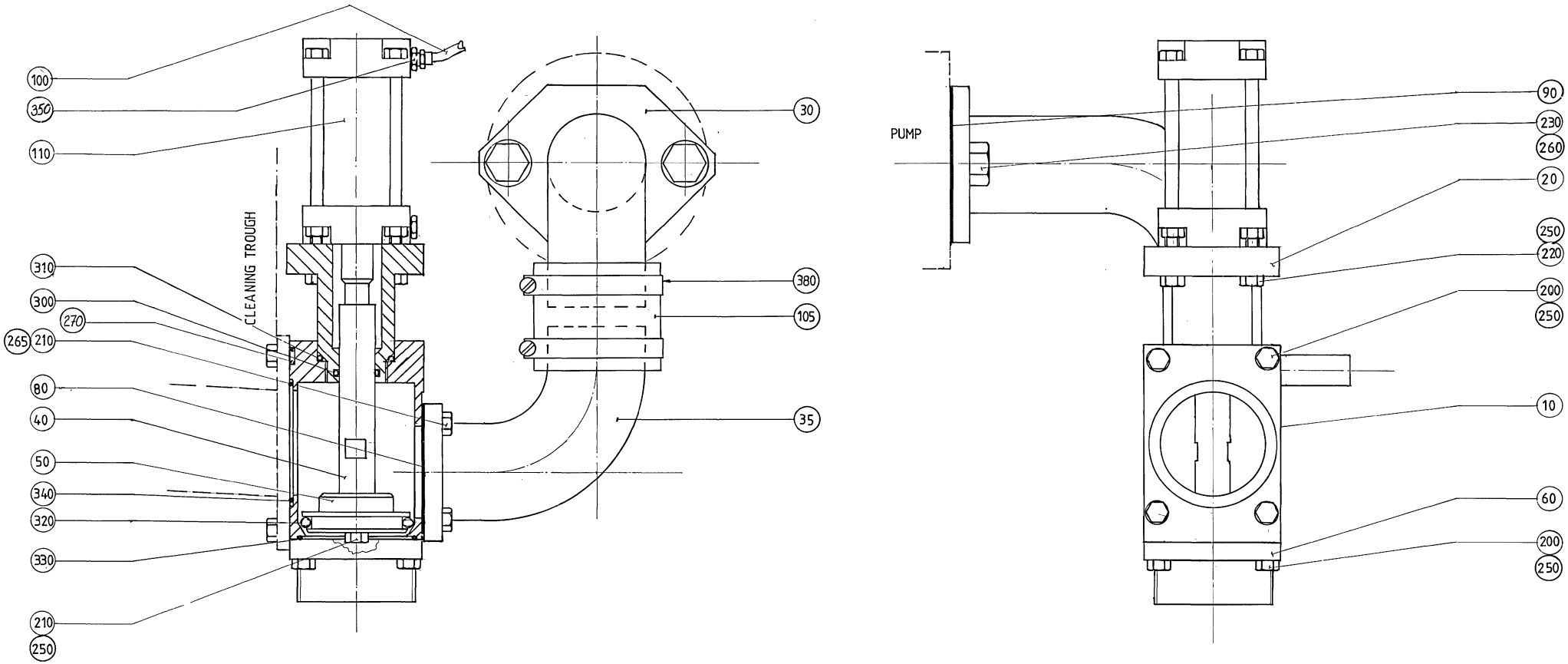
100
350
110
30
380
105
35
310
300
270
265
210
80
40
50
340
320
330
210
250
CLEANING TROUGH
PUMP
90
230
260
20
250
220
200
250
10
60
200
250

ECM: 72197 - 19990215
Group number: 525143-0200
Assembly Drawing: 525143-2_1_AA

Pos	Part No	SP	UN	Qty	Description	Page No
-						
010	443122-0000	D		1	HOUSE	
020	443123-0000	D		1	HOUSE	
030	525269-0000	D		1	PIPE	
035	525270-0000	D		1	PIPE	
040	442851-0000	D		1	SHAFT	
050	442852-0000	D		1	VALVE	
060	442853-0000	-		1	ATTACHMENT PIPE	
080	531116-0000	C		1	GASKET	
090	531189-0000	C		1	GASKET	
100	90166-0124	-	MM	650	TUBE 6 MM PA,TRANSP.	
105	90166-0199	-	MM	80	RUBBER HOSE	
110	90239-0960	C		1	CYLINDER	
200	312105-0368	-		8	SCREW M6S M6X16 A280	
210	312105-0370	-		5	SCREW M6S ISO 4017 M6X20 A480	
220	312105-0374	-		4	SCREW M6S ISO 4014 M6X30 A480	
230	312105-0534	-		2	SCREW M6S ISO 4017 M12X25 A480	
250	315105-0153	-		13	WASHER BRB6,4X12RFR	
260	315105-0178	-		2	WASHER BRB13X24RFR	
265	315115-0153	-		4	WASHER PLAIN, TBRB 6,4/12 H=3	
270	315202-0106	C		2	O-RING 8,1X1,6 MM	
300	315202-0214	C		1	O-RING 17,3X2,4 MM	
310	315202-0220	C		1	O-RING 32,2X3 MM	
320	315202-0226	C		1	O-RING 44,2X5,7 MM	
330	315202-0302	C		1	O-RING 54,5X3 MM	
340	315202-0303	C		1	O-RING 59,5X3 MM	
350	342920-0113	-		1	STRAIGHT COUPLING,EXT.THREADED 6/4-R1/8"	
380	342991-0111	-		2	HOSE CLIP,WORM DRIVE TYPE (63)-73	

Pos	Part No	SP	UN	Qty	Description	Page No

Machine Type | Group Description | Used-In | Group Number | Page No

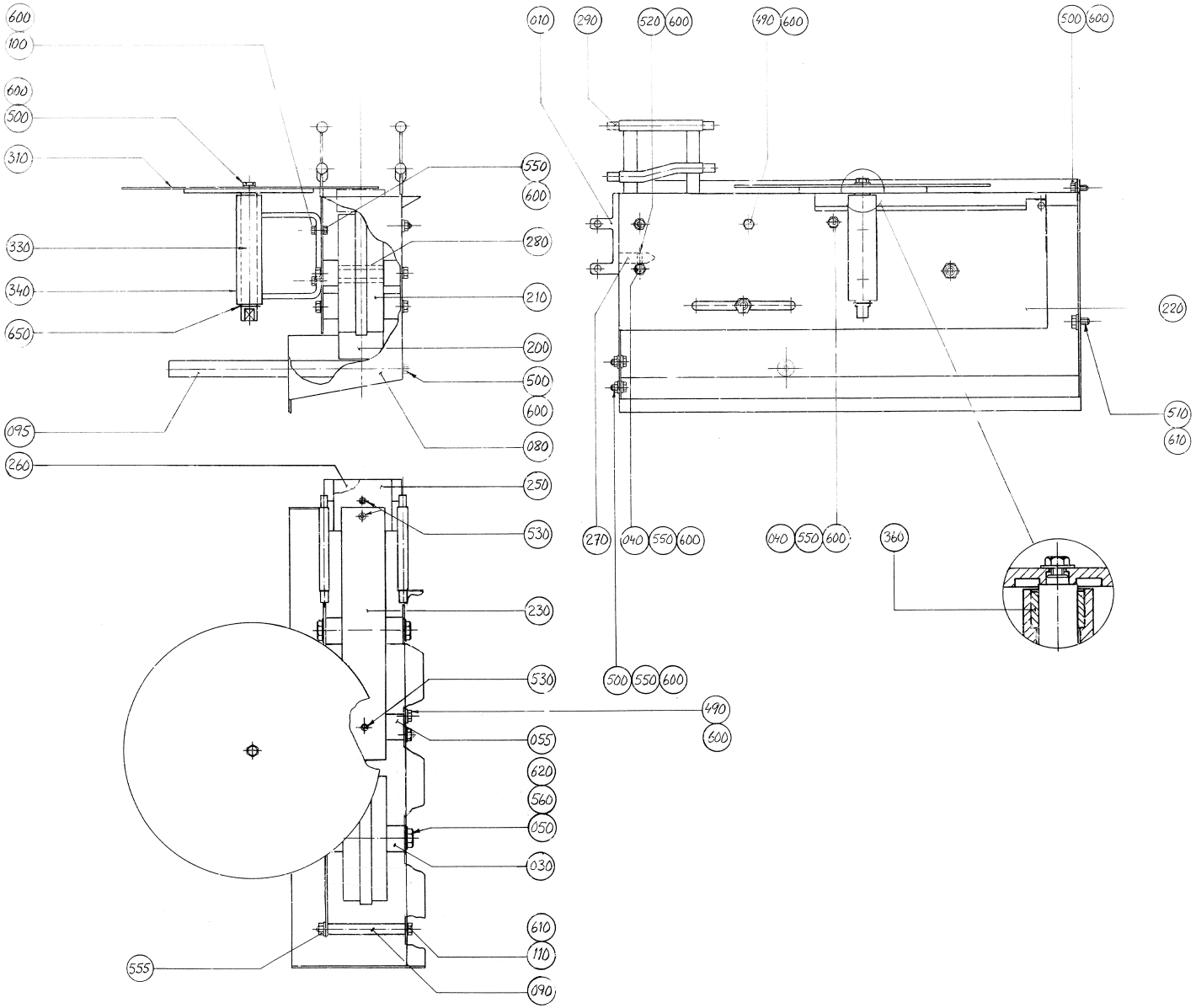
600
100
600
500
310
330
340
650
095
260
550
600
280
210
200
500
600
080
250
530
230
530
055
620
560
050
030
610
110
090
555
010
290
520
600
490
600
500
600
220
510
610
270
040
550
600
040
550
600
360
500
550
600
490
600

ECM: 72197 - 19990215
Group number: 595087-0100
Assembly Drawing: 595087-1_1_AA

Pos	Part No	SP	UN	Qty	Description	Page No
-						
010	228843-0001	C		2	SPACER	
030	229201-0002	C		4	SPACER	
040	229508-0029	C		5	STUD SCREW	
050	229760-0013	C		2	STUD SCREW	
055	237082-0002	D		1	MOUNTING BLOCK	
080	594632-0000	D		1	SIDE PLATE	
090	297574-0002	D		1	SPACER	
095	525171-0001	D		1	BRACKET	
100	312105-0368	-		2	SCREW M6S M6X16 A280	
110	312105-0471	-		1	SCREW M6S ISO 4014 M8X100 A480	
200	476975-0000	C		1	WHEEL	
210	245039-0000	C		1	GUIDE WHEEL	
220	297569-0000	D		1	SIDE PLATE	
230	442776-0000	C		1	SLIDE RAIL	
250	228845-0000	C		1	MOUNTING BLOCK	
260	229202-0000	C		1	MOUNTING BLOCK	
270	229206-0000	D		1	LOCATING PIECE	
280	229207-0000	C		2	BEARING SLEEVE	
290	229516-0000	C		8	PIN	
310	525053-0000	D		1	PLATE (CIRCULAR)	
330	285132-0000	C		1	SHAFT	
340	285133-0000	D		1	CANTILEVER	
360	525252-0000	C		2	BEARING	
490	312105-0362	-		2	SCREW M6S ISO 4017 M6X8 A480	
500	312105-0367	-		5	SCREW M6S M6X14 A280	
510	312105-0449	-		1	SCREW M6S ISO 4017 M8X16 A480	
520	312115-0368	-		1	SCREW ISO4762 M6X16 A4	
530	312155-0370	-		3	SCREW EN 10642 MF6S M6X20 A480	
550-02	312605-0316	-		14	HEXAGON NUT, M6M M6 A280	
555	312605-0318	-		1	HEXAGON NUT, M6M M8 A280	
560	312605-0320	-		4	HEXAGON NUT, M6M M10 A280	
600	315105-0153	-		19	WASHER BRB6,4X12RFR	
610	315105-0165	-		3	WASHER BRB8,4X16RFR	
620	315105-0173	-		4	WASHER BRB10,5X22RFR	
650	315755-0113	-		1	LOCKING WASHER 15	

Pos	Part No	SP	UN	Qty	Description	Page No

Machine Type	Group Description	Used-In	Group Number	Page No

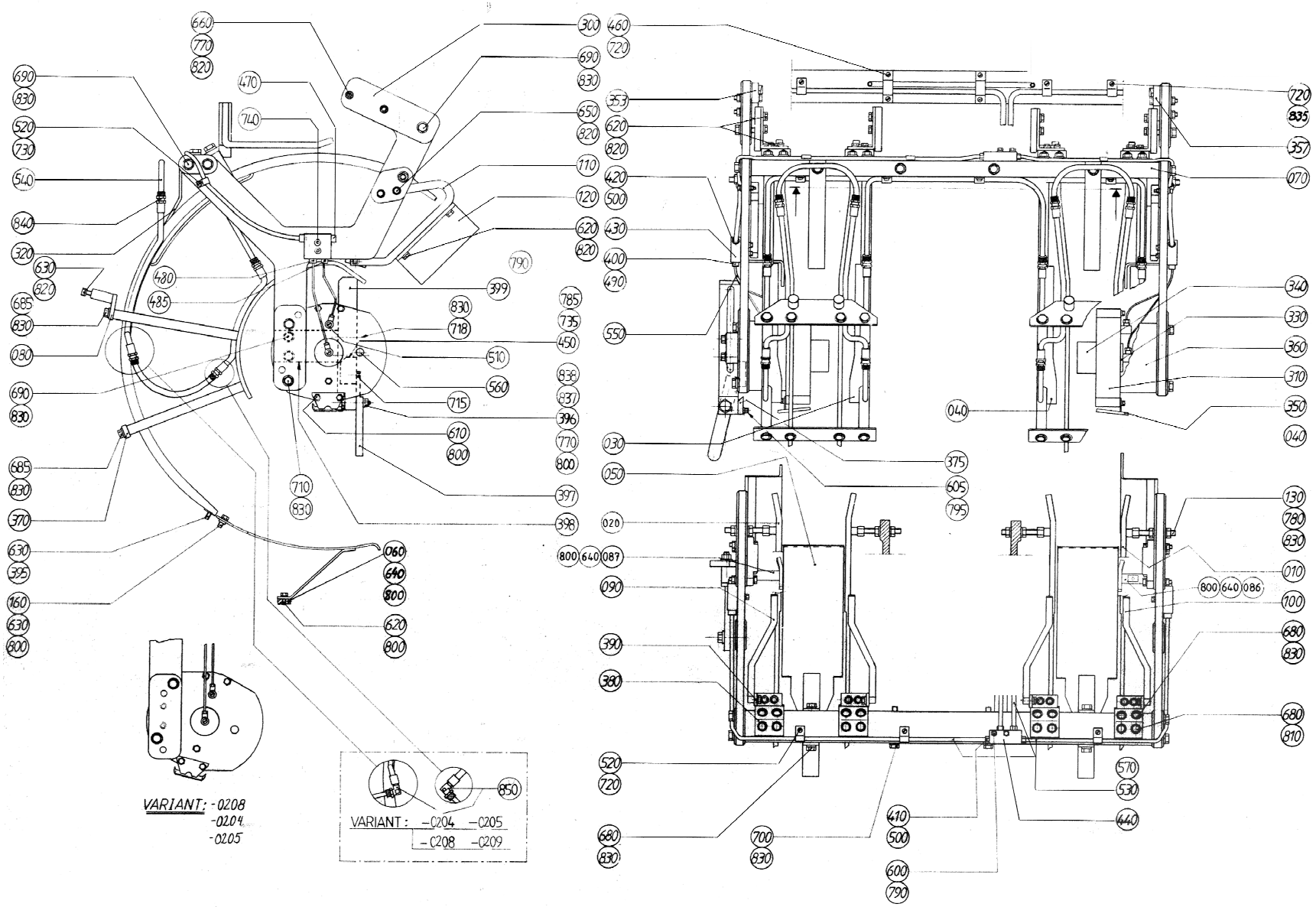
VARIANT: -0208
-0204
-0205
VARIANT: -0204 -0205
-0208 -0209

ECM: 72353 - 19990525
Group number: 595088-0200
Assembly Drawing: 595088-1_1_AA

This list covers pages from 5-24 to 5-27

Pos	Part No	SP	UN	Qty	Description	Page No
1000SQ NORMFIN						
030	574045-0000	D		2	FOLDING BAR	
040	574046-0000	D		2	FOLDING BAR	
086	574097-0000	D		1	STEERING	
087	574098-0000	D		1	STEERING	
397	550359-0000	D		1	ARM	
399	595055-0000	D		1	BRACKET	
640	312105-0370	-		2	SCREW M6S ISO 4017 M6X20 A480	
840	342920-0121	-		16	STRAIGHT COUPLING,EXT.THREADED 8/6-R1/8"	
1000SQ REVFIN						
030	597537-0000	D		2	FOLDING BAR	
040	597536-0000	D		2	FOLDING BAR	
086	574097-0000	D		1	STEERING	
087	574098-0000	D		1	STEERING	
397	550359-0000	D		1	ARM	
399	595055-0000	D		1	BRACKET	
640	312105-0370	-		2	SCREW M6S ISO 4017 M6X20 A480	
840	342920-0121	-		16	STRAIGHT COUPLING,EXT.THREADED 8/6-R1/8"	
Common Parts						
010	525001-0000	D		2	FOLDING BAR	
020	525003-0000	D		2	FOLDING BAR	
050	574047-0000	C		2	LEAD RAIL	
070	525007-0002	D		1	CANTILEVER	
080	525008-0001	D		2	BRACKET	
090	569122-0000	D		2	FOLDING ARM	
100	569123-0000	D		2	FOLDING ARM	
110	574048-0000	D		2	BRACKET	
120	574049-0000	D		2	COUNTER PLATE	
130	525015-0002	D		4	SCREW	
300	525016-0000	D		2	FASTENING PLATE	
310	574050-0000	D		2	CURVE	
320	525017-0000	D		2	STEERING GUIDE	
330	285168-0000	D		2	BUSHING	
340	285851-0000	C		2	BEARING	
350	443240-0000	-		2	DRIP PLATE	
353	442564-0000	C		1	CURVE	
357	442565-0000	C		1	CURVE	
360	525018-0000	-		2	SPACER	
370	525019-0000	D		2	BRACKET	
375	595057-0000	D		1	BRACKET	
380	525340-0000	D		4	BRACKET	
390	525178-0000	D		4	BRACKET	
395	525181-0000	-		2	WASHER	
396	525321-0000	C		1	SCREW	
398	525296-0000	-		1	BRACKET	
400	90028-0020	C		4	CONE TUBE 2,5MM	
410	90028-0022	C		4	CONE TUBE 6 MM	
420	90028-0025	C		2	CONE TUBE 6 MM	
430	90032-0038	-		2	BLOCK 2 WAYS	
440	90032-0044	-		1	DISTRIBUTION BLOCK 4 WAYS	
450	90044-0104	C		1	PROX.SWITCH IFM IN 3002	
460	90074-0018	-		2	CABLE CLIPS, D=2X10 MM	
470	90087-0019	-		2	PLUG M10X1 STAINLESS	
480	90092-0052	C		2	METERING VALVE 10 MM3	
485	90092-0053	C		2	METERING VALVE 30 MM3	
490	90134-0039	C		4	BUSHING VALVE CONNECTION 2,5 MM	
500	90134-0055	C		6	BUSHING/NUT INLET/OUTLET 6 MM	
510	90134-0058	-		4	CONNECTION	
520	90165-0057	-		5	PIPE CLIP FOR TUBE D=6 MM	
530	90166-0108	-	MM	5200	TUBE 6 MM PA,TRANSP.	
540	90166-0122	-	MM	6000	TUBE 8 MM PA,TRANSP.	
550	90166-0143	-	MM	2000	TUBE 2,5 MM PA,TRANSP.	
560	90261-0032	-		4	PLUG, BLIND, PLASTIC, NO. 1073	
570	90134-0030	-		6	SLEEVE FOR PLASTIC TUBE	
600	312105-0295	-		2	SCREW M6S ISO4017 M4X20 A480	
605	312105-0327	-		2	SCREW M6S ISO 4017 M5X12 A480	
610	312105-0364	-		10	SCREW M6S ISO 4017 M6X10 A480	
620	312105-0366	-		24	SCREW M6S M6X12 A280	
630	312105-0368	-		10	SCREW M6S M6X16 A280	
650	312105-0374	-		4	SCREW M6S ISO 4014 M6X30 A480	
660	312105-0378	-		4	SCREW M6S ISO 4014 M6X40 A480	
680	312105-0449	-		20	SCREW M6S ISO 4017 M8X16 A480	
685	312105-0451	-		16	SCREW M6S ISO 4017 M8X20 A480	
690	312105-0455	-		8	SCREW M6S ISO 4017 M8X30 A480	
700	312105-0464	-		2	SCREW M6S ISO 4014 M8X65 A480	
710	312105-0469	-		4	SCREW M6S ISO 4014 M8X90 A480	
715	312115-0323	-		1	SCREW ISO4762 M5X8 A4	
718	312115-0455	-		2	SCREW ISO4762 M8X30 A4	
720	312125-0287	-		10	SLOTTED CHEESE HEAD SCREW MCS 4X8 SS	
730	312125-0291	-		2	SLOTTED CHEESE HEAD SCREW MCS 4X12 SS	
735	312125-0230	-		2	SLOTTED CHEESE HEAD SCREW MCS 3X20 SS	
740	312155-0297	-		4	SCREW EN 10642 MF6S M4X25 A480	

Machine Type Group Description Used-In Group Number Page No

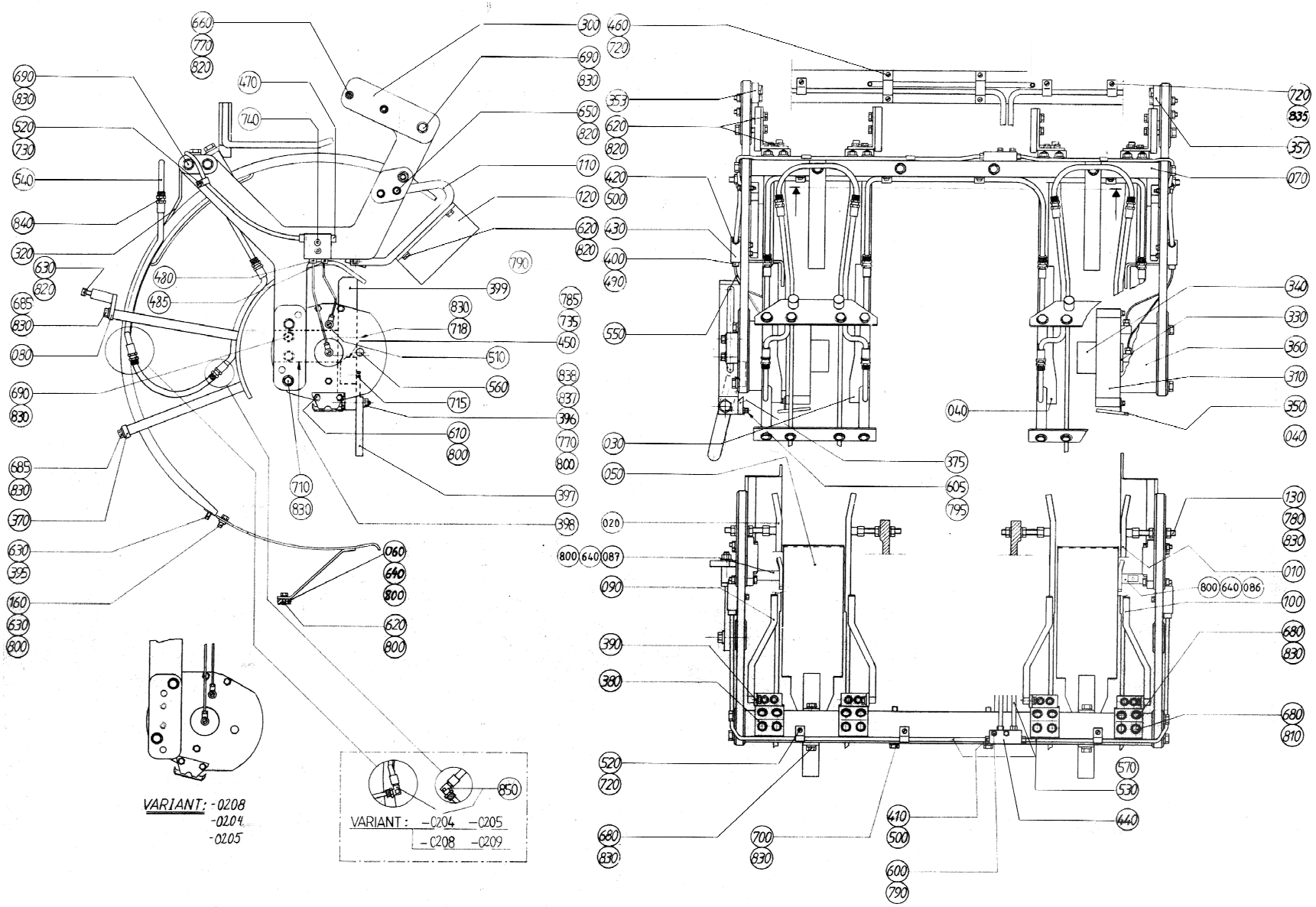
VARIANT: -0208
-0204
-0205
VARIANT: -0204 -0205
-0208 -0209

Pos	Part No	SP	UN	Qty	Description	Page No
Common Parts (Cont'd)						
770	312605-0316	-		5	HEXAGON NUT, M6M M6 A280	
780	312605-0318	-		8	HEXAGON NUT, M6M M8 A280	
785	315105-0124	-		2	BRICKA BRB3,2X6RFR	
790	315105-0136	-		2	WASHER BRB4,3XRFR	
795	315105-0146	-		2	BRICKA BRB5,3X10RFR	
800	315105-0153	-		19	WASHER BRB6,4X12RFR	
810	315105-0165	-		8	WASHER BRB8,4X16RFR	
820	315115-0153	-		40	WASHER PLAIN, TBRB 6,4/12 H=3	
830	315115-0165	-		52	WASHER PLAIN, TBRB 8,4/16 H=3	
835	316810-0106	-		3	PIPE CLIP FOR TUBE D=8 MM	
837	321116-0127	C		1	BEAR. BUSH. WITHOUT FL, 10X14X10 MM	
838	321116-0128	C		1	BEAR. BUSH. WITHOUT FL, 10X14X16 MM	

Pos	Part No	SP	UN	Qty	Description	Page No

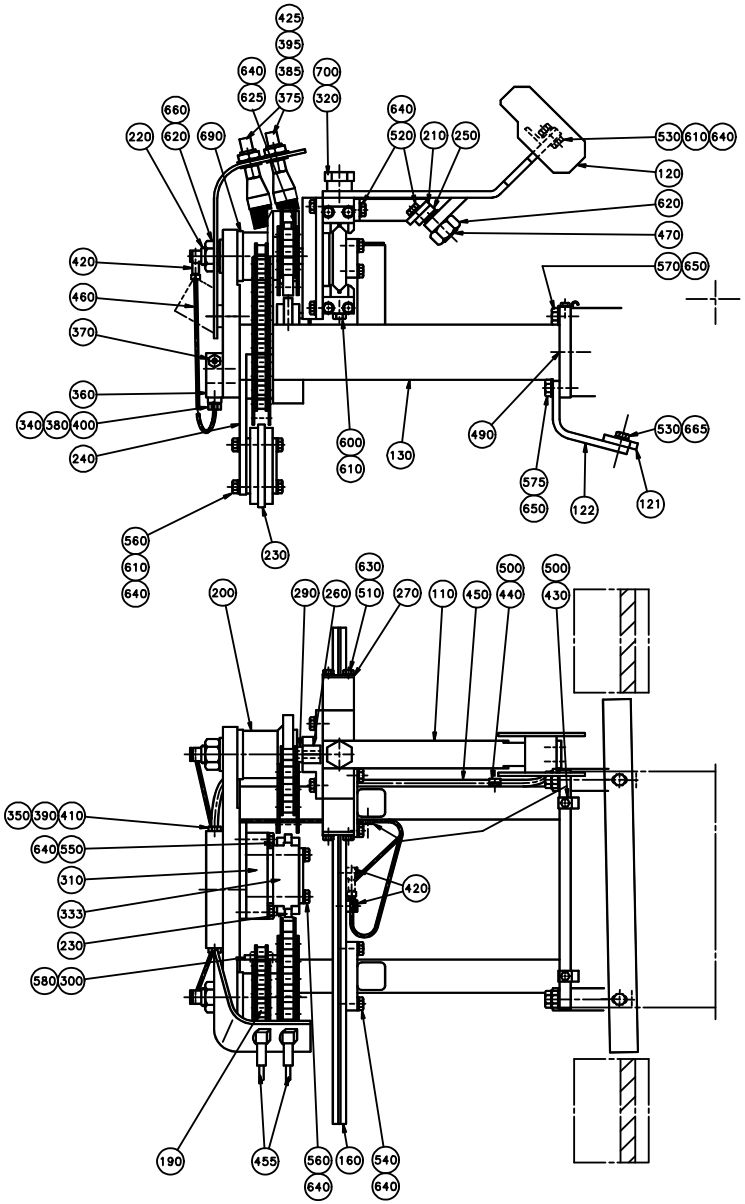
425
395
640
385
700
625
375
320
660
640
220
620
690
520
210
250
530
610
640
120
620
470
420
570
650
460
370
360
340
380
400
240
600
610
130
490
530
665
575
650
122
121
560
610
640
230
630
200
290
260
510
270
110
450
500
440
500
430
350
390
410
640
550
310
333
230
580
300
420
190
455
560
640
160
540
640

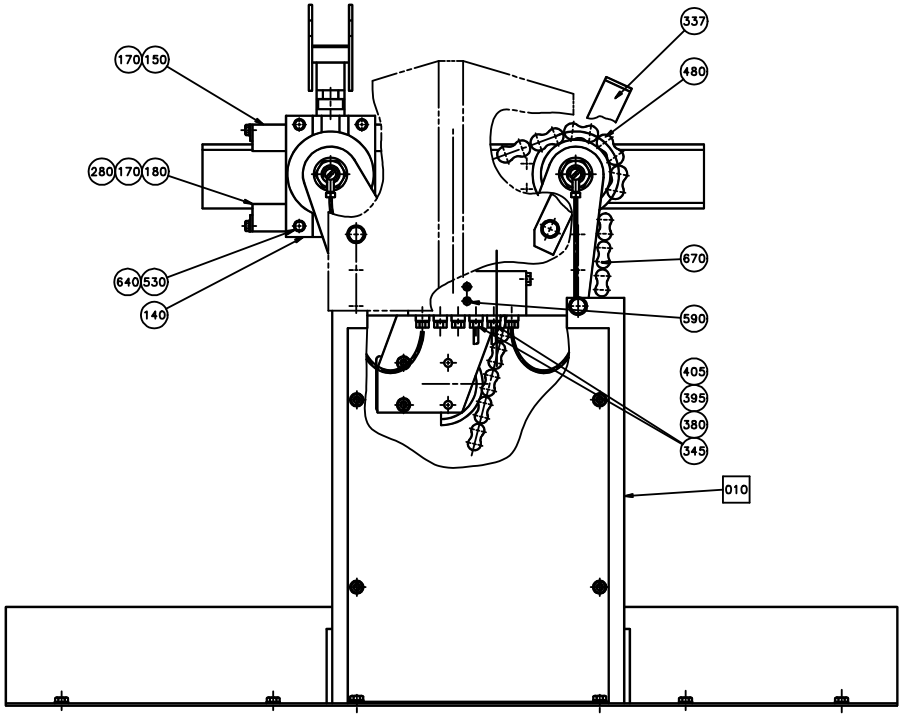
337
480
170
150
280
170
180
640
530
140
670
590
405
395
380
345
010

ECM: 72392 - 19990617
Group number: 595089-0100
Assembly Drawing: 595089-1_1_AA

Pos	Part No	SP	UN	Qty	Description	Page No
1000SQ						
110	525301-0000	D		1	ARM	
120	574056-0000	D		1	DISTRIBUTOR	
121	595068-0000	-		1	STEERING	
122	574058-0000	-		2	HOLDER	
530	312105-0368	-		8	SCREW M6S M6X16 A280	
570	312105-0453	-		2	SCREW M6S ISO 4017 M8X25 A480	
575	312105-0455	-		2	SCREW M6S ISO 4017 M8X30 A480	
665	315115-0153	-		2	WASHER PLAIN, TBRB 6,4/12 H=3	
Common Parts						
010	A525320-0100	-		1	CHAIN GUARD	**5-31**
130	525310-0000	-		1	BRACKET	
140	443229-0000	C		1	BRACKET	
150	525140-0000	D		1	HOLDER	
160	525311-0000	C		1	GUIDE	
170	442931-0000	C		2	SLIDE RAIL	
180	443232-0000	D		1	HOLDER	
190	443235-0000	C		1	SPROCKET	
200	525194-0000	C		1	SPROCKET	
210	525200-0000	C		1	BRACKET	
220	525312-0000	C		2	SHAFT	
230	90344-0049	D		2	CHAIN TENSIONER	
240	566533-0000	D		1	BRACKET	
250	597564-0000	D		1	PLATE	
260	443237-0000	C		1	SLIDER	
270	443239-0000	-		4	WASHER	
280	525138-0000	C		1	SHEET	
290	525195-0000	C		1	WASHER	
300	525315-0000	D		1	SLIDER	
310	566312-0000	-		1	BRACKET	
320	525317-0000	C		1	FITTING BOLT	
333	566311-0000	D		1	PROFILE	
337	566315-0000	-		1	HOLDER	
340	90028-0020	C		4	CONE TUBE 2,5MM	
345	90028-0021	-		2	CONE TUBE 4 MM	
350	90028-0025	C		1	CONE TUBE 6 MM	
360	90032-0040	-		1	BLOCK 6 WAYS	
370	90087-0019	-		1	PLUG M10X1 STAINLESS	
375	90092-0048	C		2	OIL BRUSH, FLAT, 5/16-24 UNF	
380	90092-0052	C		6	METERING VALVE 10 MM3	
385	90134-0002	-		2	CONNECTOR R1/8, D=4 MM	
390	90134-0030	-		2	SLEEVE FOR PLASTIC TUBE	
395	342706-0114	-		4	ACCESSORIES, INSERT SLEEVE 4 MM	
400	90134-0039	C		4	BUSHING VALVE CONNECTION 2,5 MM	
405	90134-0040	C		2	BUSHING VALVE CONNECTION 4 MM	
410	90134-0055	C		1	BUSHING/NUT INLET/OUTLET 6 MM	
420	90134-0058	-		4	CONNECTION	
425	90137-0002	-		2	BANJO CONN. 1/8 - 5/16-24UNF	
430	90165-0056	-		3	PIPE CLIP FOR TUBE D=4 MM	
440	90165-0057	-		2	PIPE CLIP FOR TUBE D=6 MM	
450	90166-0108	-	MM	1400	TUBE 6 MM PA,TRANSP.	
455	90166-0051	-	MM	600	TUBE PA,TRANSP.	
460	90166-0143	-	MM	1200	TUBE 2,5 MM PA,TRANSP.	
470	90287-0109	C		1	SCREW SPRINGLOAD. SLOTTED HEAD M16X24	
480	B90288-0055	C		1	ROLLER CHAIN, SINGLE 5/8 -42	
	90288-0324	*C*		*1*	*CARRIER*	
	90288-0317	*C*		*1*	*CONNECTING LINK SINGLE 5/8",SS*	
490	311103-0399	-		2	PARALLEL PIN ISO 2338 8M6X16 A1	
500	312105-0287	-		5	SCREW M6S ISO4017 M4X8 A480	
510	312105-0325	-		8	SCREW M6S ISO 4017 M5X10 A480	
520	312105-0366	-		4	SCREW M6S M6X12 A280	
540	312105-0370	-		8	SCREW M6S ISO 4017 M6X20 A480	
550	312105-0376	-		2	SCREW M6S ISO 4014 M6X35 A480	
560	312105-0379	-		4	SCREW M6S ISO 4014 M6X45 A480	
580	312155-0291	-		4	SCREW EN 10642 MF6S M4X12 A480	
590	312155-0297	-		2	SCREW EN 10642 MF6S M4X25 A480	
600	312318-0368	-		2	SCREW ISO4029 M6X16 A4	
610	312605-0316	-		4	HEXAGON NUT, M6M M6 A280	
620	312605-0324	-		3	HEXAGON NUT, M6M M16 A280	
625	312812-0316	-		2	HEXAGON NUT, NY-LOCK M6 A480	
630	315105-0146	-		8	BRICKA BRB5,3X10RFR	
640	315105-0153	-		28	WASHER BRB6,4X12RFR	
650	315105-0165	-		4	WASHER BRB8,4X16RFR	
660	315105-0186	-		2	WASHER BRB17X30RFR	
670	318212-0119	C		1	ROLLER CHAIN, SINGLE 1/2 -119,SS	
690	321101-0252	C		4	FLANGE BUSHING, 25X35X16 MM	
700	321120-0122	C		1	BEARING BUSHING W/O FL, 15X17X15 MM	

Machine Type | Group Description | Used-In | Group Number | Page No

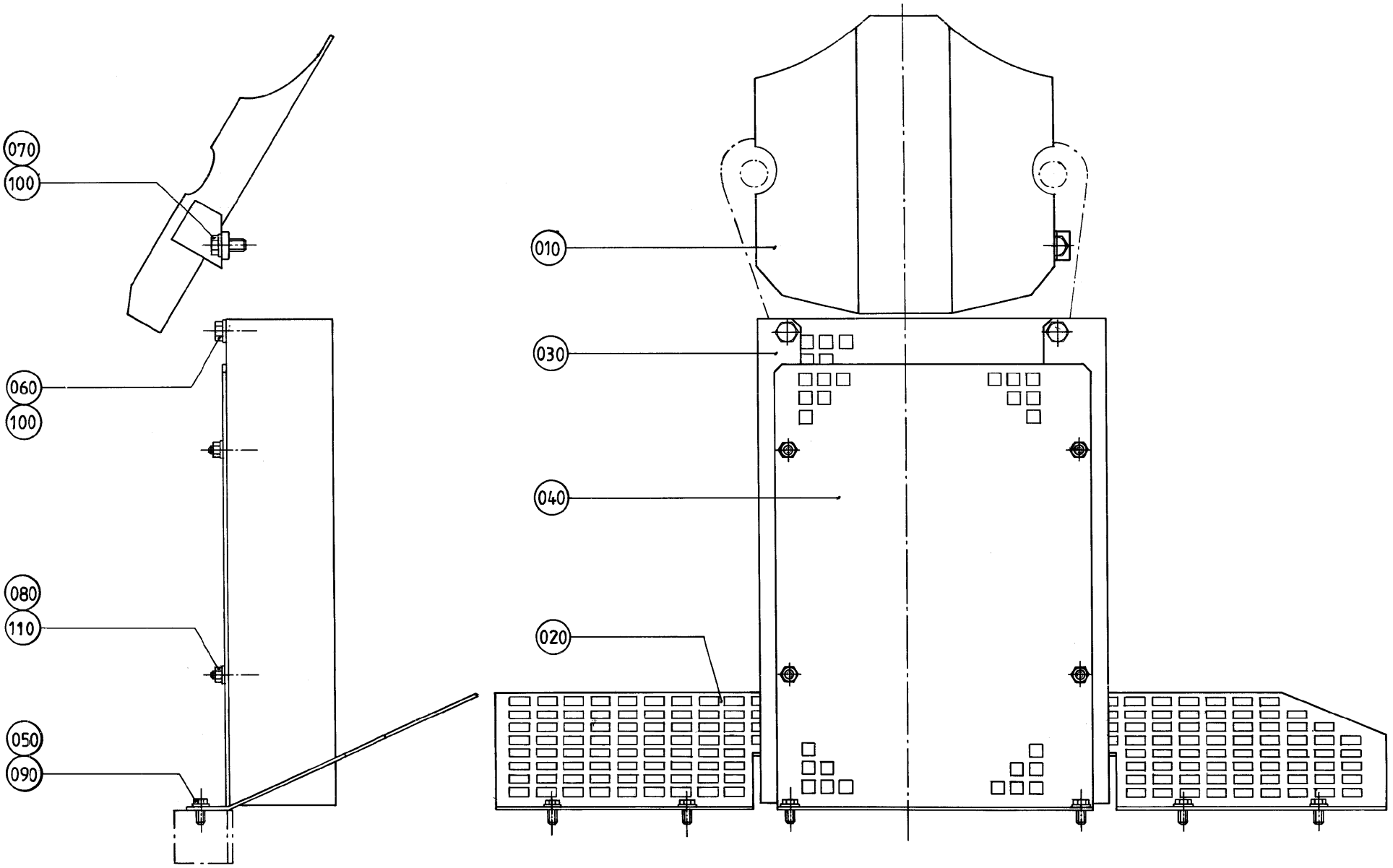
070
100
060
100
080
110
050
090
010
030
040
020

ECM: 71939 - 19981102
Group number: 525320-0100
Assembly Drawing: 525320-1_1_AA

Pos	Part No	SP	UN	Qty	Description	Page No
0375S						
010	525265-0003	-		1	LEAD PLATE	
0500B, 0355B						
010	525265-0004	-		1	LEAD PLATE	
0500S, 0750B						
010	525265-0002	-		1	LEAD PLATE	
1000SQ						
010	574131-0000	-		1	LEAD PLATE	
1000S, 0750S, 1000B						
010	525265-0001	-		1	LEAD PLATE	
Common Parts						
020	525326-0000	-		1	CHAIN GUARD	
030	525327-0000	-		1	CHAIN GUARD	
040	525328-0000	-		1	CHAIN GUARD	
050	312105-0368	-		6	SCREW M6S M6X16 A280	
060	312105-0449	-		2	SCREW M6S ISO 4017 M8X16 A480	
070	312105-0451	-		2	SCREW M6S ISO 4017 M8X20 A480	
080	312605-0316	-		4	HEXAGON NUT, M6M M6 A280	
090	315105-0153	-		6	WASHER BRB6,4X12RFR	
100	315105-0165	-		4	WASHER BRB8,4X16RFR	
110	315115-0153	-		4	WASHER PLAIN, TBRB 6,4/12 H=3	

Pos	Part No	SP	UN	Qty	Description	Page No

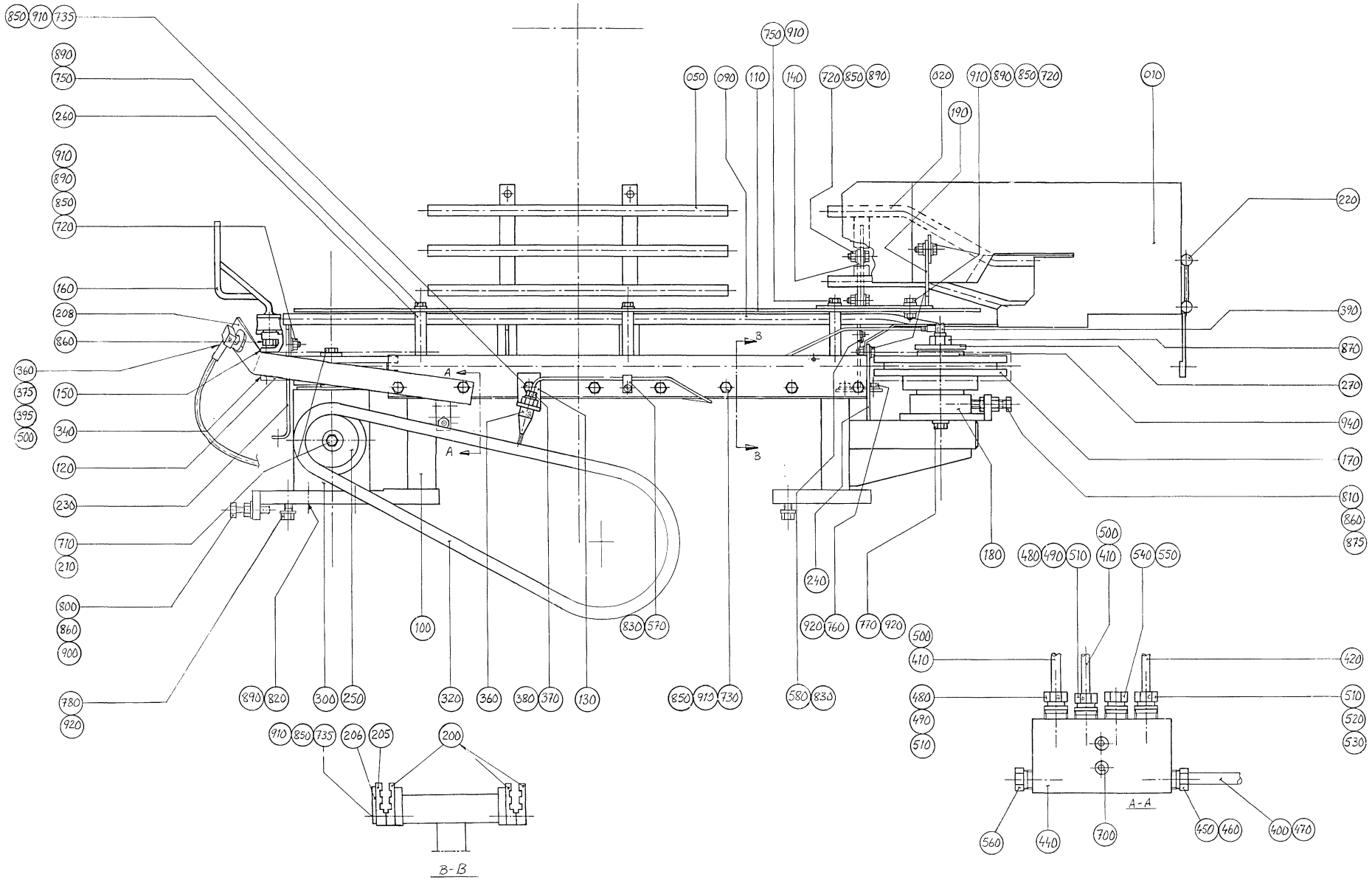
B-B
A-A

ECM: 72392 - 19990617
Group number: 595090-0100
Assembly Drawing: 595090-1_1_AB

Pos	Part No	SP	UN	Qty	Description	Page No
1000SQ						
020	595048-0000	D		1	ARCH	
050	595060-0000	D		1	LEAD RAIL	
140	443217-0000	-		1	BRACKET	
160	595046-0000	C		4	CARRIER	
Common Parts						
010	595052-0000	D		1	ARCH	
090	594644-0000	D		1	LEAD RAIL	
100	595044-0000	D		1	MACHINE BODY	
110	443210-0000	D		1	PLATE STAINLESS	
120	443081-0000	C		1	SPROCKET	
130	443213-0000	-		1	BRACKET	
150	525254-0000	C		4	LINK	
170	525298-0000	C		1	SPROCKET	
180	525299-0000	C		1	SHAFT	
190	595053-0000	D		1	BRACKET	
200	525324-0000	C		3	PROFILE	
205	525411-0000	C		1	PROFILE	
206	525412-0000	-		1	RULER	
208	595061-0000	-		1	HOLDER	
210	6278-0000	-		2	WASHER	
220	229516-0000	C		4	PIN	
230	595056-0000	D		1	BRACKET	
240	442830-0000	D		1	BRACKET	
250	442836-0000	C		1	SPROCKET	
260	443215-0000	-		3	SPACER	
270	443295-0000	-		1	WASHER	
300	90056-0147	D		1	GEARS, BEVEL ALU-00	
320	318212-0074	C		1	ROLLER CHAIN, SINGLE 1/2 -74,SS	
340	318242-0034	C		4	ROLLER CHAIN DUPLEX 1/2"-34,SS	
360	90092-0048	C		2	OIL BRUSH, FLAT, 5/16-24 UNF	
370	90028-0001	C		1	CONE 5/32"	
375	90134-0002	-		1	CONNECTOR R1/8, D=4 MM	
380	90134-0003	C		1	BUSHING	
390	90134-0058	-		1	CONNECTION	
395	90137-0002	-		1	BANJO CONN. 1/8 - 5/16-24UNF	
400	90166-0108	-	MM	1300	TUBE 6 MM PA,TRANSP.	
410	90166-0051	-	MM	700	TUBE PA,TRANSP.	
420	90166-0143	-	MM	500	TUBE 2,5 MM PA,TRANSP.	
440	90032-0039	-		1	BLOCK 4 WAYS	
450	90028-0025	C		1	CONE TUBE 6 MM	
460	90134-0055	C		1	BUSHING/NUT INLET/OUTLET 6 MM	
470	90134-0030	-		2	SLEEVE FOR PLASTIC TUBE	
480	90028-0021	C		2	CONE TUBE 4 MM	
490	90134-0040	C		2	BUSHING VALVE CONNECTION 4 MM	
500	342706-0114	-		4	ACCESSORIES, INSERT SLEEVE 4 MM	
510	90092-0052	C		3	METERING VALVE 10 MM3	
520	90028-0020	C		1	CONE TUBE 2,5MM	
530	90134-0039	C		1	BUSHING VALVE CONNECTION 2,5 MM	
540	90134-0045	-		1	PLUG M12X1	
550	90134-0052	-		1	PLUG DOSING BLOCK	
560	90087-0019	-		1	PLUG M10X1 STAINLESS	
570	90165-0056	-		1	PIPE CLIP FOR TUBE D=4 MM	
580	90165-0060	-		1	PIPE CLIP FOR TUBE D=5 MM	
700	312155-0295	-		2	SCREW EN 10642 MF6S M4X20 A480	
710	312105-0366	-		2	SCREW M6S M6X12 A280	
720	312105-0368	-		6	SCREW M6S M6X16 A280	
730	312105-0376	-		7	SCREW M6S ISO 4014 M6X35 A480	
735	312105-0378	-		9	SCREW M6S ISO 4014 M6X40 A480	
750	312105-0386	-		3	SCREW M6S ISO 4014 M6X80 A480	
760	312105-0449	-		2	SCREW M6S ISO 4017 M8X16 A480	
770	312105-0451	-		2	SCREW M6S ISO 4017 M8X20 A480	
780	312105-0453	-		4	SCREW M6S ISO 4017 M8X25 A480	
800	312109-0457	-		1	SCREW M6S ISO 4017 M8X35 A480	
810	312109-0461	-		1	SCREW M6S ISO 4017 M8X50 A480	
820	312115-0368	-		4	SCREW ISO4762 M6X16 A4	
830	312125-0285	-		2	SLOTTED CHEESE HEAD SCREW MCS 4X6 SS	
840	312125-0289	-		1	SLOTTED CHEESE HEAD SCREW MCS 4X10 SS	
850	312605-0316	-		22	HEXAGON NUT, M6M M6 A280	
860	312605-0318	-		6	HEXAGON NUT, M6M M8 A280	
870	312605-0322	-		1	HEXAGON NUT, M6M M12 A280	
875	312625-0318	-		1	HEXAGON THIN NUT, EN 24035 ML6M M8 A4	
890	315105-0153	-		14	WASHER BRB6,4X12RFR	
900	315105-0165	-		1	WASHER BRB8,4X16RFR	
910	315115-0153	-		21	WASHER PLAIN, TBRB 6,4/12 H=3	
920	315115-0165	-		8	WASHER PLAIN, TBRB 8,4/16 H=3	
940	321101-0272	C		2	FLANGE BUSHING, 30X40X20 MM	

Machine Type | Group Description | Used-In | Group Number | Page No

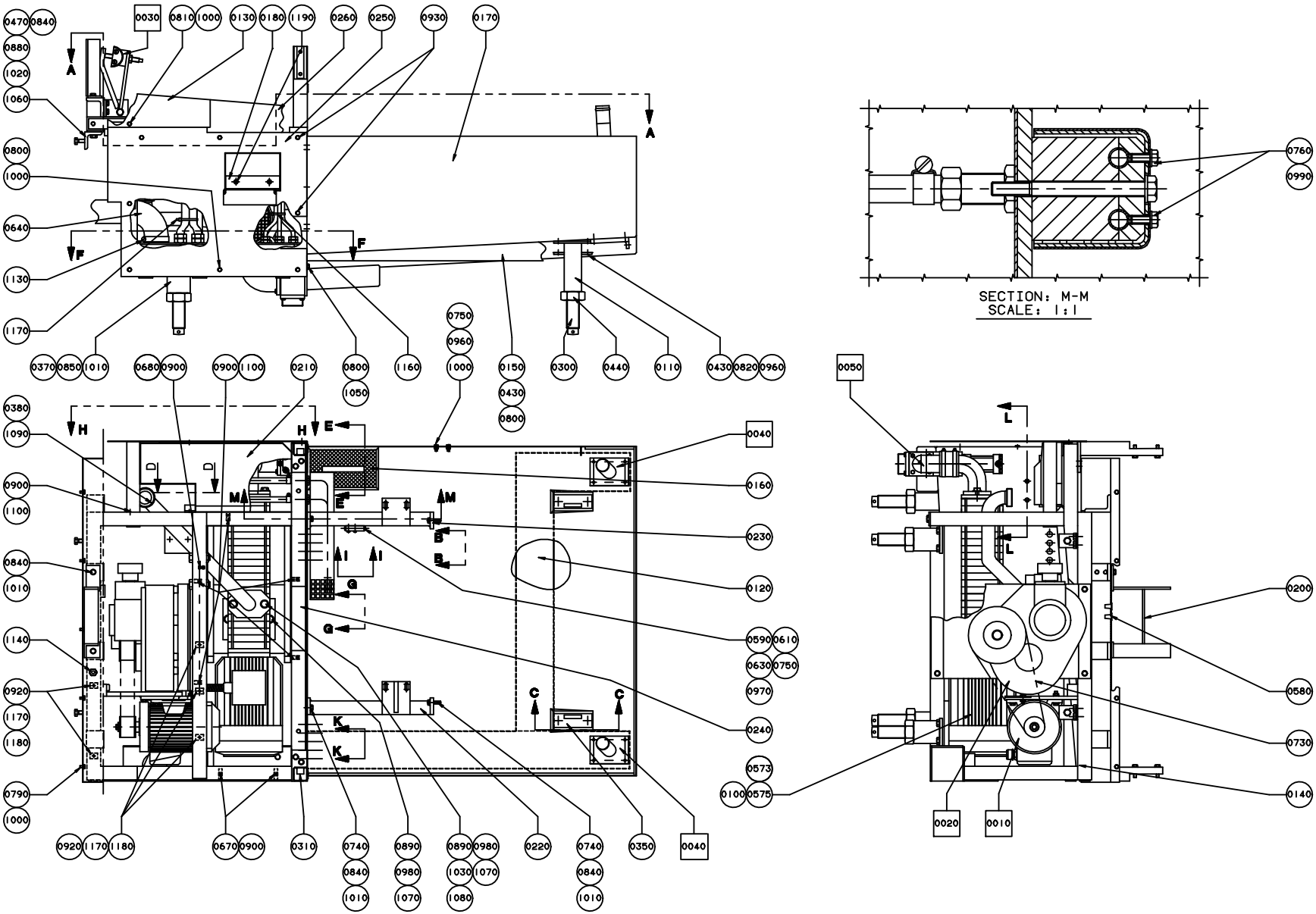
SECTION: M-M
SCALE: 1:1

ECM: 139059 - 20030709
Group number: 1362065-0100
Assembly Drawing: 1362065-1_1_AC

This list covers pages from 5-34 to 5-37

Pos	Part No	SP	UN	Qty	Description	Page No
TBA/8 50HZ						
0100	B90321-0015	A		1	PUMP 502 CFX 7ETV 302 50HZ IP55	
	90321-0481	*C*		*1*	*GASKET*	
	90321-0466	*C*		*1*	*SPARE PART KIT*	
TBA/8 60HZ						
0100	B90321-0034	A		1	PUMP 502 CFX 5ETV 362 60HZ IP55	
	90321-0481	*C*		*1*	*GASKET*	
	90321-0466	*C*		*1*	*SPARE PART KIT*	
Common Parts						
0010	A285287-0500	-		1	DRIVE UNIT	**5-11**
0020	A285861-0500	A		1	GEAR REDUCTION	**5-13**
0030	A297638-0200	-		1	CHAIN TENSIONER	**5-17**
0040	A525110-0100	-		1	CABLE CONDUIT	**5-19**
0050	A525143-0200	A		1	BOTTOM VALVE	**5-21**
0110	525130-0000	-		1	LEG	
0120	525132-0000	-		1	CABLE TRENCH	
0130	525262-0000	-		1	COVERING PLATE	
0140	525274-0000	-		1	FINISH FRAME	
0150	525277-0000	-		1	CABLE TRENCH	
0160	531119-0000	-		1	STRAINER	
0170	1362220-0000	-		1	CLEANING TROUGH	
0200	285330-0000	-		1	HOLDER	
0210	443186-0000	-		1	CHUTE	
0220	525272-0000	-		1	STRUT	
0230	525273-0000	-		1	STRUT	
0240	525275-0000	-		1	COVERING PLATE	
0250	525346-0000	-		1	SIDE PLATE	
0260	529331-0000	-		1	COVERING PLATE	
0300	285923-0000	-		4	SCREW	
0310	297663-0000	-		1	POST HOLDER	
0320	297664-0000	-		1	POST HOLDER	
0330	442545-0000	-		1	SHEET	
0340	443187-0000	-		1	SHEET	
0350	525266-0000	-		1	LEG	
0360	525267-0000	-		1	LEG	
0370	525268-0000	-		2	LEG	
0380	525271-0000	-		1	ELBOW PIPE	
0390	1347210-0000	-		1	HOSE HOLDER	
0400	1347211-0000	-		1	PIPE	
0410	1347212-0000	-		1	PIPE	
0420	1347217-0000	-		1	TOUCH GUARD	
0430	6278-0000	-		3	WASHER	
0440	285994-0000	-		4	NUT	
0450	295435-0000	-		2	WASHER	
0460	297551-0000	-		1	SHEET	
0470	297814-0000	-		2	BRACKET	
0480	297860-0000	-		2	BUSHING	
0490	525174-0000	-		1	BRACKET	
0500	525175-0000	-		1	BRACKET	
0510	525280-0000	-		1	SHEET	
0520	525281-0000	-		1	GASKET	
0530	1347209-0000	-		1	HOSE HOLDER	
0540	1347216-0000	-		1	PIPE	
0560	90012-0071	-		3	GLAND FITTING	
0570	90012-0072	-		2	GLAND FITTING **	
0573	90458-0430	-		1	EXTENDED WITHOUT INSERT, M20X1,5	
0575	353249-0014	-		1	INSERT, SINGEL HOLE, EK 154/16	
0580	90015-0020	-		11	LEAD-IN, TET5-7, E-1458016	
0590	90028-0022	-		4	CONE TUBE 6 MM	
0600	90030-0030	-		4	CONN. BULKHEAD SV 12-L/SY	
0610	90032-0044	-		1	DISTRIBUTION BLOCK 4 WAYS	
0620	90134-0030	-		1	SLEEVE FOR PLASTIC TUBE	
0630	90134-0055	-		4	BUSHING/NUT INLET/OUTLET 6 MM	
0640	90152-0044	-	MM	350	FLEXIBLE CONDUIT 3641-0070	
0650	90152-0050	-	MM	2500	SPIRAL CONDUIT, 20X13, UL 1313	
0660	90152-0051	-	MM	1000	SPIRAL CONDUIT, 25X18, UL 1816	
0670	90165-0057	-		4	PIPE CLIP FOR TUBE D=6 MM	
0680	90165-0060	-		1	PIPE CLIP FOR TUBE D=5 MM	
0690	90166-0059	-	M	1180	HOSE PVC 12/16MM TRANSP.	
0700	90166-0087	-	MM	660	HOSE 15/23 REINF.PVC TRANSP.	
0710	90166-0108	-	MM	870	TUBE 6 MM PA,TRANSP.	
0730	90417-0180	A		1	TIMING BELT T10X920X40 POLYURETH	
0740	311103-0399	-		8	PARALLEL PIN ISO 2338 8M6X16 A1	
0750	312105-0295	-		2	SCREW M6S ISO4017 M4X20 A480	
0760	312105-0327	-		2	SCREW M6S ISO 4017 M5X12 A480	
0770	312105-0329	-		1	SCREW M6S ISO 4017 M5X16 A480	
0780	312105-0362	-		1	SCREW M6S ISO 4017 M6X8 A480	
0790	312105-0364	-		8	SCREW M6S ISO 4017 M6X10 A480	
0800	312105-0367	-		15	SCREW M6S M6X14 A280	
0810	312105-0368	-		6	SCREW M6S M6X16 A280	
0820	312105-0370	-		1	SCREW M6S ISO 4017 M6X20 A480	
0830	312105-0376	-		2	SCREW M6S ISO 4014 M6X35 A480	

Machine Type | Group Description | Used-In | Group Number | Page No

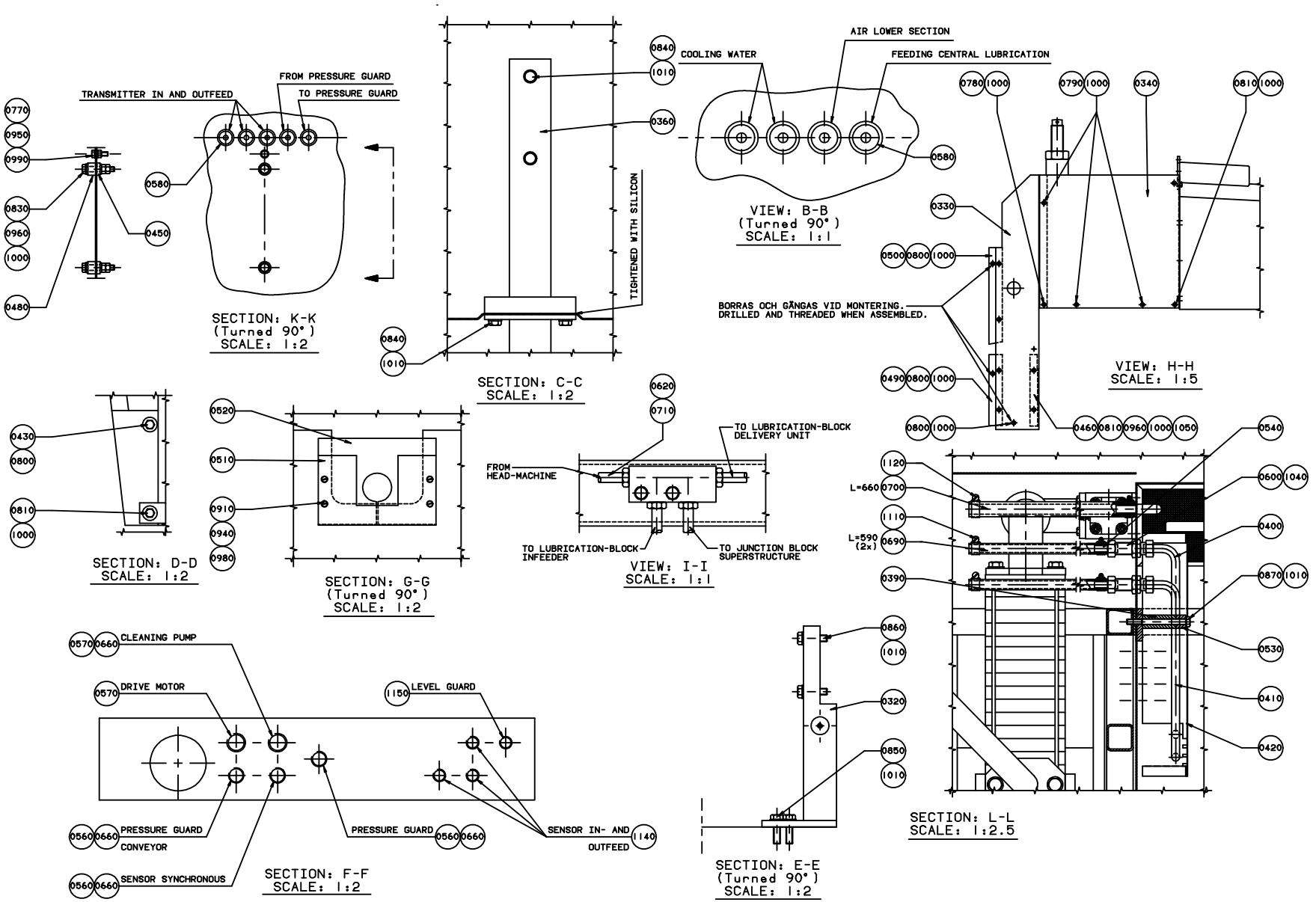
TRANSMITTER IN AND OUTFEED
FROM PRESSURE GUARD
TO PRESSURE GUARD
SECTION: K-K
(Turned 90°)
SCALE: 1:2
TIGHTENED WITH SILICON
SECTION: C-C
SCALE: 1:2
COOLING WATER
AIR LOWER SECTION
FEEDING CENTRAL LUBRICATION
VIEW: B-B
(Turned 90°)
SCALE: 1:1
BORRAS OCH GÄNGAS VID MONTERING.
DRILLED AND THREADED WHEN ASSEMBLED.
VIEW: H-H
SCALE: 1:5
SECTION: D-D
SCALE: 1:2
SECTION: G-G
(Turned 90°)
SCALE: 1:2
FROM HEAD-MACHINE
TO LUBRICATION-BLOCK DELIVERY UNIT
TO LUBRICATION-BLOCK INFEEDER
TO JUNCTION BLOCK SUPERSTRUCTURE
VIEW: I-I
SCALE: 1:1
L=660
L=590 (2x)
SECTION: L-L
SCALE: 1:2.5
CLEANING PUMP
DRIVE MOTOR
LEVEL GUARD
PRESSURE GUARD CONVEYOR
PRESSURE GUARD
SENSOR IN- AND OUTFEED
SENSOR SYNCHRONOUS
SECTION: F-F
SCALE: 1:2
SECTION: E-E
(Turned 90°)
SCALE: 1:2

Pos	Part No	SP	UN	Qty	Description	Page No
Common Parts (Cont'd)						
0840	312105-0451	-		23	SCREW M6S ISO 4017 M8X20 A480	
0850	312105-0453	-		8	SCREW M6S ISO 4017 M8X25 A480	
0860	312105-0455	-		4	SCREW M6S ISO 4017 M8X30 A480	
0870	312105-0469	-		1	SCREW M6S ISO 4014 M8X90 A480	
0880	312105-0495	-		2	SCREW M6S ISO 4017 M10X30 A480	
0890	312105-0542	-		4	SCREW M6S ISO 4014 M12X50 A480	
0900	312125-0287	-		9	SLOTTED CHEESE HEAD SCREW MCS 4X8 SS	
0910	312125-0291	-		4	SLOTTED CHEESE HEAD SCREW MCS 4X12 SS	
0920	312125-0323	-		5	SLOTTED CHEESE HEAD SCREW MCS 5X8 SS	
0930	312155-0366	-		2	SCREW EN 10642 MF6S M6X12 A480	
0940	312605-0312	-		4	HEXAGON NUT, M6M M4 A280	
0950	312605-0314	-		2	HEXAGON NUT, M6M M5 A280	
0960	312605-0316	-		7	HEXAGON NUT, M6M M6 A280	
0970	312605-0322	-		4	HEXAGON NUT, M6M M12 A280	
0980	315105-0136	-		11	WASHER BRB4,3XRFR	
0990	315105-0146	-		4	BRICKA BRB5,3X10RFR	
1000	315105-0153	-		31	WASHER BRB6,4X12RFR	
1010	315105-0165	-		32	WASHER BRB8,4X16RFR	
1020	315105-0173	-		2	WASHER BRB10,5X22RFR	
1030	315105-0178	-		2	WASHER BRB13X24RFR	
1040	315105-0192	-		2	WASHER BRB21X36RFR	
1050	315115-0153	-		3	WASHER PLAIN, TBRB 6,4/12 H=3	
1060	315115-0165	-		4	WASHER PLAIN, TBRB 8,4/16 H=3	
1070	315115-0178	-		6	WASHER PLAIN, TBRB 13/24 H=4	
1080	315202-0229	A		1	O-RING 59,2X5,7 MM	
1090	315250-0103	A		1	GASKET 48X38X5,5 MM	
1100	316810-0106	-		7	PIPE CLIP FOR TUBE D=8 MM	
1110	342991-0101	-		5	HOSE CLIP,WORM DRIVE TYPE (13)-16	
1120	342991-0103	-		2	HOSE CLIP,WORM DRIVE TYPE (19)-23	
1130	342991-0112	-		2	HOSE CLIP,WORM DRIVE TYPE (73)-83	
1140	352103-0100	-		4	CABLE GLAND, STR 9, PR15,2/PG9	
1150	352103-0101	-		1	CABLE GLAND, ST 9, PR15,2/PG9	
1160	352113-0101	-		3	CLIP STRIP, 92X2,5 MM	
1170	352113-0102	-		6	CLIP-STRIP, BLACK 188X4,8 MM	
1180	352113-0204	-		5	ANCHOR PLATES FOR STRIPS, TYPE TM3S25-M	

Pos	Part No	SP	UN	Qty	Description	Page No

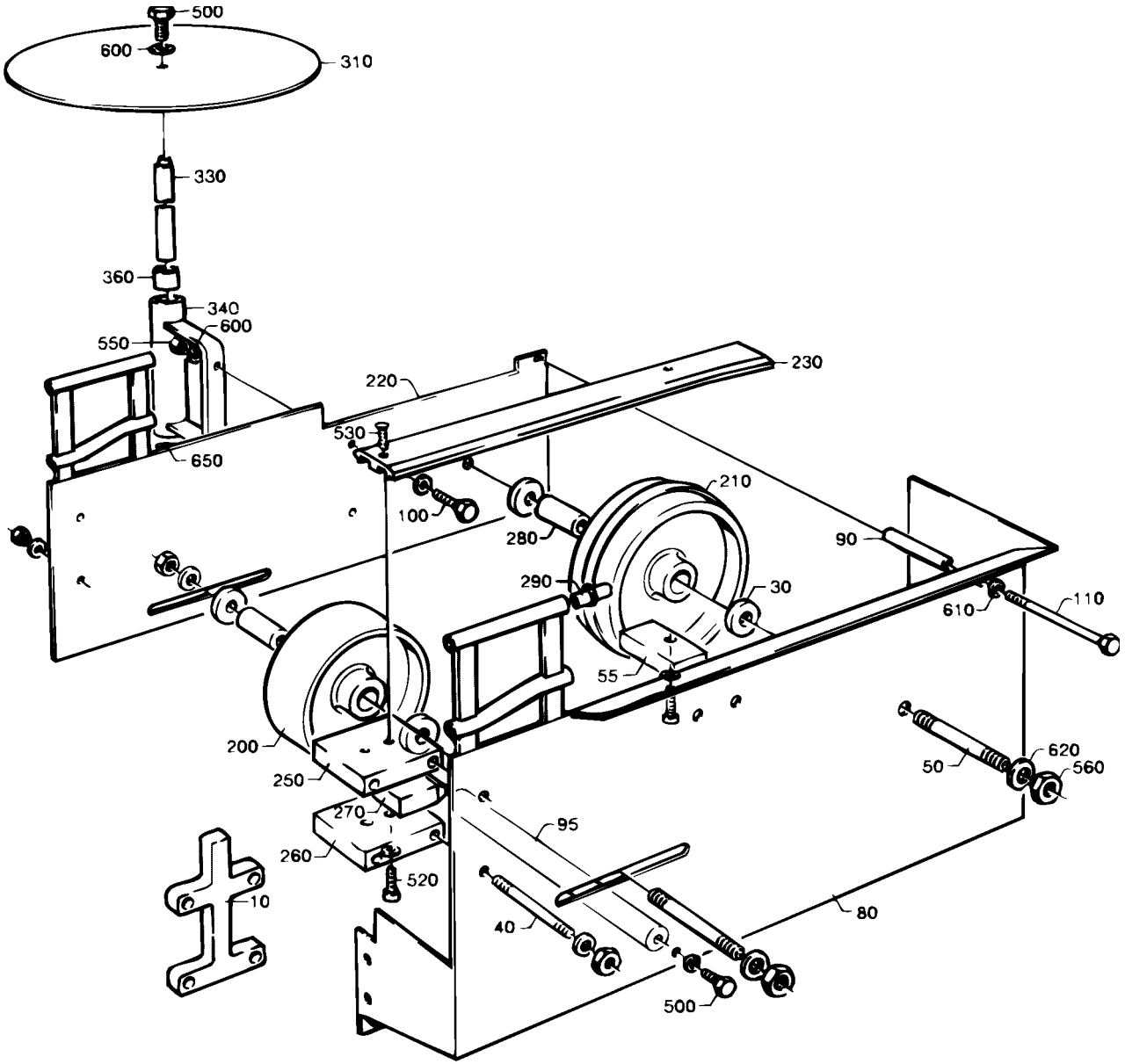
500
600
310
330
360
340
600
550
650
220
230
530
100
210
280
90
290
30
610
110
55
200
250
270
260
520
10
95
40
80
620
50
560
500

ECM: 72197 - 19990215
Group number: 285591-0400
Assembly Drawing: 285591-4_1_AA

Pos	Part No	SP	UN	Qty	Description	Page No
0375S, 0355B, 0500S						
030	229201-0001	C		4	SPACER	
040	229508-0031	C		5	STUD SCREW	
050	229760-0012	C		2	STUD SCREW	
055	237082-0001	D		1	MOUNTING BLOCK	
080	525170-0000	D		1	SIDE PLATE	
090	297574-0001	D		1	SPACER	
095	525171-0002	D		1	BRACKET	
110	312105-0469	-		1	SCREW M6S ISO 4014 M8X90 A480	
220	525054-0000	D		1	SIDE PLATE	
550	312605-0316	-		12	HEXAGON NUT, M6M M6 A280	
0500B, 1000SQ, 1000S, 0750B, 0750S, 1000B						
010	228843-0001	C		2	SPACER	
030	229201-0002	C		4	SPACER	
040	229508-0029	C		5	STUD SCREW	
050	229760-0013	C		2	STUD SCREW	
055	237082-0002	D		1	MOUNTING BLOCK	
080	525169-0000	D		1	SIDE PLATE	
090	297574-0002	D		1	SPACER	
095	525171-0001	D		1	BRACKET	
110	312105-0471	-		1	SCREW M6S ISO 4014 M8X100 A480	
220	297569-0000	D		1	SIDE PLATE	
550	312605-0316	-		14	HEXAGON NUT, M6M M6 A280	
Common Parts						
100	312105-0368	-		2	SCREW M6S M6X16 A280	
200	476975-0000	C		1	WHEEL	
210	245039-0000	C		1	GUIDE WHEEL	
230	442776-0000	D		1	SLIDE RAIL	
250	228845-0000	C		1	MOUNTING BLOCK	
260	229202-0000	C		1	MOUNTING BLOCK	
270	229206-0000	D		1	LOCATING PIECE	
280	229207-0000	C		2	BEARING SLEEVE	
290	229516-0000	C		8	PIN	
310	525053-0000	D		1	PLATE (CIRCULAR)	
330	285132-0000	C		1	SHAFT	
340	285133-0000	D		1	CANTILEVER	
360	525252-0000	C		2	BEARING	
490	312105-0362	-		2	SCREW M6S ISO 4017 M6X8 A480	
500	312105-0367	-		5	SCREW M6S M6X14 A280	
510	312105-0449	-		1	SCREW M6S ISO 4017 M8X16 A480	
520	312115-0368	-		1	SCREW ISO4762 M6X16 A4	
530	312155-0370	-		3	SCREW EN 10642 MF6S M6X20 A480	
555	312605-0318	-		1	HEXAGON NUT, M6M M8 A280	
560	312605-0320	-		4	HEXAGON NUT, M6M M10 A280	
600	315105-0153	-		19	WASHER BRB6,4X12RFR	
610	315105-0165	-		3	WASHER BRB8,4X16RFR	
620	315105-0173	-		4	WASHER BRB10,5X22RFR	
650	315755-0113	-		1	LOCKING WASHER 15	

Machine Type | Group Description | Used-In | Group Number | Page No

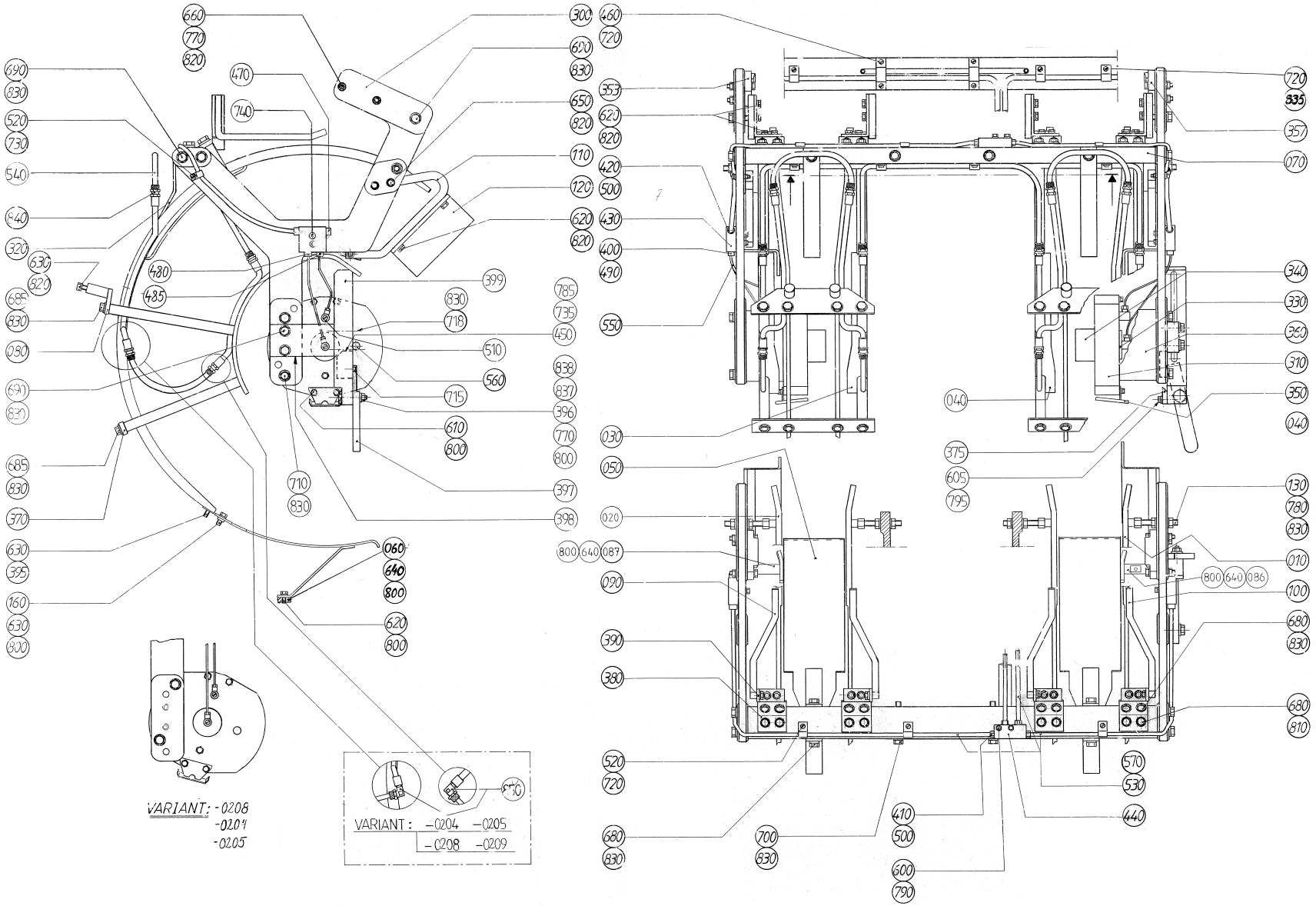
VARIANT: -0208
-0209
-0205
VARIANT : -0204 -0205
-0208 -0209

ECM: 72353 - 19990525
Group number: 525000-0300
Assembly Drawing: 525000-2_1_AB

This list covers pages from 5-40 to 5-47

Pos	Part No	SP	UN	Qty	Description	Page No
0355B						
010	525002-0000	D		2	FOLDING BAR	
020	525004-0000	D		2	FOLDING BAR	
030	525005-0009	D		2	FOLDING BAR	
040	525006-0009	D		2	FOLDING BAR	
050	525341-0002	C		2	LEAD RAIL	
070	525007-0002	D		1	CANTILEVER	
080	525008-0002	D		2	BRACKET	
090	525180-0002	D		2	FOLDING ARM	
100	525179-0002	D		2	FOLDING ARM	
110	525011-0009	D		2	BRACKET	
120	525182-0002	D		2	COUNTER PLATE	
130	525015-0002	D		4	SCREW	
160	315115-0153	-		2	WASHER PLAIN, TBRB 6,4/12 H=3	
397	525295-0000	D		1	ARM	
399	525297-0000	D		1	BRACKET	
800	315105-0153	-		17	WASHER BRB6,4X12RFR	
840	342920-0121	-		8	STRAIGHT COUPLING,EXT.THREADED 8/6-R1/8"	
850	342930-0121	-		8	ELBOW 90 COUPL.,EXT.THREAD 8/6-R1/8"	
0375S						
010	525002-0000	D		2	FOLDING BAR	
020	525004-0000	D		2	FOLDING BAR	
030	525005-0007	D		2	FOLDING BAR	
040	525006-0007	D		2	FOLDING BAR	
050	525341-0002	C		2	LEAD RAIL	
070	525007-0003	D		1	CANTILEVER	
080	525008-0002	D		2	BRACKET	
090	525180-0002	D		2	FOLDING ARM	
100	525179-0002	D		2	FOLDING ARM	
110	525011-0007	D		2	BRACKET	
120	525014-0001	D		2	COUNTER PLATE	
130	525015-0003	D		4	SCREW	
160	315115-0153	-		2	WASHER PLAIN, TBRB 6,4/12 H=3	
397	525295-0000	D		1	ARM	
399	525297-0000	D		1	BRACKET	
800	315105-0153	-		17	WASHER BRB6,4X12RFR	
840	342920-0121	-		16	STRAIGHT COUPLING,EXT.THREADED 8/6-R1/8"	
0500B						
010	525001-0000	D		2	FOLDING BAR	
020	525003-0000	D		2	FOLDING BAR	
030	525005-0005	D		2	FOLDING BAR	
040	525006-0005	D		2	FOLDING BAR	
050	525341-0001	C		2	LEAD RAIL	
070	525007-0001	D		1	CANTILEVER	
080	525008-0003	D		2	BRACKET	
090	525180-0001	D		2	FOLDING ARM	
100	525179-0001	D		2	FOLDING ARM	
110	525011-0005	D		2	BRACKET	
120	525012-0005	D		2	COUNTER PLATE	
130	525015-0001	D		4	SCREW	
397	525295-0000	D		1	ARM	
399	525297-0000	D		1	BRACKET	
800	315105-0153	-		17	WASHER BRB6,4X12RFR	
840	342920-0121	-		8	STRAIGHT COUPLING,EXT.THREADED 8/6-R1/8"	
850	342930-0121	-		8	ELBOW 90 COUPL.,EXT.THREAD 8/6-R1/8"	
0500S						
010	525002-0000	D		2	FOLDING BAR	
020	525004-0000	D		2	FOLDING BAR	
030	525005-0006	D		2	FOLDING BAR	
040	525006-0006	D		2	FOLDING BAR	
050	525341-0002	C		2	LEAD RAIL	
070	525007-0002	D		1	CANTILEVER	
080	525008-0002	D		2	BRACKET	
090	525180-0002	D		2	FOLDING ARM	
100	525179-0002	D		2	FOLDING ARM	
110	525011-0006	D		2	BRACKET	
120	525182-0001	D		2	COUNTER PLATE	
130	525015-0002	D		4	SCREW	
160	315115-0153	-		2	WASHER PLAIN, TBRB 6,4/12 H=3	
397	525295-0000	D		1	ARM	
399	525297-0000	D		1	BRACKET	
800	315105-0153	-		17	WASHER BRB6,4X12RFR	
840	342920-0121	-		16	STRAIGHT COUPLING,EXT.THREADED 8/6-R1/8"	
0750B						
010	525001-0000	D		2	FOLDING BAR	
020	525003-0000	D		2	FOLDING BAR	
030	525005-0003	D		2	FOLDING BAR	
040	525006-0003	D		2	FOLDING BAR	
050	525341-0001	C		2	LEAD RAIL	
070	525007-0001	D		1	CANTILEVER	

Machine Type | Group Description | Used-In | Group Number | Page No

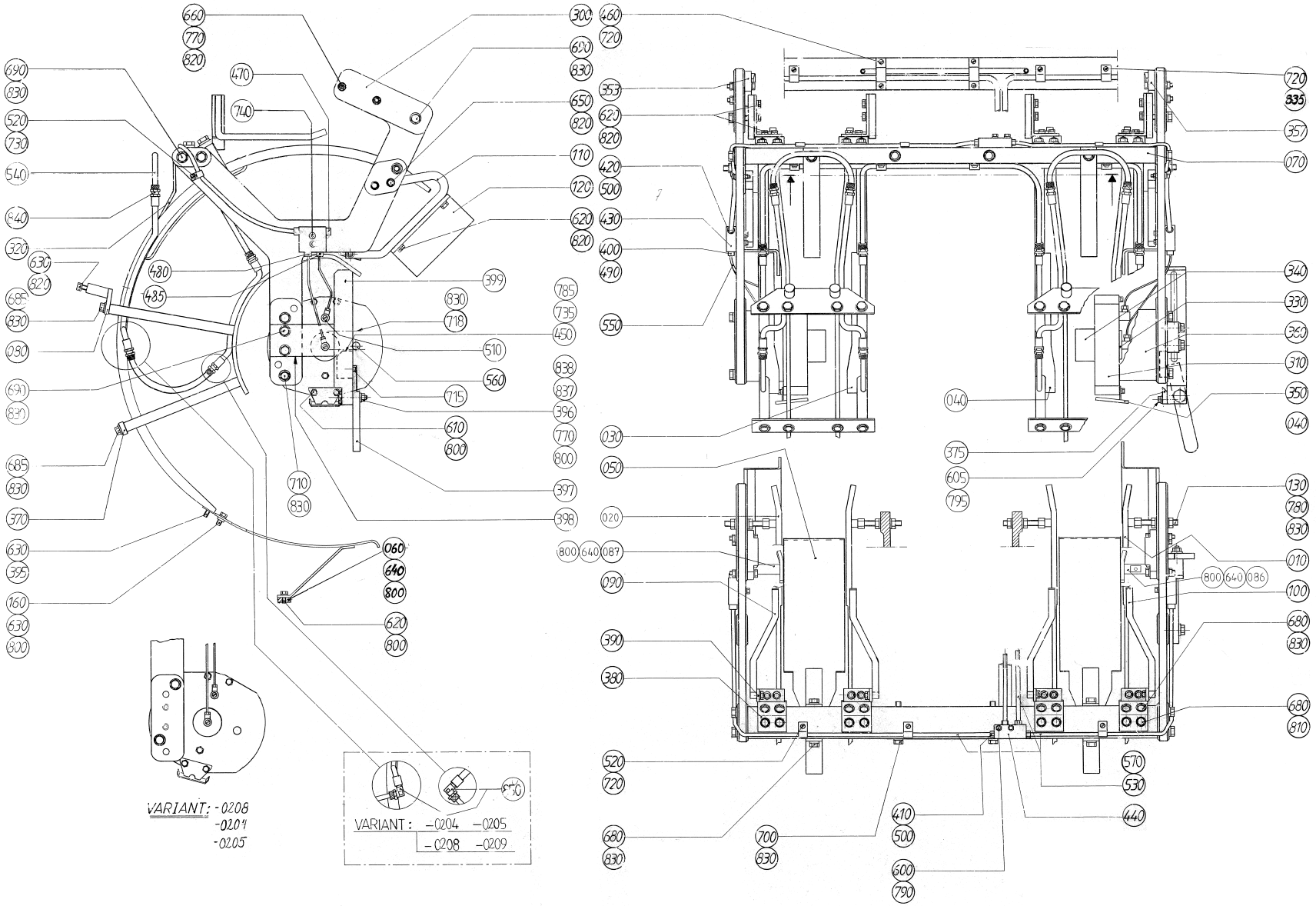
VARIANT: -0208
-0209
-0205
VARIANT : -0204 -0205
-0208 -0209

ECM: 72353 - 19990525
Group number: 525000-0300
Assembly Drawing: 525000-2_1_AB

This list covers pages from 5-40 to 5-47

Pos	Part No	SP	UN	Qty	Description	Page No
0750B (Cont'd)						
080	525008-0002	D		2	BRACKET	
090	525180-0001	D		2	FOLDING ARM	
100	525179-0001	D		2	FOLDING ARM	
110	525011-0003	D		2	BRACKET	
120	525012-0003	D		2	COUNTER PLATE	
130	525015-0001	D		4	SCREW	
397	525295-0000	D		1	ARM	
399	525297-0000	D		1	BRACKET	
800	315105-0153	-		17	WASHER BRB6,4X12RFR	
840	342920-0121	-		16	STRAIGHT COUPLING,EXT.THREADED 8/6-R1/8"	
0750S						
010	525001-0000	D		2	FOLDING BAR	
020	525003-0000	D		2	FOLDING BAR	
030	525005-0001	D		2	FOLDING BAR	
040	525006-0001	D		2	FOLDING BAR	
050	525341-0001	C		2	LEAD RAIL	
070	525007-0004	D		1	CANTILEVER	
080	525008-0001	D		2	BRACKET	
090	525180-0002	D		2	FOLDING ARM	
100	525179-0002	D		2	FOLDING ARM	
110	525011-0002	D		2	BRACKET	
120	525438-0000	D		2	COUNTER PLATE	
130	525015-0002	D		4	SCREW	
397	525295-0000	D		1	ARM	
399	525297-0000	D		1	BRACKET	
800	315105-0153	-		17	WASHER BRB6,4X12RFR	
840	342920-0121	-		16	STRAIGHT COUPLING,EXT.THREADED 8/6-R1/8"	
1000B						
010	525001-0000	D		2	FOLDING BAR	
020	525003-0000	D		2	FOLDING BAR	
030	525005-0002	D		2	FOLDING BAR	
040	525006-0002	D		2	FOLDING BAR	
050	525341-0001	C		2	LEAD RAIL	
070	525007-0001	D		1	CANTILEVER	
080	525008-0001	D		2	BRACKET	
090	525180-0001	D		2	FOLDING ARM	
100	525179-0001	D		2	FOLDING ARM	
110	525011-0002	D		2	BRACKET	
120	525012-0002	D		2	COUNTER PLATE	
130	525015-0001	D		4	SCREW	
397	525295-0000	D		1	ARM	
399	525297-0000	D		1	BRACKET	
800	315105-0153	-		17	WASHER BRB6,4X12RFR	
840	342920-0121	-		16	STRAIGHT COUPLING,EXT.THREADED 8/6-R1/8"	
1000S						
010	525001-0000	D		2	FOLDING BAR	
020	525003-0000	D		2	FOLDING BAR	
030	569120-0000	D		2	FOLDING BAR	
040	569121-0000	D		2	FOLDING BAR	
050	525410-0000	C		2	LEAD RAIL	
070	525007-0001	D		1	CANTILEVER	
080	525008-0001	D		2	BRACKET	
086	573486-0000	D		1	STEERING	
087	573487-0000	D		1	STEERING	
090	569122-0000	D		2	FOLDING ARM	
100	569123-0000	D		2	FOLDING ARM	
110	573485-0000	D		2	BRACKET	
120	525012-0001	D		2	COUNTER PLATE	
130	525015-0001	D		4	SCREW	
397	550359-0000	D		1	ARM	
399	525297-0000	D		1	BRACKET	
640	312105-0370	-		2	SCREW M6S ISO 4017 M6X20 A480	
800	315105-0153	-		19	WASHER BRB6,4X12RFR	
840	342920-0121	-		16	STRAIGHT COUPLING,EXT.THREADED 8/6-R1/8"	
1000SQ NORMFIN						
010	525001-0000	D		2	FOLDING BAR	
020	525003-0000	D		2	FOLDING BAR	
030	574045-0000	D		2	FOLDING BAR	
040	574046-0000	D		2	FOLDING BAR	
050	574047-0000	C		2	LEAD RAIL	
070	525007-0002	D		1	CANTILEVER	
080	525008-0001	D		2	BRACKET	
086	574097-0000	D		1	STEERING	
087	574098-0000	D		1	STEERING	
090	569122-0000	D		2	FOLDING ARM	
100	569123-0000	D		2	FOLDING ARM	
110	574048-0000	D		2	BRACKET	
120	574049-0000	D		2	COUNTER PLATE	
130	525015-0002	D		4	SCREW	

Machine Type | Group Description | Used-In | Group Number | Page No

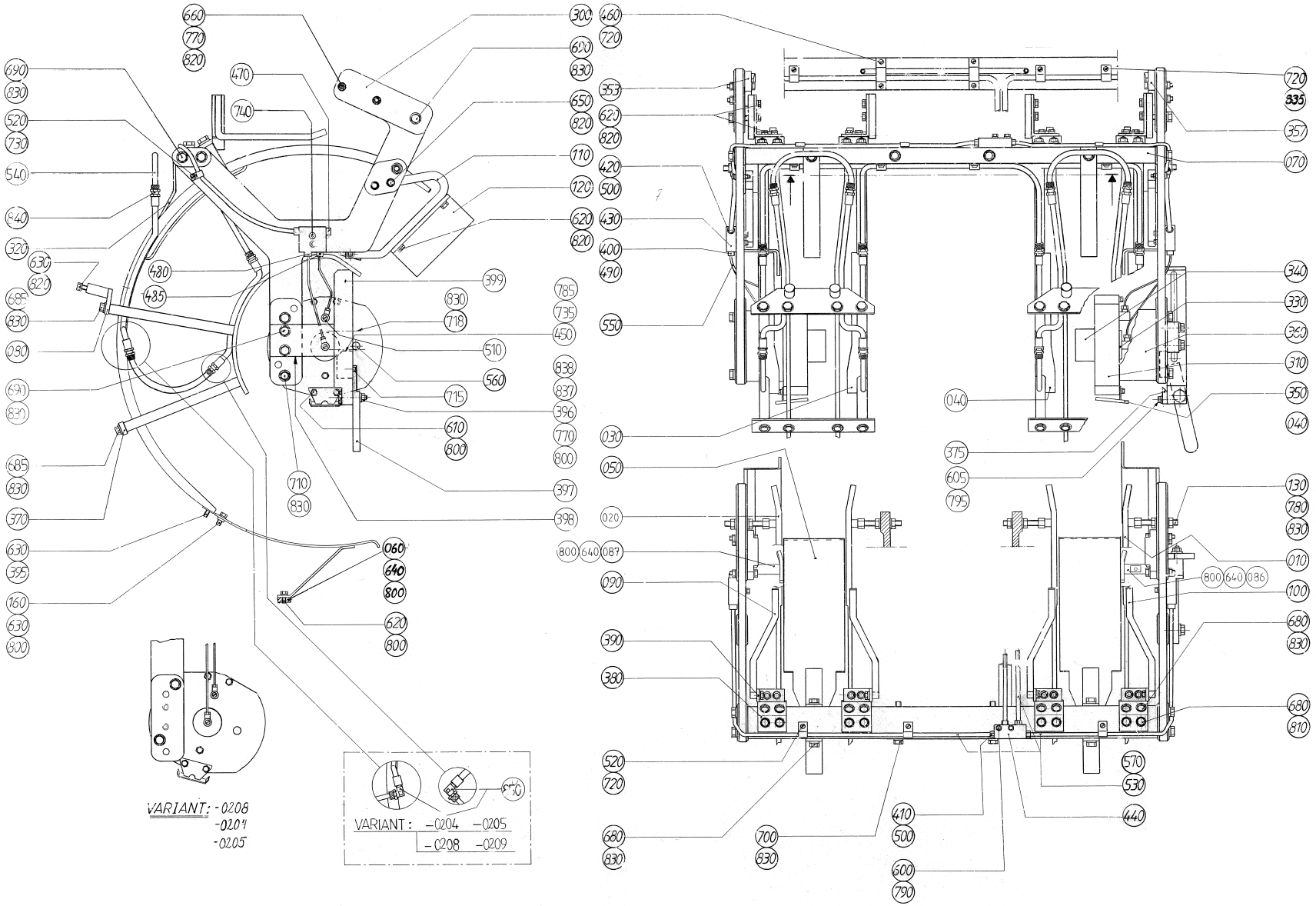
VARIANT: -0208
-0209
-0205
VARIANT : -0204 -0205
-0208 -0209

ECM: 72353 - 19990525
Group number: 525000-0300
Assembly Drawing: 525000-2_1_AB

This list covers pages from 5-40 to 5-47

Pos	Part No	SP	UN	Qty	Description	Page No
1000SQ NORMFIN (Cont'd)						
397	550359-0000	D		1	ARM	
399	574125-0000	D		1	BRACKET	
640	312105-0370	-		2	SCREW M6S ISO 4017 M6X20 A480	
800	315105-0153	-		19	WASHER BRB6,4X12RFR	
840	342920-0121	-		16	STRAIGHT COUPLING,EXT.THREADED 8/6-R1/8"	
1000SQ REVFIN						
010	525001-0000	D		2	FOLDING BAR	
020	525003-0000	D		2	FOLDING BAR	
030	597537-0000	D		2	FOLDING BAR	
040	597536-0000	D		2	FOLDING BAR	
050	574047-0000	C		2	LEAD RAIL	
070	525007-0002	D		1	CANTILEVER	
080	525008-0001	D		2	BRACKET	
086	574097-0000	D		1	STEERING	
087	574098-0000	D		1	STEERING	
090	569122-0000	D		2	FOLDING ARM	
100	569123-0000	D		2	FOLDING ARM	
110	574048-0000	D		2	BRACKET	
120	574049-0000	D		2	COUNTER PLATE	
130	525015-0002	D		4	SCREW	
397	550359-0000	D		1	ARM	
399	574125-0000	D		1	BRACKET	
640	312105-0370	-		2	SCREW M6S ISO 4017 M6X20 A480	
800	315105-0153	-		19	WASHER BRB6,4X12RFR	
840	342920-0121	-		16	STRAIGHT COUPLING,EXT.THREADED 8/6-R1/8"	
Common Parts						
300	525016-0000	D		2	FASTENING PLATE	
310	574050-0000	D		2	CURVE	
320	525017-0000	D		2	STEERING GUIDE	
330	285168-0000	D		2	BUSHING	
340	285851-0000	C		2	BEARING	
350	443240-0000	-		2	DRIP PLATE	
353	442564-0000	C		1	CURVE	
357	442565-0000	C		1	CURVE	
360	525018-0000	-		2	SPACER	
370	525019-0000	D		2	BRACKET	
375	525360-0000	D		1	BRACKET	
380	525340-0000	D		4	BRACKET	
390	525178-0000	D		4	BRACKET	
395	525181-0000	-		2	WASHER	
396	525321-0000	C		1	SCREW	
398	525296-0000	-		1	BRACKET	
400	90028-0020	C		4	CONE TUBE 2,5MM	
410	90028-0022	C		4	CONE TUBE 6 MM	
420	90028-0025	C		2	CONE TUBE 6 MM	
430	90032-0038	-		2	BLOCK 2 WAYS	
440	90032-0044	-		1	DISTRIBUTION BLOCK 4 WAYS	
450	90044-0104	C		1	PROX.SWITCH IFM IN 3002	
460	90074-0018	-		2	CABLE CLIPS, D=2X10 MM	
470	90087-0019	-		2	PLUG M10X1 STAINLESS	
480	90092-0052	C		2	METERING VALVE 10 MM3	
485	90092-0053	C		2	METERING VALVE 30 MM3	
490	90134-0039	C		4	BUSHING VALVE CONNECTION 2,5 MM	
500	90134-0055	C		6	BUSHING/NUT INLET/OUTLET 6 MM	
510	90134-0058	-		4	CONNECTION	
520	90165-0057	-		5	PIPE CLIP FOR TUBE D=6 MM	
530	90166-0108	-	MM	5200	TUBE 6 MM PA,TRANSP.	
540	90166-0122	-	MM	6000	TUBE 8 MM PA,TRANSP.	
550	90166-0143	-	MM	2000	TUBE 2,5 MM PA,TRANSP.	
560	90261-0032	-		4	PLUG, BLIND, PLASTIC, NO. 1073	
570	90134-0030	-		6	SLEEVE FOR PLASTIC TUBE	
600	312105-0295	-		2	SCREW M6S ISO4017 M4X20 A480	
605	312105-0327	-		2	SCREW M6S ISO 4017 M5X12 A480	
610	312105-0364	-		10	SCREW M6S ISO 4017 M6X10 A480	
620	312105-0366	-		24	SCREW M6S M6X12 A280	
630	312105-0368	-		10	SCREW M6S M6X16 A280	
650	312105-0374	-		4	SCREW M6S ISO 4014 M6X30 A480	
660	312105-0378	-		4	SCREW M6S ISO 4014 M6X40 A480	
680	312105-0449	-		20	SCREW M6S ISO 4017 M8X16 A480	
685	312105-0451	-		16	SCREW M6S ISO 4017 M8X20 A480	
690	312105-0455	-		8	SCREW M6S ISO 4017 M8X30 A480	
700	312105-0464	-		2	SCREW M6S ISO 4014 M8X65 A480	
710	312105-0469	-		4	SCREW M6S ISO 4014 M8X90 A480	
715	312115-0323	-		1	SCREW ISO4762 M5X8 A4	
718	312115-0455	-		2	SCREW ISO4762 M8X30 A4	
720	312125-0287	-		10	SLOTTED CHEESE HEAD SCREW MCS 4X8 SS	
730	312125-0291	-		2	SLOTTED CHEESE HEAD SCREW MCS 4X12 SS	
735	312125-0230	-		2	SLOTTED CHEESE HEAD SCREW MCS 3X20 SS	
740	312155-0297	-		4	SCREW EN 10642 MF6S M4X25 A480	
770	312605-0316	-		5	HEXAGON NUT, M6M M6 A280	
780	312605-0318	-		8	HEXAGON NUT, M6M M8 A280	

Machine Type | Group Description | Used-In | Group Number | Page No

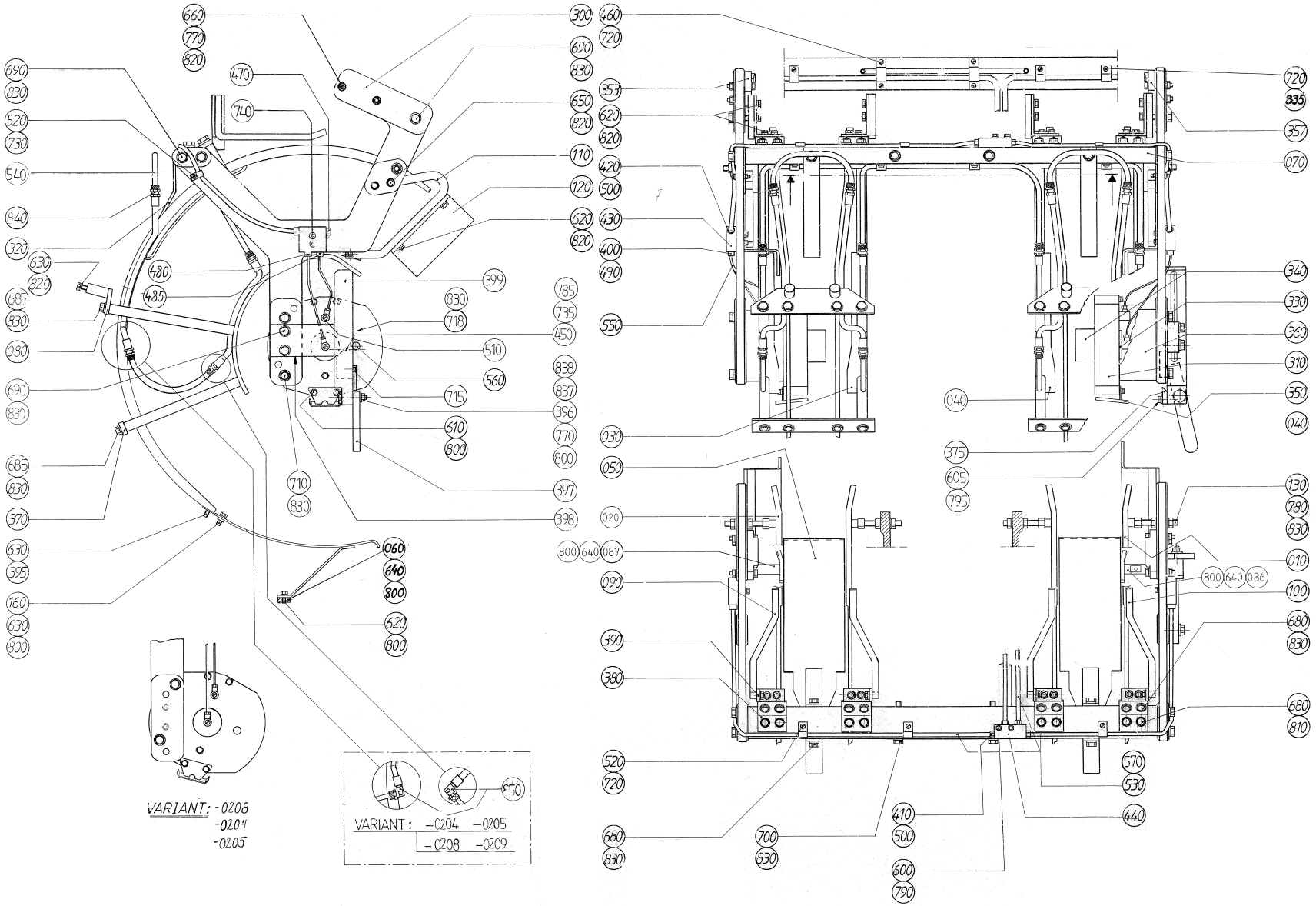
VARIANT: -0208
-0209
-0205
VARIANT : -0204 -0205
-0208 -0209

Pos	Part No	SP	UN	Qty	Description	Page No
Common Parts (Cont'd)						
785	315105-0124	-		2	BRICKA BRB3,2X6RFR	
790	315105-0136	-		2	WASHER BRB4,3XRFR	
795	315105-0146	-		2	BRICKA BRB5,3X10RFR	
810	315105-0165	-		8	WASHER BRB8,4X16RFR	
820	315115-0153	-		40	WASHER PLAIN, TBRB 6,4/12 H=3	
830	315115-0165	-		52	WASHER PLAIN, TBRB 8,4/16 H=3	
835	316810-0106	-		3	PIPE CLIP FOR TUBE D=8 MM	
837	321116-0127	C		1	BEAR. BUSH. WITHOUT FL, 10X14X10 MM	
838	321116-0128	C		1	BEAR. BUSH. WITHOUT FL, 10X14X16 MM	

Pos	Part No	SP	UN	Qty	Description	Page No

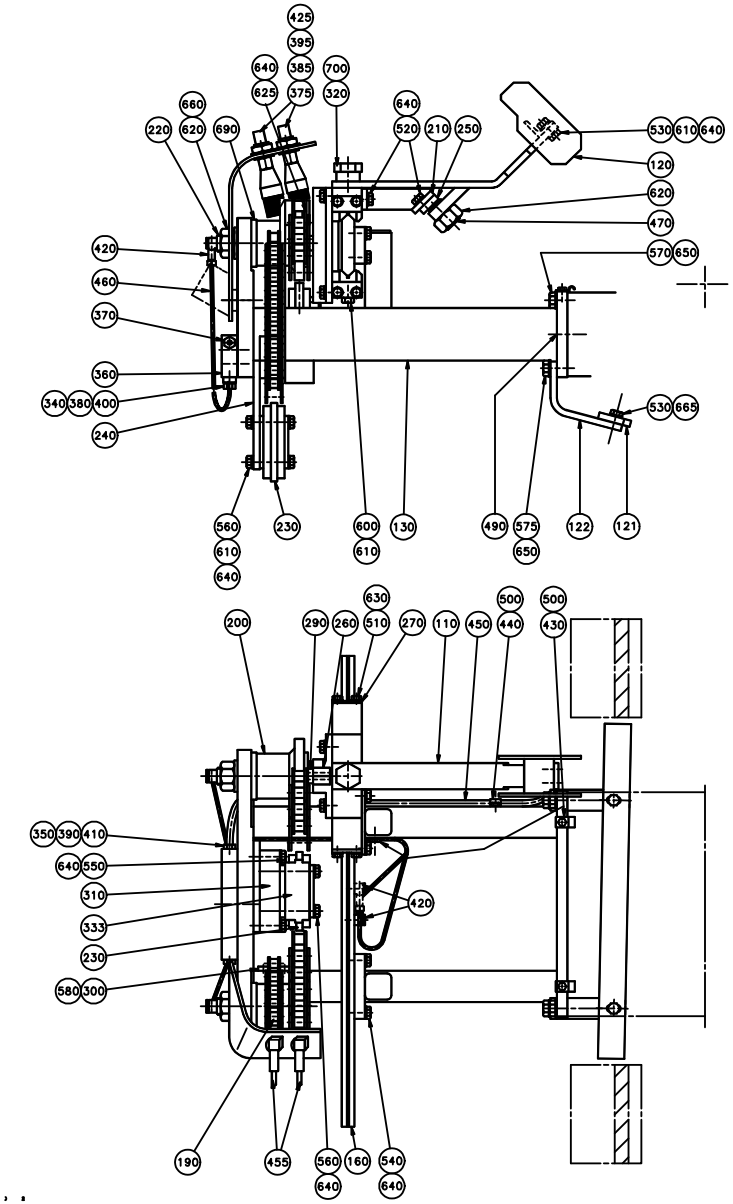
425
395
640
385
700
625
375
320
660
640
220
620
690
520
210
250
530
610
640
120
620
470
420
570
650
460
370
360
340
380
400
530
665
240
560
610
640
230
600
610
130
490
575
650
122
121
630
500
500
200
290
260
510
270
110
450
440
430
350
390
410
640
550
310
333
230
420
580
300
190
455
560
640
160
540
640

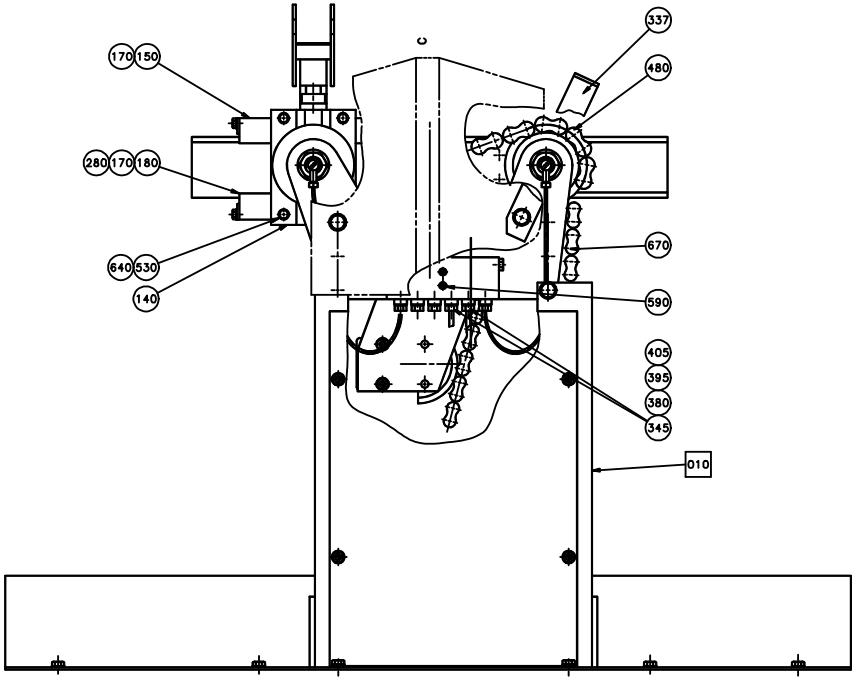
337
170
150
480
280
170
180
670
640
530
140
590
405
395
380
345
010

ECM: 80740 - 20001006
Group number: 525213-0200
Assembly Drawing: 525213-2_1_AA

This list covers pages from 5-48 to 5-51

Pos	Part No	SP	UN	Qty	Description	Page No
0375S						
110	525302-0000	D		1	ARM	
120	525309-0000	D		1	DISTRIBUTOR	
530	312105-0368	-		6	SCREW M6S M6X16 A280	
570	312105-0453	-		4	SCREW M6S ISO 4017 M8X25 A480	
0355B						
110	525304-0000	D		1	ARM	
120	525308-0000	D		1	DISTRIBUTOR	
530	312105-0368	-		6	SCREW M6S M6X16 A280	
570	312105-0453	-		4	SCREW M6S ISO 4017 M8X25 A480	
0500B						
110	525303-0000	D		1	ARM	
120	525307-0000	D		1	DISTRIBUTOR	
530	312105-0368	-		6	SCREW M6S M6X16 A280	
570	312105-0453	-		4	SCREW M6S ISO 4017 M8X25 A480	
0500S						
110	525304-0000	D		1	ARM	
110	525302-0000	D		1	ARM	
120	525308-0000	D		1	DISTRIBUTOR	
530	312105-0368	-		6	SCREW M6S M6X16 A280	
570	312105-0453	-		4	SCREW M6S ISO 4017 M8X25 A480	
0750B						
110	525302-0000	D		1	ARM	
120	525306-0000	D		1	DISTRIBUTOR	
530	312105-0368	-		6	SCREW M6S M6X16 A280	
570	312105-0453	-		4	SCREW M6S ISO 4017 M8X25 A480	
0750S						
110	525301-0000	D		1	ARM	
120	544318-0000	D		1	DISTRIBUTOR	
530	312105-0368	-		6	SCREW M6S M6X16 A280	
570	312105-0453	-		4	SCREW M6S ISO 4017 M8X25 A480	
1000S						
110	525301-0000	D		1	ARM	
120	569129-0000	D		1	DISTRIBUTOR	
121	525417-0000	-		1	STEERING	
122	525418-0000	-		2	HOLDER	
530	312105-0368	-		8	SCREW M6S M6X16 A280	
570	312105-0453	-		2	SCREW M6S ISO 4017 M8X25 A480	
575	312105-0455	-		2	SCREW M6S ISO 4017 M8X30 A480	
665	315115-0153	-		2	WASHER PLAIN, TBRB 6,4/12 H=3	
1000SQ						
110	525301-0000	D		1	ARM	
120	574056-0000	D		1	DISTRIBUTOR	
121	574099-0000	-		1	STEERING	
122	574058-0000	-		2	HOLDER	
530	312105-0368	-		8	SCREW M6S M6X16 A280	
570	312105-0453	-		2	SCREW M6S ISO 4017 M8X25 A480	
575	312105-0455	-		2	SCREW M6S ISO 4017 M8X30 A480	
665	315115-0153	-		2	WASHER PLAIN, TBRB 6,4/12 H=3	
1000B						
110	525301-0000	D		1	ARM	
120	525305-0000	D		1	DISTRIBUTOR	
530	312105-0368	-		6	SCREW M6S M6X16 A280	
570	312105-0453	-		4	SCREW M6S ISO 4017 M8X25 A480	
Common Parts						
130	525310-0000	-		1	BRACKET	
140	443229-0000	C		1	BRACKET	
150	525140-0000	D		1	HOLDER	
160	1478881-0000	B		1	GUIDE	
170	442931-0000	C		2	SLIDE RAIL	
180	443232-0000	D		1	HOLDER	
190	443235-0000	C		1	SPROCKET	
200	525194-0000	C		1	SPROCKET	
210	525200-0000	C		1	BRACKET	
220	525312-0000	C		2	SHAFT	
230	90344-0049	D		2	CHAIN TENSIONER	
240	566533-0000	D		1	BRACKET	
250	597564-0000	D		1	PLATE	
260	443237-0000	C		1	SLIDER	
270	443239-0000	-		4	WASHER	
280	525138-0000	C		1	SHEET	
290	525195-0000	C		1	WASHER	
300	525315-0000	D		1	SLIDER	
310	566312-0000	D		1	BRACKET	
320	525317-0000	C		1	FITTING BOLT	

Machine Type | Group Description | Used-In | Group Number | Page No

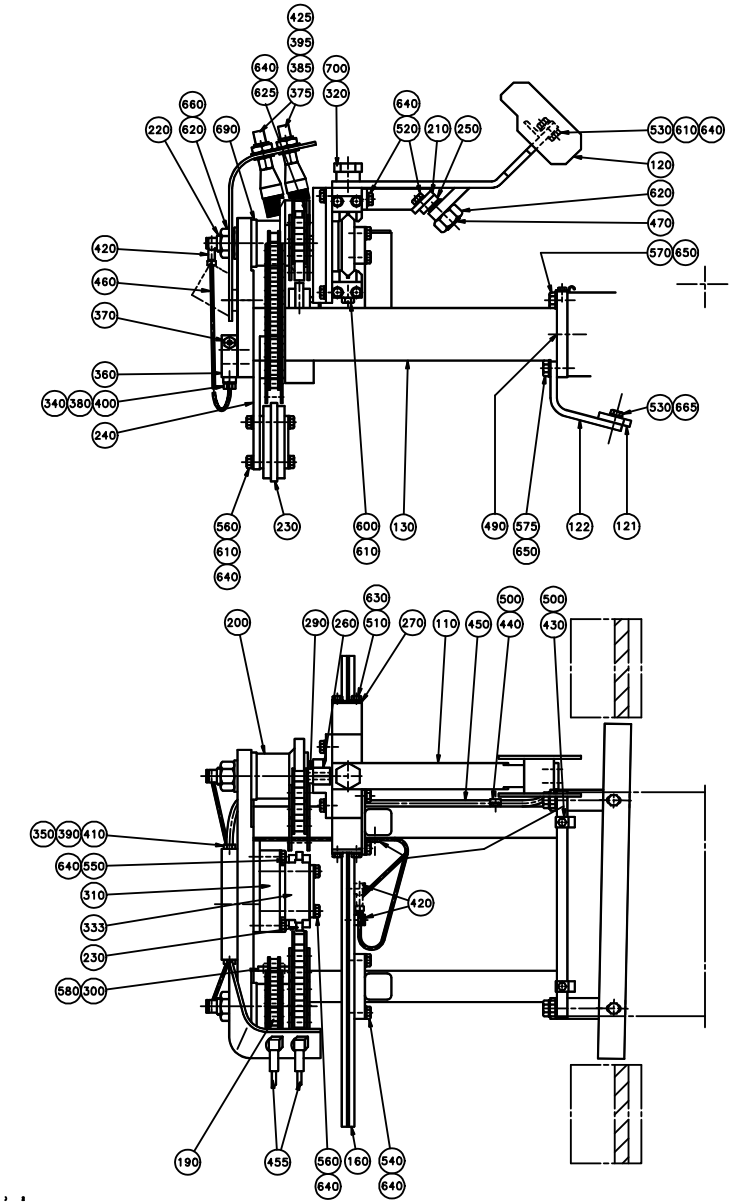
425
395
640
385
700
625
375
320
660
640
220
620
690
520
210
250
530
610
640
120
620
470
420
570
650
460
370
360
340
380
400
530
665
240
560
610
640
230
600
610
130
490
575
650
122
121
630
500
500
200
290
260
510
270
110
450
440
430
350
390
410
640
550
310
333
420
230
580
300
190
455
560
640
160
540
640

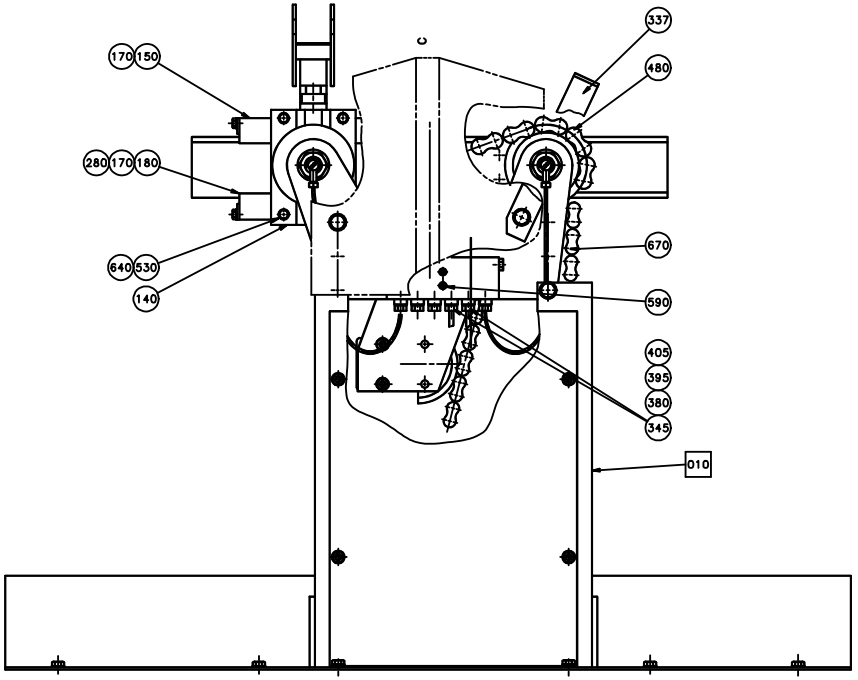
337
170
150
480
280
170
180
670
640
530
140
590
405
395
380
345
010

ECM: 80740 - 20001006
Group number: 525213-0200
Assembly Drawing: 525213-2_1_AA

This list covers pages from 5-48 to 5-51

Pos	Part No	SP	UN	Qty	Description	Page No
Common Parts (Cont'd)						
333	566311-0000	D		1	PROFILE	
337	566315-0000	-		1	HOLDER	
340	90028-0020	C		4	CONE TUBE 2,5MM	
345	90028-0021	-		2	CONE TUBE 4 MM	
350	90028-0025	C		1	CONE TUBE 6 MM	
360	90032-0040	-		1	BLOCK 6 WAYS	
370	90087-0019	-		1	PLUG M10X1 STAINLESS	
375	90092-0048	C		2	OIL BRUSH, FLAT, 5/16-24 UNF	
380	90092-0052	C		6	METERING VALVE 10 MM3	
385	90134-0002	-		2	CONNECTOR R1/8, D=4 MM	
390	90134-0030	-		2	SLEEVE FOR PLASTIC TUBE	
395	342706-0114	-		4	ACCESSORIES, INSERT SLEEVE 4 MM	
400	90134-0039	C		4	BUSHING VALVE CONNECTION 2,5 MM	
405	90134-0040	C		2	BUSHING VALVE CONNECTION 4 MM	
410	90134-0055	C		1	BUSHING/NUT INLET/OUTLET 6 MM	
420	90134-0058	-		4	CONNECTION	
425	90137-0002	-		2	BANJO CONN. 1/8 - 5/16-24UNF	
430	90165-0056	-		3	PIPE CLIP FOR TUBE D=4 MM	
440	90165-0057	-		2	PIPE CLIP FOR TUBE D=6 MM	
450	90166-0108	-	MM	1400	TUBE 6 MM PA,TRANSP.	
455	90166-0051	-	MM	600	TUBE PA,TRANSP.	
460	90166-0143	-	MM	1200	TUBE 2,5 MM PA,TRANSP.	
470	90287-0109	C		1	SCREW SPRINGLOAD. SLOTTED HEAD M16X24	
480	B90288-0055	C		1	ROLLER CHAIN, SINGLE 5/8 -42	
	90288-0324	*C*		*1*	*CARRIER*	
	90288-0317	*C*		*1*	*CONNECTING LINK SINGLE 5/8",SS*	
490	311103-0399	-		2	PARALLEL PIN ISO 2338 8M6X16 A1	
500	312105-0287	-		5	SCREW M6S ISO4017 M4X8 A480	
510	312105-0325	-		8	SCREW M6S ISO 4017 M5X10 A480	
520	312105-0366	-		4	SCREW M6S M6X12 A280	
540	312105-0370	-		8	SCREW M6S ISO 4017 M6X20 A480	
550	312105-0376	-		2	SCREW M6S ISO 4014 M6X35 A480	
560	312105-0379	-		4	SCREW M6S ISO 4014 M6X45 A480	
580	312155-0291	-		4	SCREW EN 10642 MF6S M4X12 A480	
590	312155-0297	-		2	SCREW EN 10642 MF6S M4X25 A480	
600	312318-0368	-		2	SCREW ISO4029 M6X16 A4	
610	312605-0316	-		4	HEXAGON NUT, M6M M6 A280	
620	312605-0324	-		3	HEXAGON NUT, M6M M16 A280	
625	312812-0316	-		2	HEXAGON NUT, NY-LOCK M6 A480	
630	315105-0146	-		8	BRICKA BRB5,3X10RFR	
640	315105-0153	-		28	WASHER BRB6,4X12RFR	
650	315105-0165	-		4	WASHER BRB8,4X16RFR	
660	315105-0186	-		2	WASHER BRB17X30RFR	
670	318212-0119	C		1	ROLLER CHAIN, SINGLE 1/2 -119,SS	
690	321101-0252	C		4	FLANGE BUSHING, 25X35X16 MM	
700	321120-0122	C		1	BEARING BUSHING W/O FL, 15X17X15 MM	
F010	A525320-0100	-		1	CHAIN GUARD	**5-31**

Machine Type | Group Description | Used-In | Group Number | Page No

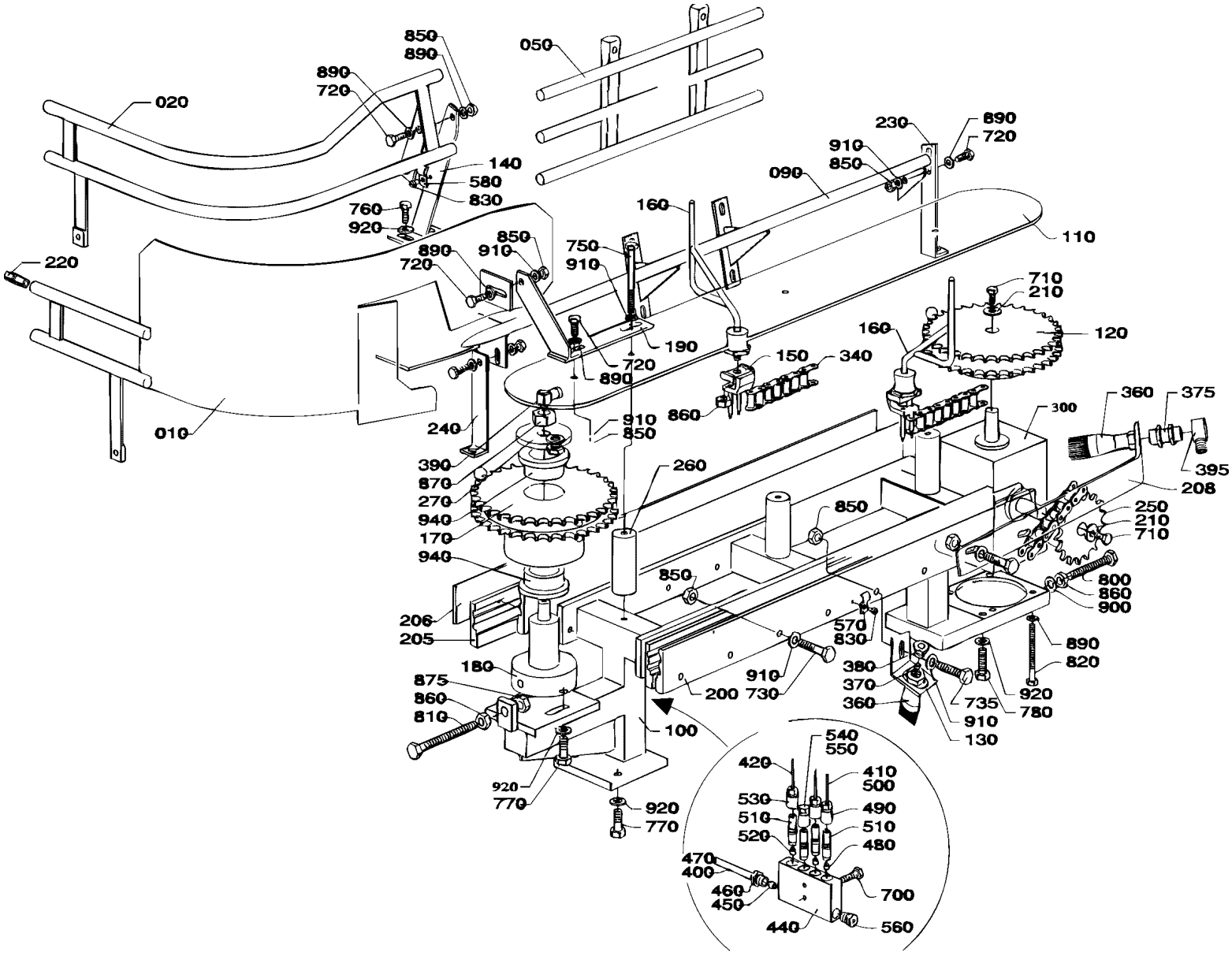
850
890
050
890
720
020
230
890
720
910
850
140
580
830
090
760
920
160
110
850
910
890
720
750
910
220
190
720
890
710
210
160
120
150
340
860
360
375
300
240
910
850
010
390
870
270
940
170
940
260
395
208
850
250
210
710
850
800
860
900
206
205
570
830
890
820
180
910
380
370
360
875
860
810
200
730
735
920
780
910
130
100
540
550
420
410
500
530
490
510
510
520
480
470
400
700
460
450
440
560
920
770
920
770

ECM: 72197 - 19990215
Group number: 525325-0200
Assembly Drawing: 525325-2_1_AA

This list covers pages from 5-52 to 5-55

Pos	Part No	SP	UN	Qty	Description	Page No
0375S						
010	442811-0002	D		1	ARCH	
020	443206-0003	D		1	ARCH	
050	525322-0003	D		1	LEAD RAIL	
140	443217-0000	-		1	BRACKET	
160	525374-0000	C		4	CARRIER	
0355B						
010	442811-0002	D		1	ARCH	
020	443207-0002	D		1	ARCH	
050	525322-0002	D		1	LEAD RAIL	
140	443217-0000	-		1	BRACKET	
160	525374-0000	C		4	CARRIER	
0500B						
010	442811-0001	D		1	ARCH	
020	443207-0001	D		1	ARCH	
050	525322-0001	D		1	LEAD RAIL	
140	443217-0000	-		1	BRACKET	
160	525374-0000	C		4	CARRIER	
0500S						
010	525466-0000	D		1	ARCH	
020	443206-0002	D		1	ARCH	
050	525322-0002	D		1	LEAD RAIL	
140	443217-0000	-		1	BRACKET	
160	525414-0000	C		4	CARRIER	
0750B						
010	442811-0001	D		1	ARCH	
020	443206-0001	D		1	ARCH	
050	525322-0001	D		1	LEAD RAIL	
140	443217-0000	-		1	BRACKET	
160	525374-0000	C		4	CARRIER	
0750S						
010	525437-0000	D		1	ARCH	
020	443206-0004	D		1	ARCH	
050	525322-0004	D		1	LEAD RAIL	
140	443217-0000	-		1	BRACKET	
160	525414-0000	C		4	CARRIER	
1000S						
010	525437-0000	D		1	ARCH	
020	443206-0001	D		1	ARCH	
050	569130-0000	D		1	LEAD RAIL	
140	443217-0000	-		1	BRACKET	
160	525414-0000	C		4	CARRIER	
1000SQ						
010	525437-0000	D		1	ARCH	
020	574055-0000	D		1	ARCH	
050	574057-0000	D		1	LEAD RAIL	
140	443217-0000	-		1	BRACKET	
160	525414-0000	C		4	CARRIER	
1000B						
010	525437-0000	D		1	ARCH	
020	443206-0001	D		1	ARCH	
050	525322-0001	D		1	LEAD RAIL	
140	443217-0000	-		1	BRACKET	
160	525414-0000	C		4	CARRIER	
Common Parts						
090	442809-0000	D		1	LEAD RAIL	
100	525300-0000	D		1	MACHINE BODY	
110	443210-0000	D		1	PLATE STAINLESS	
120	443081-0000	C		1	SPROCKET	
130	443213-0000	-		1	BRACKET	
150	525254-0000	C		4	LINK	
170	525298-0000	C		1	SPROCKET	
180	525299-0000	C		1	SHAFT	
190	525323-0000	D		1	BRACKET	
200	525324-0000	C		3	PROFILE	
205	525411-0000	C		1	PROFILE	
206	525412-0000	-		1	RULER	
208	566314-0000	-		1	HOLDER	
210	6278-0000	-		2	WASHER	
220	229516-0000	C		4	PIN	
230	442829-0000	D		1	BRACKET	
240	442830-0000	D		1	BRACKET	
250	442836-0000	C		1	SPROCKET	
260	443215-0000	-		3	SPACER	
270	443295-0000	-		1	WASHER	

Machine Type | Group Description | Used-In | Group Number | Page No

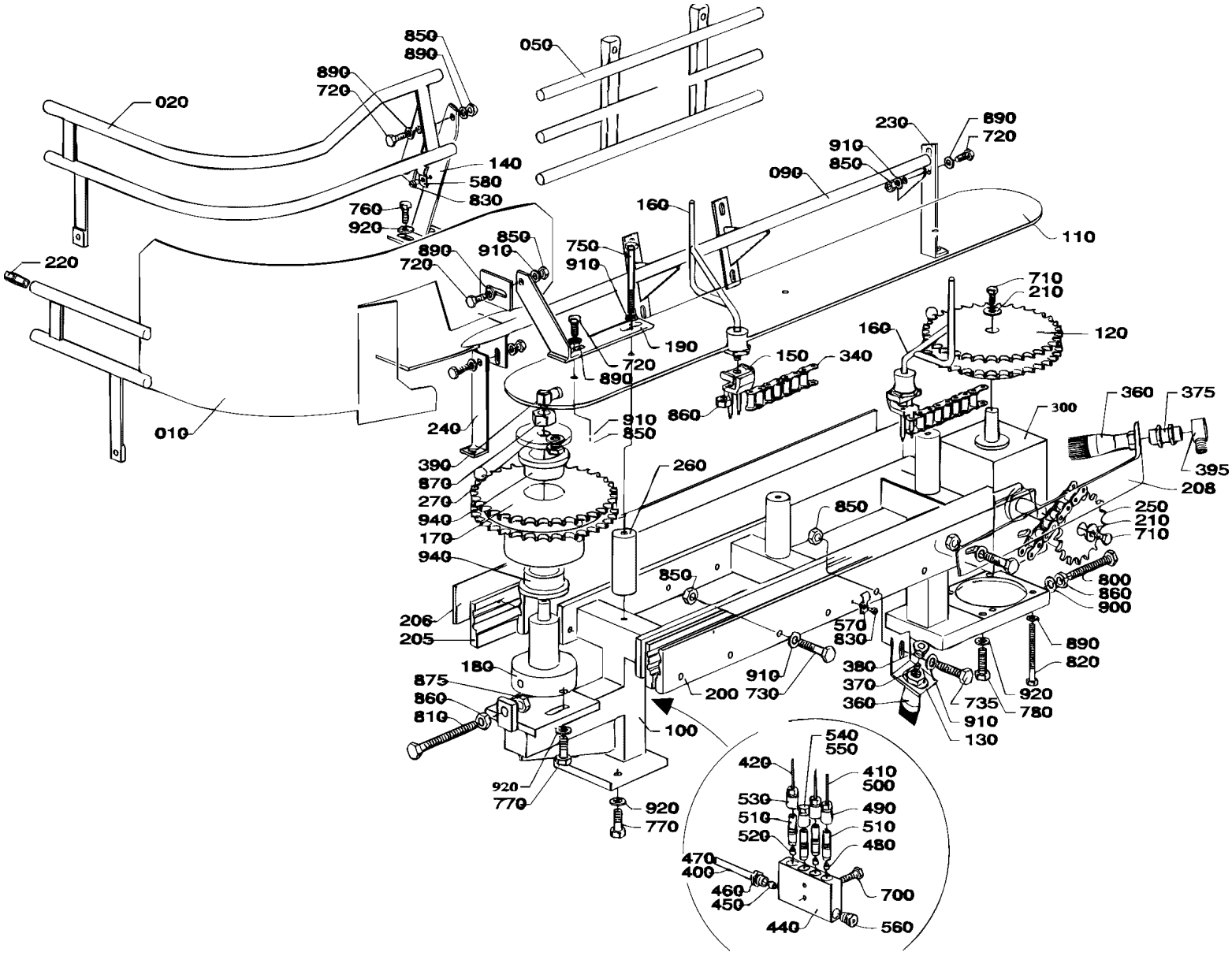
850
890
050
890
720
020
230
890
720
910
850
140
580
830
090
760
920
160
110
850
910
890
720
750
910
220
190
720
890
710
210
160
120
150
340
860
360
375
300
240
910
850
010
390
870
270
940
170
940
260
395
208
850
250
210
710
850
800
860
900
206
205
570
830
890
820
180
910
380
875
860
810
200
730
370
360
735
920
780
910
130
100
540
550
420
410
500
530
490
510
510
520
480
470
400
700
460
450
440
560
920
770
920
770

ECM: 72197 - 19990215
Group number: 525325-0200
Assembly Drawing: 525325-2_1_AA

This list covers pages from 5-52 to 5-55

Pos	Part No	SP	UN	Qty	Description	Page No
Common Parts (Cont'd)						
300	90056-0099	D		1	GEARS, BEVEL ALU-00	
320	318212-0066	C		1	ROLLER CHAIN, SINGLE 1/2 -66,SS	
340	318242-0034	C		4	ROLLER CHAIN DUPLEX 1/2"-34,SS	
360	90092-0048	C		2	OIL BRUSH, FLAT, 5/16-24 UNF	
370	90028-0001	C		1	CONE 5/32"	
375	90134-0002	-		1	CONNECTOR R1/8, D=4 MM	
380	90134-0003	C		1	BUSHING	
390	90134-0058	-		1	CONNECTION	
395	90137-0002	-		1	BANJO CONN. 1/8 - 5/16-24UNF	
400	90166-0108	-	MM	1300	TUBE 6 MM PA,TRANSP.	
410	90166-0051	-	MM	1100	TUBE PA,TRANSP.	
420	90166-0143	-	MM	200	TUBE 2,5 MM PA,TRANSP.	
440	90032-0039	-		1	BLOCK 4 WAYS	
450	90028-0025	-		1	CONE TUBE 6 MM	
460	90134-0055	C		1	BUSHING/NUT INLET/OUTLET 6 MM	
470	90134-0030	-		2	SLEEVE FOR PLASTIC TUBE	
480	90028-0021	C		2	CONE TUBE 4 MM	
490	90134-0040	C		2	BUSHING VALVE CONNECTION 4 MM	
500	342706-0114	-		4	ACCESSORIES, INSERT SLEEVE 4 MM	
510	90092-0052	C		3	METERING VALVE 10 MM3	
520	90028-0020	C		1	CONE TUBE 2,5MM	
530	90134-0039	C		1	BUSHING VALVE CONNECTION 2,5 MM	
540	90134-0045	-		1	PLUG M12X1	
550	90134-0052	-		1	PLUG DOSING BLOCK	
560	90087-0019	-		1	PLUG M10X1 STAINLESS	
570	90165-0056	-		1	PIPE CLIP FOR TUBE D=4 MM	
580	90165-0060	-		1	PIPE CLIP FOR TUBE D=5 MM	
700	312155-0295	-		2	SCREW EN 10642 MF6S M4X20 A480	
710	312105-0366	-		2	SCREW M6S M6X12 A280	
720	312105-0368	-		6	SCREW M6S M6X16 A280	
730	312105-0376	-		7	SCREW M6S ISO 4014 M6X35 A480	
735	312105-0378	-		9	SCREW M6S ISO 4014 M6X40 A480	
750	312105-0386	-		3	SCREW M6S ISO 4014 M6X80 A480	
760	312105-0449	-		2	SCREW M6S ISO 4017 M8X16 A480	
770	312105-0451	-		4	SCREW M6S ISO 4017 M8X20 A480	
780	312105-0453	-		2	SCREW M6S ISO 4017 M8X25 A480	
800	312109-0457	-		1	SCREW M6S ISO 4017 M8X35 A480	
810	312109-0461	-		1	SCREW M6S ISO 4017 M8X50 A480	
820	312115-0368	-		4	SCREW ISO4762 M6X16 A4	
830	312125-0285	-		2	SLOTTED CHEESE HEAD SCREW MCS 4X6 SS	
840	312125-0289	-		1	SLOTTED CHEESE HEAD SCREW MCS 4X10 SS	
850	312605-0316	-		22	HEXAGON NUT, M6M M6 A280	
860	312605-0318	-		6	HEXAGON NUT, M6M M8 A280	
870	312605-0322	-		1	HEXAGON NUT, M6M M12 A280	
875	312625-0318	-		1	HEXAGON THIN NUT, EN 24035 ML6M M8 A4	
890	315105-0153	-		14	WASHER BRB6,4X12RFR	
900	315105-0165	-		1	WASHER BRB8,4X16RFR	
910	315115-0153	-		21	WASHER PLAIN, TBRB 6,4/12 H=3	
920	315115-0165	-		8	WASHER PLAIN, TBRB 8,4/16 H=3	
940	321101-0272	C		2	FLANGE BUSHING, 30X40X20 MM	

Machine Type | Group Description | Used-In | Group Number | Page No

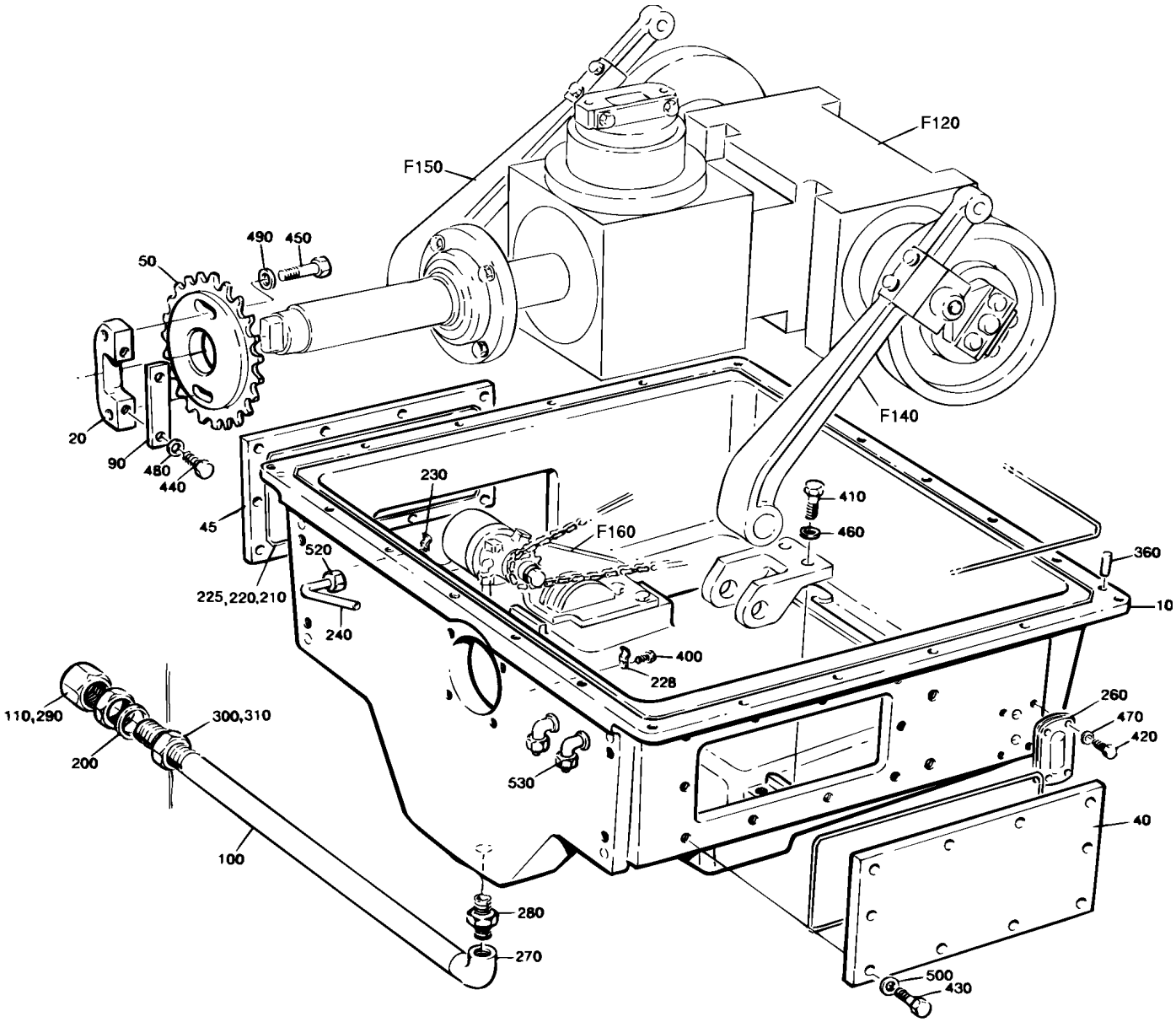
F150
F120
F140
F160
490
450
50
20
90
480
440
45
230
410
460
360
10
520
225,220,210
240
400
228
260
470
420
110,290
300,310
200
530
40
100
280
270
500
430

ECM: 72437 - 19990426
Group number: 285303-0400
Assembly Drawing: 285303-4_1_AA

Pos	Part No	SP	UN	Qty	Description	Page No
-						
010	525276-0000	-		1	HOUSE	
020	262274-0005	D		1	BRACKET	
040	525185-0000	-		1	HATCH	
045	525377-0000	-		1	HATCH	
050	443176-0000	D		1	SPROCKET	
090	262275-0003	D		1	CAP	
100	443126-0000	-		1	CONNECTION PIPE	
110	525047-0000	D		2	GASKET	
200	525046-0000	D		2	GASKET	
210	90296-0009	-	L	1	SILICONE GREASE TUBE 100 GR.	
220	90161-0001	-	MM	3900	O-RING MATERIAL 3 MM	
225	90153-0043	-	KG	1	ADHESIVE, LOCTITE 495 20G	
228	90165-0056	-		2	PIPE CLIP FOR TUBE D=4 MM	
230	90165-0057	-		3	PIPE CLIP FOR TUBE D=6 MM	
240	90166-0124	-	MM	1500	TUBE 6 MM PA,TRANSP.	
260	90199-0004	C		1	LEVEL GLASS, ST60	
270	90330-0020	-		1	ELBOW, 90 INT. THREAD, R-2221/2	
280	90330-0021	-		1	NIPPLES, EXT. THREAD. R-207R1/2	
290	90330-0086	-		1	PLUG, INT. THREAD, NO. R-231-R1/2	
300	90330-0093	-		2	NUT, HEXAGON, G1/2	
310	90157-0034	-	L	1	SEALING COMPOUND LOCTITE 572 50 ML	
360	311103-0399	-		2	PARALLEL PIN ISO 2338 8M6X16 A1	
400	312105-0287	-		3	SCREW M6S ISO4017 M4X8 A480	
410	312105-0453	-		4	SCREW M6S ISO 4017 M8X25 A480	
420	312105-0293	-		4	SCREW M6S ISO 4017 M4X16 A480	
430	312105-0370	-		20	SCREW M6S ISO 4017 M6X20 A480	
440	90287-0165	-		2	SCREW M6S M8X20 A480 NY-LOCK	
450	312105-0493	-		2	SCREW M6S ISO 4017 M10X25 A480	
460	315105-0165	-		4	WASHER BRB8,4X16RFR	
470	315105-0136	-		4	WASHER BRB4,3XRFR	
480	315105-0165	-		2	WASHER BRB8,4X16RFR	
490	315105-0173	-		2	WASHER BRB10,5X22RFR	
500	315115-0153	-		20	WASHER PLAIN, TBRB 6,4/12 H=3	
520	342920-0113	-		1	STRAIGHT COUPLING,EXT.THREADED 6/4-R1/8"	
530	342930-0113	-		4	ELBOW 90 COUPL.,EXT.THREAD 6/4-R1/8"	
F120	A285291-0400	D		1	BEVEL GEAR	**5-59**
F140	A285299-0100	-		1	PRESSURE ARM	**5-63**
F150	A594621-0100	-		1	PRESSURE ARM	**5-65**
F160	A525102-0200	-		1	LUBRICATING SYSTEM	**5-67**

Pos	Part No	SP	UN	Qty	Description	Page No

Machine Type | Group Description | Used-In | Group Number | Page No

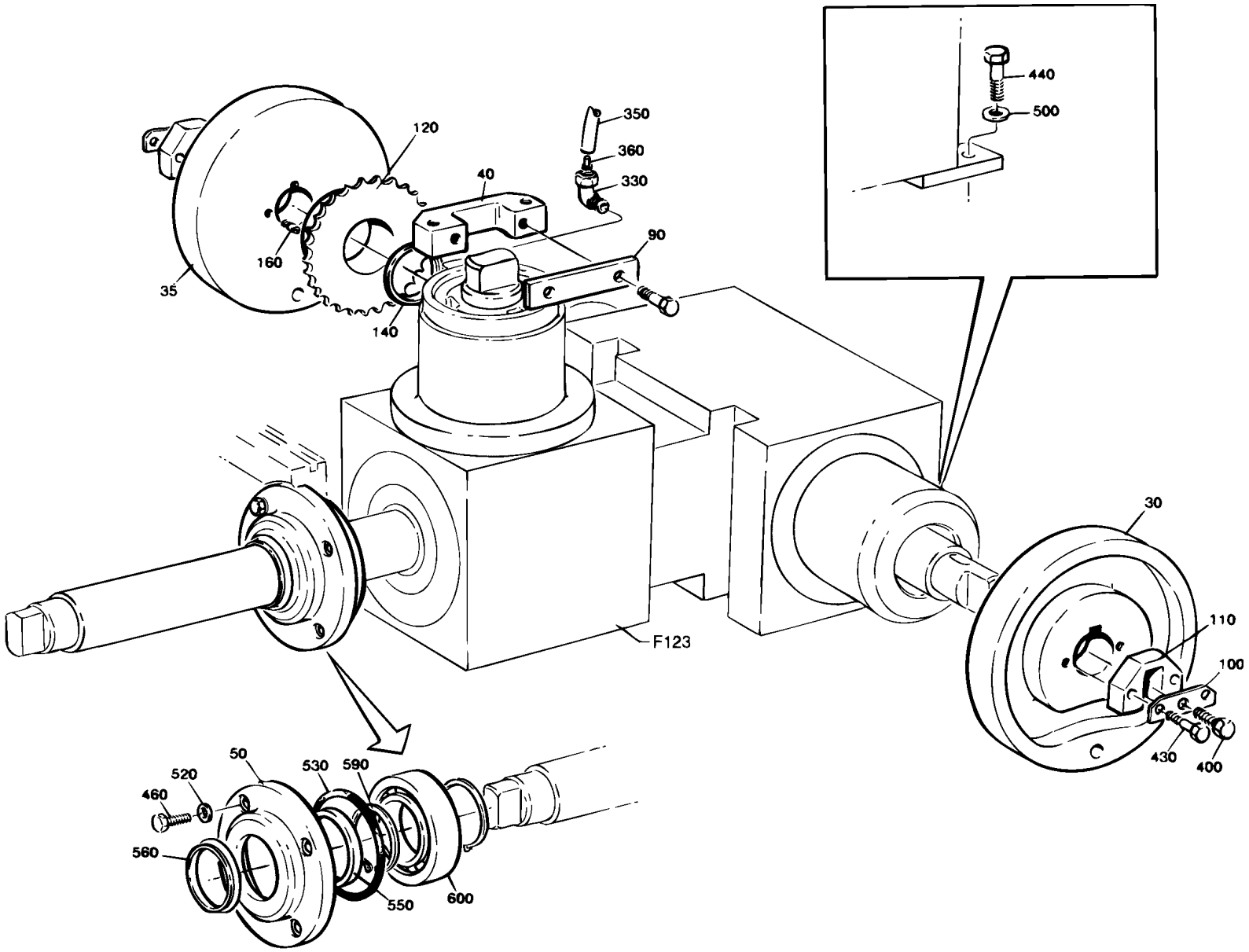
440
500
350
360
330
120
40
90
160
35
140
30
110
100
430
400
F123
50
520
530
590
460
560
550
600

ECM: 72197 - 19990215
Group number: 285291-0400
Assembly Drawing: 285291-4_1_AA

Pos	Part No	SP	UN	Qty	Description	Page No
-						
030	285054-0000	D		1	CURVE	
035	285055-0000	D		1	CURVE	
040	262274-0002	D		1	BRACKET	
050	276613-0000	D		1	LID	
090	262275-0002	D		1	CAP	
100	276636-0000	D		2	WASHER	
110	285027-0000	D		2	CARRIER	
120	443047-0000	D		1	SPROCKET	
140	443052-0000	D		1	SPACER RING	
160	443149-0000	D		1	STUD SCREW	
330	342731-0102	-		1	CONN. ELBOW WE 6-LRFZB	
350	90166-0108	-	MM	400	TUBE 6 MM PA,TRANSP.	
360	90134-0030	C		2	SLEEVE FOR PLASTIC TUBE	
400	312101-0374	-		4	SCREW M6S M6X30 FZB	
430	312101-0451	-		4	SCREW M6S M8X20 FZB	
440	312101-0453	-		2	SCREW M6S M8X25 FZB	
460	312105-0371	-		4	SCREW M6S ISO 4017 M6X22 A480	
500	315101-0165	-		2	WASHER PLAIN, BRB, 8,4/16 H=1,5	
520	315115-0153	-		4	WASHER PLAIN, TBRB 6,4/12 H=3	
530	315202-0309	C		1	O-RING 89,5X3 MM	
550	315221-0200	C		1	RADIAL SEAL 50X72X8 MM	
560	315226-0200	C		1	AXIAL SEAL WITH STEEL COVER 50X70X4,5 MM	
590	315750-0131	-		2	RETAIN. RING, 50	
600	321309-0110	C		1	BALL BEARING, 50X90X20 MM	
F123	A442644-0300	D		1	DOUBLE GEAR	**5-61**

Pos	Part No	SP	UN	Qty	Description	Page No

Machine Type | Group Description | Used-In | Group Number | Page No

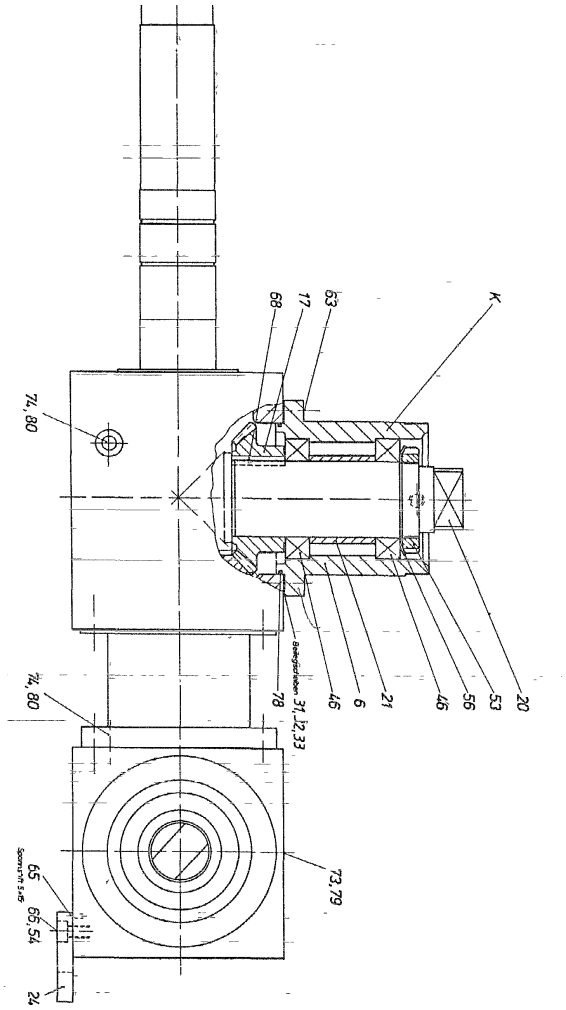
K
68
17
63
74, 80
74, 80
78
Bedeckplatten
31, 32, 33
46
6
21
46
56
53
20
73, 79
65
Sicherungsfeder
65, 54
24

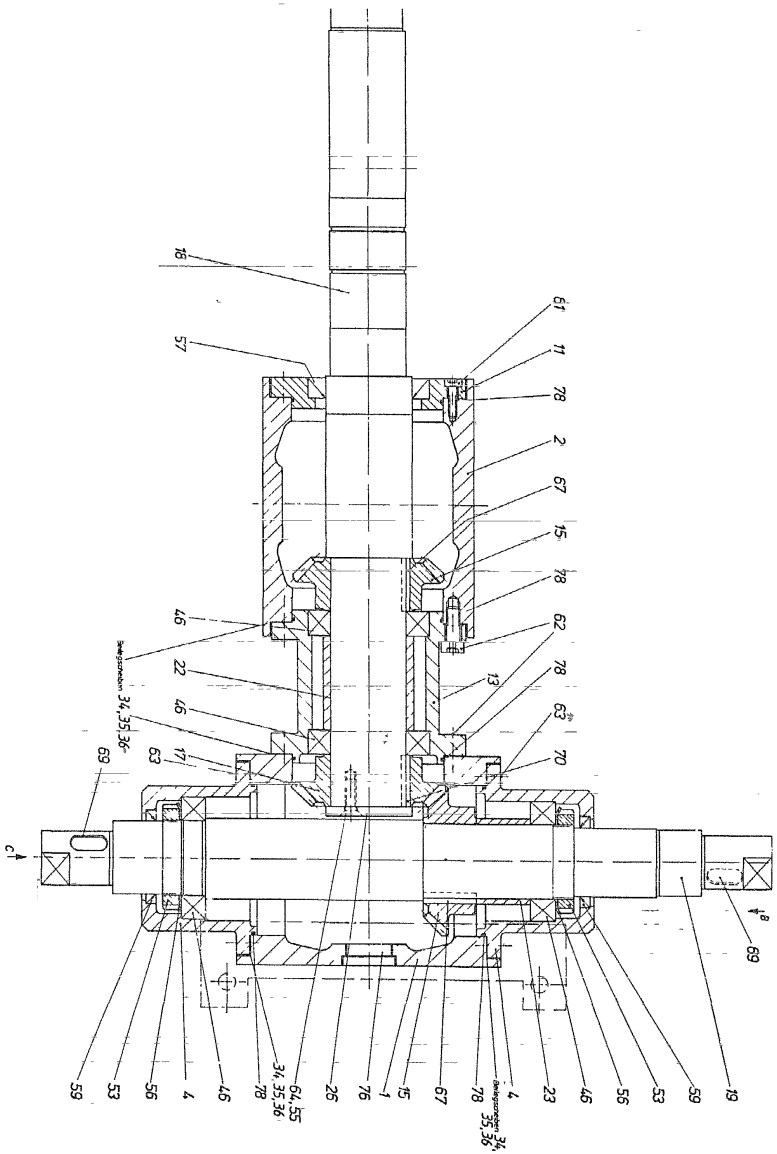
18
57
61
11
78
2
67
15
78
62
78
63
70
46
22
46
63
17
69
Bedeckplatten
34, 35, 36
13
C
A
B
69
59
53
56
4
46
78
34, 35, 36
64, 55
26
76
1
15
67
78
4
Bedeckplatten
34, 35, 36
23
46
56
53
59
19

ECM: 72197 - 19990215
Group number: 442644-0300
Assembly Drawing: 442644-2_1_AA

Pos	Part No	SP	UN	Qty	Description	Page No
-						
001	568151-0000	D		1	GEAR HOUSING	
002	568152-0000	D		1	GEAR HOUSING	
004	568153-0000	D		2	BEARING SEAT	
006	568154-0000	D		1	BEARING SEAT	
011	568155-0000	D		1	BEARING COVER	
013	568156-0000	D		1	FLANGE	
015	442613-0000	D		2	GEAR WHEEL	
017	442614-0000	D		2	GEAR WHEEL	
018	568157-0000	D		1	SHAFT	
019	568158-0000	D		1	SHAFT	
020	568159-0000	D		1	SHAFT	
021	442615-0000	D		1	SPACER	
022	442616-0000	D		1	SPACER	
023	442617-0000	D		1	SPACER	
024	568160-0000	D		1	FASTENING PLATE	
026	568161-0000	D		1	WASHER	
031	525331-0000	D		1	SHIM	
032	443055-0000	D		1	SHIM	
033	443056-0000	D		1	SHIM	
034	525332-0000	D		4	SHIM	
035	443057-0000	D		4	SHIM	
036	443058-0000	D		4	SHIM	
046	321306-0110	C		6	BALL BEARING, 50X80X16 MM	
053	312805-0110	-		3	NUT ROUND WITH SLOTS M50X1,5 FE	
054	315402-0173	-		2	LOCK WASHER FBB 10,2	
056	315410-0110	-		3	LOCK WASHER MB 10 D=50 H=1,25	
057	90091-0202	-		1	RADIAL SEAL 58X80X13 MM DUST LIP	
059	90091-0143	-		2	RADIAL SEAL 47X62X6 MM	
061	312111-0370	-		4	SCREW HEX.SOCK.HD.MC6S-TT 6X20 88 FZB	
062	312111-0453	-		8	SCREW HEX.SOCK.HD.MC6S-TT 8X25 88 FZB	
063	312111-0451	-		12	SCREW HEX.SOCK.HD.MC6S-TT 8X20 88 FZB	
064	312151-0451	-		2	SCREW HEX.SOCK.COUNT.MF6S 8X20 FZB	
065	311111-0305	-		2	SPRING PIN ISO 8752 5X14-ST	
066	312111-0491	-		2	SCREW HEX.SOCK.HD.MC6S-TT 10X20 88 FZ	
067	315701-0363	-		2	PARALLEL KEY W. ROUND ENDS 14X9X40 MM	
068	568162-0000	D		1	WEDGE	
069	315701-0296	-		2	PARALLEL KEY W. ROUND ENDS 10X8X25 MM	
070	315701-0363	-		1	PARALLEL KEY W. ROUND ENDS 14X9X40 MM	
078	90242-0118	C		6	O-RING 90X2 MM	
079	90242-0120	C		1	O-RING 28X3,5 MM	
080	90242-0121	C		2	O-RING 11X2,5 MM	

Machine Type	Group Description	Used-In	Group Number	Page No

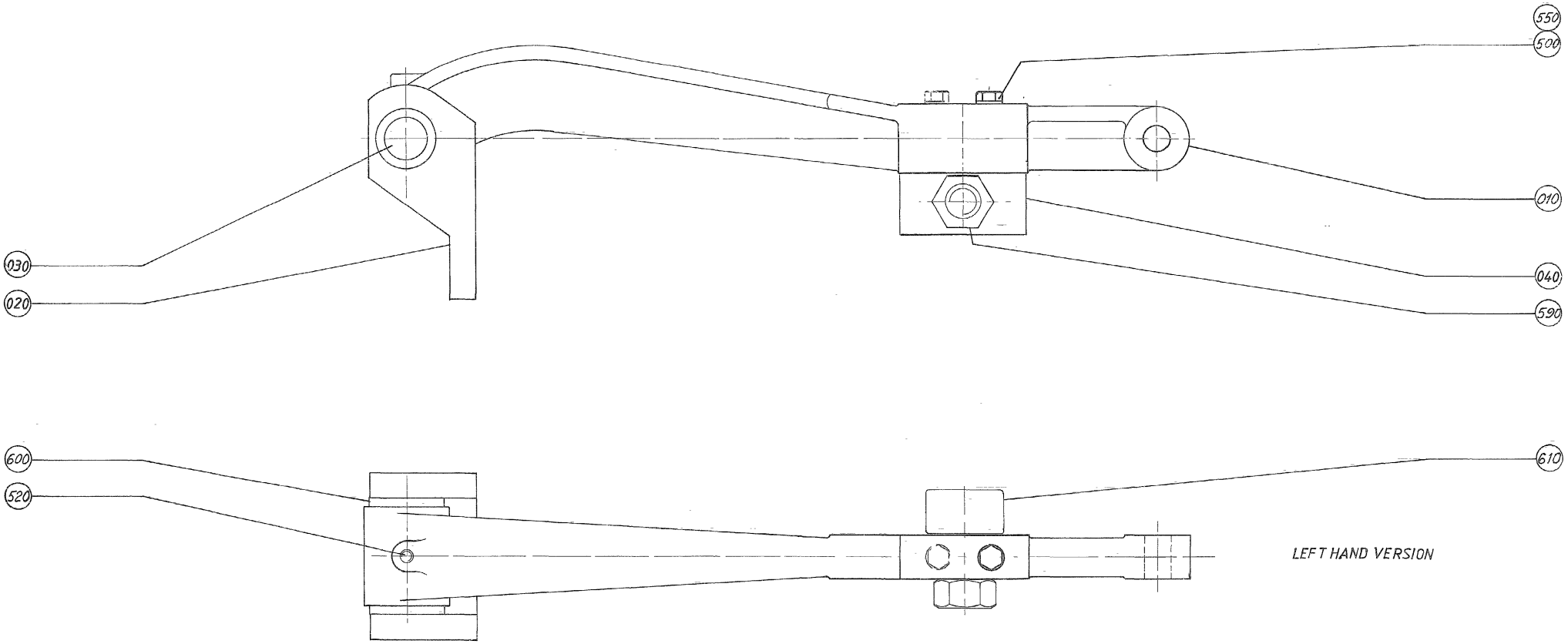
550
500
010
040
590
030
020
600
520
610
LEFT HAND VERSION

ECM: 72437 - 19990426
Group number: 285299-0100
Assembly Drawing: 285299-1_1_AA

Pos	Part No	SP	UN	Qty	Description	Page No
-						
010	442524-0000	D		1	ARM	
020	285300-0000	D		1	BRACKET	
030	262261-0000	D		1	SHAFT	
040	442523-0000	-		1	HOLDER	
500	312105-0379	-		2	SCREW M6S ISO 4014 M6X45 A480	
520	312311-0370	-		1	SCREW ISO4028 M6X20 FZB	
550	315105-0153	-		2	WASHER BRB6,4X12RFR	
590	312631-0324	-		1	HEX.NUT FINE, EN 24032 M6M M16X1,5 FZB8	
600	321101-0232	D		2	FLANGE BUSHING, 20X28X16 MM	
610	321582-0212	C		1	CAM ROLLER, 16X35X52 MM	

Pos	Part No	SP	UN	Qty	Description	Page No

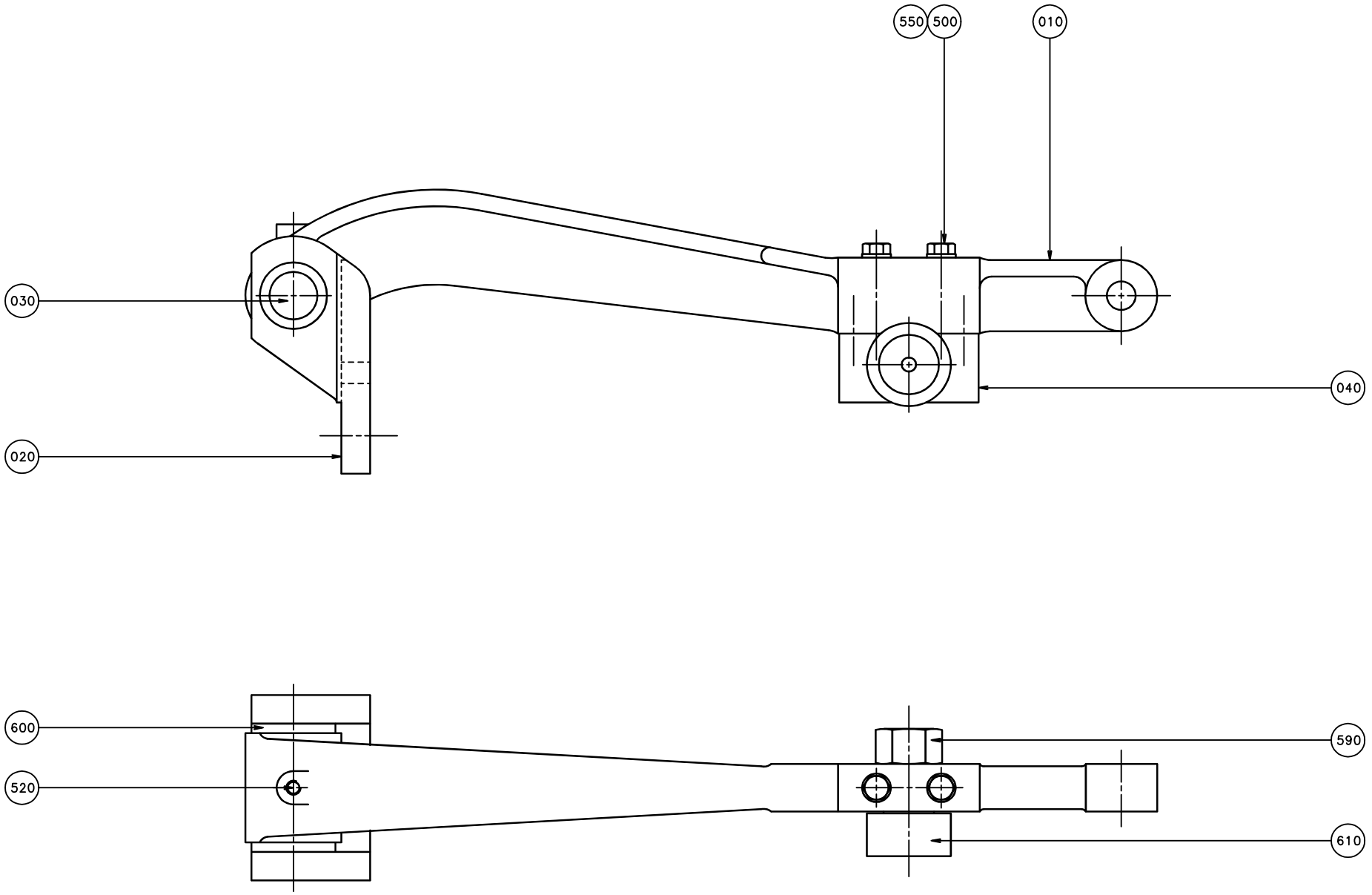
550
500
010
030
040
020
600
590
520
610

ECM: 72437 - 19990426
Group number: 594621-0100
Assembly Drawing: 594621-1_1_AA

Pos	Part No	SP	UN	Qty	Description	Page No
-						
010	442524-0000	D		1	ARM	
020	285300-0000	D		1	BRACKET	
030	262261-0000	D		1	SHAFT	
040	442523-0000	-		1	HOLDER	
500	312105-0379	-		2	SCREW M6S ISO 4014 M6X45 A480	
520	312311-0370	-		1	SCREW ISO4028 M6X20 FZB	
550	315105-0153	-		2	WASHER BRB6,4X12RFR	
590	312631-0324	-		1	HEX.NUT FINE, EN 24032 M6M M16X1,5 FZB8	
600	321101-0232	D		2	FLANGE BUSHING, 20X28X16 MM	
610	321582-0212	C		1	CAM ROLLER, 16X35X52 MM	

Pos	Part No	SP	UN	Qty	Description	Page No

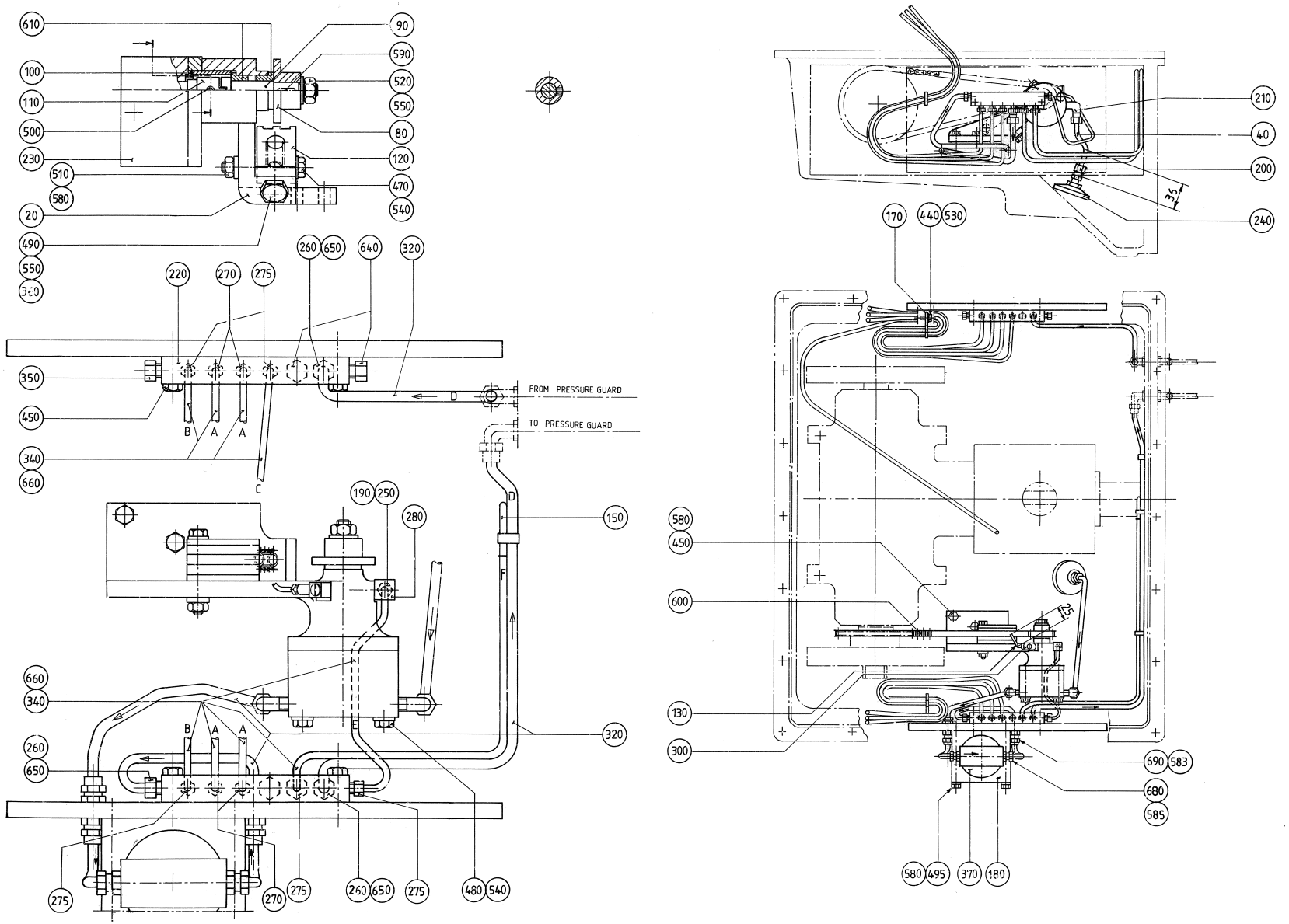
610
90
590
100
520
110
550
500
80
230
120
510
470
580
540
20
490
260
650
640
320
550
220
270
275
350
FROM PRESSURE GUARD
450
TO PRESSURE GUARD
B
A
A
340
660
C
D
190
250
280
150
660
340
320
260
650
275
270
275
260
650
275
480
540
210
40
200
35
240
170
440
530
580
450
600
130
300
690
583
680
585
580
495
370
180

ECM: 72437 - 19990426
Group number: 525102-0200
Assembly Drawing: 525102-2_1_AA

Pos	Part No	SP	UN	Qty	Description	Page No
-						
020	525173-0000	-		1	CANTILEVER	
040	443150-0000	-		1	SUCTION TUBE	
080	443048-0000	D		1	SPROCKET	
090	443049-0000	D		1	SHAFT	
100	443050-0000	D		1	GUIDE SLEEVE	
110	443051-0000	D		1	CONNECTION	
120	443053-0000	D		1	CHAIN GUIDE	
130	443151-0000	D		1	PIPE	
150	525375-0000	-		1	OIL PIPE	
170	525358-0000	-		2	BRACKET	
180	525376-0000	D		2	BOW CLAMP	
190	90028-0001	C		1	CONE 5/32"	
200	90030-0107	-		1	CONN. STR. 6-1/8 NPT, EXT. TAPPERED	
210	90030-0222	-		2	CONN. ELBOW, 6-1/8 NPT, EXT.THREAD	
220	90032-0035	-		2	DISTR. BLOCK & DIST.5/16-24UNF X8	
230	90048-0033	C		1	GEAR PUMP, C 2347	
240	90048-0420	C		1	FILTER	
250	90134-0003	C		1	BUSHING	
260	B90134-0034	-		3	NIPPLE	
	90030-0101	*-*		*1*	*TAPER*	
270	90092-0038	C		4	METERING VALVE, CJB 1, 5/16-24 UNF	
275	90092-0081	C		5	MET.VALVE CONT. LUBR., 5/16-24 UNF	
280	90137-0005	-		1	BANJO CONN. M6, 5/16-24UNF	
300	90137-0010	-		1	BANJO CONN. M6, D=2,5 MM	
320	90166-0011	-	MM	1500	TUBE 6 MM PA,TRANSP.	
340	90166-0051	-	MM	4500	TUBE PA,TRANSP.	
350	90230-0031	-		1	NON-RETURN VALVE B5146	
360	90335-0012	D		1	SPRING	
370	B90415-0033	C		1	OIL FILTER REFILLING UC-HP-1229-25	
	90415-0330	*C*		*1*	*FILTER INSERT ARTNO HR-1229-25UCC*	
440	312105-0327	-		2	SCREW M6S ISO 4017 M5X12 A480	
450	312105-0370	-		6	SCREW M6S ISO 4017 M6X20 A480	
470	312105-0379	-		1	SCREW M6S ISO 4014 M6X45 A480	
480	312105-0380	-		2	SCREW M6S ISO 4014 M6X50 A480	
490	312105-0451	-		1	SCREW M6S ISO 4017 M8X20 A480	
495	312105-0388	-		2	SCREW M6S ISO 4014 M6X90 A480	
500	312318-0283	-		1	SCREW ISO4029 M4X4 A4	
510	312605-0316	-		1	HEXAGON NUT, M6M M6 A280	
520	312605-0318	-		1	HEXAGON NUT, M6M M8 A280	
530	315105-0146	-		2	BRICKA BRB5,3X10RFR	
540	315105-0153	-		3	WASHER BRB6,4X12RFR	
550	315105-0165	-		2	WASHER BRB8,4X16RFR	
580	315115-0153	-		5	WASHER PLAIN, TBRB 6,4/12 H=3	
583	315233-0109	-		2	WASHER CAPTIVE SEALING G1/8	
585	315233-0110	-		2	WASHER CAPTIVE SEALING G1/4	
590	315701-0134	-		1	PARALLEL KEY W. ROUND ENDS 3X3X10 MM	
600	318201-0076	C		1	ROLLER CHAIN, SINGLE 3/8 -76	
610	321101-0172	-		2	FLANGE BUS 12F7X10	
640	90136-0002	-		3	PLUG 5/16"24	
650	342706-0130	-		3	ACCESSORIES, INSERT SLEEVE 6 MM	
660	342706-0114	-		16	ACCESSORIES, INSERT SLEEVE 4 MM	
680	342921-0114	-		2	STRAIGHT COUPLING,EXT.THREADED 6/4-G1/4"	
690	342960-0112	-		2	BULKHEAD COUPLING 6/4	

Machine Type | Group Description | Used-In | Group Number | Page No

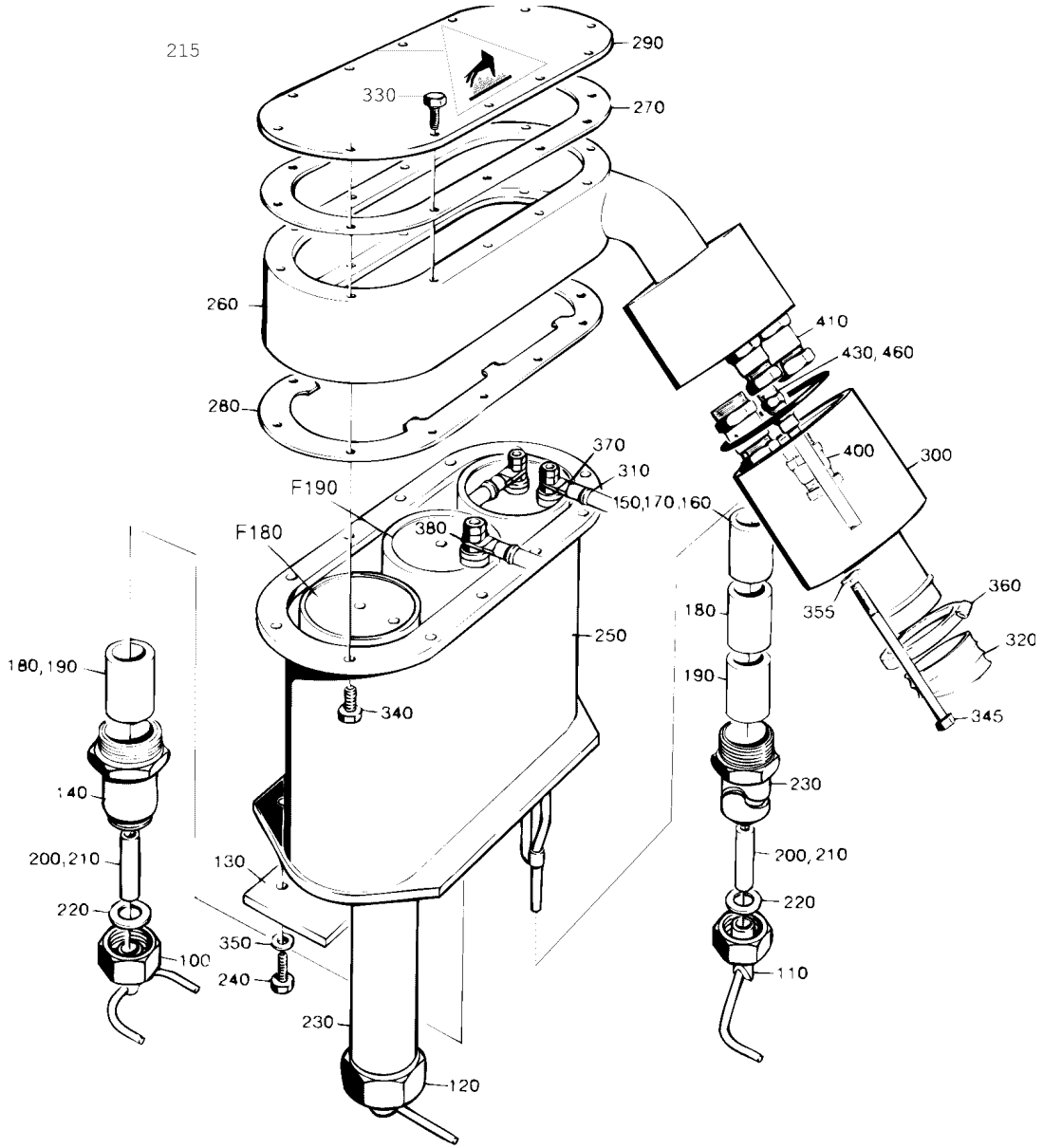
215
290
330
270
260
280
410
430, 460
400
300
370
310
150,170,160
F190
F180
380
360
355
320
345
180
190
250
180, 190
340
140
230
200, 210
200, 210
130
220
220
350
100
240
110
230
120

ECM: 72197 - 19990215
Group number: 525129-0100
Assembly Drawing: 525129-1_1_AA

This list covers pages from 5-68 to 5-71

Pos	Part No	SP	UN	Qty	Description	Page No
0355B						
100	442867-0000	C		1	AIR NOZZLE	
110	285676-0000	C		1	AIR NOZZLE	
120	285677-0000	C		1	AIR NOZZLE	
140	23763-0006	D		1	SPACER PIPE	
180	23765-0004	C		4	INSULATING PIPE	
190	23765-0005	C		1	INSULATING PIPE	
200	252766-0001	C		4	INSULATING PIPE	
210	252766-0002	C		1	INSULATING PIPE	
230	297499-0007	D		2	SIDE PIPE	
240	312105-0372	-		3	SCREW M6S ISO 4017 M6X25 A480	
0375S						
100	A247227-0002	C		1	AIR NOZZLE	**5-73**
110	A285507-0002	C		1	AIR NOZZLE	**5-75**
120	A285508-0002	C		1	AIR NOZZLE	**5-77**
140	23763-0010	D		1	SPACER PIPE	
170	23765-0003	C		2	INSULATING PIPE	
180	23765-0004	C		4	INSULATING PIPE	
190	23765-0005	C		1	INSULATING PIPE	
210	252766-0002	C		3	INSULATING PIPE	
230	297499-0009	D		2	SIDE PIPE	
240	312105-0372	-		3	SCREW M6S ISO 4017 M6X25 A480	
0500B						
100	247227-0003	C		1	AIR NOZZLE	
110	525197-0000	C		1	BLOW-OFF NOZZLE TR	
120	525198-0000	C		1	BLOW-OFF NOZZLE TL	
130	262290-0002	-		1	LACE	
140	23763-0003	D		1	SPACER PIPE	
160	23765-0002	C		2	INSULATING PIPE	
180	23765-0004	C		1	INSULATING PIPE	
200	252766-0001	C		3	INSULATING PIPE	
230	297499-0002	D		2	SIDE PIPE	
240	312105-0376	-		3	SCREW M6S ISO 4014 M6X35 A480	
0500S						
100	442867-0000	C		1	AIR NOZZLE	
110	285676-0000	C		1	AIR NOZZLE	
120	285677-0000	C		1	AIR NOZZLE	
140	23763-0006	D		1	SPACER PIPE	
170	23765-0003	C		2	INSULATING PIPE	
180	23765-0004	C		2	INSULATING PIPE	
190	23765-0005	C		3	INSULATING PIPE	
200	252766-0001	C		4	INSULATING PIPE	
210	252766-0002	C		1	INSULATING PIPE	
230	297499-0003	D		2	SIDE PIPE	
240	312105-0372	-		3	SCREW M6S ISO 4017 M6X25 A480	
0750B						
100	247227-0003	C		1	AIR NOZZLE	
110	525197-0000	C		1	BLOW-OFF NOZZLE TR	
120	525198-0000	C		1	BLOW-OFF NOZZLE TL	
140	23763-0005	D		1	SPACER PIPE	
160	23765-0002	C		2	INSULATING PIPE	
180	23765-0004	C		1	INSULATING PIPE	
190	23765-0005	C		2	INSULATING PIPE	
210	252766-0002	C		3	INSULATING PIPE	
230	297499-0008	D		2	SIDE PIPE	
240	312105-0372	-		3	SCREW M6S ISO 4017 M6X25 A480	
0750S						
100	544298-0000	C		1	BLOWING NOZZLE B	
110	544293-0000	C		1	BLOW-OFF NOZZLE TH	
120	544269-0000	C		1	BLOW-OFF NOZZLE TV	
130	262290-0001	-		1	LACE	
140	23763-0004	D		1	SPACER PIPE	
160	23765-0002	C		2	INSULATING PIPE	
180	23765-0004	C		5	INSULATING PIPE	
200	252766-0001	C		3	INSULATING PIPE	
230	443158-0000	D		2	SIDE PIPE	
240	312105-0374	-		3	SCREW M6S ISO 4014 M6X30 A480	
1000B						
100	247227-0003	C		1	AIR NOZZLE	
110	525197-0000	C		1	BLOW-OFF NOZZLE TR	
120	525198-0000	C		1	BLOW-OFF NOZZLE TL	
130	262290-0001	-		1	LACE	
140	23763-0004	D		1	SPACER PIPE	
150	23765-0001	C		2	INSULATING PIPE	
180	23765-0004	C		1	INSULATING PIPE	
200	252766-0001	C		3	INSULATING PIPE	
230	297499-0001	D		2	SIDE PIPE	
240	312105-0374	-		3	SCREW M6S ISO 4014 M6X30 A480	

Machine Type | Group Description | Used-In | Group Number | Page No

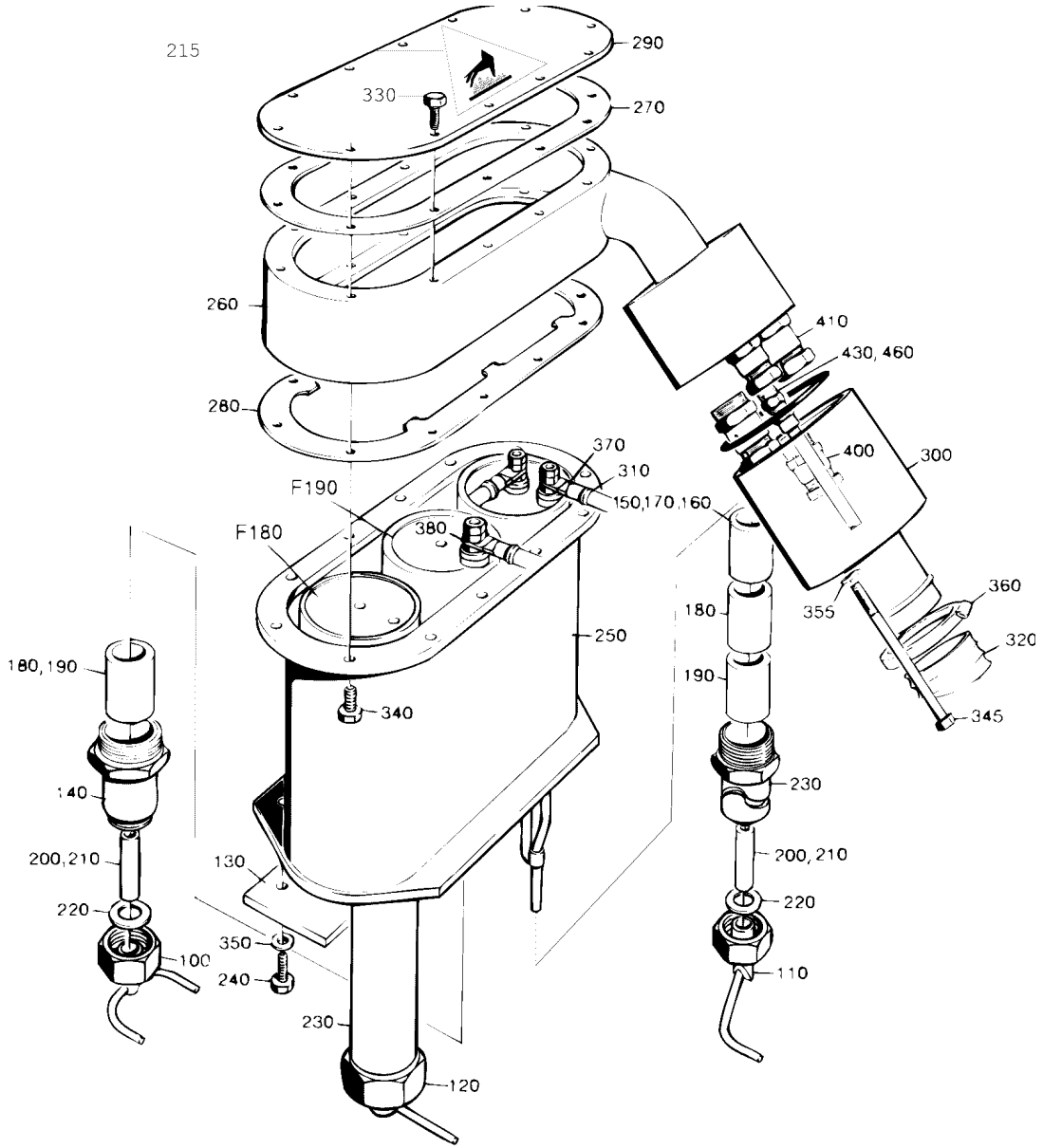
215
290
330
270
260
280
410
430, 460
400
300
370
310
150,170,160
F190
F180
380
360
355
320
345
180
190
250
340
180, 190
140
200, 210
220
100
130
350
240
230
120
230
200, 210
220
110

ECM: 72197 - 19990215
Group number: 525129-0100
Assembly Drawing: 525129-1_1_AA

This list covers pages from 5-68 to 5-71

Pos	Part No	SP	UN	Qty	Description	Page No
1000S (Cont'd)						
100	569124-0000	C		1	AIR NOZZLE	
110	569125-0000	C		1	AIR NOZZLE	
120	569126-0000	C		1	AIR NOZZLE	
130	262290-0001	-		1	LACE	
140	23763-0004	D		1	SPACER PIPE	
160	23765-0002	C		2	INSULATING PIPE	
170	23765-0003	C		2	INSULATING PIPE	
180	23765-0004	C		3	INSULATING PIPE	
200	252766-0001	C		1	INSULATING PIPE	
210	252766-0002	C		2	INSULATING PIPE	
230	548402-0000	D		2	SIDE PIPE	
240	312105-0374	-		3	SCREW M6S ISO 4014 M6X30 A480	
1000SQ						
100	574032-0000	C		1	BLOWING NOZZLE B	
110	574033-0000	C		1	BLOWING NOZZLE TH	
120	574034-0000	C		1	BLOWING NOZZLE TV	
130	262290-0001	-		1	LACE	
140	23763-0006	D		1	SPACER PIPE	
160	23765-0002	C		2	INSULATING PIPE	
180	23765-0004	C		4	INSULATING PIPE	
190	23765-0005	C		1	INSULATING PIPE	
200	252766-0001	C		3	INSULATING PIPE	
230	443158-0000	D		2	SIDE PIPE	
240	312105-0374	-		3	SCREW M6S ISO 4014 M6X30 A480	
Common Parts						
215	359710-0002	-		1	WARNING SIGN ISO, HOT SURFACE	
220	263673-0000	C		6	GASKET	
250	262272-0000	D		1	HEATING CHAMBER	
260	525071-0000	D		1	SPACER PIECE	
270	531730-0000	C		3	FLANGE SEAL	
280	23769-0000	C		1	STOP PLATE	
290	262288-0000	D		1	LID	
300	525073-0000	D		1	COVER	
310	B525070-0000	C		1	ELECTRICAL CONNECTION	
	353102-0168	*C*		*1*	*CABLE SHOEYAEV16-M6*	
	351121-0109	*C*	*M*	*1*	*CABLE RHH 16*	
320	352135-0116	C	MM	500	FLEXIBLE CONDUIT DIA. 40	
330	312105-0325	-		12	SCREW M6S ISO 4017 M5X10 A480	
340	312105-0328	-		12	SCREW M6S ISO 4017 M5X14 A480	
345	312105-0388	-		2	SCREW M6S ISO 4014 M6X90 A480	
350	315115-0153	-		3	WASHER PLAIN, TBRB 6,4/12 H=3	
355	315105-0153	-		2	WASHER BRB6,4X12RFR	
360	342991-0109	-		2	HOSE CLIP,WORM DRIVE TYPE (48)-50	
370	353104-0168	-		2	CABLE SHO YAV 16 M6*	
380	353104-0182	-		2	CABLE SHOE YAV 35 M6*	
400	352103-0106	-		2	CABLE GLAND, ST 11, PR18,6/PG11	
410	352103-0111	-		2	CABLE GLAND, ST 16, PR22,5/PG16	
430	342921-0121	-		1	STRAIGHT COUPLING,EXT.THREADED 8/6-G1/8"	
460	315234-0109	-		1	WASHER,PL.RND.CU.10,3/13,5 H=1,0	
F180	A31390-0100	-		2	FF-ELEMENT TOP	**5-79**
F190	A31390-0110	-		1	FF-ELEMENT BOTTOM	**5-81**

Machine Type Group Description Used-In Group Number Page No

This page is intentionally left blank.

ECM: - -
Group number: 247227-0002
Assembly Drawing:

Pos	Part No	SP	UN	Qty	Description	Page No
-						
	20704-0000	-		1	NUT	

Pos	Part No	SP	UN	Qty	Description	Page No

Machine Type	Group Description	Used-In	Group Number	Page No

This page is intentionally left blank.

ECM: - -
Group number: 285507-0002
Assembly Drawing:

Pos	Part No	SP	UN	Qty	Description	Page No
-						
	20704-0000	-		1	NUT	

Pos	Part No	SP	UN	Qty	Description	Page No

Machine Type Group Description Used-In Group Number Page No

This page is intentionally left blank.

ECM: - -
Group number: 285508-0002
Assembly Drawing:

Pos	Part No	SP	UN	Qty	Description	Page No
-						
	20704-0000	-		1	NUT	

Pos	Part No	SP	UN	Qty	Description	Page No

Machine Type | Group Description | Used-In | Group Number | Page No

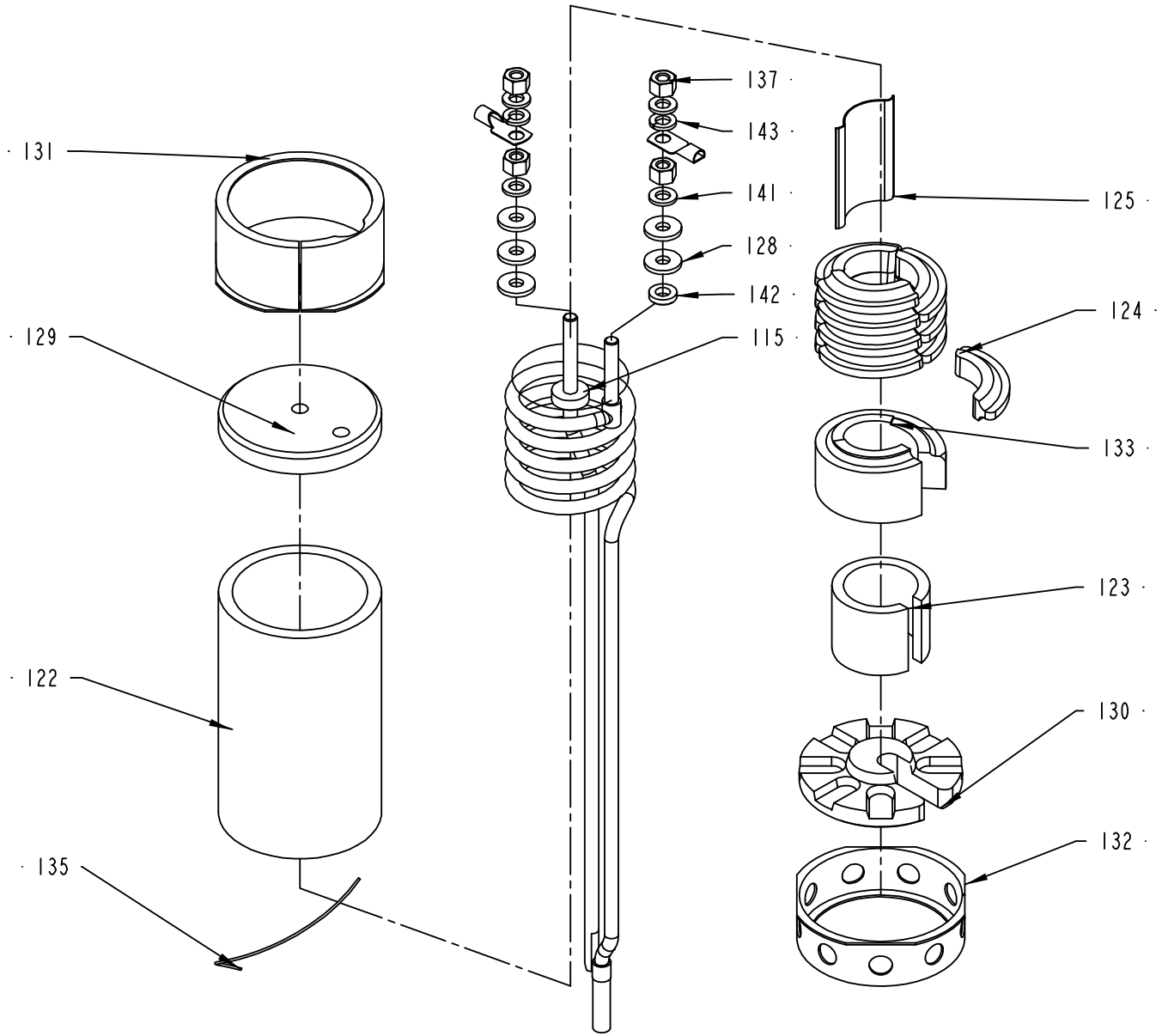
131
129
122
135
137
143
141
128
142
115
125
124
133
123
130
132

ECM: 101987 - 20011203
Group number: 31390-0100
Assembly Drawing: 31390-1_1_AC

Pos	Part No	SP	UN	Qty	Description	Page No
0355B 648035						
115	30310-0003	A		1	FF HEATING ELEMENT TOP	
0375S 648035, 0500B 648035, 0500S 648035, 0750B 648035						
115	30310-0002	A		1	FF HEATING ELEMENT TOP	
1000SQ 648035, 1000S 648035, 0750S 648035, 1000B 648035						
115	30310-0001	A		1	FF HEATING ELEMENT TOP	
Common Parts						
122	20705-0001	A		1	INSULATING PIPE	
123	29411-0000	A		1	SPACER PIPE	
124	29413-0000	A		12	LACE	
125	31653-0001	A		1	SHEET	
128	525233-0000	A		5	GASKET 16X2X6MM	
129	20772-0000	A		1	INSULATOR BODY 70X70X15MM	
130	37536-0000	A		1	INSULATOR BODY LOWER 70X70X15MM	
131	23771-0000	A		1	SPACER RING 4X78X1MM	
132	37537-0000	A		1	SPACER RING LOWER 72X78X1MM	
133	37535-0000	A		1	SUPPORTING PART 56X56X31,5MM	
135	90145-0005	-	M	1	WIRE	
137	312811-0316	-		4	NUT HEX.LOCK HELI COIL MID GRIP M6 SS	
141	315105-0153	-		4	WASHER BRB6,4X12RFR	
142	315115-0153	-		1	WASHER PLAIN, TBRB 6,4/12 H=3	
143	315402-0156	-		2	LOCK WASHER FBB 6,5	

Pos	Part No	SP	UN	Qty	Description	Page No

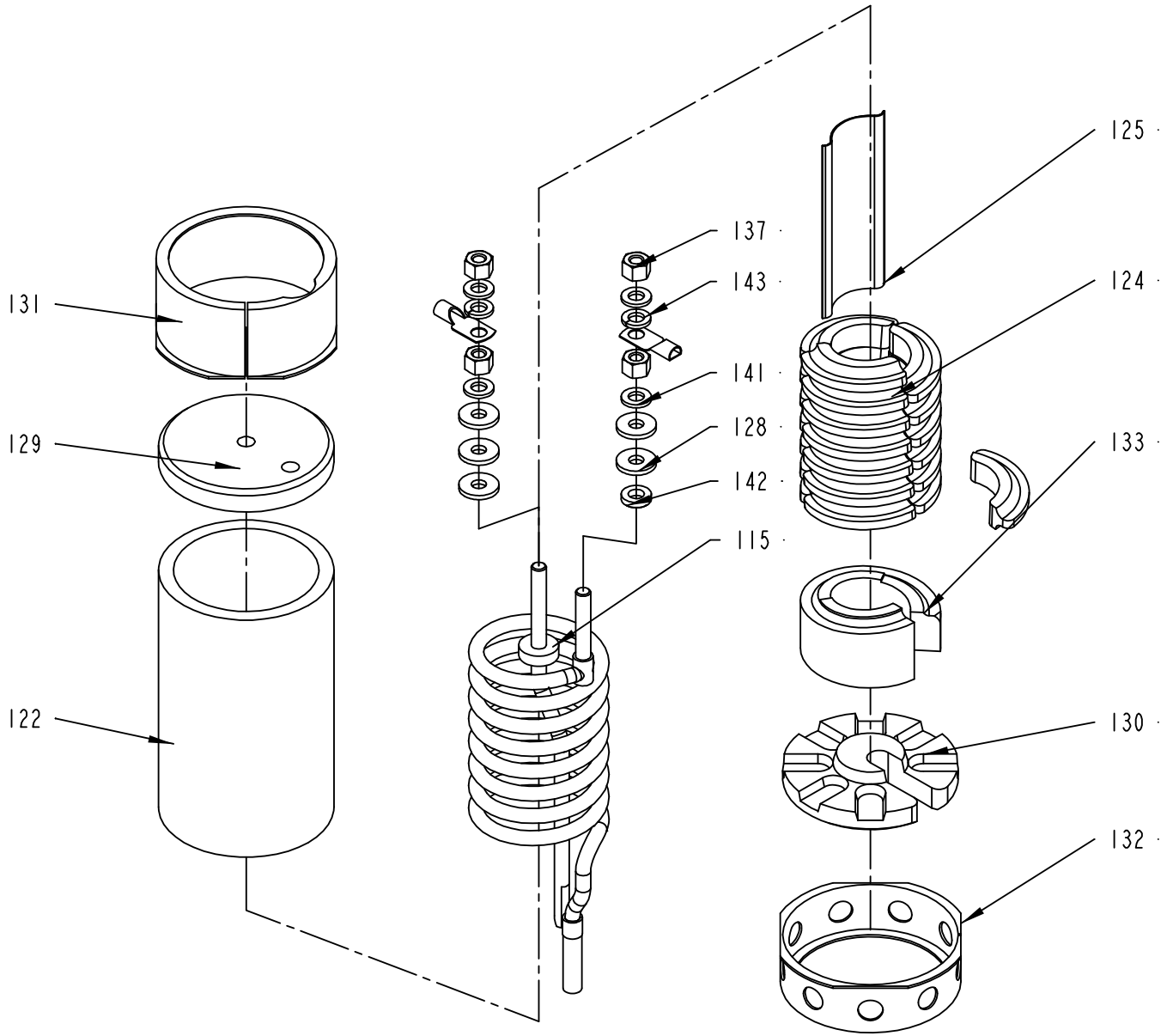
131
129
122
137
143
141
128
142
115
125
124
133
130
132

ECM: 103352 - 20020115
Group number: 31390-0110
Assembly Drawing: 31390-2_1_AA

Pos	Part No	SP	UN	Qty	Description	Page No
0375S 648035, 0355B 648035, 1000SQ 648035, 0500S 648035, 0750B 648035						
115	30311-0001	A		1	FF HEATINGELEMENT BUTTOM KANTHAL 2333-02	
0500B 648035, 1000S 648035, 0750S 648035, 1000B 648035						
115	30311-0002	-		1	FF HEATINGELEMENT BUTTOM KANTHAL 2333-02	
Common Parts						
122	20705-0001	A		1	INSULATING PIPE	
124	29413-0000	A		21	LACE	
125	31653-0002	A		1	FIX PLATE 39X85X0,5MM	
128	525233-0000	A		5	GASKET 16X2X6MM	
129	20772-0000	A		1	INSULATOR BODY 70X70X15MM	
130	37536-0000	-		1	INSULATOR BODY LOWER 70X70X15MM	
131	23771-0000	-		1	SPACER RING 4X78X1MM	
132	37537-0000	-		1	SPACER RING LOWER 72X78X1MM	
133	37535-0000	-		1	SUPPORTING PART 56X56X31,5MM	
137	312811-0316	-		4	NUT HEX.LOCK HELI COIL MID GRIP M6 SS	
141	315105-0153	-		4	WASHER BRB6,4X12RFR	
142	315115-0153	-		1	WASHER PLAIN, TBRB 6,4/12 H=3	
143	315402-0156	-		2	LOCK WASHER FBB 6,5	

Pos	Part No	SP	UN	Qty	Description	Page No

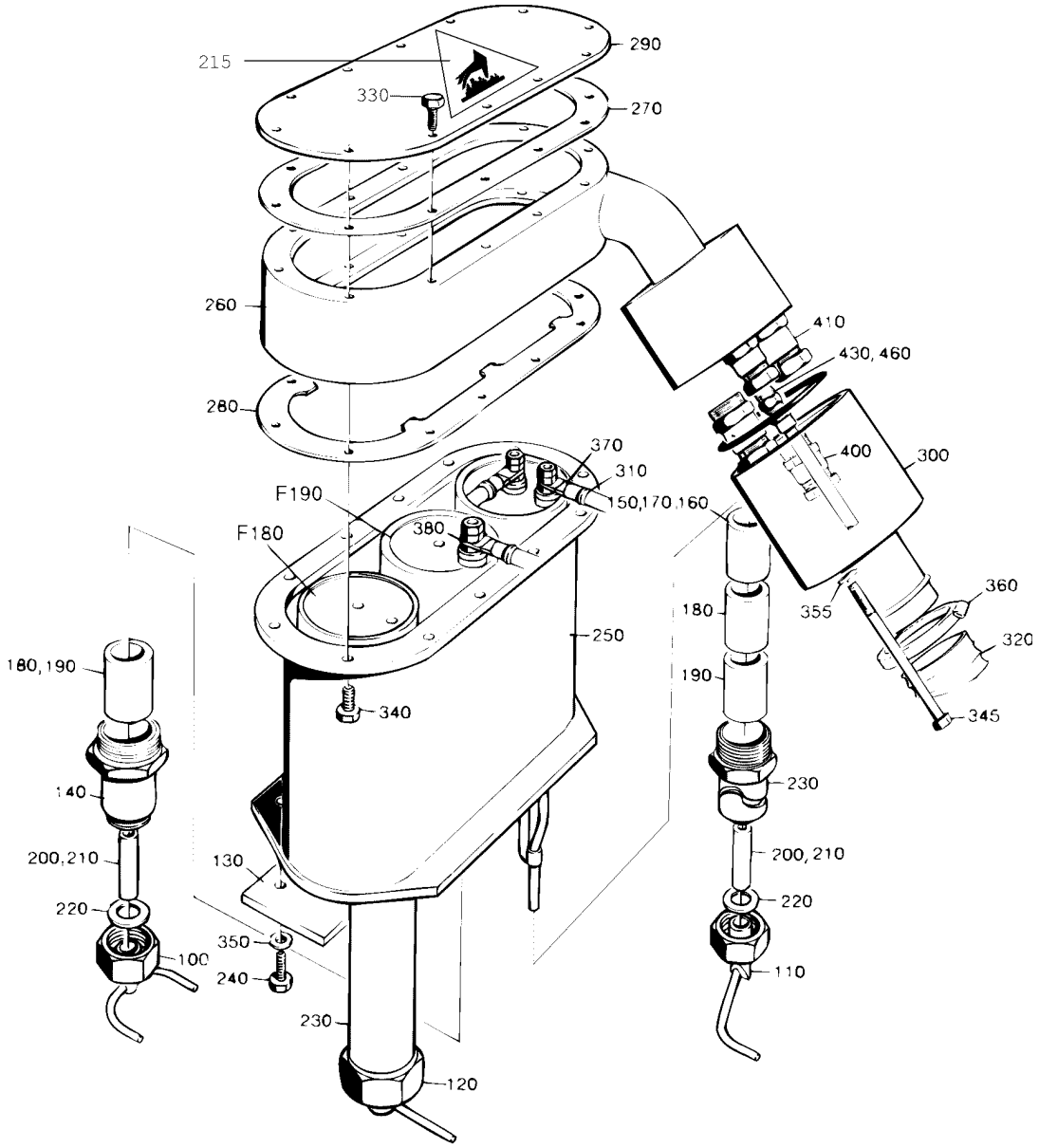
215
290
330
270
260
410
430, 460
280
370
400
300
310
F190
150,170,160
F180
380
360
180
355
320
250
180, 190
190
340
345
140
230
200, 210
130
200, 210
220
220
350
100
240
110
230
120

ECM: 72197 - 19990215
Group number: 525128-0100
Assembly Drawing: 525128-1_1_AA

This list covers pages from 5-82 to 5-85

Pos	Part No	SP	UN	Qty	Description	Page No
0355B						
100	442867-0000	C		1	AIR NOZZLE	
110	285676-0000	C		1	AIR NOZZLE	
120	285677-0000	C		1	AIR NOZZLE	
140	23763-0006	D		1	SPACER PIPE	
180	23765-0004	C		4	INSULATING PIPE	
190	23765-0005	C		1	INSULATING PIPE	
200	252766-0001	C		4	INSULATING PIPE	
210	252766-0002	C		1	INSULATING PIPE	
230	297499-0007	D		2	SIDE PIPE	
240	312105-0372	-		3	SCREW M6S ISO 4017 M6X25 A480	
0375S						
100	A247227-0002	C		1	AIR NOZZLE	**5-73**
110	A285507-0002	C		1	AIR NOZZLE	**5-75**
120	A285508-0002	C		1	AIR NOZZLE	**5-77**
140	23763-0010	D		1	SPACER PIPE	
170	23765-0003	C		2	INSULATING PIPE	
180	23765-0004	C		4	INSULATING PIPE	
190	23765-0005	C		1	INSULATING PIPE	
210	252766-0002	C		3	INSULATING PIPE	
230	297499-0009	D		2	SIDE PIPE	
240	312105-0372	-		3	SCREW M6S ISO 4017 M6X25 A480	
0500B						
100	247227-0003	C		1	AIR NOZZLE	
110	525197-0000	C		1	BLOW-OFF NOZZLE TR	
120	525198-0000	C		1	BLOW-OFF NOZZLE TL	
130	262290-0002	-		1	LACE	
140	23763-0003	D		1	SPACER PIPE	
160	23765-0002	C		2	INSULATING PIPE	
180	23765-0004	C		1	INSULATING PIPE	
200	252766-0001	C		3	INSULATING PIPE	
230	297499-0002	D		2	SIDE PIPE	
240	312105-0376	-		3	SCREW M6S ISO 4014 M6X35 A480	
0500S						
100	442867-0000	C		1	AIR NOZZLE	
110	285676-0000	C		1	AIR NOZZLE	
120	285677-0000	C		1	AIR NOZZLE	
140	23763-0006	D		1	SPACER PIPE	
170	23765-0003	C		2	INSULATING PIPE	
180	23765-0004	C		2	INSULATING PIPE	
190	23765-0005	C		3	INSULATING PIPE	
200	252766-0001	C		4	INSULATING PIPE	
210	252766-0002	C		1	INSULATING PIPE	
230	297499-0003	D		2	SIDE PIPE	
240	312105-0372	-		3	SCREW M6S ISO 4017 M6X25 A480	
0750B						
100	247227-0003	C		1	AIR NOZZLE	
110	525197-0000	C		1	BLOW-OFF NOZZLE TR	
120	525198-0000	C		1	BLOW-OFF NOZZLE TL	
140	23763-0005	D		1	SPACER PIPE	
160	23765-0002	C		2	INSULATING PIPE	
190	23765-0005	C		3	INSULATING PIPE	
210	252766-0002	C		3	INSULATING PIPE	
230	297499-0008	D		2	SIDE PIPE	
240	312105-0372	-		3	SCREW M6S ISO 4017 M6X25 A480	
0750S						
100	544298-0000	C		1	BLOWING NOZZLE B	
110	544293-0000	C		1	BLOW-OFF NOZZLE TH	
120	544269-0000	C		1	BLOW-OFF NOZZLE TV	
130	262290-0001	-		1	LACE	
140	23763-0004	D		1	SPACER PIPE	
160	23765-0002	C		2	INSULATING PIPE	
180	23765-0004	C		5	INSULATING PIPE	
200	252766-0001	C		3	INSULATING PIPE	
230	443158-0000	D		2	SIDE PIPE	
240	312105-0374	-		3	SCREW M6S ISO 4014 M6X30 A480	
1000B						
100	247227-0003	C		1	AIR NOZZLE	
110	525197-0000	C		1	BLOW-OFF NOZZLE TR	
120	525198-0000	C		1	BLOW-OFF NOZZLE TL	
130	262290-0001	-		1	LACE	
140	23763-0004	D		1	SPACER PIPE	
150	23765-0001	C		2	INSULATING PIPE	
180	23765-0004	C		1	INSULATING PIPE	
200	252766-0001	C		3	INSULATING PIPE	
230	297499-0001	D		2	SIDE PIPE	
240	312105-0374	-		3	SCREW M6S ISO 4014 M6X30 A480	

Machine Type | Group Description | Used-In | Group Number | Page No

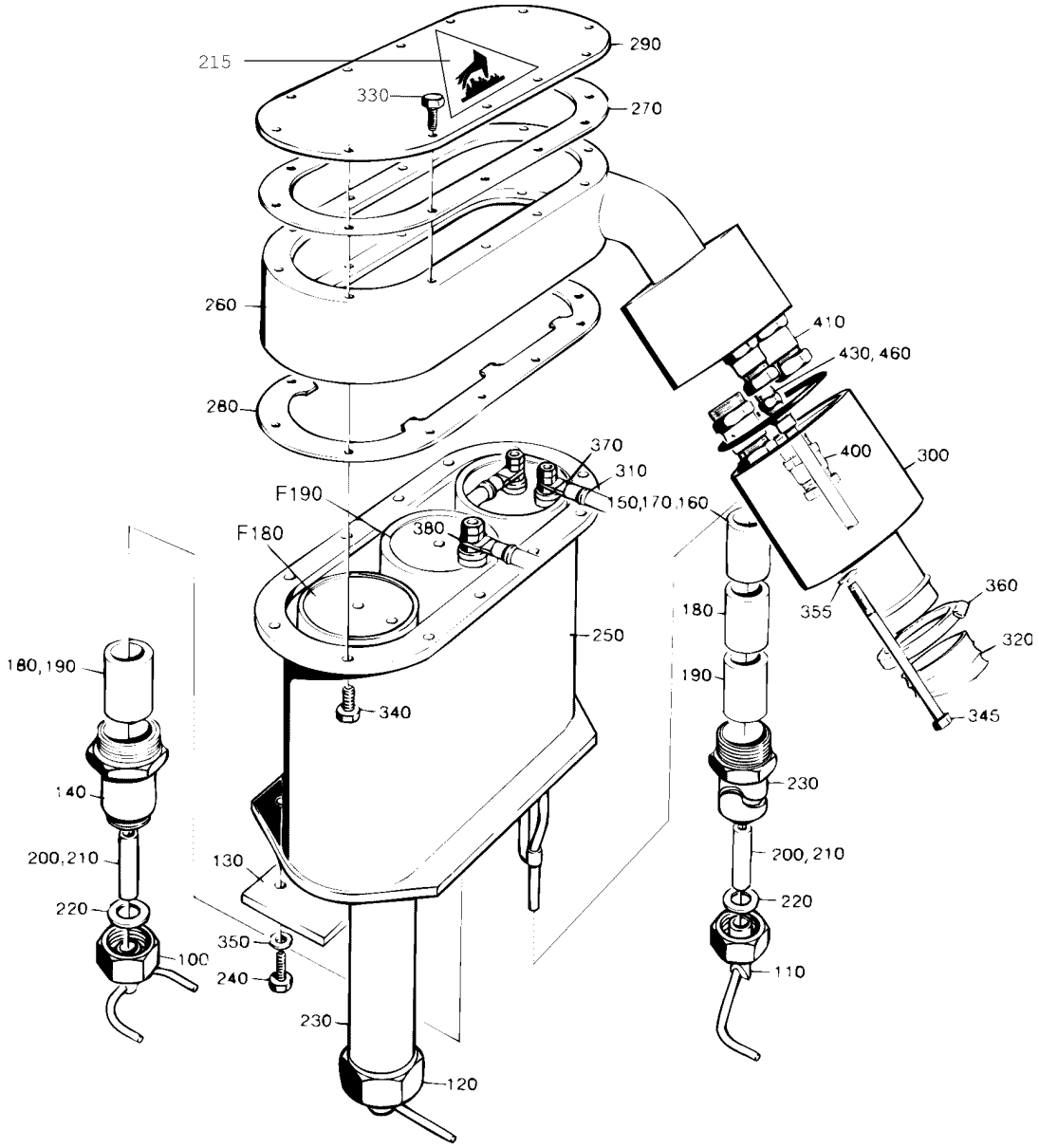
215
290
330
270
260
410
430, 460
280
370
400
300
310
F190
150,170,160
F180
380
360
180
355
320
180, 190
250
190
340
345
140
230
200, 210
130
200, 210
220
220
350
100
240
110
230
120

ECM: 72197 - 19990215
Group number: 525128-0100
Assembly Drawing: 525128-1_1_AA

This list covers pages from 5-82 to 5-85

Pos	Part No	SP	UN	Qty	Description	Page No
1000S (Cont'd)						
100	569124-0000	C		1	AIR NOZZLE	
110	569125-0000	C		1	AIR NOZZLE	
120	569126-0000	C		1	AIR NOZZLE	
130	262290-0001	-		1	LACE	
140	23763-0004	D		1	SPACER PIPE	
160	23765-0002	C		2	INSULATING PIPE	
170	23765-0003	C		2	INSULATING PIPE	
180	23765-0004	C		3	INSULATING PIPE	
200	252766-0001	C		1	INSULATING PIPE	
210	252766-0002	C		2	INSULATING PIPE	
230	548402-0000	D		2	SIDE PIPE	
240	312105-0374	-		3	SCREW M6S ISO 4014 M6X30 A480	
1000SQ						
100	574032-0000	C		1	BLOWING NOZZLE B	
110	574033-0000	C		1	BLOWING NOZZLE TH	
120	574034-0000	C		1	BLOWING NOZZLE TV	
130	262290-0001	-		1	LACE	
140	23763-0006	D		1	SPACER PIPE	
160	23765-0002	C		2	INSULATING PIPE	
180	23765-0004	C		4	INSULATING PIPE	
190	23765-0005	C		1	INSULATING PIPE	
200	252766-0001	C		3	INSULATING PIPE	
230	443158-0000	D		2	SIDE PIPE	
240	312105-0374	-		3	SCREW M6S ISO 4014 M6X30 A480	
Common Parts						
215	359710-0002	-		1	WARNING SIGN ISO, HOT SURFACE	
220	263673-0000	C		6	GASKET	
250	262272-0000	D		1	HEATING CHAMBER	
260	525134-0000	D		1	SPACER PIECE	
270	531730-0000	C		3	FLANGE SEAL	
280	23769-0000	C		1	STOP PLATE	
290	262288-0000	D		1	LID	
300	525073-0000	D		1	COVER	
310	B525070-0000	C		1	ELECTRICAL CONNECTION	
	353102-0168	*C*		*1*	*CABLE SHOEYAEV16-M6*	
	351121-0109	*C*	*M*	*1*	*CABLE RHH 16*	
320	352135-0116	C	MM	500	FLEXIBLE CONDUIT DIA. 40	
330	312105-0325	-		12	SCREW M6S ISO 4017 M5X10 A480	
340	312105-0328	-		12	SCREW M6S ISO 4017 M5X14 A480	
345	312105-0388	-		2	SCREW M6S ISO 4014 M6X90 A480	
350	315115-0153	-		3	WASHER PLAIN, TBRB 6,4/12 H=3	
355	315105-0153	-		2	WASHER BRB6,4X12RFR	
360	342991-0109	-		2	HOSE CLIP,WORM DRIVE TYPE (48)-50	
370	353104-0168	-		2	CABLE SHO YAV 16 M6*	
380	353104-0182	-		2	CABLE SHOE YAV 35 M6*	
400	352103-0106	-		2	CABLE GLAND, ST 11, PR18,6/PG11	
410	352103-0111	-		2	CABLE GLAND, ST 16, PR22,5/PG16	
430	342921-0121	-		1	STRAIGHT COUPLING,EXT.THREADED 8/6-G1/8"	
460	315234-0109	-		1	WASHER,PL.RND.CU.10,3/13,5 H=1,0	
F180	A31390-0100	-		2	FF-ELEMENT TOP	**5-79**
F190	A31390-0110	-		1	FF-ELEMENT BOTTOM	**5-81**

Machine Type Group Description Used-In Group Number Page No

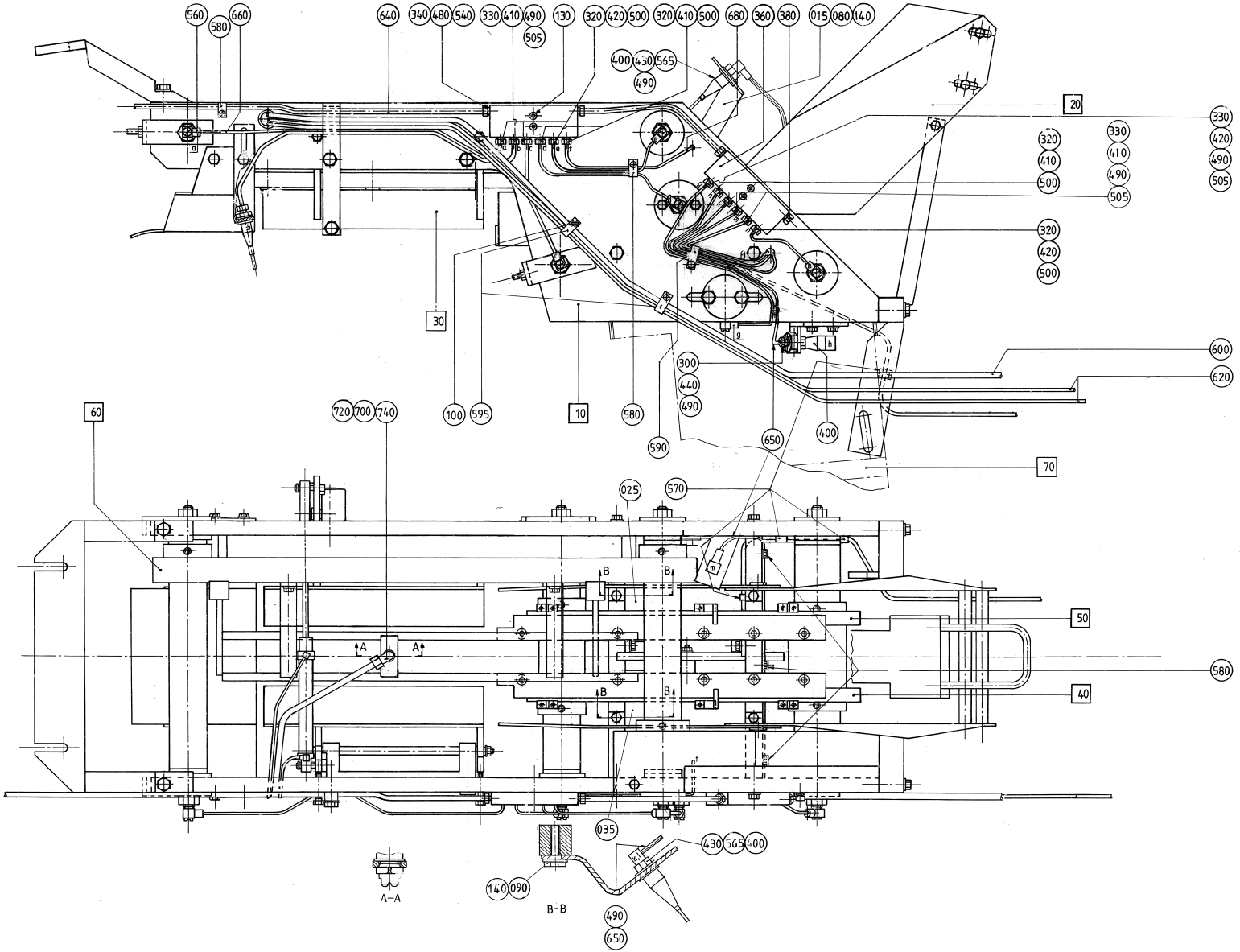
560
580
660
640
340
480
540
330
410
490
505
130
320
420
500
320
410
500
680
360
380
015
080
140
400
430
565
490
20
330
420
490
505
320
410
490
505
320
420
500
30
600
620
300
440
490
60
720
700
740
100
595
10
580
590
650
400
70
025
570
B
B
50
A
A
580
B
B
40
035
430
565
400
140
090
490
650
A–A
B–B

ECM: 81019 - 20000831
Group number: 525085-0300
Assembly Drawing: 525085-3_1_AA

This list covers pages from 5-86 to 5-91

Pos	Part No	SP	UN	Qty	Description	Page No
TBA/8 0500B, TBA/8 0375S, TBA/8 0500S, TBA/8 0355B, TBA/8 1000B, TBA/8 0750S, TBA/8 0750B, TBA/8 1000S (See drawing on page: 5-86)						
010	A525086-0200	-		1	CONVEYING EQUIPMENT	**5-93, 5-95**
015	566313-0000	-		1	HOLDER	
025	566316-0000	-		1	HOLDER	
035	566317-0000	-		1	HOLDER	
040	A525089-0100	-		1	CHAIN RIGHT	**5-97, 5-99**
050	A525090-0100	-		1	CHAIN LEFT	**5-101, 5-103**
060	A525091-0100	-		1	CHAIN	**5-105**
070	A525092-0100	-		1	CHAIN GUARD	**5-107**
080	312105-0368	-		2	SCREW M6S M6X16 A280	
090	312105-0366	-		4	SCREW M6S M6X12 A280	
100	312125-0287	-		11	SLOTTED CHEESE HEAD SCREW MCS 4X8 SS	
140	315115-0153	-		6	WASHER PLAIN, TBRB 6,4/12 H=3	
300	90028-0001	C		2	CONE 5/32"	
320	90028-0020	C		7	CONE TUBE 2,5MM	
330	90028-0021	C		5	CONE TUBE 4 MM	
360	90032-0040	-		2	BLOCK 6 WAYS	
400	90092-0048	C		5	OIL BRUSH, FLAT, 5/16-24 UNF	
410	90092-0052	C		7	METERING VALVE 10 MM3	
420	90092-0053	C		5	METERING VALVE 30 MM3	
430	90134-0002	-		3	CONNECTOR R1/8, D=4 MM	
440	90134-0003	C		2	BUSHING	
480	90134-0030	-		4	SLEEVE FOR PLASTIC TUBE	
490	342706-0114	-		10	ACCESSORIES, INSERT SLEEVE 4 MM	
500	90134-0039	C		7	BUSHING VALVE CONNECTION 2,5 MM	
505	90134-0040	C		5	BUSHING VALVE CONNECTION 4 MM	
560	90134-0058	-		6	CONNECTION	
565	90137-0002	-		3	BANJO CONN. 1/8 - 5/16-24UNF	
570	90165-0056	-		4	PIPE CLIP FOR TUBE D=4 MM	
580	90165-0057	-		5	PIPE CLIP FOR TUBE D=6 MM	
590	316810-0106	-		1	PIPE CLIP FOR TUBE D=8 MM	
595	90074-0002	-		2	CABLE CLIPS, D=11 MM	
TBA/8 1000SQ NORMFIN (See drawing on page: 5-88)						
010	A576251-0100	-		1	CONVEYOR	**5-109**
070	A576247-0100	-		1	PROTECTION	**5-119**
100	312125-0287	-		4	SLOTTED CHEESE HEAD SCREW MCS 4X8 SS	
300	90028-0001	C		1	CONE 5/32"	
320	90028-0020	-		10	CONE TUBE 2,5MM	
330	90028-0021	C		2	CONE TUBE 4 MM	
360	90032-0040	-		2	BLOCK 6 WAYS	
400	90092-0048	C		2	OIL BRUSH, FLAT, 5/16-24 UNF	
410	90092-0052	C		4	METERING VALVE 10 MM3	
420	90092-0053	-		8	METERING VALVE 30 MM3	
430	90134-0002	-		1	CONNECTOR R1/8, D=4 MM	
440	90134-0003	C		1	BUSHING	
480	90134-0030	-		3	SLEEVE FOR PLASTIC TUBE	
490	342706-0114	-		4	ACCESSORIES, INSERT SLEEVE 4 MM	
500	90134-0039	-		10	BUSHING VALVE CONNECTION 2,5 MM	
505	90134-0040	C		2	BUSHING VALVE CONNECTION 4 MM	
560	90134-0058	-		9	CONNECTION	
565	90137-0002	-		1	BANJO CONN. 1/8 - 5/16-24UNF	
570	90165-0056	-		1	PIPE CLIP FOR TUBE D=4 MM	
580	90165-0057	-		1	PIPE CLIP FOR TUBE D=6 MM	
590	316810-0106	-		1	PIPE CLIP FOR TUBE D=8 MM	
595	90074-0002	-		2	CABLE CLIPS, D=11 MM	
TBA/8 1000SQ REVFIN (See drawing on page: 5-90)						
010	A576251-0100	-		1	CONVEYOR	**5-109**
034	597584-0000	-		2	BRACKET	
036	1143001-0000	-		1	ATTACHMENT PLATE	
037	1143002-0000	D		2	BRACKET	
039	1143000-0000	D		2	PUSHER	
070	A576247-0100	-		1	PROTECTION	**5-119**
080	312105-0368	-		4	SCREW M6S M6X16 A280	
100	312125-0287	-		6	SLOTTED CHEESE HEAD SCREW MCS 4X8 SS	
300	90028-0001	C		1	CONE 5/32"	
320	90028-0020	-		10	CONE TUBE 2,5MM	
330	90028-0021	C		2	CONE TUBE 4 MM	
360	90032-0040	-		2	BLOCK 6 WAYS	
400	90092-0048	C		2	OIL BRUSH, FLAT, 5/16-24 UNF	
410	90092-0052	C		4	METERING VALVE 10 MM3	
420	90092-0053	-		8	METERING VALVE 30 MM3	
430	90134-0002	-		1	CONNECTOR R1/8, D=4 MM	
440	90134-0003	C		1	BUSHING	
480	90134-0030	-		3	SLEEVE FOR PLASTIC TUBE	
490	342706-0114	-		4	ACCESSORIES, INSERT SLEEVE 4 MM	
500	90134-0039	-		10	BUSHING VALVE CONNECTION 2,5 MM	
505	90134-0040	C		2	BUSHING VALVE CONNECTION 4 MM	
560	90134-0058	-		9	CONNECTION	
565	90137-0002	-		1	BANJO CONN. 1/8 - 5/16-24UNF	
570	90165-0056	-		1	PIPE CLIP FOR TUBE D=4 MM	
580	90165-0057	-		1	PIPE CLIP FOR TUBE D=6 MM	

Machine Type Group Description Used-In Group Number Page No

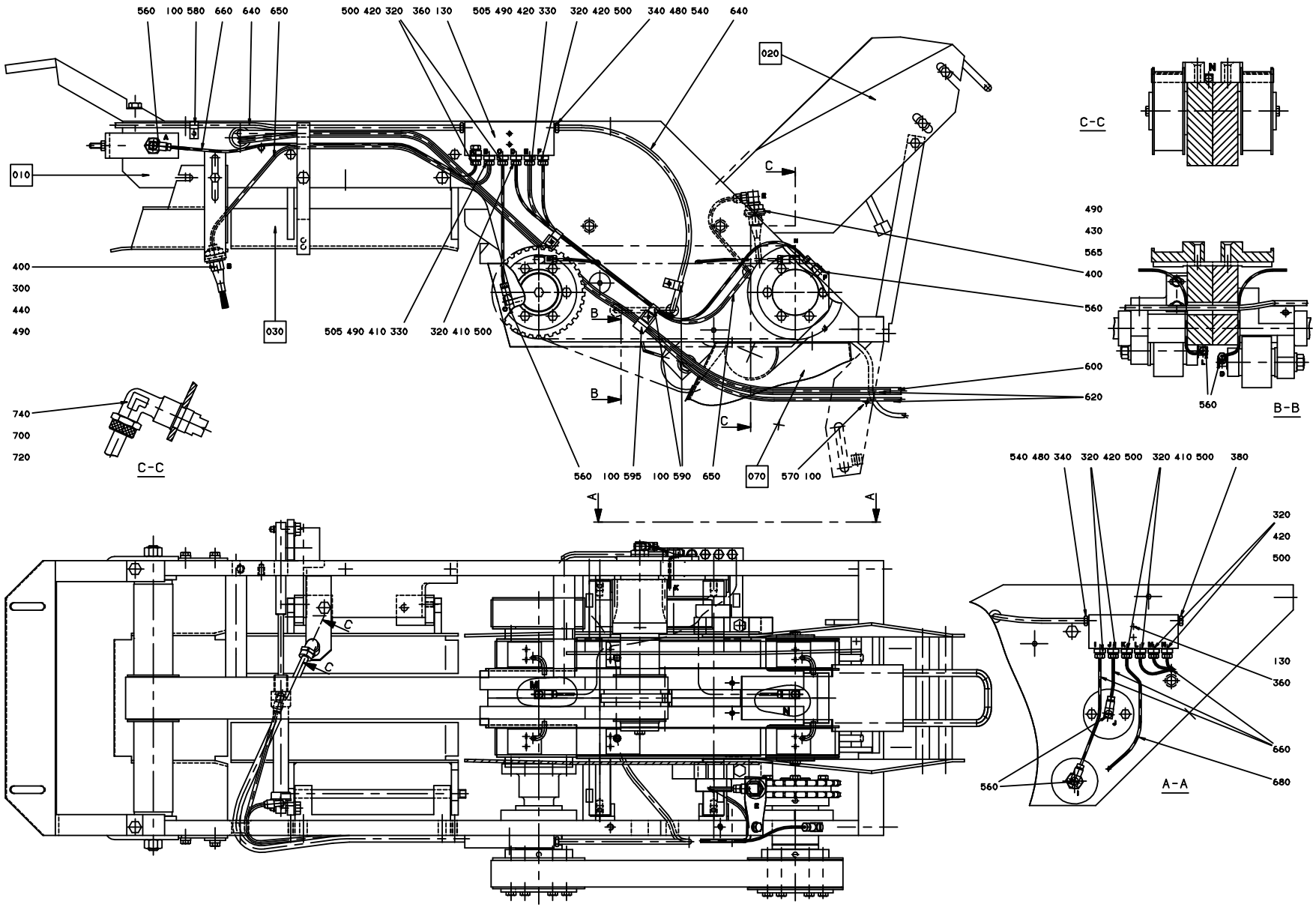
560 100 580 660 640 650
500 420 320 360 130
505 490 420 330
320 420 500
340 480 540
640
020
010
030
400
300
440
490
505 490 410 330
320 410 500
740
700
720
C-C
560 100 595 100 590 650
070
570 100
C-C
490
430
565
400
560
600
620
560
B-B
540 480 340 320 420 500 320 410 500 380
320
420
500
130
360
660
680
560
A-A

Pos	Part No	SP	UN	Qty	Description	Page No
TBA/8 1000SQ REVFIN (Cont'd) (See drawing on page: 5-90)						
580	90165-0057	-		1	PIPE CLIP FOR TUBE D=6 MM	
590	316810-0106	-		3	PIPE CLIP FOR TUBE D=8 MM	
591	90450-0495	C		2	CYLINDER	
592	342732-0102	-		4	ELBOW PIPE JOINT, EXT.THREAD, D=6MM-G1/8	
593	90166-0124	-	MM	7000	TUBE 6 MM PA,TRANSP.	
594	312631-0321	-		2	HEX.NUT FINE, EN 24032 M6M M10X1,25 FZB8	
595	90074-0002	-		4	CABLE CLIPS, D=11 MM	
596	312105-0372	-		10	SCREW M6S ISO 4017 M6X25 A480	
597	315101-0153	-		10	WASHER PLAIN, BRB, 6,4/12 H=1,5	
598	352113-0101	-		3	CLIP STRIP, 92X2,5 MM	
599	312105-0362	-		1	SCREW M6S ISO 4017 M6X8 A480	
Common Parts						
020	A525087-0100	-		1	DROP	**5-121, 5-123**
030	A525088-0200	-		1	DISCHARGE CHUTE	**5-125**
130	312155-0295	-		4	SCREW EN 10642 MF6S M4X20 A480	
340	90028-0025	C		3	CONE TUBE 6 MM	
380	90087-0019	-		1	PLUG M10X1 STAINLESS	
540	90134-0055	C		3	BUSHING/NUT INLET/OUTLET 6 MM	
600	90166-0122	-	MM	1300	TUBE 8 MM PA,TRANSP.	
620	90166-0095	-	MM	3000	TUBE 4 MM PA BLUE	
640	90166-0108	-	MM	1300	TUBE 6 MM PA,TRANSP.	
650	90166-0051	-	MM	2600	TUBE PA,TRANSP.	
660	90166-0143	-	MM	4000	TUBE 2,5 MM PA,TRANSP.	
680	90266-0019	-	MM	300	PIPE	
700	90424-0035	D		1	SPRAY NOZZLE 95 DEG	
720	315233-0110	-		1	WASHER CAPTIVE SEALING G1/4	
740	342933-0122	-		1	ELBOW 90 COUPL.,INT.THREAD 8/6-G1/4"	

Pos	Part No	SP	UN	Qty	Description	Page No

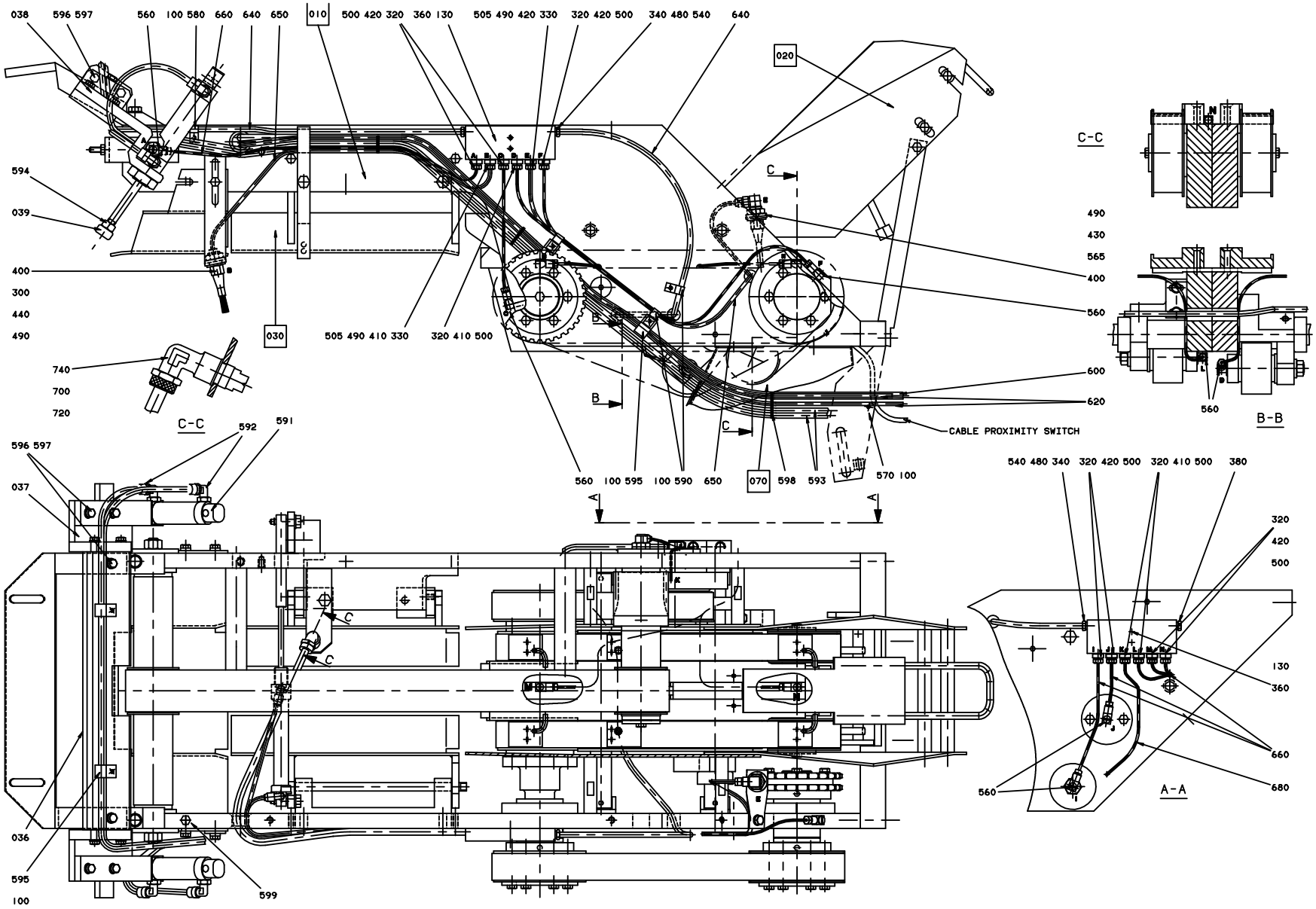
038
596 597
560
100 580
660
640
650
010
500 420 320
360 130
505 490 420 330
320 420 500
340 480 540
640
020
C-C
490
430
565
400
560
600
620
560
B-B
594
039
400
300
440
490
030
505 490 410 330
320 410 500
740
700
720
C-C
592
591
596 597
037
CABLE PROXIMITY SWITCH
560
100 595
100 590
650
070
598
593
570 100
540 480 340
320 420 500
320 410 500
380
320
420
500
130
360
660
680
A-A
560
036
595
100
599

Pos	Part No	SP	UN	Qty	Description	Page No
SEE PREVIOUS LISTS PAGES: 5-87, 5-89.						

Pos	Part No	SP	UN	Qty	Description	Page No

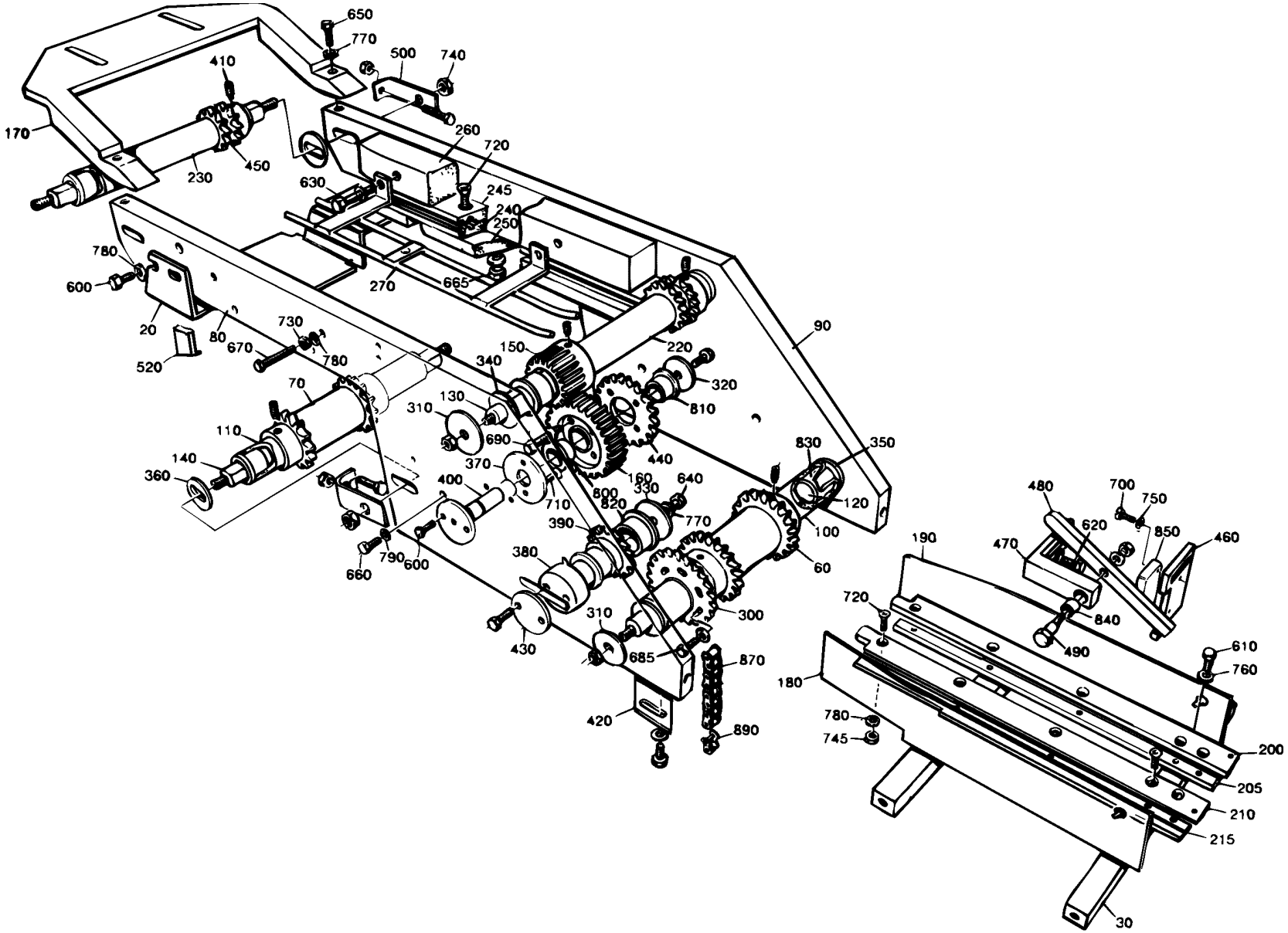
650
770
500
740
410
260
720
170
230
450
630
245
240
250
780
600
270
665
20
80
730
670
780
520
90
150
220
340
320
810
70
130
310
690
110
140
360
370
440
160
400
710
800
330
640
820
770
830
350
120
100
390
60
380
790
600
660
300
310
685
870
430
420
890
480
700
750
620
850
460
470
190
720
840
490
610
760
180
780
745
200
205
210
215
30

ECM: 72197 - 19990215
Group number: 525086-0200
Assembly Drawing: 525086-1_1_AA

This list covers pages from 5-92 to 5-95

Pos	Part No	SP	UN	Qty	Description	Page No
0375S						
020	443388-0002	D		1	HEAD PLATE	
030	443481-0000	D		2	BRACKET	
060	443478-0003	D		1	SPROCKET	
070	443479-0003	D		1	SPROCKET	
200	525245-0000	D		1	PROFILE	
205	525246-0000	D		1	PROFILE	
210	525247-0000	D		1	PROFILE	
215	525248-0000	D		1	PROFILE	
0355B						
020	443388-0001	D		1	HEAD PLATE	
030	443480-0000	D		2	BRACKET	
060	443478-0002	D		1	SPROCKET	
070	443479-0002	D		1	SPROCKET	
200	525425-0000	D		1	PROFILE	
205	525426-0000	D		1	PROFILE	
210	525427-0000	D		1	PROFILE	
215	525428-0000	D		1	PROFILE	
0500B						
020	443387-0000	D		1	HEAD PLATE	
030	443454-0000	D		2	BRACKET	
060	443478-0001	D		1	SPROCKET	
070	443479-0001	D		1	SPROCKET	
200	525425-0000	D		1	PROFILE	
205	525426-0000	D		1	PROFILE	
210	525427-0000	D		1	PROFILE	
215	525428-0000	D		1	PROFILE	
0500S						
020	443388-0001	D		1	HEAD PLATE	
030	443480-0000	D		2	BRACKET	
060	443478-0002	D		1	SPROCKET	
070	443479-0002	D		1	SPROCKET	
200	525245-0000	D		1	PROFILE	
205	525246-0000	D		1	PROFILE	
210	525247-0000	D		1	PROFILE	
215	525248-0000	D		1	PROFILE	
0750S						
020	544321-0000	D		1	HEAD PLATE	
030	544322-0000	D		2	BRACKET	
060	443478-0004	D		1	SPROCKET	
070	443479-0004	D		1	SPROCKET	
200	525245-0000	D		1	PROFILE	
205	525246-0000	D		1	PROFILE	
210	525247-0000	D		1	PROFILE	
215	525248-0000	D		1	PROFILE	
1000S						
020	569132-0000	D		1	HEAD PLATE	
030	569133-0000	D		2	BRACKET	
060	443478-0004	D		1	SPROCKET	
070	443479-0004	D		1	SPROCKET	
200	525403-0000	D		1	PROFILE	
205	525404-0000	D		1	PROFILE	
210	525405-0000	D		1	PROFILE	
215	525406-0000	D		1	PROFILE	
0750B, 1000B						
020	443387-0000	D		1	HEAD PLATE	
030	443454-0000	D		2	BRACKET	
060	443478-0001	D		1	SPROCKET	
070	443479-0001	D		1	SPROCKET	
200	525245-0000	D		1	PROFILE	
205	525246-0000	D		1	PROFILE	
210	525247-0000	D		1	PROFILE	
215	525248-0000	D		1	PROFILE	
Common Parts						
080	443445-0000	D		1	SIDE PLATE	
090	443446-0000	D		1	SIDE PLATE	
100	443455-0000	D		1	SHAFT	
110	443456-0000	D		1	SHAFT	
120	525400-0000	C		1	SHAFT	
130	525401-0000	C		1	SHAFT	
140	525402-0000	C		2	SHAFT	
150	443290-0000	D		1	GEAR WHEEL	
160	443291-0000	D		1	GEAR WHEEL	
170	443293-0000	D		1	BRACKET	
180	443450-0000	D		1	HEAD PLATE	
190	443451-0000	D		1	HEAD PLATE	
220	443457-0000	D		1	SHAFT	

Machine Type | Group Description | Used-In | Group Number | Page No

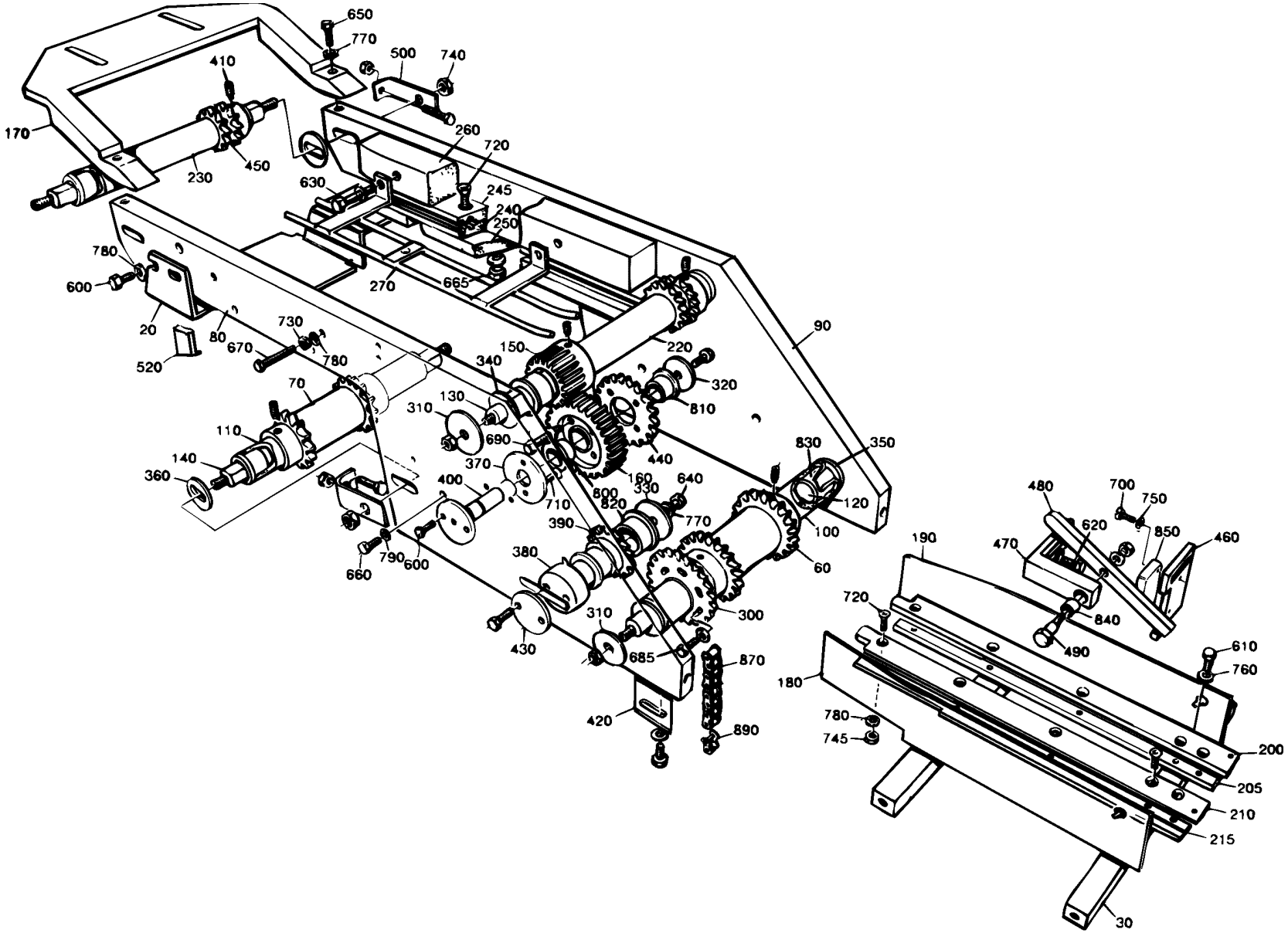
650
770
500
740
410
170
260
720
230
450
630
245
240
250
780
600
270
665
20
80
730
670
780
520
90
150
220
340
320
810
70
130
310
690
110
140
360
370
440
160
400
710
800
330
640
820
770
830
350
120
100
390
60
380
790
600
660
300
310
685
870
430
420
890
480
700
750
620
850
460
470
190
720
840
490
610
760
180
780
745
200
205
210
215
30

ECM: 72197 - 19990215
Group number: 525086-0200
Assembly Drawing: 525086-1_1_AA

This list covers pages from 5-92 to 5-95

Pos	Part No	SP	UN	Qty	Description	Page No
Common Parts (Cont'd)						
230	443458-0000	D		1	SHAFT	
240	525243-0000	D		1	PROFILE	
245	525244-0000	D		1	PROFILE	
250	525242-0000	-		1	BRACKET	
260	443486-0000	D		1	GUIDE	
270	525419-0000	D		1	LEAD RAIL	
300	297899-0000	D		1	SPROCKET	
310	443295-0000	D		4	WASHER	
320	443296-0000	D		1	WASHER	
330	443297-0000	D		1	WASHER	
340	443298-0000	D		2	WASHER	
350	443299-0000	D		2	WASHER	
360	443300-0000	D		4	WASHER	
370	443301-0000	D		1	WASHER	
380	443305-0000	C		1	SHAFT	
390	443306-0000	D		1	SPROCKET	
400	443307-0000	C		1	SHAFT	
410	90287-0161	-		10	SCREW, SOCK.SET DOGPOINT M8X12	
420	443350-0000	-		1	BRACKET	
430	443414-0000	-		1	WASHER	
440	443464-0000	D		1	SPROCKET	
450	443467-0000	C		2	SPROCKET	
460	443482-0000	-		1	BRACKET	
470	443483-0000	-		1	BRACKET	
480	443484-0000	D		1	ARM	
490	443485-0000	C		1	SCREW	
500	443489-0000	-		2	BRACKET	
520	525334-0000	-		1	BRACKET	
530	556886-0000	-		2	BRACKET	
600	312105-0366	-		6	SCREW M6S M6X12 A280	
610	312105-0368	-		7	SCREW M6S M6X16 A280	
620	312105-0370	-		4	SCREW M6S ISO 4017 M6X20 A480	
625	312105-0372	-		2	SCREW M6S ISO 4017 M6X25 A480	
630	312105-0384	-		2	SCREW M6S ISO 4014 M6X70 A480	
640	312105-0449	-		1	SCREW M6S ISO 4017 M8X16 A480	
650	312105-0453	-		2	SCREW M6S ISO 4017 M8X25 A480	
660	312105-0455	-		6	SCREW M6S ISO 4017 M8X30 A480	
665	312105-0457	-		3	SCREW M6S ISO 4014 M8X35 A480	
670	312109-0376	-		4	SCREW M6S ISO 4017 M6X35 A480	
685	312115-0370	-		6	SCREW ISO4762 M6X20 A4	
690	312115-0374	-		4	SCREW ISO4762 M6X30 A4	
700	312125-0230	-		2	SLOTTED CHEESE HEAD SCREW MCS 3X20 SS	
710	312155-0366	-		2	SCREW EN 10642 MF6S M6X12 A480	
720	312155-0376	-		16	SCREW EN 10642 MF6S M6X35 A480	
730	312605-0316	-		7	HEXAGON NUT, M6M M6 A280	
740	312605-0322	-		8	HEXAGON NUT, M6M M12 A280	
745	312812-0316	-		6	HEXAGON NUT, NY-LOCK M6 A480	
750	315105-0124	-		2	BRICKA BRB3,2X6RFR	
760	315105-0153	-		7	WASHER BRB6,4X12RFR	
770	315105-0165	-		6	WASHER BRB8,4X16RFR	
780	315115-0153	-		28	WASHER PLAIN, TBRB 6,4/12 H=3	
790	315115-0165	-		4	WASHER PLAIN, TBRB 8,4/16 H=3	
800	321101-0252	C		1	FLANGE BUSHING, 25X35X16 MM	
810	321101-0253	C		7	FLANGE BUSHING, 25X35X25 MM	
820	321101-0272	C		2	FLANGE BUSHING, 30X40X20 MM	
830	321101-0283	C		2	FLANGE BUSHING, 35X45X35 MM	
840	321116-0128	C		1	BEAR. BUSH. WITHOUT FL, 10X14X16 MM	
850	90044-0104	C		1	PROX.SWITCH IFM IN 3002	
870	318212-0150	C		1	ROLLER CHAIN, SINGLE 1/2 -150,SS	
890	318219-0187	C		1	CONNECTING LINK SINGLE 1/2",SS	

Machine Type | Group Description | Used-In | Group Number | Page No

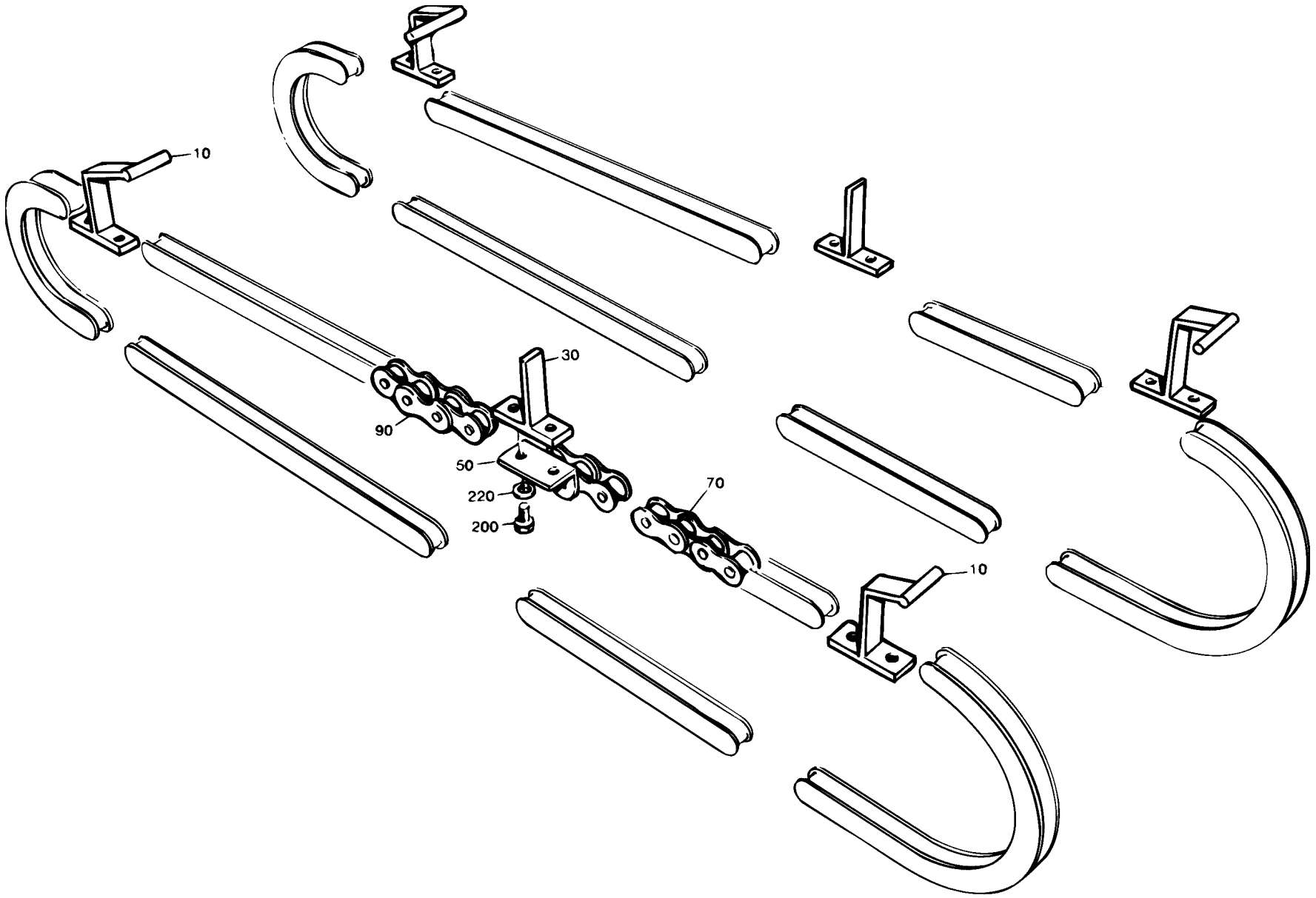
10
30
90
50
220
200
70
10

ECM: 72197 - 19990215
Group number: 525089-0100
Assembly Drawing: 525089-1_1_AA

This list covers pages from 5-96 to 5-99

Pos	Part No	SP	UN	Qty	Description	Page No
0375S, 0355B, 0500S, 0750S (See drawing on page: 5-96)						
010	443469-0000	C		3	CARRIER	
070	318212-0008	C		3	ROLLER CHAIN, SINGLE 1/2 -8,SS	
090	90288-0053	C		3	ROLLER CHAIN, SINGLE 1/2 -14	
0500B, 0750B, 1000B (See drawing on page: 5-96)						
010	525431-0000	C		3	CARRIER	
070	318212-0008	C		3	ROLLER CHAIN, SINGLE 1/2 -8,SS	
090	90288-0053	C		3	ROLLER CHAIN, SINGLE 1/2 -14	
1000S (See drawing on page: 5-98)						
010	525431-0000	C		3	CARRIER	
070	318212-0006	C		3	ROLLER CHAIN, SINGLE 1/2 -6	
090	90288-0057	C		3	ROLLER CHAIN, SINGLE 1/2 -16	
Common Parts						
030	443468-0000	C		3	CARRIER	
050	90288-0311	C		6	LINK	
200	312105-0287	-		12	SCREW M6S ISO4017 M4X8 A480	
220	315105-0136	-		12	WASHER BRB4,3XRFR	

Pos	Part No	SP	UN	Qty	Description	Page No

Machine Type | Group Description | Used-In | Group Number | Page No

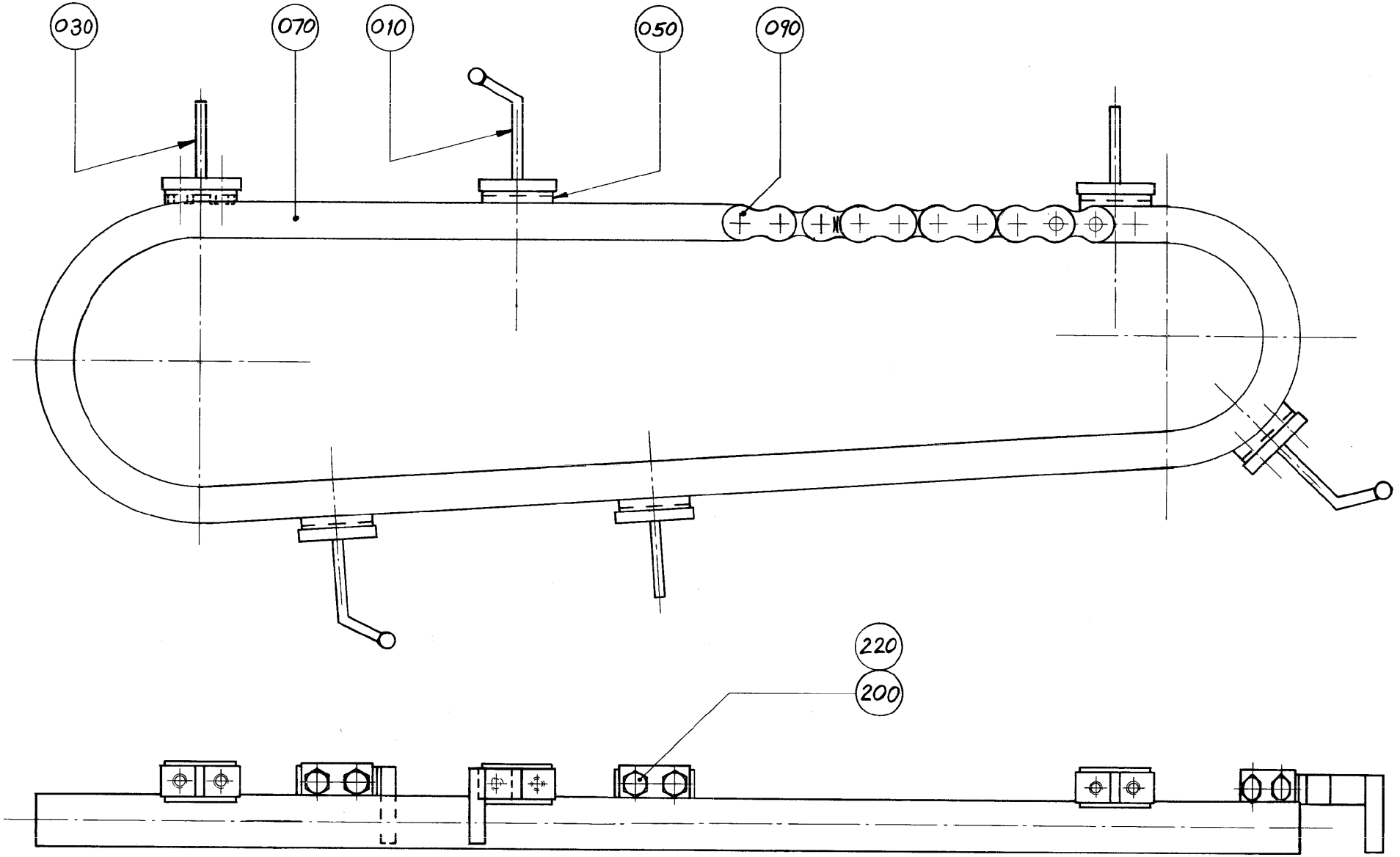
030
070
010
050
090
220
200

ECM: 72197 - 19990215
Group number: 525089-0100
Assembly Drawing: 525089-2_1_AA

This list covers pages from 5-96 to 5-99

Pos	Part No	SP	UN	Qty	Description	Page No
0375S, 0355B, 0500S, 0750S (See drawing on page: 5-96)						
010	443469-0000	C		3	CARRIER	
070	318212-0008	C		3	ROLLER CHAIN, SINGLE 1/2 -8,SS	
090	90288-0053	C		3	ROLLER CHAIN, SINGLE 1/2 -14	
0500B, 0750B, 1000B (See drawing on page: 5-96)						
010	525431-0000	C		3	CARRIER	
070	318212-0008	C		3	ROLLER CHAIN, SINGLE 1/2 -8,SS	
090	90288-0053	C		3	ROLLER CHAIN, SINGLE 1/2 -14	
1000S (See drawing on page: 5-98)						
010	525431-0000	C		3	CARRIER	
070	318212-0006	C		3	ROLLER CHAIN, SINGLE 1/2 -6	
090	90288-0057	C		3	ROLLER CHAIN, SINGLE 1/2 -16	
Common Parts						
030	443468-0000	C		3	CARRIER	
050	90288-0311	C		6	LINK	
200	312105-0287	-		12	SCREW M6S ISO4017 M4X8 A480	
220	315105-0136	-		12	WASHER BRB4,3XRFR	

Pos	Part No	SP	UN	Qty	Description	Page No

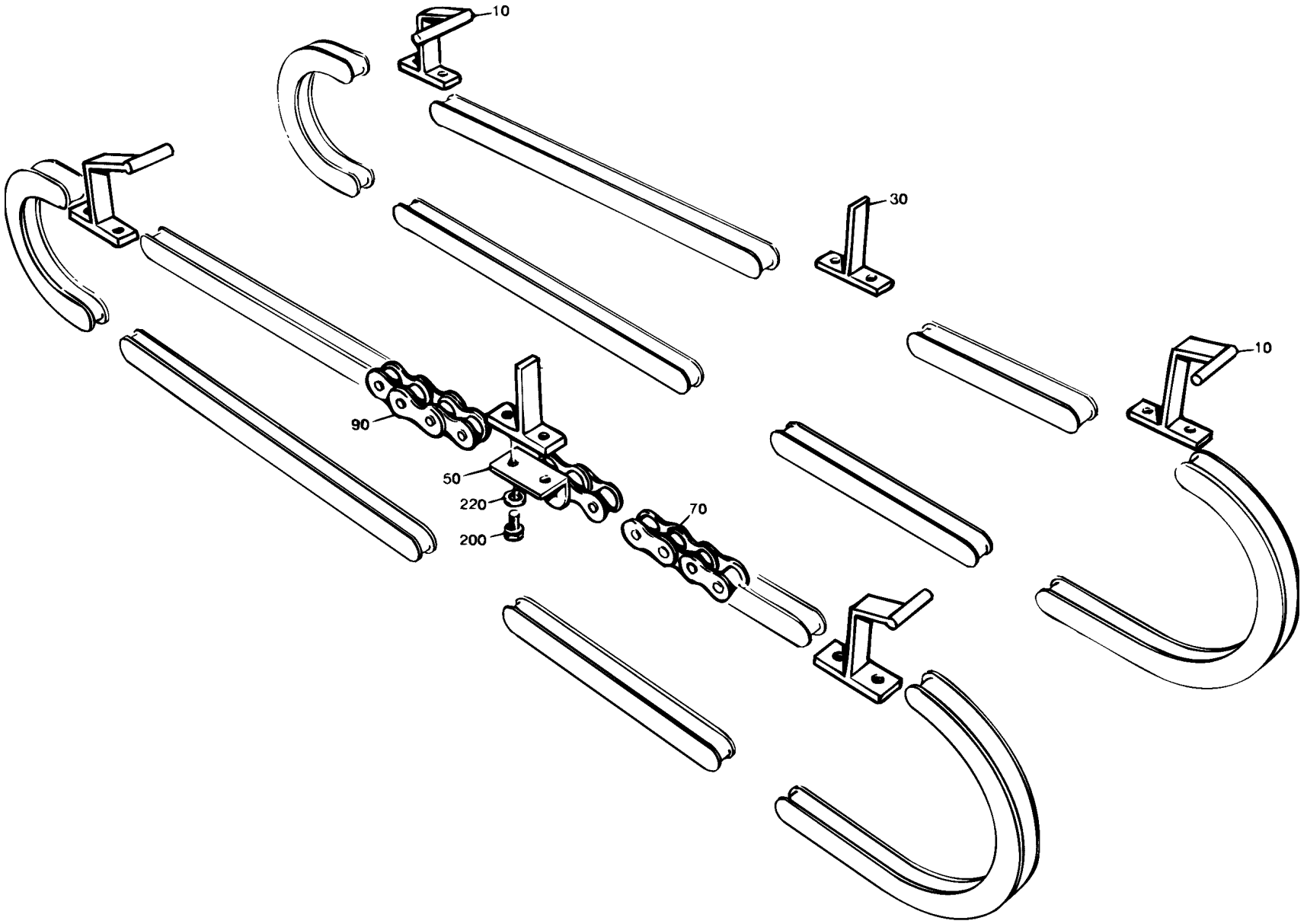
10
30
10
90
50
220
200
70

ECM: 72197 - 19990215
Group number: 525090-0100
Assembly Drawing: 525090-1_1_AA

This list covers pages from 5-100 to 5-103

Pos	Part No	SP	UN	Qty	Description	Page No
0375S, 0355B, 0500S, 0750S (See drawing on page: 5-100)						
010	443470-0000	C		3	CARRIER	
070	318212-0008	C		3	ROLLER CHAIN, SINGLE 1/2 -8,SS	
090	90288-0053	C		3	ROLLER CHAIN, SINGLE 1/2 -14	
0500B, 0750B, 1000B (See drawing on page: 5-100)						
010	525432-0000	C		3	CARRIER	
070	318212-0008	C		3	ROLLER CHAIN, SINGLE 1/2 -8,SS	
090	90288-0053	C		3	ROLLER CHAIN, SINGLE 1/2 -14	
1000S (See drawing on page: 5-102)						
010	525432-0000	C		3	CARRIER	
070	318212-0006	C		3	ROLLER CHAIN, SINGLE 1/2 -6	
090	90288-0057	C		3	ROLLER CHAIN, SINGLE 1/2 -16	
Common Parts						
030	443468-0000	C		3	CARRIER	
050	90288-0311	C		6	LINK	
200	312105-0287	-		12	SCREW M6S ISO4017 M4X8 A480	
220	315105-0136	-		12	WASHER BRB4,3XRFR	

Pos	Part No	SP	UN	Qty	Description	Page No

Machine Type | Group Description | Used-In | Group Number | Page No

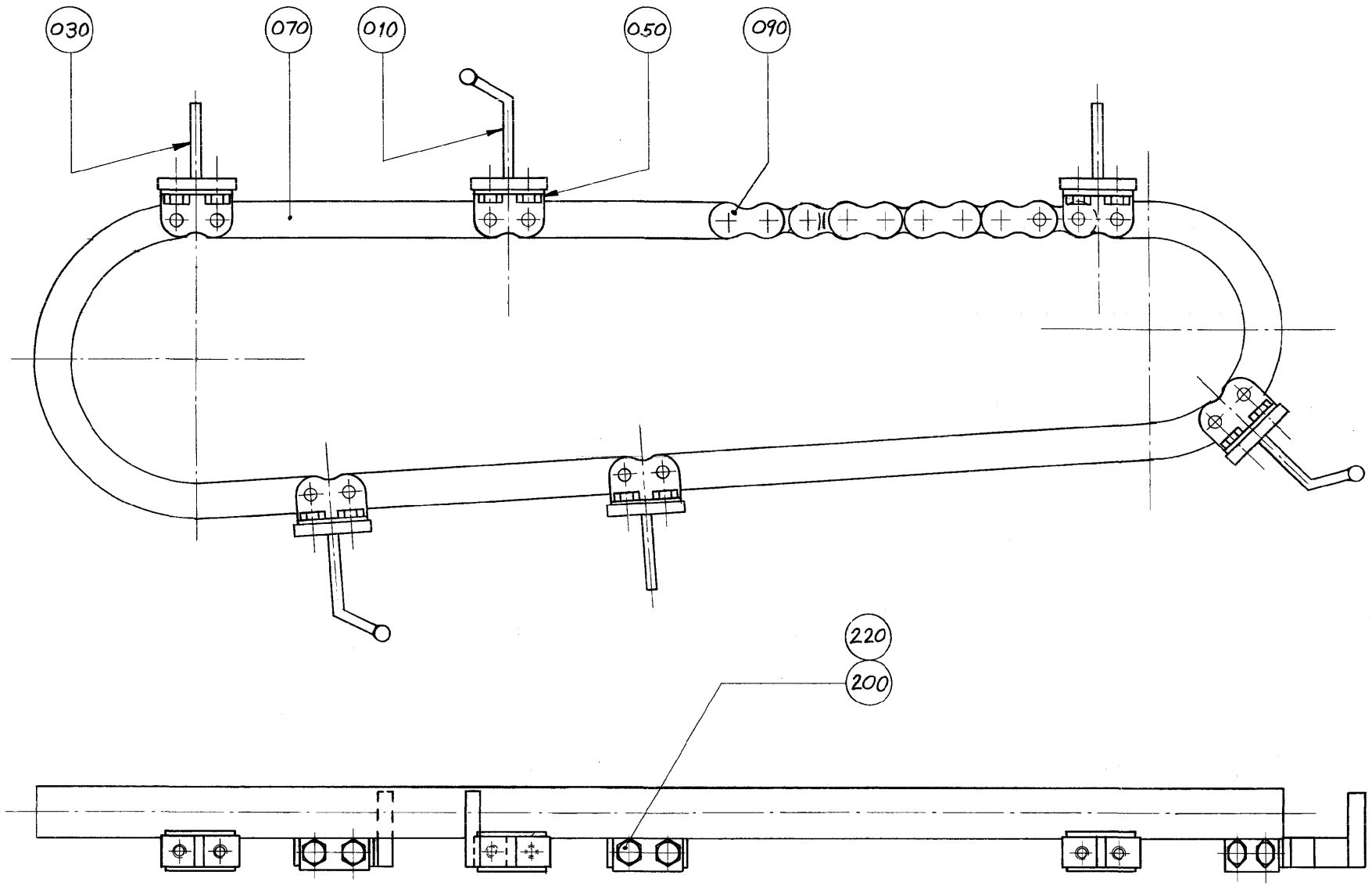
030
070
010
050
090
220
200

ECM: 72197 - 19990215
Group number: 525090-0100
Assembly Drawing: 525090-2_1_AA

This list covers pages from 5-100 to 5-103

Pos	Part No	SP	UN	Qty	Description	Page No
0375S, 0355B, 0500S, 0750S (See drawing on page: 5-100)						
010	443470-0000	C		3	CARRIER	
070	318212-0008	C		3	ROLLER CHAIN, SINGLE 1/2 -8,SS	
090	90288-0053	C		3	ROLLER CHAIN, SINGLE 1/2 -14	
0500B, 0750B, 1000B (See drawing on page: 5-100)						
010	525432-0000	C		3	CARRIER	
070	318212-0008	C		3	ROLLER CHAIN, SINGLE 1/2 -8,SS	
090	90288-0053	C		3	ROLLER CHAIN, SINGLE 1/2 -14	
1000S (See drawing on page: 5-102)						
010	525432-0000	C		3	CARRIER	
070	318212-0006	C		3	ROLLER CHAIN, SINGLE 1/2 -6	
090	90288-0057	C		3	ROLLER CHAIN, SINGLE 1/2 -16	
Common Parts						
030	443468-0000	C		3	CARRIER	
050	90288-0311	C		6	LINK	
200	312105-0287	-		12	SCREW M6S ISO4017 M4X8 A480	
220	315105-0136	-		12	WASHER BRB4,3XRFR	

Pos	Part No	SP	UN	Qty	Description	Page No

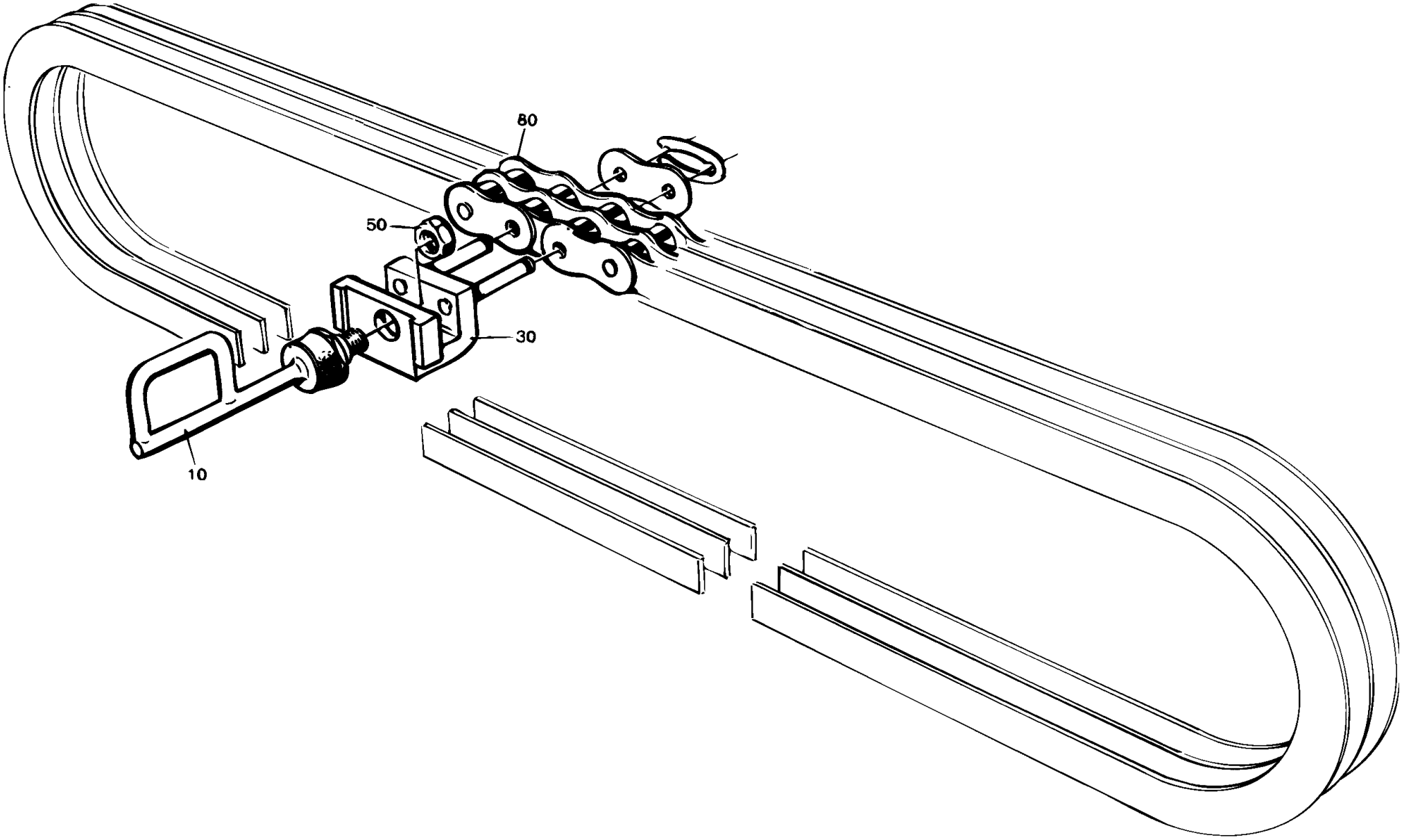
80
50
30
10

ECM: 72197 - 19990215
Group number: 525091-0100
Assembly Drawing: 525091-1_1_AA

Pos	Part No	SP	UN	Qty	Description	Page No
0375S, 0355B, 0500S						
010	525208-0002	C		3	CARRIER	
0500B, 0750B, 1000B						
010	525208-0001	C		3	CARRIER	
1000S, 0750S						
010	525208-0003	C		3	CARRIER	
Common Parts						
030	525254-0000	C		3	LINK	
050	312605-0318	-		3	HEXAGON NUT, M6M M8 A280	
080	318242-0036	C		3	ROLLER CHAIN DUPLEX 1/2"-36SS	

Pos	Part No	SP	UN	Qty	Description	Page No

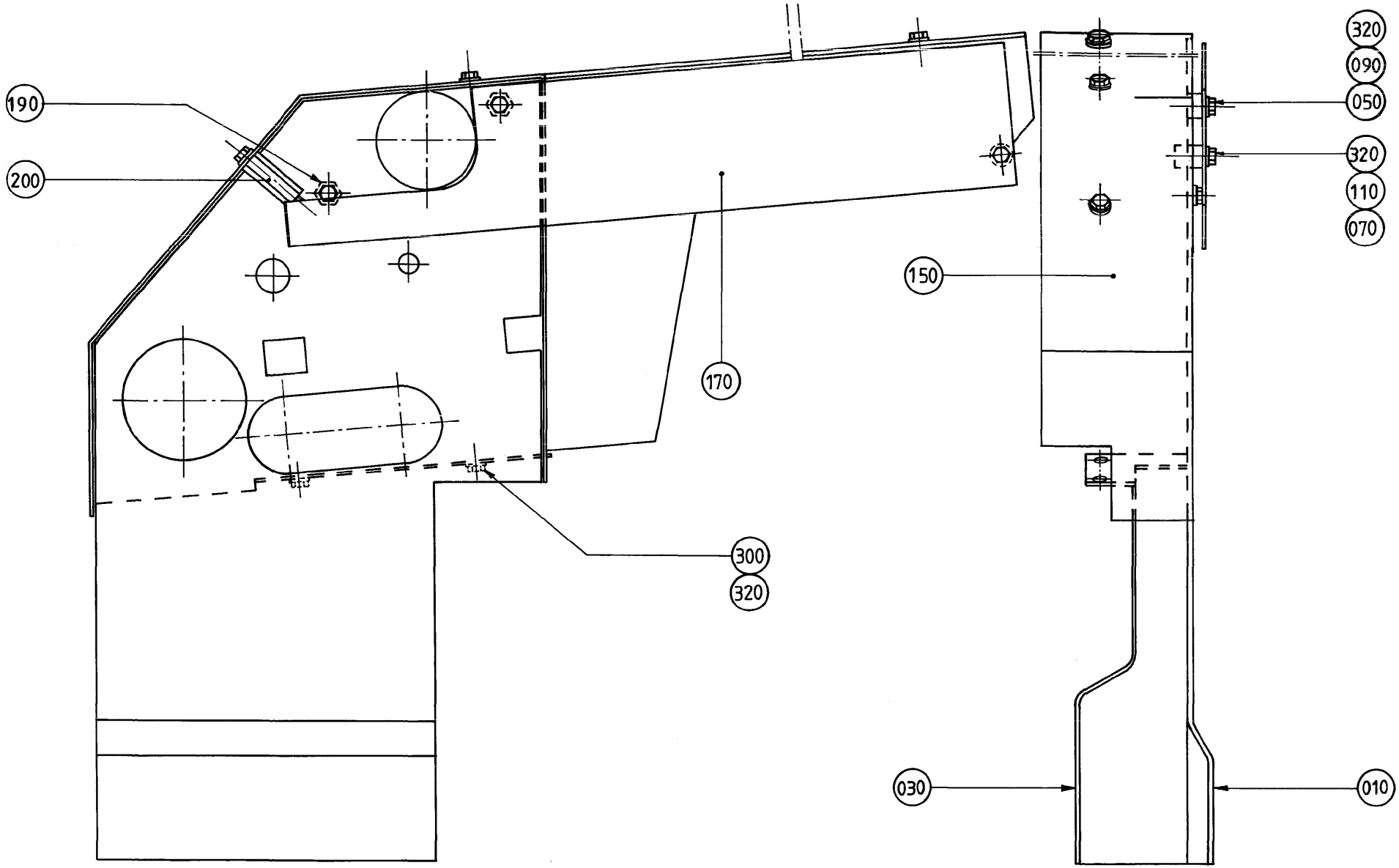
190
200
170
300
320
150
320
090
050
320
110
070
030
010

ECM: 70725 - 19970320
Group number: 525092-0100
Assembly Drawing: 525092-1_1_AA

Pos	Part No	SP	UN	Qty	Description	Page No
0375S						
010	525038-0000	-		1	GABLE PLATE	
030	525039-0000	-		1	GABLE PLATE	
050	525052-0005	-		1	SPACER	
070	525052-0006	-		1	SPACER	
090	312105-0378	-		1	SCREW M6S ISO 4014 M6X40 A480	
110	312105-0381	-		1	SCREW M6S ISO 4014 M6X55 A480	
150	928901-0000	-		1	COVERING PLATE	
0355B						
010	525260-0000	-		1	GABLE PLATE	
030	525261-0000	-		1	GABLE PLATE	
050	525052-0003	-		1	SPACER	
070	525052-0004	-		1	SPACER	
090	312105-0376	-		1	SCREW M6S ISO 4014 M6X35 A480	
110	312105-0380	-		1	SCREW M6S ISO 4014 M6X50 A480	
150	566416-0000	-		1	COVERING PLATE	
200	525338-0000	-		1	SPACER	
0500B, 0750B						
010	525150-0000	-		1	GABLE PLATE	
030	525151-0000	-		1	GABLE PLATE	
050	525052-0001	-		1	SPACER	
070	525052-0002	-		1	SPACER	
090	312105-0370	-		1	SCREW M6S ISO 4017 M6X20 A480	
110	312105-0374	-		1	SCREW M6S ISO 4014 M6X30 A480	
150	525339-0000	-		1	COVERING PLATE	
200	525338-0000	-		1	SPACER	
0500S						
010	525038-0000	-		1	GABLE PLATE	
030	525039-0000	-		1	GABLE PLATE	
050	525052-0003	-		1	SPACER	
070	525052-0004	-		1	SPACER	
090	312105-0376	-		1	SCREW M6S ISO 4014 M6X35 A480	
110	312105-0380	-		1	SCREW M6S ISO 4014 M6X50 A480	
150	566416-0000	-		1	COVERING PLATE	
200	525338-0000	-		1	SPACER	
1000S, 0750S, 1000B						
010	443476-0000	-		1	GABLE PLATE	
030	443477-0000	-		1	GABLE PLATE	
050	525052-0001	-		1	SPACER	
070	525052-0002	-		1	SPACER	
090	312105-0370	-		1	SCREW M6S ISO 4017 M6X20 A480	
110	312105-0374	-		1	SCREW M6S ISO 4014 M6X30 A480	
150	525339-0000	-		1	COVERING PLATE	
200	525338-0000	-		1	SPACER	
Common Parts						
170	525051-0000	-		1	HEAD PLATE	
190	443419-0000	-		2	SPACER	
300	312105-0364	-		6	SCREW M6S ISO 4017 M6X10 A480	
320	315105-0153	-		8	WASHER BRB6,4X12RFR	

Machine Type | Group Description | Used-In | Group Number | Page No

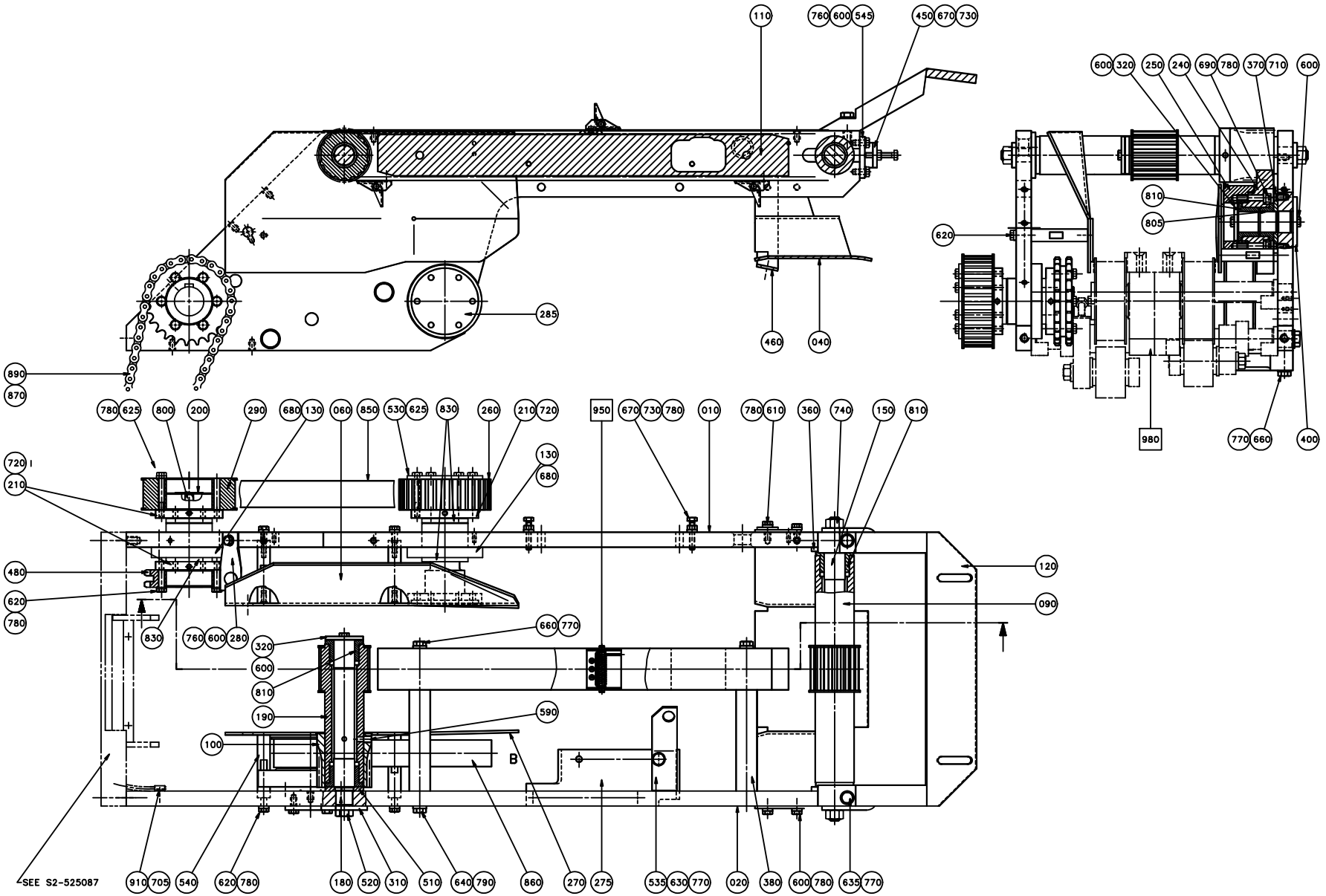
110
760 600 545
450 670 730
600 320 250 240 690 780 370 710 600
810
805
620
285
460
040
890
870
780 625 800 200 290 680 130 060 850 530 625 830 260 210 720
950 670 730 780 010 780 610 360 740 150 810
720
210
130
680
480
620
780
830
760 600 280
320
600
810
190
100
660 770
590
120
090
980
770 660 400
SEE S2-525087
910 705 540 620 780 180 520 310 510 640 790 860 270 275 535 630 770 020 380 600 780 635 770

ECM: 72197 - 19990215
Group number: 576251-0100
Assembly Drawing: 576251-1_1_AA

Pos	Part No	SP	UN	Qty	Description	Page No
NORMFIN						
120	443293-0000	-		1	BRACKET	
REVFIN						
120	1143003-0000	-		1	BRACKET	
Common Parts						
010	574132-0000	D		1	SIDE PLATE	
020	574133-0000	D		1	SIDE PLATE	
040	574094-0000	D		1	HEAD PLATE	
060	574145-0000	D		1	HEAD PLATE	
090	443289-0000	D		1	TOOTHED PULLY	
100	443290-0000	C		1	GEAR WHEEL	
110	443292-0000	-		1	STEERING	
130	574139-0000	-		2	BEARING HOUSING	
150	525402-0000	C		1	SHAFT	
180	574069-0000	D		1	AXLE PIN	
190	574070-0000	D		1	TIMING BELT SHAFT	
200	574140-0000	-		1	SHAFT	
210	574150-0000	-		3	SLEEVE	
240	574082-0000	D		1	GEAR WHEEL	
250	574085-0000	D		1	TIMING BELT PULLEY	
260	574086-0000	D		1	TIMING BELT PULLEY	
270	574146-0000	-		1	HEAD PLATE	
275	574121-0000	-		1	BRACKET	
280	574122-0000	-		1	BRACKET	
285	574148-0000	-		1	SHAFT	
290	574159-0000	D		1	TIMING BELT PULLEY	
310	443295-0000	D		1	WASHER	
320	443296-0000	D		2	WASHER	
360	443300-0000	D		2	WASHER	
370	443301-0000	D		1	WASHER	
380	443312-0000	-		2	SPACER	
400	443307-0000	D		1	SHAFT	
450	443489-0000	-		2	BRACKET	
460	525334-0000	-		1	BRACKET	
480	573353-0000	D		1	SPROCKET	
510	574083-0000	D		1	WASHER	
520	574084-0000	D		1	SCREW	
530	574087-0000	-		1	WASHER	
535	574123-0000	-		1	BRACKET	
540	574147-0000	-		4	HOLDER	
545	574155-0000	-		2	PLATE	
590	90287-0161	-		2	SCREW, SOCK.SET DOGPOINT M8X12	
600	312105-0366	-		10	SCREW M6S M6X12 A280	
610	312105-0368	-		1	SCREW M6S M6X16 A280	
620	312105-0374	-		10	SCREW M6S ISO 4014 M6X30 A480	
625	312105-0380	-		12	SCREW M6S ISO 4014 M6X50 A480	
630	312105-0447	-		1	SCREW M6S ISO 4017 M8X12 A480	
635	312105-0453	-		2	SCREW M6S ISO 4017 M8X25 A480	
640	312105-0455	-		2	SCREW M6S ISO 4017 M8X30 A480	
660	312105-0463	-		4	SCREW M6S ISO 4014 M8X60 A480	
670	312109-0376	-		4	SCREW M6S ISO 4017 M6X35 A480	
680	312115-0366	-		8	SCREW ISO4762 M6X12 A4	
690	312115-0374	-		4	SCREW ISO4762 M6X30 A4	
705	312125-0287	-		2	SLOTTED CHEESE HEAD SCREW MCS 4X8 SS	
710	312155-0366	-		2	SCREW EN 10642 MF6S M6X12 A480	
720	312318-0366	-		3	SCREW ISO4029 M6X12 A4	
730	312605-0316	-		4	HEXAGON NUT, M6M M6 A280	
740	312605-0322	-		2	HEXAGON NUT, M6M M12 A280	
760	315105-0153	-		5	WASHER BRB6,4X12RFR	
770	315105-0165	-		8	WASHER BRB8,4X16RFR	
780	315115-0153	-		26	WASHER PLAIN, TBRB 6,4/12 H=3	
790	315115-0165	-		2	WASHER PLAIN, TBRB 8,4/16 H=3	
800	315705-0298	-		3	PARALLEL KEY W. ROUND ENDS 10X8X30 MM	
805	321101-0252	C		1	FLANGE BUSHING, 25X35X16 MM	
810	321101-0253	C		5	FLANGE BUSHING, 25X35X25 MM	
830	321101-0282	C		4	FLANGE BUSHING, 35X45X20 MM	
850	90417-0329	C		1	TIMING BELT T10X960X32 POLYURETH	
860	90417-0345	C		1	TIMING BELT T10X690X32 POLYURETH	
870	318219-0487	C		1	CONNECTING LINK, DUPLEX 1/2", SS	
890	318242-0108	C		1	ROLLER CHAIN, DUPLEX 1/2"-108, SS	
910	90165-0056	-		2	PIPE CLIP FOR TUBE D=4 MM	
F950	A574332-0100	C		1	BELT	**5-111**
F980	A576252-0100	-		1	INFEED SECTION	**5-113**

Machine Type	Group Description	Used-In	Group Number	Page No

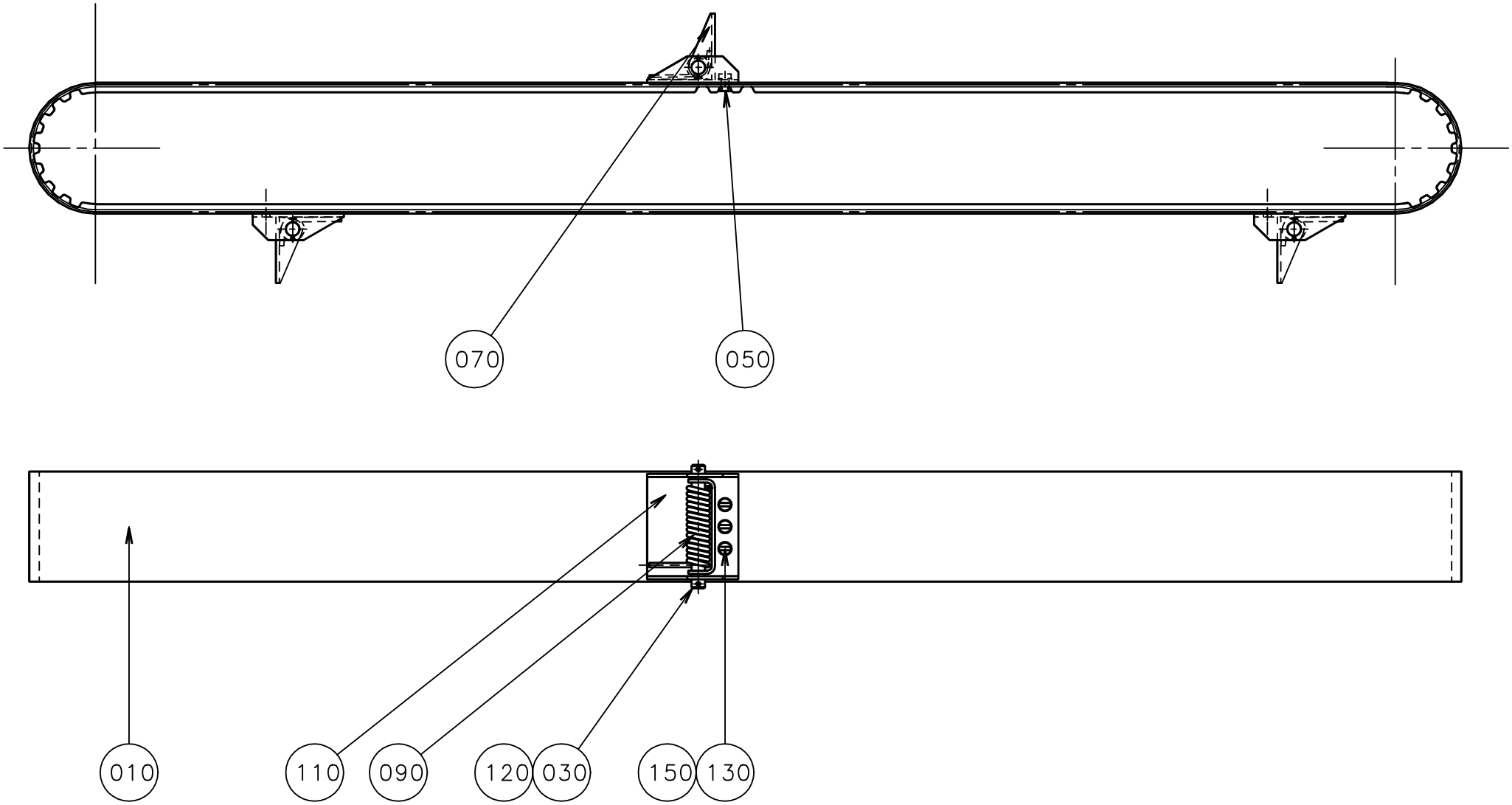
070
050
010
110
090
120
030
150
130

ECM: 72197 - 19990215
Group number: 574332-0100
Assembly Drawing: 574332-1_1_AA

Pos	Part No	SP	UN	Qty	Description	Page No
-						
010	90417-0330	C		1	TIMING BELT T10X1350X50 POLYURETH	
030	297751-0000	C		3	SHAFT	
050	297755-0000	C		3	WEDGE	
070	297794-0000	C		3	SHEET	
090	297795-0000	C		3	SPRING	
110	525055-0000	C		3	BRACKET	
120	311411-0127	-		6	SPLIT PIN SP1,2X12RFR	
130	312125-0220	-		9	SLOTTED CHEESE HEAD SCREW MCS 3X6 SS	
150	315105-0124	-		9	BRICKA BRB3,2X6RFR	

Pos	Part No	SP	UN	Qty	Description	Page No

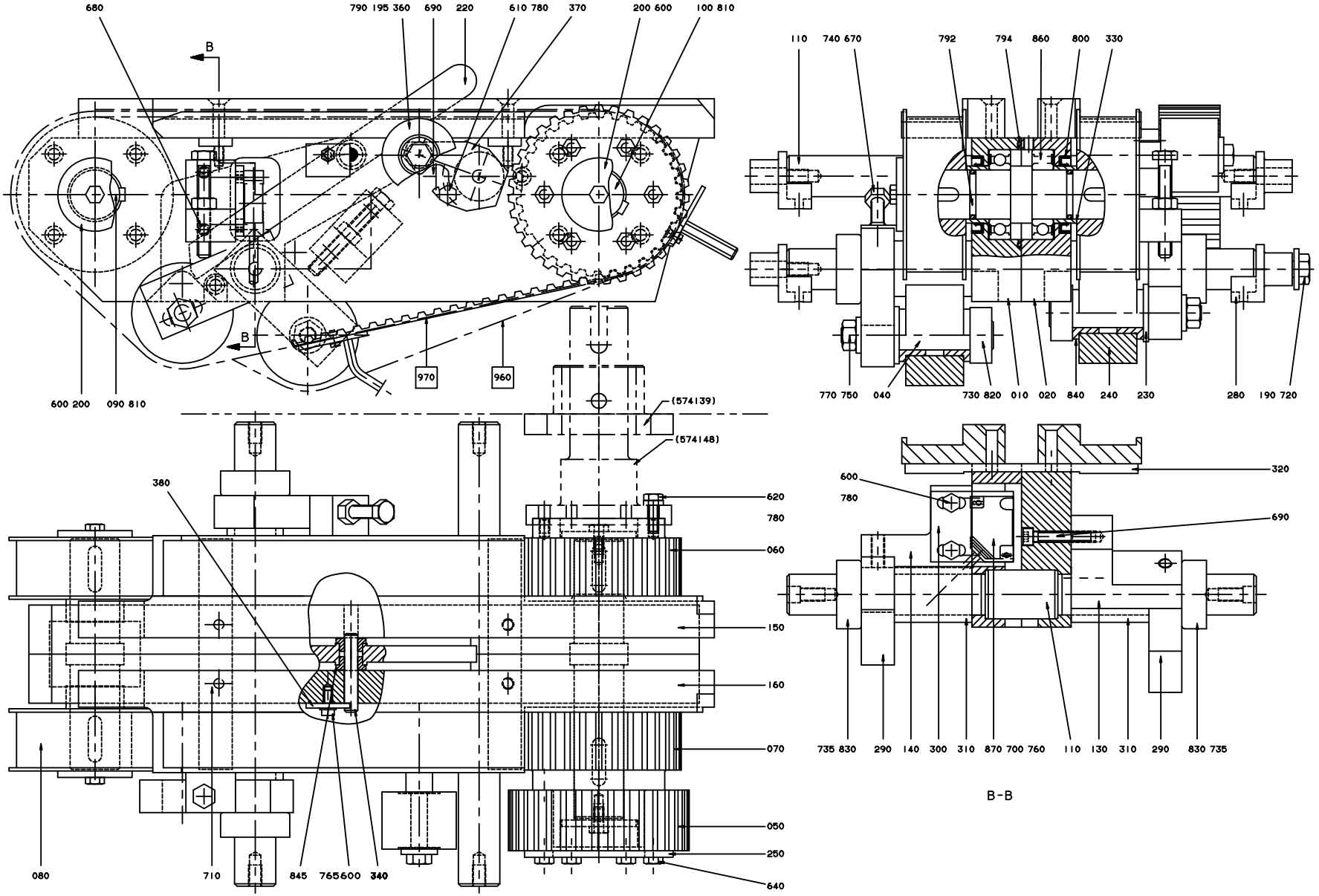
680
790 195 360
690
220
610 780
370
200 600
100 810
B
B
970
960
600 200
090 810
110
740 670
792
794
860
800
330
770 750
040
730 820
010
020
840
240
230
280
190 720
(574139)
(574148)
380
620
780
060
150
160
070
050
250
640
080
710
845
765600
340
600
780
320
690
735 830
290
140
300
310
870 700 760
110
130
310
290
830 735
B-B

ECM: 81020 - 20000831
Group number: 576252-0100
Assembly Drawing: 576252-2_1_AA

Pos	Part No	SP	UN	Qty	Description	Page No
-						
010	1478218-0000	D		1	BEARING CONSOLE	
020	1478219-0000	D		1	BEARING CONSOLE	
040	525363-0002	C		2	SHAFT	
050	574086-0000	C		1	TIMING BELT PULLEY	
060	574136-0000	C		1	TIMING BELT PULLEY	
070	574137-0000	C		1	TIMING BELT PULLEY	
080	574138-0000	C		2	TIMING BELT PULLEY	
090	1478489-0000	C		1	SHAFT	
100	1478490-0000	C		1	SHAFT	
110	574144-0000	C		2	SHAFT	
130	574151-0000	D		1	BRACKET	
140	574152-0000	D		1	BRACKET	
150	574157-0000	D		1	PROFILE	
160	574158-0000	D		1	PROFILE	
190	26490-0000	-		4	WASHER	
195	262028-0016	C		1	FITTING BOLT	
200	443296-0000	D		4	WASHER	
220	1478220-0000	D		1	ARM	
230	285363-0000	D		2	WASHER	
240	574075-0000	D		2	ROLL	
250	574087-0000	D		1	WASHER	
280	574143-0000	C		4	AXLE SUPPORT	
290	574149-0000	D		2	ARM	
300	574153-0000	-		1	PLATE	
310	574154-0000	-		2	SPACER	
320	574156-0000	-		2	SUPPORT RAIL	
330	1478491-0000	A		4	SPACER	
340	1478216-0000	C		1	AXLE PIN	
360	580366-0000	C		1	ROLL	
370	580996-0000	-		1	ROLLER BRACKET	
380	292482-0000	-		1	WASHER	
600	312105-0366	-		7	SCREW M6S M6X12 A280	
610	312105-0368	-		1	SCREW M6S M6X16 A280	
620	312105-0370	-		6	SCREW M6S ISO 4017 M6X20 A480	
640	312105-0380	-		6	SCREW M6S ISO 4014 M6X50 A480	
670	312109-0463	-		2	SCREW M6S ISO 4017 M8X60 A480	
680	312115-0372	-		2	SCREW ISO4762 M6X25 A4	
690	312115-0374	-		14	SCREW ISO4762 M6X30 A4	
700	312125-0228	-		2	SLOTTED CHEESE HEAD SCREW MCS 3X16 SS	
710	312155-0376	-		4	SCREW EN 10642 MF6S M6X35 A480	
720	927891-0000	-		4	SCREW	
730	312318-0362	-		2	SCREW ISO4029 M6X8 A4	
735	312318-0443	-		2	SCREW ISO4029 M8X8 A4	
740	312605-0318	-		2	HEXAGON NUT, M6M M8 A280	
750	312605-0320	-		2	HEXAGON NUT, M6M M10 A280	
760	315105-0124	-		2	BRICKA BRB3,2X6RFR	
765	315105-0153	-		1	WASHER BRB6,4X12RFR	
770	315105-0173	-		2	WASHER BRB10,5X22RFR	
780	315115-0153	-		9	WASHER PLAIN, TBRB 6,4/12 H=3	
790	315115-0173	-		1	WASHER PLAIN, TBRB 10,5/22 H=4	
792	315202-0217	B		4	O-RING 24,2X3 MM	
794	315202-0303	B		2	O-RING 59,5X3 MM	
800	315221-0175	-		4	RADIAL SEAL 35X47X7 MM	
810	315705-0266	-		4	PARALLEL KEY W. ROUND ENDS 8X7X28 MM	
820	315742-0114	-		2	COLLAR, 18/34, H=13	
830	315742-0119	-		2	COLLAR, 25/42, H=15	
840	321101-0223	C		4	FLANGE BUSHING, 18X25X16	
845	321101-0143	C		2	FLANGE BUSHING, 8X14X8 MM	
860	321308-0106	C		4	BALL BEARING, 30X55X13 MM	
870	90044-0104	C		1	PROX.SWITCH IFM IN 3002	
F960	A576245-0100	C		1	BELT RIGHT	**5-115**
F970	A576246-0100	C		1	BELT LEFT	**5-117**

Machine Type | Group Description | Used-In | Group Number | Page No

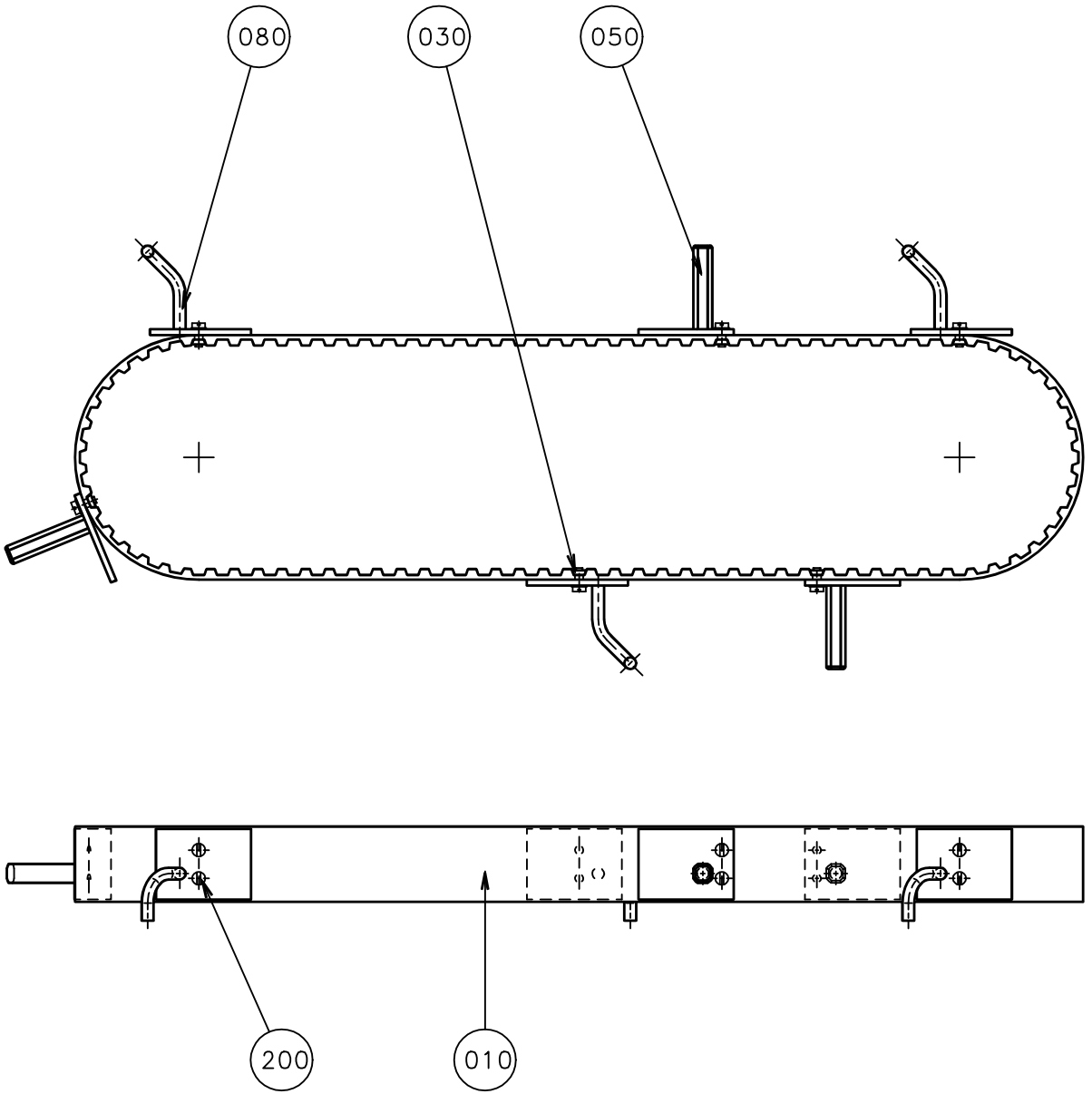
080
030
050
200
010

ECM: 72197 - 19990215
Group number: 576245-0100
Assembly Drawing: 576245-1_1_AA

Pos	Part No	SP	UN	Qty	Description	Page No
-						
010	90417-0329	C		1	TIMING BELT T10X960X32 POLYURETH	
030	285380-0002	C		6	WEDGE	
050	574090-0000	C		3	CARRIER	
080	574091-0000	C		3	CARRIER	
200	312125-0220	-		12	SLOTTED CHEESE HEAD SCREW MCS 3X6 SS	

Pos	Part No	SP	UN	Qty	Description	Page No

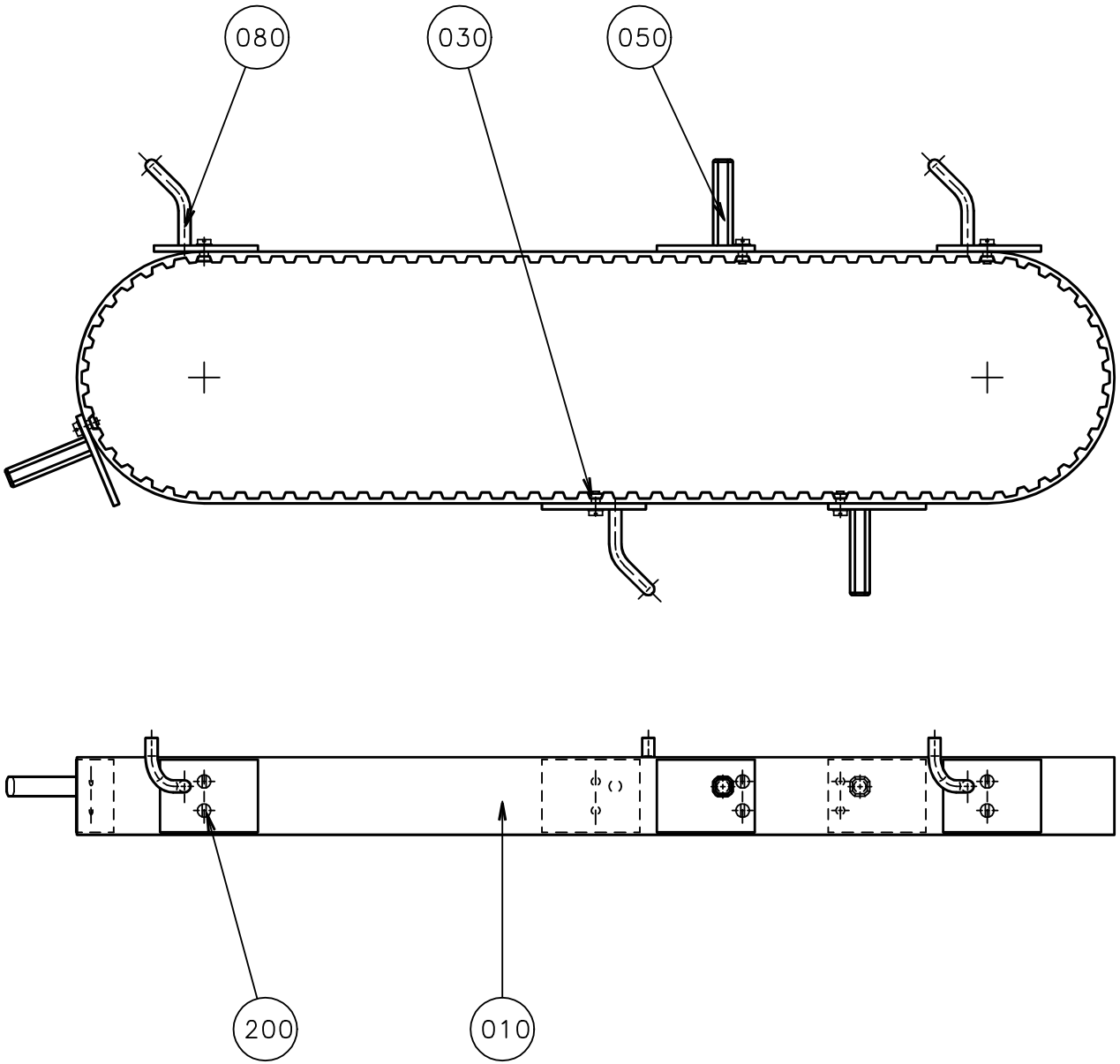
080
030
050
200
010

ECM: 72197 - 19990215
Group number: 576246-0100
Assembly Drawing: 576246-1_1_AA

Pos	Part No	SP	UN	Qty	Description	Page No
-						
010	90417-0329	C		1	TIMING BELT T10X960X32 POLYURETH	
030	285380-0002	C		6	WEDGE	
050	574089-0000	C		3	CARRIER	
080	574092-0000	C		3	CARRIER	
200	312125-0220	-		12	SLOTTED CHEESE HEAD SCREW MCS 3X6 SS	

Pos	Part No	SP	UN	Qty	Description	Page No

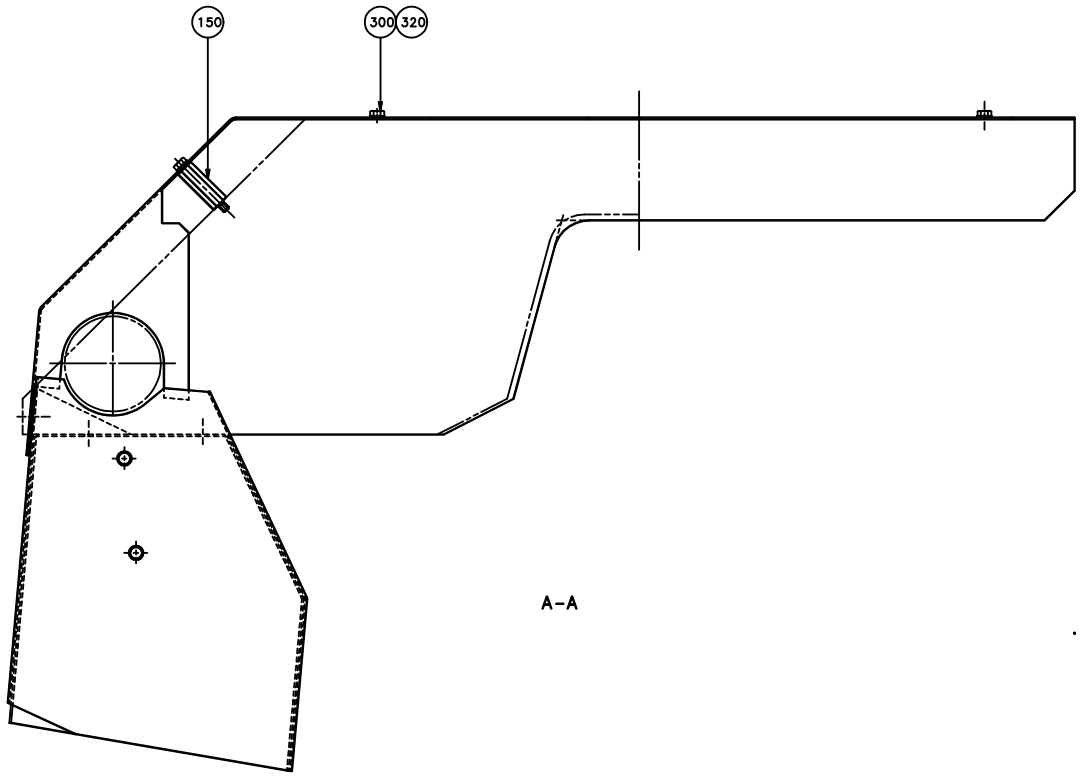
150
300
320
A-A

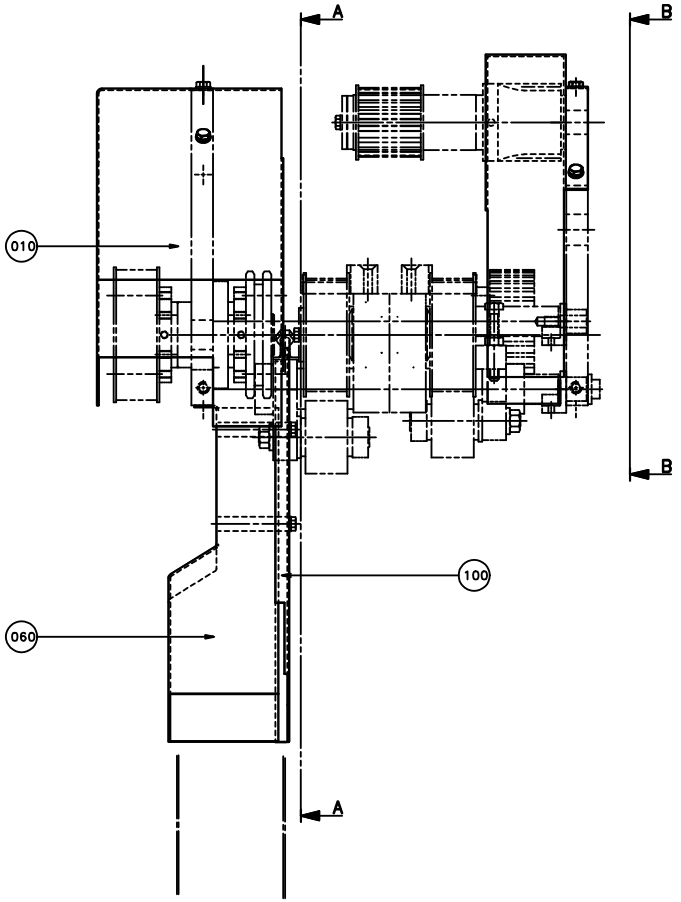
A
B
010
100
060
B
A

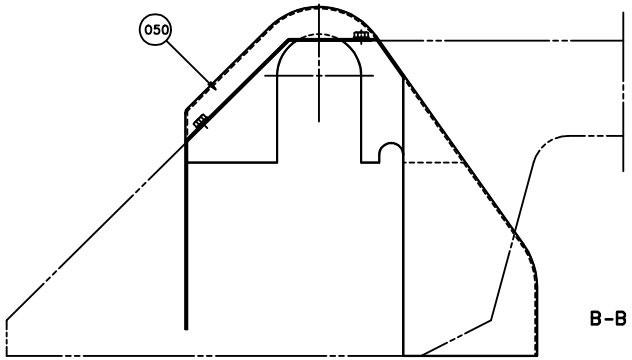
050
B-B

ECM: 71765 - 19980710
Group number: 576247-0100
Assembly Drawing: 576247-2_1_AA

Pos	Part No	SP	UN	Qty	Description	Page No
TBA/8 1000SQ NORMFIN (See drawing on page: 5-118)						
010	574164-0000	-		1	PROTECTION PLATE	
050	574165-0000	-		1	PROTECTIVE COVER	
060	580006-0000	-		1	PROTECTION PLATE	
100	580007-0000	-		1	PROTECTION PLATE	
TBA/8 1000SQ REVFIN (See drawing on page: 5-118)						
010	1195332-0000	-		1	PROTECTION PLATE	
050	574165-0000	-		1	PROTECTIVE COVER	
060	580006-0000	-		1	PROTECTION PLATE	
100	580007-0000	-		1	PROTECTION PLATE	
Common Parts						
150	525338-0000	-		1	SPACER	
300	312105-0364	-		9	SCREW M6S ISO 4017 M6X10 A480	
320	315105-0153	-		9	WASHER BRB6,4X12RFR	

Pos	Part No	SP	UN	Qty	Description	Page No

Machine Type	Group Description	Used-In	Group Number	Page No

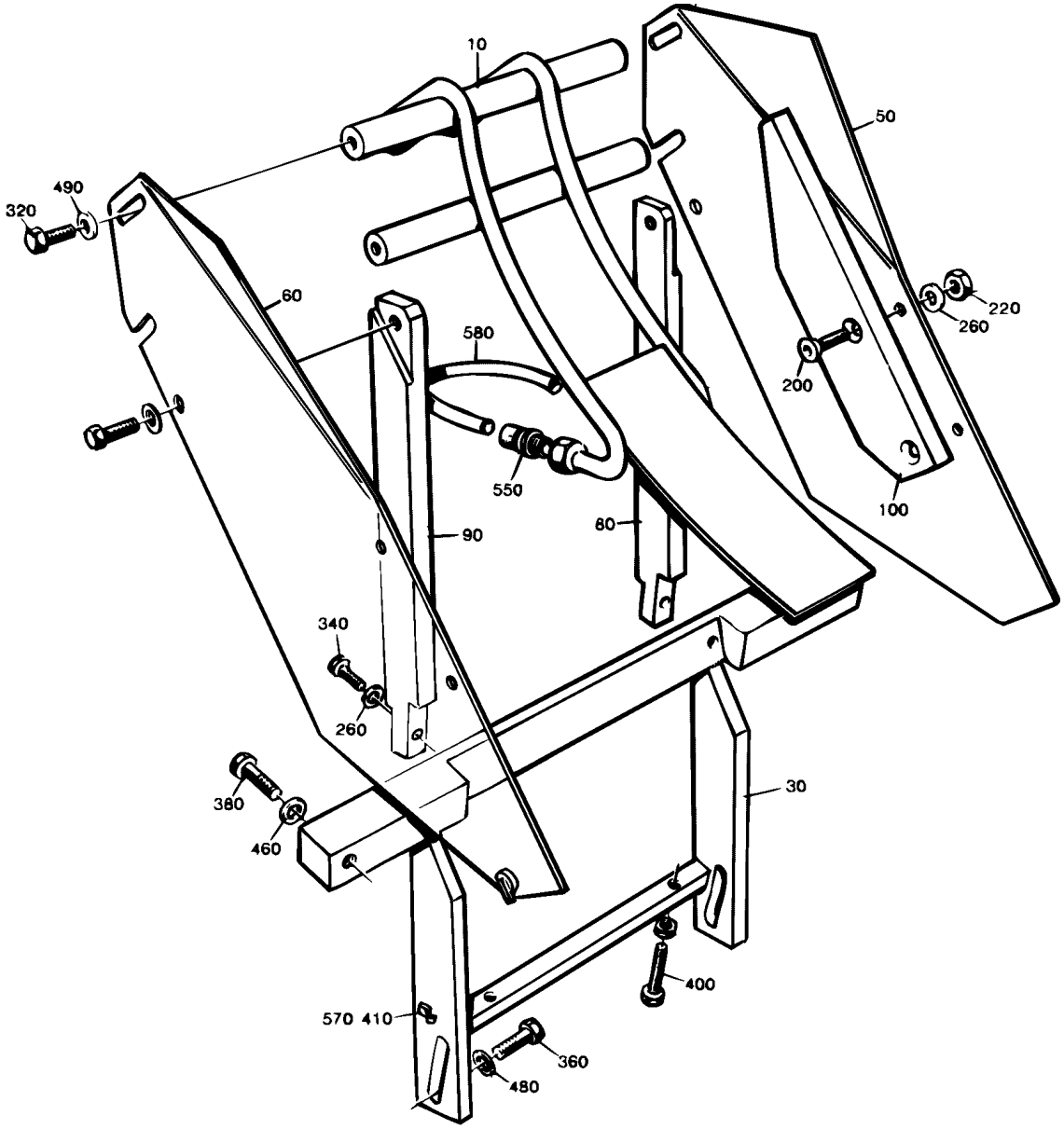
10
50
490
320
60
580
220
260
200
550
100
90
80
340
260
380
460
30
400
570 410
360
480

ECM: 72197 - 19990215
Group number: 525087-0100
Assembly Drawing: 525087-1_1_AA

This list covers pages from 5-120 to 5-123

Pos	Part No	SP	UN	Qty	Description	Page No
TBA/8 0375S						
010	544229-0003	D		1	DROP WING	
030	443492-0000	D		1	BRACKET	
050	443273-0000	D		1	HEAD PLATE	
060	443274-0000	D		1	HEAD PLATE	
080	443497-0000	D		1	SUPPORT	
090	443498-0000	D		1	SUPPORT	
220	312605-0316	-		2	HEXAGON NUT, M6M M6 A280	
260	315105-0153	-		4	WASHER BRB6,4X12RFR	
TBA/8 0355B						
010	544229-0002	D		1	DROP WING	
030	525259-0000	D		1	BRACKET	
050	443271-0000	D		1	HEAD PLATE	
060	443272-0000	D		1	HEAD PLATE	
080	443497-0000	D		1	SUPPORT	
090	443498-0000	D		1	SUPPORT	
220	312605-0316	-		2	HEXAGON NUT, M6M M6 A280	
260	315105-0153	-		4	WASHER BRB6,4X12RFR	
TBA/8 0500B						
010	544229-0001	D		1	DROP WING	
030	525148-0000	D		1	BRACKET	
050	443273-0000	D		1	HEAD PLATE	
060	443274-0000	D		1	HEAD PLATE	
080	443497-0000	D		1	SUPPORT	
090	443498-0000	D		1	SUPPORT	
100	525164-0000	D		2	STEERING	
200	312155-0372	-		4	SCREW EN 10642 MF6S M6X25 A480	
220	312605-0316	-		6	HEXAGON NUT, M6M M6 A280	
260	315105-0153	-		8	WASHER BRB6,4X12RFR	
TBA/8 0500S						
010	544229-0002	D		1	DROP WING	
030	443491-0000	D		1	BRACKET	
050	443271-0000	D		1	HEAD PLATE	
060	443272-0000	D		1	HEAD PLATE	
080	443497-0000	D		1	SUPPORT	
090	443498-0000	D		1	SUPPORT	
220	312605-0316	-		2	HEXAGON NUT, M6M M6 A280	
260	315105-0153	-		4	WASHER BRB6,4X12RFR	
TBA/8 0750B						
010	544229-0001	D		1	DROP WING	
030	525146-0000	D		1	BRACKET	
050	443273-0000	D		1	HEAD PLATE	
060	443274-0000	D		1	HEAD PLATE	
080	443497-0000	D		1	SUPPORT	
090	443498-0000	D		1	SUPPORT	
220	312605-0316	-		2	HEXAGON NUT, M6M M6 A280	
260	315105-0153	-		4	WASHER BRB6,4X12RFR	
TBA/8 0750S						
010	544229-0004	D		1	DROP WING	
030	443447-0000	D		1	BRACKET	
050	525255-0000	D		1	HEAD PLATE	
060	525256-0000	D		1	HEAD PLATE	
080	443462-0000	D		1	SUPPORT	
090	443463-0000	D		1	SUPPORT	
220	312605-0316	-		2	HEXAGON NUT, M6M M6 A280	
260	315105-0153	-		6	WASHER BRB6,4X12RFR	
TBA/8 1000B						
010	544229-0001	D		1	DROP WING	
030	443447-0000	D		1	BRACKET	
050	525255-0000	D		1	HEAD PLATE	
060	525256-0000	D		1	HEAD PLATE	
080	443462-0000	D		1	SUPPORT	
090	443463-0000	D		1	SUPPORT	
220	312605-0316	-		2	HEXAGON NUT, M6M M6 A280	
260	315105-0153	-		4	WASHER BRB6,4X12RFR	
TBA/8 1000S						
010	544229-0005	D		1	DROP WING	
030	569131-0000	D		1	BRACKET	
050	525255-0000	D		1	HEAD PLATE	
060	525256-0000	D		1	HEAD PLATE	
080	443462-0000	D		1	SUPPORT	
090	443463-0000	D		1	SUPPORT	
220	312605-0316	-		2	HEXAGON NUT, M6M M6 A280	
260	315105-0153	-		4	WASHER BRB6,4X12RFR	
TBA/8 1000SQ						
010	574166-0000	D		1	DROP WING	

Machine Type | Group Description | Used-In | Group Number | Page No

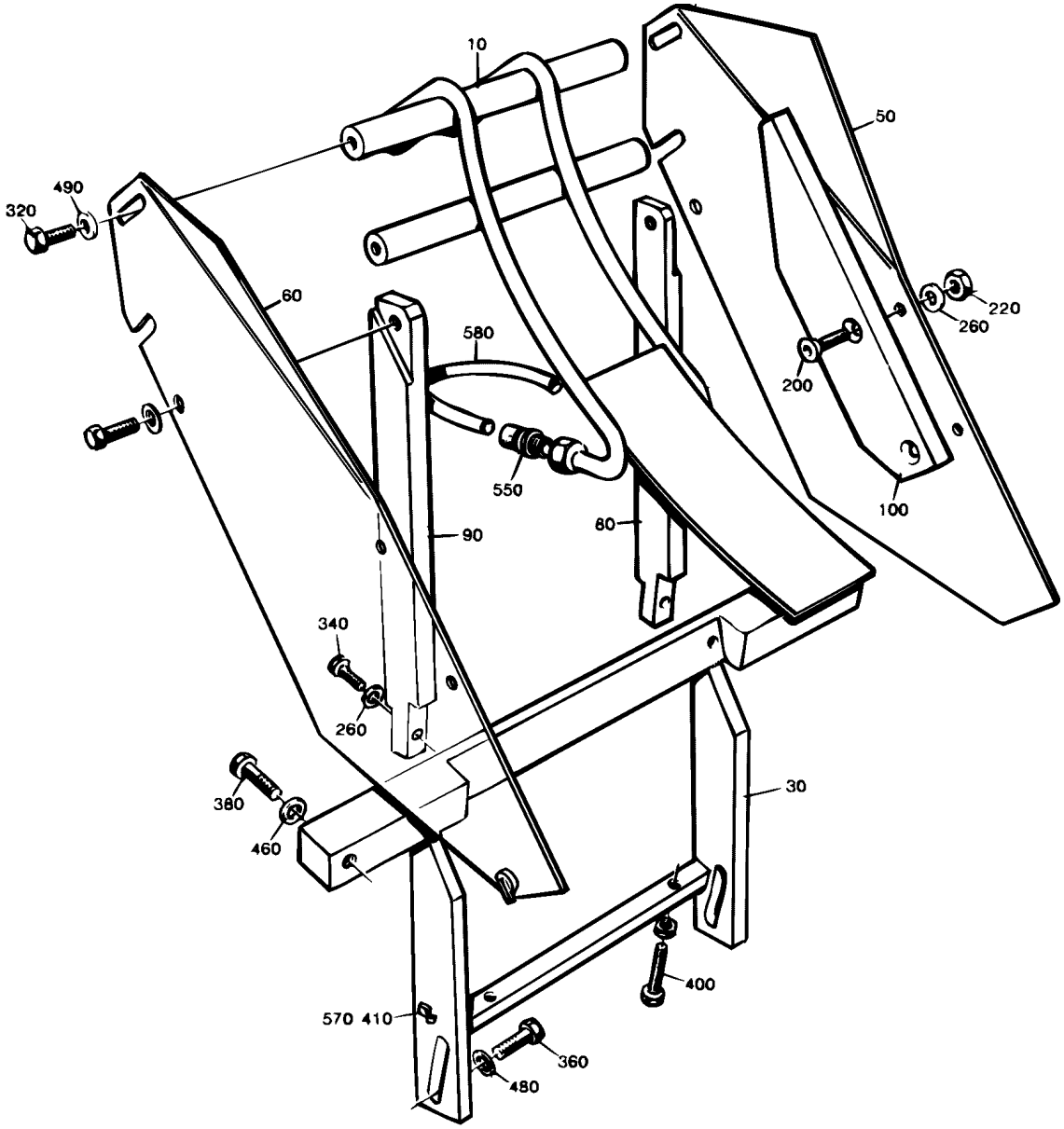
10
50
490
320
60
580
220
260
200
550
100
90
80
340
260
380
460
30
400
570 410
360
480

Pos	Part No	SP	UN	Qty	Description	Page No
TBA/8 1000SQ (Cont'd)						
030	574080-0000	D		1	BRACKET	
050	525255-0000	D		1	HEAD PLATE	
060	525256-0000	D		1	HEAD PLATE	
080	443462-0000	D		1	SUPPORT	
090	443463-0000	D		1	SUPPORT	
220	312605-0316	-		2	HEXAGON NUT, M6M M6 A280	
260	315105-0153	-		4	WASHER BRB6,4X12RFR	
Common Parts						
320	312105-0366	-		6	SCREW M6S M6X12 A280	
340	312105-0368	-		2	SCREW M6S M6X16 A280	
360	312105-0449	-		4	SCREW M6S ISO 4017 M8X16 A480	
380	312105-0459	-		2	SCREW M6S ISO 4014 M8X40 A480	
400	312109-0381	-		2	SCREW M6S ISO 4017 M6X55 A480	
410	312125-0287	-		1	SLOTTED CHEESE HEAD SCREW MCS 4X8 SS	
460	315105-0165	-		2	WASHER BRB8,4X16RFR	
480	315115-0165	-		4	WASHER PLAIN, TBRB 8,4/16 H=3	
490	315125-0153	-		4	WASHER TBRSB 6,4X22X4 A4	
550	342920-0121	-		2	STRAIGHT COUPLING,EXT.THREADED 8/6-R1/8"	
570	90165-0056	-		1	PIPE CLIP FOR TUBE D=4 MM	
580	90166-0122	-	MM	1500	TUBE 8 MM PA,TRANSP.	

Pos	Part No	SP	UN	Qty	Description	Page No

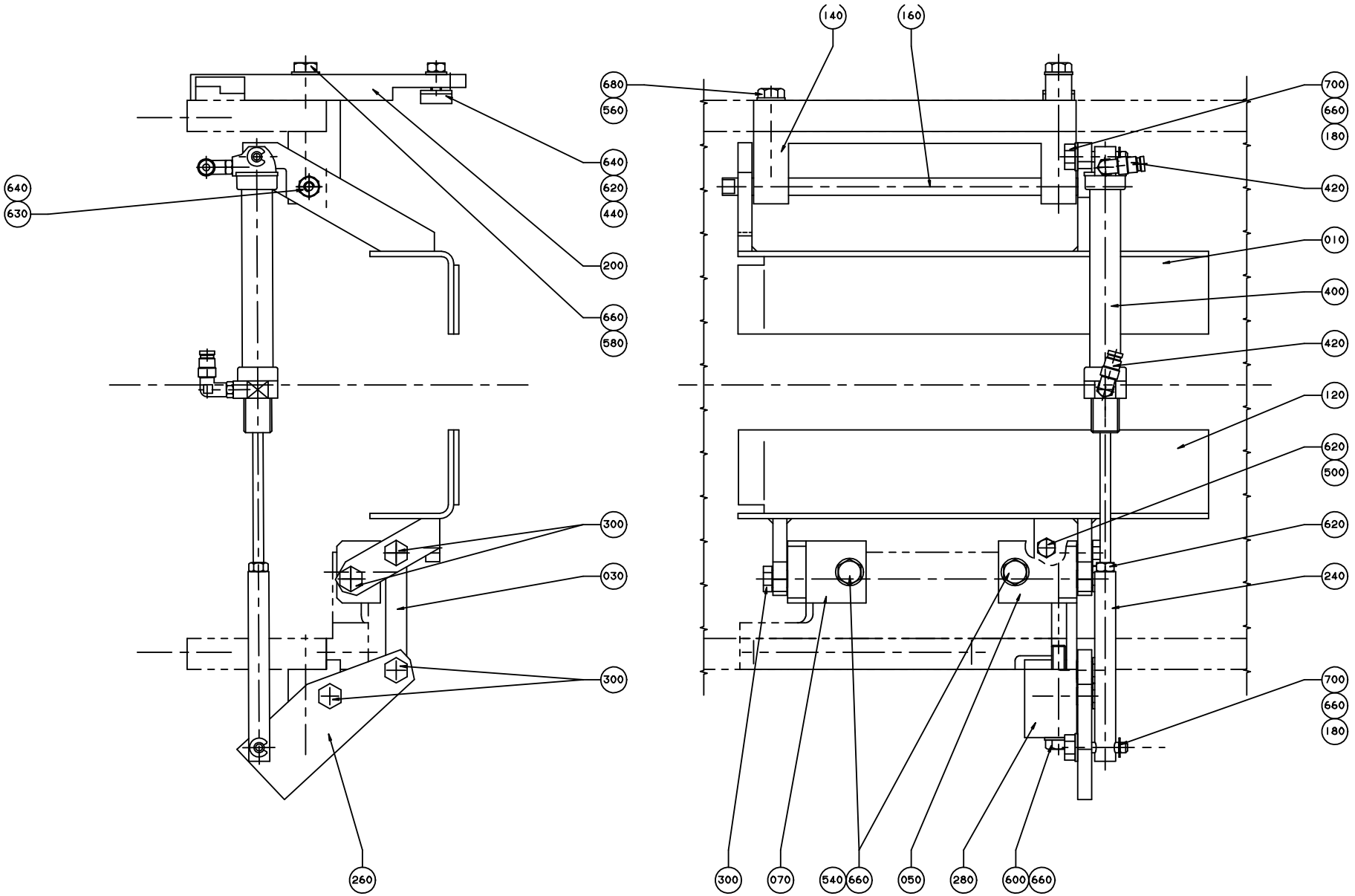
140
160
680
560
640
620
440
200
660
580
640
630
300
030
300
260
700
660
180
420
010
400
420
120
620
500
620
240
700
660
180
300
070
540
660
050
280
600
660

ECM: 117812 - 20021210
Group number: 525088-0200
Assembly Drawing: 525088-3_1_AB

Pos	Part No	SP	UN	Qty	Description	Page No
0375S						
010	443495-0000	A		1	HEAD PLATE	
030	525075-0003	A		1	LINK	
050	525082-0000	A		1	BRACKET	
070	525083-0000	A		1	BRACKET	
120	525084-0000	A		1	HEAD PLATE	
200	525416-0000	-		1	STOP	
0355B, 0500S						
010	443493-0000	A		1	HEAD PLATE	
030	525075-0002	A		1	LINK	
050	525080-0000	A		1	BRACKET	
070	525081-0000	A		1	BRACKET	
120	525084-0000	A		1	HEAD PLATE	
200	525416-0000	-		1	STOP	
0500B, 0750B, 1000B						
010	443448-0000	A		1	HEAD PLATE	
030	525075-0001	A		1	LINK	
050	525078-0000	A		1	BRACKET	
070	525079-0000	A		1	BRACKET	
120	525084-0000	A		1	HEAD PLATE	
200	525416-0000	-		1	STOP	
0750S						
010	544307-0000	A		1	HEAD PLATE	
030	525075-0004	A		1	LINK	
050	544331-0000	A		1	BRACKET	
070	544332-0000	A		1	BRACKET	
120	525084-0000	A		1	HEAD PLATE	
200	525416-0000	-		1	STOP	
1000S						
010	569134-0000	A		1	HEAD PLATE	
030	525075-0005	A		1	LINK	
050	569135-0000	A		1	BRACKET	
070	569136-0000	A		1	BRACKET	
120	525084-0000	A		1	HEAD PLATE	
200	525416-0000	-		1	STOP	
1000SQ NORMFIN, 0500SQ						
010	574077-0000	A		1	HEAD PLATE	
030	525075-0006	A		1	LINK	
050	574078-0000	A		1	BRACKET	
070	574079-0000	A		1	BRACKET	
120	574126-0000	A		1	HEAD PLATE	
200	525416-0000	-		1	STOP	
1000SQ REVFIN						
010	574077-0000	A		1	HEAD PLATE	
030	525075-0006	A		1	LINK	
050	574078-0000	A		1	BRACKET	
070	574079-0000	A		1	BRACKET	
120	574126-0000	A		1	HEAD PLATE	
200	1195333-0000	-		1	STOP	
Common Parts						
140	443365-0000	-		1	BRACKET	
160	443309-0000	A		1	SHAFT	
180	443310-0000	A		2	AXLE PIN	
240	443474-0000	A		1	BRACKET	
260	525074-0000	-		1	ARM	
280	525465-0000	-		1	BRACKET	
300	525077-0000	A		5	AXLE PIN	
400	90239-0818	A		1	DOUBLE ACTING, MINI-ISO, CYL.16-80	
420	90458-2954	-		2	ELBOW PIPE JOINT, EXT.THREAD, D=4MM M5	
440	90347-0007	A		1	VIBRATION DAMPER	
500	312105-0374	-		1	SCREW M6S ISO 4014 M6X30 A480	
540	312105-0451	-		2	SCREW M6S ISO 4017 M8X20 A480	
560	312105-0455	-		1	SCREW M6S ISO 4017 M8X30 A480	
580	312105-0460	-		1	SCREW M6S ISO 4014 M8X45 A480	
600	312105-0462	-		1	SCREW M6S ISO 4014 M8X55 A480	
620	312605-0316	-		3	HEXAGON NUT, M6M M6 A280	
630	312812-0316	-		1	HEXAGON NUT, NY-LOCK M6 A480	
640	315105-0153	-		2	WASHER BRB6,4X12RFR	
660	315105-0165	-		6	WASHER BRB8,4X16RFR	
680	315115-0165	-		1	WASHER PLAIN, TBRB 8,4/16 H=3	
700	315755-0107	-		2	LOCKING WASHER 5	

Machine Type	Group Description	Used-In	Group Number	Page No

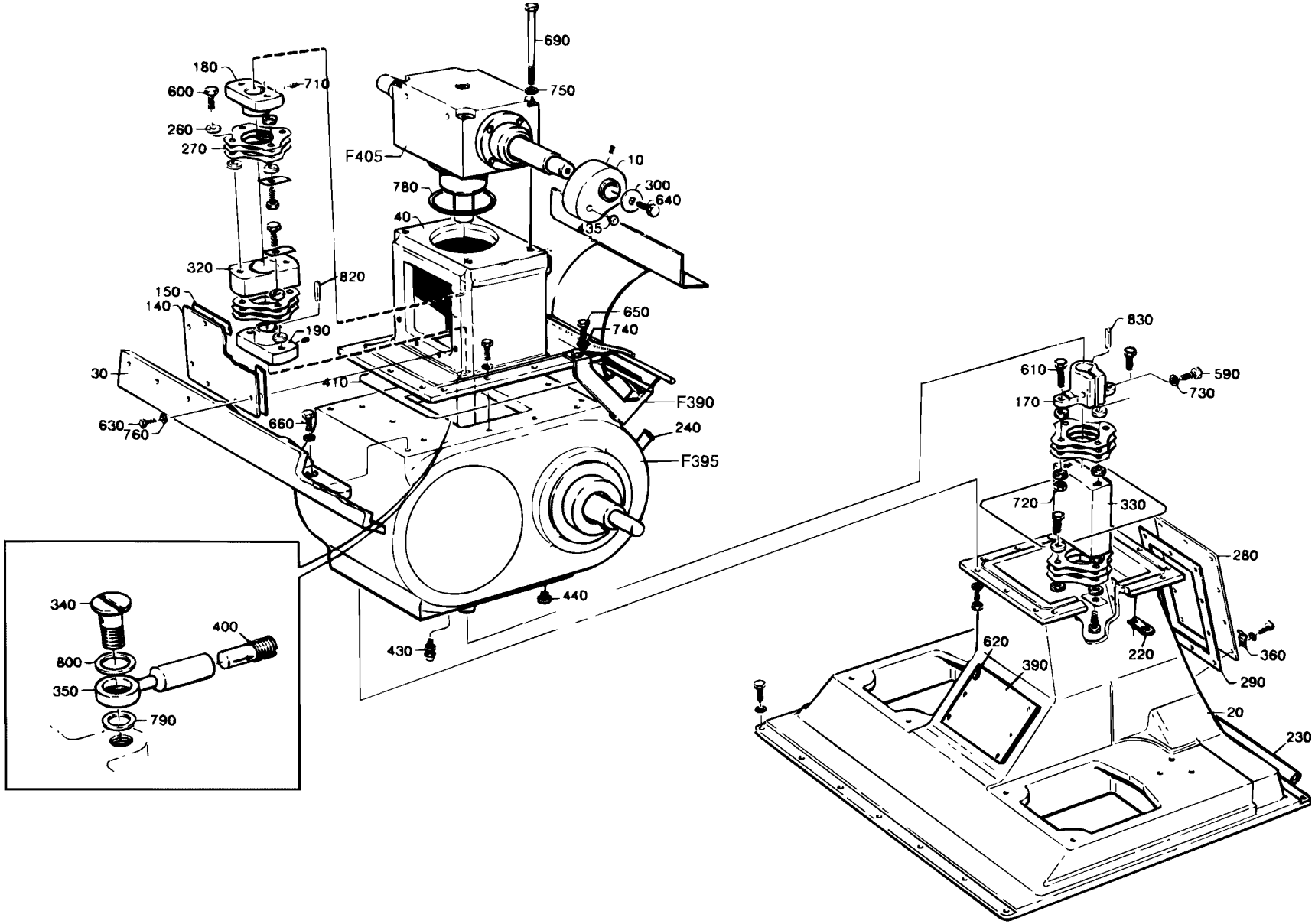
690
180
710
600
750
260
270
F405
10
780
300
640
40
435
320
820
150
140
650
740
190
30
410
F390
630
760
660
240
F395
440
430
340
400
800
350
790
830
610
590
730
170
720
330
280
620
390
220
360
290
20
230

ECM: 72353 - 19990525
Group number: 285479-0600
Assembly Drawing: 285479-4_1_AA

Pos	Part No	SP	UN	Qty	Description	Page No
0375S, 0355B, 0500S						
010	525235-0000	D		2	CURVE	
0500B, 1000SQ, 1000S, 0750B, 0750S, 1000B						
010	443362-0000	D		2	CURVE	
Common Parts						
020	443218-0000	-		1	INTERMEDIARY SECTION	
030	262264-0000	-		1	CANTILEVER	
040	262922-0000	-		1	HOUSE	
140	262932-0000	-		1	HATCH	
150	262933-0000	D		1	GASKET	
170	285141-0003	D		1	CLAMPING SLEEVE	
180	285142-0002	D		1	SLEEVE	
190	285142-0003	D		1	SLEEVE	
220	525292-0000	-		3	BRACKET	
230	525293-0000	-		1	PIPE	
240	525294-0000	-		1	PIPE	
260	31553-0002	C		32	WASHER	
270	33261-0000	C		32	SPRING PLATE	
280	262252-0000	-		1	HATCH	
290	262253-0000	D		1	GASKET	
300	276659-0000	D		2	WASHER	
320	285145-0002	D		1	INTERMEDIARY SECTION	
330	285147-0000	D		1	INTERMEDIARY SECTION	
340	285891-0000	D		1	SCREW	
350	285892-0000	D		1	CONNECTION	
390	525279-0000	-		1	HATCH	
400	90092-0077	C		1	METERING VALVE, FKD3, G1/8	
410	90143-0052	-	MM	2450	STRAP	
420	90153-0043	-		1	ADHESIVE, LOCTITE 495 20G	
425	90296-0009	-	L	1	SILICONE GREASE TUBE 100 GR.	
430	90224-0066	-		1	CONN. STRAIGHT, 160•SSA	
435	90261-0032	-		4	PLUG, BLIND, PLASTIC, NO. 1073	
440	342720-0102	-		1	CONN. STR. GA-6-G1/8	
570	311103-0399	-		10	PARALLEL PIN ISO 2338 8M6X16 A1	
590	312101-0455	-		1	SCREW M6S M8X30 FZB	
600	90287-0155	-		14	SCREW M6S M10X25 88 NY-LOCK	
610	312101-0497	-		2	SCREW M6S M10X35 FZB	
620	312105-0367	-		6	SCREW M6S M6X14 A280	
630	312105-0368	-		12	SCREW M6S M6X16 A280	
635	312105-0370	-		4	SCREW M6S ISO 4017 M6X20 A480	
638	312105-0372	-		2	SCREW M6S ISO 4017 M6X25 A480	
640	312105-0451	-		2	SCREW M6S ISO 4017 M8X20 A480	
650	312105-0453	-		50	SCREW M6S ISO 4017 M8X25 A480	
660	312105-0455	-		2	SCREW M6S ISO 4017 M8X30 A480	
690	312105-0517	-		4	SCREW M6S ISO 4014 M10X130 A480	
710	312316-0362	-		2	SCREW HEX.SOCK.SET CUP P.MSK6SS6X8 FZB	
720	312810-0320	-		2	HEXAGON NUT, NY-LOCK M10 FZB	
730	315101-0165	-		1	WASHER PLAIN, BRB, 8,4/16 H=1,5	
735	315105-0153	-		2	WASHER BRB6,4X12RFR	
740	315105-0165	-		10	WASHER BRB8,4X16RFR	
750	315115-0173	-		4	WASHER PLAIN, TBRB 10,5/22 H=4	
760	315115-0153	-		22	WASHER PLAIN, TBRB 6,4/12 H=3	
770	315115-0165	-		42	WASHER PLAIN, TBRB 8,4/16 H=3	
780	315202-0311	C		1	O-RING 99,5X3 MM	
790	315233-0109	C		1	WASHER CAPTIVE SEALING G1/8	
800	315233-0110	C		1	WASHER CAPTIVE SEALING G1/4	
820	315701-0270	-		1	PARALLEL KEY W. ROUND ENDS 8X7X40 MM	
830	315701-0274	-		1	PARALLEL KEY W. ROUND ENDS 8X7X60 MM	
F390	A285853-0300	-		1	STEERING RAIL	**5-129, 5-131**
F395	A525117-0300	D		1	INDEXING GEAR	**5-133, 5-135**
F405	A442646-0200	D		1	TOP GEAR	**5-137**

Machine Type | Group Description | Used-In | Group Number | Page No

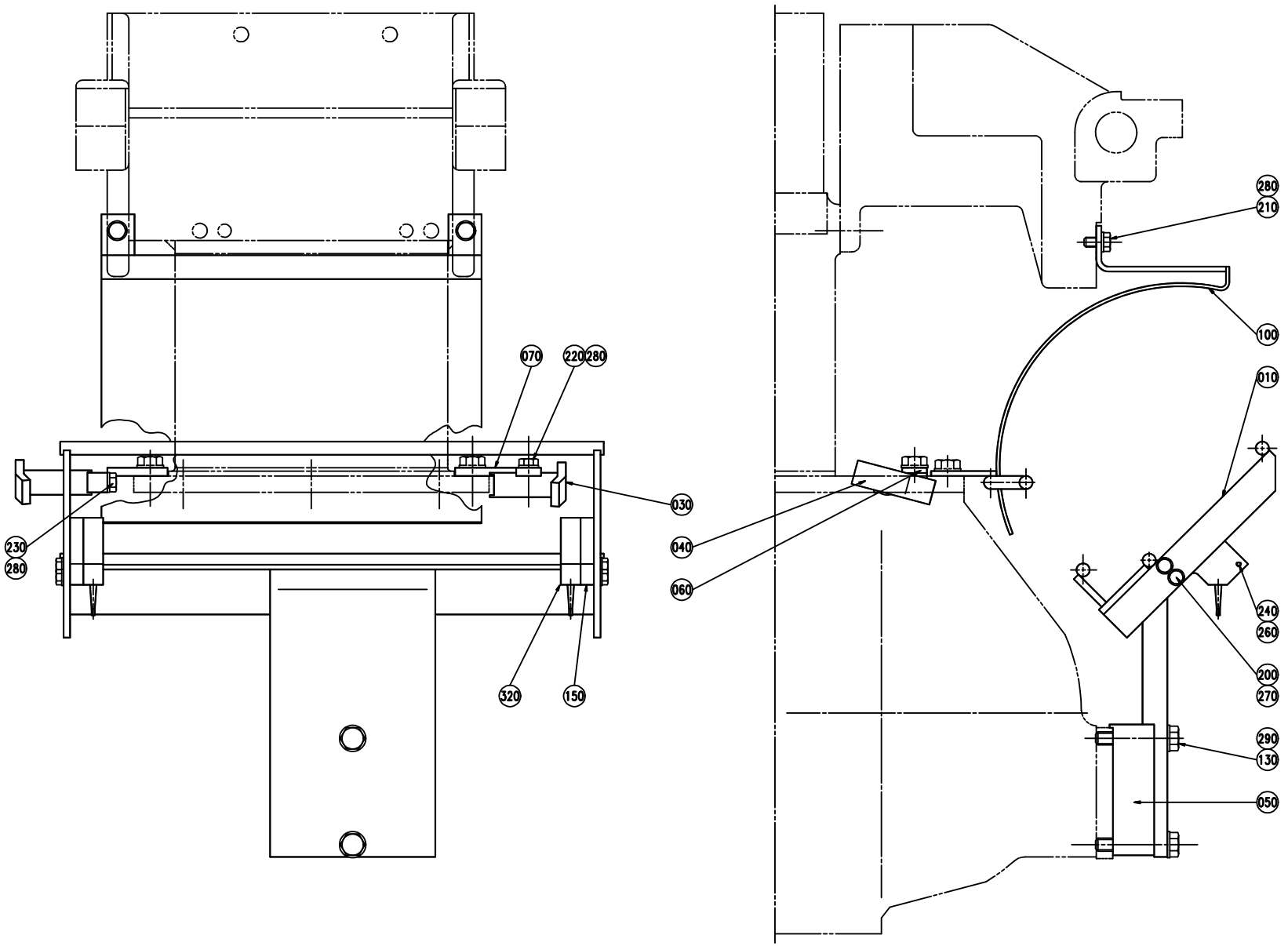
070
220
280
030
230
280
040
060
320
150
280
210
100
010
240
260
200
270
290
130
050

ECM: 72353 - 19990525
Group number: 285853-0300
Assembly Drawing: 285853-3_1_AA

This list covers pages from 5-128 to 5-131

Pos	Part No	SP	UN	Qty	Description	Page No
1000SQ REVFIN (See drawing on page: 5-130)						
010	597539-0000	-		1	SLIDE RAIL	
020	597542-0000	D		1	RAIL REV.FIN	
030	1143007-0000	D		1	STEERING	
040	1143006-0000	D		1	STEERING	
060	1143008-0000	D		1	BRACKET	
070	1143009-0000	D		1	BRACKET	
100	574054-0000	-		1	HEAD PLATE	
130	312105-0451	-		2	SCREW M6S ISO 4017 M8X20 A480	
220	312105-0368	-		1	SCREW M6S M6X16 A280	
230	312105-0371	-		1	SCREW M6S ISO 4017 M6X22 A480	
280	315105-0153	-		4	WASHER BRB6,4X12RFR	
300	312105-0366	-		2	SCREW M6S M6X12 A280	
0355B (See drawing on page: 5-128)						
010	525354-0000	D		1	SLIDE RAIL	
100	527861-0000	-		1	HEAD PLATE	
130	312105-0451	-		2	SCREW M6S ISO 4017 M8X20 A480	
280	315105-0153	-		2	WASHER BRB6,4X12RFR	
0375S (See drawing on page: 5-128)						
010	525355-0000	D		1	SLIDE RAIL	
100	531313-0000	-		1	HEAD PLATE	
130	312105-0451	-		2	SCREW M6S ISO 4017 M8X20 A480	
280	315105-0153	-		2	WASHER BRB6,4X12RFR	
0500B (See drawing on page: 5-128)						
010	525352-0000	D		1	SLIDE RAIL	
050	525357-0000	-		1	SPACER	
100	525424-0000	-		1	HEAD PLATE	
130	312105-0460	-		2	SCREW M6S ISO 4014 M8X45 A480	
280	315105-0153	-		2	WASHER BRB6,4X12RFR	
0500S (See drawing on page: 5-128)						
010	525353-0000	D		1	SLIDE RAIL	
100	531312-0000	-		1	HEAD PLATE	
130	312105-0451	-		2	SCREW M6S ISO 4017 M8X20 A480	
280	315105-0153	-		2	WASHER BRB6,4X12RFR	
0750B (See drawing on page: 5-128)						
010	525350-0000	D		1	SLIDE RAIL	
100	531314-0000	-		1	HEAD PLATE	
130	312105-0451	-		2	SCREW M6S ISO 4017 M8X20 A480	
280	315105-0153	-		2	WASHER BRB6,4X12RFR	
0750S (See drawing on page: 5-128)						
010	543694-0000	D		1	SLIDE RAIL	
100	525378-0000	-		1	HEAD PLATE	
130	312105-0451	-		2	SCREW M6S ISO 4017 M8X20 A480	
280	315105-0153	-		2	WASHER BRB6,4X12RFR	
1000B HIFIN (See drawing on page: 5-128)						
010	525349-0000	D		1	SLIDE RAIL	
100	529312-0000	-		1	HEAD PLATE	
130	312105-0451	-		2	SCREW M6S ISO 4017 M8X20 A480	
280	315105-0153	-		2	WASHER BRB6,4X12RFR	
1000B LOFIN (See drawing on page: 5-128)						
010	525348-0000	D		1	SLIDE RAIL	
100	529312-0000	-		1	HEAD PLATE	
130	312105-0451	-		2	SCREW M6S ISO 4017 M8X20 A480	
280	315105-0153	-		2	WASHER BRB6,4X12RFR	
1000S (See drawing on page: 5-128)						
010	569127-0000	D		1	SLIDE RAIL	
030	573486-0000	D		1	STEERING	
040	573487-0000	D		1	STEERING	
060	573488-0000	D		1	BRACKET	
070	573489-0000	D		1	BRACKET	
100	569128-0000	-		1	HEAD PLATE	
130	312105-0451	-		2	SCREW M6S ISO 4017 M8X20 A480	
220	312105-0368	-		1	SCREW M6S M6X16 A280	
230	312105-0371	-		1	SCREW M6S ISO 4017 M6X22 A480	
280	315105-0153	-		4	WASHER BRB6,4X12RFR	
1000SQ NORMFIN (See drawing on page: 5-128)						
010	597539-0000	-		1	SLIDE RAIL	
020	597543-0000	-		1	RAIL NORM.FIN	
030	574097-0000	D		1	STEERING	
040	574098-0000	D		1	STEERING	
060	573488-0000	D		1	BRACKET	
070	573489-0000	D		1	BRACKET	
100	574054-0000	-		1	HEAD PLATE	
130	312105-0451	-		2	SCREW M6S ISO 4017 M8X20 A480	

Machine Type | Group Description | Used-In | Group Number | Page No

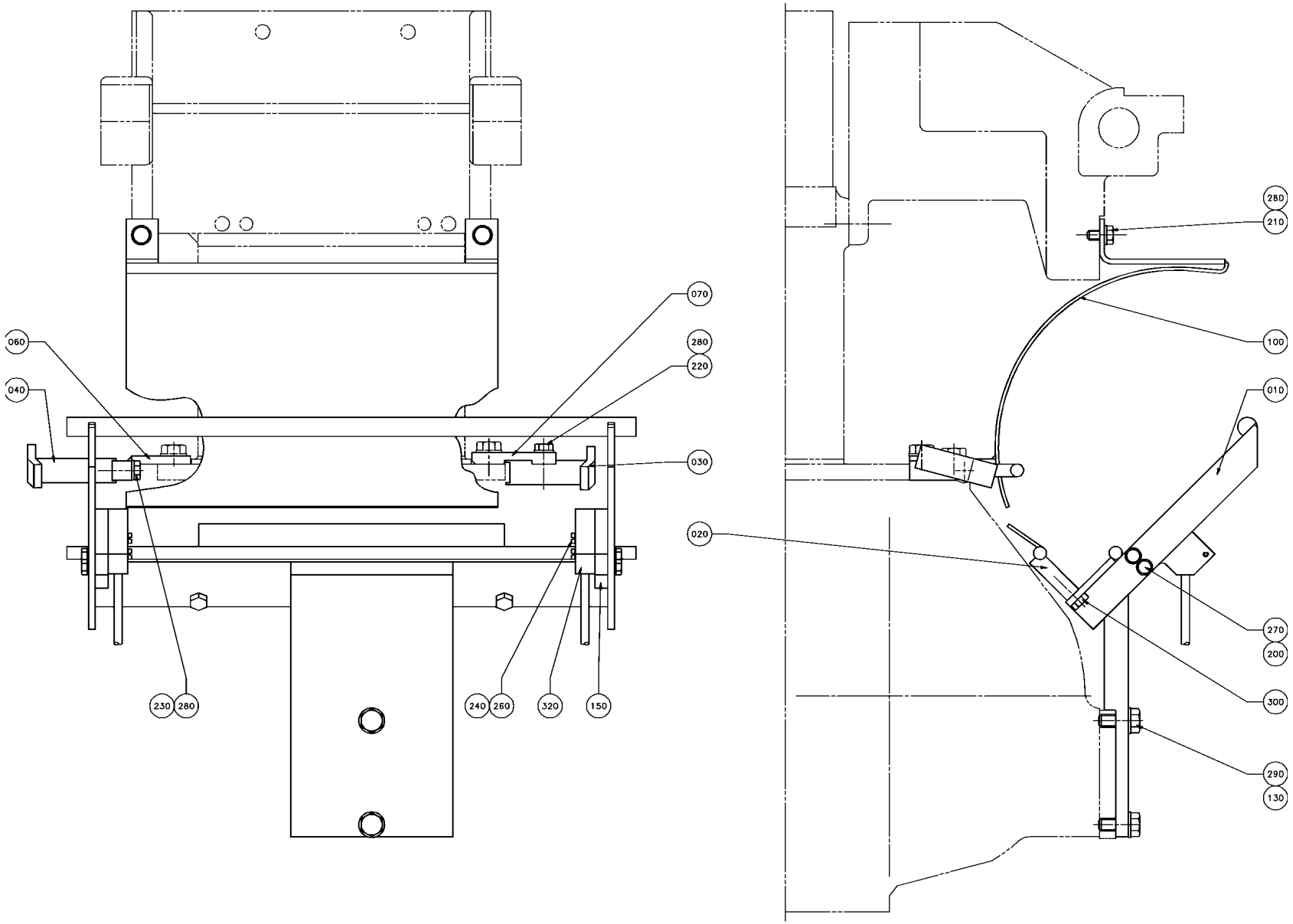
060
040
070
280
220
030
020
230
280
240
260
320
150
280
210
100
010
270
200
300
290
130

Pos	Part No	SP	UN	Qty	Description	Page No
1000SQ NORMFIN (Cont'd) (See drawing on page: 5-128)						
220	312105-0368	-		1	SCREW M6S M6X16 A280	
230	312105-0371	-		1	SCREW M6S ISO 4017 M6X22 A480	
280	315105-0153	-		4	WASHER BRB6,4X12RFR	
300	312105-0366	-		2	SCREW M6S M6X12 A280	
Common Parts						
150	525172-0000	-		2	SPACER	
200	312105-0328	-		4	SCREW M6S ISO 4017 M5X14 A480	
210	312105-0366	-		2	SCREW M6S M6X12 A280	
240	312125-0230	-		4	SLOTTED CHEESE HEAD SCREW MCS 3X20 SS	
260	315105-0124	-		4	BRICKA BRB3,2X6RFR	
270	315105-0146	-		4	BRICKA BRB5,3X10RFR	
290	315105-0165	-		2	WASHER BRB8,4X16RFR	
320	90044-0104	C		2	PROX.SWITCH IFM IN 3002	

Pos	Part No	SP	UN	Qty	Description	Page No

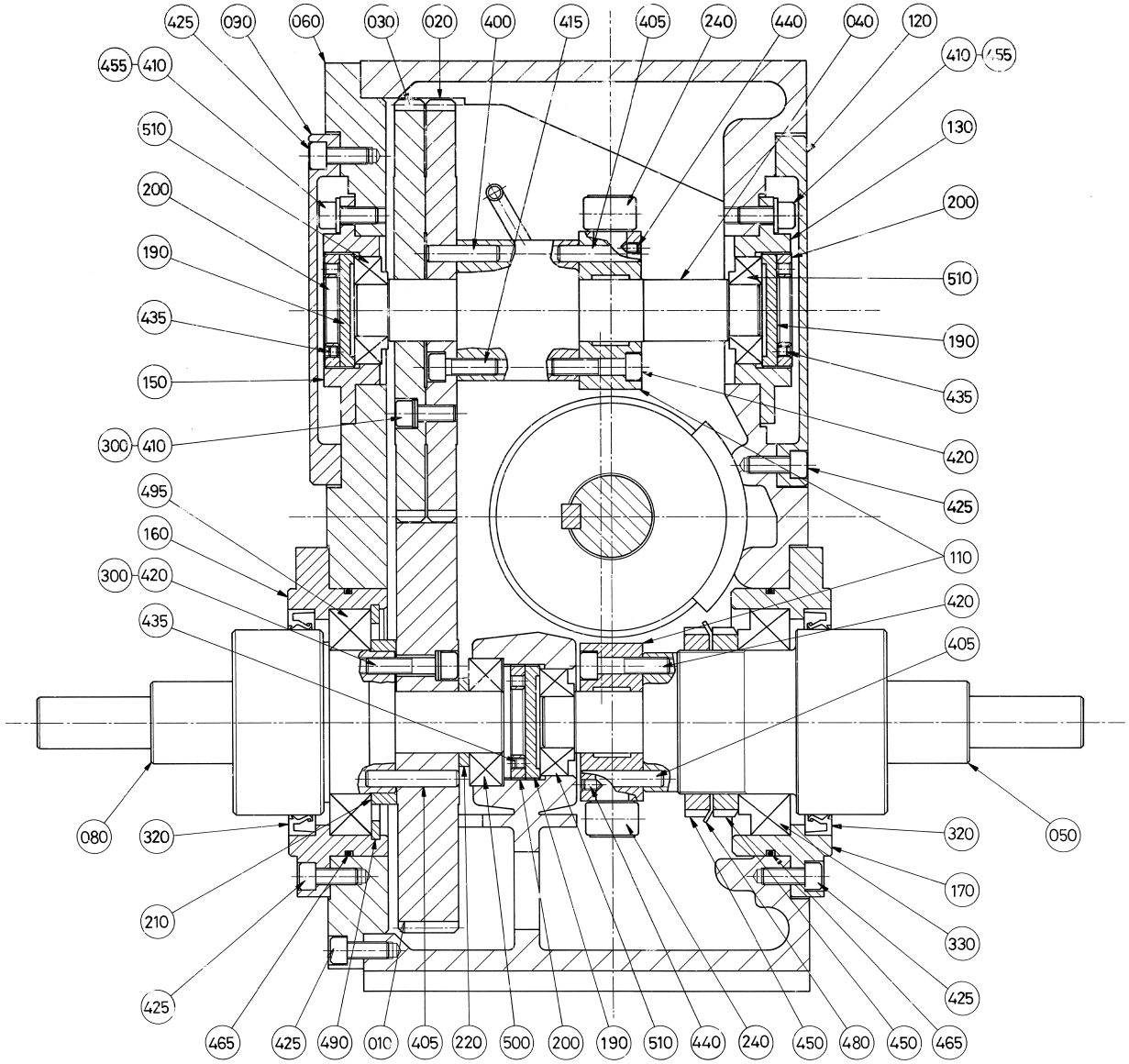
425
090
060
030
020
400
415
405
240
440
040
120
455
410
510
200
190
435
150
300
495
160
420
080
320
210
465
490
010
220
500
450
480
170
330
050

ECM: 72197 - 19990215
Group number: 525117-0300
Assembly Drawing: 525117-3_1_AA

This list covers pages from 5-132 to 5-135

Pos	Part No	SP	UN	Qty	Description	Page No
-						
010	543705-0000	D		1	GEAR WHEEL WIDE	
020	543706-0000	D		1	GEAR WHEEL SLIM , INNER	
030	543707-0000	D		1	GEAR WHEEL SLIM , OUTER	
040	565322-0000	D		1	INTERMEDIARY SHAFT	
050	565323-0000	D		1	OUTPUT SHAFT, LONG	
060	565324-0000	D		1	LID	
070	565325-0000	D		1	INPUT SHAFT	
080	565336-0000	D		1	OUTPUT SHAFT SHORT	
090	565338-0000	D		1	GEAR HOUSING	
100	927314-0000	D		1	CAM	
110	927315-0000	D		2	TURRET	
120	565326-0000	D		2	LID	
130	565331-0000	D		1	BEARING HOLDER	
140	565332-0000	D		2	BEARING HOLDER	
150	565333-0000	D		1	BEARING HOLDER	
160	565334-0000	D		1	BEARING HOLDER	
170	565335-0000	D		1	BEARING HOLDER	
180	565339-0000	D		1	OIL PIPE	
190	565327-0000	D		3	RING NUT	
200	565328-0000	D		3	SCREW RING	
210	565329-0000	D		1	SPACER	
220	565330-0000	D		1	SPACER	
230	565340-0000	D		1	OIL LEVEL TUBE	
240	927318-0000	D		12	ROLLER	
300	90062-0049	-		18	LOCK WASHER NORD-LOCK,8,5/13,5, H=2,3	
310	90087-0015	-		1	PLUG, EXT. THREAD HEX. SOCKET VSTI 1/4-E	
320	90091-0130	C		2	RADIAL SEAL 90X110X12 MM DUST LIP	
330	90214-0087	C		1	TAPER ROLLER BEARING, 70X110X25 MM	
400	311103-0407	-		3	PARALLEL PIN ISO 2338 8M6X35 A1	
405	311103-0411	-		9	PARALLEL PIN ISO 2338 8M6X45 A1	
410	312111-0451	-		12	SCREW HEX.SOCK.HD.MC6S-TT 8X20 88 FZB	
415	312111-0453	-		3	SCREW HEX.SOCK.HD.MC6S-TT 8X25 88 FZB	
420	312111-0457	-		9	SCREW HEX.SOCK.HD.MC6S-TT 8X35 88 FZB	
425	312115-0451	-		40	SCREW ISO4762 M8X20 A4	
430	312115-0453	-		12	SCREW ISO4762 M8X25 A4	
435	312316-0320	-		3	SCREW HEX.SOCK.SET CUP P.MSK6SS5X5 FZB	
440	312316-0323	-		12	SCREW HEX.SOCK.SET CUP P.MSK6SS5X8 FZB	
445	312805-0108	-		4	NUT ROUND WITH SLOTS M40X1,5 FE	
450	312805-0114	-		2	NUT ROUND WITH SLOTS M70X20 FE	
455	315101-0165	-		8	WASHER PLAIN, BRB, 8,4/16 H=1,5	
460	315105-0165	-		12	WASHER BRB8,4X16RFR	
465	315202-0316	C		2	O-RING 124,5X3 MM	
470	315221-0171	C		1	RADIAL SEAL 30X62X7 MM	
475	315410-0108	-		2	LOCK WASHER MB 8 D=40 H=1,25	
480	315410-0114	-		1	LOCK WASHER MB 14 D=70 H=1,5	
485	315701-0338	-		1	PARALLEL KEY W. ROUND ENDS 12X8X70 MM	
490	315752-0149	-		1	RETAINING RING FOR HOLE, 110X4 MM	
495	321306-0114	C		1	BALL BEARING, 70X110X20 MM	
500	321309-0106	C		1	BALL BEARING, 30X62X16 MM	
505	321364-0106	C		2	TAPER ROLLER BEARING, 30X72X19 MM	
510	321361-0105	C		3	TAPER ROLLER BEARING, 25X52X16,25 MM	
515	342720-0104	-		1	CONN. STR. GA-8-G1/4	
520	342730-0104	-		2	CONN. ELBOW WA-8-1/4	

Machine Type | Group Description | Used-In | Group Number | Page No

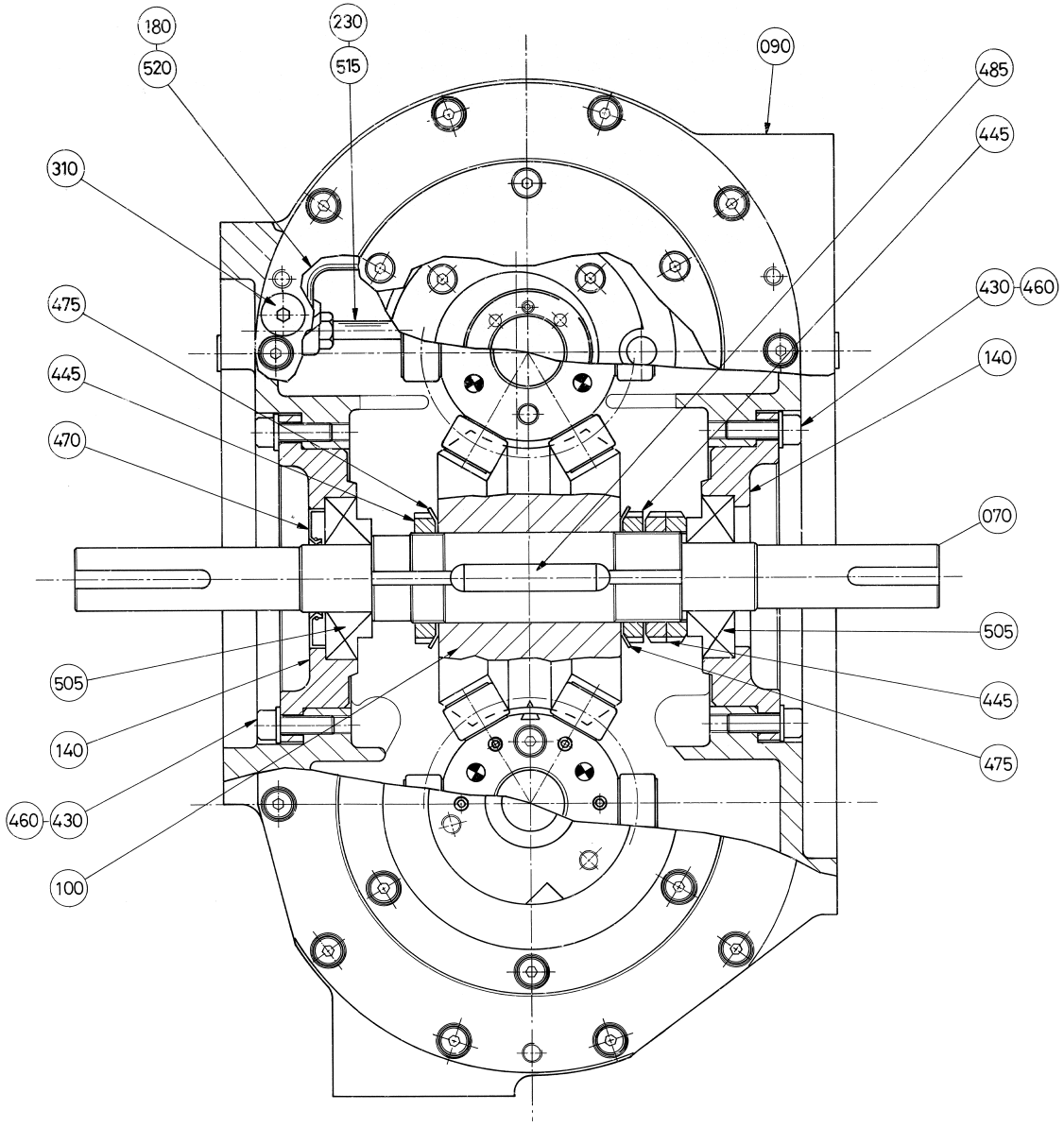
180
520
230
515
090
485
445
310
430
460
475
140
445
470
070
505
505
445
140
475
460
430
100

ECM: 72197 - 19990215
Group number: 525117-0300
Assembly Drawing: 525117-4_1_AA

This list covers pages from 5-132 to 5-135

Pos	Part No	SP	UN	Qty	Description	Page No
-						
010	543705-0000	D		1	GEAR WHEEL WIDE	
020	543706-0000	D		1	GEAR WHEEL SLIM , INNER	
030	543707-0000	D		1	GEAR WHEEL SLIM , OUTER	
040	565322-0000	D		1	INTERMEDIARY SHAFT	
050	565323-0000	D		1	OUTPUT SHAFT, LONG	
060	565324-0000	D		1	LID	
070	565325-0000	D		1	INPUT SHAFT	
080	565336-0000	D		1	OUTPUT SHAFT SHORT	
090	565338-0000	D		1	GEAR HOUSING	
100	927314-0000	D		1	CAM	
110	927315-0000	D		2	TURRET	
120	565326-0000	D		2	LID	
130	565331-0000	D		1	BEARING HOLDER	
140	565332-0000	D		2	BEARING HOLDER	
150	565333-0000	D		1	BEARING HOLDER	
160	565334-0000	D		1	BEARING HOLDER	
170	565335-0000	D		1	BEARING HOLDER	
180	565339-0000	D		1	OIL PIPE	
190	565327-0000	D		3	RING NUT	
200	565328-0000	D		3	SCREW RING	
210	565329-0000	D		1	SPACER	
220	565330-0000	D		1	SPACER	
230	565340-0000	D		1	OIL LEVEL TUBE	
240	927318-0000	D		12	ROLLER	
300	90062-0049	-		18	LOCK WASHER NORD-LOCK,8,5/13,5, H=2,3	
310	90087-0015	-		1	PLUG, EXT. THREAD HEX. SOCKET VSTI 1/4-E	
320	90091-0130	C		2	RADIAL SEAL 90X110X12 MM DUST LIP	
330	90214-0087	C		1	TAPER ROLLER BEARING, 70X110X25 MM	
400	311103-0407	-		3	PARALLEL PIN ISO 2338 8M6X35 A1	
405	311103-0411	-		9	PARALLEL PIN ISO 2338 8M6X45 A1	
410	312111-0451	-		12	SCREW HEX.SOCK.HD.MC6S-TT 8X20 88 FZB	
415	312111-0453	-		3	SCREW HEX.SOCK.HD.MC6S-TT 8X25 88 FZB	
420	312111-0457	-		9	SCREW HEX.SOCK.HD.MC6S-TT 8X35 88 FZB	
425	312115-0451	-		40	SCREW ISO4762 M8X20 A4	
430	312115-0453	-		12	SCREW ISO4762 M8X25 A4	
435	312316-0320	-		3	SCREW HEX.SOCK.SET CUP P.MSK6SS5X5 FZB	
440	312316-0323	-		12	SCREW HEX.SOCK.SET CUP P.MSK6SS5X8 FZB	
445	312805-0108	-		4	NUT ROUND WITH SLOTS M40X1,5 FE	
450	312805-0114	-		2	NUT ROUND WITH SLOTS M70X20 FE	
455	315101-0165	-		8	WASHER PLAIN, BRB, 8,4/16 H=1,5	
460	315105-0165	-		12	WASHER BRB8,4X16RFR	
465	315202-0316	C		2	O-RING 124,5X3 MM	
470	315221-0171	C		1	RADIAL SEAL 30X62X7 MM	
475	315410-0108	-		2	LOCK WASHER MB 8 D=40 H=1,25	
480	315410-0114	-		1	LOCK WASHER MB 14 D=70 H=1,5	
485	315701-0338	-		1	PARALLEL KEY W. ROUND ENDS 12X8X70 MM	
490	315752-0149	-		1	RETAINING RING FOR HOLE, 110X4 MM	
495	321306-0114	C		1	BALL BEARING, 70X110X20 MM	
500	321309-0106	C		1	BALL BEARING, 30X62X16 MM	
505	321364-0106	C		2	TAPER ROLLER BEARING, 30X72X19 MM	
510	321361-0105	C		3	TAPER ROLLER BEARING, 25X52X16,25 MM	
515	342720-0104	-		1	CONN. STR. GA-8-G1/4	
520	342730-0104	-		2	CONN. ELBOW WA-8-1/4	

Machine Type | Group Description | Used-In | Group Number | Page No

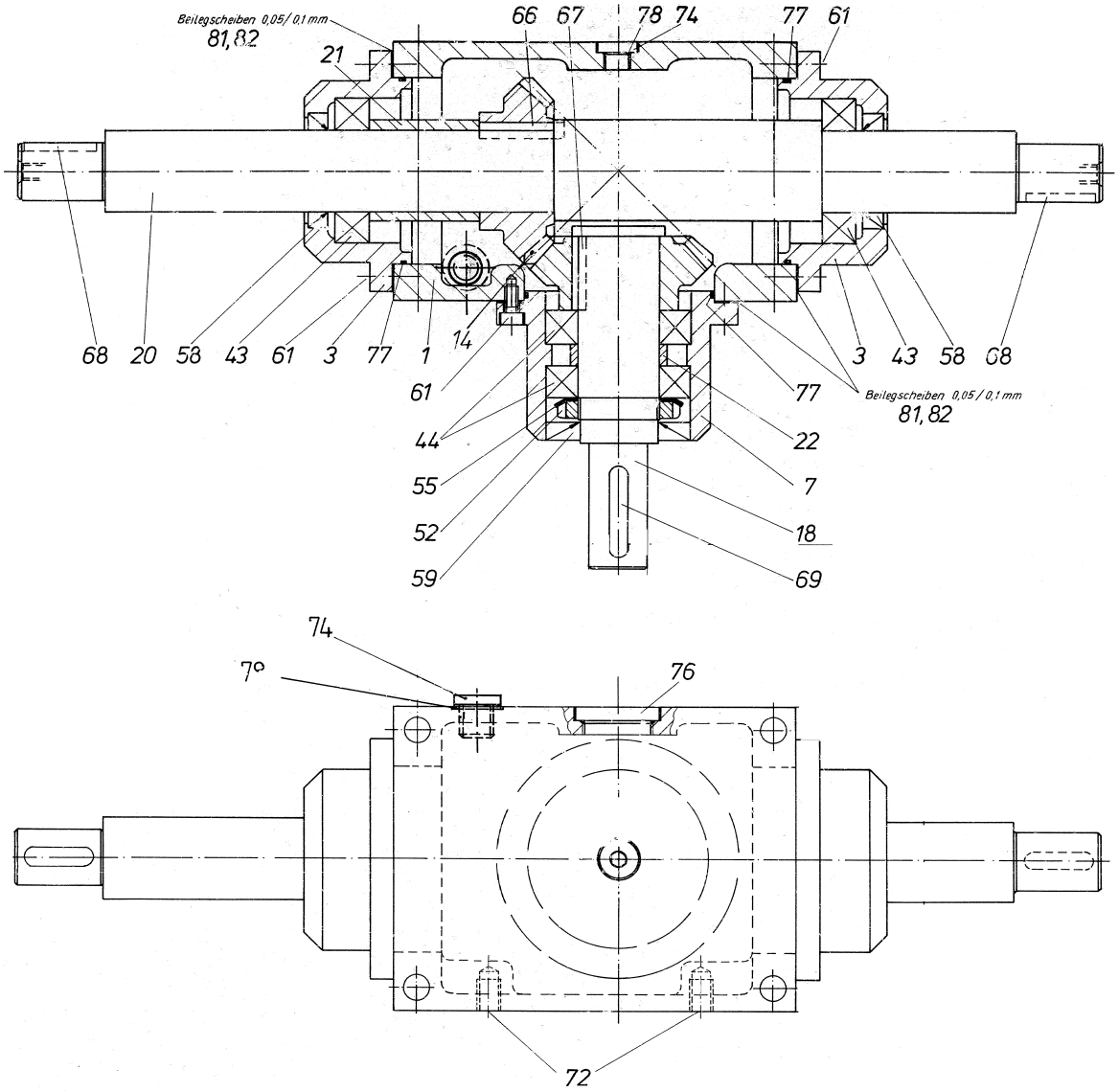
Beilegscheiben 0,05/0,1 mm
81,82
21
66
67
78
74
77
61
68
20
58
43
61
3
77
1
14
61
44
55
52
59
77
22
7
18
69
3
43
58
68
Beilegscheiben 0,05/0,1 mm
81,82
74
7°
76
72

ECM: 72197 - 19990215
Group number: 442646-0200
Assembly Drawing: 442646-2_1_AA

Pos	Part No	SP	UN	Qty	Description	Page No
-						
001	568070-0000	D		1	GEAR HOUSING	
003	568071-0000	D		2	BEARING SEAT	
007	568072-0000	D		1	BEARING SEAT	
014	443188-0000	D		1	GEAR WHEEL	
018	568073-0000	D		1	SHAFT	
020	568074-0000	D		1	SHAFT	
021	442621-0000	D		1	SPACER	
022	442622-0000	D		1	SPACER	
043	321306-0107	D		2	BALL BEARING, 35X62X14 MM	
044	321306-0107	D		2	BALL BEARING, 35X62X14 MM	
052	312805-0107	-		1	NUT ROUND WITH SLOTS M35X1,5 FE	
055	315410-0107	-		1	LOCK WASHER MB 7 D=35 H=1,25	
058	90091-0142	C		2	RADIAL SEAL 35X50X9 MM	
059	315221-0171	C		1	RADIAL SEAL 30X62X7 MM	
061	312111-0368	-		12	SCREW HEX.SOCK.HD.MC6S-TT 6X16 88 FZB	
066	315701-0802	-		1	PARALLEL KEY W. ROUND ENDS 10X8X36 MM	
067	315701-0299	-		1	PARALLEL KEY W. ROUND ENDS 10X8X32 MM	
068	315701-0268	-		2	PARALLEL KEY W. ROUND ENDS 8X7X32 MM	
069	315701-0270	-		1	PARALLEL KEY W. ROUND ENDS 8X7X40 MM	
072	312910-0126	-		2	THREADED INSERT, FREE RUNNING M8X1,5D	
077	90242-0117	D		3	O-RING 70X2 MM	
078	90242-0121	D		2	O-RING 11X2,5 MM	
081	443193-0000	D		3	SHIM	
082	443194-0000	D		3	SHIM	

Pos	Part No	SP	UN	Qty	Description	Page No

Machine Type | Group Description | Used-In | Group Number | Page No

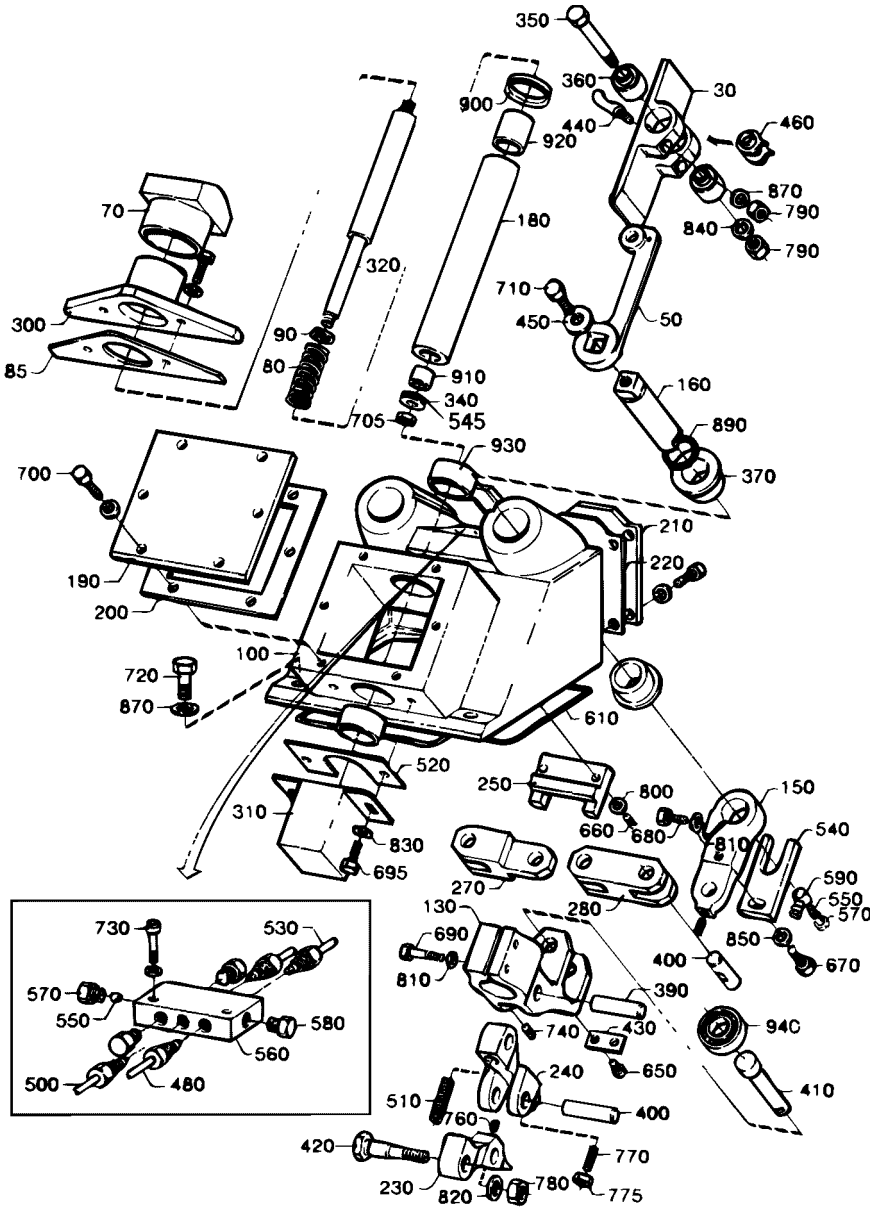
350
360
900
920
440
30
460
870
790
840
790
180
320
70
710
450
50
300
85
90
80
910
340
545
705
160
890
370
930
700
210
220
190
200
100
720
870
610
520
310
830
695
250
800
660
680
150
540
810
590
550
570
270
280
130
690
810
850
670
400
390
740
430
940
240
650
410
510
760
400
420
770
230
820
780
775
730
530
570
550
580
560
500
480

ECM: 72437 - 19990426
Group number: 285456-0300
Assembly Drawing: 285456-2_1_AA

This list covers pages from 5-138 to 5-141

Pos	Part No	SP	UN	Qty	Description	Page No
0355B						
030	531628-0000	D		2	PRESSURE DEVICE FLAP	
050	285449-0000	D		2	ARM	
070	525101-0001	D		1	BLOCKING PIECE	
080	268830-0000	C		1	COMPRESSION SPRING	
095	312105-0370	-		2	SCREW M6S ISO 4017 M6X20 A480	
440	525125-0000	C		4	PIN	
0375S						
030	443249-0000	D		2	FLAP	
050	442589-0000	D		2	ARM	
070	525101-0002	D		1	BLOCKING PIECE	
080	268830-0000	C		1	COMPRESSION SPRING	
095	312105-0370	-		2	SCREW M6S ISO 4017 M6X20 A480	
440	262350-0001	C		4	PIN	
0500B						
030	442886-0000	D		2	FLAP	
050	262907-0000	D		2	ARM	
070	525100-0000	D		1	BLOCKING PIECE	
080	525379-0000	C		1	COMPRESSION SPRING	
085	297496-0000	C		1	LACE	
095	312105-0372	-		2	SCREW M6S ISO 4017 M6X25 A480	
440	262350-0001	C		4	PIN	
0500S						
030	443038-0000	D		2	FLAP	
050	262906-0000	D		2	ARM	
070	525101-0001	D		1	BLOCKING PIECE	
080	268830-0000	C		1	COMPRESSION SPRING	
095	312105-0370	-		2	SCREW M6S ISO 4017 M6X20 A480	
440	525125-0000	C		4	PIN	
0750B						
030	442984-0000	D		2	FLAP	
050	262906-0000	D		2	ARM	
070	525100-0000	D		1	BLOCKING PIECE	
080	525379-0000	C		1	COMPRESSION SPRING	
085	297496-0000	C		1	LACE	
095	312105-0372	-		2	SCREW M6S ISO 4017 M6X25 A480	
440	262350-0001	C		4	PIN	
0750S						
030	544289-0000	D		2	FLAP	
050	262906-0000	D		2	ARM	
070	544255-0000	D		1	BLOCKING PIECE	
080	268830-0000	C		1	COMPRESSION SPRING	
085	297496-0000	C		1	LACE	
095	312105-0372	-		2	SCREW M6S ISO 4017 M6X25 A480	
440	525125-0000	C		4	PIN	
1000B						
030	443182-0000	D		2	FLAP	
050	262906-0000	D		2	ARM	
070	525100-0000	D		1	BLOCKING PIECE	
080	525379-0000	C		1	COMPRESSION SPRING	
085	297496-0000	C		1	LACE	
095	312105-0372	-		2	SCREW M6S ISO 4017 M6X25 A480	
440	262350-0001	C		4	PIN	
1000S						
030	569111-0000	D		2	FLAP	
050	262906-0000	D		2	ARM	
070	569112-0000	D		1	BLOCKING PIECE	
080	268830-0000	C		1	COMPRESSION SPRING	
085	297496-0000	C		1	LACE	
095	312105-0372	-		2	SCREW M6S ISO 4017 M6X25 A480	
440	262350-0001	C		4	PIN	
1000SQ						
030	574035-0000	D		2	FLAP	
050	262906-0000	D		2	ARM	
070	574036-0000	D		1	BLOCKING PIECE	
080	268830-0000	C		1	COMPRESSION SPRING	
085	297496-0000	C		1	LACE	
095	312105-0372	-		2	SCREW M6S ISO 4017 M6X25 A480	
440	262350-0001	C		4	PIN	
Common Parts						
090	442883-0000	D		2	SPACING WASHER	
100	525335-0000	D		1	HOUSE	
130	262234-0000	D		1	BRACKET	
150	262235-0000	D		2	ARM	
160	262266-0000	D		2	SHAFT	

Machine Type | Group Description | Used-In | Group Number | Page No

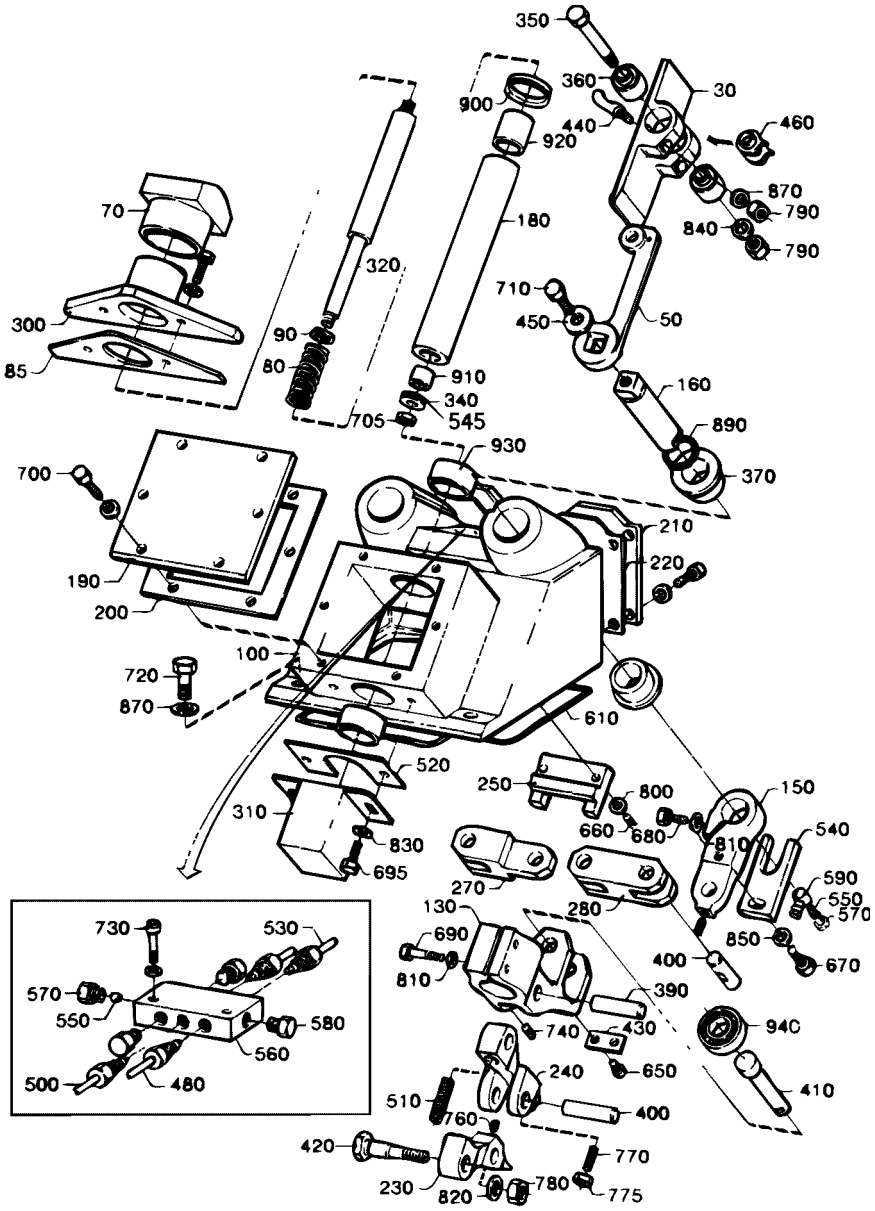
350
360
30
900
920
440
460
870
790
840
790
70
180
320
710
450
50
300
90
80
85
910
340
545
705
160
890
370
930
700
210
220
190
200
100
720
870
610
520
250
800
150
660
680
540
310
830
695
270
280
590
550
570
130
690
810
850
670
400
390
740
430
940
240
650
410
510
760
400
420
770
230
820
780
775
730
530
570
550
580
560
500
480

ECM: 72437 - 19990426
Group number: 285456-0300
Assembly Drawing: 285456-2_1_AA

This list covers pages from 5-138 to 5-141

Pos	Part No	SP	UN	Qty	Description	Page No
Common Parts (Cont'd)						
180	262309-0000	D		1	SLEEVE	
190	262313-0000	-		1	LID	
200	262314-0000	D		1	RUBBER GASKET	
210	262315-0000	-		1	LID	
220	262316-0000	D		1	RUBBER GASKET	
230	262415-0000	D		1	LINK	
240	262610-0000	D		1	LINK	
250	262720-0000	D		1	STEERING	
270	285157-0000	D		1	LINK	
280	285158-0000	D		1	LINK	
300	285448-0000	-		1	PROTECTIVE CASING	
310	442532-0000	-		1	COVER	
320	442882-0000	D		1	SPINDLE	
340	28037-0000	-		1	WASHER	
350	262028-0011	C		2	FITTING BOLT	
360	525367-0000	C		4	SLEEVE	
370	262267-0000	C		4	BUSHING	
390	262322-0000	D		1	SHAFT	
400	262323-0000	C		3	SHAFT	
410	262324-0000	D		1	SHAFT	
420	262325-0000	D		1	SHAFT	
430	262343-0000	D		1	SECURING PLATE	
450	276659-0000	D		2	WASHER	
460	311103-0306	-		4	PARALLEL PIN ISO 2338 5M6X12 A1	
480	285162-0000	D		1	LUBRICATING PIPE	
500	285164-0000	D		2	LUBRICATING PIPE	
510	285970-0000	C		1	COMPRESSION SPRING	
520	442533-0000	C		1	RUBBER GASKET	
530	442560-0000	D		1	LUBR.OIL PIPE	
540	442884-0000	D		2	LOCK PLATE	
545	566016-0000	D		1	WASHER	
550	90028-0001	C		3	CONE 5/32"	
560	90032-0034	-		1	DISTR. BLOCK & DIST.5/16-24UNF X8	
570	90134-0003	C		3	BUSHING	
580	90136-0002	-		3	PLUG 5/16"24	
590	90137-0005	-		2	BANJO CONN. M6, 5/16-24UNF	
600	90153-0043	-	KG	1	ADHESIVE, LOCTITE 495 20G	
605	90157-0022	-	L	1	SEALING COMPOUND	
610	90161-0001	-	MM	900	O-RING MATERIAL 3 MM	
620	90296-0009	-	L	1	SILICONE GREASE TUBE 100 GR.	
650	312105-0362	-		2	SCREW M6S ISO 4017 M6X8 A480	
660	312105-0372	-		2	SCREW M6S ISO 4017 M6X25 A480	
670	312105-0453	-		2	SCREW M6S ISO 4017 M8X25 A480	
680	312105-0457	-		2	SCREW M6S ISO 4014 M8X35 A480	
690	312105-0459	-		2	SCREW M6S ISO 4014 M8X40 A480	
695	312105-0368	-		2	SCREW M6S M6X16 A280	
700	312105-0368	-		14	SCREW M6S M6X16 A280	
705	312105-0447	-		1	SCREW M6S ISO 4017 M8X12 A480	
710	312105-0449	-		2	SCREW M6S ISO 4017 M8X16 A480	
720	312105-0453	-		3	SCREW M6S ISO 4017 M8X25 A480	
730	312115-0293	-		2	SCREW ISO4762 M4X16 A4	
740	312318-0287	-		1	SCREW ISO4029 M4X8 A4	
760	312318-0362	-		3	SCREW ISO4029 M6X8 A4	
770	312318-0372	-		1	SCREW ISO4029 M6X25 A4	
775	312605-0316	-		1	HEXAGON NUT, M6M M6 A280	
780	312605-0322	-		1	HEXAGON NUT, M6M M12 A280	
790	312605-0318	-		6	HEXAGON NUT, M6M M8 A280	
800	315105-0153	-		2	WASHER BRB6,4X12RFR	
810	315105-0165	-		4	WASHER BRB8,4X16RFR	
820	315105-0178	-		1	WASHER BRB13X24RFR	
830	315105-0153	-		20	WASHER BRB6,4X12RFR	
840	315105-0165	-		2	WASHER BRB8,4X16RFR	
850	315115-0165	-		2	WASHER PLAIN, TBRB 8,4/16 H=3	
870	315115-0165	-		7	WASHER PLAIN, TBRB 8,4/16 H=3	
890	315202-0217	C		2	O-RING 24,2X3 MM	
900	315220-0175	C		1	V-RINGS 31X39X10,5 MM V-35S	
910	321120-0122	C		1	BEARING BUSHING W/O FL, 15X17X15 MM	
920	321120-0160	C		1	BEARING BUSHING W/O FL 25/28X30	
930	321120-0183	C		2	BEARING BUSHING W/O FL, 35X39X20 MM	
940	321306-0104	C		1	BALL BEARING, 20X42X12 MM	

Machine Type | Group Description | Used-In | Group Number | Page No

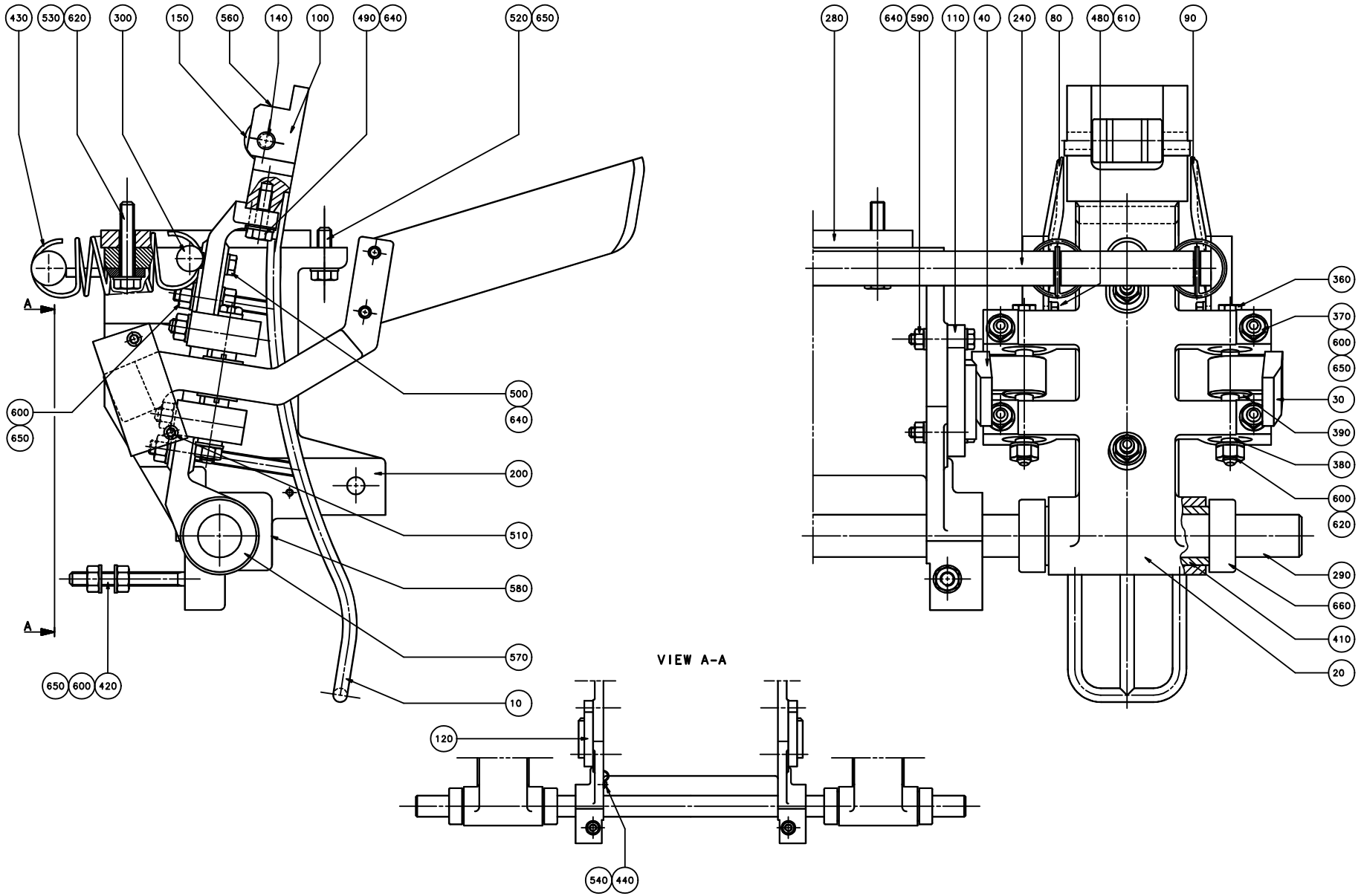
430
530
620
300
150
560
140
100
490
640
520
650
A
600
650
500
640
200
510
580
570
10
650
600
420
280
640
590
110
40
240
80
480
610
90
360
370
600
650
30
390
380
600
620
290
660
410
20
VIEW A-A
120
540
440

ECM: 72392 - 19990617
Group number: 285736-0300
Assembly Drawing: 285736-2_1_AB

This list covers pages from 5-142 to 5-147

Pos	Part No	SP	UN	Qty	Description	Page No
1000SQ NORMFIN (See drawing on page: 5-142)						
010	574039-0000	D		2	RAIL	
020	285723-0000	D		2	ARM	
030	285660-0000	D		2	ARM	
040	285661-0000	D		2	ARM	
080	574040-0000	D		2	SHEET	
090	574041-0000	D		2	SHEET	
100	574042-0000	C		2	PLATE	
140	262427-0008	C		2	SHAFT	
300	297644-0000	D		2	SHAFT	
410	285729-0000	C		2	BUSHING	
600	312605-0318	-		24	HEXAGON NUT, M6M M8 A280	
610	315105-0153	-		8	WASHER BRB6,4X12RFR	
660	315742-0119	-		4	COLLAR, 25/42, H=15	
1000SQ REVFIN (See drawing on page: 5-144)						
010	574039-0000	D		2	RAIL	
020	285723-0000	D		2	ARM	
030	285660-0000	D		2	ARM	
040	285661-0000	D		2	ARM	
080	574040-0000	D		2	SHEET	
090	574041-0000	D		2	SHEET	
100	574042-0000	C		2	PLATE	
140	262427-0008	C		2	SHAFT	
150	B443487-0000	C		2	ROLL	
	90242-0054	-		*2*	*O-RING 20X3 MM*	
160	1255161-0000	D		4	ARM	
170	1255162-0000	D		2	ROCKER ARM	
180	1255163-0000	D		2	ROCKER ARM	
185	1255160-0000	D		4	THREADED INSERT	
190	1143015-0000	C		4	BUSHING	
300	1143016-0000	D		2	AXLE PIN	
410	285729-0000	C		2	BUSHING	
600	312605-0318	-		32	HEXAGON NUT, M6M M8 A280	
605	312902-0318	-		4	NUT HEX. LEFT THREAD, M8 A280	
610	315105-0153	-		12	WASHER BRB6,4X12RFR	
615	1143223-0000	D		4	WASHER	
616	315105-0146	-		4	BRICKA BRB5,3X10RFR	
617	312105-0323	-		4	SKRUV M6S ISO 4017 M5X8 A480	
660	315742-0119	-		4	COLLAR, 25/42, H=15	
670	312105-0370	-		4	SCREW M6S ISO 4017 M6X20 A480	
680	312105-0362	-		4	SCREW M6S ISO 4017 M6X8 A480	
690	90115-0139	C		8	ROD END, ID=8 MM, M8X1,25	
0355B (See drawing on page: 5-142)						
010	285712-0000	D		2	RAIL	
020	285723-0000	D		2	ARM	
030	285656-0000	D		2	ARM	
040	285657-0000	D		2	ARM	
080	527854-0000	D		2	PLATE RIGHT	
090	527856-0000	D		2	PLATE LEFT	
100	525212-0000	C		2	PLATE	
140	262427-0005	C		2	SHAFT	
150	B443487-0000	C		2	ROLL	
	90242-0054	-		*2*	*O-RING 20X3 MM*	
300	297644-0000	D		2	SHAFT	
410	285729-0000	C		2	BUSHING	
600	312605-0318	-		24	HEXAGON NUT, M6M M8 A280	
610	315105-0153	-		8	WASHER BRB6,4X12RFR	
660	315742-0119	-		4	COLLAR, 25/42, H=15	
0375S (See drawing on page: 5-142)						
010	285724-0002	D		2	RAIL	
020	285723-0000	D		2	ARM	
030	285660-0000	D		2	ARM	
040	285661-0000	D		2	ARM	
080	443027-0000	D		2	SHEET	
090	443028-0000	D		2	SHEET	
100	525234-0002	C		2	PLATE	
140	262427-0002	C		2	SHAFT	
150	B443488-0000	C		2	ROLL	
	90242-0054	-		*2*	*O-RING 20X3 MM*	
300	297644-0000	D		2	SHAFT	
410	285729-0000	C		2	BUSHING	
600	312605-0318	-		24	HEXAGON NUT, M6M M8 A280	
610	315105-0153	-		8	WASHER BRB6,4X12RFR	
660	315742-0119	-		4	COLLAR, 25/42, H=15	
0500B (See drawing on page: 5-142)						
010	262970-0000	D		2	RAIL	
020	285655-0000	D		2	ARM	
030	285656-0000	D		2	ARM	
040	285657-0000	D		2	ARM	
080	525066-0000	D		2	SHEET	

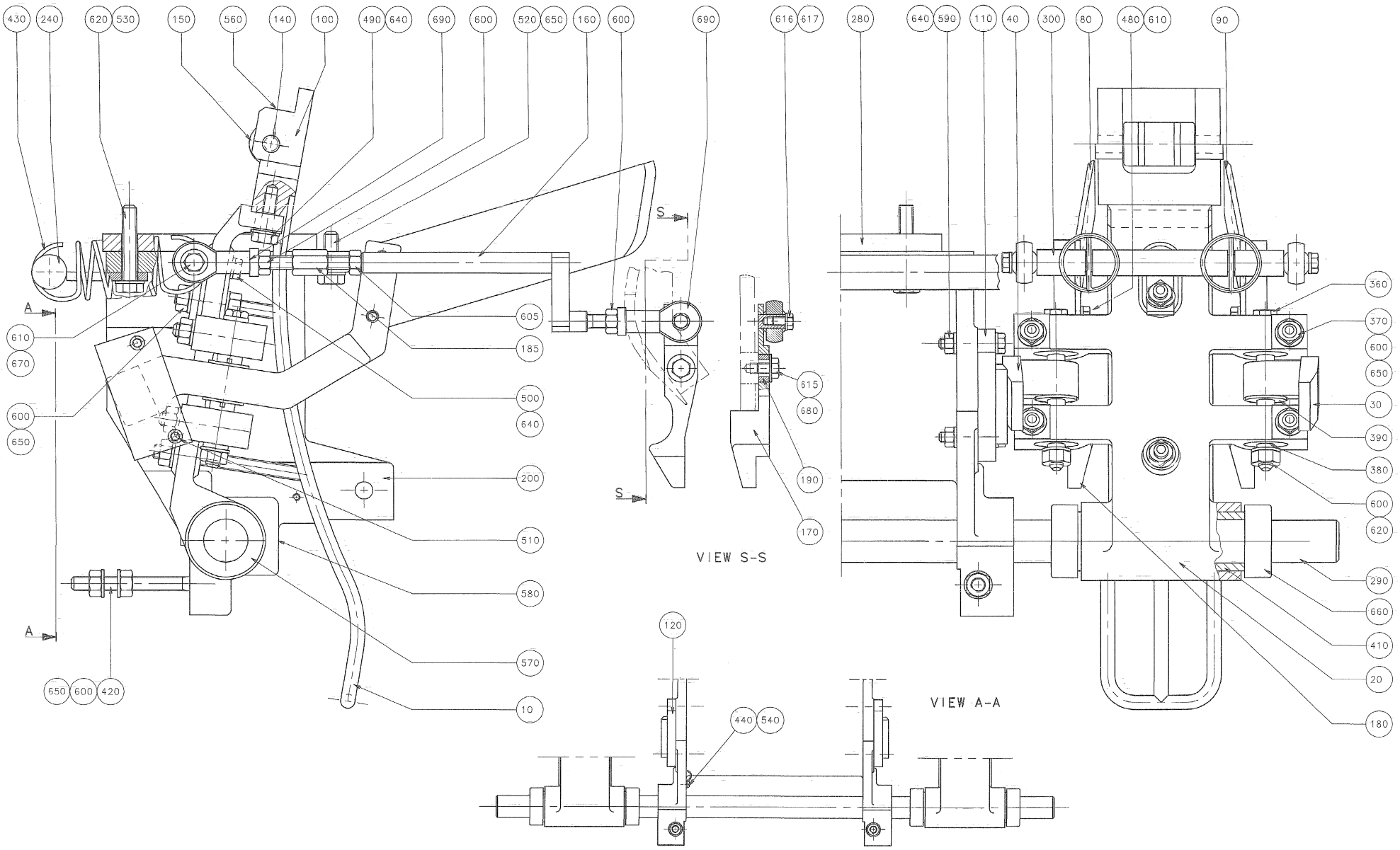
430
240
620
530
150
560
140
100
490
640
690
600
520
650
160
600
690
616
617
280
640
590
110
40
300
80
480
610
90
360
370
600
650
30
390
380
600
620
290
660
410
20
180
605
185
500
640
200
510
580
570
10
610
670
600
650
A
A
650
600
420
S
S
615
680
190
170
VIEW S-S
120
440
540
VIEW A-A

ECM: 72392 - 19990617
Group number: 285736-0300
Assembly Drawing: 285736-3_1_AC

This list covers pages from 5-142 to 5-147

Pos	Part No	SP	UN	Qty	Description	Page No
0500B (Cont'd) (See drawing on page: 5-142)						
090	525067-0000	D		2	SHEET	
100	525429-0000	C		2	PLATE	
140	262427-0001	C		2	SHAFT	
150	B443487-0000	C		2	ROLL	
	90242-0054	-		*2*	*O-RING 20X3 MM*	
300	297644-0000	D		2	SHAFT	
410	285729-0000	C		2	BUSHING	
600	312605-0318	-		24	HEXAGON NUT, M6M M8 A280	
610	315105-0153	-		8	WASHER BRB6,4X12RFR	
660	315742-0119	-		4	COLLAR, 25/42, H=15	
0500S (See drawing on page: 5-142)						
010	285712-0000	D		2	RAIL	
020	285723-0000	D		2	ARM	
030	285656-0000	D		2	ARM	
040	285657-0000	D		2	ARM	
080	443023-0000	D		2	SHEET	
090	443024-0000	D		2	SHEET	
100	525212-0000	C		2	PLATE	
140	262427-0005	C		2	SHAFT	
150	B443487-0000	C		2	ROLL	
	90242-0054	-		*2*	*O-RING 20X3 MM*	
300	297644-0000	D		2	SHAFT	
410	285729-0000	C		2	BUSHING	
600	312605-0318	-		24	HEXAGON NUT, M6M M8 A280	
610	315105-0153	-		8	WASHER BRB6,4X12RFR	
660	315742-0119	-		4	COLLAR, 25/42, H=15	
0750B (See drawing on page: 5-142)						
010	262970-0000	D		2	RAIL	
020	285655-0000	D		2	ARM	
030	285656-0000	D		2	ARM	
040	285657-0000	D		2	ARM	
080	442979-0000	D		2	SHEET	
090	442980-0000	D		2	SHEET	
100	525429-0000	C		2	PLATE	
140	262427-0001	C		2	SHAFT	
150	B443487-0000	C		2	ROLL	
	90242-0054	-		*2*	*O-RING 20X3 MM*	
300	297644-0000	D		2	SHAFT	
410	285729-0000	C		2	BUSHING	
600	312605-0318	-		24	HEXAGON NUT, M6M M8 A280	
610	315105-0153	-		8	WASHER BRB6,4X12RFR	
660	315742-0119	-		4	COLLAR, 25/42, H=15	
0750S (See drawing on page: 5-142)						
010	544290-0000	D		2	RAIL	
020	285723-0000	D		2	ARM	
030	285656-0000	D		2	ARM	
040	285657-0000	D		2	ARM	
080	544288-0000	D		2	SHEET	
090	544280-0000	D		2	SHEET	
100	544291-0000	C		2	PLATE	
140	262427-0006	C		2	SHAFT	
150	B443487-0000	C		2	ROLL	
	90242-0054	-		*2*	*O-RING 20X3 MM*	
300	297644-0000	D		2	SHAFT	
410	285729-0000	C		2	BUSHING	
600	312605-0318	-		24	HEXAGON NUT, M6M M8 A280	
610	315105-0153	-		8	WASHER BRB6,4X12RFR	
660	315742-0119	-		4	COLLAR, 25/42, H=15	
1000B HIFIN (See drawing on page: 5-142)						
010	262970-0000	D		2	RAIL	
020	285655-0000	D		2	ARM	
030	285656-0000	D		2	ARM	
040	285657-0000	D		2	ARM	
080	443021-0000	D		2	SHEET	
090	443022-0000	D		2	SHEET	
100	443348-0000	C		2	PLATE	
140	262427-0001	C		2	SHAFT	
150	B443487-0000	C		2	ROLL	
	90242-0054	-		*2*	*O-RING 20X3 MM*	
300	297644-0000	D		2	SHAFT	
410	285729-0000	C		2	BUSHING	
600	312605-0318	-		24	HEXAGON NUT, M6M M8 A280	
610	315105-0153	-		8	WASHER BRB6,4X12RFR	
660	315742-0119	-		4	COLLAR, 25/42, H=15	
1000B LOFIN (See drawing on page: 5-142)						
010	262970-0000	D		2	RAIL	
020	285655-0000	D		2	ARM	
030	285656-0000	D		2	ARM	

See previous drawings pages: 5-142, 5-144.

ECM: 72392 - 19990617
Group number: 285736-0300
Assembly Drawing: 285736-3_1_AC

This list covers pages from 5-142 to 5-147

Pos	Part No	SP	UN	Qty	Description	Page No
1000B LOFIN (Cont'd) (See drawing on page: 5-142)						
040	285657-0000	D		2	ARM	
080	443021-0000	D		2	SHEET	
090	443022-0000	D		2	SHEET	
100	525211-0000	C		2	PLATE	
140	262427-0001	C		2	SHAFT	
150	B443487-0000	C		2	ROLL	
	90242-0054	-		*2*	*O-RING 20X3 MM*	
300	297644-0000	D		2	SHAFT	
410	285729-0000	C		2	BUSHING	
600	312605-0318	-		24	HEXAGON NUT, M6M M8 A280	
610	315105-0153	-		8	WASHER BRB6,4X12RFR	
660	315742-0119	-		4	COLLAR, 25/42, H=15	
1000S (See drawing on page: 5-142)						
010	544290-0000	D		2	RAIL	
020	285723-0000	D		2	ARM	
030	285656-0000	D		2	ARM	
040	285657-0000	D		2	ARM	
080	569115-0000	D		2	SHEET	
090	569116-0000	D		2	SHEET	
100	569114-0000	C		2	PLATE	
140	262427-0007	C		2	SHAFT	
150	B443487-0000	C		2	ROLL	
	90242-0054	-		*2*	*O-RING 20X3 MM*	
300	297644-0000	D		2	SHAFT	
410	285729-0000	C		2	BUSHING	
600	312605-0318	-		24	HEXAGON NUT, M6M M8 A280	
610	315105-0153	-		8	WASHER BRB6,4X12RFR	
660	315742-0119	-		4	COLLAR, 25/42, H=15	
Common Parts						
110	442564-0000	C		1	CURVE	
120	442565-0000	C		1	CURVE	
200	262924-0000	-		1	CANTILEVER	
240	297643-0000	-		1	BRACKET	
280	285444-0000	-		1	SPACER	
290	285664-0000	D		1	SHAFT	
360	262028-0002	C		4	FITTING BOLT	
370	262179-0001	C		8	PIN	
380	262183-0000	C		8	BUSHING	
390	276664-0000	C		8	WASHER	
420	443313-0000	-		2	STUD SCREW	
430	297567-0000	C		4	TENSION SPRING	
440	90165-0057	-		1	PIPE CLIP FOR TUBE D=6 MM	
480	312105-0366	-		8	SCREW M6S M6X12 A280	
490	312105-0372	-		4	SCREW M6S ISO 4017 M6X25 A480	
500	312105-0374	-		2	SCREW M6S ISO 4014 M6X30 A480	
510	312105-0376	-		4	SCREW M6S ISO 4014 M6X35 A480	
520	312105-0453	-		2	SCREW M6S ISO 4017 M8X25 A480	
530	312105-0460	-		2	SCREW M6S ISO 4014 M8X45 A480	
540	312125-0291	-		1	SLOTTED CHEESE HEAD SCREW MCS 4X12 SS	
560	312318-0370	-		2	SCREW ISO4029 M6X20 A4	
570	312318-0443	-		4	SCREW ISO4029 M8X8 A4	
580	312318-0449	-		2	SCREW ISO4029 M8X16 A4	
590	312605-0316	-		4	HEXAGON NUT, M6M M6 A280	
620	315105-0165	-		6	WASHER BRB8,4X16RFR	
640	315115-0153	-		14	WASHER PLAIN, TBRB 6,4/12 H=3	
650	315115-0165	-		22	WASHER PLAIN, TBRB 8,4/16 H=3	
675	342732-0102	-		2	ELBOW PIPE JOINT, EXT.THREAD, D=6MM-G1/8	
685	312155-0368	-		2	SCREW EN 10642 MF6S M6X16 A480	

Machine Type | Group Description | Used-In | Group Number | Page No

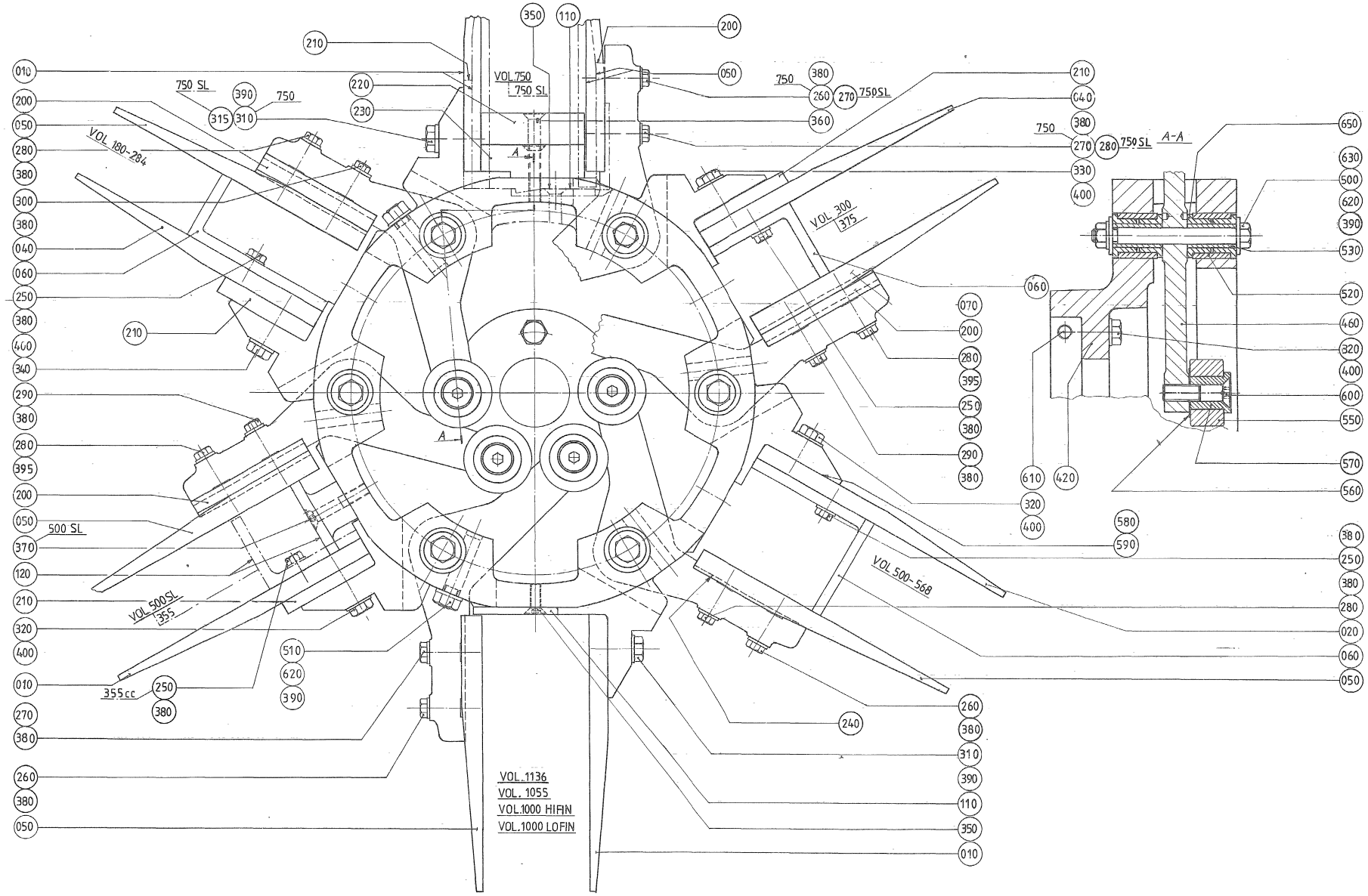
VOL.750
750 SL
750 SL
750
750
750SL
750
750SL
A-A
VOL 180-284
VOL 300
375
500 SL
VOL 500SL
355
355cc
VOL 500-568
VOL.1136
VOL. 1055
VOL.1000 HIFIN
VOL.1000 LOFIN

ECM: 72353 - 19990525
Group number: 297681-0400
Assembly Drawing: 297681-2_1_AA

This list covers pages from 5-148 to 5-153

Pos	Part No	SP	UN	Qty	Description	Page No
0355B (See drawing on page: 5-148)						
010	525458-0000	C		6	FLAP	
050	A285310-0002	C		6	FLAP	
120	525371-0000	D		6	BOTTOM	
200	285316-0002	D		6	SPACER PIECE	
210	525461-0000	D		6	SPACER PIECE	
250	312105-0368	-		6	SCREW M6S M6X16 A280	
280	312105-0378	-		6	SCREW M6S ISO 4014 M6X40 A480	
290	312105-0379	-		6	SCREW M6S ISO 4014 M6X45 A480	
320	312105-0457	-		9	SCREW M6S ISO 4014 M8X35 A480	
380	315105-0153	-		12	WASHER BRB6,4X12RFR	
390	315105-0165	-		24	WASHER BRB8,4X16RFR	
395	315115-0153	-		6	WASHER PLAIN, TBRB 6,4/12 H=3	
400	315115-0165	-		9	WASHER PLAIN, TBRB 8,4/16 H=3	
420	525450-0000	D		1	HUB	
460	565967-0000	C		6	ARM	
510	262179-0001	C		12	PIN	
520	525329-0000	C		12	SLEEVE	
610	312109-0459	-		2	SCREW M6S ISO 4017 M8X40 A480	
620	312605-0318	-		18	HEXAGON NUT, M6M M8 A280	
650	321111-0185	C		24	FLANGE BUSHING, 14X20X14 MM	
0375S (See drawing on page: 5-148)						
040	525430-0000	C		6	FLAP	
060	525372-0000	D		6	BOTTOM	
070	297646-0000	C		6	FLAP	
200	285316-0002	D		6	SPACER PIECE	
210	525461-0000	D		6	SPACER PIECE	
250	312105-0368	-		12	SCREW M6S M6X16 A280	
280	312105-0378	-		6	SCREW M6S ISO 4014 M6X40 A480	
290	312105-0379	-		6	SCREW M6S ISO 4014 M6X45 A480	
320	312105-0457	-		3	SCREW M6S ISO 4014 M8X35 A480	
330	312105-0459	-		6	SCREW M6S ISO 4014 M8X40 A480	
380	315105-0153	-		18	WASHER BRB6,4X12RFR	
390	315105-0165	-		24	WASHER BRB8,4X16RFR	
395	315115-0153	-		6	WASHER PLAIN, TBRB 6,4/12 H=3	
400	315115-0165	-		9	WASHER PLAIN, TBRB 8,4/16 H=3	
420	525450-0000	D		1	HUB	
460	565967-0000	C		6	ARM	
510	262179-0001	C		12	PIN	
520	525329-0000	C		12	SLEEVE	
610	312109-0459	-		2	SCREW M6S ISO 4017 M8X40 A480	
620	312605-0318	-		18	HEXAGON NUT, M6M M8 A280	
650	321111-0185	C		24	FLANGE BUSHING, 14X20X14 MM	
0500B (See drawing on page: 5-148)						
020	525455-0000	C		6	FLAP	
050	A285310-0001	C		6	FLAP	
060	525369-0000	D		6	BOTTOM	
240	442981-0000	D		6	SHIM	
250	312105-0368	-		6	SCREW M6S M6X16 A280	
260	312105-0374	-		6	SCREW M6S ISO 4014 M6X30 A480	
280	312105-0378	-		6	SCREW M6S ISO 4014 M6X40 A480	
320	312105-0457	-		9	SCREW M6S ISO 4014 M8X35 A480	
380	315105-0153	-		18	WASHER BRB6,4X12RFR	
390	315105-0165	-		24	WASHER BRB8,4X16RFR	
400	315115-0165	-		9	WASHER PLAIN, TBRB 8,4/16 H=3	
420	525450-0000	D		1	HUB	
460	565967-0000	C		6	ARM	
510	262179-0001	C		12	PIN	
520	525329-0000	C		12	SLEEVE	
610	312109-0459	-		2	SCREW M6S ISO 4017 M8X40 A480	
620	312605-0318	-		18	HEXAGON NUT, M6M M8 A280	
650	321111-0185	C		24	FLANGE BUSHING, 14X20X14 MM	
0500S (See drawing on page: 5-148)						
010	525456-0000	C		6	FLAP	
050	A285310-0002	C		6	FLAP	
120	525370-0000	D		6	BOTTOM	
200	285316-0002	D		6	SPACER PIECE	
210	525461-0000	D		6	SPACER PIECE	
280	312105-0378	-		6	SCREW M6S ISO 4014 M6X40 A480	
290	312105-0379	-		6	SCREW M6S ISO 4014 M6X45 A480	
320	312105-0457	-		9	SCREW M6S ISO 4014 M8X35 A480	
370	312155-0378	-		6	SCREW EN 10642 MF6S M6X40 A480	
380	315105-0153	-		12	WASHER BRB6,4X12RFR	
390	315105-0165	-		24	WASHER BRB8,4X16RFR	
395	315115-0153	-		6	WASHER PLAIN, TBRB 6,4/12 H=3	
400	315115-0165	-		9	WASHER PLAIN, TBRB 8,4/16 H=3	
420	525450-0000	D		1	HUB	
460	565967-0000	C		6	ARM	
510	262179-0001	C		12	PIN	
520	525329-0000	C		12	SLEEVE	
610	312109-0459	-		2	SCREW M6S ISO 4017 M8X40 A480	

Machine Type | Group Description | Used-In | Group Number | Page No

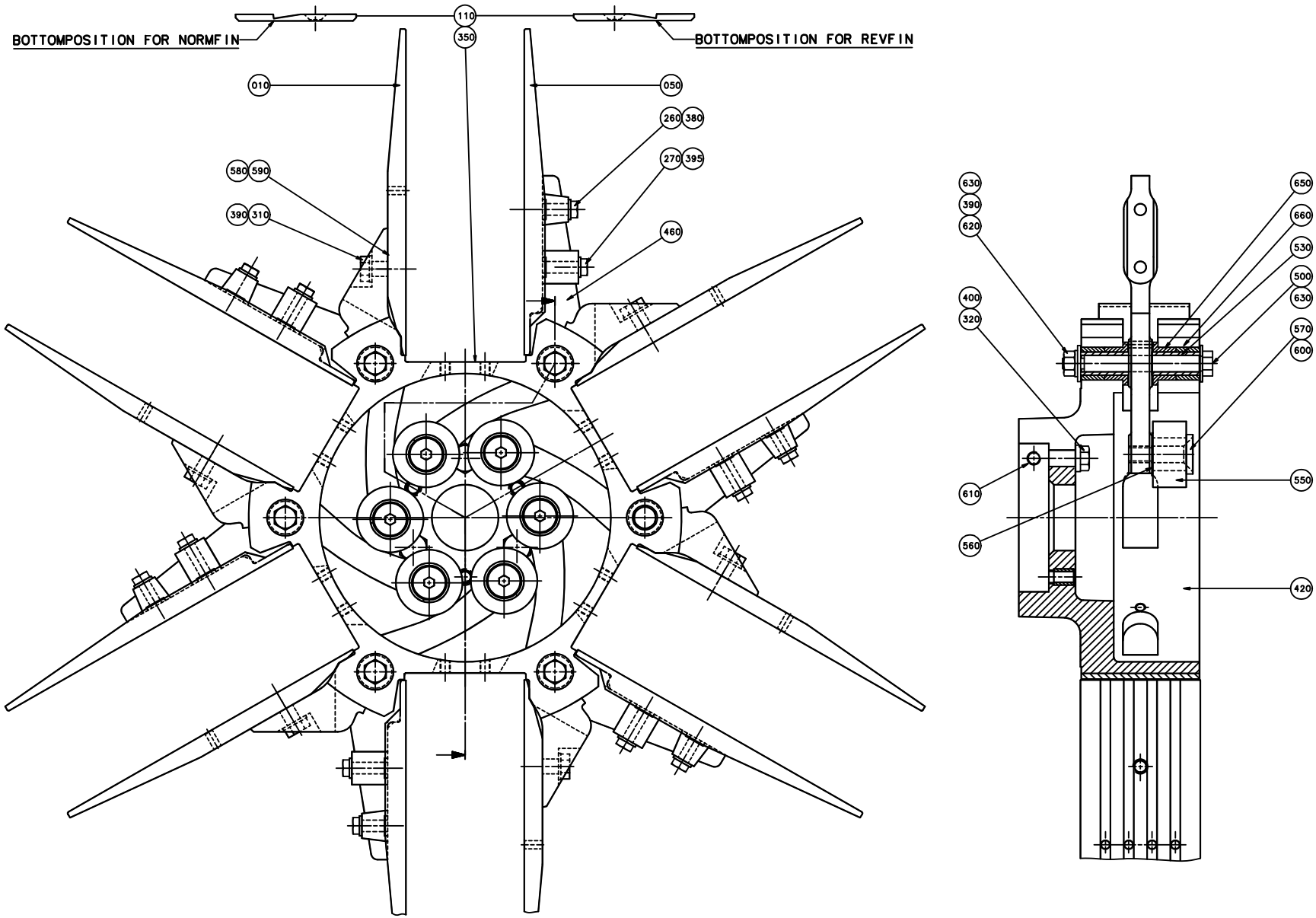
BOTTOMPOSITION FOR NORMFIN
BOTTOMPOSITION FOR REVFIN
110
350
010
050
260
380
270
395
580
590
390
310
460
630
390
620
400
320
610
560
650
660
530
500
630
570
600
550
420

ECM: 72353 - 19990525
Group number: 297681-0400
Assembly Drawing: 297681-3_1_AA

This list covers pages from 5-148 to 5-153

Pos	Part No	SP	UN	Qty	Description	Page No
0500S (Cont'd) (See drawing on page: 5-148)						
620	312605-0318	-		18	HEXAGON NUT, M6M M8 A280	
650	321111-0185	C		24	FLANGE BUSHING, 14X20X14 MM	
0750B (See drawing on page: 5-148)						
010	525453-0000	C		6	FLAP	
050	A285310-0001	C		6	FLAP	
220	525264-0000	D		6	BOTTOM	
230	297650-0000	D		6	BOTTOM	
240	442981-0000	D		6	SHIM	
260	312105-0374	-		6	SCREW M6S ISO 4014 M6X30 A480	
270	312105-0376	-		6	SCREW M6S ISO 4014 M6X35 A480	
310	312105-0453	-		6	SCREW M6S ISO 4017 M8X25 A480	
320	312105-0457	-		3	SCREW M6S ISO 4014 M8X35 A480	
360	312155-0376	-		18	SCREW EN 10642 MF6S M6X35 A480	
380	315105-0153	-		12	WASHER BRB6,4X12RFR	
390	315105-0165	-		30	WASHER BRB8,4X16RFR	
400	315115-0165	-		3	WASHER PLAIN, TBRB 8,4/16 H=3	
420	525450-0000	D		1	HUB	
460	565967-0000	C		6	ARM	
510	262179-0001	C		12	PIN	
520	525329-0000	C		12	SLEEVE	
610	312109-0459	-		2	SCREW M6S ISO 4017 M8X40 A480	
620	312605-0318	-		18	HEXAGON NUT, M6M M8 A280	
650	321111-0185	C		24	FLANGE BUSHING, 14X20X14 MM	
0750S (See drawing on page: 5-148)						
010	525454-0000	C		6	FLAP	
050	544252-0000	C		6	FLAP	
110	544254-0000	C		6	PLATE	
200	543697-0000	D		6	SPACER PIECE	
210	525460-0000	D		6	SPACER PIECE	
270	312105-0376	-		6	SCREW M6S ISO 4014 M6X35 A480	
280	312105-0378	-		6	SCREW M6S ISO 4014 M6X40 A480	
315	312105-0455	-		6	SCREW M6S ISO 4017 M8X30 A480	
320	312105-0457	-		3	SCREW M6S ISO 4014 M8X35 A480	
350	312155-0368	-		6	SCREW EN 10642 MF6S M6X16 A480	
380	315105-0153	-		12	WASHER BRB6,4X12RFR	
390	315105-0165	-		30	WASHER BRB8,4X16RFR	
400	315115-0165	-		3	WASHER PLAIN, TBRB 8,4/16 H=3	
420	525448-0000	D		1	HUB	
460	565967-0000	C		6	ARM	
510	262179-0001	C		12	PIN	
520	525329-0000	C		12	SLEEVE	
610	312109-0459	-		2	SCREW M6S ISO 4017 M8X40 A480	
620	312605-0318	-		18	HEXAGON NUT, M6M M8 A280	
650	321111-0185	C		24	FLANGE BUSHING, 14X20X14 MM	
1000B HIFIN (See drawing on page: 5-148)						
010	525453-0000	C		6	FLAP	
050	A285310-0001	C		6	FLAP	
110	525063-0000	C		6	BOTTOM	
260	312105-0374	-		6	SCREW M6S ISO 4014 M6X30 A480	
270	312105-0376	-		6	SCREW M6S ISO 4014 M6X35 A480	
310	312105-0453	-		6	SCREW M6S ISO 4017 M8X25 A480	
320	312105-0457	-		3	SCREW M6S ISO 4014 M8X35 A480	
350	312155-0368	-		6	SCREW EN 10642 MF6S M6X16 A480	
380	315105-0153	-		12	WASHER BRB6,4X12RFR	
390	315105-0165	-		30	WASHER BRB8,4X16RFR	
400	315115-0165	-		3	WASHER PLAIN, TBRB 8,4/16 H=3	
420	525450-0000	D		1	HUB	
460	565967-0000	C		6	ARM	
510	262179-0001	C		12	PIN	
520	525329-0000	C		12	SLEEVE	
610	312109-0459	-		2	SCREW M6S ISO 4017 M8X40 A480	
620	312605-0318	-		18	HEXAGON NUT, M6M M8 A280	
650	321111-0185	C		24	FLANGE BUSHING, 14X20X14 MM	
1000B LOFIN (See drawing on page: 5-148)						
010	525453-0000	C		6	FLAP	
050	A285310-0001	C		6	FLAP	
110	443076-0000	C		6	BOTTOM	
260	312105-0374	-		6	SCREW M6S ISO 4014 M6X30 A480	
270	312105-0376	-		6	SCREW M6S ISO 4014 M6X35 A480	
310	312105-0453	-		6	SCREW M6S ISO 4017 M8X25 A480	
320	312105-0457	-		3	SCREW M6S ISO 4014 M8X35 A480	
350	312155-0368	-		6	SCREW EN 10642 MF6S M6X16 A480	
380	315105-0153	-		12	WASHER BRB6,4X12RFR	
390	315105-0165	-		30	WASHER BRB8,4X16RFR	
400	315115-0165	-		3	WASHER PLAIN, TBRB 8,4/16 H=3	
420	525450-0000	D		1	HUB	
460	565967-0000	C		6	ARM	
510	262179-0001	C		12	PIN	
520	525329-0000	C		12	SLEEVE	

Machine Type Group Description Used-In Group Number Page No

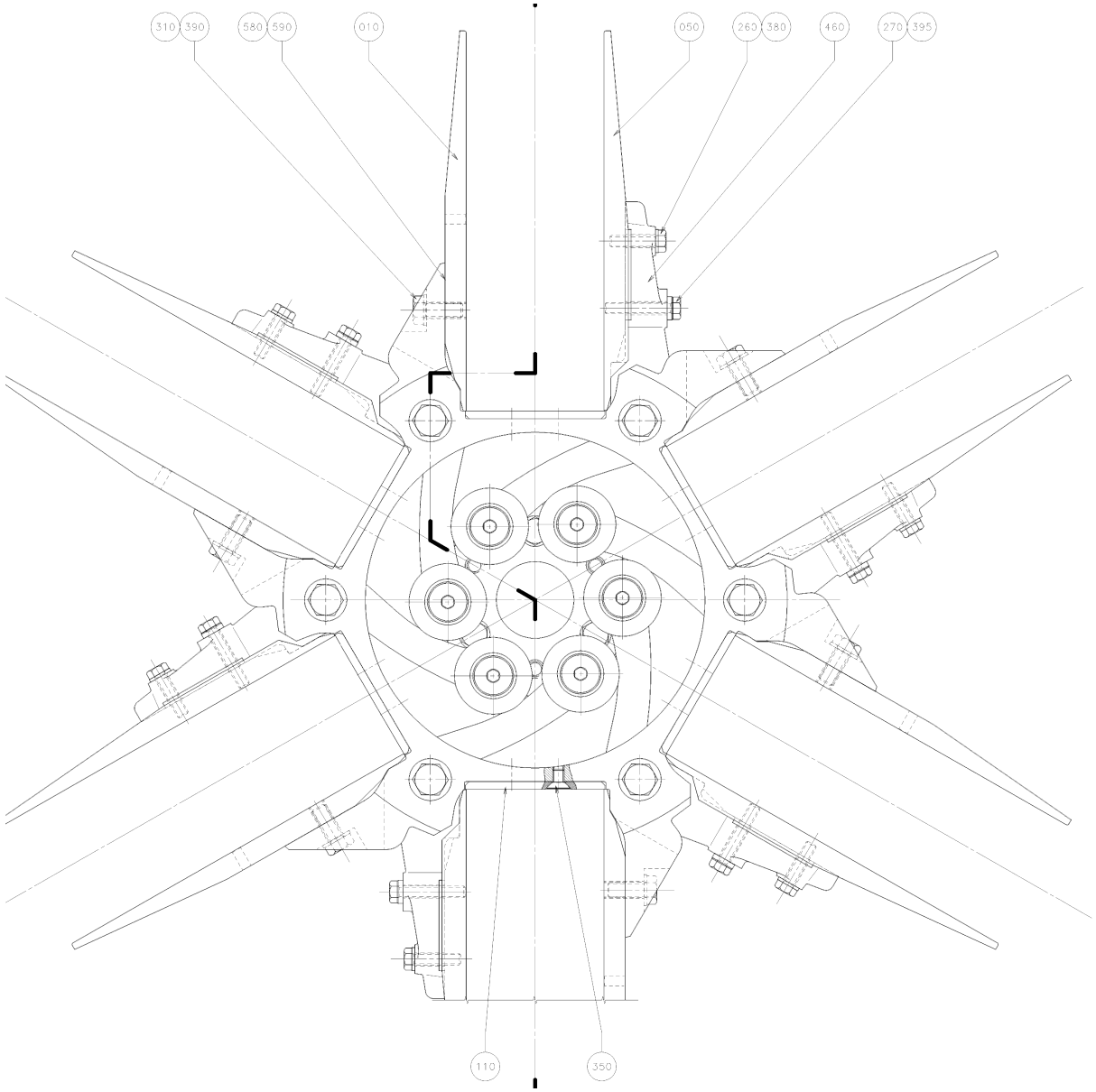
310
390
580
590
010
050
260
380
460
270
395
110
350

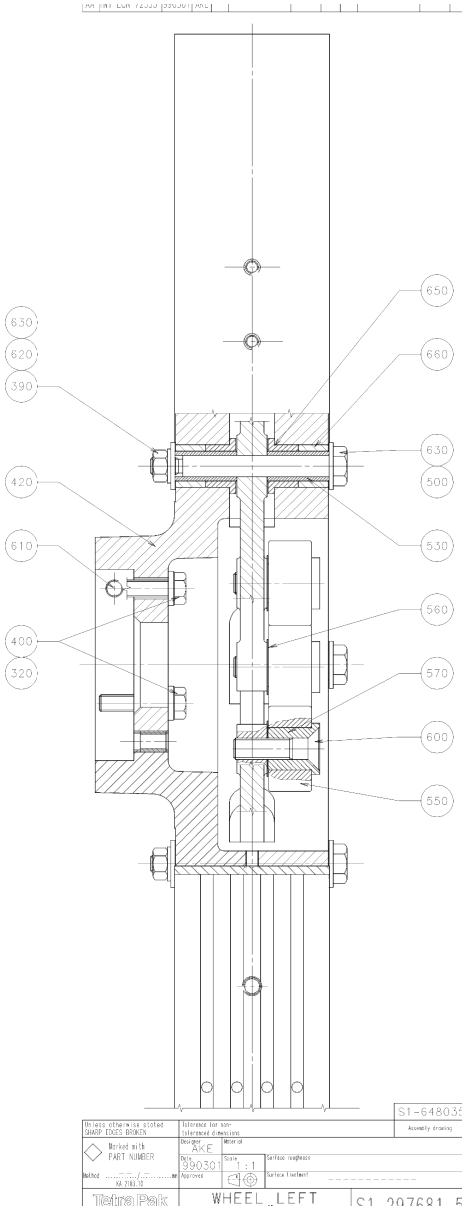
650
660
630
500
530
560
570
600
550
630
620
390
420
610
400
320
WHEEL LEFT

ECM: 72353 - 19990525
Group number: 297681-0400
Assembly Drawing: 297681-5_1_AA

This list covers pages from 5-148 to 5-153

Pos	Part No	SP	UN	Qty	Description	Page No
1000B LOFIN (Cont'd) (See drawing on page: 5-148)						
610	312109-0459	-		2	SCREW M6S ISO 4017 M8X40 A480	
620	312605-0318	-		18	HEXAGON NUT, M6M M8 A280	
650	321111-0185	C		24	FLANGE BUSHING, 14X20X14 MM	
1000S (See drawing on page: 5-148)						
010	569117-0000	C		6	FLAP	
050	569118-0000	C		6	FLAP	
110	569119-0000	C		6	BOTTOM	
270	312105-0376	-		6	SCREW M6S ISO 4014 M6X35 A480	
280	312105-0378	-		6	SCREW M6S ISO 4014 M6X40 A480	
310	312105-0453	-		6	SCREW M6S ISO 4017 M8X25 A480	
350	312155-0368	-		6	SCREW EN 10642 MF6S M6X16 A480	
390	315105-0165	-		30	WASHER BRB8,4X16RFR	
395	315115-0153	-		12	WASHER PLAIN, TBRB 6,4/12 H=3	
420	525446-0000	D		1	HUB	
460	565967-0000	C		6	ARM	
510	262179-0001	C		12	PIN	
520	525329-0000	C		12	SLEEVE	
610	312109-0459	-		2	SCREW M6S ISO 4017 M8X40 A480	
620	312605-0318	-		18	HEXAGON NUT, M6M M8 A280	
650	321111-0185	C		24	FLANGE BUSHING, 14X20X14 MM	
1000SQ NORMFIN (See drawing on page: 5-150)						
010	574029-0000	C		6	FLAP	
050	574030-0000	C		6	FLAP	
110	574031-0000	C		6	BOTTOM	
260	312105-0372	-		6	SCREW M6S ISO 4017 M6X25 A480	
270	312105-0376	-		6	SCREW M6S ISO 4014 M6X35 A480	
310	312105-0451	-		6	SCREW M6S ISO 4017 M8X20 A480	
320	312105-0457	-		3	SCREW M6S ISO 4014 M8X35 A480	
350	312155-0364	-		6	SCREW EN 10642 MF6S M6X10 A480	
380	315105-0153	-		6	WASHER BRB6,4X12RFR	
390	315105-0165	-		12	WASHER BRB8,4X16RFR	
395	315115-0153	-		6	WASHER PLAIN, TBRB 6,4/12 H=3	
400	315115-0165	-		3	WASHER PLAIN, TBRB 8,4/16 H=3	
420	574026-0000	D		1	HUB	
460	574028-0000	C		6	ARM	
610	312109-0459	-		2	SCREW M6S ISO 4017 M8X40 A480	
620	312605-0318	-		6	HEXAGON NUT, M6M M8 A280	
650	321111-0185	C		12	FLANGE BUSHING, 14X20X14 MM	
660	90240-0233	C		12	BEAR. BUSH. WITHOUT FL, 14X20X14 MM	

Pos	Part No	SP	UN	Qty	Description	Page No
1000SQ REVFIN (See drawing on page: 5-152)						
010	574029-0000	C		6	FLAP	
050	574030-0000	C		6	FLAP	
260	312105-0372	-		6	SCREW M6S ISO 4017 M6X25 A480	
270	312105-0376	-		6	SCREW M6S ISO 4014 M6X35 A480	
310	312105-0451	-		6	SCREW M6S ISO 4017 M8X20 A480	
320	312105-0457	-		3	SCREW M6S ISO 4014 M8X35 A480	
350	312155-0364	-		6	SCREW EN 10642 MF6S M6X10 A480	
380	315105-0153	-		6	WASHER BRB6,4X12RFR	
390	315105-0165	-		12	WASHER BRB8,4X16RFR	
395	315115-0153	-		6	WASHER PLAIN, TBRB 6,4/12 H=3	
400	315115-0165	-		3	WASHER PLAIN, TBRB 8,4/16 H=3	
420	574026-0000	D		1	HUB	
460	574028-0000	C		6	ARM	
610	312318-0455	-		2	SCREW ISO4029 M8X30 A4	
620	312605-0318	-		6	HEXAGON NUT, M6M M8 A280	
650	321111-0185	C		12	FLANGE BUSHING, 14X20X14 MM	
660	90240-0233	C		12	BEAR. BUSH. WITHOUT FL, 14X20X14 MM	
Common Parts						
110	597608-0000	-		6	BOTTOM	
500	262028-0001	C		6	FITTING BOLT	
530	525330-0000	C		12	SHAFT	
550	285321-0000	C		6	ROLL	
560	285322-0000	C		6	WASHER	
570	442563-0000	C		6	AXLE PIN	
580	442894-0000	-		1	SHIM	
590	442939-0000	-		1	SHIM	
600	312155-0499	-		6	SCREW EN 10642 MF6S M10X40 A480	
630	315105-0173	-		12	WASHER BRB10,5X22RFR	

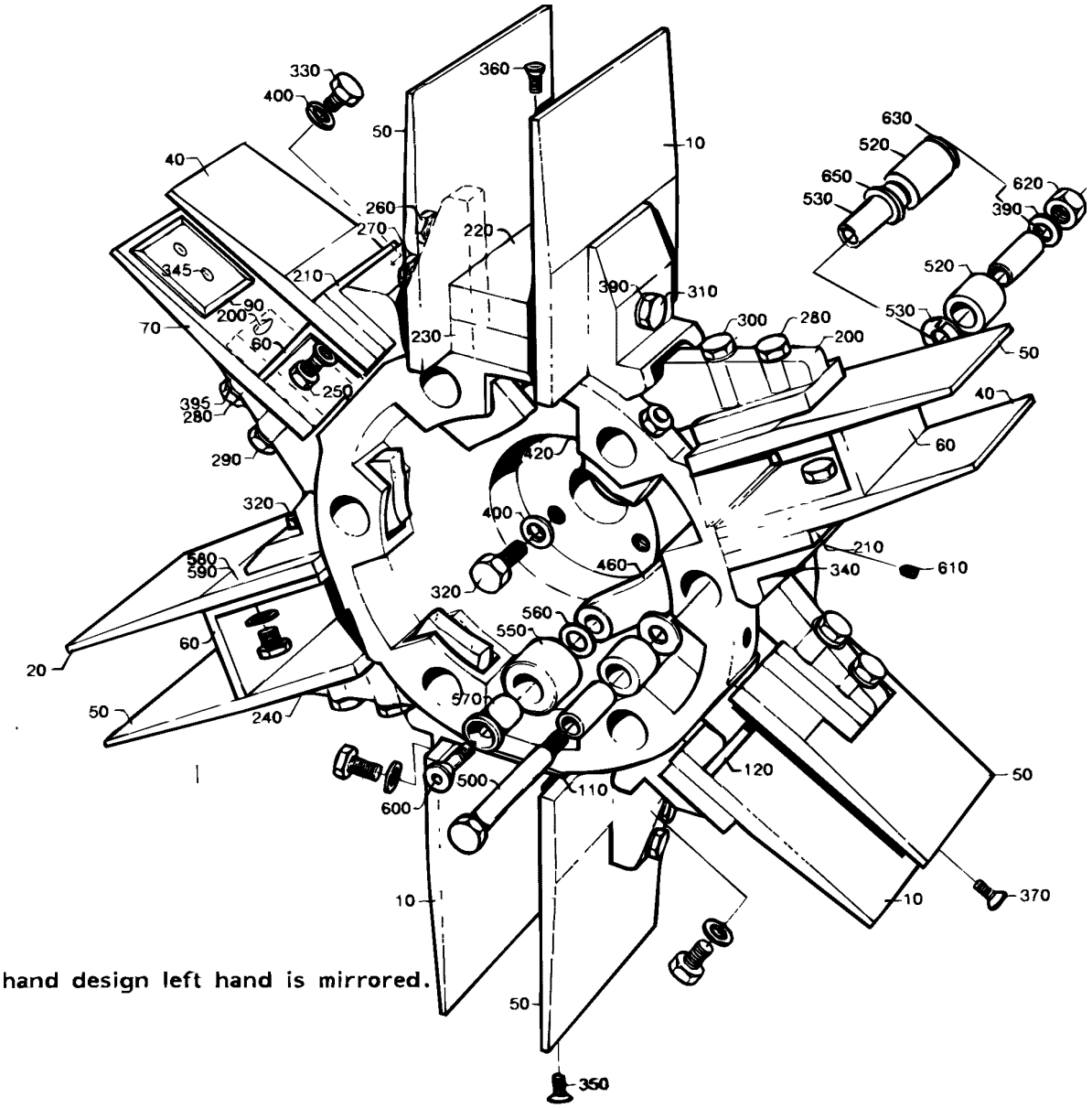

The Illustration shows right hand design left hand is mirrored.

ECM: 72353 - 19990525
Group number: 297682-0400
Assembly Drawing: 297682-2_1_AA

This list covers pages from 5-154 to 5-159

Pos	Part No	SP	UN	Qty	Description	Page No
0355B (See drawing on page: 5-154)						
010	525458-0000	C		6	FLAP	
050	A285310-0002	C		6	FLAP	
120	525371-0000	D		6	BOTTOM	
200	285316-0002	D		6	SPACER PIECE	
210	525461-0000	D		6	SPACER PIECE	
250	312105-0368	-		6	SCREW M6S M6X16 A280	
280	312105-0378	-		6	SCREW M6S ISO 4014 M6X40 A480	
290	312105-0379	-		6	SCREW M6S ISO 4014 M6X45 A480	
320	312105-0457	-		9	SCREW M6S ISO 4014 M8X35 A480	
380	315105-0153	-		12	WASHER BRB6,4X12RFR	
390	315105-0165	-		24	WASHER BRB8,4X16RFR	
395	315115-0153	-		6	WASHER PLAIN, TBRB 6,4/12 H=3	
400	315115-0165	-		9	WASHER PLAIN, TBRB 8,4/16 H=3	
420	525449-0000	D		1	HUB	
460	565967-0000	C		6	ARM	
510	262179-0001	C		12	PIN	
520	525329-0000	C		12	SLEEVE	
610	312109-0459	-		2	SCREW M6S ISO 4017 M8X40 A480	
620	312605-0318	-		18	HEXAGON NUT, M6M M8 A280	
650	321111-0185	C		24	FLANGE BUSHING, 14X20X14 MM	
0375S (See drawing on page: 5-154)						
040	525430-0000	C		6	FLAP	
060	525372-0000	D		6	BOTTOM	
070	297646-0000	C		6	FLAP	
200	285316-0002	D		6	SPACER PIECE	
210	525461-0000	D		6	SPACER PIECE	
250	312105-0368	-		12	SCREW M6S M6X16 A280	
280	312105-0378	-		6	SCREW M6S ISO 4014 M6X40 A480	
290	312105-0379	-		6	SCREW M6S ISO 4014 M6X45 A480	
320	312105-0457	-		3	SCREW M6S ISO 4014 M8X35 A480	
330	312105-0459	-		6	SCREW M6S ISO 4014 M8X40 A480	
380	315105-0153	-		18	WASHER BRB6,4X12RFR	
390	315105-0165	-		24	WASHER BRB8,4X16RFR	
395	315115-0153	-		6	WASHER PLAIN, TBRB 6,4/12 H=3	
400	315115-0165	-		9	WASHER PLAIN, TBRB 8,4/16 H=3	
420	525449-0000	D		1	HUB	
460	565967-0000	C		6	ARM	
510	262179-0001	C		12	PIN	
520	525329-0000	C		12	SLEEVE	
610	312109-0459	-		2	SCREW M6S ISO 4017 M8X40 A480	
620	312605-0318	-		18	HEXAGON NUT, M6M M8 A280	
650	321111-0185	C		24	FLANGE BUSHING, 14X20X14 MM	
0500B (See drawing on page: 5-154)						
020	525455-0000	C		6	FLAP	
050	A285310-0001	C		6	FLAP	
060	525369-0000	D		6	BOTTOM	
240	442981-0000	D		6	SHIM	
250	312105-0368	-		6	SCREW M6S M6X16 A280	
260	312105-0374	-		6	SCREW M6S ISO 4014 M6X30 A480	
280	312105-0378	-		6	SCREW M6S ISO 4014 M6X40 A480	
320	312105-0457	-		9	SCREW M6S ISO 4014 M8X35 A480	
380	315105-0153	-		18	WASHER BRB6,4X12RFR	
390	315105-0165	-		24	WASHER BRB8,4X16RFR	
400	315115-0165	-		9	WASHER PLAIN, TBRB 8,4/16 H=3	
420	525449-0000	D		1	HUB	
460	565967-0000	C		6	ARM	
510	262179-0001	C		12	PIN	
520	525329-0000	C		12	SLEEVE	
610	312109-0459	-		2	SCREW M6S ISO 4017 M8X40 A480	
620	312605-0318	-		18	HEXAGON NUT, M6M M8 A280	
650	321111-0185	C		24	FLANGE BUSHING, 14X20X14 MM	
0500S (See drawing on page: 5-154)						
010	525456-0000	C		6	FLAP	
050	A285310-0002	C		6	FLAP	
120	525370-0000	D		6	BOTTOM	
200	285316-0002	D		6	SPACER PIECE	
210	525461-0000	D		6	SPACER PIECE	
280	312105-0378	-		6	SCREW M6S ISO 4014 M6X40 A480	
290	312105-0379	-		6	SCREW M6S ISO 4014 M6X45 A480	
320	312105-0457	-		9	SCREW M6S ISO 4014 M8X35 A480	
370	312155-0378	-		6	SCREW EN 10642 MF6S M6X40 A480	
380	315105-0153	-		12	WASHER BRB6,4X12RFR	
390	315105-0165	-		24	WASHER BRB8,4X16RFR	
395	315115-0153	-		6	WASHER PLAIN, TBRB 6,4/12 H=3	
400	315115-0165	-		9	WASHER PLAIN, TBRB 8,4/16 H=3	
420	525449-0000	D		1	HUB	
460	565967-0000	C		6	ARM	
510	262179-0001	C		12	PIN	
520	525329-0000	C		12	SLEEVE	
610	312109-0459	-		2	SCREW M6S ISO 4017 M8X40 A480	

Machine Type | Group Description | Used-In | Group Number | Page No

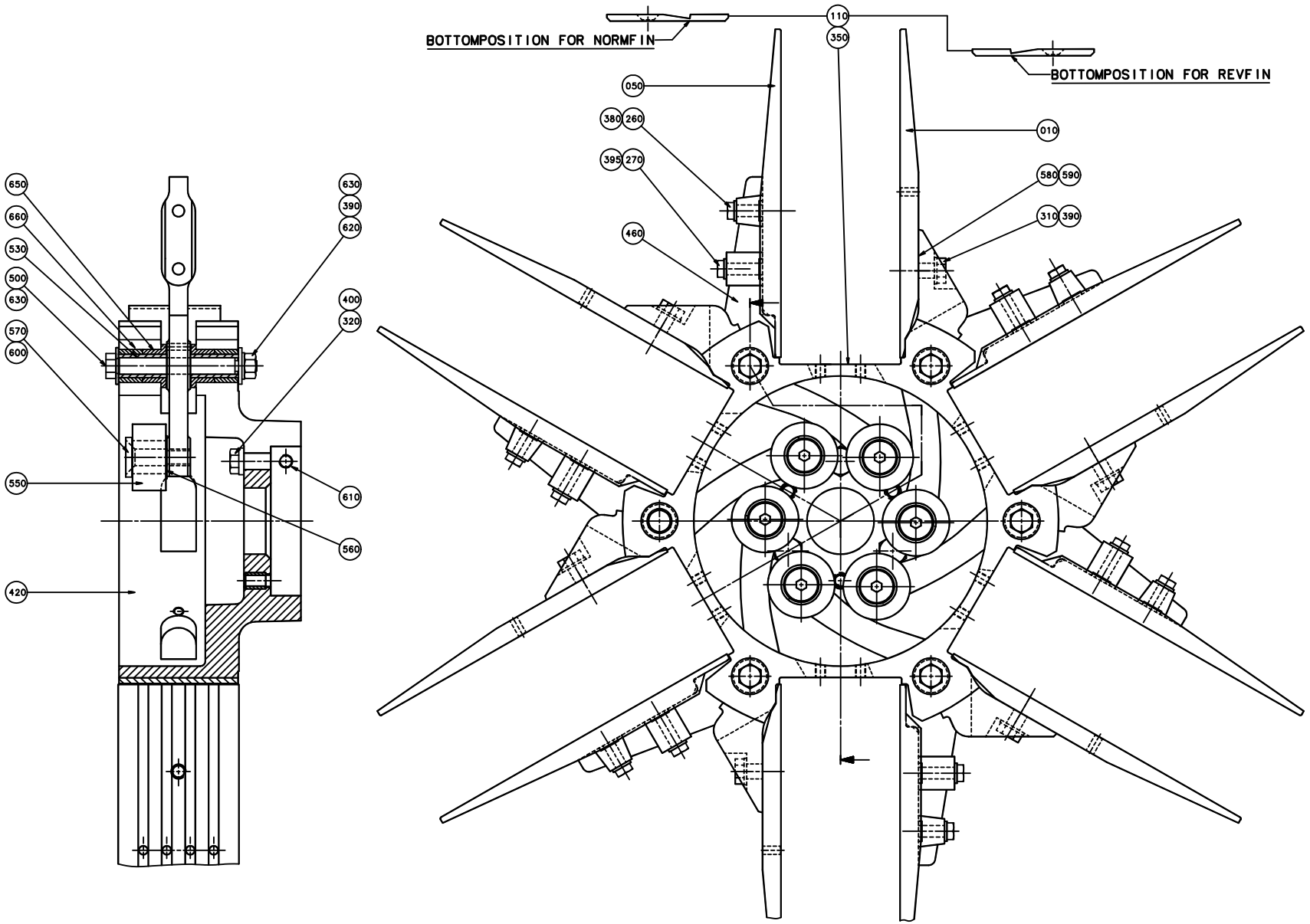
BOTTOMPOSITION FOR NORMFIN
BOTTOMPOSITION FOR REVFIN
110
350
050
380
260
010
395
270
580
590
310
390
460
650
660
530
500
630
570
600
630
390
620
400
320
550
610
560
420

ECM: 72353 - 19990525
Group number: 297682-0400
Assembly Drawing: 297682-3_1_AA

This list covers pages from 5-154 to 5-159

Pos	Part No	SP	UN	Qty	Description	Page No
0500S (Cont'd) (See drawing on page: 5-154)						
620	312605-0318	-		18	HEXAGON NUT, M6M M8 A280	
650	321111-0185	C		24	FLANGE BUSHING, 14X20X14 MM	
0750B (See drawing on page: 5-154)						
010	525453-0000	C		6	FLAP	
050	A285310-0001	C		6	FLAP	
220	525264-0000	D		6	BOTTOM	
230	297650-0000	D		6	BOTTOM	
240	442981-0000	D		6	SHIM	
260	312105-0374	-		6	SCREW M6S ISO 4014 M6X30 A480	
270	312105-0376	-		6	SCREW M6S ISO 4014 M6X35 A480	
310	312105-0453	-		6	SCREW M6S ISO 4017 M8X25 A480	
320	312105-0457	-		3	SCREW M6S ISO 4014 M8X35 A480	
360	312155-0376	-		18	SCREW EN 10642 MF6S M6X35 A480	
380	315105-0153	-		12	WASHER BRB6,4X12RFR	
390	315105-0165	-		30	WASHER BRB8,4X16RFR	
400	315115-0165	-		3	WASHER PLAIN, TBRB 8,4/16 H=3	
420	525449-0000	D		1	HUB	
460	565967-0000	C		6	ARM	
510	262179-0001	C		12	PIN	
520	525329-0000	C		12	SLEEVE	
610	312109-0459	-		2	SCREW M6S ISO 4017 M8X40 A480	
620	312605-0318	-		18	HEXAGON NUT, M6M M8 A280	
650	321111-0185	C		24	FLANGE BUSHING, 14X20X14 MM	
0750S (See drawing on page: 5-154)						
010	525454-0000	C		6	FLAP	
050	544252-0000	C		6	FLAP	
110	544254-0000	C		6	PLATE	
200	543697-0000	D		6	SPACER PIECE	
210	525460-0000	D		6	SPACER PIECE	
270	312105-0376	-		6	SCREW M6S ISO 4014 M6X35 A480	
280	312105-0378	-		6	SCREW M6S ISO 4014 M6X40 A480	
315	312105-0455	-		6	SCREW M6S ISO 4017 M8X30 A480	
320	312105-0457	-		3	SCREW M6S ISO 4014 M8X35 A480	
350	312155-0368	-		6	SCREW EN 10642 MF6S M6X16 A480	
380	315105-0153	-		12	WASHER BRB6,4X12RFR	
390	315105-0165	-		30	WASHER BRB8,4X16RFR	
400	315115-0165	-		3	WASHER PLAIN, TBRB 8,4/16 H=3	
420	525447-0000	D		1	HUB	
460	565967-0000	C		6	ARM	
510	262179-0001	C		12	PIN	
520	525329-0000	C		12	SLEEVE	
610	312109-0459	-		2	SCREW M6S ISO 4017 M8X40 A480	
620	312605-0318	-		18	HEXAGON NUT, M6M M8 A280	
650	321111-0185	C		24	FLANGE BUSHING, 14X20X14 MM	
1000B HIFIN (See drawing on page: 5-154)						
010	525453-0000	C		6	FLAP	
050	A285310-0001	C		6	FLAP	
110	525063-0000	C		6	BOTTOM	
260	312105-0374	-		6	SCREW M6S ISO 4014 M6X30 A480	
270	312105-0376	-		6	SCREW M6S ISO 4014 M6X35 A480	
310	312105-0453	-		6	SCREW M6S ISO 4017 M8X25 A480	
320	312105-0457	-		3	SCREW M6S ISO 4014 M8X35 A480	
350	312155-0368	-		6	SCREW EN 10642 MF6S M6X16 A480	
380	315105-0153	-		12	WASHER BRB6,4X12RFR	
390	315105-0165	-		30	WASHER BRB8,4X16RFR	
400	315115-0165	-		3	WASHER PLAIN, TBRB 8,4/16 H=3	
420	525449-0000	D		1	HUB	
460	565967-0000	C		6	ARM	
510	262179-0001	C		12	PIN	
520	525329-0000	C		12	SLEEVE	
610	312109-0459	-		2	SCREW M6S ISO 4017 M8X40 A480	
620	312605-0318	-		18	HEXAGON NUT, M6M M8 A280	
650	321111-0185	C		24	FLANGE BUSHING, 14X20X14 MM	
1000B LOFIN (See drawing on page: 5-154)						
010	525453-0000	C		6	FLAP	
050	A285310-0001	C		6	FLAP	
110	443076-0000	C		6	BOTTOM	
260	312105-0374	-		6	SCREW M6S ISO 4014 M6X30 A480	
270	312105-0376	-		6	SCREW M6S ISO 4014 M6X35 A480	
310	312105-0453	-		6	SCREW M6S ISO 4017 M8X25 A480	
320	312105-0457	-		3	SCREW M6S ISO 4014 M8X35 A480	
350	312155-0368	-		6	SCREW EN 10642 MF6S M6X16 A480	
380	315105-0153	-		12	WASHER BRB6,4X12RFR	
390	315105-0165	-		30	WASHER BRB8,4X16RFR	
400	315115-0165	-		3	WASHER PLAIN, TBRB 8,4/16 H=3	
420	525449-0000	D		1	HUB	
460	565967-0000	C		6	ARM	
510	262179-0001	C		12	PIN	
520	525329-0000	C		12	SLEEVE	

Machine Type | Group Description | Used-In | Group Number | Page No

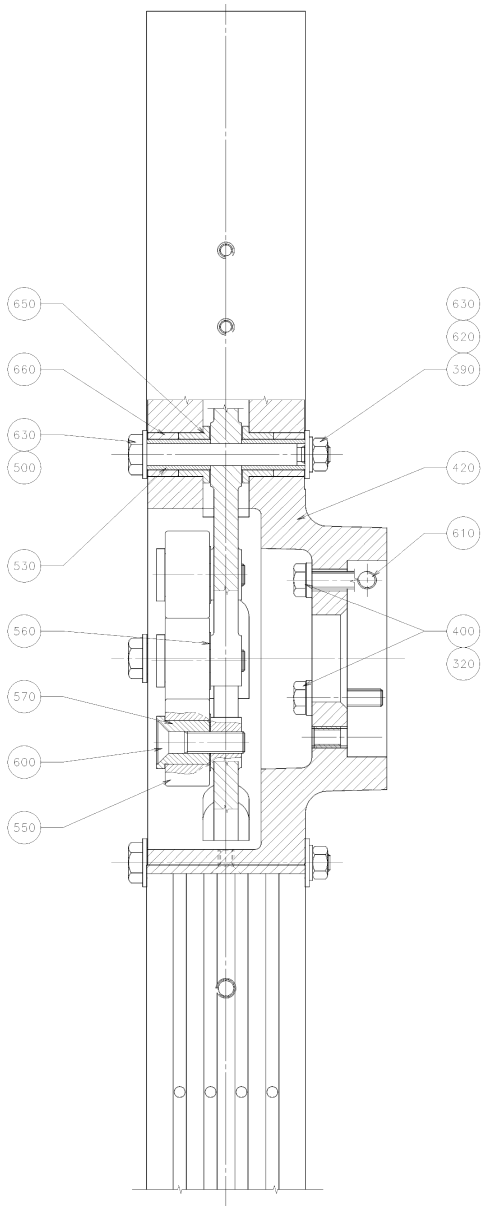
650
660
630
500
530
560
570
600
550
630
620
390
420
610
400
320

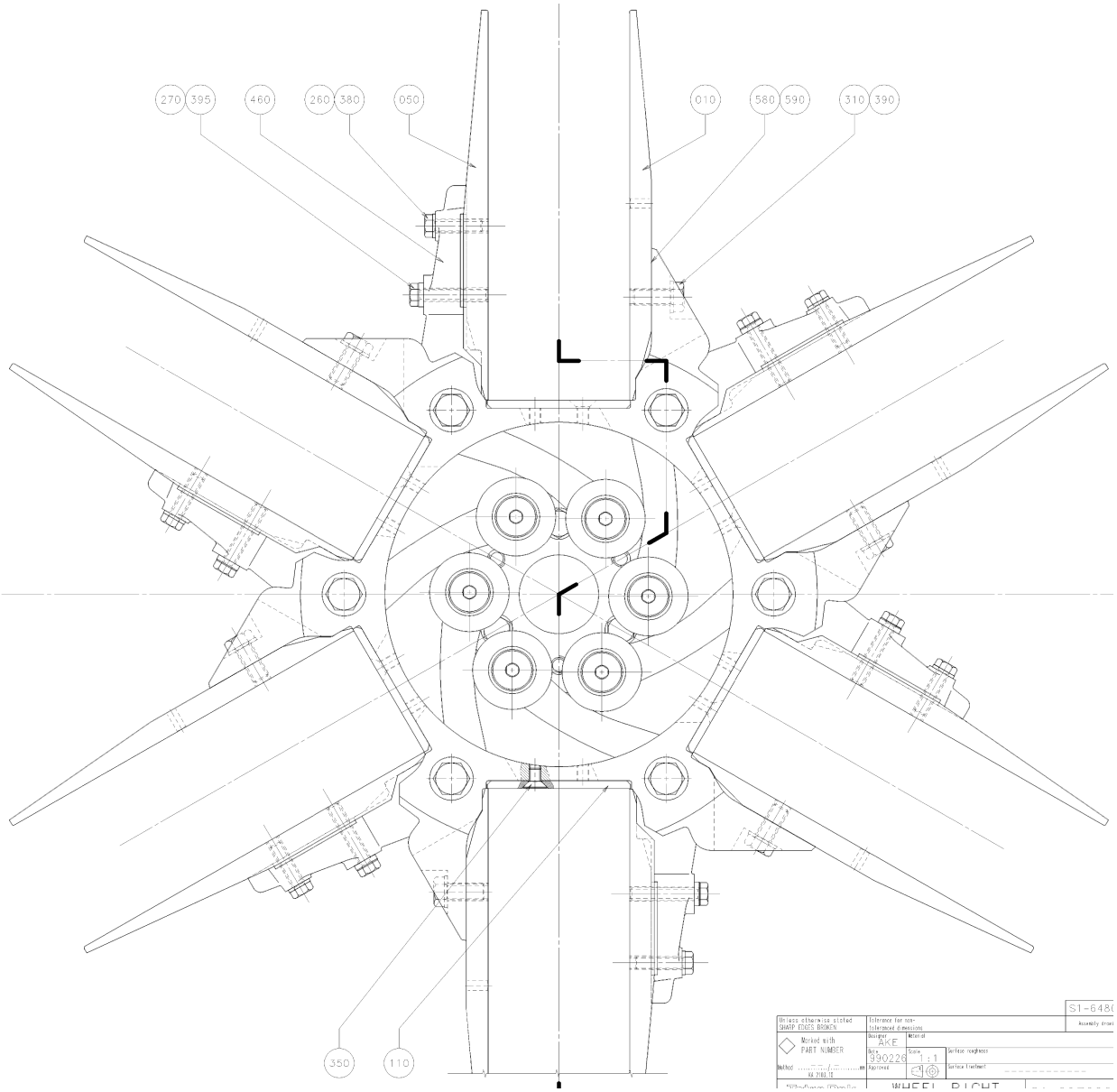
270
395
460
260
380
050
010
580
590
310
390
350
110
Unless otherwise stated SHARP EDGES BROKEN
Marked with PART NUMBER
Tolerance for non-toleranced dimensions
Designer AKE
Material
Scale 1:1
Surface roughness
Surface Treatment
WHEEL RIGHT

ECM: 72353 - 19990525
Group number: 297682-0400
Assembly Drawing: 297682-5_1_AA

This list covers pages from 5-154 to 5-159

Pos	Part No	SP	UN	Qty	Description	Page No
1000B LOFIN (Cont'd) (See drawing on page: 5-154)						
610	312109-0459	-		2	SCREW M6S ISO 4017 M8X40 A480	
620	312605-0318	-		18	HEXAGON NUT, M6M M8 A280	
650	321111-0185	C		24	FLANGE BUSHING, 14X20X14 MM	
1000S (See drawing on page: 5-154)						
010	569117-0000	C		6	FLAP	
050	569118-0000	C		6	FLAP	
110	569119-0000	C		6	BOTTOM	
270	312105-0376	-		6	SCREW M6S ISO 4014 M6X35 A480	
280	312105-0378	-		6	SCREW M6S ISO 4014 M6X40 A480	
310	312105-0453	-		6	SCREW M6S ISO 4017 M8X25 A480	
390	315105-0165	-		30	WASHER BRB8,4X16RFR	
395	315115-0153	-		12	WASHER PLAIN, TBRB 6,4/12 H=3	
420	525445-0000	D		1	HUB	
460	565967-0000	C		6	ARM	
510	262179-0001	C		12	PIN	
520	525329-0000	C		12	SLEEVE	
610	312109-0459	-		2	SCREW M6S ISO 4017 M8X40 A480	
620	312605-0318	-		18	HEXAGON NUT, M6M M8 A280	
650	321111-0185	C		24	FLANGE BUSHING, 14X20X14 MM	
1000SQ NORMFIN (See drawing on page: 5-156)						
010	574029-0000	C		6	FLAP	
050	574030-0000	C		6	FLAP	
110	574031-0000	C		6	BOTTOM	
260	312105-0372	-		6	SCREW M6S ISO 4017 M6X25 A480	
270	312105-0376	-		6	SCREW M6S ISO 4014 M6X35 A480	
310	312105-0451	-		6	SCREW M6S ISO 4017 M8X20 A480	
350	312155-0364	-		6	SCREW EN 10642 MF6S M6X10 A480	
380	315105-0153	-		6	WASHER BRB6,4X12RFR	
390	315105-0165	-		12	WASHER BRB8,4X16RFR	
395	315115-0153	-		6	WASHER PLAIN, TBRB 6,4/12 H=3	
400	315115-0165	-		3	WASHER PLAIN, TBRB 8,4/16 H=3	
420	574027-0000	D		1	HUB	
460	574028-0000	C		6	ARM	
610	312109-0459	-		2	SCREW M6S ISO 4017 M8X40 A480	
620	312605-0318	-		6	HEXAGON NUT, M6M M8 A280	
650	321111-0185	C		12	FLANGE BUSHING, 14X20X14 MM	
660	90240-0233	C		12	BEAR. BUSH. WITHOUT FL, 14X20X14 MM	
1000SQ REVFIN (See drawing on page: 5-158)						
010	574029-0000	C		6	FLAP	
050	574030-0000	C		6	FLAP	
260	312105-0372	-		6	SCREW M6S ISO 4017 M6X25 A480	
270	312105-0376	-		6	SCREW M6S ISO 4014 M6X35 A480	
310	312105-0451	-		6	SCREW M6S ISO 4017 M8X20 A480	
350	312155-0364	-		6	SCREW EN 10642 MF6S M6X10 A480	
380	315105-0153	-		6	WASHER BRB6,4X12RFR	
390	315105-0165	-		12	WASHER BRB8,4X16RFR	
395	315115-0153	-		6	WASHER PLAIN, TBRB 6,4/12 H=3	
400	315115-0165	-		3	WASHER PLAIN, TBRB 8,4/16 H=3	
420	574027-0000	D		1	HUB	
460	574028-0000	C		6	ARM	
610	312318-0455	-		2	SCREW ISO4029 M8X30 A4	
620	312605-0318	-		6	HEXAGON NUT, M6M M8 A280	
650	321111-0185	C		12	FLANGE BUSHING, 14X20X14 MM	
660	90240-0233	C		12	BEAR. BUSH. WITHOUT FL, 14X20X14 MM	
Common Parts						
110	597608-0000	-		6	BOTTOM	
500	262028-0001	C		6	FITTING BOLT	
530	525330-0000	C		12	SHAFT	
550	285321-0000	C		6	ROLL	
560	285322-0000	C		6	WASHER	
570	442563-0000	C		6	AXLE PIN	
580	442894-0000	-		1	SHIM	
590	442939-0000	-		1	SHIM	
600	312155-0499	-		6	SCREW EN 10642 MF6S M10X40 A480	
630	315105-0173	-		12	WASHER BRB10,5X22RFR	

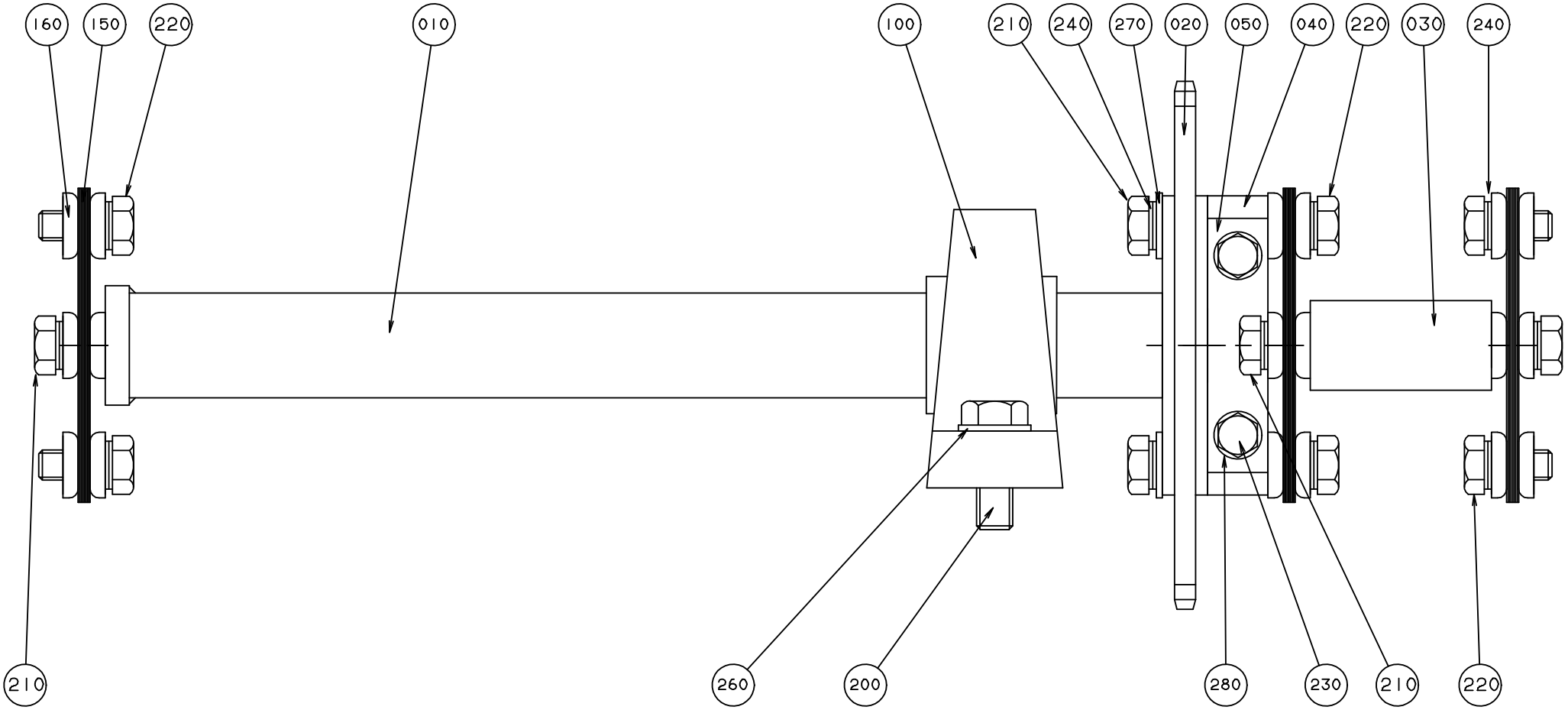
160
150
220
010
100
210
240
270
020
050
040
220
030
240
210
260
200
280
230
210
220

ECM: 139058 - 20030709
Group number: 443173-0100
Assembly Drawing: 443173-1_1_AB

Pos	Part No	SP	UN	Qty	Description	Page No
-						
010	443175-0000	D		1	SHAFT	
020	443177-0000	D		1	SPROCKET	
030	443179-0000	-		1	SPACER	
040	443178-0000	D		1	BRACKET	
050	262275-0003	D		1	CAP	
100	90345-0038	D		1	STANDING BEARING, TYPE SY 35	
150	33261-0000	C		24	SPRING PLATE	
160	31553-0002	C		24	WASHER	
200	312105-0538	-		2	SCREW M6S ISO 4017 M12X35 A480	
210	312105-0495	-		8	SCREW M6S ISO 4017 M10X30 A480	
220	312105-0493	-		6	SCREW M6S ISO 4017 M10X25 A480	
230	90287-0165	-		2	SCREW M6S M8X20 A480 NY-LOCK	
240	90062-0070	-		14	LOCK WASHER NORD-LOCK,10,3/16 H=2,4	
260	315105-0178	-		2	WASHER BRB13X24RFR	
270	315105-0173	-		4	WASHER BRB10,5X22RFR	
280	315105-0165	-		2	WASHER BRB8,4X16RFR	

Pos	Part No	SP	UN	Qty	Description	Page No

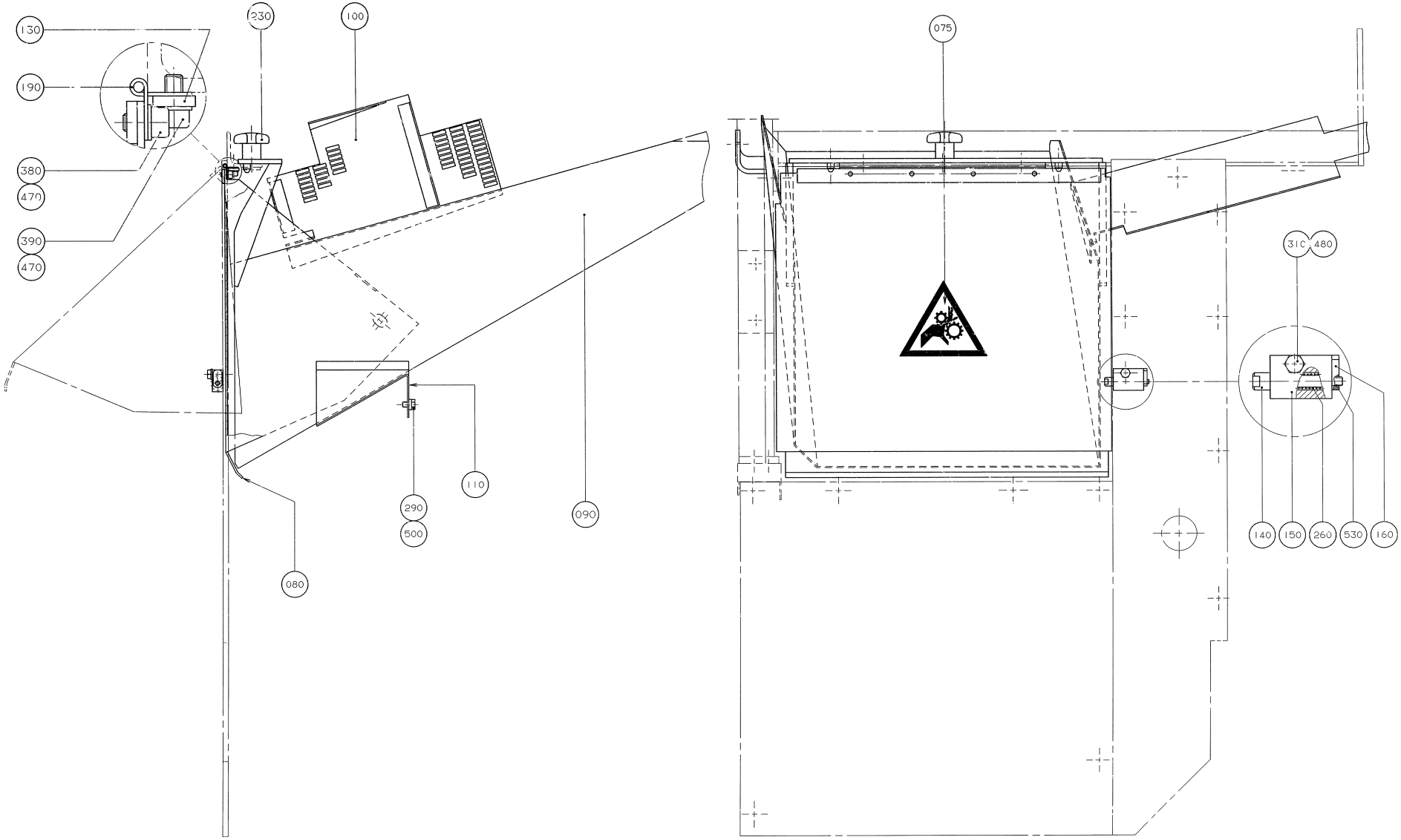
130
190
380
470
390
470
230
100
080
290
500
110
090
075
310
480
140
150
260
530
160

ECM: 72197 - 19990215
Group number: 442537-0500
Assembly Drawing: 442537-5_1_AA

Pos	Part No	SP	UN	Qty	Description	Page No
0375S, 0500B, 0355B, 0500S, 1000S, 0750B, 0750S, 1000B						
090	525409-0000	-		1	WASTE CHUTE	
1000SQ						
090	574124-0000	-		1	WASTE CHUTE	
Common Parts						
075	359705-0002	-		1	WARNING SIGN ISO, ENTAGLEMENT	
080	525380-0000	-		1	HATCH	
100	525423-0000	-		1	COVERING PLATE	
110	525439-0000	-		1	DRIP PLATE	
130	525381-0000	-		1	BRACKET	
140	525382-0000	-		1	SHAFT	
150	525383-0000	-		1	BRACKET	
160	525384-0000	-		1	DOWEL	
190	525394-0000	-		1	HINGE	
230	90051-0025	-		1	KNOB, EXTERNAL THREAD. NO. 8306-0200	
260	90335-0005	C		1	SPRING	
290	312105-0364	-		1	SCREW M6S ISO 4017 M6X10 A480	
310	312105-0372	-		1	SCREW M6S ISO 4017 M6X25 A480	
380	312115-0323	-		4	SCREW ISO4762 M5X8 A4	
390	312115-0325	-		3	SCREW ISO4762 M5X10 A4	
470	315105-0146	-		7	BRICKA BRB5,3X10RFR	
480	315105-0153	-		1	WASHER BRB6,4X12RFR	
500	315115-0153	-		1	WASHER PLAIN, TBRB 6,4/12 H=3	
530	90157-0002	-		1	SEALING COMPOUND, COLLEXIN	

Pos	Part No	SP	UN	Qty	Description	Page No

Tetra Pak

SPC
Spare Parts Catalogue

Total pages in this module: 26

This page is intentionally left blank.

ECM: 73357 - 20000121
Group number: 648009-0900
Assembly Drawing:

Pos	Part No	SP	UN	Qty	Description	Page No
TBA/8 0375S, TBA/8 0500S, TBA/8 0355B, TBA/8 0750S						
330	A284953-0100	-		1	HOSE	**6-5**
340	A292445-0100	-		1	LIFTING UNIT	**6-7**
360	A531345-0200	-		1	PERSONAL PROTECT. EQ H2O2	**6-9**
540	436512-0000	-		2	PIPE	
560	499082-0403	-		1	ADAPTER, TYPE 1	
TBA/8 0500B, TBA/8 1000B, TBA/8 0750B						
330	A284953-0100	-		1	HOSE	**6-5**
340	A292445-0100	-		1	LIFTING UNIT	**6-7**
360	A531345-0200	-		1	PERSONAL PROTECT. EQ H2O2	**6-9**
540	436512-0000	-		2	PIPE	
560	499082-0404	-		1	ADAPTER, TYPE 1	
TBA/8 1000S						
330	A284953-0100	-		1	HOSE	**6-5**
340	A292445-0100	-		1	LIFTING UNIT	**6-7**
360	A531345-0200	-		1	PERSONAL PROTECT. EQ H2O2	**6-9**
540	436512-0000	-		2	PIPE	
560	499082-0407	-		1	ADAPTER, TYPE 1	
TBA/8 1000SQ						
330	A284953-0100	-		1	HOSE	**6-5**
340	A292445-0100	-		1	LIFTING UNIT	**6-7**
360	A531345-0200	-		1	PERSONAL PROTECT. EQ H2O2	**6-9**
540	436512-0000	-		2	PIPE	
560	499082-0404	-		1	ADAPTER, TYPE 1	
610	A559141-0100	-		1	EL. RK "DCS8PLUS FOR TBA/8-1000"	**6-11**
Common Parts						
240	A250610-0200	-		1	TOOL KIT	**6-15**
300	A554171-0300	-		1	PLATFORM ADDITION	**6-19**
370	A551997-0100	-		1	LIFTING UNIT	**6-25**
480	A593634-0200	-		1	DIAGRAM	
490	90243-0133	-		1	CONTAINER	
500	90347-0111	-		4	MACHINE SHOE TFE 1201 SS	
502	90347-0110	-		4	MACHINE SHOE TFE 601 SS	
600	598878-0000	-		1	MACHINE SIGN 2 ADR. EEA	

Pos	Part No	SP	UN	Qty	Description	Page No

Machine Type | Group Description | Used-In | Group Number | Page No

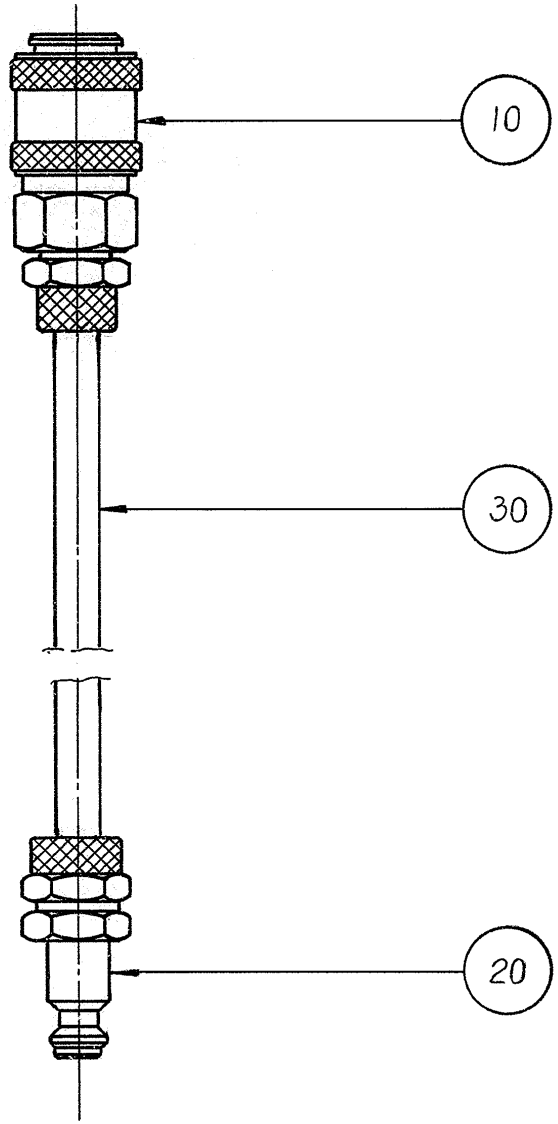
10
30
20

ECM: - -
Group number: 284953-0100
Assembly Drawing: 284953-1_1_AA

Pos	Part No	SP	UN	Qty	Description	Page No
-						
010	90163-0056	-		1	QUICK COUPLING, (F) 5054-6/4	
020	90163-0063	-		1	QUICK COUPLING, (M) 5450-6/4	
030	90166-0124	-	MM	1500	TUBE 6 MM PA,TRANSP.	

Pos	Part No	SP	UN	Qty	Description	Page No

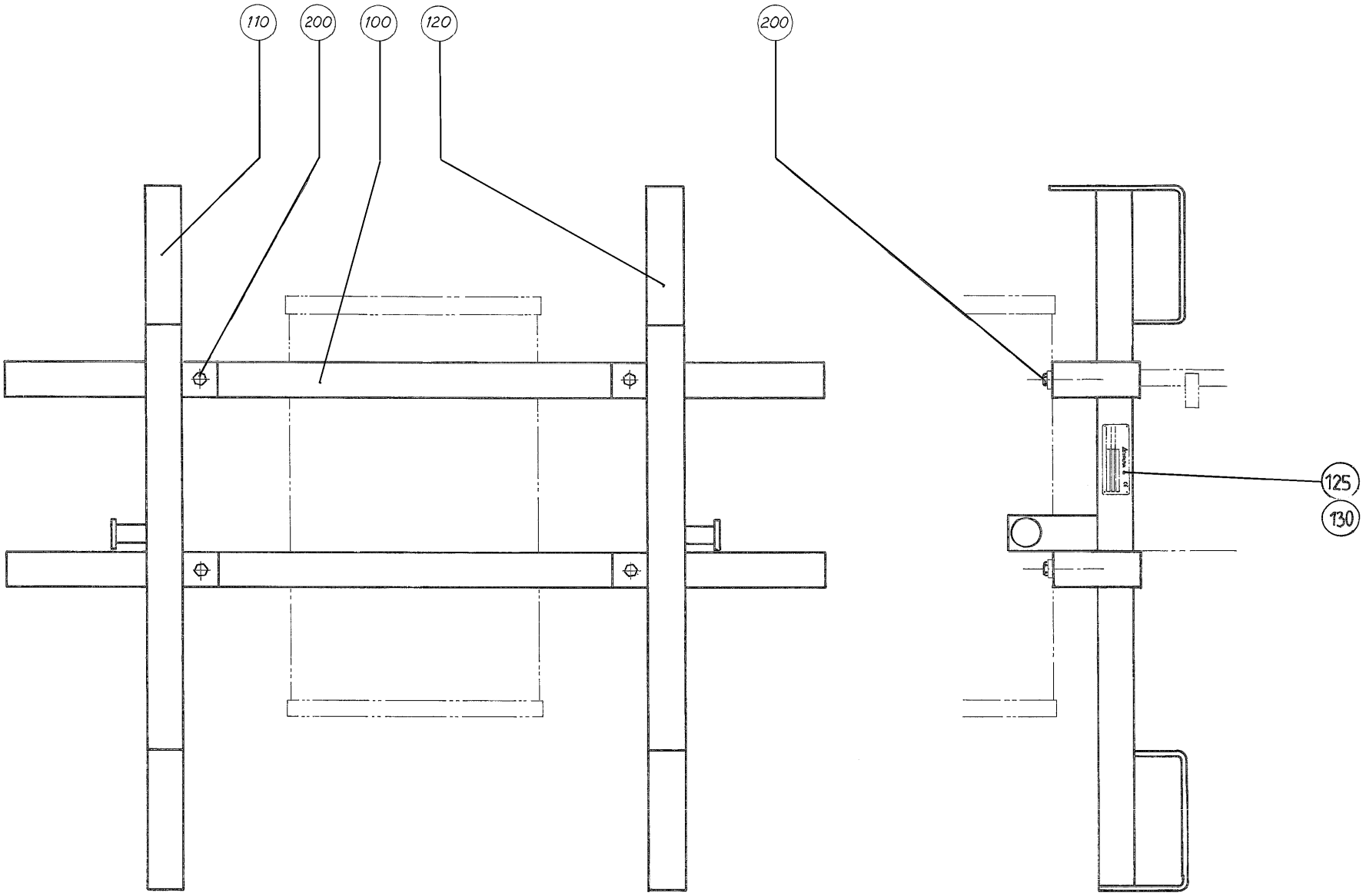
110
200
100
120
200
125
130

ECM: - -
Group number: 292445-0100
Assembly Drawing: 292445-1_1_AA

Pos	Part No	SP	UN	Qty	Description	Page No
-						
100	292313-0000	-		2	BEAM	
110	292314-0000	-		1	BEAM	
120	292315-0000	-		1	BEAM	
125	1143455-0000	-		1	MACHINE SIGN CE	
130	311521-0144	-		4	BLANK RIVET 3,2X10	
200	312101-0491	-		8	SCREW M6S M10X20 FZB	

Pos	Part No	SP	UN	Qty	Description	Page No

This page is intentionally left blank.

ECM: 72190 - 19990628
Group number: 531345-0200
Assembly Drawing:

Pos	Part No	SP	UN	Qty	Description	Page No	Pos	Part No	SP	UN	Qty	Description	Page No
-													
	90303-0011	-		1	PROTECTIVE GOGGLES								
	90303-0012	-		1	PROTECTIVE GLOVES								
	90303-0013	-		1	APRON								

This page is intentionally left blank.

ECM: 71572 - 19980622
Group number: 559141-0100
Assembly Drawing:

Pos	Part No	SP	UN	Qty	Description	Page No
-						
0010	A559142-0100	-		1	ELECTRICAL DOCUMENT	
0020	A559143-0100	-		1	ELECTRIC MATERIALS	**6-13**

Pos	Part No	SP	UN	Qty	Description	Page No

Machine Type | Group Description | Used-In | Group Number | Page No

This page is intentionally left blank.

ECM: 71572 - 19980622
Group number: 559143-0100
Assembly Drawing:

Pos	Part No	SP	UN	Qty	Description	Page No
-						
0010	A48393-0100	-		1	DCS8+, DESIGN CONTROL SYSTEM PLUS	
0020	351172-0102	-	MM	3000	CABLE AWM 1X 0,75 MM2 DARK-BLUE	
0030	353001-0119	-		2	END SLEEVE H 1.0/14 YELLOW	

Pos	Part No	SP	UN	Qty	Description	Page No

Machine Type | Group Description | Used-In | Group Number | Page No

This page is intentionally left blank.

ECM: 126857 - 20030410
Group number: 250610-0200
Assembly Drawing:

Pos	Part No	SP	UN	Qty	Description	Page No
IH						
015	283084-0000	-		1	GUIDE SHAFT	
020	A2594032-0100	-		1	ASSEMBLY TOOL	**6-17**
Common Parts						
040	72947-0000	-		1	HOOK SPANNER	
045	74387-0000	-		1	HOOK SPANNER	
070	76138-0000	-		1	LOCKING LOOP	
075	434841-0000	-		1	GAUGE	
130	318301-0130	-		4	LIFTING EYE BOLT, TYPE, LT, M30	
150	776422-0101	-		2	BRASS WIRESTE	
320	777200-0101	-		1	PIPE WRENCEL	
330	777510-0101	-		1	SCISSORS	

Pos	Part No	SP	UN	Qty	Description	Page No

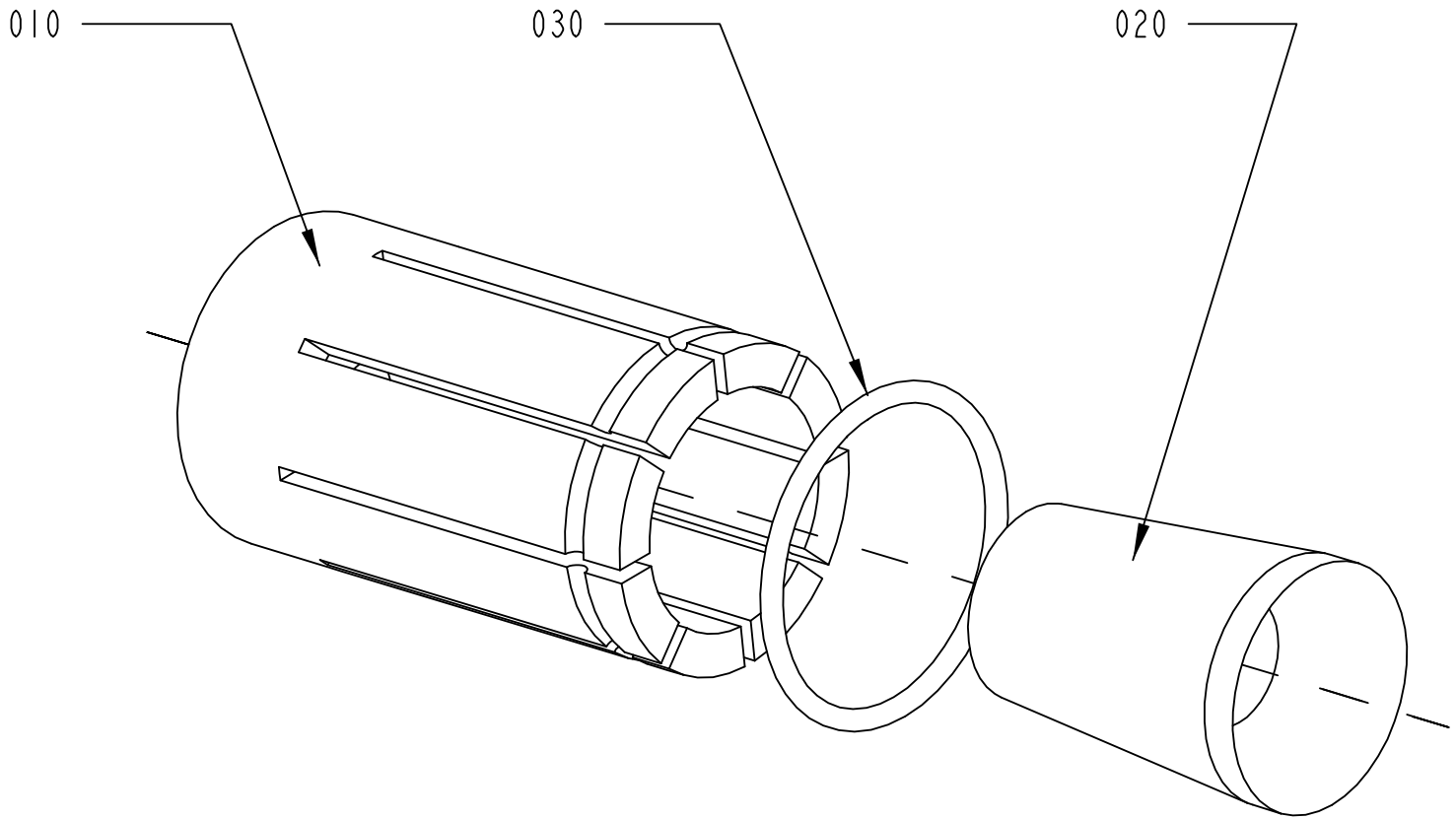

2594032-1
ECM 126850

ECM: 126856 - 20030410
Group number: 2594032-0100
Assembly Drawing: 2594032-1_1_AA

Pos	Part No	SP	UN	Qty	Description	Page No
-						
010	283085-0000	-		1	SLEEVE	
020	245165-0000	-		1	ASSEMBLY CONE	
030	315202-0224	-		1	O-RING 42,2X3 MM	

Pos	Part No	SP	UN	Qty	Description	Page No

This page is intentionally left blank.

ECM: 70726 - 19970304
Group number: 554171-0300
Assembly Drawing:

Pos	Part No	SP	UN	Qty	Description	Page No
PFV11						
F020	A266756-0500	-		1	PLATFORM	**6-21**

Pos	Part No	SP	UN	Qty	Description	Page No

Machine Type | Group Description | Used-In | Group Number | Page No

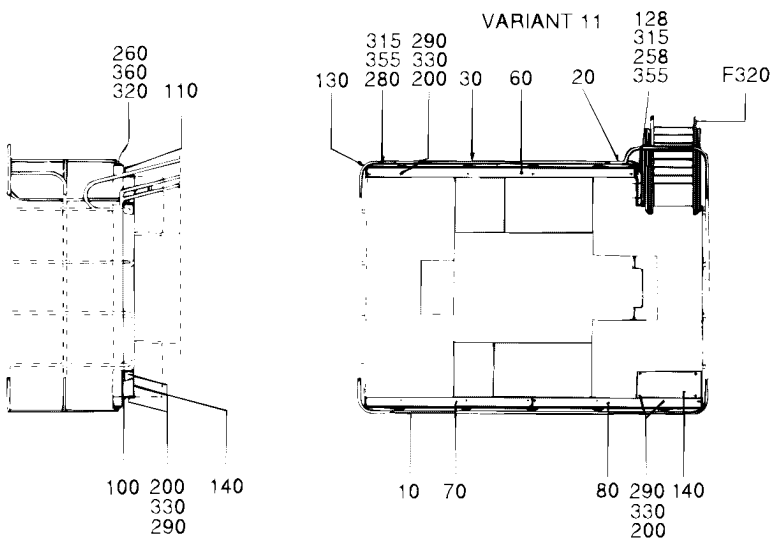
260
360
320 110
100 200 330 290 140
VARIANT 11
315 290
355 330
130 280 200 30 60 20
128
315
258
355
F320
10 70 80 290 330 200 140

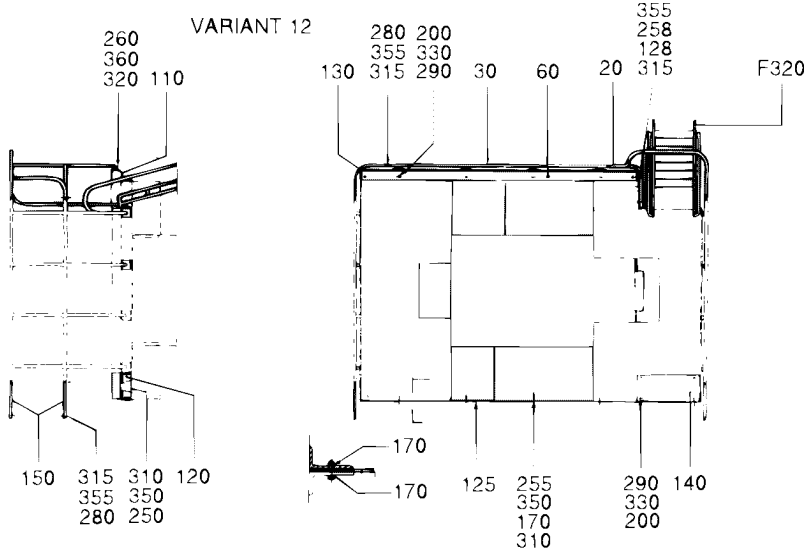
VARIANT 12
260
360
320 110
150 315 355 280 310 350 250 120
280 200
355 330
130 315 290 30 60 20
355
258
128
315
F320
170
170
125 255 350 170 310
290 140
330
200

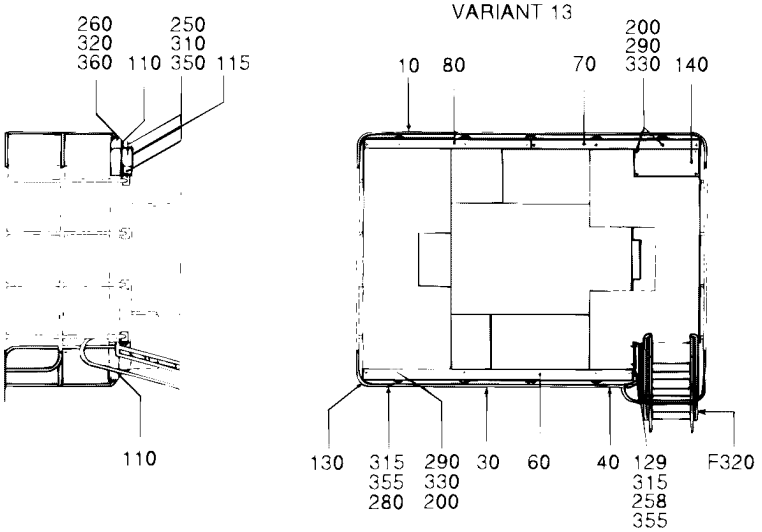
260
320
360 110
250
310
350 115
110
VARIANT 13
10 80 70
200
290
330 140
130 315 355 280 290 330 200 30 60 40
129
315
258
355
F320

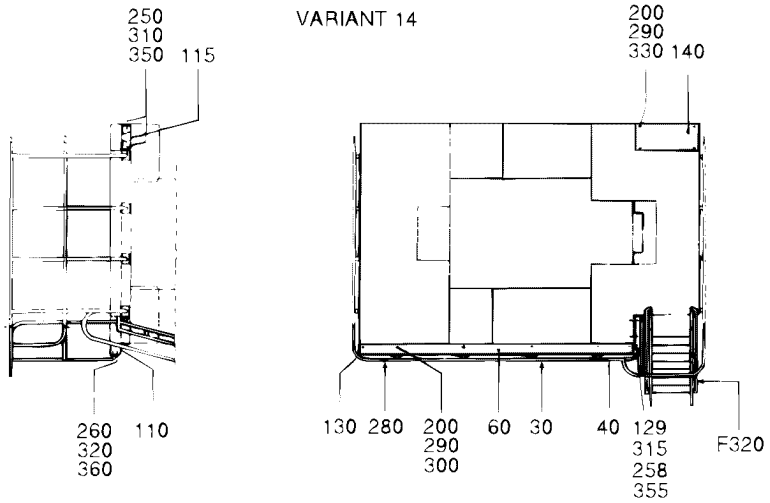
250
310
350 115
260 110
320
360
VARIANT 14
200
290
330 140
130 280 200 290 300 60 30 40
129
315
258
355
F320

ECM: 70726 - 19970304
Group number: 266756-0500
Assembly Drawing: 266756-4_1_AA

Pos	Part No	SP	UN	Qty	Description	Page No
PFV11						
010	257845-0000	-		1	RAILING	
020	257846-0000	-		1	RAILING	
070	247146-0000	-		1	PLATFORM	
080	257852-0000	-		1	PLATFORM	
100	257854-0000	-		1	CANTILEVER	
120	269340-0000	-		1	CANTILEVER	
128	551903-0000	-		1	KICKPLATE,LEFT	
130-02	257859-0000	-		6	RAILING	
200-02	90287-0076	-		18	SCREW SLOT. PAN HEAD LKCS M6X20	
250-02	312101-0495	-		16	SCREW M6S M10X30 FZB	
260-02	312105-0493	-		40	SCREW M6S ISO 4017 M10X25 A480	
280-02	312115-0453	-		16	SCREW ISO4762 M8X25 A4	
290-02	312601-0316	-		18	NUT M6M 6-8 FZB	
310-02	312601-0320	-		10	NUT M6M 10-8 FZB	
315-02	312605-0318	-		18	HEXAGON NUT, M6M M8 A280	
320-02	312605-0320	-		40	HEXAGON NUT, M6M M10 A280	
330-02	315101-0153	-		18	WASHER PLAIN, BRB, 6,4/12 H=1,5	
350-02	315101-0173	-		26	WASHER PLAIN, BRB, 10,5/22 H=2	
355-02	315105-0165	-		20	WASHER BRB8,4X16RFR	
360-02	315105-0173	-		40	WASHER BRB10,5X22RFR	
Common Parts						
030	263322-0000	-		1	RAILING	
060	247145-0000	-		1	PLATFORM	
110	257855-0000	-		1	CANTILEVER	
140	257862-0000	-		1	PLATFORM	
258	312105-0453	-		2	SCREW M6S ISO 4017 M8X25 A480	
F320	A243171-0200	-		1	LADDER	**6-23**

Pos	Part No	SP	UN	Qty	Description	Page No

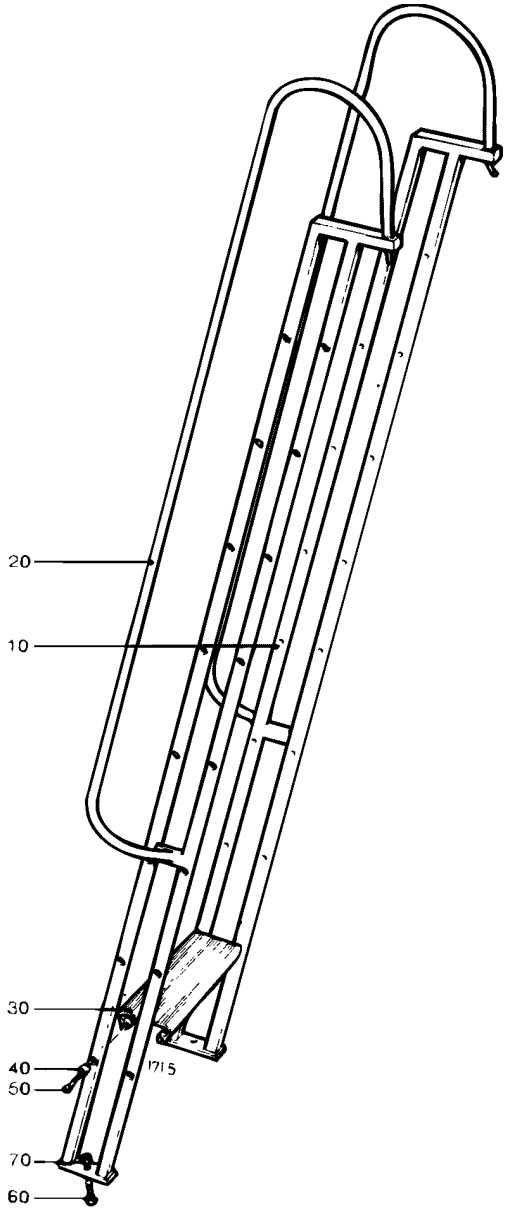
20
10
30
40
50
70
60
1715

ECM: - -
Group number: 243171-0200
Assembly Drawing: 243171-2_1_AA

Pos	Part No	SP	UN	Qty	Description	Page No
-						
010	243172-0001	-		1	SIDE PIECE	
020	243172-0002	-		1	SIDE PIECE	
030	208361-0001	-		8	STAIR	
040	208658-0001	-		32	SPACER	
050	90287-0056	-		32	SCREW MC6S-TT M8X40	
060	312101-0495	-		2	SCREW M6S M10X30 FZB	
070	312601-0320	-		2	NUT M6M 10-8 FZB	

Pos	Part No	SP	UN	Qty	Description	Page No

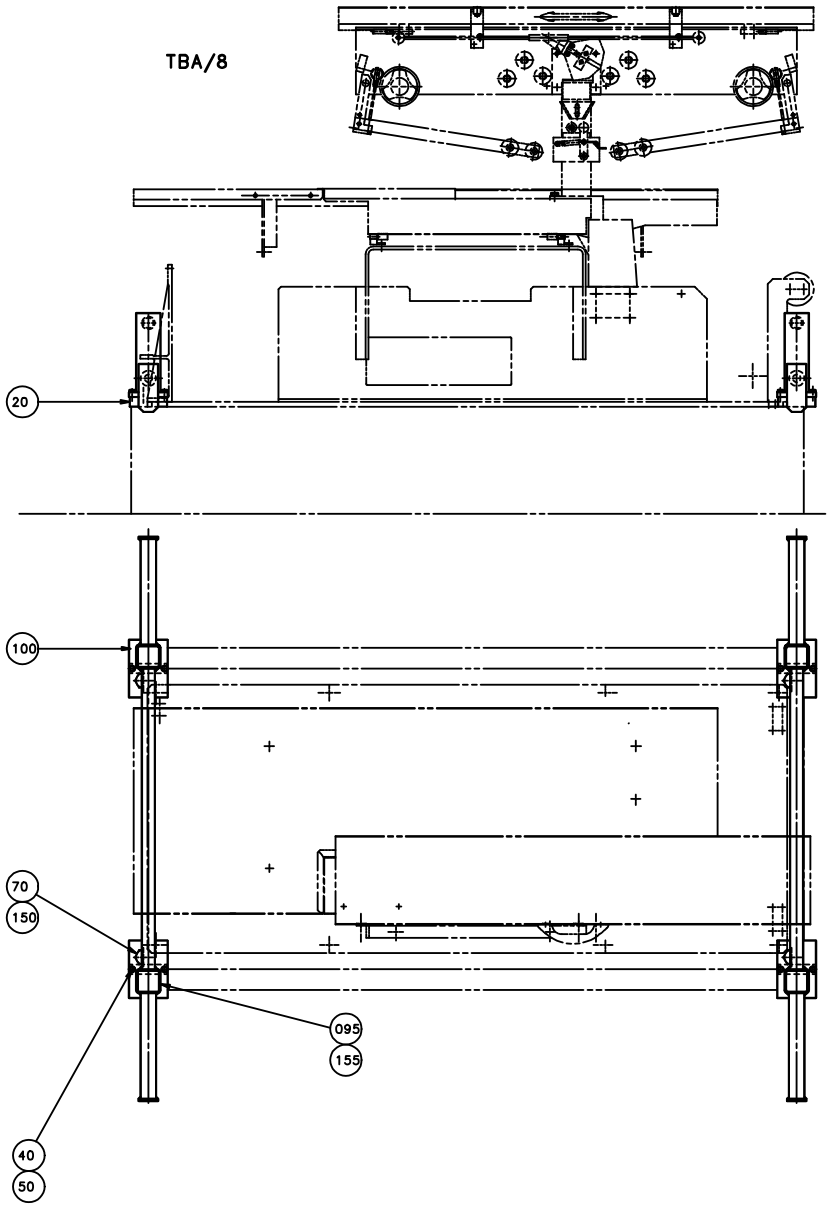
TBA/8
20
100
70
150
095
155
40
50

ECM: 71167 - 19980122
Group number: 551997-0100
Assembly Drawing: 551997-1_1_AA

Pos	Part No	SP	UN	Qty	Description	Page No
TBA/8						
020	551998-0000	-		4	SUPPORT LUG	
040	312101-0370	-		8	SCREW M6S M6X20 FZB	
050	315101-0153	-		8	WASHER PLAIN, BRB, 6,4/12 H=1,5	
070	90287-0127	-		4	SCREW M6S M20X60 88	
Common Parts						
095	1143456-0000	-		1	MACHINE SIGN CE	
100	548778-0000	-		2	LIFTING UNIT	
150	315102-0192	-		4	WASHER PLAIN, BRFB 21/36 H=3	
155	311521-0144	-		4	BLANK RIVET 3,2X10	

Pos	Part No	SP	UN	Qty	Description	Page No

Tetra Pak

SPC
Spare Parts Catalogue

Total pages in this module: 86

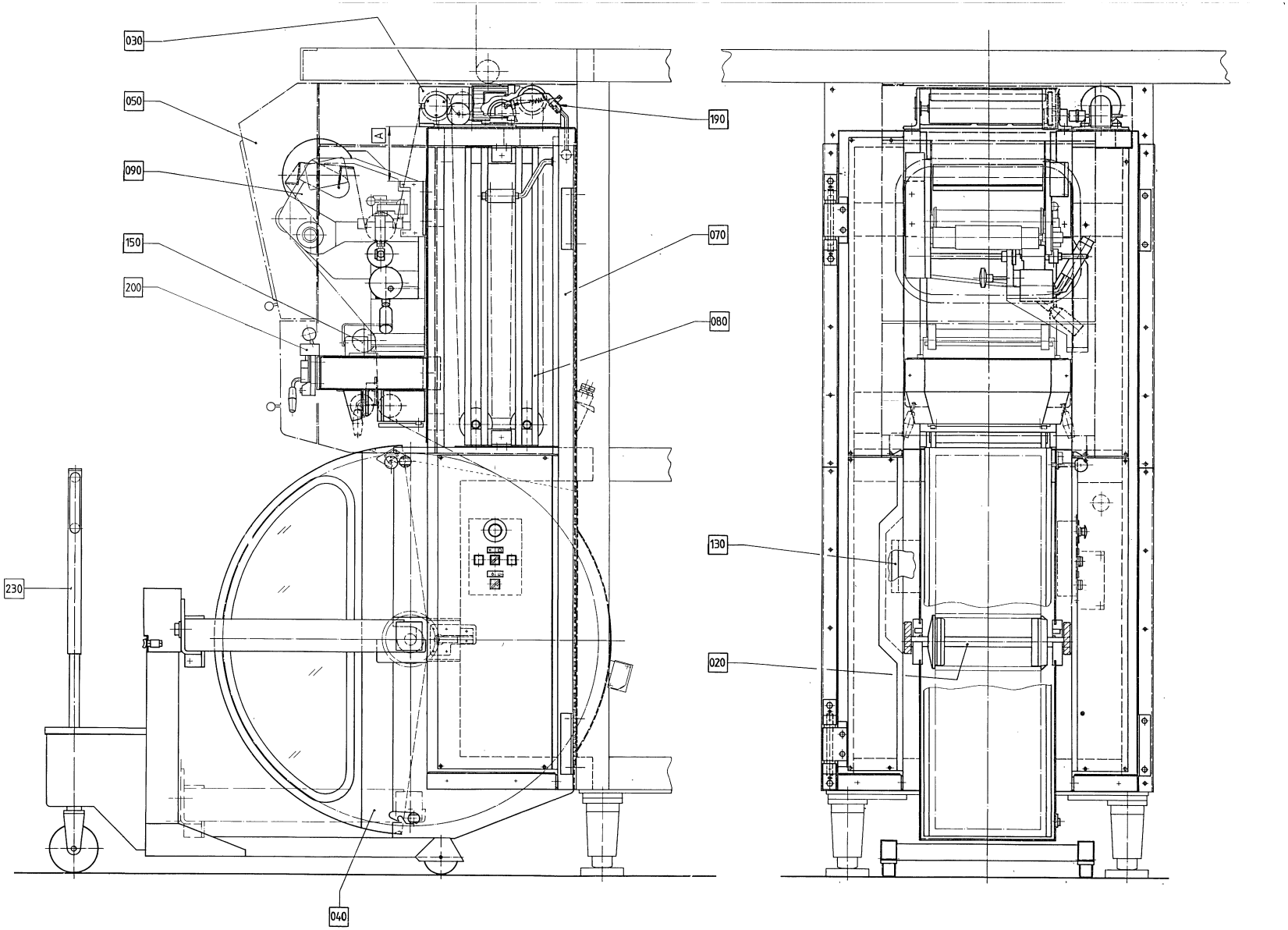
030
050
090
150
200
230
040
190
070
080
130
020
A

ECM: 71843 - 19981215
Group number: 648013-0700
Assembly Drawing: 648013-6_1_AA

This list covers pages from 7-2 to 7-5

Pos	Part No	SP	UN	Qty	Description	Page No
TBA/8 ST-ER						
030	A445840-0100	-		1	DRIVE UNIT	**7-7**
090	A1361947-0100	-		1	DATING UNIT NSS	**7-9, 7-11, 7-13, 7-15, 7-17, 7-19**
190	A445930-0100	-		1	BENDING UNIT	**7-39**
Common Parts						
020	A440285-0100	-		2	PAPER REEL HOLDER	**7-43, 7-45**
040	A556875-0100	-		1	COVER	**7-47**
050	A1361946-0100	-		1	SIDE GUARDS	**7-49, 7-51**
070	A440133-0400	-		1	MACHINE BODY	**7-53**
080	A440210-0200	-		1	ROLL	**7-55**
130	A1360783-0100	-		1	EL-PNEUMATIC EQUIPMENT	**7-57, 7-59, 7-61, 7-63**
150	A1362931-0100	-		1	SPLICING DEVICE	**7-67, 7-69, 7-71**
200	A522121-0200	-		1	CUTTING TABLE	**7-81**
220	A440132-0200	-		1	START-UP KIT	**7-83**
230	A576739-0200	-		1	(PAPER)REEL TROLLEY	**7-85**

Pos	Part No	SP	UN	Qty	Description	Page No

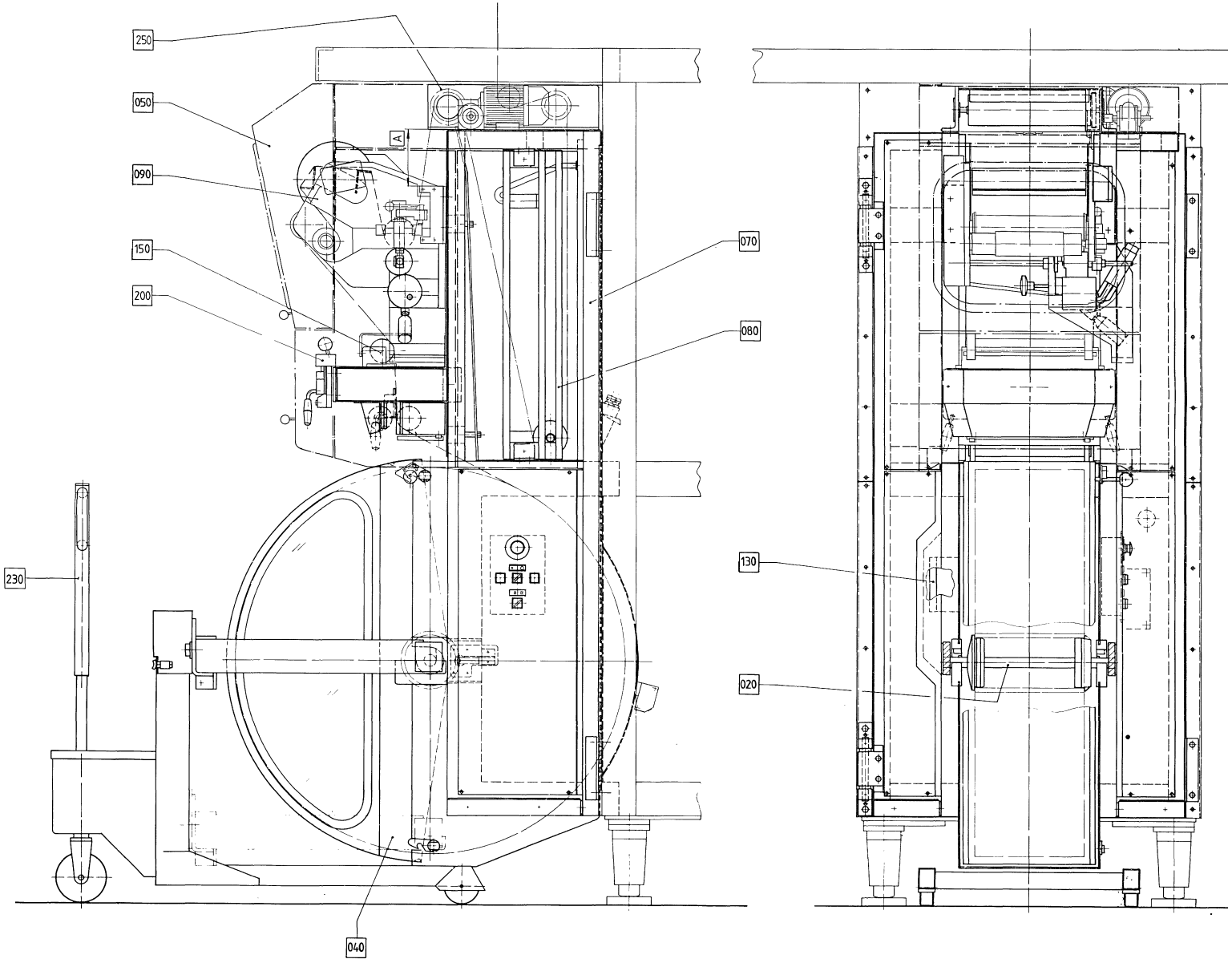
250
050
090
150
200
230
040
070
080
130
020
A

ECM: 71843 - 19981215
Group number: 648013-0700
Assembly Drawing: 648013-7_1_AA

This list covers pages from 7-2 to 7-5

Pos	Part No	SP	UN	Qty	Description	Page No
TBA/8 ST-ER						
030	A445840-0100	-		1	DRIVE UNIT	**7-7**
090	A1361947-0100	-		1	DATING UNIT NSS	**7-9, 7-11, 7-13, 7-15, 7-17, 7-19**
190	A445930-0100	-		1	BENDING UNIT	**7-39**
Common Parts						
020	A440285-0100	-		2	PAPER REEL HOLDER	**7-43, 7-45**
040	A556875-0100	-		1	COVER	**7-47**
050	A1361946-0100	-		1	SIDE GUARDS	**7-49, 7-51**
070	A440133-0400	-		1	MACHINE BODY	**7-53**
080	A440210-0200	-		1	ROLL	**7-55**
130	A1360783-0100	-		1	EL-PNEUMATIC EQUIPMENT	**7-57, 7-59, 7-61, 7-63**
150	A1362931-0100	-		1	SPLICING DEVICE	**7-67, 7-69, 7-71**
200	A522121-0200	-		1	CUTTING TABLE	**7-81**
220	A440132-0200	-		1	START-UP KIT	**7-83**
230	A576739-0200	-		1	(PAPER)REEL TROLLEY	**7-85**

Pos	Part No	SP	UN	Qty	Description	Page No

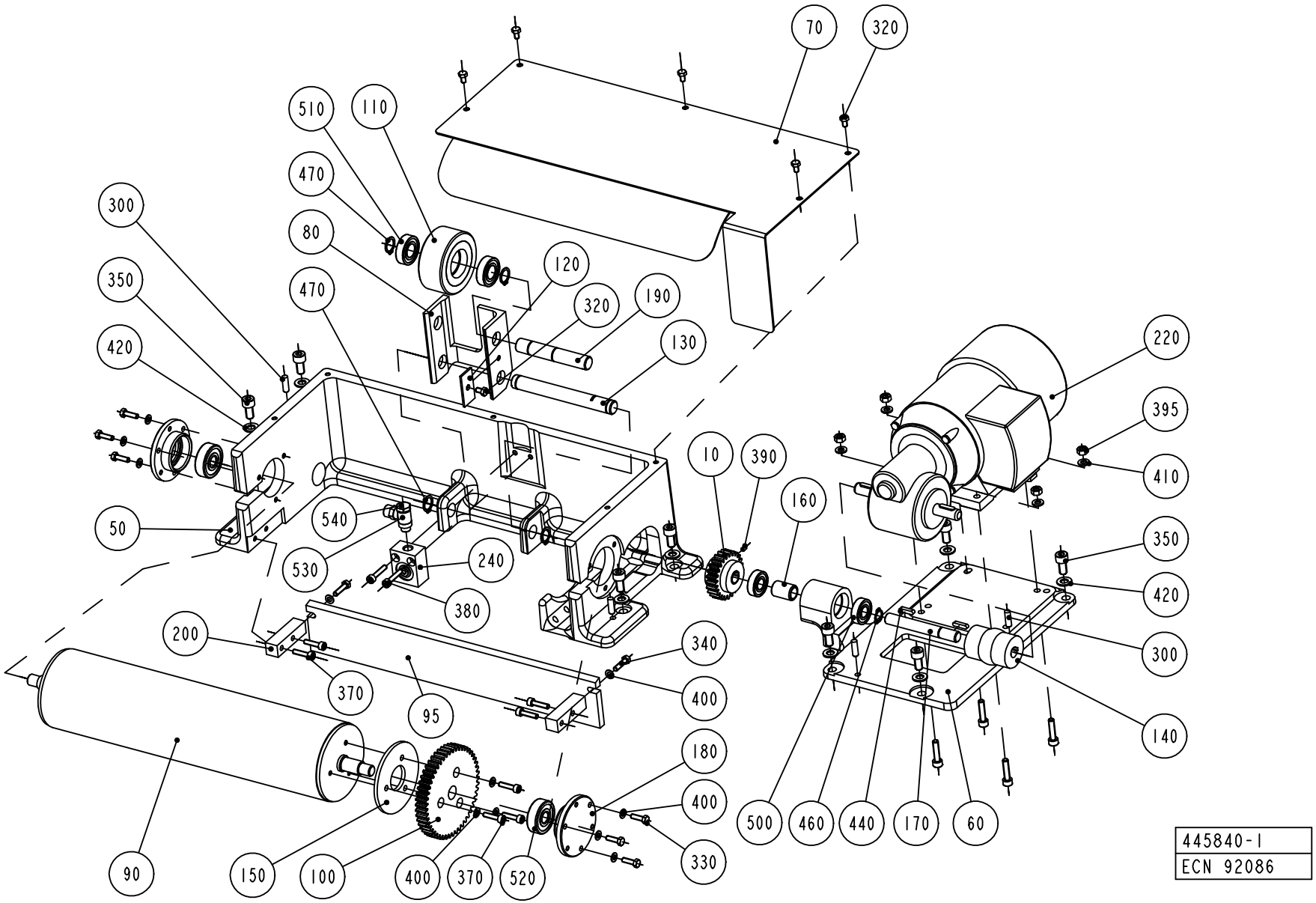
70
320
510
110
470
300
80
120
350
470
320
190
420
130
220
395
10
390
410
160
50
540
350
530
240
420
380
200
340
300
370
400
95
140
180
400
500
460
440
170
60
90
150
100
400
370
520
330
445840-1
ECN 92086

ECM: 92088 - 20030311
Group number: 445840-0100
Assembly Drawing: 445840-1_1_AB

Pos	Part No	SP	UN	Qty	Description	Page No
TBA/8						
010	445854-0002	A		1	GEAR WHEEL	
050	445841-0000	A		1	CANTILEVER	
070	450363-0000	-		1	LID	
Common Parts						
060	445842-0000	-		1	MOTOR PLATE	
080	445837-0000	-		1	CANTILEVER	
090	445845-0000	A		1	DRIVE ROLLER	
095	526680-0000	-		1	FENDER WALING	
100	207019-0003	A		1	GEAR WHEEL	
110	266710-0000	A		1	USE NEW PART 2555116 WHEEL	
120	445839-0000	-		1	SECURING PLATE	
130	445847-0000	A		1	SHAFT	
140	445848-0000	A		1	ELASTIC COUPLING	
150	445849-0000	-		1	SPACER DISC	
160	445850-0000	A		1	SPACER SLEEVE	
170	445851-0000	A		1	SHAFT	
180	445852-0000	A		2	LID	
190	445838-0000	-		1	SHAFT	
200	476503-0000	-		2	BRACKET	
220	B90069-0116	A		1	GEARS, WORM MOTOR REPBY 90069-0281	
	90056-0096	*C*		*1*	*WORM GEAR E3*	
	90069-0364	*C*		*1*	*CARBON BRUSH*	
	90069-0365	*C*		*1*	*CARBON BRUSH*	
240	90239-0259	A		1	CYLINDER	
300	311102-0353	-		4	PARALLEL PIN ISO 2338 6M6X20 ST	
320	312101-0323	-		6	SCREW M6S M5X8 FZB	
330	312101-0329	-		6	SCREW M6S M5X16 FZB	
340	312105-0331	-		2	SCREW M6S ISO 4017 M5X20 A480	
350	312111-0449	-		8	SCREW HEX.SOCK.HD.MC6S-TT 8X16 88 FZB	
370	312111-0331	-		7	SCREW HEX.SOCK.HD.MC6S-TT 5X20 88 FZB	
380	312111-0333	-		2	SCREW HEX.SOCK.HD.MC6S-TT 5X25 88 FZB	
385	312111-0371	-		4	SCREW HEX.SOCK.HD.MC6S-TT 6X22 88 FZB	
390	312316-0285	-		1	SCREW HEX.SOCK.SET CUP P.MSK6SS4X6 FZB	
395	312601-0316	-		4	NUT M6M 6-8 FZB	
400	315101-0146	-		11	WASHER PLAIN, BRB, 5,3/10 H=1	
410	315101-0153	-		4	WASHER PLAIN, BRB, 6,4/12 H=1,5	
420	315101-0165	-		8	WASHER PLAIN, BRB, 8,4/16 H=1,5	
440	315701-0169	-		2	PARALLEL KEY W. ROUND ENDS 4X4X18 MM	
460	315750-0109	-		1	RETAIN. RING, 12	
470	315750-0112	-		4	RETAIN. RING, 15	
500	321308-0201	-		2	BALL BEARING, 12X28X8 MM	
510	321308-0202	-		2	BALL BEARING, 15X32X9 MM	
520	321316-0201	-		2	BALL BEARING, 12X37X12 MM	
530	342980-0113	-		1	BANJO-CONNECTION,RING 6/4-G1/8"	
540	342980-0303	-		1	BANJO-HOLLOW BOLT COUPL,EXT.THR.01-G1/8"	

Machine Type | Group Description | Used-In | Group Number | Page No

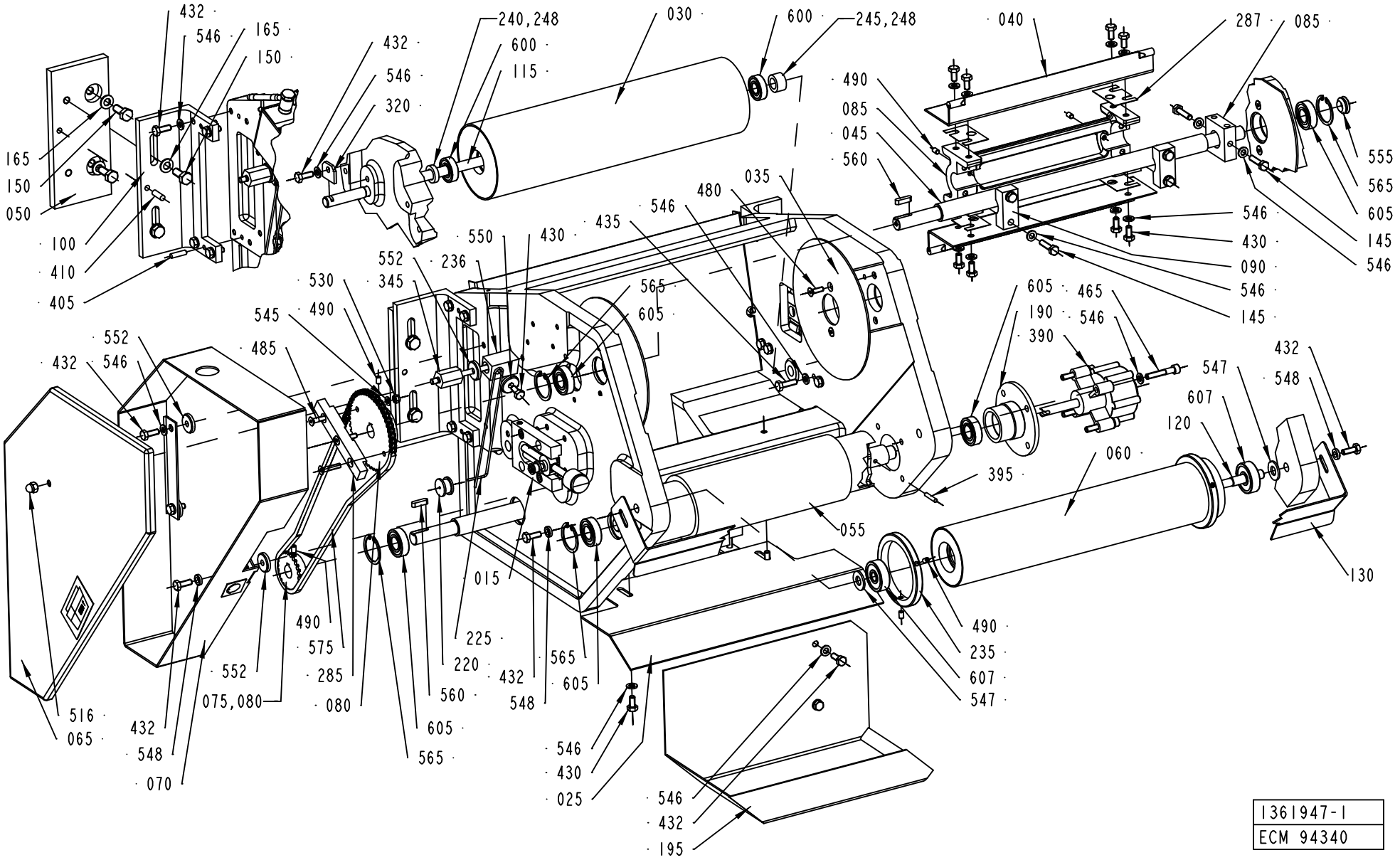
432
546
165
150
240,248
600
115
030
600
245,248
040
287
085
490
085
045
560
555
565
605
145
546
165
150
050
100
410
405
432
546
320
035
480
546
435
430
550
552
236
530
345
565
605
545
490
485
552
546
432
605
465
546
190
390
547
548
607
120
060
395
055
130
015
225
220
560
605
565
490
575
285
080
552
075,080
516
065
432
548
070
546
430
025
546
432
195
490
235
607
547
1361947-1
ECM 94340

ECM: 94342 - 20021112
Group number: 1361947-0100
Assembly Drawing: 1361947-1_1_AC

This list covers pages from 7-8 to 7-19

Pos	Part No	SP	UN	Qty	Description	Page No
0355B						
020	484848-0002	-		1	MACHINE BODY	
025	573827-0002	-		1	PROTECTION	
030	293621-0001	A		1	BNDING ROLLER	
035	293624-0001	-		2	PROTECTION PLATE	
040	529139-0000	A		2	CREASE FORMER	
045	486960-0001	A		1	SHAFT	
050	486961-0000	-		1	PLATE	
055	532719-0001	A		1	FEEDING ROLLER	
060	533449-0001	A		1	BENDING ROLLER	
065	533453-0000	-		1	LID	
070	533454-0000	-		1	FRAME	
075	32629-0000	A		1	SPROCKET	
080	32630-0000	A		1	SPROCKET	
085	543137-0002	-		1	SPACER	
090	539338-0000	-		2	CAP	
095	486962-0002	-		1	FASTENING BRACKET	
100	486962-0004	-		1	FASTENING BRACKET	
105	486964-0000	-		1	HEAD PLATE	
110	486966-0001	-		1	SHAFT	
115	486968-0001	-		1	SHAFT FOR BENDINGROLLER	
120	533457-0001	-		1	SHAFT	
130	575786-0000	-		1	PAPER SUPPORT	
150	312105-0451	-		6	SCREW M6S ISO 4017 M8X20 A480	
165	315105-0165	-		7	WASHER BRB8,4X16RFR	
215	32926-0000	A		1	ROLL	
230	228653-0000	A		1	SHAFT	
235	544706-0000	-		2	FLANGE	
240	293646-0001	A		1	WASHER	
245	293646-0002	A		1	WASHER	
250	293674-0000	A		1	DOWEL	
290	458489-0000	-		1	CANTILEVER	
435	312105-0370	-		4	SCREW M6S ISO 4017 M6X20 A480	
490	312318-0323	-		8	SCREW ISO4029 M5X8 A4	
546	315105-0153	-		43	WASHER BRB6,4X12RFR	
0375S						
020	533448-0000	-		1	MACHINE BODY	
030	293621-0002	A		1	BENDING ROLLER	
035	293624-0002	-		2	PROTECTION PLATE	
040	458109-0000	A		2	CREASE FORMER	
045	486960-0002	A		1	SHAFT	
055	532719-0002	A		1	FEEDING ROLLER	
060	533449-0002	A		1	BENDING ROLLER	
065	533455-0000	-		1	LID	
070	533456-0000	-		1	FRAME	
075	32629-0000	A		1	SPROCKET	
080	32630-0000	A		1	SPROCKET	
085	543138-0000	-		1	SPACER	
090	539338-0000	-		2	CAP	
095	486962-0003	-		2	FASTENING BRACKET	
105	486965-0000	-		1	HEAD PLATE	
110	486966-0002	-		1	SHAFT FOR CARRIER	
115	486968-0002	-		1	SHAFT FOR BENDINGROLLER	
120	533457-0002	-		1	SHAFT	
130	576218-0000	-		1	PAPER SUPPORT	
150	312105-0451	-		4	SCREW M6S ISO 4017 M8X20 A480	
165	315105-0165	-		5	WASHER BRB8,4X16RFR	
215	32926-0000	A		1	ROLL	
230	228653-0000	A		1	SHAFT	
235	544706-0000	-		2	FLANGE	
240	293646-0001	A		1	WASHER	
245	293646-0002	A		1	WASHER	
250	293674-0000	A		1	DOWEL	
290	458489-0000	-		1	CANTILEVER	
435	312105-0370	-		4	SCREW M6S ISO 4017 M6X20 A480	
490	312318-0323	-		8	SCREW ISO4029 M5X8 A4	
546	315105-0153	-		43	WASHER BRB6,4X12RFR	
0500B						
020	484848-0003	-		1	MACHINE BODY	
025	573827-0003	-		1	PROTECTION	
030	293621-0001	A		1	BNDING ROLLER	
035	293624-0002	-		2	PROTECTION PLATE	
040	458106-0000	A		2	CREASE FORMER	
045	544367-0000	A		1	SHAFT	
055	532719-0001	A		1	FEEDING ROLLER	
060	533449-0001	A		1	BENDING ROLLER	
065	533453-0000	-		1	LID	
070	533454-0000	-		1	FRAME	
080	32630-0000	A		2	SPROCKET	
085	440282-0004	-		2	SPACER	
095	486962-0001	-		2	FASTENING BRACKET	
105	486964-0000	-		1	HEAD PLATE	

Machine Type | Group Description | Used-In | Group Number | Page No

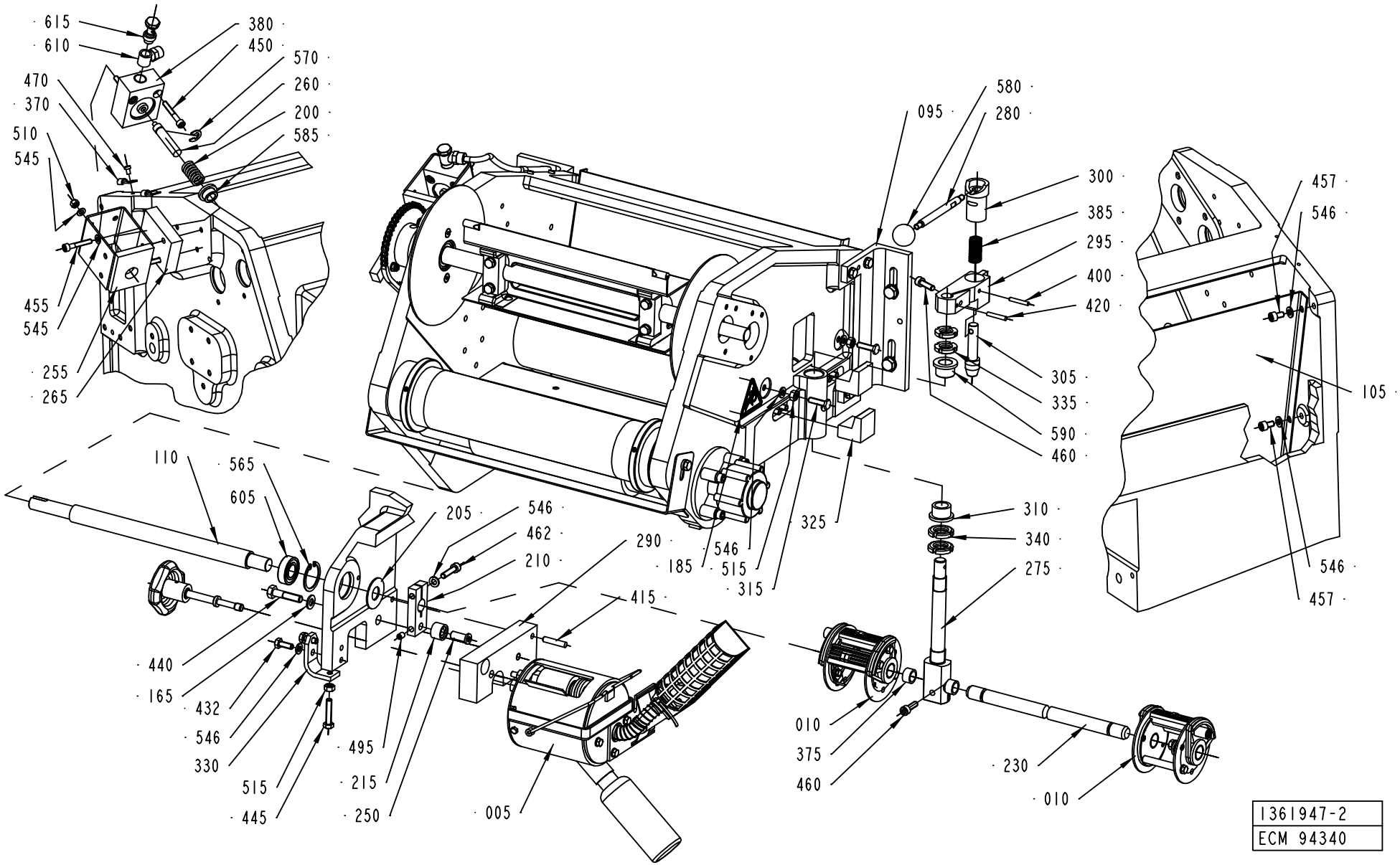
615
610
380
450
570
260
200
585
470
370
510
545
455
545
255
265
580
095
280
300
385
295
400
420
305
335
590
460
457
546
105
546
457
110
565
605
205
546
462
210
290
185
546
515
315
325
310
340
275
415
440
165
432
546
330
515
445
495
215
250
005
010
375
460
230
010
1361947-2
ECM 94340

ECM: 94342 - 20021112
Group number: 1361947-0100
Assembly Drawing: 1361947-2_1_AC

This list covers pages from 7-8 to 7-19

Pos	Part No	SP	UN	Qty	Description	Page No
0500B (Cont'd)						
110	486966-0001	-		1	SHAFT	
115	486968-0001	-		1	SHAFT FOR BENDINGROLLER	
120	533457-0001	-		1	SHAFT	
130	576217-0000	-		1	PAPER SUPPORT	
150	312105-0451	-		4	SCREW M6S ISO 4017 M8X20 A480	
165	315105-0165	-		5	WASHER BRB8,4X16RFR	
215	32926-0000	A		1	ROLL	
230	228653-0000	A		1	SHAFT	
235	544706-0000	-		2	FLANGE	
240	293646-0001	A		1	WASHER	
245	293646-0002	A		1	WASHER	
250	293674-0000	A		1	DOWEL	
290	458489-0000	-		1	CANTILEVER	
435	312105-0370	-		4	SCREW M6S ISO 4017 M6X20 A480	
490	312318-0323	-		6	SCREW ISO4029 M5X8 A4	
546	315105-0153	-		43	WASHER BRB6,4X12RFR	
0500S						
020	484848-0002	-		1	MACHINE BODY	
025	573827-0002	-		1	PROTECTION	
030	293621-0001	A		1	BNDING ROLLER	
035	293624-0001	-		2	PROTECTION PLATE	
040	458108-0000	A		2	CREASE FORMER	
045	486960-0001	A		1	SHAFT	
050	486961-0000	-		1	PLATE	
055	532719-0001	A		1	FEEDING ROLLER	
060	533449-0001	A		1	BENDING ROLLER	
065	533453-0000	-		1	LID	
070	533454-0000	-		1	FRAME	
075	32629-0000	A		1	SPROCKET	
080	32630-0000	A		1	SPROCKET	
085	538241-0004	-		1	SPACER	
090	539338-0000	-		2	CAP	
095	486962-0002	-		1	FASTENING BRACKET	
100	486962-0004	-		1	FASTENING BRACKET	
105	486964-0000	-		1	HEAD PLATE	
110	486966-0001	-		1	SHAFT	
115	486968-0001	-		1	SHAFT FOR BENDINGROLLER	
120	533457-0001	-		1	SHAFT	
130	575786-0000	-		1	PAPER SUPPORT	
150	312105-0451	-		6	SCREW M6S ISO 4017 M8X20 A480	
165	315105-0165	-		7	WASHER BRB8,4X16RFR	
215	32926-0000	A		1	ROLL	
230	228653-0000	A		1	SHAFT	
235	544706-0000	-		2	FLANGE	
240	293646-0001	A		1	WASHER	
245	293646-0002	A		1	WASHER	
250	293674-0000	A		1	DOWEL	
290	458489-0000	-		1	CANTILEVER	
435	312105-0370	-		4	SCREW M6S ISO 4017 M6X20 A480	
490	312318-0323	-		8	SCREW ISO4029 M5X8 A4	
546	315105-0153	-		43	WASHER BRB6,4X12RFR	
0750B						
020	484848-0002	-		1	MACHINE BODY	
025	573827-0002	-		1	PROTECTION	
030	293621-0001	A		1	BNDING ROLLER	
035	293624-0001	-		2	PROTECTION PLATE	
040	458105-0000	A		2	CREASE FORMER	
045	486960-0001	A		1	SHAFT	
055	532719-0001	A		1	FEEDING ROLLER	
060	533449-0001	A		1	BENDING ROLLER	
065	533453-0000	-		1	LID	
070	533454-0000	-		1	FRAME	
075	32629-0000	A		1	SPROCKET	
080	32630-0000	A		1	SPROCKET	
085	543137-0001	-		1	SPACER	
090	539338-0000	-		2	CAP	
095	486962-0001	-		2	FASTENING BRACKET	
105	486964-0000	-		1	HEAD PLATE	
110	486966-0001	-		1	SHAFT	
115	486968-0001	-		1	SHAFT FOR BENDINGROLLER	
120	533457-0001	-		1	SHAFT	
130	575786-0000	-		1	PAPER SUPPORT	
150	312105-0451	-		4	SCREW M6S ISO 4017 M8X20 A480	
165	315105-0165	-		5	WASHER BRB8,4X16RFR	
215	32926-0000	A		1	ROLL	
230	228653-0000	A		1	SHAFT	
235	544706-0000	-		2	FLANGE	
240	293646-0001	A		1	WASHER	
245	293646-0002	A		1	WASHER	
250	293674-0000	A		1	DOWEL	
290	458489-0000	-		1	CANTILEVER	

Machine Type | Group Description | Used-In | Group Number | Page No

See previous drawings pages: 7-8, 7-10.

ECM: 94342 - 20021112
Group number: 1361947-0100
Assembly Drawing: 1361947-2_1_AC

This list covers pages from 7-8 to 7-19

Pos	Part No	SP	UN	Qty	Description	Page No
0750B (Cont'd)						
435	312105-0370	-		4	SCREW M6S ISO 4017 M6X20 A480	
490	312318-0323	-		8	SCREW ISO4029 M5X8 A4	
546	315105-0153	-		43	WASHER BRB6,4X12RFR	
0750S						
020	484848-0001	-		1	MACHINE BODY	
025	573827-0001	-		1	PROTECTION	
030	293621-0001	A		1	BNDING ROLLER	
035	293624-0001	-		2	PROTECTION PLATE	
040	544279-0000	A		2	CREASE FORMER	
045	486960-0001	A		1	SHAFT	
050	486961-0000	-		1	PLATE	
055	532719-0001	A		1	FEEDING ROLLER	
060	533449-0001	A		1	BENDING ROLLER	
065	533453-0000	-		1	LID	
070	533454-0000	-		1	FRAME	
075	32629-0000	A		1	SPROCKET	
080	32630-0000	A		1	SPROCKET	
085	538241-0005	-		1	SPACER	
090	539338-0000	-		2	CAP	
095	486962-0007	-		1	FASTENING BRACKET	
100	486962-0008	-		1	FASTENING BRACKET	
105	486964-0000	-		1	HEAD PLATE	
110	486966-0001	-		1	SHAFT	
115	486968-0001	-		1	SHAFT FOR BENDINGROLLER	
120	533457-0001	-		1	SHAFT	
130	575786-0000	-		1	PAPER SUPPORT	
150	312105-0451	-		6	SCREW M6S ISO 4017 M8X20 A480	
165	315105-0165	-		7	WASHER BRB8,4X16RFR	
215	32926-0000	A		1	ROLL	
230	228653-0000	A		1	SHAFT	
235	544706-0000	-		2	FLANGE	
240	293646-0001	A		1	WASHER	
245	293646-0002	A		1	WASHER	
250	293674-0000	A		1	DOWEL	
290	458489-0000	-		1	CANTILEVER	
435	312105-0370	-		4	SCREW M6S ISO 4017 M6X20 A480	
490	312318-0323	-		8	SCREW ISO4029 M5X8 A4	
546	315105-0153	-		43	WASHER BRB6,4X12RFR	
1000B HIFIN						
020	484848-0001	-		1	MACHINE BODY	
025	573827-0001	-		1	PROTECTION	
030	293621-0001	A		1	BNDING ROLLER	
035	293624-0001	-		2	PROTECTION PLATE	
040	458104-0000	A		2	CREASE FORMER	
045	486960-0001	A		1	SHAFT	
055	532719-0001	A		1	FEEDING ROLLER	
060	533449-0001	A		1	BENDING ROLLER	
065	533453-0000	-		1	LID	
070	533454-0000	-		1	FRAME	
075	32629-0000	A		1	SPROCKET	
080	32630-0000	A		1	SPROCKET	
085	538241-0003	-		1	SPACER	
090	539338-0000	-		2	CAP	
095	486962-0001	-		2	FASTENING BRACKET	
105	486964-0000	-		1	HEAD PLATE	
110	486966-0001	-		1	SHAFT	
115	486968-0001	-		1	SHAFT FOR BENDINGROLLER	
120	533457-0001	-		1	SHAFT	
130	575786-0000	-		1	PAPER SUPPORT	
150	312105-0451	-		4	SCREW M6S ISO 4017 M8X20 A480	
165	315105-0165	-		5	WASHER BRB8,4X16RFR	
215	32926-0000	A		1	ROLL	
230	228653-0000	A		1	SHAFT	
235	544706-0000	-		2	FLANGE	
240	293646-0001	A		1	WASHER	
245	293646-0002	A		1	WASHER	
250	293674-0000	A		1	DOWEL	
290	458489-0000	-		1	CANTILEVER	
435	312105-0370	-		4	SCREW M6S ISO 4017 M6X20 A480	
490	312318-0323	-		8	SCREW ISO4029 M5X8 A4	
546	315105-0153	-		43	WASHER BRB6,4X12RFR	
1000B LOFIN						
020	484848-0001	-		1	MACHINE BODY	
025	573827-0001	-		1	PROTECTION	
030	293621-0001	A		1	BNDING ROLLER	
035	293624-0001	-		2	PROTECTION PLATE	
040	458105-0000	A		2	CREASE FORMER	
045	486960-0001	A		1	SHAFT	
055	532719-0001	A		1	FEEDING ROLLER	
060	533449-0001	A		1	BENDING ROLLER	

Machine Type | Group Description | Used-In | Group Number | Page No

See previous drawings pages: 7-8, 7-10.

ECM: 94342 - 20021112
Group number: 1361947-0100
Assembly Drawing: 1361947-2_1_AC

This list covers pages from 7-8 to 7-19

Pos	Part No	SP	UN	Qty	Description	Page No
1000B LOFIN (Cont'd)						
065	533453-0000	-		1	LID	
070	533454-0000	-		1	FRAME	
075	32629-0000	A		1	SPROCKET	
080	32630-0000	A		1	SPROCKET	
085	538241-0002	-		1	SPACER	
090	539338-0000	-		2	CAP	
095	486962-0001	-		2	FASTENING BRACKET	
105	486964-0000	-		1	HEAD PLATE	
110	486966-0001	-		1	SHAFT	
115	486968-0001	-		1	SHAFT FOR BENDINGROLLER	
120	533457-0001	-		1	SHAFT	
130	575786-0000	-		1	PAPER SUPPORT	
150	312105-0451	-		4	SCREW M6S ISO 4017 M8X20 A480	
165	315105-0165	-		5	WASHER BRB8,4X16RFR	
215	32926-0000	A		1	ROLL	
230	228653-0000	A		1	SHAFT	
235	544706-0000	-		2	FLANGE	
240	293646-0001	A		1	WASHER	
245	293646-0002	A		1	WASHER	
250	293674-0000	A		1	DOWEL	
290	458489-0000	-		1	CANTILEVER	
435	312105-0370	-		4	SCREW M6S ISO 4017 M6X20 A480	
490	312318-0323	-		8	SCREW ISO4029 M5X8 A4	
546	315105-0153	-		43	WASHER BRB6,4X12RFR	
1000S						
020	484848-0001	-		1	MACHINE BODY	
025	573827-0001	-		1	PROTECTION	
030	293621-0001	A		1	BNDING ROLLER	
035	293624-0001	-		2	PROTECTION PLATE	
040	569651-0000	A		2	CREASE FORMER	
045	486960-0001	A		1	SHAFT	
055	532719-0001	A		1	FEEDING ROLLER	
060	533449-0001	A		1	BENDING ROLLER	
065	533453-0000	-		1	LID	
070	533454-0000	-		1	FRAME	
075	32629-0000	A		1	SPROCKET	
080	32630-0000	A		1	SPROCKET	
085	569652-0002	-		1	SPACER	
090	539338-0000	-		2	CAP	
095	486962-0009	-		1	FASTENING BRACKET	
100	486962-0010	-		1	FASTENING BRACKET	
105	486964-0000	-		1	HEAD PLATE	
110	486966-0001	-		1	SHAFT	
115	486968-0001	-		1	SHAFT FOR BENDINGROLLER	
120	533457-0001	-		1	SHAFT	
130	575786-0000	-		1	PAPER SUPPORT	
150	312105-0451	-		4	SCREW M6S ISO 4017 M8X20 A480	
165	315105-0165	-		5	WASHER BRB8,4X16RFR	
215	32926-0000	A		1	ROLL	
230	228653-0000	A		1	SHAFT	
235	544706-0000	-		2	FLANGE	
240	293646-0001	A		1	WASHER	
245	293646-0002	A		1	WASHER	
250	293674-0000	A		1	DOWEL	
290	458489-0000	-		1	CANTILEVER	
435	312105-0370	-		4	SCREW M6S ISO 4017 M6X20 A480	
490	312318-0323	-		8	SCREW ISO4029 M5X8 A4	
546	315105-0153	-		43	WASHER BRB6,4X12RFR	
1000SQ						
020	484848-0001	-		1	MACHINE BODY	
025	573827-0001	-		1	PROTECTION	
030	293621-0001	A		1	BNDING ROLLER	
035	293624-0001	-		2	PROTECTION PLATE	
040	574043-0000	A		2	CREASE FORMER	
045	486960-0001	A		1	SHAFT	
055	532719-0001	A		1	FEEDING ROLLER	
060	533449-0001	A		1	BENDING ROLLER	
065	533453-0000	-		1	LID	
070	533454-0000	-		1	FRAME	
075	32629-0000	A		1	SPROCKET	
080	32630-0000	A		1	SPROCKET	
085	569652-0003	-		1	SPACER	
090	539338-0000	-		2	CAP	
095	486962-0011	-		1	FASTENING BRACKET	
100	574044-0000	-		1	FASTENING BRACKET	
105	486964-0000	-		1	HEAD PLATE	
110	486966-0001	-		1	SHAFT	
115	486968-0001	-		1	SHAFT FOR BENDINGROLLER	
120	533457-0001	-		1	SHAFT	
130	575786-0000	-		1	PAPER SUPPORT	
150	312105-0451	-		4	SCREW M6S ISO 4017 M8X20 A480	

Machine Type | Group Description | Used-In | Group Number | Page No

See previous drawings pages: 7-8, 7-10.

ECM: 94342 - 20021112
Group number: 1361947-0100
Assembly Drawing: 1361947-2_1_AC

This list covers pages from 7-8 to 7-19

Pos	Part No	SP	UN	Qty	Description	Page No
1000SQ (Cont'd)						
165	315105-0165	-		5	WASHER BRB8,4X16RFR	
215	32926-0000	A		1	ROLL	
230	228653-0000	A		1	SHAFT	
235	544706-0000	-		2	FLANGE	
240	293646-0001	A		1	WASHER	
245	293646-0002	A		1	WASHER	
250	293674-0000	A		1	DOWEL	
290	458489-0000	-		1	CANTILEVER	
435	312105-0370	-		4	SCREW M6S ISO 4017 M6X20 A480	
490	312318-0323	-		8	SCREW ISO4029 M5X8 A4	
546	315105-0153	-		43	WASHER BRB6,4X12RFR	
Common Parts						
005	A440286-0300	-		1	INK UNIT NSS	**7-21, 7-23**
010	A293684-0200	-		2	PRINTING WHEEL NSS	**7-25, 7-27, 7-29, 7-31, 7-33**
015	A543143-0100	-		1	ADJUSTMENT DEVICE	**7-35, 7-37**
145	312105-0372	-		4	SCREW M6S ISO 4017 M6X25 A480	
185	359705-0001	-		1	WARNING SIGN ISO, ENTAGLEMENT	
190	522408-0000	-		1	BEARING HOUSING	
195	549832-0000	-		1	WASTE CHUTE	
200	90335-0037	A		1	COMP. SPRING 22900, 2,2X15X20	
205	533458-0000	-		1	WASHER	
210	32925-0000	A		1	CARRIER	
220	33182-0000	A		1	ROLL	
225	33183-0000	A		1	SPRING	
236	293645-0000	A		1	BRACKET	
255	595204-0000	A		1	CYLINDER BRACKET	
260	595202-0000	A		1	SHAFT	
265	595203-0000	A		1	LACE	
275	450497-0000	A		1	SHAFT	
280	450500-0000	-		1	DOWEL	
285	457430-0000	-		1	BEATER	
287	458193-0001	A		4	WASHER	
287	458193-0002	A		4	WASHER	
287	458193-0003	A		4	WASHER	
295	464010-0000	-		1	ARM	
300	464012-0000	A		1	CURVE	
305	464011-0000	A		1	LOCK STUD	
310	466430-0000	-		1	BUSHING	
315	476377-0000	-		2	SCREW	
320	486967-0000	-		1	SHEET	
325	486969-0000	-		2	GUIDE LUG	
330	486971-0000	-		1	ANGLE	
335	532082-0000	-		2	ROUND NUT	
340	532083-0000	-		2	ROUND NUT	
345	533459-0000	-		1	SCREW	
370	90165-0057	-		2	PIPE CLIP FOR TUBE D=6 MM	
375	90166-0059	A	MM	18	HOSE PVC 12/16MM TRANSP.	
380	90450-0454	A		1	CYLINDER	
385	90335-0064	-		1	COMP. SPRING 22270, 1,25X13,75X62,5	
390	90347-0054	A		1	DAMPER	
395	311103-0273	-		1	ARALLEL PIN ISO 2338 4M6X22 A1	
400	311103-0274	-		1	PARALLELL PIN, M6, 4X25 MM	
405	311103-0310	-		4	PARALLEL PIN ISO 2338 5M6X20 A1	
410	311103-0353	-		2	PARALLEL PIN ISO 2338 6M6X20 A1	
415	311103-0357	-		1	PARALLEL PIN ISO 2338 6M6X30 A1	
420	311202-0241	-		1	PIN, TAPERED, KP, 4X25 GROUND	
430	312105-0366	-		11	SCREW M6S M6X12 A280	
432	312105-0368	-		18	SCREW M6S M6X16 A280	
440	312105-0457	-		1	SCREW M6S ISO 4014 M8X35 A480	
445	312109-0374	-		1	SCREW M6S ISO 4017 M6X30 A480	
450	312111-0337	-		2	SCREW HEX.SOCK.HD.MC6S-TT 5X35 88 FZB	
455	312111-0335	-		2	SCREW HEX.SOCK.HD.MC6S-TT 5X30 88 FZB	
457	312111-0364	-		3	SCREW HEX.SOCK.HD.MC6S-TT 6X10 88 FZB	
460	312115-0370	-		2	SCREW ISO4762 M6X20 A4	
462	312115-0372	-		1	SCREW ISO4762 M6X25 A4	
465	312115-0376	-		4	SCREW ISO4762 M6X35 A4	
470	312125-0285	-		2	SLOTTED CHEESE HEAD SCREW MCS 4X6 SS	
480	312155-0329	-		4	SCREW EN 10642 MF6S M5X16 A480	
485	312155-0333	-		3	SCREW EN 10642 MF6S M5X25 A480	
495	312318-0362	-		1	SCREW ISO4029 M6X8 A4	
510	312605-0314	-		2	HEXAGON NUT, M6M M5 A280	
515	312605-0316	-		3	HEXAGON NUT, M6M M6 A280	
516	312705-0316	-		1	NUT HEX. DOMED CAP MHM-6 M6 A280	
530	312812-0314	-		2	HEXAGON NUT, NY-LOCK M5 A480	
545	315105-0146	-		6	BRICKA BRB5,3X10RFR	
547	315105-0173	-		2	WASHER BRB10,5X22RFR	
548	315115-0153	-		3	WASHER PLAIN, TBRB 6,4/12 H=3	
550	315121-0153	-		1	WASHER PLAIN, TBRSB 6,4/22 H=4	
552	315125-0153	-		4	WASHER TBRSB 6,4X22X4 A4	
555	315220-0121	A		1	V-RINGS 12,5X18,5X7,7 MM V-14S	
560	315701-0201	A		2	PARALLEL KEY W. ROUND ENDS 5X5X20 MM	
565	315752-0123	A		5	RETAIN. RING, 32	

Machine Type | Group Description | Used-In | Group Number | Page No

See previous drawings pages: 7-8, 7-10.

Pos	Part No	SP	UN	Qty	Description	Page No
Common Parts (Cont'd)						
570	315755-0801	A		1	LOCKING WASHER 8	
575	318207-0168	A		1	ROLLER CHAIN, SINGLE 6MM-168	
580	318800-0103	-		1	HANDLES,SPHERICAL KNOB,INT.THRE.,D.25-M6	
585	321111-0135	A		1	FLANGE BUSHING, 10X16X10 MM	
590	321111-0212	A		1	FLANGE BUSHING, 15X21X15	
600	321308-0101	A		2	BALL BEARING, 12X28X8 MM	
605	321308-0202	A		6	BALL BEARING, 15X32X9 MM	
607	321316-0200	A		2	BALL BEARING, 10X35X11 MM	
610	342980-0113	-		1	BANJO-CONNECTION,RING 6/4-G1/8"	
615	342980-0303	-		1	BANJO-HOLLOW BOLT COUPL,EXT.THR.01-G1/8"	

Pos	Part No	SP	UN	Qty	Description	Page No

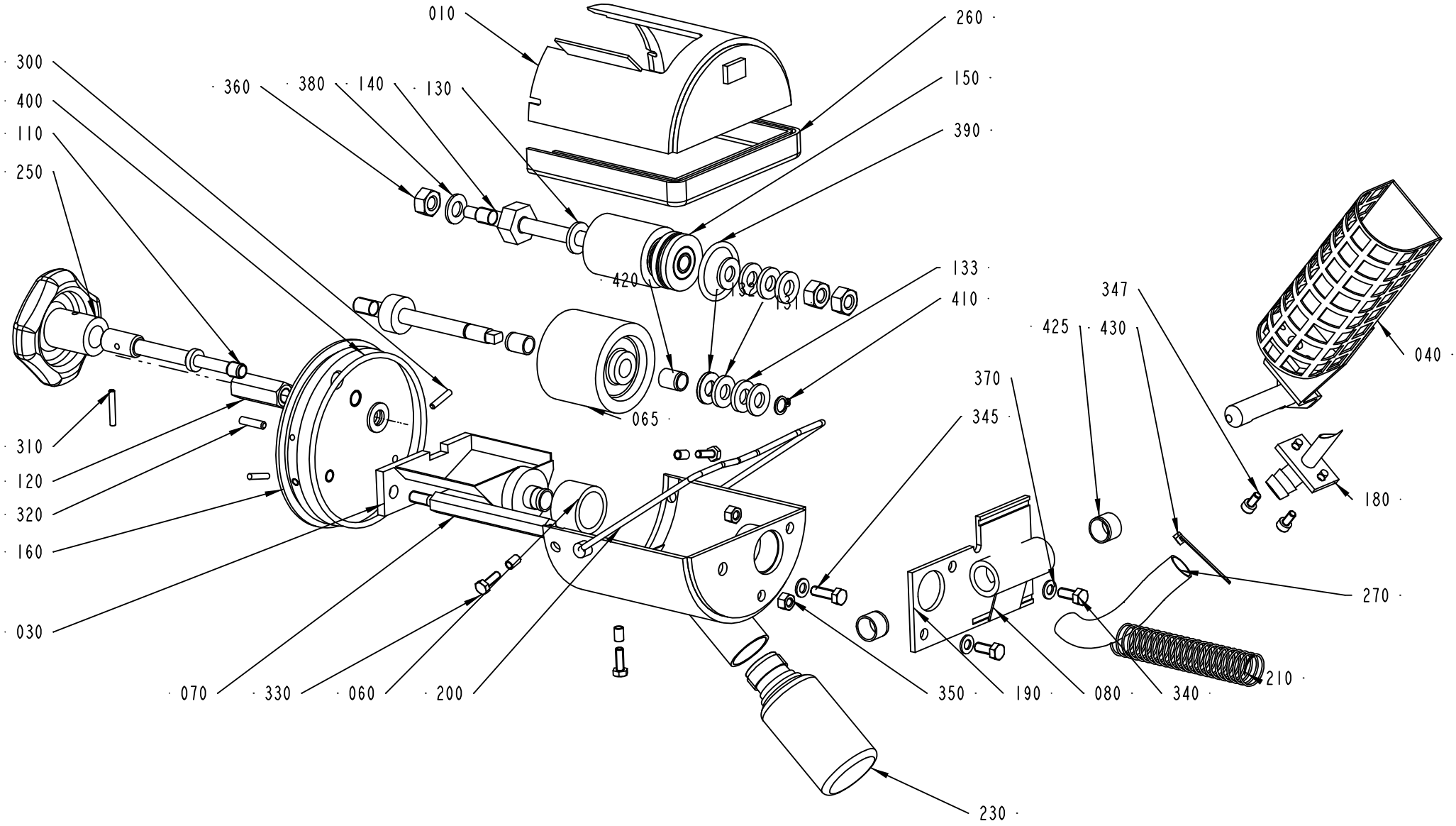
010
260
300
150
400
360
380
140
130
390
110
250
420
133
132
131
410
065
347
425
430
040
370
345
310
180
120
320
160
270
030
210
070
330
060
200
350
190
080
340
230

ECM: 104523 - 20021112
Group number: 440286-0300
Assembly Drawing: 440286-3_1_AC

This list covers pages from 7-20 to 7-23

Pos	Part No	SP	UN	Qty	Description	Page No
TBA/8						
230	90050-0008	B		1	BOTTLE	
Common Parts						
010	440287-0000	-		1	COVER	
030	297211-0000	B		1	INK WELL	
040	476356-0000	B		1	HOLDER FOR INK BOTTLE	
060	445542-0000	B		1	MANTEL RUBBER	
065	450355-0000	A		1	INK ROLLER	
070	33010-0000	B		1	SCREW	
080	35547-0000	B		1	SPRING	
100	292044-0000	A		1	SHAFT	
110	293667-0000	A		1	DOWEL	
120	436927-0000	B		1	NUT	
130	293669-0001	A		4	WASHER	
131	293669-0002	A		2	WASHER	
132	293669-0003	A		2	WASHER	
133	293669-0004	A		2	WASHER	
140	293670-0000	A		1	SHAFT	
150	B543135-0000	A		1	INK TRANSFER ROLLER	
	90153-0050	-		*1*	*ADHESIVE, 3M TYPE SCOTCH-WELD 2216 B/A*	
	321120-0100	-		*1*	*BEARING BUSHING W/O FLANGE 8/10X12*	
160	293697-0000	B		1	END SECTION	
180	476354-0000	B		1	CANNULAR TUBE	
190	456773-0000	B		1	PIVOT BRACKET	
200	434747-0000	B		1	BOW CLAMP	
210	537308-0000	B		1	SPRING	
250	90051-0077	-		1	HANDLE	
260	90143-0029	B	MM	295	STRIP	
270	90166-0138	B	MM	100	HOSE	
280	90299-0072	A		48	INK	
300	311103-0236	-		2	PARALLEL PIN ISO 2338 3M6X16 A1	
310	311103-0238	-		1	PARALLEL PIN ISO 2338 3M6X20 A1	
320	311103-0270	-		1	PARALLEL PIN ISO 2338 4M6X16 A1	
330	312105-0291	-		3	SCREW M6S ISO 4017 M4X12 A480	
340	312105-0327	-		2	SCREW M6S ISO 4017 M5X12 A480	
345	312105-0329	-		1	SCREW M6S ISO 4017 M5X16 A480	
347	312115-0287	-		2	SCREW ISO4762 M4X8 A4	
350	312605-0314	-		2	HEXAGON NUT, M6M M5 A280	
360	312605-0318	-		3	HEXAGON NUT, M6M M8 A280	
370	315105-0146	-		3	BRICKA BRB5,3X10RFR	
380	315105-0165	-		2	WASHER BRB8,4X16RFR	
390	315202-0218	A		1	O-RING 26,2X3 MM	
400	315202-0309	A		1	O-RING 89,5X3 MM	
410	315750-0105	-		1	RETAIN. RING, 8	
420	321120-0100	A		2	BEARING BUSHING W/O FLANGE 8/10X12	
425	321120-0109	A		2	BEARING BUSHING W/O FLANGE,12/14X10	
430	352113-0101	-		1	CLIP STRIP, 92X2,5 MM	

Machine Type | Group Description | Used-In | Group Number | Page No

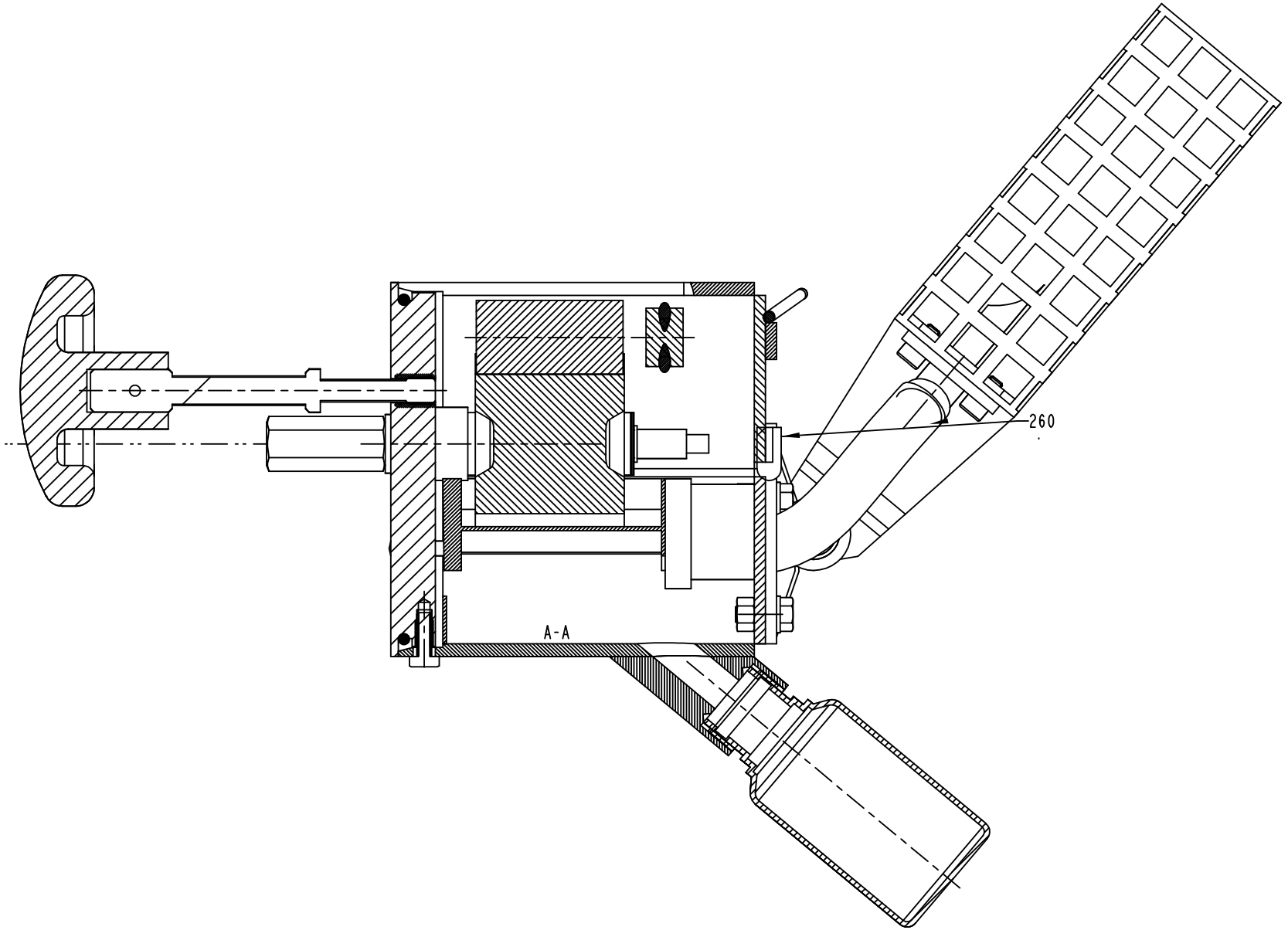
260
A-A

ECM: 104523 - 20021112
Group number: 440286-0300
Assembly Drawing: 440286-3_2_AC

This list covers pages from 7-20 to 7-23

Pos	Part No	SP	UN	Qty	Description	Page No
TBA/8						
230	90050-0008	B		1	BOTTLE	
Common Parts						
010	440287-0000	-		1	COVER	
030	297211-0000	B		1	INK WELL	
040	476356-0000	B		1	HOLDER FOR INK BOTTLE	
060	445542-0000	B		1	MANTEL RUBBER	
065	450355-0000	A		1	INK ROLLER	
070	33010-0000	B		1	SCREW	
080	35547-0000	B		1	SPRING	
100	292044-0000	A		1	SHAFT	
110	293667-0000	A		1	DOWEL	
120	436927-0000	B		1	NUT	
130	293669-0001	A		4	WASHER	
131	293669-0002	A		2	WASHER	
132	293669-0003	A		2	WASHER	
133	293669-0004	A		2	WASHER	
140	293670-0000	A		1	SHAFT	
150	B543135-0000	A		1	INK TRANSFER ROLLER	
	90153-0050	-		*1*	*ADHESIVE, 3M TYPE SCOTCH-WELD 2216 B/A*	
	321120-0100	-		*1*	*BEARING BUSHING W/O FLANGE 8/10X12*	
160	293697-0000	B		1	END SECTION	
180	476354-0000	B		1	CANNULAR TUBE	
190	456773-0000	B		1	PIVOT BRACKET	
200	434747-0000	B		1	BOW CLAMP	
210	537308-0000	B		1	SPRING	
250	90051-0077	-		1	HANDLE	
260	90143-0029	B	MM	295	STRIP	
270	90166-0138	B	MM	100	HOSE	
280	90299-0072	A		48	INK	
300	311103-0236	-		2	PARALLEL PIN ISO 2338 3M6X16 A1	
310	311103-0238	-		1	PARALLEL PIN ISO 2338 3M6X20 A1	
320	311103-0270	-		1	PARALLEL PIN ISO 2338 4M6X16 A1	
330	312105-0291	-		3	SCREW M6S ISO 4017 M4X12 A480	
340	312105-0327	-		2	SCREW M6S ISO 4017 M5X12 A480	
345	312105-0329	-		1	SCREW M6S ISO 4017 M5X16 A480	
347	312115-0287	-		2	SCREW ISO4762 M4X8 A4	
350	312605-0314	-		2	HEXAGON NUT, M6M M5 A280	
360	312605-0318	-		3	HEXAGON NUT, M6M M8 A280	
370	315105-0146	-		3	BRICKA BRB5,3X10RFR	
380	315105-0165	-		2	WASHER BRB8,4X16RFR	
390	315202-0218	A		1	O-RING 26,2X3 MM	
400	315202-0309	A		1	O-RING 89,5X3 MM	
410	315750-0105	-		1	RETAIN. RING, 8	
420	321120-0100	A		2	BEARING BUSHING W/O FLANGE 8/10X12	
425	321120-0109	A		2	BEARING BUSHING W/O FLANGE,12/14X10	
430	352113-0101	-		1	CLIP STRIP, 92X2,5 MM	

Machine Type | Group Description | Used-In | Group Number | Page No

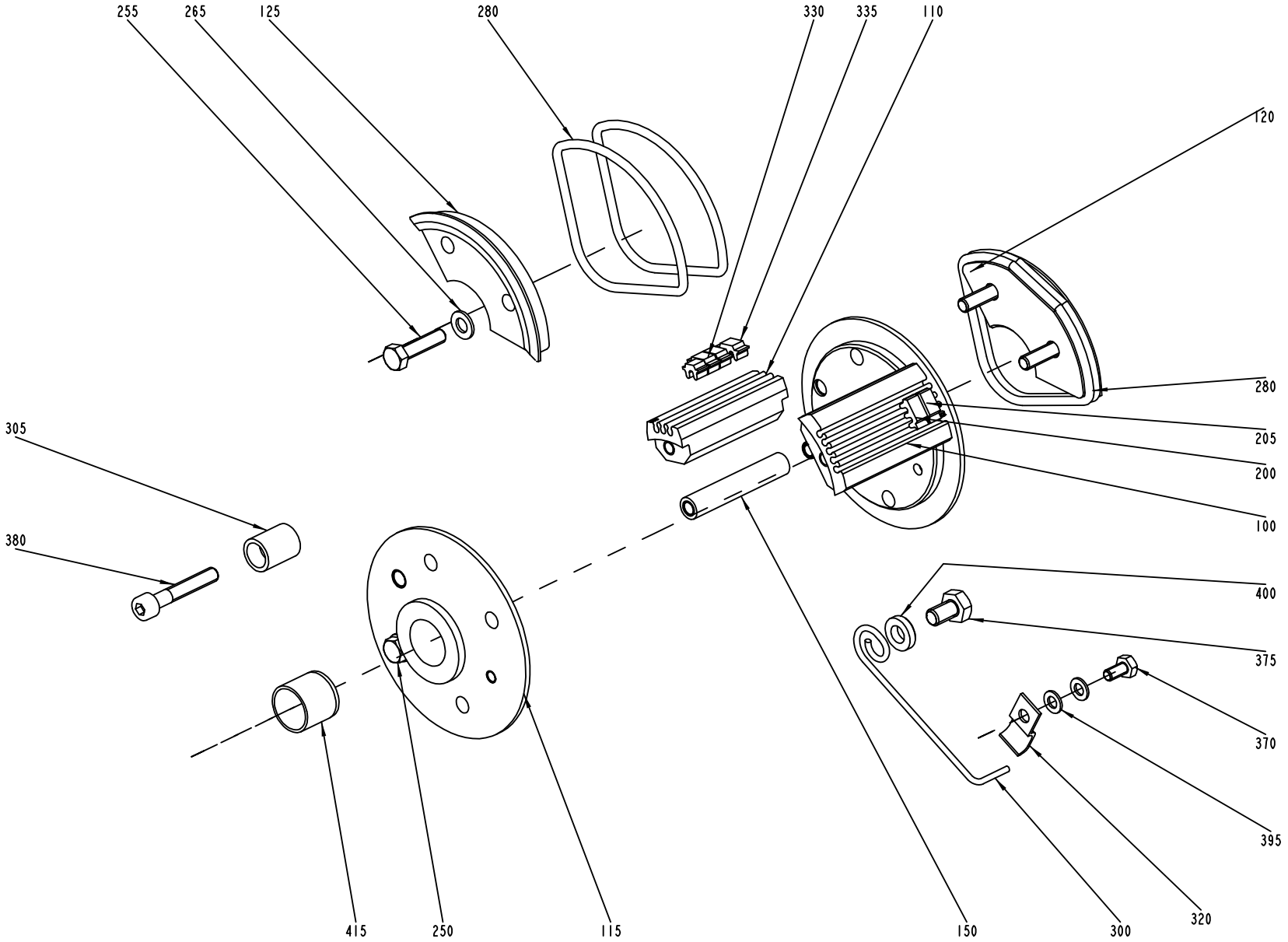
255
265
125
280
330
335
110
120
280
205
200
100
305
380
400
375
370
395
320
300
150
115
250
415

ECM: 124773 - 20030526
Group number: 293684-0200
Assembly Drawing: 293684-3_1_AB

This list covers pages from 7-24 to 7-33

Pos	Part No	SP	UN	Qty	Description	Page No
TBA 0500B (See drawing on pages: 7-24, 7-26, 7-28)						
100	293395-0003	A		2	TYPE HOLDER	
110	293395-0001	A		2	TYPE HOLDER	
115	434787-0000	A		1	END SECTION	
120	292410-0000	A		1	END SECTION	
155	293676-0000	A		1	CARRIER	
200	90413-0048	A		1	CODE INSERT SET	
205	90413-0049	A		1	CODE INSERT SET	
255	312101-0331	-		7	SCREW M6S M5X20 FZB	
265	315101-0146	-		7	WASHER PLAIN, BRB, 5,3/10 H=1	
285	315202-0304	A		2	O-RING 64,5X3 MM	
410	315202-0305	A		2	O-RING 69,5X3 MM	
TBA 0500S, TBA 0355B, TBA 0375S, TBA 0750S (See drawing on pages: 7-30, 7-32)						
105	293395-0002	A		1	TYPE HOLDER	
110	293395-0001	A		1	TYPE HOLDER	
125	479237-0000	A		1	CARRIER	
140	479236-0000	A		2	END SECTION	
145	479238-0000	A		1	CARRIER	
150	293671-0000	A		1	SPACER	
250	312101-0329	-		2	SCREW M6S M5X16 FZB	
255	312101-0331	-		3	SCREW M6S M5X20 FZB	
265	315101-0146	-		5	WASHER PLAIN, BRB, 5,3/10 H=1	
275	315202-0224	A		4	O-RING 42,2X3 MM	
TBA 0750B, TBA 1000S, TBA 1000SQ, TBA 1000B LOFIN (See drawing on pages: 7-24, 7-26, 7-28)						
100	293395-0003	A		1	TYPE HOLDER	
110	293395-0001	A		1	TYPE HOLDER	
115	292409-0000	A		2	END SECTION	
120	442072-0000	A		1	CARRIER	
125	292411-0000	A		1	CARRIER	
150	293671-0000	A		1	SPACER	
200	90413-0048	A		1	CODE INSERT SET	
205	90413-0049	A		1	CODE INSERT SET	
250	312101-0329	-		2	SCREW M6S M5X16 FZB	
255	312101-0331	-		3	SCREW M6S M5X20 FZB	
265	315101-0146	-		5	WASHER PLAIN, BRB, 5,3/10 H=1	
280	315202-0301	A		4	O-RING 49,5X3 MM	
TBA 1000B HIFIN (See drawing on pages: 7-24, 7-26, 7-28)						
100	293395-0003	A		1	TYPE HOLDER	
110	293395-0001	A		1	TYPE HOLDER	
115	293690-0000	A		2	END SECTION	
120	442431-0000	A		1	CARRIER	
125	293688-0000	A		1	CARRIER	
150	293671-0000	A		1	SPACER	
200	90413-0048	A		1	CODE INSERT SET	
205	90413-0049	A		1	CODE INSERT SET	
250	312101-0329	-		2	SCREW M6S M5X16 FZB	
255	312101-0331	-		3	SCREW M6S M5X20 FZB	
265	315101-0146	-		5	WASHER PLAIN, BRB, 5,3/10 H=1	
280	315202-0301	A		4	O-RING 49,5X3 MM	
Common Parts						
300	32691-0000	B		1	LOCKING SPRING	
305	33011-0000	A		1	SLEEVE	
320	1511572-0000	-		1	CLIP	
330	90413-0043	A		1	CODE INSERT SET	
330	90413-0033	A		1	CODE INSERT SET 0-9	
335	90413-0047	A		1	CODE INSERT SET	
335	90413-0044	A		1	CODE INSERT SET	
370	312101-0287	-		1	SCREW M6S M4X8 FZB	
375	312101-0364	-		1	SCREW M6S M6X10 FZB	
380	312111-0335	-		1	SCREW HEX.SOCK.HD.MC6S-TT 5X30 88 FZB	
395	315101-0136	-		2	BRICKA BRB, 4,3/8 H=0,8	
400	315111-0153	-		1	WASHER PLAIN, TBRB 6,4/12 H=3	
415	321120-0122	A		2	BEARING BUSHING W/O FL, 15X17X15 MM	

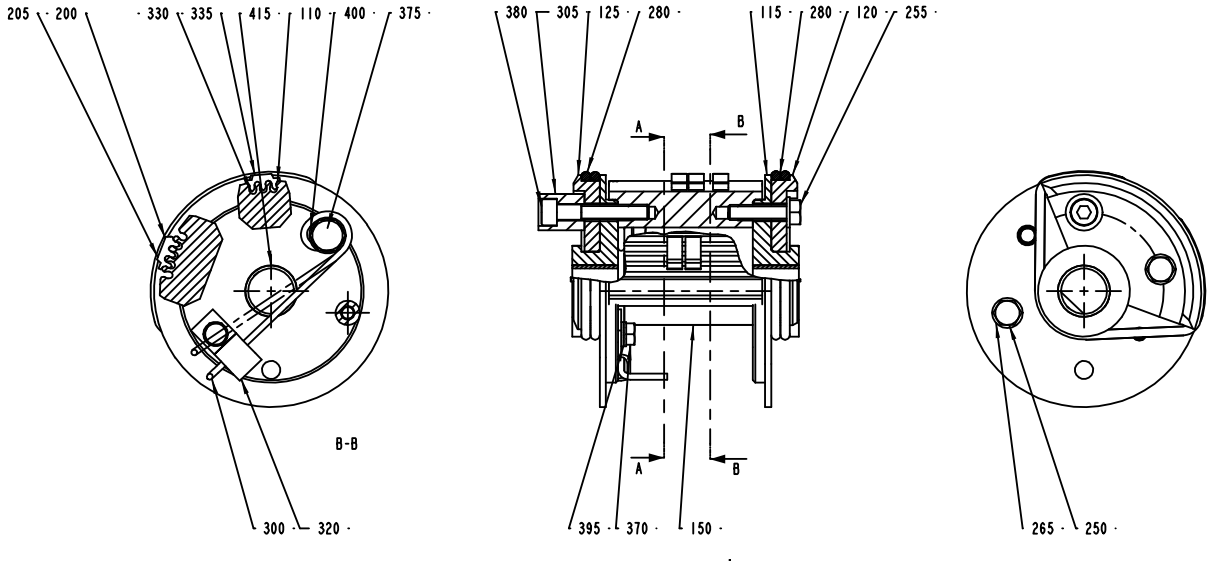

Volume: TBA- 500B.ml

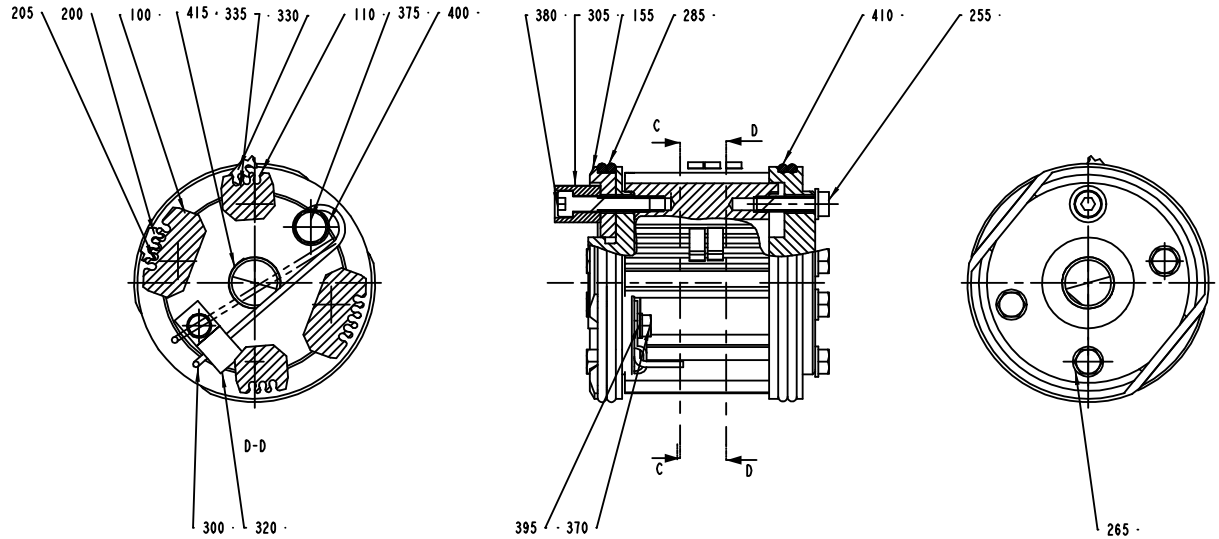

Volume: TBA- 500SQ. 750B. 1000B LOFIN. 1000S. 1000SQ. 1055B. 1500S.ml

Pos	Part No	SP	UN	Qty	Description	Page No
TBA 0500B (See drawing on pages: 7-24, 7-26, 7-28)						
100	293395-0003	A		2	TYPE HOLDER	
110	293395-0001	A		2	TYPE HOLDER	
115	434787-0000	A		1	END SECTION	
120	292410-0000	A		1	END SECTION	
155	293676-0000	A		1	CARRIER	
200	90413-0048	A		1	CODE INSERT SET	
205	90413-0049	A		1	CODE INSERT SET	
255	312101-0331	-		7	SCREW M6S M5X20 FZB	
265	315101-0146	-		7	WASHER PLAIN, BRB, 5,3/10 H=1	
285	315202-0304	A		2	O-RING 64,5X3 MM	
410	315202-0305	A		2	O-RING 69,5X3 MM	
TBA 0500S, TBA 0355B, TBA 0375S, TBA 0750S (See drawing on pages: 7-30, 7-32)						
105	293395-0002	A		1	TYPE HOLDER	
110	293395-0001	A		1	TYPE HOLDER	
125	479237-0000	A		1	CARRIER	
140	479236-0000	A		2	END SECTION	
145	479238-0000	A		1	CARRIER	
150	293671-0000	A		1	SPACER	
250	312101-0329	-		2	SCREW M6S M5X16 FZB	
255	312101-0331	-		3	SCREW M6S M5X20 FZB	
265	315101-0146	-		5	WASHER PLAIN, BRB, 5,3/10 H=1	
275	315202-0224	A		4	O-RING 42,2X3 MM	
TBA 0750B, TBA 1000S, TBA 1000SQ, TBA 1000B LOFIN (See drawing on pages: 7-24, 7-26, 7-28)						
100	293395-0003	A		1	TYPE HOLDER	
110	293395-0001	A		1	TYPE HOLDER	
115	292409-0000	A		2	END SECTION	
120	442072-0000	A		1	CARRIER	
125	292411-0000	A		1	CARRIER	
150	293671-0000	A		1	SPACER	
200	90413-0048	A		1	CODE INSERT SET	
205	90413-0049	A		1	CODE INSERT SET	
250	312101-0329	-		2	SCREW M6S M5X16 FZB	
255	312101-0331	-		3	SCREW M6S M5X20 FZB	
265	315101-0146	-		5	WASHER PLAIN, BRB, 5,3/10 H=1	
280	315202-0301	A		4	O-RING 49,5X3 MM	
TBA 1000B HIFIN (See drawing on pages: 7-24, 7-26, 7-28)						
100	293395-0003	A		1	TYPE HOLDER	
110	293395-0001	A		1	TYPE HOLDER	
115	293690-0000	A		2	END SECTION	
120	442431-0000	A		1	CARRIER	
125	293688-0000	A		1	CARRIER	
150	293671-0000	A		1	SPACER	
200	90413-0048	A		1	CODE INSERT SET	
205	90413-0049	A		1	CODE INSERT SET	
250	312101-0329	-		2	SCREW M6S M5X16 FZB	
255	312101-0331	-		3	SCREW M6S M5X20 FZB	
265	315101-0146	-		5	WASHER PLAIN, BRB, 5,3/10 H=1	
280	315202-0301	A		4	O-RING 49,5X3 MM	
Common Parts						
300	32691-0000	B		1	LOCKING SPRING	
305	33011-0000	A		1	SLEEVE	
320	1511572-0000	-		1	CLIP	
330	90413-0043	A		1	CODE INSERT SET	
330	90413-0033	A		1	CODE INSERT SET 0-9	
335	90413-0047	A		1	CODE INSERT SET	
335	90413-0044	A		1	CODE INSERT SET	
370	312101-0287	-		1	SCREW M6S M4X8 FZB	
375	312101-0364	-		1	SCREW M6S M6X10 FZB	
380	312111-0335	-		1	SCREW HEX.SOCK.HD.MC6S-TT 5X30 88 FZB	
395	315101-0136	-		2	BRICKA BRB, 4,3/8 H=0,8	
400	315111-0153	-		1	WASHER PLAIN, TBRB 6,4/12 H=3	
415	321120-0122	A		2	BEARING BUSHING W/O FL, 15X17X15 MM	

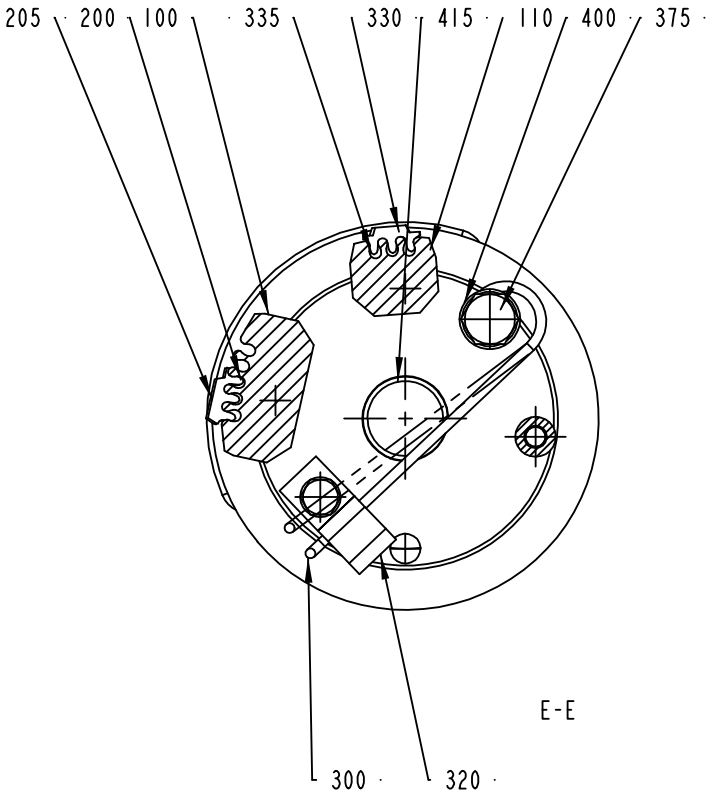
205
200
100
335
330
415
110
400
375
E-E
300
320

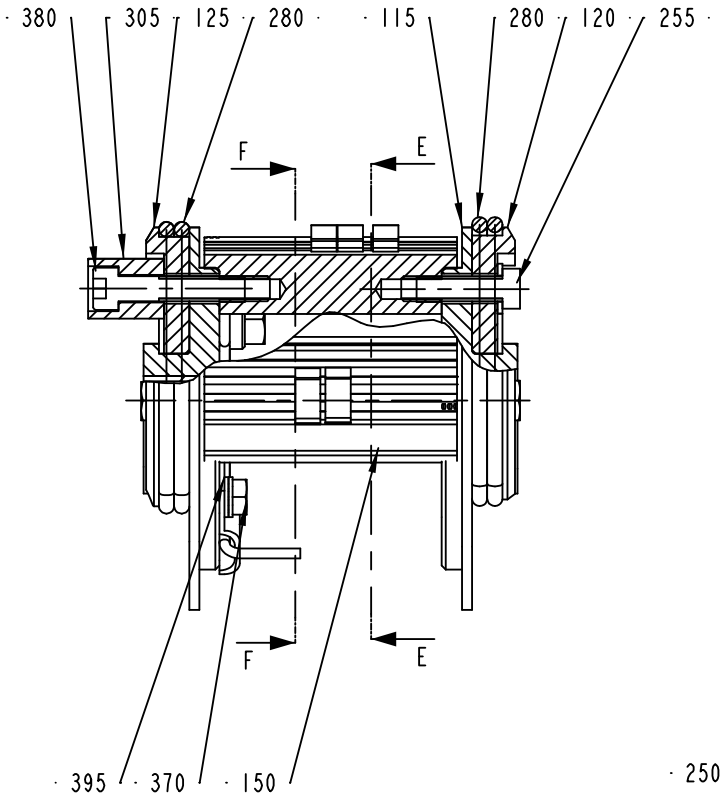
380
305
125
280
115
280
120
255
F
E
F
E
395
370
150

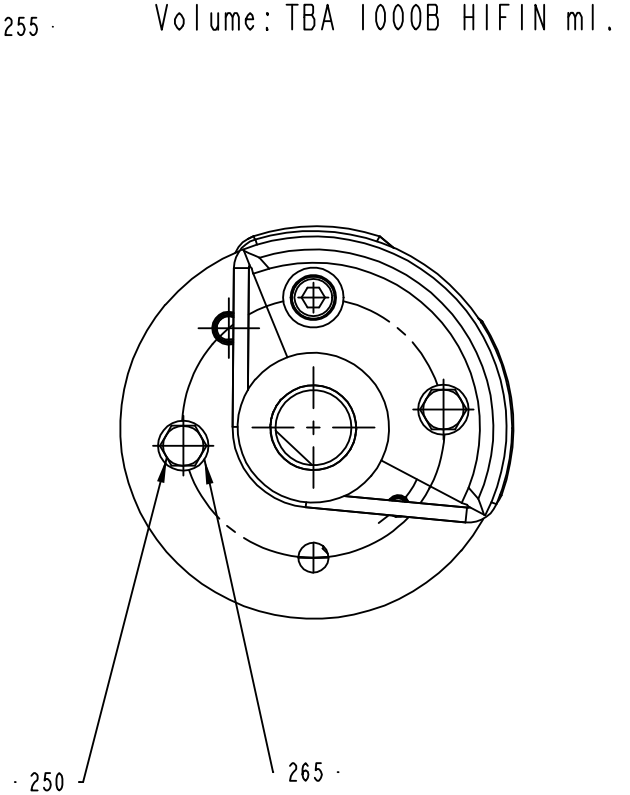
Volume: TBA 1000B HIFIN ml.
250
265

ECM: 124773 - 20030526
Group number: 293684-0200
Assembly Drawing: 293684-3_3_AB

This list covers pages from 7-24 to 7-33

Pos	Part No	SP	UN	Qty	Description	Page No
TBA 0500B (See drawing on pages: 7-24, 7-26, 7-28)						
100	293395-0003	A		2	TYPE HOLDER	
110	293395-0001	A		2	TYPE HOLDER	
115	434787-0000	A		1	END SECTION	
120	292410-0000	A		1	END SECTION	
155	293676-0000	A		1	CARRIER	
200	90413-0048	A		1	CODE INSERT SET	
205	90413-0049	A		1	CODE INSERT SET	
255	312101-0331	-		7	SCREW M6S M5X20 FZB	
265	315101-0146	-		7	WASHER PLAIN, BRB, 5,3/10 H=1	
285	315202-0304	A		2	O-RING 64,5X3 MM	
410	315202-0305	A		2	O-RING 69,5X3 MM	
TBA 0500S, TBA 0355B, TBA 0375S, TBA 0750S (See drawing on pages: 7-30, 7-32)						
105	293395-0002	A		1	TYPE HOLDER	
110	293395-0001	A		1	TYPE HOLDER	
125	479237-0000	A		1	CARRIER	
140	479236-0000	A		2	END SECTION	
145	479238-0000	A		1	CARRIER	
150	293671-0000	A		1	SPACER	
250	312101-0329	-		2	SCREW M6S M5X16 FZB	
255	312101-0331	-		3	SCREW M6S M5X20 FZB	
265	315101-0146	-		5	WASHER PLAIN, BRB, 5,3/10 H=1	
275	315202-0224	A		4	O-RING 42,2X3 MM	
TBA 0750B, TBA 1000S, TBA 1000SQ, TBA 1000B LOFIN (See drawing on pages: 7-24, 7-26, 7-28)						
100	293395-0003	A		1	TYPE HOLDER	
110	293395-0001	A		1	TYPE HOLDER	
115	292409-0000	A		2	END SECTION	
120	442072-0000	A		1	CARRIER	
125	292411-0000	A		1	CARRIER	
150	293671-0000	A		1	SPACER	
200	90413-0048	A		1	CODE INSERT SET	
205	90413-0049	A		1	CODE INSERT SET	
250	312101-0329	-		2	SCREW M6S M5X16 FZB	
255	312101-0331	-		3	SCREW M6S M5X20 FZB	
265	315101-0146	-		5	WASHER PLAIN, BRB, 5,3/10 H=1	
280	315202-0301	A		4	O-RING 49,5X3 MM	
TBA 1000B HIFIN (See drawing on pages: 7-24, 7-26, 7-28)						
100	293395-0003	A		1	TYPE HOLDER	
110	293395-0001	A		1	TYPE HOLDER	
115	293690-0000	A		2	END SECTION	
120	442431-0000	A		1	CARRIER	
125	293688-0000	A		1	CARRIER	
150	293671-0000	A		1	SPACER	
200	90413-0048	A		1	CODE INSERT SET	
205	90413-0049	A		1	CODE INSERT SET	
250	312101-0329	-		2	SCREW M6S M5X16 FZB	
255	312101-0331	-		3	SCREW M6S M5X20 FZB	
265	315101-0146	-		5	WASHER PLAIN, BRB, 5,3/10 H=1	
280	315202-0301	A		4	O-RING 49,5X3 MM	
Common Parts						
300	32691-0000	B		1	LOCKING SPRING	
305	33011-0000	A		1	SLEEVE	
320	1511572-0000	-		1	CLIP	
330	90413-0043	A		1	CODE INSERT SET	
330	90413-0033	A		1	CODE INSERT SET 0-9	
335	90413-0047	A		1	CODE INSERT SET	
335	90413-0044	A		1	CODE INSERT SET	
370	312101-0287	-		1	SCREW M6S M4X8 FZB	
375	312101-0364	-		1	SCREW M6S M6X10 FZB	
380	312111-0335	-		1	SCREW HEX.SOCK.HD.MC6S-TT 5X30 88 FZB	
395	315101-0136	-		2	BRICKA BRB, 4,3/8 H=0,8	
400	315111-0153	-		1	WASHER PLAIN, TBRB 6,4/12 H=3	
415	321120-0122	A		2	BEARING BUSHING W/O FL, 15X17X15 MM	

Machine Type | Group Description | Used-In | Group Number | Page No

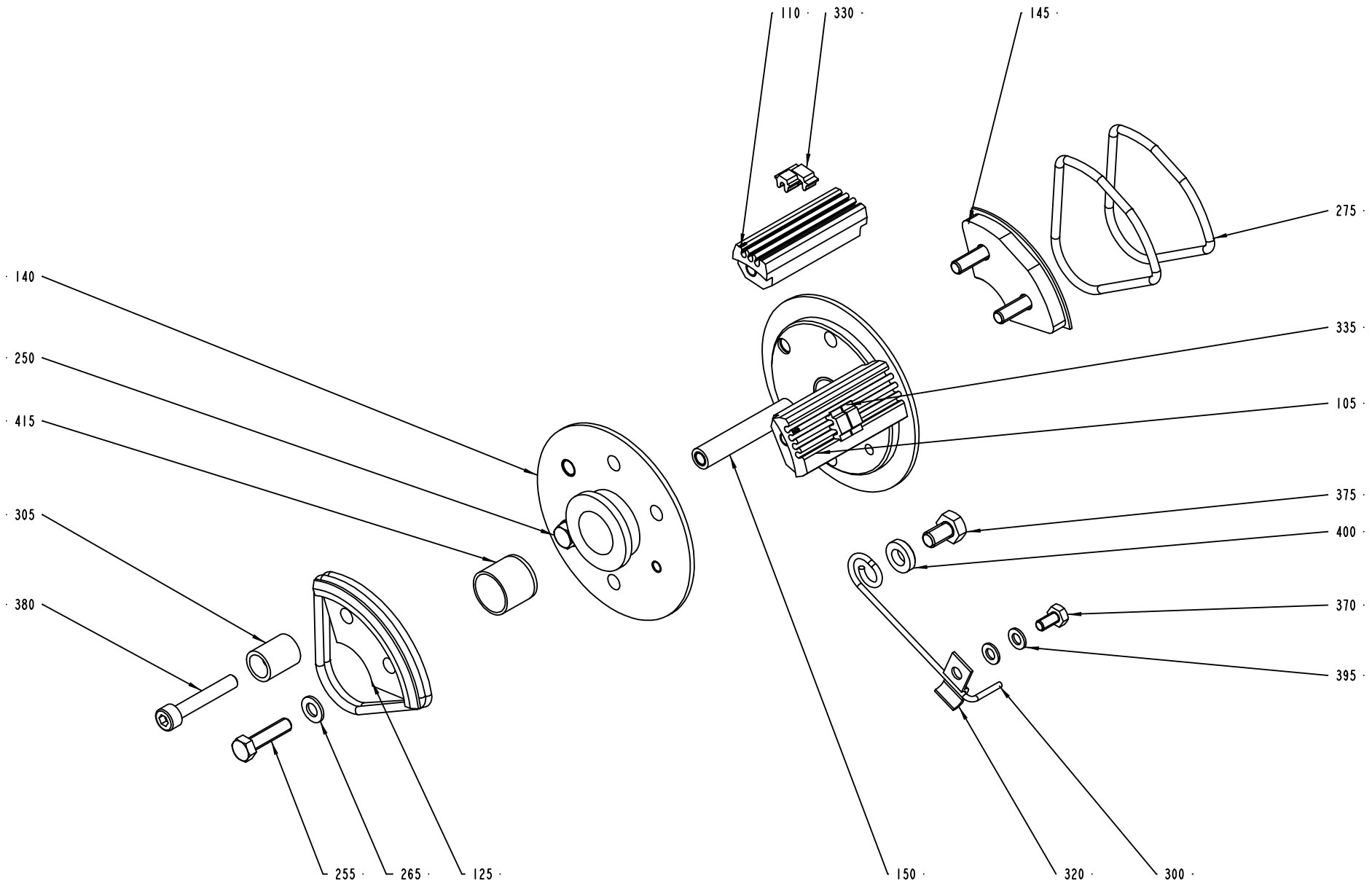
110
330
145
275
140
335
250
105
415
375
400
305
370
380
395
255
265
125
150
320
300

ECM: 124773 - 20030526
Group number: 293684-0200
Assembly Drawing: 293684-4_1_AB

This list covers pages from 7-24 to 7-33

Pos	Part No	SP	UN	Qty	Description	Page No
TBA 0500B (See drawing on pages: 7-24, 7-26, 7-28)						
100	293395-0003	A		2	TYPE HOLDER	
110	293395-0001	A		2	TYPE HOLDER	
115	434787-0000	A		1	END SECTION	
120	292410-0000	A		1	END SECTION	
155	293676-0000	A		1	CARRIER	
200	90413-0048	A		1	CODE INSERT SET	
205	90413-0049	A		1	CODE INSERT SET	
255	312101-0331	-		7	SCREW M6S M5X20 FZB	
265	315101-0146	-		7	WASHER PLAIN, BRB, 5,3/10 H=1	
285	315202-0304	A		2	O-RING 64,5X3 MM	
410	315202-0305	A		2	O-RING 69,5X3 MM	
TBA 0500S, TBA 0355B, TBA 0375S, TBA 0750S (See drawing on pages: 7-30, 7-32)						
105	293395-0002	A		1	TYPE HOLDER	
110	293395-0001	A		1	TYPE HOLDER	
125	479237-0000	A		1	CARRIER	
140	479236-0000	A		2	END SECTION	
145	479238-0000	A		1	CARRIER	
150	293671-0000	A		1	SPACER	
250	312101-0329	-		2	SCREW M6S M5X16 FZB	
255	312101-0331	-		3	SCREW M6S M5X20 FZB	
265	315101-0146	-		5	WASHER PLAIN, BRB, 5,3/10 H=1	
275	315202-0224	A		4	O-RING 42,2X3 MM	
TBA 0750B, TBA 1000S, TBA 1000SQ, TBA 1000B LOFIN (See drawing on pages: 7-24, 7-26, 7-28)						
100	293395-0003	A		1	TYPE HOLDER	
110	293395-0001	A		1	TYPE HOLDER	
115	292409-0000	A		2	END SECTION	
120	442072-0000	A		1	CARRIER	
125	292411-0000	A		1	CARRIER	
150	293671-0000	A		1	SPACER	
200	90413-0048	A		1	CODE INSERT SET	
205	90413-0049	A		1	CODE INSERT SET	
250	312101-0329	-		2	SCREW M6S M5X16 FZB	
255	312101-0331	-		3	SCREW M6S M5X20 FZB	
265	315101-0146	-		5	WASHER PLAIN, BRB, 5,3/10 H=1	
280	315202-0301	A		4	O-RING 49,5X3 MM	
TBA 1000B HIFIN (See drawing on pages: 7-24, 7-26, 7-28)						
100	293395-0003	A		1	TYPE HOLDER	
110	293395-0001	A		1	TYPE HOLDER	
115	293690-0000	A		2	END SECTION	
120	442431-0000	A		1	CARRIER	
125	293688-0000	A		1	CARRIER	
150	293671-0000	A		1	SPACER	
200	90413-0048	A		1	CODE INSERT SET	
205	90413-0049	A		1	CODE INSERT SET	
250	312101-0329	-		2	SCREW M6S M5X16 FZB	
255	312101-0331	-		3	SCREW M6S M5X20 FZB	
265	315101-0146	-		5	WASHER PLAIN, BRB, 5,3/10 H=1	
280	315202-0301	A		4	O-RING 49,5X3 MM	
Common Parts						
300	32691-0000	B		1	LOCKING SPRING	
305	33011-0000	A		1	SLEEVE	
320	1511572-0000	-		1	CLIP	
330	90413-0043	A		1	CODE INSERT SET	
330	90413-0033	A		1	CODE INSERT SET 0-9	
335	90413-0047	A		1	CODE INSERT SET	
335	90413-0044	A		1	CODE INSERT SET	
370	312101-0287	-		1	SCREW M6S M4X8 FZB	
375	312101-0364	-		1	SCREW M6S M6X10 FZB	
380	312111-0335	-		1	SCREW HEX.SOCK.HD.MC6S-TT 5X30 88 FZB	
395	315101-0136	-		2	BRICKA BRB, 4,3/8 H=0,8	
400	315111-0153	-		1	WASHER PLAIN, TBRB 6,4/12 H=3	
415	321120-0122	A		2	BEARING BUSHING W/O FL, 15X17X15 MM	

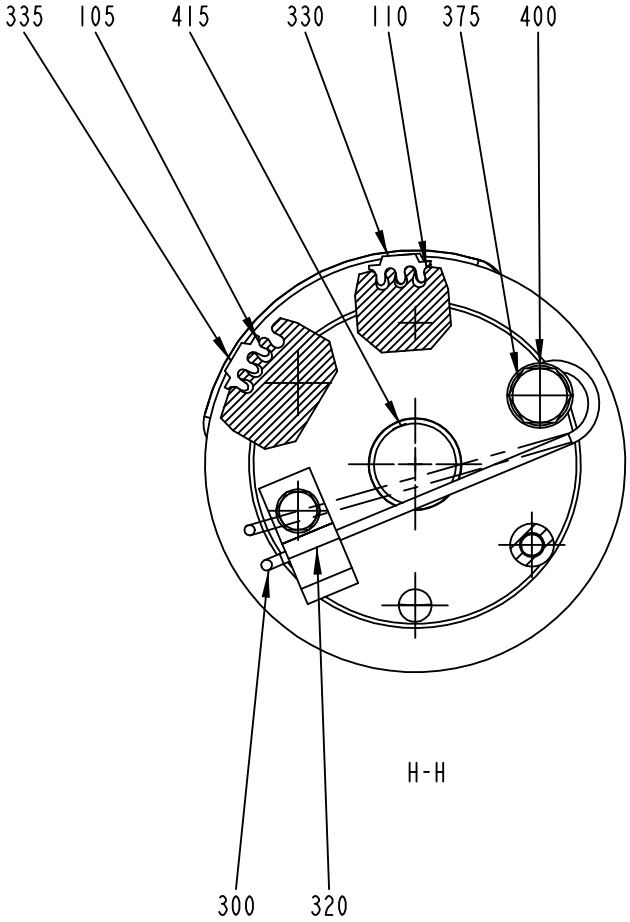

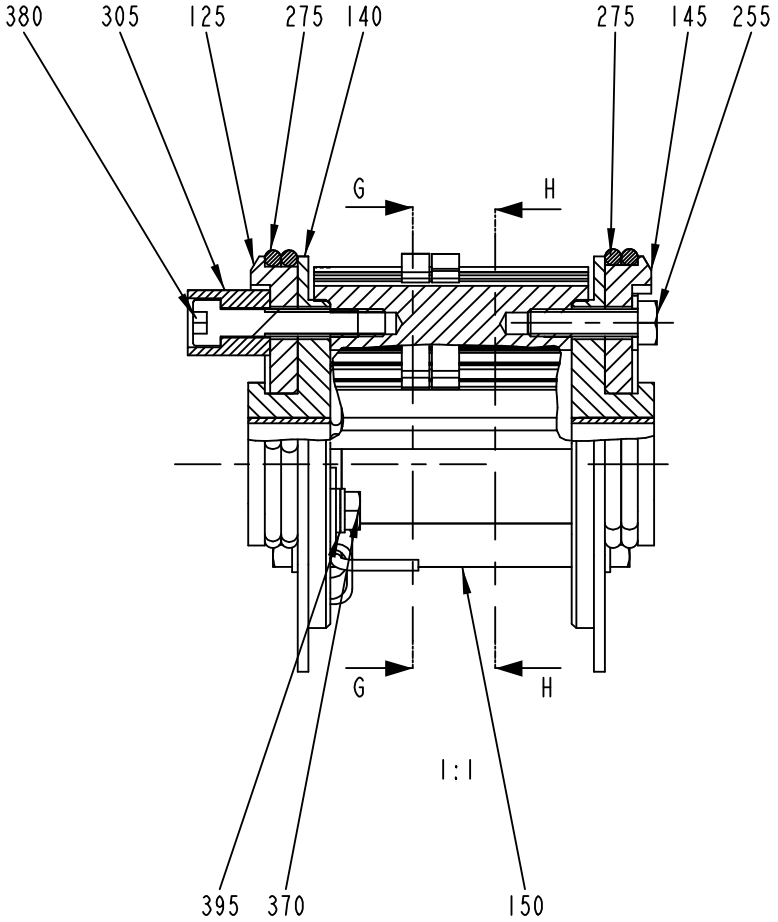

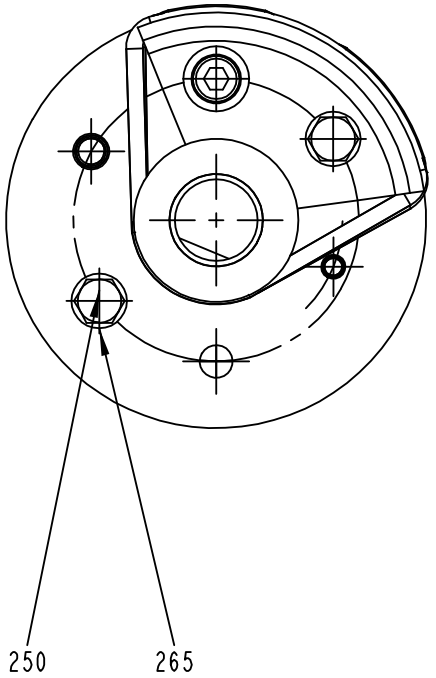

Volume: TBA- 355B. 375S. 400B. 500S. 750S.ml

ECM: 124773 - 20030526
Group number: 293684-0200
Assembly Drawing: 293684-4_2_AB

This list covers pages from 7-24 to 7-33

Pos	Part No	SP	UN	Qty	Description	Page No
TBA 0500B (See drawing on pages: 7-24, 7-26, 7-28)						
100	293395-0003	A		2	TYPE HOLDER	
110	293395-0001	A		2	TYPE HOLDER	
115	434787-0000	A		1	END SECTION	
120	292410-0000	A		1	END SECTION	
155	293676-0000	A		1	CARRIER	
200	90413-0048	A		1	CODE INSERT SET	
205	90413-0049	A		1	CODE INSERT SET	
255	312101-0331	-		7	SCREW M6S M5X20 FZB	
265	315101-0146	-		7	WASHER PLAIN, BRB, 5,3/10 H=1	
285	315202-0304	A		2	O-RING 64,5X3 MM	
410	315202-0305	A		2	O-RING 69,5X3 MM	
TBA 0500S, TBA 0355B, TBA 0375S, TBA 0750S (See drawing on pages: 7-30, 7-32)						
105	293395-0002	A		1	TYPE HOLDER	
110	293395-0001	A		1	TYPE HOLDER	
125	479237-0000	A		1	CARRIER	
140	479236-0000	A		2	END SECTION	
145	479238-0000	A		1	CARRIER	
150	293671-0000	A		1	SPACER	
250	312101-0329	-		2	SCREW M6S M5X16 FZB	
255	312101-0331	-		3	SCREW M6S M5X20 FZB	
265	315101-0146	-		5	WASHER PLAIN, BRB, 5,3/10 H=1	
275	315202-0224	A		4	O-RING 42,2X3 MM	
TBA 0750B, TBA 1000S, TBA 1000SQ, TBA 1000B LOFIN (See drawing on pages: 7-24, 7-26, 7-28)						
100	293395-0003	A		1	TYPE HOLDER	
110	293395-0001	A		1	TYPE HOLDER	
115	292409-0000	A		2	END SECTION	
120	442072-0000	A		1	CARRIER	
125	292411-0000	A		1	CARRIER	
150	293671-0000	A		1	SPACER	
200	90413-0048	A		1	CODE INSERT SET	
205	90413-0049	A		1	CODE INSERT SET	
250	312101-0329	-		2	SCREW M6S M5X16 FZB	
255	312101-0331	-		3	SCREW M6S M5X20 FZB	
265	315101-0146	-		5	WASHER PLAIN, BRB, 5,3/10 H=1	
280	315202-0301	A		4	O-RING 49,5X3 MM	
TBA 1000B HIFIN (See drawing on pages: 7-24, 7-26, 7-28)						
100	293395-0003	A		1	TYPE HOLDER	
110	293395-0001	A		1	TYPE HOLDER	
115	293690-0000	A		2	END SECTION	
120	442431-0000	A		1	CARRIER	
125	293688-0000	A		1	CARRIER	
150	293671-0000	A		1	SPACER	
200	90413-0048	A		1	CODE INSERT SET	
205	90413-0049	A		1	CODE INSERT SET	
250	312101-0329	-		2	SCREW M6S M5X16 FZB	
255	312101-0331	-		3	SCREW M6S M5X20 FZB	
265	315101-0146	-		5	WASHER PLAIN, BRB, 5,3/10 H=1	
280	315202-0301	A		4	O-RING 49,5X3 MM	
Common Parts						
300	32691-0000	B		1	LOCKING SPRING	
305	33011-0000	A		1	SLEEVE	
320	1511572-0000	-		1	CLIP	
330	90413-0043	A		1	CODE INSERT SET	
330	90413-0033	A		1	CODE INSERT SET 0-9	
335	90413-0047	A		1	CODE INSERT SET	
335	90413-0044	A		1	CODE INSERT SET	
370	312101-0287	-		1	SCREW M6S M4X8 FZB	
375	312101-0364	-		1	SCREW M6S M6X10 FZB	
380	312111-0335	-		1	SCREW HEX.SOCK.HD.MC6S-TT 5X30 88 FZB	
395	315101-0136	-		2	BRICKA BRB, 4,3/8 H=0,8	
400	315111-0153	-		1	WASHER PLAIN, TBRB 6,4/12 H=3	
415	321120-0122	A		2	BEARING BUSHING W/O FL, 15X17X15 MM	

Machine Type | Group Description | Used-In | Group Number | Page No

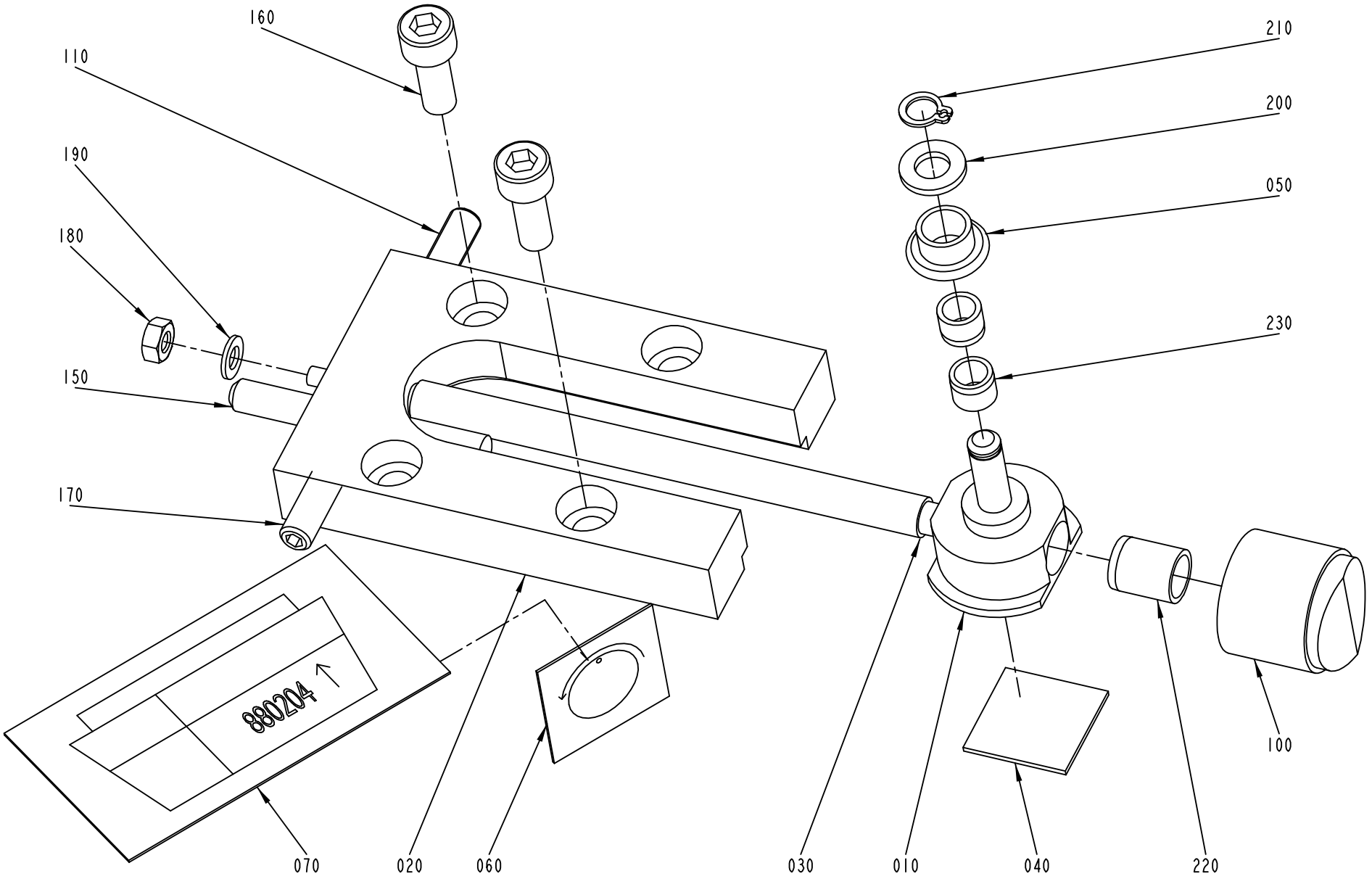
160
110
190
180
150
170
210
200
050
230
100
070
020
060
030
010
040
220
880204

ECM: 99112 - 20011129
Group number: 543143-0100
Assembly Drawing: 543143-1_1_AC

This list covers pages from 7-34 to 7-37

Pos	Part No	SP	UN	Qty	Description	Page No
-						
010	526984-0000	A		1	SADDLE	
020	526985-0000	B		1	PLATE	
030	526986-0001	B		1	SHAFT	
040	527649-0000	B		1	DISTANCE RUBBER	
050	529362-0000	A		1	SPROCKET	
060	543141-0000	-		1	SIGN	
070	543142-0000	-		1	SIGN	
100	90051-0089	-		1	SHIFTER HANDLE	
110	90287-0167	-		1	SCREW SPRINGLOAD. SOCK. HEX HEAD M6X20	
150	311103-0365	-		1	PARALLEL PIN ISO 2338 6M6X50 A1	
160	312115-0368	-		2	SCREW ISO4762 M6X16 A4	
170	312318-0368	-		1	SCREW ISO4029 M6X16 A4	
180	312605-0312	-		1	HEXAGON NUT, M6M M4 A280	
190	315105-0136	-		1	WASHER BRB4,3XRFR	
200	315105-0153	-		1	WASHER BRB6,4X12RFR	
210	315751-0103	-		1	RETAIN. RING, 6	
220	321120-0100	A		1	BEARING BUSHING W/O FLANGE 8/10X12	
230	321120-0101	A		2	BEARING BUSHING W/O FLANGE,6/8X6	

Pos	Part No	SP	UN	Qty	Description	Page No

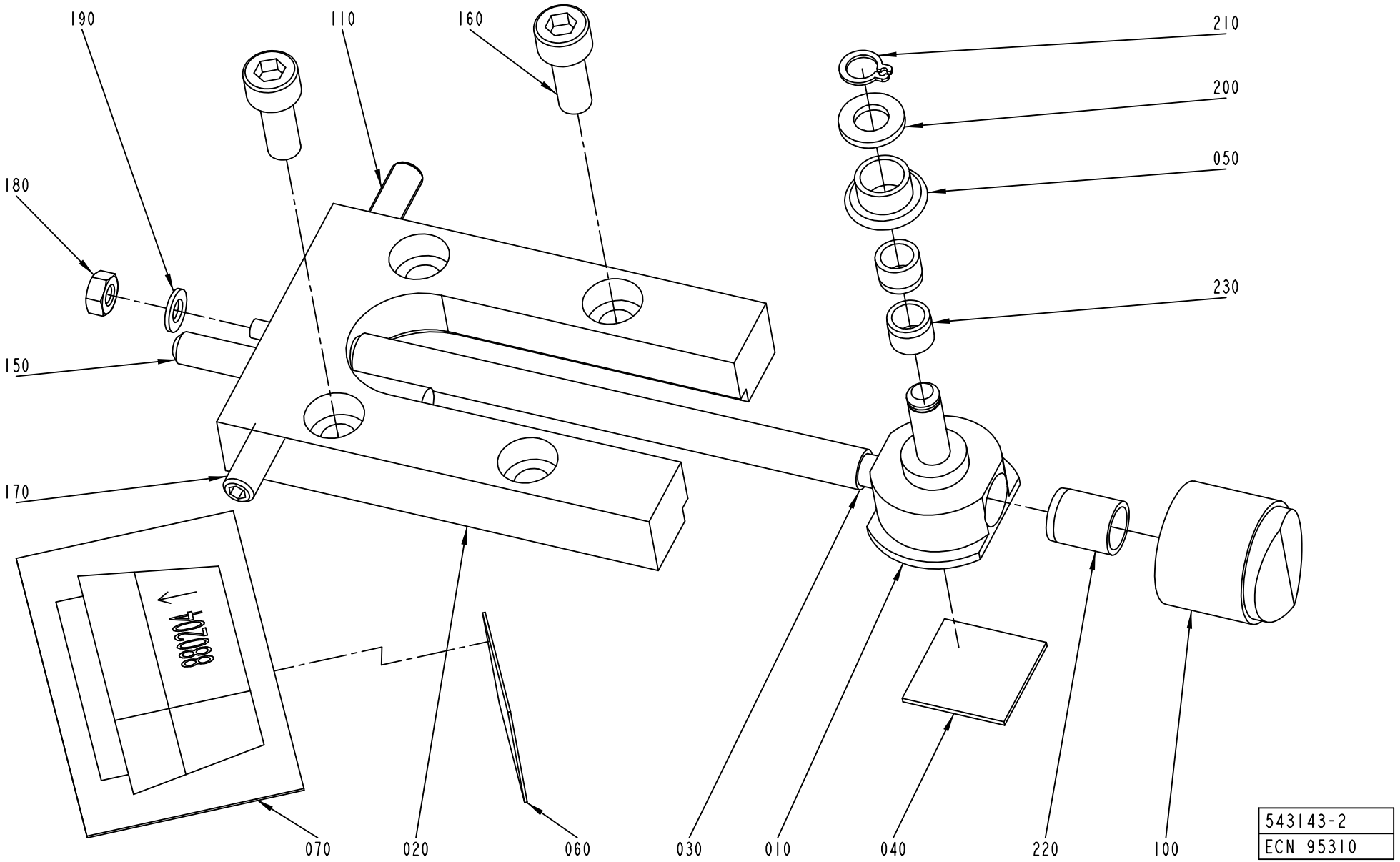
190
110
160
210
200
180
050
230
150
170
070
020
060
030
010
040
220
100
543143-2
ECN 95310

ECM: 99112 - 20011129
Group number: 543143-0100
Assembly Drawing: 543143-2_1_AB

This list covers pages from 7-34 to 7-37

Pos	Part No	SP	UN	Qty	Description	Page No
-						
010	526984-0000	A		1	SADDLE	
020	526985-0000	B		1	PLATE	
030	526986-0001	B		1	SHAFT	
040	527649-0000	B		1	DISTANCE RUBBER	
050	529362-0000	A		1	SPROCKET	
060	543141-0000	-		1	SIGN	
070	543142-0000	-		1	SIGN	
100	90051-0089	-		1	SHIFTER HANDLE	
110	90287-0167	-		1	SCREW SPRINGLOAD. SOCK. HEX HEAD M6X20	
150	311103-0365	-		1	PARALLEL PIN ISO 2338 6M6X50 A1	
160	312115-0368	-		2	SCREW ISO4762 M6X16 A4	
170	312318-0368	-		1	SCREW ISO4029 M6X16 A4	
180	312605-0312	-		1	HEXAGON NUT, M6M M4 A280	
190	315105-0136	-		1	WASHER BRB4,3XRFR	
200	315105-0153	-		1	WASHER BRB6,4X12RFR	
210	315751-0103	-		1	RETAIN. RING, 6	
220	321120-0100	A		1	BEARING BUSHING W/O FLANGE 8/10X12	
230	321120-0101	A		2	BEARING BUSHING W/O FLANGE,6/8X6	

Pos	Part No	SP	UN	Qty	Description	Page No

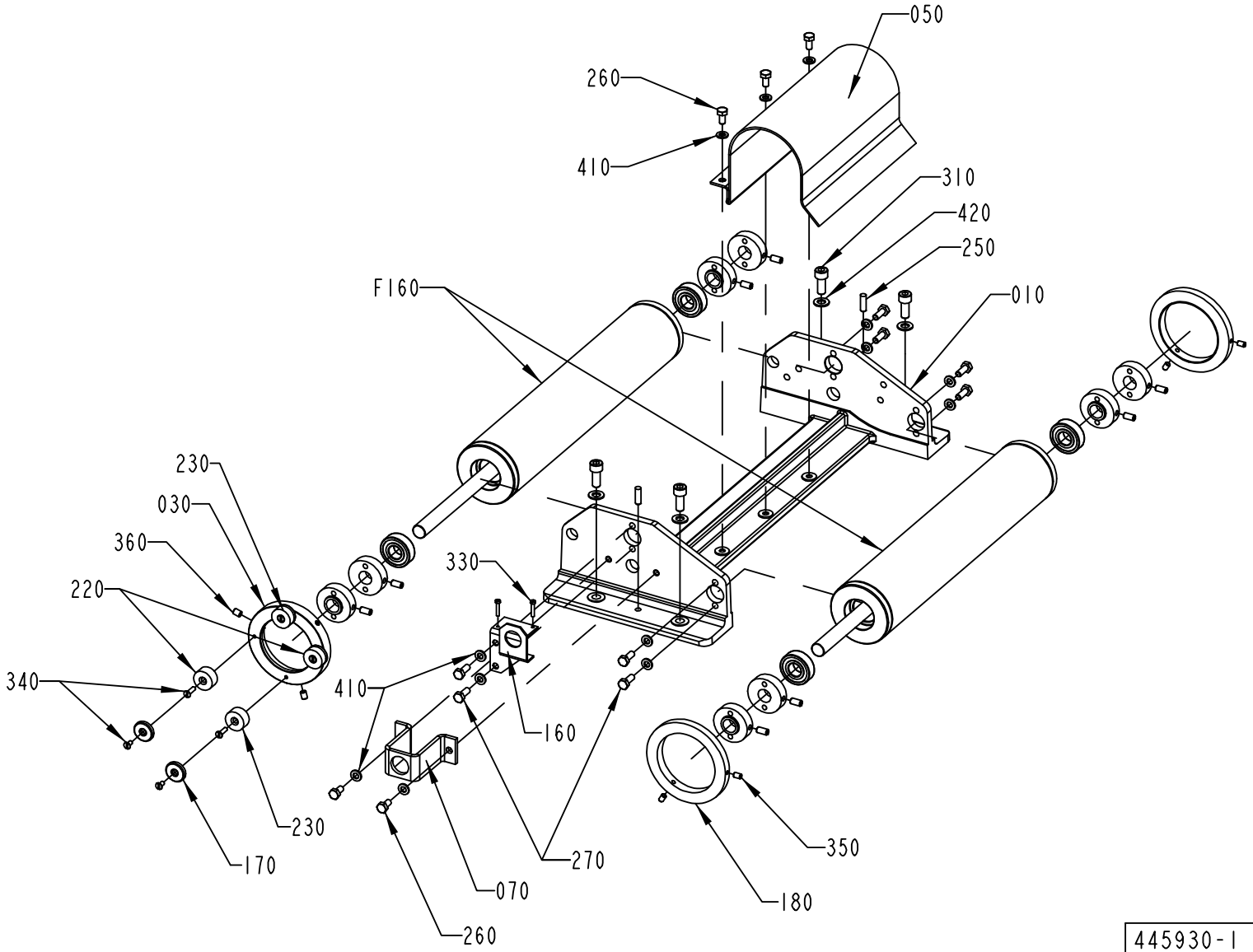

445930-1
ECM 96898

ECM: 96900 - 20021112
Group number: 445930-0100
Assembly Drawing: 445930-1_1_AB

Pos	Part No	SP	UN	Qty	Description	Page No
-						
010	445931-0000	-		1	CANTILEVER	
030	440157-0000	-		1	MAGNET BRACKET	
050	476403-0000	-		1	HEAD PLATE	
180	250588-0000	A		2	FLANGE	
250	311102-0353	-		2	PARALLEL PIN ISO 2338 6M6X20 ST	
270	312105-0368	-		8	SCREW M6S M6X16 A280	
310	312115-0451	-		4	SCREW ISO4762 M8X20 A4	
350	312316-0323	-		4	SCREW HEX.SOCK.SET CUP P.MSK6SS5X8 FZB	
360	312316-0362	-		3	SCREW HEX.SOCK.SET CUP P.MSK6SS6X8 FZB	
420	315105-0165	-		4	WASHER BRB8,4X16RFR	
F160	A440135-0100	-		2	BENDING ROLLER	**7-41**

Pos	Part No	SP	UN	Qty	Description	Page No

Machine Type | Group Description | Used-In | Group Number | Page No

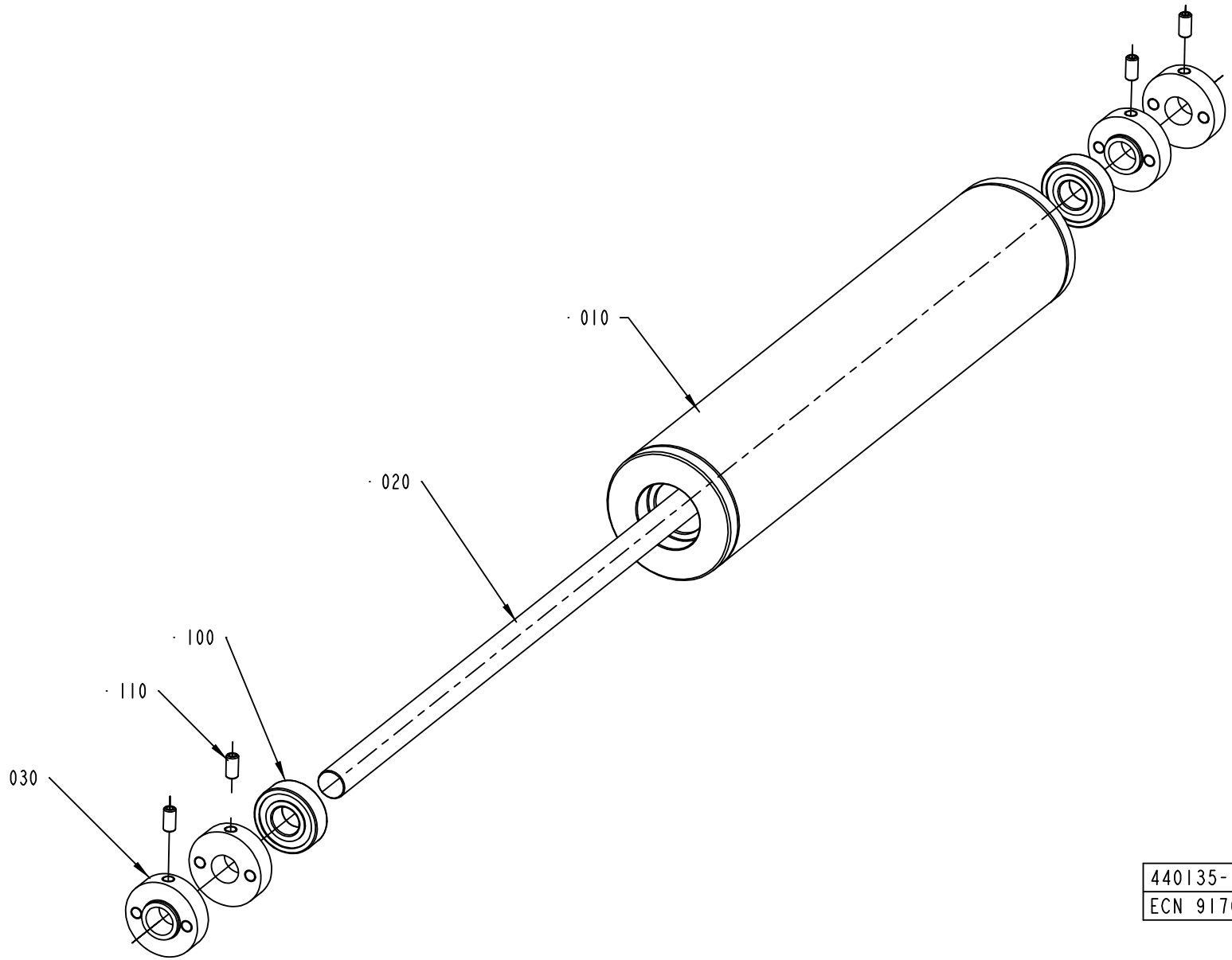

440135-1
ECN 91702

ECM: 91705 - 20021112
Group number: 440135-0100
Assembly Drawing: 440135-1_1_AB

Pos	Part No	SP	UN	Qty	Description	Page No
-						
010	440136-0001	A		1	ROLL	
020	440137-0001	A		1	SHAFT	
030	440138-0000	-		4	LOCKING CIRCLIP	
100	321313-0102	A		2	BALL BEARING, 15X35X11 MM	
110	312306-0366	-		4	SCREW ISO4026 M6X12 BLACK	

Pos	Part No	SP	UN	Qty	Description	Page No

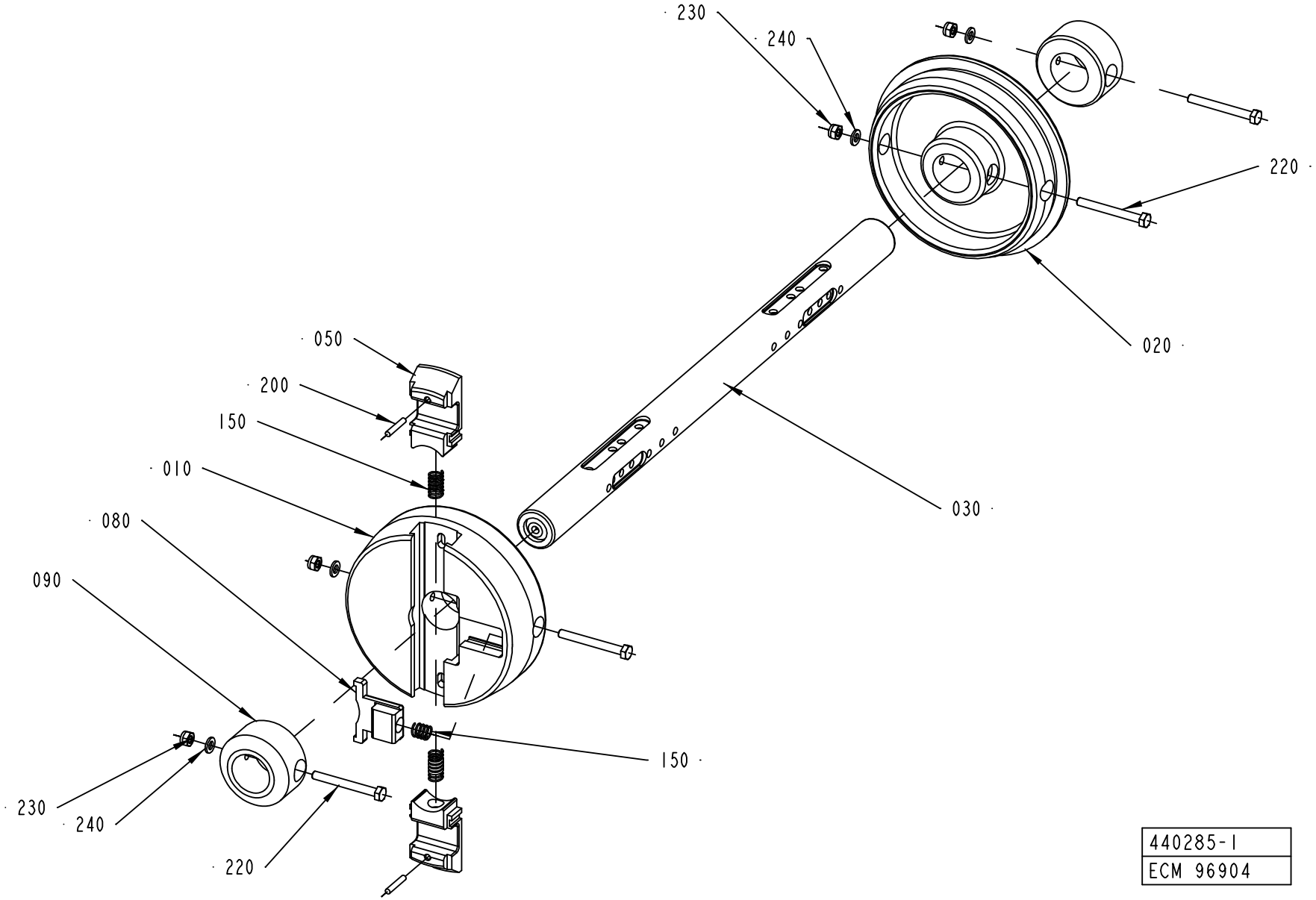
230
240
220
020
030
050
200
150
010
080
090
150
230
240
220
440285-1
ECM 96904

ECM: 96906 - 20021112
Group number: 440285-0100
Assembly Drawing: 440285-1_1_AB

This list covers pages from 7-42 to 7-45

Pos	Part No	SP	UN	Qty	Description	Page No
TBA 0500B, TBA 0750B, TBA 1000B (See drawing on page: 7-42)						
010	272814-0000	A		1	SLEEVE	
020	272815-0001	A		1	SLEEVE	
050	575002-0000	A		2	PLUNGER	
220	312101-0381	-		2	SCREW M6S M6X55 FZB	
230	312812-0316	-		2	HEXAGON NUT, NY-LOCK M6 A480	
240	315101-0153	-		2	WASHER PLAIN, BRB, 6,4/12 H=1,5	
TBA 0500S, TBA 0355B, TBA 0375S (See drawing on page: 7-42)						
010	272814-0000	A		1	SLEEVE	
020	272815-0001	A		1	SLEEVE	
050	575002-0000	A		2	PLUNGER	
090	440259-0000	A		2	RETAINING RING	
220	312101-0381	-		4	SCREW M6S M6X55 FZB	
230	312812-0316	-		4	HEXAGON NUT, NY-LOCK M6 A480	
240	315101-0153	-		4	WASHER PLAIN, BRB, 6,4/12 H=1,5	
TBA 1000SQ (See drawing on page: 7-44)						
010	272814-0000	A		1	SLEEVE	
020	272815-0001	A		1	SLEEVE	
050	575002-0000	A		2	PLUNGER	
090	574051-0000	A		2	RETAINING RING	
210	311112-0350	-		2	SPRING PIN, ISO 8752 6X55-C	
220	312101-0381	-		2	SCREW M6S M6X55 FZB	
230	312812-0316	-		2	HEXAGON NUT, NY-LOCK M6 A480	
240	315101-0153	-		2	WASHER PLAIN, BRB, 6,4/12 H=1,5	
TBA 0750S (See drawing on page: 7-44)						
010	272814-0000	A		1	SLEEVE	
020	272815-0001	A		1	SLEEVE	
050	575002-0000	A		2	PLUNGER	
090	544277-0000	A		2	RETAINING RING	
210	311112-0350	-		2	SPRING PIN, ISO 8752 6X55-C	
220	312101-0381	-		2	SCREW M6S M6X55 FZB	
230	312812-0316	-		2	HEXAGON NUT, NY-LOCK M6 A480	
240	315101-0153	-		2	WASHER PLAIN, BRB, 6,4/12 H=1,5	
TBA 1000S (See drawing on page: 7-44)						
010	569944-0000	A		1	SLEEVE	
020	569945-0000	A		1	SLEEVE	
050	575003-0000	A		2	PLUNGER	
220	312101-0381	-		2	SCREW M6S M6X55 FZB	
230	312812-0316	-		2	HEXAGON NUT, NY-LOCK M6 A480	
240	315101-0153	-		2	WASHER PLAIN, BRB, 6,4/12 H=1,5	
Common Parts						
030	440260-0000	A		1	SHAFT	
080	272728-0000	A		1	BARRIER	
150	90335-0025	A		3	COMP. SPRING 22010, 1X11X26	
200	311103-0274	-		2	PARALLELL PIN, M6, 4X25 MM	

Machine Type | Group Description | Used-In | Group Number | Page No

PAPER REEL HOLDER

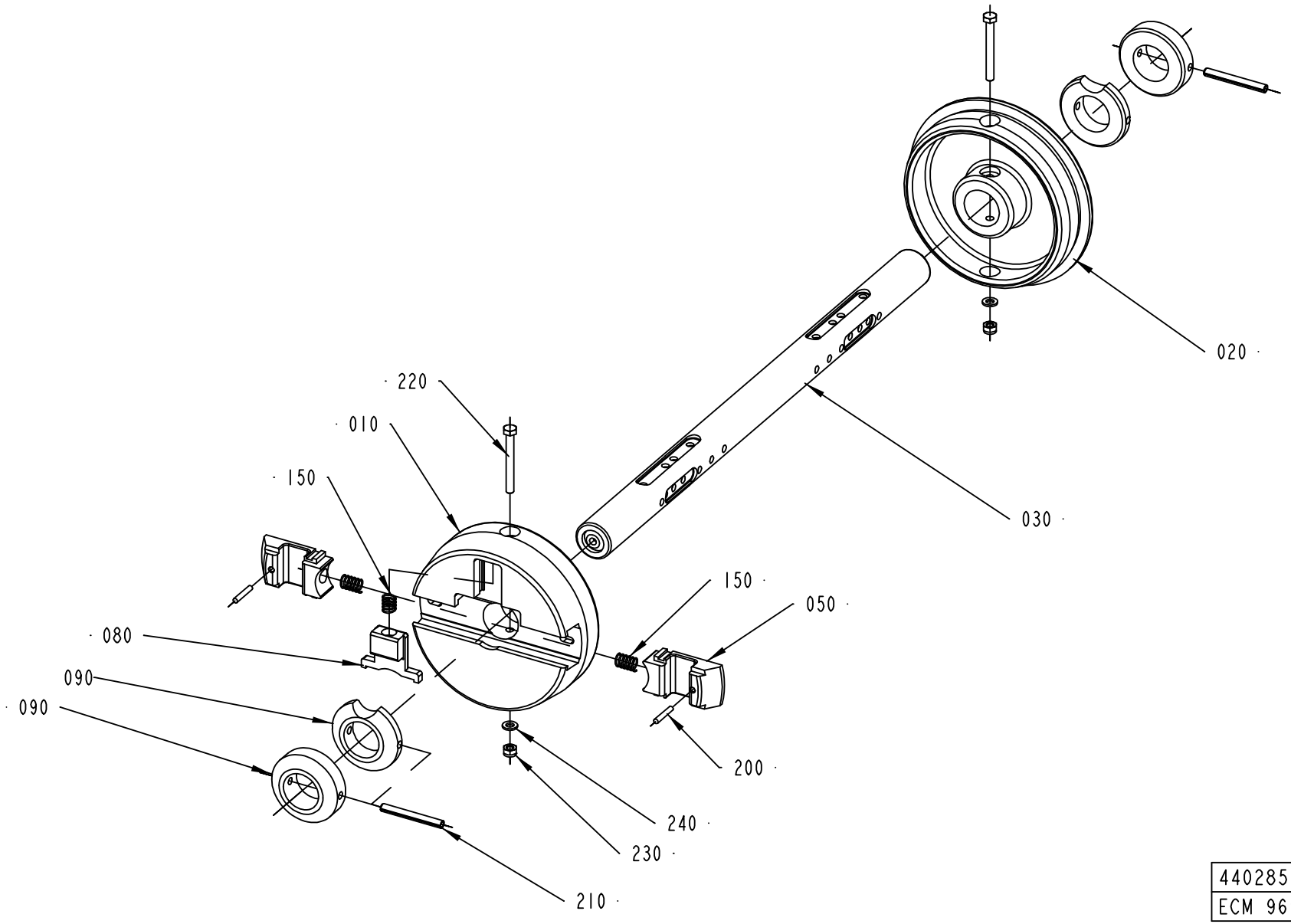

440285-2
ECM 96904

ECM: 96906 - 20021112
Group number: 440285-0100
Assembly Drawing: 440285-2_1_AB

This list covers pages from 7-42 to 7-45

Pos	Part No	SP	UN	Qty	Description	Page No
TBA 0500B, TBA 0750B, TBA 1000B (See drawing on page: 7-42)						
010	272814-0000	A		1	SLEEVE	
020	272815-0001	A		1	SLEEVE	
050	575002-0000	A		2	PLUNGER	
220	312101-0381	-		2	SCREW M6S M6X55 FZB	
230	312812-0316	-		2	HEXAGON NUT, NY-LOCK M6 A480	
240	315101-0153	-		2	WASHER PLAIN, BRB, 6,4/12 H=1,5	
TBA 0500S, TBA 0355B, TBA 0375S (See drawing on page: 7-42)						
010	272814-0000	A		1	SLEEVE	
020	272815-0001	A		1	SLEEVE	
050	575002-0000	A		2	PLUNGER	
090	440259-0000	A		2	RETAINING RING	
220	312101-0381	-		4	SCREW M6S M6X55 FZB	
230	312812-0316	-		4	HEXAGON NUT, NY-LOCK M6 A480	
240	315101-0153	-		4	WASHER PLAIN, BRB, 6,4/12 H=1,5	
TBA 1000SQ (See drawing on page: 7-44)						
010	272814-0000	A		1	SLEEVE	
020	272815-0001	A		1	SLEEVE	
050	575002-0000	A		2	PLUNGER	
090	574051-0000	A		2	RETAINING RING	
210	311112-0350	-		2	SPRING PIN, ISO 8752 6X55-C	
220	312101-0381	-		2	SCREW M6S M6X55 FZB	
230	312812-0316	-		2	HEXAGON NUT, NY-LOCK M6 A480	
240	315101-0153	-		2	WASHER PLAIN, BRB, 6,4/12 H=1,5	
TBA 0750S (See drawing on page: 7-44)						
010	272814-0000	A		1	SLEEVE	
020	272815-0001	A		1	SLEEVE	
050	575002-0000	A		2	PLUNGER	
090	544277-0000	A		2	RETAINING RING	
210	311112-0350	-		2	SPRING PIN, ISO 8752 6X55-C	
220	312101-0381	-		2	SCREW M6S M6X55 FZB	
230	312812-0316	-		2	HEXAGON NUT, NY-LOCK M6 A480	
240	315101-0153	-		2	WASHER PLAIN, BRB, 6,4/12 H=1,5	
TBA 1000S (See drawing on page: 7-44)						
010	569944-0000	A		1	SLEEVE	
020	569945-0000	A		1	SLEEVE	
050	575003-0000	A		2	PLUNGER	
220	312101-0381	-		2	SCREW M6S M6X55 FZB	
230	312812-0316	-		2	HEXAGON NUT, NY-LOCK M6 A480	
240	315101-0153	-		2	WASHER PLAIN, BRB, 6,4/12 H=1,5	
Common Parts						
030	440260-0000	A		1	SHAFT	
080	272728-0000	A		1	BARRIER	
150	90335-0025	A		3	COMP. SPRING 22010, 1X11X26	
200	311103-0274	-		2	PARALLELL PIN, M6, 4X25 MM	

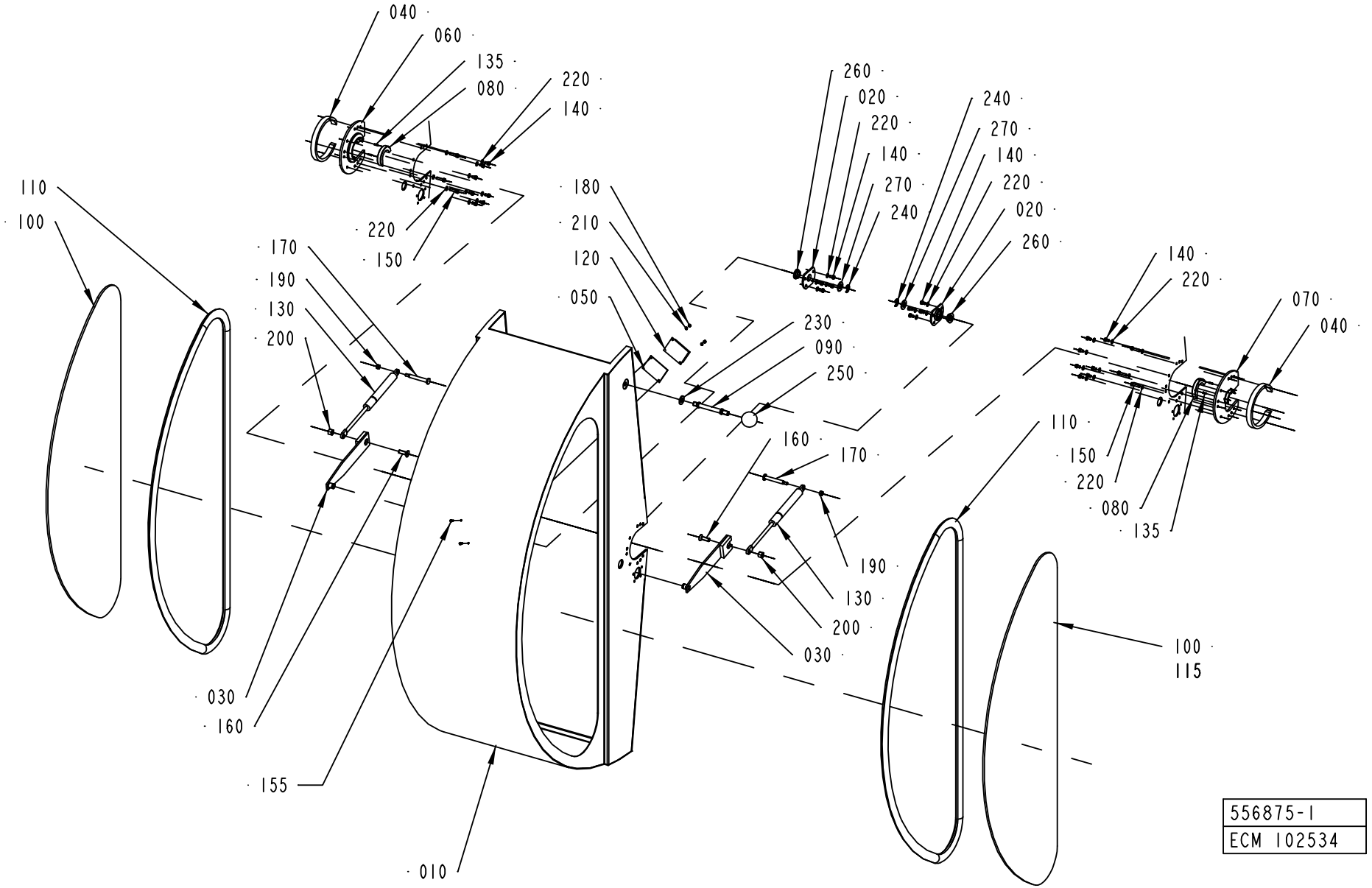
040
060
135
080
220
140
220
150
110
100
170
190
130
200
030
160
155
010
180
210
120
050
260
020
220
140
270
240
240
270
140
220
020
260
230
090
250
160
170
190
130
200
030
140
220
070
040
110
150
220
080
135
100
115
556875-1
ECM 102534

ECM: 128489 - 20030404
Group number: 556875-0100
Assembly Drawing: 556875-1_1_AF

Pos	Part No	SP	UN	Qty	Description	Page No
TBA 0500S, TBA 0500B, TBA 0750B, TBA 0355B, TBA 0375S, TBA 1000S, TBA 1000SQ, TBA 1000B, TBA 0750S						
010	556879-0000	-		1	COVER	
100	440251-0000	A		2	GLASS PANE	
110	90143-0039	-	MM	5200	STRIP	
Common Parts						
020	556872-0000	-		2	BEARING UNIT	
030	556873-0000	-		2	EXTENSION PIECE	
040	556874-0000	A		2	BLOCKING RING	
050	1143605-0000	-		1	SPACER	
060	440247-0000	-		1	HOLDER	
070	440248-0000	-		1	HOLDER	
080	440249-0000	A		2	SLIDE BELT	
090	440250-0000	A		1	AXLE PIN	
120	90232-0333	A		1	REFLECTOR E39-R1	
130	90347-0108	A		2	GAS SPRING NO. 03-08-100-084174	
135	311103-0233	-		4	PARALLEL PIN ISO 2338 3M6X10 A1	
140	312105-0323	-		22	SKRUV M6S ISO 4017 M5X8 A480	
150	312105-0331	-		6	SCREW M6S ISO 4017 M5X20 A480	
155	312125-0224	-		2	SLOTTED CHEESE HEAD SCREW MCS 3X10 SS	
160	312155-0453	-		2	SCREW EN 10642 MF6S M8X25 A480	
170	568166-0000	-		2	REAMED BOLT	
180	312605-0310	-		2	HEXAGON NUT, M6M M3 A280	
190	312605-0316	-		2	HEXAGON NUT, M6M M6 A280	
200	312811-0318	-		2	NUT HEX.LOCK HELI COIL M8 SS	
210	315105-0124	-		2	BRICKA BRB3,2X6RFR	
220	315105-0146	-		28	BRICKA BRB5,3X10RFR	
230	315105-0173	-		1	WASHER BRB10,5X22RFR	
240	315755-0111	-		2	LOCKING WASHER 10	
250	318800-0106	-		1	HANDLE,SPHERICAL KNOB,INT.THRE,D.40-M10	
260	321111-0157	A		2	FLANGE BUSHING, 12X18X8 MM	
270	321130-0180	-		2	THRUST WASHER, 12X24X1,5 MM	

Pos	Part No	SP	UN	Qty	Description	Page No

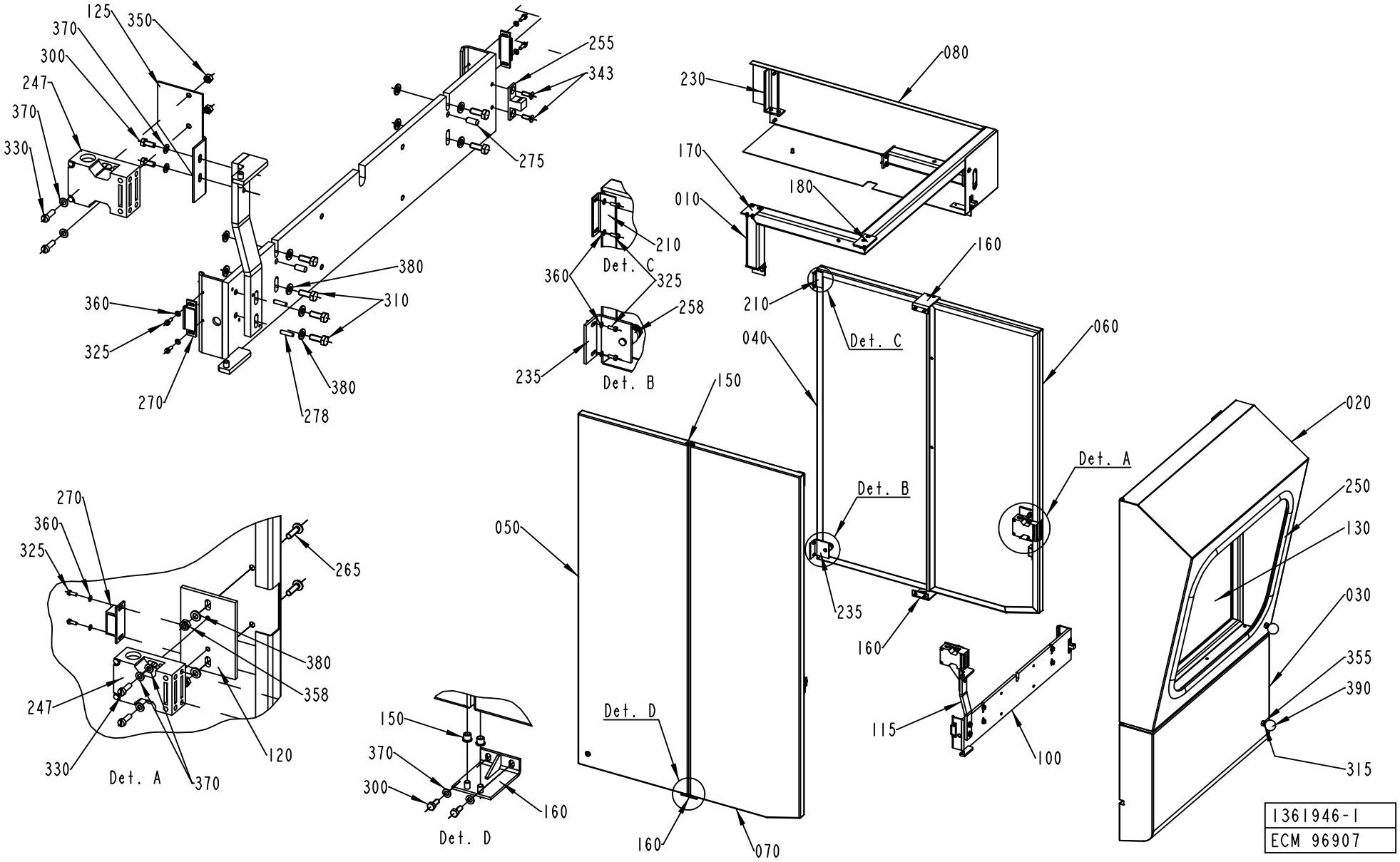
125
350
370
300
247
370
330
255
343
275
380
310
360
325
270
278
380
080
230
170
180
010
160
210
Det. C
040
060
Det. A
Det. B
150
050
235
160
Det. D
160
070
210
Det. C
360
325
258
235
Det. B
270
360
325
265
380
358
247
330
370
120
Det. A
150
370
300
160
Det. D
115
100
020
250
130
030
355
390
315
1361946-1
ECM 96907

ECM: 130198 - 20030404
Group number: 1361946-0100
Assembly Drawing: 1361946-1_1_AC

This list covers pages from 7-48 to 7-51

Pos	Part No	SP	UN	Qty	Description	Page No
-						
010	445861-0000	-		1	FRAME	
020	1361945-0000	-		1	HOOD	
030	1360788-0000	-		1	HOOD	
040	445863-0000	-		1	PROTECTION	
050	529498-0000	-		1	SIDE GUARD RIGHT	
060	573507-0000	-		1	SIDE GUARD	
070	529476-0000	-		1	SIDE GUARD	
080	1360787-0000	-		1	COVER	
100	1360786-0000	-		1	MOUNTING BAR	
115	571424-0000	-		1	HINGE	
120	571425-0000	-		1	BRACKET	
125	572246-0000	-		1	BRACKET	
130	571423-0000	-		1	GLASS PANE	
135	576410-0000	-		1	BRACKET	
140	1347154-0000	-		2	BRACKET	
150	436991-0000	A		10	BEARING	
160	445872-0000	-		3	HINGE	
170	445873-0000	-		1	HINGE	
180	445874-0000	-		1	HINGE	
210	445877-0000	-		3	SUPPORT	
230	445879-0000	-		1	SUPPORT	
235	525385-0000	-		2	BRACKET	
240	1347153-0000	-		2	ANGLE BRACKET	
247	B90044-0103	A		2	KEY SAFETY SWITCH AZ 15 ZVR	
	90044-0310	*A*		*1*	*KEY FOR SAFETY SWITCH, AZ 15/16 B1*	
248	90044-0139	A		1	KEY SAF.SW. AZ16-02 ZVR K-2254	
250	90143-0039	-	MM	2000	STRIP	
255	90237-0070	-		2	SNAP-IN BALL LOCK, 69X19 MM	
258	90237-0075	-		2	FAST LOCK, SK-M8	
260	90287-0075	-		6	SCREW SLOT. PAN HEAD LKCS M6X12	
265	90287-0076	-		2	SCREW SLOT. PAN HEAD LKCS M6X20	
270	90339-0011	-		2	MAGNETIC LOCK, 40X18X14 MM	
275	311102-0350	-		2	PARALLEL PIN ISO 2338 6M6X14 ST	
278	311103-0270	-		2	PARALLEL PIN ISO 2338 4M6X16 A1	
300	312105-0327	-		12	SCREW M6S ISO 4017 M5X12 A480	
310	312105-0368	-		10	SCREW M6S M6X16 A280	
315	312105-0453	-		2	SCREW M6S ISO 4017 M8X25 A480	
320	312115-0287	-		4	SCREW ISO4762 M4X8 A4	
325	312125-0222	-		18	SLOTTED CHEESE HEAD SCREW MCS 3X8 SS	
330	312125-0329	-		6	SLOTTED CHEESE HEAD SCREW MCS 5X16 SS	
335	312145-0323	-		6	SCREW COUNTERS.SLOT.HD. MFS 5X8 SS	
340	312155-0327	-		4	SCREW EN 10642 MF6S M5X12 A480	
343	312155-0291	-		8	SCREW EN 10642 MF6S M4X12 A480	
346	312155-0339	-		4	SCREW EN 10642 MF6S M5X40 A480	
348	312605-0312	-		4	HEXAGON NUT, M6M M4 A280	
350	312605-0314	-		4	HEXAGON NUT, M6M M5 A280	
355	312605-0318	-		2	HEXAGON NUT, M6M M8 A280	
358	312812-0316	-		2	HEXAGON NUT, NY-LOCK M6 A480	
360	315105-0124	-		18	BRICKA BRB3,2X6RFR	
365	315105-0136	-		8	WASHER BRB4,3XRFR	
370	315105-0146	-		18	BRICKA BRB5,3X10RFR	
380	315105-0153	-		16	WASHER BRB6,4X12RFR	
390	318800-0104	-		2	HANDLE,SPHERICAL KNOB,INT.THRE.,D.30-M8	

Machine Type | Group Description | Used-In | Group Number | Page No

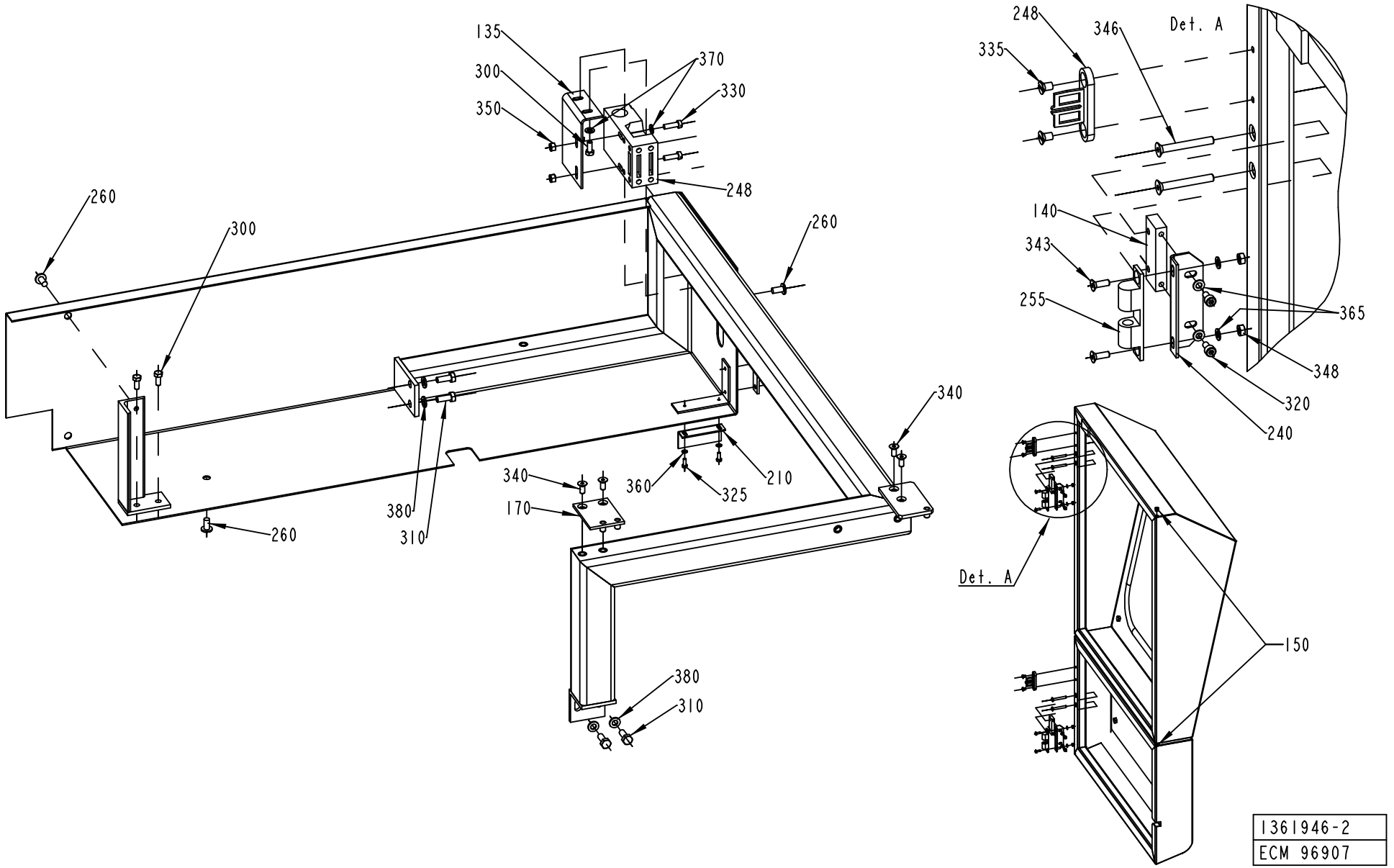
135
300
350
370
330
248
260
300
260
340
340
170
360
325
210
380
310
260
380
310
248
346
335
Det. A
140
343
255
365
348
320
240
Det. A
150
1361946-2
ECM 96907

ECM: 130198 - 20030404
Group number: 1361946-0100
Assembly Drawing: 1361946-2_1_AC

This list covers pages from 7-48 to 7-51

Pos	Part No	SP	UN	Qty	Description	Page No
-						
010	445861-0000	-		1	FRAME	
020	1361945-0000	-		1	HOOD	
030	1360788-0000	-		1	HOOD	
040	445863-0000	-		1	PROTECTION	
050	529498-0000	-		1	SIDE GUARD RIGHT	
060	573507-0000	-		1	SIDE GUARD	
070	529476-0000	-		1	SIDE GUARD	
080	1360787-0000	-		1	COVER	
100	1360786-0000	-		1	MOUNTING BAR	
115	571424-0000	-		1	HINGE	
120	571425-0000	-		1	BRACKET	
125	572246-0000	-		1	BRACKET	
130	571423-0000	-		1	GLASS PANE	
135	576410-0000	-		1	BRACKET	
140	1347154-0000	-		2	BRACKET	
150	436991-0000	A		10	BEARING	
160	445872-0000	-		3	HINGE	
170	445873-0000	-		1	HINGE	
180	445874-0000	-		1	HINGE	
210	445877-0000	-		3	SUPPORT	
230	445879-0000	-		1	SUPPORT	
235	525385-0000	-		2	BRACKET	
240	1347153-0000	-		2	ANGLE BRACKET	
247	B90044-0103	A		2	KEY SAFETY SWITCH AZ 15 ZVR	
	90044-0310	*A*		*1*	*KEY FOR SAFETY SWITCH, AZ 15/16 B1*	
248	90044-0139	A		1	KEY SAF.SW. AZ16-02 ZVR K-2254	
250	90143-0039	-	MM	2000	STRIP	
255	90237-0070	-		2	SNAP-IN BALL LOCK, 69X19 MM	
258	90237-0075	-		2	FAST LOCK, SK-M8	
260	90287-0075	-		6	SCREW SLOT. PAN HEAD LKCS M6X12	
265	90287-0076	-		2	SCREW SLOT. PAN HEAD LKCS M6X20	
270	90339-0011	-		2	MAGNETIC LOCK, 40X18X14 MM	
275	311102-0350	-		2	PARALLEL PIN ISO 2338 6M6X14 ST	
278	311103-0270	-		2	PARALLEL PIN ISO 2338 4M6X16 A1	
300	312105-0327	-		12	SCREW M6S ISO 4017 M5X12 A480	
310	312105-0368	-		10	SCREW M6S M6X16 A280	
315	312105-0453	-		2	SCREW M6S ISO 4017 M8X25 A480	
320	312115-0287	-		4	SCREW ISO4762 M4X8 A4	
325	312125-0222	-		18	SLOTTED CHEESE HEAD SCREW MCS 3X8 SS	
330	312125-0329	-		6	SLOTTED CHEESE HEAD SCREW MCS 5X16 SS	
335	312145-0323	-		6	SCREW COUNTERS.SLOT.HD. MFS 5X8 SS	
340	312155-0327	-		4	SCREW EN 10642 MF6S M5X12 A480	
343	312155-0291	-		8	SCREW EN 10642 MF6S M4X12 A480	
346	312155-0339	-		4	SCREW EN 10642 MF6S M5X40 A480	
348	312605-0312	-		4	HEXAGON NUT, M6M M4 A280	
350	312605-0314	-		4	HEXAGON NUT, M6M M5 A280	
355	312605-0318	-		2	HEXAGON NUT, M6M M8 A280	
358	312812-0316	-		2	HEXAGON NUT, NY-LOCK M6 A480	
360	315105-0124	-		18	BRICKA BRB3,2X6RFR	
365	315105-0136	-		8	WASHER BRB4,3XRFR	
370	315105-0146	-		18	BRICKA BRB5,3X10RFR	
380	315105-0153	-		16	WASHER BRB6,4X12RFR	
390	318800-0104	-		2	HANDLE,SPHERICAL KNOB,INT.THRE.,D.30-M8	

Machine Type | Group Description | Used-In | Group Number | Page No

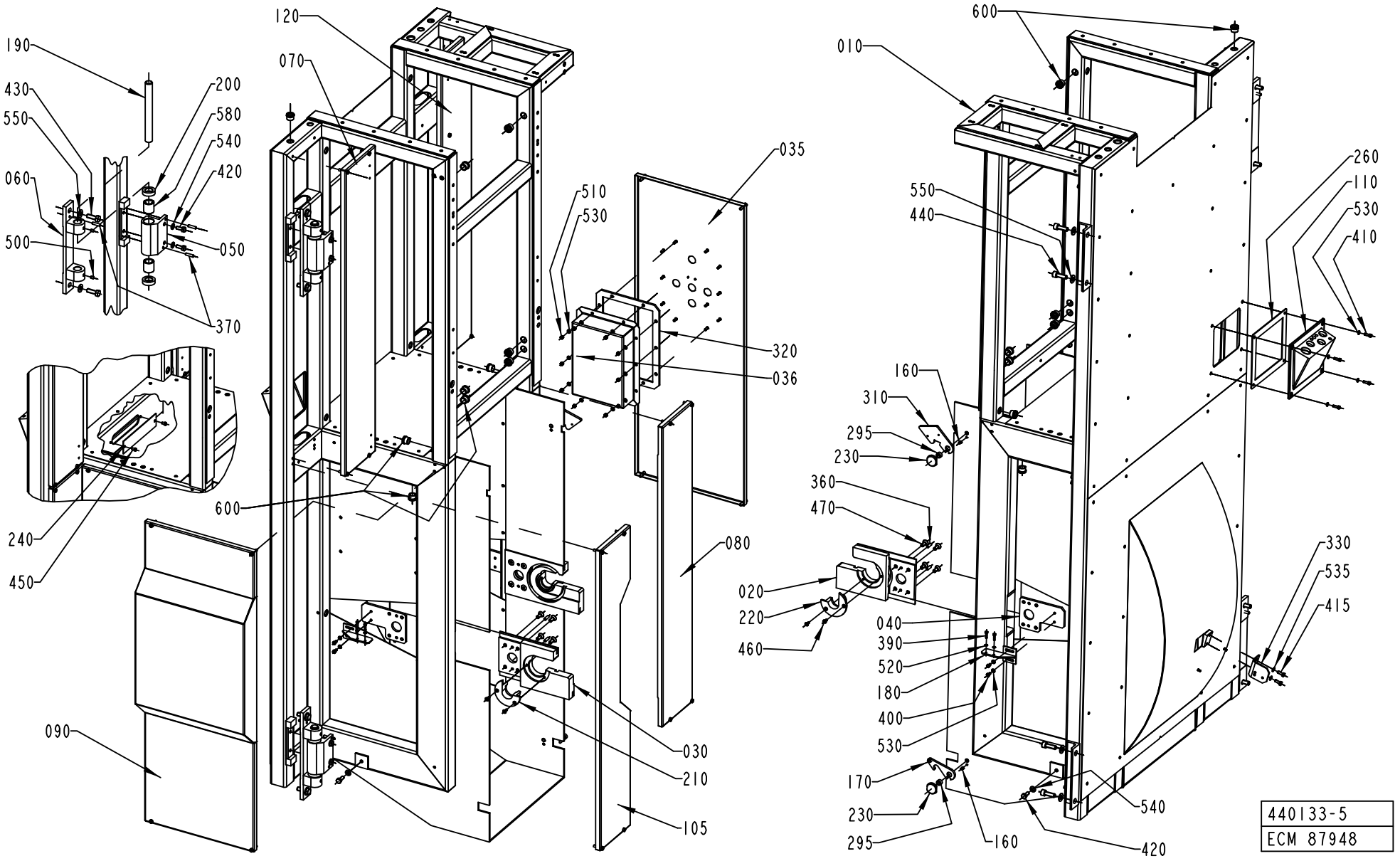
190
430
550
060
500
200
580
540
420
050
370
120
070
510
530
035
320
036
600
080
240
450
090
030
210
105
600
010
550
440
260
110
530
410
160
310
295
230
360
470
020
220
460
040
390
520
180
400
530
330
535
415
170
230
295
160
540
420
440-133-5
ECM 87948

ECM: 104557 - 20021112
Group number: 440133-0400
Assembly Drawing: 440133-5_1_AE

Pos	Part No	SP	UN	Qty	Description	Page No
-						
010	531337-0000	-		1	MACHINE BODY	
020	440185-0000	-		1	HOLDER	
030	440186-0000	-		1	HOLDER	
035	549830-0000	-		1	PROTECTION PLATE	
036	532026-0000	-		1	SEAL COVER	
040	440192-0000	-		2	BRACKET	
050	440195-0000	-		2	JOINT	
060	440196-0000	-		2	HANGER	
070	440199-0000	-		1	PROTECTION PLATE	
080	440200-0000	-		1	PROTECTION PLATE	
090	440202-0000	-		1	PROTECTION PLATE	
105	445857-0000	-		1	PROTECTION PLATE	
110	464141-0000	-		1	LEAD-IN PLATE	
120	445935-0000	-		1	PROTECTION PLATE	
160	1013-0000	-		2	SHAFT	
170	476117-0000	-		1	CATCH	
180	440193-0000	-		2	HOLDER	
190	440197-0000	-		2	SHAFT	
200	440198-0000	-		4	WASHER	
210	440252-0000	A		1	SLEEVE	
220	440253-0000	A		1	SLEEVE	
230	440271-0000	-		2	SCREW	
240	445934-0000	-		1	LID	
260	445929-0000	-		1	GASKET	
295	457358-0000	-		2	SLEEVE	
310	568167-0000	-		1	CATCH	
320	532024-0000	-		1	GASKET	
330	1195094-0000	-		1	BRACKET	
360	311103-0353	-		4	PARALLEL PIN ISO 2338 6M6X20 A1	
370	311103-0355	-		6	PARALLELL PIN, M6, 6X25 MM	
390	312105-0293	-		4	SCREW M6S ISO 4017 M4X16 A480	
400	312105-0325	-		4	SCREW M6S ISO 4017 M5X10 A480	
410	312105-0329	-		4	SCREW M6S ISO 4017 M5X16 A480	
415	312105-0368	-		2	SCREW M6S M6X16 A280	
420	312105-0451	-		6	SCREW M6S ISO 4017 M8X20 A480	
430	312105-0495	-		4	SCREW M6S ISO 4017 M10X30 A480	
440	312115-0495	-		4	SCREW ISO4762 M10X30 A4	
450	312125-0323	-		2	SLOTTED CHEESE HEAD SCREW MCS 5X8 SS	
460	312155-0327	-		4	SCREW EN 10642 MF6S M5X12 A480	
470	312155-0451	-		8	SCREW EN 10642 MF6S M8X20 A480	
500	312318-0362	-		4	SCREW ISO4029 M6X8 A4	
510	312605-0314	-		10	HEXAGON NUT, M6M M5 A280	
520	315105-0136	-		4	WASHER BRB4,3XRFR	
530	315105-0146	-		18	BRICKA BRB5,3X10RFR	
535	315105-0153	-		2	WASHER BRB6,4X12RFR	
540	315105-0165	-		6	WASHER BRB8,4X16RFR	
550	315105-0173	-		8	WASHER BRB10,5X22RFR	
580	321105-0234	-		4	BEAR. BUSH. WITHOUT FL, 20X28X30 MM	
600	352101-0103	-		18	LEAD-IN, PR18,6/PG11, E-1457518	

Machine Type	Group Description	Used-In	Group Number	Page No

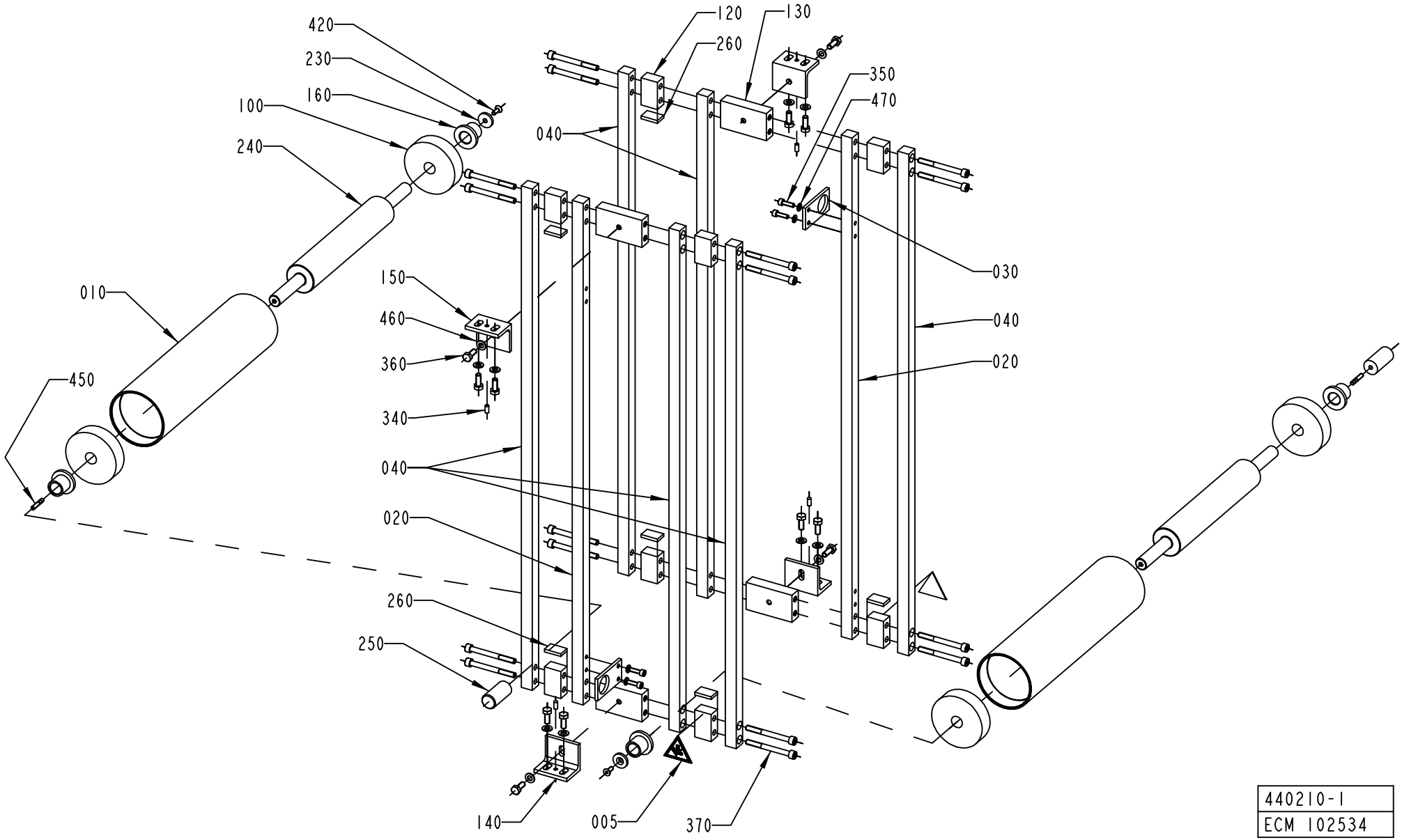

440210-1
ECM 102534

ECM: 130197 - 20030404
Group number: 440210-0200
Assembly Drawing: 440210-1_1_AE

Pos	Part No	SP	UN	Qty	Description	Page No
TBA/8 0375S, TBA/8 0500S, TBA/8 0355B (See drawing on page: 7-54)						
130	440213-0000	-		4	LUG	
240	466086-0000	A		2	SHAFT	
460	315105-0165	-		12	WASHER BRB8,4X16RFR	
TBA/8 0500B, TBA/8 1000B, TBA/8 0750S, TBA/8 0750B, TBA/8 1000SQ, TBA/8 1000S (See drawing on page: 7-54)						
130	440213-0000	-		4	LUG	
240	476401-0000	A		2	SHAFT	
460	315105-0165	-		12	WASHER BRB8,4X16RFR	
Common Parts						
005	359705-0005	-		2	WARNING SIGN ISO, MOVING PART	
010	226097-0002	A		2	BENDING ROLLER	
020	440211-0000	-		2	GUIDE	
030	2554286-0000	-		2	HOLDER	
040	476556-0000	-		6	GUIDE	
100	226098-0000	A		4	BEARING	
120	440212-0000	-		8	LUG	
140	440214-0000	-		2	HOLDER	
150	440215-0000	-		2	HOLDER	
160	440217-0000	A		4	BUSHING	
230	445926-0000	-		2	WASHER	
250	476015-0000	A		2	DOWEL	
260	476016-0000	A		6	RUBBER	
340	311103-0350	-		4	PARALLEL PIN ISO 2338 6M6X14 A1	
350	312115-0370	-		4	SCREW ISO4762 M6X20 A4	
360	312105-0451	-		12	SCREW M6S ISO 4017 M8X20 A480	
370	312111-0467	-		16	SCREW HEX.SOCK.HD.MC6S-TT 8X80 88 FZB	
420	312155-0368	-		2	SCREW EN 10642 MF6S M6X16 A480	
450	312303-0374	-		2	SCREW DIN 938 PS M6X25 A4 80	
470	315105-0153	-		4	WASHER BRB6,4X12RFR	

Pos	Part No	SP	UN	Qty	Description	Page No

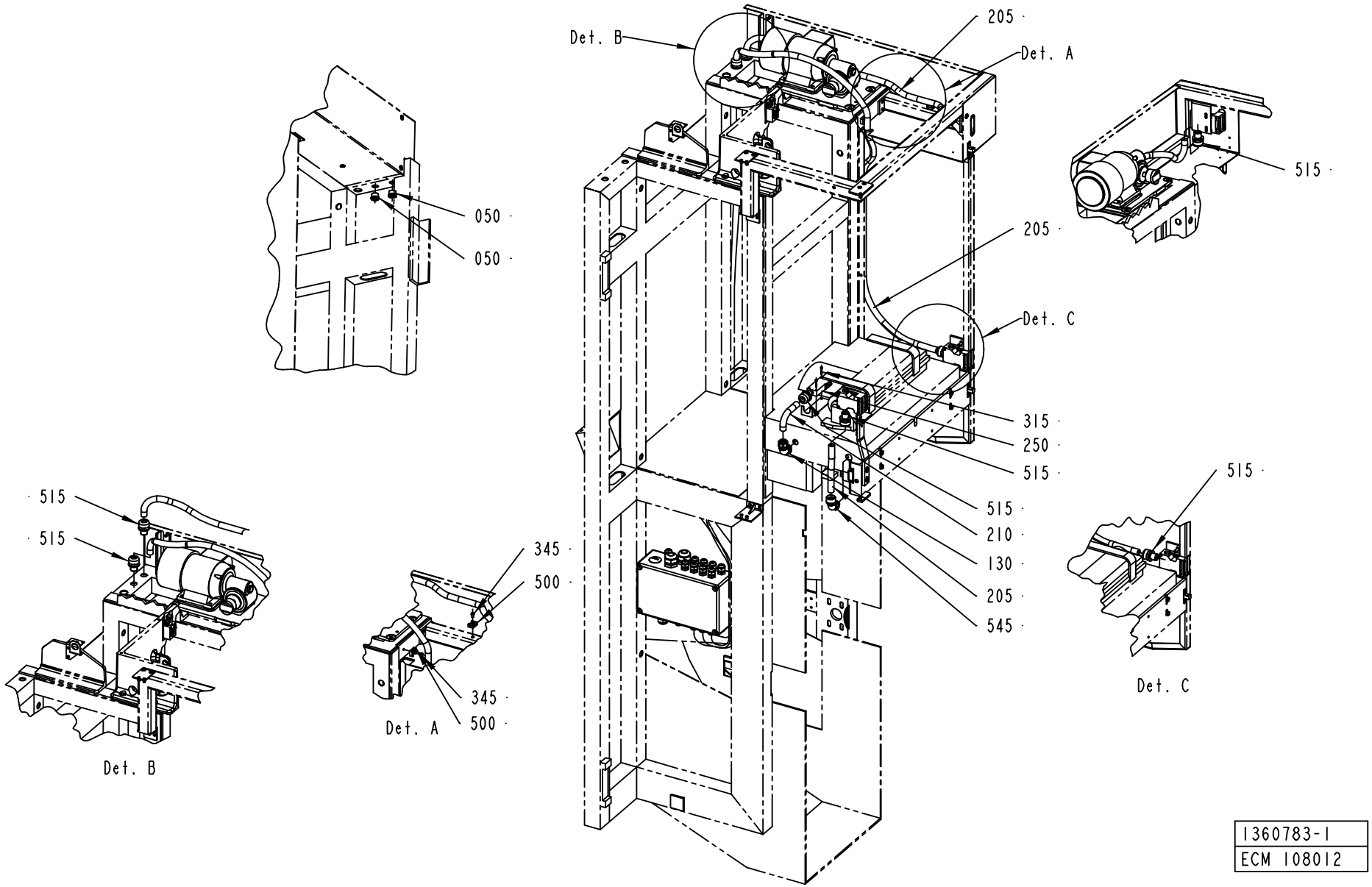

1360783-1
ECM 108012

ECM: 129368 - 20030404
Group number: 1360783-0100
Assembly Drawing: 1360783-1_1_AC

This list covers pages from 7-56 to 7-63

Pos	Part No	SP	UN	Qty	Description	Page No
TBA/8 (See drawing on pages: 7-60, 7-62)						
010	445844-0000	-		2	SLEEVE	
020	458362-0000	-		1	PLUG	
050	352101-0103	-		6	LEAD-IN, PR18,6/PG11, E-1457518	
Common Parts						
005	A1360782-0100	-		1	CONNECTION BOX	**7-65**
030	90166-0081	-	MM	7800	TUBE 6 MM PA BLUE	
040	352135-0106	-	MM	4100	SPIRAL CONDUIT DI=16 MM	
060	466337-0000	-		1	CONNECTION BOX	
070	486826-0001	-		1	SIGN "EMERGENCY STOP"	
075	529456-0000	-		1	PLATE	
080	529455-0000	-		1	PLATE	
100	440256-0000	-		1	ARM	
110	445846-0000	-		1	SLEEVE	
120	90002-0004	-		1	BLANK-OFF PLUG, PR 22,5 SKINDICHT-BLK16	
125	90002-0009	-		1	BLANK-OFF PLUG, PR 18.6 SKINDICHT-BLK11	
130	90012-0064	-		1	GLAND	
140	90044-0104	A		5	PROX.SWITCH IFM IN 3002	
145	90458-0674	A		2	PROXIMITY SWITCH, E2EG-X10B1-5M	
150	90064-0084	A		2	PUSH BUTTON, YELLOW	
160	90064-0085	A		1	PUSH BUTTON, RED	
170	90064-0124	A		1	SWITCH, EM. STOP, ZB2-BS844+ZB2-BZ1045	
180	90099-0003	-		1	NUT	
190	90110-0128	-		1	MALE INSERT, HAN 24 E-M 933 024 2631	
200	90111-0150	A		1	SWITCH GEAR, 704.502 .0+704.901.3	
205	90152-0033	-	DM	30	SPIRAL CONDUIT FOR PR 15,2(PG 9)	
210	90152-0033	-	M		SPIRAL CONDUIT FOR PR 15,2(PG 9)	
215	90166-0013	-	DM	25	TUBE 8 MM PA BLUE	
220	359705-0015	-		2	WARNING SIGN ISO, RISK OF ELECTRIC SHOCK	
230	90232-0103	A		1	PH.CELL E3S-CT61-L-5M	
235	90232-0104	A		1	PH.CELL E3S-CT61-D-5M	
240	90232-0106	A		1	PH.CELL E3S-CR11-5M	
250	90232-0118	A		1	PH.CELL WT18-2P115S14	
310	312111-0323	-		2	SCREW HEX.SOCK.HD.MC6S-TT 5X8 88 FZB	
315	312121-0230	-		2	SLOTTED CHEESE HEAD SCREW MCS 3X20 FZB	
320	312121-0228	-		2	SLOTTED CHEESE HEAD SCREW MCS 3X16 FZB	
330	312125-0228	-		2	SLOTTED CHEESE HEAD SCREW MCS 3X16 SS	
340	312125-0234	-		2	SLOTTED CHEESE HEAD SCREW MCS 3X30 SS	
342	312125-0287	-		2	SLOTTED CHEESE HEAD SCREW MCS 4X8 SS	
345	312125-0323	-		2	SLOTTED CHEESE HEAD SCREW MCS 5X8 SS	
350	312155-0329	-		3	SCREW EN 10642 MF6S M5X16 A480	
360	312316-0360	-		1	STOP SCREW SK6SS6X6FZB	
365	312605-0310	-		2	HEXAGON NUT, M6M M3 A280	
370	312605-0312	-		3	HEXAGON NUT, M6M M4 A280	
380	315105-0124	-		6	BRICKA BRB3,2X6RFR	
390	315101-0136	-		3	BRICKA BRB, 4,3/8 H=0,8	
400	315105-0146	-		2	BRICKA BRB5,3X10RFR	
430	90055-0100	-		1	Y-CONNECTION, 6-6	
460	352101-0105	-		1	LEAD-IN, PR22,5/PG16, E-1457522	
470	352103-0100	-		1	CABLE GLAND, STR 9, PR15,2/PG9	
480	352103-0111	-		2	CABLE GLAND, ST 16, PR22,5/PG16	
490	352110-0099	-		3	CABLE CLIPS, D=3-5 MM	
500	352113-0204	-		4	ANCHOR PLATES FOR STRIPS, TYPE TM3S25-M	
510	352135-0109	-	DM	10	HOSE .022	
515	352136-0113	-		7	GLAND FITTING PR18,6/PG11 DI=12MM	
520	352136-0127	-		3	GLAND FITTING PR 18,6	
530	352136-0129	-		4	GLAND FITTING PR22,5/PG16 DI=16MM	
540	352136-0143	-		2	GLAND FITTING	
545	352137-0113	-		1	COND.FITTING PR 18,6 DI=12MM	
550	352137-0127	-		3	COND.FITTING PR 18,6 DI=16MM	
560	359241-0269	-		1	SIGN, SMALL-LARGE REEL, REDUCT.OF WASTE	
570	359301-0100	-		1	SIGN "SPLICING"	
580	359301-0110	-		1	SIGN "SHORT STOP"	
590	359301-0335	-		1	SIGN T	
595	90012-0137	-		1	GLAND, EXTENDED WITH INSERT, PG11	

Machine Type | Group Description | Used-In | Group Number | Page No

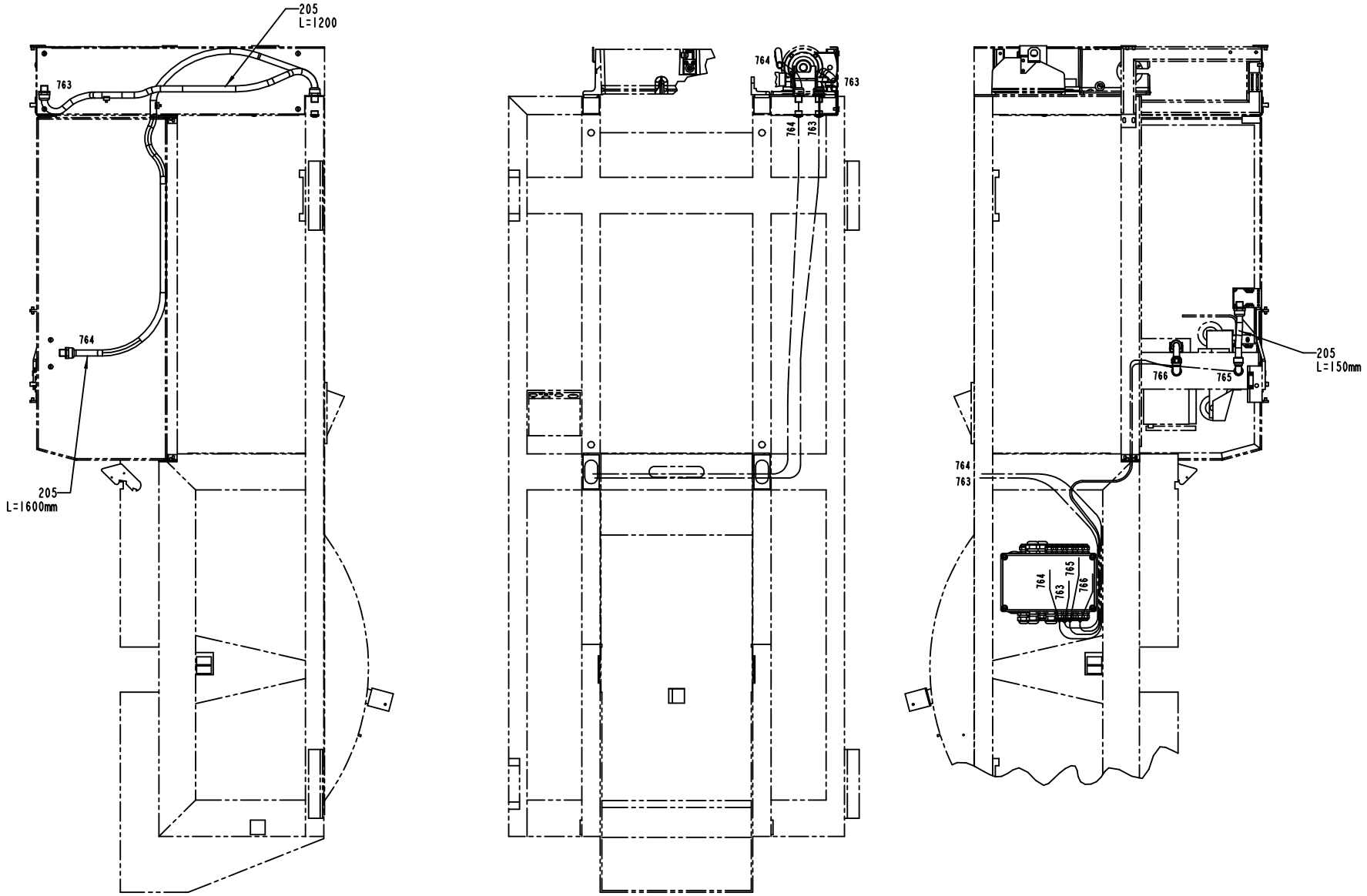
205
L=1200
763
764
205
L=1600mm
764
763
764
763
205
L=150mm
766
765
764
763
764
765
763
766

ECM: 129368 - 20030404
Group number: 1360783-0100
Assembly Drawing: 1360783-1_2_AC

This list covers pages from 7-56 to 7-63

Pos	Part No	SP	UN	Qty	Description	Page No
TBA/8 (See drawing on pages: 7-60, 7-62)						
010	445844-0000	-		2	SLEEVE	
020	458362-0000	-		1	PLUG	
050	352101-0103	-		6	LEAD-IN, PR18,6/PG11, E-1457518	
Common Parts						
005	A1360782-0100	-		1	CONNECTION BOX	**7-65**
030	90166-0081	-	MM	7800	TUBE 6 MM PA BLUE	
040	352135-0106	-	MM	4100	SPIRAL CONDUIT DI=16 MM	
060	466337-0000	-		1	CONNECTION BOX	
070	486826-0001	-		1	SIGN "EMERGENCY STOP"	
075	529456-0000	-		1	PLATE	
080	529455-0000	-		1	PLATE	
100	440256-0000	-		1	ARM	
110	445846-0000	-		1	SLEEVE	
120	90002-0004	-		1	BLANK-OFF PLUG, PR 22,5 SKINDICHT-BLK16	
125	90002-0009	-		1	BLANK-OFF PLUG, PR 18.6 SKINDICHT-BLK11	
130	90012-0064	-		1	GLAND	
140	90044-0104	A		5	PROX.SWITCH IFM IN 3002	
145	90458-0674	A		2	PROXIMITY SWITCH, E2EG-X10B1-5M	
150	90064-0084	A		2	PUSH BUTTON, YELLOW	
160	90064-0085	A		1	PUSH BUTTON, RED	
170	90064-0124	A		1	SWITCH, EM. STOP, ZB2-BS844+ZB2-BZ1045	
180	90099-0003	-		1	NUT	
190	90110-0128	-		1	MALE INSERT, HAN 24 E-M 933 024 2631	
200	90111-0150	A		1	SWITCH GEAR, 704.502 .0+704.901.3	
205	90152-0033	-	DM	30	SPIRAL CONDUIT FOR PR 15,2(PG 9)	
210	90152-0033	-	M		SPIRAL CONDUIT FOR PR 15,2(PG 9)	
215	90166-0013	-	DM	25	TUBE 8 MM PA BLUE	
220	359705-0015	-		2	WARNING SIGN ISO, RISK OF ELECTRIC SHOCK	
230	90232-0103	A		1	PH.CELL E3S-CT61-L-5M	
235	90232-0104	A		1	PH.CELL E3S-CT61-D-5M	
240	90232-0106	A		1	PH.CELL E3S-CR11-5M	
250	90232-0118	A		1	PH.CELL WT18-2P115S14	
310	312111-0323	-		2	SCREW HEX.SOCK.HD.MC6S-TT 5X8 88 FZB	
315	312121-0230	-		2	SLOTTED CHEESE HEAD SCREW MCS 3X20 FZB	
320	312121-0228	-		2	SLOTTED CHEESE HEAD SCREW MCS 3X16 FZB	
330	312125-0228	-		2	SLOTTED CHEESE HEAD SCREW MCS 3X16 SS	
340	312125-0234	-		2	SLOTTED CHEESE HEAD SCREW MCS 3X30 SS	
342	312125-0287	-		2	SLOTTED CHEESE HEAD SCREW MCS 4X8 SS	
345	312125-0323	-		2	SLOTTED CHEESE HEAD SCREW MCS 5X8 SS	
350	312155-0329	-		3	SCREW EN 10642 MF6S M5X16 A480	
360	312316-0360	-		1	STOP SCREW SK6SS6X6FZB	
365	312605-0310	-		2	HEXAGON NUT, M6M M3 A280	
370	312605-0312	-		3	HEXAGON NUT, M6M M4 A280	
380	315105-0124	-		6	BRICKA BRB3,2X6RFR	
390	315101-0136	-		3	BRICKA BRB, 4,3/8 H=0,8	
400	315105-0146	-		2	BRICKA BRB5,3X10RFR	
430	90055-0100	-		1	Y-CONNECTION, 6-6	
460	352101-0105	-		1	LEAD-IN, PR22,5/PG16, E-1457522	
470	352103-0100	-		1	CABLE GLAND, STR 9, PR15,2/PG9	
480	352103-0111	-		2	CABLE GLAND, ST 16, PR22,5/PG16	
490	352110-0099	-		3	CABLE CLIPS, D=3-5 MM	
500	352113-0204	-		4	ANCHOR PLATES FOR STRIPS, TYPE TM3S25-M	
510	352135-0109	-	DM	10	HOSE .022	
515	352136-0113	-		7	GLAND FITTING PR18,6/PG11 DI=12MM	
520	352136-0127	-		3	GLAND FITTING PR 18,6	
530	352136-0129	-		4	GLAND FITTING PR22,5/PG16 DI=16MM	
540	352136-0143	-		2	GLAND FITTING	
545	352137-0113	-		1	COND.FITTING PR 18,6 DI=12MM	
550	352137-0127	-		3	COND.FITTING PR 18,6 DI=16MM	
560	359241-0269	-		1	SIGN, SMALL-LARGE REEL, REDUCT.OF WASTE	
570	359301-0100	-		1	SIGN "SPLICING"	
580	359301-0110	-		1	SIGN "SHORT STOP"	
590	359301-0335	-		1	SIGN T	
595	90012-0137	-		1	GLAND, EXTENDED WITH INSERT, PG11	

Machine Type | Group Description | Used-In | Group Number | Page No

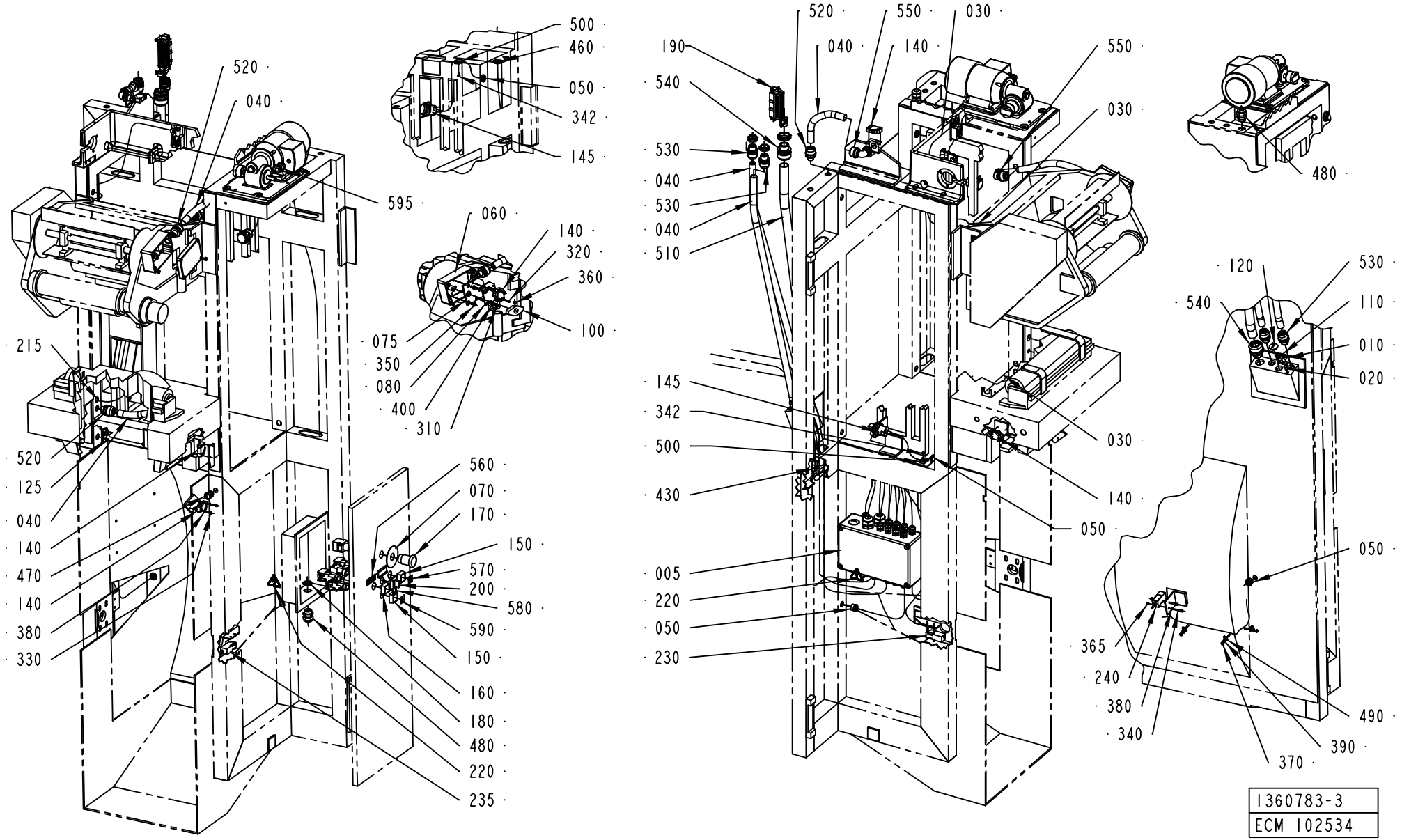
500
460
050
342
145
520
040
595
060
140
320
360
100
075
350
080
400
310
215
520
125
040
140
470
140
380
330
560
070
170
150
570
200
580
590
150
160
180
480
220
235
520
550
030
190
040
140
550
540
030
530
040
530
040
510
480
120
530
540
110
010
020
145
342
500
030
140
430
050
005
220
050
230
050
365
240
380
340
490
390
370
1360783-3
ECM 102534

ECM: 129368 - 20030404
Group number: 1360783-0100
Assembly Drawing: 1360783-3_1_AD

This list covers pages from 7-56 to 7-63

Pos	Part No	SP	UN	Qty	Description	Page No
TBA/8 (See drawing on pages: 7-60, 7-62)						
010	445844-0000	-		2	SLEEVE	
020	458362-0000	-		1	PLUG	
050	352101-0103	-		6	LEAD-IN, PR18,6/PG11, E-1457518	
Common Parts						
005	A1360782-0100	-		1	CONNECTION BOX	**7-65**
030	90166-0081	-	MM	7800	TUBE 6 MM PA BLUE	
040	352135-0106	-	MM	4100	SPIRAL CONDUIT DI=16 MM	
060	466337-0000	-		1	CONNECTION BOX	
070	486826-0001	-		1	SIGN "EMERGENCY STOP"	
075	529456-0000	-		1	PLATE	
080	529455-0000	-		1	PLATE	
100	440256-0000	-		1	ARM	
110	445846-0000	-		1	SLEEVE	
120	90002-0004	-		1	BLANK-OFF PLUG, PR 22,5 SKINDICHT-BLK16	
125	90002-0009	-		1	BLANK-OFF PLUG, PR 18.6 SKINDICHT-BLK11	
130	90012-0064	-		1	GLAND	
140	90044-0104	A		5	PROX.SWITCH IFM IN 3002	
145	90458-0674	A		2	PROXIMITY SWITCH, E2EG-X10B1-5M	
150	90064-0084	A		2	PUSH BUTTON, YELLOW	
160	90064-0085	A		1	PUSH BUTTON, RED	
170	90064-0124	A		1	SWITCH, EM. STOP, ZB2-BS844+ZB2-BZ1045	
180	90099-0003	-		1	NUT	
190	90110-0128	-		1	MALE INSERT, HAN 24 E-M 933 024 2631	
200	90111-0150	A		1	SWITCH GEAR, 704.502 .0+704.901.3	
205	90152-0033	-	DM	30	SPIRAL CONDUIT FOR PR 15,2(PG 9)	
210	90152-0033	-	M		SPIRAL CONDUIT FOR PR 15,2(PG 9)	
215	90166-0013	-	DM	25	TUBE 8 MM PA BLUE	
220	359705-0015	-		2	WARNING SIGN ISO, RISK OF ELECTRIC SHOCK	
230	90232-0103	A		1	PH.CELL E3S-CT61-L-5M	
235	90232-0104	A		1	PH.CELL E3S-CT61-D-5M	
240	90232-0106	A		1	PH.CELL E3S-CR11-5M	
250	90232-0118	A		1	PH.CELL WT18-2P115S14	
310	312111-0323	-		2	SCREW HEX.SOCK.HD.MC6S-TT 5X8 88 FZB	
315	312121-0230	-		2	SLOTTED CHEESE HEAD SCREW MCS 3X20 FZB	
320	312121-0228	-		2	SLOTTED CHEESE HEAD SCREW MCS 3X16 FZB	
330	312125-0228	-		2	SLOTTED CHEESE HEAD SCREW MCS 3X16 SS	
340	312125-0234	-		2	SLOTTED CHEESE HEAD SCREW MCS 3X30 SS	
342	312125-0287	-		2	SLOTTED CHEESE HEAD SCREW MCS 4X8 SS	
345	312125-0323	-		2	SLOTTED CHEESE HEAD SCREW MCS 5X8 SS	
350	312155-0329	-		3	SCREW EN 10642 MF6S M5X16 A480	
360	312316-0360	-		1	STOP SCREW SK6SS6X6FZB	
365	312605-0310	-		2	HEXAGON NUT, M6M M3 A280	
370	312605-0312	-		3	HEXAGON NUT, M6M M4 A280	
380	315105-0124	-		6	BRICKA BRB3,2X6RFR	
390	315101-0136	-		3	BRICKA BRB, 4,3/8 H=0,8	
400	315105-0146	-		2	BRICKA BRB5,3X10RFR	
430	90055-0100	-		1	Y-CONNECTION, 6-6	
460	352101-0105	-		1	LEAD-IN, PR22,5/PG16, E-1457522	
470	352103-0100	-		1	CABLE GLAND, STR 9, PR15,2/PG9	
480	352103-0111	-		2	CABLE GLAND, ST 16, PR22,5/PG16	
490	352110-0099	-		3	CABLE CLIPS, D=3-5 MM	
500	352113-0204	-		4	ANCHOR PLATES FOR STRIPS, TYPE TM3S25-M	
510	352135-0109	-	DM	10	HOSE .022	
515	352136-0113	-		7	GLAND FITTING PR18,6/PG11 DI=12MM	
520	352136-0127	-		3	GLAND FITTING PR 18,6	
530	352136-0129	-		4	GLAND FITTING PR22,5/PG16 DI=16MM	
540	352136-0143	-		2	GLAND FITTING	
545	352137-0113	-		1	COND.FITTING PR 18,6 DI=12MM	
550	352137-0127	-		3	COND.FITTING PR 18,6 DI=16MM	
560	359241-0269	-		1	SIGN, SMALL-LARGE REEL, REDUCT.OF WASTE	
570	359301-0100	-		1	SIGN "SPLICING"	
580	359301-0110	-		1	SIGN "SHORT STOP"	
590	359301-0335	-		1	SIGN T	
595	90012-0137	-		1	GLAND, EXTENDED WITH INSERT, PG11	

Machine Type | Group Description | Used-In | Group Number | Page No

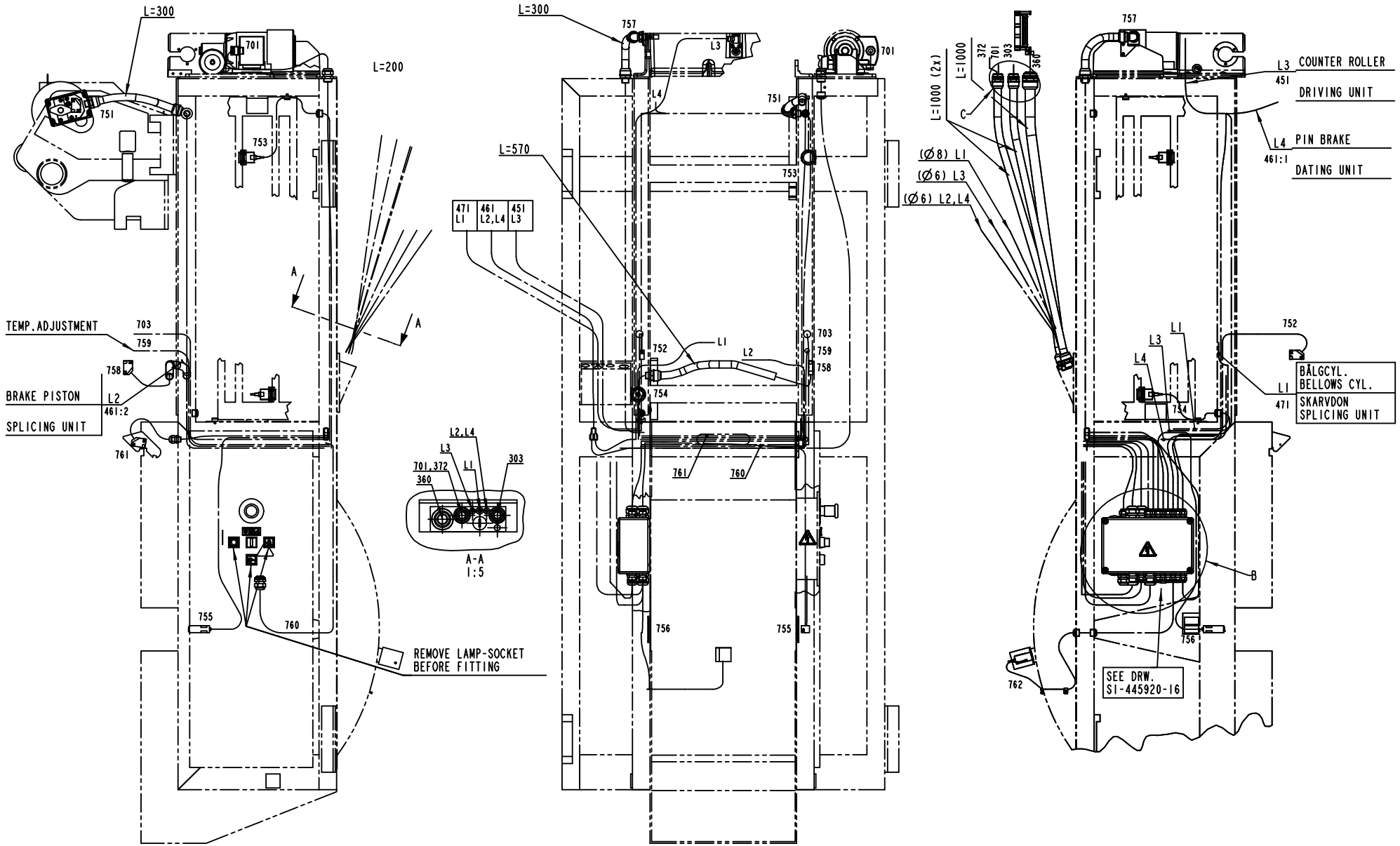
L=300
701
L=200
751
753
A
A
TEMP.ADJUSTMENT
703
759
758
BRAKE PISTON
L2
461:2
SPLICING UNIT
761
755
760
REMOVE LAMP-SOCKET
BEFORE FITTING
L2,L4
L3
701,372
L1
303
360
A-A
1:5
L=300
757
L3
701
L4
751
L=570
753
471
L1
461
L2,L4
451
L3
752
L1
L2
703
759
758
754
761
760
756
755
L=1000 (2x)
L=1000
372
701
303
360
C
(Ø8) L1
(Ø6) L3
(Ø6) L2,L4
757
L3
COUNTER ROLLER
451
DRIVING UNIT
L4
PIN BRAKE
461:1
DATING UNIT
752
L1
L3
L4
754
BÄLGCYL.
BELLOWS CYL.
L1
471
SKARVDON
SPLICING UNIT
B
756
762
SEE DRW.
SI-445920-16

ECM: 129368 - 20030404
Group number: 1360783-0100
Assembly Drawing: 1360783-3_2_AD

This list covers pages from 7-56 to 7-63

Pos	Part No	SP	UN	Qty	Description	Page No
TBA/8 (See drawing on pages: 7-60, 7-62)						
010	445844-0000	-		2	SLEEVE	
020	458362-0000	-		1	PLUG	
050	352101-0103	-		6	LEAD-IN, PR18,6/PG11, E-1457518	
Common Parts						
005	A1360782-0100	-		1	CONNECTION BOX	**7-65**
030	90166-0081	-	MM	7800	TUBE 6 MM PA BLUE	
040	352135-0106	-	MM	4100	SPIRAL CONDUIT DI=16 MM	
060	466337-0000	-		1	CONNECTION BOX	
070	486826-0001	-		1	SIGN "EMERGENCY STOP"	
075	529456-0000	-		1	PLATE	
080	529455-0000	-		1	PLATE	
100	440256-0000	-		1	ARM	
110	445846-0000	-		1	SLEEVE	
120	90002-0004	-		1	BLANK-OFF PLUG, PR 22,5 SKINDICHT-BLK16	
125	90002-0009	-		1	BLANK-OFF PLUG, PR 18.6 SKINDICHT-BLK11	
130	90012-0064	-		1	GLAND	
140	90044-0104	A		5	PROX.SWITCH IFM IN 3002	
145	90458-0674	A		2	PROXIMITY SWITCH, E2EG-X10B1-5M	
150	90064-0084	A		2	PUSH BUTTON, YELLOW	
160	90064-0085	A		1	PUSH BUTTON, RED	
170	90064-0124	A		1	SWITCH, EM. STOP, ZB2-BS844+ZB2-BZ1045	
180	90099-0003	-		1	NUT	
190	90110-0128	-		1	MALE INSERT, HAN 24 E-M 933 024 2631	
200	90111-0150	A		1	SWITCH GEAR, 704.502 .0+704.901.3	
205	90152-0033	-	DM	30	SPIRAL CONDUIT FOR PR 15,2(PG 9)	
210	90152-0033	-	M		SPIRAL CONDUIT FOR PR 15,2(PG 9)	
215	90166-0013	-	DM	25	TUBE 8 MM PA BLUE	
220	359705-0015	-		2	WARNING SIGN ISO, RISK OF ELECTRIC SHOCK	
230	90232-0103	A		1	PH.CELL E3S-CT61-L-5M	
235	90232-0104	A		1	PH.CELL E3S-CT61-D-5M	
240	90232-0106	A		1	PH.CELL E3S-CR11-5M	
250	90232-0118	A		1	PH.CELL WT18-2P115S14	
310	312111-0323	-		2	SCREW HEX.SOCK.HD.MC6S-TT 5X8 88 FZB	
315	312121-0230	-		2	SLOTTED CHEESE HEAD SCREW MCS 3X20 FZB	
320	312121-0228	-		2	SLOTTED CHEESE HEAD SCREW MCS 3X16 FZB	
330	312125-0228	-		2	SLOTTED CHEESE HEAD SCREW MCS 3X16 SS	
340	312125-0234	-		2	SLOTTED CHEESE HEAD SCREW MCS 3X30 SS	
342	312125-0287	-		2	SLOTTED CHEESE HEAD SCREW MCS 4X8 SS	
345	312125-0323	-		2	SLOTTED CHEESE HEAD SCREW MCS 5X8 SS	
350	312155-0329	-		3	SCREW EN 10642 MF6S M5X16 A480	
360	312316-0360	-		1	STOP SCREW SK6SS6X6FZB	
365	312605-0310	-		2	HEXAGON NUT, M6M M3 A280	
370	312605-0312	-		3	HEXAGON NUT, M6M M4 A280	
380	315105-0124	-		6	BRICKA BRB3,2X6RFR	
390	315101-0136	-		3	BRICKA BRB, 4,3/8 H=0,8	
400	315105-0146	-		2	BRICKA BRB5,3X10RFR	
430	90055-0100	-		1	Y-CONNECTION, 6-6	
460	352101-0105	-		1	LEAD-IN, PR22,5/PG16, E-1457522	
470	352103-0100	-		1	CABLE GLAND, STR 9, PR15,2/PG9	
480	352103-0111	-		2	CABLE GLAND, ST 16, PR22,5/PG16	
490	352110-0099	-		3	CABLE CLIPS, D=3-5 MM	
500	352113-0204	-		4	ANCHOR PLATES FOR STRIPS, TYPE TM3S25-M	
510	352135-0109	-	DM	10	HOSE .022	
515	352136-0113	-		7	GLAND FITTING PR18,6/PG11 DI=12MM	
520	352136-0127	-		3	GLAND FITTING PR 18,6	
530	352136-0129	-		4	GLAND FITTING PR22,5/PG16 DI=16MM	
540	352136-0143	-		2	GLAND FITTING	
545	352137-0113	-		1	COND.FITTING PR 18,6 DI=12MM	
550	352137-0127	-		3	COND.FITTING PR 18,6 DI=16MM	
560	359241-0269	-		1	SIGN, SMALL-LARGE REEL, REDUCT.OF WASTE	
570	359301-0100	-		1	SIGN "SPLICING"	
580	359301-0110	-		1	SIGN "SHORT STOP"	
590	359301-0335	-		1	SIGN T	
595	90012-0137	-		1	GLAND, EXTENDED WITH INSERT, PG11	

Machine Type | Group Description | Used-In | Group Number | Page No

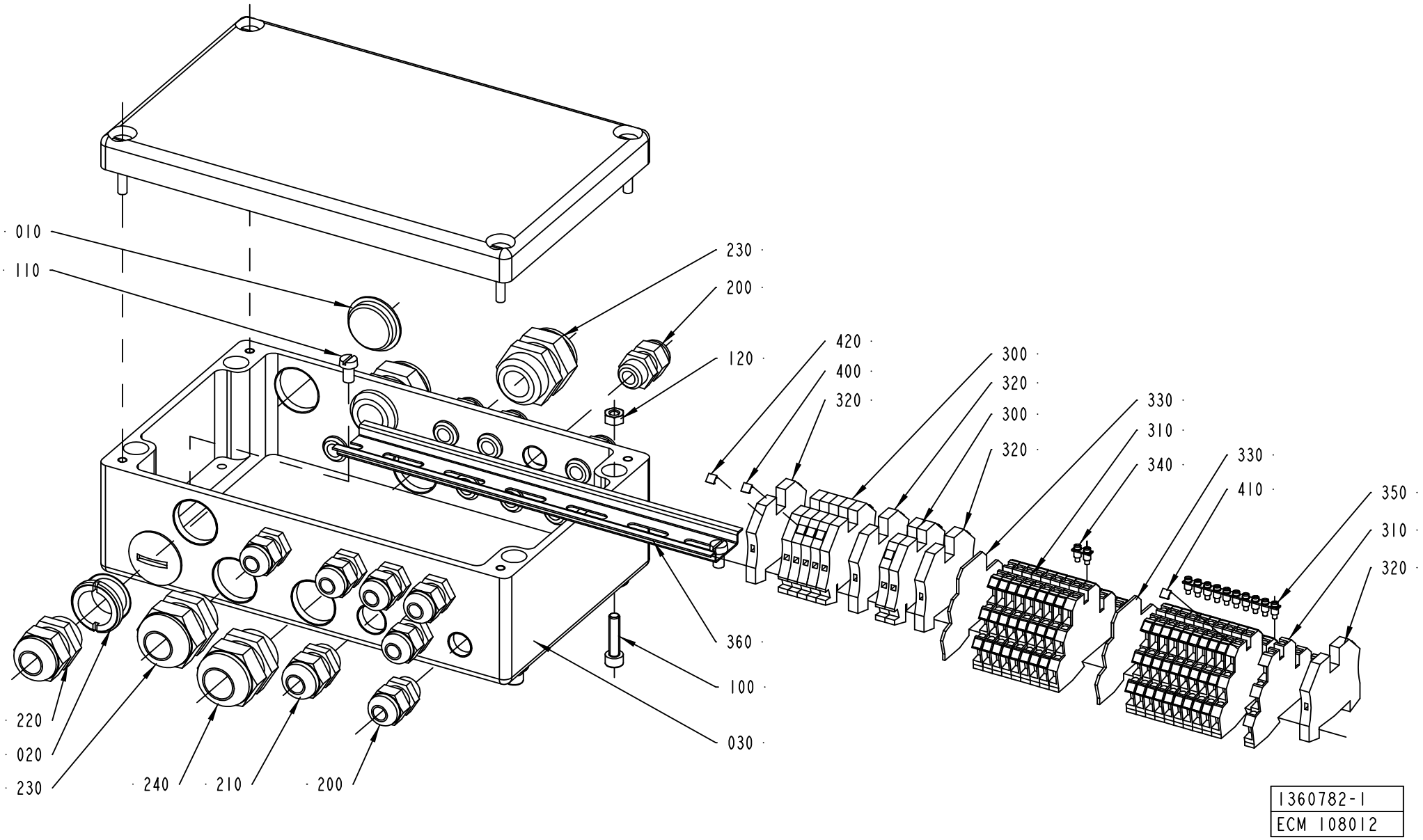
010
110
230
200
120
420
400
320
300
320
300
320
330
310
340
330
410
350
310
320
360
100
030
220
020
230
240
210
200
1360782-1
ECM 108012

ECM: 110286 - 20021112
Group number: 1360782-0100
Assembly Drawing: 1360782-1_1_AB

Pos	Part No	SP	UN	Qty	Description	Page No
-						
010	90002-0012	-		2	BLANK-OFF PLUG, PR 28,3 SKINDICHT-BLK21	
020	90089-0004	-		1	REDUCING SLEEVE, PR28,3/PR22,5	
030	90265-0081	-		1	CONNECTION BOX 01 1626 09	
100	312111-0372	-		4	SCREW HEX.SOCK.HD.MC6S-TT 6X25 88 FZB	
110	312121-0364	-		2	SLOTTED CHEESE HEAD SCREW MCS 6X10 FZB	
120	312601-0316	-		4	NUT M6M 6-8 FZB	
200	352103-0101	-		15	CABLE GLAND, ST 9, PR15,2/PG9	
210	352103-0106	-		1	CABLE GLAND, ST 11, PR18,6/PG11	
220	352103-0110	-		1	CABLE GLAND, STR 16, PR22,5/PG16	
230	352103-0115	-		3	CABLE GLAND, STR 21, PR28,3/PG21	
240	352103-0116	-		1	CABLE GLAND, ST 21, PR28,3/PG21	
300	353021-0213	-		7	FEED THROUGH TERMINAL, 10201.0	
310	353021-0302	-		20	TERMINALS,TRIPLE-LEVEL, DLD 2,5/35 PA	
320	353024-0205	-		4	EARTH TERMINAL, 1010.1	
330	353032-0302	-		2	END PLATE WAP	
340	353034-0401	-		2	BRIDGE CONNECTOR Q2, 13125.0	
350	353034-0404	-		2	BRIDGE CONNECTOR Q10, 13131.0	
360	353042-0005	-	MM	240	RAIL TS 35/7.5	
400	359011-0807	-		2	MARKING PLATES 5-FW 1-50	
410	359011-0808	-		2	MARKING PLATES 5-FW 51-100	
420	359011-0819	-		1	MARKING PLATES 5-GW (EARTH)	

Pos	Part No	SP	UN	Qty	Description	Page No

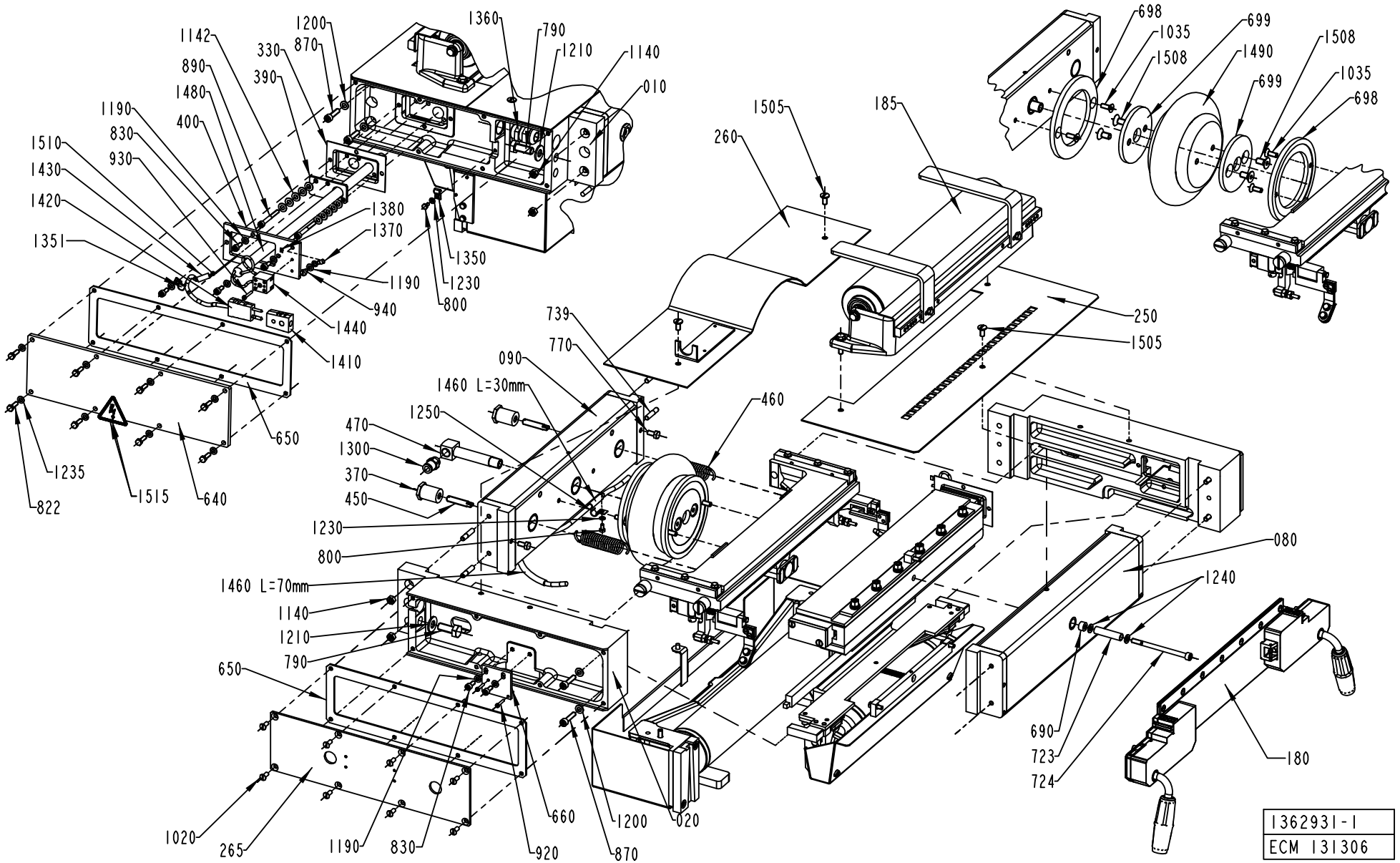
1200
1142
330
870
1360
790
1210
1140
010
890
390
1480
1190
400
830
930
1510
1430
1420
1351
1380
1370
1350
1190
1230
800
940
1440
1410
650
1235
822
1515
640
698
1035
1508
699
1490
1508
699
1035
698
1505
185
260
250
1505
739
770
090
1460 L=30mm
460
1250
470
1300
370
450
1230
800
1460 L=70mm
1140
1210
790
650
080
1240
690
723
724
180
1020
265
1190
830
660
920
1200
870
020
1362931-1
ECM 131306

ECM: 131308 - 20030416
Group number: 1362931-0100
Assembly Drawing: 1362931-1_1_AC

This list covers pages from 7-66 to 7-71

Pos	Part No	SP	UN	Qty	Description	Page No
0375S						
010	445881-0000	A		1	BRACKET LEFT	
020	445882-0000	A		1	BRACKET RIGHT	
042	553770-0002	A		1	PRESSURE JAW	
230	458908-0000	A		1	BRACKET	
232	458909-0000	A		1	BRACKET	
252	484895-0003	-		1	SHEET	
720	466621-0000	A		1	PISTON	
0355B, 0500S						
010	445881-0000	A		1	BRACKET LEFT	
020	445882-0000	A		1	BRACKET RIGHT	
042	553770-0002	A		1	PRESSURE JAW	
230	458908-0000	A		1	BRACKET	
232	458909-0000	A		1	BRACKET	
252	484895-0002	-		1	SHEET	
720	466621-0000	A		1	PISTON	
0500B, 0750B, 1000B						
010	445881-0000	A		1	BRACKET LEFT	
020	445882-0000	A		1	BRACKET RIGHT	
042	553770-0001	A		1	PRESSURE JAW	
230	458908-0000	A		1	BRACKET	
232	458909-0000	A		1	BRACKET	
252	484895-0001	-		1	SHEET	
720	466621-0000	A		1	PISTON	
0750S						
010	445881-0000	A		1	BRACKET LEFT	
020	445882-0000	A		1	BRACKET RIGHT	
042	553770-0001	A		1	PRESSURE JAW	
230	458908-0000	A		1	BRACKET	
232	458909-0000	A		1	BRACKET	
252	484895-0005	-		1	SHEET	
720	466621-0000	A		1	PISTON	
1000S						
010	445881-0000	A		1	BRACKET LEFT	
020	445882-0000	A		1	BRACKET RIGHT	
042	553770-0001	A		1	PRESSURE JAW	
230	458908-0000	A		1	BRACKET	
232	458909-0000	A		1	BRACKET	
252	484895-0006	-		1	SHEET	
720	466621-0000	A		1	PISTON	
1000SQ						
010	445881-0000	A		1	BRACKET LEFT	
020	445882-0000	A		1	BRACKET RIGHT	
042	553770-0004	A		1	PRESSURE JAW	
230	458908-0000	A		1	BRACKET	
232	458909-0000	A		1	BRACKET	
252	484895-0007	-		1	SHEET	
255	312155-0325	-		2	SCREW EN 10642 MF6S M5X10 A480	
720	2601494-0000	A		1	PISTON	
721	2601493-0000	A		1	PLATE	
Common Parts						
045	457627-0000	A		1	DOLLY	
060	445911-0000	-		1	CANTILEVER	
080	445885-0000	-		1	BEAM	
090	445886-0000	-		1	BEAM	
1010	312145-0289	A		7	SCREW COUNTERS.SLOT.HD. MFS 4X10 SS	
1020	312145-0327	-		8	SCREW COUNTERS.SLOT.HD. MFS 5X12 SS	
1021	312145-0335	-		2	SCREW COUNTERS.SLOT.HD. MFS 5X30 SS	
1030	312145-0329	-		4	SCREW COUNTERS.SLOT.HD. MFS 5X16 SS	
1035	312151-0368	-		4	SCREW HEX.SOCK.COUNT.MF6S 6X16 FZB	
1040	312151-0384	-		6	SCREW HEX.SOCK.COUNT.MF6S 6X70 FZB	
1050	312306-0287	-		2	SCREW ISO4026 M4X8 BLACK	
1110	312318-0321	A		7	SCREW ISO4029 M5X6 A4	
1120	312601-0312	-		2	MUTTER M6M 4-8 FZB	
1130	312601-0314	-		3	MUTTER M6M5FZB	
1140	312601-0316	-		6	NUT M6M 6-8 FZB	
1141	312811-0316	-		6	NUT HEX.LOCK HELI COIL MID GRIP M6 SS	
1142	319030-0125	-		40	DISC SPRING, CONICAL 12,5X6,2X0,5 MM	
1150	312605-0316	-		2	HEXAGON NUT, M6M M6 A280	
1180	315101-0136	-		2	BRICKA BRB, 4,3/8 H=0,8	
1190	315101-0146	-		43	WASHER PLAIN, BRB, 5,3/10 H=1	
1200	315101-0153	-		16	WASHER PLAIN, BRB, 6,4/12 H=1,5	
1210	315101-0173	-		2	WASHER PLAIN, BRB, 10,5/22 H=2	
1230	315105-0136	-		2	WASHER BRB4,3XRFR	
1235	315105-0146	-		10	BRICKA BRB5,3X10RFR	
1240	315105-0153	-		2	WASHER BRB6,4X12RFR	
1250	316810-0106	-		1	PIPE CLIP FOR TUBE D=8 MM	
1270	321116-0179	A		4	BEAR. BUSH. WITHOUT FL, 14X18X14 MM	

Machine Type | Group Description | Used-In | Group Number | Page No

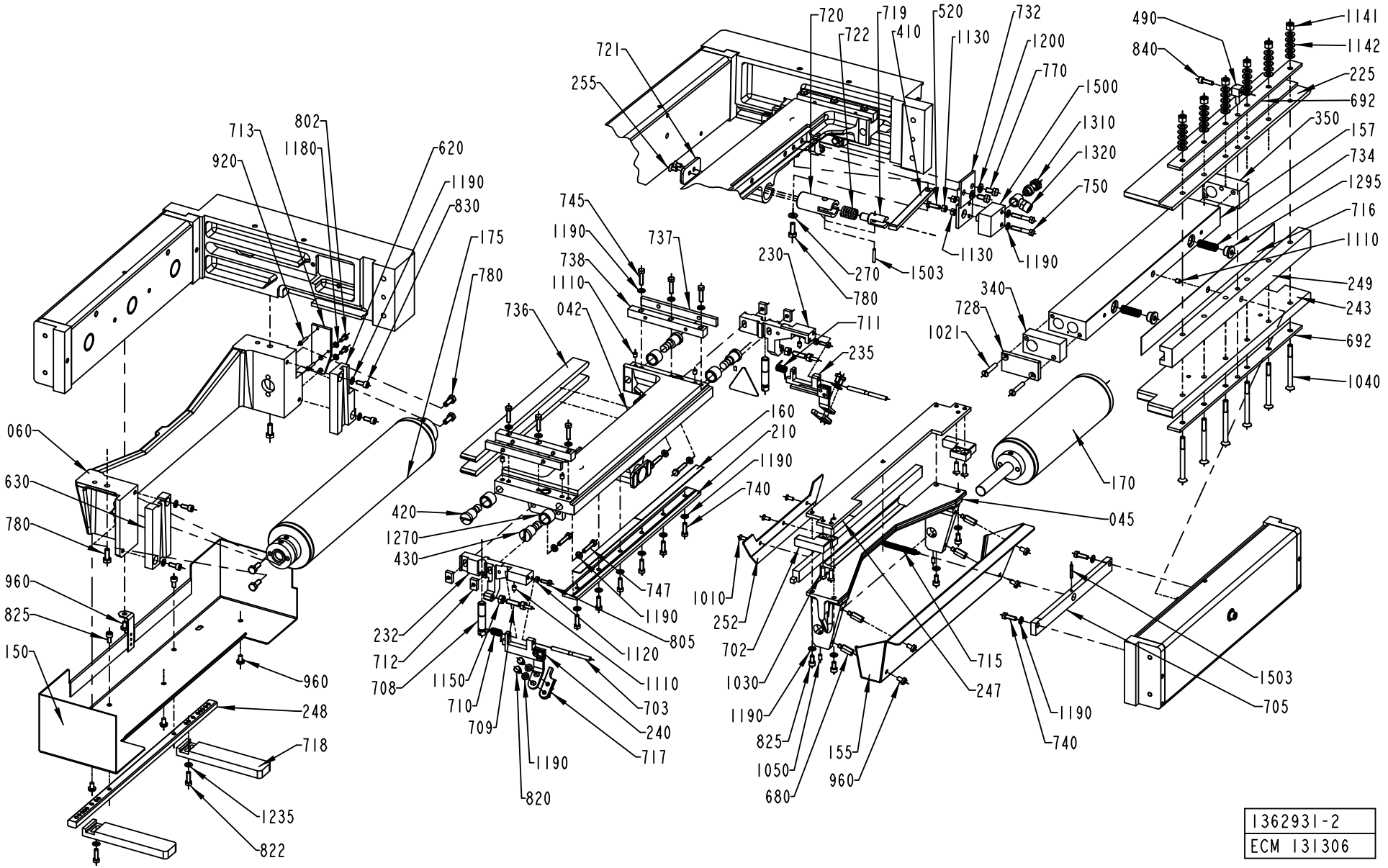

1362931-2
ECM 131306

Pos	Part No	SP	UN	Qty	Description	Page No
Common Parts (Cont'd)						
1295	342713-0210	A		2	PLUG, EXT THREAD HEX SOCKET 8638-00-140	
1300	342722-0205	-		1	STRAIGHT COUPLING D=8-G1/4"	
1310	342980-0113	-		1	BANJO-CONNECTION,RING 6/4-G1/8"	
1320	342980-0303	-		1	BANJO-HOLLOW BOLT COUPL,EXT.THR.01-G1/8"	
1350	352110-0099	-		1	CABLE CLIPS, D=3-5 MM	
1351	352110-0100	-		1	CABLE CLIPS, D=5-7 MM	
1360	352103-0108	-		1	CABLE GLAND, ST 13,5 , PR20,4/PG13,5	
1370	353101-0132	-		1	CABLE SHOE, RING ø5,3MM	
1380	359020-0202	-		1	SHEET OF SELF ADHESIVE DIG.& LETT. 4 MM	
1410	90326-0020	-		1	PLUG, FEMALE YELLOW CR-AL	
1420	90326-0022	-		1	PLUG, MALE YELLOW CR-AL	
1430	90326-0060	A		1	THERMOCOUPLE, CR-AL	
1440	90195-0020	A		1	TERMINAL BLOCK, 1977.2	
1460	90166-0122	A	MM	100	TUBE 8 MM PA,TRANSP.	
1480	90206-0097	A		1	HEATING CARTRIDGE 500W 220V	
1490	90239-0231	A		1	BELLOWS	
150	449751-0000	-		1	PROTECTION	
1500	90239-0259	A		1	CYLINDER	
1503	90258-0031	-		2	PIN, STRAIGHT SLOTTED SPRING FRP 3X20	
1505	90287-0075	-		3	SCREW SLOT. PAN HEAD LKCS M6X12	
1508	312155-0449	-		4	SCREW EN 10642 MF6S M8X16 A480	
1510	90296-0051	-		1	PASTE	
1515	359705-0015	-		1	WARNING SIGN ISO, RISK OF ELECTRIC SHOCK	
155	450853-0000	-		1	PROTECTION	
157	548794-0000	A		1	HEATING JAW	
160	294009-0000	A		2	KNIFE	
170	A440184-0100	-		1	BENDING ROLLER	**7-73**
175	A440135-0100	-		1	BENDING ROLLER	**7-41**
180	A1360785-0100	A		1	PAPER HOLDER	**7-75, 7-77**
185	A522410-0200	-		1	BENDING ROLLER	**7-79**
210	1346514-0000	A		1	KNIFE HOLDER	
225	449770-0000	A		1	INSULATION	
235	466618-0000	A		1	CATCH	
240	466619-0000	A		1	CATCH	
243	457658-0000	A		1	INSULATION	
247	458912-0000	-		1	BRACKET	
248	479223-0000	-		1	RAIL	
249	484844-0000	A		1	INSULATION	
250	531886-0000	-		1	PROTECTION PLATE	
260	1360784-0000	-		1	PROTECTION PLATE	
265	1362926-0000	-		1	COVERING PLATE	
270	32079-0000	-		1	WASHER	
330	445894-0000	A		1	SEAL	
340	556316-0000	-		1	INSULATION	
350	556317-0000	A		1	INSULATION	
370	445898-0000	-		2	NUT	
390	556318-0000	A		1	INSULATION	
400	445901-0000	-		1	FRAME	
410	445902-0000	-		1	ARM	
420	445903-0000	A		2	ECCENTRIC SHAFT	
430	445904-0000	A		2	SHAFT	
450	445907-0000	-		2	SCREW	
460	458062-0000	A		2	TENSION SPRING	
470	445909-0000	-		1	NIPPLE	
490	445915-0000	-		1	STEERING	
520	445918-0000	-		1	SCREW	
620	449623-0000	A		1	STEERING	
630	449624-0000	A		1	STEERING	
640	927428-0000	-		1	COVERING PLATE	
650	449626-0000	A		2	SEAL	
660	449629-0000	-		1	BRACKET	
680	449753-0000	-		4	SCREW	
690	449761-0000	A		1	WASHER	
692	450017-0000	A		2	PLATE	
698	451412-0000	-		2	WASHER	
699	451413-0000	-		2	WASHER	
702	458915-0000	A		2	HEAD RAIL	
703	458916-0000	A		2	SHAFT	
705	458917-0000	-		1	SUPPORT	
708	553763-0000	A		2	ADJUSTING SCREW	
709	464983-0000	A		2	SCREW	
710	458929-0000	A		1	TURN SPRING	
711	2594033-0000	-		1	TURN SPRING	
712	464547-0000	A		4	NUT	
713	464548-0000	-		1	BRACKET	
715	464854-0000	A		1	TENSION SPRING	
716	561426-0000	A		1	LACE	
717	466446-0000	-		2	HANDLE	
718	479224-0000	A		2	STEERING	
719	466620-0000	A		1	PISTON	
722	466623-0000	A		1	COMPRESSION SPRING	
723	476288-0000	-		1	PIPE	
724	476289-0000	-		1	SCREW	

Machine Type | Group Description | Used-In | Group Number | Page No

See previous drawings pages: 7-66, 7-68.

Pos	Part No	SP	UN	Qty	Description	Page No
Common Parts (Cont'd)						
728	479188-0000	A		1	INSULATION	
732	484529-0000	A		1	CYLINDER BRACKET	
734	484682-0000	A		2	COMPRESSION SPRING	
736	484783-0000	A		2	RAIL	
737	484877-0000	A		2	STEERING	
738	484878-0000	-		2	HOLDER	
739	311211-0292	A		6	TAPER PIN THREADED ISO 8737 M6X30 SS	
740	312101-0329	-		8	SCREW M6S M5X16 FZB	
745	312101-0331	-		6	SCREW M6S M5X20 FZB	
747	312101-0333	-		4	SCREW M6S M5X25 FZB	
750	312101-0335	-		2	SCREW M6S M5X30 FZB	
770	312101-0366	-		4	SCREW M6S M6X12 FZB	
780	312101-0368	-		9	SCREW M6S M6X16 FZB	
790	312101-0493	-		2	SCREW M6S M10X25 FZB	
800	312105-0287	-		2	SCREW M6S ISO4017 M4X8 A480	
802	312101-0289	-		2	SCREW M6S M4X10 FZB	
805	312101-0291	-		2	SCREW M6S M4X12 FZB	
820	312101-0323	-		4	SCREW M6S M5X8 FZB	
822	312105-0329	-		10	SCREW M6S ISO 4017 M5X16 A480	
825	312111-0325	-		6	SCREW HEX.SOCK.HD.MC6S-TT 5X10 88 FZB	
830	312111-0327	-		10	SCREW HEX.SOCK.HD.MC6S-TT 5X12 88 FZB	
840	312111-0329	-		2	SCREW HEX.SOCK.HD.MC6S-TT 5X16 88 FZB	
870	312111-0372	-		8	SCREW HEX.SOCK.HD.MC6S-TT 6X25 88 FZB	
890	312115-0340	-		2	SCREW ISO4762 M5X45 A4	
920	312121-0228	-		4	SLOTTED CHEESE HEAD SCREW MCS 3X16 FZB	
930	312121-0230	-		1	SLOTTED CHEESE HEAD SCREW MCS 3X20 FZB	
940	312121-0321	-		1	SLOTTED CHEESE HEAD SCREW MCS 5X6 FZB	
960	312132-0323	A		8	SCREW SLOT. PAN HEAD MSCS M5X8	

Pos	Part No	SP	UN	Qty	Description	Page No

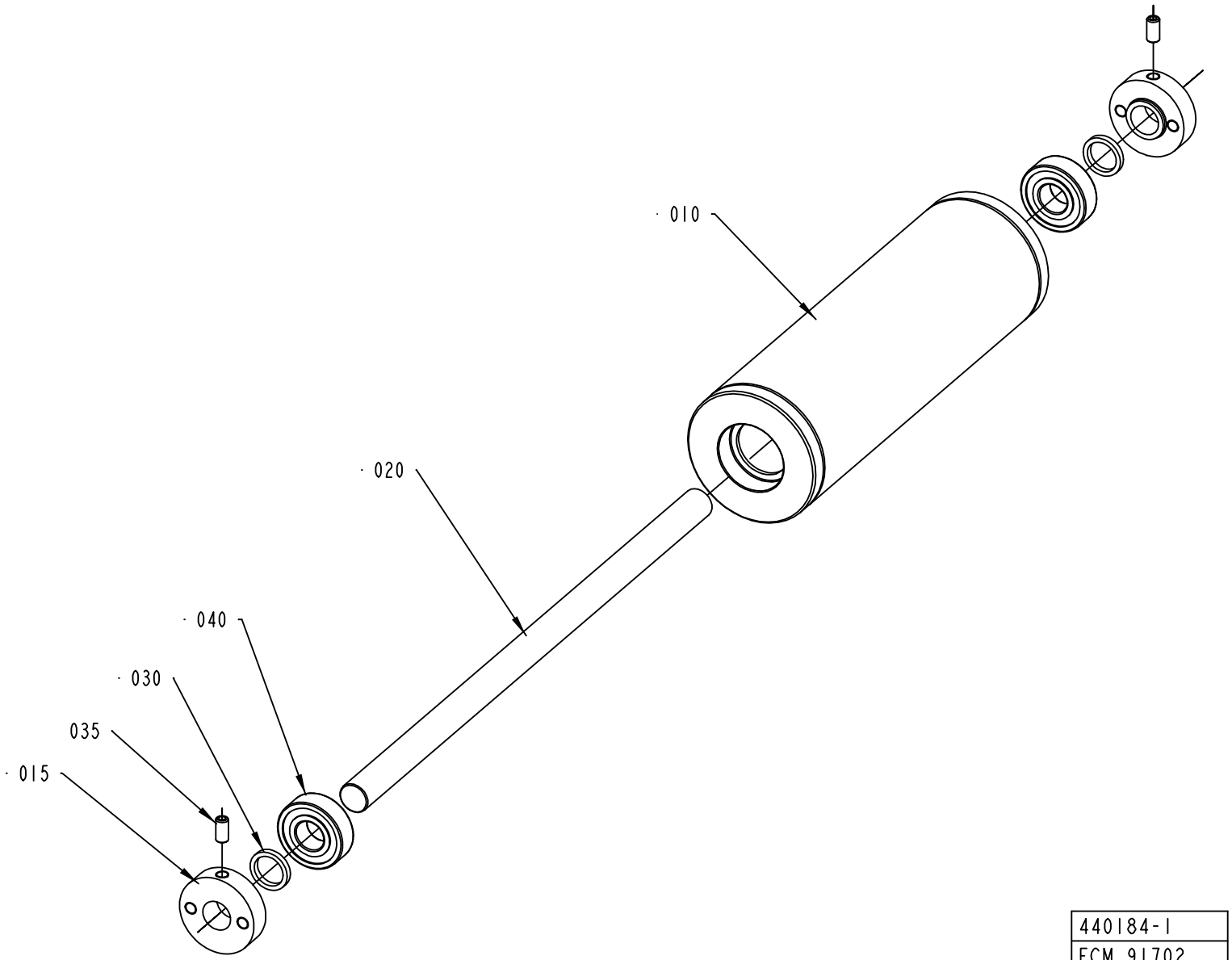

440184-1
ECM 91702

ECM: 91706 - 20021112
Group number: 440184-0100
Assembly Drawing: 440184-1_1_AB

Pos	Part No	SP	UN	Qty	Description	Page No
TBA 0375S						
010	440136-0004	A		1	ROLL	
015	440138-0000	A		2	LOCKING CIRCLIP	
035	312306-0366	-		2	SCREW ISO4026 M6X12 BLACK	
TBA 0500B, TBA 0750B, TBA 1000B						
010	440136-0002	A		1	ROLL	
030	440194-0000	-		2	WASHER	
TBA 0500S, TBA 0355B						
010	440136-0003	A		1	ROLL	
015	440138-0000	A		2	LOCKING CIRCLIP	
035	312306-0366	-		2	SCREW ISO4026 M6X12 BLACK	
TBA 1000SQ						
010	440136-0008	A		1	ROLL	
015	440138-0000	A		2	LOCKING CIRCLIP	
035	312306-0366	-		2	SCREW ISO4026 M6X12 BLACK	
TBA 0750S						
010	440136-0006	A		1	ROLL	
015	440138-0000	A		2	LOCKING CIRCLIP	
035	312306-0366	-		2	SCREW ISO4026 M6X12 BLACK	
TBA 1000S						
010	440136-0007	A		1	ROLL	
015	569917-0000	A		2	LOCKING CIRCLIP	
035	312306-0366	-		2	SCREW ISO4026 M6X12 BLACK	
Common Parts						
020	440137-0002	A		1	SHAFT	
040	321313-0102	A		2	BALL BEARING, 15X35X11 MM	

Pos	Part No	SP	UN	Qty	Description	Page No

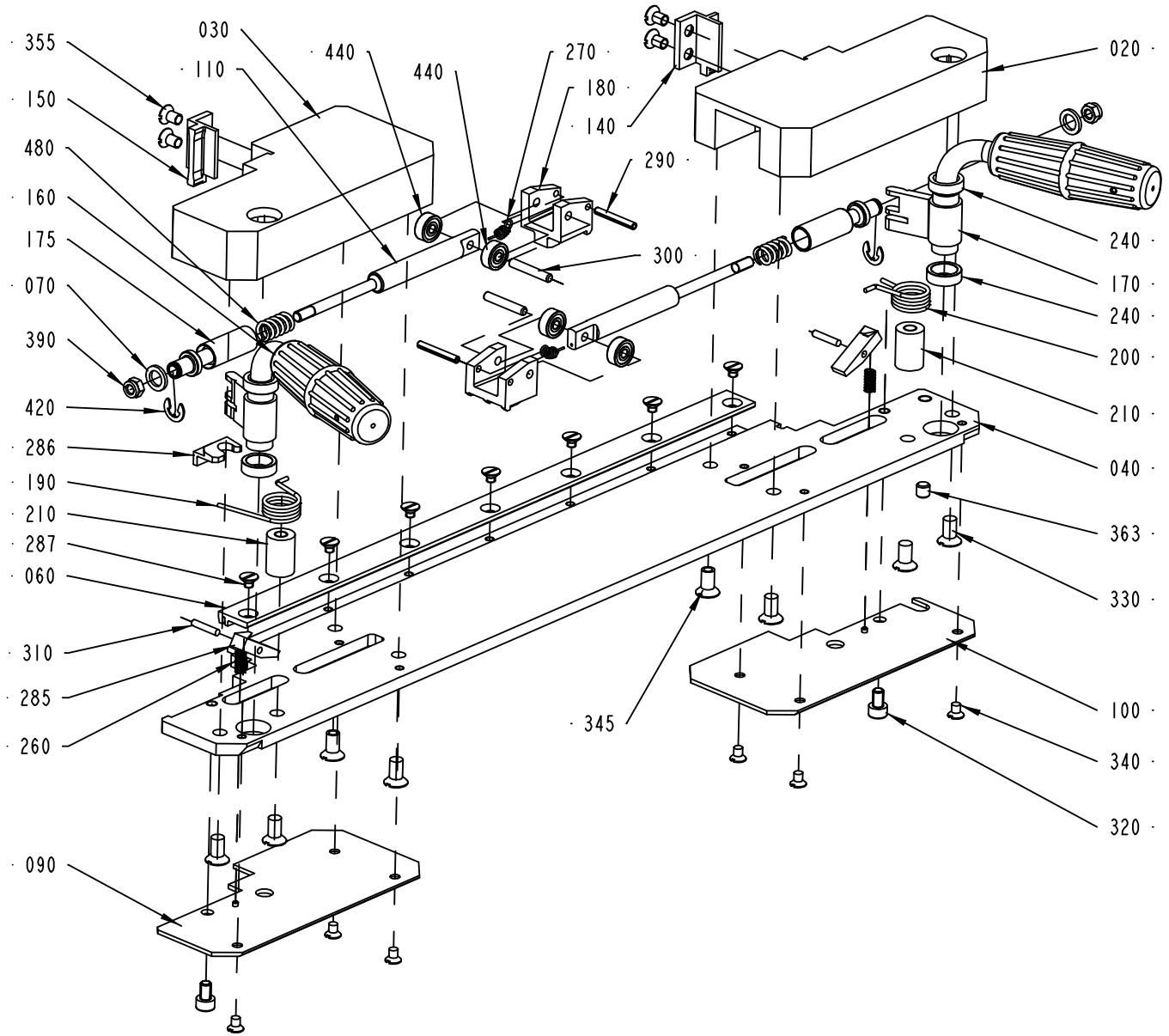

1360785-1
ECM 91708

ECM: 92160 - 20030221
Group number: 1360785-0100
Assembly Drawing: 1360785-1_1_AB

This list covers pages from 7-74 to 7-77

Pos	Part No	SP	UN	Qty	Description	Page No
TBA 0375S						
020	457487-0000	A		1	BEARING HOUSING	
030	457489-0000	A		1	BEARING HOUSING	
040	556395-0000	A		1	CUTTING RAIL	
090	457493-0000	A		1	COVERING PLATE	
100	457495-0000	A		1	COVERING PLATE	
110	556325-0000	-		2	SHAFT	
140	522474-0000	A		1	BLOCK L	
150	522475-0000	A		1	BLOCK R	
330	312141-0366	-		8	SCREW COUNTERS.SLOT.HD. MFS 6X12 FZB	
355	312145-0323	-		4	SCREW COUNTERS.SLOT.HD. MFS 5X8 SS	
TBA 0500B, TBA 0750B, TBA 1000B						
020	449631-0000	A		1	BEARING HOUSING	
030	449632-0000	A		1	BEARING HOUSING	
040	549834-0000	A		1	CUTTING RAIL	
090	449634-0000	A		1	COVERING PLATE	
100	449635-0000	A		1	COVERING PLATE	
110	556322-0000	-		2	SHAFT	
140	522474-0000	A		1	BLOCK L	
150	522475-0000	A		1	BLOCK R	
330	312141-0366	-		8	SCREW COUNTERS.SLOT.HD. MFS 6X12 FZB	
355	312145-0323	-		4	SCREW COUNTERS.SLOT.HD. MFS 5X8 SS	
TBA 0500S, TBA 0355B						
020	457486-0000	A		1	BEARING HOUSING	
030	457488-0000	A		1	BEARING HOUSING	
040	556394-0000	A		1	CUTTING RAIL	
090	457492-0000	A		1	COVERING PLATE	
100	457494-0000	A		1	COVERING PLATE	
110	556324-0000	-		2	SHAFT	
140	522474-0000	A		1	BLOCK L	
150	522475-0000	A		1	BLOCK R	
330	312141-0366	-		8	SCREW COUNTERS.SLOT.HD. MFS 6X12 FZB	
355	312145-0323	-		4	SCREW COUNTERS.SLOT.HD. MFS 5X8 SS	
TBA 1000SQ						
020	574059-0000	A		1	BEARING HOUSING	
030	574060-0000	A		1	BEARING HOUSING	
040	574061-0000	A		1	CUTTING RAIL	
090	574062-0000	A		1	COVERING PLATE	
100	574063-0000	A		1	COVERING PLATE	
110	574064-0000	-		2	SHAFT	
140	522474-0000	A		1	BLOCK L	
150	522475-0000	A		1	BLOCK R	
330	312141-0366	-		8	SCREW COUNTERS.SLOT.HD. MFS 6X12 FZB	
355	312145-0323	-		4	SCREW COUNTERS.SLOT.HD. MFS 5X8 SS	
TBA 0750S						
020	544272-0000	A		1	BEARING HOUSING	
030	544273-0000	A		1	BEARING HOUSING	
040	556393-0000	A		1	CUTTING RAIL	
090	544274-0000	A		1	COVERING PLATE	
100	544275-0000	A		1	COVERING PLATE	
110	556323-0000	-		2	SHAFT	
140	522474-0000	A		1	BLOCK L	
150	522475-0000	A		1	BLOCK R	
330	312141-0366	-		8	SCREW COUNTERS.SLOT.HD. MFS 6X12 FZB	
355	312145-0323	-		4	SCREW COUNTERS.SLOT.HD. MFS 5X8 SS	
TBA 1000S						
020	569921-0000	A		1	BEARING HOUSE L.	
030	569922-0000	A		1	BEARING HOUSE R.	
040	569923-0000	A		1	CUTTING RAIL	
090	569919-0000	A		1	COVER PLATE R.	
100	569918-0000	A		1	COVER PLATE L.	
110	569920-0000	-		2	SHAFT	
140	522474-0000	A		1	BLOCK L	
150	522475-0000	A		1	BLOCK R	
330	312141-0366	-		8	SCREW COUNTERS.SLOT.HD. MFS 6X12 FZB	
355	312145-0323	-		4	SCREW COUNTERS.SLOT.HD. MFS 5X8 SS	
Common Parts						
060	549835-0000	A		1	CUTTING RAIL	
070	556319-0000	A		2	WASHER	
160	556391-0000	A		1	HANDLE	
170	556392-0000	A		1	HANDLE	
175	556320-0000	A		2	SLEEVE	
180	1317719-0000	-		2	CLAMP	
190	449744-0000	A		1	TURN SPRING	
200	449745-0000	A		1	TURN SPRING	
210	449746-0000	-		2	STEERING	
240	449748-0000	A		4	BEARING	
260	458041-0000	A		2	COMPRESSION SPRING	

Machine Type | Group Description | Used-In | Group Number | Page No

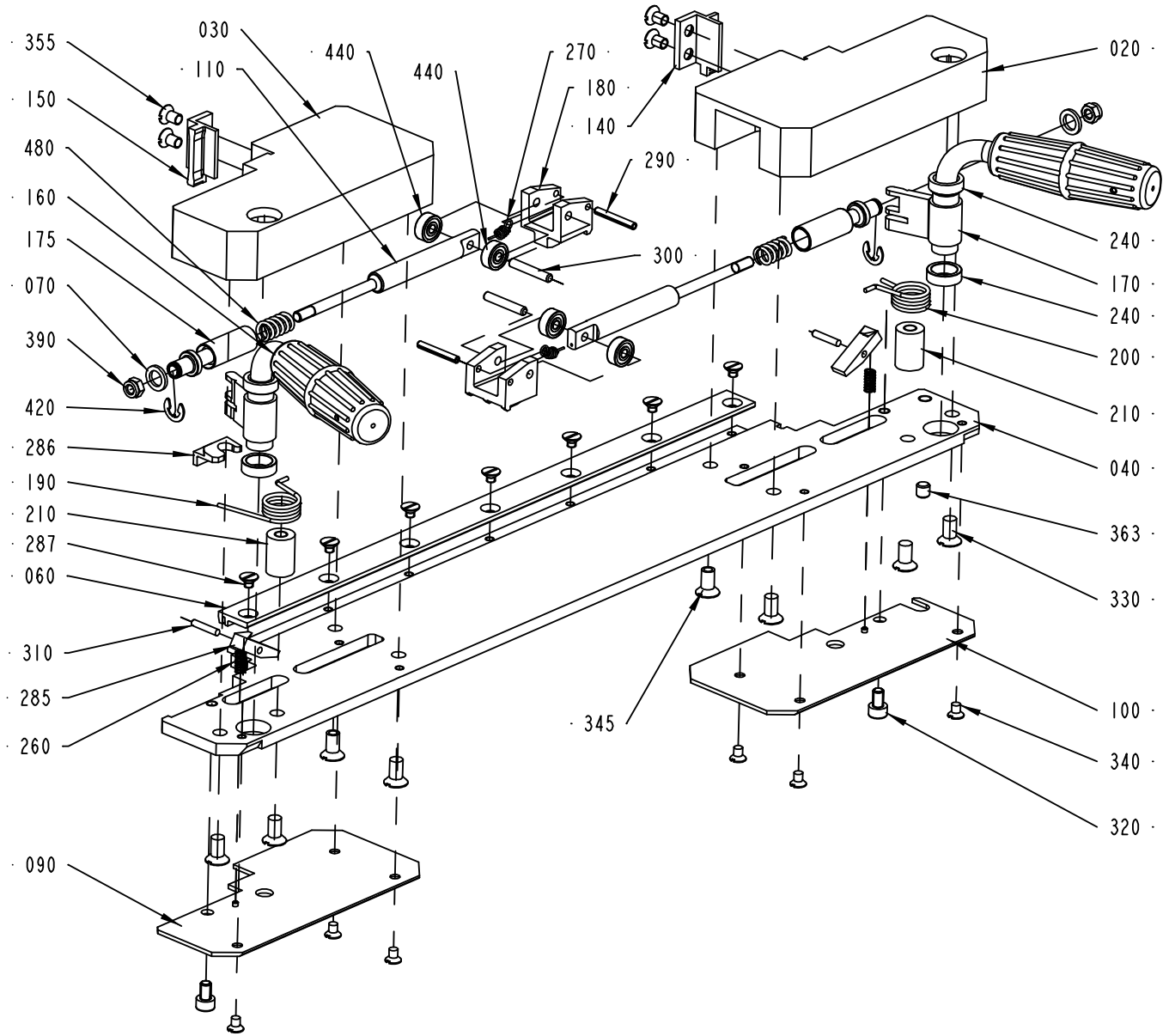

1360785-1
ECM 91708

Pos	Part No	SP	UN	Qty	Description	Page No
Common Parts (Cont'd)						
270	458042-0000	A		2	SPRING	
285	457370-0000	A		2	CATCH	
286	457586-0000	A		1	SLIDE	
287	90287-0206	-		7	SLOTTED SCREW	
290	90258-0030	A		2	PIN, STRAIGHT SLOTTED SPRING FRP 3X24	
300	311101-0274	A		2	PARALLELL PIN, CP, H6, 4X25 MM	
310	311102-0236	A		2	PARALLEL PIN ISO 2338 3M6X16 ST	
320	312115-0323	-		2	SCREW ISO4762 M5X8 A4	
340	312145-0285	-		6	SCREW COUNTERS.SLOT.HD. MFS 4X6 SS	
363	312306-0360	-		1	SCREW ISO4026 M6X6 BLACK	
390	312812-0314	-		2	HEXAGON NUT, NY-LOCK M5 A480	
420	315755-0108	A		2	LOCKING WASHER 6	
440	321300-0094	A		4	BALL BEARING, 4X13X5 MM	
470	90296-0009	-	ML	2	SILICONE GREASE TUBE 100 GR.	
480	90335-0237	A		2	COMP. SPRING, DM12360	

Pos	Part No	SP	UN	Qty	Description	Page No

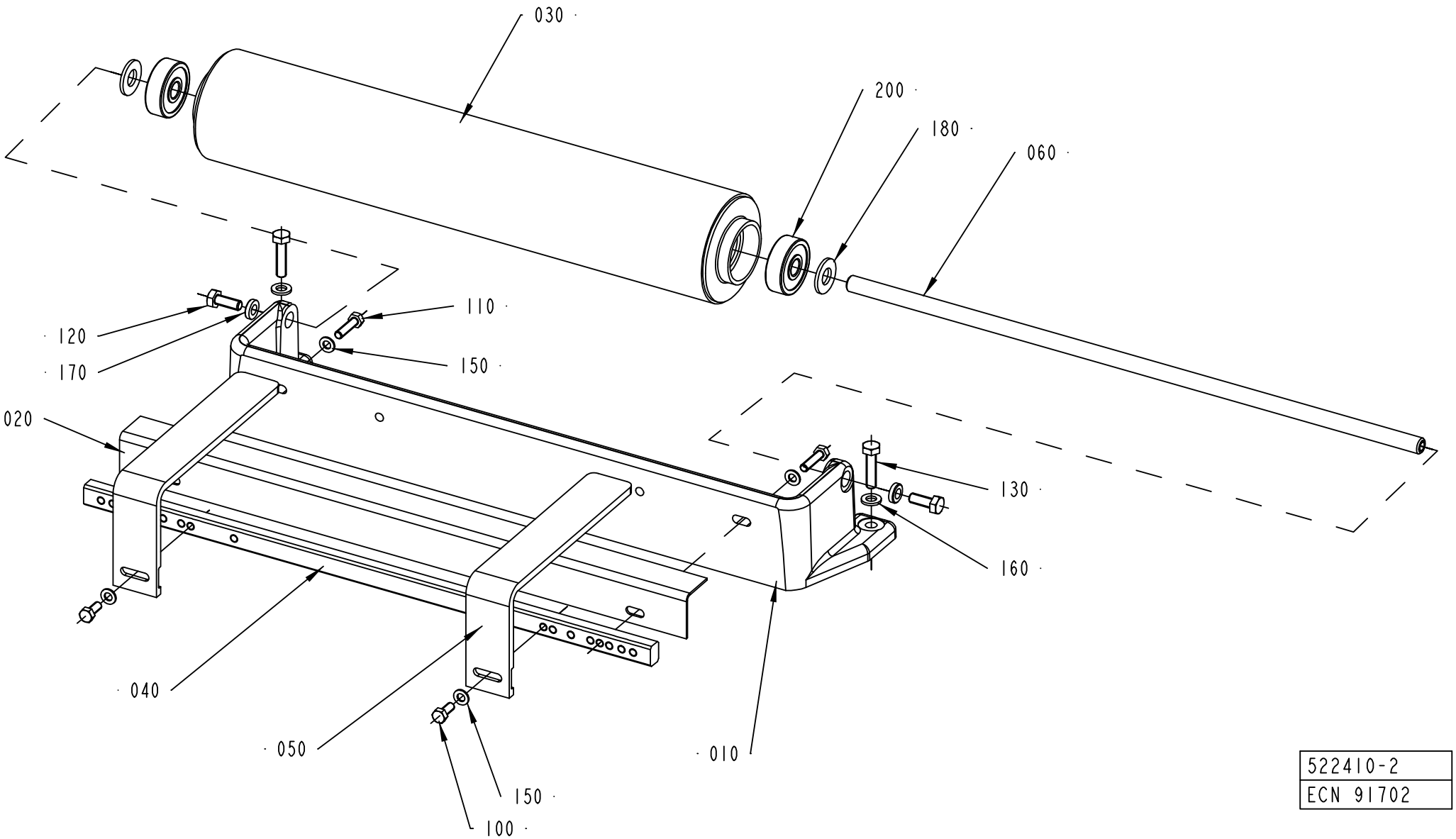

522410-2
ECN 91702

ECM: 91704 - 20021112
Group number: 522410-0200
Assembly Drawing: 522410-2_1_AB

Pos	Part No	SP	UN	Qty	Description	Page No
-						
010	522173-0000	-		1	CANTILEVER	
020	574651-0000	-		1	SHEET	
030	265564-0000	A		1	BENDING ROLLER	
040	479223-0000	-		1	RAIL	
050	531885-0000	-		2	STEERING	
060	499132-0002	A		1	SHAFT	
100	312105-0327	-		2	SCREW M6S ISO 4017 M5X12 A480	
110	312105-0331	-		2	SCREW M6S ISO 4017 M5X20 A480	
120	312105-0368	-		2	SCREW M6S M6X16 A280	
130	312105-0372	-		2	SCREW M6S ISO 4017 M6X25 A480	
150	315105-0146	-		4	BRICKA BRB5,3X10RFR	
160	315105-0153	-		2	WASHER BRB6,4X12RFR	
170	315115-0153	-		2	WASHER PLAIN, TBRB 6,4/12 H=3	
180	315105-0173	-		2	WASHER BRB10,5X22RFR	
200	321316-0200	A		2	BALL BEARING, 10X35X11 MM	

Pos	Part No	SP	UN	Qty	Description	Page No

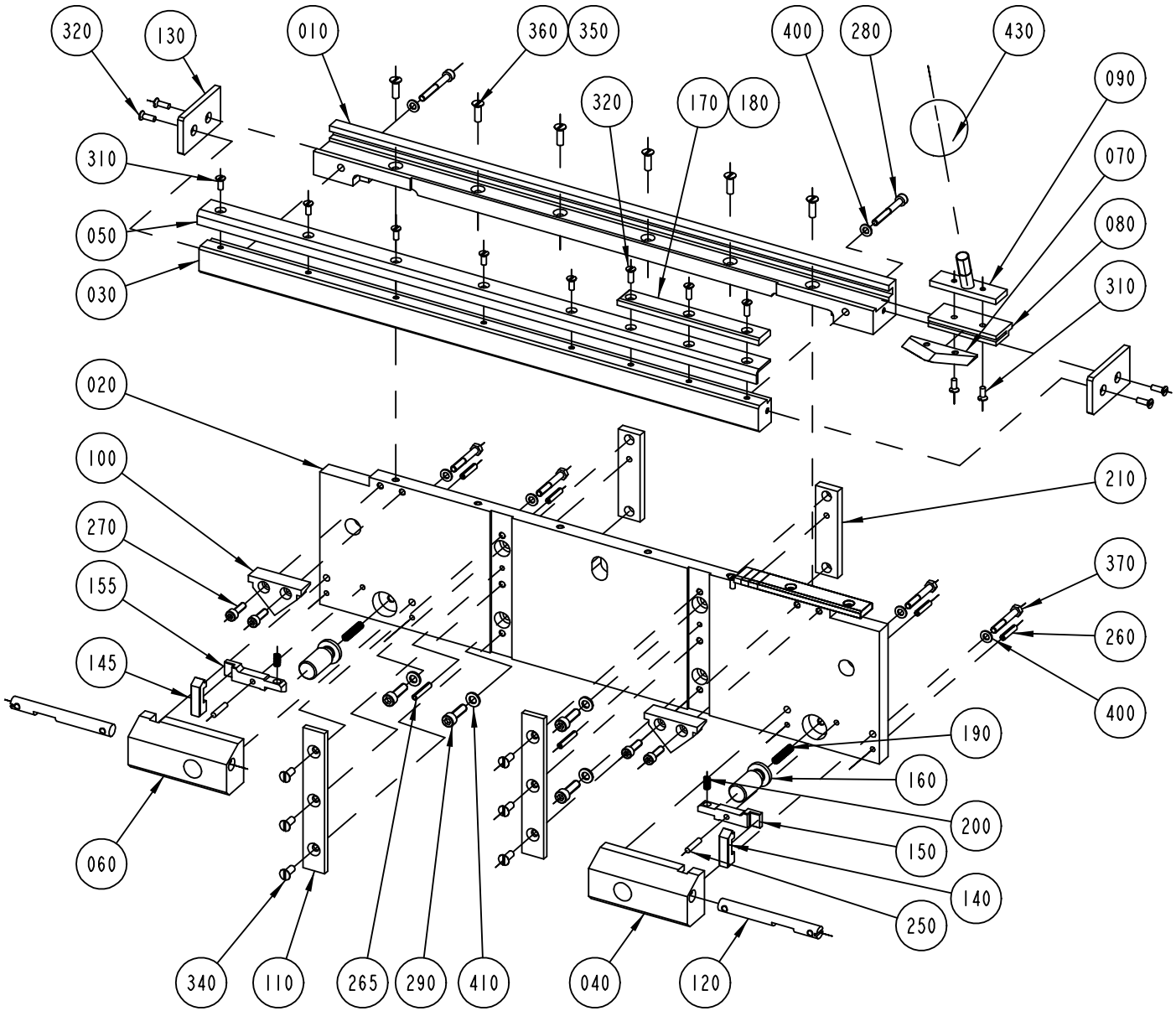
320
130
010
360
350
400
280
430
090
320
170
180
070
310
080
050
310
030
020
100
210
270
370
155
260
145
400
190
160
200
060
150
140
250
340
110
265
290
410
040
120

522121-2
ECN -

ECM: 92185 - 20030304
Group number: 522121-0200
Assembly Drawing: 522121-2_1_AB

Pos	Part No	SP	UN	Qty	Description	Page No
TBA 0375S (See drawing on page: 7-80)						
010	522122-0002	A		1	RAIL	
020	522123-0000	-		1	PLATE	
030	522124-0000	-		1	RULER	
100	522131-0000	A		2	STEERING	
180	522139-0002	A		1	STOPPER	
350	312145-0329	-		6	SCREW COUNTERS.SLOT.HD. MFS 5X16 SS	
TBA 0500B, TBA 0750B, TBA 1000B (See drawing on page: 7-80)						
010	522122-0001	A		1	RAIL	
020	522123-0000	-		1	PLATE	
030	522124-0000	-		1	RULER	
100	522131-0000	A		2	STEERING	
170	522138-0000	A		1	STOPPER	
360	312145-0331	-		6	SCREW COUNTERS.SLOT.HD. MFS 5X20 SS	
TBA 0500S, TBA 0355B (See drawing on page: 7-80)						
010	522122-0002	A		1	RAIL	
020	522123-0000	-		1	PLATE	
030	522124-0000	-		1	RULER	
100	522131-0000	A		2	STEERING	
180	522139-0001	A		1	STOPPER	
350	312145-0329	-		6	SCREW COUNTERS.SLOT.HD. MFS 5X16 SS	
TBA 1000SQ (See drawing on page: 7-80)						
010	522122-0001	A		1	RAIL	
020	522123-0000	-		1	PLATE	
030	522124-0000	-		1	RULER	
100	522131-0000	A		2	STEERING	
170	574052-0000	A		1	STOPPER	
360	312145-0331	-		6	SCREW COUNTERS.SLOT.HD. MFS 5X20 SS	
TBA 0750S (See drawing on page: 7-80)						
010	522122-0001	A		1	RAIL	
020	522123-0000	-		1	PLATE	
030	522124-0000	-		1	RULER	
100	522131-0000	A		2	STEERING	
170	544270-0000	A		1	STOPPER	
360	312145-0331	-		6	SCREW COUNTERS.SLOT.HD. MFS 5X20 SS	
TBA 1000S (See drawing on page: 7-80)						
010	522122-0001	A		1	RAIL	
020	522123-0000	-		1	PLATE	
030	522124-0000	-		1	RULER	
100	522131-0000	A		2	STEERING	
170	569924-0000	A		1	STOPPER	
360	312145-0331	-		6	SCREW COUNTERS.SLOT.HD. MFS 5X20 SS	
Common Parts						
040	522125-0000	A		1	BEARING HOUSING	
050	522126-0000	-		1	SHEET	
060	556443-0000	A		1	BEARING HOUSING	
070	522128-0000	A		1	KNIFE	
080	522129-0000	A		1	KNIFE HOLDER	
090	522130-0000	A		1	HANDLE	
110	522132-0000	-		2	SLIDE BELT	
120	522133-0000	A		2	SHAFT	
130	522134-0000	-		2	END PLATE	
140	556439-0000	A		1	BARRIER	
145	556440-0000	A		1	BARRIER	
150	556441-0000	-		1	ARM	
155	556442-0000	-		1	ARM	
160	522137-0000	A		2	PUSH BUTTON	
190	522158-0000	A		2	COMPRESSION SPRING	
200	458041-0000	A		2	COMPRESSION SPRING	
210	530778-0000	-		2	LACE	
250	311103-0272	-		2	PARALLEL PIN ISO 2338 4M6X20 A1	
260	311112-0256	-		4	SPRING PIN, ISO 8752 4X20-C	
265	311112-0258	-		2	SPRING PIN, ISO 8752 4X24-C	
270	312115-0329	-		4	SCREW ISO4762 M5X16 A4	
280	312115-0339	-		2	SCREW ISO4762 M5X40 A4	
290	312115-0370	-		4	SCREW ISO4762 M6X20 A4	
310	312145-0289	-		8	SCREW COUNTERS.SLOT.HD. MFS 4X10 SS	
320	312145-0291	-		6	SCREW COUNTERS.SLOT.HD. MFS 4X12 SS	
340	312145-0327	-		6	SCREW COUNTERS.SLOT.HD. MFS 5X12 SS	
370	312105-0337	-		4	SCREW M6S ISO 4014 M5X35 A480	
400	315105-0146	-		6	BRICKA BRB5,3X10RFR	
410	315105-0153	-		4	WASHER BRB6,4X12RFR	
430	318800-0107	-		1	HANDLE,SPHERICAL KNOB,INT.THRE.,D45-M10	

Machine Type | Group Description | Used-In | Group Number | Page No

This page is intentionally left blank.

ECM: - -
Group number: 440132-0200
Assembly Drawing:

Pos	Part No	SP	UN	Qty	Description	Page No	Pos	Part No	SP	UN	Qty	Description	Page No
-													
030	294009-0000	-		2	KNIFE								

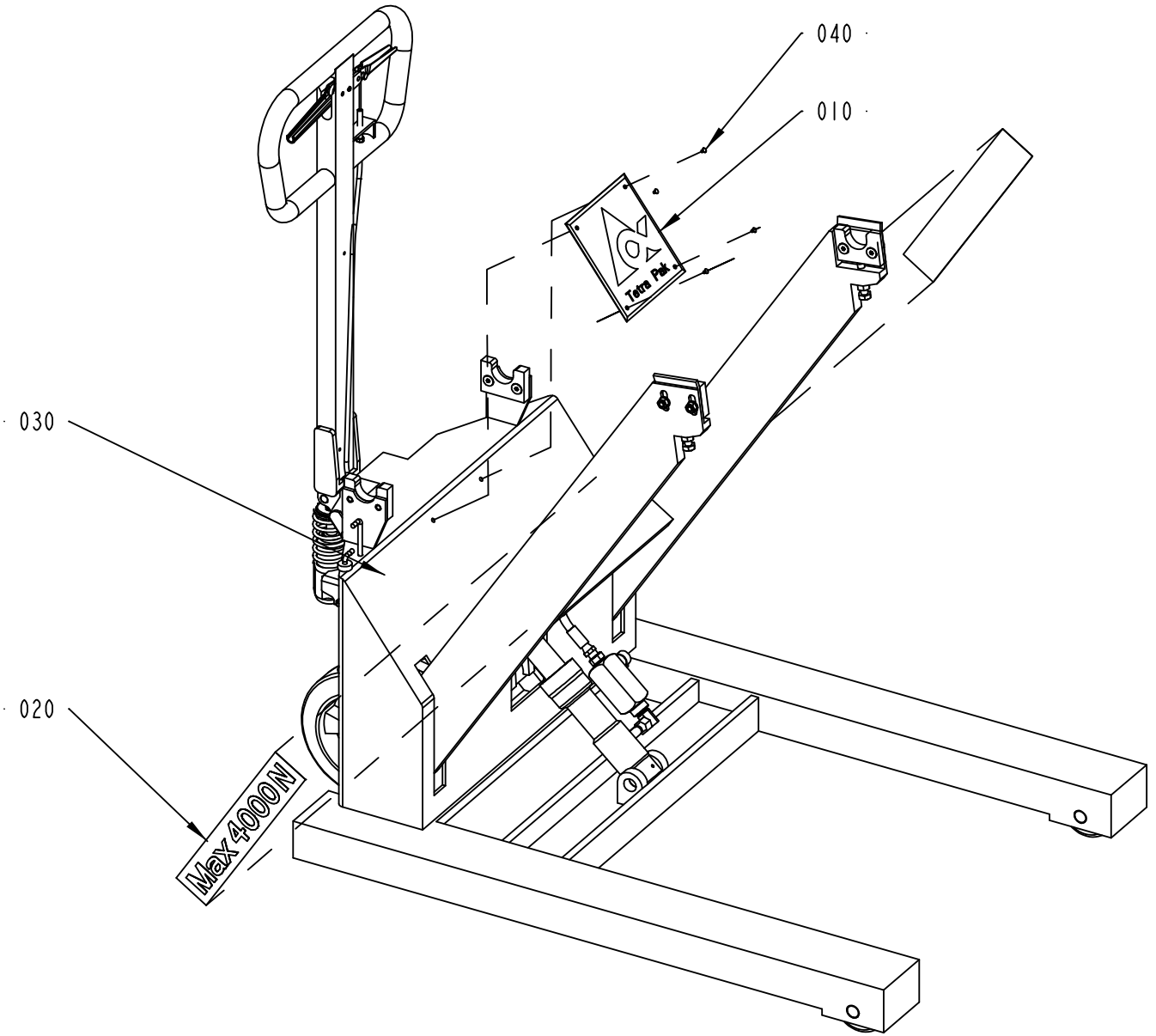

576739-4
ECM 111657

ECM: 111659 - 20030127
Group number: 576739-0200
Assembly Drawing: 576739-4_1_AB

Pos	Part No	SP	UN	Qty	Description	Page No
-						
010	574658-0000	-		1	LOGOTYPE TP	
020	522308-0000	-		2	SIGN	
030	B90067-0021	B		1	CARRIAGE 32 04 129 5	
100	*90067-0301*	*C*		*1*	*BRAKE WIRE, 32 82 138 1*	
110	*90067-0302*	*D*		*2*	*TORSION SPRING*	
120	*90067-0317*	*D*		*2*	*BRAKE LINING*	
130	*90067-0320*	*C*		*1*	*COTTER FOR 90067-301*	
140	*90067-0334*	*D*		*1*	*AXIAL BEARING KIT, 32 14 174 9*	
150	*90067-0336*	*D*		*1*	*GUIDE SHAFT UNIT, 32 82 123 3*	
160	*90067-0337*	*D*		*2*	*BRAKE DRUM*	
170	*90067-0338*	*C*		*2*	*GUIDE ROLLER 32 44 117 2*	
180	*90067-0370*	*C*		*2*	*WHEEL, 32 04 176 6*	
190	*90067-0371*	*D*		*4*	*SLEEVE, 32 04 175 8*	
200	*90067-0372*	*D*		*2*	*SHAFT, 32 04 174 1*	
210	*90067-0342*	*D*		*4*	*TENSION SPRING*	
220	*90067-0346*	*C*		*1*	*PISTON ROD*	
230	*90067-0347*	*C*		*1*	*CYLINDER SHELL*	
240	*90067-0348*	*C*		*1*	*REPAIR KIT*	
250	*90067-0349*	*C*		*1*	*ROLLER KIT, 34 73 050 7*	
260	*90067-0350*	*D*		*1*	*AXLE PIN*	
270	*90067-0351*	*C*		*1*	*SEAL KIT*	
280	*90067-0352*	*C*		*1*	*SINK VALVE COMPL.*	
290	*90067-0353*	*C*		*1*	*PUMP HOUSING, 34 73 522 5*	
300	*90067-0354*	*C*		*1*	*PUMP PISTON*	
310	*90067-0355*	*D*		*1*	*COMPRESSION SPRING*	
320	*90067-0356*	*D*		*1*	*TOP WASHER*	
330	*90067-0357*	*C*		*1*	*REPAIR KIT*	
340	*90067-0358*	*D*		*1*	*SINK HANDLE*	
350	*90067-0359*	*D*		*1*	*SINK ROD, 34 74 021 7*	
360	*90067-0360*	*C*		*1*	*MOUNTING KIT, 34 74 022 5*	
370	*90067-0361*	*D*		*1*	*TIE ROD*	
380	*90067-0362*	*-*		*1*	*CIRCLIP*	
390	*90067-0363*	*C*		*4*	*SLIDER, 32 04 160 1*	
400	*90067-0364*	*D*		*1*	*BRAKE HANDLE*	
410	*90067-0365*	*C*		*1*	*HYDRAULIC HOSE, 32 04 169 1*	
420	*90067-0366*	*C*		*1*	*INDICATOR L=278MM;D=6MM*	
430	*90067-0367*	*D*		*1*	*INDICATOR L=83MM;D=6MM*	
440	*90067-0368*	*D*		*1*	*YOKE*	
450	*90067-0369*	*D*		*1*	*VALVE ARM*	
500	*90055-0042*	*C*		*1*	*NIPPLES, EXT. THREAD, HEXAGON, NO. 6835-*	
510	*90055-0145*	*C*		*1*	*ELBOW ADAPTOR-R1/4*	
550	*90091-0106*	*-*		*1*	*SCRAPER 30X40X10 MM*	
570	*90201-0098*	*C*		*1*	*ADJ. FLOW CON. VALVE, NO. 32 04 149 4*	
600	*311111-0251*	*-*		*1*	*SPRING PIN ISO 8752 4X10-ST*	
610	*311111-0345*	*-*		*1*	*SPRING PIN ISO 8752 6X32-ST*	
620	*311103-0271*	*-*		*2*	*PARALLEL PIN ISO 2338 4M6X18 A1*	
650	*312101-0678*	*-*		*2*	*SCREW M6S M20X70 FZB*	
670	*312104-0501*	*-*		*2*	*SCREW M6S M10X50H FZB*	
680	*312151-0451*	*-*		*4*	*SCREW HEX.SOCK.COUNT.MF6S 8X20 FZB*	
690	*312151-0455*	*-*		*4*	*SCREW HEX.SOCK.COUNT.MF6S 8X30 FZB*	
750	*312601-0318*	*-*		*4*	*NUT M6M8FZB*	
760	*312601-0320*	*-*		*2*	*NUT M6M 10-8 FZB*	
800	*315101-0165*	*-*		*4*	*WASHER PLAIN, BRB, 8,4/16 H=1,5*	
840	*315234-0110*	*C*		*2*	*WASHER,PL.RND.CU.13,5/18 H=1,5*	
850	*315750-0119*	*C*		*4*	*RETAIN. RING, 25*	
860	*315750-0131*	*C*		*1*	*RETAIN. RING, 50*	
900	*321120-0137*	*D*		*2*	*BEARING BUSHING W/O FLANGE,20/23X15*	
040	311521-0143	-		4	BLANK RIVET 3,2X8	

Machine Type	Group Description	Used-In	Group Number	Page No

Tetra Pak

SPC
Spare Parts Catalogue

TBA/8 110V
648022-1100

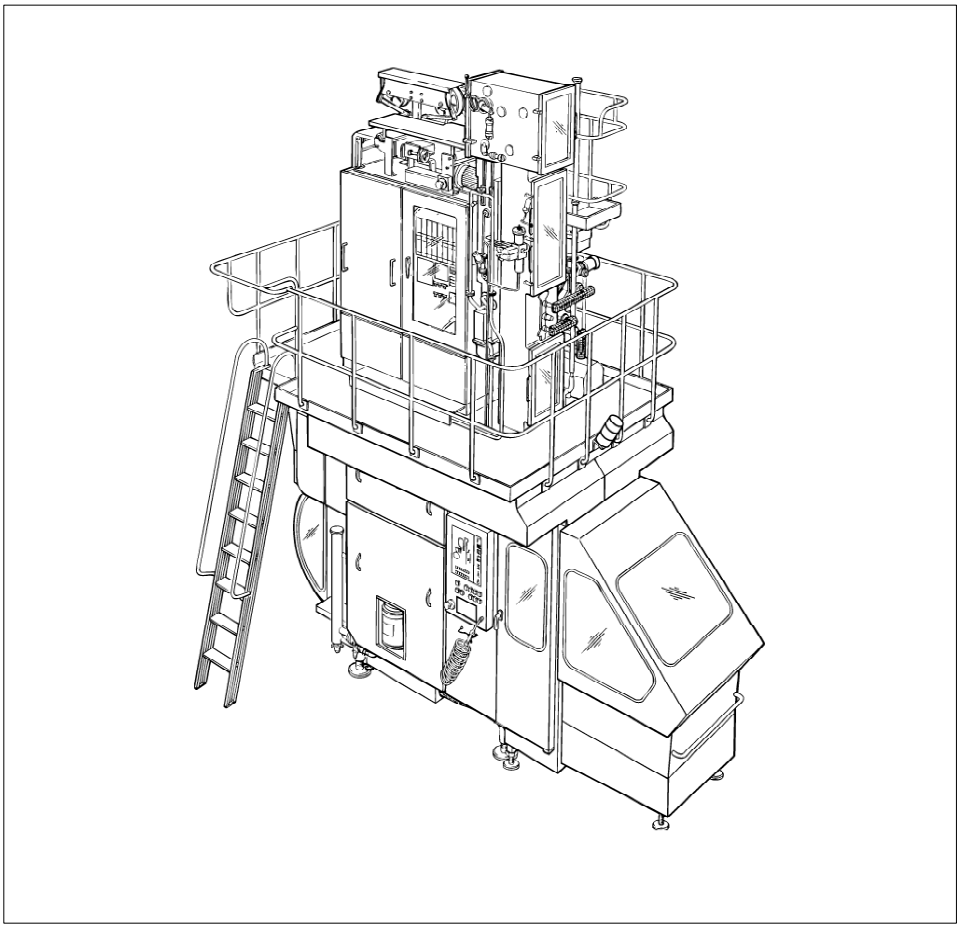

Tetra Pak

Doc. No: SPC-81524-0105

Main Groups of the Machine

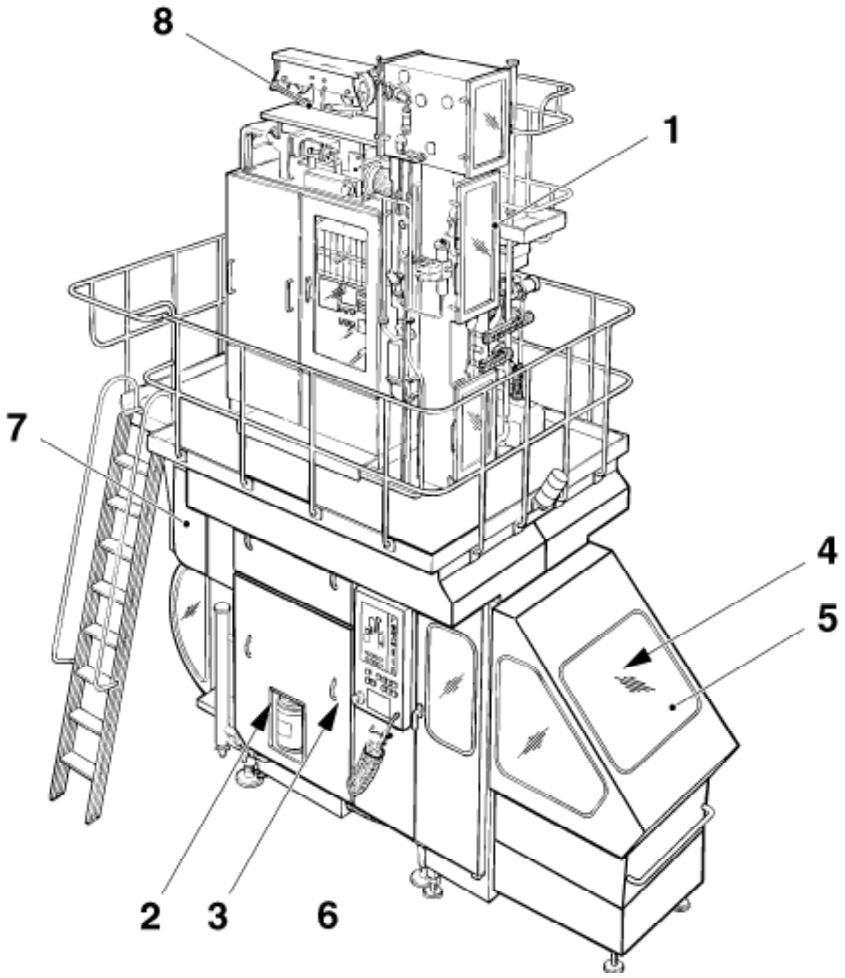

1 - Superstructure
2 - Machine Body
3 - Drive
4 - Jaw System
5 - Final Folder
6 - Regular Accessories
7 - Automatic Splicing Unit
8 - Strip Applicator
9 - Electric Equipment
10 - Optional Equipment

For the correct machine data, check your machine specification, supplied with the machine!

This document is valid for:

Series No/Machine No Sign.

SPC
Spare Parts Catalogue

TBA/8 110V
648022-1100

Valid from machine series No.:
15010/01569

Doc. No: SPC-81524-0105

Issue 200401

Tetra Pak

Tetra Pak Carton Ambient AB

Table of Content:

BINDER 1

Introduction ..... , **i-5**

Superstructure TBA/8
B-648011-0900 ..... , **1-1**

Machine Body TB/TBA/8
B-648012-0900 ..... , **2-1**

Drive TBA/8
B-648003-1100 ..... , **3-1**

Jaw System TB/TBA/8
B-648004-1000 ..... , **4-1**

Final Folder TBA/8
B-648035-0800 ..... , **5-1**

Regular Accessories
B-648009-0900 ..... , **6-1**

Automatic Splicing Unit
B-648013-0700 ..... , **7-1**

BINDER 2

Strip Applicator TBA/8
B-648007-0500 ..... , **8-1**

Electric Equipment
B-649171-1100 ..... , **9-1**

Optional Equipment TBA/8
B-648026-0200 ..... , **10-1**

Part Number Index
..... , **ii-1**

Electrical Parts Index
..... , **iii-1**

General information

Manufacturer

This machine is produced by:
Tetra Pak Carton Ambient AB
Ruben Rausings gata
221 86 LUND / Sweden

Document producer

This document has been produced by:
Tetra Pak Carton Ambient AB
Ruben Rausings gata
221 86 LUND / Sweden

Number of pages

This document contains totally **1286 pages**, including the first **8** introduction pages.

Copyright © 2004 Tetra Pak Carton Ambient AB

All rights reserved. No parts of this document may be reproduced or copied in any forms or by any means, without written permission from Tetra Pak Carton Ambient AB.

SPC
Spare Parts Catalogue

Total pages in this module: 48

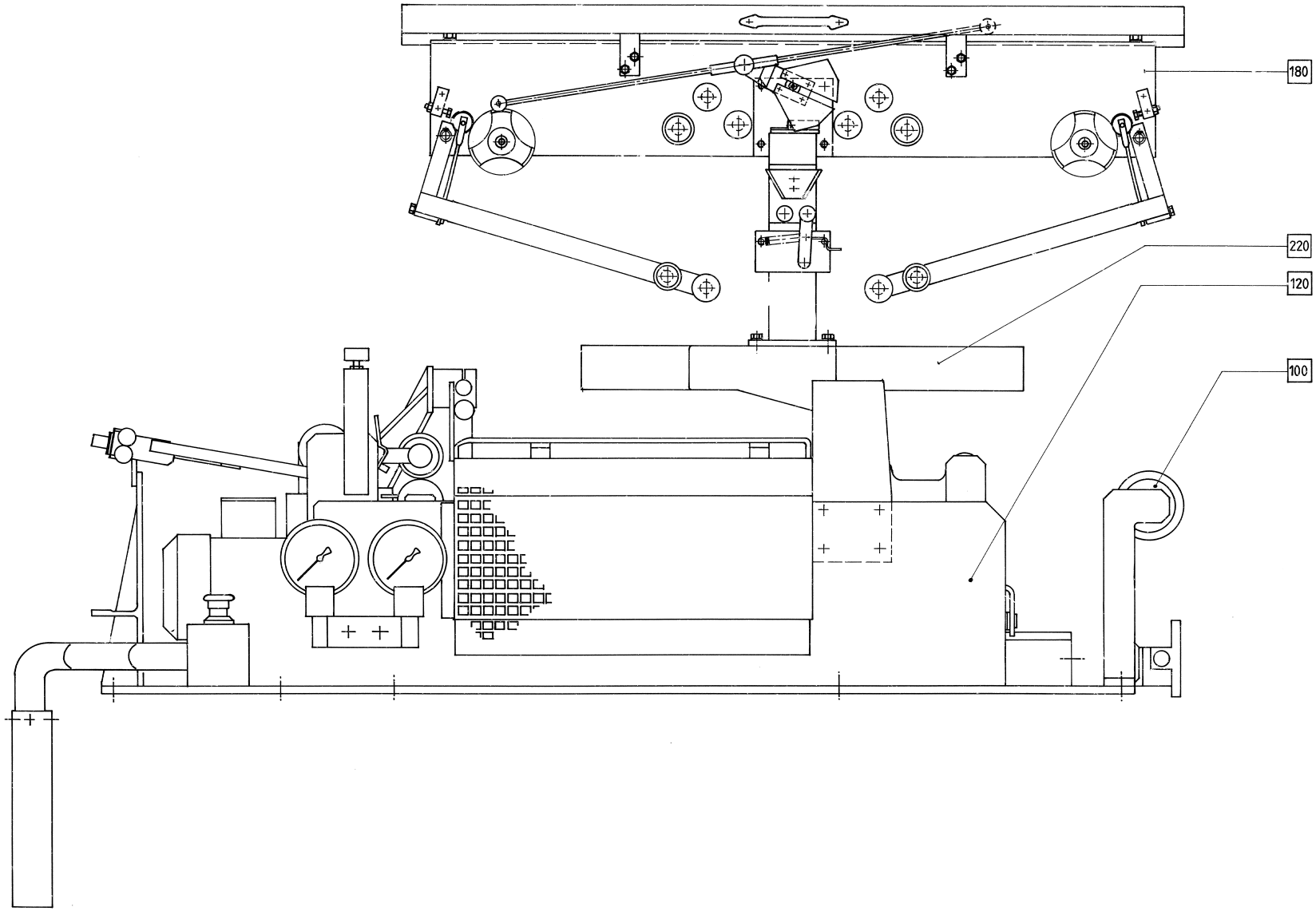
180
220
120
100

ECM: 114578 - 20020930
Group number: 648007-0500
Assembly Drawing: 648007-5_1_AA

This list covers pages from 8-2 to 8-5

Pos	Part No	SP	UN	Qty	Description	Page No
-						
040	A282509-0300	-		1	BENDING ROLLER	**8-7**
065	A1361281-0100	-		1	SUPPORT ROLLER	**8-9**
070	A1498072-0100	-		1	CONNECTION BOX	**8-11**
080	A526931-0300	-		1	BOTTOM PLATE	**8-13**
090	A1487979-0100	-		1	PIPE WORK TBA/8	**8-15**
095	A1361275-0100	-		1	PAPER GUIDE	**8-17**
100	A265565-0200	-		1	BENDING ROLLER BRACKET	**8-21**
110	A266726-0300	-		1	PRESSURE ROLLER	**8-23**
120	A269112-0600	-		1	STRIP APPLICATOR	**8-25, 8-27**
130	A282528-0200	-		1	PRESSURE ROLLER	**8-29**
135	A1348231-0100	-		1	STRIP GUIDE	**8-31**
160	A546180-0100	-		1	SPLICE DETECTOR	**8-33**
170	A526954-0100	-		1	START-UP KIT	**8-35**
180	A543823-0100	-		1	STRIP MAGAZINE	**8-37**
220	A544973-0200	-		1	PILLAR	**8-47**

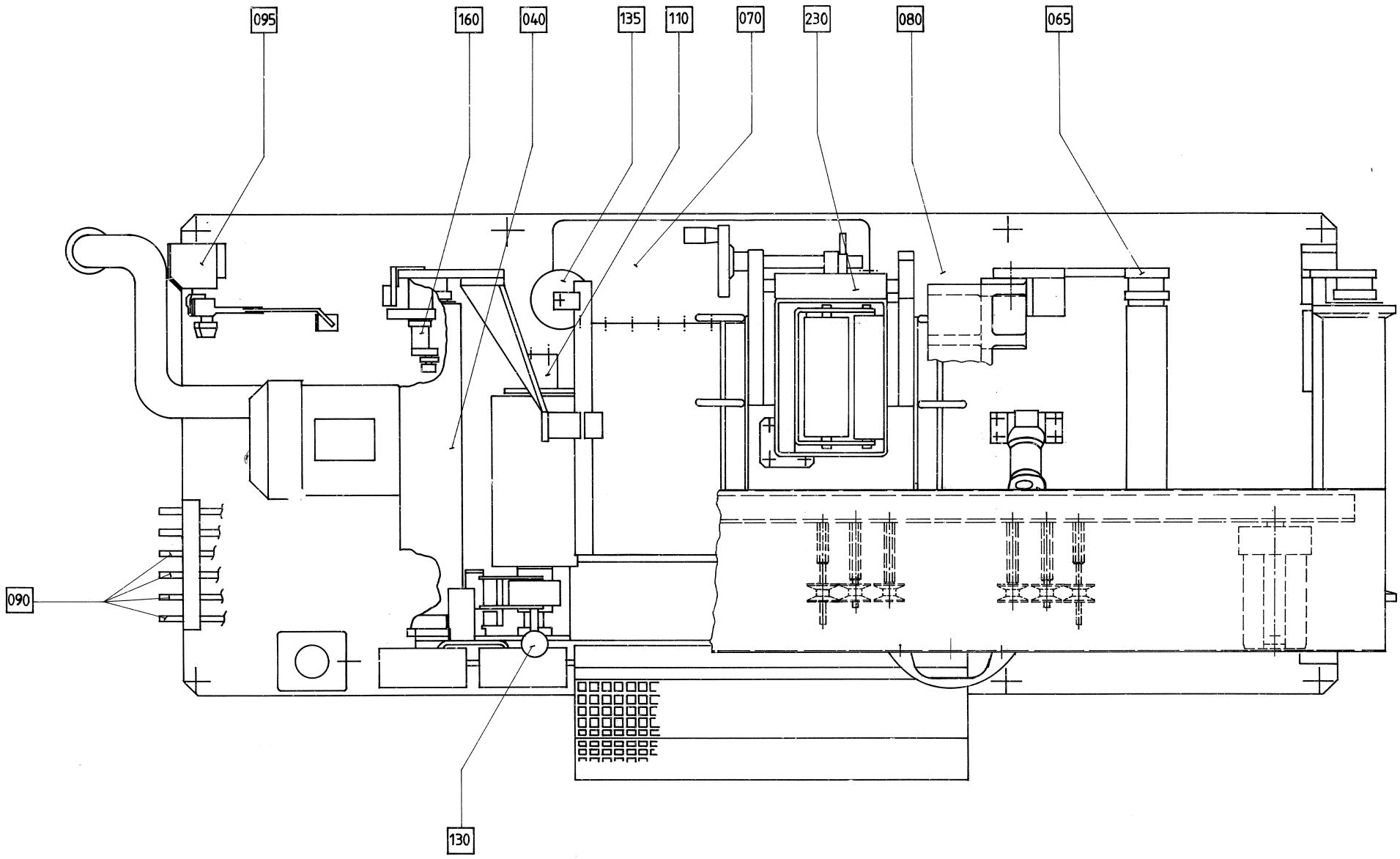
095
160
040
135
110
070
230
080
065
090
130

ECM: 114578 - 20020930
Group number: 648007-0500
Assembly Drawing: 648007-6_1_AA

This list covers pages from 8-2 to 8-5

Pos	Part No	SP	UN	Qty	Description	Page No
-						
040	A282509-0300	-		1	BENDING ROLLER	**8-7**
065	A1361281-0100	-		1	SUPPORT ROLLER	**8-9**
070	A1498072-0100	-		1	CONNECTION BOX	**8-11**
080	A526931-0300	-		1	BOTTOM PLATE	**8-13**
090	A1487979-0100	-		1	PIPE WORK TBA/8	**8-15**
095	A1361275-0100	-		1	PAPER GUIDE	**8-17**
100	A265565-0200	-		1	BENDING ROLLER BRACKET	**8-21**
110	A266726-0300	-		1	PRESSURE ROLLER	**8-23**
120	A269112-0600	-		1	STRIP APPLICATOR	**8-25, 8-27**
130	A282528-0200	-		1	PRESSURE ROLLER	**8-29**
135	A1348231-0100	-		1	STRIP GUIDE	**8-31**
160	A546180-0100	-		1	SPLICE DETECTOR	**8-33**
170	A526954-0100	-		1	START-UP KIT	**8-35**
180	A543823-0100	-		1	STRIP MAGAZINE	**8-37**
220	A544973-0200	-		1	PILLAR	**8-47**

Pos	Part No	SP	UN	Qty	Description	Page No

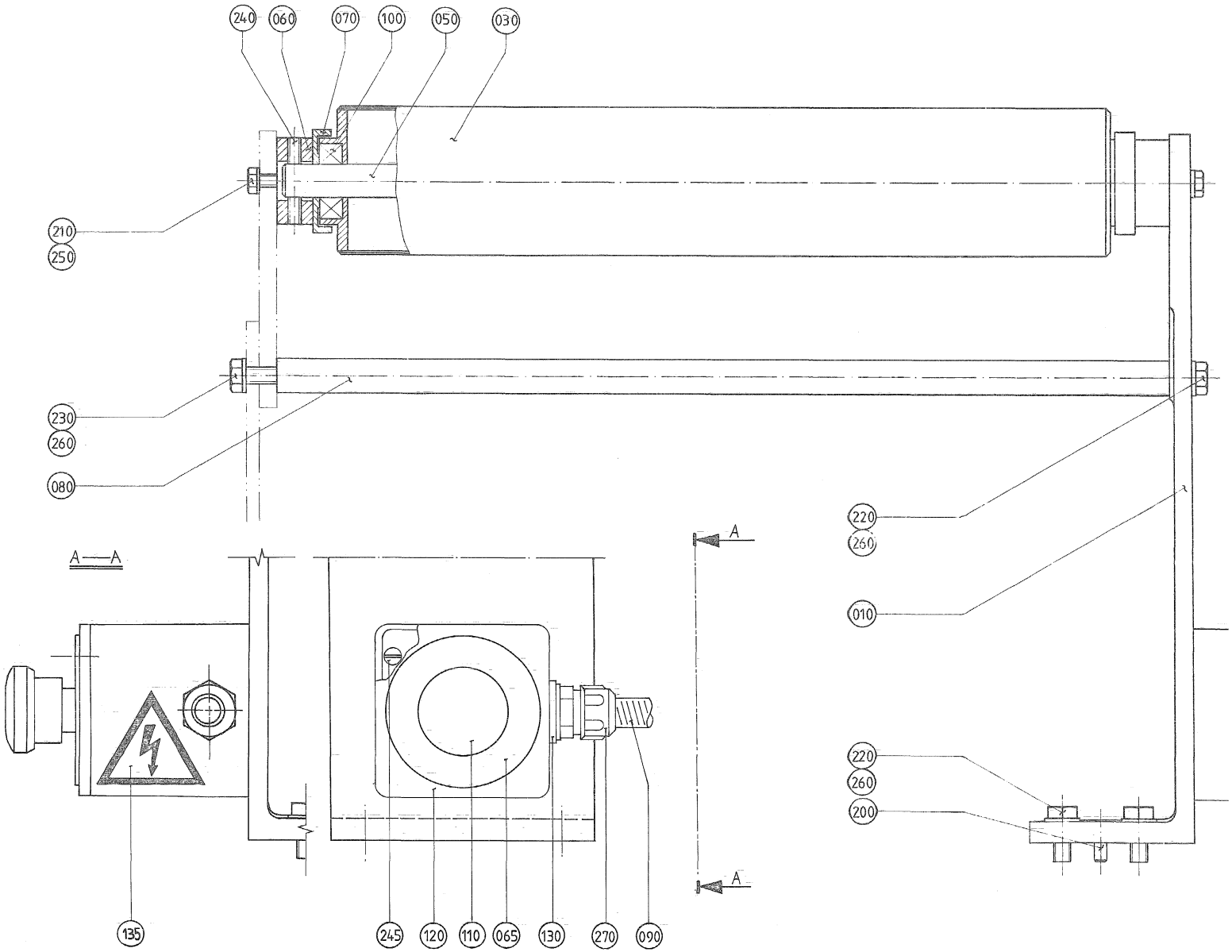
240
060
070
100
050
030
210
250
230
260
080
A—A
A
A
220
260
010
220
260
200
135
245
120
110
065
130
270
090

ECM: 72191 - 19990215
Group number: 282509-0300
Assembly Drawing: 282509-2_1_AA

Pos	Part No	SP	UN	Qty	Description	Page No
TBA 0500B, TBA 0750B, TBA 1000S, TBA 1000B						
030	449843-0001	D		1	BENDING ROLLER	
050	265566-0001	D		1	SHAFT	
080	265569-0001	-		1	STRUT	
TBA 0500S, TBA 0355B, TBA 0375S						
030	449843-0002	D		1	BENDING ROLLER	
050	265566-0003	D		1	SHAFT	
080	265569-0003	-		1	STRUT	
TBA 1000SQ						
030	449843-0004	D		1	BENDING ROLLER	
050	265566-0005	D		1	SHAFT	
080	265569-0006	-		1	STRUT	
TBA 0750S						
030	449843-0003	D		1	BENDING ROLLER	
050	265566-0004	D		1	SHAFT	
080	265569-0005	-		1	STRUT	
Common Parts						
010	265756-0000	-		1	CANTILEVER	
060	265567-0000	D		2	BEARING UNIT	
065	486826-0001	-		1	SIGN "EMERGENCY STOP"	
070	265568-0000	C		2	DUST COVER	
090	90152-0033	-	M	1	SPIRAL CONDUIT FOR PR 15,2(PG 9)	
100	90214-0098	C		2	BALL BEARING, 15X35X11 MM	
110	90064-0105	D		1	EMERGENCY STOP BUTTON REPL.BY 90064-124	
120	90066-0021	-		1	PUSH BUTTON BOX XAP-M1501	
130	90089-0003	-		1	REDUCING SLEEVE, PR22,5/PR18,6	
135	90194-0016	-		1	WARNING SIGN, RISK OF ELECTRIC SHOCK	
200	311305-0308	-		2	LOTTED PIRPC5X16FZB	
210	312105-0370	-		4	SCREW M6S ISO 4017 M6X20 A480	
220	312105-0451	-		5	SCREW M6S ISO 4017 M8X20 A480	
230	312105-0453	-		1	SCREW M6S ISO 4017 M8X25 A480	
240	312318-0364	-		4	SCREW ISO4029 M6X10 A4	
245	312125-0333	-		2	SLOTTED CHEESE HEAD SCREW MCS 5X25 SS	
250	315105-0153	-		4	WASHER BRB6,4X12RFR	
260	315105-0165	-		6	WASHER BRB8,4X16RFR	
270	352136-0113	-		1	GLAND FITTING PR18,6/PG11 DI=12MM	

Pos	Part No	SP	UN	Qty	Description	Page No

Machine Type | Group Description | Used-In | Group Number | Page No

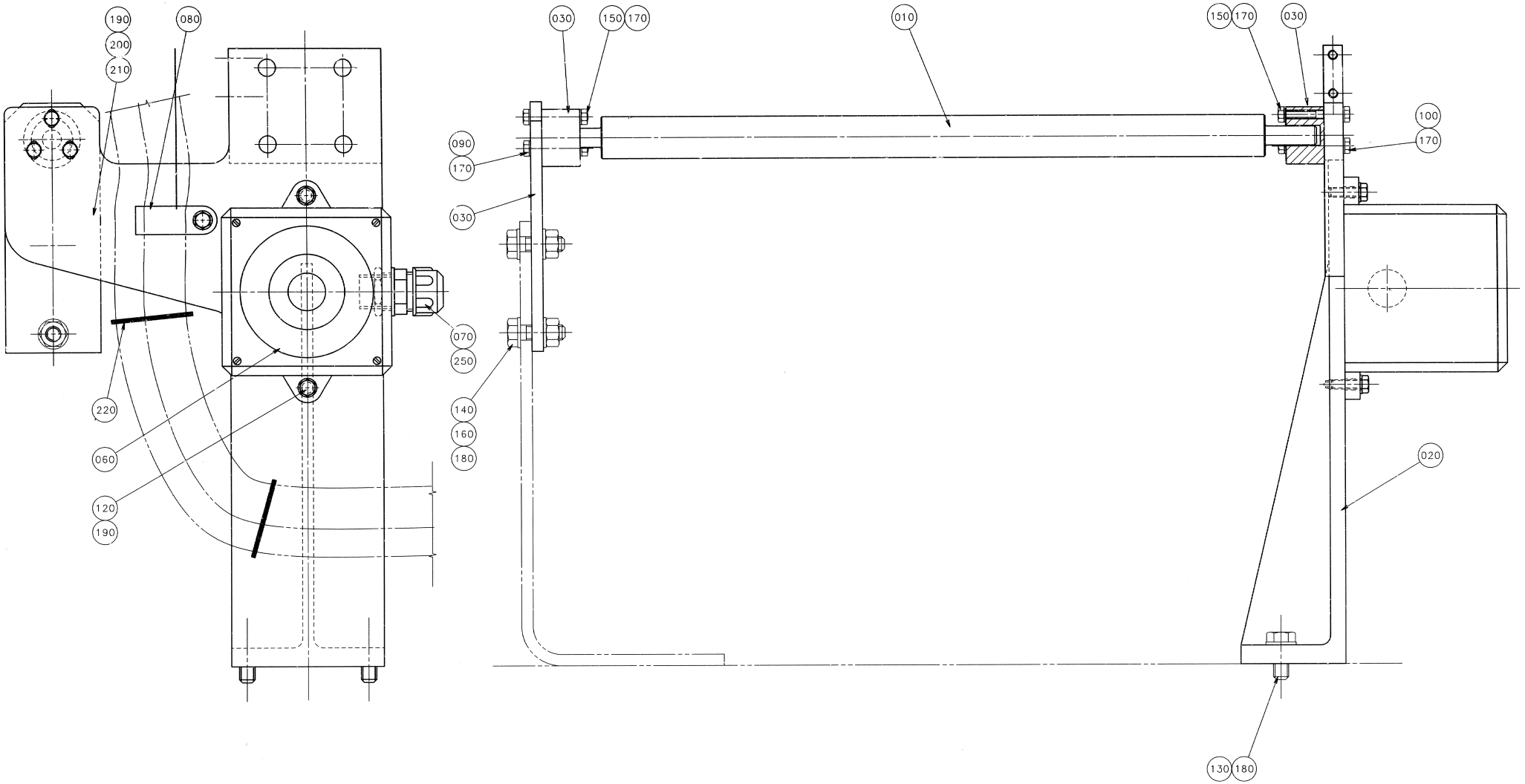
190
200
210
080
030
150
170
010
150
170
030
100
170
090
170
030
070
250
140
160
180
220
060
120
190
020
130
180

ECM: 71712 - 19990803
Group number: 1361281-0100
Assembly Drawing: 1361281-1_1_AB

Pos	Part No	SP	UN	Qty	Description	Page No
TBA 0500B, TBA 0750B, TBA 1000S, TBA 1000B						
010	573666-0000	D		1	SUPPORT ROLLER	
190	315105-0146	-		2	BRICKA BRB5,3X10RFR	
TBA 0500S, TBA 0355B, TBA 0375S						
010	573667-0000	D		1	SUPPORT ROLLER	
190	315105-0146	-		2	BRICKA BRB5,3X10RFR	
TBA 1000SQ						
010	574038-0000	D		1	SUPPORT ROLLER	
190	315105-0146	-		2	BRICKA BRB5,3X10RFR	
TBA 0750S						
010	573668-0000	D		1	SUPPORT ROLLER	
190	315105-0146	-		2	BRICKA BRB5,3X10RFR	
Common Parts						
020	573664-0000	-		1	CANTILEVER	
030	24206-0000	C		2	BEARING	
040	573665-0000	-		1	FASTENING PLATE	
060	90052-0011	-		1	HORN HOOTERT 24:48VDC.PT NO.1YA030221	
070	90099-0002	-		1	NUT PR 18,6 BRASS	
090	312105-0299	-		3	SCREW M6S ISO 4017 M4X30 A480	
100	312105-0301	-		3	SCREW M6S ISO 4017 M4X35 A480	
120	312105-0329	-		2	SCREW M6S ISO 4017 M5X16 A480	
130	312105-0451	-		2	SCREW M6S ISO 4017 M8X20 A480	
140	312105-0453	-		2	SCREW M6S ISO 4017 M8X25 A480	
150	312605-0312	-		6	HEXAGON NUT, M6M M4 A280	
160	312605-0318	-		2	HEXAGON NUT, M6M M8 A280	
170	315105-0136	-		12	WASHER BRB4,3XRFR	
180	315105-0165	-		6	WASHER BRB8,4X16RFR	
250	352136-0113	-		1	GLAND FITTING PR18,6/PG11 DI=12MM	

Pos	Part No	SP	UN	Qty	Description	Page No

Machine Type | Group Description | Used-In | Group Number | Page No

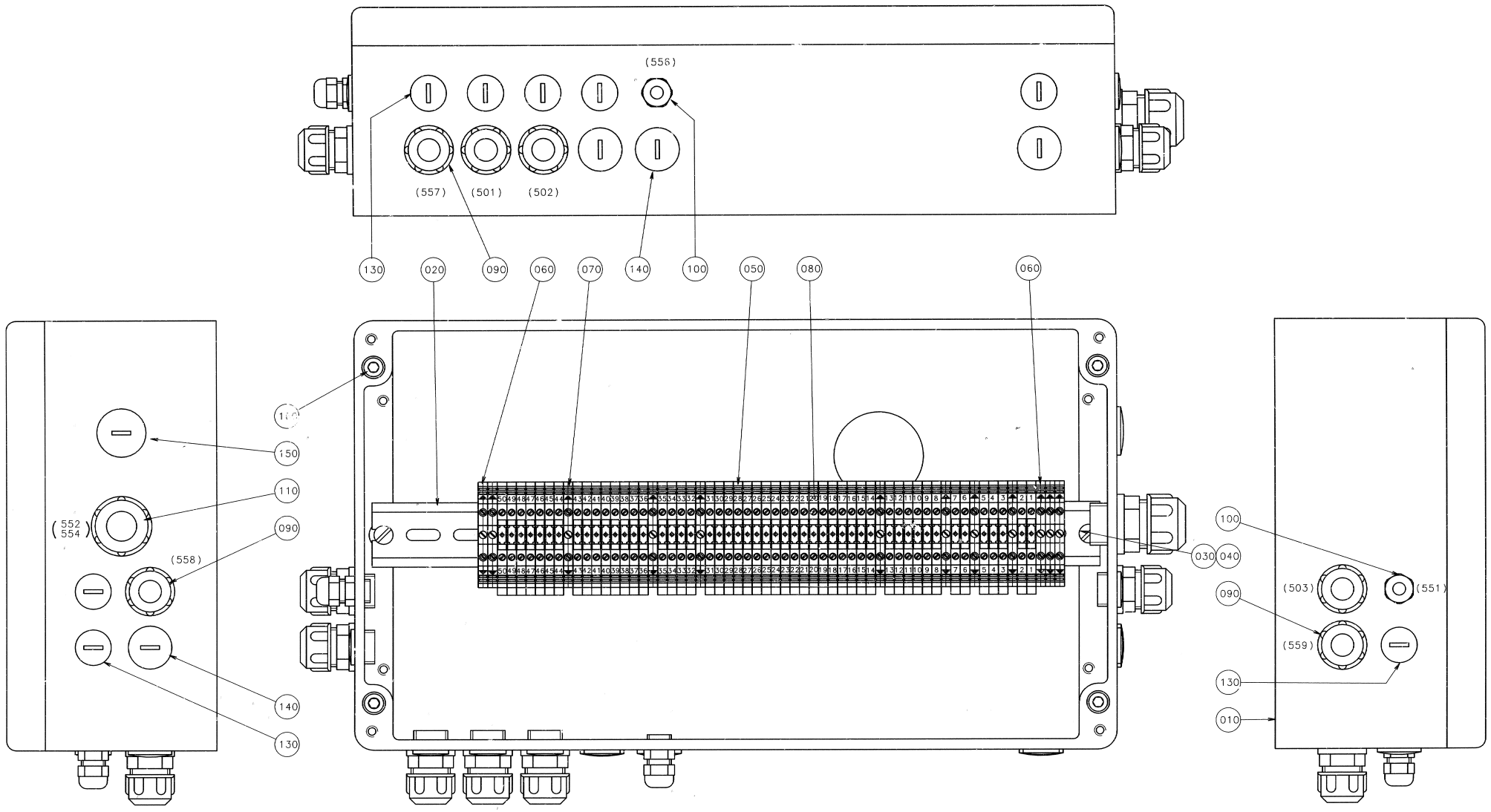
(556)
(557)
(501)
(502)
130
020
090
060
070
140
100
050
080
060
150
110
090
(552
554)
(558)
140
130
100
030
040
090
(503)
(551)
(559)
130
010

ECM: 72719 - 19990803
Group number: 1498072-0100
Assembly Drawing: 1498072-1_1_AA

Pos	Part No	SP	UN	Qty	Description	Page No
TBA/8						
150	90002-0004	-		1	BLANK-OFF PLUG, PR 22,5 SKINDICHT-BLK16	
Common Parts						
010	1487980-0000	-		1	CONNECTION BOX	
020	353042-0005	-	MM	385	RAIL TS 35/7.5	
030	312125-0366	-		2	SLOTTED CHEESE HEAD SCREW MCS 6X12 SS	
040	315105-0153	-		2	WASHER BRB6,4X12RFR	
050	353021-0212	-		50	FEED THROUGH TERMINAL, 10200.0	
060	353024-0205	-		2	EARTH TERMINAL, 1010.1	
070	353024-0204	-		10	EARTH TERMINAL WPE 2,5	
080	359011-0821	-		2	SET OF SIGNS 6-FW 1-50	
090	352136-0113	-		6	GLAND FITTING PR18,6/PG11 DI=12MM	
100	352103-0100	-		2	CABLE GLAND, STR 9, PR15,2/PG9	
110	352136-0129	-		1	GLAND FITTING PR22,5/PG16 DI=16MM	
130	90002-0013	-		8	BLANK-OFF PLUG, PR 15,2 SKINDICHT-BLK9	
140	90002-0009	-		4	BLANK-OFF PLUG, PR 18.6 SKINDICHT-BLK11	
160	312115-0376	-		4	SCREW ISO4762 M6X35 A4	

Pos	Part No	SP	UN	Qty	Description	Page No

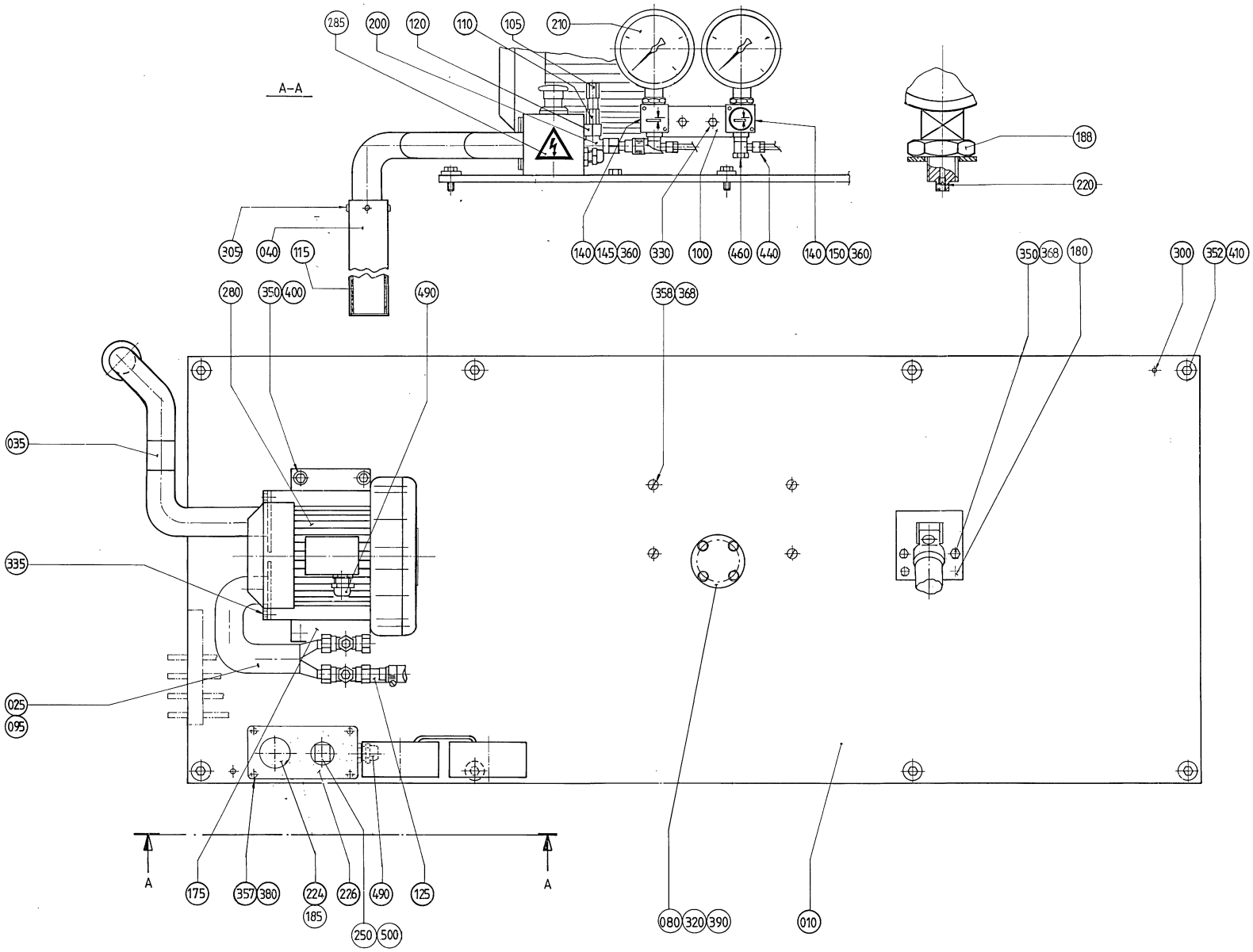
285
200
120
110
105
210
A–A
188
220
305
040
115
140
145
360
330
100
460
440
140
150
360
350
368
180
300
352
410
280
350
400
490
358
368
035
335
025
095
A
A
175
357
380
224
226
490
125
185
250
500
080
320
390
010

ECM: 71712 - 19990803
Group number: 526931-0300
Assembly Drawing: 526931-3_1_AA

Pos	Part No	SP	UN	Qty	Description	Page No
TBA 0375S						
010	450850-0003	-		1	SHEET	
250	90064-0084	D		1	PUSH BUTTON, YELLOW	
500	359301-0051	-		1	SIGN"STRIP SPLICE"	
TBA 0500B, TBA 0750B, TBA 1000B						
010	450850-0001	-		1	SHEET	
250	90064-0084	D		1	PUSH BUTTON, YELLOW	
500	359301-0051	-		1	SIGN"STRIP SPLICE"	
TBA 0500S, TBA 0355B						
010	450850-0002	-		1	SHEET	
250	90064-0084	D		1	PUSH BUTTON, YELLOW	
500	359301-0051	-		1	SIGN"STRIP SPLICE"	
TBA 1000SQ						
010	450850-0006	-		1	SHEET	
250	90064-0084	D		1	PUSH BUTTON, YELLOW	
500	359301-0051	-		1	SIGN"STRIP SPLICE"	
TBA 0750S						
010	450850-0004	-		1	SHEET	
250	90064-0084	D		1	PUSH BUTTON, YELLOW	
500	359301-0051	-		1	SIGN"STRIP SPLICE"	
TBA 1000S						
010	450850-0005	-		1	SHEET	
250	90064-0084	D		1	PUSH BUTTON, YELLOW	
500	359301-0051	-		1	SIGN"STRIP SPLICE"	
Common Parts						
025	535613-0000	-		1	BRANCH	
035	535614-0000	-		1	INNER PIPE	
040	450882-0000	-		1	OUTER PIPE	
080	247171-0000	-		1	BEARING COVER	
095	535608-0000	C		1	GASKET	
100	33577-0000	-		1	CANTILEVER	
105	209145-0000	C		2	THROTTLE SCREW	
110	209146-0000	C		2	BARRIER NUT	
115	526582-0000	D		1	NET	
120	279589-0000	D		2	NUT	
125	279590-0000	-		1	REDUCTION	
140	464173-0000	-		2	LABEL HOLDER	
145	464176-0000	-		1	SIGN	
150	464177-0000	-		1	SIGN	
175	450812-0000	-		2	SPACER	
180	556549-0000	-		1	FASTENING PLATE	
185	486826-0001	-		1	SIGN "EMERGENCY STOP"	
188	90330-0105	-		2	NUT, HEXAGON, R3/8	
200	90030-0058	-		2	CONN. T-PIPE T-12	
210	90043-0034	D		2	PRESSURE GAUGE	
220	90043-0302	D		2	SCREW	
224	90064-0105	D		1	EMERGENCY STOP BUTTON REPL.BY 90064-124	
226	90066-0029	-		1	PUSH BUTTON BOX XB2-SLS12	
280	B90264-0042	D		1	FAN SIEMENS 2BH1 300-1AH	
	90264-0306	*-*		*1*	*SILENCER*	
285	90194-0016	-		1	WARNING SIGN, RISK OF ELECTRIC SHOCK	
300	311305-0308	-		2	LOTTED PIRPC5X16FZB	
305	312105-0287	-		4	SCREW M6S ISO4017 M4X8 A480	
320	312105-0325	-		4	SCREW M6S ISO 4017 M5X10 A480	
330	312105-0364	-		2	SCREW M6S ISO 4017 M6X10 A480	
335	312105-0368	-		4	SCREW M6S M6X16 A280	
350	312105-0451	-		8	SCREW M6S ISO 4017 M8X20 A480	
352	312105-0455	-		8	SCREW M6S ISO 4017 M8X30 A480	
357	312125-0289	-		5	SLOTTED CHEESE HEAD SCREW MCS 4X10 SS	
358	312125-0447	-		4	SLOTTED CHEESE HEAD SCREW MCS 8X12 SS	
360	312502-0120	-		4	DRIVE SCREW ROUND HEAD KDS 0X5	
368	315111-0165	-		8	WASHER PLAIN, TBRB 8,4/16 H=3	
380	315105-0136	-		4	WASHER BRB4,3XRFR	
390	315105-0146	-		4	BRICKA BRB5,3X10RFR	
400	315105-0165	-		4	WASHER BRB8,4X16RFR	
410	315121-0165	-		8	WASHER PLAIN, TBRSB 8,4/26 H=5	
440	342797-0122	-		2	CONN. BANJO, RINGPIECE 6-1/4	
460	342980-0304	-		2	BANJO-HOLLOW BOLT COUPL,EXT.THR.01-G1/4"	
490	352136-0113	-		3	GLAND FITTING PR18,6/PG11 DI=12MM	

Machine Type | Group Description | Used-In | Group Number | Page No

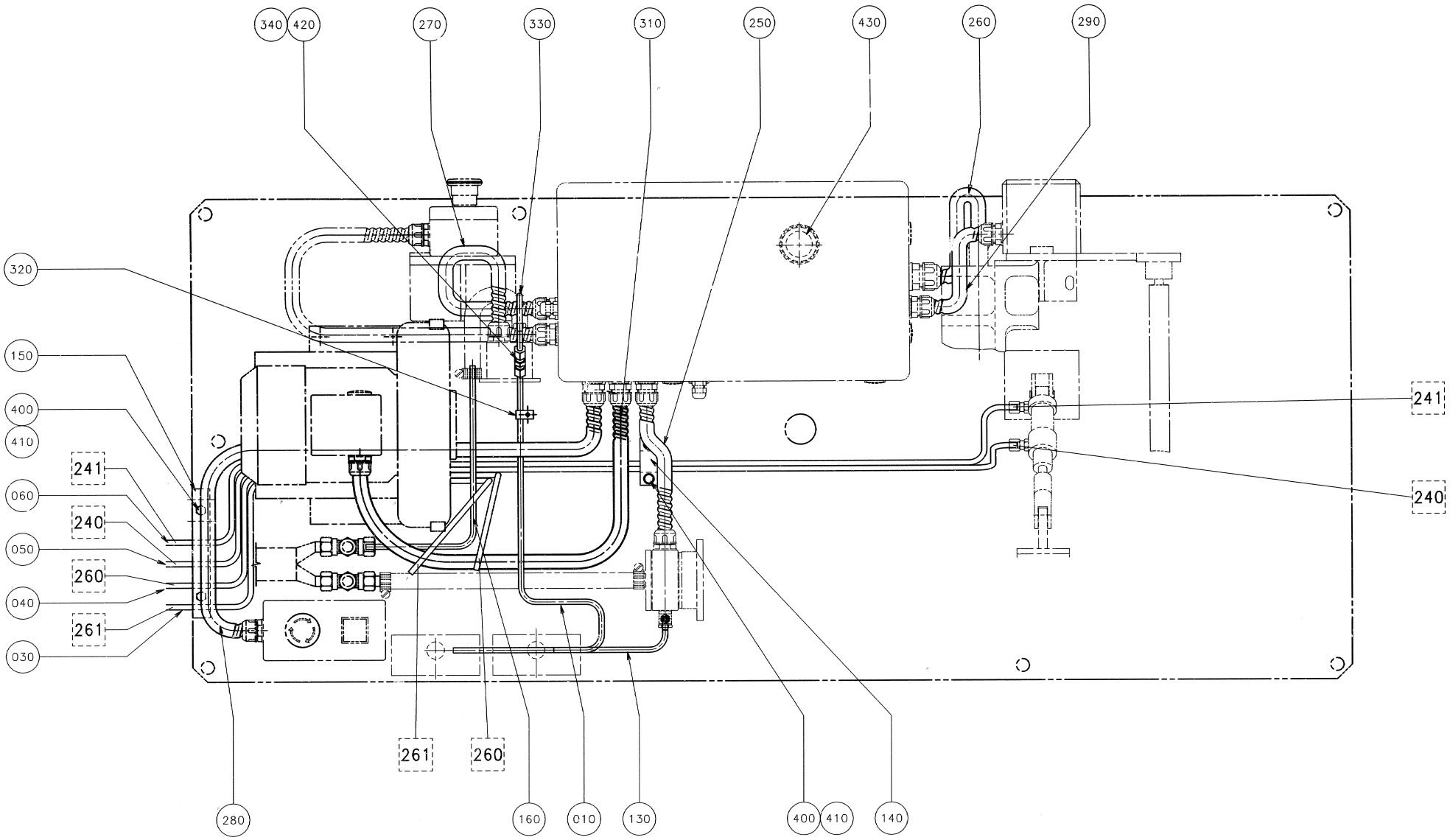
340
420
270
330
310
250
430
260
290
320
150
400
410
241
060
240
050
260
040
261
030
241
240
261
260
280
160
010
130
400
410
140

ECM: 72719 - 19990803
Group number: 1487979-0100
Assembly Drawing: 1487979-2_1_AA

Pos	Part No	SP	UN	Qty	Description	Page No
TBA 0375S (See drawing on page: 8-14)						
010	458199-0003	-		1	PIPE	
030	556557-0003	-		1	PIPE	
040	556558-0003	-		1	PIPE	
050	556559-0003	-		1	PIPE	
060	556560-0003	-		1	PIPE	
260	90152-0033	-	MM	400	SPIRAL CONDUIT FOR PR 15,2(PG 9)	
TBA 0500B, TBA 0750B, TBA 1000B (See drawing on page: 8-14)						
010	458199-0001	-		1	PIPE	
030	556557-0001	-		1	PIPE	
040	556558-0001	-		1	PIPE	
050	556559-0001	-		1	PIPE	
060	556560-0001	-		1	PIPE	
260	90152-0033	-	MM	400	SPIRAL CONDUIT FOR PR 15,2(PG 9)	
TBA 0500S, TBA 0355B (See drawing on page: 8-14)						
010	458199-0002	-		1	PIPE	
030	556557-0002	-		1	PIPE	
040	556558-0002	-		1	PIPE	
050	556559-0002	-		1	PIPE	
060	556560-0002	-		1	PIPE	
260	90152-0033	-	MM	400	SPIRAL CONDUIT FOR PR 15,2(PG 9)	
TBA 1000SQ (See drawing on page: 8-14)						
010	458199-0001	-		1	PIPE	
030	556557-0006	-		1	PIPE	
040	556558-0006	-		1	PIPE	
050	556559-0006	-		1	PIPE	
060	556560-0006	-		1	PIPE	
260	90152-0033	-	MM	400	SPIRAL CONDUIT FOR PR 15,2(PG 9)	
TBA 0750S (See drawing on page: 8-14)						
010	458199-0001	-		1	PIPE	
030	556557-0004	-		1	PIPE	
040	556558-0004	-		1	PIPE	
050	556559-0004	-		1	PIPE	
060	556560-0004	-		1	PIPE	
260	90152-0033	-	MM	400	SPIRAL CONDUIT FOR PR 15,2(PG 9)	
TBA 1000S (See drawing on page: 8-14)						
010	458199-0001	-		1	PIPE	
030	556557-0005	-		1	PIPE	
040	556558-0005	-		1	PIPE	
050	556559-0005	-		1	PIPE	
060	556560-0005	-		1	PIPE	
260	90152-0033	-	MM	400	SPIRAL CONDUIT FOR PR 15,2(PG 9)	
Common Parts						
130	282802-0000	-		1	PIPE	
140	450813-0000	-		1	HOLDER	
150	450814-0000	-		1	HOLDER	
160	535612-0000	-		1	PIPE	
250	90152-0033	-	MM	300	SPIRAL CONDUIT FOR PR 15,2(PG 9)	
270	90152-0033	-	MM	400	SPIRAL CONDUIT FOR PR 15,2(PG 9)	
280	90152-0033	-	MM	850	SPIRAL CONDUIT FOR PR 15,2(PG 9)	
290	90152-0033	-	MM	300	SPIRAL CONDUIT FOR PR 15,2(PG 9)	
310	90152-0033	-	MM	800	SPIRAL CONDUIT FOR PR 15,2(PG 9)	
320	90165-0005	-		1	PIPE CLIP FOR TUBE D=6 MM	
330	90166-0124	-	MM	200	TUBE 6 MM PA,TRANSP.	
340	90224-0304	-		1	CONNECTION	
400	312105-0370	-		6	SCREW M6S ISO 4017 M6X20 A480	
410	315105-0153	-		8	WASHER BRB6,4X12RFR	
420	342706-0130	-		1	ACCESSORIES, INSERT SLEEVE 6 MM	
430	352101-0107	-		1	LEAD-IN, PR37/PG29, E-1457537	

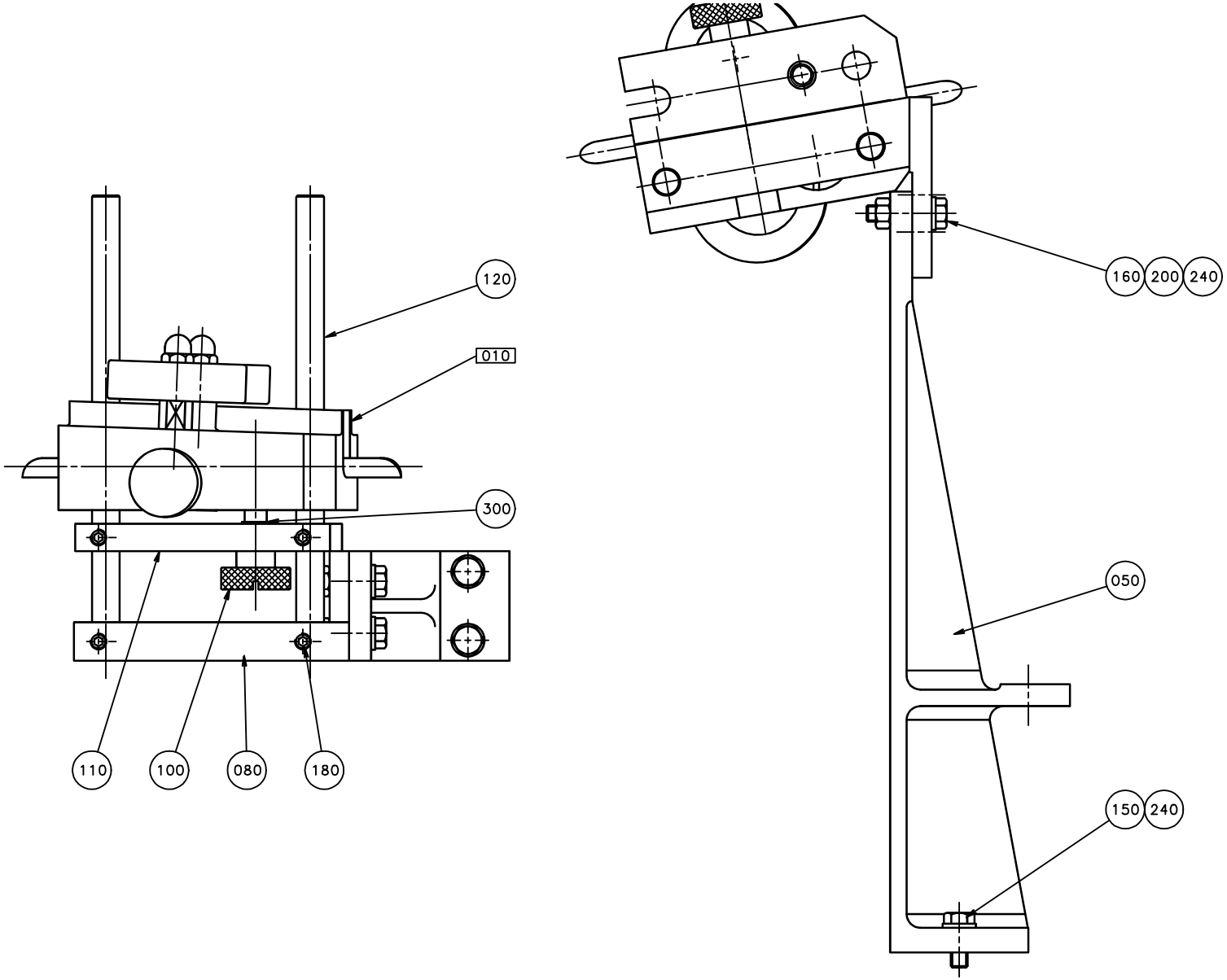
120
010
300
110
100
080
180
160
200
240
050
150
240

ECM: 72611 - 19990603
Group number: 1361275-0100
Assembly Drawing: 1361275-1_1_AA

Pos	Part No	SP	UN	Qty	Description	Page No
-						
010	A1334620-0100	-		1	PAPER GUIDE	**8-19**
050	279211-0000	-		1	CANTILEVER	
080	1317717-0000	-		1	BRACKET	
100	1317713-0000	D		1	SHAFT	
110	1317715-0000	D		1	HOLDER	
120	1317718-0000	D		2	SHAFT	
150	312105-0368	-		2	SCREW M6S M6X16 A280	
160	312105-0372	-		2	SCREW M6S ISO 4017 M6X25 A480	
180	312318-0362	-		4	SCREW ISO4029 M6X8 A4	
200	312605-0316	-		2	HEXAGON NUT, M6M M6 A280	
240	315105-0153	-		4	WASHER BRB6,4X12RFR	
300	315755-0108	-		1	LOCKING WASHER 6	

Pos	Part No	SP	UN	Qty	Description	Page No

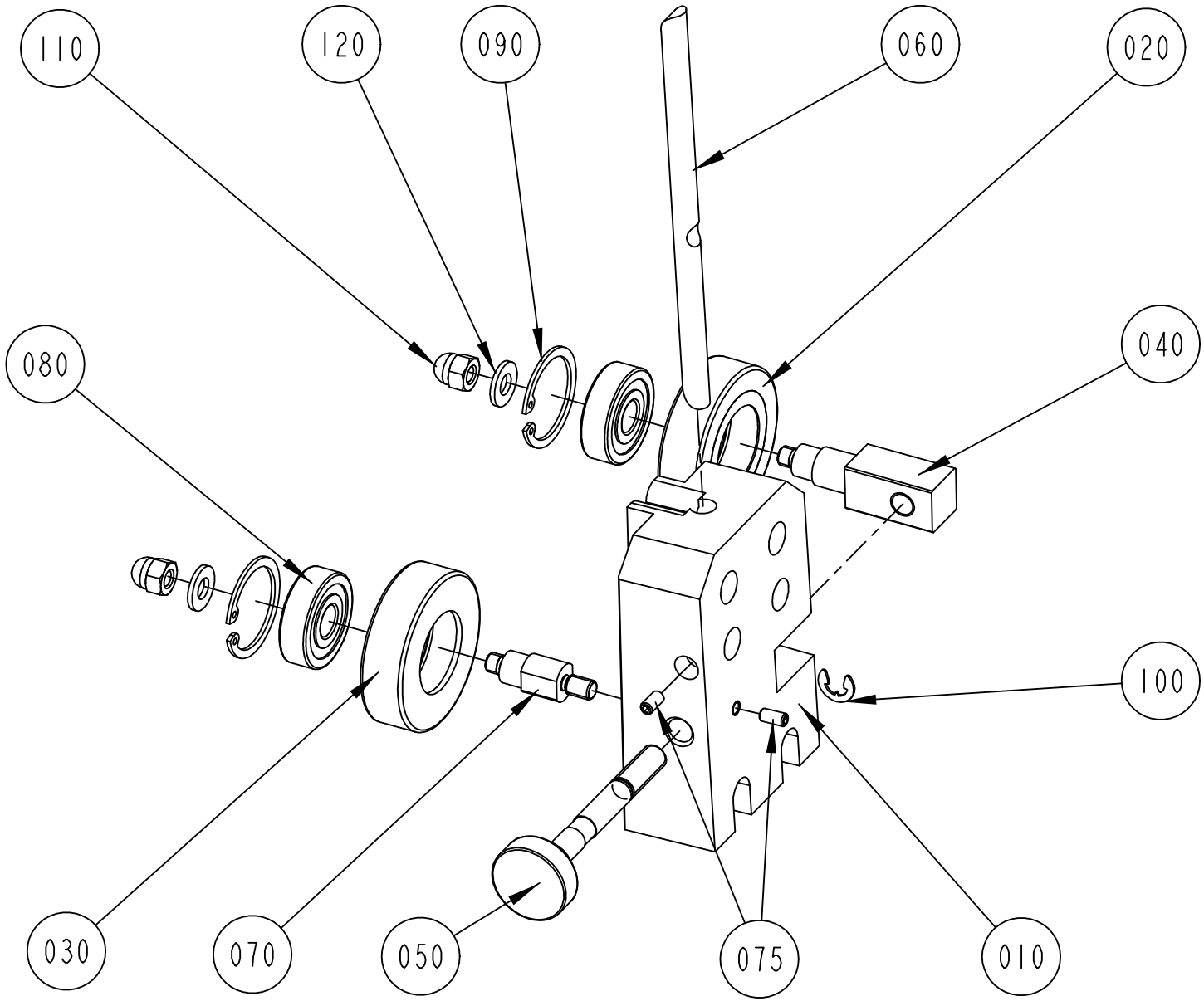
110
120
090
060
020
080
040
100
030
070
050
075
010

ECM: 84975 - 20001108
Group number: 1334620-0100
Assembly Drawing: 1334620-1_1_AC

Pos	Part No	SP	UN	Qty	Description	Page No
-						
010	1317716-0000	-		1	BRACKET	
020	1036623-0000	A		1	GUIDE ROLLER	
030	1036622-0000	A		1	GUIDE ROLLER	
040	1317711-0000	A		1	SHAFT	
050	1317712-0000	-		1	SHAFT	
060	1317714-0000	-		1	STEERING	
070	583727-0000	A		1	SHAFT	
075	312318-0287	-		2	SCREW ISO4029 M4X8 A4	
080	321313-0100	A		2	BALL BEARING, 10X30X9 MM	
090	315753-0122	-		2	RETAINING RING FOR BORE DIN 472 30 A2	
100	315755-0108	-		1	RETAINING RING 6	
110	312705-0316	-		2	NUT HEX. DOMED CAP MHM-6 M6 A280	
120	315105-0156	-		2	WASHER BRB 6.7X14 RFR	

Pos	Part No	SP	UN	Qty	Description	Page No

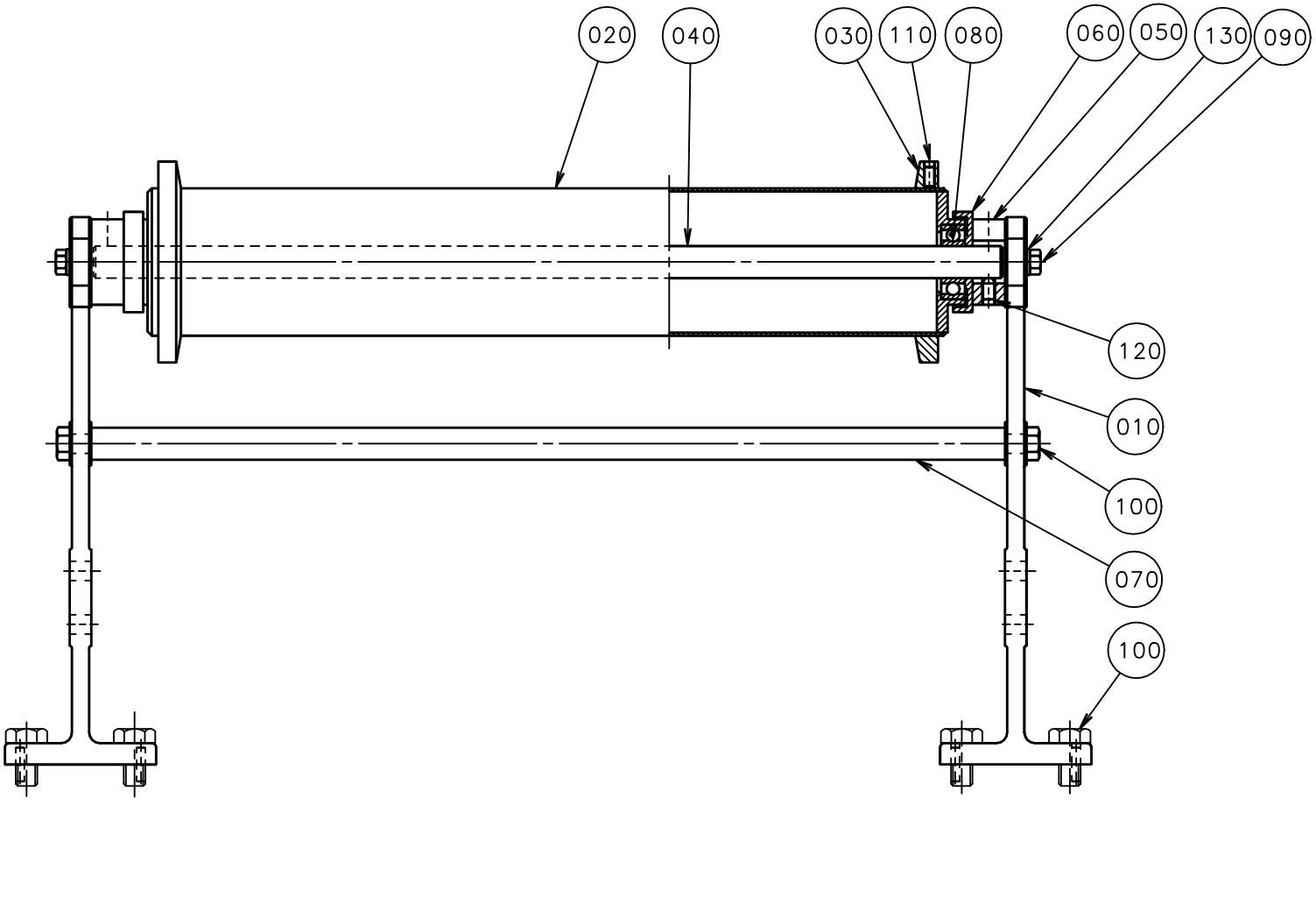
020
040
030
110
080
060
050
130
090
120
010
100
070
100

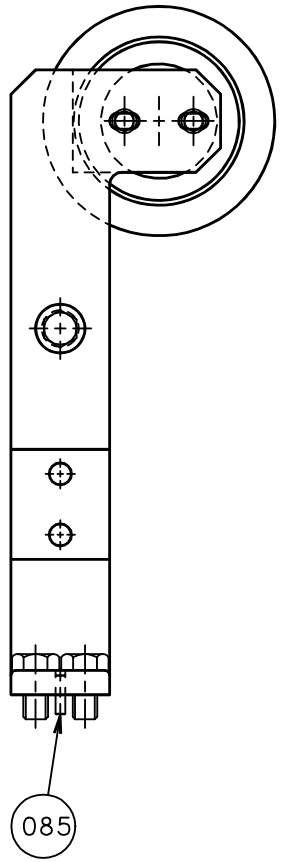
085

ECM: 73078 - 19991216
Group number: 265565-0200
Assembly Drawing: 265565-1_1_AB

Pos	Part No	SP	UN	Qty	Description	Page No
TBA/8 0500B, TBA/8 0375S, TBA/8 0500S, TBA/8 0355B, TBA/8 1000B, TBA/8 0750S, TBA/8 0750B, TBA/8 1000SQ, TBA/8 1000S						
020	265564-0000	D		1	BENDING ROLLER	
040	265566-0001	D		1	SHAFT	
070	265569-0001	-		1	STRUT	
Common Parts						
010	546116-0000	-		2	CANTILEVER	
030	250588-0000	D		2	FLANGE	
050	265567-0000	D		2	BEARING UNIT	
060	265568-0000	C		2	DUST COVER	
080	90214-0098	C		2	BALL BEARING, 15X35X11 MM	
085	311305-0308	-		4	LOTTED PIRPC5X16FZB	
090	312105-0370	-		4	SCREW M6S ISO 4017 M6X20 A480	
100	312105-0451	-		10	SCREW M6S ISO 4017 M8X20 A480	
110	312318-0289	-		4	SCREW ISO4029 M4X10 A4	
120	312318-0364	-		4	SCREW ISO4029 M6X10 A4	
130	315105-0153	-		4	WASHER BRB6,4X12RFR	

Pos	Part No	SP	UN	Qty	Description	Page No

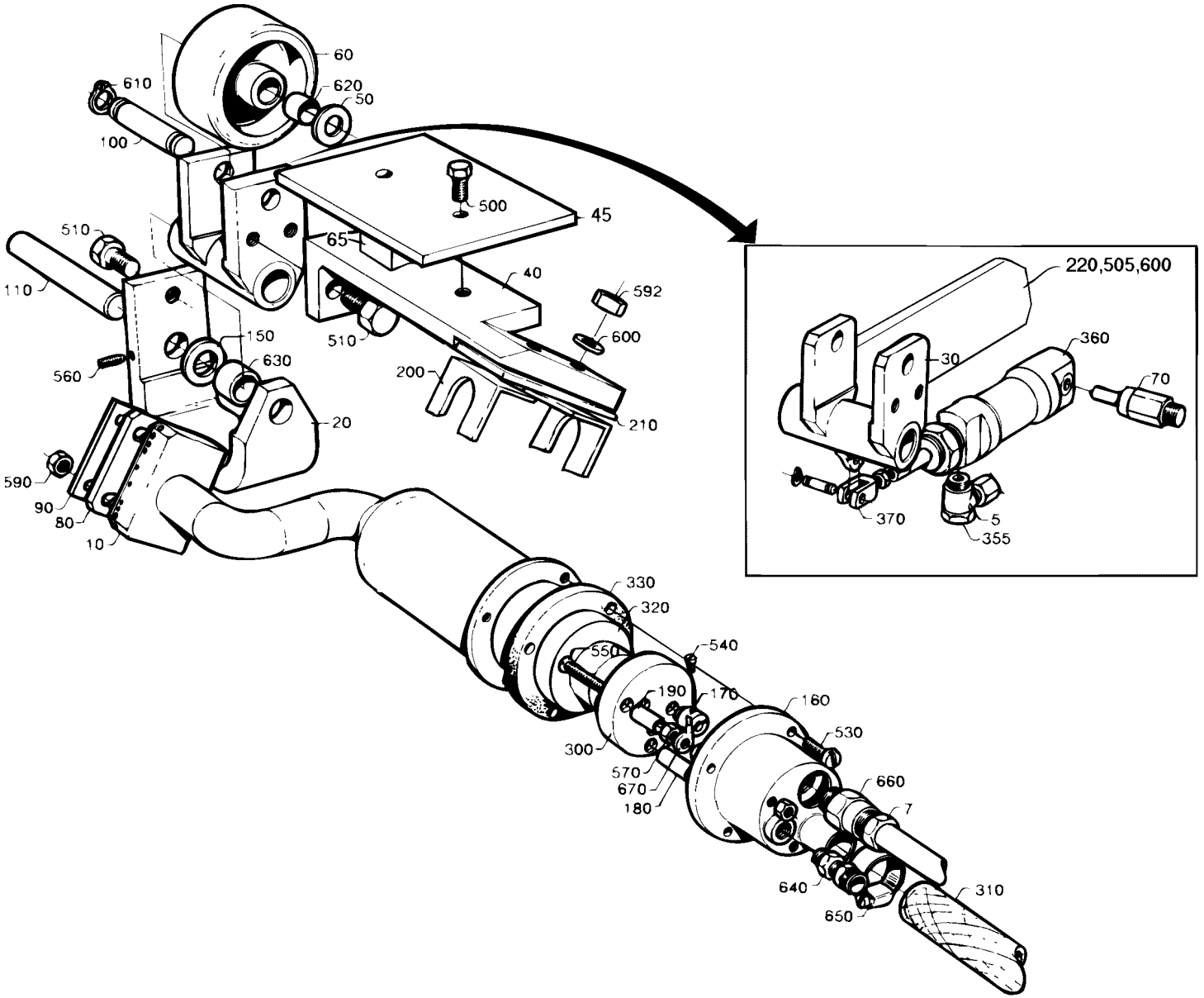
60
610
620
50
100
500
45
65
40
592
600
510
510
110
150
630
560
200
210
20
590
90
80
10
220,505,600
30
360
70
370
5
355
330
320
550
540
190
170
160
530
300
570
670
180
660
7
640
650
310

ECM: 72191 - 19990215
Group number: 266726-0300
Assembly Drawing: 266726-3_1_AA

Pos	Part No	SP	UN	Qty	Description	Page No
-						
005	342797-0121	-		2	CONN. BANJO, RINGPIECE 6-1/8	
007	352136-0113	-		1	GLAND FITTING PR18,6/PG11 DI=12MM	
010	464197-0000	D		1	AIR NOZZLE	
020	266728-0000	-		1	CANTILEVER	
030	556565-0000	-		1	ROCKER ARM	
040	266730-0000	-		1	HOLDER	
045	542090-0000	-		1	HEAT GUARD	
050	2033-0009	C		2	WASHER	
060	B21903-0000	C		1	ROLL	
	90166-0056	*-*	*M*		*SHRINKABLE HOSE*	
065	242954-0000	-		2	WASHER	
070	556551-0000	D		1	CYLINDER BRACKET	
080	466412-0000	D		1	PLATE	
090	255417-0000	D		1	WASHER	
100	266731-0000	D		1	SHAFT	
110	266732-0000	D		1	SHAFT	
150	266737-0000	D		2	WASHER	
160	266738-0000	-		1	COVER	
170	266739-0000	D		3	CABLE GLAND	
180	266740-0001	D		2	SPACER	
190	266740-0002	D		1	SPACER	
200	450887-0000	-		1	CRAMP	
210	450888-0000	-		1	INSULATING PLATE	
220	556552-0000	-		1	BRACKET	
300	B90125-0020	-		1	PLATE	
	270926-0000	*A*		*6*	*NUT*	
	270927-0000	*A*		*3*	*SCREW*	
	294464-0000	*A*		*1*	*BASE PLATE*	
310	90166-0087	-	MM	600	HOSE 15/23 REINF.PVC TRANSP.	
320	90206-0085	C		1	HEATING CARTRIDGE 460W 105 OHM	
330	90206-0322	C		1	GASKET	
355	90235-0274	D		2	THROTTLE CHECK VALVES,G1/8"	
360	90239-0821	C		1	DOUBLE ACTING, MINI-ISO, CYL.20-25	
370	90239-0532	D		1	ROD END, CLEVIS WITH AXLE M8X1,25	
500	312105-0370	-		2	SCREW M6S ISO 4017 M6X20 A480	
505	312105-0447	-		2	SCREW M6S ISO 4017 M8X12 A480	
510	312105-0451	-		4	SCREW M6S ISO 4017 M8X20 A480	
530	312125-0291	-		4	SLOTTED CHEESE HEAD SCREW MCS 4X12 SS	
540	312125-0220	-		3	SLOTTED CHEESE HEAD SCREW MCS 3X6 SS	
550	312145-0238	-		3	SCREW COUNTERS.SLOT.HD. MFS 3X40 SS	
560	312311-0292	-		1	SCREW HEX.SOCK.SET DOG P.MT6SS 4X14 FZB	
570	312605-0310	-		7	HEXAGON NUT, M6M M3 A280	
590	312605-0314	-		2	HEXAGON NUT, M6M M5 A280	
592	312605-0318	-		2	HEXAGON NUT, M6M M8 A280	
595	315105-0153	-		2	WASHER BRB6,4X12RFR	
600	315105-0165	-		4	WASHER BRB8,4X16RFR	
610	315750-0107	-		2	RETAIN. RING, 10	
620	321120-0104	C		2	BEARBUSHING W/O FL,ANGE 10/12X10	
630	321120-0110	C		2	BEARING BUSHING W/O FL, 12X14X12 MM	
640	342921-0113	-		1	STRAIGHT COUPLING,EXT.THREADED 6/4-G1/8"	
650	342991-0103	-		2	HOSE CLIP,WORM DRIVE TYPE (19)-23	
660	352100-0106	-		1	CABLE GLANR.18,6-10,5	
670	353101-0130	-		1	CABLE SHOE 1,5-2,5MM2 BLUE	

Machine Type | Group Description | Used-In | Group Number | Page No

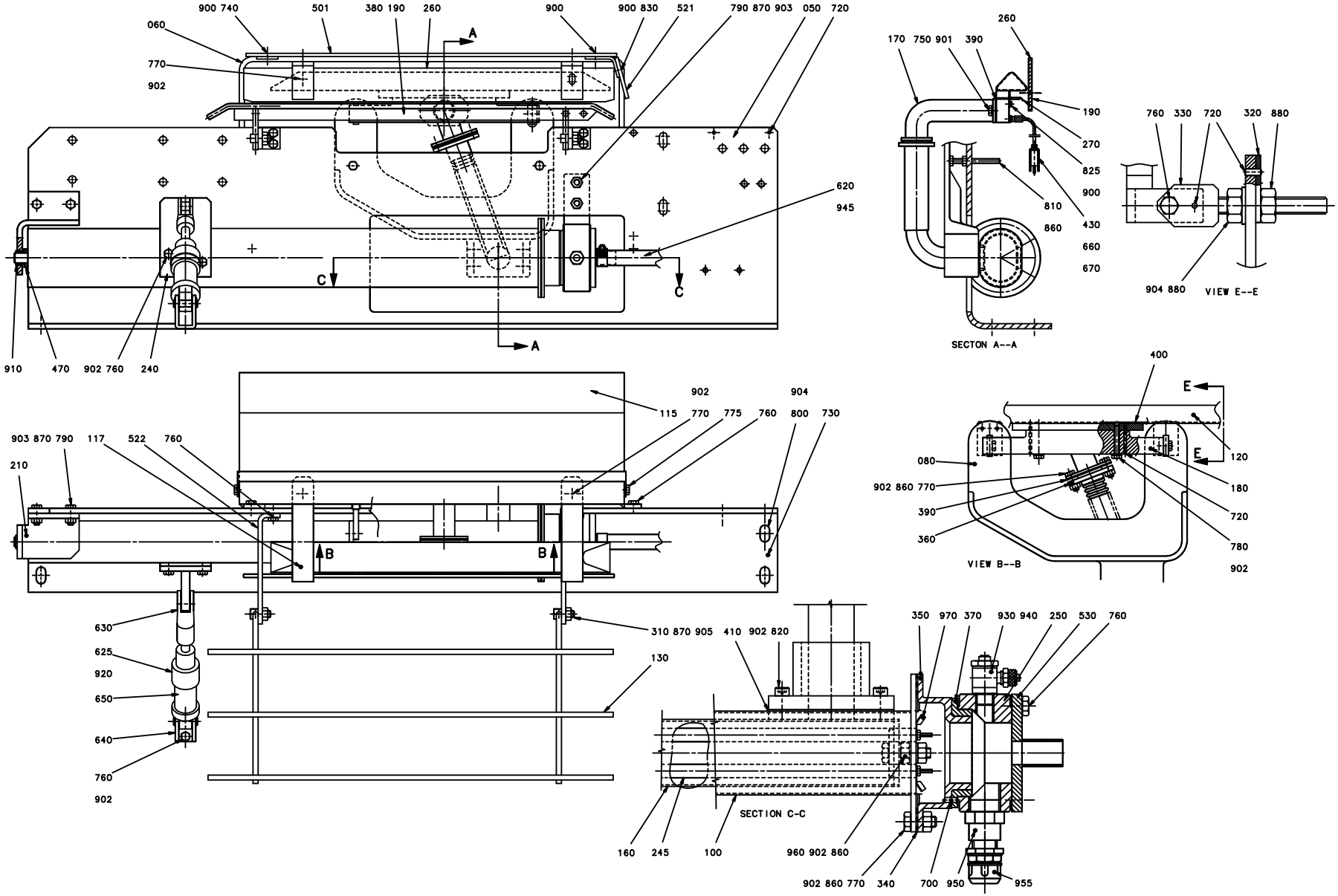
900 740
501
380 190
260
900
900 830
521
790 870 903
050
720
060
770
902
A
620
945
C
C
A
910
470
902 760
240
260
170 750 901
390
190
270
825
900
430
660
670
810
860
SECTON A--A
760 330
720
320 880
904 880
VIEW E--E
902
115 770 775
760
904
800
730
903 870 790
117
522
760
210
B
B
400
E
E
120
180
720
780
902
080
902 860 770
390
360
VIEW B--B
630
625
920
650
640
760
902
310 870 905
410 902 820
130
350 970 370
930 940
250
530
760
SECTION C-C
160
245
100
960 902 860
902 860 770
340
700
950
955

ECM: 73078 - 19991216
Group number: 269112-0600
Assembly Drawing: 269112-5_1_AA

This list covers pages from 8-24 to 8-27

Pos	Part No	SP	UN	Qty	Description	Page No
TBA 0375S IH						
130	1143677-0000	-		1	PAPER SUPPORT	
245	267494-0000	C		1	COIL HEATER	
501	246344-0000	D		1	HEAT GUARD	
TBA 0500S IH, TBA 0355B IH						
130	1296003-0000	-		1	PAPER SUPPORT	
245	267494-0000	C		1	COIL HEATER	
501	246344-0000	D		1	HEAT GUARD	
TBA 0500B IH, TBA 1000S IH, TBA 1000SQ IH, TBA 0750S IH, TBA 0750B IH, TBA 1000B IH, TPA 1000S IH						
130	22560-0000	-		1	PAPER SUPPORT	
245	267494-0000	C		1	COIL HEATER	
501	246344-0000	D		1	HEAT GUARD	
Common Parts						
050	526948-0000	-		1	MOUNTING SHEET	
060	442480-0000	-		1	BOW CLAMP	
080	32668-0000	-		1	ARM	
100	36749-0000	-		1	MANTLE	
115	571428-0000	-		1	TOUCH GUARD	
117	445669-0000	-		1	HOLDER	
120	283361-0000	D		1	AIR NOZZLE	
150	32451-0000	D		1	AIR DUCT	
160	32453-0000	-		1	MANTLE	
170	32474-0000	-		1	ATTACHMENT	
180	245189-0001	-		1	ATTACHMENT	
190	246342-0000	D		1	PAPER SUPPORT	
210	251490-0000	D		1	FASTENING BRACKET	
240	556550-0000	D		1	BRACKET	
250	283172-0000	-		1	BEARING HOUSING	
260	445670-0000	D		1	PAPER SUPPORT	
270	445688-0000	D		1	AIR GUIDE	
310	22559-0000	C		4	GRUB SCREW	
320	32213-0000	-		2	WASHER	
330	32215-0000	D		2	HOLDER	
340	531733-0000	C		1	GASKET	
350	32217-0000	-		1	BOTTOM SECTION	
360	32219-0000	-		1	WASHER	
370	32223-0000	C		1	BEARING	
380	32400-0000	-		2	HOLDER	
390	531734-0000	C		2	GASKET	
400	531735-0000	C		1	GASKET	
410	531736-0000	C		1	GASKET	
430	37768-0000	C		1	THERMOCOUPLE CR-AL	
470	230107-0000	D		1	WASHER	
521	251502-0000	D		1	HEAT GUARD	
522	592586-0000	-		2	HOLDER	
530	279672-0000	-		1	ATTACHMENT	
620	90166-0087	-	MM	600	HOSE 15/23 REINF.PVC TRANSP.	
625	90235-0274	-		2	THROTTLE CHECK VALVES,G1/8"	
630	90239-0516	D		1	ROD END, CLEVIS WITH AXLE M10X1,25	
640	90239-0487	D		1	REAR,CLEVIS,MINI-ISO 20-25	
650	90239-0829	C		1	DOUBLE ACTING, MINI-ISO, CYL.25-50	
660	90326-0012	D		1	PROTECTIVE COVER, T31A4618	
670	90326-0020	-		1	PLUG, FEMALE YELLOW CR-AL	
700	311103-0232	-		1	PARALLEL PIN ISO 2338 3M6X8 A1	
720	311103-0267	-		10	PARALLEL PIN ISO 2338 4M6X10 A1	
730	311305-0308	-		2	LOTTED PIRPC5X16FZB	
740	312105-0291	-		4	SCREW M6S ISO 4017 M4X12 A480	
750	312105-0325	-		2	SCREW M6S ISO 4017 M5X10 A480	
755	312105-0364	-		4	SCREW M6S ISO 4017 M6X10 A480	
760	312105-0366	-		18	SCREW M6S M6X12 A280	
770	312105-0368	-		16	SCREW M6S M6X16 A280	
780	312105-0378	-		2	SCREW M6S ISO 4014 M6X40 A480	
790	312105-0451	-		4	SCREW M6S ISO 4017 M8X20 A480	
800	312105-0489	-		6	SCREW M6S ISO 4017 M10X16 A480	
810	312109-0381	-		2	SCREW M6S ISO 4017 M6X55 A480	
820	312115-0368	-		4	SCREW ISO4762 M6X16 A4	
825	312125-0285	-		1	SLOTTED CHEESE HEAD SCREW MCS 4X6 SS	
830	312125-0287	-		2	SLOTTED CHEESE HEAD SCREW MCS 4X8 SS	
860	312605-0316	-		12	HEXAGON NUT, M6M M6 A280	
870	312605-0318	-		8	HEXAGON NUT, M6M M8 A280	
880	312605-0320	-		4	HEXAGON NUT, M6M M10 A280	
900	315105-0136	-		7	WASHER BRB4,3XRFR	
901	315105-0146	-		2	BRICKA BRB5,3X10RFR	
902	315105-0153	-		27	WASHER BRB6,4X12RFR	
903	315105-0165	-		4	WASHER BRB8,4X16RFR	
904	315105-0173	-		6	WASHER BRB10,5X22RFR	
905	315121-0165	-		4	WASHER PLAIN, TBRSB 8,4/26 H=5	
910	321101-0173	C		1	FLANGE BUS 12F7X12	
920	342797-0121	-		2	CONN. BANJO, RINGPIECE 6-1/8	
930	342797-0122	-		2	CONN. BANJO, RINGPIECE 6-1/4	
940	342980-0304	-		1	BANJO-HOLLOW BOLT COUPL,EXT.THR.01-G1/4"	

Machine Type | Group Description | Used-In | Group Number | Page No

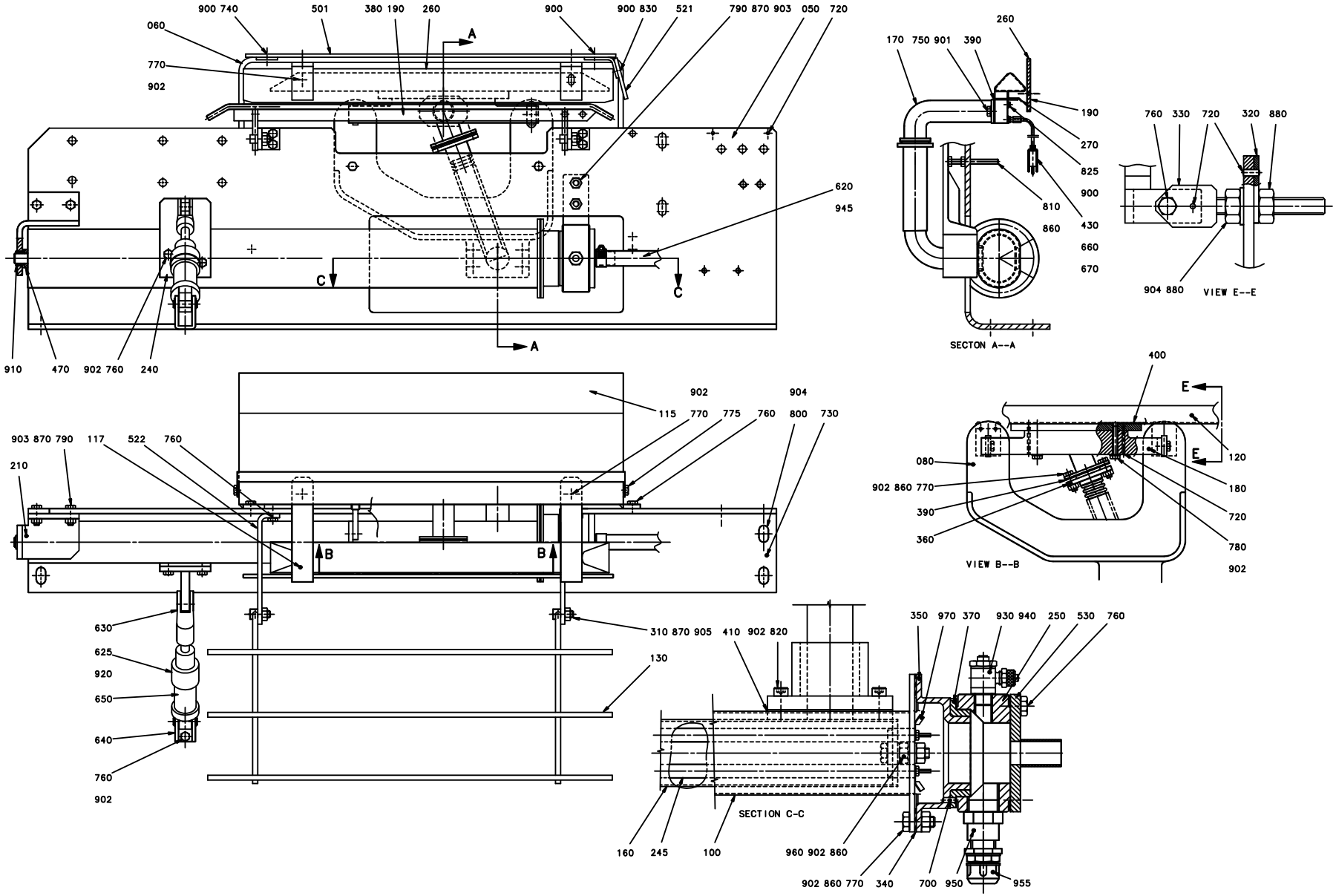
900 740
501
380 190
260
900
900 830
521
790 870 903
050
720
060
770
902
A
620
945
C
C
A
910
470
902 760
240
260
170 750 901
390
190
270
825
900
430
660
670
810
860
SECTON A--A
760 330
720
320 880
904 880
VIEW E--E
902
115 770 775
760
904
800
730
903 870 790
117
522
760
210
B
B
400
E
E
120
180
720
780
902
080
902 860 770
390
360
VIEW B--B
630
625
920
650
640
760
902
310 870 905
410 902 820
130
350 970 370
930 940
250
530
760
SECTION C-C
160
245
100
960 902 860
902 860 770
340
700
950
955

Pos	Part No	SP	UN	Qty	Description	Page No
Common Parts (Cont'd)						
940	342980-0304	-		1	BANJO-HOLLOW BOLT COUPL,EXT.THR.01-G1/4"	
945	342991-0103	-		2	HOSE CLIP,WORM DRIVE TYPE (19)-23	
950	352100-0106	-		1	CABLE GLANR.18,6-10,5	
955	352136-0113	-		1	GLAND FITTING PR18,6/PG11 DI=12MM	
960	353101-0134	-		1	CABLE SHOE	
970	353104-0130	-		2	CABLE SHOEYAV 025 M 4*	

Pos	Part No	SP	UN	Qty	Description	Page No

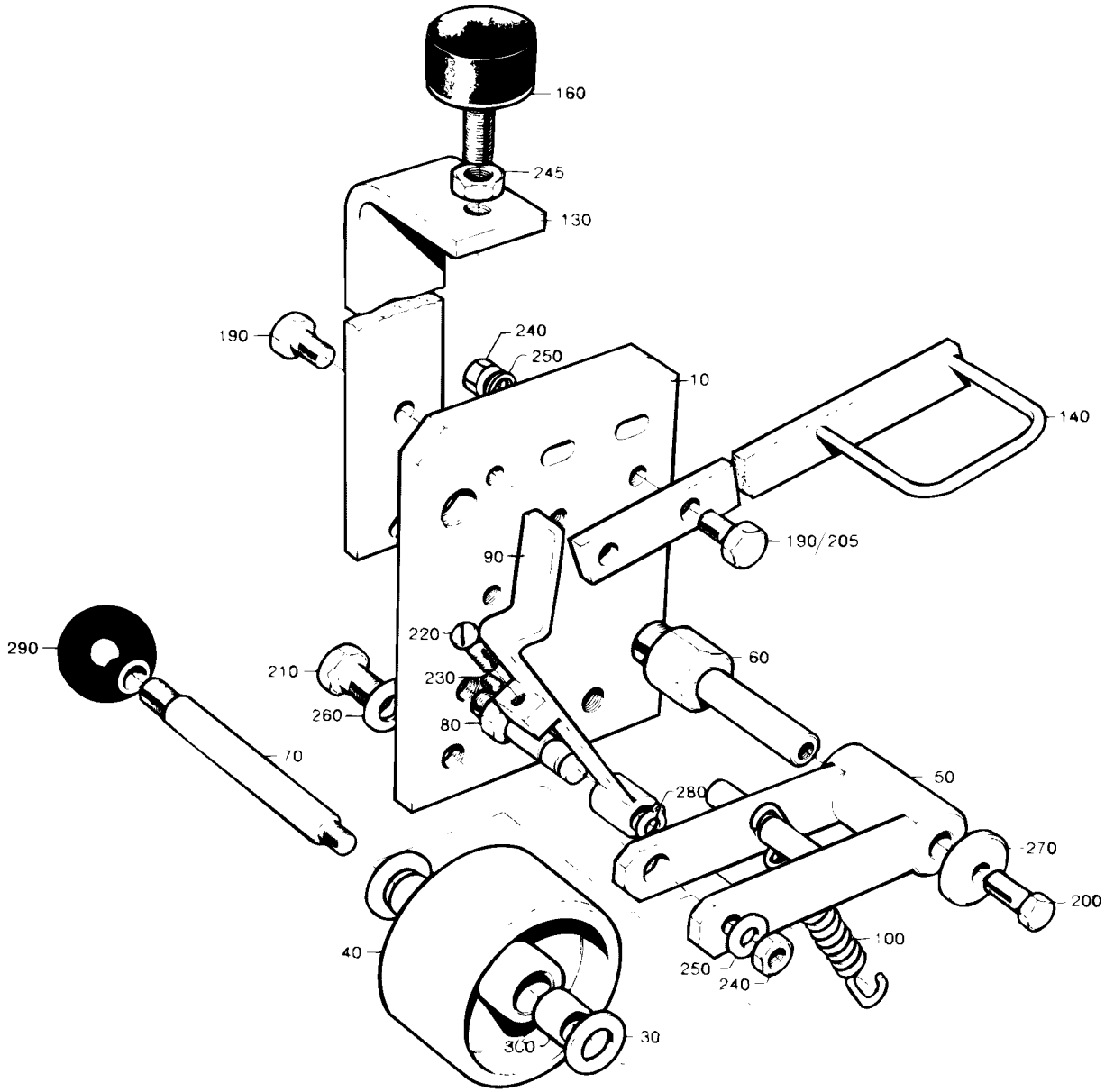
160
245
130
190
240
250
10
140
190/205
90
220
210
230
260
80
290
70
60
50
280
270
200
100
250
240
40
300
30

ECM: 72191 - 19990215
Group number: 282528-0200
Assembly Drawing: 282528-1_1_AA

Pos	Part No	SP	UN	Qty	Description	Page No
TBA/8						
140	282625-0000	-		1	EYELET	
190	312105-0366	-		3	SCREW M6S M6X12 A280	
205	312105-0370	-		1	SCREW M6S ISO 4017 M6X20 A480	
240	312605-0316	-		2	HEXAGON NUT, M6M M6 A280	
250	315105-0153	-		3	WASHER BRB6,4X12RFR	
Common Parts						
010	526947-0000	-		1	MOUNTING SHEET	
030	2033-0009	C		2	WASHER	
040	B21903-0000	C		1	ROLL	
	90166-0056	-	*M*		*SHRINKABLE HOSE*	
050	251493-0000	D		1	FORK	
060	251494-0000	D		1	SHAFT	
070	251495-0000	D		1	SHAFT	
080	251496-0000	D		1	SHAFT	
090	251498-0000	D		1	BARRIER	
100	279074-0000	C		1	TENSION SPRING	
130	282596-0000	-		1	SUPPORT	
160	90347-0004	C		1	VIBRATION DAMPER D=30 TH=M8 H=17 H2=21MM	
200	312105-0368	-		1	SCREW M6S M6X16 A280	
210	312105-0449	-		2	SCREW M6S ISO 4017 M8X16 A480	
220	312125-0329	-		1	SLOTTED CHEESE HEAD SCREW MCS 5X16 SS	
230	312318-0285	-		1	SCREW ISO4029 M4X6 A4	
245	312605-0318	-		1	HEXAGON NUT, M6M M8 A280	
260	315105-0165	-		2	WASHER BRB8,4X16RFR	
270	315121-0153	-		1	WASHER PLAIN, TBRSB 6,4/22 H=4	
280	315750-0105	-		1	RETAIN. RING, 8	
290	318800-0104	-		1	HANDLE,SPHERICAL KNOB,INT.THRE.,D.30-M8	
300	321120-0104	C		2	BEARBUSHING W/O FL,ANGE 10/12X10	

Pos	Part No	SP	UN	Qty	Description	Page No

Machine Type | Group Description | Used-In | Group Number | Page No

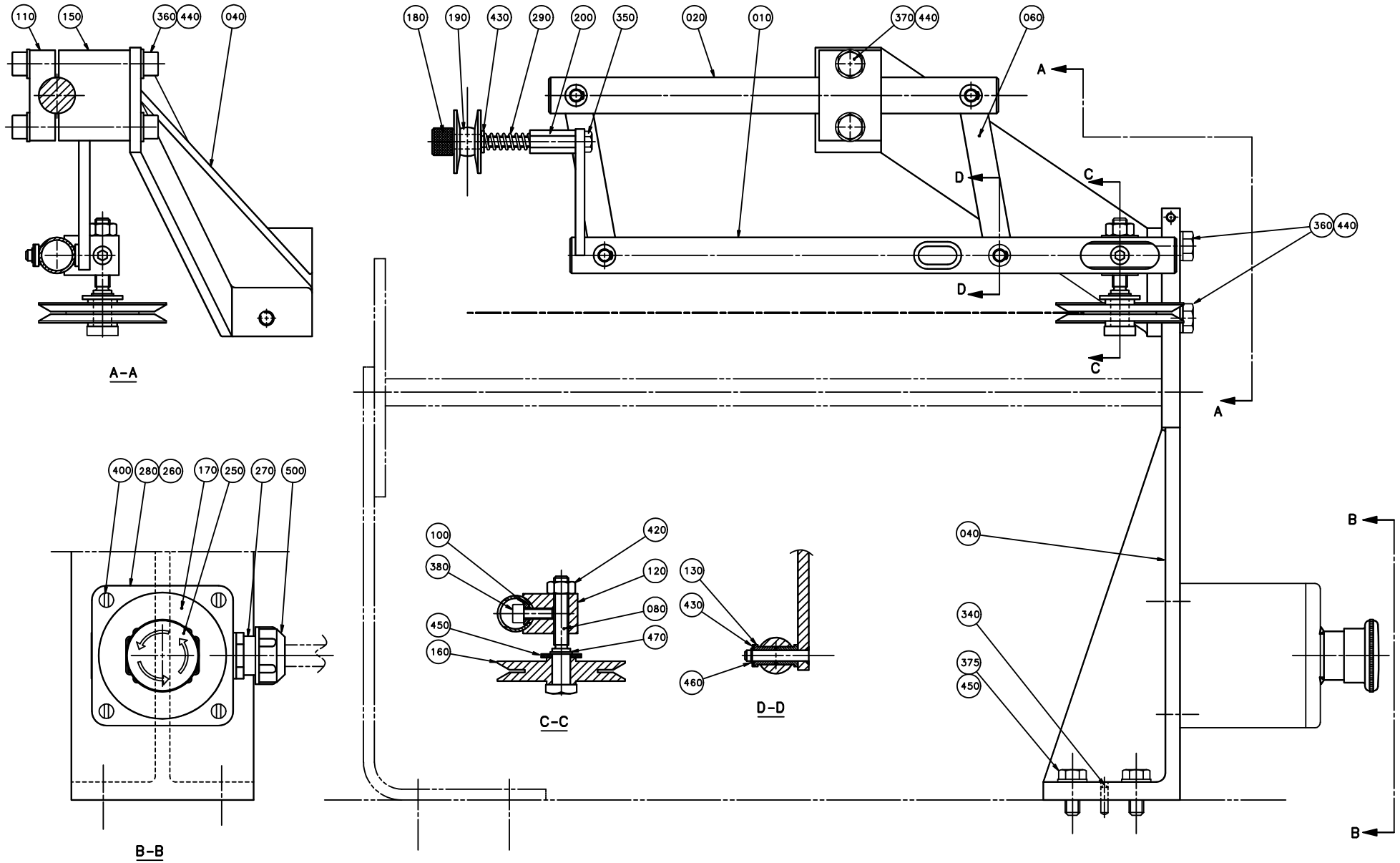
110
150
360
440
040
A-A
180
190
430
290
200
350
020
010
370
440
060
A
D
C
360
440
D
C
A
400
280
260
170
250
270
500
B-B
100
420
380
120
080
450
470
160
C-C
130
430
460
D-D
040
340
375
450
B
B

ECM: 72719 - 19990803
Group number: 1348231-0100
Assembly Drawing: 1348231-1_1_AB

Pos	Part No	SP	UN	Qty	Description	Page No
TBA/8 0375S						
010	1361278-0000	-		1	GUIDE SHAFT	
020	450461-0000	-		1	SHAFT	
TBA/8 0500S, TBA/8 0355B						
010	1361277-0000	-		1	GUIDE SHAFT	
020	450461-0000	-		1	SHAFT	
TBA/8 0500B, TBA/8 1000B, TBA/8 0750B, TBA/8 1000S						
010	1361276-0000	-		1	GUIDE SHAFT	
020	243151-0000	-		1	SHAFT	
TBA/8 0750S, TBA/8 1000SQ						
010	1361279-0000	-		1	GUIDE SHAFT	
020	450461-0000	-		1	SHAFT	
Common Parts						
050	243218-0000	-		1	CANTILEVER	
060	31417-0000	-		2	LINK	
080	31418-0000	D		1	SHAFT	
090	31419-0000	D		1	SHAFT	
100	31420-0000	C		1	WASHER	
110	31423-0000	-		1	MOUNTING LUG	
120	31424-0000	D		1	ROLLER BRACKET	
130	255064-0000	C		8	BUSHING	
140	257923-0000	C		1	GUIDE WHEEL	
150	266761-0000	-		1	MOUNTING LUG	
160	282635-0000	C		1	GUIDE WHEEL	
180	1035893-0000	-		1	ADJUSTING SCREW	
190	1285546-0000	D		1	ROLL	
200	1346505-0000	-		1	SPACER	
290	90335-0027	C		1	COMP. SPRING 22170, 1,25X9,25X33	
350	312105-0366	-		1	SCREW M6S M6X12 A280	
360	312105-0451	-		4	SCREW M6S ISO 4017 M8X20 A480	
370	312105-0455	-		2	SCREW M6S ISO 4017 M8X30 A480	
380	312115-0368	-		1	SCREW ISO4762 M6X16 A4	
390	312125-0323	-		1	SLOTTED CHEESE HEAD SCREW MCS 5X8 SS	
410	312605-0316	-		1	HEXAGON NUT, M6M M6 A280	
420	312605-0318	-		1	HEXAGON NUT, M6M M8 A280	
430	315105-0153	-		6	WASHER BRB6,4X12RFR	
440	315105-0165	-		6	WASHER BRB8,4X16RFR	
450	315105-0173	-		1	WASHER BRB10,5X22RFR	
460	315754-0107	-		4	LOCKING WAE 5	
470	315754-0110	-		1	LOCKING WAE 9	

Machine Type Group Description Used-In Group Number Page No

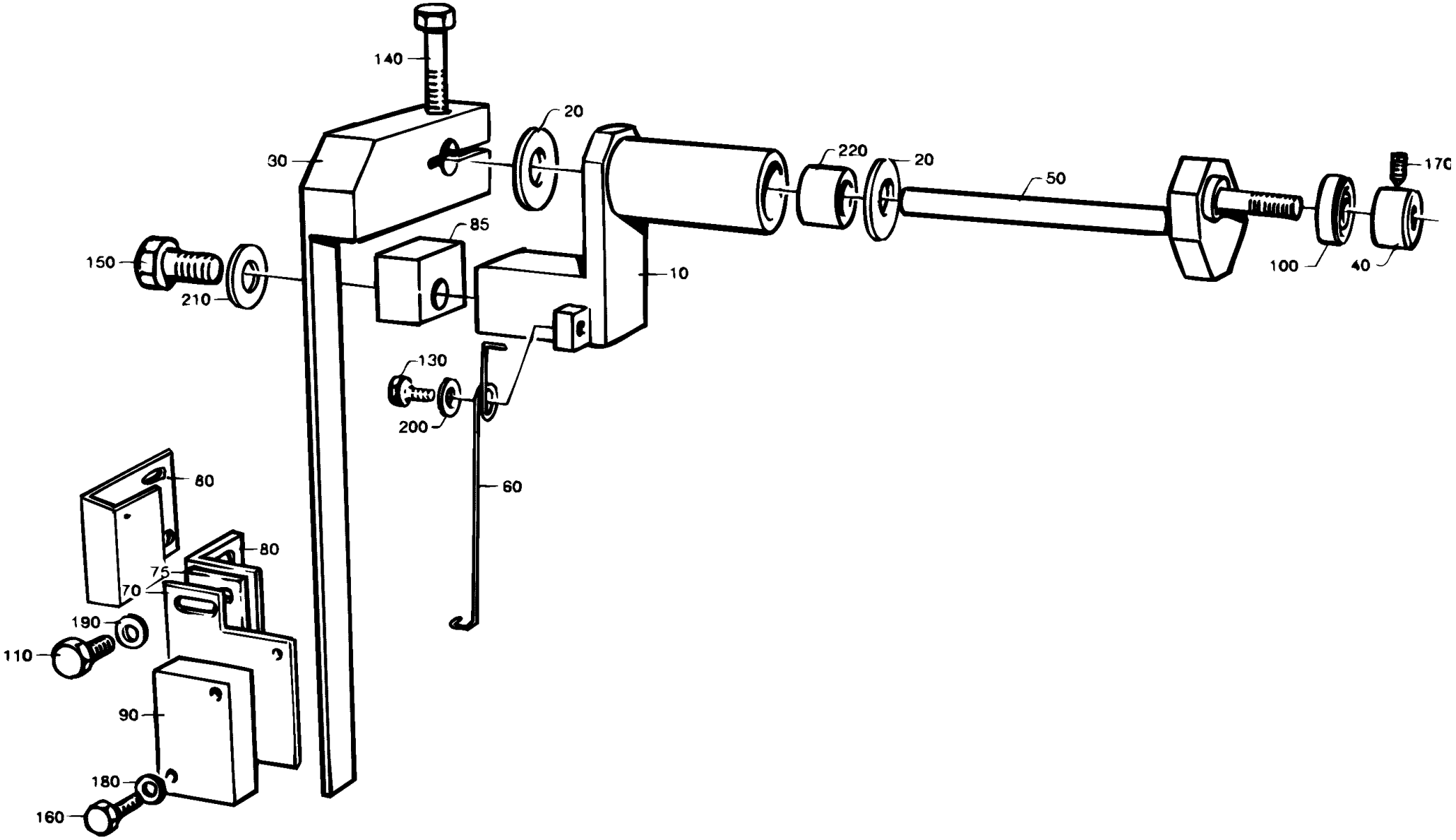
140
20
30
220
20
50
170
85
150
10
100
40
210
130
200
60
80
80
75
70
190
110
90
180
160

ECM: 72191 - 19990215
Group number: 546180-0100
Assembly Drawing: 546180-1_1_AA

Pos	Part No	SP	UN	Qty	Description	Page No
TBA/8						
060	272466-0000	C		1	SPRING	
070	450117-0000	-		1	HOLDER	
210	315105-0153	-		2	WASHER BRB6,4X12RFR	
Common Parts						
010	450116-0000	-		1	CANTILEVER	
020	271211-0000	C		2	WASHER	
030	271653-0000	-		1	ARM	
040	271654-0000	D		1	RETAINING RING	
050	271655-0000	-		1	HOLDER	
090	90044-0104	C		1	PROX.SWITCH IFM IN 3002	
100	90214-0138	C		1	BALL BEARING, 5X19X6 MM	
110	312105-0287	-		2	SCREW M6S ISO4017 M4X8 A480	
130	312105-0327	-		1	SCREW M6S ISO 4017 M5X12 A480	
140	312105-0370	-		1	SCREW M6S ISO 4017 M6X20 A480	
150	312105-0372	-		2	SCREW M6S ISO 4017 M6X25 A480	
160	312115-0228	-		2	SCREW ISO4762 M3X16 A4	
170	312318-0283	-		1	SCREW ISO4029 M4X4 A4	
180	315105-0124	-		2	BRICKA BRB3,2X6RFR	
190	315105-0136	-		2	WASHER BRB4,3XRFR	
200	315105-0146	-		1	BRICKA BRB5,3X10RFR	
220	321127-0100	C		2	BEARING BUSHING W/O FL, 10X13X10 MM	

Pos	Part No	SP	UN	Qty	Description	Page No

This page is intentionally left blank.

ECM: 71166 - 19980121
Group number: 526954-0100
Assembly Drawing:

Pos	Part No	SP	UN	Qty	Description	Page No
TBA/8						
010	267494-0000	-		1	COIL HEATER	
Common Parts						
020	B21903-0000	-		1	ROLL	
	90166-0056	-	*M*		*SHRINKABLE HOSE*	
030	531733-0000	-		1	GASKET	
040	531734-0000	-		2	GASKET	
050	531735-0000	-		1	GASKET	
060	531736-0000	-		1	GASKET	

Pos	Part No	SP	UN	Qty	Description	Page No

Machine Type | Group Description | Used-In | Group Number | Page No

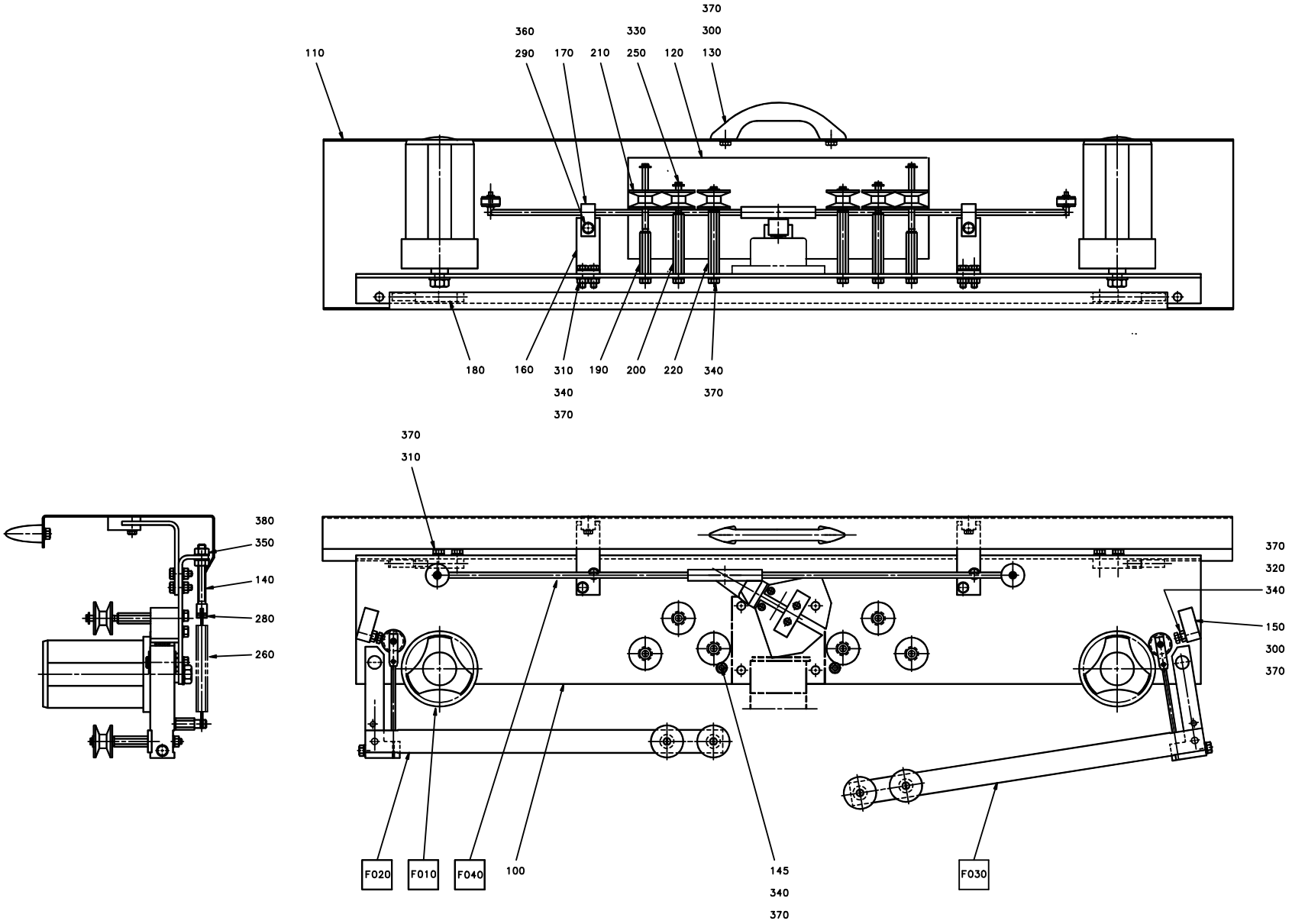
110
360
290
170
210
330
250
120
370
300
130
180
160
310
340
370
190
200
220
340
370
370
310
380
350
140
280
260
370
320
340
150
300
370
F020
F010
F040
100
145
340
370
F030

ECM: 102345 - 20011206
Group number: 543823-0100
Assembly Drawing: 543823-1_1_AB

Pos	Part No	SP	UN	Qty	Description	Page No
-						
100	540869-0000	-		1	SHEET	
110	543818-0000	-		1	PROTECTION PLATE	
120	545113-0000	-		1	SIGN STRIP MAGAZINE	
130	7309-0000	-		1	HANDLE	
140	541068-0000	B		2	SPRING HOLDER	
145	541172-0000	-		2	SET SCREW	
150	541173-0000	-		2	STOP	
160	543125-0000	-		2	ANGLE	
170	543126-0000	-		2	STOP LUG	
180	543819-0000	-		2	HINGE	
190	544725-0000	A		2	AXLE PIN	
200	544727-0000	A		2	AXLE PIN	
210	544730-0000	A		6	ROLL	
220	536916-0000	A		2	AXLE PIN	
250	90005-0082	-		6	WASHER PLAIN ROUND 4,3(M4)/12,H=1	
260	90335-0015	A		2	TENSION SPRING 42360, 2X14X98	
280	311112-0205	-		2	SPRING PIN, ISO 8752 3X10-C	
290	312105-0327	-		2	SCREW M6S ISO 4017 M5X12 A480	
300	312105-0366	-		6	SCREW M6S M6X12 A280	
310	312105-0368	-		8	SCREW M6S M6X16 A280	
320	312109-0374	-		2	SCREW M6S ISO 4017 M6X30 A480	
330	312125-0287	-		6	SLOTTED CHEESE HEAD SCREW MCS 4X8 SS	
340	312605-0316	-		14	HEXAGON NUT, M6M M6 A280	
350	312605-0318	-		4	HEXAGON NUT, M6M M8 A280	
360	315105-0146	-		2	BRICKA BRB5,3X10RFR	
370	315105-0153	-		24	WASHER BRB6,4X12RFR	
380	315105-0165	-		4	WASHER BRB8,4X16RFR	
F010	A537329-0100	-		2	HUB JUMBO	**8-39, 10-13**
F020	A543822-0100	-		1	BRAKE ARM	**8-41**
F030	A594620-0100	-		1	BRAKE ARM	**8-43**
F040	A543821-0100	-		1	LEVEL PROBE	**8-45**

Pos	Part No	SP	UN	Qty	Description	Page No

Machine Type | Group Description | Used-In | Group Number | Page No

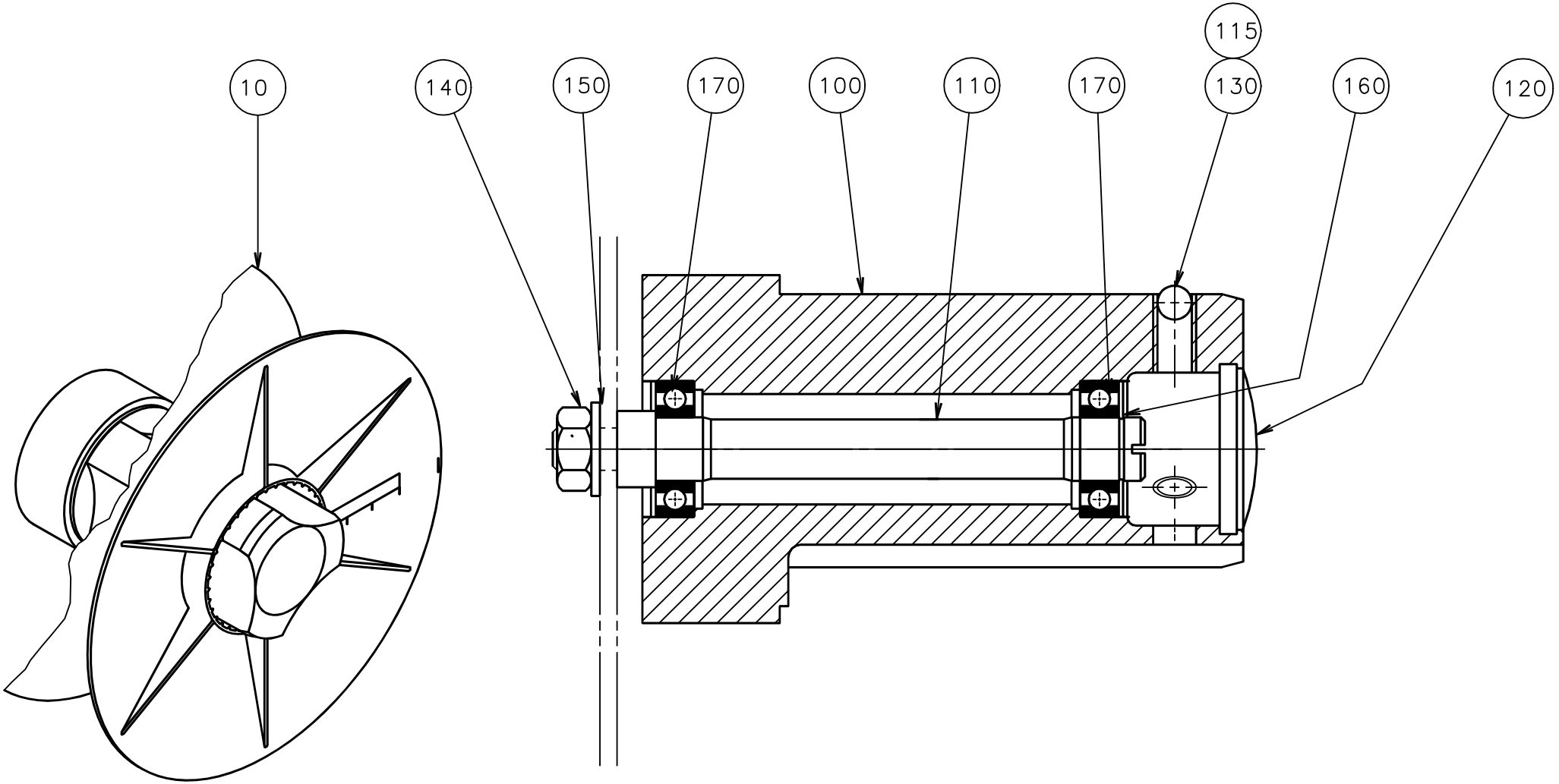
10
140
150
170
100
110
170
115
130
160
120

ECM: 89488 - 20030328
Group number: 537329-0100
Assembly Drawing: 537329-1_1_AA

Pos	Part No	SP	UN	Qty	Description	Page No
-						
010	541751-0000	-		1	CONICAL BOBBIN	
100	536913-0000	D		1	HUB	
110	537327-0000	D		1	SHAFT	
115	90157-0016	-		1	LOCKING FLUID	
120	90261-0049	-		1	PLUG, BLIND, PLASTIC, NO. SR1750	
130	90287-0106	-		3	SCREW SPRINGLOAD. SLOTTED HEAD M10X21	
140	312605-0320	-		1	HEXAGON NUT, M6M M10 A280	
150	315105-0173	-		1	WASHER BRB10,5X22RFR	
160	315751-0112	-		1	RETAIN. RING, 15	
170	90214-0207	C		2	BALL BEARING, 15X32X9 MM	

Pos	Part No	SP	UN	Qty	Description	Page No

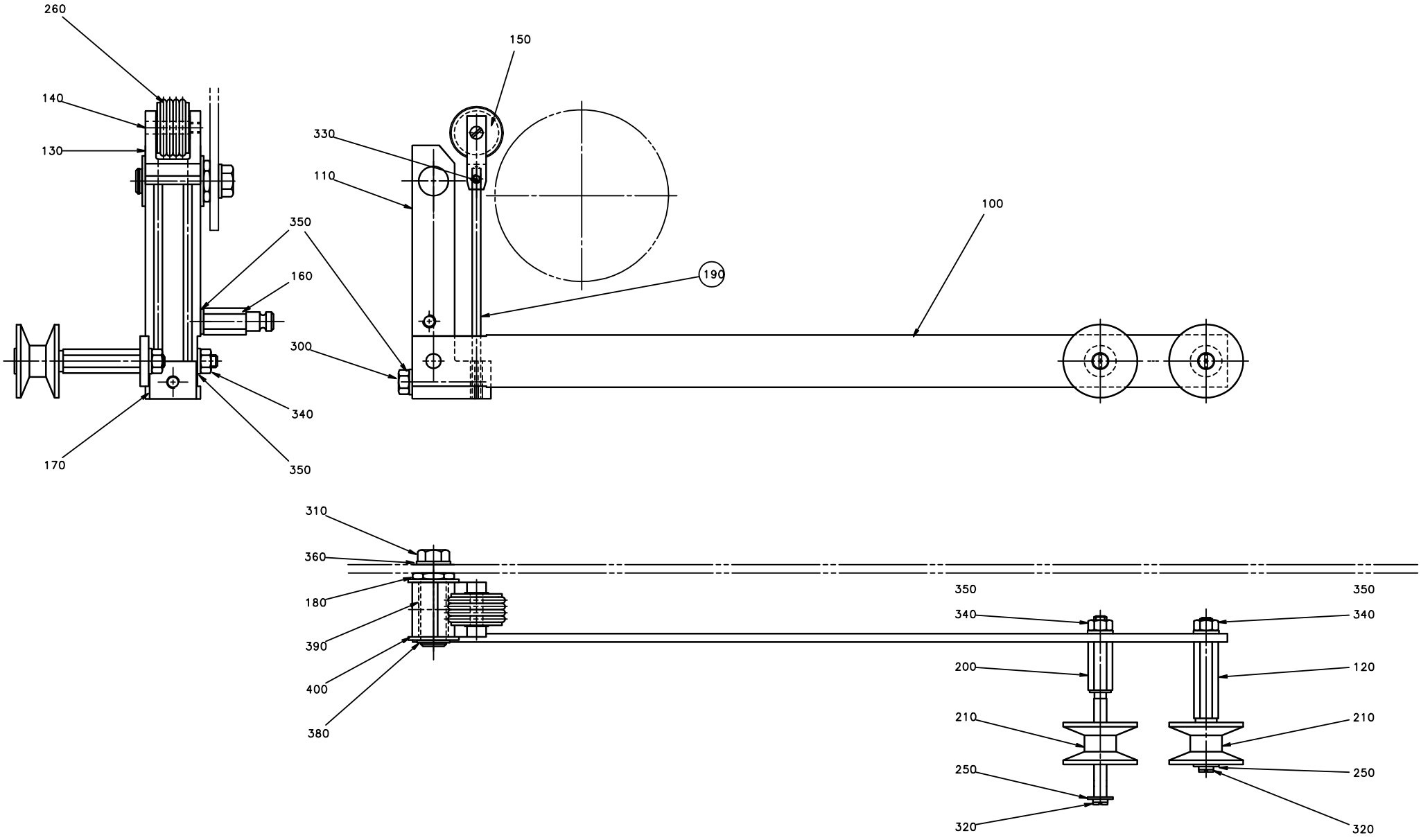
260
140
130
150
330
110
100
350
160
190
300
340
170
350
310
360
180
390
400
380
350
340
200
210
250
320
350
340
120
210
250
320

ECM: 102350 - 20011206
Group number: 543822-0100
Assembly Drawing: 543822-1_1_AA

Pos	Part No	SP	UN	Qty	Description	Page No
-						
100	540870-0000	B		1	ARM	
110	541057-0000	B		1	ARM	
120	536917-0000	A		1	AXLE PIN	
130	541064-0000	B		1	FORK	
140	541065-0000	B		1	SHAFT	
150	541066-0000	A		1	ROLL	
160	541067-0000	B		1	SPRING BRACKET	
170	541069-0000	B		1	SPRING BRACKET	
180	541070-0000	B		1	SHAFT	
190	543820-0000	A		2	SPRING	
200	544726-0000	A		1	AXLE PIN	
210	544730-0000	A		2	ROLL	
250	90005-0082	-		2	WASHER PLAIN ROUND 4,3(M4)/12,H=1	
260	90242-0148	A		4	O-RING 19,2X3 MM	
300	312105-0378	-		1	SCREW M6S ISO 4014 M6X40 A480	
310	312105-0449	-		1	SCREW M6S ISO 4017 M8X16 A480	
320	312125-0287	-		2	SLOTTED CHEESE HEAD SCREW MCS 4X8 SS	
330	312318-0283	-		2	SCREW ISO4029 M4X4 A4	
340	312605-0316	-		3	HEXAGON NUT, M6M M6 A280	
350	315105-0153	-		5	WASHER BRB6,4X12RFR	
360	315105-0165	-		1	WASHER BRB8,4X16RFR	
380	315751-0109	-		1	RETAIN. RING, 12	
390	321120-0113	A		1	BEARING BUSHING W/O FLANGE,12/14X25	
400	321129-0104	-		1	THRUST WASHER, 12/24X1,5	

Pos	Part No	SP	UN	Qty	Description	Page No

Machine Type | Group Description | Used-In | Group Number | Page No

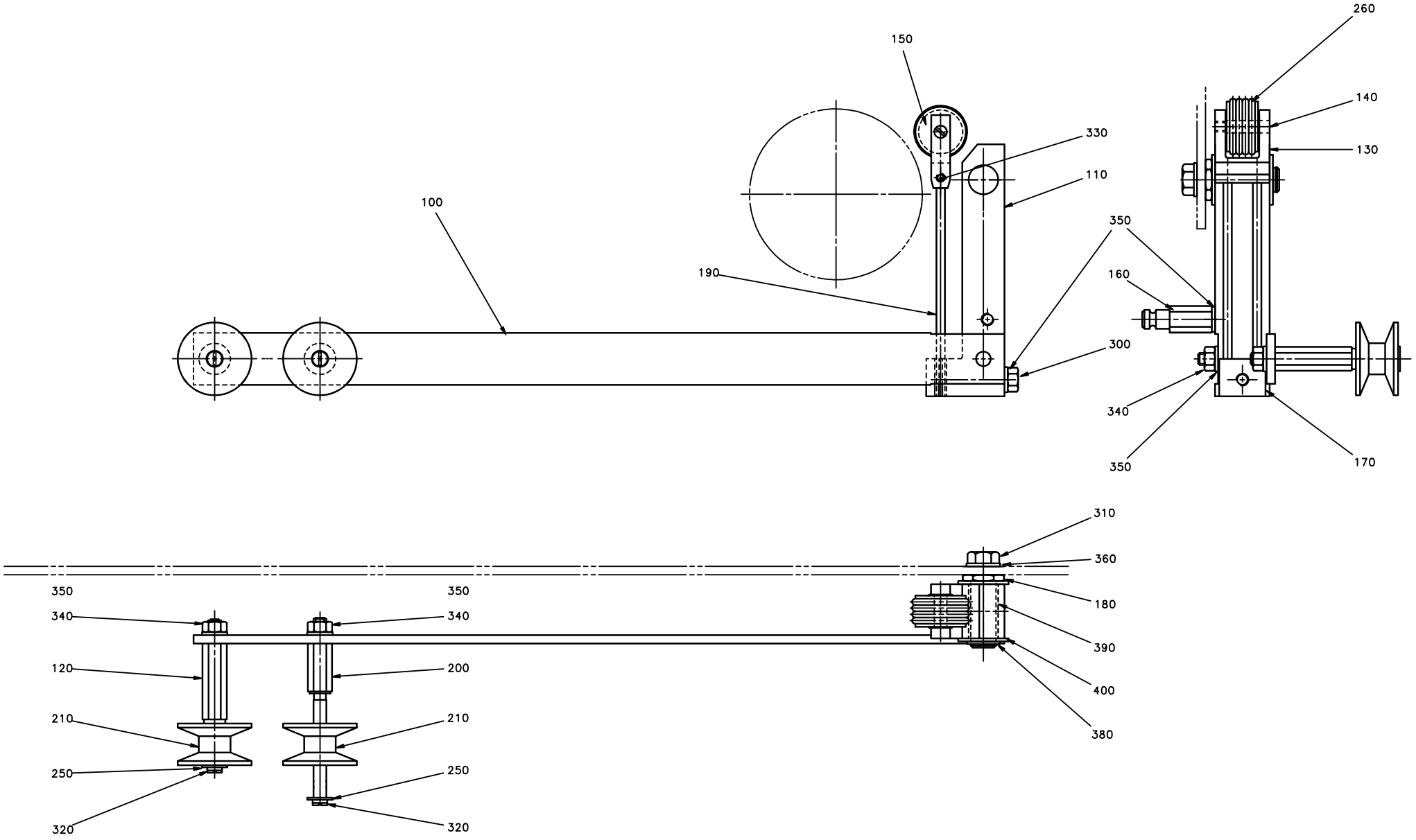
260
150
140
330
130
110
100
350
190
160
300
340
350
170
310
360
350
350
340
340
180
390
120
200
400
210
210
380
250
250
320
320

ECM: 102351 - 20011206
Group number: 594620-0100
Assembly Drawing: 594620-1_1_AA

Pos	Part No	SP	UN	Qty	Description	Page No
-						
100	540870-0000	B		1	ARM	
110	541057-0000	B		1	ARM	
120	536917-0000	A		1	AXLE PIN	
130	541064-0000	B		1	FORK	
140	541065-0000	B		1	SHAFT	
150	541066-0000	A		1	ROLL	
160	541067-0000	B		1	SPRING BRACKET	
170	541069-0000	B		1	SPRING BRACKET	
180	541070-0000	B		1	SHAFT	
190	543820-0000	A		2	SPRING	
200	544726-0000	A		1	AXLE PIN	
210	544730-0000	A		2	ROLL	
250	90005-0082	-		2	WASHER PLAIN ROUND 4,3(M4)/12,H=1	
260	90242-0148	A		4	O-RING 19,2X3 MM	
300	312105-0378	-		1	SCREW M6S ISO 4014 M6X40 A480	
310	312105-0449	-		1	SCREW M6S ISO 4017 M8X16 A480	
320	312125-0287	-		2	SLOTTED CHEESE HEAD SCREW MCS 4X8 SS	
330	312318-0283	-		2	SCREW ISO4029 M4X4 A4	
340	312605-0316	-		3	HEXAGON NUT, M6M M6 A280	
350	315105-0153	-		5	WASHER BRB6,4X12RFR	
360	315105-0165	-		1	WASHER BRB8,4X16RFR	
380	315751-0109	-		1	RETAIN. RING, 12	
390	321120-0113	A		1	BEARING BUSHING W/O FLANGE,12/14X25	
400	321129-0104	-		1	THRUST WASHER, 12/24X1,5	

Pos	Part No	SP	UN	Qty	Description	Page No

Machine Type | Group Description | Used-In | Group Number | Page No

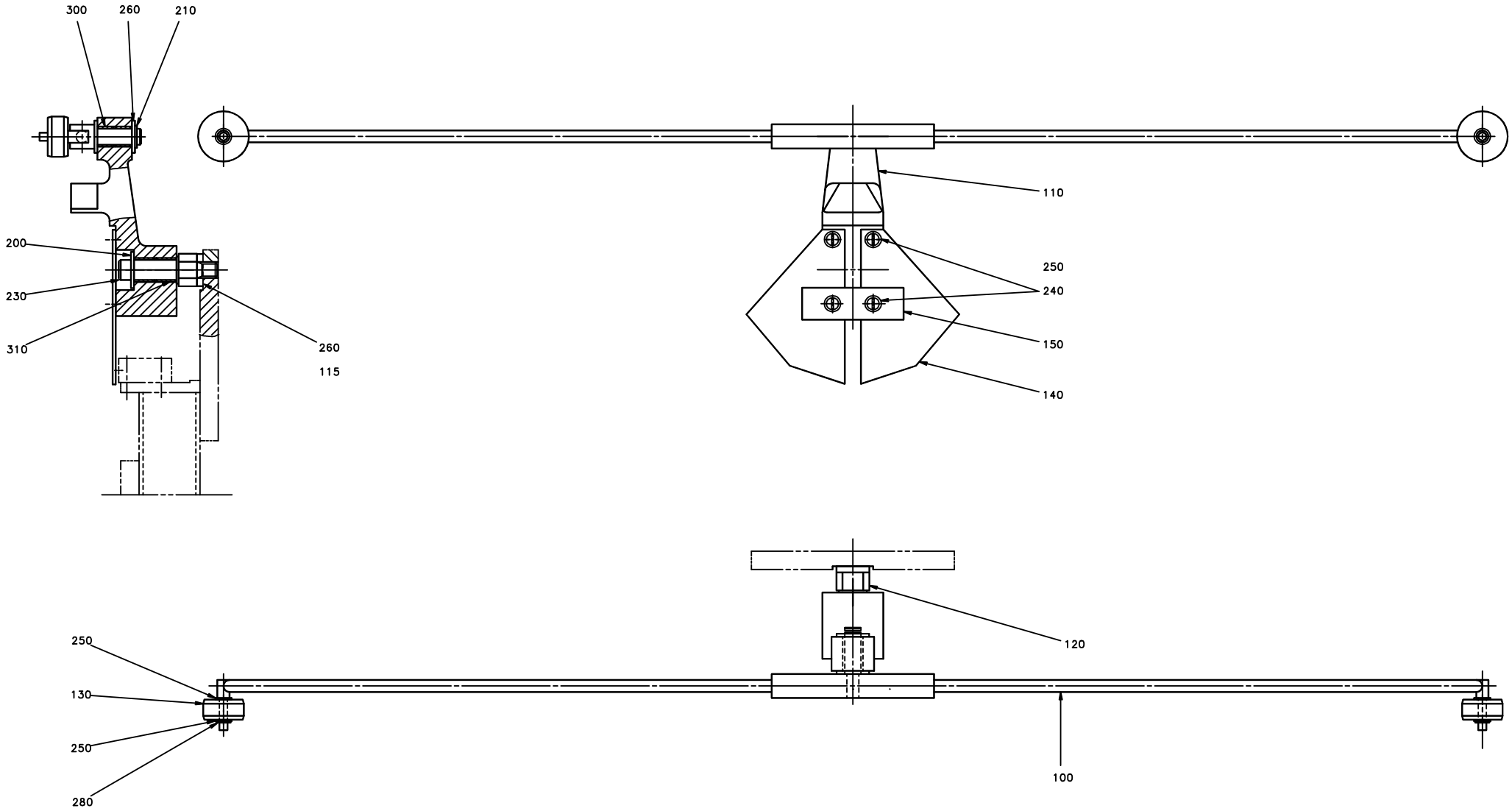
300
260
210
200
230
310
260
115
110
250
240
150
140
250
130
250
280
120
100

ECM: 102352 - 20011206
Group number: 543821-0100
Assembly Drawing: 543821-1_1_AA

Pos	Part No	SP	UN	Qty	Description	Page No
-						
100	542781-0000	B		1	ARM	
110	542784-0000	B		1	LINK ARM	
115	2033-0008	B		3	WASHER	
120	542782-0000	B		1	AXLE PIN	
130	542785-0000	A		2	ROLL	
140	542786-0000	B		2	FLAG	
150	543575-0000	-		1	LOCK SHEET	
200	90005-0060	-		1	WASHER PLAIN, RBS 6,4/M6)/18,H=1,5	
210	90141-0015	-		1	RETAIN. RING, 8	
230	312115-0366	-		1	SCREW ISO4762 M6X12 A4	
240	312125-0287	-		4	SLOTTED CHEESE HEAD SCREW MCS 4X8 SS	
250	315105-0136	-		8	WASHER BRB4,3XRFR	
260	315105-0165	-		3	WASHER BRB8,4X16RFR	
280	315755-0105	-		2	LOCKING WASHER 3,2	
300	321120-0103	A		2	BEARING BUSHING W/O FLANGE,8/10X8	
310	321120-0104	A		2	BEARBUSHING W/O FL,ANGE 10/12X10	

Pos	Part No	SP	UN	Qty	Description	Page No

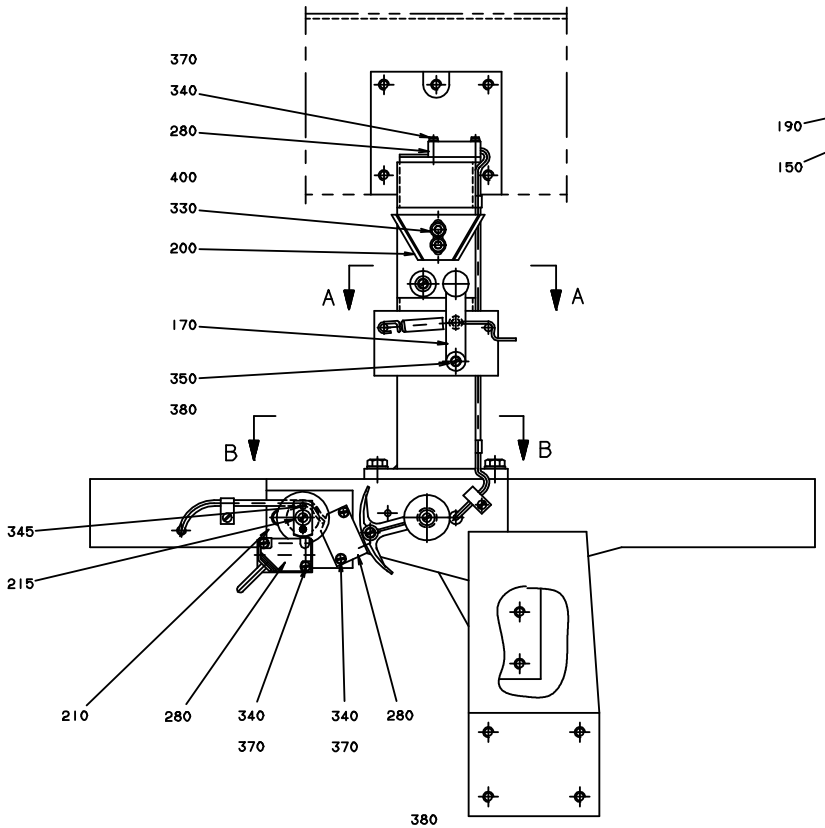

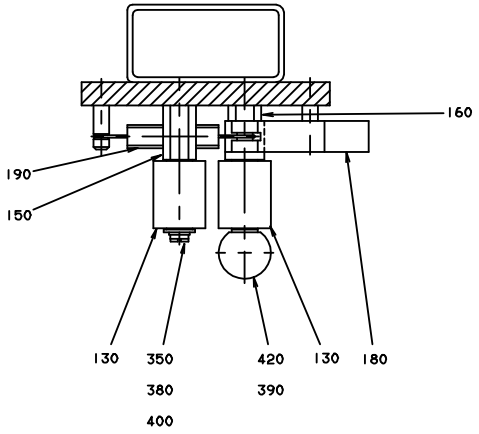

SNITT A - A

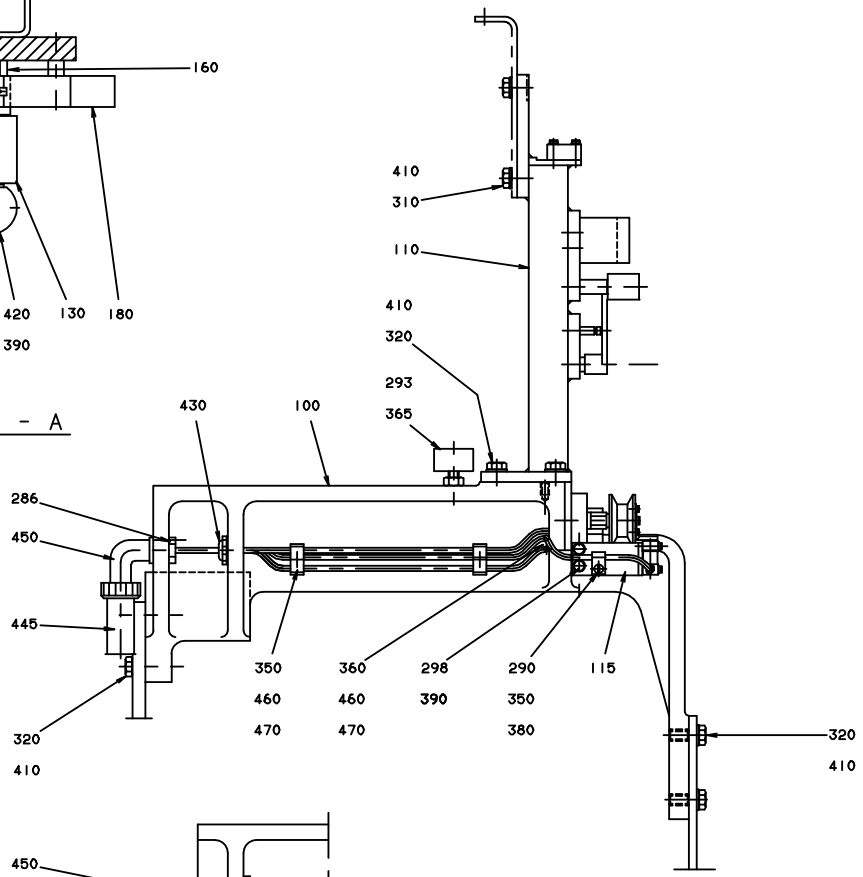

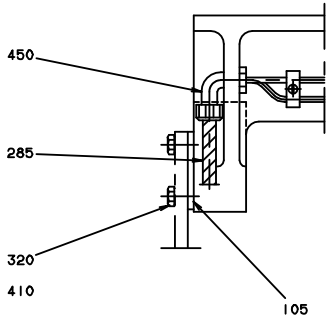

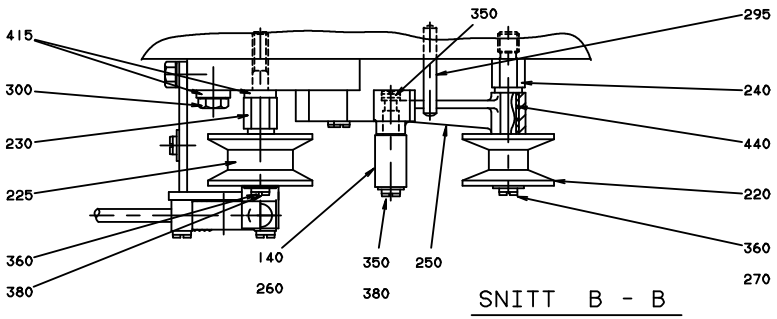

SNITT B - B

ECM: 114577 - 20020930
Group number: 544973-0200
Assembly Drawing: 544973-2_1_AA

Pos	Part No	SP	UN	Qty	Description	Page No
TBA/8 0375S, TBA/8 0500S, TBA/8 0355B						
100	546030-0001	A		1	CANTILEVER	
TBA/8 0500B, TBA/8 1000B, TBA/8 0750B, TBA/8 1000S						
100	545138-0000	A		1	CANTILEVER	
430	352101-0103	-		1	LEAD-IN, PR18,6/PG11, E-1457518	
TBA/8 1000SQ						
100	546030-0002	A		1	CANTILEVER	
105	574037-0000	A		1	SPACER	
TBA/8 0750S						
100	546030-0002	A		1	CANTILEVER	
105	546031-0000	A		1	SPACER	
Common Parts						
105	592588-0000	A		1	SPACER	
110	544974-0000	A		1	PILLAR	
115	2556494-0000	A		1	BRACKET	
130	232979-0000	A		2	PRESSURE ROLLER	
140	249298-0000	A		1	ROLL	
150	269053-0001	A		1	SHAFT	
160	269053-0003	A		1	SHAFT	
170	269054-0000	A		1	ARM	
180	269056-0000	A		1	CATCH	
190	269057-0000	A		1	TENSION SPRING	
200	279480-0000	A		1	STEERING RAIL	
210	2556527-0000	A		1	PLATE	
215	590410-0000	A		1	SHEET	
220	544730-0000	A		1	ROLL	
225	590409-0000	A		1	ROLL	
230	547924-0000	A		1	AXLE PIN	
240	547925-0000	A		1	AXLE PIN	
250	545111-0000	A		1	ARM	
260	545112-0000	A		1	SHAFT 6X29,5	
270	90005-0082	-		1	WASHER PLAIN ROUND 4,3(M4)/12,H=1	
280	90044-0104	A		3	PROX.SWITCH IFM IN 3002	
286	90099-0002	-		1	NUT PR 18,6 BRASS	
290	90165-0060	-		7	PIPE CLIP FOR TUBE D=5 MM	
293	90347-0004	A		1	VIBRATION DAMPER D=30 TH=M8 H=17 H2=21MM	
295	311103-0316	-		1	PARALLEL PIN ISO 2338 5M6X35 A1	
298	312105-0328	-		2	SCREW M6S ISO 4017 M5X14 A480	
300	312105-0372	-		1	SCREW M6S ISO 4017 M6X25 A480	
310	312105-0449	-		4	SCREW M6S ISO 4017 M8X16 A480	
320	312105-0452	-		10	SCREW M6S ISO 4017 M8X22 A480	
330	312115-0366	-		2	SCREW ISO4762 M6X12 A4	
340	312125-0228	-		6	SLOTTED CHEESE HEAD SCREW MCS 3X16 SS	
345	312125-0224	-		2	SLOTTED CHEESE HEAD SCREW MCS 3X10 SS	
350	312125-0285	-		12	SLOTTED CHEESE HEAD SCREW MCS 4X6 SS	
360	312125-0287	-		3	SLOTTED CHEESE HEAD SCREW MCS 4X8 SS	
365	312605-0318	-		1	HEXAGON NUT, M6M M8 A280	
370	315105-0124	-		6	BRICKA BRB3,2X6RFR	
380	315105-0136	-		11	WASHER BRB4,3XRFR	
390	315105-0146	-		3	BRICKA BRB5,3X10RFR	
400	315105-0153	-		3	WASHER BRB6,4X12RFR	
410	315105-0165	-		14	WASHER BRB8,4X16RFR	
415	315115-0153	-		2	WASHER PLAIN, TBRB 6,4/12 H=3	
420	318800-0102	-		1	HANDLES,SPHERICAL KNOB,INT.THRE.,D.20-M5	
440	321120-0101	C		2	BEARING BUSHING W/O FLANGE,6/8X6	
445	352135-0106	-	MM	430	SPIRAL CONDUIT DI=16 MM	
450	352137-0127	-		1	COND.FITTING PR 18,6 DI=16MM	
460	352113-0205	-		3	ANCHOR PLATES FOR STRIPS, TYPE TM2S8-C10	
470	352113-0102	-		4	CLIP-STRIP, BLACK 188X4,8 MM	

Machine Type | Group Description | Used-In | Group Number | Page No

Tetra Pak

SPC
Spare Parts Catalogue

Total pages in this module: 52

This page is intentionally left blank.

ECM: 71465 - 19981023
Group number: 649171-1100
Assembly Drawing:

Pos	Part No	SP	UN	Qty	Description	Page No
-						
0090	A971250-1100	-		1	ELECTRICAL CABINET	**9-5**
0100	A971411-1100	-		1	CONTROL PANEL MECHANICAL	**9-43**
0110	A971444-1100	-		1	SIDE PANEL MECHANICAL	**9-49**

Pos	Part No	SP	UN	Qty	Description	Page No

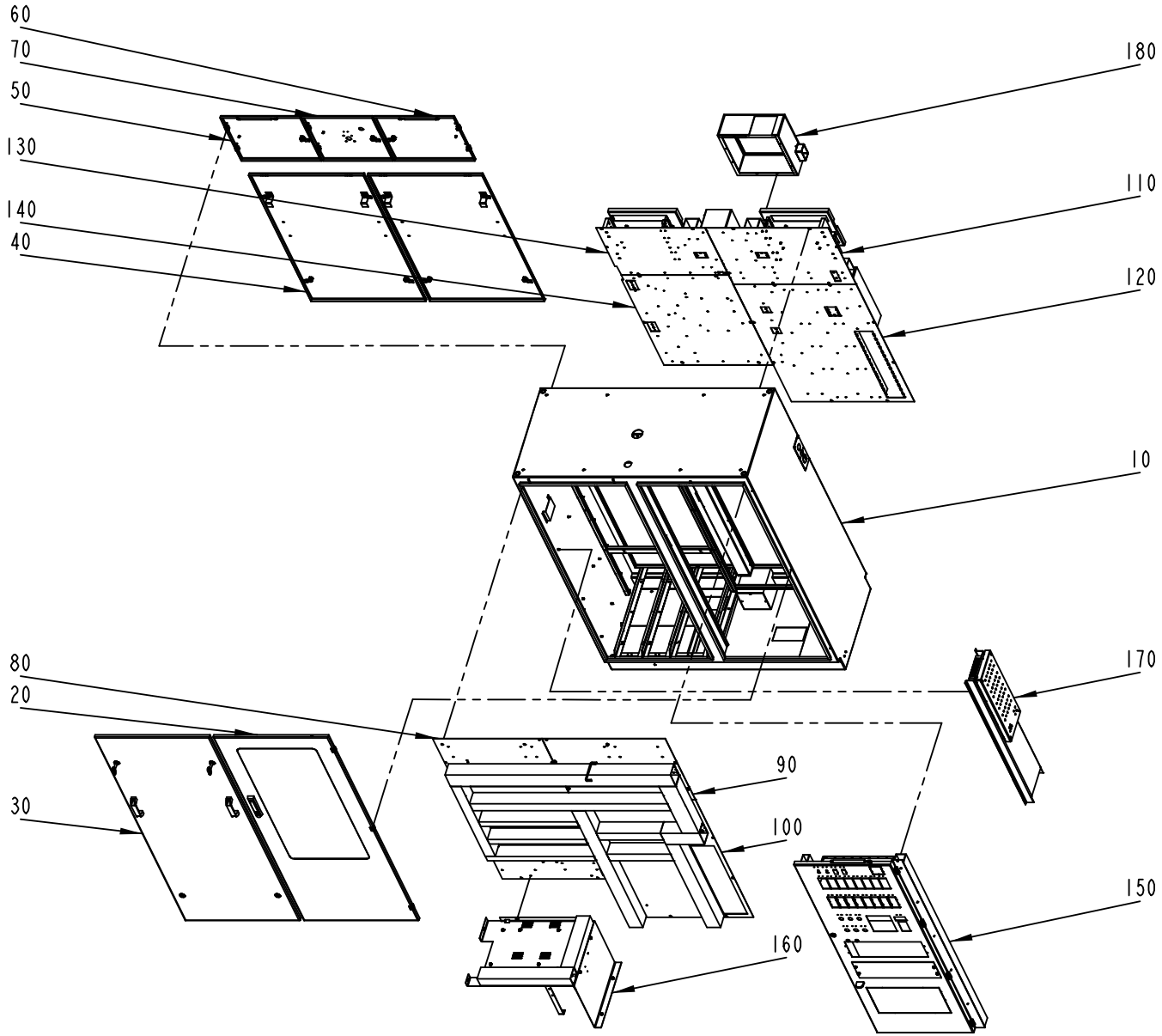
60
70
50
130
140
40
180
110
120
10
80
20
30
90
100
160
150
170

ECM: 72485 - 19991001
Group number: 971250-1100
Assembly Drawing: 971250-8_1_AB

Pos	Part No	SP	UN	Qty	Description	Page No
-						
010	A599132-0100	-		1	CABINET	9-7
020	A599133-0100	-		1	DOOR	9-9
030	A599134-0100	-		1	DOOR	9-11
040	A599135-0100	-		2	DOOR	9-13
050	A599136-0100	-		1	DOOR	9-15
060	A599137-0100	-		1	DOOR	9-17
070	A599138-0100	-		1	DOOR	9-19
080	A599140-0100	-		1	MOUNTINGPLATE PLC 1-2	9-21
090	A599141-0100	-		1	MOUNTINGPLATE PLC 2-3	9-23
100	A599142-0100	-		1	MOUNTINGPLATE MULTI CONNECTOR	9-25
110	A599143-0100	-		1	MOUNTINGPLATE SUPPLY L1-L3	9-27
120	A599144-0100	-		1	MOUNTINGPLATE TERMINALS	9-29
130	A599145-0100	-		1	MOUNTINGPLATE SUPPLY L4-L6	9-31
140	A599146-0100	-		1	MOUNTINGPLATE FILTER	9-33
150	A599147-0100	-		1	SWING FRAME	9-35
160	A599148-0100	-		1	MOUNTINGPLATE	9-37
170	A599149-0100	-		1	RELAY SOLID-STATES	9-39
180	A599170-0100	-		1	FILTER BOX	9-41

Pos	Part No	SP	UN	Qty	Description	Page No

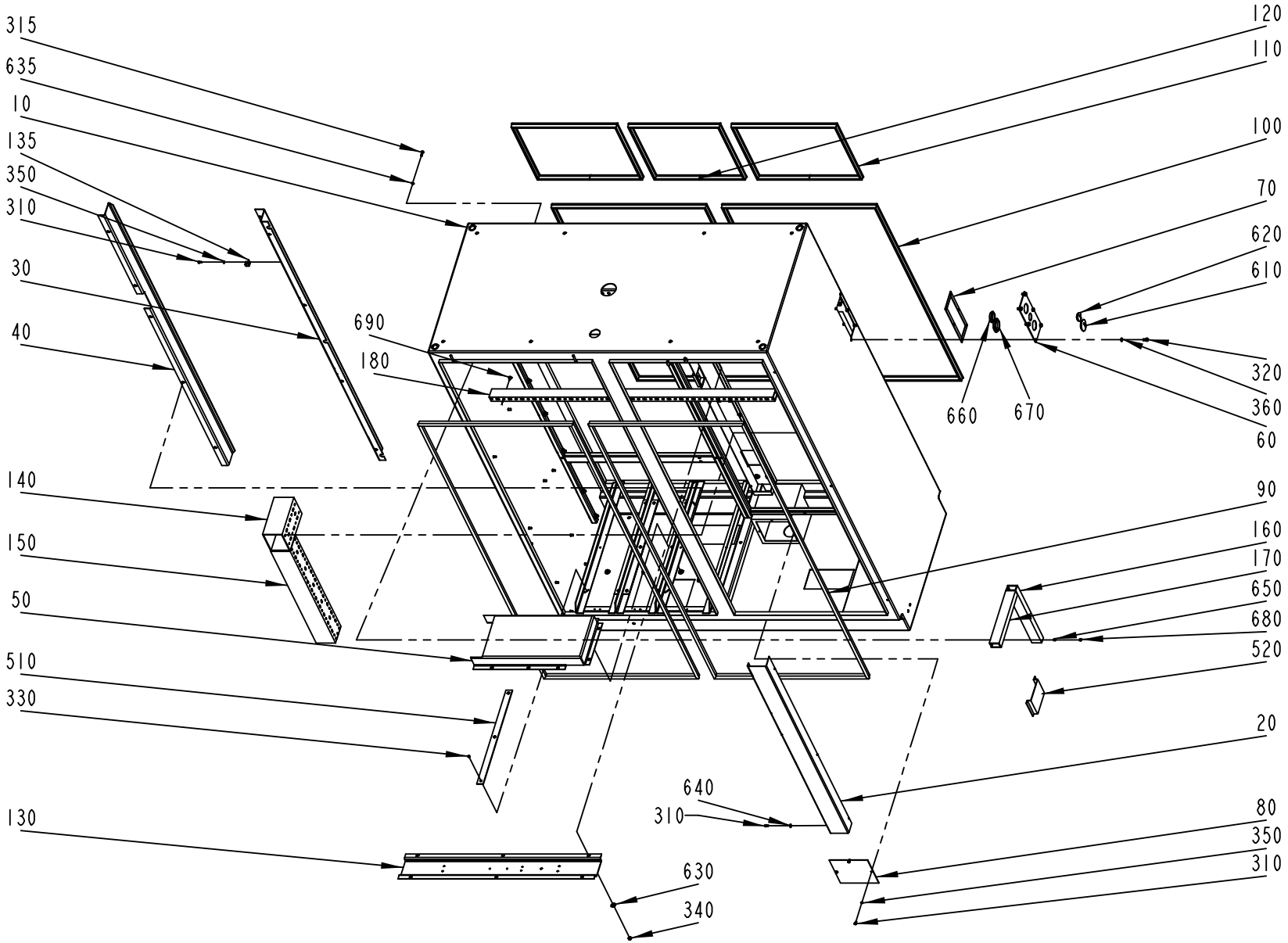
315
635
10
135
350
310
30
40
690
180
140
150
50
510
330
130
640
310
630
340
120
110
100
70
620
610
320
360
60
660
670
90
160
170
650
680
520
20
80
350
310

ECM: 93015 - 20010522
Group number: 599132-0100
Assembly Drawing: 599132-1_1_AC

Pos	Part No	SP	UN	Qty	Description	Page No
-						
010	1360973-0000	-		1	WELDED CABINET	
020	1360997-0000	-		1	COVER	
030	1361037-0000	-		1	PROFILE	
040	1361038-0000	-		1	PROFILE	
050	1361018-0000	-		1	CHANNEL	
060	1361019-0000	-		1	FLANGE	
070	1361020-0000	-		1	GASKET	
080	1361021-0000	-		1	COVER PLATE	
090	1361027-0000	-		2	GASKET	
100	1361028-0000	-		2	GASKET	
110	1361029-0000	-		2	GASKET	
120	1361030-0000	-		1	GASKET	
130	1361034-0000	-		1	BRACKET	
135	1361039-0000	-		1	BRACKET	
140	1361215-0000	-		1	CABLE DUCT 100X80	
150	1361216-0000	-		1	CABLE DUCT 80X80	
160	1361217-0000	-		1	CABLE DUCT 25X40	
170	1361218-0000	-		1	CABLE DUCT 25X40	
180	1361220-0000	-		1	CABLE DUCT 25X40	
310	312105-0287	-		10	SCREW M6S ISO4017 M4X8 A480	
315	312105-0329	-		1	SCREW M6S ISO 4017 M5X16 A480	
320	312105-0366	-		6	SCREW M6S M6X12 A280	
330	312145-0285	-		12	SCREW COUNTERS.SLOT.HD. MFS 4X6 SS	
340	312812-0316	-		53	HEXAGON NUT, NY-LOCK M6 A480	
350	315105-0136	-		4	WASHER BRB4,3XRFR	
360	315105-0153	-		6	WASHER BRB6,4X12RFR	
510	731049-0000	-		4	SLIDING STRIP TPIH	
520	970802-0000	-		1	DISCETTE BOX 3,5"	
610	90002-0010	-		1	BLANK-OFF PLUG, PR 37 SKINDICHT-BLK29	
620	90002-0012	-		1	BLANK-OFF PLUG, PR 28,3 SKINDICHT-BLK21	
630	90005-0060	-		53	WASHER PLAIN, RBS 6,4/M6)/18,H=1,5	
635	90005-0078	-		1	WASHER PL.RND.FIBRE 6/10, H=1,5	
640	90005-0082	-		6	WASHER PLAIN ROUND 4,3(M4)/12,H=1	
650	90005-0158	-		14	SPACER 4,3/8, H=5	
660	90099-0119	-		1	NUT, PR 28,3 (PG21)	
670	90099-0120	-		1	MUTTER PR 37 (PG29)	
680	90261-0079	-		14	PLUG, BLIND, PLASTIC, NO. 1955	
690	90287-0337	-		5	SCREW RECESSED HEAD M4X10 WH. NYLON	

Pos	Part No	SP	UN	Qty	Description	Page No

Machine Type | Group Description | Used-In | Group Number | Page No

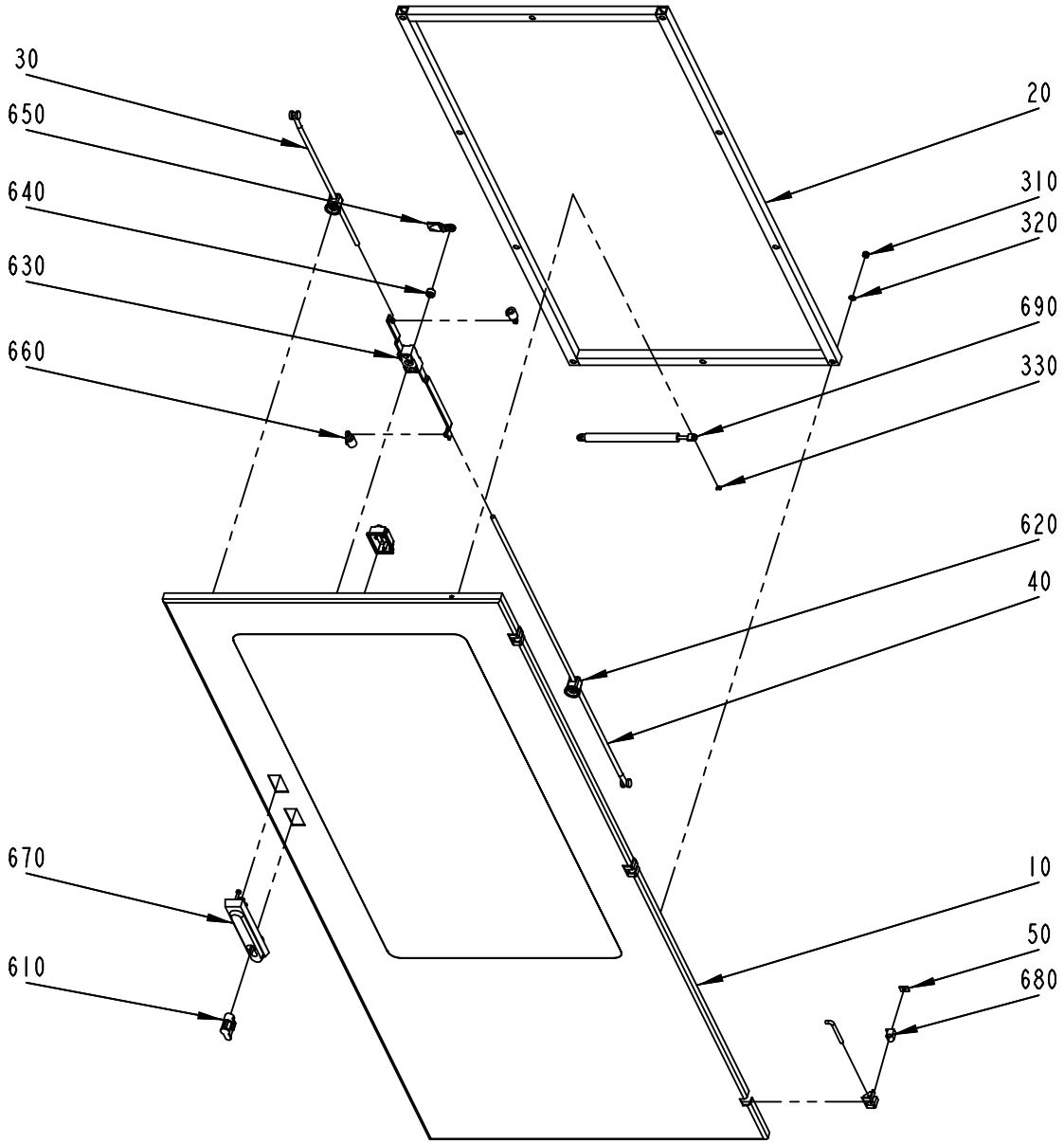
30
650
640
630
660
20
310
320
690
330
620
40
670
610
10
50
680

ECM: 71465 - 19981023
Group number: 599133-0100
Assembly Drawing: 599133-1_1_AA

Pos	Part No	SP	UN	Qty	Description	Page No
-						
010	1360974-0000	-		1	DOOR	
020	1360988-0000	-		1	FRAME	
030	1361031-0000	-		1	ROD	
040	1361032-0000	-		1	ROD	
050	1361036-0000	-		3	GASKET	
310	312812-0316	-		10	HEXAGON NUT, NY-LOCK M6 A480	
320	315105-0153	-		10	WASHER BRB6,4X12RFR	
330	315755-0106	-		2	LOCKING WASHER 4	
610	90237-0128	-		1	LOCK CYLINDER, 1109-U3	
620	90237-0151	-		2	GUIDE, 1001-U11	
630	90237-0153	-		1	LOCK HOUSING, 1121-U26-0B	
640	90237-0155	-		1	LOCK ADAPTER, 1121-U40	
650	90237-0156	-		1	LOCK BOLT, 1000-16	
660	90237-0158	-		2	ROUND BAR, NO. 1049-U18-L839.5	
670	90237-0176	-		1	TURNING HANDLE	
680	90248-0032	-		3	HINGE, 1110-U2	
690	90347-0050	-		1	GAS SPRING NO. 0306 150 398535	

Pos	Part No	SP	UN	Qty	Description	Page No

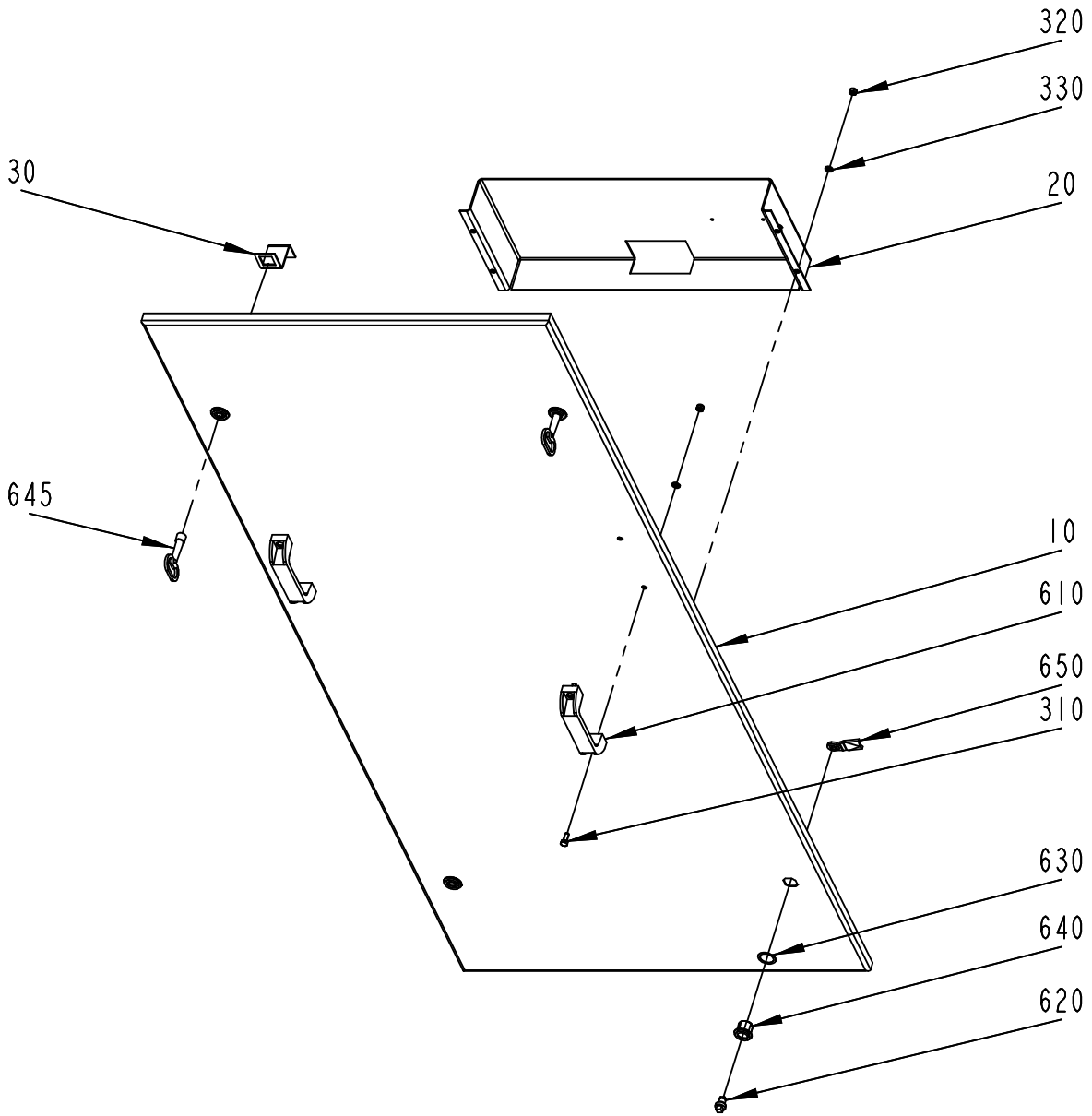
320
330
20
30
645
10
610
650
310
630
640
620

ECM: 71465 - 19981023
Group number: 599134-0100
Assembly Drawing: 599134-1_1_AA

Pos	Part No	SP	UN	Qty	Description	Page No
-						
010	1360975-0000	-		1	PLATE	
020	1361022-0000	-		1	FILE HOLDER	
030	1361025-0000	-		2	PROFILE	
310	312105-0368	-		4	SCREW M6S M6X16 A280	
320	312812-0316	-		8	HEXAGON NUT, NY-LOCK M6 A480	
330	315105-0153	-		8	WASHER BRB6,4X12RFR	
610	90017-0035	-		2	HANDLE, NO. 1095-05	
620	90237-0202	-		4	LOCK, INSERT SQUARE,1000-U2 8 MM	
630	90237-0322	-		4	LOCK GASKET, 1000-U137	
640	90237-0142	-		4	LOCK HOUSING, 1000-U45	
645	90237-0324	-		2	KEY, 1104-02 FOR SQUARE 8 MM	
650	90237-0368	-		4	LOCK CAM, 1000-15	

Pos	Part No	SP	UN	Qty	Description	Page No

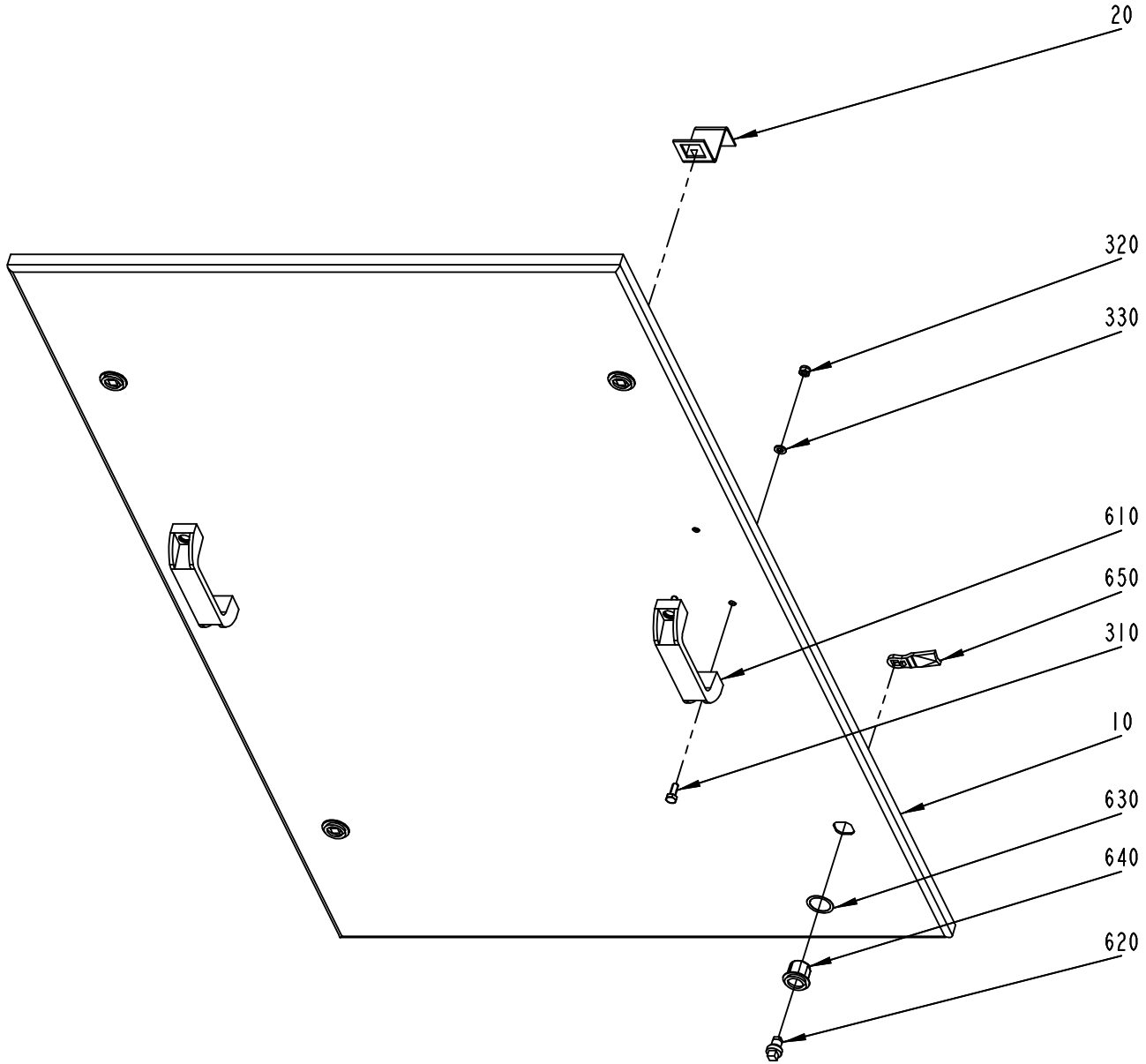
20
320
330
610
650
310
10
630
640
620

ECM: 71465 - 19981023
Group number: 599135-0100
Assembly Drawing: 599135-1_1_AA

Pos	Part No	SP	UN	Qty	Description	Page No
-						
010	1360976-0000	-		1	PLATE	
020	1361025-0000	-		2	PROFILE	
310	312105-0368	-		4	SCREW M6S M6X16 A280	
320	312812-0316	-		4	HEXAGON NUT, NY-LOCK M6 A480	
330	315105-0153	-		4	WASHER BRB6,4X12RFR	
610	90017-0035	-		2	HANDLE, NO. 1095-05	
620	90237-0202	-		4	LOCK, INSERT SQUARE,1000-U2 8 MM	
630	90237-0322	-		4	LOCK GASKET, 1000-U137	
640	90237-0142	-		4	LOCK HOUSING, 1000-U45	
650	90237-0368	-		4	LOCK CAM, 1000-15	

Pos	Part No	SP	UN	Qty	Description	Page No

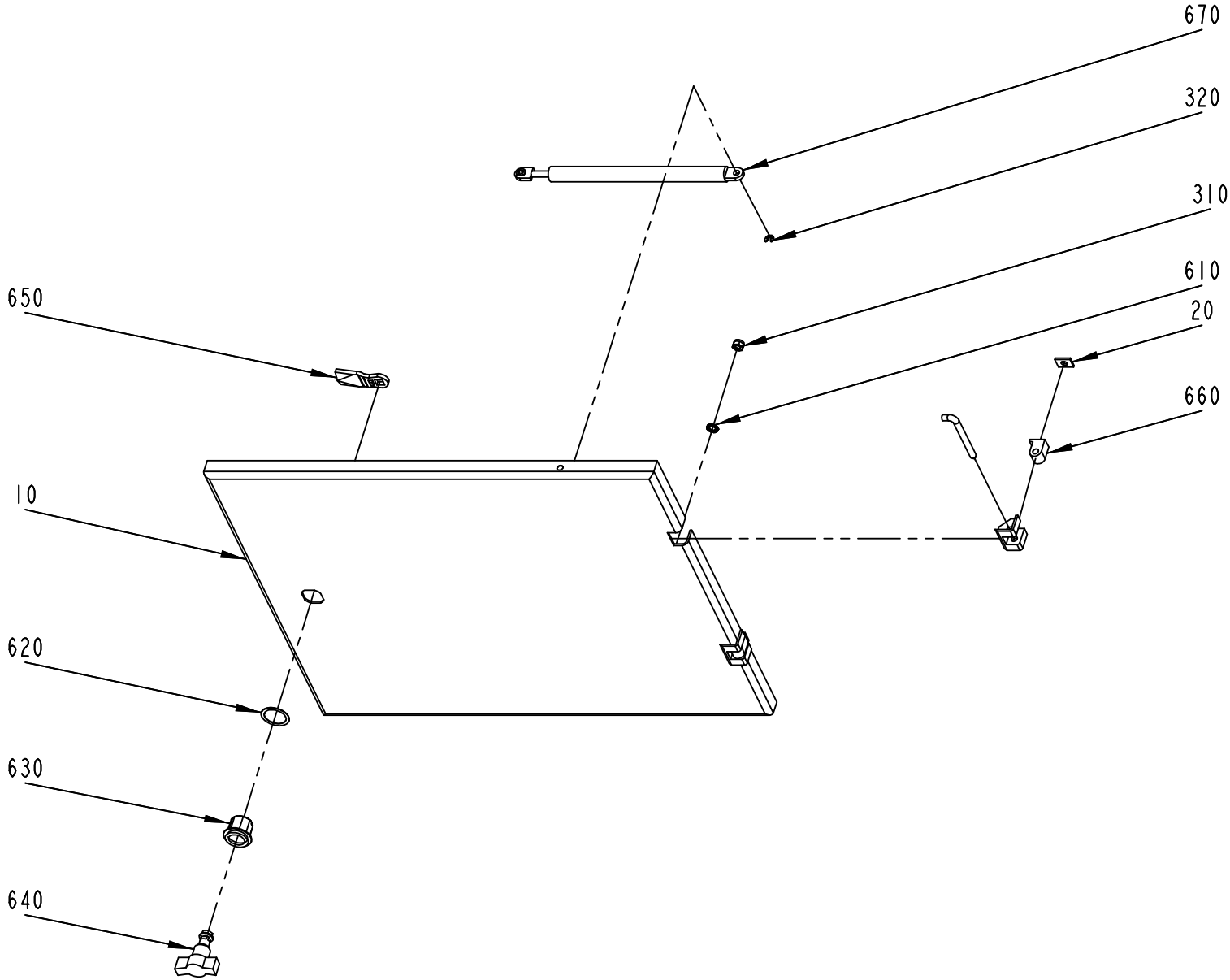
670
320
310
610
20
660
650
10
620
630
640

ECM: 71465 - 19981023
Group number: 599136-0100
Assembly Drawing: 599136-1_1_AA

Pos	Part No	SP	UN	Qty	Description	Page No
-						
010	1360977-0000	-		1	DOOR	
020	1361036-0000	-		2	GASKET	
310	312812-0316	-		1	HEXAGON NUT, NY-LOCK M6 A480	
320	315755-0106	-		2	LOCKING WASHER 4	
610	90062-0015	-		1	LOCK WASHER SERRAT.EXT.GEAR,6,4/11 H=0,7	
620	90237-0322	-		1	LOCK GASKET, 1000-U137	
630	90237-0142	-		1	LOCK HOUSING, 1000-U45	
640	90237-0337	-		1	LOCK HANDLE FOR 90237-319	
650	90237-0368	-		1	LOCK CAM, 1000-15	
660	90248-0032	-		2	HINGE, 1110-U2	
670	90347-0050	-		1	GAS SPRING NO. 0306 150 398535	

Pos	Part No	SP	UN	Qty	Description	Page No

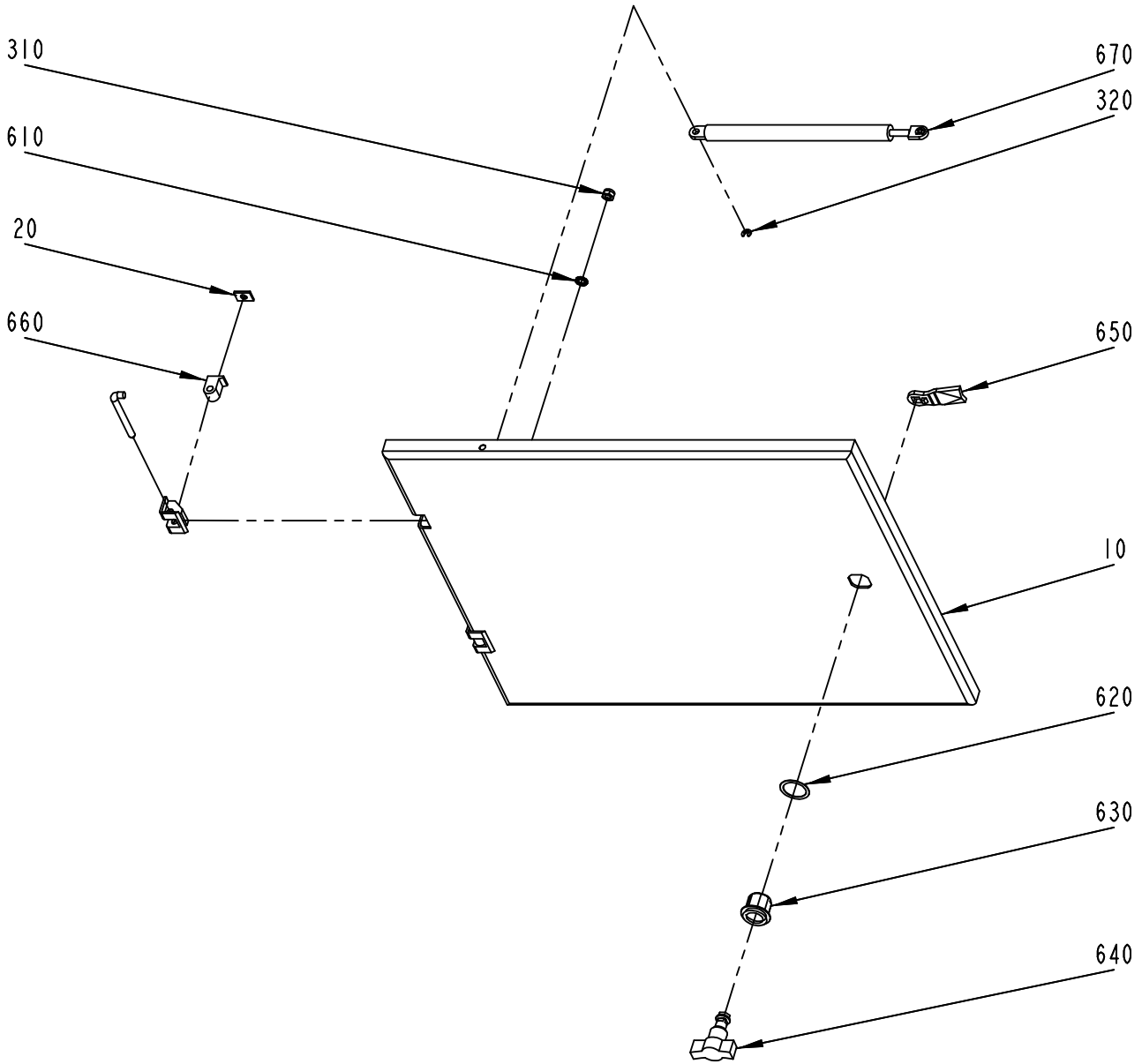
310
610
20
660
670
320
650
10
620
630
640

ECM: 71465 - 19981023
Group number: 599137-0100
Assembly Drawing: 599137-1_1_AA

Pos	Part No	SP	UN	Qty	Description	Page No
-						
010	1360978-0000	-		1	DOOR	
020	1361036-0000	-		2	GASKET	
310	312812-0316	-		1	HEXAGON NUT, NY-LOCK M6 A480	
320	315755-0106	-		2	LOCKING WASHER 4	
610	90062-0015	-		1	LOCK WASHER SERRAT.EXT.GEAR,6,4/11 H=0,7	
620	90237-0322	-		1	LOCK GASKET, 1000-U137	
630	90237-0142	-		1	LOCK HOUSING, 1000-U45	
640	90237-0337	-		1	LOCK HANDLE FOR 90237-319	
650	90237-0368	-		1	LOCK CAM, 1000-15	
660	90248-0032	-		2	HINGE, 1110-U2	
670	90347-0050	-		1	GAS SPRING NO. 0306 150 398535	

Pos	Part No	SP	UN	Qty	Description	Page No

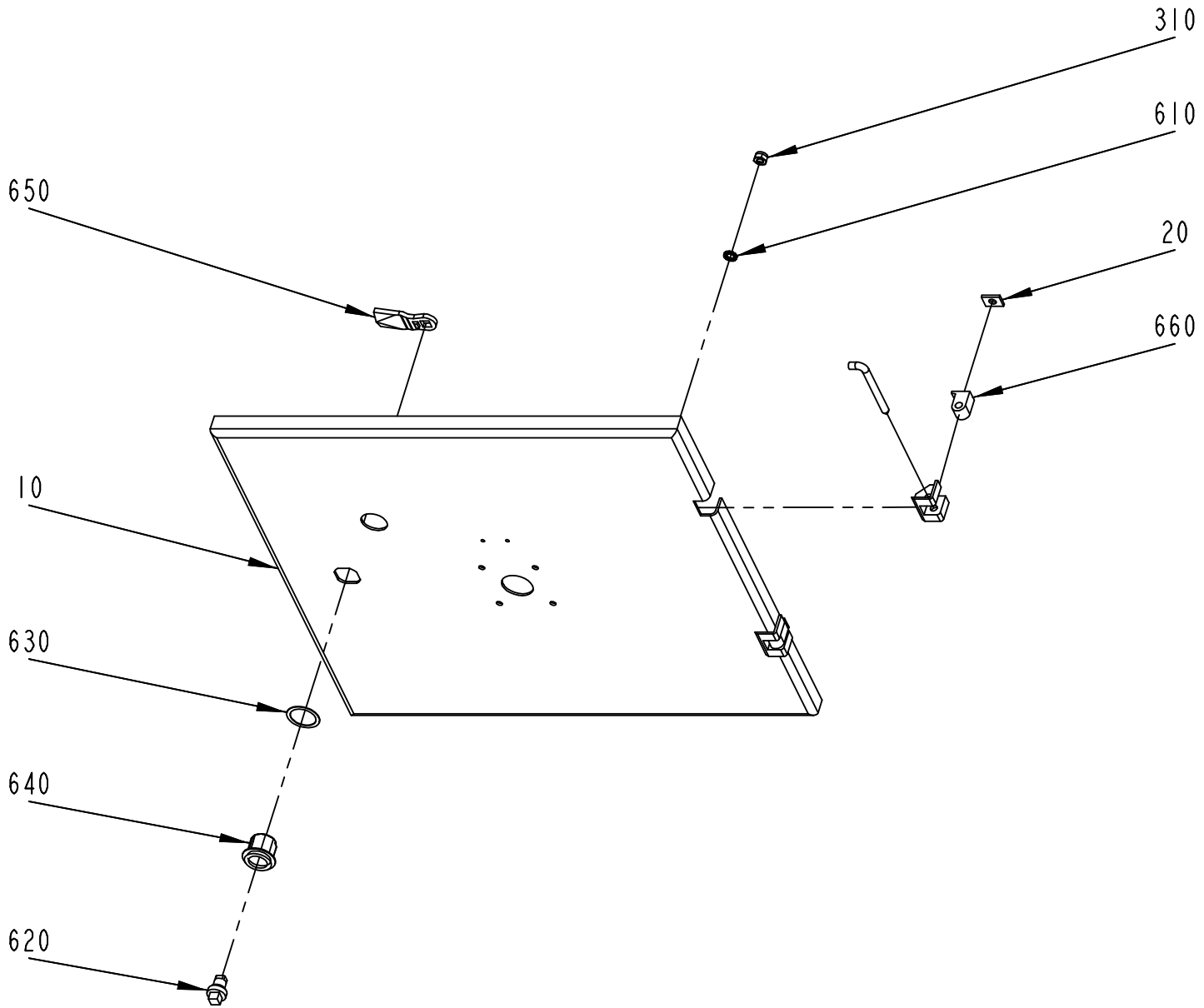
310
610
650
20
660
10
630
640
620

ECM: 71465 - 19981023
Group number: 599138-0100
Assembly Drawing: 599138-1_1_AA

Pos	Part No	SP	UN	Qty	Description	Page No
-						
010	1360979-0000	-		1	DOOR	
020	1361036-0000	-		2	GASKET	
310	312812-0316	-		1	HEXAGON NUT, NY-LOCK M6 A480	
610	90062-0015	-		1	LOCK WASHER SERRAT.EXT.GEAR,6,4/11 H=0,7	
620	90237-0202	-		1	LOCK, INSERT SQUARE,1000-U2 8 MM	
630	90237-0322	-		1	LOCK GASKET, 1000-U137	
640	90237-0142	-		1	LOCK HOUSING, 1000-U45	
650	90237-0368	-		1	LOCK CAM, 1000-15	
660	90248-0032	-		2	HINGE, 1110-U2	

Pos	Part No	SP	UN	Qty	Description	Page No

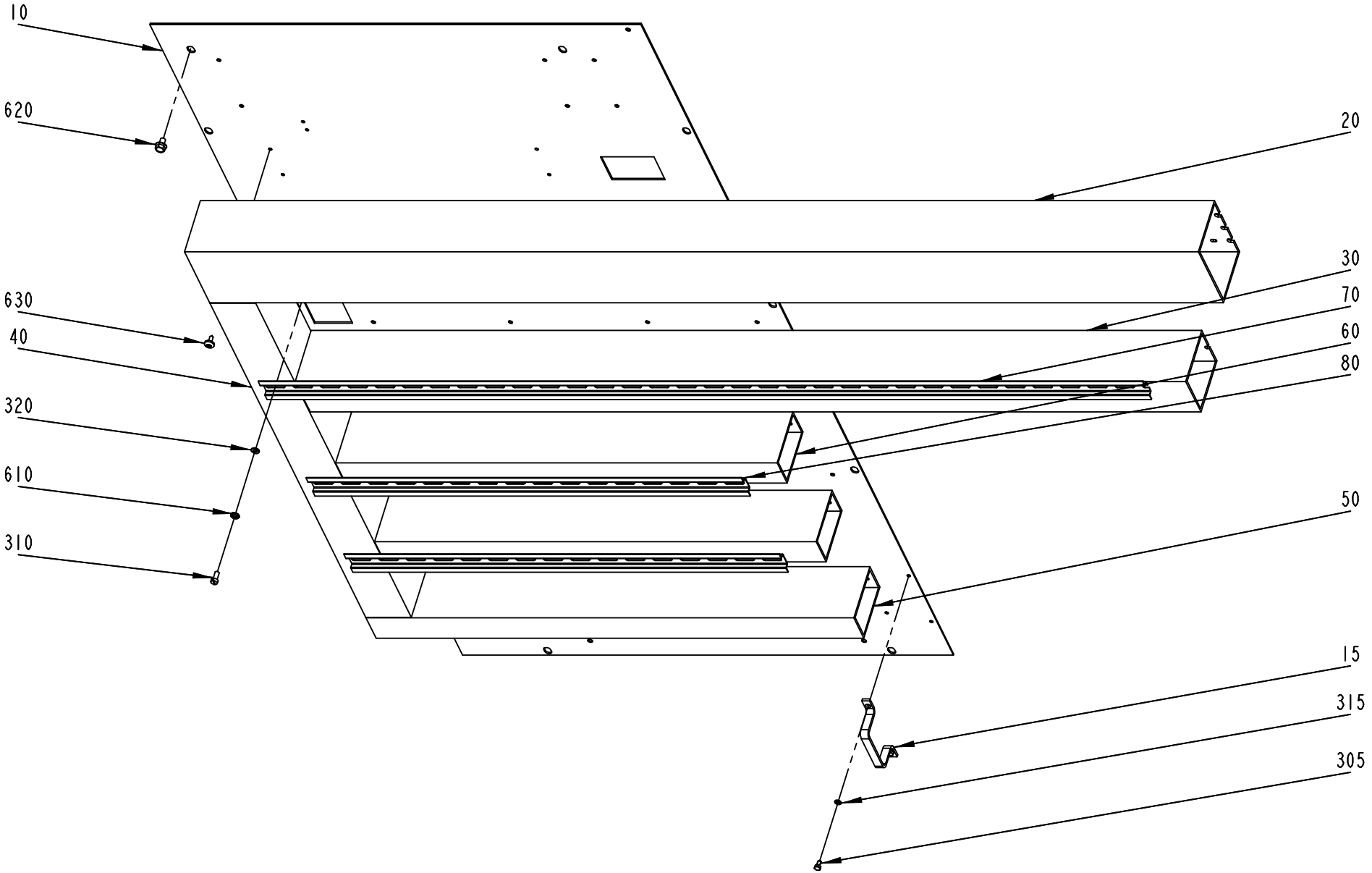
10
620
20
30
70
60
80
630
40
320
610
310
50
15
315
305

ECM: 71465 - 19981023
Group number: 599140-0100
Assembly Drawing: 599140-1_1_AA

Pos	Part No	SP	UN	Qty	Description	Page No
-						
010	1360980-0000	-		1	MOUNTING PLATE	
015	1361035-0000	-		1	PROFILE 70X10X40MM	
020	1361181-0000	-		1	CABLE DUCT 100X80	
030	1361182-0000	-		1	CABLE DUCT 60X80	
040	1361183-0000	-		1	CABLE DUCT 60X80	
050	1361184-0000	-		1	CABLE DUCT 40X80	
060	1361185-0000	-		2	CABLE DUCT 40X80	
070	1361226-0000	-		1	RAIL TS35	
080	1361227-0000	-		2	RAIL TS35	
305	312105-0287	-		2	SCREW M6S ISO4017 M4X8 A480	
310	312125-0327	-		15	SLOTTED CHEESE HEAD SCREW MCS 5X12 SS	
315	315105-0136	-		2	WASHER BRB4,3XRFR	
320	315105-0146	-		15	BRICKA BRB5,3X10RFR	
610	90062-0060	-		15	LOCK WASHER SERRAT.EXT.GEAR,5,3/10 H=0,6	
620	90287-0157	-		10	SCREW M6SF FLAT HEAD M6X10 88	
630	90287-0337	-		28	SCREW RECESSED HEAD M4X10 WH. NYLON	

Pos	Part No	SP	UN	Qty	Description	Page No

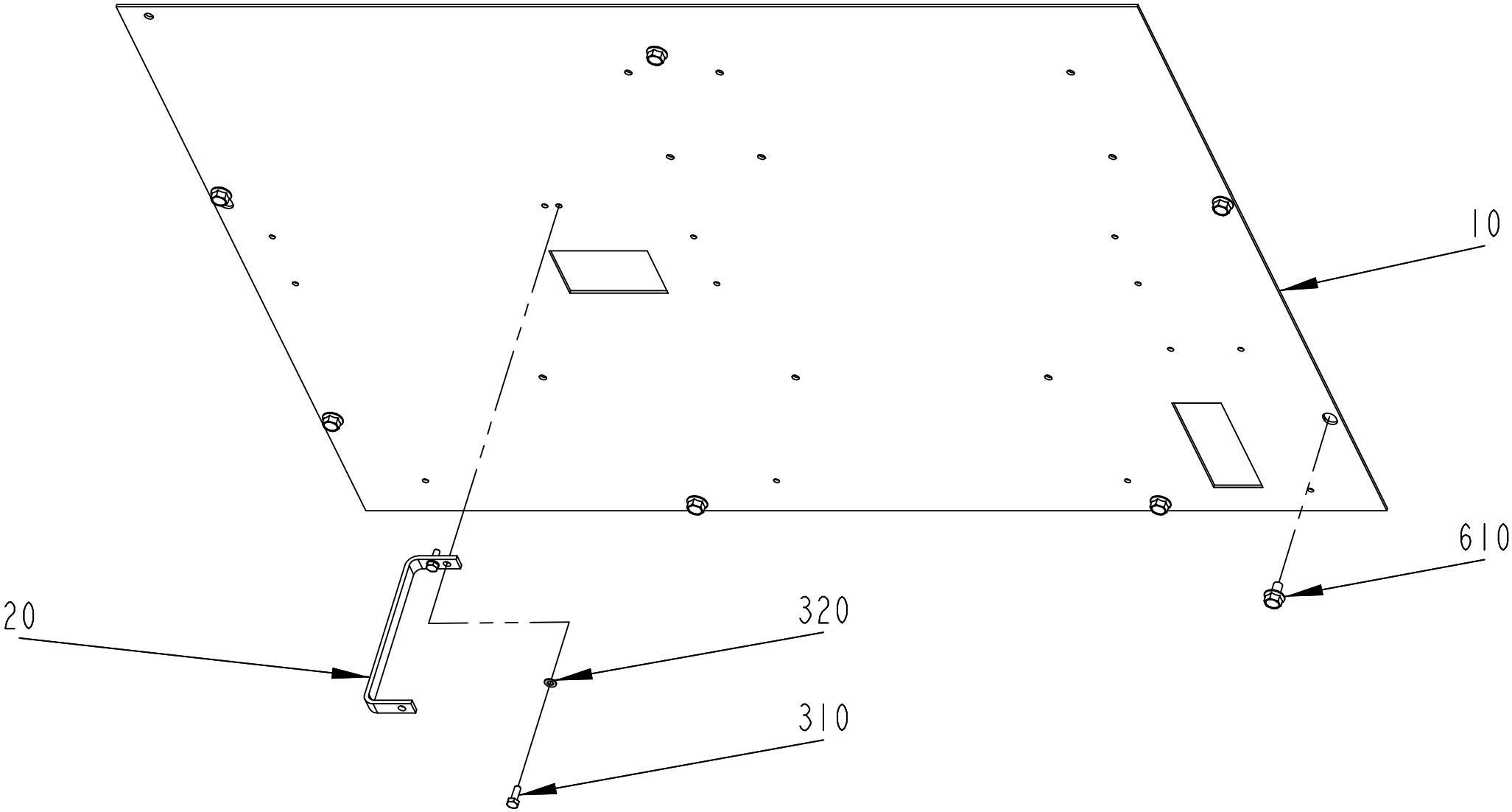
10
610
20
320
310

ECM: 71465 - 19981023
Group number: 599141-0100
Assembly Drawing: 599141-1_1_AA

Pos	Part No	SP	UN	Qty	Description	Page No
-						
010	1360981-0000	-		1	MOUNTING PLATE	
020	1361023-0000	-		1	PROFILE 125X10X35MM	
310	312105-0291	-		2	SCREW M6S ISO 4017 M4X12 A480	
320	315105-0136	-		2	WASHER BRB4,3XRFR	
610	90287-0157	-		7	SCREW M6SF FLAT HEAD M6X10 88	

Pos	Part No	SP	UN	Qty	Description	Page No

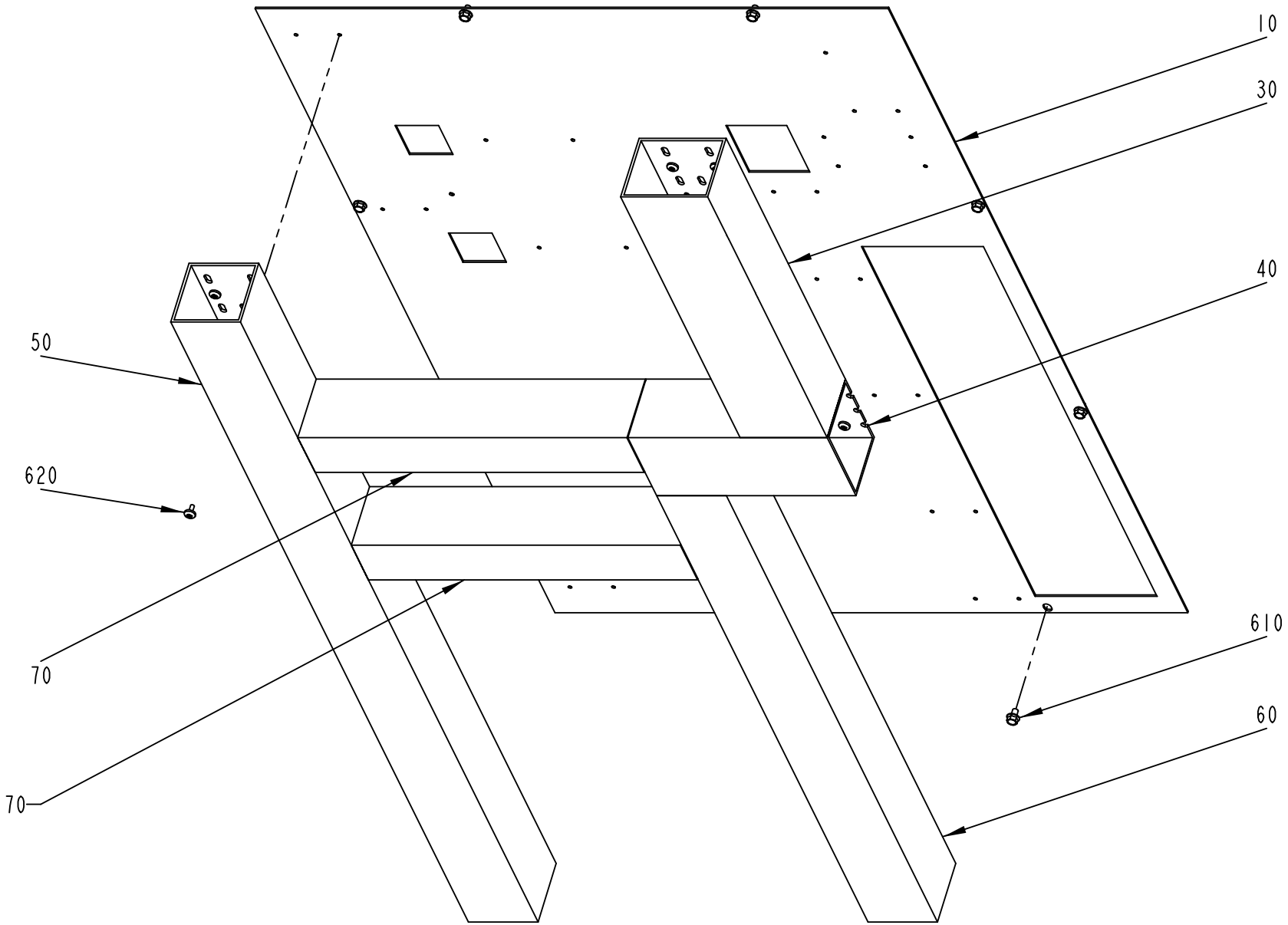
10
30
40
50
620
70
70
610
60

ECM: 72485 - 19991001
Group number: 599142-0100
Assembly Drawing: 599142-1_1_AB

Pos	Part No	SP	UN	Qty	Description	Page No
-						
010	1360982-0000	-		1	MOUNTING PLATE	
030	1361186-0000	-		1	CABLE DUCT 100X80	
040	1361187-0000	-		1	CABLE DUCT 100X80	
050	1361188-0000	-		1	CABLE DUCT 80X80	
060	1361189-0000	-		1	CABLE DUCT 80X80	
070	1361190-0000	-		2	CABLE DUCT 60X80	
610	90287-0157	-		8	SCREW M6SF FLAT HEAD M6X10 88	
620	90287-0337	-		34	SCREW RECESSED HEAD M4X10 WH. NYLON	

Pos	Part No	SP	UN	Qty	Description	Page No

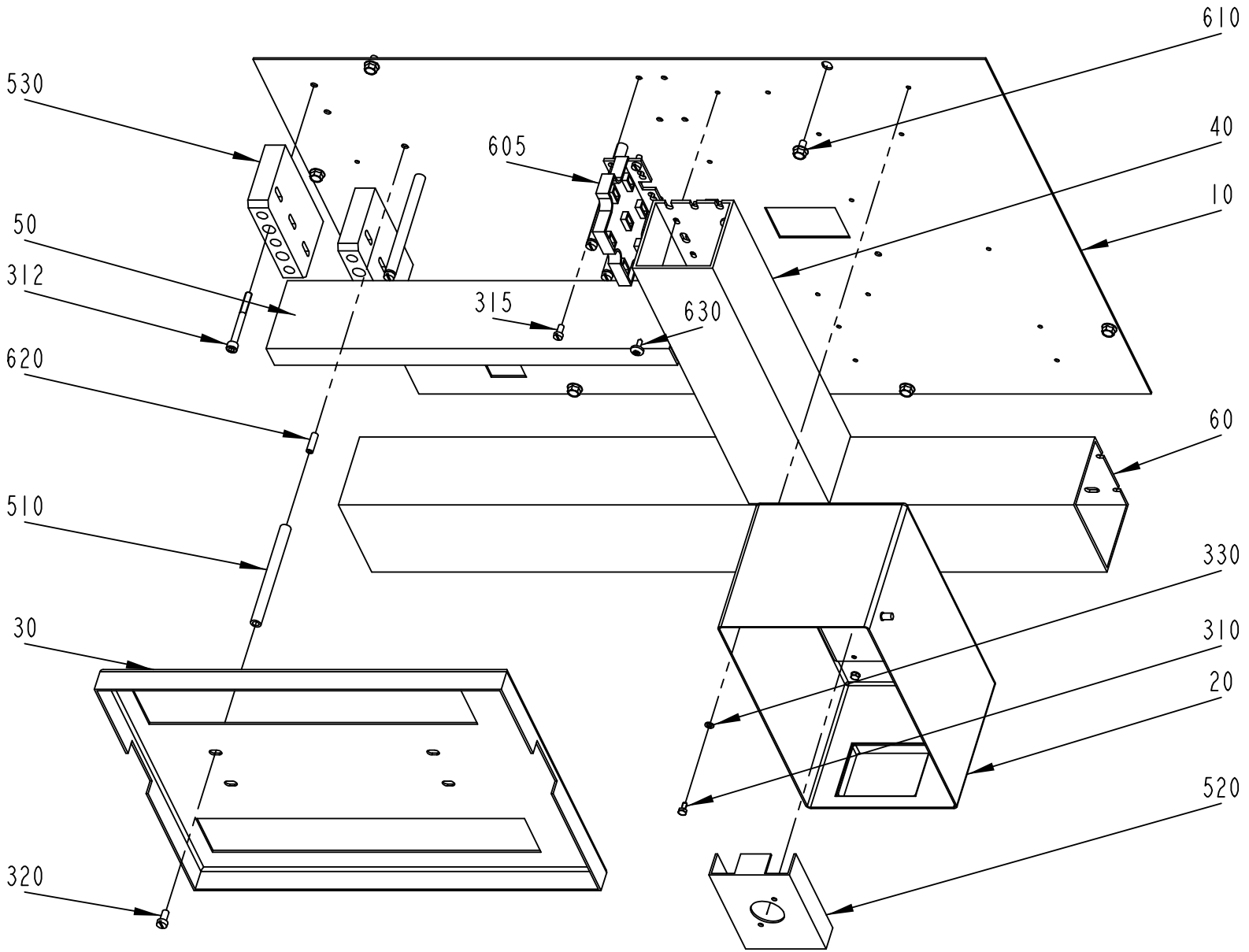
610
530
605
40
10
50
312
315
630
620
60
510
330
30
310
20
520
320

ECM: 72485 - 19991001
Group number: 599143-0100
Assembly Drawing: 599143-1_1_AB

Pos	Part No	SP	UN	Qty	Description	Page No
-						
010	1360983-0000	-		1	MOUNTING PLATE	
020	1360994-0000	-		1	SCREEN	
030	1361011-0000	-		1	COVER PLATE	
040	1361191-0000	-		1	CABLE DUCT 80X80	
050	1361192-0000	-		1	CABLE DUCT 25X80	
060	1361193-0000	-		1	CABLE DUCT 100X80	
310	312105-0287	-		4	SCREW M6S ISO4017 M4X8 A480	
312	312115-0382	-		4	SCREW ISO4762 M6X60 A4	
315	312125-0325	-		8	SLOTTED CHEESE HEAD SCREW MCS 5X10 SS	
320	312125-0366	-		4	SLOTTED CHEESE HEAD SCREW MCS 6X12 SS	
330	315105-0136	-		4	WASHER BRB4,3XRFR	
510	495131-0013	-		4	SPACER TUBE L=13MM	
520	732883-0000	-		1	TOUCHGUARD MAIN SWITCH	
530	734789-0000	-		2	SUPPORT F LIVE RAIL	
605	90135-0031	-		2	BUSBAR HOLDER K&M SHO165/2	
610	90287-0157	-		6	SCREW M6SF FLAT HEAD M6X10 88	
620	90287-0336	-		4	SCREW HEX. SOCK. SET, M6X20 PLASTIC	
630	90287-0337	-		14	SCREW RECESSED HEAD M4X10 WH. NYLON	

Pos	Part No	SP	UN	Qty	Description	Page No

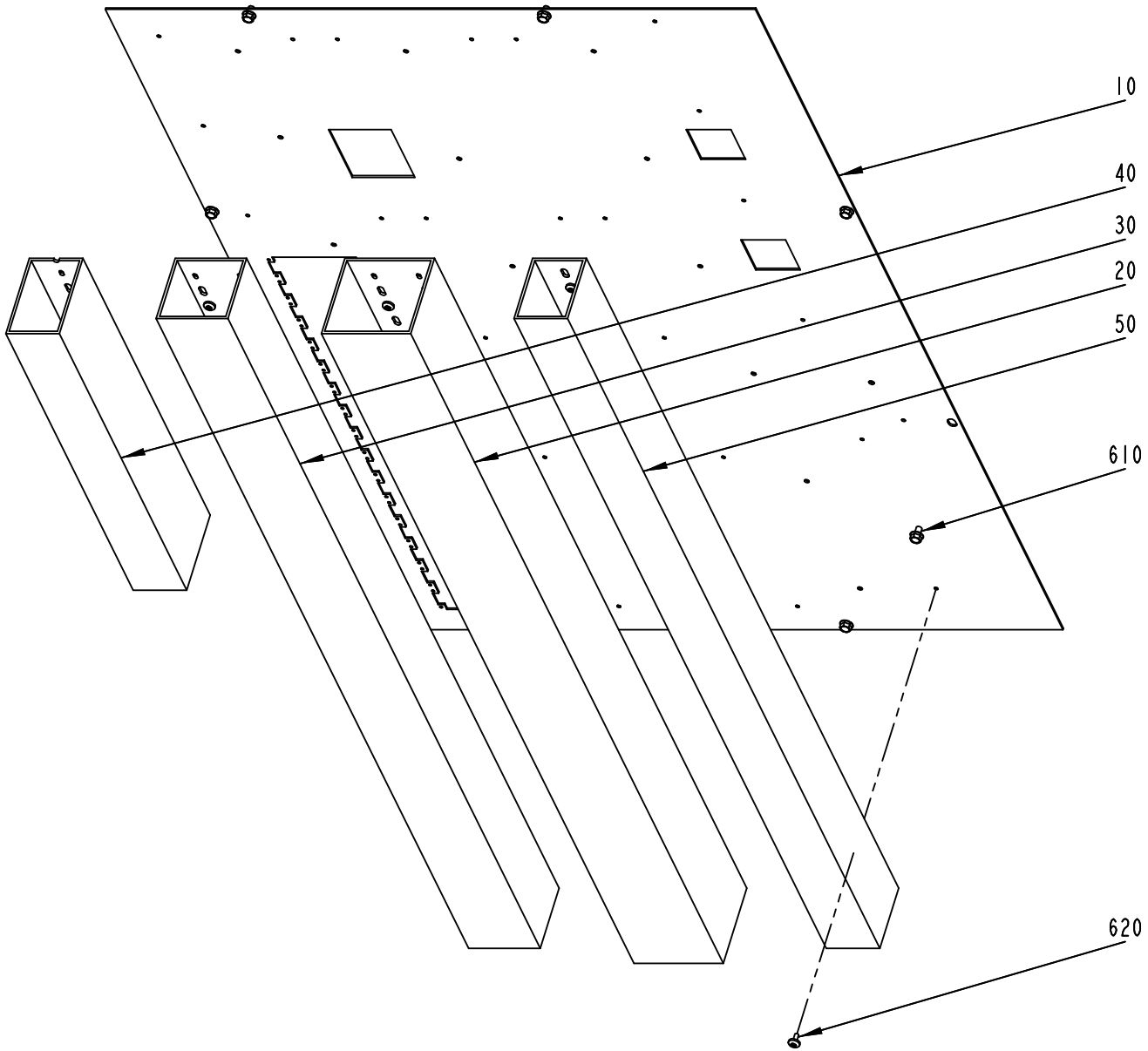
10
40
30
20
50
610
620

ECM: 71465 - 19981023
Group number: 599144-0100
Assembly Drawing: 599144-1_1_AA

Pos	Part No	SP	UN	Qty	Description	Page No
-						
010	1360984-0000	-		1	MOUNTING PLATE	
020	1361208-0000	-		1	CABLE DUCT 100X100	
030	1361209-0000	-		1	CABLE DUCT 80X80	
040	1361210-0000	-		1	CABLE DUCT 60X100	
050	1361211-0000	-		1	CABLE DUCT 60X80	
610	90287-0157	-		8	SCREW M6SF FLAT HEAD M6X10 88	
620	90287-0337	-		29	SCREW RECESSED HEAD M4X10 WH. NYLON	

Pos	Part No	SP	UN	Qty	Description	Page No

Machine Type | Group Description | Used-In | Group Number | Page No

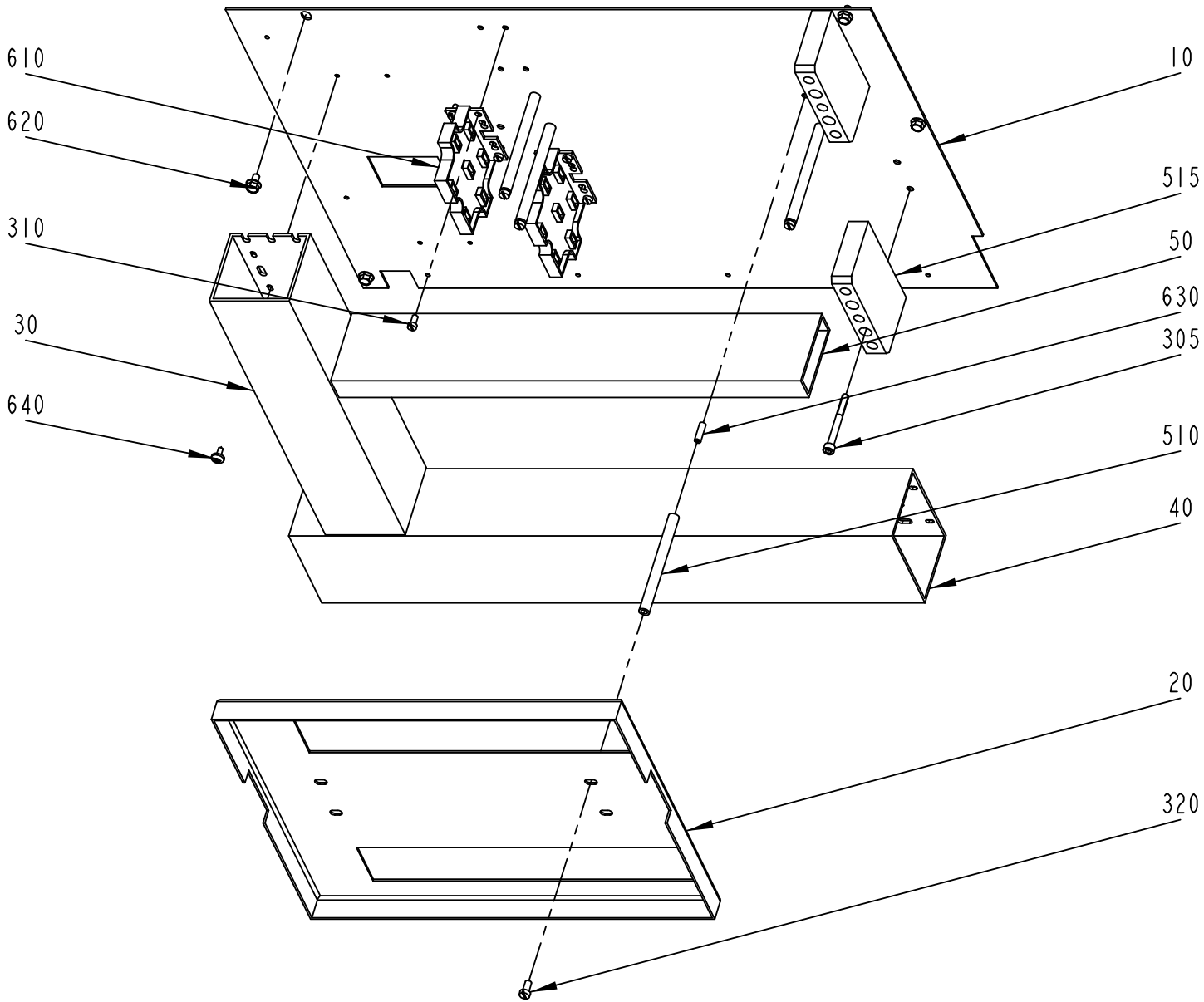
610
620
310
30
640
10
515
50
630
305
510
40
20
320

ECM: 72485 - 19991001
Group number: 599145-0100
Assembly Drawing: 599145-1_1_AB

Pos	Part No	SP	UN	Qty	Description	Page No
-						
010	1360985-0000	-		1	MOUNTING PLATE	
020	1361012-0000	-		1	COVER PLATE	
030	1361191-0000	-		1	CABLE DUCT 80X80	
040	1361194-0000	-		1	CABLE DUCT 100X80	
050	1361195-0000	-		1	CABLE DUCT 25X80	
305	312115-0382	-		4	SCREW ISO4762 M6X60 A4	
310	312125-0325	-		8	SLOTTED CHEESE HEAD SCREW MCS 5X10 SS	
320	312125-0366	-		4	SLOTTED CHEESE HEAD SCREW MCS 6X12 SS	
510	495131-0013	-		4	SPACER TUBE L=13MM	
515	734789-0000	-		2	SUPPORT F LIVE RAIL	
610	90135-0031	-		2	BUSBAR HOLDER K&M SHO165/2	
620	90287-0157	-		5	SCREW M6SF FLAT HEAD M6X10 88	
630	90287-0336	-		4	SCREW HEX. SOCK. SET, M6X20 PLASTIC	
640	90287-0337	-		14	SCREW RECESSED HEAD M4X10 WH. NYLON	

Pos	Part No	SP	UN	Qty	Description	Page No

Machine Type | Group Description | Used-In | Group Number | Page No

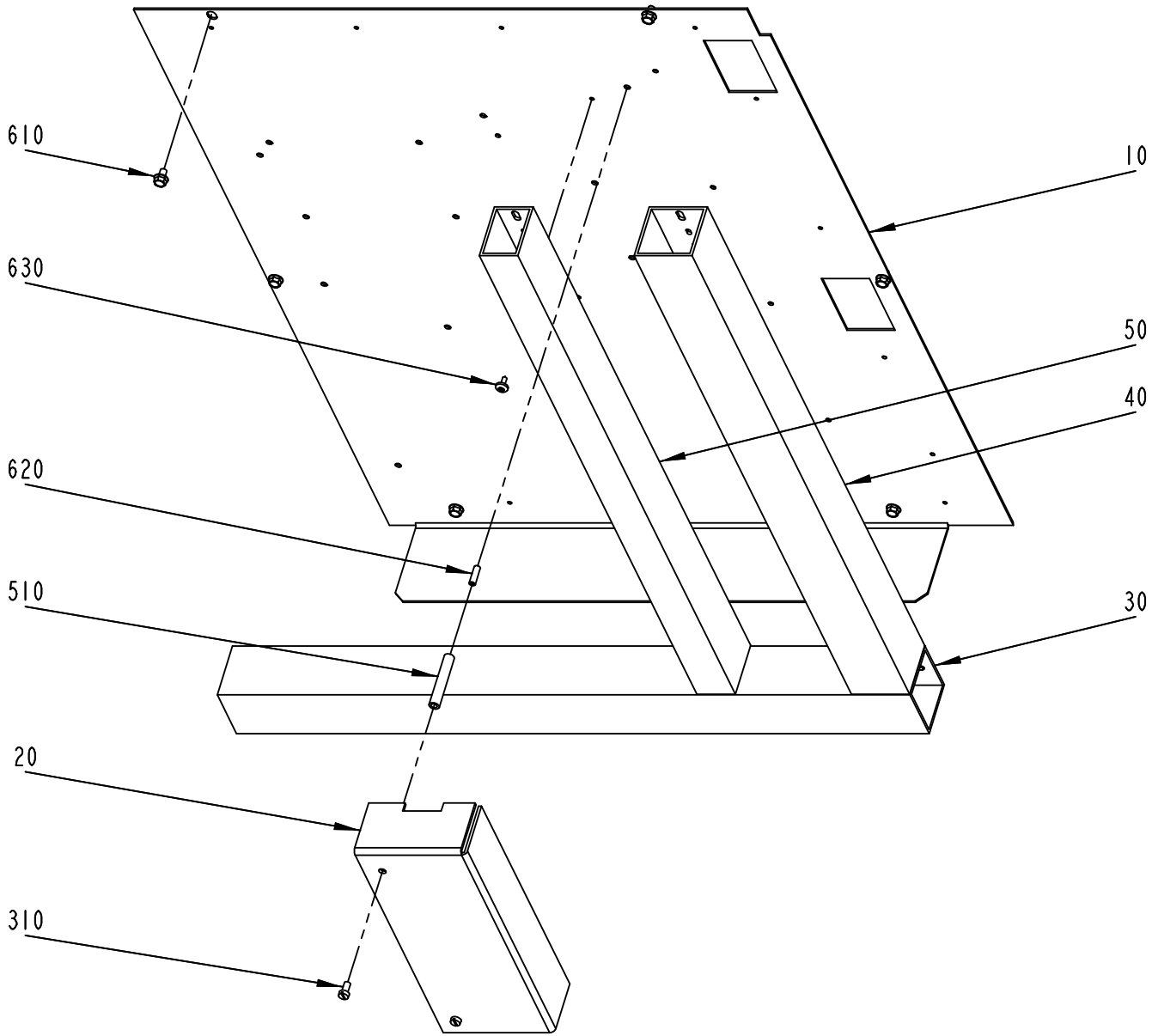
610
630
620
510
20
310
10
50
40
30

ECM: 71465 - 19981023
Group number: 599146-0100
Assembly Drawing: 599146-1_1_AA

Pos	Part No	SP	UN	Qty	Description	Page No
-						
010	1360986-0000	-		1	MOUNTING PLATE	
020	1361033-0000	-		1	COVER PLATE	
030	1361212-0000	-		1	CABLE DUCT 60X60	
040	1361213-0000	-		1	CABLE DUCT 60X60	
050	1361214-0000	-		1	CABLE DUCT 40X60	
310	312125-0366	-		2	SLOTTED CHEESE HEAD SCREW MCS 6X12 SS	
510	495130-0060	-		2	SPACER SLEEVE	
610	90287-0157	-		6	SCREW M6SF FLAT HEAD M6X10 88	
620	90287-0336	-		2	SCREW HEX. SOCK. SET, M6X20 PLASTIC	
630	90287-0337	-		13	SCREW RECESSED HEAD M4X10 WH. NYLON	

Pos	Part No	SP	UN	Qty	Description	Page No

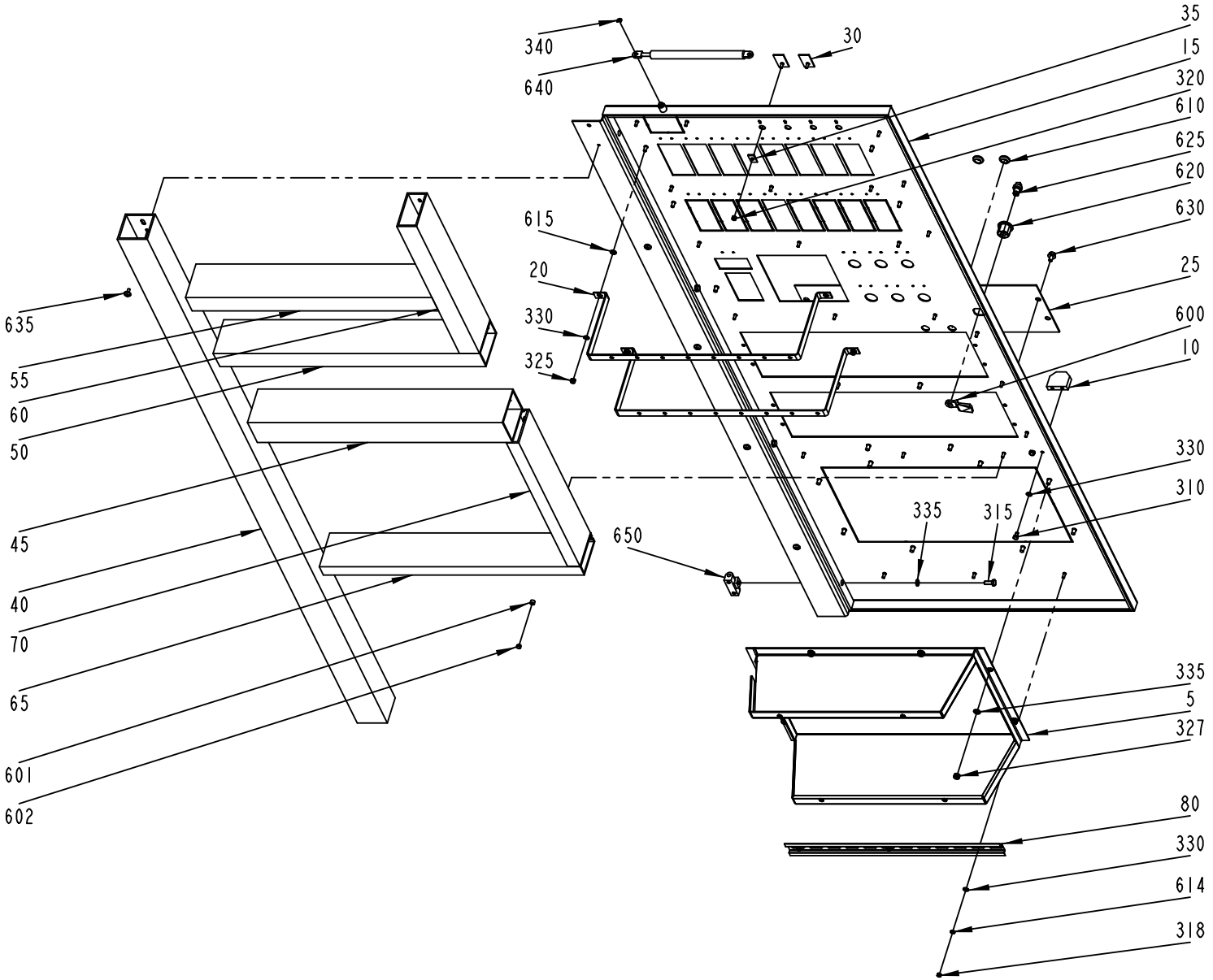
340
640
30
35
15
320
610
625
620
630
615
20
330
325
25
600
10
635
55
60
50
45
40
70
65
601
602
650
335
315
330
310
335
5
327
80
330
614
318

ECM: 72485 - 19991001
Group number: 599147-0100
Assembly Drawing: 599147-1_1_AB

Pos	Part No	SP	UN	Qty	Description	Page No
-						
005	1347145-0000	-		1	FRAME	
010	970215-0000	-		1	STOP BLOCK	
015	1360998-0000	-		1	SWINGFRAME	
020	1361013-0000	-		2	COUPLING RAIL	
025	1361015-0000	-		1	COVER PLATE	
030	1361016-0000	-		2	COVER PLATE	
035	1361017-0000	-		2	WASHER	
040	1361201-0000	-		1	CABLE DUCT 60X60	
045	1361202-0000	-		1	CABLE DUCT 60X80	
050	1361203-0000	-		1	CABLE DUCT 40X80	
055	1361204-0000	-		1	CABLE DUCT 40X80	
060	1361205-0000	-		1	CABLE DUCT 40X80	
065	1361206-0000	-		1	CABLE DUCT 25X80	
070	1361207-0000	-		1	CABLE DUCT 25X80	
080	1361228-0000	-		1	RAIL TS35	
310	312105-0323	-		2	SKRUV M6S ISO 4017 M5X8 A480	
315	312105-0368	-		4	SCREW M6S M6X16 A280	
318	312605-0312	-		3	HEXAGON NUT, M6M M4 A280	
320	312812-0312	-		2	HEXAGON NUT, NY-LOCK M4 A480	
325	312812-0314	-		4	HEXAGON NUT, NY-LOCK M5 A480	
327	312812-0316	-		8	HEXAGON NUT, NY-LOCK M6 A480	
330	315105-0146	-		9	BRICKA BRB5,3X10RFR	
335	315105-0153	-		12	WASHER BRB6,4X12RFR	
340	315755-0106	-		1	LOCKING WASHER 4	
600	90237-0335	-		1	LOCKING CATCH	
601	90005-0158	-		18	SPACER 4,3/8, H=5	
602	90261-0079	-		18	PLUG, BLIND, PLASTIC, NO. 1955	
610	90015-0019	-		2	BUSHING	
614	90062-0059	-		3	LOCK WASHER SERRAT.EXT.GEAR,4,3/8 H=0,5	
615	90062-0060	-		4	LOCK WASHER SERRAT.EXT.GEAR,5,3/10 H=0,6	
620	90237-0142	-		1	LOCK HOUSING, 1000-U45	
625	90237-0202	-		1	LOCK, INSERT SQUARE,1000-U2 8 MM	
630	90287-0157	-		4	SCREW M6SF FLAT HEAD M6X10 88	
635	90287-0337	-		5	SCREW RECESSED HEAD M4X10 WH. NYLON	
640	90347-0050	-		1	GAS SPRING NO. 0306 150 398535	
650	90248-0019	-		4	HINGE 1054-U1	

Pos	Part No	SP	UN	Qty	Description	Page No

Machine Type | Group Description | Used-In | Group Number | Page No

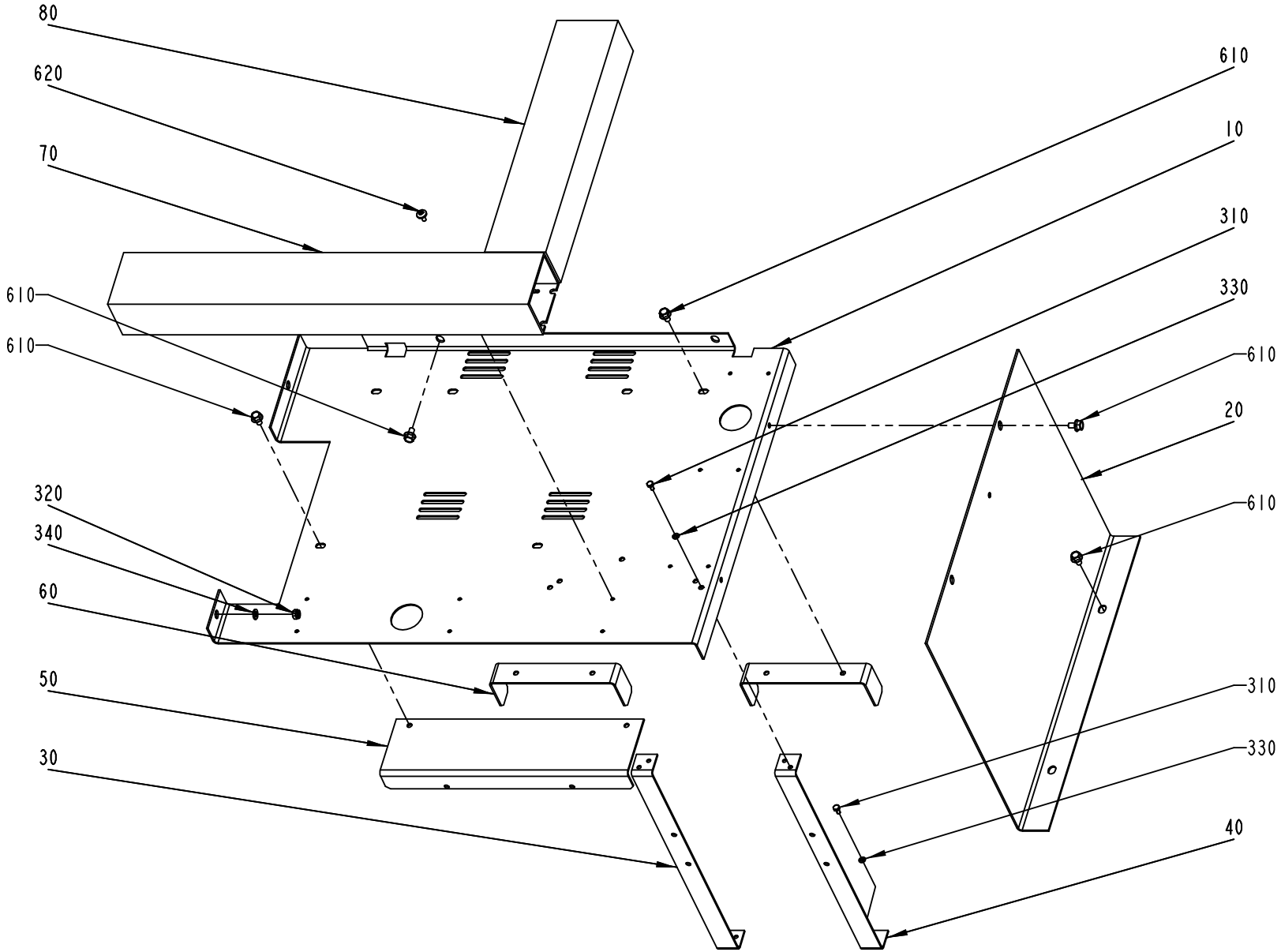
80
620
70
610
610
320
340
60
50
30
610
10
310
330
610
20
610
310
330
40

ECM: 71465 - 19981023
Group number: 599148-0100
Assembly Drawing: 599148-1_1_AA

Pos	Part No	SP	UN	Qty	Description	Page No
-						
010	1360991-0000	-		1	MOUNTING PLATE	
020	1361002-0000	-		1	MOUNTING PLATE	
030	1361005-0000	-		1	PROFILE	
040	1361006-0000	-		1	PROFILE	
050	1361009-0000	-		1	BRACKET	
060	1361010-0000	-		2	PROFILE	
070	1361197-0000	-		1	CABLE DUCT 80X40	
080	1361198-0000	-		1	CABLE DUCT 80X40	
310	312105-0287	-		8	SCREW M6S ISO4017 M4X8 A480	
320	312812-0316	-		2	HEXAGON NUT, NY-LOCK M6 A480	
330	315105-0136	-		8	WASHER BRB4,3XRFR	
340	315105-0153	-		2	WASHER BRB6,4X12RFR	
610	90287-0157	-		12	SCREW M6SF FLAT HEAD M6X10 88	
620	90287-0337	-		12	SCREW RECESSED HEAD M4X10 WH. NYLON	

Pos	Part No	SP	UN	Qty	Description	Page No

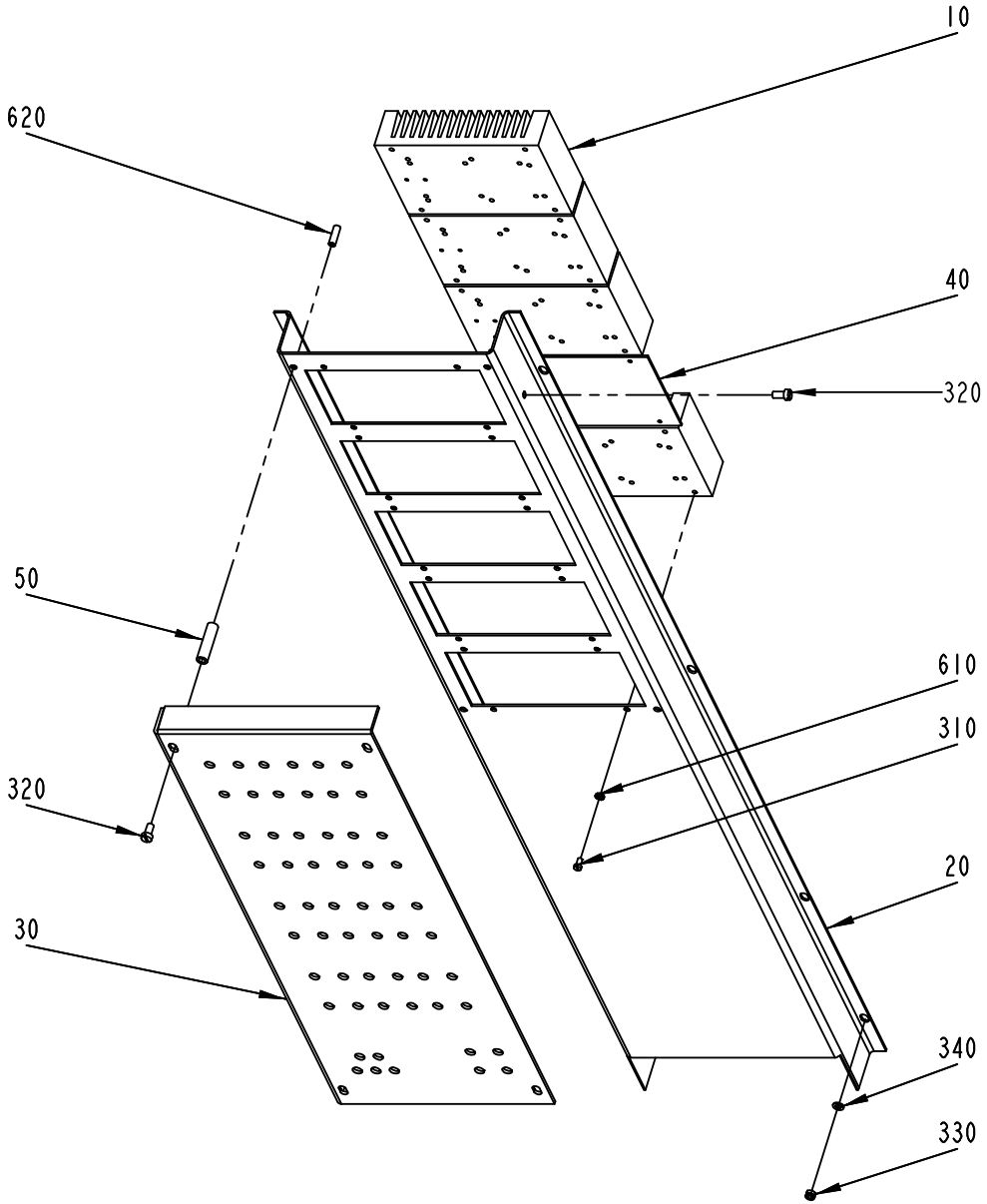
10
620
40
320
50
610
310
320
20
30
340
330

ECM: 71465 - 19981023
Group number: 599149-0100
Assembly Drawing: 599149-1_1_AA

Pos	Part No	SP	UN	Qty	Description	Page No
-						
010	731771-0000	-		4	COOLING PLATE,SOLIDSTATE	
020	1360992-0000	-		1	BRACKET	
030	1360993-0000	-		1	COVER PLATE	
040	1361024-0000	-		1	PLATE	
310	312125-0287	-		20	SLOTTED CHEESE HEAD SCREW MCS 4X8 SS	
320	312125-0366	-		5	SLOTTED CHEESE HEAD SCREW MCS 6X12 SS	
330	312812-0314	-		8	HEXAGON NUT, NY-LOCK M5 A480	
340	315105-0146	-		8	BRICKA BRB5,3X10RFR	
510	495130-0040	-		4	SPACER TUBE L=40MM	
610	90062-0059	-		20	LOCK WASHER SERRAT.EXT.GEAR,4,3/8 H=0,5	
620	90287-0336	-		4	SCREW HEX. SOCK. SET, M6X20 PLASTIC	

Pos	Part No	SP	UN	Qty	Description	Page No

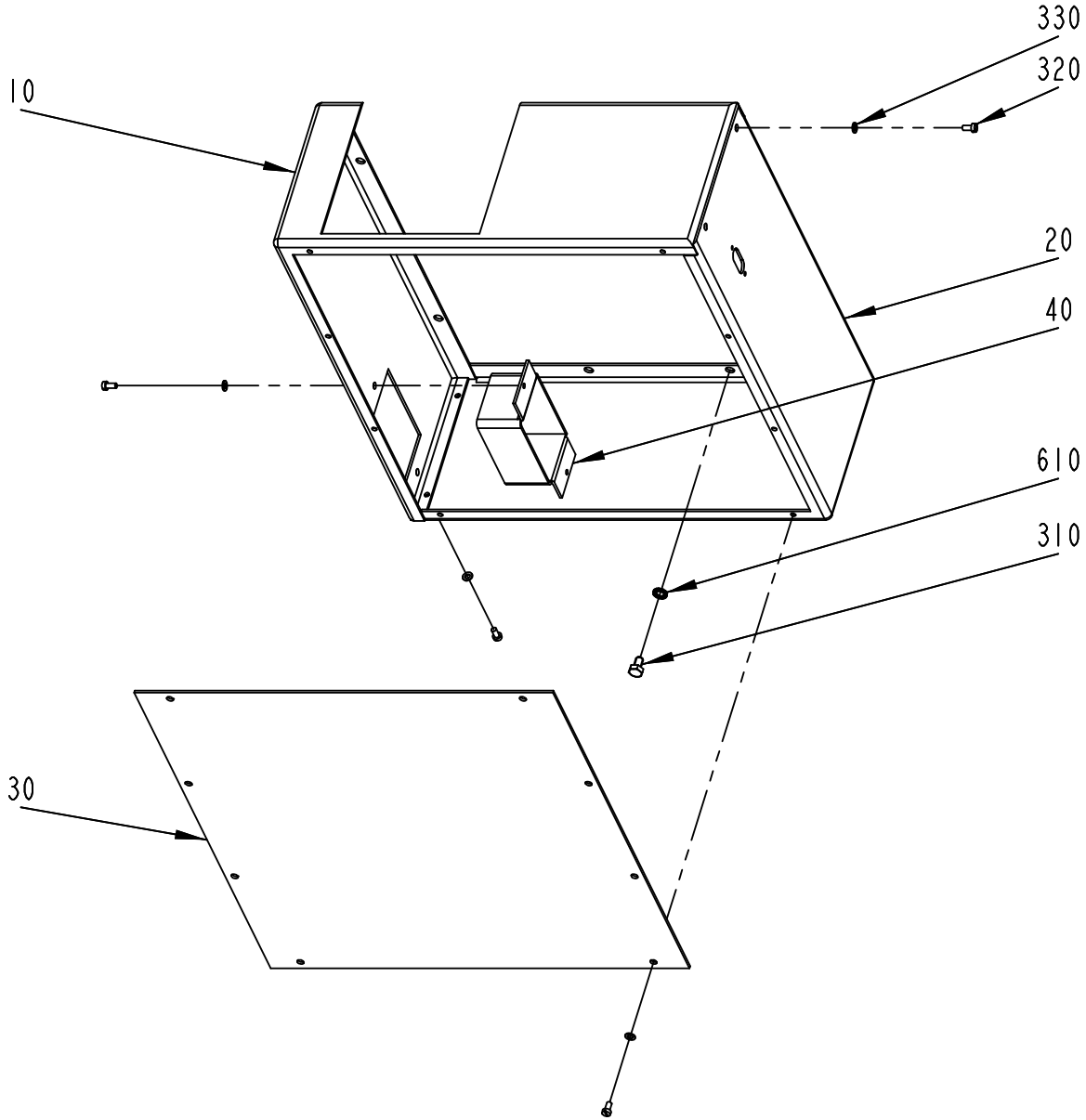
330
320
10
20
40
610
310
30

ECM: 71465 - 19981023
Group number: 599170-0100
Assembly Drawing: 599170-1_1_AA

Pos	Part No	SP	UN	Qty	Description	Page No
-						
010	1360995-0000	-		1	PROFILE	
020	1360996-0000	-		1	PROFILE	
030	1361000-0000	-		1	COVER PLATE	
040	1361001-0000	-		1	TUBE	
310	312101-0364	-		7	SCREW M6S M6X10 FZB	
320	312125-0287	-		14	SLOTTED CHEESE HEAD SCREW MCS 4X8 SS	
330	315105-0136	-		14	WASHER BRB4,3XRFR	
610	90062-0015	-		7	LOCK WASHER SERRAT.EXT.GEAR,6,4/11 H=0,7	

Pos	Part No	SP	UN	Qty	Description	Page No

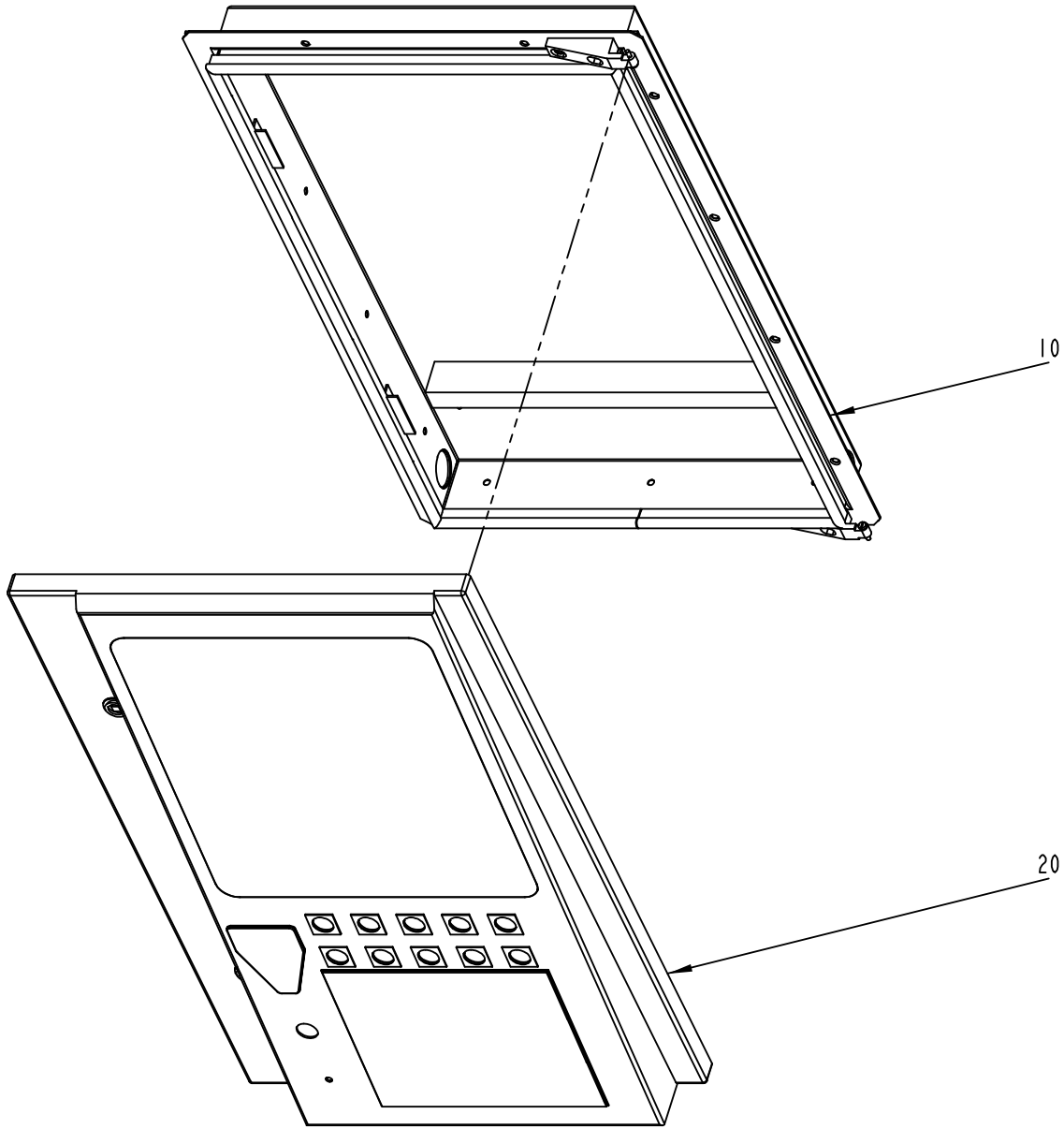
10
20

ECM: 72485 - 19991001
Group number: 971411-1100
Assembly Drawing: 971411-2_1_AB

Pos	Part No	SP	UN	Qty	Description	Page No
-						
010	A599153-0100	-		1	CABINET	**9-45**
020	A599155-0100	-		1	DOOR	**9-47**

Pos	Part No	SP	UN	Qty	Description	Page No

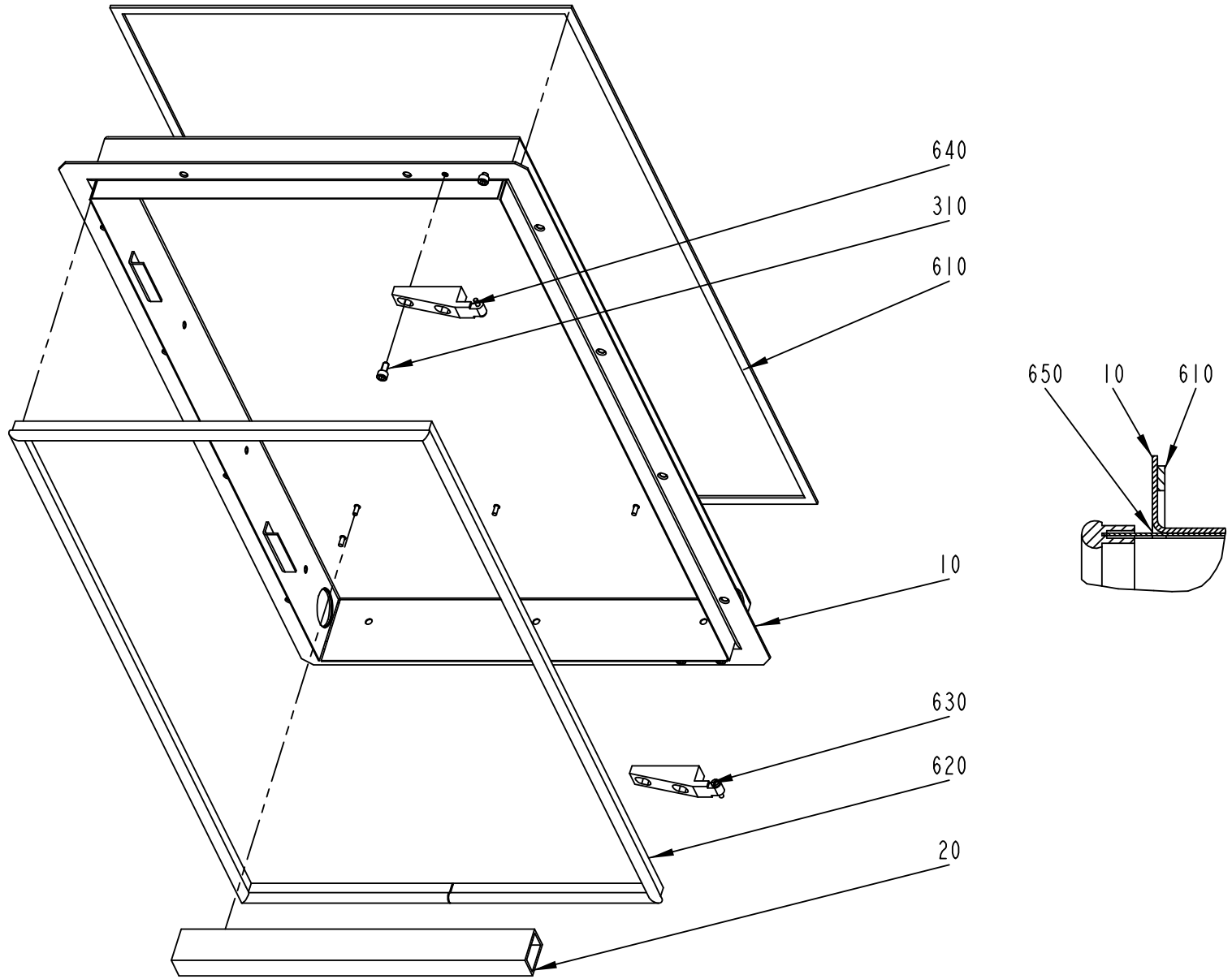
640
310
610
650
10
610
10
630
620
20

ECM: 72706 - 19990628
Group number: 599153-0100
Assembly Drawing: 599153-1_1_AB

Pos	Part No	SP	UN	Qty	Description	Page No
-						
010	1361045-0000	-		1	WELDED CABINET	
020	1361219-0000	-		1	CABLE DUCT 25X40	
310	312115-0366	-		4	SCREW ISO4762 M6X12 A4	
610	90143-0043	-	MM	2552	STRIP SELLOTAPE 3,2X6MM	
620	90143-0057	-	MM	2372	STRIP EMKA 1011-05 21X11MM	
630	90248-0015	-		1	HINGE, RIGHT HT 1	
640	90248-0016	-		1	HINGE, LEFT HT2	
650	90153-0016	-	L		ADHESIVE,TUBE 100G RHODORSIL CAF 3	

Pos	Part No	SP	UN	Qty	Description	Page No

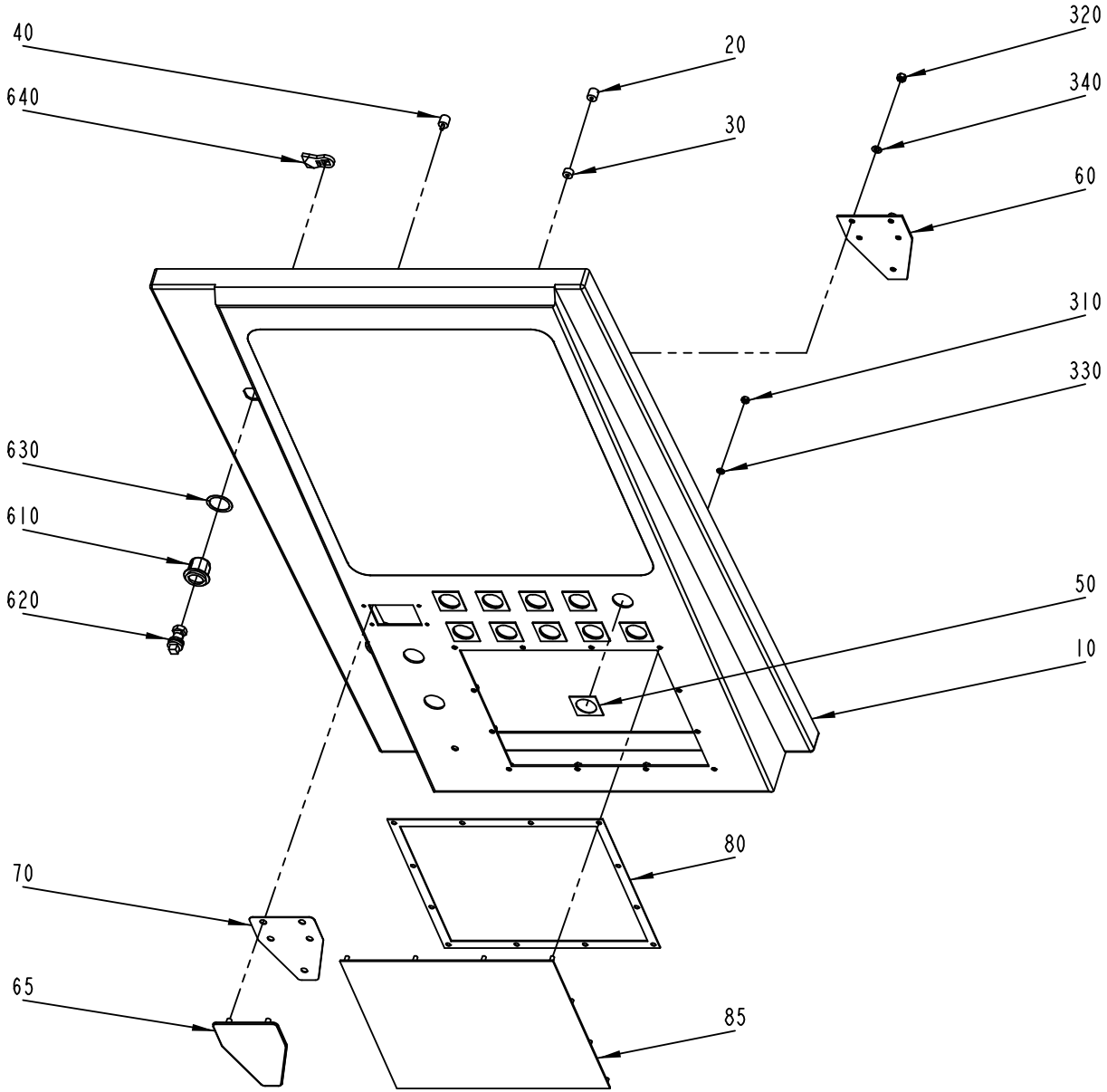
40
640
20
30
320
340
60
310
330
630
610
620
50
10
80
70
65
85

ECM: 72485 - 19991001
Group number: 599155-0100
Assembly Drawing: 599155-1_1_AA

Pos	Part No	SP	UN	Qty	Description	Page No
-						
010	1361048-0000	-		1	DOOR	
020	970261-0000	-		16	SPACER SCREW 10,2X10MM	
030	971286-0000	-		16	SPACER H=6MM	
040	975849-0000	-		12	SPACER	
050	1346126-0000	-		10	SEAL	
060	1346500-0000	-		1	BACK PLATE	
065	1346501-0000	-		1	COVERING PLATE	
070	1346502-0000	-		1	SEAL	
080	1347796-0000	-		1	SEAL	
085	1478507-0000	-		1	COVER	
310	312605-0312	-		12	HEXAGON NUT, M6M M4 A280	
320	312605-0314	-		5	HEXAGON NUT, M6M M5 A280	
330	315105-0136	-		12	WASHER BRB4,3XRFR	
340	315105-0146	-		5	BRICKA BRB5,3X10RFR	
610	90237-0319	-		2	LOCK HOUSING, 1000-U134	
620	90237-0320	-		2	LOCK HOUSING, 1000-U136	
630	90237-0322	-		2	LOCK GASKET, 1000-U137	
640	90237-0339	-		2	CAM EMKA 1000-S58	

Pos	Part No	SP	UN	Qty	Description	Page No

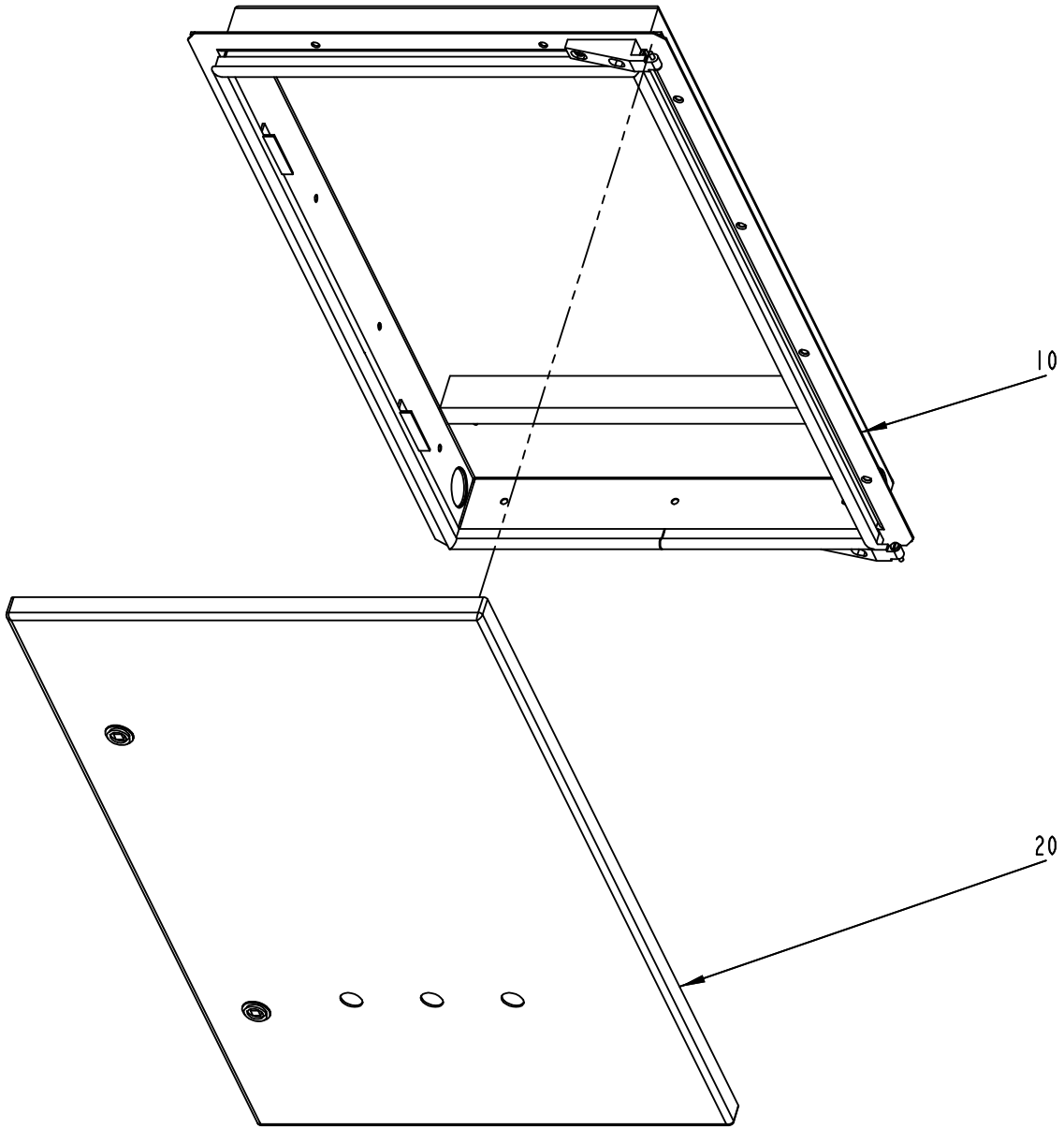
10
20

ECM: 71465 - 19981023
Group number: 971444-1100
Assembly Drawing: 971444-2_1_AA

Pos	Part No	SP	UN	Qty	Description	Page No
-						
010	A599153-0100	-		1	CABINET	**9-45**
020	A599158-0100	-		1	DOOR	**9-51**

Pos	Part No	SP	UN	Qty	Description	Page No

Machine Type | Group Description | Used-In | Group Number | Page No

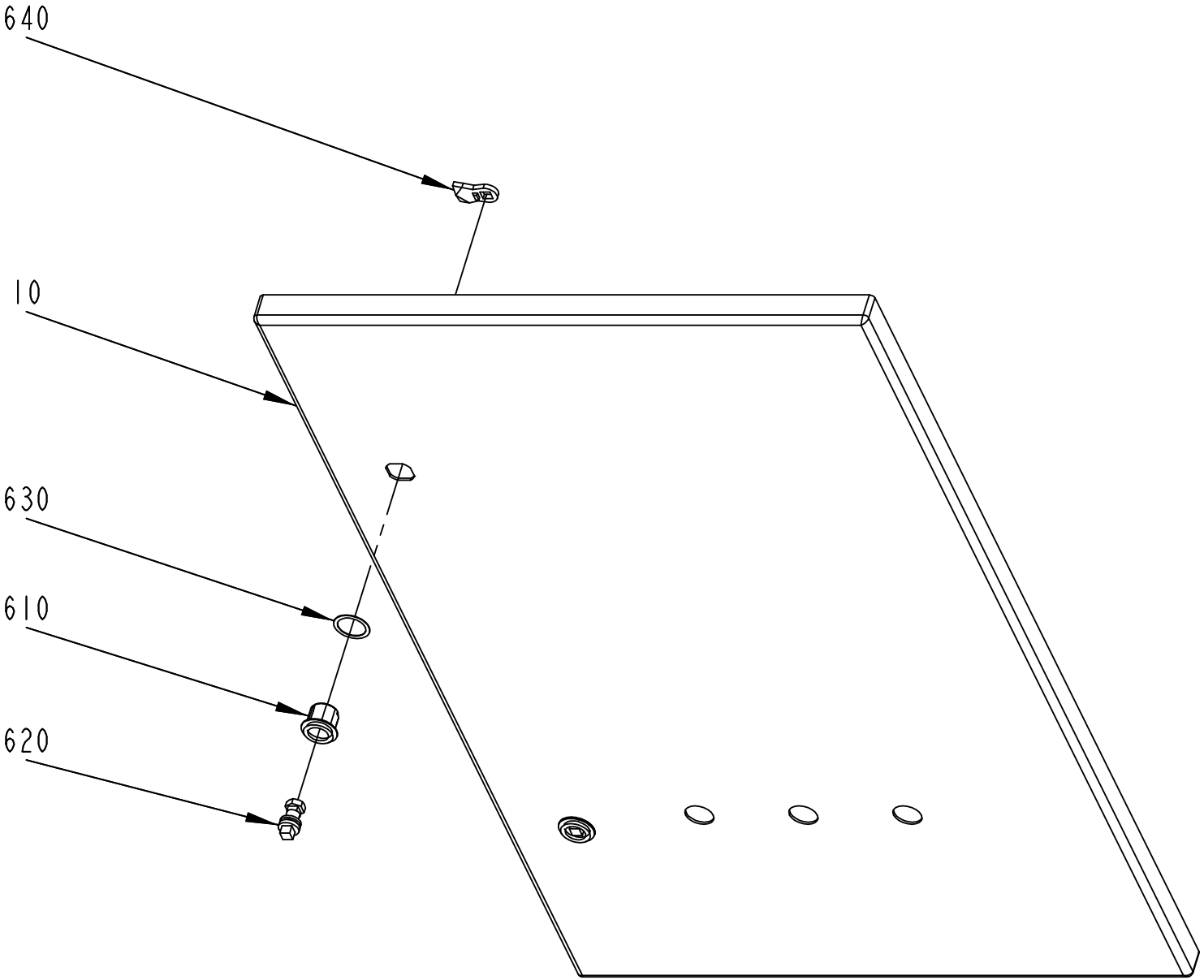
640
10
630
610
620

ECM: 71465 - 19981023
Group number: 599158-0100
Assembly Drawing: 599158-1_1_AA

Pos	Part No	SP	UN	Qty	Description	Page No
-						
010	1361053-0000	-		1	DOOR	
610	90237-0319	-		2	LOCK HOUSING, 1000-U134	
620	90237-0320	-		2	LOCK HOUSING, 1000-U136	
630	90237-0322	-		2	LOCK GASKET, 1000-U137	
640	90237-0339	-		2	CAM EMKA 1000-S58	

Pos	Part No	SP	UN	Qty	Description	Page No

Tetra Pak

SPC
Spare Parts Catalogue

Total pages in this module: 410

This page is intentionally left blank.

ECM: 130061 - 20030320
Group number: 648026-0200
Assembly Drawing:

Pos	Part No	SP	UN	Qty	Description	Page No
ASSU/8/9						
	A1260536-0100	-		1	AUTOMATIC STRIP SPLICING UNIT ASSU/8/9	**10-5**
HVA-0400						
	A925400-0400	-		1	HIGH VISCOSITY ASEPTIC HVA	**10-49, 10-51**
PARALLELCIP						
	A576843-0200	-		1	PARALLEL CLEANING IN PLACE	**10-177**
PERFHEAT						
	A282642-0500	-		1	PERFORATION HEATER	**10-181**
PLMS						
	A2570110-0100	-		1	PLMS FOR TBA/8	**10-233**
TBA/8 HL						
	A926973-0200	-		1	HEADSPACE BY LOW LEVEL FILLING HL	**10-283**
TCSB						
	A1260871-0100	-		1	TEMPERATURE CONTROLLED STEAM BARRIER	**10-399**

Pos	Part No	SP	UN	Qty	Description	Page No

Machine Type | Group Description | Used-In | Group Number | Page No

This page is intentionally left blank.

ECM: 126104 - 20030321
Group number: 1260536-0100
Assembly Drawing:

Pos	Part No	SP	UN	Qty	Description	Page No
TBA/8-110V						
	1361308-0102	-		1	DOCUMENT FOLDER	
010	A1260537-0100	-		1	ASSU UNIT	**10-7**
020	A1260371-0100	-		1	MECHANICAL DOCKING	**10-33**
050	A559272-0100	-		1	EL.RK ASSU/8/9	**10-43**

Pos	Part No	SP	UN	Qty	Description	Page No

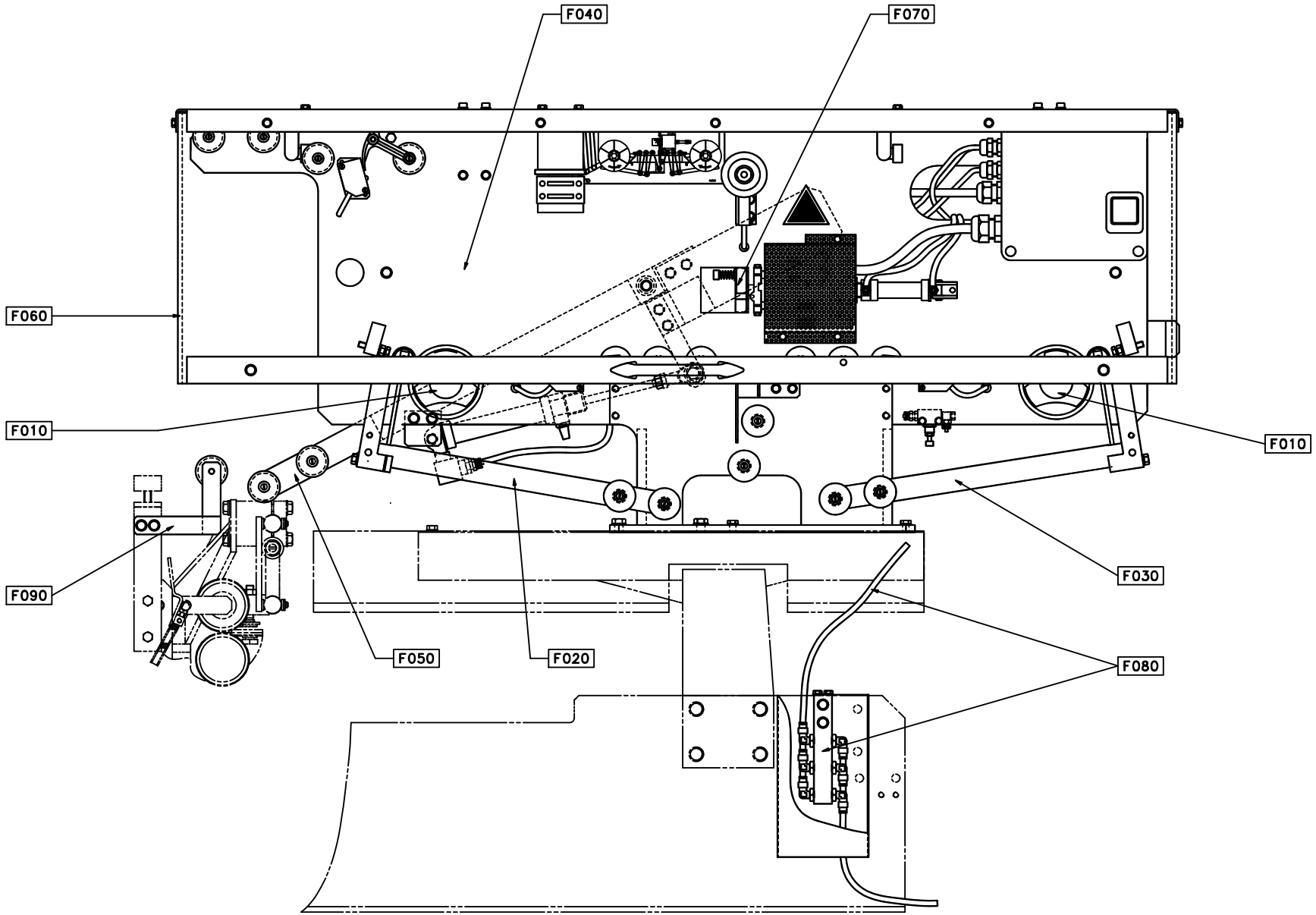
F040
F070
F060
F010
F010
F090
F030
F050
F020
F080

ECM: 142176 - 20030825
Group number: 1260537-0100
Assembly Drawing: 1260537-1_1_AB

Pos	Part No	SP	UN	Qty	Description	Page No
TBA/8-110V						
F080	A1260375-0100	-		1	PNEUMATIC CIRCUIT	**10-9**
F090	A1260383-0100	-		1	STRIP GUIDE	**10-11**
Common Parts						
F010	A537329-0100	-		2	HUB JUMBO	**8-39, 10-13**
F020	A1282818-0100	-		1	BRAKE ARM LEFT	**10-15**
F030	A1282819-0100	-		1	BRAKE ARM RIGHT	**10-17**
F040	A1260372-0100	-		1	STRIP MAGAZINE	**10-19**
F050	A1260373-0100	-		1	SPLICING MAGAZINE	**10-23**
F060	A1260374-0100	-		1	COVER	**10-25**
F070	A580043-0100	-		1	SPLICING DEVICE	**10-27, 10-29, 10-31**

Pos	Part No	SP	UN	Qty	Description	Page No

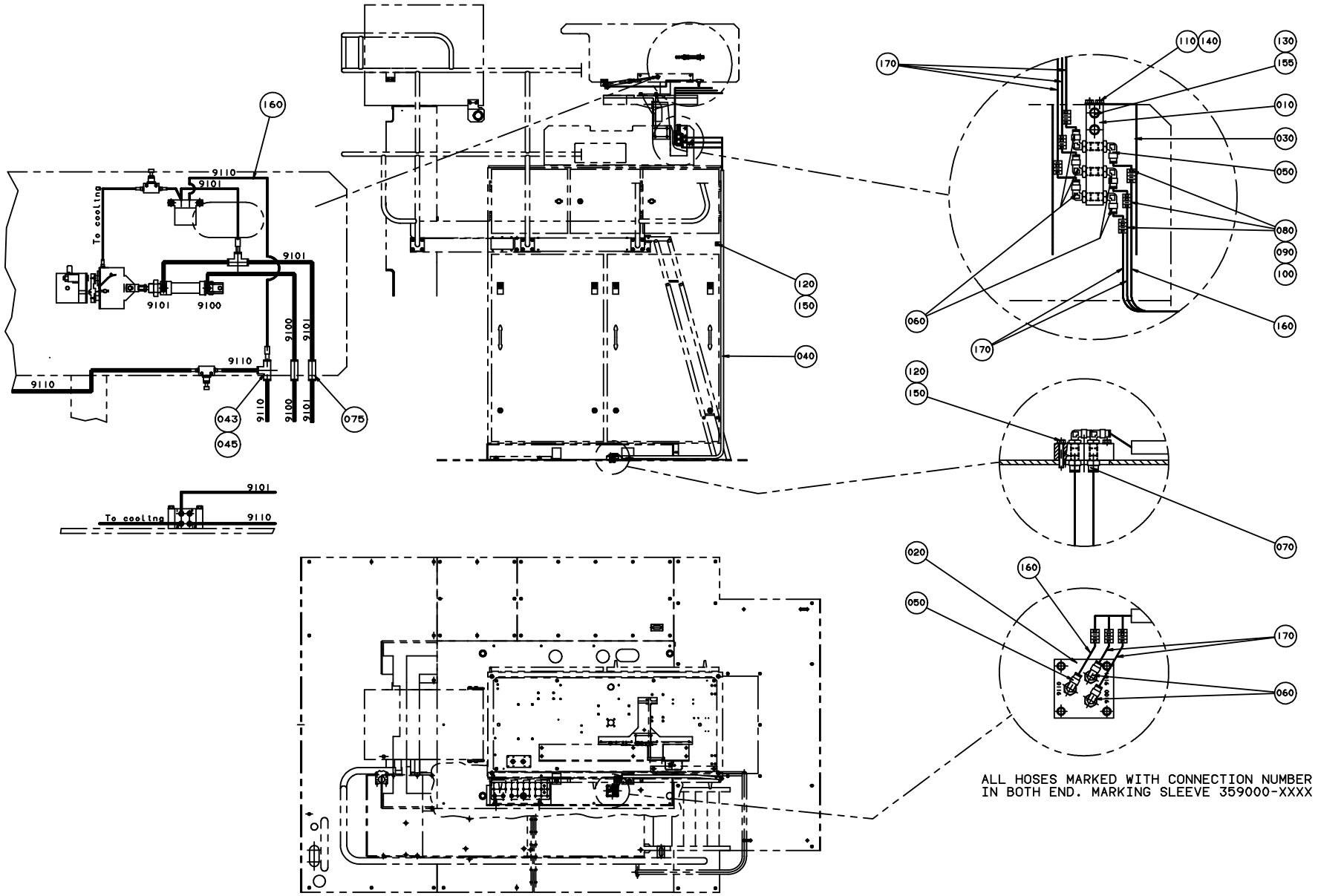
160
9110
9101
To cooling
9101
9101
9100
9110
9110
9101
9100
9110
043
045
075
9101
To cooling
9110
120
150
040
170
110
140
130
155
010
030
050
080
090
100
060
170
160
120
150
070
020
160
050
170
060
ALL HOSES MARKED WITH CONNECTION NUMBER
IN BOTH END. MARKING SLEEVE 359000-XXXX

ECM: 153473 - 20031217
Group number: 1260375-0100
Assembly Drawing: 1260375-1_1_AD

Pos	Part No	SP	UN	Qty	Description	Page No
-						
010	1255423-0000	-		1	LEAD-IN PLATE	
020	1255424-0000	-		1	LEAD-IN PLATE	
030	1255425-0000	-		1	COVER	
040	1255564-0000	-		1	PROTECTION PIPE	
043	342716-0202	-		2	REDUCER 4-6	
045	342748-0102	-		2	T-CONNECTION 6MM	
050	90458-2955	-		2	ELBOW PIPE JOINT, EXT.THREAD,	
060	90458-2956	-		7	ELBOW PIPE JOINT, EXT.THREAD, D=6MM-G1/8	
070	342722-0202	-		3	PIPE COUPLING 1/8" D=6MM	
075	342728-0102	-		2	PIPE COUPLING 6 MM	
080	359000-0400	-		30	MARKING CO2/4"0"	
090	359000-0401	-		40	MARKING COLLAR 2/4 "1" YELLOW	
100	359000-0409	-		25	MARKING COLLAR PA2/4 "9" YELLOW	
110	312105-0287	-		2	SCREW M6S ISO4017 M4X8 A480	
120	312105-0335	-		5	SCREW M6S ISO 4014 M5X30 A480	
130	312109-0378	-		2	SCREW M6S ISO4017 M6X40 A480	
140	315105-0136	-		2	WASHER BRB4,3XRFR	
150	315105-0146	-		7	BRICKA BRB5,3X10RFR	
155	315105-0153	-		2	WASHER BRB6,4X12RFR	
160	90166-0109	-	M	6	TUBE 4 MM PA,TRANSP.	
170	90166-0132	-	M	12	TUBE 6 MM PA,TRANSP.	

Pos	Part No	SP	UN	Qty	Description	Page No

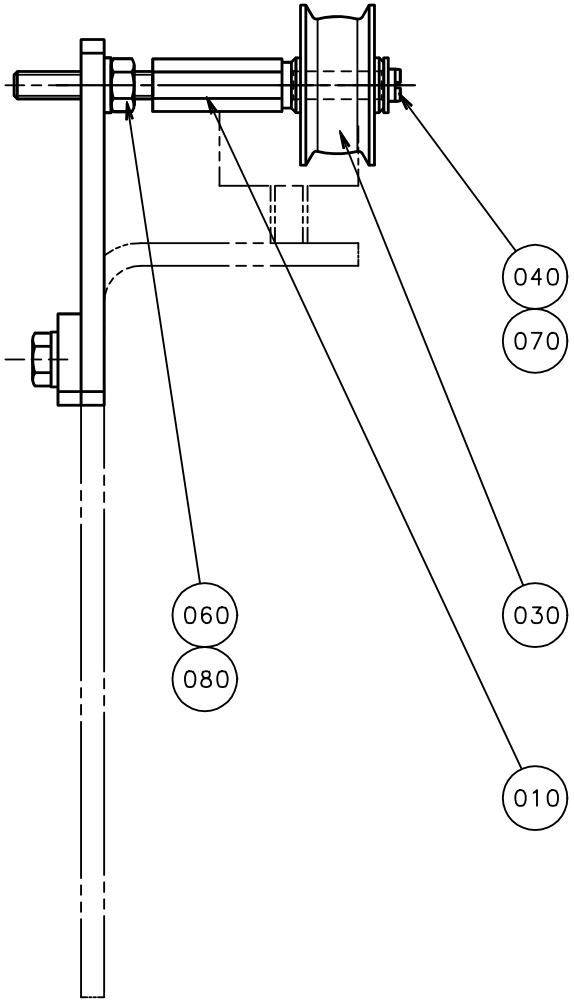
040
070
060
080
030
010

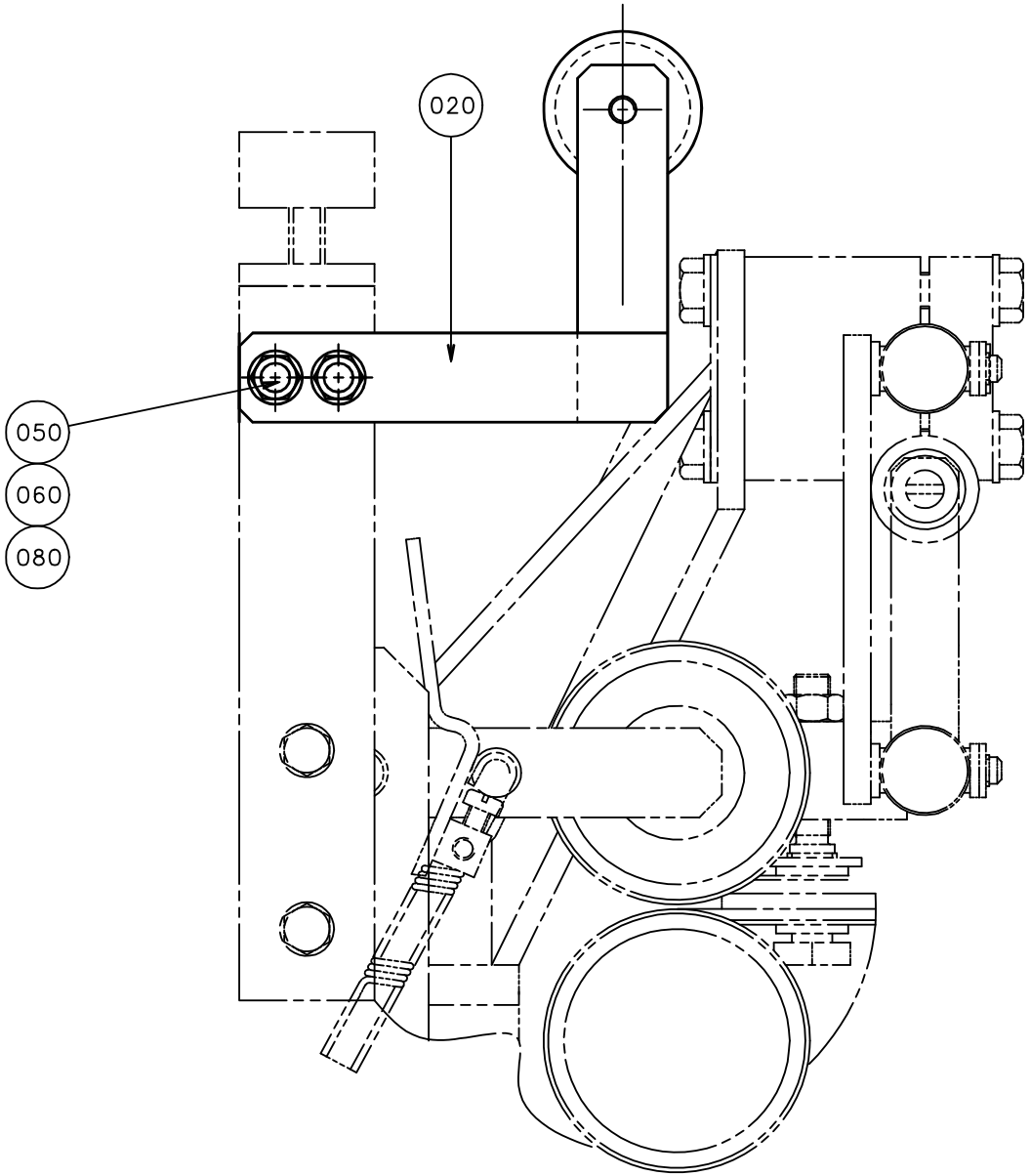
020
050
060
080

ECM: 71192 - 19971118
Group number: 1260383-0100
Assembly Drawing: 1260383-1_1_AB

Pos	Part No	SP	UN	Qty	Description	Page No
-						
010	1143341-0000	-		1	AXLE PIN	
020	1334177-0000	-		1	FASTENING PLATE	
030	1255348-0000	C		1	ROLL	
040	312125-0287	-		1	SCREW ISO 1207 M4X8 A4	
050	312105-0370	-		2	SCREW M6S ISO 4017 M6X20 A480	
060	312605-0316	-		3	HEXAGON NUT, M6M M6 A280	
070	90005-0082	-		1	WASHER PLAIN ROUND 4,3(M4)/12,H=1	
080	315105-0153	-		5	WASHER BRB6,4X12RFR	

Pos	Part No	SP	UN	Qty	Description	Page No

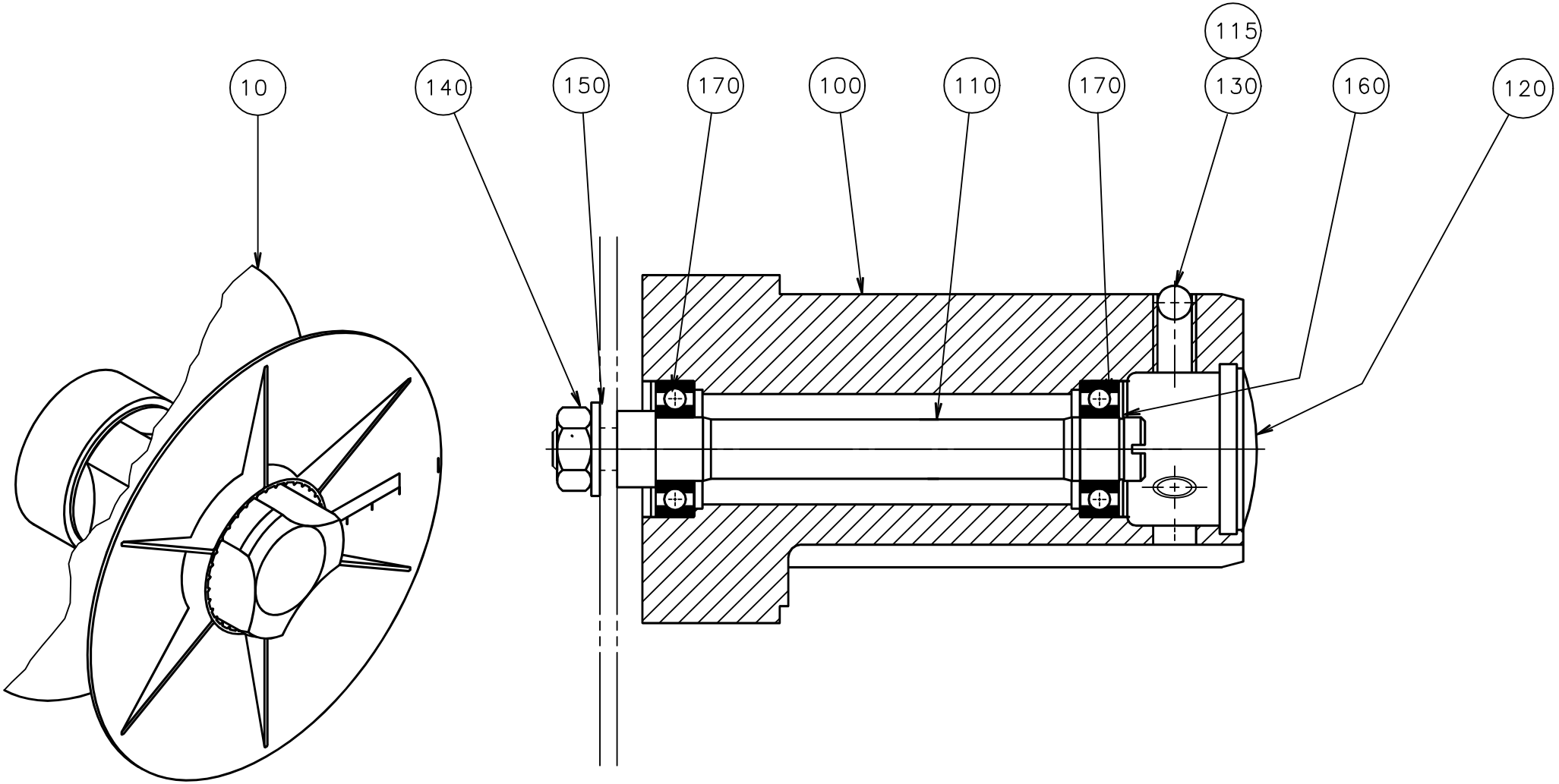
10
140
150
170
100
110
170
115
130
160
120

ECM: 89488 - 20030328
Group number: 537329-0100
Assembly Drawing: 537329-1_1_AA

Pos	Part No	SP	UN	Qty	Description	Page No
-						
010	541751-0000	-		1	CONICAL BOBBIN	
100	536913-0000	D		1	HUB	
110	537327-0000	D		1	SHAFT	
115	90157-0016	-		1	LOCKING FLUID	
120	90261-0049	-		1	PLUG, BLIND, PLASTIC, NO. SR1750	
130	90287-0106	-		3	SCREW SPRINGLOAD. SLOTTED HEAD M10X21	
140	312605-0320	-		1	HEXAGON NUT, M6M M10 A280	
150	315105-0173	-		1	WASHER BRB10,5X22RFR	
160	315751-0112	-		1	RETAIN. RING, 15	
170	90214-0207	C		2	BALL BEARING, 15X32X9 MM	

Pos	Part No	SP	UN	Qty	Description	Page No

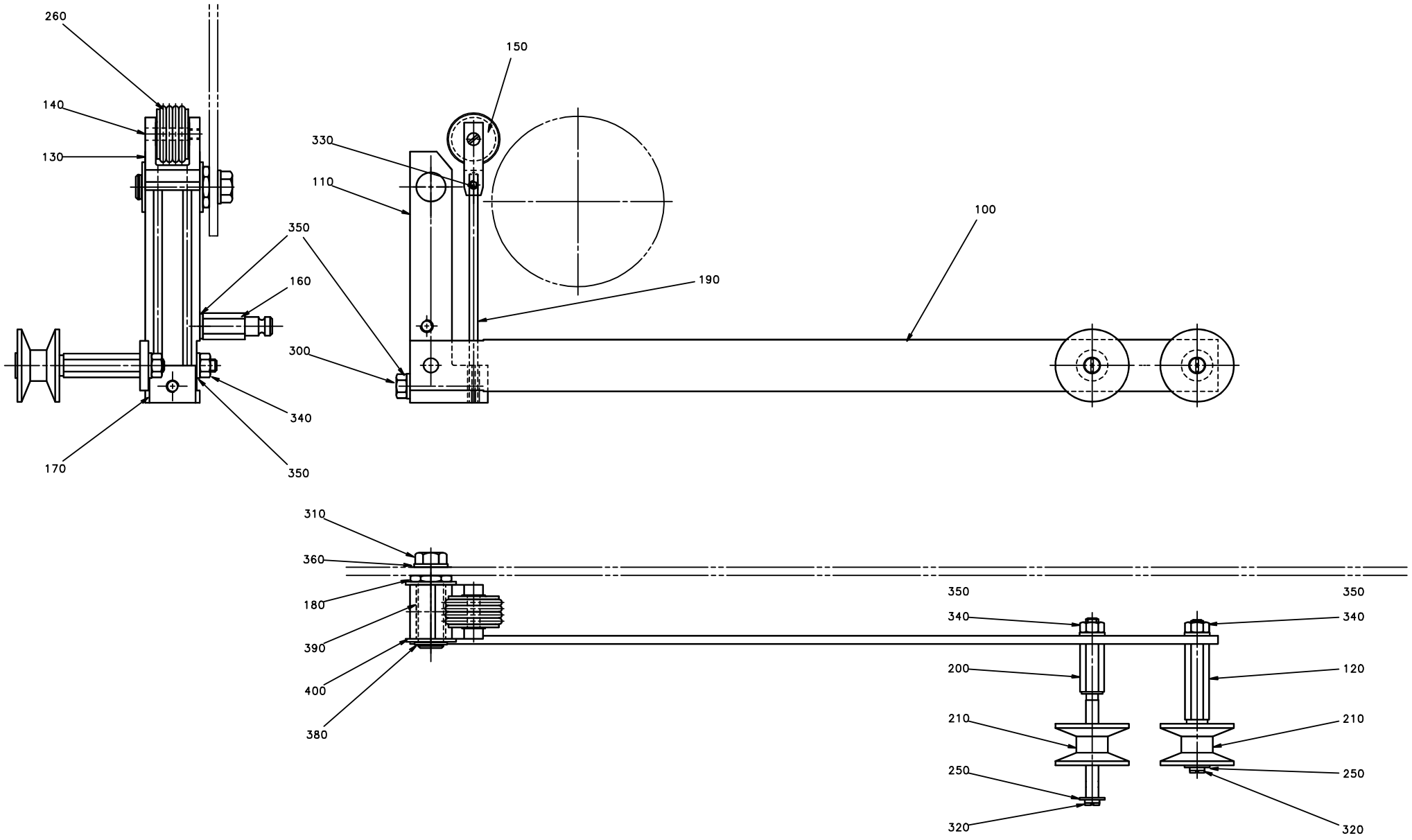
260
140
130
150
330
110
100
350
160
190
300
340
170
350
310
360
180
390
400
380
350
340
200
210
250
320
350
340
120
210
250
320

ECM: 71191 - 19971201
Group number: 1282818-0100
Assembly Drawing: 1282818-1_1_AA

Pos	Part No	SP	UN	Qty	Description	Page No
-						
100	1143336-0000	D		1	ARM	
110	541057-0000	D		1	ARM	
120	536917-0000	C		1	AXLE PIN	
130	541064-0000	D		1	FORK	
140	541065-0000	D		1	SHAFT	
150	541066-0000	C		1	ROLL	
160	541067-0000	D		1	SPRING BRACKET	
170	541069-0000	D		1	SPRING BRACKET	
180	541070-0000	C		1	SHAFT	
190	543820-0000	C		2	SPRING	
200	544726-0000	C		1	AXLE PIN	
210	544730-0000	C		2	ROLL	
250	90005-0082	-		2	WASHER PLAIN ROUND 4,3(M4)/12,H=1	
260	90242-0148	C		4	O-RING 19,2X3 MM	
300	312105-0378	-		1	SCREW M6S ISO 4014 M6X40 A480	
310	312105-0449	-		1	SCREW M6S ISO 4017 M8X16 A480	
320	312125-0287	-		2	SCREW ISO 1207 M4X8 A4	
330	312318-0283	-		2	SCREW ISO4029 M4X4 A4	
340	312605-0316	-		3	HEXAGON NUT, M6M M6 A280	
350	315105-0153	-		5	WASHER BRB6,4X12RFR	
360	315105-0165	-		1	WASHER BRB8,4X16RFR	
380	315751-0109	C		1	RETAIN. RING, 12	
390	321120-0113	C		1	BEARING BUSHING W/O FLANGE,12/14X25	
400	321129-0104	C		1	THRUST WASHER, 12/24X1,5	

Pos	Part No	SP	UN	Qty	Description	Page No

Machine Type | Group Description | Used-In | Group Number | Page No

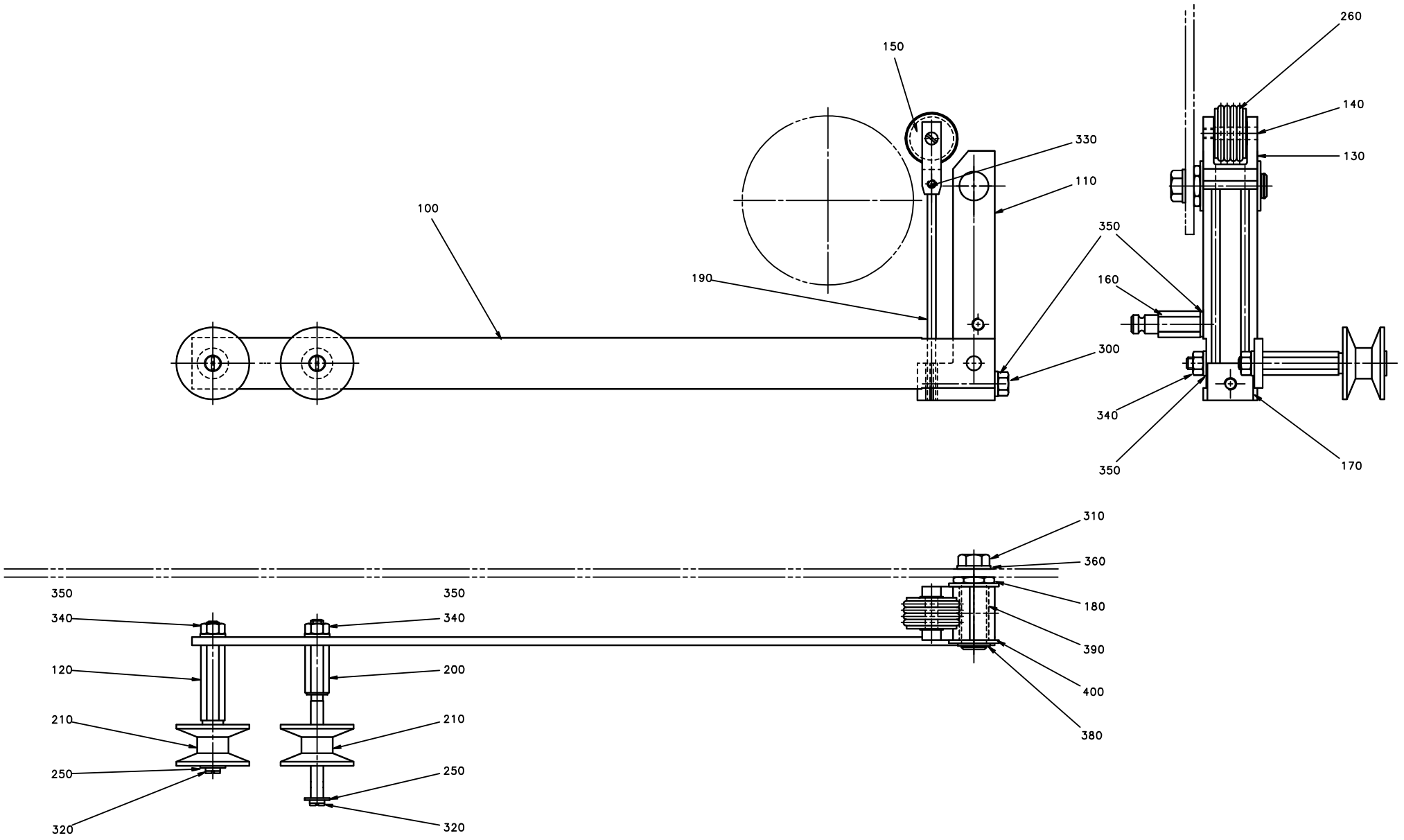
260
150
140
330
130
110
100
350
190
160
300
340
350
170
310
360
350
350
340
340
180
120
200
390
210
210
400
250
250
380
320
320

ECM: 71191 - 19971201
Group number: 1282819-0100
Assembly Drawing: 1282819-1_1_AA

Pos	Part No	SP	UN	Qty	Description	Page No
-						
100	1143336-0000	D		1	ARM	
110	541057-0000	D		1	ARM	
120	536917-0000	C		1	AXLE PIN	
130	541064-0000	D		1	FORK	
140	541065-0000	D		1	SHAFT	
150	541066-0000	C		1	ROLL	
160	541067-0000	D		1	SPRING BRACKET	
170	541069-0000	D		1	SPRING BRACKET	
180	541070-0000	C		1	SHAFT	
190	543820-0000	C		2	SPRING	
200	544726-0000	C		1	AXLE PIN	
210	544730-0000	C		2	ROLL	
250	90005-0082	-		2	WASHER PLAIN ROUND 4,3(M4)/12,H=1	
260	90242-0148	C		4	O-RING 19,2X3 MM	
300	312105-0378	-		1	SCREW M6S ISO 4014 M6X40 A480	
310	312105-0449	-		1	SCREW M6S ISO 4017 M8X16 A480	
320	312125-0287	-		2	SCREW ISO 1207 M4X8 A4	
330	312318-0283	-		2	SCREW ISO4029 M4X4 A4	
340	312605-0316	-		3	HEXAGON NUT, M6M M6 A280	
350	315105-0153	-		5	WASHER BRB6,4X12RFR	
360	315105-0165	-		1	WASHER BRB8,4X16RFR	
380	315751-0109	C		1	RETAIN. RING, 12	
390	321120-0113	C		1	BEARING BUSHING W/O FLANGE,12/14X25	
400	321129-0104	C		1	THRUST WASHER, 12/24X1,5	

Pos	Part No	SP	UN	Qty	Description	Page No

Machine Type | Group Description | Used-In | Group Number | Page No

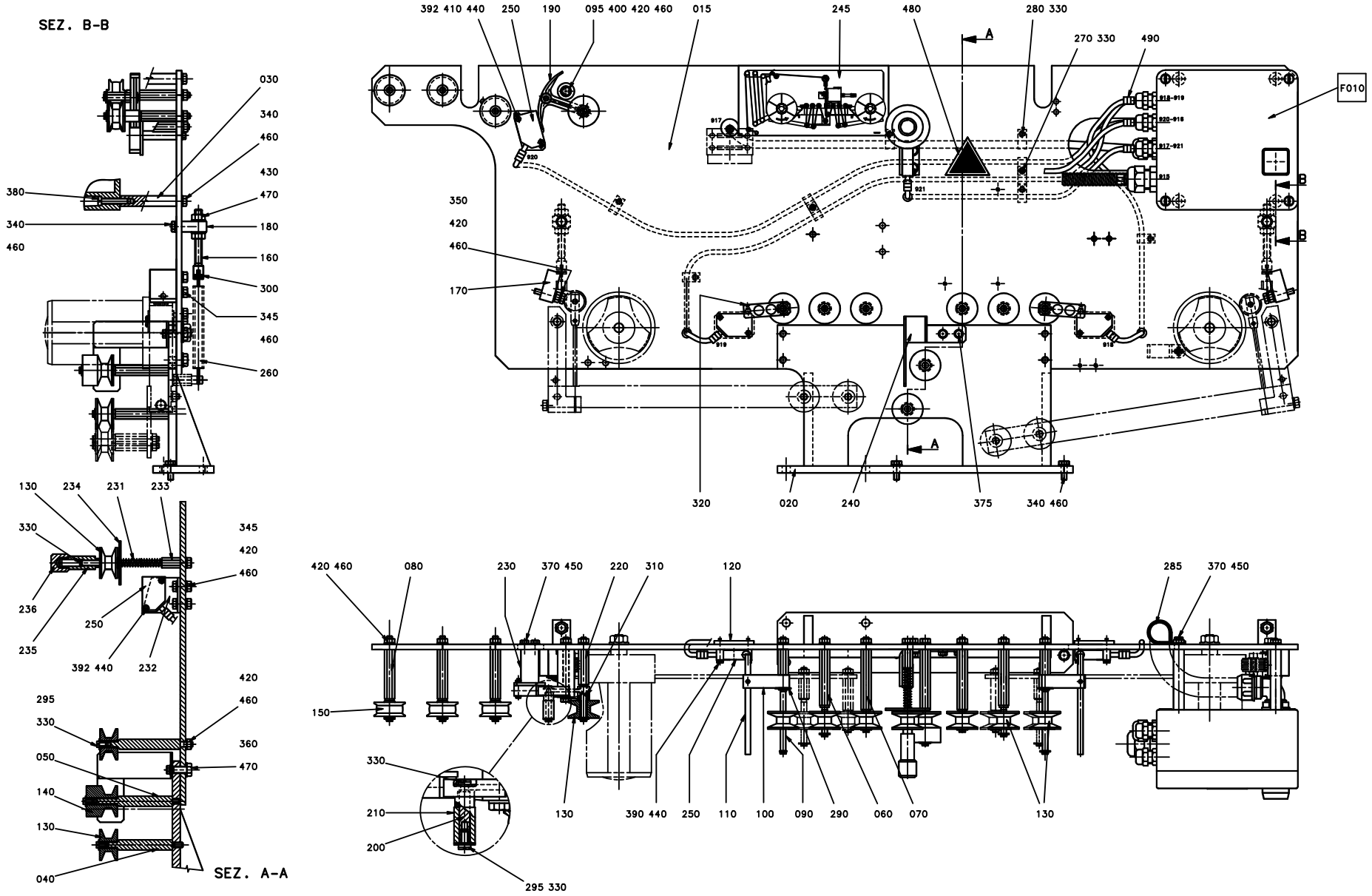
SEZ. B-B
SEZ. A-A
F010
392 410 440
250
190
095 400 420 460
015
245
480
280 330
270 330
490
030
340
460
430
470
180
160
300
345
260
380
350
420
170
320
020
240
375
340 460
130
234
231
233
330
236
235
250
392 440
232
345
420
295
360
050
140
040
420 460
080
230
370 450
220
310
120
285
150
210
200
295 330
390 440
110
100
090
290
060
070

ECM: 153471 - 20031217
Group number: 1260372-0100
Assembly Drawing: 1260372-1_1_AC

Pos	Part No	SP	UN	Qty	Description	Page No
-						
015	1255411-0000	-		1	PLATE	
020	1334175-0000	-		1	COLUMN	
030	1255413-0000	-		4	BRACKET	
040	1143324-0000	-		1	AXLE PIN	
050	1143343-0000	-		1	AXLE PIN	
060	1260670-0000	-		2	AXLE PIN	
070	1260669-0000	-		2	AXLE PIN	
080	1255563-0000	-		3	AXLE PIN	
090	1260668-0000	-		2	AXLE PIN	
095	1285949-0000	-		1	DAMPER	
100	979667-0000	A		2	ARM	
110	979668-0000	A		2	FINGER	
120	1195471-0000	-		2	FORCE PLATE	
130	544730-0000	A		9	ROLL	
140	580059-0000	A		1	ROLL	
150	1255348-0000	A		3	ROLL	
160	541068-0000	A		2	SPRING HOLDER	
170	541173-0000	-		2	STOP	
180	1143337-0000	-		2	ADJUSTING PLATE	
190	545111-0000	A		1	ARM	
200	545112-0000	A		1	SHAFT 6X29,5	
210	249298-0000	A		1	ROLL	
220	1255419-0000	A		1	AXLE PIN	
230	1255422-0000	-		1	MICROSWITCH BRACKET	
231	90335-0218	A		2	COMP. SPRING 21560, 0,63X8,63X24,5	
232	1260499-0000	-		1	BRACKET	
233	1260500-0000	-		1	AXLE PIN	
234	1260501-0000	-		1	CONTACT LINK	
235	1260502-0000	-		1	RETURN PIPE	
236	1260503-0000	-		1	PUSH BUTTON	
240	1260222-0000	-		1	PLATE	
245	1260560-0000	-		1	SIGN	
250	90044-0104	A		4	PROX.SWITCH IFM IN 3002	
260	90335-0015	A		2	TENSION SPRING 42360, 2X14X98	
270	90165-0057	-		8	PIPE CLIP FOR TUBE D=6 MM	
280	90165-0007	-		2	PIPE CLIP FOR TUBE D=8 MM	
285	90165-0086	-		1	PIPE CLAMP, RSGU 1.24/15-V4, D=24 MM	
290	90141-0016	-		2	RETAIN. RING, 10	
295	90005-0082	-		14	WASHER PLAIN ROUND 4,3(M4)/12,H=1	
300	311112-0205	-		2	SPRING PIN, ISO 8752 3X10-C	
310	321120-0101	A		1	BEARING BUSHING W/O FLANGE,6/8X6	
320	312318-0287	-		2	SCREW ISO4029 M4X8 A4	
330	312125-0287	-		25	SCREW ISO 1207 M4X8 A4	
340	312105-0368	-		8	SCREW M6S M6X16 A280	
345	312105-0370	-		6	SCREW M6S ISO 4017 M6X20 A480	
350	312109-0374	-		2	SCREW M6S ISO 4017 M6X30 A480	
360	312105-0451	-		4	SCREW M6S ISO 4017 M8X20 A480	
370	312105-0329	-		3	SCREW M6S ISO 4017 M5X16 A480	
375	312105-0323	-		2	SKRUV M6S ISO 4017 M5X8 A480	
380	312125-0368	-		4	SCREW ISO 1207 M6X16 A4	
390	312125-0232	-		4	SCREW ISO 1207 M3X25 A4	
392	312125-0230	-		4	SCREW ISO 1207 M3X20 A4	
400	312105-0384	-		1	SCREW M6S ISO 4014 M6X70 A480	
410	312605-0310	-		2	HEXAGON NUT, M6M M3 A280	
420	312605-0316	-		17	HEXAGON NUT, M6M M6 A280	
430	312605-0318	-		4	HEXAGON NUT, M6M M8 A280	
440	315105-0124	-		10	BRICKA BRB3,2X6RFR	
450	315105-0146	-		3	BRICKA BRB5,3X10RFR	
460	315105-0153	-		28	WASHER BRB6,4X12RFR	
470	315105-0165	-		8	WASHER BRB8,4X16RFR	
480	359705-0007	-		1	WARNING SIGN ISO, HOT SURFACE	
490	359009-0800	-		1	CABLE MARKER, YELLOW, PK 2/4, 0-9	
F010	A1260259-0100	-		1	CONNECTION BOX	**10-21**

Machine Type	Group Description	Used-In	Group Number	Page No

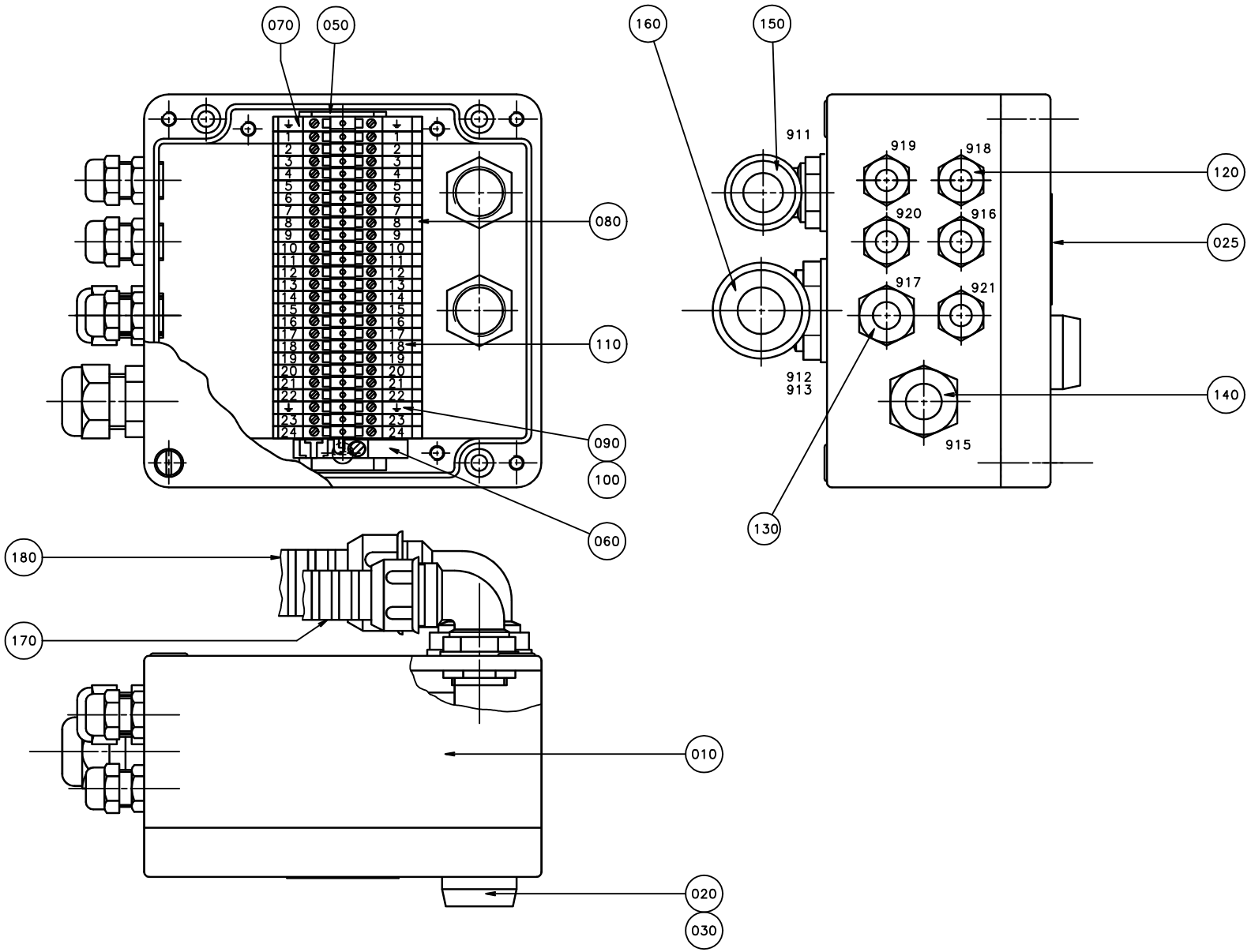
070
050
160
150
080
110
090
100
060
911
919
918
920
916
917
921
912
913
915
120
025
140
130
180
170
010
020
030

ECM: 70791 - 19970430
Group number: 1260259-0100
Assembly Drawing: 1260259-1_1_AB

Pos	Part No	SP	UN	Qty	Description	Page No
-						
010	1260223-0000	-		1	BOX	
020	90064-0084	-		1	PUSH BUTTON, YELLOW	
025	90194-0016	-		1	WARNING SIGN, RISK OF ELECTRIC SHOCK	
030	359301-0100	-		1	SIGN "SPLICING"	
050	353042-0005	-	M		RAIL TS 35/7.5	
060	353024-0205	-		1	EARTH TERMINAL, 1010.1	
070	353032-0004	-		1	END PLATE WAP 2,5-10 BEIGE	
080	353021-0212	-		24	FEED THROUGH TERMINAL, 10200.0	
090	353024-0204	-		1	EARTH TERMINAL WPE 2,5	
100	359011-0819	-		1	MARKING PLATES 5-GW (EARTH)	
110	359011-0807	-		2	MARKING PLATES 5-FW 1-50	
120	352103-0100	-		5	CABLE GLAND, STR 9, PR15,2/PG9	
130	352103-0106	-		1	CABLE GLAND, ST 11, PR18,6/PG11	
140	352103-0111	-		1	CABLE GLAND, ST 16, PR22,5/PG16	
150	352137-0129	-		1	CABLE GLAND;PR22,5(PG16)	
160	352137-0142	-		1	GLAND FITTING	
170	352135-0106	-	M	1	SPIRAL CONDUIT DI=16 MM	
180	352135-0109	-	M	1	HOSE .022	

Pos	Part No	SP	UN	Qty	Description	Page No

Machine Type Group Description Used-In Group Number Page No

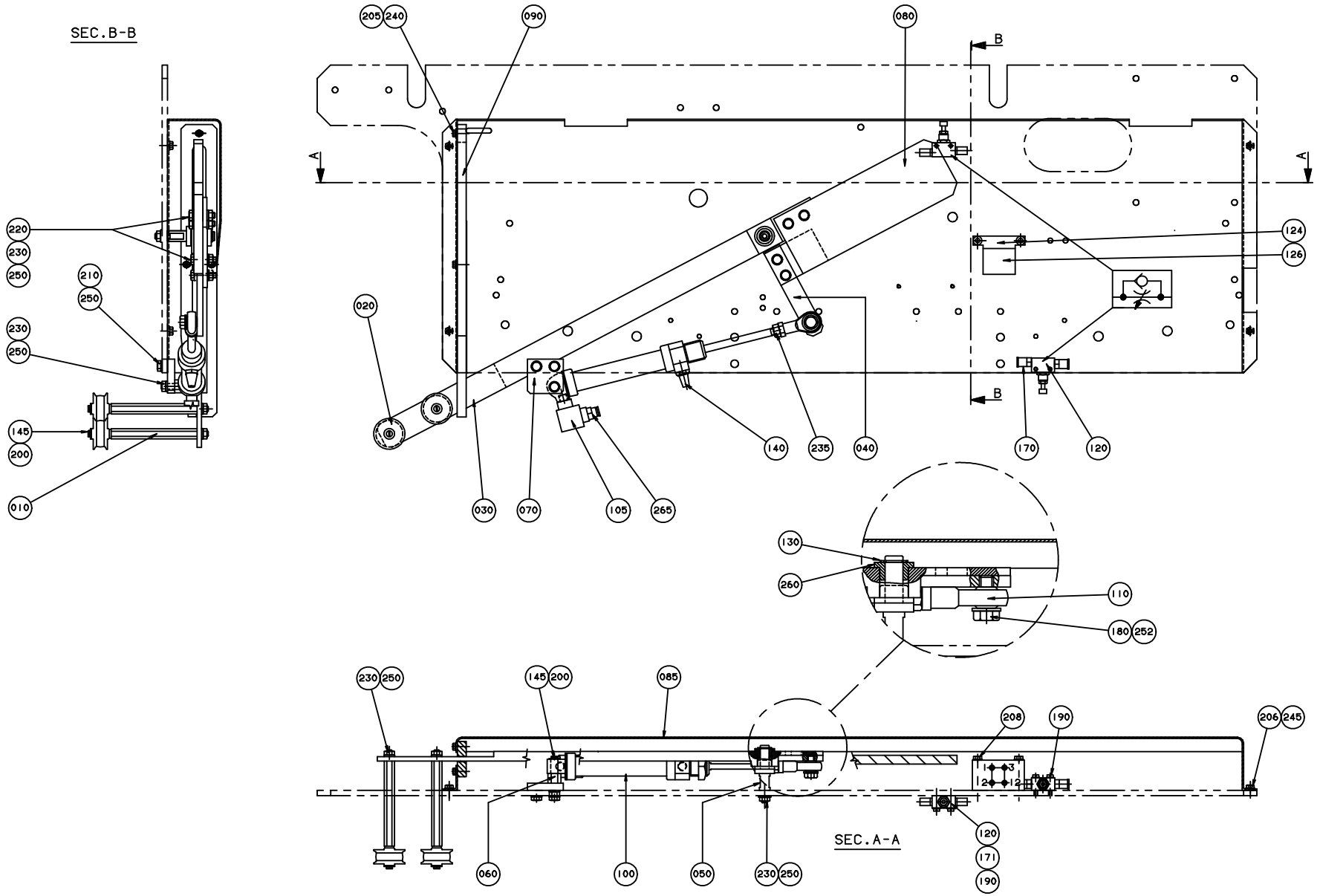
SEC.B-B
205
240
090
080
B
A
124
126
020
140
235
040
170
120
030
070
105
265
130
260
110
180
252
230
250
145
200
085
208
190
206
245
SEC.A-A
060
100
050
230
250
120
171
190

ECM: 153470 - 20031217
Group number: 1260373-0100
Assembly Drawing: 1260373-1_1_AE

Pos	Part No	SP	UN	Qty	Description	Page No
-						
010	1143323-0000	-		2	AXLE PIN	
020	1255348-0000	A		2	ROLL	
030	1195000-0000	-		1	ARM	
040	1350314-0000	-		1	FASTENING PLATE	
050	1195002-0000	-		1	ARM	
060	1350315-0000	-		1	AXLE PIN	
070	1350316-0000	-		1	PISTON HOLDER	
080	1255357-0000	-		1	ROCKER	
085	1296807-0000	-		1	COVER	
090	1350295-0000	-		1	GUIDE	
100	90239-0823	A		1	DOUBLE ACTING, MINI-ISO, CYL.20-80	
105	90235-0206	A		1	QUICK EXHAUST VALVE, SEU-1/8	
110	90115-0139	A		1	ROD END, ID=8 MM, M8X1,25	
120	90235-0723	-		2	THROTTLE VALVE	
124	90235-0449	-		1	MODULE PLATE	
126	90235-0222	A		1	VALVE	
130	90141-0016	-		1	RETAIN. RING, 10	
140	90328-0003	-		1	SILENCER	
145	90005-0082	-		3	WASHER PLAIN ROUND 4,3(M4)/12,H=1	
170	342722-0197	-		2	STRAIGHT COUPLING	
171	342722-0198	-		2	STRAIGHT COUPLING	
180	312105-0451	-		1	SCREW M6S ISO 4017 M8X20 A480	
190	312125-0295	-		4	SCREW ISO 1207 M4X20 A4	
200	312125-0287	-		3	SCREW ISO 1207 M4X8 A4	
205	312105-0291	-		3	SCREW M6S ISO 4017 M4X12 A480	
206	312105-0327	-		4	SCREW M6S ISO 4017 M5X12 A480	
208	312105-0339	-		2	SCREW M6S ISO 4014 M5X40 A480	
210	312105-0368	-		2	SCREW M6S M6X16 A280	
220	312105-0370	-		4	SCREW M6S ISO 4017 M6X20 A480	
230	312605-0316	-		8	HEXAGON NUT, M6M M6 A280	
235	312605-0318	-		1	HEXAGON NUT, M6M M8 A280	
240	315105-0136	-		3	WASHER BRB4,3XRFR	
245	315105-0146	-		4	BRICKA BRB5,3X10RFR	
250	315105-0153	-		13	WASHER BRB6,4X12RFR	
252	315105-0165	-		1	WASHER BRB8,4X16RFR	
260	321111-0135	A		2	FLANGE BUSHING, 10X16X10 MM	
265	342722-0202	-		1	PIPE COUPLING 1/8" D=6MM	

Pos	Part No	SP	UN	Qty	Description	Page No

Machine Type | Group Description | Used-In | Group Number | Page No

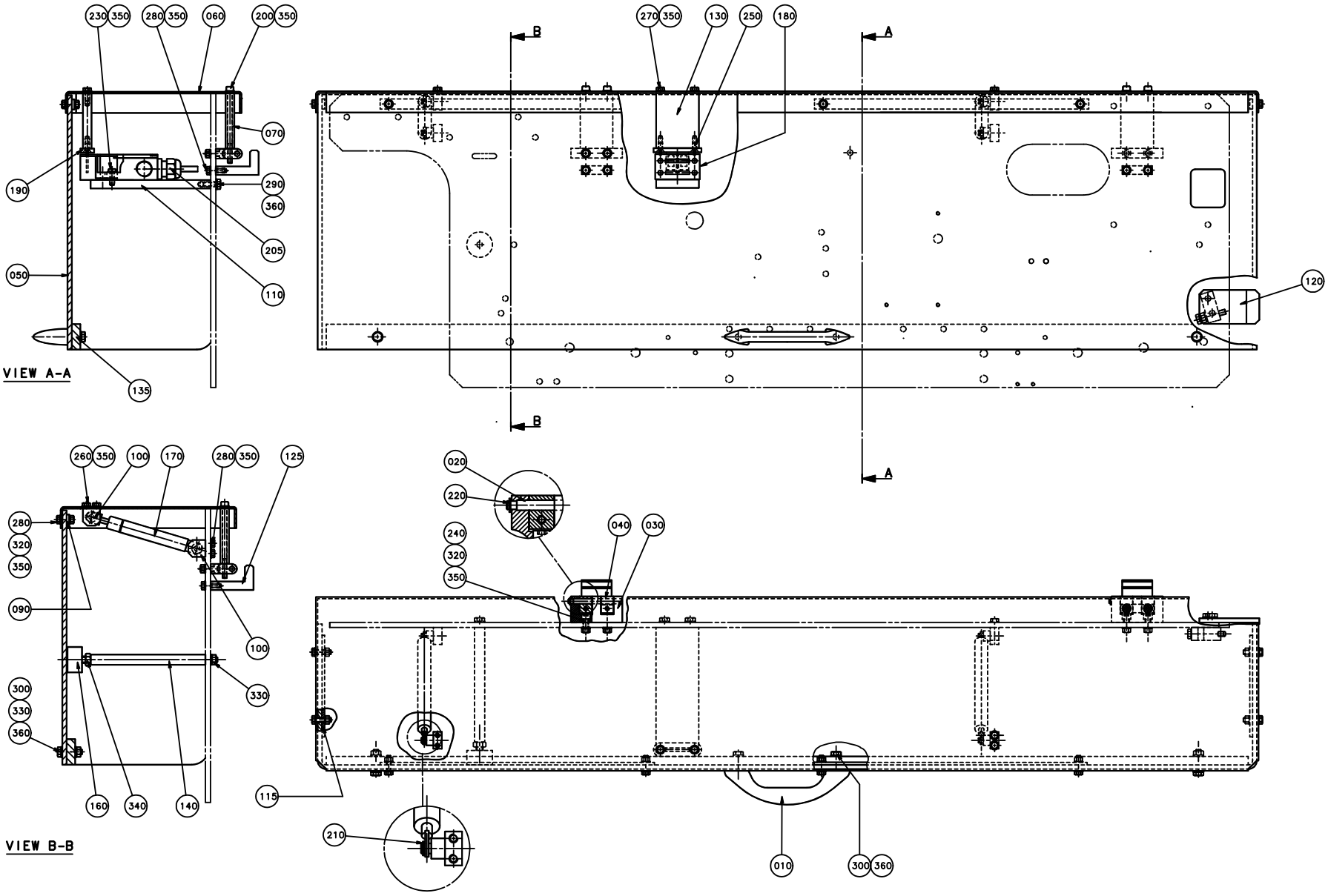
230 350
280 350
060
200 350
070
190
290
360
205
050
110
135
VIEW A-A
270 350
130
250
180
B
A
120
260 350
100
170
280 350
125
280
320
350
090
100
330
300
330
360
160
340
140
VIEW B-B
020
220
240
320
350
040
030
115
210
010
300 360

ECM: 70344 - 19970206
Group number: 1260374-0100
Assembly Drawing: 1260374-1_1_AA

Pos	Part No	SP	UN	Qty	Description	Page No
-						
010	7309-0000	-		1	HANDLE	
020	1036329-0000	-		2	PIN	
030	1035792-0000	-		2	E-HINGE	
040	1035794-0000	-		4	BLOCKING PIECE	
050	1255414-0000	-		1	PROTECTION PLATE	
060	1255415-0000	-		1	COVERING PLATE	
070	1260662-0000	-		2	HINGE	
090	1255418-0000	-		2	FORCE PLATE	
100	1255420-0000	-		4	SUPPORT	
110	1260664-0000	-		1	SUPPORT	
115	1260665-0000	-		2	FORCE PLATE	
120	1260217-0000	-		1	PLATE	
125	1260666-0000	-		2	STOP	
130	1260663-0000	-		1	HINGE	
135	1260667-0000	-		1	FORCE PLATE	
140	1260220-0000	-		1	AXLE PIN	
160	90347-0004	-		1	VIBRATION DAMPER D=30 TH=M8 H=17 H2=21MM	
170	90347-0118	C		2	GAS SPRING NO. 192856 03 06060	
180	90044-0139	D		1	KEY SAF.SW. AZ16-02 ZVR K-2254	
190	90044-0310	-		1	KEY FOR SAFETY SWITCH, AZ 15/16 B1	
200	90287-0212	-		4	SCREW MC6S M5X85 129	
205	352103-0106	-		1	CABLE GLAND, ST 11, PR18,6/PG11	
210	315751-0103	-		4	RETAIN. RING, 6	
220	315755-0106	-		2	RETAINING RING 4	
230	312125-0329	-		2	SCREW ISO 1207 M5X16 A4	
240	312115-0329	-		4	SCREW ISO4762 M5X16 A4	
250	312155-0327	-		2	SCREW EN 10642 MF6S M5X12 A480	
260	312105-0323	-		4	SKRUV M6S ISO 4017 M5X8 A480	
270	312105-0327	-		2	SCREW M6S ISO 4017 M5X12 A480	
280	312105-0329	-		16	SCREW M6S ISO 4017 M5X16 A480	
290	312105-0368	-		2	SCREW M6S M6X16 A280	
300	312105-0372	-		4	SCREW M6S ISO 4017 M6X25 A480	
320	312605-0314	-		12	HEXAGON NUT, M6M M5 A280	
330	312605-0316	-		3	HEXAGON NUT, M6M M6 A280	
340	312605-0318	-		1	HEXAGON NUT, M6M M8 A280	
350	315105-0146	-		38	BRICKA BRB5,3X10RFR	
360	315105-0153	-		9	WASHER BRB6,4X12RFR	

Pos	Part No	SP	UN	Qty	Description	Page No

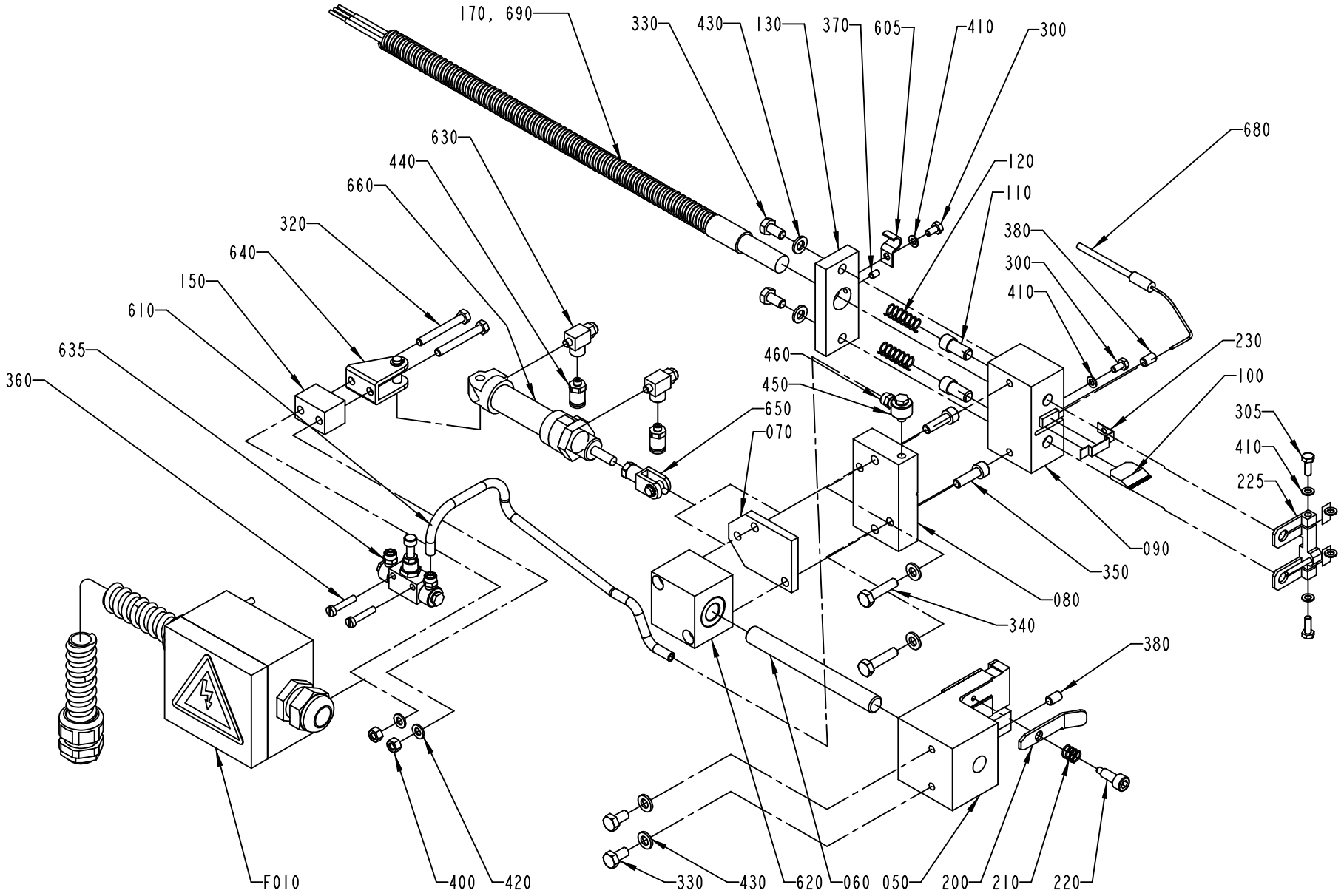
170, 690
330
430
130
370
605
410
300
680
630
440
660
320
640
150
610
635
360
120
110
380
300
410
230
100
305
410
225
460
450
650
070
090
350
080
340
380
F010
400
420
330
430
620
060
050
200
210
220

ECM: 153472 - 20031217
Group number: 580043-0100
Assembly Drawing: 580043-1_1_AG

This list covers pages from 10-26 to 10-31

Pos	Part No	SP	UN	Qty	Description	Page No
TBA/8 (See drawing on pages: 10-26, 10-28, 10-30)						
050	1260532-0000	-		1	BRACKET	
090	580320-0000	A		1	HEATING BLOCK	
100	1255941-0000	A		1	KNIFE	
170	580327-0000	A		1	HEATING ELEMENT	
200	1255961-0000	-		1	BOW CLAMP	
210	90335-0218	A		1	COMP. SPRING 21560, 0,63X8,63X24,5	
222	1296104-0000	-		1	SPACER	
225	1260498-0000	-		1	STRIP GUIDE	
305	312105-0291	-		2	SCREW M6S ISO 4017 M4X12 A480	
330	312105-0368	-		4	SCREW M6S M6X16 A280	
335	312105-0297	-		1	SCREW M6S ISO 4017 M4X25 A480	
410	315105-0136	-		9	WASHER BRB4,3XRFR	
440	342722-0197	-		2	STRAIGHT COUPLING	
455	342722-0198	-		1	STRAIGHT COUPLING	
Common Parts						
060	580317-0000	-		1	SHAFT	
070	580318-0000	-		1	SHEET	
080	580319-0000	A		1	BLOCK	
110	580322-0000	A		2	DOWEL	
120	400828-0000	A		2	SPRING	
130	580323-0000	A		1	LOCK PLATE	
150	580325-0000	-		1	SPACER	
160	580326-0000	-		1	TOUCH GUARD	
230	580330-0000	A		1	FABRIC	
300	312105-0287	-		5	SCREW M6S ISO4017 M4X8 A480	
320	312105-0339	-		2	SCREW M6S ISO 4014 M5X40 A480	
340	312105-0372	-		2	SCREW M6S ISO 4017 M6X25 A480	
350	312115-0370	-		2	SCREW ISO4762 M6X20 A4	
370	312318-0285	-		1	SCREW ISO4029 M4X6 A4	
380	312318-0364	-		2	SCREW ISO4029 M6X10 A4	
400	312605-0314	-		2	HEXAGON NUT, M6M M5 A280	
420	315105-0146	-		2	BRICKA BRB5,3X10RFR	
430	315105-0153	-		6	WASHER BRB6,4X12RFR	
500	359705-0007	-		1	WARNING SIGN ISO, HOT SURFACE	
605	90165-0057	-		1	PIPE CLIP FOR TUBE D=6 MM	
620	90189-0075	A		1	BALL BUSHING, 12X42X40 MM	
630	90235-0289	A		2	VALVE	
640	90239-0486	-		1	REAR,CLEVIS,MINI-ISO 16	
650	90239-0489	-		1	ROD END, CLEVIS WITH AXLE M6X1,25	
660	90239-0816	A		1	DOUBLE ACTING, MINI-ISO, CYL.16-25	
680	90326-0060	A		1	THERMOCOUPLE, CR-AL	
690	90296-0051	A		2	PASTE	

Machine Type	Group Description	Used-In	Group Number	Page No

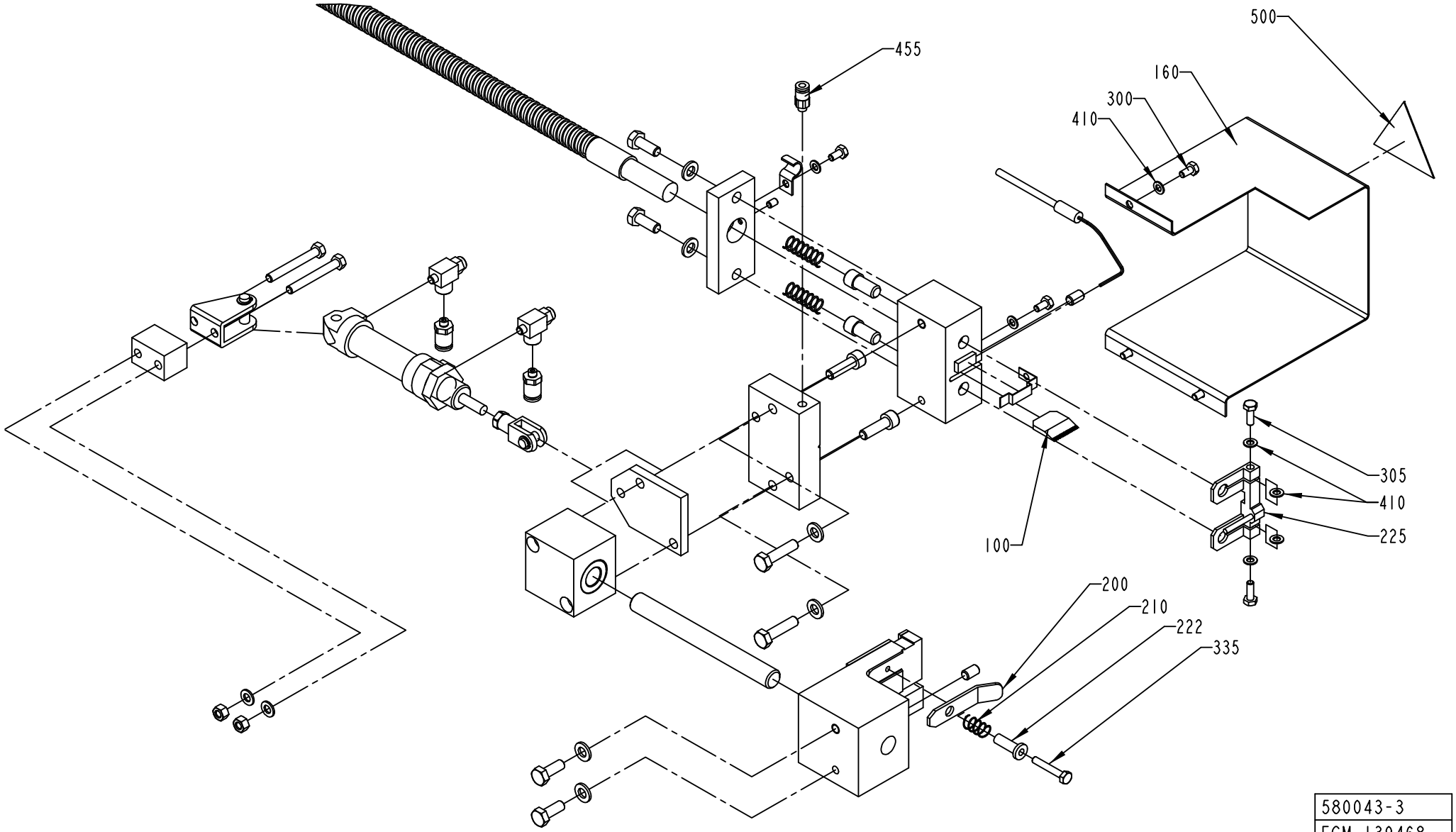
455
500
160
300
410
305
410
225
100
200
210
222
335
580043-3
ECM 139468

ECM: 153472 - 20031217
Group number: 580043-0100
Assembly Drawing: 580043-3_1_AE

This list covers pages from 10-26 to 10-31

Pos	Part No	SP	UN	Qty	Description	Page No
TBA/8 (See drawing on pages: 10-26, 10-28, 10-30)						
050	1260532-0000	-		1	BRACKET	
090	580320-0000	A		1	HEATING BLOCK	
100	1255941-0000	A		1	KNIFE	
170	580327-0000	A		1	HEATING ELEMENT	
200	1255961-0000	-		1	BOW CLAMP	
210	90335-0218	A		1	COMP. SPRING 21560, 0,63X8,63X24,5	
222	1296104-0000	-		1	SPACER	
225	1260498-0000	-		1	STRIP GUIDE	
305	312105-0291	-		2	SCREW M6S ISO 4017 M4X12 A480	
330	312105-0368	-		4	SCREW M6S M6X16 A280	
335	312105-0297	-		1	SCREW M6S ISO 4017 M4X25 A480	
410	315105-0136	-		9	WASHER BRB4,3XRFR	
440	342722-0197	-		2	STRAIGHT COUPLING	
455	342722-0198	-		1	STRAIGHT COUPLING	
Common Parts						
060	580317-0000	-		1	SHAFT	
070	580318-0000	-		1	SHEET	
080	580319-0000	A		1	BLOCK	
110	580322-0000	A		2	DOWEL	
120	400828-0000	A		2	SPRING	
130	580323-0000	A		1	LOCK PLATE	
150	580325-0000	-		1	SPACER	
160	580326-0000	-		1	TOUCH GUARD	
230	580330-0000	A		1	FABRIC	
300	312105-0287	-		5	SCREW M6S ISO4017 M4X8 A480	
320	312105-0339	-		2	SCREW M6S ISO 4014 M5X40 A480	
340	312105-0372	-		2	SCREW M6S ISO 4017 M6X25 A480	
350	312115-0370	-		2	SCREW ISO4762 M6X20 A4	
370	312318-0285	-		1	SCREW ISO4029 M4X6 A4	
380	312318-0364	-		2	SCREW ISO4029 M6X10 A4	
400	312605-0314	-		2	HEXAGON NUT, M6M M5 A280	
420	315105-0146	-		2	BRICKA BRB5,3X10RFR	
430	315105-0153	-		6	WASHER BRB6,4X12RFR	
500	359705-0007	-		1	WARNING SIGN ISO, HOT SURFACE	
605	90165-0057	-		1	PIPE CLIP FOR TUBE D=6 MM	
620	90189-0075	A		1	BALL BUSHING, 12X42X40 MM	
630	90235-0289	A		2	VALVE	
640	90239-0486	-		1	REAR,CLEVIS,MINI-ISO 16	
650	90239-0489	-		1	ROD END, CLEVIS WITH AXLE M6X1,25	
660	90239-0816	A		1	DOUBLE ACTING, MINI-ISO, CYL.16-25	
680	90326-0060	A		1	THERMOCOUPLE, CR-AL	
690	90296-0051	A		2	PASTE	

Machine Type	Group Description	Used-In	Group Number	Page No

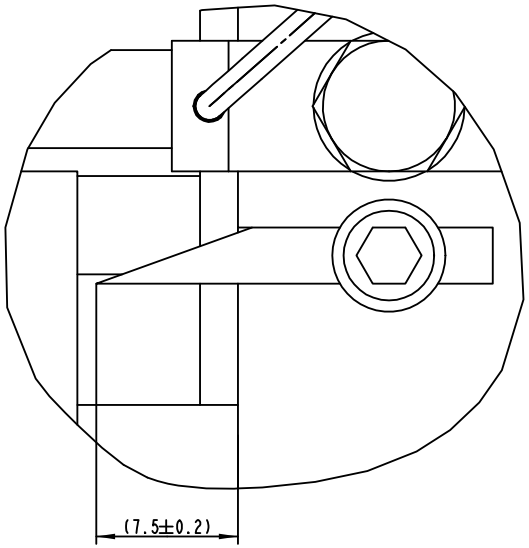

DETAIL A
5:1

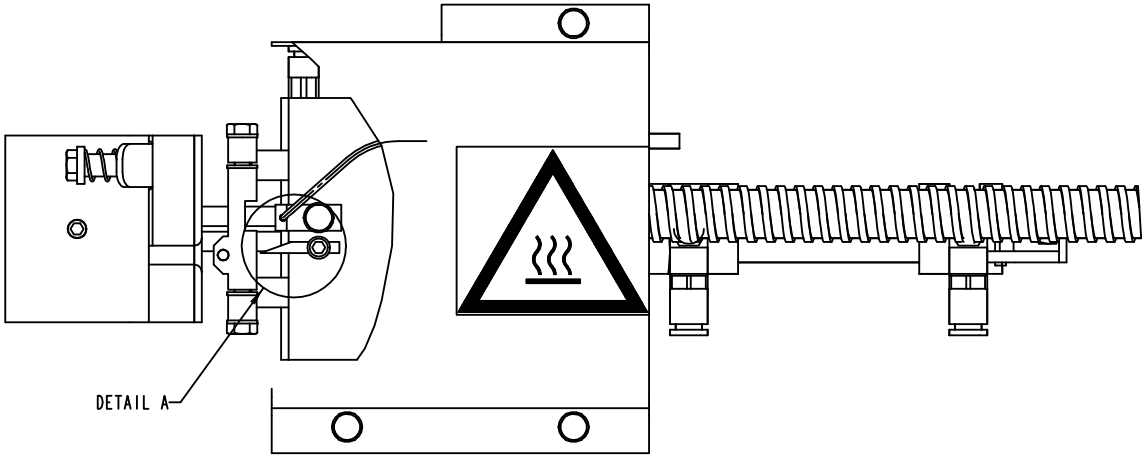

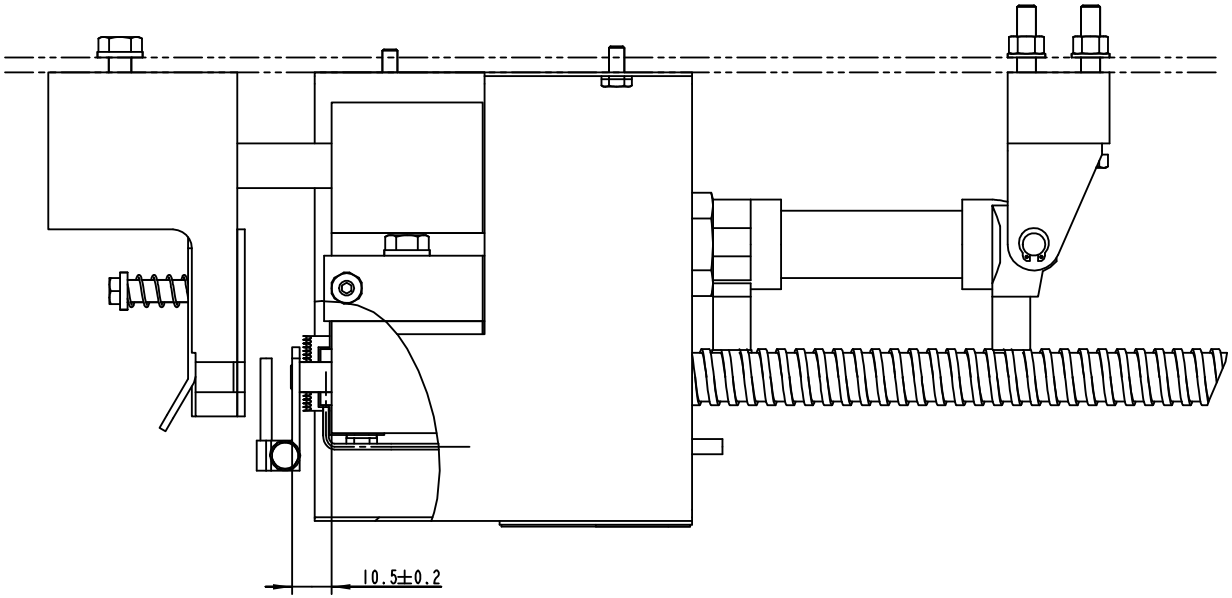

Pos	Part No	SP	UN	Qty	Description	Page No
TBA/8 (See drawing on pages: 10-26, 10-28, 10-30)						
050	1260532-0000	-		1	BRACKET	
090	580320-0000	A		1	HEATING BLOCK	
100	1255941-0000	A		1	KNIFE	
170	580327-0000	A		1	HEATING ELEMENT	
200	1255961-0000	-		1	BOW CLAMP	
210	90335-0218	A		1	COMP. SPRING 21560, 0,63X8,63X24,5	
222	1296104-0000	-		1	SPACER	
225	1260498-0000	-		1	STRIP GUIDE	
305	312105-0291	-		2	SCREW M6S ISO 4017 M4X12 A480	
330	312105-0368	-		4	SCREW M6S M6X16 A280	
335	312105-0297	-		1	SCREW M6S ISO 4017 M4X25 A480	
410	315105-0136	-		9	WASHER BRB4,3XRFR	
440	342722-0197	-		2	STRAIGHT COUPLING	
455	342722-0198	-		1	STRAIGHT COUPLING	
Common Parts						
060	580317-0000	-		1	SHAFT	
070	580318-0000	-		1	SHEET	
080	580319-0000	A		1	BLOCK	
110	580322-0000	A		2	DOWEL	
120	400828-0000	A		2	SPRING	
130	580323-0000	A		1	LOCK PLATE	
150	580325-0000	-		1	SPACER	
160	580326-0000	-		1	TOUCH GUARD	
230	580330-0000	A		1	FABRIC	
300	312105-0287	-		5	SCREW M6S ISO4017 M4X8 A480	
320	312105-0339	-		2	SCREW M6S ISO 4014 M5X40 A480	
340	312105-0372	-		2	SCREW M6S ISO 4017 M6X25 A480	
350	312115-0370	-		2	SCREW ISO4762 M6X20 A4	
370	312318-0285	-		1	SCREW ISO4029 M4X6 A4	
380	312318-0364	-		2	SCREW ISO4029 M6X10 A4	
400	312605-0314	-		2	HEXAGON NUT, M6M M5 A280	
420	315105-0146	-		2	BRICKA BRB5,3X10RFR	
430	315105-0153	-		6	WASHER BRB6,4X12RFR	
500	359705-0007	-		1	WARNING SIGN ISO, HOT SURFACE	
605	90165-0057	-		1	PIPE CLIP FOR TUBE D=6 MM	
620	90189-0075	A		1	BALL BUSHING, 12X42X40 MM	
630	90235-0289	A		2	VALVE	
640	90239-0486	-		1	REAR,CLEVIS,MINI-ISO 16	
650	90239-0489	-		1	ROD END, CLEVIS WITH AXLE M6X1,25	
660	90239-0816	A		1	DOUBLE ACTING, MINI-ISO, CYL.16-25	
680	90326-0060	A		1	THERMOCOUPLE, CR-AL	
690	90296-0051	A		2	PASTE	

Machine Type | Group Description | Used-In | Group Number | Page No

This page is intentionally left blank.

ECM: 70344 - 19970206
Group number: 1260371-0100
Assembly Drawing:

Pos	Part No	SP	UN	Qty	Description	Page No
-						
	1260756-1	-		1	MODIFICATION DRAWING	
	1260460-1	-		1	MODIFICATION DRAWING	
	1260459-1	-		1	MODIFICATION DRAWING	
	1260454-1	-		1	MODIFICATION DRAWING	
050	1255296-0000	-		1	SAFETY GUARD	
060	1260535-0000	-		1	HEAT GUARD	
F010	A1260539-0100	-		1	PAPER GUARD	**10-35**
F020	A1260540-0100	-		1	CONNECTION BOX	**10-37**
F030	A1260541-0100	-		1	BOTTOM PLATE	**10-39**
F040	A1260543-0100	-		1	VALVE PANEL	**10-41**

Pos	Part No	SP	UN	Qty	Description	Page No

Machine Type | Group Description | Used-In | Group Number | Page No

This page is intentionally left blank.

ECM: 140997 - 20030825
Group number: 1260539-0100
Assembly Drawing:

Pos	Part No	SP	UN	Qty	Description	Page No
-						
	1260455-1	-		1	MODIFICATION DRAWING	
010	1334176-0000	-		1	COVER	

Pos	Part No	SP	UN	Qty	Description	Page No

Machine Type | Group Description | Used-In | Group Number | Page No

This page is intentionally left blank.

ECM: 71192 - 19971118
Group number: 1260540-0100
Assembly Drawing:

Pos	Part No	SP	UN	Qty	Description	Page No
-						
	1334202-1	-		1	MODIFICATION DRAWING	
	1334203-1	-		1	MODIFICATION DRAWING	
	1260457-1	-		1	MODIFICATION DRAWING	
	1260456-1	-		1	MODIFICATION DRAWING	
010	90077-0064	-		12	TERMINAL SAK2,5 PA FOR TS32	
020	90135-0022	-		2	EARTH TERMINAL EK 2,5N	
025	90165-0086	-		1	PIPE CLAMP, RSGU 1.24/15-V4, D=24 MM	
030	359011-0821	-		2	SET OF SIGNS 6-FW 1-50	
035	359011-0834	-		1	SET OF SIGNS 6-GW(EARTH)	
040	352136-0129	-		1	GLAND FITTING PR22,5/PG16 DI=16MM	
050	352136-0142	-		1	GLAND FITTING	
060	352113-0101	-		4	CLIP STRIP, 92X2,5 MM	
070	312105-0331	-		1	SCREW M6S ISO 4017 M5X20 A480	
080	312605-0314	-		1	HEXAGON NUT, M6M M5 A280	
090	315105-0146	-		1	BRICKA BRB5,3X10RFR	
100	90165-0086	-		1	PIPE CLAMP, RSGU 1.24/15-V4, D=24 MM	

Pos	Part No	SP	UN	Qty	Description	Page No

Machine Type | Group Description | Used-In | Group Number | Page No

This page is intentionally left blank.

ECM: 71337 - 19990113
Group number: 1260541-0100
Assembly Drawing:

Pos	Part No	SP	UN	Qty	Description	Page No
TBA/8						
	1260458-1	-		1	MODIFICATION DRAWING	
Common Parts						
010	90002-0004	-		1	BLANK-OFF PLUG, PR 22,5 SKINDICHT-BLK16	
020	90099-0003	-		1	NUT	

Pos	Part No	SP	UN	Qty	Description	Page No

This page is intentionally left blank.

ECM: 72071 - 19990713
Group number: 1260543-0100
Assembly Drawing:

Pos	Part No	SP	UN	Qty	Description	Page No
TBA/8-110V						
	1279480-1	-		1	MODIFICATION DRAWING	
002	1334251-0000	-		1	PNEUMATIC DIAGRAM	
009	1478899-0000	-		1	PNEUMATIC DIAGRAM	
016	1490103-0000	-		1	VALVE PANEL	
017	1490104-0000	-		1	VALVE PANEL	
020	90042-0215	-		2	VALVE BODY 5/2 UNISTABLE	
030	90042-0538	-		2	PILOT VALVE L=500MM	
040	90055-0118	-		3	ELBOW PIPE JOINT -8MM	
050	342716-0203	-		3	REDUCER 6-8	
Common Parts						
060	90166-0124	-	M	5	TUBE 6 MM PA,TRANSP.	

Pos	Part No	SP	UN	Qty	Description	Page No

This page is intentionally left blank.

ECM: 72407 - 19990715
Group number: 559272-0100
Assembly Drawing:

Pos	Part No	SP	UN	Qty	Description	Page No
-						
0010	A559273-0100	-		1	ELECTRICAL DOCUMENT	**10-45**
0020	A559274-0100	-		1	ELECTRIC MATERIALS	**10-47**

Pos	Part No	SP	UN	Qty	Description	Page No

This page is intentionally left blank.

ECM: 73421 - 20000214
Group number: 559273-0100
Assembly Drawing:

Pos	Part No	SP	UN	Qty	Description	Page No
-						
0040	1360568-0	-		1	NEUTRAL AND GROUND TERM, X2.3	

Pos	Part No	SP	UN	Qty	Description	Page No

This page is intentionally left blank.

ECM: 72407 - 19990715
Group number: 559274-0100
Assembly Drawing:

Pos	Part No	SP	UN	Qty	Description	Page No
-						
0010	351173-0105	-	M	5	CABLE AWM 1X25 MM2 LIGHT-BLUE	
0020	351179-0105	-	M	8	CABLE AWM 1X25 MM2 BLACK	
0030	351176-0102	-	M	2	CABLE AWM 1X075 MM2 RED	
0040	351172-0102	-	M	50	CABLE AWM 1X 0,75 MM2 DARK-BLUE	
0050	90097-0019	-		15	FLAT PIN PLUG 2,8MM	
0060	90194-0302	-		1	MARKING LABELS REBUILDING KIT	
0070	353101-0120	-		3	KABELSKO 1,25-4MM2	
0080	353101-0130	-		3	CABLE SHOE 1,5-2,5MM2 BLUE	
0100	1360568-0000	-		1	NEUTRAL AND GROUND TERMINAL X2.3	
A143	90031-0057	-		1	PLC, DIGITAL INPUT MODULE	
A144	90031-0059	-		1	PLC, DIGITAL OUTPUT MODULE	
A910	90410-0051	-		1	TEMPERATURE CONTROLLER, KS 40	
A910:1	359241-0144	-		1	SIGN, INTERNAL STRIP, AUTO SPLICE	
K910	90119-0067	-		1	SOLID-STATE RELAY, H12WD4850	
W910	90220-0059	-	M	2	THERMOCOUPLE CABLE K/ 2X0,81MM2	
W911	351150-0412	-	M	3	CABLE OLFLEX 3X1,5 MM2 LIGHT/GREY	
W912	90220-0059	-	M	2	THERMOCOUPLE CABLE K/ 2X0,81MM2	
W913	351150-0407	-	M	2	CABLE OLFLEX 12X0,75 MM2 LIGHT/GREY	
W914	1143884-0000	-		1	COPPER BRAID	
W917	351150-0405	-	M	1	CABLE OLFLEX 5X0,75 MM2 LIGHT/GREY	

Pos	Part No	SP	UN	Qty	Description	Page No

Machine Type | Group Description | Used-In | Group Number | Page No

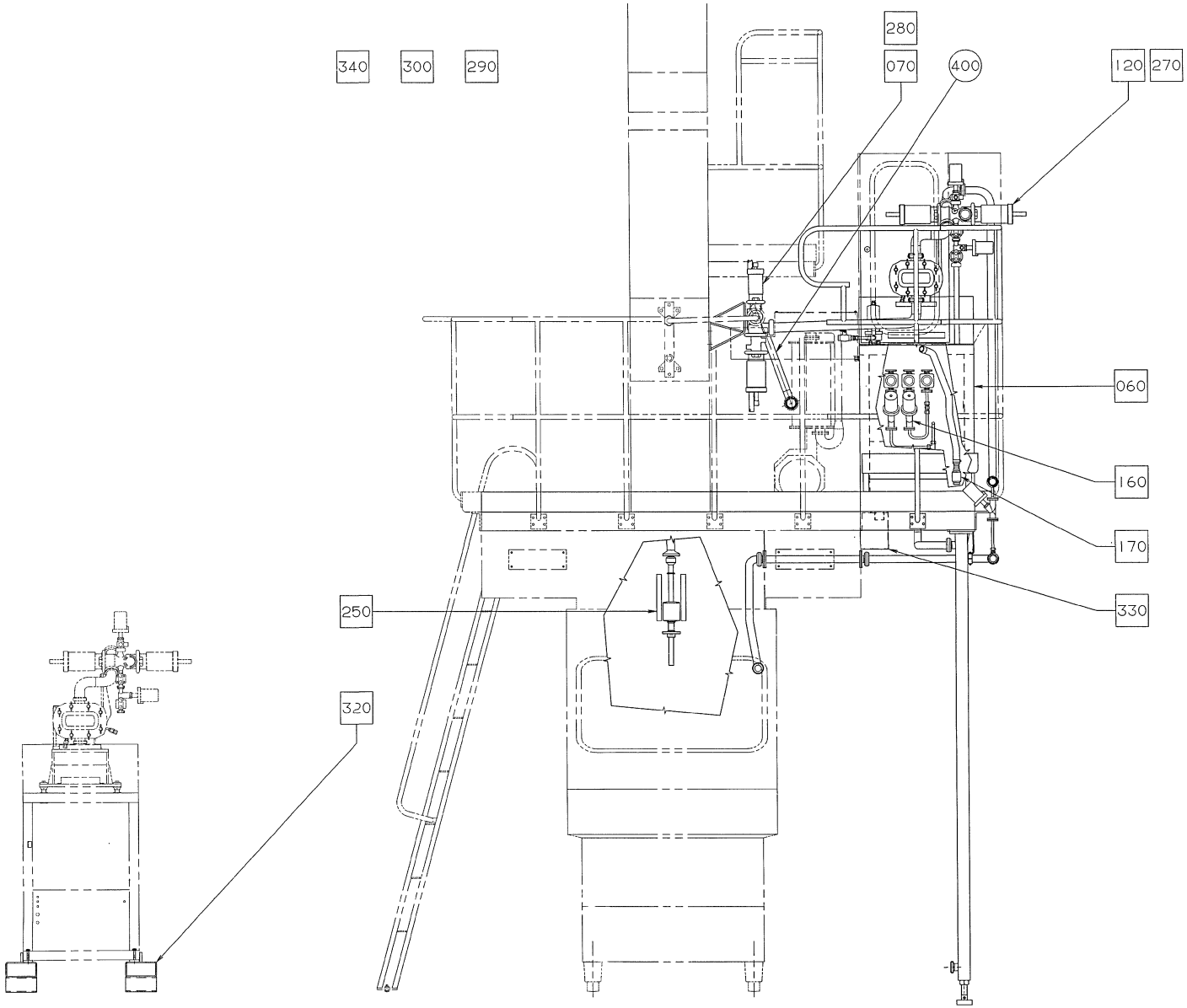
340
300
290
280
070
400
120
270
060
160
170
330
250
320

ECM: 71687 - 19990526
Group number: 925400-0400
Assembly Drawing: 925400-1_1_AA

This list covers pages from 10-48 to 10-51

Pos	Part No	SP	UN	Qty	Description	Page No
TBA/8-110V						
	1361310-0000	-		1	DOCUMENT FOLDER	
340	A925421-0200	-		1	REGULAR ACCESSORIES	**10-53**
370	A559275-0100	-		1	DOCKING OF HVA KIT-0300	**10-59**
Common Parts						
020	A925401-0300	-		1	PUMP GROUP	**10-69, 10-71, 10-73, 10-75**
050	A925402-0100	-		1	PLATFORM	**10-81**
060	A925403-0100	-		1	FRAME	**10-83**
070	A925404-0100	-		1	VALVE GROUP B-C	**10-85**
120	A925405-0100	-		1	EXTERNAL VALVE GROUP	**10-95**
160	A925406-0100	-		1	STEAM CIRCUIT	**10-101, 10-103**
170	A925407-0100	-		1	DISCHARGE UNIT	**10-105**
180	A925408-0100	-		1	PNEUMATIC CIRCUIT	**10-107, 10-109**
190	A925409-0100	-		1	VALVE PANEL	**10-111**
200	A925410-0100	-		1	CLEANING CIRCUIT	**10-113, 10-115**
210	A925411-0100	-		1	AIR SUPPLY	**10-117**
250	A925414-0200	-		1	LEVEL CONTROL DEVICE	**10-119, 10-121**
270	A925415-0100	-		1	EXT. PRODUCT VALVE SUPPLY	**10-127**
280	A925416-0100	-		1	PRODUCT VALVE B-C SUPPLY	**10-129**
290	A925417-0100	-		1	START-UP KIT	**10-131**
300	A925418-0100	-		1	ASSEMBLY TOOL	**10-133**
320	A925419-0100	-		1	BED	**10-135**
330	A925420-0100	-		1	ELECTRIC CONDUIT	**10-137, 10-139**
360	A925422-0200	-		1	TOUCH GUARD	**10-141, 10-143**
390	A649440-0300	-		1	ELECTRIC EQUIPMENT	**10-145**
400	924716-0000	-		1	U-TUBE	

Pos	Part No	SP	UN	Qty	Description	Page No

Machine Type | Group Description | Used-In | Group Number | Page No

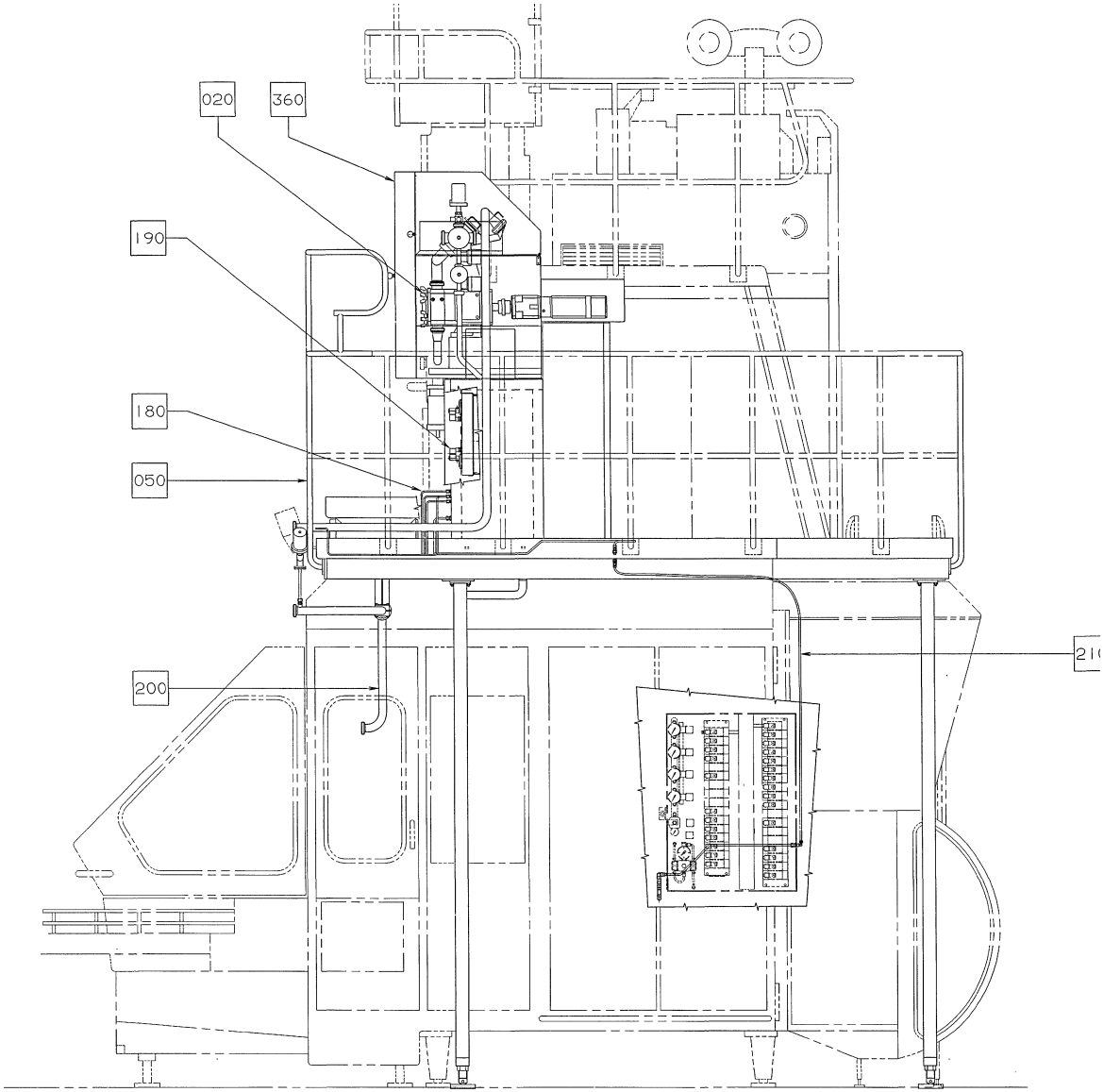
020
360
190
180
050
200

ECM: 71687 - 19990526
Group number: 925400-0400
Assembly Drawing: 925400-2_1_AA

This list covers pages from 10-48 to 10-51

Pos	Part No	SP	UN	Qty	Description	Page No
TBA/8-110V						
	1361310-0000	-		1	DOCUMENT FOLDER	
340	A925421-0200	-		1	REGULAR ACCESSORIES	**10-53**
370	A559275-0100	-		1	DOCKING OF HVA KIT-0300	**10-59**
Common Parts						
020	A925401-0300	-		1	PUMP GROUP	**10-69, 10-71, 10-73, 10-75**
050	A925402-0100	-		1	PLATFORM	**10-81**
060	A925403-0100	-		1	FRAME	**10-83**
070	A925404-0100	-		1	VALVE GROUP B-C	**10-85**
120	A925405-0100	-		1	EXTERNAL VALVE GROUP	**10-95**
160	A925406-0100	-		1	STEAM CIRCUIT	**10-101, 10-103**
170	A925407-0100	-		1	DISCHARGE UNIT	**10-105**
180	A925408-0100	-		1	PNEUMATIC CIRCUIT	**10-107, 10-109**
190	A925409-0100	-		1	VALVE PANEL	**10-111**
200	A925410-0100	-		1	CLEANING CIRCUIT	**10-113, 10-115**
210	A925411-0100	-		1	AIR SUPPLY	**10-117**
250	A925414-0200	-		1	LEVEL CONTROL DEVICE	**10-119, 10-121**
270	A925415-0100	-		1	EXT. PRODUCT VALVE SUPPLY	**10-127**
280	A925416-0100	-		1	PRODUCT VALVE B-C SUPPLY	**10-129**
290	A925417-0100	-		1	START-UP KIT	**10-131**
300	A925418-0100	-		1	ASSEMBLY TOOL	**10-133**
320	A925419-0100	-		1	BED	**10-135**
330	A925420-0100	-		1	ELECTRIC CONDUIT	**10-137, 10-139**
360	A925422-0200	-		1	TOUCH GUARD	**10-141, 10-143**
390	A649440-0300	-		1	ELECTRIC EQUIPMENT	**10-145**
400	924716-0000	-		1	U-TUBE	

Pos	Part No	SP	UN	Qty	Description	Page No

Machine Type | Group Description | Used-In | Group Number | Page No

This page is intentionally left blank.

ECM: 71319 - 19980521
Group number: 925421-0200
Assembly Drawing:

Pos	Part No	SP	UN	Qty	Description	Page No
0355B						
060	926759-0000	-		1	PRODUCT PIPE	
070	925625-0000	-		1	FLANGE	
080	927407-0000	-		1	FLANGE	
100	90217-0035	-		1	NUT	
0375S						
060	926759-0000	-		1	PRODUCT PIPE	
070	925627-0000	-		1	FLANGE	
080	927408-0000	-		1	FLANGE	
100	90217-0035	-		1	NUT	
0500B						
060	926758-0000	-		1	PRODUCT PIPE	
070	925624-0000	-		1	FLANGE	
070	925623-0000	-		1	FLANGE	
080	927404-0000	-		1	FLANGE	
100	90217-0047	-		1	BLANKING OFF NUT, RD 70-6 (SMS 51)	
0500S						
060	926758-0000	-		1	PRODUCT PIPE	
080	927406-0000	-		1	FLANGE	
100	90217-0047	-		1	BLANKING OFF NUT, RD 70-6 (SMS 51)	
0750B						
060	926758-0000	-		1	PRODUCT PIPE	
070	925621-0000	-		1	FLANGE	
080	927405-0000	-		1	FLANGE	
100	90217-0047	-		1	BLANKING OFF NUT, RD 70-6 (SMS 51)	
1000B						
060	926758-0000	-		1	PRODUCT PIPE	
070	925622-0000	-		1	FLANGE	
080	927404-0000	-		1	FLANGE	
100	90217-0047	-		1	BLANKING OFF NUT, RD 70-6 (SMS 51)	
1000SQ						
060	926758-0000	-		1	PRODUCT PIPE	
070	1334483-0000	-		1	FLANGE	
080	1334484-0000	-		1	FLANGE	
100	90217-0047	-		1	BLANKING OFF NUT, RD 70-6 (SMS 51)	

Pos	Part No	SP	UN	Qty	Description	Page No
Common Parts						
	925781-1_1_AB.hpgl	-		1	INSTALLATION DRAWING	
010	925676-0000	-		1	AIR/STEAM DIAGRAM	
030	1334319-0000	-		1	PNEUMATIC DIAGRAM	
050	925675-0000	-		1	VALVE PANEL	
130	90321-0553	-		1	MANDREL	
140	90321-0554	-		1	KEY	
340	A925670-0100	-		1	PULLER	**10-55**
350	A795900-0100	-		1	TOOL	**10-57**

Machine Type | Group Description | Used-In | Group Number | Page No

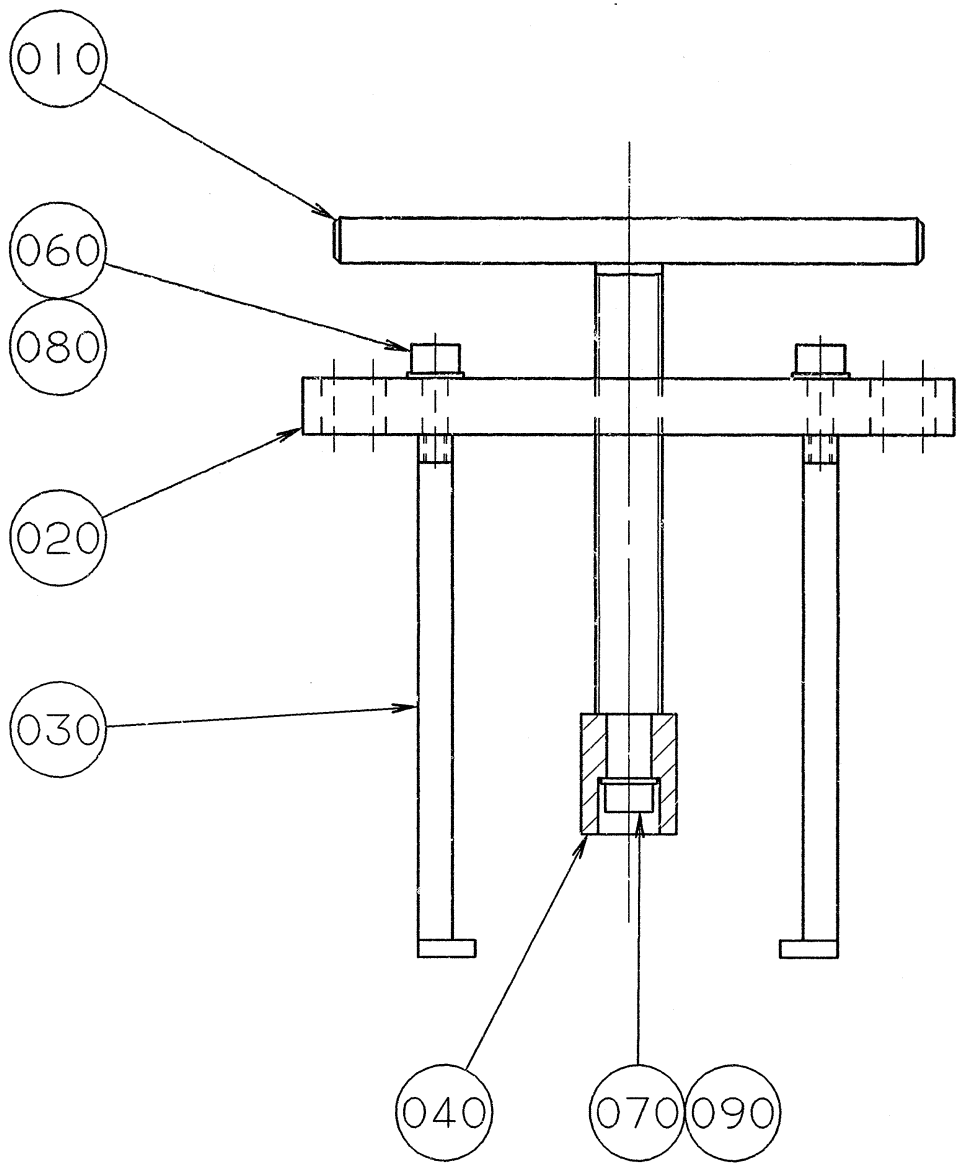
010
060
080
020
030
040
070
090

ECM: - -
Group number: 925670-0100
Assembly Drawing: 925670-1_1_AA

Pos	Part No	SP	UN	Qty	Description	Page No
-						
010	925672-0000	-		1	WING SCREW	
020	925673-0000	-		1	BEAM	
030	925674-0000	-		2	ARM	
040	925671-0000	-		1	BUSHING	
060	312115-0293	-		4	SCREW ISO4762 M4X16 A4	
070	312115-0323	-		1	SCREW ISO4762 M5X8 A4	
080	315105-0136	-		4	WASHER BRB4,3XRFR	
090	315105-0146	-		1	BRICKA BRB5,3X10RFR	

Pos	Part No	SP	UN	Qty	Description	Page No

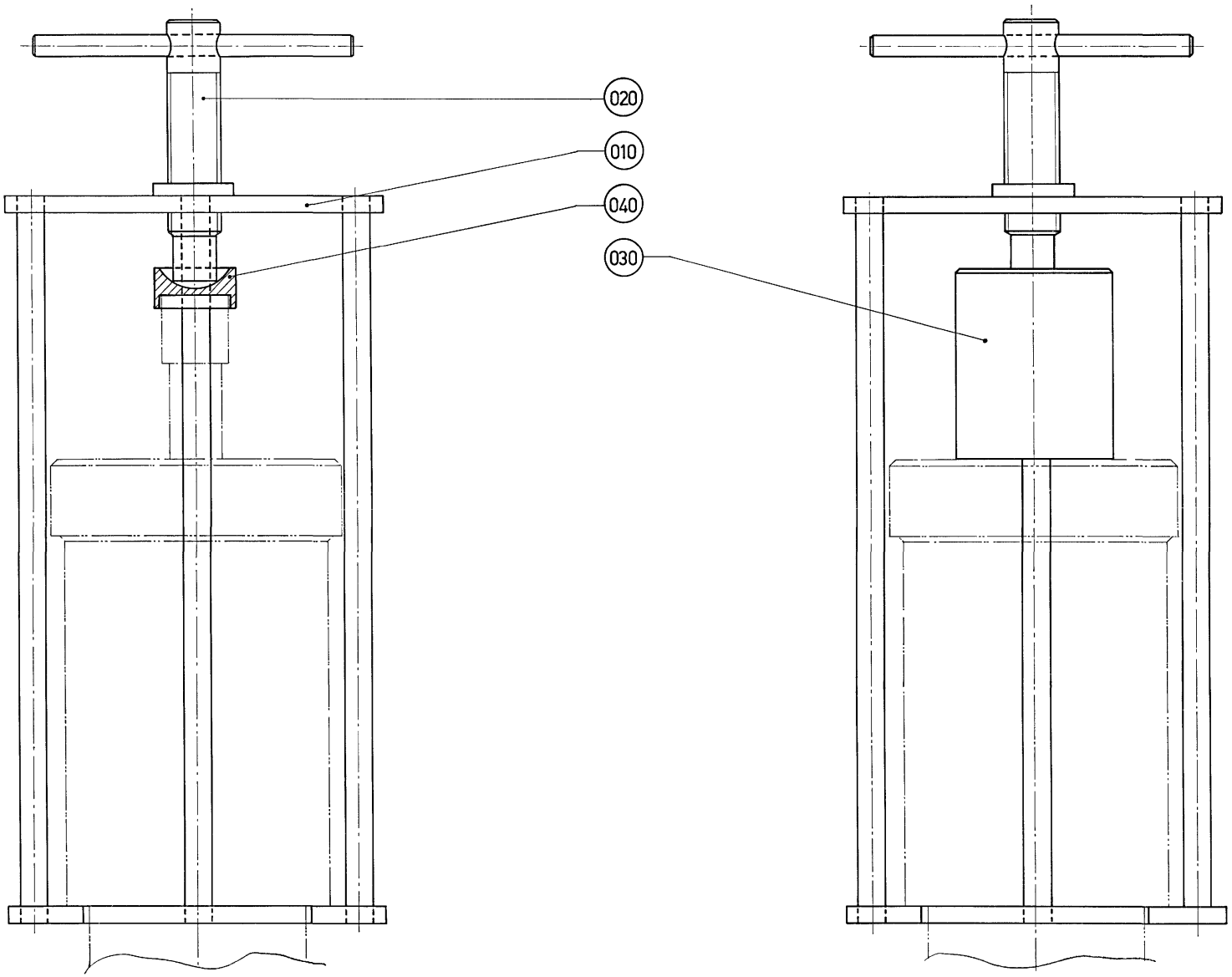
020
010
040
030

ECM: - -
Group number: 795900-0100
Assembly Drawing: 795900-1_1_AA

Pos	Part No	SP	UN	Qty	Description	Page No
-						
010	795897-0000	-		1	FRAME	
020	795898-0000	-		1	HANDLE	
030	795905-0000	-		1	BUSHING	
040	795899-0000	-		1	BUSHING	

Pos	Part No	SP	UN	Qty	Description	Page No

This page is intentionally left blank.

ECM: 71845 - 19981120
Group number: 559275-0100
Assembly Drawing:

Pos	Part No	SP	UN	Qty	Description	Page No
-						
0010	A559276-0100	-		1	ELECTRICAL DOCUMENT	
0020	A559277-0100	-		1	ELECTRIC MATERIALS	**10-61**

Pos	Part No	SP	UN	Qty	Description	Page No

Machine Type | Group Description | Used-In | Group Number | Page No

This page is intentionally left blank.

ECM: 71845 - 19981120
Group number: 559277-0100
Assembly Drawing:

Pos	Part No	SP	UN	Qty	Description	Page No
-						
0003	90194-0302	-		1	MARKING LABELS REBUILDING KIT	
0005	351179-0106	-	MM	6000	CABLE AWM 1X4 MM2 BLACK	
0010	351173-0106	-	MM	3000	CABLE AWM 1X4 MM2 LIGHT-BLUE	
0015	351176-0102	-	MM	7000	CABLE AWM 1X075 MM2 RED	
0020	351172-0102	-	M	100	CABLE AWM 1X 0,75 MM2 DARK-BLUE	
0025	351175-0102	-	MM	6000	CABLE AWM 1X 075 MM2 YELLOW-GREEN	
0045	1347406-0000	-		1	FUSE PANEL HVA KIT	
0850	351150-0186	-	MM	7000	CABLE OLFLEX 5X4 MM2 LIGHT/GREY	
0852	351150-0425	-	MM	6000	CABLE OLFLEX 25X0,75 MM2 LIGHT/GREY	
0853	351150-0425	-	MM	6000	CABLE OLFLEX 25X0,75 MM2 LIGHT/GREY	
0854	90220-0034	-	MM	6000	THERMOCOUPLE CABLE K/ 2X0,5MM2	
0890	351150-0403	-	M	50	CABLE OLFLEX 3X0,75 MM2 LIGHT/GREY	
0891	351150-0403	-	M	50	CABLE OLFLEX 3X0,75 MM2 LIGHT/GREY	
A130	90031-0057	-		1	PLC, DIGITAL INPUT MODULE	
A144	90031-0059	-		1	PLC, DIGITAL OUTPUT MODULE	
A145	90031-0059	-		1	PLC, DIGITAL OUTPUT MODULE	
F550	90007-0150	-		1	CIRCUIT BREAKER, 3P 25 A K	
X003	A1347206-0000	-		1	TERMINAL BLOCK	**10-63**
X113	90110-0057	-		1	FEMALE INSERT HAN 24 E 09 33 002 4201	
X113:1	90110-0334	-		4	SCREW HARTING	
X113:2	90110-0128	-		1	MALE INSERT, HAN 24 E-M 933 024 2631	
X114	90110-0057	-		1	FEMALE INSERT HAN 24 E 09 33 002 4201	
X114:1	90110-0334	-		4	SCREW HARTING	
X114:2	90110-0128	-		1	MALE INSERT, HAN 24 E-M 933 024 2631	
X550:1	A1347207-0000	-		1	TERMINAL BLOCK	**10-65**
X550:2	A1347208-0000	-		1	TERMINAL BLOCK	**10-67**

Pos	Part No	SP	UN	Qty	Description	Page No

Machine Type | Group Description | Used-In | Group Number | Page No

This page is intentionally left blank.

ECM: 71269 - 19980515
Group number: 1347206-0000
Assembly Drawing:

Pos	Part No	SP	UN	Qty	Description	Page No
-						
:1	359011-0820	-		1	MARKING PLATES 5-FW 501-550	

Pos	Part No	SP	UN	Qty	Description	Page No

This page is intentionally left blank.

ECM: 71269 - 19980515
Group number: 1347207-0000
Assembly Drawing:

Pos	Part No	SP	UN	Qty	Description	Page No
-						
:1	353024-0206	-		1	EARTH TERMINAL, 1010.2	
:2	353021-0214	-		4	FEED THROUGH TERMINAL, 10202.0	
:3	359011-0807	-		2	MARKING PLATES 5-FW 1-50	
:4	353031-0203	-		1	END SUPPORT, WEW 35/2	
:5	359011-0819	-		2	MARKING PLATES 5-GW (EARTH)	

Pos	Part No	SP	UN	Qty	Description	Page No

This page is intentionally left blank.

ECM: 71269 - 19980515
Group number: 1347208-0000
Assembly Drawing:

Pos	Part No	SP	UN	Qty	Description	Page No
-						
:1	353024-0204	-		2	EARTH TERMINAL WPE 2,5	
:2	353021-0216	-		5	FEED THROUGH TERMINAL, 10200.8	
:3	353031-0203	-		1	END SUPPORT, WEW 35/2	
:4	353032-0004	-		1	END PLATE WAP 2,5-10 BEIGE	
:5	359011-0807	-		2	MARKING PLATES 5-FW 1-50	
:6	359011-0819	-		2	MARKING PLATES 5-GW (EARTH)	

Pos	Part No	SP	UN	Qty	Description	Page No

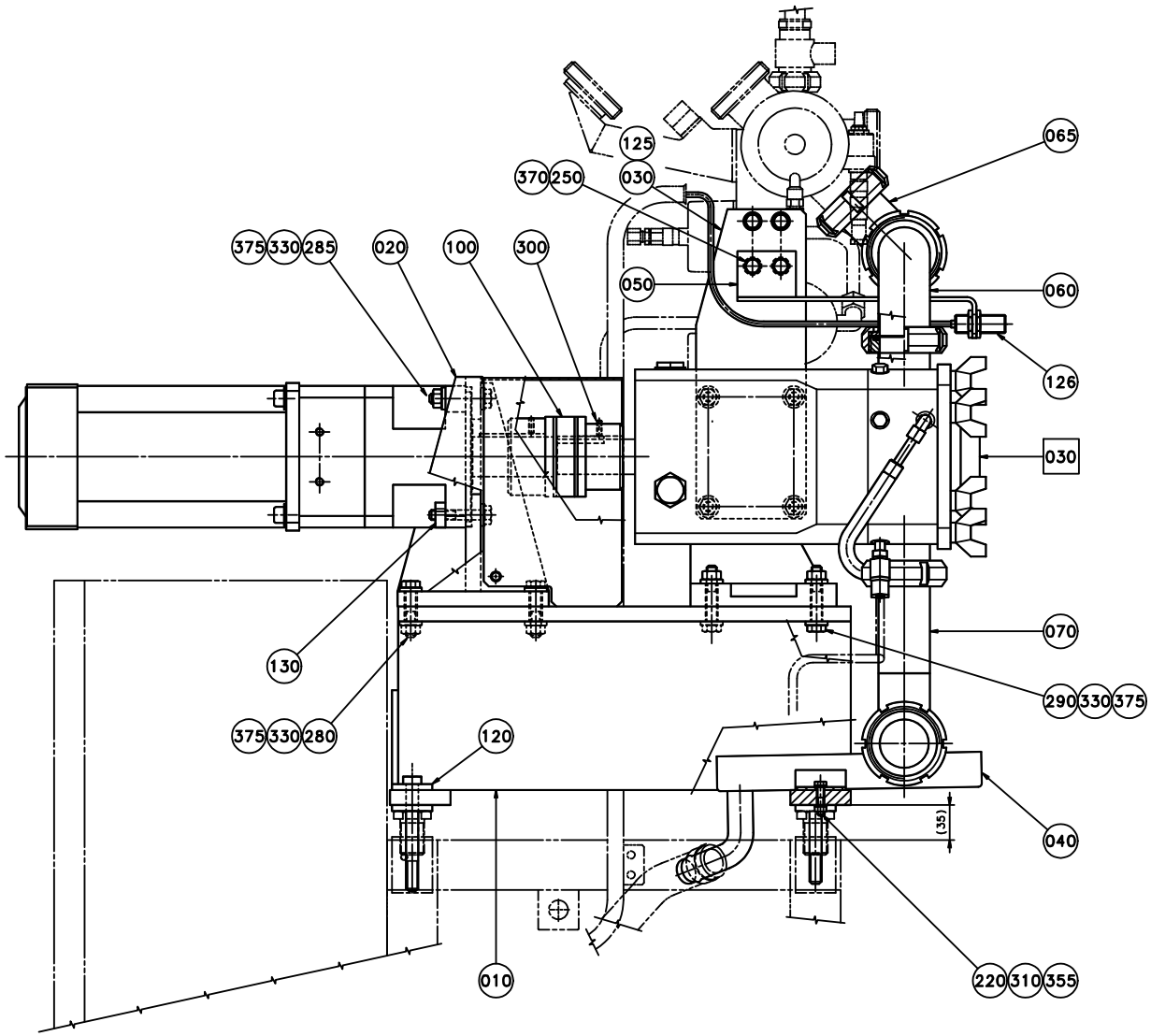
125
370 250
030
065
375 330 285
020
100
300
050
060
126
030
130
070
290 330 375
375 330 280
120
040
(35)
010
220 310 355

ECM: 71777 - 19980716
Group number: 925401-0300
Assembly Drawing: 925401-9_1_AA

This list covers pages from 10-68 to 10-75

Pos	Part No	SP	UN	Qty	Description	Page No
0375S, 0355B (See drawing on pages: 10-72, 10-74)						
020	925633-0000	-		1	SUPPORT	
030	925635-0000	-		1	HOLDER	
060	925638-0000	-		1	PRODUCT PIPE	
065	926757-0000	-		1	PRODUCT PIPE	
070	925640-0000	-		1	PRODUCT PIPE	
090	925642-0000	-		1	COVER	
100	925644-0000	-		1	JOINT	
110	12242-0003	C		1	GASKET 48X38X5,5	
130	925648-0000	-		2	NUT	
150	90045-0194	D		1	SERVO MOTOR EP 115-131-66T3B	
160	90056-0149	D		1	GEARS, PLANETARY PL115-4-M2	
230	312115-0455	-		4	SCREW ISO4762 M8X30 A4	
235	312105-0451	-		2	SCREW M6S ISO 4017 M8X20 A480	
240	312105-0460	-		4	SCREW M6S ISO 4014 M8X45 A480	
295	312316-0325	-		2	SCREW HEX.SOCK.SET CUP P.MSK6SS5X10 FZB	
320	312605-0318	-		2	HEXAGON NUT, M6M M8 A280	
330	312812-0320	-		8	HEXAGON NUT, NY-LOCK M10 A480	
360	315105-0165	-		4	WASHER BRB8,4X16RFR	
370	315115-0165	-		12	WASHER PLAIN, TBRB 8,4/16 H=3	
375	315115-0173	-		20	WASHER PLAIN, TBRB 10,5/22 H=4	
F030	A925425-0100	-		1	PUMP	**10-77**
0500B, 1000SQ, 0500S, 0750B, 1000B (See drawing on pages: 10-68, 10-70)						
020	925632-0000	-		1	SUPPORT	
030	925634-0000	-		1	HOLDER	
060	925637-0000	-		1	PRODUCT PIPE	
065	926756-0000	-		1	PRODUCT PIPE	
070	925639-0000	-		1	PRODUCT PIPE	
090	925641-0000	-		1	COVER	
100	925643-0000	-		1	JOINT	
110	12242-0005	C		1	GASKET 61X51X5,5	
130	925647-0000	-		2	NUT	
150	90045-0197	D		1	SERVO MOTOR EP 165-090-66T3B	
160	90056-0125	D		1	GEARS, PLANETARY PL142-4-M2	
270	312115-0495	-		4	SCREW ISO4762 M10X30 A4	
290	312105-0503	-		4	SCREW M6S ISO 4014 M10X60 A480	
300	312316-0329	-		2	SCREW HEX.SOCK.SET CUP P.MSK6SS5X16 FZB	
330	312812-0320	-		10	HEXAGON NUT, NY-LOCK M10 A480	
365	315105-0173	-		4	WASHER BRB10,5X22RFR	
370	315115-0165	-		4	WASHER PLAIN, TBRB 8,4/16 H=3	
375	315115-0173	-		26	WASHER PLAIN, TBRB 10,5/22 H=4	

Pos	Part No	SP	UN	Qty	Description	Page No
F030	A925424-0100	-		1	PUMP	**10-79**
Common Parts						
010	925631-0000	-		1	SUPPORT	
040	925636-0000	-		1	SPLASH GUARD	
050	1347497-0000	-		1	HOLDER	
120	735922-0000	-		4	WASHER	
125	735934-0000	-		2	SPACER	
126	90044-0126	D		1	PROX.SW. 922AA3XM-A9P-060-LZ876	
127	926732-0000	-		1	SLEEVE	
128	1350713-0000	-		1	SLEEVE	
200	312104-0552	-		4	SCREW M6S M12X100H FZB	
210	312105-0327	-		2	SCREW M6S ISO 4017 M5X12 A480	
220	312105-0374	-		2	SCREW M6S ISO 4014 M6X30 A480	
250	312105-0464	-		4	SCREW M6S ISO 4014 M8X65 A480	
260	312105-0493	-		4	SCREW M6S ISO 4017 M10X25 A480	
280	312105-0501	-		4	SCREW M6S ISO 4014 M10X50 A480	
285	312105-0502	-		4	SCREW M6S ISO 4014 M10X55 A480	
310	312605-0316	-		2	HEXAGON NUT, M6M M6 A280	
350	315105-0146	-		2	BRICKA BRB5,3X10RFR	
355	315105-0153	-		4	WASHER BRB6,4X12RFR	
380	315701-0266	-		1	PARALLEL KEY W. ROUND ENDS 8X7X28 MM	
400	352135-0106	-	M	2	SPIRAL CONDUIT DI=16 MM	
410	352135-0109	-	M	2	HOSE .022	
420	352103-0108	-		1	CABLE GLAND, ST 13,5 , PR20,4/PG13,5	
430	352103-0116	-		1	CABLE GLAND, ST 21, PR28,3/PG21	
440	353245-0005	-		1	GLAND, EXTENDED WITH INSERT, PG16/PR 22,	
450	352136-0128	-		1	GLAND FITTING	
460	352136-0143	-		1	GLAND FITTING	

Machine Type | Group Description | Used-In | Group Number | Page No

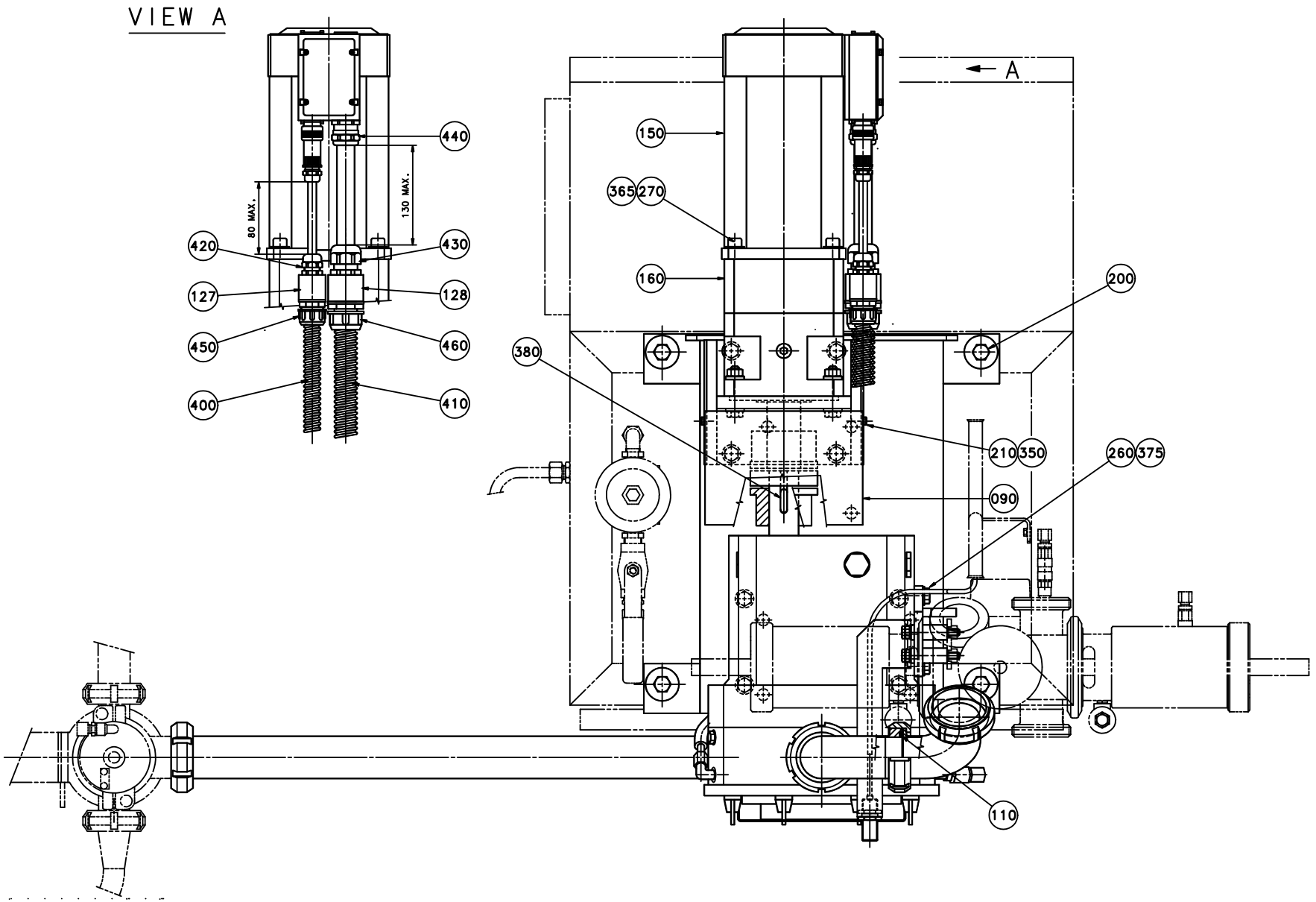
VIEW A
A
440
80 MAX.
130 MAX.
420
430
127
128
450
460
400
410
150
365
270
160
200
380
210
350
260
375
090
110

ECM: 71777 - 19980716
Group number: 925401-0300
Assembly Drawing: 925401-10_1_AA

This list covers pages from 10-68 to 10-75

Pos	Part No	SP	UN	Qty	Description	Page No
0375S, 0355B (See drawing on pages: 10-72, 10-74)						
020	925633-0000	-		1	SUPPORT	
030	925635-0000	-		1	HOLDER	
060	925638-0000	-		1	PRODUCT PIPE	
065	926757-0000	-		1	PRODUCT PIPE	
070	925640-0000	-		1	PRODUCT PIPE	
090	925642-0000	-		1	COVER	
100	925644-0000	-		1	JOINT	
110	12242-0003	C		1	GASKET 48X38X5,5	
130	925648-0000	-		2	NUT	
150	90045-0194	D		1	SERVO MOTOR EP 115-131-66T3B	
160	90056-0149	D		1	GEARS, PLANETARY PL115-4-M2	
230	312115-0455	-		4	SCREW ISO4762 M8X30 A4	
235	312105-0451	-		2	SCREW M6S ISO 4017 M8X20 A480	
240	312105-0460	-		4	SCREW M6S ISO 4014 M8X45 A480	
295	312316-0325	-		2	SCREW HEX.SOCK.SET CUP P.MSK6SS5X10 FZB	
320	312605-0318	-		2	HEXAGON NUT, M6M M8 A280	
330	312812-0320	-		8	HEXAGON NUT, NY-LOCK M10 A480	
360	315105-0165	-		4	WASHER BRB8,4X16RFR	
370	315115-0165	-		12	WASHER PLAIN, TBRB 8,4/16 H=3	
375	315115-0173	-		20	WASHER PLAIN, TBRB 10,5/22 H=4	
F030	A925425-0100	-		1	PUMP	**10-77**
0500B, 1000SQ, 0500S, 0750B, 1000B (See drawing on pages: 10-68, 10-70)						
020	925632-0000	-		1	SUPPORT	
030	925634-0000	-		1	HOLDER	
060	925637-0000	-		1	PRODUCT PIPE	
065	926756-0000	-		1	PRODUCT PIPE	
070	925639-0000	-		1	PRODUCT PIPE	
090	925641-0000	-		1	COVER	
100	925643-0000	-		1	JOINT	
110	12242-0005	C		1	GASKET 61X51X5,5	
130	925647-0000	-		2	NUT	
150	90045-0197	D		1	SERVO MOTOR EP 165-090-66T3B	
160	90056-0125	D		1	GEARS, PLANETARY PL142-4-M2	
270	312115-0495	-		4	SCREW ISO4762 M10X30 A4	
290	312105-0503	-		4	SCREW M6S ISO 4014 M10X60 A480	
300	312316-0329	-		2	SCREW HEX.SOCK.SET CUP P.MSK6SS5X16 FZB	
330	312812-0320	-		10	HEXAGON NUT, NY-LOCK M10 A480	
365	315105-0173	-		4	WASHER BRB10,5X22RFR	
370	315115-0165	-		4	WASHER PLAIN, TBRB 8,4/16 H=3	
375	315115-0173	-		26	WASHER PLAIN, TBRB 10,5/22 H=4	

Pos	Part No	SP	UN	Qty	Description	Page No
F030	A925424-0100	-		1	PUMP	**10-79**
Common Parts						
010	925631-0000	-		1	SUPPORT	
040	925636-0000	-		1	SPLASH GUARD	
050	1347497-0000	-		1	HOLDER	
120	735922-0000	-		4	WASHER	
125	735934-0000	-		2	SPACER	
126	90044-0126	D		1	PROX.SW. 922AA3XM-A9P-060-LZ876	
127	926732-0000	-		1	SLEEVE	
128	1350713-0000	-		1	SLEEVE	
200	312104-0552	-		4	SCREW M6S M12X100H FZB	
210	312105-0327	-		2	SCREW M6S ISO 4017 M5X12 A480	
220	312105-0374	-		2	SCREW M6S ISO 4014 M6X30 A480	
250	312105-0464	-		4	SCREW M6S ISO 4014 M8X65 A480	
260	312105-0493	-		4	SCREW M6S ISO 4017 M10X25 A480	
280	312105-0501	-		4	SCREW M6S ISO 4014 M10X50 A480	
285	312105-0502	-		4	SCREW M6S ISO 4014 M10X55 A480	
310	312605-0316	-		2	HEXAGON NUT, M6M M6 A280	
350	315105-0146	-		2	BRICKA BRB5,3X10RFR	
355	315105-0153	-		4	WASHER BRB6,4X12RFR	
380	315701-0266	-		1	PARALLEL KEY W. ROUND ENDS 8X7X28 MM	
400	352135-0106	-	M	2	SPIRAL CONDUIT DI=16 MM	
410	352135-0109	-	M	2	HOSE .022	
420	352103-0108	-		1	CABLE GLAND, ST 13,5 , PR20,4/PG13,5	
430	352103-0116	-		1	CABLE GLAND, ST 21, PR28,3/PG21	
440	353245-0005	-		1	GLAND, EXTENDED WITH INSERT, PG16/PR 22,	
450	352136-0128	-		1	GLAND FITTING	
460	352136-0143	-		1	GLAND FITTING	

Machine Type | Group Description | Used-In | Group Number | Page No

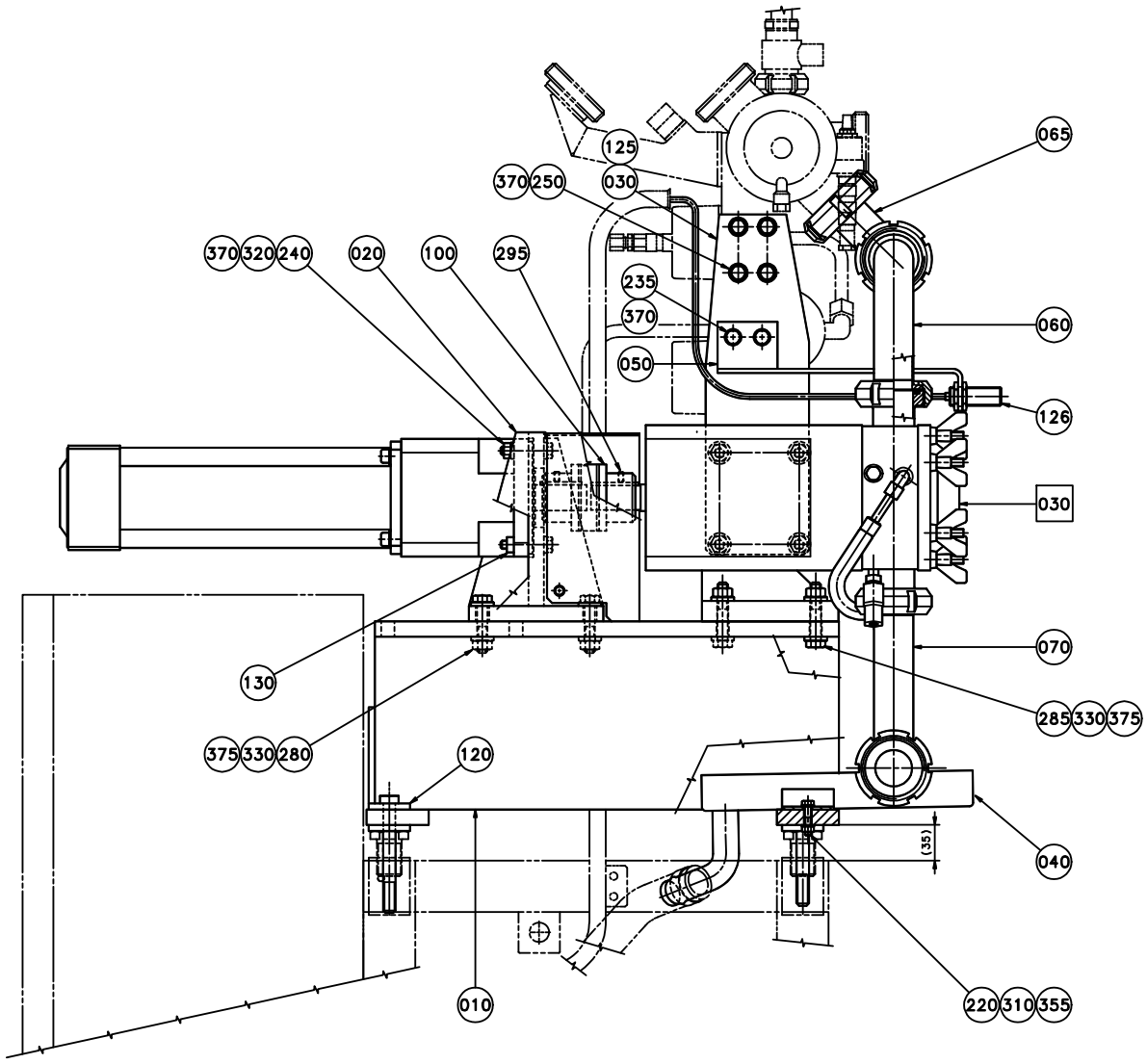
065
125
370 250
030
370 320 240
020
100
295
235
370
060
050
126
030
070
130
285 330 375
375 330 280
120
040
(35)
010
220 310 355

ECM: 71777 - 19980716
Group number: 925401-0300
Assembly Drawing: 925401-11_1_AA

This list covers pages from 10-68 to 10-75

Pos	Part No	SP	UN	Qty	Description	Page No
0375S, 0355B (See drawing on pages: 10-72, 10-74)						
020	925633-0000	-		1	SUPPORT	
030	925635-0000	-		1	HOLDER	
060	925638-0000	-		1	PRODUCT PIPE	
065	926757-0000	-		1	PRODUCT PIPE	
070	925640-0000	-		1	PRODUCT PIPE	
090	925642-0000	-		1	COVER	
100	925644-0000	-		1	JOINT	
110	12242-0003	C		1	GASKET 48X38X5,5	
130	925648-0000	-		2	NUT	
150	90045-0194	D		1	SERVO MOTOR EP 115-131-66T3B	
160	90056-0149	D		1	GEARS, PLANETARY PL115-4-M2	
230	312115-0455	-		4	SCREW ISO4762 M8X30 A4	
235	312105-0451	-		2	SCREW M6S ISO 4017 M8X20 A480	
240	312105-0460	-		4	SCREW M6S ISO 4014 M8X45 A480	
295	312316-0325	-		2	SCREW HEX.SOCK.SET CUP P.MSK6SS5X10 FZB	
320	312605-0318	-		2	HEXAGON NUT, M6M M8 A280	
330	312812-0320	-		8	HEXAGON NUT, NY-LOCK M10 A480	
360	315105-0165	-		4	WASHER BRB8,4X16RFR	
370	315115-0165	-		12	WASHER PLAIN, TBRB 8,4/16 H=3	
375	315115-0173	-		20	WASHER PLAIN, TBRB 10,5/22 H=4	
F030	A925425-0100	-		1	PUMP	**10-77**
0500B, 1000SQ, 0500S, 0750B, 1000B (See drawing on pages: 10-68, 10-70)						
020	925632-0000	-		1	SUPPORT	
030	925634-0000	-		1	HOLDER	
060	925637-0000	-		1	PRODUCT PIPE	
065	926756-0000	-		1	PRODUCT PIPE	
070	925639-0000	-		1	PRODUCT PIPE	
090	925641-0000	-		1	COVER	
100	925643-0000	-		1	JOINT	
110	12242-0005	C		1	GASKET 61X51X5,5	
130	925647-0000	-		2	NUT	
150	90045-0197	D		1	SERVO MOTOR EP 165-090-66T3B	
160	90056-0125	D		1	GEARS, PLANETARY PL142-4-M2	
270	312115-0495	-		4	SCREW ISO4762 M10X30 A4	
290	312105-0503	-		4	SCREW M6S ISO 4014 M10X60 A480	
300	312316-0329	-		2	SCREW HEX.SOCK.SET CUP P.MSK6SS5X16 FZB	
330	312812-0320	-		10	HEXAGON NUT, NY-LOCK M10 A480	
365	315105-0173	-		4	WASHER BRB10,5X22RFR	
370	315115-0165	-		4	WASHER PLAIN, TBRB 8,4/16 H=3	
375	315115-0173	-		26	WASHER PLAIN, TBRB 10,5/22 H=4	
F030	A925424-0100	-		1	PUMP	**10-79**
Common Parts						
010	925631-0000	-		1	SUPPORT	
040	925636-0000	-		1	SPLASH GUARD	
050	1347497-0000	-		1	HOLDER	
120	735922-0000	-		4	WASHER	
125	735934-0000	-		2	SPACER	
126	90044-0126	D		1	PROX.SW. 922AA3XM-A9P-060-LZ876	
127	926732-0000	-		1	SLEEVE	
128	1350713-0000	-		1	SLEEVE	
200	312104-0552	-		4	SCREW M6S M12X100H FZB	
210	312105-0327	-		2	SCREW M6S ISO 4017 M5X12 A480	
220	312105-0374	-		2	SCREW M6S ISO 4014 M6X30 A480	
250	312105-0464	-		4	SCREW M6S ISO 4014 M8X65 A480	
260	312105-0493	-		4	SCREW M6S ISO 4017 M10X25 A480	
280	312105-0501	-		4	SCREW M6S ISO 4014 M10X50 A480	
285	312105-0502	-		4	SCREW M6S ISO 4014 M10X55 A480	
310	312605-0316	-		2	HEXAGON NUT, M6M M6 A280	
350	315105-0146	-		2	BRICKA BRB5,3X10RFR	
355	315105-0153	-		4	WASHER BRB6,4X12RFR	
380	315701-0266	-		1	PARALLEL KEY W. ROUND ENDS 8X7X28 MM	
400	352135-0106	-	M	2	SPIRAL CONDUIT DI=16 MM	
410	352135-0109	-	M	2	HOSE .022	
420	352103-0108	-		1	CABLE GLAND, ST 13,5 , PR20,4/PG13,5	
430	352103-0116	-		1	CABLE GLAND, ST 21, PR28,3/PG21	
440	353245-0005	-		1	GLAND, EXTENDED WITH INSERT, PG16/PR 22,	
450	352136-0128	-		1	GLAND FITTING	
460	352136-0143	-		1	GLAND FITTING	

Machine Type | Group Description | Used-In | Group Number | Page No

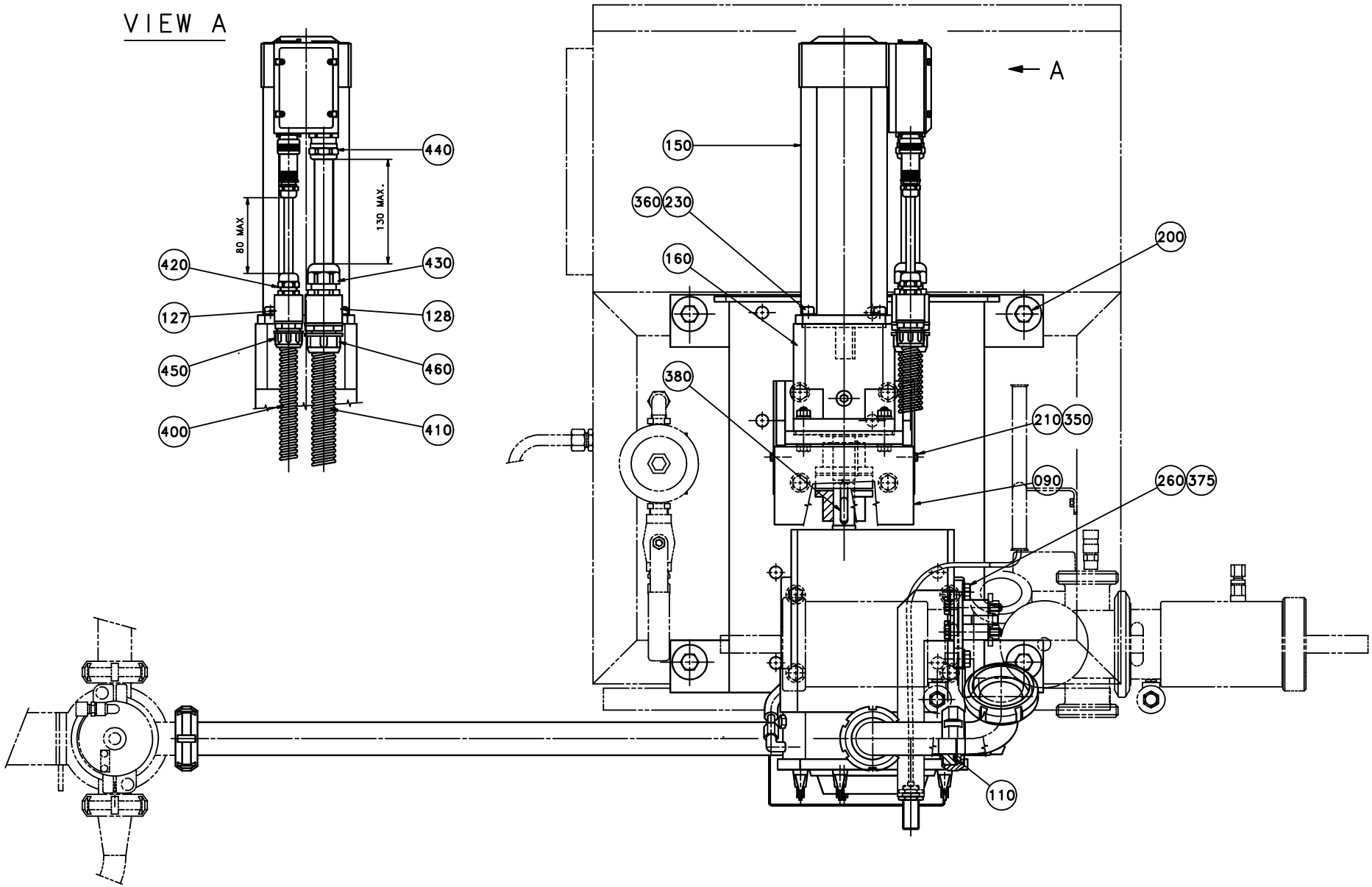
VIEW A
A
80 MAX
130 MAX.
440
420
430
127
128
450
460
400
410
150
360
230
160
200
380
210
350
090
260
375
110

ECM: 71777 - 19980716
Group number: 925401-0300
Assembly Drawing: 925401-12_1_AA

This list covers pages from 10-68 to 10-75

Pos	Part No	SP	UN	Qty	Description	Page No
0375S, 0355B (See drawing on pages: 10-72, 10-74)						
020	925633-0000	-		1	SUPPORT	
030	925635-0000	-		1	HOLDER	
060	925638-0000	-		1	PRODUCT PIPE	
065	926757-0000	-		1	PRODUCT PIPE	
070	925640-0000	-		1	PRODUCT PIPE	
090	925642-0000	-		1	COVER	
100	925644-0000	-		1	JOINT	
110	12242-0003	C		1	GASKET 48X38X5,5	
130	925648-0000	-		2	NUT	
150	90045-0194	D		1	SERVO MOTOR EP 115-131-66T3B	
160	90056-0149	D		1	GEARS, PLANETARY PL115-4-M2	
230	312115-0455	-		4	SCREW ISO4762 M8X30 A4	
235	312105-0451	-		2	SCREW M6S ISO 4017 M8X20 A480	
240	312105-0460	-		4	SCREW M6S ISO 4014 M8X45 A480	
295	312316-0325	-		2	SCREW HEX.SOCK.SET CUP P.MSK6SS5X10 FZB	
320	312605-0318	-		2	HEXAGON NUT, M6M M8 A280	
330	312812-0320	-		8	HEXAGON NUT, NY-LOCK M10 A480	
360	315105-0165	-		4	WASHER BRB8,4X16RFR	
370	315115-0165	-		12	WASHER PLAIN, TBRB 8,4/16 H=3	
375	315115-0173	-		20	WASHER PLAIN, TBRB 10,5/22 H=4	
F030	A925425-0100	-		1	PUMP	**10-77**
0500B, 1000SQ, 0500S, 0750B, 1000B (See drawing on pages: 10-68, 10-70)						
020	925632-0000	-		1	SUPPORT	
030	925634-0000	-		1	HOLDER	
060	925637-0000	-		1	PRODUCT PIPE	
065	926756-0000	-		1	PRODUCT PIPE	
070	925639-0000	-		1	PRODUCT PIPE	
090	925641-0000	-		1	COVER	
100	925643-0000	-		1	JOINT	
110	12242-0005	C		1	GASKET 61X51X5,5	
130	925647-0000	-		2	NUT	
150	90045-0197	D		1	SERVO MOTOR EP 165-090-66T3B	
160	90056-0125	D		1	GEARS, PLANETARY PL142-4-M2	
270	312115-0495	-		4	SCREW ISO4762 M10X30 A4	
290	312105-0503	-		4	SCREW M6S ISO 4014 M10X60 A480	
300	312316-0329	-		2	SCREW HEX.SOCK.SET CUP P.MSK6SS5X16 FZB	
330	312812-0320	-		10	HEXAGON NUT, NY-LOCK M10 A480	
365	315105-0173	-		4	WASHER BRB10,5X22RFR	
370	315115-0165	-		4	WASHER PLAIN, TBRB 8,4/16 H=3	
375	315115-0173	-		26	WASHER PLAIN, TBRB 10,5/22 H=4	

Pos	Part No	SP	UN	Qty	Description	Page No
F030	A925424-0100	-		1	PUMP	**10-79**
Common Parts						
010	925631-0000	-		1	SUPPORT	
040	925636-0000	-		1	SPLASH GUARD	
050	1347497-0000	-		1	HOLDER	
120	735922-0000	-		4	WASHER	
125	735934-0000	-		2	SPACER	
126	90044-0126	D		1	PROX.SW. 922AA3XM-A9P-060-LZ876	
127	926732-0000	-		1	SLEEVE	
128	1350713-0000	-		1	SLEEVE	
200	312104-0552	-		4	SCREW M6S M12X100H FZB	
210	312105-0327	-		2	SCREW M6S ISO 4017 M5X12 A480	
220	312105-0374	-		2	SCREW M6S ISO 4014 M6X30 A480	
250	312105-0464	-		4	SCREW M6S ISO 4014 M8X65 A480	
260	312105-0493	-		4	SCREW M6S ISO 4017 M10X25 A480	
280	312105-0501	-		4	SCREW M6S ISO 4014 M10X50 A480	
285	312105-0502	-		4	SCREW M6S ISO 4014 M10X55 A480	
310	312605-0316	-		2	HEXAGON NUT, M6M M6 A280	
350	315105-0146	-		2	BRICKA BRB5,3X10RFR	
355	315105-0153	-		4	WASHER BRB6,4X12RFR	
380	315701-0266	-		1	PARALLEL KEY W. ROUND ENDS 8X7X28 MM	
400	352135-0106	-	M	2	SPIRAL CONDUIT DI=16 MM	
410	352135-0109	-	M	2	HOSE .022	
420	352103-0108	-		1	CABLE GLAND, ST 13,5 , PR20,4/PG13,5	
430	352103-0116	-		1	CABLE GLAND, ST 21, PR28,3/PG21	
440	353245-0005	-		1	GLAND, EXTENDED WITH INSERT, PG16/PR 22,	
450	352136-0128	-		1	GLAND FITTING	
460	352136-0143	-		1	GLAND FITTING	

Machine Type | Group Description | Used-In | Group Number | Page No

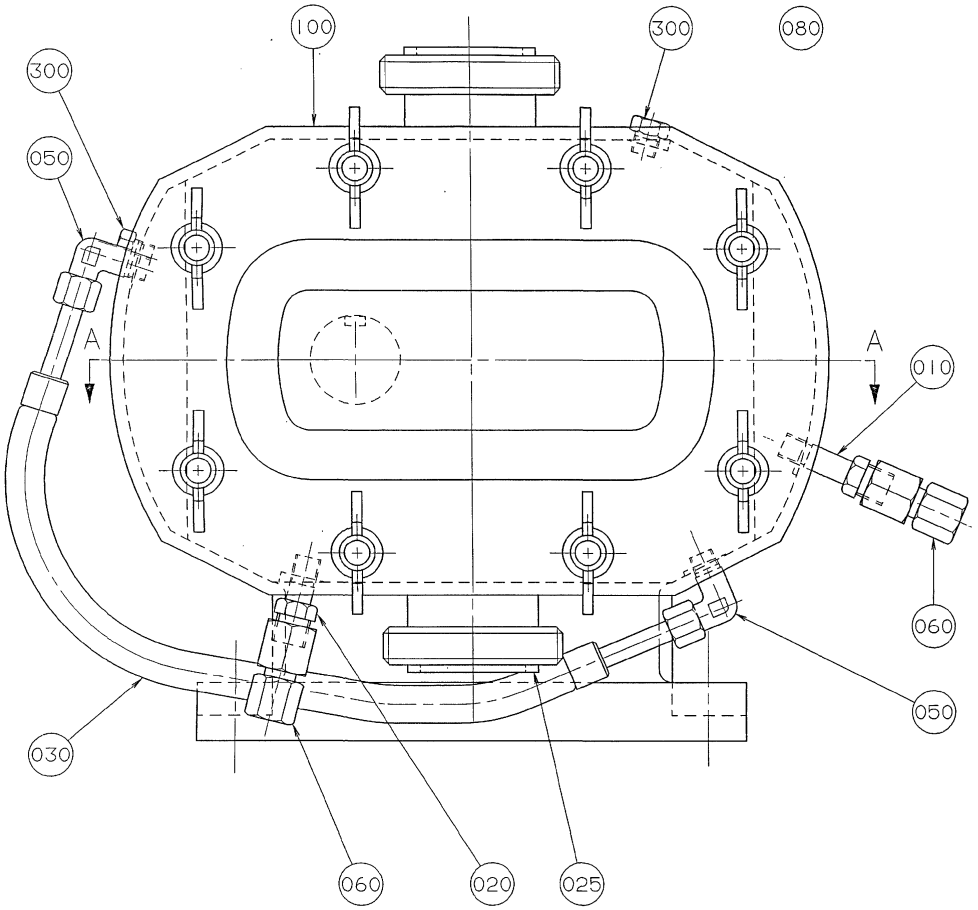
100
300
080
300
050
A
A
010
060
050
030
060
020
025

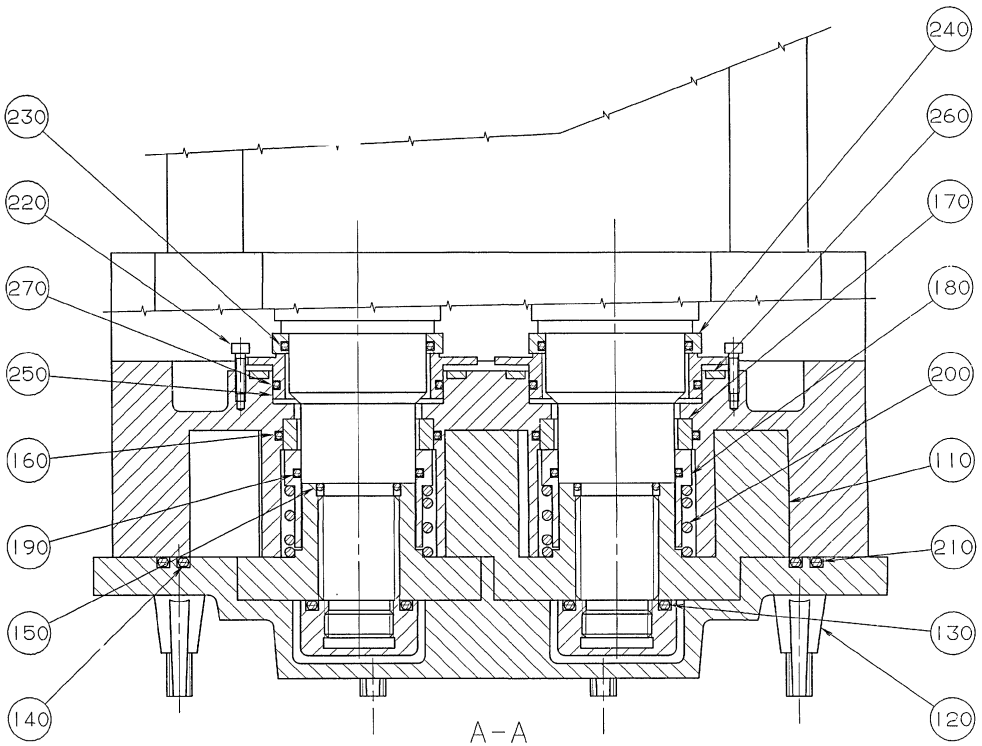
240
230
260
220
170
270
180
250
200
160
110
190
210
150
130
140
120
A–A

ECM: 71777 - 19980716
Group number: 925425-0100
Assembly Drawing: 925425-1_1_AA

Pos	Part No	SP	UN	Qty	Description	Page No
-						
010	925330-0000	-		1	NIPPLE	
020	925331-0000	-		1	NIPPLE	
025	12242-0003	C		2	GASKET 48X38X5,5	
030	925646-0000	C		1	HOSE	
050	90030-0257	-		2	CONN. ELBOW, 8-R1/8, EXT.THREAD	
060	90030-0258	-		2	CONN. STR., 8-G1/4, INT. THREAD	
080	90144-0004	-	MM	1	TREBOFLON-TAPE W=13MM	
100	B90321-0059	C		1	ROT. LOBE PUMP AMXT 3500	
	90321-0505	*C*		*2*	*ROTOR*	
	90321-0504	*C*		*2*	*O-RING*	
	90321-0503	*C*		*2*	*SPRING*	
	90321-0502	*C*		*2*	*SEAL RING*	
	90321-0501	*C*		*2*	*SEAL RING*	
	90321-0500	*C*		*2*	*O-RING*	
	90321-0498	*C*		*1*	*O-RING*	
	90321-0497	*C*		*2*	*SPRING*	
	90321-0490	*C*		*2*	*O-RING*	
	90321-0491	*C*		*1*	*O-RING*	
	90321-0492	*C*		*2*	*O-RING*	
	90321-0493	*C*		*2*	*O-RING*	
	90321-0494	*C*		*2*	*SEAL RING*	
	90321-0495	*C*		*2*	*SEAL RING*	
	90321-0496	*C*		*2*	*O-RING*	
300	342219-0201	-		2	PLUG	

Pos	Part No	SP	UN	Qty	Description	Page No

Machine Type | Group Description | Used-In | Group Number | Page No

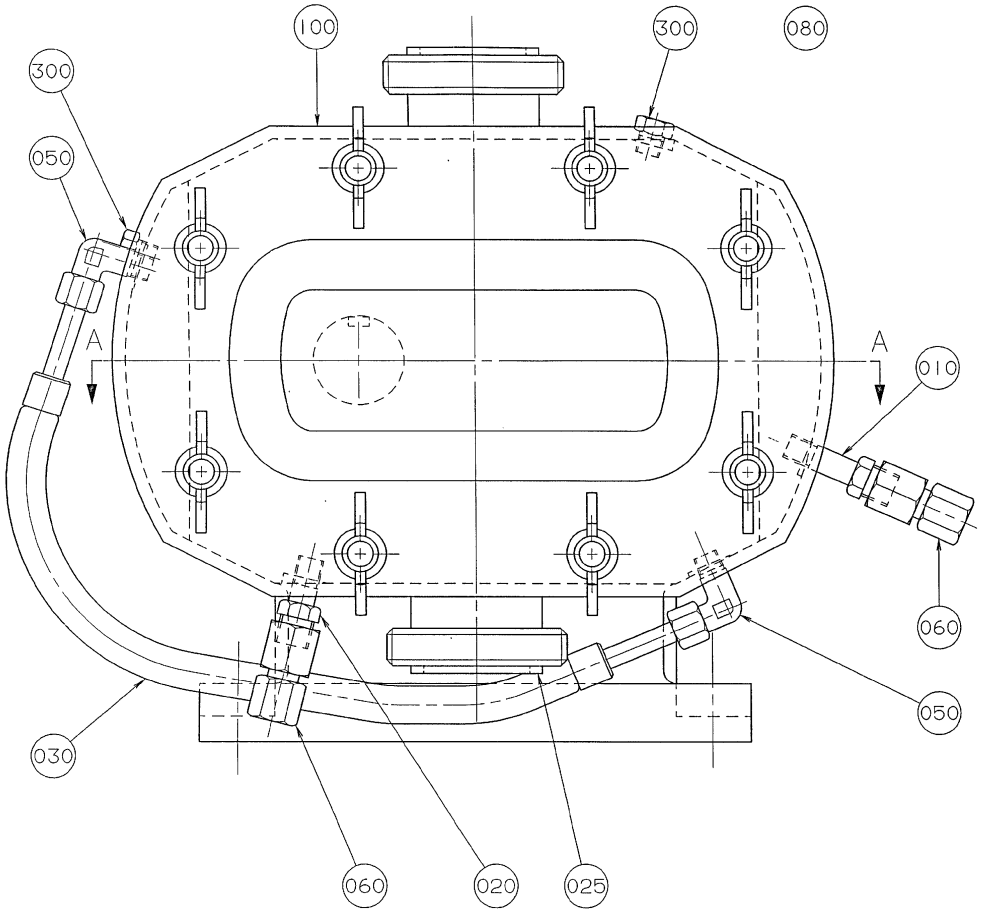
100
300
080
300
050
A
A
010
060
050
030
060
020
025

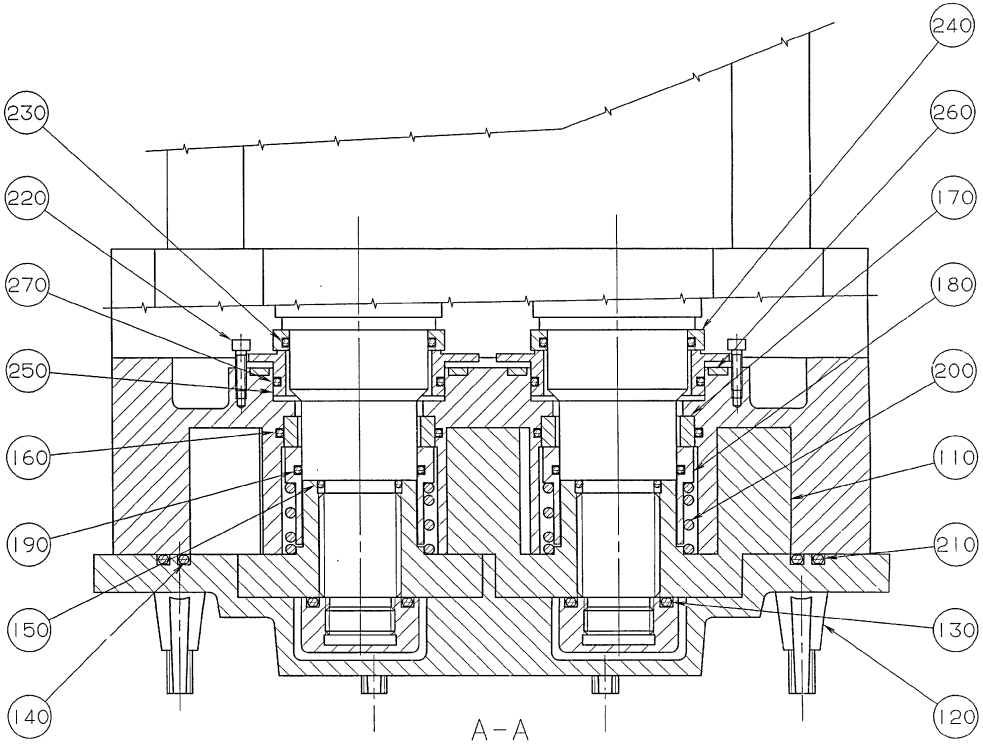
240
230
260
220
170
270
180
250
200
160
110
190
210
150
130
140
120
A-A

ECM: 71777 - 19980716
Group number: 925424-0100
Assembly Drawing: 925424-1_1_AA

Pos	Part No	SP	UN	Qty	Description	Page No
-						
010	925330-0000	-		1	NIPPLE	
020	925331-0000	-		1	NIPPLE	
025	12242-0005	C		2	GASKET 61X51X5,5	
030	925645-0000	C		1	HOSE	
050	90030-0257	-		2	CONN. ELBOW, 8-R1/8, EXT.THREAD	
060	90030-0258	-		2	CONN. STR., 8-G1/4, INT. THREAD	
080	90144-0004	-	MM	1	TREBOFLON-TAPE W=13MM	
100	B90321-0057	C		1	ROT. LOBE PUMP AMXT 7000	
	90321-0488	*C*		*2*	*O-RING*	
	90321-0487	*C*		*2*	*SPRING*	
	90321-0486	*C*		*2*	*SEAL RING*	
	90321-0485	*C*		*2*	*SEAL RING*	
	90321-0484	*C*		*2*	*O-RING*	
	90321-0483	*C*		*6*	*SCREW*	
	90321-0482	*C*		*1*	*O-RING*	
	90321-0479	*C*		*2*	*SPRING*	
	90321-0478	*C*		*2*	*O-RING*	
	90321-0470	*C*		*2*	*ROTOR*	
	90321-0471	*C*		*8*	*WING NUT FOR NAKAMURA PUMPS*	
	90321-0472	*C*		*2*	*O-RING*	
	90321-0473	*C*		*1*	*O-RING*	
	90321-0474	*C*		*2*	*O-RING*	
	90321-0475	*C*		*2*	*O-RING*	
	90321-0476	*C*		*2*	*SEAL RING*	
	90321-0477	*C*		*2*	*SEAL RING*	
300	342219-0201	-		2	PLUG	

Pos	Part No	SP	UN	Qty	Description	Page No

Machine Type | Group Description | Used-In | Group Number | Page No

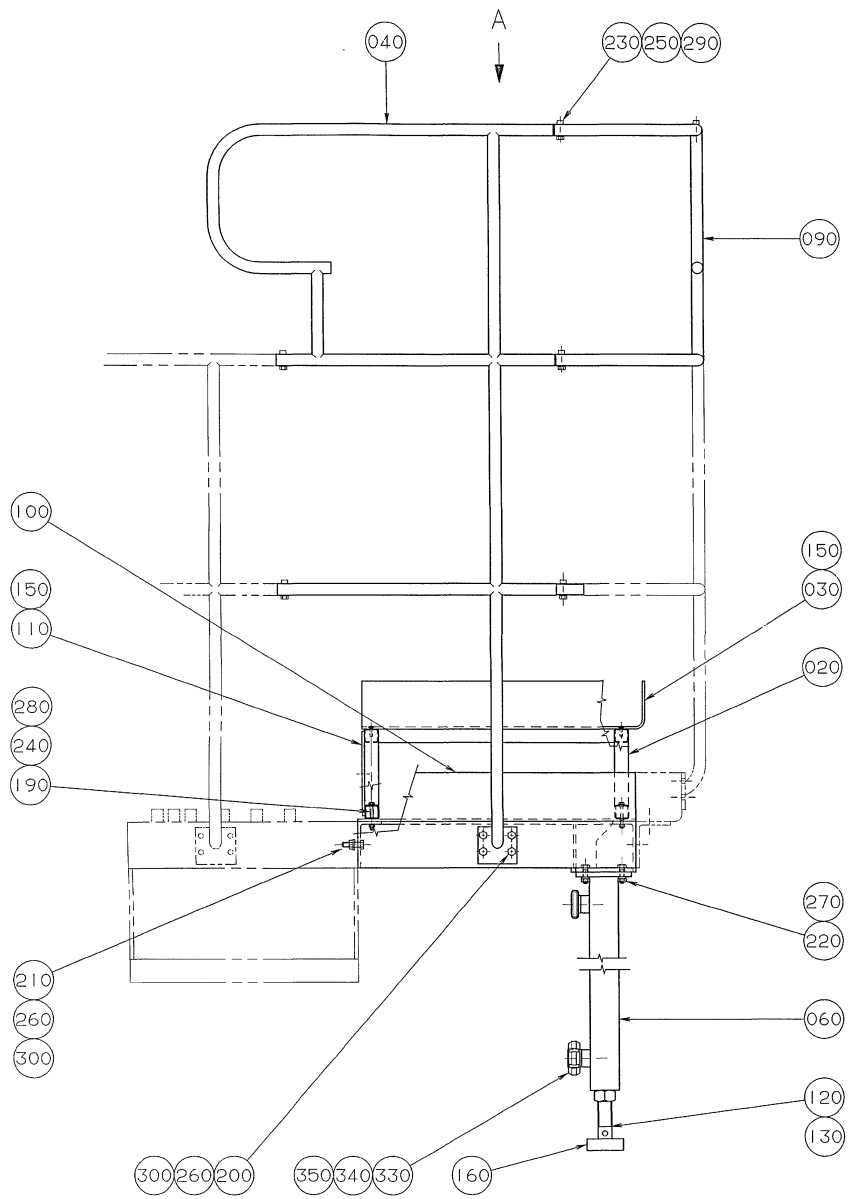
A
040
230
250
290
090
100
150
110
280
240
190
150
030
020
270
220
210
260
300
060
120
130
300
260
200
350
340
330
160

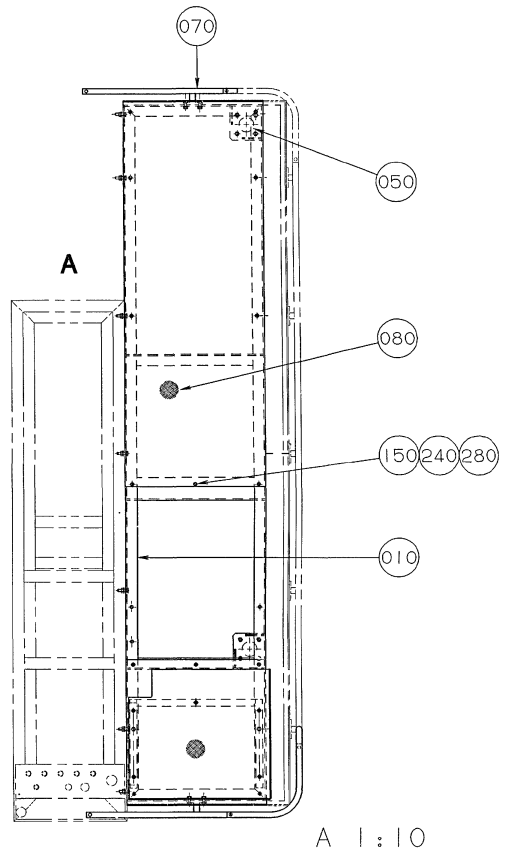
070
050
A
080
150
240
280
010
A 1:10

ECM: - -
Group number: 925402-0100
Assembly Drawing: 925402-1_1_AA

Pos	Part No	SP	UN	Qty	Description	Page No
-						
010	924740-0000	-		1	FRAME	
020	926798-0000	-		1	FRAME	
030	926799-0000	-		1	PLATFORM	
040	926800-0000	-		1	RAILING	
050	736876-0000	-		1	COLUMN	
060	736877-0000	-		1	COLUMN	
070	795853-0000	-		1	RAILING	
080	924749-0000	-		1	PLATFORM	
090	926801-0000	-		1	RAILING	
100	924748-0000	-		1	PLATFORM	
110	926802-0000	-		1	SIDE PLATE	
120	469096-0000	-		2	LEG	
130	735738-0000	-		2	NUT	
150	90287-0076	-		21	SCREW SLOT. PAN HEAD LKCS M6X20	
160	90347-0079	-		2	DAMPER TFE 601	
190	312105-0381	-		2	SCREW M6S ISO 4014 M6X55 A480	
200	312105-0493	-		8	SCREW M6S ISO 4017 M10X25 A480	
210	312105-0495	-		7	SCREW M6S ISO 4017 M10X30 A480	
220	312105-0497	-		8	SCREW M6S ISO 4017 M10X35 A480	
230	312115-0453	-		5	SCREW ISO4762 M8X25 A4	
240	312605-0316	-		16	HEXAGON NUT, M6M M6 A280	
250	312605-0318	-		4	HEXAGON NUT, M6M M8 A280	
260	312605-0320	-		15	HEXAGON NUT, M6M M10 A280	
270	312812-0320	-		8	HEXAGON NUT, NY-LOCK M10 A480	
280	315105-0153	-		18	WASHER BRB6,4X12RFR	
290	315105-0165	-		5	WASHER BRB8,4X16RFR	
300	315105-0173	-		15	WASHER BRB10,5X22RFR	
330	315250-0103	-		2	GASKET 48X38X5,5 MM	
340	342803-0103	-		1	UNION NUT, RD 60-6 (SMS 38)	
350	342812-0103	-		1	FERRULE, SMS 1145, 2333, NO. 190706	

Pos	Part No	SP	UN	Qty	Description	Page No

Machine Type	Group Description	Used-In	Group Number	Page No

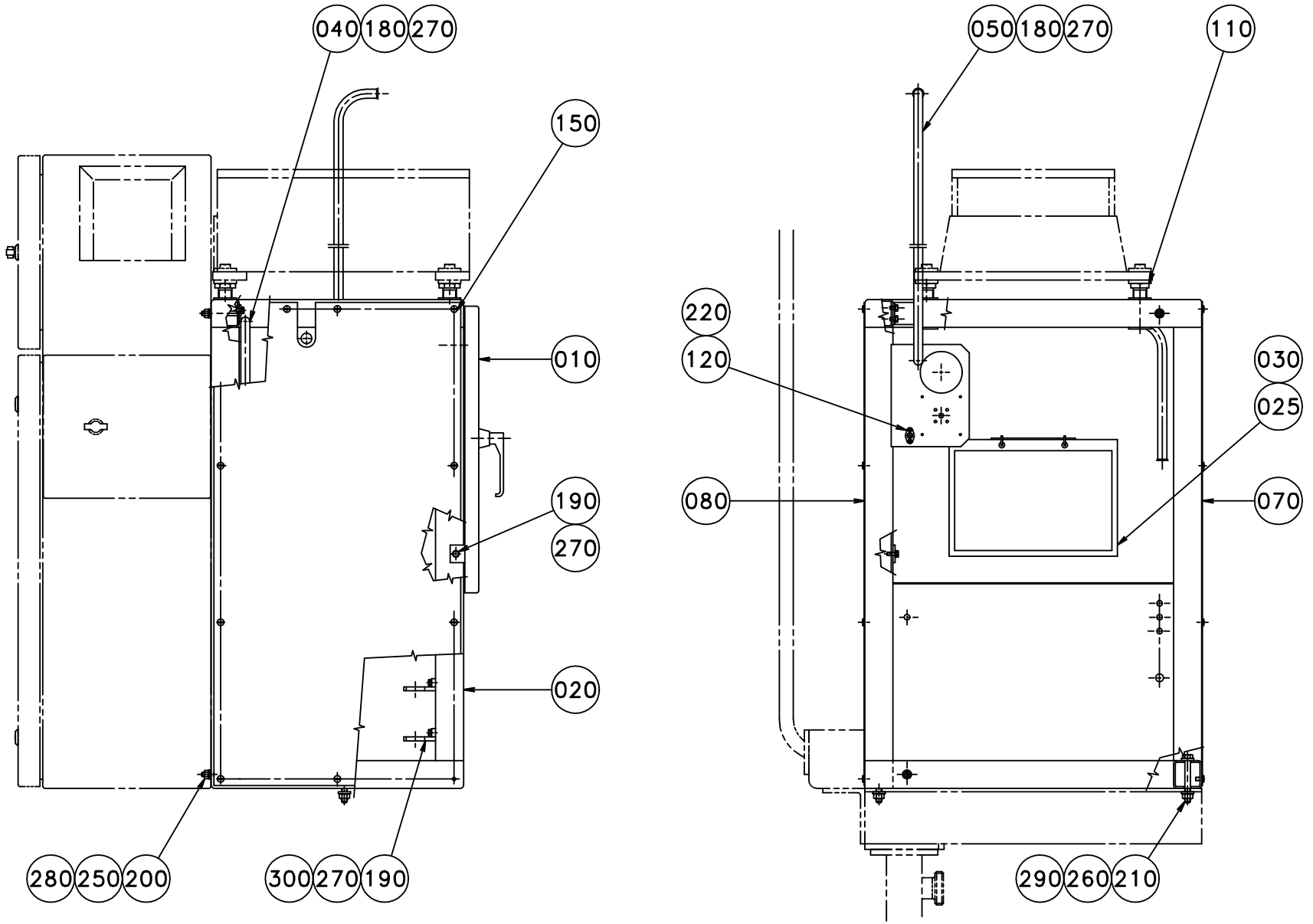
040 180 270
150
010
190
270
020
280 250 200
300 270 190
050 180 270
110
220
120
080
030
025
070
290 260 210

ECM: 71319 - 19980521
Group number: 925403-0100
Assembly Drawing: 925403-1_1_AA

Pos	Part No	SP	UN	Qty	Description	Page No
-						
010	735509-0000	-		1	DOOR	
020	925452-0000	-		1	FRAME	
025	925676-0000	-		1	AIR/STEAM DIAGRAM	
030	925675-0000	-		1	VALVE PANEL	
040	925766-0000	-		1	CABLE CONDUIT	
050	925767-0000	-		1	CABLE CONDUIT	
070	736113-0000	-		1	PANEL	
080	925090-0000	-		1	PANEL	
110	735921-0000	-		4	SCREW	
120	736378-0000	-		1	BASE	
150	90287-0075	-		22	SCREW SLOT. PAN HEAD LKCS M6X12	
180	312105-0364	-		4	SCREW M6S ISO 4017 M6X10 A480	
190	312105-0368	-		6	SCREW M6S M6X16 A280	
200	312105-0465	-		4	SCREW M6S ISO 4014 M8X70 A480	
210	312105-0507	-		2	SCREW M6S ISO 4014 M10X80 A480	
220	312145-0222	-		2	SCREW ISO 2009 MFS M3X8 A4	
250	312605-0318	-		4	HEXAGON NUT, M6M M8 A280	
260	312605-0320	-		2	HEXAGON NUT, M6M M10 A280	
270	315105-0153	-		10	WASHER BRB6,4X12RFR	
280	315115-0165	-		8	WASHER PLAIN, TBRB 8,4/16 H=3	
290	315115-0173	-		4	WASHER PLAIN, TBRB 10,5/22 H=4	
300	352135-0204	-		2	CLIP, 28 MM, 913.028	

Pos	Part No	SP	UN	Qty	Description	Page No

Machine Type | Group Description | Used-In | Group Number | Page No

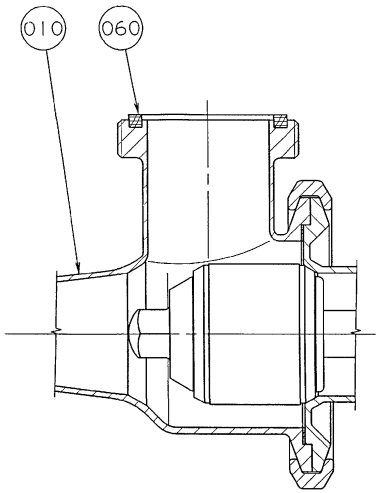

A-A
VARIANT 101

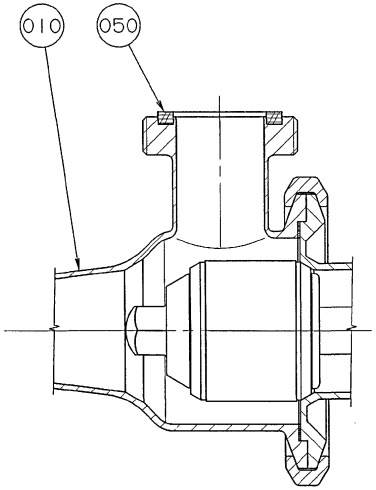

A-A
VARIANT 102

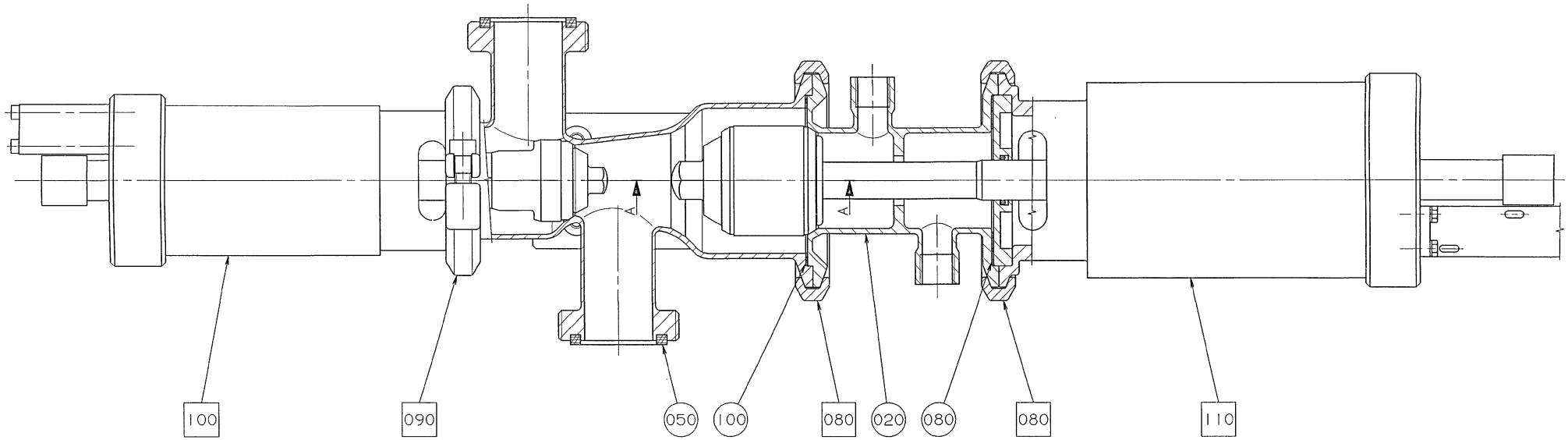

ECM: 71777 - 19980716
Group number: 925404-0100
Assembly Drawing: 925404-1_1_AA

Pos	Part No	SP	UN	Qty	Description	Page No
0375S, 0355B						
010	735891-0000	-		1	VALVE HOUSING	
050	12242-0003	C		3	GASKET 48X38X5,5	
0500B, 1000SQ, 0500S, 0750B, 1000B						
010	529795-0000	-		1	VALVE HOUSING	
050	12242-0003	C		2	GASKET 48X38X5,5	
060	12242-0005	C		1	GASKET 61X51X5,5	
Common Parts						
020	440634-0000	-		1	HOUSE	
080	539212-0000	C		1	GASKET	
100	90207-0363	C		1	GASKET	
F080	A541163-0100	-		2	CLAMP RING	**1-75, 10-87**
F090	A541164-0100	-		1	CLAMP RING	**1-77, 10-89**
F100	A794243-0100	-		1	B-CYLINDER	**10-91**
F110	A926937-0100	-		1	CYLINDER C	**10-93**

Pos	Part No	SP	UN	Qty	Description	Page No

Machine Type | Group Description | Used-In | Group Number | Page No

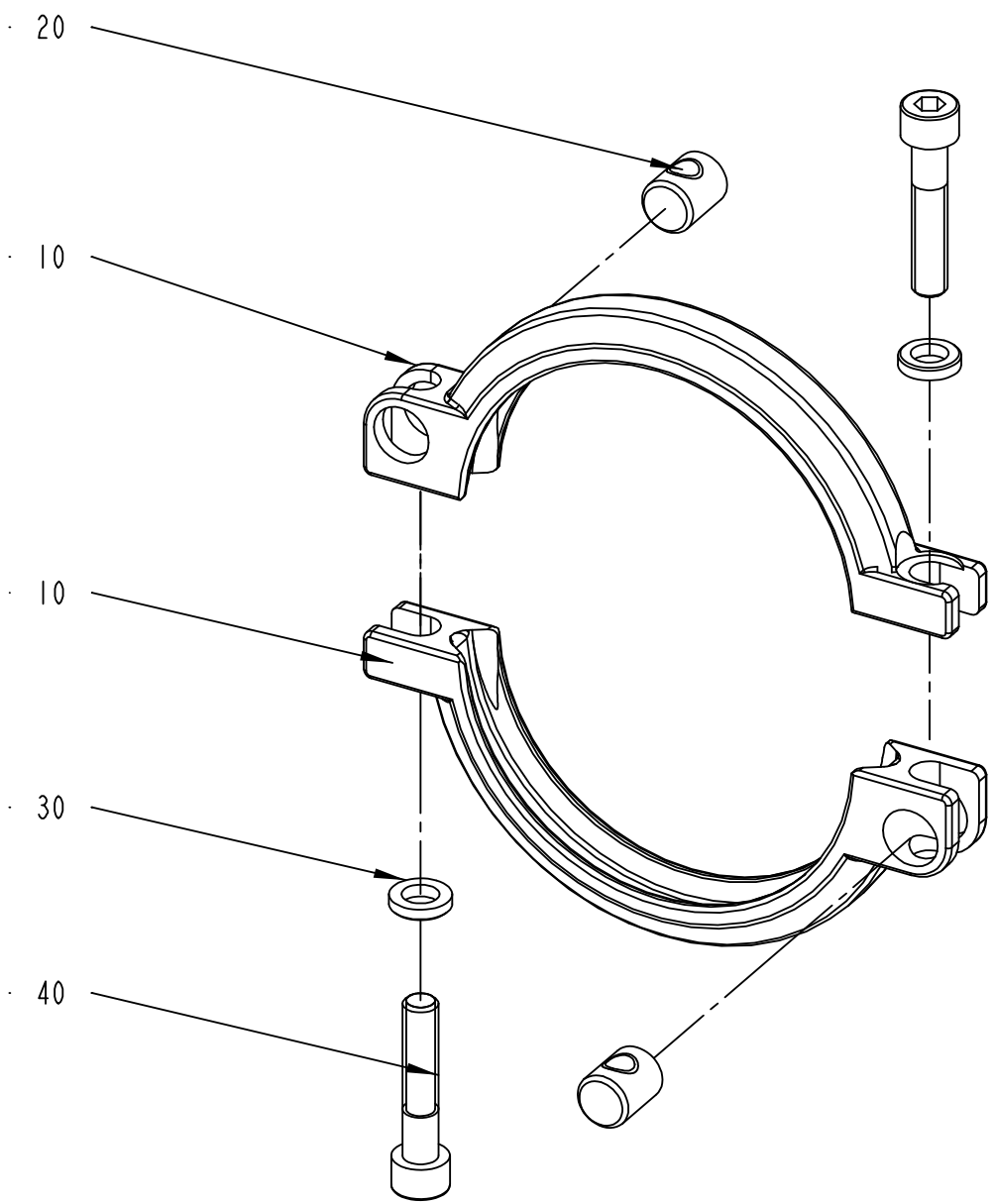
· 20
· 10
· 10
· 30
· 40

ECM: 105002 - 20020215
Group number: 541163-0100
Assembly Drawing: 541163-1_1_AB

Pos	Part No	SP	UN	Qty	Description	Page No
-						
010	532117-0000	B		2	CLAMP RING	
020	497748-0000	B		2	PIN	
030	541165-0000	B		2	WASHER	
040	312115-0459	-		2	SCREW ISO4762 M8X40 A4	

Pos	Part No	SP	UN	Qty	Description	Page No

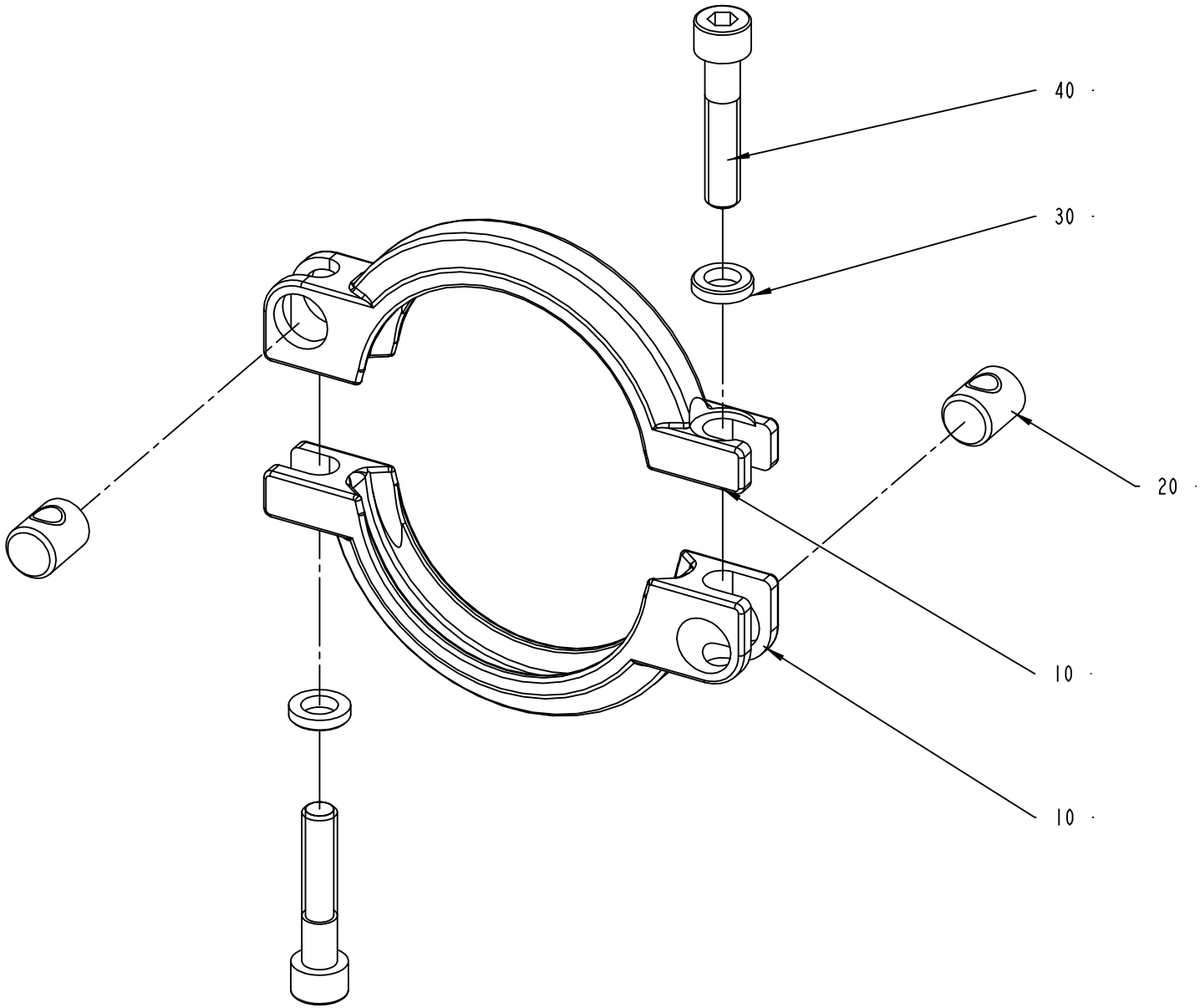
40
30
20
10
10

ECM: 102718 - 20020207
Group number: 541164-0100
Assembly Drawing: 541164-1_1_AB

Pos	Part No	SP	UN	Qty	Description	Page No
-						
010	532118-0000	B		2	CLAMP RING	
020	497748-0000	B		2	PIN	
030	541165-0000	B		2	WASHER	
040	312115-0459	-		2	SCREW ISO4762 M8X40 A4	

Pos	Part No	SP	UN	Qty	Description	Page No

Machine Type	Group Description	Used-In	Group Number	Page No

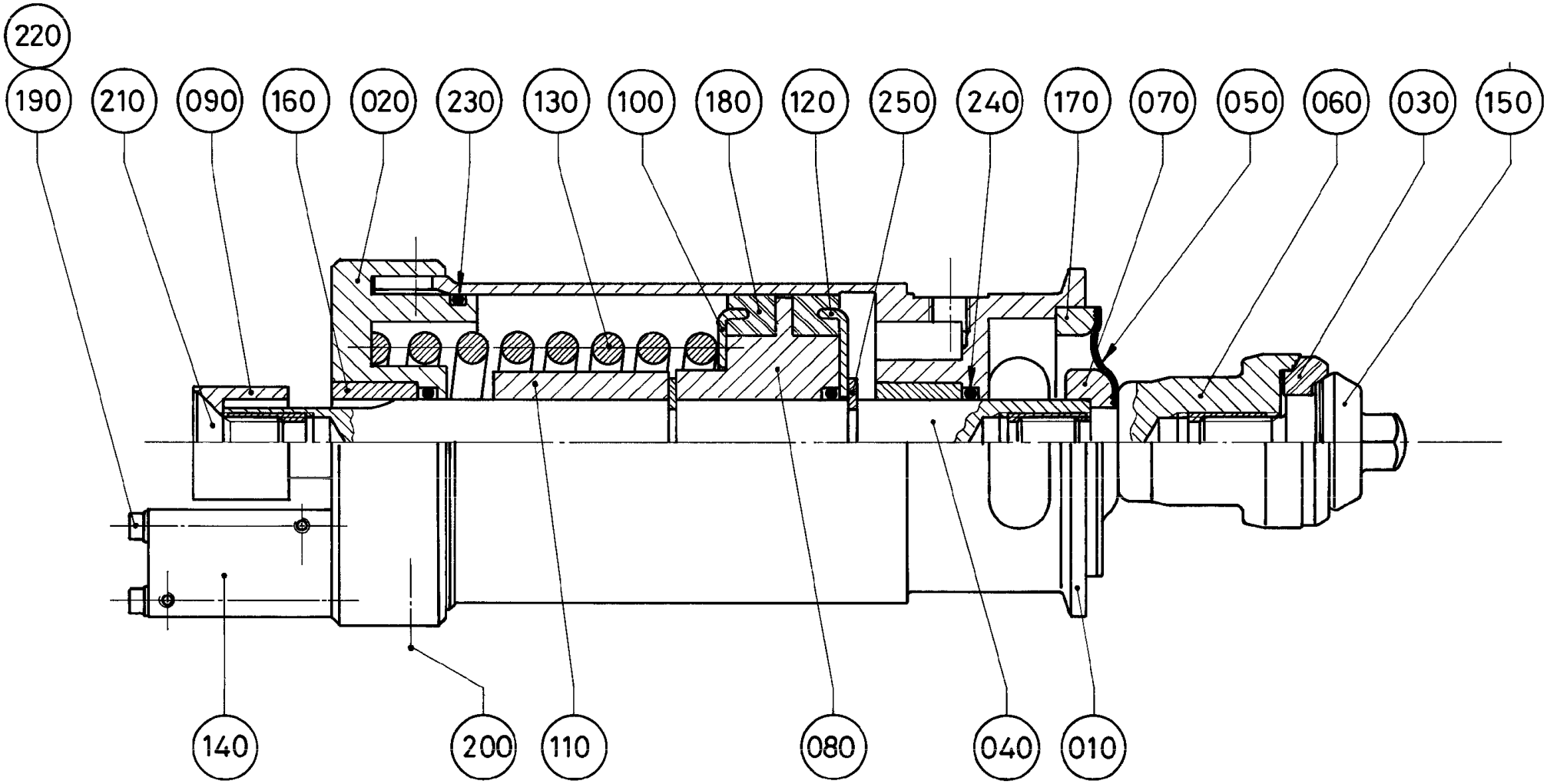
220
190
210
090
160
020
230
130
100
180
120
250
240
170
070
050
060
030
150
140
200
110
080
040
010

ECM: 71777 - 19980716
Group number: 794243-0100
Assembly Drawing: 794243-1_1_AA

Pos	Part No	SP	UN	Qty	Description	Page No
-						
010	440633-0000	-		1	CYLINDER HOUSING	
020	440695-0000	-		1	END SECTION	
030	530588-0000	C		1	SEAL RING	
040	735632-0000	-		1	PISTON ROD	
050	794246-0000	C		1	DIAPHRAGM	
060	794247-0000	-		1	SEAL RING HOLDER	
070	794248-0000	-		1	WASHER	
080	440646-0000	-		1	PISTON	
090	440647-0000	-		1	SLEEVE	
100	440652-0000	-		1	WASHER	
110	440654-0000	-		1	SPACER SLEEVE	
120	440656-0000	-		1	WASHER	
130	440662-0000	-		1	COMPRESSION SPRING	
140	440731-0000	-		1	PLATE	
150	476185-0000	-		1	VALVE CONE	
160	497933-0000	-		2	BUSHING	
170	735630-0000	C		1	RING	
180	90020-0027	C		2	SLEEVE	
190	312115-0304	-		2	SCREW ISO4762 M4X45 A4	
200	312155-0323	-		1	SCREW EN 10642 MF6S M5X8 A480	
210	312155-0532	-		1	SCREW EN 10642 MF6S M12X20 A480	
220	315105-0136	-		2	WASHER BRB4,3XRFR	
230	315202-0304	C		1	O-RING 64,5X3 MM	
240	315204-0215	C		3	O-RING 19,2X3 MM	
250	315754-0113	C		2	LOCKING WAE 15	

Pos	Part No	SP	UN	Qty	Description	Page No

Machine Type	Group Description	Used-In	Group Number	Page No

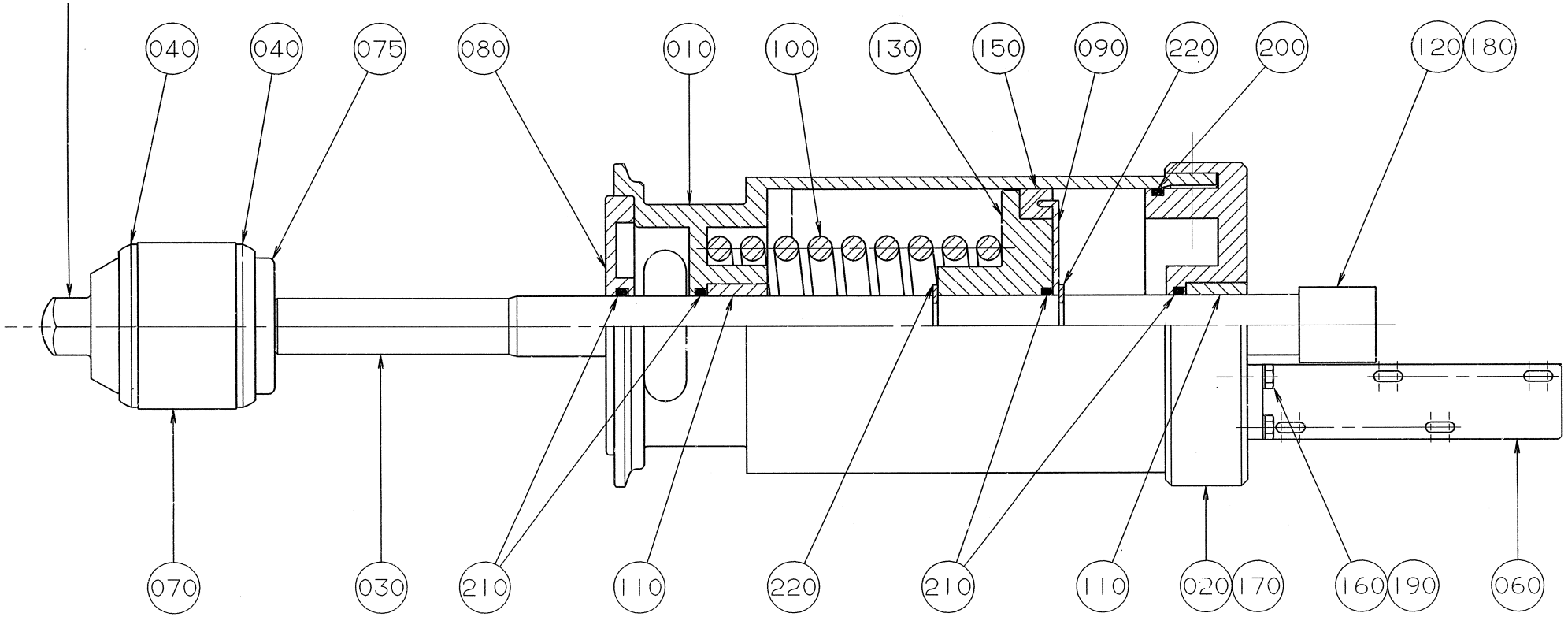
040
040
075
080
010
100
130
150
090
220
200
120
180
070
030
210
110
220
210
110
020
170
160
190
060

ECM: 71777 - 19980716
Group number: 926937-0100
Assembly Drawing: 926937-1_1_AA

Pos	Part No	SP	UN	Qty	Description	Page No
-						
010	440632-0000	-		1	CYLINDER HOUSING	
020	484998-0000	-		1	END SECTION	
030	735663-0000	-		1	PISTON ROD	
040	530589-0000	C		2	SEAL RING	
050	530590-0000	-		1	VALVE CONE	
060	735549-0000	-		1	HOOK HOLDER	
070	925471-0000	-		1	SEAL HOLDER	
075	925472-0000	-		1	SEAL HOLDER	
080	440648-0000	-		1	SEALING WASHER	
090	440651-0000	-		1	WASHER	
100	440663-0000	-		1	COMPRESSION SPRING	
110	497933-0000	-		2	BUSHING	
120	735550-0000	-		1	BUSHING	
130	794117-0000	-		1	PISTON	
150	90020-0028	C		1	SLEEVE	
160	312105-0289	-		2	SCREW M6S ISO 4017 M4X10 A480	
170	312155-0323	-		1	SCREW EN 10642 MF6S M5X8 A480	
180	312155-0538	-		1	SCREW EN 10642 MF6S M12X35 A480	
190	315105-0136	-		2	WASHER BRB4,3XRFR	
200	315202-0308	C		1	O-RING 84,5X3 MM	
210	315204-0215	C		4	O-RING 19,2X3 MM	
220	315754-0113	C		2	LOCKING WAE 15	

Pos	Part No	SP	UN	Qty	Description	Page No

A- A

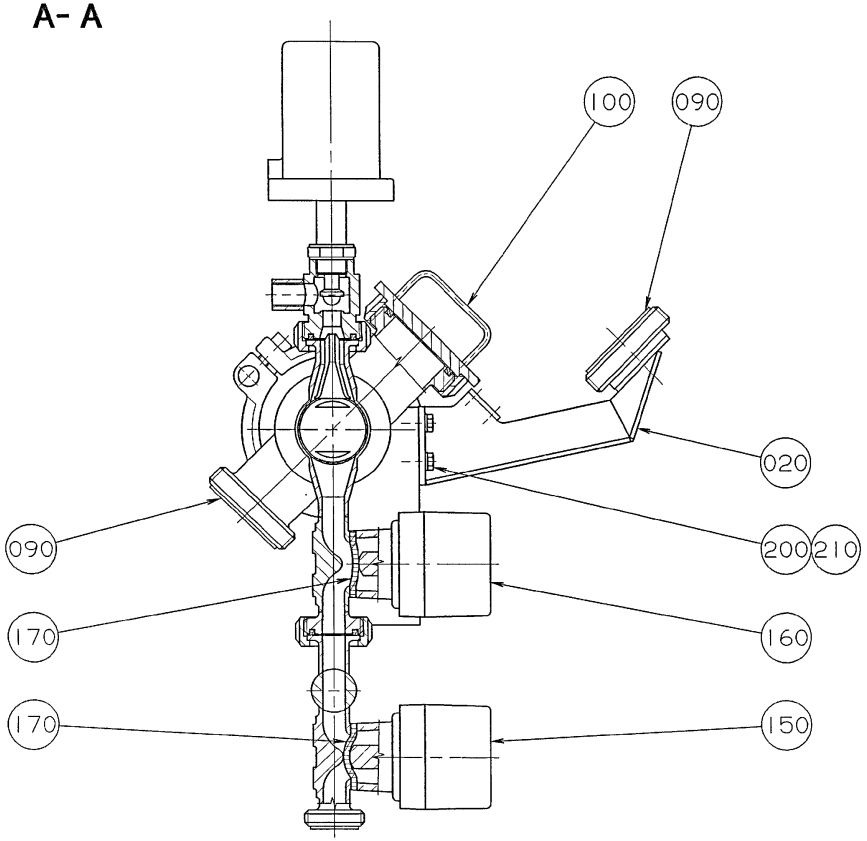
100
090
020
090
200
210
170
160
170
150

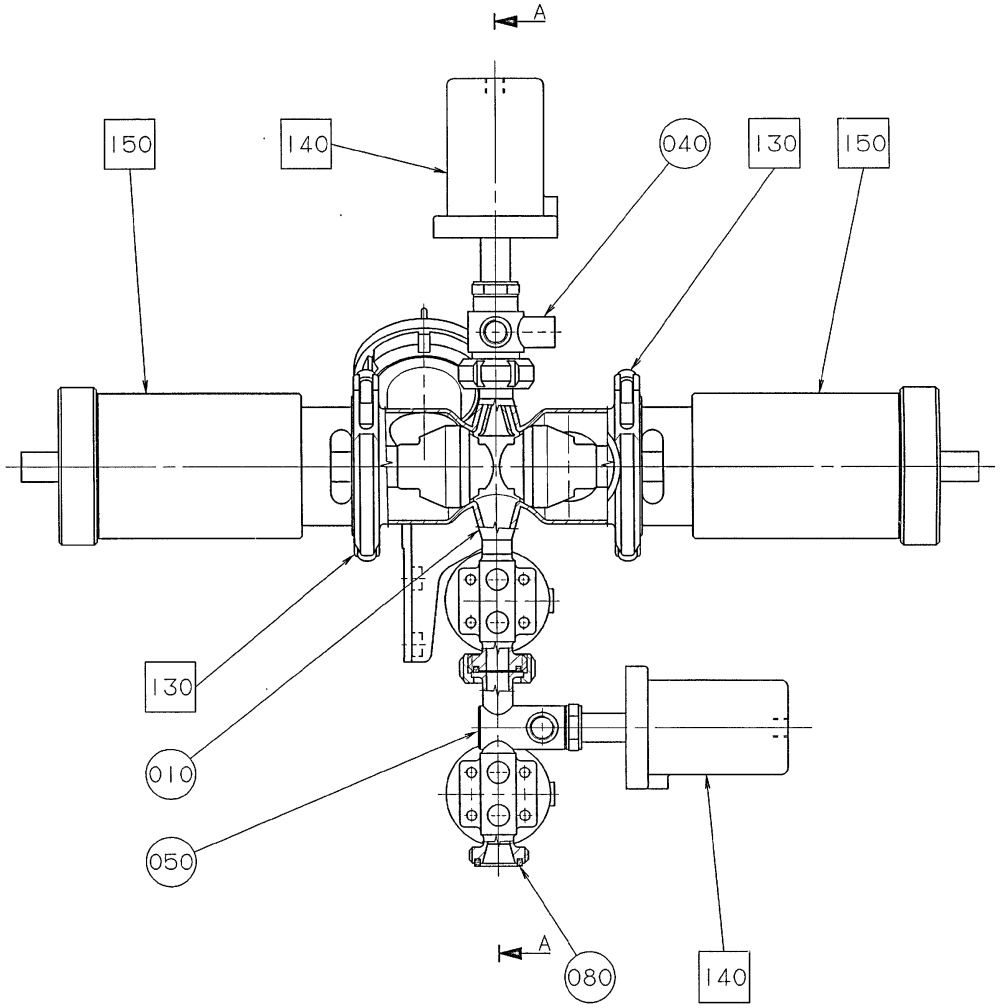
A
150
140
040
130
150
130
010
050
A
080
140

ECM: 70784 - 19970507
Group number: 925405-0100
Assembly Drawing: 925405-1_1_AA

Pos	Part No	SP	UN	Qty	Description	Page No
-						
010	735342-0000	-		1	VALVE BODY 2"	
020	794276-0000	-		1	SUPPORT	
040	925426-0000	-		1	VALVE SEAT	
050	925427-0000	-		1	VALVE SEAT	
080	12242-0001	-		3	GASKET 32X25X5,5	
090	12242-0005	-		5	GASKET 61X51X5,5	
100	735521-0000	-		1	BLANK NUT	
150	90187-0110	C		1	DIAPHRAGM VALVE DN15, N.C. WELD CONN.	
160	90187-0111	C		1	DIAPHRAGM VALVE DN15, N.O. WELD CONN.	
170	90187-0312	C		2	DIAPHRAGM #328 FOR SIZE 15 VALVE	
200	312105-0366	-		2	SCREW M6S M6X12 A280	
210	315105-0153	-		2	WASHER BRB6,4X12RFR	
F130	A541163-0100	-		2	CLAMP RING	**1-75, 10-87**
F140	A794226-0100	-		2	VALVE	**10-97**
F150	A926938-0100	-		2	CYLINDER A	**10-99**

Pos	Part No	SP	UN	Qty	Description	Page No

Machine Type | Group Description | Used-In | Group Number | Page No

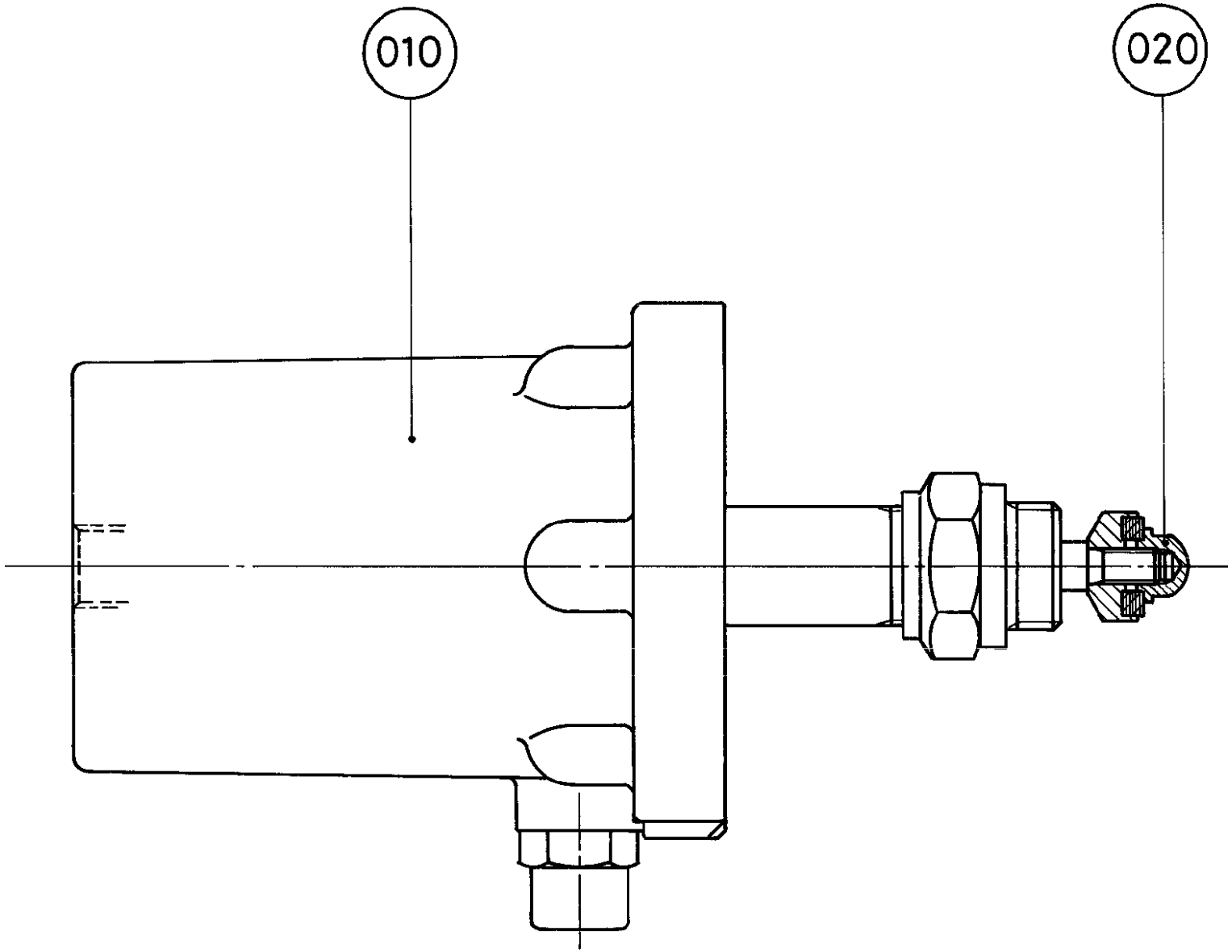
010
020

ECM: - -
Group number: 794226-0100
Assembly Drawing: 794226-1_1_AA

Pos	Part No	SP	UN	Qty	Description	Page No
-						
010	735911-0000	C		1	VALVE 1/2"	
020	735846-0000	-		1	CAP NUT	

Pos	Part No	SP	UN	Qty	Description	Page No

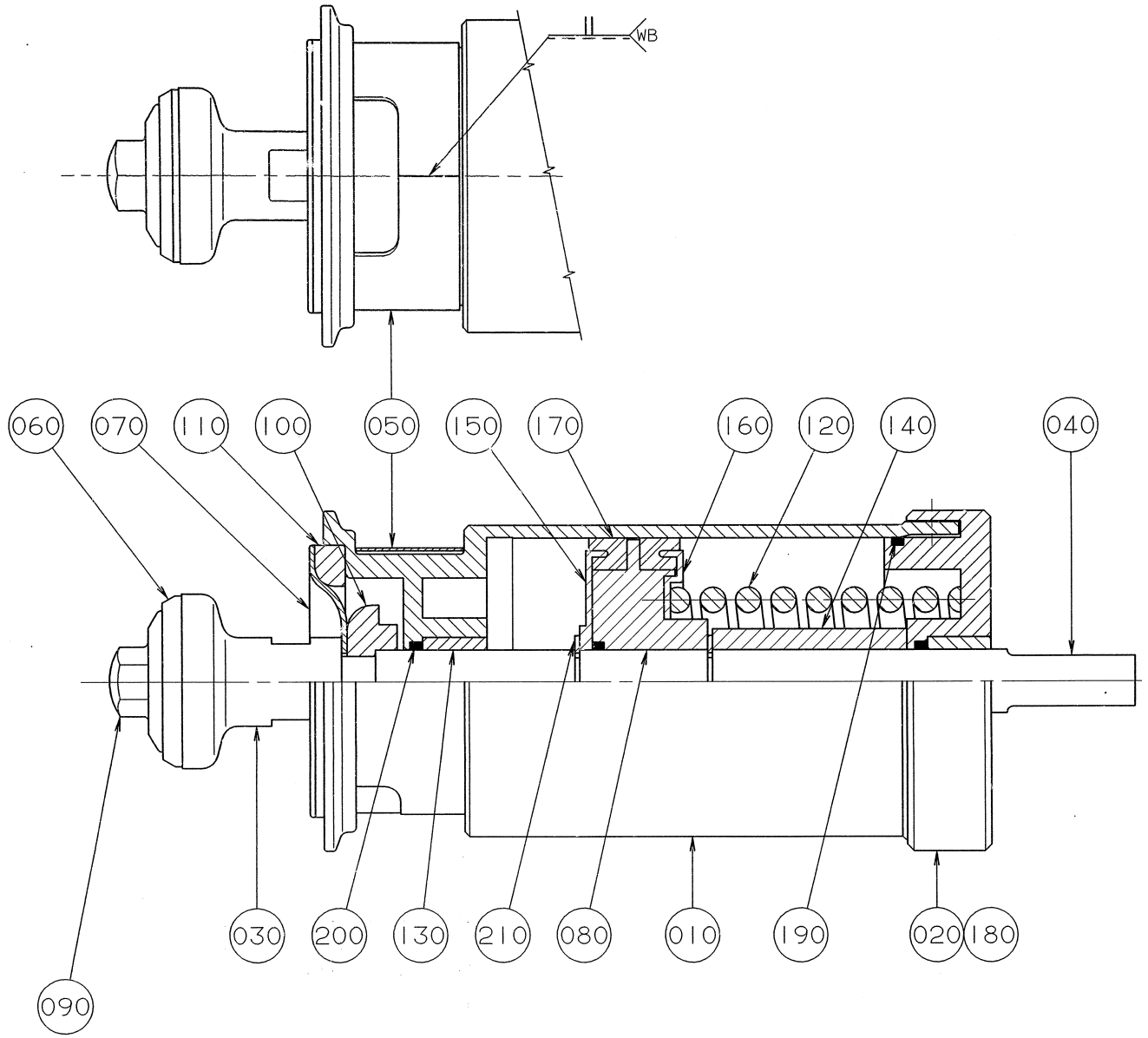
WB
060
070
110
100
050
150
170
160
120
140
040
030
200
130
210
080
010
190
020
180
090

ECM: 71999 - 19990301
Group number: 926938-0100
Assembly Drawing: 926938-1_1_AA

Pos	Part No	SP	UN	Qty	Description	Page No
TBA/8						
140	924062-0000	-		1	SPACER	
Common Parts						
010	440632-0000	-		1	CYLINDER HOUSING	
020	484998-0000	-		1	END SECTION	
030	924895-0000	-		1	SEAL HOLDER	
040	440637-0000	-		1	PISTON ROD	
050	476203-0000	-		1	PROTECTION	
060	530589-0000	C		1	SEAL RING	
070	533169-0000	C		1	DIAPHRAGM	
080	924063-0000	-		1	PISTON	
090	924897-0000	-		1	SCREW	
100	926194-0000	-		1	SPACER	
110	440655-0000	-		1	RING	
120	440663-0000	-		1	COMPRESSION SPRING	
130	497933-0000	-		2	BUSHING	
150	924064-0000	-		1	WASHER	
160	924065-0000	-		1	WASHER	
170	90020-0028	C		2	SLEEVE	
180	312155-0323	-		1	SCREW EN 10642 MF6S M5X8 A480	
190	315202-0308	C		1	O-RING 84,5X3 MM	
200	315204-0215	C		3	O-RING 19,2X3 MM	
210	315754-0113	C		2	LOCKING WAE 15	

Pos	Part No	SP	UN	Qty	Description	Page No

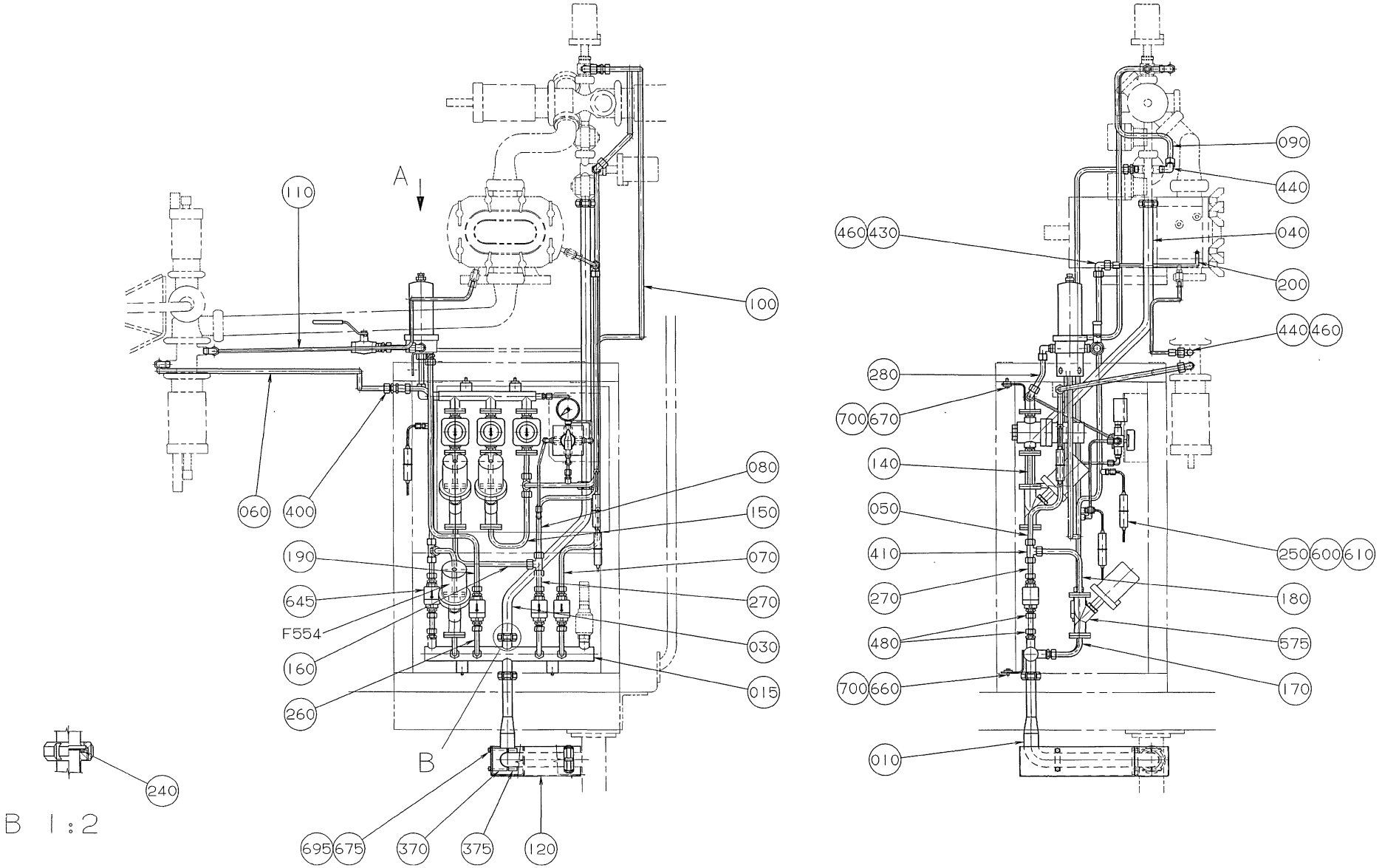
A
B
B 1:2
110
100
060
400
080
150
190
070
645
270
F554
030
160
015
260
240
695
675
370
375
120
090
440
460
430
040
200
440
460
280
700
670
140
050
410
250
600
610
270
180
480
575
700
660
170
010

ECM: 71777 - 19980716
Group number: 925406-0100
Assembly Drawing: 925406-1_1_AA

This list covers pages from 10-100 to 10-103

Pos	Part No	SP	UN	Qty	Description	Page No
0375S, 0355B						
110	925455-0000	-		1	STEAM PIPE	
200	925456-0000	-		1	STEAM PIPE	
0500B, 1000SQ, 0500S, 0750B, 1000B						
110	925454-0000	-		1	STEAM PIPE	
200	925453-0000	-		1	STEAM PIPE	
Common Parts						
010	924774-0000	-		1	PIPE	
015	925428-0000	-		1	PIPE	
020	925429-0000	-		1	PIPE	
030	925430-0000	-		1	PIPE	
040	925431-0000	-		1	PIPE	
050	925439-0000	-		1	STEAM PIPE	
060	925440-0000	-		1	STEAM PIPE	
070	925443-0000	-		1	STEAM PIPE	
080	925444-0000	-		1	STEAM PIPE	
090	925445-0000	-		1	STEAM PIPE	
100	925446-0000	-		1	STEAM PIPE	
120	926761-0000	-		1	TOUCH GUARD	
130	736040-0000	-		1	FILTER SUPPORT	
140	925432-0000	-		2	STEAM PIPE	
150	925433-0000	-		1	STEAM PIPE	
160	925434-0000	-		1	STEAM PIPE	
170	925435-0000	-		1	STEAM PIPE	
180	925436-0000	-		1	STEAM PIPE	
190	925441-0000	-		1	STEAM PIPE	
210	925451-0000	-		1	STEAM PIPE	
240	12242-0001	-		3	GASKET 32X25X5,5	
250	37768-0000	C		3	THERMOCOUPLE CR-AL	
255	736146-0000	-		1	SIGN BOARD	
260	925437-0000	-		3	STEAM PIPE	
270	925438-0000	-		3	STEAM PIPE	
280	925442-0000	-		1	STEAM PIPE	
290	925449-0000	-		1	STEAM PIPE	
300	925450-0000	-		1	STEAM PIPE	
330	926283-0000	-		6	FLANGE	
350	926485-0000	-		1	TUBE	
360	926755-0000	-		1	TUBE	
370	926762-0000	-		2	LAMP HOLDER	
375	926763-0000	-		2	CLAMP HOLDER	
400	90030-0030	-		1	CONN. BULKHEAD SV 12-L/SY	
410	90030-0058	-		3	CONN. T-PIPE T-12	
420	90030-0088	-		1	CONN. STR., 12-R1/4, EXT. THREAD	
430	90030-0096	-		1	CONN. ELBOW W-12	
440	90030-0115	-		7	CONN. ELBOW WA 12-R3/8	
450	90030-0137	-		4	CONN. ELBOW WA 6-R1/8	
460	90030-0167	-		2	REDUCTION KOR 12/8-L/SY	
470	90030-0184	-		2	CONN. STR. GA-6-G1/8	
480	90030-0187	-		16	CONN. STR. GA-12-G3/8	
500	90043-0082	C		1	PRESSURE GAUGE, 2740, D=63 MM	
530	90113-0063	C		1	PRESSURE REGULATOR	
540	90113-0064	C		2	PRESSURE REGULATOR	
550	90187-0082	-		1	BALL VALVE G1/2	
560	90187-0112	C		1	COCK VALVE, G1/4, 4-WAY, VITON	
570	90235-0271	C		2	ANGLE SEAT VALVE W. FLANGES, N.C. D=13	
575	90235-0743	C		1	ANGLE SEAT VALVE W. FLANGES, N.O. D=13	
580	B90277-0055	-		1	FILTER HOUSING / MDS 4463 G 08 H	
	90277-0339	-		*1*	*O-RING, ACS0272 EU FOR PALL FILTER*	
585	90277-0333	-		1	GASKET KIT / ART NO ACS 0325 EH	
590	90277-0336	-		1	FILTER REPBY 0090337-0315	
600	90326-0012	-		3	PROTECTIVE COVER, T31A4618	
610	90326-0020	-		3	PLUG, FEMALE YELLOW CR-AL	
630	90330-0025	-		3	BUSHING, INT/EXT. THR. R1/4-RP1/8	
640	90330-0048	-		3	BUSHING, INT/EXT. THR. R1/2-RP3/8	
645	B90360-0020	-		4	STEAM TRAP / MK36/51 3/8"	
	90360-0309	-		*1*	*STRAINER, FOR STEAM TRAP 90360-20*	
	90360-0310	-		*1*	*CAPSULE, FOR STEAM TRAP 90360-20*	
650	311521-0143	-		4	BLANK RIVET 3,2X8	
660	312105-0366	-		4	SCREW M6S M6X12 A280	
670	312105-0370	-		2	SCREW M6S ISO 4017 M6X20 A480	
675	312105-0382	-		4	SCREW M6S ISO 4014 M6X60 A480	
680	312115-0368	-		48	SCREW ISO4762 M6X16 A4	
690	312155-0289	-		4	SCREW EN 10642 MF6S M4X10 A480	
692	312205-0107	-		2	SCREW U6S1/4X13RFR	
695	315105-0153	-		10	WASHER BRB6,4X12RFR	
700	315125-0153	-		4	WASHER TBRSB 6,4X22X4 A4	
720	315204-0219	-		12	O-RING 29,2X3 MM	

Machine Type | Group Description | Used-In | Group Number | Page No

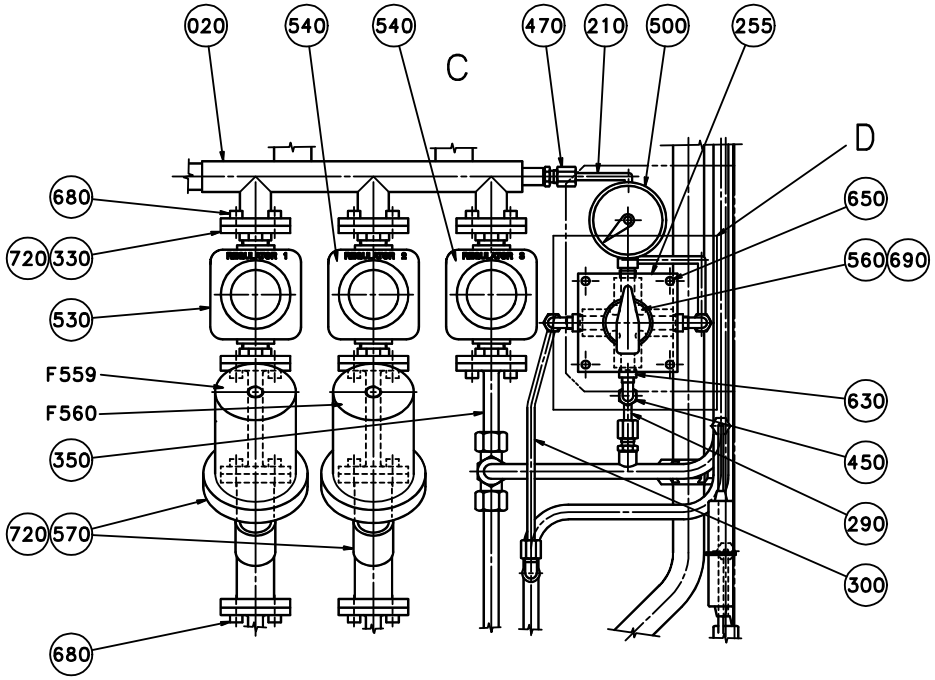
020
540
540
470
210
500
255
C
D
680
650
720
330
560
690
530
F559
630
F560
350
450
290
720
570
300
680

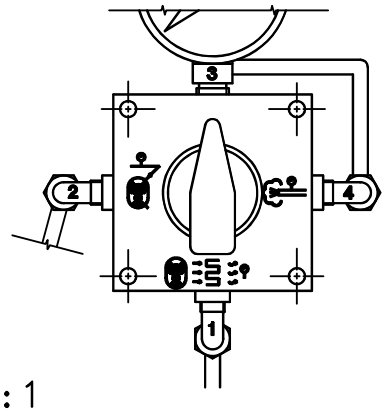
3
2
4
1

D 1 : 1

A 1 : 2

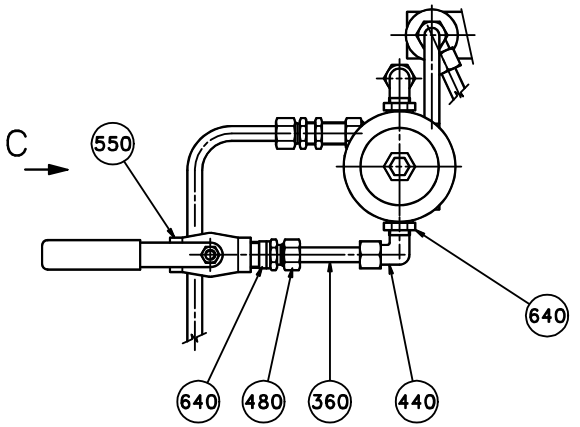
C
550
640
640
480
360
440

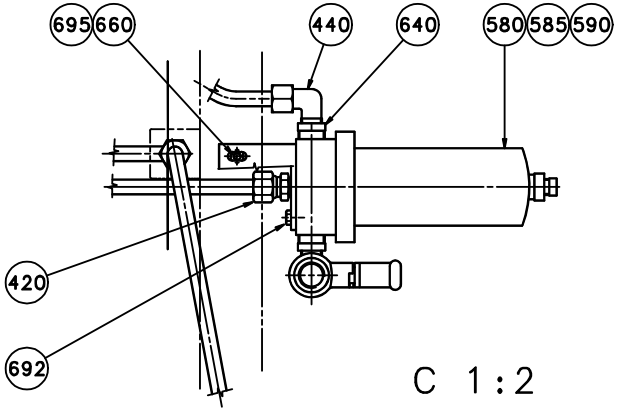
695
660
440
640
580
585
590
420
692

C 1 : 2

ECM: 71777 - 19980716
Group number: 925406-0100
Assembly Drawing: 925406-2_1_AB

This list covers pages from 10-100 to 10-103

Pos	Part No	SP	UN	Qty	Description	Page No
0375S, 0355B						
110	925455-0000	-		1	STEAM PIPE	
200	925456-0000	-		1	STEAM PIPE	
0500B, 1000SQ, 0500S, 0750B, 1000B						
110	925454-0000	-		1	STEAM PIPE	
200	925453-0000	-		1	STEAM PIPE	
Common Parts						
010	924774-0000	-		1	PIPE	
015	925428-0000	-		1	PIPE	
020	925429-0000	-		1	PIPE	
030	925430-0000	-		1	PIPE	
040	925431-0000	-		1	PIPE	
050	925439-0000	-		1	STEAM PIPE	
060	925440-0000	-		1	STEAM PIPE	
070	925443-0000	-		1	STEAM PIPE	
080	925444-0000	-		1	STEAM PIPE	
090	925445-0000	-		1	STEAM PIPE	
100	925446-0000	-		1	STEAM PIPE	
120	926761-0000	-		1	TOUCH GUARD	
130	736040-0000	-		1	FILTER SUPPORT	
140	925432-0000	-		2	STEAM PIPE	
150	925433-0000	-		1	STEAM PIPE	
160	925434-0000	-		1	STEAM PIPE	
170	925435-0000	-		1	STEAM PIPE	
180	925436-0000	-		1	STEAM PIPE	
190	925441-0000	-		1	STEAM PIPE	
210	925451-0000	-		1	STEAM PIPE	
240	12242-0001	-		3	GASKET 32X25X5,5	
250	37768-0000	C		3	THERMOCOUPLE CR-AL	
255	736146-0000	-		1	SIGN BOARD	
260	925437-0000	-		3	STEAM PIPE	
270	925438-0000	-		3	STEAM PIPE	
280	925442-0000	-		1	STEAM PIPE	
290	925449-0000	-		1	STEAM PIPE	
300	925450-0000	-		1	STEAM PIPE	
330	926283-0000	-		6	FLANGE	
350	926485-0000	-		1	TUBE	
360	926755-0000	-		1	TUBE	
370	926762-0000	-		2	LAMP HOLDER	
375	926763-0000	-		2	CLAMP HOLDER	
400	90030-0030	-		1	CONN. BULKHEAD SV 12-L/SY	
410	90030-0058	-		3	CONN. T-PIPE T-12	
420	90030-0088	-		1	CONN. STR., 12-R1/4, EXT. THREAD	
430	90030-0096	-		1	CONN. ELBOW W-12	
440	90030-0115	-		7	CONN. ELBOW WA 12-R3/8	
450	90030-0137	-		4	CONN. ELBOW WA 6-R1/8	
460	90030-0167	-		2	REDUCTION KOR 12/8-L/SY	
470	90030-0184	-		2	CONN. STR. GA-6-G1/8	
480	90030-0187	-		16	CONN. STR. GA-12-G3/8	
500	90043-0082	C		1	PRESSURE GAUGE, 2740, D=63 MM	
530	90113-0063	C		1	PRESSURE REGULATOR	
540	90113-0064	C		2	PRESSURE REGULATOR	
550	90187-0082	-		1	BALL VALVE G1/2	
560	90187-0112	C		1	COCK VALVE, G1/4, 4-WAY, VITON	
570	90235-0271	C		2	ANGLE SEAT VALVE W. FLANGES, N.C. D=13	
575	90235-0743	C		1	ANGLE SEAT VALVE W. FLANGES, N.O. D=13	
580	B90277-0055	-		1	FILTER HOUSING / MDS 4463 G 08 H	
	90277-0339	-		*1*	*O-RING, ACS0272 EU FOR PALL FILTER*	
585	90277-0333	-		1	GASKET KIT / ART NO ACS 0325 EH	
590	90277-0336	-		1	FILTER REPBY 0090337-0315	
600	90326-0012	-		3	PROTECTIVE COVER, T31A4618	
610	90326-0020	-		3	PLUG, FEMALE YELLOW CR-AL	
630	90330-0025	-		3	BUSHING, INT/EXT. THR. R1/4-RP1/8	
640	90330-0048	-		3	BUSHING, INT/EXT. THR. R1/2-RP3/8	
645	B90360-0020	-		4	STEAM TRAP / MK36/51 3/8"	
	90360-0309	-		*1*	*STRAINER, FOR STEAM TRAP 90360-20*	
	90360-0310	-		*1*	*CAPSULE, FOR STEAM TRAP 90360-20*	
650	311521-0143	-		4	BLANK RIVET 3,2X8	
660	312105-0366	-		4	SCREW M6S M6X12 A280	
670	312105-0370	-		2	SCREW M6S ISO 4017 M6X20 A480	
675	312105-0382	-		4	SCREW M6S ISO 4014 M6X60 A480	
680	312115-0368	-		48	SCREW ISO4762 M6X16 A4	
690	312155-0289	-		4	SCREW EN 10642 MF6S M4X10 A480	
692	312205-0107	-		2	SCREW U6S1/4X13RFR	
695	315105-0153	-		10	WASHER BRB6,4X12RFR	
700	315125-0153	-		4	WASHER TBRSB 6,4X22X4 A4	
720	315204-0219	-		12	O-RING 29,2X3 MM	

Machine Type | Group Description | Used-In | Group Number | Page No

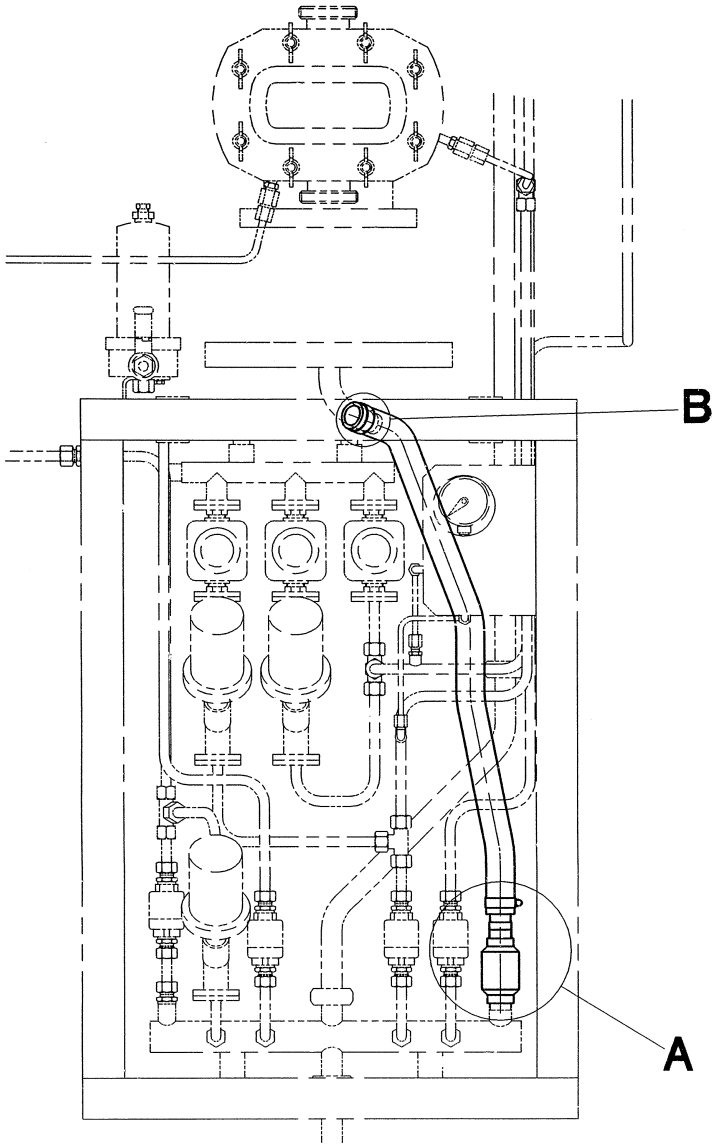

B
1 : 2

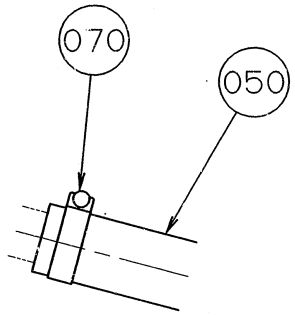

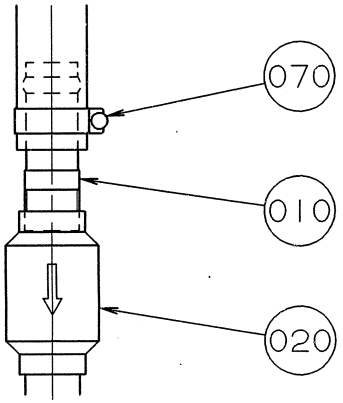

A
1 : 2

ECM: - -
Group number: 925407-0100
Assembly Drawing: 925407-1_1_AA

Pos	Part No	SP	UN	Qty	Description	Page No
-						
010	794039-0000	-		1	HOSE CONNECTION	
020	B794040-0000	-		1	NON-RETURN VALVE	
	794041-0000	*C*		*1*	*COMPRESSION SPRING*	
050	90166-0049	-	M	1	HOSE PVC 25/33-34	
070	342991-0106	-		2	HOSE CLIP,WORM DRIVE TYPE (30)-36	

Pos	Part No	SP	UN	Qty	Description	Page No

Machine Type | Group Description | Used-In | Group Number | Page No

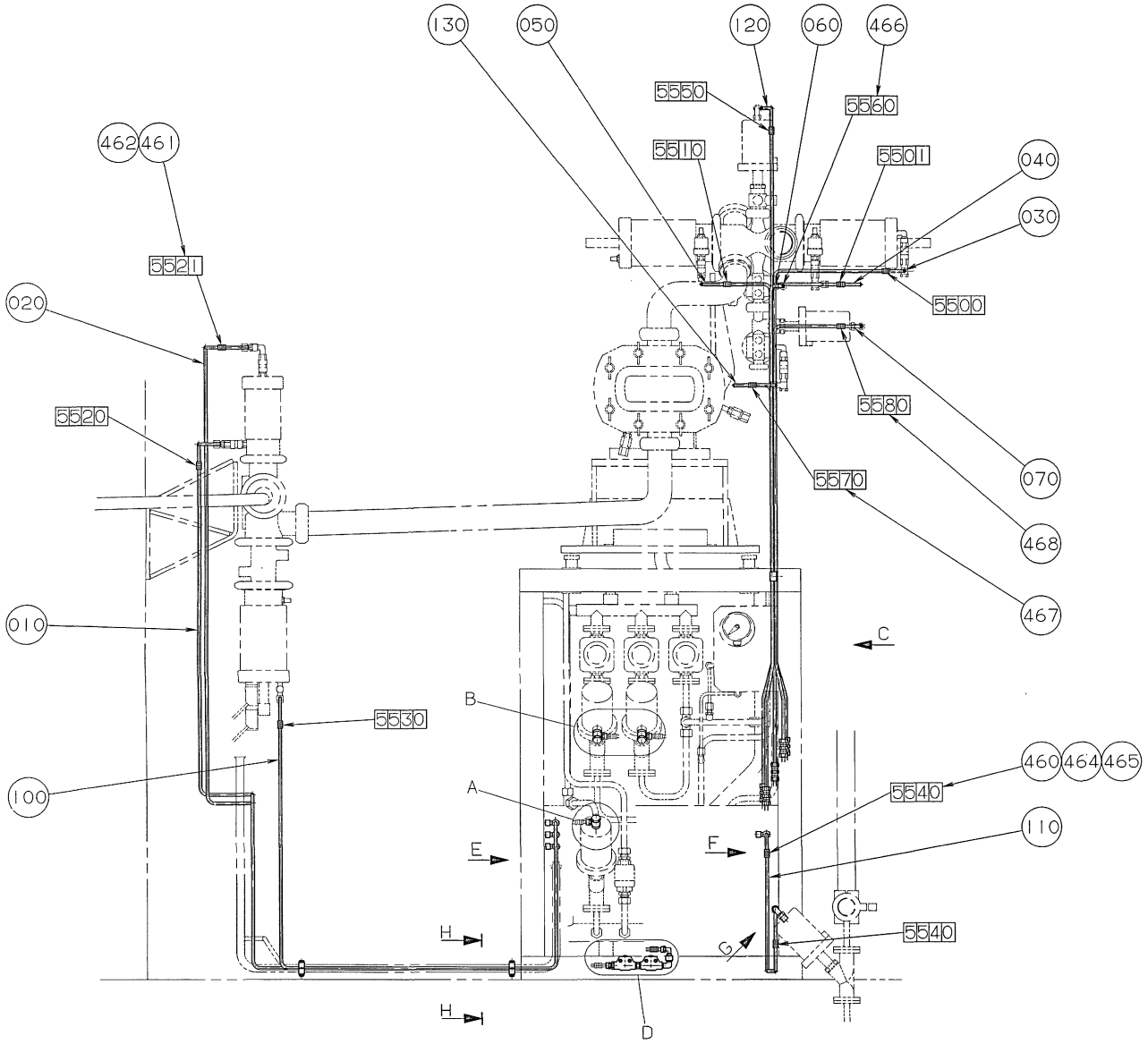
130
050
120
060
466
5550
5560
462
461
55110
55011
040
030
5521
020
5500
5520
5580
070
5570
468
467
010
C
B
5530
460
464
465
100
A
5540
110
E
F
H
G
5540
H
D

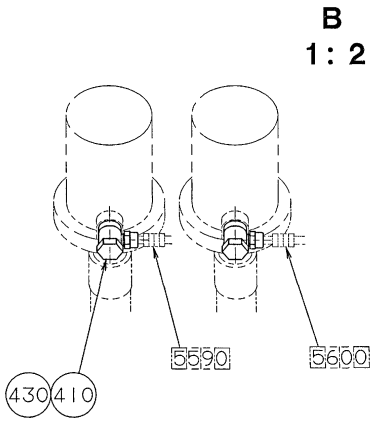
B
1 : 2
5590
5600
430
410

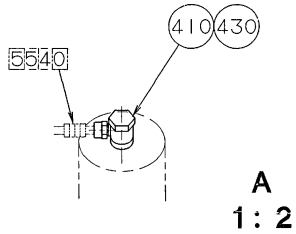
410
430
5540
A
1 : 2

ECM: - -
Group number: 925408-0100
Assembly Drawing: 925408-1_1_AA

This list covers pages from 10-106 to 10-109

Pos	Part No	SP	UN	Qty	Description	Page No
-						
010	925651-0000	-		1	AIR PIPE	
020	925652-0000	-		1	AIR PIPE	
030	925754-0000	-		1	AIR PIPE	
040	925755-0000	-		1	AIR PIPE	
050	925758-0000	-		1	AIR PIPE	
060	925759-0000	-		1	AIR PIPE	
070	925760-0000	-		1	AIR PIPE	
100	925650-0000	-		1	AIR PIPE	
110	925653-0000	-		1	AIR PIPE	
120	925756-0000	-		1	AIR PIPE	
130	925757-0000	-		1	AIR PIPE	
160	736358-0000	-		1	CLAMPING PIECE	
170	794239-0000	-		4	ATTACHMENT	
180	925761-0000	-		4	CONNECTION CLAMP	
210	90030-0075	-		7	PIPE CONNECTION G-6	
220	90030-0184	-		5	CONN. STR. GA-6-G1/8	
230	90140-0021	-		2	ELBOW, 90 INT/EXT, 20201/8-1/8	
240	90163-0057	-		1	NIPPLE 1/8" BRASS	
250	90163-0062	-		1	QUICK COUPLING, (F) 5053-1/8	
260	90166-0132	-	M	1	TUBE 6 MM PA,TRANSP.	
270	90235-0048	-		2	VALVE	
280	90330-0025	-		1	BUSHING, INT/EXT. THR. R1/4-RP1/8	
290	90330-0032	-		1	NIPPLES, EXT. THREAD. ISO 7/1 R1/8-R1/8	
320	312105-0335	-		4	SCREW M6S ISO 4014 M5X30 A480	
330	312105-0362	-		2	SCREW M6S ISO 4017 M6X8 A480	
340	312115-0297	-		4	SCREW ISO4762 M4X25 A4	
350	312605-0314	-		4	HEXAGON NUT, M6M M5 A280	
360	315233-0109	-		4	WASHER CAPTIVE SEALING G1/8	
370	342706-0130	-		7	ACCESSORIES, INSERT SLEEVE 6 MM	
380	342921-0113	-		1	STRAIGHT COUPLING,EXT.THREADED 6/4-G1/8"	
390	342930-0113	-		1	ELBOW 90 COUPL.,EXT.THREAD 6/4-R1/8"	
400	342980-0113	-		4	BANJO-CONNECTION,RING 6/4-G1/8"	
410	342980-0114	-		3	BANJO-CONNECTION,RING 6/4-G1/4"	
420	342980-0303	-		4	BANJO-HOLLOW BOLT COUPL,EXT.THR.01-G1/8"	
430	342980-0304	-		3	BANJO-HOLLOW BOLT COUPL,EXT.THR.01-G1/4"	
460	359000-0400	-		24	MARKING CO2/4"0"	
461	359000-0401	-		6	MARKING COLLAR 2/4 "1" YELLOW	
462	359000-0402	-		4	MARKING COLLAR 2/4 "2" YELLOW	
463	359000-0403	-		4	MARKING COLLAR PA2/4 "3" YELLOW	
464	359000-0404	-		2	MARKING COLLAR PA2/4 "4" YELLOW	
465	359000-0405	-		50	MARKING CO2/4"5"	
466	359000-0406	-		2	MARKING COLLAR PA2/4 "6" YELLOW	
467	359000-0407	-		2	MARKING COLLAR PA2/4 "7" YELLOW	
468	359000-0408	-		2	MARKING COLLAR PA2/4 "8" YELLOW	

Machine Type | Group Description | Used-In | Group Number | Page No

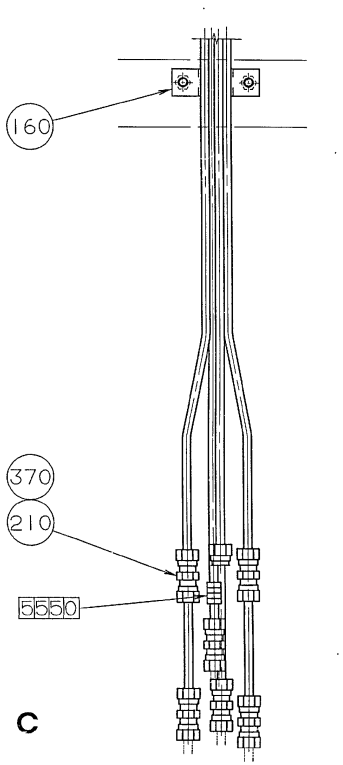
160
370
210
5550

C

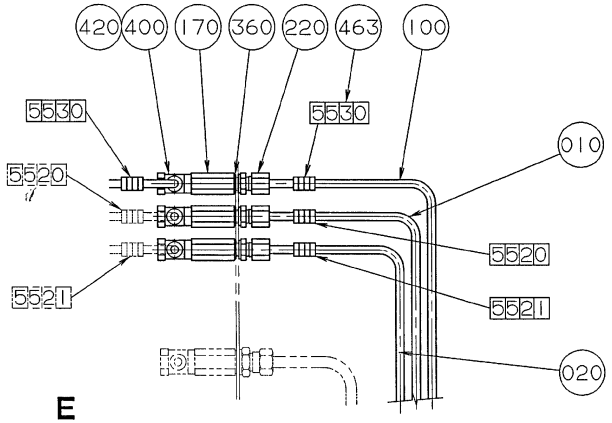
420
400
170
360
220
463
100
5530
5530
010
5520
5520
5521
5521
020

E

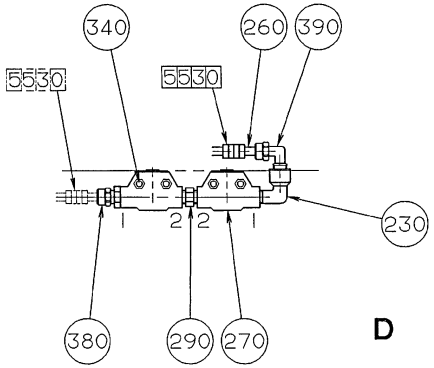
340
260
390
5530
5530
230
1
2
2
1
380
290
270

D

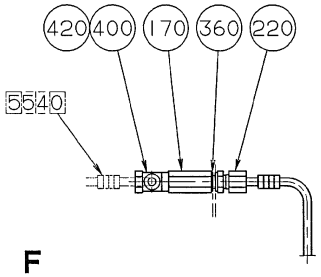
420
400
170
360
220
5540

F

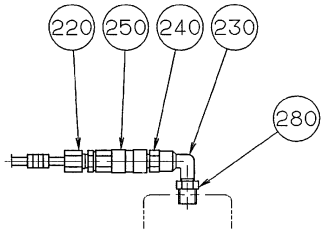
220
250
240
230
280

G

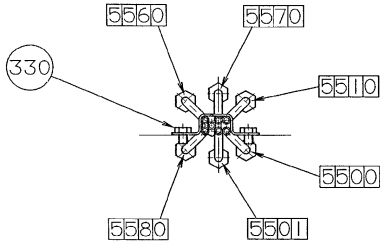
5560
5570
330
5510
5500
5580
5501

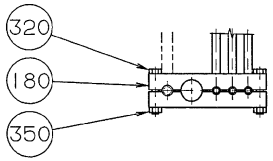
320
180
350

H-H

ECM: - -
Group number: 925408-0100
Assembly Drawing: 925408-2_1_AA

This list covers pages from 10-106 to 10-109

Pos	Part No	SP	UN	Qty	Description	Page No
-						
010	925651-0000	-		1	AIR PIPE	
020	925652-0000	-		1	AIR PIPE	
030	925754-0000	-		1	AIR PIPE	
040	925755-0000	-		1	AIR PIPE	
050	925758-0000	-		1	AIR PIPE	
060	925759-0000	-		1	AIR PIPE	
070	925760-0000	-		1	AIR PIPE	
100	925650-0000	-		1	AIR PIPE	
110	925653-0000	-		1	AIR PIPE	
120	925756-0000	-		1	AIR PIPE	
130	925757-0000	-		1	AIR PIPE	
160	736358-0000	-		1	CLAMPING PIECE	
170	794239-0000	-		4	ATTACHMENT	
180	925761-0000	-		4	CONNECTION CLAMP	
210	90030-0075	-		7	PIPE CONNECTION G-6	
220	90030-0184	-		5	CONN. STR. GA-6-G1/8	
230	90140-0021	-		2	ELBOW, 90 INT/EXT, 20201/8-1/8	
240	90163-0057	-		1	NIPPLE 1/8" BRASS	
250	90163-0062	-		1	QUICK COUPLING, (F) 5053-1/8	
260	90166-0132	-	M	1	TUBE 6 MM PA,TRANSP.	
270	90235-0048	-		2	VALVE	
280	90330-0025	-		1	BUSHING, INT/EXT. THR. R1/4-RP1/8	
290	90330-0032	-		1	NIPPLES, EXT. THREAD. ISO 7/1 R1/8-R1/8	
320	312105-0335	-		4	SCREW M6S ISO 4014 M5X30 A480	
330	312105-0362	-		2	SCREW M6S ISO 4017 M6X8 A480	
340	312115-0297	-		4	SCREW ISO4762 M4X25 A4	
350	312605-0314	-		4	HEXAGON NUT, M6M M5 A280	
360	315233-0109	-		4	WASHER CAPTIVE SEALING G1/8	
370	342706-0130	-		7	ACCESSORIES, INSERT SLEEVE 6 MM	
380	342921-0113	-		1	STRAIGHT COUPLING,EXT.THREADED 6/4-G1/8"	
390	342930-0113	-		1	ELBOW 90 COUPL.,EXT.THREAD 6/4-R1/8"	
400	342980-0113	-		4	BANJO-CONNECTION,RING 6/4-G1/8"	
410	342980-0114	-		3	BANJO-CONNECTION,RING 6/4-G1/4"	
420	342980-0303	-		4	BANJO-HOLLOW BOLT COUPL,EXT.THR.01-G1/8"	
430	342980-0304	-		3	BANJO-HOLLOW BOLT COUPL,EXT.THR.01-G1/4"	
460	359000-0400	-		24	MARKING CO2/4"0"	
461	359000-0401	-		6	MARKING COLLAR 2/4 "1" YELLOW	
462	359000-0402	-		4	MARKING COLLAR 2/4 "2" YELLOW	
463	359000-0403	-		4	MARKING COLLAR PA2/4 "3" YELLOW	
464	359000-0404	-		2	MARKING COLLAR PA2/4 "4" YELLOW	
465	359000-0405	-		50	MARKING CO2/4"5"	
466	359000-0406	-		2	MARKING COLLAR PA2/4 "6" YELLOW	
467	359000-0407	-		2	MARKING COLLAR PA2/4 "7" YELLOW	
468	359000-0408	-		2	MARKING COLLAR PA2/4 "8" YELLOW	

Machine Type | Group Description | Used-In | Group Number | Page No

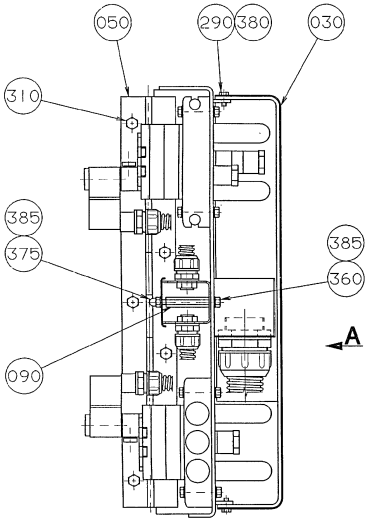
050
290
380
030
310
385
375
385
360
A
090

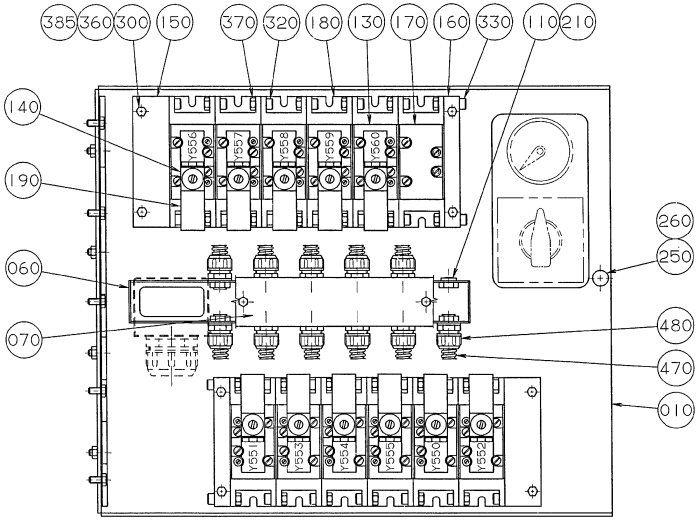
385
360
300
150
370
320
180
130
170
160
330
110
210
140
190
260
250
060
070
480
470
010

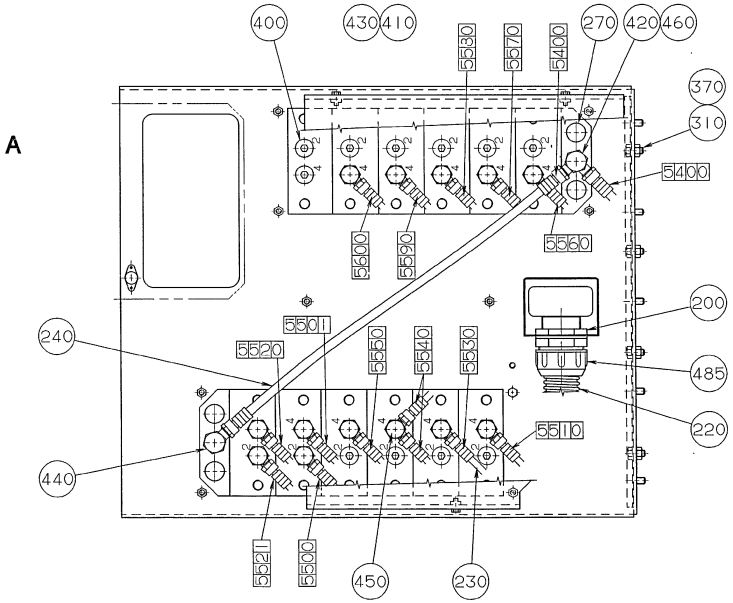
A
400
430
410
5530
5570
5400
270
420
460
370
310
5400
5560
5560
5560
200
240
5501
5520
5550
5540
5530
485
5510
220
440
5521
5500
450
230

ECM: 71999 - 19990301
Group number: 925409-0100
Assembly Drawing: 925409-1_1_AA

Pos	Part No	SP	UN	Qty	Description	Page No
-						
010	925461-0000	-		1	SUPPORT	
030	925457-0000	-		1	TOUCH GUARD	
050	735503-0000	-		1	HINGE	
060	925458-0000	-		1	CABLE DUCT	
070	925460-0000	-		1	COVER	
090	925459-0000	-		2	SPACER	
110	90002-0018	-		1	BLANK-OFF PLUG, PR 12,5 SKINDICHT-BLK7	
130	B90042-0108	-		11	SOLENOID VALVE MECMAN 581-111-100	
	90042-0451	*C*		*1*	*WEAR & TEAR PARTS KIT 04904 295 06*	
140	90042-0345	-		11	COIL 24V DC	
150	90042-0368	-		2	CONNECTION	
160	90042-0369	-		2	END PIECE	
170	90042-0404	-		1	BLIND PLATE 580-187-000	
180	90042-0431	-		12	PLATE 580-175-000	
190	90042-0476	-		11	CONTACT, 122-07N	
200	90099-0011	-		1	NUT PR 37 BRASS	
210	90099-0116	-		1	NUT, PR 12,5 (PG7)	
220	90152-0029	-	MM	1750	HOSE 35/41	
230	90166-0132	-	M	10	TUBE 6 MM PA,TRANSP.	
240	90166-0133	-	M	2	TUBE 8 MM PA,TRANSP.	
250	90237-0114	-		1	FAST LOCKING BOLT, 3140 K 15-8	
260	90237-0308	-		1	LOCKING WASHER, 3141-1	
270	90328-0024	-		4	SILENCER G3/8	
290	312105-0289	-		3	SCREW M6S ISO 4017 M4X10 A480	
300	312105-0337	-		8	SCREW M6S ISO 4014 M5X35 A480	
310	312105-0366	-		9	SCREW M6S M6X12 A280	
320	312115-0368	-		24	SCREW ISO4762 M6X16 A4	
330	312115-0372	-		4	SCREW ISO4762 M6X25 A4	
360	312605-0314	-		10	HEXAGON NUT, M6M M5 A280	
370	312605-0316	-		32	HEXAGON NUT, M6M M6 A280	
375	312705-0314	-		2	NUT HEX. DOMED CAP MHM-6 M5 A280	
380	315105-0136	-		3	WASHER BRB4,3XRFR	
385	315105-0146	-		20	BRICKA BRB5,3X10RFR	
400	342713-0210	-		11	PLUG, EXT THREAD HEX SOCKET 8638-00-140	
410	342980-0114	-		14	BANJO-CONNECTION,RING 6/4-G1/4"	
420	342980-0123	-		3	BANJO-CONNECTION,RING 8/6-G3/8"	
430	342980-0304	-		12	BANJO-HOLLOW BOLT COUPL,EXT.THR.01-G1/4"	
440	342980-0305	-		1	BANJO-HOLLOW BOLT COUPL,EXT.THR.01-G3/8"	
450	342980-0314	-		1	BANJO-HOLLOW BOLT COUPL,EXT.THR.02-G1/4"	
460	342980-0315	-		1	BANJO-HALLOW BOLT COUPL,EXT.THR.02-G3/8"	
470	352135-0102	-	M	2	SPIRAL CONDUIT 155.010 DI=10MM;DO=14,7MM	
480	352136-0107	-		22	GLAND FITTING PR12,5 PG7 FOR HOSE	
485	352136-0167	-		1	GLAND FITTING	
490	359000-0400	-		38	MARKING CO2/4"0"	
491	359000-0401	-		6	MARKING COLLAR 2/4 "1" YELLOW	
492	359000-0402	-		4	MARKING COLLAR 2/4 "2" YELLOW	
493	359000-0403	-		2	MARKING COLLAR PA2/4 "3" YELLOW	
494	359000-0404	-		8	MARKING COLLAR PA2/4 "4" YELLOW	
495	359000-0405	-		60	MARKING CO2/4"5"	
496	359000-0406	-		4	MARKING COLLAR PA2/4 "6" YELLOW	
497	359000-0407	-		2	MARKING COLLAR PA2/4 "7" YELLOW	
498	359000-0408	-		2	MARKING COLLAR PA2/4 "8" YELLOW	
499	359000-0409	-		2	MARKING COLLAR PA2/4 "9" YELLOW	

Machine Type	Group Description	Used-In	Group Number	Page No

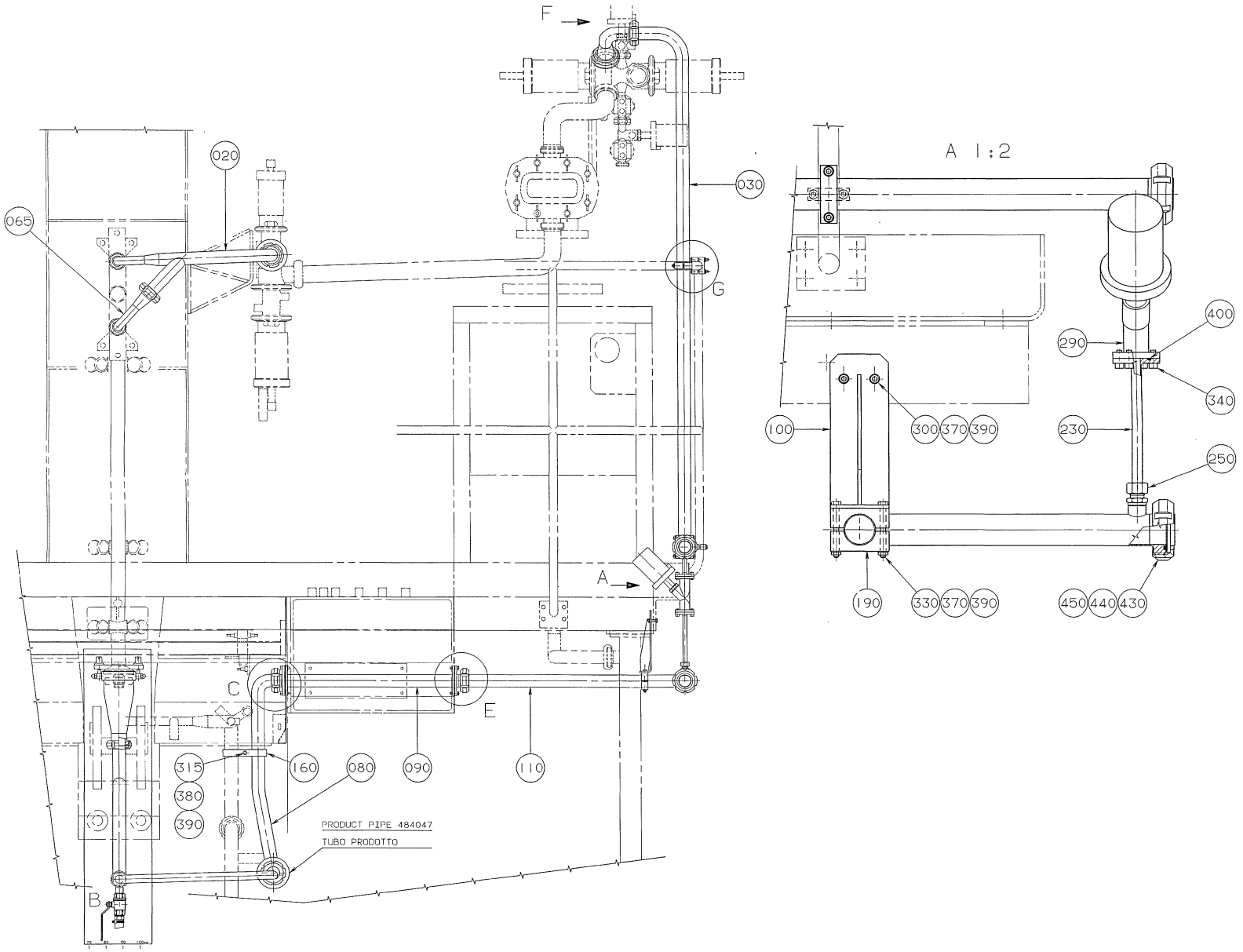
F
020
030
065
G
A
C
E
315
160
080
090
110
380
390
PRODUCT PIPE 484047
TUBO PRODOTTO
B
A 1:2
400
290
340
100
300
370
390
230
250
190
330
370
390
450
440
430

ECM: 71777 - 19980716
Group number: 925410-0100
Assembly Drawing: 925410-1_1_AA

This list covers pages from 10-112 to 10-115

Pos	Part No	SP	UN	Qty	Description	Page No
0355B, 0500S						
010	924634-0000	-		1	CLEANING CUP	
050	924638-0000	-		1	COVER	
180	449992-0000	C		1	GASKET	
0375S						
010	924635-0000	-		1	CLEANING CUP	
050	924639-0000	-		1	COVER	
180	449993-0000	C		1	GASKET	
0500B, 0750B, 1000B						
010	924632-0000	-		1	CLEANING CUP	
050	924636-0000	-		1	COVER	
180	458786-0000	C		1	GASKET	
1000SQ						
010	1347019-0000	-		1	CLEANING CUP	
050	1347020-0000	-		1	COVER	
180	569106-0000	C		1	GASKET	
Common Parts						
020	924792-0000	-		1	CLEANING PIPE	
030	925462-0000	-		1	CLEANING PIPE	
060	924806-0000	-		1	CLEANING PIPE	
065	924842-0000	-		1	CLEANING PIPE	
070	924847-0000	-		1	CLEANING PIPE	
080	925463-0000	-		1	CLEANING PIPE	
090	925464-0000	-		1	CLEANING PIPE	
100	925465-0000	-		1	HOLDER	
110	925466-0000	-		1	CLEANING PIPE	
120	457614-0001	-		2	CLAMPING PIECE	
130	924845-0000	-		2	BRACKET	
140	925467-0000	-		2	FLANGE	
150	925468-0000	-		2	FLANGE	
160	926754-0000	-		2	CLAMP HOLDER	
190	735041-0000	-		4	CONNECTION CLAMP	
200	924640-0000	-		2	NUT	
210	924641-0000	-		2	SCREW	
220	925469-0000	C		1	GASKET	
230	925470-0000	-		1	TUBE	
250	90030-0187	-		1	CONN. STR. GA-12-G3/8	
260	90055-0071	-		1	HOSE NIPPLE, EXT.THR. R1/2X13 MM	
270	90148-0021	C	M	1	HOSE	
280	90187-0082	-		1	BALL VALVE G1/2	
290	90235-0743	-		1	ANGLE SEAT VALVE W. FLANGES, N.O. D=13	
300	312105-0372	-		2	SCREW M6S ISO 4017 M6X25 A480	
310	312105-0380	-		4	SCREW M6S ISO 4014 M6X50 A480	
315	312105-0381	-		1	SCREW M6S ISO 4014 M6X55 A480	
320	312105-0382	-		4	SCREW M6S ISO 4014 M6X60 A480	
330	312105-0383	-		2	SCREW M6S ISO 4014 M6X65 A480	
340	312115-0368	-		20	SCREW ISO4762 M6X16 A4	
360	312115-0374	-		1	SCREW ISO4762 M6X30 A4	
370	312605-0316	-		12	HEXAGON NUT, M6M M6 A280	
380	312705-0316	-		2	NUT HEX. DOMED CAP MHM-6 M6 A280	
385	312705-0318	-		2	NUT HEX. DOMED CAP MHM-6 M8 A280	
390	315105-0153	-		13	WASHER BRB6,4X12RFR	
400	315204-0219	C		2	O-RING 29,2X3 MM	
410	315233-0113	C		1	WASHER CAPTIVE SEALING G1/2	
420	315250-0101	C		1	GASKET 32X25X5,5 MM	
430	315250-0103	C		9	GASKET 48X38X5,5 MM	
440	342803-0103	-		2	UNION NUT, RD 60-6 (SMS 38)	
450	342812-0103	-		2	FERRULE, SMS 1145, 2333, NO. 190706	
460	342991-0104	-		1	HOSE CLIP,WORM DRIVE TYPE (23)-27	

Machine Type | Group Description | Used-In | Group Number | Page No

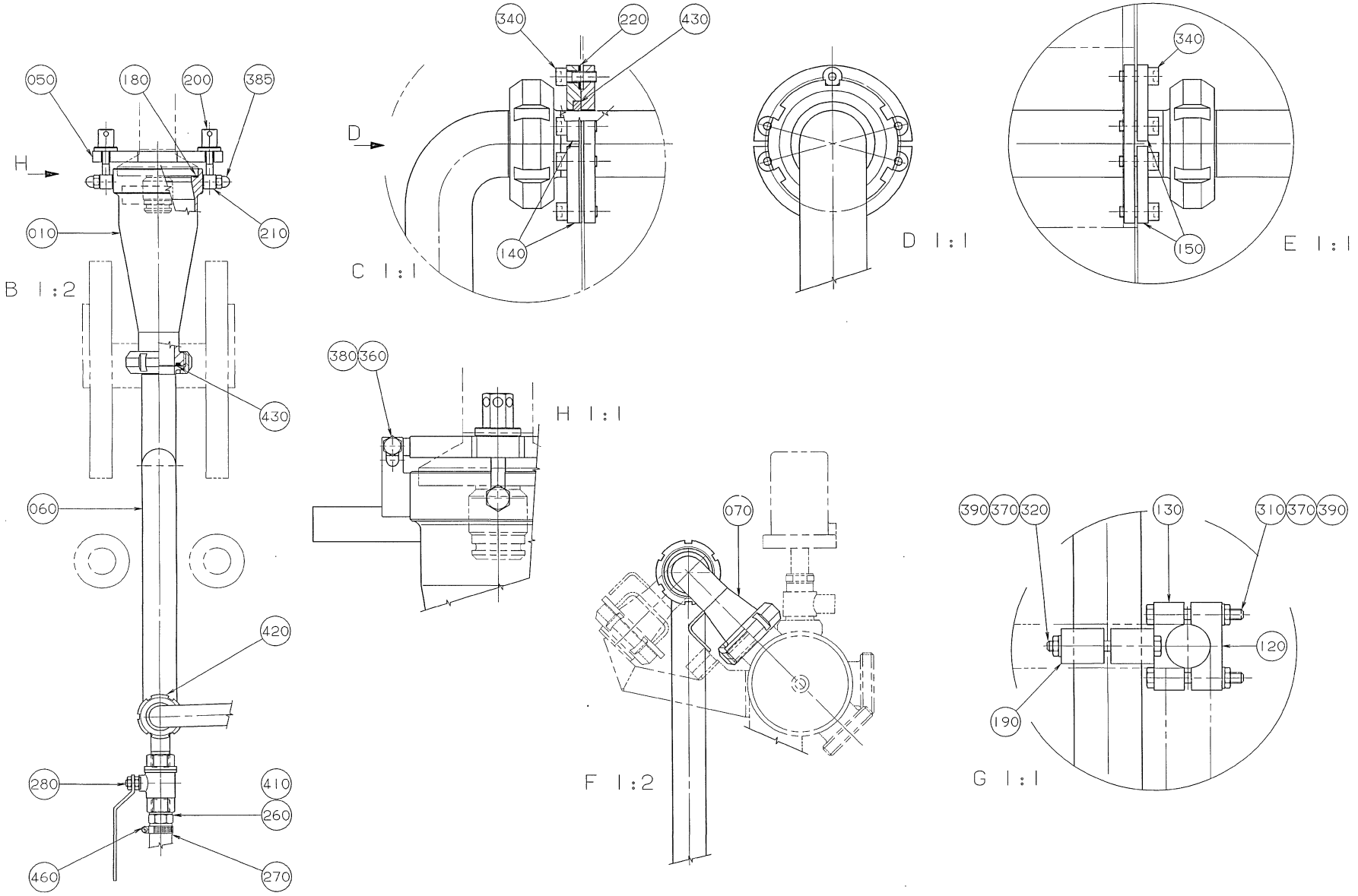
050
180
200
385
H
010
210
B 1:2
430
060
420
280
410
260
460
270
340
220
430
D
140
C 1:1
D 1:1
340
150
E 1:1
380
360
H 1:1
070
F 1:2
390
370
320
130
310
370
390
120
190
G 1:1

ECM: 71777 - 19980716
Group number: 925410-0100
Assembly Drawing: 925410-2_1_AA

This list covers pages from 10-112 to 10-115

Pos	Part No	SP	UN	Qty	Description	Page No
0355B, 0500S						
010	924634-0000	-		1	CLEANING CUP	
050	924638-0000	-		1	COVER	
180	449992-0000	C		1	GASKET	
0375S						
010	924635-0000	-		1	CLEANING CUP	
050	924639-0000	-		1	COVER	
180	449993-0000	C		1	GASKET	
0500B, 0750B, 1000B						
010	924632-0000	-		1	CLEANING CUP	
050	924636-0000	-		1	COVER	
180	458786-0000	C		1	GASKET	
1000SQ						
010	1347019-0000	-		1	CLEANING CUP	
050	1347020-0000	-		1	COVER	
180	569106-0000	C		1	GASKET	
Common Parts						
020	924792-0000	-		1	CLEANING PIPE	
030	925462-0000	-		1	CLEANING PIPE	
060	924806-0000	-		1	CLEANING PIPE	
065	924842-0000	-		1	CLEANING PIPE	
070	924847-0000	-		1	CLEANING PIPE	
080	925463-0000	-		1	CLEANING PIPE	
090	925464-0000	-		1	CLEANING PIPE	
100	925465-0000	-		1	HOLDER	
110	925466-0000	-		1	CLEANING PIPE	
120	457614-0001	-		2	CLAMPING PIECE	
130	924845-0000	-		2	BRACKET	
140	925467-0000	-		2	FLANGE	
150	925468-0000	-		2	FLANGE	
160	926754-0000	-		2	CLAMP HOLDER	
190	735041-0000	-		4	CONNECTION CLAMP	
200	924640-0000	-		2	NUT	
210	924641-0000	-		2	SCREW	
220	925469-0000	C		1	GASKET	
230	925470-0000	-		1	TUBE	
250	90030-0187	-		1	CONN. STR. GA-12-G3/8	
260	90055-0071	-		1	HOSE NIPPLE, EXT.THR. R1/2X13 MM	
270	90148-0021	C	M	1	HOSE	
280	90187-0082	-		1	BALL VALVE G1/2	
290	90235-0743	-		1	ANGLE SEAT VALVE W. FLANGES, N.O. D=13	
300	312105-0372	-		2	SCREW M6S ISO 4017 M6X25 A480	
310	312105-0380	-		4	SCREW M6S ISO 4014 M6X50 A480	
315	312105-0381	-		1	SCREW M6S ISO 4014 M6X55 A480	
320	312105-0382	-		4	SCREW M6S ISO 4014 M6X60 A480	
330	312105-0383	-		2	SCREW M6S ISO 4014 M6X65 A480	
340	312115-0368	-		20	SCREW ISO4762 M6X16 A4	
360	312115-0374	-		1	SCREW ISO4762 M6X30 A4	
370	312605-0316	-		12	HEXAGON NUT, M6M M6 A280	
380	312705-0316	-		2	NUT HEX. DOMED CAP MHM-6 M6 A280	
385	312705-0318	-		2	NUT HEX. DOMED CAP MHM-6 M8 A280	
390	315105-0153	-		13	WASHER BRB6,4X12RFR	
400	315204-0219	C		2	O-RING 29,2X3 MM	
410	315233-0113	C		1	WASHER CAPTIVE SEALING G1/2	
420	315250-0101	C		1	GASKET 32X25X5,5 MM	
430	315250-0103	C		9	GASKET 48X38X5,5 MM	
440	342803-0103	-		2	UNION NUT, RD 60-6 (SMS 38)	
450	342812-0103	-		2	FERRULE, SMS 1145, 2333, NO. 190706	
460	342991-0104	-		1	HOSE CLIP,WORM DRIVE TYPE (23)-27	

Machine Type | Group Description | Used-In | Group Number | Page No

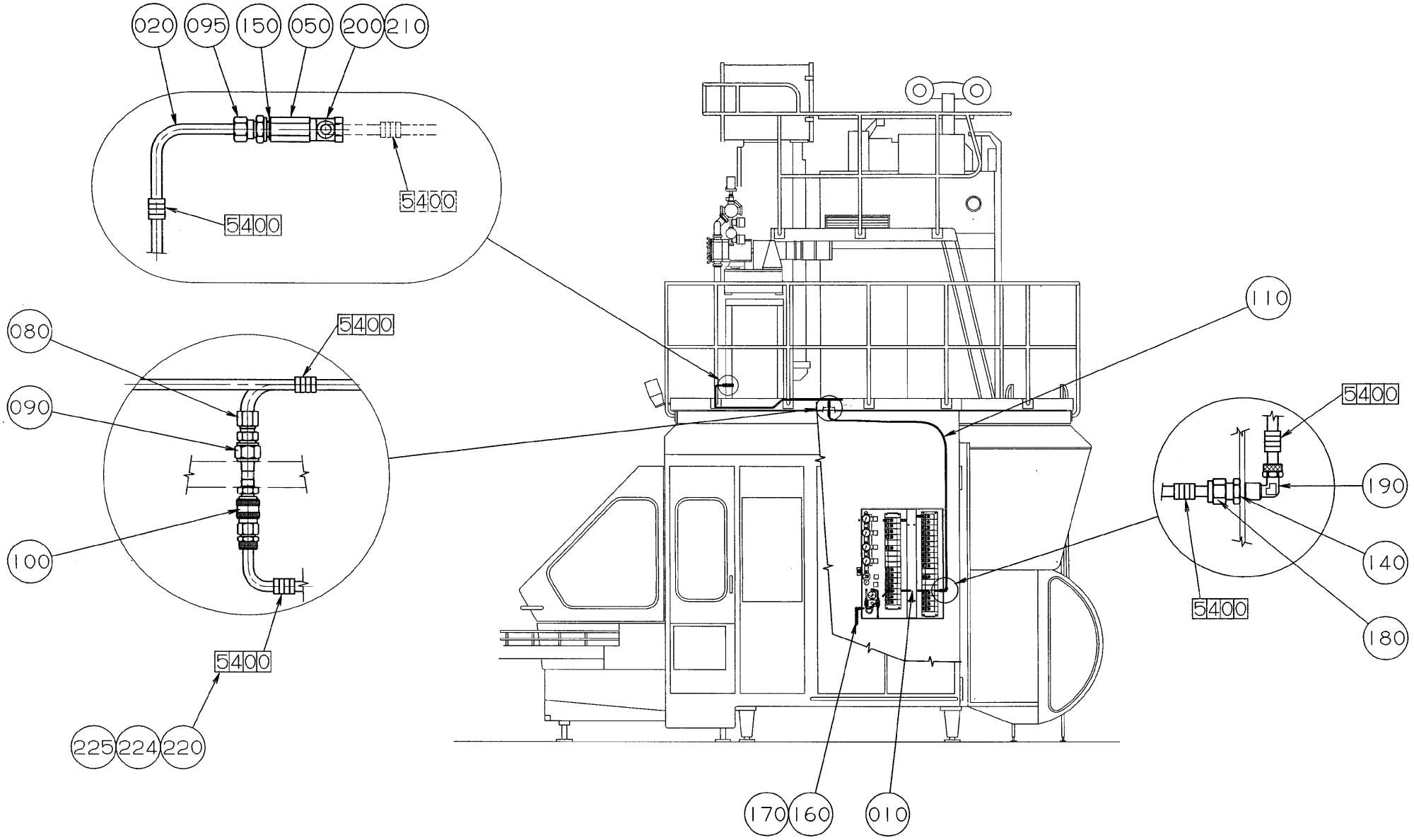
020
095
150
050
200
210
5400
5400
080
090
100
5400
5400
225
224
220
110
5400
190
140
180
5400
170
160
010

ECM: 71319 - 19980521
Group number: 925411-0100
Assembly Drawing: 925411-1_1_AA

Pos	Part No	SP	UN	Qty	Description	Page No
-						
010	561548-0000	-		1	PIPE	
020	925762-0000	-		1	AIR PIPE	
050	794238-0000	-		1	ATTACHMENT	
080	90030-0086	-		2	CONN. STR., 8-R1/4, EXT. THREAD	
090	90030-0116	-		1	NIPPLES, REDUCING, EXT. THR. NO. 2520	
095	90030-0185	-		1	CONN. STR. GA-8-G1/4	
100	90163-0079	-		1	SLEEVE 5480-8/6	
110	90166-0133	-	M	2	TUBE 8 MM PA,TRANSP.	
140	315233-0109	-		1	WASHER CAPTIVE SEALING G1/8	
150	315233-0110	-		1	WASHER CAPTIVE SEALING G1/4	
160	342702-0115	-		2	NUT, PIPES & CONNECTORS,NUT M-16 BR	
170	342704-0114	-		4	ACCESSORIES, FERRULE 15-MSG	
180	342720-0103	-		1	CONN. STR. GA-8-G1/8	
190	342933-0121	-		1	ELBOW 90 COUPL.,INT.THREAD 8/6-G1/8"	
200	342980-0122	-		1	BANJO-CONNECTION,RING 8/6-G1/4"	
210	342980-0304	-		1	BANJO-HOLLOW BOLT COUPL,EXT.THR.01-G1/4"	
220	359000-0400	-		12	MARKING CO2/4"0"	
224	359000-0404	-		6	MARKING COLLAR PA2/4 "4" YELLOW	
225	359000-0405	-		6	MARKING CO2/4"5"	

Pos	Part No	SP	UN	Qty	Description	Page No

Machine Type | Group Description | Used-In | Group Number | Page No

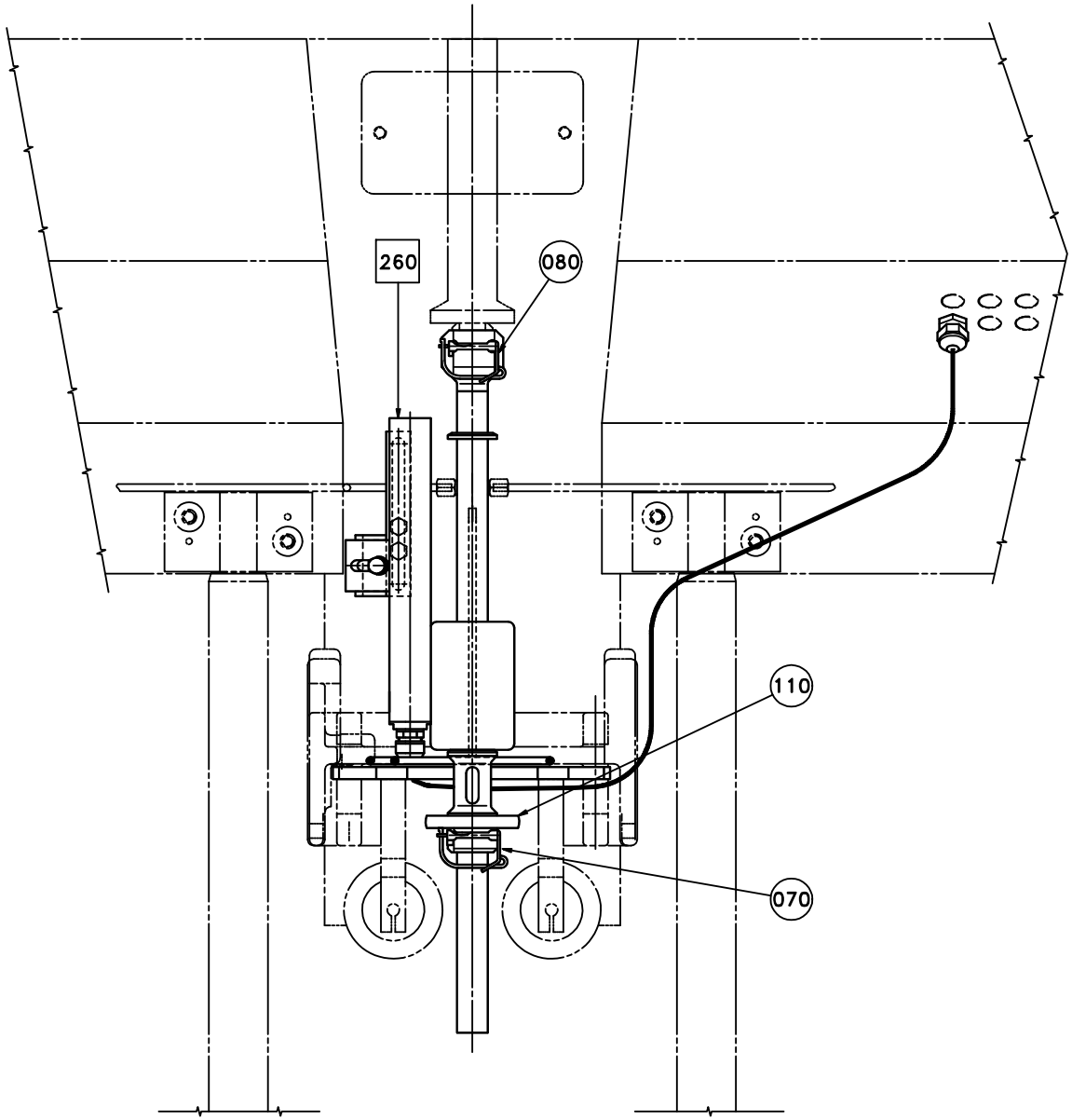
260
080
110
070

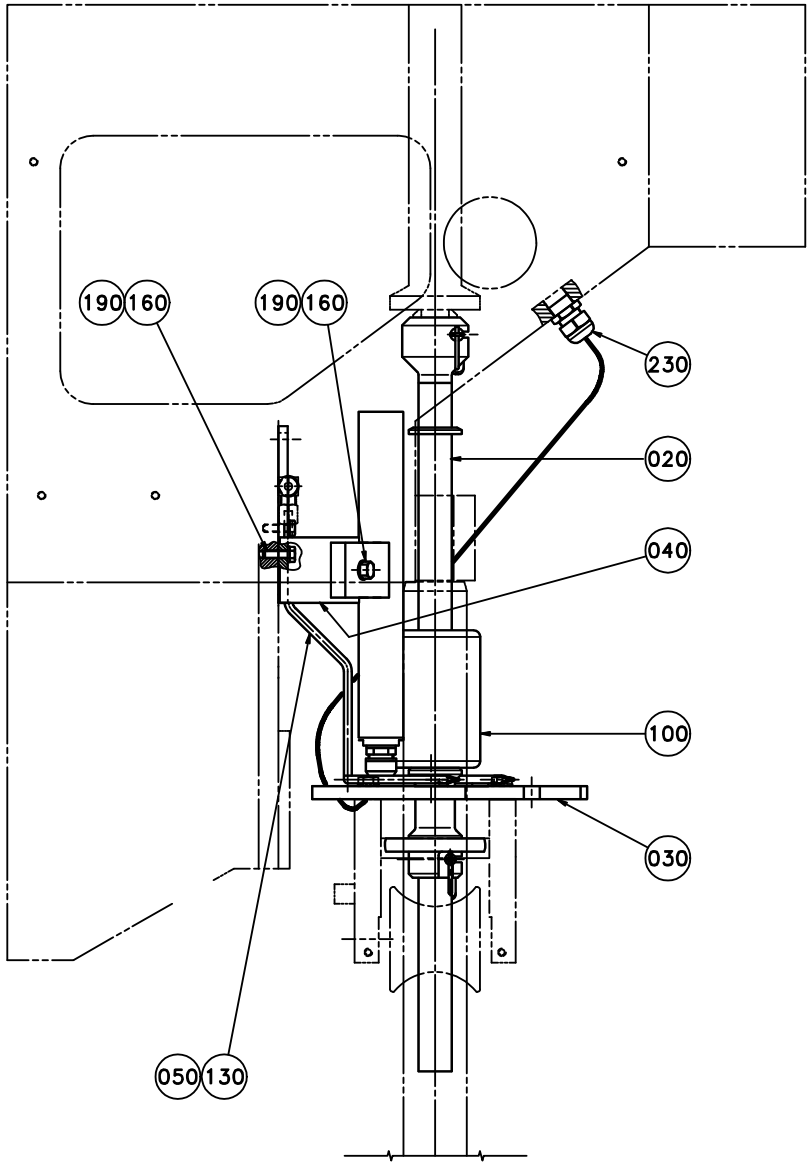
190
160
190
160
230
020
040
100
030
050
130

ECM: 71990 - 19981102
Group number: 925414-0200
Assembly Drawing: 925414-3_1_AA

This list covers pages from 10-118 to 10-121

Pos	Part No	SP	UN	Qty	Description	Page No
0355B (See drawing on page: 10-120)						
010	924683-0000	-		1	HOLDER	
020	924682-0000	-		1	FILLING PIPE	
070	493734-0000	C		1	LOCKING PIN LOWER	
080	493733-0000	C		1	LOCKING PIN UPPER	
100	1347138-0000	C		1	FLOAT	
110	924679-0000	-		1	FLANGE	
0375S (See drawing on page: 10-118)						
020	1347887-0000	-		1	FILLING PIPE	
070	1349975-0000	C		1	LOCKING PIN LOWER	
080	493733-0000	C		1	LOCKING PIN UPPER	
100	1347139-0000	C		1	FLOAT	
110	925626-0000	-		1	FLANGE	
0500B (See drawing on page: 10-120)						
010	736256-0000	-		1	HOLDER	
020	795944-0001	-		1	FILLING PIPE	
070	445502-0000	C		1	LOCKING PIN LOWER	
080	445504-0000	C		1	LOCKING PIN UPPER	
100	1334016-0000	C		1	FLOAT	
110	795946-0000	-		1	FLANGE	
0500S (See drawing on page: 10-118)						
020	1347888-0000	-		1	FILLING PIPE	
070	493734-0000	C		1	LOCKING PIN LOWER	
080	493733-0000	C		1	LOCKING PIN UPPER	
100	1347138-0000	C		1	FLOAT	
110	795960-0000	-		1	FLANGE	
0750B (See drawing on page: 10-118)						
020	1347889-0000	-		1	FILLING PIPE	
070	445502-0000	C		1	LOCKING PIN LOWER	
080	445504-0000	C		1	LOCKING PIN UPPER	
100	1334016-0000	C		1	FLOAT	
110	925620-0000	-		1	FLANGE	
1000B (See drawing on page: 10-118)						
020	1347886-0000	-		1	FILLING PIPE	
070	445502-0000	C		1	LOCKING PIN LOWER	
080	445504-0000	C		1	LOCKING PIN UPPER	
100	1334016-0000	C		1	FLOAT	
110	795947-0000	-		1	FLANGE	
1000SQ (See drawing on page: 10-118)						
020	1334481-0000	-		1	FILLING PIPE	
070	493734-0000	C		1	LOCKING PIN LOWER	
080	493733-0000	C		1	LOCKING PIN UPPER	
100	1334485-0000	C		1	FLOAT	
110	1334482-0000	-		1	FLANGE	
Common Parts						
030	1346081-0000	-		1	BRACKET	
040	1346079-0000	-		1	HOLDER	
050	1346080-0000	-		1	SPREADER	
130	90030-0097	-		1	ACCESSORIES, FERRULE 6	
160	312105-0451	-		3	SCREW M6S ISO 4017 M8X20 A480	
190	315105-0165	-		3	WASHER BRB8,4X16RFR	
230	352103-0105	-		1	CABLE GLAND, STR 11, PR 18,6/PG11	
F260	A42062-0100	C		1	LEVEL PROBE	**10-123**

Machine Type | Group Description | Used-In | Group Number | Page No

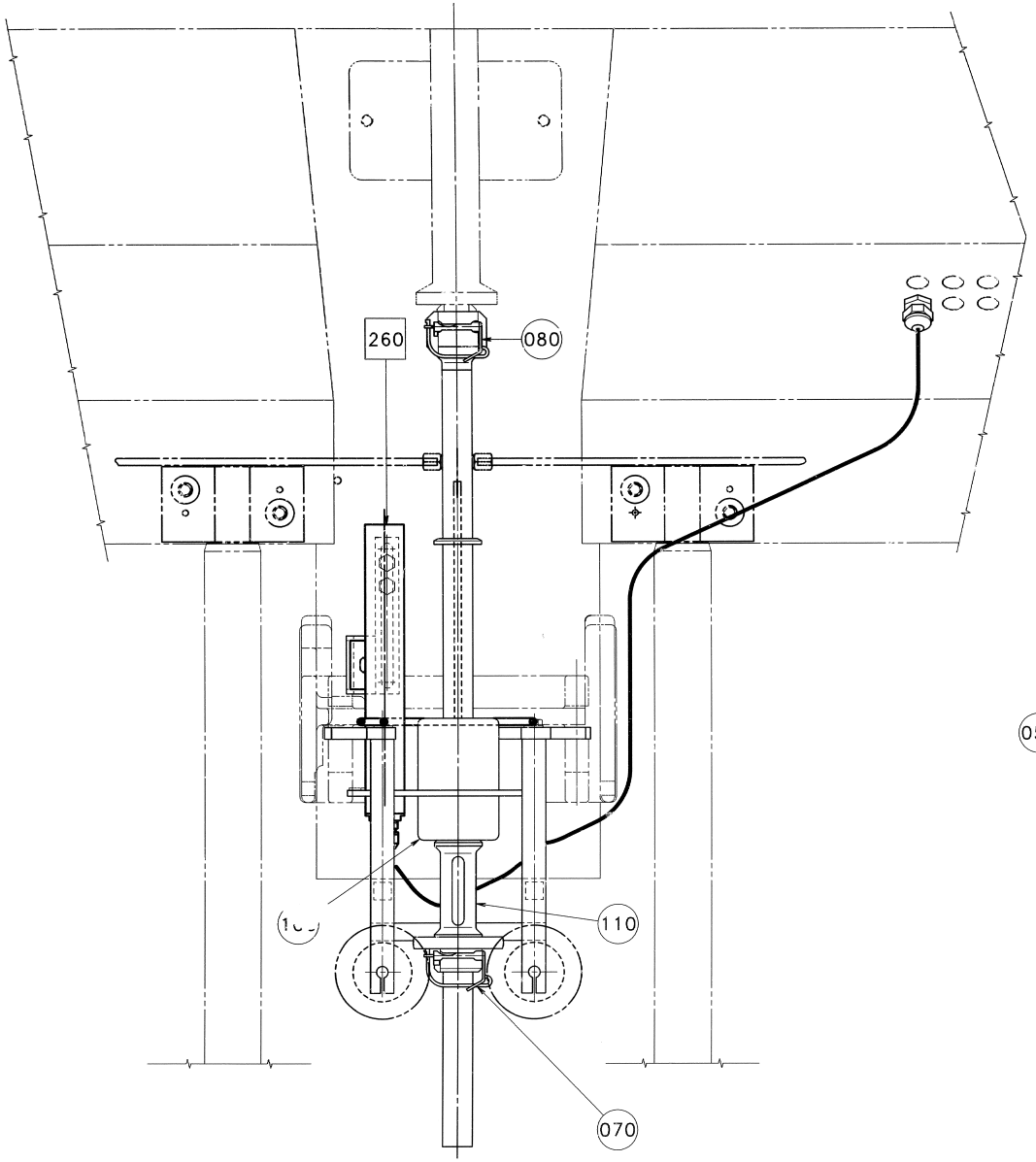
260
080
110
070

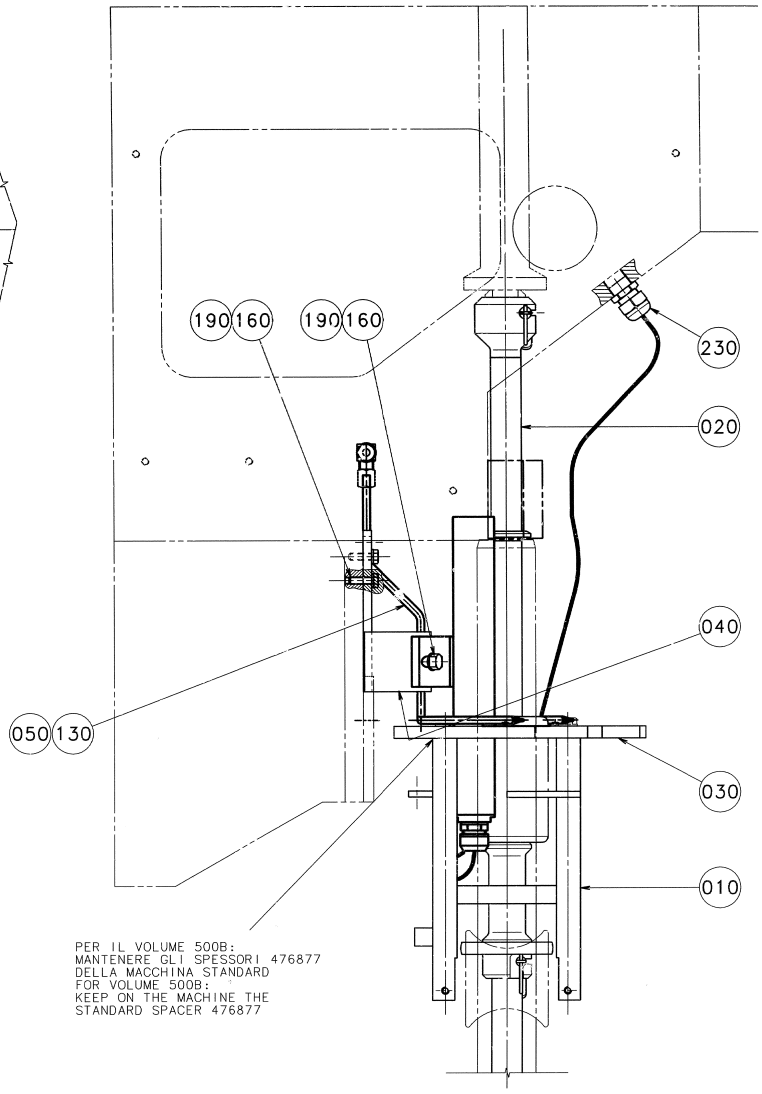
190
160
190
160
230
020
040
050
130
030
010
PER IL VOLUME 500B:
MANTENERE GLI SPESSORI 476877
DELLA MACCHINA STANDARD
FOR VOLUME 500B:
KEEP ON THE MACHINE THE
STANDARD SPACER 476877

ECM: 71990 - 19981102
Group number: 925414-0200
Assembly Drawing: 925414-4_1_AA

This list covers pages from 10-118 to 10-121

Pos	Part No	SP	UN	Qty	Description	Page No
0355B (See drawing on page: 10-120)						
010	924683-0000	-		1	HOLDER	
020	924682-0000	-		1	FILLING PIPE	
070	493734-0000	C		1	LOCKING PIN LOWER	
080	493733-0000	C		1	LOCKING PIN UPPER	
100	1347138-0000	C		1	FLOAT	
110	924679-0000	-		1	FLANGE	
0375S (See drawing on page: 10-118)						
020	1347887-0000	-		1	FILLING PIPE	
070	1349975-0000	C		1	LOCKING PIN LOWER	
080	493733-0000	C		1	LOCKING PIN UPPER	
100	1347139-0000	C		1	FLOAT	
110	925626-0000	-		1	FLANGE	
0500B (See drawing on page: 10-120)						
010	736256-0000	-		1	HOLDER	
020	795944-0001	-		1	FILLING PIPE	
070	445502-0000	C		1	LOCKING PIN LOWER	
080	445504-0000	C		1	LOCKING PIN UPPER	
100	1334016-0000	C		1	FLOAT	
110	795946-0000	-		1	FLANGE	
0500S (See drawing on page: 10-118)						
020	1347888-0000	-		1	FILLING PIPE	
070	493734-0000	C		1	LOCKING PIN LOWER	
080	493733-0000	C		1	LOCKING PIN UPPER	
100	1347138-0000	C		1	FLOAT	
110	795960-0000	-		1	FLANGE	
0750B (See drawing on page: 10-118)						
020	1347889-0000	-		1	FILLING PIPE	
070	445502-0000	C		1	LOCKING PIN LOWER	
080	445504-0000	C		1	LOCKING PIN UPPER	
100	1334016-0000	C		1	FLOAT	
110	925620-0000	-		1	FLANGE	
1000B (See drawing on page: 10-118)						
020	1347886-0000	-		1	FILLING PIPE	
070	445502-0000	C		1	LOCKING PIN LOWER	
080	445504-0000	C		1	LOCKING PIN UPPER	
100	1334016-0000	C		1	FLOAT	
110	795947-0000	-		1	FLANGE	
1000SQ (See drawing on page: 10-118)						
020	1334481-0000	-		1	FILLING PIPE	
070	493734-0000	C		1	LOCKING PIN LOWER	
080	493733-0000	C		1	LOCKING PIN UPPER	
100	1334485-0000	C		1	FLOAT	
110	1334482-0000	-		1	FLANGE	
Common Parts						
030	1346081-0000	-		1	BRACKET	
040	1346079-0000	-		1	HOLDER	
050	1346080-0000	-		1	SPREADER	
130	90030-0097	-		1	ACCESSORIES, FERRULE 6	
160	312105-0451	-		3	SCREW M6S ISO 4017 M8X20 A480	
190	315105-0165	-		3	WASHER BRB8,4X16RFR	
230	352103-0105	-		1	CABLE GLAND, STR 11, PR 18,6/PG11	
F260	A42062-0100	C		1	LEVEL PROBE	**10-123**

Machine Type | Group Description | Used-In | Group Number | Page No

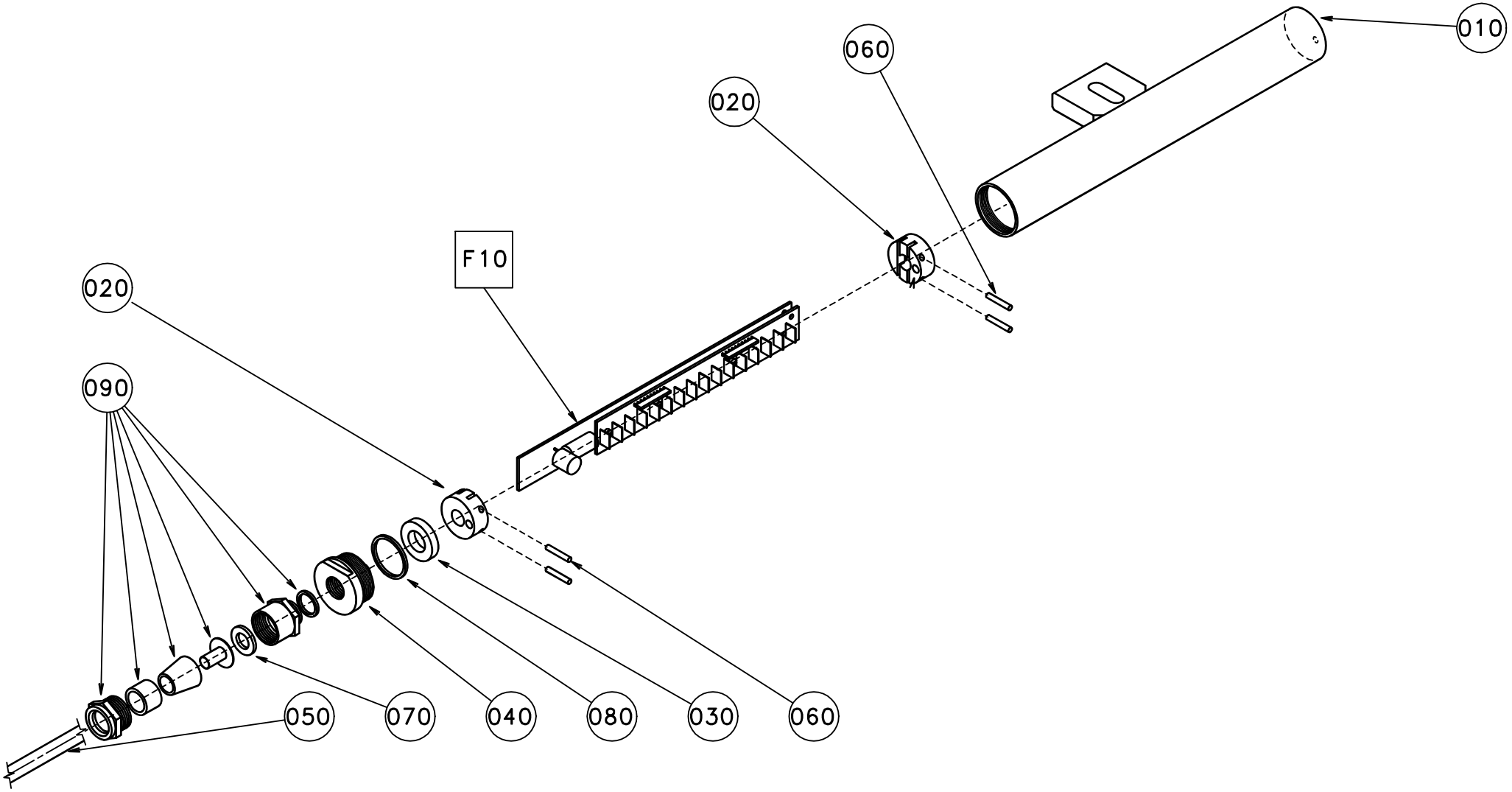
010
060
020
F10
020
090
050
070
040
080
030
060

ECM: 115123 - 20030528
Group number: 42062-0100
Assembly Drawing: 42062-1_1_AC

Pos	Part No	SP	UN	Qty	Description	Page No
TBA/8 0375S, TBA/8 0500S, TBA/8 1000B, TBA/8 0750B, TBA/8 1000SQ						
020	925999-0000	-		1	PROTECTION PIPE	
TBA/8 0500B, TBA/8 0355B						
020	1347417-0000	-		1	PROTECTION PIPE	
Common Parts						
010	A42063-0100	-		1	LEVEL DETECTOR	**10-125**
030	925877-0000	-		2	SUPPORT	
040	736514-0000	-		1	SHOCK ABSORBER	
050	926820-0000	-		1	PLUG	
060	90220-0085	-	M	6	CABLES, MULTI-CONDUCTOR SCREENED	
070	311111-0209	-		4	SPRING PIN ISO 8752 3X18-ST	
080	315105-0171	-		1	WASHER BRB10X18	
090	315202-0120	-		1	O-RING 27,1X1,6 MM	
100	90012-0119	-		1	GLAND, EXTENDED WITH INSERT, PG9	

Pos	Part No	SP	UN	Qty	Description	Page No

LEVEL DETECTOR

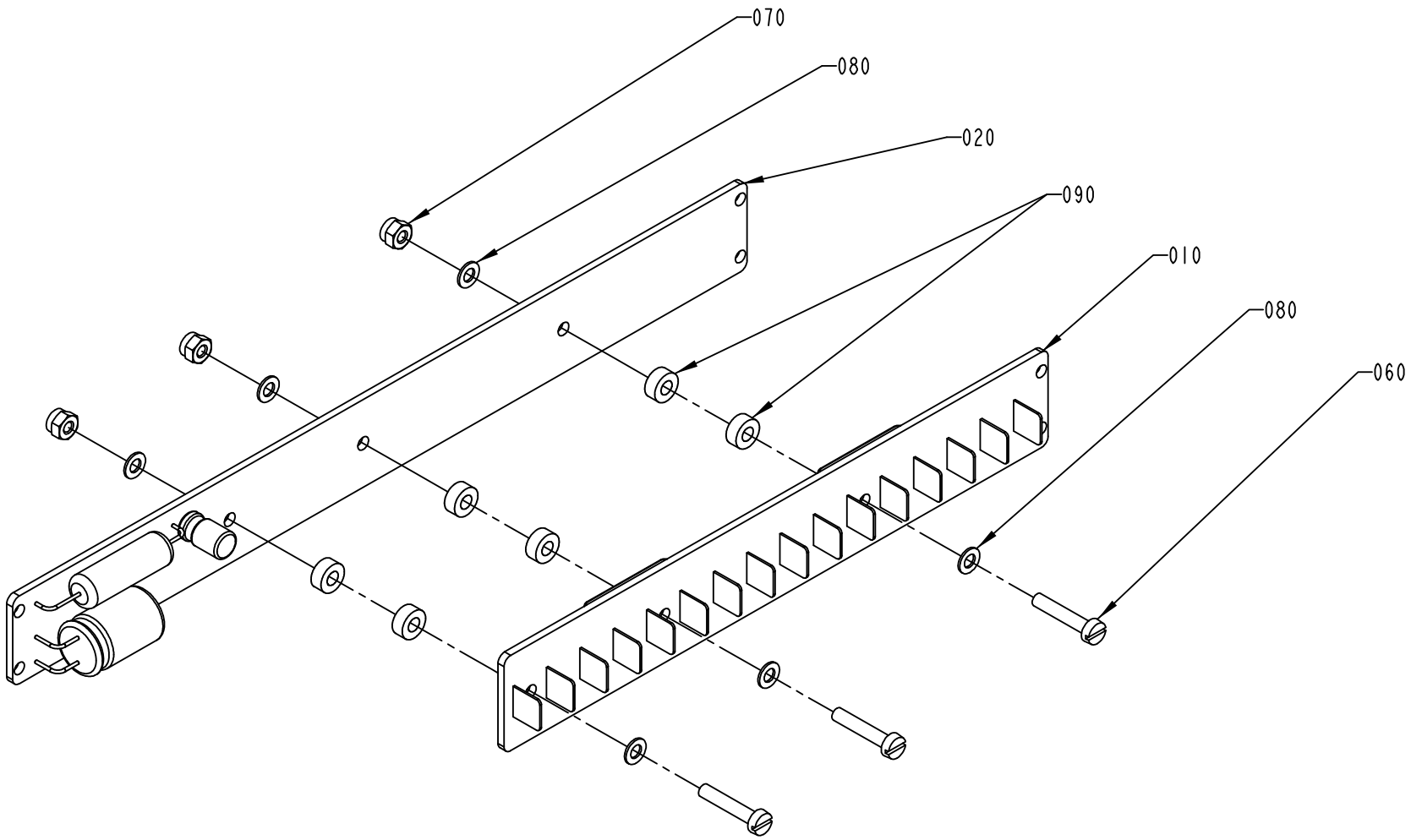

42063-1
ECM 139376

ECM: 142247 - 20031020
Group number: 42063-0100
Assembly Drawing: 42063-1_1_AB

Pos	Part No	SP	UN	Qty	Description	Page No
-						
010	A42067-0100	-		1	SENSOR BOARD	
020	A42068-0100	-		1	CONVERTER BOARD	
060	312125-0228	-		3	SCREW ISO 1207 M3X16 A4	
070	312812-0310	-		3	HEXAGON NUT, NY-LOCK M3 A480	
080	315105-0124	-		6	BRICKA BRB3,2X6RFR	
090	90005-0143	-		6	SPACER 3,3/7, H=3	

Pos	Part No	SP	UN	Qty	Description	Page No

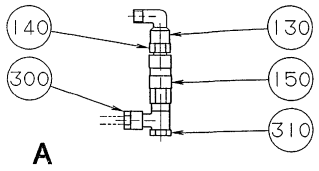
140
130
300
150
310
A

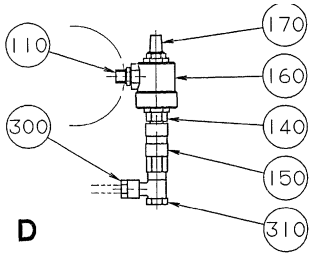
110
170
160
300
140
150
310
D

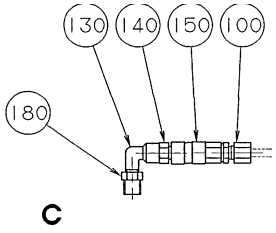
130
140
150
100
180
C

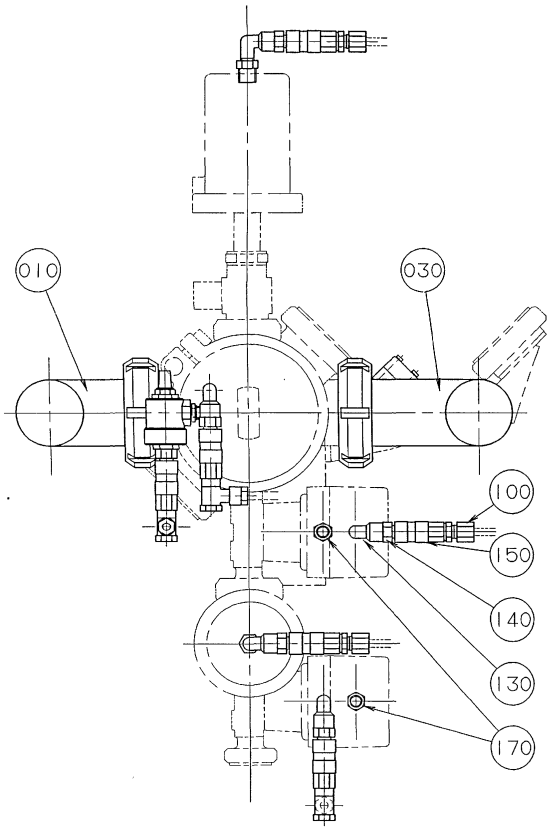
010
030
100
150
140
130
170

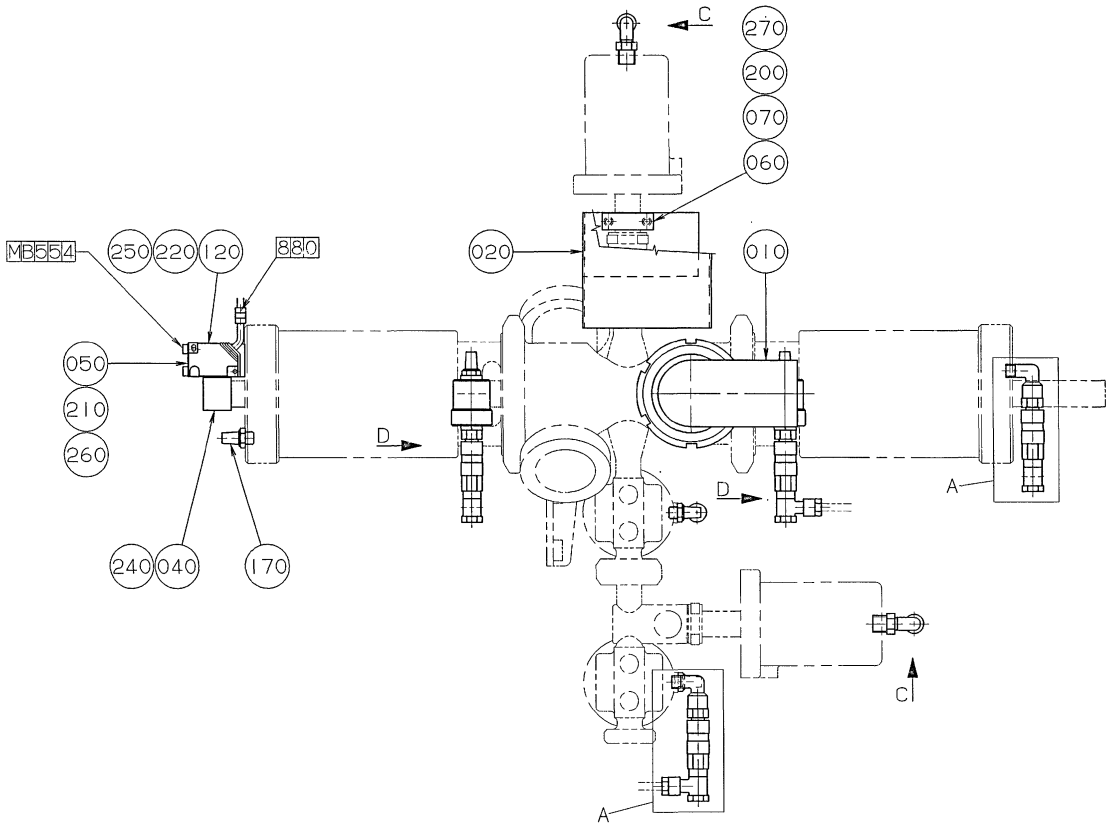
MB554
250
220
120
880
050
210
260
240
040
170
C
270
200
070
060
020
010
D
D
A
C
A

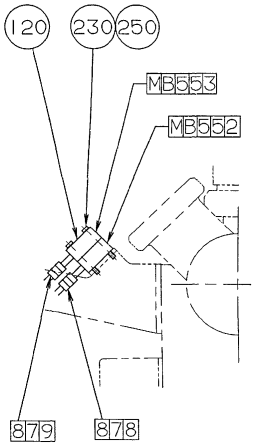
120
230
250
MB553
MB552
879
878

ECM: - -
Group number: 925415-0100
Assembly Drawing: 925415-1_1_AA

Pos	Part No	SP	UN	Qty	Description	Page No
-						
010	926760-0000	-		1	PRODUCT PIPE	
020	926764-0000	-		1	TOUCH GUARD	
030	927480-0000	-		1	PRODUCT PIPE	
040	440647-0000	-		1	SLEEVE	
050	440731-0000	-		1	PLATE	
060	926765-0000	-		1	CLAMP HOLDER	
070	926766-0000	-		1	CLAMP HOLDER	
100	90030-0184	-		3	CONN. STR. GA-6-G1/8	
110	90030-0207	-		2	NIPPLE	
120	90044-0104	-		3	PROX.SWITCH IFM IN 3002	
130	90140-0021	-		5	ELBOW, 90 INT/EXT, 20201/8-1/8	
140	90163-0057	-		7	NIPPLE 1/8" BRASS	
150	90163-0062	-		7	QUICK COUPLING, (F) 5053-1/8	
160	90235-0259	-		2	VALVE	
170	90328-0003	-		5	SILENCER	
180	90330-0025	-		2	BUSHING, INT/EXT. THR. R1/4-RP1/8	
200	312105-0337	-		2	SCREW M6S ISO 4014 M5X35 A480	
210	312115-0305	-		2	SCREW ISO4762 M4X50 A4	
220	312125-0228	-		2	SCREW ISO 1207 M3X16 A4	
230	312125-0234	-		2	SCREW ISO 1207 M3X30 A4	
240	312155-0532	-		1	SCREW EN 10642 MF6S M12X20 A480	
250	315105-0124	-		4	BRICKA BRB3,2X6RFR	
260	315105-0136	-		2	WASHER BRB4,3XRFR	
270	315105-0146	-		2	BRICKA BRB5,3X10RFR	
300	342797-0121	-		4	CONN. BANJO, RINGPIECE 6-1/8	
310	342980-0303	-		4	BANJO-HOLLOW BOLT COUPL,EXT.THR.01-G1/8"	

Pos	Part No	SP	UN	Qty	Description	Page No

Machine Type | Group Description | Used-In | Group Number | Page No

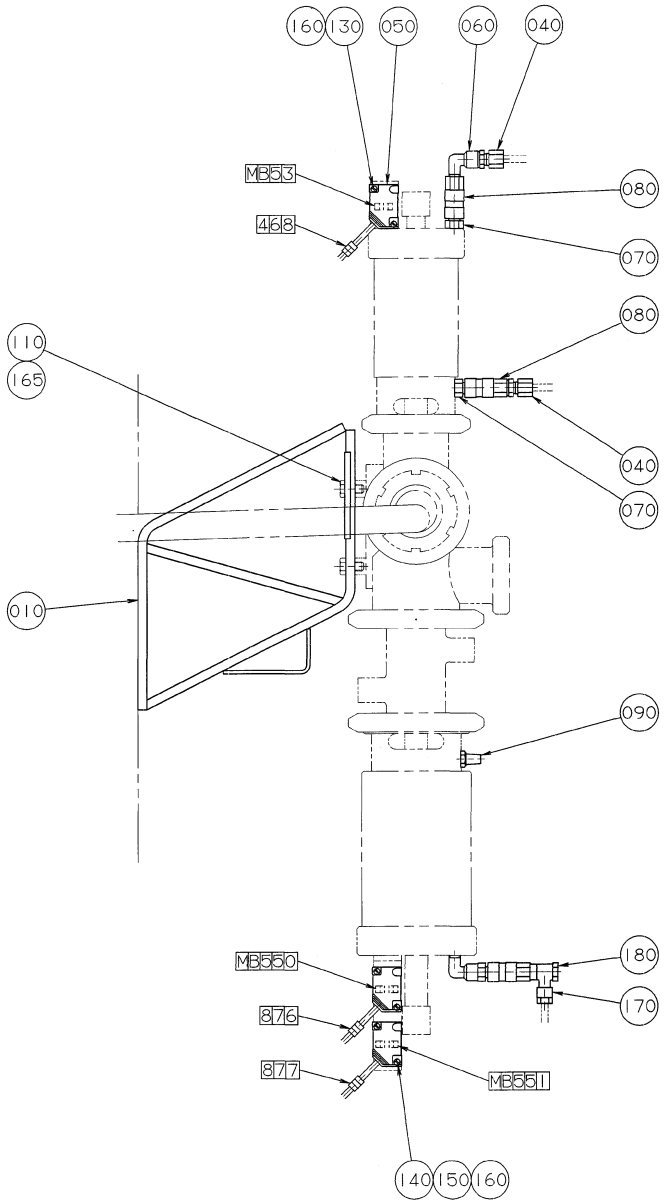
160
130
050
060
040
MB53
080
468
070
080
110
165
040
070
010
090
MB550
180
170
876
877
MB551
140
150
160

ECM: - -
Group number: 925416-0100
Assembly Drawing: 925416-1_1_AA

Pos	Part No	SP	UN	Qty	Description	Page No
-						
010	794223-0000	-		1	SUPPORT	
040	90030-0184	-		2	CONN. STR. GA-6-G1/8	
050	90044-0104	-		3	PROX.SWITCH IFM IN 3002	
060	90140-0021	-		2	ELBOW, 90 INT/EXT, 20201/8-1/8	
070	90163-0057	-		3	NIPPLE 1/8" BRASS	
080	90163-0062	-		3	QUICK COUPLING, (F) 5053-1/8	
090	90328-0003	-		1	SILENCER	
110	312105-0453	-		4	SCREW M6S ISO 4017 M8X25 A480	
130	312125-0228	-		2	SCREW ISO 1207 M3X16 A4	
140	312125-0230	-		4	SCREW ISO 1207 M3X20 A4	
150	312605-0310	-		4	HEXAGON NUT, M6M M3 A280	
160	315105-0124	-		10	BRICKA BRB3,2X6RFR	
165	315115-0165	-		4	WASHER PLAIN, TBRB 8,4/16 H=3	
170	342797-0121	-		1	CONN. BANJO, RINGPIECE 6-1/8	
180	342980-0303	-		1	BANJO-HOLLOW BOLT COUPL,EXT.THR.01-G1/8"	

Pos	Part No	SP	UN	Qty	Description	Page No

Machine Type | Group Description | Used-In | Group Number | Page No

This page is intentionally left blank.

ECM: 71319 - 19980521
Group number: 925417-0100
Assembly Drawing:

Pos	Part No	SP	UN	Qty	Description	Page No
0375S, 0355B						
130	90321-0490	-		2	O-RING	
140	90321-0491	-		1	O-RING	
150	90321-0492	-		2	O-RING	
160	90321-0493	-		2	O-RING	
190	90321-0496	-		2	O-RING	
210	90321-0498	-		1	O-RING	
230	90321-0500	-		2	O-RING	
270	90321-0504	-		2	O-RING	
0500B, 1000SQ, 0500S, 0750B, 1000B						
130	90321-0472	-		2	O-RING	
140	90321-0473	-		1	O-RING	
150	90321-0474	-		2	O-RING	
160	90321-0475	-		2	O-RING	
190	90321-0478	-		2	O-RING	
210	90321-0482	-		1	O-RING	
230	90321-0484	-		2	O-RING	
270	90321-0488	-		2	O-RING	
Common Parts						
300	794246-0000	-		1	DIAPHRAGM	
330	12242-0001	-		5	GASKET 32X25X5,5	
340	12242-0003	-		5	GASKET 48X38X5,5	
350	12242-0005	-		5	GASKET 61X51X5,5	
380	90277-0333	-		1	GASKET KIT / ART NO ACS 0325 EH	

Pos	Part No	SP	UN	Qty	Description	Page No

Machine Type | Group Description | Used-In | Group Number | Page No

This page is intentionally left blank.

ECM: - -
Group number: 925418-0100
Assembly Drawing:

Pos	Part No	SP	UN	Qty	Description	Page No
-						
010	295730-0000	-		2	SPACER SHEET	
020	794420-0000	-		10	SPACER	
030	925125-0000	-		1	COVER	
040	925126-0000	-		1	GASKET	
050	90144-0004	-	MM	1	TREBOFLON-TAPE W=13MM	
070	90321-0558	-		1	ROTOR	
090	90333-0004	-		10	GRAPH PAPER 24 HRS	
150	767181-0138	-		1	TAP	
160	767181-0238	-		1	TAP	
180	769211-0117	-		1	SAW BLADE	
190	769211-0165	-		1	SAW BLADE	
200	769219-0100	-		1	HOLDER	
210	769219-0103	-		1	HANDLE BRACKET	

Pos	Part No	SP	UN	Qty	Description	Page No

Machine Type | Group Description | Used-In | Group Number | Page No

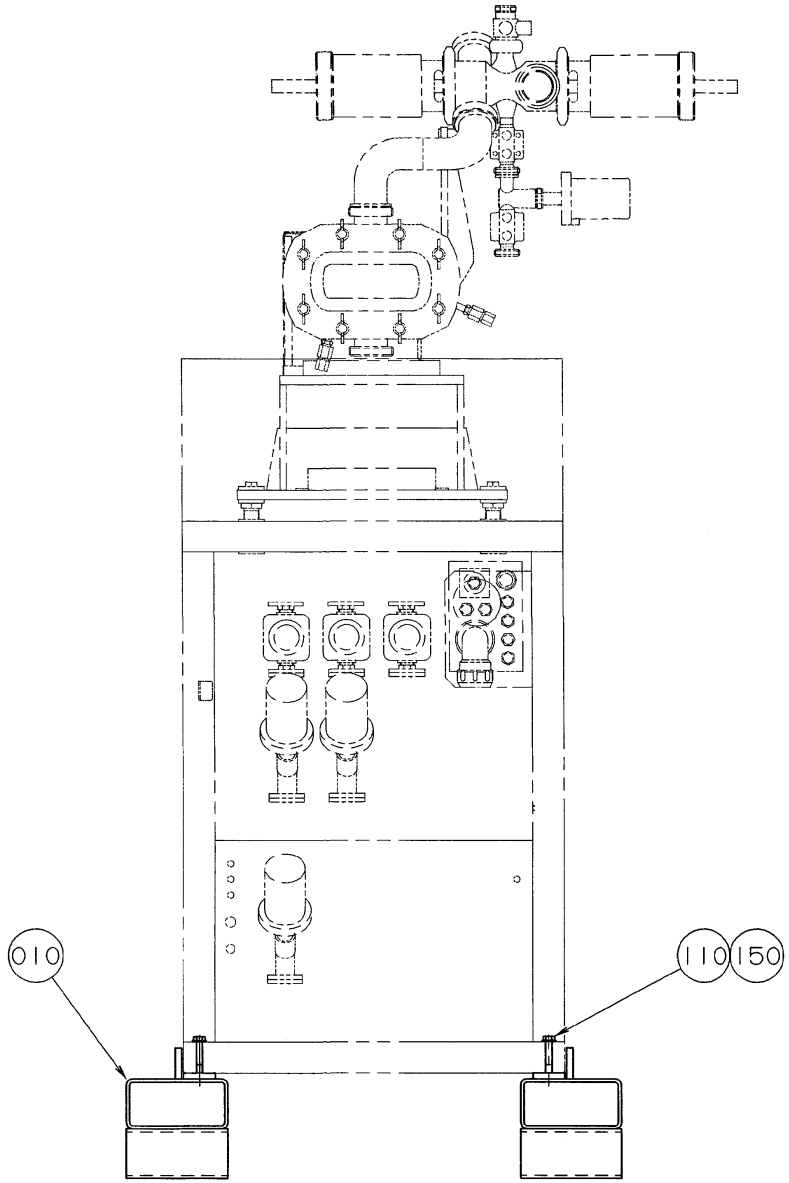
010
110
150

ECM: - -
Group number: 925419-0100
Assembly Drawing: 925419-1_1_AA

Pos	Part No	SP	UN	Qty	Description	Page No
-						
010	925765-0000	-		2	BED	
110	312101-0504	-		2	SCREW M6S M10X65 FZB	
150	315101-0173	-		2	WASHER PLAIN, BRB, 10,5/22 H=2	

Pos	Part No	SP	UN	Qty	Description	Page No

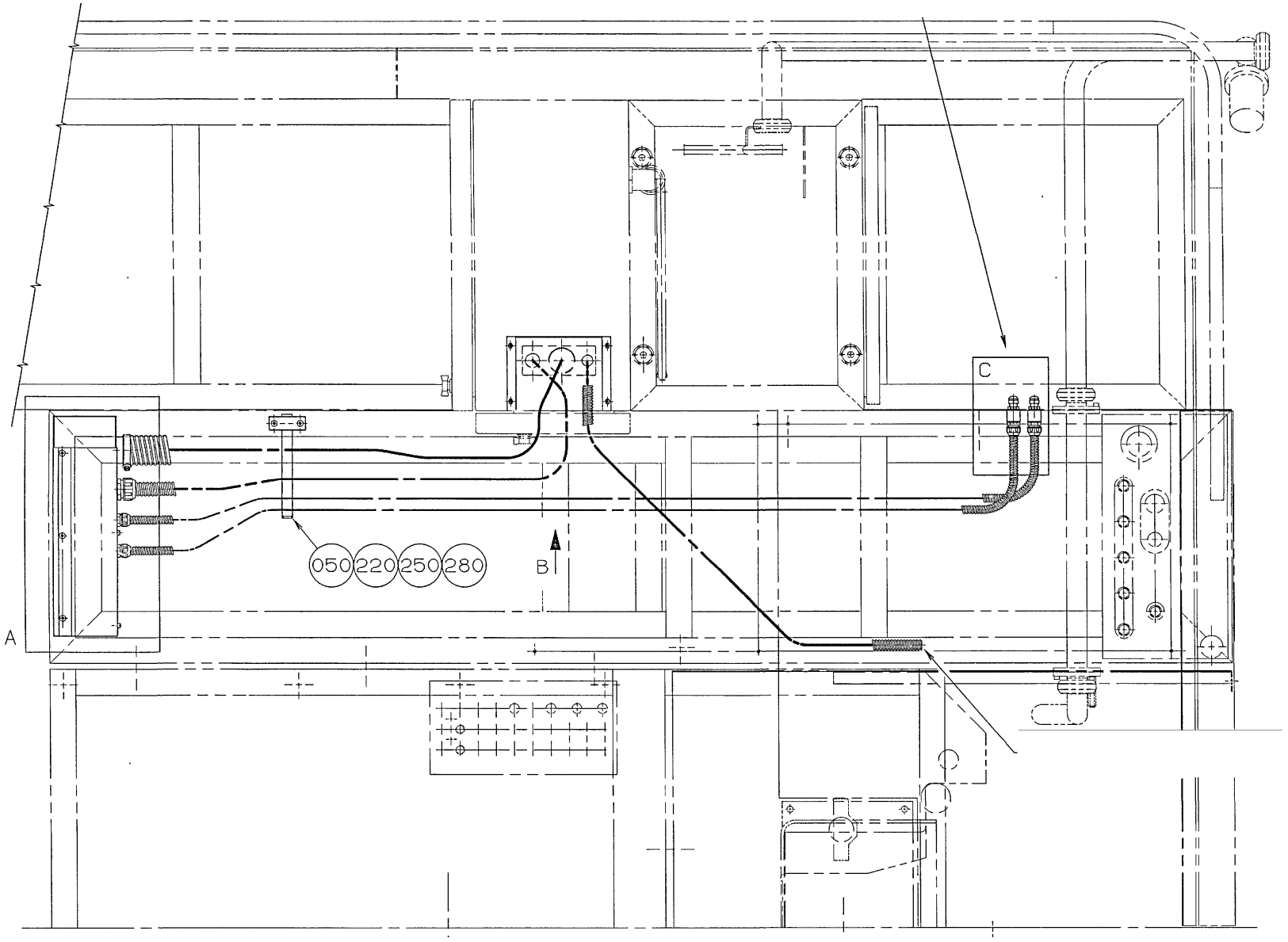
C
050
220
250
280
B
A

ECM: - -
Group number: 925420-0100
Assembly Drawing: 925420-1_1_AA

This list covers pages from 10-136 to 10-139

Pos	Part No	SP	UN	Qty	Description	Page No
-						
010	925785-0000	-		1	PROTECTION	
030	925950-0000	-		1	CABLE TRACK	
050	794542-0000	-		1	SUPPORT	
060	795758-0000	-		1	COVER	
080	925952-0000	-		2	SLEEVE	
100	90012-0063	-		4	CABLE GLAND PR 15,2	
120	90152-0033	-	MM	3500	SPIRAL CONDUIT FOR PR 15,2(PG 9)	
125	90152-0033	-	MM	3500	SPIRAL CONDUIT FOR PR 15,2(PG 9)	
200	312105-0327	-		4	SCREW M6S ISO 4017 M5X12 A480	
210	312115-0325	-		2	SCREW ISO4762 M5X10 A4	
220	312155-0370	-		2	SCREW EN 10642 MF6S M6X20 A480	
230	312155-0378	-		3	SCREW EN 10642 MF6S M6X40 A480	
250	312605-0316	-		5	HEXAGON NUT, M6M M6 A280	
270	315105-0146	-		4	BRICKA BRB5,3X10RFR	
280	315105-0153	-		5	WASHER BRB6,4X12RFR	
300	342991-0110	-		2	HOSE CLIP,WORM DRIVE TYPE (54)-63	
320	352103-0101	-		2	CABLE GLAND, ST 9, PR15,2/PG9	
330	352135-0106	-	M	2	SPIRAL CONDUIT DI=16 MM	
340	352135-0109	-	M	2	HOSE .022	
350	352135-0118	-	M	2	HOSE .050	
360	352136-0143	-		1	GLAND FITTING	

Pos	Part No	SP	UN	Qty	Description	Page No

Machine Type | Group Description | Used-In | Group Number | Page No

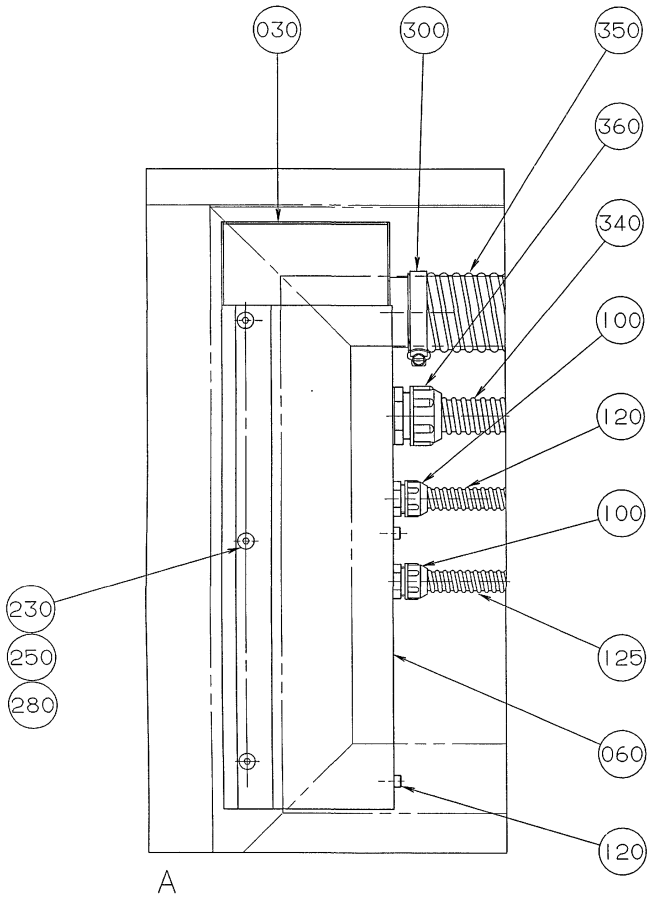
030
300
350
360
340
100
120
100
230
250
280
125
060
120
A

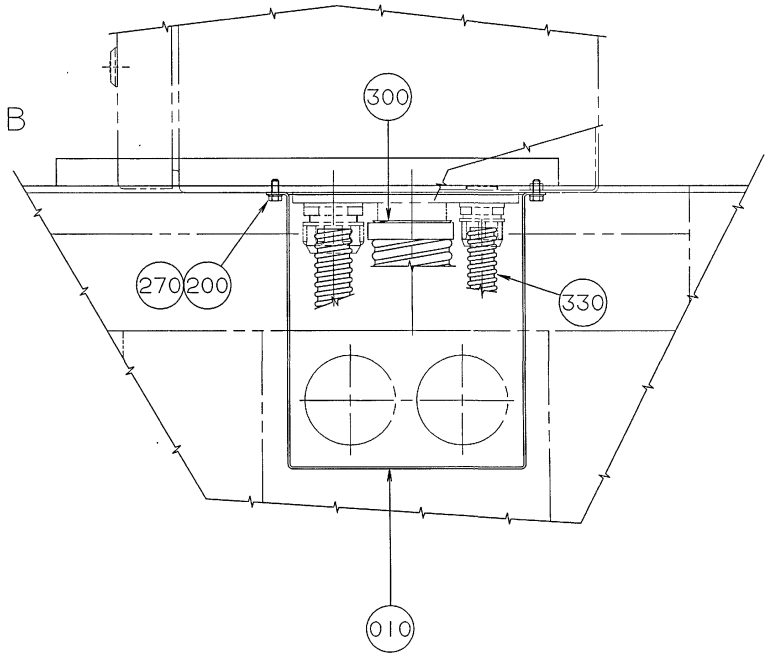
B
300
270
200
330
010

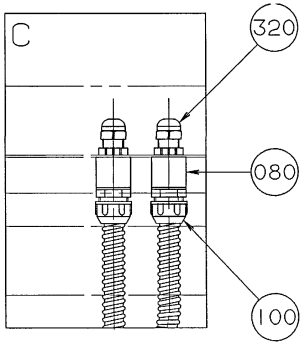
C
320
080
100

ECM: - -
Group number: 925420-0100
Assembly Drawing: 925420-2_1_AA

This list covers pages from 10-136 to 10-139

Pos	Part No	SP	UN	Qty	Description	Page No
-						
010	925785-0000	-		1	PROTECTION	
030	925950-0000	-		1	CABLE TRACK	
050	794542-0000	-		1	SUPPORT	
060	795758-0000	-		1	COVER	
080	925952-0000	-		2	SLEEVE	
100	90012-0063	-		4	CABLE GLAND PR 15,2	
120	90152-0033	-	MM	3500	SPIRAL CONDUIT FOR PR 15,2(PG 9)	
125	90152-0033	-	MM	3500	SPIRAL CONDUIT FOR PR 15,2(PG 9)	
200	312105-0327	-		4	SCREW M6S ISO 4017 M5X12 A480	
210	312115-0325	-		2	SCREW ISO4762 M5X10 A4	
220	312155-0370	-		2	SCREW EN 10642 MF6S M6X20 A480	
230	312155-0378	-		3	SCREW EN 10642 MF6S M6X40 A480	
250	312605-0316	-		5	HEXAGON NUT, M6M M6 A280	
270	315105-0146	-		4	BRICKA BRB5,3X10RFR	
280	315105-0153	-		5	WASHER BRB6,4X12RFR	
300	342991-0110	-		2	HOSE CLIP,WORM DRIVE TYPE (54)-63	
320	352103-0101	-		2	CABLE GLAND, ST 9, PR15,2/PG9	
330	352135-0106	-	M	2	SPIRAL CONDUIT DI=16 MM	
340	352135-0109	-	M	2	HOSE .022	
350	352135-0118	-	M	2	HOSE .050	
360	352136-0143	-		1	GLAND FITTING	

Pos	Part No	SP	UN	Qty	Description	Page No

Machine Type | Group Description | Used-In | Group Number | Page No

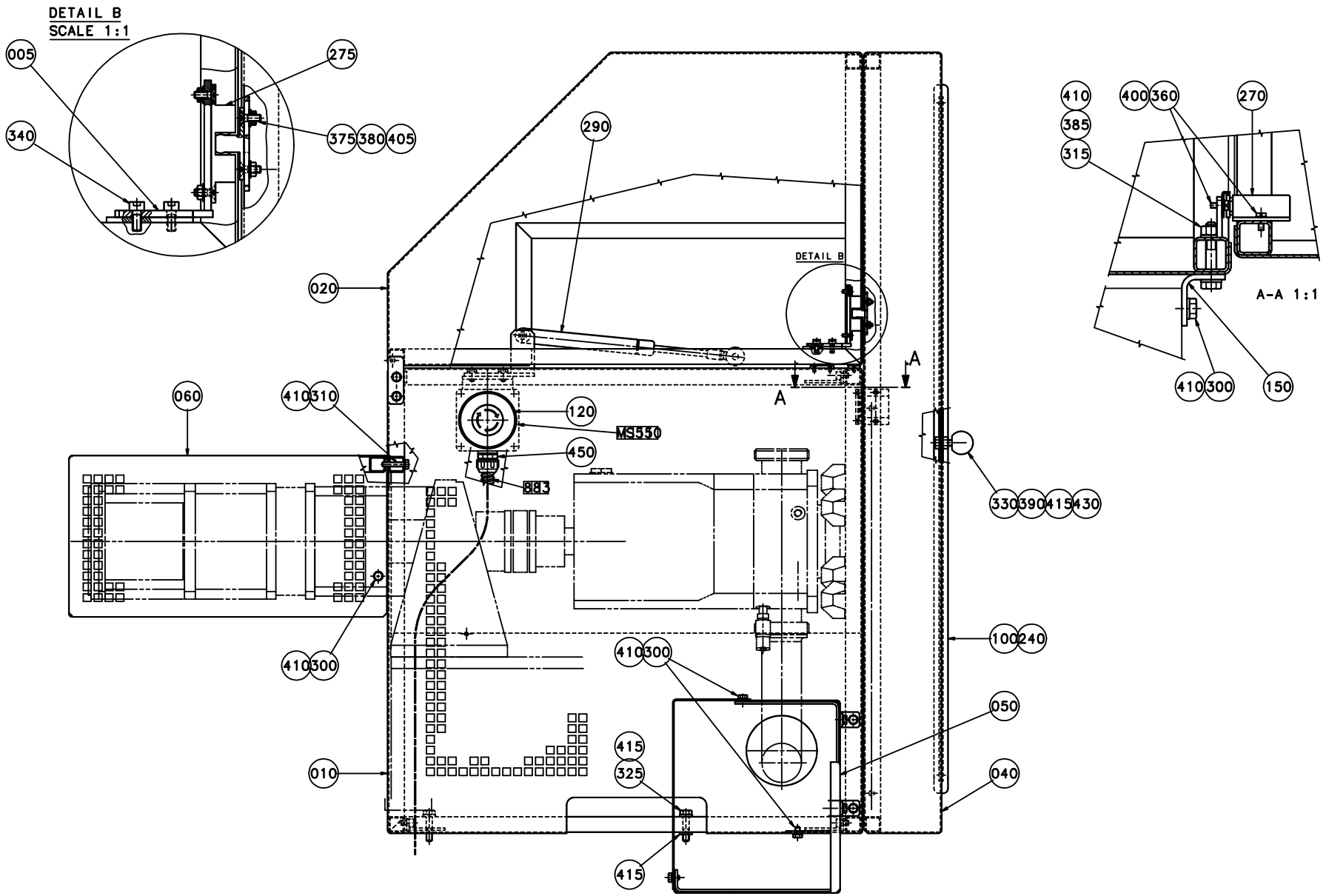
DETAIL B
SCALE 1:1
005
275
340
375 380 405
290
020
DETAIL B
A
A
060
410 310
120
MS550
450
883
330 390 415 430
410 300
100 240
050
040
010
415
325
415
410
385
315
400 360
270
A-A 1:1
410 300
150

ECM: 71319 - 19980521
Group number: 925422-0200
Assembly Drawing: 925422-3_1_AA

This list covers pages from 10-140 to 10-143

Pos	Part No	SP	UN	Qty	Description	Page No
-						
005	1347661-0000	-		1	HOLDER	
010	926767-0000	-		1	FRAME	
020	926768-0000	-		1	COVER	
030	926769-0000	-		1	SIDE PLATE	
040	926770-0000	-		1	DOOR	
050	926771-0000	-		1	TOUCH GUARD	
060	926772-0000	-		1	TOUCH GUARD	
070	926773-0000	-		1	TOUCH GUARD	
080	926791-0000	-		1	HINGE	
090	926792-0000	-		1	HOLDER	
100	926793-0000	-		1	WINDOW	
120	486826-0001	-		1	SIGN "EMERGENCY STOP"	
130	926794-0000	-		1	HINGE	
150	926796-0000	-		2	HOLDER	
160	926797-0000	-		2	SPACER	
205	90064-0124	-		1	SWITCH, EM. STOP, ZB2-BS844+ZB2-BZ1045	
210	90066-0021	-		1	PUSH BUTTON BOX XAP-M1501	
230	90115-0020	-		1	ROD END, ID=8 MM, M8X1,25	
240	90143-0039	-	MM	2500	STRIP	
260	90194-0075	-		2	WARNING SIGN ISO, HOT SURFACE	
270	90237-0046	-		1	MAGNETIC LOCK, 46X33X15 MM	
275	90237-0070	-		1	SNAP-IN BALL LOCK, 69X19 MM	
280	90248-0019	-		2	HINGE 1054-U1	
290	90347-0014	-		1	DAMPER	
295	979548-0000	-		1	MACHINE PLATE	
296	311521-0142	-		4	BLANK RIVET 3,2X6	
300	312105-0364	-		17	SCREW M6S ISO 4017 M6X10 A480	
305	312105-0366	-		12	SCREW M6S M6X12 A280	
310	312105-0374	-		3	SCREW M6S ISO 4014 M6X30 A480	
315	312105-0376	-		2	SCREW M6S ISO 4014 M6X35 A480	
325	312105-0457	-		4	SCREW M6S ISO 4014 M8X35 A480	
330	312109-0457	-		2	SCREW M6S ISO 4017 M8X35 A480	
340	312115-0327	-		2	SCREW ISO4762 M5X12 A4	
350	312115-0364	-		8	SCREW ISO4762 M6X10 A4	
360	312125-0222	-		4	SCREW ISO 1207 M3X8 A4	
365	312125-0333	-		2	SCREW ISO 1207 M5X25 A4	
375	312155-0291	-		4	SCREW EN 10642 MF6S M4X12 A480	
380	312605-0312	-		4	HEXAGON NUT, M6M M4 A280	
385	312605-0316	-		12	HEXAGON NUT, M6M M6 A280	
390	312605-0318	-		2	HEXAGON NUT, M6M M8 A280	
395	312812-0316	-		2	HEXAGON NUT, NY-LOCK M6 A480	
400	315105-0124	-		4	BRICKA BRB3,2X6RFR	
405	315105-0136	-		4	WASHER BRB4,3XRFR	
410	315105-0153	-		48	WASHER BRB6,4X12RFR	
415	315105-0165	-		5	WASHER BRB8,4X16RFR	
420	315115-0165	-		4	WASHER PLAIN, TBRB 8,4/16 H=3	
430	318800-0104	-		2	HANDLE,SPHERICAL KNOB,INT.THRE.,D.30-M8	
435	352135-0106	-	MM	1500	SPIRAL CONDUIT DI=16 MM	
450	352136-0129	-		1	GLAND FITTING PR22,5/PG16 DI=16MM	

Machine Type | Group Description | Used-In | Group Number | Page No

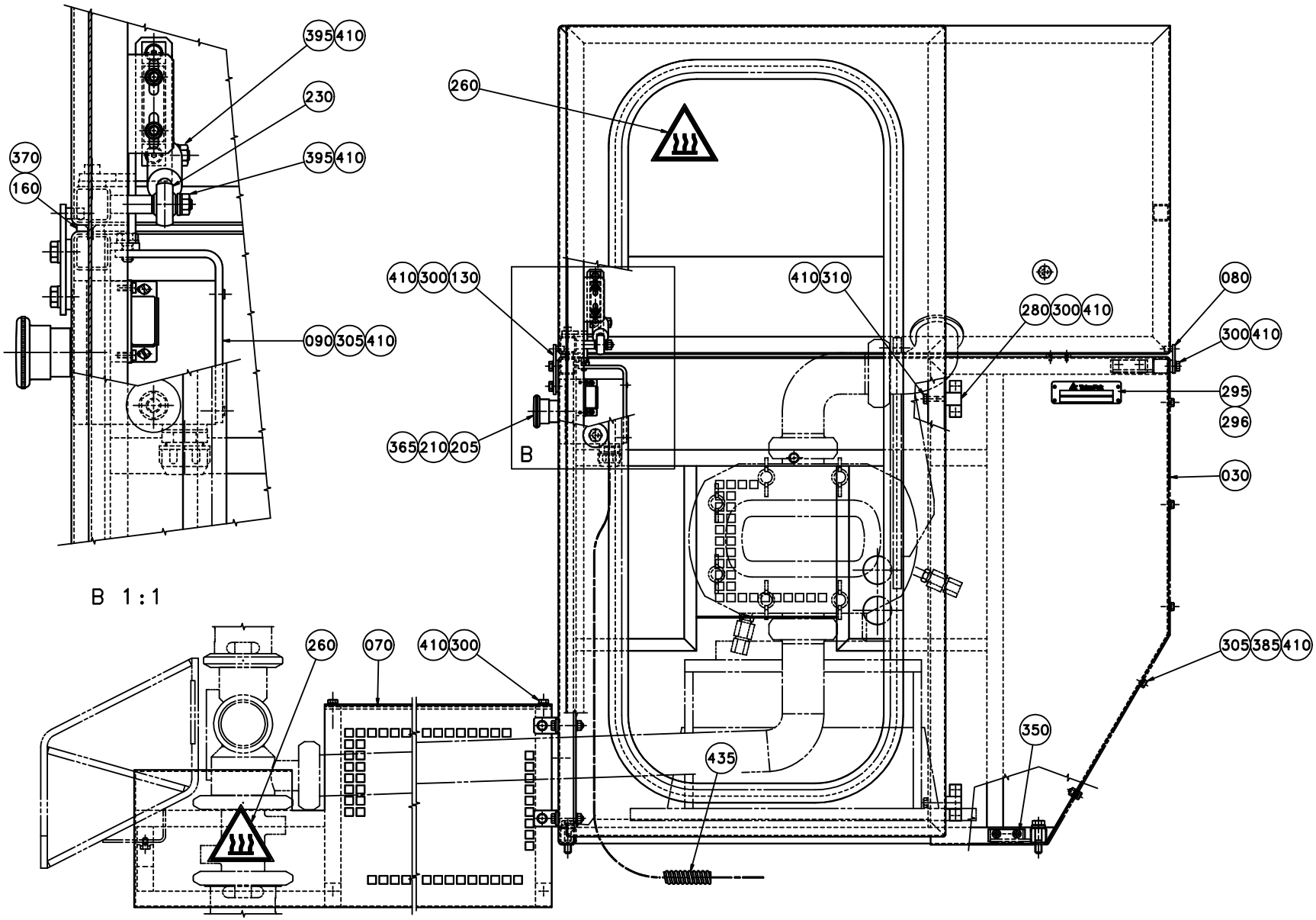
395 410
230
395 410
370
160
090 305 410
B 1 : 1
260
410 300 130
410 310
280 300 410
080
300 410
295
296
365 210 205
B
030
260
070
410 300
305 385 410
350
435

ECM: 71319 - 19980521
Group number: 925422-0200
Assembly Drawing: 925422-4_1_AA

This list covers pages from 10-140 to 10-143

Pos	Part No	SP	UN	Qty	Description	Page No
-						
005	1347661-0000	-		1	HOLDER	
010	926767-0000	-		1	FRAME	
020	926768-0000	-		1	COVER	
030	926769-0000	-		1	SIDE PLATE	
040	926770-0000	-		1	DOOR	
050	926771-0000	-		1	TOUCH GUARD	
060	926772-0000	-		1	TOUCH GUARD	
070	926773-0000	-		1	TOUCH GUARD	
080	926791-0000	-		1	HINGE	
090	926792-0000	-		1	HOLDER	
100	926793-0000	-		1	WINDOW	
120	486826-0001	-		1	SIGN "EMERGENCY STOP"	
130	926794-0000	-		1	HINGE	
150	926796-0000	-		2	HOLDER	
160	926797-0000	-		2	SPACER	
205	90064-0124	-		1	SWITCH, EM. STOP, ZB2-BS844+ZB2-BZ1045	
210	90066-0021	-		1	PUSH BUTTON BOX XAP-M1501	
230	90115-0020	-		1	ROD END, ID=8 MM, M8X1,25	
240	90143-0039	-	MM	2500	STRIP	
260	90194-0075	-		2	WARNING SIGN ISO, HOT SURFACE	
270	90237-0046	-		1	MAGNETIC LOCK, 46X33X15 MM	
275	90237-0070	-		1	SNAP-IN BALL LOCK, 69X19 MM	
280	90248-0019	-		2	HINGE 1054-U1	
290	90347-0014	-		1	DAMPER	
295	979548-0000	-		1	MACHINE PLATE	
296	311521-0142	-		4	BLANK RIVET 3,2X6	
300	312105-0364	-		17	SCREW M6S ISO 4017 M6X10 A480	
305	312105-0366	-		12	SCREW M6S M6X12 A280	
310	312105-0374	-		3	SCREW M6S ISO 4014 M6X30 A480	
315	312105-0376	-		2	SCREW M6S ISO 4014 M6X35 A480	
325	312105-0457	-		4	SCREW M6S ISO 4014 M8X35 A480	
330	312109-0457	-		2	SCREW M6S ISO 4017 M8X35 A480	
340	312115-0327	-		2	SCREW ISO4762 M5X12 A4	
350	312115-0364	-		8	SCREW ISO4762 M6X10 A4	
360	312125-0222	-		4	SCREW ISO 1207 M3X8 A4	
365	312125-0333	-		2	SCREW ISO 1207 M5X25 A4	
375	312155-0291	-		4	SCREW EN 10642 MF6S M4X12 A480	
380	312605-0312	-		4	HEXAGON NUT, M6M M4 A280	
385	312605-0316	-		12	HEXAGON NUT, M6M M6 A280	
390	312605-0318	-		2	HEXAGON NUT, M6M M8 A280	
395	312812-0316	-		2	HEXAGON NUT, NY-LOCK M6 A480	
400	315105-0124	-		4	BRICKA BRB3,2X6RFR	
405	315105-0136	-		4	WASHER BRB4,3XRFR	
410	315105-0153	-		48	WASHER BRB6,4X12RFR	
415	315105-0165	-		5	WASHER BRB8,4X16RFR	
420	315115-0165	-		4	WASHER PLAIN, TBRB 8,4/16 H=3	
430	318800-0104	-		2	HANDLE,SPHERICAL KNOB,INT.THRE.,D.30-M8	
435	352135-0106	-	MM	1500	SPIRAL CONDUIT DI=16 MM	
450	352136-0129	-		1	GLAND FITTING PR22,5/PG16 DI=16MM	

Machine Type | Group Description | Used-In | Group Number | Page No

This page is intentionally left blank.

ECM: 71268 - 19980608
Group number: 649440-0300
Assembly Drawing:

Pos	Part No	SP	UN	Qty	Description	Page No
-						
0010	A42003-0300	-		1	MACHINE	**10-147**
0020	A42004-0300	-		1	ELECTRICAL DOCUMENT	**10-149**
0030	A42005-0300	-		1	ELECTRICAL CABINET	**10-151**

Pos	Part No	SP	UN	Qty	Description	Page No

This page is intentionally left blank.

ECM: 71268 - 19980608
Group number: 42003-0300
Assembly Drawing:

Pos	Part No	SP	UN	Qty	Description	Page No
-						
455	90220-0034	-	MM	2000	THERMOCOUPLE CABLE K/ 2X0,5MM2	
860	351180-0102	-	MM	7000	CABLE AWM 1X075 MM2 ORANGE	
861	351180-0102	-	MM	7000	CABLE AWM 1X075 MM2 ORANGE	
862	351180-0102	-	MM	7000	CABLE AWM 1X075 MM2 ORANGE	
863	351180-0102	-	MM	7000	CABLE AWM 1X075 MM2 ORANGE	
864	351180-0102	-	MM	7000	CABLE AWM 1X075 MM2 ORANGE	
865	351180-0102	-	MM	7000	CABLE AWM 1X075 MM2 ORANGE	
866	351180-0102	-	MM	7000	CABLE AWM 1X075 MM2 ORANGE	
867	351180-0102	-	MM	7000	CABLE AWM 1X075 MM2 ORANGE	
868	351180-0102	-	MM	7000	CABLE AWM 1X075 MM2 ORANGE	
869	351180-0102	-	MM	7000	CABLE AWM 1X075 MM2 ORANGE	
870	351180-0102	-	MM	7000	CABLE AWM 1X075 MM2 ORANGE	
872	90220-0034	-	MM	2200	THERMOCOUPLE CABLE K/ 2X0,5MM2	
873	90220-0034	-	MM	2200	THERMOCOUPLE CABLE K/ 2X0,5MM2	
883	351150-0405	-	MM	2500	CABLE OLFLEX 5X0,75 MM2 LIGHT/GREY	
885	90220-0084	-	MM	3500	MOTOR CABLE 4X2,5+2(2X0.75)+SHIELD	
886	1334789-0000	-		1	DMC RESOLVER CABLE	

Pos	Part No	SP	UN	Qty	Description	Page No

Machine Type | Group Description | Used-In | Group Number | Page No

This page is intentionally left blank.

ECM: 72040 - 19990218
Group number: 42004-0300
Assembly Drawing:

Pos	Part No	SP	UN	Qty	Description	Page No
-						
0500	1334787-0_1_AA.hpgl	-		1	DISTRIBUTION TERMINAL	
0502	1334788-0_1_AA.hpgl	-		1	DISTRIBUTION TERMINAL	
0505	1334789-0_1_AA.hpgl	-		1	DMC RESOLVER CABLE	

Pos	Part No	SP	UN	Qty	Description	Page No

This page is intentionally left blank.

ECM: 71268 - 19980608
Group number: 42005-0300
Assembly Drawing:

Pos	Part No	SP	UN	Qty	Description	Page No
0375S, 0355B						
A556:2	A42931-0202	-		1	HVA8 LOBE PUMP CONTROL	**10-153**
F551.	90007-0148	-		1	CIRCUIT BREAKER, 3P 16 A K	
0500B, 1000SQ, 0500S, 0750B, 1000B						
A556:1	A42931-0201	-		1	HVA8 LOBE PUMP CONTROL	**10-155**
F551	90007-0149	-		1	CIRCUIT BREAKER, 3P 20 A K	
Common Parts						
0001	A925413-0300	-		1	ELECTRICAL CABINET	**10-157, 10-159**
0010	90220-0303	-		1	CLAMP FOR SCR.CABLE, 10MM, 55-016-22	
0015	90220-0305	-		1	CLAMP FOR SCR.CABLE, 16MM,	
0020	312125-0232	-		2	SCREW ISO 1207 M3X25 A4	
0025	90062-0058	-		2	LOCK WASHER SERRAT.EXT.GEAR,3,2/6 H=0,4	
0030	315105-0124	-		4	BRICKA BRB3,2X6RFR	
0035	312605-0310	-		4	HEXAGON NUT, M6M M3 A280	
0040	90194-0133	-		1	SIGN "DELIVERED DESIGN"	
0045	90194-0080	-		1	SIGN, IDENTIFICATION OF WIRING	
0100	351179-0106	-	M	8	CABLE AWM 1X4 MM2 BLACK	
0105	351179-0104	-	M	4	CABLE AWM 1X15 MM2 BLACK	
0110	351172-0106	-	M	2	CABLE AWM 1X4 MM2 DARK-BLUE	
0115	351172-0102	-	M	10	CABLE AWM 1X 0,75 MM2 DARK-BLUE	
0120	351175-0106	-	M	4	CABLE AWM 1X4 MM2 YELLOW-GREEN	
0125	351175-0102	-	M	3	CABLE AWM 1X 075 MM2 YELLOW-GREEN	
0130	351173-0106	-	M	3	CABLE AWM 1X4 MM2 LIGHT-BLUE	
0135	351180-0102	-	M	100	CABLE AWM 1X075 MM2 ORANGE	
0140	351176-0102	-	M	3	CABLE AWM 1X075 MM2 RED	
0145	351175-0105	-	MM	500	CABLE AWM 1X25 MM2 YELLOW-GREEN	
0150	351176-0104	-	MM	2500	CABLE AWM 1X15 MM2 RED	
0160	351173-0104	-	M	3	CABLE AWM 1X15 MM2 LIGHT-BLUE	
A550	558230-0201	-		1	TMCC CONTROLLER	
A550:1	A68262-0100	-		1	BACKPLANE FRONT RACK 8TE	**10-163**
A550:2	A48339-0101	-		1	H.VISCOSITY FILLING SYSTEM	
A552	90410-0051	-		1	TEMPERATURE CONTROLLER, KS 40	
A552:1	359241-0266	-		1	SIGN	
A552:2	359240-0100	-		1	SIGN HOLDER FOR 359240-0001	
A553	90410-0051	-		1	TEMPERATURE CONTROLLER, KS 40	
A553:1	359241-0123	-		1	SIGN, TEMP. PRE-STERILIZATION VALVE	
A553:2	359240-0100	-		1	SIGN HOLDER FOR 359240-0001	
A556	90045-0398	-		1	SERVO DRIVE 10,5A/AC DMC 51540 P	
A556:3	90045-0382	-		1	CONNECTOR KIT 19N117F	
A557:2	A68835-0200	-		1	RACK	**10-165**
A557:3	A68445-0105	-		2	FRONT PLATE 10TE	**10-167**
A557:4	A68445-0104	-		2	FRONT PLATE 8 TE	**10-169**
A557:5	A68445-0102	-		3	FRONT PLATE 5TE	**10-171**
A557:6	90005-0138	-		4	PLASTIC WASHER DI=6,4MM	
A557:7	90287-0274	-		4	SCREW M6X16	
A557:8	90099-0113	-		4	CLIP NUT M6	
A557:9	1350709-0000	-		1	COVERING PLATE	
F552	90007-0128	-		1	CIRCUIT BREAKER, 1P 6 A K	
K550	90075-0128	-		1	CONTACTOR, 7,5KW 24VDC	
K551	A90119-0056	-		1	RELAY, AUXILIARY MK3P5-S 24VDC	
K551	90119-0056	-		1	RELAY, AUXILIARY MK3P5-S 24VDC	
K551:1	90129-0006	-		1	BASE, S3-B	
M551	90264-0032	-		1	FAN PAPST 220V;18W	
Q550	90111-0132	-		1	MAIN SWITCH P1-25/EA/SVB-SW/N/HI11/H-P14	
Q550:1	359241-0353	-		1	SIGN"RATINING PLATE"	
Q550:2	359241-0124	-		1	SIGN, MAIN SWITCH	
Q550:3	359240-0100	-		2	SIGN HOLDER FOR 359240-0001	
R550	90121-0132	-		1	RESISTANCE FIXED, 0,51 KOHM, 0,25 W	
S550	90111-0120	-		1	SWITCH, 2 POS.704.510 .0A+704.901.5/A	
S550:1	359241-0267	-		1	SIGN	
S550:2	359240-0100	-		1	SIGN HOLDER FOR 359240-0001	
W010	90220-0095	-	MM	3000	SCR. CABLE 3X0,75MM2	
W015	90220-0059	-	MM	2500	THERMOCOUPLE CABLE K/ 2X0,81MM2	
W016	90220-0059	-	MM	2500	THERMOCOUPLE CABLE K/ 2X0,81MM2	
W020	1143884-0000	-		1	COPPER BRAID	
W021	1143884-0000	-		1	COPPER BRAID	
X551	A1334787-0000	-		1	DISTRIBUTION TERMINAL	**10-173**
X552	90110-0057	-		1	FEMALE INSERT HAN 24 E 09 33 002 4201	
X552:1	90110-0334	-		4	SCREW HARTING	
X552:2	90110-0128	-		1	MALE INSERT, HAN 24 E-M 933 024 2631	
X553	90110-0057	-		1	FEMALE INSERT HAN 24 E 09 33 002 4201	
X553:1	90110-0334	-		4	SCREW HARTING	
X553:2	90110-0128	-		1	MALE INSERT, HAN 24 E-M 933 024 2631	
X560	A1334788-0000	-		1	DISTRIBUTION TERMINAL	**10-175**
Z550	90024-0038	-		1	INPUT FILTER, 16 A	

Machine Type | Group Description | Used-In | Group Number | Page No

This page is intentionally left blank.

ECM: 71300 - 19980608
Group number: 42931-0202
Assembly Drawing:

Pos	Part No	SP	UN	Qty	Description	Page No
-						
100	598882-0000	-		1	COMPONENTS WITHOUT TP-NO	
180	90045-0379	-		1	MEMORY EPROM	

Pos	Part No	SP	UN	Qty	Description	Page No

Machine Type | Group Description | Used-In | Group Number | Page No

This page is intentionally left blank.

ECM: 71300 - 19980608
Group number: 42931-0201
Assembly Drawing:

Pos	Part No	SP	UN	Qty	Description	Page No
-						
100	598882-0000	-		1	COMPONENTS WITHOUT TP-NO	
180	90045-0379	-		1	MEMORY EPROM	

Pos	Part No	SP	UN	Qty	Description	Page No

Machine Type	Group Description	Used-In	Group Number	Page No

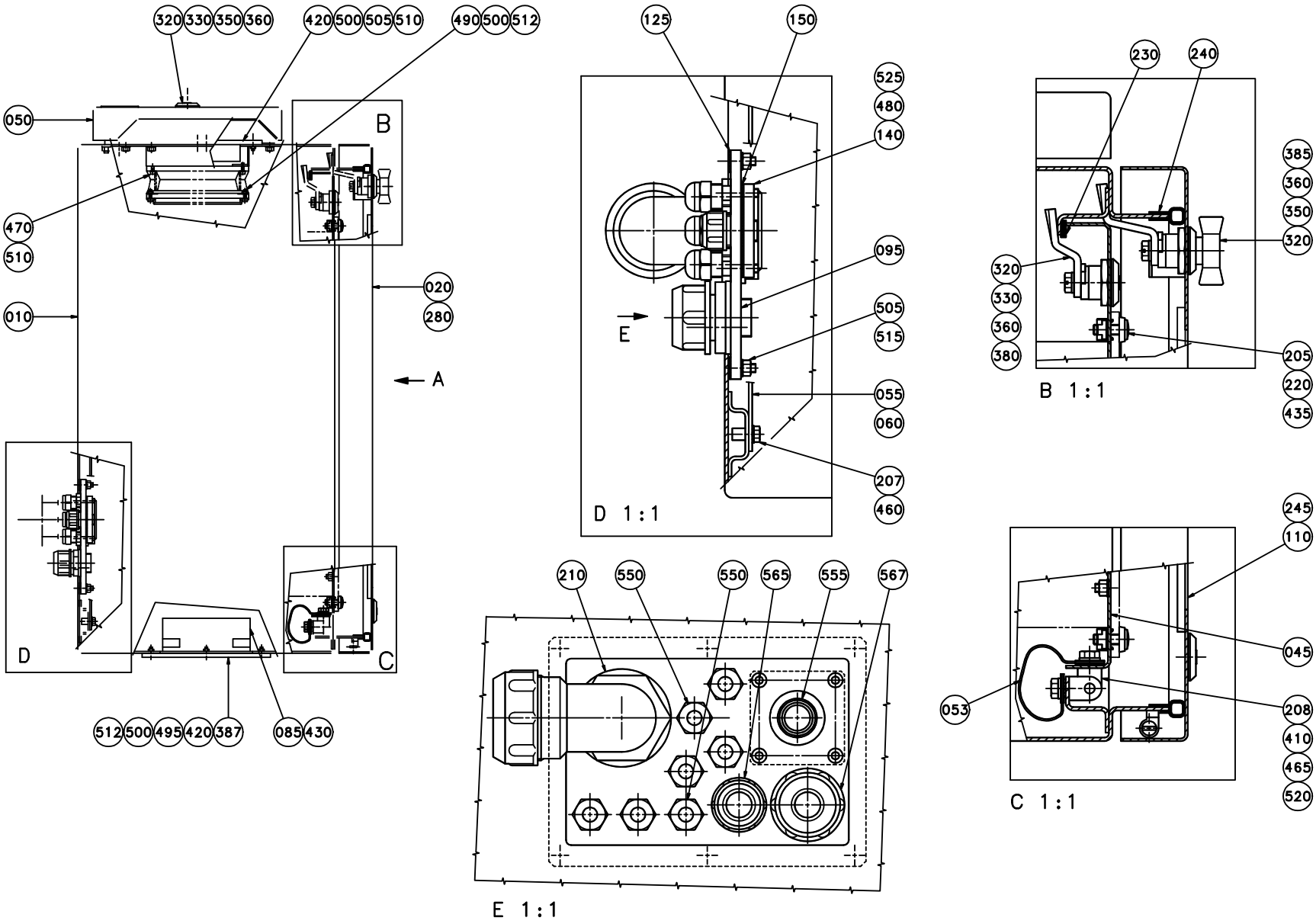
320 330 350 360
420 500 505 510
490 500 512
050
470
510
010
020
280
A
B
C
D
512 500 495 420 387
085 430
125
150
525
480
140
095
505
515
055
060
207
460
E
D 1 : 1
210 550 550 565 555 567
E 1 : 1
230
240
385
360
350
320
320
330
360
380
205
220
435
B 1 : 1
245
110
045
053
208
410
465
520
C 1 : 1

ECM: 71990 - 19981102
Group number: 925413-0300
Assembly Drawing: 925413-5_1_AA

This list covers pages from 10-156 to 10-159

Pos	Part No	SP	UN	Qty	Description	Page No
-						
005	A1347238-0100	-		1	EARTH BAR	**10-161**
010	925782-0000	-		1	CABINET	
015	925783-0000	-		1	COVER	
020	925784-0000	-		1	DOOR	
030	925786-0000	-		1	BOX	
040	924599-0000	-		1	COVER	
045	1317404-0000	-		1	DOOR	
050	1350691-0000	-		1	COVER	
053	1317540-0000	-		2	HF BRAIDED WIRE 1,6 MM2	
055	925789-0000	-		1	MOUNTING PLATE	
060	925790-0000	-		1	MOUNTING PLATE	
065	925791-0000	-		1	HOLDER	
070	925792-0000	-		1	CABLE TRACK	
075	925793-0000	-		1	BOX	
085	731665-0000	-		1	FRAME FOR FILTER	
090	925794-0000	-		1	COVER	
095	925795-0000	-		1	PLATE	
100	925796-0000	-		1	PLATE	
110	925798-0000	-		1	WINDOW	
120	925800-0000	-		1	COVER	
125	925801-0000	-		1	GASKET	
130	925802-0000	-		1	GASKET	
140	925804-0000	-		1	PLATE	
150	925806-0000	-		1	GASKET	
155	925807-0000	-		4	SPACER	
157	927069-0000	-		1	GASKET	
160	927435-0000	-		1	MOUNTING RAIL	
161	927436-0000	-		1	MOUNTING RAIL	
165	927446-0000	-		1	WALL	
166	927447-0000	-		1	WALL	
170	970802-0000	-		1	DISCETTE BOX 3,5"	
205	90005-0138	-		4	PLASTIC WASHER DI=6,4MM	
206	90062-0020	-		8	LOCKING WASHER AZ 4,3	
207	90062-0021	-		16	LOCK WASHER DIN 6797 TYPE A 5,3	
208	90062-0022	-		4	LOCKING WASHER D=6,4/11	
210	90012-0060	-		1	GLAND	
220	90099-0113	-		4	CLIP NUT M6	
230	90143-0043	-	MM	500	STRIP SELLOTAPE 3,2X6MM	
240	90143-0057	-	M	6	STRIP EMKA 1011-05 21X11MM	
245	90144-0044	-		2	TAPE SCOTCH VHB 4945;12,7MM	
247	90181-0044	-	MM	160	CABLE DUCT, 25X60MM	
250	90181-0045	-	MM	460	CABLE DUCT, 40X60MM	
253	90181-0045	-	MM	360	CABLE DUCT, 40X60MM	
254	90181-0045	-	MM	200	CABLE DUCT, 40X60MM	
255	90181-0045	-	MM	380	CABLE DUCT, 40X60MM	
260	90181-0047	-	MM	895	CABLE DUCT, 80X60MM	
261	90181-0047	-	MM	125	CABLE DUCT, 80X60MM	
262	90181-0047	-	MM	200	CABLE DUCT, 80X60MM	
263	90181-0047	-	MM	245	CABLE DUCT, 80X60MM	
264	90181-0047	-	MM	200	CABLE DUCT, 80X60MM	
270	90181-0064	-		5	LOCK ZP1 FOR CHANNEL T1	
280	90194-0016	-		3	WARNING SIGN, RISK OF ELECTRIC SHOCK	
290	90194-0080	-		1	SIGN, IDENTIFICATION OF WIRING	
300	90194-0133	-		1	SIGN "DELIVERED DESIGN"	
320	90237-0319	-		8	LOCK HOUSING, 1000-U134	
330	90237-0320	-		6	LOCK HOUSING, 1000-U136	
350	90237-0321	-		7	LOCK COMPONENT EMKA 1000-10	
360	90237-0322	-		8	LOCK GASKET, 1000-U137	
370	90237-0324	-		2	KEY, 1104-02 FOR SQUARE 8 MM	
380	90237-0335	-		1	LOCKING CATCH	
385	90237-0337	-		1	LOCK HANDLE FOR 90237-319	
387	90242-0132	-		2	O-RING 176X3,5	
390	90248-0015	-		1	HINGE, RIGHT HT 1	
400	90248-0016	-		1	HINGE, LEFT HT2	
410	90248-0019	-		2	HINGE 1054-U1	
420	90264-0324	-		2	GRILL / 315851-004	
430	90264-0335	-		1	FILTER	
433	90287-0169	-		27	SCREW	
435	90287-0274	-		4	SCREW M6X16	
440	90347-0050	-		1	GAS SPRING NO. 0306 150 398535	
445	312105-0287	-		6	SCREW M6S ISO4017 M4X8 A480	
450	312105-0323	-		3	SKRUV M6S ISO 4017 M5X8 A480	
455	312105-0325	-		6	SCREW M6S ISO 4017 M5X10 A480	
460	312105-0327	-		16	SCREW M6S ISO 4017 M5X12 A480	
465	312105-0366	-		6	SCREW M6S M6X12 A280	
470	312115-0224	-		4	SCREW ISO4762 M3X10 A4	
475	312115-0285	-		7	SCREW ISO4762 M4X6 A4	
480	312115-0329	-		10	SCREW ISO4762 M5X16 A4	
485	312121-0287	-		8	SCREW ISO 1207 M4X8 4.8 - 5.8 Z.PL.	
490	312121-0291	-		12	SCREW ISO 1207 M4X12 4.8 - 5.8 Z.PL.	
491	312132-0284	-		8	SCREW SLOT. PAN HEAD MSCS M4X5	
492	312141-0291	-		2	SCREW ISO 2009 MFS M4X12 4.8 EL.PL	
495	312151-0291	-		8	SCREW EN 10642 MF6S M4X12 10.9 EL.PL	

Machine Type | Group Description | Used-In | Group Number | Page No

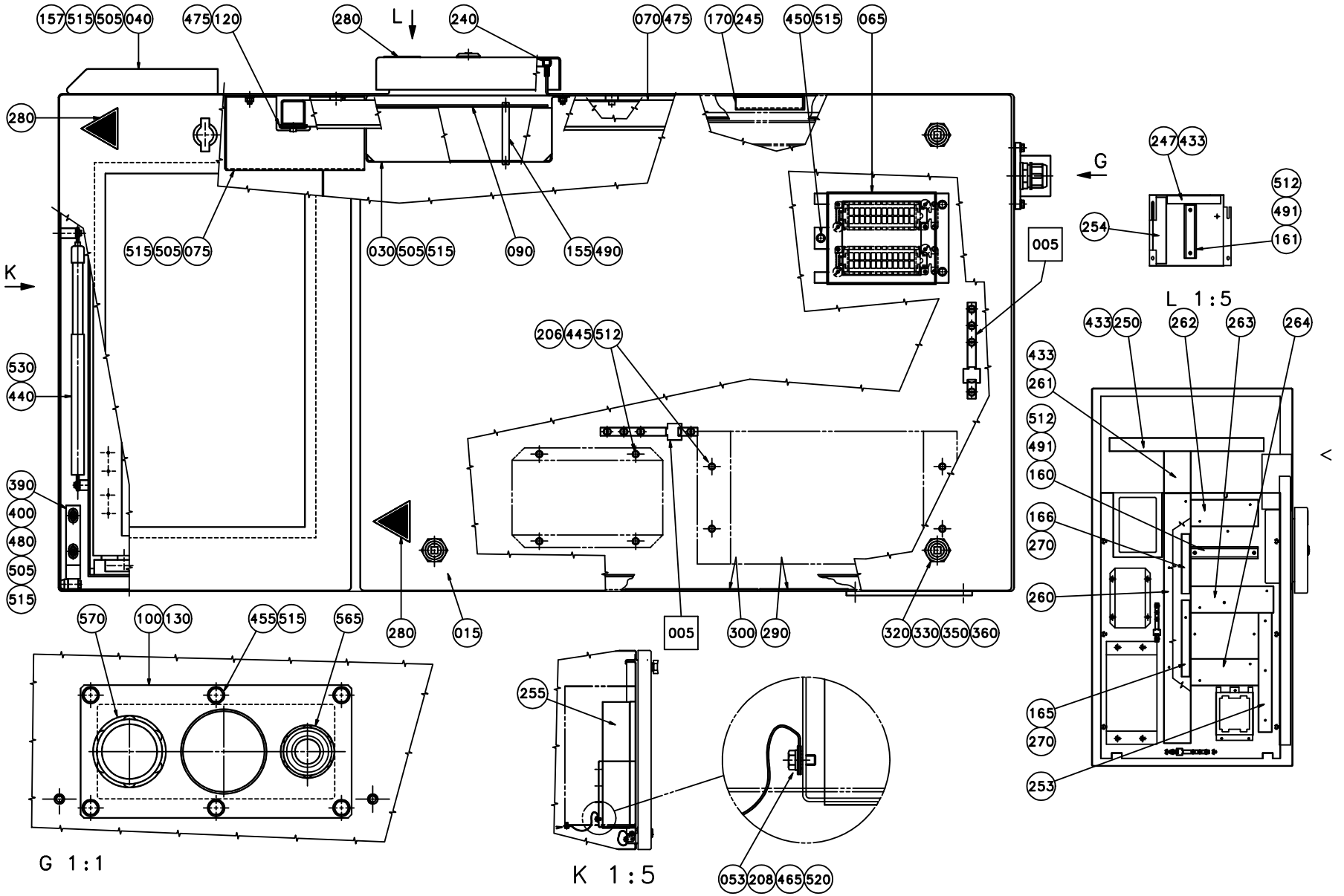
157 515 505 040
475 120
280
L
240
070 475
170 245
450 515
065
280
515 505 075
030 505 515
090
155 490
005
247 433
512
491
254
161
G
L 1:5
K
530
440
206 445 512
433 250
262
263
264
433
261
512
491
160
166
270
260
390
400
480
505
515
570
100 130
455 515
565
280
015
005
300
290
320 330 350 360
165
270
253
255
053 208 465 520
G 1:1
K 1:5

Pos	Part No	SP	UN	Qty	Description	Page No
- (Cont'd)						
500	312601-0312	-		14	MUTTER M6M 4-8 FZB	
505	312605-0314	-		22	HEXAGON NUT, M6M M5 A280	
510	315101-0124	-		4	WASHER PLAIN, BRB, 3,2/6 H=0,5	
512	315101-0136	-		28	BRICKA BRB, 4,3/8 H=0,8	
515	315105-0146	-		23	BRICKA BRB5,3X10RFR	
520	315105-0153	-		6	WASHER BRB6,4X12RFR	
525	315233-0101	-		4	WASHER CAPTIVE SEALING M5	
530	315755-0106	-		2	RETAINING RING 4	
550	352103-0100	-		7	CABLE GLAND, STR 9, PR15,2/PG9	
555	352136-0107	-		1	GLAND FITTING PR12,5 PG7 FOR HOSE	
560	352136-0113	-		1	GLAND FITTING PR18,6/PG11 DI=12MM	
565	352136-0129	-		2	GLAND FITTING PR22,5/PG16 DI=16MM	
567	352136-0142	-		1	GLAND FITTING	
570	352136-0143	-		1	GLAND FITTING	

Pos	Part No	SP	UN	Qty	Description	Page No

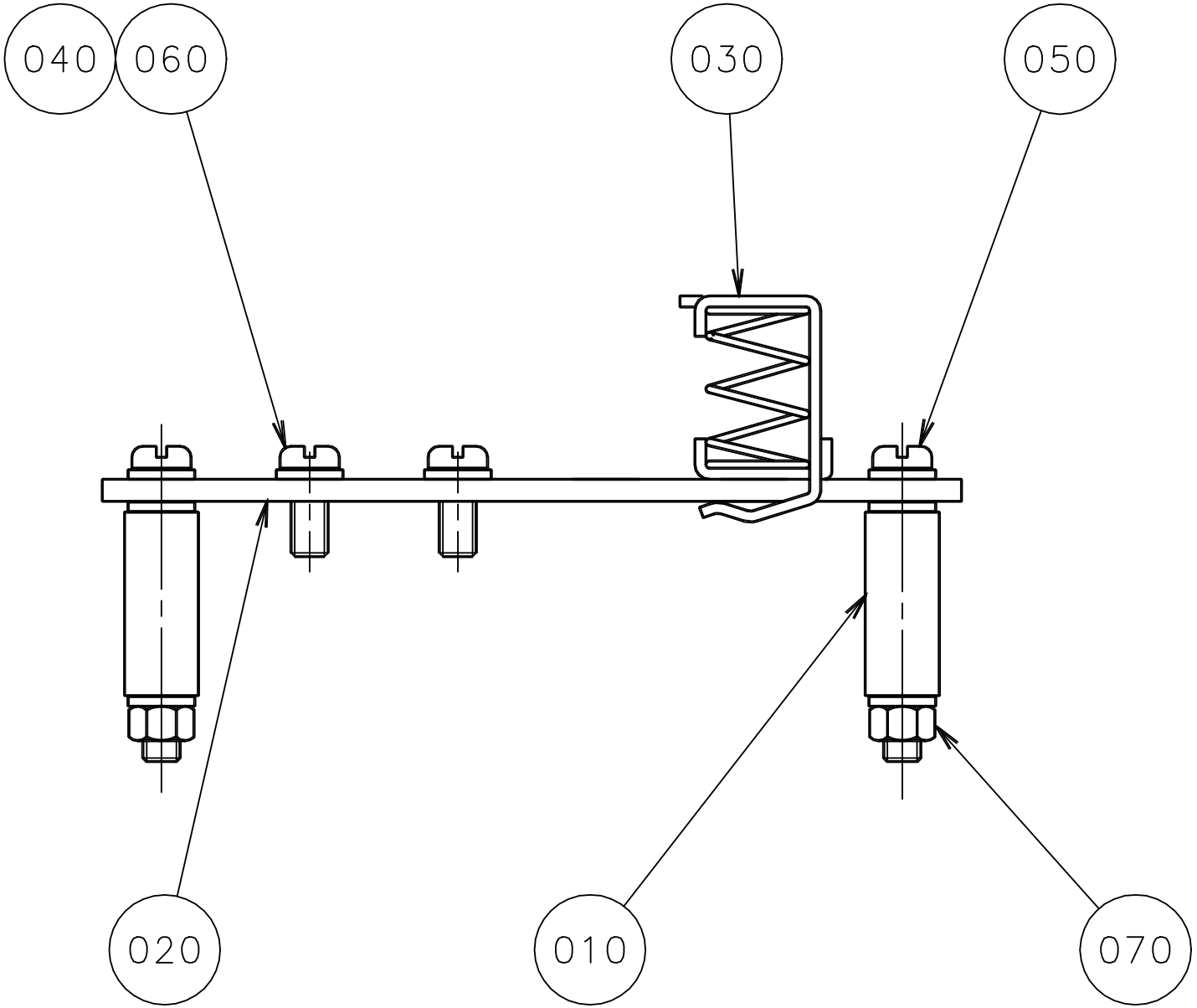
040
060
030
050
020
010
070

ECM: 71319 - 19980521
Group number: 1347238-0100
Assembly Drawing: 1347238-1_1_AA

Pos	Part No	SP	UN	Qty	Description	Page No
-						
010	988436-0000	-		2	SPACER SLEEVE	
020	1347239-0000	-		1	EARTH BAR	
030	90135-0039	-		1	SHIELD CLIP KLBU 4-13.5	
040	90062-0060	-		8	LOCK WASHER SERRAT.EXT.GEAR,5,3/10 H=0,6	
050	312125-0339	-		2	SCREW ISO 1207 M5X40 A4	
060	312125-0327	-		2	SCREW ISO 1207 M5X12 A4	
070	312605-0314	-		2	HEXAGON NUT, M6M M5 A280	

Pos	Part No	SP	UN	Qty	Description	Page No

This page is intentionally left blank.

ECM: - -
Group number: 68262-0100
Assembly Drawing:

Pos	Part No	SP	UN	Qty	Description	Page No
-						
100	543371-0000	-		1	CIRCUIT BOARD 8TE	
110	551927-0001	-		1	COMPONENTS WITHOUT TP-NO	
120	551928-0000	-		1	TERMINAL LABELS 8TE	

Pos	Part No	SP	UN	Qty	Description	Page No

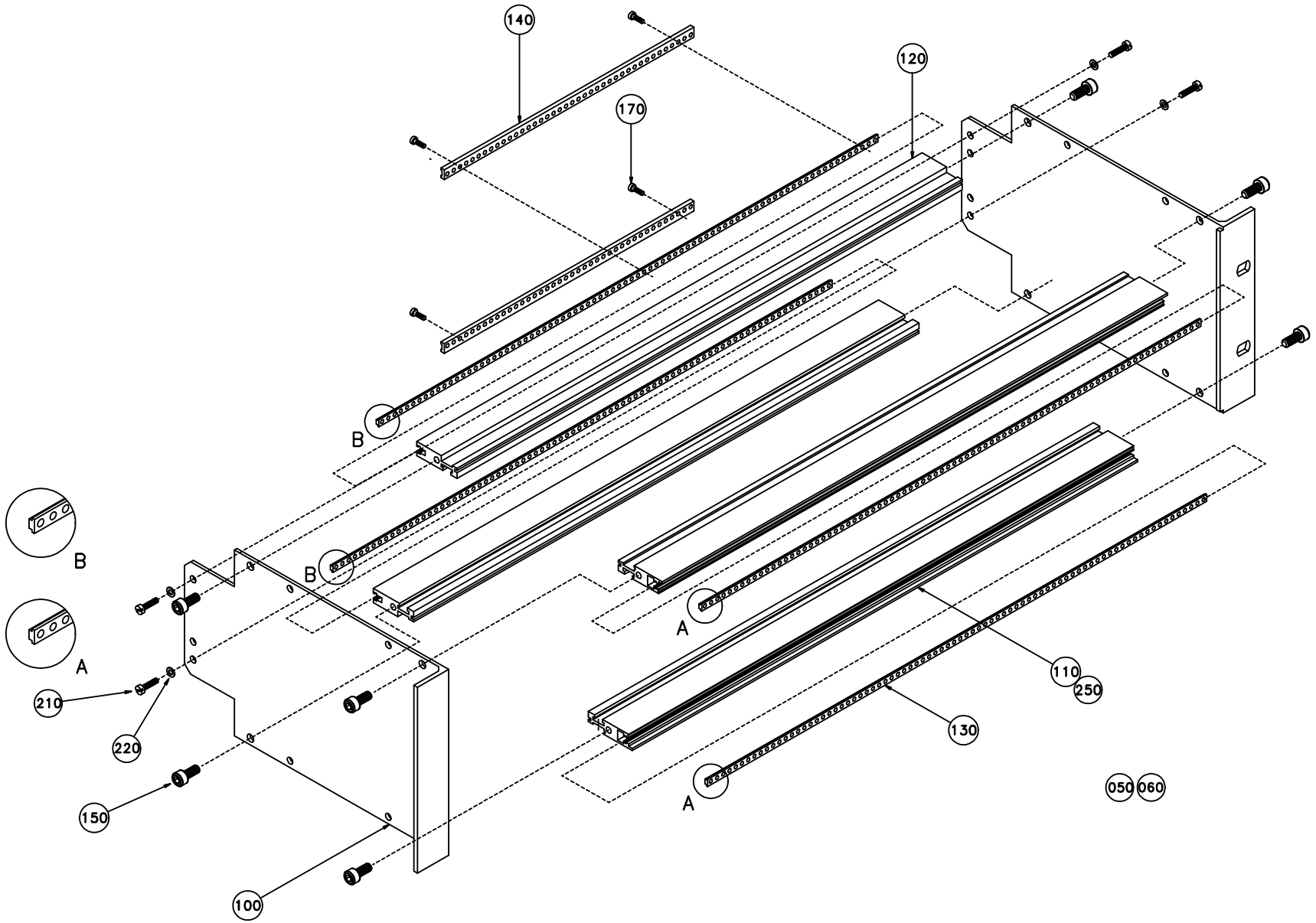
140
120
170
B
B
B
A
A
A
210
220
150
100
110
250
130
050
060

ECM: 70969 - 19970925
Group number: 68835-0200
Assembly Drawing: 68835-2_1_AA

Pos	Part No	SP	UN	Qty	Description	Page No
-						
040	57441-0101	-		1	ASSEMBLY INSTRUCTION	
050	578042-0001	-		1	COMPONENTS WITHOUT TP-NO	
060	578042-0002	-		1	COMPONENTS WITHOUT TP-NO	
110	926981-0000	-		2	DETAIL DRAWING	
120	926982-0000	-		2	DETAIL DRAWING	
130	926983-0000	-		4	DETAIL DRAWING	
140	926984-0000	-		2	DETAIL DRAWING	
150	312115-0327	-		8	SCREW ISO4762 M5X12 A4	
180	312121-0222	-		8	SCREW ISO 1207 M3X8 4.8 - 5.8 Z.PL.	
200	926985-0000	-		1	DETAIL DRAWING	
210	312121-0224	-		4	SCREW ISO 1207 M3X10 4.8 - 5.8 Z.PL.	
220	315101-0124	-		4	WASHER PLAIN, BRB, 3,2/6 H=0,5	

Pos	Part No	SP	UN	Qty	Description	Page No

This page is intentionally left blank.

ECM: - -
Group number: 68445-0105
Assembly Drawing:

Pos	Part No	SP	UN	Qty	Description	Page No
-						
010 5	543921-0005	-		1	COMPONENTS WITHOUT TP-NO	

Pos	Part No	SP	UN	Qty	Description	Page No

This page is intentionally left blank.

ECM: - -
Group number: 68445-0104
Assembly Drawing:

Pos	Part No	SP	UN	Qty	Description	Page No	Pos	Part No	SP	UN	Qty	Description	Page No
-													
010 4	543921-0004	-		1	COMPONENTS WITHOUT TP-NO								

This page is intentionally left blank.

ECM: - -
Group number: 68445-0102
Assembly Drawing:

Pos	Part No	SP	UN	Qty	Description	Page No
-						
010 2	543921-0002	-		1	COMPONENTS WITHOUT TP-NO	

Pos	Part No	SP	UN	Qty	Description	Page No

This page is intentionally left blank.

ECM: 71268 - 19980608
Group number: 1334787-0000
Assembly Drawing:

Pos	Part No	SP	UN	Qty	Description	Page No
-						
:1	353042-0005	-	MM	200	RAIL TS 35/7.5	
:10	353032-0302	-		1	END PLATE WAP	
:11	353034-0403	-		2	BRIDGE CONNECTOR Q4, 13127,0	
:12	353021-0302	-		4	TERMINALS,TRIPLE-LEVEL, DLD 2,5/35 PA	
:13	353021-0127	-		1	TERMINAL DISCONNECTBLE, WTR 2,5+WSD 2,5	
:2	353031-0203	-		2	END SUPPORT, WEW 35/2	
:3	359011-0807	-		2	MARKING PLATES 5-FW 1-50	
:4	353024-0205	-		2	EARTH TERMINAL, 1010.1	
:5	359011-0819	-		2	MARKING PLATES 5-GW (EARTH)	
:6	353021-0213	-		5	FEED THROUGH TERMINAL, 10201.0	
:7	353021-0212	-		7	FEED THROUGH TERMINAL, 10200.0	
:8	90077-0113	-		12	FEED THROUGH TERMINAL, 10-00102150-1	
:9	353032-0009	-		1	END PLATE, WAP FOR WDK	

Pos	Part No	SP	UN	Qty	Description	Page No

This page is intentionally left blank.

ECM: 71268 - 19980608
Group number: 1334788-0000
Assembly Drawing:

Pos	Part No	SP	UN	Qty	Description	Page No
-						
:1	353042-0005	-	MM	200	RAIL TS 35/7.5	
:2	353031-0203	-		2	END SUPPORT, WEW 35/2	
:3	359011-0807	-		3	MARKING PLATES 5-FW 1-50	
:4	353024-0205	-		3	EARTH TERMINAL, 1010.1	
:5	353032-0004	-		2	END PLATE WAP 2,5-10 BEIGE	
:6	353021-0213	-		4	FEED THROUGH TERMINAL, 10201.0	
:7	353024-0206	-		2	EARTH TERMINAL, 1010.2	
:8	353034-0031	-		1	BRIDGE CONNECTOR, WQV 4/10, 10520.6	

Pos	Part No	SP	UN	Qty	Description	Page No

This page is intentionally left blank.

ECM: 153028 - 20031127
Group number: 576843-0200
Assembly Drawing:

Pos	Part No	SP	UN	Qty	Description	Page No
-						
	A570330-0100	-		1	CLEANING SYSTEM	**10-179**
000	1365782-0103	-		1	DOCUMENT FOLDER	

Pos	Part No	SP	UN	Qty	Description	Page No

Machine Type | Group Description | Used-In | Group Number | Page No

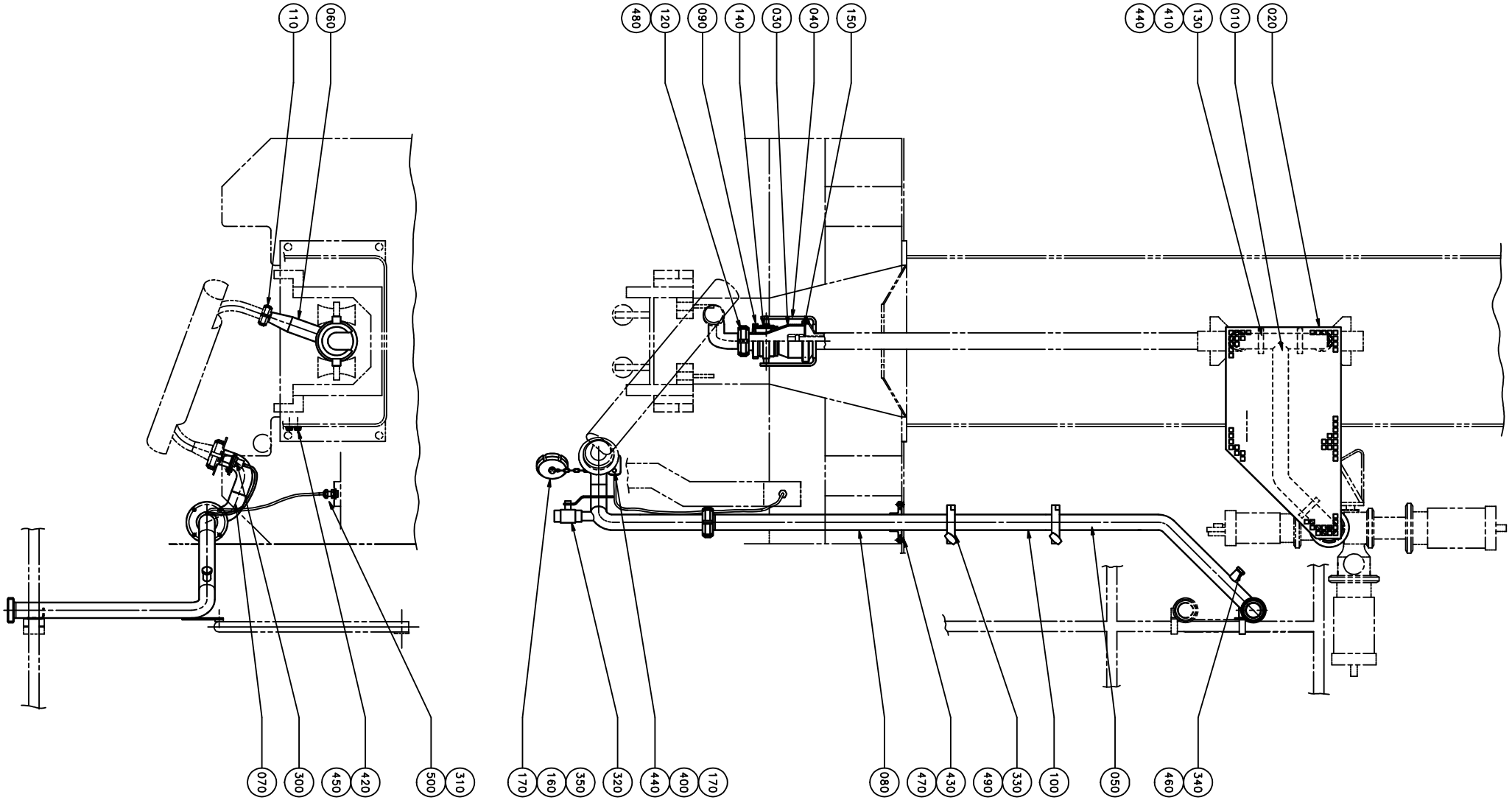
110
060
480
120
090
140
030
040
150
440
410
130
010
020
070
300
450
420
500
310
170
160
350
320
440
400
170
080
470
430
490
330
100
050
460
340

ECM: 151229 - 20031127
Group number: 570330-0100
Assembly Drawing: 570330-1_1_AA

Pos	Part No	SP	UN	Qty	Description	Page No
0355B, 0500S						
030	570338-0000	-		1	CUP	
040	570332-0000	-		1	BOW CLAMP	
080	570334-0000	-		1	PIPE	
150	1367804-0000	A		1	GASKET	
0375S						
030	570339-0000	-		1	CUP	
040	570332-0000	-		1	BOW CLAMP	
080	570334-0000	-		1	PIPE	
150	1367800-0000	A		1	GASKET	
0500B, 0750B, 1000B						
030	570320-0000	-		1	CUP	
040	570321-0000	-		1	BOW CLAMP	
080	570334-0000	-		1	PIPE	
150	1367796-0000	A		1	GASKET	
0750S						
030	570325-0000	-		1	CUP	
040	570332-0000	-		1	BOW CLAMP	
080	570334-0000	-		1	PIPE	
150	1367808-0000	A		1	GASKET	
1000SQ, 1000S						
030	570324-0000	-		1	CUP	
040	570332-0000	-		1	BOW CLAMP	
080	570334-0000	-		1	PIPE	
150	1478137-0000	A		1	GASKET	
Common Parts						
000	90194-0302	-		1	MARKING LABELS REBUILDING KIT	
000	765602-0379	-		1	COUNTERSINK	
000	769211-0116	-		1	SAW BLADE	
000	769211-0152	-		1	SAW BLADE	
010	570323-0000	-		1	CLEANING PIPE	
020	570328-0000	-		1	HEAT GUARD	
050	570322-0000	-		1	PIPE	
060	570331-0000	-		1	PIPE	
070	570333-0000	-		1	PIPE	
090	570329-0000	-		1	NUT	
100	570335-0000	-		1	PIPE	
110	12242-0001	-		3	GASKET 32X25X5,5	
120	12242-0003	-		4	GASKET 48X38X5,5	
130	570326-0000	-		3	CAP	
140	570327-0000	-		1	BUSHING	
160	209181-0000	-		1	LID	
170	209183-0000	-		2	RING	
300	90044-0126	-		1	PROX.SW. 922AA3XM-A9P-060-LZ876	
310	90099-0001	-		1	NUT PR 15,2 MäSSING	
320	90187-0082	-		1	BALL VALVE G1/2	
330	90217-0308	-		2	CLAMP, ISO2852 FOR PIPE 25,4 AND 38,1 MM	
340	90330-0026	-		1	PLUG, EXT. G-THREAD, G1/4	
350	90155-0008	-	MM	150	HANGER CHAIN, 18	
400	312105-0325	-		1	SCREW M6S ISO 4017 M5X10 A480	
410	312105-0337	-		6	SCREW M6S ISO 4014 M5X35 A480	
420	312105-0447	-		2	SCREW M6S ISO 4017 M8X12 A480	
430	312155-0368	-		4	SCREW EN 10642 MF6S M6X16 A480	
440	315105-0146	-		7	BRICKA BRB5,3X10RFR	
450	315111-0165	-		2	WASHER PLAIN, TBRB 8,4/16 H=3	
460	315233-0110	-		1	WASHER CAPTIVE SEALING G1/4	
470	315250-0105	-		1	GASKET 73,5X63,5X5,5 MM	
480	342803-0103	-		1	UNION NUT, RD 60-6 (SMS 38)	
490	342850-0304	-		2	GASKET 35,4X49,1X5,2 1"1/2 FDA	
500	352103-0100	-		1	CABLE GLAND, STR 9, PR15,2/PG9	

Machine Type | Group Description | Used-In | Group Number | Page No

PERFORATION HEATER

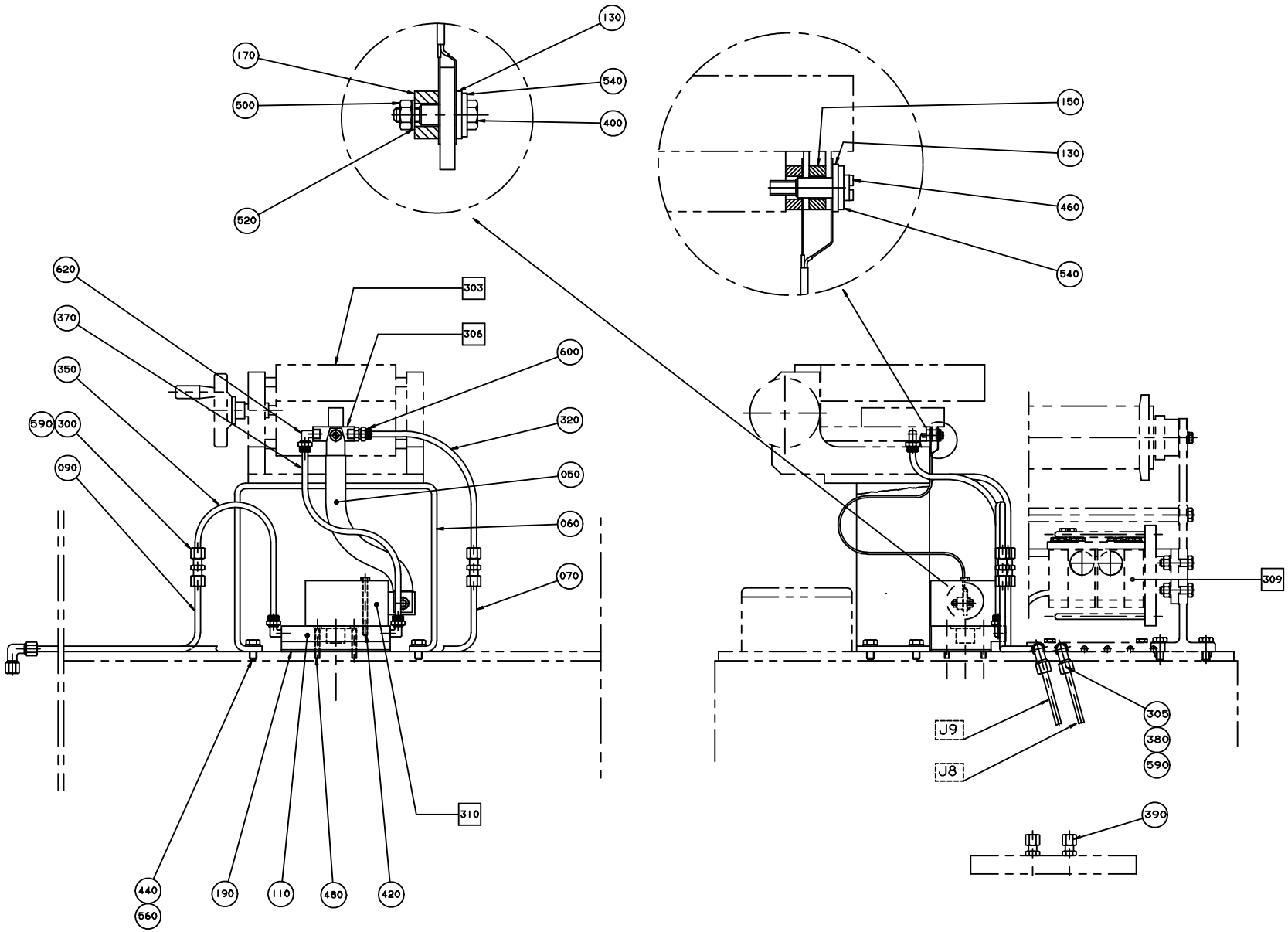

ECM: 114356 - 20021002
Group number: 282642-0500
Assembly Drawing: 282642-4_1_AB

Pos	Part No	SP	UN	Qty	Description	Page No
-						
000	1362179-0102	-		1	DOCUMENT FOLDER	
050	546115-0000	A		1	IH BUSBAR	
060	1487978-0000	-		1	BRACKET	
070	450819-0000	-		1	PIPE	
090	450820-0000	-		1	PIPE	
110	546386-0000	-		1	CANTILEVER	
130	32544-0000	-		2	INSULATION NUT	
150	32644-0000	-		2	WASHER	
170	449761-0000	-		1	WASHER	
190	546387-0000	-		1	GASKET	
300	90224-0304	-		2	CONNECTION	
303	A450125-0100	-		1	HEATING DEVICE	**10-183**
305	90224-0309	-		2	CONNECTION	
306	A450873-0200	-		1	INDUCTOR UNIT	**10-185**
309	A546117-0100	-		1	BAR CODE	**10-187, 10-189**
310	A67379-0103	-		1	TRANSFORMER	
310	67379-0103	-		1	TRANSFORMER	
315	A559284-0100	-		1	EL. RK "ZONE HEATER"	**10-191**
320	90166-0132	-	MM	200	TUBE 6 MM PA,TRANSP.	
350	90166-0132	-	MM	230	TUBE 6 MM PA,TRANSP.	
370	90166-0132	-	MM	290	TUBE 6 MM PA,TRANSP.	
380	90166-0132	-	M	5	TUBE 6 MM PA,TRANSP.	
390	90458-1850	-		2	CONN. STR., 6-R1/4, EXT. THREAD	
400	312105-0295	-		1	SCREW M6S ISO4017 M4X20 A480	
420	312105-0343	-		1	SCREW M6S ISO 4014 M5X60 A480	
440	312105-0449	-		4	SCREW M6S ISO 4017 M8X16 A480	
460	312122-0295	-		1	SCREW ISO 1207 M4X20 NI PL BRASS	
480	312155-0337	-		4	SCREW EN 10642 MF6S M5X35 A480	
500	312605-0312	-		1	HEXAGON NUT, M6M M4 A280	
520	315105-0136	-		1	WASHER BRB4,3XRFR	
540	315105-0153	-		2	WASHER BRB6,4X12RFR	
560	315105-0165	-		4	WASHER BRB8,4X16RFR	
590	342706-0130	-		6	ACCESSORIES, INSERT SLEEVE 6 MM	
600	342920-0113	-		1	STRAIGHT COUPLING,EXT.THREADED 6/4-R1/8"	
620	342930-0113	-		3	ELBOW 90 COUPL.,EXT.THREAD 6/4-R1/8"	

Pos	Part No	SP	UN	Qty	Description	Page No

Machine Type	Group Description	Used-In	Group Number	Page No

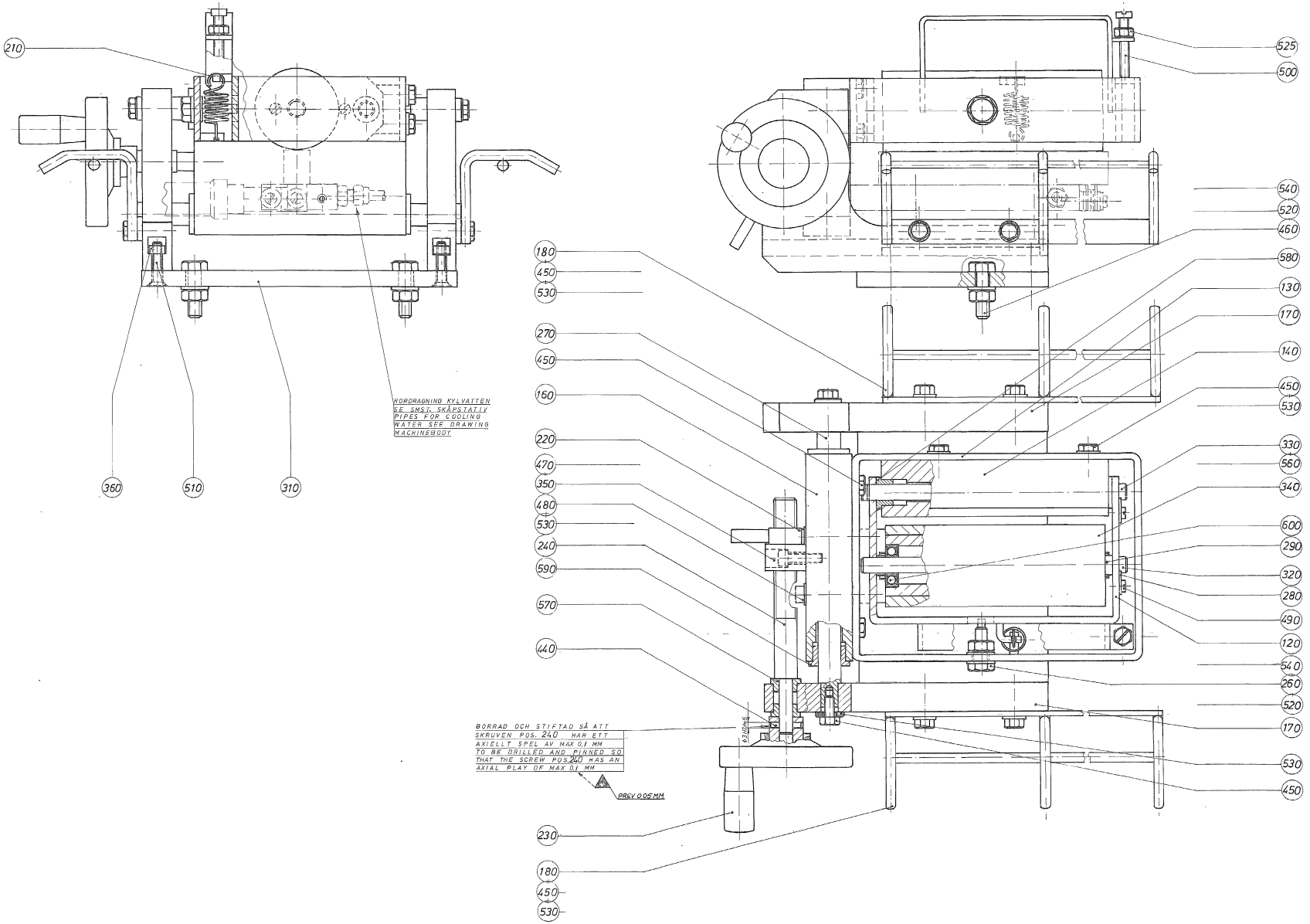
210
360
510
310
HORDRAGNING KYLVATTEN SE SMS 1 SKÄMSTATLY PIPES FOR COOLING WATER SEE DRAWING MACHINEBODY
525
500
540
520
460
180
450
530
580
130
170
270
450
140
160
450
530
220
470
350
480
530
240
590
570
440
330
560
340
600
290
320
280
490
120
540
260
520
170
530
450
BORRAD OCH STIFTAD SÅ ATT SKRUVEN POS. 240 HAR ETT AXIELLT SPEL AV MAX 0,1 MM
TO BE DRILLED AND PINNED SO THAT THE SCREW POS. 240 HAS AN AXIAL PLAY OF MAX 0,1 MM
PREV 0.05 MM
230
180
450
530

ECM: - -
Group number: 450125-0100
Assembly Drawing: 450125-1_1_AA

Pos	Part No	SP	UN	Qty	Description	Page No
TBA/8						
180	562141-0000	D		2	HOLDER	
Common Parts						
120	445645-0000	-		1	FRAME	
130	445646-0000	-		1	SUPPORTING FRAME	
140	445647-0000	D		1	BEARING HOUSING	
160	450015-0000	D		1	HOUSE	
170	450124-0000	-		2	CANTILEVER	
210	4623-0000	D		1	SPRING	
220	243073-0000	-		1	LOCK NUT	
230	243075-0000	-		1	SHIFTER HANDLE	
240	243076-0000	D		1	SCREW	
260	243077-0000	-		1	SCREW	
270	243078-0000	-		2	GUIDE SHAFT	
280	243081-0000	-		2	SECURING PLATE	
290	243084-0000	-		2	SPACER SLEEVE	
310	445638-0000	-		1	BOTTOM PLATE	
320	445639-0000	D		1	SHAFT	
330	445640-0000	D		1	SHAFT	
340	445641-0000	C		1	ROLLER	
350	450016-0000	D		1	NUT	
360	450123-0000	-		2	BRACKET	
440	311103-0238	-		1	PARALLEL PIN ISO 2338 3M6X20 A1	
450	312105-0366	-		16	SCREW M6S M6X12 A280	
460	312105-0455	-		2	SCREW M6S ISO 4017 M8X30 A480	
470	312115-0368	-		2	SCREW ISO4762 M6X16 A4	
480	312115-0376	-		2	SCREW ISO4762 M6X35 A4	
490	312125-0285	-		2	SCREW ISO 1207 M4X6 A4	
500	312125-0380	-		1	SCREW ISO 1207 M6X50 A4	
510	312155-0372	-		4	SCREW EN 10642 MF6S M6X25 A480	
520	312605-0318	-		3	HEXAGON NUT, M6M M8 A280	
525	312605-0316	-		1	HEXAGON NUT, M6M M6 A280	
530	315105-0156	-		8	WASHER BRB 6.7X14 RFR	
540	315105-0165	-		4	WASHER BRB8,4X16RFR	
560	315750-0107	-		1	RETAIN. RING, 10	
570	321110-0143	-		2	FLANGE BUS 8E7X8	
580	321110-0163	-		2	FLANGE BUS 10E7X10	
590	321110-0183	-		4	FLANGE BUS 14E7X12	
600	321308-0200	-		2	BALL BEARING, 10X26X8 MM	

Pos	Part No	SP	UN	Qty	Description	Page No

Machine Type | Group Description | Used-In | Group Number | Page No

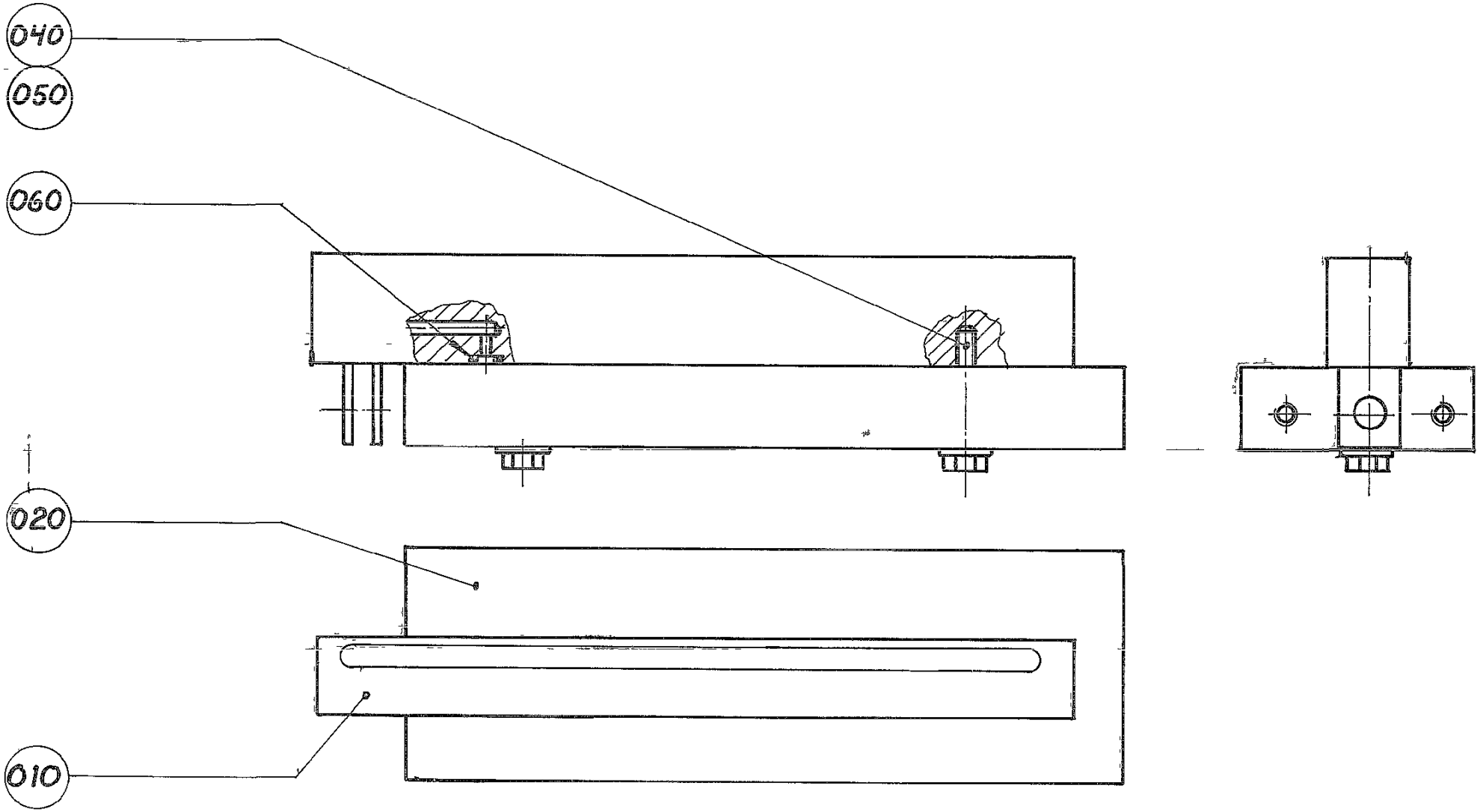
040
050
060
020
010

ECM: - -
Group number: 450873-0200
Assembly Drawing: 450873-1_1_AA

Pos	Part No	SP	UN	Qty	Description	Page No
-						
010	555600-0000	C		1	INDUCTOR	
020	450065-0002	D		1	BRACKET	
040	312105-0295	-		2	SCREW M6S ISO4017 M4X20 A480	
050	315105-0136	-		2	WASHER BRB4,3XRFR	
060	315202-0101	-		2	O-RING 3,1X1,6 MM	

Pos	Part No	SP	UN	Qty	Description	Page No

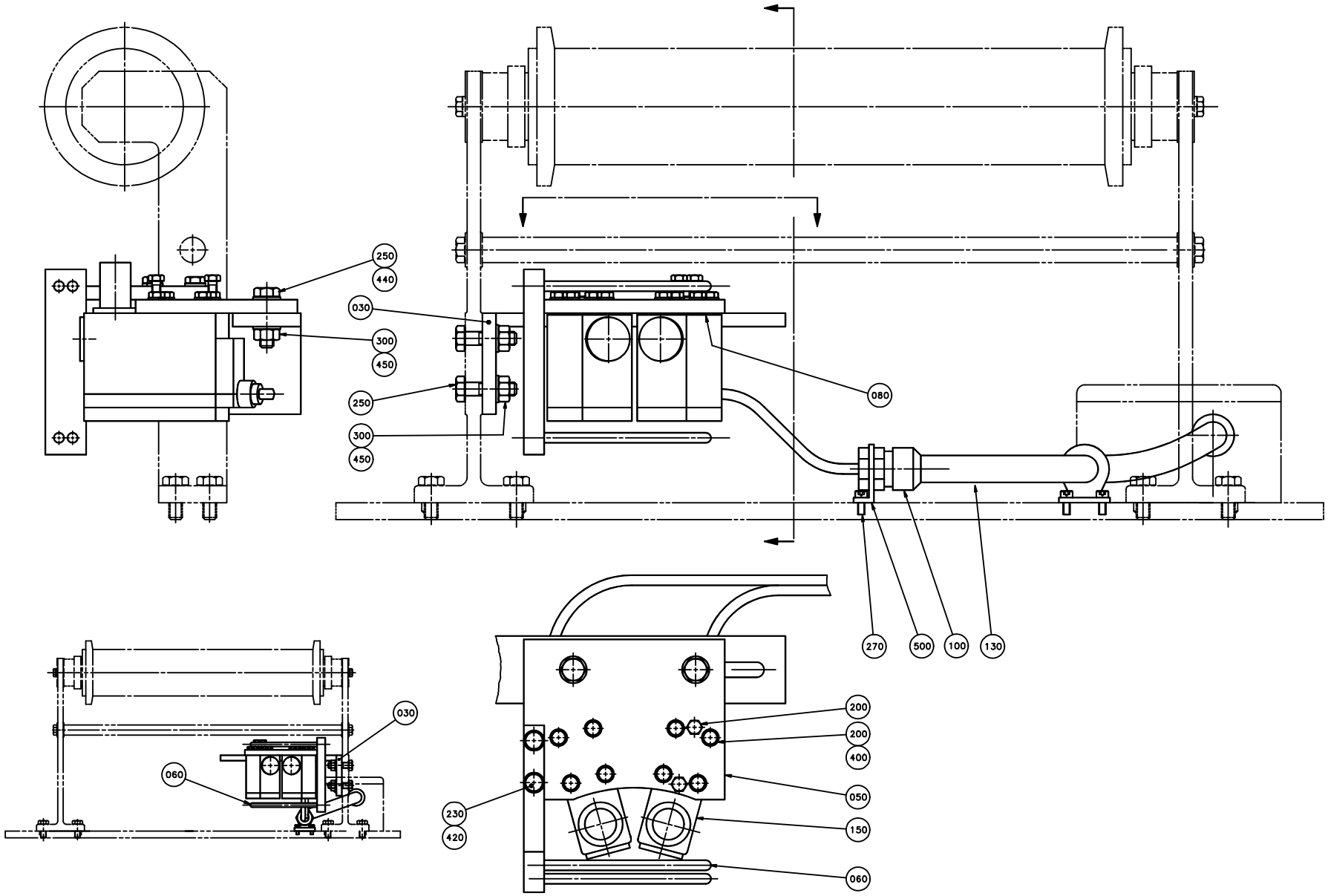
250
440
030
300
450
250
300
450
080
270
500
100
130
030
060
200
200
400
050
150
060
230
420

ECM: - -
Group number: 546117-0100
Assembly Drawing: 546117-1_1_AA

This list covers pages from 10-186 to 10-189

Pos	Part No	SP	UN	Qty	Description	Page No
ST-ER						
030	545817-0000	D		1	CANTILEVER	
060	536694-0000	D		1	PAPER GUIDE	
130-02	352135-0106	-	MM	520	SPIRAL CONDUIT DI=16 MM	
270-02	312125-0325	-		6	SCREW ISO 1207 M5X10 A4	
500-02	352135-0202	-		3	CLIP, 16 MM, 913.016	
Common Parts						
050	536693-0000	D		1	FASTENING PLATE	
080	536374-0000	D		2	WASHER	
100	352136-0127	-		2	GLAND FITTING PR 18,6	
150	90232-0055	C		2	PH.CELL NT6-14920S17	
200	312105-0328	-		10	SCREW M6S ISO 4017 M5X14 A480	
230	312105-0370	-		2	SCREW M6S ISO 4017 M6X20 A480	
250	312105-0455	-		4	SCREW M6S ISO 4017 M8X30 A480	
300	312605-0318	-		4	HEXAGON NUT, M6M M8 A280	
400	315105-0146	-		8	BRICKA BRB5,3X10RFR	
420	315115-0153	-		2	WASHER PLAIN, TBRB 6,4/12 H=3	
440	315105-0165	-		2	WASHER BRB8,4X16RFR	
450	315115-0165	-		4	WASHER PLAIN, TBRB 8,4/16 H=3	

Pos	Part No	SP	UN	Qty	Description	Page No

Machine Type Group Description Used-In Group Number Page No

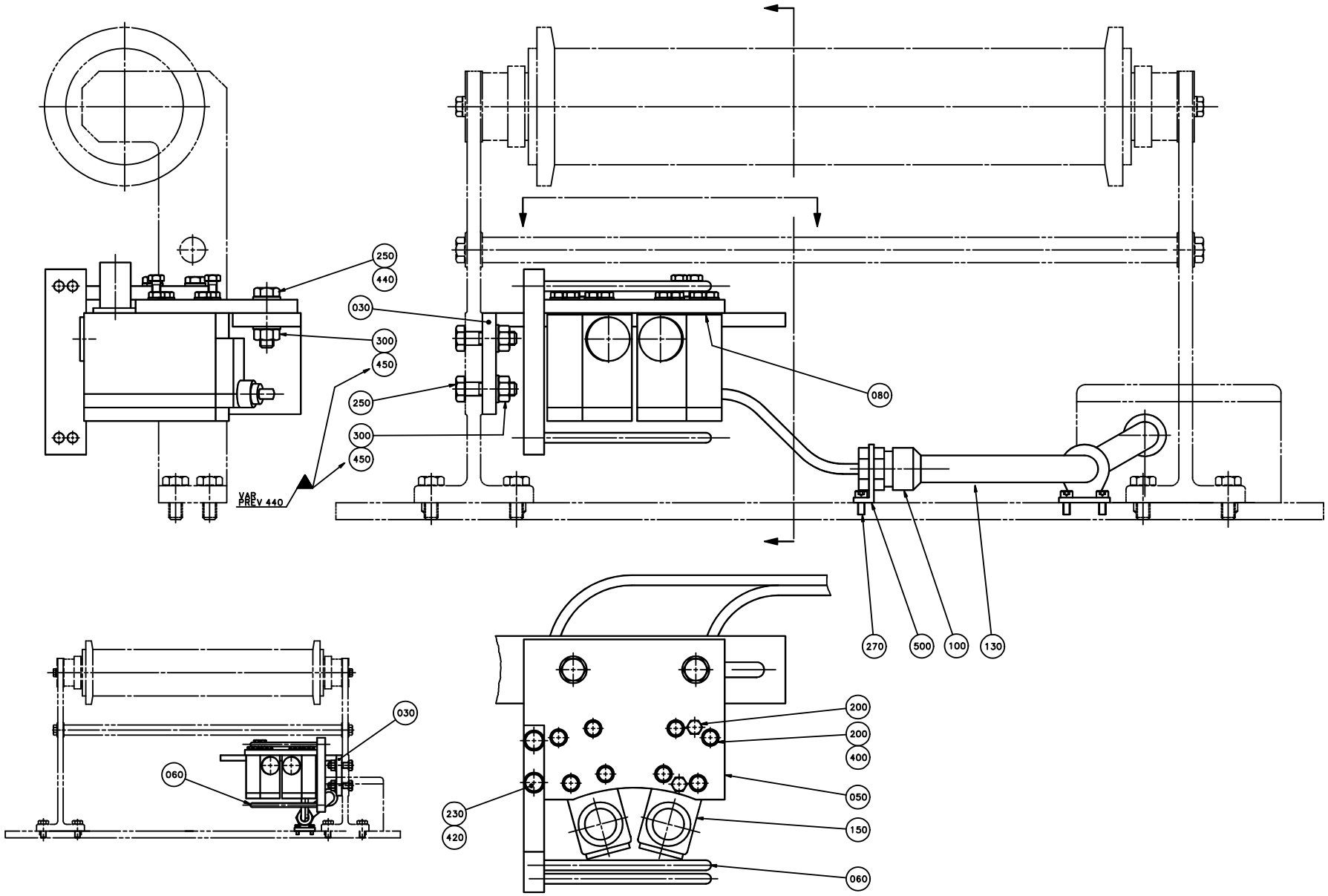
250
440
030
300
450
250
300
450
VAR
PREV 440
080
270
500
100
130
030
060
200
200
400
050
150
060
230
420

ECM: - -
Group number: 546117-0100
Assembly Drawing: 546117-2_1_AA

This list covers pages from 10-186 to 10-189

Pos	Part No	SP	UN	Qty	Description	Page No
ST-ER						
030	545817-0000	D		1	CANTILEVER	
060	536694-0000	D		1	PAPER GUIDE	
130-02	352135-0106	-	MM	520	SPIRAL CONDUIT DI=16 MM	
270-02	312125-0325	-		6	SCREW ISO 1207 M5X10 A4	
500-02	352135-0202	-		3	CLIP, 16 MM, 913.016	
Common Parts						
050	536693-0000	D		1	FASTENING PLATE	
080	536374-0000	D		2	WASHER	
100	352136-0127	-		2	GLAND FITTING PR 18,6	
150	90232-0055	C		2	PH.CELL NT6-14920S17	
200	312105-0328	-		10	SCREW M6S ISO 4017 M5X14 A480	
230	312105-0370	-		2	SCREW M6S ISO 4017 M6X20 A480	
250	312105-0455	-		4	SCREW M6S ISO 4017 M8X30 A480	
300	312605-0318	-		4	HEXAGON NUT, M6M M8 A280	
400	315105-0146	-		8	BRICKA BRB5,3X10RFR	
420	315115-0153	-		2	WASHER PLAIN, TBRB 6,4/12 H=3	
440	315105-0165	-		2	WASHER BRB8,4X16RFR	
450	315115-0165	-		4	WASHER PLAIN, TBRB 8,4/16 H=3	

Pos	Part No	SP	UN	Qty	Description	Page No

Machine Type | Group Description | Used-In | Group Number | Page No

This page is intentionally left blank.

ECM: 72784 - 19990726
Group number: 559284-0100
Assembly Drawing:

Pos	Part No	SP	UN	Qty	Description	Page No
-						
0010	A559285-0100	-		1	ELECTRICAL DOCUMENT	
0020	A559286-0100	-		1	ELECTRICAL MATERIAL	**10-193**

Pos	Part No	SP	UN	Qty	Description	Page No

Machine Type | Group Description | Used-In | Group Number | Page No

This page is intentionally left blank.

ECM: 72784 - 19990726
Group number: 559286-0100
Assembly Drawing:

Pos	Part No	SP	UN	Qty	Description	Page No
-						
1000	351179-0104	-	M	10	CABLE AWM 1X15 MM2 BLACK	
1010	351173-0104	-	M	10	CABLE AWM 1X15 MM2 LIGHT-BLUE	
1020	351172-0102	-	M	10	CABLE AWM 1X 0,75 MM2 DARK-BLUE	
1030	351175-0105	-	M	10	CABLE AWM 1X25 MM2 YELLOW-GREEN	
A006	68446-0301	-		1	ZONE HEATER TIMER	
A006:1	A68262-0101	-		1	BACKPLANE FRONT RACK 8TE	**10-195**
A403	A67600-0501	-		1	TPIH 2000 GENERATOR	**10-197**
A403:1	90110-0121	-		2	FEMALE INSERT GDS A-H 09 06 215 2811	
A403:2	90110-0122	-		2	COVER, 09 06 000 9957	
A403:3	359241-0136	-		1	SIGN, PERFORATION HEATER	
F004	90233-0028	-		3	TUBE FUSE, 10A	
F004:1	90233-0303	-		3	FUSE HOLDER, ST 10 1-POLE	
K017	B90075-0125	-		1	CONTACTOR, 7,5KW 24VDC	
	90075-0313	*A*		*1*	*AUXILIARY CONTACT K&M 22 DILM.2NO;2NC*	
R005	90130-0017	-		1	POTENTIOMETER, 10 KOHM	
R005:1	90130-0301	-		1	ADJUSTING KNOB WITH DIAL	
R005:2	359241-0136	-		1	SIGN, PERFORATION HEATER	
S007	90111-0120	-		1	SWITCH, 2 POS.704.510 .0A+704.901.5/A	
S007:1	359241-0146	-		1	SIGN "ZONE HEATER ON/OFF"	
W015	548770-0001	-		1	COAXIAL CABLE L=5000MM	

Pos	Part No	SP	UN	Qty	Description	Page No

Machine Type | Group Description | Used-In | Group Number | Page No

This page is intentionally left blank.

ECM: - -
Group number: 68262-0101
Assembly Drawing:

Pos	Part No	SP	UN	Qty	Description	Page No
-						
100	543371-0000	-		1	CIRCUIT BOARD 8TE	
110	551927-0001	-		1	COMPONENTS WITHOUT TP-NO	
120	551928-0000	-		1	TERMINAL LABELS 8TE	

Pos	Part No	SP	UN	Qty	Description	Page No

This page is intentionally left blank.

ECM: - -
Group number: 67600-0501
Assembly Drawing:

Pos	Part No	SP	UN	Qty	Description	Page No
-						
10	542036-0000	-			LABEL "PART NO" 84X140MM	
500	565140-0001	-			COMPONENTS WITHOUT TP-NO	
510	565144-0000	-			LABEL LED	
520	565145-0000	-			LABEL X1/X2	
530	565146-0000	-			INSERT	
540	565147-0000	-			RAIL L	
550	565148-0000	-			RAIL R	
560	565149-0000	-			RAIL	
570	565150-0000	-			FRONT HANDLE	
580	565151-0000	-			BOX BOTTOM	
590	565152-0000	-			FRAME	
600	565153-0000	-			COMPLETE BOX	
610	565154-0000	-			BOX UPPER PART	
F100	A67577-0501	-			POWER CARD	**10-199**
F200	A67578-0101	-			TPIH FAN HOLDER	**10-223**
F300	A67579-0501	-			CONTROL CARD	**10-227**
F400	A67580-0201	-			FRONT PANEL	**10-231**

Pos	Part No	SP	UN	Qty	Description	Page No

This page is intentionally left blank.

ECM: - -
Group number: 67577-0501
Assembly Drawing:

Pos	Part No	SP	UN	Qty	Description	Page No
-						
130	573137-0001	-			COMPONENTS WITHOUT TP-NO	
140	565299-0000	-			SORTING INSTRUCTION	
150	543112-0000	-			MODIFYING EUROPECONNECTOR	
160	573138-0000	-		3	COOLER	
180	565301-0000	-			CAPACITOR CABLE RED	
190	565300-0000	-			CAPACITOR CABLE BLACK	
200	575980-0000	-			CIRCUIT DIAGRAM	
F101	A67564-0101	-			THIH TOROID COIL 1	**10-201**
F102	A67565-0101	-			TPIH TOROID COIL 2	**10-203**
F103	A67566-0101	-			TPIH TOROID COIL 3	**10-205**
F104	A67567-0101	-			TPIH THERMOSTAT CABLE	**10-207**
F105	A67568-0101	-			TPIH COIL SINGLE LAYER	**10-209**
F106	A67569-0101	-			TPIH TANK COIL	**10-211**
F107	A67570-0101	-			TPIH CAPACITOR CARD	**10-213**
F108	A67582-0101	-			HEAT SINK PREREGULATOR	**10-215**
F110	A67573-0101	-			TPIH TRANSISTOR PACKAGE	**10-217**
F111	A67581-0101	-			TPIH TRANSISTOR PACKAGE	**10-219**
F112	A67574-0401	-			OUTPUT TRANSFORMER	**10-221**

Pos	Part No	SP	UN	Qty	Description	Page No

This page is intentionally left blank.

ECM: - -
Group number: 67564-0101
Assembly Drawing:

Pos	Part No	SP	UN	Qty	Description	Page No
-						
100	564253-0001	-			COMPONENTS WITHOUT TP-NO	
110	532687-0000	-			TOROID COIL 1	

Pos	Part No	SP	UN	Qty	Description	Page No

Machine Type | Group Description | Used-In | Group Number | Page No

This page is intentionally left blank.

ECM: - -
Group number: 67565-0101
Assembly Drawing:

Pos	Part No	SP	UN	Qty	Description	Page No
-						
100	564254-0001	-			COMPONENTS WITHOUT TP-NO	
110	532688-0000	-			TOROID COIL 2	

Pos	Part No	SP	UN	Qty	Description	Page No

Machine Type | Group Description | Used-In | Group Number | Page No

This page is intentionally left blank.

ECM: - -
Group number: 67566-0101
Assembly Drawing:

Pos	Part No	SP	UN	Qty	Description	Page No
-						
100	564255-0001	-			COMPONENTS WITHOUT TP-NO	
110	532689-0000	-			TOROID COIL 3	

Pos	Part No	SP	UN	Qty	Description	Page No

Machine Type | Group Description | Used-In | Group Number | Page No

This page is intentionally left blank.

ECM: - -
Group number: 67567-0101
Assembly Drawing:

Pos	Part No	SP	UN	Qty	Description	Page No
-						
100	564256-0001	-			COMPONENTS WITHOUT TP-NO	
110	532690-0000	-			THERMOSTAT CABLE	

Pos	Part No	SP	UN	Qty	Description	Page No

This page is intentionally left blank.

ECM: - -
Group number: 67568-0101
Assembly Drawing:

Pos	Part No	SP	UN	Qty	Description	Page No
-						
100	564257-0001	-			COMPONENTS WITHOUT TP-NO	
110	532692-0000	-			COIL SINGLE LAYER	
120	532691-0000	-			COIL FORMER	

Pos	Part No	SP	UN	Qty	Description	Page No

Machine Type | Group Description | Used-In | Group Number | Page No

This page is intentionally left blank.

ECM: - -
Group number: 67569-0101
Assembly Drawing:

Pos	Part No	SP	UN	Qty	Description	Page No
-						
100	564260-0001	-			COMPONENTS WITHOUT TP-NO	
110	532693-0000	-			BOTTOM GABLE	
120	532695-0000	-			GABLE	
130	532696-0000	-			RING SPRING	
140	532697-0000	-			WINDING HOLDER	
150	565286-0000	-			WINDING HOLDER	
160	565287-0000	-			SPACER	
170	532694-0000	-			TANK COIL	

Pos	Part No	SP	UN	Qty	Description	Page No

This page is intentionally left blank.

ECM: - -
Group number: 67570-0101
Assembly Drawing:

Pos	Part No	SP	UN	Qty	Description	Page No
-						
100	564261-0001	-			COMPONENTS WITHOUT TP-NO	
120	484995-0000	-			PRINTED CIRCUIT BOARD	
130	565289-0000	-			COMPONENT REFERENCE	

Pos	Part No	SP	UN	Qty	Description	Page No

This page is intentionally left blank.

ECM: - -
Group number: 67582-0101
Assembly Drawing:

Pos	Part No	SP	UN	Qty	Description	Page No
-						
100	573134-0001	-			COMPONENTS WITHOUT TP-NO	
110	565290-0000	-			HEAT SINK V1	
120	532703-0000	-			HEAT SINK V2	
130	565291-0000	-			HEAT SINK V3	
140	573135-0000	-			HEAT SINK PREREGULATOR	

Pos	Part No	SP	UN	Qty	Description	Page No

This page is intentionally left blank.

ECM: - -
Group number: 67573-0101
Assembly Drawing:

Pos	Part No	SP	UN	Qty	Description	Page No
-						
100	564264-0001	-			COMPONENTS WITHOUT TP-NO	
110	565295-0000	-			GABLE LEFT	
120	532709-0000	-			GABLE RIGHT	
130	532710-0000	-			STUDSCREW	
140	532711-0000	-			KYLPLåT PLAN	
150	532712-0000	-			DISTANSPLåT	
160	565296-0000	-			WASHER	
170	565297-0000	-			TRANSISTOR PACKAGE R	

Pos	Part No	SP	UN	Qty	Description	Page No

This page is intentionally left blank.

ECM: - -
Group number: 67581-0101
Assembly Drawing:

Pos	Part No	SP	UN	Qty	Description	Page No
-						
100	565312-0001	-			COMPONENTS WITHOUT TP-NO	
110	565295-0000	-			GABLE LEFT	
120	532709-0000	-			GABLE RIGHT	
130	532710-0000	-			STUDSCREW	
140	532711-0000	-			KYLPLåT PLAN	
150	532712-0000	-			DISTANSPLåT	
160	565296-0000	-			WASHER	
180	565298-0000	-			TRANSISTOR PACKAGE L	

Pos	Part No	SP	UN	Qty	Description	Page No

This page is intentionally left blank.

ECM: - -
Group number: 67574-0401
Assembly Drawing:

Pos	Part No	SP	UN	Qty	Description	Page No
-						
100	565134-0001	-			COMPONENTS WITHOUT TP-NO	
110	532716-0000	-			OUTPUT TRANSFORMER	

Pos	Part No	SP	UN	Qty	Description	Page No

This page is intentionally left blank.

ECM: - -
Group number: 67578-0101
Assembly Drawing:

Pos	Part No	SP	UN	Qty	Description	Page No
-						
202	565136-0001	-			COMPONENTS WITHOUT TP-NO	
203	543120-0000	-			PARTITION WALL	
204	533839-0000	-			FILTER	
205	533840-0000	-			GASKET	
206	533841-0000	-			TäTNING	
207	533842-0000	-			MOUNTING DRAWING	
208	533838-0000	-			RIVET	
209	543119-0000	-			PARTITION WALL	
F201	A67575-0101	-			TPIH INTERNAL TRANSFORMER	**10-225**

Pos	Part No	SP	UN	Qty	Description	Page No

Machine Type | Group Description | Used-In | Group Number | Page No

This page is intentionally left blank.

ECM: - -
Group number: 67575-0101
Assembly Drawing:

Pos	Part No	SP	UN	Qty	Description	Page No
-						
210	565141-0001	-			COMPONENTS WITHOUT TP-NO	
220	551827-0000	-			TRANSFORMER	

Pos	Part No	SP	UN	Qty	Description	Page No

This page is intentionally left blank.

ECM: - -
Group number: 67579-0501
Assembly Drawing:

Pos	Part No	SP	UN	Qty	Description	Page No
-						
110	573136-0001	-			COMPONENTS WITHOUT TP-NO	
120	551219-0000	-			CIRCUIT DIAGRAM	
F301	A67576-0101	-			TPIHTRANSFORMER CONT.CARD	**10-229**

Pos	Part No	SP	UN	Qty	Description	Page No

This page is intentionally left blank.

ECM: - -
Group number: 67576-0101
Assembly Drawing:

Pos	Part No	SP	UN	Qty	Description	Page No
-						
302	565137-0001	-			COMPONENTS WITHOUT TP-NO	
303	532717-0000	-			TRANSFORMER CONTROL CARD	

Pos	Part No	SP	UN	Qty	Description	Page No

This page is intentionally left blank.

ECM: - -
Group number: 67580-0201
Assembly Drawing:

Pos	Part No	SP	UN	Qty	Description	Page No
-						
401	565138-0001	-			COMPONENTS WITHOUT TP-NO	
402	543118-0000	-			FRONT PANEL MOUNTING DWG	
403	553857-0000	-			COAXIAL CABLE	
406	565143-0000	-			PANEL	
407	543117-0000	-			PANEL	

Pos	Part No	SP	UN	Qty	Description	Page No

This page is intentionally left blank.

ECM: 116868 - 20020930
Group number: 2570110-0100
Assembly Drawing:

Pos	Part No	SP	UN	Qty	Description	Page No
TBA/8-110V						
0030	A2570113-0100	-		1	PLMS FOR TBA/8-110V	**10-235**

Pos	Part No	SP	UN	Qty	Description	Page No

Machine Type | Group Description | Used-In | Group Number | Page No

This page is intentionally left blank.

ECM: 116871 - 20020930
Group number: 2570113-0100
Assembly Drawing:

Pos	Part No	SP	UN	Qty	Description	Page No
-						
000	1531059-0101	-		1	DOCUMENT FOLDER	
010	A1498724-0100	-		1	RK-CONNECTION BOX	**10-237**
020	A1478502-0100	-		2	PACK COUNTER	**10-239**
030	A1478503-0100	-		2	CONNECTION BOX	**10-241**
040	A559402-0200	-		1	EL RK"PLMS" FOR TBA/8-1100,TBA/8LSC-020V	**10-243**
050	A1254471-0402	-		1	PLMS OFF-LINE	**10-267**
060	A1478663-0100	-		1	PHOTOCELL UNIT	**10-269**
070	A559405-0100	-		1	EL. RK "LINE SUPERVISION"	**10-271**
080	A559408-0200	-		1	EL RK "SERIAL COMMUNICATION"	**10-275**

Pos	Part No	SP	UN	Qty	Description	Page No

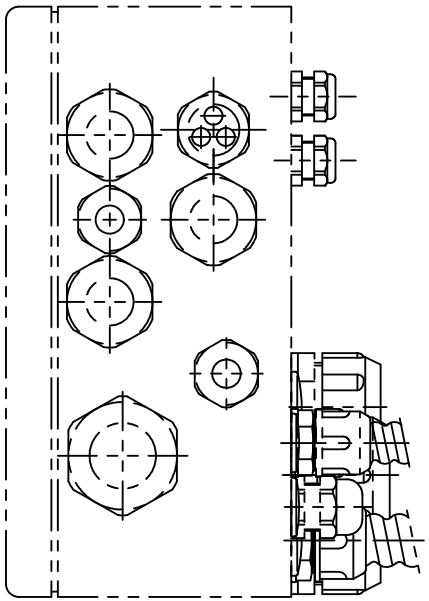

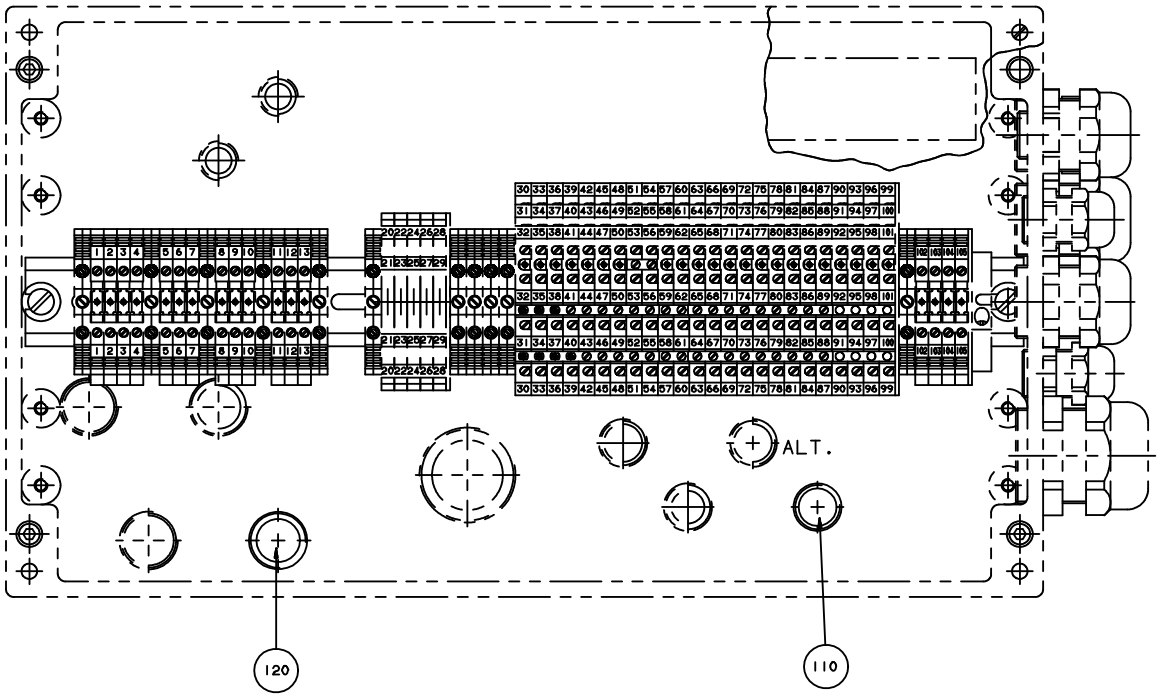
ALT.
120
110

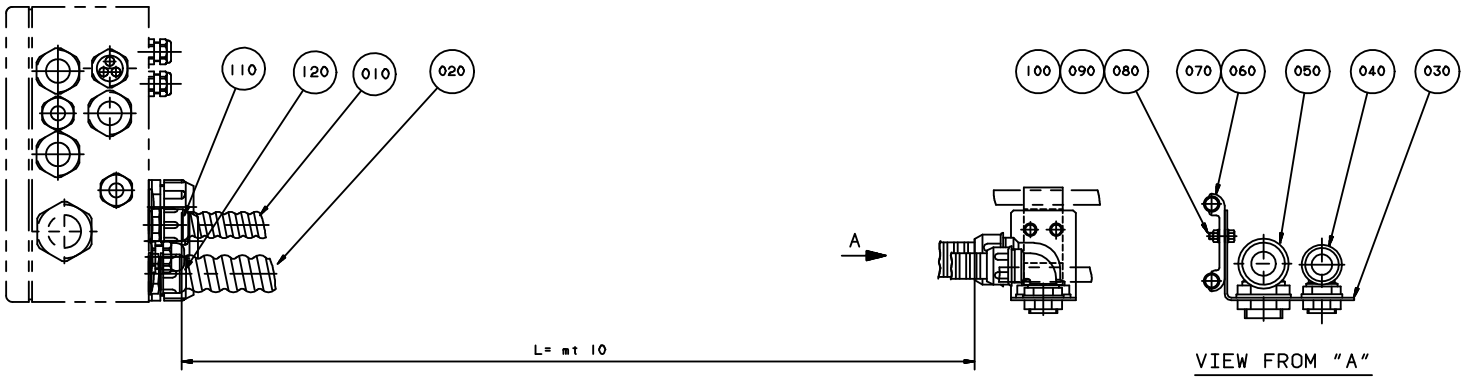
110
120
010
020
A
L= mt 10
100
090
080
070
060
050
040
030
VIEW FROM "A"

ECM: 72741 - 19990713
Group number: 1498724-0100
Assembly Drawing: 1498724-1_1_AA

Pos	Part No	SP	UN	Qty	Description	Page No
-						
010	352135-0106	-	M	10	SPIRAL CONDUIT DI=16 MM	
020	352135-0109	-	M	10	HOSE .022	
030	1478660-0000	-		1	BRACKET	
040	352137-0129	-		1	CABLE GLAND;PR22,5(PG16)	
050	352137-0142	-		1	GLAND FITTING	
060	1020637-0000	-		1	HOLDER	
070	1020638-0000	-		1	HOLDER	
080	312105-0329	-		2	SCREW M6S ISO 4017 M5X16 A480	
090	312605-0314	-		2	HEXAGON NUT, M6M M5 A280	
100	315105-0146	-		4	BRICKA BRB5,3X10RFR	
110	352136-0127	-		1	GLAND FITTING PR 18,6	
120	352136-0142	-		1	GLAND FITTING	

Pos	Part No	SP	UN	Qty	Description	Page No

Machine Type | Group Description | Used-In | Group Number | Page No

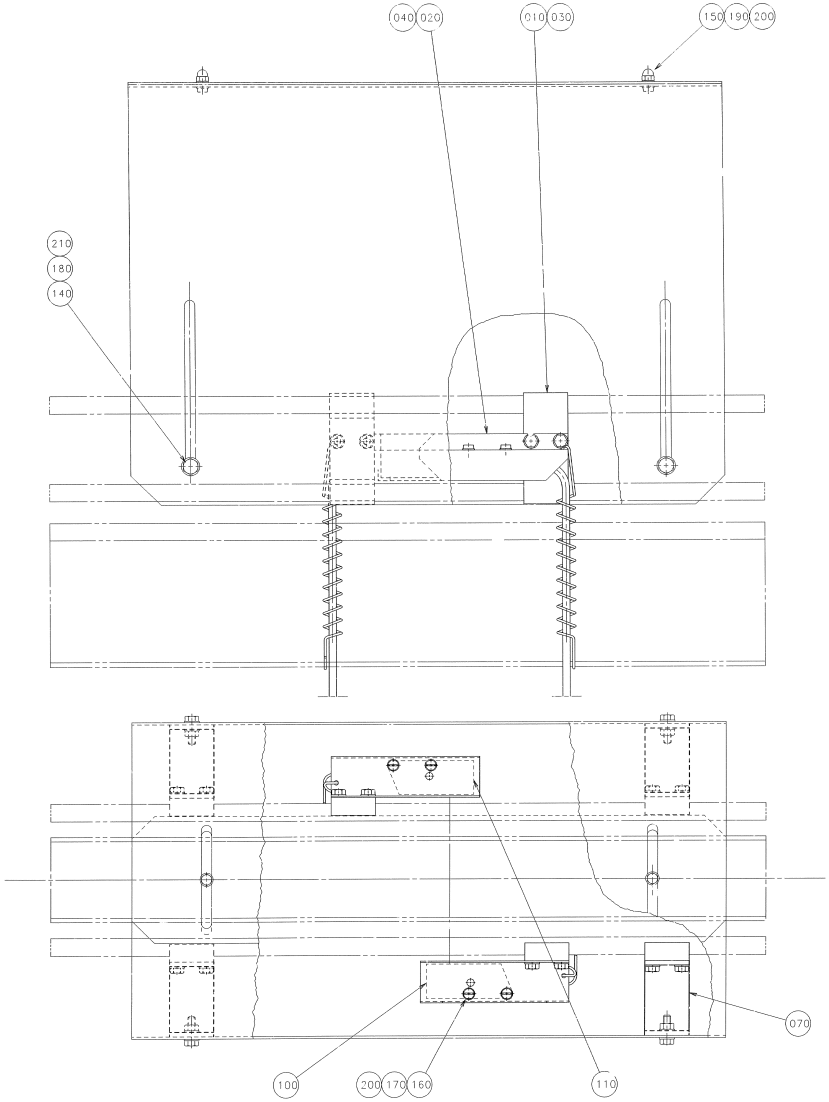
040
020
010
030
150
190
200
210
180
140
070
100
200
170
160
110

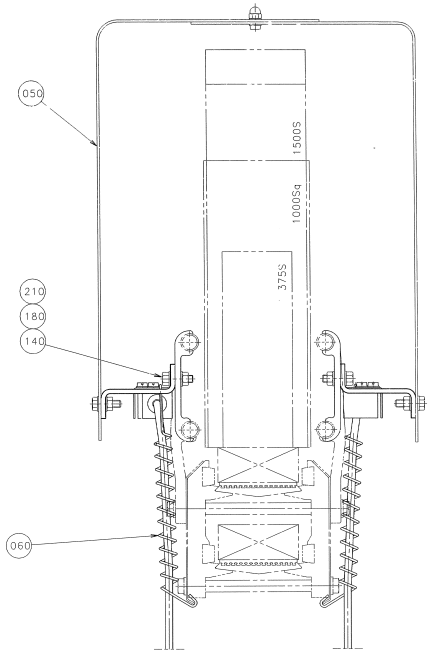
050
1500S
1000Sq
375S
210
180
140
060

ECM: 72949 - 19991006
Group number: 1478502-0100
Assembly Drawing: 1478502-1_1_AA

Pos	Part No	SP	UN	Qty	Description	Page No
-						
010	1020637-0000	-		6	HOLDER	
020	1086889-0000	-		2	COVER	
030	1020638-0000	-		6	HOLDER	
040	1086888-0000	-		2	COVER	
050	1349566-0000	-		2	COVER	
060	532412-0000	-		2	SPRING	
070	1478659-0000	-		4	BRACKET	
100	90232-0103	-		1	PH.CELL E3S-CT61-L-5M	
110	90232-0104	-		1	PH.CELL E3S-CT61-D-5M	
140	312105-0329	-		12	SCREW M6S ISO 4017 M5X16 A480	
150	312105-0362	-		2	SCREW M6S ISO 4017 M6X8 A480	
155	312105-0368	-		4	SCREW M6S M6X16 A280	
160	312125-0293	-		4	SCREW ISO 1207 M4X16 A4	
170	312605-0312	-		4	HEXAGON NUT, M6M M4 A280	
180	312605-0314	-		16	HEXAGON NUT, M6M M5 A280	
190	312705-0316	-		2	NUT HEX. DOMED CAP MHM-6 M6 A280	
200	315105-0136	-		8	WASHER BRB4,3XRFR	
210	315105-0146	-		32	BRICKA BRB5,3X10RFR	
220	315105-0153	-		12	WASHER BRB6,4X12RFR	

Pos	Part No	SP	UN	Qty	Description	Page No

Machine Type | Group Description | Used-In | Group Number | Page No

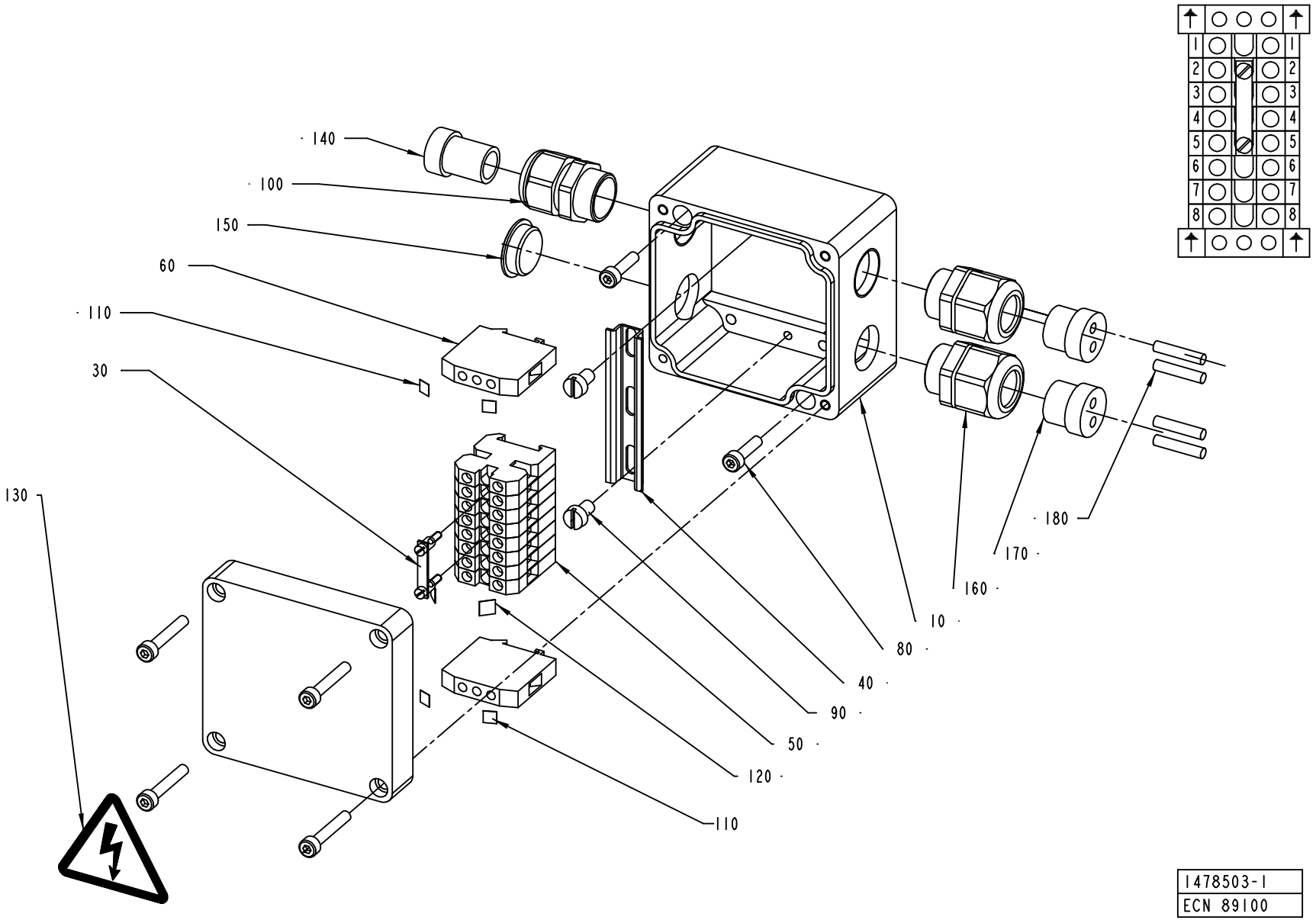

1478503-1
ECN 89100

ECM: 89266 - 20010226
Group number: 1478503-0100
Assembly Drawing: 1478503-1_1_AB

Pos	Part No	SP	UN	Qty	Description	Page No
TBA/8						
010	1349568-0000	-		1	CONNECTION BOX	
030	90077-0318	-		1	BRIDGE CONNECTOR	
040	90077-0328	-	MM	65	RAIL TS15/5	
050	90077-0079	-		8	FEED THROUGH TERMINAL, 02943.6	
060	90135-0026	-		2	EARTH TERMINAL, 3802.6	
080	312115-0293	-		2	SCREW ISO4762 M4X16 A4	
090	312125-0323	-		2	SCREW ISO 1207 M5X8 A4	
100	353240-0002	-		1	NORMAL WITHOUT INSERT, PG 11	
110	359011-0819	-		4	MARKING PLATES 5-GW (EARTH)	
120	359011-0821	-		2	SET OF SIGNS 6-FW 1-50	
130	359705-0015	-		1	WARNING SIGN ISO, RISK OF ELECTRIC SHOCK	
140	353249-0003	-		1	INSERT, SINGEL HOLE, E151/11	
150	90002-0009	-		1	BLANK-OFF PLUG, PR 18.6 SKINDICHT-BLK11	
160	353241-0002	-		2	EXTENDED WITHOUT INSERT, PG 11	
170	353249-0036	-		2	INSERT, MULTI HOLE, EK152 M 2X4	
180	353249-0301	-		4	SEALING PIN, 4X20	
190	351172-0102	-	MM	50	CABLE AWM 1X 0,75 MM2 DARK-BLUE	
200	353001-0113	-		2	END SLEEVE 0,75MM2	
210	359000-0201	-		1	MARKING CO02/3"1"	
220	359000-0204	-		1	MARKING CO02/3"4"	

Pos	Part No	SP	UN	Qty	Description	Page No

This page is intentionally left blank.

ECM: 119134 - 20020930
Group number: 559402-0200
Assembly Drawing:

Pos	Part No	SP	UN	Qty	Description	Page No
-						
0010	A559403-0200	-		1	ELECTRICAL DOCUMENT	
0020	A559404-0200	-		1	ELECTRICAL MATERIAL	**10-245**

Pos	Part No	SP	UN	Qty	Description	Page No

Machine Type | Group Description | Used-In | Group Number | Page No

This page is intentionally left blank.

ECM: 119136 - 20020930
Group number: 559404-0200
Assembly Drawing:

Pos	Part No	SP	UN	Qty	Description	Page No
-						
A452	A1363288-0301	B		1	FLEXBOX TETRA BRIK	**10-247**
A452:1	A1363292-0501	-		1	PLMS COMMON SOFTWARE	**10-251**
A452:2	A1362582-0500	-		1	SOFTWARE PLMS TBA/8 GEF	**10-261**
A452:5	90456-0003	-		1	INTOUCH OEM 256 V.5.6B/6.0B HW KEY	
P.A451	A1349775-0101	B		1	DISPLAY UNIT 8,4"	**10-263**
W936	351150-0405	-	M	200	CABLE OLFLEX 5X0,75 MM2 LIGHT/GREY	
W941	351150-0405	-	M	10	CABLE OLFLEX 5X0,75 MM2 LIGHT/GREY	

Pos	Part No	SP	UN	Qty	Description	Page No

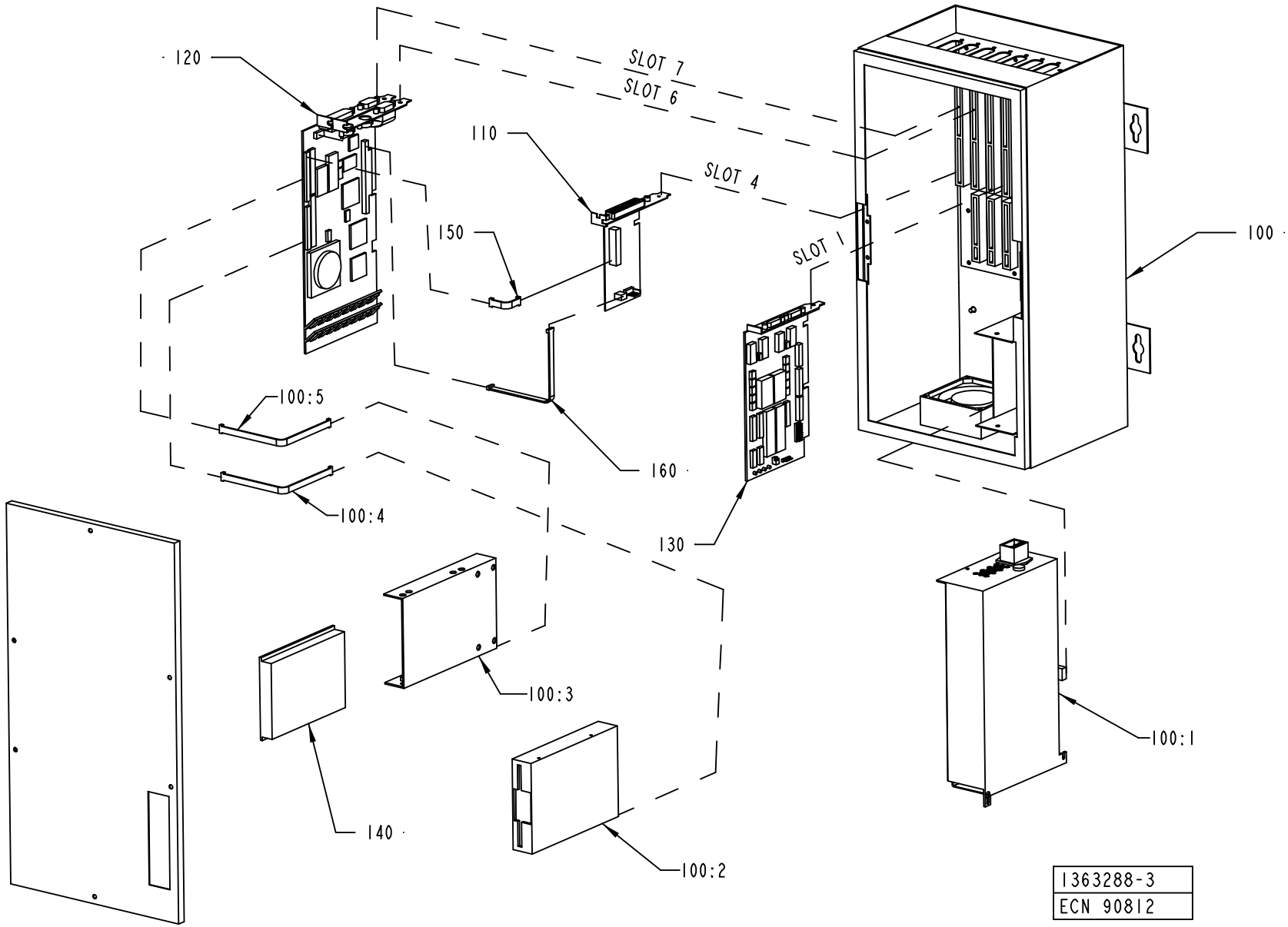
120
SLOT 7
SLOT 6
110
SLOT 4
150
SLOT 1
100
100:5
160
100:4
130
100:3
140
100:2
100:1
1363288-3
ECN 90812

ECM: 114457 - 20020828
Group number: 1363288-0301
Assembly Drawing: 1363288-3_1_AB

Pos	Part No	SP	UN	Qty	Description	Page No
-						
	1367184-0_1_AA.hpgl	-		1	JUMPER SETTINGS CPU	
100	A90041-0092	A		1	FLEX BOX INNOSCAN E100006A	**10-249**
110	90041-0083	A		1	HOST COMM. LINK BOARD LVDS, E000013A-02	
120	90458-0259	A		1	PROCESSOR BOARD PMMX E000032B	
130	90041-0087	A		1	SERIAL CARD 2 CHANNEL RS486/422 BOARD	
140	90041-0090	A		1	HARD DISC 2,5" , U036403A	
150	90041-0080	A		1	CABLE, CPU-LVDSCARD+DISPLAY-LVDSCARD	
160	90041-0086	A		1	CABLE, COM 2, 2223-0012-015	

Pos	Part No	SP	UN	Qty	Description	Page No

This page is intentionally left blank.

ECM: 91592 - 20010710
Group number: 90041-0092
Assembly Drawing:

Pos	Part No	SP	UN	Qty	Description	Page No
-						
	90458-0266	A		1	POWER SUPPLY UNIT, U036407A	
	90264-0064	A		1	FAN / FL 12G308	
	90041-0091	A		1	PC 2,5" HD BAY, 3016-0028-013	
	90041-0029	A		1	FLOPPY DISC UNIT FD-235HF 1,4MB	
	90041-0027	A		1	BACK PLANE CARD 7-SLOT, 2120-0037-015	

Pos	Part No	SP	UN	Qty	Description	Page No

This page is intentionally left blank.

ECM: 104734 - 20020211
Group number: 1363292-0501
Assembly Drawing:

Pos	Part No	SP	UN	Qty	Description	Page No
-						
0010	A47932-0601	-		1	PLMS BASIC PROGRAM	**10-253**
0020	A48621-0501	-		1	PLMS DDE	**10-255**
0030	A47962-0401	-		1	PLMS DOS WINDOWS	**10-257**
0040	A47936-0201	-		1	PLMS INTOUCH RUNTIME PROGRAM	**10-259**

Pos	Part No	SP	UN	Qty	Description	Page No

This page is intentionally left blank.

ECM: 103882 - 20020226
Group number: 47932-0601
Assembly Drawing:

Pos	Part No	SP	UN	Qty	Description	Page No
-						
0020	58283-0000	-		1	DOCUMENTATION DISKETT	
0030	1363455-0000	-		1	LABELS DISKETT	
0040	1363456-0000	-		1	LABELS FLEXBOX	
0050	58282-0000	-		1	SHORT FORM INSTRUCTION	
0060	58280-0000	-		1	MASTER DISKETT	

Pos	Part No	SP	UN	Qty	Description	Page No

This page is intentionally left blank.

ECM: 104733 - 20020211
Group number: 48621-0501
Assembly Drawing:

Pos	Part No	SP	UN	Qty	Description	Page No
-						
0020	2536014-0000	-		1	DOCUMENTATION DISKETTE	
0030	2536015-0000	-		1	LABEL DISKETTE	
0040	2536016-0000	-		1	LABEL FLEXBOX	
0050	2536013-0000	-		1	SHORT FORM INSTRUCTION	
0060	2536011-0000	-		1	MASTER DISKETTE	

Pos	Part No	SP	UN	Qty	Description	Page No

This page is intentionally left blank.

ECM: 103883 - 20020226
Group number: 47962-0401
Assembly Drawing:

Pos	Part No	SP	UN	Qty	Description	Page No
-						
0020	58291-0000	-		1	DOCUMENTATION DISKETT	
0030	1363460-0000	-		1	LABELS FLEXBOX	
0040	58290-0000	-		1	SHORT FORM INSTRUCTION	

Pos	Part No	SP	UN	Qty	Description	Page No

This page is intentionally left blank.

ECM: 103884 - 20020226
Group number: 47936-0201
Assembly Drawing:

Pos	Part No	SP	UN	Qty	Description	Page No
-						
0020	57587-0000	-		1	DOCUMENTATION DISKETT	
0030	597779-0000	-		1	LABELS FLEXBOX	
0040	57588-0000	-		1	SHORT FORM INSTRUCTION	

Pos	Part No	SP	UN	Qty	Description	Page No

This page is intentionally left blank.

ECM: 121800 - 20020930
Group number: 1362582-0500
Assembly Drawing:

Pos	Part No	SP	UN	Qty	Description	Page No
-						
0010	48629-0501	-		1	"TPOPHMI8G, TPOP HMI SYSTEM" TBA/8 GEF	
0020	48630-0501	-		1	"PLMS DDE CONFIG. SYSTEM" TBA/8 GEF	

Pos	Part No	SP	UN	Qty	Description	Page No

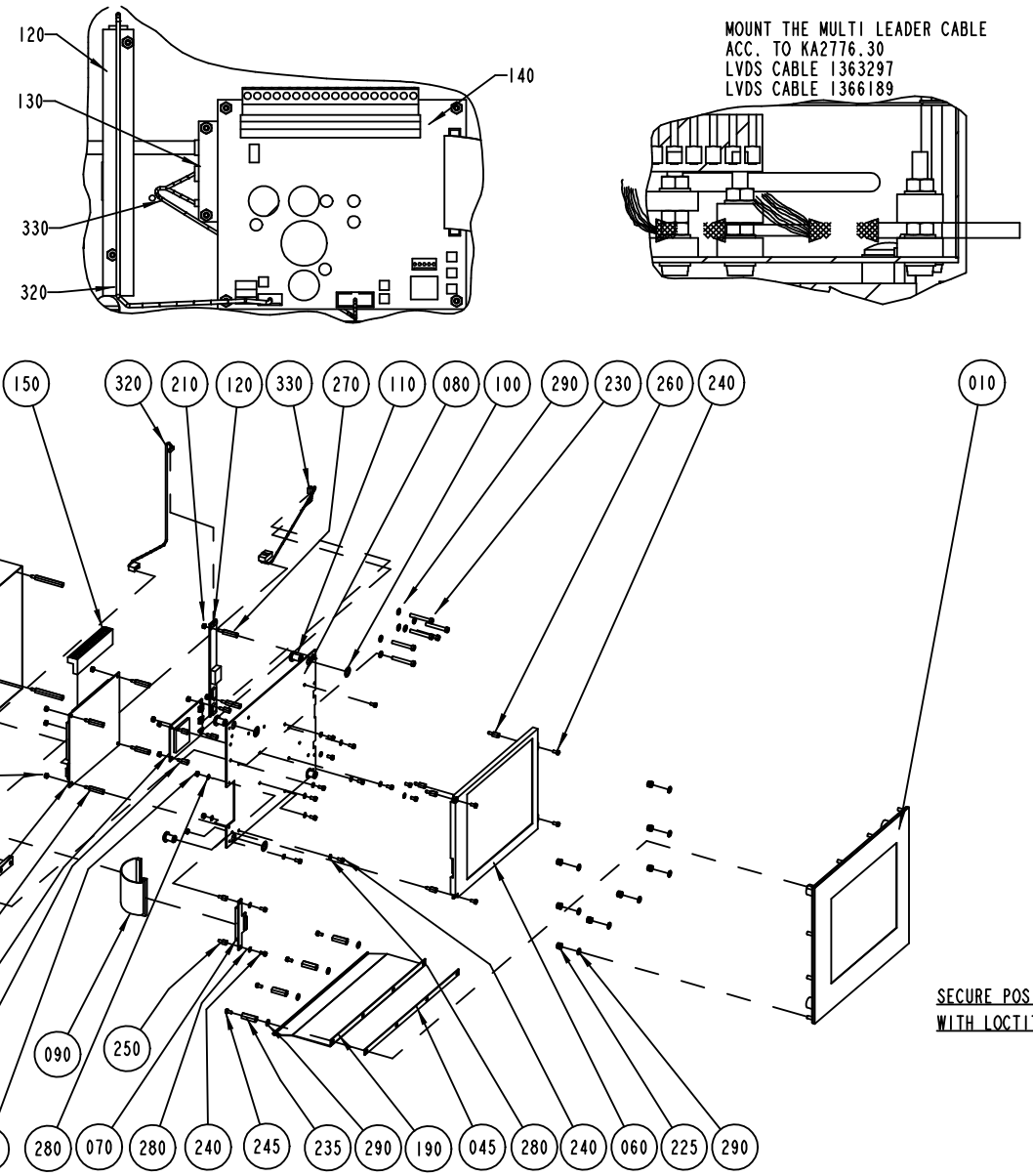
120
130
140
330
320
MOUNT THE MULTI LEADER CABLE
ACC. TO KA2776.30
LVDS CABLE 1363297
LVDS CABLE 1366189
340
160
150
320
210
120
330
270
110
080
100
290
230
260
240
010
280
210
310
210
220
290
170
220
290
180
140
300
130
260
210
280
070
280
240
245
235
290
190
045
280
240
060
225
290
090
250
SECURE POS. No. 245 TO POS. No 235
WITH LOCTITE (PERMANENT)
1349775-1
ECM 109651

ECM: 158114 - 20040128
Group number: 1349775-0101
Assembly Drawing: 1349775-1_1_AE

Pos	Part No	SP	UN	Qty	Description	Page No
-						
010	A1369440-0100	B		1	BEZEL ASSEMBLY 8,4"	**10-265**
045	1367630-0000	-		1	GASKET	
060	90041-0094	6		1	DISPLAY, SHARP 8,4"	
070	90041-0081	6		1	DISPLAY ADAPTER FOR LVDS, 1930-2200-010	
080	1348179-0000	-		1	MOUNTING PLATE	
090	90041-0080	6		1	CABLE, CPU-LVDSCARD+DISPLAY-LVDSCARD	
100	495765-0000	-		4	WASHER	
110	495722-0000	-		4	SCREW BUSHING	
120	90041-0098	6		1	ADAPTER BACKLIGHT, CXA-0214	
130	90041-0097	6		1	CONTROLLER, E271-2210	
140	90041-0078	6		1	REMOTE COMMUNIKATION LINK BOARD,E000014B	
150	1129570-0000	B		1	LDS, LVDS TERMINAL 1	
160	1348705-0000	-		1	COVER	
170	90220-0302	-		1	CLAMP FOR SCR.CABLE, 16MM, 55-016-89	
180	90220-0304	-		5	CLAMP FOR SCR.CABLE, 24MM,	
190	1362133-0000	-		1	PROTECTION PLATE	
210	312605-0310	-		20	HEXAGON NUT, M6M M3 A280	
220	312605-0312	-		14	HEXAGON NUT, M6M M4 A280	
225	312812-0312	-		8	HEXAGON NUT, NY-LOCK M4 A480	
230	312125-0299	-		4	SCREW ISO 1207 M4X30 A4	
235	90457-0949	-		4	SPACER NUT M4/20 NI PL	
240	312125-0220	-		20	SCREW ISO 1207 M3X6 A4	
245	312132-0284	-		4	SCREW SLOT. PAN HEAD MSCS M4X5	
250	90316-0019	-		2	SPACER SCREW DSM M3/5 NI PL	
260	90316-0023	-		8	SPACER NUT DSM M3055X8	
270	90316-0022	-		2	SPACER NUT DSNF M3060X20	
280	90005-0127	-		22	WASHER PL.RND.NYL.3,2/7 H=0,5	
290	315105-0136	-		28	WASHER BRB4,3XRFR	
300	90316-0016	-		4	SPACER NUT DSM M3/20 NI PL	
310	90041-0324	-		4	SPACER NUT, DSM M3050 X 40	
320	90041-0327	6		1	BACKLIGHT INVERTER CABLE, E400000A	
330	90041-0100	6		1	RESITIVE TOUCH CABLE, E400001A	
340	359705-0015	-		1	WARNING SIGN ISO, RISK OF ELECTRIC SHOCK	

Pos	Part No	SP	UN	Qty	Description	Page No

Machine Type | Group Description | Used-In | Group Number | Page No

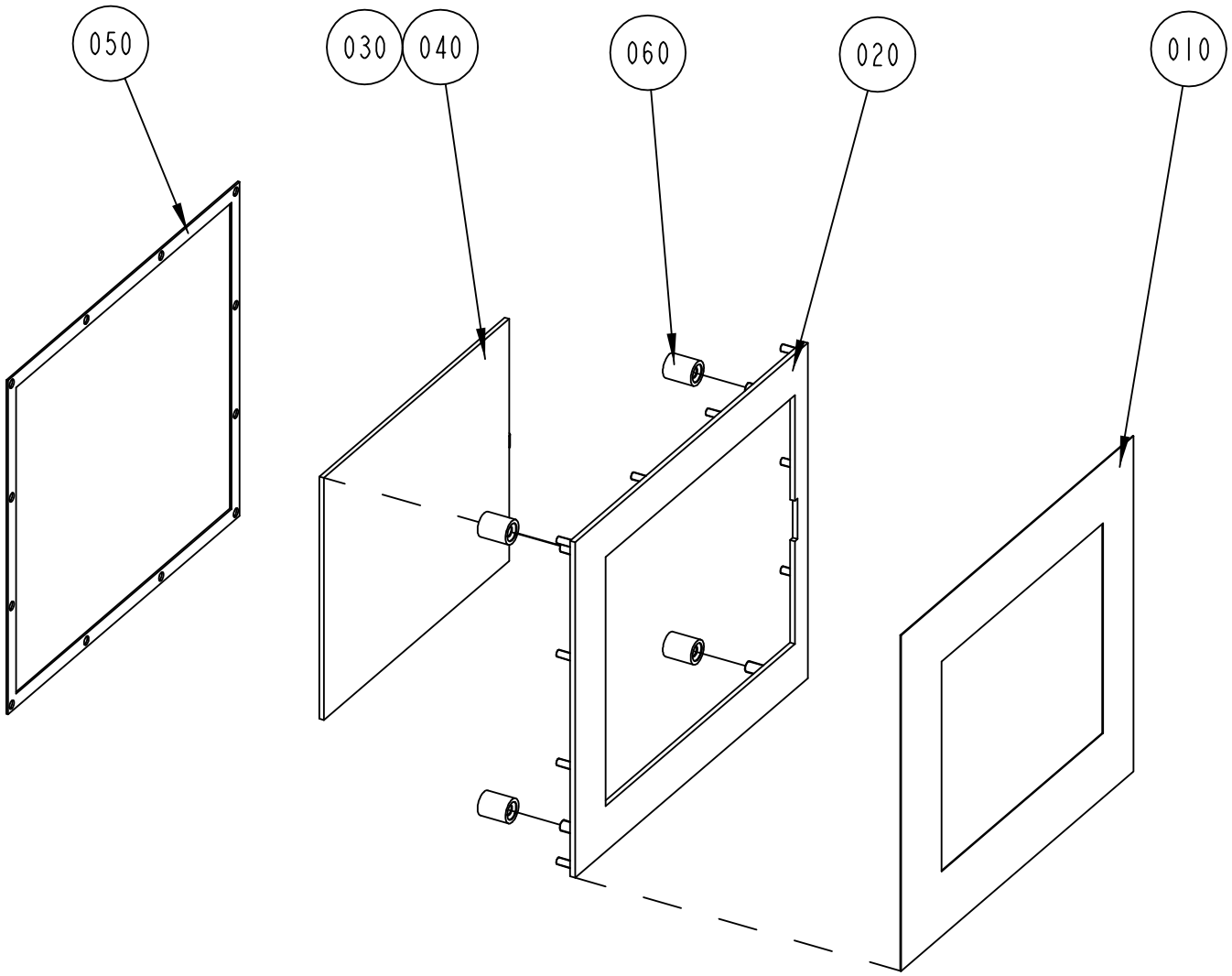

1369440-1
ECM 109651

ECM: 106198 - 20020626
Group number: 1369440-0100
Assembly Drawing: 1369440-1_1_AB

Pos	Part No	SP	UN	Qty	Description	Page No
-						
0010	1349770-0000	-		1	FOIL	
0020	1348178-0000	-		1	FRONT PLATE	
0030	B90041-0096	-		1	FRAME, BEZEL, 8,4" , E274HL-585	
	90153-0060	*-*		*1*	*ADHESIVE, 3M DP-190 B/A*	
0050	1348175-0000	-		1	GASKET	
0060	598116-0000	-		1	SPACER	

Pos	Part No	SP	UN	Qty	Description	Page No

Machine Type | Group Description | Used-In | Group Number | Page No

This page is intentionally left blank.

ECM: 116692 - 20021016
Group number: 1254471-0402
Assembly Drawing:

Pos	Part No	SP	UN	Qty	Description	Page No
-						
0010	47937-0402	-		1	PLMS OFF-LINE PROGRAM	
0020	82351-0105	-		1	USER MANUAL PLMS OFF-LINE	

Pos	Part No	SP	UN	Qty	Description	Page No

Machine Type | Group Description | Used-In | Group Number | Page No

This page is intentionally left blank.

ECM: 71808 - 19990326
Group number: 1478663-0100
Assembly Drawing:

Pos	Part No	SP	UN	Qty	Description	Page No
-						
	534362-0502	-		1	QUEUE GUARD,SINGLE	
010	1020638-0000	-		2	HOLDER	
020	1086888-0000	-		2	COVER	

Pos	Part No	SP	UN	Qty	Description	Page No

This page is intentionally left blank.

ECM: 72318 - 19991210
Group number: 559405-0100
Assembly Drawing:

Pos	Part No	SP	UN	Qty	Description	Page No
-						
0010	A559406-0100	-		1	ELECTRICAL DOCUMENT	
0020	A559407-0100	-		1	ELECTRIC MATERIALS	**10-273**

Pos	Part No	SP	UN	Qty	Description	Page No

Machine Type | Group Description | Used-In | Group Number | Page No

This page is intentionally left blank.

ECM: 72318 - 19991210
Group number: 559407-0100
Assembly Drawing:

Pos	Part No	SP	UN	Qty	Description	Page No
-						
0010	90194-0302	-		1	MARKING LABELS REBUILDING KIT	
M.X452	90110-0518	-		5	PLINTH 15 PIN	
M.X452.1	90110-0383	-		5	CONTACT COVER 15 PIN	
W932	90220-0091	-	M	200	PAIR TWISTED CABLE 2X2X0,25MM2	

Pos	Part No	SP	UN	Qty	Description	Page No

Machine Type | Group Description | Used-In | Group Number | Page No

This page is intentionally left blank.

ECM: 119140 - 20020930
Group number: 559408-0200
Assembly Drawing:

Pos	Part No	SP	UN	Qty	Description	Page No
-						
0010	A559409-0200	-		1	ELECTRICAL DOCUMENT	
0020	A559410-0200	-		1	ELECTRICAL MATERIAL	**10-277**

Pos	Part No	SP	UN	Qty	Description	Page No

Machine Type | Group Description | Used-In | Group Number | Page No

This page is intentionally left blank.

ECM: 119142 - 20020930
Group number: 559410-0200
Assembly Drawing:

Pos	Part No	SP	UN	Qty	Description	Page No
-						
0100	90194-0302	-		1	MARKING LABELS REBUILDING KIT	
0110	82197-0104	-		1	USER MANUAL	
A453	90453-0002	D		1	MODEM MD-12 DC	
A453.1	A1190006-0401	-		1	PLMS SEND	**10-279**
M.A454	90453-0001	D		1	MODEM MA-12	
M.A454.1	A1190007-0401	-		1	PLMS RECEIVE	**10-281**
W934	90220-0091	-	M	200	PAIR TWISTED CABLE 2X2X0,25MM2	
W943	90041-0068	-		1	DATACABLE MODEM PC	

Pos	Part No	SP	UN	Qty	Description	Page No

This page is intentionally left blank.

ECM: 116639 - 20021015
Group number: 1190006-0401
Assembly Drawing:

Pos	Part No	SP	UN	Qty	Description	Page No
-						
0020	2547106-0000	-		1	DOCUMENTATION DISKETTE	
0030	2547107-0000	-		1	LABEL DISKETTE	
0040	2547108-0000	-		1	LABEL FLEXBOX	
0050	2547109-0000	-		1	SHORT FORM INSTRUCTION	
0060	2547110-0000	-		1	MASTER DISKETTE	

Pos	Part No	SP	UN	Qty	Description	Page No

This page is intentionally left blank.

ECM: 116640 - 20021015
Group number: 1190007-0401
Assembly Drawing:

Pos	Part No	SP	UN	Qty	Description	Page No
-						
0020	2547112-0000	-		1	DOCUMENTATION DISKETTE	
0030	2547113-0000	-		1	LABEL DISKETTE	
0040	2547114-0000	-		1	SHORT FORM INSTRUCTION	
0050	2547115-0000	-		1	MASTER DISKETTE	

Pos	Part No	SP	UN	Qty	Description	Page No

HEADSPACE BY LOW LEVEL FILLING HL

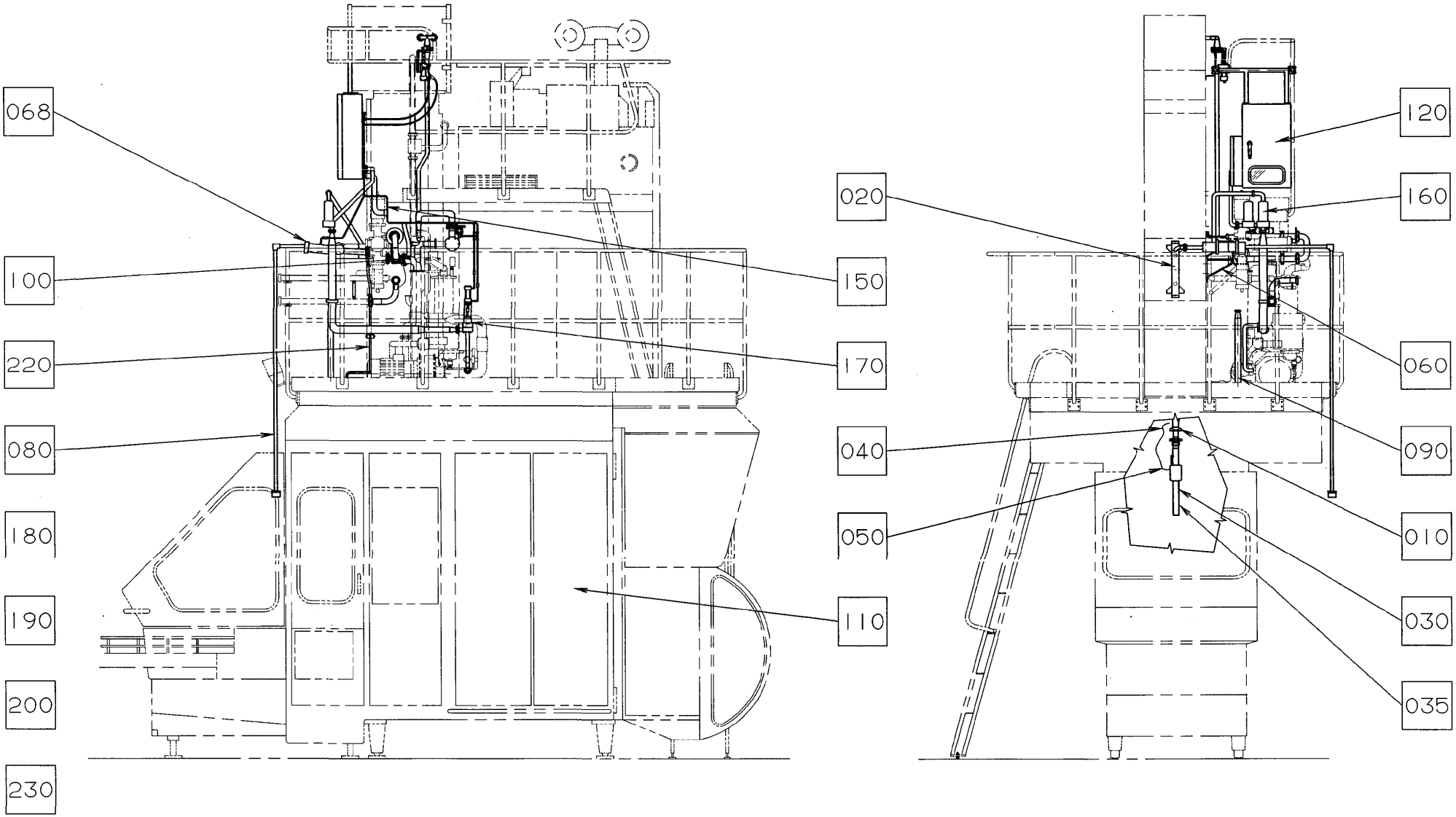

ECM: 73195 - 19991210
Group number: 926973-0200
Assembly Drawing: 926973-1_1_AA

Pos	Part No	SP	UN	Qty	Description	Page No
-						
	A1350111-0200	-		1	OPTIONAL EQUIPMENT	**10-285**
010	A529645-0100	-		1	UPPER FILLING TUBE	**10-329, 10-331**
020	A490309-0100	-		1	HOLDER	**10-335**
030	A529638-0200	-		1	LOWER FILLING PIPE LLF	**10-337, 10-339**
035	A1512503-0100	-		1	LOWER FILLING TUBE FFP	**10-341**
040	A927281-0100	-		1	TUBE L.S. COOLING	**10-343, 10-345**
050	A927364-0100	-		1	READING DEVICE	**10-347**
060	A924300-0100	-		1	VALVE HOLDER	**10-349**
068	A925100-0100	-		1	ASSEM. OF CFV AND MAN.DV	**10-351**
080	A736590-0100	-		1	C.F.V. CONTROL DEVICE	**10-357**
090	A924304-0100	-		1	PARALLEL CLEANING CIRCUIT	**10-359, 10-361**
100	A925576-0200	-		1	STERILE AIR SYSTEM	**10-363**
110	A927282-0100	-		1	PNEUMATIC COMPONENTS	**10-365**
120	A927245-0100	-		1	ASSEM.OF C.AND P.BOXES	**10-367**
150	A927293-0100	-		1	PNEUMATIC	**10-375**
160	A554600-0100	-		1	PIPE	**10-377**
170	A927294-0100	-		1	AIR VALVE	**10-383**
180	A924951-0100	-		1	START-UP KIT	**10-385**
190	A927312-0100	-		1	ASSEMBLING TOOL	**10-387**
200	A559266-0100	-		1	LOW LEVEL FILLING HL	**10-389**
220	A925000-0100	-		1	DISCHARGE CIRCUIT	**10-393**
230	A927295-0200	-		1	REGULAR ACCESSORIES	**10-395**

Pos	Part No	SP	UN	Qty	Description	Page No

Machine Type | Group Description | Used-In | Group Number | Page No

This page is intentionally left blank.

ECM: 71687 - 19990526
Group number: 1350111-0200
Assembly Drawing:

Pos	Part No	SP	UN	Qty	Description	Page No
FLOWCONTROL						
	A927297-0200	-		1	FLOW CONTROL OF HL	**10-287**

Pos	Part No	SP	UN	Qty	Description	Page No

Machine Type | Group Description | Used-In | Group Number | Page No

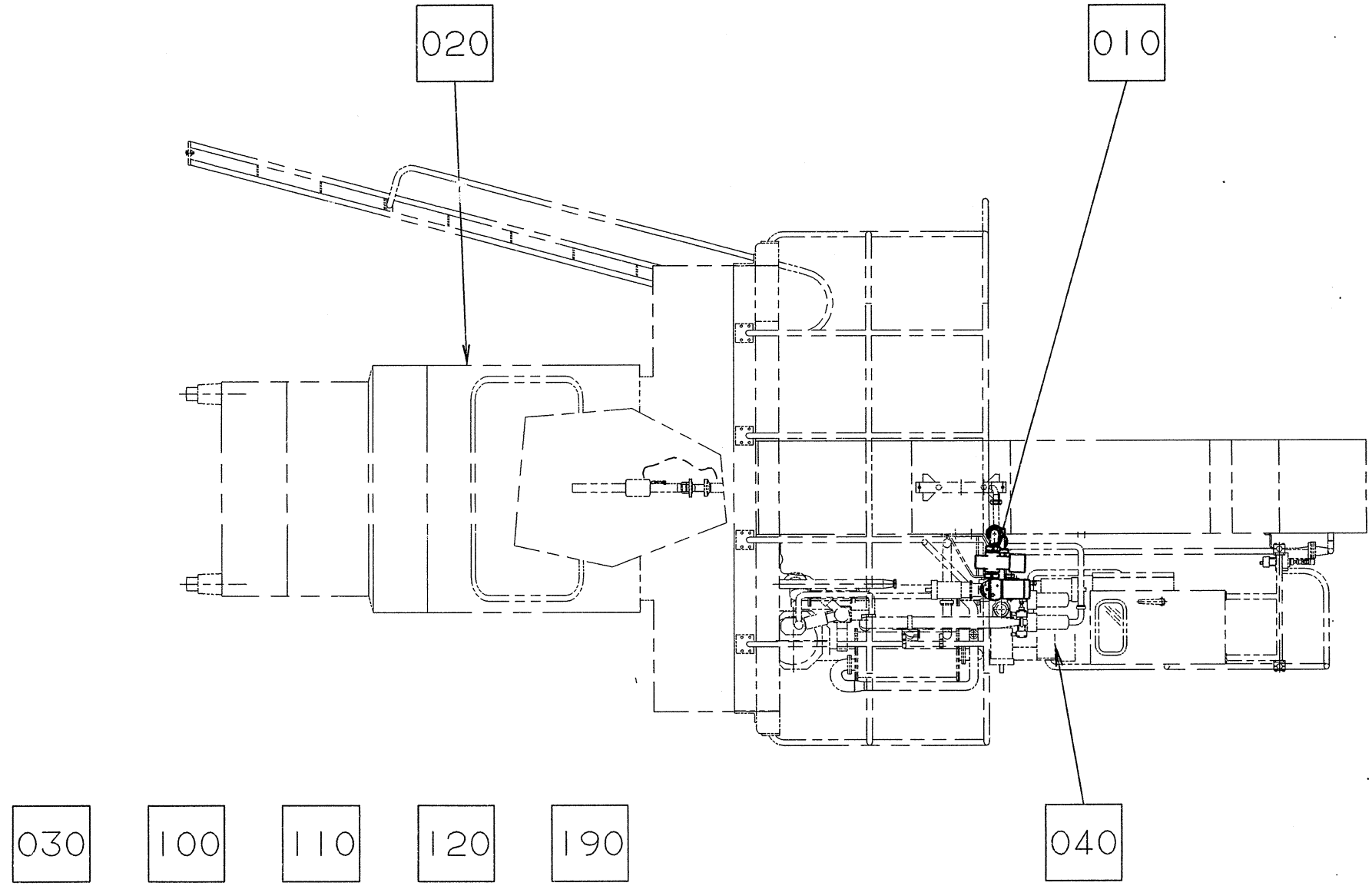
020
010
030
100
110
120
190
040

ECM: 71687 - 19990526
Group number: 927297-0200
Assembly Drawing: 927297-1_1_AA

Pos	Part No	SP	UN	Qty	Description	Page No
-						
	924865-1	-		1	MODIFICATION DRAWING	
	927301-1	-		1	MODIFICATION DRAWING	
	927378-1	-		1	MODIFICATION DRAWING	
	1346893-1	-		1	MODIFICATION DRAWING	
010	A927313-0100	-		1	MOT.D.V. WITH FLOWMETER	**10-289**
020	A924704-0100	-		1	THUMBWHEEL HOLDER	**10-291**
030	A925570-0100	-		1	ELECTRIC MATERIALS	**10-293**
040	A927302-0100	-		1	CABLE LEAD-IN	**10-299**
100	A927453-0100	-		1	ASSEMBLY TOOL	**10-301**
110	A924867-0100	-		1	START-UP KIT	**10-303**
120	1361311-0000	-		1	DOCUMENT FOLDER	
190	A559269-0100	-		1	FLOW CONTROL FOR HL	**10-305**

Pos	Part No	SP	UN	Qty	Description	Page No

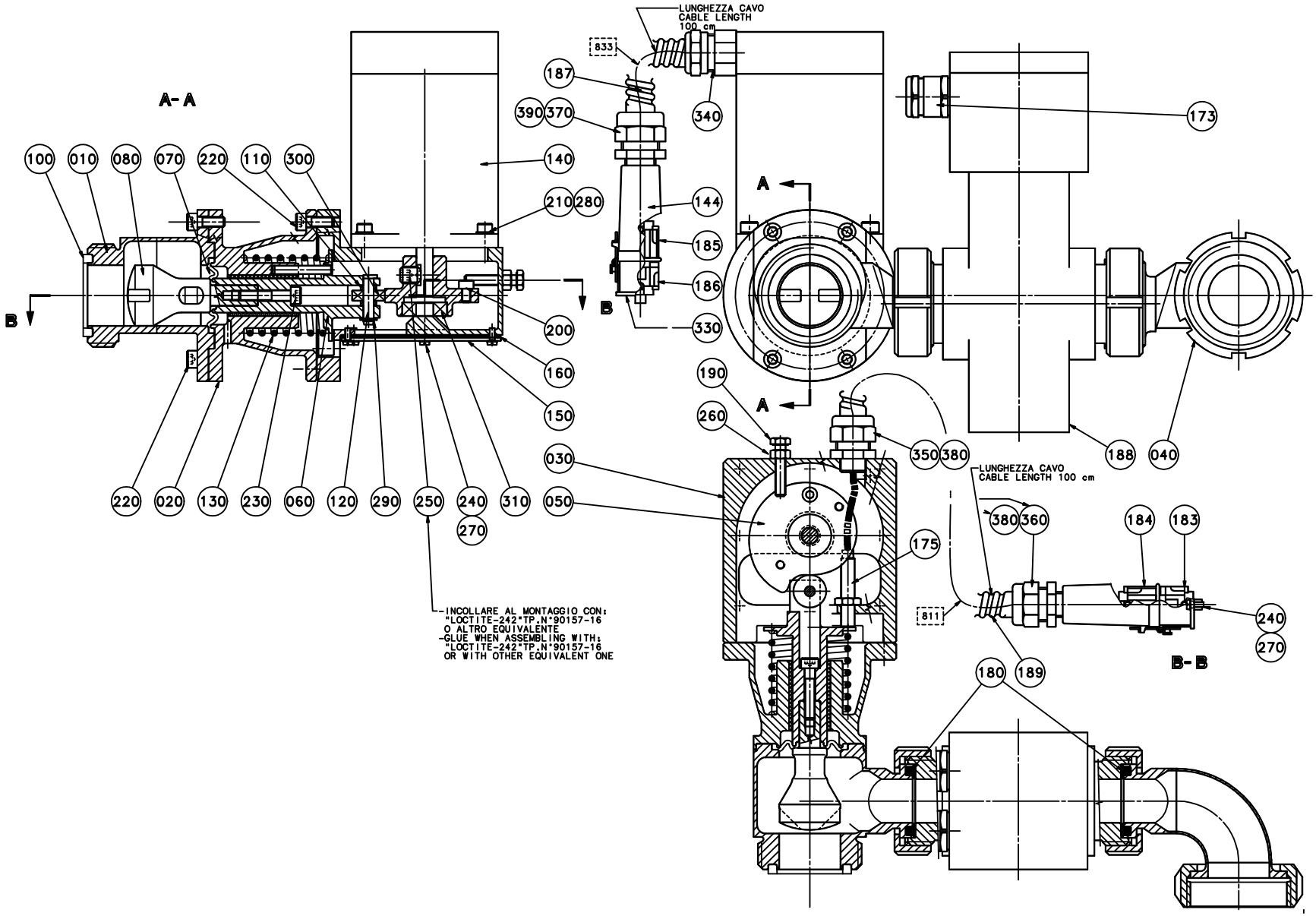
LUNGHEZZA CAVO
CABLE LENGTH
100 cm
833
187
390
370
340
173
A-A
100
010
080
070
220
110
300
140
210
280
144
185
186
330
200
160
150
030
050
190
260
350
380
188
040
220
020
130
230
060
120
290
250
240
310
270
LUNGHEZZA CAVO
CABLE LENGTH 100 cm
380
360
184
183
175
811
240
270
180
189
B-B
INCOLLARE AL MONTAGGIO CON:
"LOCTITE-242"TP.N°90157-16
O ALTRO EQUIVALENTE
-GLUE WHEN ASSEMBLING WITH:
"LOCTITE-242"TP.N°90157-16
OR WITH OTHER EQUIVALENT ONE

ECM: 71414 - 19980415
Group number: 927313-0100
Assembly Drawing: 927313-1_1_AB

Pos	Part No	SP	UN	Qty	Description	Page No
TBA 1000S 50HZ, TBA 1000B 50HZ						
080	924160-0000	-		1	DOSING PISTON	
188	B90243-0223	-		1	PRIMARY FLOW METER, 0-10M/S DN 25MM 50HZ	
	90091-0294	-		*1*	*GASKET 40X30X5 MM*	
TBA 1000S 60HZ, TBA 1000B 60HZ						
080	924160-0000	-		1	DOSING PISTON	
188	B90243-0224	-		1	PRIMARY FLOW METER, 0-10M/S DN 25MM 60HZ	
	90091-0294	-		*1*	*GASKET 40X30X5 MM*	
	90091-0295	-		*1*	*GASKET 46X36X5 MM*	
TBA 0500S 50HZ, TBA 0500B 50HZ, TBA 0355B 50HZ, TBA 0375S 50HZ						
080	924157-0000	-		1	DOSING PISTON	
188	B90243-0223	-		1	PRIMARY FLOW METER, 0-10M/S DN 25MM 50HZ	
	90091-0294	-		*1*	*GASKET 40X30X5 MM*	
TBA 0500S 60HZ, TBA 0500B 60HZ, TBA 0375S 60HZ, TBA 0355B 60HZ						
080	924157-0000	-		1	DOSING PISTON	
188	B90243-0224	-		1	PRIMARY FLOW METER, 0-10M/S DN 25MM 60HZ	
	90091-0294	-		*1*	*GASKET 40X30X5 MM*	
	90091-0295	-		*1*	*GASKET 46X36X5 MM*	
TBA 0750B 50HZ, TBA 0750S 50HZ						
080	924159-0000	-		1	DOSING PISTON	
188	B90243-0223	-		1	PRIMARY FLOW METER, 0-10M/S DN 25MM 50HZ	
	90091-0294	-		*1*	*GASKET 40X30X5 MM*	
TBA 0750B 60HZ, TBA 0750S 60HZ						
080	924159-0000	-		1	DOSING PISTON	
188	B90243-0224	-		1	PRIMARY FLOW METER, 0-10M/S DN 25MM 60HZ	
	90091-0294	-		*1*	*GASKET 40X30X5 MM*	
	90091-0295	-		*1*	*GASKET 46X36X5 MM*	
Common Parts						
010	924365-0000	-		1	DOSING VALVE BODY	
020	924379-0000	-		1	SPRING BODY	
030	926099-0000	-		1	MOTOR HOLDER	
040	924119-0000	-		1	PRODUCT PIPE	
050	924380-0000	-		1	CAM	
060	924381-0000	-		1	SHAFT	
070	736508-0001	-		1	MEMBRANE	
100	12242-0003	-		1	GASKET 48X38X5,5	
110	736619-0000	-		2	WASHER	
120	736624-0000	-		1	SPINDLE	
130	736629-0000	-		1	COMPRESSION SPRING	
140	924664-0000	-		1	MOTOR	
144	90110-0372	-		2	PLUG HOOD	
150	926100-0000	-		1	COVER	
160	926101-0000	-		1	GASKET	
170	90001-0004	-		1	CONNECTOR, MS 3108E-14S-2S	
173	90012-0088	-		2	GLAND, EXTENDED WITH INSERT, PG13,5	
175	90044-0111	-		1	PROX.SW. INSOR M8 IX 020 814	
180	90091-0275	-		2	GASKET 40X26X6 MM	
183	90110-0511	-		1	MALE SCREW CONNECTION	
184	90110-0512	-		1	FEMALE SCREW CONNECTION	
185	90110-0295	-		1	CONNECTOR 4 POLE + EARTH	
186	90110-0296	-		1	CONTACT SCREW	
187	90152-0050	-	M	1	SPIRAL CONDUIT, 20X13, UL 1313	
189	90152-0059	-	M	1	SPIRAL CONDUIT, 18X12, UL 1211	
190	312109-0374	-		1	SCREW M6S ISO 4017 M6X30 A480	
200	312115-0325	-		1	SCREW ISO4762 M5X10 A4	
210	312115-0329	-		4	SCREW ISO4762 M5X16 A4	
220	312115-0368	-		8	SCREW ISO4762 M6X16 A4	
230	312115-0374	-		1	SCREW ISO4762 M6X30 A4	
240	312125-0222	-		12	SCREW ISO 1207 M3X8 A4	
250	312318-0487	-		1	SCREW ISO4029 M10X12 A4	
260	312605-0316	-		1	HEXAGON NUT, M6M M6 A280	
270	315105-0124	-		12	BRICKA BRB3,2X6RFR	
280	315105-0146	-		4	BRICKA BRB5,3X10RFR	
290	315751-0103	-		1	RETAIN. RING, 6	
300	321302-0296	-		1	BALL BEARING, 6X19X6 MM	
310	321308-0200	-		1	BALL BEARING, 10X26X8 MM	
330	90110-0510	-		2	COVER	
340	353247-0003	-		2	GLAND, PG13,5, 15253P11S04UL13	
350	353243-0001	-		1	EXTENDED WITHOUT INSERT, PG9	
360	353243-0002	-		1	EXTENDED WITHOUT INSERT, PG11	
370	353243-0003	-		1	EXTENDED WITHOUT INSERT, PG11	
380	353249-0008	-		2	INSERT, SINGEL HOLE, EK 152/7	
390	353249-0011	-		1	INSERT, SINGEL HOLE, EK 153/11	

Machine Type | Group Description | Used-In | Group Number | Page No

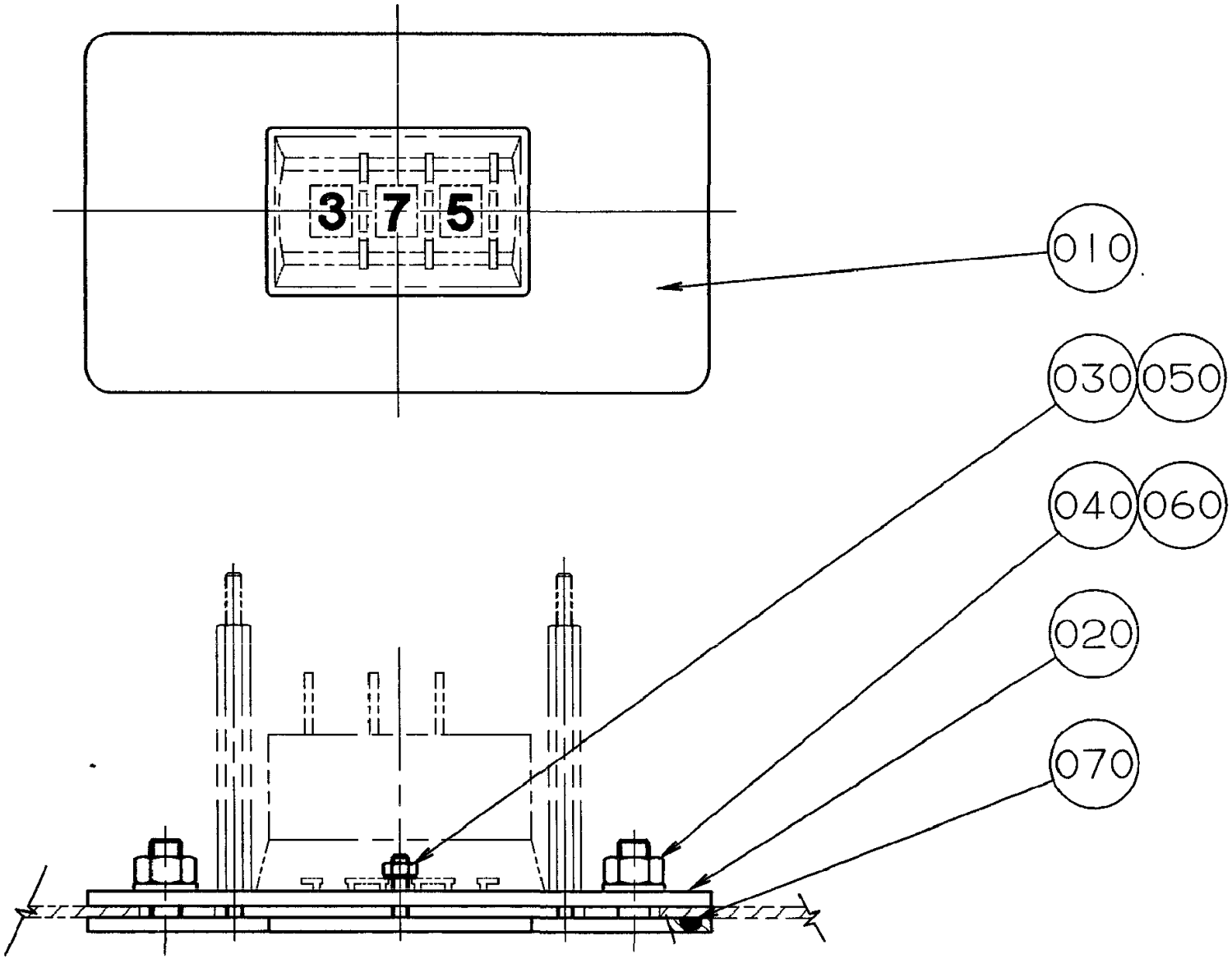
3 7 5
010
030
050
040
060
020
070

ECM: - -
Group number: 924704-0100
Assembly Drawing: 924704-1_1_AA

Pos	Part No	SP	UN	Qty	Description	Page No
-						
010	924705-0000	-		1	HOLDER	
020	924706-0000	-		1	PLATE	
030	312605-0310	-		2	HEXAGON NUT, M6M M3 A280	
040	312605-0316	-		2	HEXAGON NUT, M6M M6 A280	
050	315105-0124	-		2	BRICKA BRB3,2X6RFR	
060	315105-0153	-		2	WASHER BRB6,4X12RFR	
070	315202-0309	-		1	O-RING 89,5X3 MM	

Pos	Part No	SP	UN	Qty	Description	Page No

This page is intentionally left blank.

ECM: - -
Group number: 925570-0100
Assembly Drawing:

Pos	Part No	SP	UN	Qty	Description	Page No
-						
020	B90064-0082	-		1	PUSH BUTTON, WHITE	
	90036-0057	*B*		*1*	*LIGHT BULB, BA9S 28V*	
030	90110-0003	-		1	PLUG, MS 3102E-14S-2P	
100	312125-0222	-		4	SCREW ISO 1207 M3X8 A4	
150	359301-0474	-		1	BUTTON SIGN, ENTER	
F010	A68816-0100	-		1	FLOW PRESET CARD	**10-295**

Pos	Part No	SP	UN	Qty	Description	Page No

Machine Type | Group Description | Used-In | Group Number | Page No

This page is intentionally left blank.

ECM: 71186 - 20000125
Group number: 68816-0100
Assembly Drawing:

Pos	Part No	SP	UN	Qty	Description	Page No
-						
200	925942-0001	-		1	COMPONENTS WITHOUT TP-NO	
210	924817-0000	-		1	CIRCUIT BOARD	
F100	A68833-0100	-		1	SWITCH GEAR	**10-297**

Pos	Part No	SP	UN	Qty	Description	Page No

This page is intentionally left blank.

ECM: - -
Group number: 68833-0100
Assembly Drawing:

Pos	Part No	SP	UN	Qty	Description	Page No
-						
030	90111-0157	-		1	SWITCH GEAR, NO.OF DIGIT: 3	
400	925970-0001	-		1	COMPONENTS WITHOUT TP-NO	

Pos	Part No	SP	UN	Qty	Description	Page No

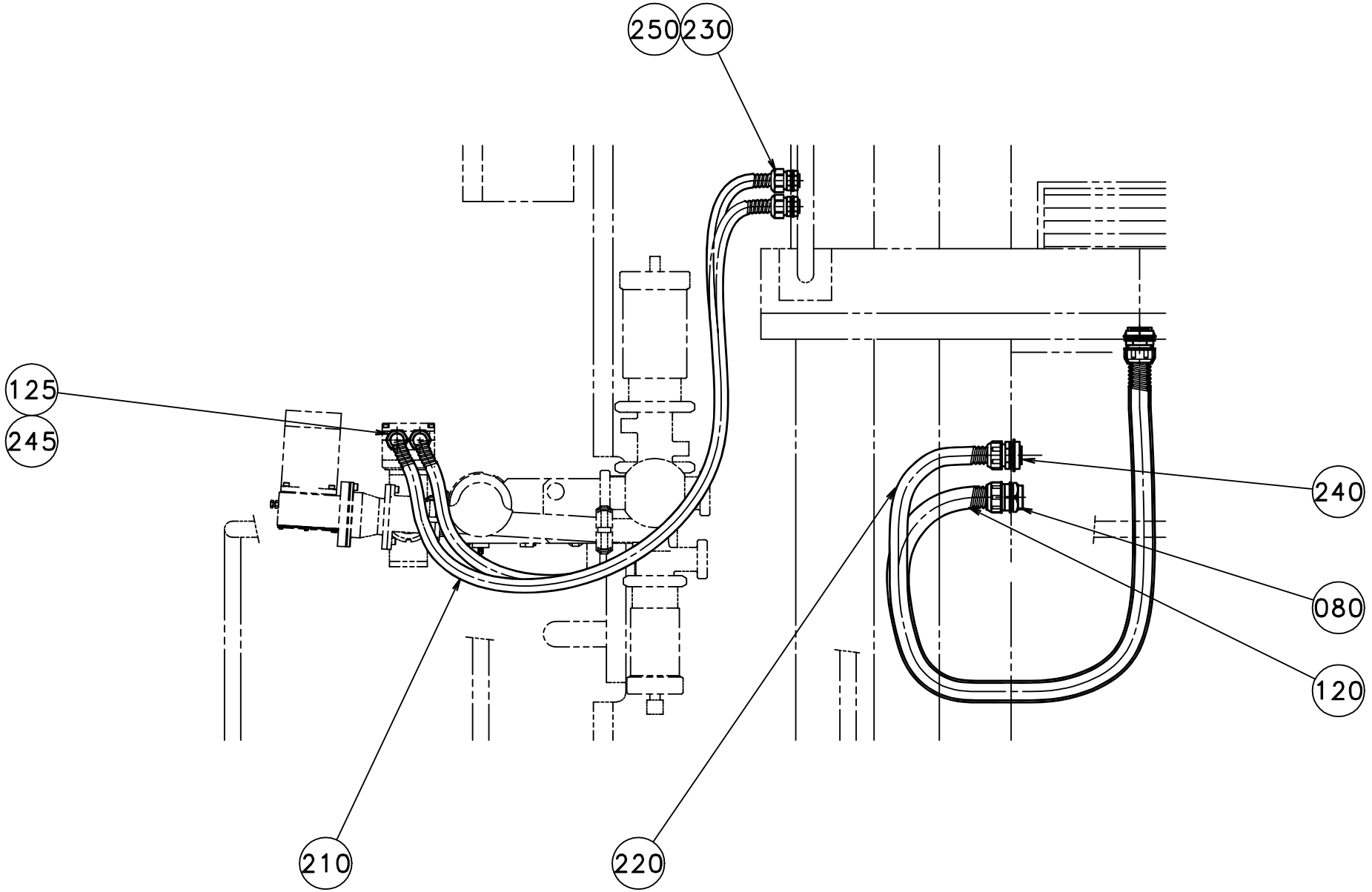
250
230
125
245
240
080
120
210
220

ECM: 71414 - 19980415
Group number: 927302-0100
Assembly Drawing: 927302-1_1_AB

Pos	Part No	SP	UN	Qty	Description	Page No
-						
	1346893-1_1_AA.hpgl	-		1	MODIFICATION DRAWING	
080	90012-0061	-		2	GLAND	
120	90152-0031	-	M	1	HOSE	
125	1334458-0000	-		2	REDUCTION NIPPLE	
210	90152-0051	-	M	3	SPIRAL CONDUIT, 25X18, UL 1816	
220	352135-0109	-	M	1	HOSE .022	
230	353243-0005	-		2	EXTENDED WITHOUT INSERT, PG16	
240	352136-0143	-		2	GLAND FITTING	
245	353247-0004	-		2	GLAND, PG16, 15354P18S08UL16	
250	353249-0013	-		2	INSERT, SINGEL HOLE, EK 154/13	

Pos	Part No	SP	UN	Qty	Description	Page No

This page is intentionally left blank.

ECM: - -
Group number: 927453-0100
Assembly Drawing:

Pos	Part No	SP	UN	Qty	Description	Page No
-						
010	90330-0026	-		1	PLUG, EXT. G-THREAD, G1/4	
050	315234-0110	-		1	WASHER,PL.RND.CU.13,5/18 H=1,5	
110	769211-0122	-		1	SAW BLADE	
120	769211-0129	-		1	SAW BLADE	
125	769211-0138	-		1	SAW BLADE	
130	769211-0148	-		1	SAW BLADE	
140	769219-0100	-		1	HOLDER	
150	769219-0103	-		1	HANDLE BRACKET	

Pos	Part No	SP	UN	Qty	Description	Page No

This page is intentionally left blank.

ECM: - -
Group number: 924867-0100
Assembly Drawing:

Pos	Part No	SP	UN	Qty	Description	Page No
-						
010	736508-0001	-		1	MEMBRANE	
100	90091-0275	-		4	GASKET 40X26X6 MM	
200	321302-0296	-		1	BALL BEARING, 6X19X6 MM	
210	321308-0200	-		1	BALL BEARING, 10X26X8 MM	

Pos	Part No	SP	UN	Qty	Description	Page No

This page is intentionally left blank.

ECM: 71828 - 19981120
Group number: 559269-0100
Assembly Drawing:

Pos	Part No	SP	UN	Qty	Description	Page No
-						
0010	A559270-0100	-		1	ELECTRICAL DOCUMENT	
0020	A559271-0100	-		1	ELECTRICAL MATERIAL	**10-307**

Pos	Part No	SP	UN	Qty	Description	Page No

This page is intentionally left blank.

ECM: 71828 - 19981120
Group number: 559271-0100
Assembly Drawing:

Pos	Part No	SP	UN	Qty	Description	Page No
50HZ						
A515	90243-0221	-		1	FLOW METER, SIGNAL CONVERTER, 0-10M/S 50	
60HZ						
A515	90243-0222	-		1	FLOW METER, SIGNAL CONVERTER, 0-10M/S 60	
Common Parts						
0005	90220-0303	-		2	CLAMP FOR SCR.CABLE, 10MM, 55-016-22	
0010	90220-0305	-		2	CLAMP FOR SCR.CABLE, 16MM,	
0015	312125-0232	-		4	SCREW ISO 1207 M3X25 A4	
0020	90062-0058	-		4	LOCK WASHER SERRAT.EXT.GEAR,3,2/6 H=0,4	
0025	315105-0124	-		8	BRICKA BRB3,2X6RFR	
0030	312605-0310	-		8	HEXAGON NUT, M6M M3 A280	
0040	90166-0171	-	MM	100	SHRINKABLE HOSE BLACK	
0045	90166-0172	-	MM	100	KRYMPSLANG	
0050	90166-0173	-	MM	100	SHRINKABLE HOSE BLACK	
0100	90194-0302	-		1	MARKING LABELS REBUILDING KIT	
0200	351172-0102	-	M	60	CABLE AWM 1X 0,75 MM2 DARK-BLUE	
0205	351176-0102	-	M	15	CABLE AWM 1X075 MM2 RED	
0210	351175-0102	-	M	7	CABLE AWM 1X 075 MM2 YELLOW-GREEN	
0215	351175-0104	-	M	3	KABEL AWM 1X15 MM2 YELLOW-GREEN	
0831	90220-0096	-	M	10	SCR. CABLE 3X1,5MM2	
0832	90220-0085	-	M	9	CABLES, MULTI-CONDUCTOR SCREENED	
0833	90220-0085	-	M	1	CABLES, MULTI-CONDUCTOR SCREENED	
0834	90220-0083	-	M	8	CABLE OLFLEX 16X0,25 MM2	
0835	90220-0085	-	M	1	CABLES, MULTI-CONDUCTOR SCREENED	
0836	90220-0090	-	M	10	SCR. CABLE 3X0,34MM2 FOR 90243-221?-222	
A143	90031-0057	-		1	PLC, DIGITAL INPUT MODULE	
A144	90031-0059	-		1	PLC, DIGITAL OUTPUT MODULE	
A512	A68530-0101	-		1	AUTO FLOW CONTROLLER	**10-309**
A512:1	A68262-0101	-		1	BACKPLANE FRONT RACK 8TE	**10-195**
A513	A68447-0202	-		1	VALVE POS: ASSEMBLY	**10-311**
A513:1	A68262-0101	-		1	BACKPLANE FRONT RACK 8TE	**10-195**
A514	A68450-0101	-		1	STEPPER MOTOR DRIVER	**10-319**
A514:1	A68262-0101	-		1	BACKPLANE FRONT RACK 8TE	**10-195**
A515:1	A68539-0102	-		1	BOTTOM CARD FILL-MAG	**10-325**
A515:2	A67388-0102	-		1	RACK FRONTMOUNTED 84TE	**10-327**
A515:3	90287-0274	-		4	SCREW M6X16	
A515:4	90005-0138	-		4	PLASTIC WASHER DI=6,4MM	
A515:5	A68445-0104	-		2	FRONT PLATE 8 TE	**10-169**
A515:6	A68445-0105	-		1	FRONT PLATE 10TE	**10-167**
S511	90111-0120	-		1	SWITCH, 2 POS.704.510 .0A+704.901.5/A	
S511:1	359241-0320	-		1	SIGN "FLOWMETER ON/OFF"	

Machine Type | Group Description | Used-In | Group Number | Page No

This page is intentionally left blank.

ECM: - -
Group number: 68530-0101
Assembly Drawing:

Pos	Part No	SP	UN	Qty	Description	Page No
-						
010	565157-0001	-		1	COMPONENTS WITHOUT TP-NO	
020	565158-0000	-		1	FRONT PANEL 14TE	
030	565318-0000	-		1	COVER PLATE HANDEL 14TE	
040	565317-0000	-		1	COVER PLATE CIRCUIT CARD	
050	565159-0000	-		1	LAYOUTS PLATES AND LABELS	

Pos	Part No	SP	UN	Qty	Description	Page No

This page is intentionally left blank.

ECM: - -
Group number: 68447-0202
Assembly Drawing:

Pos	Part No	SP	UN	Qty	Description	Page No
-						
200	543932-0001	-		1	COMPONENTS WITHOUT TP-NO	
210	543933-0000	-		1	FRONT PANEL 8TE	
220	543924-0000	-		1	COVER PLATE:HANDLE 8TE	
230	543874-0000	-		1	COVER PLATE:CIRCUIT CARD	
250	556504-0000	-		1	LAYOUTS:PLATES AND LABELS	
F100	A68448-0200	-		1	VALVE POS.: MAIN CARD	**10-313**
F110	A68449-0200	-		1	VALVE POS.: AUX. CARD I	**10-315**
F120	A68473-0200	-		1	VALVE POS.: AUX. CARD II	**10-317**

Pos	Part No	SP	UN	Qty	Description	Page No

Machine Type | Group Description | Used-In | Group Number | Page No

This page is intentionally left blank.

ECM: - -
Group number: 68448-0200
Assembly Drawing:

Pos	Part No	SP	UN	Qty	Description	Page No
-						
400	543875-0001	-		1	COMPONENTS WITHOUT TP-NO	
410	543876-0000	-		1	PRINTED CIRCUIT BOARD	
420	543879-0000	-		1	COOLING DISTANCE BLOCK	

Pos	Part No	SP	UN	Qty	Description	Page No

This page is intentionally left blank.

ECM: - -
Group number: 68449-0200
Assembly Drawing:

Pos	Part No	SP	UN	Qty	Description	Page No
-						
600	543877-0001	-		1	COMPONENTS WITHOUT TP-NO	
610	543878-0000	-		1	PRINTED CIRCUIT BOARD	

Pos	Part No	SP	UN	Qty	Description	Page No

This page is intentionally left blank.

ECM: - -
Group number: 68473-0200
Assembly Drawing:

Pos	Part No	SP	UN	Qty	Description	Page No
-						
720	556509-0000	-		1	PRINTED CIRCUIT BOARD	
730	556510-0001	-		1	COMPONENTS WITHOUT TP-NO	

Pos	Part No	SP	UN	Qty	Description	Page No

This page is intentionally left blank.

ECM: - -
Group number: 68450-0101
Assembly Drawing:

Pos	Part No	SP	UN	Qty	Description	Page No
-						
040	543326-0000	-		1	COVERPLATE HANDLE 5TE	
700	543897-0001	-		1	COMPONENTS WITHOUT TP-NO	
710	543898-0000	-		1	FRONT PANEL 14TE	
720	543899-0000	-		1	COOLING FLANGE	
730	543900-0000	-		1	COOLING FLANGE DISTANCE	
740	543901-0000	-		1	COOLING BLOCK	
750	543902-0000	-		1	SIGN BOARD	
760	556502-0000	-		1	LAYOUTS FOR PLATES,LABLES	
F100	A68451-0101	-		1	STEP. MOT. DR. MAIN CARD	**10-321**
F110	A68452-0101	-		1	STEP. MOT. DR. AUX. CARD	**10-323**

Pos	Part No	SP	UN	Qty	Description	Page No

Machine Type | Group Description | Used-In | Group Number | Page No

This page is intentionally left blank.

ECM: - -
Group number: 68451-0101
Assembly Drawing:

Pos	Part No	SP	UN	Qty	Description	Page No
-						
400	543903-0001	-		1	COMPONENTS WITHOUT TP-NO	
410	543880-0000	-		1	PRINTED CIRCUIT BOARD	

Pos	Part No	SP	UN	Qty	Description	Page No

This page is intentionally left blank.

ECM: - -
Group number: 68452-0101
Assembly Drawing:

Pos	Part No	SP	UN	Qty	Description	Page No
-						
600	551913-0001	-		1	COMPONENTS WITHOUT TP-NO	
610	543881-0000	-		1	PRINTED CIRCUIT BOARD	
620	551914-0000	-		1	MACHINING OF DRIVER MODUL	

Pos	Part No	SP	UN	Qty	Description	Page No

This page is intentionally left blank.

ECM: - -
Group number: 68539-0102
Assembly Drawing:

Pos	Part No	SP	UN	Qty	Description	Page No
-						
220	573123-0000	-		1	COVER MAINS CONNECTION	
230	573126-0001	-		1	COMPONENTS WITHOUT TP-NO	
240	573550-0000	-		1	COVER PLATE CIRCUIT CARD	
250	573549-0000	-		1	CIRCUIT BOARD SPEC.	

Pos	Part No	SP	UN	Qty	Description	Page No

Machine Type | Group Description | Used-In | Group Number | Page No

This page is intentionally left blank.

ECM: - -
Group number: 67388-0102
Assembly Drawing:

Pos	Part No	SP	UN	Qty	Description	Page No
-						
020 2	542038-0002	-		1	COMPONENTS WITHOUT TP-NO	

Pos	Part No	SP	UN	Qty	Description	Page No

Machine Type | Group Description | Used-In | Group Number | Page No

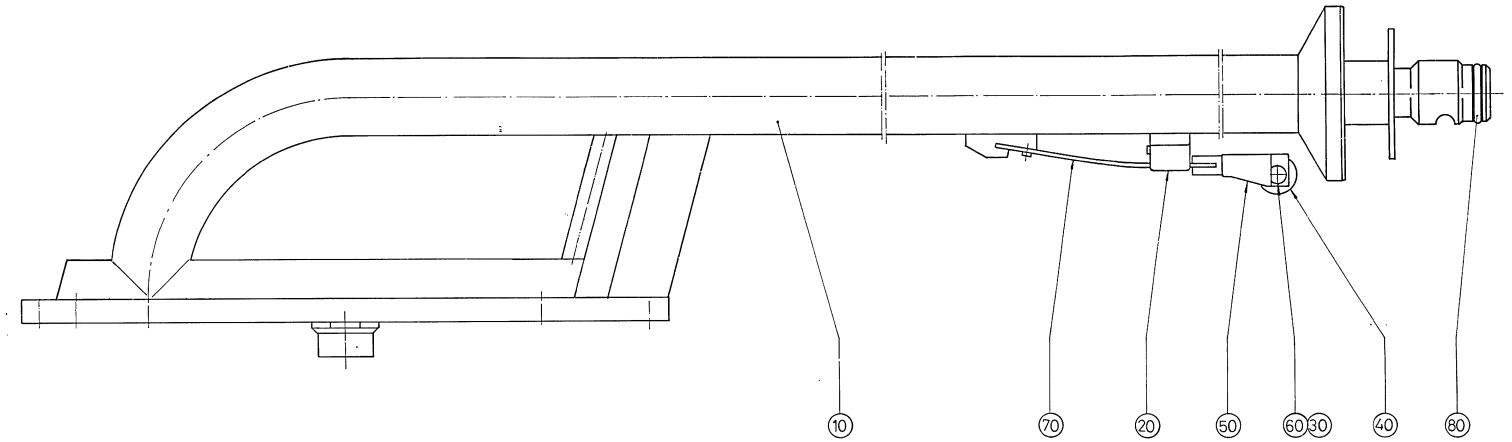
10
70
20
50
60
30
40
80

ECM: 71170 - 19980121
Group number: 529645-0100
Assembly Drawing: 529645-1_1_AA

This list covers pages from 10-328 to 10-331

Pos	Part No	SP	UN	Qty	Description	Page No
TBA 0375S (See drawing on page: 10-330)						
005	A925717-0100	-		1	UPPER FILLING TUBE	**10-333**
020	526682-0000	C		1	HOOD	
040	499387-0000	C		1	PRESSURE ROLLER	
050	529180-0000	C		1	FORK	
060	499011-0000	C		1	SHAFT	
070	544893-0000	C		1	SPRING	
TBA 0500B, TBA 0750B, TBA 1000B (See drawing on page: 10-328)						
010	439964-0000	D		1	UPPER FILLING TUBE	
020	14600-0000	C		1	HOOD	
040	232979-0000	C		1	RESSURE ROLLER	
050	267727-0000	C		1	FORK	
060	267728-0000	C		1	SHAFT	
070	544892-0000	C		1	SPRING	
TBA 0500S, TBA 0355B (See drawing on page: 10-328)						
010	531901-0000	D		1	UPPER FILLING TUBE	
020	434665-0000	C		1	HOOD	
040	499387-0000	C		1	PRESSURE ROLLER	
050	499016-0000	C		1	FORK	
060	499011-0000	C		1	SHAFT	
070	544892-0000	C		1	SPRING	
TBA 0750S (See drawing on page: 10-328)						
010	924042-0000	D		1	UPPER FILLING TUBE	
020	434665-0000	C		1	HOOD	
040	499387-0000	C		1	PRESSURE ROLLER	
050	499016-0000	C		1	FORK	
060	499011-0000	C		1	SHAFT	
070	544892-0000	C		1	SPRING	
TBA 1000S (See drawing on page: 10-328)						
010	925208-0000	D		1	UPPER FILLING TUBE	
020	434665-0000	C		1	HOOD	
040	499387-0000	C		1	PRESSURE ROLLER	
050	499016-0000	C		1	FORK	
060	499011-0000	C		1	SHAFT	
070	544892-0000	C		1	SPRING	
Common Parts						
030	24928-0000	C		1	LOCKING RUBBER	
080	315204-0217	C		1	O-RING 24,2X3 MM	

Machine Type	Group Description	Used-In	Group Number	Page No

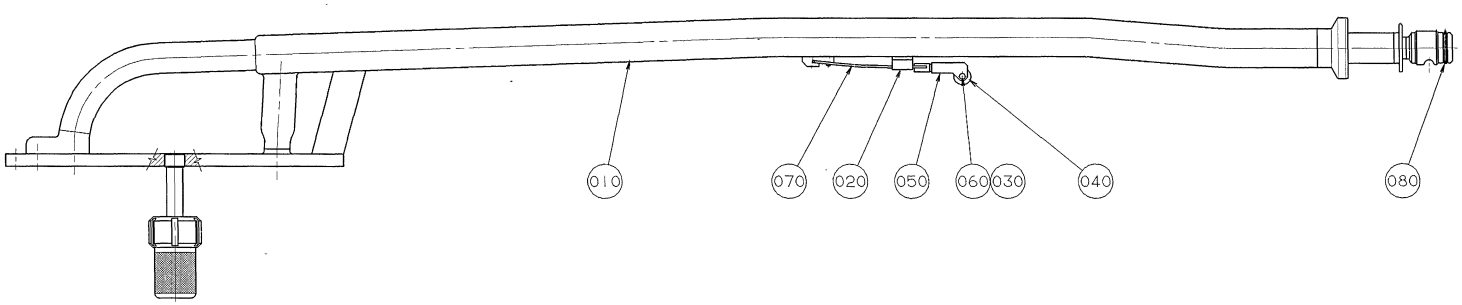
010
070
020
050
060
030
040
080

ECM: 71170 - 19980121
Group number: 529645-0100
Assembly Drawing: 529645-2_1_AA

This list covers pages from 10-328 to 10-331

Pos	Part No	SP	UN	Qty	Description	Page No
TBA 0375S (See drawing on page: 10-330)						
005	A925717-0100	-		1	UPPER FILLING TUBE	**10-333**
020	526682-0000	C		1	HOOD	
040	499387-0000	C		1	PRESSURE ROLLER	
050	529180-0000	C		1	FORK	
060	499011-0000	C		1	SHAFT	
070	544893-0000	C		1	SPRING	
TBA 0500B, TBA 0750B, TBA 1000B (See drawing on page: 10-328)						
010	439964-0000	D		1	UPPER FILLING TUBE	
020	14600-0000	C		1	HOOD	
040	232979-0000	C		1	RESSURE ROLLER	
050	267727-0000	C		1	FORK	
060	267728-0000	C		1	SHAFT	
070	544892-0000	C		1	SPRING	
TBA 0500S, TBA 0355B (See drawing on page: 10-328)						
010	531901-0000	D		1	UPPER FILLING TUBE	
020	434665-0000	C		1	HOOD	
040	499387-0000	C		1	PRESSURE ROLLER	
050	499016-0000	C		1	FORK	
060	499011-0000	C		1	SHAFT	
070	544892-0000	C		1	SPRING	
TBA 0750S (See drawing on page: 10-328)						
010	924042-0000	D		1	UPPER FILLING TUBE	
020	434665-0000	C		1	HOOD	
040	499387-0000	C		1	PRESSURE ROLLER	
050	499016-0000	C		1	FORK	
060	499011-0000	C		1	SHAFT	
070	544892-0000	C		1	SPRING	
TBA 1000S (See drawing on page: 10-328)						
010	925208-0000	D		1	UPPER FILLING TUBE	
020	434665-0000	C		1	HOOD	
040	499387-0000	C		1	PRESSURE ROLLER	
050	499016-0000	C		1	FORK	
060	499011-0000	C		1	SHAFT	
070	544892-0000	C		1	SPRING	
Common Parts						
030	24928-0000	C		1	LOCKING RUBBER	
080	315204-0217	C		1	O-RING 24,2X3 MM	

Machine Type	Group Description	Used-In	Group Number	Page No

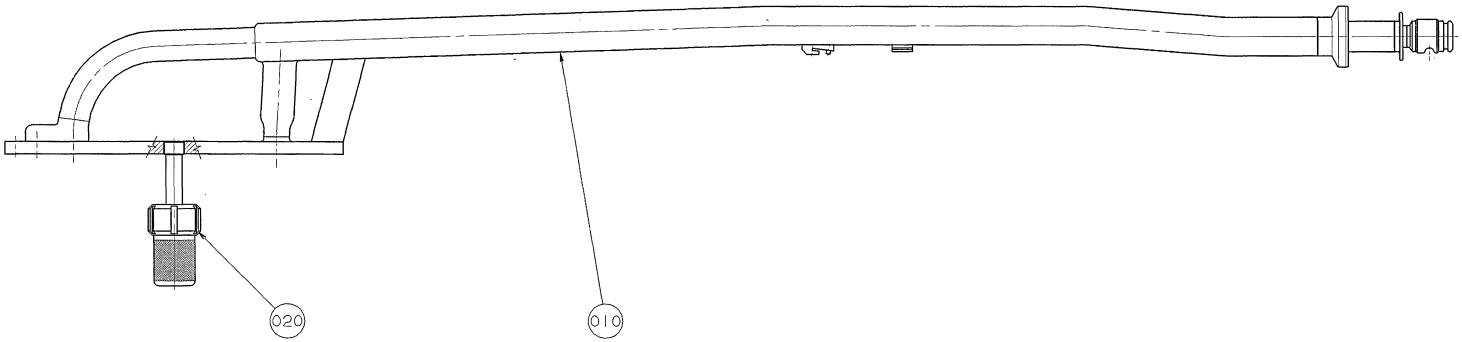
020
010

ECM: - -
Group number: 925717-0100
Assembly Drawing: 925717-1_1_AA

Pos	Part No	SP	UN	Qty	Description	Page No
-						
010	924873-0000	-		1	UPPER FILLING TUBE	
020	924257-0000	-		1	SCREW	

Pos	Part No	SP	UN	Qty	Description	Page No

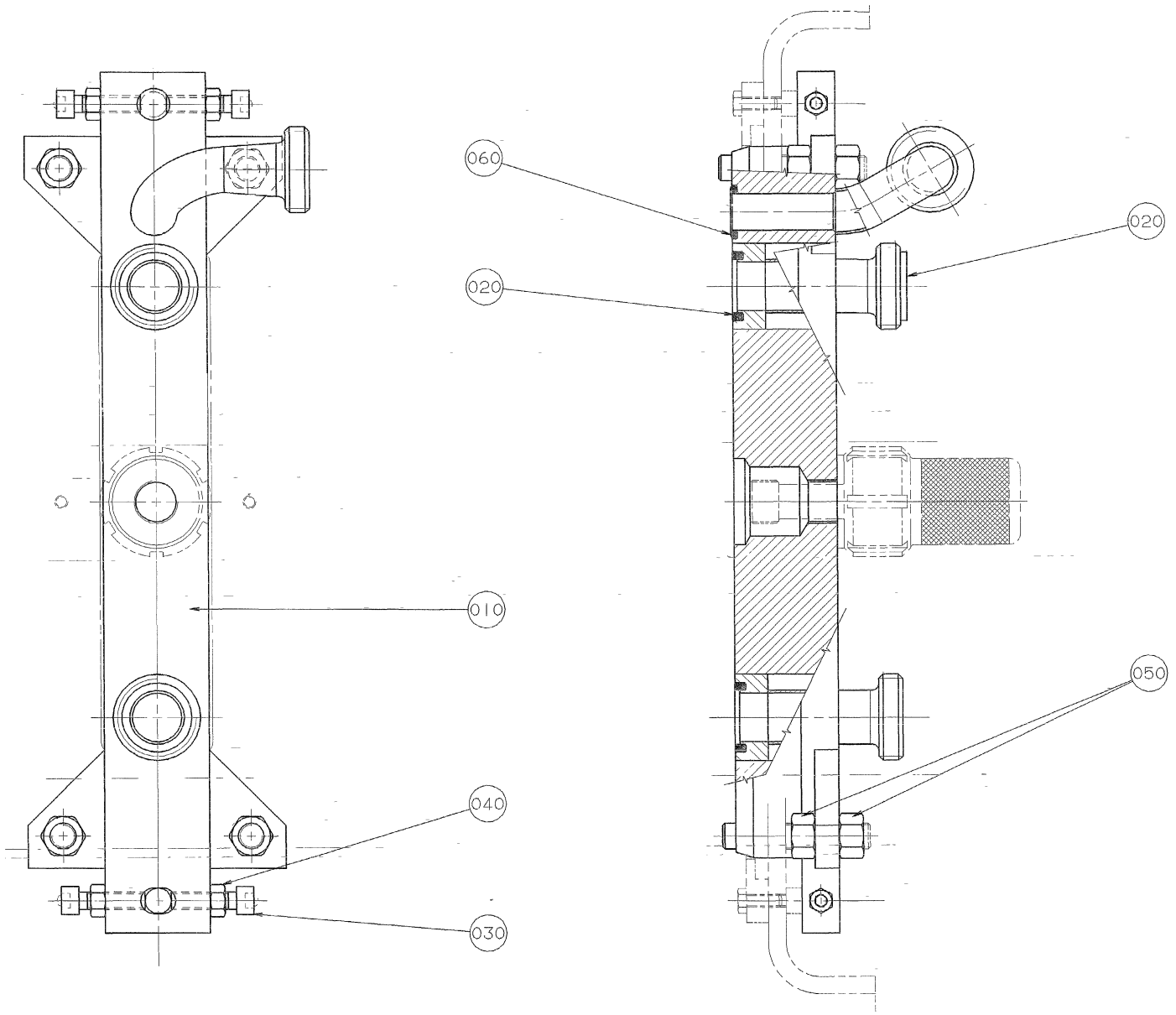
060
020
020
010
040
030
050

ECM: - -
Group number: 490309-0100
Assembly Drawing: 490309-1_1_AA

Pos	Part No	SP	UN	Qty	Description	Page No
-						
010	490223-0000	-		1	BRACKET	
020	12242-0001	C		4	GASKET 32X25X5,5	
030	312115-0455	-		4	SCREW ISO4762 M8X30 A4	
040	312605-0318	-		4	HEXAGON NUT, M6M M8 A280	
050	312605-0322	-		8	HEXAGON NUT, M6M M12 A280	
060	90242-0050	C		1	O-RING 19,2X3 MM	

Pos	Part No	SP	UN	Qty	Description	Page No

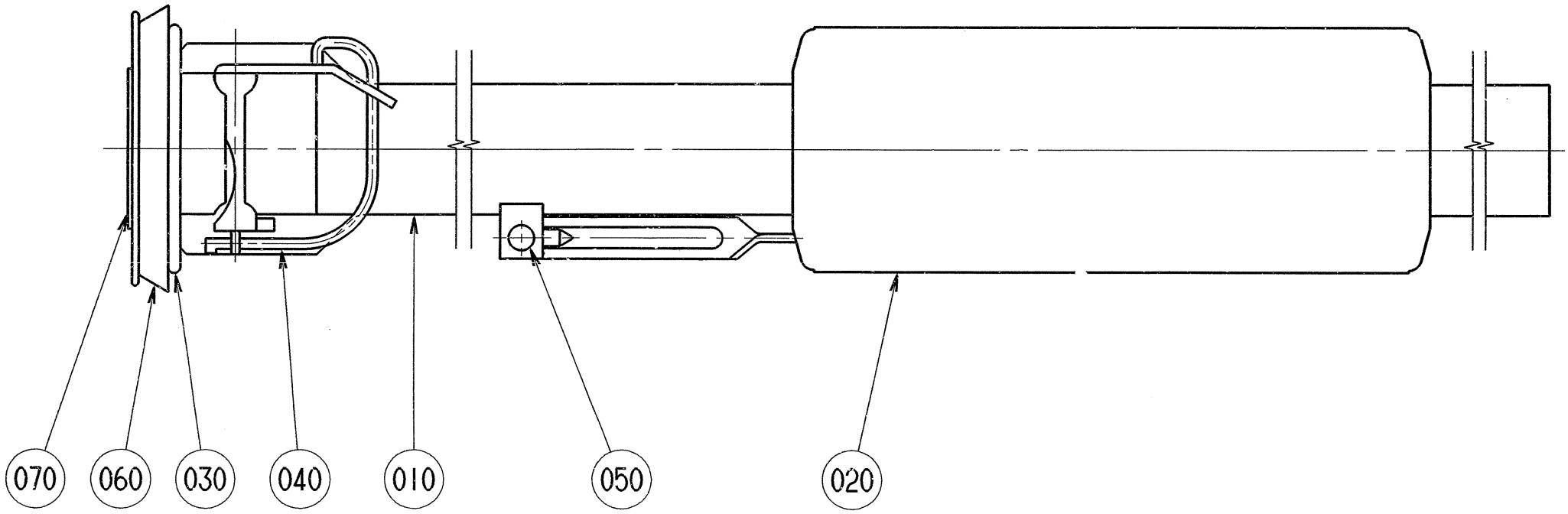
070
060
030
040
010
050
020

ECM: 71170 - 19980121
Group number: 529638-0200
Assembly Drawing: 529638-2_1_AA

This list covers pages from 10-336 to 10-339

Pos	Part No	SP	UN	Qty	Description	Page No
TBA 0355B 6000/H (See drawing on page: 10-336)						
010	531902-0000	D		1	LOWER FILLING TUBE	
020	735073-0000	D		1	FLOAT	
030	736726-0000	D		1	HOLDER	
040	493733-0000	-		1	LOCKING PIN UPPER	
050	271351-0000	-		1	SHEAR PIN	
060	736724-0000	C		1	GASKET	
070	490048-0002	C		1	PACKING MEMBRANE	
TBA 0375S 5000/H (See drawing on page: 10-336)						
010	439862-0000	D		1	LOWER FILLING TUBE	
020	490336-0000	D		1	FLOAT	
030	736727-0000	D		1	HOLDER	
040	493733-0000	-		1	LOCKING PIN UPPER	
050	271351-0000	-		1	SHEAR PIN	
060	927392-0000	C		1	GASKET	
070	490076-0002	C		1	PACKING MEMBRANE	
TBA 0375S 6000/H (See drawing on page: 10-336)						
010	543315-0000	D		1	LOWER FILLING TUBE	
020	543316-0000	D		1	FLOAT	
030	736727-0000	D		1	HOLDER	
040	493733-0000	-		1	LOCKING PIN UPPER	
050	271351-0000	-		1	SHEAR PIN	
060	927392-0000	C		1	GASKET	
070	490076-0002	C		1	PACKING MEMBRANE	
TBA 0500B 6000/H (See drawing on page: 10-336)						
010	529893-0003	D		1	LOWER FILLING TUBE	
020	735026-0000	D		1	FLOAT	
030	735182-0000	D		1	HOLDER	
040	445504-0000	-		1	LOCKING PIN UPPER	
050	271351-0000	-		1	SHEAR PIN	
060	439616-0003	C		1	GASKET	
070	490048-0002	C		1	PACKING MEMBRANE	
TBA 0500S 6000/H (See drawing on page: 10-336)						
010	529893-0004	D		1	LOWER FILLING TUBE	
020	735073-0000	D		1	FLOAT	
030	736726-0000	D		1	HOLDER	
040	493733-0000	-		1	LOCKING PIN UPPER	
050	271351-0000	-		1	SHEAR PIN	
060	736724-0000	C		1	GASKET	
070	490048-0002	C		1	PACKING MEMBRANE	
TBA 0750B 6000/H (See drawing on page: 10-336)						
010	529893-0002	D		1	LOWER FILLING TUBE	
020	735026-0000	D		1	FLOAT	
030	735182-0000	D		1	HOLDER	
040	445504-0000	-		1	LOCKING PIN UPPER	
050	271351-0000	-		1	SHEAR PIN	
060	439616-0003	C		1	GASKET	
070	490048-0002	C		1	PACKING MEMBRANE	
TBA 0750S 6000/H (See drawing on page: 10-336)						
010	565457-0000	D		1	LOWER FILLING TUBE	
020	565458-0000	D		1	FLOAT	
030	926730-0000	D		1	RING	
040	493733-0000	-		1	LOCKING PIN UPPER	
050	271351-0000	-		1	SHEAR PIN	
060	926729-0000	C		1	GASKET	
070	490048-0002	C		1	PACKING MEMBRANE	
TBA 1000B 6000/H (See drawing on page: 10-338)						
010	736536-0000	D		1	LOWER FILLING TUBE	
020	736662-0000	D		1	FLOAT	
030	735182-0000	D		1	HOLDER	
040	37294-0000	-		1	LOCKING PIN UPPER	
050	36821-0001	-		1	SHEAR PIN	
060	439616-0003	C		1	GASKET	
070	490048-0002	C		1	PACKING MEMBRANE	
TBA 1000S 6000/H (See drawing on page: 10-338)						
010	925209-0000	D		1	LOWER FILLING TUBE	
020	736662-0000	D		1	FLOAT	
030	927382-0000	D		1	HOLDER	
040	927583-0000	-		1	LOCKING FINGER	
050	36821-0001	-		1	SHEAR PIN	
060	927383-0000	C		1	GASKET	
070	490048-0002	C		1	PACKING MEMBRANE	

Machine Type | Group Description | Used-In | Group Number | Page No

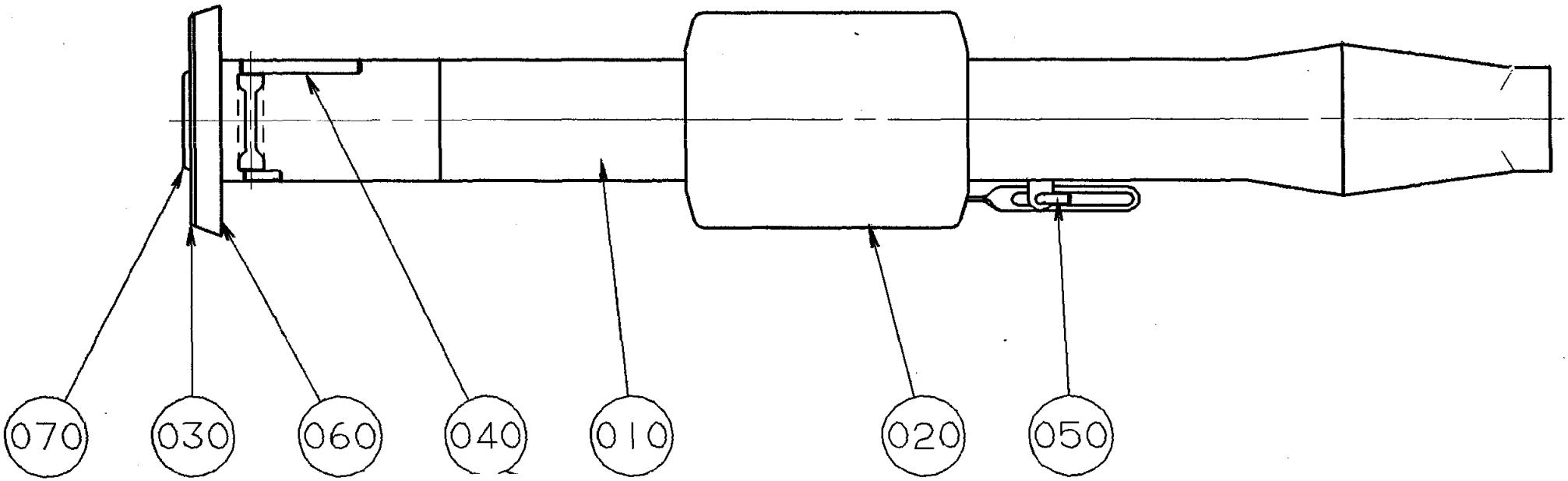
070
030
060
040
010
020
050

ECM: 71170 - 19980121
Group number: 529638-0200
Assembly Drawing: 529638-3_1_AA

This list covers pages from 10-336 to 10-339

Pos	Part No	SP	UN	Qty	Description	Page No
TBA 0355B 6000/H (See drawing on page: 10-336)						
010	531902-0000	D		1	LOWER FILLING TUBE	
020	735073-0000	D		1	FLOAT	
030	736726-0000	D		1	HOLDER	
040	493733-0000	-		1	LOCKING PIN UPPER	
050	271351-0000	-		1	SHEAR PIN	
060	736724-0000	C		1	GASKET	
070	490048-0002	C		1	PACKING MEMBRANE	
TBA 0375S 5000/H (See drawing on page: 10-336)						
010	439862-0000	D		1	LOWER FILLING TUBE	
020	490336-0000	D		1	FLOAT	
030	736727-0000	D		1	HOLDER	
040	493733-0000	-		1	LOCKING PIN UPPER	
050	271351-0000	-		1	SHEAR PIN	
060	927392-0000	C		1	GASKET	
070	490076-0002	C		1	PACKING MEMBRANE	
TBA 0375S 6000/H (See drawing on page: 10-336)						
010	543315-0000	D		1	LOWER FILLING TUBE	
020	543316-0000	D		1	FLOAT	
030	736727-0000	D		1	HOLDER	
040	493733-0000	-		1	LOCKING PIN UPPER	
050	271351-0000	-		1	SHEAR PIN	
060	927392-0000	C		1	GASKET	
070	490076-0002	C		1	PACKING MEMBRANE	
TBA 0500B 6000/H (See drawing on page: 10-336)						
010	529893-0003	D		1	LOWER FILLING TUBE	
020	735026-0000	D		1	FLOAT	
030	735182-0000	D		1	HOLDER	
040	445504-0000	-		1	LOCKING PIN UPPER	
050	271351-0000	-		1	SHEAR PIN	
060	439616-0003	C		1	GASKET	
070	490048-0002	C		1	PACKING MEMBRANE	
TBA 0500S 6000/H (See drawing on page: 10-336)						
010	529893-0004	D		1	LOWER FILLING TUBE	
020	735073-0000	D		1	FLOAT	
030	736726-0000	D		1	HOLDER	
040	493733-0000	-		1	LOCKING PIN UPPER	
050	271351-0000	-		1	SHEAR PIN	
060	736724-0000	C		1	GASKET	
070	490048-0002	C		1	PACKING MEMBRANE	
TBA 0750B 6000/H (See drawing on page: 10-336)						
010	529893-0002	D		1	LOWER FILLING TUBE	
020	735026-0000	D		1	FLOAT	
030	735182-0000	D		1	HOLDER	
040	445504-0000	-		1	LOCKING PIN UPPER	
050	271351-0000	-		1	SHEAR PIN	
060	439616-0003	C		1	GASKET	
070	490048-0002	C		1	PACKING MEMBRANE	
TBA 0750S 6000/H (See drawing on page: 10-336)						
010	565457-0000	D		1	LOWER FILLING TUBE	
020	565458-0000	D		1	FLOAT	
030	926730-0000	D		1	RING	
040	493733-0000	-		1	LOCKING PIN UPPER	
050	271351-0000	-		1	SHEAR PIN	
060	926729-0000	C		1	GASKET	
070	490048-0002	C		1	PACKING MEMBRANE	
TBA 1000B 6000/H (See drawing on page: 10-338)						
010	736536-0000	D		1	LOWER FILLING TUBE	
020	736662-0000	D		1	FLOAT	
030	735182-0000	D		1	HOLDER	
040	37294-0000	-		1	LOCKING PIN UPPER	
050	36821-0001	-		1	SHEAR PIN	
060	439616-0003	C		1	GASKET	
070	490048-0002	C		1	PACKING MEMBRANE	
TBA 1000S 6000/H (See drawing on page: 10-338)						
010	925209-0000	D		1	LOWER FILLING TUBE	
020	736662-0000	D		1	FLOAT	
030	927382-0000	D		1	HOLDER	
040	927583-0000	-		1	LOCKING FINGER	
050	36821-0001	-		1	SHEAR PIN	
060	927383-0000	C		1	GASKET	
070	490048-0002	C		1	PACKING MEMBRANE	

Machine Type | Group Description | Used-In | Group Number | Page No

LOWER FILLING TUBE FFP

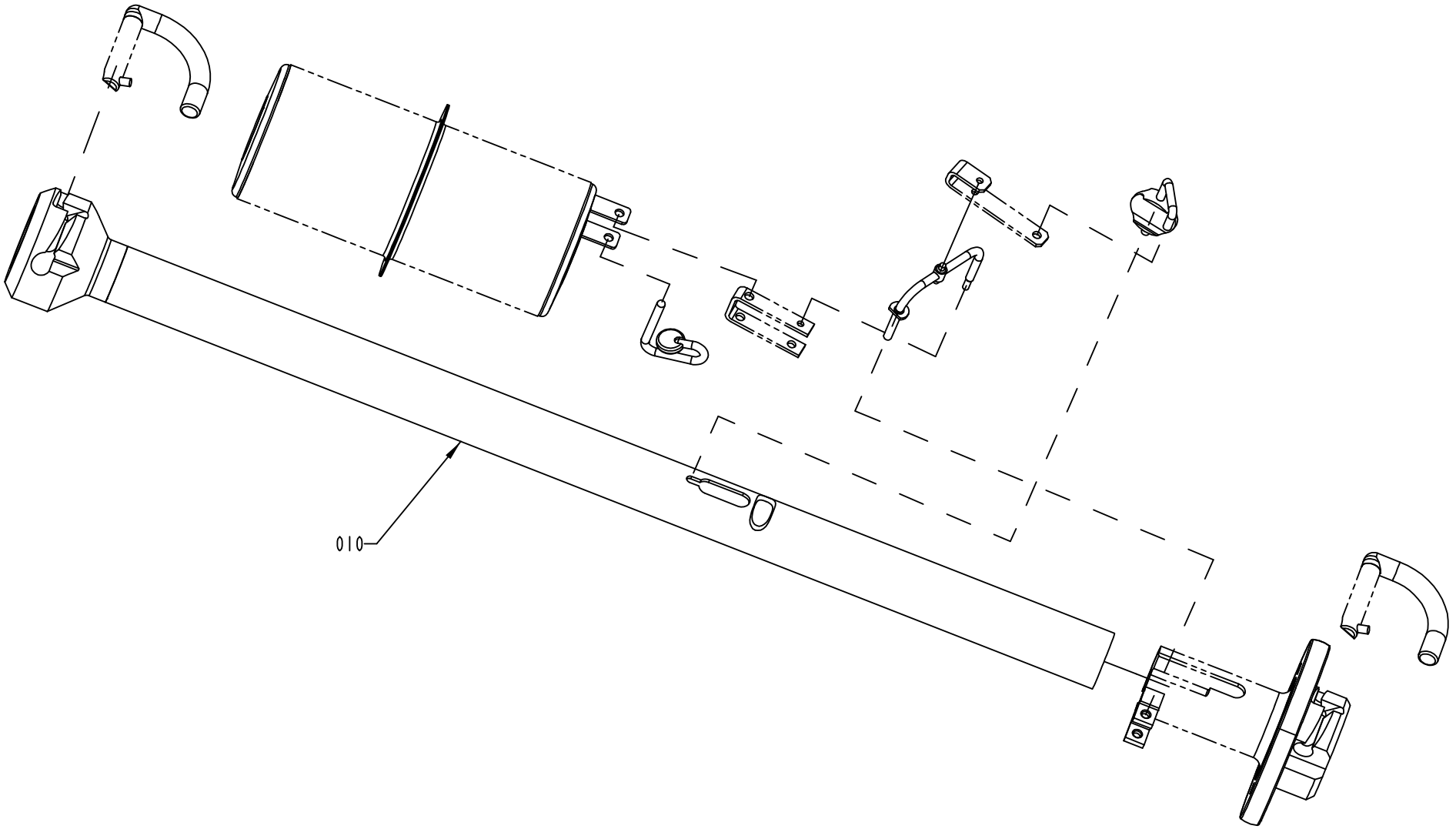

S-1512503-1
ECN 73195

ECM: 73195 - 19991210
Group number: 1512503-0100
Assembly Drawing: 1512503-1_1_AA

Pos	Part No	SP	UN	Qty	Description	Page No
TBA/8 0355B						
010	1512496-0000	D		1	FILLING PIPE	
TBA/8 0375S						
010	1512497-0000	D		1	FILLING PIPE	
TBA/8 0500B						
010	1512498-0000	D		1	FILLING PIPE	
TBA/8 0500S						
010	1512499-0000	D		1	FILLING PIPE	
TBA/8 0750S, TBA/8 1000S						
010	1512501-0000	D		1	FILLING PIPE	
TBA/8 1000B, TBA/8 0750B						
010	1512500-0000	D		1	FILLING PIPE	

Pos	Part No	SP	UN	Qty	Description	Page No

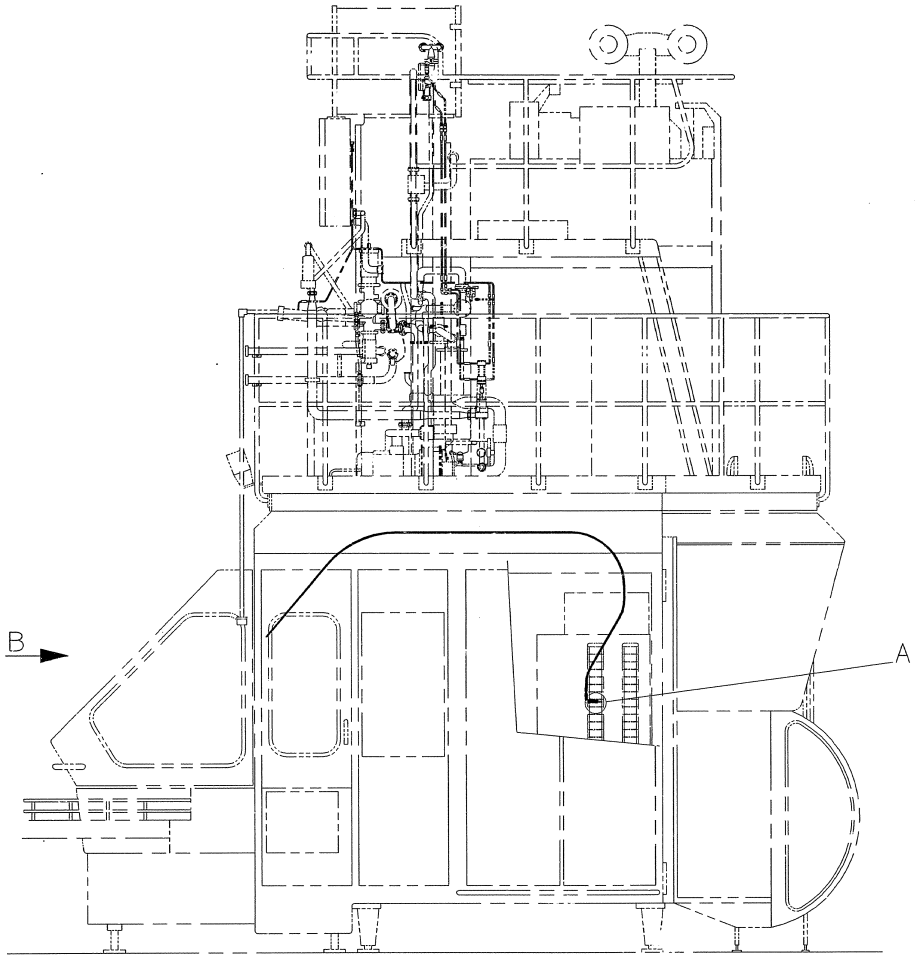

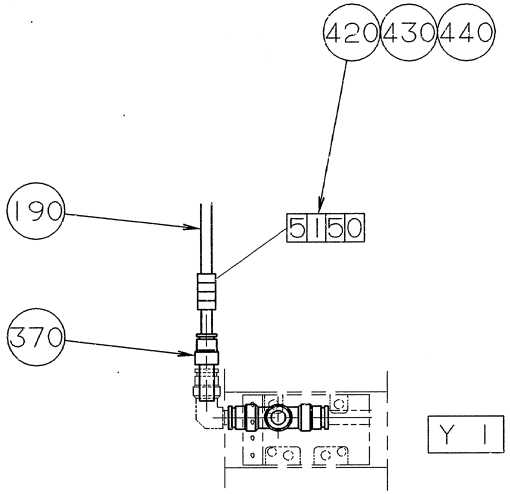

A
1 : 2

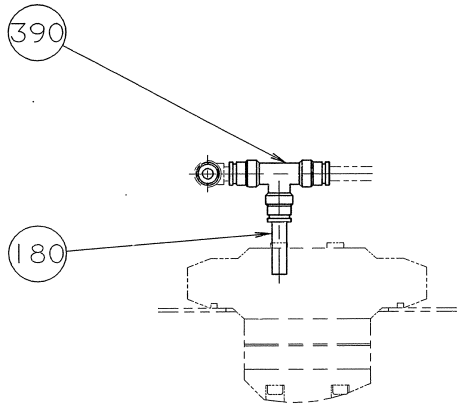

1 : 2

ECM: - -
Group number: 927281-0100
Assembly Drawing: 927281-1_1_AA

This list covers pages from 10-342 to 10-345

Pos	Part No	SP	UN	Qty	Description	Page No
-						
010	563097-0000	-		1	PLATE	
030	563094-0000	-		2	CANTILEVER	
040	563095-0000	-		1	PLATE	
050	563096-0000	-		1	HOLDER	
060	563098-0000	-		1	SUPPORT	
070	924856-0000	C		1	BRUSH	
180	90166-0013	-	MM	50	TUBE 8 MM PA BLUE	
190	90166-0081	-	MM	3500	TUBE 6 MM PA BLUE	
200	90166-0119	-	MM	700	HOSE PUR 4/6 BLACK	
220	90235-0280	-		1	THROTTLE CHECK VALVES,M5	
230	90424-0032	C		1	SPRAY NOZZLE 95 DEG	
300	312105-0328	-		2	SCREW M6S ISO 4017 M5X14 A480	
310	312105-0329	-		3	SCREW M6S ISO 4017 M5X16 A480	
320	312105-0453	-		2	SCREW M6S ISO 4017 M8X25 A480	
330	315105-0146	-		5	BRICKA BRB5,3X10RFR	
340	315105-0165	-		2	WASHER BRB8,4X16RFR	
370	342716-0203	-		1	REDUCER 6-8	
380	342737-0204	-		1	CONN. ELBOW W-6 LRFR	
390	342748-0103	-		1	T-CONNECTION 8MM	
400	342980-0113	-		2	BANJO-CONNECTION,RING 6/4-G1/8"	
410	342980-0303	-		1	BANJO-HOLLOW BOLT COUPL,EXT.THR.01-G1/8"	
420	359000-0400	-		2	MARKING CO2/4"0"	
430	359000-0401	-		2	MARKING COLLAR 2/4 "1" YELLOW	
440	359000-0405	-		4	MARKING CO2/4"5"	

Pos	Part No	SP	UN	Qty	Description	Page No

Machine Type	Group Description	Used-In	Group Number	Page No

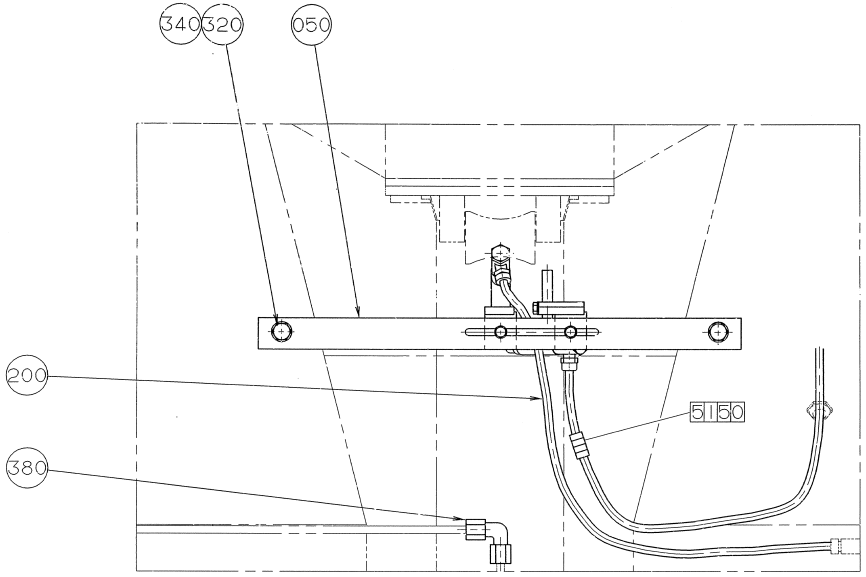
340
320
050
200
5150
380

B

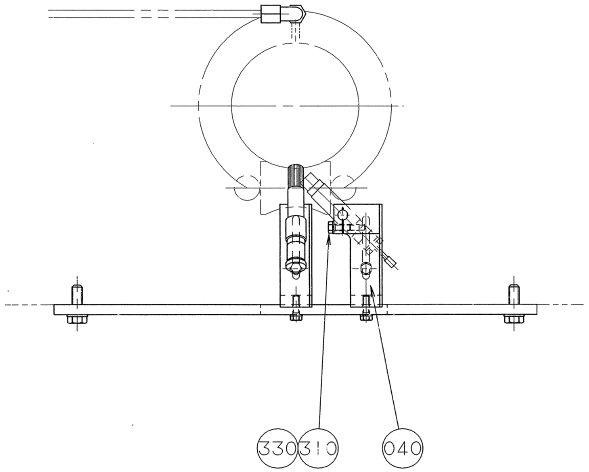
330
310
040

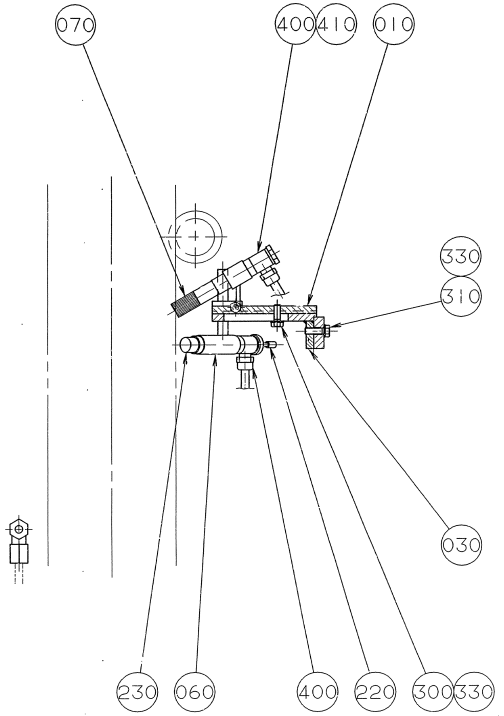
070
400
410
010
330
310
030
230
060
400
220
300
330

ECM: - -
Group number: 927281-0100
Assembly Drawing: 927281-2_1_AA

This list covers pages from 10-342 to 10-345

Pos	Part No	SP	UN	Qty	Description	Page No
-						
010	563097-0000	-		1	PLATE	
030	563094-0000	-		2	CANTILEVER	
040	563095-0000	-		1	PLATE	
050	563096-0000	-		1	HOLDER	
060	563098-0000	-		1	SUPPORT	
070	924856-0000	C		1	BRUSH	
180	90166-0013	-	MM	50	TUBE 8 MM PA BLUE	
190	90166-0081	-	MM	3500	TUBE 6 MM PA BLUE	
200	90166-0119	-	MM	700	HOSE PUR 4/6 BLACK	
220	90235-0280	-		1	THROTTLE CHECK VALVES,M5	
230	90424-0032	C		1	SPRAY NOZZLE 95 DEG	
300	312105-0328	-		2	SCREW M6S ISO 4017 M5X14 A480	
310	312105-0329	-		3	SCREW M6S ISO 4017 M5X16 A480	
320	312105-0453	-		2	SCREW M6S ISO 4017 M8X25 A480	
330	315105-0146	-		5	BRICKA BRB5,3X10RFR	
340	315105-0165	-		2	WASHER BRB8,4X16RFR	
370	342716-0203	-		1	REDUCER 6-8	
380	342737-0204	-		1	CONN. ELBOW W-6 LRFR	
390	342748-0103	-		1	T-CONNECTION 8MM	
400	342980-0113	-		2	BANJO-CONNECTION,RING 6/4-G1/8"	
410	342980-0303	-		1	BANJO-HOLLOW BOLT COUPL,EXT.THR.01-G1/8"	
420	359000-0400	-		2	MARKING CO2/4"0"	
430	359000-0401	-		2	MARKING COLLAR 2/4 "1" YELLOW	
440	359000-0405	-		4	MARKING CO2/4"5"	

Pos	Part No	SP	UN	Qty	Description	Page No

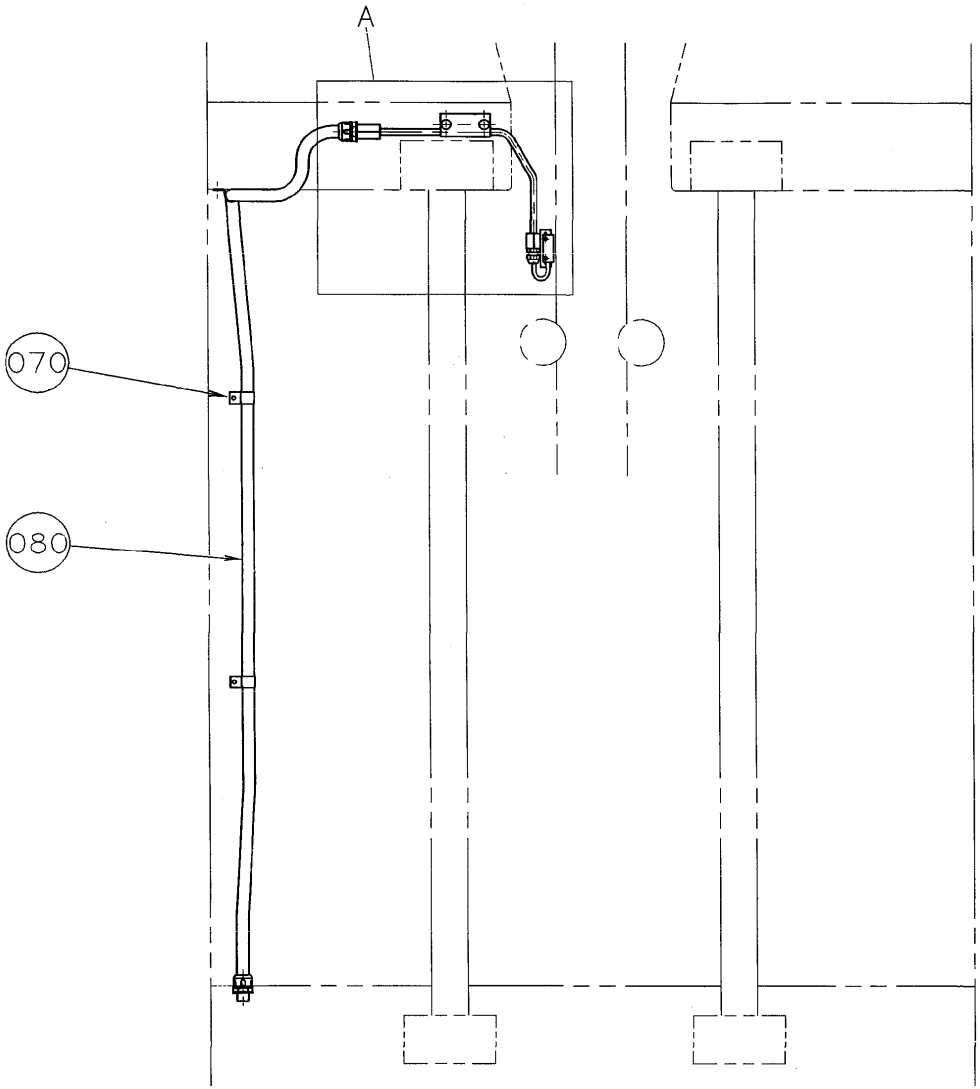
A
070
080

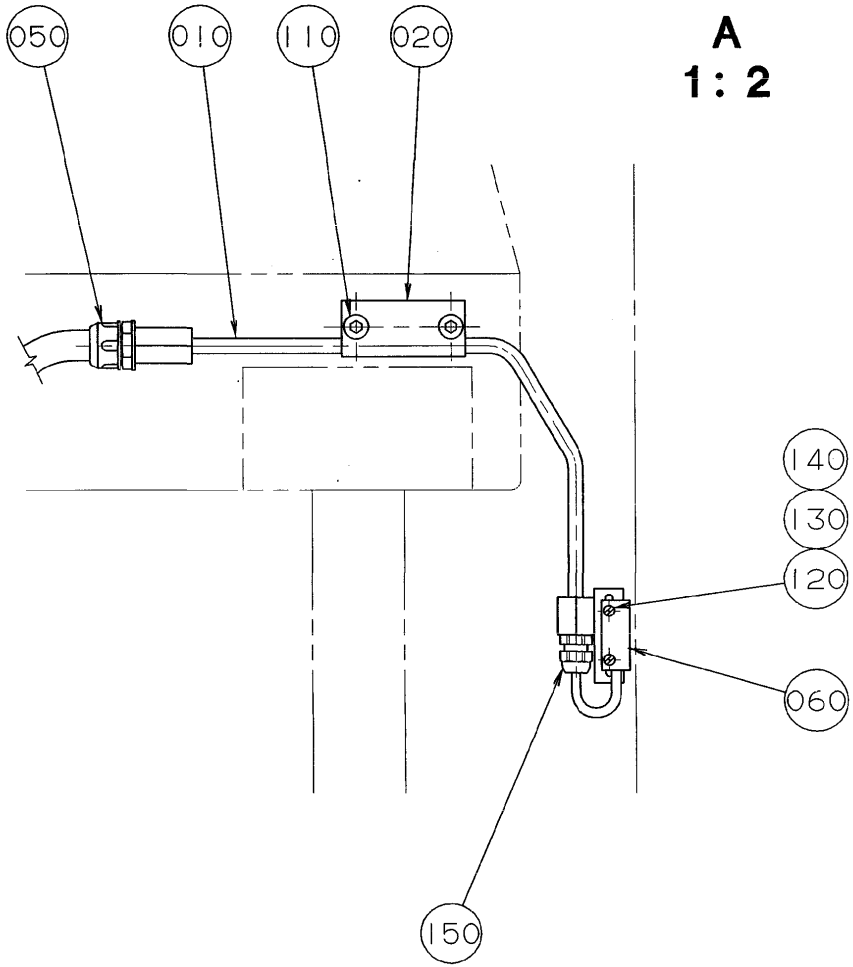
050
010
110
020
A
1 : 2
140
130
120
060
150

ECM: 71170 - 19980121
Group number: 927364-0100
Assembly Drawing: 927364-1_1_AA

Pos	Part No	SP	UN	Qty	Description	Page No
TBA/8						
010	529647-0000	-		1	HOLDER	
Common Parts						
020	529639-0000	-		2	CONNECTION CLAMP	
050	90012-0063	-		2	CABLE GLAND PR 15,2	
060	90044-0112	C		1	PROX.SW. MA 3 SAIET	
070	90074-0004	-		3	CABLE CLIPS, D=16 MM	
080	90152-0033	-	MM	1600	SPIRAL CONDUIT FOR PR 15,2(PG 9)	
110	312115-0461	-		2	SCREW ISO4762 M8X50 A4	
120	312125-0226	-		2	SCREW ISO 1207 M3X12 A4	
130	312605-0310	-		2	HEXAGON NUT, M6M M3 A280	
140	315105-0124	-		2	BRICKA BRB3,2X6RFR	
150	352103-0096	-		1	CABLE GLAND, ST 7, PR 12,5/PG7	

Pos	Part No	SP	UN	Qty	Description	Page No

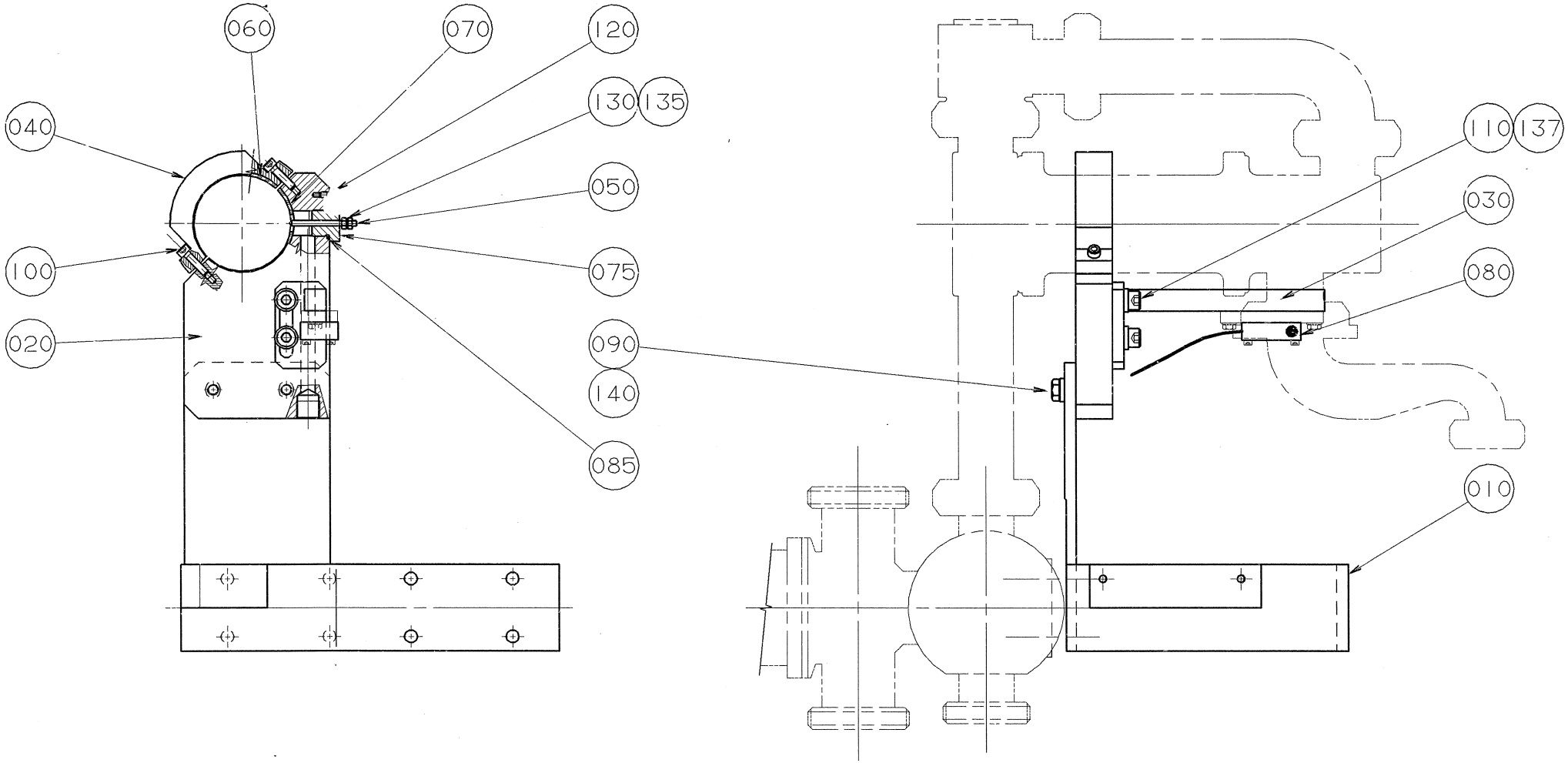
060
070
120
130
135
040
050
100
075
020
090
140
085
110
137
030
080
010

ECM: 71170 - 19980121
Group number: 924300-0100
Assembly Drawing: 924300-1_1_AA

Pos	Part No	SP	UN	Qty	Description	Page No
TBA/8						
010	924350-0000	-		1	BRACKET	
090	312105-0453	-		2	SCREW M6S ISO 4017 M8X25 A480	
140	315115-0165	-		2	WASHER PLAIN, TBRB 8,4/16 H=3	
Common Parts						
020	924352-0000	-		1	BRACKET	
030	924353-0000	-		1	BRACKET	
040	924354-0000	-		1	CLAMP	
050	567070-0013	-		1	ELECTRODE	
060	924518-0000	-		1	GASKET	
070	924519-0000	-		1	GASKET	
075	924703-0000	-		1	BRACKET	
080	90044-0104	-		1	PROX.SWITCH IFM IN 3002	
085	315204-0213	-		1	O-RING 15,2X2,4 MM	
100	312115-0331	-		2	SCREW ISO4762 M5X20 A4	
110	312115-0453	-		2	SCREW ISO4762 M8X25 A4	
120	312125-0285	-		1	SCREW ISO 1207 M4X6 A4	
130	312605-0312	-		2	HEXAGON NUT, M6M M4 A280	
135	315105-0136	-		3	WASHER BRB4,3XRFR	
137	315105-0165	-		2	WASHER BRB8,4X16RFR	

Pos	Part No	SP	UN	Qty	Description	Page No

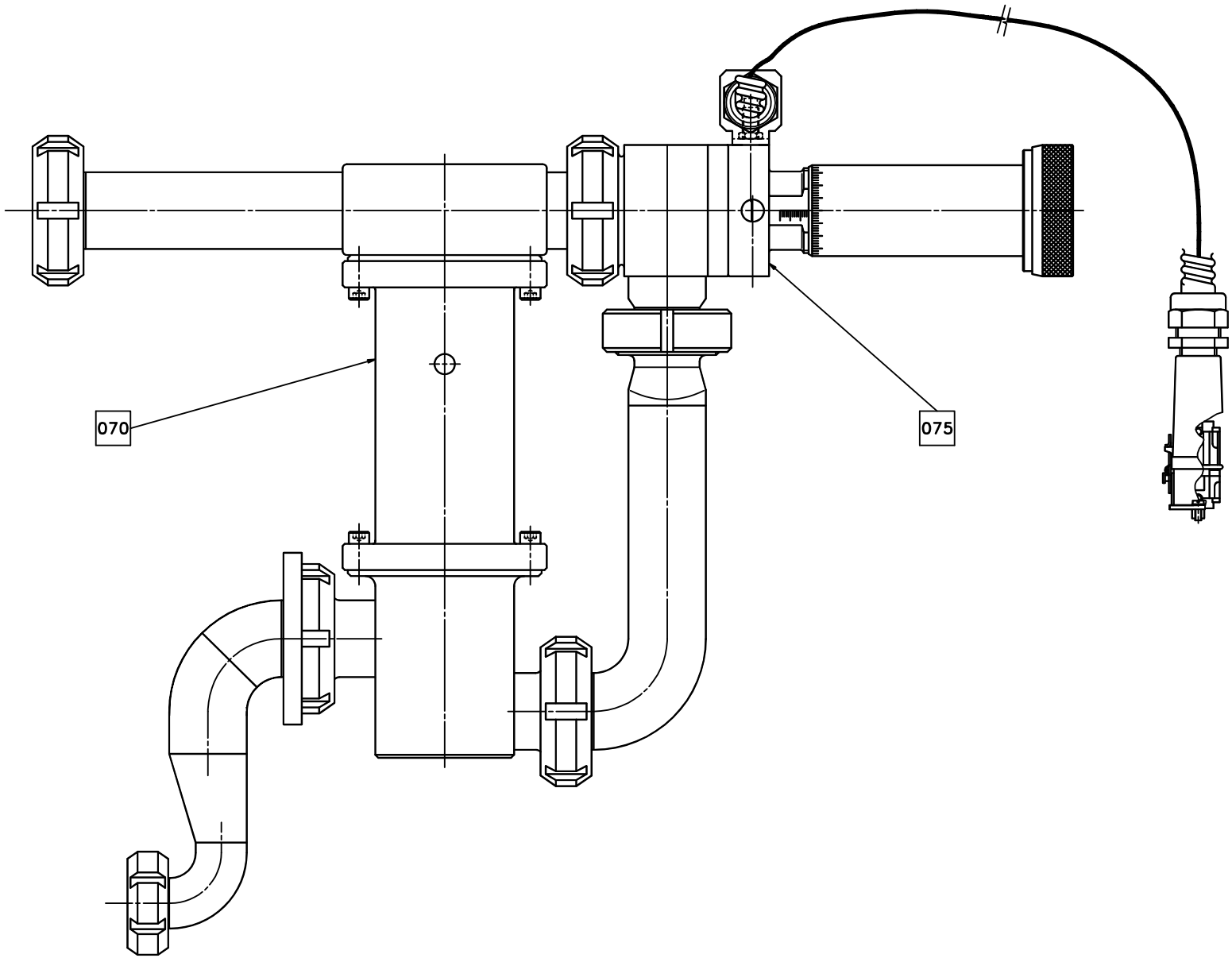
070
075

ECM: 71170 - 19980121
Group number: 925100-0100
Assembly Drawing: 925100-1_1_AA

Pos	Part No	SP	UN	Qty	Description	Page No
-						
070	A924305-0100	-		1	CONSTANT FLOW VALVE	**10-353**
075	A924167-0100	-		1	MANUAL DOSING VALVE	**10-355**

Pos	Part No	SP	UN	Qty	Description	Page No

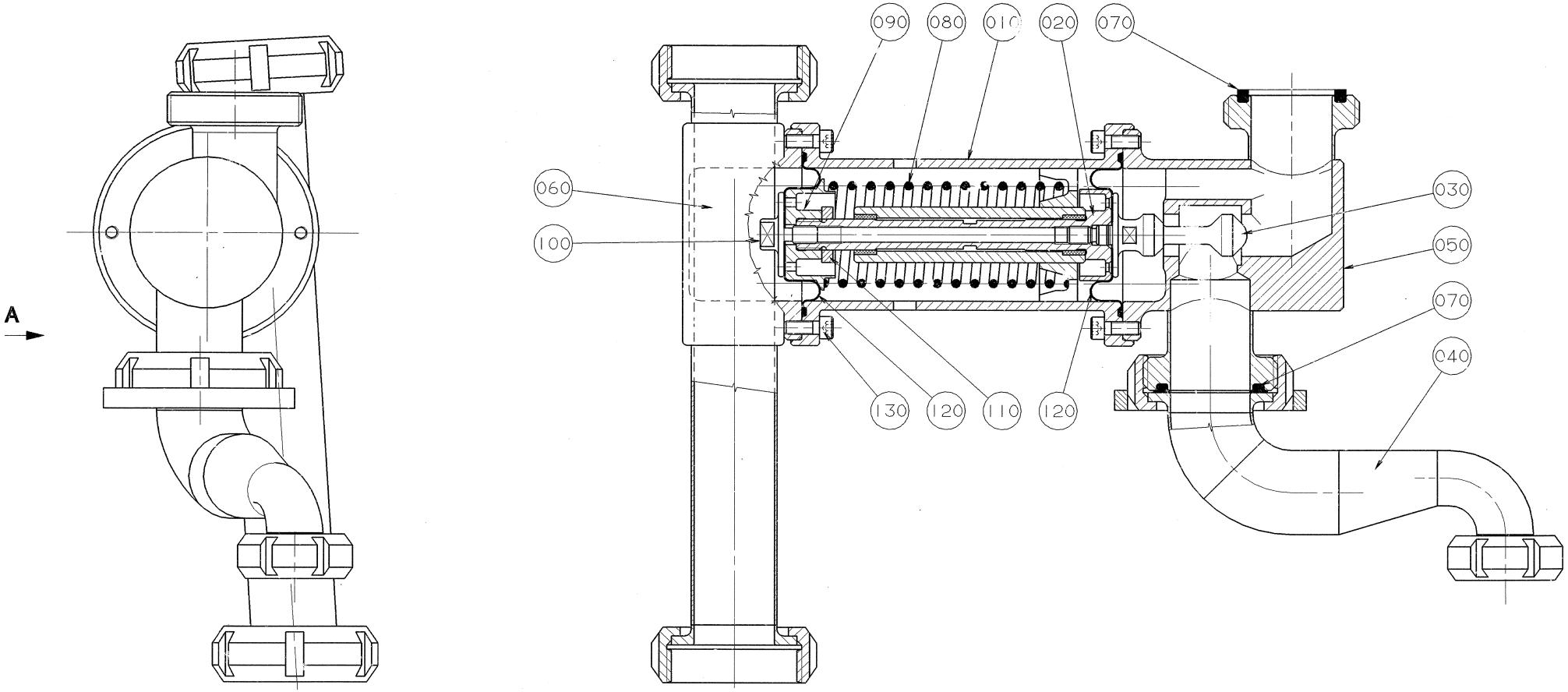
A
090
080
010
020
070
060
100
030
050
070
040
130
120
110
120

ECM: 71170 - 19980121
Group number: 924305-0100
Assembly Drawing: 924305-1_1_AA

Pos	Part No	SP	UN	Qty	Description	Page No
TBA 0500S, TBA 0500B, TBA 0355B, TBA 0375S						
030	795931-0000	-		1	CLOSING DEVICE	
040	924114-0000	-		1	PRODUCT PIPE	
050	926199-0000	-		1	LATERAL BODY VALVE	
TBA 0750B, TBA 1000S, TBA 1000B, TBA 0750S						
030	795932-0000	-		1	CLOSING DEVICE	
040	924114-0000	-		1	PRODUCT PIPE	
050	926198-0000	-		1	LATERAL BODY VALVE	
Common Parts						
010	B924361-0000	-		1	BODY CENTRAL VALVE	
	321116-0177	*-*		*2*	*BEAR. BUSH. WITHOUT FL, 14X18X10 MM*	
020	795930-0000	-		1	TIE ROD	
060	736555-0000	-		1	LATERAL BODY	
070	12242-0003	-		2	GASKET 48X38X5,5	
080	529659-0000	-		1	COMPRESSION SPRING	
090	529908-0000	-		1	WASHER	
100	529910-0000	-		1	THRUST WASHER	
110	736514-0000	-		1	SHOCK ABSORBER	
120	925091-0000	-		2	DIAPHRAGM	
130	312115-0368	-		8	SCREW ISO4762 M6X16 A4	

Pos	Part No	SP	UN	Qty	Description	Page No

Machine Type | Group Description | Used-In | Group Number | Page No

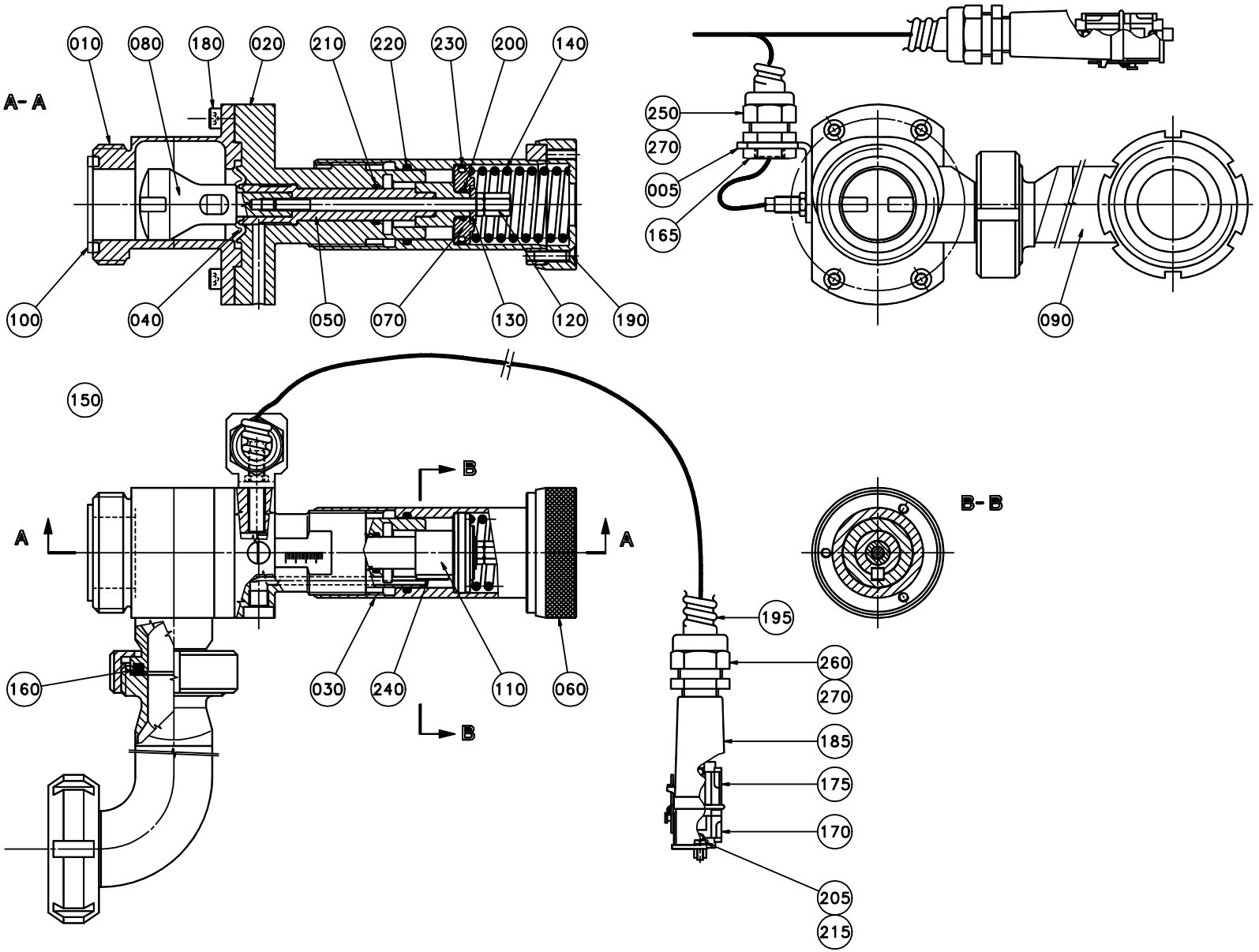
A-A
010
080
180
020
210
220
230
200
140
100
040
050
070
130
120
190
250
270
005
165
090
150
B
A
A
B
B-B
160
030
240
110
060
195
260
270
185
175
170
205
215

ECM: 71647 - 19980626
Group number: 924167-0100
Assembly Drawing: 924167-1_1_AA

Pos	Part No	SP	UN	Qty	Description	Page No
TBA 0500S, TBA 0500B, TBA 0355B, TBA 0375S						
080	924157-0000	-		1	DOSING PISTON	
TBA 0750B, TBA 0750S						
080	924159-0000	-		1	DOSING PISTON	
TBA 1000S, TBA 1000B						
080	924160-0000	-		1	DOSING PISTON	
Common Parts						
005	1348261-0000	-		1	BRACKET	
010	924365-0000	-		1	DOSING VALVE BODY	
020	924149-0000	-		1	VALVE BODY	
030	924150-0000	-		1	CYLINDER	
040	736508-0001	-		1	MEMBRANE	
050	924151-0000	-		1	SHAFT	
060	924152-0000	-		1	KNOB	
070	924153-0000	-		1	PISTON	
090	924370-0000	-		1	PRODUCT PIPE	
100	12242-0003	-		1	GASKET 48X38X5,5	
110	924161-0000	-		1	SLEEVE	
120	924163-0000	-		1	SCREW	
130	924164-0000	-		1	WASHER	
140	924567-0000	-		1	COMPRESSION SPRING	
150	90044-0111	-		1	PROX.SW. INSOR M8 IX 020 814	
160	90091-0275	-		1	GASKET 40X26X6 MM	
165	90099-0104	-		1	NUT, PR 15,2 (PG9)	
170	90110-0511	-		1	MALE SCREW CONNECTION	
175	90110-0512	-		1	FEMALE SCREW CONNECTION	
180	312115-0372	-		4	SCREW ISO4762 M6X25 A4	
185	90110-0372	-		1	PLUG HOOD	
190	312155-0331	-		3	SCREW EN 10642 MF6S M5X20 A480	
195	90152-0059	-	M	1	SPIRAL CONDUIT, 18X12, UL 1211	
200	315204-0210	-		1	O-RING 11,3X2,4 MM	
205	312125-0222	-		2	SCREW ISO 1207 M3X8 A4	
210	315204-0213	-		1	O-RING 15,2X2,4 MM	
215	315105-0124	-		2	BRICKA BRB3,2X6RFR	
220	315204-0221	-		1	O-RING 34,2X3 MM	
230	315224-0115	-		1	PISTON SEAL, GLIDORING 32X40X3,5 MM	
240	315701-0230	-		1	PARALLEL KEY W. ROUND ENDS 6X6X16 MM	
250	353243-0001	-		1	EXTENDED WITHOUT INSERT, PG9	
260	353243-0002	-		1	EXTENDED WITHOUT INSERT, PG11	
270	353249-0008	-		2	INSERT, SINGEL HOLE, EK 152/7	

Machine Type	Group Description	Used-In	Group Number	Page No

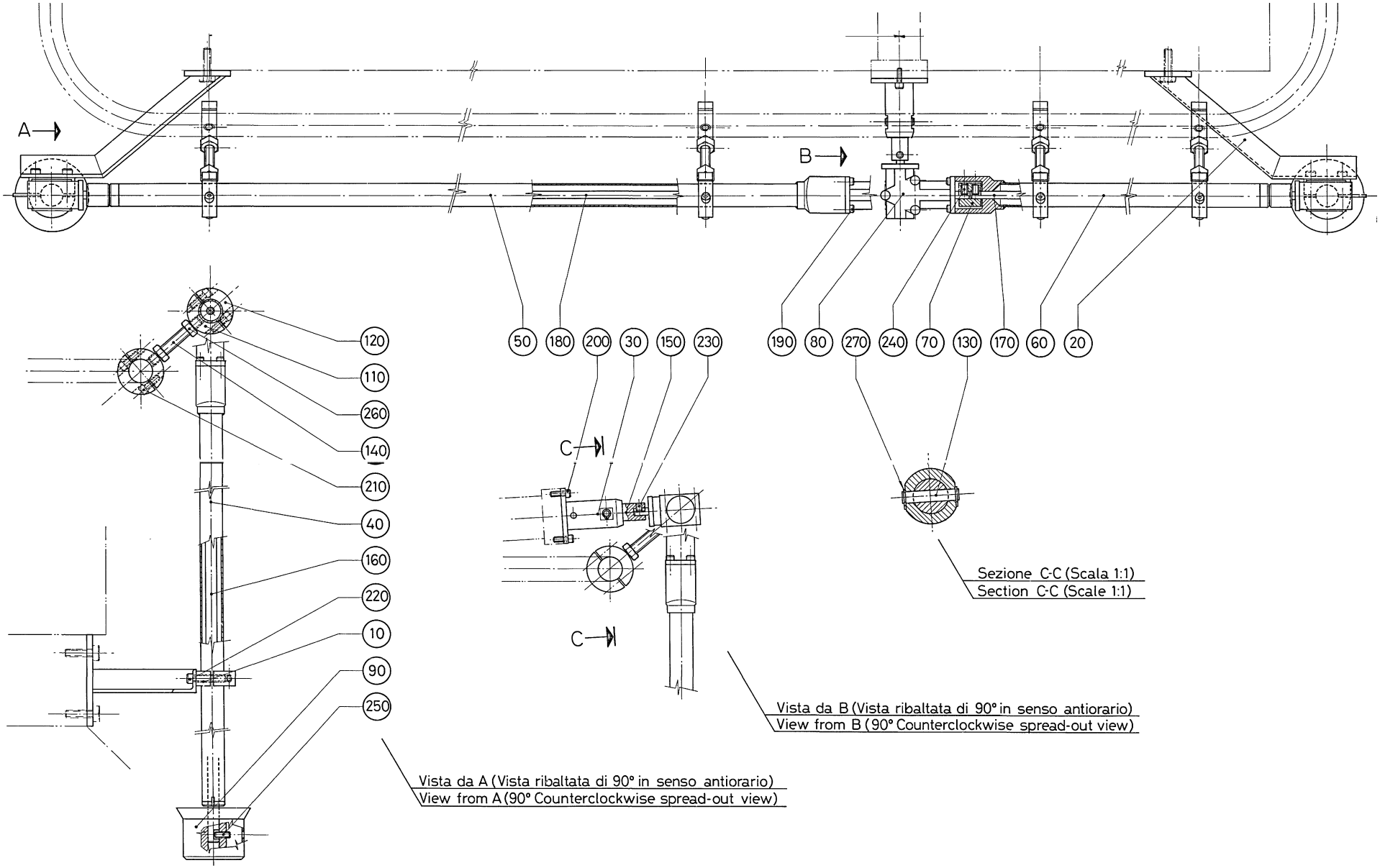
A
B
C
C
120
110
260
140
210
40
160
220
10
90
250
50
180
200
30
150
230
190
80
270
240
70
130
170
60
20
Sezione C-C (Scala 1:1)
Section C-C (Scale 1:1)
Vista da B (Vista ribaltata di 90° in senso antiorario)
View from B (90° Counterclockwise spread-out view)
Vista da A (Vista ribaltata di 90° in senso antiorario)
View from A (90° Counterclockwise spread-out view)

ECM: - -
Group number: 736590-0100
Assembly Drawing: 736590-1_1_AA

Pos	Part No	SP	UN	Qty	Description	Page No
-						
010	457614-0001	-		1	CLAMPING PIECE	
020	735239-0000	-		1	BRACKET	
030	736581-0000	-		1	COUPLING BOX	
040	736582-0002	-		1	SHAFT SLIDE GUIDE	
050	736583-0000	-		1	SHAFT SLIDE GUIDE	
060	736584-0000	-		1	SHAFT SLIDE GUIDE	
070	735018-0000	-		3	SLEEVE ELEMENT	
080	736501-0000	-		2	GEAR	
090	736502-0000	-		1	SHIFTER HANDLE	
110	736578-0000	-		5	CONNECTION CLAMP	
120	736749-0000	-		4	CONNECTION CLAMP	
130	736585-0000	-		1	PIN	
140	736586-0000	-		2	SPACER SCREW	
150	736587-0000	-		1	SHAFT	
160	736588-0002	-		1	SHAFT	
170	736589-0001	-		1	SHAFT	
180	736589-0002	-		1	SHAFT	
190	312115-0289	-		8	SCREW ISO4762 M4X10 A4	
200	312115-0329	-		2	SCREW ISO4762 M5X16 A4	
210	312115-0370	-		8	SCREW ISO4762 M6X20 A4	
220	312115-0374	-		2	SCREW ISO4762 M6X30 A4	
230	312318-0362	-		1	SCREW ISO4029 M6X8 A4	
240	312318-0366	-		6	SCREW ISO4029 M6X12 A4	
250	312318-0368	-		1	SCREW ISO4029 M6X16 A4	
260	312605-0320	-		4	HEXAGON NUT, M6M M10 A280	
270	315751-0103	-		2	RETAIN. RING, 6	

Pos	Part No	SP	UN	Qty	Description	Page No

Machine Type | Group Description | Used-In | Group Number | Page No

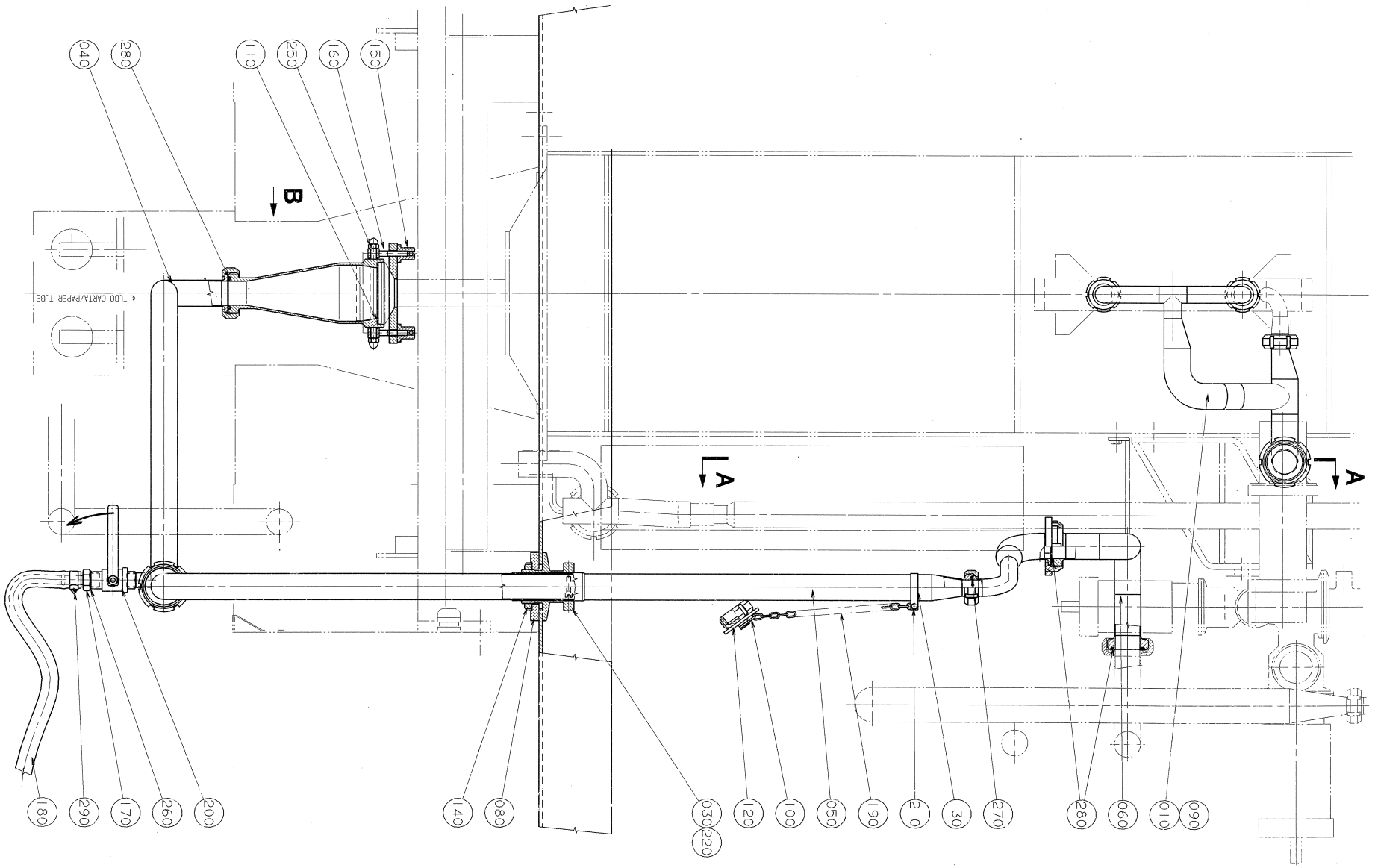
040
280
110
250
160
150
B
A
A
TUBO CARTA/PAPER TUBE
180
290
170
260
200
140
080
030
220
120
100
050
190
210
130
270
280
060
010
090

ECM: 71170 - 19980121
Group number: 924304-0100
Assembly Drawing: 924304-1_1_AA

This list covers pages from 10-358 to 10-361

Pos	Part No	SP	UN	Qty	Description	Page No
TBA 0375S						
020	924635-0000	-		1	CLEANING CUP	
070	925588-0000	-		1	COVER	
110	449993-0000	-		1	GASKET	
TBA 0500B, TBA 0750B, TBA 1000B						
020	924632-0000	-		1	CLEANING CUP	
070	924636-0000	-		1	COVER	
110	458786-0000	-		1	GASKET	
TBA 0500S, TBA 0355B						
020	924634-0000	-		1	CLEANING CUP	
070	924638-0000	-		1	COVER	
110	449992-0000	-		1	GASKET	
TBA 0750S						
020	924633-0000	-		1	CLEANING CUP	
070	924637-0000	-		1	COVER	
110	544300-0000	-		1	GASKET	
TBA 1000S						
020	925222-0000	-		1	CLEANING CUP	
070	925223-0000	-		1	COVER	
110	569106-0000	-		1	GASKET	
Common Parts						
010	924504-0000	-		1	CLEANING PIPE	
030	924196-0000	-		1	CLAMP	
040	924212-0000	-		1	CLEANING PIPE	
050	924213-0000	-		1	CLEANING PIPE	
060	924303-0000	-		1	CLEANING PIPE	
080	924197-0000	-		1	WASHER	
090	924505-0000	-		1	CLEANING PIPE	
100	209183-0000	-		1	RING	
120	795710-0000	-		1	LID	
130	924215-0000	-		1	CLAMP	
140	924216-0000	-		1	RING NUT	
150	924640-0000	-		2	NUT	
160	924641-0000	-		2	SCREW	
170	90055-0071	-		1	HOSE NIPPLE, EXT.THR. R1/2X13 MM	
180	90148-0021	-	MM	2500	HOSE	
190	90155-0008	-	MM	250	HANGER CHAIN, 18	
200	90187-0082	-		1	BALL VALVE G1/2	
210	312105-0327	-		1	SCREW M6S ISO 4017 M5X12 A480	
220	312115-0370	-		2	SCREW ISO4762 M6X20 A4	
230	312115-0374	-		1	SCREW ISO4762 M6X30 A4	
240	312705-0316	-		1	NUT HEX. DOMED CAP MHM-6 M6 A280	
250	312705-0318	-		2	NUT HEX. DOMED CAP MHM-6 M8 A280	
260	315233-0113	-		1	WASHER CAPTIVE SEALING G1/2	
270	315250-0101	-		1	GASKET 32X25X5,5 MM	
280	315250-0103	-		4	GASKET 48X38X5,5 MM	
290	342991-0104	-		1	HOSE CLIP,WORM DRIVE TYPE (23)-27	

Machine Type | Group Description | Used-In | Group Number | Page No

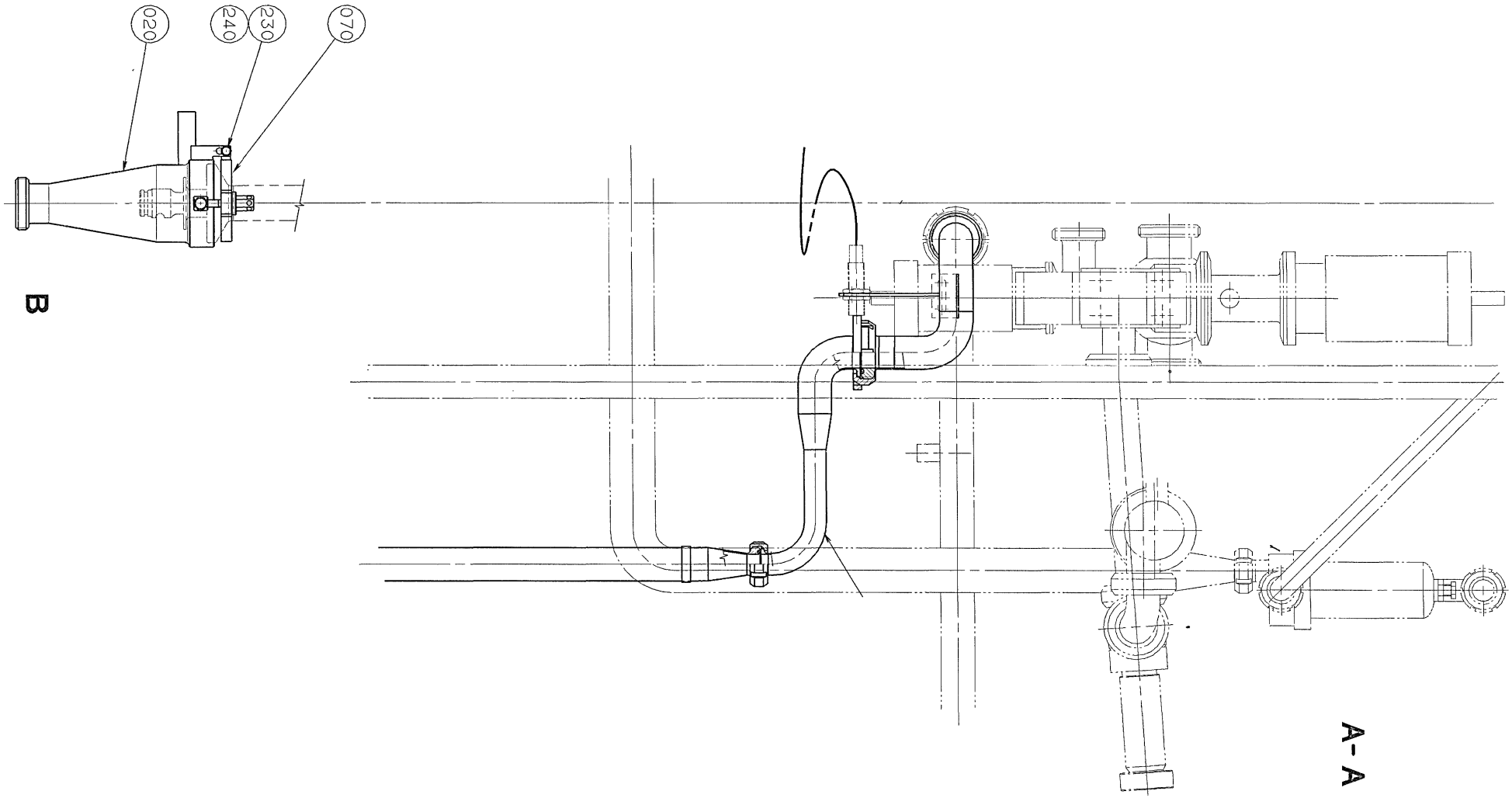
020
240
230
070
B
A - A

ECM: 71170 - 19980121
Group number: 924304-0100
Assembly Drawing: 924304-2_1_AA

This list covers pages from 10-358 to 10-361

Pos	Part No	SP	UN	Qty	Description	Page No
TBA 0375S						
020	924635-0000	-		1	CLEANING CUP	
070	925588-0000	-		1	COVER	
110	449993-0000	-		1	GASKET	
TBA 0500B, TBA 0750B, TBA 1000B						
020	924632-0000	-		1	CLEANING CUP	
070	924636-0000	-		1	COVER	
110	458786-0000	-		1	GASKET	
TBA 0500S, TBA 0355B						
020	924634-0000	-		1	CLEANING CUP	
070	924638-0000	-		1	COVER	
110	449992-0000	-		1	GASKET	
TBA 0750S						
020	924633-0000	-		1	CLEANING CUP	
070	924637-0000	-		1	COVER	
110	544300-0000	-		1	GASKET	
TBA 1000S						
020	925222-0000	-		1	CLEANING CUP	
070	925223-0000	-		1	COVER	
110	569106-0000	-		1	GASKET	
Common Parts						
010	924504-0000	-		1	CLEANING PIPE	
030	924196-0000	-		1	CLAMP	
040	924212-0000	-		1	CLEANING PIPE	
050	924213-0000	-		1	CLEANING PIPE	
060	924303-0000	-		1	CLEANING PIPE	
080	924197-0000	-		1	WASHER	
090	924505-0000	-		1	CLEANING PIPE	
100	209183-0000	-		1	RING	
120	795710-0000	-		1	LID	
130	924215-0000	-		1	CLAMP	
140	924216-0000	-		1	RING NUT	
150	924640-0000	-		2	NUT	
160	924641-0000	-		2	SCREW	
170	90055-0071	-		1	HOSE NIPPLE, EXT.THR. R1/2X13 MM	
180	90148-0021	-	MM	2500	HOSE	
190	90155-0008	-	MM	250	HANGER CHAIN, 18	
200	90187-0082	-		1	BALL VALVE G1/2	
210	312105-0327	-		1	SCREW M6S ISO 4017 M5X12 A480	
220	312115-0370	-		2	SCREW ISO4762 M6X20 A4	
230	312115-0374	-		1	SCREW ISO4762 M6X30 A4	
240	312705-0316	-		1	NUT HEX. DOMED CAP MHM-6 M6 A280	
250	312705-0318	-		2	NUT HEX. DOMED CAP MHM-6 M8 A280	
260	315233-0113	-		1	WASHER CAPTIVE SEALING G1/2	
270	315250-0101	-		1	GASKET 32X25X5,5 MM	
280	315250-0103	-		4	GASKET 48X38X5,5 MM	
290	342991-0104	-		1	HOSE CLIP,WORM DRIVE TYPE (23)-27	

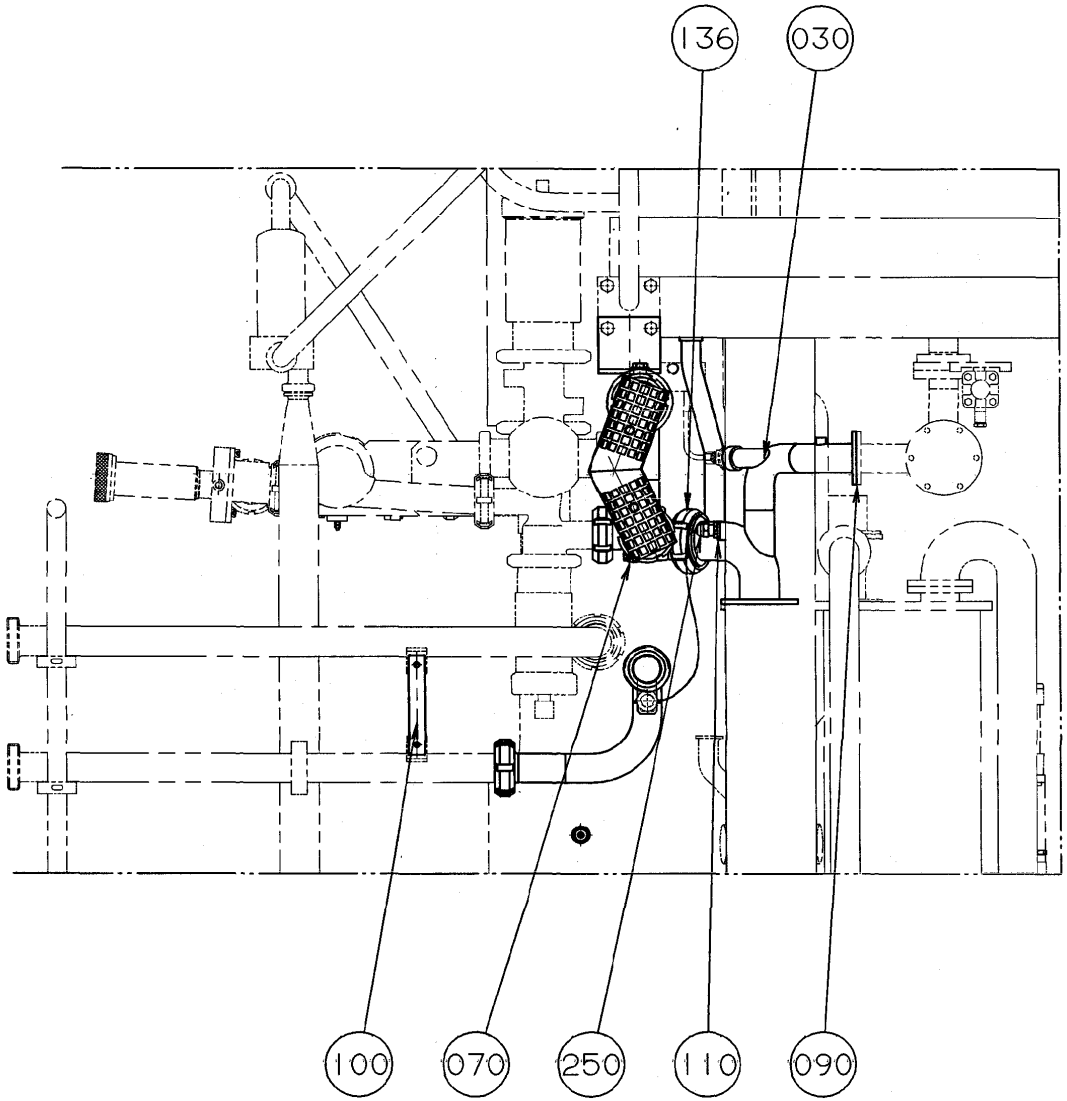
136
030
100
070
250
110
090

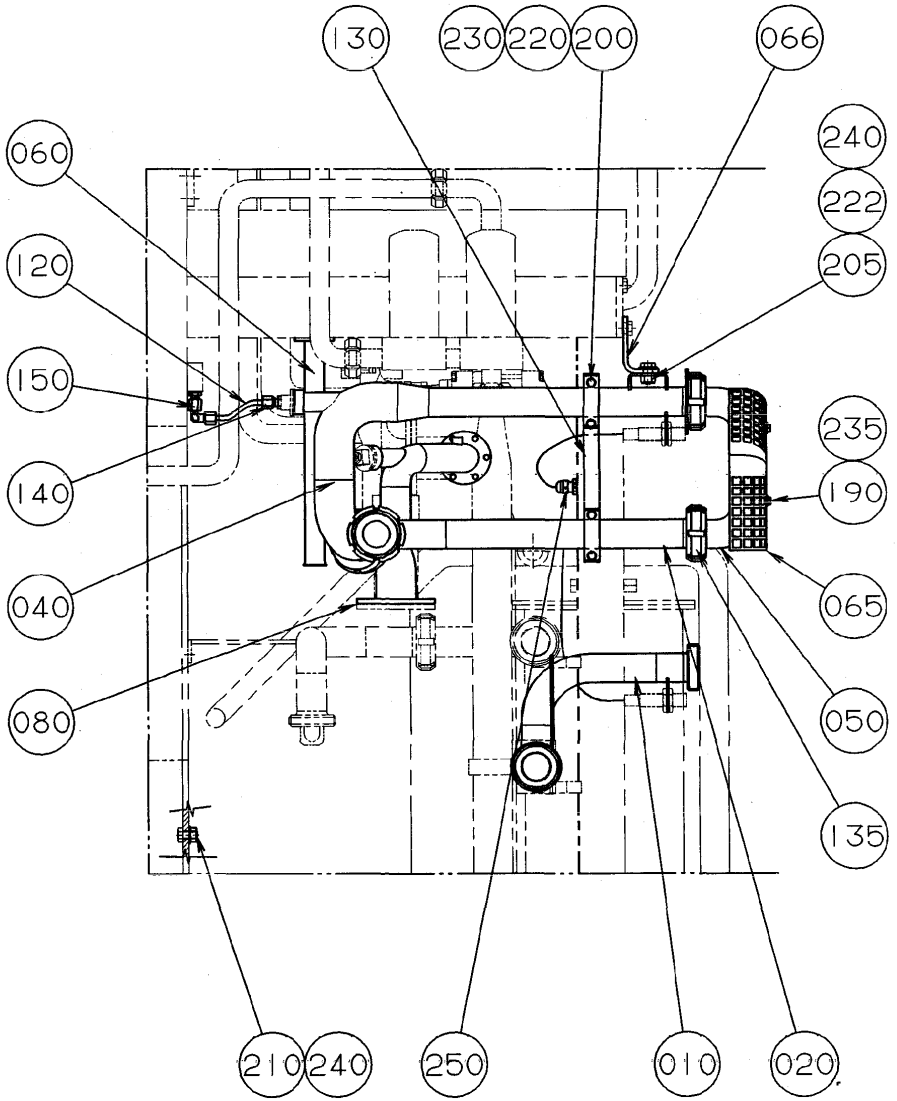
130
230
220
200
066
240
222
205
060
120
150
235
140
190
065
040
080
050
135
210
240
250
010
020

ECM: 72791 - 19990721
Group number: 925576-0200
Assembly Drawing: 925576-2_1_AA

Pos	Part No	SP	UN	Qty	Description	Page No
TBA/8-110V						
250	352103-0101	-		2	CABLE GLAND, ST 9, PR15,2/PG9	
Common Parts						
010	926812-0000	-		1	PIPE	
020	925516-0000	-		1	PIPE	
030	925550-0000	-		1	BRANCH PIPE	
040	926811-0000	-		1	BRANCH PIPE	
050	926814-0000	-		1	PIPE	
060	925559-0000	-		1	TUBE	
065	926815-0000	-		1	TOUCH GUARD	
066	926744-0000	-		1	BAR CLAMP	
080	531737-0000	-		1	GASKET	
090	531742-0000	-		1	GASKET	
100	925557-0000	-		1	SUPPORT	
110	925577-0000	-		1	PLUG	
120	926825-0000	-		1	PIPE	
130	926816-0000	-		1	BAR CLAMP	
135	12242-0003	-		3	GASKET 48X38X5,5	
136	12242-0005	-		1	GASKET 61X51X5,5	
140	90030-0051	-		1	CONN. STR., 6-R1/8, EXT. THREAD	
150	90030-0171	-		1	ADJUSTABLE ELBOW CONNECTION,EXT 6-G1/8	
190	312105-0364	-		2	SCREW M6S ISO 4017 M6X10 A480	
205	312105-0492	-		1	SCREW M6S ISO 4017 M10X22 A480	
210	312605-0320	-		1	HEXAGON NUT, M6M M10 A280	
222	312812-0320	-		1	HEXAGON NUT, NY-LOCK M10 A480	
235	315105-0156	-		2	WASHER BRB 6.7X14 RFR	
240	315105-0173	-		2	WASHER BRB10,5X22RFR	

Pos	Part No	SP	UN	Qty	Description	Page No

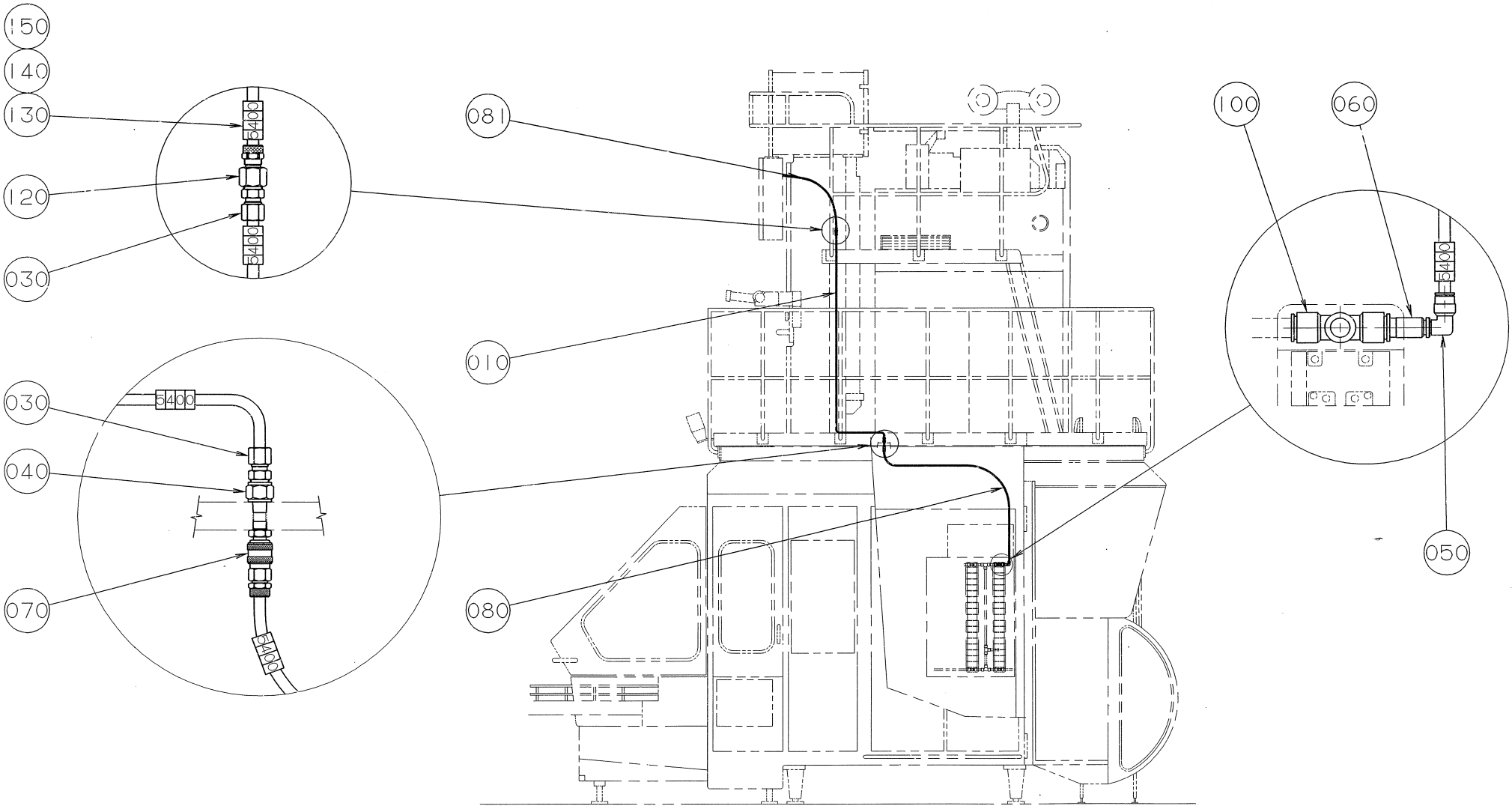
150
140
130
120
030
030
040
070
081
010
080
100
060
050
5400

ECM: - -
Group number: 927282-0100
Assembly Drawing: 927282-1_1_AA

Pos	Part No	SP	UN	Qty	Description	Page No
-						
010	924954-0000	-		1	TUBE	
030	90030-0086	-		2	CONN. STR., 8-R1/4, EXT. THREAD	
040	90030-0116	-		1	NIPPLES, REDUCING, EXT. THR. NO. 2520	
050	90055-0118	-		1	ELBOW PIPE JOINT -8MM	
060	90055-0129	-		1	REDUCER 8-14	
070	90163-0079	-		1	SLEEVE 5480-8/6	
080	90166-0013	-	MM	1800	TUBE 8 MM PA BLUE	
081	90166-0013	-	MM	1500	TUBE 8 MM PA BLUE	
100	342748-0110	-		1	T-CONNECTION 14MM	
120	342923-0122	-		1	STRAIGHT COUPL.,INT.THREADED 8/6-G1/4"	
130	359000-0400	-		12	MARKING CO2/4"0"	
140	359000-0404	-		6	MARKING COLLAR PA2/4 "4" YELLOW	
150	359000-0405	-		6	MARKING CO2/4"5"	

Pos	Part No	SP	UN	Qty	Description	Page No

Machine Type | Group Description | Used-In | Group Number | Page No

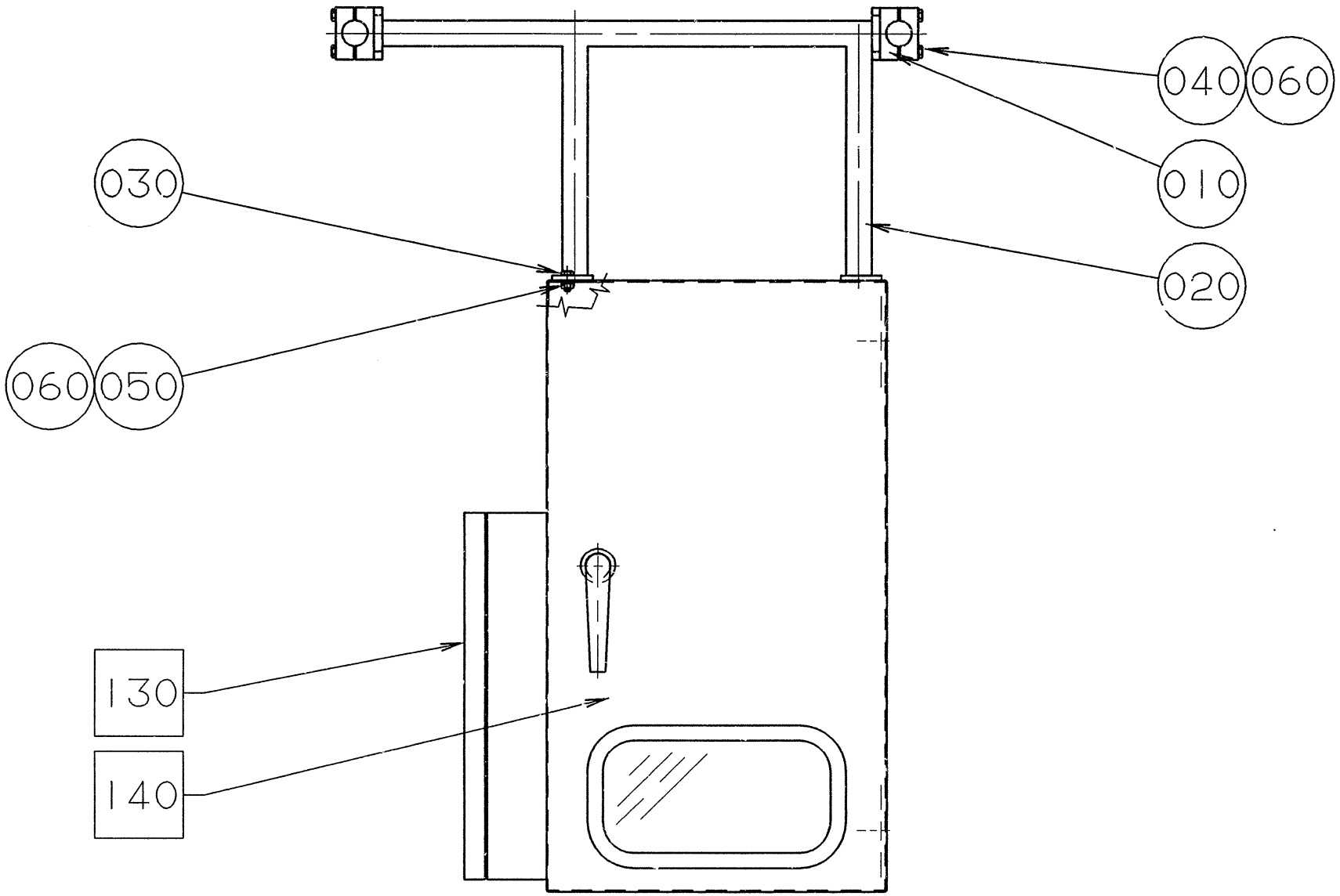
040
060
010
020
030
060
050
130
140

ECM: 70784 - 19970507
Group number: 927245-0100
Assembly Drawing: 927245-1_1_AA

Pos	Part No	SP	UN	Qty	Description	Page No
-						
010	457614-0001	-		4	CLAMPING PIECE	
020	735046-0000	-		1	BRACKET	
030	312105-0368	-		4	SCREW M6S M6X16 A280	
040	312105-0379	-		4	SCREW M6S ISO 4014 M6X45 A480	
050	312605-0316	-		4	HEXAGON NUT, M6M M6 A280	
060	315105-0153	-		8	WASHER BRB6,4X12RFR	
F130	A927361-0100	-		1	CONNECTION BOX	**10-369**
F140	A927246-0100	-		1	PNEUMATIC CABINET	**10-371, 10-373**

Pos	Part No	SP	UN	Qty	Description	Page No

Machine Type | Group Description | Used-In | Group Number | Page No

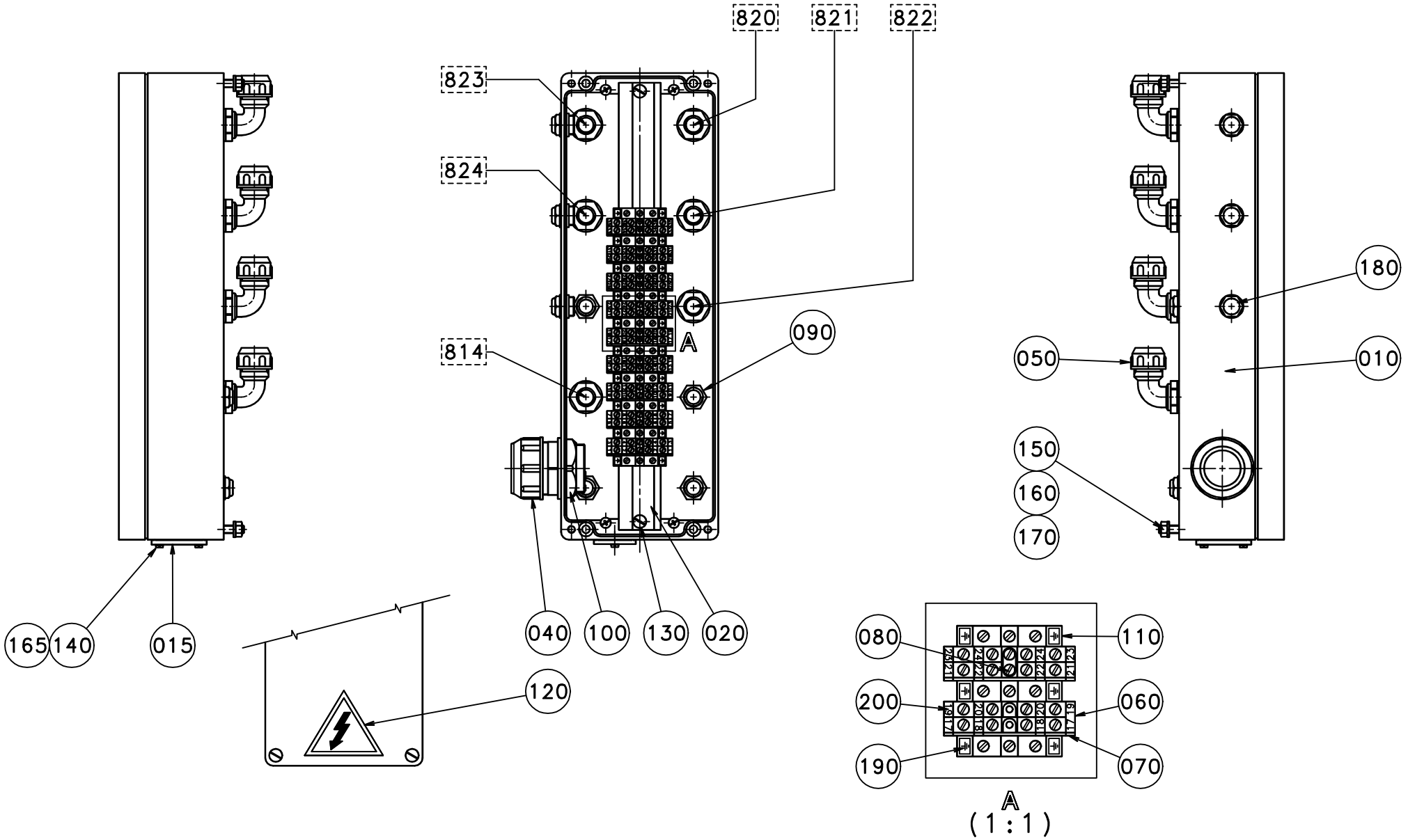
820
821
822
823
824
814
090
A
180
050
010
150
160
170
165
140
015
040
100
130
020
120
080
110
200
060
190
070
A
(1:1)

ECM: 71646 - 19980626
Group number: 927361-0100
Assembly Drawing: 927361-1_1_AA

Pos	Part No	SP	UN	Qty	Description	Page No
-						
010	1346894-0000	-		1	BOX	
015	1348385-0000	-		1	SEALING PLATE	
020	490252-0000	-		1	RAIL	
040	90012-0061	-		1	GLAND	
050	90012-0064	-		6	GLAND	
060	90077-0090	-		18	FEED THROUGH TERMINAL, 10-00035546-1	
070	90077-0309	-		9	END PLATE	
080	90077-0316	-		4	BRIDGE CONNECTOR	
090	90099-0001	-		7	NUT PR 15,2 MäSSING	
100	90099-0011	-		1	NUT PR 37 BRASS	
110	90135-0022	-		10	EARTH TERMINAL EK 2,5N	
120	90194-0016	-		1	WARNING SIGN, RISK OF ELECTRIC SHOCK	
130	312121-0364	-		2	SCREW ISO 1207 M6X10 4.8 - 5.8 Z.PL.	
140	312125-0222	-		2	SCREW ISO 1207 M3X8 A4	
150	312125-0374	-		4	SCREW ISO 1207 M6X30 A4	
160	312605-0316	-		4	HEXAGON NUT, M6M M6 A280	
165	315105-0124	-		2	BRICKA BRB3,2X6RFR	
170	315105-0153	-		4	WASHER BRB6,4X12RFR	
180	352101-0102	-		7	LEAD-IN, PR15,2/PG9, E-1457515	
190	359011-0202	-		20	SIGN BOARD(GROUND)	
200	359011-0801	-		2	SIGN BOARD BSFW 1-50	

Pos	Part No	SP	UN	Qty	Description	Page No

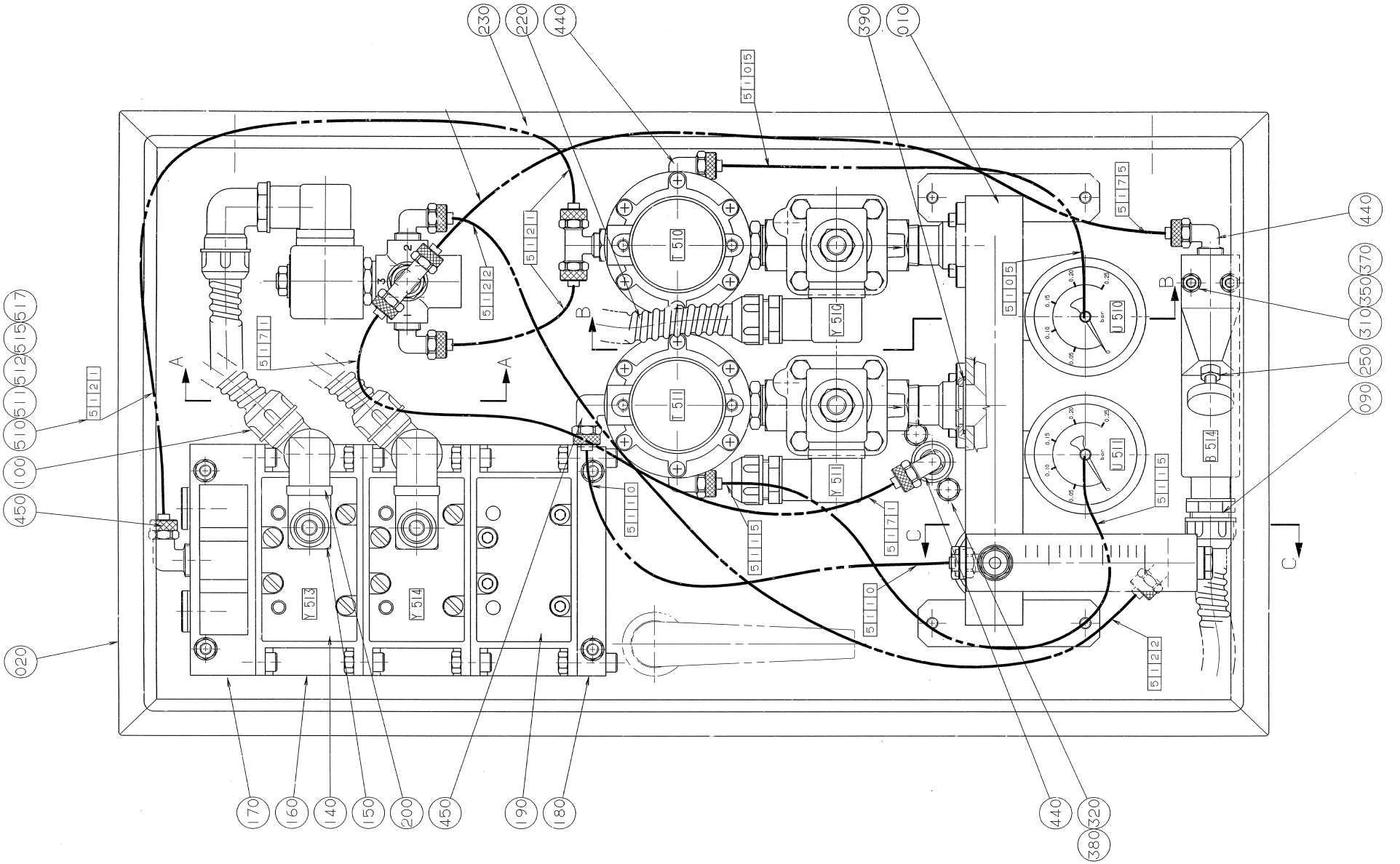
230
220
440
390
010
5 1 0 1 5
5 1 2 1
5 1 2 2
5 1 1 7 1
T 510
Y 510
T 511
Y 511
5 1 1 0 5
5 1 1 7 5
U 510
U 511
B 514
5 1 1 1 5
5 1 1 7 1
5 1 1 1 0
5 1 1 1 5
5 1 1 2 2
Y 513
Y 514
A
B
C
440
370
350
310
250
090
211
105
115
125
155
175
100
450
020
170
160
140
150
200
450
190
180
440
320
380

ECM: 71170 - 19980121
Group number: 927246-0100
Assembly Drawing: 927246-1_1_AA

This list covers pages from 10-370 to 10-373

Pos	Part No	SP	UN	Qty	Description	Page No
TBA 0355B, TBA 0375S						
070	736526-0000	-		1	FLOW METER	
TBA 0500S, TBA 0500B, TBA 0750B, TBA 1000S, TBA 1000B, TBA 0750S						
070	736527-0000	-		1	FLOW METER	
Common Parts						
010	795957-0000	-		1	CONNECTION PLATE	
020	927263-0000	-		1	BOX	
030	795956-0000	-		2	NIPPLE	
040	927110-0000	-		1	AIR-INERT GAS DIAGRAM	
050	927111-0000	-		1	PNEUMATIC BOX SURVEY	
055	20497-0000	-		1	GROUP NUMBER PLATE	
060	735053-0000	-		1	SLEEVE ELEMENT	
080	926011-0000	-		2	REDUCTION	
085	927113-0000	-		1	SPACER ELEMENT	
090	90012-0063	-		3	CABLE GLAND PR 15,2	
100	90012-0064	-		3	GLAND	
110	90030-0071	-		1	CONN. ELBOW WA 8-R1/4	
120	90030-0088	-		1	CONN. STR., 12-R1/4, EXT. THREAD	
140	B90042-0074	-		2	SOLENOID VALVE MECMAN 581-211-100	
	90042-0371	*C*		*1*	*WEAR & TEAR PARTS KIT*	
	90042-0385	*-*		*1*	*SEAL KIT 04904 273 09*	
144	90042-0210	-		2	SOLENOID VALVE LUCIFER 221 G 15-30	
147	90042-0238	-		1	SOLENOID VALVE HONEYWELL LUCIFER 133 T23	
150	90042-0345	-		2	COIL 24V DC	
160	90042-0367	-		3	PLATE	
170	90042-0368	-		1	CONNECTION	
180	90042-0369	-		1	END PIECE	
190	90042-0370	-		1	BLIND PLATE 580-287-000	
200	90042-0392	-		2	CONTACT 2 POLE + EARTH	
205	90042-0512	-		3	EL.COIL 481865/24	
206	90043-0096	-		2	PRESSURE GAUGE, 7169 MA-63-0,25	
210	90042-0398	-		3	CONTACT 3 POLE+EARTH	
215	90113-0067	-		2	PRESSURE REGULATOR	
220	90152-0033	-	M	6	SPIRAL CONDUIT FOR PR 15,2(PG 9)	
230	90166-0013	-	M	4	TUBE 8 MM PA BLUE	
235	90243-0169	-		1	BINDER CLIP, DIAM.29 MM, NO. 4670819	
240	90257-0006	-		2	FILTER PLUG PARTNO 8145-00-380 TYP F38	
250	90274-0040	-		1	PRESSURE SWITCH	
260	90330-0019	-		2	NIPPLES, EXT. THREAD. R1/2-R3/8	
290	90330-0042	-		2	BUSHING, INT/EXT. THR. R3/8-RP1/4	
295	311520-0320	-		4	RIVET, BLANK 2,4X6	
310	312105-0339	-		2	SCREW M6S ISO 4014 M5X40 A480	
320	312105-0362	-		6	SCREW M6S ISO 4017 M6X8 A480	
330	312105-0378	-		4	SCREW M6S ISO 4014 M6X40 A480	
340	312115-0289	-		8	SCREW ISO4762 M4X10 A4	
345	312115-0297	-		2	SCREW ISO4762 M4X25 A4	
349	312605-0312	-		2	HEXAGON NUT, M6M M4 A280	
350	312605-0314	-		2	HEXAGON NUT, M6M M5 A280	
360	312605-0316	-		4	HEXAGON NUT, M6M M6 A280	
369	315105-0136	-		4	WASHER BRB4,3XRFR	
370	315105-0146	-		4	BRICKA BRB5,3X10RFR	
380	315105-0153	-		14	WASHER BRB6,4X12RFR	
390	315202-0120	-		2	O-RING 27,1X1,6 MM	
400	315233-0101	-		2	WASHER CAPTIVE SEALING M5	
420	342706-0148	-		1	ACCESSORIES, INSERT SLEEVE 8 MM	
430	342713-0210	-		3	PLUG, EXT THREAD HEX SOCKET 8638-00-140	
435	342797-0122	-		3	CONN. BANJO, RINGPIECE 6-1/4	
440	342930-0122	-		6	ELBOW 90 COUPL.,EXT.THREAD 8/6-R1/4"	
450	342930-0123	-		2	ELBOW 90 COUPL.,EXT.THREAD 8/6-R3/8"	
460	342940-0122	-		2	T-COUPLING,EXT.THREAD 8/6-R1/4"	
470	342980-0114	-		2	BANJO-CONNECTION,RING 6/4-G1/4"	
480	342980-0122	-		4	BANJO-CONNECTION,RING 8/6-G1/4"	
490	342980-0304	-		4	BANJO-HOLLOW BOLT COUPL,EXT.THR.01-G1/4"	
500	342980-0314	-		3	BANJO-HOLLOW BOLT COUPL,EXT.THR.02-G1/4"	
510	359000-0400	-		4	MARKING CO2/4"0"	
511	359000-0401	-		24	MARKING COLLAR 2/4 "1" YELLOW	
512	359000-0402	-		7	MARKING COLLAR 2/4 "2" YELLOW	
515	359000-0405	-		21	MARKING CO2/4"5"	
517	359000-0407	-		4	MARKING COLLAR PA2/4 "7" YELLOW	

Machine Type | Group Description | Used-In | Group Number | Page No

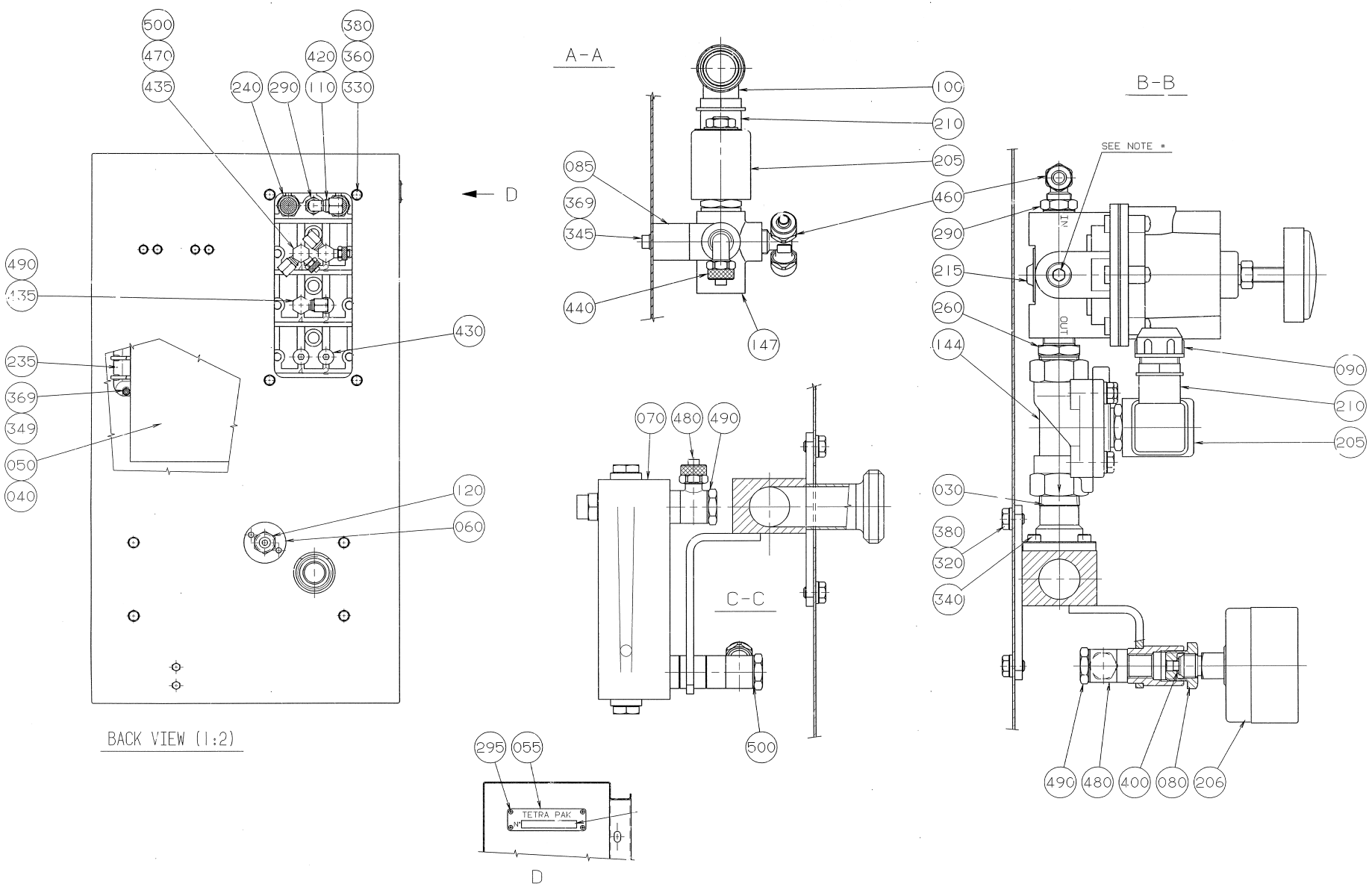
500
470
435
380
420
360
240
290
110
330
D
490
135
430
235
369
349
050
040
120
060
BACK VIEW (1:2)
A-A
100
210
205
085
369
345
460
440
147
B-B
SEE NOTE *
290
215
260
144
090
210
205
030
380
320
340
490
480
400
080
206
070
480
490
C-C
500
295
055
TETRA PAK
D

ECM: 71170 - 19980121
Group number: 927246-0100
Assembly Drawing: 927246-2_1_AA

This list covers pages from 10-370 to 10-373

Pos	Part No	SP	UN	Qty	Description	Page No
TBA 0355B, TBA 0375S						
070	736526-0000	-		1	FLOW METER	
TBA 0500S, TBA 0500B, TBA 0750B, TBA 1000S, TBA 1000B, TBA 0750S						
070	736527-0000	-		1	FLOW METER	
Common Parts						
010	795957-0000	-		1	CONNECTION PLATE	
020	927263-0000	-		1	BOX	
030	795956-0000	-		2	NIPPLE	
040	927110-0000	-		1	AIR-INERT GAS DIAGRAM	
050	927111-0000	-		1	PNEUMATIC BOX SURVEY	
055	20497-0000	-		1	GROUP NUMBER PLATE	
060	735053-0000	-		1	SLEEVE ELEMENT	
080	926011-0000	-		2	REDUCTION	
085	927113-0000	-		1	SPACER ELEMENT	
090	90012-0063	-		3	CABLE GLAND PR 15,2	
100	90012-0064	-		3	GLAND	
110	90030-0071	-		1	CONN. ELBOW WA 8-R1/4	
120	90030-0088	-		1	CONN. STR., 12-R1/4, EXT. THREAD	
140	B90042-0074	-		2	SOLENOID VALVE MECMAN 581-211-100	
	90042-0371	*C*		*1*	*WEAR & TEAR PARTS KIT*	
	90042-0385	*-*		*1*	*SEAL KIT 04904 273 09*	
144	90042-0210	-		2	SOLENOID VALVE LUCIFER 221 G 15-30	
147	90042-0238	-		1	SOLENOID VALVE HONEYWELL LUCIFER 133 T23	
150	90042-0345	-		2	COIL 24V DC	
160	90042-0367	-		3	PLATE	
170	90042-0368	-		1	CONNECTION	
180	90042-0369	-		1	END PIECE	
190	90042-0370	-		1	BLIND PLATE 580-287-000	
200	90042-0392	-		2	CONTACT 2 POLE + EARTH	
205	90042-0512	-		3	EL.COIL 481865/24	
206	90043-0096	-		2	PRESSURE GAUGE, 7169 MA-63-0,25	
210	90042-0398	-		3	CONTACT 3 POLE+EARTH	
215	90113-0067	-		2	PRESSURE REGULATOR	
220	90152-0033	-	M	6	SPIRAL CONDUIT FOR PR 15,2(PG 9)	
230	90166-0013	-	M	4	TUBE 8 MM PA BLUE	
235	90243-0169	-		1	BINDER CLIP, DIAM.29 MM, NO. 4670819	
240	90257-0006	-		2	FILTER PLUG PARTNO 8145-00-380 TYP F38	
250	90274-0040	-		1	PRESSURE SWITCH	
260	90330-0019	-		2	NIPPLES, EXT. THREAD. R1/2-R3/8	
290	90330-0042	-		2	BUSHING, INT/EXT. THR. R3/8-RP1/4	
295	311520-0320	-		4	RIVET, BLANK 2,4X6	
310	312105-0339	-		2	SCREW M6S ISO 4014 M5X40 A480	
320	312105-0362	-		6	SCREW M6S ISO 4017 M6X8 A480	
330	312105-0378	-		4	SCREW M6S ISO 4014 M6X40 A480	
340	312115-0289	-		8	SCREW ISO4762 M4X10 A4	
345	312115-0297	-		2	SCREW ISO4762 M4X25 A4	
349	312605-0312	-		2	HEXAGON NUT, M6M M4 A280	
350	312605-0314	-		2	HEXAGON NUT, M6M M5 A280	
360	312605-0316	-		4	HEXAGON NUT, M6M M6 A280	
369	315105-0136	-		4	WASHER BRB4,3XRFR	
370	315105-0146	-		4	BRICKA BRB5,3X10RFR	
380	315105-0153	-		14	WASHER BRB6,4X12RFR	
390	315202-0120	-		2	O-RING 27,1X1,6 MM	
400	315233-0101	-		2	WASHER CAPTIVE SEALING M5	
420	342706-0148	-		1	ACCESSORIES, INSERT SLEEVE 8 MM	
430	342713-0210	-		3	PLUG, EXT THREAD HEX SOCKET 8638-00-140	
435	342797-0122	-		3	CONN. BANJO, RINGPIECE 6-1/4	
440	342930-0122	-		6	ELBOW 90 COUPL.,EXT.THREAD 8/6-R1/4"	
450	342930-0123	-		2	ELBOW 90 COUPL.,EXT.THREAD 8/6-R3/8"	
460	342940-0122	-		2	T-COUPLING,EXT.THREAD 8/6-R1/4"	
470	342980-0114	-		2	BANJO-CONNECTION,RING 6/4-G1/4"	
480	342980-0122	-		4	BANJO-CONNECTION,RING 8/6-G1/4"	
490	342980-0304	-		4	BANJO-HOLLOW BOLT COUPL,EXT.THR.01-G1/4"	
500	342980-0314	-		3	BANJO-HOLLOW BOLT COUPL,EXT.THR.02-G1/4"	
510	359000-0400	-		4	MARKING CO2/4"0"	
511	359000-0401	-		24	MARKING COLLAR 2/4 "1" YELLOW	
512	359000-0402	-		7	MARKING COLLAR 2/4 "2" YELLOW	
515	359000-0405	-		21	MARKING CO2/4"5"	
517	359000-0407	-		4	MARKING COLLAR PA2/4 "7" YELLOW	

Machine Type | Group Description | Used-In | Group Number | Page No

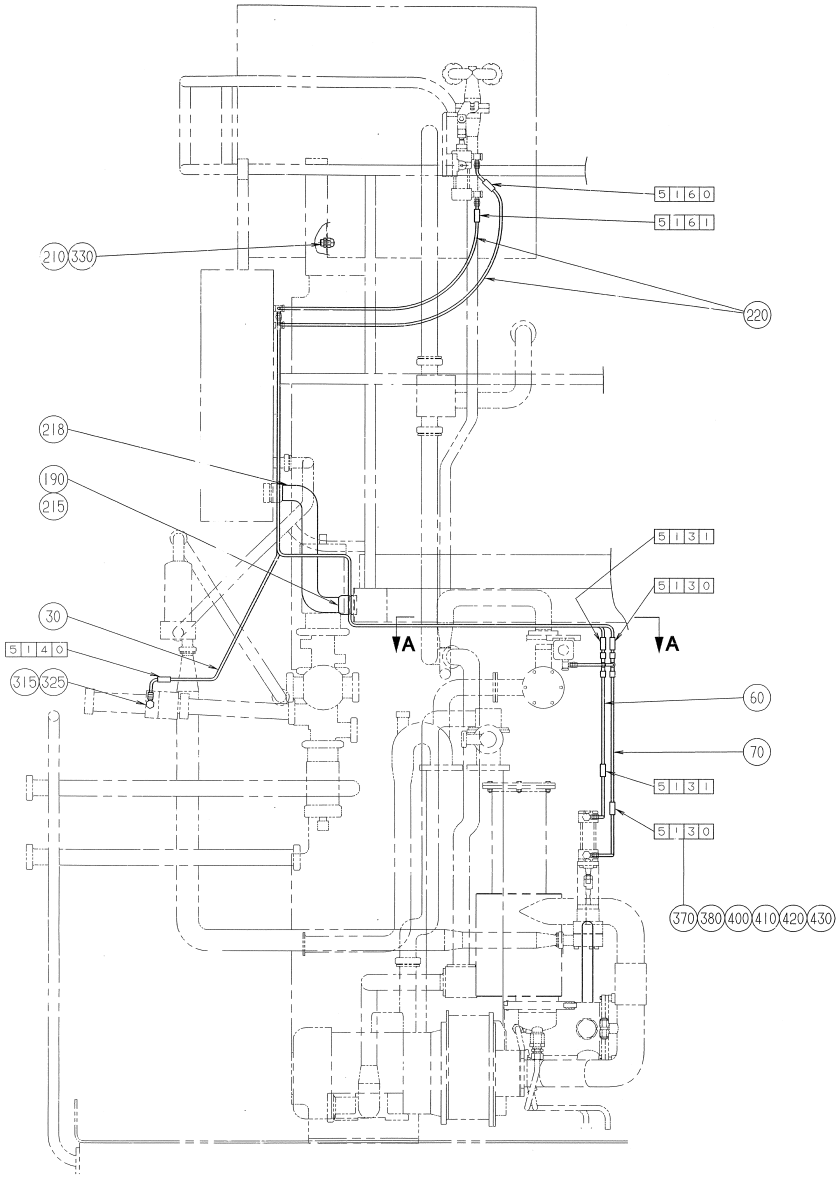
5160
5161
210
330
220
218
190
215
5131
5130
30
5140
315
325
A
A
60
70
5131
5130
370
380
400
410
420
430

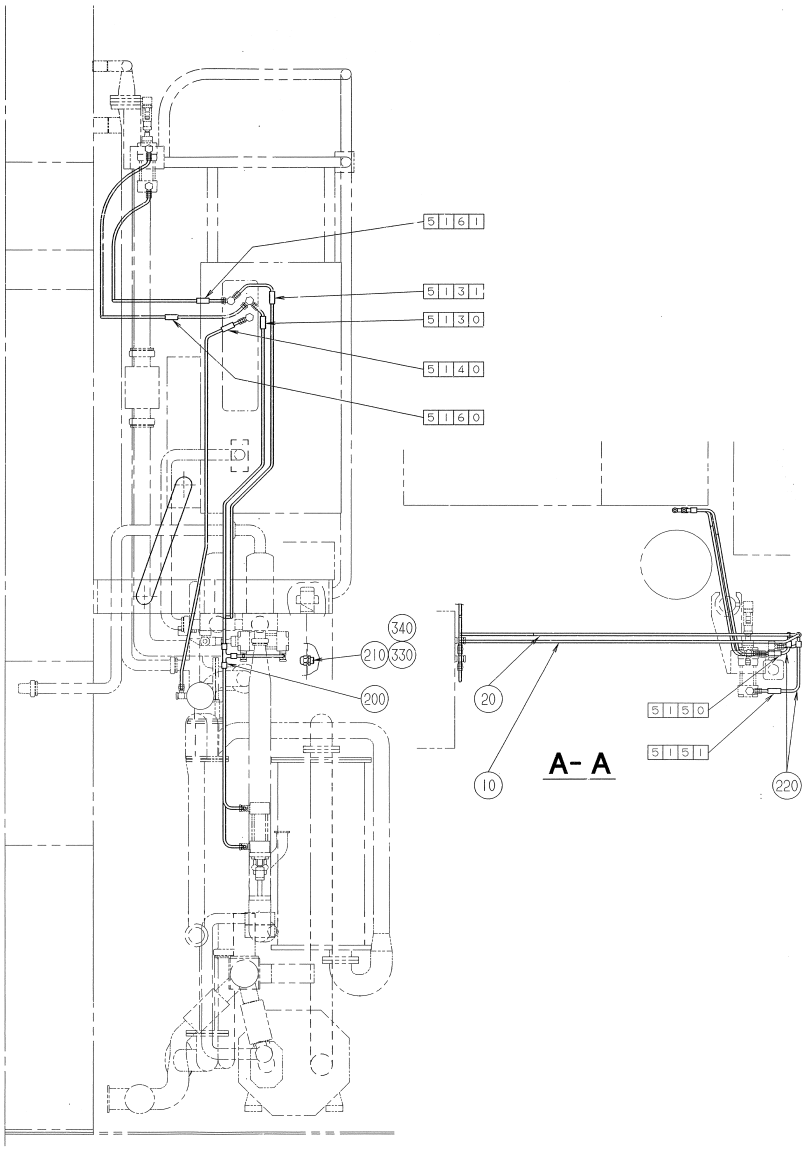
5161
5131
5130
5140
5160
340
210
330
200
20
10
A- A
5150
5151
220

ECM: - -
Group number: 927293-0100
Assembly Drawing: 927293-1_1_AA

Pos	Part No	SP	UN	Qty	Description	Page No
-						
010	554971-0000	-		1	PIPE	
020	554972-0000	-		1	PIPE	
030	554973-0000	-		1	PIPE	
060	554976-0001	-		1	PIPE	
070	554976-0002	-		1	PIPE	
190	90012-0061	-		1	GLAND	
200	90030-0076	-		2	CONN. T-PIPE T-6	
210	90099-0001	-		3	NUT PR 15,2 MäSSING	
215	90099-0011	-		1	NUT PR 37 BRASS	
218	90152-0031	-	MM	600	HOSE	
220	90166-0081	-	M	4	TUBE 6 MM PA BLUE	
315	342797-0121	-		1	CONN. BANJO, RINGPIECE 6-1/8	
325	342980-0303	-		1	BANJO-HOLLOW BOLT COUPL,EXT.THR.01-G1/8"	
330	352103-0100	-		3	CABLE GLAND, STR 9, PR15,2/PG9	
340	352103-0101	-		1	CABLE GLAND, ST 9, PR15,2/PG9	
370	359000-0400	-		8	MARKING CO2/4"0"	
380	359000-0401	-		20	MARKING COLLAR 2/4 "1" YELLOW	
400	359000-0403	-		6	MARKING COLLAR PA2/4 "3" YELLOW	
410	359000-0404	-		2	MARKING COLLAR PA2/4 "4" YELLOW	
420	359000-0405	-		16	MARKING CO2/4"5"	
430	359000-0406	-		4	MARKING COLLAR PA2/4 "6" YELLOW	

Pos	Part No	SP	UN	Qty	Description	Page No

Machine Type | Group Description | Used-In | Group Number | Page No

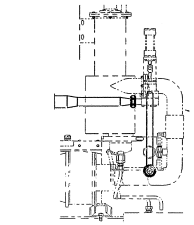

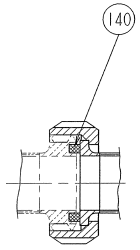

B SCALE 1:1

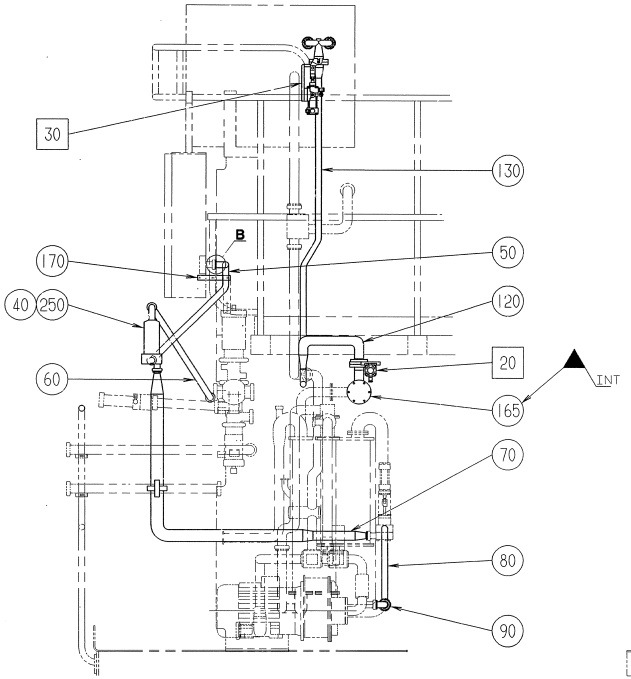

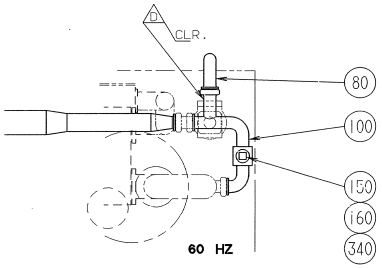

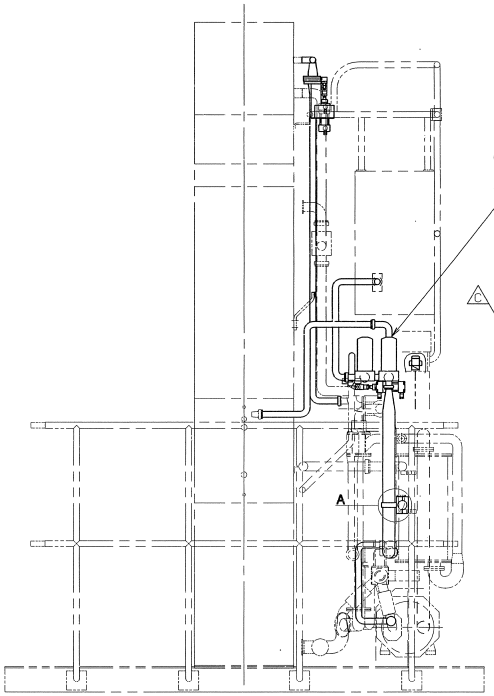

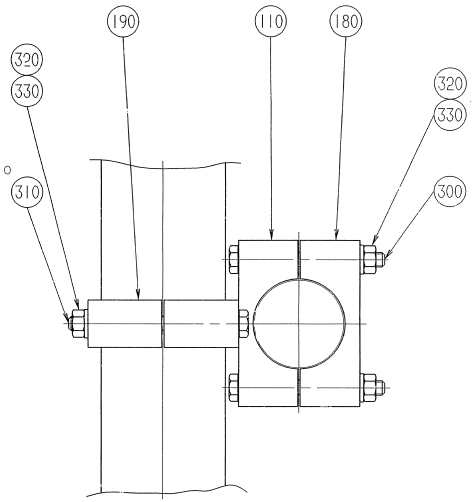

A SCALE 1:1

ECM: 72791 - 19990721
Group number: 554600-0100
Assembly Drawing: 554600-1_1_AA

Pos	Part No	SP	UN	Qty	Description	Page No
TBA/8-110V						
140	12242-0001	C		4	GASKET 32X25X5,5	
Common Parts						
020	A795616-0100	-		1	VALVE DRIVE	**10-379**
030	A795739-0100	-		1	VALVE DRIVE	**10-381**
040	B529682-0000	-		1	FILTERS HOUSING	
	924117-0000	*-*		*1*	*FILTER COVER*	
	90277-0333	*-*		*2*	*GASKET KIT / ART NO ACS 0325 EH*	
050	554593-0000	-		1	PIPE	
060	554594-0000	-		1	PIPE	
070	554595-0000	-		1	PIPE	
080	735003-0000	-		1	PIPE	
110	735051-0000	-		1	BRACKET	
120	795608-0000	-		1	AIR PIPE	
130	795609-0000	-		1	AIR PIPE	
165	531737-0000	-		1	GASKET	
170	735004-0000	-		1	HOLDER	
180	735041-0000	-		1	CONNECTION CLAMP	
190	735050-0000	-		1	CONNECTION CLAMP	
250	90277-0331	C		2	FILTER CARTRIDGE / MCY 4463 V002 PVJ	
300	312105-0382	-		2	SCREW M6S ISO 4014 M6X60 A480	
310	312105-0384	-		2	SCREW M6S ISO 4014 M6X70 A480	
320	312605-0316	-		4	HEXAGON NUT, M6M M6 A280	
330	315105-0153	-		4	WASHER BRB6,4X12RFR	

Pos	Part No	SP	UN	Qty	Description	Page No

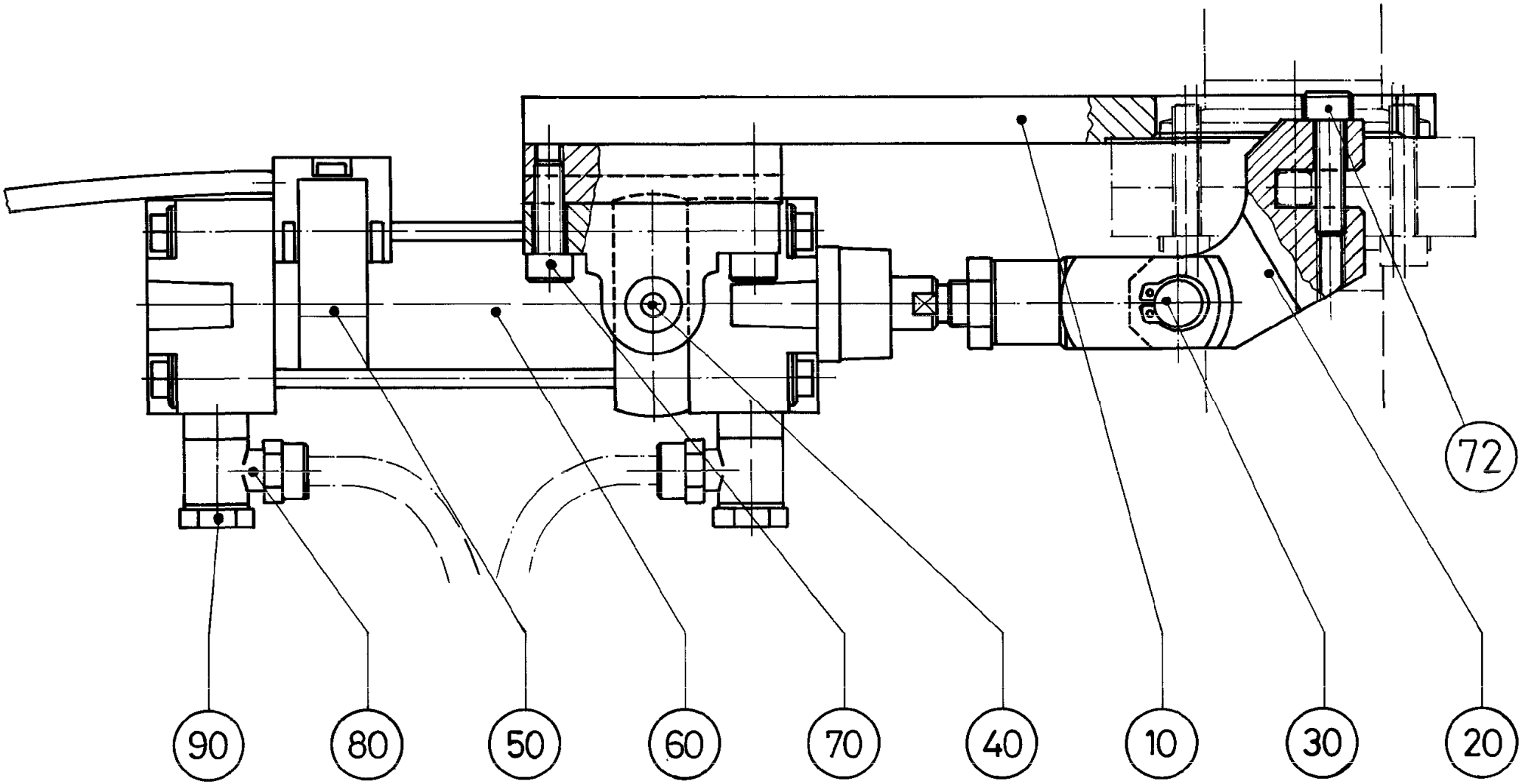
72
90
80
50
60
70
40
10
30
20

ECM: - -
Group number: 795616-0100
Assembly Drawing: 795616-1_1_AA

Pos	Part No	SP	UN	Qty	Description	Page No
-						
010	795742-0000	-		1	BRACKET	
020	554439-0000	-		1	LEVER	
030	90239-0357	-		1	ROD END, CLEVIS WITH AXLE M10X1,25	
040	90239-0460	-		1	BRACKET	
050	90239-0543	C		1	SENSOR REPBY 0090239-0585	
060	B90239-0779	-		1	CYLINDER	
	90239-0442	*C*		*1*	*SEAL KIT*	
070	312115-0370	-		4	SCREW ISO4762 M6X20 A4	
072	312115-0374	-		2	SCREW ISO4762 M6X30 A4	
080	342980-0113	-		2	BANJO-CONNECTION,RING 6/4-G1/8"	
090	342980-0303	-		2	BANJO-HOLLOW BOLT COUPL,EXT.THR.01-G1/8"	

Pos	Part No	SP	UN	Qty	Description	Page No

Machine Type | Group Description | Used-In | Group Number | Page No

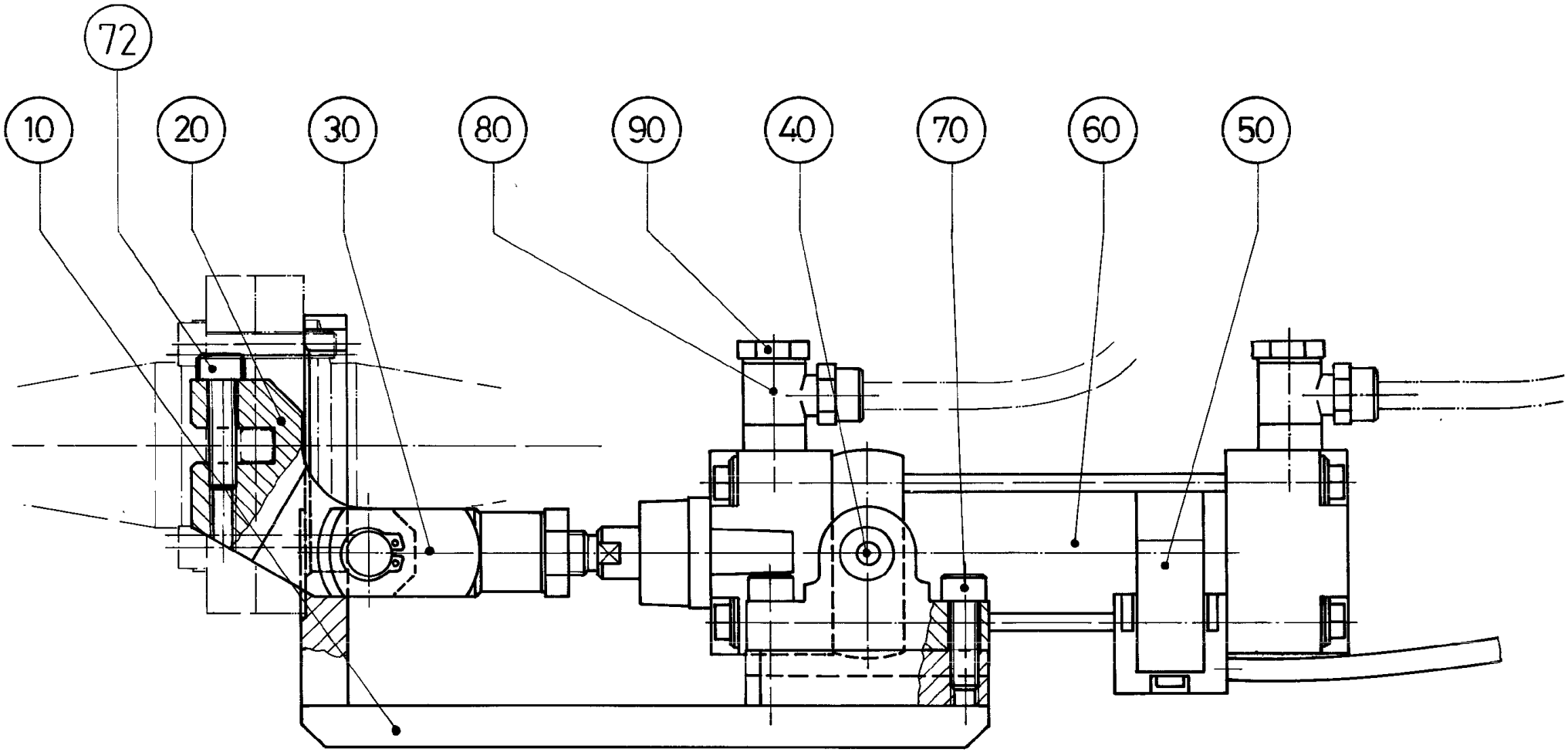
72
10
20
30
80
90
40
70
60
50

ECM: - -
Group number: 795739-0100
Assembly Drawing: 795739-1_1_AA

Pos	Part No	SP	UN	Qty	Description	Page No
-						
010	795741-0000	-		1	BRACKET	
020	554439-0000	-		1	LEVER	
030	90239-0357	-		1	ROD END, CLEVIS WITH AXLE M10X1,25	
040	90239-0460	-		1	BRACKET	
050	90239-0543	C		1	SENSOR REPBY 0090239-0585	
060	B90239-0779	-		1	CYLINDER	
	90239-0442	*C*		*1*	*SEAL KIT*	
070	312115-0370	-		4	SCREW ISO4762 M6X20 A4	
072	312115-0374	-		2	SCREW ISO4762 M6X30 A4	
080	342980-0113	-		2	BANJO-CONNECTION,RING 6/4-G1/8"	
090	342980-0303	-		2	BANJO-HOLLOW BOLT COUPL,EXT.THR.01-G1/8"	

Pos	Part No	SP	UN	Qty	Description	Page No

Machine Type | Group Description | Used-In | Group Number | Page No

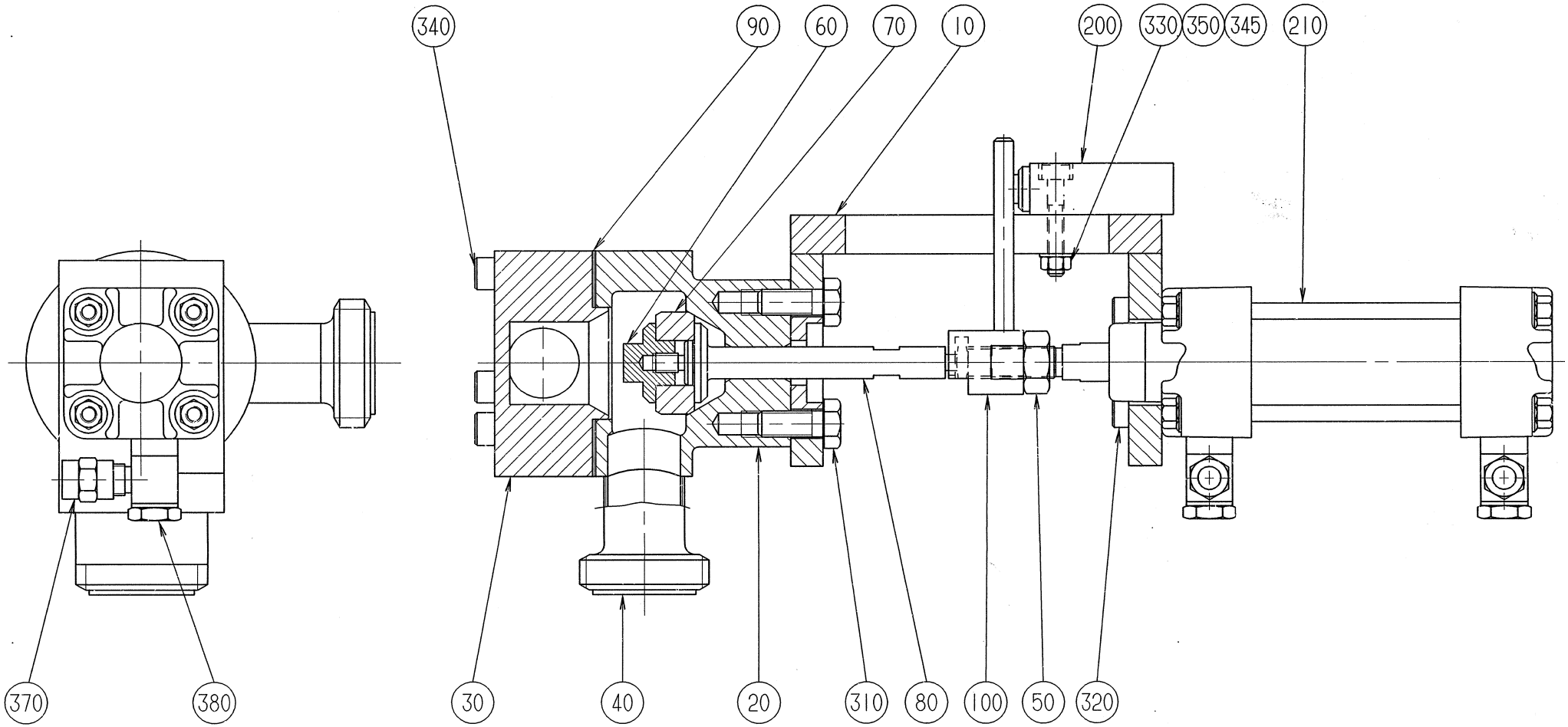
340
90
60
70
10
200
330
350
345
210
370
380
30
40
20
310
80
100
50
320

ECM: - -
Group number: 927294-0100
Assembly Drawing: 927294-1_1_AA

Pos	Part No	SP	UN	Qty	Description	Page No
-						
010	553184-0000	-		1	BRACKET	
020	529925-0000	-		1	VALVE BODY	
030	529926-0000	-		1	COVER	
040	12242-0001	C		2	GASKET 32X25X5,5	
050	441286-0000	-		1	NUT	
060	434003-0000	-		1	PLUG	
070	434004-0000	C		1	SEALING RING	
080	529927-0000	-		1	PISTON ROD	
090	531742-0000	C		1	GASKET	
100	553183-0000	-		1	PENDULUM SUSPENSION	
200	90044-0084	C		1	LIMIT SW. 14 CE1-4	
210	B90239-0773	-		1	CYLINDER	
	90239-0442	*C*		*1*	*SEAL KIT*	
310	312105-0452	-		2	SCREW M6S ISO 4017 M8X22 A480	
320	312115-0331	-		4	SCREW ISO4762 M5X20 A4	
330	312115-0335	-		2	SCREW ISO4762 M5X30 A4	
340	312115-0379	-		3	SCREW ISO4762 M6X45 A4	
345	312605-0314	-		2	HEXAGON NUT, M6M M5 A280	
350	315105-0146	-		2	BRICKA BRB5,3X10RFR	
370	342797-0121	-		2	CONN. BANJO, RINGPIECE 6-1/8	
380	342980-0303	-		2	BANJO-HOLLOW BOLT COUPL,EXT.THR.01-G1/8"	

Pos	Part No	SP	UN	Qty	Description	Page No

Machine Type | Group Description | Used-In | Group Number | Page No

This page is intentionally left blank.

ECM: 71170 - 19980121
Group number: 924951-0100
Assembly Drawing:

Pos	Part No	SP	UN	Qty	Description	Page No
TBA 0375S						
020	927392-0000	-		10	GASKET	
030	490076-0002	-		2	PACKING MEMBRANE	
TBA 0500B, TBA 0750B, TBA 1000B						
020	439616-0003	-		10	GASKET	
030	490048-0002	-		2	PACKING MEMBRANE	
TBA 0500S, TBA 0355B						
020	736724-0000	-		10	GASKET	
030	490048-0002	-		2	PACKING MEMBRANE	
TBA 0750S						
020	926729-0000	-		10	GASKET	
030	490048-0002	-		2	PACKING MEMBRANE	
TBA 1000S						
020	927383-0000	-		10	GASKET	
030	490048-0002	-		2	PACKING MEMBRANE	
Common Parts						
010	736508-0001	-		5	MEMBRANE	
050	736514-0000	-		1	SHOCK ABSORBER	
060	925091-0000	-		10	DIAPHRAGM	
070	924856-0000	-		1	BRUSH	
080	924983-0000	-		3	SHIM	
200	90091-0275	-		1	GASKET 40X26X6 MM	
210	90207-0470	-		2	SEALING RING	
220	90277-0331	-		2	FILTER CARTRIDGE / MCY 4463 V002 PVJ	
230	90277-0333	-		2	GASKET KIT / ART NO ACS 0325 EH	
290	312105-0451	-		4	SCREW M6S ISO 4017 M8X20 A480	
300	315204-0210	-		1	O-RING 11,3X2,4 MM	
310	315204-0213	-		2	O-RING 15,2X2,4 MM	
320	315204-0221	-		1	O-RING 34,2X3 MM	
330	315224-0115	-		1	PISTON SEAL, GLIDORING 32X40X3,5 MM	

Pos	Part No	SP	UN	Qty	Description	Page No

Machine Type	Group Description	Used-In	Group Number	Page No

This page is intentionally left blank.

ECM: - -
Group number: 927312-0100
Assembly Drawing:

Pos	Part No	SP	UN	Qty	Description	Page No
-						
010	736643-0000	-		1	SEALING PLUG	
020	924170-0000	-		1	NUT	
030	924171-0000	-		1	SCREW	
040	927316-0000	-		1	SPACER	
050	927317-0000	-		1	PLATE	
200	90144-0004	-	MM	1	TREBOFLON-TAPE W=13MM	
210	90153-0023	-		1	ADHESIVE, SILICON 251470 TUB 90CC	
220	90243-0164	-		2	HOOK SPANNER ADJUST.DIA.4	
230	90243-0165	-		1	SPIRIT LEVEL	
260	312105-0364	-		2	SCREW M6S ISO 4017 M6X10 A480	
270	312105-0386	-		1	SCREW M6S ISO 4014 M6X80 A480	
320	767181-0235	-		1	TAP	
330	769211-0116	-		1	SAW BLADE	
340	769211-0119	-		1	SAW BLADE	
350	769211-0138	-		1	SAW BLADE	
360	769211-0165	-		1	SAW BLADE	
370	769219-0100	-		1	HOLDER	
380	769219-0103	-		1	HANDLE BRACKET	

Pos	Part No	SP	UN	Qty	Description	Page No

Machine Type	Group Description	Used-In	Group Number	Page No

This page is intentionally left blank.

ECM: 71827 - 19981120
Group number: 559266-0100
Assembly Drawing:

Pos	Part No	SP	UN	Qty	Description	Page No
-						
0010	A559267-0100	-		1	ELECTRICAL DOCUMENT	
0020	A559268-0100	-		1	ELECTRICAL MATERIAL	**10-391**

Pos	Part No	SP	UN	Qty	Description	Page No

Machine Type | Group Description | Used-In | Group Number | Page No

This page is intentionally left blank.

ECM: 71827 - 19981120
Group number: 559268-0100
Assembly Drawing:

Pos	Part No	SP	UN	Qty	Description	Page No
-						
0010	353001-0103	-		50	END SLEEVE 0,75 MM2	
0015	353101-0118	-		5	KABELSKO 0,75-1,5MM2 RED	
0020	353105-0117	-		50	PIN CABLE SHOE 0,75-1,5MM2 RED A1519SR	
0100	90194-0302	-		1	MARKING LABELS REBUILDING KIT	
0200	351172-0102	-	M	60	CABLE AWM 1X 0,75 MM2 DARK-BLUE	
0205	351176-0102	-	M	4	CABLE AWM 1X075 MM2 RED	
0210	351175-0102	-	M	4	CABLE AWM 1X 075 MM2 YELLOW-GREEN	
0810	351150-0424	-	M	4	CABLE OLFLEX 18X0,75 MM2 LIGHT/GREY	
0814	351150-0403	-	M	1	CABLE OLFLEX 3X0,75 MM2 LIGHT/GREY	
0817	351150-0403	-	MM	2500	CABLE OLFLEX 3X0,75 MM2 LIGHT/GREY	
0820	351150-0403	-	MM	1500	CABLE OLFLEX 3X0,75 MM2 LIGHT/GREY	
0821	351150-0403	-	MM	1500	CABLE OLFLEX 3X0,75 MM2 LIGHT/GREY	
0822	351150-0403	-	MM	1500	CABLE OLFLEX 3X0,75 MM2 LIGHT/GREY	
0823	351150-0403	-	MM	1500	CABLE OLFLEX 3X0,75 MM2 LIGHT/GREY	
0824	351150-0403	-	MM	1500	CABLE OLFLEX 3X0,75 MM2 LIGHT/GREY	
A141	90031-0057	-		1	PLC, DIGITAL INPUT MODULE	
A142	90031-0059	-		1	PLC, DIGITAL OUTPUT MODULE	
A510	90314-0038	-		1	LEVEL CONTROL RELAY, RM3 220-240VAC	
S510	90111-0121	-		1	SWITCH, 3 POS.704.502.0A+2 PCE 704.901.3	
S510	735185-0000	-		1	SYMBOLLABEL PACK SHAPE 18,2X50MM	
X111	90110-0334	-		4	SCREW HARTING	
X111	90110-0128	-		1	MALE INSERT, HAN 24 E-M 933 024 2631	
X111	90110-0057	-		1	FEMALE INSERT HAN 24 E 09 33 002 4201	

Pos	Part No	SP	UN	Qty	Description	Page No

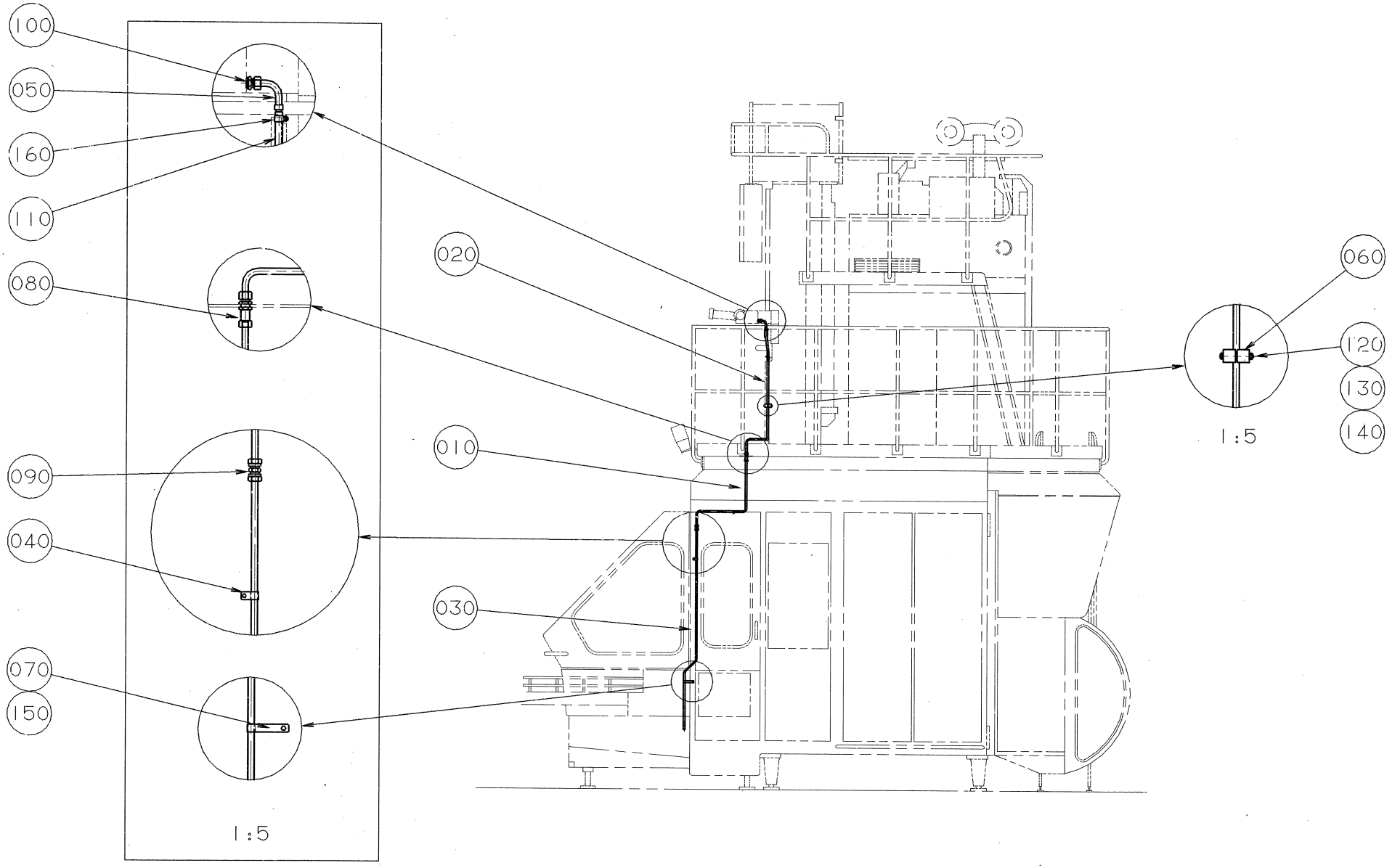
100
050
160
110
080
090
040
070
150
1:5
020
010
030
060
120
130
140
1:5

ECM: - -
Group number: 925000-0100
Assembly Drawing: 925000-1_1_AA

Pos	Part No	SP	UN	Qty	Description	Page No
-						
010	924496-0000	-		1	PIPE	
020	924520-0000	-		1	PIPE	
030	925050-0000	-		1	PIPE	
040	924499-0000	-		1	CLAMP	
050	924521-0000	-		1	PIPE	
060	924522-0000	-		2	CLAMP	
070	925001-0000	-		1	CLAMP	
080	90030-0030	-		1	CONN. BULKHEAD SV 12-L/SY	
090	90030-0106	-		1	CONN. PIPE G-12	
100	90030-0187	-		1	CONN. STR. GA-12-G3/8	
110	90166-0007	-	MM	250	HOSE PVC 10/14 TRANSP.	
120	312105-0382	-		1	SCREW M6S ISO 4014 M6X60 A480	
130	312605-0316	-		1	HEXAGON NUT, M6M M6 A280	
140	315105-0153	-		2	WASHER BRB6,4X12RFR	
150	315125-0153	-		1	WASHER TBRSB 6,4X22X4 A4	
160	342991-0101	-		2	HOSE CLIP,WORM DRIVE TYPE (13)-16	

Pos	Part No	SP	UN	Qty	Description	Page No

This page is intentionally left blank.

ECM: 71687 - 19990526
Group number: 927295-0200
Assembly Drawing:

Pos	Part No	SP	UN	Qty	Description	Page No
-						
010	A926974-0200	-		1	DOCUMENT	**10-397**

Pos	Part No	SP	UN	Qty	Description	Page No

Machine Type | Group Description | Used-In | Group Number | Page No

This page is intentionally left blank.

ECM: 73195 - 19991210
Group number: 926974-0200
Assembly Drawing:

Pos	Part No	SP	UN	Qty	Description	Page No
-						
090	1361313-0101	-		1	DOCUMENT FOLDER	

Pos	Part No	SP	UN	Qty	Description	Page No

This page is intentionally left blank.

ECM: 114354 - 20021002
Group number: 1260871-0100
Assembly Drawing:

Pos	Part No	SP	UN	Qty	Description	Page No
TBA/8-110V						
	1362180-0102	-		1	DOCUMENT FOLDER	
045	A559278-0100	-		1	EL. RK "TEMP. CONTROLLED STEAM BARRIER" .	**10-401**
Common Parts						
100	A1260323-0100	-		1	T.C.S.B. UNIT	**10-405**

Pos	Part No	SP	UN	Qty	Description	Page No

Machine Type | Group Description | Used-In | Group Number | Page No

This page is intentionally left blank.

ECM: 72787 - 19990824
Group number: 559278-0100
Assembly Drawing:

Pos	Part No	SP	UN	Qty	Description	Page No
-						
0010	A559279-0100	-		1	ELECTRICAL DOCUMENT	
0020	A559280-0100	-		1	ELECTRICAL MATERIAL	**10-403**

Pos	Part No	SP	UN	Qty	Description	Page No

Machine Type | Group Description | Used-In | Group Number | Page No

This page is intentionally left blank.

ECM: 72787 - 19990824
Group number: 559280-0100
Assembly Drawing:

Pos	Part No	SP	UN	Qty	Description	Page No
-						
0010	351172-0102	-	M	15	CABLE AWM 1X 0,75 MM2 DARK-BLUE	
0020	90194-0302	-		1	MARKING LABELS REBUILDING KIT	
0040	90097-0019	-		5	FLAT PIN PLUG 2,8MM	
0050	578874-0000	-		1	HF BRAIDED WIRE 1,6 MM2	
K915	A90119-0056	-		1	RELAY, AUXILIARY MK3P5-S 24VDC	
K915	90119-0056	-		1	RELAY, AUXILIARY MK3P5-S 24VDC	
K915:1	90129-0006	-		1	BASE, S3-B	

Pos	Part No	SP	UN	Qty	Description	Page No

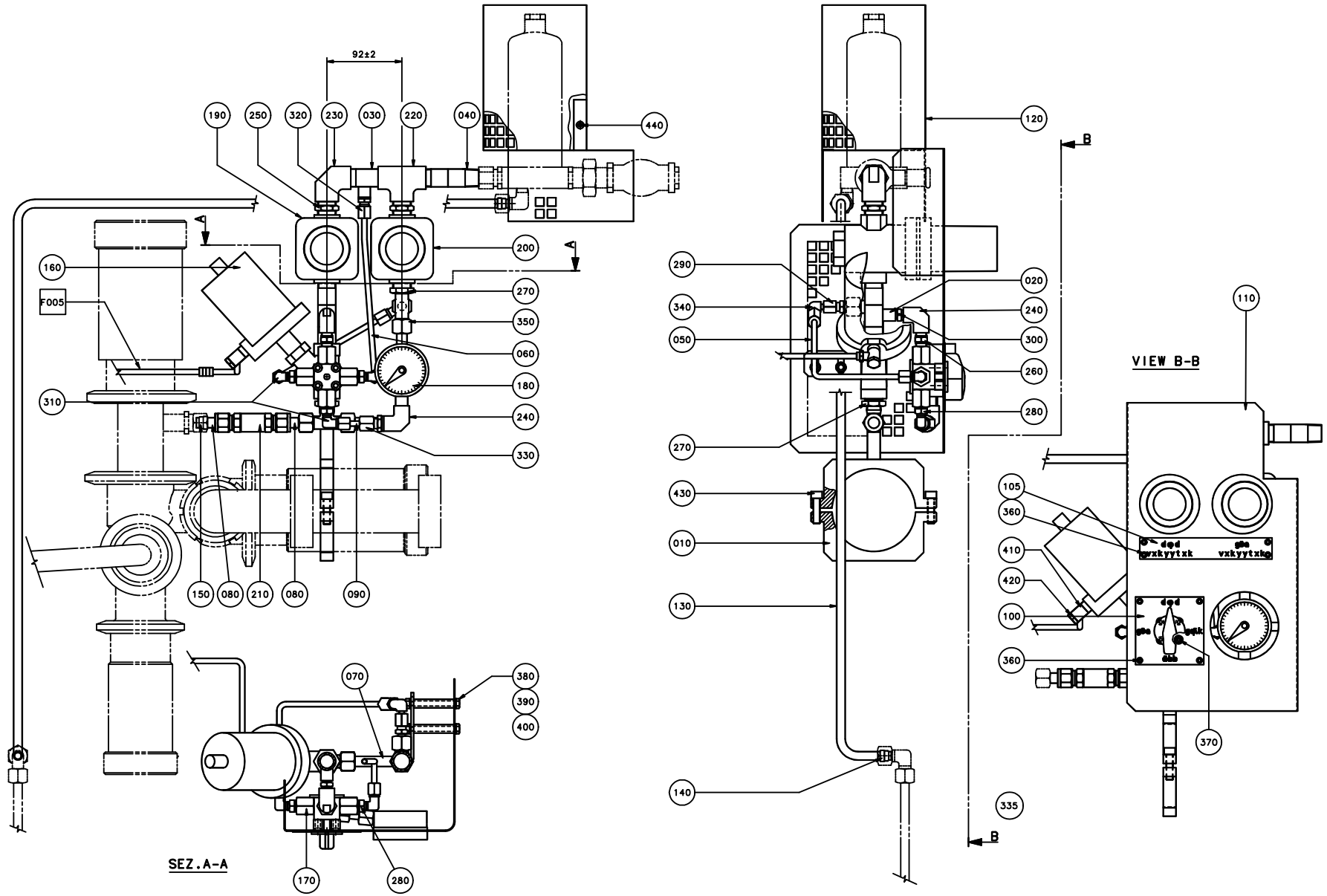
92±2
190
250
320
230
030
220
040
440
200
160
F005
270
350
060
180
310
240
330
150
080
210
080
090
070
380
390
400
170
280
SEZ.A-A
120
B
290
340
050
020
240
300
260
280
270
430
010
130
140
335
B
VIEW B-B
110
105
360
410
420
100
360
370

ECM: 71337 - 19990113
Group number: 1260323-0100
Assembly Drawing: 1260323-1_1_AA

Pos	Part No	SP	UN	Qty	Description	Page No
TBA/8						
005	A1260324-0100	-		1	PNEUMATIC CIRCUIT TBA/8	**10-407, 10-409**
130	1260269-0000	-		1	STEAM PIPE	
140	90030-0099	-		2	ACCESSORIES, FERRULE 10	
150	90030-0110	-		1	ACCESSORIES, FERRULE 12	
Common Parts						
010	1260443-0000	-		1	CLAMP HOLDER	
020	1260261-0000	-		1	T-PIPE	
030	1260262-0000	-		1	T-PIPE	
040	1260263-0000	-		1	PIPE	
050	1260264-0000	-		1	PIPE	
060	1260265-0000	-		1	PIPE	
070	1260266-0000	-		1	PIPE	
080	1260267-0000	-		2	PIPE	
090	1260268-0000	-		1	PIPE	
100	1255924-0000	-		1	LABEL	
105	1279456-0000	-		1	LABEL	
110	1255925-0000	-		1	COVER	
120	1260311-0000	-		1	COVER	
160	90235-0261	-		1	ANGLE SEAT VALVE G1/2, N.C. DN13	
170	90187-0112	C		1	COCK VALVE, G1/4, 4-WAY, VITON	
180	90043-0082	C		1	PRESSURE GAUGE, 2740, D=63 MM	
190	90113-0064	C		1	PRESSURE REGULATOR	
200	90113-0063	C		1	PRESSURE REGULATOR	
210	90230-0025	-		1	NON-RETURN VALVE, 12MM, L=85	
220	90330-0049	-		1	T-PIPE, INT. THREAD, R-221R1/2	
230	90330-0020	-		1	ELBOW, 90 INT. THREAD, R-2221/2	
240	90330-0081	-		2	ELBOW, 90 INT. THREAD, R-222R1/4	
250	90330-0021	-		2	NIPPLES, EXT. THREAD. R-207R1/2	
260	90330-0043	-		1	NIPPLES, EXT. THREAD. R-207R1/4	
270	90330-0048	-		2	BUSHING, INT/EXT. THR. R1/2-RP3/8	
280	90330-0025	-		3	BUSHING, INT/EXT. THR. R1/4-RP1/8	
290	90030-0138	-		1	REDUCTION KOR 12/6-L/SY	
300	90330-0013	-		1	NIPPLES, EXT. THREAD. ISO 7/1 R1/4-R1/8	
310	90030-0137	-		3	CONN. ELBOW WA 6-R1/8	
320	90030-0051	-		1	CONN. STR., 6-R1/8, EXT. THREAD	
330	90030-0092	-		1	STRAIGHT CONN., 6-R1/4,EXT. TAPPERED	
335	90144-0004	-		2	TREBOFLON-TAPE W=13MM	
340	90030-0171	-		1	ADJUSTABLE ELBOW CONNECTION,EXT 6-G1/8	
350	342751-0215	-		1	CONN. L-PIPE, EXT. LE-12-R3/8	
360	311521-0142	-		8	BLANK RIVET 3,2X6	
370	312155-0297	-		4	SCREW EN 10642 MF6S M4X25 A480	
380	312105-0382	-		2	SCREW M6S ISO 4014 M6X60 A480	
390	312605-0316	-		2	HEXAGON NUT, M6M M6 A280	
400	315105-0153	-		2	WASHER BRB6,4X12RFR	
410	342797-0122	-		1	CONN. BANJO, RINGPIECE 6-1/4	
420	342980-0304	-		1	BANJO-HOLLOW BOLT COUPL,EXT.THR.01-G1/4"	
430	312115-0455	-		2	SCREW ISO4762 M8X30 A4	
440	312155-0329	-		1	SCREW EN 10642 MF6S M5X16 A480	

Machine Type Group Description Used-In Group Number Page No

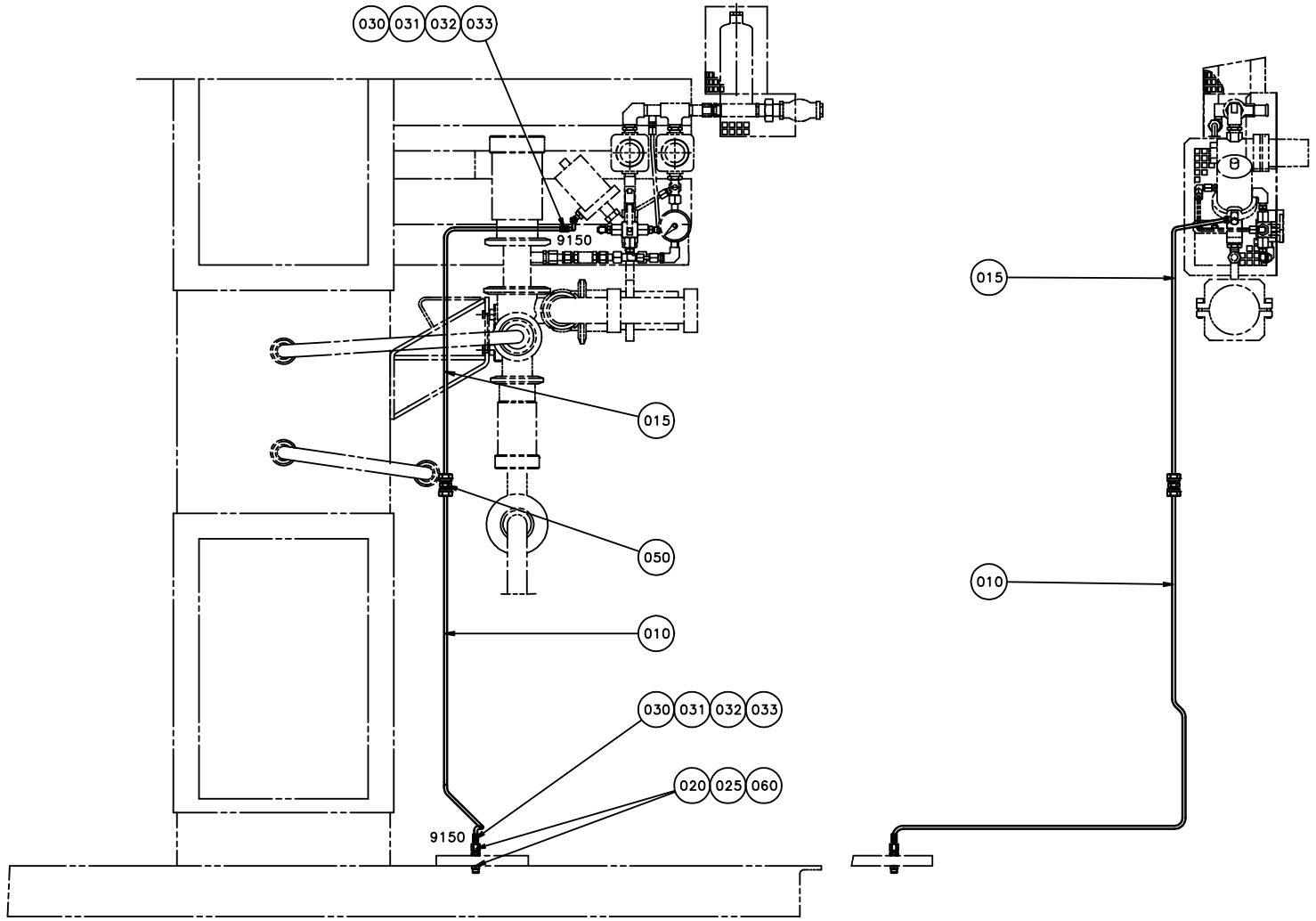
030
031
032
033
9150
015
050
010
030
031
032
033
020
025
060
9150
015
010

ECM: 114355 - 20021002
Group number: 1260324-0100
Assembly Drawing: 1260324-1_1_AA

This list covers pages from 10-406 to 10-409

Pos	Part No	SP	UN	Qty	Description	Page No
TBA/8-110V (See drawing on page: 10-408)						
020	315233-0109	-		1	WASHER CAPTIVE SEALING G1/8	
021	342715-0103	-		1	BLIND PLUG 8 MM	
026	342716-0203	-		1	REDUCER 6-8	
070	90042-0215	-		1	VALVE BODY 5/2 UNISTABLE	
080	90042-0538	-		1	PILOT VALVE L=500MM	
090	90055-0118	-		1	ELBOW PIPE JOINT -8MM	
Common Parts						
	1260475-1_1_AB.hpgl	-		1	MODIFICATION DRAWING	
010	1260312-0000	-		1	AIR PIPE	
015	1260748-0000	-		1	AIR PIPE	
025	342722-0202	-		1	PIPE COUPLING 1/8" D=6MM	
030	359000-0400	-		2	MARKING CO2/4"0"	
031	359000-0401	-		2	MARKING COLLAR 2/4 "1" YELLOW	
032	359000-0405	-		2	MARKING CO2/4"5"	
033	359000-0409	-		2	MARKING COLLAR PA2/4 "9" YELLOW	
050	90030-0075	-		1	PIPE CONNECTION G-6	
060	90458-1849	-		1	CONN. STR., 6-R1/8, EXT. THREAD	
100	90166-0081	-	M	4	TUBE 6 MM PA BLUE	

Pos	Part No	SP	UN	Qty	Description	Page No

Machine Type | Group Description | Used-In | Group Number | Page No

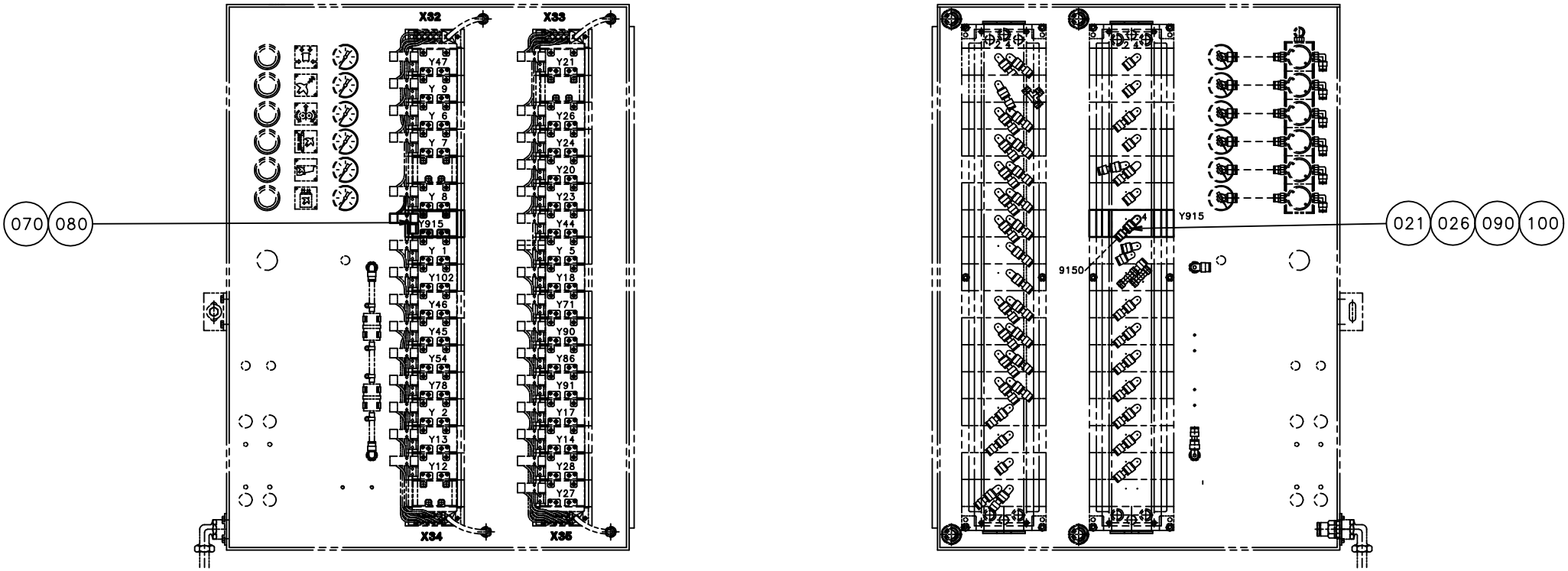
070
080
X32
X33
Y47
Y 9
Y 6
Y 7
Y 8
Y915
Y 1
Y102
Y46
Y45
Y54
Y78
Y 2
Y13
Y12
Y21
Y26
Y24
Y20
Y23
Y44
Y 5
Y18
Y71
Y90
Y86
Y91
Y17
Y14
Y28
Y27
X34
X35
Y915
9150
021
026
090
100

ECM: 114355 - 20021002
Group number: 1260324-0100
Assembly Drawing: 1260324-2_1_AA

This list covers pages from 10-406 to 10-409

Pos	Part No	SP	UN	Qty	Description	Page No
TBA/8-110V (See drawing on page: 10-408)						
020	315233-0109	-		1	WASHER CAPTIVE SEALING G1/8	
021	342715-0103	-		1	BLIND PLUG 8 MM	
026	342716-0203	-		1	REDUCER 6-8	
070	90042-0215	-		1	VALVE BODY 5/2 UNISTABLE	
080	90042-0538	-		1	PILOT VALVE L=500MM	
090	90055-0118	-		1	ELBOW PIPE JOINT -8MM	
Common Parts						
	1260475-1_1_AB.hpgl	-		1	MODIFICATION DRAWING	
010	1260312-0000	-		1	AIR PIPE	
015	1260748-0000	-		1	AIR PIPE	
025	342722-0202	-		1	PIPE COUPLING 1/8" D=6MM	
030	359000-0400	-		2	MARKING CO2/4"0"	
031	359000-0401	-		2	MARKING COLLAR 2/4 "1" YELLOW	
032	359000-0405	-		2	MARKING CO2/4"5"	
033	359000-0409	-		2	MARKING COLLAR PA2/4 "9" YELLOW	
050	90030-0075	-		1	PIPE CONNECTION G-6	
060	90458-1849	-		1	CONN. STR., 6-R1/8, EXT. THREAD	
100	90166-0081	-	M	4	TUBE 6 MM PA BLUE	

Pos	Part No	SP	UN	Qty	Description	Page No

Machine Type | Group Description | Used-In | Group Number | Page No

Tetra Pak

SPC
Spare Parts Catalogue

Part No	Description	Page No
1013-0000	SHAFT	7-53
1881-0001	COMPRESSION SPRING	1-5, 1-7, 1-9, 1-11
2033-0008	WASHER	1-5, 1-7, 1-9, 1-11, 1-17, 1-19, 1-23, 1-25, 1-27, 8-45
2033-0009	WASHER	8-23, 8-29
4623-0000	SPRING	10-183
6161-0000	ROLL	1-49
6278-0000	WASHER	1-31, 1-113, 5-7, 5-9, 5-33, 5-35, 5-37, 5-53, 5-55
7309-0000	HANDLE	1-15, 2-99, 2-101, 2-135, 8-37, 10-25
10793-0036	MOUNTINGRAIL TS32 L=400MM	1-129
12242-0001	GASKET 32X25X5,5	1-35, 1-93, 1-107, 10-95, 10-101, 10-103, 10-131, 10-179, 10-335, 10-377, 10-383
12242-0003	GASKET 48X38X5,5	1-59, 1-61, 1-65, 1-83, 1-85, 1-93, 1-101, 1-131, 10-69, 10-71, 10-73, 10-75, 10-77, 10-85, 10-131, 10-179, 10-289, 10-353, 10-355, 10-363
12242-0005	GASKET 61X51X5,5	1-59, 1-61, 1-65, 1-83, 1-111, 1-131, 10-69, 10-71, 10-73, 10-75, 10-79, 10-85, 10-95, 10-131, 10-363
14600-0000	HOOD	1-37, 10-329, 10-331
14729-0000	NUT	4-63, 4-65
19972-0000	WASHER	4-19, 4-21, 4-23
20494-0000	COMPRESSION SPRING	4-59, 4-61
20497-0000	GROUP NUMBER PLATE	10-371, 10-373
20704-0000	NUT	5-73, 5-75, 5-77
20705-0001	INSULATING PIPE	5-79, 5-81
20718-0000	BEARING	4-7, 4-9, 4-11, 4-13
20770-0000	WASHER	2-109
20772-0000	INSULATOR BODY 70X70X15MM	5-79, 5-81
21521-0000	COMPRESSION SPRING	1-53, 1-89, 1-91
21903-0000	ROLL	8-23, 8-29, 8-35
22462-0000	SHAFT	4-53, 4-57
22463-0000	ROLL	4-53, 4-57
22473-0000	ROLLER BRACKET	4-53
22483-0000	FORK	4-7, 4-9, 4-11, 4-13
22485-0000	DOWEL	4-7, 4-9, 4-11, 4-13
22486-0000	DOWEL	4-7, 4-9, 4-11, 4-13
22488-0000	ELBOW PIPE	4-39
22489-0000	ELBOW PIPE	4-39
22504-0000	STOP LUG	4-7, 4-9, 4-11, 4-13
22559-0000	GRUB SCREW	8-25, 8-27
22560-0000	PAPER SUPPORT	8-25, 8-27
23127-0101	TRANSFORMER	2-49
23229-0000	BRACKET	4-53, 4-57
23270-0000	BUSHING	3-15
23291-0000	BEARING COVER	4-7, 4-9, 4-11, 4-13
23292-0000	BEARING HOUSING	4-7, 4-9, 4-11, 4-13
23312-0000	BUSHING	4-7, 4-9, 4-11, 4-13
23361-0000	ROLLER BRACKET	4-57
23458-0000	SHAFT	3-11, 3-13
23462-0000	SPACER RING	3-11, 3-13
23582-0000	HOLDER	1-5, 1-7, 1-9, 1-11
23583-0000	GUIDE FINGER	1-5, 1-7, 1-9, 1-11
23584-0000	SCREW	1-5, 1-7, 1-9, 1-11
23763-0003	SPACER PIPE	5-69, 5-71, 5-83, 5-85
23763-0004	SPACER PIPE	5-69, 5-71, 5-83, 5-85
23763-0005	SPACER PIPE	5-69, 5-71, 5-83, 5-85
23763-0006	SPACER PIPE	5-69, 5-71, 5-83, 5-85
23763-0010	SPACER PIPE	5-69, 5-71, 5-83, 5-85
23765-0001	INSULATING PIPE	5-69, 5-71, 5-83, 5-85
23765-0002	INSULATING PIPE	5-69, 5-71, 5-83, 5-85
23765-0003	INSULATING PIPE	5-69, 5-71, 5-83, 5-85
23765-0004	INSULATING PIPE	5-69, 5-71, 5-83, 5-85
23765-0005	INSULATING PIPE	5-69, 5-71, 5-83, 5-85
23769-0000	STOP PLATE	5-69, 5-71, 5-83, 5-85
23771-0000	SPACER RING 4X78X1MM	5-79, 5-81
24206-0000	BEARING	8-9
24351-0000	BOW CLAMP	1-5, 1-7, 1-9, 1-11
24355-0000	DOWEL	1-5, 1-7, 1-9, 1-11
24356-0000	PIECE	1-5, 1-7, 1-9, 1-11
24928-0000	LOCKING RUBBER	1-37, 10-329, 10-331
25640-0000	CARRIER	4-55
25641-0000	REAMED BOLT	4-55
26075-0000	VOLUME BULGE	4-19, 4-21, 4-23
26423-0000	LACE	4-53, 4-57
26425-0000	LACE	4-63, 4-65
26426-0000	LACE	4-7, 4-9, 4-11, 4-13
26490-0000	WASHER	5-113
26642-0200	CARRIER	4-53, 4-57
26760-0000	LOCATING PIECE	4-59, 4-61
28036-0000	WASHER	1-23, 1-25, 1-27, 3-19
28037-0000	WASHER	1-5, 1-7, 1-9, 1-11, 1-47, 5-139, 5-141
28334-0000	CURVE ROLLER	3-25
28509-0000	BRICKA	4-25, 4-27
28880-0000	PLUNGER	4-29, 4-31, 4-33, 4-35
29411-0000	SPACER PIPE	5-79
29413-0000	LACE	5-79, 5-81
29876-0000	COVER	1-99
29886-0000	LACE	4-59, 4-61

Part No	Description	Page No
30298-0000	INSULATION	1-99
30310-0001	FF HEATING ELEMENT TOP	5-79
30310-0002	FF HEATING ELEMENT TOP	5-79
30310-0003	FF HEATING ELEMENT TOP	5-79
30311-0001	FF HEATINGELEMENT BUTTOM KANTHAL 2333-02	5-81
30311-0002	FF HEATINGELEMENT BUTTOM KANTHAL 2333-02	5-81
31390-0100	FF-ELEMENT TOP	5-69, 5-71, 5-83, 5-85
31390-0110	FF-ELEMENT BOTTOM	5-69, 5-71, 5-83, 5-85
31417-0000	LINK	8-31
31418-0000	SHAFT	8-31
31419-0000	SHAFT	8-31
31420-0000	WASHER	8-31
31423-0000	MOUNTING LUG	8-31
31424-0000	ROLLER BRACKET	8-31
31553-0002	WASHER	5-127, 5-161
31653-0001	SHEET	5-79
31653-0002	FIX PLATE 39X85X0,5MM	5-81
31837-0000	SPRING HOUSING	4-59, 4-61
31838-0000	PLUNGER	4-59, 4-61
32079-0000	WASHER	7-67, 7-69, 7-71
32116-0000	END PIECE	4-29, 4-31, 4-33, 4-35, 4-49, 4-51
32213-0000	WASHER	8-25, 8-27
32215-0000	HOLDER	1-47, 8-25, 8-27
32217-0000	BOTTOM SECTION	8-25, 8-27
32219-0000	WASHER	8-25, 8-27
32223-0000	BEARING	8-25, 8-27
32400-0000	HOLDER	8-25, 8-27
32451-0000	AIR DUCT	8-25, 8-27
32453-0000	MANTLE	8-25, 8-27
32462-0000	SHAFT	4-55
32463-0000	BEARING	4-53, 4-57
32464-0000	SHAFT	4-29, 4-31, 4-33, 4-35
32468-0000	OPERATING ROD	4-53, 4-57
32474-0000	ATTACHMENT	8-25, 8-27
32494-0000	OPERATING ROD	4-53, 4-57
32544-0000	INSULATION NUT	4-25, 4-27, 4-49, 4-51, 10-181
32629-0000	SPROCKET	7-9, 7-11, 7-13, 7-15, 7-17, 7-19
32630-0000	SPROCKET	7-9, 7-11, 7-13, 7-15, 7-17, 7-19
32644-0000	WASHER	4-25, 4-27, 10-181
32668-0000	ARM	8-25, 8-27
32691-0000	LOCKING SPRING	7-25, 7-27, 7-29, 7-31, 7-33
32925-0000	CARRIER	7-9, 7-11, 7-13, 7-15, 7-17, 7-19
32926-0000	ROLL	7-9, 7-11, 7-13, 7-15, 7-17, 7-19
32957-0000	SCREW	4-63, 4-65
33010-0000	SCREW	7-21, 7-23
33011-0000	SLEEVE	7-25, 7-27, 7-29, 7-31, 7-33
33150-0000	GUIDE STUD	4-67, 4-69
33152-0000	STOPPER	4-67, 4-69
33182-0000	ROLL	7-9, 7-11, 7-13, 7-15, 7-17, 7-19
33183-0000	SPRING	7-9, 7-11, 7-13, 7-15, 7-17, 7-19
33261-0000	SPRING PLATE	5-127, 5-161
33408-0000	BEARING	4-53, 4-57
33409-0000	SCREW	4-7, 4-9, 4-11, 4-13
33442-0000	ROLL	1-31
33577-0000	CANTILEVER	1-111, 8-13
33648-0000	HOLDER	1-5, 1-7, 1-9
35547-0000	SPRING	7-21, 7-23
35827-0000	BRACKET	3-15
35962-0000	LID	2-133
36133-0000	BUSHING	4-19, 4-21, 4-23
36749-0000	MANTLE	8-25, 8-27
36753-0000	RING	4-59, 4-61
36804-0000	ARM	1-43, 1-45
36805-0000	LINK	1-43, 1-45
36806-0000	CLAMPING ELEMENT	1-43, 1-45
36816-0000	LINK	1-43, 1-45
36817-0000	CLAMPING ELEMENT	1-43, 1-45
36821-0001	SHEAR PIN	10-337, 10-339
36885-0000	CRANK ARM	3-5
36953-0001	ROLL	1-17, 1-19
36953-0010	ROLL	1-29
37070-0000	SPRING	4-83, 4-85, 4-87, 4-89
37071-0000	WASHER	4-83, 4-85, 4-87, 4-89
37097-0000	CARRIER	3-9
37258-0000	BUSHING	4-53, 4-57
37294-0000	LOCKING PIN UPPER	10-337, 10-339
37296-0000	ARM	1-43, 1-45
37535-0000	SUPPORTING PART 56X56X31,5MM	5-79, 5-81
37536-0000	INSULATOR BODY LOWER 70X70X15MM	5-79, 5-81
37537-0000	SPACER RING LOWER 72X78X1MM	5-79, 5-81
37638-0000	PENDULUM SUSPENSION	1-95
37768-0000	THERMOCOUPLE CR-AL	8-25, 8-27, 10-101, 10-103
37782-0000	THROTTLE	1-43, 1-45
38087-0000	WASHER	1-63, 2-139

Part No	Description	Page No
38603-0002	SPACER	4-83, 4-85, 4-87, 4-89
38630-0001	COUNTER ROLLER	1-17, 1-19
42003-0300	MACHINE	10-145
42004-0300	ELECTRICAL DOCUMENT	10-145
42005-0300	ELECTRICAL CABINET	10-145
42062-0100	LEVEL PROBE	10-119, 10-121
42063-0100	LEVEL DETECTOR	10-123
42067-0100	SENSOR BOARD	10-125
42068-0100	CONVERTER BOARD	10-125
42931-0201	HVA8 LOBE PUMP CONTROL	10-151
42931-0202	HVA8 LOBE PUMP CONTROL	10-151
47932-0601	PLMS BASIC PROGRAM	10-251
47936-0201	PLMS INTOUCH RUNTIME PROGRAM	10-251
47937-0402	PLMS OFF-LINE PROGRAM	10-267
47962-0401	PLMS DOS WINDOWS	10-251
48339-0101	H.VISCOSITY FILLING SYSTEM	10-151
48393-0100	DCS8+, DESIGN CONTROL SYSTEM PLUS	6-13
48621-0501	PLMS DDE	10-251
48629-0501	"TPOPHMI8G, TPOP HMI SYSTEM" TBA/8 GEF	10-261
48630-0501	"PLMS DDE CONFIG. SYSTEM" TBA/8 GEF	10-261
57441-0101	ASSEMBLY INSTRUCTION	10-165
57587-0000	DOCUMENTATION DISKETT	10-259
57588-0000	SHORT FORM INSTRUCTION	10-259
58280-0000	MASTER DISKETT	10-253
58282-0000	SHORT FORM INSTRUCTION	10-253
58283-0000	DOCUMENTATION DISKETT	10-253
58290-0000	SHORT FORM INSTRUCTION	10-257
58291-0000	DOCUMENTATION DISKETT	10-257
67379-0101	TRANSFORMER	4-15, 4-17
67379-0102	TRANSFORMER	4-15, 4-17
67379-0103	TRANSFORMER	10-181
67388-0102	RACK FRONTMOUNTED 84TE	10-307
67564-0101	THIH TOROID COIL 1	10-199
67565-0101	TPIH TOROID COIL 2	10-199
67566-0101	TPIH TOROID COIL 3	10-199
67567-0101	TPIH THERMOSTAT CABLE	10-199
67568-0101	TPIH COIL SINGLE LAYER	10-199
67569-0101	TPIH TANK COIL	10-199
67570-0101	TPIH CAPACITOR CARD	10-199
67573-0101	TPIH TRANSISTOR PACKAGE	10-199
67574-0401	OUTPUT TRANSFORMER	10-199
67575-0101	TPIH INTERNAL TRANSFORMER	10-223
67576-0101	TPIHTRANSFORMER CONT.CARD	10-227
67577-0501	POWER CARD	10-197
67578-0101	TPIH FAN HOLDER	10-197
67579-0501	CONTROL CARD	10-197
67580-0201	FRONT PANEL	10-197
67581-0101	TPIH TRANSISTOR PACKAGE	10-199
67582-0101	HEAT SINK PREREGULATOR	10-199
67600-0501	TPIH 2000 GENERATOR	10-193
68262-0100	BACKPLANE FRONT RACK 8TE	10-151
68262-0101	BACKPLANE FRONT RACK 8TE	10-193, 10-307
68445-0102	FRONT PLATE 5TE	10-151
68445-0104	FRONT PLATE 8 TE	10-151, 10-307
68445-0105	FRONT PLATE 10TE	10-151, 10-307
68446-0301	ZONE HEATER TIMER	10-193
68447-0202	VALVE POS: ASSEMBLY	10-307
68448-0200	VALVE POS.: MAIN CARD	10-311
68449-0200	VALVE POS.: AUX. CARD I	10-311
68450-0101	STEPPER MOTOR DRIVER	10-307
68451-0101	STEP. MOT. DR. MAIN CARD	10-319
68452-0101	STEP. MOT. DR. AUX. CARD	10-319
68473-0200	VALVE POS.: AUX. CARD II	10-311
68530-0101	AUTO FLOW CONTROLLER	10-307
68539-0102	BOTTOM CARD FILL-MAG	10-307
68816-0100	FLOW PRESET CARD	10-293
68833-0100	SWITCH GEAR	10-295
68835-0200	RACK	10-151
68917-0100	ANGLE INDICATOR	2-141
72947-0000	HOOK SPANNER	6-15
74387-0000	HOOK SPANNER	6-15
76138-0000	LOCKING LOOP	6-15
82197-0104	USER MANUAL	10-277
82351-0105	USER MANUAL PLMS OFF-LINE	10-267
90001-0004	CONNECTOR, MS 3108E-14S-2S	10-289
90002-0004	BLANK-OFF PLUG, PR 22,5 SKINDICHT-BLK16	2-63, 2-131, 7-57, 7-59, 7-61, 7-63, 8-11, 10-39
90002-0009	BLANK-OFF PLUG, PR 18.6 SKINDICHT-BLK11	1-123, 2-63, 2-129, 2-131, 7-57, 7-59, 7-61
		7-63, 8-11, 10-241
90002-0010	BLANK-OFF PLUG, PR 37 SKINDICHT-BLK29	2-11, 2-131, 9-7
90002-0012	BLANK-OFF PLUG, PR 28,3 SKINDICHT-BLK21	2-11, 7-65, 9-7
90002-0013	BLANK-OFF PLUG, PR 15,2 SKINDICHT-BLK9	1-123, 2-55, 2-131, 8-11
90002-0018	BLANK-OFF PLUG, PR 12,5 SKINDICHT-BLK7	10-111
90005-0005	SEAL WASHER, 13,7X20,6X2,1 MM G1/4"	2-15
90005-0007	SEAL WASHER, 8,7X14X1 MM M8	4-25, 4-27

Part No	Description	Page No
90005-0009	SEAL WASHER,10,4X15,9X2,1 MM G1/8"	2-15
90005-0060	WASHER PLAIN, RBS 6,4/M6)/18,H=1,5	8-45, 9-7
90005-0078	WASHER PL.RND.FIBRE 6/10, H=1,5	9-7
90005-0082	WASHER PLAIN ROUND 4,3(M4)/12,H=1	8-37, 8-41, 8-43, 8-47, 9-7, 10-11, 10-15, 10-17, 10-19, 10-23
90005-0127	WASHER PL.RND.NYL.3,2/7 H=0,5	10-263
90005-0138	PLASTIC WASHER DI=6,4MM	10-151, 10-157, 10-159, 10-307
90005-0143	SPACER 3,3/7, H=3	10-125
90005-0158	SPACER 4,3/8, H=5	9-7, 9-35
90007-0100	FUSE,	2-49
90007-0101	FUSE,	2-49
90007-0128	CIRCUIT BREAKER, 1P 6 A K	10-151
90007-0148	CIRCUIT BREAKER, 3P 16 A K	10-151
90007-0149	CIRCUIT BREAKER, 3P 20 A K	10-151
90007-0150	CIRCUIT BREAKER, 3P 25 A K	10-61
90012-0059	GLAND	1-123
90012-0060	GLAND	10-157, 10-159
90012-0061	GLAND	1-99, 2-63, 2-131, 10-299, 10-369, 10-375
90012-0062	GLAND	1-99
90012-0063	CABLE GLAND PR 15,2	1-51, 1-123, 2-15, 2-55, 2-63, 2-103, 2-117, 2-119, 2-131, 10-137, 10-139, 10-347, 10-371, 10-373
90012-0064	GLAND	1-123, 7-57, 7-59, 7-61, 7-63, 10-369, 10-371, 10-373
90012-0071	GLAND FITTING	5-7, 5-9, 5-35, 5-37
90012-0072	GLAND FITTING **	5-7, 5-9, 5-35, 5-37
90012-0073	GLAND FITTING	5-13
90012-0088	GLAND, EXTENDED WITH INSERT, PG13,5	10-289
90012-0119	GLAND, EXTENDED WITH INSERT, PG9	10-123
90012-0137	GLAND, EXTENDED WITH INSERT, PG11	1-105, 7-57, 7-59, 7-61, 7-63
90015-0010	BUSHING	2-57, 2-59, 2-61
90015-0011	BUSHING	2-57, 2-59, 2-61
90015-0019	BUSHING	9-35
90015-0020	LEAD-IN, TET5-7, E-1458016	5-7, 5-9, 5-35, 5-37
90015-0021	LEAD-IN, TET10-14, E-1458023	2-57, 2-59, 2-61
90017-0009	HANDLE, SWIVWLLING, SIZE32 /M12 THREAD	3-5
90017-0035	HANDLE, NO. 1095-05	9-11, 9-13
90020-0027	SLEEVE	1-73, 10-91
90020-0028	SLEEVE	1-69, 1-71, 10-93, 10-99
90024-0038	INPUT FILTER, 16 A	10-151
90028-0001	CONE 5/32"	5-33, 5-53, 5-55, 5-67, 5-87, 5-89, 5-139, 5-141
90028-0020	CONE TUBE 2,5MM	2-103, 3-15, 3-17, 3-25, 4-7, 4-9, 4-11, 4-13, 4-15, 4-17, 4-19, 4-21, 4-23, 4-59, 4-61, 4-63, 4-65, 4-83, 4-85, 4-87, 4-89, 5-25, 5-27, 5-29, 5-33, 5-41, 5-43, 5-45, 5-47, 5-49, 5-51, 5-53, 5-55, 5-87, 5-89
90028-0021	CONE TUBE 4 MM	2-103, 4-7, 4-9, 4-11, 4-13, 4-15, 4-17, 4-59, 4-61, 4-63, 4-65, 4-83, 4-85, 4-87, 4-89, 5-29, 5-33, 5-49, 5-51, 5-53, 5-55, 5-87, 5-89
90028-0022	CONE TUBE 6 MM	2-103, 3-15, 5-7, 5-9, 5-25, 5-27, 5-35, 5-37, 5-41, 5-43, 5-45, 5-47
90028-0024	CONE TUBE 4 MM	2-103, 3-15
90028-0025	CONE TUBE 6 MM	2-103, 3-15, 5-25, 5-27, 5-29, 5-33, 5-41, 5-43, 5-45, 5-47, 5-49, 5-51, 5-53, 5-55, 5-87, 5-89
90030-0030	CONN. BULKHEAD SV 12-L/SY	2-51, 2-57, 2-59, 2-61, 2-83, 2-85, 2-87, 2-89, 5-7, 5-9, 5-35, 5-37, 10-101, 10-103, 10-393
90030-0051	CONN. STR., 6-R1/8, EXT. THREAD	1-93, 1-111, 10-363, 10-405
90030-0058	CONN. T-PIPE T-12	1-109, 8-13, 10-101, 10-103
90030-0066	CONN. BULKHEAD SV 6-L/SY	2-57, 2-59, 2-61
90030-0067	CONN. BULKHEAD SV 8-L/SY	2-57, 2-59, 2-61
90030-0070	CONN. ELBOW WA 10-R1/4	1-65
90030-0071	CONN. ELBOW WA 8-R1/4	10-371, 10-373
90030-0075	PIPE CONNECTION G-6	10-107, 10-109, 10-407, 10-409
90030-0076	CONN. T-PIPE T-6	2-115, 10-375
90030-0086	CONN. STR., 8-R1/4, EXT. THREAD	10-117, 10-365
90030-0088	CONN. STR., 12-R1/4, EXT. THREAD	1-65, 10-101, 10-103, 10-371, 10-373
90030-0091	CONN. PIPE G-8	2-73, 2-75
90030-0092	STRAIGHT CONN., 6-R1/4,EXT. TAPPERED	1-47, 10-405
90030-0096	CONN. ELBOW W-12	1-65, 1-117, 1-119, 10-101, 10-103
90030-0097	ACCESSORIES, FERRULE 6	10-119, 10-121
90030-0098	ACCESSORIES, FERRULE 8	4-39
90030-0099	ACCESSORIES, FERRULE 10	10-405
90030-0106	CONN. PIPE G-12	2-73, 2-75, 10-393
90030-0107	CONN. STR. 6-1/8 NPT, EXT. TAPPERED	5-67
90030-0109	CONN. STR., 12-R1/2, EXT. THREAD	1-59, 1-61, 1-65
90030-0110	ACCESSORIES, FERRULE 12	10-405
90030-0115	CONN. ELBOW WA 12-R3/8	1-51, 1-59, 1-61, 2-69, 10-101, 10-103
90030-0116	NIPPLES, REDUCING, EXT. THR. NO. 2520	10-117, 10-365
90030-0119	PIPE CONNECTION	1-65
90030-0120	ADJ. L-PIPE CONNECTION EVL, INT.T-10	2-107
90030-0121	CONN. ELBOW ADJ.,INT 10	2-105, 2-107
90030-0137	CONN. ELBOW WA 6-R1/8	1-109, 10-101, 10-103, 10-405
90030-0138	REDUCTION KOR 12/6-L/SY	10-405
90030-0146	ADJUSTABLE ELBOW CONNECTION,EXT 6-G1/8	2-107
90030-0155	CONN. STR., 8-R3/8, EXT. THREAD	2-67
90030-0157	CONN. STR. 10-R3/8, EXT. THREAD	2-67, 2-105, 2-107
90030-0159	CONN. BULKHEAD SV 15-L/SY	2-57, 2-59, 2-61, 2-73, 2-75
90030-0162	CONN. STR. 6-M10X1, EXT. THREAD	3-25
90030-0167	REDUCTION KOR 12/8-L/SY	10-101, 10-103
90030-0171	ADJUSTABLE ELBOW CONNECTION,EXT 6-G1/8	10-363, 10-405
90030-0178	CONN. STR., 10-R1/4, EXT. THREAD	2-105

Part No	Description	Page No
90030-0179	CONN. BULKHEAD SV 22-L/SY	2-57, 2-59, 2-61
90030-0180	CONN. STR. GE 12-1/2-14 NPTF	1-65
90030-0184	CONN. STR. GA-6-G1/8	1-109, 2-15, 10-101, 10-103, 10-107, 10-109, 10-127, 10-129
90030-0185	CONN. STR. GA-8-G1/4	10-117
90030-0187	CONN. STR. GA-12-G3/8	1-47, 1-51, 1-65, 1-93, 2-69, 10-101, 10-103, 10-113, 10-115, 10-393
90030-0201	CONN. STR., 8-R1/4, EXT. THREAD	4-29, 4-31, 4-33, 4-35
90030-0207	NIPPLE	1-83, 10-127
90030-0221	CONN. ELBOW BULKHEAD WSV 12	2-51
90030-0222	CONN. ELBOW, 6-1/8 NPT, EXT.THREAD	5-67
90030-0253	CONN. STR. 12-1/4 NPT, EXT. TAPPERED	2-73, 2-75
90030-0257	CONN. ELBOW, 8-R1/8, EXT.THREAD	10-77, 10-79
90030-0258	CONN. STR., 8-G1/4, INT. THREAD	10-77, 10-79
90031-0057	PLC, DIGITAL INPUT MODULE	10-47, 10-61, 10-307, 10-391
90031-0059	PLC, DIGITAL OUTPUT MODULE	10-47, 10-61, 10-307, 10-391
90032-0034	DISTR. BLOCK & DIST.5/16-24UNF X8	5-139, 5-141
90032-0035	DISTR. BLOCK & DIST.5/16-24UNF X8	5-67
90032-0038	BLOCK 2 WAYS	2-103, 3-17, 4-7, 4-9, 4-11, 4-13, 4-83, 4-85, 4-87, 4-89, 5-25, 5-27, 5-41, 5-43, 5-45, 5-47
90032-0039	BLOCK 4 WAYS	3-15, 3-25, 4-15, 4-17, 4-59, 4-61, 4-63, 4-65, 5-33, 5-53, 5-55
90032-0040	BLOCK 6 WAYS	5-29, 5-49, 5-51, 5-87, 5-89
90032-0043	DISTRIBUTION BLOCK 3 WAYS	2-103, 3-15
90032-0044	DISTRIBUTION BLOCK 4 WAYS	2-103, 5-7, 5-9, 5-25, 5-27, 5-35, 5-37, 5-41, 5-43, 5-45, 5-47
90032-0046	DISTRIBUTION BLOCK 6 WAYS	2-103
90036-0068	BULB 6.5W 24V	2-113
90041-0027	BACK PLANE CARD 7-SLOT, 2120-0037-015	10-249
90041-0029	FLOPPY DISC UNIT FD-235HF 1,4MB	10-249
90041-0068	DATACABLE MODEM PC	10-277
90041-0078	REMOTE COMMUNIKATION LINK BOARD,E000014B	10-263
90041-0080	CABLE, CPU-LVDSCARD+DISPLAY-LVDSCARD	10-247, 10-263
90041-0081	DISPLAY ADAPTER FOR LVDS, 1930-2200-010	10-263
90041-0083	HOST COMM. LINK BOARD LVDS, E000013A-02	10-247
90041-0086	CABLE, COM 2, 2223-0012-015	10-247
90041-0087	SERIAL CARD 2 CHANNEL RS486/422 BOARD	10-247
90041-0090	HARD DISC 2,5" , U036403A	10-247
90041-0091	PC 2,5" HD BAY, 3016-0028-013	10-249
90041-0092	FLEX BOX INNOSCAN E100006A	10-247
90041-0094	DISPLAY, SHARP 8,4"	10-263
90041-0096	FRAME, BEZEL, 8,4" , E274HL-585	10-265
90041-0097	CONTROLLER, E271-2210	10-263
90041-0098	ADAPTER BACKLIGHT, CXA-0214	10-263
90041-0100	RESITIVE TOUCH CABLE, E400001A	10-263
90041-0324	SPACER NUT, DSM M3050 X 40	10-263
90041-0327	BACKLIGHT INVERTER CABLE, E400000A	10-263
90042-0074	SOLENOID VALVE MECMAN 581-211-100	10-371, 10-373
90042-0108	SOLENOID VALVE MECMAN 581-111-100	10-111
90042-0172	SOLENOID VALVE 4023/1005/1032 24VDC	2-117, 2-119
90042-0187	SOLENOID VALVE BUERKERT	1-57
90042-0203	SOLENOID VALVE BURKERT	1-33
90042-0206	SOLENOID VALVE 444-111-000-1	2-15
90042-0210	SOLENOID VALVE LUCIFER 221 G 15-30	10-371, 10-373
90042-0215	VALVE BODY 5/2 UNISTABLE	2-121, 2-123, 10-41, 10-407, 10-409
90042-0238	SOLENOID VALVE HONEYWELL LUCIFER 133 T23	10-371, 10-373
90042-0345	COIL 24V DC	10-111, 10-371, 10-373
90042-0367	PLATE	10-371, 10-373
90042-0368	CONNECTION	10-111, 10-371, 10-373
90042-0369	END PIECE	10-111, 10-371, 10-373
90042-0370	BLIND PLATE 580-287-000	10-371, 10-373
90042-0392	CONTACT 2 POLE + EARTH	10-371, 10-373
90042-0398	CONTACT 3 POLE+EARTH	10-371, 10-373
90042-0404	BLIND PLATE 580-187-000	10-111
90042-0431	PLATE 580-175-000	10-111
90042-0476	CONTACT, 122-07N	10-111
90042-0481	CONNECTION TABLE 583-471-000 MECMAN	2-117, 2-119
90042-0487	COIL 24 VDC MECMAN	2-15
90042-0512	EL.COIL 481865/24	10-371, 10-373
90042-0519	BLANK PLATE ISO SIZE 1	2-121, 2-123
90042-0520	BASE PLATE ISO SIZE 1	2-121, 2-123
90042-0522	PORTED END PIECE ISO SIZE 1	2-121, 2-123
90042-0527	SEAL KIT PILOT VALVE	2-121, 2-123
90042-0528	BLANKING KIT SEALS ISO SIZE 1	2-121, 2-123
90042-0532	BASE PLATE ISO SIZE 1	2-121, 2-123
90042-0535	TERMINAL BOARD 19 CORDS	2-117, 2-119, 2-121, 2-123
90042-0536	PILOT CABLE MECMAN 440-728-000-1	2-117, 2-119
90042-0538	PILOT VALVE L=500MM	2-121, 2-123, 10-41, 10-407, 10-409
90042-0539	PILOT VALVE L=350MM	2-121, 2-123
90042-0550	PROTECTION PLUG FOR UNUSED CONNECTION	2-117, 2-119, 2-121, 2-123
90043-0004	PRESSURE GAUGE, 2040 D=63 MM	2-15
90043-0006	PRESSURE GAUGE, 2041 D=63 MM	2-117, 2-119
90043-0021	PRESSURE GAUGE WIEGAND 0-1 BAR 1/8"	2-121, 2-123
90043-0034	PRESSURE GAUGE	1-111, 8-13
90043-0043	PRESSURE GAUGE WIEGAND 0-10 BAR 1/8"	2-117, 2-119, 2-121, 2-123
90043-0062	MANOMETER	2-107
90043-0082	PRESSURE GAUGE, 2740, D=63 MM	10-101, 10-103, 10-405
90043-0095	PRESSURE GAUGE, 2740, D=63 MM, GLYC.	1-55

Part No	Description	Page No
90043-0096	PRESSURE GAUGE, 7169 MA-63-0,25	10-371, 10-373
90043-0302	SCREW	1-111, 8-13
90044-0084	LIMIT SW. 14 CE1-4	1-59, 1-61, 1-97, 10-383
90044-0094	LIMIT SW. 924 CE31-Y20-X5	2-31, 2-33, 2-109, 3-17
90044-0099	PROXIMITY SWITCH IG REPL.BY 90044-126	1-83, 1-121
90044-0103	KEY SAFETY SWITCH AZ 15 ZVR	1-101, 1-111, 7-49, 7-51
90044-0104	PROX.SWITCH IFM IN 3002	1-65, 1-103, 1-105, 1-107, 5-13, 5-25, 5-27, 5-41, 5-43, 5-45, 5-47 . 5-93, 5-95, 5-113, 5-129, 5-131, 7-57, 7-59, 7-61, 7-63, 8-33, 8-47, 10-19, 10-127, 10-129, 10-349
90044-0111	PROX.SW. INSOR M8 IX 020 814	10-289, 10-355
90044-0112	PROX.SW. MA 3 SAIET	10-347
90044-0126	PROX.SW. 922AA3XM-A9P-060-LZ876	1-93, 10-69, 10-71, 10-73, 10-75, 10-179
90044-0139	KEY SAF.SW. AZ16-02 ZVR K-2254	7-49, 7-51, 10-25
90044-0310	KEY FOR SAFETY SWITCH, AZ 15/16 B1	10-25
90045-0049	MOTOR 3GAA 082002-ASA	5-11
90045-0194	SERVO MOTOR EP 115-131-66T3B	10-69, 10-71, 10-73, 10-75
90045-0197	SERVO MOTOR EP 165-090-66T3B	10-69, 10-71, 10-73, 10-75
90045-0379	MEMORY EPROM	10-153, 10-155
90045-0382	CONNECTOR KIT 19N117F	10-151
90045-0398	SERVO DRIVE 10,5A/AC DMC 51540 P	10-151
90046-0015	DRIVE BRAKE MOTOR 50HZ	3-9
90046-0016	DRIVE BRAKE MOTOR 60HZ	3-9
90048-0033	GEAR PUMP, C 2347	5-67
90048-0034	OIL PUMP INCL. CONTAINER 4,5 L	2-103
90048-0420	FILTER	5-67
90050-0008	BOTTLE	7-21, 7-23
90050-0011	BOTTLE	2-133
90051-0025	KNOB, EXTERNAL THREAD. NO. 8306-0200	5-163
90051-0053	KNOB, INTERNAL THREAD, M6 24X17	1-83
90051-0065	HANDLE, THREADED TAP. NO. 8305-2151	1-63
90051-0077	HANDLE	7-21, 7-23
90051-0089	SHIFTER HANDLE	7-35, 7-37
90052-0011	HORN HOOTERT 24:48VDC.PT NO.1YA030221	8-9
90055-0033	HOSE NIPPLE, EXT.THR. R1/2-13 MM	2-57, 2-59, 2-61
90055-0071	HOSE NIPPLE, EXT.THR. R1/2X13 MM	1-13, 10-113, 10-115, 10-359, 10-361
90055-0096	STRAIGHT COUPLING	2-121, 2-123
90055-0100	Y-CONNECTION, 6-6	2-83, 2-85, 2-87, 2-89, 4-93, 7-57, 7-59, 7-61, 7-63
90055-0118	ELBOW PIPE JOINT -8MM	2-121, 2-123, 10-41, 10-365, 10-407, 10-409
90055-0129	REDUCER 8-14	10-365
90055-0217	ELBOW PIPE JOINT	2-121, 2-123
90056-0099	GEARS, BEVEL ALU-00	5-53, 5-55
90056-0125	GEARS, PLANETARY PL142-4-M2	10-69, 10-71, 10-73, 10-75
90056-0147	GEARS, BEVEL ALU-00	5-33
90056-0149	GEARS, PLANETARY PL115-4-M2	10-69, 10-71, 10-73, 10-75
90061-0018	ANGLE ENC 8BIT GRAY (REPL BY 90061-27)	3-19
90062-0015	LOCK WASHER SERRAT.EXT.GEAR,6,4/11 H=0,7	9-15, 9-17, 9-19, 9-41
90062-0020	LOCKING WASHER AZ 4,3	10-157, 10-159
90062-0021	LOCK WASHER DIN 6797 TYPE A 5,3	10-157, 10-159
90062-0022	LOCKING WASHER D=6,4/11	10-157, 10-159
90062-0049	LOCK WASHER NORD-LOCK,8,5/13,5, H=2,3	5-133, 5-135
90062-0058	LOCK WASHER SERRAT.EXT.GEAR,3,2/6 H=0,4	10-151, 10-307
90062-0059	LOCK WASHER SERRAT.EXT.GEAR,4,3/8 H=0,5	9-35, 9-39
90062-0060	LOCK WASHER SERRAT.EXT.GEAR,5,3/10 H=0,6	9-21, 9-35, 10-161
90062-0070	LOCK WASHER NORD-LOCK,10,3/16 H=2,4	5-161
90064-0082	PUSH BUTTON, WHITE	10-293
90064-0084	PUSH BUTTON, YELLOW	2-129, 7-57, 7-59, 7-61, 7-63, 8-13, 10-21
90064-0085	PUSH BUTTON, RED	7-57, 7-59, 7-61, 7-63
90064-0094	PUSH BUTTON, RED	2-129
90064-0095	PUSH BUTTON, YELLOW	2-129
90064-0096	PUSH BUTTON, GREEN	2-129
90064-0105	EMERGENCY STOP BUTTON REPL.BY 90064-124	8-7, 8-13
90064-0124	SWITCH, EM. STOP, ZB2-BS844+ZB2-BZ1045	7-57, 7-59, 7-61, 7-63, 10-141, 10-143
90064-0317	TOUCHGUARD, REPL.BY 90064-335	2-129
90066-0021	PUSH BUTTON BOX XAP-M1501	8-7, 10-141, 10-143
90066-0029	PUSH BUTTON BOX XB2-SLS12	8-13
90067-0021	CARRIAGE 32 04 129 5	7-85
90069-0116	GEARS, WORM MOTOR REPBY 90069-0281	7-7
90069-0281	GEAR WORM MOTOR OKM87-60E3	1-105
90074-0001	CABLE CLIPS, D=10 MM	2-57, 2-59, 2-61
90074-0002	CABLE CLIPS, D=11 MM	2-133, 5-87, 5-89
90074-0004	CABLE CLIPS, D=16 MM	2-53, 10-347
90074-0006	CABLE CLIPS, D=2X12 MM	2-67
90074-0018	CABLE CLIPS, D=2X10 MM	5-25, 5-27, 5-41, 5-43, 5-45, 5-47
90074-0026	PIPE CLIP FOR TUBE D=24-35 MM	2-121, 2-123
90075-0125	CONTACTOR, 7,5KW 24VDC	10-193
90075-0128	CONTACTOR, 7,5KW 24VDC	10-151
90077-0064	TERMINAL SAK2,5 PA FOR TS32	10-37
90077-0079	FEED THROUGH TERMINAL, 02943.6	10-241
90077-0090	FEED THROUGH TERMINAL, 10-00035546-1	1-129, 10-369
90077-0102	TERMINAL BLOCK, 1952.2	2-55
90077-0113	FEED THROUGH TERMINAL, 10-00102150-1	2-63, 10-173
90077-0115	TERMINALS, DISCONNECTABLE	2-129
90077-0302	RAIL TS/35X7,5	2-129
90077-0309	END PLATE	1-129, 10-369
90077-0316	BRIDGE CONNECTOR	10-369

Part No	Description	Page No
90077-0318	BRIDGE CONNECTOR	10-241
90077-0328	RAIL TS15/5	10-241
90087-0002	PIPE PLUG	2-11, 2-73, 2-75
90087-0003	PIPE PLUG	3-9
90087-0015	PLUG, EXT. THREAD HEX. SOCKET VSTI 1/4-E	5-133, 5-135
90087-0019	PLUG M10X1 STAINLESS	2-103, 3-15, 3-17, 3-25, 4-7, 4-9, 4-11, 4-13, 4-15, 4-17, 4-63, 4-65 4-83, 4-85, 4-87, 4-89, 5-25, 5-27, 5-29, 5-33, 5-41, 5-43, 5-45, 5-47, 5-49, 5-51, 5-53, 5-55, 5-87, 5-89
90089-0003	REDUCING SLEEVE, PR22,5/PR18,6	8-7
90089-0004	REDUCING SLEEVE, PR28,3/PR22,5	7-65
90089-0018	REDUCING SLEEVE, 3/4NPT /PR22,5	2-73, 2-75
90090-0013	BALL, D=4 MM	4-41, 4-43, 4-45, 4-47, 4-49, 4-51
90090-0014	BALL, D=7,938 MM	2-57, 2-59, 2-61
90090-0016	BALL, D=15 MM	4-93
90090-0020	BALL, D=5 MM	2-37, 2-39, 2-45, 2-47, 2-71, 2-93
90091-0029	RADIAL SEAL 80X105X13 MM	3-11, 3-13
90091-0054	RADIAL SEAL 30X47X8 MM DUST LIP	5-15
90091-0078	ROD SEAL, O-RING 18X25X3 MM	4-41, 4-43, 4-45, 4-47, 4-49, 4-51
90091-0079	PISTON SEAL, GLIDORING 27X35X3,5MM	4-41, 4-43, 4-45, 4-47, 4-49, 4-51
90091-0080	SCRAPER 48X60X10 MM	4-59, 4-61
90091-0130	RADIAL SEAL 90X110X12 MM DUST LIP	5-133, 5-135
90091-0142	RADIAL SEAL 35X50X9 MM	5-137
90091-0143	RADIAL SEAL 47X62X6 MM	5-61
90091-0145	RADIAL SEAL 30X62X10 MM	5-15
90091-0159	GASKET 330X308X9 MM	2-105
90091-0182	GASKET 48X38X4,8 MM	1-95, 1-97
90091-0202	RADIAL SEAL 58X80X13 MM DUST LIP	5-61
90091-0275	GASKET 40X26X6 MM	10-289, 10-303, 10-355, 10-385
90091-0412	SEAL RING	2-21
90092-0038	METERING VALVE, CJB 1, 5/16-24 UNF	5-67
90092-0048	OIL BRUSH, FLAT, 5/16-24 UNF	5-29, 5-33, 5-49, 5-51, 5-53, 5-55, 5-87, 5-89
90092-0052	METERING VALVE 10 MM3	2-103, 3-25, 4-7, 4-9, 4-11, 4-13, 4-15, 4-17, 4-59, 4-61, 4-63, 4-65 5-25, 5-27, 5-29, 5-33, 5-41, 5-43, 5-45, 5-47, 5-49, 5-51, 5-53, 5-55, 5-87, 5-89
90092-0053	METERING VALVE 30 MM3	2-103, 3-15, 3-17, 3-25, 4-15, 4-17, 4-59, 4-61, 4-63, 4-65, 4-83 4-85, 4-87, 4-89, 5-25, 5-27, 5-41, 5-43, 5-45, 5-47, 5-87, 5-89
90092-0054	METERING VALVE 50 MM3	3-15, 4-7, 4-9, 4-11, 4-13, 4-63, 4-65
90092-0077	METERING VALVE, FKD3, G1/8	5-127
90092-0081	MET.VALVE CONT. LUBR., 5/16-24 UNF	5-67
90097-0017	FLAT PIN PLUG 6,3MM	1-47
90097-0019	FLAT PIN PLUG 2,8MM	10-47, 10-403
90099-0001	NUT PR 15,2 MäSSING	1-123, 2-131, 10-179, 10-369, 10-375
90099-0002	NUT PR 18,6 BRASS	1-123, 2-129, 2-131, 8-9, 8-47
90099-0003	NUT	1-123, 2-131, 2-133, 7-57, 7-59, 7-61, 7-63, 10-39
90099-0004	NUT	2-57, 2-59, 2-61
90099-0011	NUT PR 37 BRASS	2-57, 2-59, 2-61, 2-131, 10-111, 10-369, 10-375
90099-0012	NUT HEX. M18X1,5, FE	3-25
90099-0015	NUT HEX. ML6M, M12X1,5, FE	3-19
90099-0085	NUT	2-51
90099-0104	NUT, PR 15,2 (PG9)	10-355
90099-0113	CLIP NUT M6	10-151, 10-157, 10-159
90099-0116	NUT, PR 12,5 (PG7)	10-111
90099-0119	NUT, PR 28,3 (PG21)	9-7
90099-0120	MUTTER PR 37 (PG29)	9-7
90099-0178	GLAND, LOCKNUT, PG 16	5-11
90110-0003	PLUG, MS 3102E-14S-2P	10-293
90110-0057	FEMALE INSERT HAN 24 E 09 33 002 4201	10-61, 10-151, 10-391
90110-0095	CONNECTOR 3 POLE + EARTH	2-15, 2-117, 2-119
90110-0121	FEMALE INSERT GDS A-H 09 06 215 2811	10-193
90110-0122	COVER, 09 06 000 9957	10-193
90110-0128	MALE INSERT, HAN 24 E-M 933 024 2631	1-123, 2-117, 2-119, 2-121, 2-123, 2-141, 7-57, 7-59 7-61, 7-63, 10-61, 10-151, 10-391
90110-0295	CONNECTOR 4 POLE + EARTH	10-289
90110-0296	CONTACT SCREW	10-289
90110-0334	SCREW HARTING	10-61, 10-151, 10-391
90110-0372	PLUG HOOD	10-289, 10-355
90110-0383	CONTACT COVER 15 PIN	10-273
90110-0510	COVER	10-289
90110-0511	MALE SCREW CONNECTION	10-289, 10-355
90110-0512	FEMALE SCREW CONNECTION	10-289, 10-355
90110-0518	PLINTH 15 PIN	10-273
90111-0120	SWITCH, 2 POS.704.510 .0A+704.901.5/A	10-151, 10-193, 10-307
90111-0121	SWITCH, 3 POS.704.502.0A+2 PCE 704.901.3	2-129, 10-391
90111-0132	MAIN SWITCH P1-25/EA/SVB-SW/N/HI11/H-P14	10-151
90111-0150	SWITCH GEAR, 704.502 .0+704.901.3	7-57, 7-59, 7-61, 7-63
90111-0157	SWITCH GEAR, NO.OF DIGIT: 3	10-297
90113-0044	PRESSURE REGULATOR	2-107
90113-0056	REGULATOR	2-15
90113-0063	PRESSURE REGULATOR	10-101, 10-103, 10-405
90113-0064	PRESSURE REGULATOR	10-101, 10-103, 10-405
90113-0067	PRESSURE REGULATOR	10-371, 10-373
90113-0069	PRESSURE REGULATOR	2-121, 2-123
90113-0076	PRESSURE REGULATOR	2-121, 2-123
90113-0114	REGULATOR	2-117, 2-119
90113-0379	NUT	2-121, 2-123
90113-0407	YOKE, SINGLE	2-117, 2-119

Part No	Description	Page No
90115-0020	ROD END, ID=8 MM, M8X1,25	10-141, 10-143
90115-0067	ROD END, ID=16 MM, M16X2	3-25
90115-0105	ROD END, ID=10 MM, M10X1,5	3-9
90115-0106	ROD END, ID=8 MM, M8X1,25	3-23
90115-0107	ROD END, ID=8 MM, M8X1,25 LH	3-23
90115-0111	ROD END, ID=22 MM, M22X1,5 LH	2-91
90115-0122	ROD END, ID=8 MM, M8X1,25	3-25
90115-0133	ROD END, ID=12 MM, M12X1,25	3-17
90115-0139	ROD END, ID=8 MM, M8X1,25	5-143, 5-145, 5-147, 10-23
90119-0056	RELAY, AUXILIARY MK3P5-S 24VDC	10-151, 10-403
90119-0067	SOLID-STATE RELAY, H12WD4850	10-47
90121-0132	RESISTANCE FIXED, 0,51 KOHM, 0,25 W	10-151
90125-0020	PLATE	1-31, 8-23
90129-0006	BASE, S3-B	10-151, 10-403
90130-0017	POTENTIOMETER, 10 KOHM	10-193
90130-0301	ADJUSTING KNOB WITH DIAL	10-193
90131-0004	HOSE COUPLING	2-133
90132-0021	HOSE CLIP 6-10MM	2-29, 2-121, 2-123
90134-0002	CONNECTOR R1/8, D=4 MM	5-29, 5-33, 5-49, 5-51, 5-53, 5-55, 5-87, 5-89
90134-0003	BUSHING	5-33, 5-53, 5-55, 5-67, 5-87, 5-89, 5-139, 5-141
90134-0004	PIPE CONNECTION R1/8	2-57, 2-59, 2-61
90134-0030	SLEEVE FOR PLASTIC TUBE	2-103, 3-15, 3-25, 5-7, 5-9, 5-25, 5-27, 5-29, 5-33, 5-35, 5-37, 5-41, 5-43, 5-45, 5-47, 5-49, 5-51, 5-53, 5-55, 5-59, 5-87, 5-89
90134-0031	SLEEVE FOR PLASTIC TUBE	2-103, 3-15, 3-17, 4-7, 4-9, 4-11, 4-13, 4-15, 4-17, 4-59, 4-61, 4-63, 4-65, 4-83, 4-85, 4-87, 4-89
90134-0034	NIPPLE	5-67
90134-0038	BUSHING/NUT INLET/OUTLET 4 MM	2-103, 3-15, 3-17, 4-7, 4-9, 4-11, 4-13, 4-15, 4-17, 4-59, 4-61, 4-63, 4-65, 4-83, 4-85, 4-87, 4-89
90134-0039	BUSHING VALVE CONNECTION 2,5 MM	2-103, 3-15, 3-17, 3-25, 4-7, 4-9, 4-11, 4-13, 4-15, 4-17, 4-59, 4-61, 4-63, 4-65, 4-83, 4-85, 4-87, 4-89, 5-25, 5-27, 5-29, 5-33, 5-41, 5-43, 5-45, 5-47, 5-49, 5-51, 5-53, 5-55, 5-87, 5-89
90134-0040	BUSHING VALVE CONNECTION 4 MM	4-59, 4-61, 5-29, 5-33, 5-49, 5-51, 5-53, 5-55, 5-87, 5-89
90134-0045	PLUG M12X1	5-33, 5-53, 5-55
90134-0051	SPACING COLLAR DOSING BLOCK	4-59, 4-61
90134-0052	PLUG DOSING BLOCK	2-103, 3-15, 3-17, 3-25, 5-33, 5-53, 5-55
90134-0054	BLOCK CONNECTION M10X1	2-103
90134-0055	BUSHING/NUT INLET/OUTLET 6 MM	2-103, 3-15, 5-7, 5-9, 5-25, 5-27, 5-29, 5-33, 5-35, 5-37, 5-41, 5-43, 5-45, 5-47, 5-49, 5-51, 5-53, 5-55, 5-87, 5-89
90134-0058	CONNECTION	3-15, 3-17, 3-25, 4-7, 4-9, 4-11, 4-13, 4-15, 4-17, 4-29, 4-31, 4-33, 4-35, 4-41, 4-43, 4-45, 4-47, 4-53, 4-57, 4-59, 4-61, 5-25, 5-27, 5-29, 5-33, 5-41, 5-43, 5-45, 5-47, 5-49, 5-51, 5-53, 5-55, 5-87, 5-89
90134-0063	BUSHING/NUT M8X1, D=2,5 MM	4-19, 4-21, 4-23
90135-0021	EARTH CLAMP	1-129
90135-0022	EARTH TERMINAL EK 2,5N	10-37, 10-369
90135-0026	EARTH TERMINAL, 3802.6	10-241
90135-0031	BUSBAR HOLDER K&M SHO165/2	9-27, 9-31
90135-0039	SHIELD CLIP KLBU 4-13.5	10-161
90136-0002	PLUG 5/16"24	5-67, 5-139, 5-141
90137-0002	BANJO CONN. 1/8 - 5/16-24UNF	5-29, 5-33, 5-49, 5-51, 5-53, 5-55, 5-87, 5-89
90137-0005	BANJO CONN. M6, 5/16-24UNF	5-67, 5-139, 5-141
90137-0010	BANJO CONN. M6, D=2,5 MM	5-67
90140-0010	T-PIPE, INT. THREAD, 20031/2	2-117, 2-119
90140-0011	T-PIPE, INT. THREAD, NO. 2070-1/2-1/2	2-117, 2-119
90140-0012	ELBOW, 90 INT/EXT, 2020-1/2-1/2	2-117, 2-119
90140-0021	ELBOW, 90 INT/EXT, 20201/8-1/8	1-117, 1-119, 10-107, 10-109, 10-127, 10-129
90141-0012	RETAINING RING FOR SHAFT,17X1,5MM	5-15
90141-0015	RETAIN. RING, 8	8-45
90141-0016	RETAIN. RING, 10	10-19, 10-23
90141-0022	SNAP RING B 16	1-95, 1-97
90143-0011	STRIP	1-125, 1-127
90143-0018	STRIP	1-111
90143-0020	STRIP	1-59, 1-61, 2-23
90143-0029	STRIP	7-21, 7-23
90143-0035	STRIP	2-31, 2-33, 2-41, 2-43
90143-0039	STRIP	2-31, 2-33, 2-41, 2-43, 7-47, 7-49, 7-51, 10-141, 10-143
90143-0043	STRIP SELLOTAPE 3,2X6MM	9-45, 10-157, 10-159
90143-0049	RUBBERSTRIP 11X21MM	2-99, 2-101, 2-135
90143-0052	STRAP	5-127
90143-0054	STRIP	2-57, 2-59, 2-61
90143-0057	STRIP EMKA 1011-05 21X11MM	9-45, 10-157, 10-159
90143-0068	RUBBERSTRIP EMKA 1011-06	2-41, 2-43
90144-0004	TREBOFLON-TAPE W=13MM	10-77, 10-79, 10-133, 10-387, 10-405
90144-0044	TAPE SCOTCH VHB 4945;12,7MM	10-157, 10-159
90144-0073	TREBOFLON-TAPE W=13MM	1-59, 1-61
90145-0005	WIRE	5-79
90148-0021	HOSE	1-13, 10-113, 10-115, 10-359, 10-361
90148-0036	HOSE	2-107
90148-0040	HOSE	4-39
90151-0001	BRASS PIPE DI=2,6 MM	4-7, 4-9, 4-11, 4-13, 4-59, 4-61
90152-0016	HOSE (SPIRAL)	2-95
90152-0017	HOSE (SPIRAL)	2-97
90152-0029	HOSE 35/41	1-123, 2-131, 10-111
90152-0031	HOSE	1-99, 2-131, 10-299, 10-375
90152-0032	HOSE 5"=127MM	2-53

Part No	Description	Page No
90152-0033	SPIRAL CONDUIT FOR PR 15,2(PG 9)	1-47, 1-123, 2-55, 2-117, 2-119, 2-129, 2-131, 7-57, 7-59, 7-61, 7-63, 8-7, 8-15, 10-137, 10-139, 10-347, 10-371, 10-373
90152-0044	FLEXIBLE CONDUIT 3641-0070	5-7, 5-9, 5-35, 5-37
90152-0050	SPIRAL CONDUIT, 20X13, UL 1313	5-7, 5-9, 5-35, 5-37, 10-289
90152-0051	SPIRAL CONDUIT, 25X18, UL 1816	5-7, 5-9, 5-35, 5-37, 10-299
90152-0059	SPIRAL CONDUIT, 18X12, UL 1211	10-289, 10-355
90153-0016	ADHESIVE,TUBE 100G RHODORSIL CAF 3	1-59, 1-61, 9-45
90153-0017	ADHESIVE, 2963 TUBE 160G	1-125, 1-127
90153-0020	ADHESIVE, BOSTIK 1782 125ML	1-99
90153-0023	ADHESIVE, SILICON 251470 TUB 90CC	2-23, 10-387
90153-0043	ADHESIVE, LOCTITE 495 20G	5-57, 5-127, 5-139, 5-141
90155-0008	HANGER CHAIN, 18	10-179, 10-359, 10-361
90157-0002	SEALING COMPOUND, COLLEXIN	5-163
90157-0016	LOCKING FLUID	1-87, 2-35, 3-25, 4-41, 4-43, 4-45, 4-47, 4-59, 4-61, 8-39, 10-13
90157-0021	LOCKING FLUID	4-41, 4-43, 4-45, 4-47
90157-0022	SEALING COMPOUND	2-57, 2-59, 2-61, 5-139, 5-141
90157-0034	SEALING COMPOUND LOCTITE 572 50 ML	5-57
90161-0001	O-RING MATERIAL 3 MM	5-57, 5-139, 5-141
90163-0041	HOSE NIPPLE, EXT.THR. 3/8-12 MM	2-67
90163-0050	QUICK COUPLING, (M) 5089 / 9	2-103
90163-0056	QUICK COUPLING, (F) 5054-6/4	6-5
90163-0057	NIPPLE 1/8" BRASS	1-65, 2-51, 10-107, 10-109, 10-127, 10-129
90163-0062	QUICK COUPLING, (F) 5053-1/8	1-65, 10-107, 10-109, 10-127, 10-129
90163-0063	QUICK COUPLING, (M) 5450-6/4	6-5
90163-0064	QUICK COUPLING, (M) LP-006-2-WR517	2-103
90163-0076	QUICK COUPLING, (F) LP-006-0-WR021	2-67
90163-0079	SLEEVE 5480-8/6	10-117, 10-365
90163-0133	QUICK COUPLING, (F) LP-004-0-WR013-21-1	2-81
90163-0134	QUICK COUPLING, LP-004-1-SL006-21	2-81
90164-0003	LIGHT FIXTURE	2-91
90164-0016	LIGHT FIXTURE, DWD118B	2-131
90165-0003	PIPE CLIP FOR TUBE D=4 MM	2-103, 3-15
90165-0005	PIPE CLIP FOR TUBE D=6 MM	2-103, 3-15, 8-15
90165-0007	PIPE CLIP FOR TUBE D=8 MM	2-73, 2-75, 10-19
90165-0022	PIPE CLIP, FOR TUBE D=2,5 MM, B-3570	2-103, 3-25
90165-0056	PIPE CLIP FOR TUBE D=4 MM	4-15, 4-17, 4-53, 4-57, 4-63, 4-65, 4-83, 4-85, 4-87, 4-89, 5-13, 5-29, 5-33, 5-49, 5-51, 5-53, 5-55, 5-57, 5-87, 5-89, 5-109, 5-121, 5-123
90165-0057	PIPE CLIP FOR TUBE D=6 MM	4-29, 4-31, 4-33, 4-35, 5-7, 5-9, 5-25, 5-27, 5-29, 5-35, 5-37, 5-41, 5-43, 5-45, 5-47, 5-49, 5-51, 5-57, 5-87, 5-89, 5-143, 5-145, 5-147, 7-9, 7-11, 7-13, 7-15, 7-17, 7-19, 10-19, 10-27, 10-29, 10-31
90165-0058	PIPE CLIP FOR TUBE D=25 MM	4-7, 4-9, 4-11, 4-13, 4-29, 4-31, 4-33, 4-35, 4-83, 4-85, 4-87, 4-89
90165-0060	PIPE CLIP FOR TUBE D=5 MM	4-59, 4-61, 5-7, 5-9, 5-33, 5-35, 5-37, 5-53, 5-55, 8-47
90165-0086	PIPE CLAMP, RSGU 1.24/15-V4, D=24 MM	2-111, 10-19, 10-37
90166-0007	HOSE PVC 10/14 TRANSP.	2-53, 2-67, 10-393
90166-0011	TUBE 6 MM PA,TRANSP.	5-13, 5-67
90166-0013	TUBE 8 MM PA BLUE	2-83, 2-85, 2-87, 2-89, 2-117, 2-119, 2-121, 2-123, 7-57, 7-59, 7-61, 7-63, 10-343, 10-345, 10-365, 10-371, 10-373
90166-0049	HOSE PVC 25/33-34	10-105
90166-0051	TUBE PA,TRANSP.	5-29, 5-33, 5-49, 5-51, 5-53, 5-55, 5-67, 5-87, 5-89
90166-0059	HOSE PVC 12/16MM TRANSP.	5-7, 5-9, 5-35, 5-37, 7-9, 7-11, 7-13, 7-15, 7-17, 7-19
90166-0060	HOSE 19/26-27 REINF.PVC	2-25, 2-83, 2-85, 2-87, 2-89
90166-0068	TUBE 12 MM PA BLUE	2-121, 2-123
90166-0081	TUBE 6 MM PA BLUE	2-83, 2-85, 2-87, 2-89, 2-117, 2-119, 2-121, 2-123, 7-57, 7-59, 7-61, 7-63, 10-343, 10-345, 10-375, 10-407, 10-409
90166-0087	HOSE 15/23 REINF.PVC TRANSP.	5-7, 5-9, 5-35, 5-37, 8-23, 8-25, 8-27
90166-0095	TUBE 4 MM PA BLUE	5-87, 5-89
90166-0101	HOSE, SILICONE, 60 SHORE, 6/10 MM	2-29
90166-0108	TUBE 6 MM PA,TRANSP.	2-103, 3-15, 5-7, 5-9, 5-25, 5-27, 5-29, 5-33, 5-35, 5-37, 5-41, 5-43, 5-45, 5-47, 5-49, 5-51, 5-53, 5-55, 5-59, 5-87, 5-89
90166-0109	TUBE 4 MM PA,TRANSP.	2-103, 3-15, 4-15, 4-17, 4-59, 4-61, 4-63, 4-65, 4-83, 4-85, 4-87, 4-89, 10-9
90166-0113	HOSE	2-103, 3-19
90166-0119	HOSE PUR 4/6 BLACK	10-343, 10-345
90166-0121	HOSE	2-57, 2-59, 2-61, 2-73, 2-75
90166-0122	TUBE 8 MM PA,TRANSP.	2-67, 2-73, 2-75, 5-19, 5-25, 5-27, 5-41, 5-43, 5-45, 5-47, 5-87, 5-89, 5-121, 5-123, 7-67, 7-69, 7-71
90166-0123	HOSE	4-39
90166-0124	TUBE 6 MM PA,TRANSP.	2-15, 4-7, 4-9, 4-11, 4-13, 5-21, 5-57, 5-87, 5-89, 6-5, 8-15, 10-41
90166-0132	TUBE 6 MM PA,TRANSP.	1-117, 1-119, 2-73, 2-75, 4-29, 4-31, 4-33, 4-35, 4-93, 10-9, 10-107, 10-109, 10-111, 10-181
90166-0133	TUBE 8 MM PA,TRANSP.	2-81, 4-29, 4-31, 4-33, 4-35, 4-41, 4-43, 4-45, 4-47, 10-111, 10-117
90166-0138	HOSE	2-29, 7-21, 7-23
90166-0142	HOSE	2-35, 2-41, 2-43
90166-0143	TUBE 2,5 MM PA,TRANSP.	3-15, 3-17, 3-25, 4-7, 4-9, 4-11, 4-13, 4-15, 4-17, 4-53, 4-57, 4-59, 4-61, 4-63, 4-65, 5-25, 5-27, 5-29, 5-33, 5-41, 5-43, 5-45, 5-47, 5-49, 5-51, 5-53, 5-55, 5-87, 5-89
90166-0171	SHRINKABLE HOSE BLACK	10-307
90166-0172	KRYMPSLANG	10-307
90166-0173	SHRINKABLE HOSE BLACK	10-307
90166-0194	TUBE 8 MM PUR BLUE	2-121, 2-123
90166-0199	RUBBER HOSE	5-21
90166-0206	TUBE 14 MM PUR BLUE	2-121, 2-123
90181-0044	CABLE DUCT, 25X60MM	10-157, 10-159
90181-0045	CABLE DUCT, 40X60MM	10-157, 10-159
90181-0047	CABLE DUCT, 80X60MM	10-157, 10-159
90181-0064	LOCK ZP1 FOR CHANNEL T1	10-157, 10-159

Part No	Description	Page No
90187-0029	BALL VALVE G1/2, NPBR	2-57, 2-59, 2-61, 2-117, 2-119
90187-0054	BALL VALVE G3/8	2-67
90187-0062	BALL VALVE G1/2, NPBR	2-117, 2-119
90187-0081	BALL VALVE G1/2	1-59, 1-61
90187-0082	BALL VALVE G1/2	1-13, 1-65, 10-101, 10-103, 10-113, 10-115, 10-179, 10-359, 10-361
90187-0110	DIAPHRAGM VALVE DN15, N.C. WELD CONN.	10-95
90187-0111	DIAPHRAGM VALVE DN15, N.O. WELD CONN.	10-95
90187-0112	COCK VALVE, G1/4, 4-WAY, VITON	10-101, 10-103, 10-405
90187-0312	DIAPHRAGM #328 FOR SIZE 15 VALVE	10-95
90189-0075	BALL BUSHING, 12X42X40 MM	10-27, 10-29, 10-31
90194-0016	WARNING SIGN, RISK OF ELECTRIC SHOCK	1-59, 1-61, 1-99, 1-123, 2-55, 2-57, 2-59, 2-61, 2-63, 2-129, 2-141, 8-7, 8-13, 10-21, 10-157, 10-159, 10-369
90194-0039	WARNING SIGN, RISK OF ELECTRIC SHOCK	3-19
90194-0075	WARNING SIGN ISO, HOT SURFACE	10-141, 10-143
90194-0080	SIGN, IDENTIFICATION OF WIRING	10-151, 10-157, 10-159
90194-0133	SIGN "DELIVERED DESIGN"	10-151, 10-157, 10-159
90194-0302	MARKING LABELS REBUILDING KIT	10-47, 10-61, 10-179, 10-273, 10-277, 10-307, 10-391, 10-403
90195-0020	TERMINAL BLOCK, 1977.2	2-133, 7-67, 7-69, 7-71
90195-0028	TERM.BLOCK 6-POLE STEATIT	1-99
90195-0029	CONN. LINK NO324 FOR -28	1-99
90196-0055	PULLEY	3-9
90196-0061	PULLEY	3-9
90196-0062	PULLEY	3-9
90196-0065	PULLEY	3-9
90196-0066	PULLEY	3-9
90196-0067	PULLEY	3-7
90196-0079	TIMING BELT PULLEY	3-9
90196-0090	TIMING BELT PULLEY	3-9
90199-0004	LEVEL GLASS, ST60	5-57
90199-0010	LEVEL GLASS	1-59, 1-61
90201-0010	DIRECT CHECK VALVE, NO. DGMDC-3-Y-PK-41	3-21
90201-0014	VALVE	2-107
90201-0057	VALVE	3-21
90201-0300	MOUNTING PLATE, NO. A1-89 57B	3-21
90201-0303	SPARE PARTS KIT	3-21
90201-0307	BLANKING, NO. DGMA-3-C1-10	2-107
90201-0308	BLANKING, NO. DGVM-3-10-R	2-107
90206-0070	HEATING ELEMENT 6000W 380/220V	1-59, 1-61
90206-0085	HEATING CARTRIDGE 460W 105 OHM	1-31, 8-23
90206-0097	HEATING CARTRIDGE 500W 220V	7-67, 7-69, 7-71
90206-0322	GASKET	1-31, 8-23
90207-0363	GASKET	1-67, 1-133, 10-85
90207-0365	GASKET	1-67, 1-133
90207-0470	SEALING RING	10-385
90208-0067	CLAMPING ELEMENT	3-7
90214-0087	TAPER ROLLER BEARING, 70X110X25 MM	5-133, 5-135
90214-0098	BALL BEARING, 15X35X11 MM	2-9, 8-7, 8-21
90214-0138	BALL BEARING, 5X19X6 MM	1-5, 1-7, 1-9, 1-11, 1-131, 8-33
90214-0163	BALL BEARING SOLID OIL 25X47X12 MM	3-17
90214-0169	BALL BEARING SOLID OIL 15X35X11 MM	3-15, 3-25
90214-0207	BALL BEARING, 15X32X9 MM	8-39, 10-13
90214-0303	SEALING RING, 18,6X35X2 MM	1-101, 1-103, 1-105
90214-0310	SEALING LID, 62X8 MM	5-15
90217-0026	NUT	1-51
90217-0035	NUT	10-53
90217-0047	BLANKING OFF NUT, RD 70-6 (SMS 51)	1-59, 1-61, 10-53
90217-0053	NIPPLE, RD 60-6 - R1 1/2 M	2-35
90217-0308	CLAMP, ISO2852 FOR PIPE 25,4 AND 38,1 MM	10-179
90217-0312	CLAMP, ISO2852 FOR PIPE 101,6 MM	1-55
90217-0313	GASKET 97,8X119X5,5 MM	1-55
90220-0034	THERMOCOUPLE CABLE K/ 2X0,5MM2	10-61, 10-147
90220-0059	THERMOCOUPLE CABLE K/ 2X0,81MM2	10-47, 10-151
90220-0083	CABLE OLFLEX 16X0,25 MM2	10-307
90220-0084	MOTOR CABLE 4X2,5+2(2X0.75)+SHIELD	10-147
90220-0085	CABLES, MULTI-CONDUCTOR SCREENED	10-123, 10-307
90220-0090	SCR. CABLE 3X0,34MM2 FOR 90243-221?-222	10-307
90220-0091	PAIR TWISTED CABLE 2X2X0,25MM2	10-273, 10-277
90220-0095	SCR. CABLE 3X0,75MM2	10-151
90220-0096	SCR. CABLE 3X1,5MM2	10-307
90220-0302	CLAMP FOR SCR.CABLE, 16MM, 55-016-89	10-263
90220-0303	CLAMP FOR SCR.CABLE, 10MM, 55-016-22	10-151, 10-307
90220-0304	CLAMP FOR SCR.CABLE, 24MM,	10-263
90220-0305	CLAMP FOR SCR.CABLE, 16MM,	10-151, 10-307
90224-0066	CONN. STRAIGHT, 160•SSA	5-127
90224-0078	PIPE SOCKET, ART.NO RAN 1612	1-59, 1-61
90224-0284	CONN. BANJO, ART. NO LJK-1/4	1-17, 1-19, 1-31
90224-0301	CONNECTION	1-31
90224-0302	CONNECTION	2-73, 2-75
90224-0304	CONNECTION	8-15, 10-181
90224-0307	STRAIGHT FITTING, 6MM, 1/8",	1-65
90224-0308	CONN. BANJO, ART. NO. 2023-1/8-1/8	1-65
90224-0309	CONNECTION	1-117, 1-119, 10-181
90224-0310	CONNECTION	1-117, 1-119
90224-0316	CONNECTION	2-83, 2-85, 2-87, 2-89

Part No	Description	Page No
90224-0318	CONNECTION	2-73, 2-75
90224-0319	CONN. STR., 8-R1/4, EXT. THREAD	2-83, 2-85, 2-87, 2-89
90224-0323	CONNECTION	2-73, 2-75, 2-83, 2-85, 2-87, 2-89
90224-0329	ELBOW 90 COUPL.,EXT.THREAD 6/4-G1/4"	2-15
90230-0011	NON RETURN VALVE RHD-115L	2-67
90230-0017	NON RETURN VALVE RHD 10-L	2-105
90230-0021	NON RETURN VALVE, NO. RHD-15-L/MS 59	2-133
90230-0023	NON RETURN VALVE	2-73, 2-75
90230-0025	NON-RETURN VALVE, 12MM, L=85	10-405
90230-0031	NON-RETURN VALVE B5146	5-67
90232-0055	PH.CELL NT6-14920S17	10-187, 10-189
90232-0103	PH.CELL E3S-CT61-L-5M	7-57, 7-59, 7-61, 7-63, 10-239
90232-0104	PH.CELL E3S-CT61-D-5M	7-57, 7-59, 7-61, 7-63, 10-239
90232-0106	PH.CELL E3S-CR11-5M	7-57, 7-59, 7-61, 7-63
90232-0118	PH.CELL WT18-2P115S14	7-57, 7-59, 7-61, 7-63
90232-0333	REFLECTOR E39-R1	7-47
90233-0028	TUBE FUSE, 10A	10-193
90233-0303	FUSE HOLDER, ST 10 1-POLE	10-193
90235-0048	VALVE	1-117, 1-119, 10-107, 10-109
90235-0206	QUICK EXHAUST VALVE, SEU-1/8	10-23
90235-0222	VALVE	10-23
90235-0259	VALVE	1-65, 10-127
90235-0261	ANGLE SEAT VALVE G1/2, N.C. DN13	10-405
90235-0271	ANGLE SEAT VALVE W. FLANGES, N.C. D=13	10-101, 10-103
90235-0274	THROTTLE CHECK VALVES,G1/8"	1-65, 1-85, 8-23, 8-25, 8-27
90235-0275	THROTTLE CHECK VALVES,G1/4"	1-17, 1-19, 1-31, 1-47, 1-107
90235-0280	THROTTLE CHECK VALVES,M5	10-343, 10-345
90235-0289	VALVE	10-27, 10-29, 10-31
90235-0295	THROTTLE CHECK VALVES,G1/4"	2-73, 2-75
90235-0449	MODULE PLATE	10-23
90235-0450	PLATE	2-121, 2-123
90235-0708	VALVE	2-121, 2-123
90235-0723	THROTTLE VALVE	10-23
90235-0743	ANGLE SEAT VALVE W. FLANGES, N.O. D=13	10-101, 10-103, 10-113, 10-115
90235-0767	VALVE	2-117, 2-119
90236-0041	BRACKET	2-117, 2-119
90237-0011	BAR CLAMP	2-31, 2-33
90237-0046	MAGNETIC LOCK, 46X33X15 MM	2-49, 2-133, 10-141, 10-143
90237-0066	LOCK, FIX 590, L=1820 MM	2-31
90237-0067	LOCK, FIX 590, L=1198 MM	2-33
90237-0070	SNAP-IN BALL LOCK, 69X19 MM	2-135, 7-49, 7-51, 10-141, 10-143
90237-0075	FAST LOCK, SK-M8	7-49, 7-51
90237-0114	FAST LOCKING BOLT, 3140 K 15-8	10-111
90237-0128	LOCK CYLINDER, 1109-U3	9-9
90237-0142	LOCK HOUSING, 1000-U45	9-11, 9-13, 9-15, 9-17, 9-19, 9-35
90237-0151	GUIDE, 1001-U11	9-9
90237-0153	LOCK HOUSING, 1121-U26-0B	9-9
90237-0155	LOCK ADAPTER, 1121-U40	9-9
90237-0156	LOCK BOLT, 1000-16	9-9
90237-0158	ROUND BAR, NO. 1049-U18-L839.5	9-9
90237-0176	TURNING HANDLE	9-9
90237-0202	LOCK, INSERT SQUARE,1000-U2 8 MM	9-11, 9-13, 9-19, 9-35
90237-0308	LOCKING WASHER, 3141-1	10-111
90237-0319	LOCK HOUSING, 1000-U134	2-129, 9-47, 9-51, 10-157, 10-159
90237-0320	LOCK HOUSING, 1000-U136	2-129, 9-47, 9-51, 10-157, 10-159
90237-0321	LOCK COMPONENT EMKA 1000-10	10-157, 10-159
90237-0322	LOCK GASKET, 1000-U137	9-11, 9-13, 9-15, 9-17, 9-19, 9-47, 9-51, 10-157, 10-159
90237-0324	KEY, 1104-02 FOR SQUARE 8 MM	9-11, 10-157, 10-159
90237-0335	LOCKING CATCH	2-129, 9-35, 10-157, 10-159
90237-0337	LOCK HANDLE FOR 90237-319	9-15, 9-17, 10-157, 10-159
90237-0339	CAM EMKA 1000-S58	9-47, 9-51
90237-0368	LOCK CAM, 1000-15	9-11, 9-13, 9-15, 9-17, 9-19
90239-0127	BRACKET	1-17, 1-19, 1-31, 1-103
90239-0166	CYLINDER	1-17, 1-19, 1-31, 1-95, 1-97
90239-0189	CYLINDER	1-103
90239-0196	CYLINDER	1-107
90239-0231	BELLOWS	7-67, 7-69, 7-71
90239-0259	CYLINDER	7-7, 7-67, 7-69, 7-71
90239-0321	BRACKET	1-107
90239-0346	ROD END,CLEVIS W.AXLE M12X1,25	1-47
90239-0357	ROD END, CLEVIS WITH AXLE M10X1,25	10-379, 10-381
90239-0453	BRACKET	1-53, 1-89, 1-91
90239-0460	BRACKET	10-379, 10-381
90239-0486	REAR,CLEVIS,MINI-ISO 16	10-27, 10-29, 10-31
90239-0487	REAR,CLEVIS,MINI-ISO 20-25	8-25, 8-27
90239-0489	ROD END, CLEVIS WITH AXLE M6X1,25	10-27, 10-29, 10-31
90239-0490	ROD END, CLEVIS WITH AXLE M8X1,25	1-85
90239-0516	ROD END, CLEVIS WITH AXLE M10X1,25	1-53, 1-89, 1-91, 8-25, 8-27
90239-0532	ROD END, CLEVIS WITH AXLE M8X1,25	8-23
90239-0543	SENSOR REPBY 0090239-0585	10-379, 10-381
90239-0773	CYLINDER	10-383
90239-0779	CYLINDER	1-53, 1-89, 1-91, 10-379, 10-381
90239-0816	DOUBLE ACTING, MINI-ISO, CYL.16-25	10-27, 10-29, 10-31
90239-0818	DOUBLE ACTING, MINI-ISO, CYL.16-80	5-125

Part No	Description	Page No
90239-0821	DOUBLE ACTING, MINI-ISO, CYL.20-25	8-23
90239-0822	DOUBLE ACTING, MINI-ISO, CYL.20-50	1-85
90239-0823	DOUBLE ACTING, MINI-ISO, CYL.20-80	10-23
90239-0829	DOUBLE ACTING, MINI-ISO, CYL.25-50	8-25, 8-27
90239-0951	CYLINDER	1-47
90239-0960	CYLINDER	5-21
90240-0097	FLANGE BUSHING, 12X14X9 MM	3-25
90240-0146	FLANGE BUSHING,15X21X20 MM	1-59, 1-61
90240-0172	FLANGE BUSHING, 8X12X10 MM	1-7, 1-9, 1-11, 1-17, 1-19, 1-23, 1-25, 1-27, 1-29
90240-0180	FLANGE BUSHING 10X14X15MM	4-83, 4-85, 4-87, 4-89
90240-0233	BEAR. BUSH. WITHOUT FL, 14X20X14 MM	5-149, 5-151, 5-153, 5-155, 5-157, 5-159
90242-0050	O-RING 19,2X3 MM	10-335
90242-0084	O-RING 203,0X3 MM	1-131
90242-0115	O-RING MATERIAL 5,7 MM	2-57, 2-59, 2-61
90242-0116	O-RING 55X2,5 MM	5-15
90242-0117	O-RING 70X2 MM	5-137
90242-0118	O-RING 90X2 MM	5-61
90242-0120	O-RING 28X3,5 MM	5-61
90242-0121	O-RING 11X2,5 MM	5-61, 5-137
90242-0132	O-RING 176X3,5	10-157, 10-159
90242-0148	O-RING 19,2X3 MM	8-41, 8-43, 10-15, 10-17
90242-0163	O-RING	2-29
90243-0061	AIR GUN, CEJN SERIE 204 ED: 90459-0173	2-95
90243-0133	CONTAINER	6-3
90243-0164	HOOK SPANNER ADJUST.DIA.4	10-387
90243-0165	SPIRIT LEVEL	10-387
90243-0169	BINDER CLIP, DIAM.29 MM, NO. 4670819	2-139, 10-371, 10-373
90243-0221	FLOW METER, SIGNAL CONVERTER, 0-10M/S 50	10-307
90243-0222	FLOW METER, SIGNAL CONVERTER, 0-10M/S 60	10-307
90243-0223	PRIMARY FLOW METER, 0-10M/S DN 25MM 50HZ	10-289
90243-0224	PRIMARY FLOW METER, 0-10M/S DN 25MM 60HZ	10-289
90248-0013	HINGE 3562E STUV	2-135
90248-0015	HINGE, RIGHT HT 1	9-45, 10-157, 10-159
90248-0016	HINGE, LEFT HT2	9-45, 10-157, 10-159
90248-0019	HINGE 1054-U1	9-35, 10-141, 10-143, 10-157, 10-159
90248-0032	HINGE, 1110-U2	9-9, 9-15, 9-17, 9-19
90257-0006	FILTER PLUG PARTNO 8145-00-380 TYP F38	10-371, 10-373
90258-0001	PIN, STRAIGHT SLOTTED SPRING FRP 2X20	4-53, 4-57
90258-0030	PIN, STRAIGHT SLOTTED SPRING FRP 3X24	7-75, 7-77
90258-0031	PIN, STRAIGHT SLOTTED SPRING FRP 3X20	7-67, 7-69, 7-71
90261-0003	PLUG, BLIND, PLASTIC GPN300V-10	2-57, 2-59, 2-61
90261-0008	PLUG, BLIND, PLASTIC GPN300F26	2-121, 2-123
90261-0011	PLUG, BLIND, PLASTIC GPN300F233	2-57, 2-59, 2-61
90261-0018	PLUG, BLIND, PLASTIC GPN300F-183	2-57, 2-59, 2-61
90261-0032	PLUG, BLIND, PLASTIC, NO. 1073	5-25, 5-27, 5-41, 5-43, 5-45, 5-47, 5-127
90261-0035	PLUG, BLIND, PLASTIC, F7	2-121, 2-123
90261-0036	PIPE PLUG "REPL.BY 90261-71"	4-7, 4-9, 4-11, 4-13
90261-0049	PLUG, BLIND, PLASTIC, NO. SR1750	8-39, 10-13
90261-0079	PLUG, BLIND, PLASTIC, NO. 1955	9-7, 9-35
90264-0019	FAN ZIEHL 230V 250W 1,15A 595 M3/H	2-55
90264-0032	FAN PAPST 220V;18W	10-151
90264-0042	FAN SIEMENS 2BH1 300-1AH	8-13
90264-0064	FAN / FL 12G308	10-249
90264-0324	GRILL / 315851-004	10-157, 10-159
90264-0335	FILTER	10-157, 10-159
90264-0344	FAN CASING, US 1412	2-55
90265-0081	CONNECTION BOX 01 1626 09	7-65
90266-0006	TUBE	3-15
90266-0007	TUBE	2-73, 2-75, 2-83, 2-85, 2-87, 2-89
90266-0010	TUBE	2-57, 2-59, 2-61
90266-0019	PIPE	2-103, 3-15, 4-53, 4-57, 4-59, 4-61, 4-83, 4-85, 4-87, 4-89, 5-87, 5-89
90266-0165	BRASS PIPE	4-15, 4-17, 4-63, 4-65
90270-0017	COMPRESSOR NASH/ELMO 112 MB/4-2083	1-51
90270-0347	VALVE	1-51
90274-0002	PRESSURE SWITCH XMJ, REPBY 90458-0844	5-13
90274-0040	PRESSURE SWITCH	10-371, 10-373
90274-0042	PRESSURE GUARD, 200 KPA	2-117, 2-119
90274-0044	PRESSURE GUARD, 400 KPA	2-117, 2-119
90274-0045	PRESSURE GUARD, 14 KPA	1-51
90274-0053	LEVEL GUARD, 40VA/250V AC/DC	2-107
90274-0065	PRESSURE SWITCH, 7 - 200 KPA	2-73, 2-75
90274-0084	PRESSURE GUARD, 1800 KPA	2-103
90277-0041	TANK BREATH. FILTER / UC-SAB-3101 UCC	2-107
90277-0045	FILTER / 9900-05-BK	2-121, 2-123
90277-0046	FILTER / 9933-05-101	2-121, 2-123
90277-0055	FILTER HOUSING / MDS 4463 G 08 H	1-65, 10-101, 10-103
90277-0331	FILTER CARTRIDGE / MCY 4463 V002 PVJ	10-377, 10-385
90277-0333	GASKET KIT / ART NO ACS 0325 EH	10-101, 10-103, 10-131, 10-385
90277-0336	FILTER REPBY 0090337-0315	10-101, 10-103
90287-0056	SCREW MC6S-TT M8X40	1-81, 6-23
90287-0062	SCREW M6	2-111
90287-0070	SCREW MLC6S M6X23	4-29, 4-31, 4-33, 4-35
90287-0073	SCREW MC6S M5X70 129	3-21
90287-0074	SCREW SLOT. PAN HEAD LKCS M4X12	2-111

Part No	Description	Page No
90287-0075	SCREW SLOT. PAN HEAD LKCS M6X12	1-79, 2-11, 2-51, 2-53, 2-57, 2-59, 2-61, 2-111, 7-49, 7-51, 7-67, 7-69, 7-71, 10-83
90287-0076	SCREW SLOT. PAN HEAD LKCS M6X20	2-111, 6-21, 7-49, 7-51, 10-81
90287-0106	SCREW SPRINGLOAD. SLOTTED HEAD M10X21	8-39, 10-13
90287-0109	SCREW SPRINGLOAD. SLOTTED HEAD M16X24	5-29, 5-49, 5-51
90287-0127	SCREW M6S M20X60 88	6-25
90287-0136	SCREW MC6S M10X150 129	3-17
90287-0155	SCREW M6S M10X25 88 NY-LOCK	5-127
90287-0157	SCREW M6SF FLAT HEAD M6X10 88	9-21, 9-23, 9-25, 9-27, 9-29, 9-31, 9-33, 9-35, 9-37
90287-0159	SCREW, SOCK.SET DOGPOINT M6X16	2-21
90287-0161	SCREW, SOCK.SET DOGPOINT M8X12	5-93, 5-95, 5-109
90287-0165	SCREW M6S M8X20 A480 NY-LOCK	5-57, 5-161
90287-0167	SCREW SPRINGLOAD. SOCK. HEX HEAD M6X20	7-35, 7-37
90287-0169	SCREW	10-157, 10-159
90287-0206	SLOTTED SCREW	7-75, 7-77
90287-0212	SCREW MC6S M5X85 129	10-25
90287-0274	SCREW M6X16	10-151, 10-157, 10-159, 10-307
90287-0336	SCREW HEX. SOCK. SET, M6X20 PLASTIC	9-27, 9-31, 9-33, 9-39
90287-0337	SCREW RECESSED HEAD M4X10 WH. NYLON	9-7, 9-21, 9-25, 9-27, 9-29, 9-31, 9-33, 9-35, 9-37
90288-0053	ROLLER CHAIN, SINGLE 1/2 -14	5-97, 5-99, 5-101, 5-103
90288-0055	ROLLER CHAIN, SINGLE 5/8 -42	5-29, 5-49, 5-51
90288-0057	ROLLER CHAIN, SINGLE 1/2 -16	5-97, 5-99, 5-101, 5-103
90288-0062	ROLLER CHAIN, SINGLE 3/8 -100	1-63
90288-0305	CONNECTING LINK SINGLE 3/4",SS	4-53, 4-57
90288-0311	LINK	5-97, 5-99, 5-101, 5-103
90296-0009	SILICONE GREASE TUBE 100 GR.	5-19, 5-57, 5-127, 5-139, 5-141, 7-75, 7-77
90296-0051	PASTE	7-67, 7-69, 7-71, 10-27, 10-29, 10-31
90296-0075	OIL 54322-320 ACC TO M 1254.322	5-15
90297-0300	BALLAST COIL 50HZ	2-129
90298-0022	ZERUST CAPSULE	2-63
90299-0072	INK	7-21, 7-23
90303-0011	PROTECTIVE GOGGLES	6-9
90303-0012	PROTECTIVE GLOVES	6-9
90303-0013	APRON	6-9
90314-0038	LEVEL CONTROL RELAY, RM3 220-240VAC	10-391
90316-0016	SPACER NUT DSM M3/20 NI PL	10-263
90316-0019	SPACER SCREW DSM M3/5 NI PL	10-263
90316-0022	SPACER NUT DSNF M3060X20	10-263
90316-0023	SPACER NUT DSM M3055X8	10-263
90321-0015	PUMP 502 CFX 7ETV 302 50HZ IP55	5-7, 5-9, 5-35, 5-37
90321-0018	GEAR PUMP MLPS/T124D	2-105
90321-0034	PUMP 502 CFX 5ETV 362 60HZ IP55	5-7, 5-9, 5-35, 5-37
90321-0037	PUMP C-6125P EP 220V;50HZ	2-133
90321-0057	ROT. LOBE PUMP AMXT 7000	10-79
90321-0059	ROT. LOBE PUMP AMXT 3500	10-77
90321-0381	HYDRACCU SBO-210-0.75E1/112	2-105
90321-0382	FLANGE, RG 26/12-3/8 FOR 90321-18	2-105
90321-0383	PUMP CONN. ELBOW FLANGE RG 26/12-1/2	2-105
90321-0384	DISTANCE PIECE	2-105
90321-0385	COUPLING	2-105
90321-0472	O-RING	10-131
90321-0473	O-RING	10-131
90321-0474	O-RING	10-131
90321-0475	O-RING	10-131
90321-0478	O-RING	10-131
90321-0482	O-RING	10-131
90321-0484	O-RING	10-131
90321-0488	O-RING	10-131
90321-0490	O-RING	10-131
90321-0491	O-RING	10-131
90321-0492	O-RING	10-131
90321-0493	O-RING	10-131
90321-0496	O-RING	10-131
90321-0498	O-RING	10-131
90321-0500	O-RING	10-131
90321-0504	O-RING	10-131
90321-0553	MANDREL	10-53
90321-0554	KEY	10-53
90321-0558	ROTOR	10-133
90326-0012	PROTECTIVE COVER, T31A4618	1-47, 1-59, 1-61, 1-65, 1-93, 1-99, 8-25, 8-27, 10-101, 10-103
90326-0017	GLAND 1/8".REPL.BY 90326-306	1-99
90326-0019	THERMOELEMENT	1-59, 1-61
90326-0020	PLUG, FEMALE YELLOW CR-AL	1-47, 1-59, 1-61, 1-65, 1-93, 1-99, 7-67, 7-69, 7-71, 8-25, 8-27, 10-101, 10-103
90326-0022	PLUG, MALE YELLOW CR-AL	7-67, 7-69, 7-71
90326-0043	THERMOCOUPLE, CR-ALPREM.G	1-59, 1-61, 1-99
90326-0048	THERMOCOUPLE, 12826-31	1-47
90326-0052	THERMO ELEMENT	1-93
90326-0053	THERMOCOUPLE, 12826-35	1-93
90326-0060	THERMOCOUPLE, CR-AL	7-67, 7-69, 7-71, 10-27, 10-29, 10-31
90326-0089	THERMOCOUPLE, 5110-089-000	1-65
90326-0304	LEAD IN, 9041-15-KS-UB60	1-47
90326-0306	GLAND FITTING 9041-45-KS-KR.1/8" D=4,5MM	1-47, 1-59, 1-61
90328-0001	SILENCER	2-117, 2-119

Part No	Description	Page No
90328-0003	SILENCER	1-65, 10-23, 10-127, 10-129
90328-0024	SILENCER G3/8	2-121, 2-123, 10-111
90330-0012	SLEEVE, REDUCTION, INT, R-2021/4X1/8	1-51
90330-0013	NIPPLES, EXT. THREAD. ISO 7/1 R1/4-R1/8	10-405
90330-0019	NIPPLES, EXT. THREAD. R1/2-R3/8	10-371, 10-373
90330-0020	ELBOW, 90 INT. THREAD, R-2221/2	5-57, 10-405
90330-0021	NIPPLES, EXT. THREAD. R-207R1/2	1-65, 5-57, 10-405
90330-0024	T-PIPE, INT. THREAD, RP1/4	2-41, 2-43
90330-0025	BUSHING, INT/EXT. THR. R1/4-RP1/8	10-101, 10-103, 10-107, 10-109, 10-127, 10-405
90330-0026	PLUG, EXT. G-THREAD, G1/4	1-83, 2-35, 5-15, 10-179, 10-301
90330-0032	NIPPLES, EXT. THREAD. ISO 7/1 R1/8-R1/8	1-65, 10-107, 10-109
90330-0034	NUT, HEXAGON, G1/4	2-37, 2-39, 2-45, 2-47, 2-71, 2-93
90330-0037	PLUG, EXT. G-THREAD, G1/2	5-15
90330-0042	BUSHING, INT/EXT. THR. R3/8-RP1/4	1-55, 1-107, 10-371, 10-373
90330-0043	NIPPLES, EXT. THREAD. R-207R1/4	10-405
90330-0048	BUSHING, INT/EXT. THR. R1/2-RP3/8	1-59, 1-61, 10-101, 10-103, 10-405
90330-0049	T-PIPE, INT. THREAD, R-221R1/2	10-405
90330-0059	NIPPLES, EXT. THREAD WELD. R-208/KR1/2	2-25
90330-0066	PLUG, EXT. G-THREAD, G1/8	1-59, 1-61, 1-111, 2-57, 2-59, 2-61
90330-0078	BUSHING, INT/EXT. THR. R3/4-RP3/8	1-51
90330-0081	ELBOW, 90 INT. THREAD, R-222R1/4	10-405
90330-0083	NIPPLES, EXT. THREAD. R3/8-R1/4	2-41, 2-43
90330-0086	PLUG, INT. THREAD, NO. R-231-R1/2	5-57
90330-0093	NUT, HEXAGON, G1/2	2-67, 5-57
90330-0105	NUT, HEXAGON, R3/8	1-111, 8-13
90330-0106	PIPE COUPLING	1-65
90333-0004	GRAPH PAPER 24 HRS	10-133
90335-0005	SPRING	5-163
90335-0012	SPRING	5-67
90335-0015	TENSION SPRING 42360, 2X14X98	8-37, 10-19
90335-0025	COMP. SPRING 22010, 1X11X26	7-43, 7-45
90335-0027	COMP. SPRING 22170, 1,25X9,25X33	8-31
90335-0034	COMP. SPRING 21700, 0,8X7,1X10,5	1-57
90335-0037	COMP. SPRING 22900, 2,2X15X20	7-9, 7-11, 7-13, 7-15, 7-17, 7-19
90335-0064	COMP. SPRING 22270, 1,25X13,75X62,5	7-9, 7-11, 7-13, 7-15, 7-17, 7-19
90335-0218	COMP. SPRING 21560, 0,63X8,63X24,5	10-19, 10-27, 10-29, 10-31
90335-0237	COMP. SPRING, DM12360	7-75, 7-77
90337-0315	FILTERINSERT / MCS 4463	1-65
90339-0011	MAGNETIC LOCK, 40X18X14 MM	7-49, 7-51
90344-0049	CHAIN TENSIONER	5-29, 5-49, 5-51
90345-0038	STANDING BEARING, TYPE SY 35	5-161
90347-0004	VIBRATION DAMPER D=30 TH=M8 H=17 H2=21MM	2-99, 2-101, 8-29, 8-47, 10-25
90347-0007	VIBRATION DAMPER	5-125
90347-0014	DAMPER	10-141, 10-143
90347-0026	DAMPER	1-51
90347-0036	GAS SPRING E0A1-52-195-460--001/900N	2-91
90347-0038	GAS SPRINGE 0A1-52-195-460--002/1075N	2-91
90347-0050	GAS SPRING NO. 0306 150 398535	9-9, 9-15, 9-17, 9-35, 10-157, 10-159
90347-0054	DAMPER	7-9, 7-11, 7-13, 7-15, 7-17, 7-19
90347-0079	DAMPER TFE 601	10-81
90347-0108	GAS SPRING NO. 03-08-100-084174	7-47
90347-0110	MACHINE SHOE TFE 601 SS	6-3
90347-0111	MACHINE SHOE TFE 1201 SS	6-3
90347-0118	GAS SPRING NO. 192856 03 06060	10-25
90347-0300	ROD END, ID=10 MM, M10 FOR 90347-36;-38	2-91
90348-0007	FREE WHEEL COUPLING	1-105
90355-0031	TORQUE RIGID COUPLING, 10X10 MM	3-19
90360-0009	STEAM TRAP / 1/4 BSP TD 18	1-65
90360-0020	STEAM TRAP / MK36/51 3/8"	1-65, 10-101, 10-103
90360-0305	FLOAT, ART NO 10739920	1-55
90410-0051	TEMPERATURE CONTROLLER, KS 40	10-47, 10-151
90411-0005	INSULATOR	1-99
90413-0033	CODE INSERT SET 0-9	7-25, 7-27, 7-29, 7-31, 7-33
90413-0043	CODE INSERT SET	7-25, 7-27, 7-29, 7-31, 7-33
90413-0044	CODE INSERT SET	7-25, 7-27, 7-29, 7-31, 7-33
90413-0047	CODE INSERT SET	7-25, 7-27, 7-29, 7-31, 7-33
90413-0048	CODE INSERT SET	7-25, 7-27, 7-29, 7-31, 7-33
90413-0049	CODE INSERT SET	7-25, 7-27, 7-29, 7-31, 7-33
90415-0018	FILTER FOR LIME SEPARATING / D MOD.AD	2-117, 2-119
90415-0019	FILTER / ART.NO. HH-M15-RG	2-117, 2-119
90415-0029	FULL PR. FILTER / MDF BN 30 G 10 B1-BYP	2-105
90415-0032	FILTER / 3-02-00-1 1/2"	2-35
90415-0033	OIL FILTER REFILLING UC-HP-1229-25	5-67
90417-0133	TIMING BELT 12,7X990,6X38,1	3-9
90417-0134	TIMING BELT 12,7X1600,2X38,1	3-9
90417-0180	TIMING BELT T10X920X40 POLYURETH	5-7, 5-9, 5-35, 5-37
90417-0329	TIMING BELT T10X960X32 POLYURETH	5-109, 5-115, 5-117
90417-0330	TIMING BELT T10X1350X50 POLYURETH	5-111
90417-0345	TIMING BELT T10X690X32 POLYURETH	5-109
90418-0014	ELBOW PIPE	2-117, 2-119
90418-0039	ELBOW PIPE	2-117, 2-119
90418-0048	T-PIPE, INT. CONN. NO. 7130-15	2-117, 2-119
90418-0050	T-PIPE, REDUCTION, INT, NO. 7130-15X12X1	2-117, 2-119
90418-0053	ELBOW, 90, INT. CONN. NO. 7090-15	2-117, 2-119

Part No	Description	Page No
90418-0054	ELBOW, 45, INT. CONN. NO. 7041-15	2-117, 2-119
90418-0055	ELBOW, 45, INT/EXT. CONN. NO. 7040-15	2-117, 2-119
90418-0056	T-PIPE, REDUCTION, INT, NO. 7130-15X15X1	2-117, 2-119
90418-0058	ELBOW, 90, INT/EXT. CONN. NO. 7092-15	2-117, 2-119
90418-0063	ADAPTER, INT. CONN. NO. 7272CU/15-G1/2	2-117, 2-119
90418-0068	T-PIPE, REDUCTION, INT, NO. 7130-15X8X15	2-117, 2-119
90422-0008	COOLER	2-105
90424-0025	SPRAY NOZZLE 145 DEG	2-41, 2-43
90424-0026	SPRAY NOZZLE 95 DEG	2-37, 2-39, 2-45, 2-47, 2-71, 2-93
90424-0031	SPRAY NOZZLE 60 DEG	1-93, 1-111
90424-0032	SPRAY NOZZLE 95 DEG	10-343, 10-345
90424-0035	SPRAY NOZZLE 95 DEG	2-69, 2-91, 5-87, 5-89
90424-0054	SPRAY NOZZLE 120 DEG	1-57
90425-0009	HESKEL ENERGY SYSTEM 27238	1-83
90426-0003	HAND SHOWER	2-97
90450-0105	5 STEPS CYLINDER MECMAN	4-7, 4-9, 4-11, 4-13
90450-0454	CYLINDER	7-9, 7-11, 7-13, 7-15, 7-17, 7-19
90450-0495	CYLINDER	5-87, 5-89
90453-0001	MODEM MA-12	10-277
90453-0002	MODEM MD-12 DC	10-277
90456-0003	INTOUCH OEM 256 V.5.6B/6.0B HW KEY	10-245
90457-0036	3-PHASE MOTOR,FOOT MOUNT.1,1KW,1410 RPM	2-105
90457-0949	SPACER NUT M4/20 NI PL	10-263
90458-0256	PROXIMITY SWITCH IIA 3010-BPKG/6M	2-57, 2-59, 2-61
90458-0259	PROCESSOR BOARD PMMX E000032B	10-247
90458-0266	POWER SUPPLY UNIT, U036407A	10-249
90458-0292	BASE, KT70-1001	2-113
90458-0293	LIGHT ELEMENT, RED, KL70-401R	2-113
90458-0294	LIGHT ELEMENT, YELLOW, KL70-401Y	2-113
90458-0295	LIGHT ELEMENT, BLUE, KL70-401L	2-113
90458-0430	EXTENDED WITHOUT INSERT, M20X1,5	5-7, 5-9, 5-35, 5-37
90458-0601	PHOTOCELL, SICK PHOTOCELL 1	4-93
90458-0674	PROXIMITY SWITCH, E2EG-X10B1-5M	7-57, 7-59, 7-61, 7-63
90458-0921	FILTER SP 122-200	2-117, 2-119
90458-1704	BALL BEARING, 15X35X11 MM	1-101, 1-103, 1-105
90458-1849	CONN. STR., 6-R1/8, EXT. THREAD	1-31, 1-117, 1-119, 2-51, 10-407, 10-409
90458-1850	CONN. STR., 6-R1/4, EXT. THREAD	10-181
90458-1851	CONN. STR., 8-R1/4, EXT. THREAD	2-51, 2-73, 2-75, 2-117, 2-119
90458-2466	MOTOR 3GVA071002-CSB	2-21
90458-2621	HANDLE, FIX 8307-0230	2-31, 2-33
90458-2954	ELBOW PIPE JOINT, EXT.THREAD, D=4MM M5	5-125
90458-2955	ELBOW PIPE JOINT, EXT.THREAD,	10-9
90458-2956	ELBOW PIPE JOINT, EXT.THREAD, D=6MM-G1/8	10-9
90458-2957	ELBOW PIPE JOINT, EXT.THREAD, D=6MM-G1/4	2-65, 2-121, 2-123
90458-2958	ELBOW PIPE JOINT, EXT.THREAD, D=8MM-G1/4	2-121, 2-123
90458-2959	ELBOW PIPE JOINT, EXT.THREAD,D=12MM-G1/4	2-121, 2-123
90459-0335	CONN. STR. 12-R1/2, EXT. TAPERED	2-73, 2-75
107062-0000 ..	LID	3-11, 3-13
107095-0000 ..	LID	3-7
107334-0000 ..	SPACER SLEEVE	4-7, 4-9, 4-11, 4-13
107335-0000 ..	SPACER RING	4-7, 4-9, 4-11, 4-13
107339-0000 ..	DOWEL	4-7, 4-9, 4-11, 4-13
111017-0000 ..	SPACER RING	3-7
111543-0000 ..	GUIDE CONE	1-5, 1-7, 1-9, 1-11
113653-0000 ..	BEARING PLATE	4-53, 4-57
113654-0000 ..	RING	4-53, 4-57
207019-0003 ..	GEAR WHEEL	7-7
208361-0001 ..	STAIR	6-23
208361-0002 ..	STAIR	1-81
208658-0001 ..	SPACER	1-81, 6-23
208709-0000 ..	VOLUME SHIM	4-19, 4-21, 4-23, 4-49, 4-51
208843-0000 ..	ANGLE BRACKET	1-29
209145-0000 ..	THROTTLE SCREW	1-109, 8-13
209146-0000 ..	BARRIER NUT	1-109, 8-13
209181-0000 ..	LID	10-179
209183-0000 ..	RING	10-179, 10-359, 10-361
209331-0007 ..	GEAR WHEEL	1-105
209331-0009 ..	GEAR WHEEL	1-105
209331-0012 ..	GEAR WHEEL	1-105
209331-0013 ..	GEAR WHEEL	1-105
209331-0014 ..	GEAR WHEEL	1-105
226097-0002 ..	BENDING ROLLER	7-55
226098-0000 ..	BEARING	7-55
228653-0000 ..	SHAFT	7-9, 7-11, 7-13, 7-15, 7-17, 7-19
228843-0001 ..	SPACER	5-23, 5-39
228845-0000 ..	MOUNTING BLOCK	5-23, 5-39
228943-0000 ..	THROTTLE	1-43, 1-45
229201-0001 ..	SPACER	5-39
229201-0002 ..	SPACER	5-23, 5-39
229202-0000 ..	MOUNTING BLOCK	5-23, 5-39
229206-0000 ..	LOCATING PIECE	5-23, 5-39
229207-0000 ..	BEARING SLEEVE	5-23, 5-39
229508-0029 ..	STUD SCREW	5-23, 5-39
229508-0031 ..	STUD SCREW	5-39

Part No	Description	Page No
229516-0000 ..	PIN	5-23, 5-33, 5-39, 5-53, 5-55
229760-0012 ..	STUD SCREW	5-39
229760-0013 ..	STUD SCREW	5-23, 5-39
230107-0000 ..	WASHER	8-25, 8-27
230226-0000 ..	BLOCKING PIECE	2-135
230462-0000 ..	BUSHING	3-25
230551-0000 ..	GASKET	1-51, 1-131
230922-0100 ..	AIR JET GUN	2-3, 2-5
232236-0000 ..	TOOTH PART	4-15, 4-17
232237-0000 ..	SCREW	4-15, 4-17
232238-0000 ..	TOOTH PART	4-63, 4-65
232979-0000 ..	PRESSURE ROLLER	1-37, 1-131, 8-47, 10-329, 10-331
237082-0001 ..	MOUNTING BLOCK	5-39
237082-0002 ..	MOUNTING BLOCK	5-23, 5-39
237725-0000 ..	BEARING HOUSING	3-7
239383-0000 ..	SLEEVE	3-17
239440-0000 ..	SHAFT	1-31
239441-0000 ..	BRACKET	1-31
239476-0000 ..	ROD	4-63, 4-65
239533-0000 ..	DRUM	3-11, 3-13
239534-0000 ..	FLANGE	3-11, 3-13
239535-0000 ..	FLANGE	3-11, 3-13
239536-0000 ..	GEAR WHEEL	3-11, 3-13
239538-0000 ..	WASHER	3-25
239847-0000 ..	HINGE	2-111
239870-0000 ..	SPACER SLEEVE	3-7
239874-0000 ..	WASHER	4-59, 4-61
239890-0300 ..	INTERMEDIARY SHAFT	3-3
242954-0000 ..	WASHER	8-23
243016-0000 ..	GEARING	3-11, 3-13
243017-0000 ..	GEAR WHEEL	3-19
243073-0000 ..	LOCK NUT	10-183
243075-0000 ..	SHIFTER HANDLE	10-183
243076-0000 ..	SCREW	10-183
243077-0000 ..	SCREW	10-183
243078-0000 ..	GUIDE SHAFT	10-183
243081-0000 ..	SECURING PLATE	10-183
243084-0000 ..	SPACER SLEEVE	10-183
243143-0000 ..	SCREW	4-29, 4-31, 4-33, 4-35
243144-0000 ..	BUSHING	4-29, 4-31, 4-33, 4-35
243151-0000 ..	SHAFT	8-31
243171-0200 ..	LADDER	6-21
243172-0001 ..	SIDE PIECE	6-23
243172-0002 ..	SIDE PIECE	6-23
243218-0000 ..	CANTILEVER	8-31
243573-0000 ..	LACE	2-57, 2-59, 2-61
243846-0000 ..	ATTACHMENT	1-49
243851-0000 ..	GASKET	1-131
243927-0700 ..	ARM	3-3
243928-0000 ..	BRACKET	3-15
243930-0000 ..	SHAFT	3-15
243931-0000 ..	SECURING PLATE	3-15
243942-0400 ..	YOKE	4-3, 4-5
243943-0000 ..	BUSHING	4-59, 4-61
243951-0000 ..	YOKE	4-61
243952-0000 ..	YOKE	4-59
243971-0000 ..	SPRING	3-17
245039-0000 ..	GUIDE WHEEL	5-23, 5-39
245165-0000 ..	ASSEMBLY CONE	6-17
245189-0001 ..	ATTACHMENT	8-25, 8-27
245190-0000 ..	FLOAT	1-43, 1-45
245271-0000 ..	GASKET	4-29, 4-31, 4-33, 4-35
245272-0000 ..	GASKET	4-29, 4-31, 4-33, 4-35
246327-0500 ..	SHOCK ABSORBER	4-3, 4-5
246328-0000 ..	SPRING	4-67, 4-69
246329-0000 ..	SPRING	4-67, 4-69
246342-0000 ..	PAPER SUPPORT	8-25, 8-27
246344-0000 ..	HEAT GUARD	8-25, 8-27
246374-0000 ..	BRACKET	2-131
246494-0000 ..	ATTACHMENT	4-41, 4-43
246495-0000 ..	ATTACHMENT	4-45, 4-47
246499-0600 ..	ARM WITH AXLE,CUT L	4-3, 4-5
246513-0000 ..	BEARING	4-59, 4-61
246739-0000 ..	BRACKET	2-135
246787-0000 ..	SCREW	3-15
246790-0000 ..	LINK	3-15
246885-0000 ..	WASHER	2-69
246948-0000 ..	BRACKET	3-17
246964-0000 ..	CYLINDER BRACKET	1-107
246965-0000 ..	STOP	1-107
246966-0000 ..	SCREW	1-103, 1-107
246982-0000 ..	PROTRACTOR	3-11, 3-13
247080-0000 ..	BRACKET	2-57, 2-59, 2-61
247082-0000 ..	LEG	2-57, 2-59, 2-61

Part No	Description	Page No
247112-0000 ..	SHAFT	4-59, 4-61
247119-0000 ..	ROD	3-25
247145-0000 ..	PLATFORM	6-21
247146-0000 ..	PLATFORM	6-21
247159-0000 ..	AXLE SUPPORT	1-103
247160-0000 ..	AXLE SUPPORT	1-59, 1-61, 1-103
247161-0000 ..	AXLE SUPPORT	1-103
247162-0000 ..	BRACKET	1-103
247168-0000 ..	CYLINDER BRACKET	1-103
247170-0000 ..	BEARING COVER	1-103
247171-0000 ..	BEARING COVER	1-101, 1-105, 8-13
247172-0000 ..	SPACER RING	1-101, 1-105
247173-0000 ..	BEARING SEAT	1-101, 1-105
247227-0002 ..	AIR NOZZLE	5-69, 5-71, 5-83, 5-85
247227-0003 ..	AIR NOZZLE	5-69, 5-71, 5-83, 5-85
247236-0000 ..	CARRIER	1-59, 1-61
247240-0000 ..	WHEEL	1-103
247241-0000 ..	AXLE SUPPORT	1-59, 1-61
247248-0000 ..	PIN	1-59, 1-61
247252-0000 ..	GASKET	1-59, 1-61
247262-0000 ..	SPRING BRACKET	4-67, 4-69
247263-0000 ..	SPACER	4-67, 4-69
247271-0000 ..	LACE	4-67, 4-69
247296-0001 ..	SIDE PIECE	1-81
247296-0002 ..	SIDE PIECE	1-81
247349-0000 ..	STEERING	1-101
247355-0000 ..	LOCK WASHER	1-101
247357-0000 ..	SPROCKET	1-63, 1-101
247358-0000 ..	SHIFTER HANDLE	1-101
247385-0000 ..	SIGN	2-107
247386-0000 ..	SIGN	2-107
247422-0000 ..	DRIP PLATE	1-101
249298-0000 ..	ROLL	8-47, 10-19
250588-0000 ..	FLANGE	1-101, 7-39, 8-21
250590-0000 ..	BEARING COVER	1-105
250591-0000 ..	SHAFT	1-105
250592-0000 ..	WASHER	1-105
250594-0000 ..	FORMING RING	1-23, 1-25, 1-27
250610-0200 ..	TOOL KIT	6-3
250633-0000 ..	CABLE CLAMP	4-49, 4-51
250654-0000 ..	PIVOT ARM	1-47
250656-0000 ..	ATTACHMENT PIPE	1-47
250660-0000 ..	BEARING CONSOLE	1-47
250662-0000 ..	LEVER	1-47
250663-0000 ..	BEARING	1-31, 1-47
250664-0000 ..	TIE ROD	1-47
250668-0000 ..	SPACER	1-47
251454-0000 ..	LID	1-85
251455-0000 ..	SEAL	1-85
251490-0000 ..	FASTENING BRACKET	8-25, 8-27
251493-0000 ..	FORK	8-29
251494-0000 ..	SHAFT	8-29
251495-0000 ..	SHAFT	8-29
251496-0000 ..	SHAFT	8-29
251498-0000 ..	BARRIER	8-29
251502-0000 ..	HEAT GUARD	8-25, 8-27
251544-0000 ..	SHEET	1-101
251561-0000 ..	LINK	3-15
251562-0000 ..	SHAFT	3-15
252707-0000 ..	SPRING	3-25
252732-0000 ..	GLASS PANE	1-39
252733-0000 ..	GLASS PANE	1-41
252766-0001 ..	INSULATING PIPE	5-69, 5-71, 5-83, 5-85
252766-0002 ..	INSULATING PIPE	5-69, 5-71, 5-83, 5-85
252768-0000 ..	CANTILEVER	4-83, 4-85, 4-87, 4-89
252770-0000 ..	RAIL BRACKET	4-83, 4-85, 4-87, 4-89
252773-0000 ..	FASTENING PLATE	4-83, 4-85, 4-87, 4-89
252774-0000 ..	FASTENING PLATE	4-83, 4-85, 4-87, 4-89
252775-0000 ..	CURVE	4-83, 4-85, 4-87, 4-89
252776-0000 ..	VOLUME CAM	4-83, 4-85, 4-87, 4-89
252780-0000 ..	RULER	4-83, 4-85, 4-87, 4-89
252785-0000 ..	SCREW	4-83, 4-85, 4-87, 4-89
252786-0000 ..	WASHER	4-83, 4-85, 4-87, 4-89
252787-0000 ..	BUSHING	4-83, 4-85, 4-87, 4-89
252788-0000 ..	BUSHING	4-83, 4-85, 4-87, 4-89
252789-0000 ..	NUT	4-83, 4-85, 4-87, 4-89
252791-0000 ..	NUT	4-83, 4-85, 4-87, 4-89
252792-0000 ..	NUT	4-83, 4-85, 4-87, 4-89
252793-0000 ..	SUPPORT	4-83, 4-85, 4-87, 4-89
252794-0000 ..	LACE	4-83, 4-85, 4-87, 4-89
252797-0000 ..	RUBBER STRIP	1-39
252798-0000 ..	RUBBER STRIP	1-41
252930-0000 ..	SPACER SCREW	4-83, 4-85, 4-87, 4-89
252953-0000 ..	TANK	2-105

Part No	Description	Page No
252972-0000 ..	SHOULDER SCREW	1-15
255017-0000 ..	BRACKET	2-67
255064-0000 ..	BUSHING	8-31
255227-0001 ..	VOLUME BULGE	4-19, 4-21
255228-0001 ..	VOLUME SHIM	4-19, 4-21, 4-49, 4-51
255278-0000 ..	PLUG FINISHER	4-29, 4-31, 4-33, 4-35
255335-0000 ..	SHAFT	3-25
255368-0000 ..	PRESSURE GAUGE TUBE	1-65
255398-0000 ..	SLEEVE	3-25
255417-0000 ..	WASHER	8-23
255874-0000 ..	BEARING COVER	1-53, 1-89, 1-91
255875-0000 ..	BUSHING	1-53, 1-89, 1-91
257090-0000 ..	SHIFTER HANDLE	1-5, 1-7, 1-9, 1-11
257783-0000 ..	CUTTING JAW	4-29, 4-31, 4-33, 4-35
257835-0300 ..	CUTTING JAW,LEFT IH	4-3, 4-5
257835-0350 ..	CUTTING JAW, RIHGT IH	4-3, 4-5
257845-0000 ..	RAILING	6-21
257846-0000 ..	RAILING	6-21
257852-0000 ..	PLATFORM	6-21
257854-0000 ..	CANTILEVER	6-21
257855-0000 ..	CANTILEVER	6-21
257859-0000 ..	RAILING	6-21
257862-0000 ..	PLATFORM	6-21
257903-0000 ..	AIR NOZZLE	1-31
257904-0000 ..	HEAT GUARD	1-31
257923-0000 ..	GUIDE WHEEL	8-31
257987-0000 ..	AXLE SUPPORT	1-7, 1-9, 1-11, 1-23, 1-25, 1-27
257988-0000 ..	AXLE SUPPORT	1-7, 1-9, 1-11
259414-0500 ..	CARRIER PRESSURE L IH	4-3, 4-5
259415-0500 ..	CARRIER PRESSURE R IH	4-3, 4-5
259534-0700 ..	PRESSURE JAW LEFT IH	4-3, 4-5
259534-0750 ..	PRESSURE JAW RIGHT IH	4-3, 4-5
259760-0000 ..	BENDING ROLLER BRACKET	2-9
259835-0000 ..	FLANGE SEAL	2-19
259867-0000 ..	HOSE CLAMP	2-133
259902-0000 ..	FLOAT	1-43, 1-45
262028-0001 ..	FITTING BOLT	5-149, 5-151, 5-153, 5-155, 5-157, 5-159
262028-0002 ..	FITTING BOLT	5-143, 5-145, 5-147
262028-0011 ..	FITTING BOLT	5-139, 5-141
262028-0016 ..	FITTING BOLT	5-113
262179-0001 ..	PIN	5-143, 5-145, 5-147, 5-149, 5-151, 5-153, 5-155, 5-157, 5-159
262183-0000 ..	BUSHING	5-143, 5-145, 5-147
262234-0000 ..	BRACKET	5-139, 5-141
262235-0000 ..	ARM	5-139, 5-141
262252-0000 ..	HATCH	5-127
262253-0000 ..	GASKET	5-127
262261-0000 ..	SHAFT	5-63, 5-65
262264-0000 ..	CANTILEVER	5-127
262266-0000 ..	SHAFT	5-139, 5-141
262267-0000 ..	BUSHING	5-139, 5-141
262272-0000 ..	HEATING CHAMBER	5-69, 5-71, 5-83, 5-85
262274-0002 ..	BRACKET	5-59
262274-0005 ..	BRACKET	5-57
262275-0002 ..	CAP	5-59
262275-0003 ..	CAP	5-57, 5-161
262288-0000 ..	LID	5-69, 5-71, 5-83, 5-85
262290-0001 ..	LACE	5-69, 5-71, 5-83, 5-85
262290-0002 ..	LACE	5-69, 5-71, 5-83, 5-85
262309-0000 ..	SLEEVE	5-139, 5-141
262313-0000 ..	LID	5-139, 5-141
262314-0000 ..	RUBBER GASKET	5-139, 5-141
262315-0000 ..	LID	5-139, 5-141
262316-0000 ..	RUBBER GASKET	5-139, 5-141
262322-0000 ..	SHAFT	5-139, 5-141
262323-0000 ..	SHAFT	5-139, 5-141
262324-0000 ..	SHAFT	5-139, 5-141
262325-0000 ..	SHAFT	5-139, 5-141
262343-0000 ..	SECURING PLATE	5-139, 5-141
262350-0001 ..	PIN	5-139, 5-141
262415-0000 ..	LINK	5-139, 5-141
262427-0001 ..	SHAFT	5-143, 5-145, 5-147
262427-0002 ..	SHAFT	5-143, 5-145, 5-147
262427-0005 ..	SHAFT	5-143, 5-145, 5-147
262427-0006 ..	SHAFT	5-143, 5-145, 5-147
262427-0007 ..	SHAFT	5-143, 5-145, 5-147
262427-0008 ..	SHAFT	5-143, 5-145, 5-147
262610-0000 ..	LINK	5-139, 5-141
262720-0000 ..	STEERING	5-139, 5-141
262774-0009 ..	GLASS PANE	2-41, 2-43
262906-0000 ..	ARM	5-139, 5-141
262907-0000 ..	ARM	5-139, 5-141
262922-0000 ..	HOUSE	5-127
262924-0000 ..	CANTILEVER	5-143, 5-145, 5-147
262932-0000 ..	HATCH	5-127

Part No	Description	Page No
262933-0000 ..	GASKET	5-127
262970-0000 ..	RAIL	5-143, 5-145, 5-147
263249-0000 ..	PIVOT ARM	1-31
263250-0000 ..	TOOTH PART	1-31
263251-0000 ..	GEAR WHEEL	1-31
263252-0000 ..	SHAFT	1-31
263254-0000 ..	BRACKET	1-31
263256-0000 ..	ROCKER ARM	1-31
263257-0000 ..	CYLINDER BRACKET	1-17, 1-19, 1-31
263262-0000 ..	BUSHING	1-17, 1-19
263313-0000 ..	LINK HEAD	3-25
263314-0000 ..	LINK HEAD	3-25
263322-0000 ..	RAILING	6-21
263323-0000 ..	RAILING	2-111
263328-0000 ..	SPACER	3-25
263329-0000 ..	NUT	3-25
263391-0400 ..	CALENDER ROLLER	1-101
263394-0300 ..	BENDING ROLLER	1-101
263509-0000 ..	LID	4-59, 4-61
263572-0000 ..	CANTILEVER	1-63
263574-0000 ..	BEARING CONSOLE	1-63
263575-0000 ..	GASKET	1-63
263576-0000 ..	GUIDE STUD	1-63
263579-0000 ..	WASHER	1-63
263585-0000 ..	BUSHING	1-63
263586-0000 ..	BUSHING	1-63
263587-0000 ..	CRANK	1-63
263588-0000 ..	JOINT	1-63
263589-0000 ..	RATCHET	1-63
263590-0000 ..	BARRIER	1-63
263592-0000 ..	WHEEL	1-63
263593-0000 ..	SHAFT	1-63
263612-0000 ..	RAIL	2-111
263655-0002 ..	SHAFT	1-7, 1-9
263655-0003 ..	SHAFT	1-7, 1-9
263655-0004 ..	SHAFT	1-7, 1-9
263655-0006 ..	SHAFT	1-5
263655-0007 ..	SHAFT	1-113
263655-0008 ..	SHAFT	1-7, 1-9, 1-23, 1-25, 1-27, 1-113
263655-0009 ..	SHAFT	1-17, 1-19, 1-23, 1-25, 1-27, 1-113
263655-0010 ..	SHAFT	1-23, 1-25, 1-27
263655-0012 ..	SHAFT	1-7, 1-9, 1-11
263655-0018 ..	SHAFT	1-5
263655-0021 ..	SHAFT	1-7, 1-9
263655-0022 ..	SHAFT	1-11, 1-17, 1-19
263655-0023 ..	SHAFT	1-7, 1-9
263655-0024 ..	SHAFT	1-7, 1-9, 1-11
263656-0002 ..	SHAFT	1-7, 1-9
263673-0000 ..	GASKET	5-69, 5-71, 5-83, 5-85
263684-0000 ..	SPACER	4-67, 4-69
263805-0200 ..	FORM CLAMP	1-3
263828-0000 ..	JUNCTION RAIL	2-57, 2-59, 2-61
263948-0400 ..	CUP	1-3
265564-0000 ..	BENDING ROLLER	2-9, 7-79, 8-21
265565-0200 ..	BENDING ROLLER BRACKET	8-3, 8-5
265566-0001 ..	SHAFT	2-9, 8-7, 8-21
265566-0003 ..	SHAFT	8-7
265566-0004 ..	SHAFT	8-7
265566-0005 ..	SHAFT	8-7
265567-0000 ..	BEARING UNIT	2-9, 8-7, 8-21
265568-0000 ..	DUST COVER	2-9, 8-7, 8-21
265569-0001 ..	STRUT	8-7, 8-21
265569-0003 ..	STRUT	8-7
265569-0005 ..	STRUT	8-7
265569-0006 ..	STRUT	8-7
265756-0000 ..	CANTILEVER	8-7
265809-0300 ..	PAPER GUARD	1-3
265872-0001 ..	GEAR WHEEL	1-105
265889-0300 ..	SWITCH (MONITOR)	2-3, 2-5
265957-0000 ..	SHAFT	1-49
266182-0000 ..	BUSHING	1-85
266389-0000 ..	PISTON ROD	1-95, 1-97
266390-0000 ..	NUT	1-95, 1-97
266391-0000 ..	RING	1-95, 1-97
266394-0000 ..	BRACKET	1-95
266446-0500 ..	DESIGN CORRECTION DEVICE	4-3, 4-5
266447-0500 ..	DESIGN CORRECTION DEVICE	4-3, 4-5
266550-0400 ..	FILTER HOUSING	2-13
266557-0000 ..	GASKET	2-17
266710-0000 ..	USE NEW PART 2555116 WHEEL	7-7
266726-0300 ..	PRESSURE ROLLER	8-3, 8-5
266728-0000 ..	CANTILEVER	8-23
266730-0000 ..	HOLDER	8-23
266731-0000 ..	SHAFT	8-23

Part No	Description	Page No
266732-0000 ..	SHAFT	8-23
266737-0000 ..	WASHER	1-53, 1-89, 1-91, 8-23
266738-0000 ..	COVER	8-23
266739-0000 ..	CABLE GLAND	1-31, 8-23
266740-0001 ..	SPACER	8-23
266740-0002 ..	SPACER	8-23
266756-0500 ..	PLATFORM	6-19
266761-0000 ..	MOUNTING LUG	8-31
266797-0002 ..	PAPER GUARD	1-15
266986-0500 ..	CURVE SHAFT	3-3
267033-0000 ..	WASHER	1-101
267056-0000 ..	BEARING CONSOLE	1-59, 1-61
267327-0000 ..	HOLDER	4-83, 4-85, 4-87, 4-89
267462-0000 ..	LOCK SHEET	2-57, 2-59, 2-61
267463-0000 ..	LOCK SHEET	2-57, 2-59, 2-61
267494-0000 ..	COIL HEATER	8-25, 8-27, 8-35
267564-0000 ..	BRACKET	1-111
267646-0000 ..	BLOCKING PIECE	1-115
267665-0000 ..	BRACKET	1-115
267676-0000 ..	HOLDER	4-83, 4-85, 4-87, 4-89
267727-0000 ..	FORK	1-37, 10-329, 10-331
267728-0000 ..	SHAFT	1-37, 10-329, 10-331
267754-0000 ..	BOW CLAMP	4-63, 4-65
267835-0000 ..	CANTILEVER	2-57, 2-59, 2-61
268015-0100 ..	BENDING ROLLER BRACKET	2-3, 2-5
268195-0000 ..	SCREW	4-83, 4-85, 4-87, 4-89
268614-0500 ..	START-UP KIT IH	4-3, 4-5
268746-0000 ..	SCREW	2-7
268830-0000 ..	COMPRESSION SPRING	5-139, 5-141
268954-0000 ..	FOLDING FLAP CAM L	4-7, 4-9
268955-0000 ..	FOLDING FLAP CAM R	4-11, 4-13
269053-0001 ..	SHAFT	8-47
269053-0003 ..	SHAFT	8-47
269054-0000 ..	ARM	8-47
269056-0000 ..	CATCH	8-47
269057-0000 ..	TENSION SPRING	8-47
269059-0000 ..	COUNTER CAM	4-7, 4-9
269060-0000 ..	COUNTER CAM	4-11, 4-13
269108-0000 ..	FOLDING FLAP CAM L	4-7, 4-9
269109-0000 ..	FOLDING FLAP CAM R	4-11, 4-13
269110-0000 ..	COUNTER CAM	4-7, 4-9
269111-0000 ..	COUNTER CAM	4-11, 4-13
269112-0600 ..	STRIP APPLICATOR	8-3, 8-5
269113-0600 ..	LOWER FORMING RING	1-3
269115-0500 ..	UPPER FORMING RING	1-3
269136-0200 ..	EDGE ROLLER	1-3
269147-0000 ..	SHAFT	1-17, 1-19
269152-0000 ..	ROCKER ARM	1-17, 1-19
269153-0000 ..	STOP	1-17, 1-19
269154-0000 ..	BUSHING	1-17, 1-19, 1-31
269158-0400 ..	HOT AIR ELEMENT	1-3
269242-0000 ..	BEARING HOUSING	1-31
269274-0000 ..	PLATFORM COVER	2-111
269275-0000 ..	PLATFORM COVER	2-111
269285-0000 ..	PROTECTION PLATE	2-57, 2-59, 2-61
269291-0000 ..	RULER	2-57, 2-59, 2-61
269294-0000 ..	RULER	2-57, 2-59, 2-61
269295-0000 ..	PROTECTION PLATE	2-57, 2-59, 2-61
269296-0000 ..	PROTECTION PLATE	2-57, 2-59, 2-61
269297-0000 ..	PROTECTION PLATE	2-57, 2-59, 2-61
269313-0000 ..	FASTENING PLATE	1-31
269314-0000 ..	CANTILEVER	1-31
269315-0000 ..	WASHER	1-31
269316-0000 ..	BEARING HOUSING	1-31
269320-0000 ..	RAIL	2-135
269321-0000 ..	RAIL	2-135
269322-0300 ..	COVER UPPER	2-3, 2-5
269324-0400 ..	HATCH	2-3, 2-5
269340-0000 ..	CANTILEVER	6-21
269366-0000 ..	DOWEL	4-53, 4-57
269405-0000 ..	PIPE	1-93
269522-0000 ..	PIPE	1-83
269575-0000 ..	HOLDER	1-99
269576-0000 ..	CAP	1-99
269577-0000 ..	DISCHARGE TRAY	1-99
269578-0000 ..	DISCHARGE TRAY	1-99
269715-0100 ..	PIPE HOLDER	1-3
269716-0000 ..	FASTENING PLATE	1-35
269717-0000 ..	GASKET HOLDER	1-35
269718-0000 ..	GASKET	1-35
269719-0000 ..	SCREW	1-35
269720-0300 ..	FILLER TUBE	1-3
269792-0000 ..	DAMPER	4-83, 4-85, 4-87, 4-89
269828-0600 ..	FILLER TUBE	1-3

Part No	Description	Page No
269859-0000 ..	BRACKET	1-51
269903-0000 ..	FILTER INSERT	2-17
269904-0000 ..	FILTER MESH	2-17
269905-0000 ..	WASHER	2-17
269913-0000 ..	STOPPER	1-47
269914-0000 ..	SHOULDER SCREW	1-47
269915-0700 ..	HOT AIR ELEMENT	1-3
269930-0000 ..	SCREW	1-63
269932-0600 ..	BOTTOM COVER	1-59, 1-61
269941-0600 ..	BATH	1-3
269970-0500 ..	PLATFORM	1-3
269971-0200 ..	LADDER	1-79
269988-0600 ..	VENTILATION SYSTEM	1-3
269989-0300 ..	VALVE	1-93
271211-0000 ..	WASHER	8-33
271351-0000 ..	SHEAR PIN	10-337, 10-339
271653-0000 ..	ARM	8-33
271654-0000 ..	RETAINING RING	8-33
271655-0000 ..	HOLDER	8-33
272466-0000 ..	SPRING	8-33
272728-0000 ..	BARRIER	7-43, 7-45
272814-0000 ..	SLEEVE	7-43, 7-45
272815-0001 ..	SLEEVE	7-43, 7-45
273400-0700 ..	STERILE AIR SYSTEM	1-3
273401-0300 ..	CHANGE-OVER VALVE	1-83
273402-0400 ..	AIR SUPER-HEATER	1-93
273429-0000 ..	WASHER	1-47, 1-59, 1-61
273449-0000 ..	SIGN	2-121, 2-123
273450-0000 ..	SIGN	2-121, 2-123
273452-0000 ..	SIGN	2-121, 2-123
273455-0000 ..	LABEL (COLD WATER)	2-117, 2-119
273456-0000 ..	SIGN	2-117, 2-119
273458-0000 ..	LABEL (AIR)	2-117, 2-119
273514-0000 ..	TOUCH GUARD	1-93
273515-0000 ..	TOUCH GUARD	1-93
273547-0001 ..	TOUCH GUARD	1-65
273547-0002 ..	TOUCH GUARD	1-93
273548-0001 ..	TOUCH GUARD	1-65
273548-0002 ..	TOUCH GUARD	1-93
273728-0300 ..	VALVE GROUP	3-19
273751-0000 ..	FRONT PLATE	2-57, 2-59, 2-61
273753-0000 ..	PROTECTION PLATE	2-57, 2-59, 2-61
273934-0000 ..	LID	1-59, 1-61
273937-0000 ..	DIAPHRAGM	1-59, 1-61
273938-0000 ..	WASHER	1-59, 1-61
273944-0000 ..	DIAPHRAGM	1-87
273950-0000 ..	FILTER	1-83
273951-0000 ..	VALVE HOUSING	1-87
273961-0000 ..	SEAL	1-59, 1-61
273977-0000 ..	NUT	2-27
273978-0000 ..	LEVEL GLASS	2-27
273980-0000 ..	SPRING	2-27
273981-0000 ..	GASKET	2-29
273982-0000 ..	WEIGHT	2-29
273996-0000 ..	NUT	2-27
276164-0000 ..	VALVE HOUSING	1-95, 1-97
276165-0000 ..	HOUSE	1-95, 1-97
276166-0000 ..	PIPE	1-93
276167-0000 ..	PIPE	1-93
276172-0000 ..	AXLE PIN	4-53, 4-57
276173-0000 ..	CURVE ROLLER	4-53, 4-57
276189-0000 ..	DAMPER	4-83, 4-85, 4-87, 4-89
276304-0000 ..	PIPE	1-93
276305-0000 ..	PIPE	1-93
276343-0300 ..	LID	2-105
276345-0300 ..	AIR KNIFE	1-101
276346-0000 ..	AIR GUIDE	1-107
276347-0000 ..	AIR DISTRIBUTOR	1-107
276348-0000 ..	AIR DISTRIBUTOR	1-107
276350-0000 ..	GEAR WHEEL	1-107
276351-0000 ..	GEAR WHEEL	1-107
276354-0000 ..	ATTACHMENT	1-107
276355-0000 ..	SLEEVE	1-107
276356-0000 ..	BEARING HOUSING	1-107
276357-0000 ..	BUSHING	1-107
276358-0000 ..	BUSHING	1-107
276359-0000 ..	LEVER	1-107
276360-0000 ..	SPRING	1-107
276361-0000 ..	BRACKET	1-107
276373-0700 ..	DRIER	1-3
276398-0000 ..	HEXAGON NIPPLE	2-73, 2-75
276480-0500 ..	PIPE WORK	1-3
276490-0000 ..	PIPE	1-109
276613-0000 ..	LID	5-59

Part No	Description	Page No
276636-0000 ..	WASHER	5-59
276659-0000 ..	WASHER	5-127, 5-139, 5-141
276664-0000 ..	WASHER	5-143, 5-145, 5-147
278954-0000 ..	NET	1-93
278955-0000 ..	NET	1-93
278956-0700 ..	PILLAR	1-3
279006-0000 ..	BENDING ROLLER	1-101
279007-0000 ..	BENDING ROLLER	1-101
279009-0000 ..	BEARING PLATE	1-101
279010-0000 ..	BEARING PLATE	1-101
279011-0000 ..	COVERING PLATE	1-101
279074-0000 ..	TENSION SPRING	8-29
279103-0000 ..	CONNECTION CLAMP	4-39
279105-0000 ..	WASHER	2-73, 2-75
279134-0500 ..	TRANSMISSION	4-3, 4-5
279208-0000 ..	BEARING HOUSING	1-47
279209-0000 ..	ROCKER ARM	1-47
279211-0000 ..	CANTILEVER	8-17
279213-0000 ..	DOWEL	1-47
279370-0000 ..	STEERING	2-57, 2-59, 2-61
279466-0000 ..	BRACKET	3-15
279471-0000 ..	CANTILEVER	1-59, 1-61
279472-0000 ..	FASTENING BRACKET	1-59, 1-61
279478-0000 ..	BEARING PLATE	1-59, 1-61
279480-0000 ..	STEERING RAIL	8-47
279526-0000 ..	BRACKET	2-73, 2-75
279564-0300 ..	FOLDING DEVICE	4-3, 4-5
279565-0300 ..	FOLDING DEVICE	4-3, 4-5
279589-0000 ..	NUT	1-109, 8-13
279590-0000 ..	REDUCTION	8-13
279619-0000 ..	BRACKET	1-115
279621-0000 ..	FASTENING PLATE	4-83, 4-85, 4-87, 4-89
279651-0600 ..	TOUCH GUARD	1-3
279672-0000 ..	ATTACHMENT	8-25, 8-27
279804-0000 ..	BUSHING	2-51
279807-0000 ..	COVER	2-111
279860-0000 ..	ADJUSTMENT PLATE	1-111
279885-0000 ..	COVER	2-111
279979-0500 ..	CENTRAL LUBRICATION	2-3, 2-5
279983-0000 ..	SPLASH PROTECTION	3-23
279984-0000 ..	SPLASH PROTECTION	3-23
279985-0000 ..	BRACKET	3-23
279987-0000 ..	BRACKET	3-23
279989-0000 ..	SPACER	3-23
279991-0000 ..	BRACKET	3-23
279992-0000 ..	BRACKET	3-23
279993-0000 ..	BRACKET	3-23
279997-0000 ..	BRACKET	3-23
279998-0000 ..	SHAFT	3-23
279999-0000 ..	COVERING PLATE	3-23
282507-0000 ..	BRACKET LEFT	2-99, 2-101
282509-0300 ..	BENDING ROLLER	8-3, 8-5
282511-0000 ..	COVERING PLATE	3-23
282512-0000 ..	BRACKET	3-23
282513-0000 ..	BRACKET	3-23
282528-0200 ..	PRESSURE ROLLER	8-3, 8-5
282596-0000 ..	SUPPORT	8-29
282608-0000 ..	ANGLE	1-111
282625-0000 ..	EYELET	8-29
282635-0000 ..	GUIDE WHEEL	8-31
282642-0500 ..	PERFORATION HEATER	10-3
282682-0000 ..	BRACKET	1-51
282683-0000 ..	BRACKET	1-51
282766-0000 ..	LINK	1-103
282767-0000 ..	BRACKET	1-103
282802-0000 ..	PIPE	8-15
282805-0900 ..	PIPE WORK-PNEUMATIC TBA/8	1-3
282893-0000 ..	SAFETY GUARD	1-79
283084-0000 ..	GUIDE SHAFT	6-15
283085-0000 ..	SLEEVE	6-17
283157-0000 ..	MAIN CAM	3-11, 3-13
283160-0000 ..	COUNTER CAM	3-11, 3-13
283172-0000 ..	BEARING HOUSING	8-25, 8-27
283271-0000 ..	BRACKET	1-15
283361-0000 ..	AIR NOZZLE	8-25, 8-27
283774-0000 ..	BEARING	3-23
283775-0000 ..	SLIDE	3-23
283884-0000 ..	OIL TROUGH	2-57, 2-59, 2-61
283926-0300 ..	AIR NOZZLE	1-47
283992-0000 ..	RULER	2-57, 2-59, 2-61
284124-0000 ..	HOLDER	4-83, 4-85, 4-87, 4-89
284138-0000 ..	CATCH	4-67, 4-69
284139-0000 ..	CATCH	4-67, 4-69
284163-0500 ..	START-UP KIT	1-3

Part No	Description	Page No
284232-0000 ..	FOLDING FLAP CAM L	4-7, 4-9
284233-0000 ..	FOLDING FLAP CAM R	4-11, 4-13
284234-0000 ..	COUNTER CAM	4-7, 4-9
284235-0000 ..	COUNTER CAM	4-11, 4-13
284578-0000 ..	CUTTING JAW	4-29, 4-31, 4-33, 4-35
284581-0000 ..	RAIL	4-41, 4-43
284582-0000 ..	RAIL	4-45, 4-47
284833-0000 ..	LID	4-41, 4-43, 4-45, 4-47
284840-0000 ..	NUT	2-17
284953-0100 ..	HOSE	6-3
284974-0000 ..	HUB	1-105
285027-0000 ..	CARRIER	5-59
285054-0000 ..	CURVE	5-59
285055-0000 ..	CURVE	5-59
285132-0000 ..	SHAFT	5-23, 5-39
285133-0000 ..	CANTILEVER	5-23, 5-39
285141-0003 ..	CLAMPING SLEEVE	5-127
285142-0002 ..	SLEEVE	5-127
285142-0003 ..	SLEEVE	5-127
285145-0002 ..	INTERMEDIARY SECTION	5-127
285147-0000 ..	INTERMEDIARY SECTION	5-127
285157-0000 ..	LINK	5-139, 5-141
285158-0000 ..	LINK	5-139, 5-141
285162-0000 ..	LUBRICATING PIPE	5-139, 5-141
285164-0000 ..	LUBRICATING PIPE	5-139, 5-141
285168-0000 ..	BUSHING	5-25, 5-27, 5-41, 5-43, 5-45, 5-47
285287-0500 ..	DRIVE UNIT	5-7, 5-9, 5-35, 5-37
285291-0400 ..	BEVEL GEAR	5-57
285299-0100 ..	PRESSURE ARM	5-57
285300-0000 ..	BRACKET	5-63, 5-65
285303-0400 ..	LOWER SECTION	5-3, 5-5
285310-0001 ..	FLAP	5-149, 5-151, 5-153, 5-155, 5-157, 5-159
285310-0002 ..	FLAP	5-149, 5-151, 5-153, 5-155, 5-157, 5-159
285316-0002 ..	SPACER PIECE	5-149, 5-151, 5-153, 5-155, 5-157, 5-159
285321-0000 ..	ROLL	5-149, 5-151, 5-153, 5-155, 5-157, 5-159
285322-0000 ..	WASHER	5-149, 5-151, 5-153, 5-155, 5-157, 5-159
285330-0000 ..	HOLDER	5-7, 5-9, 5-35, 5-37
285363-0000 ..	WASHER	5-113
285380-0002 ..	WEDGE	5-115, 5-117
285403-0000 ..	WASHER	5-13
285444-0000 ..	SPACER	5-143, 5-145, 5-147
285448-0000 ..	PROTECTIVE CASING	5-139, 5-141
285449-0000 ..	ARM	5-139, 5-141
285456-0300 ..	PRESSURE DEVICE	5-3, 5-5
285479-0600 ..	SUPERSTRUCTURE	5-3, 5-5
285507-0002 ..	AIR NOZZLE	5-69, 5-71, 5-83, 5-85
285508-0002 ..	AIR NOZZLE	5-69, 5-71, 5-83, 5-85
285591-0400 ..	STATION	5-3, 5-5
285655-0000 ..	ARM	5-143, 5-145, 5-147
285656-0000 ..	ARM	5-143, 5-145, 5-147
285657-0000 ..	ARM	5-143, 5-145, 5-147
285660-0000 ..	ARM	5-143, 5-145, 5-147
285661-0000 ..	ARM	5-143, 5-145, 5-147
285664-0000 ..	SHAFT	5-143, 5-145, 5-147
285676-0000 ..	AIR NOZZLE	5-69, 5-71, 5-83, 5-85
285677-0000 ..	AIR NOZZLE	5-69, 5-71, 5-83, 5-85
285712-0000 ..	RAIL	5-143, 5-145, 5-147
285723-0000 ..	ARM	5-143, 5-145, 5-147
285724-0002 ..	RAIL	5-143, 5-145, 5-147
285729-0000 ..	BUSHING	5-143, 5-145, 5-147
285736-0300 ..	PULL-DOWN DEVICE	5-3, 5-5
285801-0000 ..	BEAM	2-57, 2-59, 2-61
285825-0000 ..	SHAFT	2-91
285851-0000 ..	BEARING	5-25, 5-27, 5-41, 5-43, 5-45, 5-47
285853-0300 ..	STEERING RAIL	5-127
285861-0500 ..	GEAR REDUCTION	5-7, 5-9, 5-35, 5-37
285891-0000 ..	SCREW	5-127
285892-0000 ..	CONNECTION	5-127
285923-0000 ..	SCREW	5-7, 5-9, 5-35, 5-37
285956-0000 ..	HANDLE	2-41, 2-43
285970-0000 ..	COMPRESSION SPRING	5-139, 5-141
285979-0000 ..	PIPE	2-91
285994-0000 ..	NUT	5-7, 5-9, 5-35, 5-37
292037-0000 ..	SCREW	4-41, 4-43, 4-45, 4-47
292044-0000 ..	SHAFT	7-21, 7-23
292071-0200 ..	SPLASH PROTECTION	3-3
292313-0000 ..	BEAM	6-7
292314-0000 ..	BEAM	6-7
292315-0000 ..	BEAM	6-7
292367-0000 ..	PISTON	4-41, 4-43, 4-45, 4-47
292409-0000 ..	END SECTION	7-25, 7-27, 7-29, 7-31, 7-33
292410-0000 ..	END SECTION	7-25, 7-27, 7-29, 7-31, 7-33
292411-0000 ..	CARRIER	7-25, 7-27, 7-29, 7-31, 7-33
292445-0100 ..	LIFTING UNIT	6-3

Part No	Description	Page No
292449-0000 ..	PUMP HOUSING	2-21
292451-0500 ..	PEROXIDE PUMP	2-19
292452-0000 ..	EXTENSION PIPE	2-21
292456-0000 ..	BEARING COVER	2-21
292464-0000 ..	FLANGE	2-21
292472-0000 ..	HOLDER	3-19
292473-0000 ..	CANTILEVER	3-19
292477-0000 ..	SHAFT	3-19
292482-0000 ..	WASHER	3-19, 5-113
292565-0000 ..	PROTECTION	1-107
293158-0000 ..	HATCH	2-57, 2-59, 2-61
293159-0000 ..	HATCH	2-57, 2-59, 2-61
293160-0000 ..	COVERING PLATE	2-57, 2-59, 2-61
293161-0000 ..	COVERING PLATE	2-57, 2-59, 2-61
293198-0002 ..	BRACKET	2-103
293201-0000 ..	PIPE	2-117, 2-119
293351-0000 ..	CRAMP	2-73, 2-75
293352-0000 ..	CRAMP	2-73, 2-75
293395-0001 ..	TYPE HOLDER	7-25, 7-27, 7-29, 7-31, 7-33
293395-0002 ..	TYPE HOLDER	7-25, 7-27, 7-29, 7-31, 7-33
293395-0003 ..	TYPE HOLDER	7-25, 7-27, 7-29, 7-31, 7-33
293405-0000 ..	GASKET	1-59, 1-61
293566-0000 ..	MOUNTINGS	2-31, 2-33
293598-0000 ..	GLASS PANE	2-31, 2-33
293605-0600 ..	VOLUM CURVE PIECE	4-3, 4-5
293606-0000 ..	SHIFTER HANDLE	4-83, 4-85, 4-87, 4-89
293608-0000 ..	BEARING CONSOLE	4-83, 4-85, 4-87, 4-89
293609-0000 ..	BEARING CONSOLE	4-83, 4-85, 4-87, 4-89
293610-0000 ..	GEAR WHEEL	4-83, 4-85, 4-87, 4-89
293612-0000 ..	SCREW	4-83, 4-85, 4-87, 4-89
293621-0001 ..	BNDING ROLLER	7-9, 7-11, 7-13, 7-15, 7-17, 7-19
293621-0002 ..	BENDING ROLLER	7-9, 7-11, 7-13, 7-15, 7-17, 7-19
293624-0001 ..	PROTECTION PLATE	7-9, 7-11, 7-13, 7-15, 7-17, 7-19
293624-0002 ..	PROTECTION PLATE	7-9, 7-11, 7-13, 7-15, 7-17, 7-19
293645-0000 ..	BRACKET	7-9, 7-11, 7-13, 7-15, 7-17, 7-19
293646-0001 ..	WASHER	7-9, 7-11, 7-13, 7-15, 7-17, 7-19
293646-0002 ..	WASHER	7-9, 7-11, 7-13, 7-15, 7-17, 7-19
293667-0000 ..	DOWEL	7-21, 7-23
293669-0001 ..	WASHER	7-21, 7-23
293669-0002 ..	WASHER	7-21, 7-23
293669-0003 ..	WASHER	7-21, 7-23
293669-0004 ..	WASHER	7-21, 7-23
293670-0000 ..	SHAFT	7-21, 7-23
293671-0000 ..	SPACER	7-25, 7-27, 7-29, 7-31, 7-33
293674-0000 ..	DOWEL	7-9, 7-11, 7-13, 7-15, 7-17, 7-19
293676-0000 ..	CARRIER	7-25, 7-27, 7-29, 7-31, 7-33
293684-0200 ..	PRINTING WHEEL NSS	7-9, 7-11, 7-13, 7-15, 7-17, 7-19
293688-0000 ..	CARRIER	7-25, 7-27, 7-29, 7-31, 7-33
293690-0000 ..	END SECTION	7-25, 7-27, 7-29, 7-31, 7-33
293697-0000 ..	END SECTION	7-21, 7-23
294009-0000 ..	KNIFE	7-67, 7-69, 7-71, 7-83
294042-0000 ..	SEALING WASHER	4-83, 4-85, 4-87, 4-89
294472-0000 ..	CANTILEVER	1-115
294474-0000 ..	ROLL	1-7, 1-9
294475-0000 ..	ROLL	1-7, 1-9
294476-0000 ..	ROLL	1-7, 1-9
294477-0000 ..	ROLL	1-7, 1-9
294480-0000 ..	ROLL	1-7, 1-9
294493-0000 ..	HYDRAULIC PIPE	2-67
294494-0000 ..	HYDRAULIC PIPE	2-67
294495-0000 ..	HYDRAULIC PIPE	2-67
294496-0000 ..	HYDRAULIC PIPE	2-67
295391-0003 ..	THROTTLE SCREW	3-21
295435-0000 ..	WASHER	5-7, 5-9, 5-35, 5-37
295730-0000 ..	SPACER SHEET	10-133
295878-0000 ..	THROTTLE SCREW	1-51
295879-0000 ..	NUT	1-51
297054-0000 ..	WASHER	1-47
297091-0000 ..	ARM	3-19
297092-0000 ..	ARM	3-19
297142-0000 ..	BUSHING	1-103
297163-0000 ..	CARRIER	1-63
297195-0000 ..	SPACER	1-65
297211-0000 ..	INK WELL	7-21, 7-23
297309-0000 ..	PIPE-LINE	1-31
297310-0000 ..	FLANGE	1-31
297311-0000 ..	COVER	1-31
297347-0000 ..	PIPE	1-109
297413-0000 ..	PIPE	5-19
297488-0000 ..	GLASS PANE	2-41, 2-43
297496-0000 ..	LACE	5-139, 5-141
297499-0001 ..	SIDE PIPE	5-69, 5-71, 5-83, 5-85
297499-0002 ..	SIDE PIPE	5-69, 5-71, 5-83, 5-85
297499-0003 ..	SIDE PIPE	5-69, 5-71, 5-83, 5-85

Part No	Description	Page No
297499-0007 ..	SIDE PIPE	5-69, 5-71, 5-83, 5-85
297499-0008 ..	SIDE PIPE	5-69, 5-71, 5-83, 5-85
297499-0009 ..	SIDE PIPE	5-69, 5-71, 5-83, 5-85
297551-0000 ..	SHEET	5-7, 5-9, 5-35, 5-37
297567-0000 ..	TENSION SPRING	5-143, 5-145, 5-147
297569-0000 ..	SIDE PLATE	5-23, 5-39
297574-0001 ..	SPACER	5-39
297574-0002 ..	SPACER	5-23, 5-39
297576-0000 ..	BEAM	2-57, 2-59, 2-61
297604-0400 ..	HOOD	2-3, 2-5
297608-0000 ..	BRACKET	5-17
297609-0000 ..	ARM	5-17
297610-0000 ..	SCREW	5-17
297611-0000 ..	SHAFT	5-17
297638-0200 ..	CHAIN TENSIONER	5-7, 5-9, 5-35, 5-37
297643-0000 ..	BRACKET	5-143, 5-145, 5-147
297644-0000 ..	SHAFT	5-143, 5-145, 5-147
297646-0000 ..	FLAP	5-149, 5-151, 5-153, 5-155, 5-157, 5-159
297650-0000 ..	BOTTOM	5-149, 5-151, 5-153, 5-155, 5-157, 5-159
297663-0000 ..	POST HOLDER	5-7, 5-9, 5-35, 5-37
297664-0000 ..	POST HOLDER	5-7, 5-9, 5-35, 5-37
297669-0000 ..	POST	2-57, 2-59, 2-61
297670-0000 ..	POST	2-57, 2-59, 2-61
297679-0000 ..	PIPE	2-41, 2-43
297681-0400 ..	WHEEL LEFT	5-3, 5-5
297682-0400 ..	WHEEL RIGHT	5-3, 5-5
297751-0000 ..	SHAFT	5-111
297755-0000 ..	WEDGE	5-111
297770-0000 ..	SCREW	2-91
297794-0000 ..	SHEET	5-111
297795-0000 ..	SPRING	5-111
297800-0000 ..	PIPE	2-35
297802-0000 ..	BRACKET	2-35
297805-0000 ..	PIPE	2-35
297808-0500 ..	CLEANING EQUIPMENT	2-3, 2-5
297814-0000 ..	BRACKET	5-7, 5-9, 5-35, 5-37
297860-0000 ..	BUSHING	5-7, 5-9, 5-35, 5-37
297899-0000 ..	SPROCKET	5-93, 5-95
297969-0000 ..	FASTENING PLATE	1-107
297970-0000 ..	CATCH LEVER	1-107
297998-0000 ..	ADJUSTMENT PLATE	4-83, 4-85, 4-87, 4-89
297999-0000 ..	ADJUSTMENT PLATE	4-83, 4-85, 4-87, 4-89

Part No	Description	Page No
311101-0274 ..	PARALLELL PIN, CP, H6, 4X25 MM	7-75, 7-77
311102-0236 ..	PARALLEL PIN ISO 2338 3M6X16 ST	7-75, 7-77
311102-0350 ..	PARALLEL PIN ISO 2338 6M6X14 ST	7-49, 7-51
311102-0353 ..	PARALLEL PIN ISO 2338 6M6X20 ST	7-7, 7-39
311103-0209 ..	PARALLEL PIN ISO 2338 2,5M6X14 A1	1-31
311103-0212 ..	PARALLEL PIN ISO 2338 2,5M6X20 A1	1-17, 1-19
311103-0232 ..	PARALLEL PIN ISO 2338 3M6X8 A1	8-25, 8-27
311103-0233 ..	PARALLEL PIN ISO 2338 3M6X10 A1	1-17, 1-19, 1-47, 7-47
311103-0235 ..	PARALLEL PIN ISO 2338 3M6X14	1-23, 1-25, 1-27
311103-0236 ..	PARALLEL PIN ISO 2338 3M6X16 A1	1-5, 1-7, 1-9, 1-11, 1-85, 7-21, 7-23
311103-0238 ..	PARALLEL PIN ISO 2338 3M6X20 A1	1-111, 7-21, 7-23, 10-183
311103-0267 ..	PARALLEL PIN ISO 2338 4M6X10 A1	8-25, 8-27
311103-0270 ..	PARALLEL PIN ISO 2338 4M6X16 A1	1-13, 7-21, 7-23, 7-49, 7-51
311103-0272 ..	PARALLEL PIN ISO 2338 4M6X20 A1	1-17, 1-19, 4-83, 4-85, 4-87, 4-89, 7-81
311103-0273 ..	ARALLEL PIN ISO 2338 4M6X22 A1	2-29, 7-9, 7-11, 7-13, 7-15, 7-17, 7-19
311103-0274 ..	PARALLELL PIN, M6, 4X25 MM	1-31, 7-9, 7-11, 7-13, 7-15, 7-17, 7-19, 7-43, 7-45
311103-0275 ..	PARALLEL PIN ISO 2338 4M6X28 A1	1-101
311103-0276 ..	PARALLEL PIN ISO 2338 4M6X30 A1	1-17, 1-19, 1-63, 4-83, 4-85, 4-87, 4-89
311103-0278 ..	PARALLEL PIN ISO 2338 4M6X35 A1	1-101
311103-0306 ..	PARALLEL PIN ISO 2338 5M6X12 A1	5-139, 5-141
311103-0310 ..	PARALLEL PIN ISO 2338 5M6X20 A1	1-59, 1-61, 1-63, 1-101, 4-7, 4-9, 4-11, 4-13, 4-53, 4-57, 4-83, 4-85, 4-87, 4-89, 7-9, 7-11, 7-13, 7-15, 7-17, 7-19
311103-0314 ..	PARALLEL PIN ISO 2338 5M6X30 A1	2-57, 2-59, 2-61
311103-0316 ..	PARALLEL PIN ISO 2338 5M6X35 A1	8-47
311103-0350 ..	PARALLEL PIN ISO 2338 6M6X14 A1	7-55
311103-0353 ..	PARALLEL PIN ISO 2338 6M6X20 A1	7-9, 7-11, 7-13, 7-15, 7-17, 7-19, 7-53
311103-0355 ..	PARALLELL PIN, M6, 6X25 MM	7-53
311103-0357 ..	PARALLEL PIN ISO 2338 6M6X30 A1	1-63, 4-7, 4-9, 4-11, 4-13, 4-83, 4-85, 4-87, 4-89, 7-9, 7-11, 7-13, 7-15, 7-17, 7-19
311103-0365 ..	PARALLEL PIN ISO 2338 6M6X50 A1	7-35, 7-37
311103-0367 ..	PARALLEL PIN ISO 2338 6M6X55 A1	1-107
311103-0399 ..	PARALLEL PIN ISO 2338 8M6X16 A1	5-7, 5-9, 5-29, 5-35, 5-37, 5-49, 5-51, 5-57, 5-127
311103-0401 ..	PARALLEL PIN ISO 2338 8M6X20 A1	1-63
311103-0403 ..	PARALLELL PIN, M6, 8X25 MM	2-135
311103-0407 ..	PARALLEL PIN ISO 2338 8M6X35 A1	5-133, 5-135
311103-0411 ..	PARALLEL PIN ISO 2338 8M6X45 A1	5-133, 5-135
311103-0413 ..	PARALLEL PIN ISO 2338 8M6X50 A1	1-39, 1-41, 2-57, 2-59, 2-61
311111-0209 ..	SPRING PIN ISO 8752 3X18-ST	10-123
311111-0305 ..	SPRING PIN ISO 8752 5X14-ST	5-61
311112-0192 ..	SPRING PIN, ISO 8752 2,5X24-C	4-7, 4-9, 4-11, 4-13
311112-0205 ..	SPRING PIN, ISO 8752 3X10-C	8-37, 10-19
311112-0256 ..	SPRING PIN, ISO 8752 4X20-C	2-21, 7-81

Part No	Description	Page No
311112-0258 ..	SPRING PIN, ISO 8752 4X24-C	7-81
311112-0310 ..	SPRING PIN, ISO 8752 5X24-C	2-9
311112-0341 ..	SPRING PIN, ISO 8752 6X24-C	5-13
311112-0350 ..	SPRING PIN, ISO 8752 6X55-C	7-43, 7-45
311202-0241 ..	PIN, TAPERED, KP, 4X25 GROUND	7-9, 7-11, 7-13, 7-15, 7-17, 7-19
311202-0320 ..	TAPER PIN EN 22339 A 8X35 SS	2-57, 2-59, 2-61
311211-0267 ..	TAPER PIN THREADED ISO 8737 M5X30 SS	2-57, 2-59, 2-61
311211-0292 ..	TAPER PIN THREADED ISO 8737 M6X30 SS	2-137, 7-67, 7-69, 7-71
311303-0356 ..	SLOTTED PIN RPB 6X30 ZINC COATED	3-17
311305-0308 ..	LOTTED PIRPC5X16FZB	8-7, 8-13, 8-21, 8-25, 8-27
311411-0127 ..	SPLIT PIN SP1,2X12RFR	5-111
311411-0140 ..	SPLIT PIN SP1,6X16RFR	1-31
311411-0169 ..	SPLIT PIN SP2,5X25RFR	2-21
311520-0320 ..	RIVET, BLANK 2,4X6	10-371, 10-373
311520-0329 ..	RIVET, BLANK 2,4X8	2-129
311520-0420 ..	RIVET, BLANK 3,2X4	2-99, 2-135
311521-0142 ..	BLANK RIVET 3,2X6	10-141, 10-143, 10-405
311521-0143 ..	BLANK RIVET 3,2X8	7-85, 10-101, 10-103
311521-0144 ..	BLANK RIVET 3,2X10	6-7, 6-25
312101-0287 ..	SCREW M6S M4X8 FZB	2-55, 7-25, 7-27, 7-29, 7-31, 7-33
312101-0289 ..	SCREW M6S M4X10 FZB	2-109, 7-67, 7-69, 7-71
312101-0291 ..	SCREW M6S M4X12 FZB	7-67, 7-69, 7-71
312101-0295 ..	SCREW M6S M4X20 FZB	2-103, 3-15, 3-17
312101-0323 ..	SCREW M6S M5X8 FZB	3-25, 7-7, 7-67, 7-69, 7-71
312101-0325 ..	SCREW M6S M5X10 FZB	2-131, 3-19
312101-0327 ..	SCREW M6S M5X12 FZB	2-73, 2-75
312101-0329 ..	SCREW M6S M5X16 FZB	7-7, 7-25, 7-27, 7-29, 7-31, 7-33, 7-67, 7-69, 7-71
312101-0331 ..	SCREW M6S M5X20 FZB	2-67, 7-25, 7-27, 7-29, 7-31, 7-33, 7-67, 7-69, 7-71
312101-0333 ..	SCREW M6S M5X25 FZB	7-67, 7-69, 7-71
312101-0335 ..	SCREW M6S M5X30 FZB	7-67, 7-69, 7-71
312101-0362 ..	SCREW M6S M6X8 FZB	3-15
312101-0364 ..	SCREW M6S M6X10 FZB	2-55, 2-73, 2-75, 2-99, 2-101, 2-131, 3-9, 7-25, 7-27, 7-29, 7-31, 7-33, 9-41
312101-0366 ..	SCREW M6S M6X12 FZB	2-55, 2-57, 2-59, 2-61, 2-103, 2-137, 3-19, 3-25, 7-67, 7-69, 7-71
312101-0368 ..	SCREW M6S M6X16 FZB	2-57, 2-59, 2-61, 2-105, 2-109, 3-15, 7-67, 7-69, 7-71
312101-0370 ..	SCREW M6S M6X20 FZB	2-9, 6-25
312101-0372 ..	SCREW M6S M6X25 FZB	2-73, 2-75, 3-17, 3-19
312101-0374 ..	SCREW M6S M6X30 FZB	5-59
312101-0378 ..	SCREW M6S M6X40 FZB	2-51
312101-0380 ..	SCREW M6S M6X50 FZB	2-131
312101-0381 ..	SCREW M6S M6X55 FZB	7-43, 7-45
312101-0383 ..	SCREW M6S M6X65 FZB	3-23
312101-0447 ..	SCREW M6S M8X12 FZB	2-131
312101-0449 ..	SCREW M6S M8X16 FZB	2-55, 2-99, 2-101, 3-7
312101-0451 ..	SCREW M6S M8X20 FZB	2-49, 2-109, 5-59
312101-0453 ..	SCREW M6S M8X25 FZB	2-9, 2-57, 2-59, 2-61, 2-105, 2-111, 3-17, 3-19, 5-59
312101-0455 ..	SCREW M6S M8X30 FZB	3-9, 5-127
312101-0459 ..	SCREW M6S M8X40 FZB	3-17
312101-0461 ..	SCREW M6S M8X50 FZB	2-49
312101-0463 ..	SCREW M6S M8X60 FZB	2-105
312101-0465 ..	SCREW M6S M8X70 FZB	3-15, 3-25
312101-0467 ..	SCREW M6S M8X80 FZB	2-103
312101-0473 ..	SCREW M6S M8X110 FZB	2-99, 2-101
312101-0491 ..	SCREW M6S M10X20 FZB	6-7
312101-0493 ..	SCREW M6S M10X25 FZB	1-79, 7-67, 7-69, 7-71
312101-0495 ..	SCREW M6S M10X30 FZB	2-105, 6-21, 6-23
312101-0497 ..	SCREW M6S M10X35 FZB	5-127
312101-0499 ..	SCREW M6S M10X40 FZB	2-57, 2-59, 2-61, 3-7
312101-0501 ..	SCREW M6S M10X50 FZB	3-9
312101-0504 ..	SCREW M6S M10X65 FZB	10-135
312101-0518 ..	SCREW M6S M10X140 FZB	2-57, 2-59, 2-61
312101-0536 ..	SCREW M6S M12X30 FZB	3-9
312101-0538 ..	SCREW M6S M12X35 FZB	2-57, 2-59, 2-61
312101-0540 ..	SCREW M6S M12X40 FZB	2-11, 2-53, 2-111, 3-9
312101-0546 ..	SCREW M6S M12X70 FZB	3-17
312104-0460 ..	SCREW M6S M8X45H FZB	3-19
312104-0465 ..	SCREW M6S M8X70H FZB	3-9, 3-25
312104-0505 ..	SCREW M6S M10X70H FZB	3-9
312104-0552 ..	SCREW M6S M12X100H FZB	10-69, 10-71, 10-73, 10-75
312105-0287 ..	SCREW M6S ISO4017 M4X8 A480	1-99, 1-123, 4-15, 4-17, 4-59, 4-61, 4-63, 4-65, 5-29, 5-49, 5-51, 5-57, 5-97, 5-99, 5-101, 5-103, 7-67, 7-69, 7-71, 8-13, 8-33, 9-7, 9-21, 9-27, 9-37, 10-9, 10-27, 10-29, 10-31, 10-157, 10-159
312105-0289 ..	SCREW M6S ISO 4017 M4X10 A480	1-47, 10-93, 10-111
312105-0291 ..	SCREW M6S ISO 4017 M4X12 A480	1-31, 2-135, 4-83, 4-85, 4-87, 4-89, 7-21, 7-23, 8-25, 8-27, 9-23, 10-23, 10-27, 10-29, 10-31
312105-0293 ..	SCREW M6S ISO 4017 M4X16 A480	5-57, 7-53
312105-0295 ..	SCREW M6S ISO4017 M4X20 A480	4-7, 4-9, 4-11, 4-13, 4-25, 4-27, 4-59, 4-61, 4-83, 4-85, 4-87, 4-89, 5-7, 5-9, 5-25, 5-27, 5-35, 5-37, 5-41, 5-43, 5-45, 5-47, 10-181, 10-185
312105-0297 ..	SCREW M6S ISO 4017 M4X25 A480	10-27, 10-29, 10-31
312105-0299 ..	SCREW M6S ISO 4017 M4X30 A480	8-9
312105-0301 ..	SCREW M6S ISO 4017 M4X35 A480	8-9
312105-0323 ..	SKRUV M6S ISO 4017 M5X8 A480	2-121, 2-123, 2-133, 5-143, 5-145, 5-147, 7-47, 9-35, 10-19, 10-25, 10-157, 10-159
312105-0325 ..	SCREW M6S ISO 4017 M5X10 A480	1-47, 1-59, 1-61, 1-85, 1-101, 1-107, 2-115, 4-67, 4-69, 5-29, 5-49, 5-51, 5-69, 5-71, 5-83, 5-85, 7-53, 8-13, 8-25, 8-27, 10-157, 10-159, 10-179

Part No	Description	Page No
312105-0327 ..	SCREW M6S ISO 4017 M5X12 A480	1-47, 1-109, 1-117, 1-119, 2-31, 2-33, 2-57, 2-59, 2-61, 2-73, 2-75, 2-135, 4-15, 4-17, 4-67, 4-69, 5-7, 5-9, 5-25, 5-27, 5-35, 5-37, 5-41, 5-43, 5-45, 5-47, 5-67, 7-21, 7-23, 7-49, 7-51, 7-79, 8-33, 8-37, 10-23, 10-25, 10-69, 10-71, 10-73, 10-75, 10-137, 10-139, 10-157, 10-159, 10-359, 10-361
312105-0328 ..	SCREW M6S ISO 4017 M5X14 A480	5-69, 5-71, 5-83, 5-85, 5-129, 5-131, 8-47, 10-187, 10-189, 10-343, 10-345
312105-0329 ..	SCREW M6S ISO 4017 M5X16 A480	1-63, 4-7, 4-9, 4-11, 4-13, 4-67, 4-69, 4-93, 5-7, 5-9, 5-35, 5-37, 7-21, 7-23, 7-53, 7-67, 7-69, 7-71, 8-9, 9-7, 10-19, 10-25, 10-237, 10-239, 10-343, 10-345
312105-0331 ..	SCREW M6S ISO 4017 M5X20 A480	1-39, 1-41, 1-65, 4-67, 4-69, 4-83, 4-85, 4-87, 4-89, 7-7, 7-47, 7-79, 10-37
312105-0332 ..	SCREW M6S ISO 4017 M5X22 A480	1-59, 1-61
312105-0333 ..	SCREW M6S ISO 4017 M5X25 A480	2-51, 4-67, 4-69
312105-0335 ..	SCREW M6S ISO 4014 M5X30 A480	4-15, 4-17, 4-59, 4-61, 10-9, 10-107, 10-109
312105-0337 ..	SCREW M6S ISO 4014 M5X35 A480	4-67, 4-69, 7-81, 10-111, 10-127, 10-179
312105-0339 ..	SCREW M6S ISO 4014 M5X40 A480	2-121, 2-123, 4-67, 4-69, 10-23, 10-27, 10-29, 10-31, 10-371, 10-373
312105-0340 ..	SCREW M6S ISO 4014 M5X45 A480	4-67, 4-69
312105-0343 ..	SCREW M6S ISO 4014 M5X60 A480	4-15, 4-17, 10-181
312105-0362 ..	SCREW M6S ISO 4017 M6X8 A480	1-15, 1-83, 2-117, 2-119, 2-129, 5-7, 5-9, 5-23, 5-35, 5-37, 5-39, 5-87, 5-89, 5-139, 5-141, 5-143, 5-145, 5-147, 10-107, 10-109, 10-239, 10-371, 10-373
312105-0364 ..	SCREW M6S ISO 4017 M6X10 A480	1-17, 1-19, 1-31, 1-47, 1-53, 1-59, 1-61, 1-65, 1-83, 1-85, 1-89, 1-91, 1-101, 1-103, 1-107, 1-111, 1-121, 1-123, 2-15, 2-31, 2-33, 2-57, 2-59, 2-61, 2-121, 2-123, 3-23, 4-93, 5-7, 5-9, 5-13, 5-19, 5-25, 5-27, 5-35, 5-37, 5-41, 5-43, 5-45, 5-47, 5-107, 5-119, 5-163, 8-13, 8-25, 8-27, 10-83, 10-141, 10-143, 10-363, 10-387
312105-0366 ..	SCREW M6S M6X12 A280	1-15, 1-29, 1-31, 1-51, 1-59, 1-61, 1-63, 1-95, 1-97, 1-99, 1-103, 1-105, 1-109, 1-111, 1-115, 2-11, 2-49, 2-65, 2-135, 3-23, 4-83, 4-85, 4-87, 4-89, 5-25, 5-27, 5-29, 5-33, 5-41, 5-43, 5-45, 5-47, 5-49, 5-51, 5-53, 5-55, 5-87, 5-89, 5-93, 5-95, 5-109, 5-113, 5-121, 5-123, 5-129, 5-131, 5-143, 5-145, 5-147, 7-9, 7-11, 7-13, 7-15, 7-17, 7-19, 8-25, 8-27, 8-29, 8-31, 8-37, 9-7, 10-95, 10-101, 10-103, 10-111, 10-141, 10-143, 10-157, 10-159, 10-183
312105-0367 ..	SCREW M6S M6X14 A280	1-59, 1-61, 1-101, 2-19, 5-7, 5-9, 5-23, 5-35, 5-37, 5-39, 5-127
312105-0368 ..	SCREW M6S M6X16 A280	1-7, 1-9, 1-33, 1-35, 1-47, 1-51, 1-53, 1-59, 1-61, 1-63, 1-89, 1-91, 1-101, 1-107, 1-117, 1-119, 2-17, 2-29, 2-31, 2-33, 2-35, 2-41, 2-43, 2-57, 2-59, 2-61, 2-65, 2-81, 2-91, 2-133, 2-135, 5-7, 5-9, 5-21, 5-23, 5-25, 5-27, 5-29, 5-31, 5-33, 5-35, 5-37, 5-39, 5-41, 5-43, 5-45, 5-47, 5-49, 5-51, 5-53, 5-55, 5-87, 5-89, 5-93, 5-95, 5-109, 5-113, 5-121, 5-123, 5-127, 5-129, 5-131, 5-139, 5-141, 5-149, 5-151, 5-153, 5-155, 5-157, 5-159, 7-9, 7-11, 7-13, 7-15, 7-17, 7-19, 7-39, 7-49, 7-51, 7-53, 7-79, 8-13, 8-17, 8-25, 8-27, 8-29, 8-37, 9-11, 9-13, 9-35, 10-19, 10-23, 10-25, 10-27, 10-29, 10-31, 10-83, 10-239, 10-367
312105-0370 ..	SCREW M6S ISO 4017 M6X20 A480	1-17, 1-19, 1-29, 1-47, 1-51, 1-53, 1-59, 1-61, 1-85, 1-89, 1-91, 1-93, 1-99, 1-103, 1-107, 2-17, 2-19, 2-29, 2-31, 2-35, 2-65, 3-23, 4-7, 4-9, 4-11, 4-13, 4-83, 4-85, 4-87, 4-89, 4-93, 5-7, 5-9, 5-13, 5-19, 5-21, 5-25, 5-27, 5-29, 5-35, 5-37, 5-41, 5-43, 5-45, 5-47, 5-49, 5-51, 5-57, 5-67, 5-93, 5-95, 5-107, 5-113, 5-127, 5-139, 5-141, 5-143, 5-145, 5-147, 7-9, 7-11, 7-13, 7-15, 7-17, 7-19, 8-7, 8-15, 8-21, 8-23, 8-29, 8-33, 10-11, 10-19, 10-23, 10-101, 10-103, 10-187, 10-189
312105-0371 ..	SCREW M6S ISO 4017 M6X22 A480	1-59, 1-61, 5-59, 5-129, 5-131
312105-0372 ..	SCREW M6S ISO 4017 M6X25 A480	1-47, 1-51, 1-55, 1-63, 1-101, 1-115, 1-121, 2-21, 2-65, 2-69, 4-7, 4-9, 4-11, 4-13, 4-41, 4-43, 4-45, 4-47, 4-83, 4-85, 4-87, 4-89, 5-69, 5-71, 5-83, 5-85, 5-87, 5-89, 5-93, 5-95, 5-127, 5-139, 5-141, 5-143, 5-145, 5-147, 5-149, 5-151, 5-153, 5-155, 5-157, 5-159, 5-163, 7-9, 7-11, 7-13, 7-15, 7-17, 7-19, 7-79, 8-17, 8-33, 8-47, 10-25, 10-27, 10-29, 10-31, 10-113, 10-115
312105-0374 ..	SCREW M6S ISO 4014 M6X30 A480	1-31, 1-51, 1-105, 2-21, 2-25, 3-15, 3-23, 5-21, 5-25, 5-27, 5-41, 5-43, 5-45, 5-47, 5-69, 5-71, 5-83, 5-85, 5-107, 5-109, 5-125, 5-143, 5-145, 5-147, 5-149, 5-151, 5-153, 5-155, 5-157, 5-159, 10-69, 10-71, 10-73, 10-75, 10-141, 10-143
312105-0376 ..	SCREW M6S ISO 4014 M6X35 A480	1-17, 1-19, 1-49, 1-59, 1-61, 1-107, 2-121, 2-123, 3-23, 4-83, 4-85, 4-87, 4-89, 5-7, 5-9, 5-29, 5-33, 5-35, 5-37, 5-49, 5-51, 5-53, 5-55, 5-69, 5-71, 5-83, 5-85, 5-107, 5-143, 5-145, 5-147, 5-149, 5-151, 5-153, 5-155, 5-157, 5-159, 10-141, 10-143
312105-0378 ..	SCREW M6S ISO 4014 M6X40 A480	2-15, 2-29, 4-39, 5-25, 5-27, 5-33, 5-41, 5-43, 5-45, 5-47, 5-53, 5-55, 5-107, 5-149, 5-151, 5-153, 5-155, 5-157, 5-159, 8-25, 8-27, 8-41, 8-43, 10-15, 10-17, 10-371, 10-373
312105-0379 ..	SCREW M6S ISO 4014 M6X45 A480	1-113, 5-29, 5-49, 5-51, 5-63, 5-65, 5-67, 5-149, 5-151, 5-153, 5-155, 5-157, 5-159, 10-367
312105-0380 ..	SCREW M6S ISO 4014 M6X50 A480	1-17, 1-19, 1-31, 5-67, 5-107, 5-109, 5-113, 10-113, 10-115
312105-0381 ..	SCREW M6S ISO 4014 M6X55 A480	2-81, 5-107, 10-81, 10-113, 10-115
312105-0382 ..	SCREW M6S ISO 4014 M6X60 A480	1-83, 1-93, 2-21, 10-101, 10-103, 10-113, 10-115, 10-377, 10-393, 10-405
312105-0383 ..	SCREW M6S ISO 4014 M6X65 A480	10-113, 10-115
312105-0384 ..	SCREW M6S ISO 4014 M6X70 A480	1-79, 3-23, 5-13, 5-93, 5-95, 10-19, 10-377
312105-0386 ..	SCREW M6S ISO 4014 M6X80 A480	5-33, 5-53, 5-55, 10-387
312105-0388 ..	SCREW M6S ISO 4014 M6X90 A480	5-67, 5-69, 5-71, 5-83, 5-85
312105-0447 ..	SCREW M6S ISO 4017 M8X12 A480	1-51, 1-93, 1-99, 1-107, 1-111, 1-115, 1-121, 4-25, 4-27, 5-109, 5-139, 5-141, 8-23, 10-179
312105-0449 ..	SCREW M6S ISO 4017 M8X16 A480	1-17, 1-19, 1-47, 1-79, 1-95, 1-111, 1-121, 2-57, 2-59, 2-61, 2-121, 2-123, 3-15, 3-25, 4-83, 4-85, 4-87, 4-89, 5-23, 5-25, 5-27, 5-31, 5-33, 5-39, 5-41, 5-43, 5-45, 5-47, 5-53, 5-55, 5-93, 5-95, 5-121, 5-123, 5-139, 5-141, 8-29, 8-41, 8-43, 8-47, 10-15, 10-17, 10-181
312105-0451 ..	SCREW M6S ISO 4017 M8X20 A480	1-5, 1-7, 1-9, 1-11, 1-17, 1-19, 1-31, 1-39, 1-41, 1-57, 1-59, 1-61, 1-65, 1-101, 1-105, 2-25, 2-31, 2-33, 2-41, 2-43, 5-7, 5-9, 5-11, 5-13, 5-17, 5-25, 5-27, 5-31, 5-33, 5-35, 5-37, 5-41, 5-43, 5-45, 5-47, 5-53, 5-55, 5-67, 5-125, 5-127, 5-129, 5-131, 5-149, 5-151, 5-153, 5-155, 5-157, 5-159, 7-9, 7-11, 7-13, 7-15, 7-17, 7-19, 7-53, 7-55, 8-7, 8-9, 8-13, 8-21, 8-23, 8-25, 8-27, 8-31, 10-19, 10-23, 10-69, 10-71, 10-73, 10-75, 10-119, 10-121, 10-385
312105-0452 ..	SCREW M6S ISO 4017 M8X22 A480	1-59, 1-61, 1-99, 2-17, 4-83, 4-85, 4-87, 4-89, 8-47, 10-383
312105-0453 ..	SCREW M6S ISO 4017 M8X25 A480	1-5, 1-23, 1-25, 1-27, 1-31, 1-47, 1-79, 2-117, 2-119, 3-23, 3-25, 4-63, 4-65, 4-83, 4-85, 4-87, 4-89, 5-7, 5-9, 5-11, 5-29, 5-33, 5-35, 5-37, 5-49, 5-51, 5-53, 5-55, 5-57, 5-93, 5-95, 5-109, 5-127, 5-139, 5-141, 5-143, 5-145, 5-147, 5-149, 5-151, 5-153, 5-155, 5-157, 5-159, 6-21, 7-49, 7-51, 8-7, 8-9, 10-129, 10-343, 10-345, 10-349
312105-0455 ..	SCREW M6S ISO 4017 M8X30 A480	1-31, 1-47, 4-93, 5-7, 5-9, 5-13, 5-25, 5-27, 5-29, 5-35

Part No	Description	Page No
		5-37, 5-41, 5-43, 5-45, 5-47, 5-49, 5-51, 5-93, 5-95, 5-109, 5-125, 5-127, 5-149, 5-151, 5-153, 5-155
		5-157, 5-159, 8-13, 8-31, 10-183, 10-187, 10-189
312105-0457 ..	SCREW M6S ISO 4014 M8X35 A480	1-99, 4-25, 4-27, 4-63, 4-65, 5-11, 5-93, 5-95, 5-139, 5-141
		5-149, 5-151, 5-153, 5-155, 5-157, 5-159, 7-9, 7-11, 7-13, 7-15, 7-17, 7-19, 10-141, 10-143
312105-0459 ..	SCREW M6S ISO 4014 M8X40 A480	5-121, 5-123, 5-139, 5-141, 5-149, 5-151, 5-153, 5-155
		5-157, 5-159
312105-0460 ..	SCREW M6S ISO 4014 M8X45 A480	5-125, 5-129, 5-131, 5-143, 5-145, 5-147, 10-69, 10-71
		10-73, 10-75
312105-0462 ..	SCREW M6S ISO 4014 M8X55 A480	1-7, 1-9, 1-23, 1-25, 1-27, 5-125
312105-0463 ..	SCREW M6S ISO 4014 M8X60 A480	1-7, 1-9, 1-11, 5-109
312105-0464 ..	SCREW M6S ISO 4014 M8X65 A480	1-5, 1-23, 1-25, 1-27, 5-25, 5-27, 5-41, 5-43, 5-45, 5-47
		10-69, 10-71, 10-73, 10-75
312105-0465 ..	SCREW M6S ISO 4014 M8X70 A480	10-83
312105-0466 ..	SCREW M6S ISO 4014 M8X75 A480	2-23, 4-63, 4-65
312105-0467 ..	SCREW M6S ISO 4014 M8X80 A480	1-107
312105-0469 ..	SCREW M6S ISO 4014 M8X90 A480	5-7, 5-9, 5-25, 5-27, 5-35, 5-37, 5-39, 5-41, 5-43, 5-45, 5-47
312105-0471 ..	SCREW M6S ISO 4014 M8X100 A480	5-23, 5-39
312105-0489 ..	SCREW M6S ISO 4017 M10X16 A480	1-93, 8-25, 8-27
312105-0491 ..	SCREW M6S ISO 4017 M10X20 A480	1-51, 1-79, 1-107, 1-123, 2-111
312105-0492 ..	SCREW M6S ISO 4017 M10X22 A480	10-363
312105-0493 ..	SCREW M6S ISO 4017 M10X25 A480	1-31, 1-101, 2-57, 2-59, 2-61, 2-91, 4-83, 4-85, 4-87, 4-89
		5-13, 5-57, 5-161, 6-21, 10-69, 10-71, 10-73, 10-75, 10-81
312105-0495 ..	SCREW M6S ISO 4017 M10X30 A480	2-91, 2-111, 4-83, 4-85, 4-87, 4-89, 5-7, 5-9, 5-35, 5-37
		5-161, 7-53, 10-81
312105-0497 ..	SCREW M6S ISO 4017 M10X35 A480	1-17, 1-19, 1-51, 2-91, 4-15, 4-17, 10-81
312105-0499 ..	SCREW M6S ISO 4014 M10X40 A480	4-83, 4-85, 4-87, 4-89
312105-0501 ..	SCREW M6S ISO 4014 M10X50 A480	10-69, 10-71, 10-73, 10-75
312105-0502 ..	SCREW M6S ISO 4014 M10X55 A480	10-69, 10-71, 10-73, 10-75
312105-0503 ..	SCREW M6S ISO 4014 M10X60 A480	10-69, 10-71, 10-73, 10-75
312105-0507 ..	SCREW M6S ISO 4014 M10X80 A480	10-83
312105-0509 ..	SCREW M6S ISO 4014 M10X90 A480	4-83, 4-85, 4-87, 4-89
312105-0517 ..	SCREW M6S ISO 4014 M10X130 A480	5-127
312105-0532 ..	SCREW M6S ISO 4017 M12X20 A480	1-111
312105-0534 ..	SCREW M6S ISO 4017 M12X25 A480	5-21
312105-0536 ..	SCREW M6S ISO 4017 M12X30 A480	1-31
312105-0538 ..	SCREW M6S ISO 4017 M12X35 A480	5-161
312105-0540 ..	SCREW M6S ISO 4017 M12X40 A480	1-5, 1-7, 1-9, 1-11, 1-23, 1-25, 1-27, 1-111, 2-57, 2-59, 2-61
312105-0542 ..	SCREW M6S ISO 4014 M12X50 A480	2-57, 2-59, 2-61, 5-7, 5-9, 5-35, 5-37
312109-0374 ..	SCREW M6S ISO 4017 M6X30 A480	1-33, 5-13, 7-9, 7-11, 7-13, 7-15, 7-17, 7-19, 8-37, 10-19, 10-289
312109-0376 ..	SCREW M6S ISO 4017 M6X35 A480	5-93, 5-95, 5-109
312109-0378 ..	SCREW M6S ISO4017 M6X40 A480	10-9
312109-0381 ..	SCREW M6S ISO 4017 M6X55 A480	5-121, 5-123, 8-25, 8-27
312109-0457 ..	SCREW M6S ISO 4017 M8X35 A480	4-15, 4-17, 5-33, 5-53, 5-55, 10-141, 10-143
312109-0459 ..	SCREW M6S ISO 4017 M8X40 A480	4-63, 4-65, 5-149, 5-151, 5-153, 5-155, 5-157, 5-159
312109-0461 ..	SCREW M6S ISO 4017 M8X50 A480	5-33, 5-53, 5-55
312109-0463 ..	SCREW M6S ISO 4017 M8X60 A480	3-15, 3-17, 4-7, 4-9, 4-11, 4-13, 4-25, 4-27, 5-113
312111-0297 ..	SCREW HEX.SOCK.HD.MC6S-TT 4X25 88 FZB	2-103
312111-0323 ..	SCREW HEX.SOCK.HD.MC6S-TT 5X8 88 FZB	7-57, 7-59, 7-61, 7-63
312111-0325 ..	SCREW HEX.SOCK.HD.MC6S-TT 5X10 88 FZB	7-67, 7-69, 7-71
312111-0327 ..	SCREW HEX.SOCK.HD.MC6S-TT 5X12 88 FZB	7-67, 7-69, 7-71
312111-0329 ..	SCREW HEX.SOCK.HD.MC6S-TT 5X16 88 FZB	2-109, 5-15, 7-67, 7-69, 7-71
312111-0331 ..	SCREW HEX.SOCK.HD.MC6S-TT 5X20 88 FZB	7-7
312111-0333 ..	SCREW HEX.SOCK.HD.MC6S-TT 5X25 88 FZB	2-107, 7-7
312111-0335 ..	SCREW HEX.SOCK.HD.MC6S-TT 5X30 88 FZB	3-17, 7-9, 7-11, 7-13, 7-15, 7-17, 7-19, 7-25
		7-27, 7-29, 7-31, 7-33
312111-0337 ..	SCREW HEX.SOCK.HD.MC6S-TT 5X35 88 FZB	7-9, 7-11, 7-13, 7-15, 7-17, 7-19
312111-0343 ..	SCREW HEX.SOCK.HD.MC6S-TT 5X60 88 FZB	2-107
312111-0364 ..	SCREW HEX.SOCK.HD.MC6S-TT 6X10 88 FZB	2-57, 2-59, 2-61, 7-9, 7-11, 7-13, 7-15, 7-17, 7-19
312111-0368 ..	SCREW HEX.SOCK.HD.MC6S-TT 6X16 88 FZB	2-107, 3-17, 5-137
312111-0370 ..	SCREW HEX.SOCK.HD.MC6S-TT 6X20 88 FZB	5-15, 5-61
312111-0371 ..	SCREW HEX.SOCK.HD.MC6S-TT 6X22 88 FZB	7-7
312111-0372 ..	SCREW HEX.SOCK.HD.MC6S-TT 6X25 88 FZB	7-65, 7-67, 7-69, 7-71
312111-0374 ..	SCREW HEX.SOCK.HD.MC6S-TT 6X30 88 FZB	1-13, 3-11, 3-13
312111-0449 ..	SCREW HEX.SOCK.HD.MC6S-TT 8X16 88 FZB	7-7
312111-0451 ..	SCREW HEX.SOCK.HD.MC6S-TT 8X20 88 FZB	3-9, 5-61, 5-133, 5-135
312111-0453 ..	SCREW HEX.SOCK.HD.MC6S-TT 8X25 88 FZB	5-61, 5-133, 5-135
312111-0455 ..	SCREW HEX.SOCK.HD.MC6S-TT 8X30 88 FZB	3-25
312111-0457 ..	SCREW HEX.SOCK.HD.MC6S-TT 8X35 88 FZB	5-133, 5-135
312111-0459 ..	SCREW HEX.SOCK.HD.MC6S-TT 8X40 88 FZB	2-7
312111-0467 ..	SCREW HEX.SOCK.HD.MC6S-TT 8X80 88 FZB	7-55
312111-0491 ..	SCREW HEX.SOCK.HD.MC6S-TT 10X20 88 FZ	5-61
312111-0492 ..	SCREW HEX.SOCK.HD.MC6S-TT 10X22 88 FZ	3-11, 3-13
312111-0497 ..	SCREW HEX.SOCK.HD.MC6S-TT 10X35 88 FZ	3-11, 3-13
312111-0499 ..	SCREW HEX.SOCK.HD.MC6S-TT 10X40 88 FZ	3-11, 3-13
312111-0501 ..	SCREW HEX.SOCK.HD.MC6S-TT 10X50 88 FZ	3-11, 3-13
312111-0504 ..	SCREW HEX.SOCK.HD.MC6S-TT 10X65 88 FZ	3-11, 3-13
312111-0506 ..	SCREW HEX.SOCK.HD.MC6S-TT 10X75 88 FZ	3-11, 3-13
312115-0224 ..	SCREW ISO4762 M3X10 A4	1-53, 1-89, 10-157, 10-159
312115-0228 ..	SCREW ISO4762 M3X16 A4	1-65, 8-33
312115-0232 ..	SCREW ISO4762 M3X25 A4	1-105
312115-0285 ..	SCREW ISO4762 M4X6 A4	10-157, 10-159
312115-0287 ..	SCREW ISO4762 M4X8 A4	2-129, 7-21, 7-23, 7-49, 7-51
312115-0289 ..	SCREW ISO4762 M4X10 A4	4-63, 4-65, 10-357, 10-371, 10-373
312115-0291 ..	SCREW ISO4762 M4X12 A4	1-71, 5-13

Part No	Description	Page No
312115-0293 ..	SCREW ISO4762 M4X16 A4	5-139, 5-141, 10-55, 10-241
312115-0295 ..	SCREW ISO4762 M4X20 A4	1-105, 5-13
312115-0297 ..	SCREW ISO4762 M4X25 A4	4-41, 4-43, 4-45, 4-47, 4-49, 4-51, 10-107, 10-109, 10-371, 10-373
312115-0303 ..	SCREW ISO4762 M4X40 A4	4-15, 4-17
312115-0304 ..	SCREW ISO4762 M4X45 A4	10-91
312115-0305 ..	SCREW ISO4762 M4X50 A4	1-65, 10-127
312115-0323 ..	SCREW ISO4762 M5X8 A4	5-25, 5-27, 5-41, 5-43, 5-45, 5-47, 5-163, 7-75, 7-77, 10-55
312115-0325 ..	SCREW ISO4762 M5X10 A4	1-107, 2-31, 2-33, 2-135, 2-139, 5-163, 10-137, 10-139, 10-289
312115-0327 ..	SCREW ISO4762 M5X12 A4	4-67, 4-69, 10-141, 10-143, 10-165
312115-0328 ..	SCREW ISO4762 M5X14 A4	1-101, 1-105
312115-0329 ..	SCREW ISO4762 M5X16 A4	1-59, 1-61, 1-65, 1-85, 1-111, 2-31, 2-33, 4-59, 4-61, 4-67, 4-69, 7-81, 10-25, 10-157, 10-159, 10-289, 10-357
312115-0331 ..	SCREW ISO4762 M5X20 A4	1-93, 1-97, 10-349, 10-383
312115-0332 ..	SCREW ISO4762 M5X22 A4	1-107
312115-0333 ..	SCREW ISO4762 M5X25 A4	2-117, 2-119
312115-0335 ..	SCREW ISO4762 M5X30 A4	10-383
312115-0339 ..	SCREW ISO4762 M5X40 A4	7-81
312115-0340 ..	SCREW ISO4762 M5X45 A4	4-67, 4-69, 7-67, 7-69, 7-71
312115-0364 ..	SCREW ISO4762 M6X10 A4	1-53, 1-89, 1-129, 2-21, 10-141, 10-143
312115-0366 ..	SCREW ISO4762 M6X12 A4	1-5, 1-7, 1-9, 1-11, 2-31, 2-33, 2-117, 2-119, 4-25, 4-27, 4-53, 4-57, 5-109, 8-45, 8-47, 9-45
312115-0368 ..	SCREW ISO4762 M6X16 A4	2-57, 2-59, 2-61, 5-23, 5-33, 5-39, 5-53, 5-55, 7-35, 7-37, 8-25, 8-27, 8-31, 10-101, 10-103, 10-111, 10-113, 10-115, 10-183, 10-289, 10-353
312115-0370 ..	SCREW ISO4762 M6X20 A4	2-21, 4-41, 4-43, 4-45, 4-47, 4-49, 4-51, 4-53, 4-57, 5-13, 5-93, 5-95 7-9, 7-11, 7-13, 7-15, 7-17, 7-19, 7-55, 7-81, 10-27, 10-29, 10-31, 10-357, 10-359, 10-361, 10-379, 10-381
312115-0372 ..	SCREW ISO4762 M6X25 A4	2-63, 4-41, 4-43, 4-45, 4-47, 5-113, 7-9, 7-11, 7-13, 7-15, 7-17, 7-19, 10-111, 10-355
312115-0374 ..	SCREW ISO4762 M6X30 A4	4-29, 4-31, 4-33, 4-35, 4-41, 4-43, 4-45, 4-47, 4-49, 4-51, 5-93, 5-95, 5-109, 5-113, 10-113, 10-115, 10-289, 10-357, 10-359, 10-361, 10-379, 10-381
312115-0376 ..	SCREW ISO4762 M6X35 A4	3-23, 7-9, 7-11, 7-13, 7-15, 7-17, 7-19, 8-11, 10-183
312115-0378 ..	SCREW ISO4762 M6X40 A4	2-57, 2-59, 2-61
312115-0379 ..	SCREW ISO4762 M6X45 A4	10-383
312115-0382 ..	SCREW ISO4762 M6X60 A4	9-27, 9-31
312115-0384 ..	SCREW ISO4762 M6X70 A4	1-113
312115-0386 ..	SCREW ISO4762 M6X80 A4	1-113
312115-0449 ..	SCREW ISO4762 M8X16 A4	4-53, 4-57
312115-0451 ..	SCREW ISO4762 M8X20 A4	1-123, 2-57, 2-59, 2-61, 5-133, 5-135, 7-39
312115-0453 ..	SCREW ISO4762 M8X25 A4	3-15, 5-133, 5-135, 6-21, 10-81, 10-349
312115-0455 ..	SCREW ISO4762 M8X30 A4	1-35, 2-31, 2-33, 4-15, 4-17, 4-63, 4-65, 5-25, 5-27, 5-41, 5-43, 5-45, 5-47, 10-69, 10-71, 10-73, 10-75, 10-335, 10-405
312115-0459 ..	SCREW ISO4762 M8X40 A4	1-75, 1-77, 10-87, 10-89
312115-0461 ..	SCREW ISO4762 M8X50 A4	4-7, 4-9, 4-11, 4-13, 4-29, 4-31, 4-33, 4-35, 10-347
312115-0467 ..	SCREW ISO4762 M8X80 A4	1-107
312115-0495 ..	SCREW ISO4762 M10X30 A4	7-53, 10-69, 10-71, 10-73, 10-75
312115-0501 ..	SCREW ISO4762 M10X50 A4	2-57, 2-59, 2-61
312115-0503 ..	SCREW ISO4762 M10X60 A4	2-57, 2-59, 2-61
312121-0222 ..	SCREW ISO 1207 M3X8 4.8 - 5.8 Z.PL.	10-165
312121-0224 ..	SCREW ISO 1207 M3X10 4.8 - 5.8 Z.PL.	10-165
312121-0228 ..	SLOTTED CHEESE HEAD SCREW MCS 3X16 FZB	7-57, 7-59, 7-61, 7-63, 7-67, 7-69, 7-71
312121-0230 ..	SLOTTED CHEESE HEAD SCREW MCS 3X20 FZB	2-55, 7-57, 7-59, 7-61, 7-63, 7-67, 7-69, 7-71
312121-0285 ..	SLOTTED CHEESE HEAD SCREW MCS 4X6 FZB	2-103, 3-11, 3-13, 3-15
312121-0287 ..	SLOTTED CHEESE HEAD SCREW MCS 4X8 FZB	2-53, 2-73, 2-75, 2-131, 3-25, 10-157, 10-159
312121-0291 ..	SLOTTED CHEESE HEAD SCREW MCS 4X12 FZB	2-49, 10-157, 10-159
312121-0293 ..	SLOTTED CHEESE HEAD SCREW MCS 4X16 FZB	2-55
312121-0321 ..	SLOTTED CHEESE HEAD SCREW MCS 5X6 FZB	2-51, 7-67, 7-69, 7-71
312121-0323 ..	SLOTTED CHEESE HEAD SCREW MCS 5X8 FZB	2-129
312121-0364 ..	SLOTTED CHEESE HEAD SCREW MCS 6X10 FZB	7-65, 10-369
312122-0295 ..	SCREW ISO 1207 M4X20 NI PL BRASS	10-181
312125-0220 ..	SLOTTED CHEESE HEAD SCREW MCS 3X6 SS	1-31, 1-59, 1-61, 2-49, 2-73, 2-75, 2-121, 2-123, 2-133, 2-141, 5-111, 5-115, 5-117, 8-23, 10-263
312125-0222 ..	SLOTTED CHEESE HEAD SCREW MCS 3X8 SS	2-31, 7-49, 7-51, 10-141, 10-143, 10-289, 10-293, 10-355, 10-369
312125-0224 ..	SLOTTED CHEESE HEAD SCREW MCS 3X10 SS	2-117, 2-119, 7-47, 8-47
312125-0226 ..	SCREW ISO 1207 M3X12 A4	10-347
312125-0228 ..	SLOTTED CHEESE HEAD SCREW MCS 3X16 SS	5-13, 5-113, 7-57, 7-59, 7-61, 7-63, 8-47, 10-125, 10-127, 10-129
312125-0230 ..	SLOTTED CHEESE HEAD SCREW MCS 3X20 SS	1-103, 1-107, 5-25, 5-27, 5-41, 5-43, 5-45, 5-47, 5-93, 5-95, 5-129, 5-131, 10-19, 10-129
312125-0232 ..	SLOTTED CHEESE HEAD SCREW MCS 3X25 SS	4-59, 4-61, 10-19, 10-151, 10-307
312125-0234 ..	SLOTTED CHEESE HEAD SCREW MCS 3X30 SS	7-57, 7-59, 7-61, 7-63, 10-127
312125-0285 ..	SLOTTED CHEESE HEAD SCREW MCS 4X6 SS	1-33, 1-55, 1-59, 1-61, 1-93, 2-19, 2-91, 4-7 4-9, 4-11, 4-13, 4-41, 4-43, 4-45, 4-47, 4-59, 4-61, 5-33, 5-53, 5-55, 7-9, 7-11, 7-13, 7-15, 7-17 7-19, 8-25, 8-27, 8-47, 10-183, 10-349
312125-0287 ..	SLOTTED CHEESE HEAD SCREW MCS 4X8 SS	2-57, 2-59, 2-61, 4-29, 4-31, 4-33, 4-35, 4-53 4-57, 4-83, 4-85, 4-87, 4-89, 5-7, 5-9, 5-13, 5-25, 5-27, 5-35, 5-37, 5-41, 5-43, 5-45, 5-47, 5-87 5-89, 5-109, 5-121, 5-123, 7-57, 7-59, 7-61, 7-63, 8-25, 8-27, 8-37, 8-41, 8-43, 8-45, 8-47, 9-39 9-41, 10-11, 10-15, 10-17, 10-19, 10-23
312125-0289 ..	SLOTTED CHEESE HEAD SCREW MCS 4X10 SS	5-33, 5-53, 5-55, 8-13
312125-0291 ..	SLOTTED CHEESE HEAD SCREW MCS 4X12 SS	1-105, 2-141, 5-7, 5-9, 5-25, 5-27, 5-35, 5-37 5-41, 5-43, 5-45, 5-47, 5-143, 5-145, 5-147, 8-23
312125-0293 ..	SCREW ISO 1207 M4X16 A4	10-239
312125-0295 ..	SLOTTED CHEESE HEAD SCREW MCS 4X20 SS	1-31, 10-23
312125-0299 ..	SCREW ISO 1207 M4X30 A4	10-263
312125-0323 ..	SLOTTED CHEESE HEAD SCREW MCS 5X8 SS	1-69, 1-71, 1-73, 1-99, 2-67, 2-73, 2-75, 5-7

Part No	Description	Page No
		5-9, 5-35, 5-37, 7-53, 7-57, 7-59, 7-61, 7-63, 8-31, 10-241
312125-0325 ..	SLOTTED CHEESE HEAD SCREW MCS 5X10 SS	9-27, 9-31, 10-187, 10-189
312125-0327 ..	SLOTTED CHEESE HEAD SCREW MCS 5X12 SS	1-47, 1-57, 9-21, 10-161
312125-0329 ..	SLOTTED CHEESE HEAD SCREW MCS 5X16 SS	7-49, 7-51, 8-29, 10-25
312125-0331 ..	SLOTTED CHEESE HEAD SCREW MCS 5X20 SS	1-99
312125-0333 ..	SLOTTED CHEESE HEAD SCREW MCS 5X25 SS	8-7, 10-141, 10-143
312125-0339 ..	SCREW ISO 1207 M5X40 A4	10-161
312125-0364 ..	SLOTTED CHEESE HEAD SCREW MCS 6X10 SS	1-99
312125-0366 ..	SLOTTED CHEESE HEAD SCREW MCS 6X12 SS	8-11, 9-27, 9-31, 9-33, 9-39
312125-0368 ..	SCREW ISO 1207 M6X16 A4	10-19
312125-0370 ..	SLOTTED CHEESE HEAD SCREW MCS 6X20 SS	2-29
312125-0374 ..	SCREW ISO 1207 M6X30 A4	10-369
312125-0376 ..	SLOTTED CHEESE HEAD SCREW MCS 6X35 SS	2-63
312125-0378 ..	SLOTTED CHEESE HEAD SCREW MCS 6X40 SS	1-87
312125-0380 ..	SCREW ISO 1207 M6X50 A4	10-183
312125-0447 ..	SLOTTED CHEESE HEAD SCREW MCS 8X12 SS	8-13
312132-0284 ..	SCREW SLOT. PAN HEAD MSCS M4X5	10-157, 10-159, 10-263
312132-0323 ..	SCREW SLOT. PAN HEAD MSCS M5X8	7-67, 7-69, 7-71
312141-0291 ..	SCREW ISO 2009 MFS M4X12 4.8 EL.PL	10-157, 10-159
312141-0295 ..	SCREW COUNTERS.SLOT.HD. MFS 4X20 FZB	3-25
312141-0325 ..	SCREW COUNTERS.SLOT.HD. MFS 5X10 FZB	2-131
312141-0366 ..	SCREW COUNTERS.SLOT.HD. MFS 6X12 FZB	7-75, 7-77
312145-0222 ..	SCREW COUNTERS.SLOT.HD. MFS 3X8 SS	4-19, 4-21, 10-83
312145-0228 ..	SCREW COUNTERS.SLOT.HD. MFS 3X16 SS	1-31
312145-0238 ..	SCREW COUNTERS.SLOT.HD. MFS 3X40 SS	4-29, 4-31, 4-33, 4-35, 4-49, 4-51, 8-23
312145-0285 ..	SCREW COUNTERS.SLOT.HD. MFS 4X6 SS	2-135, 4-15, 4-17, 4-63, 4-65, 7-75, 7-77, 9-7
312145-0289 ..	SCREW COUNTERS.SLOT.HD. MFS 4X10 SS	4-19, 4-21, 4-23, 7-67, 7-69, 7-71, 7-81
312145-0291 ..	SCREW COUNTERS.SLOT.HD. MFS 4X12 SS	7-81
312145-0297 ..	SCREW COUNTERS.SLOT.HD. MFS 4X25 SS	4-63, 4-65
312145-0305 ..	SCREW COUNTERS.SLOT.HD. MFS 4X50 SS	4-59, 4-61
312145-0323 ..	SCREW COUNTERS.SLOT.HD. MFS 5X8 SS	7-49, 7-51, 7-75, 7-77
312145-0325 ..	SCREW COUNTERS.SLOT.HD. MFS 5X10 SS	2-135, 4-67, 4-69
312145-0327 ..	SCREW COUNTERS.SLOT.HD. MFS 5X12 SS	2-135, 7-67, 7-69, 7-71, 7-81
312145-0329 ..	SCREW COUNTERS.SLOT.HD. MFS 5X16 SS	7-67, 7-69, 7-71, 7-81
312145-0331 ..	SCREW COUNTERS.SLOT.HD. MFS 5X20 SS	7-81
312145-0335 ..	SCREW COUNTERS.SLOT.HD. MFS 5X30 SS	7-67, 7-69, 7-71
312145-0366 ..	SCREW COUNTERS.SLOT.HD. MFS 6X12 SS	2-49, 4-83, 4-85, 4-87, 4-89
312145-0378 ..	SCREW COUNTERS.SLOT.HD. MFS 6X40 SS	5-17
312145-0449 ..	SCREW COUNTERS.SLOT.HD. MFS 8X16 SS	2-17
312151-0291 ..	SCREW EN 10642 MF6S M4X12 10.9 EL.PL	10-157, 10-159
312151-0366 ..	SCREW HEX.SOCK.COUNT.MF6S 6X12 FZB	2-57, 2-59, 2-61
312151-0368 ..	SCREW HEX.SOCK.COUNT.MF6S 6X16 FZB	7-67, 7-69, 7-71
312151-0384 ..	SCREW HEX.SOCK.COUNT.MF6S 6X70 FZB	7-67, 7-69, 7-71
312151-0451 ..	SCREW HEX.SOCK.COUNT.MF6S 8X20 FZB	5-61
312155-0289 ..	SCREW EN 10642 MF6S M4X10 A480	3-19, 10-101, 10-103
312155-0291 ..	SCREW EN 10642 MF6S M4X12 A480	5-29, 5-49, 5-51, 7-49, 7-51, 10-141, 10-143
312155-0295 ..	SCREW EN 10642 MF6S M4X20 A480	5-33, 5-53, 5-55, 5-87, 5-89
312155-0297 ..	SCREW EN 10642 MF6S M4X25 A480	5-25, 5-27, 5-29, 5-41, 5-43, 5-45, 5-47, 5-49, 5-51, 10-405
312155-0301 ..	SCREW EN 10642 MF6S M4X35 A480	4-15, 4-17
312155-0323 ..	SCREW EN 10642 MF6S M5X8 A480	10-91, 10-93, 10-99
312155-0325 ..	SCREW EN 10642 MF6S M5X10 A480	7-67, 7-69, 7-71
312155-0327 ..	SCREW EN 10642 MF6S M5X12 A480	2-57, 2-59, 2-61, 7-49, 7-51, 7-53, 10-25
312155-0329 ..	SCREW EN 10642 MF6S M5X16 A480	1-15, 1-101, 1-111, 7-9, 7-11, 7-13, 7-15, 7-17, 7-19, 7-57, 7-59, 7-61, 7-63, 10-405
312155-0331 ..	SCREW EN 10642 MF6S M5X20 A480	10-355
312155-0333 ..	SCREW EN 10642 MF6S M5X25 A480	7-9, 7-11, 7-13, 7-15, 7-17, 7-19
312155-0337 ..	SCREW EN 10642 MF6S M5X35 A480	10-181
312155-0339 ..	SCREW EN 10642 MF6S M5X40 A480	7-49, 7-51
312155-0364 ..	SCREW EN 10642 MF6S M6X10 A480	1-53, 1-89, 1-91, 5-149, 5-151, 5-153, 5-155, 5-157, 5-159
312155-0366 ..	SCREW EN 10642 MF6S M6X12 A480	2-29, 2-57, 2-59, 2-61, 4-67, 4-69, 5-7, 5-9, 5-35, 5-37, 5-93, 5-95, 5-109
312155-0368 ..	SCREW EN 10642 MF6S M6X16 A480	2-57, 2-59, 2-61, 5-143, 5-145, 5-147, 5-149, 5-151, 5-153, 5-155, 5-157, 5-159, 7-55, 10-179
312155-0370 ..	SCREW EN 10642 MF6S M6X20 A480	1-53, 1-89, 1-91, 2-57, 2-59, 2-61, 2-111, 5-23, 5-39, 10-137, 10-139
312155-0372 ..	SCREW EN 10642 MF6S M6X25 A480	2-49, 4-25, 4-27, 5-121, 5-123, 10-183
312155-0374 ..	SCREW EN 10642 MF6S M6X30 A480	4-53, 4-57
312155-0376 ..	SCREW EN 10642 MF6S M6X35 A480	5-93, 5-95, 5-113, 5-149, 5-151, 5-153, 5-155, 5-157, 5-159
312155-0378 ..	SCREW EN 10642 MF6S M6X40 A480	5-149, 5-151, 5-153, 5-155, 5-157, 5-159, 10-137, 10-139
312155-0382 ..	SCREW EN 10642 MF6S M6X60 A480	4-7, 4-9, 4-11, 4-13
312155-0449 ..	SCREW EN 10642 MF6S M8X16 A480	1-97, 7-67, 7-69, 7-71
312155-0451 ..	SCREW EN 10642 MF6S M8X20 A480	2-57, 2-59, 2-61, 7-53
312155-0453 ..	SCREW EN 10642 MF6S M8X25 A480	7-47
312155-0499 ..	SCREW EN 10642 MF6S M10X40 A480	5-149, 5-151, 5-153, 5-155, 5-157, 5-159
312155-0532 ..	SCREW EN 10642 MF6S M12X20 A480	1-65, 10-91, 10-127
312155-0538 ..	SCREW EN 10642 MF6S M12X35 A480	10-93
312180-0447 ..	SCREW ISO7379 H8X12	2-109
312180-0489 ..	SCREW ISO7379 H10X16	3-17, 3-25
312180-0493 ..	SCREW ISO7379 H10X25	1-63
312180-0499 ..	SCREW ISO7379 H10X40	4-59, 4-61
312180-0530 ..	SCREW ISO7379 H10X16	1-107, 5-11
312205-0107 ..	SCREW U6S1/4X13RFR	10-101, 10-103
312303-0374 ..	SCREW DIN 938 PS M6X25 A4 80	7-55

Part No	Description	Page No
312303-0497 ..	SCREW DIN 938 PS M10X25 A4 80	1-51
312306-0287 ..	SCREW ISO4026 M4X8 BLACK	7-67, 7-69, 7-71
312306-0360 ..	SCREW ISO4026 M6X6 BLACK	7-75, 7-77
312306-0366 ..	SCREW ISO4026 M6X12 BLACK	7-41, 7-73
312311-0292 ..	SCREW HEX.SOCK.SET DOG P.MT6SS 4X14 FZB	8-23
312311-0370 ..	SCREW ISO4028 M6X20 FZB	5-63, 5-65
312316-0283 ..	SCREW HEX.SOCK.SET CUP P.MSK6SS4X4 FZB	3-25
312316-0285 ..	SCREW HEX.SOCK.SET CUP P.MSK6SS4X6 FZB	7-7
312316-0320 ..	SCREW HEX.SOCK.SET CUP P.MSK6SS5X5 FZB	1-107, 5-133, 5-135
312316-0323 ..	SCREW HEX.SOCK.SET CUP P.MSK6SS5X8 FZB	5-133, 5-135, 7-39
312316-0325 ..	SCREW HEX.SOCK.SET CUP P.MSK6SS5X10 FZB	10-69, 10-71, 10-73, 10-75
312316-0329 ..	SCREW HEX.SOCK.SET CUP P.MSK6SS5X16 FZB	10-69, 10-71, 10-73, 10-75
312316-0360 ..	STOP SCREW SK6SS6X6FZB	7-57, 7-59, 7-61, 7-63
312316-0362 ..	SCREW HEX.SOCK.SET CUP P.MSK6SS6X8 FZB	5-127, 7-39
312318-0283 ..	SCREW ISO4029 M4X4 A4	1-5, 1-7, 1-9, 1-11, 5-67, 8-33, 8-41, 8-43, 10-15, 10-17
312318-0285 ..	SCREW ISO4029 M4X6 A4	1-5, 1-7, 1-9, 1-11, 4-19, 4-21, 4-23, 8-29, 10-27, 10-29, 10-31
312318-0287 ..	SCREW ISO4029 M4X8 A4	5-139, 5-141, 8-19, 10-19
312318-0289 ..	SCREW ISO4029 M4X10 A4	4-83, 4-85, 4-87, 4-89, 8-21
312318-0291 ..	SCREW ISO4029 M4X12 A4	1-5, 1-7, 1-9, 1-11
312318-0321 ..	SCREW ISO4029 M5X6 A4	4-29, 4-31, 4-33, 4-35, 7-67, 7-69, 7-71
312318-0323 ..	SCREW ISO4029 M5X8 A4	4-93, 7-9, 7-11, 7-13, 7-15, 7-17, 7-19
312318-0325 ..	SCREW ISO4029 M5X10 A4	1-63
312318-0327 ..	SCREW ISO4029 M5X12 A4	1-101
312318-0360 ..	SCREW ISO4029 M6X6 A4	3-19
312318-0362 ..	SCREW ISO4029 M6X8 A4	1-47, 1-105, 2-91, 5-113, 5-139, 5-141, 7-9, 7-11, 7-13, 7-15, 7-17, 7-19, 7-53, 8-17, 10-357
312318-0364 ..	SCREW ISO4029 M6X10 A4	2-9, 8-7, 8-21, 10-27, 10-29, 10-31
312318-0366 ..	SCREW ISO4029 M6X12 A4	5-109, 10-357
312318-0368 ..	SCREW ISO4029 M6X16 A4	1-105, 5-29, 5-49, 5-51, 7-35, 7-37, 10-357
312318-0370 ..	SCREW ISO4029 M6X20 A4	4-53, 4-57, 5-143, 5-145, 5-147
312318-0372 ..	SCREW ISO4029 M6X25 A4	5-139, 5-141
312318-0443 ..	SCREW ISO4029 M8X8 A4	5-113, 5-143, 5-145, 5-147
312318-0449 ..	SCREW ISO4029 M8X16 A4	5-143, 5-145, 5-147
312318-0455 ..	SCREW ISO4029 M8X30 A4	5-149, 5-151, 5-153, 5-155, 5-157, 5-159
312318-0459 ..	SCREW ISO4029 M8X40 A4	4-7, 4-9, 4-11, 4-13
312318-0487 ..	SCREW ISO4029 M10X12 A4	10-289
312318-0499 ..	SCREW ISO4029 M10X40 A4	4-7, 4-9, 4-11, 4-13
312502-0120 ..	DRIVE SCREW ROUND HEAD KDS 0X5	1-111, 2-117, 2-119, 2-121, 2-123, 8-13
312502-0171 ..	DRIVE SCREW ROUND HEAD KDS 2X6	2-107
312601-0312 ..	MUTTER M6M 4-8 FZB	2-111, 7-67, 7-69, 7-71, 10-157, 10-159
312601-0314 ..	MUTTER M6M5FZB	2-129, 7-67, 7-69, 7-71
312601-0316 ..	NUT M6M 6-8 FZB	2-55, 2-105, 2-111, 3-17, 3-19, 6-21, 7-7, 7-65, 7-67, 7-69, 7-71
312601-0318 ..	NUT M6M8FZB	2-9, 2-99, 2-101, 2-103, 2-105, 2-111, 3-9, 3-19
312601-0320 ..	NUT M6M 10-8 FZB	2-57, 2-59, 2-61, 3-9, 6-21, 6-23
312601-0322 ..	NUT M6M 12-8 FZB	2-111, 3-5, 3-9, 3-17
312601-0324 ..	NUT M6M 16-8 FZB	3-25
312605-0310 ..	HEXAGON NUT, M6M M3 A280	1-31, 1-103, 1-107, 2-31, 2-33, 2-133, 7-47, 7-57, 7-59, 7-61, 7-63, 8-23, 10-19, 10-129, 10-151, 10-263, 10-291, 10-307, 10-347
312605-0312 ..	HEXAGON NUT, M6M M4 A280	1-5, 1-7, 1-9, 1-11, 1-17, 1-19, 1-33, 1-55, 1-59, 1-61, 2-19, 2-31, 2-33, 2-135, 4-25, 4-27, 4-59, 4-61, 5-7, 5-9, 5-35, 5-37, 7-35, 7-37, 7-49, 7-51, 7-57, 7-59, 7-61, 7-63, 8-9, 9-35, 9-47, 10-141, 10-143, 10-181, 10-239, 10-263, 10-349, 10-371, 10-373
312605-0314 ..	HEXAGON NUT, M6M M5 A280	1-33, 1-39, 1-41, 1-47, 1-63, 1-97, 2-31, 2-33, 2-57, 2-59, 2-61, 2-117, 2-119, 2-139, 4-55, 5-7, 5-9, 5-35, 5-37, 7-9, 7-11, 7-13, 7-15, 7-17, 7-19, 7-21, 7-23, 7-49, 7-51, 7-53, 8-23, 9-47, 10-25, 10-27, 10-29, 10-31, 10-37, 10-107, 10-109, 10-111, 10-157, 10-159, 10-161, 10-237, 10-239, 10-371, 10-373, 10-383
312605-0316 ..	HEXAGON NUT, M6M M6 A280	1-5, 1-7, 1-9, 1-11, 1-17, 1-19, 1-29, 1-47, 1-51, 1-55, 1-59, 1-61, 1-79, 1-85, 1-87, 1-93, 1-99, 1-105, 1-107, 2-15, 2-21, 2-25, 2-29, 2-31, 2-33, 2-35, 2-41, 2-43, 2-49, 2-57, 2-59, 2-61, 2-65, 2-69, 2-81, 2-91, 2-121, 2-123, 5-7, 5-9, 5-23, 5-25, 5-27, 5-29, 5-31, 5-33, 5-35, 5-37, 5-39, 5-41, 5-43, 5-45, 5-47, 5-49, 5-51, 5-53, 5-55, 5-67, 5-93, 5-95, 5-109, 5-121, 5-123, 5-125, 5-139, 5-141, 5-143, 5-145, 5-147, 7-9, 7-11, 7-13, 7-15, 7-17, 7-19, 7-47, 7-67, 7-69, 7-71, 8-17, 8-25, 8-27, 8-29, 8-31, 8-37, 8-41, 8-43, 10-11, 10-15, 10-17, 10-19, 10-23, 10-25, 10-69, 10-71, 10-73, 10-75, 10-81, 10-111, 10-113, 10-115, 10-137, 10-139, 10-141, 10-143, 10-183, 10-289, 10-291, 10-367, 10-369, 10-371, 10-373, 10-377, 10-393, 10-405
312605-0318 ..	HEXAGON NUT, M6M M8 A280	1-5, 1-35, 1-47, 1-63, 1-103, 1-111, 2-7, 2-17, 2-23, 2-29, 3-15, 3-23, 3-25, 4-7, 4-9, 4-11, 4-13, 4-15, 4-17, 4-25, 4-27, 4-53, 4-57, 4-63, 4-65, 4-83, 4-85, 4-87, 4-89, 5-11, 5-17, 5-23, 5-25, 5-27, 5-33, 5-39, 5-41, 5-43, 5-45, 5-47, 5-53, 5-55, 5-67, 5-105, 5-113, 5-139, 5-141, 5-143, 5-145, 5-147, 5-149, 5-151, 5-153, 5-155, 5-157, 5-159, 6-21, 7-21, 7-23, 7-49, 7-51, 8-9, 8-23, 8-25, 8-27, 8-29, 8-31, 8-37, 8-47, 10-19, 10-23, 10-25, 10-69, 10-71, 10-73, 10-75, 10-81, 10-83, 10-141, 10-143, 10-183, 10-187, 10-189, 10-335
312605-0320 ..	HEXAGON NUT, M6M M10 A280	1-31, 1-47, 1-51, 1-103, 1-107, 2-21, 2-57, 2-59, 2-61, 2-111, 4-15, 4-17, 4-67, 4-69, 5-23, 5-39, 5-113, 6-21, 8-25, 8-27, 8-39, 10-13, 10-81, 10-83, 10-357, 10-363
312605-0322 ..	HEXAGON NUT, M6M M12 A280	1-35, 2-91, 5-7, 5-9, 5-17, 5-33, 5-35, 5-37, 5-53, 5-55, 5-93, 5-95, 5-109, 5-139, 5-141, 10-335
312605-0324 ..	HEXAGON NUT, M6M M16 A280	5-29, 5-49, 5-51
312621-0318 ..	ROD END,NUT M8	3-25
312621-0324 ..	NUT ML6M16FZB	3-25
312625-0318 ..	HEXAGON THIN NUT, EN 24035 ML6M M8 A4	5-33, 5-53, 5-55
312631-0321 ..	HEX.NUT FINE, EN 24032 M6M M10X1,25 FZB8	5-87, 5-89
312631-0324 ..	HEX.NUT FINE, EN 24032 M6M M16X1,5 FZB8	5-63, 5-65
312635-0320 ..	NUT M6M 10X1 STAINLESS A2 80	4-7, 4-9, 4-11, 4-13, 4-63, 4-65
312705-0314 ..	NUT HEX. DOMED CAP MHM-6 M5 A280	10-111
312705-0316 ..	NUT HEX. DOMED CAP MHM-6 M6 A280	1-13, 1-123, 7-9, 7-11, 7-13, 7-15, 7-17, 7-19, 8-19, 10-113, 10-115, 10-239, 10-359, 10-361
312705-0318 ..	NUT HEX. DOMED CAP MHM-6 M8 A280	1-13, 10-113, 10-115, 10-359, 10-361

Part No	Description	Page No
312715-0114 ..	NUT WING COLD WORK.MVM-K M5 A280	2-49
312805-0100 ..	NUT ROUND WITH SLOTS M10X0,75 FE	4-7, 4-9, 4-11, 4-13
312805-0101 ..	NUT ROUND WITH SLOTS M12X1 FE	4-7, 4-9, 4-11, 4-13
312805-0107 ..	NUT ROUND WITH SLOTS M35X1,5 FE	5-137
312805-0108 ..	NUT ROUND WITH SLOTS M40X1,5 FE	5-133, 5-135
312805-0110 ..	NUT ROUND WITH SLOTS M50X1,5 FE	5-61
312805-0114 ..	NUT ROUND WITH SLOTS M70X20 FE	5-133, 5-135
312810-0310 ..	HEXAGON NUT, NY-LOCK M3 FZB	2-31
312810-0320 ..	HEXAGON NUT, NY-LOCK M10 FZB	5-127
312810-0322 ..	HEXAGON NUT, NY-LOCK M12 FZB	3-17
312810-0324 ..	HEXAGON NUT, NY-LOCK M16 FZB	3-17
312811-0316 ..	NUT HEX.LOCK HELI COIL MID GRIP M6 SS	1-85, 3-23, 5-79, 5-81, 7-67, 7-69, 7-71
312811-0318 ..	NUT HEX.LOCK HELI COIL M8 SS	4-7, 4-9, 4-11, 4-13, 4-59, 4-61, 7-47
312811-0322 ..	NUT HEX.LOCK HELI COIL MID GRIP M12 SS	3-25
312811-0324 ..	NUT HEX.LOCK HELI COIL MID GRIP M16 SS	3-15
312812-0310 ..	HEXAGON NUT, NY-LOCK M3 A480	10-125
312812-0312 ..	HEXAGON NUT, NY-LOCK M4 A480	9-35, 10-263
312812-0314 ..	HEXAGON NUT, NY-LOCK M5 A480	1-101, 1-111, 7-9, 7-11, 7-13, 7-15, 7-17, 7-19, 7-75, 7-77 9-35, 9-39
312812-0316 ..	HEXAGON NUT, NY-LOCK M6 A480	1-83, 1-85, 1-93, 2-29, 2-111, 4-93, 5-29, 5-49, 5-51, 5-93 5-95, 5-125, 7-43, 7-45, 7-49, 7-51, 9-7, 9-9, 9-11, 9-13, 9-15, 9-17, 9-19, 9-35, 9-37, 10-141, 10-143
312812-0318 ..	HEXAGON NUT, NY-LOCK M8 A480	4-93
312812-0320 ..	HEXAGON NUT, NY-LOCK M10 A480	3-9, 10-69, 10-71, 10-73, 10-75, 10-81, 10-363
312821-0102 ..	HEXAGON WELDING NUT M4 RFR	2-55
312902-0318 ..	NUT HEX. LEFT THREAD, M8 A280	3-23, 3-25, 5-143, 5-145, 5-147
312910-0126 ..	THREADED INSERT, FREE RUNNING M8X1,5D	5-137
315101-0124 ..	WASHER PLAIN, BRB, 3,2/6 H=0,5	2-55, 10-157, 10-159, 10-165
315101-0136 ..	BRICKA BRB, 4,3/8 H=0,8	2-49, 2-55, 2-109, 2-131, 7-25, 7-27, 7-29, 7-31, 7-33, 7-57, 7-59, 7-61 7-63, 7-67, 7-69, 7-71, 10-157, 10-159
315101-0146 ..	WASHER PLAIN, BRB, 5,3/10 H=1	2-109, 2-131, 7-7, 7-25, 7-27, 7-29, 7-31, 7-33, 7-67, 7-69, 7-71
315101-0153 ..	WASHER PLAIN, BRB, 6,4/12 H=1,5	2-9, 2-11, 2-51, 2-55, 2-73, 2-75, 2-103, 2-109, 2-111, 2-131 2-137, 3-17, 3-25, 5-87, 5-89, 6-21, 6-25, 7-7, 7-43, 7-45, 7-67, 7-69, 7-71
315101-0165 ..	WASHER PLAIN, BRB, 8,4/16 H=1,5	2-9, 2-49, 2-55, 2-103, 2-111, 3-9, 3-15, 3-19, 5-59, 5-127 5-133, 5-135, 7-7
315101-0173 ..	WASHER PLAIN, BRB, 10,5/22 H=2	2-57, 2-59, 2-61, 3-7, 3-9, 6-21, 7-67, 7-69, 7-71, 10-135
315101-0178 ..	WASHER PLAIN, BRB, 13/24 H=2	2-11, 2-53, 2-111, 3-9, 3-17
315101-0186 ..	WASHER PLAIN, BRB, 17/30 H=3	3-17
315102-0192 ..	WASHER PLAIN, BRFB 21/36 H=3	6-25
315103-0195 ..	WASHER PLAIN, BRB, 23/40,H=3 NI PL BR	2-91
315105-0124 ..	BRICKA BRB3,2X6RFR	1-65, 1-103, 1-107, 2-31, 2-33, 2-49, 2-73, 2-75, 5-13, 5-25, 5-27, 5-41 5-43, 5-45, 5-47, 5-93, 5-95, 5-111, 5-113, 5-129, 5-131, 7-47, 7-49, 7-51, 7-57, 7-59, 7-61, 7-63 8-33, 8-47, 10-19, 10-125, 10-127, 10-129, 10-141, 10-143, 10-151, 10-289, 10-291, 10-307, 10-347
315105-0136 ..	WASHER BRB4,3XRFR	1-33, 1-49, 1-55, 1-59, 1-61, 1-65, 1-105, 1-123, 2-19, 2-31, 2-33, 2-135 4-15, 4-17, 4-25, 4-27, 4-59, 4-61, 4-63, 4-65, 4-83, 4-85, 4-87, 4-89, 5-7, 5-9, 5-13, 5-25, 5-27 5-35, 5-37, 5-41, 5-43, 5-45, 5-47, 5-57, 5-97, 5-99, 5-101, 5-103, 7-35, 7-37, 7-49, 7-51, 7-53 7-67, 7-69, 7-71, 8-9, 8-13, 8-25, 8-27, 8-33, 8-45, 8-47, 9-7, 9-21, 9-23, 9-27, 9-37, 9-41, 9-47 10-9, 10-23, 10-27, 10-29, 10-31, 10-55, 10-91, 10-93, 10-111, 10-127, 10-141, 10-143, 10-181 10-185, 10-239, 10-263, 10-349, 10-371, 10-373
315105-0146 ..	BRICKA BRB5,3X10RFR	1-5, 1-7, 1-9, 1-11, 1-33, 1-47, 1-59, 1-61, 1-65, 1-99, 1-101, 1-105 1-107, 1-109, 1-111, 1-117, 1-119, 2-31, 2-33, 2-49, 2-51, 2-117, 2-119, 2-121, 2-123, 2-135, 4-15 4-17, 4-67, 4-69, 4-93, 5-7, 5-9, 5-25, 5-27, 5-29, 5-35, 5-37, 5-41, 5-43, 5-45, 5-47, 5-49, 5-51 5-67, 5-129, 5-131, 5-143, 5-145, 5-147, 5-163, 7-9, 7-11, 7-13, 7-15, 7-17, 7-19, 7-21, 7-23, 7-47 7-49, 7-51, 7-53, 7-57, 7-59, 7-61, 7-63, 7-67, 7-69, 7-71, 7-79, 7-81, 8-9, 8-13, 8-25, 8-27, 8-33 8-37, 8-47, 9-21, 9-35, 9-39, 9-47, 10-9, 10-19, 10-23, 10-25, 10-27, 10-29, 10-31, 10-37, 10-55 10-69, 10-71, 10-73, 10-75, 10-111, 10-127, 10-137, 10-139, 10-157, 10-159, 10-179, 10-187 10-189, 10-237, 10-239, 10-289, 10-343, 10-345, 10-371, 10-373, 10-383
315105-0153 ..	WASHER BRB6,4X12RFR	1-15, 1-17, 1-19, 1-29, 1-31, 1-33, 1-47, 1-51, 1-53, 1-55, 1-59, 1-61 1-83, 1-89, 1-91, 1-93, 1-101, 1-105, 1-107, 1-109, 1-115, 1-121, 1-123, 2-17, 2-19, 2-21, 2-29 2-31, 2-33, 2-35, 2-41, 2-43, 2-49, 2-57, 2-59, 2-61, 2-63, 2-65, 2-81, 2-91, 2-117, 2-119, 2-121 2-123, 2-129, 2-133, 2-135, 3-15, 3-19, 3-23, 4-7, 4-9, 4-11, 4-13, 4-39, 4-83, 4-85, 4-87, 4-89 4-93, 5-7, 5-9, 5-13, 5-19, 5-21, 5-23, 5-25, 5-27, 5-29, 5-31, 5-33, 5-35, 5-37, 5-39, 5-41, 5-43 5-45, 5-47, 5-49, 5-51, 5-53, 5-55, 5-63, 5-65, 5-67, 5-69, 5-71, 5-79, 5-81, 5-83, 5-85, 5-93, 5-95 5-107, 5-109, 5-113, 5-119, 5-121, 5-123, 5-125, 5-127, 5-129, 5-131, 5-139, 5-141, 5-143, 5-145 5-147, 5-149, 5-151, 5-153, 5-155, 5-157, 5-159, 5-163, 7-9, 7-11, 7-13, 7-15, 7-17, 7-19, 7-35 7-37, 7-49, 7-51, 7-53, 7-55, 7-67, 7-69, 7-71, 7-79, 7-81, 8-7, 8-11, 8-15, 8-17, 8-21, 8-23, 8-25 8-27, 8-29, 8-31, 8-33, 8-37, 8-41, 8-43, 8-47, 9-7, 9-9, 9-11, 9-13, 9-35, 9-37, 10-9, 10-11, 10-15 10-17, 10-19, 10-23, 10-25, 10-27, 10-29, 10-31, 10-69, 10-71, 10-73, 10-75, 10-81, 10-83, 10-95 10-101, 10-103, 10-113, 10-115, 10-137, 10-139, 10-141, 10-143, 10-157, 10-159, 10-181, 10-239 10-291, 10-367, 10-369, 10-371, 10-373, 10-377, 10-393, 10-405
315105-0156 ..	WASHER BRB 6.7X14 RFR	1-79, 3-19, 8-19, 10-183, 10-363
315105-0165 ..	WASHER BRB8,4X16RFR	1-5, 1-7, 1-9, 1-11, 1-17, 1-19, 1-31, 1-47, 1-51, 1-57, 1-59, 1-61 1-63, 1-79, 1-101, 1-105, 1-111, 1-115, 1-121, 1-123, 2-17, 2-31, 2-33, 2-41, 2-43, 2-57, 2-59, 2-61 2-117, 2-119, 3-23, 3-25, 4-7, 4-9, 4-11, 4-13, 4-15, 4-17, 4-25, 4-27, 4-53, 4-57, 4-63, 4-65, 4-83 4-85, 4-87, 4-89, 4-93, 5-7, 5-9, 5-11, 5-13, 5-17, 5-23, 5-25, 5-27, 5-29, 5-31, 5-33, 5-35, 5-37 5-39, 5-41, 5-43, 5-45, 5-47, 5-49, 5-51, 5-53, 5-55, 5-57, 5-67, 5-93, 5-95, 5-109, 5-121, 5-123 5-125, 5-127, 5-129, 5-131, 5-133, 5-135, 5-139, 5-141, 5-143, 5-145, 5-147, 5-149, 5-151, 5-153 5-155, 5-157, 5-159, 5-161, 6-21, 7-9, 7-11, 7-13, 7-15, 7-17, 7-19, 7-21, 7-23, 7-39, 7-53, 7-55 8-7, 8-9, 8-13, 8-23, 8-25, 8-27, 8-29, 8-31, 8-37, 8-41, 8-43, 8-45, 8-47, 10-15, 10-17, 10-19 10-23, 10-69, 10-71, 10-73, 10-75, 10-81, 10-119, 10-121, 10-141, 10-143, 10-181, 10-183, 10-187 10-189, 10-343, 10-345, 10-349
315105-0171 ..	WASHER BRB10X18	10-123
315105-0173 ..	WASHER BRB10,5X22RFR	1-17, 1-19, 1-31, 1-47, 1-51, 1-63, 1-103, 1-123, 2-21, 2-57, 2-59 2-61, 2-91, 2-111, 4-15, 4-17, 4-83, 4-85, 4-87, 4-89, 5-7, 5-9, 5-13, 5-23, 5-35, 5-37, 5-39, 5-57 10-355, 10-369

Part No	Description	Page No
		5-113, 5-149, 5-151, 5-153, 5-155, 5-157, 5-159, 5-161, 6-21, 7-9, 7-11, 7-13, 7-15, 7-17, 7-19, 7-47
		7-53, 7-79, 8-25, 8-27, 8-31, 8-39, 10-13, 10-69, 10-71, 10-73, 10-75, 10-81, 10-363
315105-0176 ..	WASHER BRB 12X22 RFR	4-83, 4-85, 4-87, 4-89
315105-0178 ..	WASHER BRB13X24RFR	1-5, 1-7, 1-9, 1-11, 1-23, 1-25, 1-27, 1-31, 5-7, 5-9, 5-21, 5-35, 5-37
		5-139, 5-141, 5-161
315105-0186 ..	WASHER BRB17X30RFR	5-29, 5-49, 5-51
315105-0192 ..	WASHER BRB21X36RFR	1-35, 5-7, 5-9, 5-35, 5-37
315111-0153 ..	WASHER PLAIN, TBRB 6,4/12 H=3	7-25, 7-27, 7-29, 7-31, 7-33
315111-0165 ..	WASHER PLAIN, TBRB 8,4/16 H=3	2-105, 2-109, 8-13, 10-179
315111-0178 ..	WASHER PLAIN, TBRB 13/24 H=4	2-57, 2-59, 2-61
315115-0153 ..	WASHER PLAIN, TBRB 6,4/12 H=3	1-101, 5-7, 5-9, 5-21, 5-25, 5-27, 5-29, 5-31, 5-33, 5-35, 5-37
		5-41, 5-43, 5-45, 5-47, 5-49, 5-51, 5-53, 5-55, 5-57, 5-59, 5-67, 5-69, 5-71, 5-79, 5-81, 5-83, 5-85
		5-87, 5-89, 5-93, 5-95, 5-109, 5-113, 5-127, 5-143, 5-145, 5-147, 5-149, 5-151, 5-153, 5-155, 5-157
		5-159, 5-163, 7-9, 7-11, 7-13, 7-15, 7-17, 7-19, 7-79, 8-47, 10-187, 10-189
315115-0165 ..	WASHER PLAIN, TBRB 8,4/16 H=3	1-5, 1-7, 1-9, 1-23, 1-25, 1-27, 2-25, 2-31, 4-63, 4-65, 5-7
		5-9, 5-11, 5-25, 5-27, 5-33, 5-35, 5-37, 5-41, 5-43, 5-45, 5-47, 5-53, 5-55, 5-93, 5-95, 5-109, 5-121
		5-123, 5-125, 5-127, 5-139, 5-141, 5-143, 5-145, 5-147, 5-149, 5-151, 5-153, 5-155, 5-157, 5-159
		10-69, 10-71, 10-73, 10-75, 10-83, 10-129, 10-141, 10-143, 10-187, 10-189, 10-349
315115-0171 ..	WASHER PLAIN, TBRB 10/18 H=4	4-53, 4-57
315115-0173 ..	WASHER PLAIN, TBRB 10,5/22 H=4	4-59, 4-61, 5-113, 5-127, 10-69, 10-71, 10-73, 10-75, 10-83
315115-0178 ..	WASHER PLAIN, TBRB 13/24 H=4	1-111, 2-57, 2-59, 2-61, 5-7, 5-9, 5-35, 5-37
315121-0153 ..	WASHER PLAIN, TBRSB 6,4/22 H=4	1-103, 2-49, 2-57, 2-59, 2-61, 7-9, 7-11, 7-13, 7-15, 7-17
		7-19, 8-29
315121-0165 ..	WASHER PLAIN, TBRSB 8,4/26 H=5	1-107, 3-15, 3-25, 8-13, 8-25, 8-27
315125-0153 ..	WASHER TBRSB 6,4X22X4 A4	2-19, 5-121, 5-123, 7-9, 7-11, 7-13, 7-15, 7-17, 7-19, 10-101
		10-103, 10-393
315125-0165 ..	WASHER TBRSB 8,4X26X5 A4	2-121, 2-123, 5-11
315202-0101 ..	O-RING 3,1X1,6 MM	4-41, 4-43, 4-45, 4-47, 4-49, 4-51, 10-185
315202-0102 ..	O-RING 4,1X1,6 MM	4-49, 4-51
315202-0104 ..	O-RING 6,1X1,6 MM	4-41, 4-43, 4-45, 4-47, 4-49, 4-51
315202-0106 ..	O-RING 8,1X1,6 MM	5-21
315202-0111 ..	O-RING 13,1X1,6 MM	4-29, 4-31, 4-33, 4-35, 4-49, 4-51
315202-0114 ..	O-RING 16,1X1,6 MM	4-49, 4-51, 4-53, 4-57
315202-0119 ..	O-RING 25,1X1,6 MM	1-51
315202-0120 ..	O-RING 27,1X1,6 MM	10-123, 10-371, 10-373
315202-0203 ..	O-RING 4,3X2,4 MM	4-41, 4-43, 4-45, 4-47
315202-0206 ..	O-RING 7,3X2,4 MM	2-99, 2-101, 4-49, 4-51
315202-0207 ..	O-RING 8,3X2,4 MM	4-29, 4-31, 4-33, 4-35, 4-49, 4-51
315202-0208 ..	O-RING 9,3X2,4 MM	4-49, 4-51, 4-53, 4-57
315202-0211 ..	O-RING 13,3X2,4 MM	2-37, 2-39, 2-45, 2-47, 2-71, 2-93
315202-0212 ..	O-RING 14,3X2,4 MM	4-29, 4-31, 4-33, 4-35, 4-49, 4-51
315202-0214 ..	O-RING 17,3X2,4 MM	5-21
315202-0216 ..	O-RING 22,2X3 MM	2-41, 2-43, 2-91
315202-0217 ..	O-RING 24,2X3 MM	5-113, 5-139, 5-141
315202-0218 ..	O-RING 26,2X3 MM	7-21, 7-23
315202-0220 ..	O-RING 32,2X3 MM	5-21
315202-0224 ..	O-RING 42,2X3 MM	6-17, 7-25, 7-27, 7-29, 7-31, 7-33
315202-0226 ..	O-RING 44,2X5,7 MM	5-21
315202-0229 ..	O-RING 59,2X5,7 MM	5-7, 5-9, 5-35, 5-37
315202-0244 ..	O-RING 134,3X5,7 MM	1-55
315202-0265 ..	O-RING 12,3X2,4 MM	4-39
315202-0301 ..	O-RING 49,5X3 MM	1-133, 5-19, 7-25, 7-27, 7-29, 7-31, 7-33
315202-0302 ..	O-RING 54,5X3 MM	5-21
315202-0303 ..	O-RING 59,5X3 MM	5-21, 5-113
315202-0304 ..	O-RING 64,5X3 MM	1-73, 7-25, 7-27, 7-29, 7-31, 7-33, 10-91
315202-0305 ..	O-RING 69,5X3 MM	7-25, 7-27, 7-29, 7-31, 7-33
315202-0308 ..	O-RING 84,5X3 MM	1-69, 1-71, 10-93, 10-99
315202-0309 ..	O-RING 89,5X3 MM	5-59, 7-21, 7-23, 10-291
315202-0311 ..	O-RING 99,5X3 MM	5-127
315202-0316 ..	O-RING 124,5X3 MM	5-133, 5-135
315202-0317 ..	O-RING 129,5X3 MM	1-57
315202-0702 ..	O-RING 12,42X1,78 MM	4-49, 4-51
315204-0109 ..	O-RING 11,1X1,6 MM	1-101
315204-0110 ..	O-RING 12,1X1,6 MM	1-53, 1-89, 1-91
315204-0111 ..	O-RING 13,1X1,6 MM	1-85
315204-0208 ..	O-RING 9,3X2,4 MM	1-117, 1-119
315204-0209 ..	O-RING 10,3X2,4 MM	1-111
315204-0210 ..	O-RING 11,3X2,4 MM	10-355, 10-385
315204-0213 ..	O-RING 15,2X2,4 MM	1-55, 10-349, 10-355, 10-385
315204-0215 ..	O-RING 19,2X3 MM	1-69, 1-71, 1-73, 1-133, 10-91, 10-93, 10-99
315204-0217 ..	O-RING 24,2X3 MM	1-37, 1-131, 10-329, 10-331
315204-0219 ..	O-RING 29,2X3 MM	10-101, 10-103, 10-113, 10-115
315204-0221 ..	O-RING 34,2X3 MM	1-101, 10-355, 10-385
315204-0222 ..	O-RING 36,2X3 MM	1-51, 1-53, 1-83, 1-89
315204-0223 ..	O-RING 39,2X3 MM	1-51
315204-0301 ..	O-RING 49,5X3 MM	1-73
315204-0302 ..	O-RING 54,5X3 MM	1-51, 1-53, 1-89, 1-91
315204-0304 ..	O-RING 64,5X3 MM	1-51
315204-0324 ..	O-RING 164,3X5,7 MM	1-113
315211-0103 ..	BONDED SEAL SS/NBR90 M6	2-25
315220-0121 ..	V-RINGS 12,5X18,5X7,7 MM V-14S	7-9, 7-11, 7-13, 7-15, 7-17, 7-19
315220-0175 ..	V-RINGS 31X39X10,5 MM V-35S	5-139, 5-141
315220-0198 ..	V-RINGS 45X55X13 MM V-50S	3-7
315221-0171 ..	RADIAL SEAL 30X62X7 MM	5-133, 5-135, 5-137

Part No	Description	Page No
315221-0175 ..	RADIAL SEAL 35X47X7 MM	5-113
315221-0197 ..	RADIAL SEAL 48X72X8 MM	3-7
315221-0200 ..	RADIAL SEAL 50X72X8 MM	5-59
315221-0221 ..	RADIAL SEAL 70X90X10 MM	3-11, 3-13
315224-0115 ..	PISTON SEAL, GLIDORING 32X40X3,5 MM	10-355, 10-385
315226-0196 ..	AXIAL SEAL WITH STEEL COVER 48X65X4,5 MM	4-83, 4-85, 4-87, 4-89
315226-0200 ..	AXIAL SEAL WITH STEEL COVER 50X70X4,5 MM	5-59
315230-0157 ..	BEARING SEAL 12X16X3 MM	4-53, 4-57
315233-0101 ..	WASHER CAPTIVE SEALING M5	1-69, 1-71, 1-73, 10-157, 10-159, 10-371, 10-373
315233-0109 ..	WASHER CAPTIVE SEALING G1/8	2-51, 5-67, 5-127, 10-107, 10-109, 10-117, 10-407, 10-409
315233-0110 ..	WASHER CAPTIVE SEALING G1/4	1-83, 2-83, 2-85, 2-87, 2-89, 2-97, 4-39, 5-67, 5-87, 5-89 5-127, 10-117, 10-179
315233-0111 ..	WASHER CAPTIVE SEALING G3/8	2-103
315233-0113 ..	WASHER CAPTIVE SEALING G1/2	1-13, 2-73, 2-75, 2-81, 2-83, 2-85, 2-87, 2-89, 2-97, 10-113 10-115, 10-359, 10-361
315234-0109 ..	WASHER,PL.RND.CU.10,3/13,5 H=1,0	5-69, 5-71, 5-83, 5-85
315234-0110 ..	WASHER,PL.RND.CU.13,5/18 H=1,5	1-93, 4-29, 4-31, 4-33, 4-35, 5-15, 10-301
315234-0113 ..	WASHER PL.RND.CU.21,3//26 H=1,5	2-69, 2-73, 2-75, 5-15
315237-0109 ..	WASHER,PL.RND.AL.10/14,H=1,5	1-31
315239-0110 ..	NYLON WASHER G1/4	2-117, 2-119
315239-0111 ..	NYLON WASHER G3/8	2-117, 2-119
315239-0113 ..	NYLON WASHER G1/2	1-51, 2-117, 2-119, 2-121, 2-123
315250-0101 ..	GASKET 32X25X5,5 MM	1-51, 1-121, 10-113, 10-115, 10-359, 10-361
315250-0103 ..	GASKET 48X38X5,5 MM	1-93, 1-121, 2-35, 5-7, 5-9, 5-35, 5-37, 10-81, 10-113, 10-115, 10-359, 10-361
315250-0105 ..	GASKET 73,5X63,5X5,5 MM	10-179
315259-0103 ..	FELT SEAL 47-67 MM	4-59, 4-61
315401-0153 ..	WASHER FBH6,1FZB	3-11, 3-13
315401-0173 ..	WASHER FBH10,2FZB	3-11, 3-13
315401-0178 ..	WASHER FBH12,2FZB	3-5
315402-0136 ..	LOCK WASHER FBB 4,1	1-71
315402-0156 ..	LOCK WASHER FBB 6,5	5-79, 5-81
315402-0173 ..	LOCK WASHER FBB 10,2	2-57, 2-59, 2-61, 5-61
315410-0100 ..	LOCK WASHER MB 0 D=10 H=1	4-7, 4-9, 4-11, 4-13
315410-0101 ..	LOCK WASHER MB 1 D=12 H=1	4-7, 4-9, 4-11, 4-13
315410-0107 ..	LOCK WASHER MB 7 D=35 H=1,25	5-137
315410-0108 ..	LOCK WASHER MB 8 D=40 H=1,25	5-133, 5-135
315410-0110 ..	LOCK WASHER MB 10 D=50 H=1,25	5-61
315410-0114 ..	LOCK WASHER MB 14 D=70 H=1,5	5-133, 5-135
315701-0134 ..	PARALLEL KEY W. ROUND ENDS 3X3X10 MM	5-67
315701-0169 ..	PARALLEL KEY W. ROUND ENDS 4X4X18 MM	7-7
315701-0201 ..	PARALLEL KEY W. ROUND ENDS 5X5X20 MM	7-9, 7-11, 7-13, 7-15, 7-17, 7-19
315701-0202 ..	PARALLEL KEY W. ROUND ENDS 5X5X22 MM	5-15
315701-0230 ..	PARALLEL KEY W. ROUND ENDS 6X6X16 MM	10-355
315701-0234 ..	PARALLEL KEY W. ROUND ENDS 6X6X25 MM	5-15
315701-0262 ..	PARALLEL KEY W.ROUND ENDS 8X7X18	3-19
315701-0263 ..	PARALLEL KEY W.ROUND ENDS 8X7X20	3-19
315701-0266 ..	PARALLEL KEY W. ROUND ENDS 8X7X28 MM	10-69, 10-71, 10-73, 10-75
315701-0268 ..	PARALLEL KEY W. ROUND ENDS 8X7X32 MM	5-137
315701-0270 ..	PARALLEL KEY W. ROUND ENDS 8X7X40 MM	3-15, 5-15, 5-127, 5-137
315701-0272 ..	PARALLEL KEY W. ROUND ENDS 8X7X50 MM	5-15
315701-0274 ..	PARALLEL KEY W. ROUND ENDS 8X7X60 MM	5-127
315701-0296 ..	PARALLEL KEY W. ROUND ENDS 10X8X25 MM	5-61
315701-0299 ..	PARALLEL KEY W. ROUND ENDS 10X8X32 MM	5-137
315701-0307 ..	PARALLEL KEY W. ROUND ENDS 10X8X70 MM	3-9
315701-0330 ..	PARALLEL KEY W. ROUND ENDS 12X8X32 MM	2-57, 2-59, 2-61
315701-0336 ..	PARALLEL KEY W. ROUND ENDS 12X8X63 MM	2-57, 2-59, 2-61
315701-0338 ..	PARALLEL KEY W. ROUND ENDS 12X8X70 MM	5-133, 5-135
315701-0363 ..	PARALLEL KEY W. ROUND ENDS 14X9X40 MM	5-61
315701-0802 ..	PARALLEL KEY W. ROUND ENDS 10X8X36 MM	5-137
315705-0196 ..	PARALLEL KEY W.ROUND ENDS 5X5X10	2-21
315705-0266 ..	PARALLEL KEY W. ROUND ENDS 8X7X28 MM	5-113
315705-0298 ..	PARALLEL KEY W. ROUND ENDS 10X8X30 MM	5-109
315742-0114 ..	COLLAR, 18/34, H=13	5-113
315742-0119 ..	COLLAR, 25/42, H=15	5-113, 5-143, 5-145, 5-147
315750-0105 ..	RETAIN. RING, 8	7-21, 7-23, 8-29
315750-0107 ..	RETAIN. RING, 10	4-7, 4-9, 4-11, 4-13, 8-23, 10-183
315750-0109 ..	RETAIN. RING, 12	7-7
315750-0112 ..	RETAIN. RING, 15	7-7
315750-0119 ..	RETAIN. RING, 25	3-19
315750-0122 ..	RETAIN. RING, 30	5-15
315750-0127 ..	RETAIN. RING, 40	5-15
315750-0131 ..	RETAIN. RING, 50	5-59
315751-0103 ..	RETAIN. RING, 6	7-35, 7-37, 10-25, 10-289, 10-357
315751-0109 ..	RETAIN. RING, 12	8-41, 8-43, 10-15, 10-17
315751-0112 ..	RETAIN. RING, 15	8-39, 10-13
315752-0123 ..	RETAIN. RING, 32	7-9, 7-11, 7-13, 7-15, 7-17, 7-19
315752-0136 ..	RETAIN. RING, 62	4-59, 4-61, 5-15
315752-0149 ..	RETAINING RING FOR HOLE, 110X4 MM	5-133, 5-135
315753-0122 ..	RETAINING RING FOR BORE DIN 472 30 A2	8-19
315754-0107 ..	LOCKING WAE 5	8-31
315754-0110 ..	LOCKING WAE 9	8-31
315754-0113 ..	LOCKING WAE 15	1-69, 1-71, 1-73, 10-91, 10-93, 10-99
315755-0105 ..	LOCKING WASHER 3,2	8-45
315755-0106 ..	LOCKING WASHER 4	9-9, 9-15, 9-17, 9-35, 10-25, 10-157, 10-159

Machine Type Group Description Page No

Part No	Description	Page No
315755-0107 ..	LOCKING WASHER 5	5-125
315755-0108 ..	LOCKING WASHER 6	7-75, 7-77, 8-17, 8-19
315755-0109 ..	LOCKING WASHER 7	3-23
315755-0111 ..	LOCKING WASHER 10	7-47
315755-0113 ..	LOCKING WASHER 15	5-23, 5-39
315755-0801 ..	LOCKING WASHER 8	7-9, 7-11, 7-13, 7-15, 7-17, 7-19
316810-0106 ..	PIPE CLIP FOR TUBE D=8 MM	4-29, 4-31, 4-33, 4-35, 4-41, 4-43, 4-45, 4-47, 5-7, 5-9, 5-25, 5-27, 5-35, 5-37, 5-41, 5-43, 5-45, 5-47, 5-87, 5-89, 7-67, 7-69, 7-71
318201-0076 ..	ROLLER CHAIN, SINGLE 3/8 -76	5-67
318207-0168 ..	ROLLER CHAIN, SINGLE 6MM-168	7-9, 7-11, 7-13, 7-15, 7-17, 7-19
318212-0006 ..	ROLLER CHAIN, SINGLE 1/2 -6	5-97, 5-99, 5-101, 5-103
318212-0008 ..	ROLLER CHAIN, SINGLE 1/2 -8,SS	5-97, 5-99, 5-101, 5-103
318212-0066 ..	ROLLER CHAIN, SINGLE 1/2 -66,SS	5-53, 5-55
318212-0074 ..	ROLLER CHAIN, SINGLE 1/2 -74,SS	5-33
318212-0119 ..	ROLLER CHAIN, SINGLE 1/2 -119,SS	5-29, 5-49, 5-51
318212-0150 ..	ROLLER CHAIN, SINGLE 1/2 -150,SS	5-93, 5-95
318219-0187 ..	CONNECTING LINK SINGLE 1/2",SS	5-93, 5-95
318219-0487 ..	CONNECTING LINK, DUPLEX 1/2", SS	5-109
318242-0034 ..	ROLLER CHAIN DUPLEX 1/2"-34,SS	5-33, 5-53, 5-55
318242-0036 ..	ROLLER CHAIN DUPLEX 1/2"-36SS	5-105
318242-0108 ..	ROLLER CHAIN, DUPLEX 1/2"-108, SS	5-109
318301-0130 ..	LIFTING EYE BOLT, TYPE, LT, M30	6-15
318800-0102 ..	HANDLES,SPHERICAL KNOB,INT.THRE.,D.20-M5	8-47
318800-0103 ..	HANDLES,SPHERICAL KNOB,INT.THRE.,D.25-M6	7-9, 7-11, 7-13, 7-15, 7-17, 7-19
318800-0104 ..	HANDLE,SPHERICAL KNOB,INT.THRE.,D.30-M8	1-111, 7-49, 7-51, 8-29, 10-141, 10-143
318800-0105 ..	HANDLE,SPHERICAL KNOB,INT.THRE.,D.35-M10	1-107
318800-0106 ..	HANDLE,SPHERICAL KNOB,INT.THRE,D.40-M10	7-47
318800-0107 ..	HANDLE,SPHERICAL KNOB,INT.THRE.,D45-M10	7-81
319030-0125 ..	DISC SPRING, CONICAL 12,5X6,2X0,5 MM	7-67, 7-69, 7-71
321101-0143 ..	FLANGE BUSHING, 8X14X8 MM	4-93, 5-113
321101-0163 ..	FLANGE BUSHING, 10X16X10 MM	4-53, 4-57
321101-0172 ..	FLANGE BUS 12F7X10	5-67
321101-0173 ..	FLANGE BUS 12F7X12	2-91, 8-25, 8-27
321101-0223 ..	FLANGE BUSHING, 18X25X16	5-113
321101-0232 ..	FLANGE BUSHING, 20X28X16 MM	5-63, 5-65
321101-0233 ..	FLANGE BUSHING, 20X28X20 MM	2-91
321101-0252 ..	FLANGE BUSHING, 25X35X16 MM	5-29, 5-49, 5-51, 5-93, 5-95, 5-109
321101-0253 ..	FLANGE BUSHING, 25X35X25 MM	5-93, 5-95, 5-109
321101-0272 ..	FLANGE BUSHING, 30X40X20 MM	5-33, 5-53, 5-55, 5-93, 5-95
321101-0282 ..	FLANGE BUSHING, 35X45X20 MM	5-109
321101-0283 ..	FLANGE BUSHING, 35X45X35 MM	5-93, 5-95
321105-0234 ..	BEAR. BUSH. WITHOUT FL, 20X28X30 MM	4-59, 4-61, 7-53
321110-0143 ..	FLANGE BUS 8E7X8	10-183
321110-0163 ..	FLANGE BUS 10E7X10	10-183
321110-0183 ..	FLANGE BUS 14E7X12	10-183
321111-0095 ..	FLANGE BUSHING, 8X12X6MM	3-23
321111-0135 ..	FLANGE BUSHING, 10X16X10 MM	7-9, 7-11, 7-13, 7-15, 7-17, 7-19, 10-23
321111-0157 ..	FLANGE BUSHING, 12X18X8 MM	7-47
321111-0159 ..	FLANGE BUSHING, 12X18X12 MM	1-47
321111-0163 ..	FLANGE BUSHING, 12X18X20 MM	4-83, 4-85, 4-87, 4-89
321111-0185 ..	FLANGE BUSHING, 14X20X14 MM	5-149, 5-151, 5-153, 5-155, 5-157, 5-159
321111-0212 ..	FLANGE BUSHING, 15X21X15	7-9, 7-11, 7-13, 7-15, 7-17, 7-19
321111-0240 ..	FLANGE BUSHING, 16X22X12	3-19
321116-0127 ..	BEAR. BUSH. WITHOUT FL, 10X14X10 MM	5-25, 5-27, 5-41, 5-43, 5-45, 5-47
321116-0128 ..	BEAR. BUSH. WITHOUT FL, 10X14X16 MM	5-25, 5-27, 5-41, 5-43, 5-45, 5-47, 5-93, 5-95
321116-0163 ..	BEAR. BUSH. WITHOUT FL, 12X18X20 MM	4-83, 4-85, 4-87, 4-89
321116-0179 ..	BEAR. BUSH. WITHOUT FL, 14X18X14 MM	7-67, 7-69, 7-71
321120-0100 ..	BEARING BUSHING W/O FLANGE 8/10X12	7-21, 7-23, 7-35, 7-37
321120-0101 ..	BEARING BUSHING W/O FLANGE,6/8X6	7-35, 7-37, 8-47, 10-19
321120-0103 ..	BEARING BUSHING W/O FLANGE,8/10X8	8-45
321120-0104 ..	BEARBUSHING W/O FL,ANGE 10/12X10	8-23, 8-29, 8-45
321120-0109 ..	BEARING BUSHING W/O FLANGE,12/14X10	7-21, 7-23
321120-0110 ..	BEARING BUSHING W/O FL, 12X14X12 MM	8-23
321120-0113 ..	BEARING BUSHING W/O FLANGE,12/14X25	8-41, 8-43, 10-15, 10-17
321120-0122 ..	BEARING BUSHING W/O FL, 15X17X15 MM	5-29, 5-49, 5-51, 5-139, 5-141, 7-25, 7-27, 7-29, 7-31, 7-33
321120-0160 ..	BEARING BUSHING W/O FL 25/28X30	5-139, 5-141
321120-0183 ..	BEARING BUSHING W/O FL, 35X39X20 MM	5-139, 5-141
321127-0100 ..	BEARING BUSHING W/O FL, 10X13X10 MM	8-33
321129-0104 ..	THRUST WASHER, 12/24X1,5	8-41, 8-43, 10-15, 10-17
321130-0180 ..	THRUST WASHER, 12X24X1,5 MM	7-47
321300-0094 ..	BALL BEARING, 4X13X5 MM	7-75, 7-77
321302-0296 ..	BALL BEARING, 6X19X6 MM	10-289, 10-303
321306-0104 ..	BALL BEARING, 20X42X12 MM	5-139, 5-141
321306-0107 ..	BALL BEARING, 35X62X14 MM	5-15, 5-137
321306-0110 ..	BALL BEARING, 50X80X16 MM	3-7, 5-61
321306-0114 ..	BALL BEARING, 70X110X20 MM	5-133, 5-135
321308-0101 ..	BALL BEARING, 12X28X8 MM	7-9, 7-11, 7-13, 7-15, 7-17, 7-19
321308-0106 ..	BALL BEARING, 30X55X13 MM	5-113
321308-0200 ..	BALL BEARING, 10X26X8 MM	10-183, 10-289, 10-303
321308-0201 ..	BALL BEARING, 12X28X8 MM	7-7
321308-0202 ..	BALL BEARING, 15X32X9 MM	7-7, 7-9, 7-11, 7-13, 7-15, 7-17, 7-19
321308-0205 ..	BALL BEARING, 25X47X12MM	3-19
321309-0100 ..	BALL BEARING, 10X30X9 MM	4-7, 4-9, 4-11, 4-13

Part No	Description	Page No
321309-0106 ..	BALL BEARING, 30X62X16 MM	5-15, 5-133, 5-135
321309-0108 ..	BALL BEARING, 40X80X18 MM	3-7
321309-0110 ..	BALL BEARING, 50X90X20 MM	5-59
321309-0114 ..	BALL BEARING, 70X125X24 MM	3-11, 3-13
321312-0100 ..	BALL BEARING, 10X30X9 MM	4-7, 4-9, 4-11, 4-13
321312-0101 ..	BALL BEARING, 12X32X10 MM	4-7, 4-9, 4-11, 4-13
321313-0100 ..	BALL BEARING, 10X30X9 MM	8-19
321313-0102 ..	BALL BEARING, 15X35X11 MM	7-41, 7-73
321316-0108 ..	BALL BEARING, 40X90X23 MM	3-9
321316-0200 ..	BALL BEARING, 10X35X11 MM	7-9, 7-11, 7-13, 7-15, 7-17, 7-19, 7-79
321316-0201 ..	BALL BEARING, 12X37X12 MM	7-7
321361-0105 ..	TAPER ROLLER BEARING, 25X52X16,25 MM	5-133, 5-135
321364-0106 ..	TAPER ROLLER BEARING, 30X72X19 MM	5-133, 5-135
321576-0360 ..	BEARING ROLLER, 30X62X29 MM	3-15, 3-17
321580-0165 ..	CAM ROLLER, 12X30X40 MM	3-19
321582-0212 ..	CAM ROLLER, 16X35X52 MM	5-63, 5-65
341001-0148 ..	COPPER TUBE	2-117, 2-119
341001-0192 ..	COPPER TUBE	2-117, 2-119
341001-0228 ..	COPPER TUBE	2-57, 2-59, 2-61, 2-73, 2-75, 2-117, 2-119
342219-0201 ..	PLUG	10-77, 10-79
342407-0102 ..	ELBOW 2	2-117, 2-119
342701-0205 ..	BUSHING,INT./EXT.G-THREAD G1/2"-G1/4"	2-69, 2-97, 2-117, 2-119
342701-0206 ..	BUSHING,INT./EXT.G-THREAD G1/2"-G3/8"	2-69, 2-121, 2-123
342701-0208 ..	BUSHING, INT/EXT. G-THREAD NO. 3/4-1/4	2-105
342702-0115 ..	NUT, PIPES & CONNECTORS,NUT M-16 BR	10-117
342703-0103 ..	NUT, PIPES & CONNECTORS,NUT M-8 FE	2-67
342703-0208 ..	NUT, PIPES & CONNECTORS,NUT M-8 SS	4-39
342704-0114 ..	ACCESSORIES, FERRULE 15-MSG	10-117
342705-0103 ..	ACCESSORIES, FERRULE 8-LFZB	2-67
342706-0114 ..	ACCESSORIES, INSERT SLEEVE 4 MM	5-29, 5-33, 5-49, 5-51, 5-53, 5-55, 5-67, 5-87, 5-89
342706-0130 ..	ACCESSORIES, INSERT SLEEVE 6 MM	1-117, 1-119, 5-13, 5-67, 8-15, 10-107, 10-109, 10-181
342706-0148 ..	ACCESSORIES, INSERT SLEEVE 8 MM	10-371, 10-373
342710-0115 ..	REDUCTION RBM 16/8	2-117, 2-119
342710-0203 ..	REDUCTION RBM 12/8	2-73, 2-75
342711-0115 ..	ACCESSORIES, PLUG PL-15 AND 16	2-117, 2-119
342712-0205 ..	BUSHING, INT/EXT. G-THREAD NO. 1/2X1/4	2-105
342713-0209 ..	PLUG, EXT THREAD HEX SOCKET 8638-00-180	2-51, 4-29, 4-31, 4-33, 4-35, 4-41, 4-43, 4-45, 4-47
342713-0210 ..	PLUG, EXT THREAD HEX SOCKET 8638-00-140	2-51, 2-73, 2-75, 2-83, 2-85, 2-87, 2-89, 2-121 2-123, 7-67, 7-69, 7-71, 10-111, 10-371, 10-373
342713-0211 ..	PLUG, EXT THREAD HEX SOCKET 8638-00-380	2-121, 2-123
342713-0213 ..	PLUG, EXT THREAD HEX SOCKET 8638-00-120	1-51, 2-117, 2-119
342713-0311 ..	PLUG, EXT. THREAD HEX. SOCKET. BPS38	2-107
342714-0202 ..	REDUCTION KOR 10/6-LFZB	2-107
342715-0102 ..	BLIND PLUG 6 MM	2-121, 2-123
342715-0103 ..	BLIND PLUG 8 MM	2-121, 2-123, 10-407, 10-409
342716-0202 ..	REDUCER 4-6	10-9
342716-0203 ..	REDUCER 6-8	2-121, 2-123, 10-41, 10-343, 10-345, 10-407, 10-409
342716-0209 ..	REDUCER 8-12	2-121, 2-123
342716-0210 ..	REDUCER 6-12	2-121, 2-123
342716-0211 ..	REDUCER 12-14	2-121, 2-123
342720-0102 ..	CONN. STR. GA-6-G1/8	5-127
342720-0103 ..	CONN. STR. GA-8-G1/8	2-117, 2-119, 10-117
342720-0104 ..	CONN. STR. GA-8-G1/4	5-133, 5-135
342720-0114 ..	CONN. STR. GA-15-G1/2	2-69, 2-73, 2-75, 2-81, 2-83, 2-85, 2-87, 2-89, 2-117, 2-119
342720-0115 ..	CONN. STR. GA-16-G1/2	5-13
342721-0108 ..	PIPE COUPLGA10-LRFZB REPBY 0342752-0104	2-105, 2-107
342721-0114 ..	PIPE COUPLGA15-LRFZB REPBY 0342752-0114	2-105
342722-0197 ..	STRAIGHT COUPLING	10-23, 10-27, 10-29, 10-31
342722-0198 ..	STRAIGHT COUPLING	10-23, 10-27, 10-29, 10-31
342722-0202 ..	PIPE COUPLING 1/8" D=6MM	2-51, 2-121, 2-123, 10-9, 10-23, 10-407, 10-409
342722-0203 ..	STRAIGHT COUPLING	2-121, 2-123
342722-0204 ..	PIPE COUPLING	2-51
342722-0205 ..	STRAIGHT COUPLING D=8-G1/4"	7-67, 7-69, 7-71
342722-0206 ..	STRAIGHT COUPLING D=8-G3/8"	2-121, 2-123
342723-0109 ..	CONN. STR. PIPE GI-12-G3/8	2-117, 2-119
342723-0114 ..	CONN. STR. PIPE GI-15-G1/2	2-55
342728-0102 ..	PIPE COUPLING 6 MM	10-9
342730-0104 ..	CONN. ELBOW WA-8-1/4	5-133, 5-135
342730-0114 ..	CONN. ELBOW WA-15-1/2	2-117, 2-119
342731-0102 ..	CONN. ELBOW WE 6-LRFZB	5-59
342731-0108 ..	CONN. ELBOW WE 10-LRFZB	2-107
342731-0114 ..	CONN. ELBOW WE 15-LRFZB	2-67, 2-105
342732-0102 ..	ELBOW PIPE JOINT, EXT.THREAD, D=6MM-G1/8	2-57, 2-59, 2-61, 5-87, 5-89, 5-143, 5-145, 5-147
342733-0114 ..	CONN. ELBOW WI-15-G1/2	2-117, 2-119, 2-121, 2-123
342735-0103 ..	ELBOW PIPE JOINT	2-121, 2-123
342736-0114 ..	CONN. ELBOW W-15	2-73, 2-75, 2-117, 2-119
342737-0204 ..	CONN. ELBOW W-6 LRFR	10-343, 10-345
342737-0212 ..	CONN. ELBOW W-10 LRFR	1-65
342740-0114 ..	CONN. T-PIPE TA-15-G1/2	2-117, 2-119
342741-0108 ..	CONN. T-PIPE TA-10-R1/4	2-105
342746-0109 ..	CONN. T-PIPE T-12	2-73, 2-75
342748-0102 ..	T-CONNECTION 6MM	2-121, 2-123, 10-9
342748-0103 ..	T-CONNECTION 8MM	2-121, 2-123, 10-343, 10-345
342748-0110 ..	T-CONNECTION 14MM	2-121, 2-123, 10-365

Part No	Description	Page No
342750-0114 ..	CONN. L-PIPE, EXT. LA-15-G1/2	2-117, 2-119
342751-0215 ..	CONN. L-PIPE, EXT. LE-12-R3/8	10-405
342764-0108 ..	CONN. ELBOW BULKHEAD LWSV10-LFZB	2-107
342764-0114 ..	CONN. ELBOW BULKHEAD LWSV15-LFZB	2-107
342767-0114 ..	CONN. BULKHEAD G1/2	2-69
342768-0103 ..	BULKHEAD CONNECTOR, 8 MM	2-121, 2-123
342770-0105 ..	STRAIGHT COUPLING INT, D=6 MM - G1/8	2-121, 2-123
342790-0102 ..	CONN. PRESS. GAUGE MAV6-LRFZB	2-107
342790-0202 ..	CONN. PRESS. GAUGE MAV6-S/R3/8FZB	5-13
342797-0121 ..	CONN. BANJO, RINGPIECE 6-1/8	1-51, 1-53, 1-89, 1-91, 8-23, 8-25, 8-27, 10-127, 10-129, 10-375, 10-383
342797-0122 ..	CONN. BANJO, RINGPIECE 6-1/4	1-17, 1-19, 1-31, 1-47, 1-59, 1-61, 1-95, 1-97, 1-103, 1-107, 1-111, 8-13, 8-25, 8-27, 10-371, 10-373, 10-405
342803-0103 ..	UNION NUT, RD 60-6 (SMS 38)	1-121, 10-81, 10-113, 10-115, 10-179
342803-0104 ..	UNION NUT, RD 70-6 (SMS 51)	1-65
342803-0106 ..	UNION NUT, RD 98-6 (SMS 76)	1-65
342812-0103 ..	FERRULE, SMS 1145, 2333, NO. 190706	10-81, 10-113, 10-115
342812-0203 ..	FERRULE, SMS 1145, 2343, NO.190996	1-121
342850-0304 ..	GASKET 35,4X49,1X5,2 1"1/2 FDA	10-179
342903-0111 ..	NUT WITH SPRING 6/4-M10X1	2-15
342920-0113 ..	STRAIGHT COUPLING,EXT.THREADED 6/4-R1/8"	2-57, 2-59, 2-61, 4-7, 4-9, 4-11, 4-13, 5-21, 5-57, 10-181
342920-0121 ..	STRAIGHT COUPLING,EXT.THREADED 8/6-R1/8"	2-57, 2-59, 2-61, 5-25, 5-27, 5-41, 5-43, 5-45, 5-47, 5-121, 5-123
342921-0113 ..	STRAIGHT COUPLING,EXT.THREADED 6/4-G1/8"	2-15, 8-23, 10-107, 10-109
342921-0114 ..	STRAIGHT COUPLING,EXT.THREADED 6/4-G1/4"	5-67
342921-0121 ..	STRAIGHT COUPLING,EXT.THREADED 8/6-G1/8"	5-69, 5-71, 5-83, 5-85
342923-0114 ..	STRAIGHT COUPL.,INT.THREADED 6/4-G1/4"	2-15, 2-73, 2-75, 2-83, 2-85, 2-87, 2-89
342923-0122 ..	STRAIGHT COUPL.,INT.THREADED 8/6-G1/4"	2-73, 2-75, 10-365
342929-0121 ..	STRAIGHT COUPLING,SOLDER 8/6-8	2-57, 2-59, 2-61, 2-83, 2-85, 2-87, 2-89, 2-117, 2-119
342930-0113 ..	ELBOW 90 COUPL.,EXT.THREAD 6/4-R1/8"	2-117, 2-119, 5-57, 10-107, 10-109, 10-181
342930-0121 ..	ELBOW 90 COUPL.,EXT.THREAD 8/6-R1/8"	5-41, 5-43, 5-45, 5-47
342930-0122 ..	ELBOW 90 COUPL.,EXT.THREAD 8/6-R1/4"	2-105, 10-371, 10-373
342930-0123 ..	ELBOW 90 COUPL.,EXT.THREAD 8/6-R3/8"	10-371, 10-373
342931-0113 ..	ELBOW 90 COUPL.,EXT.THREAD 6/4-G1/8"	2-103
342933-0121 ..	ELBOW 90 COUPL.,INT.THREAD 8/6-G1/8"	10-117
342933-0122 ..	ELBOW 90 COUPL.,INT.THREAD 8/6-G1/4"	5-87, 5-89
342940-0122 ..	T-COUPLING,EXT.THREAD 8/6-R1/4"	10-371, 10-373
342946-0112 ..	T-COUPLING,UNION 6/4	4-7, 4-9, 4-11, 4-13, 5-13
342946-0122 ..	T-COUPLING,UNION 8/6	5-19
342950-0114 ..	L-COUPLING,EXT.THREAD 6/4-R1/4"	2-15
342960-0112 ..	BULKHEAD COUPLING 6/4	2-57, 2-59, 2-61, 2-83, 2-85, 2-87, 2-89, 5-67
342960-0122 ..	BULKHEAD COUPLING 8/6	2-57, 2-59, 2-61
342980-0113 ..	BANJO-CONNECTION,RING 6/4-G1/8"	1-85, 4-7, 4-9, 4-11, 4-13, 7-7, 7-9, 7-11, 7-13, 7-15, 7-17, 7-19, 7-67, 7-69, 7-71, 10-107, 10-109, 10-343, 10-345, 10-379, 10-381
342980-0114 ..	BANJO-CONNECTION,RING 6/4-G1/4"	10-107, 10-109, 10-111, 10-371, 10-373
342980-0122 ..	BANJO-CONNECTION,RING 8/6-G1/4"	2-73, 2-75, 4-39, 10-117, 10-371, 10-373
342980-0123 ..	BANJO-CONNECTION,RING 8/6-G3/8"	10-111
342980-0303 ..	BANJO-HOLLOW BOLT COUPL,EXT.THR.01-G1/8"	1-51, 1-53, 1-65, 1-89, 1-91, 4-7, 4-9, 4-11, 4-13, 7-7, 7-9, 7-11, 7-13, 7-15, 7-17, 7-19, 7-67, 7-69, 7-71, 10-107, 10-109, 10-127, 10-129, 10-343, 10-345, 10-375, 10-379, 10-381, 10-383
342980-0304 ..	BANJO-HOLLOW BOLT COUPL,EXT.THR.01-G1/4"	1-17, 1-19, 1-31, 1-59, 1-61, 1-97, 1-103, 1-111, 4-39, 8-13, 8-25, 8-27, 10-107, 10-109, 10-111, 10-117, 10-371, 10-373, 10-405
342980-0305 ..	BANJO-HOLLOW BOLT COUPL,EXT.THR.01-G3/8"	10-111
342980-0314 ..	BANJO-HOLLOW BOLT COUPL,EXT.THR.02-G1/4"	1-95, 1-103, 10-111, 10-371, 10-373
342980-0315 ..	BANJO-HALLOW BOLT COUPL,EXT.THR.02-G3/8"	10-111
342991-0100 ..	HOSE CLIP,WORM DRIVE TYPE 10-13	2-103
342991-0101 ..	HOSE CLIP,WORM DRIVE TYPE (13)-16	2-29, 2-53, 2-67, 3-19, 5-7, 5-9, 5-35, 5-37, 10-393
342991-0102 ..	HOSE CLIP,WORM DRIVE TYPE (16)-19	2-73, 2-75
342991-0103 ..	HOSE CLIP,WORM DRIVE TYPE (19)-23	2-57, 2-59, 2-61, 5-7, 5-9, 5-35, 5-37, 8-23, 8-25, 8-27
342991-0104 ..	HOSE CLIP,WORM DRIVE TYPE (23)-27	1-13, 2-25, 2-83, 2-85, 2-87, 2-89, 10-113, 10-115, 10-359, 10-361
342991-0106 ..	HOSE CLIP,WORM DRIVE TYPE (30)-36	2-35, 2-41, 2-43, 10-105
342991-0108 ..	HOSE CLIP 38-50MMRFR	2-131
342991-0109 ..	HOSE CLIP,WORM DRIVE TYPE (48)-50	5-69, 5-71, 5-83, 5-85
342991-0110 ..	HOSE CLIP,WORM DRIVE TYPE (54)-63	10-137, 10-139
342991-0111 ..	HOSE CLIP,WORM DRIVE TYPE (63)-73	5-21
342991-0112 ..	HOSE CLIP,WORM DRIVE TYPE (73)-83	5-7, 5-9, 5-35, 5-37
342991-0115 ..	HOSE CLIP,WORM DRIVE TYPE (110)-136	2-53
344502-0026 ..	GREASE NIPPLE STRAIGHT R1/8 CON.	3-11, 3-13
344502-0046 ..	GREASE NIPPLE 45§ R1/8 CON.	3-9
344502-0066 ..	GREASE NIPPLE 90§ R1/8 CON.	3-7, 3-11, 3-13
346800-0109 ..	SILENCER FILTER R1/8"	1-65
351150-0186 ..	CABLE OLFLEX 5X4 MM2 LIGHT/GREY	10-61
351150-0403 ..	CABLE OLFLEX 3X0,75 MM2 LIGHT/GREY	10-61, 10-391
351150-0405 ..	CABLE OLFLEX 5X0,75 MM2 LIGHT/GREY	10-47, 10-147, 10-245
351150-0407 ..	CABLE OLFLEX 12X0,75 MM2 LIGHT/GREY	10-47
351150-0412 ..	CABLE OLFLEX 3X1,5 MM2 LIGHT/GREY	10-47
351150-0424 ..	CABLE OLFLEX 18X0,75 MM2 LIGHT/GREY	10-391
351150-0425 ..	CABLE OLFLEX 25X0,75 MM2 LIGHT/GREY	10-61
351172-0102 ..	CABLE AWM 1X 0,75 MM2 DARK-BLUE	6-13, 10-47, 10-61, 10-151, 10-193, 10-241, 10-307, 10-391, 10-403
351172-0106 ..	CABLE AWM 1X4 MM2 DARK-BLUE	10-151
351173-0104 ..	CABLE AWM 1X15 MM2 LIGHT-BLUE	10-151, 10-193

Part No	Description	Page No
351173-0105 ..	CABLE AWM 1X25 MM2 LIGHT-BLUE	10-47
351173-0106 ..	CABLE AWM 1X4 MM2 LIGHT-BLUE	10-61, 10-151
351175-0102 ..	CABLE AWM 1X 075 MM2 YELLOW-GREEN	10-61, 10-151, 10-307, 10-391
351175-0104 ..	KABEL AWM 1X15 MM2 YELLOW-GREEN	10-307
351175-0105 ..	CABLE AWM 1X25 MM2 YELLOW-GREEN	10-151, 10-193
351175-0106 ..	CABLE AWM 1X4 MM2 YELLOW-GREEN	10-151
351176-0102 ..	CABLE AWM 1X075 MM2 RED	10-47, 10-61, 10-151, 10-307, 10-391
351176-0104 ..	CABLE AWM 1X15 MM2 RED	10-151
351179-0104 ..	CABLE AWM 1X15 MM2 BLACK	10-151, 10-193
351179-0105 ..	CABLE AWM 1X25 MM2 BLACK	10-47
351179-0106 ..	CABLE AWM 1X4 MM2 BLACK	10-61, 10-151
351180-0102 ..	CABLE AWM 1X075 MM2 ORANGE	10-147, 10-151
352100-0100 ..	CABLE GLANR.15,2-7,5	2-55
352100-0106 ..	CABLE GLANR.18,6-10,5	1-31, 1-47, 2-55, 8-23, 8-25, 8-27
352100-0108 ..	CABLE GLANR.20,4-12	2-105
352100-0115 ..	CABLE GLANR.28,3-15,5	3-9
352100-0126 ..	CABLE GLANR.47-32,5	2-11
352100-0127 ..	CABLE GLANR.47-34,5	2-51
352100-0227 ..	CABLE GLANR.31-34,5	2-11
352101-0102 ..	LEAD-IN, PR15,2/PG9, E-1457515	10-369
352101-0103 ..	LEAD-IN, PR18,6/PG11, E-14575182	2-49, 2-57, 2-59, 2-61, 2-103, 7-53, 7-57, 7-59, 7-61, 7-63, 8-47
352101-0105 ..	LEAD-IN, PR22,5/PG16, E-1457522	7-57, 7-59, 7-61, 7-63
352101-0107 ..	LEAD-IN, PR37/PG29, E-1457537	8-15
352103-0096 ..	CABLE GLAND, ST 7, PR 12,5/PG7	10-347
352103-0100 ..	CABLE GLAND, STR 9, PR15,2/PG9	1-123, 2-117, 2-119, 5-7, 5-9, 5-35, 5-37, 7-57, 7-59, 7-61, 7-63, 8-11, 10-21, 10-157, 10-159, 10-179, 10-375
352103-0101 ..	CABLE GLAND, ST 9, PR15,2/PG9	1-123, 2-55, 5-7, 5-9, 5-35, 5-37, 7-65, 10-137, 10-139, 10-363, 10-375
352103-0105 ..	CABLE GLAND, STR 11, PR 18,6/PG11	2-57, 2-59, 2-61, 10-119, 10-121
352103-0106 ..	CABLE GLAND, ST 11, PR18,6/PG11	2-63, 2-131, 2-141, 5-69, 5-71, 5-83, 5-85, 7-65, 10-21, 10-25
352103-0108 ..	CABLE GLAND, ST 13,5 , PR20,4/PG13,5	7-67, 7-69, 7-71, 10-69, 10-71, 10-73, 10-75
352103-0110 ..	CABLE GLAND, STR 16, PR22,5/PG16	7-65
352103-0111 ..	CABLE GLAND, ST 16, PR22,5/PG16	1-51, 1-123, 5-69, 5-71, 5-83, 5-85, 7-57, 7-59, 7-61, 7-63, 10-21
352103-0115 ..	CABLE GLAND, STR 21, PR28,3/PG21	7-65
352103-0116 ..	CABLE GLAND, ST 21, PR28,3/PG21	2-57, 2-59, 2-61, 2-63, 7-65, 10-69, 10-71, 10-73, 10-75
352103-0120 ..	CABLE GLAND, STR 29, PR37,0/PG29	2-63
352103-0121 ..	CABLE GLAND, ST 29, PR37,0/PG29	2-57, 2-59, 2-61
352110-0099 ..	CABLE CLIPS, D=3-5 MM	7-57, 7-59, 7-61, 7-63, 7-67, 7-69, 7-71
352110-0100 ..	CABLE CLIPS, D=5-7 MM	7-67, 7-69, 7-71
352110-0101 ..	CABLE CLIPS, D=7-10 MM	2-57, 2-59, 2-61
352113-0101 ..	CLIP STRIP, 92X2,5 MM	3-15, 4-39, 5-7, 5-9, 5-35, 5-37, 5-87, 5-89, 7-21, 7-23, 10-37
352113-0102 ..	CLIP-STRIP, BLACK 188X4,8 MM	5-7, 5-9, 5-35, 5-37, 8-47
352113-0204 ..	ANCHOR PLATES FOR STRIPS, TYPE TM3S25-M	5-7, 5-9, 5-35, 5-37, 7-57, 7-59, 7-61, 7-63
352113-0205 ..	ANCHOR PLATES FOR STRIPS, TYPE TM2S8-C10	8-47
352135-0102 ..	SPIRAL CONDUIT 155.010 DI=10MM;DO=14,7MM	10-111
352135-0106 ..	SPIRAL CONDUIT DI=16 MM	1-123, 2-55, 2-117, 2-119, 2-121, 2-123, 2-129, 2-131, 2-141, 7-57, 7-59, 7-61, 7-63, 8-47, 10-21, 10-69, 10-71, 10-73, 10-75, 10-137, 10-139, 10-141, 10-143, 10-187, 10-189, 10-237
352135-0109 ..	HOSE .022	2-131, 7-57, 7-59, 7-61, 7-63, 10-21, 10-69, 10-71, 10-73, 10-75, 10-137, 10-139, 10-237, 10-299
352135-0116 ..	FLEXIBLE CONDUIT DIA. 40	2-131, 5-69, 5-71, 5-83, 5-85
352135-0118 ..	HOSE .050	10-137, 10-139
352135-0201 ..	CLIP, 12 MM, 913.012	2-57, 2-59, 2-61, 2-91
352135-0202 ..	CLIP, 16 MM, 913.016	2-57, 2-59, 2-61, 10-187, 10-189
352135-0204 ..	CLIP, 28 MM, 913.028	10-83
352136-0107 ..	GLAND FITTING PR12,5 PG7 FOR HOSE	10-111, 10-157, 10-159
352136-0113 ..	GLAND FITTING PR18,6/PG11 DI=12MM	1-33, 1-47, 1-57, 1-123, 2-63, 2-107, 2-113, 2-117, 2-119, 2-129, 2-131, 7-57, 7-59, 7-61, 7-63, 8-7, 8-9, 8-11, 8-13, 8-23, 8-25, 8-27, 10-157, 10-159
352136-0127 ..	GLAND FITTING PR 18,6	1-31, 1-51, 1-123, 2-55, 2-91, 2-117, 2-119, 2-121, 2-123, 2-129, 2-131, 2-133, 2-141, 7-57, 7-59, 7-61, 7-63, 10-187, 10-189, 10-237
352136-0128 ..	GLAND FITTING	2-105, 10-69, 10-71, 10-73, 10-75
352136-0129 ..	GLAND FITTING PR22,5/PG16 DI=16MM	2-21, 2-73, 2-75, 7-57, 7-59, 7-61, 7-63, 8-11, 10-37, 10-141, 10-143, 10-157, 10-159
352136-0142 ..	GLAND FITTING	2-63, 2-131, 10-37, 10-157, 10-159, 10-237
352136-0143 ..	GLAND FITTING	2-131, 3-9, 7-57, 7-59, 7-61, 7-63, 10-69, 10-71, 10-73, 10-75, 10-137, 10-139, 10-157, 10-159, 10-299
352136-0167 ..	GLAND FITTING	2-31, 2-33, 2-131, 10-111
352137-0113 ..	COND.FITTING PR 18,6 DI=12MM	1-123, 2-129, 7-57, 7-59, 7-61, 7-63
352137-0127 ..	COND.FITTING PR 18,6 DI=16MM	2-129, 7-57, 7-59, 7-61, 7-63, 8-47
352137-0129 ..	CABLE GLAND;PR22,5(PG16)	2-129, 10-21, 10-237
352137-0142 ..	GLAND FITTING	10-21, 10-237
353001-0103 ..	END SLEEVE 0,75 MM2	10-391
353001-0113 ..	END SLEEVE 0,75MM2	10-241
353001-0119 ..	END SLEEVE H 1.0/14 YELLOW	6-13
353021-0127 ..	TERMINAL DISCONNECTBLE, WTR 2,5+WSD 2,5	10-173
353021-0212 ..	FEED THROUGH TERMINAL, 10200.0	2-63, 8-11, 10-21, 10-173
353021-0213 ..	FEED THROUGH TERMINAL, 10201.0	2-129, 7-65, 10-173, 10-175
353021-0214 ..	FEED THROUGH TERMINAL, 10202.0	10-65
353021-0216 ..	FEED THROUGH TERMINAL, 10200.8	10-67
353021-0217 ..	FEED THROUGH TERMINAL, 10201.8	2-129
353021-0302 ..	TERMINALS,TRIPLE-LEVEL, DLD 2,5/35 PA	2-63, 7-65, 10-173
353024-0204 ..	EARTH TERMINAL WPE 2,5	8-11, 10-21, 10-67
353024-0205 ..	EARTH TERMINAL, 1010.1	2-63, 2-129, 7-65, 8-11, 10-21, 10-173, 10-175
353024-0206 ..	EARTH TERMINAL, 1010.2	10-65, 10-175

Part No	Description	Page No
353031-0201 ..	END BRACKET EW35	2-63, 2-129
353031-0203 ..	END SUPPORT, WEW 35/2	10-65, 10-67, 10-173, 10-175
353032-0004 ..	END PLATE WAP 2,5-10 BEIGE	2-63, 10-21, 10-67, 10-175
353032-0005 ..	END PLATE WAP 2,5-10 BLUE	2-129
353032-0009 ..	END PLATE, WAP 16/35	2-63, 10-173
353032-0302 ..	END PLATE WAP	2-63, 7-65, 10-173
353034-0031 ..	BRIDGE CONNECTOR, WQV 4/10, 10520.6	2-129, 10-175
353034-0401 ..	BRIDGE CONNECTOR Q2, 13125.0	2-63, 7-65
353034-0403 ..	BRIDGE CONNECTOR Q4, 13127,0	10-173
353034-0404 ..	BRIDGE CONNECTOR Q10, 13131.0	2-63, 7-65
353042-0004 ..	RAIL TS 35/7,5	2-63
353042-0005 ..	RAIL TS 35/7.5	7-65, 8-11, 10-21, 10-173, 10-175
353101-0118 ..	KABELSKO 0,75-1,5MM2 RED	10-391
353101-0120 ..	KABELSKO 1,25-4MM2	10-47
353101-0130 ..	CABLE SHOE 1,5-2,5MM2 BLUE	8-23, 10-47
353101-0132 ..	CABLE SHOE, RING ø5,3MM	7-67, 7-69, 7-71
353101-0134 ..	CABLE SHOE	8-25, 8-27
353104-0129 ..	CABLE SHOEYAV 025 M 35*	1-31
353104-0130 ..	CABLE SHOEYAV 025 M 4*	1-47, 8-25, 8-27
353104-0168 ..	CABLE SHO YAV 16 M6*	5-69, 5-71, 5-83, 5-85
353104-0182 ..	CABLE SHOE YAV 35 M6*	5-69, 5-71, 5-83, 5-85
353105-0117 ..	PIN CABLE SHOE 0,75-1,5MM2 RED A1519SR	10-391
353240-0002 ..	NORMAL WITHOUT INSERT, PG 11	10-241
353240-0004 ..	NORMAL WITHOUT INSERT, PG 16	2-63
353241-0002 ..	EXTENDED WITHOUT INSERT, PG 11	10-241
353243-0001 ..	EXTENDED WITHOUT INSERT, PG9	10-289, 10-355
353243-0002 ..	EXTENDED WITHOUT INSERT, PG11	10-289, 10-355
353243-0003 ..	EXTENDED WITHOUT INSERT, PG11	10-289
353243-0005 ..	EXTENDED WITHOUT INSERT, PG16	10-299
353245-0005 ..	GLAND, EXTENDED WITH INSERT, PG16/PR 22,	5-11, 10-69, 10-71, 10-73, 10-75
353247-0003 ..	GLAND, PG13,5, 15253P11S04UL13	10-289
353247-0004 ..	GLAND, PG16, 15354P18S08UL16	10-299
353249-0003 ..	INSERT, SINGEL HOLE, E151/11	10-241
353249-0008 ..	INSERT, SINGEL HOLE, EK 152/7	10-289, 10-355
353249-0011 ..	INSERT, SINGEL HOLE, EK 153/11	10-289
353249-0013 ..	INSERT, SINGEL HOLE, EK 154/13	10-299
353249-0014 ..	INSERT, SINGEL HOLE, EK 154/16	5-7, 5-9, 5-35, 5-37
353249-0027 ..	INSERT, MULTI HOLE, E153M3X7	2-63
353249-0036 ..	INSERT, MULTI HOLE, EK152 M 2X4	10-241
353249-0301 ..	SEALING PIN, 4X20	10-241
353249-0306 ..	SEALING PIN, 7X25	2-63
359000-0201 ..	MARKING CO02/3"1"	10-241
359000-0204 ..	MARKING CO02/3"4"	10-241
359000-0400 ..	MARKING CO2/4"0"	10-9, 10-107, 10-109, 10-111, 10-117, 10-343, 10-345, 10-365, 10-371, 10-373, 10-375, 10-407, 10-409
359000-0401 ..	MARKING COLLAR 2/4 "1" YELLOW	10-9, 10-107, 10-109, 10-111, 10-343, 10-345, 10-371, 10-373, 10-375, 10-407, 10-409
359000-0402 ..	MARKING COLLAR 2/4 "2" YELLOW	10-107, 10-109, 10-111, 10-371, 10-373
359000-0403 ..	MARKING COLLAR PA2/4 "3" YELLOW	10-107, 10-109, 10-111, 10-375
359000-0404 ..	MARKING COLLAR PA2/4 "4" YELLOW	10-107, 10-109, 10-111, 10-117, 10-365, 10-375
359000-0405 ..	MARKING CO2/4"5"	10-107, 10-109, 10-111, 10-117, 10-343, 10-345, 10-365, 10-371, 10-373, 10-375, 10-407, 10-409
359000-0406 ..	MARKING COLLAR PA2/4 "6" YELLOW	10-107, 10-109, 10-111, 10-375
359000-0407 ..	MARKING COLLAR PA2/4 "7" YELLOW	10-107, 10-109, 10-111, 10-371, 10-373
359000-0408 ..	MARKING COLLAR PA2/4 "8" YELLOW	10-107, 10-109, 10-111
359000-0409 ..	MARKING COLLAR PA2/4 "9" YELLOW	10-9, 10-111, 10-407, 10-409
359009-0800 ..	CABLE MARKER, YELLOW, PK 2/4, 0-9	10-19
359011-0202 ..	SIGN BOARD(GROUND)	1-129, 10-369
359011-0800 ..	MARKING PLATES BSFW 51-100	1-129
359011-0801 ..	SIGN BOARD BSFW 1-50	10-369
359011-0807 ..	MARKING PLATES 5-FW 1-50	2-63, 2-129, 7-65, 10-21, 10-65, 10-67, 10-173, 10-175
359011-0808 ..	MARKING PLATES 5-FW 51-100	2-63, 7-65
359011-0809 ..	MARKING PLATES 5-FW 101-150	2-63
359011-0819 ..	MARKING PLATES 5-GW (EARTH)	7-65, 10-21, 10-65, 10-67, 10-173, 10-241
359011-0820 ..	MARKING PLATES 5-FW 501-550	10-63
359011-0821 ..	SET OF SIGNS 6-FW 1-50	8-11, 10-37, 10-241
359011-0834 ..	SET OF SIGNS 6-GW(EARTH)	10-37
359020-0202 ..	SHEET OF SELF ADHESIVE DIG.& LETT. 4 MM	7-67, 7-69, 7-71
359240-0100 ..	SIGN HOLDER FOR 359240-0001	2-129, 10-151
359241-0123 ..	SIGN, TEMP. PRE-STERILIZATION VALVE	10-151
359241-0124 ..	SIGN, MAIN SWITCH	10-151
359241-0127 ..	SIGN, LIGHT, JAW SYSTEM & MACHINE	2-129
359241-0136 ..	SIGN, PERFORATION HEATER	10-193
359241-0144 ..	SIGN, INTERNAL STRIP, AUTO SPLICE	10-47
359241-0146 ..	SIGN "ZONE HEATER ON/OFF"	10-193
359241-0158 ..	SIGN "LEVEL HYDR.OIL TANK"	2-129
359241-0266 ..	SIGN	10-151
359241-0267 ..	SIGN	10-151
359241-0269 ..	SIGN, SMALL-LARGE REEL, REDUCT.OF WASTE	7-57, 7-59, 7-61, 7-63
359241-0320 ..	SIGN "FLOWMETER ON/OFF"	10-307
359241-0353 ..	SIGN"RATINING PLATE"	10-151
359301-0051 ..	SIGN"STRIP SPLICE"	8-13
359301-0100 ..	SIGN "SPLICING"	7-57, 7-59, 7-61, 7-63, 10-21
359301-0110 ..	SIGN "SHORT STOP"	7-57, 7-59, 7-61, 7-63

Part No	Description	Page No
359301-0125 ..	SIGN "LUBRICATION"	2-129
359301-0335 ..	SIGN T	7-57, 7-59, 7-61, 7-63
359301-0474 ..	BUTTON SIGN, ENTER	10-293
359705-0001 ..	WARNING SIGN ISO, ENTAGLEMENT	7-9, 7-11, 7-13, 7-15, 7-17, 7-19
359705-0002 ..	WARNING SIGN ISO, ENTAGLEMENT	5-163
359705-0003 ..	WARNING SIGN ISO, DANGEROUS CHEMICALS	1-13, 1-33, 1-59, 1-61, 2-17
359705-0005 ..	WARNING SIGN ISO, MOVING PART	7-55
359705-0007 ..	WARNING SIGN ISO, HOT SURFACE	10-19, 10-27, 10-29, 10-31
359705-0015 ..	WARNING SIGN ISO, RISK OF ELECTRIC SHOCK	7-57, 7-59, 7-61, 7-63, 7-67, 7-69, 7-71 10-241, 10-263
359710-0002 ..	WARNING SIGN ISO, HOT SURFACE	5-69, 5-71, 5-83, 5-85
400828-0000 ..	SPRING	10-27, 10-29, 10-31
434003-0000 ..	PLUG	10-383
434004-0000 ..	SEALING RING	10-383
434020-0000 ..	BEARING CONSOLE	4-83, 4-85, 4-87, 4-89
434021-0000 ..	SCREW	4-83, 4-85, 4-87, 4-89
434062-0000 ..	SHAFT	3-17
434073-0000 ..	NUT	4-83, 4-85, 4-87, 4-89
434098-0000 ..	STRUT	3-17
434101-0000 ..	WASHER	1-17, 1-19
434142-0000 ..	PISTON	3-25
434143-0000 ..	END SECTION	3-25
434168-0000 ..	PIPE	2-73, 2-75
434171-0000 ..	PIPE	2-73, 2-75
434222-0000 ..	FILLER TUBE	1-37
434270-0000 ..	RAILING	1-79
434273-0000 ..	STRUT	1-79
434274-0000 ..	PIPE	1-93
434309-0000 ..	FASTENING PLATE	4-83, 4-85, 4-87, 4-89
434320-0000 ..	AXLE PIN	4-19, 4-21, 4-23
434321-0000 ..	CURVE ROLLER	4-19, 4-21, 4-23
434379-0000 ..	TIE ROD	3-9
434380-0000 ..	SHAFT	3-9
434387-0000 ..	BRACKET	4-7, 4-9, 4-11, 4-13
434388-0000 ..	SHAFT	4-7, 4-9, 4-11, 4-13
434469-0000 ..	HEATING PIPE	1-99
434490-0001 ..	SHAFT	1-5
434490-0002 ..	SHAFT	1-5
434490-0003 ..	SHAFT	1-5
434493-0000 ..	FORMING RING	1-23, 1-25, 1-27
434499-0000 ..	FORK	1-17, 1-19
434500-0000 ..	SHAFT	1-17, 1-19
434504-0000 ..	SHAFT	1-17, 1-19
434507-0000 ..	SHAFT	1-17, 1-19
434659-0000 ..	CRANK BRACKET	2-109
434661-0000 ..	BUSHING	2-109
434664-0000 ..	BRACKET	2-109
434665-0000 ..	HOOD	1-37, 10-329, 10-331
434668-0400 ..	DRIVE UNIT	3-3
434669-0400 ..	IMPULSE TRANSMITTER	3-3
434670-0600 ..	LINK SYSTEM	3-3
434707-0300 ..	HYDRAULIC SYSTEM	2-3, 2-5
434708-0000 ..	PIPE	2-107
434709-0000 ..	PIPE	2-107
434710-0000 ..	PIPE	2-105
434711-0000 ..	PIPE	2-107
434712-0001 ..	PIPE	2-107
434712-0002 ..	PIPE	2-107
434713-0000 ..	PIPE	2-107
434714-0000 ..	PIPE	2-105
434715-0000 ..	PIPE	2-107
434716-0000 ..	PIPE	2-107
434717-0000 ..	PIPE	2-105
434718-0000 ..	PIPE	2-105
434719-0000 ..	PIPE	2-105
434747-0000 ..	BOW CLAMP	7-21, 7-23
434749-0000 ..	FLOAT	1-43, 1-45
434751-0000 ..	ARM	1-43, 1-45
434752-0000 ..	LINK	1-43, 1-45
434787-0000 ..	END SECTION	7-25, 7-27, 7-29, 7-31, 7-33
434829-0000 ..	LEAD	1-47
434841-0000 ..	GAUGE	6-15
434858-0000 ..	CUSHION	2-31, 2-33
434919-0000 ..	COLUMN LEFT	2-57, 2-59, 2-61
434920-0000 ..	COLUMN RIGHT	2-57, 2-59, 2-61
434972-0000 ..	AIR GUIDE	1-107
434973-0000 ..	AIR DISTRIBUTOR	1-107
434974-0000 ..	AIR DISTRIBUTOR	1-107
434976-0000 ..	STOP	1-107
436302-0000 ..	ROLLER	1-5, 1-7, 1-9, 1-11
436342-0000 ..	SPACER	1-17, 1-19
436355-0000 ..	REAMED BOLT	1-5, 1-7, 1-9, 1-11
436356-0000 ..	BUSHING	1-5, 1-7, 1-9, 1-11
436357-0000 ..	NUT	1-5, 1-7, 1-9, 1-11

Part No	Description	Page No
436377-0000 ..	JOINT	1-7, 1-9
436378-0000 ..	SHAFT	1-7, 1-9
436395-0000 ..	CANTILEVER	1-5, 1-7, 1-9, 1-11
436403-0000 ..	WASHER	1-5, 1-7, 1-9, 1-11
436404-0000 ..	BOW CLAMP	1-7, 1-9
436405-0000 ..	FORK	1-5, 1-7, 1-9, 1-11
436482-0000 ..	BEARING BRACKET	3-9
436483-0000 ..	SHAFT	3-9
436484-0000 ..	BRACKET	3-9
436485-0000 ..	LACE	3-9
436486-0000 ..	LID	3-9
436487-0000 ..	SPACER	3-9
436488-0000 ..	WASHER	3-9
436502-0000 ..	CURVE	4-83, 4-85, 4-87, 4-89
436512-0000 ..	PIPE	6-3
436556-0000 ..	CURVE ROLLER	4-19, 4-21
436580-0000 ..	COVERING PLATE	3-23
436648-0000 ..	CANTILEVER	1-23, 1-25, 1-27
436671-0000 ..	ECCENTRIC SHAFT	4-7, 4-9, 4-11, 4-13
436672-0000 ..	LINK	3-23
436740-0000 ..	LINK	4-7, 4-9, 4-11, 4-13
436776-0000 ..	MACHINE BODY	2-57, 2-59, 2-61
436778-0000 ..	PIPE	1-65
436779-0000 ..	PRESSURE GAUGE TUBE	1-65
436781-0000 ..	GASKET	1-65
436927-0000 ..	NUT	7-21, 7-23
436991-0000 ..	BEARING	7-49, 7-51
439616-0003 ..	GASKET	10-337, 10-339, 10-385
439862-0000 ..	LOWER FILLING TUBE	10-337, 10-339
439964-0000 ..	UPPER FILLING TUBE	10-329, 10-331
440023-0000 ..	PROTECTION PLATE	2-57, 2-59, 2-61
440024-0000 ..	PROTECTION PLATE	2-57, 2-59, 2-61
440025-0000 ..	PROTECTION PLATE	2-57, 2-59, 2-61
440026-0000 ..	CANTILEVER	2-57, 2-59, 2-61
440068-0000 ..	ROLL	1-23, 1-25, 1-27
440077-0000 ..	COVERING PLATE	2-57, 2-59, 2-61
440098-0300 ..	CRANK BRACKET	2-3, 2-5
440132-0200 ..	START-UP KIT	7-3, 7-5
440133-0400 ..	MACHINE BODY	7-3, 7-5
440135-0100 ..	BENDING ROLLER	7-39, 7-67, 7-69, 7-71
440136-0001 ..	ROLL	7-41
440136-0002 ..	ROLL	7-73
440136-0003 ..	ROLL	7-73
440136-0004 ..	ROLL	7-73
440136-0006 ..	ROLL	7-73
440136-0007 ..	ROLL	7-73
440136-0008 ..	ROLL	7-73
440137-0001 ..	SHAFT	7-41
440137-0002 ..	SHAFT	7-73
440138-0000 ..	LOCKING CIRCLIP	7-41, 7-73
440157-0000 ..	MAGNET BRACKET	7-39
440184-0100 ..	BENDING ROLLER	7-67, 7-69, 7-71
440185-0000 ..	HOLDER	7-53
440186-0000 ..	HOLDER	7-53
440192-0000 ..	BRACKET	7-53
440193-0000 ..	HOLDER	7-53
440194-0000 ..	WASHER	7-73
440195-0000 ..	JOINT	7-53
440196-0000 ..	HANGER	7-53
440197-0000 ..	SHAFT	7-53
440198-0000 ..	WASHER	7-53
440199-0000 ..	PROTECTION PLATE	7-53
440200-0000 ..	PROTECTION PLATE	7-53
440202-0000 ..	PROTECTION PLATE	7-53
440203-0000 ..	RULER	2-57, 2-59, 2-61
440204-0000 ..	RULER	2-57, 2-59, 2-61
440205-0000 ..	RULER	2-57, 2-59, 2-61
440206-0000 ..	RULER	2-57, 2-59, 2-61
440210-0200 ..	ROLL	7-3, 7-5
440211-0000 ..	GUIDE	7-55
440212-0000 ..	LUG	7-55
440213-0000 ..	LUG	7-55
440214-0000 ..	HOLDER	7-55
440215-0000 ..	HOLDER	7-55
440217-0000 ..	BUSHING	7-55
440247-0000 ..	HOLDER	7-47
440248-0000 ..	HOLDER	7-47
440249-0000 ..	SLIDE BELT	7-47
440250-0000 ..	AXLE PIN	7-47
440251-0000 ..	GLASS PANE	7-47
440252-0000 ..	SLEEVE	7-53
440253-0000 ..	SLEEVE	7-53
440256-0000 ..	ARM	7-57, 7-59, 7-61, 7-63
440259-0000 ..	RETAINING RING	7-43, 7-45

Part No	Description	Page No
440260-0000 ..	SHAFT	7-43, 7-45
440271-0000 ..	SCREW	7-53
440282-0004 ..	SPACER	7-9, 7-11, 7-13, 7-15, 7-17, 7-19
440285-0100 ..	PAPER REEL HOLDER	7-3, 7-5
440286-0300 ..	INK UNIT NSS	7-9, 7-11, 7-13, 7-15, 7-17, 7-19
440287-0000 ..	COVER	7-21, 7-23
440349-0000 ..	FASTENING IRON	2-55
440384-0600 ..	PLATFORM	2-3, 2-5
440385-0000 ..	CANTILEVER	2-111
440386-0000 ..	PLATFORM REAR	2-111
440389-0000 ..	HATCH	2-111
440415-0200 ..	TRANSFORMER	2-3, 2-5
440424-0000 ..	DRUM	2-51
440474-0100 ..	TUBE FLUSHING DEVICE	2-3, 2-5
440482-0000 ..	PROTECTION	2-137
440491-0000 ..	NIPPLE	4-41, 4-43, 4-45, 4-47
440507-0000 ..	FASTENING PLATE	4-83, 4-85, 4-87, 4-89
440510-0000 ..	COUNTER CAM	4-7, 4-9
440511-0000 ..	COUNTER CAM	4-11, 4-13
440537-0500 ..	MACHINE BODY	2-3, 2-5
440565-0000 ..	CYLINDER	4-41, 4-43, 4-45, 4-47
440588-0200 ..	CRANK	3-3
440600-0000 ..	ROTOR	2-37, 2-39, 2-45, 2-47, 2-71, 2-93
440604-0001 ..	PIPE	2-37, 2-39, 2-47, 2-93
440605-0001 ..	PIPE	2-37, 2-45, 2-47, 2-71
440630-0200 ..	AP-VALVE	1-65
440631-0000 ..	VALVE BODY 51	1-67
440632-0000 ..	CYLINDER HOUSING	1-69, 1-71, 10-93, 10-99
440633-0000 ..	CYLINDER HOUSING	1-73, 10-91
440634-0000 ..	HOUSE	1-67, 10-85
440635-0000 ..	PISTON ROD	1-71
440636-0000 ..	PISTON ROD	1-73
440637-0000 ..	PISTON ROD	1-69, 10-99
440638-0000 ..	PISTON	1-69, 1-71
440646-0000 ..	PISTON	1-73, 10-91
440647-0000 ..	SLEEVE	1-65, 10-91, 10-127
440648-0000 ..	SEALING WASHER	1-71, 10-93
440650-0000 ..	WASHER	1-71
440651-0000 ..	WASHER	1-69, 1-71, 10-93
440652-0000 ..	WASHER	1-73, 10-91
440654-0000 ..	SPACER SLEEVE	1-73, 10-91
440655-0000 ..	RING	1-69, 10-99
440656-0000 ..	WASHER	1-73, 10-91
440659-0000 ..	CYLINDRICAL PIN	1-71
440660-0000 ..	COMPRESSION SPRING	1-71
440661-0000 ..	COMPRESSION SPRING	1-71
440662-0000 ..	COMPRESSION SPRING	1-73, 10-91
440663-0000 ..	COMPRESSION SPRING	1-69, 1-71, 10-93, 10-99
440664-0000 ..	SEALING WASHER	1-73
440695-0000 ..	END SECTION	1-73, 10-91
440702-0000 ..	BEAM	2-57, 2-59, 2-61
440731-0000 ..	PLATE	1-65, 10-91, 10-127
440930-0000 ..	COUNTER CAM	4-7, 4-9
440931-0000 ..	COUNTER CAM	4-11, 4-13
440977-0000 ..	ATTACHMENT PIPE	1-65
440978-0000 ..	PIPE BEND	1-65
441286-0000 ..	NUT	10-383
441483-0000 ..	CYLINDER BRACKET	1-53, 1-89, 1-91
441718-0000 ..	SPACER	1-39, 1-41
441737-0000 ..	WASHER	1-39, 1-41
441739-0000 ..	WASHER	1-39, 1-41
441740-0000 ..	HINGE FLANGE	1-39, 1-41
441741-0000 ..	HINGE FLANGE	1-39, 1-41
442072-0000 ..	CARRIER	7-25, 7-27, 7-29, 7-31, 7-33
442076-0000 ..	LID	2-107
442193-0000 ..	PROTECTIVE CASING	2-31
442194-0000 ..	PROTECTIVE CASING	2-33
442195-0000 ..	LID	2-31
442236-0000 ..	THROTTLE SCREW	1-51
442237-0000 ..	NUT	1-51
442431-0000 ..	CARRIER	7-25, 7-27, 7-29, 7-31, 7-33
442463-0400 ..	PIPE WORK	2-3, 2-5
442466-0000 ..	PIPE CONNECTION	2-65
442480-0000 ..	BOW CLAMP	8-25, 8-27
442500-0000 ..	SPROCKET	5-13
442523-0000 ..	HOLDER	5-63, 5-65
442524-0000 ..	ARM	5-63, 5-65
442532-0000 ..	COVER	5-139, 5-141
442533-0000 ..	RUBBER GASKET	5-139, 5-141
442537-0500 ..	WASTE CHUTE	5-3, 5-5
442545-0000 ..	SHEET	5-7, 5-9, 5-35, 5-37
442554-0000 ..	GEARING	5-15
442555-0000 ..	GEAR WHEEL	5-15
442556-0000 ..	GEAR WHEEL	5-15

Part No	Description	Page No
442557-0000 ..	GEAR WHEEL	5-15
442558-0000 ..	GEAR WHEEL	5-15
442559-0000 ..	GEAR WHEEL	5-15
442560-0000 ..	LUBR.OIL PIPE	5-139, 5-141
442563-0000 ..	AXLE PIN	5-149, 5-151, 5-153, 5-155, 5-157, 5-159
442564-0000 ..	CURVE	5-25, 5-27, 5-41, 5-43, 5-45, 5-47, 5-143, 5-145, 5-147
442565-0000 ..	CURVE	5-25, 5-27, 5-41, 5-43, 5-45, 5-47, 5-143, 5-145, 5-147
442566-0000 ..	BRACKET	2-91
442582-0100 ..	DRIVE GEAR	5-13
442589-0000 ..	ARM	5-139, 5-141
442613-0000 ..	GEAR WHEEL	5-61
442614-0000 ..	GEAR WHEEL	5-61
442615-0000 ..	SPACER	5-61
442616-0000 ..	SPACER	5-61
442617-0000 ..	SPACER	5-61
442621-0000 ..	SPACER	5-137
442622-0000 ..	SPACER	5-137
442644-0300 ..	DOUBLE GEAR	5-59
442646-0200 ..	TOP GEAR	5-127
442776-0000 ..	SLIDE RAIL	5-23, 5-39
442809-0000 ..	LEAD RAIL	5-53, 5-55
442811-0001 ..	ARCH	5-53, 5-55
442811-0002 ..	ARCH	5-53, 5-55
442829-0000 ..	BRACKET	5-53, 5-55
442830-0000 ..	BRACKET	5-33, 5-53, 5-55
442836-0000 ..	SPROCKET	5-33, 5-53, 5-55
442841-0000 ..	AIR SCREW	5-15
442851-0000 ..	SHAFT	5-21
442852-0000 ..	VALVE	5-21
442853-0000 ..	ATTACHMENT PIPE	5-21
442867-0000 ..	AIR NOZZLE	5-69, 5-71, 5-83, 5-85
442882-0000 ..	SPINDLE	5-139, 5-141
442883-0000 ..	SPACING WASHER	5-139, 5-141
442884-0000 ..	LOCK PLATE	5-139, 5-141
442886-0000 ..	FLAP	5-139, 5-141
442894-0000 ..	SHIM	5-149, 5-151, 5-153, 5-155, 5-157, 5-159
442903-0000 ..	SHIM	5-15
442904-0000 ..	SHIM	5-15
442905-0000 ..	SHIM	5-15
442931-0000 ..	SLIDE RAIL	5-29, 5-49, 5-51
442939-0000 ..	SHIM	5-149, 5-151, 5-153, 5-155, 5-157, 5-159
442979-0000 ..	SHEET	5-143, 5-145, 5-147
442980-0000 ..	SHEET	5-143, 5-145, 5-147
442981-0000 ..	SHIM	5-149, 5-151, 5-153, 5-155, 5-157, 5-159
442984-0000 ..	FLAP	5-139, 5-141
443021-0000 ..	SHEET	5-143, 5-145, 5-147
443022-0000 ..	SHEET	5-143, 5-145, 5-147
443023-0000 ..	SHEET	5-143, 5-145, 5-147
443024-0000 ..	SHEET	5-143, 5-145, 5-147
443027-0000 ..	SHEET	5-143, 5-145, 5-147
443028-0000 ..	SHEET	5-143, 5-145, 5-147
443038-0000 ..	FLAP	5-139, 5-141
443047-0000 ..	SPROCKET	5-59
443048-0000 ..	SPROCKET	5-67
443049-0000 ..	SHAFT	5-67
443050-0000 ..	GUIDE SLEEVE	5-67
443051-0000 ..	CONNECTION	5-67
443052-0000 ..	SPACER RING	5-59
443053-0000 ..	CHAIN GUIDE	5-67
443055-0000 ..	SHIM	5-61
443056-0000 ..	SHIM	5-61
443057-0000 ..	SHIM	5-61
443058-0000 ..	SHIM	5-61
443076-0000 ..	BOTTOM	5-149, 5-151, 5-153, 5-155, 5-157, 5-159
443081-0000 ..	SPROCKET	5-33, 5-53, 5-55
443122-0000 ..	HOUSE	5-21
443123-0000 ..	HOUSE	5-21
443126-0000 ..	CONNECTION PIPE	5-57
443149-0000 ..	STUD SCREW	5-59
443150-0000 ..	SUCTION TUBE	5-67
443151-0000 ..	PIPE	5-67
443158-0000 ..	SIDE PIPE	5-69, 5-71, 5-83, 5-85
443173-0100 ..	DRIVE SHAFT	5-3, 5-5
443175-0000 ..	SHAFT	5-161
443176-0000 ..	SPROCKET	5-57
443177-0000 ..	SPROCKET	5-161
443178-0000 ..	BRACKET	5-161
443179-0000 ..	SPACER	5-161
443182-0000 ..	FLAP	5-139, 5-141
443186-0000 ..	CHUTE	5-7, 5-9, 5-35, 5-37
443187-0000 ..	SHEET	5-7, 5-9, 5-35, 5-37
443188-0000 ..	GEAR WHEEL	5-137
443193-0000 ..	SHIM	5-137
443194-0000 ..	SHIM	5-137

Part No	Description	Page No
443206-0001 ..	ARCH	5-53, 5-55
443206-0002 ..	ARCH	5-53, 5-55
443206-0003 ..	ARCH	5-53, 5-55
443206-0004 ..	ARCH	5-53, 5-55
443207-0001 ..	ARCH	5-53, 5-55
443207-0002 ..	ARCH	5-53, 5-55
443210-0000 ..	PLATE STAINLESS	5-33, 5-53, 5-55
443213-0000 ..	BRACKET	5-33, 5-53, 5-55
443215-0000 ..	SPACER	5-33, 5-53, 5-55
443217-0000 ..	BRACKET	5-33, 5-53, 5-55
443218-0000 ..	INTERMEDIARY SECTION	5-127
443229-0000 ..	BRACKET	5-29, 5-49, 5-51
443232-0000 ..	HOLDER	5-29, 5-49, 5-51
443235-0000 ..	SPROCKET	5-29, 5-49, 5-51
443237-0000 ..	SLIDER	5-29, 5-49, 5-51
443239-0000 ..	WASHER	5-29, 5-49, 5-51
443240-0000 ..	DRIP PLATE	5-25, 5-27, 5-41, 5-43, 5-45, 5-47
443248-0000 ..	OIL PIPE	5-13
443249-0000 ..	FLAP	5-139, 5-141
443271-0000 ..	HEAD PLATE	5-121, 5-123
443272-0000 ..	HEAD PLATE	5-121, 5-123
443273-0000 ..	HEAD PLATE	5-121, 5-123
443274-0000 ..	HEAD PLATE	5-121, 5-123
443289-0000 ..	TOOTHED PULLY	5-109
443290-0000 ..	GEAR WHEEL	5-93, 5-95, 5-109
443291-0000 ..	GEAR WHEEL	5-93, 5-95
443292-0000 ..	STEERING	5-109
443293-0000 ..	BRACKET	5-93, 5-95, 5-109
443295-0000 ..	WASHER	5-33, 5-53, 5-55, 5-93, 5-95, 5-109
443296-0000 ..	WASHER	5-93, 5-95, 5-109, 5-113
443297-0000 ..	WASHER	5-93, 5-95
443298-0000 ..	WASHER	5-93, 5-95
443299-0000 ..	WASHER	5-93, 5-95
443300-0000 ..	WASHER	5-93, 5-95, 5-109
443301-0000 ..	WASHER	5-93, 5-95, 5-109
443305-0000 ..	SHAFT	5-93, 5-95
443306-0000 ..	SPROCKET	5-93, 5-95
443307-0000 ..	SHAFT	5-93, 5-95, 5-109
443309-0000 ..	SHAFT	5-125
443310-0000 ..	AXLE PIN	5-125
443312-0000 ..	SPACER	5-109
443313-0000 ..	STUD SCREW	5-143, 5-145, 5-147
443336-0008 ..	TIMING BELT PULLEY	5-11
443348-0000 ..	PLATE	5-143, 5-145, 5-147
443350-0000 ..	BRACKET	5-93, 5-95
443362-0000 ..	CURVE	5-127
443365-0000 ..	BRACKET	5-125
443367-0000 ..	PROFILE	5-17
443387-0000 ..	HEAD PLATE	5-93, 5-95
443388-0001 ..	HEAD PLATE	5-93, 5-95
443388-0002 ..	HEAD PLATE	5-93, 5-95
443414-0000 ..	WASHER	5-93, 5-95
443419-0000 ..	SPACER	5-107
443445-0000 ..	SIDE PLATE	5-93, 5-95
443446-0000 ..	SIDE PLATE	5-93, 5-95
443447-0000 ..	BRACKET	5-121, 5-123
443448-0000 ..	HEAD PLATE	5-125
443450-0000 ..	HEAD PLATE	5-93, 5-95
443451-0000 ..	HEAD PLATE	5-93, 5-95
443454-0000 ..	BRACKET	5-93, 5-95
443455-0000 ..	SHAFT	5-93, 5-95
443456-0000 ..	SHAFT	5-93, 5-95
443457-0000 ..	SHAFT	5-93, 5-95
443458-0000 ..	SHAFT	5-93, 5-95
443462-0000 ..	SUPPORT	5-121, 5-123
443463-0000 ..	SUPPORT	5-121, 5-123
443464-0000 ..	SPROCKET	5-93, 5-95
443467-0000 ..	SPROCKET	5-93, 5-95
443468-0000 ..	CARRIER	5-97, 5-99, 5-101, 5-103
443469-0000 ..	CARRIER	5-97, 5-99
443470-0000 ..	CARRIER	5-101, 5-103
443474-0000 ..	BRACKET	5-125
443476-0000 ..	GABLE PLATE	5-107
443477-0000 ..	GABLE PLATE	5-107
443478-0001 ..	SPROCKET	5-93, 5-95
443478-0002 ..	SPROCKET	5-93, 5-95
443478-0003 ..	SPROCKET	5-93, 5-95
443478-0004 ..	SPROCKET	5-93, 5-95
443479-0001 ..	SPROCKET	5-93, 5-95
443479-0002 ..	SPROCKET	5-93, 5-95
443479-0003 ..	SPROCKET	5-93, 5-95
443479-0004 ..	SPROCKET	5-93, 5-95
443480-0000 ..	BRACKET	5-93, 5-95
443481-0000 ..	BRACKET	5-93, 5-95

Part No	Description	Page No
443482-0000 ..	BRACKET	5-93, 5-95
443483-0000 ..	BRACKET	5-93, 5-95
443484-0000 ..	ARM	5-93, 5-95
443485-0000 ..	SCREW	5-93, 5-95
443486-0000 ..	GUIDE	5-93, 5-95
443487-0000 ..	ROLL	5-143, 5-145, 5-147
443488-0000 ..	ROLL	5-143, 5-145, 5-147
443489-0000 ..	BRACKET	5-93, 5-95, 5-109
443491-0000 ..	BRACKET	5-121, 5-123
443492-0000 ..	BRACKET	5-121, 5-123
443493-0000 ..	HEAD PLATE	5-125
443495-0000 ..	HEAD PLATE	5-125
443497-0000 ..	SUPPORT	5-121, 5-123
443498-0000 ..	SUPPORT	5-121, 5-123
445502-0000 ..	LOCKING PIN LOWER	1-43, 1-45, 10-119, 10-121
445504-0000 ..	LOCKING PIN UPPER	1-43, 1-45, 10-119, 10-121, 10-337, 10-339
445515-0000 ..	PIPE BEND	1-65
445537-0200 ..	PIPE WORK-HYDRAULIC	2-3, 2-5
445538-0000 ..	HYDRAULIC PIPE	2-67
445539-0000 ..	HYDRAULIC PIPE	2-67
445540-0000 ..	HYDRAULIC PIPE	2-67
445541-0000 ..	HYDRAULIC PIPE	2-67
445542-0000 ..	MANTEL RUBBER	7-21, 7-23
445583-0000 ..	VALVE	2-115
445638-0000 ..	BOTTOM PLATE	10-183
445639-0000 ..	SHAFT	10-183
445640-0000 ..	SHAFT	10-183
445641-0000 ..	ROLLER	10-183
445645-0000 ..	FRAME	10-183
445646-0000 ..	SUPPORTING FRAME	10-183
445647-0000 ..	BEARING HOUSING	10-183
445669-0000 ..	HOLDER	8-25, 8-27
445670-0000 ..	PAPER SUPPORT	8-25, 8-27
445688-0000 ..	AIR GUIDE	8-25, 8-27
445736-0000 ..	HINGE	2-121, 2-123
445776-0000 ..	ROLL	1-5
445777-0000 ..	ROLL	1-5
445778-0000 ..	ROLL	1-5
445779-0000 ..	ROLL	1-5
445780-0000 ..	ROLL	1-5
445781-0000 ..	ROLL	1-5
445782-0000 ..	ROLL	1-5
445783-0000 ..	ROLL	1-5
445784-0000 ..	ROLL	1-5
445785-0000 ..	ROLL	1-5
445786-0000 ..	ROLL	1-5
445787-0000 ..	ROLL	1-5
445788-0002 ..	SHAFT	1-5
445788-0003 ..	SHAFT	1-5
445788-0005 ..	SHAFT	1-5
445788-0006 ..	SHAFT	1-5
445790-0000 ..	AXLE SUPPORT	1-5
445791-0000 ..	AXLE SUPPORT	1-5
445837-0000 ..	CANTILEVER	7-7
445838-0000 ..	SHAFT	7-7
445839-0000 ..	SECURING PLATE	7-7
445840-0100 ..	DRIVE UNIT	7-3, 7-5
445841-0000 ..	CANTILEVER	7-7
445842-0000 ..	MOTOR PLATE	7-7
445844-0000 ..	SLEEVE	7-57, 7-59, 7-61, 7-63
445845-0000 ..	DRIVE ROLLER	7-7
445846-0000 ..	SLEEVE	7-57, 7-59, 7-61, 7-63
445847-0000 ..	SHAFT	7-7
445848-0000 ..	ELASTIC COUPLING	7-7
445849-0000 ..	SPACER DISC	7-7
445850-0000 ..	SPACER SLEEVE	7-7
445851-0000 ..	SHAFT	7-7
445852-0000 ..	LID	7-7
445854-0002 ..	GEAR WHEEL	7-7
445857-0000 ..	PROTECTION PLATE	7-53
445858-0000 ..	WASHER	2-111
445861-0000 ..	FRAME	7-49, 7-51
445863-0000 ..	PROTECTION	7-49, 7-51
445872-0000 ..	HINGE	7-49, 7-51
445873-0000 ..	HINGE	7-49, 7-51
445874-0000 ..	HINGE	7-49, 7-51
445877-0000 ..	SUPPORT	7-49, 7-51
445879-0000 ..	SUPPORT	7-49, 7-51
445881-0000 ..	BRACKET LEFT	7-67, 7-69, 7-71
445882-0000 ..	BRACKET RIGHT	7-67, 7-69, 7-71
445885-0000 ..	BEAM	7-67, 7-69, 7-71
445886-0000 ..	BEAM	7-67, 7-69, 7-71
445894-0000 ..	SEAL	7-67, 7-69, 7-71
445898-0000 ..	NUT	7-67, 7-69, 7-71

Part No	Description	Page No
445901-0000 ..	FRAME	7-67, 7-69, 7-71
445902-0000 ..	ARM	7-67, 7-69, 7-71
445903-0000 ..	ECCENTRIC SHAFT	7-67, 7-69, 7-71
445904-0000 ..	SHAFT	7-67, 7-69, 7-71
445907-0000 ..	SCREW	7-67, 7-69, 7-71
445909-0000 ..	NIPPLE	7-67, 7-69, 7-71
445911-0000 ..	CANTILEVER	7-67, 7-69, 7-71
445915-0000 ..	STEERING	7-67, 7-69, 7-71
445918-0000 ..	SCREW	7-67, 7-69, 7-71
445926-0000 ..	WASHER	7-55
445929-0000 ..	GASKET	7-53
445930-0100 ..	BENDING UNIT	7-3, 7-5
445931-0000 ..	CANTILEVER	7-39
445934-0000 ..	LID	7-53
445935-0000 ..	PROTECTION PLATE	7-53
445950-0000 ..	HOLDER	4-41, 4-43, 4-45, 4-47
449000-0000 ..	BRACKET	1-15
449130-0000 ..	CONNECTING PIPE	1-51
449168-0300 ..	CLEANING SYSTEM	2-3, 2-5
449170-0000 ..	CLEANING PIPE	2-69
449414-0000 ..	BRACKET	1-97
449415-0000 ..	PENDULUM SUSPENSION	1-97
449586-0000 ..	ROLL	1-23, 1-25, 1-27
449589-0001 ..	ROLLER, (STD.SIZE)	1-17, 1-19
449623-0000 ..	STEERING	7-67, 7-69, 7-71
449624-0000 ..	STEERING	7-67, 7-69, 7-71
449626-0000 ..	SEAL	7-67, 7-69, 7-71
449629-0000 ..	BRACKET	7-67, 7-69, 7-71
449631-0000 ..	BEARING HOUSING	7-75, 7-77
449632-0000 ..	BEARING HOUSING	7-75, 7-77
449634-0000 ..	COVERING PLATE	7-75, 7-77
449635-0000 ..	COVERING PLATE	7-75, 7-77
449678-0000 ..	VALVE BODY 76	1-67
449716-0000 ..	MAIN CAM	3-11, 3-13
449719-0000 ..	COUNTER CAM	3-11, 3-13
449727-0000 ..	CUTTING JAW	4-29, 4-31, 4-33, 4-35
449734-0000 ..	HOLDER	4-83, 4-85, 4-87, 4-89
449744-0000 ..	TURN SPRING	7-75, 7-77
449745-0000 ..	TURN SPRING	7-75, 7-77
449746-0000 ..	STEERING	7-75, 7-77
449748-0000 ..	BEARING	7-75, 7-77
449751-0000 ..	PROTECTION	7-67, 7-69, 7-71
449753-0000 ..	SCREW	7-67, 7-69, 7-71
449761-0000 ..	WASHER	7-67, 7-69, 7-71, 10-181
449770-0000 ..	INSULATION	7-67, 7-69, 7-71
449817-0000 ..	U-TUBE	1-93
449818-0000 ..	PIPE	1-93
449840-0001 ..	ROLLER, (STD.SIZE)	1-17, 1-19
449843-0001 ..	BENDING ROLLER	8-7
449843-0002 ..	BENDING ROLLER	8-7
449843-0003 ..	BENDING ROLLER	8-7
449843-0004 ..	BENDING ROLLER	8-7
449908-0000 ..	BUSHING	4-19, 4-21
449926-0000 ..	HOLDER	4-83, 4-85, 4-87, 4-89
449930-0500 ..	CONNECTION BOX	2-3, 2-5
449939-0001 ..	HEATING ELEMENT 15KW	1-99
449960-0000 ..	BRACKET	1-93, 1-121
449963-0000 ..	U-TUBE	1-93
449964-0000 ..	PIPE	1-121
449966-0000 ..	PIPE	1-121
449967-0000 ..	PIPE	1-121
449992-0000 ..	GASKET	10-113, 10-115, 10-359, 10-361
449993-0000 ..	GASKET	10-113, 10-115, 10-359, 10-361
450010-0000 ..	FILLER TUBE	1-37
450015-0000 ..	HOUSE	10-183
450016-0000 ..	NUT	10-183
450017-0000 ..	PLATE	7-67, 7-69, 7-71
450022-0000 ..	WASHER	1-93
450023-0000 ..	BRACKET	1-93
450065-0002 ..	BRACKET	10-185
450116-0000 ..	CANTILEVER	8-33
450117-0000 ..	HOLDER	8-33
450123-0000 ..	BRACKET	10-183
450124-0000 ..	CANTILEVER	10-183
450125-0100 ..	HEATING DEVICE	10-181
450145-0000 ..	STRUT	3-9
450146-0000 ..	STRUT	3-9
450284-0000 ..	CABLE DUCT	2-131
450285-0000 ..	CABLE DUCT	2-131
450286-0000 ..	LID	2-131
450287-0000 ..	LID	2-131
450290-0000 ..	LID	2-131
450291-0000 ..	ATTACHMENT PIPE	2-131
450292-0000 ..	ATTACHMENT PIPE	2-131

Part No	Description	Page No
450298-0000 ..	COVERING PLATE	2-57, 2-59, 2-61
450299-0000 ..	SWIVEL PLATE	2-49
450300-0000 ..	BEAM	2-49
450301-0000 ..	FASTENING PLATE	2-49
450335-0000 ..	PIPE	1-121
450340-0000 ..	PIPE	2-115
450342-0000 ..	COVERING PLATE	2-57, 2-59, 2-61
450355-0000 ..	INK ROLLER	7-21, 7-23
450363-0000 ..	LID	7-7
450457-0000 ..	FLANGE	2-57, 2-59, 2-61
450459-0001 ..	FORMING RING	1-17, 1-19
450459-0002 ..	FORMING RING	1-17, 1-19
450461-0000 ..	SHAFT	8-31
450490-0100 ..	FORM CLAMP	1-3
450491-0000 ..	BOW CLAMP	1-5
450492-0000 ..	BOW CLAMP	1-5
450493-0000 ..	BOW CLAMP	1-5
450495-0000 ..	CONNECTION BOX	2-55
450497-0000 ..	SHAFT	7-9, 7-11, 7-13, 7-15, 7-17, 7-19
450500-0000 ..	DOWEL	7-9, 7-11, 7-13, 7-15, 7-17, 7-19
450503-0000 ..	BEARING HOUSING	4-29, 4-31, 4-33, 4-35
450505-0000 ..	CARRIER RULER LEFT	4-53
450506-0000 ..	CARRIER RULER	4-57
450509-0000 ..	PIPE	1-59, 1-61
450512-0000 ..	COVER	1-59, 1-61
450667-0000 ..	SPLASH GUARD	2-49
450668-0000 ..	SPLASH GUARD	2-49
450669-0000 ..	TOUCH GUARD	2-49
450716-0000 ..	PIPE	2-73, 2-75
450717-0000 ..	PIPE	2-73, 2-75
450719-0000 ..	PIPE	2-73, 2-75
450722-0000 ..	PIPE	2-73, 2-75
450723-0000 ..	PIPE	2-73, 2-75
450724-0000 ..	PIPE	2-73, 2-75
450725-0000 ..	ATTACHMENT PLATE	2-73, 2-75
450730-0000 ..	PIPE	2-73, 2-75
450731-0000 ..	PIPE	2-73, 2-75
450733-0000 ..	PIPE	2-73, 2-75
450735-0000 ..	PIPE	2-73, 2-75
450736-0000 ..	PIPE	2-73, 2-75
450737-0000 ..	PIPE	2-73, 2-75
450738-0000 ..	PIPE	2-73, 2-75
450739-0000 ..	PIPE	2-73, 2-75
450740-0000 ..	PIPE	2-73, 2-75
450742-0000 ..	PIPE	2-73, 2-75
450744-0000 ..	CRAMP	2-73, 2-75
450745-0000 ..	SPACER	2-73, 2-75
450746-0000 ..	HOLDER	2-73, 2-75
450747-0000 ..	PIPE	2-73, 2-75
450748-0000 ..	PIPE	2-73, 2-75
450781-0000 ..	VOLUME BULGE	4-19, 4-21
450782-0000 ..	VOLUME SHIM	4-19, 4-21, 4-49, 4-51
450788-0600 ..	PIPE WORK-PNEUMATIC	2-3, 2-5
450791-0000 ..	PIPE	2-83, 2-85, 2-87, 2-89
450792-0100 ..	DETERGENT PUMP	2-3, 2-5
450793-0000 ..	PIPE	2-133
450794-0000 ..	PIPE	2-133
450795-0000 ..	PIPE	2-133
450796-0000 ..	BRACKET	2-133
450812-0000 ..	SPACER	8-13
450813-0000 ..	HOLDER	8-15
450814-0000 ..	HOLDER	1-117, 1-119, 8-15
450819-0000 ..	PIPE	10-181
450820-0000 ..	PIPE	10-181
450824-0200 ..	DOOR	2-3, 2-5
450826-0000 ..	BRACKET	2-135
450840-0400 ..	LIFTING UNIT	2-3, 2-5
450841-0000 ..	CANTILEVER	2-91
450846-0000 ..	CANTILEVER	1-63
450850-0001 ..	SHEET	8-13
450850-0002 ..	SHEET	8-13
450850-0003 ..	SHEET	8-13
450850-0004 ..	SHEET	8-13
450850-0005 ..	SHEET	8-13
450850-0006 ..	SHEET	8-13
450853-0000 ..	PROTECTION	7-67, 7-69, 7-71
450869-0000 ..	BRACKET RIGHT	2-99, 2-101
450873-0200 ..	INDUCTOR UNIT	10-181
450882-0000 ..	OUTER PIPE	8-13
450883-0400 ..	PROTECTION	2-3, 2-5
450884-0000 ..	PROTECTION	2-137
450887-0000 ..	CRAMP	8-23
450888-0000 ..	INSULATING PLATE	8-23
450899-0001 ..	SPACER	2-63

Part No	Description	Page No
450973-0000 ..	BRACKET	2-135
451053-0000 ..	PIPE	1-109
451085-0002 ..	SPACER SCREW	1-123
451085-0003 ..	SPACER SCREW	1-123
451085-0004 ..	SPACER SCREW	1-123
451085-0005 ..	SPACER SCREW	1-123
451088-0000 ..	PROTECTION	2-49
451089-0000 ..	BRACKET	2-49
451099-0000 ..	CABLE TRENCH	1-123
451101-0000 ..	CABLE TRENCH	1-123
451102-0000 ..	COVER STAINLESS	1-123
451103-0000 ..	LID	1-123
451104-0000 ..	LID	1-123
451127-0000 ..	CHUTE, LEFT FRONT	2-31
451128-0000 ..	CHUTE, RIGHT FRONT	2-33
451131-0100 ..	CLEANING PIPE	1-3
451277-0000 ..	PIPE	1-117, 1-119
451280-0000 ..	PIPE	1-117, 1-119
451281-0000 ..	PIPE	1-117, 1-119
451284-0000 ..	PIPE	1-117, 1-119
451285-0000 ..	PIPE	1-117, 1-119
451286-0000 ..	PIPE	1-117, 1-119
451287-0000 ..	PIPE	1-117, 1-119
451288-0000 ..	PIPE	1-117, 1-119
451289-0000 ..	PIPE	1-117, 1-119
451290-0000 ..	PIPE	1-117, 1-119
451296-0000 ..	PIPE	1-117, 1-119
451297-0000 ..	PIPE	1-117, 1-119
451298-0000 ..	PIPE	1-117, 1-119
451299-0000 ..	PIPE	1-117, 1-119
451300-0000 ..	PIPE	1-117, 1-119
451301-0000 ..	PIPE	1-117, 1-119
451302-0000 ..	PIPE	1-117, 1-119
451303-0001 ..	PIPE	1-117, 1-119
451303-0002 ..	PIPE	1-117, 1-119
451303-0003 ..	PIPE	1-117, 1-119
451303-0004 ..	PIPE	1-117, 1-119
451304-0000 ..	PIPE	1-117, 1-119
451305-0000 ..	PIPE	1-117, 1-119
451306-0000 ..	PIPE	1-117, 1-119
451307-0000 ..	PIPE	1-117, 1-119
451321-0000 ..	COVER	1-51
451323-0000 ..	SHEET	1-51
451324-0000 ..	PIPE	1-51
451326-0000 ..	CLAMPING PLATE	1-117, 1-119
451338-0000 ..	PIPE	1-123
451339-0000 ..	BOXSTAINLESS	1-123
451340-0000 ..	CHANNELSTAINLESS	1-123
451341-0001 ..	LID	1-123
451341-0002 ..	LID	1-123
451342-0500 ..	CABLE DUCT	1-3
451348-0200 ..	CONNECTION BOX	2-3, 2-5
451365-0200 ..	TERMINAL PLINTH	1-123
451389-0000 ..	PLATFORM	1-79
451390-0000 ..	PLATFORM	1-79
451391-0000 ..	PLATFORM	1-79
451412-0000 ..	WASHER	7-67, 7-69, 7-71
451413-0000 ..	WASHER	7-67, 7-69, 7-71
451423-0000 ..	CIRCUIT BOARD	2-141
451430-0000 ..	CONNECTION HOUS.(MINOR)	1-99
456011-0000 ..	PIN	4-49, 4-51
456256-0000 ..	PROTECTIVE COVER	2-55
456773-0000 ..	PIVOT BRACKET	7-21, 7-23
457354-0000 ..	SCREW	2-91
457355-0000 ..	NUT	2-91
457357-0000 ..	BRACKET	2-57, 2-59, 2-61
457358-0000 ..	SLEEVE	7-53
457359-0000 ..	BRACKET	4-93
457361-0000 ..	CANTILEVER	4-93
457364-0000 ..	PLATE RIGHT	4-93
457367-0000 ..	SHAFT	4-93
457368-0000 ..	SPRING	4-93
457370-0000 ..	CATCH	7-75, 7-77
457430-0000 ..	BEATER	7-9, 7-11, 7-13, 7-15, 7-17, 7-19
457486-0000 ..	BEARING HOUSING	7-75, 7-77
457487-0000 ..	BEARING HOUSING	7-75, 7-77
457488-0000 ..	BEARING HOUSING	7-75, 7-77
457489-0000 ..	BEARING HOUSING	7-75, 7-77
457492-0000 ..	COVERING PLATE	7-75, 7-77
457493-0000 ..	COVERING PLATE	7-75, 7-77
457494-0000 ..	COVERING PLATE	7-75, 7-77
457495-0000 ..	COVERING PLATE	7-75, 7-77
457586-0000 ..	SLIDE	7-75, 7-77
457614-0001 ..	CLAMPING PIECE	1-121, 10-113, 10-115, 10-357, 10-367

Part No	Description	Page No
457614-0002 ..	CLAMPING PIECE	1-121
457627-0000 ..	DOLLY	7-67, 7-69, 7-71
457658-0000 ..	INSULATION	7-67, 7-69, 7-71
457752-0000 ..	CANTILEVER	1-115
457753-0000 ..	BRACKET	1-115
458019-0000 ..	BEARING HOUSING	4-41, 4-43, 4-45, 4-47
458030-0000 ..	CARRIER RULER	4-53
458031-0000 ..	CARRIER RULER	4-57
458038-0000 ..	CARRIER RULER	4-53
458039-0000 ..	CARRIER RULER	4-57
458041-0000 ..	COMPRESSION SPRING	7-75, 7-77, 7-81
458042-0000 ..	SPRING	7-75, 7-77
458046-0000 ..	PIPE	1-31
458062-0000 ..	TENSION SPRING	7-67, 7-69, 7-71
458104-0000 ..	CREASE FORMER	7-9, 7-11, 7-13, 7-15, 7-17, 7-19
458105-0000 ..	CREASE FORMER	7-9, 7-11, 7-13, 7-15, 7-17, 7-19
458106-0000 ..	CREASE FORMER	7-9, 7-11, 7-13, 7-15, 7-17, 7-19
458108-0000 ..	CREASE FORMER	7-9, 7-11, 7-13, 7-15, 7-17, 7-19
458109-0000 ..	CREASE FORMER	7-9, 7-11, 7-13, 7-15, 7-17, 7-19
458164-0000 ..	SHAFT	4-19, 4-21, 4-23
458165-0000 ..	SHAFT	4-19, 4-21
458193-0001 ..	WASHER	7-9, 7-11, 7-13, 7-15, 7-17, 7-19
458193-0002 ..	WASHER	7-9, 7-11, 7-13, 7-15, 7-17, 7-19
458193-0003 ..	WASHER	7-9, 7-11, 7-13, 7-15, 7-17, 7-19
458199-0001 ..	PIPE	8-15
458199-0002 ..	PIPE	8-15
458199-0003 ..	PIPE	8-15
458362-0000 ..	PLUG	7-57, 7-59, 7-61, 7-63
458467-0000 ..	VOLUME BULGE	4-19, 4-21
458481-0001 ..	SHIM	1-111
458481-0002 ..	SHIM	1-111
458481-0003 ..	SHIM	1-111
458489-0000 ..	CANTILEVER	7-9, 7-11, 7-13, 7-15, 7-17, 7-19
458786-0000 ..	GASKET	10-113, 10-115, 10-359, 10-361
458791-0000 ..	SHAFT	1-29
458908-0000 ..	BRACKET	7-67, 7-69, 7-71
458909-0000 ..	BRACKET	7-67, 7-69, 7-71
458912-0000 ..	BRACKET	7-67, 7-69, 7-71
458915-0000 ..	HEAD RAIL	7-67, 7-69, 7-71
458916-0000 ..	SHAFT	7-67, 7-69, 7-71
458917-0000 ..	SUPPORT	7-67, 7-69, 7-71
458929-0000 ..	TURN SPRING	7-67, 7-69, 7-71
464010-0000 ..	ARM	7-9, 7-11, 7-13, 7-15, 7-17, 7-19
464011-0000 ..	LOCK STUD	7-9, 7-11, 7-13, 7-15, 7-17, 7-19
464012-0000 ..	CURVE	7-9, 7-11, 7-13, 7-15, 7-17, 7-19
464018-0000 ..	JUNCTION BLOCK	1-109
464141-0000 ..	LEAD-IN PLATE	7-53
464162-0000 ..	CUTTING JAW	4-29, 4-31, 4-33, 4-35
464164-0000 ..	CARRIER CUT LEFT	4-29, 4-31
464171-0000 ..	CARRIER CUT RIGHT	4-33, 4-35
464173-0000 ..	LABEL HOLDER	1-111, 8-13
464174-0000 ..	SIGN	1-111
464175-0000 ..	SIGN	1-111
464176-0000 ..	SIGN	8-13
464177-0000 ..	SIGN	8-13
464197-0000 ..	AIR NOZZLE	8-23
464297-0000 ..	CONNECTION BOX	2-141
464307-0000 ..	PIPE BEND	1-109
464308-0000 ..	PIPE	1-109
464309-0000 ..	PIPE	1-109
464310-0000 ..	FOLDING FLAP	4-53, 4-57
464311-0000 ..	FOLDING FLAP	4-53, 4-57
464314-0000 ..	VOLUME BULGE	4-19, 4-21
464315-0000 ..	VOLUME SHIM	4-19, 4-21, 4-49, 4-51
464363-0000 ..	HOLDER	3-25
464366-0000 ..	LID	4-15, 4-17
464367-0000 ..	CRAMP	4-15, 4-17
464368-0000 ..	CRAMP	4-15, 4-17
464370-0000 ..	SPACER	4-39
464431-0000 ..	PIPE	2-73, 2-75
464432-0000 ..	PIPE	2-73, 2-75
464520-0000 ..	PIPE	2-73, 2-75
464547-0000 ..	NUT	7-67, 7-69, 7-71
464548-0000 ..	BRACKET	7-67, 7-69, 7-71
464719-0000 ..	SIGN	2-73, 2-75
464854-0000 ..	TENSION SPRING	7-67, 7-69, 7-71
464983-0000 ..	SCREW	7-67, 7-69, 7-71
466040-0000 ..	AXLE SUPPORT	1-113
466041-0000 ..	WASHER	1-113
466042-0000 ..	SEAL	1-113, 1-131
466046-0000 ..	ROLLER	1-113
466086-0000 ..	SHAFT	7-55
466089-0000 ..	SEAL	1-113, 1-131
466092-0000 ..	ROLL	1-113

Part No	Description	Page No
466099-0000 ..	SEAL	1-113, 1-131
466102-0000 ..	ROLL	1-113
466337-0000 ..	CONNECTION BOX	7-57, 7-59, 7-61, 7-63
466395-0000 ..	BEARING HOUSING	4-41, 4-43, 4-45, 4-47
466399-0100 ..	SEAL	1-111
466400-0000 ..	RING	1-113
466401-0000 ..	RING	1-113
466402-0000 ..	RING	1-113
466403-0000 ..	RING	1-113
466404-0000 ..	RING	1-113
466405-0000 ..	RING	1-113
466412-0000 ..	PLATE	8-23
466430-0000 ..	BUSHING	7-9, 7-11, 7-13, 7-15, 7-17, 7-19
466431-0000 ..	BEARING HOUSING	4-29, 4-31, 4-33, 4-35
466432-0000 ..	BEARING HOUSING	4-29, 4-31, 4-33, 4-35
466446-0000 ..	HANDLE	7-67, 7-69, 7-71
466463-0000 ..	PRESSURE FLANGE	1-43, 1-45
466471-0000 ..	PIPE	1-83
466474-0000 ..	VALVE HOUSING	1-53, 1-89, 1-91
466477-0000 ..	INNER PIPE	1-53, 1-89
466478-0000 ..	OUTER PIPE	1-53, 1-89
466479-0000 ..	PIECE	1-53, 1-89, 1-91
466483-0000 ..	CLAMPING PIECE	1-53, 1-89
466484-0000 ..	NET	1-53, 1-89
466618-0000 ..	CATCH	7-67, 7-69, 7-71
466619-0000 ..	CATCH	7-67, 7-69, 7-71
466620-0000 ..	PISTON	7-67, 7-69, 7-71
466621-0000 ..	PISTON	7-67, 7-69, 7-71
466623-0000 ..	COMPRESSION SPRING	7-67, 7-69, 7-71
469096-0000 ..	LEG	10-81
469463-0000 ..	SHAFT	1-17, 1-19
469464-0000 ..	ROLL	1-17, 1-19
469795-0000 ..	HOLDER	2-31
476015-0000 ..	DOWEL	7-55
476016-0000 ..	RUBBER	7-55
476087-0000 ..	LID	1-59, 1-61
476115-0000 ..	VOLUME FLAP	4-19, 4-21
476117-0000 ..	CATCH	7-53
476185-0000 ..	VALVE CONE	1-73, 10-91
476203-0000 ..	PROTECTION	1-69, 10-99
476288-0000 ..	PIPE	7-67, 7-69, 7-71
476289-0000 ..	SCREW	7-67, 7-69, 7-71
476354-0000 ..	CANNULAR TUBE	7-21, 7-23
476356-0000 ..	HOLDER FOR INK BOTTLE	7-21, 7-23
476360-0000 ..	LID	1-47
476377-0000 ..	SCREW	7-9, 7-11, 7-13, 7-15, 7-17, 7-19
476398-0000 ..	LID	1-59, 1-61
476400-0000 ..	PIPE	1-59, 1-61
476401-0000 ..	SHAFT	7-55
476403-0000 ..	HEAD PLATE	7-39
476449-0000 ..	PIPE	1-83
476503-0000 ..	BRACKET	7-7
476556-0000 ..	GUIDE	7-55
476599-0000 ..	PLATFORM	1-79
476600-0000 ..	PIPE HOLDER	1-79, 1-83, 1-93
476794-0001 ..	PIPE	1-117, 1-119
476794-0002 ..	PIPE	1-117, 1-119
476796-0000 ..	PIPE	1-117, 1-119
476824-0000 ..	COVERING PLATE	2-57, 2-59, 2-61
476849-0100 ..	VALVE	1-83
476859-0200 ..	CHANGE-OVER VALVE	1-83
476877-0000 ..	SPACER	4-83, 4-85, 4-87, 4-89
476884-0200 ..	CLEANING HEAD	2-35
476885-0200 ..	CLEANING HEAD	2-41, 2-43
476886-0200 ..	CLEANING HEAD	2-41, 2-43
476887-0200 ..	CLEANING HEAD	2-35
476894-0000 ..	PIPE HOLDER	2-91
476975-0000 ..	WHEEL	5-23, 5-39
479025-0000 ..	WASHER	1-59, 1-61
479032-0000 ..	HATCH	2-19
479033-0000 ..	PIPE CONNECTION	2-65
479034-0000 ..	PIPE CONNECTION	2-65
479036-0000 ..	PIPE CONNECTION	2-65
479040-0000 ..	PIPE CONNECTION	2-65
479061-0000 ..	PIPE	1-117, 1-119
479072-0000 ..	PIPE	1-117, 1-119
479073-0000 ..	PIPE	1-117, 1-119
479074-0000 ..	PIPE	1-117, 1-119
479176-0000 ..	PIPE	1-47
479188-0000 ..	INSULATION	7-67, 7-69, 7-71
479223-0000 ..	RAIL	7-67, 7-69, 7-71, 7-79
479224-0000 ..	STEERING	7-67, 7-69, 7-71
479230-0000 ..	PIPE	1-109
479231-0000 ..	PIPE	1-109

Part No	Description	Page No
479232-0000 ..	PIPE	1-109
479234-0000 ..	WASHER	1-51
479236-0000 ..	END SECTION	7-25, 7-27, 7-29, 7-31, 7-33
479237-0000 ..	CARRIER	7-25, 7-27, 7-29, 7-31, 7-33
479238-0000 ..	CARRIER	7-25, 7-27, 7-29, 7-31, 7-33
479245-0000 ..	VOLUME SHIM	4-19, 4-21, 4-49, 4-51
479261-0000 ..	NIPPLE	2-117, 2-119
479354-0000 ..	SCREW	3-19
479374-0000 ..	DRIP PLATE	2-57, 2-59, 2-61
479743-0000 ..	COMPRESSION SPRING	4-41, 4-43, 4-45, 4-47
479744-0000 ..	COMPRESSION SPRING	4-41, 4-43, 4-45, 4-47
479753-0000 ..	STRIPPER	3-19
479858-0000 ..	HYDRAULIC DIAGRAM	2-139
479964-0000 ..	SIGN	2-121, 2-123
484047-0000 ..	PIPE	1-65
484189-0000 ..	HIGH PRESSURE HOSE	1-63
484212-0000 ..	BRACKET	2-57, 2-59, 2-61
484213-0000 ..	BRACKET	2-57, 2-59, 2-61
484219-0000 ..	SHAFT	2-91
484220-0000 ..	BRACKET	2-91
484221-0000 ..	BRACKET	2-91
484222-0000 ..	SHAFT	2-91
484223-0000 ..	NUT	2-91
484529-0000 ..	CYLINDER BRACKET	7-67, 7-69, 7-71
484536-0000 ..	VALVE	2-17, 2-25
484682-0000 ..	COMPRESSION SPRING	7-67, 7-69, 7-71
484783-0000 ..	RAIL	7-67, 7-69, 7-71
484791-0000 ..	GASKET	2-21
484843-0000 ..	GASKET	4-15, 4-17
484844-0000 ..	INSULATION	7-67, 7-69, 7-71
484848-0001 ..	MACHINE BODY	7-9, 7-11, 7-13, 7-15, 7-17, 7-19
484848-0002 ..	MACHINE BODY	7-9, 7-11, 7-13, 7-15, 7-17, 7-19
484848-0003 ..	MACHINE BODY	7-9, 7-11, 7-13, 7-15, 7-17, 7-19
484877-0000 ..	STEERING	7-67, 7-69, 7-71
484878-0000 ..	HOLDER	7-67, 7-69, 7-71
484895-0001 ..	SHEET	7-67, 7-69, 7-71
484895-0002 ..	SHEET	7-67, 7-69, 7-71
484895-0003 ..	SHEET	7-67, 7-69, 7-71
484895-0005 ..	SHEET	7-67, 7-69, 7-71
484895-0006 ..	SHEET	7-67, 7-69, 7-71
484895-0007 ..	SHEET	7-67, 7-69, 7-71
484975-0000 ..	WASHER	1-69, 1-71
484995-0000 ..	PRINTED CIRCUIT BOARD	10-213
484998-0000 ..	END SECTION	1-69, 1-71, 10-93, 10-99
486803-0000 ..	BEARING HOUSING	1-17, 1-19
486826-0001 ..	SIGN "EMERGENCY STOP"	7-57, 7-59, 7-61, 7-63, 8-7, 8-13, 10-141, 10-143
486960-0001 ..	SHAFT	7-9, 7-11, 7-13, 7-15, 7-17, 7-19
486960-0002 ..	SHAFT	7-9, 7-11, 7-13, 7-15, 7-17, 7-19
486961-0000 ..	PLATE	7-9, 7-11, 7-13, 7-15, 7-17, 7-19
486962-0001 ..	FASTENING BRACKET	7-9, 7-11, 7-13, 7-15, 7-17, 7-19
486962-0002 ..	FASTENING BRACKET	7-9, 7-11, 7-13, 7-15, 7-17, 7-19
486962-0003 ..	FASTENING BRACKET	7-9, 7-11, 7-13, 7-15, 7-17, 7-19
486962-0004 ..	FASTENING BRACKET	7-9, 7-11, 7-13, 7-15, 7-17, 7-19
486962-0007 ..	FASTENING BRACKET	7-9, 7-11, 7-13, 7-15, 7-17, 7-19
486962-0008 ..	FASTENING BRACKET	7-9, 7-11, 7-13, 7-15, 7-17, 7-19
486962-0009 ..	FASTENING BRACKET	7-9, 7-11, 7-13, 7-15, 7-17, 7-19
486962-0010 ..	FASTENING BRACKET	7-9, 7-11, 7-13, 7-15, 7-17, 7-19
486962-0011 ..	FASTENING BRACKET	7-9, 7-11, 7-13, 7-15, 7-17, 7-19
486964-0000 ..	HEAD PLATE	7-9, 7-11, 7-13, 7-15, 7-17, 7-19
486965-0000 ..	HEAD PLATE	7-9, 7-11, 7-13, 7-15, 7-17, 7-19
486966-0001 ..	SHAFT	7-9, 7-11, 7-13, 7-15, 7-17, 7-19
486966-0002 ..	SHAFT FOR CARRIER	7-9, 7-11, 7-13, 7-15, 7-17, 7-19
486967-0000 ..	SHEET	7-9, 7-11, 7-13, 7-15, 7-17, 7-19
486968-0001 ..	SHAFT FOR BENDINGROLLER	7-9, 7-11, 7-13, 7-15, 7-17, 7-19
486968-0002 ..	SHAFT FOR BENDINGROLLER	7-9, 7-11, 7-13, 7-15, 7-17, 7-19
486969-0000 ..	GUIDE LUG	7-9, 7-11, 7-13, 7-15, 7-17, 7-19
486971-0000 ..	ANGLE	7-9, 7-11, 7-13, 7-15, 7-17, 7-19
490048-0002 ..	PACKING MEMBRANE	10-337, 10-339, 10-385
490076-0002 ..	PACKING MEMBRANE	10-337, 10-339, 10-385
490223-0000 ..	BRACKET	10-335
490252-0000 ..	RAIL	10-369
490309-0100 ..	HOLDER	10-283
490336-0000 ..	FLOAT	10-337, 10-339
491126-0000 ..	SCREW	1-59, 1-61
491128-0000 ..	GASKET	1-101
491602-0000 ..	GASKET HOLDER	1-101
491929-0000 ..	IMPELLER WHEEL	2-21
493021-0000 ..	ARM	2-91
493022-0000 ..	ARM	2-91
493091-0000 ..	CLAMP RAIL	1-111
493614-0100 ..	SPRAY GUN	2-3, 2-5
493653-0000 ..	GASKET	1-83
493658-0000 ..	AXLE SUPPORT	1-113
493710-0000 ..	FOLDING FLAP	4-53, 4-57

Part No	Description	Page No
493711-0000 ..	FOLDING FLAP	4-53, 4-57
493733-0000 ..	LOCKING PIN UPPER	10-119, 10-121, 10-337, 10-339
493734-0000 ..	LOCKING PIN LOWER	10-119, 10-121
493747-0000 ..	GUIDE STUD	1-5, 1-11
493886-0000 ..	SHAFT	1-5, 1-11
493948-0000 ..	CANTILEVER	1-23, 1-25, 1-27
495130-0040 ..	SPACER TUBE L=40MM	9-39
495130-0060 ..	SPACER SLEEVE	9-33
495131-0013 ..	SPACER TUBE L=13MM	9-27, 9-31
495201-0000 ..	COOLING ELEMENT	2-55
495722-0000 ..	SCREW BUSHING	10-263
495765-0000 ..	WASHER	10-263
497040-0000 ..	STEERING	4-41, 4-43, 4-45, 4-47
497121-0000 ..	SPLASH GUARD	2-19
497131-0000 ..	FILLER TUBE	1-37
497572-0000 ..	BEARING HOUSING	4-29, 4-31, 4-33, 4-35
497579-0000 ..	CLAMP HALF	1-31
497580-0000 ..	CLAMP HALF	1-31
497583-0000 ..	HOUSING	4-41, 4-43, 4-45, 4-47
497716-0000 ..	GASKET	4-29, 4-31, 4-33, 4-35
497719-0000 ..	WASHER	1-101
497720-0000 ..	WASHER	1-5, 1-7, 1-9, 1-11
497748-0000 ..	PIN	1-75, 1-77, 10-87, 10-89
497933-0000 ..	BUSHING	1-69, 1-71, 1-73, 10-91, 10-93, 10-99
499011-0000 ..	SHAFT	1-37, 10-329, 10-331
499016-0000 ..	FORK	1-37, 10-329, 10-331
499082-0403 ..	ADAPTER, TYPE 1	6-3
499082-0404 ..	ADAPTER, TYPE 1	6-3
499082-0407 ..	ADAPTER, TYPE 1	6-3
499132-0002 ..	SHAFT	7-79
499181-0000 ..	WASHER	1-83
499255-0200 ..	SEAL KIT	1-131
499387-0000 ..	PRESSURE ROLLER	1-37, 1-131, 10-329, 10-331
499473-0000 ..	GEAR WHEEL	3-7
499474-0000 ..	SHAFT	3-7
499825-0000 ..	GASKET	1-83
499826-0000 ..	PIPE	1-83
499833-0000 ..	PIPE RIGHT	2-41, 2-43
499834-0000 ..	PIPE LEFT	2-41, 2-43
522090-0000 ..	HEAT EXCHANGER	1-93
522121-0200 ..	CUTTING TABLE	7-3, 7-5
522122-0001 ..	RAIL	7-81
522122-0002 ..	RAIL	7-81
522123-0000 ..	PLATE	7-81
522124-0000 ..	RULER	7-81
522125-0000 ..	BEARING HOUSING	7-81
522126-0000 ..	SHEET	7-81
522128-0000 ..	KNIFE	7-81
522129-0000 ..	KNIFE HOLDER	7-81
522130-0000 ..	HANDLE	7-81
522131-0000 ..	STEERING	7-81
522132-0000 ..	SLIDE BELT	7-81
522133-0000 ..	SHAFT	7-81
522134-0000 ..	END PLATE	7-81
522137-0000 ..	PUSH BUTTON	7-81
522138-0000 ..	STOPPER	7-81
522139-0001 ..	STOPPER	7-81
522139-0002 ..	STOPPER	7-81
522152-0000 ..	RAIL BRACKET	4-83, 4-85, 4-87, 4-89
522153-0000 ..	VOLUME CAM	4-83, 4-85, 4-87, 4-89
522158-0000 ..	COMPRESSION SPRING	7-81
522173-0000 ..	CANTILEVER	7-79
522308-0000 ..	SIGN	7-85
522408-0000 ..	BEARING HOUSING	7-9, 7-11, 7-13, 7-15, 7-17, 7-19
522410-0200 ..	BENDING ROLLER	7-67, 7-69, 7-71
522474-0000 ..	BLOCK L	7-75, 7-77
522475-0000 ..	BLOCK R	7-75, 7-77
525000-0300 ..	FOLDING PART	5-3, 5-5
525001-0000 ..	FOLDING BAR	5-25, 5-27, 5-41, 5-43, 5-45, 5-47
525002-0000 ..	FOLDING BAR	5-41, 5-43, 5-45, 5-47
525003-0000 ..	FOLDING BAR	5-25, 5-27, 5-41, 5-43, 5-45, 5-47
525004-0000 ..	FOLDING BAR	5-41, 5-43, 5-45, 5-47
525005-0001 ..	FOLDING BAR	5-41, 5-43, 5-45, 5-47
525005-0002 ..	FOLDING BAR	5-41, 5-43, 5-45, 5-47
525005-0003 ..	FOLDING BAR	5-41, 5-43, 5-45, 5-47
525005-0005 ..	FOLDING BAR	5-41, 5-43, 5-45, 5-47
525005-0006 ..	FOLDING BAR	5-41, 5-43, 5-45, 5-47
525005-0007 ..	FOLDING BAR	5-41, 5-43, 5-45, 5-47
525005-0009 ..	FOLDING BAR	5-41, 5-43, 5-45, 5-47
525006-0001 ..	FOLDING BAR	5-41, 5-43, 5-45, 5-47
525006-0002 ..	FOLDING BAR	5-41, 5-43, 5-45, 5-47
525006-0003 ..	FOLDING BAR	5-41, 5-43, 5-45, 5-47
525006-0005 ..	FOLDING BAR	5-41, 5-43, 5-45, 5-47
525006-0006 ..	FOLDING BAR	5-41, 5-43, 5-45, 5-47

Part No	Description	Page No
525006-0007 ..	FOLDING BAR	5-41, 5-43, 5-45, 5-47
525006-0009 ..	FOLDING BAR	5-41, 5-43, 5-45, 5-47
525007-0001 ..	CANTILEVER	5-41, 5-43, 5-45, 5-47
525007-0002 ..	CANTILEVER	5-25, 5-27, 5-41, 5-43, 5-45, 5-47
525007-0003 ..	CANTILEVER	5-41, 5-43, 5-45, 5-47
525007-0004 ..	CANTILEVER	5-41, 5-43, 5-45, 5-47
525008-0001 ..	BRACKET	5-25, 5-27, 5-41, 5-43, 5-45, 5-47
525008-0002 ..	BRACKET	5-41, 5-43, 5-45, 5-47
525008-0003 ..	BRACKET	5-41, 5-43, 5-45, 5-47
525011-0002 ..	BRACKET	5-41, 5-43, 5-45, 5-47
525011-0003 ..	BRACKET	5-41, 5-43, 5-45, 5-47
525011-0005 ..	BRACKET	5-41, 5-43, 5-45, 5-47
525011-0006 ..	BRACKET	5-41, 5-43, 5-45, 5-47
525011-0007 ..	BRACKET	5-41, 5-43, 5-45, 5-47
525011-0009 ..	BRACKET	5-41, 5-43, 5-45, 5-47
525012-0001 ..	COUNTER PLATE	5-41, 5-43, 5-45, 5-47
525012-0002 ..	COUNTER PLATE	5-41, 5-43, 5-45, 5-47
525012-0003 ..	COUNTER PLATE	5-41, 5-43, 5-45, 5-47
525012-0005 ..	COUNTER PLATE	5-41, 5-43, 5-45, 5-47
525014-0001 ..	COUNTER PLATE	5-41, 5-43, 5-45, 5-47
525015-0001 ..	SCREW	5-41, 5-43, 5-45, 5-47
525015-0002 ..	SCREW	5-25, 5-27, 5-41, 5-43, 5-45, 5-47
525015-0003 ..	SCREW	5-41, 5-43, 5-45, 5-47
525016-0000 ..	FASTENING PLATE	5-25, 5-27, 5-41, 5-43, 5-45, 5-47
525017-0000 ..	STEERING GUIDE	5-25, 5-27, 5-41, 5-43, 5-45, 5-47
525018-0000 ..	SPACER	5-25, 5-27, 5-41, 5-43, 5-45, 5-47
525019-0000 ..	BRACKET	5-25, 5-27, 5-41, 5-43, 5-45, 5-47
525038-0000 ..	GABLE PLATE	5-107
525039-0000 ..	GABLE PLATE	5-107
525046-0000 ..	GASKET	5-57
525047-0000 ..	GASKET	5-57
525051-0000 ..	HEAD PLATE	5-107
525052-0001 ..	SPACER	5-107
525052-0002 ..	SPACER	5-107
525052-0003 ..	SPACER	5-107
525052-0004 ..	SPACER	5-107
525052-0005 ..	SPACER	5-107
525052-0006 ..	SPACER	5-107
525053-0000 ..	PLATE (CIRCULAR)	5-23, 5-39
525054-0000 ..	SIDE PLATE	5-39
525055-0000 ..	BRACKET	5-111
525063-0000 ..	BOTTOM	5-149, 5-151, 5-153, 5-155, 5-157, 5-159
525066-0000 ..	SHEET	5-143, 5-145, 5-147
525067-0000 ..	SHEET	5-143, 5-145, 5-147
525070-0000 ..	ELECTRICAL CONNECTION	5-69, 5-71, 5-83, 5-85
525071-0000 ..	SPACER PIECE	5-69, 5-71
525073-0000 ..	COVER	5-69, 5-71, 5-83, 5-85
525074-0000 ..	ARM	5-125
525075-0001 ..	LINK	5-125
525075-0002 ..	LINK	5-125
525075-0003 ..	LINK	5-125
525075-0004 ..	LINK	5-125
525075-0005 ..	LINK	5-125
525075-0006 ..	LINK	5-125
525077-0000 ..	AXLE PIN	5-125
525078-0000 ..	BRACKET	5-125
525079-0000 ..	BRACKET	5-125
525080-0000 ..	BRACKET	5-125
525081-0000 ..	BRACKET	5-125
525082-0000 ..	BRACKET	5-125
525083-0000 ..	BRACKET	5-125
525084-0000 ..	HEAD PLATE	5-125
525085-0300 ..	LUBRICATING SYSTEM	5-3, 5-5
525086-0200 ..	CONVEYING EQUIPMENT	5-87, 5-89
525087-0100 ..	DROP	5-87, 5-89
525088-0200 ..	DISCHARGE CHUTE	5-87, 5-89
525089-0100 ..	CHAIN RIGHT	5-87, 5-89
525090-0100 ..	CHAIN LEFT	5-87, 5-89
525091-0100 ..	CHAIN	5-87, 5-89
525092-0100 ..	CHAIN GUARD	5-87, 5-89
525100-0000 ..	BLOCKING PIECE	5-139, 5-141
525101-0001 ..	BLOCKING PIECE	5-139, 5-141
525101-0002 ..	BLOCKING PIECE	5-139, 5-141
525102-0200 ..	LUBRICATING SYSTEM	5-57
525109-0000 ..	BRACKET	5-13
525110-0100 ..	CABLE CONDUIT	5-7, 5-9, 5-35, 5-37
525117-0300 ..	INDEXING GEAR	5-127
525125-0000 ..	PIN	5-139, 5-141
525128-0100 ..	FF-ELEMENT R	5-3, 5-5
525129-0100 ..	ELEMENT	5-3, 5-5
525130-0000 ..	LEG	5-7, 5-9, 5-35, 5-37
525132-0000 ..	CABLE TRENCH	5-7, 5-9, 5-35, 5-37
525134-0000 ..	SPACER PIECE	5-83, 5-85
525135-0000 ..	PLATE	5-19

Part No	Description	Page No
525136-0000 ..	SHAFT	5-15
525138-0000 ..	SHEET	5-29, 5-49, 5-51
525140-0000 ..	HOLDER	5-29, 5-49, 5-51
525143-0200 ..	BOTTOM VALVE	5-7, 5-9, 5-35, 5-37
525146-0000 ..	BRACKET	5-121, 5-123
525148-0000 ..	BRACKET	5-121, 5-123
525150-0000 ..	GABLE PLATE	5-107
525151-0000 ..	GABLE PLATE	5-107
525164-0000 ..	STEERING	5-121, 5-123
525166-0000 ..	MOTOR CRADLE	5-11
525169-0000 ..	SIDE PLATE	5-39
525170-0000 ..	SIDE PLATE	5-39
525171-0001 ..	BRACKET	5-23, 5-39
525171-0002 ..	BRACKET	5-39
525172-0000 ..	SPACER	5-129, 5-131
525173-0000 ..	CANTILEVER	5-67
525174-0000 ..	BRACKET	5-7, 5-9, 5-35, 5-37
525175-0000 ..	BRACKET	5-7, 5-9, 5-35, 5-37
525178-0000 ..	BRACKET	5-25, 5-27, 5-41, 5-43, 5-45, 5-47
525179-0001 ..	FOLDING ARM	5-41, 5-43, 5-45, 5-47
525179-0002 ..	FOLDING ARM	5-41, 5-43, 5-45, 5-47
525180-0001 ..	FOLDING ARM	5-41, 5-43, 5-45, 5-47
525180-0002 ..	FOLDING ARM	5-41, 5-43, 5-45, 5-47
525181-0000 ..	WASHER	5-25, 5-27, 5-41, 5-43, 5-45, 5-47
525182-0001 ..	COUNTER PLATE	5-41, 5-43, 5-45, 5-47
525182-0002 ..	COUNTER PLATE	5-41, 5-43, 5-45, 5-47
525185-0000 ..	HATCH	5-57
525194-0000 ..	SPROCKET	5-29, 5-49, 5-51
525195-0000 ..	WASHER	5-29, 5-49, 5-51
525197-0000 ..	BLOW-OFF NOZZLE TR	5-69, 5-71, 5-83, 5-85
525198-0000 ..	BLOW-OFF NOZZLE TL	5-69, 5-71, 5-83, 5-85
525200-0000 ..	BRACKET	5-29, 5-49, 5-51
525208-0001 ..	CARRIER	5-105
525208-0002 ..	CARRIER	5-105
525208-0003 ..	CARRIER	5-105
525211-0000 ..	PLATE	5-143, 5-145, 5-147
525212-0000 ..	PLATE	5-143, 5-145, 5-147
525213-0200 ..	INFEEDER	5-3, 5-5
525215-0006 ..	TIMING BELT PULLEY	5-13
525216-0000 ..	SLEEVE	5-13
525232-0000 ..	BRACKET	5-13
525233-0000 ..	GASKET 16X2X6MM	5-79, 5-81
525234-0002 ..	PLATE	5-143, 5-145, 5-147
525235-0000 ..	CURVE	5-127
525242-0000 ..	BRACKET	5-93, 5-95
525243-0000 ..	PROFILE	5-93, 5-95
525244-0000 ..	PROFILE	5-93, 5-95
525245-0000 ..	PROFILE	5-93, 5-95
525246-0000 ..	PROFILE	5-93, 5-95
525247-0000 ..	PROFILE	5-93, 5-95
525248-0000 ..	PROFILE	5-93, 5-95
525252-0000 ..	BEARING	5-23, 5-39
525254-0000 ..	LINK	5-33, 5-53, 5-55, 5-105
525255-0000 ..	HEAD PLATE	5-121, 5-123
525256-0000 ..	HEAD PLATE	5-121, 5-123
525259-0000 ..	BRACKET	5-121, 5-123
525260-0000 ..	GABLE PLATE	5-107
525261-0000 ..	GABLE PLATE	5-107
525262-0000 ..	COVERING PLATE	5-7, 5-9, 5-35, 5-37
525264-0000 ..	BOTTOM	5-149, 5-151, 5-153, 5-155, 5-157, 5-159
525265-0001 ..	LEAD PLATE	5-31
525265-0002 ..	LEAD PLATE	5-31
525265-0003 ..	LEAD PLATE	5-31
525265-0004 ..	LEAD PLATE	5-31
525266-0000 ..	LEG	5-7, 5-9, 5-35, 5-37
525267-0000 ..	LEG	5-7, 5-9, 5-35, 5-37
525268-0000 ..	LEG	5-7, 5-9, 5-35, 5-37
525269-0000 ..	PIPE	5-21
525270-0000 ..	PIPE	5-21
525271-0000 ..	ELBOW PIPE	5-7, 5-9, 5-35, 5-37
525272-0000 ..	STRUT	5-7, 5-9, 5-35, 5-37
525273-0000 ..	STRUT	5-7, 5-9, 5-35, 5-37
525274-0000 ..	FINISH FRAME	5-7, 5-9, 5-35, 5-37
525275-0000 ..	COVERING PLATE	5-7, 5-9, 5-35, 5-37
525276-0000 ..	HOUSE	5-57
525277-0000 ..	CABLE TRENCH	5-7, 5-9, 5-35, 5-37
525279-0000 ..	HATCH	5-127
525280-0000 ..	SHEET	5-7, 5-9, 5-35, 5-37
525281-0000 ..	GASKET	5-7, 5-9, 5-35, 5-37
525292-0000 ..	BRACKET	5-127
525293-0000 ..	PIPE	5-127
525294-0000 ..	PIPE	5-127
525295-0000 ..	ARM	5-41, 5-43, 5-45, 5-47
525296-0000 ..	BRACKET	5-25, 5-27, 5-41, 5-43, 5-45, 5-47

Part No	Description	Page No
525297-0000 ..	BRACKET	5-41, 5-43, 5-45, 5-47
525298-0000 ..	SPROCKET	5-33, 5-53, 5-55
525299-0000 ..	SHAFT	5-33, 5-53, 5-55
525300-0000 ..	MACHINE BODY	5-53, 5-55
525301-0000 ..	ARM	5-29, 5-49, 5-51
525302-0000 ..	ARM	5-49, 5-51
525303-0000 ..	ARM	5-49, 5-51
525304-0000 ..	ARM	5-49, 5-51
525305-0000 ..	DISTRIBUTOR	5-49, 5-51
525306-0000 ..	DISTRIBUTOR	5-49, 5-51
525307-0000 ..	DISTRIBUTOR	5-49, 5-51
525308-0000 ..	DISTRIBUTOR	5-49, 5-51
525309-0000 ..	DISTRIBUTOR	5-49, 5-51
525310-0000 ..	BRACKET	5-29, 5-49, 5-51
525311-0000 ..	GUIDE	5-29
525312-0000 ..	SHAFT	5-29, 5-49, 5-51
525315-0000 ..	SLIDER	5-29, 5-49, 5-51
525317-0000 ..	FITTING BOLT	5-29, 5-49, 5-51
525320-0100 ..	CHAIN GUARD	5-29, 5-49, 5-51
525321-0000 ..	SCREW	5-25, 5-27, 5-41, 5-43, 5-45, 5-47
525322-0001 ..	LEAD RAIL	5-53, 5-55
525322-0002 ..	LEAD RAIL	5-53, 5-55
525322-0003 ..	LEAD RAIL	5-53, 5-55
525322-0004 ..	LEAD RAIL	5-53, 5-55
525323-0000 ..	BRACKET	5-53, 5-55
525324-0000 ..	PROFILE	5-33, 5-53, 5-55
525325-0200 ..	DISCHARGER	5-3, 5-5
525326-0000 ..	CHAIN GUARD	5-31
525327-0000 ..	CHAIN GUARD	5-31
525328-0000 ..	CHAIN GUARD	5-31
525329-0000 ..	SLEEVE	5-149, 5-151, 5-153, 5-155, 5-157, 5-159
525330-0000 ..	SHAFT	5-149, 5-151, 5-153, 5-155, 5-157, 5-159
525331-0000 ..	SHIM	5-61
525332-0000 ..	SHIM	5-61
525334-0000 ..	BRACKET	5-93, 5-95, 5-109
525335-0000 ..	HOUSE	5-139, 5-141
525337-0000 ..	BRACKET	5-13
525338-0000 ..	SPACER	5-107, 5-119
525339-0000 ..	COVERING PLATE	5-107
525340-0000 ..	BRACKET	5-25, 5-27, 5-41, 5-43, 5-45, 5-47
525341-0001 ..	LEAD RAIL	5-41, 5-43, 5-45, 5-47
525341-0002 ..	LEAD RAIL	5-41, 5-43, 5-45, 5-47
525346-0000 ..	SIDE PLATE	5-7, 5-9, 5-35, 5-37
525348-0000 ..	SLIDE RAIL	5-129, 5-131
525349-0000 ..	SLIDE RAIL	5-129, 5-131
525350-0000 ..	SLIDE RAIL	5-129, 5-131
525352-0000 ..	SLIDE RAIL	5-129, 5-131
525353-0000 ..	SLIDE RAIL	5-129, 5-131
525354-0000 ..	SLIDE RAIL	5-129, 5-131
525355-0000 ..	SLIDE RAIL	5-129, 5-131
525357-0000 ..	SPACER	5-129, 5-131
525358-0000 ..	BRACKET	5-67
525360-0000 ..	BRACKET	5-41, 5-43, 5-45, 5-47
525363-0002 ..	SHAFT	5-113
525367-0000 ..	SLEEVE	5-139, 5-141
525369-0000 ..	BOTTOM	5-149, 5-151, 5-153, 5-155, 5-157, 5-159
525370-0000 ..	BOTTOM	5-149, 5-151, 5-153, 5-155, 5-157, 5-159
525371-0000 ..	BOTTOM	5-149, 5-151, 5-153, 5-155, 5-157, 5-159
525372-0000 ..	BOTTOM	5-149, 5-151, 5-153, 5-155, 5-157, 5-159
525374-0000 ..	CARRIER	5-53, 5-55
525375-0000 ..	OIL PIPE	5-67
525376-0000 ..	BOW CLAMP	5-67
525377-0000 ..	HATCH	5-57
525378-0000 ..	HEAD PLATE	5-129, 5-131
525379-0000 ..	COMPRESSION SPRING	5-139, 5-141
525380-0000 ..	HATCH	5-163
525381-0000 ..	BRACKET	5-163
525382-0000 ..	SHAFT	5-163
525383-0000 ..	BRACKET	5-163
525384-0000 ..	DOWEL	5-163
525385-0000 ..	BRACKET	7-49, 7-51
525394-0000 ..	HINGE	5-163
525400-0000 ..	SHAFT	5-93, 5-95
525401-0000 ..	SHAFT	5-93, 5-95
525402-0000 ..	SHAFT	5-93, 5-95, 5-109
525403-0000 ..	PROFILE	5-93, 5-95
525404-0000 ..	PROFILE	5-93, 5-95
525405-0000 ..	PROFILE	5-93, 5-95
525406-0000 ..	PROFILE	5-93, 5-95
525409-0000 ..	WASTE CHUTE	5-163
525410-0000 ..	LEAD RAIL	5-41, 5-43, 5-45, 5-47
525411-0000 ..	PROFILE	5-33, 5-53, 5-55
525412-0000 ..	RULER	5-33, 5-53, 5-55
525414-0000 ..	CARRIER	5-53, 5-55

Part No	Description	Page No
525416-0000 ..	STOP	5-125
525417-0000 ..	STEERING	5-49, 5-51
525418-0000 ..	HOLDER	5-49, 5-51
525419-0000 ..	LEAD RAIL	5-93, 5-95
525423-0000 ..	COVERING PLATE	5-163
525424-0000 ..	HEAD PLATE	5-129, 5-131
525425-0000 ..	PROFILE	5-93, 5-95
525426-0000 ..	PROFILE	5-93, 5-95
525427-0000 ..	PROFILE	5-93, 5-95
525428-0000 ..	PROFILE	5-93, 5-95
525429-0000 ..	PLATE	5-143, 5-145, 5-147
525430-0000 ..	FLAP	5-149, 5-151, 5-153, 5-155, 5-157, 5-159
525431-0000 ..	CARRIER	5-97, 5-99
525432-0000 ..	CARRIER	5-101, 5-103
525437-0000 ..	ARCH	5-53, 5-55
525438-0000 ..	COUNTER PLATE	5-41, 5-43, 5-45, 5-47
525439-0000 ..	DRIP PLATE	5-163
525445-0000 ..	HUB	5-155, 5-157, 5-159
525446-0000 ..	HUB	5-149, 5-151, 5-153
525447-0000 ..	HUB	5-155, 5-157, 5-159
525448-0000 ..	HUB	5-149, 5-151, 5-153
525449-0000 ..	HUB	5-155, 5-157, 5-159
525450-0000 ..	HUB	5-149, 5-151, 5-153
525453-0000 ..	FLAP	5-149, 5-151, 5-153, 5-155, 5-157, 5-159
525454-0000 ..	FLAP	5-149, 5-151, 5-153, 5-155, 5-157, 5-159
525455-0000 ..	FLAP	5-149, 5-151, 5-153, 5-155, 5-157, 5-159
525456-0000 ..	FLAP	5-149, 5-151, 5-153, 5-155, 5-157, 5-159
525458-0000 ..	FLAP	5-149, 5-151, 5-153, 5-155, 5-157, 5-159
525460-0000 ..	SPACER PIECE	5-149, 5-151, 5-153, 5-155, 5-157, 5-159
525461-0000 ..	SPACER PIECE	5-149, 5-151, 5-153, 5-155, 5-157, 5-159
525465-0000 ..	BRACKET	5-125
525466-0000 ..	ARCH	5-53, 5-55
526502-0000 ..	STEERING RAIL	1-107
526582-0000 ..	NET	8-13
526587-0000 ..	AIR NOZZLE	1-49
526677-0000 ..	CANTILEVER	4-93
526680-0000 ..	FENDER WALING	7-7
526682-0000 ..	HOOD	1-37, 10-329, 10-331
526687-0000 ..	ATTACHMENT	1-49
526688-0000 ..	HEAD PLATE	1-49
526689-0000 ..	DISTRIBUTOR WING	1-49, 1-131
526690-0000 ..	SHAFT	1-49
526691-0000 ..	ROLL	1-49
526692-0000 ..	ROLL	1-49
526696-0000 ..	AIR NOZZLE	1-31
526697-0000 ..	HEAT GUARD	1-31
526782-0000 ..	COVERING PLATE	1-51
526904-0000 ..	LINK HEAD	3-25
526931-0300 ..	BOTTOM PLATE	8-3, 8-5
526947-0000 ..	MOUNTING SHEET	8-29
526948-0000 ..	MOUNTING SHEET	8-25, 8-27
526954-0100 ..	START-UP KIT	8-3, 8-5
526958-0000 ..	AXLE SUPPORT	1-23, 1-25, 1-27
526984-0000 ..	SADDLE	7-35, 7-37
526985-0000 ..	PLATE	7-35, 7-37
526986-0001 ..	SHAFT	7-35, 7-37
527120-0000 ..	STEERING	2-29
527121-0001 ..	BOW CLAMP	2-29
527121-0002 ..	BOW CLAMP	2-29
527122-0000 ..	ATTACHMENT	2-29
527124-0000 ..	BEARING	2-29
527125-0000 ..	STEERING	2-29
527126-0000 ..	LEAF SPRING	2-29
527127-0000 ..	DOWEL	2-29
527128-0000 ..	GUIDE PIN	2-29
527129-0000 ..	BRACKET	2-29
527130-0000 ..	SCREW	2-29
527647-0001 ..	STEERING RAIL	1-107
527647-0002 ..	STEERING RAIL	1-107
527648-0000 ..	WASHER	3-17
527649-0000 ..	DISTANCE RUBBER	7-35, 7-37
527750-0000 ..	CALENDER ROLLER	1-103
527854-0000 ..	PLATE RIGHT	5-143, 5-145, 5-147
527856-0000 ..	PLATE LEFT	5-143, 5-145, 5-147
527861-0000 ..	HEAD PLATE	5-129, 5-131
527898-0100 ..	CONTAINER H2O2	2-13
527902-0000 ..	SHEET	2-15
527905-0000 ..	GASKET	2-25
527906-0000 ..	GASKET	2-25
527907-0000 ..	PIPE	2-83, 2-85, 2-87, 2-89
527910-0000 ..	PIPE	2-19
527912-0000 ..	NON-RETURN VALVE	2-29
529000-0000 ..	VOLUME FLAP	4-19, 4-21
529039-0000 ..	EDGE ROLLER	1-23, 1-25, 1-27

Part No	Description	Page No
529040-0000 ..	GUIDE ROLLER	1-23, 1-25, 1-27
529041-0000 ..	GUIDE ROLLER	1-23, 1-25, 1-27
529137-0000 ..	CURVE LEFT	4-7, 4-9
529138-0000 ..	CURVE RIGHT	4-11, 4-13
529139-0000 ..	CREASE FORMER	7-9, 7-11, 7-13, 7-15, 7-17, 7-19
529141-0000 ..	VOLUME SHIM	4-49, 4-51
529180-0000 ..	FORK	1-37, 10-329, 10-331
529181-0000 ..	COUNTER ROLLER	1-17, 1-19
529184-0000 ..	HOLDER	1-17, 1-19
529196-0000 ..	HOLDER	4-83, 4-85, 4-87, 4-89
529312-0000 ..	HEAD PLATE	5-129, 5-131
529331-0000 ..	COVERING PLATE	5-35, 5-37
529362-0000 ..	SPROCKET	7-35, 7-37
529376-0000 ..	ARM	1-43, 1-45
529377-0000 ..	CLAMP	1-43, 1-45
529378-0000 ..	LINK	1-43, 1-45
529455-0000 ..	PLATE	7-57, 7-59, 7-61, 7-63
529456-0000 ..	PLATE	7-57, 7-59, 7-61, 7-63
529476-0000 ..	SIDE GUARD	7-49, 7-51
529498-0000 ..	SIDE GUARD RIGHT	7-49, 7-51
529638-0200 ..	LOWER FILLING PIPE LLF	10-283
529639-0000 ..	CONNECTION CLAMP	10-347
529645-0100 ..	UPPER FILLING TUBE	10-283
529647-0000 ..	HOLDER	10-347
529659-0000 ..	COMPRESSION SPRING	10-353
529682-0000 ..	FILTERS HOUSING	10-377
529795-0000 ..	VALVE HOUSING	10-85
529893-0002 ..	LOWER FILLING TUBE	10-337, 10-339
529893-0003 ..	LOWER FILLING TUBE	10-337, 10-339
529893-0004 ..	LOWER FILLING TUBE	10-337, 10-339
529908-0000 ..	WASHER	10-353
529910-0000 ..	THRUST WASHER	10-353
529925-0000 ..	VALVE BODY	10-383
529926-0000 ..	COVER	10-383
529927-0000 ..	PISTON ROD	10-383
530469-0000 ..	FRONT PLATE	2-57, 2-59, 2-61
530529-0000 ..	MAIN CAM	3-11, 3-13
530532-0000 ..	COUNTER CAM	3-11, 3-13
530550-0000 ..	PIPE	2-15
530551-0000 ..	WASHER	2-29
530556-0000 ..	JUNCTION PIPE UPPER	2-69
530566-0000 ..	EDGE ROLLER	1-23, 1-25, 1-27
530567-0000 ..	GUIDE ROLLER	1-23, 1-25, 1-27
530568-0000 ..	GUIDE ROLLER	1-23, 1-25, 1-27
530587-0000 ..	WASHER	1-73
530588-0000 ..	SEAL RING	1-73, 1-95, 1-97, 1-133, 10-91
530589-0000 ..	SEAL RING	1-69, 1-71, 1-133, 10-93, 10-99
530590-0000 ..	VALVE CONE	1-69, 1-71, 10-93
530591-0000 ..	HOLDER	1-71
530592-0000 ..	SEAL RING HOLDER	1-69
530595-0000 ..	SEAL RING HOLDER	1-69
530597-0000 ..	WASHER	1-71
530598-0000 ..	WASHER	1-71
530599-0000 ..	RING	1-71
530622-0000 ..	BUSHING	1-47
530708-0000 ..	ARM	3-15
530754-0000 ..	FASTENING BRACKET	3-9
530755-0000 ..	SCREW	3-9
530778-0000 ..	LACE	7-81
530808-0000 ..	CLAMP RAIL	1-111
531002-0000 ..	CURVE	4-83, 4-85, 4-87, 4-89
531034-0000 ..	VALVE HOUSING	1-85
531035-0000 ..	ARM	1-85
531036-0000 ..	SHAFT	1-85
531037-0000 ..	FLAP	1-85
531038-0000 ..	GASKET	1-85
531039-0000 ..	WASHER	1-85
531040-0000 ..	BRACKET	1-85
531041-0000 ..	WEDGE	1-85
531109-0000 ..	VOLUME CAM	4-83, 4-85, 4-87, 4-89
531110-0000 ..	RAIL BRACKET	4-83, 4-85, 4-87, 4-89
531116-0000 ..	GASKET	5-21
531119-0000 ..	STRAINER	5-7, 5-9, 5-35, 5-37
531167-0000 ..	SHAFT	1-59, 1-61
531168-0000 ..	WHEEL	1-59, 1-61
531169-0000 ..	WASHER	1-59, 1-61
531182-0000 ..	CANTILEVER	2-57, 2-59, 2-61
531189-0000 ..	GASKET	5-21
531190-0000 ..	SHAFT	1-101
531191-0000 ..	BUSHING	1-101
531309-0000 ..	GASKET	1-111
531312-0000 ..	HEAD PLATE	5-129, 5-131
531313-0000 ..	HEAD PLATE	5-129, 5-131
531314-0000 ..	HEAD PLATE	5-129, 5-131

Part No	Description	Page No
531337-0000 ..	MACHINE BODY	7-53
531345-0200 ..	PERSONAL PROTECT. EQ H2O2	6-3
531365-0000 ..	BRACKET	2-57, 2-59, 2-61
531592-0000 ..	PIPE	2-65
531595-0000 ..	STRAIGHT PIPE UNION	2-65
531597-0000 ..	PIPE	2-65
531616-0000 ..	HOLDER	2-31, 2-33
531628-0000 ..	PRESSURE DEVICE FLAP	5-139, 5-141
531730-0000 ..	FLANGE SEAL	5-69, 5-71, 5-83, 5-85
531731-0000 ..	GASKET	1-99
531733-0000 ..	GASKET	8-25, 8-27, 8-35
531734-0000 ..	GASKET	1-47, 1-131, 8-25, 8-27, 8-35
531735-0000 ..	GASKET	8-25, 8-27, 8-35
531736-0000 ..	GASKET	8-25, 8-27, 8-35
531737-0000 ..	GASKET	1-93, 1-99, 10-363, 10-377
531738-0000 ..	GASKET	1-47, 1-131
531739-0000 ..	GASKET	1-47, 1-131
531740-0000 ..	GASKET	1-47, 1-131
531741-0000 ..	GASKET	1-31
531742-0000 ..	GASKET	1-51, 1-93, 1-131, 10-363, 10-383
531744-0000 ..	GASKET	1-47, 1-131
531745-0000 ..	GASKET	1-47, 1-131
531761-0000 ..	HOLDER	2-33
531764-0000 ..	GASKET	1-47, 1-131
531765-0000 ..	GASKET	1-95, 1-97
531885-0000 ..	STEERING	7-79
531886-0000 ..	PROTECTION PLATE	7-67, 7-69, 7-71
531901-0000 ..	UPPER FILLING TUBE	10-329, 10-331
531902-0000 ..	LOWER FILLING TUBE	10-337, 10-339
532024-0000 ..	GASKET	7-53
532026-0000 ..	SEAL COVER	7-53
532032-0000 ..	MAIN CAM	3-11, 3-13
532033-0000 ..	COUNTER CAM	3-11, 3-13
532082-0000 ..	ROUND NUT	7-9, 7-11, 7-13, 7-15, 7-17, 7-19
532083-0000 ..	ROUND NUT	7-9, 7-11, 7-13, 7-15, 7-17, 7-19
532097-0000 ..	COUNTER CAM	3-11, 3-13
532117-0000 ..	CLAMP RING	1-75, 10-87
532118-0000 ..	CLAMP RING	1-77, 10-89
532143-0000 ..	ARM	1-103
532144-0000 ..	SHAFT	1-103
532145-0000 ..	SHAFT	1-103
532146-0000 ..	SHAFT	1-103
532147-0000 ..	WASHER	1-103
532148-0000 ..	SCREW	1-103
532205-0000 ..	LID	2-25
532206-0000 ..	GASKET	2-25
532261-0000 ..	SLEEVE	1-103
532318-0000 ..	CATCH GUARD RIGHT	2-7
532319-0000 ..	CATCH GUARD LEFT	2-7
532348-0000 ..	SPINDLE GUIDE	1-95, 1-97
532349-0000 ..	PLAIN BEARING	1-95, 1-97
532352-0000 ..	PIPE	1-117, 1-119
532354-0000 ..	PIPE	1-117, 1-119
532355-0000 ..	PIPE	1-117, 1-119
532356-0000 ..	PIPE	1-117, 1-119
532366-0000 ..	PIPE	1-117, 1-119
532371-0000 ..	STOP LUG	2-91
532412-0000 ..	SPRING	10-239
532655-0000 ..	CAUTION SIGN	2-27
532687-0000 ..	TOROID COIL 1	10-201
532688-0000 ..	TOROID COIL 2	10-203
532689-0000 ..	TOROID COIL 3	10-205
532690-0000 ..	THERMOSTAT CABLE	10-207
532691-0000 ..	COIL FORMER	10-209
532692-0000 ..	COIL SINGLE LAYER	10-209
532693-0000 ..	BOTTOM GABLE	10-211
532694-0000 ..	TANK COIL	10-211
532695-0000 ..	GABLE	10-211
532696-0000 ..	RING SPRING	10-211
532697-0000 ..	WINDING HOLDER	10-211
532703-0000 ..	HEAT SINK V2	10-215
532709-0000 ..	GABLE RIGHT	10-217, 10-219
532710-0000 ..	STUDSCREW	10-217, 10-219
532711-0000 ..	KYLPLåT PLAN	10-217, 10-219
532712-0000 ..	DISTANSPLåT	10-217, 10-219
532716-0000 ..	OUTPUT TRANSFORMER	10-221
532717-0000 ..	TRANSFORMER CONTROL CARD	10-229
532719-0001 ..	FEEDING ROLLER	7-9, 7-11, 7-13, 7-15, 7-17, 7-19
532719-0002 ..	FEEDING ROLLER	7-9, 7-11, 7-13, 7-15, 7-17, 7-19
533169-0000 ..	DIAPHRAGM	1-69, 1-133, 10-99
533195-0000 ..	MANTLE	1-47
533196-0000 ..	FASTENING PLATE	1-47
533426-0000 ..	STOP PLATE	2-31
533442-0000 ..	COUNTER ROLLER	1-17, 1-19

Part No	Description	Page No
533448-0000 ..	MACHINE BODY	7-9, 7-11, 7-13, 7-15, 7-17, 7-19
533449-0001 ..	BENDING ROLLER	7-9, 7-11, 7-13, 7-15, 7-17, 7-19
533449-0002 ..	BENDING ROLLER	7-9, 7-11, 7-13, 7-15, 7-17, 7-19
533453-0000 ..	LID	7-9, 7-11, 7-13, 7-15, 7-17, 7-19
533454-0000 ..	FRAME	7-9, 7-11, 7-13, 7-15, 7-17, 7-19
533455-0000 ..	LID	7-9, 7-11, 7-13, 7-15, 7-17, 7-19
533456-0000 ..	FRAME	7-9, 7-11, 7-13, 7-15, 7-17, 7-19
533457-0001 ..	SHAFT	7-9, 7-11, 7-13, 7-15, 7-17, 7-19
533457-0002 ..	SHAFT	7-9, 7-11, 7-13, 7-15, 7-17, 7-19
533458-0000 ..	WASHER	7-9, 7-11, 7-13, 7-15, 7-17, 7-19
533459-0000 ..	SCREW	7-9, 7-11, 7-13, 7-15, 7-17, 7-19
533818-0000 ..	HOLDER	4-15, 4-17, 4-63, 4-65
533838-0000 ..	RIVET	10-223
533839-0000 ..	FILTER	10-223
533840-0000 ..	GASKET	10-223
533841-0000 ..	TäTNING	10-223
533842-0000 ..	MOUNTING DRAWING	10-223
533955-0000 ..	CURVE	4-83, 4-85, 4-87, 4-89
534176-0000 ..	AIR NOZZLE	1-31
534177-0000 ..	HOLDER	1-17, 1-19
534237-0000 ..	SEAL	4-15, 4-17
534362-0502 ..	QUEUE GUARD,SINGLE	10-269
534426-0000 ..	PIPE	1-93
534486-0000 ..	PIPE HOLDER	2-91
534878-0000 ..	SHAFT	2-37, 2-39, 2-45, 2-47, 2-71, 2-93
534879-0000 ..	BEARING HOUSING	2-37, 2-39, 2-45, 2-47, 2-71, 2-93
534880-0000 ..	END SECTION	2-37, 2-39, 2-45, 2-47, 2-71, 2-93
535016-0000 ..	FORCE SPRING	2-69
535017-0000 ..	BRACKET	2-69
535200-0000 ..	HOLDER	4-93
535608-0000 ..	GASKET	8-13
535612-0000 ..	PIPE	8-15
535613-0000 ..	BRANCH	8-13
535614-0000 ..	INNER PIPE	8-13
536374-0000 ..	WASHER	10-187, 10-189
536686-0000 ..	VOLUME BULGE	4-19, 4-21
536687-0000 ..	VOLUME SHIM	4-19, 4-21
536693-0000 ..	FASTENING PLATE	10-187, 10-189
536694-0000 ..	PAPER GUIDE	10-187, 10-189
536703-0000 ..	SHAFT	3-25
536704-0000 ..	WASHER	4-15, 4-17, 4-63, 4-65
536705-0000 ..	BRACKET	4-15, 4-17
536913-0000 ..	HUB	8-39, 10-13
536916-0000 ..	AXLE PIN	8-37
536917-0000 ..	AXLE PIN	8-41, 8-43, 10-15, 10-17
536987-0000 ..	WASHER	1-5
537308-0000 ..	SPRING	7-21, 7-23
537327-0000 ..	SHAFT	8-39, 10-13
537329-0100 ..	HUB JUMBO	8-37, 10-7
537901-0000 ..	FOLDING FLAP CAM L	4-7, 4-9
537902-0000 ..	FOLDING FLAP CAM R	4-11, 4-13
537918-0000 ..	PIPE	2-69
537919-0000 ..	PIPE HOLDER	2-69
538241-0002 ..	SPACER	7-9, 7-11, 7-13, 7-15, 7-17, 7-19
538241-0003 ..	SPACER	7-9, 7-11, 7-13, 7-15, 7-17, 7-19
538241-0004 ..	SPACER	7-9, 7-11, 7-13, 7-15, 7-17, 7-19
538241-0005 ..	SPACER	7-9, 7-11, 7-13, 7-15, 7-17, 7-19
538245-0000 ..	SHIM	2-57, 2-59, 2-61
538399-0000 ..	SHAFT	4-15, 4-17, 4-63, 4-65
538400-0000 ..	ARM LEFT	4-63
538401-0000 ..	ARM RIGHT	4-65
539209-0100 ..	A-CYLINDER	1-67
539210-0100 ..	C-CYLINDER	1-67
539211-0100 ..	B-CYLINDER	1-67
539212-0000 ..	GASKET	1-67, 1-133, 10-85
539338-0000 ..	CAP	7-9, 7-11, 7-13, 7-15, 7-17, 7-19
539613-0000 ..	SPREADER	2-115
539761-0000 ..	CUTTING RAIL	4-29, 4-31, 4-33, 4-35
540270-0000 ..	MAIN CAM	3-11, 3-13
540306-0001 ..	COMPONENTS WITHOUT TP-NO	2-143
540307-0000 ..	PRINTED CIRCUIT BOARD	2-143
540335-0000 ..	LINK	3-25
540367-0000 ..	CARRIER	4-27
540368-0000 ..	CARRIER	4-25
540718-0000 ..	ELBOW PIPE JOINT	2-67
540721-0000 ..	CABLE DUCT	2-131
540722-0000 ..	LID	2-131
540723-0100 ..	CONNECTION BOX	2-57, 2-59, 2-61
540724-0000 ..	CONNECTION BOX	2-63
540725-0000 ..	FRONT PLATE, LOWER	2-57, 2-59, 2-61
540726-0000 ..	HOOK HOLDER	2-57, 2-59, 2-61
540727-0000 ..	FASTENING BRACKET	2-57, 2-59, 2-61
540743-0000 ..	BUSBAR	4-27
540744-0000 ..	BUSBAR	4-25

Part No	Description	Page No
540869-0000 ..	SHEET	8-37
540870-0000 ..	ARM	8-41, 8-43
540886-0000 ..	TANK	2-19
540949-0000 ..	SHAFT	3-19
541009-0000 ..	CRANK HOLDER	2-109
541052-0100 ..	ARM WITH AXLE PRESSURE L	4-3, 4-5
541053-0100 ..	ARM WITH AXLE PRESSURE R	4-3, 4-5
541057-0000 ..	ARM	8-41, 8-43, 10-15, 10-17
541064-0000 ..	FORK	8-41, 8-43, 10-15, 10-17
541065-0000 ..	SHAFT	8-41, 8-43, 10-15, 10-17
541066-0000 ..	ROLL	8-41, 8-43, 10-15, 10-17
541067-0000 ..	SPRING BRACKET	8-41, 8-43, 10-15, 10-17
541068-0000 ..	SPRING HOLDER	8-37, 10-19
541069-0000 ..	SPRING BRACKET	8-41, 8-43, 10-15, 10-17
541070-0000 ..	SHAFT	8-41, 8-43, 10-15, 10-17
541163-0100 ..	CLAMP RING	1-67, 10-85, 10-95
541164-0100 ..	CLAMP RING	1-67, 10-85
541165-0000 ..	WASHER	1-75, 1-77, 10-87, 10-89
541166-0000 ..	WASHER	1-69
541167-0000 ..	SPACER SLEEVE	1-69
541172-0000 ..	SET SCREW	8-37
541173-0000 ..	STOP	8-37, 10-19
541177-0000 ..	BENDING ROLLER	1-59, 1-61
541188-0300 ..	BAR CODE	4-3, 4-5
541697-0000 ..	CATCH	4-41, 4-43, 4-45, 4-47
541751-0000 ..	CONICAL BOBBIN	8-39, 10-13
542036-0000 ..	LABEL "PART NO" 84X140MM	10-197
542038-0002 ..	COMPONENTS WITHOUT TP-NO	10-327
542063-0000 ..	FLANGE	3-19
542074-0000 ..	PIPE	2-65
542075-0000 ..	PIPE	1-59, 1-61
542090-0000 ..	HEAT GUARD	8-23
542262-0000 ..	CRANK	3-5
542398-0000 ..	HOLDER	2-57, 2-59, 2-61
542399-0000 ..	HOLDER	2-57, 2-59, 2-61
542695-0000 ..	COVERPLATE R	2-11
542697-0000 ..	COVER PLATE L	2-53
542700-0000 ..	VALVEPANEL LOWER	2-117, 2-119
542702-0000 ..	COVER PLATE L	2-57, 2-59, 2-61
542703-0000 ..	COVER PLATE R	2-57, 2-59, 2-61
542706-0000 ..	PIPE	2-35
542781-0000 ..	ARM	8-45
542782-0000 ..	AXLE PIN	8-45
542784-0000 ..	LINK ARM	8-45
542785-0000 ..	ROLL	8-45
542786-0000 ..	FLAG	8-45
542847-0000 ..	PAPER GUARD	1-15
542848-0000 ..	HATCH	1-15
542849-0000 ..	CANTILEVER	1-15
542850-0000 ..	COVERING PLATE	1-15
542851-0000 ..	HINGE	1-15
542852-0000 ..	CANTILEVER	1-79
542860-0000 ..	COVER PLATE	2-31
543112-0000 ..	MODIFYING EUROPECONNECTOR	10-199
543117-0000 ..	PANEL	10-231
543118-0000 ..	FRONT PANEL MOUNTING DWG	10-231
543119-0000 ..	PARTITION WALL	10-223
543120-0000 ..	PARTITION WALL	10-223
543125-0000 ..	ANGLE	8-37
543126-0000 ..	STOP LUG	8-37
543127-0000 ..	BRACKET	2-117, 2-119
543128-0000 ..	VALVE BRACKET	2-117, 2-119
543130-0000 ..	BRACKET	2-117, 2-119
543131-0000 ..	BRACKET	2-117, 2-119
543134-0000 ..	PLATE	2-117, 2-119
543135-0000 ..	INK TRANSFER ROLLER	7-21, 7-23
543137-0001 ..	SPACER	7-9, 7-11, 7-13, 7-15, 7-17, 7-19
543137-0002 ..	SPACER	7-9, 7-11, 7-13, 7-15, 7-17, 7-19
543138-0000 ..	SPACER	7-9, 7-11, 7-13, 7-15, 7-17, 7-19
543141-0000 ..	SIGN	7-35, 7-37
543142-0000 ..	SIGN	7-35, 7-37
543143-0100 ..	ADJUSTMENT DEVICE	7-9, 7-11, 7-13, 7-15, 7-17, 7-19
543148-0000 ..	HOOD	2-41, 2-43
543151-0000 ..	CANTILEVER	2-57, 2-59, 2-61
543152-0000 ..	HOSE ATTACHMENT	2-57, 2-59, 2-61
543315-0000 ..	LOWER FILLING TUBE	10-337, 10-339
543316-0000 ..	FLOAT	10-337, 10-339
543326-0000 ..	COVERPLATE HANDLE 5TE	10-319
543371-0000 ..	CIRCUIT BOARD 8TE	10-163, 10-195
543470-0000 ..	LEVEL GLASS	1-59, 1-61
543471-0000 ..	ROLL	1-23, 1-25, 1-27
543476-0000 ..	TROUGH	3-19
543575-0000 ..	LOCK SHEET	8-45
543694-0000 ..	SLIDE RAIL	5-129, 5-131

Part No	Description	Page No
543697-0000 ..	SPACER PIECE	5-149, 5-151, 5-153, 5-155, 5-157, 5-159
543705-0000 ..	GEAR WHEEL WIDE	5-133, 5-135
543706-0000 ..	GEAR WHEEL SLIM , INNER	5-133, 5-135
543707-0000 ..	GEAR WHEEL SLIM , OUTER	5-133, 5-135
543818-0000 ..	PROTECTION PLATE	8-37
543819-0000 ..	HINGE	8-37
543820-0000 ..	SPRING	8-41, 8-43, 10-15, 10-17
543821-0100 ..	LEVEL PROBE	8-37
543822-0100 ..	BRAKE ARM	8-37
543823-0100 ..	STRIP MAGAZINE	8-3, 8-5
543874-0000 ..	COVER PLATE:CIRCUIT CARD	10-311
543875-0001 ..	COMPONENTS WITHOUT TP-NO	10-313
543876-0000 ..	PRINTED CIRCUIT BOARD	10-313
543877-0001 ..	COMPONENTS WITHOUT TP-NO	10-315
543878-0000 ..	PRINTED CIRCUIT BOARD	10-315
543879-0000 ..	COOLING DISTANCE BLOCK	10-313
543880-0000 ..	PRINTED CIRCUIT BOARD	10-321
543881-0000 ..	PRINTED CIRCUIT BOARD	10-323
543897-0001 ..	COMPONENTS WITHOUT TP-NO	10-319
543898-0000 ..	FRONT PANEL 14TE	10-319
543899-0000 ..	COOLING FLANGE	10-319
543900-0000 ..	COOLING FLANGE DISTANCE	10-319
543901-0000 ..	COOLING BLOCK	10-319
543902-0000 ..	SIGN BOARD	10-319
543903-0001 ..	COMPONENTS WITHOUT TP-NO	10-321
543921-0002 ..	COMPONENTS WITHOUT TP-NO	10-171
543921-0004 ..	COMPONENTS WITHOUT TP-NO	10-169
543921-0005 ..	COMPONENTS WITHOUT TP-NO	10-167
543924-0000 ..	COVER PLATE:HANDLE 8TE	10-311
543932-0001 ..	COMPONENTS WITHOUT TP-NO	10-311
543933-0000 ..	FRONT PANEL 8TE	10-311
543950-0000 ..	BENDING ROLLER	1-101
544012-0000 ..	ROLLER	1-113
544013-0000 ..	RING	1-113
544014-0000 ..	RING	1-113
544015-0000 ..	SEAL	1-113, 1-131
544229-0001 ..	DROP WING	5-121, 5-123
544229-0002 ..	DROP WING	5-121, 5-123
544229-0003 ..	DROP WING	5-121, 5-123
544229-0004 ..	DROP WING	5-121, 5-123
544229-0005 ..	DROP WING	5-121, 5-123
544252-0000 ..	FLAP	5-149, 5-151, 5-153, 5-155, 5-157, 5-159
544254-0000 ..	PLATE	5-149, 5-151, 5-153, 5-155, 5-157, 5-159
544255-0000 ..	BLOCKING PIECE	5-139, 5-141
544263-0000 ..	FORMING RING	1-23, 1-25, 1-27
544269-0000 ..	BLOW-OFF NOZZLE TV	5-69, 5-71, 5-83, 5-85
544270-0000 ..	STOPPER	7-81
544272-0000 ..	BEARING HOUSING	7-75, 7-77
544273-0000 ..	BEARING HOUSING	7-75, 7-77
544274-0000 ..	COVERING PLATE	7-75, 7-77
544275-0000 ..	COVERING PLATE	7-75, 7-77
544277-0000 ..	RETAINING RING	7-43, 7-45
544278-0000 ..	BEARING HOUSING	4-41, 4-43, 4-45, 4-47
544279-0000 ..	CREASE FORMER	7-9, 7-11, 7-13, 7-15, 7-17, 7-19
544280-0000 ..	SHEET	5-143, 5-145, 5-147
544286-0000 ..	BOW CLAMP	1-7, 1-9
544287-0000 ..	FILLER TUBE	1-37
544288-0000 ..	SHEET	5-143, 5-145, 5-147
544289-0000 ..	FLAP	5-139, 5-141
544290-0000 ..	RAIL	5-143, 5-145, 5-147
544291-0000 ..	PLATE	5-143, 5-145, 5-147
544292-0000 ..	SHAFT	4-19, 4-21, 4-23
544293-0000 ..	BLOW-OFF NOZZLE TH	5-69, 5-71, 5-83, 5-85
544294-0000 ..	FILLER TUBE	1-43, 1-45
544295-0000 ..	FLOAT	1-43, 1-45
544298-0000 ..	BLOWING NOZZLE B	5-69, 5-71, 5-83, 5-85
544300-0000 ..	GASKET	10-359, 10-361
544301-0000 ..	STEERING RAIL	1-107
544303-0000 ..	HOLDER	4-83, 4-85, 4-87, 4-89
544305-0000 ..	VOLUME SHIM	4-49, 4-51
544306-0000 ..	BEARING HOUSING	1-17, 1-19
544307-0000 ..	HEAD PLATE	5-125
544314-0000 ..	FOLDING FLAP	4-53, 4-57
544315-0000 ..	FOLDING FLAP	4-53, 4-57
544317-0000 ..	BEARING HOUSING	4-29, 4-31, 4-33, 4-35
544318-0000 ..	DISTRIBUTOR	5-49, 5-51
544319-0000 ..	CARRIER RULER	4-53
544320-0000 ..	CARRIER RULER	4-57
544321-0000 ..	HEAD PLATE	5-93, 5-95
544322-0000 ..	BRACKET	5-93, 5-95
544323-0000 ..	CUTTING JAW	4-29, 4-31, 4-33, 4-35
544331-0000 ..	BRACKET	5-125
544332-0000 ..	BRACKET	5-125
544333-0000 ..	FORMING RING	1-17, 1-19

Part No	Description	Page No
544335-0000 ..	FORK	1-17, 1-19
544336-0000 ..	SHAFT	1-17, 1-19
544342-0000 ..	RAIL BRACKET	4-83, 4-85, 4-87, 4-89
544343-0000 ..	CANTILEVER	4-93
544367-0000 ..	SHAFT	7-9, 7-11, 7-13, 7-15, 7-17, 7-19
544435-0000 ..	PIPE	1-83
544436-0000 ..	FILTER PIPE	1-83
544437-0000 ..	BRANCH PIPE	1-93
544439-0000 ..	INTERMEDIATE PIPE	1-83
544445-0000 ..	SPACER	1-17, 1-19
544481-0000 ..	PLATE	2-31, 2-33
544504-0000 ..	VOLUME FLAP	4-19, 4-21
544506-0000 ..	PIPE	1-83
544508-0000 ..	BRACKET	2-33
544510-0000 ..	BRACKET	2-31
544527-0000 ..	MACHINE PLATE TBA	2-111
544533-0000 ..	PLASTIC PEHD 21172-10	2-111
544539-0000 ..	HOUSEMARK REPBY 0574658-0000	2-99, 2-135
544688-0000 ..	PIPE	2-73, 2-75
544689-0000 ..	PIPE	2-73, 2-75
544690-0000 ..	PIPE	2-73, 2-75
544691-0000 ..	PIPE	2-73, 2-75
544692-0000 ..	PIPE	2-83, 2-85, 2-87, 2-89
544693-0000 ..	PIPE	2-73, 2-75
544694-0000 ..	PIPE	2-73, 2-75
544695-0000 ..	PIPE	2-73, 2-75
544696-0000 ..	PIPE	2-73, 2-75
544697-0000 ..	PIPE	2-83, 2-85, 2-87, 2-89
544703-0000 ..	MOUNTING SHEET	2-57, 2-59, 2-61
544706-0000 ..	FLANGE	7-9, 7-11, 7-13, 7-15, 7-17, 7-19
544725-0000 ..	AXLE PIN	8-37
544726-0000 ..	AXLE PIN	8-41, 8-43, 10-15, 10-17
544727-0000 ..	AXLE PIN	8-37
544730-0000 ..	ROLL	8-37, 8-41, 8-43, 8-47, 10-15, 10-17, 10-19
544892-0000 ..	SPRING	1-37, 10-329, 10-331
544893-0000 ..	SPRING	1-37, 10-329, 10-331
544899-0000 ..	SIDECOVER LEFT FRONT	2-31
544900-0000 ..	SIDECOVER RIGHT FRONT	2-33
544973-0200 ..	PILLAR	8-3, 8-5
544974-0000 ..	PILLAR	8-47
545101-0000 ..	MAIN CAM	3-11, 3-13
545111-0000 ..	ARM	8-47, 10-19
545112-0000 ..	SHAFT 6X29,5	8-47, 10-19
545113-0000 ..	SIGN STRIP MAGAZINE	8-37
545125-0000 ..	STOPPER	4-67, 4-69
545126-0000 ..	STOPPER	4-67, 4-69
545127-0000 ..	CATCH	4-67, 4-69
545136-0000 ..	CATCH	4-67, 4-69
545138-0000 ..	CANTILEVER	8-47
545409-0000 ..	ARM RIGHT	4-17
545410-0000 ..	ARM LEFT	4-15
545651-0000 ..	GUIDE STUD	4-67, 4-69
545789-0000 ..	HOLDER	4-93
545801-0000 ..	SPRING	4-67, 4-69
545802-0000 ..	SPRING	4-67, 4-69
545817-0000 ..	CANTILEVER	10-187, 10-189
545995-0000 ..	WIRING DIAGRAM	1-99
546030-0001 ..	CANTILEVER	8-47
546030-0002 ..	CANTILEVER	8-47
546031-0000 ..	SPACER	8-47
546115-0000 ..	IH BUSBAR	10-181
546116-0000 ..	CANTILEVER	8-21
546117-0100 ..	BAR CODE	10-181
546180-0100 ..	SPLICE DETECTOR	8-3, 8-5
546386-0000 ..	CANTILEVER	10-181
546387-0000 ..	GASKET	10-181
546929-0000 ..	FILTER	1-55, 1-57, 2-55
547220-0000 ..	CABLE DUCT	2-131
547567-0000 ..	SHAFT	1-63
547568-0000 ..	SPACER	1-63
547902-0000 ..	BRACKET	2-103
547904-0000 ..	TUBE	2-103
547906-0000 ..	SHELF	2-133
547924-0000 ..	AXLE PIN	8-47
547925-0000 ..	AXLE PIN	8-47
548346-0000 ..	FRONT GUARD	2-111
548348-0000 ..	HATCH	2-111
548402-0000 ..	SIDE PIPE	5-69, 5-71, 5-83, 5-85
548493-0000 ..	STOPPER	4-67, 4-69
548770-0001 ..	COAXIAL CABLE L=5000MM	10-193
548778-0000 ..	LIFTING UNIT	6-25
548794-0000 ..	HEATING JAW	7-67, 7-69, 7-71
549044-0000 ..	DOOR	2-135
549045-0000 ..	HATCH	2-99

Part No	Description	Page No
549093-0000 ..	PIPE	1-117, 1-119
549263-0000 ..	BLOCK	1-33
549264-0000 ..	CONTAINER	1-33
549267-0000 ..	LID	1-33
549830-0000 ..	PROTECTION PLATE	7-53
549832-0000 ..	WASTE CHUTE	7-9, 7-11, 7-13, 7-15, 7-17, 7-19
549834-0000 ..	CUTTING RAIL	7-75, 7-77
549835-0000 ..	CUTTING RAIL	7-75, 7-77
549928-0000 ..	COUNTER CAM	3-11, 3-13
550301-0000 ..	CURVE	4-83, 4-85, 4-87, 4-89
550337-0000 ..	FOLDING FLAP CAM L	4-7, 4-9
550338-0000 ..	FOLDING FLAP CAM R	4-11, 4-13
550359-0000 ..	ARM	5-25, 5-27, 5-41, 5-43, 5-45, 5-47
550503-0000 ..	PROTECTION	2-41, 2-43
551219-0000 ..	CIRCUIT DIAGRAM	10-227
551281-0000 ..	RAIL BRACKET	4-83, 4-85, 4-87, 4-89
551282-0000 ..	FASTENING PLATE	4-83, 4-85, 4-87, 4-89
551283-0000 ..	CURVE	4-83, 4-85, 4-87, 4-89
551284-0000 ..	VOLUME CAM	4-83, 4-85, 4-87, 4-89
551285-0000 ..	FOLDING FLAP CAM	4-7, 4-9
551286-0000 ..	FOLDING FLAP CAM	4-11, 4-13
551340-0000 ..	FILLER TUBE	1-59, 1-61
551626-0000 ..	VOLUME CAM	4-83, 4-85, 4-87, 4-89
551784-0000 ..	FITTING BOLT	1-111
551786-0000 ..	LEVER	1-111
551825-0000 ..	COUNTER CAM	3-11, 3-13
551827-0000 ..	TRANSFORMER	10-225
551903-0000 ..	KICKPLATE,LEFT	6-21
551907-0000 ..	MAIN CAM	3-11, 3-13
551910-0000 ..	COUNTER CAM	3-11, 3-13
551913-0001 ..	COMPONENTS WITHOUT TP-NO	10-323
551914-0000 ..	MACHINING OF DRIVER MODUL	10-323
551927-0001 ..	COMPONENTS WITHOUT TP-NO	10-163, 10-195
551928-0000 ..	TERMINAL LABELS 8TE	10-163, 10-195
551997-0100 ..	LIFTING UNIT	6-3
551998-0000 ..	SUPPORT LUG	6-25
552158-0000 ..	RAIL BRACKET	4-83, 4-85, 4-87, 4-89
552159-0000 ..	VOLUME CAM	4-83, 4-85, 4-87, 4-89
553162-0000 ..	STOP PLATE	2-31
553164-0000 ..	LOW IMPEDANCELITZ L=150MM	2-31, 2-33
553183-0000 ..	PENDULUM SUSPENSION	10-383
553184-0000 ..	BRACKET	10-383
553763-0000 ..	ADJUSTING SCREW	7-67, 7-69, 7-71
553770-0001 ..	PRESSURE JAW	7-67, 7-69, 7-71
553770-0002 ..	PRESSURE JAW	7-67, 7-69, 7-71
553770-0004 ..	PRESSURE JAW	7-67, 7-69, 7-71
553842-0000 ..	BOTTOM PLATE	2-51
553851-0000 ..	SCREW	4-41, 4-43, 4-45, 4-47
553857-0000 ..	COAXIAL CABLE	10-231
554139-0000 ..	PIPE	1-117, 1-119
554141-0000 ..	FILTER	1-33
554142-0000 ..	FILTER HOUSING	1-33
554171-0300 ..	PLATFORM ADDITION	6-3
554439-0000 ..	LEVER	10-379, 10-381
554448-0000 ..	PIPE	1-109
554449-0000 ..	PIPE	1-109
554582-0000 ..	CANTILEVER	1-65
554583-0000 ..	PIPE	1-109
554585-0000 ..	STUD SCREW	1-33
554593-0000 ..	PIPE	10-377
554594-0000 ..	PIPE	10-377
554595-0000 ..	PIPE	10-377
554600-0100 ..	PIPE	10-283
554850-0000 ..	PIPE	1-117, 1-119
554962-0000 ..	SPRING	4-67, 4-69
554963-0000 ..	SPRING	4-67, 4-69
554971-0000 ..	PIPE	10-375
554972-0000 ..	PIPE	10-375
554973-0000 ..	PIPE	10-375
554976-0001 ..	PIPE	10-375
554976-0002 ..	PIPE	10-375
555540-0000 ..	SPACER	1-53, 1-89, 1-91
555541-0000 ..	BRACKET	1-53, 1-89, 1-91
555542-0000 ..	BRACKET	1-53, 1-89, 1-91
555544-0000 ..	PIPE	1-51
555545-0000 ..	COIL HEATER	1-47, 1-131
555546-0000 ..	INSULATING PLATE	1-47
555547-0000 ..	PIPE	1-117, 1-119
555548-0000 ..	PIPE	1-117, 1-119
555551-0000 ..	PIPE	1-117, 1-119
555552-0000 ..	PIPE	1-117, 1-119
555553-0000 ..	PIPE	1-117, 1-119
555554-0000 ..	PIPE	1-117, 1-119
555600-0000 ..	INDUCTOR	10-185

Part No	Description	Page No
555888-0000 ..	BRACKET	3-23
555892-0000 ..	VOLUME BULGE	4-19, 4-21
555926-0000 ..	VOLUME FLAP	4-19, 4-21
555928-0000 ..	VOLUME SHIM	4-19, 4-21
556139-0000 ..	ROLL	1-17, 1-19
556316-0000 ..	INSULATION	7-67, 7-69, 7-71
556317-0000 ..	INSULATION	7-67, 7-69, 7-71
556318-0000 ..	INSULATION	7-67, 7-69, 7-71
556319-0000 ..	WASHER	7-75, 7-77
556320-0000 ..	SLEEVE	7-75, 7-77
556322-0000 ..	SHAFT	7-75, 7-77
556323-0000 ..	SHAFT	7-75, 7-77
556324-0000 ..	SHAFT	7-75, 7-77
556325-0000 ..	SHAFT	7-75, 7-77
556391-0000 ..	HANDLE	7-75, 7-77
556392-0000 ..	HANDLE	7-75, 7-77
556393-0000 ..	CUTTING RAIL	7-75, 7-77
556394-0000 ..	CUTTING RAIL	7-75, 7-77
556395-0000 ..	CUTTING RAIL	7-75, 7-77
556439-0000 ..	BARRIER	7-81
556440-0000 ..	BARRIER	7-81
556441-0000 ..	ARM	7-81
556442-0000 ..	ARM	7-81
556443-0000 ..	BEARING HOUSING	7-81
556502-0000 ..	LAYOUTS FOR PLATES,LABLES	10-319
556504-0000 ..	LAYOUTS:PLATES AND LABELS	10-311
556509-0000 ..	PRINTED CIRCUIT BOARD	10-317
556510-0001 ..	COMPONENTS WITHOUT TP-NO	10-317
556549-0000 ..	FASTENING PLATE	8-13
556550-0000 ..	BRACKET	8-25, 8-27
556551-0000 ..	CYLINDER BRACKET	8-23
556552-0000 ..	BRACKET	8-23
556557-0001 ..	PIPE	8-15
556557-0002 ..	PIPE	8-15
556557-0003 ..	PIPE	8-15
556557-0004 ..	PIPE	8-15
556557-0005 ..	PIPE	8-15
556557-0006 ..	PIPE	8-15
556558-0001 ..	PIPE	8-15
556558-0002 ..	PIPE	8-15
556558-0003 ..	PIPE	8-15
556558-0004 ..	PIPE	8-15
556558-0005 ..	PIPE	8-15
556558-0006 ..	PIPE	8-15
556559-0001 ..	PIPE	8-15
556559-0002 ..	PIPE	8-15
556559-0003 ..	PIPE	8-15
556559-0004 ..	PIPE	8-15
556559-0005 ..	PIPE	8-15
556559-0006 ..	PIPE	8-15
556560-0001 ..	PIPE	8-15
556560-0002 ..	PIPE	8-15
556560-0003 ..	PIPE	8-15
556560-0004 ..	PIPE	8-15
556560-0005 ..	PIPE	8-15
556560-0006 ..	PIPE	8-15
556565-0000 ..	ROCKER ARM	8-23
556579-0000 ..	CURVE	3-19
556682-0000 ..	CABLE INLET PLATE 93X140MM	1-123
556683-0000 ..	RUBBERGASKET 90X140MM	1-123
556872-0000 ..	BEARING UNIT	7-47
556873-0000 ..	EXTENSION PIECE	7-47
556874-0000 ..	BLOCKING RING	7-47
556875-0100 ..	COVER	7-3, 7-5
556879-0000 ..	COVER	7-47
556886-0000 ..	BRACKET	5-93, 5-95
558230-0201 ..	TMCC CONTROLLER	10-151
559141-0100 ..	EL. RK "DCS8PLUS FOR TBA/8-1000"	6-3
559142-0100 ..	ELECTRICAL DOCUMENT	6-11
559143-0100 ..	ELECTRIC MATERIALS	6-11
559266-0100 ..	LOW LEVEL FILLING HL	10-283
559267-0100 ..	ELECTRICAL DOCUMENT	10-389
559268-0100 ..	ELECTRICAL MATERIAL	10-389
559269-0100 ..	FLOW CONTROL FOR HL	10-287
559270-0100 ..	ELECTRICAL DOCUMENT	10-305
559271-0100 ..	ELECTRICAL MATERIAL	10-305
559272-0100 ..	EL.RK ASSU/8/9	10-5
559273-0100 ..	ELECTRICAL DOCUMENT	10-43
559274-0100 ..	ELECTRIC MATERIALS	10-43
559275-0100 ..	DOCKING OF HVA KIT-0300	10-49, 10-51
559276-0100 ..	ELECTRICAL DOCUMENT	10-59
559277-0100 ..	ELECTRIC MATERIALS	10-59
559278-0100 ..	EL. RK "TEMP. CONTROLLED STEAM BARRIER"	10-399
559279-0100 ..	ELECTRICAL DOCUMENT	10-401

Part No	Description	Page No
559280-0100 ..	ELECTRICAL MATERIAL	10-401
559284-0100 ..	EL. RK "ZONE HEATER"	10-181
559285-0100 ..	ELECTRICAL DOCUMENT	10-191
559286-0100 ..	ELECTRICAL MATERIAL	10-191
559402-0200 ..	EL RK"PLMS" FOR TBA/8-1100,TBA/8LSC-020V	10-235
559403-0200 ..	ELECTRICAL DOCUMENT	10-243
559404-0200 ..	ELECTRICAL MATERIAL	10-243
559405-0100 ..	EL. RK "LINE SUPERVISION"	10-235
559406-0100 ..	ELECTRICAL DOCUMENT	10-271
559407-0100 ..	ELECTRIC MATERIALS	10-271
559408-0200 ..	EL RK "SERIAL COMMUNICATION"	10-235
559409-0200 ..	ELECTRICAL DOCUMENT	10-275
559410-0200 ..	ELECTRICAL MATERIAL	10-275
560122-0000 ..	SUPPORT ROLLER	4-83, 4-85, 4-87, 4-89
560391-0000 ..	CAM LEFT	3-11, 3-13
560392-0000 ..	CAM RIGHT	3-11, 3-13
560417-0000 ..	ROCKER ARM	3-17
560418-0000 ..	SHAFT	3-17
560472-0000 ..	PIPE	1-59, 1-61
560614-0000 ..	BATH	1-59, 1-61
560615-0000 ..	PIPE	1-59, 1-61
560616-0000 ..	PILLAR	1-63
560617-0000 ..	ROLLER CHAIN	1-59, 1-61
560799-0000 ..	FRONT GUARD	2-111
560800-0000 ..	BEARING UNIT	2-31, 2-33
560872-0000 ..	PLATE	2-31, 2-33
560880-0000 ..	HATCH	2-101
560881-0000 ..	PIPE	2-83, 2-85, 2-87, 2-89
560922-0100 ..	VALVE PANEL	2-13
560923-0000 ..	PIPE	2-21
560927-0000 ..	PIPE	1-65
560928-0000 ..	PIPE	1-117, 1-119
560929-0000 ..	TOUCH GUARD	1-65
560930-0100 ..	CONTAINER	1-3
560931-0000 ..	BRACKET	1-33, 1-59, 1-61, 2-19
560932-0000 ..	INTERMEDIATE PART	1-33
560933-0000 ..	ELECTRODE	1-33
560934-0000 ..	ELECTRODE	1-33
561256-0300 ..	PEROXIDE PIPE	2-3, 2-5
561257-0200 ..	PEROXIDE TANK	2-13
561258-0200 ..	DRAINING PEROXIDE	2-13
561259-0100 ..	CONNECTION HOUSING	2-13
561391-0000 ..	SPRING	4-67, 4-69
561392-0000 ..	SPRING	4-67, 4-69
561393-0000 ..	SPRING	4-67, 4-69
561394-0000 ..	SPRING	4-67, 4-69
561416-0000 ..	BRACKET	4-7, 4-9, 4-11, 4-13
561420-0000 ..	OVERFLOW TUBE	1-59, 1-61
561421-0000 ..	OVERFLOW TUBE	1-59, 1-61
561422-0000 ..	OVERFLOW TUBE	1-59, 1-61
561423-0000 ..	BRACKET	2-11
561424-0000 ..	PIPE	2-73, 2-75
561426-0000 ..	LACE	7-67, 7-69, 7-71
561427-0000 ..	CONTAINER	2-27
561543-0000 ..	SUPPORT ROLLER	4-83, 4-85, 4-87, 4-89
561544-0000 ..	SUPPORT ROLLER	4-83, 4-85, 4-87, 4-89
561545-0000 ..	SHAFT	4-83, 4-85, 4-87, 4-89
561547-0000 ..	SHAFT	4-83, 4-85, 4-87, 4-89
561548-0000 ..	PIPE	10-117
561549-0000 ..	TANK	2-25
561571-0000 ..	CBLE TRENCH	1-123
561583-0000 ..	U-TUBE	1-93
561590-0000 ..	CENTRAL LUBRIC. DIAGRAM	2-139
561591-0000 ..	PIPE	2-73, 2-75
561592-0000 ..	PIPE	2-73, 2-75
561595-0000 ..	SIGN MULTISTEP 35X35MM	2-121, 2-123
562136-0000 ..	CATCH	4-67, 4-69
562137-0000 ..	CATCH	4-67, 4-69
562140-0000 ..	CAP	3-25
562141-0000 ..	HOLDER	10-183
562746-0000 ..	ARM	3-25
562747-0000 ..	ARM	3-25
562748-0000 ..	BRACKET	3-25
562749-0000 ..	BRACKET	3-25
562971-0000 ..	CANTILEVER	4-93
563061-0000 ..	REAMED BOLT	3-25
563094-0000 ..	CANTILEVER	10-343, 10-345
563095-0000 ..	PLATE	10-343, 10-345
563096-0000 ..	HOLDER	10-343, 10-345
563097-0000 ..	PLATE	10-343, 10-345
563098-0000 ..	SUPPORT	10-343, 10-345
563285-0000 ..	BLIND PLUG	2-15
563728-0000 ..	CAM LEFT	3-11, 3-13
563729-0000 ..	CAM RIGHT	3-11, 3-13

Part No	Description	Page No
564253-0001 ..	COMPONENTS WITHOUT TP-NO	10-201
564254-0001 ..	COMPONENTS WITHOUT TP-NO	10-203
564255-0001 ..	COMPONENTS WITHOUT TP-NO	10-205
564256-0001 ..	COMPONENTS WITHOUT TP-NO	10-207
564257-0001 ..	COMPONENTS WITHOUT TP-NO	10-209
564260-0001 ..	COMPONENTS WITHOUT TP-NO	10-211
564261-0001 ..	COMPONENTS WITHOUT TP-NO	10-213
564264-0001 ..	COMPONENTS WITHOUT TP-NO	10-217
564519-0000 ..	SIDE PLATE	2-53
564520-0000 ..	SIDE PLATE	2-53
564521-0000 ..	SIDE PLATE	2-11
564522-0000 ..	SIDE PLATE	2-11
564523-0000 ..	RIM	2-11, 2-53
564524-0000 ..	CAM LEFT	3-11, 3-13
564525-0000 ..	CAM RIGHT	3-11, 3-13
564526-0000 ..	CAM LEFT	3-11, 3-13
564527-0000 ..	CAM RIGHT	3-11, 3-13
564528-0000 ..	CAM LEFT	3-11, 3-13
564529-0000 ..	CAM RIGHT	3-11, 3-13
564533-0001 ..	DOLLY	4-29, 4-31, 4-33, 4-35, 4-49, 4-51
564600-0000 ..	PIPE	1-117, 1-119
564621-0000 ..	CAM LEFT	3-11, 3-13
564622-0000 ..	CAM RIGHT	3-11, 3-13
564623-0000 ..	CAM LEFT	3-11, 3-13
564624-0000 ..	CAM RIGHT	3-11, 3-13
564933-0000 ..	CAM LEFT	3-11, 3-13
564934-0000 ..	CAM RIGHT	3-11, 3-13
565104-0000 ..	SWEEP	2-29
565134-0001 ..	COMPONENTS WITHOUT TP-NO	10-221
565136-0001 ..	COMPONENTS WITHOUT TP-NO	10-223
565137-0001 ..	COMPONENTS WITHOUT TP-NO	10-229
565138-0001 ..	COMPONENTS WITHOUT TP-NO	10-231
565140-0001 ..	COMPONENTS WITHOUT TP-NO	10-197
565141-0001 ..	COMPONENTS WITHOUT TP-NO	10-225
565143-0000 ..	PANEL	10-231
565144-0000 ..	LABEL LED	10-197
565145-0000 ..	LABEL X1/X2	10-197
565146-0000 ..	INSERT	10-197
565147-0000 ..	RAIL L	10-197
565148-0000 ..	RAIL R	10-197
565149-0000 ..	RAIL	10-197
565150-0000 ..	FRONT HANDLE	10-197
565151-0000 ..	BOX BOTTOM	10-197
565152-0000 ..	FRAME	10-197
565153-0000 ..	COMPLETE BOX	10-197
565154-0000 ..	BOX UPPER PART	10-197
565157-0001 ..	COMPONENTS WITHOUT TP-NO	10-309
565158-0000 ..	FRONT PANEL 14TE	10-309
565159-0000 ..	LAYOUTS PLATES AND LABELS	10-309
565188-0000 ..	FOLDING FLAP CAM	4-7, 4-9
565189-0000 ..	FOLDING FLAP CAM	4-11, 4-13
565250-0000 ..	WASHER	2-27
565251-0000 ..	VALVE	2-27
565259-0000 ..	VOLUME CAM	4-83, 4-85, 4-87, 4-89
565286-0000 ..	WINDING HOLDER	10-211
565287-0000 ..	SPACER	10-211
565289-0000 ..	COMPONENT REFERENCE	10-213
565290-0000 ..	HEAT SINK V1	10-215
565291-0000 ..	HEAT SINK V3	10-215
565295-0000 ..	GABLE LEFT	10-217, 10-219
565296-0000 ..	WASHER	10-217, 10-219
565297-0000 ..	TRANSISTOR PACKAGE R	10-217
565298-0000 ..	TRANSISTOR PACKAGE L	10-219
565299-0000 ..	SORTING INSTRUCTION	10-199
565300-0000 ..	CAPACITOR CABLE BLACK	10-199
565301-0000 ..	CAPACITOR CABLE RED	10-199
565312-0001 ..	COMPONENTS WITHOUT TP-NO	10-219
565317-0000 ..	COVER PLATE CIRCUIT CARD	10-309
565318-0000 ..	COVER PLATE HANDEL 14TE	10-309
565322-0000 ..	INTERMEDIARY SHAFT	5-133, 5-135
565323-0000 ..	OUTPUT SHAFT, LONG	5-133, 5-135
565324-0000 ..	LID	5-133, 5-135
565325-0000 ..	INPUT SHAFT	5-133, 5-135
565326-0000 ..	LID	5-133, 5-135
565327-0000 ..	RING NUT	5-133, 5-135
565328-0000 ..	SCREW RING	5-133, 5-135
565329-0000 ..	SPACER	5-133, 5-135
565330-0000 ..	SPACER	5-133, 5-135
565331-0000 ..	BEARING HOLDER	5-133, 5-135
565332-0000 ..	BEARING HOLDER	5-133, 5-135
565333-0000 ..	BEARING HOLDER	5-133, 5-135
565334-0000 ..	BEARING HOLDER	5-133, 5-135
565335-0000 ..	BEARING HOLDER	5-133, 5-135
565336-0000 ..	OUTPUT SHAFT SHORT	5-133, 5-135

Part No	Description	Page No
565338-0000 ..	GEAR HOUSING	5-133, 5-135
565339-0000 ..	OIL PIPE	5-133, 5-135
565340-0000 ..	OIL LEVEL TUBE	5-133, 5-135
565457-0000 ..	LOWER FILLING TUBE	10-337, 10-339
565458-0000 ..	FLOAT	10-337, 10-339
565668-0000 ..	MAIN CAM	3-11, 3-13
565967-0000 ..	ARM	5-149, 5-151, 5-153, 5-155, 5-157, 5-159
566016-0000 ..	WASHER	5-139, 5-141
566171-0000 ..	CUP SPRING	2-23
566192-0000 ..	METERING DEVICE	2-25
566194-0000 ..	WEIGHT	2-23
566195-0000 ..	LID	2-23
566196-0100 ..	LID WITH WEIGHT	2-19, 2-25
566228-0000 ..	BRACKET	1-83
566229-0000 ..	BRACKET	1-93
566311-0000 ..	PROFILE	5-29, 5-49, 5-51
566312-0000 ..	BRACKET	5-29, 5-49, 5-51
566313-0000 ..	HOLDER	5-87, 5-89
566314-0000 ..	HOLDER	5-53, 5-55
566315-0000 ..	HOLDER	5-29, 5-49, 5-51
566316-0000 ..	HOLDER	5-87, 5-89
566317-0000 ..	HOLDER	5-87, 5-89
566416-0000 ..	COVERING PLATE	5-107
566526-0000 ..	CLUTCH PIECE	4-41, 4-43, 4-45, 4-47
566527-0000 ..	CLUTCH PIECE	4-41, 4-43, 4-45, 4-47
566533-0000 ..	BRACKET	5-29, 5-49, 5-51
566645-0000 ..	SIDE GUARD	2-57, 2-59, 2-61
566646-0000 ..	SIDE GUARD	2-57, 2-59, 2-61
566683-0100 ..	AIR COOLER	2-53
566685-0000 ..	BRACKET	2-55
566686-0000 ..	CONDENSATE TRAY	2-55
566687-0000 ..	NOZZLE	2-55
566775-0000 ..	CARRIER	5-13
567023-0000 ..	TOUCH GUARD	1-115
567033-0000 ..	ARM	3-17
567070-0002 ..	ELECTRODE	2-19
567070-0006 ..	ELECTRODE	2-19
567070-0007 ..	ELECTRODE	2-19
567070-0011 ..	ELECTRODE	2-19
567070-0012 ..	ELECTRODE	1-59, 1-61
567070-0013 ..	ELECTRODE	1-55, 10-349
567070-0018 ..	ELECTRODE	2-19
567266-0000 ..	TUBE	2-73, 2-75
567267-0000 ..	TUBE	2-73, 2-75
567345-0000 ..	BEARING COVER	5-15
567347-0000 ..	SHAFT	5-15
567348-0000 ..	SHAFT	5-15
567349-0000 ..	SPACER	5-15
567350-0000 ..	WEDGE	5-15
567373-0000 ..	GEAR HOUSING	5-15
567703-0000 ..	LINK	3-17
567734-0000 ..	AIR NOZZLE	1-49
567735-0000 ..	HEAD PLATE	1-49
567736-0000 ..	EDGE ROLLER	1-23, 1-25, 1-27
567737-0000 ..	GUIDE ROLLER	1-23, 1-25, 1-27
567738-0000 ..	GUIDE ROLLER	1-23, 1-25, 1-27
567743-0000 ..	SEAL	1-113, 1-131
567744-0000 ..	FORMING RING	1-17, 1-19
567746-0001 ..	ROLLER, (STD.SIZE)	1-17, 1-19
567747-0000 ..	ROLL	1-17, 1-19
567748-0000 ..	FORK	1-17, 1-19
568070-0000 ..	GEAR HOUSING	5-137
568071-0000 ..	BEARING SEAT	5-137
568072-0000 ..	BEARING SEAT	5-137
568073-0000 ..	SHAFT	5-137
568074-0000 ..	SHAFT	5-137
568151-0000 ..	GEAR HOUSING	5-61
568152-0000 ..	GEAR HOUSING	5-61
568153-0000 ..	BEARING SEAT	5-61
568154-0000 ..	BEARING SEAT	5-61
568155-0000 ..	BEARING COVER	5-61
568156-0000 ..	FLANGE	5-61
568157-0000 ..	SHAFT	5-61
568158-0000 ..	SHAFT	5-61
568159-0000 ..	SHAFT	5-61
568160-0000 ..	FASTENING PLATE	5-61
568161-0000 ..	WASHER	5-61
568162-0000 ..	WEDGE	5-61
568166-0000 ..	REAMED BOLT	7-47
568167-0000 ..	CATCH	7-53
568286-0000 ..	SLEEVE	3-17
568287-0000 ..	RING	3-17
568802-0000 ..	CONTAINER	1-55
568803-0000 ..	CONTAINER	1-57

Part No	Description	Page No
568804-0000 ..	PIPE	1-51
568805-0000 ..	PIPE	1-51
568806-0000 ..	LID	1-57
568807-0000 ..	PIPE	1-51
568808-0000 ..	PIPE	1-51
568809-0000 ..	PIPE	1-51
568810-0000 ..	PIPE	1-51
568827-0000 ..	LID	1-55
568828-0000 ..	FLOAT GUARD	1-55
569003-0100 ..	SEPARATION INSERT	1-51
569016-0000 ..	GASKET	1-59, 1-61
569049-0000 ..	MAIN CAM	3-11, 3-13
569050-0000 ..	COUNTER CAM	3-11, 3-13
569051-0000 ..	CAM LEFT	3-11, 3-13
569052-0000 ..	CAM RIGHT	3-11, 3-13
569053-0000 ..	BEARING HOUSING	4-41, 4-43, 4-45, 4-47
569055-0000 ..	VOLUME BULGE	4-19, 4-21, 4-23
569056-0000 ..	VOLUME SHIM	4-19, 4-21, 4-23, 4-49, 4-51
569057-0000 ..	BEARING HOUSING	4-29, 4-31, 4-33, 4-35
569058-0000 ..	SUPPORT ROLLER	4-83, 4-85, 4-87, 4-89
569059-0000 ..	CUTTING JAW	4-29, 4-31, 4-33, 4-35
569060-0000 ..	FOLDING FLAP	4-53, 4-57
569061-0000 ..	FOLDING FLAP	4-53, 4-57
569062-0000 ..	CARRIER RULER	4-53
569063-0000 ..	CARRIER RULER	4-57
569085-0000 ..	SHAFT	1-17, 1-19
569086-0000 ..	ROLL	1-23, 1-25, 1-27
569087-0000 ..	ROLL	1-23, 1-25, 1-27
569088-0000 ..	ROLL	1-23, 1-25, 1-27
569089-0000 ..	ROLL	1-23, 1-25, 1-27
569090-0000 ..	FORMING RING	1-23, 1-25, 1-27
569091-0000 ..	SHAFT	1-7, 1-9
569092-0000 ..	ROLL	1-7, 1-9
569093-0000 ..	ROLL	1-7, 1-9
569094-0000 ..	ROLLER	1-7, 1-9, 1-11
569095-0000 ..	ROLLER	1-7, 1-9, 1-11
569096-0000 ..	BOW CLAMP	1-7, 1-9
569097-0000 ..	FILLER TUBE	1-37
569099-0000 ..	HOLDER	1-17, 1-19
569100-0000 ..	SHAFT	1-17, 1-19
569104-0000 ..	DISTRIBUTOR WING	1-49, 1-131
569106-0000 ..	GASKET	10-113, 10-115, 10-359, 10-361
569111-0000 ..	FLAP	5-139, 5-141
569112-0000 ..	BLOCKING PIECE	5-139, 5-141
569114-0000 ..	PLATE	5-143, 5-145, 5-147
569115-0000 ..	SHEET	5-143, 5-145, 5-147
569116-0000 ..	SHEET	5-143, 5-145, 5-147
569117-0000 ..	FLAP	5-149, 5-151, 5-153, 5-155, 5-157, 5-159
569118-0000 ..	FLAP	5-149, 5-151, 5-153, 5-155, 5-157, 5-159
569119-0000 ..	BOTTOM	5-149, 5-151, 5-153, 5-155, 5-157, 5-159
569120-0000 ..	FOLDING BAR	5-41, 5-43, 5-45, 5-47
569121-0000 ..	FOLDING BAR	5-41, 5-43, 5-45, 5-47
569122-0000 ..	FOLDING ARM	5-25, 5-27, 5-41, 5-43, 5-45, 5-47
569123-0000 ..	FOLDING ARM	5-25, 5-27, 5-41, 5-43, 5-45, 5-47
569124-0000 ..	AIR NOZZLE	5-69, 5-71, 5-83, 5-85
569125-0000 ..	AIR NOZZLE	5-69, 5-71, 5-83, 5-85
569126-0000 ..	AIR NOZZLE	5-69, 5-71, 5-83, 5-85
569127-0000 ..	SLIDE RAIL	5-129, 5-131
569128-0000 ..	HEAD PLATE	5-129, 5-131
569129-0000 ..	DISTRIBUTOR	5-49, 5-51
569130-0000 ..	LEAD RAIL	5-53, 5-55
569131-0000 ..	BRACKET	5-121, 5-123
569132-0000 ..	HEAD PLATE	5-93, 5-95
569133-0000 ..	BRACKET	5-93, 5-95
569134-0000 ..	HEAD PLATE	5-125
569135-0000 ..	BRACKET	5-125
569136-0000 ..	BRACKET	5-125
569163-0000 ..	ARM	2-109
569651-0000 ..	CREASE FORMER	7-9, 7-11, 7-13, 7-15, 7-17, 7-19
569652-0002 ..	SPACER	7-9, 7-11, 7-13, 7-15, 7-17, 7-19
569652-0003 ..	SPACER	7-9, 7-11, 7-13, 7-15, 7-17, 7-19
569917-0000 ..	LOCKING CIRCLIP	7-73
569918-0000 ..	COVER PLATE L.	7-75, 7-77
569919-0000 ..	COVER PLATE R.	7-75, 7-77
569920-0000 ..	SHAFT	7-75, 7-77
569921-0000 ..	BEARING HOUSE L.	7-75, 7-77
569922-0000 ..	BEARING HOUSE R.	7-75, 7-77
569923-0000 ..	CUTTING RAIL	7-75, 7-77
569924-0000 ..	STOPPER	7-81
569944-0000 ..	SLEEVE	7-43, 7-45
569945-0000 ..	SLEEVE	7-43, 7-45
570066-0000 ..	SHAFT	3-15, 3-25
570067-0000 ..	RING	3-15, 3-25
570125-0000 ..	SLEEVE	3-15, 3-25

Part No	Description	Page No
570126-0000 ..	SLEEVE	3-15, 3-25
570320-0000 ..	CUP	10-179
570321-0000 ..	BOW CLAMP	10-179
570322-0000 ..	PIPE	10-179
570323-0000 ..	CLEANING PIPE	10-179
570324-0000 ..	CUP	10-179
570325-0000 ..	CUP	10-179
570326-0000 ..	CAP	10-179
570327-0000 ..	BUSHING	10-179
570328-0000 ..	HEAT GUARD	10-179
570329-0000 ..	NUT	10-179
570330-0100 ..	CLEANING SYSTEM	10-177
570331-0000 ..	PIPE	10-179
570332-0000 ..	BOW CLAMP	10-179
570333-0000 ..	PIPE	10-179
570334-0000 ..	PIPE	10-179
570335-0000 ..	PIPE	10-179
570338-0000 ..	CUP	10-179
570339-0000 ..	CUP	10-179
571086-0000 ..	BRACKET	1-51
571087-0000 ..	RETAINING RING	1-57
571088-0000 ..	DRAINING	1-55
571277-0000 ..	PUMP HOUSING	2-21
571296-0000 ..	SPRING BRACKET	4-67, 4-69
571297-0000 ..	LACE	4-67, 4-69
571298-0000 ..	LACE	4-67, 4-69
571423-0000 ..	GLASS PANE	7-49, 7-51
571424-0000 ..	HINGE	7-49, 7-51
571425-0000 ..	BRACKET	7-49, 7-51
571428-0000 ..	TOUCH GUARD	8-25, 8-27
571486-0000 ..	VOLUME FLAP	4-19, 4-21
571654-0000 ..	NOZZLE	2-69
571942-0000 ..	SUPPORT ROLLER	4-83, 4-85, 4-87, 4-89
571945-0000 ..	FASTENING BRACKET	1-17, 1-19
572246-0000 ..	BRACKET	7-49, 7-51
573058-0000 ..	AIR NOZZLE	1-49
573123-0000 ..	COVER MAINS CONNECTION	10-325
573126-0001 ..	COMPONENTS WITHOUT TP-NO	10-325
573134-0001 ..	COMPONENTS WITHOUT TP-NO	10-215
573135-0000 ..	HEAT SINK PREREGULATOR	10-215
573136-0001 ..	COMPONENTS WITHOUT TP-NO	10-227
573137-0001 ..	COMPONENTS WITHOUT TP-NO	10-199
573138-0000 ..	COOLER	10-199
573277-0000 ..	PIPE	2-117, 2-119
573278-0000 ..	PIPE	2-117, 2-119
573353-0000 ..	SPROCKET	5-109
573428-0000 ..	BENDING ROLLER	1-105
573429-0000 ..	MOTOR PLATE	1-105
573430-0000 ..	DRYING HOUSE	1-101
573445-0000 ..	FILTER HOUSING	2-17
573446-0000 ..	STRAIGHT CONNECTION	2-17
573485-0000 ..	BRACKET	5-41, 5-43, 5-45, 5-47
573486-0000 ..	STEERING	5-41, 5-43, 5-45, 5-47, 5-129, 5-131
573487-0000 ..	STEERING	5-41, 5-43, 5-45, 5-47, 5-129, 5-131
573488-0000 ..	BRACKET	5-129, 5-131
573489-0000 ..	BRACKET	5-129, 5-131
573504-0000 ..	ROLLER	1-113
573507-0000 ..	SIDE GUARD	7-49, 7-51
573549-0000 ..	CIRCUIT BOARD SPEC.	10-325
573550-0000 ..	COVER PLATE CIRCUIT CARD	10-325
573583-0000 ..	SCREW	4-29, 4-31, 4-33, 4-35
573612-0100 ..	DOOR	1-3
573613-0000 ..	DOOR	1-39
573614-0000 ..	DOOR	1-41
573615-0000 ..	COVER SLIP	1-39, 1-41
573616-0000 ..	COVER SLIP	1-39
573617-0000 ..	COVER SLIP	1-41
573619-0000 ..	PILLAR	1-111
573625-0000 ..	INDUCTOR	4-41, 4-43, 4-45, 4-47, 4-49, 4-51
573664-0000 ..	CANTILEVER	8-9
573665-0000 ..	FASTENING PLATE	8-9
573666-0000 ..	SUPPORT ROLLER	8-9
573667-0000 ..	SUPPORT ROLLER	8-9
573668-0000 ..	SUPPORT ROLLER	8-9
573827-0001 ..	PROTECTION	7-9, 7-11, 7-13, 7-15, 7-17, 7-19
573827-0002 ..	PROTECTION	7-9, 7-11, 7-13, 7-15, 7-17, 7-19
573827-0003 ..	PROTECTION	7-9, 7-11, 7-13, 7-15, 7-17, 7-19
573841-0000 ..	STEERING RAIL	1-107
573976-0000 ..	SUPPORT ROLLER	4-83, 4-85, 4-87, 4-89
573979-0000 ..	CARRIER RULER	4-53
573980-0000 ..	CARRIER RULER	4-57
573985-0000 ..	BEARING HOUSING	4-29, 4-31, 4-33, 4-35
573988-0000 ..	GASKET	4-29, 4-31, 4-33, 4-35
574026-0000 ..	HUB	5-149, 5-151, 5-153

Part No	Description	Page No
574027-0000 ..	HUB	5-155, 5-157, 5-159
574028-0000 ..	ARM	5-149, 5-151, 5-153, 5-155, 5-157, 5-159
574029-0000 ..	FLAP	5-149, 5-151, 5-153, 5-155, 5-157, 5-159
574030-0000 ..	FLAP	5-149, 5-151, 5-153, 5-155, 5-157, 5-159
574031-0000 ..	BOTTOM	5-149, 5-151, 5-153, 5-155, 5-157, 5-159
574032-0000 ..	BLOWING NOZZLE B	5-69, 5-71, 5-83, 5-85
574033-0000 ..	BLOWING NOZZLE TH	5-69, 5-71, 5-83, 5-85
574034-0000 ..	BLOWING NOZZLE TV	5-69, 5-71, 5-83, 5-85
574035-0000 ..	FLAP	5-139, 5-141
574036-0000 ..	BLOCKING PIECE	5-139, 5-141
574037-0000 ..	SPACER	8-47
574038-0000 ..	SUPPORT ROLLER	8-9
574039-0000 ..	RAIL	5-143, 5-145, 5-147
574040-0000 ..	SHEET	5-143, 5-145, 5-147
574041-0000 ..	SHEET	5-143, 5-145, 5-147
574042-0000 ..	PLATE	5-143, 5-145, 5-147
574043-0000 ..	CREASE FORMER	7-9, 7-11, 7-13, 7-15, 7-17, 7-19
574044-0000 ..	FASTENING BRACKET	7-9, 7-11, 7-13, 7-15, 7-17, 7-19
574045-0000 ..	FOLDING BAR	5-25, 5-27, 5-41, 5-43, 5-45, 5-47
574046-0000 ..	FOLDING BAR	5-25, 5-27, 5-41, 5-43, 5-45, 5-47
574047-0000 ..	LEAD RAIL	5-25, 5-27, 5-41, 5-43, 5-45, 5-47
574048-0000 ..	BRACKET	5-25, 5-27, 5-41, 5-43, 5-45, 5-47
574049-0000 ..	COUNTER PLATE	5-25, 5-27, 5-41, 5-43, 5-45, 5-47
574050-0000 ..	CURVE	5-25, 5-27, 5-41, 5-43, 5-45, 5-47
574051-0000 ..	RETAINING RING	7-43, 7-45
574052-0000 ..	STOPPER	7-81
574054-0000 ..	HEAD PLATE	5-129, 5-131
574055-0000 ..	ARCH	5-53, 5-55
574056-0000 ..	DISTRIBUTOR	5-29, 5-49, 5-51
574057-0000 ..	LEAD RAIL	5-53, 5-55
574058-0000 ..	HOLDER	5-29, 5-49, 5-51
574059-0000 ..	BEARING HOUSING	7-75, 7-77
574060-0000 ..	BEARING HOUSING	7-75, 7-77
574061-0000 ..	CUTTING RAIL	7-75, 7-77
574062-0000 ..	COVERING PLATE	7-75, 7-77
574063-0000 ..	COVERING PLATE	7-75, 7-77
574064-0000 ..	SHAFT	7-75, 7-77
574069-0000 ..	AXLE PIN	5-109
574070-0000 ..	TIMING BELT SHAFT	5-109
574075-0000 ..	ROLL	5-113
574077-0000 ..	HEAD PLATE	5-125
574078-0000 ..	BRACKET	5-125
574079-0000 ..	BRACKET	5-125
574080-0000 ..	BRACKET	5-121, 5-123
574081-0000 ..	SLEEVE	5-13
574082-0000 ..	GEAR WHEEL	5-109
574083-0000 ..	WASHER	5-109
574084-0000 ..	SCREW	5-109
574085-0000 ..	TIMING BELT PULLEY	5-109
574086-0000 ..	TIMING BELT PULLEY	5-109, 5-113
574087-0000 ..	WASHER	5-109, 5-113
574088-0000 ..	SPROCKET	5-13
574089-0000 ..	CARRIER	5-117
574090-0000 ..	CARRIER	5-115
574091-0000 ..	CARRIER	5-115
574092-0000 ..	CARRIER	5-117
574093-0000 ..	PROFILE	5-17
574094-0000 ..	HEAD PLATE	5-109
574097-0000 ..	STEERING	5-25, 5-27, 5-41, 5-43, 5-45, 5-47, 5-129, 5-131
574098-0000 ..	STEERING	5-25, 5-27, 5-41, 5-43, 5-45, 5-47, 5-129, 5-131
574099-0000 ..	STEERING	5-49, 5-51
574121-0000 ..	BRACKET	5-109
574122-0000 ..	BRACKET	5-109
574123-0000 ..	BRACKET	5-109
574124-0000 ..	WASTE CHUTE	5-163
574125-0000 ..	BRACKET	5-41, 5-43, 5-45, 5-47
574126-0000 ..	HEAD PLATE	5-125
574130-0000 ..	DAMPER	4-83, 4-85, 4-87, 4-89
574131-0000 ..	LEAD PLATE	5-31
574132-0000 ..	SIDE PLATE	5-109
574133-0000 ..	SIDE PLATE	5-109
574136-0000 ..	TIMING BELT PULLEY	5-113
574137-0000 ..	TIMING BELT PULLEY	5-113
574138-0000 ..	TIMING BELT PULLEY	5-113
574139-0000 ..	BEARING HOUSING	5-109
574140-0000 ..	SHAFT	5-109
574143-0000 ..	AXLE SUPPORT	5-113
574144-0000 ..	SHAFT	5-113
574145-0000 ..	HEAD PLATE	5-109
574146-0000 ..	HEAD PLATE	5-109
574147-0000 ..	HOLDER	5-109
574148-0000 ..	SHAFT	5-109
574149-0000 ..	ARM	5-113
574150-0000 ..	SLEEVE	5-109

Part No	Description	Page No
574151-0000 ..	BRACKET	5-113
574152-0000 ..	BRACKET	5-113
574153-0000 ..	PLATE	5-113
574154-0000 ..	SPACER	5-113
574155-0000 ..	PLATE	5-109
574156-0000 ..	SUPPORT RAIL	5-113
574157-0000 ..	PROFILE	5-113
574158-0000 ..	PROFILE	5-113
574159-0000 ..	TIMING BELT PULLEY	5-109
574164-0000 ..	PROTECTION PLATE	5-119
574165-0000 ..	PROTECTIVE COVER	5-119
574166-0000 ..	DROP WING	5-121, 5-123
574167-0000 ..	LIMIT PLATE	3-23
574214-0000 ..	SPRING	1-37
574332-0100 ..	BELT	5-109
574600-0000 ..	PNEUMATIC DIAGRAM	2-139
574603-0000 ..	BRACKET	2-121, 2-123
574604-0000 ..	BRACKET	2-121, 2-123
574605-0000 ..	CONNECTION BOX	2-129
574606-0000 ..	SHEET	2-129
574651-0000 ..	SHEET	7-79
574652-0000 ..	PROTECTION	2-109
574653-0000 ..	PROTECTION	1-97
574654-0000 ..	PIPE	1-83
574658-0000 ..	LOGOTYPE TP	7-85
575002-0000 ..	PLUNGER	7-43, 7-45
575003-0000 ..	PLUNGER	7-43, 7-45
575392-0100 ..	VALVE PANEL LOWER	2-3, 2-5
575464-0000 ..	CABLE DUCT	2-131
575474-0100 ..	COMPRESSOR	1-3
575475-0100 ..	SCRUBBER	1-51
575786-0000 ..	PAPER SUPPORT	7-9, 7-11, 7-13, 7-15, 7-17, 7-19
575791-0000 ..	JUNCTION BLOCK	2-81
575792-0000 ..	ANGLE STRUT	2-81
575795-0000 ..	WATER PIPE	2-73, 2-75
575797-0100 ..	FLOWMETER GROUP	2-3, 2-5
575980-0000 ..	CIRCUIT DIAGRAM	10-199
576217-0000 ..	PAPER SUPPORT	7-9, 7-11, 7-13, 7-15, 7-17, 7-19
576218-0000 ..	PAPER SUPPORT	7-9, 7-11, 7-13, 7-15, 7-17, 7-19
576245-0100 ..	BELT RIGHT	5-113
576246-0100 ..	BELT LEFT	5-113
576247-0100 ..	PROTECTION	5-87, 5-89
576251-0100 ..	CONVEYOR	5-87, 5-89
576252-0100 ..	INFEED SECTION	5-109
576410-0000 ..	BRACKET	7-49, 7-51
576730-0000 ..	WATER DIAGRAM	2-139
576738-0000 ..	TOUCH GUARD	1-115
576739-0200 ..	(PAPER)REEL TROLLEY	7-3, 7-5
576742-0000 ..	OIL TROUGH	3-17
576833-0000 ..	PLATFORM	2-111
576835-0000 ..	PLATFORM COVER	2-111
576843-0200 ..	PARALLEL CLEANING IN PLACE	10-3
578042-0001 ..	COMPONENTS WITHOUT TP-NO	10-165
578042-0002 ..	COMPONENTS WITHOUT TP-NO	10-165
578874-0000 ..	HF BRAIDED WIRE 1,6 MM2	10-403
579306-0000 ..	ROLLER	1-7, 1-9, 1-11
579307-0000 ..	ROLL	1-7, 1-9
579308-0000 ..	ROLLER	1-7, 1-9, 1-11
579309-0000 ..	ROLL	1-7, 1-9
579310-0001 ..	ROLLER, (STD.SIZE)	1-17, 1-19
579311-0000 ..	COUNTER ROLLER	1-17, 1-19
579316-0000 ..	FILLER TUBE	1-37
579318-0000 ..	SEAL	1-113, 1-131
579319-0000 ..	ROLL	1-113
579641-0000 ..	MAIN CAM	3-11, 3-13
579642-0000 ..	COUNTER CAM	3-11, 3-13
579643-0000 ..	CAM LEFT	3-11, 3-13
579644-0000 ..	CAM RIGHT	3-11, 3-13
579645-0000 ..	CURVE	4-83, 4-85, 4-87, 4-89
579772-0000 ..	CUTTING JAW	4-29, 4-31, 4-33, 4-35
579773-0000 ..	BEARING HOUSING	4-41, 4-43, 4-45, 4-47
580006-0000 ..	PROTECTION PLATE	5-119
580007-0000 ..	PROTECTION PLATE	5-119
580043-0100 ..	SPLICING DEVICE	10-7
580059-0000 ..	ROLL	10-19
580317-0000 ..	SHAFT	10-27, 10-29, 10-31
580318-0000 ..	SHEET	10-27, 10-29, 10-31
580319-0000 ..	BLOCK	10-27, 10-29, 10-31
580320-0000 ..	HEATING BLOCK	10-27, 10-29, 10-31
580322-0000 ..	DOWEL	10-27, 10-29, 10-31
580323-0000 ..	LOCK PLATE	10-27, 10-29, 10-31
580325-0000 ..	SPACER	10-27, 10-29, 10-31
580326-0000 ..	TOUCH GUARD	10-27, 10-29, 10-31
580327-0000 ..	HEATING ELEMENT	10-27, 10-29, 10-31

Part No	Description	Page No
580330-0000 ..	FABRIC	10-27, 10-29, 10-31
580366-0000 ..	ROLL	5-113
580958-0000 ..	AXLE SUPPORT	1-113
580959-0000 ..	AXLE SUPPORT	1-113
580996-0000 ..	ROLLER BRACKET	5-113
583727-0000 ..	SHAFT	8-19
590409-0000 ..	ROLL	8-47
590410-0000 ..	SHEET	8-47
591245-0000 ..	ARM	3-17
591246-0000 ..	SHAFT	3-17
591247-0000 ..	SLEEVE	3-17
591981-0000 ..	CATCH	4-29, 4-31, 4-33, 4-35
591982-0000 ..	CATCH	4-29, 4-31, 4-33, 4-35
592586-0000 ..	HOLDER	8-25, 8-27
592588-0000 ..	SPACER	8-47
592923-0000 ..	VOLUME FLAP	4-19, 4-21
593270-0000 ..	CATCH	4-67, 4-69
593271-0000 ..	CATCH	4-67, 4-69
593634-0200 ..	DIAGRAM	6-3
593749-0100 ..	YOKE	4-3, 4-5
593750-0100 ..	ARM WITH AXLE,CUT R	4-3, 4-5
593763-0100 ..	HOLD-DOWN DEVICE	3-3
594588-0000 ..	HOOD	2-41, 2-43
594613-0100 ..	CLEANING HEAD	2-91
594614-0100 ..	CLEANING HEAD	2-69
594616-0100 ..	VALVE	1-93
594617-0100 ..	DOOR	1-3
594618-0100 ..	CHANGE-OVER VALVE	1-83
594619-0100 ..	CHANGE-OVER VALVE	1-51
594620-0100 ..	BRAKE ARM	8-37
594621-0100 ..	PRESSURE ARM	5-57
594632-0000 ..	SIDE PLATE	5-23
594644-0000 ..	LEAD RAIL	5-33
595044-0000 ..	MACHINE BODY	5-33
595046-0000 ..	CARRIER	5-33
595048-0000 ..	ARCH	5-33
595052-0000 ..	ARCH	5-33
595053-0000 ..	BRACKET	5-33
595054-0000 ..	PROTECTION	2-41, 2-43
595055-0000 ..	BRACKET	5-25, 5-27
595056-0000 ..	BRACKET	5-33
595057-0000 ..	BRACKET	5-25, 5-27
595060-0000 ..	LEAD RAIL	5-33
595061-0000 ..	HOLDER	5-33
595066-0000 ..	COVERING PLATE	5-7, 5-9
595068-0000 ..	STEERING	5-29
595087-0100 ..	STATION	5-3, 5-5
595088-0200 ..	FOLDING PART	5-3, 5-5
595089-0100 ..	INFEEDER	5-3, 5-5
595090-0100 ..	DISCHARGER	5-3, 5-5
595202-0000 ..	SHAFT	7-9, 7-11, 7-13, 7-15, 7-17, 7-19
595203-0000 ..	LACE	7-9, 7-11, 7-13, 7-15, 7-17, 7-19
595204-0000 ..	CYLINDER BRACKET	7-9, 7-11, 7-13, 7-15, 7-17, 7-19
597536-0000 ..	FOLDING BAR	5-25, 5-27, 5-41, 5-43, 5-45, 5-47
597537-0000 ..	FOLDING BAR	5-25, 5-27, 5-41, 5-43, 5-45, 5-47
597539-0000 ..	SLIDE RAIL	5-129, 5-131
597542-0000 ..	RAIL REV.FIN	5-129, 5-131
597543-0000 ..	RAIL NORM.FIN	5-129, 5-131
597545-0000 ..	HOLDER	1-11
597564-0000 ..	PLATE	5-29, 5-49, 5-51
597574-0000 ..	SPRING BRACKET	4-67, 4-69
597584-0000 ..	BRACKET	5-87, 5-89
597608-0000 ..	BOTTOM	5-149, 5-151, 5-153, 5-155, 5-157, 5-159
597779-0000 ..	LABELS FLEXBOX	10-259
598116-0000 ..	SPACER	10-265
598878-0000 ..	MACHINE SIGN 2 ADR. EEA	6-3
598882-0000 ..	COMPONENTS WITHOUT TP-NO	10-153, 10-155
599132-0100 ..	CABINET	9-5
599133-0100 ..	DOOR	9-5
599134-0100 ..	DOOR	9-5
599135-0100 ..	DOOR	9-5
599136-0100 ..	DOOR	9-5
599137-0100 ..	DOOR	9-5
599138-0100 ..	DOOR	9-5
599140-0100 ..	MOUNTINGPLATE PLC 1-2	9-5
599141-0100 ..	MOUNTINGPLATE PLC 2-3	9-5
599142-0100 ..	MOUNTINGPLATE MULTI CONNECTOR	9-5
599143-0100 ..	MOUNTINGPLATE SUPPLY L1-L3	9-5
599144-0100 ..	MOUNTINGPLATE TERMINALS	9-5
599145-0100 ..	MOUNTINGPLATE SUPPLY L4-L6	9-5
599146-0100 ..	MOUNTINGPLATE FILTER	9-5
599147-0100 ..	SWING FRAME	9-5
599148-0100 ..	MOUNTINGPLATE	9-5
599149-0100 ..	RELAY SOLID-STATES	9-5

Part No	Description	Page No
599153-0100 ..	CABINET	9-43, 9-49
599155-0100 ..	DOOR	9-43
599158-0100 ..	DOOR	9-49
599170-0100 ..	FILTER BOX	9-5
649440-0300 ..	ELECTRIC EQUIPMENT	10-49, 10-51
731049-0000 ..	SLIDING STRIP TPIH	9-7
731665-0000 ..	FRAME FOR FILTER	10-157, 10-159
731771-0000 ..	COOLING PLATE,SOLIDSTATE	9-39
732883-0000 ..	TOUCHGUARD MAIN SWITCH	9-27
734789-0000 ..	SUPPORT F LIVE RAIL	9-27, 9-31
735003-0000 ..	PIPE	10-377
735004-0000 ..	HOLDER	10-377
735018-0000 ..	SLEEVE ELEMENT	10-357
735026-0000 ..	FLOAT	10-337, 10-339
735041-0000 ..	CONNECTION CLAMP	10-113, 10-115, 10-377
735046-0000 ..	BRACKET	10-367
735050-0000 ..	CONNECTION CLAMP	10-377
735051-0000 ..	BRACKET	10-377
735053-0000 ..	SLEEVE ELEMENT	10-371, 10-373
735073-0000 ..	FLOAT	10-337, 10-339
735182-0000 ..	HOLDER	10-337, 10-339
735185-0000 ..	SYMBOLLABEL PACK SHAPE 18,2X50MM	10-391
735239-0000 ..	BRACKET	10-357
735342-0000 ..	VALVE BODY 2"	10-95
735503-0000 ..	HINGE	10-111
735509-0000 ..	DOOR	10-83
735521-0000 ..	BLANK NUT	10-95
735549-0000 ..	HOOK HOLDER	10-93
735550-0000 ..	BUSHING	10-93
735630-0000 ..	RING	10-91
735632-0000 ..	PISTON ROD	10-91
735663-0000 ..	PISTON ROD	10-93
735738-0000 ..	NUT	10-81
735846-0000 ..	CAP NUT	10-97
735891-0000 ..	VALVE HOUSING	10-85
735911-0000 ..	VALVE 1/2"	10-97
735921-0000 ..	SCREW	10-83
735922-0000 ..	WASHER	10-69, 10-71, 10-73, 10-75
735934-0000 ..	SPACER	10-69, 10-71, 10-73, 10-75
736040-0000 ..	FILTER SUPPORT	10-101, 10-103
736113-0000 ..	PANEL	10-83
736146-0000 ..	SIGN BOARD	10-101, 10-103
736256-0000 ..	HOLDER	10-119, 10-121
736358-0000 ..	CLAMPING PIECE	10-107, 10-109
736378-0000 ..	BASE	10-83
736501-0000 ..	GEAR	10-357
736502-0000 ..	SHIFTER HANDLE	10-357
736508-0001 ..	MEMBRANE	10-289, 10-303, 10-355, 10-385
736514-0000 ..	SHOCK ABSORBER	10-123, 10-353, 10-385
736526-0000 ..	FLOW METER	10-371, 10-373
736527-0000 ..	FLOW METER	10-371, 10-373
736536-0000 ..	LOWER FILLING TUBE	10-337, 10-339
736555-0000 ..	LATERAL BODY	10-353
736578-0000 ..	CONNECTION CLAMP	10-357
736581-0000 ..	COUPLING BOX	10-357
736582-0002 ..	SHAFT SLIDE GUIDE	10-357
736583-0000 ..	SHAFT SLIDE GUIDE	10-357
736584-0000 ..	SHAFT SLIDE GUIDE	10-357
736585-0000 ..	PIN	10-357
736586-0000 ..	SPACER SCREW	10-357
736587-0000 ..	SHAFT	10-357
736588-0002 ..	SHAFT	10-357
736589-0001 ..	SHAFT	10-357
736589-0002 ..	SHAFT	10-357
736590-0100 ..	C.F.V. CONTROL DEVICE	10-283
736619-0000 ..	WASHER	10-289
736624-0000 ..	SPINDLE	10-289
736629-0000 ..	COMPRESSION SPRING	10-289
736643-0000 ..	SEALING PLUG	10-387
736662-0000 ..	FLOAT	10-337, 10-339
736724-0000 ..	GASKET	10-337, 10-339, 10-385
736726-0000 ..	HOLDER	10-337, 10-339
736727-0000 ..	HOLDER	10-337, 10-339
736749-0000 ..	CONNECTION CLAMP	10-357
736876-0000 ..	COLUMN	10-81
736877-0000 ..	COLUMN	10-81
751009-0000 ..	INSULATION	1-99
751316-0000 ..	ELBOW PIPE	2-21
752156-0000 ..	FLANGE BUSHING	1-7, 1-9
752176-0000 ..	PROTECTIVE CASING	1-65
752578-0001 ..	ROLLER, (STD.SIZE)	1-17, 1-19
752583-0000 ..	ROLLER	1-7, 1-9
752584-0000 ..	ROLLER	1-7, 1-9
752585-0000 ..	ROLL	1-7, 1-9

Part No	Description	Page No
752586-0000 ..	ROLL	1-7, 1-9
752587-0000 ..	LINK	1-43, 1-45
752590-0000 ..	THROTTLE	1-43, 1-45
752711-0000 ..	PIPE	1-65
752718-0000 ..	ROLL	1-23, 1-25, 1-27
752719-0000 ..	ROLL	1-23, 1-25, 1-27
752720-0000 ..	ROLL	1-23, 1-25, 1-27
752721-0000 ..	ROLL	1-23, 1-25, 1-27
752740-0000 ..	ROLLER	1-29
752771-0000 ..	TOUCH GUARD	1-115
765602-0379 ..	COUNTERSINK	10-179
767181-0138 ..	TAP	10-133
767181-0235 ..	TAP	10-387
767181-0238 ..	TAP	10-133
769211-0116 ..	SAW BLADE	10-179, 10-387
769211-0117 ..	SAW BLADE	10-133
769211-0119 ..	SAW BLADE	10-387
769211-0122 ..	SAW BLADE	10-301
769211-0129 ..	SAW BLADE	10-301
769211-0138 ..	SAW BLADE	10-301, 10-387
769211-0148 ..	SAW BLADE	10-301
769211-0152 ..	SAW BLADE	10-179
769211-0165 ..	SAW BLADE	10-133, 10-387
769219-0100 ..	HOLDER	10-133, 10-301, 10-387
769219-0103 ..	HANDLE BRACKET	10-133, 10-301, 10-387
776422-0101 ..	BRASS WIRESTE	6-15
777200-0101 ..	PIPE WRENCEL	6-15
777510-0101 ..	SCISSORS	6-15
794039-0000 ..	HOSE CONNECTION	10-105
794040-0000 ..	NON-RETURN VALVE	10-105
794117-0000 ..	PISTON	10-93
794223-0000 ..	SUPPORT	10-129
794226-0100 ..	VALVE	10-95
794238-0000 ..	ATTACHMENT	10-117
794239-0000 ..	ATTACHMENT	10-107, 10-109
794243-0100 ..	B-CYLINDER	10-85
794246-0000 ..	DIAPHRAGM	10-91, 10-131
794247-0000 ..	SEAL RING HOLDER	10-91
794248-0000 ..	WASHER	10-91
794276-0000 ..	SUPPORT	10-95
794420-0000 ..	SPACER	10-133
794542-0000 ..	SUPPORT	10-137, 10-139
795581-0000 ..	PLATE	1-105
795608-0000 ..	AIR PIPE	10-377
795609-0000 ..	AIR PIPE	10-377
795616-0100 ..	VALVE DRIVE	10-377
795710-0000 ..	LID	10-359, 10-361
795739-0100 ..	VALVE DRIVE	10-377
795741-0000 ..	BRACKET	10-381
795742-0000 ..	BRACKET	10-379
795758-0000 ..	COVER	10-137, 10-139
795853-0000 ..	RAILING	10-81
795897-0000 ..	FRAME	10-57
795898-0000 ..	HANDLE	10-57
795899-0000 ..	BUSHING	10-57
795900-0100 ..	TOOL	10-53
795905-0000 ..	BUSHING	10-57
795930-0000 ..	TIE ROD	10-353
795931-0000 ..	CLOSING DEVICE	10-353
795932-0000 ..	CLOSING DEVICE	10-353
795944-0001 ..	FILLING PIPE	10-119, 10-121
795946-0000 ..	FLANGE	10-119, 10-121
795947-0000 ..	FLANGE	10-119, 10-121
795956-0000 ..	NIPPLE	10-371, 10-373
795957-0000 ..	CONNECTION PLATE	10-371, 10-373
795960-0000 ..	FLANGE	10-119, 10-121
924042-0000 ..	UPPER FILLING TUBE	10-329, 10-331
924062-0000 ..	SPACER	10-99
924063-0000 ..	PISTON	10-99
924064-0000 ..	WASHER	10-99
924065-0000 ..	WASHER	10-99
924114-0000 ..	PRODUCT PIPE	10-353
924119-0000 ..	PRODUCT PIPE	10-289
924149-0000 ..	VALVE BODY	10-355
924150-0000 ..	CYLINDER	10-355
924151-0000 ..	SHAFT	10-355
924152-0000 ..	KNOB	10-355
924153-0000 ..	PISTON	10-355
924157-0000 ..	DOSING PISTON	10-289, 10-355
924159-0000 ..	DOSING PISTON	10-289, 10-355
924160-0000 ..	DOSING PISTON	10-289, 10-355
924161-0000 ..	SLEEVE	10-355
924163-0000 ..	SCREW	10-355
924164-0000 ..	WASHER	10-355

Part No	Description	Page No
924167-0100 ..	MANUAL DOSING VALVE	10-351
924170-0000 ..	NUT	10-387
924171-0000 ..	SCREW	10-387
924196-0000 ..	CLAMP	10-359, 10-361
924197-0000 ..	WASHER	10-359, 10-361
924212-0000 ..	CLEANING PIPE	10-359, 10-361
924213-0000 ..	CLEANING PIPE	10-359, 10-361
924215-0000 ..	CLAMP	10-359, 10-361
924216-0000 ..	RING NUT	10-359, 10-361
924257-0000 ..	SCREW	10-333
924300-0100 ..	VALVE HOLDER	10-283
924303-0000 ..	CLEANING PIPE	10-359, 10-361
924304-0100 ..	PARALLEL CLEANING CIRCUIT	10-283
924305-0100 ..	CONSTANT FLOW VALVE	10-351
924350-0000 ..	BRACKET	10-349
924352-0000 ..	BRACKET	10-349
924353-0000 ..	BRACKET	10-349
924354-0000 ..	CLAMP	10-349
924361-0000 ..	BODY CENTRAL VALVE	10-353
924365-0000 ..	DOSING VALVE BODY	10-289, 10-355
924370-0000 ..	PRODUCT PIPE	10-355
924379-0000 ..	SPRING BODY	10-289
924380-0000 ..	CAM	10-289
924381-0000 ..	SHAFT	10-289
924496-0000 ..	PIPE	10-393
924499-0000 ..	CLAMP	10-393
924504-0000 ..	CLEANING PIPE	10-359, 10-361
924505-0000 ..	CLEANING PIPE	10-359, 10-361
924518-0000 ..	GASKET	10-349
924519-0000 ..	GASKET	10-349
924520-0000 ..	PIPE	10-393
924521-0000 ..	PIPE	10-393
924522-0000 ..	CLAMP	10-393
924567-0000 ..	COMPRESSION SPRING	10-355
924599-0000 ..	COVER	10-157, 10-159
924632-0000 ..	CLEANING CUP	10-113, 10-115, 10-359, 10-361
924633-0000 ..	CLEANING CUP	10-359, 10-361
924634-0000 ..	CLEANING CUP	10-113, 10-115, 10-359, 10-361
924635-0000 ..	CLEANING CUP	10-113, 10-115, 10-359, 10-361
924636-0000 ..	COVER	10-113, 10-115, 10-359, 10-361
924637-0000 ..	COVER	10-359, 10-361
924638-0000 ..	COVER	10-113, 10-115, 10-359, 10-361
924639-0000 ..	COVER	10-113, 10-115
924640-0000 ..	NUT	10-113, 10-115, 10-359, 10-361
924641-0000 ..	SCREW	1-13, 10-113, 10-115, 10-359, 10-361
924664-0000 ..	MOTOR	10-289
924679-0000 ..	FLANGE	10-119, 10-121
924682-0000 ..	FILLING PIPE	10-119, 10-121
924683-0000 ..	HOLDER	10-119, 10-121
924703-0000 ..	BRACKET	10-349
924704-0100 ..	THUMBWHEEL HOLDER	10-287
924705-0000 ..	HOLDER	10-291
924706-0000 ..	PLATE	10-291
924716-0000 ..	U-TUBE	10-49, 10-51
924740-0000 ..	FRAME	10-81
924748-0000 ..	PLATFORM	10-81
924749-0000 ..	PLATFORM	10-81
924774-0000 ..	PIPE	10-101, 10-103
924792-0000 ..	CLEANING PIPE	10-113, 10-115
924806-0000 ..	CLEANING PIPE	10-113, 10-115
924817-0000 ..	CIRCUIT BOARD	10-295
924842-0000 ..	CLEANING PIPE	10-113, 10-115
924845-0000 ..	BRACKET	10-113, 10-115
924847-0000 ..	CLEANING PIPE	10-113, 10-115
924856-0000 ..	BRUSH	10-343, 10-345, 10-385
924865-1	MODIFICATION DRAWING	10-287
924867-0100 ..	START-UP KIT	10-287
924873-0000 ..	UPPER FILLING TUBE	10-333
924895-0000 ..	SEAL HOLDER	10-99
924897-0000 ..	SCREW	10-99
924951-0100 ..	START-UP KIT	10-283
924954-0000 ..	TUBE	10-365
924983-0000 ..	SHIM	10-385
925000-0100 ..	DISCHARGE CIRCUIT	10-283
925001-0000 ..	CLAMP	10-393
925050-0000 ..	PIPE	10-393
925090-0000 ..	PANEL	10-83
925091-0000 ..	DIAPHRAGM	10-353, 10-385
925100-0100 ..	ASSEM. OF CFV AND MAN.DV	10-283
925125-0000 ..	COVER	10-133
925126-0000 ..	GASKET	10-133
925208-0000 ..	UPPER FILLING TUBE	10-329, 10-331
925209-0000 ..	LOWER FILLING TUBE	10-337, 10-339
925222-0000 ..	CLEANING CUP	10-359, 10-361

Part No	Description	Page No
925223-0000 ..	COVER	10-359, 10-361
925330-0000 ..	NIPPLE	10-77, 10-79
925331-0000 ..	NIPPLE	10-77, 10-79
925400-0400 ..	HIGH VISCOSITY ASEPTIC HVA	10-3
925401-0300 ..	PUMP GROUP	10-49, 10-51
925402-0100 ..	PLATFORM	10-49, 10-51
925403-0100 ..	FRAME	10-49, 10-51
925404-0100 ..	VALVE GROUP B-C	10-49, 10-51
925405-0100 ..	EXTERNAL VALVE GROUP	10-49, 10-51
925406-0100 ..	STEAM CIRCUIT	10-49, 10-51
925407-0100 ..	DISCHARGE UNIT	10-49, 10-51
925408-0100 ..	PNEUMATIC CIRCUIT	10-49, 10-51
925409-0100 ..	VALVE PANEL	10-49, 10-51
925410-0100 ..	CLEANING CIRCUIT	10-49, 10-51
925411-0100 ..	AIR SUPPLY	10-49, 10-51
925413-0300 ..	ELECTRICAL CABINET	10-151
925414-0200 ..	LEVEL CONTROL DEVICE	10-49, 10-51
925415-0100 ..	EXT. PRODUCT VALVE SUPPLY	10-49, 10-51
925416-0100 ..	PRODUCT VALVE B-C SUPPLY	10-49, 10-51
925417-0100 ..	START-UP KIT	10-49, 10-51
925418-0100 ..	ASSEMBLY TOOL	10-49, 10-51
925419-0100 ..	BED	10-49, 10-51
925420-0100 ..	ELECTRIC CONDUIT	10-49, 10-51
925421-0200 ..	REGULAR ACCESSORIES	10-49, 10-51
925422-0200 ..	TOUCH GUARD	10-49, 10-51
925424-0100 ..	PUMP	10-69, 10-71, 10-73, 10-75
925425-0100 ..	PUMP	10-69, 10-71, 10-73, 10-75
925426-0000 ..	VALVE SEAT	10-95
925427-0000 ..	VALVE SEAT	10-95
925428-0000 ..	PIPE	10-101, 10-103
925429-0000 ..	PIPE	10-101, 10-103
925430-0000 ..	PIPE	10-101, 10-103
925431-0000 ..	PIPE	10-101, 10-103
925432-0000 ..	STEAM PIPE	10-101, 10-103
925433-0000 ..	STEAM PIPE	10-101, 10-103
925434-0000 ..	STEAM PIPE	10-101, 10-103
925435-0000 ..	STEAM PIPE	10-101, 10-103
925436-0000 ..	STEAM PIPE	10-101, 10-103
925437-0000 ..	STEAM PIPE	10-101, 10-103
925438-0000 ..	STEAM PIPE	10-101, 10-103
925439-0000 ..	STEAM PIPE	10-101, 10-103
925440-0000 ..	STEAM PIPE	10-101, 10-103
925441-0000 ..	STEAM PIPE	10-101, 10-103
925442-0000 ..	STEAM PIPE	10-101, 10-103
925443-0000 ..	STEAM PIPE	10-101, 10-103
925444-0000 ..	STEAM PIPE	10-101, 10-103
925445-0000 ..	STEAM PIPE	10-101, 10-103
925446-0000 ..	STEAM PIPE	10-101, 10-103
925449-0000 ..	STEAM PIPE	10-101, 10-103
925450-0000 ..	STEAM PIPE	10-101, 10-103
925451-0000 ..	STEAM PIPE	10-101, 10-103
925452-0000 ..	FRAME	10-83
925453-0000 ..	STEAM PIPE	10-101, 10-103
925454-0000 ..	STEAM PIPE	10-101, 10-103
925455-0000 ..	STEAM PIPE	10-101, 10-103
925456-0000 ..	STEAM PIPE	10-101, 10-103
925457-0000 ..	TOUCH GUARD	10-111
925458-0000 ..	CABLE DUCT	10-111
925459-0000 ..	SPACER	10-111
925460-0000 ..	COVER	10-111
925461-0000 ..	SUPPORT	10-111
925462-0000 ..	CLEANING PIPE	10-113, 10-115
925463-0000 ..	CLEANING PIPE	10-113, 10-115
925464-0000 ..	CLEANING PIPE	10-113, 10-115
925465-0000 ..	HOLDER	10-113, 10-115
925466-0000 ..	CLEANING PIPE	10-113, 10-115
925467-0000 ..	FLANGE	10-113, 10-115
925468-0000 ..	FLANGE	10-113, 10-115
925469-0000 ..	GASKET	10-113, 10-115
925470-0000 ..	TUBE	10-113, 10-115
925471-0000 ..	SEAL HOLDER	10-93
925472-0000 ..	SEAL HOLDER	10-93
925516-0000 ..	PIPE	10-363
925550-0000 ..	BRANCH PIPE	10-363
925557-0000 ..	SUPPORT	10-363
925559-0000 ..	TUBE	10-363
925570-0100 ..	ELECTRIC MATERIALS	10-287
925576-0200 ..	STERILE AIR SYSTEM	10-283
925577-0000 ..	PLUG	10-363
925588-0000 ..	COVER	10-359, 10-361
925620-0000 ..	FLANGE	10-119, 10-121
925621-0000 ..	FLANGE	10-53
925622-0000 ..	FLANGE	10-53
925623-0000 ..	FLANGE	10-53

Part No	Description	Page No
925624-0000 ..	FLANGE	10-53
925625-0000 ..	FLANGE	10-53
925626-0000 ..	FLANGE	10-119, 10-121
925627-0000 ..	FLANGE	10-53
925631-0000 ..	SUPPORT	10-69, 10-71, 10-73, 10-75
925632-0000 ..	SUPPORT	10-69, 10-71, 10-73, 10-75
925633-0000 ..	SUPPORT	10-69, 10-71, 10-73, 10-75
925634-0000 ..	HOLDER	10-69, 10-71, 10-73, 10-75
925635-0000 ..	HOLDER	10-69, 10-71, 10-73, 10-75
925636-0000 ..	SPLASH GUARD	10-69, 10-71, 10-73, 10-75
925637-0000 ..	PRODUCT PIPE	10-69, 10-71, 10-73, 10-75
925638-0000 ..	PRODUCT PIPE	10-69, 10-71, 10-73, 10-75
925639-0000 ..	PRODUCT PIPE	10-69, 10-71, 10-73, 10-75
925640-0000 ..	PRODUCT PIPE	10-69, 10-71, 10-73, 10-75
925641-0000 ..	COVER	10-69, 10-71, 10-73, 10-75
925642-0000 ..	COVER	10-69, 10-71, 10-73, 10-75
925643-0000 ..	JOINT	10-69, 10-71, 10-73, 10-75
925644-0000 ..	JOINT	10-69, 10-71, 10-73, 10-75
925645-0000 ..	HOSE	10-79
925646-0000 ..	HOSE	10-77
925647-0000 ..	NUT	10-69, 10-71, 10-73, 10-75
925648-0000 ..	NUT	10-69, 10-71, 10-73, 10-75
925650-0000 ..	AIR PIPE	10-107, 10-109
925651-0000 ..	AIR PIPE	10-107, 10-109
925652-0000 ..	AIR PIPE	10-107, 10-109
925653-0000 ..	AIR PIPE	10-107, 10-109
925670-0100 ..	PULLER	10-53
925671-0000 ..	BUSHING	10-55
925672-0000 ..	WING SCREW	10-55
925673-0000 ..	BEAM	10-55
925674-0000 ..	ARM	10-55
925675-0000 ..	VALVE PANEL	10-53, 10-83
925676-0000 ..	AIR/STEAM DIAGRAM	10-53, 10-83
925717-0100 ..	UPPER FILLING TUBE	10-329, 10-331
925754-0000 ..	AIR PIPE	10-107, 10-109
925755-0000 ..	AIR PIPE	10-107, 10-109
925756-0000 ..	AIR PIPE	10-107, 10-109
925757-0000 ..	AIR PIPE	10-107, 10-109
925758-0000 ..	AIR PIPE	10-107, 10-109
925759-0000 ..	AIR PIPE	10-107, 10-109
925760-0000 ..	AIR PIPE	10-107, 10-109
925761-0000 ..	CONNECTION CLAMP	10-107, 10-109
925762-0000 ..	AIR PIPE	10-117
925765-0000 ..	BED	10-135
925766-0000 ..	CABLE CONDUIT	10-83
925767-0000 ..	CABLE CONDUIT	10-83
925781-1_1_ABNG	INSTALLATION DRAWING	10-53
925782-0000 ..	CABINET	10-157, 10-159
925783-0000 ..	COVER	10-157, 10-159
925784-0000 ..	DOOR	10-157, 10-159
925785-0000 ..	PROTECTION	10-137, 10-139
925786-0000 ..	BOX	10-157, 10-159
925789-0000 ..	MOUNTING PLATE	10-157, 10-159
925790-0000 ..	MOUNTING PLATE	10-157, 10-159
925791-0000 ..	HOLDER	10-157, 10-159
925792-0000 ..	CABLE TRACK	10-157, 10-159
925793-0000 ..	BOX	10-157, 10-159
925794-0000 ..	COVER	10-157, 10-159
925795-0000 ..	PLATE	10-157, 10-159
925796-0000 ..	PLATE	10-157, 10-159
925798-0000 ..	WINDOW	10-157, 10-159
925800-0000 ..	COVER	10-157, 10-159
925801-0000 ..	GASKET	10-157, 10-159
925802-0000 ..	GASKET	10-157, 10-159
925804-0000 ..	PLATE	10-157, 10-159
925806-0000 ..	GASKET	10-157, 10-159
925807-0000 ..	SPACER	10-157, 10-159
925877-0000 ..	SUPPORT	10-123
925942-0001 ..	COMPONENTS WITHOUT TP-NO	10-295
925950-0000 ..	CABLE TRACK	10-137, 10-139
925952-0000 ..	SLEEVE	10-137, 10-139
925970-0001 ..	COMPONENTS WITHOUT TP-NO	10-297
925999-0000 ..	PROTECTION PIPE	10-123
926011-0000 ..	REDUCTION	10-371, 10-373
926099-0000 ..	MOTOR HOLDER	10-289
926100-0000 ..	COVER	10-289
926101-0000 ..	GASKET	10-289
926194-0000 ..	SPACER	10-99
926198-0000 ..	LATERAL BODY VALVE	10-353
926199-0000 ..	LATERAL BODY VALVE	10-353
926283-0000 ..	FLANGE	10-101, 10-103
926485-0000 ..	TUBE	10-101, 10-103
926729-0000 ..	GASKET	10-337, 10-339, 10-385
926730-0000 ..	RING	10-337, 10-339

Part No	Description	Page No
926732-0000 ..	SLEEVE	10-69, 10-71, 10-73, 10-75
926744-0000 ..	BAR CLAMP	10-363
926754-0000 ..	CLAMP HOLDER	10-113, 10-115
926755-0000 ..	TUBE	10-101, 10-103
926756-0000 ..	PRODUCT PIPE	10-69, 10-71, 10-73, 10-75
926757-0000 ..	PRODUCT PIPE	10-69, 10-71, 10-73, 10-75
926758-0000 ..	PRODUCT PIPE	10-53
926759-0000 ..	PRODUCT PIPE	10-53
926760-0000 ..	PRODUCT PIPE	10-127
926761-0000 ..	TOUCH GUARD	10-101, 10-103
926762-0000 ..	LAMP HOLDER	10-101, 10-103
926763-0000 ..	CLAMP HOLDER	10-101, 10-103
926764-0000 ..	TOUCH GUARD	10-127
926765-0000 ..	CLAMP HOLDER	10-127
926766-0000 ..	CLAMP HOLDER	10-127
926767-0000 ..	FRAME	10-141, 10-143
926768-0000 ..	COVER	10-141, 10-143
926769-0000 ..	SIDE PLATE	10-141, 10-143
926770-0000 ..	DOOR	10-141, 10-143
926771-0000 ..	TOUCH GUARD	10-141, 10-143
926772-0000 ..	TOUCH GUARD	10-141, 10-143
926773-0000 ..	TOUCH GUARD	10-141, 10-143
926791-0000 ..	HINGE	10-141, 10-143
926792-0000 ..	HOLDER	10-141, 10-143
926793-0000 ..	WINDOW	10-141, 10-143
926794-0000 ..	HINGE	10-141, 10-143
926796-0000 ..	HOLDER	10-141, 10-143
926797-0000 ..	SPACER	10-141, 10-143
926798-0000 ..	FRAME	10-81
926799-0000 ..	PLATFORM	10-81
926800-0000 ..	RAILING	10-81
926801-0000 ..	RAILING	10-81
926802-0000 ..	SIDE PLATE	10-81
926811-0000 ..	BRANCH PIPE	10-363
926812-0000 ..	PIPE	10-363
926814-0000 ..	PIPE	10-363
926815-0000 ..	TOUCH GUARD	10-363
926816-0000 ..	BAR CLAMP	10-363
926820-0000 ..	PLUG	10-123
926825-0000 ..	PIPE	10-363
926937-0100 ..	CYLINDER C	10-85
926938-0100 ..	CYLINDER A	10-95
926973-0200 ..	HEADSPACE BY LOW LEVEL FILLING HL	10-3
926974-0200 ..	DOCUMENT	10-395
926981-0000 ..	DETAIL DRAWING	10-165
926982-0000 ..	DETAIL DRAWING	10-165
926983-0000 ..	DETAIL DRAWING	10-165
926984-0000 ..	DETAIL DRAWING	10-165
926985-0000 ..	DETAIL DRAWING	10-165
927069-0000 ..	GASKET	10-157, 10-159
927085-0000 ..	OVERFLOW TUBE	1-59, 1-61
927110-0000 ..	AIR-INERT GAS DIAGRAM	10-371, 10-373
927111-0000 ..	PNEUMATIC BOX SURVEY	10-371, 10-373
927113-0000 ..	SPACER ELEMENT	10-371, 10-373
927198-0000 ..	PIPE	1-65
927200-0000 ..	PIPE	1-65
927226-0000 ..	PIPE	1-65
927245-0100 ..	ASSEM.OF C.AND P.BOXES	10-283
927246-0100 ..	PNEUMATIC CABINET	10-367
927258-0000 ..	BRACKET	1-105
927263-0000 ..	BOX	10-371, 10-373
927281-0100 ..	TUBE L.S. COOLING	10-283
927282-0100 ..	PNEUMATIC COMPONENTS	10-283
927293-0100 ..	PNEUMATIC	10-283
927294-0100 ..	AIR VALVE	10-283
927295-0200 ..	REGULAR ACCESSORIES	10-283
927297-0200 ..	FLOW CONTROL OF HL	10-285
927301-1	MODIFICATION DRAWING	10-287
927302-0100 ..	CABLE LEAD-IN	10-287
927311-0000 ..	PIPE	1-65
927312-0100 ..	ASSEMBLING TOOL	10-283
927313-0100 ..	MOT.D.V. WITH FLOWMETER	10-287
927314-0000 ..	CAM	5-133, 5-135
927315-0000 ..	TURRET	5-133, 5-135
927316-0000 ..	SPACER	10-387
927317-0000 ..	PLATE	10-387
927318-0000 ..	ROLLER	5-133, 5-135
927319-0000 ..	PLATFORM	2-111
927332-0000 ..	BRACKET	5-13
927333-0000 ..	BAR CLAMP	5-13
927361-0100 ..	CONNECTION BOX	10-367
927364-0100 ..	READING DEVICE	10-283
927378-1	MODIFICATION DRAWING	10-287
927382-0000 ..	HOLDER	10-337, 10-339

Part No	Description	Page No
927383-0000 ..	GASKET	10-337, 10-339, 10-385
927392-0000 ..	GASKET	10-337, 10-339, 10-385
927404-0000 ..	FLANGE	10-53
927405-0000 ..	FLANGE	10-53
927406-0000 ..	FLANGE	10-53
927407-0000 ..	FLANGE	10-53
927408-0000 ..	FLANGE	10-53
927420-0001 ..	O-RING 5.1X1.6 SILICON	1-33
927421-0001 ..	O-RING 9.3X2.4 SILICON	1-59, 1-61, 1-109
927421-0002 ..	O-RING 12.3X2.4 SILICON	1-33
927421-0003 ..	O-RING 13.3X2.4 SILICON	1-59, 1-61, 1-109
927421-0004 ..	O-RING 15.3X2.4 SILICON	1-33, 2-19
927422-0001 ..	O-RING 19.2X3 SILICON	1-33, 1-59, 1-61, 2-65
927422-0003 ..	O.RING 24.2X3 SILICON	2-27
927422-0004 ..	O-RING 29.2X3 SILICON	1-59, 1-61, 1-109, 2-21
927422-0006 ..	O-RING 42.2X3 SILICON	1-59, 1-61, 2-17, 2-21, 2-65
927422-0007 ..	O-RING 44.2X3 SILICON	1-33
927422-0009 ..	O-RING 54.5X3 SILICON	1-33, 1-59, 1-61
927422-0011 ..	O-RING 69.5X3 SILICON	2-17
927428-0000 ..	COVERING PLATE	7-67, 7-69, 7-71
927435-0000 ..	MOUNTING RAIL	10-157, 10-159
927436-0000 ..	MOUNTING RAIL	10-157, 10-159
927446-0000 ..	WALL	10-157, 10-159
927447-0000 ..	WALL	10-157, 10-159
927448-0000 ..	LINK	4-53, 4-57
927449-0000 ..	SECURITY PLATE LEFT	4-53
927450-0000 ..	SECURITY PLATE RIGHT	4-57
927453-0100 ..	ASSEMBLY TOOL	10-287
927480-0000 ..	PRODUCT PIPE	10-127
927583-0000 ..	LOCKING FINGER	10-337, 10-339
927891-0000 ..	SCREW	5-113
928837-0000 ..	AIR DISTRIBUTOR	2-55
928901-0000 ..	COVERING PLATE	5-107
970215-0000 ..	STOP BLOCK	9-35
970261-0000 ..	SPACER SCREW 10,2X10MM	9-47
970802-0000 ..	DISCETTE BOX 3,5"	9-7, 10-157, 10-159
971250-1100 ..	ELECTRICAL CABINET	9-3
971286-0000 ..	SPACER H=6MM	9-47
971411-1100 ..	CONTROL PANEL MECHANICAL	9-3
971444-1100 ..	SIDE PANEL MECHANICAL	9-3
975849-0000 ..	SPACER	9-47
978603-0000 ..	SIGN	2-121, 2-123
979219-0000 ..	SPACER PIPE	2-121, 2-123
979548-0000 ..	MACHINE PLATE	10-141, 10-143
979667-0000 ..	ARM	10-19
979668-0000 ..	FINGER	10-19
988436-0000 ..	SPACER SLEEVE	10-161
1020637-0000 .	HOLDER	10-237, 10-239
1020638-0000 .	HOLDER	10-237, 10-239, 10-269
1035792-0000 .	E-HINGE	10-25
1035794-0000 .	BLOCKING PIECE	10-25
1035893-0000 .	ADJUSTING SCREW	8-31
1036329-0000 .	PIN	10-25
1036622-0000 .	GUIDE ROLLER	8-19
1036623-0000 .	GUIDE ROLLER	8-19
1037761-0000 .	PIN	2-57, 2-59, 2-61
1086888-0000 .	COVER	10-239, 10-269
1086889-0000 .	COVER	10-239
1110083-0002 .	DOLLY	4-29, 4-31, 4-33, 4-35, 4-49, 4-51
1110761-0000 .	INDUCTOR	4-41, 4-43, 4-45, 4-47, 4-49, 4-51
1110972-0000 .	INDUCTOR	4-41, 4-43, 4-45, 4-47, 4-49, 4-51
1110973-0000 .	INDUCTOR	4-41, 4-43, 4-45, 4-47, 4-49, 4-51
1110974-0000 .	INDUCTOR	4-41, 4-43, 4-45, 4-47, 4-49, 4-51
1110975-0000 .	INDUCTOR	4-41, 4-43, 4-45, 4-47, 4-49, 4-51
1110976-0000 .	INDUCTOR	4-41, 4-43, 4-45, 4-47, 4-49, 4-51
1129570-0000 .	LDS, LVDS TERMINAL 1	10-263
1143000-0000 .	PUSHER	5-87, 5-89
1143001-0000 .	ATTACHMENT PLATE	5-87, 5-89
1143002-0000 .	BRACKET	5-87, 5-89
1143003-0000 .	BRACKET	5-109
1143006-0000 .	STEERING	5-129, 5-131
1143007-0000 .	STEERING	5-129, 5-131
1143008-0000 .	BRACKET	5-129, 5-131
1143009-0000 .	BRACKET	5-129, 5-131
1143015-0000 .	BUSHING	5-143, 5-145, 5-147
1143016-0000 .	AXLE PIN	5-143, 5-145, 5-147
1143049-0000 .	VOLUME BULGE	4-19, 4-21, 4-23
1143050-0000 .	VOLUME SHIM	4-19, 4-21, 4-23, 4-49, 4-51
1143215-0000 .	SPRING	4-67, 4-69
1143216-0000 .	SPRING	4-67, 4-69
1143223-0000 .	WASHER	5-143, 5-145, 5-147
1143323-0000 .	AXLE PIN	10-23
1143324-0000 .	AXLE PIN	10-19
1143336-0000 .	ARM	10-15, 10-17

Part No	Description	Page No
1143337-0000	.ADJUSTING PLATE	10-19
1143341-0000	.AXLE PIN	10-11
1143343-0000	.AXLE PIN	10-19
1143455-0000	.MACHINE SIGN CE	6-7
1143456-0000	.MACHINE SIGN CE	6-25
1143605-0000	.SPACER	7-47
1143677-0000	.PAPER SUPPORT	8-25, 8-27
1143884-0000	.COPPER BRAID	10-47, 10-151
1190006-0401	.PLMS SEND	10-277
1190007-0401	.PLMS RECEIVE	10-277
1195000-0000	.ARM	10-23
1195002-0000	.ARM	10-23
1195094-0000	.BRACKET	7-53
1195327-0000	.PNEUMATIC DIAGRAM	2-139
1195332-0000	.PROTECTION PLATE	5-119
1195333-0000	.STOP	5-125
1195471-0000	.FORCE PLATE	10-19
1254471-0402	.PLMS OFF-LINE	10-235
1255160-0000	.THREADED INSERT	5-143, 5-145, 5-147
1255161-0000	.ARM	5-143, 5-145, 5-147
1255162-0000	.ROCKER ARM	5-143, 5-145, 5-147
1255163-0000	.ROCKER ARM	5-143, 5-145, 5-147
1255296-0000	.SAFETY GUARD	10-33
1255348-0000	.ROLL	10-11, 10-19, 10-23
1255357-0000	.ROCKER	10-23
1255411-0000	.PLATE	10-19
1255413-0000	.BRACKET	10-19
1255414-0000	.PROTECTION PLATE	10-25
1255415-0000	.COVERING PLATE	10-25
1255418-0000	.FORCE PLATE	10-25
1255419-0000	.AXLE PIN	10-19
1255420-0000	.SUPPORT	10-25
1255422-0000	.MICROSWITCH BRACKET	10-19
1255423-0000	.LEAD-IN PLATE	10-9
1255424-0000	.LEAD-IN PLATE	10-9
1255425-0000	.COVER	10-9
1255563-0000	.AXLE PIN	10-19
1255564-0000	.PROTECTION PIPE	10-9
1255924-0000	.LABEL	10-405
1255925-0000	.COVER	10-405
1255941-0000	.KNIFE	10-27, 10-29, 10-31
1255961-0000	.BOW CLAMP	10-27, 10-29, 10-31
1260217-0000	.PLATE	10-25
1260220-0000	.AXLE PIN	10-25
1260222-0000	.PLATE	10-19
1260223-0000	.BOX	10-21
1260259-0100	.CONNECTION BOX	10-19
1260261-0000	.T-PIPE	10-405
1260262-0000	.T-PIPE	10-405
1260263-0000	.PIPE	10-405
1260264-0000	.PIPE	10-405
1260265-0000	.PIPE	10-405
1260266-0000	.PIPE	10-405
1260267-0000	.PIPE	10-405
1260268-0000	.PIPE	10-405
1260269-0000	.STEAM PIPE	10-405
1260311-0000	.COVER	10-405
1260312-0000	.AIR PIPE	10-407, 10-409
1260323-0100	.T.C.S.B. UNIT	10-399
1260324-0100	.PNEUMATIC CIRCUIT TBA/8	10-405
1260371-0100	.MECHANICAL DOCKING	10-5
1260372-0100	.STRIP MAGAZINE	10-7
1260373-0100	.SPLICING MAGAZINE	10-7
1260374-0100	.COVER	10-7
1260375-0100	.PNEUMATIC CIRCUIT	10-7
1260383-0100	.STRIP GUIDE	10-7
1260443-0000	.CLAMP HOLDER	10-405
1260454-1	..... MODIFICATION DRAWING	10-33
1260455-1	..... MODIFICATION DRAWING	10-35
1260456-1	..... MODIFICATION DRAWING	10-37
1260457-1	..... MODIFICATION DRAWING	10-37
1260458-1	..... MODIFICATION DRAWING	10-39
1260459-1	..... MODIFICATION DRAWING	10-33
1260460-1	..... MODIFICATION DRAWING	10-33
1260475-1_1_A000	..... MODIFICATION DRAWING	10-407, 10-409
1260492-0000	.PRESSURE FLANGE	1-43, 1-45
1260493-0000	.FILLING PIPE	1-43, 1-45
1260498-0000	.STRIP GUIDE	10-27, 10-29, 10-31
1260499-0000	.BRACKET	10-19
1260500-0000	.AXLE PIN	10-19
1260501-0000	.CONTACT LINK	10-19
1260502-0000	.RETURN PIPE	10-19
1260503-0000	.PUSH BUTTON	10-19
1260532-0000	.BRACKET	10-27, 10-29, 10-31

Part No	Description	Page No
1260535-0000	.HEAT GUARD	10-33
1260536-0100	.AUTOMATIC STRIP SPLICING UNIT ASSU/8/9	10-3
1260537-0100	.ASSU UNIT	10-5
1260539-0100	.PAPER GUARD	10-33
1260540-0100	.CONNECTION BOX	10-33
1260541-0100	.BOTTOM PLATE	10-33
1260543-0100	.VALVE PANEL	10-33
1260560-0000	.SIGN	10-19
1260662-0000	.HINGE	10-25
1260663-0000	.HINGE	10-25
1260664-0000	.SUPPORT	10-25
1260665-0000	.FORCE PLATE	10-25
1260666-0000	.STOP	10-25
1260667-0000	.FORCE PLATE	10-25
1260668-0000	.AXLE PIN	10-19
1260669-0000	.AXLE PIN	10-19
1260670-0000	.AXLE PIN	10-19
1260748-0000	.AIR PIPE	10-407, 10-409
1260756-1	..... MODIFICATION DRAWING	10-33
1260871-0100	.TEMPERATURE CONTROLLED STEAM BARRIER	10-3
1279456-0000	.LABEL	10-405
1279457-0000	.BRACKET	1-55
1279480-1	..... MODIFICATION DRAWING	10-41
1282391-0000	.OVERFLOW TUBE	1-59, 1-61
1282592-0000	.STOPPER	4-67, 4-69
1282593-0000	.STOPPER	4-67, 4-69
1282595-0000	.CATCH	4-67, 4-69
1282596-0000	.CATCH	4-67, 4-69
1282818-0100	.BRAKE ARM LEFT	10-7
1282819-0100	.BRAKE ARM RIGHT	10-7
1285003-0000	.LINK	4-37, 4-49, 4-51
1285005-0000	.NUT	4-37, 4-49, 4-51
1285006-0000	.SPACER	4-37
1285367-0000	.HOLDER	4-25, 4-27
1285546-0000	.ROLL	8-31
1285923-0100	.WARNING BEACON	2-111
1285924-0000	.HOLDER	2-113
1285949-0000	.DAMPER	10-19
1296003-0000	.PAPER SUPPORT	8-25, 8-27
1296104-0000	.SPACER	10-27, 10-29, 10-31
1296222-0000	.SPRING	4-67, 4-69
1296223-0000	.SPRING	4-67, 4-69
1296807-0000	.COVER	10-23
1296884-0000	.SCREW	4-29, 4-31, 4-33, 4-35, 4-41, 4-43, 4-45, 4-47
1296885-0000	.SCREW	4-29, 4-31, 4-33, 4-35, 4-41, 4-43, 4-45, 4-47
1296886-0000	.SCREW	4-29, 4-31, 4-33, 4-35, 4-41, 4-43, 4-45, 4-47
1296981-0000	.SCREW	4-29, 4-31, 4-33, 4-35, 4-41, 4-43, 4-45, 4-47
1296982-0000	.SCREW	4-29, 4-31, 4-33, 4-35, 4-41, 4-43, 4-45, 4-47
1317404-0000	.DOOR	10-157, 10-159
1317540-0000	.HF BRAIDED WIRE 1,6 MM2	10-157, 10-159
1317711-0000	.SHAFT	8-19
1317712-0000	.SHAFT	8-19
1317713-0000	.SHAFT	8-17
1317714-0000	.STEERING	8-19
1317715-0000	.HOLDER	8-17
1317716-0000	.BRACKET	8-19
1317717-0000	.BRACKET	8-17
1317718-0000	.SHAFT	8-17
1317719-0000	.CLAMP	7-75, 7-77
1317808-0000	.FOLDING FLAP	4-53, 4-57
1317809-0000	.FOLDING FLAP	4-53, 4-57
1317955-0000	.SPRING BRACKET	4-67, 4-69
1334016-0000	.FLOAT	10-119, 10-121
1334175-0000	.COLUMN	10-19
1334176-0000	.COVER	10-35
1334177-0000	.FASTENING PLATE	10-11
1334202-1	..... MODIFICATION DRAWING	10-37
1334203-1	..... MODIFICATION DRAWING	10-37
1334251-0000	.PNEUMATIC DIAGRAM	10-41
1334319-0000	.PNEUMATIC DIAGRAM	10-53
1334458-0000	.REDUCTION NIPPLE	10-299
1334481-0000	.FILLING PIPE	10-119, 10-121
1334482-0000	.FLANGE	10-119, 10-121
1334483-0000	.FLANGE	10-53
1334484-0000	.FLANGE	10-53
1334485-0000	.FLOAT	10-119, 10-121
1334620-0100	.PAPER GUIDE	8-17
1334787-0_1_A	.DISTRIBUTION TERMINAL	10-149, 10-151
1334788-0_1_A	.DISTRIBUTION TERMINAL	10-149, 10-151
1334789-0000	.DMC RESOLVER CABLE	10-147, 10-149
1346079-0000	.HOLDER	10-119, 10-121
1346080-0000	.SPREADER	10-119, 10-121
1346081-0000	.BRACKET	10-119, 10-121
1346126-0000	.SEAL	9-47

Part No	Description	Page No
1346316-0000	.CURVE	3-17
1346500-0000	.BACK PLATE	9-47
1346501-0000	.COVERING PLATE	9-47
1346502-0000	.SEAL	9-47
1346505-0000	.SPACER	8-31
1346514-0000	.KNIFE HOLDER	7-67, 7-69, 7-71
1346893-1	..... MODIFICATION DRAWING	10-287, 10-299
1346894-0000	.BOX	10-369
1347019-0000	.CLEANING CUP	10-113, 10-115
1347020-0000	.COVER	10-113, 10-115
1347138-0000	.FLOAT	10-119, 10-121
1347139-0000	.FLOAT	10-119, 10-121
1347145-0000	.FRAME	9-35
1347153-0000	.ANGLE BRACKET	7-49, 7-51
1347154-0000	.BRACKET	7-49, 7-51
1347206-0000	.TERMINAL BLOCK	10-61
1347207-0000	.TERMINAL BLOCK	10-61
1347208-0000	.TERMINAL BLOCK	10-61
1347209-0000	.HOSE HOLDER	5-7, 5-9, 5-35, 5-37
1347210-0000	.HOSE HOLDER	5-7, 5-9, 5-35, 5-37
1347211-0000	.PIPE	5-7, 5-9, 5-35, 5-37
1347212-0000	.PIPE	5-7, 5-9, 5-35, 5-37
1347213-0000	.PIPE	1-65
1347214-0000	.HOSE	2-73, 2-75
1347216-0000	.PIPE	5-7, 5-9, 5-35, 5-37
1347217-0000	.TOUCH GUARD	5-7, 5-9, 5-35, 5-37
1347238-0100	.EARTH BAR	10-157, 10-159
1347239-0000	.EARTH BAR	10-161
1347406-0000	.FUSE PANEL HVA KIT	10-61
1347417-0000	.PROTECTION PIPE	10-123
1347497-0000	.HOLDER	10-69, 10-71, 10-73, 10-75
1347661-0000	.HOLDER	10-141, 10-143
1347796-0000	.SEAL	9-47
1347886-0000	.FILLING PIPE	10-119, 10-121
1347887-0000	.FILLING PIPE	10-119, 10-121
1347888-0000	.FILLING PIPE	10-119, 10-121
1347889-0000	.FILLING PIPE	10-119, 10-121
1348113-0000	.CUP	1-13
1348115-0000	.LID	1-13
1348175-0000	.GASKET	10-265
1348178-0000	.FRONT PLATE	10-265
1348179-0000	.MOUNTING PLATE	10-263
1348199-0000	.PRESSURE FLANGE	1-43, 1-45
1348200-0000	.FILLING PIPE	1-43, 1-45
1348201-0000	.PRESSURE FLANGE	1-43, 1-45
1348231-0100	.STRIP GUIDE	8-3, 8-5
1348261-0000	.BRACKET	10-355
1348385-0000	.SEALING PLATE	10-369
1348692-0000	.STOPPER	4-67, 4-69
1348696-0000	.CATCH	4-67, 4-69
1348697-0000	.CATCH	4-67, 4-69
1348705-0000	.COVER	10-263
1348955-0000	.KNIFE	4-37
1348956-0000	.KNIFE	4-37
1349007-0000	.COVER	1-63
1349566-0000	.COVER	10-239
1349568-0000	.CONNECTION BOX	10-241
1349770-0000	.FOIL	10-265
1349775-0101	.DISPLAY UNIT 8,4"	10-245
1349920-0000	.GASKET	2-21
1349975-0000	.LOCKING PIN LOWER	10-119, 10-121
1350111-0200	.OPTIONAL EQUIPMENT	10-283
1350295-0000	.GUIDE	10-23
1350314-0000	.FASTENING PLATE	10-23
1350315-0000	.AXLE PIN	10-23
1350316-0000	.PISTON HOLDER	10-23
1350691-0000	.COVER	10-157, 10-159
1350709-0000	.COVERING PLATE	10-151
1350713-0000	.SLEEVE	10-69, 10-71, 10-73, 10-75
1360568-0	..... NEUTRAL AND GROUND TERM, X2.3	10-45, 10-47
1360782-0100	.CONNECTION BOX	7-57, 7-59, 7-61, 7-63
1360783-0100	.EL-PNEUMATIC EQUIPMENT	7-3, 7-5
1360784-0000	.PROTECTION PLATE	7-67, 7-69, 7-71
1360785-0100	.PAPER HOLDER	7-67, 7-69, 7-71
1360786-0000	.MOUNTING BAR	7-49, 7-51
1360787-0000	.COVER	7-49, 7-51
1360788-0000	.HOOD	7-49, 7-51
1360889-0100	.SIDE GUARD LEFT	2-3, 2-5
1360890-0000	.SIDEGUARD LEFT	2-31
1360891-0000	.NUT	2-31, 2-33
1360892-0000	.PLATE	2-31, 2-33
1360893-0000	.BRACKET LEFT	2-31
1360894-0000	.HOLDER	2-31, 2-33
1360895-0000	.BEARING	2-31, 2-33

Part No	Description	Page No
1360896-0000	.CHUTE LEFT	2-31
1360897-0000	.PLATE	2-31, 2-33
1360898-0100	.SIDE GUARD, RIGHT	2-3, 2-5
1360899-0000	.SIDE GUARD RIGHT	2-33
1360900-0000	.BRACKET RIGHT	2-33
1360901-0000	.CHUTE RIGHT	2-33
1360902-0000	.COVER	2-33
1360903-0100	.SIDE BOX LEFT	2-3, 2-5
1360904-0000	.SIDE BOX LEFT	2-53
1360905-0000	.BOTTOM PLATE LEFT	2-53
1360906-0100	.SIDE BOX RIGHT	2-3, 2-5
1360907-0000	.SIDE BOX RIGHT	2-11
1360908-0000	.BOTTOM PLATE	2-11
1360909-0000	.SHAFT	4-83, 4-85, 4-87, 4-89
1360973-0000	.WELDED CABINET	9-7
1360974-0000	.DOOR	9-9
1360975-0000	.PLATE	9-11
1360976-0000	.PLATE	9-13
1360977-0000	.DOOR	9-15
1360978-0000	.DOOR	9-17
1360979-0000	.DOOR	9-19
1360980-0000	.MOUNTING PLATE	9-21
1360981-0000	.MOUNTING PLATE	9-23
1360982-0000	.MOUNTING PLATE	9-25
1360983-0000	.MOUNTING PLATE	9-27
1360984-0000	.MOUNTING PLATE	9-29
1360985-0000	.MOUNTING PLATE	9-31
1360986-0000	.MOUNTING PLATE	9-33
1360988-0000	.FRAME	9-9
1360991-0000	.MOUNTING PLATE	9-37
1360992-0000	.BRACKET	9-39
1360993-0000	.COVER PLATE	9-39
1360994-0000	.SCREEN	9-27
1360995-0000	.PROFILE	9-41
1360996-0000	.PROFILE	9-41
1360997-0000	.COVER	9-7
1360998-0000	.SWINGFRAME	9-35
1361000-0000	.COVER PLATE	9-41
1361001-0000	.TUBE	9-41
1361002-0000	.MOUNTING PLATE	9-37
1361005-0000	.PROFILE	9-37
1361006-0000	.PROFILE	9-37
1361009-0000	.BRACKET	9-37
1361010-0000	.PROFILE	9-37
1361011-0000	.COVER PLATE	9-27
1361012-0000	.COVER PLATE	9-31
1361013-0000	.COUPLING RAIL	9-35
1361015-0000	.COVER PLATE	9-35
1361016-0000	.COVER PLATE	9-35
1361017-0000	.WASHER	9-35
1361018-0000	.CHANNEL	9-7
1361019-0000	.FLANGE	9-7
1361020-0000	.GASKET	9-7
1361021-0000	.COVER PLATE	9-7
1361022-0000	.FILE HOLDER	9-11
1361023-0000	.PROFILE 125X10X35MM	9-23
1361024-0000	.PLATE	9-39
1361025-0000	.PROFILE	9-11, 9-13
1361027-0000	.GASKET	9-7
1361028-0000	.GASKET	9-7
1361029-0000	.GASKET	9-7
1361030-0000	.GASKET	9-7
1361031-0000	.ROD	9-9
1361032-0000	.ROD	9-9
1361033-0000	.COVER PLATE	9-33
1361034-0000	.BRACKET	9-7
1361035-0000	.PROFILE 70X10X40MM	9-21
1361036-0000	.GASKET	9-9, 9-15, 9-17, 9-19
1361037-0000	.PROFILE	9-7
1361038-0000	.PROFILE	9-7
1361039-0000	.BRACKET	9-7
1361045-0000	.WELDED CABINET	9-45
1361048-0000	.DOOR	9-47
1361053-0000	.DOOR	9-51
1361181-0000	.CABLE DUCT 100X80	9-21
1361182-0000	.CABLE DUCT 60X80	9-21
1361183-0000	.CABLE DUCT 60X80	9-21
1361184-0000	.CABLE DUCT 40X80	9-21
1361185-0000	.CABLE DUCT 40X80	9-21
1361186-0000	.CABLE DUCT 100X80	9-25
1361187-0000	.CABLE DUCT 100X80	9-25
1361188-0000	.CABLE DUCT 80X80	9-25
1361189-0000	.CABLE DUCT 80X80	9-25
1361190-0000	.CABLE DUCT 60X80	9-25

Part No	Description	Page No
1361191-0000	.CABLE DUCT 80X80	9-27, 9-31
1361192-0000	.CABLE DUCT 25X80	9-27
1361193-0000	.CABLE DUCT 100X80	9-27
1361194-0000	.CABLE DUCT 100X80	9-31
1361195-0000	.CABLE DUCT 25X80	9-31
1361197-0000	.CABLE DUCT 80X40	9-37
1361198-0000	.CABLE DUCT 80X40	9-37
1361201-0000	.CABLE DUCT 60X60	9-35
1361202-0000	.CABLE DUCT 60X80	9-35
1361203-0000	.CABLE DUCT 40X80	9-35
1361204-0000	.CABLE DUCT 40X80	9-35
1361205-0000	.CABLE DUCT 40X80	9-35
1361206-0000	.CABLE DUCT 25X80	9-35
1361207-0000	.CABLE DUCT 25X80	9-35
1361208-0000	.CABLE DUCT 100X100	9-29
1361209-0000	.CABLE DUCT 80X80	9-29
1361210-0000	.CABLE DUCT 60X100	9-29
1361211-0000	.CABLE DUCT 60X80	9-29
1361212-0000	.CABLE DUCT 60X60	9-33
1361213-0000	.CABLE DUCT 60X60	9-33
1361214-0000	.CABLE DUCT 40X60	9-33
1361215-0000	.CABLE DUCT 100X80	9-7
1361216-0000	.CABLE DUCT 80X80	9-7
1361217-0000	.CABLE DUCT 25X40	9-7
1361218-0000	.CABLE DUCT 25X40	9-7
1361219-0000	.CABLE DUCT 25X40	9-45
1361220-0000	.CABLE DUCT 25X40	9-7
1361226-0000	.RAIL TS35	9-21
1361227-0000	.RAIL TS35	9-21
1361228-0000	.RAIL TS35	9-35
1361275-0100	.PAPER GUIDE	8-3, 8-5
1361276-0000	.GUIDE SHAFT	8-31
1361277-0000	.GUIDE SHAFT	8-31
1361278-0000	.GUIDE SHAFT	8-31
1361279-0000	.GUIDE SHAFT	8-31
1361281-0100	.SUPPORT ROLLER	8-3, 8-5
1361308-0102	.DOCUMENT FOLDER	10-5
1361310-0000	.DOCUMENT FOLDER	10-49, 10-51
1361311-0000	.DOCUMENT FOLDER	10-287
1361313-0101	.DOCUMENT FOLDER	10-397
1361566-0100	.PLACING OF CABLE DUCT	2-3, 2-5
1361730-0100	.FORM CLAMP TBA/8	1-3
1361731-0000	.BOW	1-11
1361732-0000	.ROLL	1-11
1361733-0000	.ROLL	1-11
1361734-0000	.WASHER	1-11
1361801-0000	.SPACER	4-67, 4-69
1361945-0000	.HOOD	7-49, 7-51
1361946-0100	.SIDE GUARDS	7-3, 7-5
1361947-0100	.DATING UNIT NSS	7-3, 7-5
1362065-0100	.MACHINE BODY RIGHT OUT	5-3, 5-5
1362066-0100	.MACHINE BODY FF LEFT OUT	5-3, 5-5
1362133-0000	.PROTECTION PLATE	10-263
1362179-0102	.DOCUMENT FOLDER	10-181
1362180-0102	.DOCUMENT FOLDER	10-399
1362220-0000	.CLEANING TROUGH	5-35, 5-37
1362221-0000	.CLEANING TROUGH	5-7, 5-9
1362425-0000	.LEAD-IN PLATE	2-51
1362426-0100	.BOTTOM PLATE	2-3, 2-5
1362427-0100	.PIPE WORK-WATER TBA/8	2-3, 2-5
1362505-0000	.SPREADER	2-115
1362582-0500	.SOFTWARE PLMS TBA/8 GEF	10-245
1362608-0100	.PRODUCT VALVE	1-3
1362926-0000	.COVERING PLATE	7-67, 7-69, 7-71
1362931-0100	.SPLICING DEVICE	7-3, 7-5
1363288-0301	.FLEXBOX TETRA BRIK	10-245
1363292-0501	.PLMS COMMON SOFTWARE	10-245
1363455-0000	.LABELS DISKETT	10-253
1363456-0000	.LABELS FLEXBOX	10-253
1363460-0000	.LABELS FLEXBOX	10-257
1364976-0000	.FORK	1-17, 1-19
1364979-0000	.SHAFT	1-17, 1-19
1365782-0103	.DOCUMENT FOLDER	10-177
1367184-0_1_A	.NUMBER SETTINGS CPU	10-247
1367630-0000	.GASKET	10-263
1367794-0000	.LID	1-13
1367795-0000	.CUP	1-13
1367796-0000	.GASKET	1-13, 10-179
1367798-0000	.LID	1-13
1367799-0000	.CUP	1-13
1367800-0000	.GASKET	1-13, 10-179
1367802-0000	.LID	1-13
1367803-0000	.CUP	1-13
1367804-0000	.GASKET	1-13, 10-179

Part No	Description	Page No
1367806-0000	.LID	1-13
1367807-0000	.CUP	1-13
1367808-0000	.GASKET	1-13, 10-179
1367814-0100	.VOLUME FLAP	4-3, 4-5
1369440-0100	.BEZEL ASSEMBLY 8,4"	10-263
1369843-0001	.SLEEVE	4-39
1369869-0000	.SCREW	4-67, 4-69
1478135-0000	.NUT	1-13
1478136-0000	.PIN	1-13
1478137-0000	.GASKET	1-13, 10-179
1478216-0000	.AXLE PIN	5-113
1478218-0000	.BEARING CONSOLE	5-113
1478219-0000	.BEARING CONSOLE	5-113
1478220-0000	.ARM	5-113
1478489-0000	.SHAFT	5-113
1478490-0000	.SHAFT	5-113
1478491-0000	.SPACER	5-113
1478502-0100	.PACK COUNTER	10-235
1478503-0100	.CONNECTION BOX	10-235
1478507-0000	.COVER	9-47
1478659-0000	.BRACKET	10-239
1478660-0000	.BRACKET	10-237
1478663-0100	.PHOTOCELL UNIT	10-235
1478881-0000	.GUIDE	5-49, 5-51
1478882-0000	.FILLING PIPE	1-43, 1-45
1478883-0000	.FILLING PIPE	1-43, 1-45
1478885-0000	.FILLING PIPE	1-43, 1-45
1478886-0000	.PRESSURE FLANGE	1-43, 1-45
1478887-0000	.PRESSURE FLANGE	1-43, 1-45
1478888-0000	.FILLING PIPE	1-43, 1-45
1478889-0000	.PRESSURE FLANGE	1-43, 1-45
1478890-0000	.PRESSURE FLANGE	1-43, 1-45
1478891-0000	.FILLING PIPE	1-43, 1-45
1478893-0000	.LOCKING PIN	1-43, 1-45
1478894-0000	.LOCKING PIN	1-43, 1-45
1478899-0000	.PNEUMATIC DIAGRAM	10-41
1484163-0000	.KNIFE	4-37
1484831-0000	.VOLUME FLAP	4-19, 4-21
1484832-0000	.VOLUME FLAP	4-23
1484846-0000	.RAIL	4-45, 4-47
1484847-0000	.RAIL	4-41, 4-43
1487404-0200	.KNIFE HOLDER	4-3, 4-5
1487405-0100	.VOLUME FLAP	4-3, 4-5
1487412-0000	.VALVE PANEL	2-121, 2-123
1487413-0100	.VALVE PANEL	2-3, 2-5
1487414-0100	.HOLDER	2-137
1487415-0000	.VALVE PANEL	2-139
1487416-0000	.VALVE PANEL	2-139
1487685-0000	.PLUG	2-63
1487978-0000	.BRACKET	10-181
1487979-0100	.PIPE WORK TBA/8	8-3, 8-5
1487980-0000	.CONNECTION BOX	8-11
1490099-0000	.PIN	1-43, 1-45
1490103-0000	.VALVE PANEL	10-41
1490104-0000	.VALVE PANEL	10-41
1498072-0100	.CONNECTION BOX	8-3, 8-5
1498724-0100	.RK-CONNECTION BOX	10-235
1511572-0000	.CLIP	7-25, 7-27, 7-29, 7-31, 7-33
1511688-0000	.PLATE	2-51
1512496-0000	.FILLING PIPE	10-341
1512497-0000	.FILLING PIPE	10-341
1512498-0000	.FILLING PIPE	10-341
1512499-0000	.FILLING PIPE	10-341
1512500-0000	.FILLING PIPE	10-341
1512501-0000	.FILLING PIPE	10-341
1512503-0100	.LOWER FILLING TUBE FFP	10-283
1512505-0000	.VOLUME FLAP	4-23
1512506-0000	.VOLUME FLAP	4-19, 4-21
1512513-0000	.STOP	4-67, 4-69
1519643-0000	.VOLUME FLAP	4-19, 4-21
1519645-0000	.VOLUME FLAP	4-23
1519657-0000	.CANTILEVER	4-67, 4-69
1519658-0000	.CANTILEVER	4-67, 4-69
1520442-0000	.CUTTING RAIL	4-29, 4-31, 4-33, 4-35
1520490-0000	.CUTTING RAIL	4-29, 4-31, 4-33, 4-35
1520491-0000	.CUTTING RAIL	4-29, 4-31, 4-33, 4-35
1520633-0002	.DOLLY	4-29, 4-31, 4-33, 4-35, 4-49, 4-51
1531059-0101	.DOCUMENT FOLDER	10-235
1538109-0000	.COMPRESSION SPRING	4-37, 4-49, 4-51
2501271-0000	.CATCH	4-67, 4-69
2501272-0000	.CATCH	4-67, 4-69
2510372-0000	.BUSHING	2-21
2510374-0000	.SEAT VALVE	1-59, 1-61
2525460-0000	.SEAT VALVE	2-65

Part No	Description	Page No	Part No	Description	Page No

Tetra Pak

SPC
Spare Parts Catalogue

Pos	Part No	Description	Page No
A			
A006	68446-0301	ZONE HEATER TIMER	10-193
A006:1	68262-0101	BACKPLANE FRONT RACK 8TE	10-193
A130	90031-0057	PLC, DIGITAL INPUT MODULE	10-61
A141	90031-0057	PLC, DIGITAL INPUT MODULE	10-391
A142	90031-0059	PLC, DIGITAL OUTPUT MODULE	10-391
A143	90031-0057	PLC, DIGITAL INPUT MODULE	10-47, 10-307
A144	90031-0059	PLC, DIGITAL OUTPUT MODULE	10-47, 10-61, 10-307
A145	90031-0059	PLC, DIGITAL OUTPUT MODULE	10-61
A403	67600-0501	TPIH 2000 GENERATOR	10-193
A403:1	90110-0121	FEMALE INSERT GDS A-H 09 06 215 2811	10-193
A403:2	90110-0122	COVER, 09 06 000 9957	10-193
A403:3	359241-0136	SIGN, PERFORATION HEATER	10-193
A452	1363288-0301	FLEXBOX TETRA BRIK	10-245
A452:1	1363292-0501	PLMS COMMON SOFTWARE	10-245
A452:2	1362582-0500	SOFTWARE PLMS TBA/8 GEF	10-245
A452:5	90456-0003	INTOUCH OEM 256 V.5.6B/6.0B HW KEY	10-245
A453	90453-0002	MODEM MD-12 DC	10-277
A453.1	1190006-0401	PLMS SEND	10-277
A510	90314-0038	LEVEL CONTROL RELAY, RM3 220-240VAC	10-391
A512	68530-0101	AUTO FLOW CONTROLLER	10-307
A512:1	68262-0101	BACKPLANE FRONT RACK 8TE	10-307
A513	68447-0202	VALVE POS: ASSEMBLY	10-307
A513:1	68262-0101	BACKPLANE FRONT RACK 8TE	10-307
A514	68450-0101	STEPPER MOTOR DRIVER	10-307
A514:1	68262-0101	BACKPLANE FRONT RACK 8TE	10-307
A515	90243-0221	FLOW METER, SIGNAL CONVERTER, 0-10M/S 50	10-307
A515	90243-0222	FLOW METER, SIGNAL CONVERTER, 0-10M/S 60	10-307
A515:1	68539-0102	BOTTOM CARD FILL-MAG	10-307
A515:2	67388-0102	RACK FRONTMOUNTED 84TE	10-307
A515:3	90287-0274	SCREW M6X16	10-307
A515:4	90005-0138	PLASTIC WASHER DI=6,4MM	10-307
A515:5	68445-0104	FRONT PLATE 8 TE	10-307
A515:6	68445-0105	FRONT PLATE 10TE	10-307
A550	558230-0201	TMCC CONTROLLER	10-151
A550:1	68262-0100	BACKPLANE FRONT RACK 8TE	10-151
A550:2	48339-0101	H.VISCOSITY FILLING SYSTEM	10-151
A552	90410-0051	TEMPERATURE CONTROLLER, KS 40	10-151
A552:1	359241-0266	SIGN	10-151
A552:2	359240-0100	SIGN HOLDER FOR 359240-0001	10-151
A553	90410-0051	TEMPERATURE CONTROLLER, KS 40	10-151
A553:1	359241-0123	SIGN, TEMP. PRE-STERILIZATION VALVE	10-151
A553:2	359240-0100	SIGN HOLDER FOR 359240-0001	10-151
A556	90045-0398	SERVO DRIVE 10,5A/AC DMC 51540 P	10-151
A556:1	42931-0201	HVA8 LOBE PUMP CONTROL	10-151
A556:2	42931-0202	HVA8 LOBE PUMP CONTROL	10-151
A556:3	90045-0382	CONNECTOR KIT 19N117F	10-151
A557:2	68835-0200	RACK	10-151
A557:3	68445-0105	FRONT PLATE 10TE	10-151
A557:4	68445-0104	FRONT PLATE 8 TE	10-151
A557:5	68445-0102	FRONT PLATE 5TE	10-151
A557:6	90005-0138	PLASTIC WASHER DI=6,4MM	10-151
A557:7	90287-0274	SCREW M6X16	10-151
A557:8	90099-0113	CLIP NUT M6	10-151
A557:9	1350709-0000	COVERING PLATE	10-151
A910	90410-0051	TEMPERATURE CONTROLLER, KS 40	10-47
A910:1	359241-0144	SIGN, INTERNAL STRIP, AUTO SPLICE	10-47
F			
F004	90233-0028	TUBE FUSE, 10A	10-193
F004:1	90233-0303	FUSE HOLDER, ST 10 1-POLE	10-193
F005	1487414-0100	HOLDER	2-137
F010	68816-0100	FLOW PRESET CARD	10-293
F010	440588-0200	CRANK	3-3
F010	499255-0200	SEAL KIT	1-131
F010	525320-0100	CHAIN GUARD	5-49, 5-51
F010	537329-0100	HUB JUMBO	8-37, 10-7
F010	560922-0100	VALVE PANEL	2-13
F010	566196-0100	LID WITH WEIGHT	2-25
F010	1260259-0100	CONNECTION BOX	10-19
F010	1260539-0100	PAPER GUARD	10-33
F010	1362065-0100	MACHINE BODY RIGHT OUT	5-3, 5-5
F010	1362066-0100	MACHINE BODY FF LEFT OUT	5-3, 5-5
F020	239890-0300	INTERMEDIARY SHAFT	3-3
F020	266550-0400	FILTER HOUSING	2-13
F020	266756-0500	PLATFORM	6-19
F020	543822-0100	BRAKE ARM	8-37
F020	1260540-0100	CONNECTION BOX	10-33
F020	1282818-0100	BRAKE ARM LEFT	10-7
F030	68917-0100	ANGLE INDICATOR	2-141
F030	561257-0200	PEROXIDE TANK	2-13
F030	594620-0100	BRAKE ARM	8-37
F030	925424-0100	PUMP	10-69, 10-71, 10-73, 10-75
F030	925425-0100	PUMP	10-69, 10-71, 10-73, 10-75

Pos	Part No	Description	Page No
F			
F030	1260541-0100	BOTTOM PLATE	10-33
F030	1282819-0100	BRAKE ARM RIGHT	10-7
F040	442582-0100	DRIVE GEAR	5-13
F040	543821-0100	LEVEL PROBE	8-37
F040	561258-0200	DRAINING PEROXIDE	2-13
F040	1260372-0100	STRIP MAGAZINE	10-7
F040	1260543-0100	VALVE PANEL	10-33
F050	434668-0400	DRIVE UNIT	3-3
F050	527898-0100	CONTAINER H2O2	2-13
F050	1260373-0100	SPLICING MAGAZINE	10-7
F060	561259-0100	CONNECTION HOUSING	2-13
F060	1260374-0100	COVER	10-7
F070	266986-0500	CURVE SHAFT	3-3
F070	580043-0100	SPLICING DEVICE	10-7
F080	243927-0700	ARM	3-3
F080	541163-0100	CLAMP RING	10-85
F080	1260375-0100	PNEUMATIC CIRCUIT	10-7
F090	541164-0100	CLAMP RING	10-85
F090	593763-0100	HOLD-DOWN DEVICE	3-3
F090	1260383-0100	STRIP GUIDE	10-7
F100	67577-0501	POWER CARD	10-197
F100	68448-0200	VALVE POS.: MAIN CARD	10-311
F100	68451-0101	STEP. MOT. DR. MAIN CARD	10-319
F100	68833-0100	SWITCH GEAR	10-295
F100	434669-0400	IMPULSE TRANSMITTER	3-3
F100	794243-0100	B-CYLINDER	10-85
F101	67564-0101	THIH TOROID COIL 1	10-199
F102	67565-0101	TPIH TOROID COIL 2	10-199
F103	67566-0101	TPIH TOROID COIL 3	10-199
F104	67567-0101	TPIH THERMOSTAT CABLE	10-199
F105	67568-0101	TPIH COIL SINGLE LAYER	10-199
F105	273728-0300	VALVE GROUP	3-19
F106	67569-0101	TPIH TANK COIL	10-199
F107	67570-0101	TPIH CAPACITOR CARD	10-199
F108	67582-0101	HEAT SINK PREREGULATOR	10-199
F110	67573-0101	TPIH TRANSISTOR PACKAGE	10-199
F110	68449-0200	VALVE POS.: AUX. CARD I	10-311
F110	68452-0101	STEP. MOT. DR. AUX. CARD	10-319
F110	285303-0400	LOWER SECTION	5-3, 5-5
F110	926937-0100	CYLINDER C	10-85
F111	67581-0101	TPIH TRANSISTOR PACKAGE	10-199
F112	67574-0401	OUTPUT TRANSFORMER	10-199
F120	68473-0200	VALVE POS.: AUX. CARD II	10-311
F120	285291-0400	BEVEL GEAR	5-57
F120	292071-0200	SPLASH PROTECTION	3-3
F123	442644-0300	DOUBLE GEAR	5-59
F130	434670-0600	LINK SYSTEM	3-3
F130	541163-0100	CLAMP RING	10-95
F130	927361-0100	CONNECTION BOX	10-367
F140	285299-0100	PRESSURE ARM	5-57
F140	794226-0100	VALVE	10-95
F140	927246-0100	PNEUMATIC CABINET	10-367
F150	594621-0100	PRESSURE ARM	5-57
F150	926938-0100	CYLINDER A	10-95
F160	440135-0100	BENDING ROLLER	7-39
F160	525102-0200	LUBRICATING SYSTEM	5-57
F170	525129-0100	ELEMENT	5-3, 5-5
F175	525128-0100	FF-ELEMENT R	5-3, 5-5
F180	31390-0100	FF-ELEMENT TOP	5-69, 5-71, 5-83, 5-85
F190	31390-0110	FF-ELEMENT BOTTOM	5-69, 5-71, 5-83, 5-85
F200	67578-0101	TPIH FAN HOLDER	10-197
F200	285591-0400	STATION	5-3, 5-5
F200	595087-0100	STATION	5-3, 5-5
F201	67575-0101	TPIH INTERNAL TRANSFORMER	10-223
F240	476887-0200	CLEANING HEAD	2-35
F250	476884-0200	CLEANING HEAD	2-35
F260	42062-0100	LEVEL PROBE	10-119, 10-121
F260	525085-0300	LUBRICATING SYSTEM	5-3, 5-5
F265	476885-0200	CLEANING HEAD	2-41, 2-43
F270	476886-0200	CLEANING HEAD	2-41, 2-43
F290	276343-0300	LID	2-105
F300	67579-0501	CONTROL CARD	10-197
F301	67576-0101	TPIHTRANSFORMER CONT.CARD	10-227
F320	243171-0200	LADDER	6-21
F380	285479-0600	SUPERSTRUCTURE	5-3, 5-5
F390	285853-0300	STEERING RAIL	5-127
F395	525117-0300	INDEXING GEAR	5-127
F400	67580-0201	FRONT PANEL	10-197
F405	442646-0200	TOP GEAR	5-127
F405	540723-0100	CONNECTION BOX	2-57, 2-59, 2-61
F410	285456-0300	PRESSURE DEVICE	5-3, 5-5
F420	285736-0300	PULL-DOWN DEVICE	5-3, 5-5

Pos	Part No	Description	Page No
F			
F440	297681-0400	WHEEL LEFT	5-3, 5-5
F450	297682-0400	WHEEL RIGHT	5-3, 5-5
F470	443173-0100	DRIVE SHAFT	5-3, 5-5
F480	525000-0300	FOLDING PART	5-3, 5-5
F480	595088-0200	FOLDING PART	5-3, 5-5
F490	269971-0200	LADDER	1-79
F490	442537-0500	WASTE CHUTE	5-3, 5-5
F500	525213-0200	INFEEDER	5-3, 5-5
F500	595089-0100	INFEEDER	5-3, 5-5
F510	273401-0300	CHANGE-OVER VALVE	1-83
F510	525325-0200	DISCHARGER	5-3, 5-5
F510	595090-0100	DISCHARGER	5-3, 5-5
F515	476849-0100	VALVE	1-83
F517	476859-0200	CHANGE-OVER VALVE	1-83
F518	594618-0100	CHANGE-OVER VALVE	1-83
F530	269989-0300	VALVE	1-93
F535	594616-0100	VALVE	1-93
F540	273402-0400	AIR SUPER-HEATER	1-93
F550	90007-0150	CIRCUIT BREAKER, 3P 25 A K	10-61
F550	594613-0100	CLEANING HEAD	2-91
F551.	90007-0148	CIRCUIT BREAKER, 3P 16 A K	10-151
F551	90007-0149	CIRCUIT BREAKER, 3P 20 A K	10-151
F552	90007-0128	CIRCUIT BREAKER, 1P 6 A K	10-151
F560	263391-0400	CALENDER ROLLER	1-101
F570	263394-0300	BENDING ROLLER	1-101
F590	276345-0300	AIR KNIFE	1-101
F950	574332-0100	BELT	5-109
F960	576245-0100	BELT RIGHT	5-113
F970	576246-0100	BELT LEFT	5-113
F980	576252-0100	INFEED SECTION	5-109
K			
K017	90075-0125	CONTACTOR, 7,5KW 24VDC	10-193
K550	90075-0128	CONTACTOR, 7,5KW 24VDC	10-151
K551	90119-0056	RELAY, AUXILIARY MK3P5-S 24VDC	10-151
K551:1	90129-0006	BASE, S3-B	10-151
K910	90119-0067	SOLID-STATE RELAY, H12WD4850	10-47
K915	90119-0056	RELAY, AUXILIARY MK3P5-S 24VDC	10-403
K915:1	90129-0006	BASE, S3-B	10-403
M			
M551	90264-0032	FAN PAPST 220V;18W	10-151
Q			
Q550	90111-0132	MAIN SWITCH P1-25/EA/SVB-SW/N/HI11/H-P14	10-151
Q550:1	359241-0353	SIGN"RATINING PLATE"	10-151
Q550:2	359241-0124	SIGN, MAIN SWITCH	10-151
Q550:3	359240-0100	SIGN HOLDER FOR 359240-0001	10-151
R			
R005	90130-0017	POTENTIOMETER, 10 KOHM	10-193
R005:1	90130-0301	ADJUSTING KNOB WITH DIAL	10-193
R005:2	359241-0136	SIGN, PERFORATION HEATER	10-193
R550	90121-0132	RESISTANCE FIXED, 0,51 KOHM, 0,25 W	10-151
S			
S007	90111-0120	SWITCH, 2 POS.704.510 .0A+704.901.5/A	10-193
S007:1	359241-0146	SIGN "ZONE HEATER ON/OFF"	10-193
S510	90111-0121	SWITCH, 3 POS.704.502.0A+2 PCE 704.901.3	10-391
S510	735185-0000	SYMBOLLABEL PACK SHAPE 18,2X50MM	10-391
S511	90111-0120	SWITCH, 2 POS.704.510 .0A+704.901.5/A	10-307
S511:1	359241-0320	SIGN "FLOWMETER ON/OFF"	10-307
S550	90111-0120	SWITCH, 2 POS.704.510 .0A+704.901.5/A	10-151
S550:1	359241-0267	SIGN	10-151
S550:2	359240-0100	SIGN HOLDER FOR 359240-0001	10-151
W			
W010	90220-0095	SCR. CABLE 3X0,75MM2	10-151
W015	90220-0059	THERMOCOUPLE CABLE K/ 2X0,81MM2	10-151
W015	548770-0001	COAXIAL CABLE L=5000MM	10-193
W016	90220-0059	THERMOCOUPLE CABLE K/ 2X0,81MM2	10-151
W020	1143884-0000	COPPER BRAID	10-151
W021	1143884-0000	COPPER BRAID	10-151
W910	90220-0059	THERMOCOUPLE CABLE K/ 2X0,81MM2	10-47
W911	351150-0412	CABLE OLFLEX 3X1,5 MM2 LIGHT/GREY	10-47
W912	90220-0059	THERMOCOUPLE CABLE K/ 2X0,81MM2	10-47
W913	351150-0407	CABLE OLFLEX 12X0,75 MM2 LIGHT/GREY	10-47
W914	1143884-0000	COPPER BRAID	10-47
W917	351150-0405	CABLE OLFLEX 5X0,75 MM2 LIGHT/GREY	10-47
W932	90220-0091	PAIR TWISTED CABLE 2X2X0,25MM2	10-273
W934	90220-0091	PAIR TWISTED CABLE 2X2X0,25MM2	10-277
W936	351150-0405	CABLE OLFLEX 5X0,75 MM2 LIGHT/GREY	10-245
W941	351150-0405	CABLE OLFLEX 5X0,75 MM2 LIGHT/GREY	10-245
W943	90041-0068	DATACABLE MODEM PC	10-277
X			
X003	1347206-0000	TERMINAL BLOCK	10-61
X111	90110-0057	FEMALE INSERT HAN 24 E 09 33 002 4201	10-391
X111	90110-0128	MALE INSERT, HAN 24 E-M 933 024 2631	10-391

Pos	Part No	Description	Page No
X			
X111	90110-0334	SCREW HARTING	10-391
X113	90110-0057	FEMALE INSERT HAN 24 E 09 33 002 4201	10-61
X113:1	90110-0334	SCREW HARTING	10-61
X113:2	90110-0128	MALE INSERT, HAN 24 E-M 933 024 2631	10-61
X114	90110-0057	FEMALE INSERT HAN 24 E 09 33 002 4201	10-61
X114:1	90110-0334	SCREW HARTING	10-61
X114:2	90110-0128	MALE INSERT, HAN 24 E-M 933 024 2631	10-61
X550:1	1347207-0000	TERMINAL BLOCK	10-61
X550:2	1347208-0000	TERMINAL BLOCK	10-61
X551	1334787-0000	DISTRIBUTION TERMINAL	10-151
X552	90110-0057	FEMALE INSERT HAN 24 E 09 33 002 4201	10-151
X552:1	90110-0334	SCREW HARTING	10-151
X552:2	90110-0128	MALE INSERT, HAN 24 E-M 933 024 2631	10-151
X553	90110-0057	FEMALE INSERT HAN 24 E 09 33 002 4201	10-151
X553:1	90110-0334	SCREW HARTING	10-151
X553:2	90110-0128	MALE INSERT, HAN 24 E-M 933 024 2631	10-151
X560	1334788-0000	DISTRIBUTION TERMINAL	10-151
Z			
Z550	90024-0038	INPUT FILTER, 16 A	10-151

Pos	Part No	Description	Page No

Tetra Pak