SPC
Spare Parts Catalogue

TBA/8 110V

648022-1100

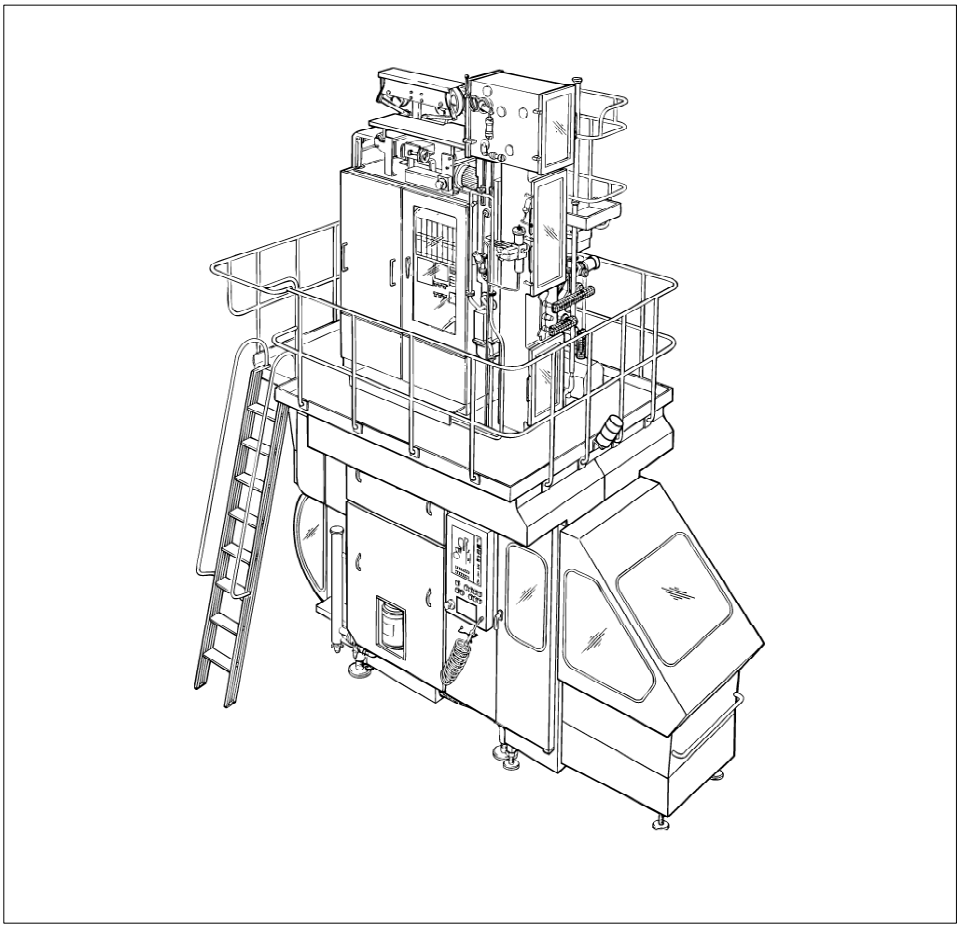

Tetra Pak

Doc. No: SPC-81524-0103

Main Groups of the Machine

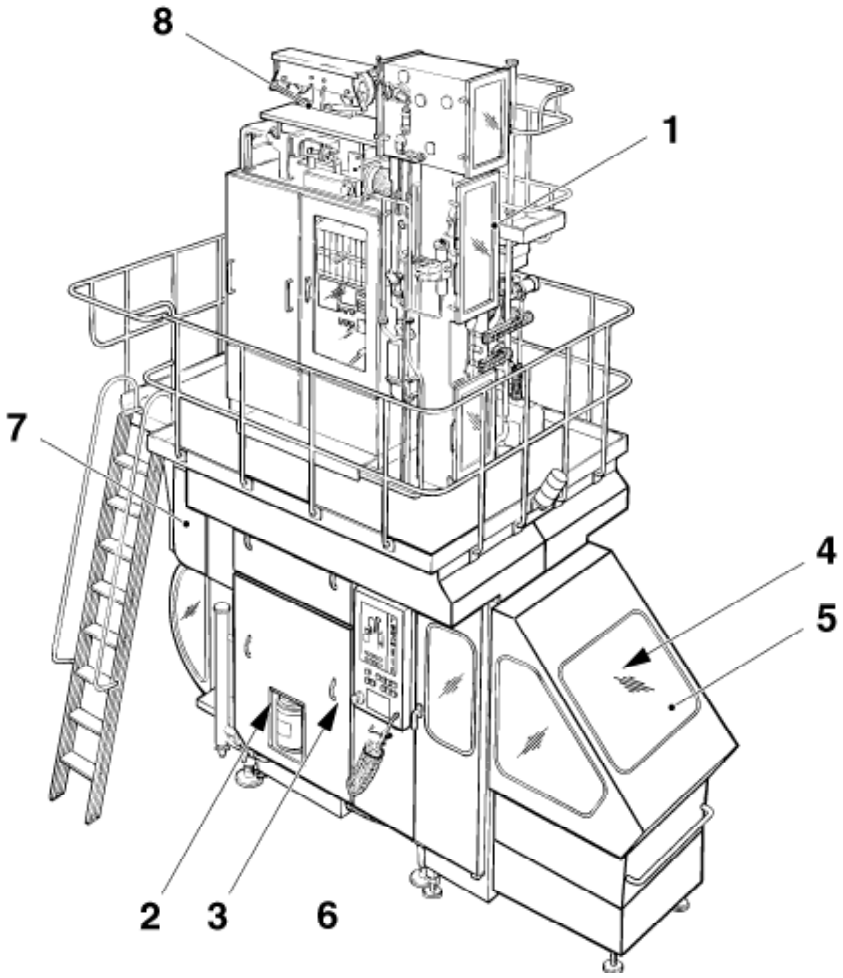

1 - Superstructure TBA/8
2 - Machine Body TB/TBA/8
3 - Drive TBA/8
4 - Jaw System TB/TBA/8
5 - Final Folder TBA/8
6 - Regular Accessories
7 - Automatic Splicing Unit
8 - Strip Applicator TBA/8

For the correct machine data, check your machine specification, supplied with the machine!

This document is valid for:

Series No/Machine No Sign.

SPC
Spare Parts Catalogue

Tetra Brik Aseptic
TBA/8
648022-1100

Valid from machine No 15010/00600

Table of Content:

Introduction ..... , **5**

Superstructure TBA/8
B- 648011-0900 ..... , **9**

Machine Body TB/TBA/8
B- 648012-0900 ..... , **143**

Drive TBA/8
B- 648003-1100 ..... , **287**

Jaw System TB/TBA/8
B- 648004-1000 ..... , **317**

Final Folder TBA/8
B- 648035-0800 ..... , **413**

Regular Accessories
B- 648009-0900 ..... , **573**

Automatic Splicing Unit
B- 648013-0700 ..... , **601**

Strip Applicator TBA/8
B- 648007-0500 ..... , **695**

Part Number Index ..... , **743**

Doc. No: SPC-81524-0103

Issue 2002-01

Tetra Pak

Tetra Pak Carton Ambient

General information

Manufacturer

This machine is produced by:
Tetra Pak Carton Ambient AB
Ruben Rausings gata
221 86 LUND /Sweden

Document producer

This document has been produced by:
Tetra Pak Carton Ambient AB
Ruben Rausings gata
221 86 LUND /Sweden

Number of pages

This document contains totally **814 pages,** including the first **8** introduction pages.

Copyright © 2002 Tetra Pak Carton Ambient

All rights reserved. No parts of this document may be reproduced or copied in any forms or by any means, without written permission from Tetra Pak Carton Ambient

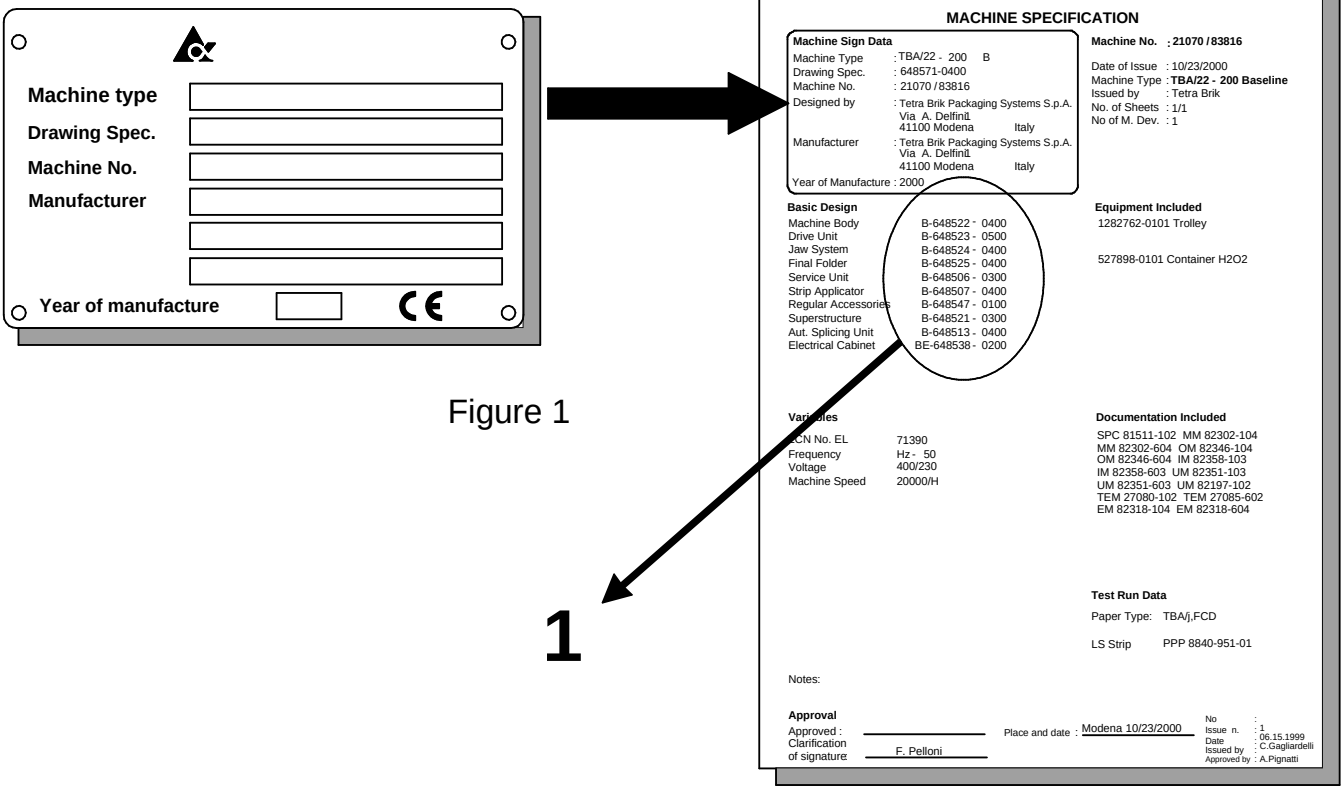

Figure 1

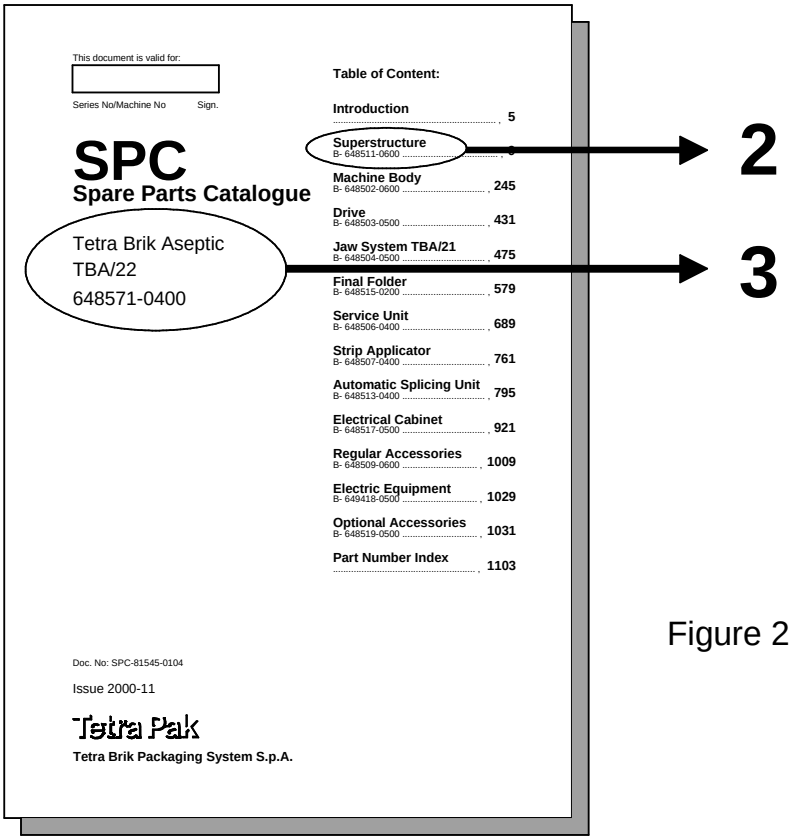

Figure 2

Figure 3

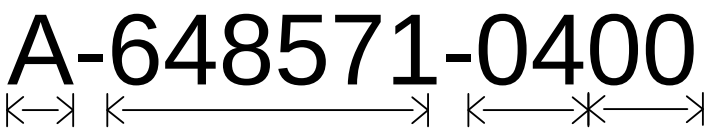

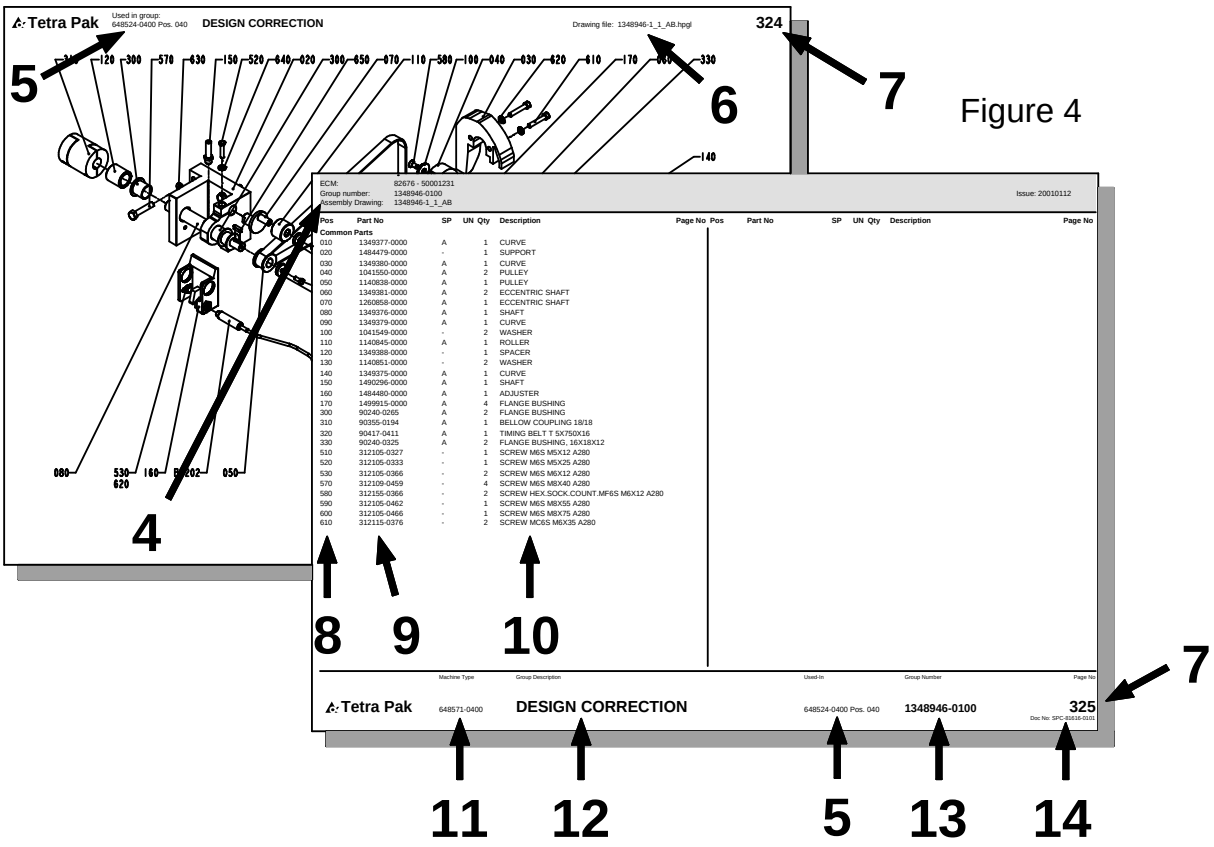

Figure 4

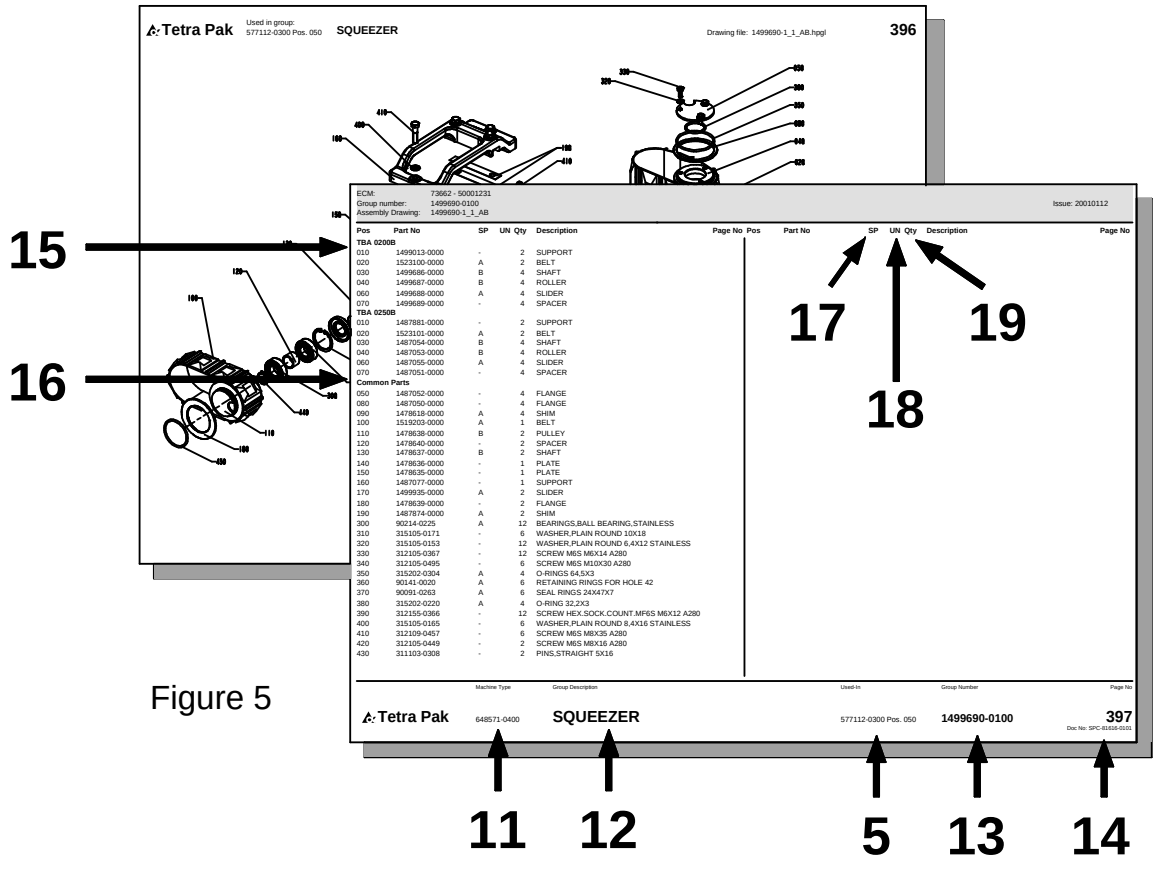

Figure 5

General information

Service

When ordering spare parts for your machine, contact the nearest Tetra Pak service station.

Machine identification

This machine plate is an example of the type of machine plate, attached to the machine frame. The plate carries data needed when contacting Tetra Pak concerning this particular machine **(see Figure 1).**

Purpose of the Spare Parts Catalogue

The purpose of the Spare Parts Catalogue (SPC) is to provide the technicians and contact personnel with information on how to find and order spare parts for maintenance and service of the machine.
For instructions of how to replace parts and adjust machine setup, see the Maintenance Manual (MM).

Delivered documentation

The technical documentation delivered with this machine is started in the Machine Specification.
Note! If any of these documents is missing, it must be reported in the document **Start Up Machine Quality Report**. For more information, see chapter 8 Preparation for Commissioning in the Installation Manual.
It is important that you keep these documents for the life of the equipment, and pass the documents on to any subsequent holder or user of the equipment.

Design modification

The content of this document is in accordance with the design and construction of the machine at the time it was delivered from the Tetra Pak machine production facility.

Further copies

Additional copies can be ordered from the nearst Tetra Pak service station. When ordering technical publications, always quote the document number printed on the front cover of the document concerned.

Tetra Pak Part numbering system

The third and forth digits in the sub-number, specify one unique group which can be ordered. If the forth digit is replaced by a "0", the number combination only points to a bill-of-material document.
The first and second digits in the sub-number, specify the development step (model) of the machine or group. **(see fig. 3)**
Main number of machine /group /article, depending on level.
Prefix, giving information about level, eg.
A = Machine
B = Main section (*)
C = Groups and subgroups
*) Customized distribution machines are registered as B-level as well.

How to find the correct Spare Part Number

A. Check that the data on your machine sign, and/or machine specification, corresponds with the catalogue. **(see fig.1)**

1) Main groups of the machine

B. The second catalogue sheet contains a table of content for the main groups, included in the catalogue. The information regarding machine and main group page status MUST correspond with your machine specification.
Locate and choose the main groups page number (1), in which you want to search for spare parts. **(see fig.2)**

2) Main group
3) Machine type

C. Search in the main group illustration, the item number, which may hold your wanted spare part. Go to the text page below and find the page number for the actual group. **(see fig. 4)**

4) Internal information, such as latest Engineering Change, Bill-of-Material included in the catalogue page and the Assembly Drawing required
5) Used-In reference to next higher level in the machine structure
6) Assembly drawing number including the archive file extension
7) Continuous page numbering through the document
8) Pos number corresponding to illustration
9) Group or article number
10) Group or article description. The letter "B" in front of some article numbers indicates that this article contains other parts, directly listed below the B-article. Letter "A" indicates a subgroup number with an own page directly after the actual page
11) Machine type including development status
12) Group description
13) Group number (bill-of-material) including development status
14) Document number

D. Continue to the found page number, and search in the illustration for your spare part. Go to the text row for the found item number, and read the part number. Take eventual variant headings in consideration; if you are unsure, read your machine specification. **(see fig. 5)**

15) Variant heading, eg volume, left/right etc.
16) Heading for common parts
17) SP = Code for articles, which are included into various spare part kits.
    A = Critical Spare Part
    B = Non Critical Spares Part
    C = Don't stop function, can bypassed
    D = Seldom break, long time production
18) UN = Short code for measure units, eg mm, kg etc.
19) Qty = Number of items needed in the complete assembly.

SPC
Spare Parts Catalogue

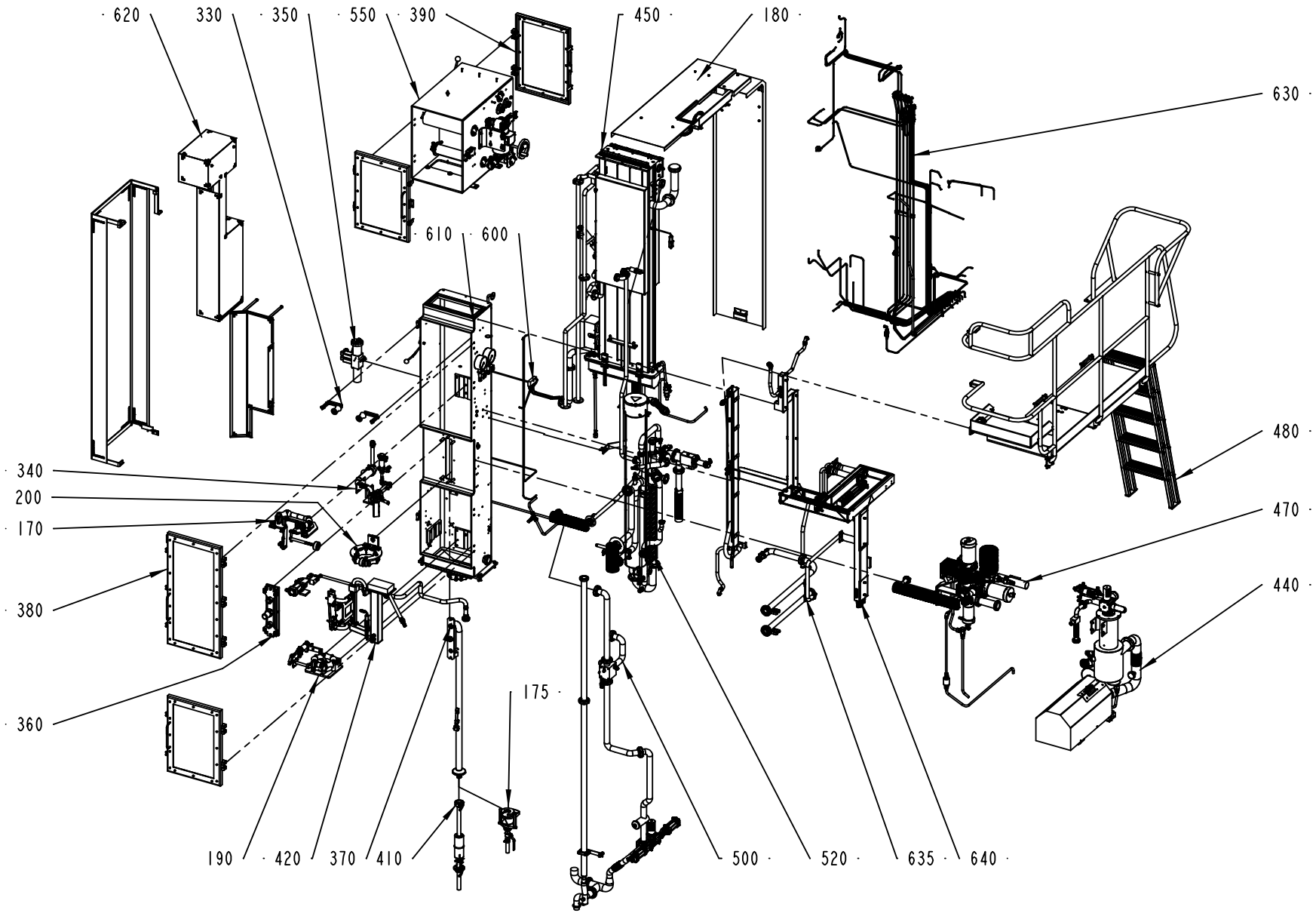
620
330
350
550
390
450
180
630
610
600
480
340
200
170
470
380
440
175
360
190
420
370
410
500
520
635
640

Pos	Part No	SP	UN	Qty	Description	Page No
0375S OR 0355B OR 0500S						
170	A450490-0100	-		1	FORM CLAMP	**13**
0500B OR 0750B OR 0750S OR 1000B						
170	A263805-0200	-		1	FORM CLAMP	**15, 17**
1000SQ OR 1000S						
170	A1361730-0100	-		1	FORM CLAMP TBA/8	**19**
Common Parts						
175	A263948-0400	-		1	CUP	**21**
180	A265809-0300	-		1	PAPER GUARD	**23**
190	A269113-0600	-		1	LOWER FORMING RING	**25, 27, 29**
200	A269115-0500	-		1	UPPER FORMING RING	**31, 33, 35**
330	A269136-0200	-		2	EDGE ROLLER	**37**
340	A269158-0400	-		1	HOT AIR ELEMENT	**39**
350	A560930-0100	-		1	CONTAINER	**41**
360	A269715-0100	-		1	PIPE HOLDER	**43**
370	A269720-0300	-		1	FILLER TUBE	**45**
380	A573612-0100	-		1	DOOR	**47**
390	A594617-0100	-		3	DOOR	**49**
410	A269828-0600	A		1	FILLER TUBE	**51, 53**
420	A269915-0800	-		1	HOT AIR ELEMENT	**55, 57**
440	A575474-0100	-		1	COMPRESSOR	**63**
450	A269941-0600	-		1	BATH	**71, 73**
470	A1362608-0100	-		1	PRODUCT VALVE	**77**
480	A269970-0500	-		1	PLATFORM	**91**
500	A269988-0600	-		1	VENTILATION SYSTEM	**95**
520	A273400-0700	-		1	STERILE AIR SYSTEM	**105**
550	A276373-0700	-		1	DRIER	**113**
600	A276480-0500	-		1	PIPE WORK	**121**
610	A278956-0700	-		1	PILLAR	**123**
620	A279651-0600	-		1	TOUCH GUARD	**127**
630	A282805-0900	-		1	PIPE WORK-PNEUMATIC TBA/8	**129, 131**
635	A451131-0100	-		1	CLEANING PIPE	**133**
640	A451342-0500	-		1	CABLE DUCT	**135**
650	A284163-0500	-		1	START-UP KIT	**139**

Pos	Part No	SP	UN	Qty	Description	Page No

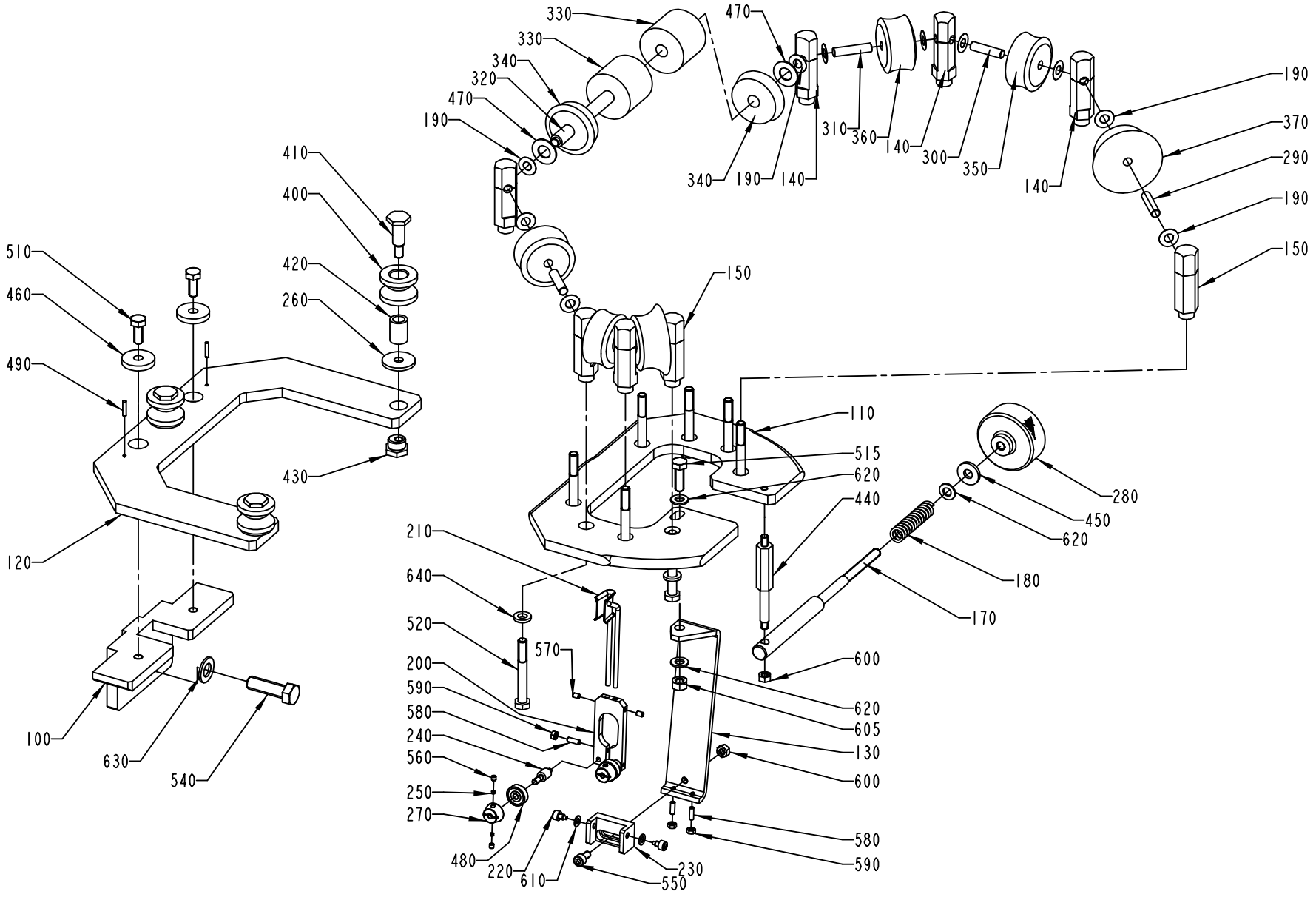
330
330
340
320
470
190
410
400
420
260
510
460
490
430
120
100
630
540
470
310
360
140
300
350
140
190
370
290
190
150
340
190
140
150
110
515
620
440
280
450
620
180
170
210
640
520
570
200
590
580
240
560
250
270
480
220
610
230
550
600
620
605
130
600
580
590

ECM: 72268 - 20000407
Group number: 450490-0100
Assembly Drawing: 450490-1_1_AF

Issue: 20020219

Pos	Part No	SP	UN	Qty	Description	Page No
0375S						
110	450493-0000	-		1	BOW CLAMP	
290	445788-0005	C		2	SHAFT	
300	445788-0006	C		2	SHAFT	
310	445788-0005	C		2	SHAFT	
320	434490-0003	D		1	SHAFT	
330	445777-0000	C		2	ROLL	
340	445780-0000	C		2	ROLL	
350	445784-0000	C		2	ROLL	
360	445783-0000	C		2	ROLL	
370	445787-0000	C		2	ROLL	
0355B OR 0500S						
110	450492-0000	-		1	BOW CLAMP	
290	263655-0018	C		2	SHAFT	
300	445788-0005	C		2	SHAFT	
310	445788-0003	C		2	SHAFT	
320	434490-0002	D		1	SHAFT	
330	445777-0000	C		2	ROLL	
340	445779-0000	C		2	ROLL	
350	445783-0000	C		2	ROLL	
360	445782-0000	C		2	ROLL	
370	445786-0000	C		2	ROLL	
0500B OR 0750B OR 1000B						
110	450491-0000	-		1	BOW CLAMP	
290	445788-0002	C		2	SHAFT	
300	445788-0003	C		2	SHAFT	
310	263655-0006	C		2	SHAFT	
320	434490-0001	D		1	SHAFT	
330	445776-0000	C		2	ROLL	
340	445778-0000	C		2	ROLL	
350	445782-0000	C		2	ROLL	
360	445781-0000	C		2	ROLL	
370	445785-0000	C		2	ROLL	
Common Parts						
100	436395-0000	-		1	CANTILEVER	
120	436405-0000	-		1	FORK	
130	33648-0000	-		1	HOLDER	
140	445790-0000	C		6	AXLE SUPPORT	
150	445791-0000	C		2	AXLE SUPPORT	
170	493886-0000	C		1	SHAFT	
180	1881-0001	C		1	COMPRESSION SPRING	
190	2033-0008	-		14	WASHER	
200	23582-0000	D		1	HOLDER	
210	23583-0000	D		1	GUIDE FINGER	
220	23584-0000	D		2	SCREW	
230	24351-0000	D		1	BOW CLAMP	
240	24355-0000	C		2	DOWEL	
250	24356-0000	-		4	PIECE	
260	28037-0000	D		3	WASHER	
270	111543-0000	C		2	GUIDE CONE	
280	257090-0000	D		1	SHIFTER HANDLE	
400	436302-0000	D		3	ROLLER	
410	436355-0000	D		3	REAMED BOLT	
420	436356-0000	D		3	BUSHING	
430	436357-0000	D		1	NUT	
440	493747-0000	D		1	GUIDE STUD	
450	436403-0000	D		1	WASHER	
460	497720-0000	-		2	WASHER	
470	536987-0000	-		1	WASHER	
480	90214-0138	C		2	BALL BEARING, 5X19X6 MM	
490	311103-0236	-		2	PARALLELL PIN, M6, 3X16 MM	
510	312105-0451	-		2	SCREW M6S 8X20 A280	
515	312105-0453	-		1	SCREW M6S M8X25 A280	
520	312105-0464	-		8	SCREW M6S M8X65 A280	
540	312105-0540	-		1	SCREW M6S M12X40 A280	
550	312115-0366	-		1	SCREW MC6S M6X12 A280	
560	312318-0283	-		4	SCREW SOCK.SET CUP P MSK6SS M4X4 A4	
570	312318-0285	-		2	SCREW SOCK.SET CUP P MSK6SS M4X6 A4	
580	312318-0291	-		3	SCREW SOCK.SET CUP P MSK6SS M4X12 A4	
590	312605-0312	-		3	HEXAGON NUT, M6M M4 A280	
600	312605-0316	-		2	HEXAGON NUT, M6M M6 A280	
605	312605-0318	-		1	HEXAGON NUT, M6M M8 A280	
610	315105-0146	-		2	WASHER PLAIN, BRB, 5,3/10,H=1	
620	315105-0165	-		3	WASHER PLAIN, BRB, 8,4/16,H=1,5	
630	315105-0178	-		1	WASHER PLAIN, BRB, 13/24,H=2	
640	315115-0165	-		8	WASHER PLAIN, TBRB 8,4/16 H=3	

Machine Type | Group Description | Used-In | Group Number | Page No

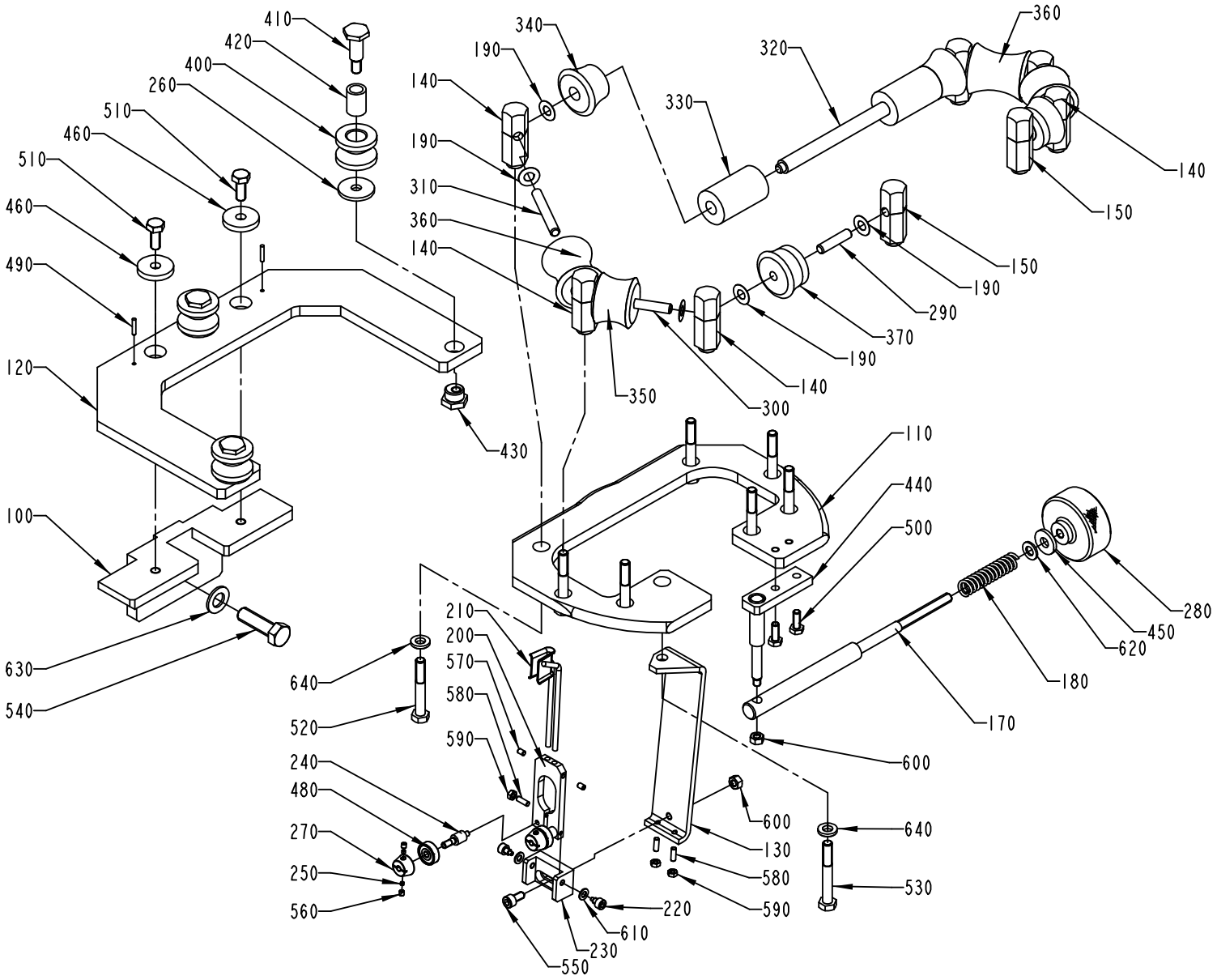
410
420
400
260
510
460
510
460
490
120
100
630
540
340
190
140
190
310
360
140
330
320
360
140
150
150
190
290
370
190
140
300
350
430
110
440
500
280
450
620
180
170
600
640
210
200
570
580
590
240
480
270
250
560
520
640
600
130
580
590
530
220
610
230
550

ECM: 72268 - 20000407
Group number: 263805-0200
Assembly Drawing: 263805-2_1_AE

Issue: 20020219

Pos	Part No	SP	UN	Qty	Description	Page No
TBA 0500B OR TBA 0750B OR TBA 1000B						
110	436404-0000	-		1	BOW CLAMP	
290	263655-0003	C		2	SHAFT	
300	263655-0004	C		2	SHAFT	
310	263655-0008	C		2	SHAFT	
320	263656-0002	D		1	SHAFT	
330	294474-0000	D		2	ROLL	
340	294475-0000	D		2	ROLL	
350	294476-0000	C		2	ROLL	
360	294477-0000	C		2	ROLL	
370	294480-0000	C		2	ROLL	
TBA 1000SQ						
110	569096-0000	-		1	BOW CLAMP	
290	263655-0002	C		2	SHAFT	
300	569091-0000	C		2	SHAFT	
310	263655-0012	C		2	SHAFT	
320	263655-0024	D		1	SHAFT	
340	579306-0000	D		1	ROLLER	
350	579307-0000	C		2	ROLL	
360	579308-0000	C		2	ROLLER	
370	579309-0000	C		2	ROLL	
380	90240-0172	C		10	FLANGE BUSHING,8X12X10 MM NFB	
390	752156-0000	C		4	FLANGE BUSHING	
TBA 0750S						
110	544286-0000	-		1	BOW CLAMP	
290	263655-0021	C		2	SHAFT	
300	263655-0023	C		2	SHAFT	
310	263655-0012	C		2	SHAFT	
320	263655-0024	D		1	SHAFT	
340	752583-0000	D		1	ROLLER	
350	752585-0000	C		2	ROLL	
360	752584-0000	C		2	ROLLER	
370	752586-0000	C		2	ROLL	
380	90240-0172	C		10	FLANGE BUSHING,8X12X10 MM NFB	
390	752156-0000	C		4	FLANGE BUSHING	
TBA 1000S						
110	569096-0000	-		1	BOW CLAMP	
290	263655-0002	C		2	SHAFT	
300	569091-0000	C		2	SHAFT	
310	263655-0012	C		2	SHAFT	
320	263655-0024	D		1	SHAFT	
340	569095-0000	D		1	ROLLER	
350	569093-0000	C		2	ROLL	
360	569094-0000	C		2	ROLLER	
370	569092-0000	C		2	ROLL	
380	90240-0172	C		10	FLANGE BUSHING,8X12X10 MM NFB	
390	752156-0000	C		4	FLANGE BUSHING	
Common Parts						
100	436395-0000	-		1	CANTILEVER	
120	436405-0000	-		1	FORK	
130	33648-0000	-		1	HOLDER	
140	257987-0000	C		6	AXLE SUPPORT	
150	257988-0000	C		2	AXLE SUPPORT	
170	436378-0000	C		1	SHAFT	
180	1881-0001	C		1	COMPRESSION SPRING	
190	2033-0008	-		14	WASHER	
200	23582-0000	D		1	HOLDER	
210	23583-0000	D		1	GUIDE FINGER	
220	23584-0000	D		2	SCREW	
230	24351-0000	D		1	BOW CLAMP	
240	24355-0000	C		2	DOWEL	
250	24356-0000	-		4	PIECE	
260	28037-0000	D		3	WASHER	
270	111543-0000	C		2	GUIDE CONE	
280	257090-0000	D		1	SHIFTER HANDLE	
400	436302-0000	D		3	ROLLER	
410	436355-0000	D		3	REAMED BOLT	
420	436356-0000	D		3	BUSHING	
430	436357-0000	D		1	NUT	
440	436377-0000	D		1	JOINT	
450	436403-0000	D		1	WASHER	
460	497720-0000	-		2	WASHER	
480	90214-0138	C		2	BALL BEARING, 5X19X6 MM	
490	311103-0236	-		2	PARALLELL PIN, M6, 3X16 MM	
500	312105-0368	-		2	SCREW M6S M6X16 A280	
510	312105-0451	-		2	SCREW M6S 8X20 A280	
520	312105-0462	-		7	SCREW M6S M8X55 A280	
530	312105-0463	-		1	SCREW M6S M8X60 A280	
540	312105-0540	-		1	SCREW M6S M12X40 A280	
550	312115-0366	-		1	SCREW MC6S M6X12 A280	

Machine Type | Group Description | Used-In | Group Number | Page No

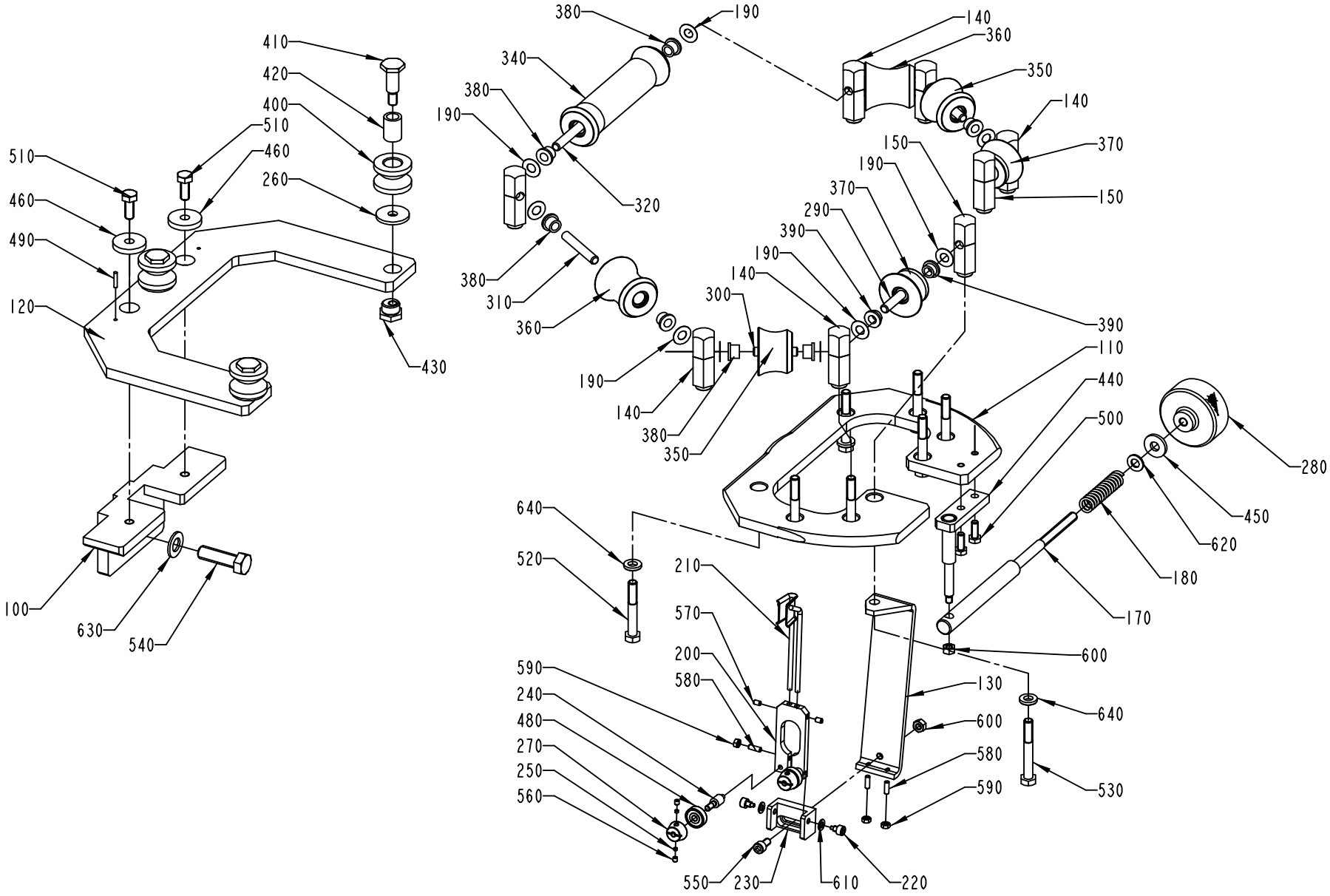
410
420
400
510
460
260
510
460
490
120
430
100
630
540
380
190
340
380
190
320
380
310
360
190
140
380
350
140
360
350
140
370
150
190
370
290
390
190
140
300
390
110
440
500
280
450
620
180
170
600
640
130
600
580
590
530
640
520
210
570
200
580
590
240
480
270
250
560
550
230
610
220

Pos	Part No	SP	UN	Qty	Description	Page No
Common Parts (Cont'd)						
560	312318-0283	-		4	SCREW SOCK.SET CUP P MSK6SS M4X4 A4	
570	312318-0285	-		2	SCREW SOCK.SET CUP P MSK6SS M4X6 A4	
580	312318-0291	-		3	SCREW SOCK.SET CUP P MSK6SS M4X12 A4	
590	312605-0312	-		3	HEXAGON NUT, M6M M4 A280	
600	312605-0316	-		2	HEXAGON NUT, M6M M6 A280	
610	315105-0146	-		2	WASHER PLAIN, BRB, 5,3/10,H=1	
620	315105-0165	-		1	WASHER PLAIN, BRB, 8,4/16,H=1,5	
630	315105-0178	-		1	WASHER PLAIN, BRB, 13/24,H=2	
640	315115-0165	-		8	WASHER PLAIN, TBRB 8,4/16 H=3	

Pos	Part No	SP	UN	Qty	Description	Page No

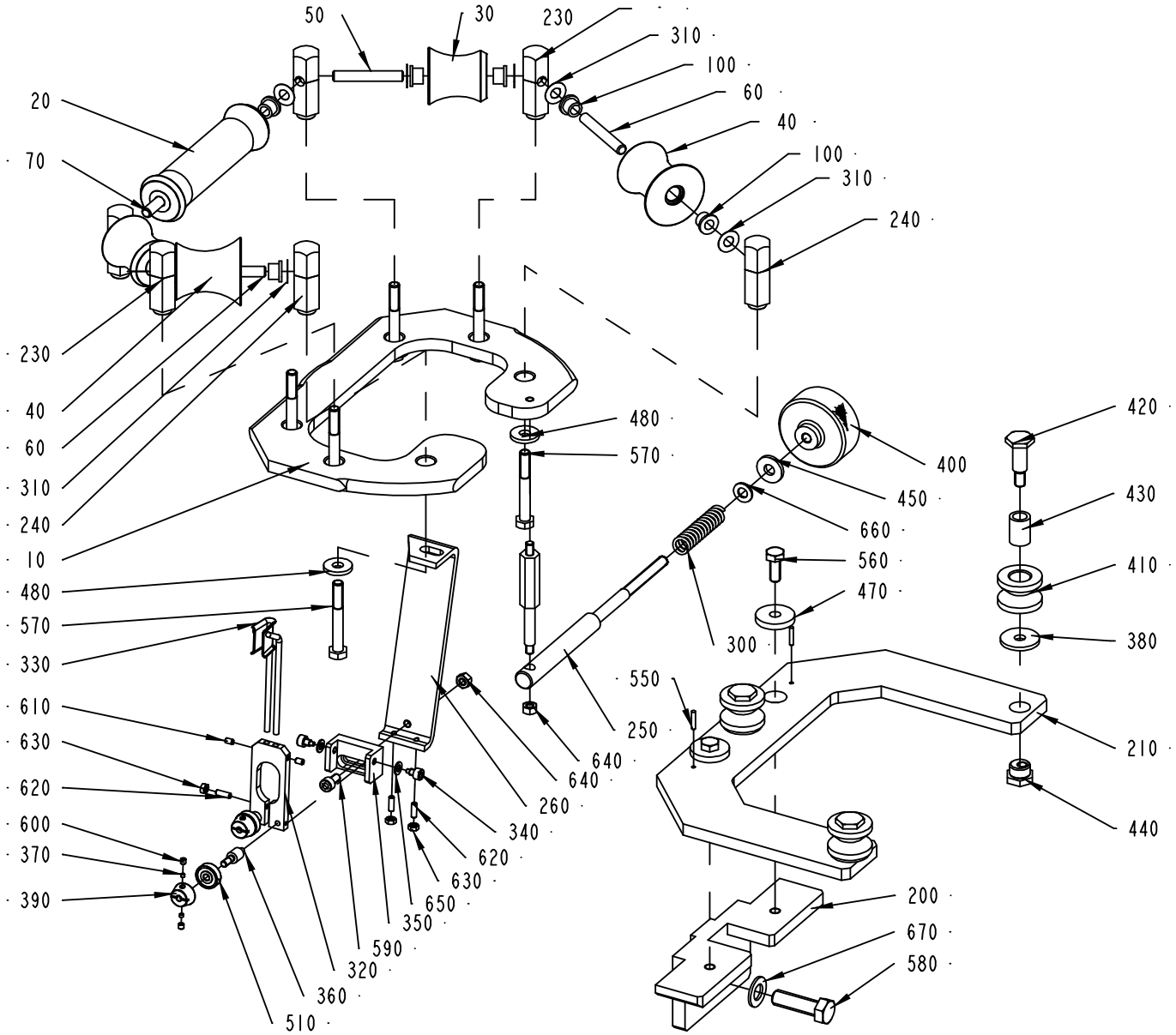
50
30
230
310
100
60
40
100
310
240
20
70
230
40
60
310
240
10
480
570
330
610
630
620
600
370
390
480
570
400
450
660
420
430
410
380
560
470
300
550
250
640
640
260
340
620
630
650
350
590
320
360
510
210
440
200
670
580

ECM: 72268 - 20000407
Group number: 1361730-0100
Assembly Drawing: 1361730-2_1_AB

Issue: 20020219

Pos	Part No	SP	UN	Qty	Description	Page No
TBA 1000SQ						
010	1361731-0000	-		1	BOW	
020	579306-0000	D		1	ROLLER	
030	579308-0000	C		2	ROLLER	
040	1361733-0000	C		2	ROLL	
050	263655-0012	C		2	SHAFT	
060	263655-0022	C		2	SHAFT	
070	263655-0024	C		1	SHAFT	
100	90240-0172	C		10	FLANGE BUSHING,8X12X10 MM NFB	
TBA 1000S						
010	1361731-0000	-		1	BOW	
020	569095-0000	D		1	ROLLER	
030	569094-0000	C		2	ROLLER	
040	1361732-0000	C		2	ROLL	
050	263655-0012	C		2	SHAFT	
060	263655-0022	C		2	SHAFT	
070	263655-0024	C		1	SHAFT	
100	90240-0172	C		10	FLANGE BUSHING,8X12X10 MM NFB	
Common Parts						
200	436395-0000	-		1	CANTILEVER	
210	436405-0000	-		1	FORK	
230	257987-0000	C		4	AXLE SUPPORT	
240	257988-0000	C		2	AXLE SUPPORT	
250	493886-0000	D		1	SHAFT	
260	597545-0000	D		1	HOLDER	
300	1881-0001	C		1	COMPRESSION SPRING	
310	2033-0008	-		10	WASHER	
320	23582-0000	D		1	HOLDER	
330	23583-0000	D		1	GUIDE FINGER	
340	23584-0000	D		2	SCREW	
350	24351-0000	D		1	BOW CLAMP	
360	24355-0000	C		2	DOWEL	
370	24356-0000	-		4	PIECE	
380	28037-0000	D		3	WASHER	
390	111543-0000	C		2	GUIDE CONE	
400	257090-0000	D		1	SHIFTER HANDLE	
410	436302-0000	D		3	ROLLER	
420	436355-0000	D		3	REAMED BOLT	
430	436356-0000	D		3	BUSHING	
440	436357-0000	D		1	NUT	
450	436403-0000	D		1	WASHER	
460	493747-0000	D		1	GUIDE STUD	
470	497720-0000	-		2	WASHER	
480	1361734-0000	-		6	WASHER	
510	90214-0138	C		2	BALL BEARING, 5X19X6 MM	
550	311103-0236	-		2	PARALLELL PIN, M6, 3X16 MM	
560	312105-0451	-		2	SCREW M6S 8X20 A280	
570	312105-0463	-		8	SCREW M6S M8X60 A280	
580	312105-0540	-		1	SCREW M6S M12X40 A280	
590	312115-0366	-		1	SCREW MC6S M6X12 A280	
600	312318-0283	-		4	SCREW SOCK.SET CUP P MSK6SS M4X4 A4	
610	312318-0285	-		2	SCREW SOCK.SET CUP P MSK6SS M4X6 A4	
620	312318-0291	-		3	SCREW SOCK.SET CUP P MSK6SS M4X12 A4	
630	312605-0312	-		3	HEXAGON NUT, M6M M4 A280	
640	312605-0316	-		2	HEXAGON NUT, M6M M6 A280	
650	315105-0146	-		2	WASHER PLAIN, BRB, 5,3/10,H=1	
660	315105-0165	-		1	WASHER PLAIN, BRB, 8,4/16,H=1,5	
670	315105-0178	-		1	WASHER PLAIN, BRB, 13/24,H=2	

Machine Type | Group Description | Used-In | Group Number | Page No

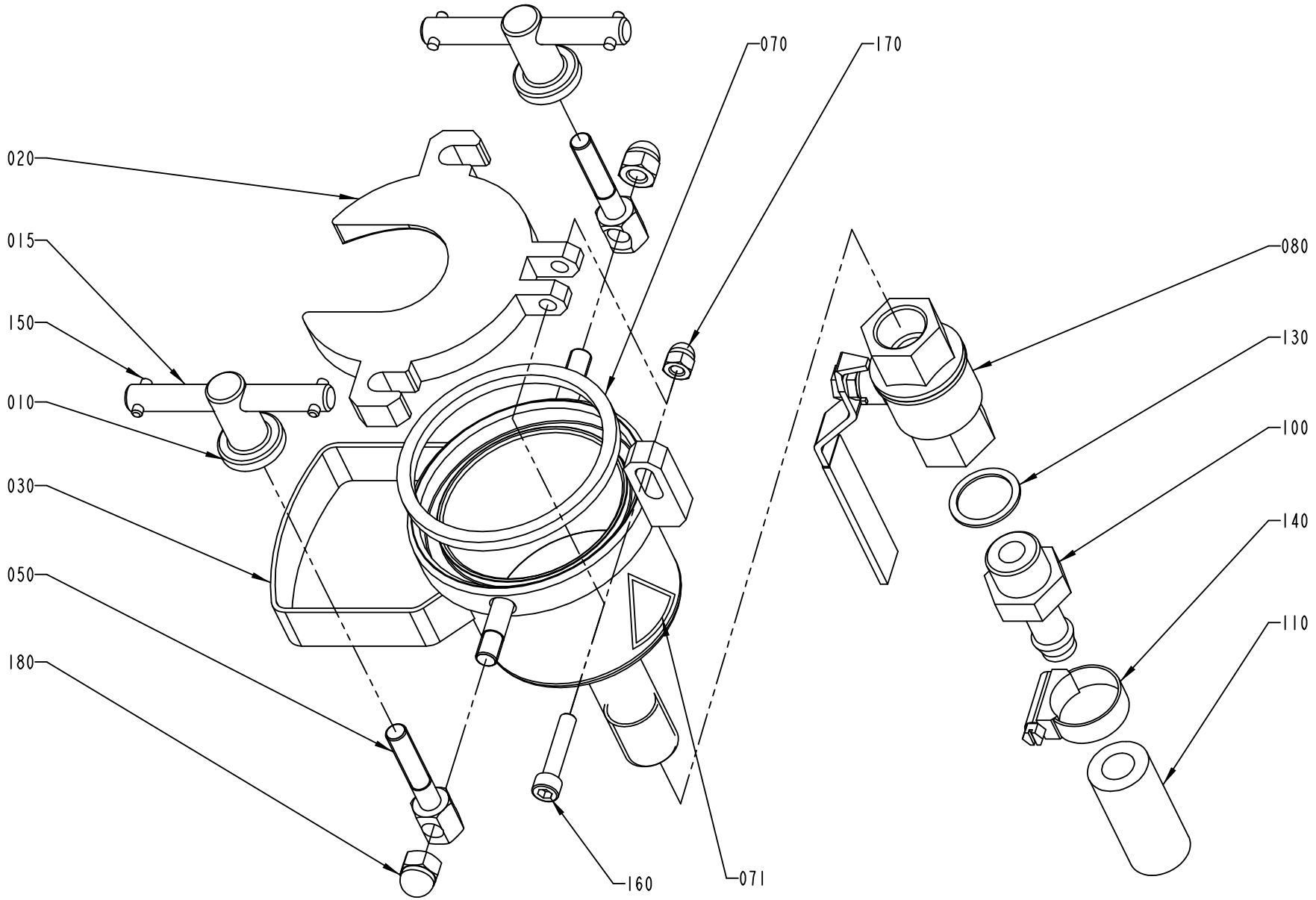
070
170
020
015
150
010
030
050
180
080
130
100
140
110
160
071

Pos	Part No	SP	UN	Qty	Description	Page No
TBA 0375S						
020	1367798-0000	-		1	LID	
030	1367799-0000	-		1	CUP	
070	1367800-0000	A		1	GASKET	
TBA 0500B OR TBA 0750B OR TBA 1000B						
020	1367794-0000	-		1	LID	
030	1367795-0000	-		1	CUP	
070	1367796-0000	A		1	GASKET	
TBA 0500S OR TBA 0355B						
020	1367802-0000	-		1	LID	
030	1367803-0000	-		1	CUP	
070	1367804-0000	A		1	GASKET	
TBA 1000S OR TBA 1000SQ						
020	1348115-0000	-		1	LID	
030	1348113-0000	-		1	CUP	
070	1478137-0000	A		1	GASKET	
TBA 0750S						
020	1367806-0000	-		1	LID	
030	1367807-0000	-		1	CUP	
070	1367808-0000	A		1	GASKET	
Common Parts						
010	1478135-0000	-		2	NUT	
015	1478136-0000	-		2	PIN	
050	924641-0000	-		2	SCREW	
071	359705-0003	-		1	WARNING SIGN ISO, DANGEROUS CHEMICALS	
080	90187-0082	A		1	BALL VALVE G1/2	
100	90055-0071	-		1	HOSE NIPPLE, EXT.THR. R1/2X13 MM	
110	90148-0021	-	MM	2500	HOSE	
130	315233-0113	-		1	WASHER PL.RND.NYL.21,4/27,H=1,2	
140	342991-0104	-		1	HOSE CLIP,WORM DRIVE TYPE (23)-27	
150	311103-0270	-		4	PARALLELL PIN, M6, 4X16 MM	
160	312111-0374	-		1	SCREW HEX.SOCK.HD.MC6S-TT 6X30 88 FZB	
170	312705-0316	-		1	NUT HEX. DOMED CAP MHM-6 M6 A280	
180	312705-0318	-		2	NUT HEX. DOMED CAP MHM-6 M8 A280	

Pos	Part No	SP	UN	Qty	Description	Page No

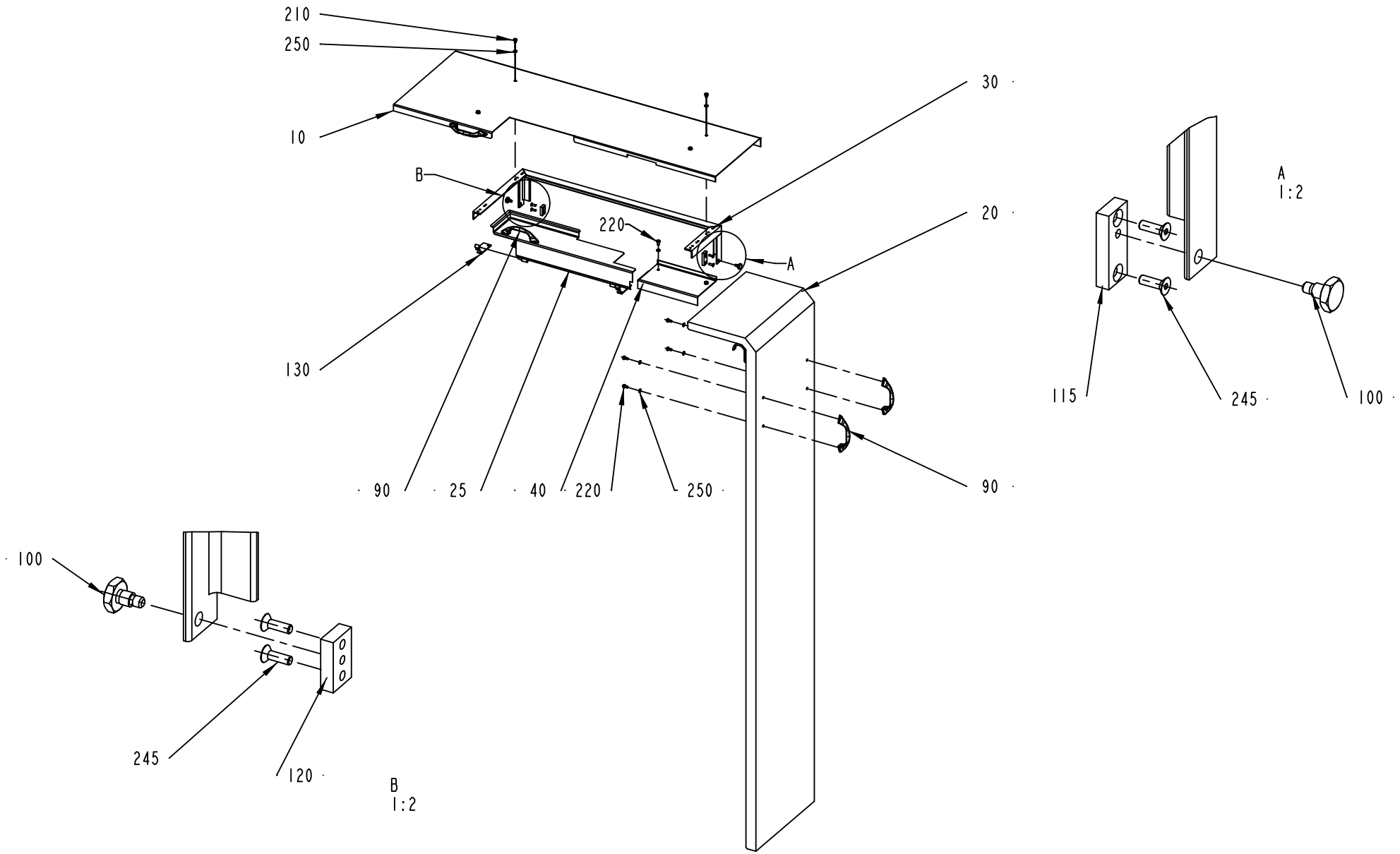
210
250
10
B
220
A
30
20
130
90
25
40
220
250
90
A
1:2
115
245
100
100
245
120
B
1:2

ECM: 104995 - 20020215
Group number: 265809-0300
Assembly Drawing: 265809-3_1_AB

Issue: 20020219

Pos	Part No	SP	UN	Qty	Description	Page No
Common Parts						
010	542847-0000	-		1	PAPER GUARD	
020	266797-0002	-		1	PAPER GUARD	
025	542848-0000	-		1	HATCH	
030	542849-0000	-		1	CANTILEVER	
040	542850-0000	-		1	COVERING PLATE	
090	7309-0000	-		4	HANDLE	
100	252972-0000	-		2	SHOULDER SCREW	
115	283271-0000	-		1	BRACKET	
120	449000-0000	-		1	BRACKET	
130	542851-0000	-		2	HINGE	
210	312105-0362	-		4	SCREW M6S M6X8 A280	
220	312105-0366	-		10	SCREW M6S M6X12 A280	
245	312155-0329	-		4	SCREW HEX.SOCK.COUNT.MF6S M5X16 A280	
250	315105-0153	-		12	WASHER PLAIN, BRB, 6,4/12,H=1,5	

Pos	Part No	SP	UN	Qty	Description	Page No

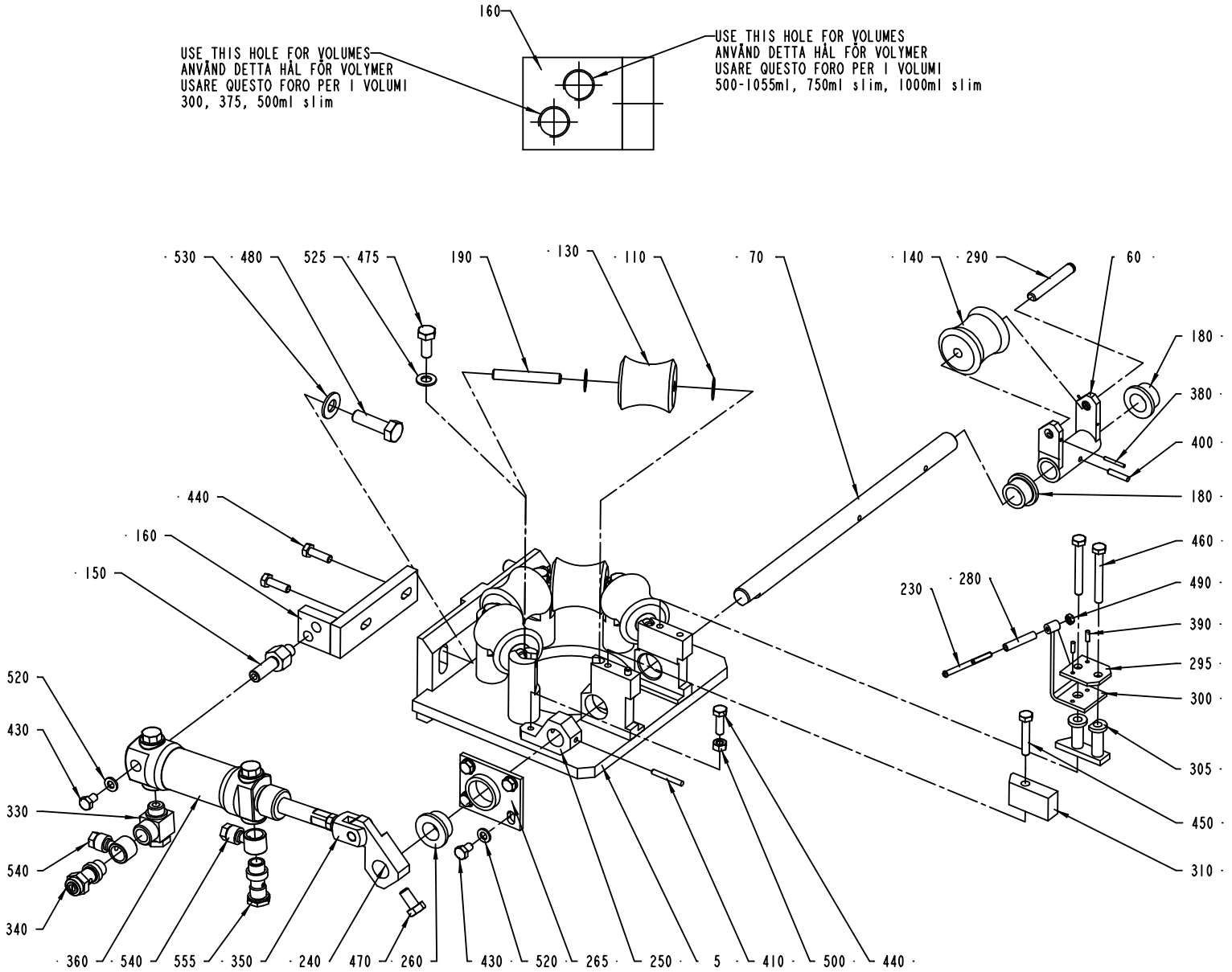
160
USE THIS HOLE FOR VOLUMES
ANVÄND DETTA HÅL FÖR VOLYMER
USARE QUESTO FORO PER I VOLUMI
300, 375, 500ml slim
USE THIS HOLE FOR VOLUMES
ANVÄND DETTA HÅL FÖR VOLYMER
USARE QUESTO FORO PER I VOLUMI
500-1055ml, 750ml slim, 1000ml slim
530
480
525
475
190
130
110
70
140
290
60
180
380
400
180
460
490
390
295
300
305
450
310
230
280
440
160
150
520
430
330
540
340
360
540
555
350
240
470
260
430
520
265
250
5
410
500
440

Pos	Part No	SP	UN	Qty	Description	Page No
0375S						
005	450459-0002	-		1	FORMING RING	
060	434499-0000	A		1	FORK	
070	434500-0000	A		1	SHAFT	
130	449589-0001	A		5	ROLLER, (STD.SIZE)	
140	529181-0000	A		1	COUNTER ROLLER	
190	434504-0000	A		5	SHAFT	
265	486803-0000	A		1	BEARING HOUSING	
290	434507-0000	A		1	SHAFT	
300	529184-0000	D		1	HOLDER	
380	311103-0212	-		1	PARALLELL PIN, CP, M6, 2,5X20 MM	
0355B OR 0500S						
005	450459-0002	-		1	FORMING RING	
060	434499-0000	A		1	FORK	
070	434500-0000	A		1	SHAFT	
130	449840-0001	A		5	ROLLER, (STD.SIZE)	
140	533442-0000	A		1	COUNTER ROLLER	
190	434504-0000	A		5	SHAFT	
265	486803-0000	A		1	BEARING HOUSING	
290	434507-0000	A		1	SHAFT	
300	534177-0000	A		1	HOLDER	
380	311103-0212	-		1	PARALLELL PIN, CP, M6, 2,5X20 MM	
0500B OR 0750B OR 1000B						
005	450459-0001	-		1	FORMING RING	
060	1364976-0000	A		1	FORK	
070	269147-0000	A		1	SHAFT	
130	36953-0001	A		5	ROLL	
140	38630-0001	A		1	COUNTER ROLLER	
190	263655-0009	A		5	SHAFT	
265	486803-0000	A		1	BEARING HOUSING	
290	1364979-0000	A		1	SHAFT	
300	569099-0000	A		1	HOLDER	
0750S						
005	544333-0000	-		1	FORMING RING	
060	544335-0000	A		1	FORK	
070	269147-0000	A		1	SHAFT	
130	752578-0001	A		5	ROLLER, (STD.SIZE)	
140	556139-0000	A		1	ROLL	
190	263655-0022	A		5	SHAFT	
200	90240-0172	A		12	FLANGE BUSHING,8X12X10 MM NFB	
265	544306-0000	A		1	BEARING HOUSING	
290	544336-0000	A		1	SHAFT	
300	534177-0000	A		1	HOLDER	
1000S						
005	567744-0000	-		1	FORMING RING	
060	567748-0000	A		1	FORK	
070	269147-0000	A		1	SHAFT	
130	567746-0001	A		5	ROLLER, (STD.SIZE)	
140	567747-0000	A		1	ROLL	
190	569100-0000	A		5	SHAFT	
200	90240-0172	A		12	FLANGE BUSHING,8X12X10 MM NFB	
265	544306-0000	A		1	BEARING HOUSING	
290	569085-0000	A		1	SHAFT	
300	569099-0000	A		1	HOLDER	
1000SQ						
005	567744-0000	-		1	FORMING RING	
060	567748-0000	A		1	FORK	
070	269147-0000	A		1	SHAFT	
130	579310-0001	A		5	ROLLER, (STD.SIZE)	
140	579311-0000	A		1	COUNTER ROLLER	
190	569100-0000	A		5	SHAFT	
200	90240-0172	A		12	FLANGE BUSHING,8X12X10 MM NFB	
265	544306-0000	A		1	BEARING HOUSING	
290	569085-0000	A		1	SHAFT	
300	569099-0000	A		1	HOLDER	
Common Parts						
110	2033-0008	-		10	WASHER	
150	263257-0000	A		1	CYLINDER BRACKET	
160	571945-0000	A		1	FASTENING BRACKET	
180	263262-0000	A		2	BUSHING	
230	469463-0000	A		1	SHAFT	
240	269152-0000	A		1	ROCKER ARM	
250	269153-0000	A		1	STOP	
260	269154-0000	A		1	BUSHING	
280	469464-0000	A		1	ROLL	
295	434101-0000	A		1	WASHER	
305	544445-0000	A		1	SPACER	
310	436342-0000	A		1	SPACER	

Machine Type | Group Description | Used-In | Group Number | Page No

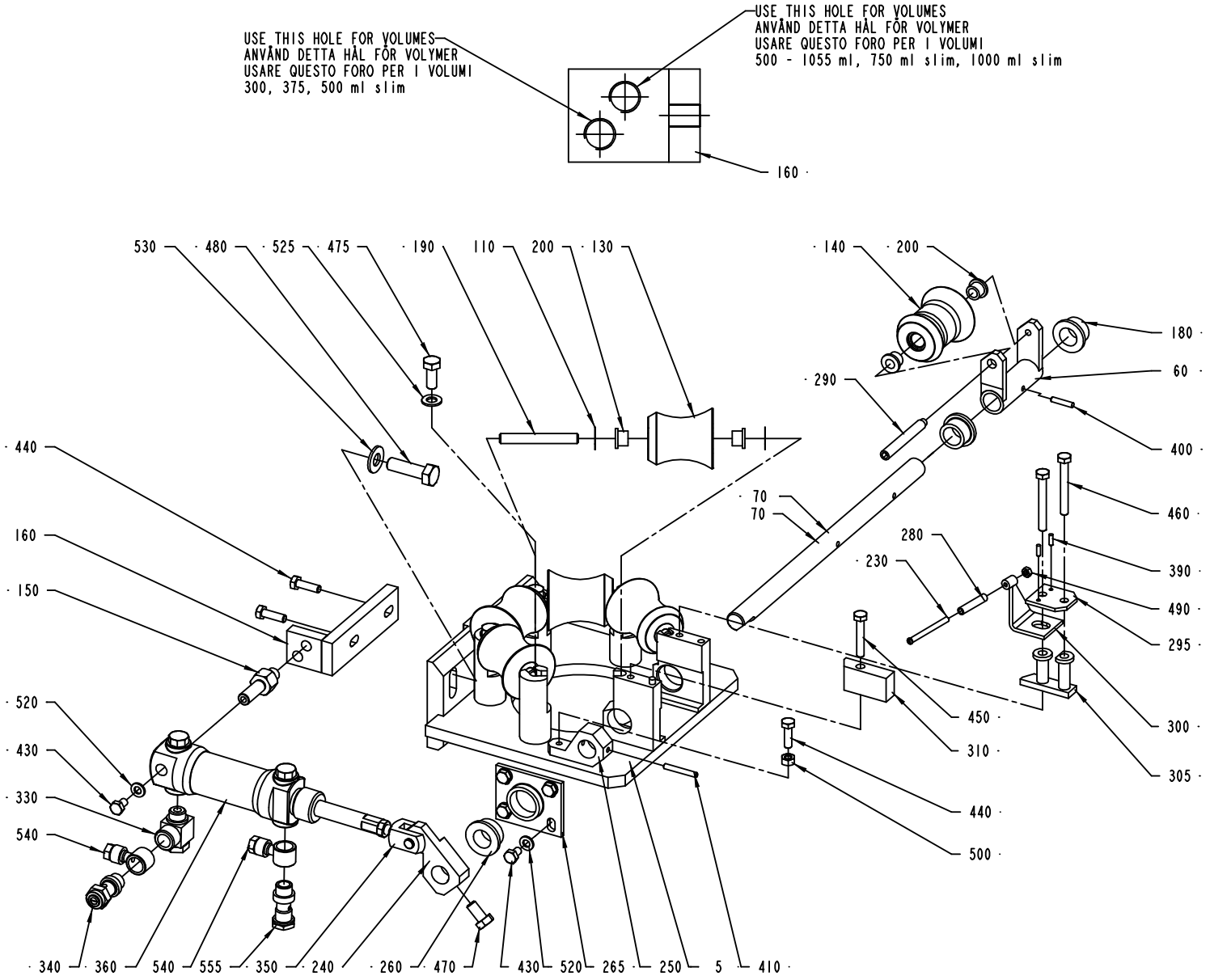
USE THIS HOLE FOR VOLUMES
ANVÄND DETTA HÅL FÖR VOLYMER
USARE QUESTO FORO PER I VOLUMI
300, 375, 500 ml slim
USE THIS HOLE FOR VOLUMES
ANVÄND DETTA HÅL FÖR VOLYMER
USARE QUESTO FORO PER I VOLUMI
500 - 1055 ml, 750 ml slim, 1000 ml slim
160
530
480
525
475
190
110
200
130
140
200
180
60
290
400
440
70
70
460
160
280
230
390
150
490
295
520
450
430
310
300
330
305
540
440
500
340
360
540
555
350
240
260
470
430
520
265
250
5
410

Pos	Part No	SP	UN	Qty	Description	Page No
Common Parts (Cont'd)						
330	90224-0284	A		1	CONN. BANJO, ART. NO LJK-1/4	
340	90235-0275	A		1	THROTTLE CHECK VALVES,G1/4"	
350	90239-0127	A		1	BRACKET	
360	B90239-0166	A		1	CYLINDER	
	90285-0094	*C*		*1*	*SEAL KIT*	
390	311103-0233	-		2	PARALLELL PIN, M6, 3X10 MM	
400	311103-0272	-		1	PARALLELL PIN, M6, 4X20 MM	
410	311103-0276	-		1	PARALLELL PIN, M6, 4X30 MM	
430	312105-0364	-		5	SCREW M6S M6X10 A280	
440	312105-0370	-		3	SCREW M6S M6X20 A280	
450	312105-0376	-		1	SCREW M6S M6S M6X35 A280	
460	312105-0380	-		2	SCREW M6S M6X50 A280	
470	312105-0449	-		1	SCREW M6S M8X16 A280	
475	312105-0451	-		4	SCREW M6S 8X20 A280	
480	312105-0497	-		2	SCREW M6S M10X35 A280	
490	312605-0312	-		1	HEXAGON NUT, M6M M4 A280	
500	312605-0316	-		1	HEXAGON NUT, M6M M6 A280	
520	315105-0153	-		5	WASHER PLAIN, BRB, 6,4/12,H=1,5	
525	315105-0165	-		4	WASHER PLAIN, BRB, 8,4/16,H=1,5	
530	315105-0173	-		2	WASHER PLAIN, BRB, 10,5/22,H=2	
540	342797-0122	-		2	CONN. BANJO, RINGPIECE 6-1/4	
555	342980-0304	-		1	BANJO-HOLLOW BOLT COUPL,EXT.THR.01-G1/4"	

Pos	Part No	SP	UN	Qty	Description	Page No

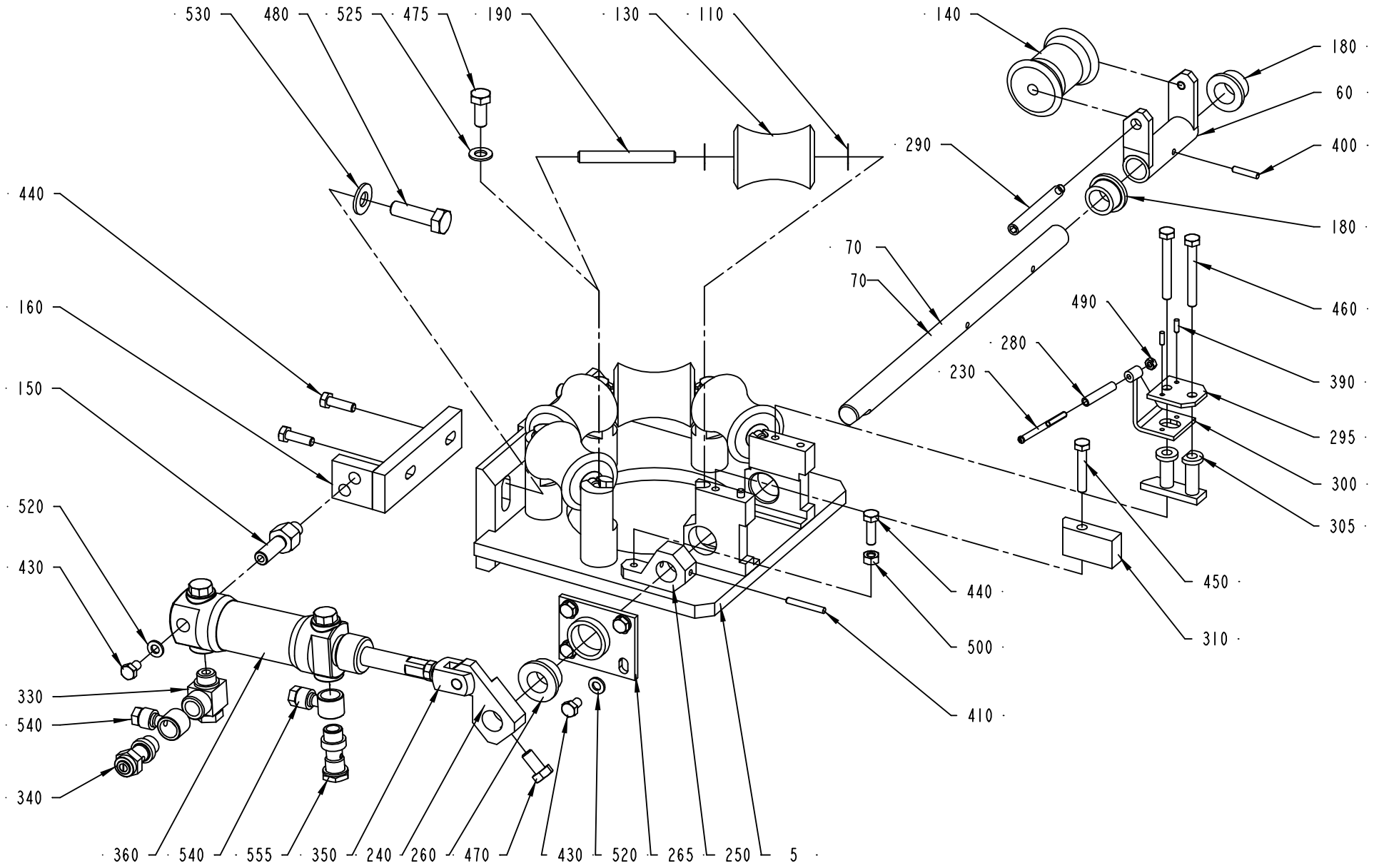
530
480
525
475
190
130
110
140
180
60
400
290
180
70
70
490
460
280
230
390
295
300
305
440
160
150
520
430
450
310
440
500
410
330
540
340
360
540
555
350
240
260
470
430
520
265
250
5

Pos	Part No	SP	UN	Qty	Description	Page No
SEE PREVIOUS LISTS PAGES: 25, 27.						

Pos	Part No	SP	UN	Qty	Description	Page No

Machine Type	Group Description	Used-In	Group Number	Page No

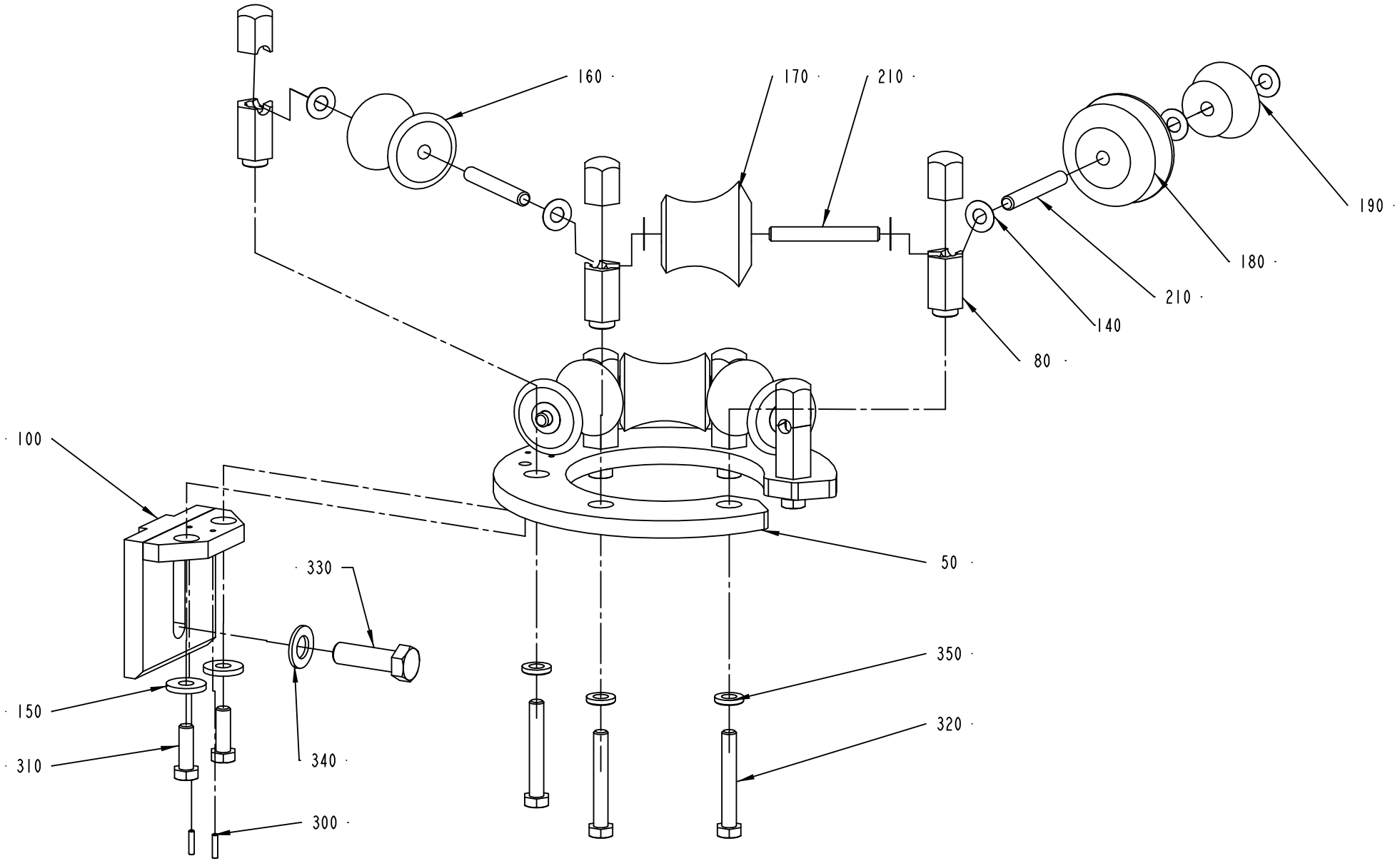
160
170
210
190
180
210
140
80
100
50
330
350
150
320
310
340
300

ECM: 104997 - 20020215
Group number: 269115-0500
Assembly Drawing: 269115-3_1_AB

Issue: 20020219

Pos	Part No	SP	UN	Qty	Description	Page No
TBA 0375S						
050	434493-0000	-		1	FORMING RING	
080	526958-0000	C		6	AXLE SUPPORT	
100	493948-0000	-		1	CANTILEVER	
140	2033-0008	-		13	WASHER	
160	449586-0000	C		4	ROLL	
170	529039-0000	C		1	EDGE ROLLER	
180	529040-0000	C		1	GUIDE ROLLER	
190	529041-0000	C		1	GUIDE ROLLER	
210	263655-0008	C		6	SHAFT	
320	312105-0464	-		6	SCREW M6S M8X65 A280	
TBA 0500B OR TBA 0750B OR TBA 1000B						
050	250594-0000	-		1	FORMING RING	
080	257987-0000	C		6	AXLE SUPPORT	
100	436648-0000	-		1	CANTILEVER	
140	2033-0008	-		13	WASHER	
160	543471-0000	C		4	ROLL	
170	567736-0000	C		1	EDGE ROLLER	
180	567737-0000	C		1	GUIDE ROLLER	
190	567738-0000	C		1	GUIDE ROLLER	
210	263655-0010	C		6	SHAFT	
320	312105-0462	-		6	SCREW M6S M8X55 A280	
TBA 0500S OR TBA 0355B						
050	434493-0000	-		1	FORMING RING	
080	257987-0000	C		6	AXLE SUPPORT	
100	493948-0000	-		1	CANTILEVER	
140	2033-0008	-		13	WASHER	
160	440068-0000	C		4	ROLL	
170	530566-0000	C		1	EDGE ROLLER	
180	530567-0000	C		1	GUIDE ROLLER	
190	530568-0000	C		1	GUIDE ROLLER	
210	263655-0008	C		6	SHAFT	
320	312105-0462	-		6	SCREW M6S M8X55 A280	
TBA 1000S OR TBA 1000SQ						
050	569090-0000	-		1	FORMING RING	
080	257987-0000	C		6	AXLE SUPPORT	
100	493948-0000	-		1	CANTILEVER	
130	90240-0172	C		14	FLANGE BUSHING,8X12X10 MM NFB	
140	2033-0008	-		13	WASHER	
160	569087-0000	C		4	ROLL	
170	569086-0000	C		1	ROLL	
180	569089-0000	C		1	ROLL	
190	569088-0000	C		1	ROLL	
210	263655-0009	C		6	SHAFT	
320	312105-0462	-		6	SCREW M6S M8X55 A280	
TBA 0750S						
050	544263-0000	-		1	FORMING RING	
080	257987-0000	C		6	AXLE SUPPORT	
100	493948-0000	-		1	CANTILEVER	
130	90240-0172	C		14	FLANGE BUSHING,8X12X10 MM NFB	
140	2033-0008	-		12	WASHER	
160	752719-0000	C		4	ROLL	
170	752721-0000	C		1	ROLL	
180	752720-0000	C		1	ROLL	
190	752718-0000	C		1	ROLL	
210	263655-0009	C		6	SHAFT	
320	312105-0462	-		6	SCREW M6S M8X55 A280	
Common Parts						
150	28036-0000	-		2	WASHER	
300	311103-0235	-		2	PARALLELL PIN, CP, M6, 3X14 MM	
310	312105-0453	-		2	SCREW M6S M8X25 A280	
330	312105-0540	-		1	SCREW M6S M12X40 A280	
340	315105-0178	-		1	WASHER PLAIN, BRB, 13/24,H=2	
350	315115-0165	-		6	WASHER PLAIN, TBRB 8,4/16 H=3	

Machine Type | Group Description | Used-In | Group Number | Page No

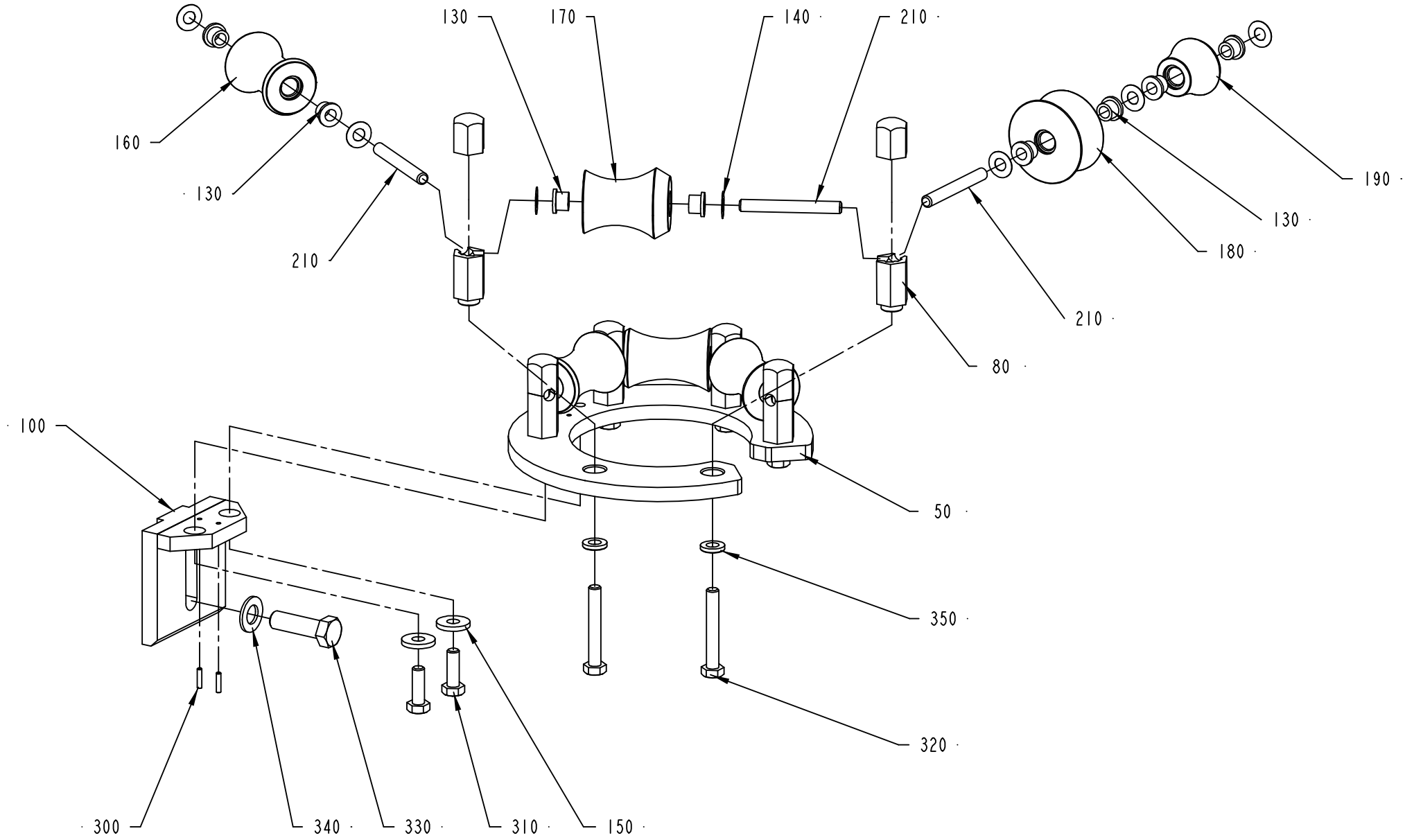
130
170
140
210
160
130
210
190
130
180
210
80
100
50
350
320
300
340
330
310
150

ECM: 104997 - 20020215
Group number: 269115-0500
Assembly Drawing: 269115-4_1_AB

Issue: 20020219

Pos	Part No	SP	UN	Qty	Description	Page No
TBA 0375S						
050	434493-0000	-		1	FORMING RING	
080	526958-0000	C		6	AXLE SUPPORT	
100	493948-0000	-		1	CANTILEVER	
140	2033-0008	-		13	WASHER	
160	449586-0000	C		4	ROLL	
170	529039-0000	C		1	EDGE ROLLER	
180	529040-0000	C		1	GUIDE ROLLER	
190	529041-0000	C		1	GUIDE ROLLER	
210	263655-0008	C		6	SHAFT	
320	312105-0464	-		6	SCREW M6S M8X65 A280	
TBA 0500B OR TBA 0750B OR TBA 1000B						
050	250594-0000	-		1	FORMING RING	
080	257987-0000	C		6	AXLE SUPPORT	
100	436648-0000	-		1	CANTILEVER	
140	2033-0008	-		13	WASHER	
160	543471-0000	C		4	ROLL	
170	567736-0000	C		1	EDGE ROLLER	
180	567737-0000	C		1	GUIDE ROLLER	
190	567738-0000	C		1	GUIDE ROLLER	
210	263655-0010	C		6	SHAFT	
320	312105-0462	-		6	SCREW M6S M8X55 A280	
TBA 0500S OR TBA 0355B						
050	434493-0000	-		1	FORMING RING	
080	257987-0000	C		6	AXLE SUPPORT	
100	493948-0000	-		1	CANTILEVER	
140	2033-0008	-		13	WASHER	
160	440068-0000	C		4	ROLL	
170	530566-0000	C		1	EDGE ROLLER	
180	530567-0000	C		1	GUIDE ROLLER	
190	530568-0000	C		1	GUIDE ROLLER	
210	263655-0008	C		6	SHAFT	
320	312105-0462	-		6	SCREW M6S M8X55 A280	
TBA 1000S OR TBA 1000SQ						
050	569090-0000	-		1	FORMING RING	
080	257987-0000	C		6	AXLE SUPPORT	
100	493948-0000	-		1	CANTILEVER	
130	90240-0172	C		14	FLANGE BUSHING,8X12X10 MM NFB	
140	2033-0008	-		13	WASHER	
160	569087-0000	C		4	ROLL	
170	569086-0000	C		1	ROLL	
180	569089-0000	C		1	ROLL	
190	569088-0000	C		1	ROLL	
210	263655-0009	C		6	SHAFT	
320	312105-0462	-		6	SCREW M6S M8X55 A280	
TBA 0750S						
050	544263-0000	-		1	FORMING RING	
080	257987-0000	C		6	AXLE SUPPORT	
100	493948-0000	-		1	CANTILEVER	
130	90240-0172	C		14	FLANGE BUSHING,8X12X10 MM NFB	
140	2033-0008	-		12	WASHER	
160	752719-0000	C		4	ROLL	
170	752721-0000	C		1	ROLL	
180	752720-0000	C		1	ROLL	
190	752718-0000	C		1	ROLL	
210	263655-0009	C		6	SHAFT	
320	312105-0462	-		6	SCREW M6S M8X55 A280	
Common Parts						
150	28036-0000	-		2	WASHER	
300	311103-0235	-		2	PARALLELL PIN, CP, M6, 3X14 MM	
310	312105-0453	-		2	SCREW M6S M8X25 A280	
330	312105-0540	-		1	SCREW M6S M12X40 A280	
340	315105-0178	-		1	WASHER PLAIN, BRB, 13/24,H=2	
350	315115-0165	-		6	WASHER PLAIN, TBRB 8,4/16 H=3	

Machine Type | Group Description | Used-In | Group Number | Page No

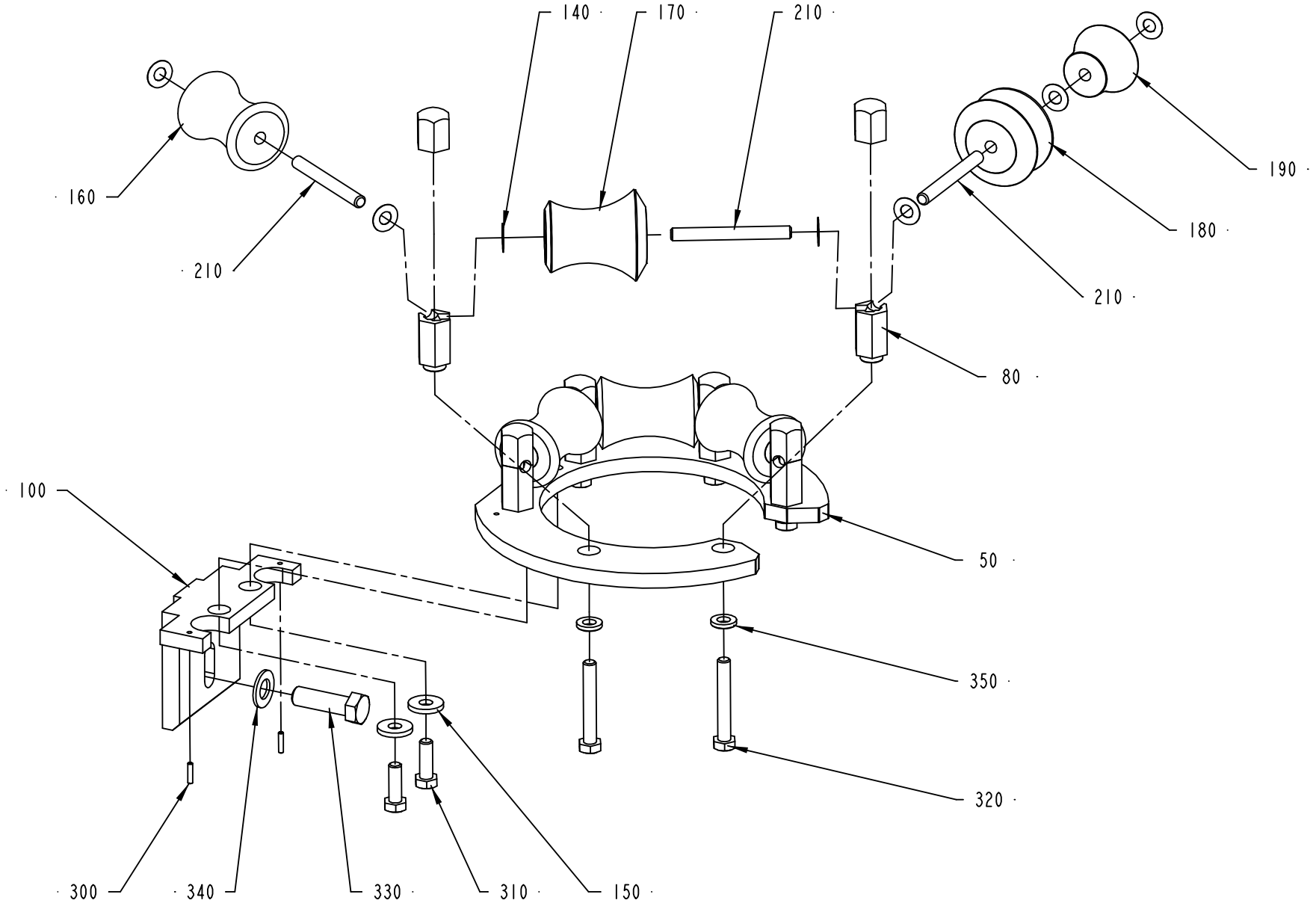
140
170
210
160
210
190
180
210
80
100
50
350
320
300
340
330
310
150

Pos	Part No	SP	UN	Qty	Description	Page No
TBA 0375S						
050	434493-0000	-		1	FORMING RING	
080	526958-0000	C		6	AXLE SUPPORT	
100	493948-0000	-		1	CANTILEVER	
140	2033-0008	-		13	WASHER	
160	449586-0000	C		4	ROLL	
170	529039-0000	C		1	EDGE ROLLER	
180	529040-0000	C		1	GUIDE ROLLER	
190	529041-0000	C		1	GUIDE ROLLER	
210	263655-0008	C		6	SHAFT	
320	312105-0464	-		6	SCREW M6S M8X65 A280	
TBA 0500B OR TBA 0750B OR TBA 1000B						
050	250594-0000	-		1	FORMING RING	
080	257987-0000	C		6	AXLE SUPPORT	
100	436648-0000	-		1	CANTILEVER	
140	2033-0008	-		13	WASHER	
160	543471-0000	C		4	ROLL	
170	567736-0000	C		1	EDGE ROLLER	
180	567737-0000	C		1	GUIDE ROLLER	
190	567738-0000	C		1	GUIDE ROLLER	
210	263655-0010	C		6	SHAFT	
320	312105-0462	-		6	SCREW M6S M8X55 A280	
TBA 0500S OR TBA 0355B						
050	434493-0000	-		1	FORMING RING	
080	257987-0000	C		6	AXLE SUPPORT	
100	493948-0000	-		1	CANTILEVER	
140	2033-0008	-		13	WASHER	
160	440068-0000	C		4	ROLL	
170	530566-0000	C		1	EDGE ROLLER	
180	530567-0000	C		1	GUIDE ROLLER	
190	530568-0000	C		1	GUIDE ROLLER	
210	263655-0008	C		6	SHAFT	
320	312105-0462	-		6	SCREW M6S M8X55 A280	
TBA 1000S OR TBA 1000SQ						
050	569090-0000	-		1	FORMING RING	
080	257987-0000	C		6	AXLE SUPPORT	
100	493948-0000	-		1	CANTILEVER	
130	90240-0172	C		14	FLANGE BUSHING,8X12X10 MM NFB	
140	2033-0008	-		13	WASHER	
160	569087-0000	C		4	ROLL	
170	569086-0000	C		1	ROLL	
180	569089-0000	C		1	ROLL	
190	569088-0000	C		1	ROLL	
210	263655-0009	C		6	SHAFT	
320	312105-0462	-		6	SCREW M6S M8X55 A280	
TBA 0750S						
050	544263-0000	-		1	FORMING RING	
080	257987-0000	C		6	AXLE SUPPORT	
100	493948-0000	-		1	CANTILEVER	
130	90240-0172	C		14	FLANGE BUSHING,8X12X10 MM NFB	
140	2033-0008	-		12	WASHER	
160	752719-0000	C		4	ROLL	
170	752721-0000	C		1	ROLL	
180	752720-0000	C		1	ROLL	
190	752718-0000	C		1	ROLL	
210	263655-0009	C		6	SHAFT	
320	312105-0462	-		6	SCREW M6S M8X55 A280	
Common Parts						
150	28036-0000	-		2	WASHER	
300	311103-0235	-		2	PARALLELL PIN, CP, M6, 3X14 MM	
310	312105-0453	-		2	SCREW M6S M8X25 A280	
330	312105-0540	-		1	SCREW M6S M12X40 A280	
340	315105-0178	-		1	WASHER PLAIN, BRB, 13/24,H=2	
350	315115-0165	-		6	WASHER PLAIN, TBRB 8,4/16 H=3	

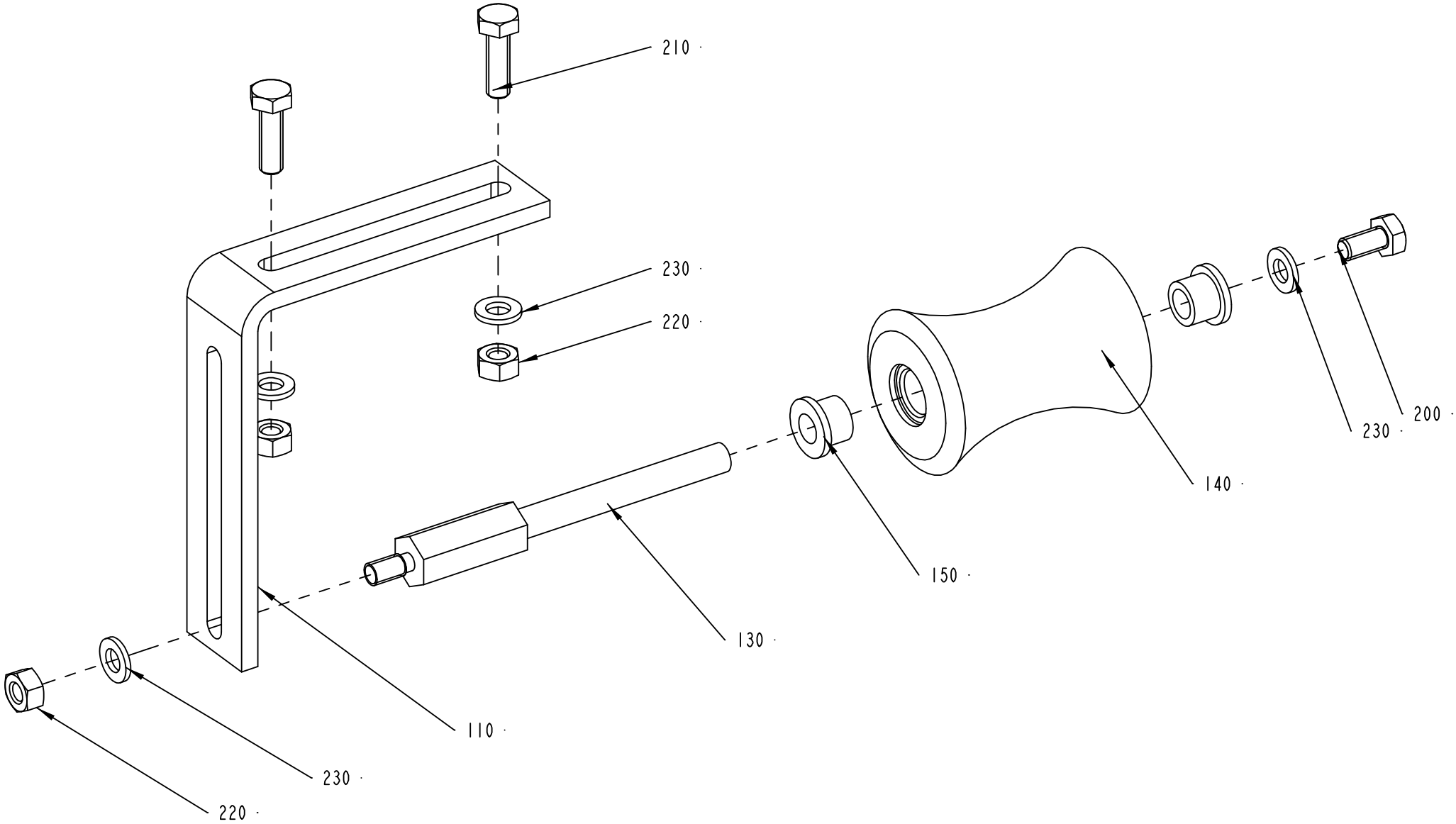
210
230
220
110
230
220
130
150
140
230
200

Pos	Part No	SP	UN	Qty	Description	Page No
0375S OR 0500B OR 0355B OR 0500S OR 0750B OR 1000B						
140	36953-0010	C		1	ROLL	
1000SQ OR 1000S OR 0750S						
140	752740-0000	C		1	ROLLER	
150	90240-0172	C		2	FLANGE BUSHING,8X12X10 MM NFB	
Common Parts						
110	208843-0000	-		1	ANGLE BRACKET	
130	458791-0000	C		1	SHAFT	
200	312105-0366	-		1	SCREW M6S M6X12 A280	
210	312105-0370	-		2	SCREW M6S M6X20 A280	
220	312605-0316	-		3	HEXAGON NUT, M6M M6 A280	
230	315105-0153	-		4	WASHER PLAIN, BRB, 6,4/12,H=1,5	

Pos	Part No	SP	UN	Qty	Description	Page No

HOT AIR ELEMENT

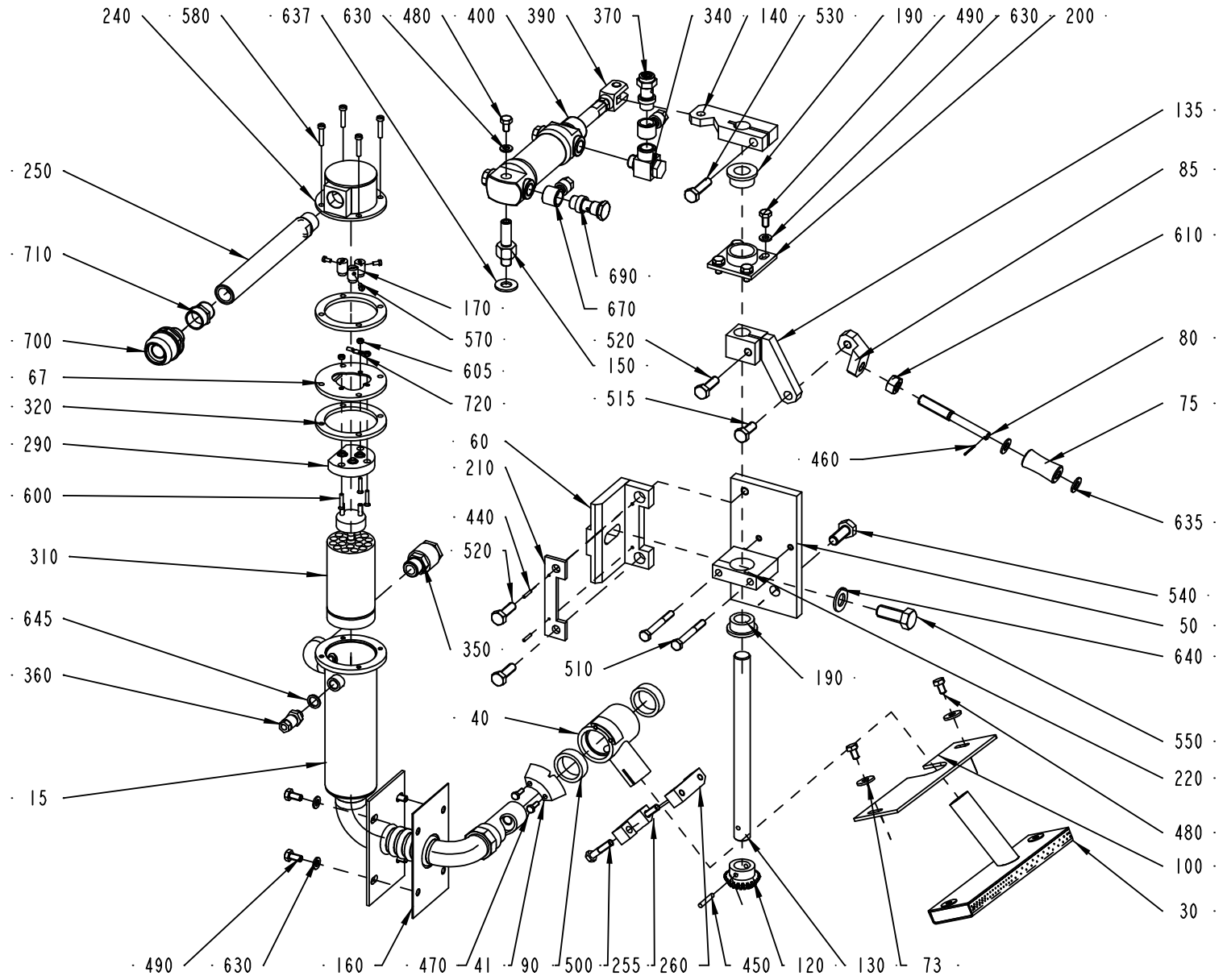

ECM: 83663 - 20000928
Group number: 269158-0400
Assembly Drawing: 269158-2_1_AE

Issue: 20020219

Pos	Part No	SP	UN	Qty	Description	Page No
0375S						
030	526696-0000	D		1	AIR NOZZLE	
100	526697-0000	C		1	HEAT GUARD	
0355B OR 0500S OR 0750S						
030	534176-0000	D		1	AIR NOZZLE	
100	526697-0000	C		1	HEAT GUARD	
0500B OR 1000SQ OR 1000S OR 0750B OR 1000B						
030	257903-0000	D		1	AIR NOZZLE	
100	257904-0000	C		1	HEAT GUARD	
Common Parts						
015	297309-0000	D		1	PIPE-LINE	
040	263249-0000	D		1	PIVOT ARM	
041	263250-0000	D		1	TOOTH PART	
050	269313-0000	D		1	FASTENING PLATE	
060	269314-0000	D		1	CANTILEVER	
067	297310-0000	-		1	FLANGE	
073	6278-0000	-		2	WASHER	
075	33442-0000	C		1	ROLL	
080	239440-0000	C		1	SHAFT	
085	239441-0000	-		1	BRACKET	
090	250663-0000	C		2	BEARING	
120	263251-0000	D		1	GEAR WHEEL	
130	263252-0000	-		1	SHAFT	
135	263254-0000	-		1	BRACKET	
140	263256-0000	D		1	ROCKER ARM	
150	263257-0000	D		1	CYLINDER BRACKET	
160	531741-0000	D		1	GASKET	
170	266739-0000	C		3	CABLE GLAND	
190	269154-0000	C		2	BUSHING	
200	269242-0000	D		1	BEARING HOUSING	
210	269315-0000	D		1	WASHER	
220	269316-0000	D		1	BEARING HOUSING	
240	297311-0000	-		1	COVER	
250	458046-0000	-		1	PIPE	
255	497579-0000	D		1	CLAMP HALF	
260	497580-0000	D		1	CLAMP HALF	
290	B90125-0020	-		1	PLATE	
	294464-0000	*A*		*1*	*BASE PLATE*	
	270927-0000	*A*		*3*	*SCREW*	
	270926-0000	*A*		*6*	*NUT*	
	294464-0000	*A*		*1*	*BASE PLATE*	
	270927-0000	*A*		*3*	*SCREW*	
	270926-0000	*A*		*6*	*NUT*	
310	90206-0085	C		1	HEATING CARTRIDGE 460W 105 OHM	
320	90206-0322	C		2	GASKET	
340	90224-0284	D		1	CONN. BANJO, ART. NO LJK-1/4	
350	90224-0301	D		1	CONNECTION	
360	90224-0307	D		1	STRAIGHT FITTING, 6MM, 1/8",	
370	90235-0275	-		1	THROTTLE CHECK VALVES,G1/4"	
390	90239-0127	C		1	BRACKET	
400	B90239-0166	C		1	CYLINDER	
	90285-0094	*C*		*1*	*SEAL KIT*	
440	311103-0209	-		2	PARALLELL PIN, CP, M6, 2,5X14 MM	
450	311103-0274	-		1	PARALLELL PIN, M6, 4X25 MM	
460	311411-0140	-		1	SPLIT PIN SP1,6X16RFR	
470	312105-0291	-		2	SCREW M6S M4X12 A280	
480	312105-0364	-		3	SCREW M6S M6X10 A280	
490	312105-0366	-		8	SCREW M6S M6X12 A280	
500	312105-0374	-		2	SCREW M6S M6X30 A280	
510	312105-0380	-		2	SCREW M6S M6X50 A280	
515	312105-0451	-		1	SCREW M6S 8X20 A280	
520	312105-0453	-		3	SCREW M6S M8X25 A280	
530	312105-0455	-		1	SCREW M6S M8X30 A280	
540	312105-0493	-		1	SCREW M6S M10X25 A280	
550	312105-0536	-		1	SCREW M6S M12X30 A280	
570	312125-0220	-		3	SCREW SLOT.PAN HD. MCS 3X6 A480	
580	312125-0295	-		4	SCREW PAN HEAD MCS M4X20 SS	
600	312145-0228	-		3	SCREW COUNTERS.SLOT.HD. MFS 3X16 SS	
605	312605-0310	-		3	HEXAGON NUT, M6M M3 A280	
610	312605-0320	-		1	HEXAGON NUT, M6M M10 A280	
630	315105-0153	-		9	WASHER PLAIN, BRB, 6,4/12,H=1,5	
635	315105-0165	-		2	WASHER PLAIN, BRB, 8,4/16,H=1,5	
637	315105-0173	-		1	WASHER PLAIN, BRB, 10,5/22,H=2	
640	315105-0178	-		1	WASHER PLAIN, BRB, 13/24,H=2	
645	315237-0109	-		1	WASHER,PL.RND.AL.10/14,H=1,5	
670	342797-0122	-		2	CONN. BANJO, RINGPIECE 6-1/4	
690	342980-0304	-		1	BANJO-HOLLOW BOLT COUPL,EXT.THR.01-G1/4"	
700	352136-0127	-		1	GLAND FITTING PR 18,6	
710	352100-0106	-		1	CABLE GLANR.18,6-10,5	
720	353104-0129	-		1	CABLE SHOEYAV 025 M 35*	

Machine Type | Group Description | Used-In | Group Number | Page No

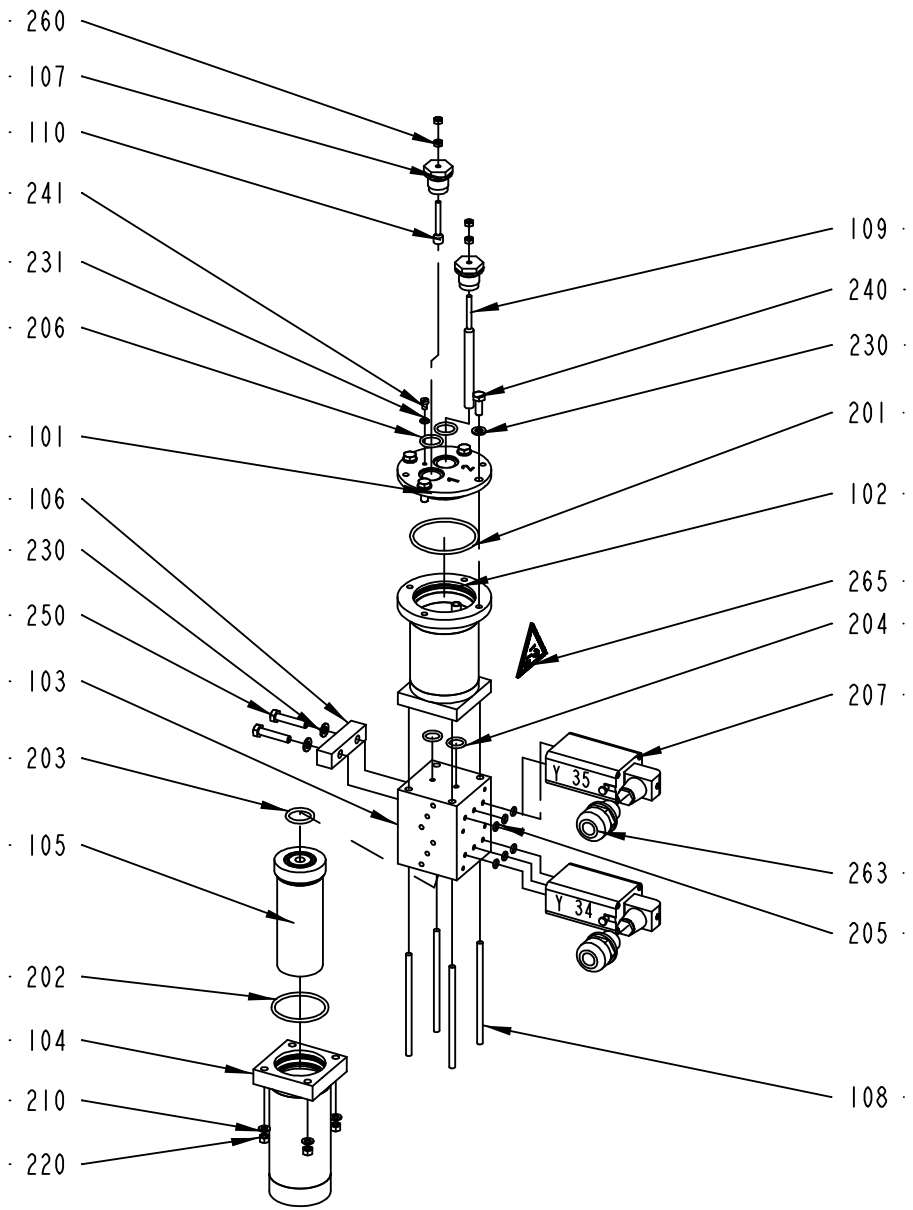
260
107
110
241
231
206
101
106
230
250
103
203
105
202
104
210
220
109
240
230
201
102
265
204
207
263
205
108
Y 35
Y 34

ECM: 72447 - 20001113
Group number: 560930-0100
Assembly Drawing: 560930-1_1_AE

Issue: 20020219

Pos	Part No	SP	UN	Qty	Description	Page No
Common Parts						
101	549267-0000	-		1	LID	
102	549264-0000	-		1	CONTAINER	
103	549263-0000	-		1	BLOCK	
104	554142-0000	-		1	FILTER HOUSING	
105	554141-0000	D		1	FILTER	
106	560932-0000	-		1	INTERMEDIATE PART	
107	560931-0000	D		2	BRACKET	
108	554585-0000	-		4	STUD SCREW	
109	560934-0000	D		1	ELECTRODE	
110	560933-0000	D		1	ELECTRODE	
201	927422-0009	C		1	O-RING 54.5X3 SILICON	
202	927422-0007	C		1	O-RING 44.2X3 SILICON	
203	927422-0001	C		1	O-RING 19.2X3 SILICON	
204	927421-0002	C		2	O-RING 12.3X2.4 SILICON	
205	927420-0001	C		6	O-RING 5.1X1.6 SILICON	
206	927421-0004	C		2	O-RING 15.3X2.4 SILICON	
207	90042-0203	C		2	SOLENOID VALVE BURKERT	
210	315105-0146	-		4	WASHER PLAIN, BRB, 5,3/10,H=1	
220	312605-0314	-		4	HEXAGON NUT, M6M M5 A280	
230	315105-0153	-		6	WASHER PLAIN, BRB, 6,4/12,H=1,5	
231	315105-0136	-		3	WASHER PLAIN, BRB, 4,3/8,H=0,8	
240	312105-0368	-		4	SCREW M6S M6X16 A280	
241	312125-0285	-		1	SCREW SLOT.PAN HD. MCS 4X6 A480	
250	312109-0374	-		2	SCREW M6S M6X30 A280	
260	312605-0312	-		4	HEXAGON NUT, M6M M4 A280	
263	352136-0113	-		2	GLAND FITTING PR18,6/PG11 DI=12MM	
265	359705-0003	-		1	WARNING SIGN ISO, DANGEROUS CHEMICALS	

Pos	Part No	SP	UN	Qty	Description	Page No

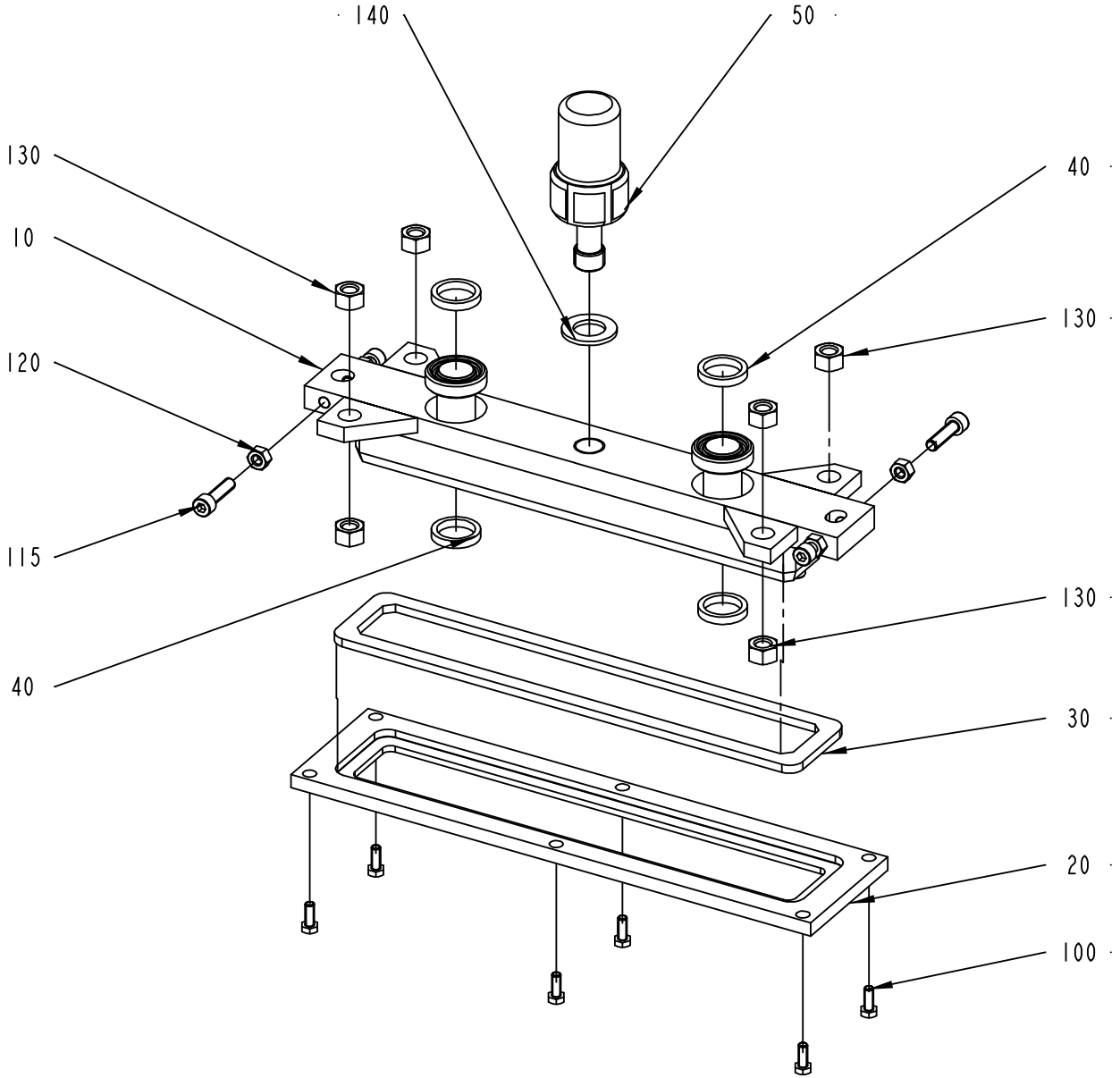
140
50
130
10
120
115
40
40
130
130
30
20
100

Pos	Part No	SP	UN	Qty	Description	Page No
Common Parts						
010	269716-0000	D		1	FASTENING PLATE	
020	269717-0000	D		1	GASKET HOLDER	
030	269718-0000	C		1	GASKET	
040	12242-0001	C		4	GASKET	
050	269719-0000	D		1	SCREW	
100	312105-0368	-		6	SCREW M6S M6X16 A280	
115	312115-0455	-		4	SCREW MC6S M8X30 A280	
120	312605-0318	-		4	HEXAGON NUT, M6M M8 A280	
130	312605-0322	-		8	HEXAGON NUT, M6M M12 A280	
140	315105-0192	-		1	WASHER PLAIN, BRB, 21/36,H=3	

Pos	Part No	SP	UN	Qty	Description	Page No

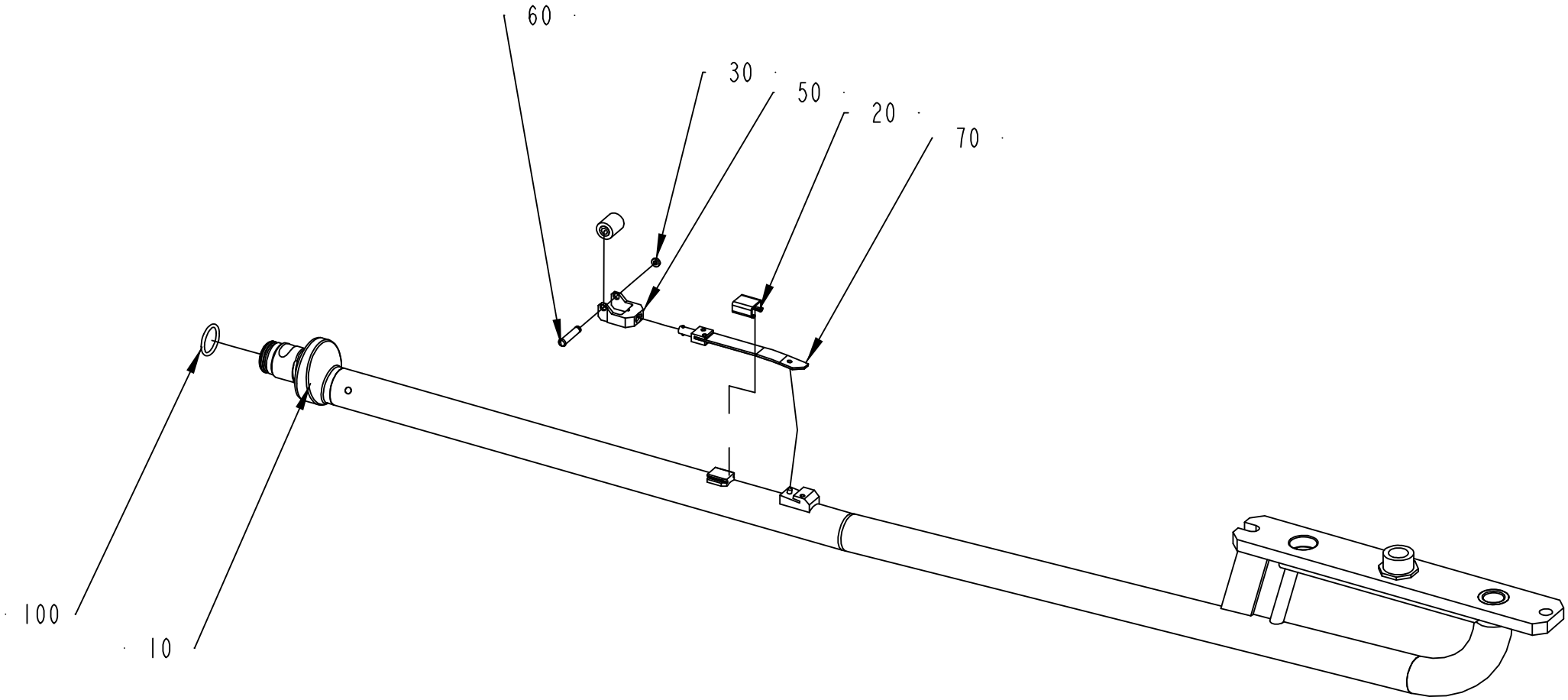
60
30
50
20
70
100
10

ECM: 72447 - 20001113
Group number: 269720-0300
Assembly Drawing: 269720-2_1_AB

Issue: 20020219

Pos	Part No	SP	UN	Qty	Description	Page No
TBA 0375S						
010	497131-0000	D		1	FILLER TUBE	
020	526682-0000	C		1	HOOD	
040	499387-0000	C		1	PRESSURE ROLLER	
050	529180-0000	C		1	FORK	
060	499011-0000	C		1	SHAFT	
070	544893-0000	C		1	SPRING	
TBA 0500B OR TBA 0750B OR TBA 1000B						
010	434222-0000	D		1	FILLER TUBE	
020	14600-0000	C		1	HOOD	
040	232979-0000	C		1	PRESSURE ROLLER	
050	267727-0000	C		1	FORK	
060	267728-0000	C		1	SHAFT	
070	544892-0000	C		1	SPRING	
TBA 0500S OR TBA 0355B						
010	450010-0000	D		1	FILLER TUBE	
020	434665-0000	C		1	HOOD	
040	499387-0000	C		1	PRESSURE ROLLER	
050	499016-0000	C		1	FORK	
060	499011-0000	C		1	SHAFT	
070	544892-0000	C		1	SPRING	
TBA 1000SQ						
010	579316-0000	D		1	FILLER TUBE	
020	434665-0000	C		1	HOOD	
040	499387-0000	C		1	PRESSURE ROLLER	
050	499016-0000	C		1	FORK	
060	499011-0000	C		1	SHAFT	
070	544892-0000	C		1	SPRING	
TBA 0750S						
010	544287-0000	D		1	FILLER TUBE	
020	434665-0000	C		1	HOOD	
040	499387-0000	C		1	PRESSURE ROLLER	
050	499016-0000	C		1	FORK	
060	499011-0000	C		1	SHAFT	
070	544892-0000	C		1	SPRING	
TBA 1000S						
010	569097-0000	D		1	FILLER TUBE	
020	434665-0000	C		1	HOOD	
040	499387-0000	C		1	PRESSURE ROLLER	
050	499016-0000	C		1	FORK	
060	499011-0000	C		1	SHAFT	
070	574214-0000	C		1	SPRING	
Common Parts						
030	24928-0000	C		1	LOCKING RUBBER	
100	315204-0217	C		1	O-RING 24,2X3 MM	

Machine Type	Group Description	Used-In	Group Number	Page No

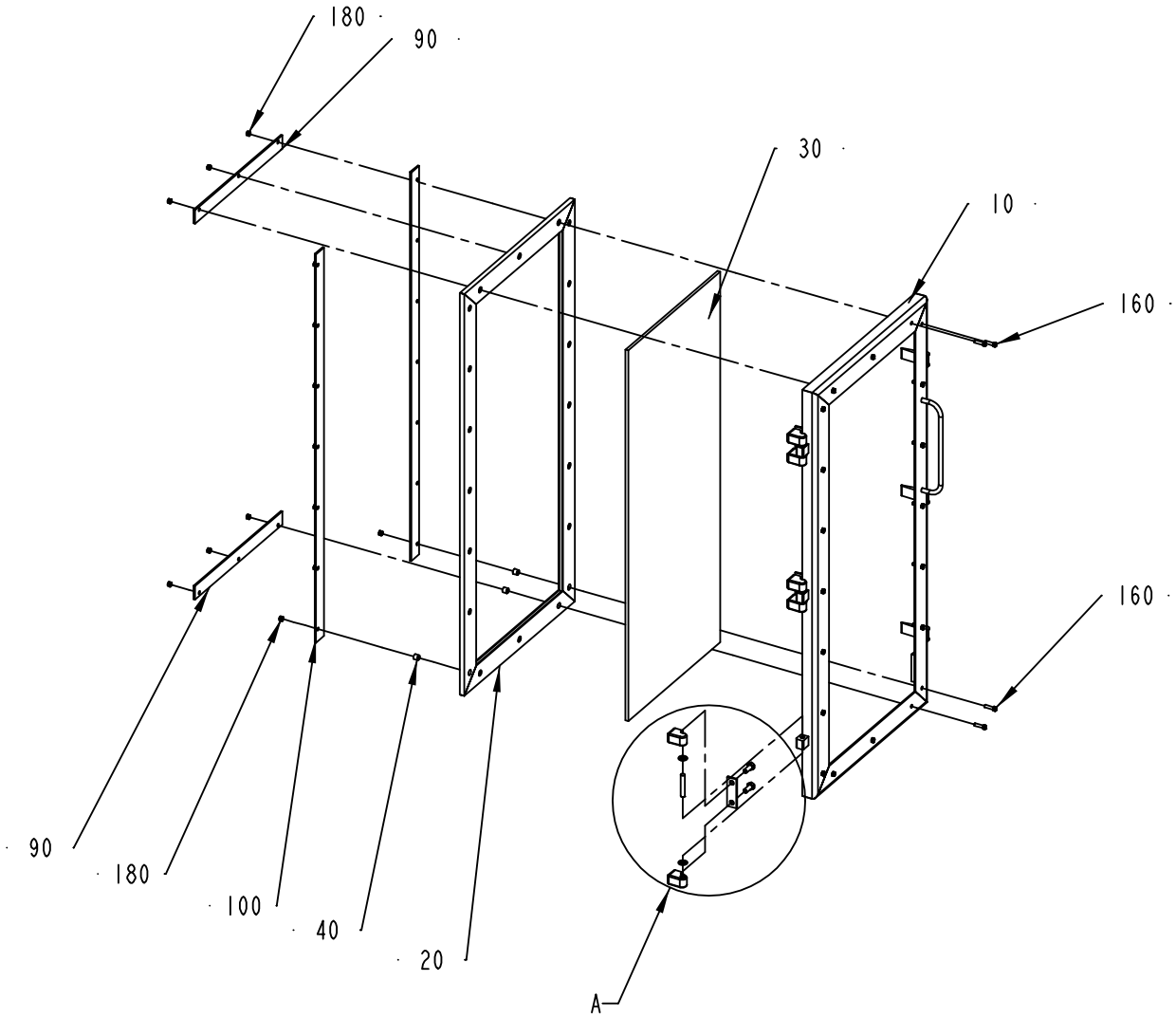
180
90
30
10
160
160
90
180
100
40
20
A

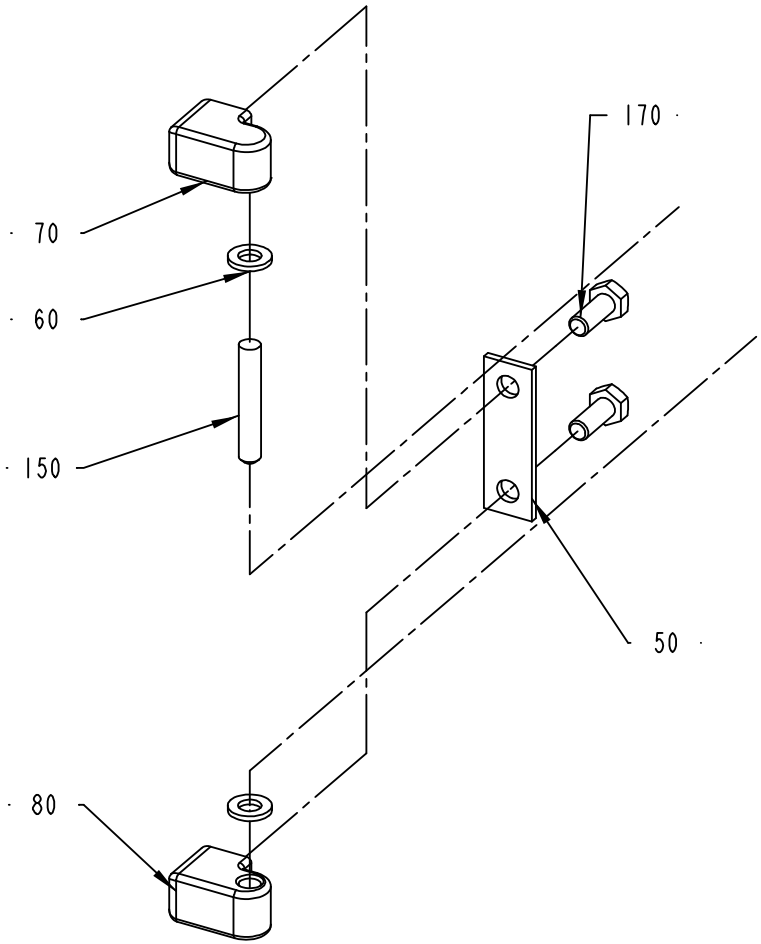
170
70
60
150
50
80

ECM: 72447 - 20001113
Group number: 573612-0100
Assembly Drawing: 573612-1_1_AB

Issue: 20020219

Pos	Part No	SP	UN	Qty	Description	Page No
Common Parts						
010	573613-0000	-		1	DOOR	
020	252797-0000	-		1	RUBBER STRIP	
030	252732-0000	-		1	GLASS PANE	
040	441718-0000	-		20	SPACER	
050	441737-0000	-		3	WASHER	
060	441739-0000	-		6	WASHER	
070	441740-0000	-		3	HINGE FLANGE	
080	441741-0000	-		3	HINGE FLANGE	
090	573615-0000	-		2	COVER SLIP	
100	573616-0000	-		2	COVER SLIP	
150	311103-0413	-		3	PARALLELL PIN, M6, 8X50 MM	
160	312105-0331	-		20	SCREW M6S M5X20 A280	
170	312105-0451	-		6	SCREW M6S 8X20 A280	
180	312605-0314	-		20	HEXAGON NUT, M6M M5 A280	

Pos	Part No	SP	UN	Qty	Description	Page No

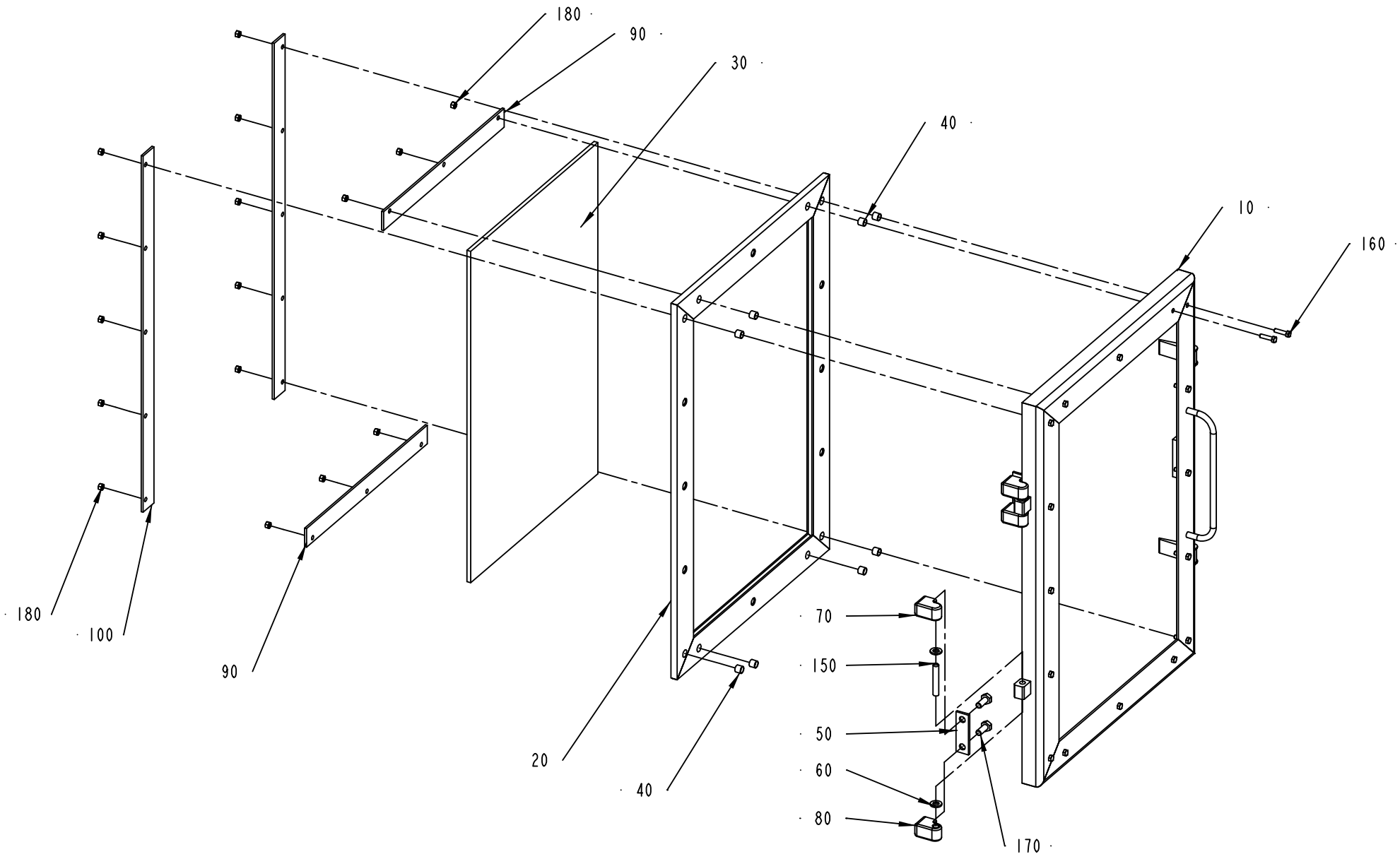
180
90
30
40
10
160
180
100
90
20
40
70
150
50
60
80
170

ECM: 72447 - 20001113
Group number: 594617-0100
Assembly Drawing: 594617-1_1_AB

Issue: 20020219

Pos	Part No	SP	UN	Qty	Description	Page No
Common Parts						
010	573614-0000	-		1	DOOR	
020	252798-0000	-		1	RUBBER STRIP	
030	252733-0000	-		1	GLASS PANE	
040	441718-0000	-		16	SPACER	
050	441737-0000	-		2	WASHER	
060	441739-0000	-		4	WASHER	
070	441740-0000	-		2	HINGE FLANGE	
080	441741-0000	-		2	HINGE FLANGE	
090	573615-0000	-		2	COVER SLIP	
100	573617-0000	-		2	COVER SLIP	
150	311103-0413	-		2	PARALLELL PIN, M6, 8X50 MM	
160	312105-0331	-		16	SCREW M6S M5X20 A280	
170	312105-0451	-		4	SCREW M6S 8X20 A280	
180	312605-0314	-		16	HEXAGON NUT, M6M M5 A280	

Pos	Part No	SP	UN	Qty	Description	Page No

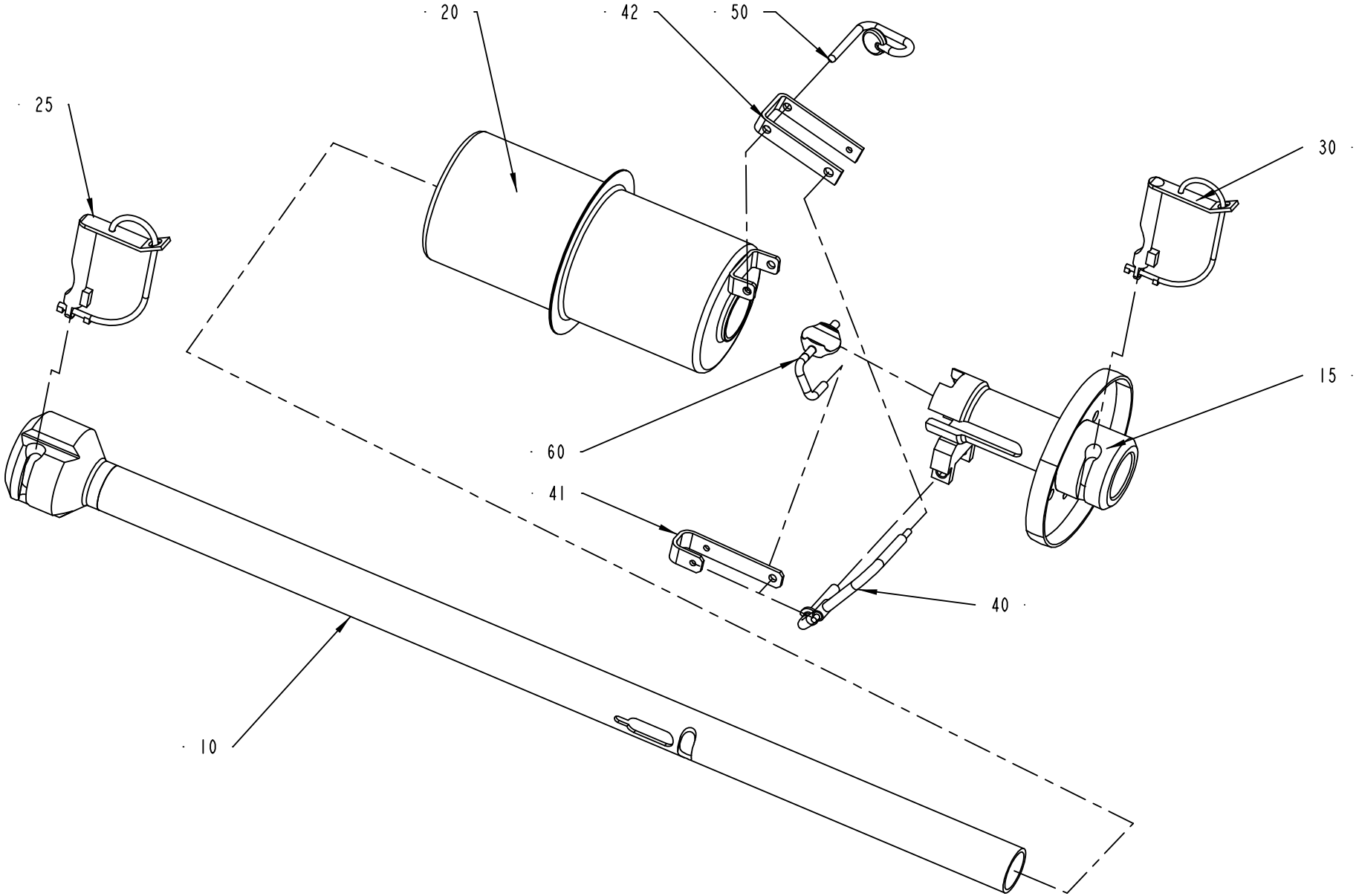
20
42
50
25
30
15
60
41
40
10

Pos	Part No	SP	UN	Qty	Description	Page No
0355B						
010	1478883-0000	C		1	FILLING PIPE	
015	1478887-0000	C		1	PRESSURE FLANGE	
020	434749-0000	C		1	FLOAT	
025	1478893-0000	C		2	LOCKING PIN	
040	434751-0000	C		1	ARM	
041	752587-0000	C		1	LINK	
042	36817-0000	C		1	CLAMPING ELEMENT	
060	37782-0000	C		1	THROTTLE	
0375S						
010	1478882-0000	C		1	FILLING PIPE	
015	1478886-0000	C		1	PRESSURE FLANGE	
020	259902-0000	C		1	FLOAT	
025	1478894-0000	C		2	LOCKING PIN	
040	37296-0000	C		1	ARM	
041	36816-0000	C		1	LINK	
042	36817-0000	C		1	CLAMPING ELEMENT	
060	228943-0000	C		1	THROTTLE	
0500B						
010	1478888-0000	C		1	FILLING PIPE	
015	1478889-0000	C		1	PRESSURE FLANGE	
020	245190-0000	C		1	FLOAT	
025	1478893-0000	C		2	LOCKING PIN	
040	36804-0000	C		1	ARM	
041	36805-0000	C		1	LINK	
042	36806-0000	C		1	CLAMPING ELEMENT	
060	37782-0000	C		1	THROTTLE	
0500S						
010	1478885-0000	C		1	FILLING PIPE	
015	1478887-0000	C		1	PRESSURE FLANGE	
020	434749-0000	C		1	FLOAT	
025	1478893-0000	C		2	LOCKING PIN	
040	434751-0000	C		1	ARM	
041	434752-0000	C		1	LINK	
042	36817-0000	C		1	CLAMPING ELEMENT	
060	37782-0000	C		1	THROTTLE	
0750B						
010	1478891-0000	C		1	FILLING PIPE	
015	1348199-0000	C		1	PRESSURE FLANGE	
020	245190-0000	C		1	FLOAT	
025	1478893-0000	C		2	LOCKING PIN	
040	36804-0000	C		1	ARM	
041	36805-0000	C		1	LINK	
042	36806-0000	C		1	CLAMPING ELEMENT	
060	37782-0000	C		1	THROTTLE	
0750S						
010	1260493-0000	C		1	FILLING PIPE	
015	1478890-0000	C		1	PRESSURE FLANGE	
020	544295-0000	C		1	FLOAT	
025	1478893-0000	C		2	LOCKING PIN	
040	434751-0000	C		1	ARM	
041	434752-0000	C		1	LINK	
042	36817-0000	C		1	CLAMPING ELEMENT	
060	752590-0000	C		1	THROTTLE	
1000B LOFIN						
010	1348200-0000	C		1	FILLING PIPE	
015	1348199-0000	C		1	PRESSURE FLANGE	
020	245190-0000	C		1	FLOAT	
025	1478893-0000	C		2	LOCKING PIN	
040	36804-0000	C		1	ARM	
041	36805-0000	C		1	LINK	
042	36806-0000	C		1	CLAMPING ELEMENT	
060	37782-0000	C		1	THROTTLE	
1000S						
010	1260493-0000	C		1	FILLING PIPE	
015	1260492-0000	C		1	PRESSURE FLANGE	
020	544295-0000	C		1	FLOAT	
025	1478893-0000	C		2	LOCKING PIN	
040	434751-0000	C		1	ARM	
041	434752-0000	C		1	LINK	
042	36817-0000	C		1	CLAMPING ELEMENT	
060	752590-0000	C		1	THROTTLE	
1000SQ						
010	1260493-0000	C		1	FILLING PIPE	
015	1348201-0000	C		1	PRESSURE FLANGE	
020	544295-0000	C		1	FLOAT	

Machine Type | Group Description | Used-In | Group Number | Page No

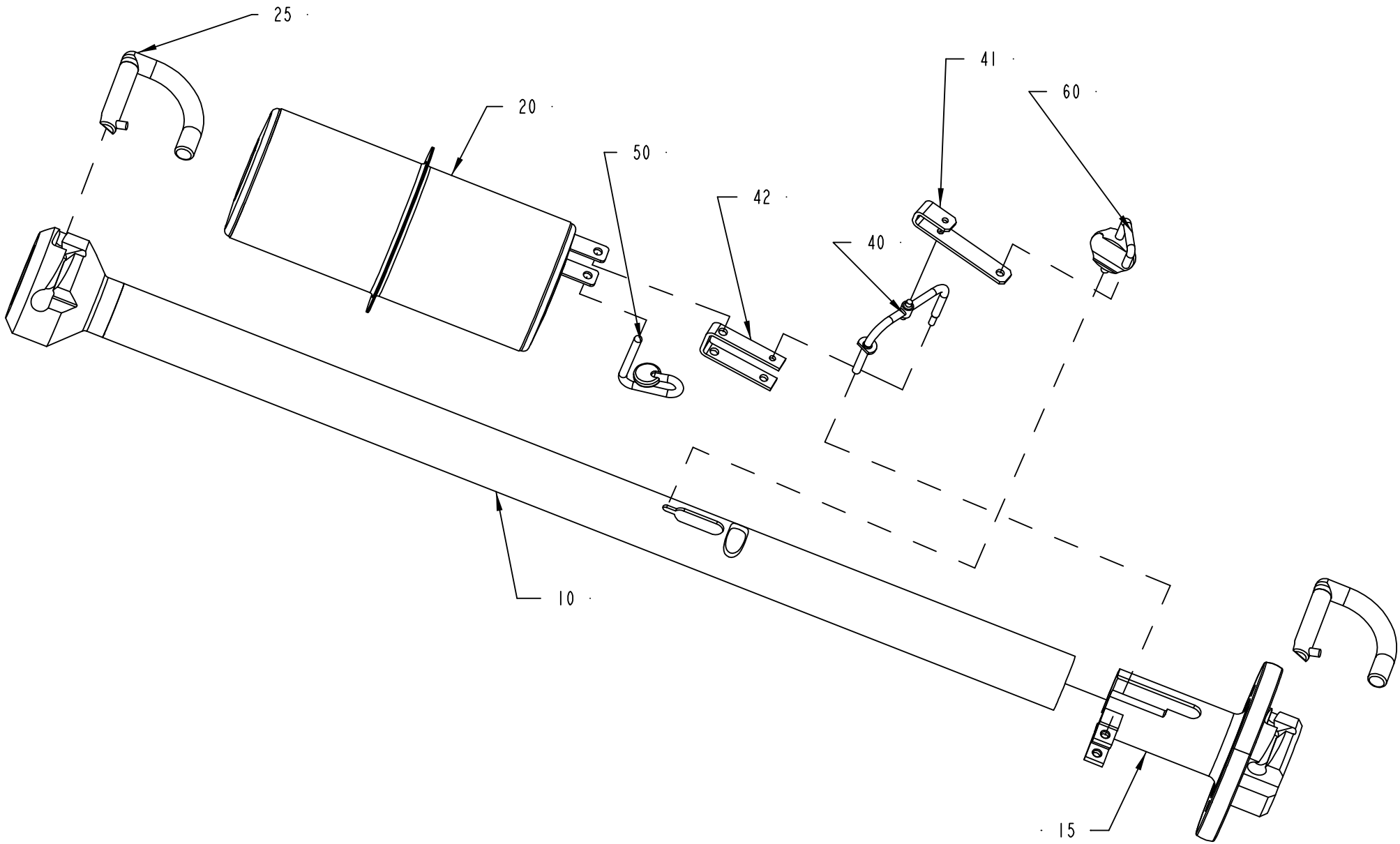
25
20
50
42
41
60
40
10
15

Pos	Part No	SP	UN	Qty	Description	Page No
1000SQ (Cont'd)						
025	1478893-0000	C		2	LOCKING PIN	
040	434751-0000	C		1	ARM	
041	434752-0000	C		1	LINK	
042	36817-0000	C		1	CLAMPING ELEMENT	
060	752590-0000	C		1	THROTTLE	
1000B HIFIN						
010	544294-0000	C		1	FILLER TUBE	
015	466463-0000	C		1	PRESSURE FLANGE	
020	245190-0000	C		1	FLOAT	
025	445504-0000	C		1	LOCKING PIN UPPER	
030	445502-0000	C		1	LOCKING PIN LOWER	
040	529376-0000	C		1	ARM	
041	529378-0000	C		1	LINK	
042	529377-0000	C		1	CLAMP	
060	37782-0000	C		1	THROTTLE	
Common Parts						
050	1490099-0000	C		1	PIN	

Pos	Part No	SP	UN	Qty	Description	Page No

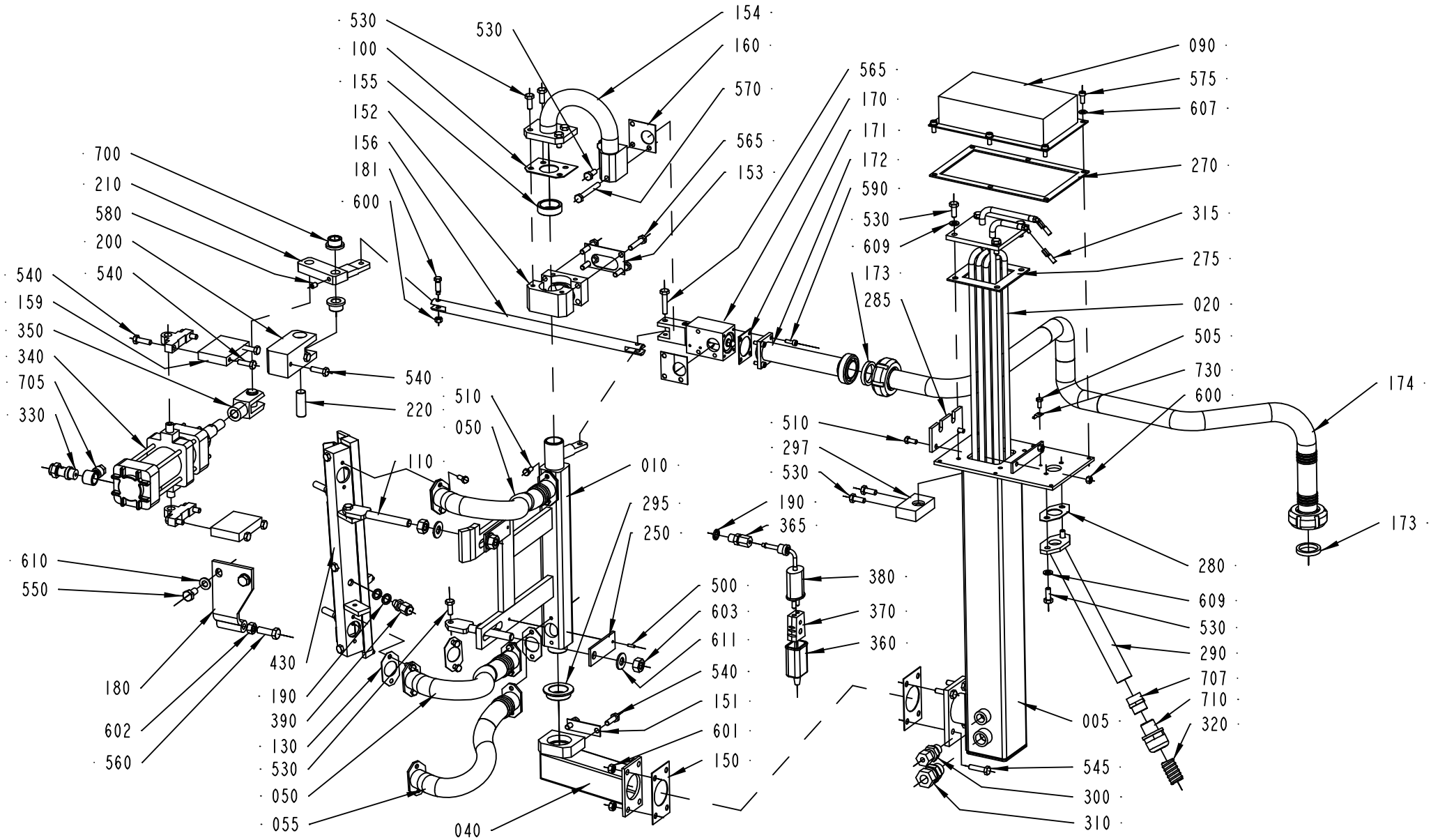
530
100
155
152
156
181
600
530
154
160
570
565
153
700
210
580
200
540
540
159
350
340
705
330
540
220
565
170
171
172
590
530
609
173
285
090
575
607
270
315
275
020
505
730
600
174
510
050
110
010
295
250
510
297
530
190
365
380
370
360
280
609
530
290
707
710
320
005
545
300
310
610
550
180
602
560
430
190
390
130
530
050
055
040
500
603
611
540
151
601
150

Pos	Part No	SP	UN	Qty	Description	Page No
TBA 0500B 50HZ OR TBA 0500B 60HZ OR TBA 0750B 50HZ OR TBA 0750B 60HZ OR TBA 1000S 50HZ OR TBA 1000S 60HZ OR TBA 1000B 50HZ OR TBA 1000B 60HZ OR TBA 1000SQ 50HZ OR TBA 1000SQ 60HZ						
050	1499055-0000	-		1	LEAD	
055	1499056-0000	-		1	LEAD	
TBA 0500S 50HZ OR TBA 0355B 50HZ OR TBA 0375S 50HZ OR TBA 0750S 50HZ						
050	1499055-0000	-		2	LEAD	
TBA 0500S 60HZ OR TBA 0375S 60HZ OR TBA 0355B 60HZ OR TBA 0750S 60HZ						
050	1499055-0000	-		2	LEAD	
Common Parts						
005	533195-0000	-		1	MANTLE	
010	2500150-0000	A		1	PIVOT ARM	
020	555545-0000	A		1	COIL HEATER	
040	250656-0000	-		1	ATTACHMENT PIPE	
090	476360-0000	-		1	LID	
100	1487976-0000	A		1	GASKET	
110	32215-0000	A		2	HOLDER	
130	1499057-0000	A		4	GASKET	
150	531738-0000	A		2	GASKET	
151	531739-0000	A		1	GASKET	
152	1487972-0000	A		1	BEARING HOLDER	
153	531740-0000	A		1	GASKET	
154	1519368-0000	-		1	CONNECTION	
155	1487975-0000	A		1	BUSHING	
156	250664-0000	A		1	TIE ROD	
159	250668-0000	-		2	SPACER	
160	1347923-0000	A		2	GASKET	
170	A2524514-0100	-		1	VALVE	**59**
171	1478691-0000	A		1	GASKET	
172	2510290-0000	-		1	PIPE	
173	90091-0180	A		2	GASKET 32X25X4,8 MM	
174	1347920-0000	-		1	PIPE	
180	269913-0000	A		1	STOPPER	
181	269914-0000	A		1	SHOULDER SCREW	
190	273429-0000	A		3	WASHER	
200	279208-0000	A		1	BEARING HOUSING	
210	279209-0000	A		1	ROCKER ARM	
220	279213-0000	A		1	DOWEL	
250	297054-0000	-		2	WASHER	
270	531744-0000	A		1	GASKET	
275	531745-0000	A		1	GASKET	
280	531764-0000	A		1	GASKET	
285	555546-0000	A		1	INSULATING PLATE	
290	479176-0000	-		1	PIPE	
295	530622-0000	A		1	BUSHING	
297	533196-0000	A		1	FASTENING PLATE	
300	90030-0092	-		1	STRAIGHT CONN., 6-R1/4,EXT. TAPPERED	
310	90030-0187	-		1	CONN. STR. GA-12-G3/8	
315	90097-0017	-		2	FLAT PIN PLUG 6,3MM	
320	90152-0033	-	MM	500	SPIRAL CONDUIT FOR PR 15,2(PG 9)	
330	90235-0275	A		2	THROTTLE CHECK VALVES,G1/4"	
340	B90239-0951	A		1	CYLINDER	
	90239-0443	*C*		*1*	*SEAL KIT*	
350	90239-0346	A		1	ROD END,CLEVIS WITH AXLE M12X1,25	
360	90326-0012	A		1	PROTECTIVE COVER	
365	90326-0306	-		1	GLAND FITTING 9041-45-KS-KR.1/8"D=4,5MM	
370	90326-0020	-		1	PLUG, FEMALE YELLOW CR-AL	
380	B90326-0048	A		1	THERMOELEMENT	
	90326-0304	*-*		*1*	*LEAD IN*	
390	90326-0304	A		1	LEAD IN	
430	A283926-0400	-		1	AIR NOZZLE	**61**
500	311103-0233	-		2	PARALLELL PIN, M6, 3X10 MM	
505	312105-0289	-		1	SCREW M6S M4X10 A280	
510	312105-0327	-		10	SCREW M6S M5X12 A280	
530	312105-0368	-		16	SCREW M6S M6X16 A280	
540	312105-0370	-		12	SCREW M6S M6X20 A280	
545	312105-0372	-		4	SCREW M6S M6X25 A280	
550	312105-0449	-		2	SCREW M6S M8X16 A280	
560	312105-0453	-		1	SCREW M6S M8X25 A280	
565	312105-0374	-		5	SCREW M6S M6X30 A280	
570	312105-0380	-		1	SCREW M6S M6X50 A280	
575	312125-0327	-		6	SCREW PAN HEAD MCS M5X12 SS	
580	312318-0362	-		1	SCREW SOCK.SET CUP P MSK6SS M6X8 A4	
590	312115-0291	-		4	SCREW MC6S M4X12 A280	
600	312605-0314	-		3	HEXAGON NUT, M6M M5 A280	
601	312605-0316	-		4	HEXAGON NUT, M6M M6 A280	
602	312605-0318	-		1	HEXAGON NUT, M6M M8 A280	
603	312605-0320	-		4	HEXAGON NUT, M6M M10 A280	
607	315105-0146	-		6	WASHER PLAIN, BRB, 5,3/10,H=1	
609	315105-0153	-		6	WASHER PLAIN, BRB, 6,4/12,H=1,5	
610	315105-0165	-		2	WASHER PLAIN, BRB, 8,4/16,H=1,5	
611	315105-0173	-		4	WASHER PLAIN, BRB, 10,5/22,H=2	

Machine Type Group Description Used-In Group Number Page No

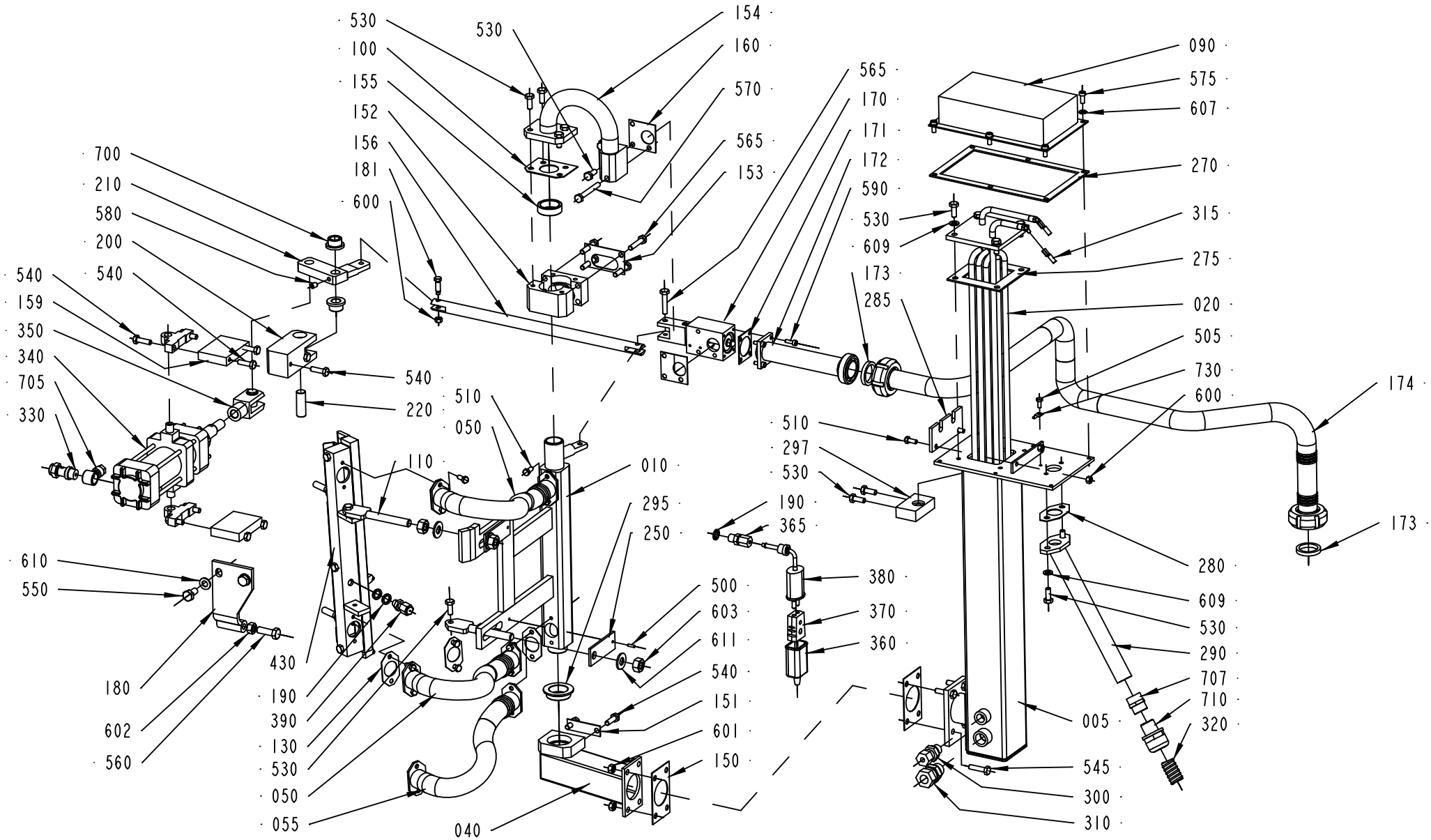
530
100
155
152
156
181
600
530
154
160
570
565
153
700
210
580
200
540
540
159
350
340
705
330
540
220
510
050
110
010
295
250
610
550
180
602
560
430
190
390
130
530
050
055
040
500
603
611
540
151
601
150
565
170
171
172
590
530
609
173
285
510
297
530
190
365
380
370
360
090
575
607
270
315
275
020
505
730
600
174
173
280
609
530
290
707
710
320
005
545
300
310

Pos	Part No	SP	UN	Qty	Description	Page No
Common Parts (Cont'd)						
603	312605-0320	-		4	HEXAGON NUT, M6M M10 A280	
607	315105-0146	-		6	WASHER PLAIN, BRB, 5,3/10,H=1	
609	315105-0153	-		6	WASHER PLAIN, BRB, 6,4/12,H=1,5	
610	315105-0165	-		2	WASHER PLAIN, BRB, 8,4/16,H=1,5	
611	315105-0173	-		4	WASHER PLAIN, BRB, 10,5/22,H=2	
700	321111-0159	-		2	BEAR.BUSHING WITH FLANGE, 12/18X12 MM	
705	342797-0122	-		2	CONN. BANJO, RINGPIECE 6-1/4	
707	352100-0106	-		1	CABLE GLANR.18,6-10,5	
710	352136-0113	-		1	GLAND FITTING PR18,6/PG11 DI=12MM	
730	353104-0130	-		1	CABLE SHOEYAV 025 M 4*	

Pos	Part No	SP	UN	Qty	Description	Page No

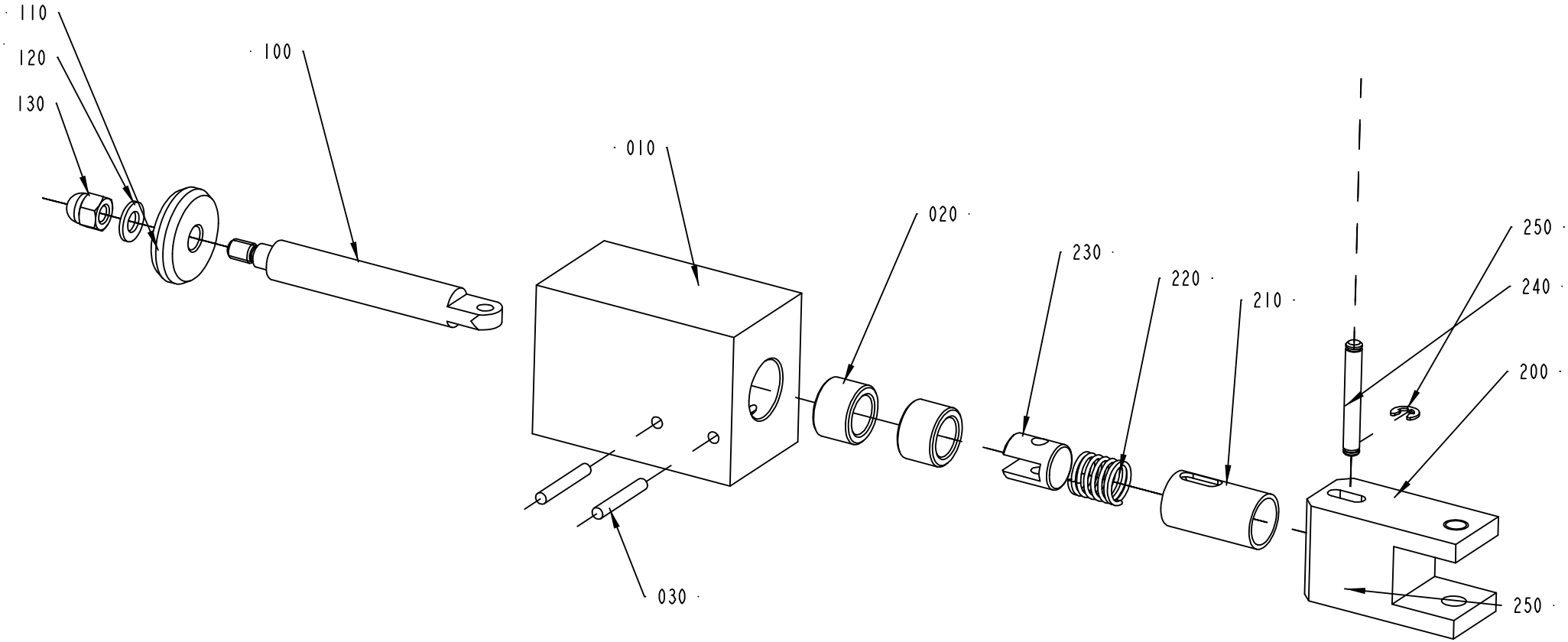
110
120
130
100
010
020
030
230
220
210
250
240
200
250

ECM: 99360 - 20011105
Group number: 2524514-0100
Assembly Drawing: 2524514-1_1_AA

Issue: 20020219

Pos	Part No	SP	UN	Qty	Description	Page No
Common Parts						
010	2520235-0000	-		1	VALVE	
020	2520233-0000	A		2	BUSHING	
030	311103-0239	-		2	CYLINDRICAL PIN CP M6 3X22 RFR	
100	2520236-0000	-		1	PISTON ROD	
110	1519369-0000	-		1	PISTON	
120	315105-0146	-		1	WASHER PLAIN, BRB, 5,3/10,H=1	
130	312705-0314	-		1	NUT HEX. DOMED CAP MHM-6 M5 A280	
200	2520239-0000	-		1	LINK	
210	2520234-0000	A		1	BUSHING	
220	90335-0073	A		1	SPRING	
230	2520238-0000	-		1	LINK	
240	2520237-0000	-		1	PIN	
250	315755-0105	-		2	LOCKING WASHER 3,2	

Pos	Part No	SP	UN	Qty	Description	Page No

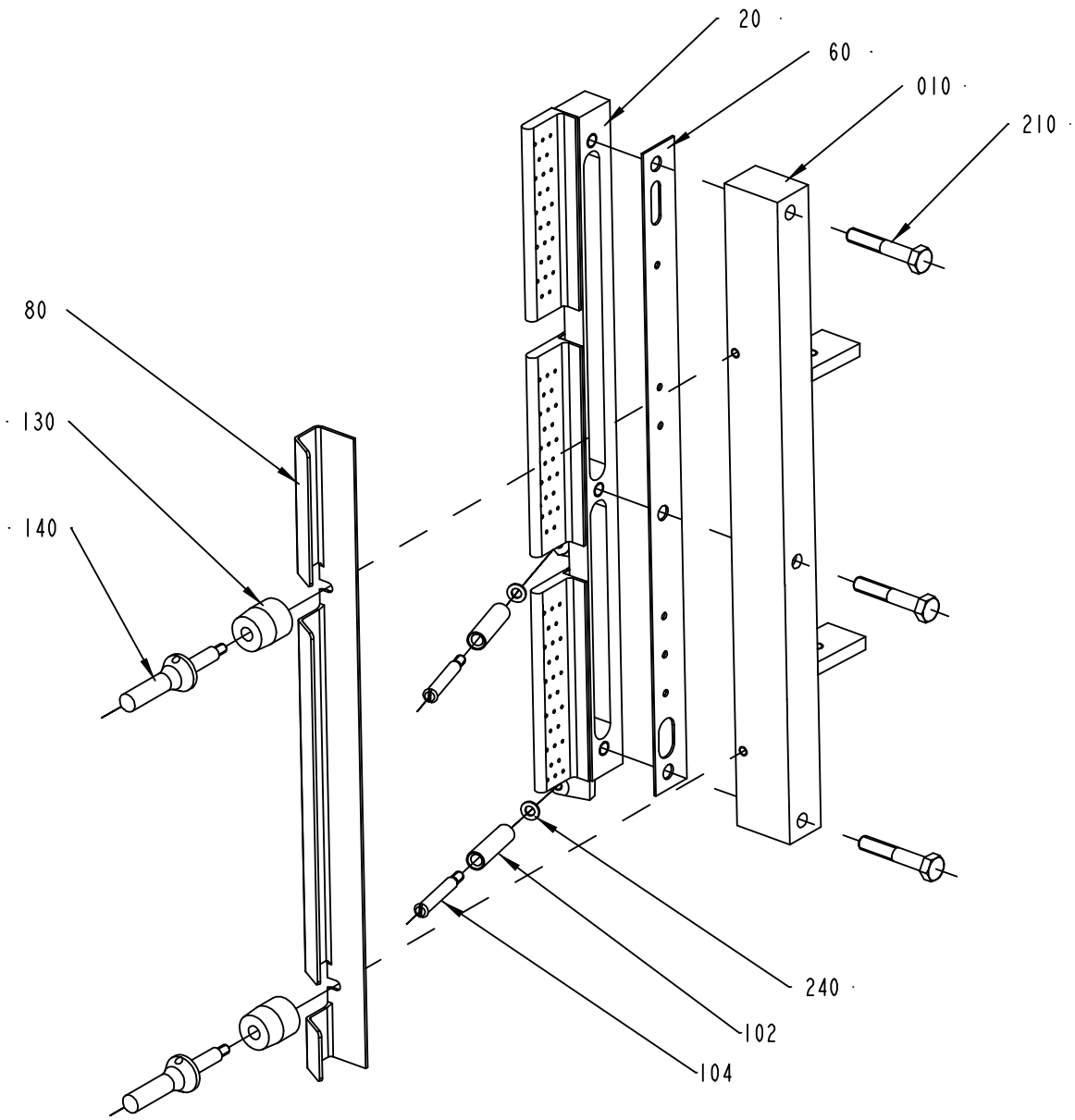
20
60
010
210
80
130
140
240
102
104

ECM: 100511 - 20011220
Group number: 283926-0400
Assembly Drawing: 283926-4_1_AA

Issue: 20020219

Pos	Part No	SP	UN	Qty	Description	Page No
0375S OR 0355B OR 0500S OR 0750S						
010	1517062-0000	-		1	ATTACHMENT	
020	526587-0000	A		1	AIR NOZZLE	
060	526689-0000	A		1	DISTRIBUTOR WING	
080	526688-0000	A		1	HEAD PLATE	
130	526692-0000	A		2	ROLL	
0500B OR 0750B OR 1000B						
010	2500151-0000	-		1	ATTACHMENT	
020	567734-0000	A		1	AIR NOZZLE	
060	569104-0000	A		1	DISTRIBUTOR WING	
080	567735-0000	A		1	HEAD PLATE	
130	6161-0000	A		2	ROLL	
1000SQ OR 1000S						
010	2500151-0000	-		1	ATTACHMENT	
020	573058-0000	A		1	AIR NOZZLE	
060	569104-0000	A		1	DISTRIBUTOR WING	
080	567735-0000	A		1	HEAD PLATE	
130	6161-0000	A		2	ROLL	
Common Parts						
102	526691-0000	A		2	ROLL	
104	526690-0000	A		2	SHAFT	
140	265957-0000	A		2	SHAFT	
210	312105-0376	-		3	SCREW M6S M6S M6X35 A280	
240	315105-0136	-		2	WASHER PLAIN, BRB, 4,3/8,H=0,8	

Pos	Part No	SP	UN	Qty	Description	Page No

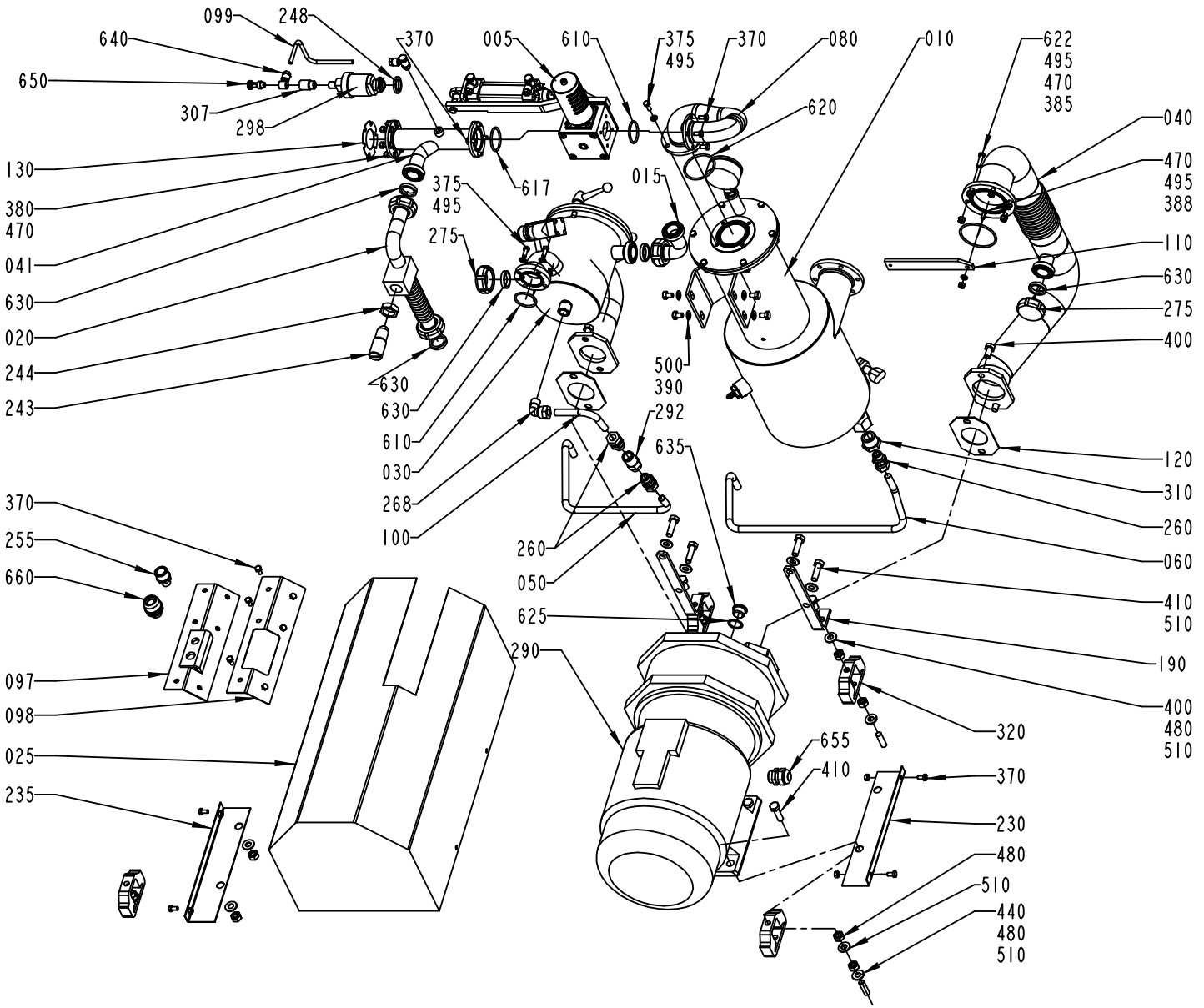
099
248
640
650
307
298
370
005
610
375
495
370
080
010
622
495
470
385
620
040
470
495
388
110
630
275
400
120
310
260
060
410
510
190
400
480
510
320
370
230
480
510
440
480
510
655
410
130
380
470
041
630
020
244
243
375
495
617
275
015
630
630
610
030
268
100
500
390
292
635
260
050
625
290
370
255
660
097
098
025
235

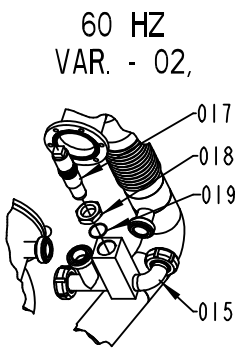
60 HZ
VAR. - 02,
017
018
019
015

ECM: 104998 - 20020215
Group number: 575474-0100
Assembly Drawing: 575474-1_1_AC

Issue: 20020219

Pos	Part No	SP	UN	Qty	Description	Page No
50HZ						
015	1347921-0000	-		1	PIPE	
275	90217-0026	-		2	NUT	
60HZ						
015	1347915-0000	-		1	PIPE	
017	442236-0000	-		1	THROTTLE SCREW	
018	442237-0000	A		1	NUT	
019	315202-0119	A		1	O-RING 25,1X1,6 MM	
275	90217-0026	-		1	NUT	
Common Parts						
020	449130-0000	A		1	CONNECTING PIPE	
025	451321-0000	-		1	COVER	
040	568804-0000	A		1	PIPE	
041	555544-0000	-		1	PIPE	
050	568807-0000	-		1	PIPE	
060	568808-0000	-		1	PIPE	
080	568809-0000	-		1	PIPE	
097	526782-0000	-		1	COVERING PLATE	
098	451323-0000	-		1	SHEET	
099	451324-0000	-		1	PIPE	
100	568810-0000	-		1	PIPE	
110	571086-0000	-		1	BRACKET	
120	230551-0000	A		2	GASKET	
130	531742-0000	A		1	GASKET	
190	269859-0000	-		2	BRACKET	
230	282682-0000	-		1	BRACKET	
235	282683-0000	-		1	BRACKET	
243	295878-0000	A		1	THROTTLE SCREW	
244	295879-0000	A		1	NUT	
248	479234-0000	A		1	WASHER	
255	90012-0063	-		1	CABLE GLAND PR 15,2	
260	90030-0187	-		3	CONN. STR. GA-12-G3/8	
268	90030-0115	-		1	CONN. ELBOW WA 12-R3/8	
290	B90270-0011	A		1	COMPRESSOR RA112 "REPL.BY 90270-17"	
	90270-0348	*-*		*1*	*MOTOR ELMO RA112/MB42083*	
	90270-0346	*C*		*1*	*GASKET*	
	90270-0345	*C*		*1*	*SHIMS*	
	90270-0338	*C*		*1*	*SPARE PARTS KIT*	
292	90270-0347	A		1	VALVE	
298	90274-0045	A		1	PRESSURE GUARD, 14 KPA	
307	90330-0012	-		1	SLEEVE, REDUCTION, INT, R-2021/4X1/8	
310	90330-0078	-		1	BUSHING, INT/EXT. THR. R3/4-RP3/8	
320	90347-0026	A		4	DAMPER	
370	312105-0366	-		18	SCREW M6S M6X12 A280	
375	312105-0368	-		8	SCREW M6S M6X16 A280	
380	312105-0370	-		6	SCREW M6S M6X20 A280	
385	312105-0372	-		5	SCREW M6S M6X25 A280	
388	312105-0374	-		1	SCREW M6S M6X30 A280	
390	312105-0447	-		4	SCREW M6S M8X12 A280	
400	312105-0491	-		6	SCREW M6S M10X20 A280	
410	312105-0497	-		8	SCREW M6S M10X35 A280	
440	312303-0497	-		4	SCREW STUD, METAL END=1D, PS 10X25 SS	
470	312605-0316	-		12	HEXAGON NUT, M6M M6 A280	
480	312605-0320	-		10	HEXAGON NUT, M6M M10 A280	
495	315105-0153	-		14	WASHER PLAIN, BRB, 6,4/12,H=1,5	
500	315105-0165	-		4	WASHER PLAIN, BRB, 8,4/16,H=1,5	
510	315105-0173	-		14	WASHER PLAIN, BRB, 10,5/22,H=2	
610	315204-0222	A		2	O-RING 36,2X3 MM	
617	315204-0223	A		2	O-RING 39,2X3 MM	
620	315204-0302	A		1	O-RING 54,5X3 MM	
622	315204-0304	A		1	O-RING 64,5X3 MM	
625	315233-0113	-		1	WASHER PL.RND.NYL.21,4/27,H=1,2	
630	315250-0101	-		5	GASKET 32X25X5,5 MM	
635	342713-0213	-		1	PLUG, EXT THREAD HEX SOCKET 8638-00-120	
640	342797-0121	-		2	CONN. BANJO, RINGPIECE 6-1/8	
650	342980-0303	-		2	BANJO-HOLLOW BOLT COUPL,EXT.THR.01-G1/8"	
655	352103-0111	-		1	CABLE GLAND, ST 16, PR22,5/PG16	
660	352136-0127	-		1	GLAND FITTING PR 18,6	
F005	A594619-0100	-		1	CHANGE-OVER VALVE	**65**
F010	A569003-0100	-		1	SEPARATION INSERT	**67**
F030	A575475-0100	-		1	SCRUBBER	**69**

Machine Type	Group Description	Used-In	Group Number	Page No

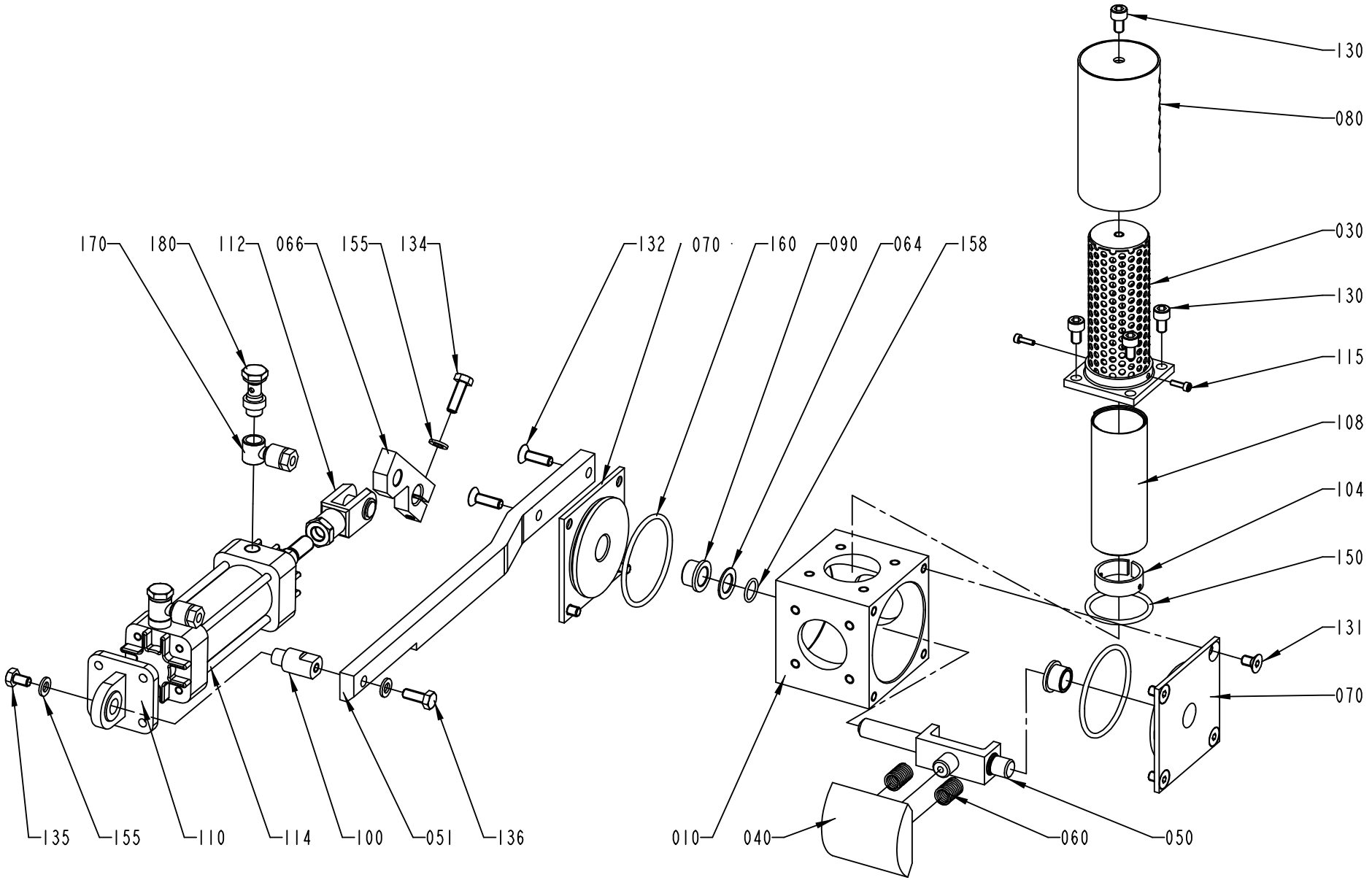
130
080
030
130
115
108
104
150
131
070
170
180
112
066
155
134
132
070
160
090
064
158
135
155
110
114
100
051
136
010
040
060
050

ECM: 103112 - 20020115
Group number: 594619-0100
Assembly Drawing: 594619-1_1_AC

Issue: 20020219

Pos	Part No	SP	UN	Qty	Description	Page No
Common Parts						
010	B466474-0000	-		1	VALVE HOUSING	
0010	*1282023-0001*	*-*		*1*	*CAST WORKPIECE*	
030	466477-0000	-		1	INNER PIPE	
040	466479-0000	B		1	PIECE	
050	555541-0000	B		1	BRACKET	
051	555542-0000	B		1	BRACKET	
060	21521-0000	A		2	COMPRESSION SPRING	
064	266737-0000	B		1	WASHER	
066	441483-0000	B		1	CYLINDER BRACKET	
070	255874-0000	-		2	BEARING COVER	
080	466478-0000	-		1	OUTER PIPE	
090	255875-0000	A		2	BUSHING	
100	555540-0000	B		1	SPACER	
104	466483-0000	-		1	CLAMPING PIECE	
108	466484-0000	-		1	NET	
110	90239-0453	B		1	BRACKET	
112	90239-0516	B		1	ROD END,CLEVIS WITH AXLE M10X1,25	
114	B90239-0779	A		1	CYLINDER	
	90239-0442	*C*		*1*	*SEAL KIT*	
115	312115-0224	-		2	SCREW HEX.SOCK.HD.MC6S-TT 3X10 A480	
130	312115-0364	-		5	SCREW HEX.SOCK.HD.MC6S-TT 6X10 A480	
131	312155-0364	-		6	SCREW HEX.SOCK.COUNT.MF6S M6X10 A280	
132	312155-0370	-		2	SCREW HEX.SOCK.COUNT.MF6S M6X20 A280	
134	312105-0370	-		1	SCREW M6S M6X20 A280	
135	312105-0364	-		2	SCREW M6S M6X10 A280	
136	312105-0368	-		1	SCREW M6S M6X16 A280	
150	315204-0222	A		1	O-RING 36,2X3 MM	
155	315105-0153	-		3	WASHER PLAIN, BRB, 6,4/12,H=1,5	
158	315204-0110	A		1	O-RING 12,1X1,6 MM	
160	315204-0302	A		2	O-RING 54,5X3 MM	
170	342797-0121	-		2	CONN. BANJO, RINGPIECE 6-1/8	
180	342980-0303	-		2	BANJO-HOLLOW BOLT COUPL,EXT.THR.01-G1/8"	

Pos	Part No	SP	UN	Qty	Description	Page No

Machine Type | Group Description | Used-In | Group Number | Page No

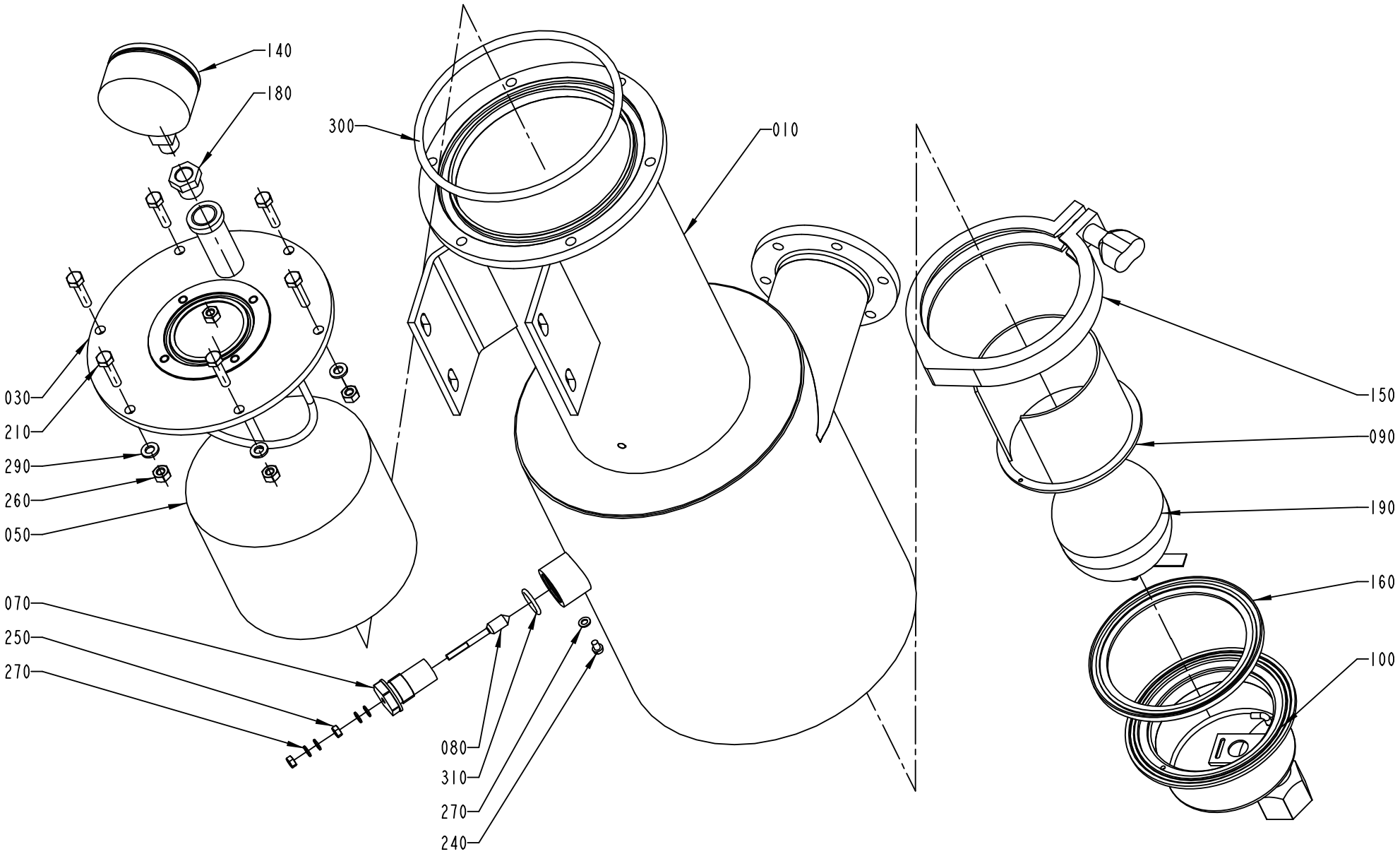
140
180
300
010
030
210
290
260
050
070
250
270
080
310
270
240
150
090
190
160
100

Pos	Part No	SP	UN	Qty	Description	Page No
Common Parts						
010	568802-0000	-		1	CONTAINER	
030	568827-0000	-		1	LID	
050	546929-0000	C		1	FILTER	
070	1279457-0000	D		1	BRACKET	
080	567070-0013	C		1	ELECTRODE	
090	568828-0000	D		1	FLOAT GUARD	
100	B571088-0000	D		1	DRAINING	
	90360-0304	*D*		*1*	*SPARE PART KIT*	
140	90043-0095	D		1	PRESSURE GAUGE, 2740, D=63 MM, GLYC.	
150	90217-0312	-		1	CLAMP, ISO2852 FOR PIPE 101,6 MM	
160	90217-0313	C		1	GASKET 97,8X119X5,5 MM	
180	90330-0042	-		1	BUSHING, INT/EXT. THR. R3/8-RP1/4	
190	90360-0305	D		1	FLOAT	
210	312105-0372	-		6	SCREW M6S M6X25 A280	
240	312125-0285	-		1	SCREW SLOT.PAN HD. MCS 4X6 A480	
250	312605-0312	-		2	HEXAGON NUT, M6M M4 A280	
260	312605-0316	-		6	HEXAGON NUT, M6M M6 A280	
270	315105-0136	-		5	WASHER PLAIN, BRB, 4,3/8,H=0,8	
290	315105-0153	-		6	WASHER PLAIN, BRB, 6,4/12,H=1,5	
300	315202-0244	C		1	O-RING 134,3X5,7 MM	
310	315204-0213	C		1	O-RING 15,2X2,4 MM	

Pos	Part No	SP	UN	Qty	Description	Page No

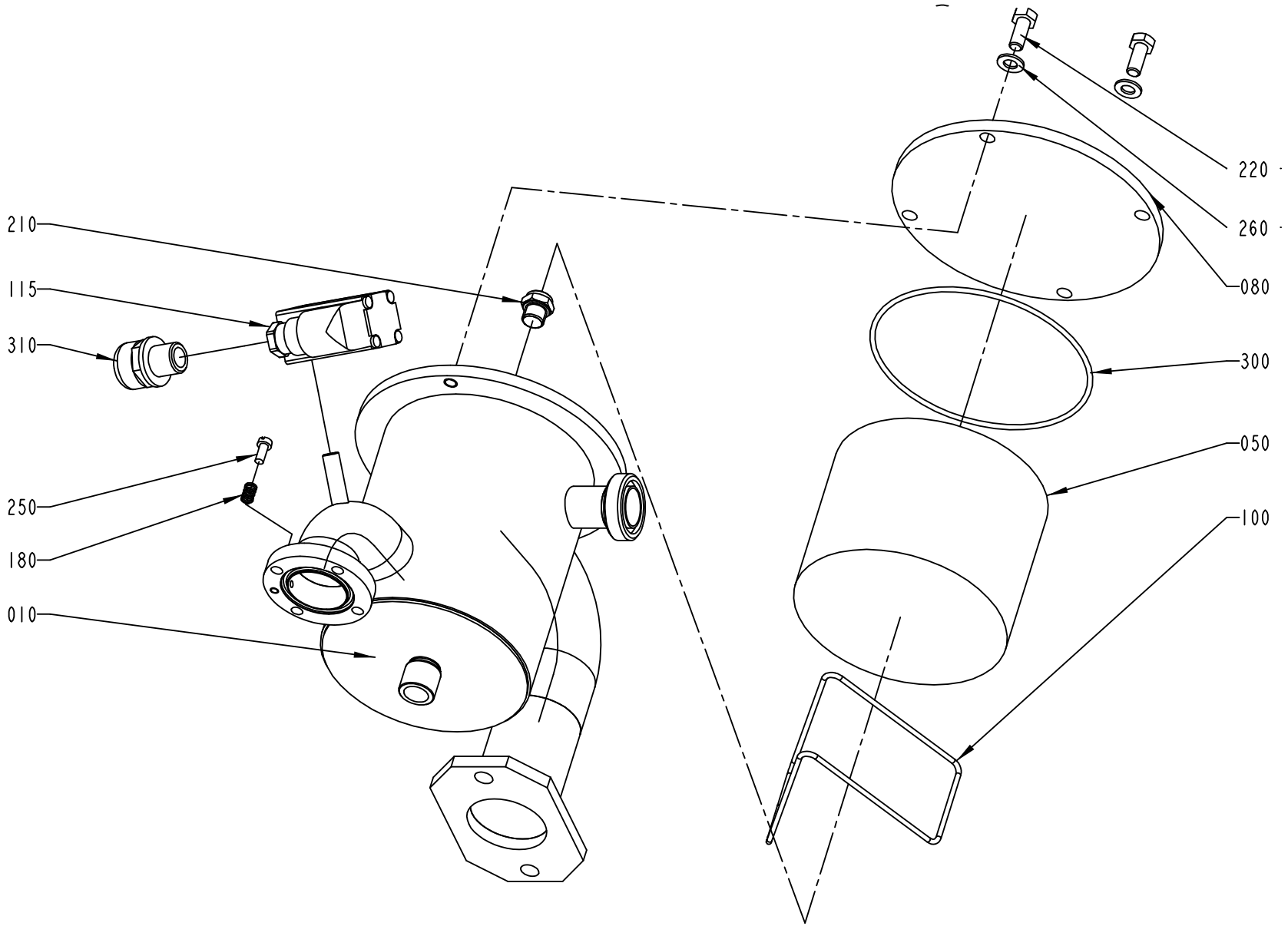
220
260
080
300
050
100
210
115
310
250
180
010

Pos	Part No	SP	UN	Qty	Description	Page No
Common Parts						
010	568803-0000	-		1	CONTAINER	
050	546929-0000	A		1	FILTER	
080	568806-0000	-		1	LID	
100	571087-0000	-		1	RETAINING RING	
115	90042-0187	B		1	SOLENOID VALVE BUERKERT	
180	90335-0034	B		1	SPRING	
210	90424-0054	B		1	SPRAY NOZZLE 120 DEG	
220	312105-0451	-		2	SCREW M6S 8X20 A280	
250	312125-0327	-		1	SCREW PAN HEAD MCS M5X12 SS	
260	315105-0165	-		2	WASHER PLAIN, BRB, 8,4/16,H=1,5	
300	315202-0317	A		1	O-RING 129,5X3 MM	
310	352136-0113	-		1	GLAND FITTING PR18,6/PG11 DI=12MM	

Pos	Part No	SP	UN	Qty	Description	Page No

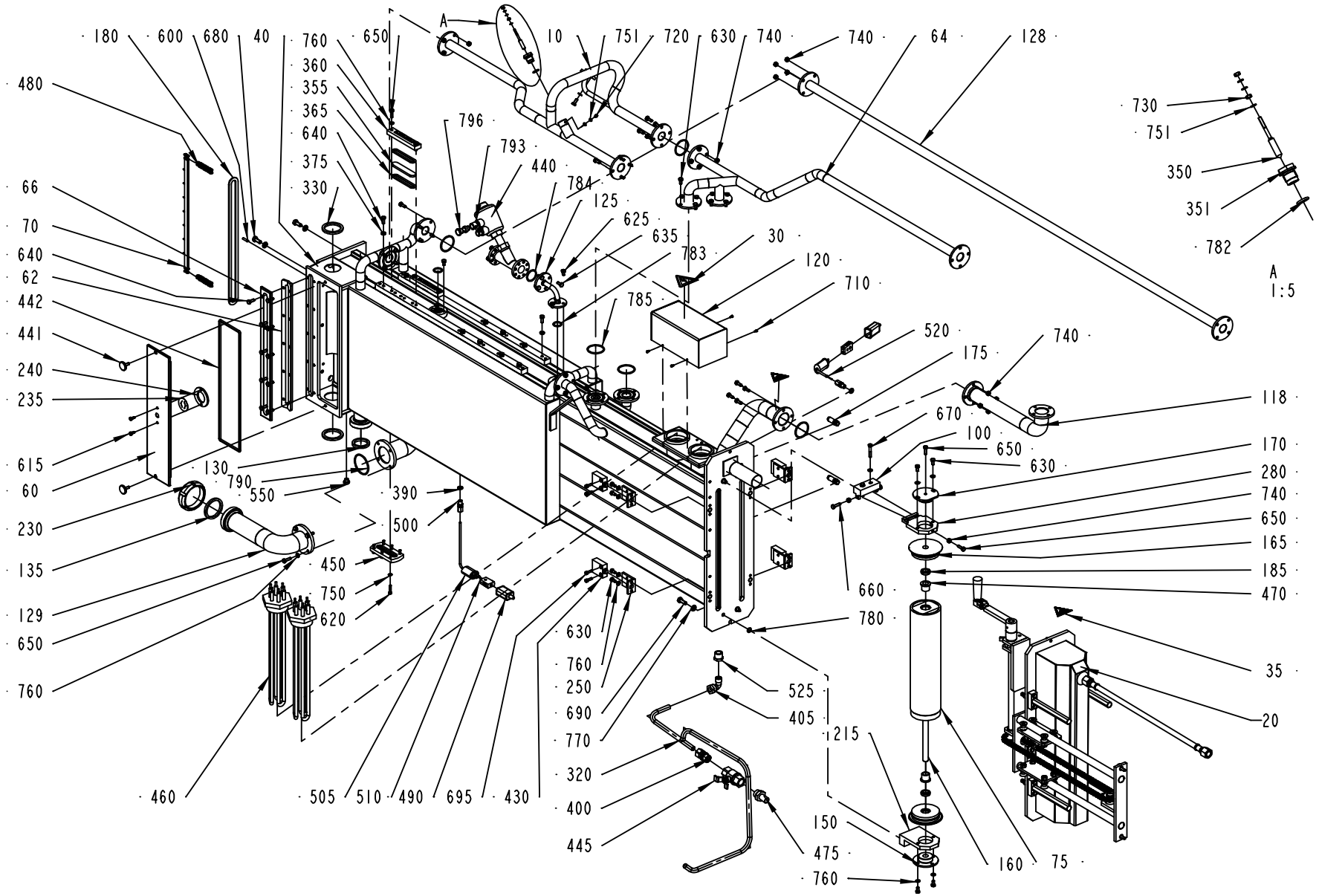
180
600
680
40
760
650
360
355
365
640
375
330
A
10
751
720
630
740
740
64
128
480
796
793
440
784
125
625
635
783
30
120
710
785
66
70
640
62
442
441
240
235
615
60
230
135
129
650
760
730
751
350
351
782
A
1:5
520
175
740
118
670
100
650
630
170
280
740
650
165
185
470
660
780
35
20
130
790
550
390
500
450
750
620
630
760
250
690
770
320
400
445
525
405
215
150
475
760
160
75
460
505
510
490
695
430

ECM: 102597 - 20020115
Group number: 269941-0600
Assembly Drawing: 269941-6_1_AP

Issue: 20020219

Pos	Part No	SP	UN	Qty	Description	Page No
0375S OR 0750B						
010	561422-0000	A		1	OVERFLOW TUBE	
0500B OR 0355B						
010	561421-0000	A		1	OVERFLOW TUBE	
0500S						
010	1282391-0000	A		1	OVERFLOW TUBE	
1000SQ OR 1000S						
010	927085-0000	A		1	OVERFLOW TUBE	
0750S OR 1000B						
010	561420-0000	A		1	OVERFLOW TUBE	
Common Parts						
020	A269932-0600	-		1	BOTTOM COVER	**75**
030	90194-0016	-		1	SIGN, FLASH, ELECTRIC EQUIPMENT SYMBOL	
035	359705-0003	-		2	WARNING SIGN ISO, DANGEROUS CHEMICALS	
040	560614-0000	A		1	BATH	
060	273934-0000	A		1	LID	
062	273961-0000	A		1	SEAL	
064	450509-0000	-		1	PIPE	
066	476087-0000	A		1	LID	
070	247236-0000	A		1	CARRIER	
075	541177-0000	A		1	BENDING ROLLER	
100	279471-0000	-		1	CANTILEVER	
118	560615-0000	-		1	PIPE	
120	450512-0000	-		1	COVER	
125	476400-0000	-		1	PIPE	
128	542075-0000	-		1	PIPE	
129	551340-0000	-		1	FILLER TUBE	
130	12242-0003	A		1	GASKET	
135	12242-0005	A		1	GASKET	
150	247160-0000	A		1	AXLE SUPPORT	
160	531167-0000	A		1	SHAFT	
165	531168-0000	A		2	WHEEL	
170	247241-0000	A		1	AXLE SUPPORT	
175	247248-0000	-		2	PIN	
180	247252-0000	A		1	GASKET	
185	531169-0000	A		2	WASHER	
215	267056-0000	A		1	BEARING CONSOLE	
230	90217-0047	A		1	BLANKING OFF NUT, RD 70-6 (SMS 51)	
235	273937-0000	A		1	DIAPHRAGM	
240	273938-0000	A		1	WASHER	
250	279472-0000	-		4	FASTENING BRACKET	
280	279478-0000	-		1	BEARING PLATE	
320	560472-0000	-		1	PIPE	
330	293405-0000	A		2	GASKET	
350	567070-0012	A		1	ELECTRODE	
351	560931-0000	A		1	BRACKET	
355	543470-0000	A		2	LEVEL GLASS	
360	476398-0000	A		2	LID	
365	569016-0000	A		4	GASKET	
375	479025-0000	-		10	WASHER	
390	273429-0000	-		2	WASHER	
400	90030-0109	-		1	CONN. STR., 12-R1/2, EXT. THREAD	
405	90030-0115	-		1	CONN. ELBOW WA 12-R3/8	
430	90044-0084	A		4	LIMIT SW. 14 CE1-4	
440	B2510374-0000	A		1	SEAT VALVE	
010	*90458-2604*	-		*1*	*ANGLE SEAT VALVE W. FLANGES, N.O. D=13*	
020	*6-990416 20*	-		*1*	*SP.P KIT ACTUATOR BUERKERT PA D (50) SS*	
441	491126-0000	A		2	SCREW	
442	90143-0020	-	MM	900	STRIP	
443	90144-0073	-	MM	1	TREBOFLON-TAPE W=13MM	
444	90153-0016	-	ML	1	ADHESIVE TUBE 100G RHODORSIL CAF 3	
445	90187-0081	-		1	BALL VALVE G1/2	
450	90199-0010	A		1	LEVEL GLASS	
460	B90206-0070	A		2	HEATING ELEMENT 6000W 380/220V	
	90206-0326	-		*1*	*JUNCTION BOX FOR 90206-56*	
	90269-0308	-		*1*	*GASKET 59X68X3 MM*	
470	90240-0146	A		2	FLANGE BUSHING,15X21X20 MM	
475	90224-0078	-		1	PIPE SOCKET, ART.NO RAN 1612	
480	560617-0000	A		2	ROLLER CHAIN	
490	90326-0012	-		2	PROTECTIVE COVER	
500	90326-0306	-		2	GLAND FITTING 9041-45-KS-KR.1/8"D=4,5MM	
505	90326-0019	A		1	THERMOELEMENT	
510	90326-0020	-		2	PLUG, FEMALE YELLOW CR-AL	
520	90326-0043	A		1	THERMOCOUPLE CR-ALPREM.G	
525	90330-0048	-		1	BUSHING, INT/EXT. THR. R1/2-RP3/8	
550	90330-0066	-		1	PLUG, EXT. G-THREAD, G1/8	
600	311103-0310	-		2	PARALLELL PIN, M6, 5X20 MM	
615	312105-0325	-		2	SCREW M6S M5X10 A280	
620	312105-0332	-		6	SCREW M6S M5X22 A280	

Machine Type | Group Description | Used-In | Group Number | Page No

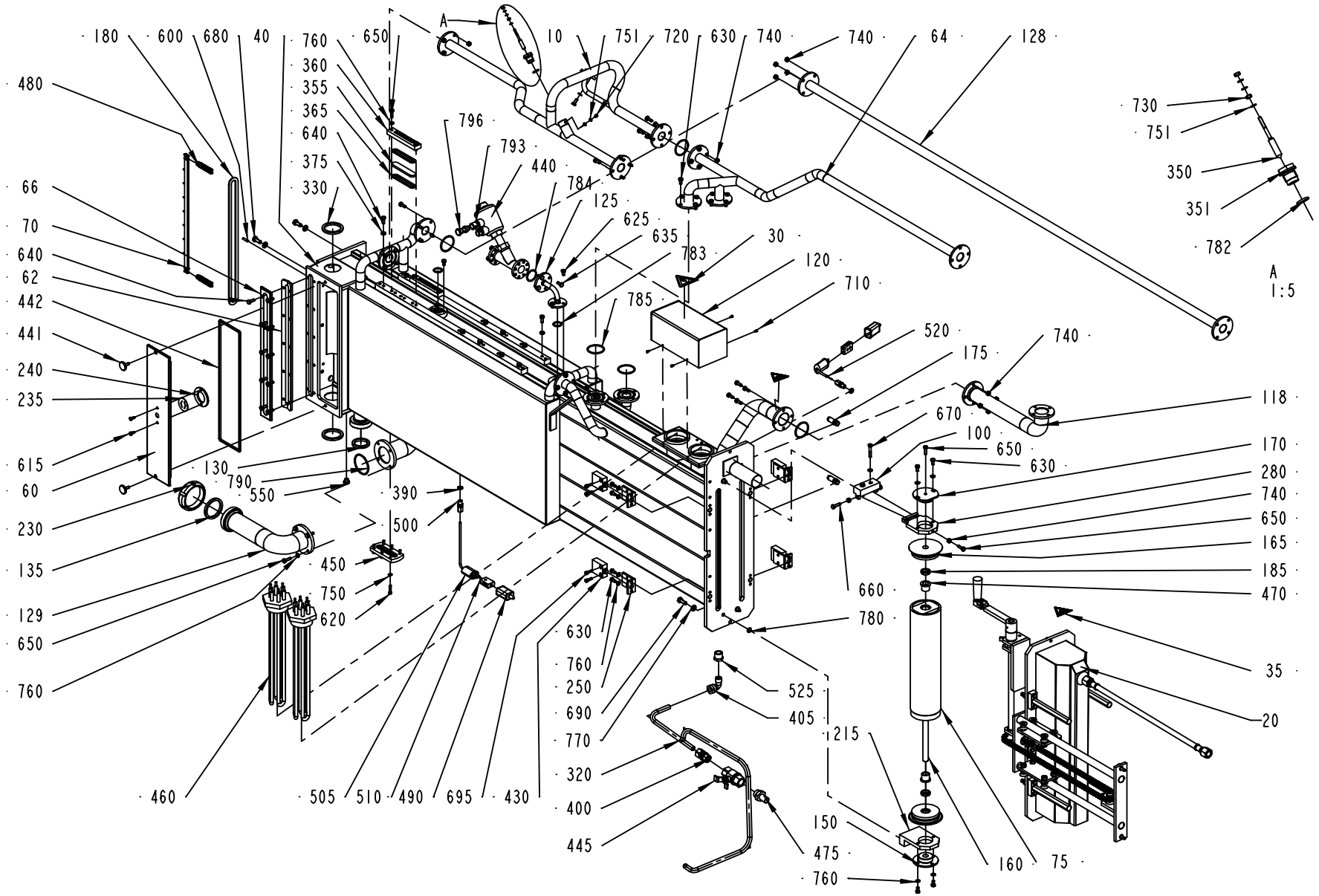
180
600
680
40
760
650
A
10
751
720
630
740
740
64
128
480
360
355
365
640
375
330
796
793
440
784
125
625
635
783
30
120
710
785
66
70
640
62
442
441
240
235
615
60
230
135
129
650
760
730
751
350
351
782
A
1:5
520
175
740
118
670
100
650
630
170
280
740
650
165
185
470
660
780
35
20
215
525
405
130
790
550
390
500
450
750
620
630
760
250
690
770
320
400
445
460
505
510
490
695
430
150
475
760
160
75

Pos	Part No	SP	UN	Qty	Description	Page No
Common Parts (Cont'd)						
625	312105-0364	-		6	SCREW M6S M6X10 A280	
630	312105-0366	-		20	SCREW M6S M6X12 A280	
635	312105-0367	-		10	SCREW M6S M6X14 A280	
640	312105-0368	-		40	SCREW M6S M6X16 A280	
650	312105-0370	-		10	SCREW M6S M6X20 A280	
660	312105-0371	-		2	SCREW M6S M6X22 A280	
670	312105-0376	-		2	SCREW M6S M6S M6X35 A280	
680	312105-0451	-		6	SCREW M6S 8X20 A280	
690	312105-0452	-		4	SCREW M6S M8X22 A280	
695	312115-0329	-		8	SCREW MC6S M5X16 A280	
710	312125-0220	-		4	SCREW SLOT.PAN HD. MCS 3X6 A480	
720	312125-0285	-		1	SCREW SLOT.PAN HD. MCS 4X6 A480	
730	312605-0312	-		2	HEXAGON NUT, M6M M4 A280	
740	312605-0316	-		23	HEXAGON NUT, M6M M6 A280	
750	315105-0146	-		6	WASHER PLAIN, BRB, 5,3/10,H=1	
751	315105-0136	-		5	WASHER PLAIN, BRB, 4,3/8,H=0,8	
760	315105-0153	-		22	WASHER PLAIN, BRB, 6,4/12,H=1,5	
770	315105-0165	-		10	WASHER PLAIN, BRB, 8,4/16,H=1,5	
780	927421-0001	A		5	O-RING 9.3X2.4 SILICON	
782	927421-0003	A		1	O-RING 13.3X2.4 SILICON	
783	927422-0001	A		1	O-RING 19.2X3 SILICON	
784	927422-0004	A		1	O-RING 29.2X3 SILICON	
785	927422-0006	A		7	O-RING 42.2X3 SILICON	
790	927422-0009	A		1	O-RING 54.5X3 SILICON	
793	342797-0122	-		1	CONN. BANJO, RINGPIECE 6-1/4	
796	342980-0304	-		1	BANJO-HOLLOW BOLT COUPL,EXT.THR.01-G1/4"	

Pos	Part No	SP	UN	Qty	Description	Page No

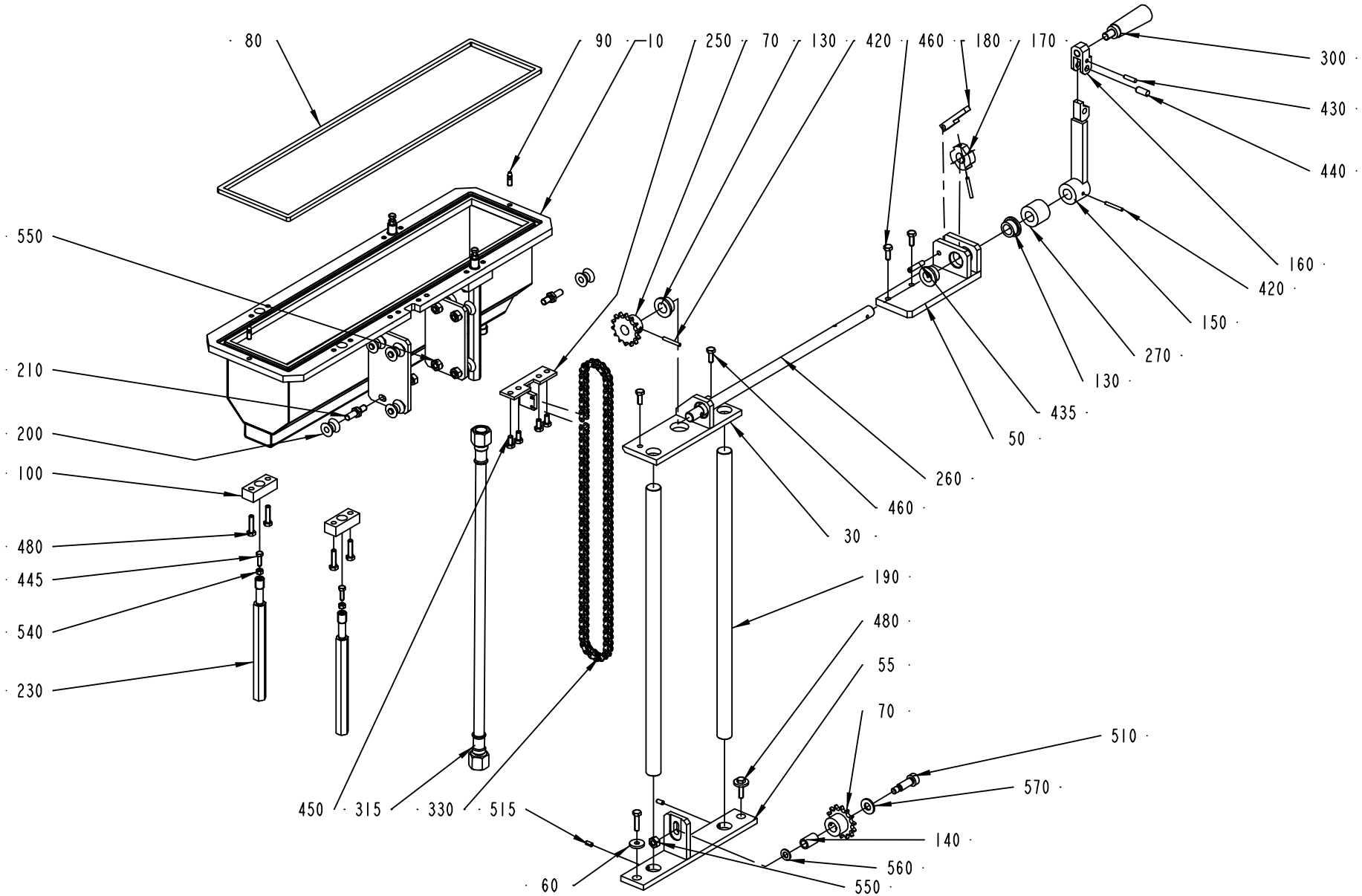
80
90
10
250
70
130
420
460
180
170
300
430
440
550
160
420
150
270
130
435
50
210
200
100
260
460
30
480
445
540
230
190
480
55
70
510
570
140
560
550
60
450
315
330
515

ECM: 94714 - 20010619
Group number: 269932-0600
Assembly Drawing: 269932-5_1_AA

Issue: 20020219

Pos	Part No	SP	UN	Qty	Description	Page No
Common Parts						
010	1349007-0000	-		1	COVER	
030	263572-0000	-		1	CANTILEVER	
050	263574-0000	-		1	BEARING CONSOLE	
055	450846-0000	-		1	CANTILEVER	
060	38087-0000	-		2	WASHER	
070	247357-0000	D		2	SPROCKET	
080	263575-0000	C		1	GASKET	
090	263576-0000	-		2	GUIDE STUD	
100	263579-0000	D		4	WASHER	
130	263585-0000	D		3	BUSHING	
140	263586-0000	D		1	BUSHING	
150	263587-0000	-		1	CRANK	
160	263588-0000	-		1	JOINT	
170	263589-0000	-		1	RATCHET	
180	263590-0000	-		1	BARRIER	
190	560616-0000	-		2	PILLAR	
200	263592-0000	C		8	WHEEL	
210	263593-0000	C		8	SHAFT	
230	269930-0000	D		4	SCREW	
250	297163-0000	-		1	CARRIER	
260	547567-0000	D		1	SHAFT	
270	547568-0000	-		1	SPACER	
300	90051-0065	-		1	HANDLE, THREADED TAP. NO. 8305-2151	
315	B484189-0000	D		1	HIGH PRESSURE HOSE	
	90148-0032	*-*		*1*	*HOSE*	
330	90288-0062	D		1	ROLLER CHAIN, SINGLE 3/8 -100	
420	311103-0276	-		3	PARALLELL PIN, M6, 4X30 MM	
430	311103-0310	-		1	PARALLELL PIN, M6, 5X20 MM	
435	311103-0357	-		1	PARALLELL PIN, M6, 6X30 MM	
440	311103-0401	-		1	PARALLELL PIN, M6, 8X20 MM	
445	312105-0329	-		4	SCREW M6S M5X16 A280	
450	312105-0366	-		4	SCREW M6S M6X12 A280	
460	312105-0368	-		4	SCREW M6S M6X16 A280	
480	312105-0372	-		10	SCREW M6S M6X25 A280	
510	312180-0493	-		1	SCREW, HEX.SOCK.HEAD SHOULD. M8X25	
515	312318-0325	-		2	SCREW HEX.SOCK.SET CUP P.MSK6SS5X10 SS	
540	312605-0314	-		4	HEXAGON NUT, M6M M5 A280	
550	312605-0318	-		9	HEXAGON NUT, M6M M8 A280	
560	315105-0165	-		1	WASHER PLAIN, BRB, 8,4/16,H=1,5	
570	315105-0173	-		1	WASHER PLAIN, BRB, 10,5/22,H=2	

Pos	Part No	SP	UN	Qty	Description	Page No

Machine Type | Group Description | Used-In | Group Number | Page No

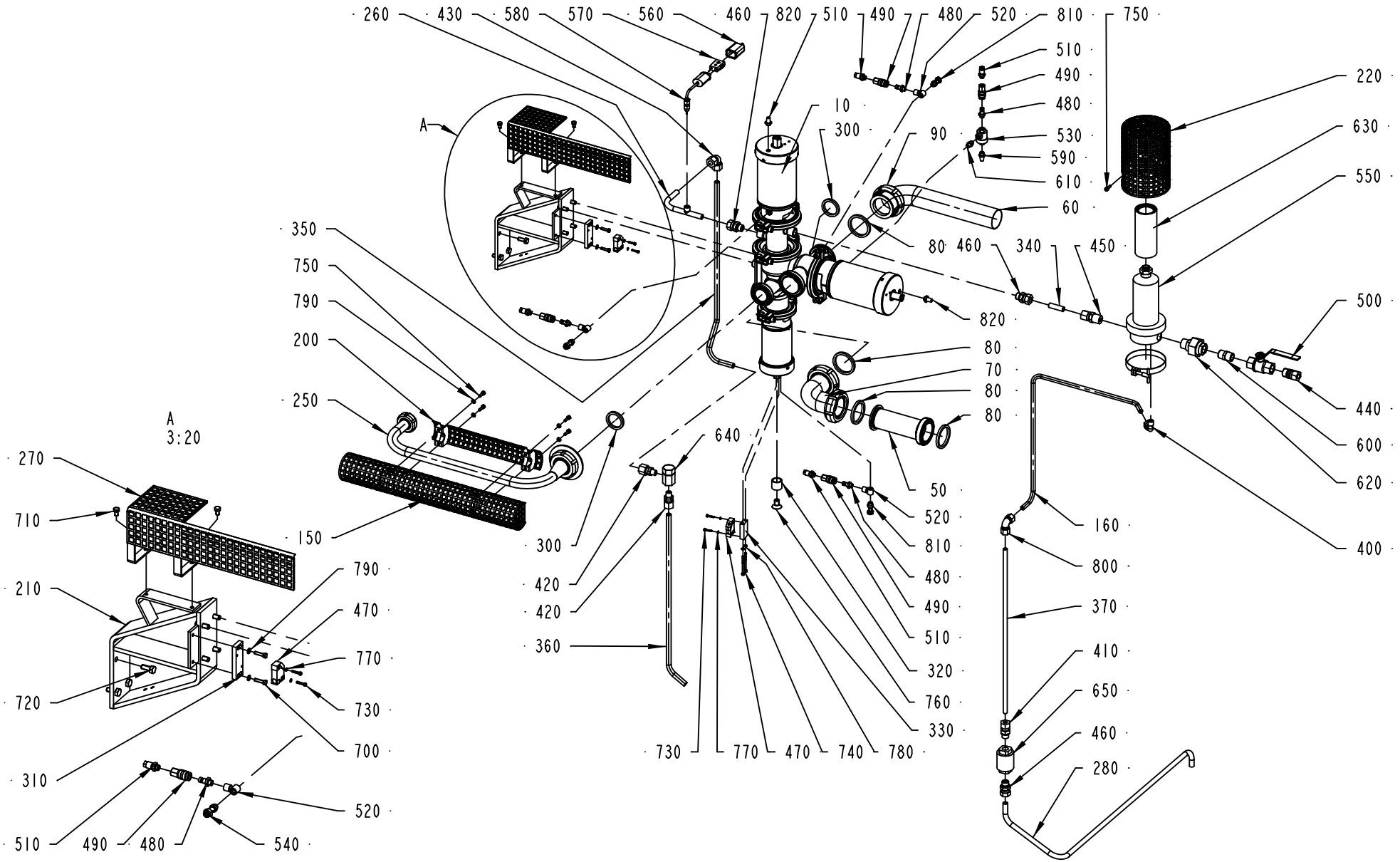
260
430
580
570
560
460
820
510
490
480
520
810
750
510
490
480
530
590
610
60
220
630
550
500
440
600
620
400
10
300
90
A
350
750
790
200
250
150
80
460
340
450
820
80
70
80
80
50
520
810
480
490
510
320
760
330
640
300
420
420
360
730
770
470
740
780
160
800
370
410
650
460
280
A
3:20
270
710
210
720
310
510
490
480
540
790
470
770
730
700
520

ECM: 82954 - 20000915
Group number: 1362608-0100
Assembly Drawing: 1362608-1_1_AC

Issue: 20020219

Pos	Part No	SP	UN	Qty	Description	Page No
2"						
050	255368-0000	D		1	PRESSURE GAUGE TUBE	
060	440977-0000	D		1	ATTACHMENT PIPE	
070	440978-0000	D		1	PIPE BEND	
080	12242-0005	C		4	GASKET	
090	342803-0104	-		1	UNION NUT, RD 70-6 (SMS 51)	
3"						
050	436779-0000	D		1	PRESSURE GAUGE TUBE	
060	436778-0000	D		1	PIPE	
070	445515-0000	D		1	PIPE BEND	
080	436781-0000	C		4	GASKET	
090	342803-0106	-		1	UNION NUT, RD 98-6 (SMS 76)	
Common Parts						
010	A440630-0200	D		1	AP-VALVE	**79**
150	273547-0001	D		1	TOUCH GUARD	
160	927198-0000	-		1	PIPE	
200	273548-0001	D		1	TOUCH GUARD	
210	554582-0000	-		1	CANTILEVER	
220	752176-0000	-		1	PROTECTIVE CASING	
250	484047-0000	D		1	PIPE	
260	560927-0000	-		1	PIPE	
270	560929-0000	D		1	TOUCH GUARD	
280	1347213-0000	-		1	PIPE	
300	12242-0003	C		2	GASKET	
310	297195-0000	D		1	SPACER	
320	440647-0000	D		1	SLEEVE	
330	440731-0000	D		1	PLATE	
340	752711-0000	D		1	PIPE	
350	927200-0000	-		1	PIPE	
360	927226-0000	-		1	PIPE	
370	927311-0000	-		1	PIPE	
400	90030-0070	-		1	CONN. ELBOW WA 10-R1/4	
410	90030-0119	-		1	PIPE CONNECTION	
420	90030-0088	-		2	CONN. STR., 12-R1/4, EXT. THREAD	
430	90030-0096	-		1	CONN. ELBOW W-12	
440	90030-0109	-		1	CONN. STR., 12-R1/2, EXT. THREAD	
450	90030-0180	-		1	CONN. STR. GE 12-1/2-14 NPTF	
460	90030-0187	D		3	CONN. STR. GA-12-G3/8	
470	90044-0104	C		2	PROX.SWITCH IFM IN 3002	
480	90163-0057	-		4	NIPPLE 1/8" BRASS	
490	90163-0062	-		4	QUICK COUPLING, (F) 5053-1/8	
500	90187-0082	D		1	BALL VALVE G1/2	
510	90224-0307	D		4	STRAIGHT FITTING, 6MM, 1/8",	
520	90224-0308	-		3	CONN. BANJO, ART. NO. 2023-1/8-1/8	
530	90235-0259	-		1	VALVE	
540	90235-0274	C		1	THROTTLE CHECK VALVES,G1/8"	
550	B90277-0055	D		1	FILTER HOUSING / MDS 4463 G 08 H	
	90277-0339	-		*1*	*O-RING, ACS0272 EU FOR PALL FILTER*	
560	90326-0012	C		1	PROTECTIVE COVER	
570	90326-0020	C		1	PLUG, FEMALE YELLOW CR-AL	
580	90326-0089	C		1	THERMOCOUPLE	
590	90328-0003	-		1	SILENCER	
600	90330-0021	-		1	NIPPLES, EXT. THREAD. R-207R1/2	
610	90330-0032	-		1	NIPPLES, EXT. THREAD. ISO 7/1 R1/8-R1/8	
620	90330-0106	-		1	PIPE COUPLING	
630	90337-0315	C		1	FILTERINSERT / MCS 4463	
640	90360-0009	C		1	STEAM TRAP / 1/4 BSP TD 18	
650	B90360-0020	C		1	STEAM TRAP / MK36/51 3/8"	
	90360-0310	-		*1*	*CAPSULE*	
	90360-0309	-		*1*	*STRAINER*	
700	312105-0331	-		2	SCREW M6S M5X20 A280	
710	312105-0364	-		2	SCREW M6S M6X10 A280	
720	312105-0451	-		8	SCREW M6S 8X20 A280	
730	312115-0228	-		4	SCREW MC6S M3X16 A280	
740	312115-0305	-		2	SCREW MC6S M4X50 A280	
750	312115-0329	-		4	SCREW MC6S M5X16 A280	
760	312155-0532	-		1	SCREW HEX.SOCK.COUNT.MF6S 12X20 SS	
770	315105-0124	-		4	WASHER PLAIN, BRB, 3,2/6,H=0,5	
780	315105-0136	-		2	WASHER PLAIN, BRB, 4,3/8,H=0,8	
790	315105-0146	-		6	WASHER PLAIN, BRB, 5,3/10,H=1	
800	342737-0212	-		1	CONN. ELBOW W-10 LRFR	
810	342980-0303	-		2	BANJO-HOLLOW BOLT COUPL,EXT.THR.01-G1/8"	
820	346800-0109	D		2	SILENCER FILTER R1/8"	

Machine Type | Group Description | Used-In | Group Number | Page No

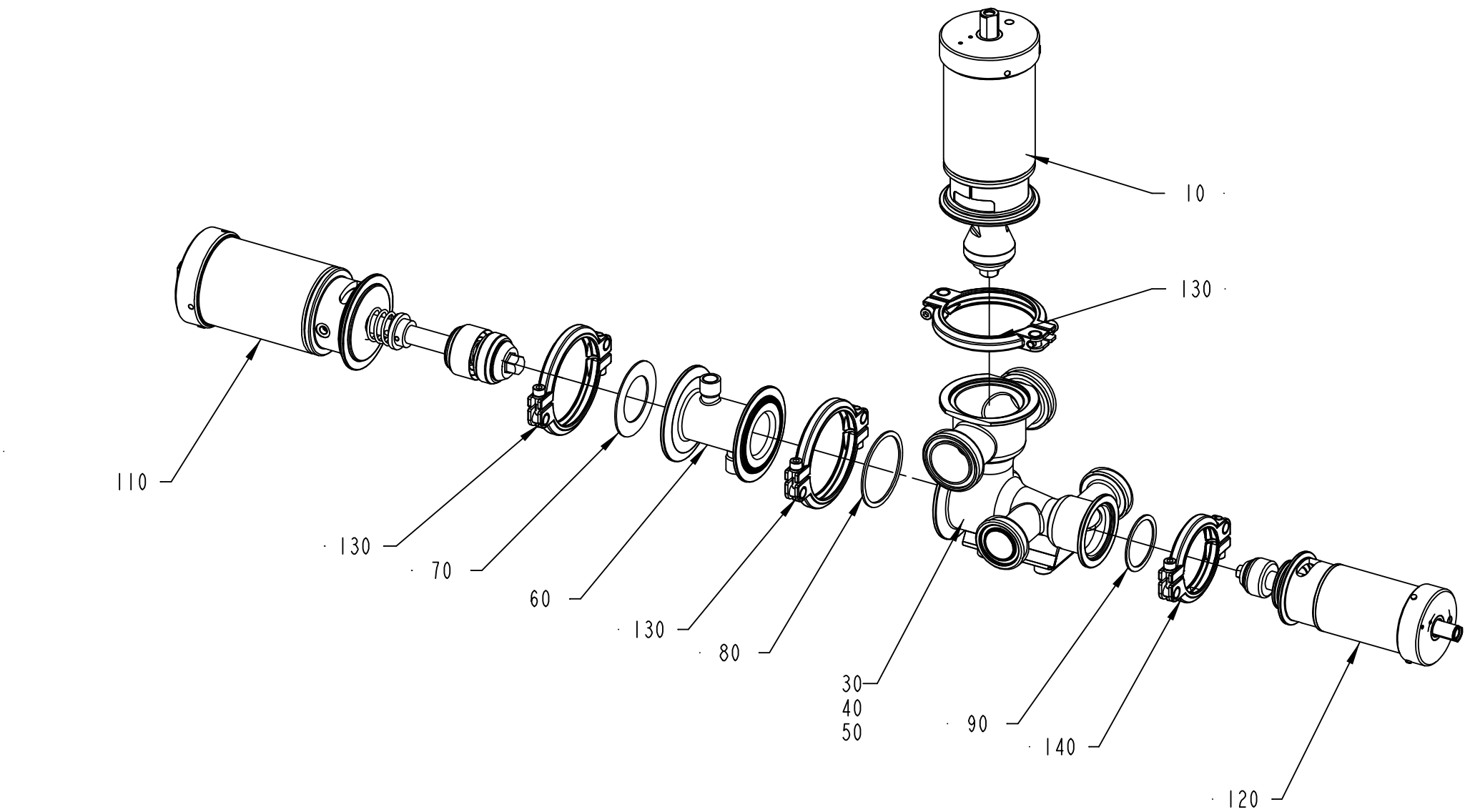
10
130
110
130
70
60
130
80
30
40
50
90
140
120

Pos	Part No	SP	UN	Qty	Description	Page No
TBA/8 2"						
030	440631-0000	B		1	VALVE BODY 51	
TBA/8 3"						
050	449678-0000	B		1	VALVE BODY 76	
Common Parts						
010	A539209-0100	B		1	A-CYLINDER	**81**
060	440634-0000	B		1	HOUSE	
070	539212-0000	A		1	GASKET	
080	90207-0363	A		1	GASKET	
090	90207-0365	A		1	GASKET	
110	A539210-0100	B		1	C-CYLINDER	**83**
120	A539211-0100	B		1	B-CYLINDER	**85**
130	A541163-0100	B		3	CLAMP RING	**87**
140	A541164-0100	B		1	CLAMP RING	**89**

Pos	Part No	SP	UN	Qty	Description	Page No

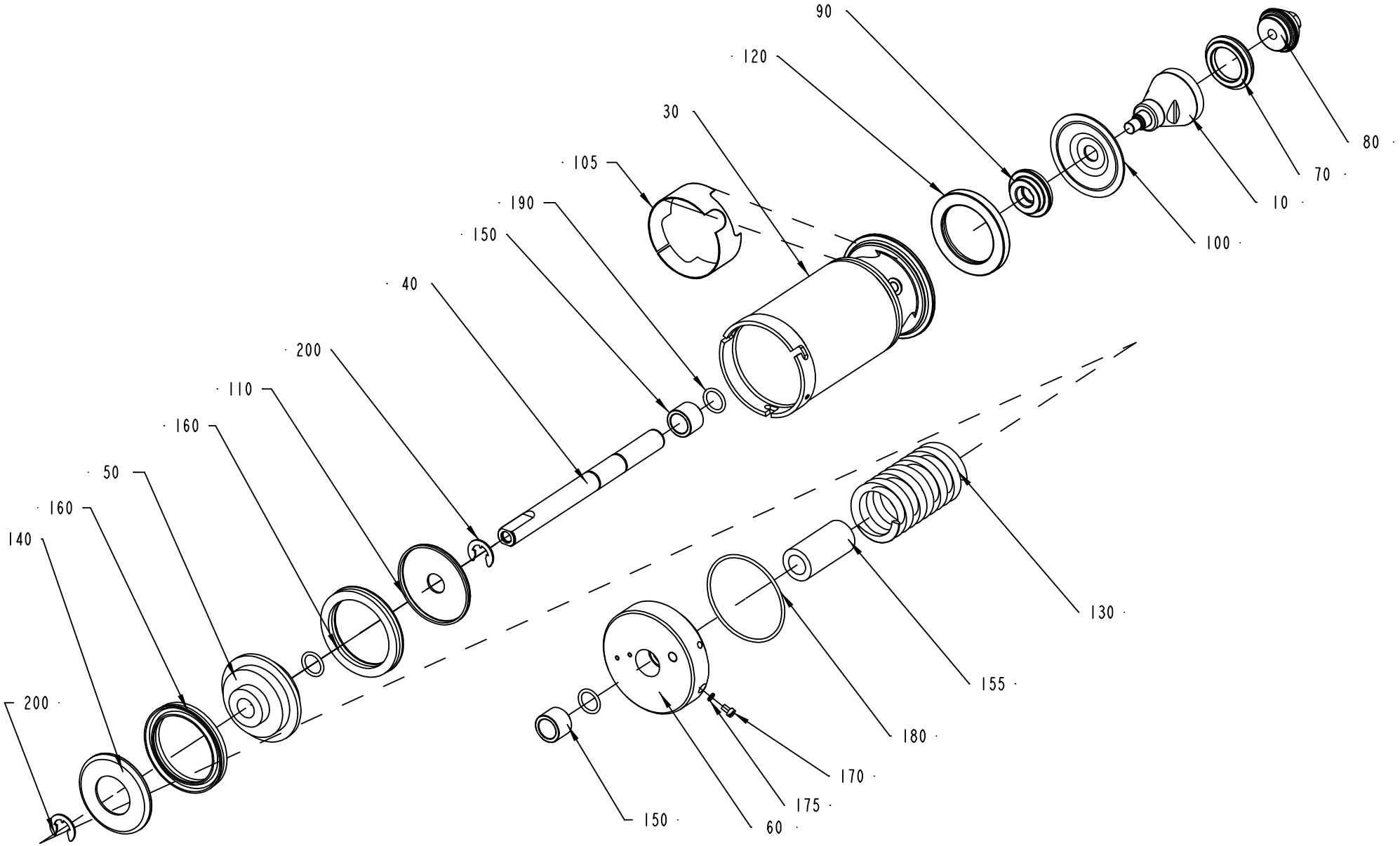
90
120
30
105
190
150
40
200
110
160
50
160
140
200
80
70
10
100
130
155
180
170
175
150
60

ECM: 102727 - 20020207
Group number: 539209-0100
Assembly Drawing: 539209-1_1_AB

Issue: 20020219

Pos	Part No	SP	UN	Qty	Description	Page No
2"						
010	530592-0000	B		1	SEAL RING HOLDER	
3"						
010	530595-0000	B		1	SEAL RING HOLDER	
Common Parts						
030	440632-0000	B		1	CYLINDER HOUSING	
040	440637-0000	B		1	PISTON ROD	
050	440638-0000	B		1	PISTON	
060	484998-0000	B		1	END SECTION	
070	530589-0000	A		1	SEAL RING	
080	530590-0000	A		1	VALVE CONE	
090	541166-0000	B		1	WASHER	
100	533169-0000	A		1	DIAPHRAGM	
105	476203-0000	-		1	PROTECTION	
110	440651-0000	B		1	WASHER	
120	440655-0000	B		1	RING	
130	440663-0000	A		1	COMPRESSION SPRING	
140	484975-0000	B		1	WASHER	
150	497933-0000	A		2	BUSHING	
155	541167-0000	B		1	SPACER SLEEVE	
160	90020-0028	A		2	SLEEVE	
170	312125-0323	-		1	SCREW PAN HEAD MCS M5X8 SS	
175	315233-0101	-		1	WASHER PL.RND.NYL.5,2/8,H=1	
180	315202-0308	A		1	O-RING 84,5X3 MM	
190	315204-0215	A		3	O-RING 19,2X3 MM	
200	315754-0113	-		2	LOCKING WAE 15	

Pos	Part No	SP	UN	Qty	Description	Page No

Machine Type | Group Description | Used-In | Group Number | Page No

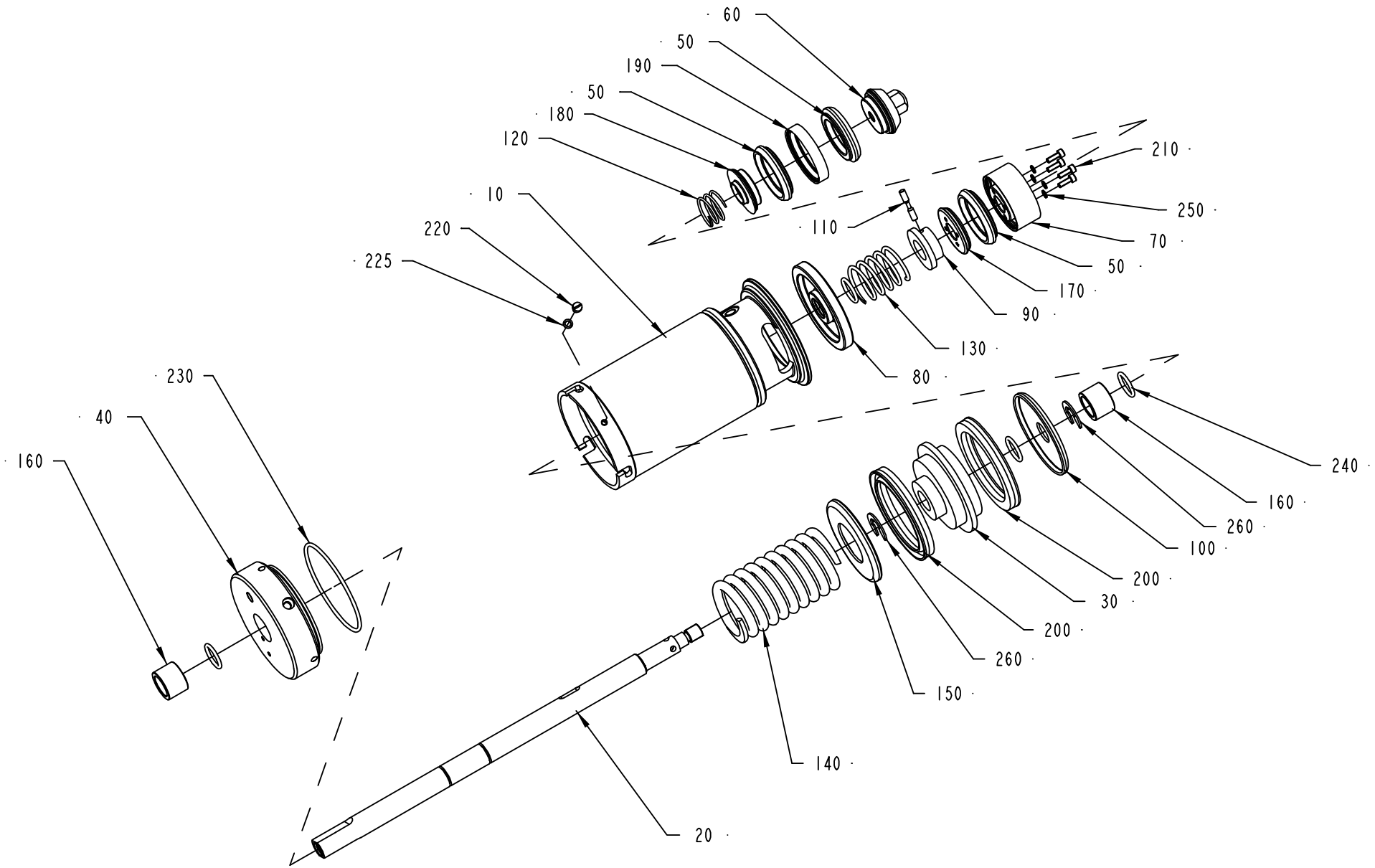
60
50
190
50
180
120
10
220
225
110
210
250
70
50
170
90
130
80
230
40
160
240
160
260
100
200
30
200
260
150
140
20

Pos	Part No	SP	UN	Qty	Description	Page No
Common Parts						
010	440632-0000	B		1	CYLINDER HOUSING	
020	440635-0000	B		1	PISTON ROD	
030	440638-0000	B		1	PISTON	
040	484998-0000	B		1	END SECTION	
050	530589-0000	A		3	SEAL RING	
060	530590-0000	A		1	VALVE CONE	
070	530591-0000	B		1	HOLDER	
080	440648-0000	B		1	SEALING WASHER	
090	440650-0000	B		1	WASHER	
100	440651-0000	B		1	WASHER	
110	440659-0000	-		1	CYLINDRICAL PIN	
120	440660-0000	A		1	COMPRESSION SPRING	
130	440661-0000	A		1	COMPRESSION SPRING	
140	440663-0000	A		1	COMPRESSION SPRING	
150	484975-0000	B		1	WASHER	
160	497933-0000	A		2	BUSHING	
170	530597-0000	B		1	WASHER	
180	530598-0000	B		1	WASHER	
190	530599-0000	A		1	RING	
200	90020-0028	A		2	SLEEVE	
210	312115-0291	-		4	SCREW MC6S M4X12 A280	
220	312125-0323	-		1	SCREW PAN HEAD MCS M5X8 SS	
225	315233-0101	-		1	WASHER PL.RND.NYL.5,2/8,H=1	
230	315202-0308	A		1	O-RING 84,5X3 MM	
240	315204-0215	A		4	O-RING 19,2X3 MM	
250	315402-0136	-		4	LOCK WASHER FBB 4,1	
260	315754-0113	-		2	LOCKING WAE 15	

Pos	Part No	SP	UN	Qty	Description	Page No

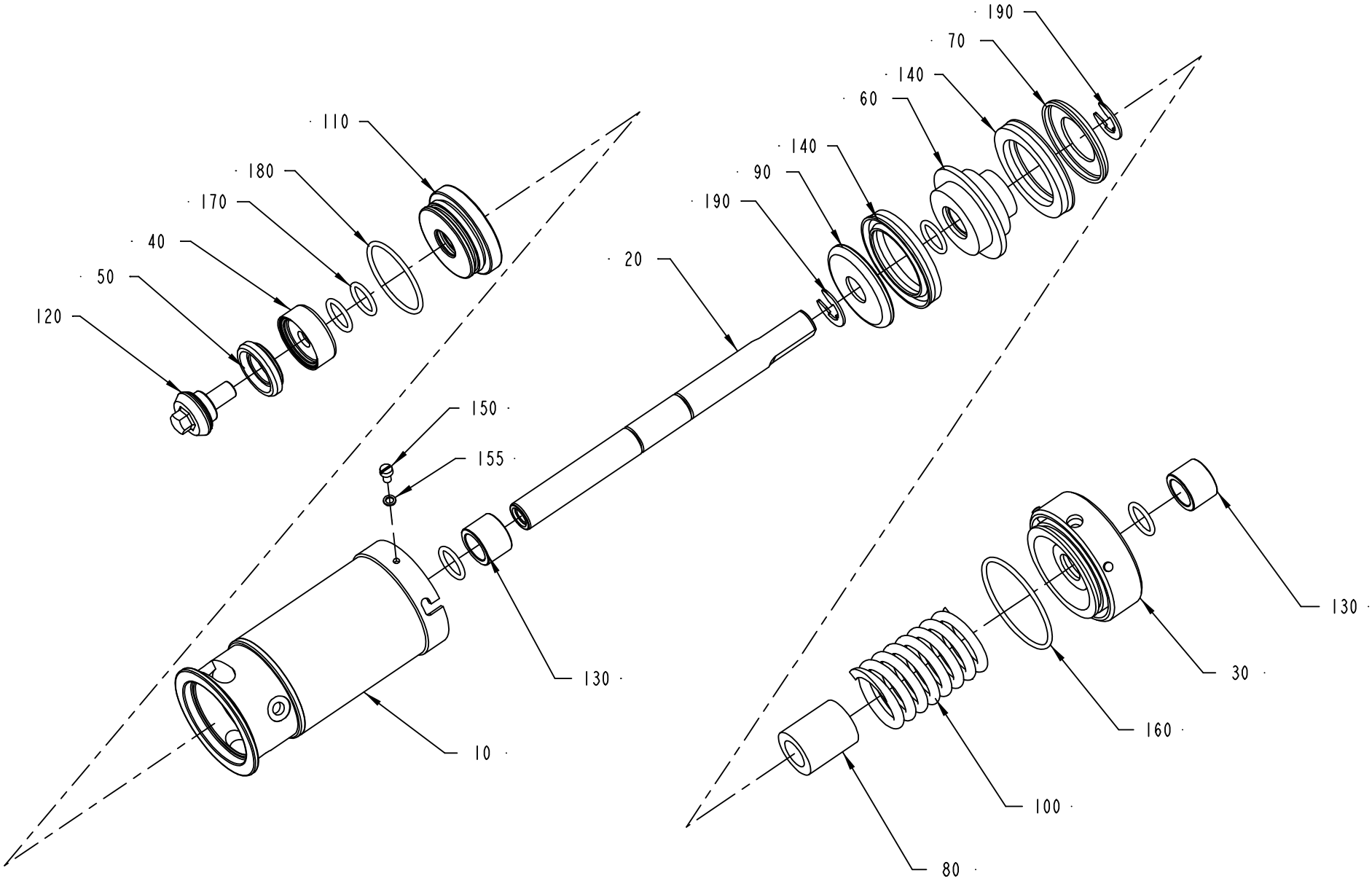
190
70
140
60
140
90
190
110
180
170
40
50
120
20
150
155
130
10
130
30
160
100
80

ECM: 105001 - 20020215
Group number: 539211-0100
Assembly Drawing: 539211-1_1_AB

Issue: 20020219

Pos	Part No	SP	UN	Qty	Description	Page No
Common Parts						
010	440633-0000	B		1	CYLINDER HOUSING	
020	440636-0000	B		1	PISTON ROD	
030	440695-0000	B		1	END SECTION	
040	530587-0000	B		1	WASHER	
050	530588-0000	A		1	SEAL RING	
060	440646-0000	B		1	PISTON	
070	440652-0000	B		1	WASHER	
080	440654-0000	B		1	SPACER SLEEVE	
090	440656-0000	B		1	WASHER	
100	440662-0000	A		1	COMPRESSION SPRING	
110	440664-0000	B		1	SEALING WASHER	
120	476185-0000	A		1	VALVE CONE	
130	497933-0000	A		2	BUSHING	
140	90020-0027	A		2	SLEEVE	
150	312125-0323	-		1	SCREW PAN HEAD MCS M5X8 SS	
155	315233-0101	-		1	WASHER PL.RND.NYL.5,2/8,H=1	
160	315202-0304	A		1	O-RING 64,5X3 MM	
170	315204-0215	A		5	O-RING 19,2X3 MM	
180	315204-0301	A		1	O-RING 49,5X3 MM	
190	315754-0113	-		2	LOCKING WAE 15	

Pos	Part No	SP	UN	Qty	Description	Page No

Machine Type | Group Description | Used-In | Group Number | Page No

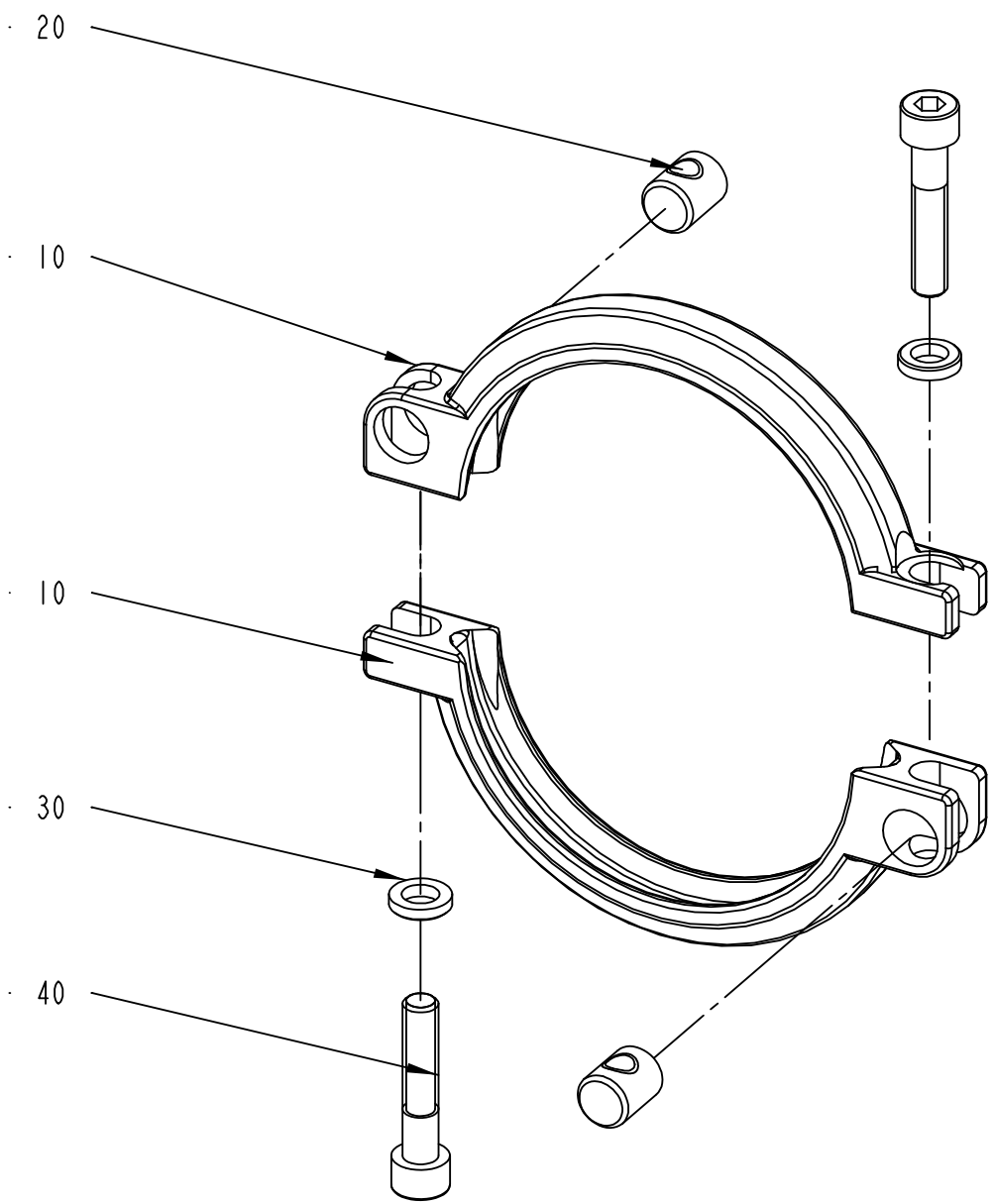
· 20
· 10
· 10
· 30
· 40

ECM: 105002 - 20020215
Group number: 541163-0100
Assembly Drawing: 541163-1_1_AB

Issue: 20020219

Pos	Part No	SP	UN	Qty	Description	Page No
Common Parts						
010	532117-0000	B		2	CLAMP RING	
020	497748-0000	B		2	PIN	
030	541165-0000	B		2	WASHER	
040	312115-0459	-		2	SCREW MC6S M8X40 A280	

Pos	Part No	SP	UN	Qty	Description	Page No

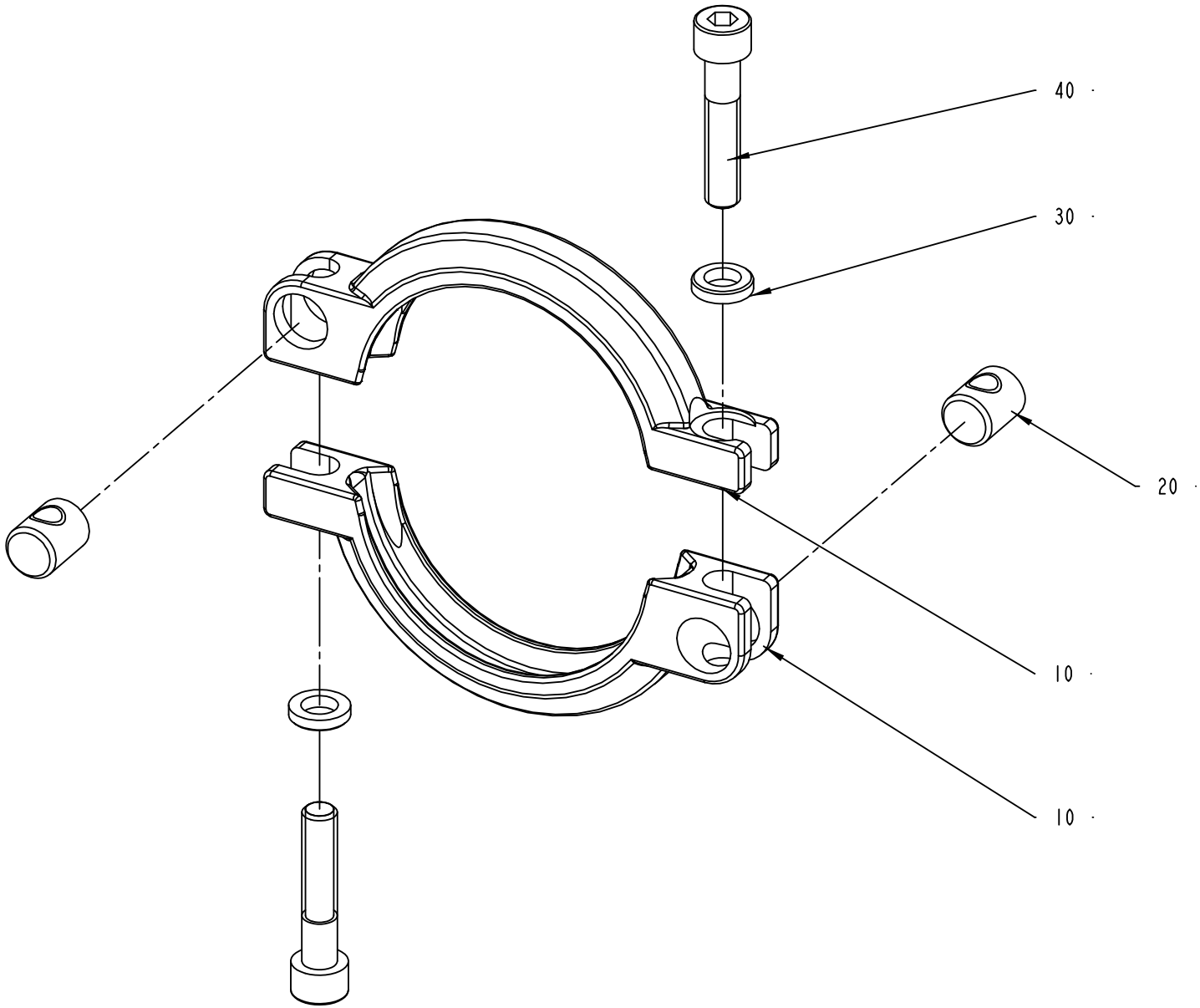
40
30
20
10
10

ECM: 102718 - 20020207
Group number: 541164-0100
Assembly Drawing: 541164-1_1_AB

Issue: 20020219

Pos	Part No	SP	UN	Qty	Description	Page No
Common Parts						
010	532118-0000	B		2	CLAMP RING	
020	497748-0000	B		2	PIN	
030	541165-0000	B		2	WASHER	
040	312115-0459	-		2	SCREW MC6S M8X40 A280	

Pos	Part No	SP	UN	Qty	Description	Page No

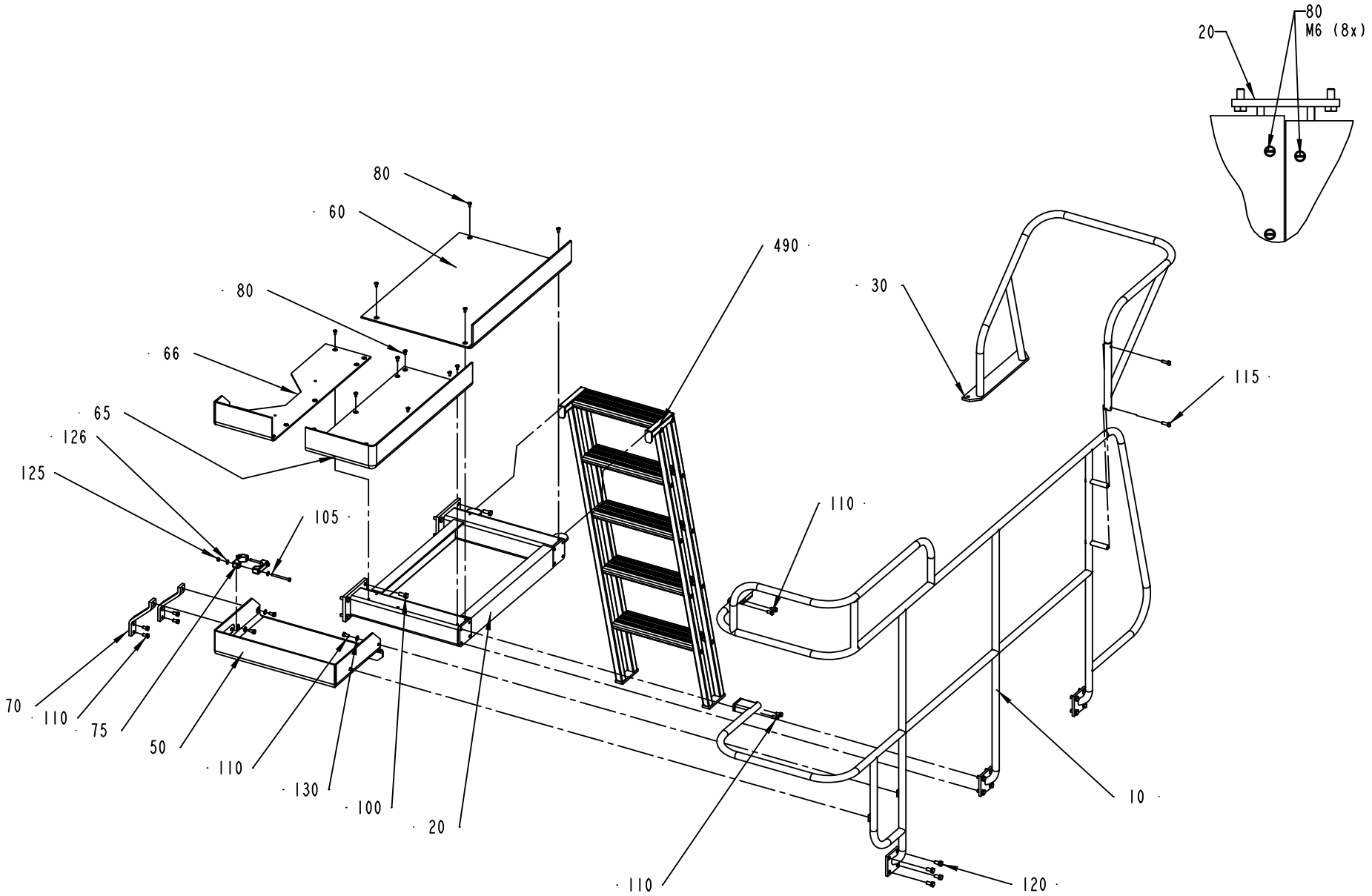
80
M6 (8x)
20
80
60
80
66
65
126
125
105
490
30
115
110
70
110
75
50
110
130
100
20
110
120
10

Pos	Part No	SP	UN	Qty	Description	Page No
TBA/8						
030	282893-0000	-		1	SAFETY GUARD	
Common Parts						
010	434270-0000	-		1	RAILING	
020	542852-0000	-		1	CANTILEVER	
050	476599-0000	-		1	PLATFORM	
060	451389-0000	-		1	PLATFORM	
065	451390-0000	-		1	PLATFORM	
066	451391-0000	-		1	PLATFORM	
070	434273-0000	-		2	STRUT	
075	476600-0000	-		2	PIPE HOLDER	
080	90287-0075	-		20	SCREW SLOT. PAN HEAD LKCS M6X12	
100	312101-0493	-		8	SCREW M6S M10X25 FZB	
105	312105-0384	-		2	SCREW M6S M6X70 A280	
110	312105-0449	-		12	SCREW M6S M8X16 A280	
115	312105-0453	-		2	SCREW M6S M8X25 A280	
120	312105-0491	-		12	SCREW M6S M10X20 A280	
125	312605-0316	-		2	HEXAGON NUT, M6M M6 A280	
126	315105-0156	-		4	WASHER PLAIN, BRB, 6,7/14,H=1,5	
130	315105-0165	-		4	WASHER PLAIN, BRB, 8,4/16,H=1,5	
F490	A269971-0200	-		1	LADDER	**93**

Pos	Part No	SP	UN	Qty	Description	Page No

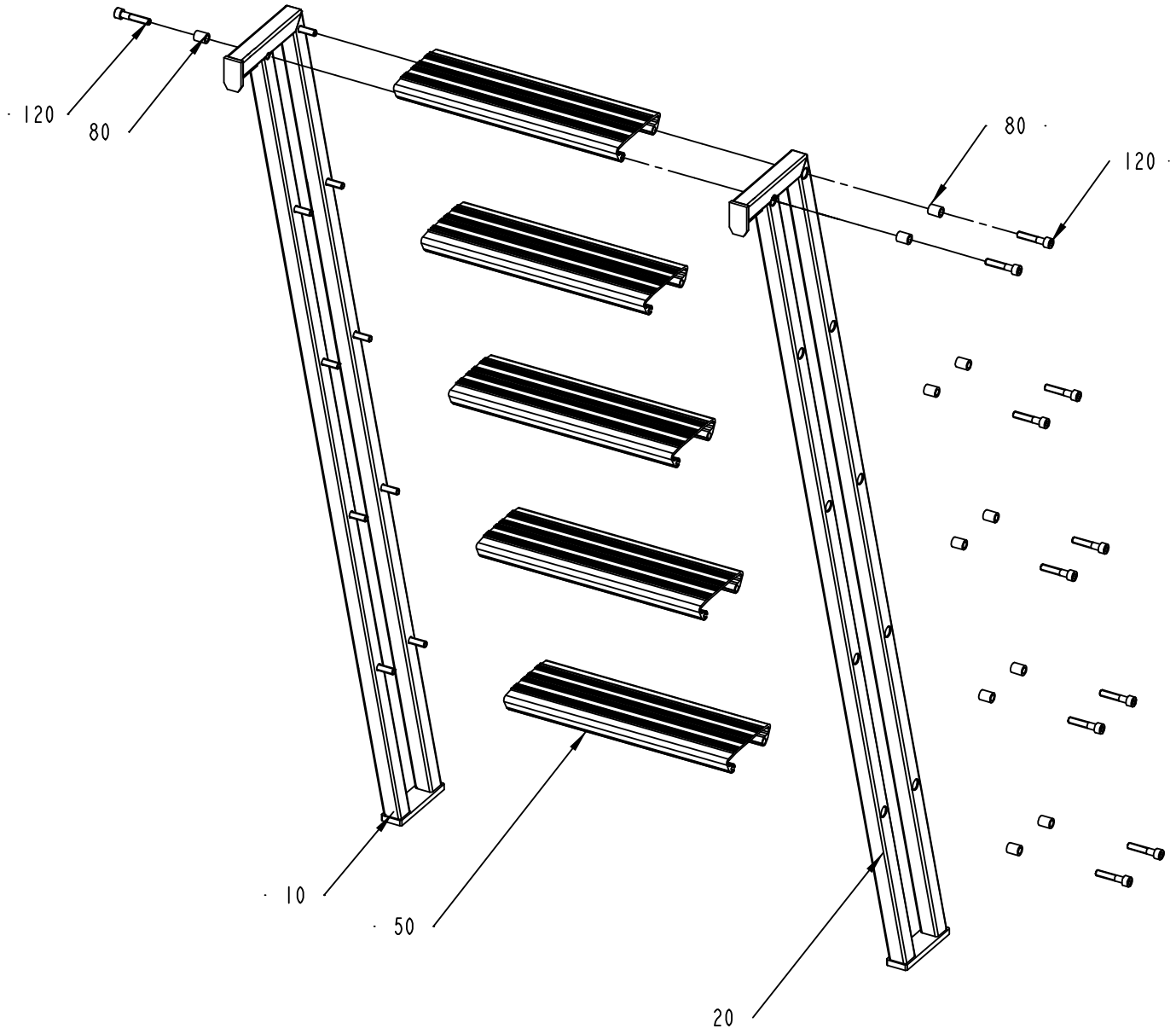
120
80
80
120
10
50
20

ECM: 81081 - 20000804
Group number: 269971-0200
Assembly Drawing: 269971-2_1_AB

Issue: 20020219

Pos	Part No	SP	UN	Qty	Description	Page No
Common Parts						
010	247296-0001	-		1	SIDE PIECE	
020	247296-0002	-		1	SIDE PIECE	
050	208361-0002	-		5	STAIR	
080	208658-0001	-		20	SPACER	
120	90287-0056	-		20	SCREW MC6S-TT M8X40	

Pos	Part No	SP	UN	Qty	Description	Page No

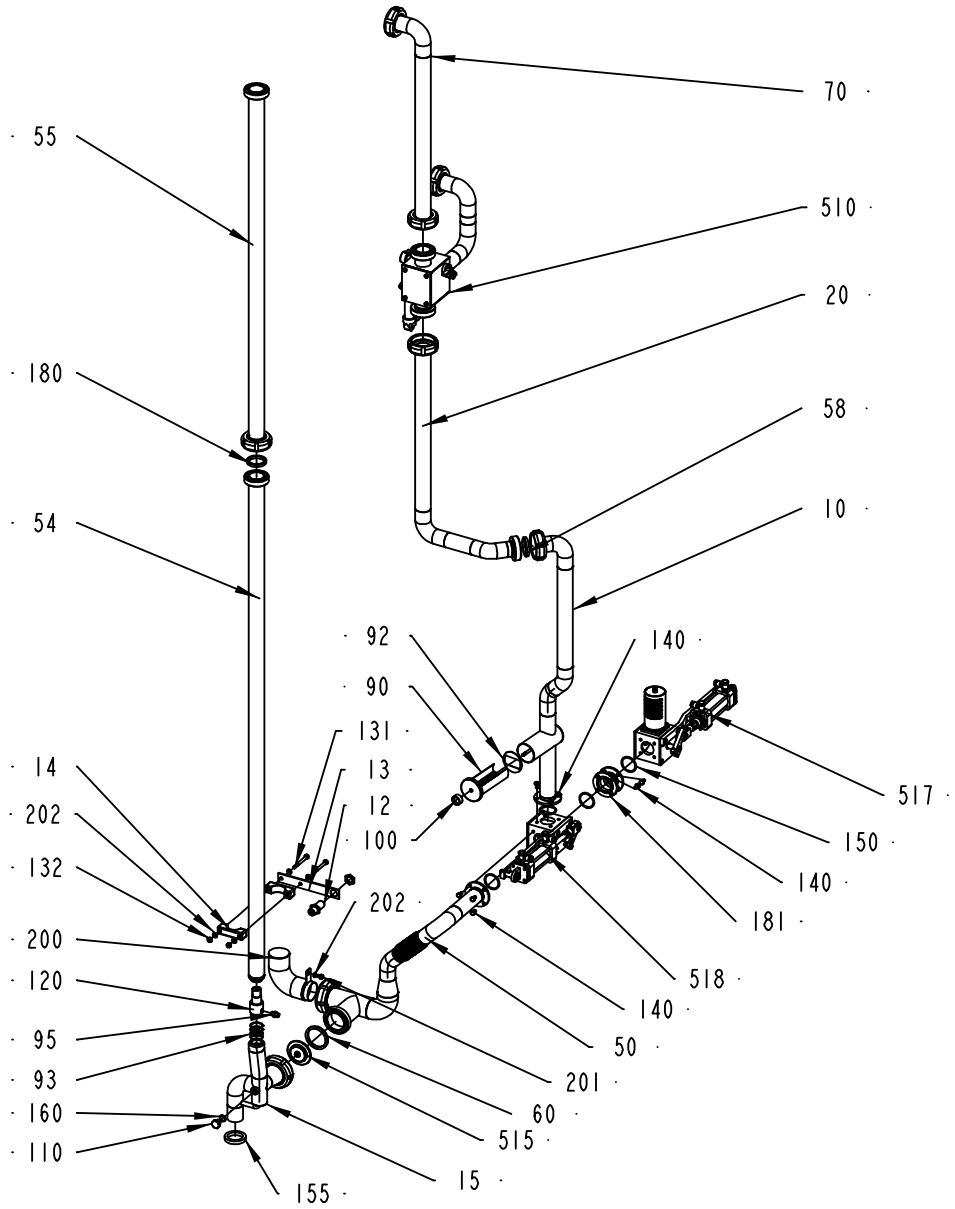
70
55
510
20
180
58
54
10
92
140
90
131
13
12
100
517
150
140
181
14
202
132
202
200
518
120
140
95
50
93
201
160
60
515
110
15
155

Pos	Part No	SP	UN	Qty	Description	Page No
Common Parts						
010	544436-0000	-		1	FILTER PIPE	
012	90044-0099	C		1	PROXIMITY SWITCH IG REPL.BY 90044-126	
013	566228-0000	-		1	BRACKET	
014	476600-0000	D		2	PIPE HOLDER	
015	476449-0000	-		1	PIPE	
020	466471-0000	-		1	PIPE	
050	544435-0000	-		1	PIPE	
054	B499826-0000	-		1	PIPE	
	342811-0103	-		*1*	*WELD NIPPLE SMS 38 - RD 60-6*	
055	574654-0000	-		1	PIPE	
058	12242-0003	C		1	GASKET	
060	12242-0005	C		1	GASKET	
070	269522-0000	-		1	PIPE	
090	273950-0000	D		1	FILTER	
092	493653-0000	C		1	GASKET	
093	499181-0000	-		4	WASHER	
095	90030-0207	-		1	NIPPLE	
100	90051-0053	-		1	KNOB, INTERNAL THREAD, M6 24X17	
110	90330-0026	-		1	PLUG, EXT. G-THREAD, G1/4	
120	90425-0009	D		1	HESKEL ENERGY SYSTEM 27238	
131	312105-0382	-		2	SCREW M6S M6X60 A280	
132	312812-0316	-		2	HEXAGON NUT, NY-LOCK M6 A480	
140	312105-0364	-		16	SCREW M6S M6X10 A280	
150	315204-0222	C		4	O-RING 36,2X3 MM	
155	499825-0000	D		1	GASKET	
160	315233-0110	-		1	WASHER PL.RND.NYL.13,3/17,H=1	
180	315250-0103	C		1	GASKET 48X38X5,5 MM	
181	544439-0000	-		1	INTERMEDIATE PIPE	
200	544506-0000	-		1	PIPE	
201	312105-0362	-		1	SCREW M6S M6X8 A280	
202	315105-0153	-		5	WASHER PLAIN, BRB, 6,4/12,H=1,5	
F510	A273401-0300	-		1	CHANGE-OVER VALVE	**97**
F515	A476849-0100	-		1	VALVE	**99**
F517	A476859-0200	-		1	CHANGE-OVER VALVE	**101**
F518	A594618-0100	-		1	CHANGE-OVER VALVE	**103**

Pos	Part No	SP	UN	Qty	Description	Page No

Machine Type | Group Description | Used-In | Group Number | Page No

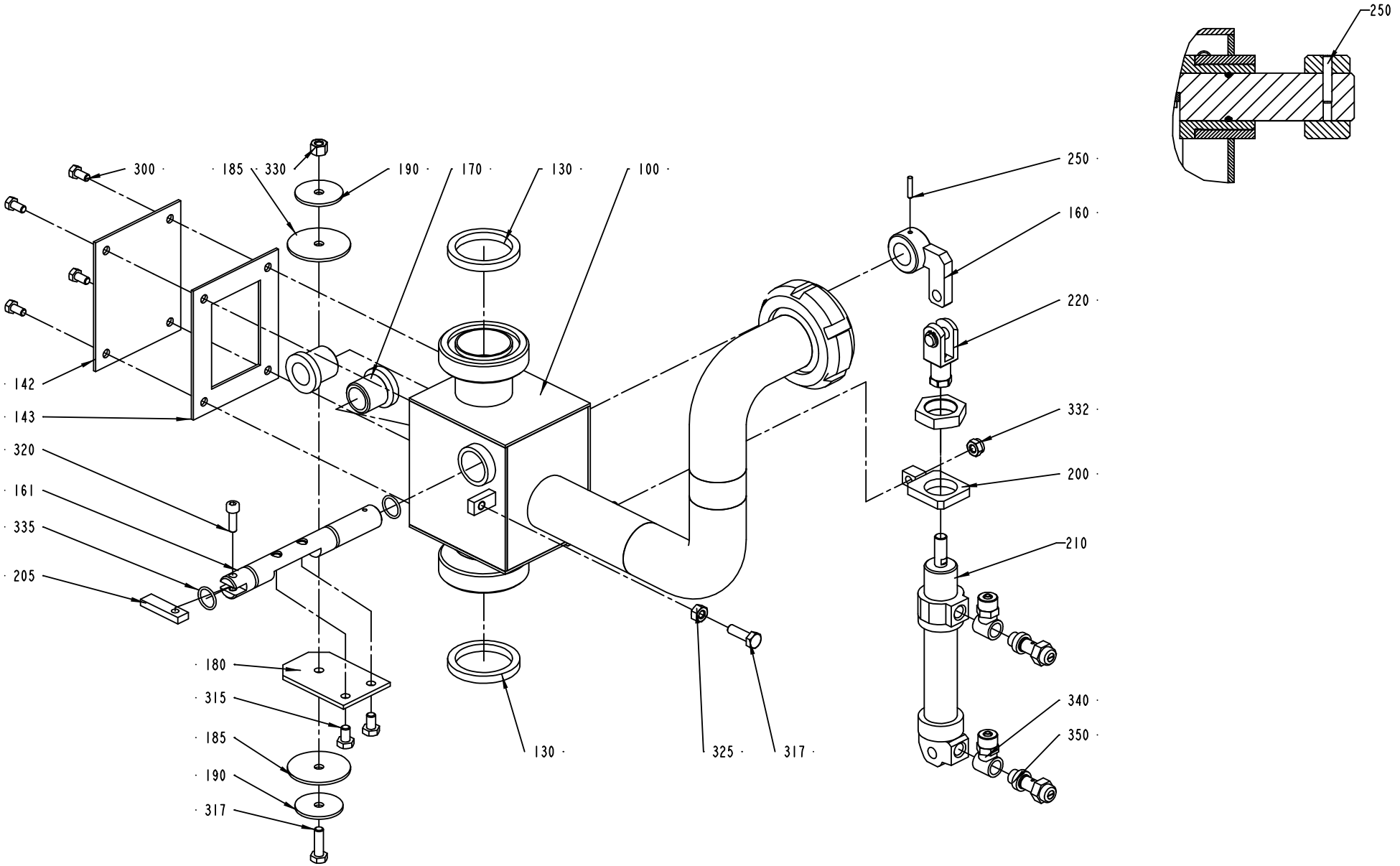
250
300
185
330
190
170
130
100
250
160
220
332
200
210
340
350
142
143
320
161
335
205
180
315
185
190
317
130
325
317

ECM: 105005 - 20020215
Group number: 273401-0300
Assembly Drawing: 273401-3_1_AB

Issue: 20020219

Pos	Part No	SP	UN	Qty	Description	Page No
Common Parts						
100	B531034-0000	-		1	VALVE HOUSING	
	342812-0103	-		*1*	*FERRULE, SMS 1145, 2333, NO. 190706*	
	342811-0103	-		*2*	*WELD NIPPLE SMS 38 - RD 60-6*	
	342808-0103	-		*2*	*PIPE ELBOW 90 DEGR. SMS3009, D=38 MM*	
	342803-0103	-		*1*	*UNION NUT, RD 60-6 (SMS 38)*	
130	12242-0003	C		2	GASKET	
142	251454-0000	-		1	LID	
143	251455-0000	C		1	SEAL	
160	531035-0000	-		1	ARM	
161	531036-0000	D		1	SHAFT	
170	266182-0000	C		2	BUSHING	
180	531037-0000	-		1	FLAP	
185	531038-0000	C		2	GASKET	
190	531039-0000	D		2	WASHER	
200	531040-0000	-		1	BRACKET	
205	531041-0000	-		1	WEDGE	
210	90239-0822	C		1	DOUBLE ACTING, MINI-ISO, CYL.20-50	
220	90239-0490	D		1	ROD END,CLEVIS WITH AXLE M8	
250	311103-0236	-		1	PARALLELL PIN, M6, 3X16 MM	
300	312105-0325	-		4	SCREW M6S M5X10 A280	
315	312105-0364	-		2	SCREW M6S M6X10 A280	
317	312105-0370	-		2	SCREW M6S M6X20 A280	
320	312115-0329	-		1	SCREW MC6S M5X16 A280	
325	312605-0316	-		1	HEXAGON NUT, M6M M6 A280	
330	312811-0316	-		1	NUT HEX.LOCK HELI COIL MID GRIP M6 SS	
332	312812-0316	-		1	HEXAGON NUT, NY-LOCK M6 A480	
335	315204-0111	C		2	O-RING 13,1X1,6 MM	
340	342980-0113	-		2	BANJO-CONNECTION,RING 6/4-G1/8"	
350	90235-0274	-		2	THROTTLE CHECK VALVES,G1/8"	

Pos	Part No	SP	UN	Qty	Description	Page No

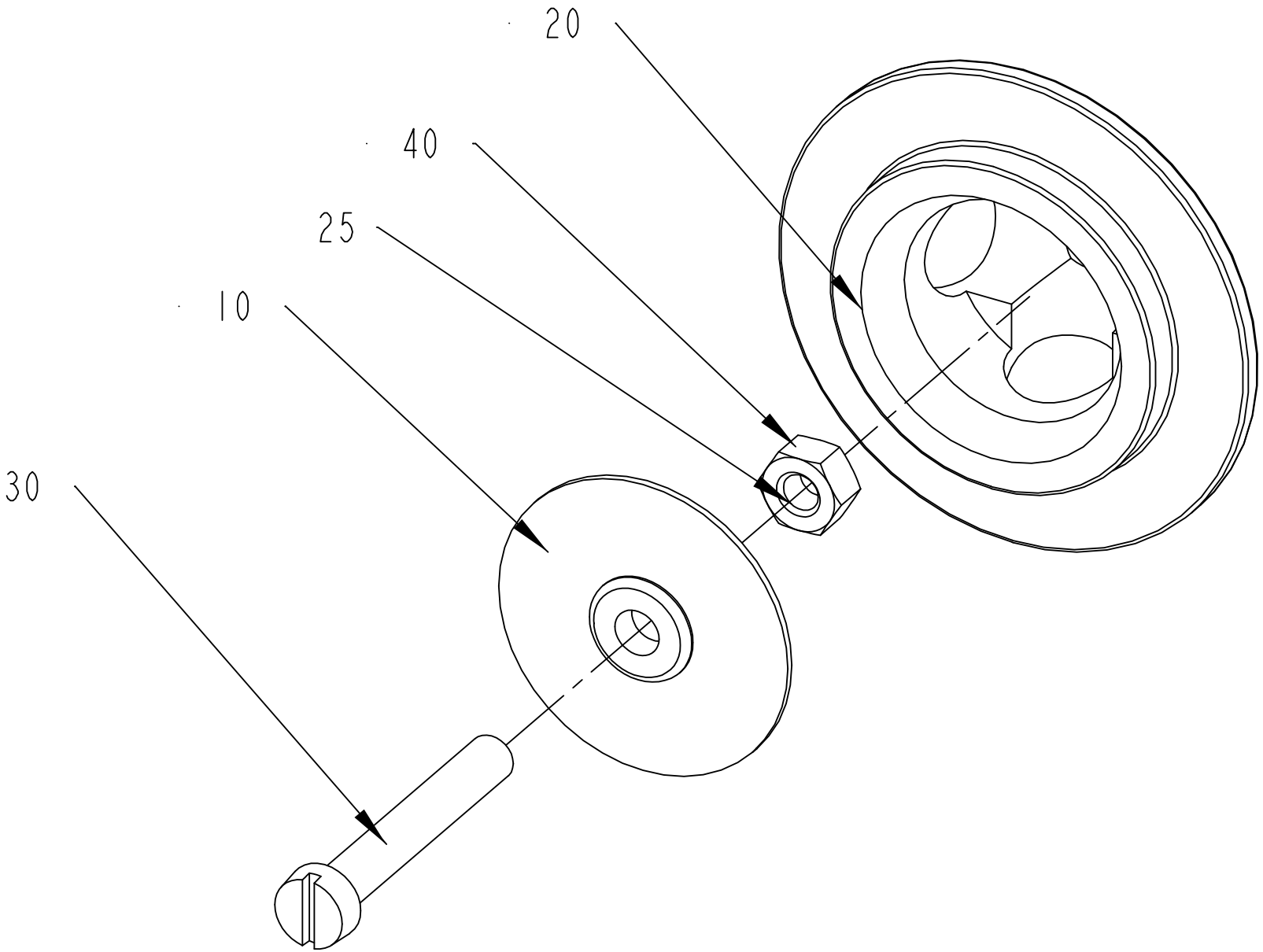
20
40
25
10
30

ECM: 81404 - 20000804
Group number: 476849-0100
Assembly Drawing: 476849-1_1_AC

Issue: 20020219

Pos	Part No	SP	UN	Qty	Description	Page No
Common Parts						
010	273944-0000	C		1	DIAPHRAGM	
020	273951-0000	D		1	VALVE HOUSING	
025	90157-0016	-	ML	1	LOCKING FLUID	
030	312125-0378	-		1	SCREW PAN HEAD MCS M6X40 SS	
040	312605-0316	-		1	HEXAGON NUT, M6M M6 A280	

Pos	Part No	SP	UN	Qty	Description	Page No

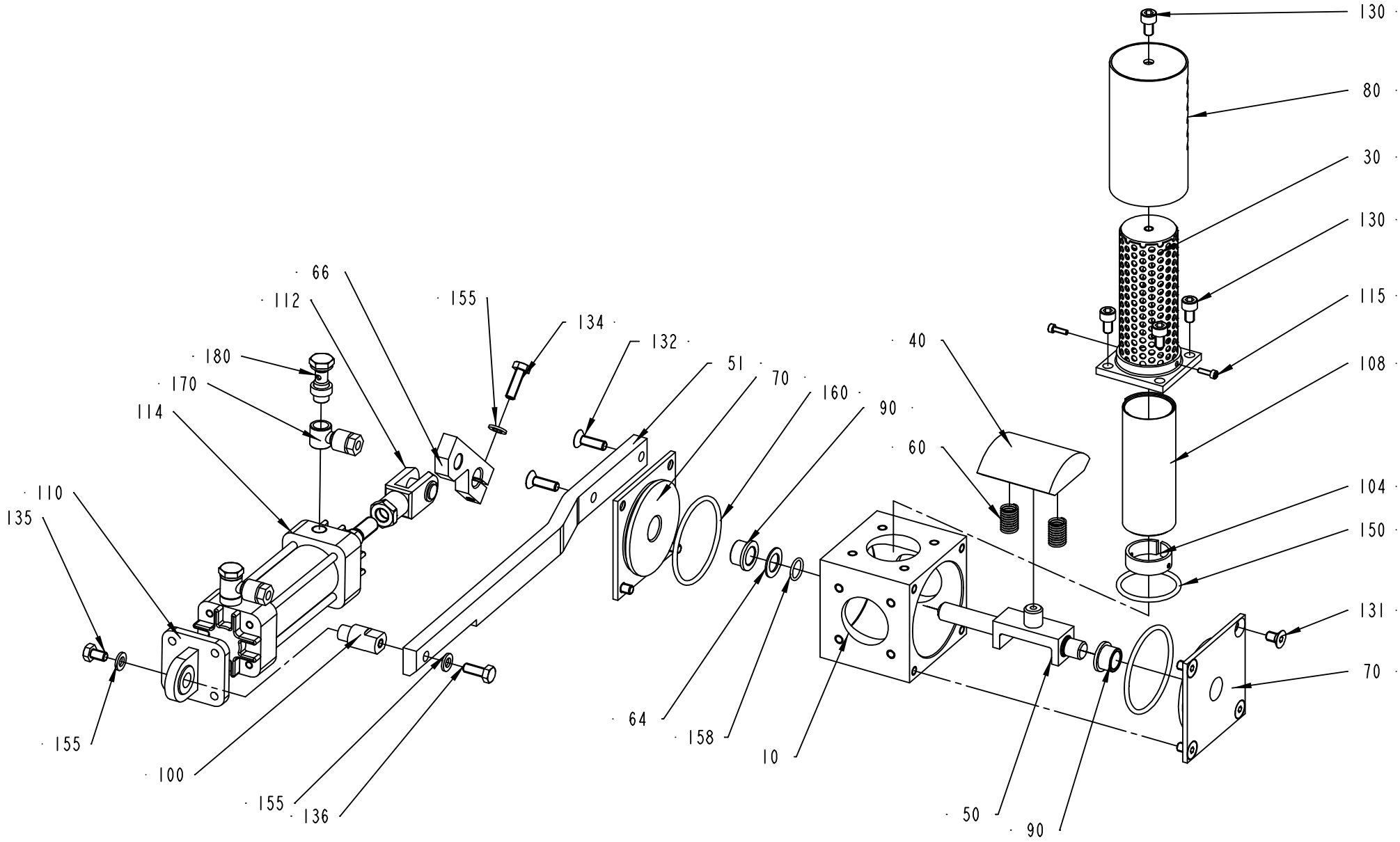
130
80
30
130
115
108
104
150
131
70
40
90
60
160
70
51
132
134
155
66
112
180
170
114
110
135
155
100
155
136
64
158
10
50
90

ECM: 102740 - 20020207
Group number: 476859-0200
Assembly Drawing: 476859-3_1_AD

Issue: 20020219

Pos	Part No	SP	UN	Qty	Description	Page No
Common Parts						
010	B466474-0000	-		1	VALVE HOUSING	
0010	*1282023-0001*	*-*		*1*	*CAST WORKPIECE*	
030	466477-0000	-		1	INNER PIPE	
040	466479-0000	B		1	PIECE	
050	555541-0000	B		1	BRACKET	
051	555542-0000	B		1	BRACKET	
060	21521-0000	A		2	COMPRESSION SPRING	
064	266737-0000	B		1	WASHER	
066	441483-0000	B		1	CYLINDER BRACKET	
070	255874-0000	-		2	BEARING COVER	
080	466478-0000	-		1	OUTER PIPE	
090	255875-0000	A		2	BUSHING	
100	555540-0000	B		1	SPACER	
104	466483-0000	-		1	CLAMPING PIECE	
108	466484-0000	-		1	NET	
110	90239-0453	B		1	BRACKET	
112	90239-0516	B		1	ROD END,CLEVIS WITH AXLE M10X1,25	
114	B90239-0779	A		1	CYLINDER	
	90239-0442	*C*		*1*	*SEAL KIT*	
115	312115-0224	-		2	SCREW HEX.SOCK.HD.MC6S-TT 3X10 A480	
130	312115-0364	-		5	SCREW HEX.SOCK.HD.MC6S-TT 6X10 A480	
131	312155-0364	-		6	SCREW HEX.SOCK.COUNT.MF6S M6X10 A280	
132	312155-0370	-		2	SCREW HEX.SOCK.COUNT.MF6S M6X20 A280	
134	312105-0370	-		1	SCREW M6S M6X20 A280	
135	312105-0364	-		2	SCREW M6S M6X10 A280	
136	312105-0368	-		1	SCREW M6S M6X16 A280	
150	315204-0222	A		1	O-RING 36,2X3 MM	
155	315105-0153	-		3	WASHER PLAIN, BRB, 6,4/12,H=1,5	
158	315204-0110	A		1	O-RING 12,1X1,6 MM	
160	315204-0302	A		2	O-RING 54,5X3 MM	
170	342797-0121	-		2	CONN. BANJO, RINGPIECE 6-1/8	
180	342980-0303	-		2	BANJO-HOLLOW BOLT COUPL,EXT.THR.01-G1/8"	

Pos	Part No	SP	UN	Qty	Description	Page No

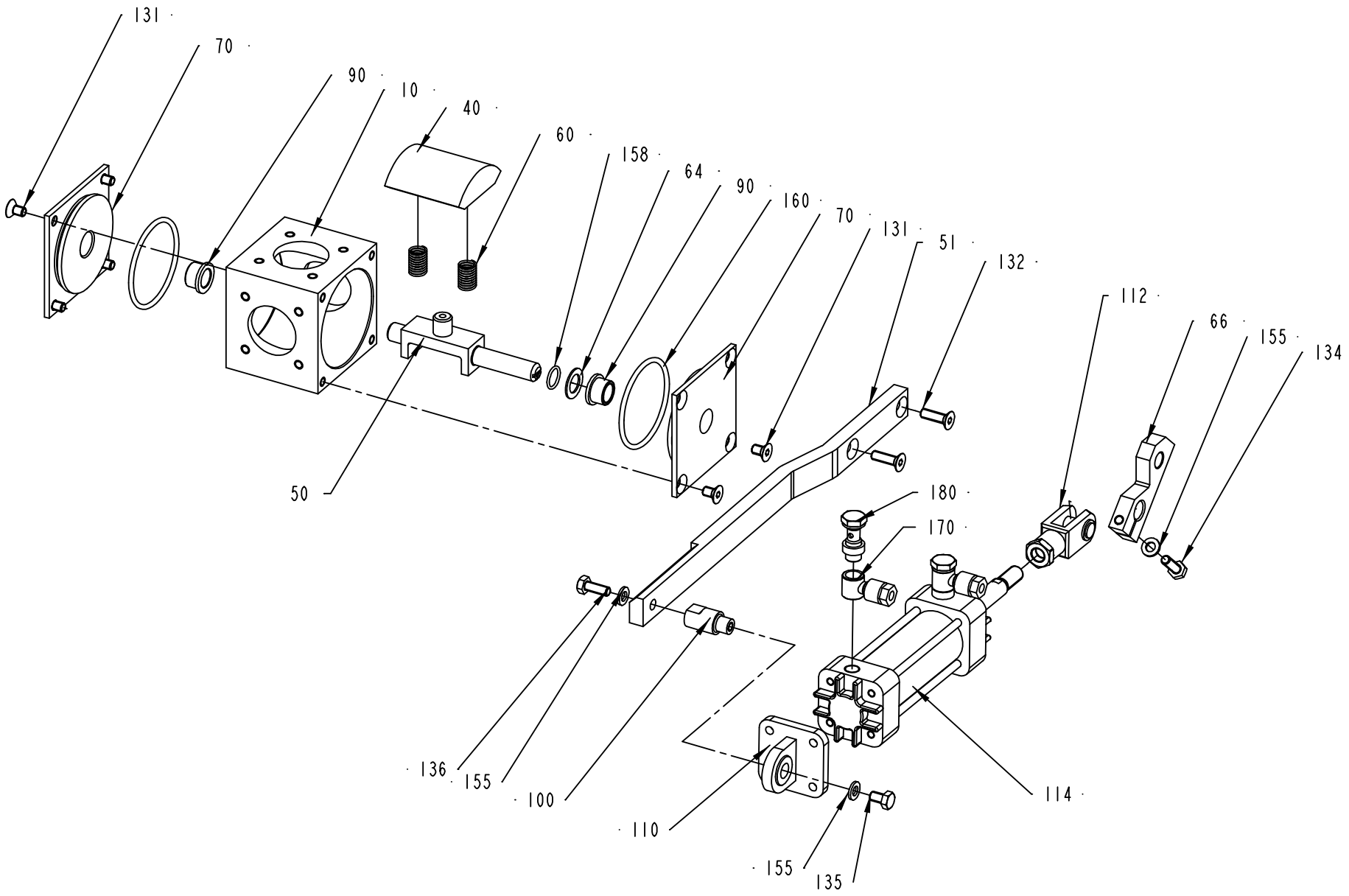
131
70
90
10
40
60
158
64
90
160
70
131
51
132
112
66
155
134
50
180
170
136
155
100
110
155
135
114

ECM: 102928 - 20020115
Group number: 594618-0100
Assembly Drawing: 594618-1_1_AC

Issue: 20020219

Pos	Part No	SP	UN	Qty	Description	Page No
Common Parts						
010	B466474-0000	-		1	VALVE HOUSING	
0010	*1282023-0001*	*-*		*1*	*CAST WORKPIECE*	
040	466479-0000	B		1	PIECE	
050	555541-0000	B		1	BRACKET	
051	555542-0000	A		1	BRACKET	
060	21521-0000	A		2	COMPRESSION SPRING	
064	266737-0000	B		1	WASHER	
066	441483-0000	B		1	CYLINDER BRACKET	
070	255874-0000	-		2	BEARING COVER	
090	255875-0000	A		2	BUSHING	
100	555540-0000	B		1	SPACER	
110	90239-0453	B		1	BRACKET	
112	90239-0516	B		1	ROD END,CLEVIS WITH AXLE M10X1,25	
114	B90239-0779	A		1	CYLINDER	
	90239-0442	*C*		*1*	*SEAL KIT*	
131	312155-0364	-		6	SCREW HEX.SOCK.COUNT.MF6S M6X10 A280	
132	312155-0370	-		2	SCREW HEX.SOCK.COUNT.MF6S M6X20 A280	
134	312105-0370	-		1	SCREW M6S M6X20 A280	
135	312105-0364	-		2	SCREW M6S M6X10 A280	
136	312105-0368	-		1	SCREW M6S M6X16 A280	
155	315105-0153	-		3	WASHER PLAIN, BRB, 6,4/12,H=1,5	
158	315204-0110	A		1	O-RING 12,1X1,6 MM	
160	315204-0302	A		2	O-RING 54,5X3 MM	
170	342797-0121	-		2	CONN. BANJO, RINGPIECE 6-1/8	
180	342980-0303	-		2	BANJO-HOLLOW BOLT COUPL,EXT.THR.01-G1/8"	

Pos	Part No	SP	UN	Qty	Description	Page No

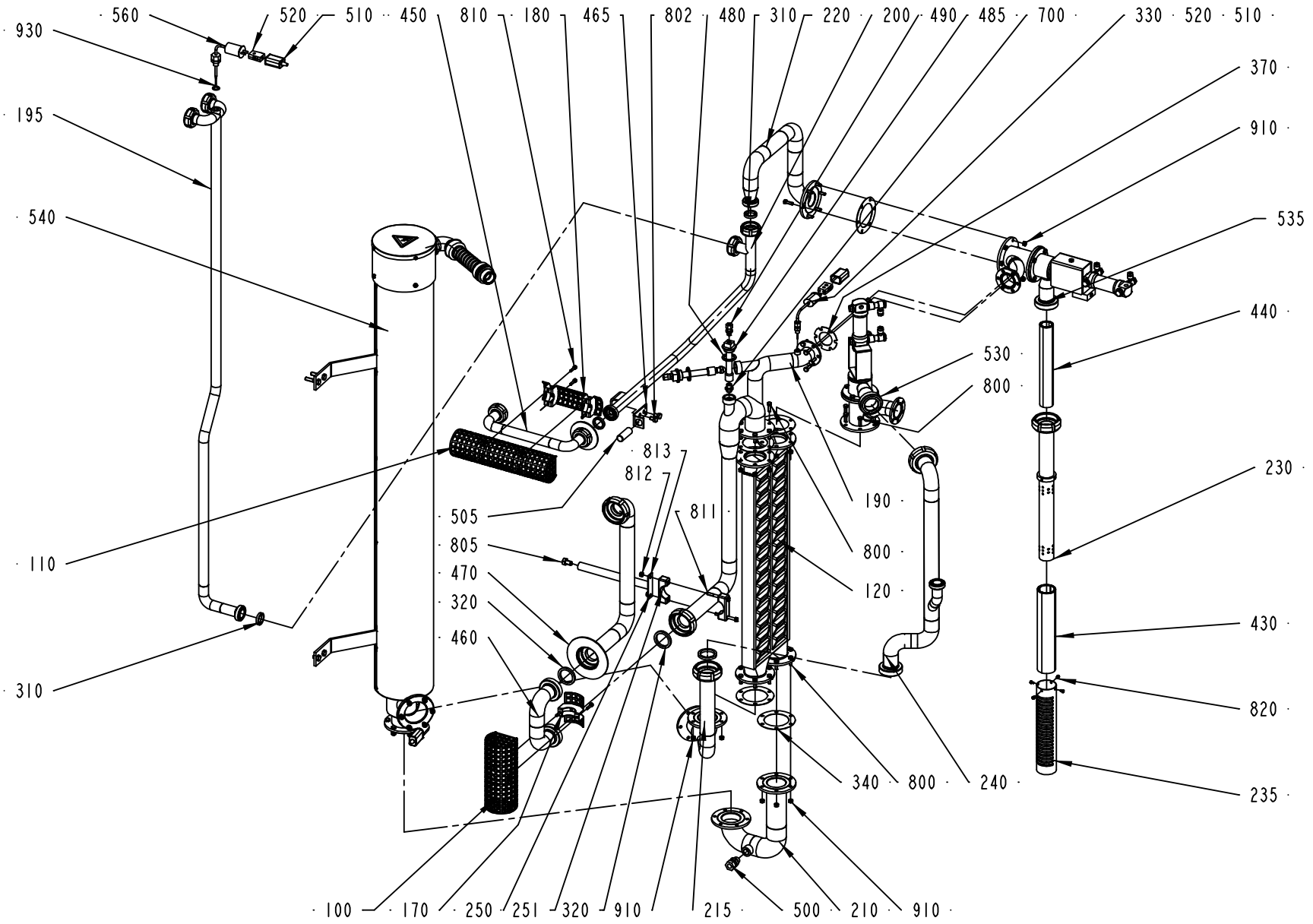
560
520
510
450
810
180
465
802
480
310
220
200
490
485
700
330
520
510
930
370
195
910
540
535
440
530
800
813
812
230
505
811
190
805
800
470
120
320
460
430
310
820
340
800
240
235
100
170
250
251
320
910
215
500
210
910

ECM: 72606 - 20001113
Group number: 273400-0700
Assembly Drawing: 273400-5_1_AC

Issue: 20020219

Pos	Part No	SP	UN	Qty	Description	Page No
Common Parts						
100	273514-0000	D		1	TOUCH GUARD	
110	273547-0002	D		1	TOUCH GUARD	
120	522090-0000	C		1	HEAT EXCHANGER	
170	273515-0000	D		1	TOUCH GUARD	
180	273548-0002	D		1	TOUCH GUARD	
190	434274-0000	D		1	PIPE	
195	534426-0000	D		1	PIPE	
200	449818-0000	D		1	PIPE	
210	269405-0000	D		1	PIPE	
215	276166-0000	D		1	PIPE	
220	276167-0000	D		1	PIPE	
230	276304-0000	D		1	PIPE	
235	276305-0000	D		1	PIPE	
240	544437-0000	D		1	BRANCH PIPE	
250	566229-0000	-		1	BRACKET	
251	476600-0000	-		2	PIPE HOLDER	
310	12242-0001	C		3	GASKET	
320	12242-0003	C		3	GASKET	
330	90326-0052	C		1	THERMO ELEMENT	
340	531737-0000	C		5	GASKET	
370	531742-0000	C		1	GASKET	
430	278954-0000	D		1	NET	
440	278955-0000	D		1	NET	
450	449817-0000	D		1	U-TUBE	
460	561583-0000	D		1	U-TUBE	
465	449960-0000	-		1	BRACKET	
470	449963-0000	D		1	U-TUBE	
480	450022-0000	C		2	WASHER	
485	450023-0000	D		2	BRACKET	
490	90030-0051	-		2	CONN. STR., 6-R1/8, EXT. THREAD	
500	90030-0187	-		1	CONN. STR. GA-12-G3/8	
505	90044-0126	-		1	PROX.SW. 922AA3XM-A9P-060-LZ876	
510	90326-0012	C		2	PROTECTIVE COVER	
520	90326-0020	C		2	PLUG, FEMALE YELLOW CR-AL	
530	90326-0053	C		1	THERMO ELEMENT	
700	90424-0031	C		2	SPRAY NOZZLE 60 DEG	
800	312105-0370	-		30	SCREW M6S M6X20 A280	
802	312105-0447	-		2	SCREW M6S M8X12 A280	
805	312105-0489	-		1	SCREW M6S M10X16 A280	
810	312115-0331	-		6	SCREW MC6S M5X20 A280	
811	312105-0382	-		2	SCREW M6S M6X60 A280	
812	312812-0316	-		2	HEXAGON NUT, NY-LOCK M6 A480	
813	315105-0153	-		2	WASHER PLAIN, BRB, 6,4/12,H=1,5	
820	312125-0285	-		4	SCREW SLOT.PAN HD. MCS 4X6 A480	
910	312605-0316	-		30	HEXAGON NUT, M6M M6 A280	
930	315234-0110	-		1	WASHER,PL.RND.CU.13,5/18 H=1,5	
F530	A269989-0300	-		1	VALVE	**107**
F535	A594616-0100	-		1	VALVE	**109**
F540	A273402-0400	-		1	AIR SUPER-HEATER	**111**

Machine Type | Group Description | Used-In | Group Number | Page No

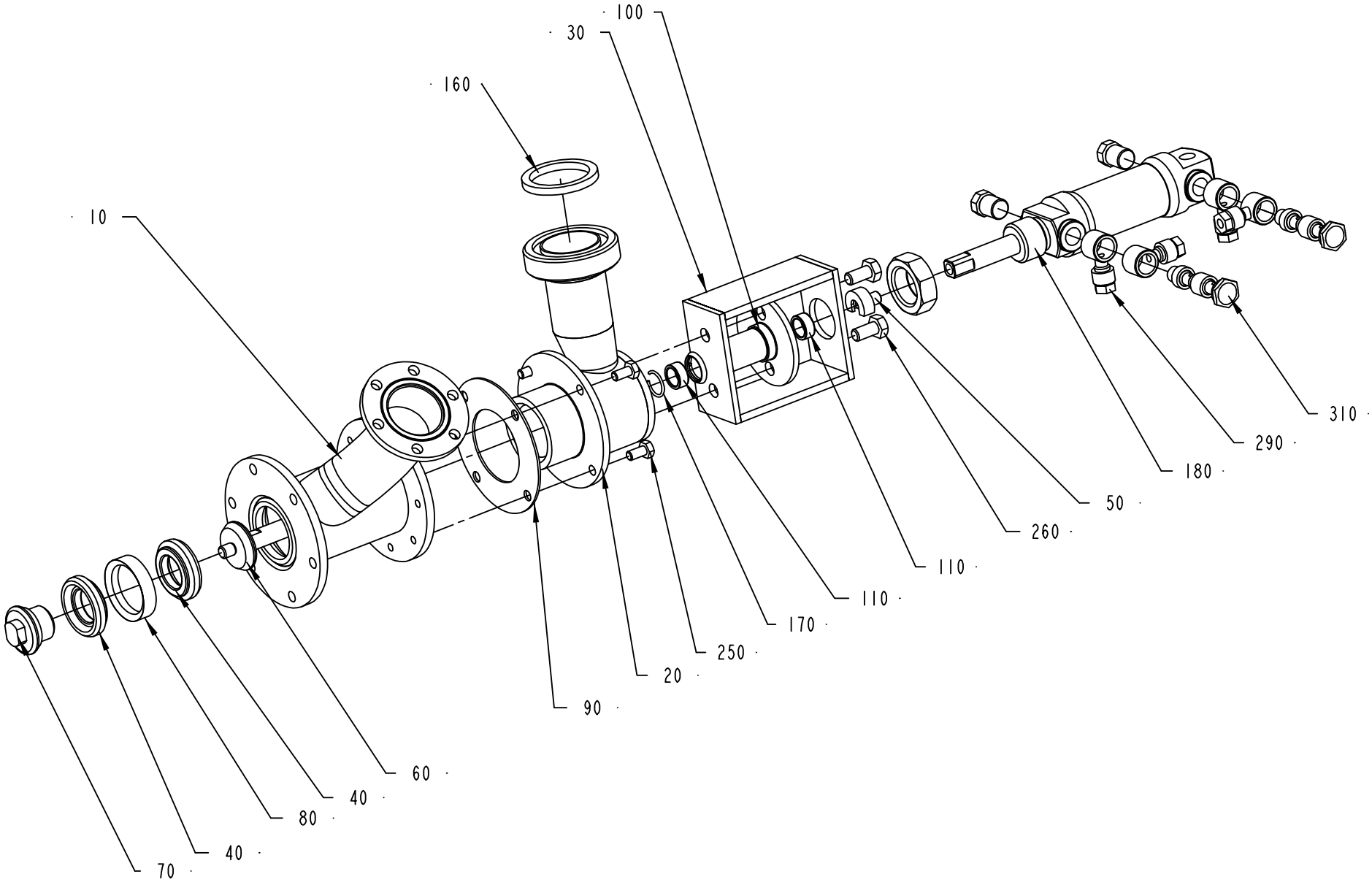
100
30
160
10
310
290
180
50
260
110
110
170
250
20
90
60
40
80
40
70

ECM: 72606 - 20001113
Group number: 269989-0300
Assembly Drawing: 269989-3_1_AB

Issue: 20020219

Pos	Part No	SP	UN	Qty	Description	Page No
Common Parts						
010	276164-0000	D		1	VALVE HOUSING	
020	276165-0000	D		1	HOUSE	
030	266394-0000	-		1	BRACKET	
040	530588-0000	C		2	SEAL RING	
050	37638-0000	D		1	PENDULUM SUSPENSION	
060	266389-0000	C		1	PISTON ROD	
070	266390-0000	C		1	NUT	
080	266391-0000	C		1	RING	
090	531765-0000	C		1	GASKET	
100	532348-0000	C		1	SPINDLE GUIDE	
110	532349-0000	C		2	PLAIN BEARING	
160	90091-0182	C		1	GASKET 48X38X4,8 MM	
170	90141-0022	C		1	SNAP RING B 16	
180	B90239-0166	C		1	CYLINDER	
	90285-0094	*C*		*1*	*SEAL KIT*	
250	312105-0366	-		4	SCREW M6S M6X12 A280	
260	312105-0449	-		2	SCREW M6S M8X16 A280	
290	342797-0122	-		4	CONN. BANJO, RINGPIECE 6-1/4	
310	342980-0314	-		2	BANJO-HOLLOW BOLT COUPL,EXT.THR.02-G1/4"	

Pos	Part No	SP	UN	Qty	Description	Page No

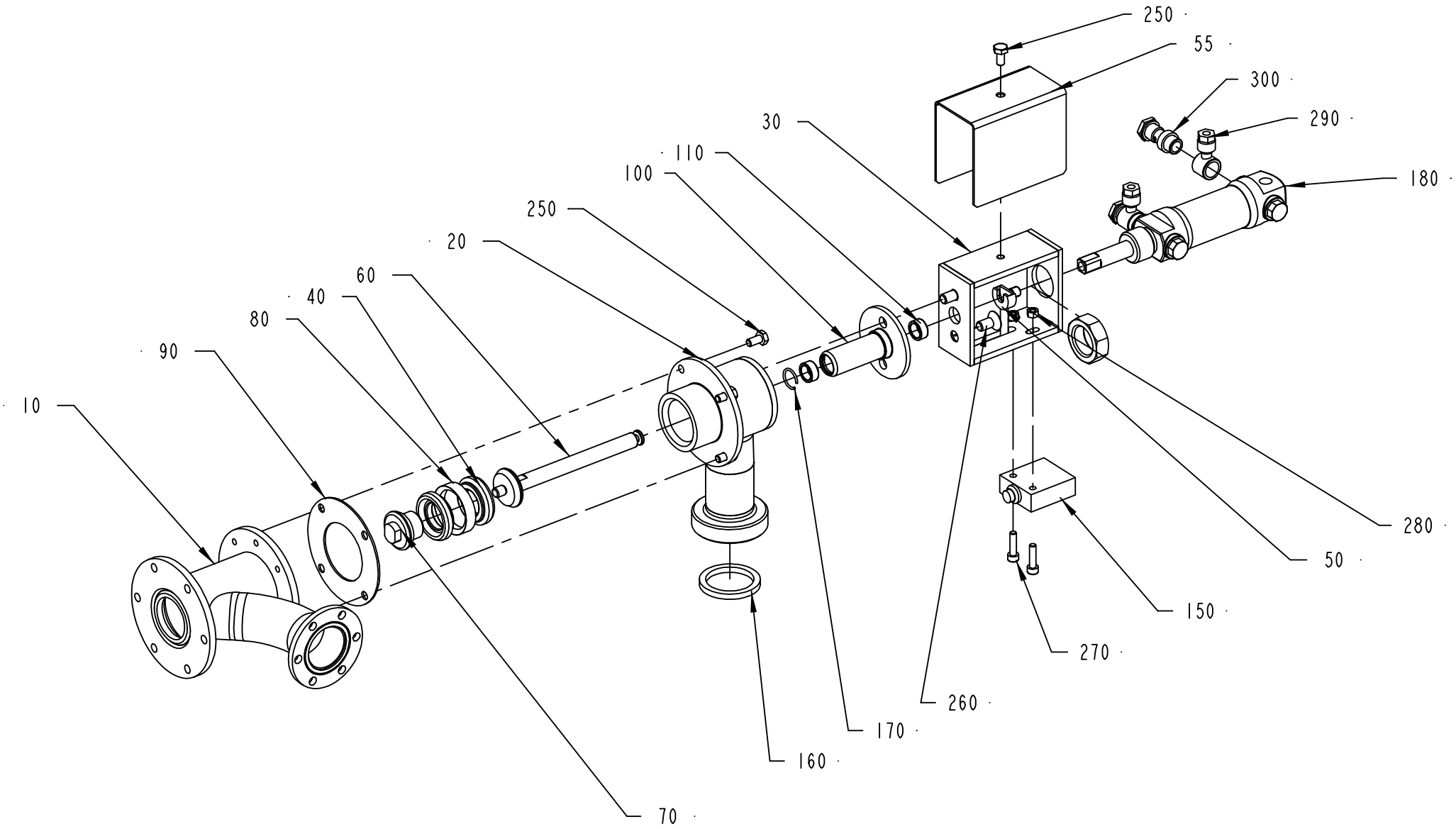
250
55
300
290
30
110
100
180
250
20
60
40
80
90
10
280
50
150
270
260
170
160
70

ECM: 72606 - 20001113
Group number: 594616-0100
Assembly Drawing: 594616-1_1_AB

Issue: 20020219

Pos	Part No	SP	UN	Qty	Description	Page No
Common Parts						
010	276164-0000	D		1	VALVE HOUSING	
020	276165-0000	D		1	HOUSE	
030	449414-0000	-		1	BRACKET	
040	530588-0000	C		2	SEAL RING	
050	449415-0000	D		1	PENDULUM SUSPENSION	
055	574653-0000	-		1	PROTECTION	
060	266389-0000	C		1	PISTON ROD	
070	266390-0000	C		1	NUT	
080	266391-0000	C		1	RING	
090	531765-0000	C		1	GASKET	
100	532348-0000	C		1	SPINDLE GUIDE	
110	532349-0000	C		2	PLAIN BEARING	
150	90044-0084	C		1	LIMIT SW. 14 CE1-4	
160	90091-0182	C		1	GASKET 48X38X4,8 MM	
170	90141-0022	C		1	SNAP RING B 16	
180	B90239-0166	C		1	CYLINDER	
	90285-0094	*C*		*1*	*SEAL KIT*	
250-02	312105-0366	-		7	SCREW M6S M6X12 A280	
260	312155-0449	-		2	SCREW HEX.SOCK.COUNT.MF6S M8X16 A280	
270	312115-0331	-		2	SCREW MC6S M5X20 A280	
280	312605-0314	-		2	HEXAGON NUT, M6M M5 A280	
290	342797-0122	-		2	CONN. BANJO, RINGPIECE 6-1/4	
300	342980-0304	-		2	BANJO-HOLLOW BOLT COUPL,EXT.THR.01-G1/4"	

Pos	Part No	SP	UN	Qty	Description	Page No

Machine Type | Group Description | Used-In | Group Number | Page No

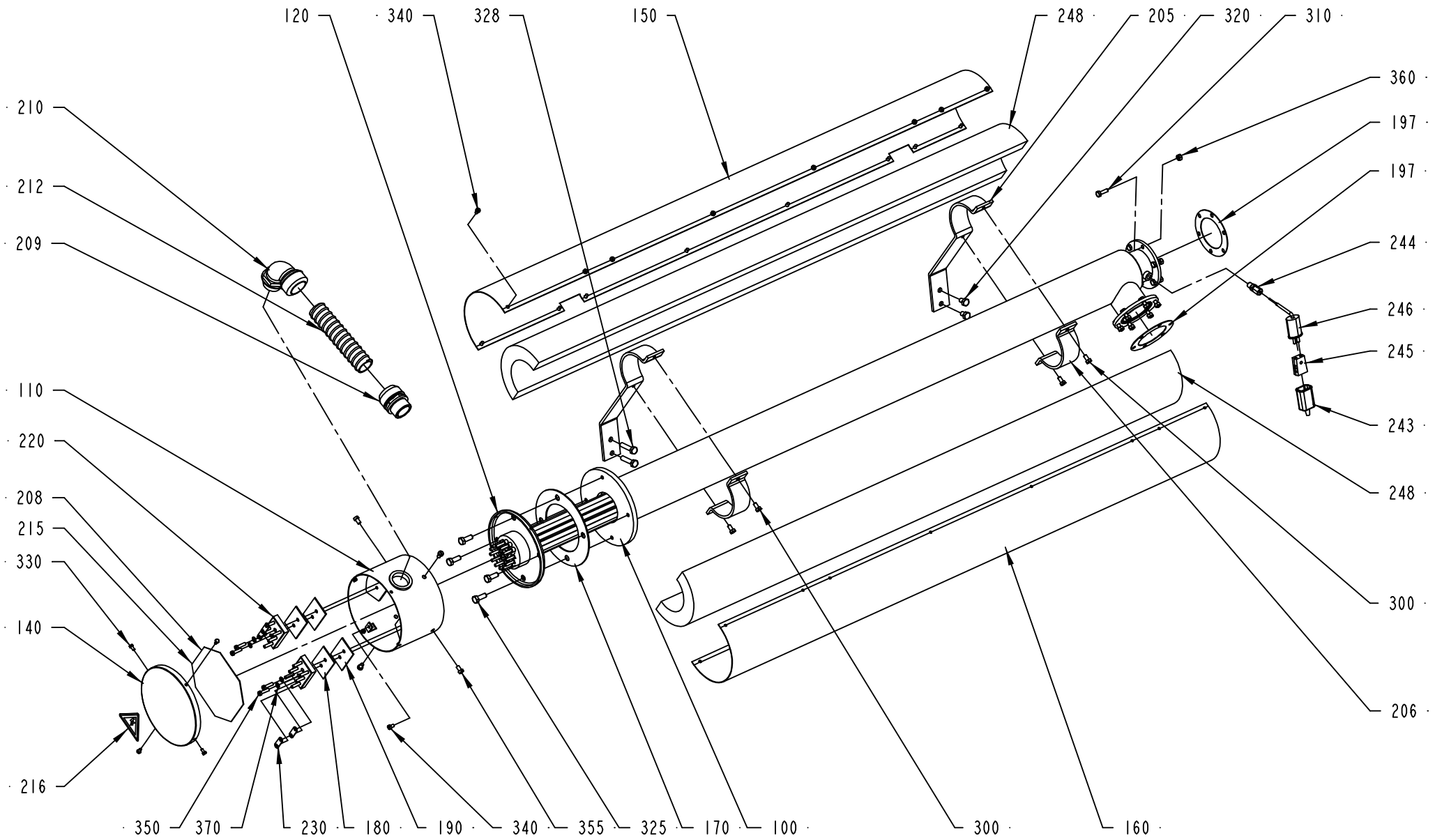
120
340
328
150
248
205
320
310
360
197
197
244
246
245
243
248
300
206
160
300
100
170
325
355
340
190
180
230
370
350
216
330
215
208
140
220
110
209
212
210

ECM: 72606 - 20001113
Group number: 273402-0400
Assembly Drawing: 273402-4_1_AC

Issue: 20020219

Pos	Part No	SP	UN	Qty	Description	Page No
Common Parts						
100	434469-0000	-		1	HEATING PIPE	
110	B451430-0000	-		1	CONNECTION HOUS.(MINOR)	
	312605-0312	*-*		*4*	*HEXAGON NUT, M6M M4 A280*	
120	B449939-0001	C		1	HEATING ELEMENT 15KW	
	449938-0003	*C*		*2*	*HEATING PIPE*	
	449938-0002	*C*		*2*	*HEATING PIPE*	
	449938-0001	*C*		*2*	*HEATING PIPE*	
140	29876-0000	-		1	COVER	
150	269577-0000	-		1	DISCHARGE TRAY	
160	269578-0000	-		1	DISCHARGE TRAY	
170	531731-0000	C		1	GASKET	
180	751009-0000	C		2	INSULATION	
190	30298-0000	C		2	INSULATION	
197	531737-0000	C		2	GASKET	
205	269575-0000	-		2	HOLDER	
206	269576-0000	-		2	CAP	
208	545995-0000	-		1	WIRING DIAGRAM	
209	90012-0061	-		1	GLAND	
210	90012-0062	-		1	GLAND	
212	90152-0031	-	MM	500	HOSE	
215	90153-0020	-	ML	1	ADHESIVE BOSTIK 1782 125ML	
216	90194-0016	-		1	SIGN, FLASH, ELECTRIC EQUIPMENT SYMBOL	
220	90195-0028	-		2	TERM.BLOCK 6-POLE STEATIT	
230	90195-0029	-		4	CONN. LINK NO324 FOR -28	
243	90326-0012	-		1	PROTECTIVE COVER	
244	90326-0017	-		1	GLAND 1/8".REPL.BY 90326-306	
245	90326-0020	C		1	PLUG, FEMALE YELLOW CR-AL	
246	90326-0043	C		1	THERMOCOUPLE CR-ALPREM.G	
248	90411-0005	D	MM	1232	INSULATOR	
300	312105-0366	-		4	SCREW M6S M6X12 A280	
310	312105-0370	-		12	SCREW M6S M6X20 A280	
320	312105-0447	-		2	SCREW M6S M8X12 A280	
325	312105-0452	-		4	SCREW M6S M8X22 A280	
328	312105-0457	-		2	SCREW M6S M8X35 A280	
330	312105-0287	-		4	SCREW M6S M4X8 A280	
340	312125-0323	-		17	SCREW PAN HEAD MCS M5X8 SS	
350	312125-0331	-		4	SCREW PAN HEAD MCS M5X20 SS	
355	312125-0364	-		4	SCREW SLOT.PAN HD. MCS 6X10 A480	
360	312605-0316	-		12	HEXAGON NUT, M6M M6 A280	
370	315105-0146	-		4	WASHER PLAIN, BRB, 5,3/10,H=1	

Pos	Part No	SP	UN	Qty	Description	Page No

Machine Type | Group Description | Used-In | Group Number | Page No

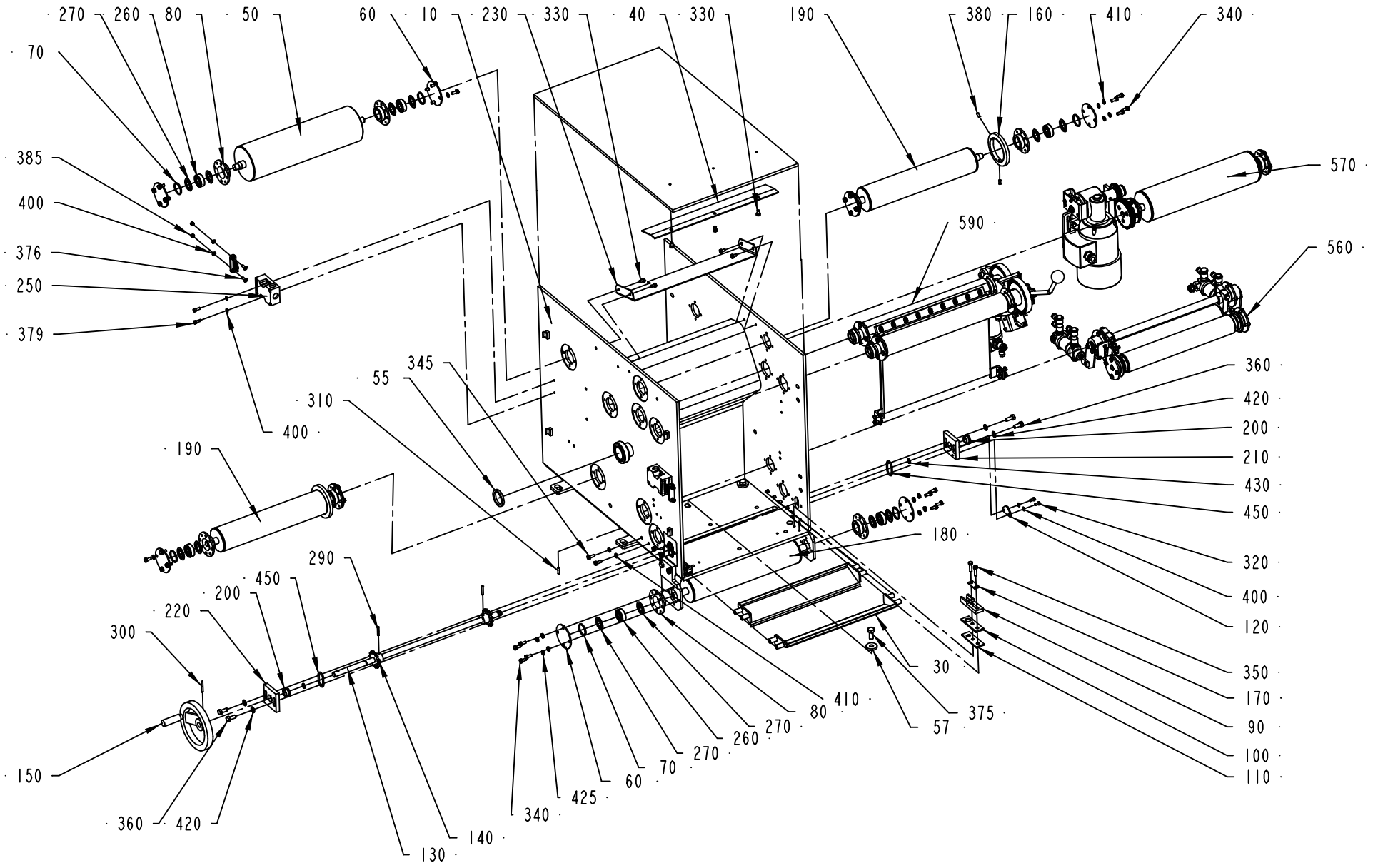
270
260
80
50
60
10
230
330
40
330
190
380
160
410
340
70
385
400
376
250
379
570
590
560
55
345
310
400
360
420
200
210
430
450
190
180
290
450
200
220
300
320
400
120
350
170
90
100
110
30
410
80
270
260
270
70
60
425
340
57
375
150
360
420
130
140

ECM: 81482 - 20000804
Group number: 276373-0700
Assembly Drawing: 276373-7_1_AB

Issue: 20020219

Pos	Part No	SP	UN	Qty	Description	Page No
Common Parts						
010	573430-0000	-		1	DRYING HOUSE	
030	247422-0000	-		2	DRIP PLATE	
040	251544-0000	-		1	SHEET	
050	543950-0000	D		1	BENDING ROLLER	
055	12242-0003	C		1	GASKET	
057	497719-0000	-		6	WASHER	
060	247171-0000	D		8	BEARING COVER	
070	247172-0000	C		8	SPACER RING	
080	247173-0000	C		8	BEARING SEAT	
090	247349-0000	C		2	STEERING	
100	491602-0000	D		2	GASKET HOLDER	
110	491128-0000	C		2	GASKET	
120	247355-0000	-		1	LOCK WASHER	
130	531190-0000	D		1	SHAFT	
140	247357-0000	D		2	SPROCKET	
150	247358-0000	D		1	SHIFTER HANDLE	
160	250588-0000	D		2	FLANGE	
170	267033-0000	D		2	WASHER	
180	279006-0000	D		1	BENDING ROLLER	
190	279007-0000	D		2	BENDING ROLLER	
200	531191-0000	D		2	BUSHING	
210	279009-0000	-		1	BEARING PLATE	
220	279010-0000	-		1	BEARING PLATE	
230	279011-0000	-		1	COVERING PLATE	
250	B90044-0103	-		2	KEY SAFETY SWITCH AZ 15 ZVR	
	90044-0310	*A*		*1*	*KEY FOR SAFETY SWITCH, AZ 15/16 B1*	
260	90214-0098	C		8	BALL BEARING, 15X35X11 MM	
270	90214-0303	C		16	SEALING RING, 18,6X35X2 MM	
290	311103-0275	-		2	PIN,STRAIGHT M6 4X28 RFR	
300	311103-0278	-		1	PARALLELL PIN, M6, 4X35 MM	
310	311103-0310	-		2	PARALLELL PIN, M6, 5X20 MM	
320	312105-0325	-		2	SCREW M6S M5X10 A280	
330	312105-0364	-		7	SCREW M6S M6X10 A280	
340	312105-0367	-		32	SCREW M6S M6X14 A280	
345	312105-0368	-		8	SCREW M6S M6X16 A280	
350	312105-0372	-		4	SCREW M6S M6X25 A280	
360	312105-0451	-		4	SCREW M6S 8X20 A280	
375	312105-0493	-		6	SCREW M6S M10X25 A280	
376	312155-0329	-		4	SCREW HEX.SOCK.COUNT.MF6S M5X16 A280	
379	312115-0328	-		4	SCREW HEX.SOCK.HD.MC6S-TT 5X14 A480	
380	312318-0327	-		4	SCREW SOCK.SET CUP P MSK6SS M5X12 A4	
385	312812-0314	-		4	HEXAGON NUT, NY-LOCK M5 A480	
400	315105-0146	-		10	WASHER PLAIN, BRB, 5,3/10,H=1	
410	315105-0153	-		32	WASHER PLAIN, BRB, 6,4/12,H=1,5	
420	315105-0165	-		4	WASHER PLAIN, BRB, 8,4/16,H=1,5	
425	315115-0153	-		8	WASHER PLAIN, TBRB 6,4/12 H=3	
430	315204-0109	C		2	O-RING 11,1X1,6 MM	
450	315204-0221	C		2	O-RING 34,2X3 MM	
F560	A263391-0400	-		1	CALENDER ROLLER	**115**
F570	A263394-0300	-		1	BENDING ROLLER	**117**
F590	A276345-0300	-		1	AIR KNIFE	**119**

Machine Type	Group Description	Used-In	Group Number	Page No

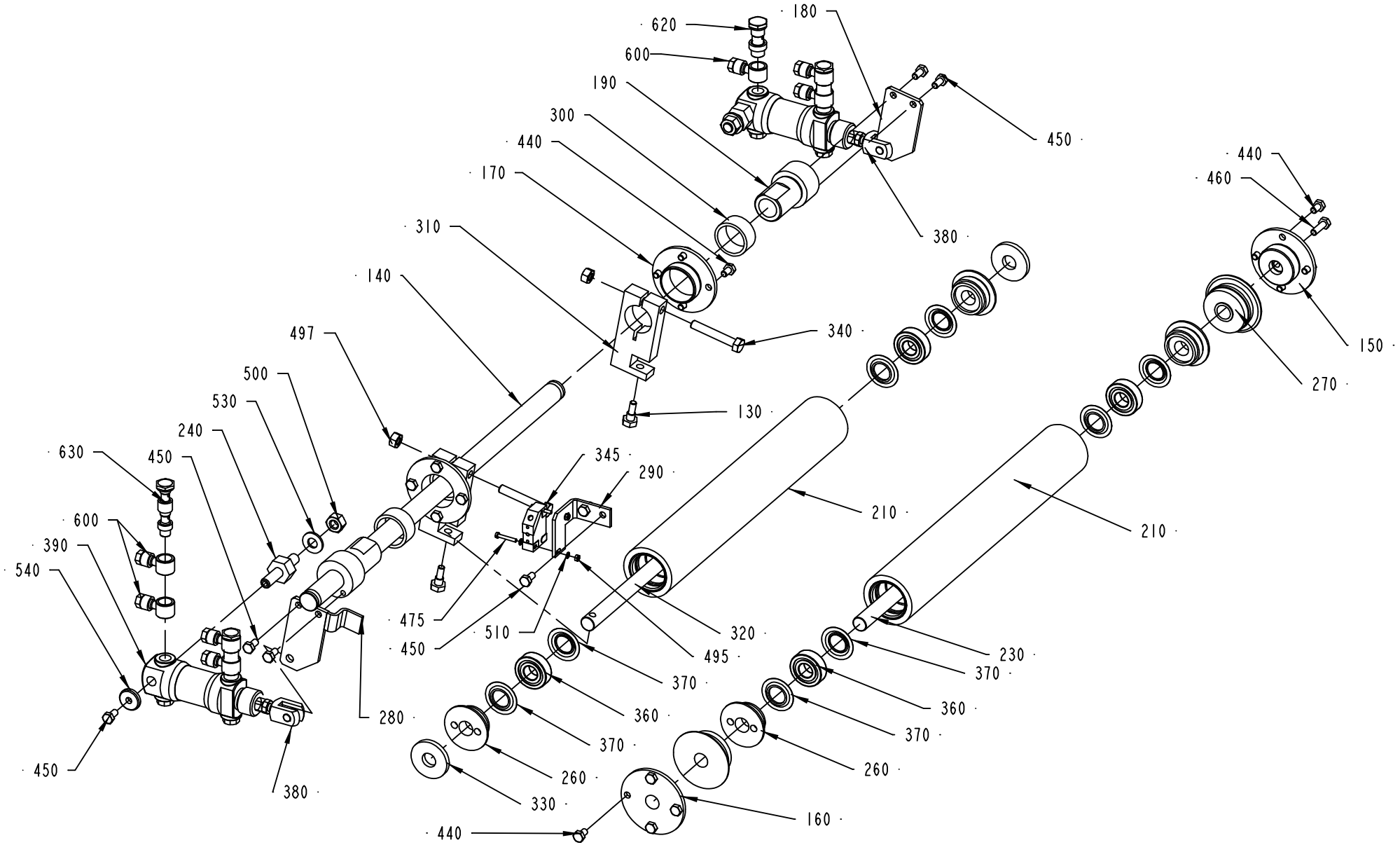
620
600
180
190
300
440
170
310
140
497
500
530
240
630
450
600
390
540
450
380
280
475
450
510
345
290
320
495
370
360
370
260
330
440
160
210
210
230
370
360
370
260
440
460
150
270
340
130
450
380

Pos	Part No	SP	UN	Qty	Description	Page No
Common Parts						
130	246966-0000	D		2	SCREW	
140	532145-0000	D		1	SHAFT	
150	247159-0000	D		1	AXLE SUPPORT	
160	247160-0000	D		1	AXLE SUPPORT	
170	247161-0000	D		2	AXLE SUPPORT	
180	247162-0000	-		1	BRACKET	
190	532261-0000	D		2	SLEEVE	
210	527750-0000	C		2	CALENDER ROLLER	
230	532144-0000	C		1	SHAFT	
240	247168-0000	D		2	CYLINDER BRACKET	
260	247170-0000	C		4	BEARING COVER	
270	247240-0000	C		2	WHEEL	
280	282766-0000	D		1	LINK	
290	282767-0000	-		1	BRACKET	
300	297142-0000	C		2	BUSHING	
310	532143-0000	D		2	ARM	
320	532146-0000	C		1	SHAFT	
330	532147-0000	C		2	WASHER	
340	532148-0000	-		2	SCREW	
345	90044-0104	C		1	PROX.SWITCH IFM IN 3002	
360	90214-0028	C		4	BALL BEARING REPL.BY 90214-98	
370	90214-0303	C		8	SEALING RING, 18,6X35X2 MM	
380	90239-0127	C		2	BRACKET	
390	B90239-0189	C		2	CYLINDER	
	90285-0094	*C*		*1*	*SEAL KIT*	
440	312105-0364	-		16	SCREW M6S M6X10 A280	
450	312105-0366	-		6	SCREW M6S M6X12 A280	
460	312105-0370	-		1	SCREW M6S M6X20 A280	
475	312125-0230	-		2	SCREW PAN HEAD MCS M3X20 SS	
495	312605-0310	-		2	HEXAGON NUT, M6M M3 A280	
497	312605-0318	-		2	HEXAGON NUT, M6M M8 A280	
500	312605-0320	-		2	HEXAGON NUT, M6M M10 A280	
510	315105-0124	-		4	WASHER PLAIN, BRB, 3,2/6,H=0,5	
530	315105-0173	-		2	WASHER PLAIN, BRB, 10,5/22,H=2	
540	315121-0153	-		2	WASHER PLAIN, TBRSB 6,4/22 H=4	
600	342797-0122	-		7	CONN. BANJO, RINGPIECE 6-1/4	
620	342980-0304	-		1	BANJO-HOLLOW BOLT COUPL,EXT.THR.01-G1/4"	
630	342980-0314	-		3	BANJO-HOLLOW BOLT COUPL,EXT.THR.02-G1/4"	

Pos	Part No	SP	UN	Qty	Description	Page No

Machine Type	Group Description	Used-In	Group Number	Page No

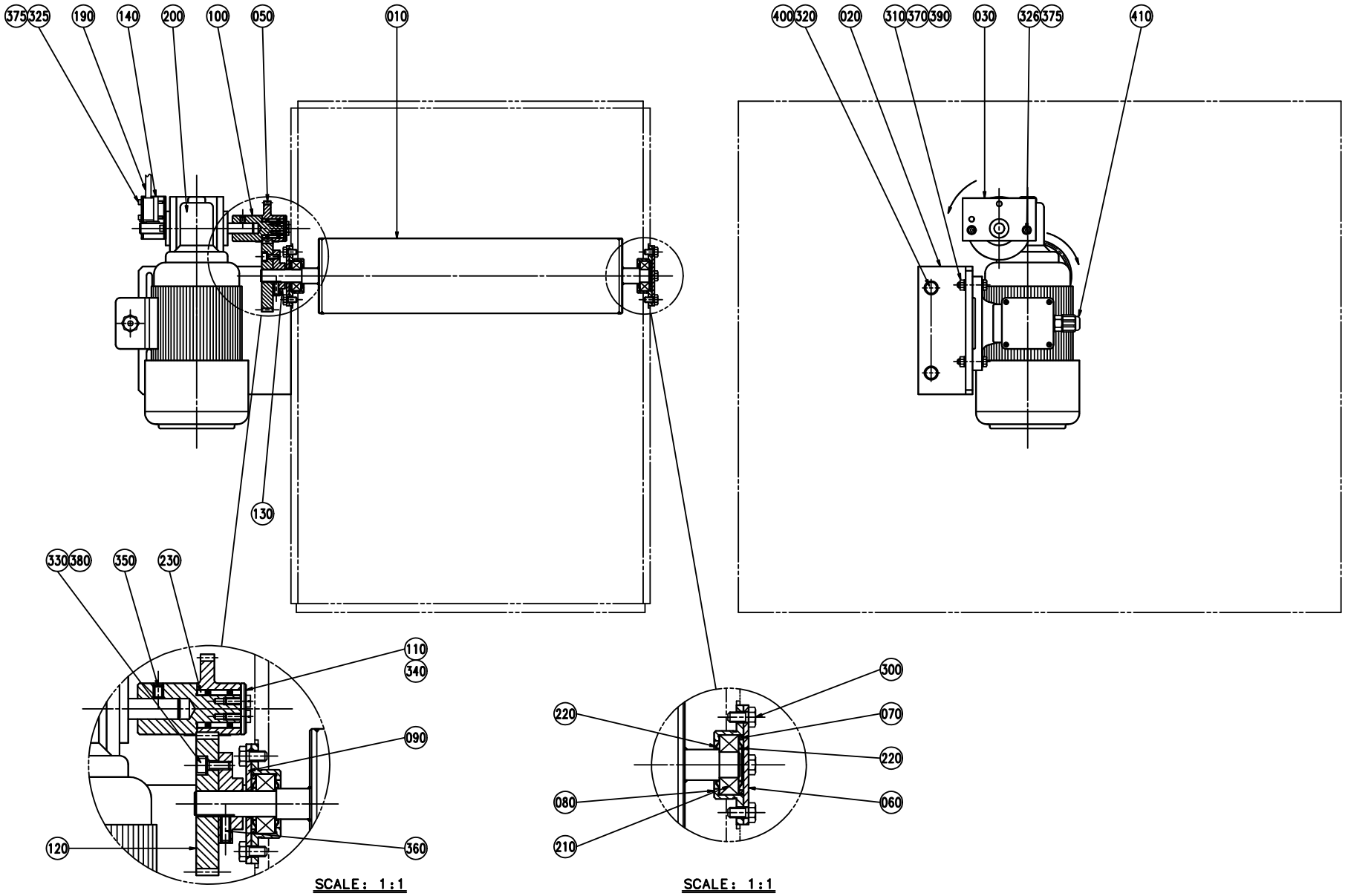
375
325
190
140
200
100
050
010
400
320
020
310
370
390
030
326
375
410
130
330
380
350
230
110
340
090
120
360
220
300
070
220
080
060
210
SCALE: 1:1
SCALE: 1:1

ECM: 81484 - 20000804
Group number: 263394-0300
Assembly Drawing: 263394-3_1_AB

Issue: 20020219

Pos	Part No	SP	UN	Qty	Description	Page No
0375S OR 0500S OR 0750B						
050	209331-0007	D		1	GEAR WHEEL	
0500B OR 0355B						
050	209331-0009	D		1	GEAR WHEEL	
1000S						
050	209331-0013	D		1	GEAR WHEEL	
1000SQ						
050	209331-0014	D		1	GEAR WHEEL	
0750S OR 1000B						
050	209331-0012	D		1	GEAR WHEEL	
Common Parts						
010	573428-0000	D		1	BENDING ROLLER	
020	573429-0000	-		1	MOTOR PLATE	
030	927258-0000	-		1	BRACKET	
060	247171-0000	D		1	BEARING COVER	
070	247172-0000	C		2	SPACER RING	
080	247173-0000	C		2	BEARING SEAT	
090	250590-0000	D		1	BEARING COVER	
100	250591-0000	D		1	SHAFT	
110	250592-0000	D		1	WASHER	
120	265872-0001	C		1	GEAR WHEEL	
130	284974-0000	-		1	HUB	
140	795581-0000	D		1	PLATE	
190	90044-0104	C		1	PROX.SWITCH IFM IN 3002	
200	B90069-0116	C		1	GEARS, WORM MOTOR REPBY 90069-0281	
	90069-0365	*C*		*1*	*CARBON BRUSH*	
	90069-0364	*C*		*1*	*CARBON BRUSH*	
	90056-0096	*C*		*1*	*WORM GEAR E3*	
	90069-0365	*C*		*1*	*CARBON BRUSH*	
	90069-0364	*C*		*1*	*CARBON BRUSH*	
	90056-0096	*C*		*1*	*WORM GEAR E3*	
210	90214-0098	C		2	BALL BEARING, 15X35X11 MM	
220	90214-0303	C		4	SEALING RING, 18,6X35X2 MM	
230	90348-0007	C		1	FREE WHEEL COUPLING	
300	312105-0366	-		8	SCREW M6S M6X12 A280	
310	312105-0374	-		4	SCREW M6S M6X30 A280	
320	312105-0451	-		2	SCREW M6S 8X20 A280	
325	312115-0232	-		2	SCREW HEX.SOCK.HD.MC6S-TT 3X25 A480	
326	312115-0295	-		2	SCREW MC6S M4X20 A280	
330	312115-0328	-		3	SCREW HEX.SOCK.HD.MC6S-TT 5X14 A480	
340	312125-0291	-		2	SCREW PAN HEAD MCS M4X12 SS	
350	312318-0362	-		1	SCREW SOCK.SET CUP P MSK6SS M6X8 A4	
360	312318-0368	-		1	SCREW SOCK.SET CUP P MSK6SS M6X16 A4	
370	312605-0316	-		4	HEXAGON NUT, M6M M6 A280	
375	315105-0136	-		4	WASHER PLAIN, BRB, 4,3/8,H=0,8	
380	315105-0146	-		3	WASHER PLAIN, BRB, 5,3/10,H=1	
390	315105-0153	-		8	WASHER PLAIN, BRB, 6,4/12,H=1,5	
400	315105-0165	-		2	WASHER PLAIN, BRB, 8,4/16,H=1,5	
410	90012-0137	-		1	GLAND, EXTENDED WITH INSERT, PG11	

Machine Type | Group Description | Used-In | Group Number | Page No

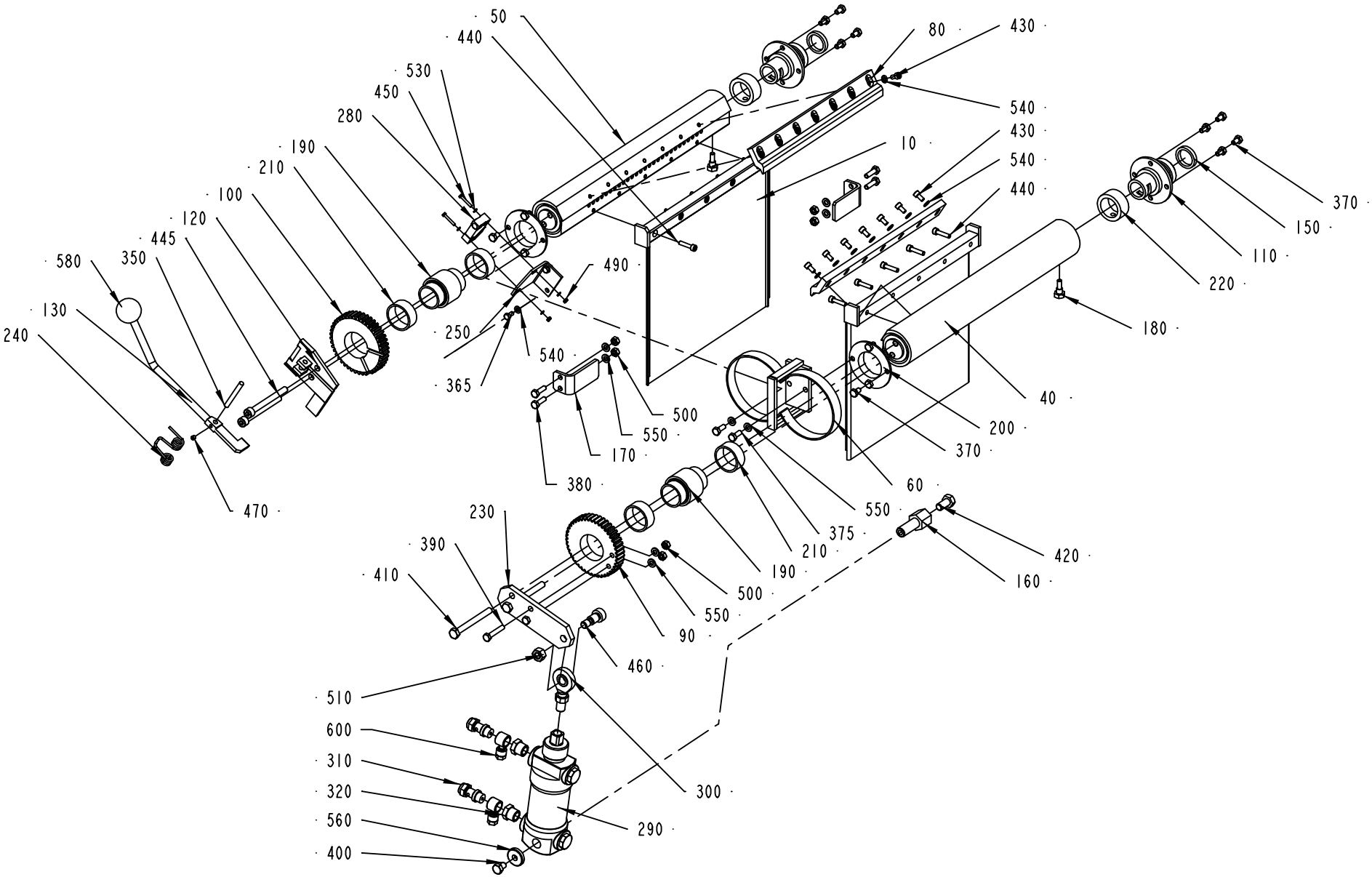
50
440
530
450
280
190
210
100
120
445
350
580
130
240
470
250
365
490
540
500
550
170
380
10
80
430
540
430
540
440
370
150
110
220
180
40
200
370
60
550
375
210
190
500
550
90
460
230
390
410
420
160
510
600
310
320
560
400
300
290

Pos	Part No	SP	UN	Qty	Description	Page No
TBA 0375S						
010	434972-0000	D		2	AIR GUIDE	
040	434973-0000	D		1	AIR DISTRIBUTOR	
050	434974-0000	D		1	AIR DISTRIBUTOR	
080	527647-0001	C		2	STEERING RAIL	
170	434976-0000	-		2	STOP	
TBA 0500B OR TBA 0750B OR TBA 1000B						
010	276346-0000	D		2	AIR GUIDE	
040	276347-0000	D		1	AIR DISTRIBUTOR	
050	276348-0000	D		1	AIR DISTRIBUTOR	
080	526502-0000	C		2	STEERING RAIL	
170	246965-0000	-		2	STOP	
TBA 0500S OR TBA 0355B						
010	434972-0000	D		2	AIR GUIDE	
040	434973-0000	D		1	AIR DISTRIBUTOR	
050	434974-0000	D		1	AIR DISTRIBUTOR	
080	527647-0002	C		2	STEERING RAIL	
170	434976-0000	-		2	STOP	
TBA 1000S OR TBA 1000SQ						
010	276346-0000	D		2	AIR GUIDE	
040	276347-0000	D		1	AIR DISTRIBUTOR	
050	276348-0000	D		1	AIR DISTRIBUTOR	
080	573841-0000	C		2	STEERING RAIL	
170	246965-0000	-		2	STOP	
TBA 0750S						
010	276346-0000	D		2	AIR GUIDE	
040	276347-0000	D		1	AIR DISTRIBUTOR	
050	276348-0000	D		1	AIR DISTRIBUTOR	
080	544301-0000	C		2	STEERING RAIL	
170	246965-0000	-		2	STOP	
Common Parts						
060	292565-0000	-		1	PROTECTION	
090	276350-0000	D		1	GEAR WHEEL	
100	276351-0000	D		1	GEAR WHEEL	
110	276354-0000	D		2	ATTACHMENT	
120	297969-0000	-		1	FASTENING PLATE	
130	297970-0000	-		1	CATCH LEVER	
150	12242-0001	C		2	GASKET	
160	246964-0000	-		1	CYLINDER BRACKET	
180	246966-0000	D		2	SCREW	
190	276355-0000	D		2	SLEEVE	
200	276356-0000	D		2	BEARING HOUSING	
210	276357-0000	C		4	BUSHING	
220	276358-0000	C		2	BUSHING	
230	276359-0000	-		1	LEVER	
240	276360-0000	D		1	SPRING	
250	276361-0000	-		1	BRACKET	
280	90044-0104	C		1	PROX.SWITCH IFM IN 3002	
290	B90239-0196	C		1	CYLINDER	
	90285-0119	*C*		*1*	*SEAL AND WEAR-AND-TEAR PA*	
300	90239-0321	D		1	BRACKET	
310	90235-0275	C		2	THROTTLE CHECK VALVES,G1/4"	
320	90330-0042	D		2	BUSHING, INT/EXT. THR. R3/8-RP1/4	
350	311103-0367	-		1	PARALLELL PIN, CP, M6, 6X55 MM	
365	312105-0325	-		2	SCREW M6S M5X10 A280	
370	312105-0364	-		14	SCREW M6S M6X10 A280	
375	312105-0368	-		2	SCREW M6S M6X16 A280	
380	312105-0370	-		4	SCREW M6S M6X20 A280	
390	312105-0376	-		2	SCREW M6S M6S M6X35 A280	
400	312105-0447	-		1	SCREW M6S M8X12 A280	
410	312105-0467	-		2	SCREW M6S M8X80 A280	
420	312105-0491	-		1	SCREW M6S M10X20 A280	
430	312115-0325	-		18	SCREW HEX.SOCK.HD.MC6S-TT 5X10 A480	
440	312115-0332	-		10	SCREW HEX.SOCK.HD.MC6S-TT 5X22 A480	
445	312115-0467	-		2	SCREW MC6S M8X80 A280	
450	312125-0230	-		2	SCREW PAN HEAD MCS M3X20 SS	
460	312180-0530	-		1	SCREW, HEX.SOCK.HEAD SHOULD. M10X16	
470	312316-0320	-		1	SCREW HEX.SOCK.SET CUP P.MSK6SS5X5 FZB	
490	312605-0310	-		2	HEXAGON NUT, M6M M3 A280	
500	312605-0316	-		6	HEXAGON NUT, M6M M6 A280	
510	312605-0320	-		1	HEXAGON NUT, M6M M10 A280	
530	315105-0124	-		4	WASHER PLAIN, BRB, 3,2/6,H=0,5	
540	315105-0146	-		20	WASHER PLAIN, BRB, 5,3/10,H=1	
550	315105-0153	-		8	WASHER PLAIN, BRB, 6,4/12,H=1,5	
560	315121-0165	-		1	WASHER PLAIN, TBRSB 8,4/26 H=5	
580	318800-0105	-		1	HANDLE,SPHERICAL KNOB,INT.THRE.,D.35-M10	
600	342797-0122	-		2	CONN. BANJO, RINGPIECE 6-1/4	

Machine Type | Group Description | Used-In | Group Number | Page No

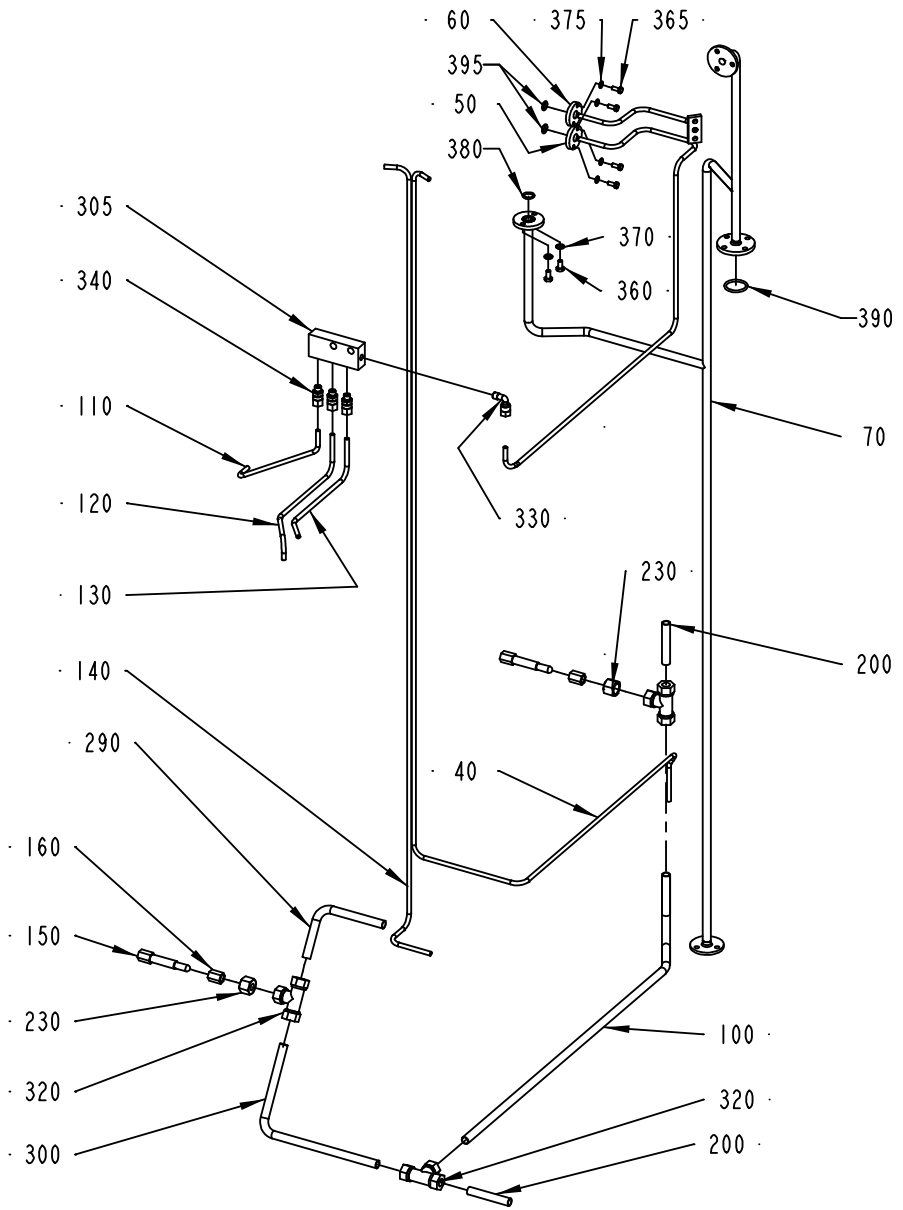
60
375
365
395
50
380
305
340
370
360
390
110
70
120
330
130
230
200
140
290
40
160
150
230
100
320
320
300
200

Pos	Part No	SP	UN	Qty	Description	Page No
Common Parts						
040	451053-0000	-		1	PIPE	
050	554448-0000	-		1	PIPE	
060	554449-0000	-		1	PIPE	
070	554583-0000	-		1	PIPE	
100	297347-0000	-		1	PIPE	
110	464307-0000	-		1	PIPE BEND	
120	464308-0000	D		1	PIPE	
130	464309-0000	D		1	PIPE	
140	479230-0000	-		1	PIPE	
150	209145-0000	C		2	THROTTLE SCREW	
160	209146-0000	C		2	BARRIER NUT	
200	276490-0000	-		2	PIPE	
230	279589-0000	C		2	NUT	
290	479231-0000	-		1	PIPE	
300	479232-0000	-		1	PIPE	
305	464018-0000	-		1	JUNCTION BLOCK	
320	90030-0058	-		3	CONN. T-PIPE T-12	
330	90030-0137	-		1	CONN. ELBOW WA 6-R1/8	
340	90030-0184	-		3	CONN. STR. GA-6-G1/8	
360	312105-0366	-		2	SCREW M6S M6X12 A280	
365	312105-0327	-		4	SCREW M6S M5X12 A280	
370	315105-0153	-		2	WASHER PLAIN, BRB, 6,4/12,H=1,5	
375	315105-0146	-		4	WASHER PLAIN, BRB, 5,3/10,H=1	
380	927421-0003	C		1	O-RING 13.3X2.4 SILICON	
390	927422-0004	C		1	O-RING 29.2X3 SILICON	
395	927421-0001	C		2	O-RING 9.3X2.4 SILICON	

Pos	Part No	SP	UN	Qty	Description	Page No

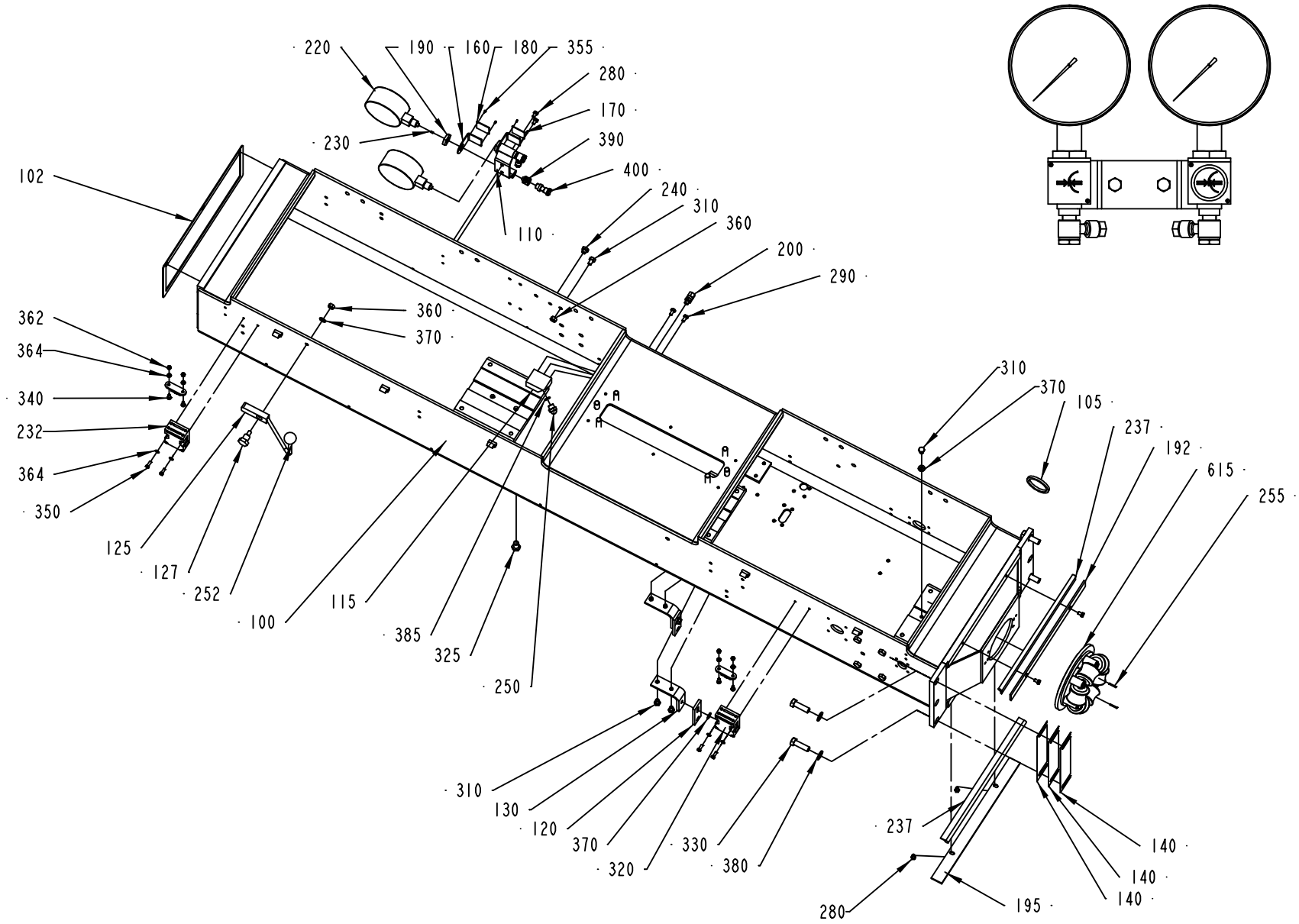
220
190
160
180
355
280
170
230
390
400
102
240
310
360
110
200
290
362
360
364
370
340
232
364
350
125
127
252
100
115
385
325
250
310
370
105
237
192
615
255
310
130
120
370
320
330
380
237
140
140
140
280
195

ECM: 105006 - 20020215
Group number: 278956-0700
Assembly Drawing: 278956-8_1_AD

Issue: 20020219

Pos	Part No	SP	UN	Qty	Description	Page No
Common Parts						
100	573619-0000	-		1	PILLAR	
102	531309-0000	A		1	GASKET	
105	12242-0005	A		1	GASKET	
110	33577-0000	-		1	CANTILEVER	
115	267564-0000	-		1	BRACKET	
120	279860-0000	-		2	ADJUSTMENT PLATE	
125	551786-0000	-		1	LEVER	
127	551784-0000	-		1	FITTING BOLT	
130	282608-0000	-		2	ANGLE	
140	458481-0003	A		1	SHIM	
140	458481-0002	A		1	SHIM	
140	458481-0001	A		1	SHIM	
160	464173-0000	-		2	LABEL HOLDER	
170	464174-0000	-		1	SIGN	
180	464175-0000	-		1	SIGN	
190	90330-0105	-		2	NUT, HEXAGON, R3/8	
192	493091-0000	-		1	CLAMP RAIL	
195	530808-0000	-		1	CLAMP RAIL	
200	90030-0051	-		1	CONN. STR., 6-R1/8, EXT. THREAD	
220	90043-0034	A		2	PRESSURE GAUGE	
230	90043-0302	A		2	SCREW	
232	B90044-0103	A		2	KEY SAFETY SWITCH AZ 15 ZVR	
	90044-0310	*A*		*1*	*KEY FOR SAFETY SWITCH, AZ 15/16 B1*	
237	90143-0018	-	MM	950	STRIP	
240	90330-0066	-		1	PLUG, EXT. G-THREAD, G1/8	
250	90424-0031	A		1	SPRAY NOZZLE 60 DEG	
252	318800-0104	-		1	HANDLE,SPHERICAL KNOB,INT.THRE.,D.30-M8	
255	311103-0238	-		2	PARALLELL PIN, M6, 3X20 MM	
280	312105-0364	-		6	SCREW M6S M6X10 A280	
290	312105-0366	-		2	SCREW M6S M6X12 A280	
310	312105-0447	-		7	SCREW M6S M8X12 A280	
320	312105-0449	-		2	SCREW M6S M8X16 A280	
325	312105-0532	-		1	SCREW M6S M12X20 A280	
330	312105-0540	-		4	SCREW M6S M12X40 A280	
340	312155-0329	-		4	SCREW HEX.SOCK.COUNT.MF6S M5X16 A280	
350	312115-0328	-		4	SCREW HEX.SOCK.HD.MC6S-TT 5X14 A480	
355	312502-0120	-		4	DRIVE SCREW ROUND HEAD KDS 0X5	
360	312605-0318	-		3	HEXAGON NUT, M6M M8 A280	
362	312812-0314	-		4	HEXAGON NUT, NY-LOCK M5 A480	
364	315105-0146	-		8	WASHER PLAIN, BRB, 5,3/10,H=1	
370	315105-0165	-		4	WASHER PLAIN, BRB, 8,4/16,H=1,5	
380	315115-0178	-		4	WASHER PLAIN, TBRB 13/24 H=4	
385	315204-0209	A		1	O-RING 10,3X2,4 MM	
390	342797-0122	-		2	CONN. BANJO, RINGPIECE 6-1/4	
400	342980-0304	-		2	BANJO-HOLLOW BOLT COUPL,EXT.THR.01-G1/4"	
F615	A466399-0100	-		1	SEAL	**125**

Machine Type Group Description Used-In Group Number Page No

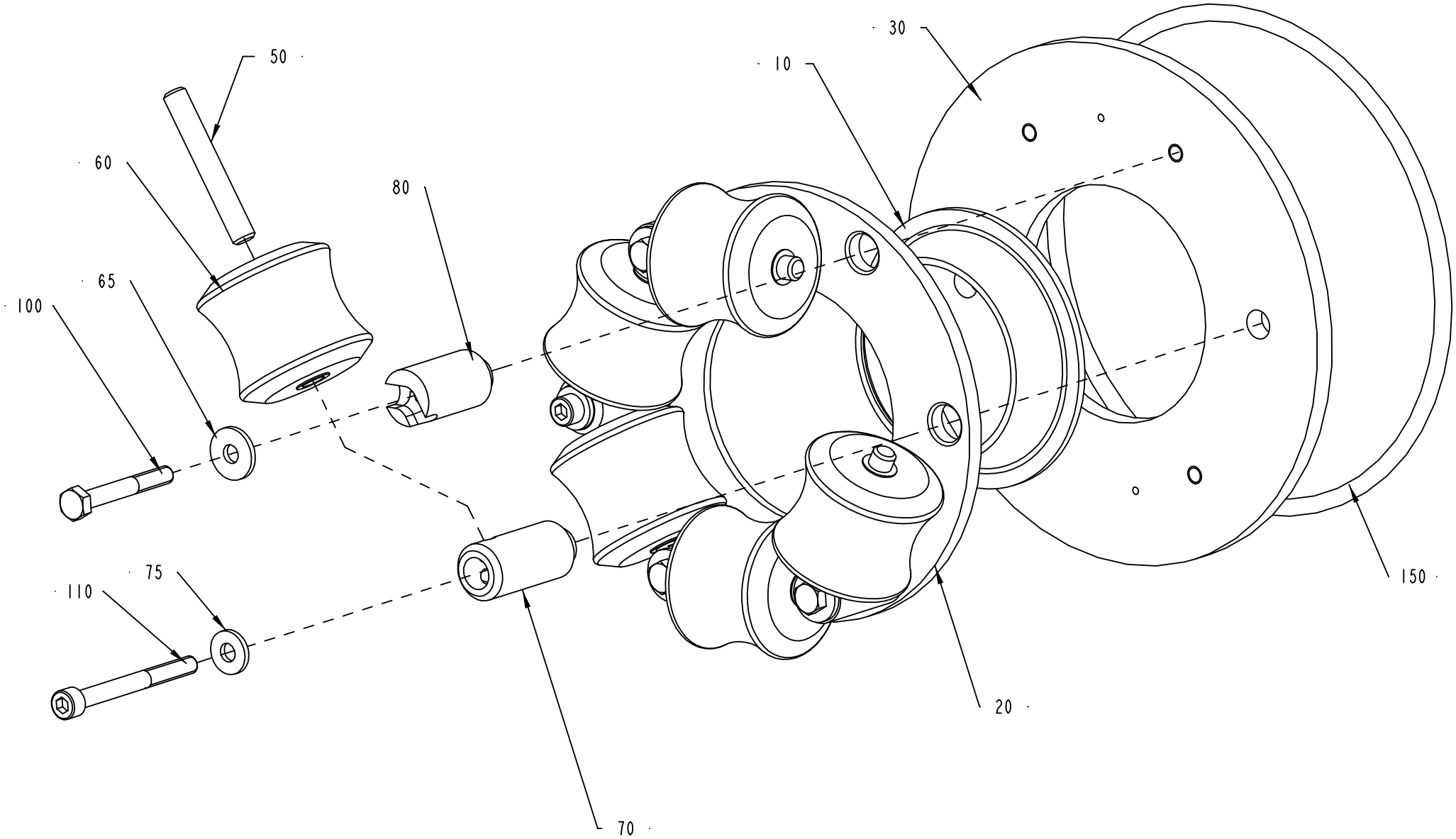
50
60
80
30
10
65
100
75
110
150
20
70

Pos	Part No	SP	UN	Qty	Description	Page No
TBA 0375S						
010	466099-0000	C		1	SEAL	
020	466402-0000	-		1	RING	
030	466405-0000	-		1	RING	
050	263655-0007	C		6	SHAFT	
060	466102-0000	C		6	ROLL	
070	466040-0000	D		2	AXLE SUPPORT	
080	493658-0000	D		4	AXLE SUPPORT	
TBA 0500B OR TBA 0750B OR TBA 1000B						
010	466042-0000	C		1	SEAL	
020	466400-0000	-		1	RING	
030	466403-0000	-		1	RING	
050	263655-0009	C		6	SHAFT	
060	466046-0000	C		6	ROLLER	
070	466040-0000	D		2	AXLE SUPPORT	
080	493658-0000	D		4	AXLE SUPPORT	
TBA 0500S OR TBA 0355B						
010	466089-0000	C		1	SEAL	
020	466401-0000	-		1	RING	
030	466404-0000	-		1	RING	
050	263655-0007	C		6	SHAFT	
060	466092-0000	C		6	ROLL	
070	466040-0000	D		2	AXLE SUPPORT	
080	493658-0000	D		4	AXLE SUPPORT	
TBA 1000SQ						
010	579318-0000	C		1	SEAL	
020	466400-0000	-		1	RING	
030	466403-0000	-		1	RING	
050	263655-0009	C		6	SHAFT	
060	579319-0000	C		6	ROLL	
070	580958-0000	D		2	AXLE SUPPORT	
080	580959-0000	D		4	AXLE SUPPORT	
TBA 0750S						
010	544015-0000	C		1	SEAL	
020	544013-0000	-		1	RING	
030	544014-0000	-		1	RING	
050	263655-0008	C		6	SHAFT	
060	544012-0000	C		6	ROLLER	
070	466040-0000	D		2	AXLE SUPPORT	
080	493658-0000	D		4	AXLE SUPPORT	
TBA 1000S						
010	567743-0000	C		1	SEAL	
020	466400-0000	-		1	RING	
030	466403-0000	-		1	RING	
050	263655-0009	C		6	SHAFT	
060	573504-0000	C		6	ROLLER	
070	466040-0000	D		2	AXLE SUPPORT	
080	493658-0000	D		4	AXLE SUPPORT	
Common Parts						
065	6278-0000	D		4	WASHER	
075	466041-0000	-		2	WASHER	
100	312105-0379	-		4	SCREW M6S M6X45 A280	
110	312115-0382	-		2	SCREW MC6S M6X60 A280	
150	315204-0324	C		1	O-RING 164,3X5,7 MM	

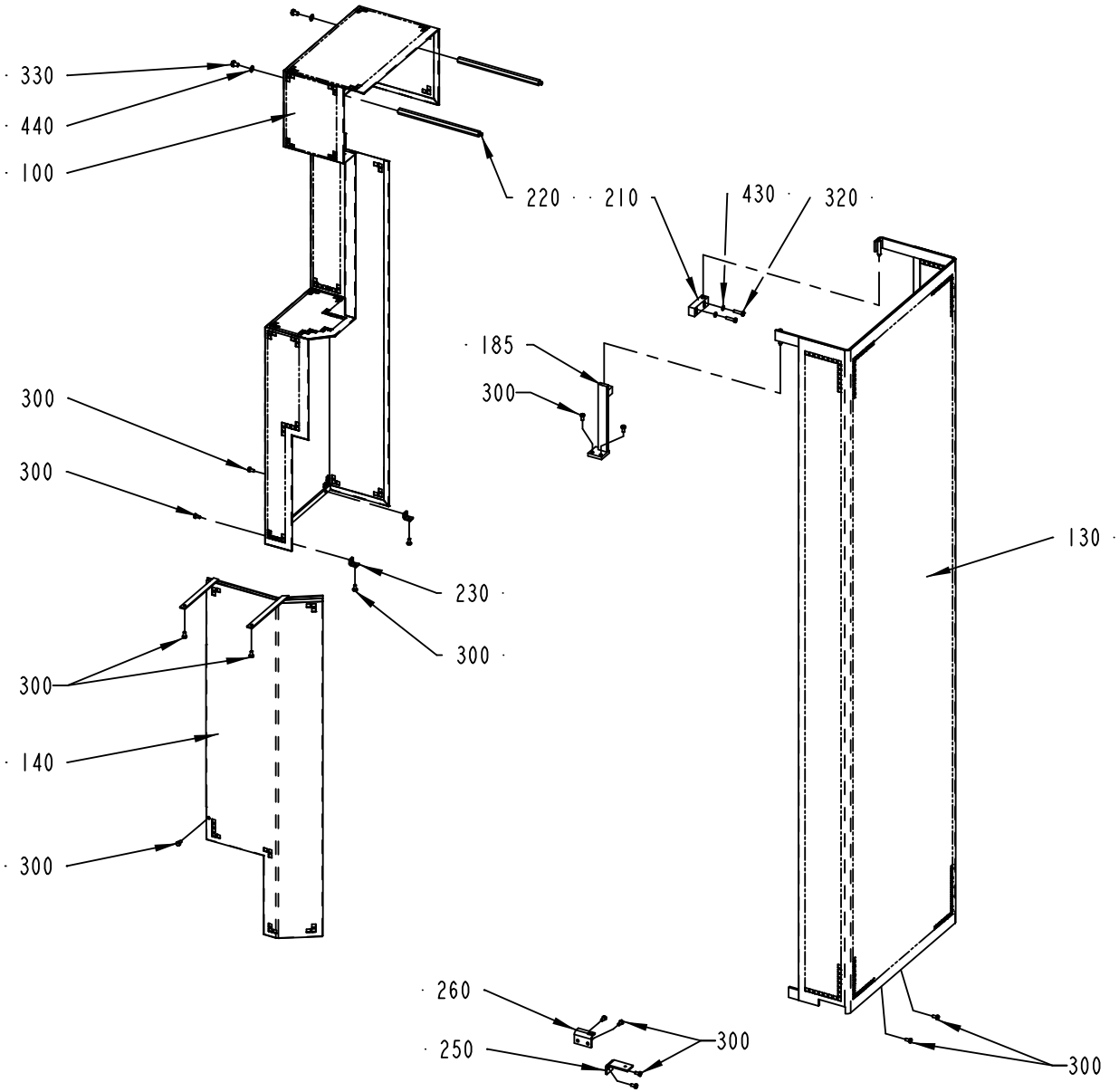
330
440
100
220
210
430
320
185
300
300
300
230
300
300
140
300
130
260
250
300
300

Pos	Part No	SP	UN	Qty	Description	Page No
Common Parts						
100	752771-0000	-		1	TOUCH GUARD	
130	567023-0000	-		1	TOUCH GUARD	
140	576738-0000	-		1	TOUCH GUARD	
185	294472-0000	-		1	CANTILEVER	
210	267646-0000	-		1	BLOCKING PIECE	
220	267665-0000	-		2	BRACKET	
230	279619-0000	-		2	BRACKET	
250	457752-0000	-		1	CANTILEVER	
260	457753-0000	-		1	BRACKET	
300	312105-0366	-		15	SCREW M6S M6X12 A280	
320	312105-0372	-		2	SCREW M6S M6X25 A280	
330	312105-0447	-		2	SCREW M6S M8X12 A280	
430	315105-0153	-		2	WASHER PLAIN, BRB, 6,4/12,H=1,5	
440	315105-0165	-		2	WASHER PLAIN, BRB, 8,4/16,H=1,5	

Pos	Part No	SP	UN	Qty	Description	Page No

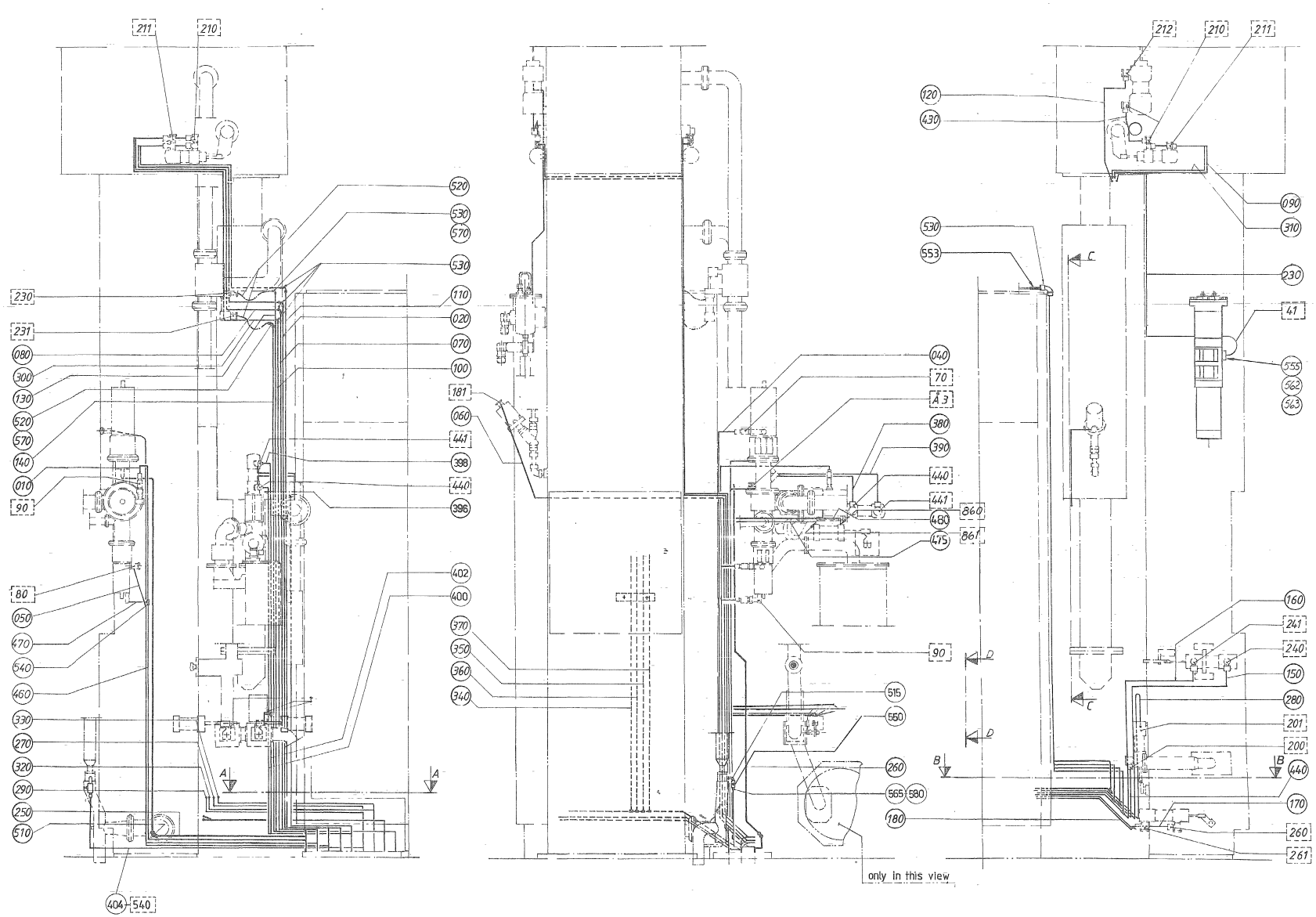
211
210
212
520
530
570
530
110
020
070
100
181
060
441
398
440
396
230
231
080
300
130
520
570
140
010
90
80
050
470
540
460
330
270
320
290
250
510
404
540
402
400
370
350
360
340
040
70
A3
380
390
440
441
860
480
861
475
90
515
550
260
565
580
180
530
553
120
430
090
310
230
41
555
562
563
160
241
240
150
280
201
200
440
170
260
261
A
B
C
D
only in this view

ECM: 102694 - 20020115
Group number: 282805-0900
Assembly Drawing: 282805-14_1_AA

Issue: 20020219

Pos	Part No	SP	UN	Qty	Description	Page No
2"						
010	476794-0001	-		1	PIPE	
3"						
010	476794-0002	-		1	PIPE	
Common Parts						
020	532352-0000	-		1	PIPE	
040	554850-0000	-		1	PIPE	
050	451277-0000	-		1	PIPE	
060	2525464-0000	-		1	PIPE	
070	532354-0000	-		1	PIPE	
080	451280-0000	-		1	PIPE	
090	451281-0000	-		1	PIPE	
100	532355-0000	-		1	PIPE	
110	532356-0000	-		1	PIPE	
120	451284-0000	-		1	PIPE	
130	451285-0000	-		1	PIPE	
140	451286-0000	-		1	PIPE	
150	451287-0000	-		1	PIPE	
160	451288-0000	-		1	PIPE	
170	451289-0000	-		1	PIPE	
180	451290-0000	-		1	PIPE	
230	564600-0000	-		1	PIPE	
250	549093-0000	-		1	PIPE	
260	560928-0000	-		1	PIPE	
270	451296-0000	-		1	PIPE	
280	451297-0000	-		1	PIPE	
290	451298-0000	-		1	PIPE	
300	451299-0000	-		1	PIPE	
310	451300-0000	-		1	PIPE	
320	451301-0000	-		1	PIPE	
330	451302-0000	-		1	PIPE	
340	451303-0001	-		1	PIPE	
350	451303-0002	-		1	PIPE	
360	451303-0003	-		1	PIPE	
370	451303-0004	-		1	PIPE	
380	451304-0000	-		1	PIPE	
390	451305-0000	-		1	PIPE	
396	479061-0000	-		1	PIPE	
398	479072-0000	-		1	PIPE	
400	479073-0000	-		1	PIPE	
402	479074-0000	-		1	PIPE	
404	532366-0000	-		1	PIPE	
406	555553-0000	-		1	PIPE	
408	555554-0000	-		1	PIPE	
410	555547-0000	-		1	PIPE	
411	555548-0000	-		1	PIPE	
420	450814-0000	-		1	HOLDER	
430	451306-0000	-		1	PIPE	
440	451307-0000	-		1	PIPE	
450	451326-0000	-		1	CLAMPING PLATE	
460	554139-0000	-		1	PIPE	
470	476796-0000	-		1	PIPE	
475	555551-0000	-		1	PIPE	
480	555552-0000	-		1	PIPE	
510	90030-0096	-		1	CONN. ELBOW W-12	
515	90140-0021	-		1	ELBOW, 90 INT/EXT, 20201/8-1/8	
520	90166-0132	-	MM	520	TUBE 6 MM PA,TRANSP.	
530	90224-0309	-		10	CONNECTION	
540	90224-0310	-		7	CONNECTION	
550	90235-0048	A		1	VALVE	
555	312105-0327	-		2	SCREW M6S M5X12 A280	
560	312105-0368	-		2	SCREW M6S M6X16 A280	
562	315105-0146	-		2	WASHER PLAIN, BRB, 5,3/10,H=1	
563	315204-0208	A		1	O-RING 9,3X2,4 MM	
570	342706-0130	-		2	ACCESSORIES, INSERT SLEEVE 6 MM	
580	90458-1849	-		1	CONN. STR., 6-R1/8, EXT. THREAD	

Machine Type | Group Description | Used-In | Group Number | Page No

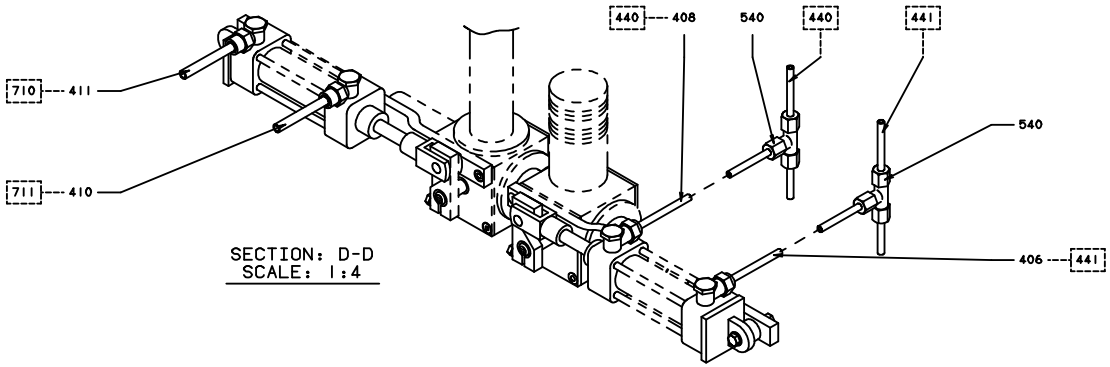

SECTION: D-D
SCALE: 1:4

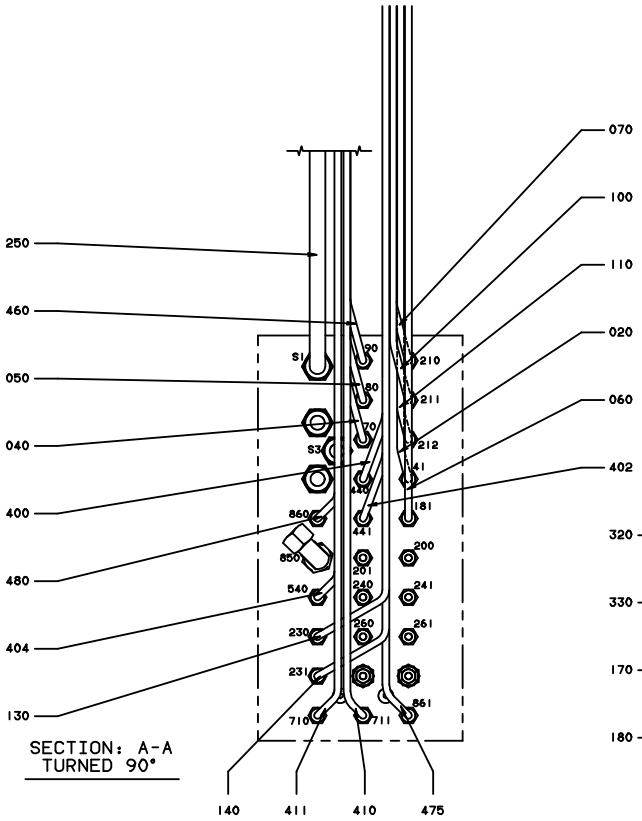

SECTION: A-A
TURNED 90°

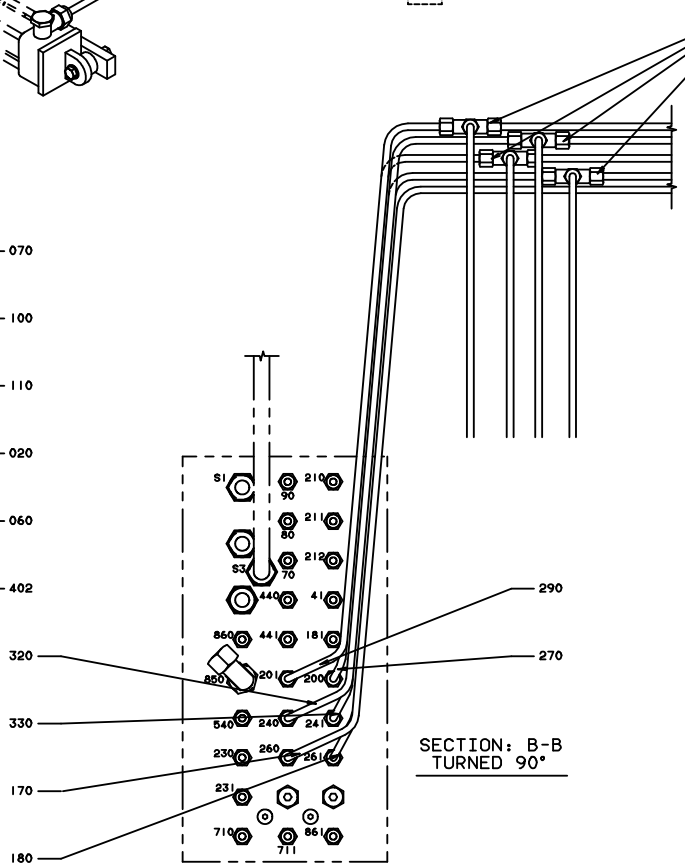

SECTION: B-B
TURNED 90°

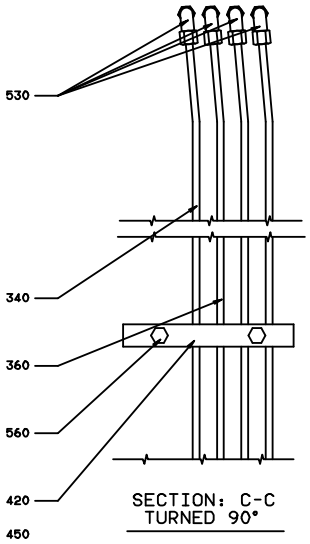

SECTION: C-C
TURNED 90°

ECM: 102694 - 20020115
Group number: 282805-0900
Assembly Drawing: 282805-16_1_AB

Issue: 20020219

Pos	Part No	SP	UN	Qty	Description	Page No
2"						
010	476794-0001	-		1	PIPE	
3"						
010	476794-0002	-		1	PIPE	
Common Parts						
020	532352-0000	-		1	PIPE	
040	554850-0000	-		1	PIPE	
050	451277-0000	-		1	PIPE	
060	2525464-0000	-		1	PIPE	
070	532354-0000	-		1	PIPE	
080	451280-0000	-		1	PIPE	
090	451281-0000	-		1	PIPE	
100	532355-0000	-		1	PIPE	
110	532356-0000	-		1	PIPE	
120	451284-0000	-		1	PIPE	
130	451285-0000	-		1	PIPE	
140	451286-0000	-		1	PIPE	
150	451287-0000	-		1	PIPE	
160	451288-0000	-		1	PIPE	
170	451289-0000	-		1	PIPE	
180	451290-0000	-		1	PIPE	
230	564600-0000	-		1	PIPE	
250	549093-0000	-		1	PIPE	
260	560928-0000	-		1	PIPE	
270	451296-0000	-		1	PIPE	
280	451297-0000	-		1	PIPE	
290	451298-0000	-		1	PIPE	
300	451299-0000	-		1	PIPE	
310	451300-0000	-		1	PIPE	
320	451301-0000	-		1	PIPE	
330	451302-0000	-		1	PIPE	
340	451303-0001	-		1	PIPE	
350	451303-0002	-		1	PIPE	
360	451303-0003	-		1	PIPE	
370	451303-0004	-		1	PIPE	
380	451304-0000	-		1	PIPE	
390	451305-0000	-		1	PIPE	
396	479061-0000	-		1	PIPE	
398	479072-0000	-		1	PIPE	
400	479073-0000	-		1	PIPE	
402	479074-0000	-		1	PIPE	
404	532366-0000	-		1	PIPE	
406	555553-0000	-		1	PIPE	
408	555554-0000	-		1	PIPE	
410	555547-0000	-		1	PIPE	
411	555548-0000	-		1	PIPE	
420	450814-0000	-		1	HOLDER	
430	451306-0000	-		1	PIPE	
440	451307-0000	-		1	PIPE	
450	451326-0000	-		1	CLAMPING PLATE	
460	554139-0000	-		1	PIPE	
470	476796-0000	-		1	PIPE	
475	555551-0000	-		1	PIPE	
480	555552-0000	-		1	PIPE	
510	90030-0096	-		1	CONN. ELBOW W-12	
515	90140-0021	-		1	ELBOW, 90 INT/EXT, 20201/8-1/8	
520	90166-0132	-	MM	520	TUBE 6 MM PA,TRANSP.	
530	90224-0309	-		10	CONNECTION	
540	90224-0310	-		7	CONNECTION	
550	90235-0048	A		1	VALVE	
555	312105-0327	-		2	SCREW M6S M5X12 A280	
560	312105-0368	-		2	SCREW M6S M6X16 A280	
562	315105-0146	-		2	WASHER PLAIN, BRB, 5,3/10,H=1	
563	315204-0208	A		1	O-RING 9,3X2,4 MM	
570	342706-0130	-		2	ACCESSORIES, INSERT SLEEVE 6 MM	
580	90458-1849	-		1	CONN. STR., 6-R1/8, EXT. THREAD	

Machine Type | Group Description | Used-In | Group Number | Page No

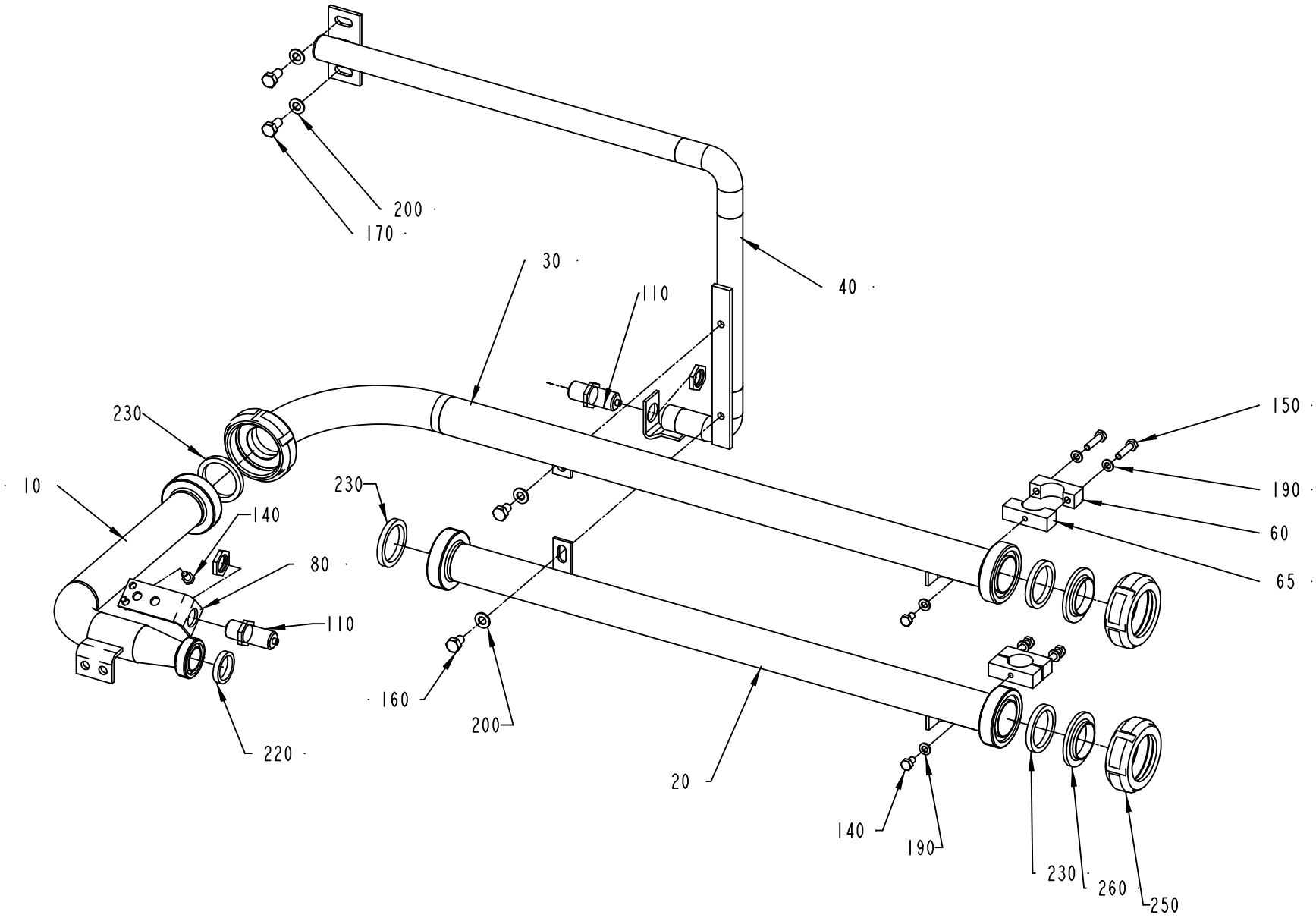
200
170
30
110
40
230
10
140
80
110
220
230
160
200
20
150
190
60
65
140
190
230
260
250

ECM: 72760 - 20001116
Group number: 451131-0100
Assembly Drawing: 451131-1_1_AD

Issue: 20020219

Pos	Part No	SP	UN	Qty	Description	Page No
Common Parts						
010	449964-0000	D		1	PIPE	
020	449966-0000	D		1	PIPE	
030	449967-0000	D		1	PIPE	
040	450335-0000	D		1	PIPE	
060	457614-0001	D		2	CLAMPING PIECE	
065	457614-0002	D		2	CLAMPING PIECE	
080	449960-0000	-		1	BRACKET	
110	90044-0099	C		2	PROXIMITY SWITCH IG REPL.BY 90044-126	
140	312105-0364	-		4	SCREW M6S M6X10 A280	
150	312105-0372	-		4	SCREW M6S M6X25 A280	
160	312105-0447	-		2	SCREW M6S M8X12 A280	
170	312105-0449	-		2	SCREW M6S M8X16 A280	
190	315105-0153	-		6	WASHER PLAIN, BRB, 6,4/12,H=1,5	
200	315105-0165	-		4	WASHER PLAIN, BRB, 8,4/16,H=1,5	
220	315250-0101	C		1	GASKET 32X25X5,5 MM	
230	315250-0103	C		3	GASKET 48X38X5,5 MM	
250	342803-0103	-		2	UNION NUT, RD 60-6 (SMS 38)	
260	342812-0203	-		2	FERRULE, SMS 1145, 2343, NO.190996	

Pos	Part No	SP	UN	Qty	Description	Page No

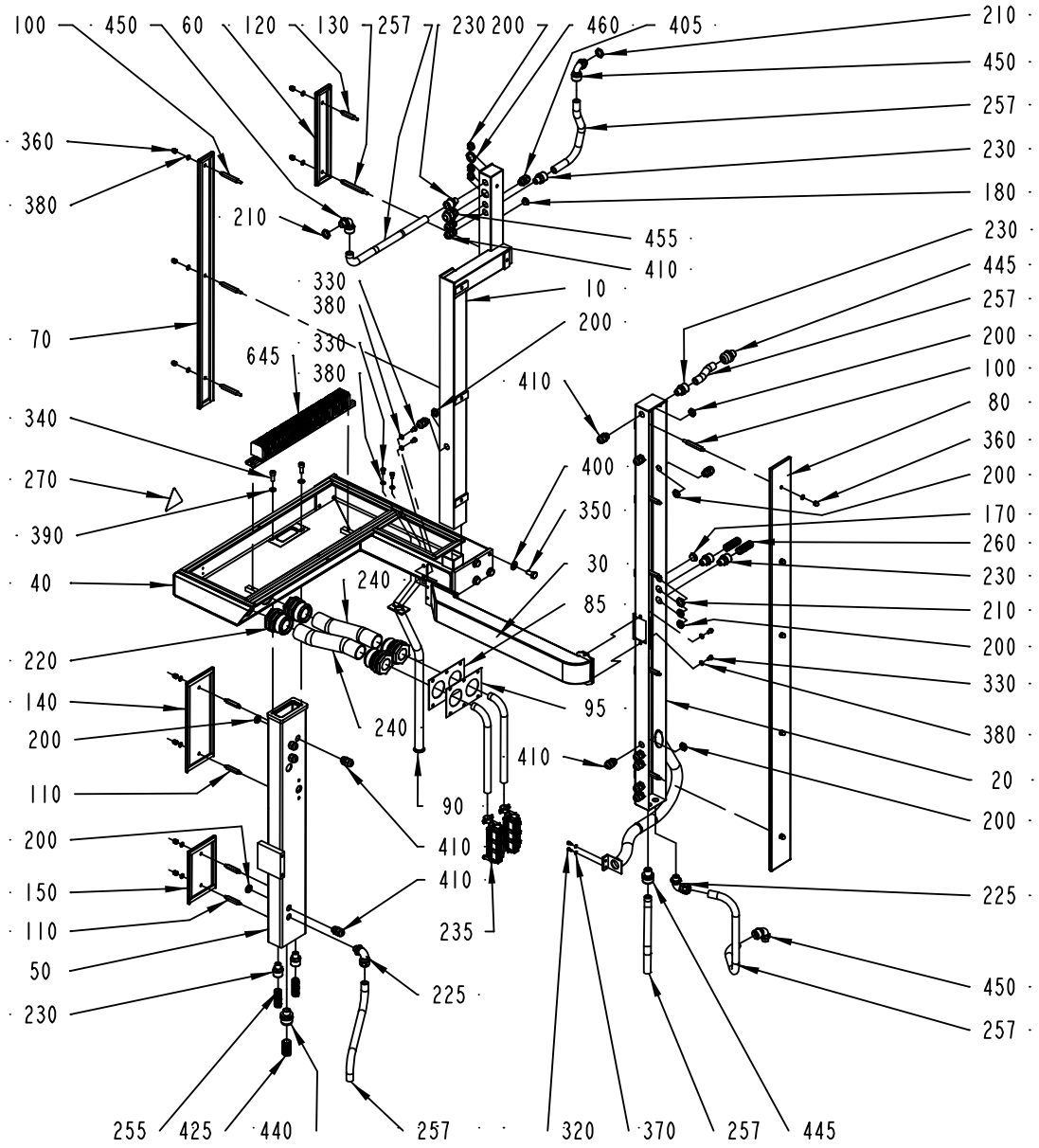
100
450
60
120
130
257
230
200
460
405
210
450
257
230
180
360
380
210
455
410
330
380
10
200
70
330
380
645
410
340
270
390
40
400
350
30
85
240
220
140
200
110
240
95
410
90
200
150
110
50
230
410
410
235
225
225
450
257
255
425
440
257
320
370
257
445

ECM: 72761 - 20000328
Group number: 451342-0500
Assembly Drawing: 451342-4_1_AD

Issue: 20020219

Pos	Part No	SP	UN	Qty	Description	Page No
Common Parts						
010	451099-0000	-		1	CABLE TRENCH	
020	561571-0000	-		1	CABLE TRENCH	
030	B451101-0000	-		1	CABLE TRENCH	
	90153-0017	*D*	*KG*	*1*	*ADHESIVE 160 ML*	
	90143-0014	*D*	*M*	*1*	*STRIP*	
040	B451339-0000	-		1	BOXSTAINLESS	
	90153-0017	*D*	*KG*	*1*	*ADHESIVE 160 ML*	
	90143-0011	*D*	*M*	*1*	*STRIP*	
050	451340-0000	-		1	CHANNELSTAINLESS	
060	B451102-0000	-		1	COVER STAINLESS	
	90143-0011	*D*	*M*	*1*	*STRIP*	
	90153-0017	*D*	*KG*	*1*	*ADHESIVE 160 ML*	
070	B451103-0000	-		1	LID	
	90153-0017	*D*	*KG*	*1*	*ADHESIVE 160 ML*	
	90143-0011	*D*	*M*	*1*	*STRIP*	
080	B451104-0000	-		1	LID	
	90143-0011	*D*	*M*	*1*	*STRIP*	
	90153-0017	*D*	*KG*	*1*	*ADHESIVE 160 ML*	
085	556682-0000	-		1	CABLE INLET PLATE 93X140MM	
090	451338-0000	-		1	PIPE	
095	556683-0000	-		1	RUBBERGASKET 90X140MM	
100	451085-0002	-		8	SPACER SCREW	
110	451085-0003	-		4	SPACER SCREW	
120	451085-0004	-		1	SPACER SCREW	
130	451085-0005	-		1	SPACER SCREW	
140	B451341-0001	-		1	LID	
	90153-0017	*D*	*KG*	*1*	*ADHESIVE 160 ML*	
	90143-0011	*D*	*M*	*1*	*STRIP*	
150	B451341-0002	-		1	LID	
	90143-0011	*D*	*M*	*1*	*STRIP*	
	90153-0017	*D*	*KG*	*1*	*ADHESIVE 160 ML*	
170	90002-0009	-		1	BLANK-OFF PLUG, PR 18.6 SKINDICHT-BLK11	
180	90002-0013	-		1	BLANK-OFF PLUG, PR 15,2 SKINDICHT-BLK9	
200	90099-0001	-		21	NUT PR 15,2 BRASS	
210	90099-0002	-		3	NUT PR 18,6 BRASS	
220	90012-0059	D		4	GLAND	
225	90012-0064	-		2	GLAND	
230	90012-0063	-		7	CABLE GLAND PR 15,2	
235	90110-0128	-		2	MALE INSERT, HAN 24 E-M 933 024 2631	
240	90152-0029	-	MM	500	HOSE 35/41	
255	90152-0033	-	MM	180	SPIRAL CONDUIT FOR PR 15,2(PG 9)	
257	90152-0033	-	MM	2300	SPIRAL CONDUIT FOR PR 15,2(PG 9)	
260	90152-0033	-	MM	600	SPIRAL CONDUIT FOR PR 15,2(PG 9)	
270	90194-0016	-		1	SIGN, FLASH, ELECTRIC EQUIPMENT SYMBOL	
320	312105-0287	-		2	SCREW M6S M4X8 A280	
330	312105-0364	-		6	SCREW M6S M6X10 A280	
340	312115-0451	-		2	SCREW MC6S M8X20 A280	
350	312105-0491	-		4	SCREW M6S M10X20 A280	
360	312705-0316	-		14	NUT HEX. DOMED CAP MHM-6 M6 A280	
370	315105-0136	-		2	WASHER PLAIN, BRB, 4,3/8,H=0,8	
380	315105-0153	-		20	WASHER PLAIN, BRB, 6,4/12,H=1,5	
390	315105-0165	-		2	WASHER PLAIN, BRB, 8,4/16,H=1,5	
400	315105-0173	-		4	WASHER PLAIN, BRB, 10,5/22,H=2	
405	352103-0100	-		1	CABLE GLAND, STR 9, PR15,2/PG9	
410	352103-0101	-		15	CABLE GLAND, ST 9, PR15,2/PG9	
425	352135-0106	-	MM	180	SPIRAL CONDUIT DI=16 MM	
440	352136-0127	-		2	GLAND FITTING PR 18,6	
445	352136-0113	-		2	GLAND FITTING PR18,6/PG11 DI=12MM	
450	352137-0113	-		3	COND.FITTING PR 18,6 DI=12MM	
455	352103-0111	-		1	CABLE GLAND, ST 16, PR22,5/PG16	
460	90099-0003	-		1	NUT	
645	A451365-0200	-		1	TERMINAL PLINTH	**137**

Machine Type | Group Description | Used-In | Group Number | Page No

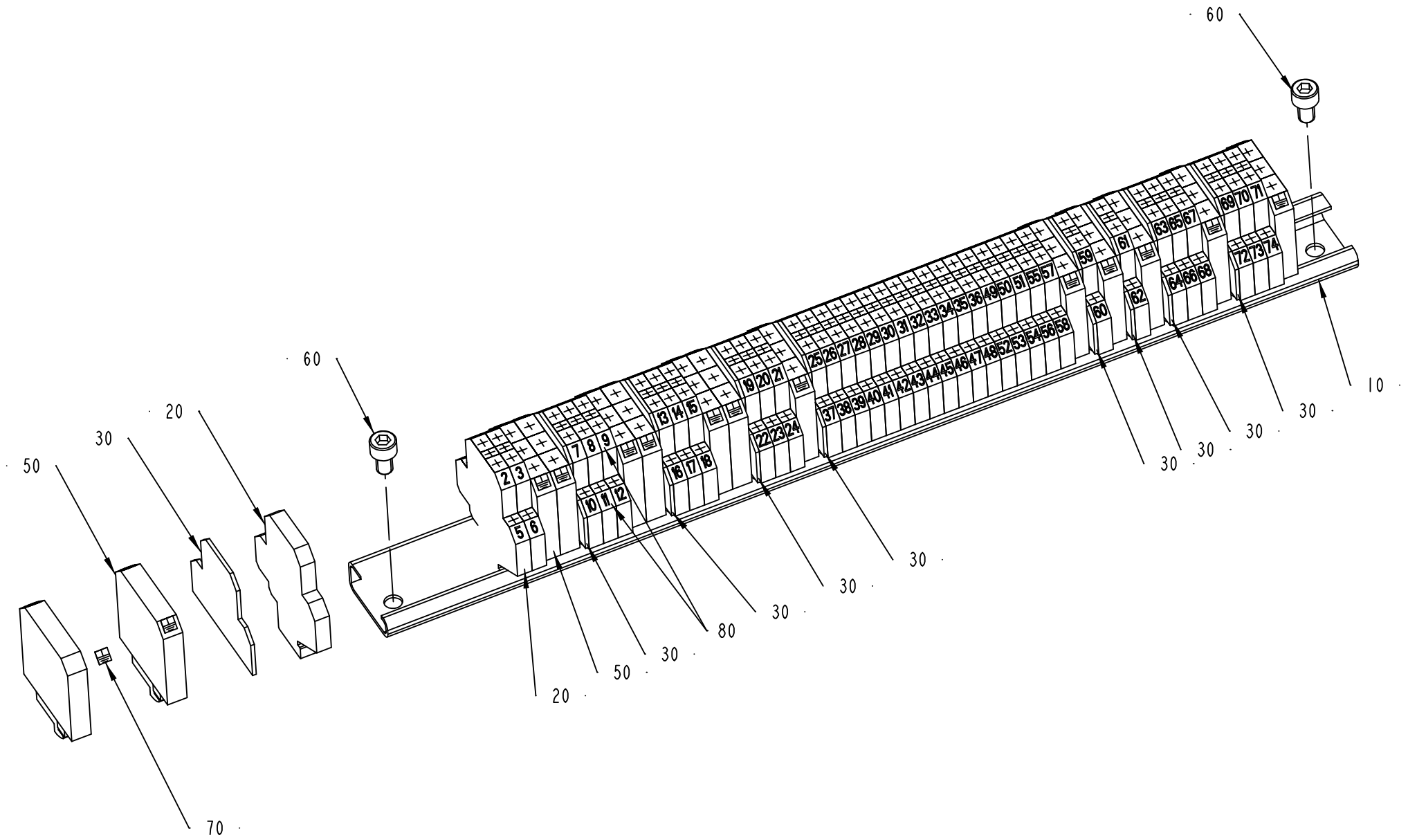
60
60
20
30
50
70
10
30
30
30
30
30
80
30
50
20
1 2 3 4 5 6 7 8 9 10 11 12 13 14 15 16 17 18 19 20 21 22 23 24 25 26 27 28 29 30 31 32 33 34 35 36 37 38 39 40 41 42 43 44 45 46 47 48 49 50 51 52 53 54 55 56 57 58 59 60 61 62 63 64 65 66 67 68 69 70 71 72 73 74

ECM: 72761 - 20000328
Group number: 451365-0200
Assembly Drawing: 451365-2_1_AB

Issue: 20020219

Pos	Part No	SP	UN	Qty	Description	Page No
Common Parts						
010	10793-0036	-		1	MOUNTINGRAIL TS32 L=400MM	
020	90077-0090	-		37	FEED THROUGH TERMINAL, 10-00035546-1	
030	90077-0309	-		9	END PLATE	
050	90135-0021	-		14	EARTH CLAMP	
060	312115-0364	-		2	SCREW HEX.SOCK.HD.MC6S-TT 6X10 A480	
070	359011-0202	-		18	SIGN BOARD(GROUND)	
080	359011-0800	-		2	MARKING PLATES BSFW 51-100	

Pos	Part No	SP	UN	Qty	Description	Page No

This page is intentionally left blank.

ECM: 71703 - 19980630
Group number: 284163-0500
Assembly Drawing:

Issue: 20020219

Pos	Part No	SP	UN	Qty	Description	Page No
0375S						
030	526689-0000	-		1	DISTRIBUTOR WING	
110	499387-0000	-		1	PRESSURE ROLLER	
115	466099-0000	-		1	SEAL	
0355B OR 0500S						
030	526689-0000	-		1	DISTRIBUTOR WING	
110	499387-0000	-		1	PRESSURE ROLLER	
115	466089-0000	-		1	SEAL	
0500B OR 0750B OR 1000B						
030	243851-0000	-		1	GASKET	
110	232979-0000	-		1	PRESSURE ROLLER	
115	466042-0000	-		1	SEAL	
0750S						
030	526689-0000	-		1	DISTRIBUTOR WING	
110	499387-0000	-		1	PRESSURE ROLLER	
115	544015-0000	-		1	SEAL	
1000S						
030	569104-0000	-		1	DISTRIBUTOR WING	
110	499387-0000	-		1	PRESSURE ROLLER	
115	567743-0000	-		1	SEAL	
1000SQ						
030	569104-0000	-		1	DISTRIBUTOR WING	
110	499387-0000	-		1	PRESSURE ROLLER	
115	579318-0000	-		1	SEAL	
Common Parts						
033	476358-0000	-		1	COIL HEATER	
040	12242-0003	-		1	GASKET	
050	12242-0005	-		1	GASKET	
100	230551-0000	-		1	GASKET	
120	531738-0000	-		2	GASKET	
130	531739-0000	-		1	GASKET	
140	531740-0000	-		1	GASKET	
160	531742-0000	-		1	GASKET	
190	531744-0000	-		1	GASKET	
195	531745-0000	-		1	GASKET	
200	531764-0000	-		1	GASKET	
205	531734-0000	-		1	GASKET	
210	90214-0138	-		2	BALL BEARING, 5X19X6 MM	
220	90242-0084	-		2	O-RING 203,0X3 MM	
230	315204-0217	-		2	O-RING 24,2X3 MM	
F010	A499255-0200	-		1	SEAL KIT	**141**

Machine Type | Group Description | Used-In | Group Number | Page No

This page is intentionally left blank.

ECM: 70777 - 19970414
Group number: 499255-0200
Assembly Drawing:

Issue: 20020219

Pos	Part No	SP	UN	Qty	Description	Page No
Common Parts						
010	530589-0000	-		4	SEAL RING	
020	530588-0000	-		1	SEAL RING	
030	533169-0000	-		1	DIAPHRAGM	
060	90207-0363	-		1	GASKET	
070	90207-0365	-		1	GASKET	
080	539212-0000	-		1	GASKET	
100	315204-0215	-		4	O-RING 19,2X3 MM	
110	315202-0301	-		1	O-RING 49,5X3 MM	

Pos	Part No	SP	UN	Qty	Description	Page No

Tetra Pak

SPC
Spare Parts Catalogue

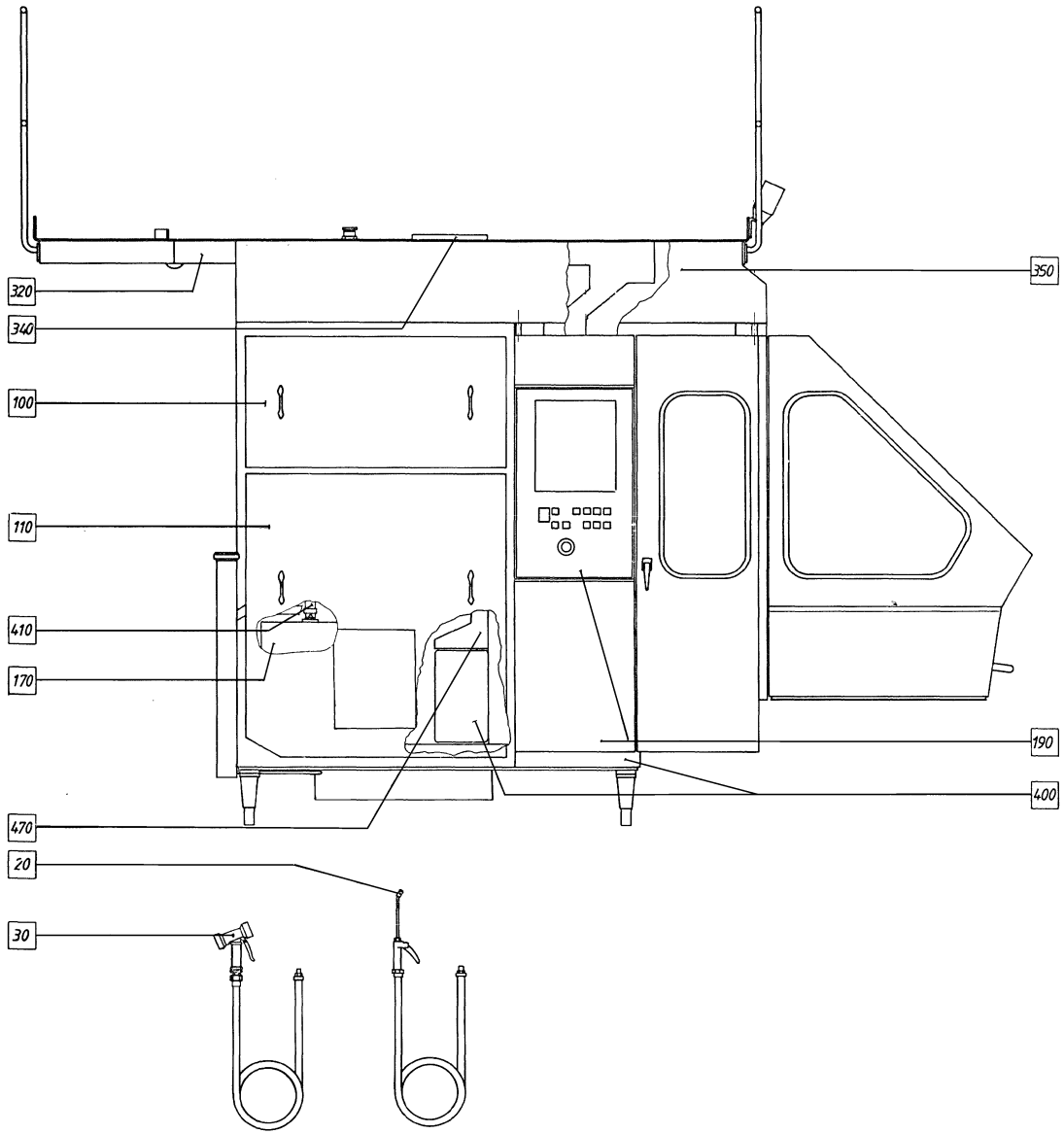
320
340
100
110
410
170
470
20
30
350
190
400

Pos	Part No	SP	UN	Qty	Description	Page No
TBA/8						
050	A265889-0300	-		1	SWITCH (MONITOR)	**149**
065	A268015-0100	-		1	BENDING ROLLER BRACKET	**151**
070	A1360906-0100	-		1	SIDE BOX RIGHT	**153**
170	A561256-0300	-		1	PEROXIDE PIPE	**155**
190	A1360889-0100	-		1	SIDE GUARD LEFT	**173**
210	A1360898-0100	-		1	SIDE GUARD, RIGHT	**175**
230	A297808-0500	-		1	CLEANING EQUIPMENT	**177**
260	A297604-0400	-		1	HOOD	**183, 185**
330	A440415-0200	-		1	TRANSFORMER	**191**
340	A1362426-0100	-		1	BOTTOM PLATE	**193**
350	A1360903-0100	-		1	SIDE BOX LEFT	**195**
400	A440537-0500	-		1	MACHINE BODY	**199, 201, 203**
410	A442463-0400	-		1	PIPE WORK	**207**
420	A445537-0200	-		1	PIPE WORK-HYDRAULIC	**209**
455	A449168-0300	-		1	CLEANING SYSTEM	**211**
460	A1362427-0100	-		1	PIPE WORK-WATER TBA/8	**215, 217, 219, 221**
490	A575797-0100	-		1	FLOWMETER GROUP	**223**
510	A450788-0600	-		1	PIPE WORK-PNEUMATIC	**225, 227, 229, 231, 233, 235**
540	A450840-0400	-		1	LIFTING UNIT	**237**
Common Parts						
020	A230922-0100	-		1	AIR JET GUN	**241**
030	A493614-0100	-		1	SPRAY GUN	**243**
100	A269322-0300	-		1	COVER UPPER	**245**
110	A269324-0400	-		1	HATCH	**247**
140	A279979-0500	-		1	CENTRAL LUBRICATION	**249**
280	A434707-0300	-		1	HYDRAULIC SYSTEM	**251**
310	A440098-0300	-		1	CRANK BRACKET	**255**
320	A440384-0600	-		1	PLATFORM	**257**
390	A440474-0100	-		1	TUBE FLUSHING DEVICE	**261**
430	A575392-0100	-		1	VALVE PANEL LOWER	**263, 265**
440	A1487413-0100	-		1	VALVE PANEL	**267, 269**
450	A449930-0500	-		1	CONNECTION BOX	**271**
470	A1361566-0100	-		1	PLACING OF CABLE DUCT	**273**
520	A450792-0100	-		1	DETERGENT PUMP	**275**
530	A450824-0200	-		1	DOOR	**277**
560	A450883-0400	-		1	PROTECTION	**279**
570	A451348-0200	-		1	CONNECTION BOX	**283**

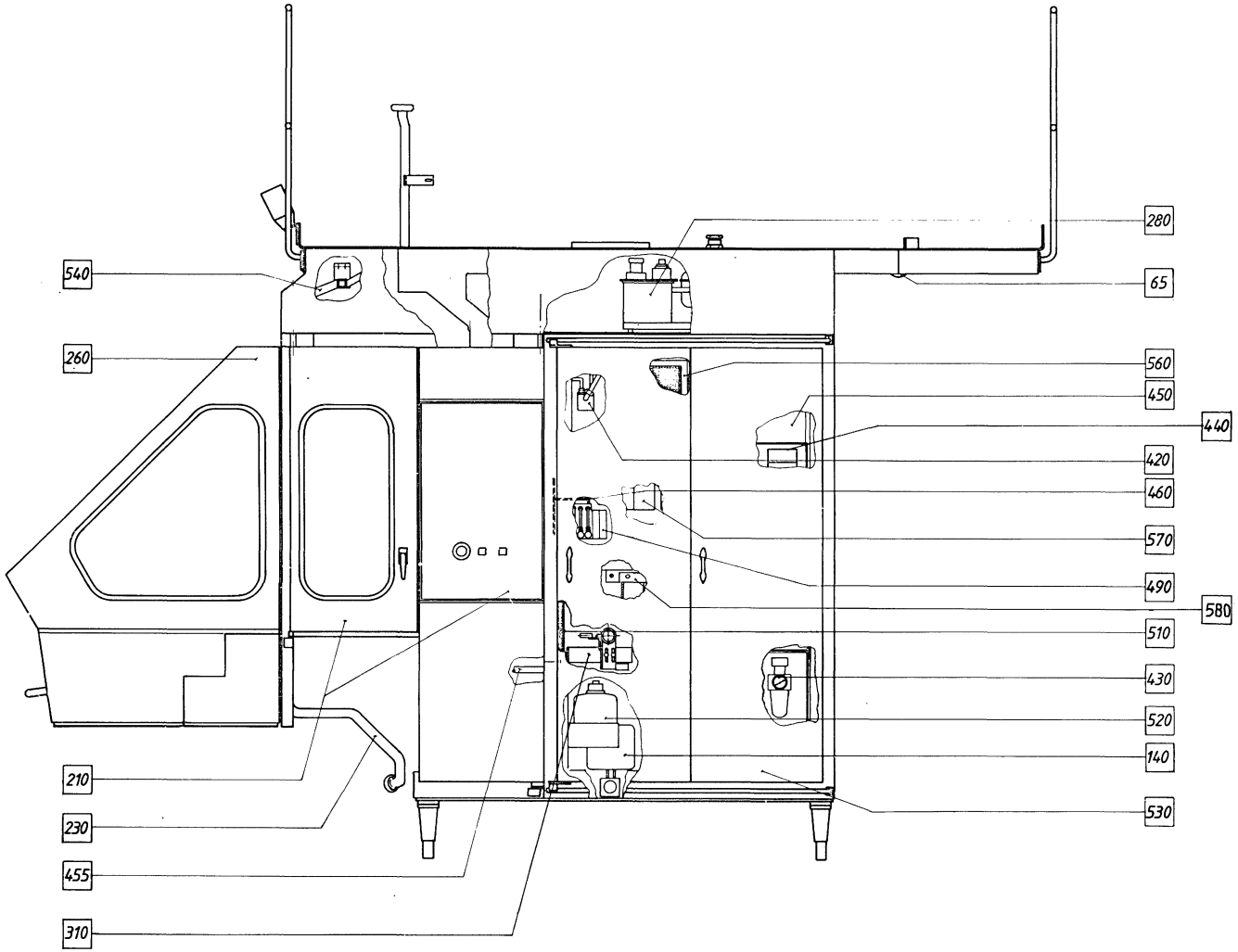
280
65
540
260
560
450
440
420
460
570
490
580
510
430
520
140
530
210
230
455
310

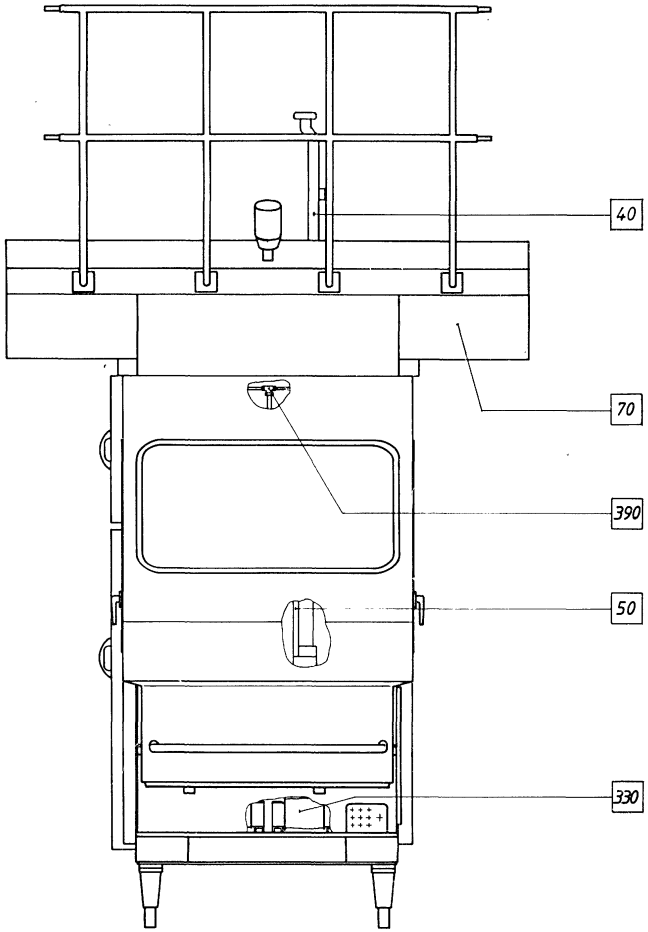
40
70
390
50
330

Pos	Part No	SP	UN	Qty	Description	Page No
TBA/8						
050	A265889-0300	-		1	SWITCH (MONITOR)	**149**
065	A268015-0100	-		1	BENDING ROLLER BRACKET	**151**
070	A1360906-0100	-		1	SIDE BOX RIGHT	**153**
170	A561256-0300	-		1	PEROXIDE PIPE	**155**
190	A1360889-0100	-		1	SIDE GUARD LEFT	**173**
210	A1360898-0100	-		1	SIDE GUARD, RIGHT	**175**
230	A297808-0500	-		1	CLEANING EQUIPMENT	**177**
260	A297604-0400	-		1	HOOD	**183, 185**
330	A440415-0200	-		1	TRANSFORMER	**191**
340	A1362426-0100	-		1	BOTTOM PLATE	**193**
350	A1360903-0100	-		1	SIDE BOX LEFT	**195**
400	A440537-0500	-		1	MACHINE BODY	**199, 201, 203**
410	A442463-0400	-		1	PIPE WORK	**207**
420	A445537-0200	-		1	PIPE WORK-HYDRAULIC	**209**
455	A449168-0300	-		1	CLEANING SYSTEM	**211**
460	A1362427-0100	-		1	PIPE WORK-WATER TBA/8	**215, 217, 219, 221**
490	A575797-0100	-		1	FLOWMETER GROUP	**223**
510	A450788-0600	-		1	PIPE WORK-PNEUMATIC	**225, 227, 229, 231, 233, 235**
540	A450840-0400	-		1	LIFTING UNIT	**237**
Common Parts						
020	A230922-0100	-		1	AIR JET GUN	**241**
030	A493614-0100	-		1	SPRAY GUN	**243**
100	A269322-0300	-		1	COVER UPPER	**245**
110	A269324-0400	-		1	HATCH	**247**
140	A279979-0500	-		1	CENTRAL LUBRICATION	**249**
280	A434707-0300	-		1	HYDRAULIC SYSTEM	**251**
310	A440098-0300	-		1	CRANK BRACKET	**255**
320	A440384-0600	-		1	PLATFORM	**257**
390	A440474-0100	-		1	TUBE FLUSHING DEVICE	**261**
430	A575392-0100	-		1	VALVE PANEL LOWER	**263, 265**
440	A1487413-0100	-		1	VALVE PANEL	**267, 269**
450	A449930-0500	-		1	CONNECTION BOX	**271**
470	A1361566-0100	-		1	PLACING OF CABLE DUCT	**273**
520	A450792-0100	-		1	DETERGENT PUMP	**275**
530	A450824-0200	-		1	DOOR	**277**
560	A450883-0400	-		1	PROTECTION	**279**
570	A451348-0200	-		1	CONNECTION BOX	**283**

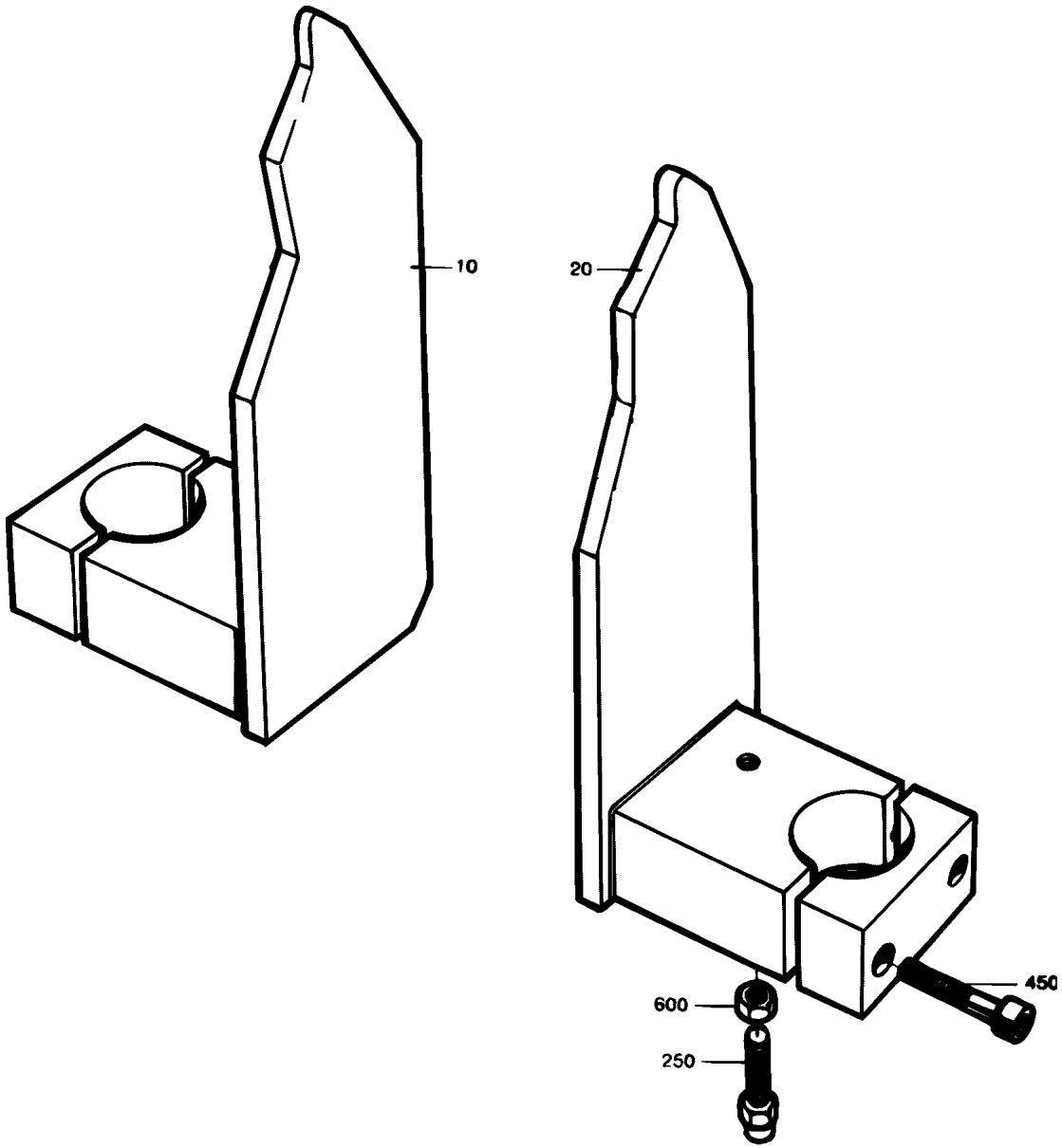
10
20
450
600
250

ECM: - -
Group number: 265889-0300
Assembly Drawing: 265889-3_1_AA

Issue: 20020121

Pos	Part No	SP	UN	Qty	Description	Page No
Common Parts						
010	532319-0000	-		1	CATCH GUARD LEFT	
020	532318-0000	-		1	CATCH GUARD RIGHT	
250	268746-0000	-		2	SCREW	
450	312111-0459	-		4	SCREW HEX.SOCK.HD.MC6S-TT 8X40 88 FZB	
600	312605-0318	-		2	HEXAGON NUT, M6M M8 A280	

Pos	Part No	SP	UN	Qty	Description	Page No

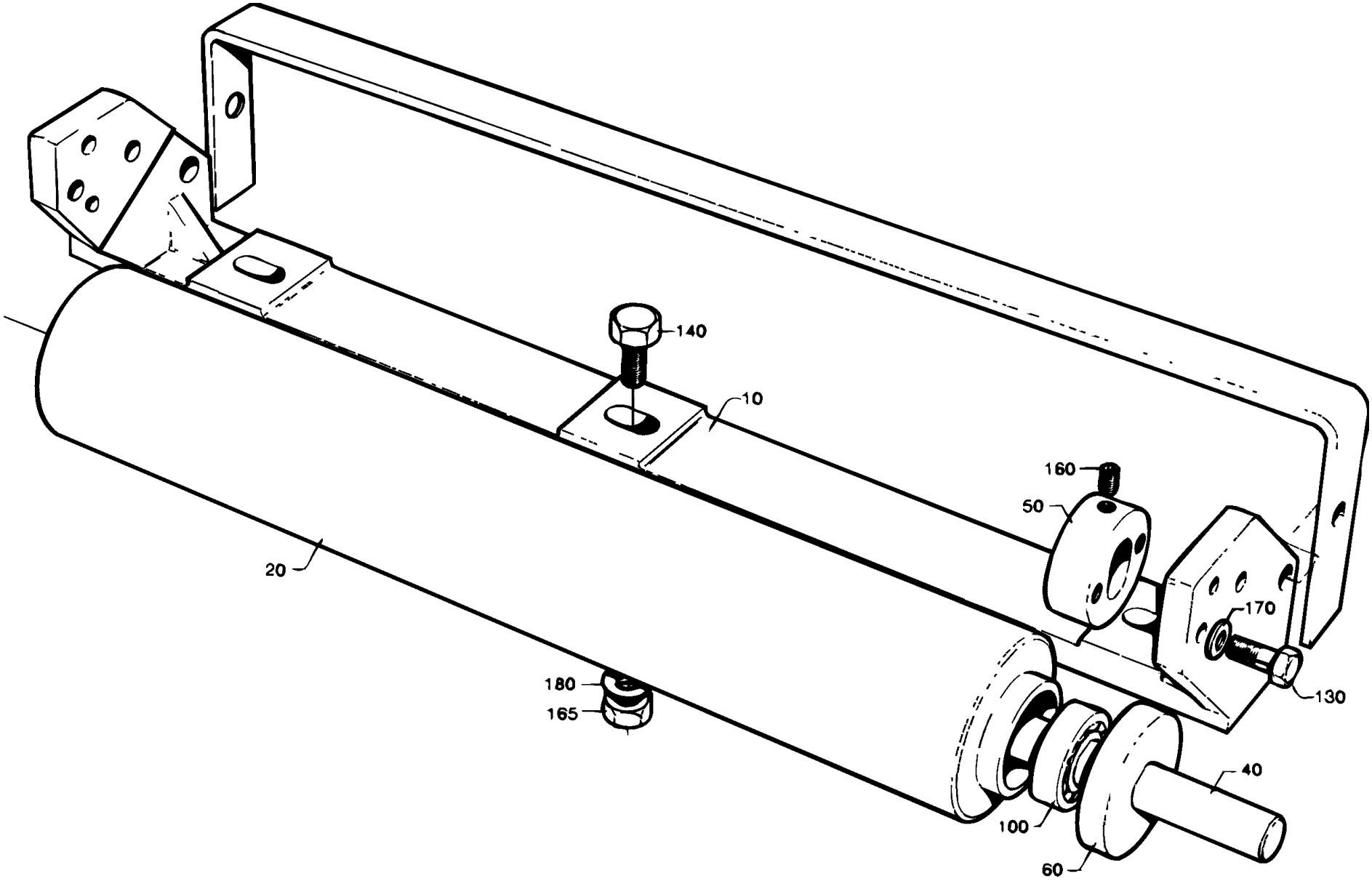
140
10
160
50
20
170
130
180
165
40
100
60

ECM: 71989 - 19990215
Group number: 268015-0100
Assembly Drawing: 268015-1_1_AA

Issue: 20020121

Pos	Part No	SP	UN	Qty	Description	Page No
Common Parts						
010	259760-0000	-		1	BENDING ROLLER BRACKET	
020	265564-0000	C		1	BENDING ROLLER	
040	265566-0001	D		1	SHAFT	
050	265567-0000	D		2	BEARING UNIT	
060	265568-0000	C		2	DUST COVER	
100	90214-0098	C		2	BALL BEARING, 15X35X11 MM	
120	311303-0310	-		2	SLOTTED PIRPB5X20FZB	
130	312101-0370	-		4	SCREW M6S M6X20 FZB	
140	312101-0453	-		3	SCREW M6S M8X25 FZB	
160	312318-0364	-		4	SCREW HEX.SOCK.SET CUP P.MSK6SS6X10 SS	
165	312601-0318	-		3	NUT M6M8FZB	
170	315101-0153	-		4	WASHER PLAIN, BRB, 6,4/12 H=1,5	
180	315101-0165	-		6	WASHER PLAIN, BRB, 8,4/16 H=1,5	

Pos	Part No	SP	UN	Qty	Description	Page No

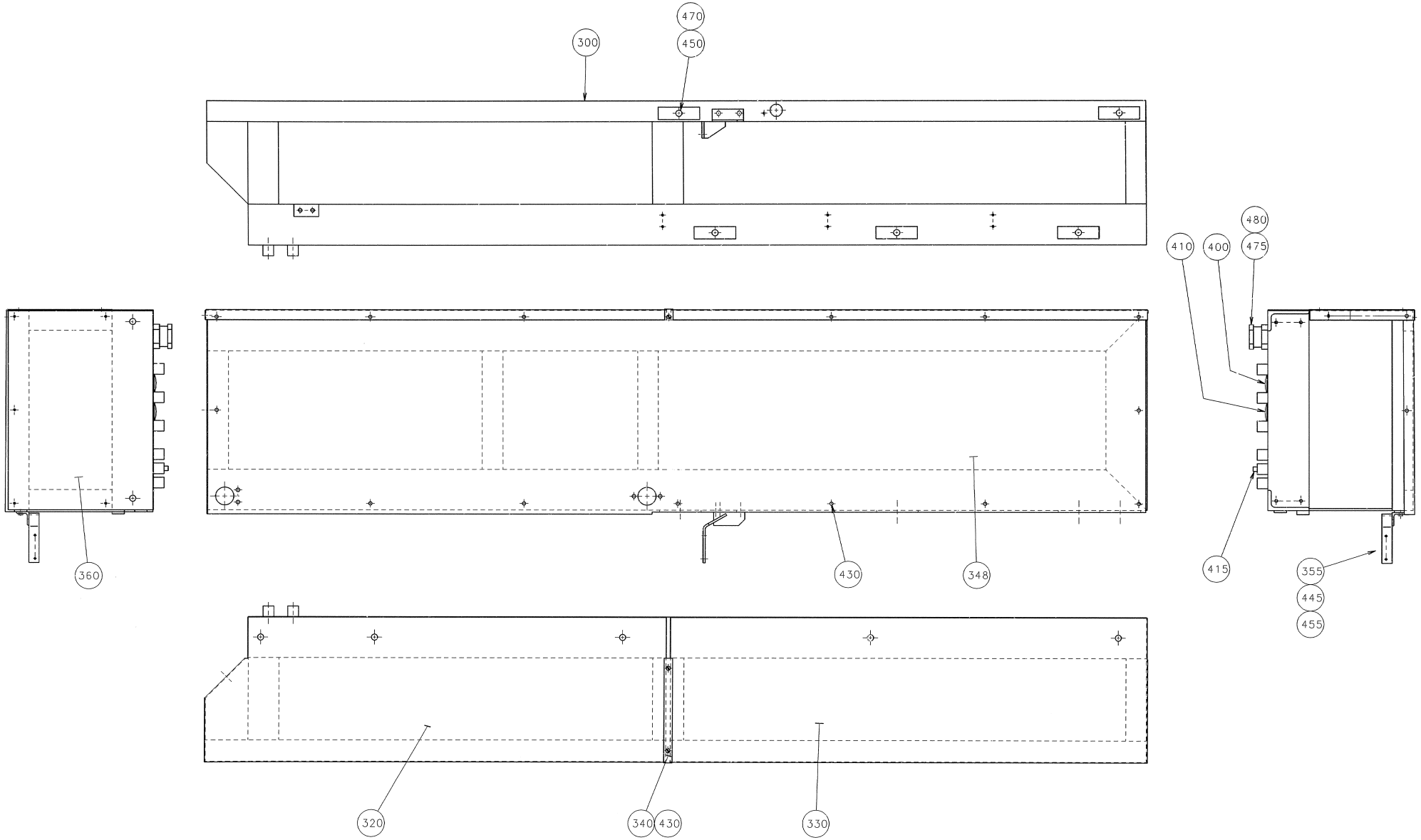
470
450
300
480
410
400
475
360
430
348
415
355
445
455
320
340
430
330

ECM: 71596 - 19981215
Group number: 1360906-0100
Assembly Drawing: 1360906-1_1_AA

Issue: 20020121

Pos	Part No	SP	UN	Qty	Description	Page No
Common Parts						
300	1360907-0000	-		1	SIDE BOX RIGHT	
320	564521-0000	-		1	SIDE PLATE	
330	564522-0000	-		1	SIDE PLATE	
340	564523-0000	-		1	RIM	
348	1360908-0000	-		1	BOTTOM PLATE	
355	561423-0000	-		1	BRACKET	
360	542695-0000	-		1	COVERPLATE R	
400	90002-0010	-		1	BLANK-OFF PLUG, PR 37 SKINDICHT-BLK29	
410	90002-0012	-		1	BLANK-OFF PLUG, PR 28,3 SKINDICHT-BLK21	
415	90087-0002	-		3	PIPE PLUG	
430	90287-0075	-		33	SCREW SLOT. PAN HEAD LKCS M6X12	
445	312105-0366	-		2	SCREW M6S M6X12 A280	
450	312101-0540	-		5	SCREW M6S M12X40 FZB	
455	315101-0153	-		2	WASHER PLAIN, BRB, 6,4/12 H=1,5	
470	315101-0178	-		5	WASHER PLAIN, BRB, 13/24 H=2	
475	352100-0126	-		1	CABLE GLANR.47-32,5	
480	352100-0227	-		1	CABLE GLANR.31-34,5	

Pos	Part No	SP	UN	Qty	Description	Page No

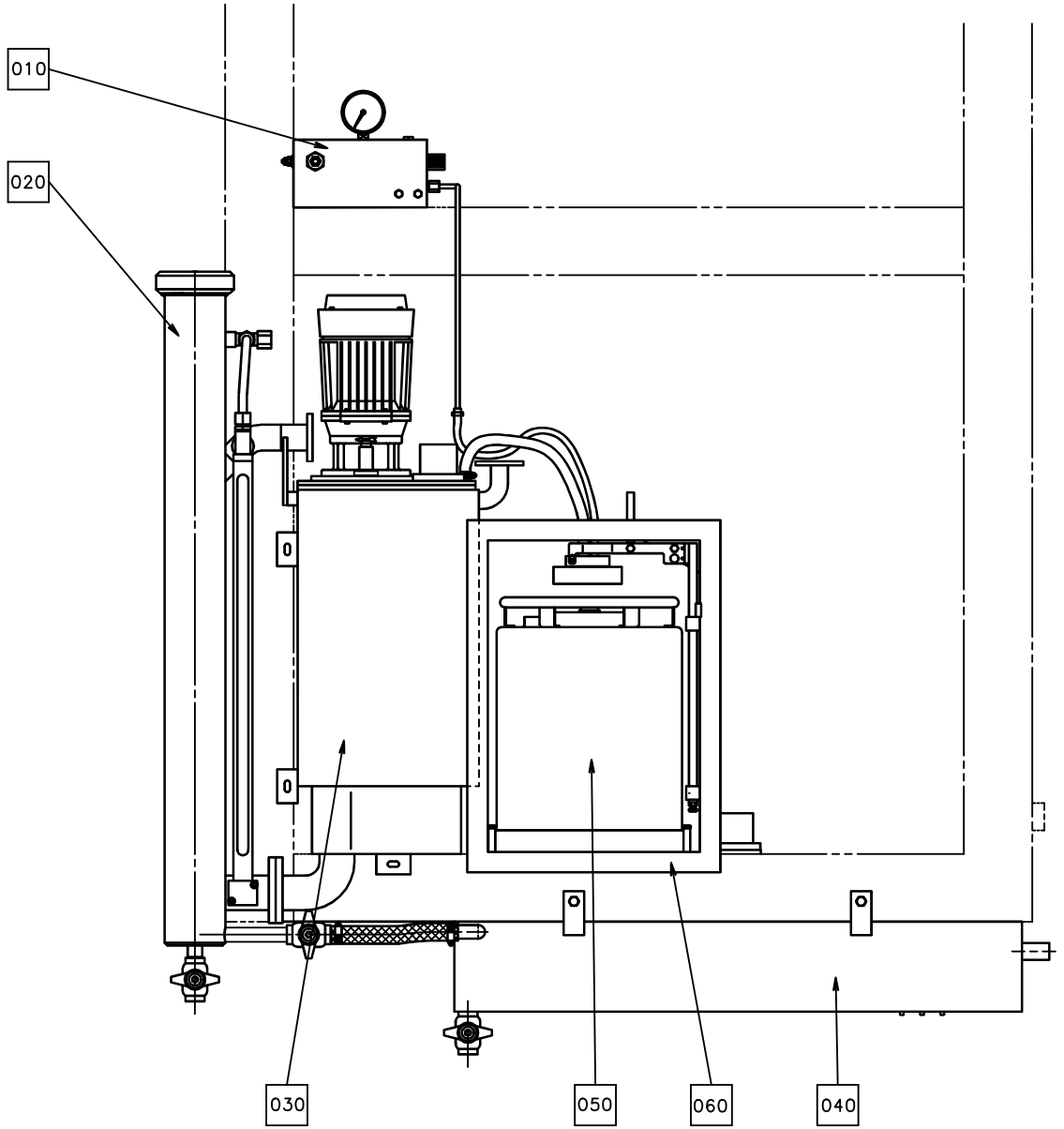
010
020
030
050
060
040

ECM: 70670 - 19970220
Group number: 561256-0300
Assembly Drawing: 561256-1_1_AA

Issue: 20020121

Pos	Part No	SP	UN	Qty	Description	Page No
Common Parts						
F010	A560922-0100	-		1	VALVE PANEL	**157**
F020	A266550-0400	-		1	FILTER HOUSING	**159**
F030	A561257-0200	-		1	PEROXIDE TANK	**161**
F040	A561258-0200	-		1	DRAINING PEROXIDE	**167**
F050	A527898-0100	-		2	CONTAINER H2O2	**169**
F060	A561259-0100	-		1	CONNECTION HOUSING	**171**

Pos	Part No	SP	UN	Qty	Description	Page No

Machine Type | Group Description | Used-In | Group Number | Page No

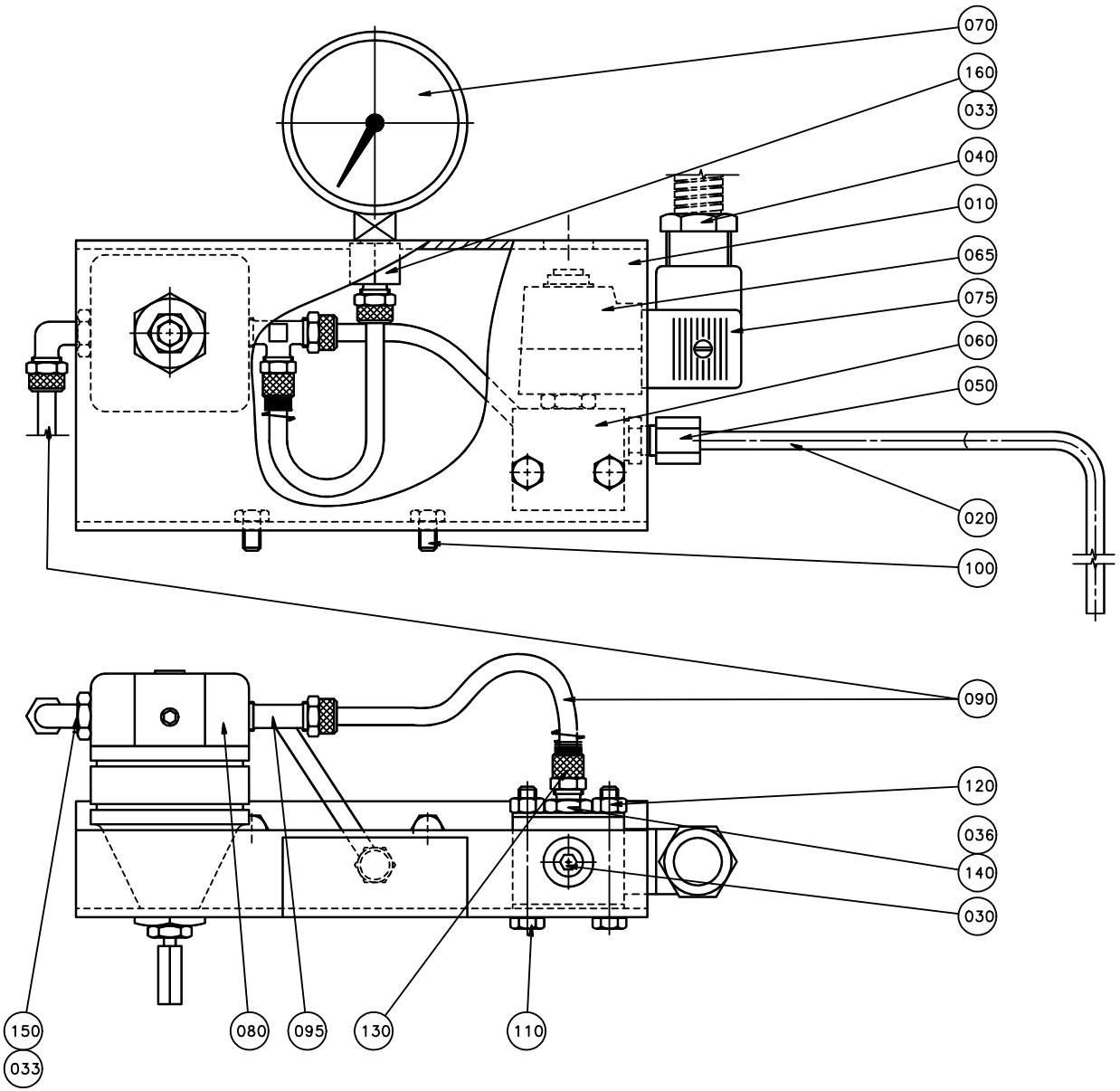
070
160
033
040
010
065
075
060
050
020
100
090
120
036
140
030
150
033
080
095
130
110

Pos	Part No	SP	UN	Qty	Description	Page No
Common Parts						
010	527902-0000	-		1	SHEET	
020	530550-0000	-		1	PIPE	
030	563285-0000	-		1	BLIND PLUG	
033	90005-0005	-		2	GASKET BOLT HEAD 13,7X20,6X2,1 MM G1/4"	
036	90005-0009	-		1	GASKET BOLT HEAD 10,4X15,9X2,1 MM G1/8"	
040	90012-0063	-		2	CABLE GLAND PR 15,2	
050	90030-0184	-		1	CONN. STR. GA-6-G1/8	
060	90042-0206	C		1	SOLENOID VALVE 444-111-000-1	
065	90042-0487	C		1	COIL 24 VDC MECMAN	
070	90043-0004	C		1	PRESSURE GAUGE, 2040 D=63 MM	
075	90110-0095	-		1	CONNECTOR 3 POLE + EARTH	
080	90113-0056	D		1	REGULATOR	
090	90166-0124	-	MM	3000	TUBE 6 MM PA,TRANSP.	
095	342950-0114	-		1	L-COUPLING,EXT.THREAD 6/4-R1/4"	
100	312105-0364	-		2	SCREW M6S M6X10 A280	
110	312105-0378	-		2	SCREW M6S M6X40 A280	
120	312605-0316	-		2	HEXAGON NUT, M6M M6 A280	
130	342903-0111	-		2	NUT WITH SPRING 6/4-M10X1	
140	342921-0113	-		1	STRAIGHT COUPLING,EXT.THREADED 6/4-G1/8"	
150	90224-0329	-		1	ELBOW 90 COUPL.,EXT.THREAD 6/4-G1/4"	
160	342923-0114	-		1	STRAIGHT COUPL.,INT.THREADED 6/4-G1/4"	

Pos	Part No	SP	UN	Qty	Description	Page No

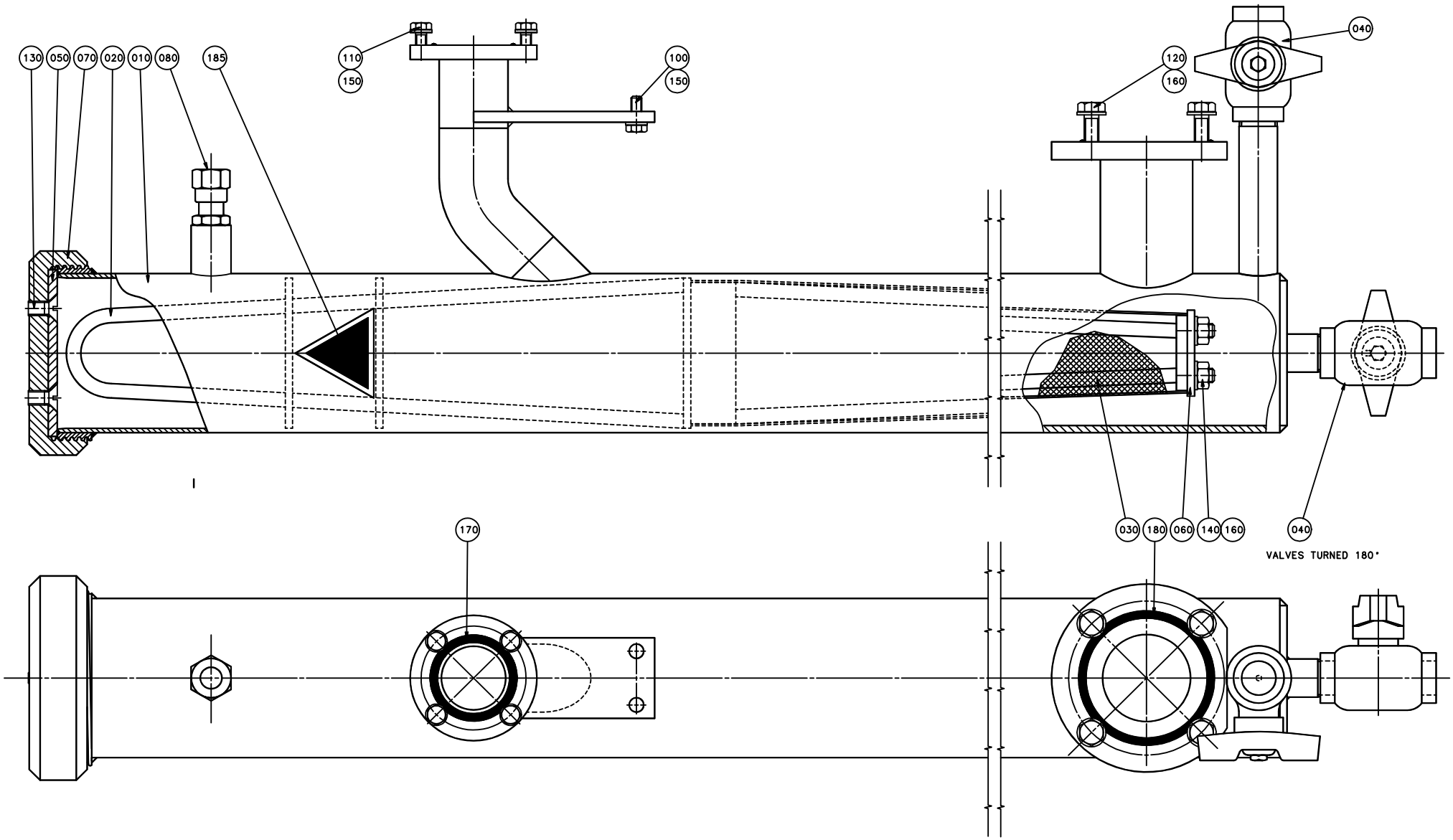
130
050
070
020
010
080
185
110
150
100
150
120
160
040
170
030
180
060
140
160
040
VALVES TURNED 180°

ECM: 72091 - 19981216
Group number: 266550-0400
Assembly Drawing: 266550-4_1_AA

Issue: 20020121

Pos	Part No	SP	UN	Qty	Description	Page No
Common Parts						
010	573445-0000	D		1	FILTER HOUSING	
020	269903-0000	-		1	FILTER INSERT	
030	269904-0000	D		1	FILTER MESH	
040	B484536-0000	D		2	VALVE	
	90187-0059	*-*		*1*	*BALL VALVE FOR HYDR.PER. G1/2 3MM HOLE*	
050	266557-0000	C		1	GASKET	
060	269905-0000	-		1	WASHER	
070	284840-0000	-		1	NUT	
080	573446-0000	-		1	STRAIGHT CONNECTION	
100	312105-0368	-		2	SCREW M6S M6X16 A280	
110	312105-0370	-		4	SCREW M6S M6X20 A280	
120	312105-0452	-		4	SCREW M6S M8X22 A280	
130	312145-0449	-		2	SCREW COUNTERS.SLOT.HD. MFS 8X16 SS	
140	312605-0318	-		2	HEXAGON NUT, M6M M8 A280	
150	315105-0153	-		6	WASHER PLAIN, BRB, 6,4/12,H=1,5	
160	315105-0165	-		6	WASHER PLAIN, BRB, 8,4/16,H=1,5	
170	927422-0006	C		1	O-RING 42.2X3 SILICON	
180	927422-0011	C		1	O-RING 69.5X3 SILICON	
185	359705-0003	-		1	WARNING SIGN ISO, DANGEROUS CHEMICALS	

Pos	Part No	SP	UN	Qty	Description	Page No

Machine Type | Group Description | Used-In | Group Number | Page No

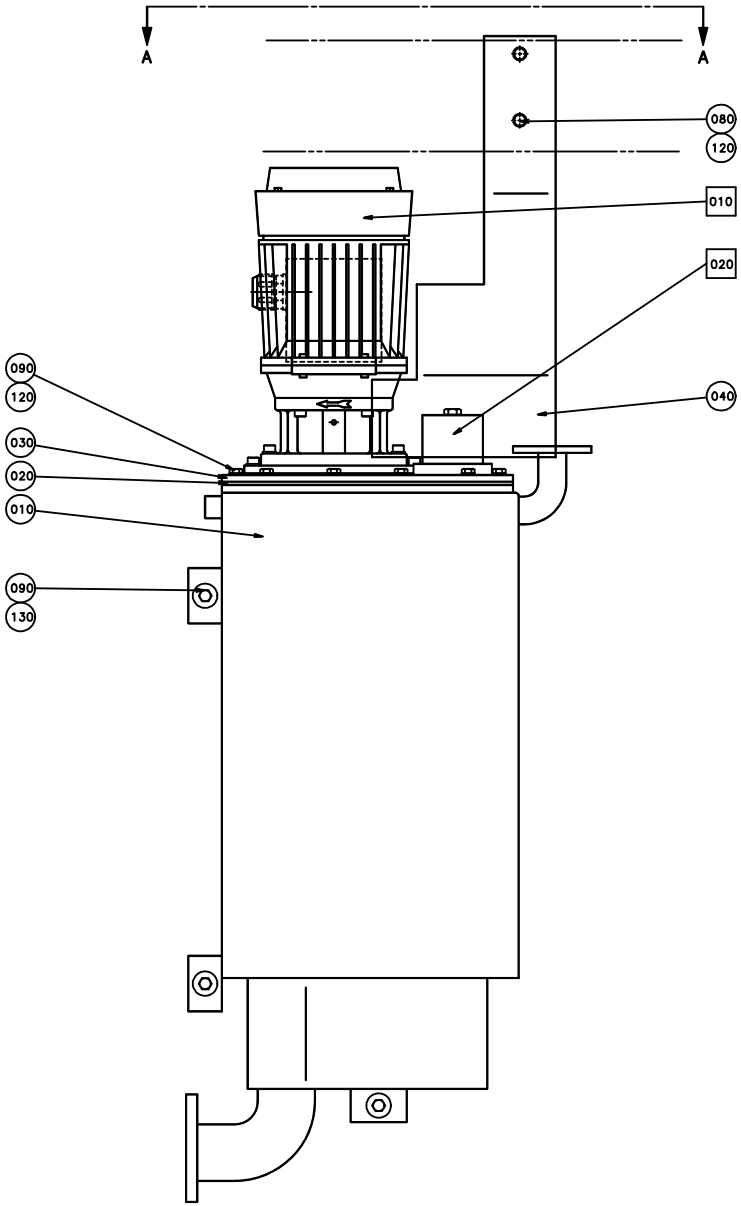

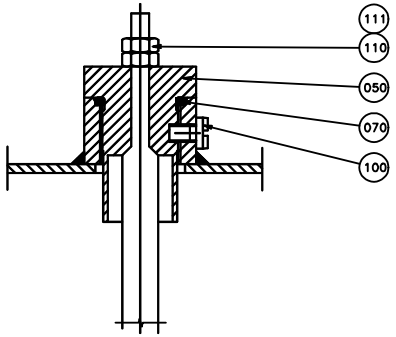

VY/VIEW B-B
SKALA/SCALE 2:1

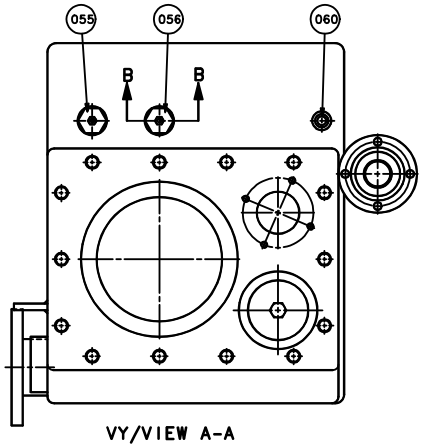

VY/VIEW A-A

Pos	Part No	SP	UN	Qty	Description	Page No
0375S OR 0500S OR 0750B						
055	567070-0007	C		1	ELECTRODE	
056	567070-0002	C		1	ELECTRODE	
0500B OR 0355B						
055	567070-0006	C		1	ELECTRODE	
056	567070-0002	C		1	ELECTRODE	
1000SQ OR 1000S						
055	567070-0011	C		1	ELECTRODE	
056	567070-0018	C		1	ELECTRODE	
0750S OR 1000B						
055	567070-0011	C		1	ELECTRODE	
056	567070-0002	C		1	ELECTRODE	
Common Parts						
010	A292451-0500	-		1	PEROXIDE PUMP	**163**
010	540886-0000	-		1	TANK	
020	A566196-0100	-		1	LID WITH WEIGHT	**165**
020	259835-0000	C		1	FLANGE SEAL	
030	479032-0000	D		1	HATCH	
040	497121-0000	-		1	SPLASH GUARD	
050	560931-0000	C		2	BRACKET	
060	527910-0000	-		1	PIPE	
070	927421-0004	C		2	O-RING 15.3X2.4 SILICON	
080	312105-0367	-		2	SCREW M6S M6X14 A280	
090	312105-0370	-		17	SCREW M6S M6X20 A280	
100	312125-0285	-		2	SCREW SLOT.PAN HD. MCS 4X6 A480	
110	312605-0312	-		4	HEXAGON NUT, M6M M4 A280	
111	315105-0136	-		6	WASHER PLAIN, BRB, 4,3/8,H=0,8	
120	315105-0153	-		16	WASHER PLAIN, BRB, 6,4/12,H=1,5	
130	315125-0153	-		3	WASHER PLAIN ROUND,CHAMF. 6,4/22, H=4	

Pos	Part No	SP	UN	Qty	Description	Page No

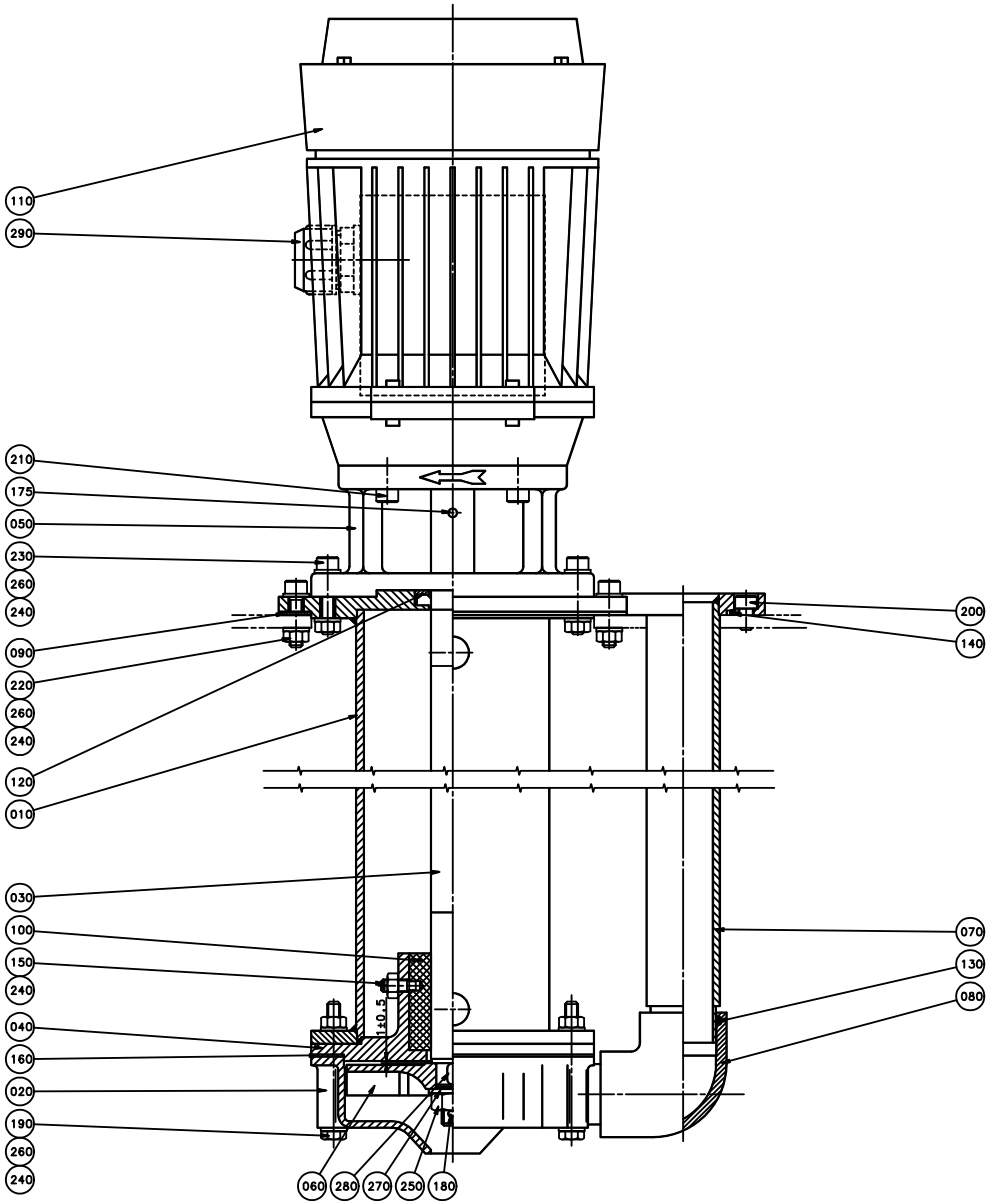
110
290
210
175
050
230
260
240
090
220
260
240
120
010
030
100
150
240
040
160
020
190
260
240
060
280
270
250
180
200
140
070
130
080
±0.5

ECM: 72628 - 19990615
Group number: 292451-0500
Assembly Drawing: 292451-5_1_AA

Issue: 20020121

Pos	Part No	SP	UN	Qty	Description	Page No
50HZ						
020	B571277-0000	C		1	PUMP HOUSING	
	292449-0000	-		*1*	*PUMP HOUSING*	
60HZ						
020	292449-0000	C		1	PUMP HOUSING	
Common Parts						
010	292452-0000	D		1	EXTENSION PIPE	
030	547793-0000	C		1	SHAFT	
040	292456-0000	D		1	BEARING COVER	
050	292464-0000	D		1	FLANGE	
060	491929-0000	C		1	IMPELLER WHEEL	
070	560923-0000	C		1	PIPE	
080	751316-0000	C		1	ELBOW PIPE	
090	484791-0000	C		1	GASKET	
100	491770-0000	C		1	BUSHING	
110	90045-0087	C		1	MOTOR 3GAA 071002-CSA M2AA 71B	
120	90091-0137	C		1	RADIAL SEAL TYPE VARILIP 20X35X7 MM	
130	927422-0004	C		1	O-RING 29.2X3 SILICON	
140	927422-0006	C		1	O-RING 42.2X3 SILICON	
150	90287-0159	-		2	SCREW, SOCK.SET DOGPOINT M6X16	
160	1349920-0000	C		1	GASKET	
175	311112-0256	-		1	PIN, STRAIGHT SLOTTED SPRING FRP 4X20	
180	311411-0169	-		1	SPLIT PIN SP2,5X25RFR	
190	312105-0382	-		5	SCREW M6S M6X60 A280	
200	312115-0364	-		4	SCREW HEX.SOCK.HD.MC6S-TT 6X10 A480	
210	312115-0370	-		4	SCREW MC6S M6X20 A280	
220	312105-0372	-		4	SCREW M6S M6X25 A280	
230	312105-0374	-		5	SCREW M6S M6X30 A280	
240	312605-0316	-		16	HEXAGON NUT, M6M M6 A280	
250	312605-0320	-		1	HEXAGON NUT, M6M M10 A280	
260	315105-0153	-		28	WASHER PLAIN, BRB, 6,4/12,H=1,5	
270	315105-0173	-		1	WASHER PLAIN, BRB, 10,5/22,H=2	
280	315705-0196	-		1	PARALLEL KEY W. ROUND ENDS 5X5X10 MM	
290	352136-0129	-		1	GLAND FITTING PR22,5/PG16 DI=16MM	

Pos	Part No	SP	UN	Qty	Description	Page No

Machine Type | Group Description | Used-In | Group Number | Page No

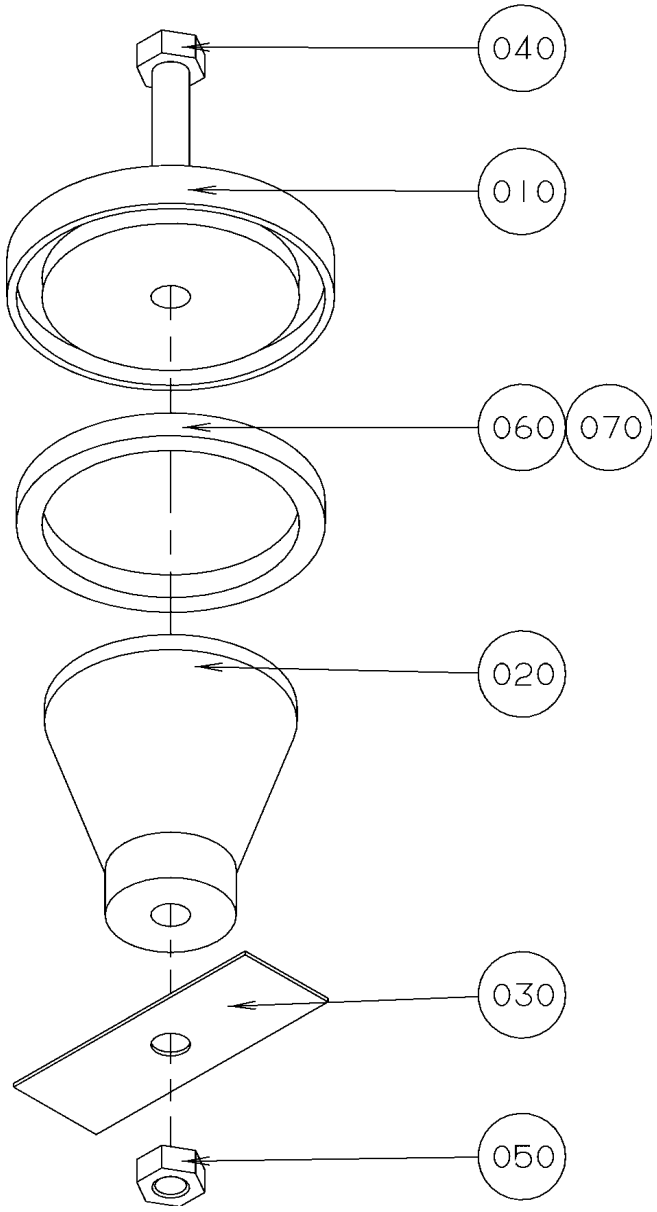
040
010
060
070
020
030
050

ECM: 72091 - 19981216
Group number: 566196-0100
Assembly Drawing: 566196-1_1_AA

Issue: 20020121

Pos	Part No	SP	UN	Qty	Description	Page No
Common Parts						
010	566195-0000	-		1	LID	
020	566194-0000	-		1	WEIGHT	
030	566171-0000	-		1	CUP SPRING	
040	312105-0466	-		1	SCREW M6S M8X75 A280	
050	312605-0318	-		1	HEXAGON NUT, M6M M8 A280	
060	90143-0020	-	MM	190	STRIP	
070	90153-0023	-		1	ADHESIVE	

Pos	Part No	SP	UN	Qty	Description	Page No

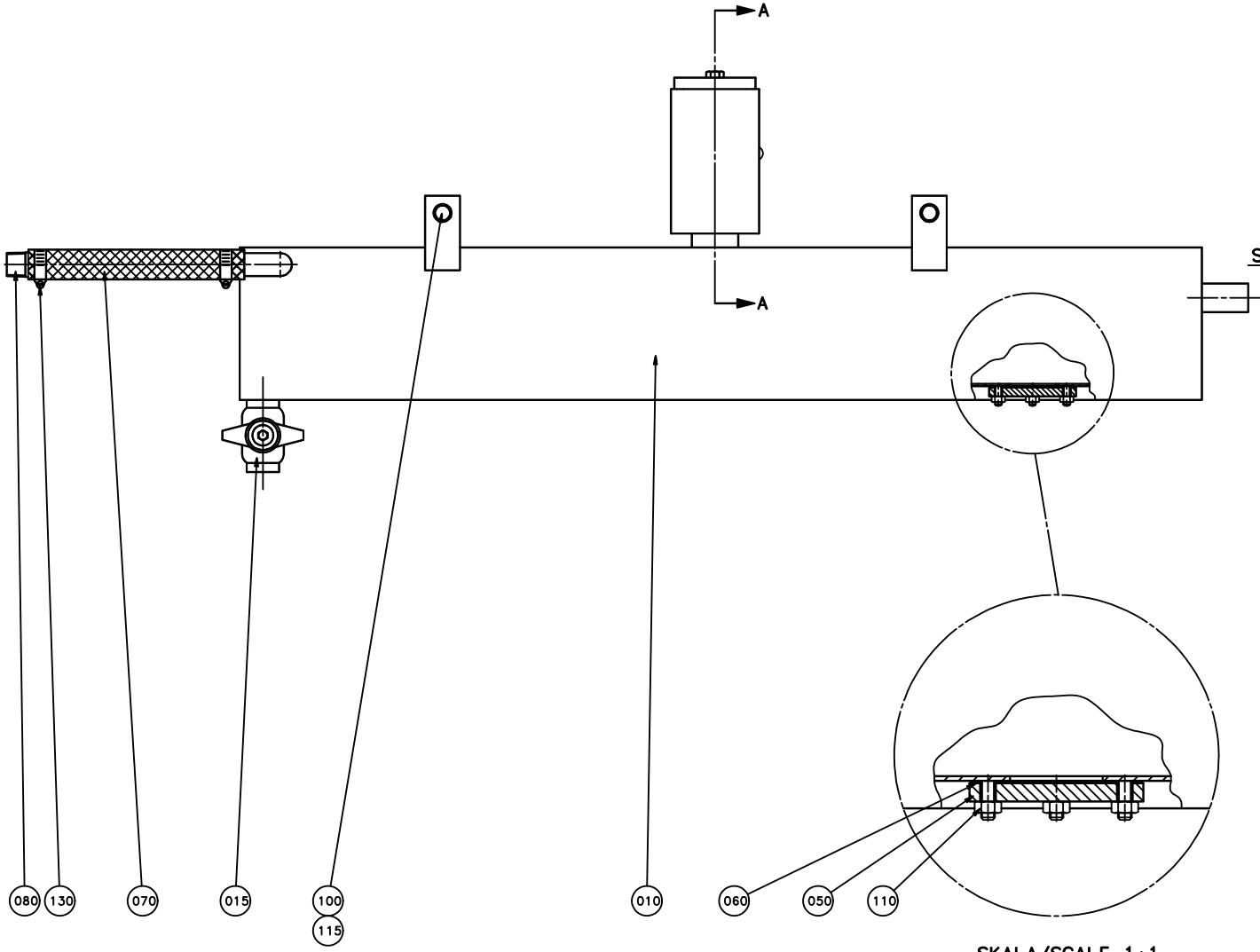

SKALA/SCALE 1:1

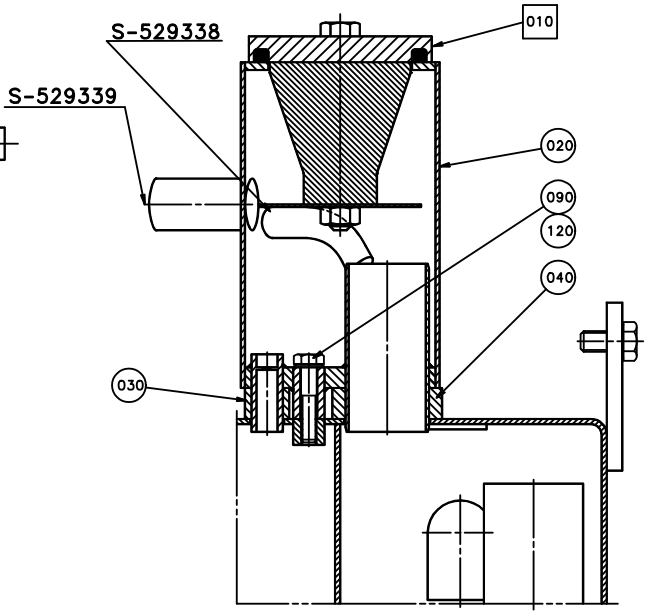

VY/VIEW A-A
SKALA/SCALE 1:1

Pos	Part No	SP	UN	Qty	Description	Page No
Common Parts						
010	561549-0000	D		1	TANK	
015	B484536-0000	C		1	VALVE	
	90187-0059	*-*		*1*	*BALL VALVE FOR HYDR.PER. G1/2 3MM HOLE*	
020	566192-0000	-		1	METERING DEVICE	
030	527905-0000	D		1	GASKET	
040	527906-0000	D		1	GASKET	
050	532205-0000	-		1	LID	
060	532206-0000	D		1	GASKET	
070	90166-0060	-	MM	200	HOSE 19/26-27 REINF.PVC	
080	90330-0059	-		1	NIPPLES, EXT. THREAD WELD. R-208/KR1/2	
090	312105-0374	-		1	SCREW M6S M6X30 A280	
100	312105-0451	-		4	SCREW M6S 8X20 A280	
110	312605-0316	-		4	HEXAGON NUT, M6M M6 A280	
115	315115-0165	-		4	WASHER PLAIN, TBRB 8,4/16 H=3	
120	315211-0103	-		1	GASKET BOLT HEAD 6,7X11X1 MM M6	
130	342991-0104	-		2	HOSE CLIP,WORM DRIVE TYPE (23)-27	
F010	A566196-0100	-		1	LID WITH WEIGHT	**165**

Pos	Part No	SP	UN	Qty	Description	Page No

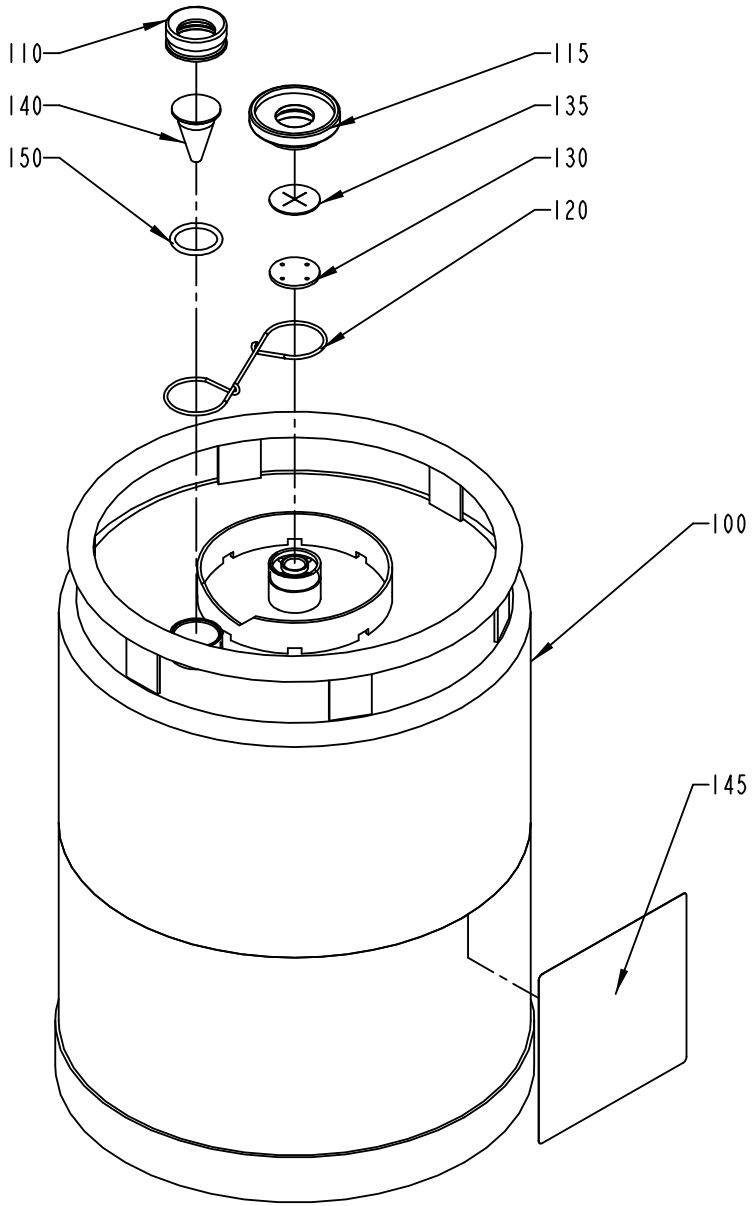
110
140
150
115
135
130
120
100
145

ECM: 82106 - 20000814
Group number: 527898-0100
Assembly Drawing: 527898-1_1_AB

Issue: 20020121

Pos	Part No	SP	UN	Qty	Description	Page No
Common Parts						
100	561427-0000	A		1	CONTAINER	
110	273977-0000	A		1	NUT	
115	273996-0000	A		1	NUT	
120	273980-0000	A		1	SPRING	
130	565250-0000	A		1	WASHER	
135	565251-0000	A		1	VALVE	
140	273978-0000	A		1	LEVEL GLASS	
145	532655-0000	B		1	CAUTION SIGN	
150	927422-0003	A		1	O.RING 24.2X3 SILICON	

Pos	Part No	SP	UN	Qty	Description	Page No

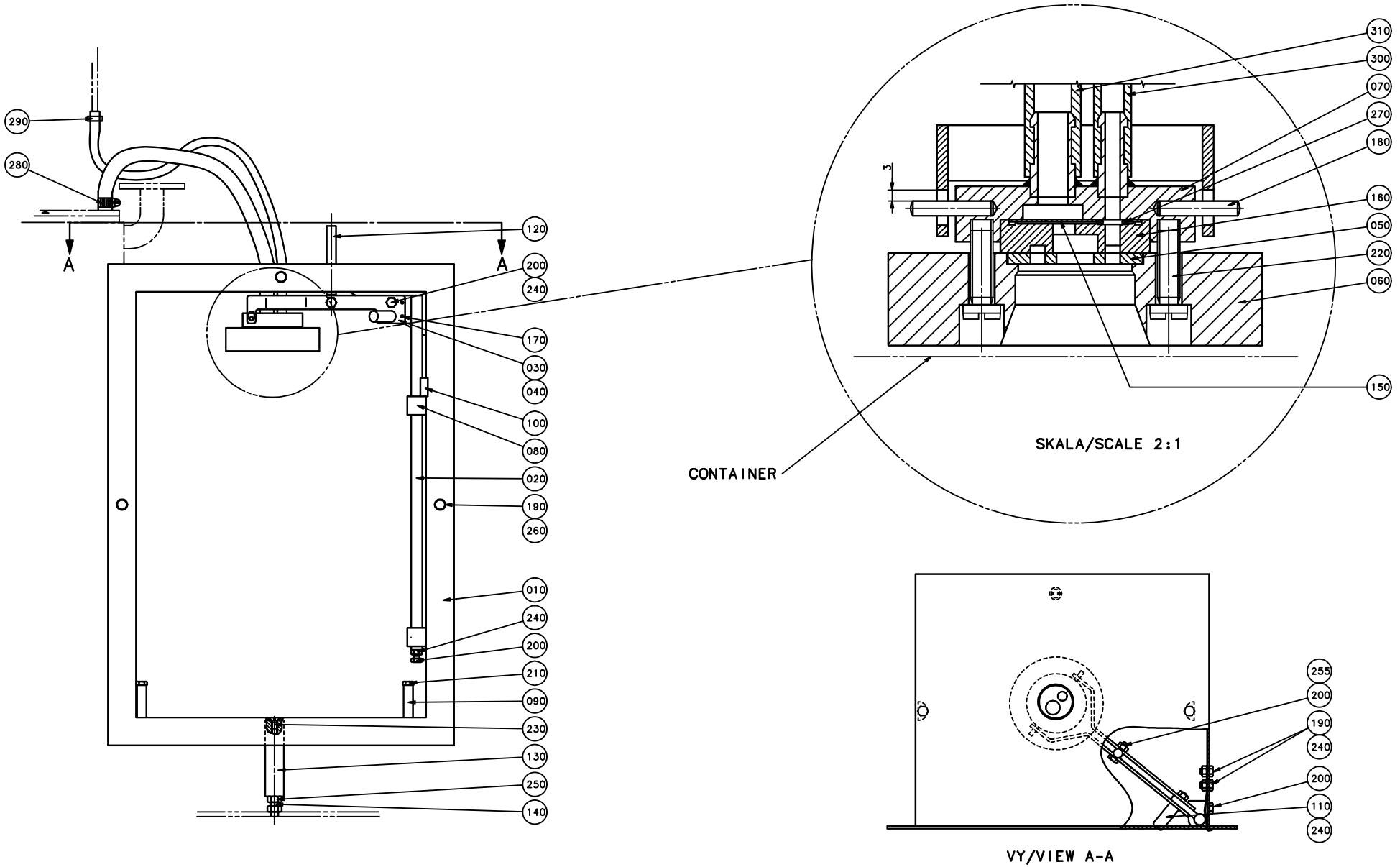
290
280
A
A
120
200
240
170
030
040
100
080
020
190
260
010
240
200
210
090
230
130
250
140
310
300
070
270
180
160
050
220
060
150
3
CONTAINER
SKALA/SCALE 2:1
255
200
190
240
200
110
240
VY/VIEW A-A

ECM: 72535 - 19990531
Group number: 561259-0100
Assembly Drawing: 561259-1_1_AB

Issue: 20020121

Pos	Part No	SP	UN	Qty	Description	Page No
Common Parts						
010	565104-0000	-		1	SWEEP	
020	527120-0000	-		1	STEERING	
030	527121-0001	-		1	BOW CLAMP	
040	527121-0002	-		1	BOW CLAMP	
050	273981-0000	C		1	GASKET	
060	273982-0000	-		1	WEIGHT	
070	527122-0000	-		1	ATTACHMENT	
080	527124-0000	C		2	BEARING	
090	527125-0000	-		2	STEERING	
100	527126-0000	D		1	LEAF SPRING	
110	527127-0000	-		1	DOWEL	
120	527128-0000	-		1	GUIDE PIN	
130	527129-0000	-		1	BRACKET	
140	527130-0000	-		1	SCREW	
150	527912-0000	C		1	NON-RETURN VALVE	
160	530551-0000	D		1	WASHER	
180	311103-0273	-		2	PIN,STRAIGHT M6 4X22 RFR	
190	312105-0362	-		6	SCREW M6S M6X8 A280	
200	312105-0370	-		5	SCREW M6S M6X20 A280	
210	312105-0378	-		2	SCREW M6S M6X40 A280	
220	312125-0370	-		2	SCREW PAN HEAD MCS M6X20 SS	
230	312155-0366	-		1	SCREW HEX.SOCK.COUNT.MF6S M6X12 A280	
240	312605-0316	-		5	HEXAGON NUT, M6M M6 A280	
250	312605-0318	-		2	HEXAGON NUT, M6M M8 A280	
255	312812-0316	-		1	HEXAGON NUT, NY-LOCK M6 A480	
260	315105-0153	-		4	WASHER PLAIN, BRB, 6,4/12,H=1,5	
270	90242-0163	C		1	O-RING	
280	342991-0101	-		2	HOSE CLIP,WORM DRIVE TYPE (13)-16	
290	90132-0021	-		2	HOSE CLIP 6-10MM	
300	90166-0101	-	MM	350	HOSE, SILICONE, 60 SHORE, 6/10 MM	
310	90166-0138	-	MM	500	HOSE	

Pos	Part No	SP	UN	Qty	Description	Page No

Machine Type | Group Description | Used-In | Group Number | Page No

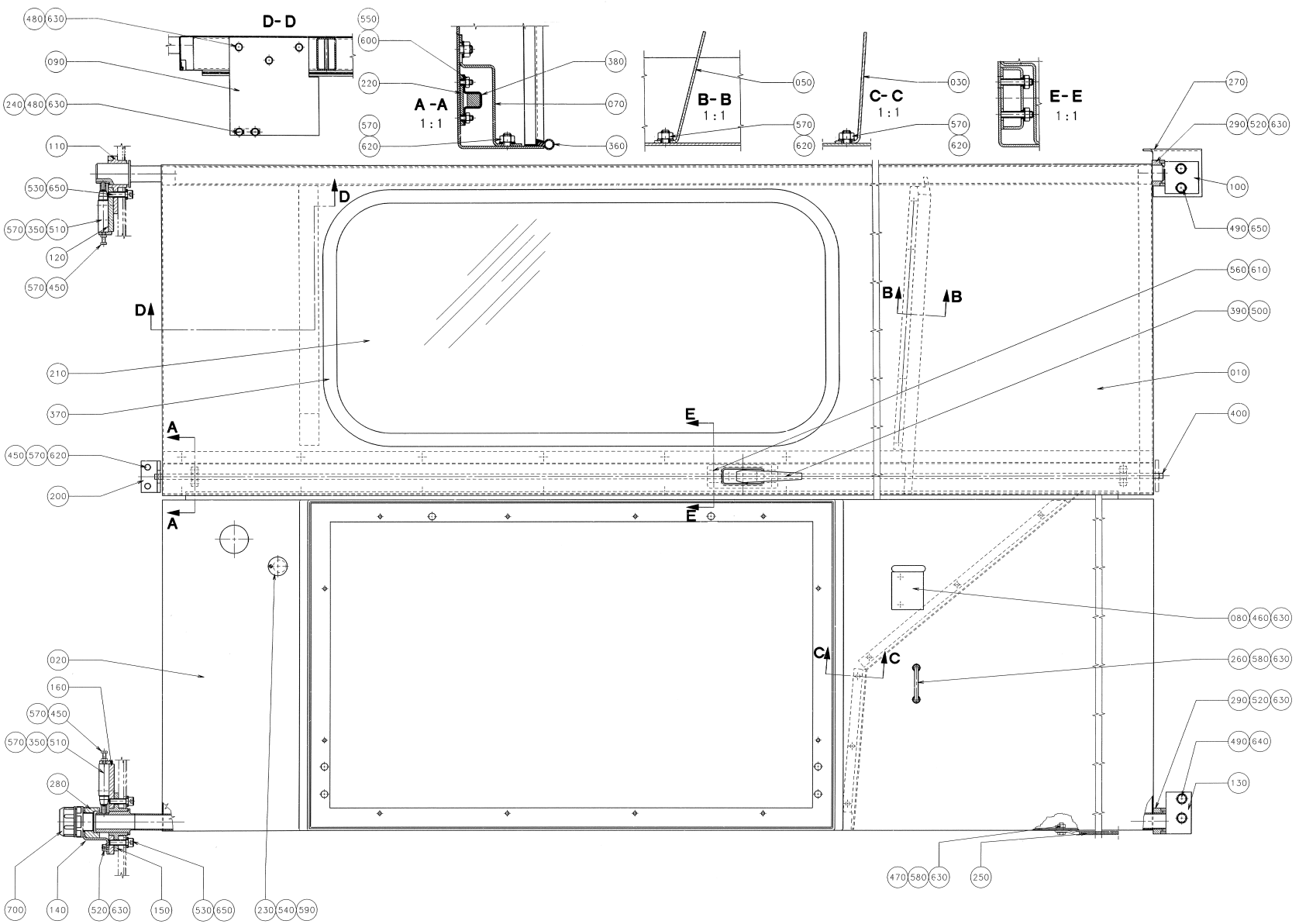
D- D
A -A
1 : 1
B- B
1 : 1
C- C
1 : 1
E- E
1 : 1
480 630
090
240 480 630
110
530 650
570 350 510
120
570 450
550
600
220
570
620
380
070
360
050
570
620
030
570
620
270
290 520 630
100
490 650
560 610
390 500
010
400
D
B
E
A
210
370
450 570 620
200
020
160
570 450
570 350 510
280
700
140
520 630
150
530 650
230 540 590
C
080 460 630
260 580 630
290 520 630
490 640
130
470 580 630
250

ECM: 81564 - 20010206
Group number: 1360889-0100
Assembly Drawing: 1360889-1_1_AA

Issue: 20020121

Pos	Part No	SP	UN	Qty	Description	Page No
TBA/8						
020	1360890-0000	-		1	SIDEGUARD LEFT	
050	451127-0000	-		1	CHUTE, LEFT FRONT	
Common Parts						
010	544899-0000	-		1	SIDECOVER LEFT FRONT	
030	1360896-0000	-		1	CHUTE LEFT	
070	442193-0000	-		1	PROTECTIVE CASING	
080	B469795-0000	-		1	HOLDER	
	312911-0118	-		*2*	*HELI-COIL M6X1,5D*	
090	533426-0000	C		1	STOP PLATE	
100	544510-0000	-		1	BRACKET	
110	560800-0000	-		1	BEARING UNIT	
120	560872-0000	-		1	PLATE	
130	1360893-0000	-		1	BRACKET LEFT	
140	1360894-0000	-		1	HOLDER	
150	1360895-0000	-		1	BEARING	
160	1360897-0000	-		1	PLATE	
200	293566-0000	-		1	MOUNTINGS	
210	293598-0000	D		1	GLASS PANE	
220	434858-0000	D		2	CUSHION	
230	442195-0000	-		1	LID	
240	553162-0000	C		1	STOP PLATE	
250	553164-0000	-		1	LOW IMPEDANCELITZ L=150MM	
260	531616-0000	-		1	HOLDER	
270	542860-0000	-		1	COVER PLATE	
280	1360891-0000	-		1	NUT	
290	1360892-0000	D		2	PLATE	
350	90044-0094	C		2	LIMIT SW. 924 CE31-Y20-X5	
360	90143-0035	D	MM	5450	STRIP	
370	90143-0039	D	MM	2400	STRIP	
380	90237-0011	-		2	BAR CLAMP	
390	90237-0061	-		1	HANDLE, FIX 0035-0230	
400	90237-0066	-		1	LOCK, FIX 590, L=1820 MM	
450	312105-0327	-		6	SCREW M6S M5X12 A280	
460	312105-0364	-		2	SCREW M6S M6X10 A280	
470	312105-0368	-		1	SCREW M6S M6X16 A280	
480	312105-0370	-		3	SCREW M6S M6X20 A280	
490	312105-0451	-		4	SCREW M6S 8X20 A280	
500	312115-0325	-		2	SCREW HEX.SOCK.HD.MC6S-TT 5X10 A480	
510	312115-0329	-		4	SCREW MC6S M5X16 A280	
520	312115-0366	-		6	SCREW MC6S M6X12 A280	
530	312115-0455	-		4	SCREW MC6S M8X30 A280	
540	312125-0222	-		1	SCREW PAN HEAD MCS M3X8 SS	
550	312605-0310	-		4	HEXAGON NUT, M6M M3 A280	
560	312605-0312	-		4	HEXAGON NUT, M6M M4 A280	
570	312605-0314	-		38	HEXAGON NUT, M6M M5 A280	
580	312605-0316	-		3	HEXAGON NUT, M6M M6 A280	
590	312810-0310	-		1	HEXAGON NUT, NY-LOCK M3 FZB	
600	315105-0124	-		4	WASHER PLAIN, BRB, 3,2/6,H=0,5	
610	315105-0136	-		4	WASHER PLAIN, BRB, 4,3/8,H=0,8	
620	315105-0146	-		33	WASHER PLAIN, BRB, 5,3/10,H=1	
630	315105-0153	-		18	WASHER PLAIN, BRB, 6,4/12,H=1,5	
640	315105-0165	-		2	WASHER PLAIN, BRB, 8,4/16,H=1,5	
650	315115-0165	-		6	WASHER PLAIN, TBRB 8,4/16 H=3	
700	352136-0167	-		1	GLAND FITTING	

Machine Type | Group Description | Used-In | Group Number | Page No

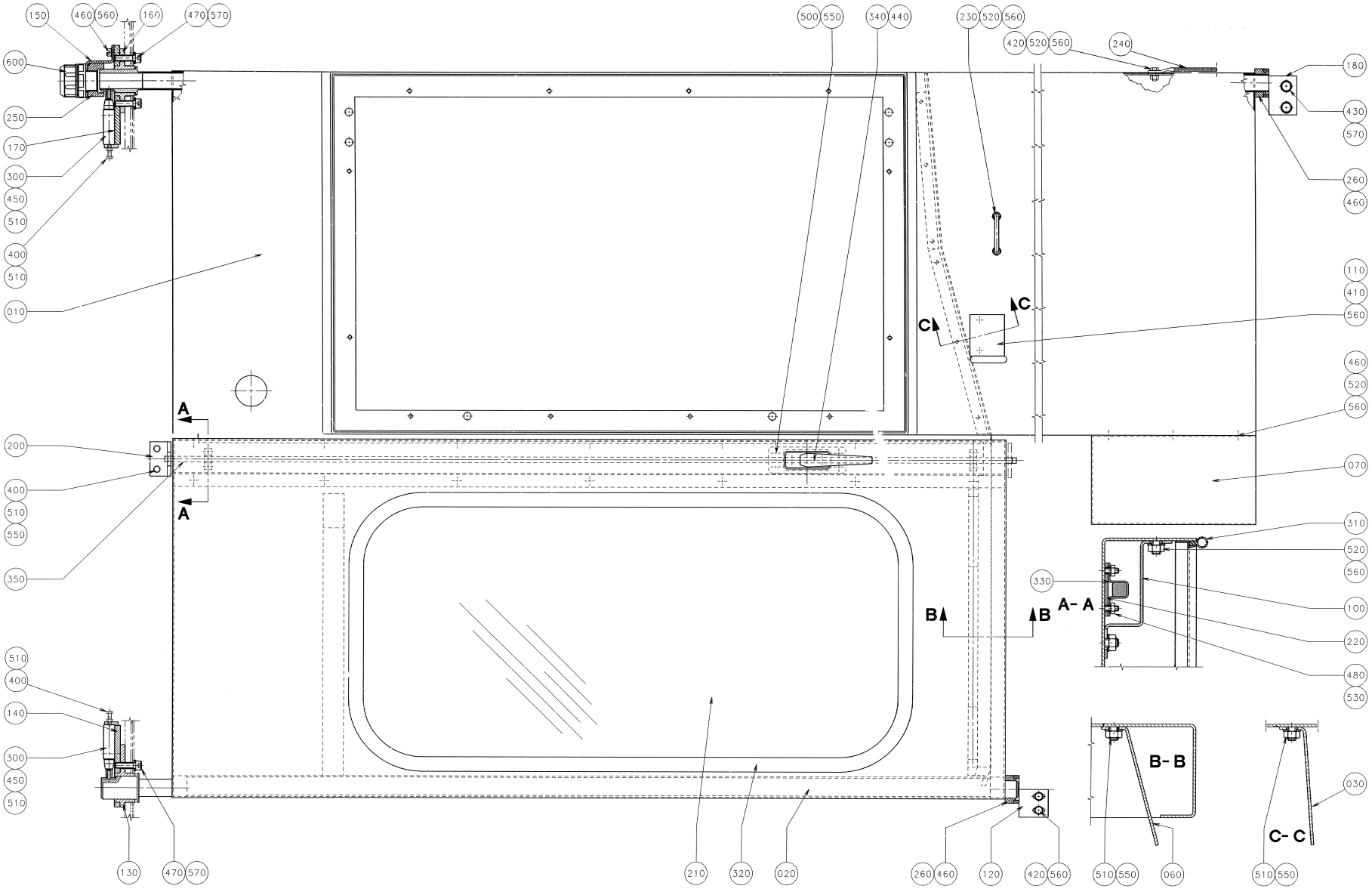
150
460 560
160
470 570
500 550
340 440
230 520 560
420 520 560
240
180
430
570
260
460
600
250
170
300
450
510
400
510
010
110
410
560
C
C
460
520
560
A
A
200
400
510
550
350
070
310
520
560
330
A- A
100
220
480
530
B
B
510
400
140
300
450
510
B- B
030
C- C
130
470 570
210
320
020
260 460
120
420 560
510 550
060
510 550

ECM: 81565 - 20010206
Group number: 1360898-0100
Assembly Drawing: 1360898-1_1_AA

Issue: 20020121

Pos	Part No	SP	UN	Qty	Description	Page No
TBA/8						
020	1360899-0000	-		1	SIDE GUARD RIGHT	
070	1360902-0000	-		1	COVER	
Common Parts						
010	544900-0000	-		1	SIDECOVER RIGHT FRONT	
030	1360901-0000	-		1	CHUTE RIGHT	
060	451128-0000	-		1	CHUTE, RIGHT FRONT	
100	442194-0000	-		1	PROTECTIVE CASING	
110	B531761-0000	-		1	HOLDER	
	312911-0118	-		*2*	*HELI-COIL M6X1,5D*	
120	544508-0000	-		1	BRACKET	
130	560800-0000	-		1	BEARING UNIT	
140	560872-0000	-		1	PLATE	
150	1360894-0000	-		1	HOLDER	
160	1360895-0000	-		1	BEARING	
170	1360897-0000	-		1	PLATE	
180	1360900-0000	-		1	BRACKET RIGHT	
200	293566-0000	-		1	MOUNTINGS	
210	293598-0000	D		1	GLASS PANE	
220	434858-0000	D		2	CUSHION	
230	531616-0000	-		1	HOLDER	
240	553164-0000	-		1	LOW IMPEDANCELITZ L=150MM	
250	1360891-0000	-		1	NUT	
260	1360892-0000	D		2	PLATE	
300	90044-0094	C		2	LIMIT SW. 924 CE31-Y20-X5	
310	90143-0035	D	MM	4550	STRIP	
320	90143-0039	D	MM	2400	STRIP	
330	90237-0011	-		2	BAR CLAMP	
340	90237-0061	-		1	HANDLE, FIX 0035-0230	
350	90237-0067	-		1	LOCK, FIX 590, L=1198 MM	
400	312105-0327	-		6	SCREW M6S M5X12 A280	
410	312105-0364	-		2	SCREW M6S M6X10 A280	
420	312105-0368	-		3	SCREW M6S M6X16 A280	
430	312105-0451	-		2	SCREW M6S 8X20 A280	
440	312115-0325	-		2	SCREW HEX.SOCK.HD.MC6S-TT 5X10 A480	
450	312115-0329	-		4	SCREW MC6S M5X16 A280	
460	312115-0366	-		9	SCREW MC6S M6X12 A280	
470	312115-0455	-		4	SCREW MC6S M8X30 A280	
480	312605-0310	-		4	HEXAGON NUT, M6M M3 A280	
500	312605-0312	-		4	HEXAGON NUT, M6M M4 A280	
510	312605-0314	-		35	HEXAGON NUT, M6M M5 A280	
520	312605-0316	-		10	HEXAGON NUT, M6M M6 A280	
530	315105-0124	-		4	WASHER PLAIN, BRB, 3,2/6,H=0,5	
540	315105-0136	-		4	WASHER PLAIN, BRB, 4,3/8,H=0,8	
550	315105-0146	-		27	WASHER PLAIN, BRB, 5,3/10,H=1	
560	315105-0153	-		15	WASHER PLAIN, BRB, 6,4/12,H=1,5	
570	315105-0165	-		6	WASHER PLAIN, BRB, 8,4/16,H=1,5	
600	352136-0167	-		1	GLAND FITTING	

Machine Type | Group Description | Used-In | Group Number | Page No

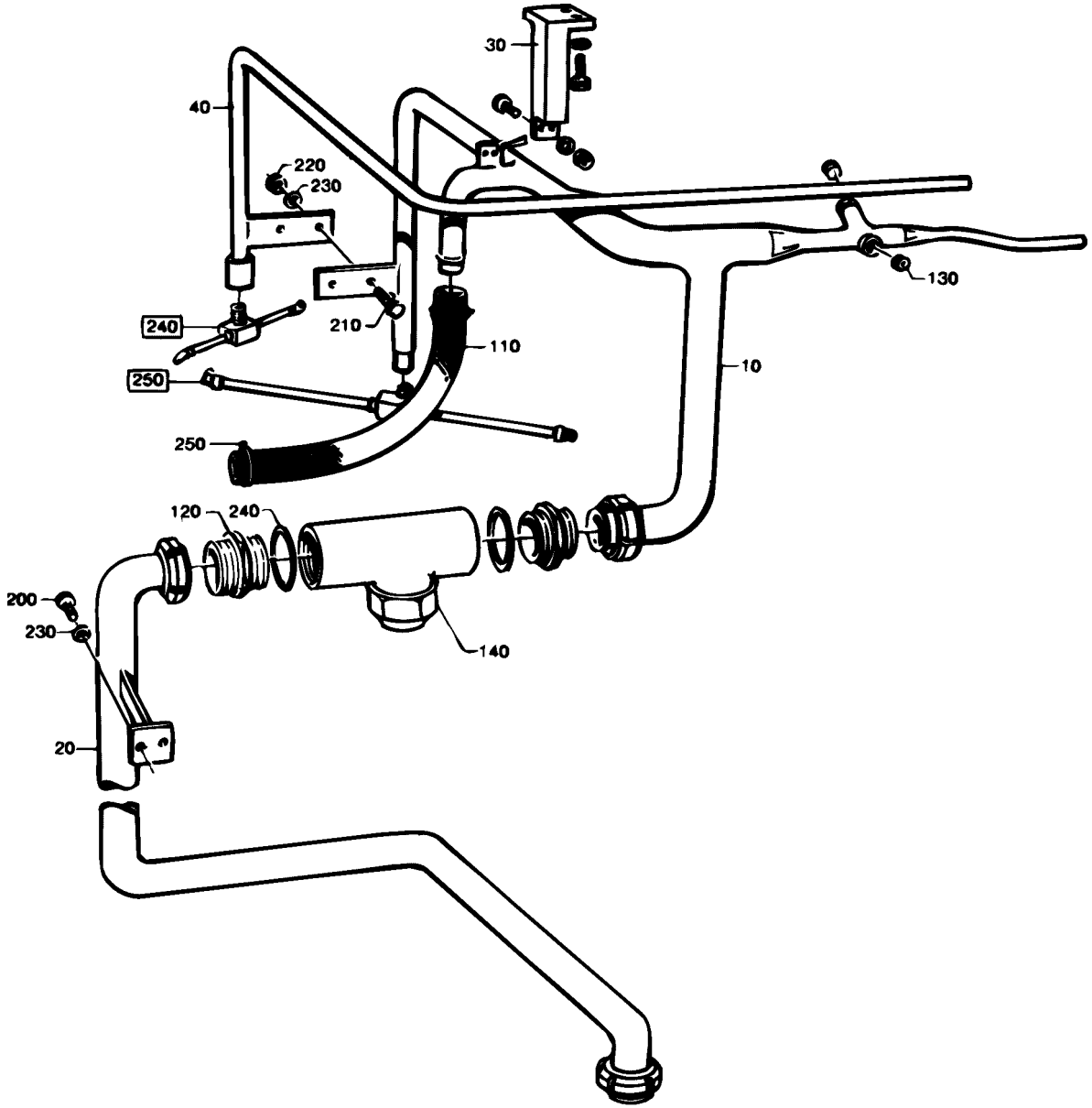
30
40
220
230
130
240
210
110
10
250
250
120
240
200
230
140
20

Pos	Part No	SP	UN	Qty	Description	Page No
Common Parts						
010	542706-0000	-		1	PIPE	
020	297800-0000	-		1	PIPE	
030	297802-0000	-		1	BRACKET	
040	297805-0000	-		1	PIPE	
100	90157-0016	-	ML	1	LOCKING FLUID	
110	90166-0142	C	MM	750	HOSE	
120	90217-0053	-		2	NIPPLE, RD 60-6 - R1 1/2 M	
130	90330-0026	C		2	PLUG, EXT. G-THREAD, G1/4	
140	B90415-0032	C		1	FILTER / 3-02-00-1 1/2"	
	90415-0328	*C*		*1*	*FILTER INSERT*	
200	312105-0368	-		2	SCREW M6S M6X16 A280	
210	312105-0370	-		6	SCREW M6S M6X20 A280	
220	312605-0316	-		4	HEXAGON NUT, M6M M6 A280	
230	315105-0153	-		10	WASHER PLAIN, BRB, 6,4/12,H=1,5	
240	315250-0103	C		2	GASKET 48X38X5,5 MM	
250	342991-0106	-		2	HOSE CLIP,WORM DRIVE TYPE (30)-36	
F240	A476887-0200	D		1	CLEANING HEAD	**179**
F250	A476884-0200	D		1	CLEANING HEAD	**181**

Pos	Part No	SP	UN	Qty	Description	Page No

Machine Type | Group Description | Used-In | Group Number | Page No

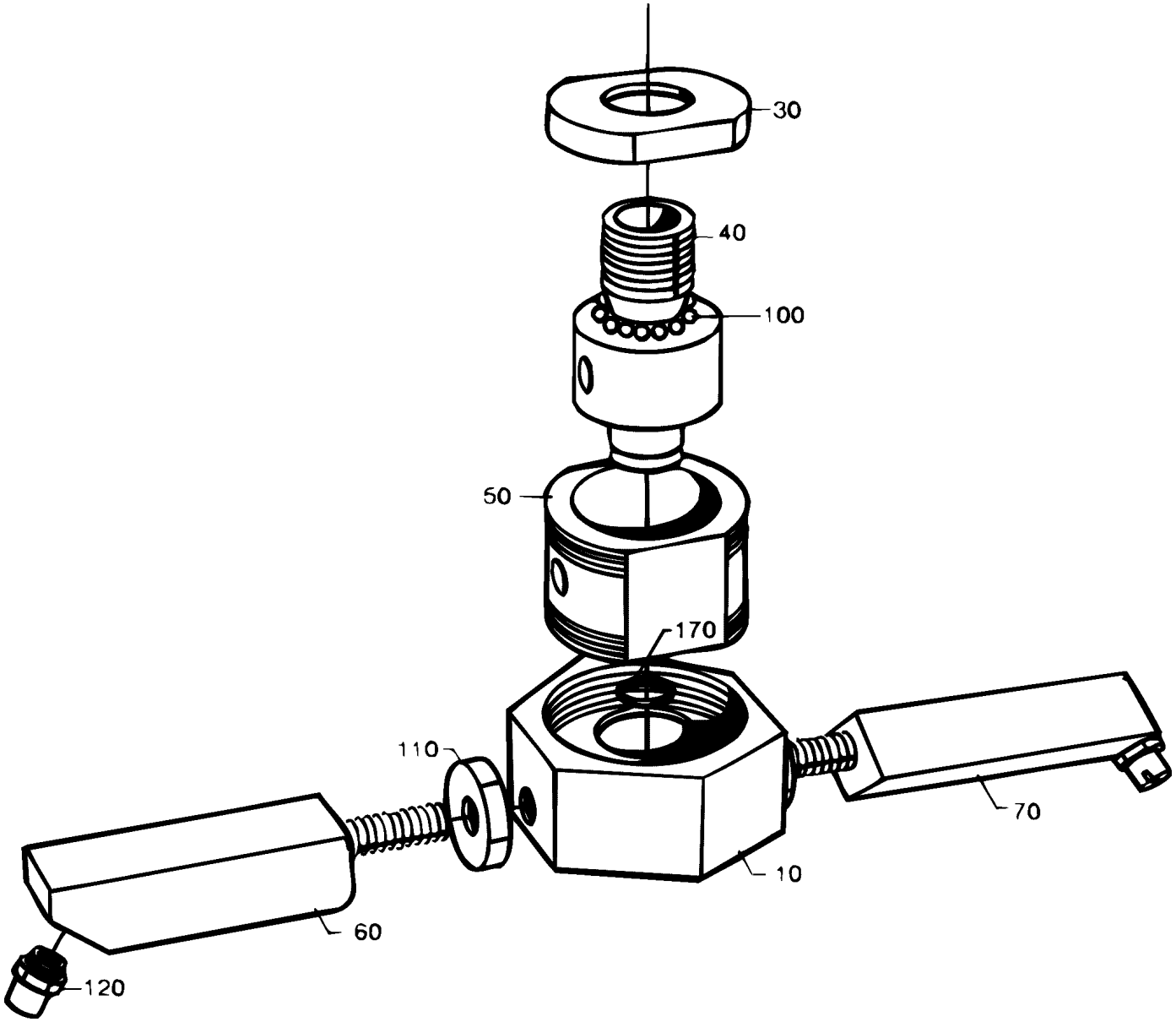
30
40
100
50
170
110
70
10
60
120

ECM: 72091 - 19981216
Group number: 476887-0200
Assembly Drawing: 476887-1_1_AA

Issue: 20020121

Pos	Part No	SP	UN	Qty	Description	Page No
Common Parts						
010	440600-0000	C		1	ROTOR	
030	534880-0000	C		1	END SECTION	
040	534878-0000	C		1	SHAFT	
050	534879-0000	C		1	BEARING HOUSING	
060	440604-0001	C		1	PIPE	
070	440605-0001	C		1	PIPE	
100	90090-0020	C		24	BALL, D=5 MM	
110	90330-0034	-		2	NUT, HEXAGON, G1/4	
120	90424-0026	C		2	SPRAY NOZZLE 95 DEG	
170	315202-0211	C		1	O-RING 13,3X2,4 MM	

Pos	Part No	SP	UN	Qty	Description	Page No

Machine Type | Group Description | Used-In | Group Number | Page No

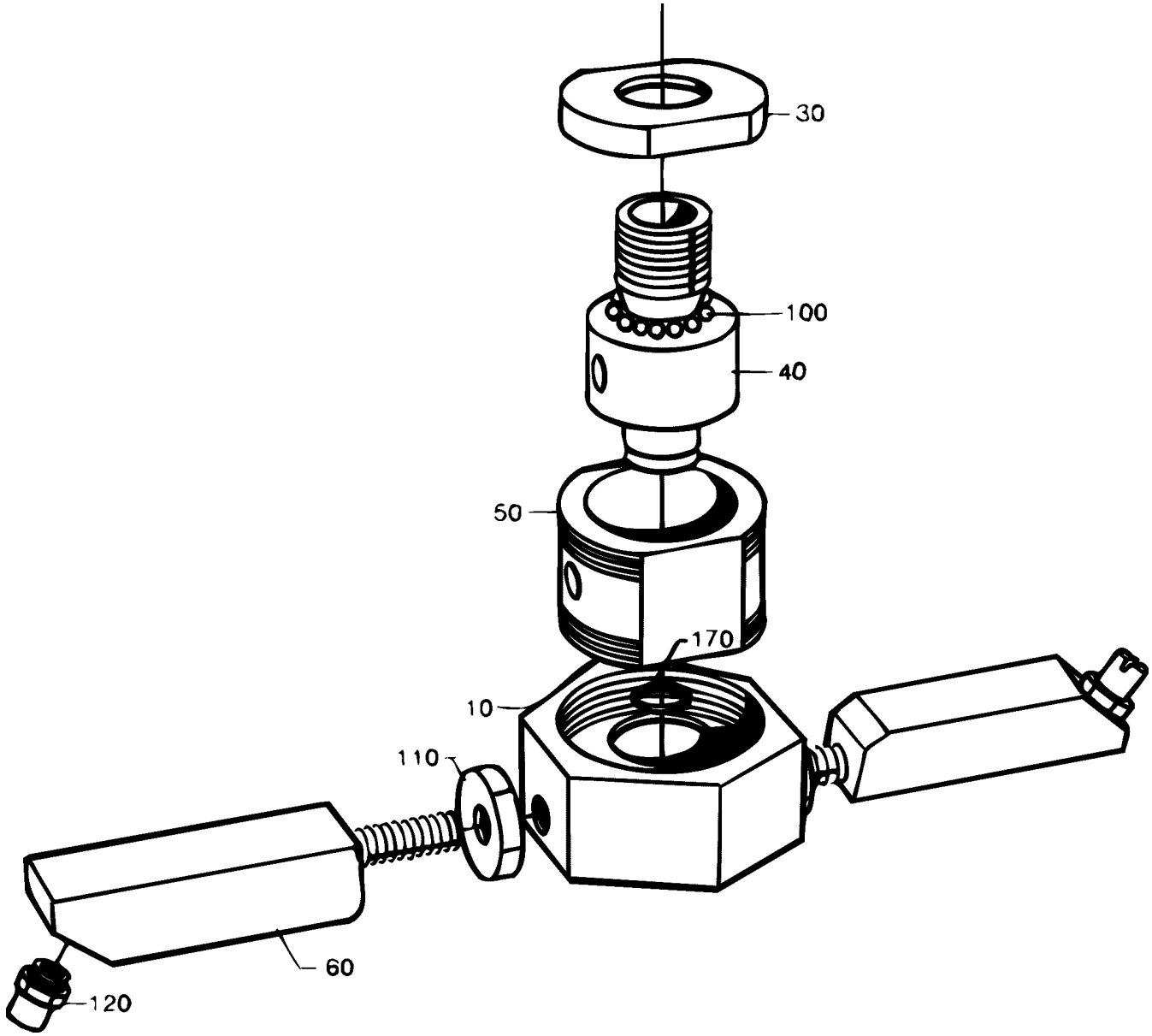
30
100
40
50
170
10
110
60
120

ECM: 72091 - 19981216
Group number: 476884-0200
Assembly Drawing: 476884-1_1_AA

Issue: 20020121

Pos	Part No	SP	UN	Qty	Description	Page No
Common Parts						
010	440600-0000	C		1	ROTOR	
030	534880-0000	C		1	END SECTION	
040	534878-0000	C		1	SHAFT	
050	534879-0000	C		1	BEARING HOUSING	
060	440604-0001	C		2	PIPE	
100	90090-0020	C		24	BALL, D=5 MM	
110	90330-0034	-		2	NUT, HEXAGON, G1/4	
120	90424-0026	C		2	SPRAY NOZZLE 95 DEG	
170	315202-0211	C		1	O-RING 13,3X2,4 MM	

Pos	Part No	SP	UN	Qty	Description	Page No

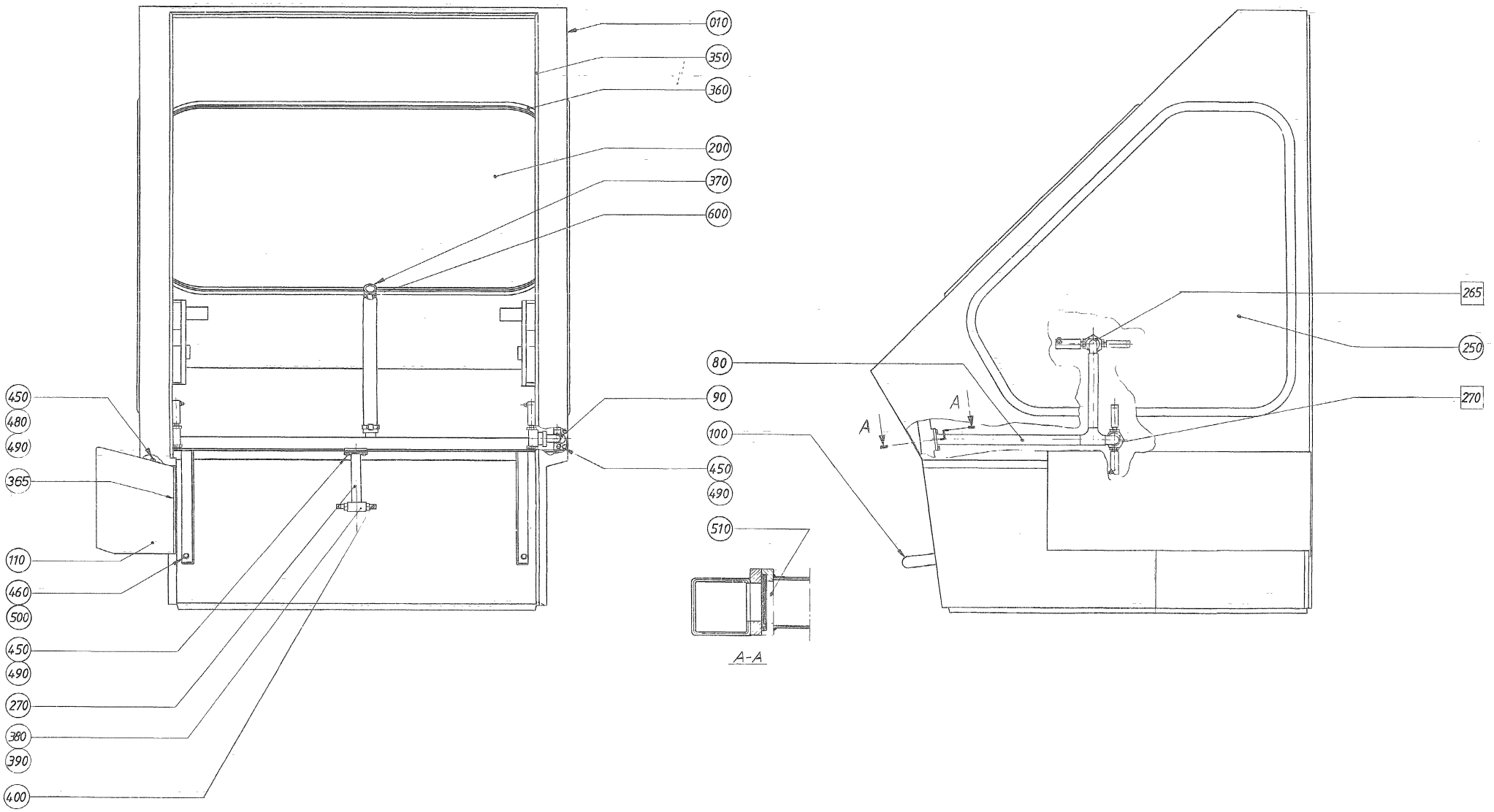
010
350
360
200
370
600
80
90
100
450
490
510
265
250
270
A
A
450
480
490
365
110
460
500
450
490
270
380
390
400
A-A

Pos	Part No	SP	UN	Qty	Description	Page No
LEFT OUT						
010	594588-0000	-		1	HOOD	
110	595054-0000	-		1	PROTECTION	
RIGHT OUT						
010	543148-0000	-		1	HOOD	
110	550503-0000	-		1	PROTECTION	
Common Parts						
080	499833-0000	-		1	PIPE RIGHT	
090	499834-0000	-		1	PIPE LEFT	
100	285956-0000	-		1	HANDLE	
200	262774-0009	D		1	GLASS PANE	
250	297488-0000	D		2	GLASS PANE	
270	297679-0000	-		1	PIPE	
350	90143-0035	D	MM	4500	STRIP	
360	90143-0039	D	MM	9500	STRIP	
365	90143-0068	D	MM	200	RUBBERSTRIP EMKA 1011-06	
370	90166-0142	-	MM	600	HOSE	
380	90330-0024	-		1	T-PIPE, INT. THREAD, RP1/4	
390	90330-0083	-		1	NIPPLES, EXT. THREAD. R3/8-R1/4	
400	90424-0025	C		2	SPRAY NOZZLE 145 DEG	
450	312105-0368	-		11	SCREW M6S M6X16 A280	
460	312105-0451	-		2	SCREW M6S 8X20 A280	
480	312605-0316	-		4	HEXAGON NUT, M6M M6 A280	
490	315105-0153	-		10	WASHER PLAIN, BRB, 6,4/12,H=1,5	
500	315105-0165	-		2	WASHER PLAIN, BRB, 8,4/16,H=1,5	
510	315202-0216	D		3	O-RING 22,2X3 MM	
600	342991-0106	-		2	HOSE CLIP,WORM DRIVE TYPE (30)-36	
F265	A476885-0200	-		2	CLEANING HEAD	**187**
F270	A476886-0200	-		2	CLEANING HEAD	**189**

Pos	Part No	SP	UN	Qty	Description	Page No

Machine Type	Group Description	Used-In	Group Number	Page No

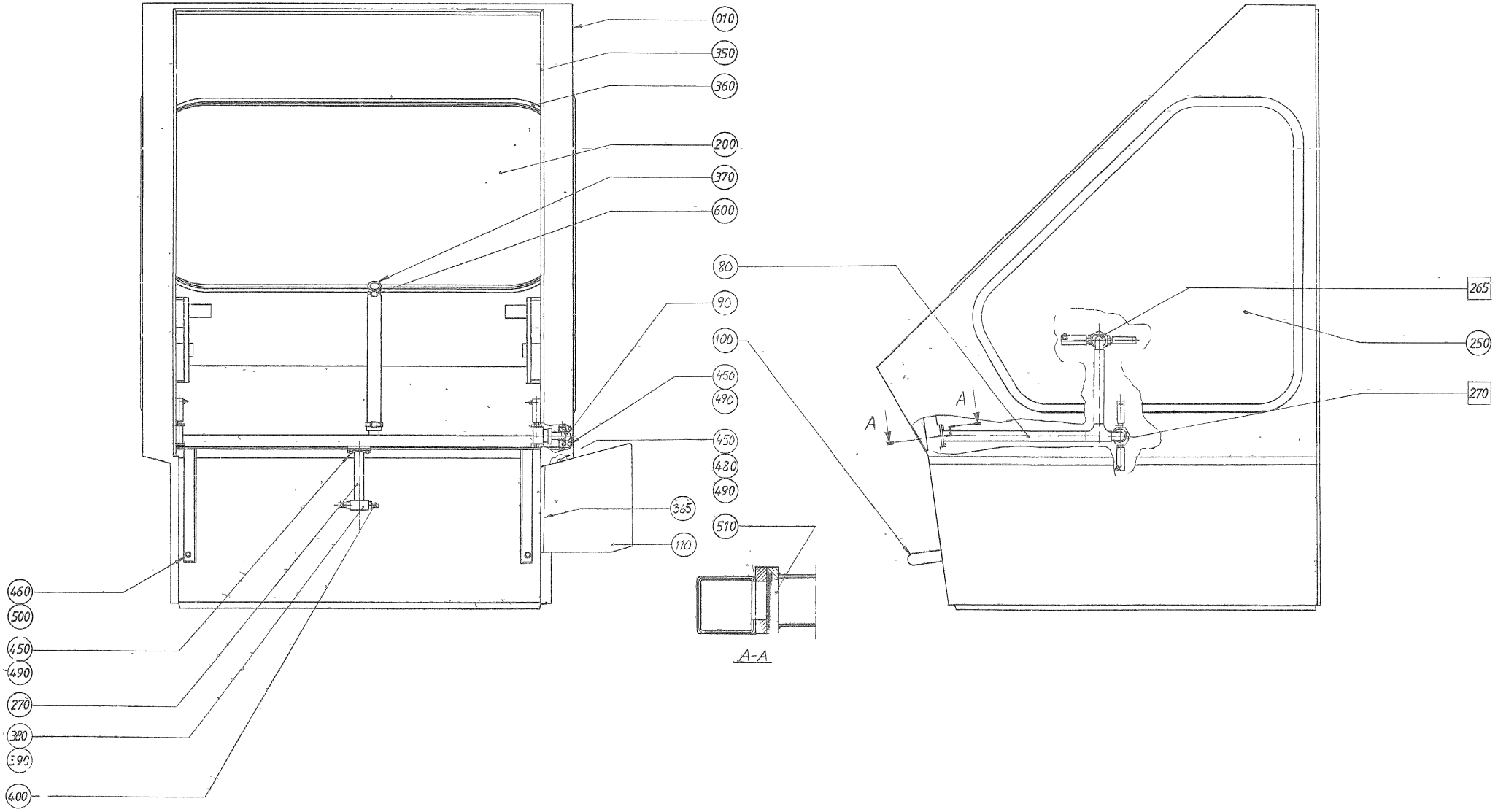
010
350
360
200
370
600
80
90
100
450
490
450
480
490
365
110
510
460
500
450
490
270
380
390
400
A-A
A
A
265
250
270

ECM: 72091 - 19981216
Group number: 297604-0400
Assembly Drawing: 297604-4_1_AA

Issue: 20020121

Pos	Part No	SP	UN	Qty	Description	Page No
LEFT OUT						
010	594588-0000	-		1	HOOD	
110	595054-0000	-		1	PROTECTION	
RIGHT OUT						
010	543148-0000	-		1	HOOD	
110	550503-0000	-		1	PROTECTION	
Common Parts						
080	499833-0000	-		1	PIPE RIGHT	
090	499834-0000	-		1	PIPE LEFT	
100	285956-0000	-		1	HANDLE	
200	262774-0009	D		1	GLASS PANE	
250	297488-0000	D		2	GLASS PANE	
270	297679-0000	-		1	PIPE	
350	90143-0035	D	MM	4500	STRIP	
360	90143-0039	D	MM	9500	STRIP	
365	90143-0068	D	MM	200	RUBBERSTRIP EMKA 1011-06	
370	90166-0142	-	MM	600	HOSE	
380	90330-0024	-		1	T-PIPE, INT. THREAD, RP1/4	
390	90330-0083	-		1	NIPPLES, EXT. THREAD. R3/8-R1/4	
400	90424-0025	C		2	SPRAY NOZZLE 145 DEG	
450	312105-0368	-		11	SCREW M6S M6X16 A280	
460	312105-0451	-		2	SCREW M6S 8X20 A280	
480	312605-0316	-		4	HEXAGON NUT, M6M M6 A280	
490	315105-0153	-		10	WASHER PLAIN, BRB, 6,4/12,H=1,5	
500	315105-0165	-		2	WASHER PLAIN, BRB, 8,4/16,H=1,5	
510	315202-0216	D		3	O-RING 22,2X3 MM	
600	342991-0106	-		2	HOSE CLIP,WORM DRIVE TYPE (30)-36	
F265	A476885-0200	-		2	CLEANING HEAD	**187**
F270	A476886-0200	-		2	CLEANING HEAD	**189**

Pos	Part No	SP	UN	Qty	Description	Page No

Machine Type	Group Description	Used-In	Group Number	Page No

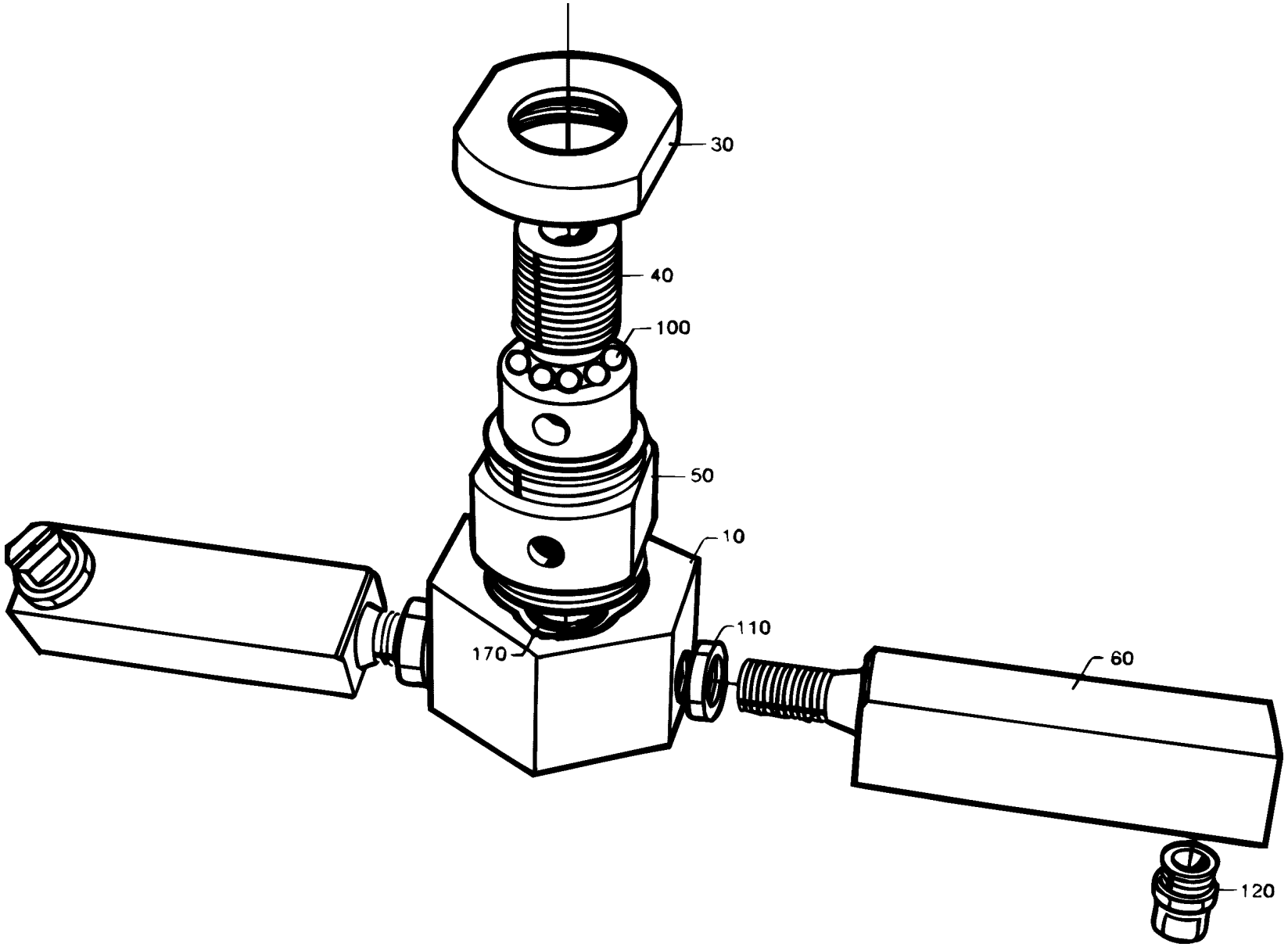
30
40
100
50
10
110
170
60
120

ECM: 72091 - 19981216
Group number: 476885-0200
Assembly Drawing: 476885-1_1_AA

Issue: 20020121

Pos	Part No	SP	UN	Qty	Description	Page No
Common Parts						
010	440600-0000	C		1	ROTOR	
030	534880-0000	C		1	END SECTION	
040	534878-0000	C		1	SHAFT	
050	534879-0000	C		1	BEARING HOUSING	
060	440605-0001	C		2	PIPE	
100	90090-0020	C		24	BALL, D=5 MM	
110	90330-0034	-		2	NUT, HEXAGON, G1/4	
120	90424-0026	C		2	SPRAY NOZZLE 95 DEG	
170	315202-0211	C		1	O-RING 13,3X2,4 MM	

Pos	Part No	SP	UN	Qty	Description	Page No

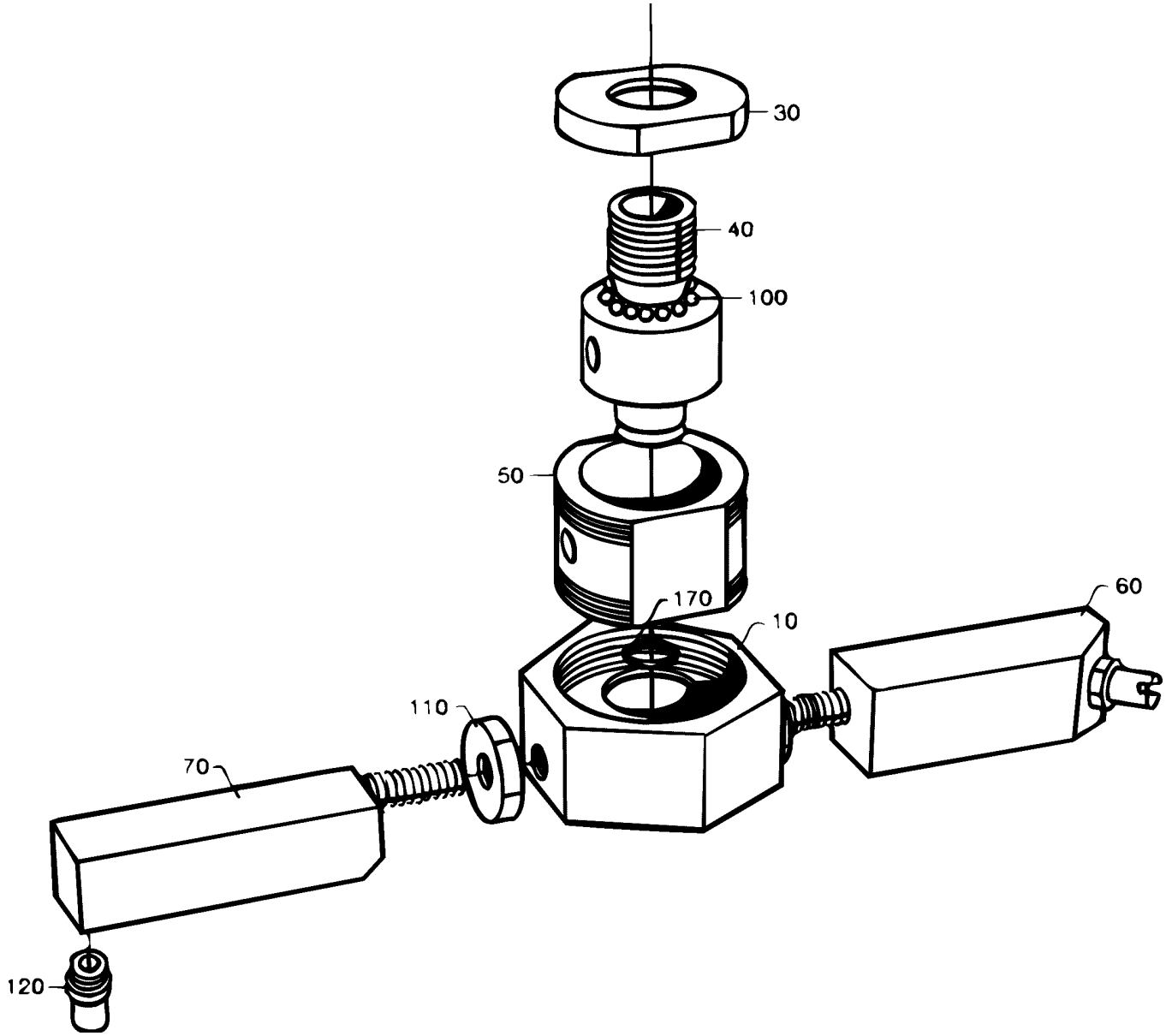
30
40
100
50
170
10
60
110
70
120

ECM: 72091 - 19981216
Group number: 476886-0200
Assembly Drawing: 476886-1_1_AA

Issue: 20020121

Pos	Part No	SP	UN	Qty	Description	Page No
Common Parts						
010	440600-0000	C		1	ROTOR	
030	534880-0000	C		1	END SECTION	
040	534878-0000	C		1	SHAFT	
050	534879-0000	C		1	BEARING HOUSING	
060	440604-0001	C		1	PIPE	
070	440605-0001	C		1	PIPE	
100	90090-0020	C		24	BALL, D=5 MM	
110	90330-0034	-		2	NUT, HEXAGON, G1/4	
120	90424-0026	C		2	SPRAY NOZZLE 95 DEG	
170	315202-0211	C		1	O-RING 13,3X2,4 MM	

Pos	Part No	SP	UN	Qty	Description	Page No

Machine Type | Group Description | Used-In | Group Number | Page No

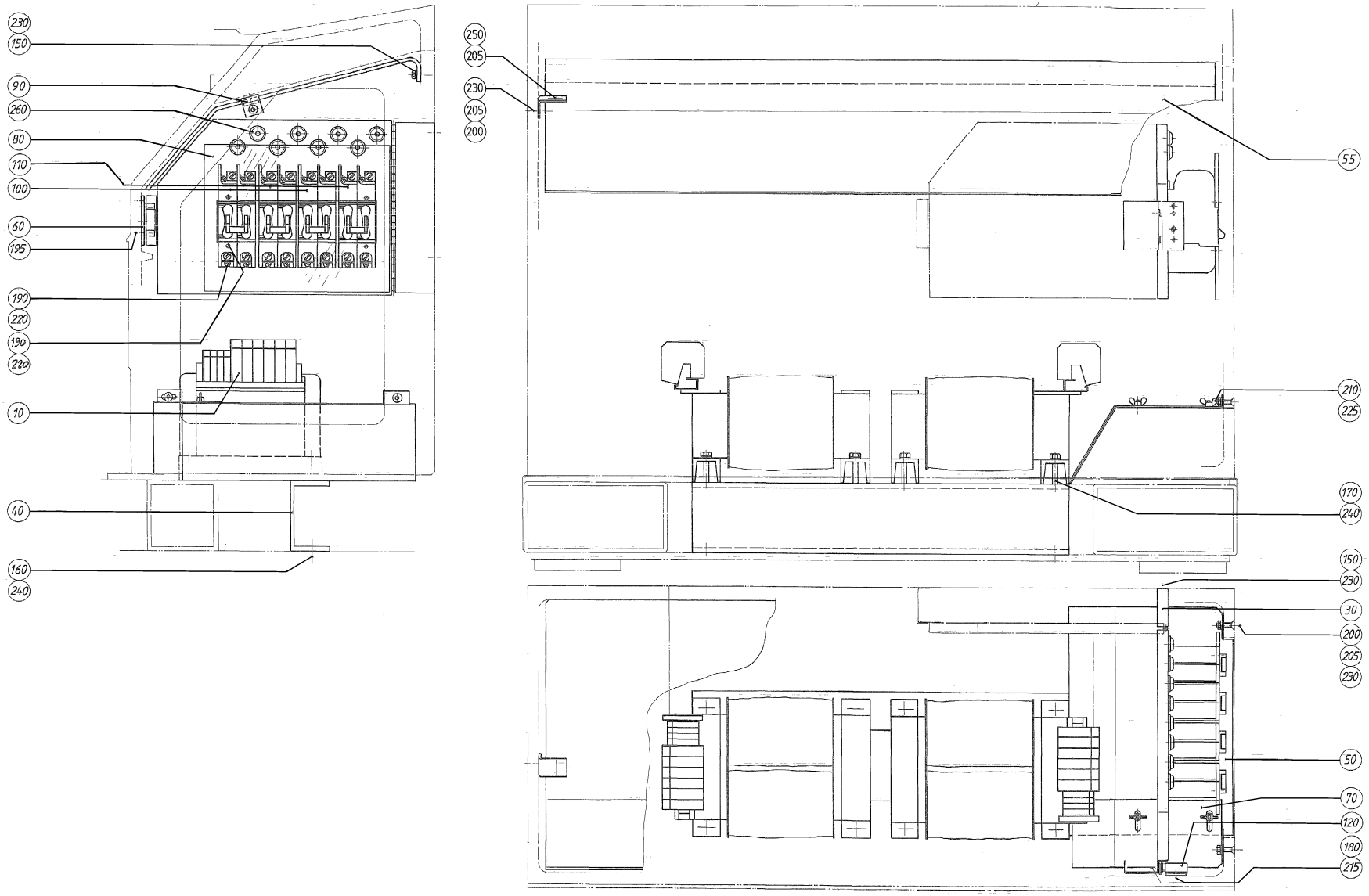
230
150
90
260
80
110
100
60
195
190
220
190
220
10
40
160
240
250
205
230
205
200
55
210
225
170
240
150
230
30
200
205
230
50
70
120
180
215

ECM: 72091 - 19981216
Group number: 440415-0200
Assembly Drawing: 440415-3_1_AA

Issue: 20020121

Pos	Part No	SP	UN	Qty	Description	Page No
Common Parts						
010	23127-0101	D		2	TRANSFORMER	
030	450299-0000	-		1	SWIVEL PLATE	
040	450300-0000	-		1	BEAM	
050	450667-0000	-		1	SPLASH GUARD	
055	451088-0000	-		1	PROTECTION	
060	450301-0000	-		1	FASTENING PLATE	
070	450668-0000	-		1	SPLASH GUARD	
080	450669-0000	-		1	TOUCH GUARD	
090	451089-0000	-		2	BRACKET	
100	90007-0100	-		2	FUSE	
110	90007-0101	-		2	FUSE	
120	90237-0046	-		1	MAGNETIC LOCK, 46X33X15 MM	
150	312105-0366	-		4	SCREW M6S M6X12 A280	
160	312101-0451	-		4	SCREW M6S M8X20 FZB	
170	312101-0461	-		8	SCREW M6S M8X50 FZB	
180	312125-0220	-		4	SCREW SLOT.PAN HD. MCS 3X6 A480	
190	312121-0291	-		20	SCREW SLOT.PAN HD. MCS 4X12 FZB	
195	312145-0366	-		2	SCREW COUNTERS.SLOT.HD. MFS 6X12 SS	
200	312155-0372	-		4	SCREW HEX.SOCK.COUNT.MF6S M6X25 A280	
205	312605-0316	-		6	HEXAGON NUT, M6M M6 A280	
210	312715-0114	-		2	NUT WING COLD WORK.MVM-K M5 A280	
215	315105-0124	-		4	WASHER PLAIN, BRB, 3,2/6,H=0,5	
220	315101-0136	-		12	WASHER PLAIN, BRB, 4,3/8 H=0,8	
225	315105-0146	-		2	WASHER PLAIN, BRB, 5,3/10,H=1	
230	315105-0153	-		8	WASHER PLAIN, BRB, 6,4/12,H=1,5	
240	315101-0165	-		12	WASHER PLAIN, BRB, 8,4/16 H=1,5	
250	315121-0153	-		2	WASHER PLAIN, TBRSB 6,4/22 H=4	
260	352101-0103	-		8	LEAD-IN, PR18,6/PG11, E-1457518	

Pos	Part No	SP	UN	Qty	Description	Page No

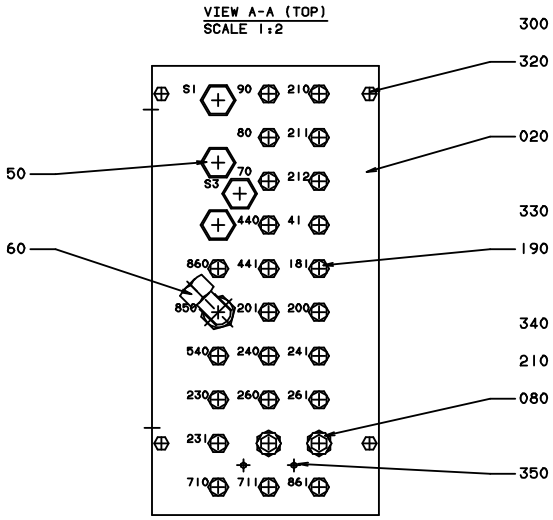
VIEW A-A (TOP)
SCALE 1:2
300
320
020
330
190
340
210
080
350
50
60
S1
90
210
80
211
S3
70
212
440
41
860
441
181
850
201
200
540
240
241
230
260
261
231
710
711
861

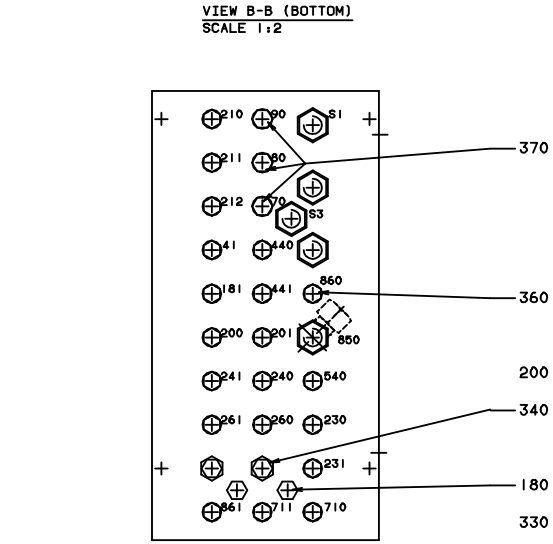
VIEW B-B (BOTTOM)
SCALE 1:2
370
360
200
340
180
330
210
90
S1
211
80
212
70
S3
41
440
181
441
860
200
201
850
241
240
540
261
260
230
231
861
711
710

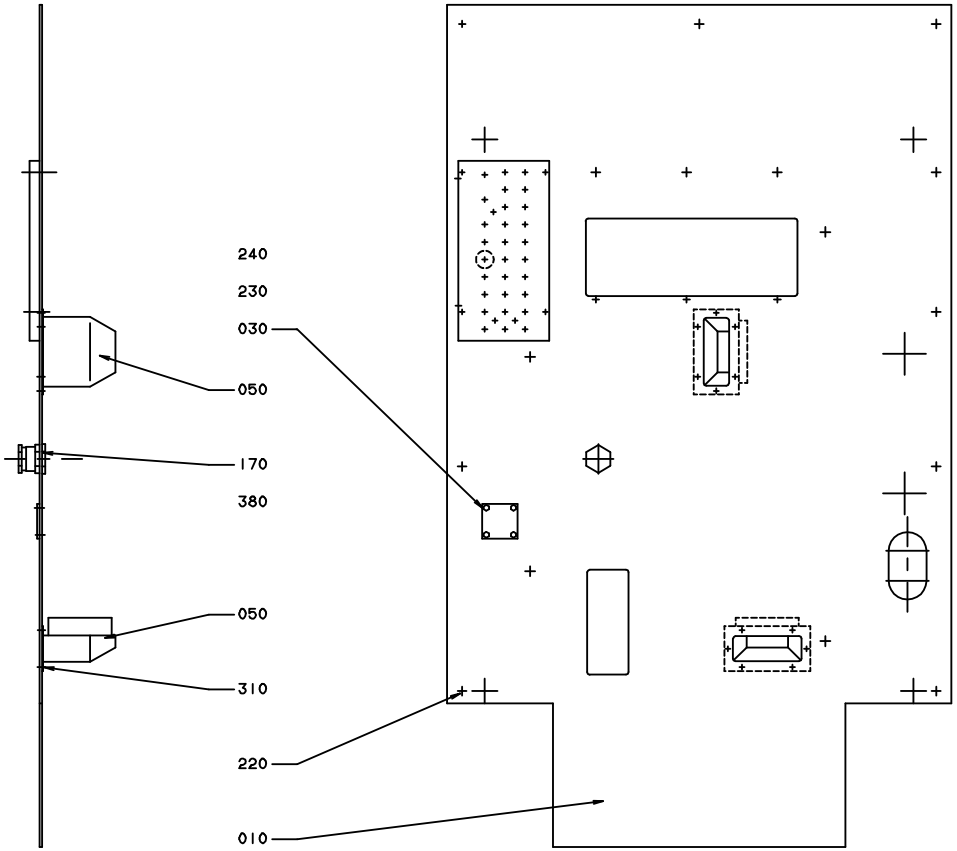
240
230
030
050
170
380
050
310
220
010

ECM: 81572 - 20010206
Group number: 1362426-0100
Assembly Drawing: 1362426-1_1_AB

Issue: 20020121

Pos	Part No	SP	UN	Qty	Description	Page No
TBA/8						
030	1511688-0000	-		1	PLATE	
050	440424-0000	-		2	DRUM	
230	312105-0333	-		4	SCREW M6S M5X25 A280	
240	315105-0146	-		4	WASHER PLAIN, BRB, 5,3/10,H=1	
Common Parts						
010	553842-0000	-		1	BOTTOM PLATE	
020	1362425-0000	-		1	LEAD-IN PLATE	
080	279804-0000	-		2	BUSHING	
150	90030-0030	-		4	CONN. BULKHEAD SV 12-L/SY	
160	90030-0221	-		1	CONN. ELBOW BULKHEAD WSV 12	
170	90099-0085	-		1	NUT	
180	90163-0057	-		2	NIPPLE 1/8" BRASS	
190	90224-0307	-		23	STRAIGHT FITTING, 6MM, 1/8",	
200	90224-0319	-		2	CONN. STR., 8-R1/4, EXT. THREAD	
210	90224-0331	-		2	CONN. STR., 6-R1/4, EXT. THREAD	
220	90287-0075	-		9	SCREW SLOT. PAN HEAD LKCS M6X12	
300	312101-0378	-		4	SCREW M6S M6X40 FZB	
310	312121-0321	-		12	SCREW SLOT.PAN HD. MCS 5X6 FZB	
320	315101-0153	-		4	WASHER PLAIN, BRB, 6,4/12 H=1,5	
330	315233-0109	-		25	WASHER PL.RND.NYL.10,3/14,H=1	
340	315233-0110	-		4	WASHER PL.RND.NYL.13,3/17,H=1	
350	342713-0209	-		2	PLUG, EXT THREAD HEX SOCKET 8638-00-180	
360	342722-0202	-		20	PIPE COUPLING 1/8" D=6MM	
370	342722-0204	-		3	PIPE COUPLING	
380	352100-0127	-		1	CABLE GLANR.47-34,5	

Pos	Part No	SP	UN	Qty	Description	Page No

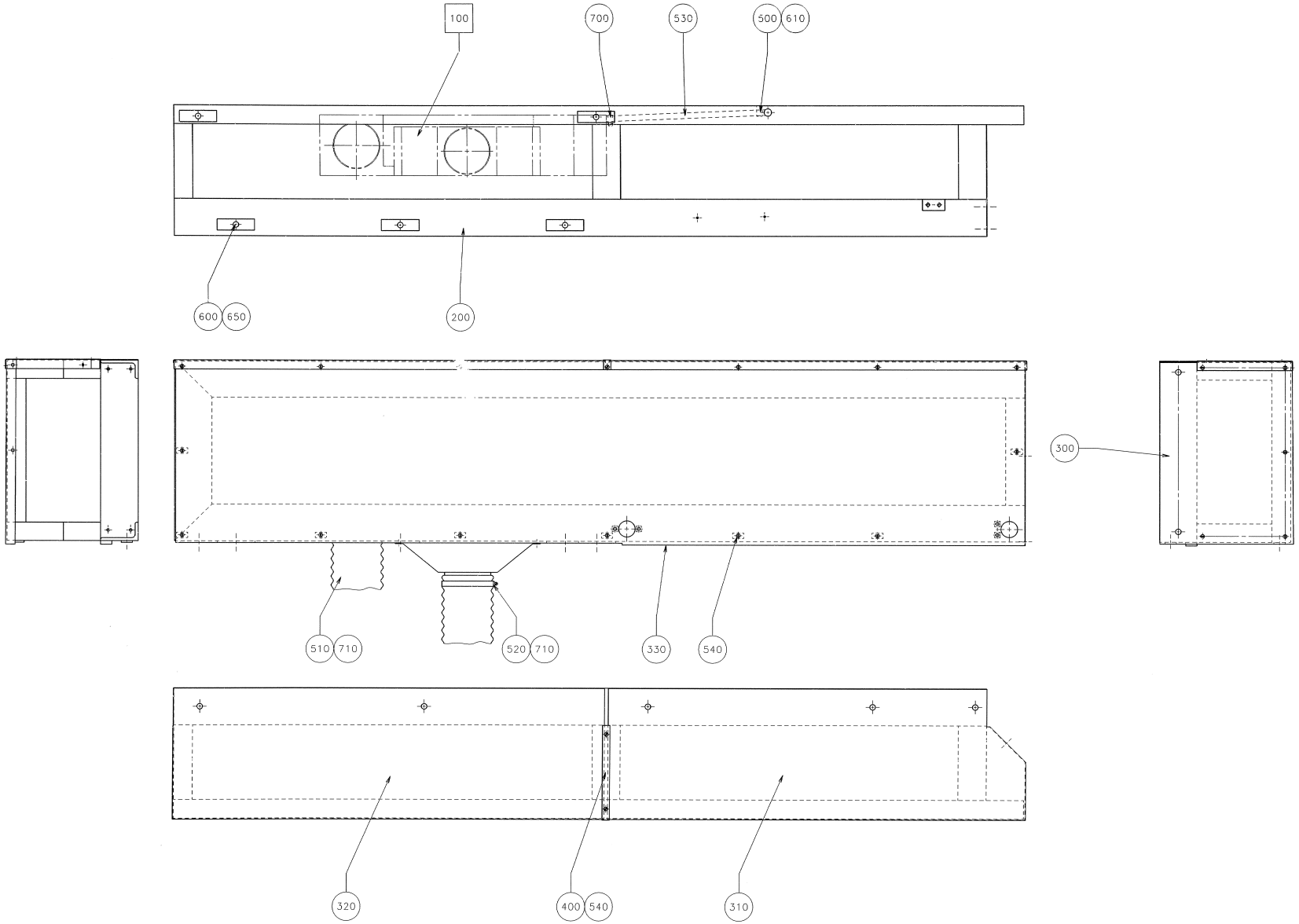
100
700
530
500
610
600
650
200
300
510
710
520
710
330
540
320
400
540
310

Pos	Part No	SP	UN	Qty	Description	Page No
Common Parts						
100	A566683-0100	-		1	AIR COOLER	**197**
200	1360904-0000	-		1	SIDE BOX LEFT	
300	542697-0000	-		1	COVER PLATE L	
310	564519-0000	-		1	SIDE PLATE	
320	564520-0000	-		1	SIDE PLATE	
330	1360905-0000	-		1	BOTTOM PLATE LEFT	
400	564523-0000	-		1	RIM	
500	90074-0004	-		1	CLIPS, CABLE CLIPS DI=16 MM	
510	90152-0032	-	MM	1000	HOSE 5"=127MM	
520	90152-0032	-	MM	1300	HOSE 5"=127MM	
530	90166-0007	-	MM	1200	HOSE PVC 10/14 TRANSP.	
540	90287-0075	-		33	SCREW SLOT. PAN HEAD LKCS M6X12	
600	312101-0540	-		5	SCREW M6S M12X40 FZB	
610	312121-0287	-		1	SCREW SLOT.PAN HD. MCS 4X8 FZB	
650	315101-0178	-		5	WASHER PLAIN, BRB, 13/24 H=2	
700	342991-0101	-		1	HOSE CLIP,WORM DRIVE TYPE (13)-16	
710	342991-0115	-		4	HOSE CLIP,WORM DRIVE TYPE (110)-136	

Pos	Part No	SP	UN	Qty	Description	Page No

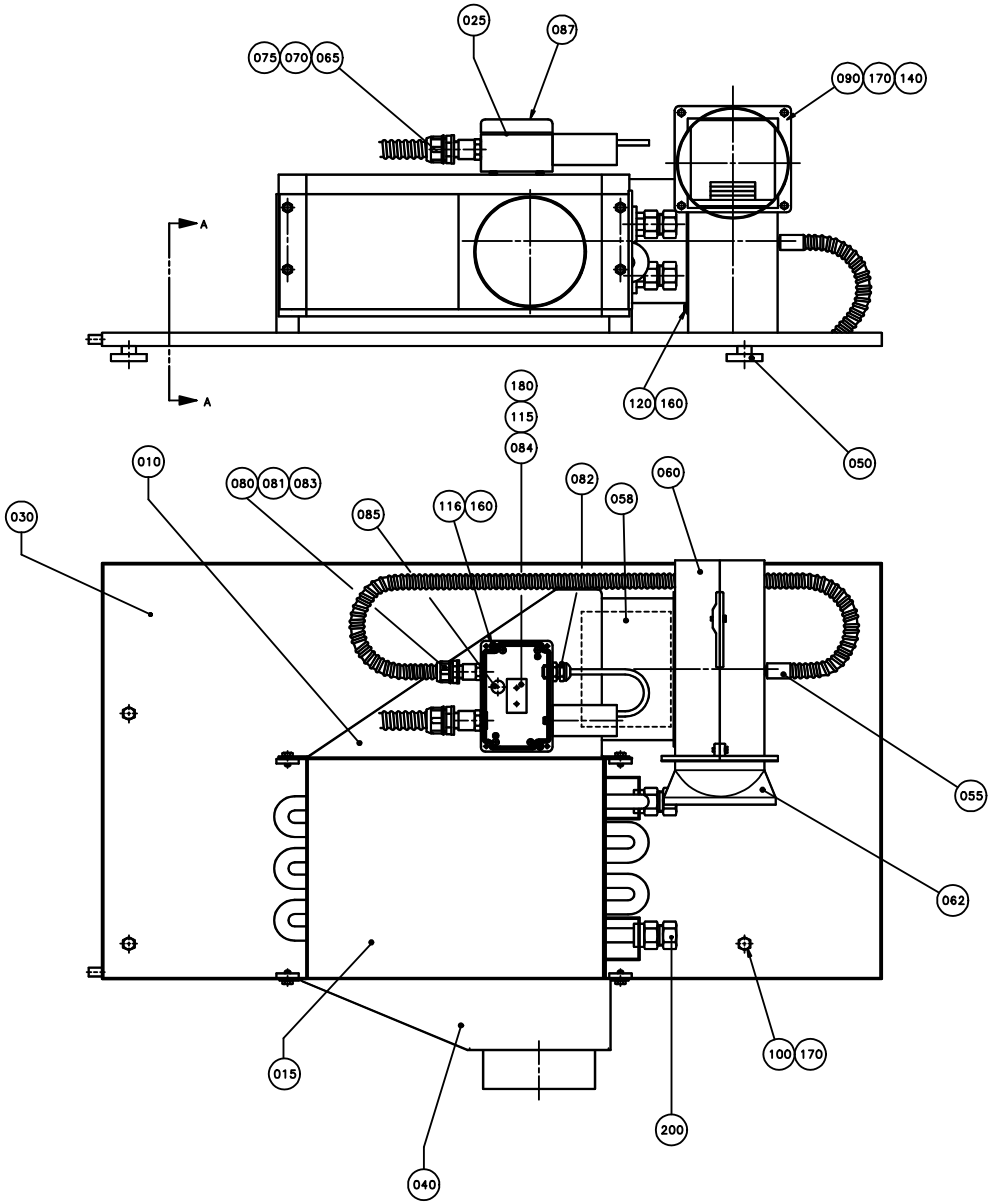
025
087
075
070
065
090
170
140
A
A
180
115
084
120
160
050
010
080
081
083
085
116
160
082
058
060
030
055
062
100
170
015
200
040

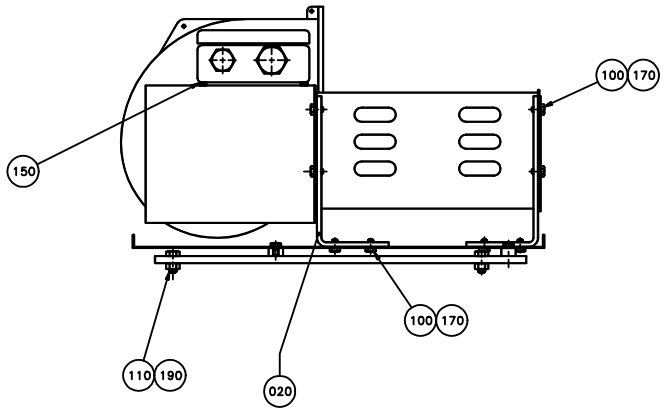
100
170
150
100
170
110
190
020

SECTIONS A-A

ECM: 72091 - 19981216
Group number: 566683-0100
Assembly Drawing: 566683-1_1_AA

Issue: 20020121

Pos	Part No	SP	UN	Qty	Description	Page No
Common Parts						
010	928837-0000	D		1	AIR DISTRIBUTOR	
015	495201-0000	C		1	COOLING ELEMENT	
020	566685-0000	-		4	BRACKET	
025	450495-0000	-		1	CONNECTION BOX	
030	566686-0000	-		1	CONDENSATE TRAY	
040	566687-0000	-		1	NOZZLE	
050	440349-0000	-		2	FASTENING IRON	
055	456256-0000	-		1	PROTECTIVE COVER	
058	546929-0000	C		1	FILTER	
060	B90264-0019	C		1	FAN ZIEHL 230V 250W 1,15A 595 M3/H	
	90159-0061	*-*		*1*	*CAPACITOR, 6 æF 400 V*	
062	90264-0344	-		1	FAN CASING	
065	352136-0127	-		1	GLAND FITTING PR 18,6	
070	352135-0106	-	MM	800	SPIRAL CONDUIT DI=16 MM	
075	352100-0106	-		1	CABLE GLANR.18,6-10,5	
080	90012-0063	-		1	CABLE GLAND PR 15,2	
081	352100-0100	-		1	CABLE GLANR.15,2-7,5	
082	352103-0101	-		1	CABLE GLAND, ST 9, PR15,2/PG9	
083	90152-0033	-	MM	1000	SPIRAL CONDUIT FOR PR 15,2(PG 9)	
084	90077-0102	-		1	TERMINAL BLOCK, 1952.2	
085	90002-0013	-		1	BLANK-OFF PLUG, PR 15,2 SKINDICHT-BLK9	
087	90194-0016	-		1	SIGN, FLASH, ELECTRIC EQUIPMENT SYMBOL	
090	312101-0366	-		4	SCREW M6S M6X12 FZB	
100	312101-0364	-		20	SCREW M6S M6X10 FZB	
110	312101-0449	-		2	SCREW M6S M8X16 FZB	
115	312121-0230	-		2	SCREW SLOT.PAN HD. MCS 3X20 FZB	
116	312121-0293	-		2	SCREW SLOT.PAN HD. MCS 4X16 FZB	
120	312101-0287	-		4	SCREW M6S M4X8 FZB	
140	312601-0316	-		4	NUT M6M 6-8 FZB	
150	312821-0102	-		2	HEXAGON WELDING NUT M4 RFR	
160	315101-0136	-		6	WASHER PLAIN, BRB, 4,3/8 H=0,8	
170	315101-0153	-		24	WASHER PLAIN, BRB, 6,4/12 H=1,5	
180	315101-0124	-		2	WASHER PLAIN, BRB, 3,2/6 H=0,5	
190	315101-0165	-		4	WASHER PLAIN, BRB, 8,4/16 H=1,5	
200	342723-0114	-		2	CONN. STR. PIPE GI-15-G1/2	

Pos	Part No	SP	UN	Qty	Description	Page No

Machine Type | Group Description | Used-In | Group Number | Page No

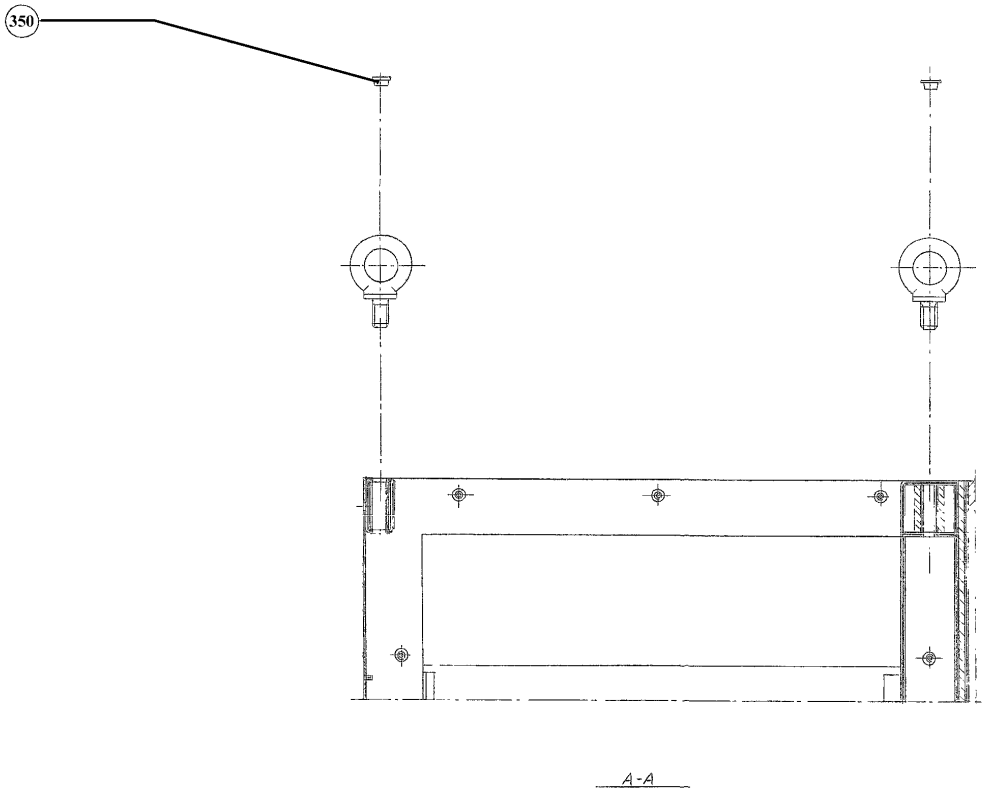

A-A

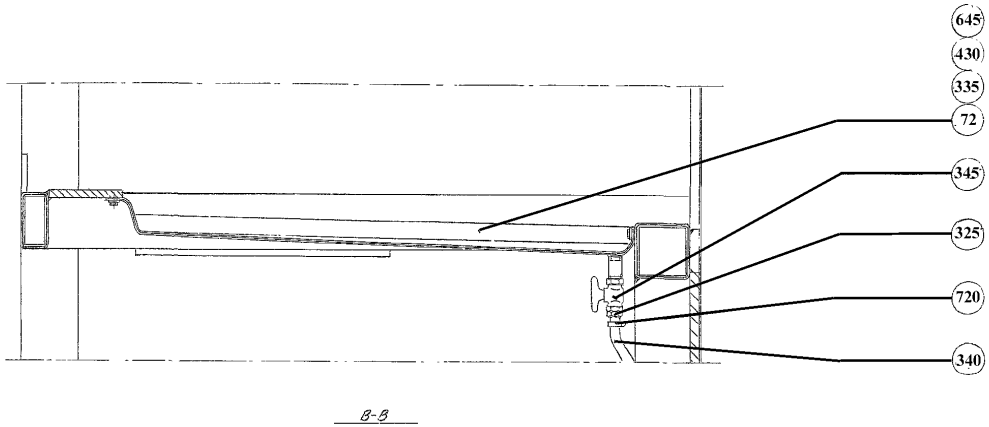

B-B

ECM: 98208 - 20011213
Group number: 440537-0500
Assembly Drawing: 440537-3_1_AA

Issue: 20020121

Pos	Part No	SP	UN	Qty	Description	Page No
TBA/8 NORMFIN						
005	530469-0000	-		1	FRONT PLATE	
015	544703-0000	-		2	MOUNTING SHEET	
016	542702-0000	-		1	COVER PLATE L	
017	542703-0000	-		1	COVER PLATE R	
020	450457-0000	-		1	FLANGE	
027	542398-0000	-		2	HOLDER	
028	542399-0000	-		2	HOLDER	
030	90030-0030	-		2	CONN. BULKHEAD SV 12-L/SY	
032	90458-0256	A		1	PROXIMITY SWITCH IIA 3010-BPKG/6M	
035	90261-0018	-		1	PLUG, BLIND, PLASTIC GPN300F-183	
040	90266-0010	-	MM	35	TUBE	
045	312105-0364	-		110	SCREW M6S M6X10 A280	
046	312105-0493	-		16	SCREW M6S M10X25 A280	
047	312125-0287	-		13	SCREW PAN HEAD MCS M4X8 SS	
049	315105-0173	-		12	WASHER PLAIN, BRB, 10,5/22,H=2	
050	312115-0368	-		4	SCREW MC6S M6X16 A280	
051	352101-0103	-		5	LEAD-IN, PR18,6/PG11, E-1457518	
052	352103-0105	-		2	CABLE GLAND, STR 11, PR 18,6/PG11	
053	352135-0202	-		4	CLIP, 16 MM, 913.016	
450	312105-0327	-		8	SCREW M6S M5X12 A280	
695	342920-0113	-		2	STRAIGHT COUPLING,EXT.THREADED 6/4-R1/8"	
705	90330-0066	-		7	PLUG, EXT. G-THREAD, G1/8	
TBA/8 REVFIN						
005	530469-0000	-		1	FRONT PLATE	
015	544703-0000	-		2	MOUNTING SHEET	
016	542702-0000	-		1	COVER PLATE L	
017	542703-0000	-		1	COVER PLATE R	
020	450457-0000	-		1	FLANGE	
027	542398-0000	-		2	HOLDER	
028	542399-0000	-		2	HOLDER	
030	90030-0030	-		2	CONN. BULKHEAD SV 12-L/SY	
032	90458-0256	A		1	PROXIMITY SWITCH IIA 3010-BPKG/6M	
035	90261-0018	-		1	PLUG, BLIND, PLASTIC GPN300F-183	
040	90266-0010	-	MM	35	TUBE	
045	312105-0364	-		110	SCREW M6S M6X10 A280	
046	312105-0493	-		16	SCREW M6S M10X25 A280	
047	312125-0287	-		13	SCREW PAN HEAD MCS M4X8 SS	
049	315105-0173	-		12	WASHER PLAIN, BRB, 10,5/22,H=2	
050	312115-0368	-		4	SCREW MC6S M6X16 A280	
051	352101-0103	-		5	LEAD-IN, PR18,6/PG11, E-1457518	
052	352103-0105	-		2	CABLE GLAND, STR 11, PR 18,6/PG11	
053	352135-0202	-		4	CLIP, 16 MM, 913.016	
450	312105-0327	-		8	SCREW M6S M5X12 A280	
692	342732-0102	-		4	ELBOW PIPE JOINT, EXT.THREAD, D=6MM-G1/8	
695	342920-0113	-		6	STRAIGHT COUPLING,EXT.THREADED 6/4-R1/8"	
705	90330-0066	-		3	PLUG, EXT. G-THREAD, G1/8	
Common Parts						
055	543151-0000	-		1	CANTILEVER	
060	531182-0000	-		1	CANTILEVER	
070	267835-0000	-		1	CANTILEVER	
072	283884-0000	-		1	OIL TROUGH	
075	436776-0000	-		1	MACHINE BODY	
078	269285-0000	-		1	PROTECTION PLATE	
080	273751-0000	-		1	FRONT PLATE	
085	273753-0000	-		1	PROTECTION PLATE	
090	285801-0000	-		1	BEAM	
095	293158-0000	-		1	HATCH	
097	293159-0000	-		1	HATCH	
100	297576-0000	-		1	BEAM	
103	297669-0000	-		1	POST	
105	297670-0000	-		1	POST	
108	B434919-0000	-		1	COLUMN LEFT	
	312911-0125	-		*2*	*THREADED INSERTS M8X1,0D*	
	312911-0119	-		*4*	*THREADED INSERTS M6X2,0D*	
	311103-0413	-		*1*	*PARALLELL PIN, M6, 8X50 MM*	
110	B434920-0000	-		1	COLUMN RIGHT	
	312911-0125	-		*2*	*THREADED INSERTS M8X1,0D*	
	312911-0119	-		*4*	*THREADED INSERTS M6X2,0D*	
	311103-0413	-		*1*	*PARALLELL PIN, M6, 8X50 MM*	
114	440023-0000	-		1	PROTECTION PLATE	
116	440024-0000	-		1	PROTECTION PLATE	
129	566646-0000	-		1	SIDE GUARD	
130	566645-0000	-		1	SIDE GUARD	
137	440702-0000	-		1	BEAM	
138	540725-0000	-		1	FRONT PLATE, LOWER	
140	283992-0000	A		2	RULER	
145	247080-0000	-		4	BRACKET	
150	269291-0000	-		1	RULER	
155	269294-0000	-		1	RULER	
160	269295-0000	-		1	PROTECTION PLATE	
165	476824-0000	-		1	COVERING PLATE	

Machine Type | Group Description | Used-In | Group Number | Page No

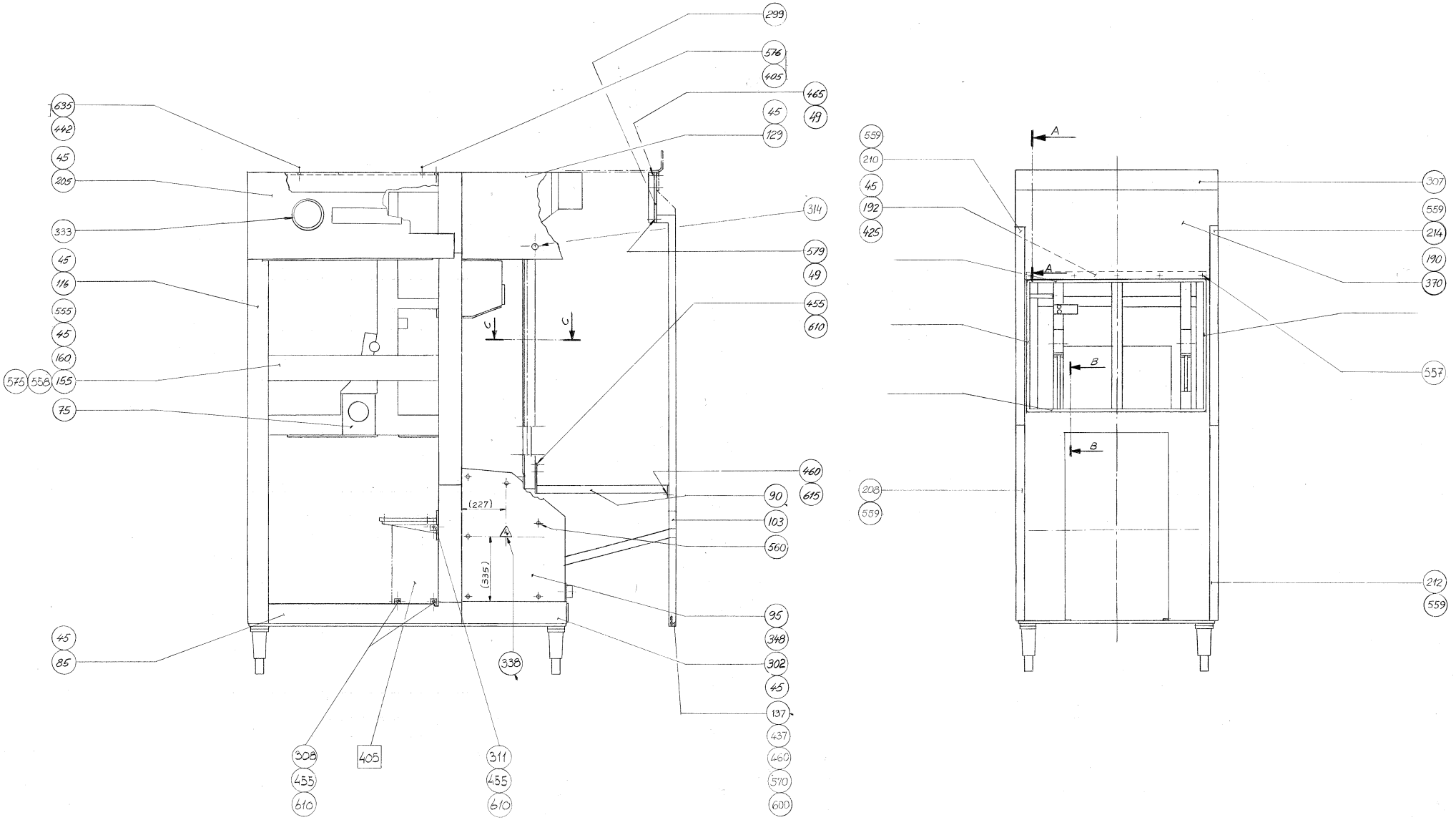
299
576
405
465
45
49
129
635
442
45
205
333
45
116
555
45
160
575
558
155
75
314
579
49
455
610
C
C
460
615
90
103
560
(227)
(335)
95
348
302
45
137
437
460
570
600
45
85
338
308
455
610
405
311
455
610
559
210
45
192
425
A
A
B
B
208
559
307
559
214
190
370
557
212
559

Pos	Part No	SP	UN	Qty	Description	Page No
Common Parts (Cont'd)						
170	279370-0000	A		2	STEERING	
190	440025-0000	-		1	PROTECTION PLATE	
192	440026-0000	-		1	CANTILEVER	
205	440077-0000	-		1	COVERING PLATE	
208	440203-0000	-		1	RULER	
210	440204-0000	-		1	RULER	
212	440205-0000	-		1	RULER	
214	440206-0000	-		1	RULER	
216	479374-0000	-		1	DRIP PLATE	
225	531365-0000	A		4	BRACKET	
275	243573-0000	-		2	LACE	
278	538245-0000	-		2	SHIM	
280	247082-0000	-		4	LEG	
285	263828-0000	-		1	JUNCTION RAIL	
287	267462-0000	-		2	LOCK SHEET	
288	267463-0000	-		2	LOCK SHEET	
290	269296-0000	-		1	PROTECTION PLATE	
295	269297-0000	-		1	PROTECTION PLATE	
298	484212-0000	-		1	BRACKET	
299	484213-0000	-		1	BRACKET	
300	293160-0000	-		1	COVERING PLATE	
302	293161-0000	-		1	COVERING PLATE	
306	450298-0000	-		1	COVERING PLATE	
307	450342-0000	-		1	COVERING PLATE	
308	540726-0000	-		2	HOOK HOLDER	
309	543152-0000	-		1	HOSE ATTACHMENT	
310	457357-0000	-		2	BRACKET	
311	540727-0000	-		1	FASTENING BRACKET	
312	90015-0010	-		16	BUSHING	
313	90015-0011	-		1	BUSHING	
314	90015-0021	-		1	LEAD-IN, TET10-14, E-1458023	
316	90030-0066	-		1	CONN. BULKHEAD SV 6-L/SY	
317	90030-0067	-		2	CONN. BULKHEAD SV 8-L/SY	
318	90030-0159	-		2	CONN. BULKHEAD SV 15-L/SY	
319	90030-0179	-		1	CONN. BULKHEAD SV 22-L/SY	
325	90055-0033	-		1	HOSE NIPPLE, EXT.THR. R1/2-13 MM	
326	90074-0001	-		1	CLIPS, CABLE CLIPS DI=10 MM	
328	90090-0014	-		1	BALL, D=7,938 MM	
329	90099-0004	-		1	NUT	
330	90099-0011	-		1	NUT PR 37 BRASS	
331	90134-0004	-		2	PIPE CONNECTION R1/8	
333	90143-0054	-	MM	500	STRIP	
335	90157-0022	-	L	1	SEALING COMPOUND	
338	90194-0016	-		2	SIGN, FLASH, ELECTRIC EQUIPMENT SYMBOL	
340	90166-0121	-	MM	1500	HOSE	
345	90187-0029	-		1	BALL VALVE G1/2, NPBR	
348	90242-0115	-	MM	3200	O-RING	
349	90261-0003	-		1	PLUG, BLIND, PLASTIC GPN300V-10	
350	90261-0011	-		4	PLUG, BLIND, PLASTIC GPN300F233	
370	90287-0075	-		6	SCREW SLOT. PAN HEAD LKCS M6X12	
385	311103-0314	-		4	PARALLELL PIN, M6, 5X30 MM	
397	311103-0413	-		16	PARALLELL PIN, M6, 8X50 MM	
400	311202-0320	-		2	PIN, TAPERED, KP, 8X35 GROUND	
405	311211-0267	-		2	TAPER PIN GKP5X5X30	
425	312101-0366	-		8	SCREW M6S M6X12 FZB	
430	312101-0368	-		8	SCREW M6S M6X16 FZB	
435	312101-0453	-		20	SCREW M6S M8X25 FZB	
437	312101-0499	-		2	SCREW M6S M10X40 FZB	
440	312101-0518	-		4	SCREW M6S M10X140 FZB	
442	312101-0538	-		4	SCREW M6S M12X35 FZB	
455	312105-0368	-		7	SCREW M6S M6X16 A280	
460	312105-0449	-		6	SCREW M6S M8X16 A280	
465	312105-0493	-		8	SCREW M6S M10X25 A280	
475	312105-0540	-		10	SCREW M6S M12X40 A280	
480	312105-0542	-		12	SCREW M6S M12X50 A280	
490	312111-0364	-		2	SCREW HEX.SOCK.HD.MC6S-TT 6X10 88 FZB	
510	312115-0378	-		6	SCREW MC6S M6X40 A280	
515	312115-0451	-		8	SCREW MC6S M8X20 A280	
525	312115-0501	-		7	SCREW MC6S M10X50 A280	
530	312115-0503	-		8	SCREW MC6S M10X60 A280	
555	312151-0366	-		4	SCREW HEX.SOCK.COUNT.MF6S 6X12 FZB	
556	312155-0327	-		4	SCREW HEX.SOCK.COUNT.MF6S M5X12 A280	
557	312155-0366	-		5	SCREW HEX.SOCK.COUNT.MF6S M6X12 A280	
558	312155-0370	-		4	SCREW HEX.SOCK.COUNT.MF6S M6X20 A280	
559	312155-0368	-		15	SCREW HEX.SOCK.COUNT.MF6S M6X16 A280	
560	312155-0451	-		12	SCREW HEX.SOCK.COUNT.MF6S M8X20 A280	
570	312601-0320	-		2	NUT M6M 10-8 FZB	
575	312605-0316	-		4	HEXAGON NUT, M6M M6 A280	
576	312605-0314	-		2	HEXAGON NUT, M6M M5 A280	
579	312605-0320	-		2	HEXAGON NUT, M6M M10 A280	
600	315101-0173	-		2	WASHER PLAIN, BRB, 10,5/22 H=2	
610	315105-0153	-		31	WASHER PLAIN, BRB, 6,4/12,H=1,5	
615	315105-0165	-		14	WASHER PLAIN, BRB, 8,4/16,H=1,5	

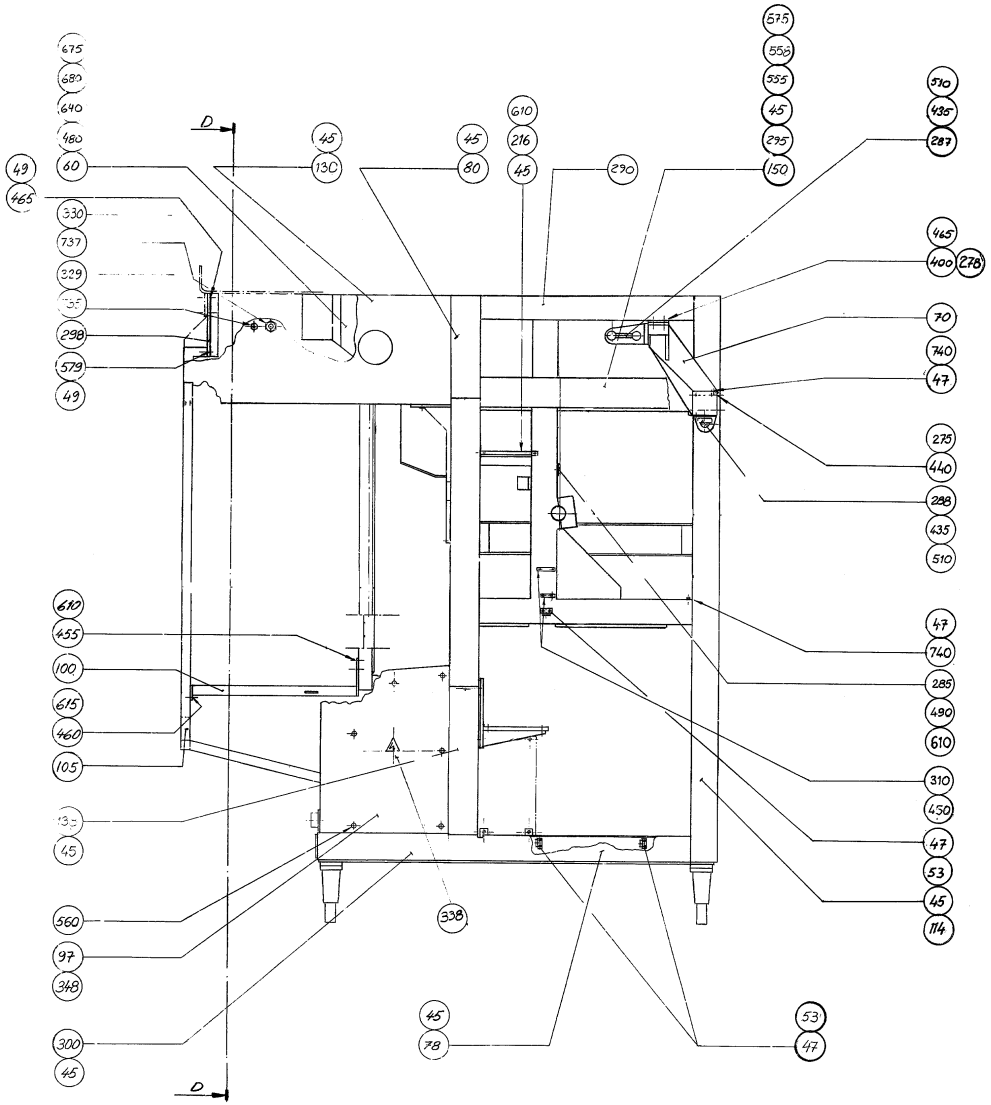
D
D
575
555
555
45
295
150
510
435
287
610
216
45
290
45
130
45
80
60
49
465
675
680
640
480
330
737
329
298
579
49
465
400
278
70
740
47
275
440
288
435
510
610
455
100
615
460
105
45
560
97
348
300
45
338
45
78
53
47
47
740
285
490
610
310
450
47
53
45
114

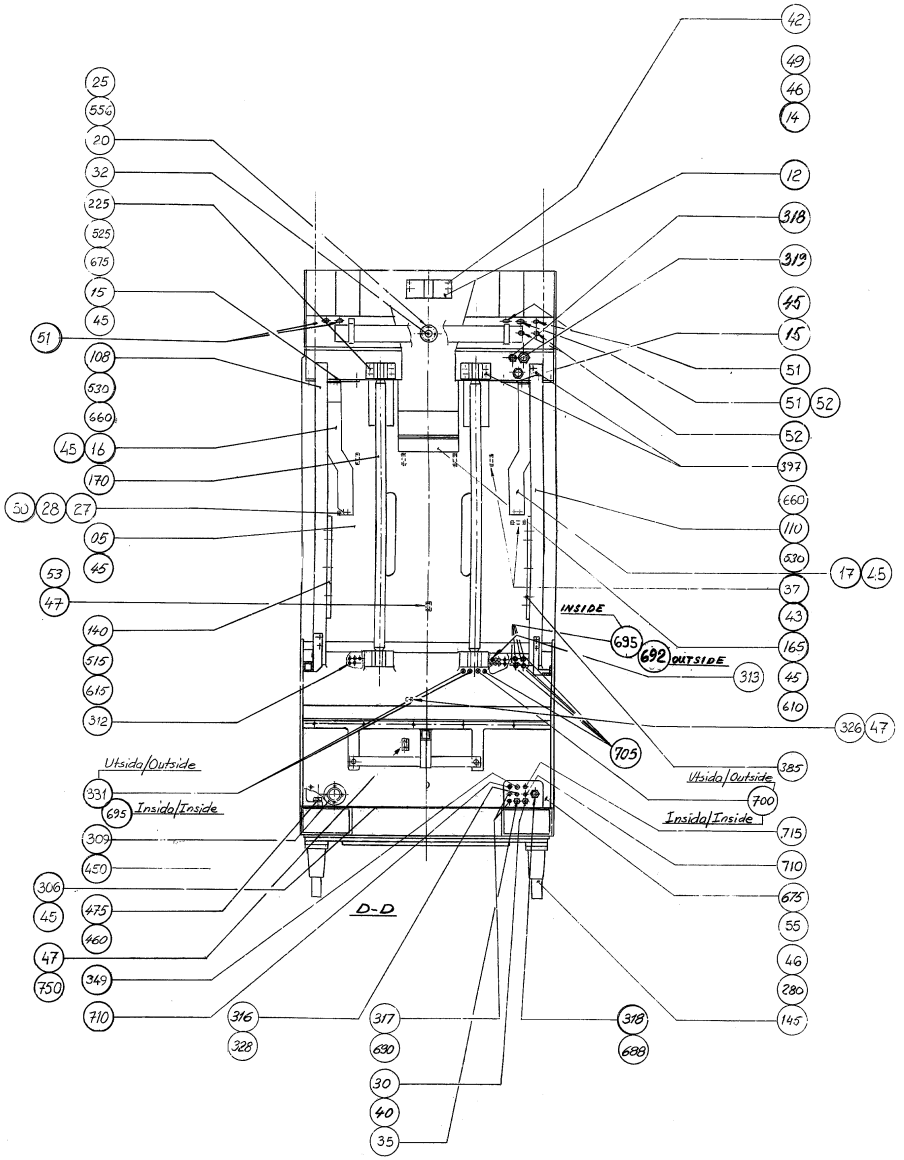
D-D
INSIDE
OUTSIDE
Utsida/Outside
Insida/Inside
Utsida/Outside
Insida/Inside
42
49
46
14
12
318
319
45
15
51
51
52
52
397
660
110
530
17
45
37
43
165
45
610
326
47
385
700
715
710
675
55
46
280
145
25
554
20
32
225
525
675
15
45
51
108
530
660
45
16
170
30
28
27
05
45
53
47
140
515
615
312
331
695
309
450
306
475
45
460
47
750
349
710
635
692
313
705
316
328
317
690
30
40
35
318
688

Pos	Part No	SP	UN	Qty	Description	Page No
Common Parts (Cont'd)						
615	315105-0165	-		14	WASHER PLAIN, BRB, 8,4/16,H=1,5	
635	315111-0178	-		4	WASHER PLAIN, TBRB 13/24 H=4	
640	315115-0178	-		22	WASHER PLAIN, TBRB 13/24 H=4	
645	315121-0153	-		8	WASHER PLAIN, TBRSB 6,4/22 H=4	
660	315402-0173	-		15	LOCK WASHER FBB 10,2	
675	315701-0330	-		2	PARALLEL KEY W. ROUND ENDS 12X8X32 MM	
680	315701-0336	-		3	PARALLEL KEY W. ROUND ENDS 12X8X63 MM	
688	341001-0228	-	MM	35	COPPER TUBE	
690	342929-0121	-		2	STRAIGHT COUPLING,SOLDER 8/6-8	
700	342920-0121	-		2	STRAIGHT COUPLING,EXT.THREADED 8/6-R1/8"	
710	342960-0112	-		2	BULKHEAD COUPLING 6/4	
715	342960-0122	-		1	BULKHEAD COUPLING 8/6	
720	342991-0103	-		1	HOSE CLIP,WORM DRIVE TYPE (19)-23	
735	352103-0116	-		1	CABLE GLAND, ST 21, PR28,3/PG21	
737	352103-0121	-		1	CABLE GLAND, ST 29, PR37,0/PG29	
740	352110-0101	-		2	CLIP, TK 7-10	
750	352135-0201	-		1	CLIP, 12 MM, 913.012	
F405	A540723-0100	-		1	CONNECTION BOX	**205**

Pos	Part No	SP	UN	Qty	Description	Page No

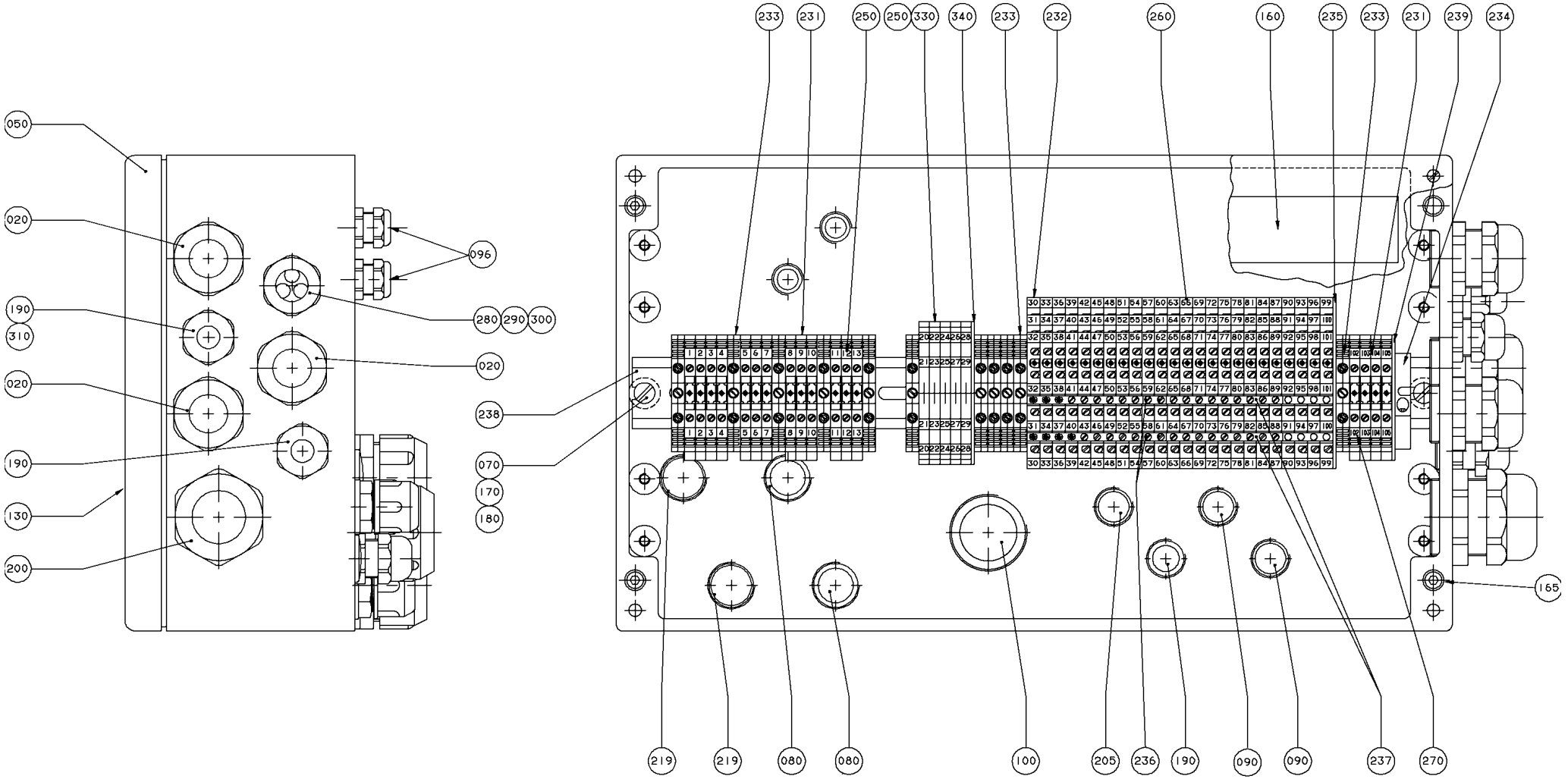
050
020
190
310
020
190
130
200
096
280
290
300
020
238
070
170
180
233
231
250
250
330
340
233
232
260
160
235
233
231
239
234
165
219
219
080
080
100
205
236
190
090
090
237
270

Pos	Part No	SP	UN	Qty	Description	Page No
TBA/8						
080	90002-0004	-		2	BLANK-OFF PLUG, PR 22,5 SKINDICHT-BLK16	
090	90002-0009	-		2	BLANK-OFF PLUG, PR 18.6 SKINDICHT-BLK11	
096	90012-0063	-		2	CABLE GLAND PR 15,2	
190	352103-0106	-		3	CABLE GLAND, ST 11, PR18,6/PG11	
219	352136-0142	-		2	GLAND FITTING	
231	353021-0212	-		17	FEED THROUGH TERMINAL, 10200.0	
233	353024-0205	D		11	EARTH TERMINAL, 1010.1	
236	353034-0401	D		2	BRIDGE CONNECTOR Q2, 13125.0	
239	353032-0004	-		1	END PLATE WAP 2,5-10 BEIGE	
250	359011-0807	-		4	MARKING PLATES 5-FW 1-50	
330	90077-0113	-		5	FEED THROUGH TERMINAL, 10-00102150-1	
340	353032-0009	-		1	END PLATE, WAP 16/35	
Common Parts						
020	352103-0116	-		3	CABLE GLAND, ST 21, PR28,3/PG21	
050	540724-0000	-		1	CONNECTION BOX	
070	450899-0001	-		2	SPACER	
100	90012-0061	-		1	GLAND	
130	90194-0016	-		1	SIGN, FLASH, ELECTRIC EQUIPMENT SYMBOL	
160	90298-0022	-		1	ZERUST CAPSULE	
165	312115-0372	-		3	SCREW MC6S M6X25 A280	
170	312125-0376	-		2	SCREW PAN HEAD MCS M6X35 SS	
180	315105-0153	-		2	WASHER PLAIN, BRB, 6,4/12,H=1,5	
200	352103-0120	-		1	CABLE GLAND, STR 29, PR37,0/PG29	
205	352136-0113	-		1	GLAND FITTING PR18,6/PG11 DI=12MM	
232	353021-0302	-		24	TERMINALS,TRIPLE-LEVEL, DLD 2,5/35 PA	
234	353031-0201	-		1	END BRACKET EW35	
235	353032-0302	-		1	END PLATE WAP	
237	353034-0404	-		4	BRIDGE CONNECTOR Q10, 13131.0	
238	353042-0004	-	MM	385	RAIL TS 35/7,5	
260	359011-0808	-		2	MARKING PLATES 5-FW 51-100	
270	359011-0809	-		2	MARKING PLATES 5-FW 101-150	
280	353240-0004	-		1	NORMAL WITHOUT INSERT, PG 16	
290	353249-0027	-		1	INSERT, MULTI HOLE, E153M3X7	
300	353249-0306	-		3	SEALING PIN, 7X25	
310	1487685-0000	-		1	PLUG	

Pos	Part No	SP	UN	Qty	Description	Page No

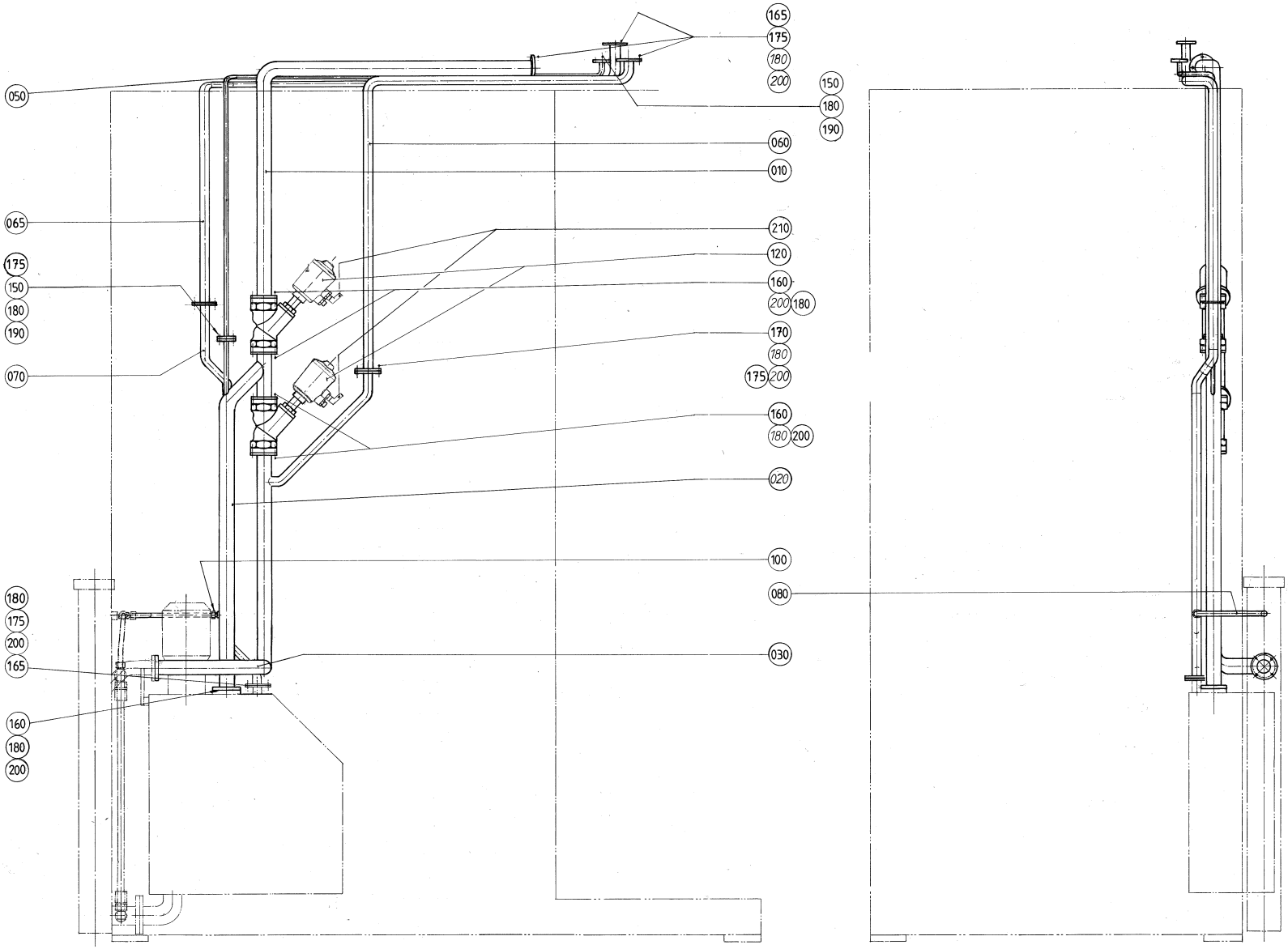
165
175
180
200
150
180
190
050
060
010
065
210
120
175
150
180
190
160
200
180
170
180
070
175
200
160
180
200
020
100
180
175
200
165
080
030
160
180
200

Pos	Part No	SP	UN	Qty	Description	Page No
Common Parts						
010	442466-0000	-		1	PIPE CONNECTION	
020	479033-0000	-		1	PIPE CONNECTION	
030	479034-0000	-		1	PIPE CONNECTION	
050	479036-0000	-		1	PIPE CONNECTION	
060	479040-0000	-		1	PIPE CONNECTION	
065	B542074-0000	-		1	PIPE	
	342810-0101	*-*		*1*	*ELBOW PIPE25*	
	342808-0101	*-*		*2*	*ELBOW PIPE25*	
	90266-0021	*-*	*M*	*1*	*DAIRY PIPE 25X1,2*	
070	B531592-0000	-		1	PIPE	
	342810-0101	*-*		*4*	*ELBOW PIPE25*	
	90266-0021	*-*	*M*	*1*	*DAIRY PIPE 25X1,2*	
080	531597-0000	-		1	PIPE	
100	531595-0000	-		1	STRAIGHT PIPE UNION	
120	B2525460-0000	A		2	SEAT VALVE	
	6-990413 83	*-*		*1*	*SP.P KIT ACTUATOR BUERKERT PA F (80) SS*	
	90458-2603	*-*		*1*	*ANGLE SEAT VALVE W. FLANGES, N.O. D=40*	
	90235-0476	*-*		*1*	*SEALING*	
150	312105-0366	-		6	SCREW M6S M6X12 A280	
160	312105-0368	-		20	SCREW M6S M6X16 A280	
165	312105-0370	-		20	SCREW M6S M6X20 A280	
170	312105-0372	-		4	SCREW M6S M6X25 A280	
175	312605-0316	-		24	HEXAGON NUT, M6M M6 A280	
180	315105-0153	-		50	WASHER PLAIN, BRB, 6,4/12,H=1,5	
190	927421-0003	A		2	O-RING 13.3X2.4 SILICON	
200	927422-0006	A		12	O-RING 42.2X3 SILICON	
210	342732-0103	-		2	ELBOW PIPE JOINT, EXT.THREAD, D=6MM-G1/4	

Pos	Part No	SP	UN	Qty	Description	Page No

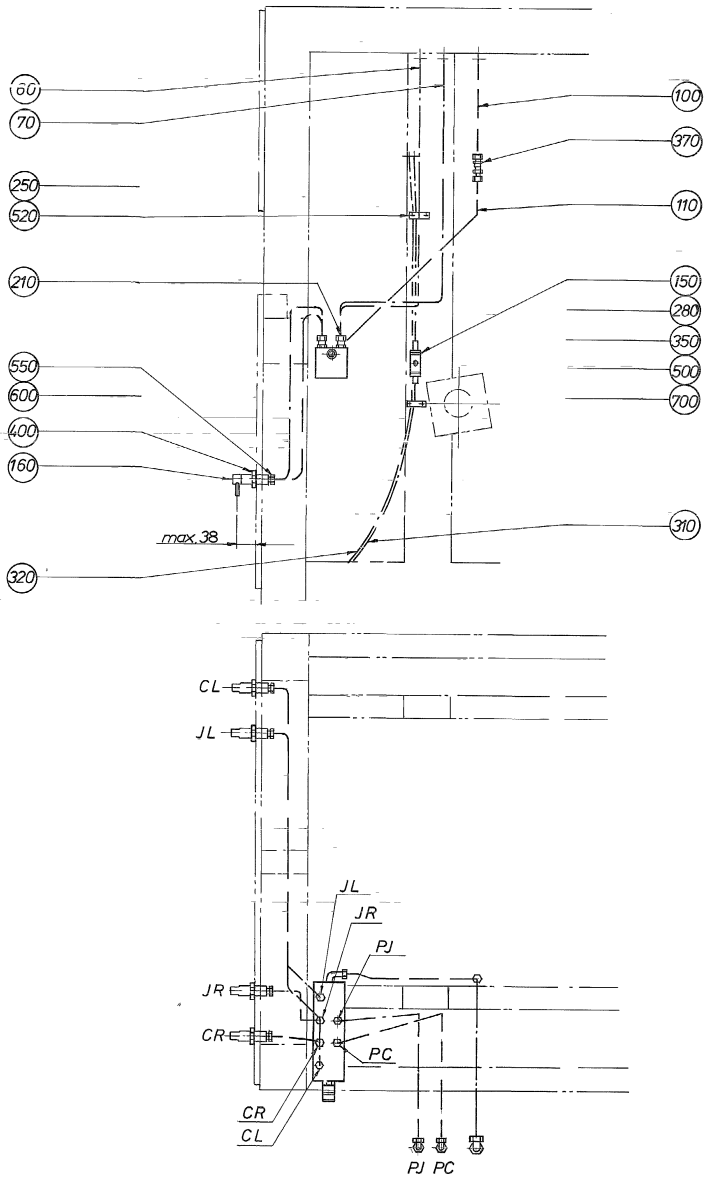
60
70
250
520
210
550
600
400
160
320
100
370
110
150
280
350
500
700
310
max. 38
CL
JL
JL
JR
PJ
JR
CR
PC
CR
CL
PJ PC

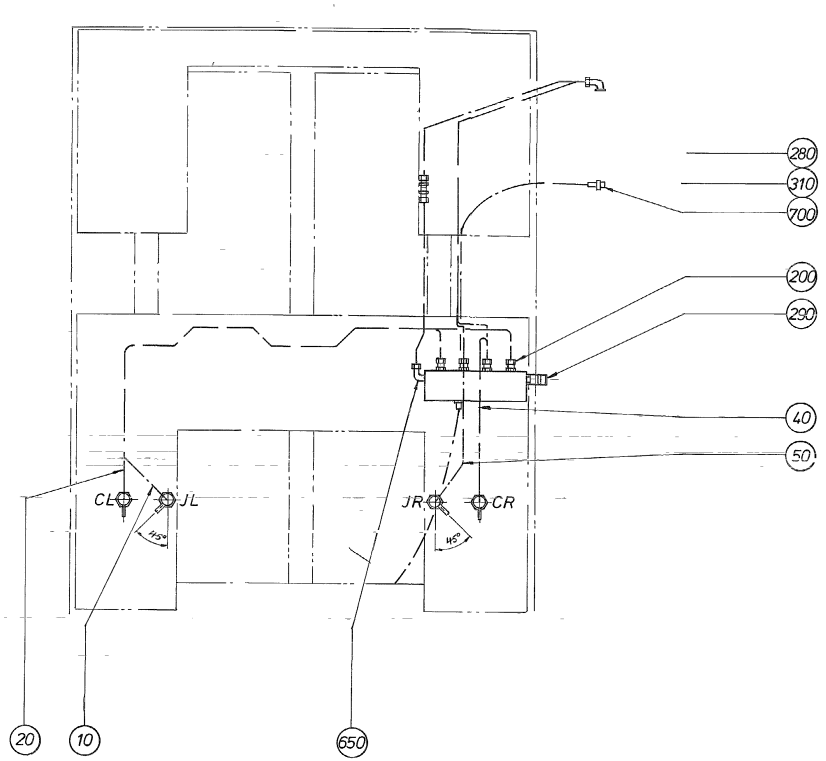
280
310
700
200
290
40
50
CL
JL
JR
CR
45°
45°
20
10
650

Pos	Part No	SP	UN	Qty	Description	Page No
TBA/8						
060	445538-0000	-		1	HYDRAULIC PIPE	
100	445540-0000	-		1	HYDRAULIC PIPE	
210	90030-0157	-		2	CONN. STR. 10-R3/8, EXT. THREAD	
Common Parts						
010	294493-0000	-		1	HYDRAULIC PIPE	
020	294494-0000	-		1	HYDRAULIC PIPE	
040	294495-0000	-		1	HYDRAULIC PIPE	
050	294496-0000	-		1	HYDRAULIC PIPE	
070	445539-0000	-		1	HYDRAULIC PIPE	
110	445541-0000	-		1	HYDRAULIC PIPE	
150	255017-0000	-		1	BRACKET	
160	540718-0000	-		4	ELBOW PIPE JOINT	
200	90030-0155	-		4	CONN. STR., 8-R3/8, EXT. THREAD	
250	90074-0006	-		2	CLIPS, CABLE CLIPS DI=2X12 MM	
280	90163-0041	-		3	HOSE NIPPLE, EXT.THR. 3/8-12 MM	
290	90163-0076	-		1	QUICK COUPLING, (F) LP-006-0-WR021	
310	90166-0007	-	MM	2000	HOSE PVC 10/14 TRANSP.	
320	90166-0122	-	MM	2000	TUBE 8 MM PA,TRANSP.	
350	90187-0054	C		1	BALL VALVE G3/8	
370	90230-0011	C		1	NON RETURN VALVE RHD-115L	
400	90330-0093	-		4	NUT, HEXAGON, G1/2	
500	312101-0331	-		2	SCREW M6S M5X20 FZB	
520	312125-0323	-		4	SCREW PAN HEAD MCS M5X8 SS	
550	342703-0103	-		4	NUT, PIPES & CONNECTORS,NUT M-8 FE	
600	342705-0103	-		4	ACCESSORIES, FERRULE 8-LFZB	
650	342731-0114	-		1	CONN. ELBOW WE 15-LRFZB	
700	342991-0101	-		3	HOSE CLIP,WORM DRIVE TYPE (13)-16	

Pos	Part No	SP	UN	Qty	Description	Page No

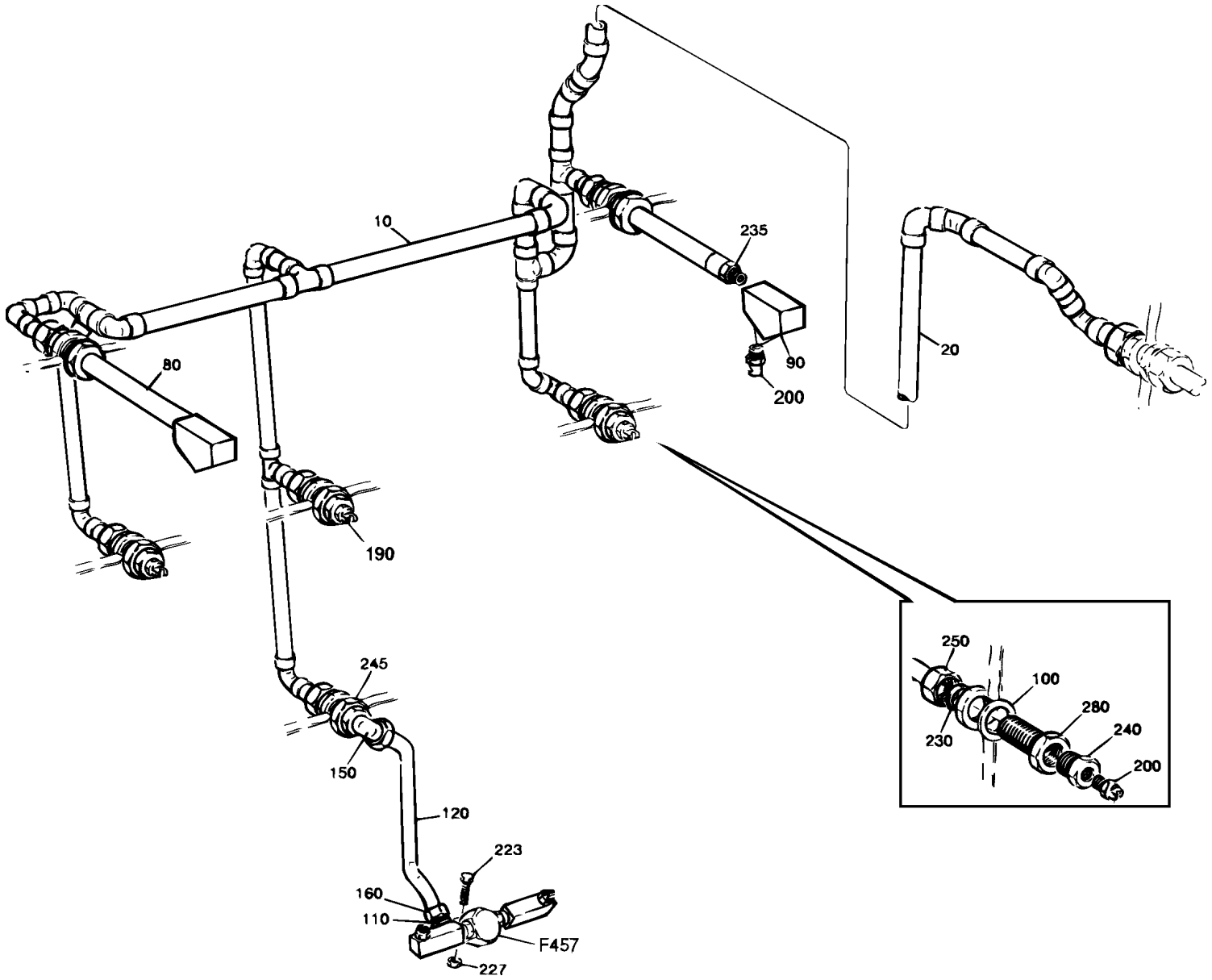
10
235
20
80
90
200
190
250
100
280
240
230
200
245
150
120
223
160
110
F457
227

Pos	Part No	SP	UN	Qty	Description	Page No
TBA/8 0500B OR TBA/8 0375S OR TBA/8 0500S OR TBA/8 0355B OR TBA/8 1000B OR TBA/8 0750S OR TBA/8 0750B						
200	90424-0035	C		7	SPRAY NOZZLE 95 DEG	
240	342701-0205	-		3	BUSHING,INT./EXT.G-THREAD G1/2"-G1/4"	
TBA/8 1000SQ OR TBA/8 1000S						
190	571654-0000	C		1	NOZZLE	
200	90424-0035	C		6	SPRAY NOZZLE 95 DEG	
240	342701-0205	-		2	BUSHING,INT./EXT.G-THREAD G1/2"-G1/4"	
Common Parts						
010	530556-0000	-		1	JUNCTION PIPE UPPER	
020	449170-0000	-		1	CLEANING PIPE	
080	535016-0000	-		2	FORCE SPRING	
090	535017-0000	D		2	BRACKET	
100	246885-0000	-		6	WASHER	
110	537919-0000	-		1	PIPE HOLDER	
120	537918-0000	-		1	PIPE	
150	90030-0115	-		1	CONN. ELBOW WA 12-R3/8	
160	90030-0187	-		1	CONN. STR. GA-12-G3/8	
223	312105-0372	-		1	SCREW M6S M6X25 A280	
227	312605-0316	-		2	HEXAGON NUT, M6M M6 A280	
230	315234-0113	-		6	WASHER PL.RND.CU.21,3//26 H=1,5	
245	342701-0206	-		1	BUSHING,INT./EXT.G-THREAD G1/2"-G3/8"	
250	342720-0114	-		6	CONN. STR. GA-15-G1/2	
280	342767-0114	-		6	CONN. BULKHEAD G1/2	
457	A594614-0100	-		1	CLEANING HEAD	**213**

Pos	Part No	SP	UN	Qty	Description	Page No

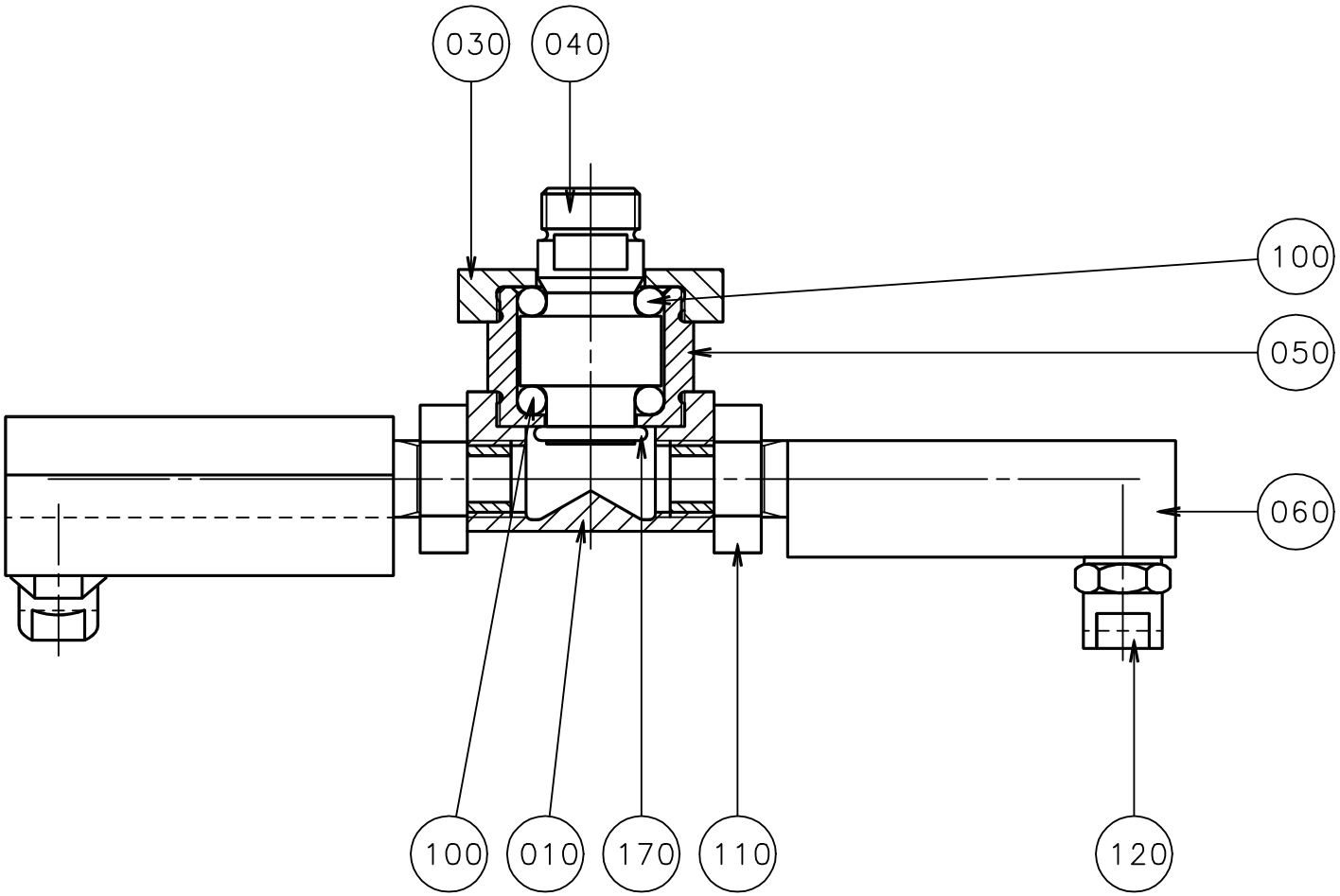
030
040
100
050
060
100
010
170
110
120

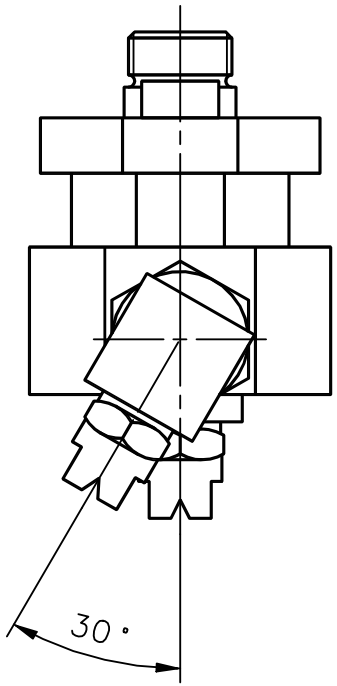
30°

ECM: 72091 - 19981216
Group number: 594614-0100
Assembly Drawing: 594614-1_1_AA

Issue: 20020121

Pos	Part No	SP	UN	Qty	Description	Page No
Common Parts						
010	440600-0000	C		1	ROTOR	
030	534880-0000	C		1	END SECTION	
040	534878-0000	C		1	SHAFT	
050	534879-0000	C		1	BEARING HOUSING	
060	440605-0001	C		2	PIPE	
100	90090-0020	C		24	BALL, D=5 MM	
110	90330-0034	-		2	NUT, HEXAGON, G1/4	
120	90424-0026	C		2	SPRAY NOZZLE 95 DEG	
170	315202-0211	C		1	O-RING 13,3X2,4 MM	

Pos	Part No	SP	UN	Qty	Description	Page No

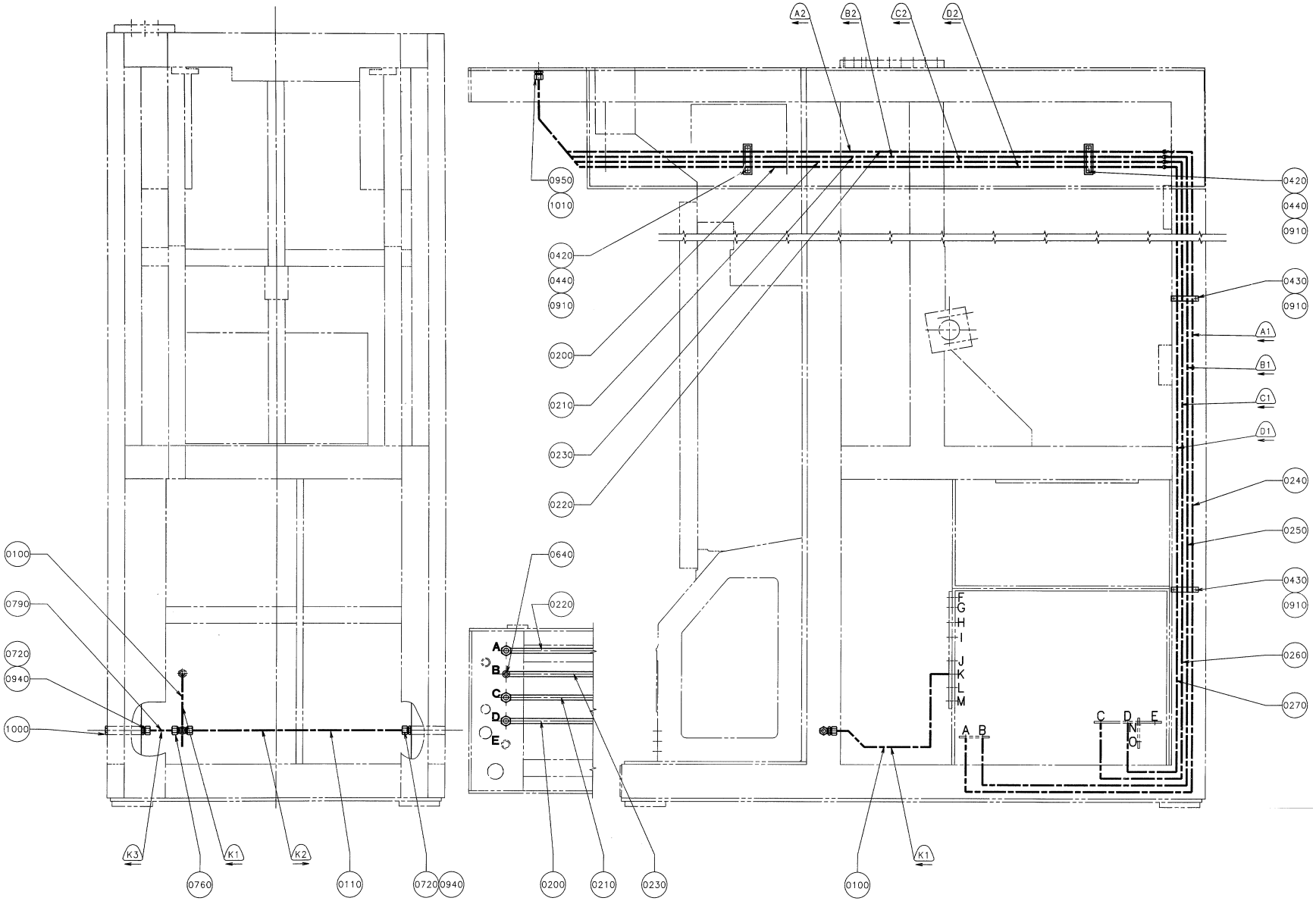
A2
B2
C2
D2
0950
1010
0420
0440
0910
0200
0210
0230
0220
0640
0430
A1
B1
C1
D1
0240
0250
0260
0270
0100
0790
0720
0940
1000
K3
K1
K2
0760
0110
0720
0940
0200
0210
0230
0100
K1

ECM: 72613 - 19990603
Group number: 1362427-0100
Assembly Drawing: 1362427-1_1_AA

Issue: 20020121

Pos	Part No	SP	UN	Qty	Description	Page No
Common Parts						
0010	434168-0000	-		1	PIPE	
0020	434171-0000	-		1	PIPE	
0030	B450716-0000	-		1	PIPE	
	341001-0228	-	*M*	*1*	*COPPER TUBE*	
	90418-0063	-		*1*	*ADAPTER, INT. CONN. NO. 7272CU/15-G1/2*	
	90418-0058	-		*1*	*ELBOW, 90, INT/EXT. CONN. NO. 7092-15*	
	90418-0053	-		*1*	*ELBOW, 90, INT. CONN. NO. 7090-15*	
0040	450717-0000	-		1	PIPE	
0050	450719-0000	-		1	PIPE	
0060	450725-0000	-		1	ATTACHMENT PLATE	
0070	B450730-0000	-		1	PIPE	
	341001-0228	-	*M*	*1*	*COPPER TUBE*	
	90418-0058	-		*1*	*ELBOW, 90, INT/EXT. CONN. NO. 7092-15*	
	90418-0053	-		*1*	*ELBOW, 90, INT. CONN. NO. 7090-15*	
0080	B450731-0000	-		1	PIPE	
	341001-0228	-	*M*	*1*	*COPPER TUBE*	
	90418-0055	-		*1*	*ELBOW, 45, INT/EXT. CONN. NO. 7040-15*	
	90418-0054	-		*1*	*ELBOW, 45, INT. CONN. NO. 7041-15*	
	90418-0053	-		*1*	*ELBOW, 90, INT. CONN. NO. 7090-15*	
0090	450733-0000	-		1	PIPE	
0100	450735-0000	-		1	PIPE	
0110	450736-0000	-		1	PIPE	
0120	450737-0000	-		1	PIPE	
0130	450738-0000	-		1	PIPE	
0140	450739-0000	-		1	PIPE	
0150	B450740-0000	-		1	PIPE	
	341001-0228	-	*M*	*1*	*COPPER TUBE*	
	90418-0053	-		*1*	*ELBOW, 90, INT. CONN. NO. 7090-15*	
0160	B450742-0000	-		1	PIPE	
	90418-0053	-		*1*	*ELBOW, 90, INT. CONN. NO. 7090-15*	
	341001-0228	-	*M*	*1*	*COPPER TUBE*	
0170	B464431-0000	-		1	PIPE	
	90418-0054	-		*1*	*ELBOW, 45, INT. CONN. NO. 7041-15*	
	90418-0055	-		*1*	*ELBOW, 45, INT/EXT. CONN. NO. 7040-15*	
	341001-0148	-	*M*	*1*	*COPPER TUBE*	
	341001-0228	-	*M*	*1*	*COPPER TUBE*	
	90418-0050	-		*1*	*T-PIPE, REDUCTION, INT, NO. 7130-15X12X1*	
	90418-0049	-		*1*	*T-PIPE,REDUCTION INTERNAL CONNE.15X12X12*	
	90418-0016	-		*2*	*ADAPTER, EXT. CONN. NO. 7276CU / 12-R3/8*	
	90418-0003	-		*1*	*SLEEVE, REDUCTION, NO. 7243/12-8*	
0180	464432-0000	-		1	PIPE	
0190	464520-0000	-		1	PIPE	
0200	B544688-0000	-		1	PIPE	
	341001-0228	-	*M*	*1*	*COPPER TUBE*	
	90418-0054	-		*1*	*ELBOW, 45, INT. CONN. NO. 7041-15*	
	90418-0053	-		*1*	*ELBOW, 90, INT. CONN. NO. 7090-15*	
0210	B544689-0000	-		1	PIPE	
	341001-0228	-	*M*	*1*	*COPPER TUBE*	
	90418-0055	-		*1*	*ELBOW, 45, INT/EXT. CONN. NO. 7040-15*	
	90418-0054	-		*1*	*ELBOW, 45, INT. CONN. NO. 7041-15*	
0220	B544690-0000	-		1	PIPE	
	90418-0054	-		*1*	*ELBOW, 45, INT. CONN. NO. 7041-15*	
	341001-0228	-	*M*	*1*	*COPPER TUBE*	
0230	B544691-0000	-		1	PIPE	
	341001-0228	-	*M*	*1*	*COPPER TUBE*	
	90418-0055	-		*1*	*ELBOW, 45, INT/EXT. CONN. NO. 7040-15*	
	90418-0054	-		*1*	*ELBOW, 45, INT. CONN. NO. 7041-15*	
0240	B544693-0000	-		1	PIPE	
	341001-0228	-	*M*	*1*	*COPPER TUBE*	
	90418-0055	-		*1*	*ELBOW, 45, INT/EXT. CONN. NO. 7040-15*	
	90418-0053	-		*1*	*ELBOW, 90, INT. CONN. NO. 7090-15*	
0250	B544694-0000	-		1	PIPE	
	341001-0228	-	*M*	*1*	*COPPER TUBE*	
	90418-0055	-		*1*	*ELBOW, 45, INT/EXT. CONN. NO. 7040-15*	
	90418-0053	-		*1*	*ELBOW, 90, INT. CONN. NO. 7090-15*	
0260	B544695-0000	-		1	PIPE	
	341001-0228	-	*M*	*1*	*COPPER TUBE*	
	90418-0053	-		*1*	*ELBOW, 90, INT. CONN. NO. 7090-15*	
0270	B544696-0000	-		1	PIPE	
	90418-0053	-		*1*	*ELBOW, 90, INT. CONN. NO. 7090-15*	
	341001-0228	-	*M*	*1*	*COPPER TUBE*	
0280	561424-0000	-		1	PIPE	
0290	561591-0000	-		1	PIPE	
0300	561592-0000	-		1	PIPE	
0310	567266-0000	-		1	TUBE	
0320	567267-0000	-		1	TUBE	
0330	1347214-0000	-		1	HOSE	
0400	276398-0000	-		4	HEXAGON NIPPLE	
0410	279105-0000	-		2	WASHER	
0420	279526-0000	-		2	BRACKET	
0430	293351-0000	-		2	CRAMP	
0440	293352-0000	-		2	CRAMP	
0450	450722-0000	-		1	PIPE	

Machine Type | Group Description | Used-In | Group Number | Page No

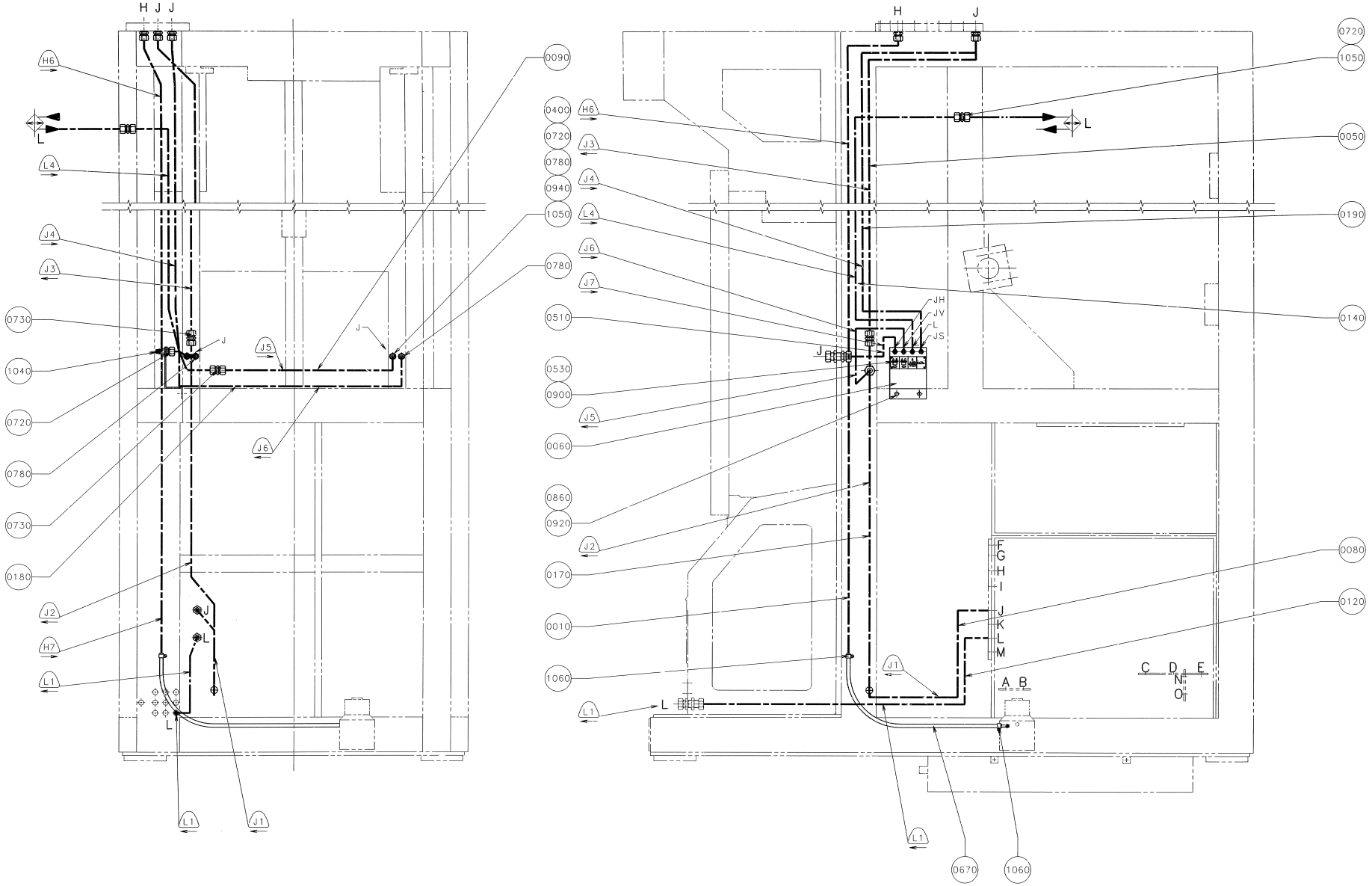
H J J
H6
L
L4
J4
J3
0730
1040
0720
0780
0730
0180
J2
H7
L1
J
L
J5
J6
0090
1050
0780
J1
H J
0400
0720
0780
0940
1050
J3
J4
L4
J6
J7
0510
0530
0900
J5
0060
0860
0920
J2
0170
0010
1060
L1
0720
1050
0050
0190
0140
JH
JV
L
JS
0080
0120
F
G
H
I
J
K
L
M
A B
C D E
N
O
0670
1060

Pos	Part No	SP	UN	Qty	Description	Page No
Common Parts (Cont'd)						
0460	450723-0000	-		1	PIPE	
0470	450724-0000	-		1	PIPE	
0480	450744-0000	-		2	CRAMP	
0490	450745-0000	-		2	SPACER	
0500	450746-0000	-		1	HOLDER	
0510	450747-0000	-		1	PIPE	
0520	B450748-0000	-		1	PIPE	
	341001-0228	-	*M*	*1*	*COPPER TUBE*	
	90418-0053	-		*1*	*ELBOW, 90, INT. CONN. NO. 7090-15*	
0530	464719-0000	-		1	SIGN	
0540	B575795-0000	-		1	WATER PIPE	
	341001-0228	-	*MM*	*900*	*COPPER TUBE*	
	90418-0053	-		*2*	*ELBOW, 90, INT. CONN. NO. 7090-15*	
0600	90030-0091	-		1	CONN. PIPE G-8	
0610	90030-0106	-		1	CONN. PIPE G-12	
0620	90030-0159	-		2	CONN. BULKHEAD SV 15-L/SY	
0630	90030-0253	-		1	CONN. STR. 12-1/4 NPT, EXT. TAPPERED	
0640	90087-0002	-		1	PIPE PLUG	
0650	90089-0018	-		1	REDUCING SLEEVE, 3/4NPT /PR22,5	
0660	90165-0007	-		3	PIPE CLIP FOR TUBE D=8 MM	
0670	90166-0121	-	MM	1200	HOSE	
0680	90166-0122	-	M	2	TUBE 8 MM PA,TRANSP.	
0690	90166-0124	-	M	2	TUBE 6 MM PA,TRANSP.	
0700	90224-0317	-		1	CONNECTION	
0710	90224-0318	-		2	CONNECTION	
0720	90224-0319	-		13	CONN. STR., 8-R1/4, EXT. THREAD	
0730	90224-0320	-		2	CONNECTION	
0740	90224-0321	-		1	CONNECTION	
0750	90224-0322	-		1	CONNECTION	
0760	90224-0323	-		1	CONNECTION	
0770	90230-0023	-		1	NON RETURN VALVE	
0780	90235-0295	-		4	THROTTLE CHECK VALVES,G1/4"	
0790	90266-0007	-	MM	63	TUBE	
0800	90274-0065	-		1	PRESSURE SWITCH	
0850	312101-0327	-		4	SCREW M6S M5X12 FZB	
0860	312101-0364	-		2	SCREW M6S M6X10 FZB	
0870	312101-0372	-		1	SCREW M6S M6X25 FZB	
0880	312105-0327	-		2	SCREW M6S M5X12 A280	
0890	312121-0287	-		3	SCREW SLOT.PAN HD. MCS 4X8 FZB	
0900	312125-0220	-		4	SCREW SLOT.PAN HD. MCS 3X6 A480	
0910	312125-0323	-		8	SCREW PAN HEAD MCS M5X8 SS	
0920	315101-0153	-		2	WASHER PLAIN, BRB, 6,4/12 H=1,5	
0930	315105-0124	-		2	WASHER PLAIN, BRB, 3,2/6,H=0,5	
0940	315233-0110	-		6	WASHER PL.RND.NYL.13,3/17,H=1	
0950	315233-0113	-		4	WASHER PL.RND.NYL.21,4/27,H=1,2	
0960	315234-0113	-		1	WASHER PL.RND.CU.21,3//26 H=1,5	
0970	341001-0228	-	MM	80	COPPER TUBE	
0980	341001-0228	-	MM	300	COPPER TUBE	
0990	341001-0228	-	MM	1792	COPPER TUBE	
1000	342713-0210	-		1	PLUG, EXT THREAD HEX SOCKET 8638-00-140	
1010	342720-0114	-		4	CONN. STR. GA-15-G1/2	
1020	342736-0114	-		1	CONN. ELBOW W-15	
1030	342923-0114	-		2	STRAIGHT COUPL.,INT.THREADED 6/4-G1/4"	
1040	342923-0122	-		6	STRAIGHT COUPL.,INT.THREADED 8/6-G1/4"	
1050	342980-0122	-		4	BANJO-CONNECTION,RING 8/6-G1/4"	
1060	342991-0102	-		2	HOSE CLIP,WORM DRIVE TYPE (16)-19	
1070	352136-0129	-		1	GLAND FITTING PR22,5/PG16 DI=16MM	

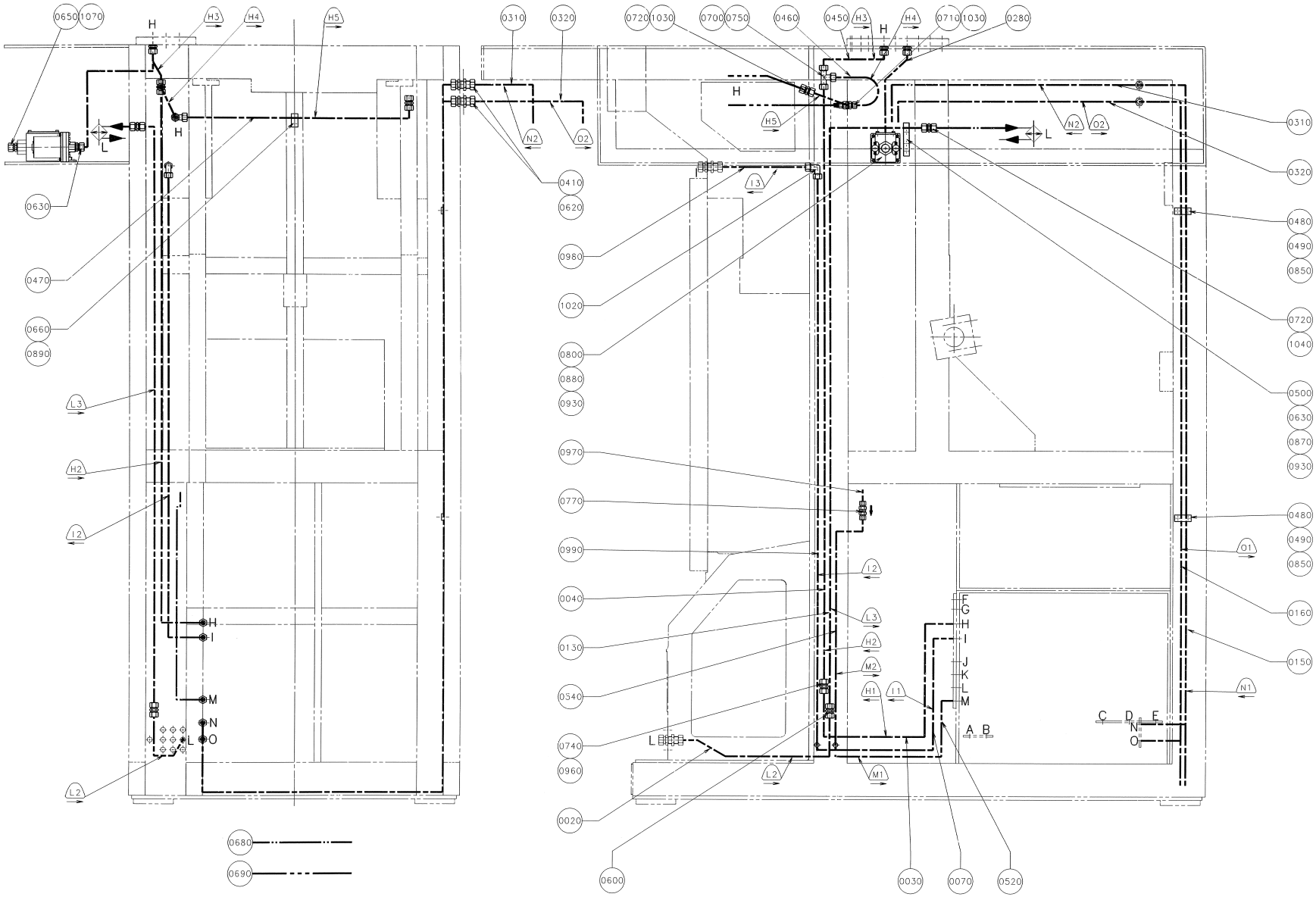
0650 1070
H
H3
H4
H5
L
0630
0470
0660
0890
L3
H2
I2
H
I
M
N
O
L2
0680
0690
0310
0320
0720 1030
0700 0750
0460
0450
0710 1030
0280
N2
O2
0410
0620
0980
1020
0800
0880
0930
0970
0770
0990
0040
0130
0540
0740
0960
0020
I3
H5
L
I2
L3
H2
M2
H1
I1
L2
M1
F
G
H
I
J
K
L
M
A B
C D E
N
O
0600
0030
0070
0520
0310
0320
0480
0490
0850
0720
1040
0500
0630
0870
0930
0480
0490
0850
O1
0160
0150
N1

Pos	Part No	SP	UN	Qty	Description	Page No	Pos	Part No	SP	UN	Qty	Description	Page No

SEE PREVIOUS LISTS PAGES: 215, 217.

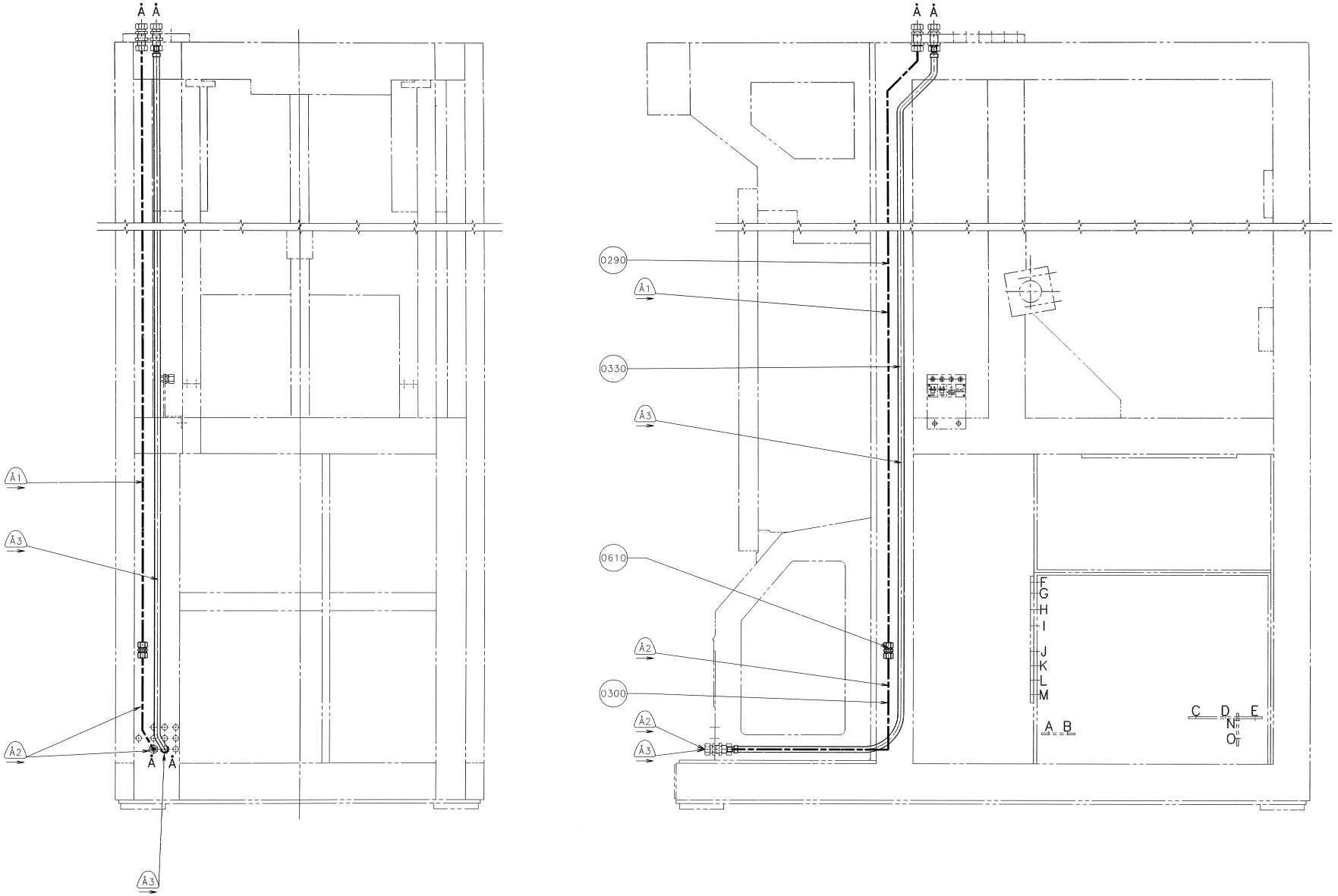
Å Å
Å1
Å3
Å2
Å Å
Å3
Å Å
0290
Å1
0330
Å3
0610
Å2
0300
Å2
Å3
F
G
H
I
J
K
L
M
A B
C D E
N
O

Pos	Part No	SP	UN	Qty	Description	Page No	Pos	Part No	SP	UN	Qty	Description	Page No

SEE PREVIOUS LISTS PAGES: 215, 217.

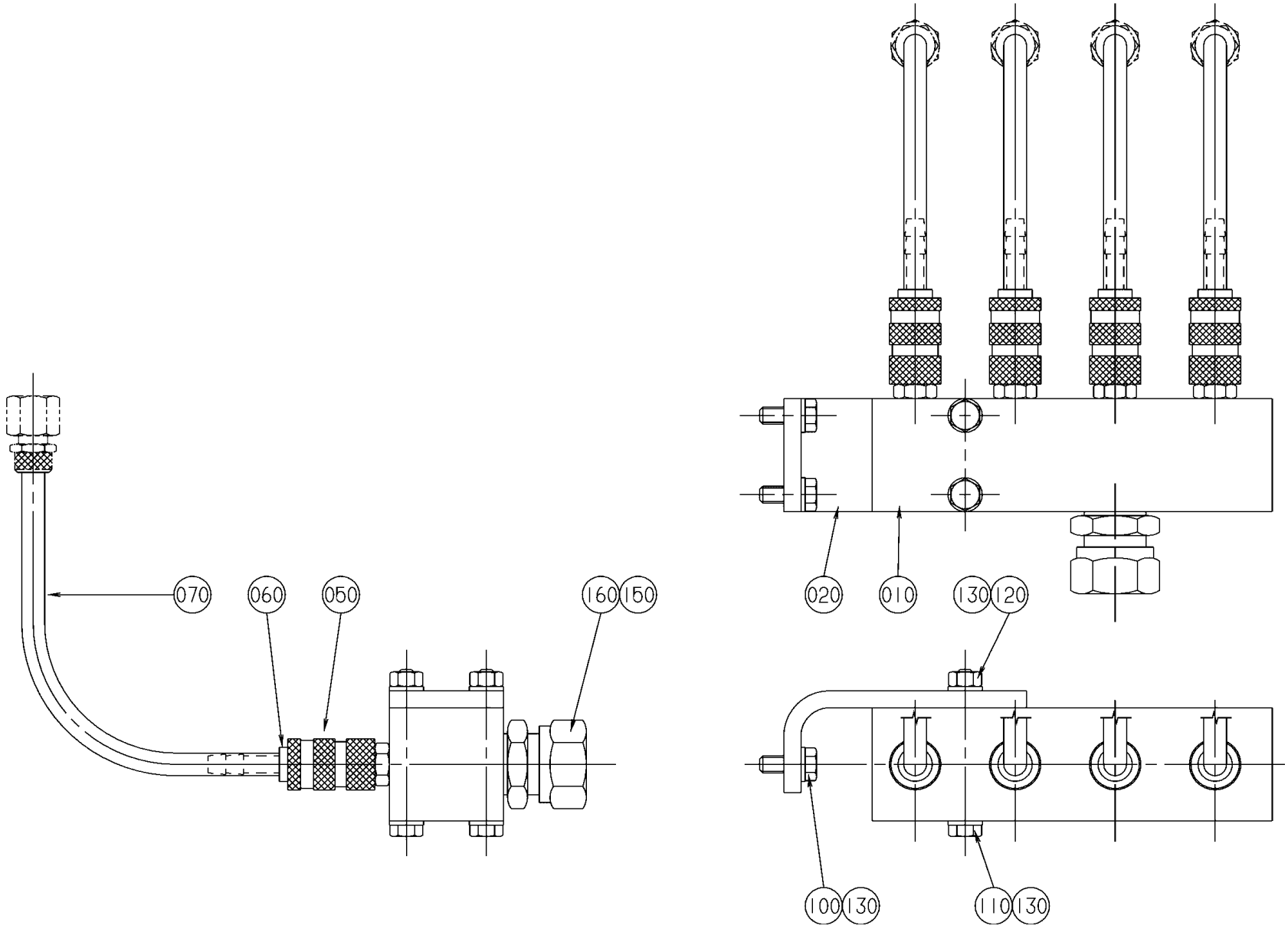
070
060
050
160
150
020
010
130
120
100
130
110
130

Pos	Part No	SP	UN	Qty	Description	Page No
TBA/8						
010	575791-0000	D		1	JUNCTION BLOCK	
050-02	90163-0133	D		4	QUICK COUPLING, (F) LP-004-0-WR013-21-1	
060-02	90163-0134	-		4	QUICK COUPLING, LP-004-1-SL006-21	
070-02	90166-0133	-	MM	900	TUBE 8 MM PA,TRANSP.	
Common Parts						
020	575792-0000	-		1	ANGLE STRUT	
100	312105-0368	-		2	SCREW M6S M6X16 A280	
110	312105-0381	-		2	SCREW M6S M6X55 A280	
120	312605-0316	-		2	HEXAGON NUT, M6M M6 A280	
130	315105-0153	-		6	WASHER PLAIN, BRB, 6,4/12,H=1,5	
150	315233-0113	-		1	WASHER PL.RND.NYL.21,4/27,H=1,2	
160	342720-0114	-		1	CONN. STR. GA-15-G1/2	

Pos	Part No	SP	UN	Qty	Description	Page No

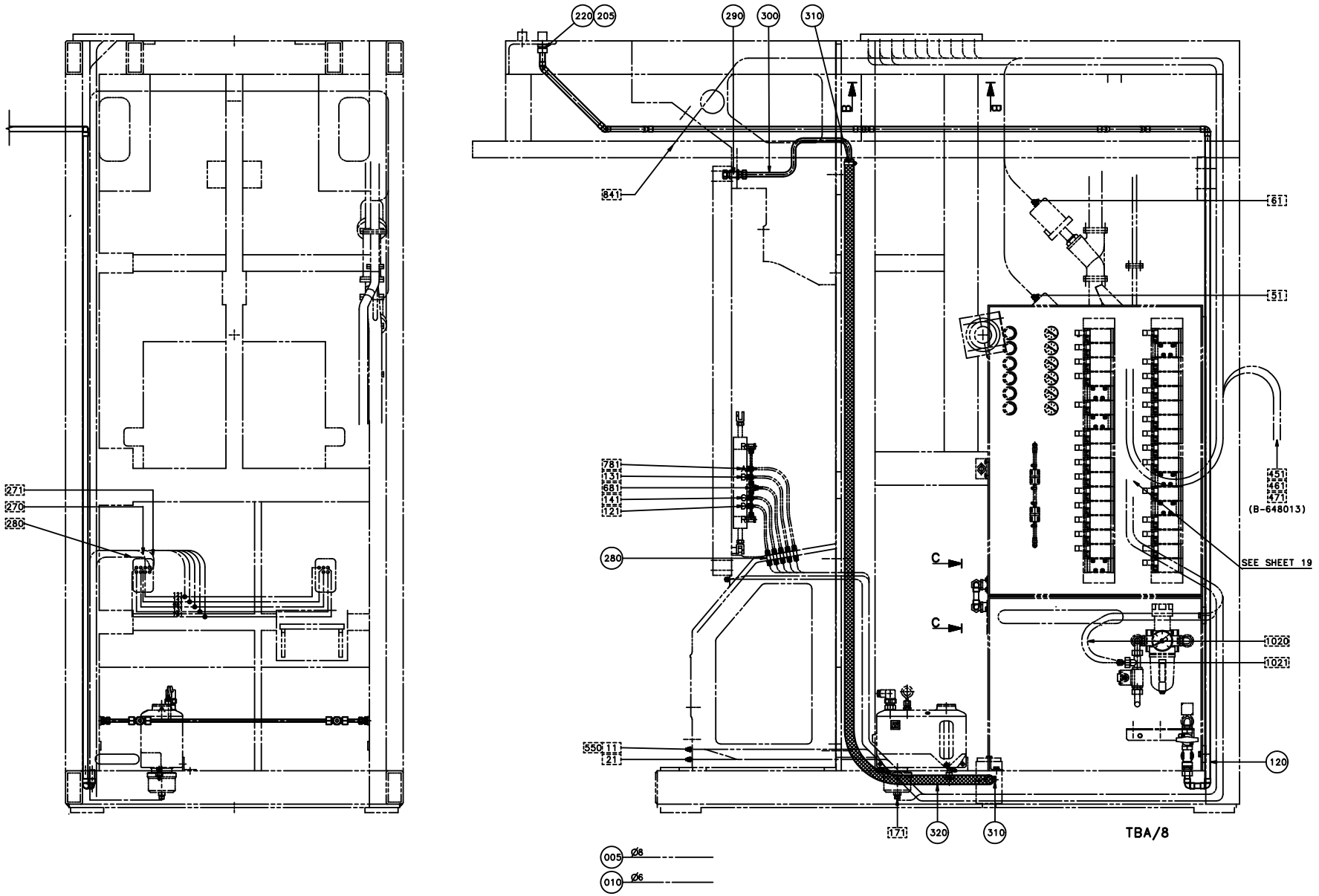
220
205
290
300
310
B
B
841
61
51
78
131
681
141
121
280
271
270
280
45
461
471
(B-648013)
SEE SHEET 19
C
C
1020
1021
120
550
11
21
171
320
310
TBA/8
005
Ø8
010
Ø6

ECM: 72533 - 19990617
Group number: 450788-0600
Assembly Drawing: 450788-17_1_AA

Issue: 20020121

Pos	Part No	SP	UN	Qty	Description	Page No
TBA/8 NORMFIN						
005	90166-0013	-	M	19	TUBE 8 MM PA BLUE	
010	90166-0081	-	M	105	TUBE 6 MM PA BLUE	
115	560881-0000	-		1	PIPE	
170	90224-0319	-		2	CONN. STR., 8-R1/4, EXT. THREAD	
190	90266-0007	-	MM	58	TUBE	
200	315233-0110	-		2	WASHER PL.RND.NYL.13,3/17,H=1	
265	342923-0114	-		1	STRAIGHT COUPL.,INT.THREADED 6/4-G1/4"	
275	90224-0316	-		1	CONNECTION	
290	90030-0030	-		1	CONN. BULKHEAD SV 12-L/SY	
300	527907-0000	-		1	PIPE	
310	342991-0104	-		2	HOSE CLIP,WORM DRIVE TYPE (23)-27	
320	90166-0060	-	MM	3000	HOSE 19/26-27 REINF.PVC	
TBA/8 REVFIN						
005	90166-0013	-	M	19	TUBE 8 MM PA BLUE	
010	90166-0081	-	M	105	TUBE 6 MM PA BLUE	
115	560881-0000	-		1	PIPE	
170	90224-0319	-		2	CONN. STR., 8-R1/4, EXT. THREAD	
190	90266-0007	-	MM	58	TUBE	
200	315233-0110	-		2	WASHER PL.RND.NYL.13,3/17,H=1	
265	342923-0114	-		1	STRAIGHT COUPL.,INT.THREADED 6/4-G1/4"	
275	90224-0316	-		1	CONNECTION	
290	90030-0030	-		1	CONN. BULKHEAD SV 12-L/SY	
300	527907-0000	-		1	PIPE	
310	342991-0104	-		2	HOSE CLIP,WORM DRIVE TYPE (23)-27	
320	90166-0060	-	MM	3000	HOSE 19/26-27 REINF.PVC	
Common Parts						
080	B544692-0000	-		1	PIPE	
	341001-0228	-	*M*	*1*	*COPPER TUBE*	
	90418-0054	-		*5*	*ELBOW, 45, INT. CONN. NO. 7041-15*	
	90418-0053	-		*1*	*ELBOW, 90, INT. CONN. NO. 7090-15*	
120	B544697-0000	-		1	PIPE	
	341001-0228	-	*M*	*1*	*COPPER TUBE*	
	90418-0053	-		*3*	*ELBOW, 90, INT. CONN. NO. 7090-15*	
140	B450791-0000	-		1	PIPE	
	90418-0053	-		*1*	*ELBOW, 90, INT. CONN. NO. 7090-15*	
	341001-0228	-	*M*	*1*	*COPPER TUBE*	
180	90224-0323	-		1	CONNECTION	
205	315233-0113	-		1	WASHER PL.RND.NYL.21,4/27,H=1,2	
210	342713-0210	-		1	PLUG, EXT THREAD HEX SOCKET 8638-00-140	
220	342720-0114	-		1	CONN. STR. GA-15-G1/2	
240	342929-0121	-		1	STRAIGHT COUPLING,SOLDER 8/6-8	
260	90055-0100	-		5	Y-CONNECTION, 6-6	
280	342960-0112	-		10	BULKHEAD COUPLING 6/4	

Machine Type | Group Description | Used-In | Group Number | Page No

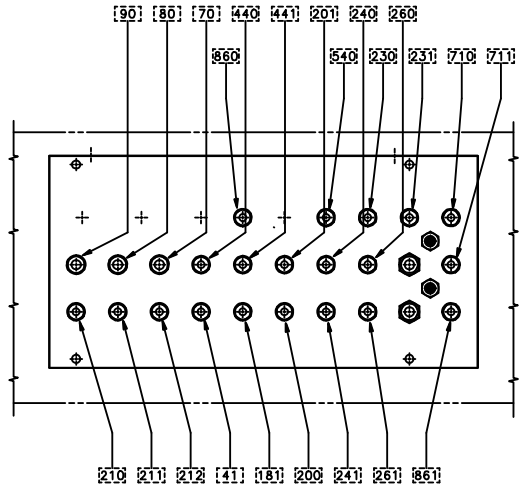

B-B SCALE 1:2

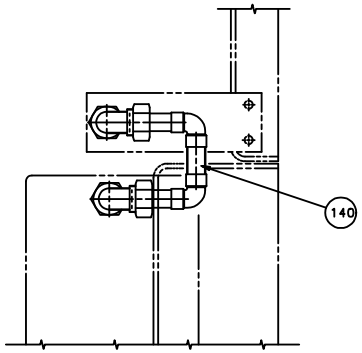

C-C SCALE 1:2

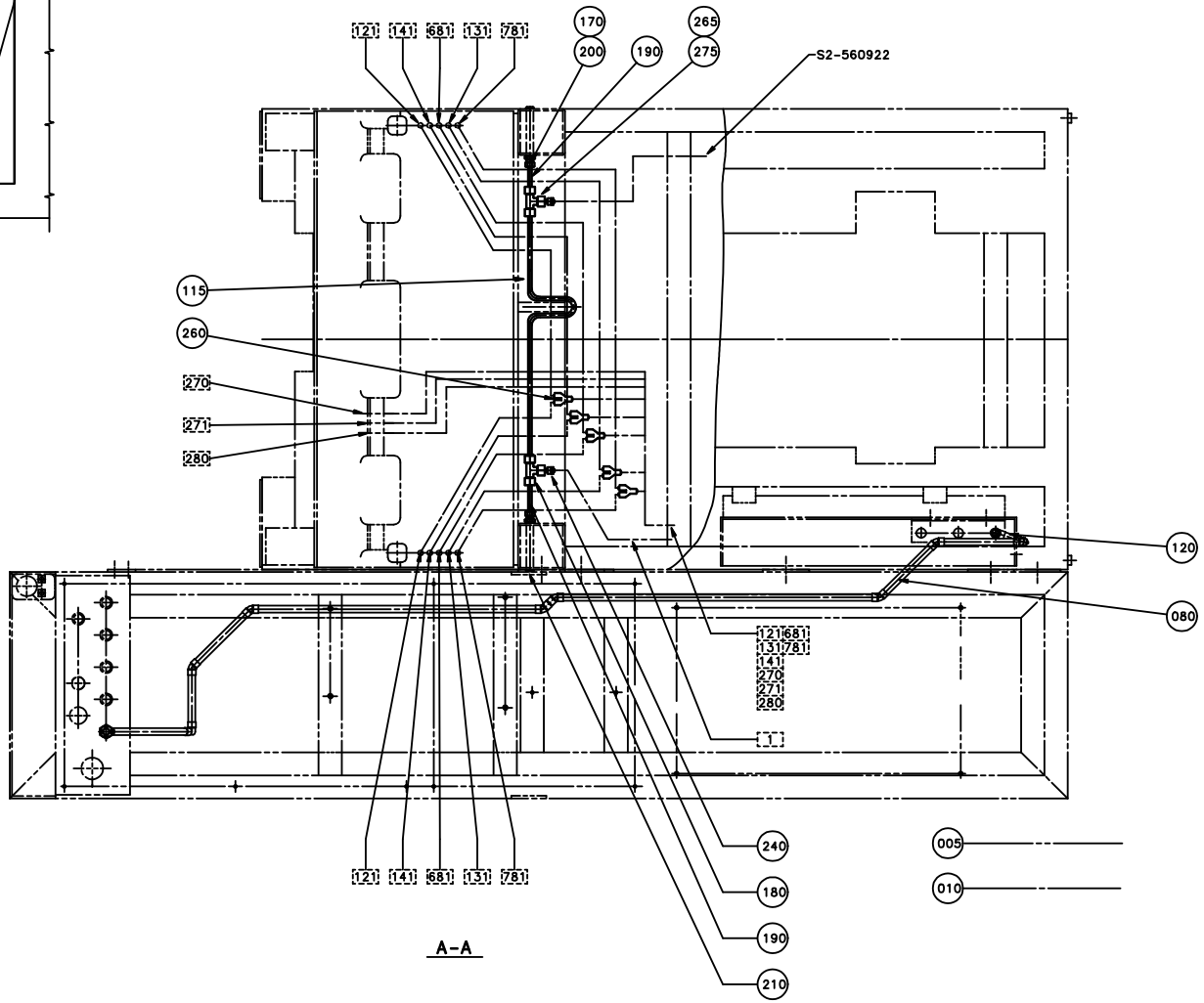

A-A

ECM: 72533 - 19990617
Group number: 450788-0600
Assembly Drawing: 450788-18_1_AA

Issue: 20020121

Pos	Part No	SP	UN	Qty	Description	Page No
TBA/8 NORMFIN						
005	90166-0013	-	M	19	TUBE 8 MM PA BLUE	
010	90166-0081	-	M	105	TUBE 6 MM PA BLUE	
115	560881-0000	-		1	PIPE	
170	90224-0319	-		2	CONN. STR., 8-R1/4, EXT. THREAD	
190	90266-0007	-	MM	58	TUBE	
200	315233-0110	-		2	WASHER PL.RND.NYL.13,3/17,H=1	
265	342923-0114	-		1	STRAIGHT COUPL.,INT.THREADED 6/4-G1/4"	
275	90224-0316	-		1	CONNECTION	
290	90030-0030	-		1	CONN. BULKHEAD SV 12-L/SY	
300	527907-0000	-		1	PIPE	
310	342991-0104	-		2	HOSE CLIP,WORM DRIVE TYPE (23)-27	
320	90166-0060	-	MM	3000	HOSE 19/26-27 REINF.PVC	
TBA/8 REVFIN						
005	90166-0013	-	M	19	TUBE 8 MM PA BLUE	
010	90166-0081	-	M	105	TUBE 6 MM PA BLUE	
115	560881-0000	-		1	PIPE	
170	90224-0319	-		2	CONN. STR., 8-R1/4, EXT. THREAD	
190	90266-0007	-	MM	58	TUBE	
200	315233-0110	-		2	WASHER PL.RND.NYL.13,3/17,H=1	
265	342923-0114	-		1	STRAIGHT COUPL.,INT.THREADED 6/4-G1/4"	
275	90224-0316	-		1	CONNECTION	
290	90030-0030	-		1	CONN. BULKHEAD SV 12-L/SY	
300	527907-0000	-		1	PIPE	
310	342991-0104	-		2	HOSE CLIP,WORM DRIVE TYPE (23)-27	
320	90166-0060	-	MM	3000	HOSE 19/26-27 REINF.PVC	
Common Parts						
080	B544692-0000	-		1	PIPE	
	341001-0228	-	*M*	*1*	*COPPER TUBE*	
	90418-0054	-		*5*	*ELBOW, 45, INT. CONN. NO. 7041-15*	
	90418-0053	-		*1*	*ELBOW, 90, INT. CONN. NO. 7090-15*	
120	B544697-0000	-		1	PIPE	
	341001-0228	-	*M*	*1*	*COPPER TUBE*	
	90418-0053	-		*3*	*ELBOW, 90, INT. CONN. NO. 7090-15*	
140	B450791-0000	-		1	PIPE	
	90418-0053	-		*1*	*ELBOW, 90, INT. CONN. NO. 7090-15*	
	341001-0228	-	*M*	*1*	*COPPER TUBE*	
180	90224-0323	-		1	CONNECTION	
205	315233-0113	-		1	WASHER PL.RND.NYL.21,4/27,H=1,2	
210	342713-0210	-		1	PLUG, EXT THREAD HEX SOCKET 8638-00-140	

Pos	Part No	SP	UN	Qty	Description	Page No
220	342720-0114	-		1	CONN. STR. GA-15-G1/2	
240	342929-0121	-		1	STRAIGHT COUPLING,SOLDER 8/6-8	
260	90055-0100	-		5	Y-CONNECTION, 6-6	
280	342960-0112	-		10	BULKHEAD COUPLING 6/4	

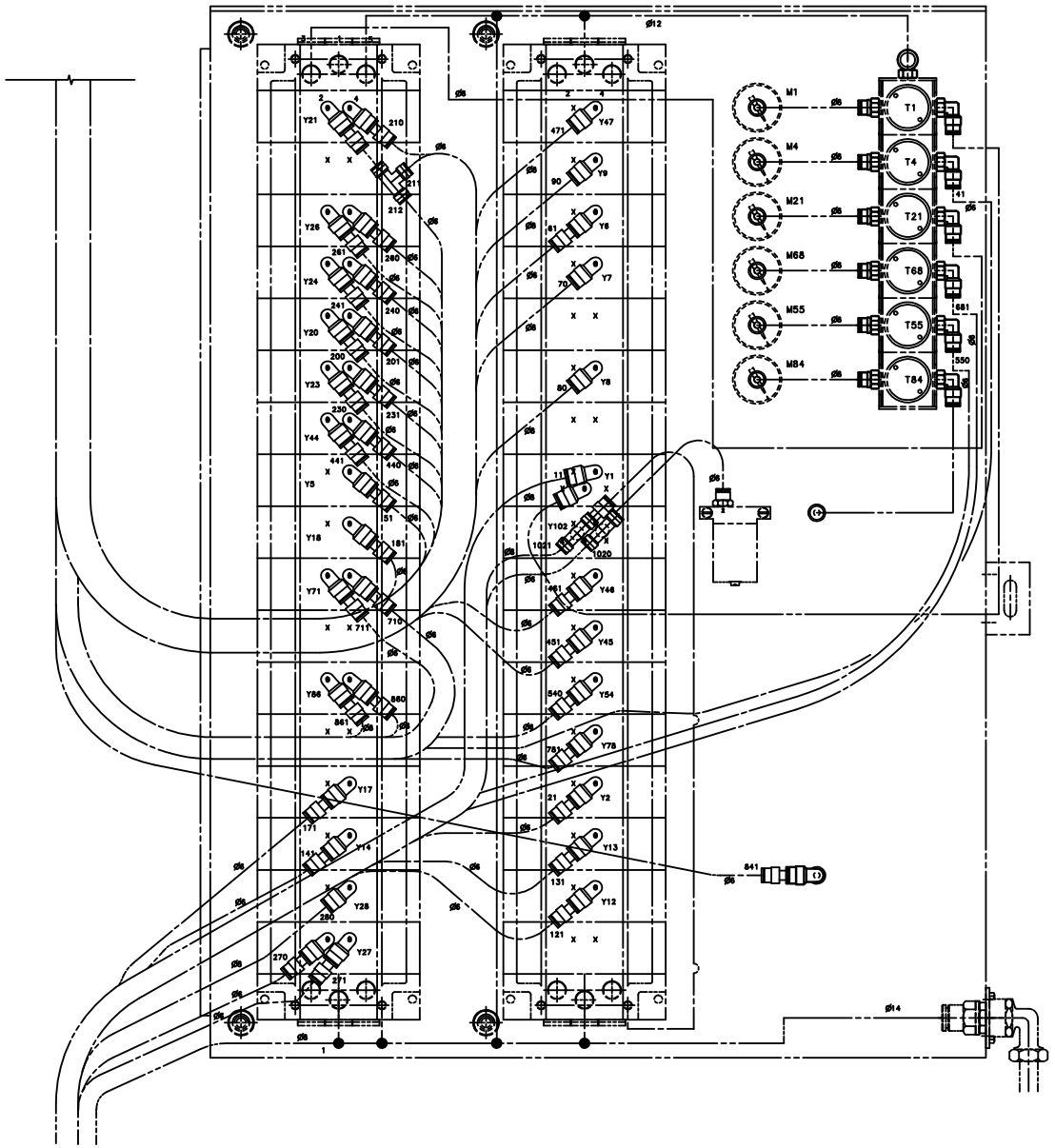
M1
M4
M21
M68
M55
M84
T1
T4
T21
T68
T55
T84
Y21
Y26
Y24
Y20
Y23
Y44
Y5
Y18
Y71
Y66
Y17
Y14
Y28
Y27
Y47
Y9
Y6
Y7
Y8
Y1
Y102
Y46
Y45
Y54
Y78
Y2
Y13
Y12
ø12
ø14

ECM: 72533 - 19990617
Group number: 450788-0600
Assembly Drawing: 450788-19_1_AA

Issue: 20020121

Pos	Part No	SP	UN	Qty	Description	Page No
TBA/8 NORMFIN						
005	90166-0013	-	M	19	TUBE 8 MM PA BLUE	
010	90166-0081	-	M	105	TUBE 6 MM PA BLUE	
115	560881-0000	-		1	PIPE	
170	90224-0319	-		2	CONN. STR., 8-R1/4, EXT. THREAD	
190	90266-0007	-	MM	58	TUBE	
200	315233-0110	-		2	WASHER PL.RND.NYL.13,3/17,H=1	
265	342923-0114	-		1	STRAIGHT COUPL.,INT.THREADED 6/4-G1/4"	
275	90224-0316	-		1	CONNECTION	
290	90030-0030	-		1	CONN. BULKHEAD SV 12-L/SY	
300	527907-0000	-		1	PIPE	
310	342991-0104	-		2	HOSE CLIP,WORM DRIVE TYPE (23)-27	
320	90166-0060	-	MM	3000	HOSE 19/26-27 REINF.PVC	
TBA/8 REVFIN						
005	90166-0013	-	M	19	TUBE 8 MM PA BLUE	
010	90166-0081	-	M	105	TUBE 6 MM PA BLUE	
115	560881-0000	-		1	PIPE	
170	90224-0319	-		2	CONN. STR., 8-R1/4, EXT. THREAD	
190	90266-0007	-	MM	58	TUBE	
200	315233-0110	-		2	WASHER PL.RND.NYL.13,3/17,H=1	
265	342923-0114	-		1	STRAIGHT COUPL.,INT.THREADED 6/4-G1/4"	
275	90224-0316	-		1	CONNECTION	
290	90030-0030	-		1	CONN. BULKHEAD SV 12-L/SY	
300	527907-0000	-		1	PIPE	
310	342991-0104	-		2	HOSE CLIP,WORM DRIVE TYPE (23)-27	
320	90166-0060	-	MM	3000	HOSE 19/26-27 REINF.PVC	
Common Parts						
080	B544692-0000	-		1	PIPE	
	341001-0228	-	*M*	*1*	*COPPER TUBE*	
	90418-0054	-		*5*	*ELBOW, 45, INT. CONN. NO. 7041-15*	
	90418-0053	-		*1*	*ELBOW, 90, INT. CONN. NO. 7090-15*	
120	B544697-0000	-		1	PIPE	
	341001-0228	-	*M*	*1*	*COPPER TUBE*	
	90418-0053	-		*3*	*ELBOW, 90, INT. CONN. NO. 7090-15*	
140	B450791-0000	-		1	PIPE	
	90418-0053	-		*1*	*ELBOW, 90, INT. CONN. NO. 7090-15*	
	341001-0228	-	*M*	*1*	*COPPER TUBE*	
180	90224-0323	-		1	CONNECTION	
205	315233-0113	-		1	WASHER PL.RND.NYL.21,4/27,H=1,2	
210	342713-0210	-		1	PLUG, EXT THREAD HEX SOCKET 8638-00-140	
220	342720-0114	-		1	CONN. STR. GA-15-G1/2	
240	342929-0121	-		1	STRAIGHT COUPLING,SOLDER 8/6-8	
260	90055-0100	-		5	Y-CONNECTION, 6-6	
280	342960-0112	-		10	BULKHEAD COUPLING 6/4	

Machine Type | Group Description | Used-In | Group Number | Page No

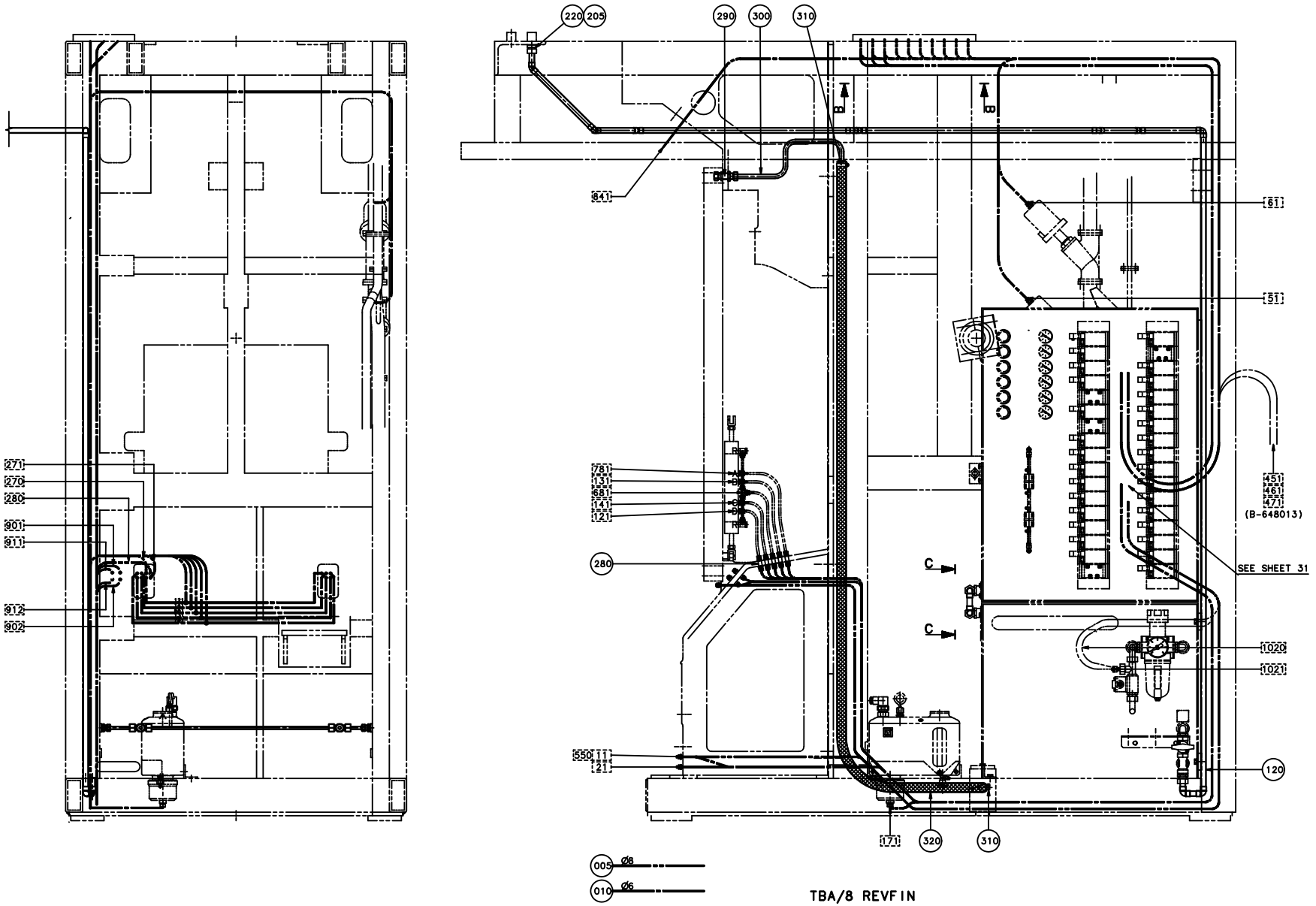
220
205
290
300
310
B
B
641
61
51
78
131
68
141
121
280
451
461
471
(B-648013)
SEE SHEET 31
C
C
1020
1021
550
11
21
120
171
320
310
271
270
280
901
911
912
902
005 Ø8
010 Ø6
TBA/8 REVF IN

ECM: 72533 - 19990617
Group number: 450788-0600
Assembly Drawing: 450788-29_1_AA

Issue: 20020121

Pos	Part No	SP	UN	Qty	Description	Page No
TBA/8 NORMFIN						
005	90166-0013	-	M	19	TUBE 8 MM PA BLUE	
010	90166-0081	-	M	105	TUBE 6 MM PA BLUE	
115	560881-0000	-		1	PIPE	
170	90224-0319	-		2	CONN. STR., 8-R1/4, EXT. THREAD	
190	90266-0007	-	MM	58	TUBE	
200	315233-0110	-		2	WASHER PL.RND.NYL.13,3/17,H=1	
265	342923-0114	-		1	STRAIGHT COUPL.,INT.THREADED 6/4-G1/4"	
275	90224-0316	-		1	CONNECTION	
290	90030-0030	-		1	CONN. BULKHEAD SV 12-L/SY	
300	527907-0000	-		1	PIPE	
310	342991-0104	-		2	HOSE CLIP,WORM DRIVE TYPE (23)-27	
320	90166-0060	-	MM	3000	HOSE 19/26-27 REINF.PVC	
TBA/8 REVFIN						
005	90166-0013	-	M	19	TUBE 8 MM PA BLUE	
010	90166-0081	-	M	105	TUBE 6 MM PA BLUE	
115	560881-0000	-		1	PIPE	
170	90224-0319	-		2	CONN. STR., 8-R1/4, EXT. THREAD	
190	90266-0007	-	MM	58	TUBE	
200	315233-0110	-		2	WASHER PL.RND.NYL.13,3/17,H=1	
265	342923-0114	-		1	STRAIGHT COUPL.,INT.THREADED 6/4-G1/4"	
275	90224-0316	-		1	CONNECTION	
290	90030-0030	-		1	CONN. BULKHEAD SV 12-L/SY	
300	527907-0000	-		1	PIPE	
310	342991-0104	-		2	HOSE CLIP,WORM DRIVE TYPE (23)-27	
320	90166-0060	-	MM	3000	HOSE 19/26-27 REINF.PVC	
Common Parts						
080	B544692-0000	-		1	PIPE	
	341001-0228	-	*M*	*1*	*COPPER TUBE*	
	90418-0054	-		*5*	*ELBOW, 45, INT. CONN. NO. 7041-15*	
	90418-0053	-		*1*	*ELBOW, 90, INT. CONN. NO. 7090-15*	
120	B544697-0000	-		1	PIPE	
	341001-0228	-	*M*	*1*	*COPPER TUBE*	
	90418-0053	-		*3*	*ELBOW, 90, INT. CONN. NO. 7090-15*	
140	B450791-0000	-		1	PIPE	
	90418-0053	-		*1*	*ELBOW, 90, INT. CONN. NO. 7090-15*	
	341001-0228	-	*M*	*1*	*COPPER TUBE*	
180	90224-0323	-		1	CONNECTION	
205	315233-0113	-		1	WASHER PL.RND.NYL.21,4/27,H=1,2	
210	342713-0210	-		1	PLUG, EXT THREAD HEX SOCKET 8638-00-140	
220	342720-0114	-		1	CONN. STR. GA-15-G1/2	
240	342929-0121	-		1	STRAIGHT COUPLING,SOLDER 8/6-8	
260	90055-0100	-		5	Y-CONNECTION, 6-6	
280	342960-0112	-		10	BULKHEAD COUPLING 6/4	

Machine Type | Group Description | Used-In | Group Number | Page No

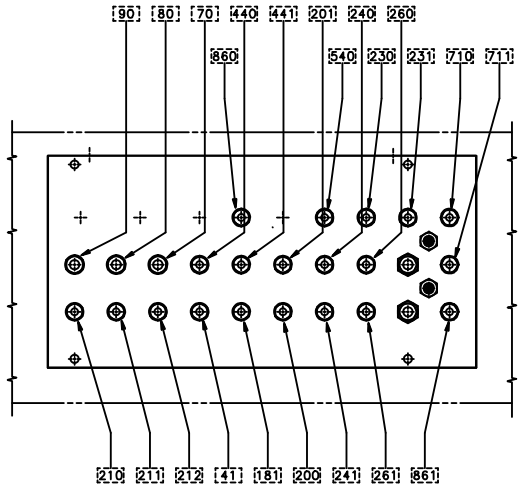

B-B SCALE 1:2

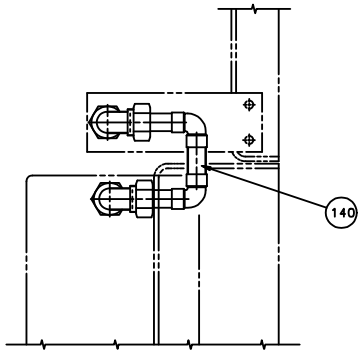

C-C SCALE 1:2

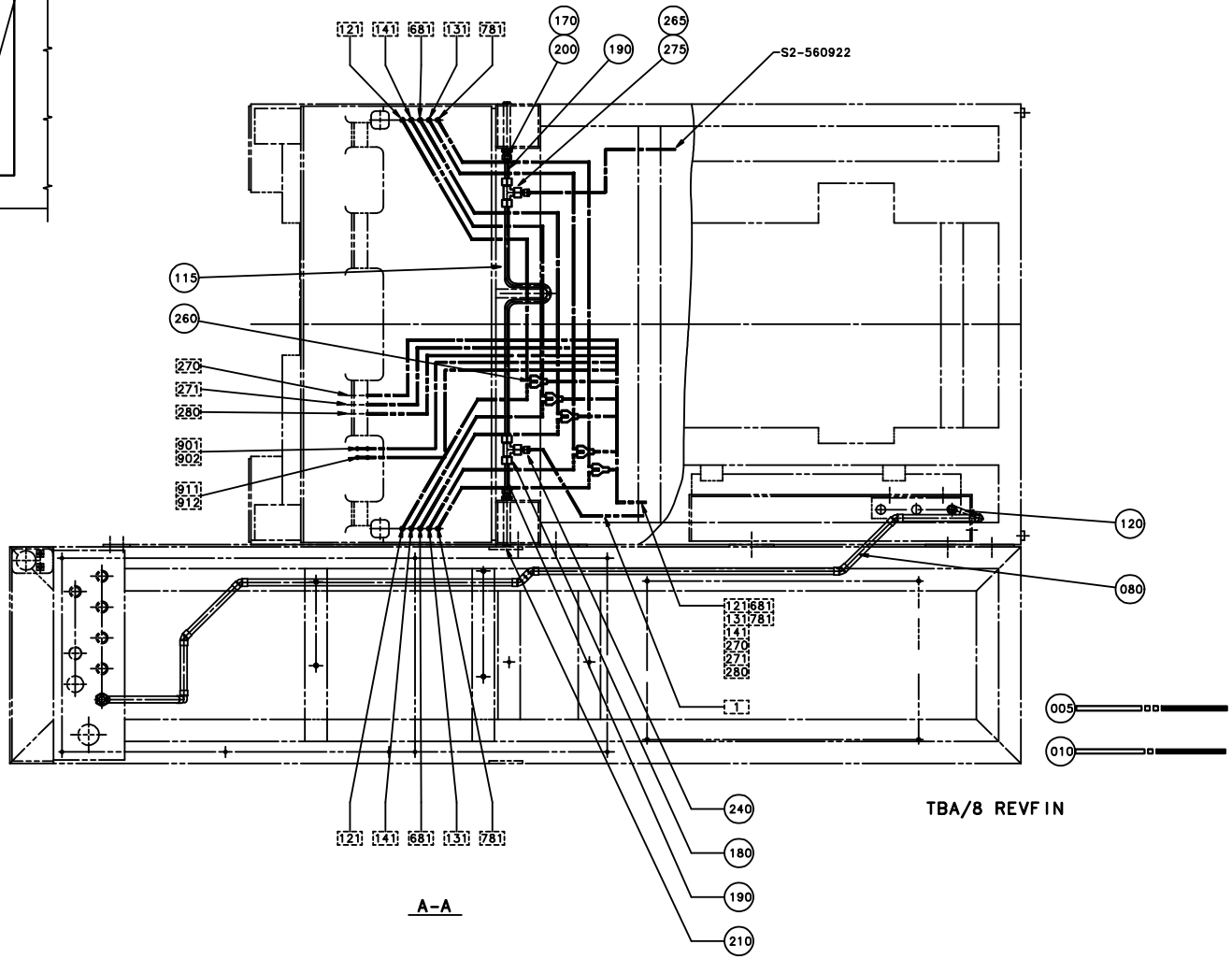

A-A

ECM: 72533 - 19990617
Group number: 450788-0600
Assembly Drawing: 450788-30_1_AA

Issue: 20020121

Pos	Part No	SP	UN	Qty	Description	Page No
TBA/8 NORMFIN						
005	90166-0013	-	M	19	TUBE 8 MM PA BLUE	
010	90166-0081	-	M	105	TUBE 6 MM PA BLUE	
115	560881-0000	-		1	PIPE	
170	90224-0319	-		2	CONN. STR., 8-R1/4, EXT. THREAD	
190	90266-0007	-	MM	58	TUBE	
200	315233-0110	-		2	WASHER PL.RND.NYL.13,3/17,H=1	
265	342923-0114	-		1	STRAIGHT COUPL.,INT.THREADED 6/4-G1/4"	
275	90224-0316	-		1	CONNECTION	
290	90030-0030	-		1	CONN. BULKHEAD SV 12-L/SY	
300	527907-0000	-		1	PIPE	
310	342991-0104	-		2	HOSE CLIP,WORM DRIVE TYPE (23)-27	
320	90166-0060	-	MM	3000	HOSE 19/26-27 REINF.PVC	
TBA/8 REVFIN						
005	90166-0013	-	M	19	TUBE 8 MM PA BLUE	
010	90166-0081	-	M	105	TUBE 6 MM PA BLUE	
115	560881-0000	-		1	PIPE	
170	90224-0319	-		2	CONN. STR., 8-R1/4, EXT. THREAD	
190	90266-0007	-	MM	58	TUBE	
200	315233-0110	-		2	WASHER PL.RND.NYL.13,3/17,H=1	
265	342923-0114	-		1	STRAIGHT COUPL.,INT.THREADED 6/4-G1/4"	
275	90224-0316	-		1	CONNECTION	
290	90030-0030	-		1	CONN. BULKHEAD SV 12-L/SY	
300	527907-0000	-		1	PIPE	
310	342991-0104	-		2	HOSE CLIP,WORM DRIVE TYPE (23)-27	
320	90166-0060	-	MM	3000	HOSE 19/26-27 REINF.PVC	
Common Parts						
080	B544692-0000	-		1	PIPE	
	341001-0228	-	*M*	*1*	*COPPER TUBE*	
	90418-0054	-		*5*	*ELBOW, 45, INT. CONN. NO. 7041-15*	
	90418-0053	-		*1*	*ELBOW, 90, INT. CONN. NO. 7090-15*	
120	B544697-0000	-		1	PIPE	
	341001-0228	-	*M*	*1*	*COPPER TUBE*	
	90418-0053	-		*3*	*ELBOW, 90, INT. CONN. NO. 7090-15*	
140	B450791-0000	-		1	PIPE	
	90418-0053	-		*1*	*ELBOW, 90, INT. CONN. NO. 7090-15*	
	341001-0228	-	*M*	*1*	*COPPER TUBE*	
180	90224-0323	-		1	CONNECTION	
205	315233-0113	-		1	WASHER PL.RND.NYL.21,4/27,H=1,2	
210	342713-0210	-		1	PLUG, EXT THREAD HEX SOCKET 8638-00-140	
220	342720-0114	-		1	CONN. STR. GA-15-G1/2	
240	342929-0121	-		1	STRAIGHT COUPLING,SOLDER 8/6-8	
260	90055-0100	-		5	Y-CONNECTION, 6-6	
280	342960-0112	-		10	BULKHEAD COUPLING 6/4	

Machine Type | Group Description | Used-In | Group Number | Page No

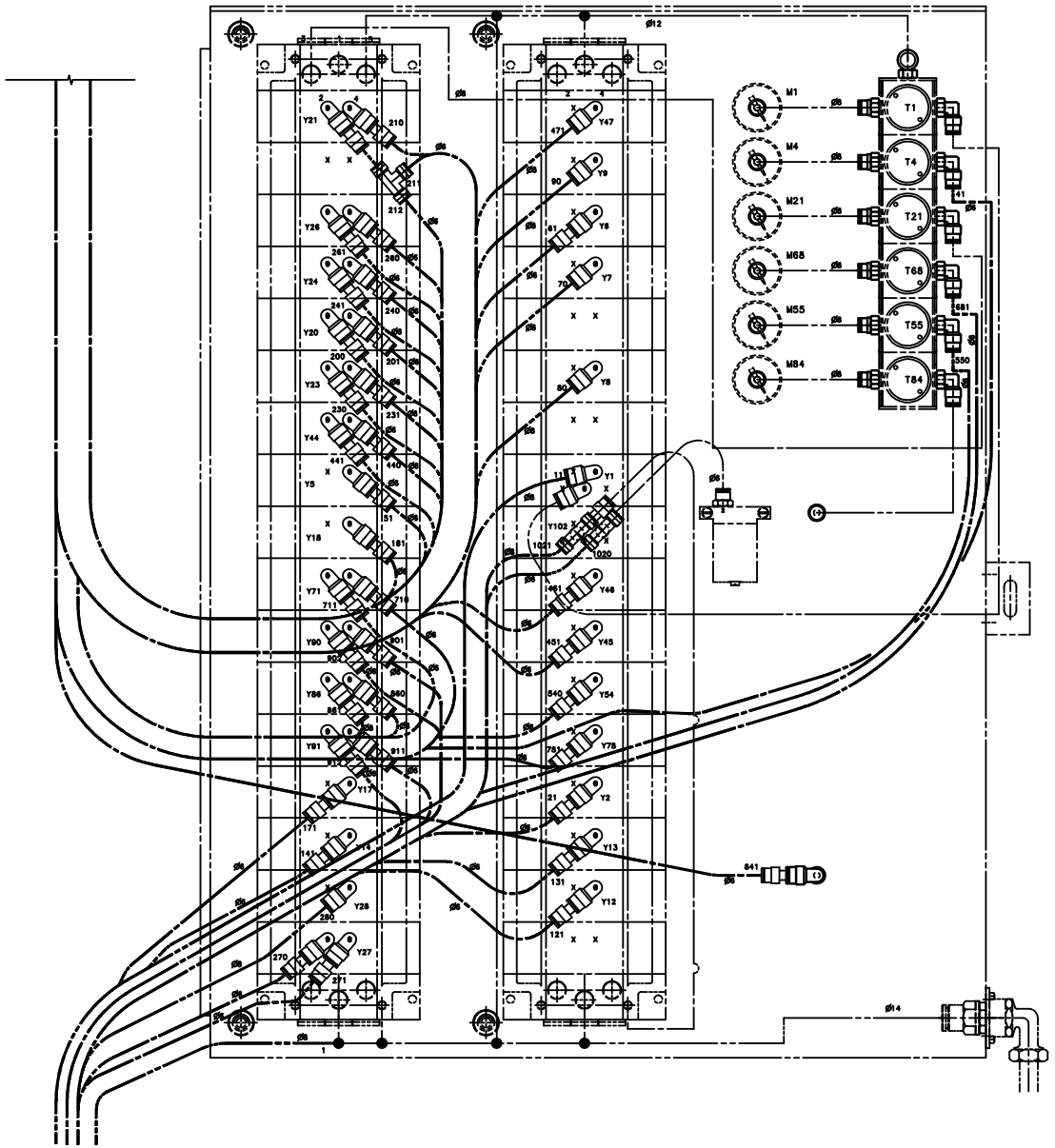
M1
M4
M21
M68
M55
M84
T1
T4
T21
T68
T55
T84
Y21
Y26
Y24
Y20
Y23
Y44
Y5
Y18
Y71
Y90
Y66
Y91
Y17
Y28
Y27
Y47
Y9
Y6
Y7
Y8
Y1
Y102
Y46
Y45
Y54
Y78
Y2
Y13
Y12
ø12
ø14

ECM: 72533 - 19990617
Group number: 450788-0600
Assembly Drawing: 450788-31_1_AA

Issue: 20020121

Pos	Part No	SP	UN	Qty	Description	Page No
TBA/8 NORMFIN						
005	90166-0013	-	M	19	TUBE 8 MM PA BLUE	
010	90166-0081	-	M	105	TUBE 6 MM PA BLUE	
115	560881-0000	-		1	PIPE	
170	90224-0319	-		2	CONN. STR., 8-R1/4, EXT. THREAD	
190	90266-0007	-	MM	58	TUBE	
200	315233-0110	-		2	WASHER PL.RND.NYL.13,3/17,H=1	
265	342923-0114	-		1	STRAIGHT COUPL.,INT.THREADED 6/4-G1/4"	
275	90224-0316	-		1	CONNECTION	
290	90030-0030	-		1	CONN. BULKHEAD SV 12-L/SY	
300	527907-0000	-		1	PIPE	
310	342991-0104	-		2	HOSE CLIP,WORM DRIVE TYPE (23)-27	
320	90166-0060	-	MM	3000	HOSE 19/26-27 REINF.PVC	
TBA/8 REVFIN						
005	90166-0013	-	M	19	TUBE 8 MM PA BLUE	
010	90166-0081	-	M	105	TUBE 6 MM PA BLUE	
115	560881-0000	-		1	PIPE	
170	90224-0319	-		2	CONN. STR., 8-R1/4, EXT. THREAD	
190	90266-0007	-	MM	58	TUBE	
200	315233-0110	-		2	WASHER PL.RND.NYL.13,3/17,H=1	
265	342923-0114	-		1	STRAIGHT COUPL.,INT.THREADED 6/4-G1/4"	
275	90224-0316	-		1	CONNECTION	
290	90030-0030	-		1	CONN. BULKHEAD SV 12-L/SY	
300	527907-0000	-		1	PIPE	
310	342991-0104	-		2	HOSE CLIP,WORM DRIVE TYPE (23)-27	
320	90166-0060	-	MM	3000	HOSE 19/26-27 REINF.PVC	
Common Parts						
080	B544692-0000	-		1	PIPE	
	341001-0228	-	*M*	*1*	*COPPER TUBE*	
	90418-0054	-		*5*	*ELBOW, 45, INT. CONN. NO. 7041-15*	
	90418-0053	-		*1*	*ELBOW, 90, INT. CONN. NO. 7090-15*	
120	B544697-0000	-		1	PIPE	
	341001-0228	-	*M*	*1*	*COPPER TUBE*	
	90418-0053	-		*3*	*ELBOW, 90, INT. CONN. NO. 7090-15*	
140	B450791-0000	-		1	PIPE	
	90418-0053	-		*1*	*ELBOW, 90, INT. CONN. NO. 7090-15*	
	341001-0228	-	*M*	*1*	*COPPER TUBE*	
180	90224-0323	-		1	CONNECTION	
205	315233-0113	-		1	WASHER PL.RND.NYL.21,4/27,H=1,2	
210	342713-0210	-		1	PLUG, EXT THREAD HEX SOCKET 8638-00-140	

Pos	Part No	SP	UN	Qty	Description	Page No
220	342720-0114	-		1	CONN. STR. GA-15-G1/2	
240	342929-0121	-		1	STRAIGHT COUPLING,SOLDER 8/6-8	
260	90055-0100	-		5	Y-CONNECTION, 6-6	
280	342960-0112	-		10	BULKHEAD COUPLING 6/4	

Machine Type | Group Description | Used-In | Group Number | Page No

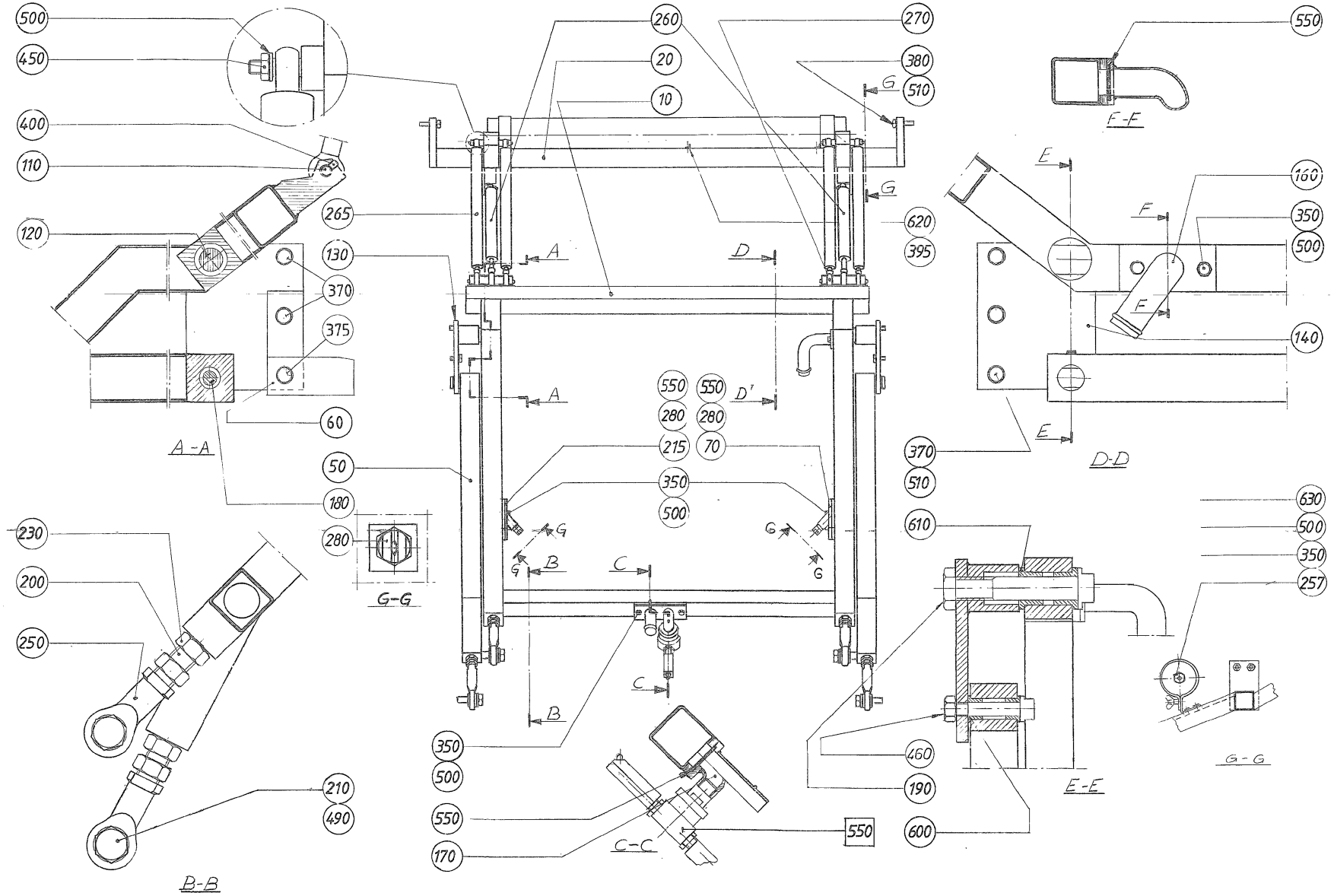
500
450
400
110
120
265
130
370
375
60
180
280
50
260
20
10
270
380
510
620
395
550
160
350
500
140
370
510
610
630
500
350
257
460
190
600
550
550
280
280
215
70
350
500
170
210
490
230
200
250
A-A
G-G
B-B
C-C
D-D
E-E
F-F
G-G

ECM: 72091 - 19981216
Group number: 450840-0400
Assembly Drawing: 450840-4_1_AA

Issue: 20020121

Pos	Part No	SP	UN	Qty	Description	Page No
Common Parts						
010	493021-0000	-		1	ARM	
020	450841-0000	-		1	CANTILEVER	
050	493022-0000	-		2	ARM	
060	532371-0000	-		1	STOP LUG	
070	534486-0000	-		1	PIPE HOLDER	
110	285825-0000	D		2	SHAFT	
120	484219-0000	D		2	SHAFT	
130	484220-0000	D		1	BRACKET	
140	484221-0000	D		1	BRACKET	
160	285979-0000	-		1	PIPE	
170	B476894-0000	-		1	PIPE HOLDER	
	90330-0065	*-*		*1*	*ELBOW, 90 INT. THREAD, R-222R3/8*	
180	484222-0000	D		2	SHAFT	
190	484223-0000	D		2	NUT	
200	457354-0000	D		4	SCREW	
210	297770-0000	D		4	SCREW	
215	442566-0000	-		1	BRACKET	
230	457355-0000	-		4	NUT	
250	90115-0111	-		4	ROD END, ID=22 MM, M22X1,5 LH	
257	B90164-0003	D		1	LIGHT FIXTURE	
	90297-0002	*C*		*1*	*FLUORESCENT TUBE 18W*	
260	90347-0036	C		2	DAMPER	
265	90347-0038	C		4	DAMPER	
270	90347-0300	-		6	ROD END, ID=10 MM, M10 FOR 90347-36;-38	
280	90424-0035	C		2	SPRAY NOZZLE 95 DEG	
350	312105-0368	-		12	SCREW M6S M6X16 A280	
370	312105-0493	-		5	SCREW M6S M10X25 A280	
375	312105-0495	-		1	SCREW M6S M10X30 A280	
380	312105-0497	-		2	SCREW M6S M10X35 A280	
395	312125-0285	-		4	SCREW SLOT.PAN HD. MCS 4X6 A480	
400	312318-0362	-		2	SCREW SOCK.SET CUP P MSK6SS M6X8 A4	
450	312605-0316	-		6	HEXAGON NUT, M6M M6 A280	
460	312605-0322	-		2	HEXAGON NUT, M6M M12 A280	
490	315103-0195	-		4	WASHER PLAIN, BRB, 23/40,H=3 NI PL BR	
500	315105-0153	-		18	WASHER PLAIN, BRB, 6,4/12,H=1,5	
510	315105-0173	-		10	WASHER PLAIN, BRB, 10,5/22,H=2	
550	315202-0216	C		5	O-RING 22,2X3 MM	
600	321101-0173	-		4	FLANGE BUS 12F7X12	
610	321101-0233	D		4	FLANGE BUS 20F7X20	
620	352135-0201	-		4	CLIP, 12 MM, 913.012	
630	352136-0127	-		1	GLAND FITTING PR 18,6	

Pos	Part No	SP	UN	Qty	Description	Page No
F550	A594613-0100	D		1	CLEANING HEAD	**239**

Machine Type	Group Description	Used-In	Group Number	Page No

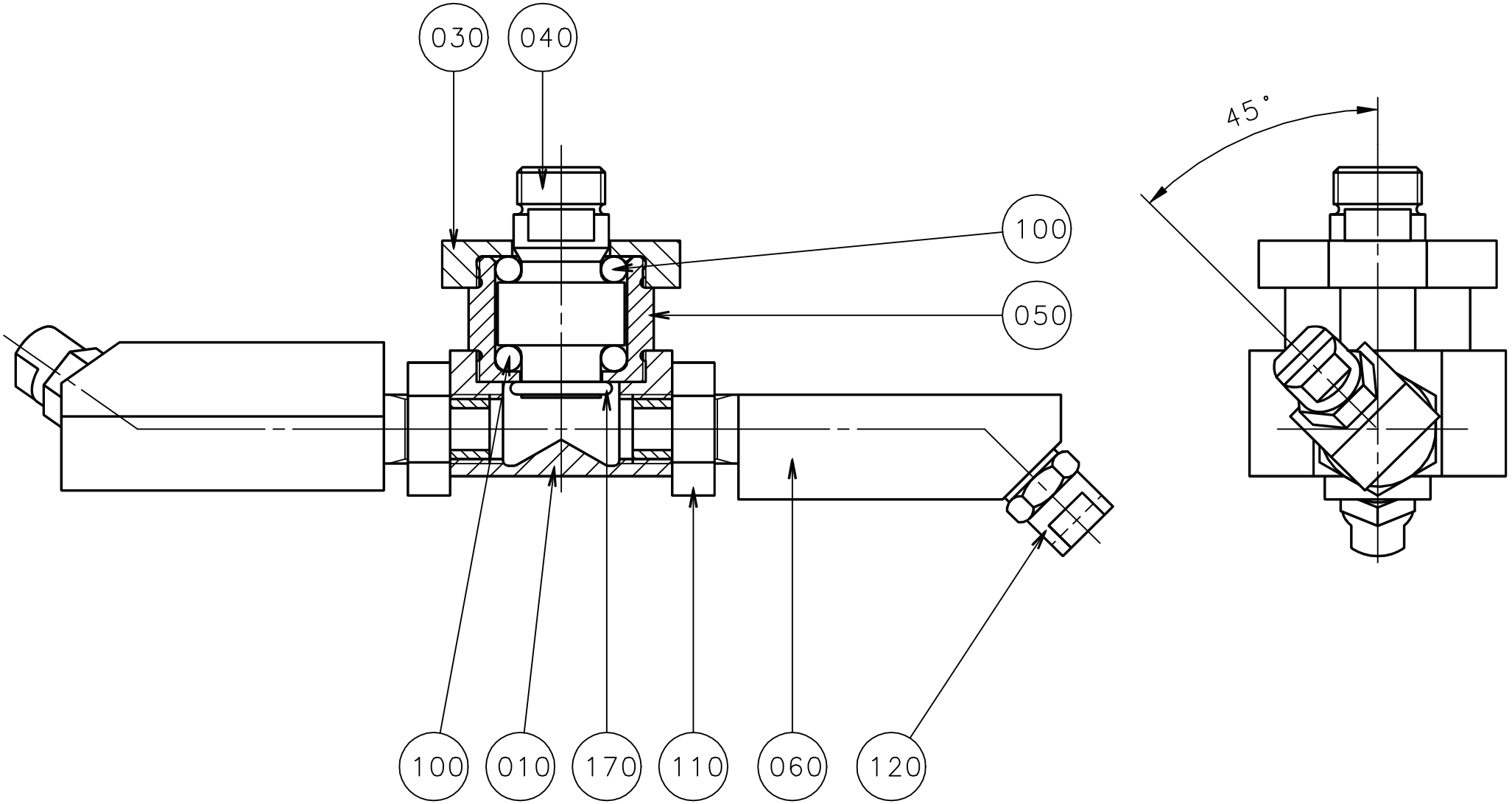
030
040
100
050
100
010
170
110
060
120
45°

ECM: 72091 - 19981216
Group number: 594613-0100
Assembly Drawing: 594613-1_1_AA

Issue: 20020121

Pos	Part No	SP	UN	Qty	Description	Page No
Common Parts						
010	440600-0000	C		1	ROTOR	
030	534880-0000	C		1	END SECTION	
040	534878-0000	C		1	SHAFT	
050	534879-0000	C		1	BEARING HOUSING	
060	440604-0001	C		2	PIPE	
100	90090-0020	C		24	BALL, D=5 MM	
110	90330-0034	-		2	NUT, HEXAGON, G1/4	
120	90424-0026	C		2	SPRAY NOZZLE 95 DEG	
170	315202-0211	C		1	O-RING 13,3X2,4 MM	

Pos	Part No	SP	UN	Qty	Description	Page No

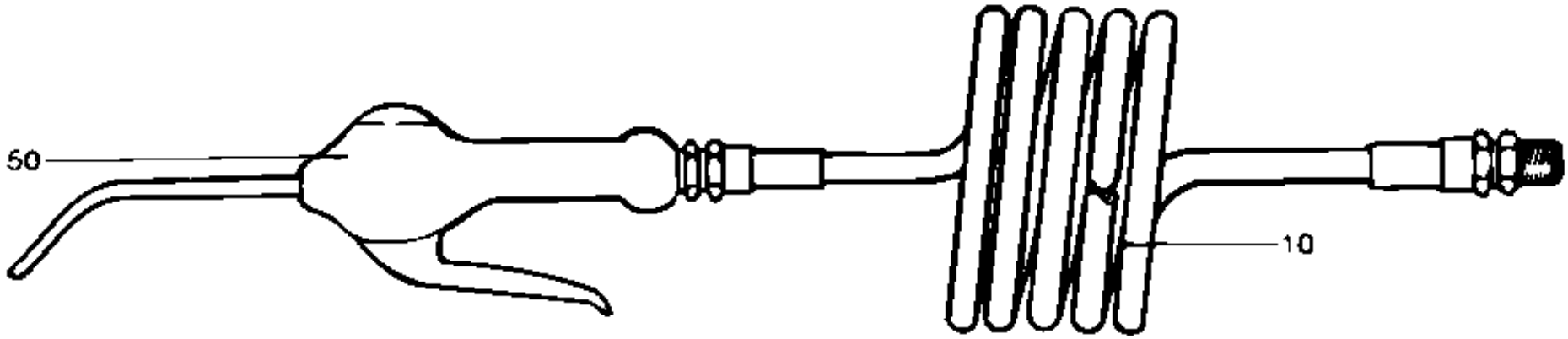
50
10

ECM: 72091 - 19981216
Group number: 230922-0100
Assembly Drawing: 230922-1_1_AA

Issue: 20020121

Pos	Part No	SP	UN	Qty	Description	Page No
Common Parts						
010	90152-0016	C		1	HOSE	
050	90243-0061	C		1	FAN NOZZLE	

Pos	Part No	SP	UN	Qty	Description	Page No

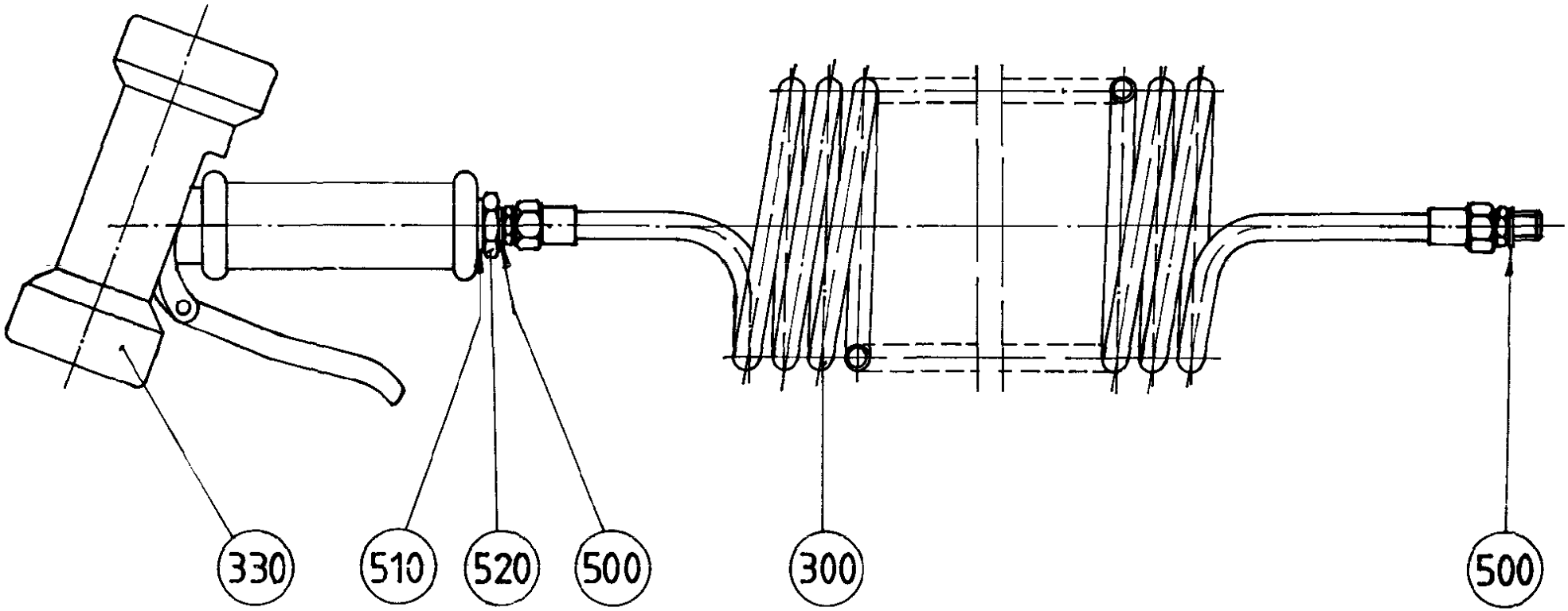
330
510
520
500
300
500

ECM: - -
Group number: 493614-0100
Assembly Drawing: 493614-1_1_AA

Issue: 20020121

Pos	Part No	SP	UN	Qty	Description	Page No
Common Parts						
300	90152-0017	C		1	HOSE	
330	90426-0003	C		1	HAND SHOWER	
500	315233-0110	-		2	WASHER PL.RND.NYL.13,3/17,H=1	
510	315233-0113	-		1	WASHER PL.RND.NYL.21,4/27,H=1,2	
520	342701-0205	-		1	BUSHING,INT./EXT.G-THREAD G1/2"-G1/4"	

Pos	Part No	SP	UN	Qty	Description	Page No

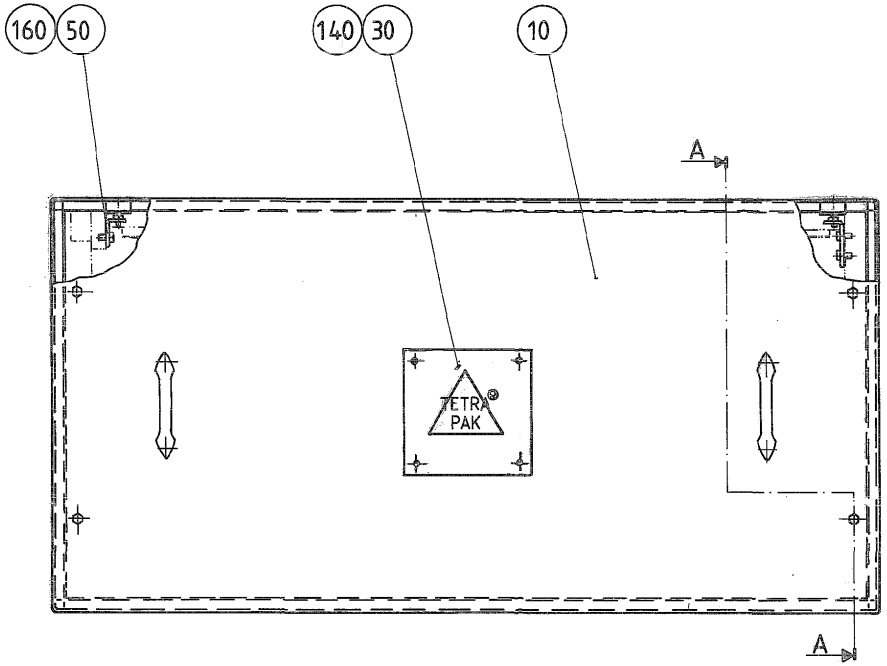

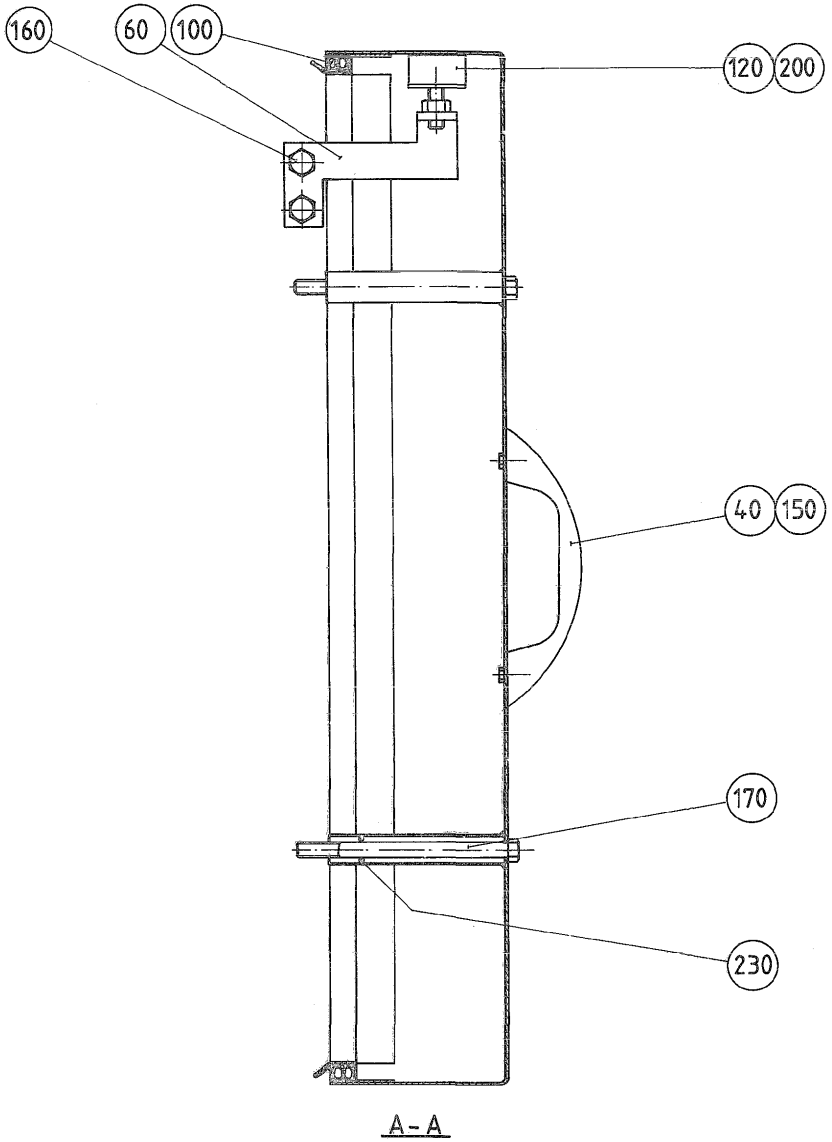

A - A

Pos	Part No	SP	UN	Qty	Description	Page No
Common Parts						
010	549045-0000	-		1	HATCH	
030	544539-0000	D		1	HOUSEMARK REPBY 0574658-0000	
040	7309-0000	-		2	HANDLE	
050	282507-0000	-		1	BRACKET LEFT	
060	450869-0000	-		1	BRACKET RIGHT	
100	90143-0049	D	MM	4000	RUBBERSTRIP 11X21MM	
120	90347-0004	-		2	VIBRATION DAMPER D=30 TH=M8 H=17 H2=21MM	
140	311520-0420	-		4	RIVET, BLANK 3,2X4	
150	312101-0364	-		4	SCREW M6S M6X10 FZB	
160	312101-0449	-		4	SCREW M6S M8X16 FZB	
170	312101-0473	-		4	SCREW M6S M8X110 FZB	
200	312601-0318	-		2	NUT M6M8FZB	
230	315202-0206	-		4	O-RING 7,3X2,4 MM	

Pos	Part No	SP	UN	Qty	Description	Page No

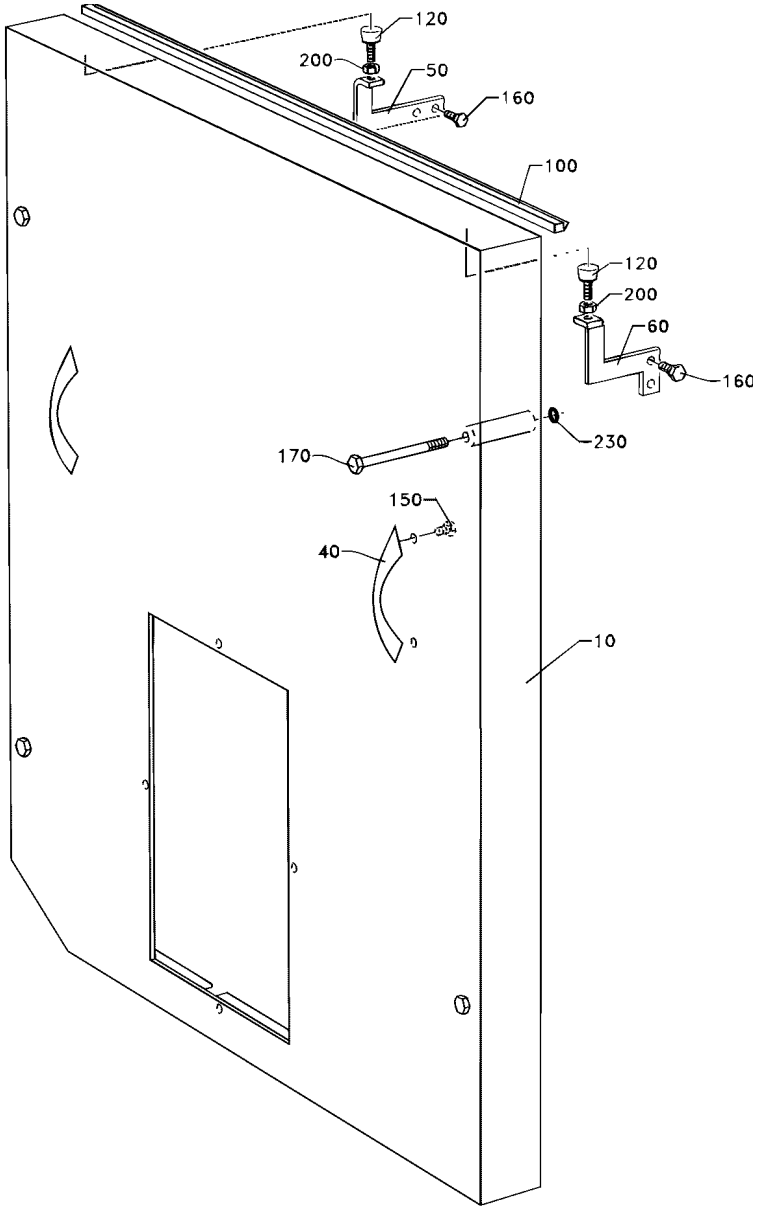
120
200
50
160
100
120
200
60
160
170
230
150
40
10

Pos	Part No	SP	UN	Qty	Description	Page No
TBA/8						
010	560880-0000	-		1	HATCH	
Common Parts						
040	7309-0000	-		2	HANDLE	
050	282507-0000	-		1	BRACKET LEFT	
060	450869-0000	-		1	BRACKET RIGHT	
100	90143-0049	D	MM	5000	RUBBERSTRIP 11X21MM	
120	90347-0004	-		2	VIBRATION DAMPER D=30 TH=M8 H=17 H2=21MM	
150	312101-0364	-		4	SCREW M6S M6X10 FZB	
160	312101-0449	-		4	SCREW M6S M8X16 FZB	
170	312101-0473	-		4	SCREW M6S M8X110 FZB	
200	312601-0318	-		2	NUT M6M8FZB	
230	315202-0206	-		4	O-RING 7,3X2,4 MM	

Pos	Part No	SP	UN	Qty	Description	Page No

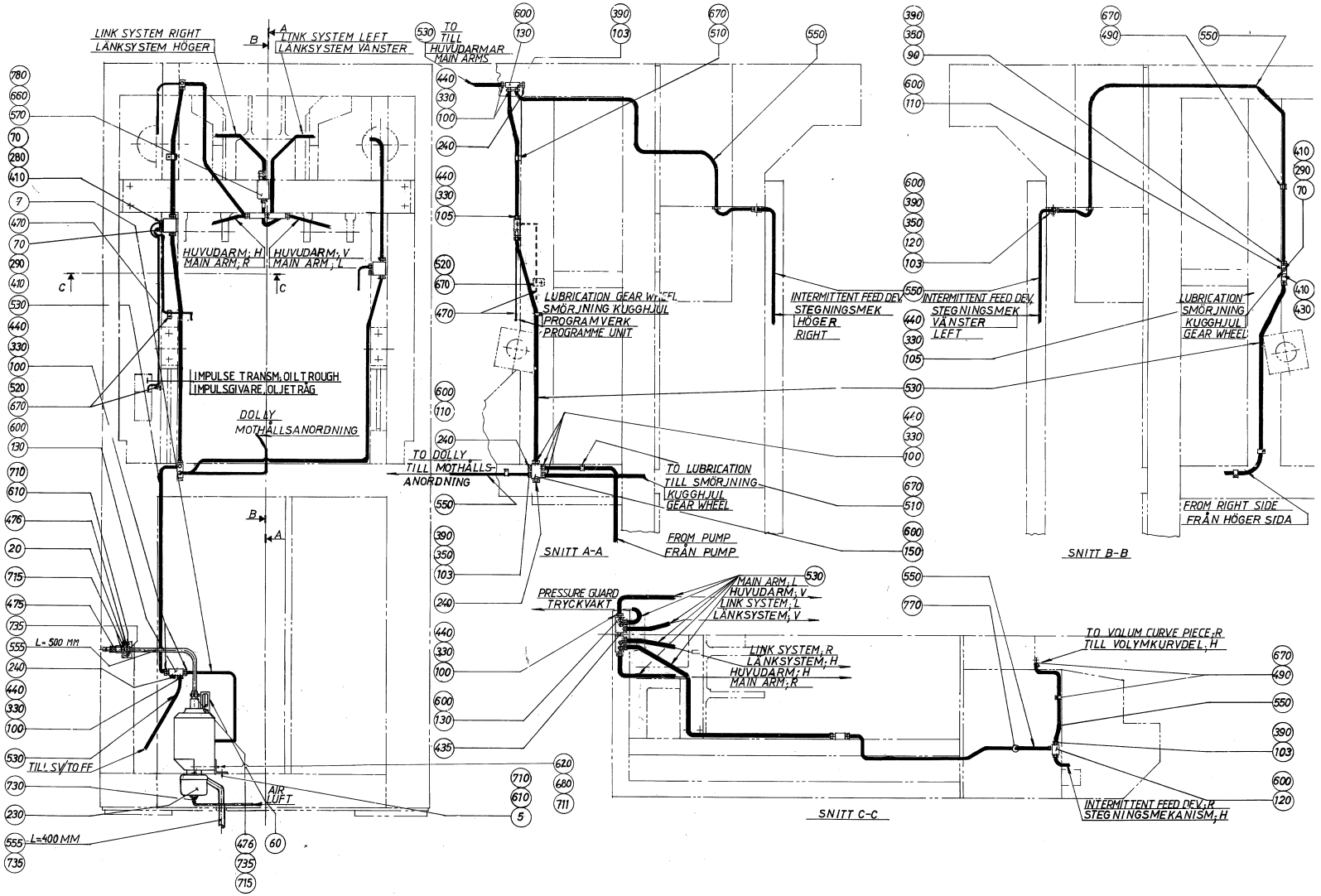
LINK SYSTEM RIGHT
LÄNKSYSTEM HÖGER
LINK SYSTEM LEFT
LÄNKSYSTEM VÄNSTER
TO
TILL
HUVUDARMAR
MAIN ARMS
HUVUDARM; H
MAIN ARM; R
HUVUDARM; V
MAIN ARM; L
IMPULSE TRANSM; OIL TROUGH
IMPULSGIVARE, OLJETRÅG
DOLLY
MOTHALLSANORDNING
TO DOLLY
TILL MOTHALLS-
ANORDNING
LUBRICATION GEAR WHEEL
SMÖRJNING KUGGHJUL
PROGRAMVERK
PROGRAMME UNIT
INTERMITTENT FEED DEV.
STEGNINGSMEK
HÖGER
RIGHT
INTERMITTENT FEED DEV.
STEGNINGSMEK
VÄNSTER
LEFT
LUBRICATION
SMÖRJNING
KUGGHJUL
GEAR WHEEL
TO LUBRICATION
TILL SMÖRJNING
KUGGHJUL
GEAR WHEEL
FROM PUMP
FRÅN PUMP
FROM RIGHT SIDE
FRÅN HÖGER SIDA
SNITT A-A
SNITT B-B
SNITT C-C
PRESSURE GUARD
TRYCKVAKT
MAIN ARM; L
HUVUDARM; V
LINK SYSTEM; L
LÄNKSYSTEM; V
LINK SYSTEM; R
LÄNKSYSTEM; H
HUVUDARM; H
MAIN ARM; R
TO VOLUM CURVE PIECE; R
TILL VOLYMKURVDEL; H
INTERMITTENT FEED DEV; R
STEGNINGSMEKANISM; H
L=500 MM
L=400 MM
TILL SWITCH
AIR
LUFT

ECM: 72091 - 19981216
Group number: 279979-0500
Assembly Drawing: 279979-5_1_AA

Issue: 20020121

Pos	Part No	SP	UN	Qty	Description	Page No
Common Parts						
005	547902-0000	-		1	BRACKET	
007	547904-0000	-		1	TUBE	
020	293198-0002	-		1	BRACKET	
060	90012-0063	-		1	CABLE GLAND PR 15,2	
070	90028-0020	C		3	CONE TUBE 2,5MM	
090	90028-0021	C		1	CONE TUBE 4 MM	
100	90028-0022	C		14	CONE TUBE 6 MM	
103	90028-0024	C		8	CONE TUBE 4 MM	
105	90028-0025	C		3	CONE TUBE 6 MM	
110	90032-0038	-		2	BLOCK 2 WAYS	
120	90032-0043	-		2	DISTRIBUTION BLOCK 3 WAYS	
130	90032-0044	-		4	DISTRIBUTION BLOCK 4 WAYS	
150	90032-0046	-		1	DISTRIBUTION BLOCK 6 WAYS	
230	B90048-0034	C		1	OIL PUMP INCL. CONTAINER 4,5 L	
	90048-0450	*-*		*1*	*SPARE PARTS KIT*	
	90274-0052	*-*		*1*	*SWITCH (MONITOR)*	
240	90087-0019	-		4	PLUG M10X1 STAINLESS	
280	90092-0052	C		1	METERING VALVE 10 MM3	
290	90092-0053	C		2	METERING VALVE 30 MM3	
330	90134-0030	C		16	SLEEVE FOR PLASTIC TUBE	
350	90134-0031	C		9	SLEEVE FOR PLASTIC TUBE	
390	90134-0038	C		9	BUSHING/NUT INLET/OUTLET 4 MM	
410	90134-0039	C		4	BUSHING VALVE CONNECTION 2,5 MM	
430	90134-0052	-		1	PLUG DOSING BLOCK	
435	90134-0054	-		1	BLOCK CONNECTION M10X1	
440	90134-0055	C		14	BUSHING/NUT INLET/OUTLET 6 MM	
470	90266-0019	-	MM	800	PIPE	
475	90163-0064	-		1	QUICK COUPLING, (M) LP-006-2-WR517	
476	90163-0050	-		2	QUICK COUPLING, (M) 5089 / 9	
490	90165-0003	-		5	PIPE CLIP FOR TUBE D=4 MM	
510	90165-0005	-		13	PIPE CLIP FOR TUBE D=6 MM	
520	90165-0022	-		3	PIPE CLIP, FOR TUBE D=2,5 MM, B-3570	
530	90166-0108	-	M	6	TUBE 6 MM PA,TRANSP.	
550	90166-0109	-	M	7	TUBE 4 MM PA,TRANSP.	
555	90166-0113	-	MM	900	HOSE	
570	90274-0084	C		1	PRESSURE SWITCH	
600	312101-0295	-		18	SCREW M6S M4X20 FZB	
610	312101-0366	-		6	SCREW M6S M6X12 FZB	
620	312101-0467	-		2	SCREW M6S M8X80 FZB	
660	312111-0297	-		2	SCREW HEX.SOCK.HD.MC6S-TT 4X25 88 FZB	
670	312121-0285	-		20	SCREW SLOT.PAN HD. MCS 4X6 FZB	
680	312601-0318	-		2	NUT M6M8FZB	
710	315101-0153	-		6	WASHER PLAIN, BRB, 6,4/12 H=1,5	
711	315101-0165	-		2	WASHER PLAIN, BRB, 8,4/16 H=1,5	
715	315233-0111	-		2	WASHER PL.RND.NYL.17/22,H=1	
730	342931-0113	-		1	ELBOW 90 COUPL.,EXT.THREAD 6/4-G1/8"	
735	342991-0100	-		3	HOSE CLIP,WORM DRIVE TYPE 10-13	
770	352101-0103	-		2	LEAD-IN, PR18,6/PG11, E-1457518	

Machine Type | Group Description | Used-In | Group Number | Page No

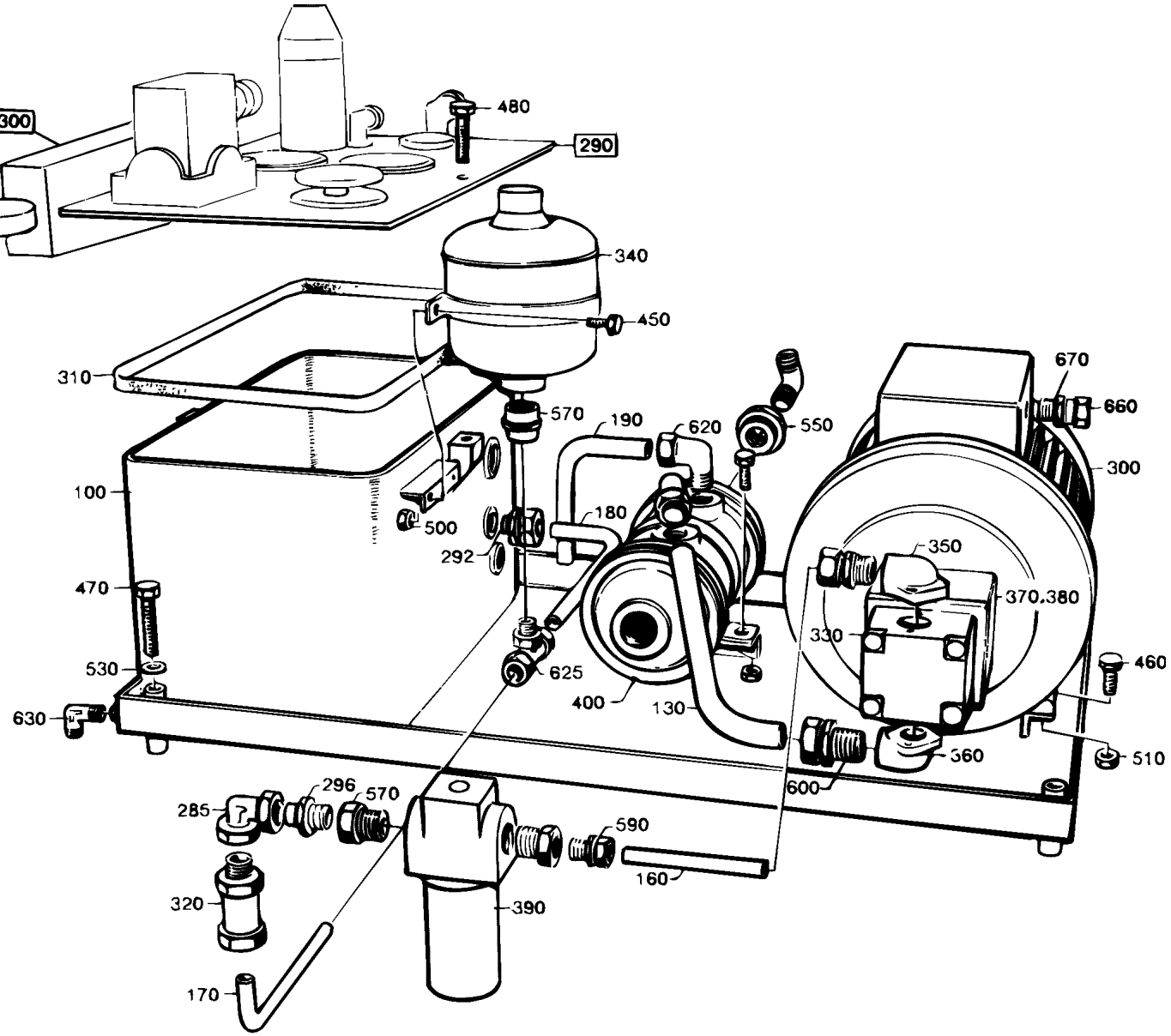
300
480
290
340
450
310
570
190
620
550
670
660
300
100
500
180
292
350
370.380
470
330
460
530
625
400
130
630
360
510
600
296
570
285
590
160
320
390
170

Pos	Part No	SP	UN	Qty	Description	Page No
TBA/8						
F290	A276343-0300	-		1	LID	**253**
Common Parts						
100	252953-0000	-		1	TANK	
130	434710-0000	-		1	PIPE	
160	434714-0000	-		1	PIPE	
170	434717-0000	-		1	PIPE	
180	434718-0000	-		1	PIPE	
190	434719-0000	-		1	PIPE	
285	90030-0121	-		2	CONN. ELBOW ADJ.,INT 10	
292	90030-0157	-		3	CONN. STR. 10-R3/8, EXT. THREAD	
296	90030-0178	-		1	CONN. STR., 10-R1/4, EXT. THREAD	
300	90457-0036	A		1	3-PHASE MOTOR,FOOT MOUNT.1,1KW,1410 RPM	
310	90091-0159	B		1	GASKET 330X308X9 MM	
320	90230-0017	A		1	NON RETURN VALVE RHD 10-L	
330	90321-0018	A		1	GEAR PUMP MLPS/T124D	
340	90321-0381	A		1	HYDR.ACCUMULATOR, SBO-210-0.75E1/112-0/1	
350	90321-0382	A		1	FLANGE, RG 26/12-3/8	
360	90321-0383	A		1	PUMP CONN. ELBOW FLANGE RG 26/12-1/2	
370	90321-0384	-		1	DISTANCE PIECE	
380	90321-0385	A		1	COUPLING	
390	B90415-0029	A		1	FULL PR. FILTER / MDF BN 30 G 10 B1-BYP	
	90415-0323	*-*		*1*	*FILTER INSERT / 0030D010 BN*	
400	B90422-0008	A		1	COOLER	
	315202-0612	*C*		*1*	*O-RING 75,80X3,53 MM*	
450	312101-0368	-		2	SCREW M6S M6X16 FZB	
460	312101-0453	-		4	SCREW M6S M8X25 FZB	
470	312101-0463	-		4	SCREW M6S M8X60 FZB	
480	312101-0495	-		2	SCREW M6S M10X30 FZB	
500	312601-0316	-		2	NUT M6M 6-8 FZB	
510	312601-0318	-		4	NUT M6M8FZB	
530	315111-0165	-		4	WASHER PLAIN, TBRB 8,4/16 H=3	
550	342701-0208	-		2	BUSHING, INT/EXT. G-THREAD NO. 3/4-1/4	
570	342712-0205	-		3	BUSHING, INT/EXT. G-THREAD NO. 1/2X1/4	
590	342721-0108	-		1	PIPE COUPLGA10-LRFZB REPBY 0342752-0104	
600	342721-0114	-		1	PIPE COUPLGA15-LRFZB REPBY 0342752-0114	
620	342731-0114	-		3	CONN. ELBOW WE 15-LRFZB	
625	342741-0108	-		1	CONN. T-PIPE TA-10-R1/4	
630	342930-0122	-		3	ELBOW 90 COUPL.,EXT.THREAD 8/6-R1/4"	
660	352136-0128	-		1	GLAND FITTING	
670	352100-0108	-		1	CABLE GLANR.20,4-12	

Machine Type | Group Description | Used-In | Group Number | Page No

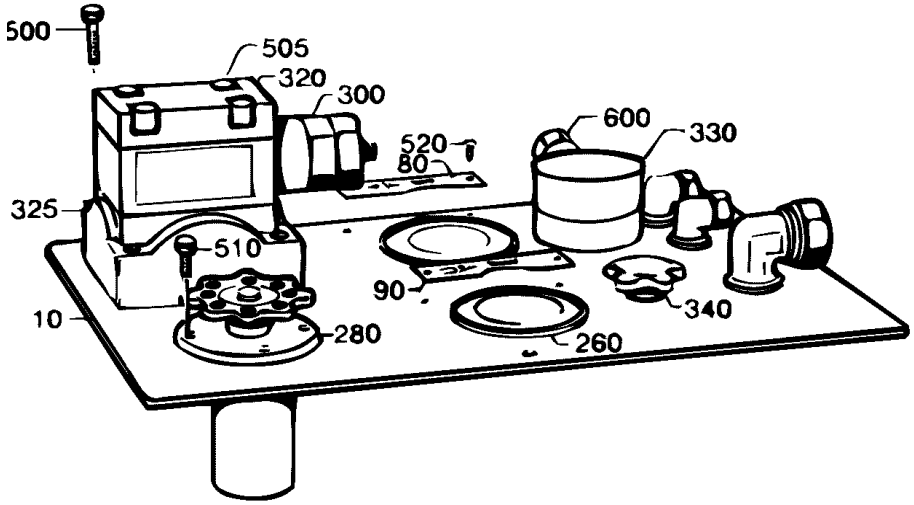
500
505
320
300
520
80
600
330
325
510
90
340
10
280
260

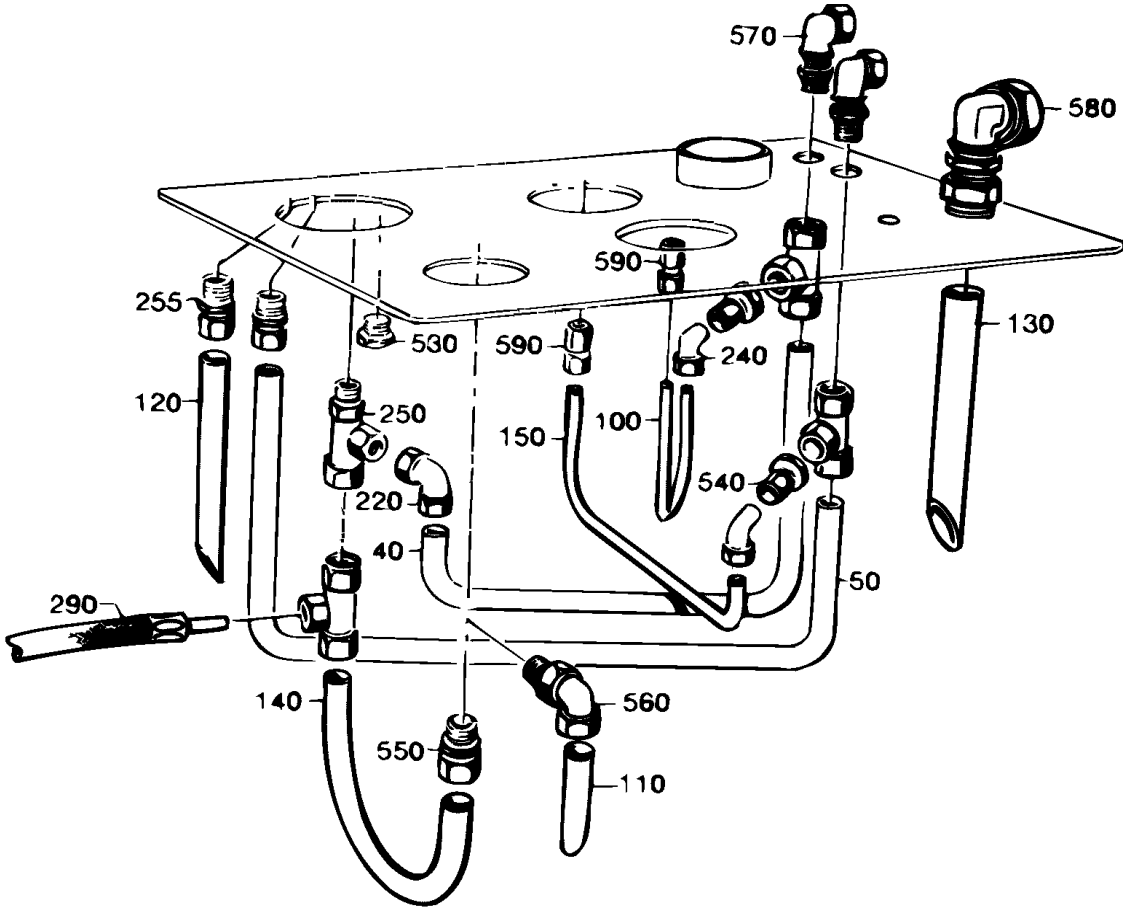
570
580
590
255
530
590
240
130
120
250
150
100
540
220
40
50
290
140
560
550
110

Pos	Part No	SP	UN	Qty	Description	Page No
Common Parts						
010	442076-0000	-		1	LID	
040	434708-0000	-		1	PIPE	
050	434709-0000	-		1	PIPE	
080	247385-0000	-		1	SIGN	
090	247386-0000	-		1	SIGN	
100	434711-0000	-		1	PIPE	
110	434712-0001	-		1	PIPE	
120	434712-0002	-		1	PIPE	
130	434713-0000	-		1	PIPE	
140	434715-0000	-		1	PIPE	
150	434716-0000	-		1	PIPE	
220	90030-0121	-		1	CONN. ELBOW ADJ.,INT 10	
240	90030-0146	-		2	ADJUSTABLE ELBOW CONNECTION,EXT 6-G1/8	
250	90030-0120	-		4	ADJ. L-PIPE CONNECTION EVL, INT.T-10	
255	90030-0157	-		3	CONN. STR. 10-R3/8, EXT. THREAD	
260	90043-0062	C		2	MANOMETER	
280	90113-0044	C		1	PRESSURE REGULATOR	
290	90148-0036	-		1	HOSE	
300	90201-0014	C		1	VALVE	
320	90201-0307	-		1	BLANKING, NO. DGMA-3-C1-10	
325	90201-0308	-		1	BLANKING, NO. DGVM-3-10-R	
330	90274-0053	D		1	LEVEL PROBE	
340	90277-0041	D		1	TANK BREATH. FILTER / UC-SAB-3101 UCC	
500	312111-0333	-		4	SCREW HEX.SOCK.HD.MC6S-TT 5X25 88 FZB	
505	312111-0343	-		4	SCREW HEX.SOCK.HD.MC6S-TT 5X60 88 FZB	
510	312111-0368	-		4	SCREW HEX.SOCK.HD.MC6S-TT 6X16 88 FZB	
520	312502-0171	-		4	DRIVE SCREW ROUND HEAD KDS 2X6	
530	342713-0311	-		1	PLUG, EXT. THREAD HEX. SOCKET. BPS38	
540	342714-0202	-		2	REDUCTION KOR 10/6-LFZB	
550	342721-0108	-		1	PIPE COUPLGA10-LRFZB REPBY 0342752-0104	
560	342731-0108	-		1	CONN. ELBOW WE 10-LRFZB	
570	342764-0108	-		2	CONN. ELBOW BULKHEAD LWSV10-LFZB	
580	342764-0114	-		1	CONN. ELBOW BULKHEAD LWSV15-LFZB	
590	342790-0102	-		2	CONN. PRESS. GAUGE MAV6-LRFZB	
600	352136-0113	-		1	GLAND FITTING PR18,6/PG11 DI=12MM	

Pos	Part No	SP	UN	Qty	Description	Page No

Machine Type | Group Description | Used-In | Group Number | Page No

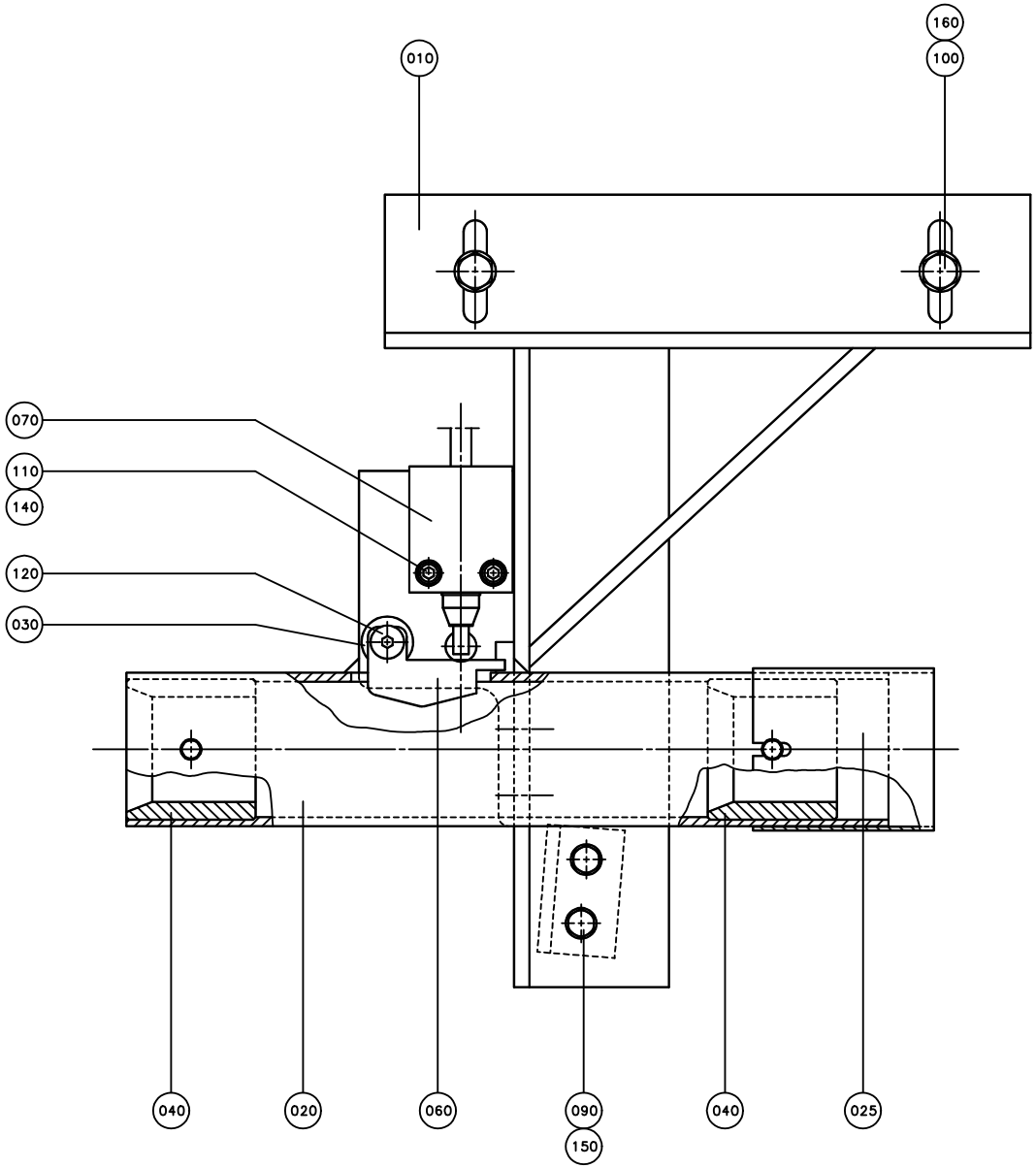
160
100
010
070
110
140
120
030
040
020
060
090
150
040
025

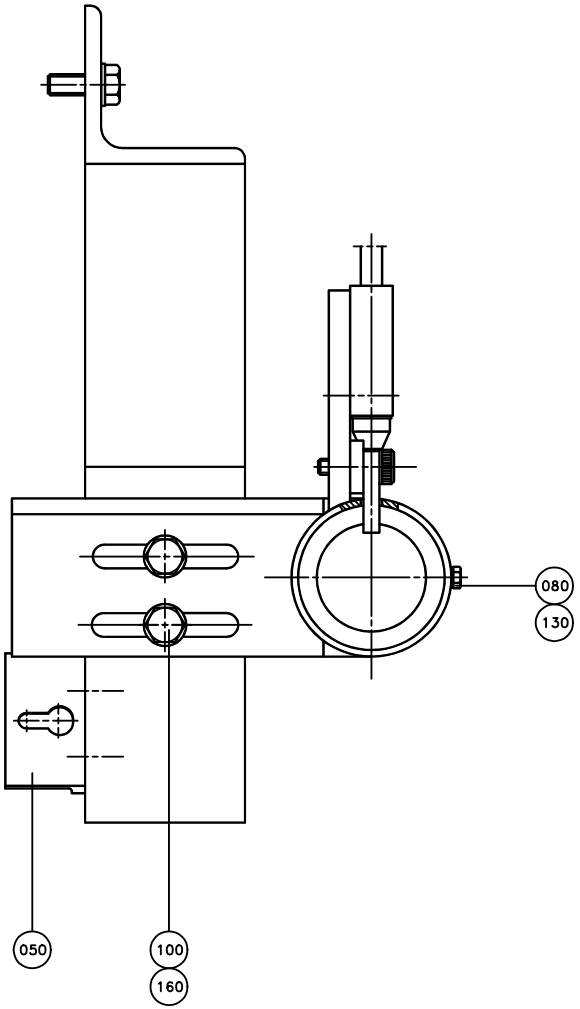
080
130
050
100
160

Pos	Part No	SP	UN	Qty	Description	Page No
Common Parts						
010	434659-0000	-		1	CRANK BRACKET	
020	541009-0000	-		1	CRANK HOLDER	
025	574652-0000	-		1	PROTECTION	
030	20770-0000	-		1	WASHER	
040	434661-0000	D		2	BUSHING	
050	434664-0000	-		1	BRACKET	
060	569163-0000	D		1	ARM	
070	90044-0094	C		1	LIMIT SW. 924 CE31-Y20-X5	
080	312101-0289	-		2	SCREW M6S M4X10 FZB	
090	312101-0368	-		2	SCREW M6S M6X16 FZB	
100	312101-0451	-		4	SCREW M6S M8X20 FZB	
110	312111-0329	-		2	SCREW HEX.SOCK.HD.MC6S-TT 5X16 88 FZB	
120	312180-0447	-		1	SCREW, HEX.SOCK.HEAD SHOULD. M6X12	
130	315101-0136	-		2	WASHER PLAIN, BRB, 4,3/8 H=0,8	
140	315101-0146	-		2	WASHER PLAIN, BRB, 5,3/10 H=1	
150	315101-0153	-		2	WASHER PLAIN, BRB, 6,4/12 H=1,5	
160	315111-0165	-		4	WASHER PLAIN, TBRB 8,4/16 H=3	

Pos	Part No	SP	UN	Qty	Description	Page No

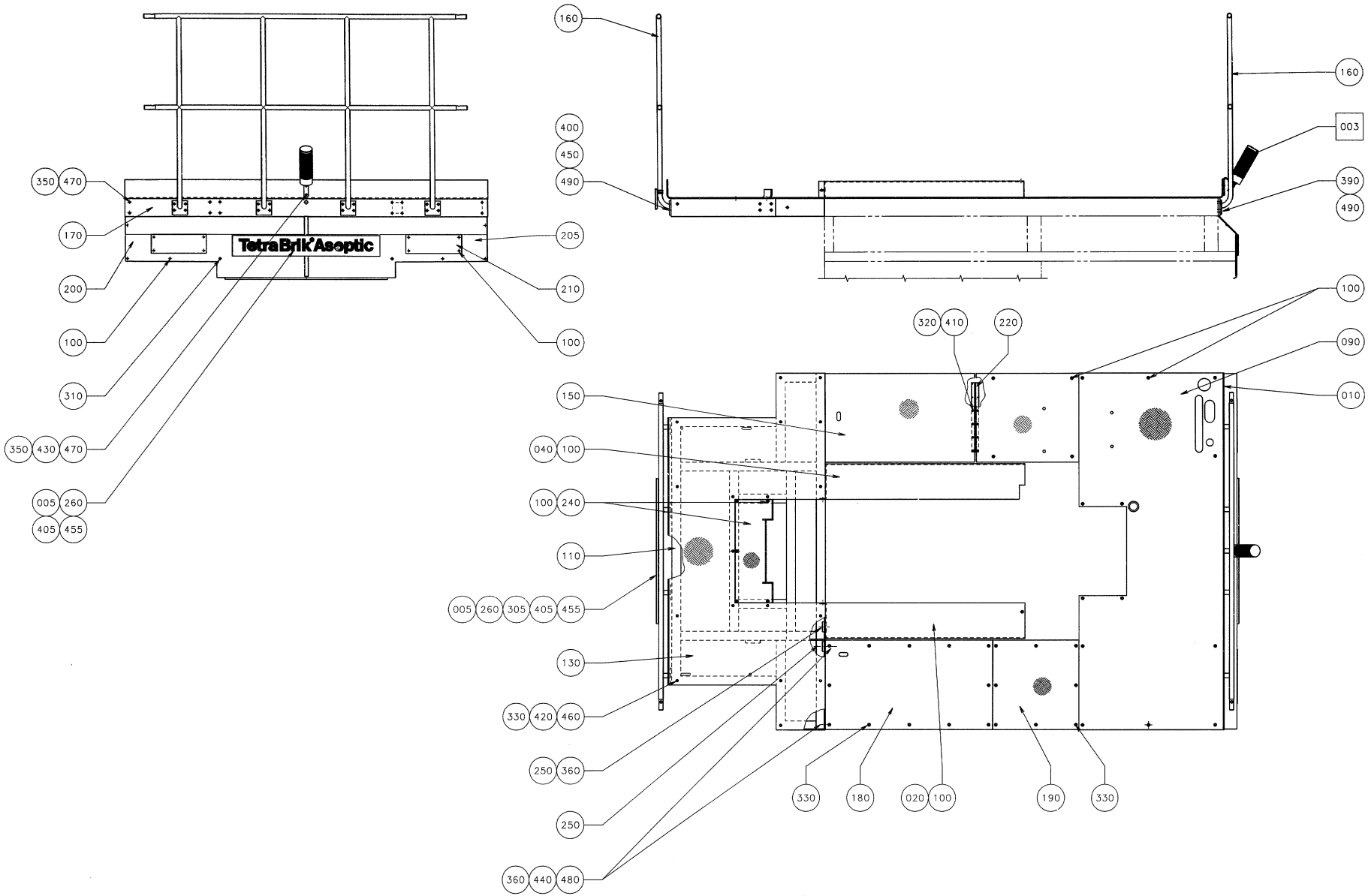
160
400
450
490
350
470
170
200
100
310
350
430
470
005
260
405
455
205
210
100
TetraBrik Aseptic
160
003
390
490
100
090
010
320
410
220
150
040
100
100
240
110
005
260
305
405
455
130
330
420
460
250
360
250
360
440
480
330
180
020
100
190
330

ECM: 92563 - 20010402
Group number: 440384-0600
Assembly Drawing: 440384-8_1_AA

Issue: 20020121

Pos	Part No	SP	UN	Qty	Description	Page No
TBA/8						
003	A1285923-0100	-		1	WARNING BEACON	**259**
005	544527-0000	-		2	MACHINE PLATE TBA	
010	B927319-0000	-		1	PLATFORM	
	1362935-0000	-		*1*	*BLANK-OFF FLANGE*	
	312155-0366	-		*4*	*SCREW HEX.SOCK.COUNT.MF6S M6X12 A280*	
020	279807-0000	-		1	COVER	
040	279885-0000	-		1	COVER	
090	576833-0000	-		1	PLATFORM	
100	90287-0075	-		40	SCREW SLOT. PAN HEAD LKCS M6X12	
Common Parts						
110	440385-0000	-		1	CANTILEVER	
130	440386-0000	-		1	PLATFORM REAR	
150	576835-0000	-		1	PLATFORM COVER	
160	263323-0000	-		2	RAILING	
170	263612-0000	-		1	RAIL	
180	269274-0000	-		1	PLATFORM COVER	
190	269275-0000	-		1	PLATFORM COVER	
200	548346-0000	-		1	FRONT GUARD	
205	560799-0000	-		1	FRONT GUARD	
210	548348-0000	-		2	HATCH	
220	239847-0000	-		1	HINGE	
240	440389-0000	-		1	HATCH	
250	445858-0000	-		4	WASHER	
260	544533-0000	-		4	PLASTIC PEHD 21172-10	
305	90165-0086	-		2	PIPE CLAMP, RSGU 1.24/15-V4, D=24 MM	
310	90287-0062	-		2	SCREW M6	
320	90287-0074	-		12	SCREW SLOT. PAN HEAD LKCS M4X12	
330	90287-0076	-		38	SCREW SLOT. PAN HEAD LKCS M6X20	
350	312101-0453	-		10	SCREW M6S M8X25 FZB	
360	312101-0540	-		6	SCREW M6S M12X40 FZB	
390	312105-0491	-		16	SCREW M6S M10X20 A280	
400	312105-0493	-		16	SCREW M6S M10X25 A280	
405	312155-0370	-		4	SCREW HEX.SOCK.COUNT.MF6S M6X20 A280	
410	312601-0312	-		12	NUT M6M 4-8 FZB	
420	312601-0316	-		19	NUT M6M 6-8 FZB	
430	312601-0318	-		2	NUT M6M8FZB	
440	312601-0322	-		4	NUT M6M 12-8 FZB	
450	312605-0320	-		32	HEXAGON NUT, M6M M10 A280	
455	312812-0316	-		4	HEXAGON NUT, NY-LOCK M6 A480	
460	315101-0153	-		19	WASHER PLAIN, BRB, 6,4/12 H=1,5	
470	315101-0165	-		10	WASHER PLAIN, BRB, 8,4/16 H=1,5	
480	315101-0178	-		6	WASHER PLAIN, BRB, 13/24 H=2	
490	315105-0173	-		48	WASHER PLAIN, BRB, 10,5/22,H=2	

Machine Type | Group Description | Used-In | Group Number | Page No

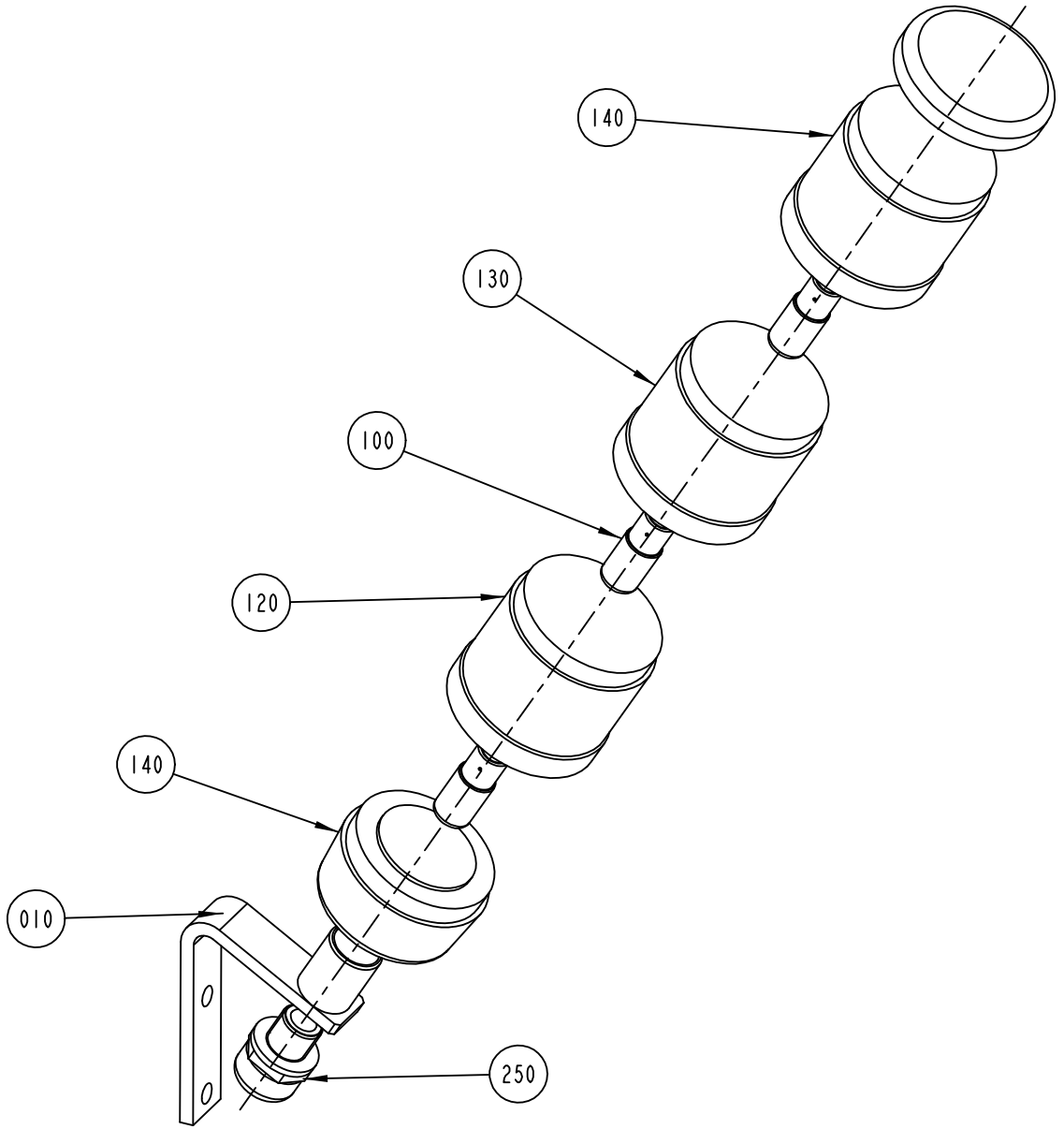
140
130
100
120
140
010
250

ECM: 83154 - 20010206
Group number: 1285923-0100
Assembly Drawing: 1285923-1_1_AB

Issue: 20020121

Pos	Part No	SP	UN	Qty	Description	Page No
Common Parts						
010	1285924-0000	-		1	HOLDER	
100	90036-0068	C		3	BULB 6.5W 24V	
110	90458-0293	D		1	LIGHT ELEMENT KL70-401R	
120	90458-0295	D		1	LIGHT ELEMENT BLUE KL70-401L	
130	90458-0294	D		1	LIGHT ELEMENT YELLOW KL70-401Y	
140	90458-0292	-		1	BASE KT70-1001	
250	352136-0113	-		1	GLAND FITTING PR18,6/PG11 DI=12MM	

Pos	Part No	SP	UN	Qty	Description	Page No

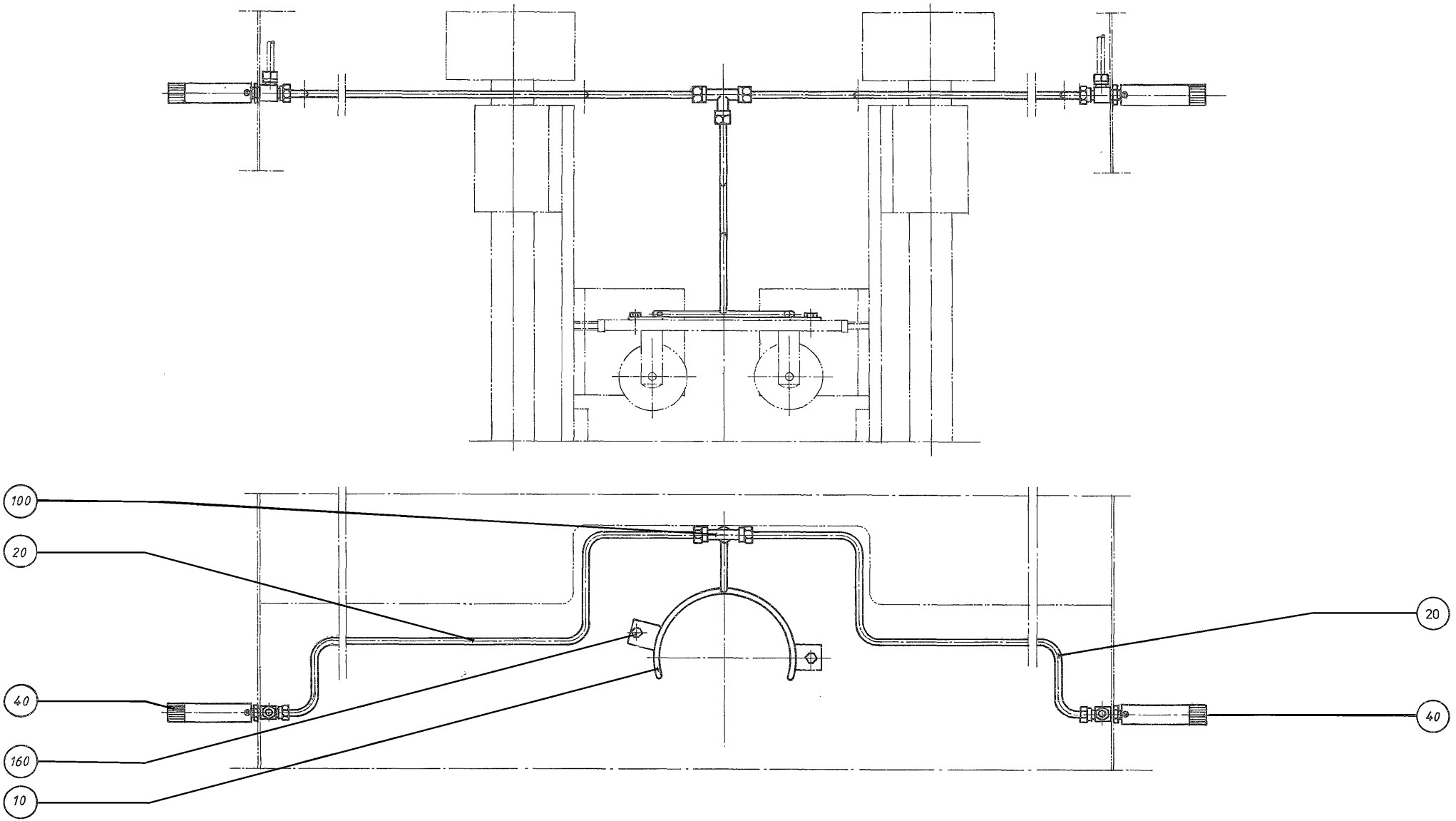
100
20
40
160
10
20
40

Pos	Part No	SP	UN	Qty	Description	Page No
0375S						
010	539613-0000	D		1	SPREADER	
0500B OR 0500S OR 1000S OR 0750B OR 0750S OR 1000B						
010	539612-0000	D		1	SPREADER	
1000SQ						
010	1362505-0000	D		1	SPREADER	
Common Parts						
020	450340-0000	-		2	PIPE	
040	B445583-0000	C		2	VALVE	
	315202-0500	*C*		*1*	*O-RING 42X1,53 MM*	
	315202-0501	*C*		*1*	*O-RING 2,90X1,78 MM*	
100	90030-0076	-		1	CONN. T-PIPE T-6	
160	312105-0325	-		2	SCREW M6S M5X10 A280	

Pos	Part No	SP	UN	Qty	Description	Page No

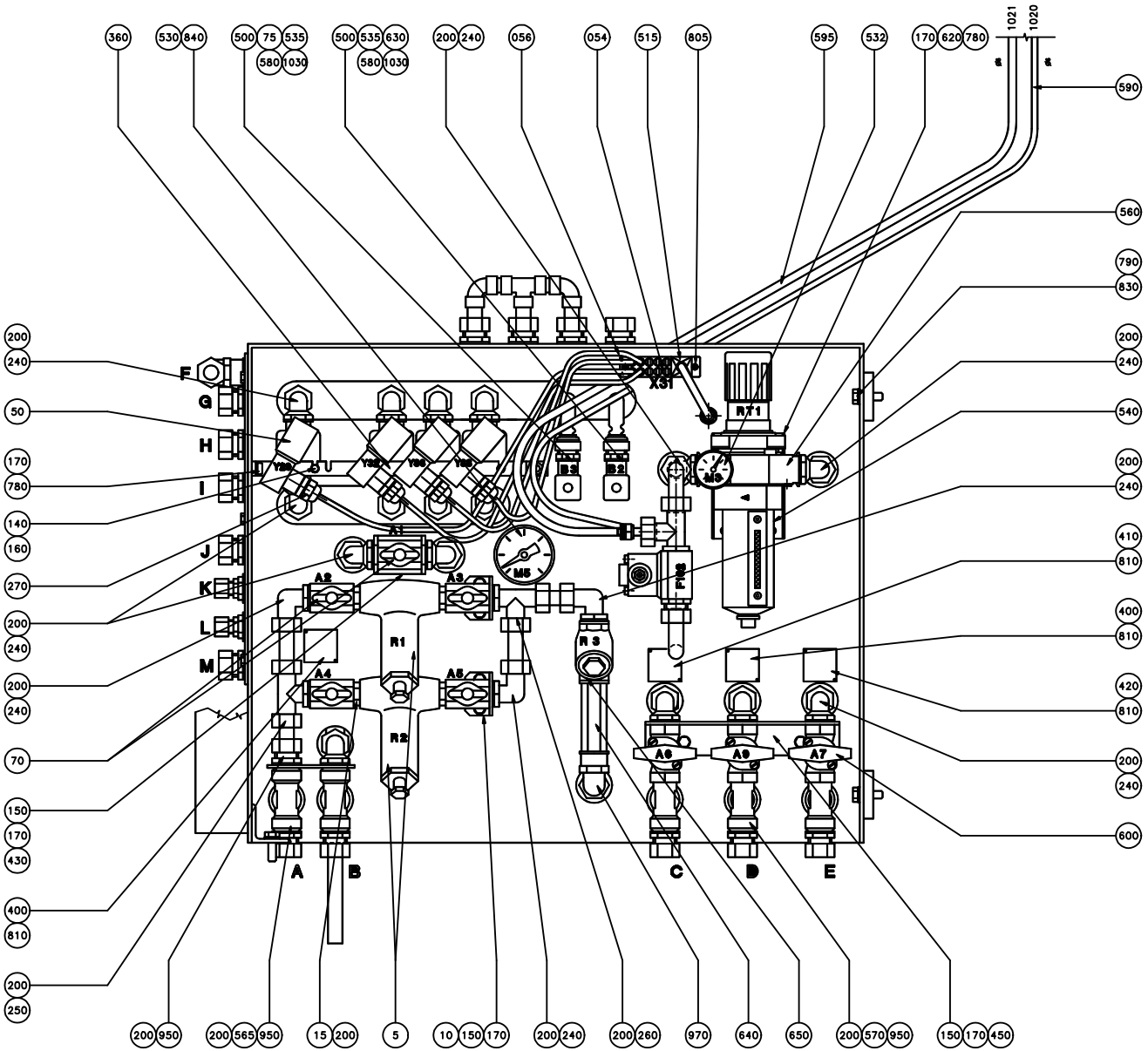
360
530 840
500 75 535
580 1030
500 535 630
580 1030
200 240
056
054
515
805
595
532
170 620 780
1021
1020
590
560
790
830
200
240
540
200
240
410
810
400
810
420
810
200
240
600
F
G
H
I
J
K
L
M
50
170
780
140
160
270
200
240
200
240
70
150
170
430
400
810
200
250
X31
R71
M5
B3
B2
A1
A2
A3
A4
A5
R1
R2
R3
A6
A9
A7
A
B
C
D
E
200 950
200 565 950
15 200
5
10 150 170
200 240
200 260
970
640
650
200 570 950
150 170 450

ECM: 98207 - 20011213
Group number: 575392-0100
Assembly Drawing: 575392-1_1_AB

Issue: 20020121

Pos	Part No	SP	UN	Qty	Description	Page No
TBA/8						
005	B90458-0921	A		2	FILTER SP 122-200	
	90458-2541	*-*		*1*	*SCREEN, NO. CP23174-7-304SS*	
010	543127-0000	-		2	BRACKET	
015	479261-0000	-		4	NIPPLE	
050	B90042-0172	A		4	SOLENOID VALVE 4023/1005/1032 24VDC	
	90042-0467	*A*		*1*	*COIL 24VDC GSR*	
056	B90042-0536	A		4	PILOT CABLE MECMAN 440-728-000-1	
	90042-0594	*-*		*1*	*ADAPTER 04938-328-08*	
070	90187-0062	A		5	BALL VALVE G1/2, NPBR	
075	90274-0042	A		1	PRESSURE SWITCH 2BAR NACOV	
090	90418-0053	-		25	ELBOW, 90, INT. CONN. NO. 7090-15	
100	90418-0054	-		7	ELBOW, 45, INT. CONN. NO. 7041-15	
110	90418-0063	-		13	ADAPTER, INT. CONN. NO. 7272CU/15-G1/2	
140	312115-0333	-		8	SCREW MC6S M5X25 A280	
150	312105-0362	-		11	SCREW M6S M6X8 A280	
160	312605-0314	-		16	HEXAGON NUT, M6M M5 A280	
170	315105-0153	-		29	WASHER PLAIN, BRB, 6,4/12,H=1,5	
200	315233-0113	-		53	WASHER PL.RND.NYL.21,4/27,H=1,2	
240	342730-0114	-		19	CONN. ELBOW WA-15-1/2	
250	342740-0114	-		1	CONN. T-PIPE TA-15-G1/2	
260	342750-0114	-		2	CONN. L-PIPE, EXT. LA-15-G1/2	
270	352103-0100	-		4	CABLE GLAND, STR 9, PR15,2/PG9	
410	273456-0000	-		1	SIGN	
430	543130-0000	-		1	BRACKET	
440	293201-0000	-		1	PIPE	
680	90418-0048	-		3	T-PIPE, INT. CONN. NO. 7130-15	
920	342710-0115	-		1	REDUCTION RBM 16/8	
930	342711-0115	-		1	ACCESSORIES, PLUG PL-15 AND 16	
960	342720-0114	-		20	CONN. STR. GA-15-G1/2	
Common Parts						
054	90042-0550	-		1	PROTECTION PLUG FOR UNUSED CONNECTION	
1010	342929-0121	-		1	STRAIGHT COUPLING,SOLDER 8/6-8	
1020	342930-0113	-		1	ELBOW 90 COUPL.,EXT.THREAD 6/4-R1/8"	
1025	352135-0106	-	M	3	SPIRAL CONDUIT DI=16 MM	
1030	352136-0113	-		3	GLAND FITTING PR18,6/PG11 DI=12MM	
1040	352136-0127	-		2	GLAND FITTING PR 18,6	
300	542700-0000	-		1	VALVEPANEL LOWER	
330	543134-0000	-		1	PLATE	
360	543128-0000	-		1	VALVE BRACKET	
400	273455-0000	-		2	LABEL (COLD WATER)	
420	273458-0000	-		1	LABEL (AIR)	
450	543131-0000	-		1	BRACKET	
460	573277-0000	-		1	PIPE	
470	573278-0000	-		1	PIPE	
500	90012-0063	-		2	CABLE GLAND PR 15,2	
510	90042-0481	-		1	CONNECTION TABLE 583-471-000 MECMAN	
515	90042-0535	-		1	TERMINAL BOARD 19 CORDS	
530	90043-0006	A		1	PRESSURE GAUGE, 2041 D=63 MM	
532	90043-0043	A		1	PRESSURE GAUGE WIEGAND 0-10 BAR 1/8"	
535	90110-0095	-		2	CONNECTOR 3 POLE + EARTH	
538	90110-0128	-		1	MALE INSERT, HAN 24 E-M 933 024 2631	
540	90113-0114	A		1	REGULATOR	
560	90113-0407	-		1	YOKE, SINGLE	
565	90140-0010	-		2	T-PIPE, INT. THREAD, 20031/2	
570	90140-0011	-		3	T-PIPE, INT. THREAD, NO. 2070-1/2-1/2	
575	90140-0012	-		5	ELBOW, 90 INT/EXT, 2020-1/2-1/2	
580	90152-0033	-	M	6	SPIRAL CONDUIT FOR PR 15,2(PG 9)	
590	90166-0081	-	MM	1700	TUBE 6 MM PA BLUE	
595	90166-0013	-	MM	1700	TUBE 8 MM PA BLUE	
600	90187-0029	A		3	BALL VALVE G1/2, NPBR	
605	90224-0319	-		2	CONN. STR., 8-R1/4, EXT. THREAD	
610	90235-0767	A		1	VALVE	
620	90236-0041	-		2	BRACKET	
630	90274-0044	A		1	PRESSURE SWITCH 4BAR NACOV	
635	90328-0001	A		1	SILENCER	
640	90415-0018	A		1	FILTER FOR LIME SEPARATING / D MOD.AD	
650	90415-0019	A		1	FILTER / ART.NO. HH-M15-RG	
660	90418-0014	-		2	ELBOW PIPE	
670	90418-0039	-		3	ELBOW PIPE	
690	90418-0050	-		1	T-PIPE, REDUCTION, INT, NO. 7130-15X12X1	
700	90418-0055	-		2	ELBOW, 45, INT/EXT. CONN. NO. 7040-15	
710	90418-0056	-		1	T-PIPE, REDUCTION, INT, NO. 7130-15X15X1	
720	90418-0058	-		3	ELBOW, 90, INT/EXT. CONN. NO. 7092-15	
730	90418-0068	-		1	T-PIPE, REDUCTION, INT, NO. 7130-15X8X15	
780	312115-0366	-		8	SCREW MC6S M6X12 A280	
790	312105-0453	-		3	SCREW M6S M8X25 A280	
805	312125-0224	-		2	SCREW SLOT.PAN HD. MCS 3X10 A480	
810	312502-0120	-		8	DRIVE SCREW ROUND HEAD KDS 0X5	
830	315105-0165	-		3	WASHER PLAIN, BRB, 8,4/16,H=1,5	
840	315233-0110	-		1	WASHER PL.RND.NYL.13,3/17,H=1	
850	315233-0111	-		2	WASHER PL.RND.NYL.17/22,H=1	
880	341001-0148	-	MM	100	COPPER TUBE	

Machine Type | Group Description | Used-In | Group Number | Page No

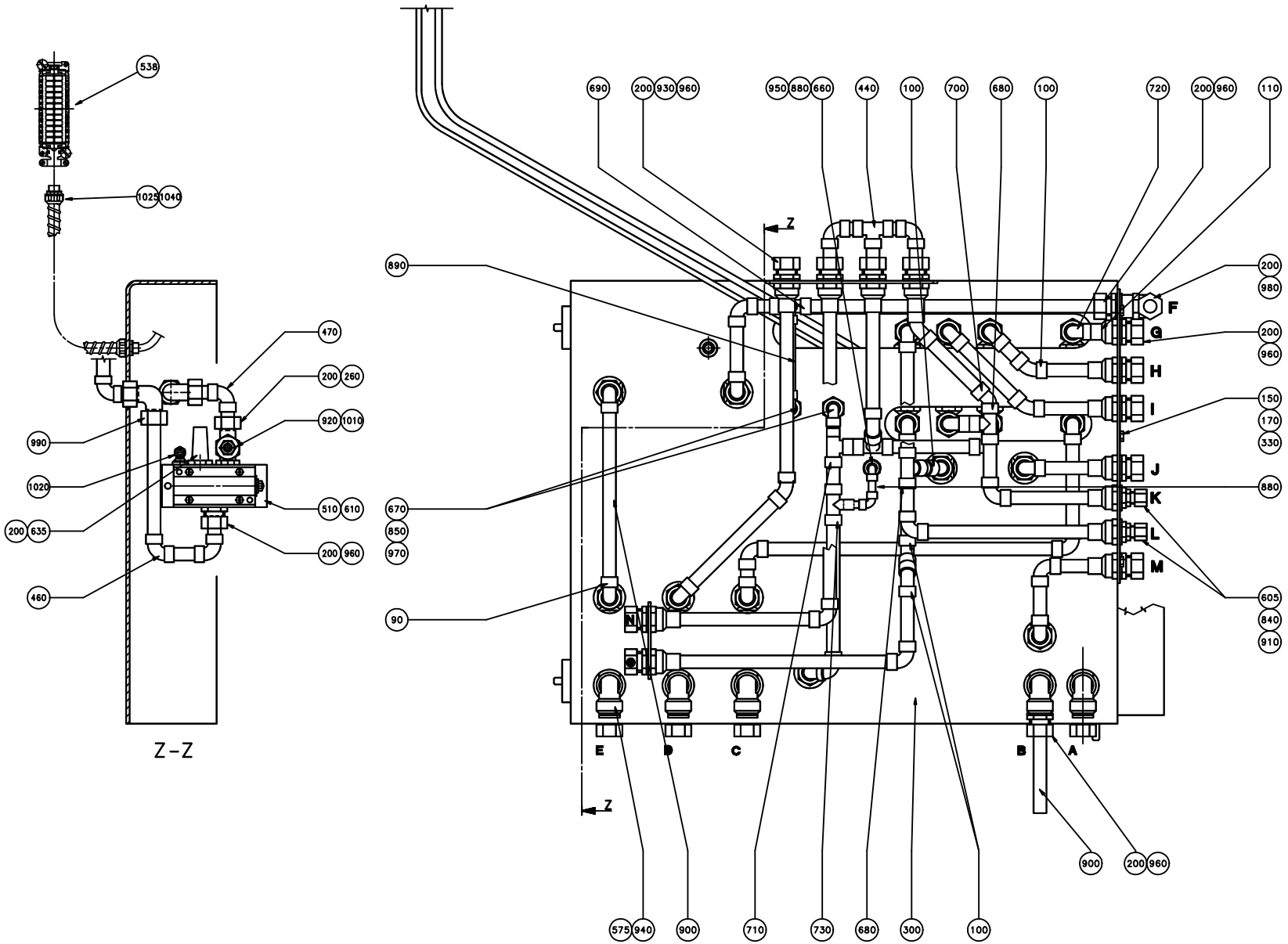
538
1025 1040
470
200 260
920 1010
990
1020
200 635
510 610
200 960
460
Z-Z
690
200 930 960
950 880 660
440
100
700
680
100
720
200 960
110
Z
890
200 980
F
200 960
G
H
150 170 330
I
J
880
K
L
M
605 840 910
670 850 970
90
N
E
D
C
B
A
Z
900
200 960
575 940
900
710
730
680
300
100

Pos	Part No	SP	UN	Qty	Description	Page No
Common Parts (Cont'd)						
890	341001-0192	-	MM	300	COPPER TUBE	
900	341001-0228	-	MM	5000	COPPER TUBE	
910	342701-0205	-		2	BUSHING,INT./EXT.G-THREAD G1/2"-G1/4"	
940	342713-0213	-		4	PLUG, EXT THREAD HEX SOCKET 8638-00-120	
950	342720-0103	-		1	CONN. STR. GA-8-G1/8	
970	342723-0109	-		2	CONN. STR. PIPE GI-12-G3/8	
980	342733-0114	-		2	CONN. ELBOW WI-15-G1/2	
990	342736-0114	-		1	CONN. ELBOW W-15	

Pos	Part No	SP	UN	Qty	Description	Page No

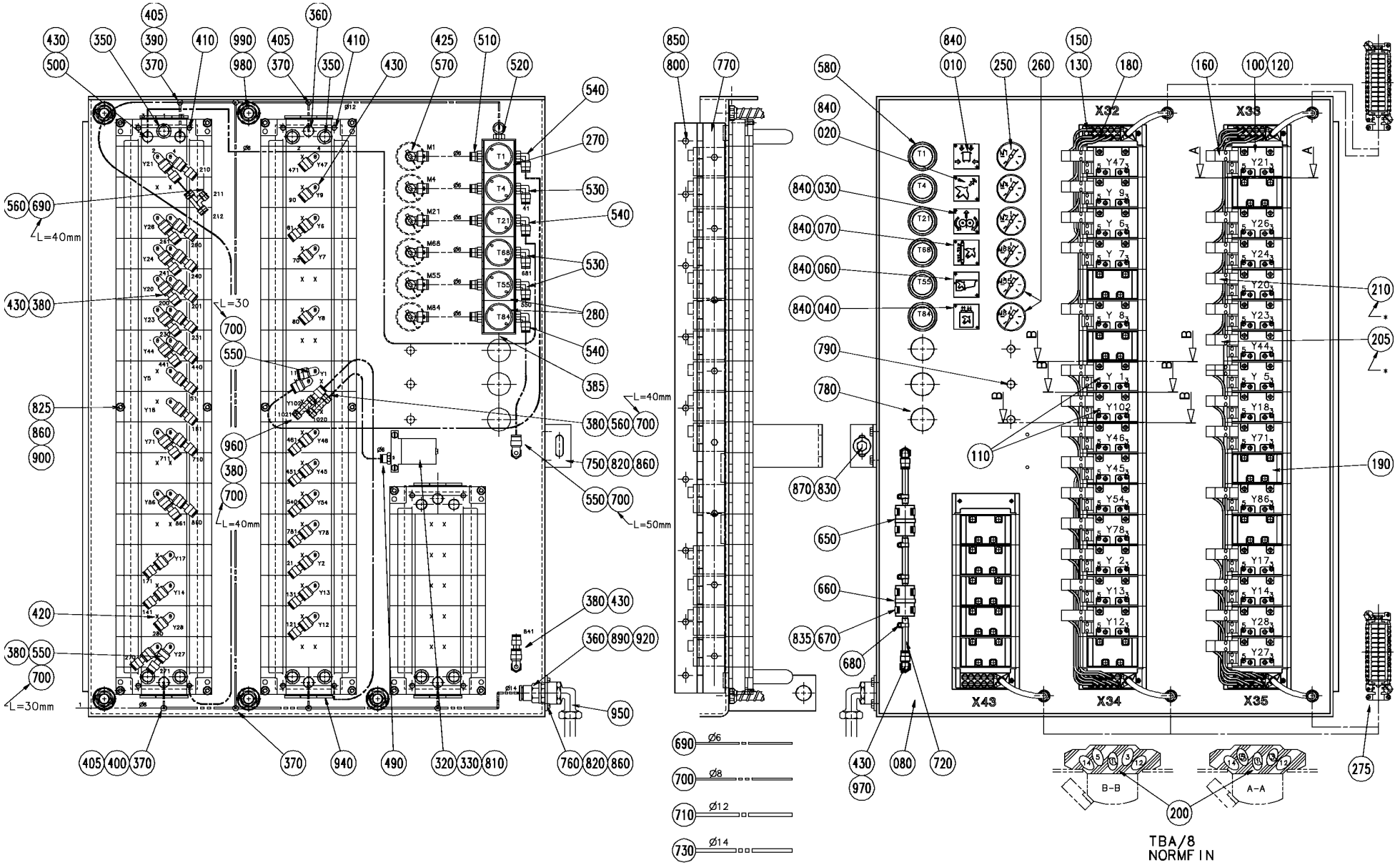
X32
X33
X34
X35
X43
B-B
A-A
TBA/8
NORMF IN
L=40mm
L=30
L=50mm
Ø6
Ø8
Ø12
Ø14

ECM: 72604 - 19990609
Group number: 1487413-0100
Assembly Drawing: 1487413-1_1_AA

Issue: 20020121

Pos	Part No	SP	UN	Qty	Description	Page No
TBA/8 NORMFIN						
100	90042-0215	C		28	VALVE BODY 5/2 UNISTABLE	
190	90042-0519	-		11	BLANK PLATE ISO SIZE 1	
205	90042-0538	C		8	PILOT VALVE L=500MM	
380	342716-0203	-		33	REDUCER 6-8	
430	90055-0118	-		39	ELBOW PIPE JOINT -8MM	
TBA/8 REVFIN						
100	90042-0215	C		30	VALVE BODY 5/2 UNISTABLE	
190	90042-0519	-		9	BLANK PLATE ISO SIZE 1	
205	90042-0538	C		10	PILOT VALVE L=500MM	
380	342716-0203	-		37	REDUCER 6-8	
430	90055-0118	-		43	ELBOW PIPE JOINT -8MM	
Common Parts						
010	273449-0000	-		1	SIGN	
020	273450-0000	-		1	SIGN	
030	273452-0000	-		1	SIGN	
040	978603-0000	-		1	SIGN	
060	479964-0000	-		1	SIGN	
070	561595-0000	-		1	SIGN MULTISTEP 35X35MM	
080	1487412-0000	-		1	VALVE PANEL	
110	90042-0520	C		2	BASE PLATE ISO SIZE 1	
120	90042-0532	C		37	BASE PLATE ISO SIZE 1	
130	90042-0522	C		6	PORTED END PIECE ISO SIZE 1	
150	90042-0535	-		5	TERMINAL BOARD 19 CORDS	
160	90042-0527	-		28	SEAL KIT PILOT VALVE	
180	90042-0550	-		3	PROTECTION PLUG FOR UNUSED CONNECTION	
200	90042-0528	-		6	BLANKING KIT SEALS ISO SIZE 1	
210	90042-0539	C		20	PILOT VALVE L=350MM	
250	90043-0043	D		4	PRESSURE GAUGE WIEGAND 0-10 BAR 1/8"	
260	90043-0021	D		2	PRESSURE GAUGE WIEGAND 0-1 BAR 1/8"	
270	90113-0069	C		4	PRESSURE REGULATOR	
275	90110-0128	-		2	MALE INSERT, HAN 24 E-M 933 024 2631	
280	90113-0076	D		2	PRESSURE REGULATOR	
320	90235-0450	-		1	PLATE	
330	90235-0708	-		1	VALVE	
350	90328-0024	C		9	SILENCER G3/8	
360	90055-0096	-		6	STRAIGHT COUPLING	
370	342748-0110	-		7	T-CONNECTION	
385	342713-0210	-		1	PLUG, EXT THREAD HEX SOCKET 8638-00-140	
390	342716-0210	-		1	REDUCER 6-12	
400	342716-0209	-		1	REDUCER 8-12	
405	342716-0211	-		3	REDUCER 12-14	
410	342715-0102	-		6	BLIND PLUG 6 MM	
420	342715-0103	-		45	BLIND PLUG 8 MM	
425	90055-0217	-		6	ELBOW PIPE JOINT	
490	342722-0202	-		8	PIPE COUPLING 1/8" D=6MM	
500	342722-0206	-		1	STRAIGHT COUPLING D=8-G3/8"	
510	342722-0203	-		6	STRAIGHT COUPLING	
520	342732-0109	-		1	ELBOW PIPE JOINT, EXT.THREAD, D=1MM-G1/4	
530	342732-0103	-		3	ELBOW PIPE JOINT, EXT.THREAD, D=6MM-G1/4	
540	342732-0104	-		3	ELBOW PIPE JOINT, EXT.THREAD, D=8MM-G1/4	
550	342735-0103	-		4	ELBOW PIPE JOINT	
560	342748-0102	-		2	T-CONNECTION	
570	342770-0105	-		6	STRAIGHT COUPLING INT, D=6 MM - G1/8	
580	90113-0379	-		6	NUT	
650	90277-0045	C		1	FILTER / 9900-05-BK	
660	90277-0046	C		1	FILTER / 9933-05-101	
670	90074-0026	-		4	CLIPS, CABLE CLIPS DI=24 MM	
680	90132-0021	-		4	HOSE CLIP 6-10MM	
690	90166-0081	-	M	3	TUBE 6 MM PA BLUE	
700	90166-0013	-	M	2	TUBE 8 MM PA BLUE	
710	90166-0068	-	MM	400	TUBE 12 MM PA BLUE	
720	90166-0194	-	MM	500	TUBE 8 MM PUR BLUE	
730	90166-0206	-	M	2	TUBE 14 MM PUR BLUE	
750	574603-0000	-		1	BRACKET	
760	574604-0000	-		1	BRACKET	
770	445736-0000	-		1	HINGE	
780	90261-0008	-		3	PLUG, BLIND, PLASTIC GPN300F26	
790	90261-0035	-		3	PLUG, BLIND, PLASTIC, F7	
800	312105-0323	-		17	SCREW M6S M5X8 A280	
810	312105-0339	-		2	SCREW M6S M5X40 A280	
820	312105-0364	-		4	SCREW M6S M6X10 A280	
825	312105-0376	-		16	SCREW M6S M6S M6X35 A280	
830	312105-0449	-		1	SCREW M6S M8X16 A280	
835	312125-0220	-		4	SCREW SLOT.PAN HD. MCS 3X6 A480	
840	312502-0120	-		12	DRIVE SCREW ROUND HEAD KDS 0X5	
850	315105-0146	-		17	WASHER PLAIN, BRB, 5,3/10,H=1	
860	315105-0153	-		20	WASHER PLAIN, BRB, 6,4/12,H=1,5	
870	315125-0165	-		1	WASHER PLAIN ROUND,CHAMF. 8,4/26, H=5	
890	315233-0113	-		1	WASHER PL.RND.NYL.21,4/27,H=1,2	
900	312605-0316	-		16	HEXAGON NUT, M6M M6 A280	
920	342701-0206	-		1	BUSHING,INT./EXT.G-THREAD G1/2"-G3/8"	

Machine Type | Group Description | Used-In | Group Number | Page No

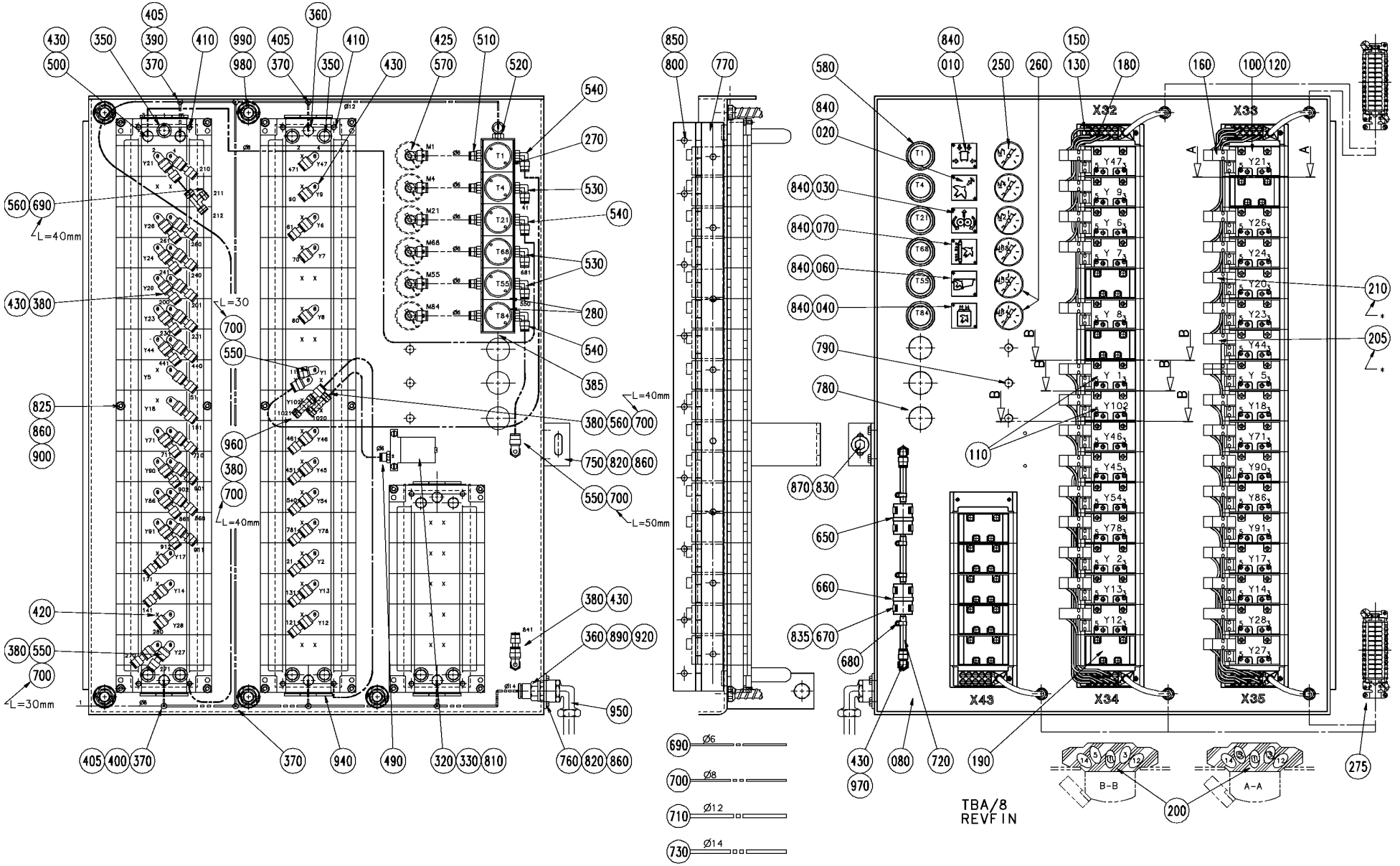
TBA/8
REVF IN
X32
X33
X34
X35
X43
B-B
A-A
L=40mm
L=30
L=40mm
L=50mm
L=30mm
Ø6
Ø8
Ø12
Ø14

Pos	Part No	SP	UN	Qty	Description	Page No
Common Parts (Cont'd)						
940	342713-0211	-		21	PLUG, EXT THREAD HEX SOCKET 8638-00-380	
950	342733-0114	-		1	CONN. ELBOW WI-15-G1/2	
960	342748-0103	-		1	T-CONNECTION	
970	342768-0103	-		2	BULKHEAD CONNECTOR, 8 MM	
980	352135-0106	-	M	10	SPIRAL CONDUIT DI=16 MM	
990	352136-0127	-		10	GLAND FITTING PR 18,6	

Pos	Part No	SP	UN	Qty	Description	Page No

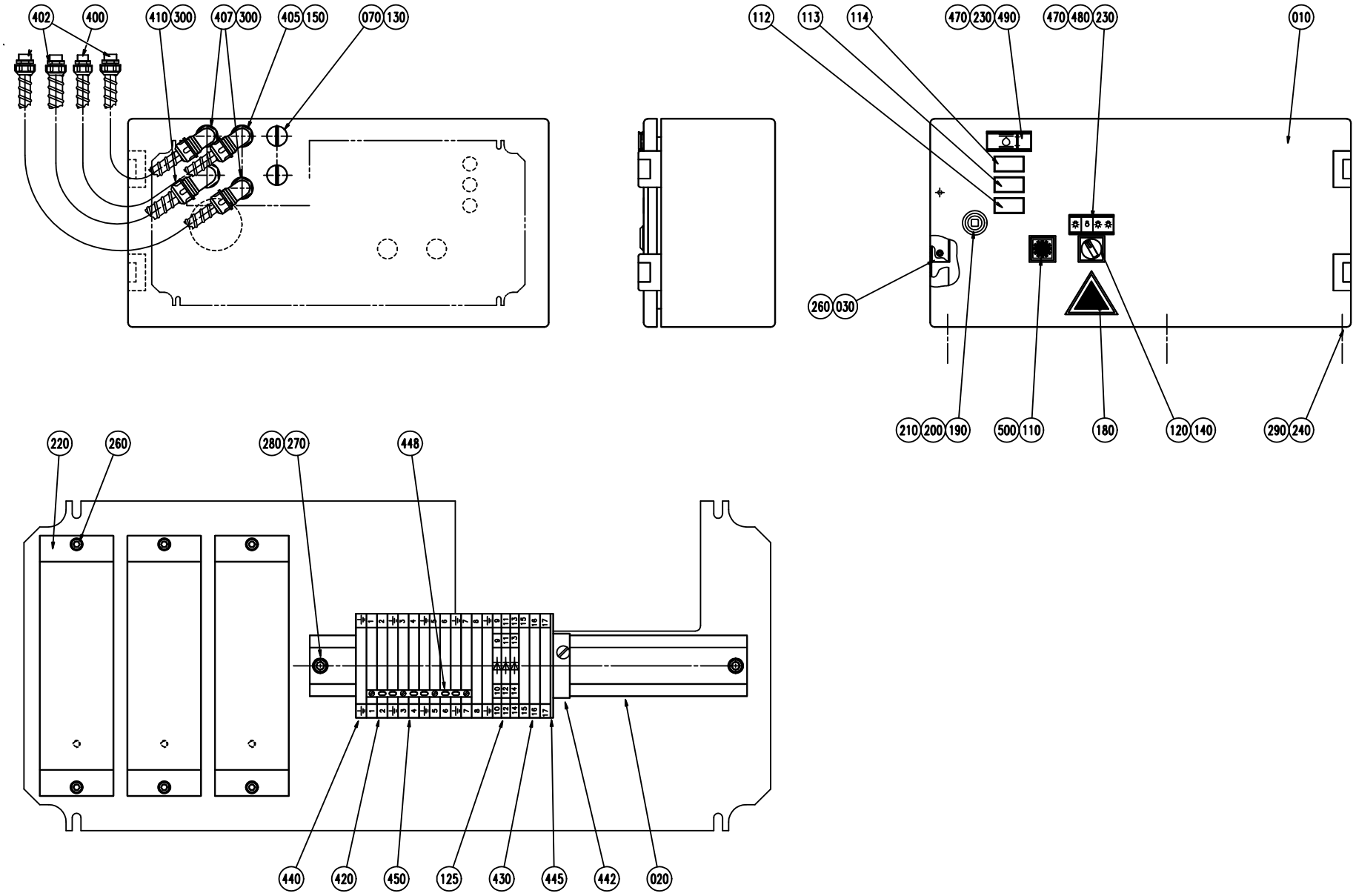
402
400
410
300
407
300
405
150
070
130
112
113
114
470
230
490
470
480
230
010
260
030
210
200
190
500
110
180
120
140
290
240
220
260
280
270
448
440
420
450
125
430
445
442
020

ECM: 72091 - 19981216
Group number: 449930-0500
Assembly Drawing: 449930-5_1_AA

Issue: 20020121

Pos	Part No	SP	UN	Qty	Description	Page No
Common Parts						
010	574605-0000	-		1	CONNECTION BOX	
020	90077-0302	-	MM	250	RAIL, TS/35X7,5 REPL.BY 353042-5	
030	574606-0000	-		1	SHEET	
070	90002-0009	-		2	BLANK-OFF PLUG, PR 18.6 SKINDICHT-BLK11	
110	90064-0084	D		1	PUSH BUTTON YELLOW	
112	B90064-0094	D		1	PUSH BUTTON RED	
	90064-0318	*C*		*1*	*SIGNAL LAMP LED RED*	
113	B90064-0095	D		1	PUSH BUTTON YELLOW	
	90064-0319	*C*		*1*	*SIGNAL LAMP LED YELLOW*	
114	B90064-0096	D		1	PUSH BUTTON GREEN	
	90064-0320	*C*		*1*	*SIGNAL LAMP LED GREEN*	
120	90064-0317	D		1	TOUCHGUARD OLTEN PUSHB.REPL.BY 90064-335	
125	90077-0115	-		3	TERMINALS, DISCONNECTABLE	
130	90099-0002	-		2	NUT PR 18,6 BRASS	
140	90111-0121	D		1	SWITCH 3 POS.EA OLTEN	
150	90152-0033	-	M	1	SPIRAL CONDUIT FOR PR 15,2(PG 9)	
180	90194-0016	-		1	SIGN, FLASH, ELECTRIC EQUIPMENT SYMBOL	
190	90237-0319	-		1	LOCK HOUSING, 1000-U134	
200	90237-0320	-		1	LOCK HOUSING, 1000-U136	
210	90237-0335	-		1	LOCKING CATCH	
220	90297-0300	D		3	BALLAST COIL 50HZ	
230	311520-0329	-		4	RIVET, BLANK 2,4X8	
240	312105-0362	-		6	SCREW M6S M6X8 A280	
260	312115-0287	-		10	SCREW MC6S M4X8 A280	
270	312121-0323	-		2	SCREW SLOT.PAN HD. MCS 5X8 FZB	
280	312601-0314	-		2	NUT M6M5FZB	
290	315105-0153	-		6	WASHER PLAIN, BRB, 6,4/12,H=1,5	
300	352135-0106	-	M	3	SPIRAL CONDUIT DI=16 MM	
400	352136-0113	-		1	GLAND FITTING PR18,6/PG11 DI=12MM	
402	352136-0127	-		3	GLAND FITTING PR 18,6	
405	352137-0113	-		1	COND.FITTING PR 18,6 DI=12MM	
407	352137-0127	-		2	COND.FITTING PR 18,6 DI=16MM	
410	352137-0129	-		1	CABLE GLAND;PR22,5(PG16)	
420	353021-0213	-		8	FEED THROUGH TERMINAL, 10201.0	
430	353021-0217	-		3	FEED THROUGH TERMINAL, 10201.8	
440	353024-0205	-		5	EARTH TERMINAL, 1010.1	
442	353031-0201	-		1	END BRACKET EW35	
445	353032-0005	-		1	END PLATE WAP 2,5-10 BLUE	
448	353034-0031	-		1	BRIDGE CONNECTOR, WQV 4/10, 10520.6	
450	359011-0807	-		2	MARKING PLATES 5-FW 1-50	
470	359240-0100	-		2	SIGN HOLDER FOR 359240-0001	
480	359241-0127	-		1	SIGN, LIGHT, JAW SYSTEM & MACHINE	
490	359241-0158	-		1	SIGN "LEVEL HYDR.OIL TANK"	
500	359301-0125	-		1	SIGN "LUBRICATION"	

Machine Type | Group Description | Used-In | Group Number | Page No

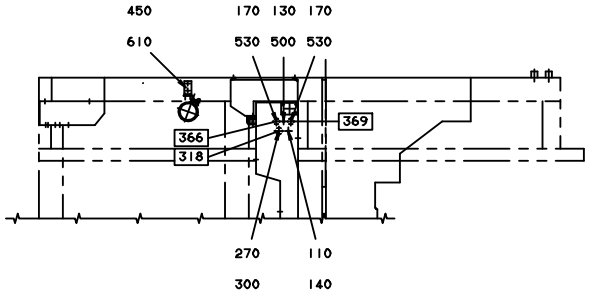

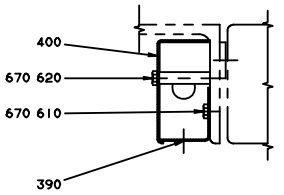

SECTION B-B

(SCALE 1:2)

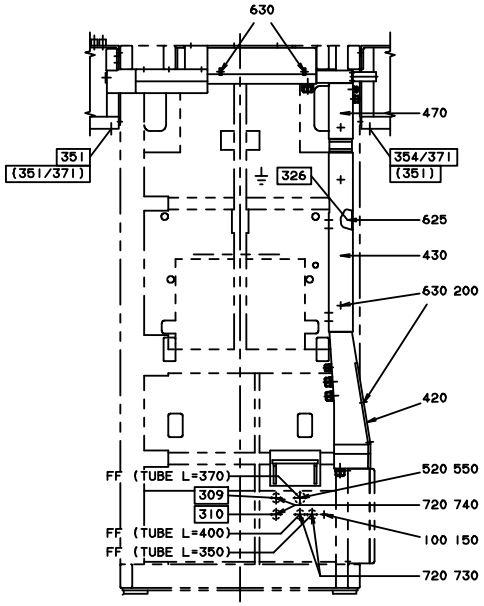

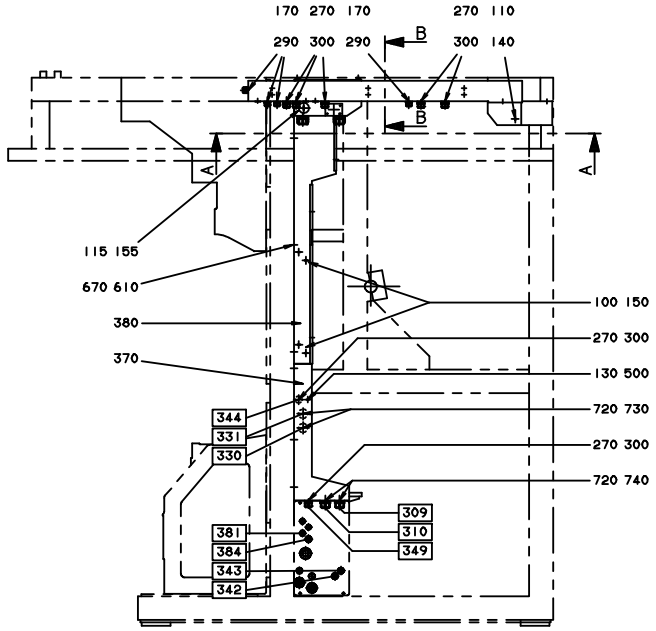

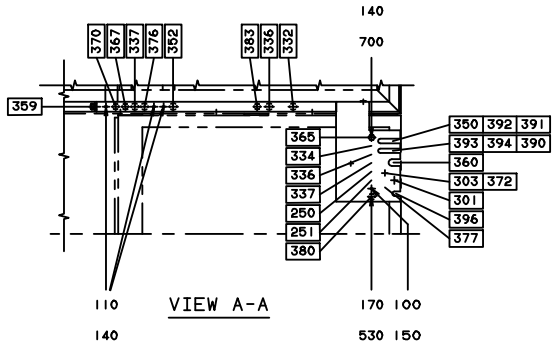

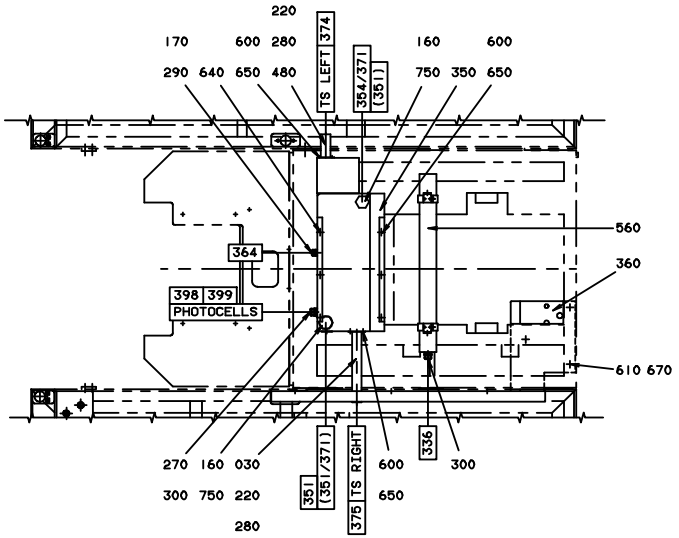

ECM: 98174 - 20011213
Group number: 1361566-0100
Assembly Drawing: 1361566-1_1_AC

Issue: 20020121

Pos	Part No	SP	UN	Qty	Description	Page No
Common Parts						
030	450292-0000	-		1	ATTACHMENT PIPE	
100	90002-0004	-		6	BLANK-OFF PLUG, PR 22,5 SKINDICHT-BLK16	
110	90002-0009	-		6	BLANK-OFF PLUG, PR 18.6 SKINDICHT-BLK11	
115	90002-0010	-		1	BLANK-OFF PLUG, PR 37 SKINDICHT-BLK29	
130	90099-0001	-		2	NUT PR 15,2 BRASS	
140	90099-0002	-		6	NUT PR 18,6 BRASS	
150	90099-0003	-		7	NUT	
155	90099-0011	-		1	NUT PR 37 BRASS	
160	90152-0029	-	M	2	HOSE 35/41	
170	90152-0033	-	MM	6800	SPIRAL CONDUIT FOR PR 15,2(PG 9)	
200	315101-0136	-		5	WASHER PLAIN, BRB, 4,3/8 H=0,8	
220	342991-0108	-		2	HOSE CLIP 38-50MMRFR	
270	352135-0106	-	MM	6400	SPIRAL CONDUIT DI=16 MM	
280	352135-0116	-	MM	3800	FLEXIBLE CONDUIT DIA. 40	
290	352136-0113	-		4	GLAND FITTING PR18,6/PG11 DI=12MM	
300	352136-0127	-		11	GLAND FITTING PR 18,6	
350	547220-0000	-		1	CABLE DUCT	
360	575464-0000	-		1	CABLE DUCT	
370	540721-0000	-		1	CABLE DUCT	
380	450284-0000	-		1	CABLE DUCT	
390	450285-0000	-		1	CABLE DUCT	
400	450286-0000	-		1	LID	
420	540722-0000	-		1	LID	
430	450287-0000	-		1	LID	
450	246374-0000	-		2	BRACKET	
470	450290-0000	-		1	LID	
480	450291-0000	-		1	ATTACHMENT PIPE	
500	90002-0013	-		2	BLANK-OFF PLUG, PR 15,2 SKINDICHT-BLK9	
520	90012-0061	-		1	GLAND	
530	90012-0063	-		4	CABLE GLAND PR 15,2	
550	90152-0031	-	MM	370	HOSE	
560	B90164-0016	-		1	LIGHT FIXTURE	
	90297-0002	*-*		*1*	*FLUORESCENT TUBE 18W*	
600	312101-0325	-		11	SCREW M6S M5X10 FZB	
610	312101-0364	-		18	SCREW M6S M6X10 FZB	
620	312101-0380	-		3	SCREW M6S M6X50 FZB	
625	312101-0447	-		1	SCREW M6S M8X12 FZB	
630	312121-0287	-		7	SCREW SLOT.PAN HD. MCS 4X8 FZB	
640	312141-0325	-		3	SCREW COUNTERS.SLOT.HD. MFS 5X10 FZB	
650	315101-0146	-		11	WASHER PLAIN, BRB, 5,3/10 H=1	
670	315101-0153	-		15	WASHER PLAIN, BRB, 6,4/12 H=1,5	
700	352103-0106	-		1	CABLE GLAND, ST 11, PR18,6/PG11	
720	352135-0109	-	MM	3700	HOSE .022	
730	352136-0142	-		4	GLAND FITTING	
740	352136-0143	-		4	GLAND FITTING	
750	352136-0167	-		2	GLAND FITTING	

Machine Type | Group Description | Used-In | Group Number | Page No

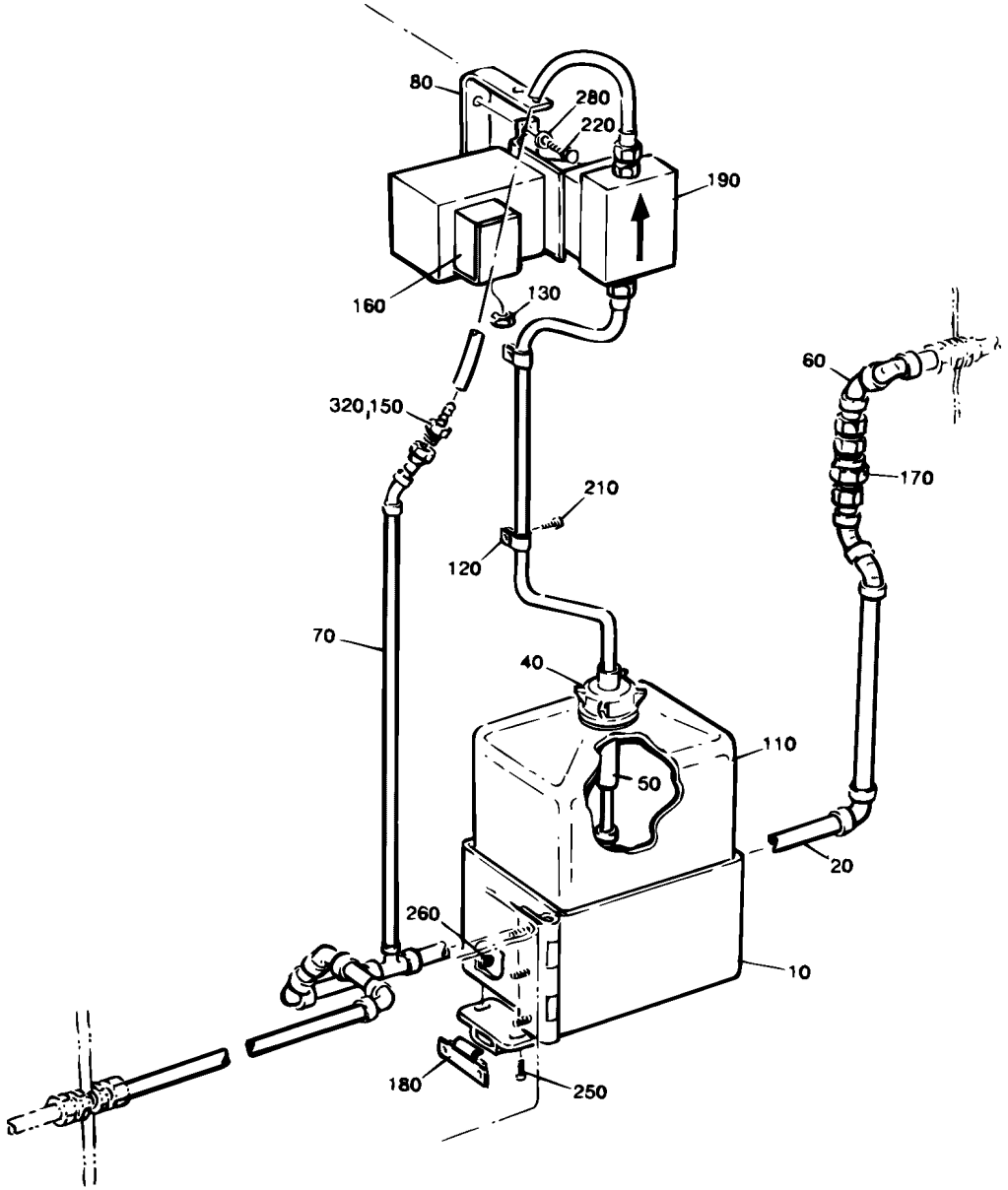
80
280
220
190
160
130
60
320,150
170
210
120
70
40
110
50
20
260
10
180
250

ECM: 72091 - 19981216
Group number: 450792-0100
Assembly Drawing: 450792-1_1_AA

Issue: 20020121

Pos	Part No	SP	UN	Qty	Description	Page No
Common Parts						
010	547906-0000	-		1	SHELF	
020	B450793-0000	-		1	PIPE	
	341001-0228	-	*M*	*1*	*COPPER TUBE*	
	90418-0068	-		*1*	*T-PIPE, REDUCTION, INT, NO. 7130-15X8X15*	
	90418-0055	-		*1*	*ELBOW, 45, INT/EXT. CONN. NO. 7040-15*	
	90418-0054	-		*1*	*ELBOW, 45, INT. CONN. NO. 7041-15*	
	90418-0053	-		*1*	*ELBOW, 90, INT. CONN. NO. 7090-15*	
040	35962-0000	C		1	LID	
050	259867-0000	D		1	HOSE CLAMP	
060	B450794-0000	-		1	PIPE	
	341001-0228	-	*M*	*1*	*COPPER TUBE*	
	90418-0058	-		*1*	*ELBOW, 90, INT/EXT. CONN. NO. 7092-15*	
	90418-0054	-		*1*	*ELBOW, 45, INT. CONN. NO. 7041-15*	
070	B450795-0000	-		1	PIPE	
	341001-0148	-	*M*	*1*	*COPPER TUBE*	
	90418-0035	-		*1*	*ADAPTER, INT. CONN. NO. 7272CU/8-G1/4*	
	90418-0018	-		*1*	*ELBOW, 45, INT. CONN. NO. 7041-8*	
080	450796-0000	-		1	BRACKET	
110	90050-0011	-		1	BOTTLE	
120	90074-0002	-		2	CLIPS, CABLE CLIPS DI=11 MM	
130	90099-0003	-		1	NUT	
150	90131-0004	-		1	HOSE COUPLING	
160	90195-0020	-		1	TERMINAL BLOCK, 1977.2	
170	90230-0021	C		1	NON RETURN VALVE, NO. RHD-15-L/MS 59	
180	90237-0046	-		1	MAGNETIC LOCK, 46X33X15 MM	
190	B90321-0037	C		1	"PUMP C-6125P EP 220V;50HZ"	
	90321-0396	*C*		*1*	*FILTER*	
	90321-0380	*C*		*1*	*DIAPHRAGM*	
	90166-0157	*C*	*MM*	*1500*	*HOSE*	
210	312105-0323	-		5	SCREW M6S M5X8 A280	
220	312105-0368	-		4	SCREW M6S M6X16 A280	
250	312125-0220	-		2	SCREW SLOT.PAN HD. MCS 3X6 A480	
260	312605-0310	-		2	HEXAGON NUT, M6M M3 A280	
280	315105-0153	-		3	WASHER PLAIN, BRB, 6,4/12,H=1,5	
320	352136-0127	-		1	GLAND FITTING PR 18,6	

Pos	Part No	SP	UN	Qty	Description	Page No

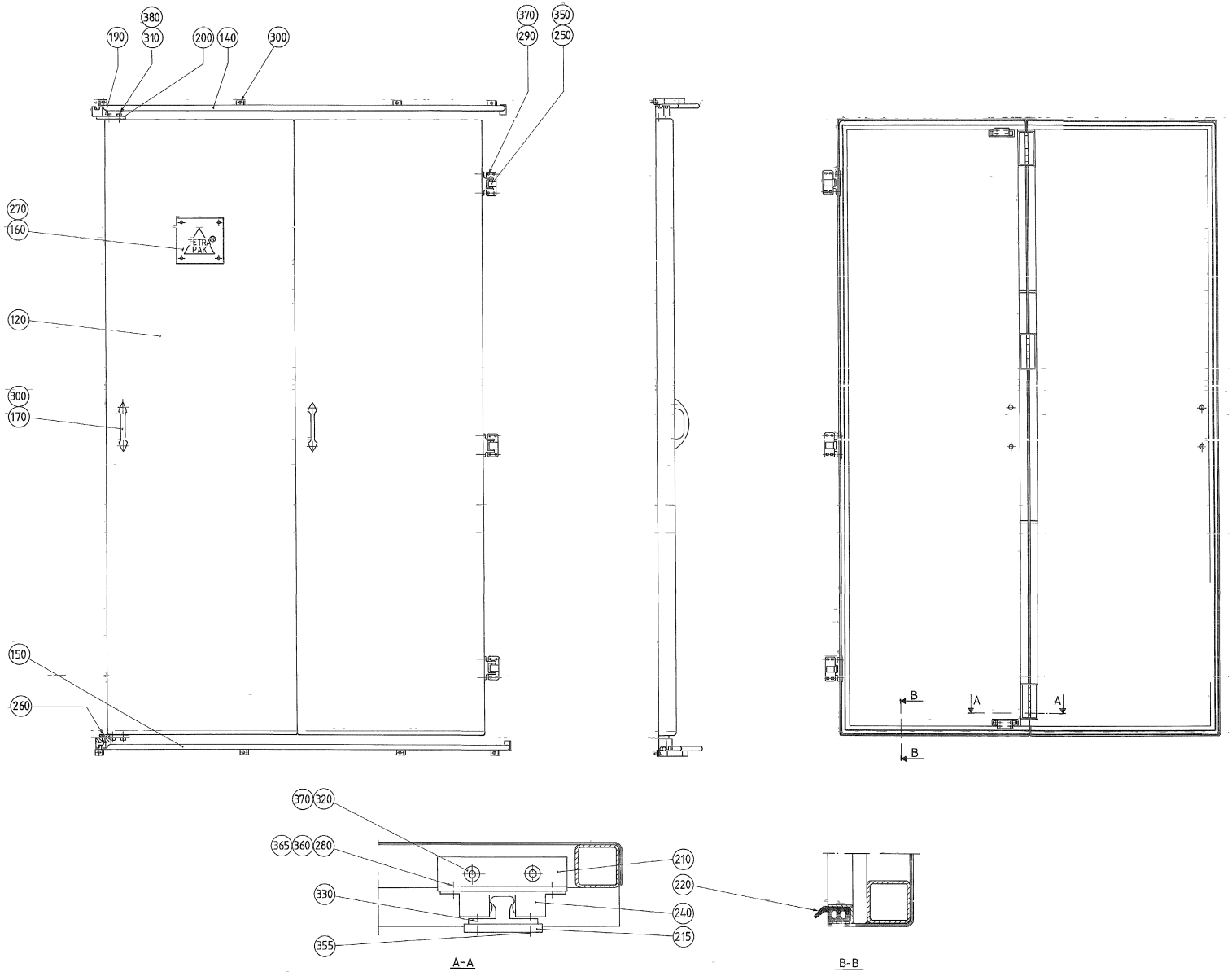
380
190
310
200
140
300
370
290
350
250
270
160
120
300
170
150
260
TETRA PAK
B
A
A
B
370
320
365
360
280
330
355
210
220
240
215
A-A
B-B

Pos	Part No	SP	UN	Qty	Description		Page No
Common Parts							
120	549044-0000	-		1	DOOR		
140	269320-0000	-		1	RAIL		
150	269321-0000	-		1	RAIL		
160	544539-0000	-		1	HOUSEMARK	REPBY 0574658-0000	
170	7309-0000	-		2	HANDLE		
190	230226-0000	C		2	BLOCKING PIECE		
200	246739-0000	D		2	BRACKET		
210	450826-0000	D		2	BRACKET		
215	450973-0000	D		2	BRACKET		
220	90143-0049	D	MM	6000	RUBBERSTRIP 11X21MM		
240	90237-0070	-		2	SNAP-IN BALL LOCK, 69X19 MM		
250	90248-0013	-		3	HINGE 3562E STUV		
260	311103-0403	-		2	PARALLELL PIN, M6, 8X25 MM		
270	311520-0420	-		4	RIVET, BLANK 3,2X4		
280	312105-0291	-		4	SCREW M6S M4X12 A280		
290	312105-0327	-		12	SCREW M6S M5X12 A280		
300	312105-0366	-		12	SCREW M6S M6X12 A280		
310	312105-0368	-		4	SCREW M6S M6X16 A280		
320	312115-0325	-		4	SCREW HEX.SOCK.HD.MC6S-TT 5X10 A480		
330	312145-0285	-		4	SCREW COUNTERS.SLOT.HD. MFS 4X6 SS		
350	312145-0325	-		12	SCREW COUNTERS.SLOT.HD. MFS 5X10 SS		
355	312145-0327	-		4	SCREW COUNTERS.SLOT.HD. MFS 5X12 SS		
360	312605-0312	-		4	HEXAGON NUT, M6M M4 A280		
365	315105-0136	-		4	WASHER PLAIN, BRB, 4,3/8,H=0,8		
370	315105-0146	-		16	WASHER PLAIN, BRB, 5,3/10,H=1		
380	315105-0153	-		4	WASHER PLAIN, BRB, 6,4/12,H=1,5		

Pos	Part No	SP	UN	Qty	Description	Page No

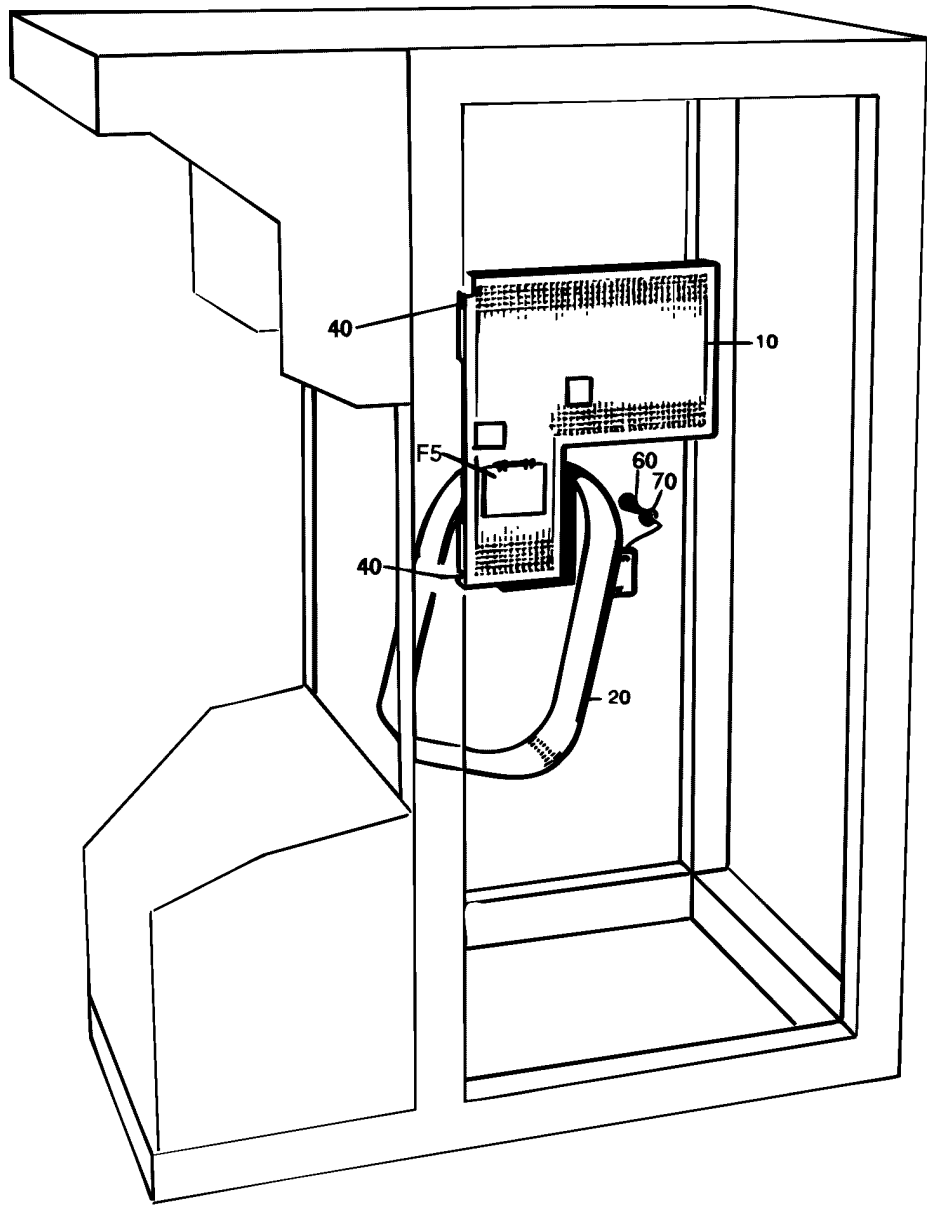
40
10
F5
60
70
40
20

Pos	Part No	SP	UN	Qty	Description	Page No
TBA/8						
F005	A1487414-0100	-		1	HOLDER	**281**
Common Parts						
010	440482-0000	-		1	PROTECTION	
020	450884-0000	-		1	PROTECTION	
040	311211-0292	-		2	TAPER PIN GKP6X6X30	
060	312101-0366	-		6	SCREW M6S M6X12 FZB	
070	315101-0153	-		6	WASHER PLAIN, BRB, 6,4/12 H=1,5	

Pos	Part No	SP	UN	Qty	Description	Page No

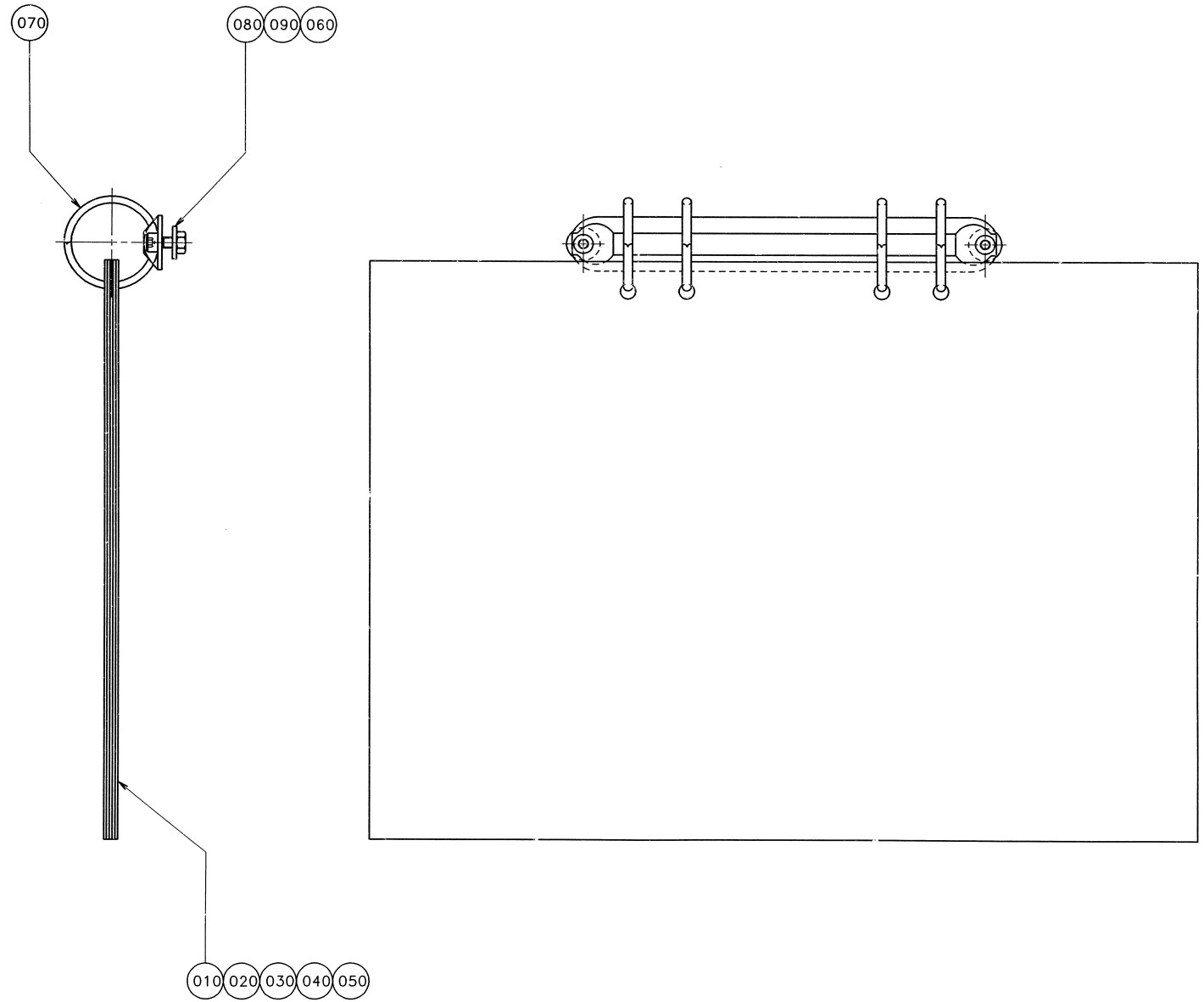
070
080
090
060
010
020
030
040
050

ECM: 72628 - 19990615
Group number: 1487414-0100
Assembly Drawing: 1487414-1_1_AA

Issue: 20020121

Pos	Part No	SP	UN	Qty	Description	Page No
TBA/8 NORMFIN						
010	1487415-0000	-		1	VALVE PANEL	
020	574600-0000	-		1	PNEUMATIC DIAGRAM	
TBA/8 REVFIN						
010	1487416-0000	-		1	VALVE PANEL	
020	1195327-0000	-		1	PNEUMATIC DIAGRAM	
Common Parts						
030	479858-0000	-		1	HYDRAULIC DIAGRAM	
040	576730-0000	-		1	WATER DIAGRAM	
050	561590-0000	-		1	CENTRAL LUBRIC. DIAGRAM	
060	38087-0000	-		2	WASHER	
070	90243-0169	-		1	BINDER CLIP, DIAM.29 MM, NO. 4670819	
080	312115-0325	-		2	SCREW HEX.SOCK.HD.MC6S-TT 5X10 A480	
090	312605-0314	-		2	HEXAGON NUT, M6M M5 A280	

Pos	Part No	SP	UN	Qty	Description	Page No

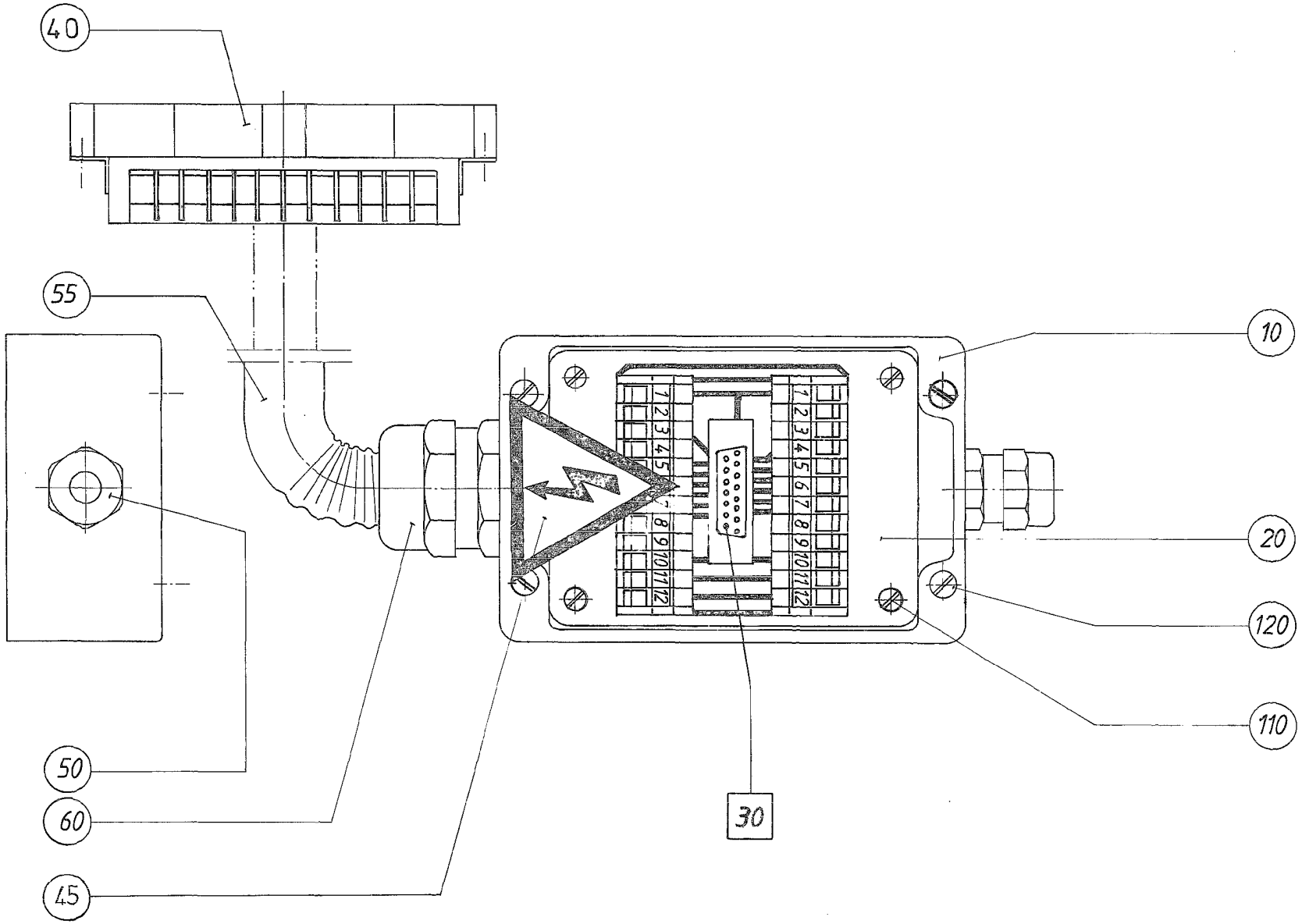
40
55
10
20
120
110
50
60
45
30
1 2 3 4 5 6 7 8 9 10 11 12

ECM: 99775 - 20011105
Group number: 451348-0200
Assembly Drawing: 451348-2_1_AA

Issue: 20020121

Pos	Part No	SP	UN	Qty	Description	Page No
TBA/8						
010	464297-0000	B		1	CONNECTION BOX	
040	90110-0128	-		1	MALE INSERT, HAN 24 E-M 933 024 2631	
045	90194-0016	-		1	SIGN, FLASH, ELECTRIC EQUIPMENT SYMBOL	
050	352103-0106	-		1	CABLE GLAND, ST 11, PR18,6/PG11	
055	352135-0106	-	MM	1400	SPIRAL CONDUIT DI=16 MM	
060	352136-0127	-		1	GLAND FITTING PR 18,6	
F030	A68917-0100	B		1	ANGLE INDICATOR	**285**
Common Parts						
020	451423-0000	A		1	CIRCUIT BOARD	
110	312125-0220	-		4	SCREW SLOT.PAN HD. MCS 3X6 A480	
120	312125-0291	-		4	SCREW PAN HEAD MCS M4X12 SS	

Pos	Part No	SP	UN	Qty	Description	Page No

This page is intentionally left blank.

ECM: - -
Group number: 68917-0100
Assembly Drawing:

Issue: 20020121

Pos	Part No	SP	UN	Qty	Description	Page No
Common Parts						
010	540306-0001	-		1	COMPONENTS WITHOUT TP-NO	
020	540307-0000	-		1	PRINTED CIRCUIT BOARD	

Pos	Part No	SP	UN	Qty	Description	Page No

Tetra Pak

SPC
Spare Parts Catalogue

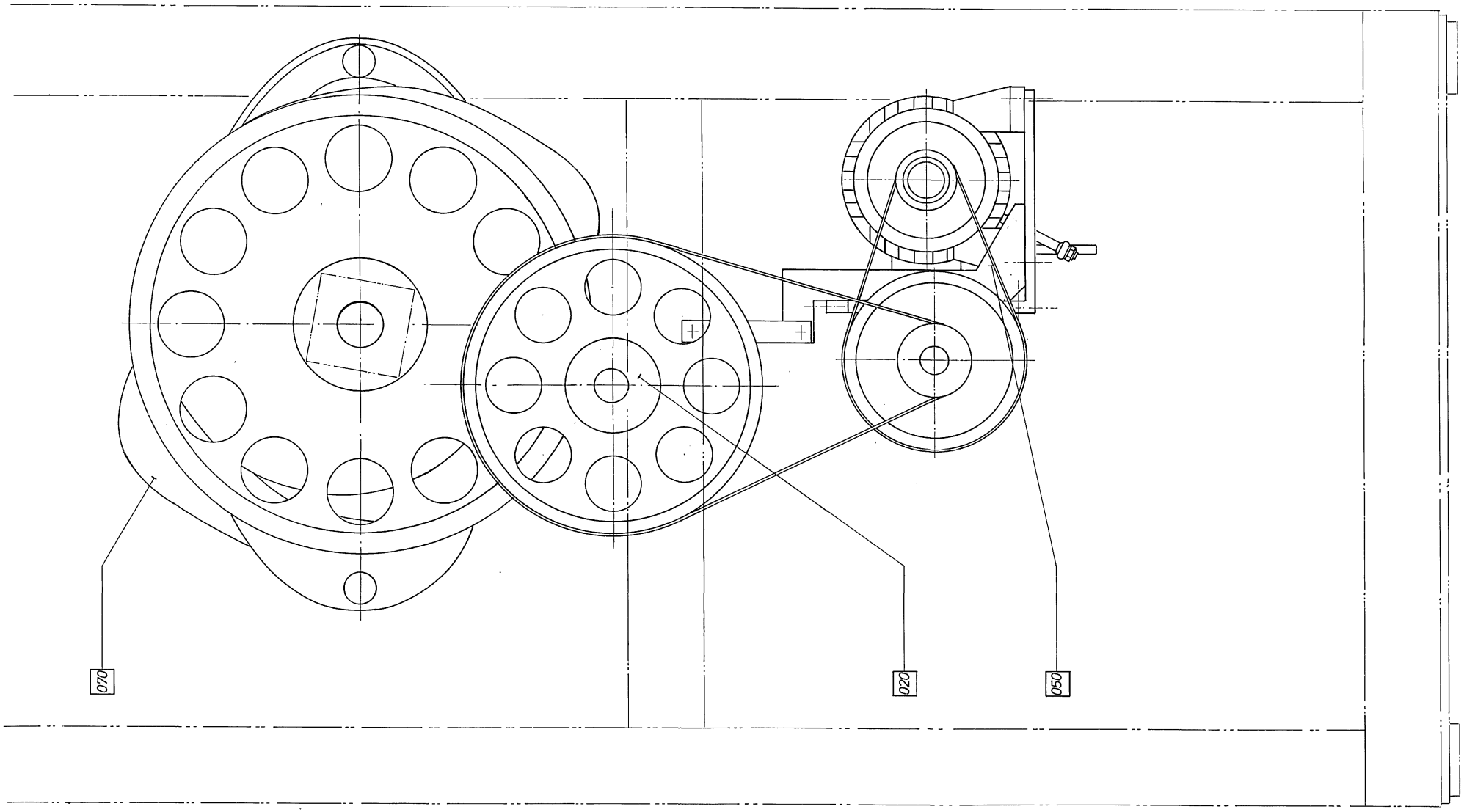
070
020
050

Pos	Part No	SP	UN	Qty	Description	Page No
Common Parts						
F010	A440588-0200	-		1	CRANK	**295**
F020	A239890-0300	-		1	INTERMEDIARY SHAFT	**297**
F050	A434668-0400	-		1	DRIVE UNIT	**299**
F070	A266986-0500	-		1	CURVE SHAFT	**301, 303**
F080	A243927-0700	-		2	ARM	**305**
F090	A593763-0100	-		1	HOLD-DOWN DEVICE	**307**
F100	A434669-0400	-		1	IMPULSE TRANSMITTER	**309**
F120	A292071-0200	-		1	SPLASH PROTECTION	**313**
F130	A434670-0600	-		1	LINK SYSTEM	**315**

Pos	Part No	SP	UN	Qty	Description	Page No

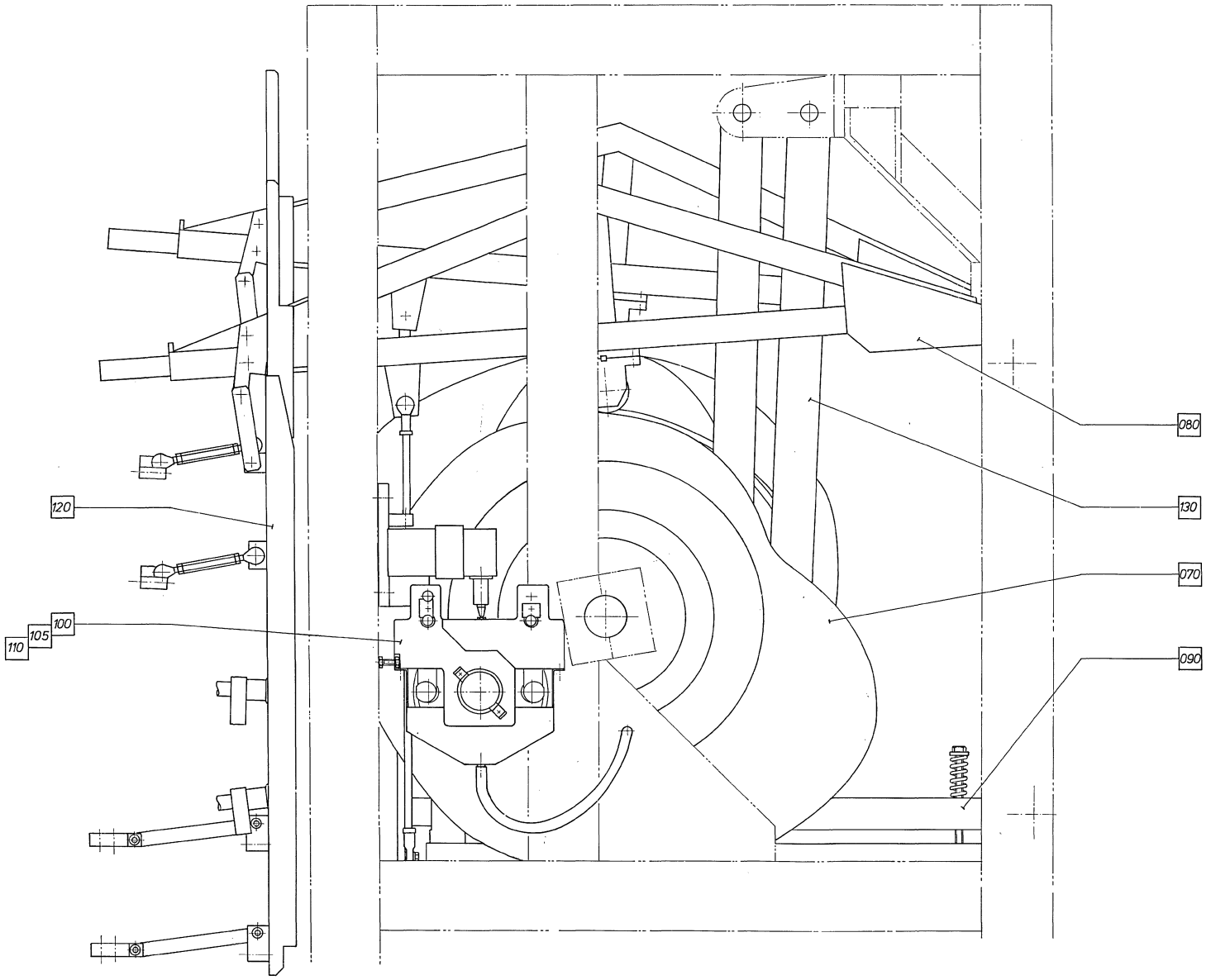
080
130
070
090
120
100
105
110

Pos	Part No	SP	UN	Qty	Description	Page No
Common Parts						
F010	A440588-0200	-		1	CRANK	**295**
F020	A239890-0300	-		1	INTERMEDIARY SHAFT	**297**
F050	A434668-0400	-		1	DRIVE UNIT	**299**
F070	A266986-0500	-		1	CURVE SHAFT	**301, 303**
F080	A243927-0700	-		2	ARM	**305**
F090	A593763-0100	-		1	HOLD-DOWN DEVICE	**307**
F100	A434669-0400	-		1	IMPULSE TRANSMITTER	**309**
F120	A292071-0200	-		1	SPLASH PROTECTION	**313**
F130	A434670-0600	-		1	LINK SYSTEM	**315**

Pos	Part No	SP	UN	Qty	Description	Page No

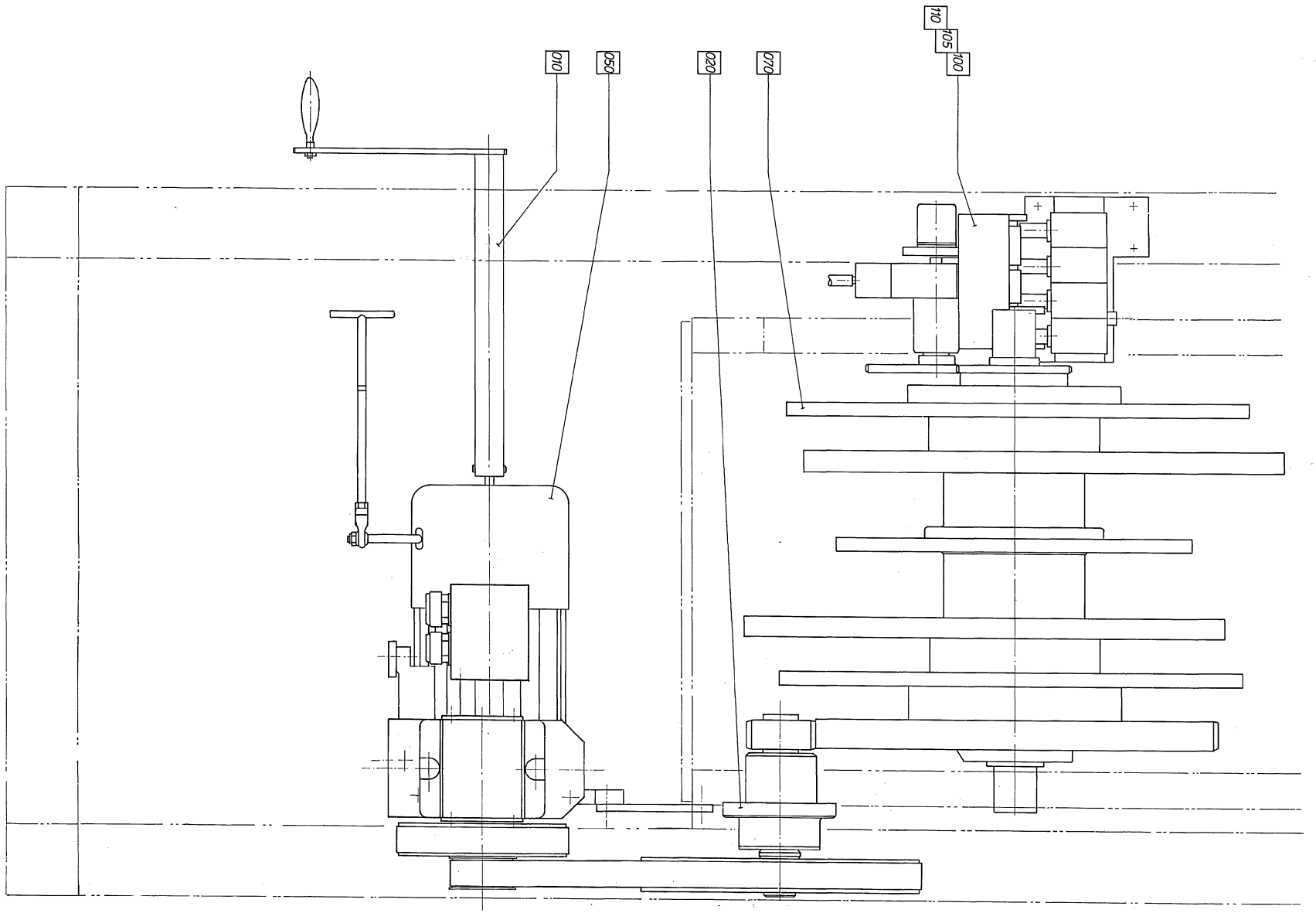
010
050
020
070
110
105
100

Pos	Part No	SP	UN	Qty	Description	Page No
Common Parts						
F010	A440588-0200	-		1	CRANK	**295**
F020	A239890-0300	-		1	INTERMEDIARY SHAFT	**297**
F050	A434668-0400	-		1	DRIVE UNIT	**299**
F070	A266986-0500	-		1	CURVE SHAFT	**301, 303**
F080	A243927-0700	-		2	ARM	**305**
F090	A593763-0100	-		1	HOLD-DOWN DEVICE	**307**
F100	A434669-0400	-		1	IMPULSE TRANSMITTER	**309**
F120	A292071-0200	-		1	SPLASH PROTECTION	**313**
F130	A434670-0600	-		1	LINK SYSTEM	**315**

Pos	Part No	SP	UN	Qty	Description	Page No

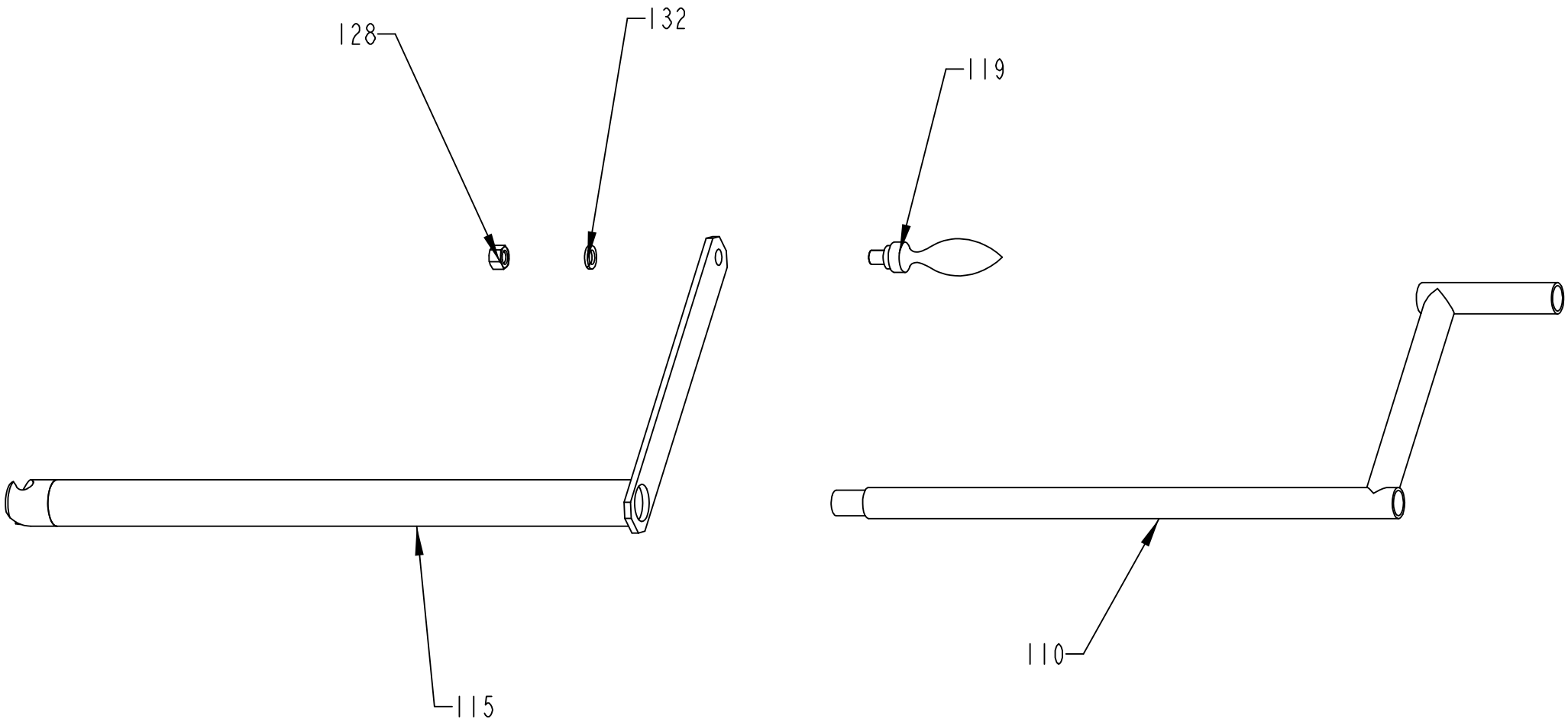
128
132
119
115
110

ECM: 73116 - 20000203
Group number: 440588-0200
Assembly Drawing: 440588-1_1_AB

Issue: 20020121

Pos	Part No	SP	UN	Qty	Description	Page No
Common Parts						
110	36885-0000	-		1	CRANK ARM	
115	542262-0000	-		1	CRANK	
119	90017-0009	-		1	HANDLE, SWIVWLLING, SIZE32 /M12 THREAD	
128	312601-0322	-		1	NUT M6M 12-8 FZB	
132	315401-0178	-		1	WASHER FBH12,2FZB	

Pos	Part No	SP	UN	Qty	Description	Page No

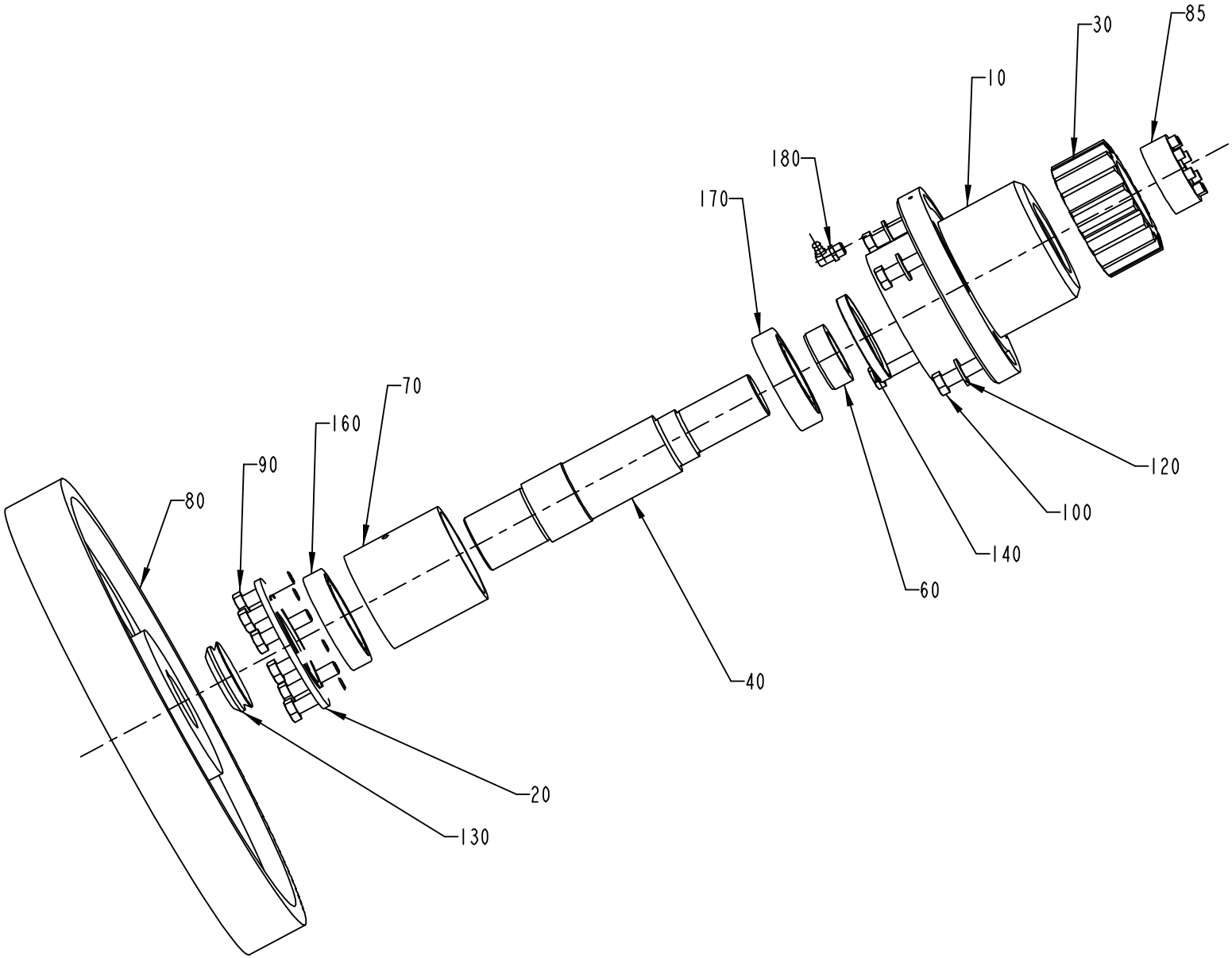
30
85
10
180
170
70
160
90
80
120
100
140
60
40
20
130

ECM: 72907 - 20000117
Group number: 239890-0300
Assembly Drawing: 239890-2_1_AB

Issue: 20020121

Pos	Part No	SP	UN	Qty	Description	Page No
Common Parts						
010	237725-0000	-		1	BEARING HOUSING	
020	107095-0000	-		1	LID	
030	499473-0000	D		1	GEAR WHEEL	
040	499474-0000	D		1	SHAFT	
060	111017-0000	-		1	SPACER RING	
070	239870-0000	-		1	SPACER SLEEVE	
080	90196-0067	-		1	PULLEY	
085	90208-0067	-		1	CLAMPING ELEMENT	
090	312101-0449	-		6	SCREW M6S M8X16 FZB	
100	312101-0499	-		4	SCREW M6S M10X40 FZB	
120	315101-0173	-		4	WASHER PLAIN, BRB, 10,5/22 H=2	
130	315220-0198	C		1	V-RINGS 45X55X13 MM V-50S	
140	315221-0197	C		1	RADIAL SEAL 48X72X8 MM	
160	321306-0110	C		1	BALL BEARING, 50X80X16 MM	
170	321309-0108	C		1	BALL BEARING, 40X80X18 MM	
180	344502-0066	-		1	GREASE NIPPLE 90§ R1/8 CON.	

Pos	Part No	SP	UN	Qty	Description	Page No

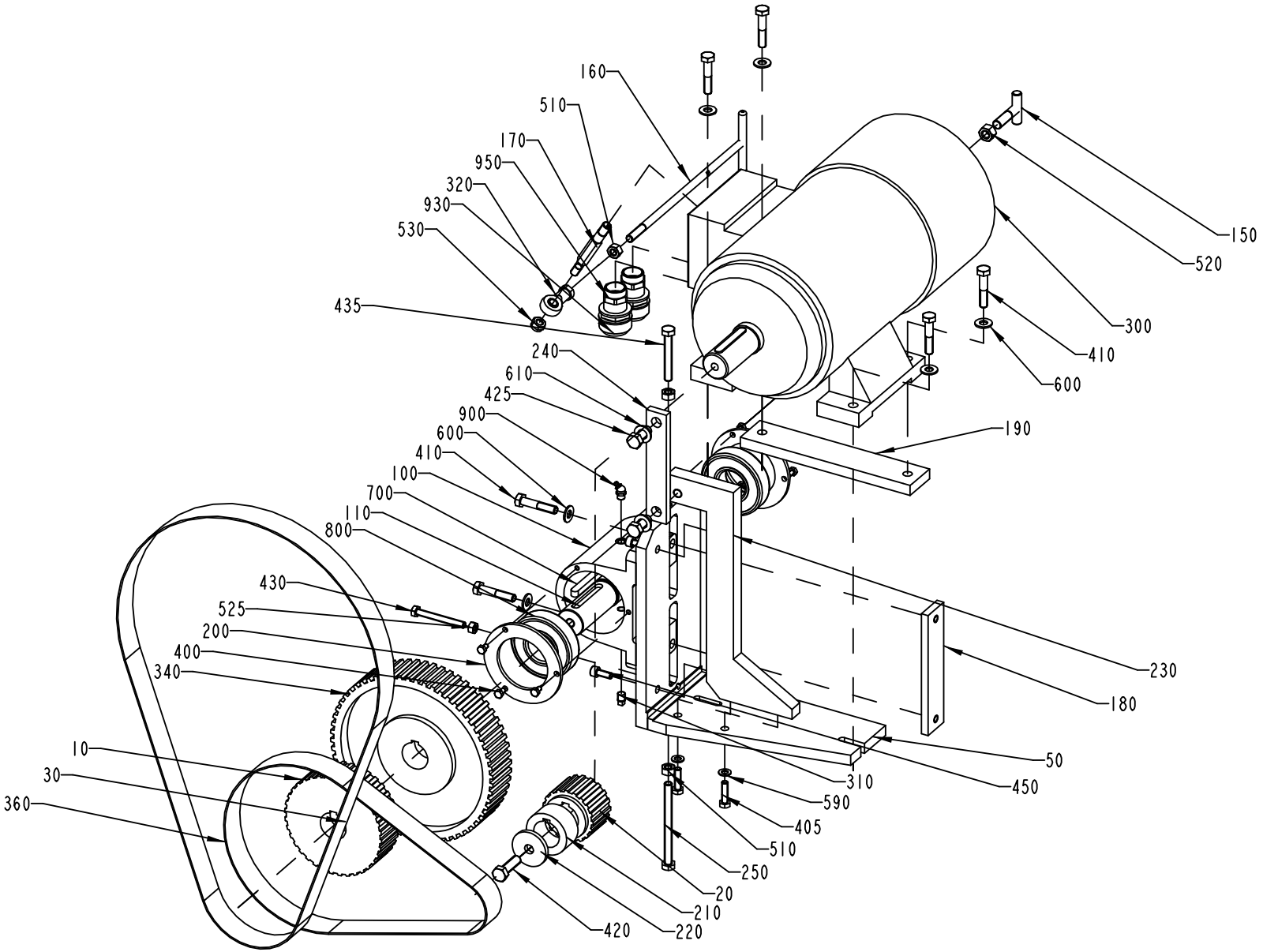
160
510
170
950
320
930
530
435
240
610
425
900
600
410
100
700
110
800
430
525
200
400
340
10
30
360
150
520
300
410
600
190
230
180
50
450
310
590
405
510
250
20
210
220
420

ECM: 72982 - 20000131
Group number: 434668-0400
Assembly Drawing: 434668-2_1_AB

Issue: 20020121

Pos	Part No	SP	UN	Qty	Description	Page No
0355B IH 60HZ OR 0375S IH 60HZ OR 0500B IH 60HZ OR 0500S IH 60HZ OR 1000B IH 60HZ OR 1000S IH 60HZ OR 0750S IH 60HZ OR 0750B IH 60HZ						
010	90196-0065	-		1	PULLEY	
020	90196-0062	-		1	PULLEY	
300	B90046-0016	C		1	DRIVE BRAKE MOTOR 60HZ	
	90046-0314	*C*		*1*	*BRAKE DISC*	
	90046-0313	*C*		*1*	*BRAKECOIL*	
	90046-0312	*C*		*1*	*RECTIFIER, 1,5A BGE-148/500VAC*	
	90046-0308	*C*		*1*	*STATOR*	
0375S IH 50HZ OR 0355B IH 50HZ OR 0500B IH 50HZ OR 0500S IH 50HZ OR 1000B IH 50HZ OR 0750S IH 50HZ OR 0750B IH 50HZ OR 1000S IH 50HZ						
010	90196-0055	-		1	PULLEY	
020	90196-0062	-		1	PULLEY	
300	B90046-0015	C		1	DRIVE BRAKE MOTOR 50HZ	
	90046-0314	*C*		*1*	*BRAKE DISC*	
	90046-0313	*C*		*1*	*BRAKECOIL*	
	90046-0312	*C*		*1*	*RECTIFIER, 1,5A BGE-148/500VAC*	
	90046-0304	*C*		*1*	*STATOR*	
1000SQ IH 50HZ						
010	90196-0079	-		1	TIMING BELT PULLEY	
020	90196-0062	-		1	PULLEY	
300	B90046-0015	C		1	DRIVE BRAKE MOTOR 50HZ	
	90046-0314	*C*		*1*	*BRAKE DISC*	
	90046-0313	*C*		*1*	*BRAKECOIL*	
	90046-0312	*C*		*1*	*RECTIFIER, 1,5A BGE-148/500VAC*	
	90046-0304	*C*		*1*	*STATOR*	
1000SQ IH 60HZ						
010	90196-0090	-		1	TIMING BELT PULLEY	
020	90196-0061	-		1	PULLEY	
300	B90046-0016	C		1	DRIVE BRAKE MOTOR 60HZ	
	90046-0314	*C*		*1*	*BRAKE DISC*	
	90046-0313	*C*		*1*	*BRAKECOIL*	
	90046-0312	*C*		*1*	*RECTIFIER, 1,5A BGE-148/500VAC*	
	90046-0308	*C*		*1*	*STATOR*	
Common Parts						
030	90417-0134	C		1	TIMING BELT 12,7X1600,2X38,1	
050	530754-0000	-		1	FASTENING BRACKET	
100	436482-0000	-		1	BEARING BRACKET	
110	436483-0000	D		1	SHAFT	
150	37097-0000	D		1	CARRIER	
160	434379-0000	D		1	TIE ROD	
170	434380-0000	D		1	SHAFT	
180	436484-0000	-		1	BRACKET	
190	436485-0000	-		1	LACE	
200	436486-0000	-		2	LID	
210	436487-0000	-		1	SPACER	
220	436488-0000	-		1	WASHER	
230	450145-0000	-		1	STRUT	
240	450146-0000	-		1	STRUT	
250	530755-0000	-		1	SCREW	
310	90087-0003	-		1	PIPE PLUG	
320	90115-0105	D		1	ROD END, ID=10 MM, M10X1,5	
340	90196-0066	-		1	PULLEY	
360	90417-0133	C		1	TIMING BELT 12,7X990,6X38,1	
400	312101-0364	-		6	SCREW M6S M6X10 FZB	
405	312101-0455	-		2	SCREW M6S M8X30 FZB	
410	312101-0501	-		6	SCREW M6S M10X50 FZB	
420	312101-0540	-		1	SCREW M6S M12X40 FZB	
425	312101-0536	-		2	SCREW M6S M12X30 FZB	
430	312104-0465	-		1	SCREW M6S M8X70H FZB	
435	312104-0505	-		1	SCREW M6S M10X70H FZB	
450	312111-0451	-		2	SCREW HEX.SOCK.HD.MC6S-TT 8X20 88 FZB	
510	312601-0320	-		3	NUT M6M 10-8 FZB	
520	312601-0322	-		1	NUT M6M 12-8 FZB	
525	312601-0318	-		1	NUT M6M8FZB	
530	312812-0320	-		1	HEXAGON NUT, NY-LOCK M10 A480	
590	315101-0165	-		2	WASHER PLAIN, BRB, 8,4/16 H=1,5	
600	315101-0173	-		6	WASHER PLAIN, BRB, 10,5/22 H=2	
610	315101-0178	-		2	WASHER PLAIN, BRB, 13/24 H=2	
700	315701-0307	-		1	PARALLEL KEY W. ROUND ENDS 10X8X70 MM	
800	321316-0108	C		2	BALL BEARING, 1 SEAL, 40X90X23 MM	
900	344502-0046	-		1	GREASE NIPPLE 45§ R1/8 CON.	
930	352136-0143	-		2	GLAND FITTING	
950	352100-0115	-		2	CABLE GLANR.28,3-15,5	

Machine Type | Group Description | Used-In | Group Number | Page No

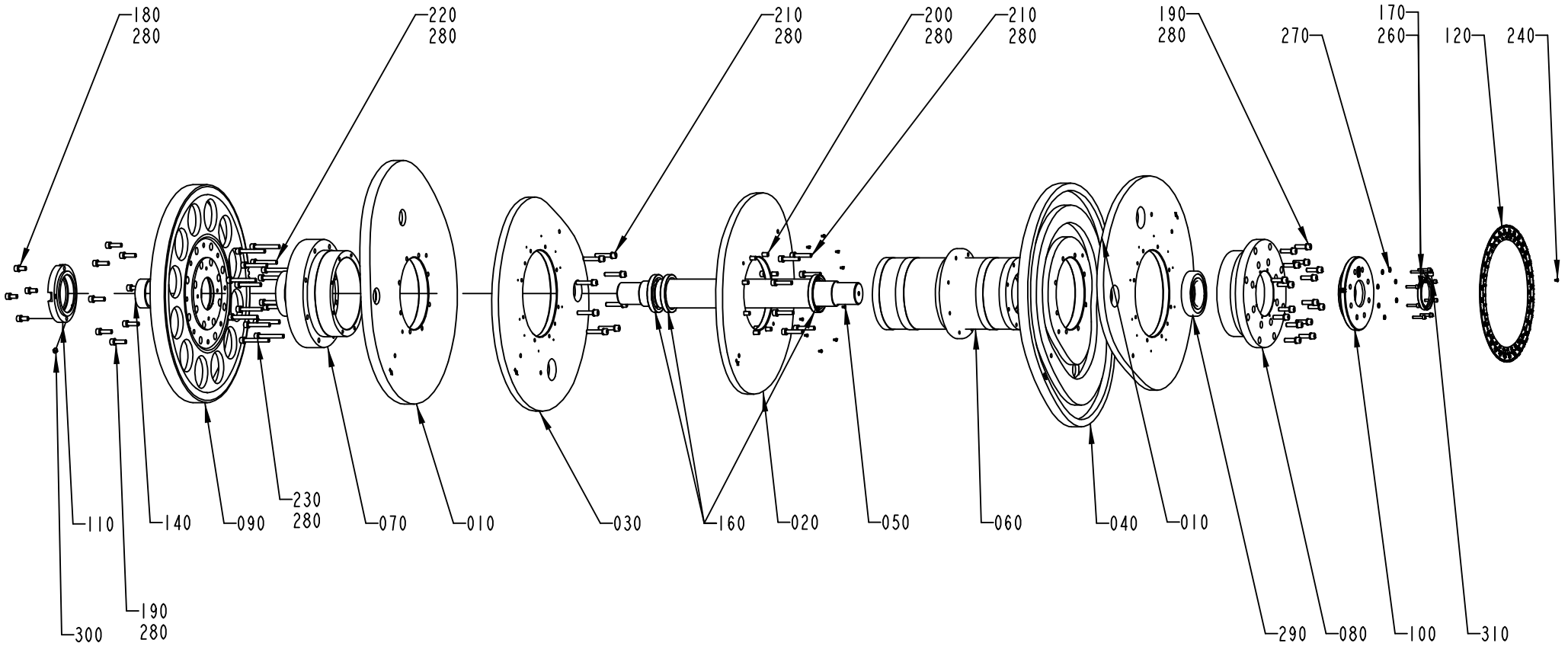
180
280
220
280
210
280
200
280
210
280
190
280
270
170
260
120
240
110
140
090
230
280
070
010
030
160
020
050
060
040
010
300
190
280
290
080
100
310

Pos	Part No	SP	UN	Qty	Description	Page No
0355B						
010	551907-0000	D		2	MAIN CAM	
020	551910-0000	D		1	COUNTER CAM	
030	564623-0000	D		1	CAM LEFT	
040	564624-0000	D		1	CAM RIGHT	
0375S						
010	449716-0000	D		2	MAIN CAM	
020	449719-0000	D		1	COUNTER CAM	
030	564528-0000	D		1	CAM LEFT	
040	564529-0000	D		1	CAM RIGHT	
0500B						
010	283157-0000	D		2	MAIN CAM	
020	283160-0000	D		1	COUNTER CAM	
030	563728-0000	D		1	CAM LEFT	
040	563729-0000	D		1	CAM RIGHT	
0500S						
010	532032-0000	D		2	MAIN CAM	
020	532033-0000	D		1	COUNTER CAM	
030	564621-0000	D		1	CAM LEFT	
040	564622-0000	D		1	CAM RIGHT	
0750B						
010	565668-0000	D		2	MAIN CAM	
020	532097-0000	D		1	COUNTER CAM	
030	564526-0000	D		1	CAM LEFT	
040	564527-0000	D		1	CAM RIGHT	
0750S						
010	545101-0000	D		2	MAIN CAM	
020	551825-0000	D		1	COUNTER CAM	
030	564933-0000	D		1	CAM LEFT	
040	564934-0000	D		1	CAM RIGHT	
1000B HIFIN						
010	540270-0000	D		2	MAIN CAM	
020	549928-0000	D		1	COUNTER CAM	
030	564524-0000	D		1	CAM LEFT	
040	564525-0000	D		1	CAM RIGHT	
1000B LOFIN						
010	530529-0000	D		2	MAIN CAM	
020	530532-0000	D		1	COUNTER CAM	
030	560391-0000	D		1	CAM LEFT	
040	560392-0000	D		1	CAM RIGHT	
1000S						
010	569049-0000	D		2	MAIN CAM	
020	569050-0000	D		1	COUNTER CAM	
030	569051-0000	D		1	CAM LEFT	
040	569052-0000	D		1	CAM RIGHT	
1000SQ						
010	579641-0000	D		2	MAIN CAM	
020	579642-0000	D		1	COUNTER CAM	
030	579643-0000	D		1	CAM LEFT	
040	579644-0000	D		1	CAM RIGHT	
Common Parts						
050	23458-0000	D		1	SHAFT	
060	239533-0000	-		1	DRUM	
070	239534-0000	-		1	FLANGE	
080	239535-0000	-		1	FLANGE	
090	239536-0000	D		1	GEAR WHEEL	
100	243016-0000	D		1	GEARING	
110	107062-0000	-		1	LID	
120	246982-0000	-		1	PROTRACTOR	
140	23462-0000	D		1	SPACER RING	
160	90091-0029	C		3	RADIAL SEAL 80X105X13 MM	
170	312111-0374	-		8	SCREW HEX.SOCK.HD.MC6S-TT 6X30 88 FZB	
180	312111-0492	-		4	SCREW HEX.SOCK.HD.MC6S-TT 10X22 88 FZ	
190	312111-0497	-		24	SCREW HEX.SOCK.HD.MC6S-TT 10X35 88 FZ	
200	312111-0499	-		8	SCREW HEX.SOCK.HD.MC6S-TT 10X40 88 FZ	
210	312111-0501	-		16	SCREW HEX.SOCK.HD.MC6S-TT 10X50 88 FZ	
220	312111-0504	-		8	SCREW HEX.SOCK.HD.MC6S-TT 10X65 88 FZ	
230	312111-0506	-		8	SCREW HEX.SOCK.HD.MC6S-TT 10X75 88 FZ	
240	312121-0285	-		10	SCREW SLOT.PAN HD. MCS 4X6 FZB	
260	315221-0221	C		1	RADIAL SEAL 70X90X10 MM	
270	315401-0153	-		8	WASHER FBH6,1FZB	
280	315401-0173	-		68	WASHER FBH10,2FZB	
290	321309-0114	C		2	BALL BEARING, 70X125X24 MM	
300	344502-0026	-		1	GREASE NIPPLE STRAIGHT R1/8 CON.	

Machine Type | Group Description | Used-In | Group Number | Page No

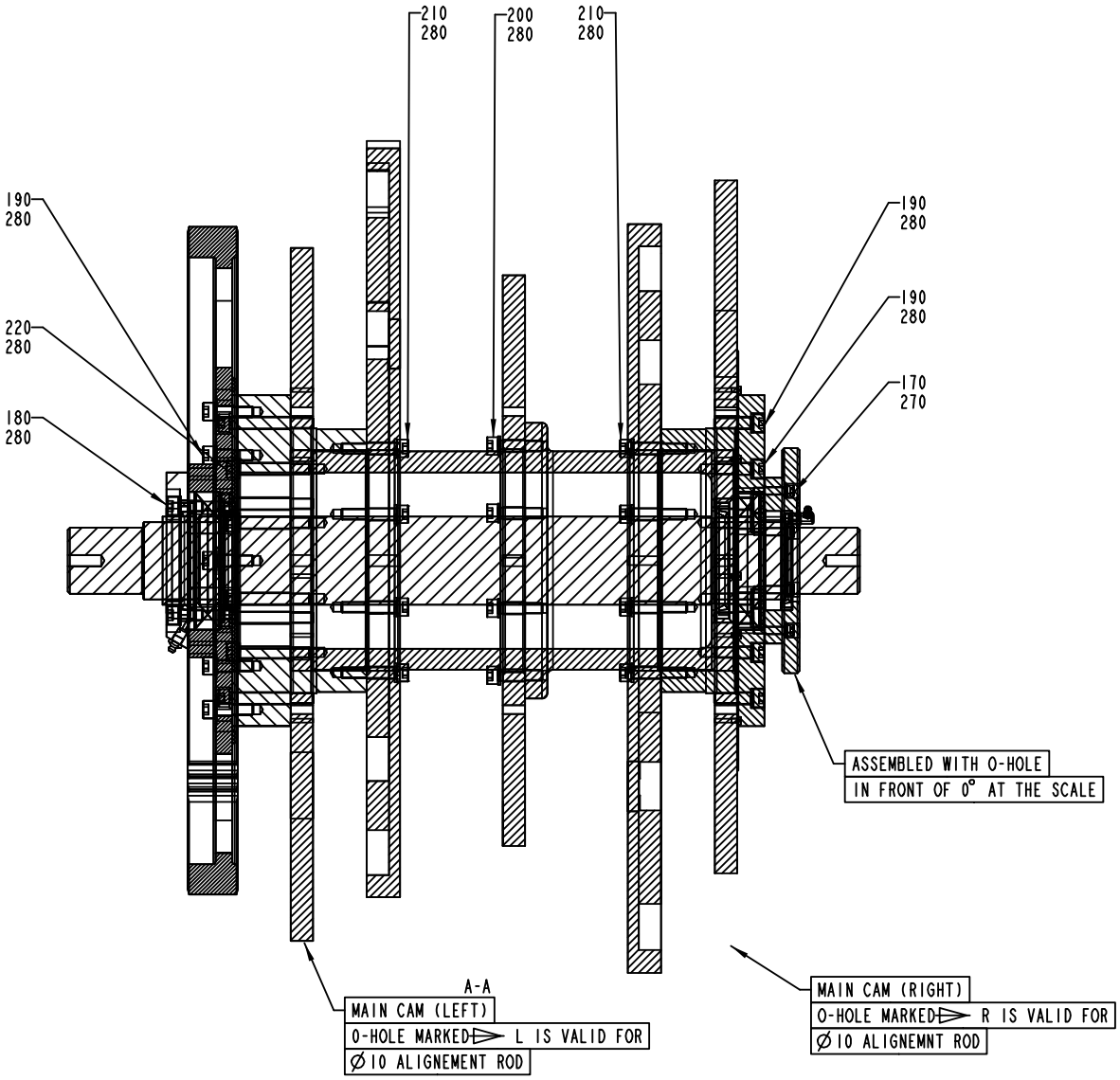

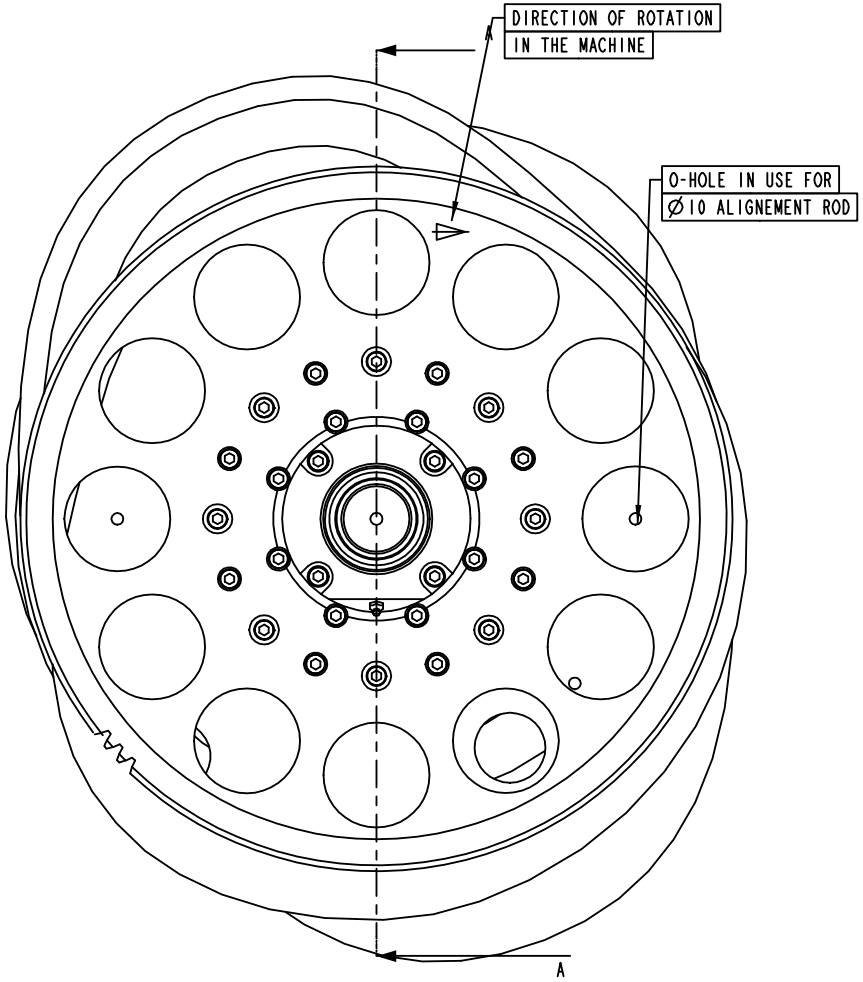

FOR M10 SCREWS TIGHTENED TORQUE: 30 Nm

Pos	Part No	SP	UN	Qty	Description	Page No
Common Parts (Cont'd)						
310	344502-0066	-		1	GREASE NIPPLE 90§ R1/8 CON.	

Pos	Part No	SP	UN	Qty	Description	Page No

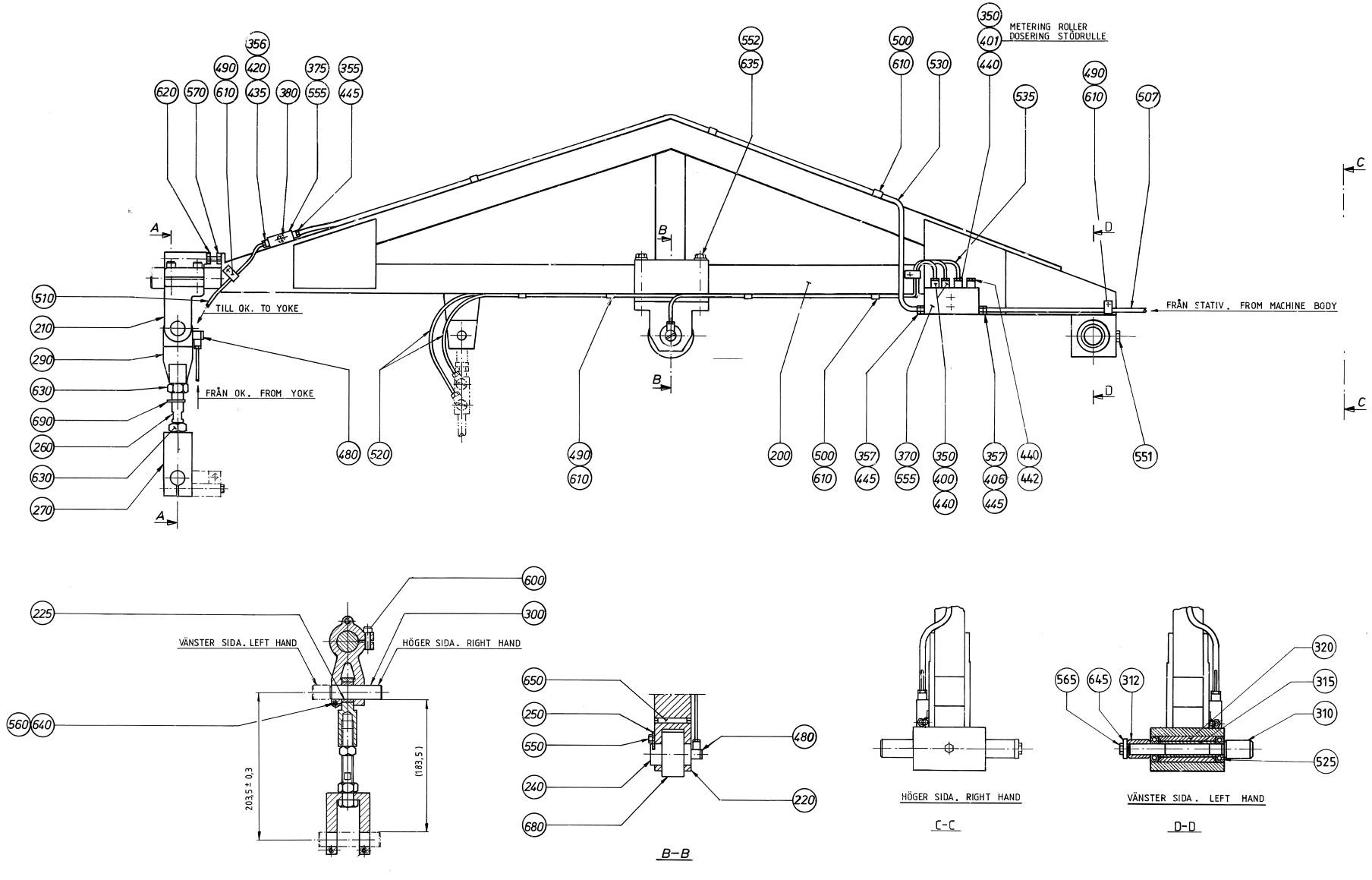
METERING ROLLER
DOSERING STÖDRULLE
TILL OK. TO YOKE
FRÅN OK. FROM YOKE
FRÅN STATIV. FROM MACHINE BODY
VÄNSTER SIDA. LEFT HAND
HÖGER SIDA. RIGHT HAND
203,5 ± 0,3
(183,5)
A–A
B–B
HÖGER SIDA. RIGHT HAND
C–C
VÄNSTER SIDA. LEFT HAND
D–D

ECM: 72174 - 19990208
Group number: 243927-0700
Assembly Drawing: 243927-7_1_AB

Issue: 20020121

Pos	Part No	SP	UN	Qty	Description	Page No
0375S OR 0500B OR 0355B OR 0500S OR 1000B LOFIN OR 0750B OR 0750S						
220	243928-0000	D		1	BRACKET	
1000SQ OR 1000S OR 1000B HIFIN						
220	279466-0000	D		1	BRACKET	
Common Parts						
200	530708-0000	C		1	ARM	
210	35827-0000	C		1	BRACKET	
225	23270-0000	C		1	BUSHING	
240	243930-0000	C		1	SHAFT	
250	243931-0000	D		1	SECURING PLATE	
260	246787-0000	D		1	SCREW	
270	246790-0000	D		1	LINK	
290	251561-0000	D		1	LINK	
300	251562-0000	C		1	SHAFT	
310	570066-0000	C		1	SHAFT	
312	570067-0000	C		1	RING	
315	570125-0000	C		1	SLEEVE	
320	570126-0000	C		1	SLEEVE	
350	90028-0020	C		3	CONE TUBE 2,5MM	
355	90028-0022	C		1	CONE TUBE 6 MM	
356	90028-0024	C		1	CONE TUBE 4 MM	
357	90028-0025	C		2	CONE TUBE 6 MM	
370	90032-0039	-		1	BLOCK 4 WAYS	
375	90032-0043	-		1	DISTRIBUTION BLOCK 3 WAYS	
380	90087-0019	-		1	PLUG M10X1 STAINLESS	
400	90092-0053	C		2	METERING VALVE 30 MM3	
401	90092-0054	C		1	METERING VALVE 50 MM3	
406	90134-0030	C		1	SLEEVE FOR PLASTIC TUBE	
420	90134-0031	C		1	SLEEVE FOR PLASTIC TUBE	
435	90134-0038	C		1	BUSHING/NUT INLET/OUTLET 4 MM	
440	90134-0039	C		4	BUSHING VALVE CONNECTION 2,5 MM	
442	90134-0052	-		1	PLUG DOSING BLOCK	
445	90134-0055	C		3	BUSHING/NUT INLET/OUTLET 6 MM	
480	90134-0058	-		2	CONNECTION	
490	90165-0003	-		4	PIPE CLIP FOR TUBE D=4 MM	
500	90165-0005	-		6	PIPE CLIP FOR TUBE D=6 MM	
507	90166-0108	-	MM	2700	TUBE 6 MM PA,TRANSP.	
510	90166-0109	-	MM	2700	TUBE 4 MM PA,TRANSP.	
520	90166-0143	-	MM	2000	TUBE 2,5 MM PA,TRANSP.	
525	90214-0169	C		2	BALL BEARING SOLID OIL 15X35X11 MM	
530	90266-0006	-	MM	1500	TUBE	
535	90266-0019	-	MM	1000	PIPE	
550	312101-0362	-		2	SCREW M6S M6X8 FZB	
551	312101-0368	-		1	SCREW M6S M6X16 FZB	
552	312101-0465	-		2	SCREW M6S M8X70 FZB	
555	312101-0295	-		4	SCREW M6S M4X20 FZB	
560	312105-0374	-		1	SCREW M6S M6X30 A280	
565	312105-0449	-		1	SCREW M6S M8X16 A280	
570	312109-0463	-		1	SCREW M6S M8X60H A4 80	
600	312115-0453	-		2	SCREW MC6S M8X25 A280	
610	312121-0285	-		10	SCREW SLOT.PAN HD. MCS 4X6 FZB	
620	312605-0318	-		1	HEXAGON NUT, M6M M8 A280	
630	312811-0324	-		2	NUT HEX.LOCK HELI COIL MID GRIP M16 SS	
635	315101-0165	-		2	WASHER PLAIN, BRB, 8,4/16 H=1,5	
640	315105-0153	-		1	WASHER PLAIN, BRB, 6,4/12,H=1,5	
645	315121-0165	-		1	WASHER PLAIN, TBRSB 8,4/26 H=5	
650	315701-0270	-		1	PARALLEL KEY W. ROUND ENDS 8X7X40 MM	
680	321576-0360	C		1	BEARING ROLLER, 2 SEALS, 30X62X29 MM	
690	352113-0101	-		1	CLIP STRIP BLACK 92X2,5MM	

Machine Type | Group Description | Used-In | Group Number | Page No

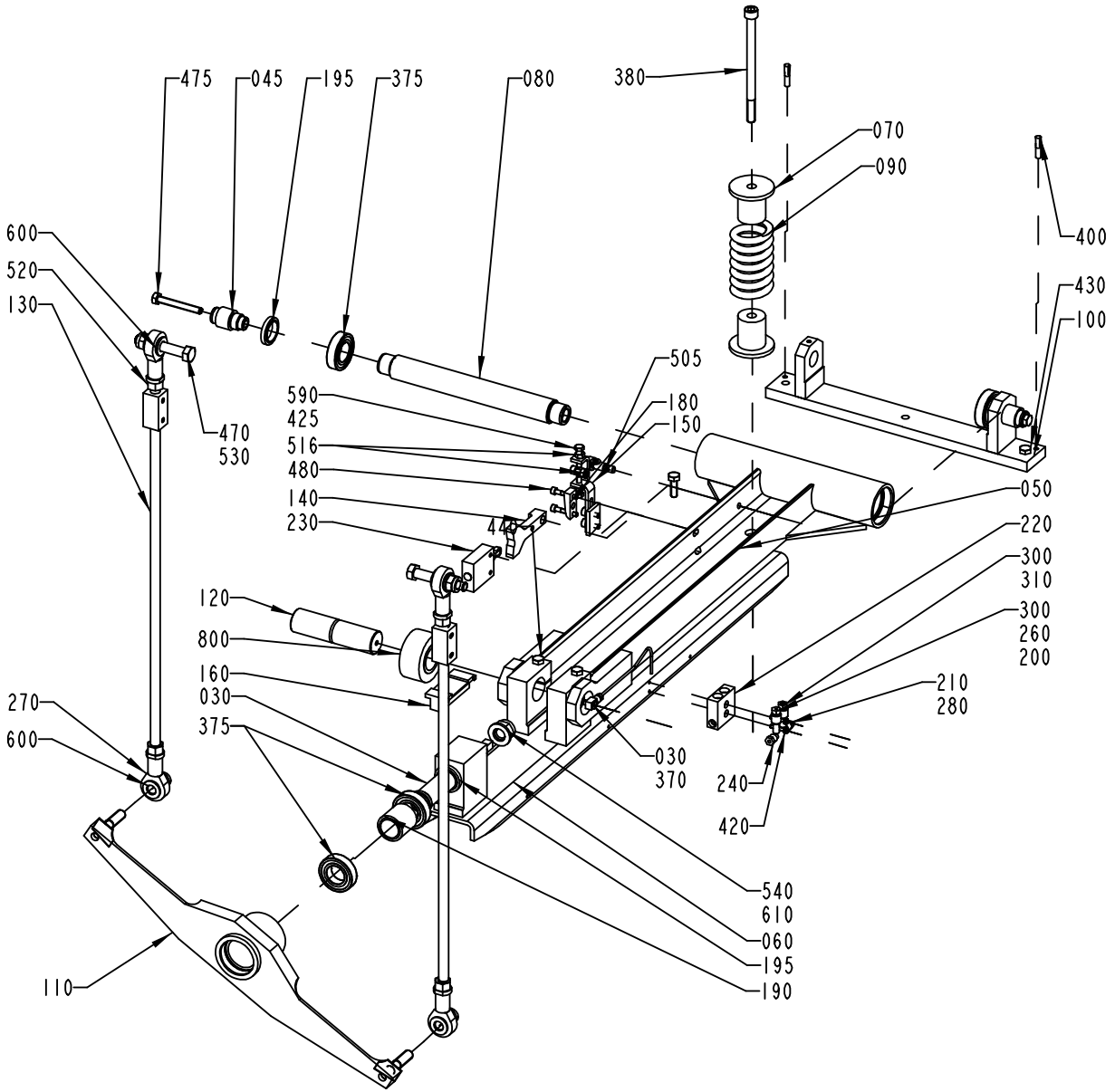
475
045
195
375
080
380
070
090
400
430
100
600
520
130
505
590
425
516
480
140
230
180
150
470
530
050
220
300
310
300
260
200
120
800
160
030
375
270
600
210
280
030
370
240
420
540
610
060
195
190
110

ECM: 73059 - 20000203
Group number: 593763-0100
Assembly Drawing: 593763-1_1_AB

Issue: 20020121

Pos	Part No	SP	UN	Qty	Description	Page No
TBA/8						
110	560417-0000	C		1	ROCKER ARM	
Common Parts						
030	560418-0000	C		1	SHAFT	
045	591247-0000	-		2	SLEEVE	
050	591245-0000	D		1	ARM	
060	567033-0000	C		1	ARM	
070	239383-0000	D		2	SLEEVE	
080	591246-0000	C		1	SHAFT	
090	243971-0000	C		1	SPRING	
100	246948-0000	D		1	BRACKET	
120	434062-0000	C		1	SHAFT	
130	434098-0000	D		2	STRUT	
140	567702-0000	D		1	CURVE	
150	567703-0000	D		1	LINK	
160	576742-0000	C		1	OIL TROUGH	
180	527648-0000	-		2	WASHER	
190	568286-0000	C		1	SLEEVE	
195	568287-0000	C		3	RING	
200	90028-0020	C		2	CONE TUBE 2,5MM	
210	90134-0038	C		1	BUSHING/NUT INLET/OUTLET 4 MM	
220	90032-0038	-		1	BLOCK 2 WAYS	
230	90044-0094	C		1	LIMIT SW. 924 CE31-Y20-X5	
240	90087-0019	-		1	PLUG M10X1 STAINLESS	
260	90092-0053	C		1	METERING VALVE 30 MM3	
270	90115-0133	C		4	ROD END, ID=12 MM, M12X1,25	
280	90134-0031	C		1	SLEEVE FOR PLASTIC TUBE	
300	90134-0039	C		2	BUSHING VALVE CONNECTION 2,5 MM	
310	90134-0052	-		1	PLUG DOSING BLOCK	
330	90134-0058	C		5	CONNECTION	
370	90166-0143	-	MM	600	TUBE 2,5 MM PA,TRANSP.	
375	90214-0163	C		4	BALL BEARING SOLID OIL 25X47X12 MM	
380	90287-0136	C		1	SCREW MC6S M10X150 129	
400	311303-0356	-		2	SLOTTED PIN RPB 6X30 ZINC COATED	
420	312101-0295	-		2	SCREW M6S M4X20 FZB	
425	312101-0372	-		2	SCREW M6S M6X25 FZB	
430	312101-0453	-		3	SCREW M6S M8X25 FZB	
440	312101-0459	-		2	SCREW M6S M8X40 FZB	
470	312101-0546	-		2	SCREW M6S M12X70 FZB	
475	312109-0463	-		2	SCREW M6S M8X60H A4 80	
480	312111-0335	-		2	SCREW HEX.SOCK.HD.MC6S-TT 5X30 88 FZB	
490	312111-0368	-		3	SCREW HEX.SOCK.HD.MC6S-TT 6X16 88 FZB	
505	312180-0489	-		1	SCREW, HEX.SOCK.HEAD SHOULD. M8X16	
516	312601-0316	-		3	NUT M6M 6-8 FZB	
520	312601-0322	-		4	NUT M6M 12-8 FZB	
530	312810-0322	C		4	HEXAGON NUT, NY-LOCK M12 FZB	
540	312810-0324	C		1	HEXAGON NUT, NY-LOCK M16 FZB	
590	315101-0153	-		5	WASHER PLAIN, BRB, 6,4/12 H=1,5	
600	315101-0178	-		8	WASHER PLAIN, BRB, 13/24 H=2	
610	315101-0186	-		1	WASHER PLAIN, BRB, 17/30 H=3	
800	321576-0360	C		1	BEARING ROLLER, 2 SEALS, 30X62X29 MM	

Machine Type | Group Description | Used-In | Group Number | Page No

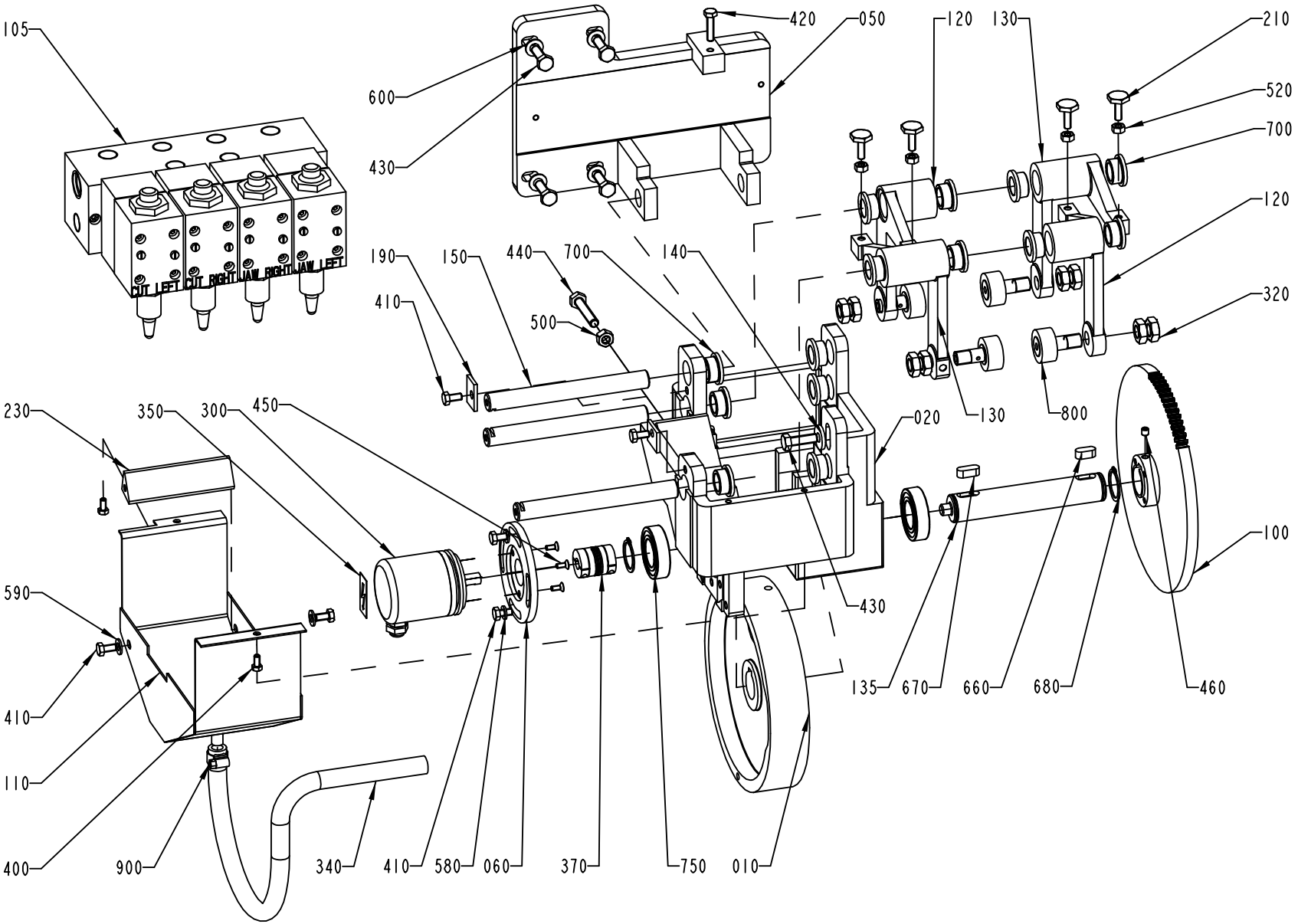
105
CUT_LEFT
CUT_RIGHT
JAW_RIGHT
JAW_LEFT
600
430
420
050
120
130
210
520
700
120
320
190
150
440
700
140
410
500
230
350
300
450
020
130
800
590
410
110
400
900
340
410
580
060
370
750
010
430
135
670
660
680
460
100

Pos	Part No	SP	UN	Qty	Description	Page No
IH						
010	556579-0000	C		1	CURVE	
Common Parts						
020	292473-0000	-		1	CANTILEVER	
050	292472-0000	-		1	HOLDER	
060	542063-0000	D		1	FLANGE	
100	243017-0000	D		1	GEAR WHEEL	
110	543476-0000	-		1	TROUGH	
120	297091-0000	-		2	ARM	
130	297092-0000	-		2	ARM	
135	540949-0000	C		1	SHAFT	
140	28036-0000	C		1	WASHER	
150	292477-0000	C		3	SHAFT	
190	292482-0000	-		2	WASHER	
210	479354-0000	C		4	SCREW	
230	479753-0000	D		1	STRIPPER	
300	90061-0018	C		1	ANGLE ENC 8BIT GRAY (REPL BY 90061-27)	
320	90099-0015	-		8	NUT HEX. ML6M, M12X1,5, FE	
340	90166-0113	-	MM	700	HOSE	
350	90194-0039	-		1	FLASH SIGN 18X37MM	
370	90355-0031	C		1	TORQUE RIGID COUPLING, 10X10 MM	
400	312101-0325	-		2	SCREW M6S M5X10 FZB	
410	312101-0366	-		6	SCREW M6S M6X12 FZB	
420	312101-0372	-		1	SCREW M6S M6X25 FZB	
430	312101-0453	-		5	SCREW M6S M8X25 FZB	
440	312104-0460	-		1	SCREW M6S M8X45H FZB	
450	312155-0289	-		3	SCREW HEX.SOCK.COUNT.MF6S M4X10 A480	
460	312318-0360	-		2	SCREW HEX.SOCK.SET CUP P.MSK6SS6X6 SS	
500	312601-0318	-		1	NUT M6M8FZB	
520	312601-0316	-		4	NUT M6M 6-8 FZB	
580	315105-0153	-		2	WASHER PLAIN, BRB, 6,4/12,H=1,5	
590	315105-0156	-		2	WASHER PLAIN, BRB, 6,7/14,H=1,5	
600	315101-0165	-		4	WASHER PLAIN, BRB, 8,4/16 H=1,5	
660	315701-0262	-		1	PARALLEL KEY W. ROUND ENDS 8X7X18 MM	
670	315701-0263	-		1	PARALLEL KEY W. ROUND ENDS 8X7X20 MM	
680	315750-0119	-		2	RETAIN. RING, 25	
700	321111-0240	C		14	BEAR.BUSHING WITH FLANGE, 16/22X12 MM	
750	321308-0205	C		2	BALL BEARING, 2 SEALS, 25X47X12 MM	
800	321580-0165	C		4	CAM ROLLER, 12X30X40 MM	
900	342991-0101	-		1	HOSE CLIP,WORM DRIVE TYPE (13)-16	
F105	A273728-0300	-		1	VALVE GROUP	**311**

Pos	Part No	SP	UN	Qty	Description	Page No

Machine Type | Group Description | Used-In | Group Number | Page No

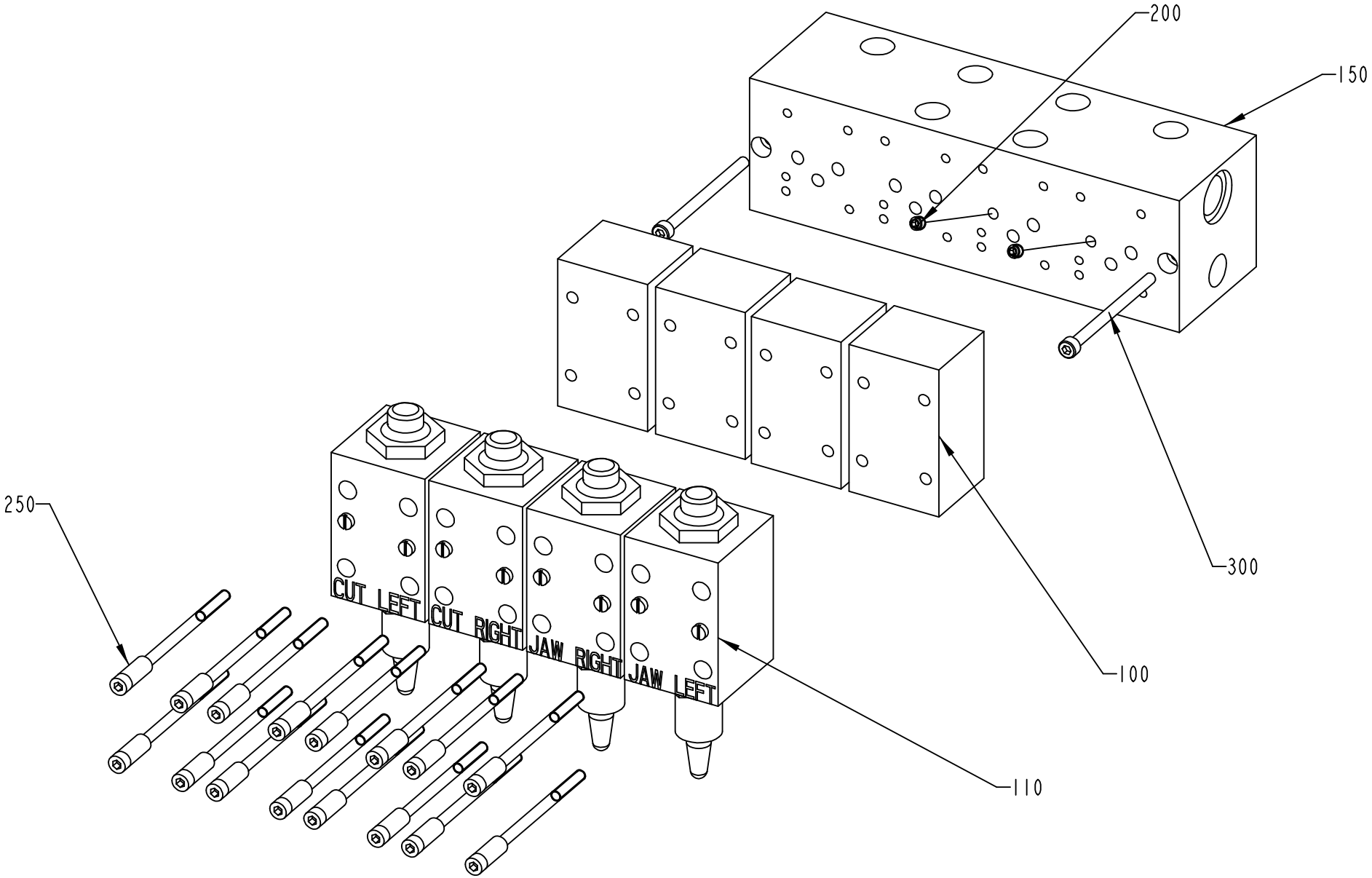
200
150
250
300
100
110
CUT LEFT
CUT RIGHT
JAW RIGHT
JAW LEFT

Pos	Part No	SP	UN	Qty	Description	Page No
0375S OR 0500B OR 0355B OR 1000SQ OR 0500S OR 1000S OR 0750B OR 0750S OR 1000B						
100	B90201-0010	D		4	VALVE	
	90201-0303	-		*1*	*SPARE PARTS KIT*	
	90201-0302	-		*1*	*WASHER*	
	90201-0301	-		*1*	*SPRING*	
	90201-0300	-		*1*	*MOUNTING PLATE, NO. A1-89 57B*	
	90201-0303	-		*1*	*SPARE PARTS KIT*	
	90201-0302	-		*1*	*WASHER*	
	90201-0301	-		*1*	*SPRING*	
	90201-0300	-		*1*	*MOUNTING PLATE, NO. A1-89 57B*	
150	90201-0300	D		1	MOUNTING PLATE, NO. A1-89 57B	
200	295391-0003	C		2	THROTTLE SCREW	
Common Parts						
110	90201-0057	D		4	VALVE	
250	90201-0303	C		4	SPARE PARTS KIT	
300	90287-0073	-		2	SCREW MC6S M5X70 129	

Pos	Part No	SP	UN	Qty	Description	Page No

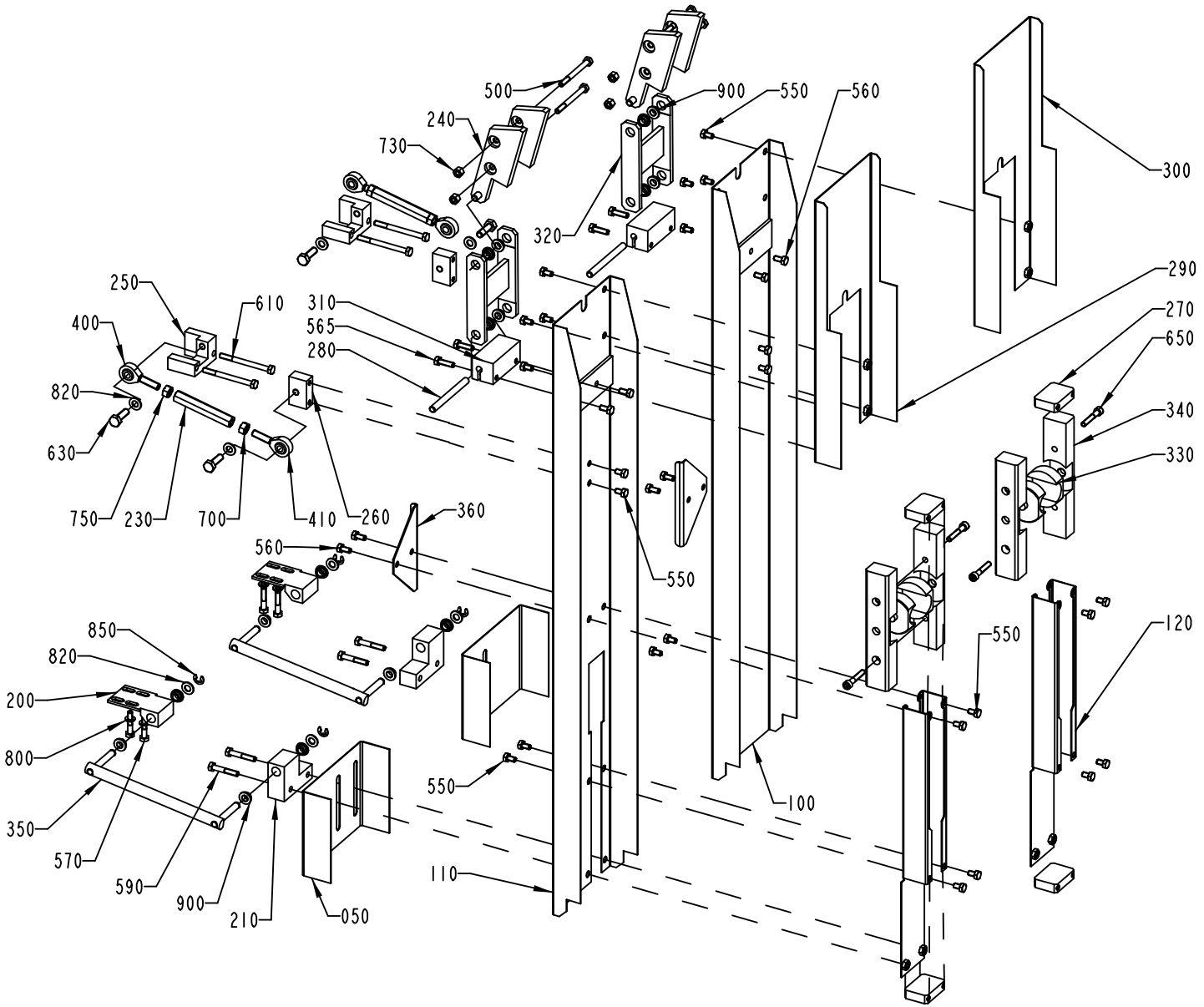
500
240
730
900
550
560
300
320
290
270
650
340
330
250
610
310
565
280
400
820
630
750
230
700
410
260
360
560
550
850
820
200
800
350
570
590
900
210
050
110
550
100
550
120

Pos	Part No	SP	UN	Qty	Description	Page No
IH						
050	436580-0000	D		2	COVERING PLATE	
330	283774-0000	C		4	BEARING	
Common Parts						
100	279983-0000	D		1	SPLASH PROTECTION	
110	279984-0000	D		1	SPLASH PROTECTION	
120	279985-0000	D		2	BRACKET	
200	555888-0000	C		2	BRACKET	
210	279987-0000	D		2	BRACKET	
230	279989-0000	D		2	SPACER	
240	279991-0000	C		4	BRACKET	
250	279992-0000	-		2	BRACKET	
260	279993-0000	-		2	BRACKET	
270	279997-0000	-		4	BRACKET	
280	279998-0000	C		2	SHAFT	
290	279999-0000	D		1	COVERING PLATE	
300	282511-0000	D		1	COVERING PLATE	
310	282512-0000	-		2	BRACKET	
320	282513-0000	C		2	BRACKET	
340	283775-0000	D		4	SLIDE	
350	436672-0000	C		2	LINK	
360	574167-0000	-		2	LIMIT PLATE	
400	90115-0107	C		2	ROD END, ID=8 MM, M8X1,25 LH	
410	90115-0106	C		2	ROD END, ID=8 MM, M8X1,25	
500	312101-0383	-		4	SCREW M6S M6X65 FZB	
550	312105-0364	-		24	SCREW M6S M6X10 A280	
560	312105-0366	-		8	SCREW M6S M6X12 A280	
565	312105-0370	-		4	SCREW M6S M6X20 A280	
570	312105-0374	-		4	SCREW M6S M6X30 A280	
590	312105-0376	-		4	SCREW M6S M6S M6X35 A280	
610	312105-0384	-		4	SCREW M6S M6X70 A280	
630	312105-0453	-		4	SCREW M6S M8X25 A280	
650	312115-0376	-		4	SCREW MC6S M6X35 A280	
700	312605-0318	-		2	HEXAGON NUT, M6M M8 A280	
730	312811-0316	-		4	NUT HEX.LOCK HELI COIL MID GRIP M6 SS	
750	312902-0318	-		2	NUT HEX. LEFT THREAD, M8 A280	
800	315105-0153	-		4	WASHER PLAIN, BRB, 6,4/12,H=1,5	
820	315105-0165	-		8	WASHER PLAIN, BRB, 8,4/16,H=1,5	
850	315755-0109	-		4	LOCKING WASHER 7	
900	321111-0095	C		16	BEAR.BUSHING WITH FLANGE, 8/12X6 MM	

Pos	Part No	SP	UN	Qty	Description	Page No

Machine Type | Group Description | Used-In | Group Number | Page No

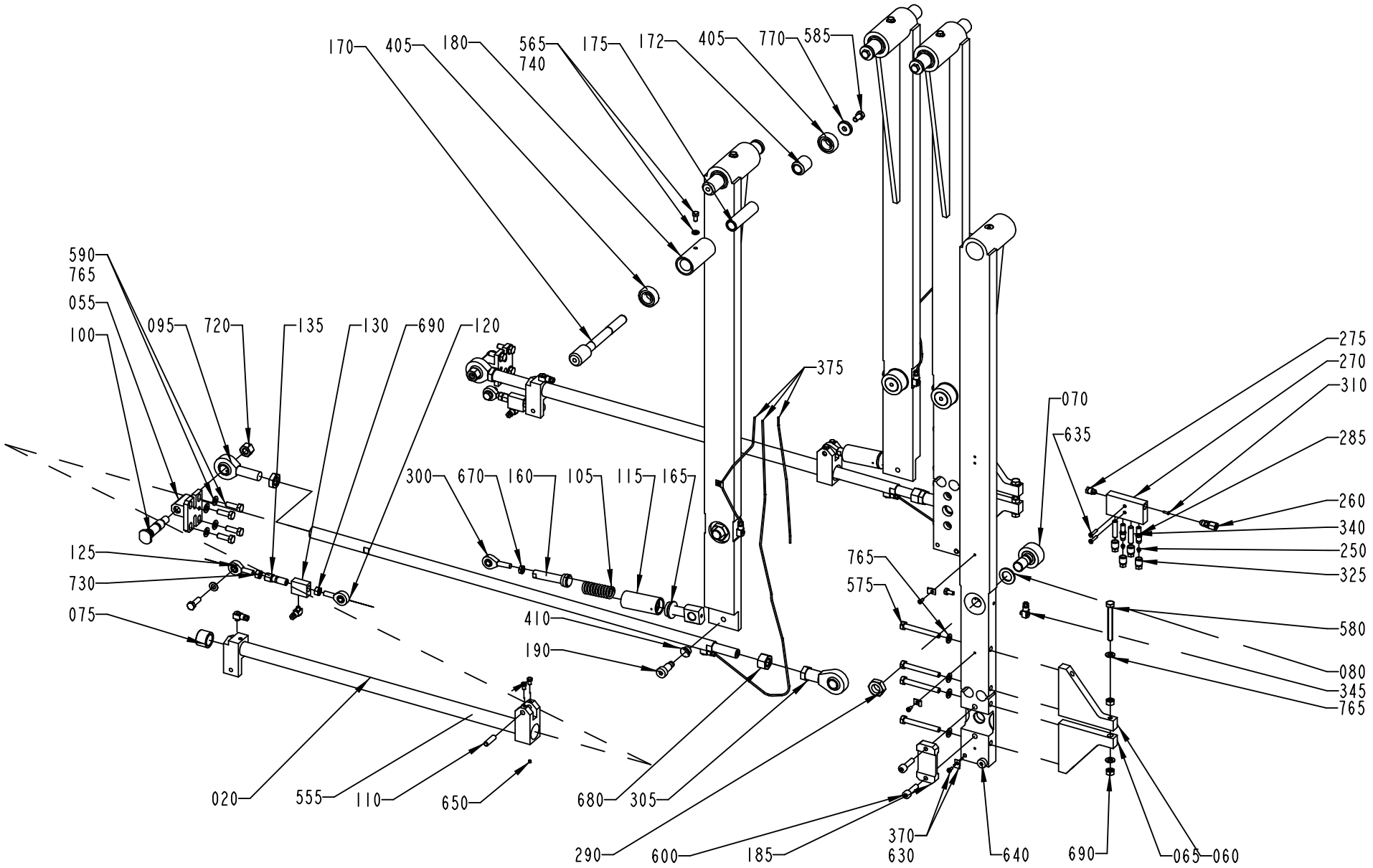
170
405
180
565
740
175
172
405
770
585
590
765
055
100
095
720
135
130
690
120
375
300
670
160
105
115
165
125
730
075
410
190
020
555
110
650
680
305
290
600
185
370
630
640
690
065
060
070
635
765
575
275
270
310
285
260
340
250
325
580
080
345
765

ECM: 73432 - 20000419
Group number: 434670-0600
Assembly Drawing: 434670-6_1_AB

Issue: 20020121

Pos	Part No	SP	UN	Qty	Description	Page No
IH						
020	540335-0000	C		2	LINK	
045	562747-0000	D		2	ARM	
070	28334-0000	C		4	CURVE ROLLER	
075	230462-0000	C		4	BUSHING	
080	239538-0000	C		4	WASHER	
105	252707-0000	C		2	SPRING	
110	255335-0000	C		2	SHAFT	
115	255398-0000	C		2	SLEEVE	
120	263313-0000	C		2	LINK HEAD	
125	263314-0000	C		2	LINK HEAD	
130	263328-0000	C		2	SPACER	
135	263329-0000	C		2	NUT	
160	434142-0000	C		2	PISTON	
165	434143-0000	C		2	END SECTION	
170	570066-0000	C		4	SHAFT	
172	570067-0000	C		4	RING	
175	570125-0000	C		4	SLEEVE	
180	570126-0000	C		4	SLEEVE	
190	563061-0000	C		2	REAMED BOLT	
250	90028-0020	C		6	CONE TUBE 2,5MM	
285	90092-0053	C		4	METERING VALVE 30 MM3	
290	90099-0012	-		8	NUT HEX. M18X1,5, FE	
300	90115-0122	C		2	ROD END, ID=8 MM, M8X1,25	
340	90134-0052	-		2	PLUG DOSING BLOCK	
370	90165-0022	-		8	PIPE CLIP, FOR TUBE D=2,5 MM, B-3570	
405	90214-0169	C		8	BALL BEARING SOLID OIL 15X35X11 MM	
410	90240-0097	C		4	FLANGE BUSHING, 12X14X9 MM	
555	312101-0323	-		4	SCREW M6S M5X8 FZB	
565	312101-0366	-		8	SCREW M6S M6X12 FZB	
585	312105-0449	-		4	SCREW M6S M8X16 A280	
590	312105-0453	-		12	SCREW M6S M8X25 A280	
630	312121-0287	-		8	SCREW SLOT.PAN HD. MCS 4X8 FZB	
650	312316-0283	-		4	SCREW HEX.SOCK.SET CUP P.MSK6SS4X4 FZB	
670	312621-0318	-		2	ROD END,NUT M8	
690	312605-0318	-		6	HEXAGON NUT, M6M M8 A280	
730	312902-0318	-		2	NUT HEX. LEFT THREAD, M8 A280	
740	315101-0153	-		4	WASHER PLAIN, BRB, 6,4/12 H=1,5	
765	315105-0165	-		30	WASHER PLAIN, BRB, 8,4/16,H=1,5	
770	315121-0165	-		4	WASHER PLAIN, TBRSB 8,4/26 H=5	
Common Parts						
040	562746-0000	C		2	ARM	
055	464363-0000	D		2	HOLDER	
060	562748-0000	-		2	BRACKET	
065	562749-0000	-		2	BRACKET	
090	247119-0000	C		2	ROD	
095	526904-0000	C		2	LINK HEAD	
100	536703-0000	C		2	SHAFT	
185	562140-0000	-		2	CAP	
260	90030-0162	-		2	CONN. STR. 6-M10X1, EXT. THREAD	
270	90032-0039	-		2	BLOCK 4 WAYS	
275	90087-0019	-		2	PLUG M10X1 STAINLESS	
280	90092-0052	C		2	METERING VALVE 10 MM3	
305	90115-0067	C		2	ROD END, ID=16 MM, M16X2	
310	90134-0030	C		2	SLEEVE FOR PLASTIC TUBE	
325	90134-0039	C		8	BUSHING VALVE CONNECTION 2,5 MM	
345	90134-0058	C		10	CONNECTION	
360	90157-0016	-	ML	1	LOCKING FLUID	
375	90166-0143	-	MM	2500	TUBE 2,5 MM PA,TRANSP.	
575	312101-0465	-		8	SCREW M6S M8X70 FZB	
580	312104-0465	-		2	SCREW M6S M8X70H FZB	
600	312111-0455	-		4	SCREW HEX.SOCK.HD.MC6S-TT 8X30 88 FZB	
635	312141-0295	-		4	SCREW COUNTERS.SLOT.HD. MFS 4X20 FZB	
640	312180-0489	-		2	SCREW, HEX.SOCK.HEAD SHOULD. M8X16	
680	312601-0324	C		2	NUT M6M 16-8 FZB	
700	312621-0324	-		2	NUT ML6M16FZB	
720	312811-0322	-		2	NUT HEX.LOCK HELI COIL MID GRIP M12 SS	

Machine Type | Group Description | Used-In | Group Number | Page No

Tetra Pak

SPC
Spare Parts Catalogue

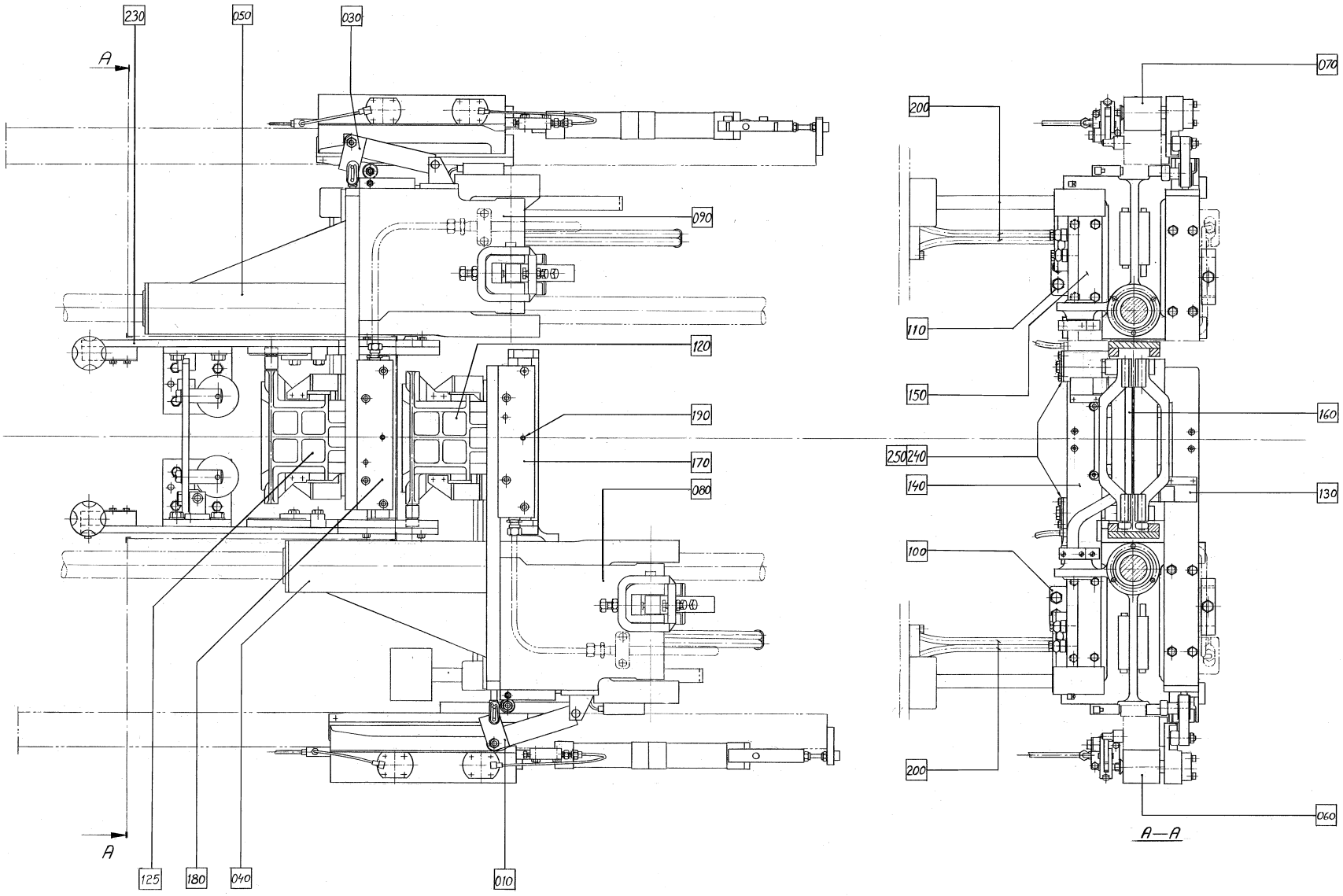
230
050
030
A
090
120
190
170
080
125
180
040
010
A
070
200
110
150
160
250
240
140
130
100
200
060
A—A

Pos	Part No	SP	UN	Qty	Description	Page No
IH						
060	A266446-0500	-		1	DESIGN CORRECTION DEVICE	**323, 325**
070	A266447-0500	-		1	DESIGN CORRECTION DEVICE	**327, 329**
100	A541052-0100	-		1	ARM WITH AXLE PRESSURE L	**331**
110	A541053-0100	-		1	ARM WITH AXLE PRESSURE R	**333**
120	A1487405-0100	-		2	VOLUME FLAP	**335, 337**
125	A1367814-0100	-		2	VOLUME FLAP	**339**
140	A259414-0500	-		1	CARRIER PRESSURE L IH	**341**
150	A259415-0500	-		1	CARRIER PRESSURE R IH	**343**
170	A257835-0300	-		1	CUTTING JAW,LEFT IH	**345, 347**
180	A257835-0350	-		1	CUTTING JAW, RIHGT IH	**349, 351**
190	A1487404-0200	-		2	KNIFE HOLDER	**353**
200	A279134-0500	-		1	TRANSMISSION	**355**
240	A259534-0700	-		1	PRESSURE JAW LEFT IH	**357, 359, 361**
250	A259534-0750	-		1	PRESSURE JAW RIGHT IH	**363, 365, 367**
270	A268614-0500	-		1	START-UP KIT IH	**369, 371**
Common Parts						
010	A279564-0300	-		1	FOLDING DEVICE	**373**
030	A279565-0300	-		1	FOLDING DEVICE	**377**
040	A243942-0400	-		1	YOKE	**379**
050	A593749-0100	-		1	YOKE	**381**
080	A246499-0600	-		1	ARM WITH AXLE,CUT L	**383**
090	A593750-0100	-		1	ARM WITH AXLE,CUT R	**385**
130	A246327-0500	-		1	SHOCK ABSORBER	**387, 389, 391, 393, 395, 397, 399, 401**
230	A293605-0600	-		1	VOLUM CURVE PIECE	**403, 405, 407, 409**
280	A541188-0300	-		1	BAR CODE	**411**

Pos	Part No	SP	UN	Qty	Description	Page No

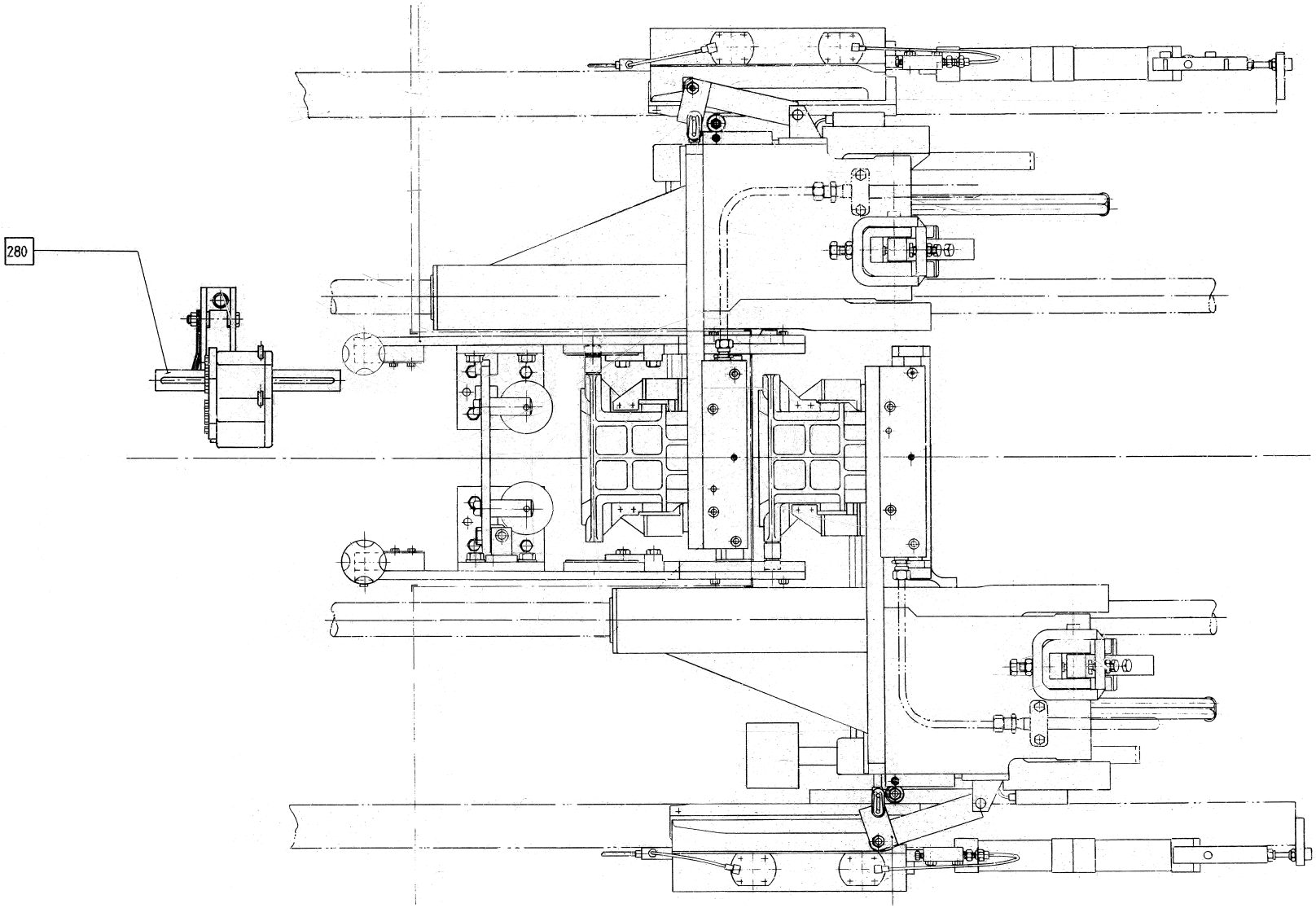
280

Pos	Part No	SP	UN	Qty	Description	Page No
IH						
060	A266446-0500	-		1	DESIGN CORRECTION DEVICE	**323, 325**
070	A266447-0500	-		1	DESIGN CORRECTION DEVICE	**327, 329**
100	A541052-0100	-		1	ARM WITH AXLE PRESSURE L	**331**
110	A541053-0100	-		1	ARM WITH AXLE PRESSURE R	**333**
120	A1487405-0100	-		2	VOLUME FLAP	**335, 337**
125	A1367814-0100	-		2	VOLUME FLAP	**339**
140	A259414-0500	-		1	CARRIER PRESSURE L IH	**341**
150	A259415-0500	-		1	CARRIER PRESSURE R IH	**343**
170	A257835-0300	-		1	CUTTING JAW,LEFT IH	**345, 347**
180	A257835-0350	-		1	CUTTING JAW, RIHGT IH	**349, 351**
190	A1487404-0200	-		2	KNIFE HOLDER	**353**
200	A279134-0500	-		1	TRANSMISSION	**355**
240	A259534-0700	-		1	PRESSURE JAW LEFT IH	**357, 359, 361**
250	A259534-0750	-		1	PRESSURE JAW RIGHT IH	**363, 365, 367**
270	A268614-0500	-		1	START-UP KIT IH	**369, 371**
Common Parts						
010	A279564-0300	-		1	FOLDING DEVICE	**373**
030	A279565-0300	-		1	FOLDING DEVICE	**377**
040	A243942-0400	-		1	YOKE	**379**
050	A593749-0100	-		1	YOKE	**381**
080	A246499-0600	-		1	ARM WITH AXLE,CUT L	**383**
090	A593750-0100	-		1	ARM WITH AXLE,CUT R	**385**
130	A246327-0500	-		1	SHOCK ABSORBER	**387, 389, 391, 393, 395, 397, 399, 401**
230	A293605-0600	-		1	VOLUM CURVE PIECE	**403, 405, 407, 409**
280	A541188-0300	-		1	BAR CODE	**411**

Pos	Part No	SP	UN	Qty	Description	Page No

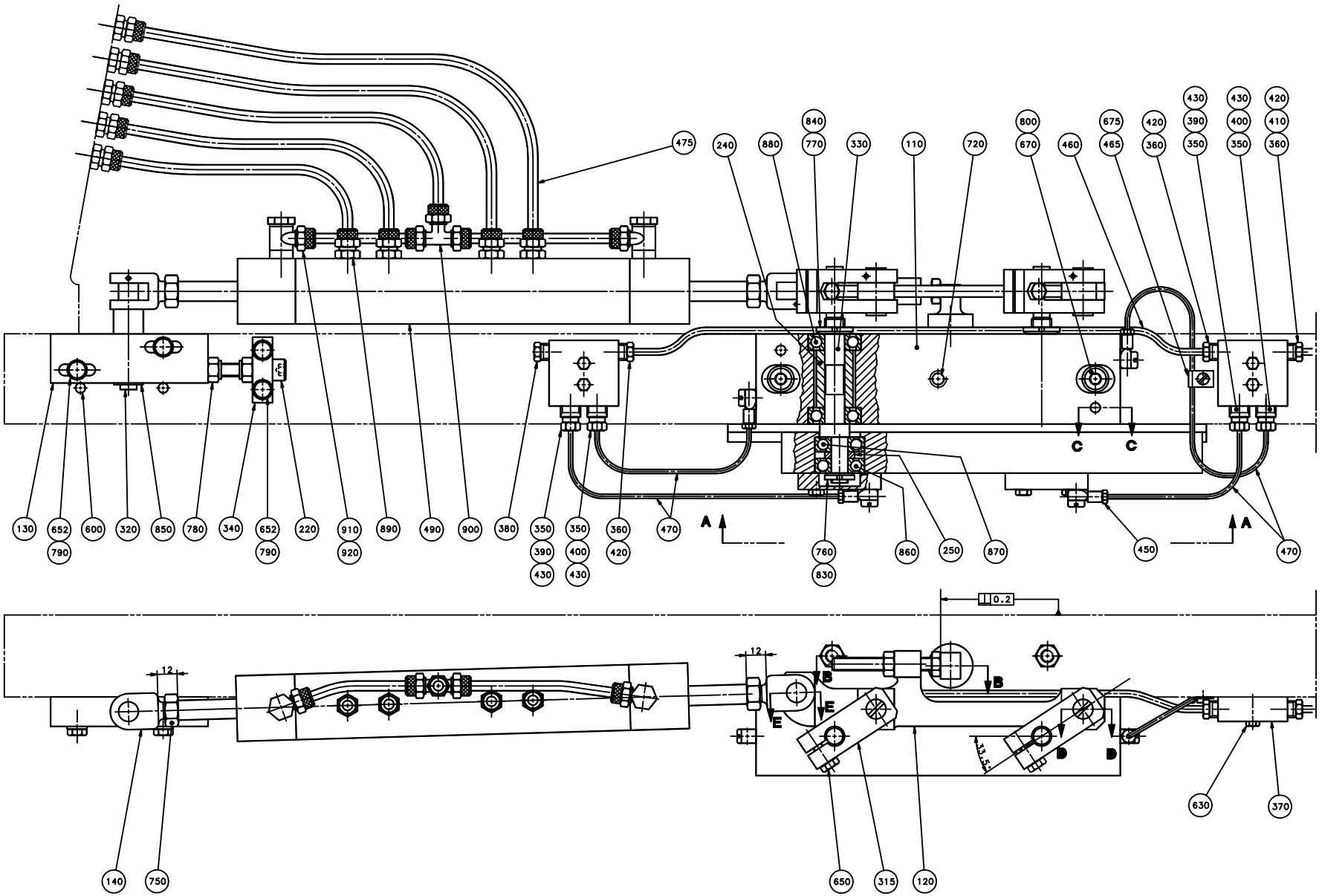
475
240
880
840
770
330
110
720
800
670
460
675
465
420
360
430
390
350
430
400
350
420
410
360
C
C
A
A
130
652
790
600
320
850
780
340
652
790
220
910
920
890
490
900
380
350
390
430
350
400
430
360
420
470
760
830
860
250
870
450
470
0.2
12
12
B
B
E
E
D
D
33.5°
140
750
650
315
120
630
370

ECM: 72090 - 19981214
Group number: 266446-0500
Assembly Drawing: 266446-4_1_AA

Issue: 20020121

Pos	Part No	SP	UN	Qty	Description	Page No
0375S OR 0750B						
010	550337-0000	C		1	FOLDING FLAP CAM L	
020	440510-0000	C		1	COUNTER CAM	
0355B						
010	537901-0000	C		1	FOLDING FLAP CAM L	
020	B529137-0000	C		1	CURVE LEFT	
	311103-0401	*-*		*2*	*PARALLELL PIN, M6, 8X20 MM*	
0500B						
010	269108-0000	C		1	FOLDING FLAP CAM L	
020	269110-0000	C		1	COUNTER CAM	
0500S						
010	551285-0000	C		1	FOLDING FLAP CAM	
020	440930-0000	C		1	COUNTER CAM	
1000B HIFIN						
010	284232-0000	C		1	FOLDING FLAP CAM L	
020	284234-0000	C		1	COUNTER CAM	
1000B LOFIN OR 0750S						
010	268954-0000	C		1	FOLDING FLAP CAM L	
020	269059-0000	C		1	COUNTER CAM	
1000SQ OR 1000S						
010	565188-0000	C		1	FOLDING FLAP CAM	
020	269059-0000	C		1	COUNTER CAM	
Common Parts						
110	23292-0000	C		1	BEARING HOUSING	
120	436740-0000	C		1	LINK	
130	20718-0000	D		1	BEARING	
140	22483-0000	C		2	FORK	
150	22485-0000	C		1	DOWEL	
160	22486-0000	C		2	DOWEL	
170	22504-0000	C		1	STOP LUG	
180	23291-0000	C		2	BEARING COVER	
200	23312-0000	C		3	BUSHING	
210	26426-0000	C		5	LACE	
220	33409-0000	C		1	SCREW	
240	107334-0000	C		2	SPACER SLEEVE	
250	107335-0000	C		2	SPACER RING	
260	107339-0000	C		2	DOWEL	
315	434387-0000	C		2	BRACKET	
320	434388-0000	C		1	SHAFT	
330	436671-0000	C		2	ECCENTRIC SHAFT	
340	561416-0000	C		1	BRACKET	
350	90028-0020	C		4	CONE TUBE 2,5MM	
360	90028-0021	C		3	CONE TUBE 4 MM	
370	90032-0038	-		2	BLOCK 2 WAYS	
380	90087-0019	-		1	PLUG M10X1 STAINLESS	
390	90092-0052	C		2	METERING VALVE 10 MM3	
400	90092-0054	C		2	METERING VALVE 50 MM3	
410	90134-0031	C		1	SLEEVE FOR PLASTIC TUBE	
420	90134-0038	C		3	BUSHING/NUT INLET/OUTLET 4 MM	
430	90134-0039	C		4	BUSHING VALVE CONNECTION 2,5 MM	
450	90134-0058	C		4	CONNECTION	
460	90151-0001	-	MM	400	BRASS PIPE DI=2,6 MM	
465	90165-0058	-		1	PIPE CLIP FOR TUBE D=25 MM	
470	90166-0143	-	MM	700	TUBE 2,5 MM PA,TRANSP.	
475	90166-0124	-	MM	1600	TUBE 6 MM PA,TRANSP.	
490	B90450-0105	C		1	5 STEPS CYLINDER MECMAN	
	90450-0634	*C*		*1*	*OVERHAUL KIT*	
500	90261-0036	-		2	PIPE PLUG "REPL.BY 90261-71"	
600	311103-0357	-		4	PARALLELL PIN, M6, 6X30 MM	
610	311103-0310	-		2	PARALLELL PIN, M6, 5X20 MM	
620	311112-0192	C		4	PIN, STRAIGHT SLOTTED SPRING FRP 2,5X24	
630	312105-0295	-		4	SCREW M6S M4X20 A280	
640	312105-0329	-		8	SCREW M6S M5X16 A280	
650	312105-0370	-		2	SCREW M6S M6X20 A280	
652	312105-0372	-		4	SCREW M6S M6X25 A280	
655	312109-0463	-		1	SCREW M6S M8X60H A4 80	
670	312115-0461	-		2	SCREW MC6S M8X50 A280	
675	312125-0285	-		1	SCREW SLOT.PAN HD. MCS 4X6 A480	
690	312155-0382	-		4	SCREW HEX.SOCK.COUNT.MF6S 6X60 A270	
700	312318-0459	-		2	SCREW SOCK.SET CUP P MSK6SS M8X40 A4	
720	312318-0499	-		1	SCREW SOCK.SET CUP P MSK6SS M10X40 A4	
740	312605-0318	-		2	HEXAGON NUT, M6M M8 A280	
750	312635-0320	-		2	NUT M6M 10X1 STAINLESS A2 80	
760	312805-0100	C		2	NUT ROUND WITH SLOTS M10X0,75 FE	
770	312805-0101	C		2	NUT ROUND WITH SLOTS M12X1 FE	
780	312811-0318	-		3	NUT HEX.LOCK HELI COIL MID GRIP M8 SS	
790	315105-0153	-		4	WASHER PLAIN, BRB, 6,4/12,H=1,5	

Machine Type | Group Description | Used-In | Group Number | Page No

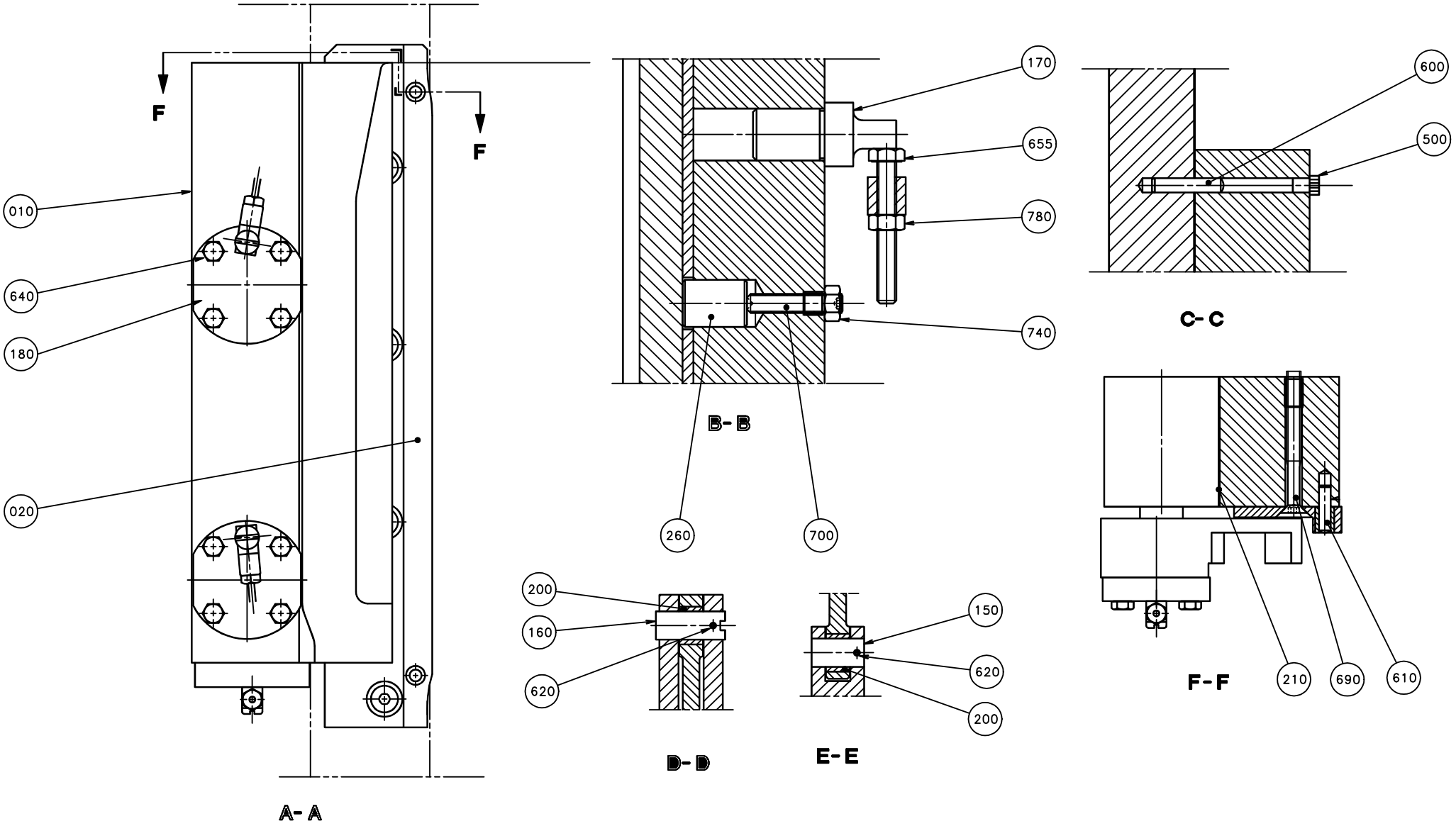
F
F
010
640
180
020
A- A
170
655
780
740
260
700
B- B
200
160
620
D- D
150
620
200
E- E
600
500
C- C
210
690
610
F- F

Pos	Part No	SP	UN	Qty	Description	Page No
Common Parts (Cont'd)						
800	315105-0165	-		2	WASHER PLAIN, BRB, 8,4/16,H=1,5	
830	315410-0100	C		2	LOCK WASHER MB 0 D=10 H=1	
840	315410-0101	C		2	LOCK WASHER MB 1 D=12 H=1	
850	315750-0107	-		1	RETAIN. RING, 10	
860	321309-0100	C		2	BALL BEARING, 10X30X9 MM	
870	321312-0100	C		2	BALL BEARING, 1 SEAL, 10X30X9 MM	
880	321312-0101	C		4	BALL BEARING, 1 SEAL, 12X32X10 MM	
890	342920-0113	-		4	STRAIGHT COUPLING,EXT.THREADED 6/4-R1/8"	
900	342946-0112	-		1	T-COUPLING,UNION 6/4	
910	342980-0113	-		2	BANJO-CONNECTION,RING 6/4-G1/8"	
920	342980-0303	-		2	BANJO-HOLLOW BOLT COUPL,EXT.THR.01-G1/8"	

Pos	Part No	SP	UN	Qty	Description	Page No

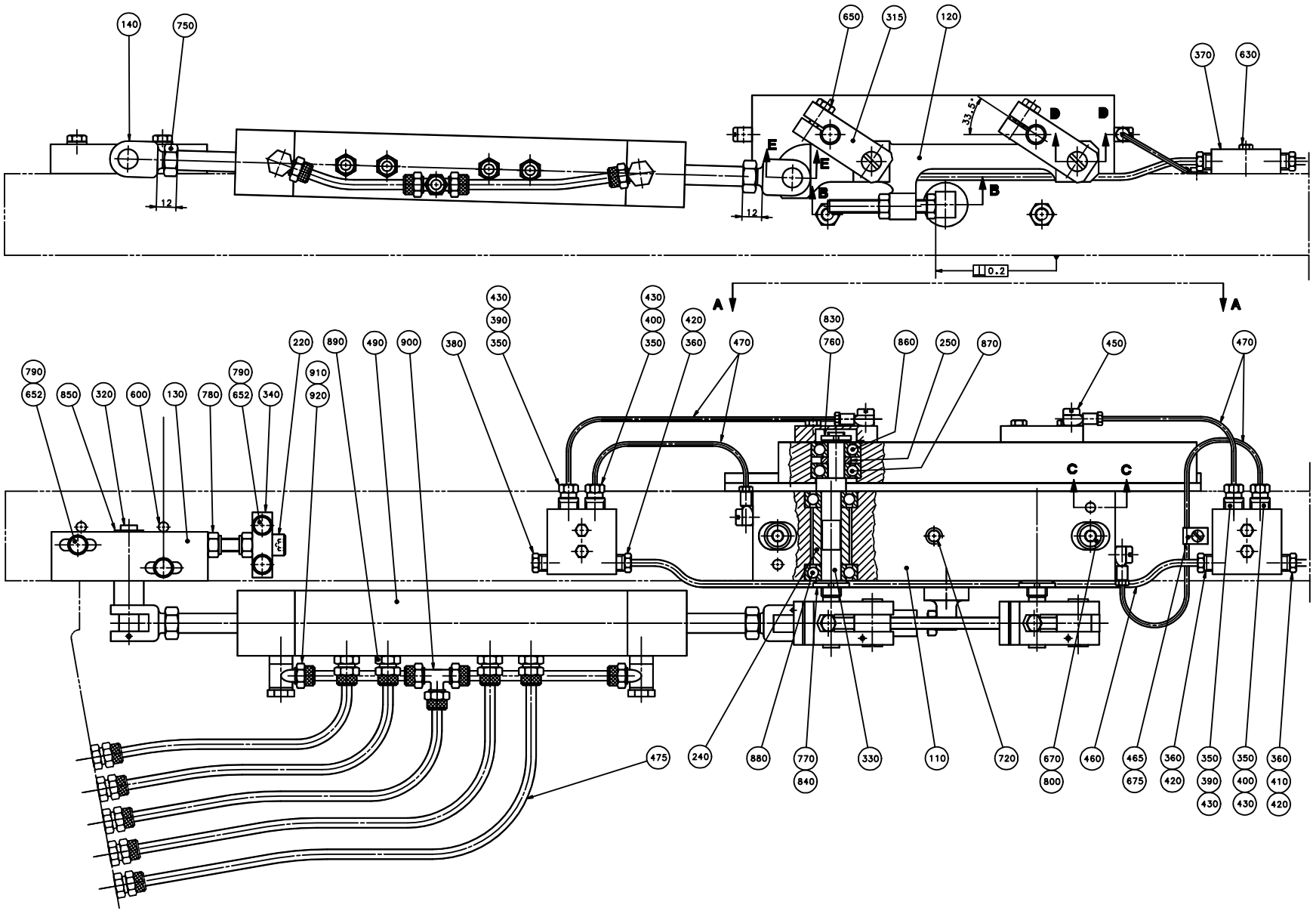
140
750
650
315
120
370
630
33.5°
D
D
E
E
B
B
12
12
0.2
A
A
430
390
350
430
400
350
420
360
470
830
760
860
250
870
450
470
790
652
850
320
600
130
780
790
652
340
910
920
220
890
490
900
380
C
C
475
240
880
770
840
330
110
720
670
800
460
465
675
360
420
350
390
430
350
400
430
360
410
420

ECM: 72090 - 19981214
Group number: 266447-0500
Assembly Drawing: 266447-4_1_AA

Issue: 20020121

Pos	Part No	SP	UN	Qty	Description	Page No
0375S OR 0750B						
010	550338-0000	C		1	FOLDING FLAP CAM R	
020	440511-0000	C		1	COUNTER CAM	
0355B						
010	537902-0000	C		1	FOLDING FLAP CAM R	
020	B529138-0000	C		1	CURVE RIGHT	
	311103-0401	*-*		*2*	*PARALLELL PIN, M6, 8X20 MM*	
0500B						
010	269109-0000	C		1	FOLDING FLAP CAM R	
020	269111-0000	C		1	COUNTER CAM	
0500S						
010	551286-0000	C		1	FOLDING FLAP CAM	
020	440931-0000	C		1	COUNTER CAM	
1000B HIFIN						
010	284233-0000	C		1	FOLDING FLAP CAM R	
020	284235-0000	C		1	COUNTER CAM	
1000B LOFIN OR 0750S						
010	268955-0000	C		1	FOLDING FLAP CAM R	
020	269060-0000	C		1	COUNTER CAM	
1000SQ OR 1000S						
010	565189-0000	C		1	FOLDING FLAP CAM	
020	269060-0000	C		1	COUNTER CAM	
Common Parts						
110	23292-0000	C		1	BEARING HOUSING	
120	436740-0000	C		1	LINK	
130	20718-0000	D		1	BEARING	
140	22483-0000	C		2	FORK	
150	22485-0000	C		1	DOWEL	
160	22486-0000	C		2	DOWEL	
170	22504-0000	C		1	STOP LUG	
180	23291-0000	C		2	BEARING COVER	
200	23312-0000	C		3	BUSHING	
210	26426-0000	C		5	LACE	
220	33409-0000	C		1	SCREW	
240	107334-0000	C		2	SPACER SLEEVE	
250	107335-0000	C		2	SPACER RING	
260	107339-0000	C		2	DOWEL	
315	434387-0000	C		2	BRACKET	
320	434388-0000	C		1	SHAFT	
330	436671-0000	C		2	ECCENTRIC SHAFT	
340	561416-0000	C		1	BRACKET	
350	90028-0020	C		4	CONE TUBE 2,5MM	
360	90028-0021	C		3	CONE TUBE 4 MM	
370	90032-0038	-		2	BLOCK 2 WAYS	
380	90087-0019	-		1	PLUG M10X1 STAINLESS	
390	90092-0052	C		2	METERING VALVE 10 MM3	
400	90092-0054	C		2	METERING VALVE 50 MM3	
410	90134-0031	C		1	SLEEVE FOR PLASTIC TUBE	
420	90134-0038	C		3	BUSHING/NUT INLET/OUTLET 4 MM	
430	90134-0039	C		4	BUSHING VALVE CONNECTION 2,5 MM	
450	90134-0058	C		4	CONNECTION	
460	90151-0001	-	MM	400	BRASS PIPE DI=2,6 MM	
465	90165-0058	-		1	PIPE CLIP FOR TUBE D=25 MM	
470	90166-0143	-	MM	700	TUBE 2,5 MM PA,TRANSP.	
475	90166-0124	-	MM	1600	TUBE 6 MM PA,TRANSP.	
490	B90450-0105	C		1	5 STEPS CYLINDER MECMAN	
	90450-0634	*C*		*1*	*OVERHAUL KIT*	
500	90261-0036	-		2	PIPE PLUG "REPL.BY 90261-71"	
600	311103-0357	-		4	PARALLELL PIN, M6, 6X30 MM	
610	311103-0310	-		2	PARALLELL PIN, M6, 5X20 MM	
620	311112-0192	C		4	PIN, STRAIGHT SLOTTED SPRING FRP 2,5X24	
630	312105-0295	-		4	SCREW M6S M4X20 A280	
640	312105-0329	-		8	SCREW M6S M5X16 A280	
650	312105-0370	-		2	SCREW M6S M6X20 A280	
652	312105-0372	-		4	SCREW M6S M6X25 A280	
655	312109-0463	-		1	SCREW M6S M8X60H A4 80	
670	312115-0461	-		2	SCREW MC6S M8X50 A280	
675	312125-0285	-		1	SCREW SLOT.PAN HD. MCS 4X6 A480	
690	312155-0382	-		4	SCREW HEX.SOCK.COUNT.MF6S 6X60 A270	
700	312318-0459	-		2	SCREW SOCK.SET CUP P MSK6SS M8X40 A4	
720	312318-0499	-		1	SCREW SOCK.SET CUP P MSK6SS M10X40 A4	
740	312605-0318	-		2	HEXAGON NUT, M6M M8 A280	
750	312635-0320	-		2	NUT M6M 10X1 STAINLESS A2 80	
760	312805-0100	C		2	NUT ROUND WITH SLOTS M10X0,75 FE	
770	312805-0101	C		2	NUT ROUND WITH SLOTS M12X1 FE	
780	312811-0318	-		3	NUT HEX.LOCK HELI COIL MID GRIP M8 SS	
790	315105-0153	-		4	WASHER PLAIN, BRB, 6,4/12,H=1,5	

Machine Type | Group Description | Used-In | Group Number | Page No

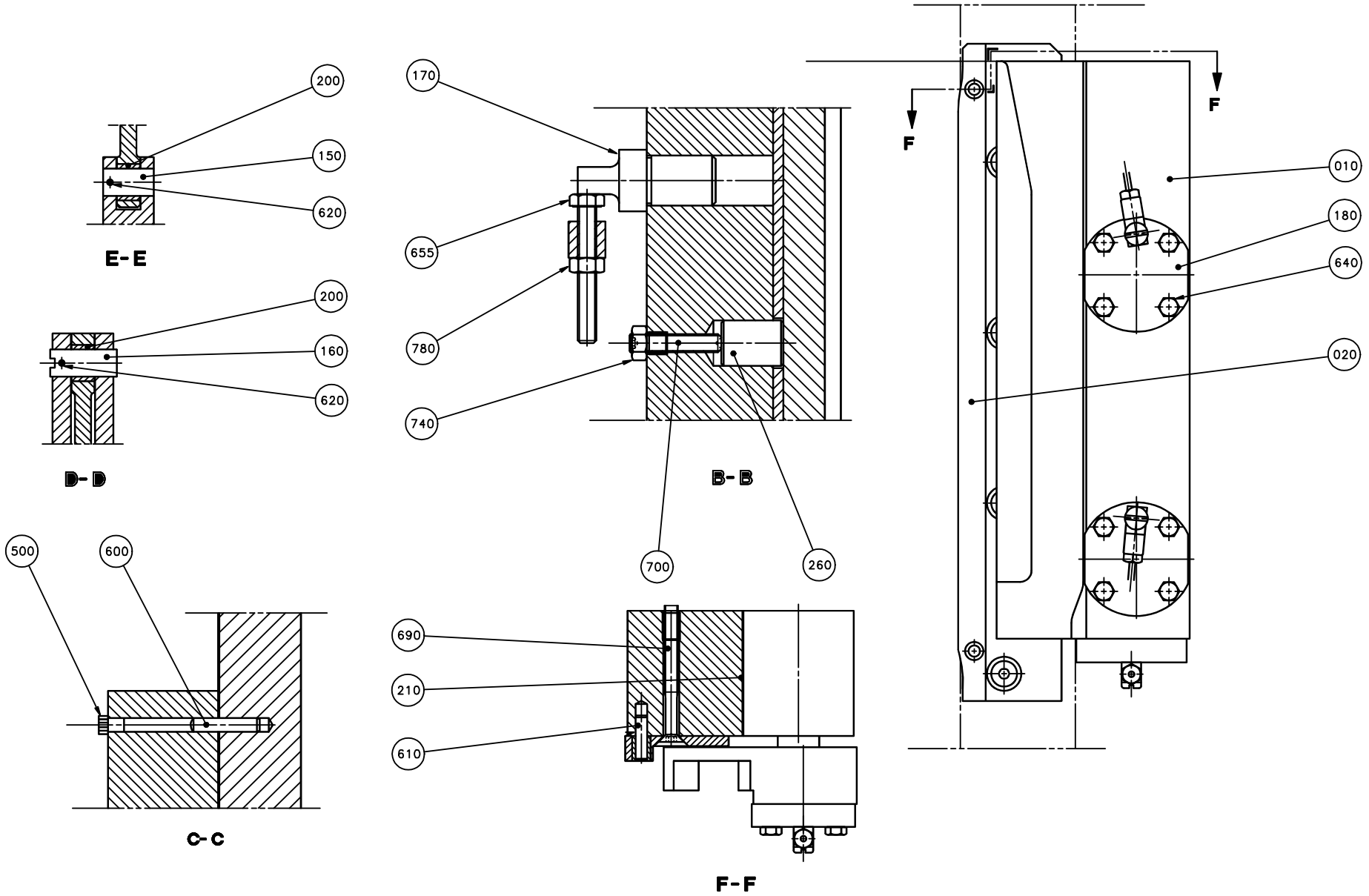
200
150
620
E-E
200
160
620
D-D
500
600
C-C
170
655
780
740
B-B
700
260
690
210
610
F-F
F
F
010
180
640
020

Pos	Part No	SP	UN	Qty	Description	Page No
Common Parts (Cont'd)						
800	315105-0165	-		2	WASHER PLAIN, BRB, 8,4/16,H=1,5	
830	315410-0100	C		2	LOCK WASHER MB 0 D=10 H=1	
840	315410-0101	C		2	LOCK WASHER MB 1 D=12 H=1	
850	315750-0107	-		1	RETAIN. RING, 10	
860	321309-0100	C		2	BALL BEARING, 10X30X9 MM	
870	321312-0100	C		2	BALL BEARING, 1 SEAL, 10X30X9 MM	
880	321312-0101	C		4	BALL BEARING, 1 SEAL, 12X32X10 MM	
890	342920-0113	-		4	STRAIGHT COUPLING,EXT.THREADED 6/4-R1/8"	
900	342946-0112	-		1	T-COUPLING,UNION 6/4	
910	342980-0113	-		2	BANJO-CONNECTION,RING 6/4-G1/8"	
920	342980-0303	-		2	BANJO-HOLLOW BOLT COUPL,EXT.THR.01-G1/8"	

Pos	Part No	SP	UN	Qty	Description	Page No

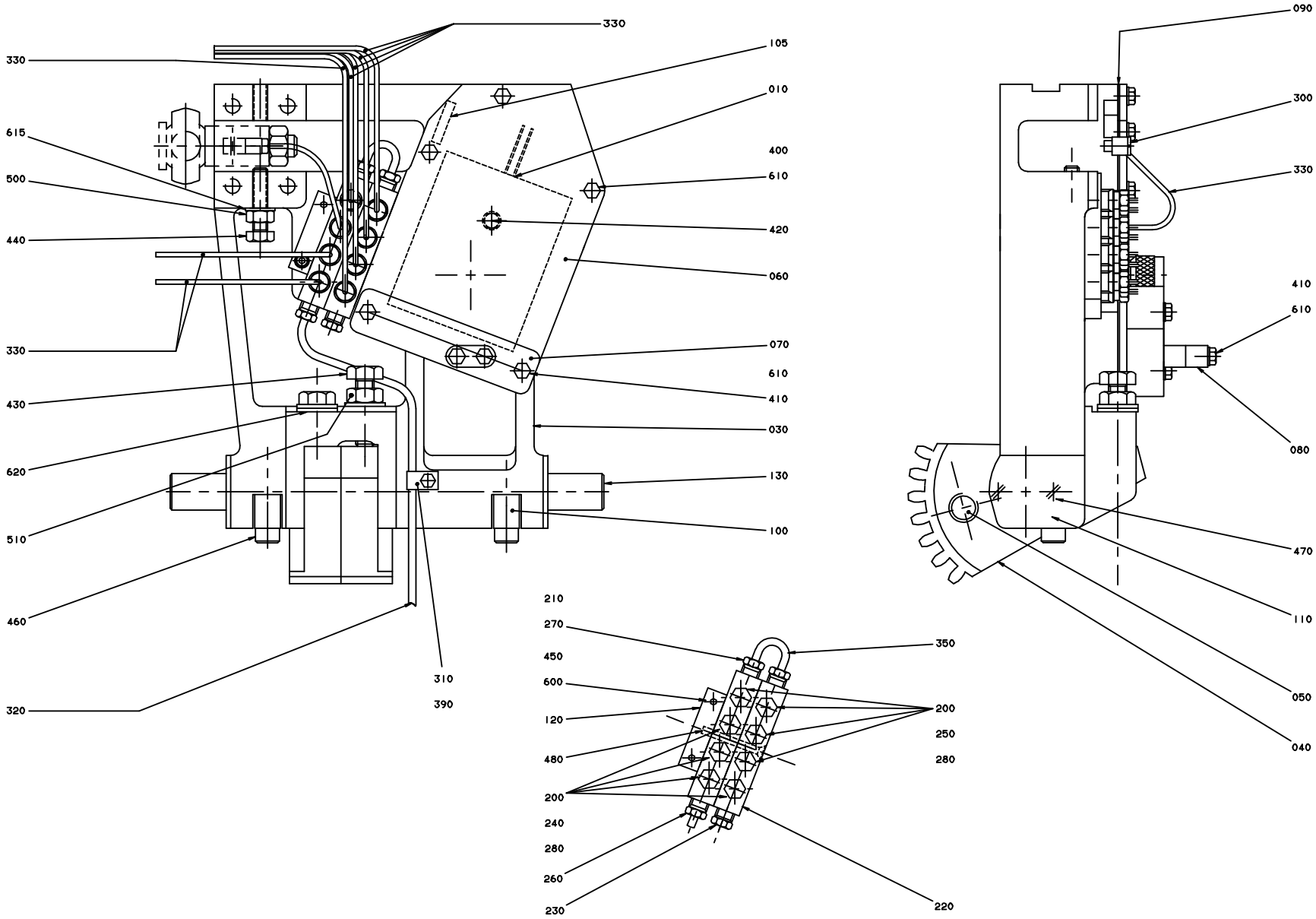
330
330
105
010
615
400
500
610
440
420
060
330
070
610
430
410
030
620
130
510
100
460
310
390
320
090
300
330
410
610
080
470
110
050
040
210
270
450
600
120
480
200
240
280
260
230
350
200
250
280
220

ECM: 86996 - 20001215
Group number: 541052-0100
Assembly Drawing: 541052-1_1_AC

Issue: 20020121

Pos	Part No	SP	UN	Qty	Description	Page No
TBA 0500B OR TBA 0750B OR TBA 1000S OR TBA 1000B OR TBA 0750S						
010	67379-0101	C		1	IMPEDANCE TRANSFORMER	
TBA 0500S OR TBA 0355B OR TBA 0375S OR TBA 1000SQ						
010	67379-0102	C		1	IMPEDANCE TRANSFORMER	
Common Parts						
030	545410-0000	C		1	ARM LEFT	
040	232236-0000	C		2	TOOTH PART	
050	232237-0000	C		1	SCREW	
060	464366-0000	D		1	LID	
070	464367-0000	C		1	CRAMP	
080	464368-0000	C		2	CRAMP	
090	484843-0000	C		1	GASKET	
100	533818-0000	C		2	HOLDER	
105	534237-0000	C		1	SEAL	
110	536704-0000	C		2	WASHER	
120	536705-0000	D		1	BRACKET	
130	538399-0000	C		1	SHAFT	
200	90028-0020	C		8	CONE TUBE 2,5MM	
210	90028-0021	C		3	CONE TUBE 4 MM	
220	90032-0039	-		2	BLOCK 4 WAYS	
230	90087-0019	-		1	PLUG M10X1 STAINLESS	
240	90092-0052	C		4	METERING VALVE 10 MM3	
250	90092-0053	C		4	METERING VALVE 30 MM3	
260	90134-0031	C		1	SLEEVE FOR PLASTIC TUBE	
270	90134-0038	C		3	BUSHING/NUT INLET/OUTLET 4 MM	
280	90134-0039	C		8	BUSHING VALVE CONNECTION 2,5 MM	
300	90134-0058	C		1	CONNECTION	
310	90165-0056	-		1	PIPE CLIP FOR TUBE D=4 MM	
320	90166-0109	-	MM	800	TUBE 4 MM PA,TRANSP.	
330	90166-0143	-	MM	3000	TUBE 2,5 MM PA,TRANSP.	
350	90266-0165	-	MM	100	BRASS PIPE	
390	312105-0287	-		1	SCREW M6S M4X8 A280	
400	312105-0327	-		3	SCREW M6S M5X12 A280	
410	312105-0335	-		4	SCREW M6S M5X30 A280	
420	312105-0343	-		1	SCREW M6S M5X60 A280	
430	312105-0497	-		2	SCREW M6S M10X35 A280	
440	312109-0457	-		1	SCREW M6S M8X35 A280	
450	312115-0303	-		2	SCREW MC6S M4X40 A280	
460	312115-0455	-		2	SCREW MC6S M8X30 A280	
470	312145-0285	-		4	SCREW COUNTERS.SLOT.HD. MFS 4X6 SS	
480	312155-0301	-		1	SCREW HEX.SOCK.COUNT.MF6S M4X35 A480	
500	312605-0318	-		1	HEXAGON NUT, M6M M8 A280	
510	312605-0320	-		1	HEXAGON NUT, M6M M10 A280	
600	315105-0136	-		2	WASHER PLAIN, BRB, 4,3/8,H=0,8	
610	315105-0146	-		7	WASHER PLAIN, BRB, 5,3/10,H=1	
615	315105-0165	-		1	WASHER PLAIN, BRB, 8,4/16,H=1,5	
620	315105-0173	-		3	WASHER PLAIN, BRB, 10,5/22,H=2	

Machine Type | Group Description | Used-In | Group Number | Page No

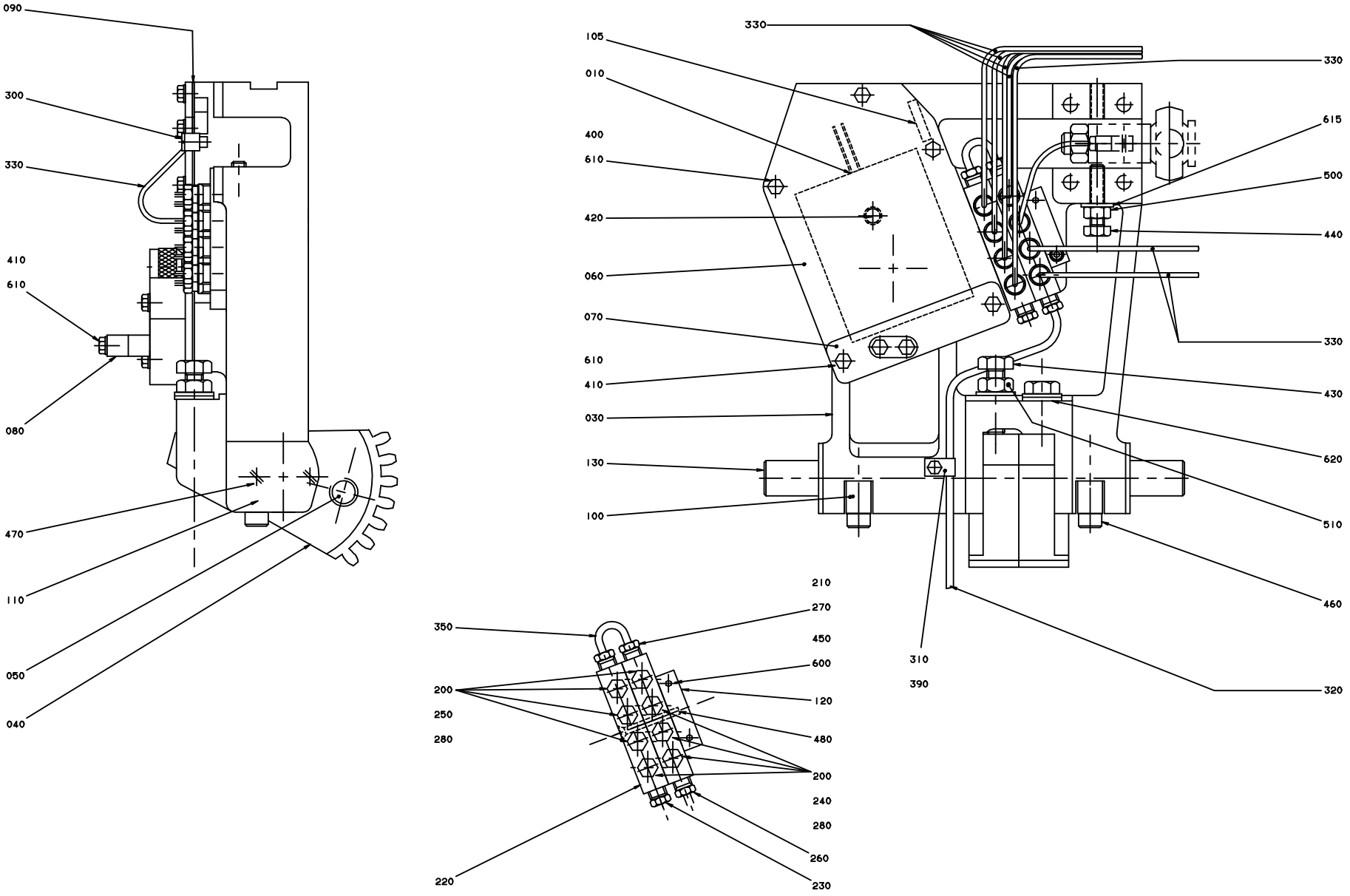
090
300
330
410
610
080
470
110
050
040
330
105
010
400
610
420
060
070
610
410
030
130
100
330
615
500
440
330
430
620
510
460
320
310
390
210
270
450
600
120
480
200
240
280
260
230
350
200
250
280
220

ECM: 86997 - 20001215
Group number: 541053-0100
Assembly Drawing: 541053-1_1_AC

Issue: 20020121

Pos	Part No	SP	UN	Qty	Description	Page No
TBA 0500B OR TBA 0750B OR TBA 1000S OR TBA 1000B OR TBA 0750S						
010	67379-0101	C		1	IMPEDANCE TRANSFORMER	
TBA 0500S OR TBA 0355B OR TBA 0375S OR TBA 1000SQ						
010	67379-0102	C		1	IMPEDANCE TRANSFORMER	
Common Parts						
030	545409-0000	C		1	ARM RIGHT	
040	232236-0000	C		2	TOOTH PART	
050	232237-0000	C		1	SCREW	
060	464366-0000	D		1	LID	
070	464367-0000	C		1	CRAMP	
080	464368-0000	C		2	CRAMP	
090	484843-0000	C		1	GASKET	
100	533818-0000	C		2	HOLDER	
105	534237-0000	C		1	SEAL	
110	536704-0000	C		2	WASHER	
120	536705-0000	D		1	BRACKET	
130	538399-0000	C		1	SHAFT	
200	90028-0020	C		8	CONE TUBE 2,5MM	
210	90028-0021	C		3	CONE TUBE 4 MM	
220	90032-0039	-		2	BLOCK 4 WAYS	
230	90087-0019	-		1	PLUG M10X1 STAINLESS	
240	90092-0052	C		4	METERING VALVE 10 MM3	
250	90092-0053	C		4	METERING VALVE 30 MM3	
260	90134-0031	C		1	SLEEVE FOR PLASTIC TUBE	
270	90134-0038	C		3	BUSHING/NUT INLET/OUTLET 4 MM	
280	90134-0039	C		8	BUSHING VALVE CONNECTION 2,5 MM	
300	90134-0058	C		1	CONNECTION	
310	90165-0056	-		1	PIPE CLIP FOR TUBE D=4 MM	
320	90166-0109	-	MM	800	TUBE 4 MM PA,TRANSP.	
330	90166-0143	-	MM	3000	TUBE 2,5 MM PA,TRANSP.	
350	90266-0165	-	MM	100	BRASS PIPE	
390	312105-0287	-		1	SCREW M6S M4X8 A280	
400	312105-0327	-		3	SCREW M6S M5X12 A280	
410	312105-0335	-		4	SCREW M6S M5X30 A280	
420	312105-0343	-		1	SCREW M6S M5X60 A280	
430	312105-0497	-		2	SCREW M6S M10X35 A280	
440	312109-0457	-		1	SCREW M6S M8X35 A280	
450	312115-0303	-		2	SCREW MC6S M4X40 A280	
460	312115-0455	-		2	SCREW MC6S M8X30 A280	
470	312145-0285	-		4	SCREW COUNTERS.SLOT.HD. MFS 4X6 SS	
480	312155-0301	-		1	SCREW HEX.SOCK.COUNT.MF6S M4X35 A480	
500	312605-0318	-		1	HEXAGON NUT, M6M M8 A280	
510	312605-0320	-		1	HEXAGON NUT, M6M M10 A280	
600	315105-0136	-		2	WASHER PLAIN, BRB, 4,3/8,H=0,8	
610	315105-0146	-		7	WASHER PLAIN, BRB, 5,3/10,H=1	
615	315105-0165	-		1	WASHER PLAIN, BRB, 8,4/16,H=1,5	
620	315105-0173	-		3	WASHER PLAIN, BRB, 10,5/22,H=2	

Machine Type | Group Description | Used-In | Group Number | Page No

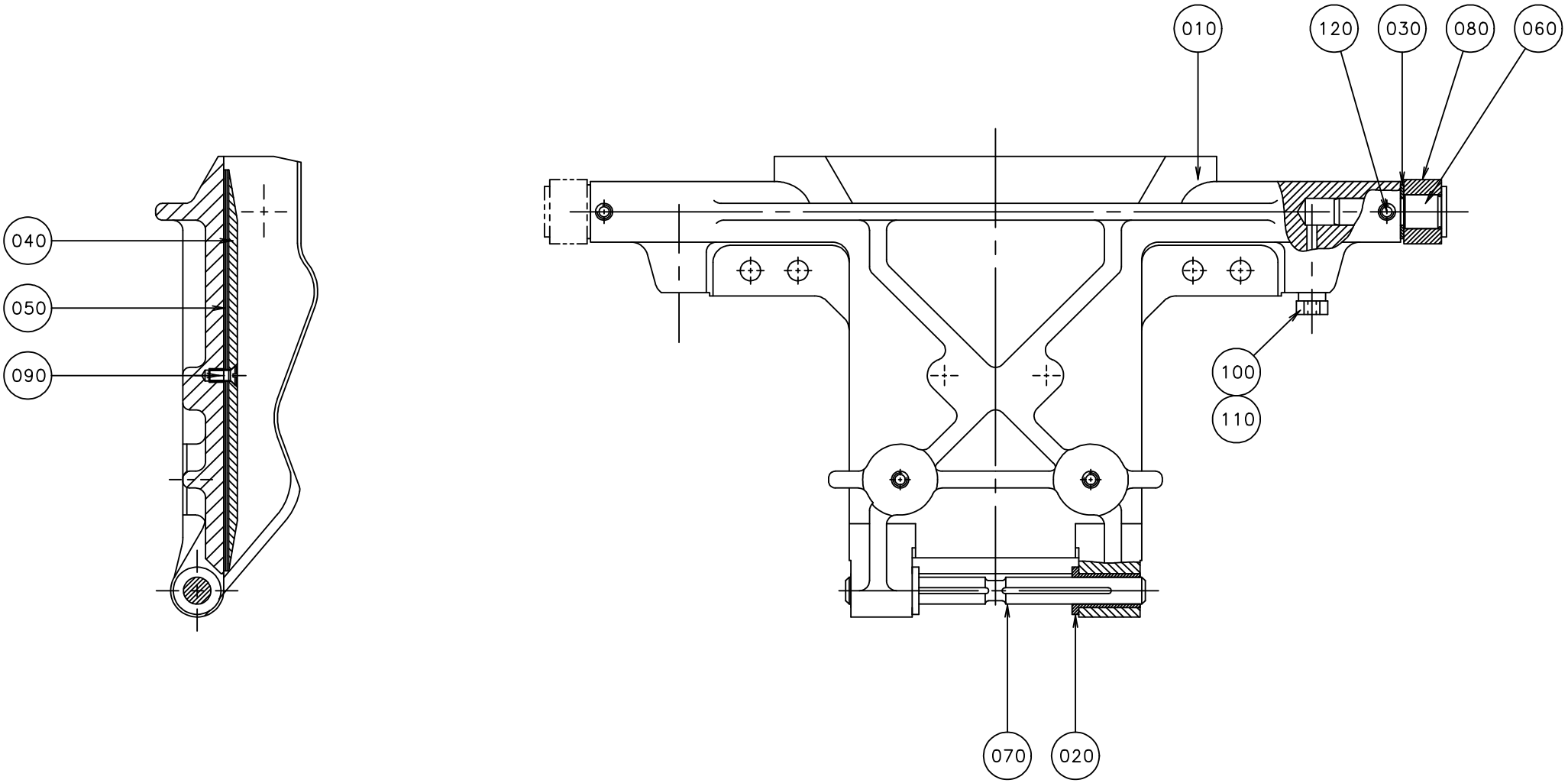
010
120
030
080
060
040
050
090
100
110
070
020

ECM: 102945 - 20020102
Group number: 1487405-0100
Assembly Drawing: 1487405-1_1_AA
Issue: 20020121

Pos	Part No	SP	UN	Qty	Description	Page No
TBA/8 0355B IH						
010	529000-0000	A		2	VOLUME FLAP	
020	449908-0000	A		4	BUSHING	
040	536686-0000	B		2	VOLUME BULGE	
050	536687-0000	B		6	VOLUME SHIM	
070	458165-0000	A		2	SHAFT	
080	436556-0000	A		2	CURVE ROLLER	
090	312145-0289	-		4	SCREW COUNTERS.SLOT.HD. MFS 4X10 SS	
TBA/8 0375S IH						
010	571486-0000	A		2	VOLUME FLAP	
020	449908-0000	A		4	BUSHING	
040	255227-0001	B		2	VOLUME BULGE	
050	255228-0001	B		6	VOLUME SHIM	
070	458165-0000	A		2	SHAFT	
080	436556-0000	A		2	CURVE ROLLER	
090	312145-0222	-		4	SCREW COUNTERS.SLOT.HD. MFS 3X8 SS	
TBA/8 0500B IH						
010	476115-0000	A		2	VOLUME FLAP	
020	36133-0000	A		4	BUSHING	
040	458467-0000	B		2	VOLUME BULGE	
050	479245-0000	B		6	VOLUME SHIM	
070	458164-0000	A		2	SHAFT	
080	436556-0000	A		2	CURVE ROLLER	
090	312145-0289	-		4	SCREW COUNTERS.SLOT.HD. MFS 4X10 SS	
TBA/8 0500S IH						
010	592923-0000	A		2	VOLUME FLAP	
020	449908-0000	A		4	BUSHING	
040	464314-0000	B		2	VOLUME BULGE	
050	464315-0000	B		6	VOLUME SHIM	
070	458165-0000	A		2	SHAFT	
080	434321-0000	A		2	CURVE ROLLER	
090	312145-0222	-		4	SCREW COUNTERS.SLOT.HD. MFS 3X8 SS	
TBA/8 0750B IH						
010	544504-0000	A		2	VOLUME FLAP	
020	36133-0000	A		4	BUSHING	
040	450781-0000	B		2	VOLUME BULGE	
050	450782-0000	B		6	VOLUME SHIM	
070	458164-0000	A		2	SHAFT	
080	436556-0000	A		2	CURVE ROLLER	
090	312145-0222	-		4	SCREW COUNTERS.SLOT.HD. MFS 3X8 SS	
TBA/8 0750S IH						
010	555926-0000	A		2	VOLUME FLAP	
020	36133-0000	A		4	BUSHING	
040	555892-0000	B		2	VOLUME BULGE	
050	555928-0000	B		6	VOLUME SHIM	
070	544292-0000	A		2	SHAFT	
080	434321-0000	A		2	CURVE ROLLER	
090	312145-0222	-		4	SCREW COUNTERS.SLOT.HD. MFS 3X8 SS	
TBA/8 1000B HIFIN IH OR TBA/8 1000B LOFIN IH						
010	1484831-0000	A		1	VOLUME FLAP	
020	36133-0000	A		2	BUSHING	
040	26075-0000	B		1	VOLUME BULGE	
050	208709-0000	B		3	VOLUME SHIM	
070	458164-0000	A		1	SHAFT	
080	434321-0000	A		1	CURVE ROLLER	
090	312145-0222	-		2	SCREW COUNTERS.SLOT.HD. MFS 3X8 SS	
TBA/8 1000S IH						
010	1512506-0000	A		1	VOLUME FLAP	
020	36133-0000	A		2	BUSHING	
040	569055-0000	B		1	VOLUME BULGE	
050	569056-0000	B		3	VOLUME SHIM	
070	458164-0000	A		1	SHAFT	
080	434321-0000	A		1	CURVE ROLLER	
090	312145-0289	-		2	SCREW COUNTERS.SLOT.HD. MFS 4X10 SS	
TBA/8 1000SQ IH						
010	1519643-0000	A		1	VOLUME FLAP	
020	36133-0000	A		2	BUSHING	
040	1143049-0000	B		1	VOLUME BULGE	
050	1143050-0000	B		3	VOLUME SHIM	
070	544292-0000	A		1	SHAFT	
080	434321-0000	A		1	CURVE ROLLER	
090	312145-0289	-		2	SCREW COUNTERS.SLOT.HD. MFS 4X10 SS	
Common Parts						
030	19972-0000	B		1	WASHER	
060	434320-0000	A		1	AXLE PIN	

Machine Type | Group Description | Used-In | Group Number | Page No

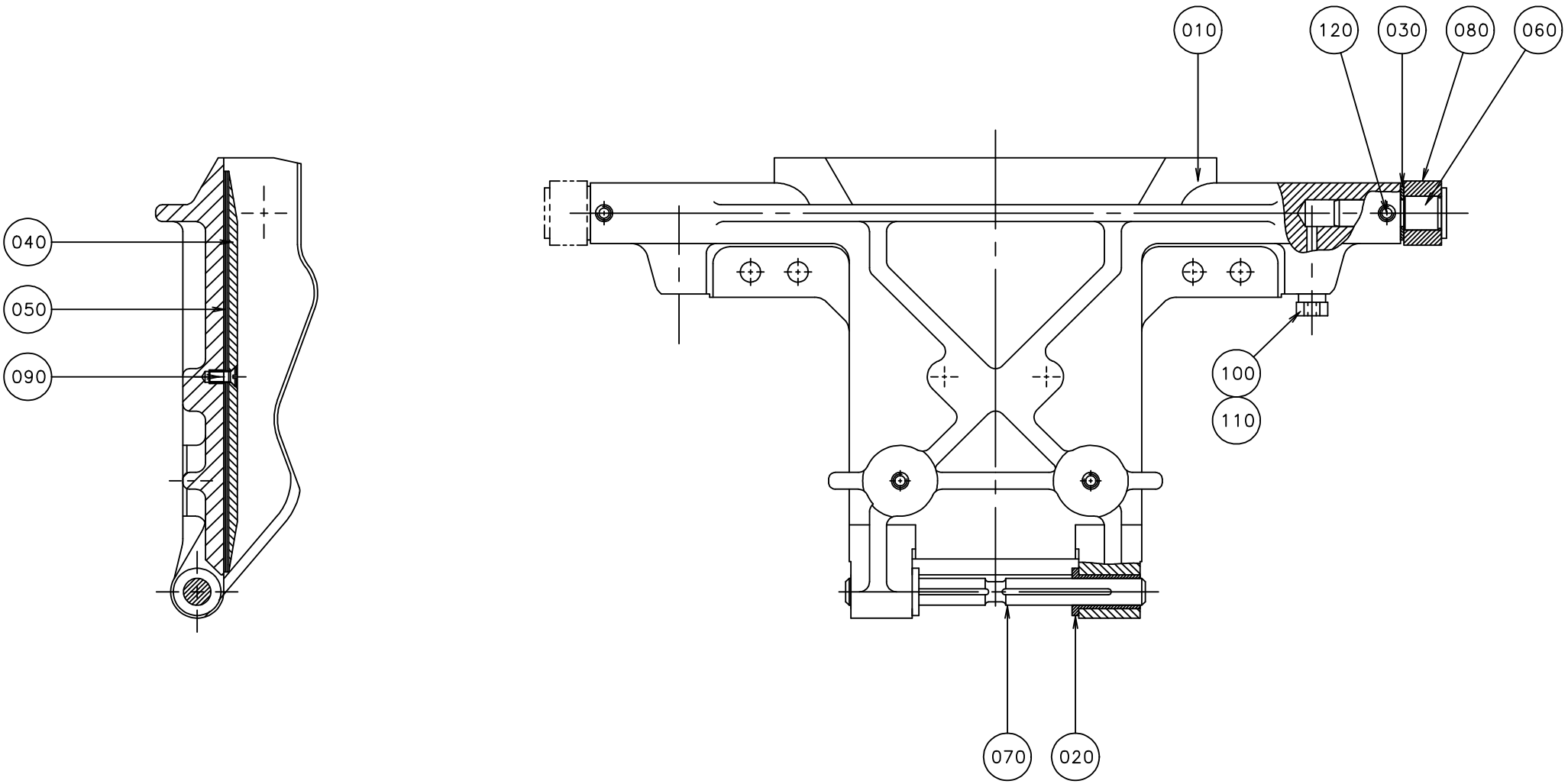
010
120
030
080
060
040
050
090
100
110
070
020

Pos	Part No	SP	UN	Qty	Description	Page No
Common Parts (Cont'd)						
100	90028-0020	B		1	CONE TUBE 2,5MM	
110	90134-0063	B		1	BUSHING/NUT M8X1, D=2,5 MM	
120	312318-0285	-		1	SCREW SOCK.SET CUP P MSK6SS M4X6 A4	

Pos	Part No	SP	UN	Qty	Description	Page No

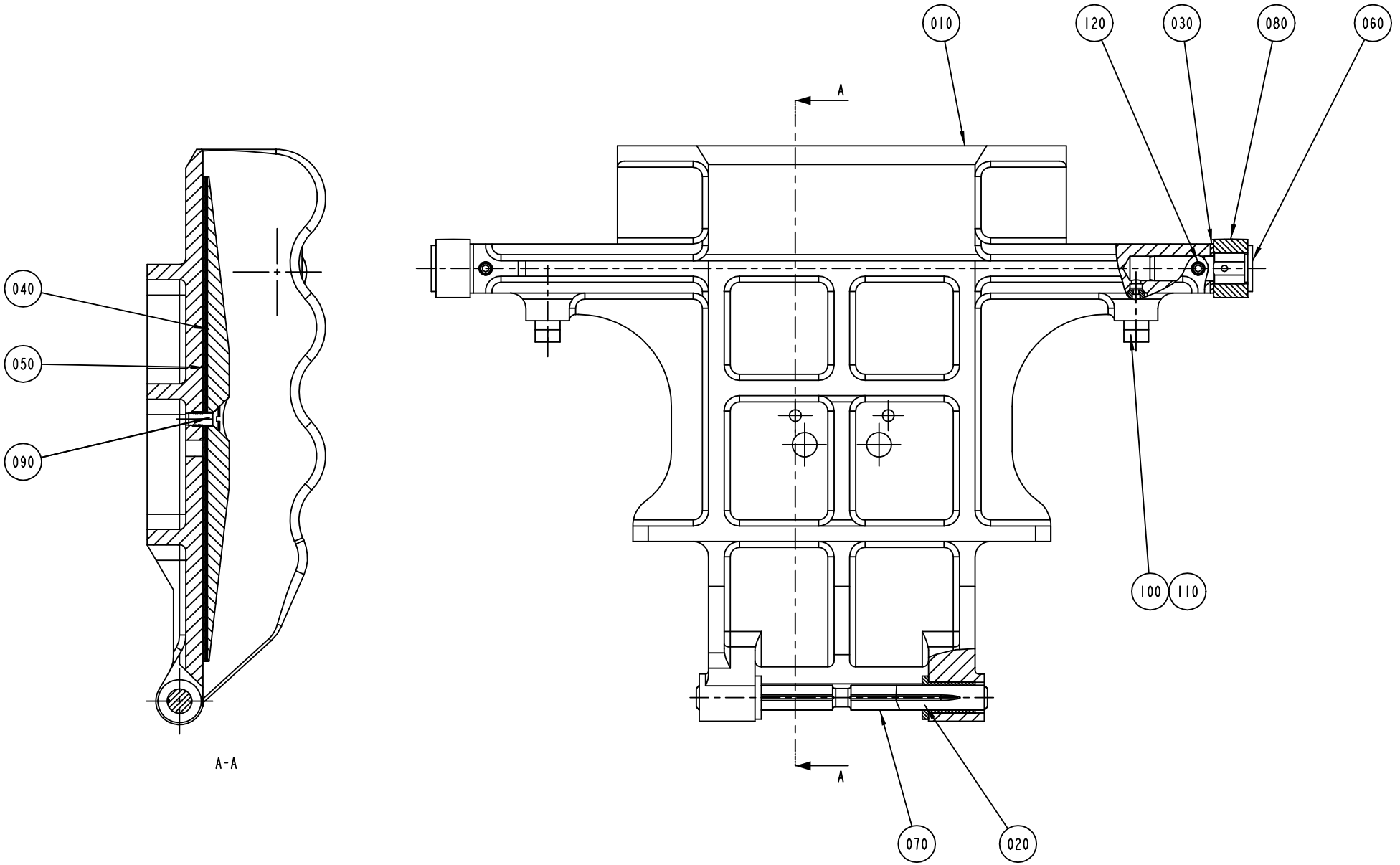
010
120
030
080
060
A
040
050
090
100
110
A-A
A
070
020

Pos	Part No	SP	UN	Qty	Description	Page No
TBA/8 1000B IH						
010	1484832-0000	A		1	VOLUME FLAP	
040	26075-0000	B		1	VOLUME BULGE	
050	208709-0000	B		3	VOLUME SHIM	
070	458164-0000	A		1	SHAFT	
TBA/8 1000S IH						
010	1512505-0000	A		1	VOLUME FLAP	
040	569055-0000	B		1	VOLUME BULGE	
050	569056-0000	B		3	VOLUME SHIM	
070	458164-0000	A		1	SHAFT	
TBA/8 1000SQ IH						
010	1519645-0000	A		1	VOLUME FLAP	
040	1143049-0000	B		1	VOLUME BULGE	
050	1143050-0000	B		3	VOLUME SHIM	
070	544292-0000	A		1	SHAFT	
Common Parts						
020	36133-0000	A		2	BUSHING	
030	19972-0000	B		1	WASHER	
060	434320-0000	A		1	AXLE PIN	
080	434321-0000	A		1	CURVE ROLLER	
090	312145-0289	-		2	SCREW COUNTERS.SLOT.HD. MFS 4X10 SS	
100	90028-0020	B		1	CONE TUBE 2,5MM	
110	90134-0063	B		1	BUSHING/NUT M8X1, D=2,5 MM	
120	312318-0285	-		1	SCREW SOCK.SET CUP P MSK6SS M4X6 A4	

Pos	Part No	SP	UN	Qty	Description	Page No

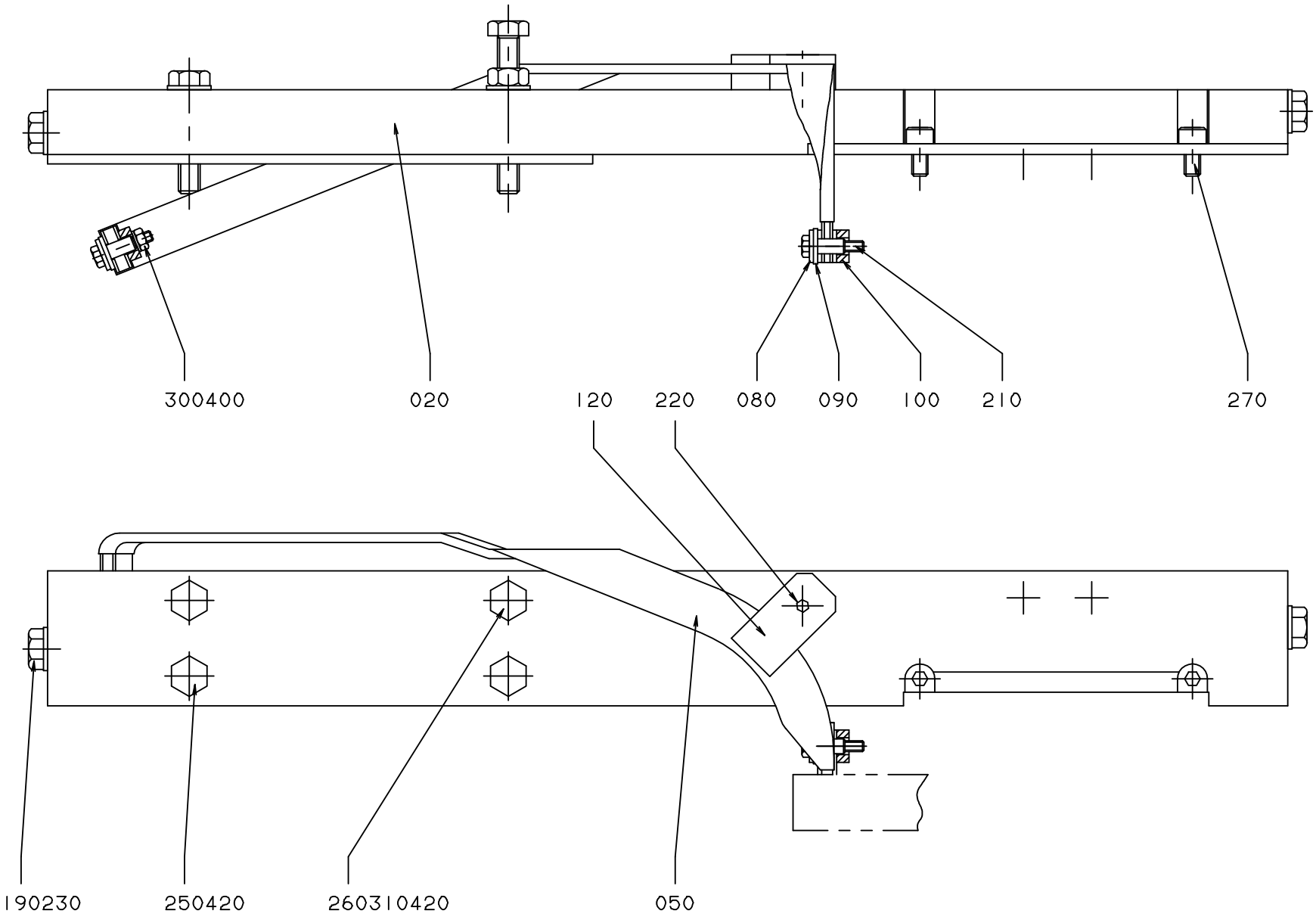
300400
020
120
220
080
090
100
210
270
190230
250420
260310420
050

ECM: 95688 - 20010906
Group number: 259414-0500
Assembly Drawing: 259414-3_1_AB

Issue: 20020121

Pos	Part No	SP	UN	Qty	Description	Page No
Common Parts						
020	540368-0000	C		1	CARRIER	
050	540744-0000	C		1	BUSBAR	
080	28509-0000	C		2	WASHER	
090	32544-0000	C		2	INSULATION NUT	
100	32644-0000	C		2	WASHER	
120	1285367-0000	C		1	HOLDER	
190	90005-0007	-		2	GASKET BOLT HEAD 8,7X14X1 MM M8	
210	312105-0295	-		2	SCREW M6S M4X20 A280	
220	312155-0372	-		1	SCREW HEX.SOCK.COUNT.MF6S M6X25 A280	
230	312105-0447	-		2	SCREW M6S M8X12 A280	
250	312105-0457	-		3	SCREW M6S M8X35 A280	
260	312109-0463	-		1	SCREW M6S M8X60H A4 80	
270	312115-0366	-		2	SCREW MC6S M6X12 A280	
300	312605-0312	-		1	HEXAGON NUT, M6M M4 A280	
310	312605-0318	-		1	HEXAGON NUT, M6M M8 A280	
400	315105-0136	-		1	WASHER PLAIN, BRB, 4,3/8,H=0,8	
420	315105-0165	-		4	WASHER PLAIN, BRB, 8,4/16,H=1,5	

Pos	Part No	SP	UN	Qty	Description	Page No

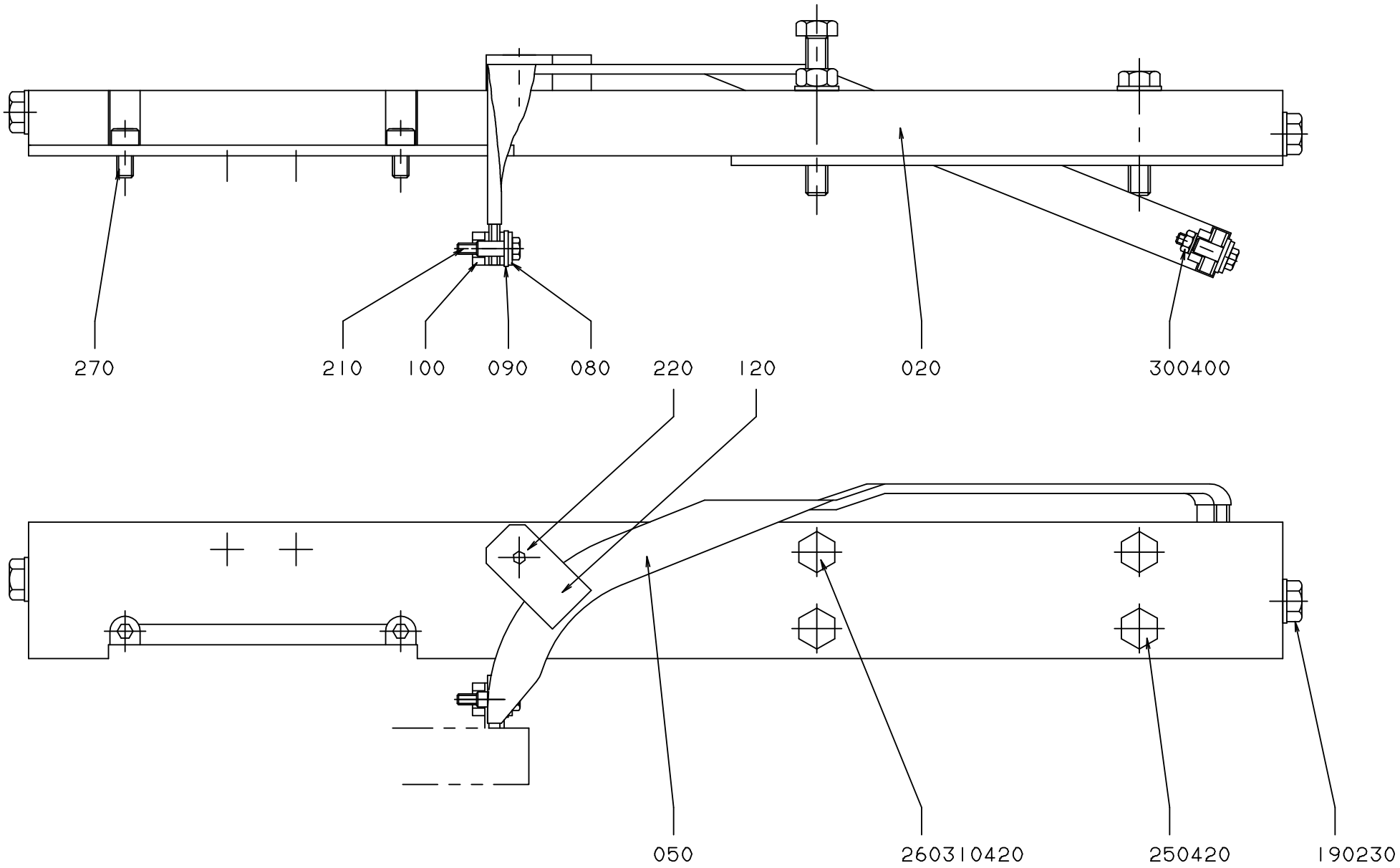
270
210
100
090
080
220
120
020
300400
050
260310420
250420
190230

ECM: 95689 - 20010906
Group number: 259415-0500
Assembly Drawing: 259415-3_1_AB

Issue: 20020121

Pos	Part No	SP	UN	Qty	Description	Page No
Common Parts						
020	540367-0000	C		1	CARRIER	
050	540743-0000	C		1	BUSBAR	
080	28509-0000	C		2	WASHER	
090	32544-0000	C		2	INSULATION NUT	
100	32644-0000	C		2	WASHER	
120	1285367-0000	C		1	HOLDER	
190	90005-0007	-		2	GASKET BOLT HEAD 8,7X14X1 MM M8	
210	312105-0295	-		2	SCREW M6S M4X20 A280	
220	312155-0372	-		1	SCREW HEX.SOCK.COUNT.MF6S M6X25 A280	
230	312105-0447	-		2	SCREW M6S M8X12 A280	
250	312105-0457	-		3	SCREW M6S M8X35 A280	
260	312109-0463	-		1	SCREW M6S M8X60H A4 80	
270	312115-0366	-		2	SCREW MC6S M6X12 A280	
300	312605-0312	-		1	HEXAGON NUT, M6M M4 A280	
310	312605-0318	-		1	HEXAGON NUT, M6M M8 A280	
400	315105-0136	-		1	WASHER PLAIN, BRB, 4,3/8,H=0,8	
420	315105-0165	-		4	WASHER PLAIN, BRB, 8,4/16,H=1,5	

Pos	Part No	SP	UN	Qty	Description	Page No

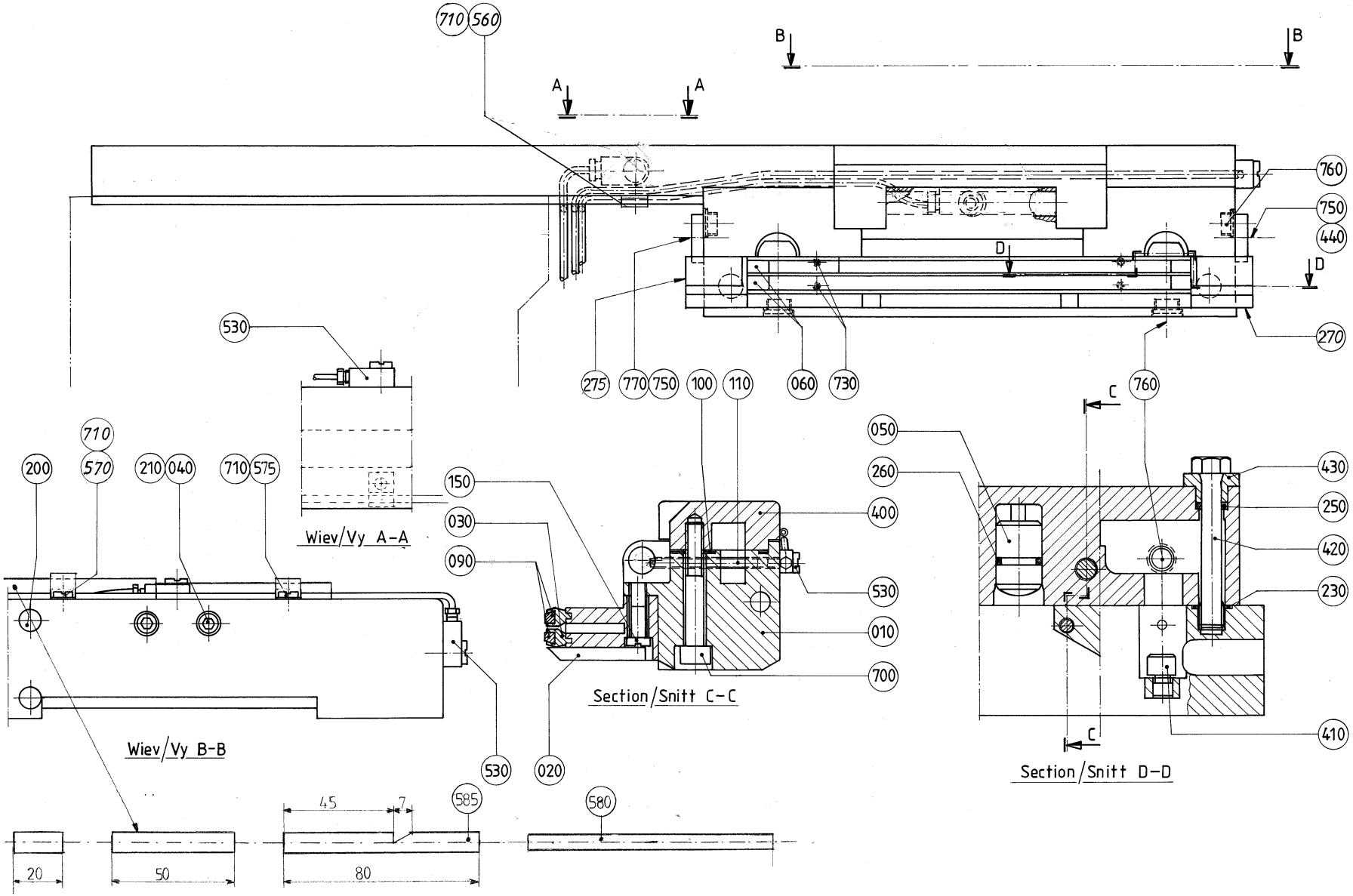
710
560
A
A
B
B
760
750
440
D
D
270
530
275
770
750
100
110
060
730
760
C
710
200
570
210
040
710
575
150
030
090
Wiev/Vy A-A
050
260
400
530
010
700
Section/Snitt C-C
430
250
420
230
410
C
Section/Snitt D-D
Wiev/Vy B-B
530
020
585
580
45
7
20
50
80

ECM: 86999 - 20001215
Group number: 257835-0300
Assembly Drawing: 257835-6_1_AB

Issue: 20020121

Pos	Part No	SP	UN	Qty	Description	Page No
0375S						
010	466432-0000	C		1	BEARING HOUSING	
020	449727-0000	C		1	CUTTING JAW	
030	544516-0000	C		2	CUTTING RAIL	
060	38490-0000	C		4	END PIECE	
090	564533-0002	C		2	DOLLY	
100	245272-0000	C		1	GASKET	
110	1296886-0000	C		1	SCREW	
150	90287-0070	C		2	SCREW MLC6S M6X23	
420	243143-0000	C		2	SCREW	
0355B OR 0500S						
010	466431-0000	C		1	BEARING HOUSING	
020	464162-0000	C		1	CUTTING JAW	
030	440925-0000	C		2	CUTTING RAIL	
040	12922-0000	C		2	WASHER	
060	440043-0000	C		4	END PIECE	
090	564533-0005	C		2	DOLLY	
100	497716-0000	C		1	GASKET	
110	1296886-0000	C		1	SCREW	
150	90287-0070	C		2	SCREW MLC6S M6X23	
210	312115-0331	-		2	SCREW MC6S M5X20 A280	
230	315202-0111	C		2	O-RING 13,1X1,6 MM	
250	315202-0207	C		2	O-RING 8,3X2,4 MM	
420	243143-0000	C		2	SCREW	
0500B						
010	450503-0000	C		1	BEARING HOUSING	
020	257783-0000	C		1	CUTTING JAW	
030	497921-0000	C		2	CUTTING RAIL	
060	32116-0000	C		4	END PIECE	
090	564533-0001	C		2	DOLLY	
100	245271-0000	C		1	GASKET	
110	1296982-0000	C		1	SCREW	
150	90287-0070	C		2	SCREW MLC6S M6X23	
200	311508-0416	-		1	RIVET, ROUND HEAD, KN, 4X10	
230	315202-0111	C		2	O-RING 13,1X1,6 MM	
250	315202-0207	C		2	O-RING 8,3X2,4 MM	
420	243143-0000	C		2	SCREW	
0750S						
010	544317-0000	C		1	BEARING HOUSING	
020	544323-0000	C		1	CUTTING JAW	
030	544334-0000	C		2	CUTTING RAIL	
040	12922-0000	C		2	WASHER	
060	544337-0000	C		4	END PIECE	
090	564533-0007	C		2	DOLLY	
100	497716-0000	C		1	GASKET	
110	1296885-0000	C		1	SCREW	
150	90287-0070	C		2	SCREW MLC6S M6X23	
210	312115-0331	-		2	SCREW MC6S M5X20 A280	
230	315202-0111	C		2	O-RING 13,1X1,6 MM	
250	315202-0207	C		2	O-RING 8,3X2,4 MM	
420	243143-0000	C		2	SCREW	
1000S						
010	569057-0000	C		1	BEARING HOUSING	
020	569059-0000	C		1	CUTTING JAW	
030	544334-0000	C		2	CUTTING RAIL	
060	32116-0000	C		4	END PIECE	
090	564533-0001	C		2	DOLLY	
100	245271-0000	C		1	GASKET	
110	1296884-0000	C		1	SCREW	
150	90287-0070	C		2	SCREW MLC6S M6X23	
230	315202-0111	C		2	O-RING 13,1X1,6 MM	
250	315202-0207	C		2	O-RING 8,3X2,4 MM	
420	243143-0000	C		2	SCREW	
1000SQ						
010	573985-0000	C		1	BEARING HOUSING	
020	579772-0000	C		1	CUTTING JAW	
030	1038517-0003	C		2	CUTTING RAIL	
060	533012-0001	C		4	END PIECE	
090	1038128-0001	C		2	DOLLY	
100	573988-0000	C		1	GASKET	
110	1296981-0000	C		1	SCREW	
150	90287-0070	C		2	SCREW MLC6S M6X23	
230	315202-0111	C		2	O-RING 13,1X1,6 MM	
250	315202-0207	C		2	O-RING 8,3X2,4 MM	
270	591981-0000	C		1	CATCH	
275	591982-0000	C		1	CATCH	
420	573583-0000	C		2	SCREW	
0750B OR TBA/8 1000B LOFIN						

Machine Type | Group Description | Used-In | Group Number | Page No

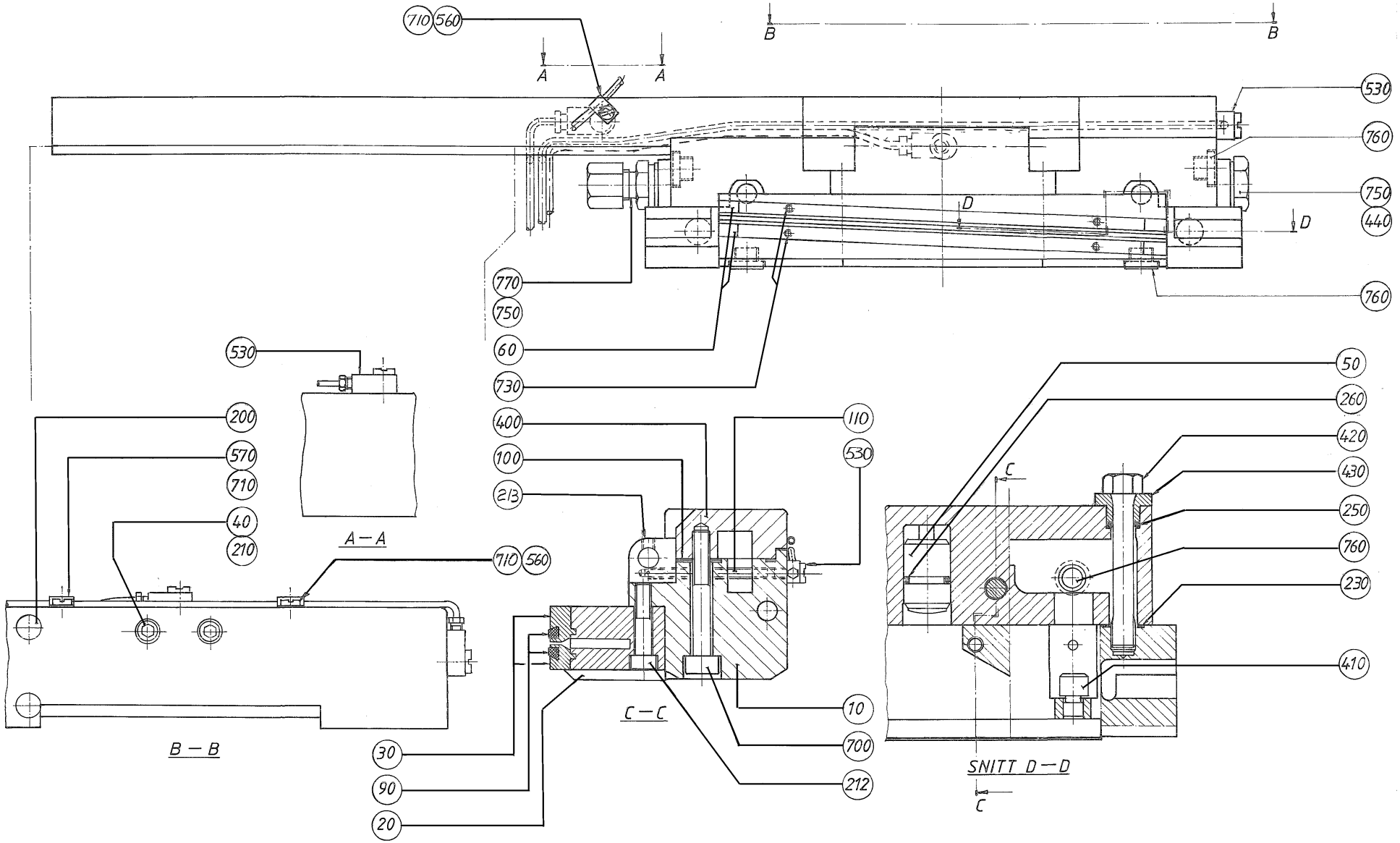
710
560
A
A
B
B
530
760
750
440
D
D
770
750
760
60
730
530
200
570
710
40
210
A — A
710
560
400
100
213
110
530
C
50
260
420
430
250
760
230
410
10
700
212
30
90
20
C — C
B — B
SNITT D — D
C

ECM: 86999 - 20001215
Group number: 257835-0300
Assembly Drawing: 257835-7_1_AA

Issue: 20020121

Pos	Part No	SP	UN	Qty	Description	Page No
0750B OR TBA/8 1000B LOFIN (Cont'd)						
010	450503-0000	C		1	BEARING HOUSING	
020	257783-0000	C		1	CUTTING JAW	
030	497921-0000	C		2	CUTTING RAIL	
040	12922-0000	C		2	WASHER	
060	32116-0000	C		4	END PIECE	
090	564533-0001	C		2	DOLLY	
100	245271-0000	C		1	GASKET	
110	1296982-0000	C		1	SCREW	
150	90287-0070	C		2	SCREW MLC6S M6X23	
210	312115-0331	-		2	SCREW MC6S M5X20 A280	
230	315202-0111	C		2	O-RING 13,1X1,6 MM	
250	315202-0207	C		2	O-RING 8,3X2,4 MM	
420	243143-0000	C		2	SCREW	
TBA/8 1000B HIFIN						
010	497572-0000	C		1	BEARING HOUSING	
020	284578-0000	C		1	CUTTING JAW	
030	539761-0000	C		2	CUTTING RAIL	
040	12922-0000	C		2	WASHER	
060	32116-0000	C		4	END PIECE	
090	564533-0001	C		2	DOLLY	
100	245271-0000	C		1	GASKET	
110	1296982-0000	C		1	SCREW	
210	312115-0331	-		2	SCREW MC6S M5X20 A280	
212	312115-0374	-		2	SCREW MC6S M6X30 A280	
213	312318-0321	-		1	SCREW HEX.SOCK.SET CUP P.MSK6SS 5X6 SS	
230	315202-0111	C		2	O-RING 13,1X1,6 MM	
250	315202-0207	C		2	O-RING 8,3X2,4 MM	
420	243143-0000	C		2	SCREW	
Common Parts						
050	28880-0000	C		2	PLUNGER	
260	315202-0212	C		2	O-RING 14,3X2,4 MM	
400	B464164-0000	C		1	CARRIER CUT LEFT	
	312911-0118	-		*1*	*HELI-COIL M6X1,5D*	
	312911-0117	-		*1*	*THREADED INSERTS M6X1,0D*	
	312911-0114	-		*1*	*HELI-COIL M5X1,5D*	
	312911-0111	-		*1*	*THREADED INSERTS M4X2,0D*	
410	32464-0000	C		2	SHAFT	
430	243144-0000	C		2	BUSHING	
440	255278-0000	C		1	PLUG FINISHER	
530	90134-0058	C		3	CONNECTION	
560	90165-0058	-		1	PIPE CLIP FOR TUBE D=25 MM	
570	316810-0106	-		1	PIPE CLIP FOR TUBE D=8 MM	
575	90165-0057	-		1	PIPE CLIP FOR TUBE D=6 MM	
580	90166-0132	-	MM	100	TUBE 6 MM PA,TRANSP.	
585	90166-0122	-	MM	130	TUBE 8 MM PA,TRANSP.	
700	312115-0461	-		2	SCREW MC6S M8X50 A280	
710	312125-0287	-		3	SCREW PAN HEAD MCS M4X8 SS	
730	312145-0238	-		4	SCREW COUNTERS.SLOT.HD. MFS 3X40 SS	
750	315234-0110	C		2	WASHER,PL.RND.CU.13,5/18 H=1,5	
760	342713-0209	-		4	PLUG, EXT THREAD HEX SOCKET 8638-00-180	
770	90030-0201	C		1	CONN. STR., 8-R1/4, EXT. THREAD	

Machine Type | Group Description | Used-In | Group Number | Page No

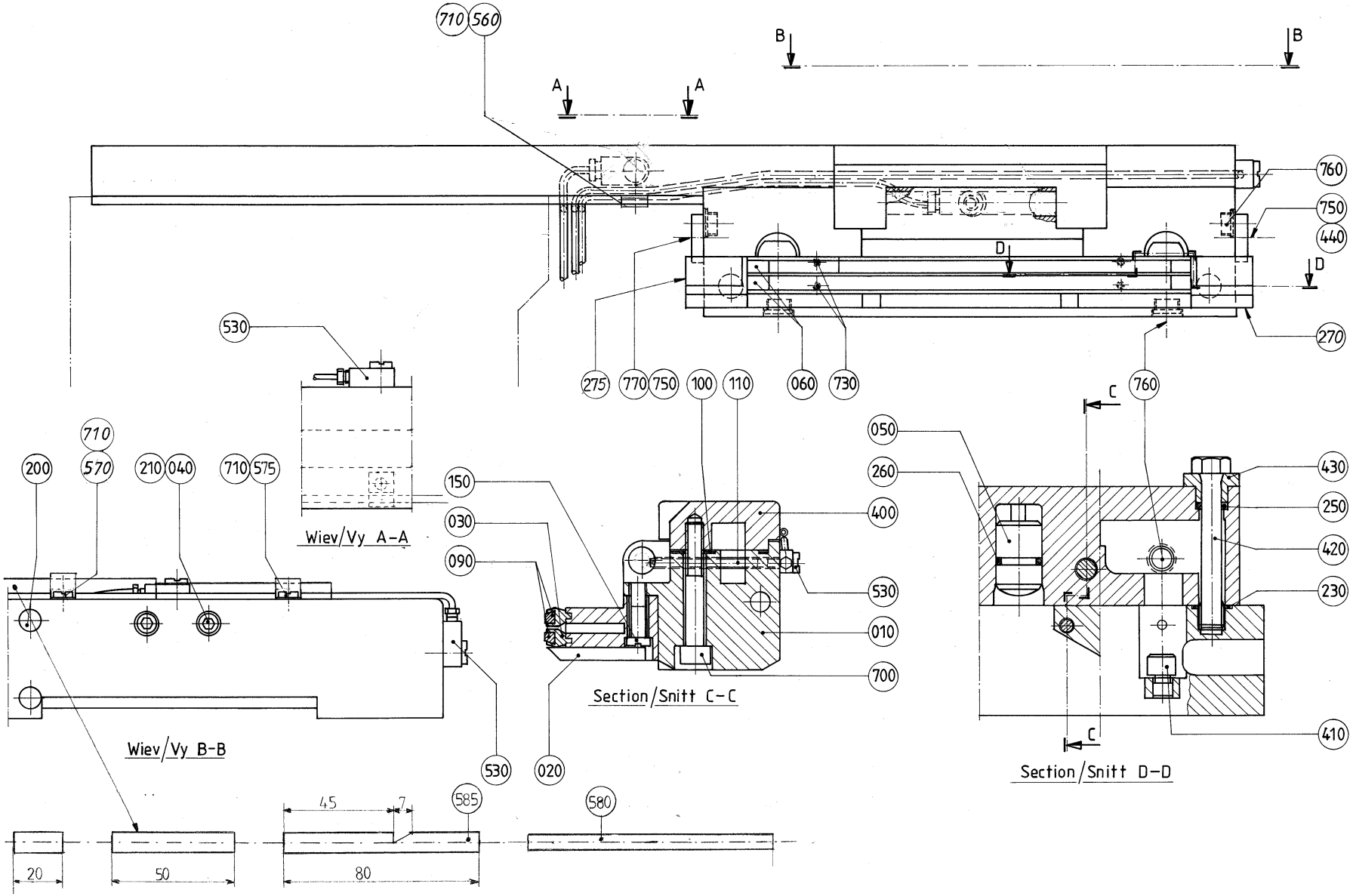
710
560
B
B
A
A
760
750
440
D
D
270
530
275
770
750
100
110
060
730
760
C
710
200
570
210
040
710
575
150
030
090
Wiev/Vy A-A
050
260
400
530
010
700
Section/Snitt C-C
430
250
420
230
410
C
Section/Snitt D-D
Wiev/Vy B-B
530
020
585
580
45
7
20
50
80

Pos	Part No	SP	UN	Qty	Description	Page No
0375S						
010	466432-0000	C		1	BEARING HOUSING	
020	449727-0000	C		1	CUTTING JAW	
030	544516-0000	C		2	CUTTING RAIL	
060	38490-0000	C		4	END PIECE	
090	564533-0002	C		2	DOLLY	
100	245272-0000	C		1	GASKET	
110	1296886-0000	C		1	SCREW	
150	90287-0070	C		2	SCREW MLC6S M6X23	
210	312115-0331	-		2	SCREW MC6S M5X20 A280	
420	243143-0000	C		2	SCREW	
0355B OR 0500S						
010	466431-0000	C		1	BEARING HOUSING	
020	464162-0000	C		1	CUTTING JAW	
030	440925-0000	C		2	CUTTING RAIL	
040	12922-0000	C		2	WASHER	
060	440043-0000	C		4	END PIECE	
090	564533-0005	C		2	DOLLY	
100	497716-0000	C		1	GASKET	
110	1296886-0000	C		1	SCREW	
150	90287-0070	C		2	SCREW MLC6S M6X23	
210	312115-0331	-		2	SCREW MC6S M5X20 A280	
230	315202-0111	C		2	O-RING 13,1X1,6 MM	
250	315202-0207	C		2	O-RING 8,3X2,4 MM	
420	243143-0000	C		2	SCREW	
0500B						
010	450503-0000	C		1	BEARING HOUSING	
020	257783-0000	C		1	CUTTING JAW	
030	497921-0000	C		2	CUTTING RAIL	
060	32116-0000	C		4	END PIECE	
090	564533-0001	C		2	DOLLY	
100	245271-0000	C		1	GASKET	
110	1296982-0000	C		1	SCREW	
150	90287-0070	C		2	SCREW MLC6S M6X23	
200	311508-0416	-		1	RIVET, ROUND HEAD, KN, 4X10	
230	315202-0111	C		2	O-RING 13,1X1,6 MM	
250	315202-0207	C		2	O-RING 8,3X2,4 MM	
420	243143-0000	C		2	SCREW	
0750S						
010	544317-0000	C		1	BEARING HOUSING	
020	544323-0000	C		1	CUTTING JAW	
030	544334-0000	C		2	CUTTING RAIL	
040	12922-0000	C		2	WASHER	
060	544337-0000	C		4	END PIECE	
090	564533-0007	C		2	DOLLY	
100	497716-0000	C		1	GASKET	
110	1296885-0000	C		1	SCREW	
150	90287-0070	C		2	SCREW MLC6S M6X23	
210	312115-0331	-		2	SCREW MC6S M5X20 A280	
230	315202-0111	C		2	O-RING 13,1X1,6 MM	
250	315202-0207	C		2	O-RING 8,3X2,4 MM	
420	243143-0000	C		2	SCREW	
1000S						
010	569057-0000	C		1	BEARING HOUSING	
020	569059-0000	C		1	CUTTING JAW	
030	544334-0000	C		2	CUTTING RAIL	
060	32116-0000	C		4	END PIECE	
090	564533-0001	C		2	DOLLY	
100	245271-0000	C		1	GASKET	
110	1296884-0000	C		1	SCREW	
150	90287-0070	C		2	SCREW MLC6S M6X23	
210	312115-0331	-		2	SCREW MC6S M5X20 A280	
230	315202-0111	C		2	O-RING 13,1X1,6 MM	
250	315202-0207	C		2	O-RING 8,3X2,4 MM	
420	243143-0000	C		2	SCREW	
1000SQ						
010	573985-0000	C		1	BEARING HOUSING	
020	579772-0000	C		1	CUTTING JAW	
030	1038517-0003	C		2	CUTTING RAIL	
060	533012-0001	C		4	END PIECE	
090	1038128-0001	C		2	DOLLY	
100	573988-0000	C		1	GASKET	
110	1296981-0000	C		1	SCREW	
150	90287-0070	C		2	SCREW MLC6S M6X23	
230	315202-0111	C		2	O-RING 13,1X1,6 MM	
250	315202-0207	C		2	O-RING 8,3X2,4 MM	
270	591981-0000	C		1	CATCH	
275	591982-0000	C		1	CATCH	
420	573583-0000	C		2	SCREW	

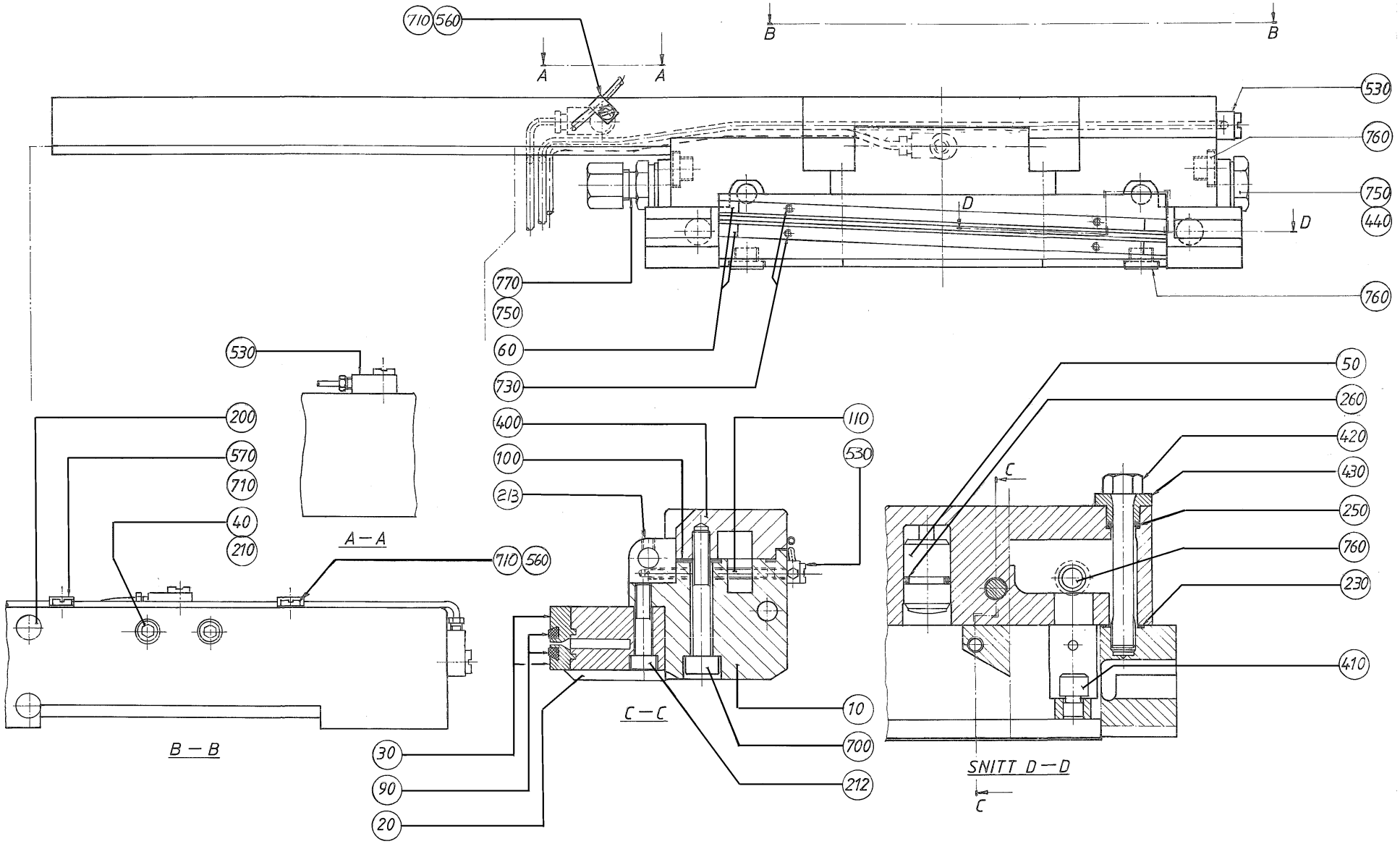
710
560
A
A
B
B
530
760
750
440
D
D
770
750
760
60
730
400
100
213
110
530
50
260
420
430
250
760
230
410
200
570
710
40
210
530
A — A
710
560
B — B
C — C
C
SNITT D — D
C
10
700
212
30
90
20

ECM: 87000 - 20001215
Group number: 257835-0350
Assembly Drawing: 257835-7_1_AA

Issue: 20020121

Pos	Part No	SP	UN	Qty	Description	Page No
0750B OR TBA/8 1000B LOFIN (Cont'd)						
010	450503-0000	C		1	BEARING HOUSING	
020	257783-0000	C		1	CUTTING JAW	
030	497921-0000	C		2	CUTTING RAIL	
040	12922-0000	C		2	WASHER	
060	32116-0000	C		4	END PIECE	
090	564533-0001	C		2	DOLLY	
100	245271-0000	C		1	GASKET	
110	1296982-0000	C		1	SCREW	
150	90287-0070	C		2	SCREW MLC6S M6X23	
210	312115-0331	-		2	SCREW MC6S M5X20 A280	
230	315202-0111	C		2	O-RING 13,1X1,6 MM	
250	315202-0207	C		2	O-RING 8,3X2,4 MM	
420	243143-0000	C		2	SCREW	
TBA/8 1000B HIFIN						
010	497572-0000	C		1	BEARING HOUSING	
020	284578-0000	C		1	CUTTING JAW	
030	539761-0000	C		2	CUTTING RAIL	
040	12922-0000	C		2	WASHER	
060	32116-0000	C		4	END PIECE	
090	564533-0001	C		2	DOLLY	
100	245271-0000	C		1	GASKET	
110	1296982-0000	C		1	SCREW	
210	312115-0331	-		2	SCREW MC6S M5X20 A280	
212	312115-0374	-		2	SCREW MC6S M6X30 A280	
213	312318-0321	-		1	SCREW HEX.SOCK.SET CUP P.MSK6SS 5X6 SS	
230	315202-0111	C		2	O-RING 13,1X1,6 MM	
250	315202-0207	C		2	O-RING 8,3X2,4 MM	
420	243143-0000	C		2	SCREW	
Common Parts						
050	28880-0000	C		2	PLUNGER	
260	315202-0212	C		2	O-RING 14,3X2,4 MM	
400	B464171-0000	C		1	CARRIER CUT RIGHT	
	312911-0118	-		*1*	*HELI-COIL M6X1,5D*	
	312911-0117	-		*1*	*THREADED INSERTS M6X1,0D*	
	312911-0114	-		*1*	*HELI-COIL M5X1,5D*	
	312911-0111	-		*1*	*THREADED INSERTS M4X2,0D*	
410	32464-0000	C		2	SHAFT	
430	243144-0000	C		2	BUSHING	
440	255278-0000	C		1	PLUG FINISHER	
530	90134-0058	C		3	CONNECTION	
560	90165-0058	-		1	PIPE CLIP FOR TUBE D=25 MM	
570	316810-0106	-		1	PIPE CLIP FOR TUBE D=8 MM	
575	90165-0057	-		1	PIPE CLIP FOR TUBE D=6 MM	
580	90166-0132	-	MM	100	TUBE 6 MM PA,TRANSP.	
585	90166-0122	-	MM	130	TUBE 8 MM PA,TRANSP.	
700	312115-0461	-		2	SCREW MC6S M8X50 A280	
710	312125-0287	-		3	SCREW PAN HEAD MCS M4X8 SS	
730	312145-0238	-		4	SCREW COUNTERS.SLOT.HD. MFS 3X40 SS	
750	315234-0110	C		2	WASHER,PL.RND.CU.13,5/18 H=1,5	
760	342713-0209	-		4	PLUG, EXT THREAD HEX SOCKET 8638-00-180	
770	90030-0201	C		1	CONN. STR., 8-R1/4, EXT. THREAD	

Machine Type | Group Description | Used-In | Group Number | Page No

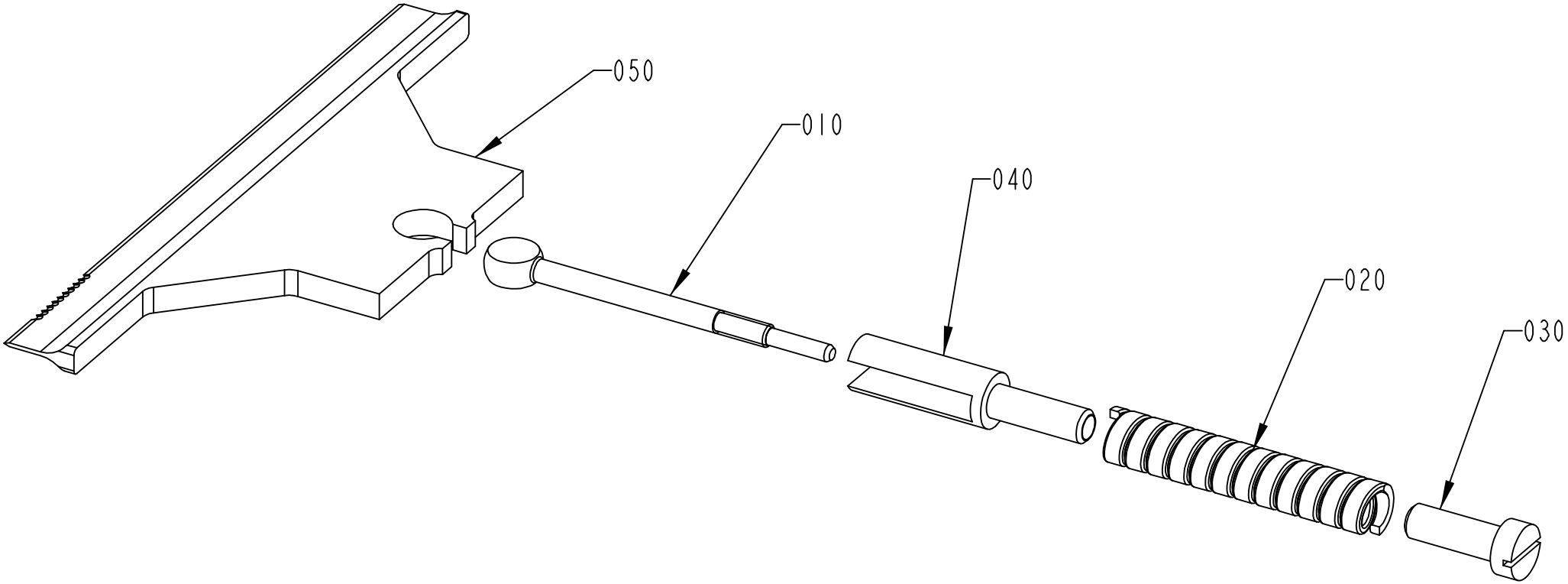
050
010
040
020
030

Pos	Part No	SP	UN	Qty	Description	Page No
TBA/8 0375S OR TBA/8 0500S OR TBA/8 0355B						
050	1484163-0000	A		1	KNIFE	
TBA/8 0500B OR TBA/8 1000B OR TBA/8 0750B OR TBA/8 1000S						
050	1348955-0000	A		1	KNIFE	
TBA/8 0750S OR TBA/8 1000SQ						
050	1348956-0000	A		1	KNIFE	
Common Parts						
010	1285003-0000	A		1	LINK	
020	1538109-0000	A		1	COMPRESSION SPRING	
030	1285005-0000	A		1	NUT	
040	1285006-0000	A		1	SPACER	

Pos	Part No	SP	UN	Qty	Description	Page No

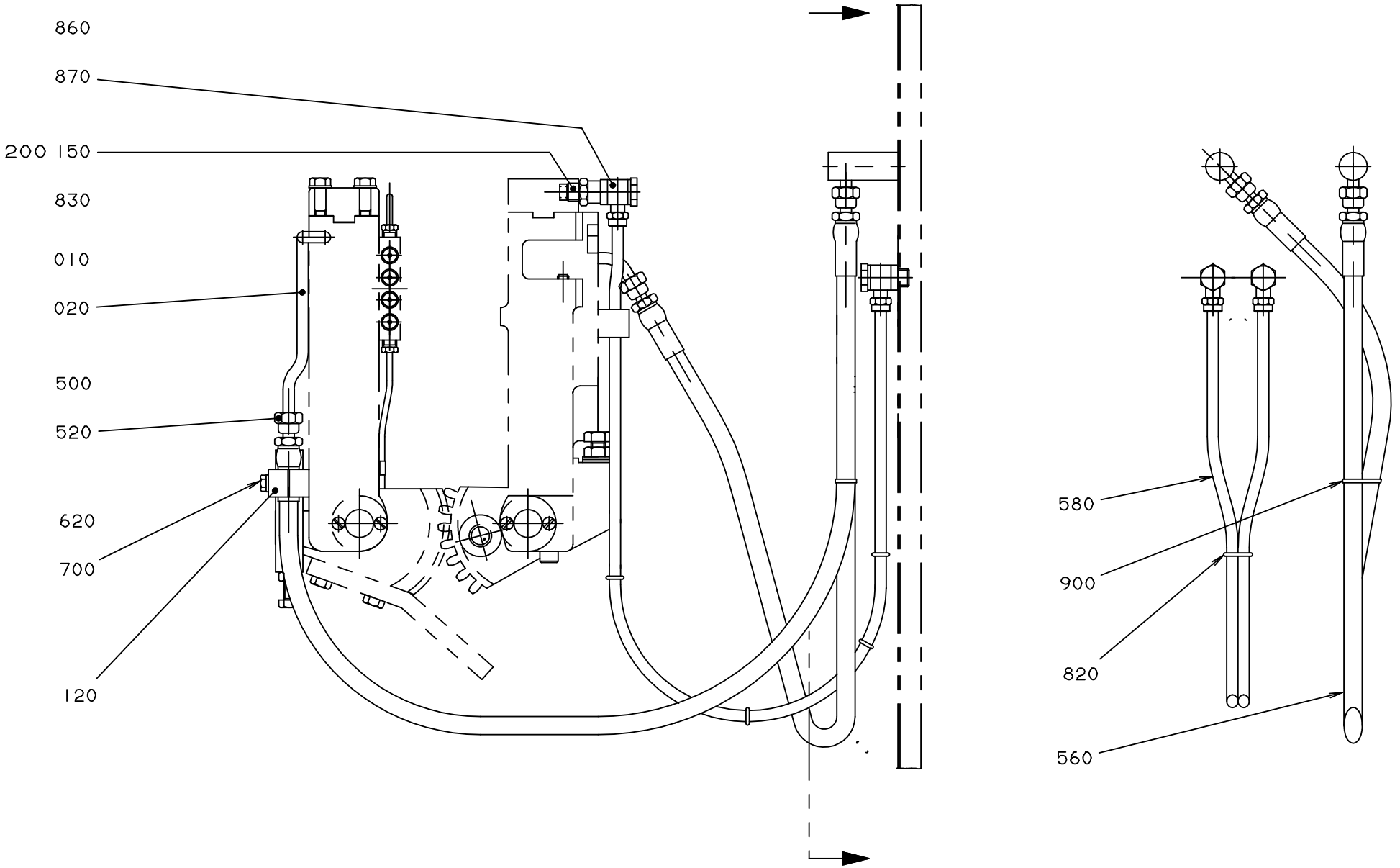
860
870
200 150
830
010
020
500
520
620
700
120
580
900
820
560

Pos	Part No	SP	UN	Qty	Description	Page No
Common Parts						
010	22488-0000	C		1	ELBOW PIPE	
020	22489-0000	C		1	ELBOW PIPE	
120	279103-0000	C		4	CONNECTION CLAMP	
150	464370-0000	C		4	SPACER	
200	1369843-0001	-		4	SLEEVE	
500	90030-0098	C		8	ACCESSORIES, FERRULE 8	
520	342703-0208	C		8	NUT, PIPES & CONNECTORS,NUT M-8 SS	
560	90148-0040	C		4	HOSE	
580	90166-0123	-	MM	2900	HOSE	
620	312105-0378	-		4	SCREW M6S M6X40 A280	
700	315105-0153	-		8	WASHER PLAIN, BRB, 6,4/12,H=1,5	
820	315202-0265	-		8	O-RING 12,3X2,4 MM	
830	315233-0110	-		4	WASHER PL.RND.NYL.13,3/17,H=1	
860	342980-0122	-		4	BANJO-CONNECTION,RING 8/6-G1/4"	
870	342980-0304	-		4	BANJO-HOLLOW BOLT COUPL,EXT.THR.01-G1/4"	
900	352113-0101	-		2	CLIP STRIP BLACK 92X2,5MM	

Pos	Part No	SP	UN	Qty	Description	Page No

PRESSURE JAW LEFT IH

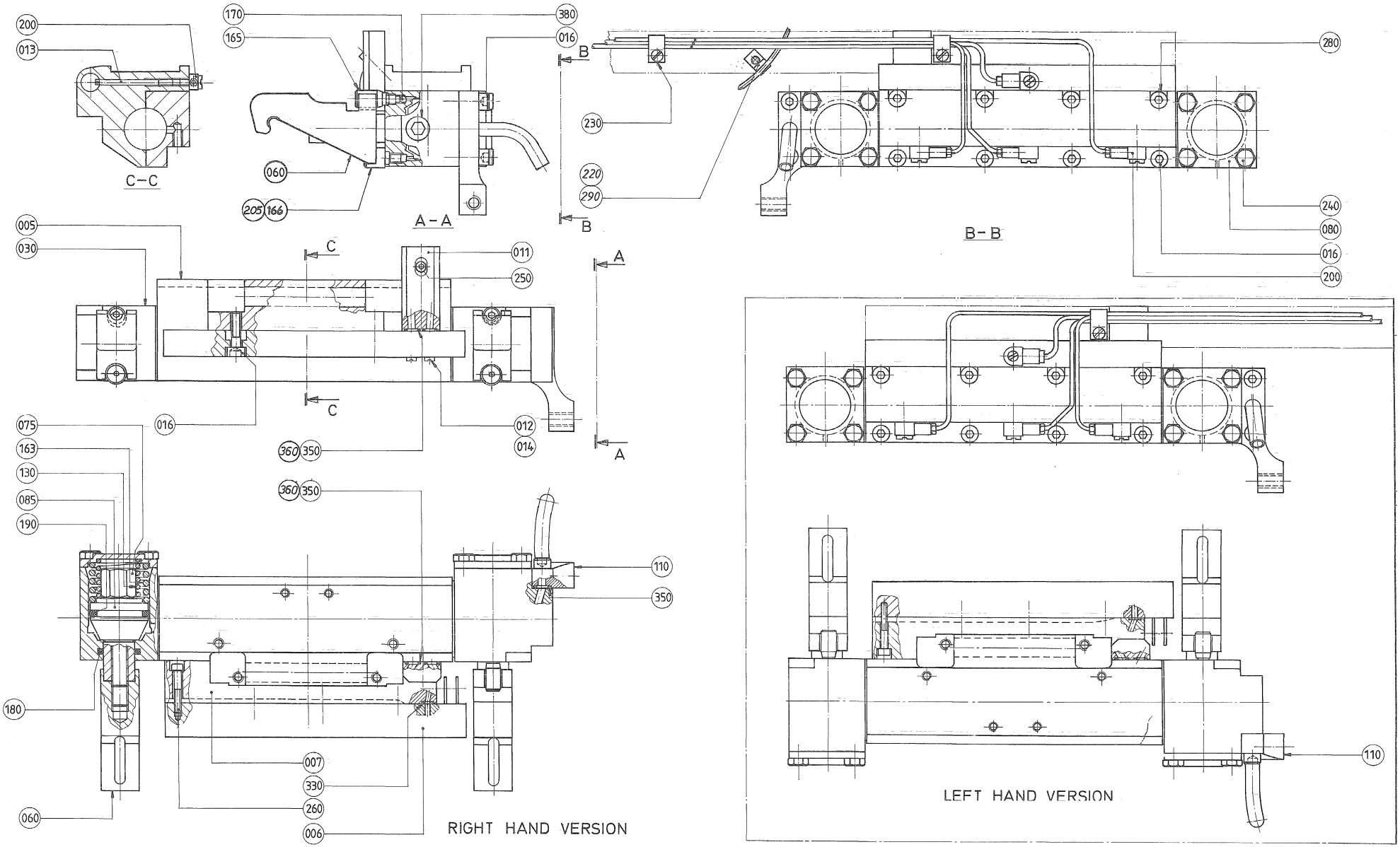

Pos	Part No	SP	UN	Qty	Description	Page No
0375S OR 0355B OR 0500S						
005	466395-0000	C		1	BEARING HOUSING	
006	B568983-0000	C		1	INDUCTOR	
	568532-0000	-		*4*	*NIPPEL 12,2*	
	568531-0000	-		*1*	*CORE*	
	568530-0000	-		*1*	*COIL*	
	315202-0101	-		*4*	*O-RING 3,1X1,6 MM*	
007	445950-0000	C		1	RAIL	
011	566526-0000	C		1	CLUTCH PIECE	
012	292037-0000	C		2	SCREW	
013	1296886-0000	C		1	SCREW	
014	90157-0021	-	KG	1	LOCKING FLUID	
016	312115-0370	-		8	SCREW MC6S M6X20 A280	
0500B OR 0750B OR TBA/8 1000B LOFIN OR TB/8 1000B LOFIN						
005	458019-0000	C		1	BEARING HOUSING	
006	B573625-0000	C		1	INDUCTOR	
	573624-0000	-		*1*	*CORE*	
	570545-0001	-		*3*	*FERROTRONINSATS*	
	568532-0000	-		*4*	*NIPPEL 12,2*	
	568530-0000	-		*1*	*COIL*	
	315202-0101	-		*2*	*O-RING 3,1X1,6 MM*	
007	445950-0000	C		1	RAIL	
011	566526-0000	C		1	CLUTCH PIECE	
012	292037-0000	C		2	SCREW	
013	1296982-0000	C		1	SCREW	
014	90157-0021	-	KG	1	LOCKING FLUID	
016	312115-0370	-		8	SCREW MC6S M6X20 A280	
0750S						
005	544278-0000	C		1	BEARING HOUSING	
006	B568983-0000	C		1	INDUCTOR	
	568532-0000	-		*4*	*NIPPEL 12,2*	
	568531-0000	-		*1*	*CORE*	
	568530-0000	-		*1*	*COIL*	
	315202-0101	-		*4*	*O-RING 3,1X1,6 MM*	
007	445950-0000	C		1	RAIL	
011	566526-0000	C		1	CLUTCH PIECE	
012	292037-0000	C		2	SCREW	
013	1296885-0000	C		1	SCREW	
014	90157-0021	-	KG	1	LOCKING FLUID	
016	312115-0370	-		8	SCREW MC6S M6X20 A280	
1000S						
005	569053-0000	C		1	BEARING HOUSING	
006	B568983-0000	C		1	INDUCTOR	
	568532-0000	-		*4*	*NIPPEL 12,2*	
	568531-0000	-		*1*	*CORE*	
	568530-0000	-		*1*	*COIL*	
	315202-0101	-		*4*	*O-RING 3,1X1,6 MM*	
007	445950-0000	C		1	RAIL	
011	566526-0000	C		1	CLUTCH PIECE	
012	292037-0000	C		2	SCREW	
013	1296884-0000	C		1	SCREW	
014	90157-0021	-	KG	1	LOCKING FLUID	
016	312115-0370	-		8	SCREW MC6S M6X20 A280	
1000SQ						
005	579773-0000	C		1	BEARING HOUSING	
006	1110761-0000	C		1	INDUCTOR	
007	1484847-0000	C		1	RAIL	
011	566526-0000	C		1	CLUTCH PIECE	
012	292037-0000	C		2	SCREW	
013	1296981-0000	C		1	SCREW	
014	90157-0021	-	KG	1	LOCKING FLUID	
016	312115-0370	-		8	SCREW MC6S M6X20 A280	
TBA/8 1000B HIFIN						
005	497583-0000	C		1	HOUSING	
006	B573625-0000	C		1	INDUCTOR	
	573624-0000	-		*1*	*CORE*	
	570545-0001	-		*3*	*FERROTRONINSATS*	
	568532-0000	-		*4*	*NIPPEL 12,2*	
	568530-0000	-		*1*	*COIL*	
	315202-0101	-		*2*	*O-RING 3,1X1,6 MM*	
007	284581-0000	C		1	RAIL	
011	566527-0000	C		1	CLUTCH PIECE	
013	1296982-0000	C		1	SCREW	
016	312115-0370	-		6	SCREW MC6S M6X20 A280	
017	312115-0374	-		2	SCREW MC6S M6X30 A280	
Common Parts						
030	440565-0000	C		1	CYLINDER	
060	541697-0000	C		2	CATCH	

Machine Type | Group Description | Used-In | Group Number | Page No

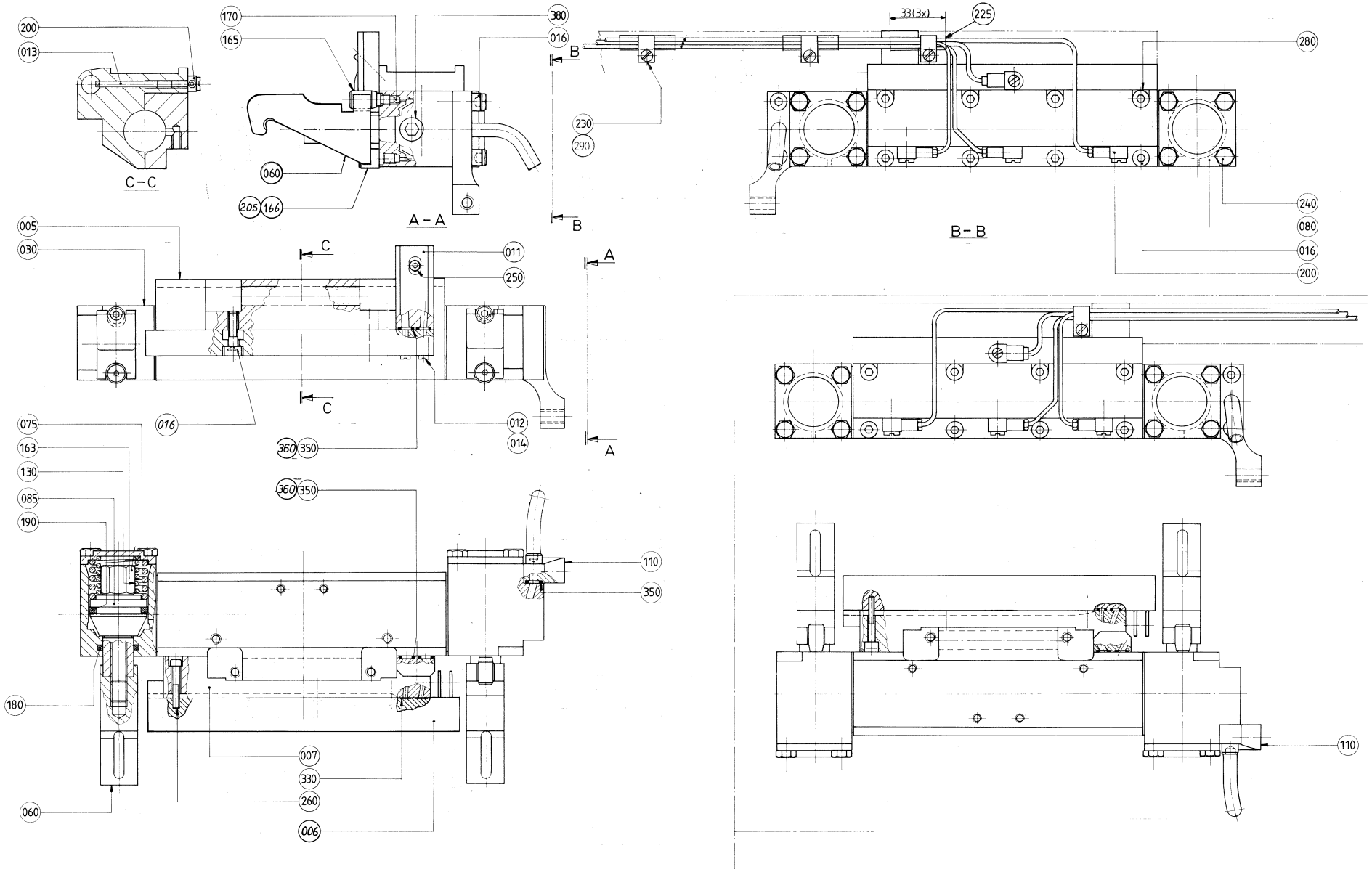
200
013
C–C
170
165
380
016
B
060
205
166
A – A
230
290
33(3x)
225
280
B – B
240
080
016
200
005
030
C
011
250
A
075
163
130
085
190
016
012
014
360
350
110
350
180
007
330
260
006
060
110

Pos	Part No	SP	UN	Qty	Description	Page No
Common Parts (Cont'd)						
060	541697-0000	C		2	CATCH	
075	553851-0000	C		2	SCREW	
080	284833-0000	C		2	LID	
085	292367-0000	C		2	PISTON	
110	246494-0000	C		1	ATTACHMENT	
130	479744-0000	C		2	COMPRESSION SPRING	
163	479743-0000	C		2	COMPRESSION SPRING	
165	440491-0000	C		2	NIPPLE	
166	497040-0000	C		2	STEERING	
170	90090-0013	C		2	BALL, D=4 MM	
180	90091-0078	C		2	ROD SEAL, GLIDORING 18X25X3 MM	
190	90091-0079	C		2	PISTON SEAL, GLIDORING 27X35X3,1 MM	
200	90134-0058	C		4	CONNECTION	
205	90157-0016	-	ML	1	LOCKING FLUID	
225	90166-0122	-	MM	100	TUBE 8 MM PA,TRANSP.	
230	316810-0106	-		3	PIPE CLIP FOR TUBE D=8 MM	
240	312105-0372	-		8	SCREW M6S M6X25 A280	
250	312115-0295	-		1	SCREW MC6S M4X20 A280	
260	312115-0297	-		4	SCREW MC6S M4X25 A280	
280	312115-0372	-		4	SCREW MC6S M6X25 A280	
290	312125-0285	-		3	SCREW SLOT.PAN HD. MCS 4X6 A480	
330	315202-0101	C		2	O-RING 3,1X1,6 MM	
350	315202-0104	C		1	O-RING 6,1X1,6 MM	
360	315202-0203	C		4	O-RING 4,3X2,4 MM	
380	342713-0209	-		1	PLUG, EXT THREAD HEX SOCKET 8638-00-180	

Pos	Part No	SP	UN	Qty	Description	Page No

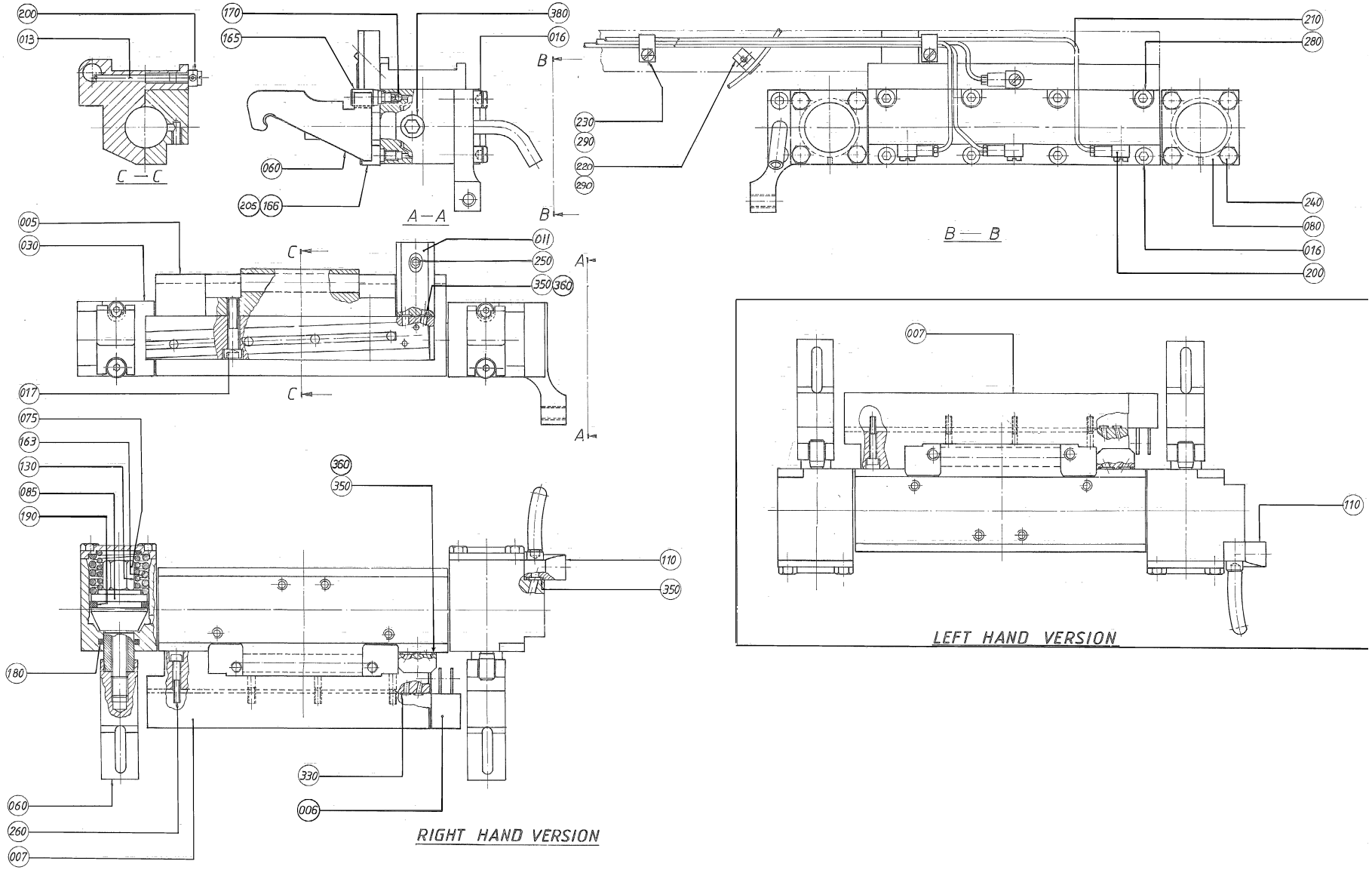
200
013
C — C
170
165
380
016
060
205
166
A — A
B
230
290
220
290
210
280
240
080
016
200
B — B
005
030
011
250
350
360
C
A
017
075
163
130
085
190
180
060
260
007
330
006
110
350
RIGHT HAND VERSION
007
110
LEFT HAND VERSION

Pos	Part No	SP	UN	Qty	Description	Page No
SEE PREVIOUS LISTS PAGES: 357, 359.						

Pos	Part No	SP	UN	Qty	Description	Page No

PRESSURE JAW RIGHT IH

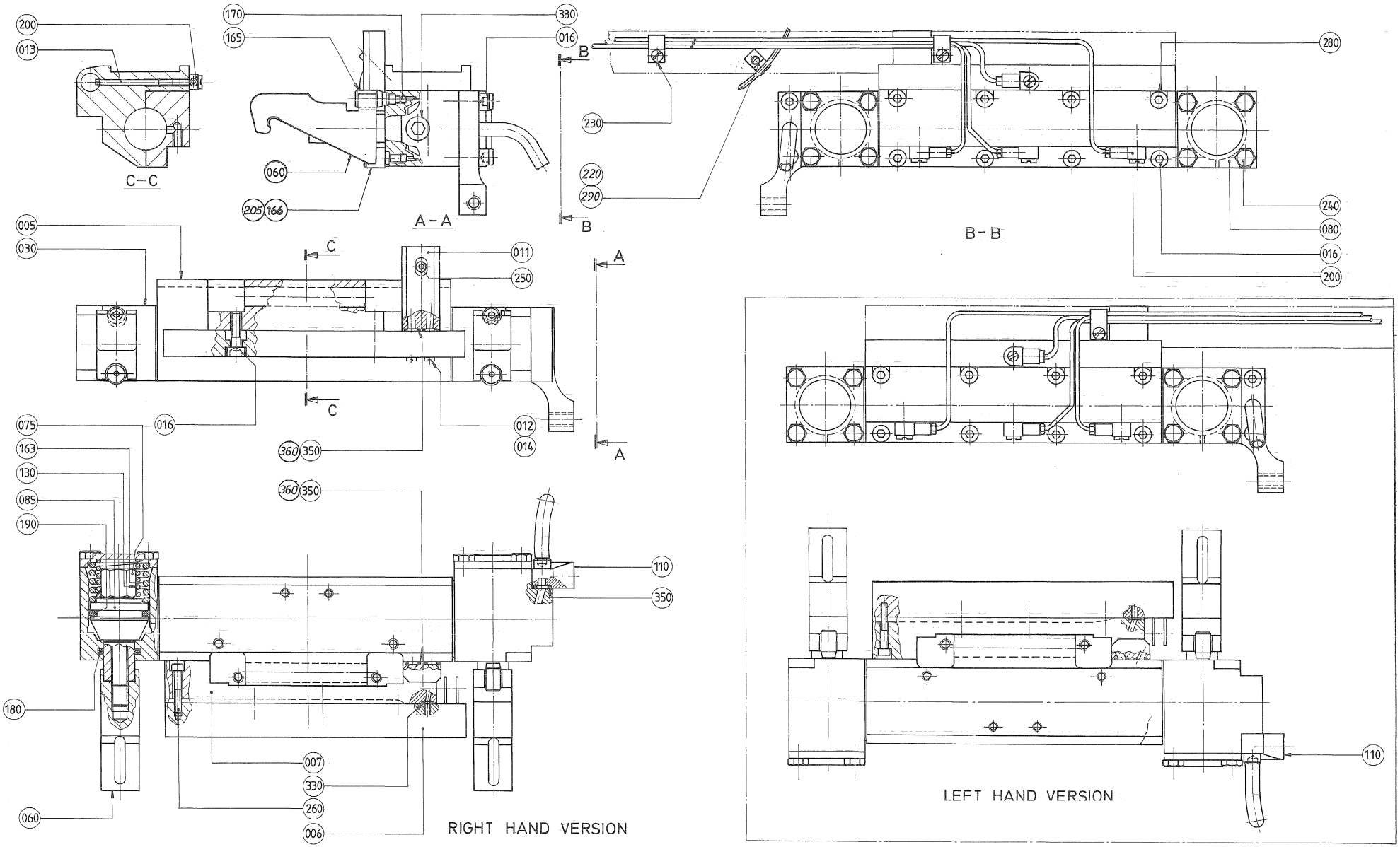

Pos	Part No	SP	UN	Qty	Description	Page No
0375S OR 0355B OR 0500S						
005	466395-0000	C		1	BEARING HOUSING	
006	B568983-0000	C		1	INDUCTOR	
	568532-0000	-		*4*	*NIPPEL 12,2*	
	568531-0000	-		*1*	*CORE*	
	568530-0000	-		*1*	*COIL*	
	315202-0101	-		*4*	*O-RING 3,1X1,6 MM*	
007	445950-0000	C		1	RAIL	
011	566526-0000	C		1	CLUTCH PIECE	
012	292037-0000	C		2	SCREW	
013	1296886-0000	C		1	SCREW	
014	90157-0021	-	KG	1	LOCKING FLUID	
016	312115-0370	-		8	SCREW MC6S M6X20 A280	
0500B OR 0750B OR TBA/8 1000B LOFIN OR TB/8 1000B LOFIN						
005	458019-0000	C		1	BEARING HOUSING	
006	B573625-0000	C		1	INDUCTOR	
	573624-0000	-		*1*	*CORE*	
	570545-0001	-		*3*	*FERROTRONINSATS*	
	568532-0000	-		*4*	*NIPPEL 12,2*	
	568530-0000	-		*1*	*COIL*	
	315202-0101	-		*2*	*O-RING 3,1X1,6 MM*	
007	445950-0000	C		1	RAIL	
011	566526-0000	C		1	CLUTCH PIECE	
012	292037-0000	C		2	SCREW	
013	1296982-0000	C		1	SCREW	
014	90157-0021	-	KG	1	LOCKING FLUID	
016	312115-0370	-		8	SCREW MC6S M6X20 A280	
0750S						
005	544278-0000	C		1	BEARING HOUSING	
006	B568983-0000	C		1	INDUCTOR	
	568532-0000	-		*4*	*NIPPEL 12,2*	
	568531-0000	-		*1*	*CORE*	
	568530-0000	-		*1*	*COIL*	
	315202-0101	-		*4*	*O-RING 3,1X1,6 MM*	
007	445950-0000	C		1	RAIL	
011	566526-0000	C		1	CLUTCH PIECE	
012	292037-0000	C		2	SCREW	
013	1296885-0000	C		1	SCREW	
014	90157-0021	-	KG	1	LOCKING FLUID	
016	312115-0370	-		8	SCREW MC6S M6X20 A280	
1000S						
005	569053-0000	C		1	BEARING HOUSING	
006	B568983-0000	C		1	INDUCTOR	
	568532-0000	-		*4*	*NIPPEL 12,2*	
	568531-0000	-		*1*	*CORE*	
	568530-0000	-		*1*	*COIL*	
	315202-0101	-		*4*	*O-RING 3,1X1,6 MM*	
007	445950-0000	C		1	RAIL	
011	566526-0000	C		1	CLUTCH PIECE	
012	292037-0000	C		2	SCREW	
013	1296884-0000	C		1	SCREW	
014	90157-0021	-	KG	1	LOCKING FLUID	
016	312115-0370	-		8	SCREW MC6S M6X20 A280	
1000SQ						
005	579773-0000	C		1	BEARING HOUSING	
006	1110761-0000	C		1	INDUCTOR	
007	1484846-0000	C		1	RAIL	
011	566526-0000	C		1	CLUTCH PIECE	
012	292037-0000	C		2	SCREW	
013	1296981-0000	C		1	SCREW	
014	90157-0021	-	KG	1	LOCKING FLUID	
016	312115-0370	-		8	SCREW MC6S M6X20 A280	
TBA/8 1000B HIFIN						
005	497583-0000	C		1	HOUSING	
006	B573625-0000	C		1	INDUCTOR	
	573624-0000	-		*1*	*CORE*	
	570545-0001	-		*3*	*FERROTRONINSATS*	
	568532-0000	-		*4*	*NIPPEL 12,2*	
	568530-0000	-		*1*	*COIL*	
	315202-0101	-		*2*	*O-RING 3,1X1,6 MM*	
007	284582-0000	C		1	RAIL	
011	566527-0000	C		1	CLUTCH PIECE	
013	1296982-0000	C		1	SCREW	
016	312115-0370	-		6	SCREW MC6S M6X20 A280	
017	312115-0374	-		2	SCREW MC6S M6X30 A280	
Common Parts						
030	440565-0000	C		1	CYLINDER	
060	541697-0000	C		2	CATCH	

Machine Type | Group Description | Used-In | Group Number | Page No

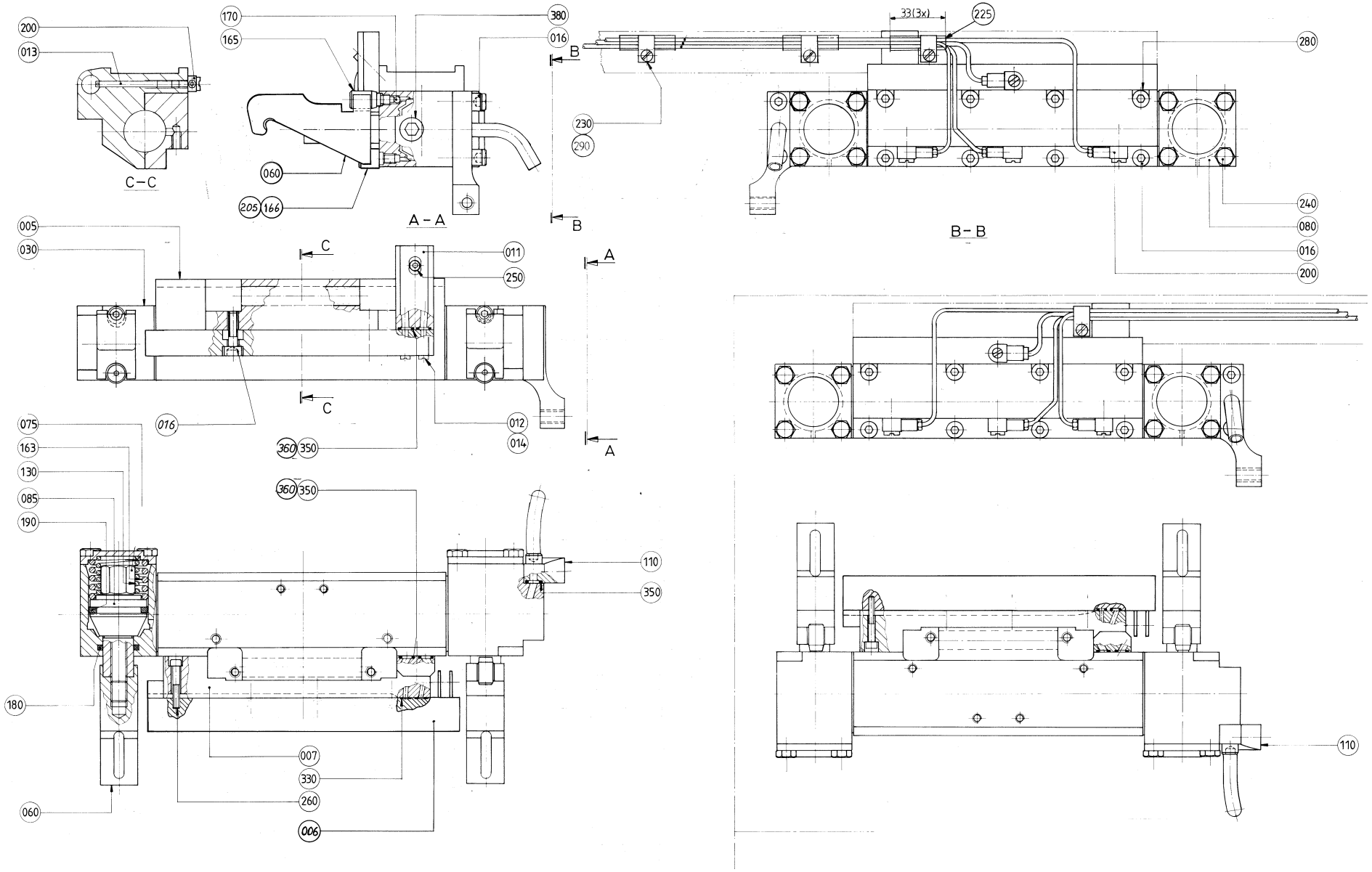
200
013
C–C
170
165
380
016
060
205
166
A – A
B
230
290
33(3x)
225
280
B – B
240
080
016
200
005
030
C
011
250
A
075
163
130
085
190
016
012
014
360
350
110
350
180
007
330
260
006
060

Pos	Part No	SP	UN	Qty	Description	Page No
Common Parts (Cont'd)						
060	541697-0000	C		2	CATCH	
075	553851-0000	C		2	SCREW	
080	284833-0000	C		2	LID	
085	292367-0000	C		2	PISTON	
110	246495-0000	C		1	ATTACHMENT	
130	479744-0000	C		2	COMPRESSION SPRING	
163	479743-0000	C		2	COMPRESSION SPRING	
165	440491-0000	C		2	NIPPLE	
166	497040-0000	C		2	STEERING	
170	90090-0013	C		2	BALL, D=4 MM	
180	90091-0078	C		2	ROD SEAL, GLIDORING 18X25X3 MM	
190	90091-0079	C		2	PISTON SEAL, GLIDORING 27X35X3,1 MM	
200	90134-0058	C		4	CONNECTION	
205	90157-0016	-	ML	1	LOCKING FLUID	
225	90166-0122	-	MM	100	TUBE 8 MM PA,TRANSP.	
230	316810-0106	-		3	PIPE CLIP FOR TUBE D=8 MM	
240	312105-0372	-		8	SCREW M6S M6X25 A280	
250	312115-0295	-		1	SCREW MC6S M4X20 A280	
260	312115-0297	-		4	SCREW MC6S M4X25 A280	
280	312115-0372	-		4	SCREW MC6S M6X25 A280	
290	312125-0285	-		3	SCREW SLOT.PAN HD. MCS 4X6 A480	
330	315202-0101	C		2	O-RING 3,1X1,6 MM	
350	315202-0104	C		1	O-RING 6,1X1,6 MM	
360	315202-0203	C		4	O-RING 4,3X2,4 MM	
380	342713-0209	-		1	PLUG, EXT THREAD HEX SOCKET 8638-00-180	

Pos	Part No	SP	UN	Qty	Description	Page No

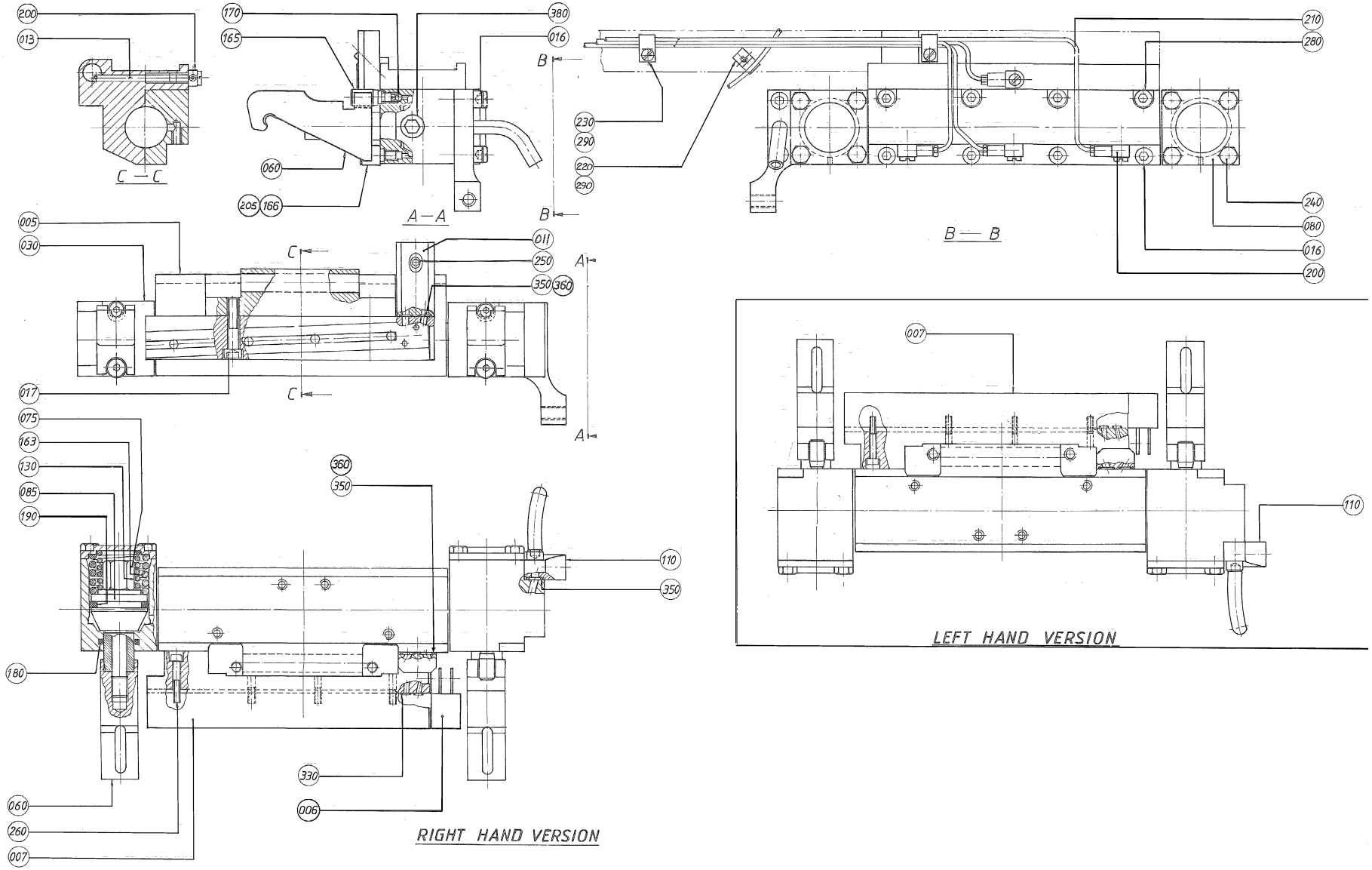
C — C
A — A
B — B
RIGHT HAND VERSION
LEFT HAND VERSION

Pos	Part No	SP	UN	Qty	Description	Page No
SEE PREVIOUS LISTS PAGES: 363, 365.						

Pos	Part No	SP	UN	Qty	Description	Page No

This page is intentionally left blank.

ECM: 82461 - 20000831
Group number: 268614-0500
Assembly Drawing:
Issue: 20020121

Pos	Part No	SP	UN	Qty	Description	Page No
0355B						
200	440043-0000	-		4	END PIECE	
210	529141-0000	-		8	VOLUME SHIM	
260	564533-0005	-		4	DOLLY	
410	315202-0206	-		5	O-RING 7,3X2,4 MM	
450	B568983-0000	-		2	INDUCTOR	
	568532-0000	-		*4*	*NIPPEL 12,2*	
	568531-0000	-		*1*	*CORE*	
	568530-0000	-		*1*	*COIL*	
	315202-0101	-		*4*	*O-RING 3,1X1,6 MM*	
0375S						
200	38490-0000	-		4	END PIECE	
210	255228-0001	-		8	VOLUME SHIM	
260	564533-0002	-		4	DOLLY	
410	315202-0206	-		5	O-RING 7,3X2,4 MM	
450	B568983-0000	-		2	INDUCTOR	
	568532-0000	-		*4*	*NIPPEL 12,2*	
	568531-0000	-		*1*	*CORE*	
	568530-0000	-		*1*	*COIL*	
	315202-0101	-		*4*	*O-RING 3,1X1,6 MM*	
0500B						
200	32116-0000	-		4	END PIECE	
210	479245-0000	-		8	VOLUME SHIM	
260	564533-0001	-		4	DOLLY	
400	315202-0111	-		10	O-RING 13,1X1,6 MM	
420	315202-0207	-		10	O-RING 8,3X2,4 MM	
430	315202-0212	-		5	O-RING 14,3X2,4 MM	
450	B573625-0000	-		2	INDUCTOR	
	573624-0000	-		*1*	*CORE*	
	570545-0001	-		*3*	*FERROTRONINSATS*	
	568532-0000	-		*4*	*NIPPEL 12,2*	
	568530-0000	-		*1*	*COIL*	
	315202-0101	-		*2*	*O-RING 3,1X1,6 MM*	
0500S						
200	440043-0000	-		4	END PIECE	
210	464315-0000	-		8	VOLUME SHIM	
260	564533-0005	-		4	DOLLY	
410	315202-0206	-		5	O-RING 7,3X2,4 MM	
450	B568983-0000	-		2	INDUCTOR	
	568532-0000	-		*4*	*NIPPEL 12,2*	
	568531-0000	-		*1*	*CORE*	
	568530-0000	-		*1*	*COIL*	
	315202-0101	-		*4*	*O-RING 3,1X1,6 MM*	
0750B						
200	32116-0000	-		4	END PIECE	
210	450782-0000	-		8	VOLUME SHIM	
260	564533-0001	-		4	DOLLY	
400	315202-0111	-		10	O-RING 13,1X1,6 MM	
420	315202-0207	-		10	O-RING 8,3X2,4 MM	
430	315202-0212	-		5	O-RING 14,3X2,4 MM	
450	B573625-0000	-		2	INDUCTOR	
	573624-0000	-		*1*	*CORE*	
	570545-0001	-		*3*	*FERROTRONINSATS*	
	568532-0000	-		*4*	*NIPPEL 12,2*	
	568530-0000	-		*1*	*COIL*	
	315202-0101	-		*2*	*O-RING 3,1X1,6 MM*	
0750S						
200	544337-0000	-		8	END PIECE	
210	544305-0000	-		8	VOLUME SHIM	
260	564533-0007	-		4	DOLLY	
450	B568983-0000	-		2	INDUCTOR	
	568532-0000	-		*4*	*NIPPEL 12,2*	
	568531-0000	-		*1*	*CORE*	
	568530-0000	-		*1*	*COIL*	
	315202-0101	-		*4*	*O-RING 3,1X1,6 MM*	
1000B HIFIN						
200	32116-0000	-		4	END PIECE	
210	208709-0000	-		8	VOLUME SHIM	
260	564533-0001	-		4	DOLLY	
370	312115-0374	-		5	SCREW MC6S M6X30 A280	
410	315202-0206	-		5	O-RING 7,3X2,4 MM	
450	B573625-0000	-		2	INDUCTOR	
	573624-0000	-		*1*	*CORE*	
	570545-0001	-		*3*	*FERROTRONINSATS*	
	568532-0000	-		*4*	*NIPPEL 12,2*	
	568530-0000	-		*1*	*COIL*	
	315202-0101	-		*2*	*O-RING 3,1X1,6 MM*	

Machine Type | Group Description | Used-In | Group Number | Page No

This page is intentionally left blank.

Pos	Part No	SP	UN	Qty	Description	Page No
1000B LOFIN (Cont'd)						
200	32116-0000	-		4	END PIECE	
210	208709-0000	-		8	VOLUME SHIM	
260	564533-0001	-		4	DOLLY	
400	315202-0111	-		10	O-RING 13,1X1,6 MM	
420	315202-0207	-		10	O-RING 8,3X2,4 MM	
430	315202-0212	-		5	O-RING 14,3X2,4 MM	
450	B573625-0000	-		2	INDUCTOR	
	573624-0000	-		*1*	*CORE*	
	570545-0001	-		*3*	*FERROTRONINSATS*	
	568532-0000	-		*4*	*NIPPEL 12,2*	
	568530-0000	-		*1*	*COIL*	
	315202-0101	-		*2*	*O-RING 3,1X1,6 MM*	
1000S						
200	32116-0000	-		4	END PIECE	
210	569056-0000	-		8	VOLUME SHIM	
260	564533-0001	-		4	DOLLY	
400	315202-0111	-		10	O-RING 13,1X1,6 MM	
420	315202-0207	-		10	O-RING 8,3X2,4 MM	
430	315202-0212	-		5	O-RING 14,3X2,4 MM	
450	B568983-0000	-		2	INDUCTOR	
	568532-0000	-		*4*	*NIPPEL 12,2*	
	568531-0000	-		*1*	*CORE*	
	568530-0000	-		*1*	*COIL*	
	315202-0101	-		*4*	*O-RING 3,1X1,6 MM*	
1000SQ						
200	533012-0001	-		4	END PIECE	
210	1143050-0000	-		8	VOLUME SHIM	
260	1038128-0001	-		4	DOLLY	
400	315202-0111	-		10	O-RING 13,1X1,6 MM	
420	315202-0207	-		10	O-RING 8,3X2,4 MM	
430	315202-0212	-		5	O-RING 14,3X2,4 MM	
450	B927495-0000	-		2	INDUCTOR	
	580829-0000	-		*1*	*STRöMSKENA*	
	580833-0001	-		*2*	*FERROTRONE INSERT*	
	580833-0002	-		*1*	*FERROTRONE INSERT*	
	315202-0101	-		*2*	*O-RING 3,1X1,6 MM*	
	568532-0000	-		*4*	*NIPPEL 12,2*	
	580828-0002	-		*1*	*CORE*	

Pos	Part No	SP	UN	Qty	Description	Page No
Common Parts						
500	1285003-0000	-		1	LINK	
510	1285005-0000	-		1	NUT	
515	1538109-0000	-		2	COMPRESSION SPRING	
520	32544-0000	-		2	INSULATION NUT	
530	250633-0000	-		2	CABLE CLAMP	
600	90090-0013	-		10	BALL, D=4 MM	
610	90091-0078	-		10	ROD SEAL, GLIDORING 18X25X3 MM	
620	90091-0079	-		10	PISTON SEAL, GLIDORING 27X35X3,1 MM	
700	456011-0000	-		10	PIN	
710	312115-0297	-		10	SCREW MC6S M4X25 A280	
720	312115-0370	-		10	SCREW MC6S M6X20 A280	
730	312145-0238	-		10	SCREW COUNTERS.SLOT.HD. MFS 3X40 SS	
740	315202-0101	-		20	O-RING 3,1X1,6 MM	
750	315202-0102	-		20	O-RING 4,1X1,6 MM	
760	315202-0104	-		20	O-RING 6,1X1,6 MM	
770	315202-0114	-		10	O-RING 16,1X1,6 MM	
780	315202-0208	-		10	O-RING 9,3X2,4 MM	
790	315202-0702	-		10	O-RING 12,42X1,78 MM	

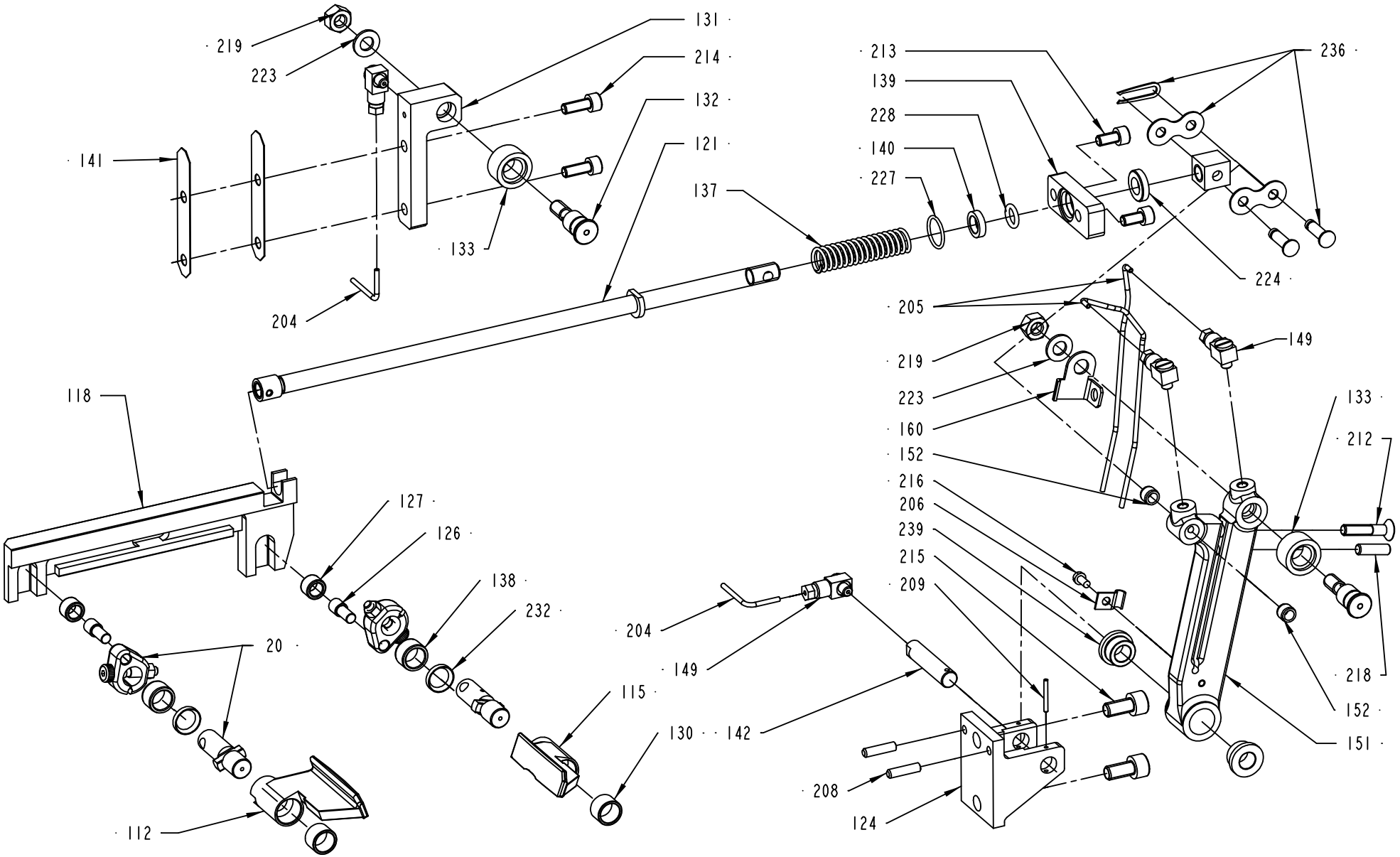
219
223
131
214
132
121
141
133
204
137
213
139
228
140
227
236
224
205
219
223
160
152
216
206
239
215
209
149
133
212
218
152
151
118
127
126
138
232
20
112
204
149
115
130
142
208
124

Pos	Part No	SP	UN	Qty	Description	Page No
0375S						
112	493711-0000	C		1	FOLDING FLAP	
115	493710-0000	C		1	FOLDING FLAP	
118	458038-0000	C		1	CARRIER RULER	
121	32494-0000	C		1	OPERATING ROD	
0355B OR 0500S						
112	493711-0000	C		1	FOLDING FLAP	
115	493710-0000	C		1	FOLDING FLAP	
118	458030-0000	C		1	CARRIER RULER	
121	32494-0000	C		1	OPERATING ROD	
0500B OR 0750B OR 1000B						
112	464311-0000	C		1	FOLDING FLAP	
115	464310-0000	C		1	FOLDING FLAP	
118	450505-0000	C		1	CARRIER RULER LEFT	
121	32468-0000	C		1	OPERATING ROD	
0750S						
112	544315-0000	C		1	FOLDING FLAP	
115	544314-0000	C		1	FOLDING FLAP	
118	544319-0000	C		1	CARRIER RULER	
121	32494-0000	C		1	OPERATING ROD	
1000S						
112	569061-0000	C		1	FOLDING FLAP	
115	569060-0000	C		1	FOLDING FLAP	
118	569062-0000	C		1	CARRIER RULER	
121	32468-0000	C		1	OPERATING ROD	
1000SQ						
112	1317809-0000	C		1	FOLDING FLAP	
115	1317808-0000	C		1	FOLDING FLAP	
118	573979-0000	C		1	CARRIER RULER	
121	32468-0000	C		1	OPERATING ROD	
Common Parts						
124	23229-0000	D		1	BRACKET	
126	22462-0000	C		2	SHAFT	
127	22463-0000	C		2	ROLL	
130	32463-0000	C		2	BEARING	
131	22473-0000	C		1	ROLLER BRACKET	
132	276172-0000	C		2	AXLE PIN	
133	276173-0000	C		2	CURVE ROLLER	
137	107000-0000	C		1	SPRING	
138	33408-0000	C		2	BEARING	
139	113653-0000	C		1	BEARING PLATE	
140	113654-0000	C		1	RING	
141	26423-0000	C		2	LACE	
142	269366-0000	C		1	DOWEL	
149	90134-0058	C		4	CONNECTION	
151	927448-0000	D		1	LINK	
152	37258-0000	C		2	BUSHING	
160	927449-0000	D		1	SECURITY PLATE LEFT	
204	90266-0019	-	MM	400	PIPE	
205	90166-0143	-	MM	800	TUBE 2,5 MM PA,TRANSP.	
206	90165-0056	-		1	PIPE CLIP FOR TUBE D=4 MM	
208	311103-0310	-		2	PARALLELL PIN, M6, 5X20 MM	
209	90258-0001	-		1	PIN, STRAIGHT SLOTTED SPRING FRP 2X20	
212	312155-0374	-		1	SCREW HEX.SOCK.COUNT.MF6S M6X30 A280	
213	312115-0366	-		2	SCREW MC6S M6X12 A280	
214	312115-0368	-		2	SCREW MC6S M6X16 A280	
215	312115-0449	-		2	SCREW MC6S M8X16 A280	
216	312125-0287	-		1	SCREW PAN HEAD MCS M4X8 SS	
218	312318-0370	-		1	SCREW SOCK.SET CUP P MSK6SS M6X20 A4	
219	312605-0318	-		2	HEXAGON NUT, M6M M8 A280	
223	315105-0165	-		2	WASHER PLAIN, BRB, 8,4/16,H=1,5	
224	315115-0171	-		1	WASHER PLAIN, TBRB 10/18 H=4	
227	315202-0114	C		1	O-RING 16,1X1,6 MM	
228	315202-0208	C		1	O-RING 9,3X2,4 MM	
232	315230-0157	-		2	BEARING SEAL 12X16X3 MM	
236	90288-0305	C		1	CONNECTING LINK SINGLE 3/4",SS	
239	321101-0163	C		2	FLANGE BUS 10F7X10	
F020	A26642-0200	C		2	CARRIER	**375**

Machine Type Group Description Used-In Group Number Page No

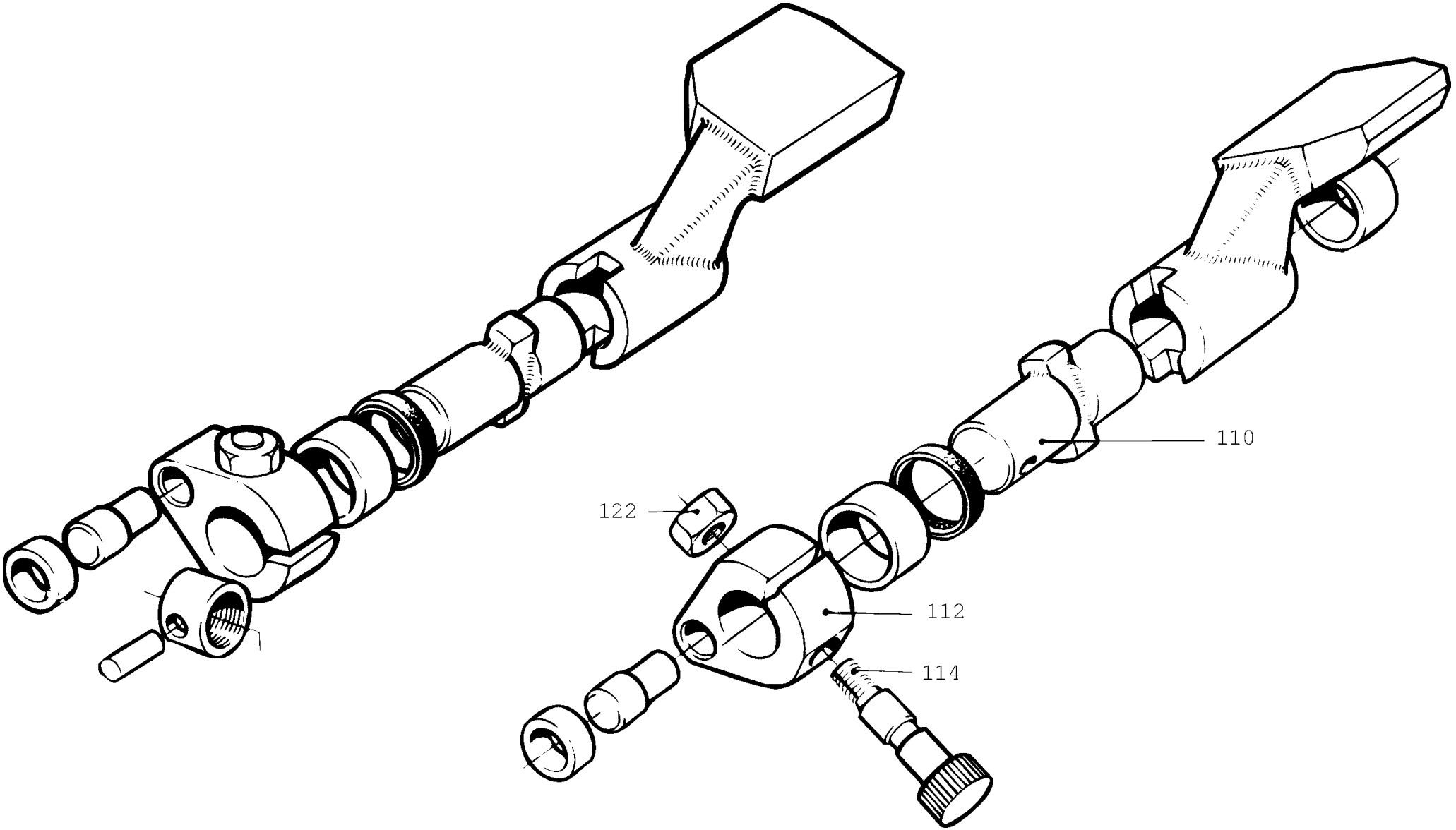
110
122
112
114

Pos	Part No	SP	UN	Qty	Description	Page No
Common Parts						
110	32462-0000	-		1	SHAFT	
112	25640-0000	-		1	CARRIER	
114	25641-0000	C		1	REAMED BOLT	
122	312605-0314	C		1	HEXAGON NUT, M6M M5 A280	

Pos	Part No	SP	UN	Qty	Description	Page No

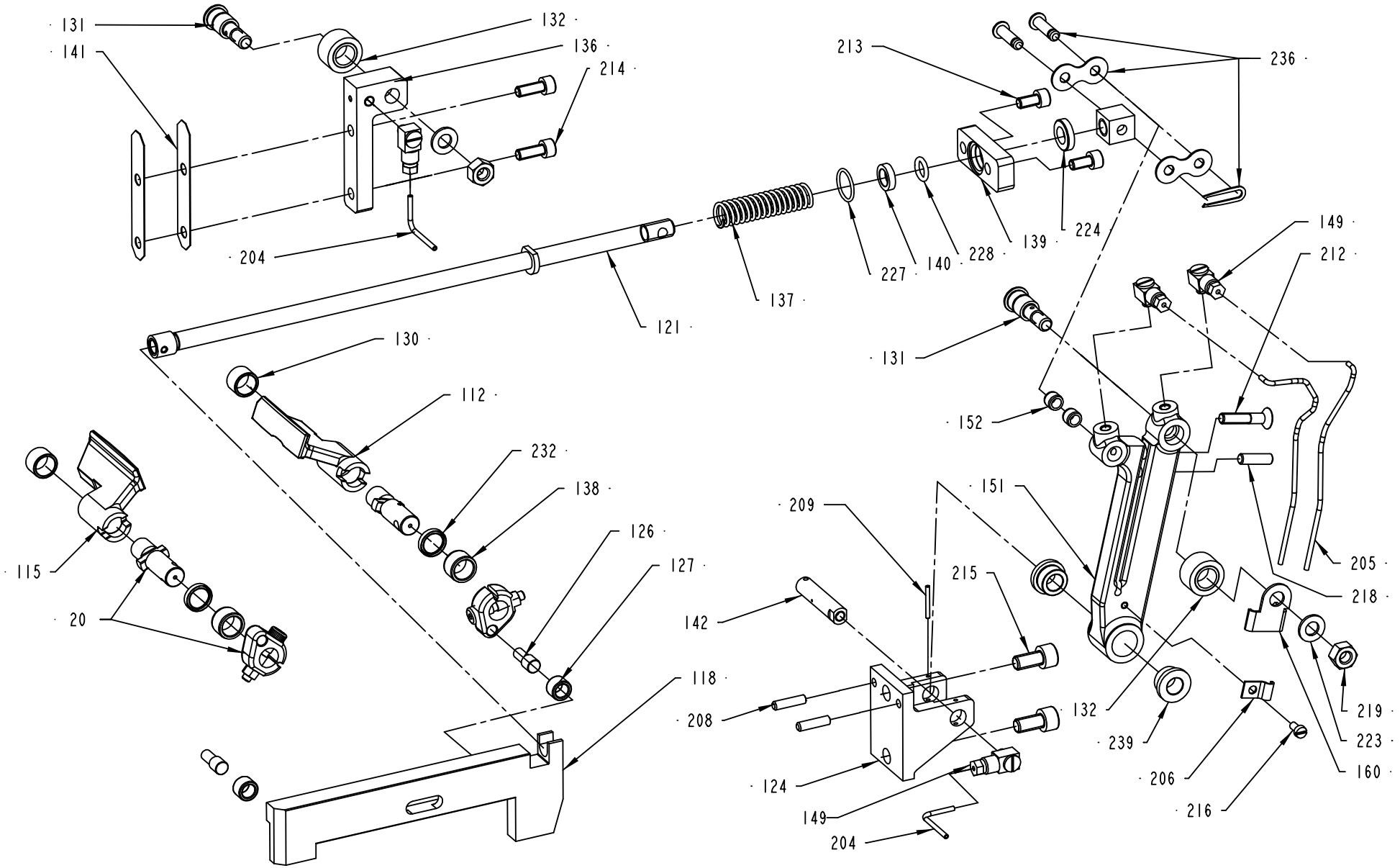
131
141
132
136
214
204
213
236
227
140
228
139
224
137
121
130
112
232
138
126
127
115
20
118
209
142
208
124
149
204
151
152
131
149
212
205
218
215
132
239
206
216
219
223
160

ECM: 81515 - 20001114
Group number: 279565-0300
Assembly Drawing: 279565-2_1_AB

Issue: 20020121

Pos	Part No	SP	UN	Qty	Description	Page No
0375S						
112	493711-0000	C		1	FOLDING FLAP	
115	493710-0000	C		1	FOLDING FLAP	
118	458039-0000	C		1	CARRIER RULER	
121	32494-0000	C		1	OPERATING ROD	
0355B OR 0500S						
112	493711-0000	C		1	FOLDING FLAP	
115	493710-0000	C		1	FOLDING FLAP	
118	458031-0000	C		1	CARRIER RULER	
121	32494-0000	C		1	OPERATING ROD	
0500B OR 0750B OR 1000B						
112	464311-0000	C		1	FOLDING FLAP	
115	464310-0000	C		1	FOLDING FLAP	
118	450506-0000	C		1	CARRIER RULER	
121	32468-0000	C		1	OPERATING ROD	
0750S						
112	544315-0000	C		1	FOLDING FLAP	
115	544314-0000	C		1	FOLDING FLAP	
118	544320-0000	C		1	CARRIER RULER	
121	32494-0000	C		1	OPERATING ROD	
1000S						
112	569061-0000	C		1	FOLDING FLAP	
115	569060-0000	C		1	FOLDING FLAP	
118	569063-0000	C		1	CARRIER RULER	
121	32468-0000	C		1	OPERATING ROD	
1000SQ						
112	1317809-0000	C		1	FOLDING FLAP	
115	1317808-0000	C		1	FOLDING FLAP	
118	573980-0000	C		1	CARRIER RULER	
121	32468-0000	C		1	OPERATING ROD	
Common Parts						
124	23229-0000	D		1	BRACKET	
126	22462-0000	C		2	SHAFT	
127	22463-0000	C		2	ROLL	
130	32463-0000	C		2	BEARING	
131	276172-0000	C		2	AXLE PIN	
132	276173-0000	C		2	CURVE ROLLER	
136	23361-0000	C		1	ROLLER BRACKET	
137	107000-0000	C		1	SPRING	
138	33408-0000	C		2	BEARING	
139	113653-0000	C		1	BEARING PLATE	
140	113654-0000	C		1	RING	
141	26423-0000	C		2	LACE	
142	269366-0000	C		1	DOWEL	
149	90134-0058	C		4	CONNECTION	
151	927448-0000	D		1	LINK	
152	37258-0000	C		2	BUSHING	
160	927450-0000	D		1	SECURITY PLATE RIGHT	
204	90266-0019	-	MM	400	PIPE	
205	90166-0143	-	MM	800	TUBE 2,5 MM PA,TRANSP.	
206	90165-0056	-		1	PIPE CLIP FOR TUBE D=4 MM	
208	311103-0310	-		2	PARALLELL PIN, M6, 5X20 MM	
209	90258-0001	-		1	PIN, STRAIGHT SLOTTED SPRING FRP 2X20	
212	312155-0374	-		1	SCREW HEX.SOCK.COUNT.MF6S M6X30 A280	
213	312115-0366	-		2	SCREW MC6S M6X12 A280	
214	312115-0368	-		2	SCREW MC6S M6X16 A280	
215	312115-0449	-		2	SCREW MC6S M8X16 A280	
216	312125-0287	-		1	SCREW PAN HEAD MCS M4X8 SS	
218	312318-0370	-		1	SCREW SOCK.SET CUP P MSK6SS M6X20 A4	
219	312605-0318	-		2	HEXAGON NUT, M6M M8 A280	
223	315105-0165	-		2	WASHER PLAIN, BRB, 8,4/16,H=1,5	
224	315115-0171	-		1	WASHER PLAIN, TBRB 10/18 H=4	
227	315202-0114	C		1	O-RING 16,1X1,6 MM	
228	315202-0208	C		1	O-RING 9,3X2,4 MM	
232	315230-0157	-		2	BEARING SEAL 12X16X3 MM	
236	90288-0305	C		1	CONNECTING LINK SINGLE 3/4",SS	
239	321101-0163	C		2	FLANGE BUS 10F7X10	
F020	A26642-0200	C		2	CARRIER	**375**

Machine Type	Group Description	Used-In	Group Number	Page No

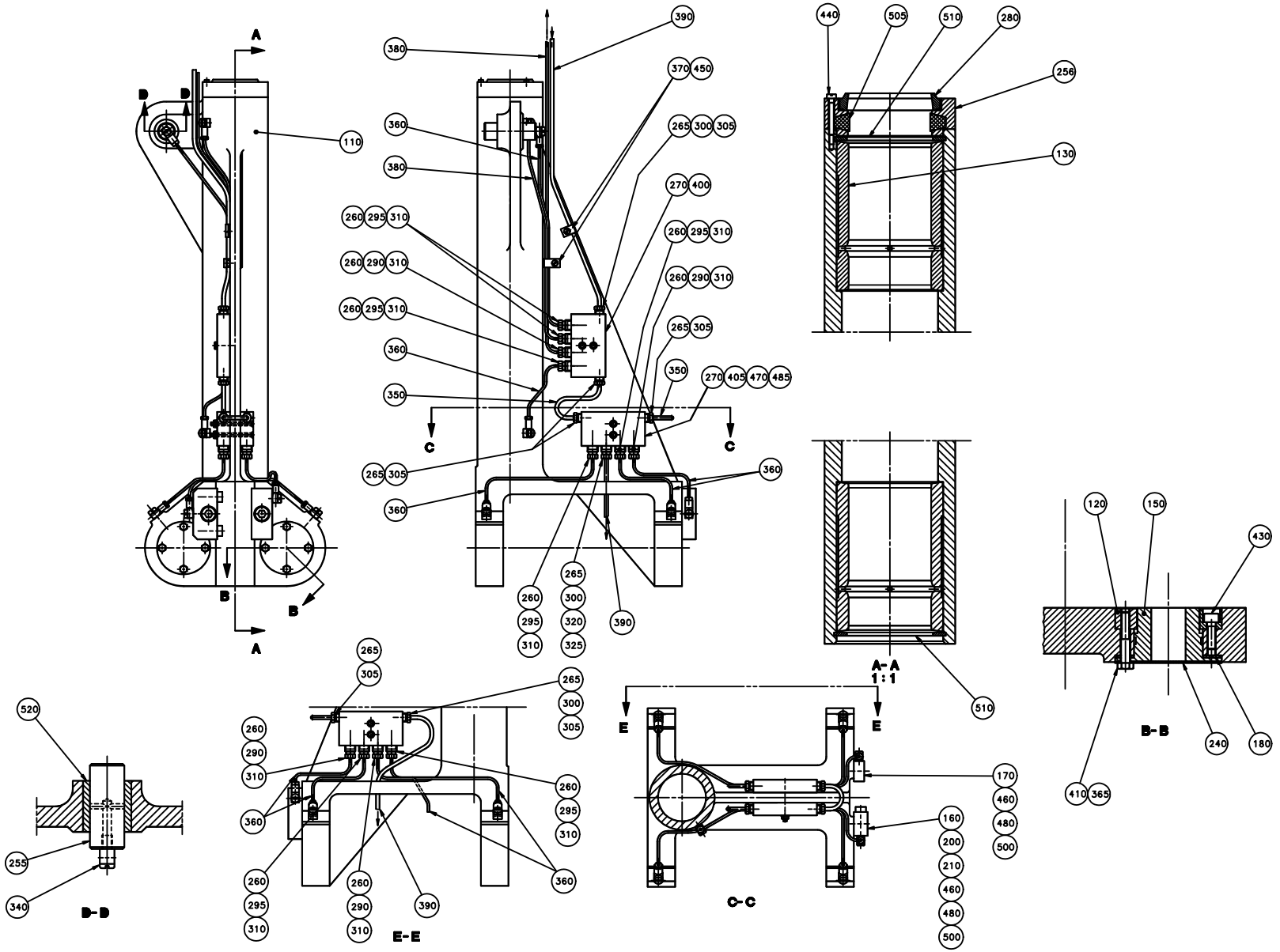
A
B
B
B
B
110
380
390
370
450
360
380
265
300
305
270
400
260
295
310
260
290
310
260
295
310
260
295
310
260
290
310
265
305
360
350
350
270
405
470
485
C
C
265
305
360
360
265
300
320
325
260
295
310
390
440
505
510
280
256
130
A-A
1:1
510
120
150
430
B-B
240
180
410
365
520
255
340
B-D
265
305
265
300
305
260
290
310
260
295
310
360
360
260
295
310
260
290
310
390
E-E
E
E
170
460
480
500
160
200
210
460
480
500
C-C

ECM: 72090 - 19981214
Group number: 243942-0400
Assembly Drawing: 243942-2_1_AA

Issue: 20020121

Pos	Part No	SP	UN	Qty	Description	Page No
Common Parts						
110	243952-0000	D		1	YOKE	
120	36753-0000	C		4	RING	
130	243943-0000	C		2	BUSHING	
150	246513-0000	C		4	BEARING	
160	20494-0000	C		2	COMPRESSION SPRING	
170	26760-0000	C		1	LOCATING PIECE	
180	29886-0000	C		4	LACE	
200	31837-0000	C		1	SPRING HOUSING	
210	31838-0000	C		2	PLUNGER	
240	239874-0000	D		4	WASHER	
255	247112-0000	C		1	SHAFT	
256	263509-0000	C		1	LID	
260	90028-0020	C		11	CONE TUBE 2,5MM	
265	90028-0021	C		7	CONE TUBE 4 MM	
270	90032-0039	-		3	BLOCK 4 WAYS	
280	90091-0080	C		1	SCRAPER 48X60X10 MM	
290	90092-0052	C		4	METERING VALVE 10 MM3	
295	90092-0053	C		7	METERING VALVE 30 MM3	
300	90134-0031	C		3	SLEEVE FOR PLASTIC TUBE	
305	90134-0038	C		6	BUSHING/NUT INLET/OUTLET 4 MM	
310	90134-0039	C		11	BUSHING VALVE CONNECTION 2,5 MM	
320	90134-0040	C		1	BUSHING VALVE CONNECTION 4 MM	
325	90134-0051	-		1	SPACING COLLAR DOSING BLOCK	
340	90134-0058	C		9	CONNECTION	
350	90151-0001	-	MM	200	BRASS PIPE DI=2,6 MM	
360	90266-0019	-	MM	1400	PIPE	
365	90157-0016	-	ML	1	LOCKING FLUID	
370	90165-0060	-		4	PIPE CLIP FOR TUBE D=5 MM	
380	90166-0143	-	MM	900	TUBE 2,5 MM PA,TRANSP.	
390	90166-0109	-	MM	500	TUBE 4 MM PA,TRANSP.	
395	312105-0287	-		2	SCREW M6S M4X8 A280	
400	312105-0295	-		2	SCREW M6S M4X20 A280	
405	312145-0305	-		2	SCREW COUNTERS.SLOT.HD. MFS 4X50 SS	
410	312105-0335	-		16	SCREW M6S M5X30 A280	
430	312115-0329	-		4	SCREW MC6S M5X16 A280	
440	312125-0232	-		3	SCREW PAN HEAD MCS M3X25 SS	
450	312125-0285	-		2	SCREW SLOT.PAN HD. MCS 4X6 A480	
460	312180-0499	-		2	SCREW, HEX.SOCK.HEAD SHOULD. M8X40	
470	312605-0312	-		2	HEXAGON NUT, M6M M4 A280	
480	312811-0318	-		2	NUT HEX.LOCK HELI COIL MID GRIP M8 SS	
485	315105-0136	-		4	WASHER PLAIN, BRB, 4,3/8,H=0,8	
500	315115-0173	-		2	WASHER PLAIN, TBRB 10,5/22 H=4	
505	315259-0103	C		1	FELT SEAL 47-67 MM	
510	315752-0136	-		4	RETAIN. RING, 62	
520	321105-0234	C		1	BUSHING 20F7X28X30	

Machine Type	Group Description	Used-In	Group Number	Page No

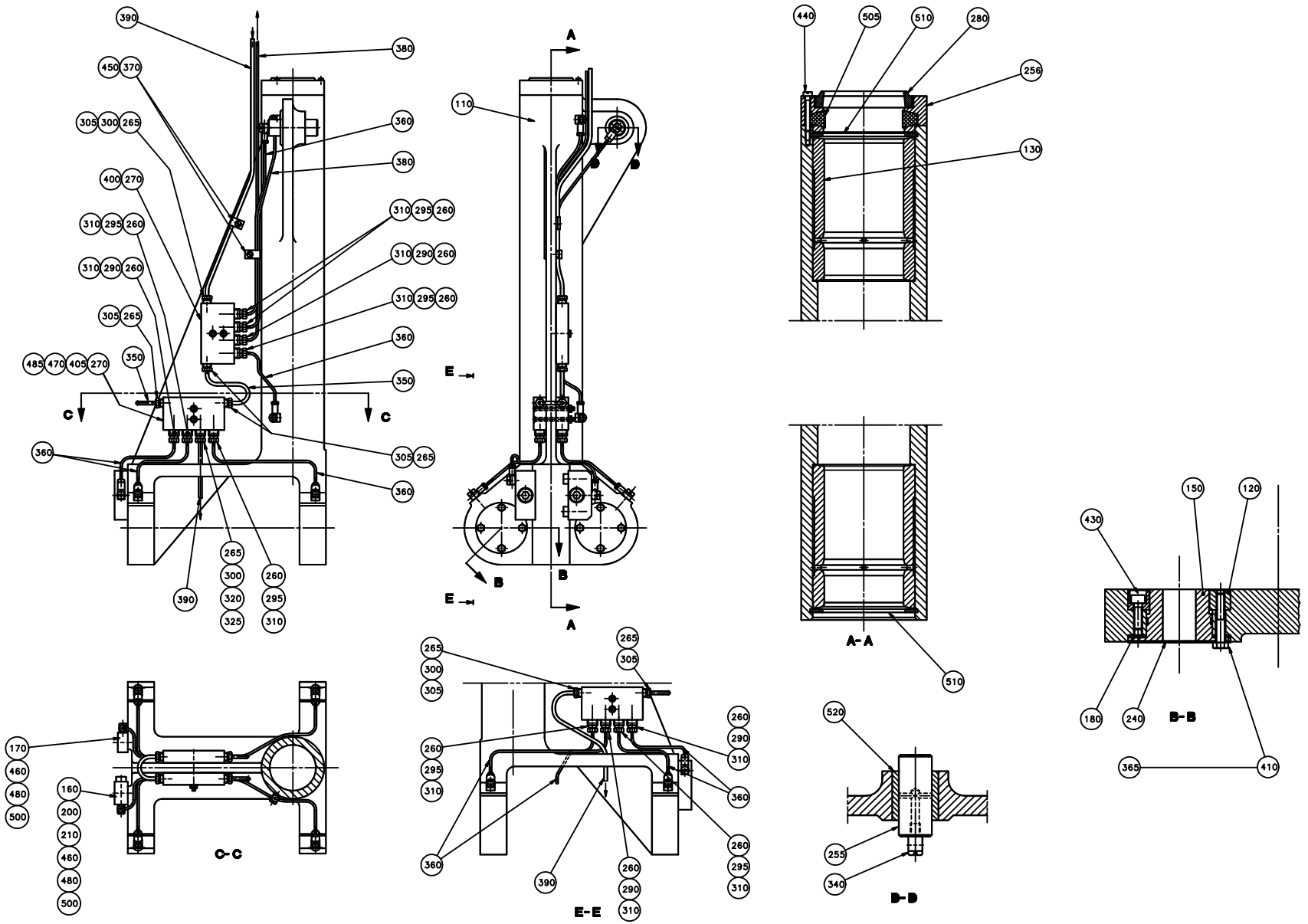
390
380
450 370
305 300 265
360
380
400 270
310 295 260
310 290 260
310 295 260
305 265
360
485 470 405 270
350
350
C
C
360
305 265
360
265 300 320 325
260 295 310
390
A
110
B
B
E
E
B
A
440 505 510 280
256
130
A-A
510
150 120
430
180 240
B-B
365 410
170 460 480 500
160 200 210 460 480 500
C-C
265 300 305
265 305
260 295 310
260 290 310
360
360
390
260 290 310
260 295 310
E-E
520
255 340
D-D

ECM: 72090 - 19981214
Group number: 593749-0100
Assembly Drawing: 593749-1_1_AA

Issue: 20020121

Pos	Part No	SP	UN	Qty	Description	Page No
Common Parts						
110	243951-0000	D		1	YOKE	
120	36753-0000	C		4	RING	
130	243943-0000	C		2	BUSHING	
150	246513-0000	C		4	BEARING	
160	20494-0000	C		2	COMPRESSION SPRING	
170	26760-0000	C		1	LOCATING PIECE	
180	29886-0000	C		4	LACE	
200	31837-0000	C		1	SPRING HOUSING	
210	31838-0000	C		2	PLUNGER	
240	239874-0000	D		4	WASHER	
255	247112-0000	C		1	SHAFT	
256	263509-0000	C		1	LID	
260	90028-0020	C		11	CONE TUBE 2,5MM	
265	90028-0021	C		7	CONE TUBE 4 MM	
270	90032-0039	-		3	BLOCK 4 WAYS	
280	90091-0080	C		1	SCRAPER 48X60X10 MM	
290	90092-0052	C		4	METERING VALVE 10 MM3	
295	90092-0053	C		7	METERING VALVE 30 MM3	
300	90134-0031	C		3	SLEEVE FOR PLASTIC TUBE	
305	90134-0038	C		6	BUSHING/NUT INLET/OUTLET 4 MM	
310	90134-0039	C		11	BUSHING VALVE CONNECTION 2,5 MM	
320	90134-0040	C		1	BUSHING VALVE CONNECTION 4 MM	
325	90134-0051	-		1	SPACING COLLAR DOSING BLOCK	
340	90134-0058	C		9	CONNECTION	
350	90151-0001	-	MM	200	BRASS PIPE DI=2,6 MM	
360	90266-0019	-	MM	1400	PIPE	
365	90157-0016	-	ML	1	LOCKING FLUID	
370	90165-0060	-		4	PIPE CLIP FOR TUBE D=5 MM	
380	90166-0143	-	MM	900	TUBE 2,5 MM PA,TRANSP.	
390	90166-0109	-	MM	500	TUBE 4 MM PA,TRANSP.	
395	312105-0287	-		2	SCREW M6S M4X8 A280	
400	312105-0295	-		2	SCREW M6S M4X20 A280	
405	312145-0305	-		2	SCREW COUNTERS.SLOT.HD. MFS 4X50 SS	
410	312105-0335	-		16	SCREW M6S M5X30 A280	
430	312115-0329	-		4	SCREW MC6S M5X16 A280	
440	312125-0232	-		3	SCREW PAN HEAD MCS M3X25 SS	
450	312125-0285	-		2	SCREW SLOT.PAN HD. MCS 4X6 A480	
460	312180-0499	-		2	SCREW, HEX.SOCK.HEAD SHOULD. M8X40	
470	312605-0312	-		2	HEXAGON NUT, M6M M4 A280	
480	312811-0318	-		2	NUT HEX.LOCK HELI COIL MID GRIP M8 SS	
485	315105-0136	-		4	WASHER PLAIN, BRB, 4,3/8,H=0,8	
500	315115-0173	-		2	WASHER PLAIN, TBRB 10,5/22 H=4	
505	315259-0103	C		1	FELT SEAL 47-67 MM	
510	315752-0136	-		4	RETAIN. RING, 62	
520	321105-0234	C		1	BUSHING 20F7X28X30	

Machine Type	Group Description	Used-In	Group Number	Page No

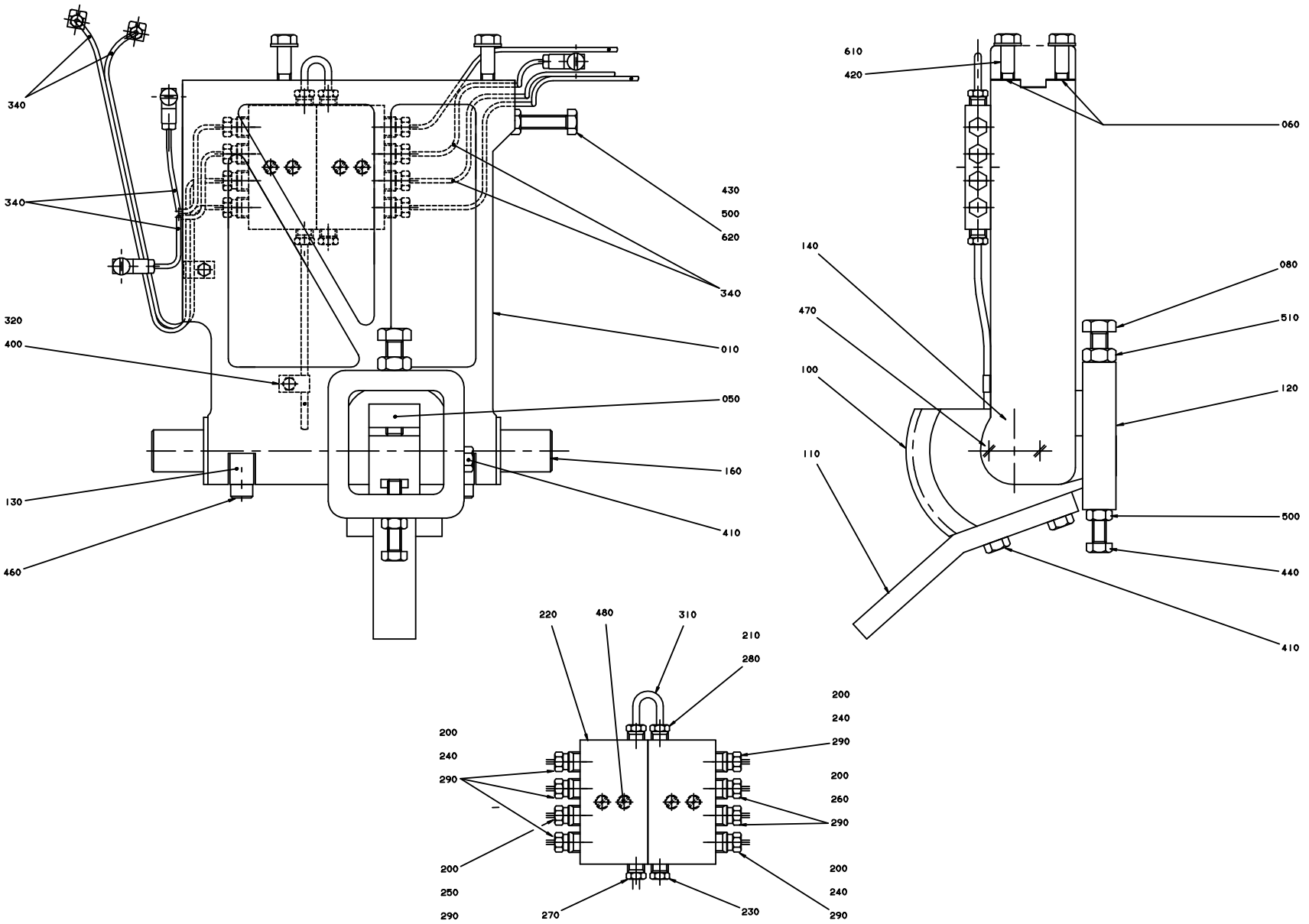
340
340
320
400
130
460
430
500
620
340
010
050
160
410
610
420
060
140
470
100
110
080
510
120
500
440
410
220
480
310
210
280
200
240
290
200
250
290
270
230
200
240
290
200
260
290
200
240
290

Pos	Part No	SP	UN	Qty	Description	Page No
IH						
200	90028-0020	-		8	CONE TUBE 2,5MM	
220	90032-0039	-		2	BLOCK 4 WAYS	
240	90092-0052	C		5	METERING VALVE 10 MM3	
290	90134-0039	-		8	BUSHING VALVE CONNECTION 2,5 MM	
Common Parts						
010	538400-0000	C		1	ARM LEFT	
050	14729-0000	C		1	NUT	
060	26425-0000	C		6	LACE	
080	32957-0000	C		1	SCREW	
100	232238-0000	C		1	TOOTH PART	
110	239476-0000	C		1	ROD	
120	267754-0000	C		1	BOW CLAMP	
130	533818-0000	C		2	HOLDER	
140	536704-0000	C		2	WASHER	
160	538399-0000	C		1	SHAFT	
210	90028-0021	C		3	CONE TUBE 4 MM	
230	90087-0019	-		1	PLUG M10X1 STAINLESS	
250	90092-0053	C		1	METERING VALVE 30 MM3	
260	90092-0054	C		2	METERING VALVE 50 MM3	
270	90134-0031	C		1	SLEEVE FOR PLASTIC TUBE	
280	90134-0038	C		3	BUSHING/NUT INLET/OUTLET 4 MM	
310	90266-0165	-	MM	100	BRASS PIPE	
320	90165-0056	-		2	PIPE CLIP FOR TUBE D=4 MM	
330	90166-0109	-	MM	400	TUBE 4 MM PA,TRANSP.	
340	90166-0143	-	MM	2500	TUBE 2,5 MM PA,TRANSP.	
400	312105-0287	-		2	SCREW M6S M4X8 A280	
410	312105-0453	-		3	SCREW M6S M8X25 A280	
420	312105-0457	-		1	SCREW M6S M8X35 A280	
430	312105-0466	-		1	SCREW M6S M8X75 A280	
440	312109-0459	-		1	SCREW M6S M8X40 A280	
450	312115-0289	-		2	SCREW HEX.SOCK.HD.MC6S-TT 4X10 A480	
460	312115-0455	-		2	SCREW MC6S M8X30 A280	
470	312145-0285	-		4	SCREW COUNTERS.SLOT.HD. MFS 4X6 SS	
480	312145-0297	-		4	SCREW COUNTERS.SLOT.HD. MFS 4X25 SS	
500	312605-0318	-		2	HEXAGON NUT, M6M M8 A280	
510	312635-0320	-		1	NUT M6M 10X1 STAINLESS A2 80	
600	315105-0136	-		2	WASHER PLAIN, BRB, 4,3/8,H=0,8	
610	315105-0165	-		4	WASHER PLAIN, BRB, 8,4/16,H=1,5	
620	315115-0165	-		1	WASHER PLAIN, TBRB 8,4/16 H=3	

Pos	Part No	SP	UN	Qty	Description	Page No

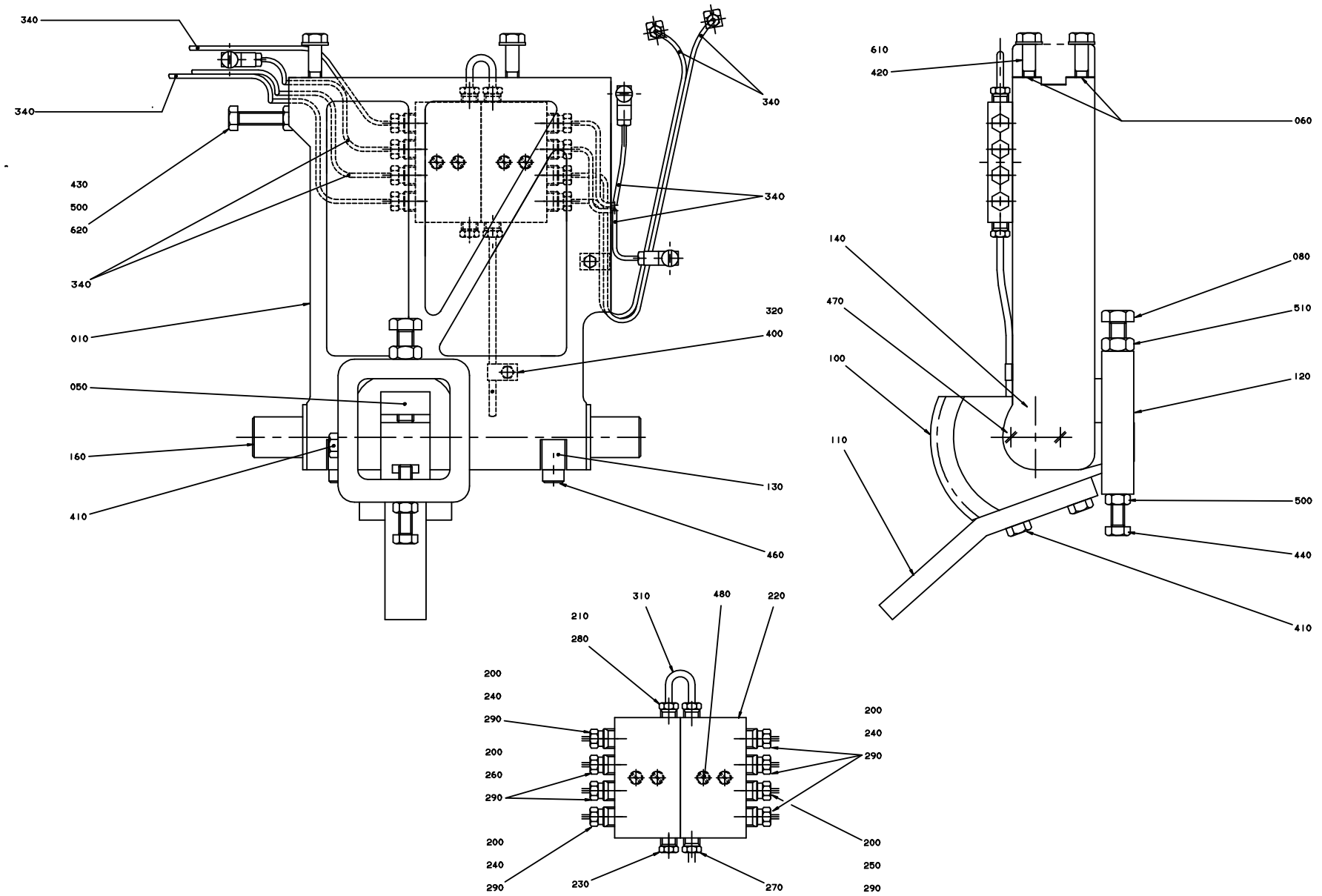
340
340
340
340
430
500
620
340
010
050
160
410
320
400
130
460
610
420
060
140
470
100
110
080
510
120
500
440
410
310
480
220
210
280
200
240
290
200
260
290
200
240
290
200
240
290
230
270
200
240
290
200
250
290

Pos	Part No	SP	UN	Qty	Description	Page No
IH						
200	90028-0020	-		8	CONE TUBE 2,5MM	
220	90032-0039	-		2	BLOCK 4 WAYS	
240	90092-0052	C		5	METERING VALVE 10 MM3	
290	90134-0039	-		8	BUSHING VALVE CONNECTION 2,5 MM	
Common Parts						
010	538401-0000	C		1	ARM RIGHT	
050	14729-0000	C		1	NUT	
060	26425-0000	C		6	LACE	
080	32957-0000	C		1	SCREW	
100	232238-0000	C		1	TOOTH PART	
110	239476-0000	C		1	ROD	
120	267754-0000	C		1	BOW CLAMP	
130	533818-0000	C		2	HOLDER	
140	536704-0000	C		2	WASHER	
160	538399-0000	C		1	SHAFT	
210	90028-0021	C		3	CONE TUBE 4 MM	
230	90087-0019	-		1	PLUG M10X1 STAINLESS	
250	90092-0053	C		1	METERING VALVE 30 MM3	
260	90092-0054	C		2	METERING VALVE 50 MM3	
270	90134-0031	C		1	SLEEVE FOR PLASTIC TUBE	
280	90134-0038	C		3	BUSHING/NUT INLET/OUTLET 4 MM	
310	90266-0165	-	MM	100	BRASS PIPE	
320	90165-0056	-		2	PIPE CLIP FOR TUBE D=4 MM	
330	90166-0109	-	MM	400	TUBE 4 MM PA,TRANSP.	
340	90166-0143	-	MM	2500	TUBE 2,5 MM PA,TRANSP.	
400	312105-0287	-		2	SCREW M6S M4X8 A280	
410	312105-0453	-		3	SCREW M6S M8X25 A280	
420	312105-0457	-		1	SCREW M6S M8X35 A280	
430	312105-0466	-		1	SCREW M6S M8X75 A280	
440	312109-0459	-		1	SCREW M6S M8X40 A280	
450	312115-0289	-		2	SCREW HEX.SOCK.HD.MC6S-TT 4X10 A480	
460	312115-0455	-		2	SCREW MC6S M8X30 A280	
470	312145-0285	-		4	SCREW COUNTERS.SLOT.HD. MFS 4X6 SS	
480	312145-0297	-		4	SCREW COUNTERS.SLOT.HD. MFS 4X25 SS	
500	312605-0318	-		2	HEXAGON NUT, M6M M8 A280	
510	312635-0320	-		1	NUT M6M 10X1 STAINLESS A2 80	
600	315105-0136	-		2	WASHER PLAIN, BRB, 4,3/8,H=0,8	
610	315105-0165	-		4	WASHER PLAIN, BRB, 8,4/16,H=1,5	
620	315115-0165	-		1	WASHER PLAIN, TBRB 8,4/16 H=3	

Pos	Part No	SP	UN	Qty	Description	Page No

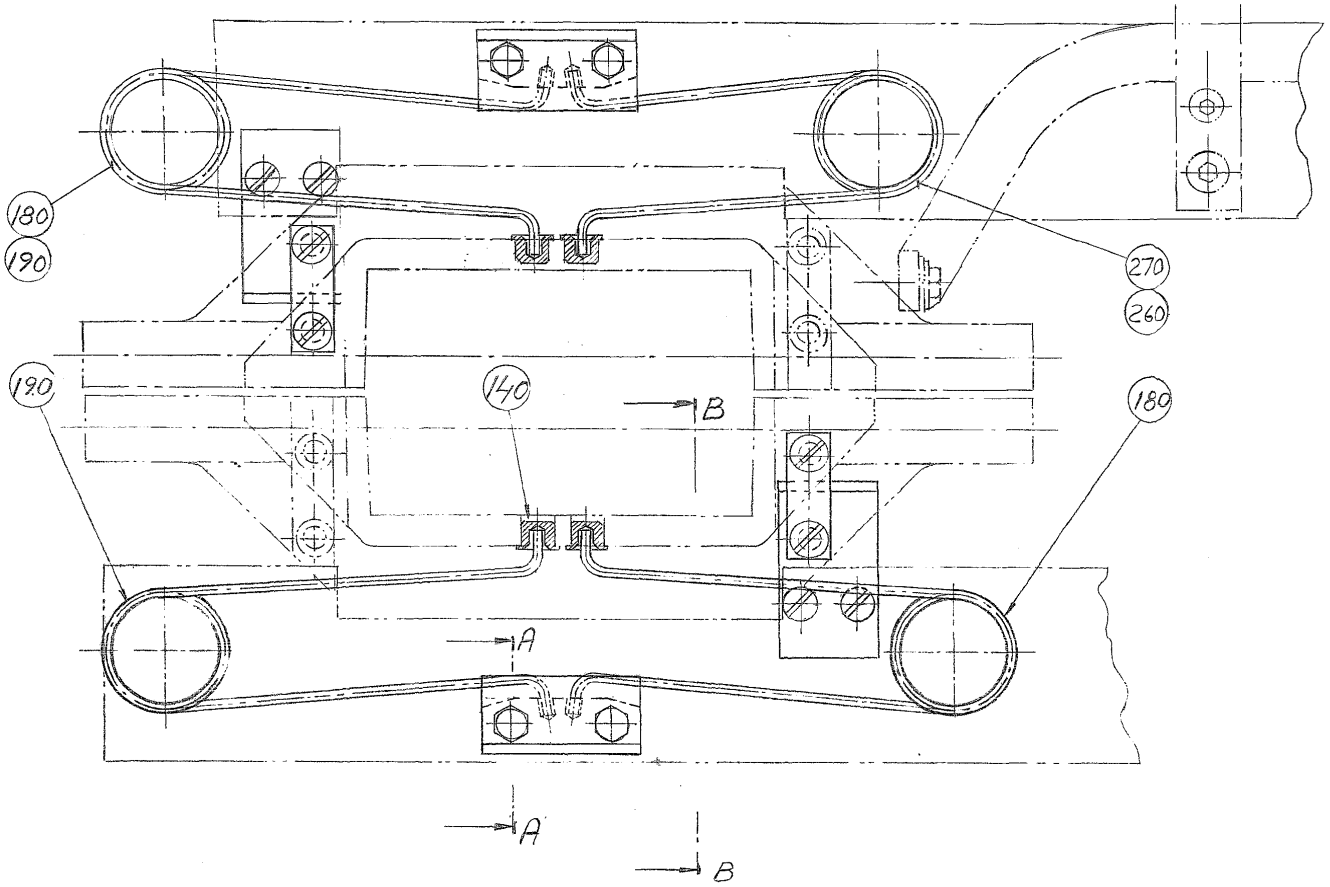
180
190
190
140
B
270
260
180
A
A
B

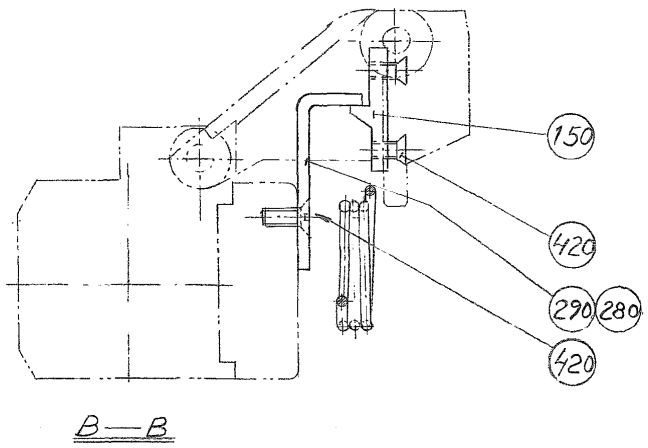
150
420
290
280
420

B—B

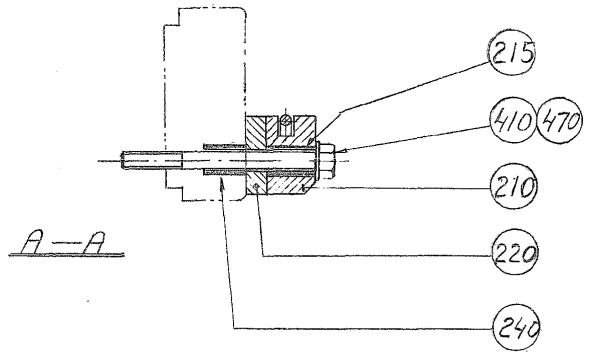
215
410
470
210
220
240

A—A

Pos	Part No	SP	UN	Qty	Description	Page No
TBA/8 0355B IH						
140	545651-0000	B		8	GUIDE STUD	
150	545125-0000	A		2	STOPPER	
152	545126-0000	A		2	STOPPER	
180	545801-0000	A		3	SPRING	
190	545802-0000	A		3	SPRING	
205	545127-0000	A		2	CATCH	
210	247262-0000	A		4	SPRING BRACKET	
215	247263-0000	B		8	SPACER	
220	247271-0000	A		2	LACE	
240	263684-0000	B		4	SPACER	
250	545136-0000	A		2	CATCH	
260	554962-0000	A		1	SPRING	
270	554963-0000	A		1	SPRING	
401	312105-0331	-		8	SCREW M6S M5X20 A280	
410	312105-0340	-		8	SCREW M6S M5X45 A280	
420	312105-0325	-		8	SCREW M6S M5X10 A280	
470	315105-0146	-		24	WASHER PLAIN, BRB, 5,3/10,H=1	
TBA/8 0375S IH						
140	545651-0000	B		8	GUIDE STUD	
150	548493-0000	A		4	STOPPER	
180	561393-0000	A		3	SPRING	
190	561394-0000	A		3	SPRING	
205	562137-0000	A		2	CATCH	
210	247262-0000	A		4	SPRING BRACKET	
215	247263-0000	B		8	SPACER	
220	247271-0000	A		2	LACE	
240	263684-0000	B		4	SPACER	
250	562136-0000	A		2	CATCH	
260	561391-0000	A		1	SPRING	
270	561392-0000	A		1	SPRING	
400	312105-0329	-		8	SCREW M6S M5X16 A280	
401	312105-0331	-		8	SCREW M6S M5X20 A280	
410	312105-0340	-		8	SCREW M6S M5X45 A280	
470	315105-0146	-		24	WASHER PLAIN, BRB, 5,3/10,H=1	
TBA/8 0500B IH						
140	33150-0000	B		8	GUIDE STUD	
150	33152-0000	A		4	STOPPER	
180	246328-0000	A		3	SPRING	
190	246329-0000	A		3	SPRING	
210	247262-0000	A		4	SPRING BRACKET	
215	247263-0000	B		8	SPACER	
220	247271-0000	A		2	LACE	
240	263684-0000	B		4	SPACER	
260	1296222-0000	A		1	SPRING	
270	1296223-0000	A		1	SPRING	
280	284138-0000	A		2	CATCH	
290	284139-0000	A		2	CATCH	
410	312105-0340	-		8	SCREW M6S M5X45 A280	
420	312145-0325	-		16	SCREW COUNTERS.SLOT.HD. MFS 5X10 SS	
470	315105-0146	-		8	WASHER PLAIN, BRB, 5,3/10,H=1	
TBA/8 0500S IH						
140	545651-0000	B		8	GUIDE STUD	
150	1348692-0000	A		4	STOPPER	
180	561393-0000	A		4	SPRING	
190	561394-0000	A		4	SPRING	
205	2501271-0000	A		2	CATCH	
210	571296-0000	A		4	SPRING BRACKET	
220	571298-0000	A		2	LACE	
230	571297-0000	A		2	LACE	
250	2501272-0000	A		2	CATCH	
400	312105-0329	-		24	SCREW M6S M5X16 A280	
402	312105-0333	-		4	SCREW M6S M5X25 A280	
412	312115-0340	-		8	SCREW MC6S M5X45 A280	
470	315105-0146	-		28	WASHER PLAIN, BRB, 5,3/10,H=1	
TBA/8 0750B IH						
140	545651-0000	B		8	GUIDE STUD	
150	548493-0000	A		4	STOPPER	
180	561393-0000	A		4	SPRING	
190	561394-0000	A		4	SPRING	
205	1348697-0000	A		2	CATCH	
210	571296-0000	A		4	SPRING BRACKET	
220	571298-0000	A		2	LACE	
230	571297-0000	A		2	LACE	
250	1348696-0000	A		2	CATCH	
400	312105-0329	-		24	SCREW M6S M5X16 A280	
402	312105-0333	-		4	SCREW M6S M5X25 A280	
412	312115-0340	-		8	SCREW MC6S M5X45 A280	
470	315105-0146	-		28	WASHER PLAIN, BRB, 5,3/10,H=1	

Machine Type | Group Description | Used-In | Group Number | Page No

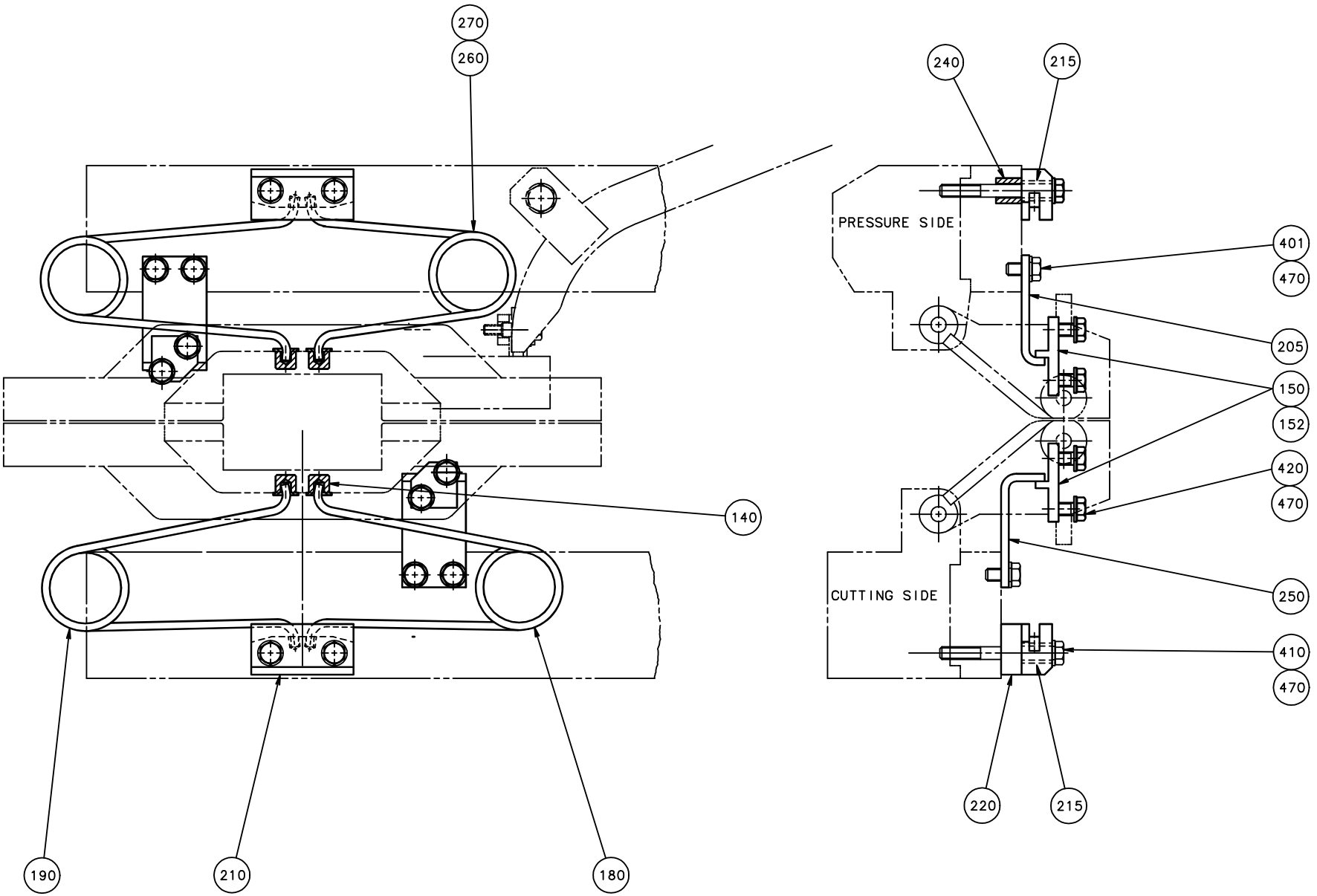
270
260
240
215
PRESSURE SIDE
401
470
205
150
152
420
470
140
CUTTING SIDE
250
410
470
220
215
190
210
180

Pos	Part No	SP	UN	Qty	Description	Page No
TBA/8 0750S IH (Cont'd)						
140	545651-0000	B		8	GUIDE STUD	
150	1282592-0000	A		2	STOPPER	
152	1282593-0000	A		2	STOPPER	
180	1143216-0000	A		4	SPRING	
190	1143215-0000	A		4	SPRING	
205	1282595-0000	A		2	CATCH	
210	1317955-0000	A		4	SPRING BRACKET	
220	571298-0000	A		2	LACE	
230	571297-0000	A		2	LACE	
240	263684-0000	B		4	SPACER	
245	1361801-0000	B		4	SPACER	
250	1282596-0000	A		2	CATCH	
402	312105-0333	-		4	SCREW M6S M5X25 A280	
411	312115-0329	-		16	SCREW MC6S M5X16 A280	
412	312115-0340	-		8	SCREW MC6S M5X45 A280	
420	312105-0325	-		8	SCREW M6S M5X10 A280	
470	315105-0146	-		12	WASHER PLAIN, BRB, 5,3/10,H=1	
TBA/8 1000B IH						
140	545651-0000	B		8	GUIDE STUD	
150	1512513-0000	A		4	STOP	
180	1143216-0000	A		4	SPRING	
190	1143215-0000	A		4	SPRING	
210	1519658-0000	A		2	CANTILEVER	
212	1519657-0000	A		2	CANTILEVER	
240	263684-0000	B		4	SPACER	
402	312105-0337	-		8	SCREW M6S M5X35 A280	
405	312105-0327	-		8	SCREW M6S M5X12 A280	
408	312105-0339	-		4	SCREW M6S M5X40 A280	
411	312105-0325	-		16	SCREW M6S M5X10 A280	
435	312155-0366	-		4	SCREW HEX.SOCK.COUNT.MF6S M6X12 A280	
470	315105-0146	-		16	WASHER PLAIN, BRB, 5,3/10,H=1	
490	1369869-0000	A		4	SCREW	
500	312605-0320	-		4	HEXAGON NUT, M6M M10 A280	
TBA/8 1000S IH						
140	545651-0000	B		8	GUIDE STUD	
150	1512513-0000	A		4	STOP	
180	1143216-0000	A		4	SPRING	
190	1143215-0000	A		4	SPRING	
210	1519658-0000	A		2	CANTILEVER	
212	1519657-0000	A		2	CANTILEVER	
240	263684-0000	B		4	SPACER	
402	312105-0337	-		8	SCREW M6S M5X35 A280	
405	312105-0327	-		8	SCREW M6S M5X12 A280	
408	312105-0339	-		4	SCREW M6S M5X40 A280	
411	312105-0325	-		16	SCREW M6S M5X10 A280	
435	312155-0366	-		4	SCREW HEX.SOCK.COUNT.MF6S M6X12 A280	
470	315105-0146	-		16	WASHER PLAIN, BRB, 5,3/10,H=1	
490	1369869-0000	A		4	SCREW	
500	312605-0320	-		4	HEXAGON NUT, M6M M10 A280	
TBA/8 1000SQ IH						
140	545651-0000	B		8	GUIDE STUD	
150	33152-0000	A		4	STOPPER	
180	1143216-0000	A		4	SPRING	
190	1143215-0000	A		4	SPRING	
205	593270-0000	A		2	CATCH	
212	597574-0000	A		4	SPRING BRACKET	
220	571298-0000	A		2	LACE	
230	571297-0000	A		2	LACE	
240	263684-0000	B		4	SPACER	
250	593271-0000	A		2	CATCH	
401	312105-0331	-		8	SCREW M6S M5X20 A280	
402	312115-0327	-		4	SCREW MC6S M5X12 A280	
412	312115-0340	-		8	SCREW MC6S M5X45 A280	
420	312105-0325	-		8	SCREW M6S M5X10 A280	
470	315105-0146	-		16	WASHER PLAIN, BRB, 5,3/10,H=1	

Machine Type | Group Description | Used-In | Group Number | Page No

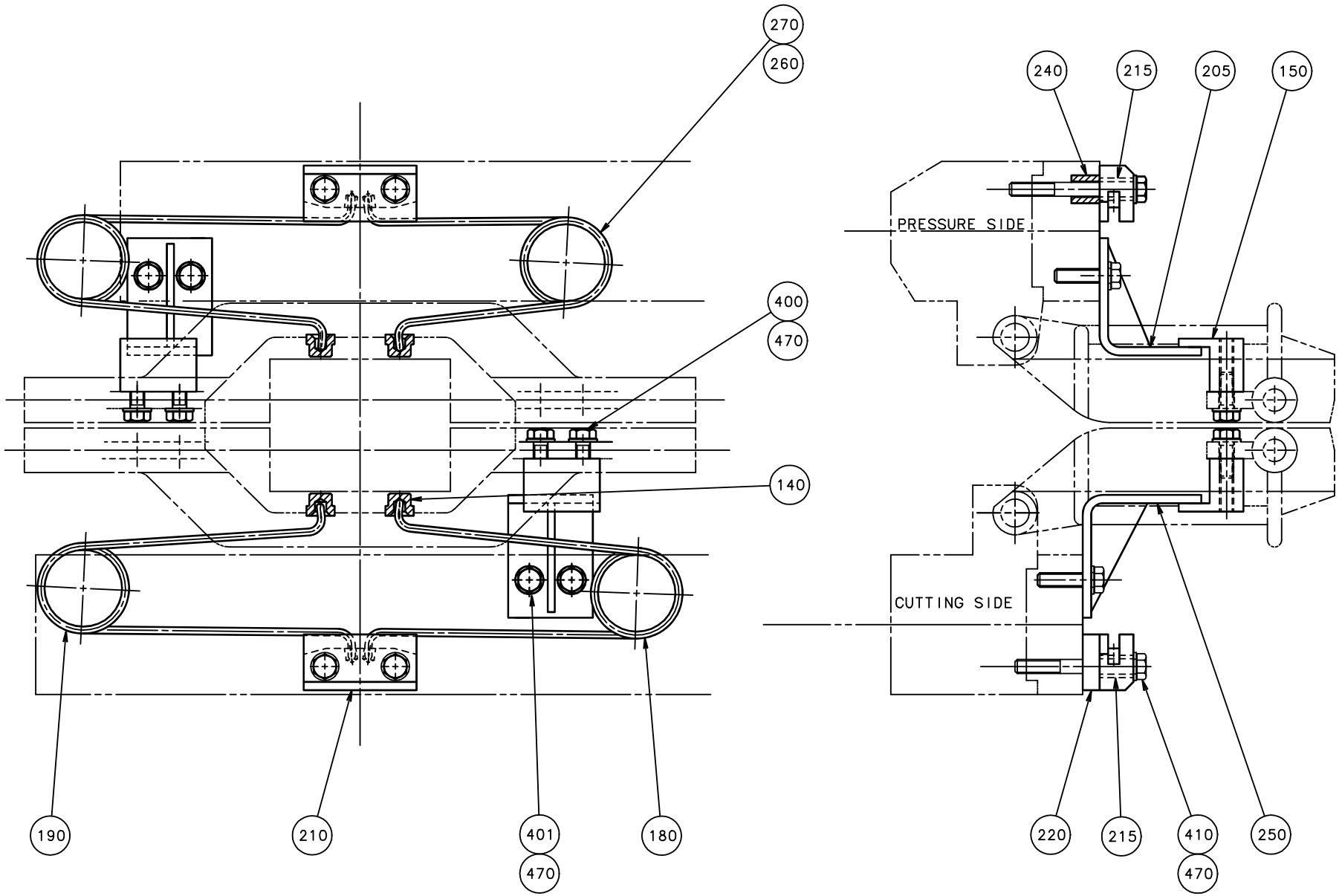
270
260
400
470
140
190
210
401
470
180
240
215
205
150
PRESSURE SIDE
CUTTING SIDE
220
215
410
470
250

Pos	Part No	SP	UN	Qty	Description	Page No

SEE PREVIOUS LISTS PAGES: 387, 389.

Pos	Part No	SP	UN	Qty	Description	Page No

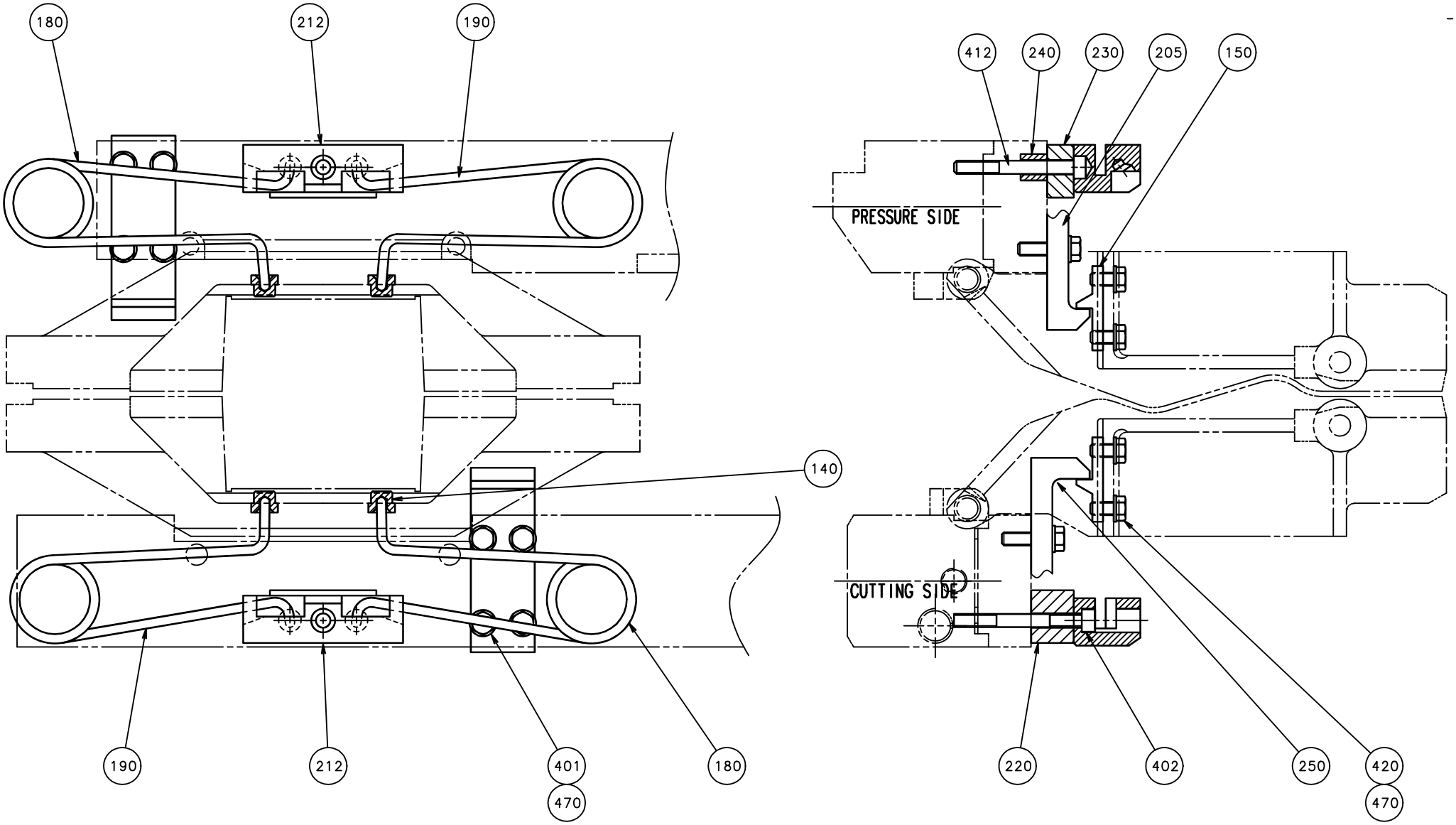
180
212
190
140
190
212
401
470
180
412
240
230
205
150
PRESSURE SIDE
CUTTING SIDE
220
402
250
420
470

Pos	Part No	SP	UN	Qty	Description	Page No
SEE PREVIOUS LISTS PAGES: 387, 389.						

Pos	Part No	SP	UN	Qty	Description	Page No

Machine Type	Group Description	Used-In	Group Number	Page No

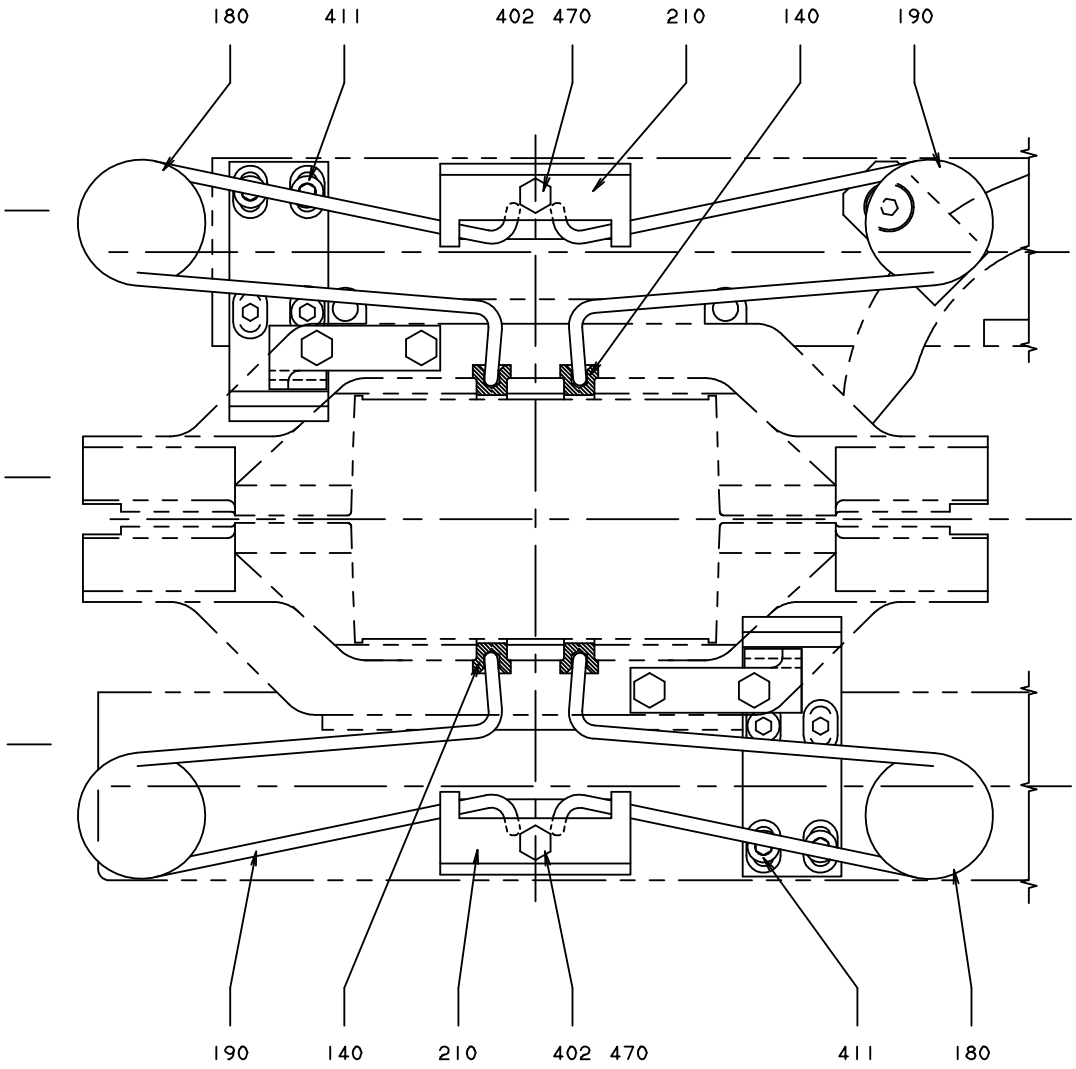
180
411
402 470
210
140
190
190
140
210
402 470
411
180

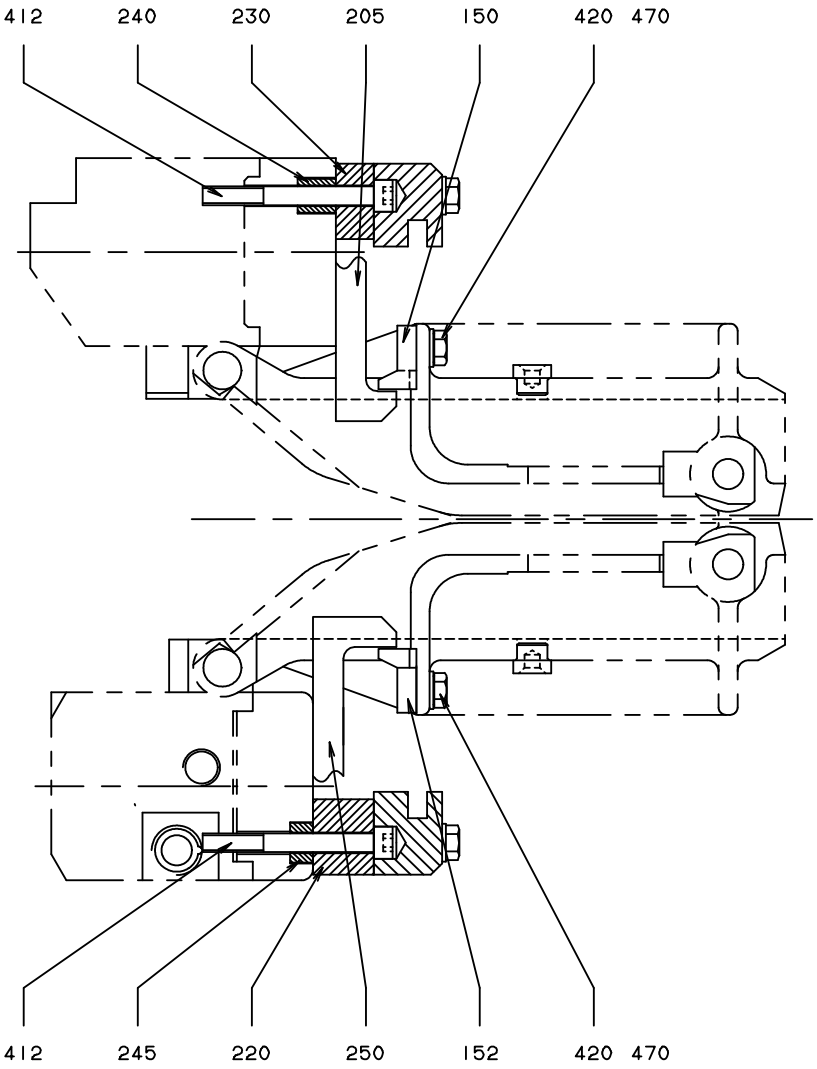
412
240
230
205
150
420 470
412
245
220
250
152
420 470

Pos	Part No	SP	UN	Qty	Description	Page No
SEE PREVIOUS LISTS PAGES: 387, 389.						

Pos	Part No	SP	UN	Qty	Description	Page No

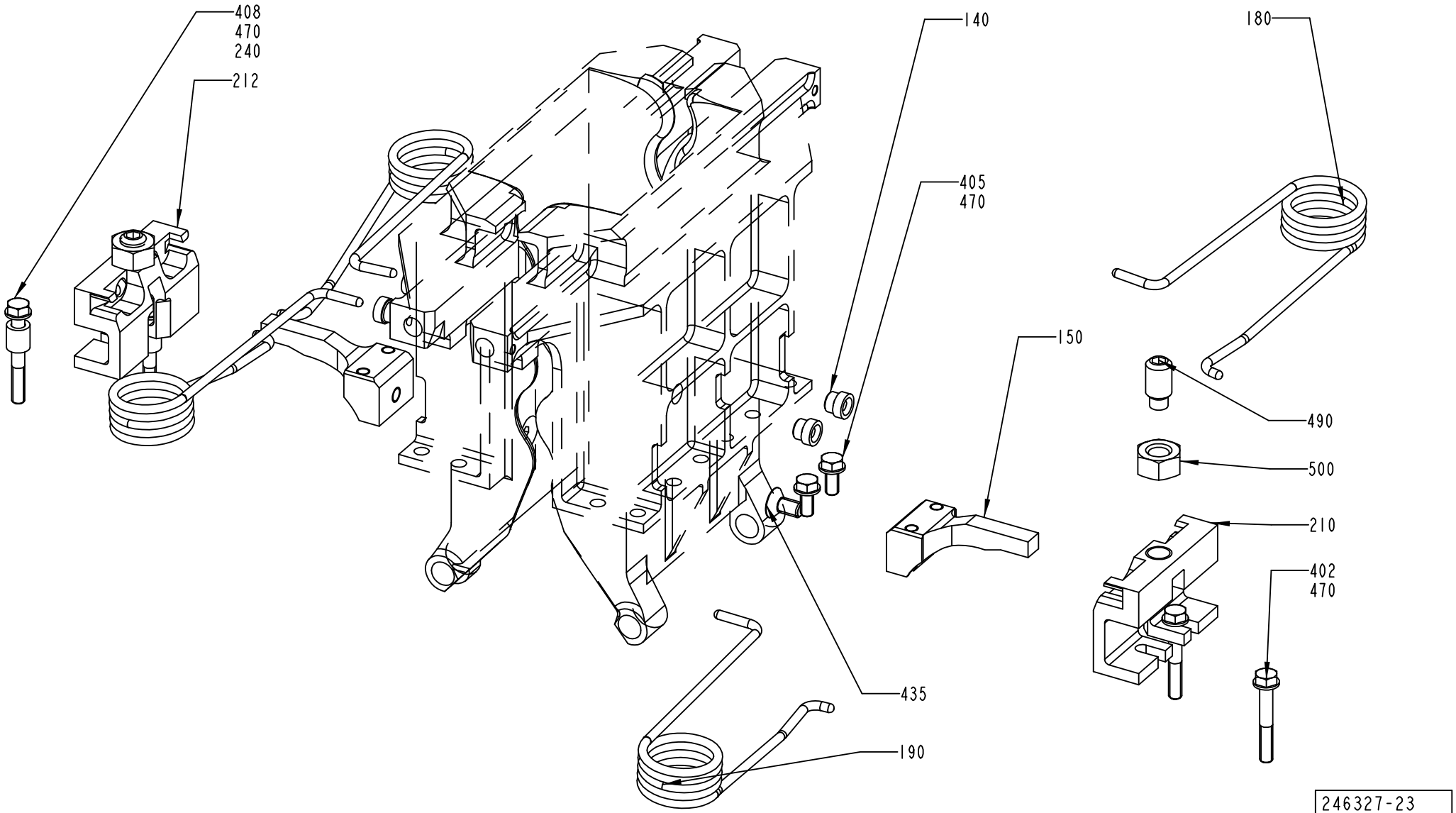

246327-23
ECN 87166

Pos	Part No	SP	UN	Qty	Description	Page No

SEE PREVIOUS LISTS PAGES: 387, 389.

Pos	Part No	SP	UN	Qty	Description	Page No

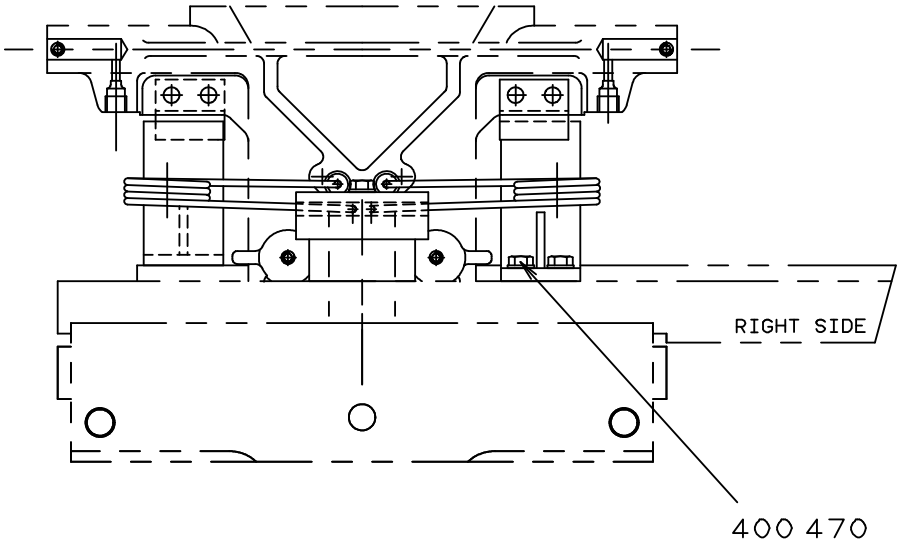
RIGHT SIDE
400 470

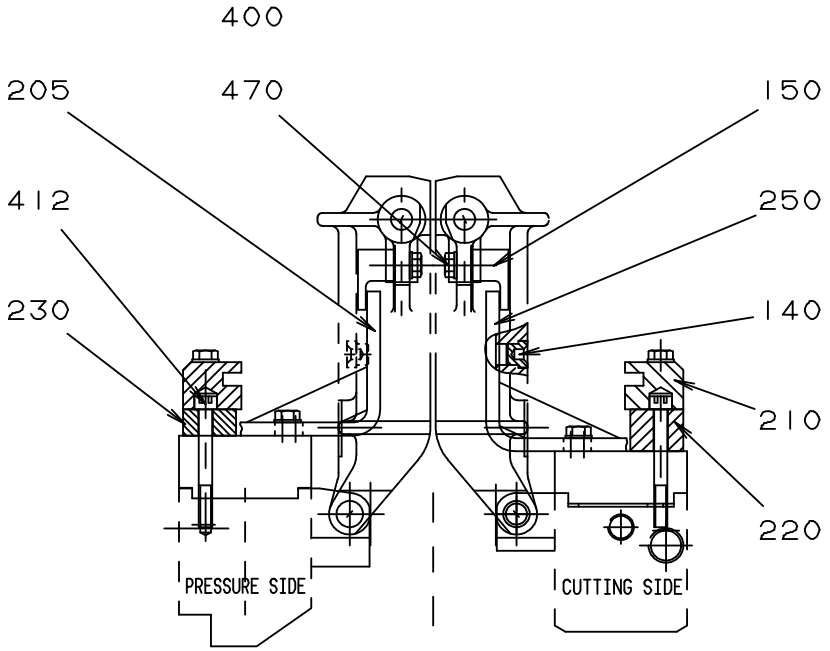
400
205
470
150
412
250
230
140
210
220
PRESSURE SIDE
CUTTING SIDE

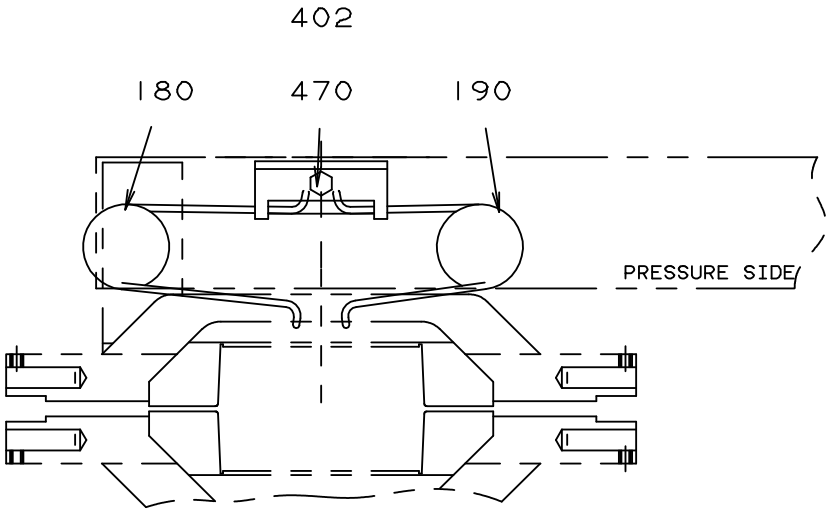
402
180
470
190
PRESSURE SIDE

Pos	Part No	SP	UN	Qty	Description	Page No
SEE PREVIOUS LISTS PAGES: 387, 389.						

Pos	Part No	SP	UN	Qty	Description	Page No

Machine Type	Group Description	Used-In	Group Number	Page No

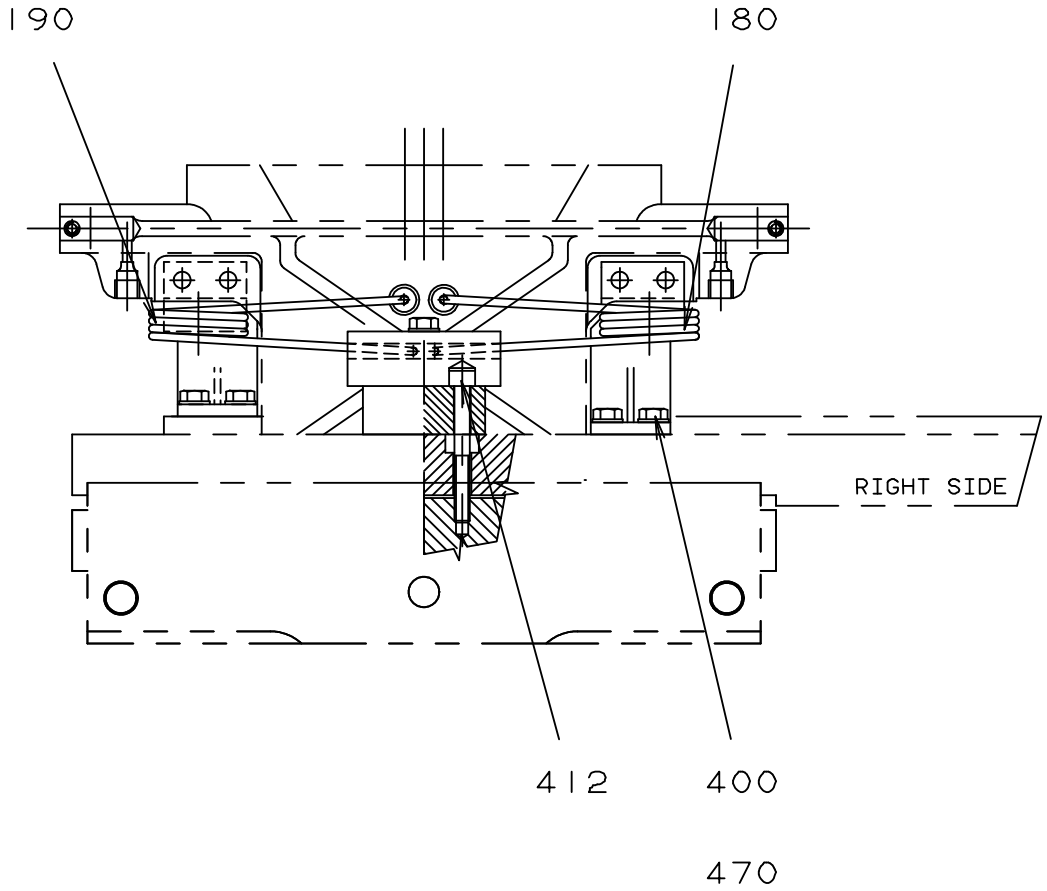
190
180
RIGHT SIDE
412
400
470

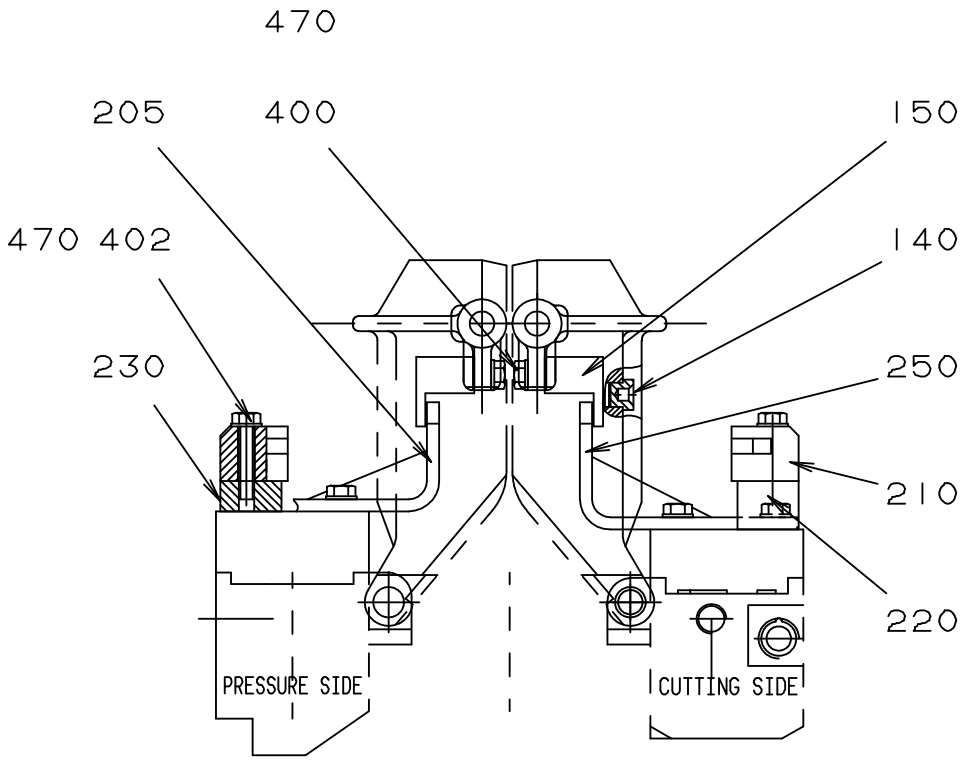
470
205
400
150
470 402
140
230
250
210
220
PRESSURE SIDE
CUTTING SIDE

Pos	Part No	SP	UN	Qty	Description	Page No
SEE PREVIOUS LISTS PAGES: 387, 389.						

Pos	Part No	SP	UN	Qty	Description	Page No

Machine Type	Group Description	Used-In	Group Number	Page No

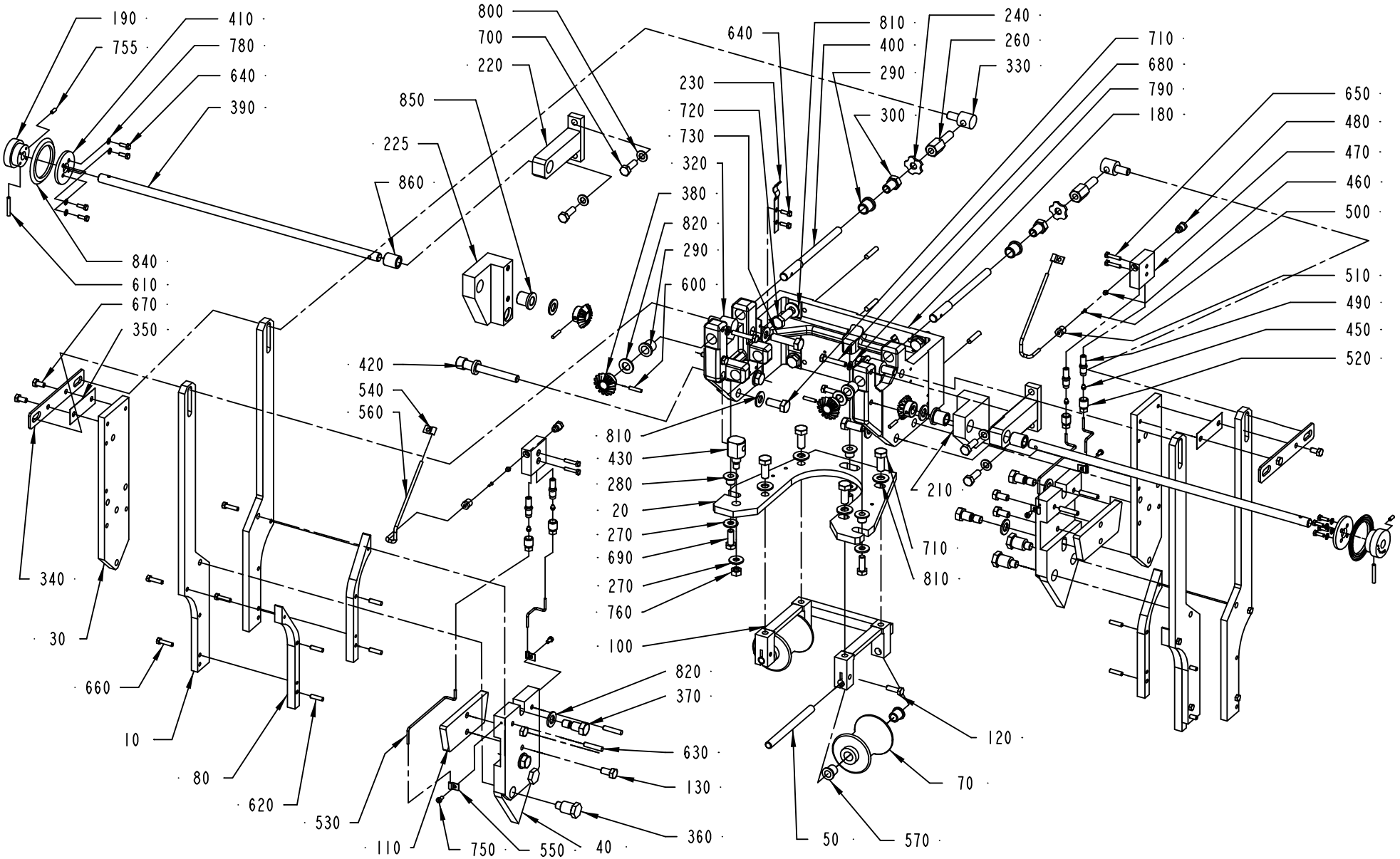
190
755
410
780
640
390
800
700
220
850
225
860
640
810
400
290
240
260
330
300
230
720
730
320
380
820
290
600
710
680
790
180
650
480
470
460
500
510
490
450
520
840
610
670
350
420
540
560
810
430
280
20
270
690
270
760
100
210
710
810
340
30
660
10
80
620
530
110
750
550
40
820
370
630
130
360
50
570
120
70

ECM: 81516 - 20001114
Group number: 293605-0600
Assembly Drawing: 293605-3_1_AF

Issue: 20020121

Pos	Part No	SP	UN	Qty	Description	Page No
1000B HIFIN IH						
010	531110-0000	D		4	RAIL BRACKET	
020	297998-0000	D		1	ADJUSTMENT PLATE	
030	279621-0000	D		2	FASTENING PLATE	
040	533955-0000	C		2	CURVE	
050	561547-0000	C		2	SHAFT	
070	560122-0000	C		2	SUPPORT ROLLER	
080	531109-0000	C		4	VOLUME CAM	
100	284124-0000	D		1	HOLDER	
110	269792-0000	C		2	DAMPER	
120	312105-0370	-		2	SCREW M6S M6X20 A280	
130	312105-0449	-		4	SCREW M6S M8X16 A280	
180	252768-0000	D		1	CANTILEVER	
190	293606-0000	-		2	SHIFTER HANDLE	
340	252793-0000	-		2	SUPPORT	
390	1360909-0000	-		2	SHAFT	
710	312105-0493	-		8	SCREW M6S M10X25 A280	
720	312105-0495	-		8	SCREW M6S M10X30 A280	
730	312105-0499	-		2	SCREW M6S M10X40 A280	
0355B IH						
010	552158-0000	D		4	RAIL BRACKET	
020	297998-0000	D		1	ADJUSTMENT PLATE	
030	434309-0000	D		2	FASTENING PLATE	
040	531002-0000	C		2	CURVE	
050	561547-0000	C		2	SHAFT	
060	38603-0002	C		8	SPACER	
070	561543-0000	C		2	SUPPORT ROLLER	
080	552159-0000	C		4	VOLUME CAM	
090	252780-0000	C		4	RULER	
100	529196-0000	D		1	HOLDER	
110	276189-0000	C		2	DAMPER	
120	312105-0370	-		2	SCREW M6S M6X20 A280	
140	312145-0366	-		8	SCREW COUNTERS.SLOT.HD. MFS 6X12 SS	
180	252768-0000	D		1	CANTILEVER	
190	293606-0000	-		2	SHIFTER HANDLE	
340	252793-0000	-		2	SUPPORT	
390	1360909-0000	-		2	SHAFT	
710	312105-0493	-		8	SCREW M6S M10X25 A280	
720	312105-0495	-		8	SCREW M6S M10X30 A280	
730	312105-0499	-		2	SCREW M6S M10X40 A280	

Pos	Part No	SP	UN	Qty	Description	Page No
0375S IH						
010	522152-0000	D		4	RAIL BRACKET	
020	297999-0000	D		1	ADJUSTMENT PLATE	
030	440507-0000	D		2	FASTENING PLATE	
040	436502-0000	C		2	CURVE	
050	561545-0000	C		2	SHAFT	
060	38603-0002	C		8	SPACER	
070	571942-0000	C		2	SUPPORT ROLLER	
080	522153-0000	C		4	VOLUME CAM	
090	252780-0000	C		4	RULER	
100	449734-0000	D		1	HOLDER	
110	276189-0000	C		2	DAMPER	
120	312105-0370	-		2	SCREW M6S M6X20 A280	
140	312145-0366	-		8	SCREW COUNTERS.SLOT.HD. MFS 6X12 SS	
180	252768-0000	D		1	CANTILEVER	
190	293606-0000	-		2	SHIFTER HANDLE	
340	252793-0000	-		2	SUPPORT	
390	1360909-0000	-		2	SHAFT	
710	312105-0493	-		8	SCREW M6S M10X25 A280	
720	312105-0495	-		8	SCREW M6S M10X30 A280	
730	312105-0499	-		2	SCREW M6S M10X40 A280	
0500B IH						
010	252770-0000	D		4	RAIL BRACKET	
020	297998-0000	D		1	ADJUSTMENT PLATE	
030	252774-0000	D		2	FASTENING PLATE	
040	252775-0000	C		2	CURVE	
050	561547-0000	C		2	SHAFT	
060	38603-0002	C		8	SPACER	
070	560122-0000	C		2	SUPPORT ROLLER	
080	252776-0000	C		4	VOLUME CAM	
090	252780-0000	C		4	RULER	
100	267327-0000	D		1	HOLDER	
110	276189-0000	C		2	DAMPER	
120	312105-0370	-		2	SCREW M6S M6X20 A280	
140	312145-0366	-		8	SCREW COUNTERS.SLOT.HD. MFS 6X12 SS	
150	476877-0000	C		4	SPACER	
160	312105-0509	-		4	SCREW M6S M10X90 A280	
180	252768-0000	D		1	CANTILEVER	
190	293606-0000	-		2	SHIFTER HANDLE	
340	252793-0000	-		2	SUPPORT	
390	1360909-0000	-		2	SHAFT	

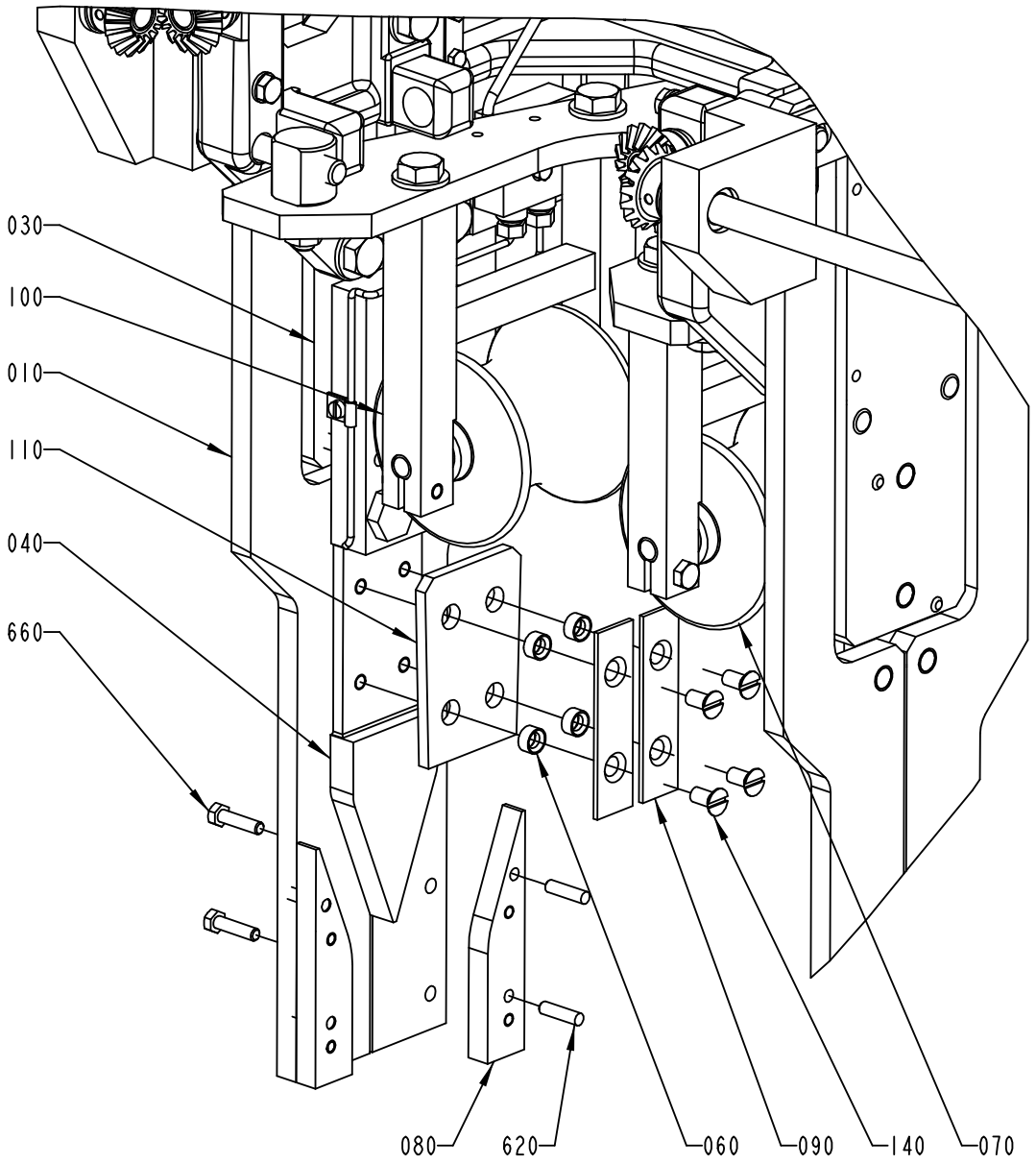
030
100
010
110
040
660
080
620
060
090
140
070

Pos	Part No	SP	UN	Qty	Description	Page No
0500B IH (Cont'd)						
710	312105-0493	-		4	SCREW M6S M10X25 A280	
720	312105-0495	-		8	SCREW M6S M10X30 A280	
730	312105-0499	-		2	SCREW M6S M10X40 A280	
0500S IH						
010	551281-0000	D		4	RAIL BRACKET	
020	297998-0000	D		1	ADJUSTMENT PLATE	
030	551282-0000	D		2	FASTENING PLATE	
040	551283-0000	C		2	CURVE	
050	561547-0000	C		2	SHAFT	
060	38603-0002	C		8	SPACER	
070	561543-0000	C		2	SUPPORT ROLLER	
080	551284-0000	C		4	VOLUME CAM	
090	252780-0000	C		4	RULER	
100	449926-0000	D		1	HOLDER	
110	276189-0000	C		2	DAMPER	
120	312105-0370	-		2	SCREW M6S M6X20 A280	
140	312145-0366	-		8	SCREW COUNTERS.SLOT.HD. MFS 6X12 SS	
180	252768-0000	D		1	CANTILEVER	
190	293606-0000	-		2	SHIFTER HANDLE	
340	252793-0000	-		2	SUPPORT	
390	1360909-0000	-		2	SHAFT	
710	312105-0493	-		8	SCREW M6S M10X25 A280	
720	312105-0495	-		8	SCREW M6S M10X30 A280	
730	312105-0499	-		2	SCREW M6S M10X40 A280	
0750B IH						
010	522152-0000	D		4	RAIL BRACKET	
020	297998-0000	D		1	ADJUSTMENT PLATE	
030	440507-0000	D		2	FASTENING PLATE	
040	550301-0000	C		2	CURVE	
050	561547-0000	C		2	SHAFT	
060	38603-0002	C		8	SPACER	
070	560122-0000	C		2	SUPPORT ROLLER	
080	522153-0000	C		4	VOLUME CAM	
090	252780-0000	C		4	RULER	
100	267327-0000	D		1	HOLDER	
110	276189-0000	C		2	DAMPER	
120	312105-0370	-		2	SCREW M6S M6X20 A280	
140	312145-0366	-		8	SCREW COUNTERS.SLOT.HD. MFS 6X12 SS	
180	252768-0000	D		1	CANTILEVER	
190	293606-0000	-		2	SHIFTER HANDLE	
340	252793-0000	-		2	SUPPORT	
390	1360909-0000	-		2	SHAFT	
710	312105-0493	-		8	SCREW M6S M10X25 A280	
720	312105-0495	-		8	SCREW M6S M10X30 A280	
730	312105-0499	-		2	SCREW M6S M10X40 A280	
0750S IH						
010	544342-0000	D		4	RAIL BRACKET	
020	297998-0000	D		1	ADJUSTMENT PLATE	
030	252773-0000	D		2	FASTENING PLATE	
040	533955-0000	C		2	CURVE	
050	561547-0000	C		2	SHAFT	
070	561544-0000	C		2	SUPPORT ROLLER	
080	565259-0000	C		4	VOLUME CAM	
100	544303-0000	D		1	HOLDER	
110	269792-0000	C		2	DAMPER	
120	312105-0372	-		2	SCREW M6S M6X25 A280	
180	252768-0000	D		1	CANTILEVER	
190	293606-0000	-		2	SHIFTER HANDLE	
340	252793-0000	-		2	SUPPORT	
390	1360909-0000	-		2	SHAFT	
710	312105-0493	-		8	SCREW M6S M10X25 A280	
720	312105-0495	-		8	SCREW M6S M10X30 A280	
730	312105-0499	-		2	SCREW M6S M10X40 A280	
1000B LOFIN IH						
010	544342-0000	D		4	RAIL BRACKET	
020	297998-0000	D		1	ADJUSTMENT PLATE	
030	252773-0000	D		2	FASTENING PLATE	
040	533955-0000	C		2	CURVE	
050	561547-0000	C		2	SHAFT	
070	560122-0000	C		2	SUPPORT ROLLER	
080	531109-0000	C		4	VOLUME CAM	
100	267676-0000	D		1	HOLDER	
110	269792-0000	C		2	DAMPER	
120	312105-0370	-		2	SCREW M6S M6X20 A280	
130	312105-0449	-		4	SCREW M6S M8X16 A280	
180	252768-0000	D		1	CANTILEVER	
190	293606-0000	-		2	SHIFTER HANDLE	
340	252793-0000	-		2	SUPPORT	
390	1360909-0000	-		2	SHAFT	

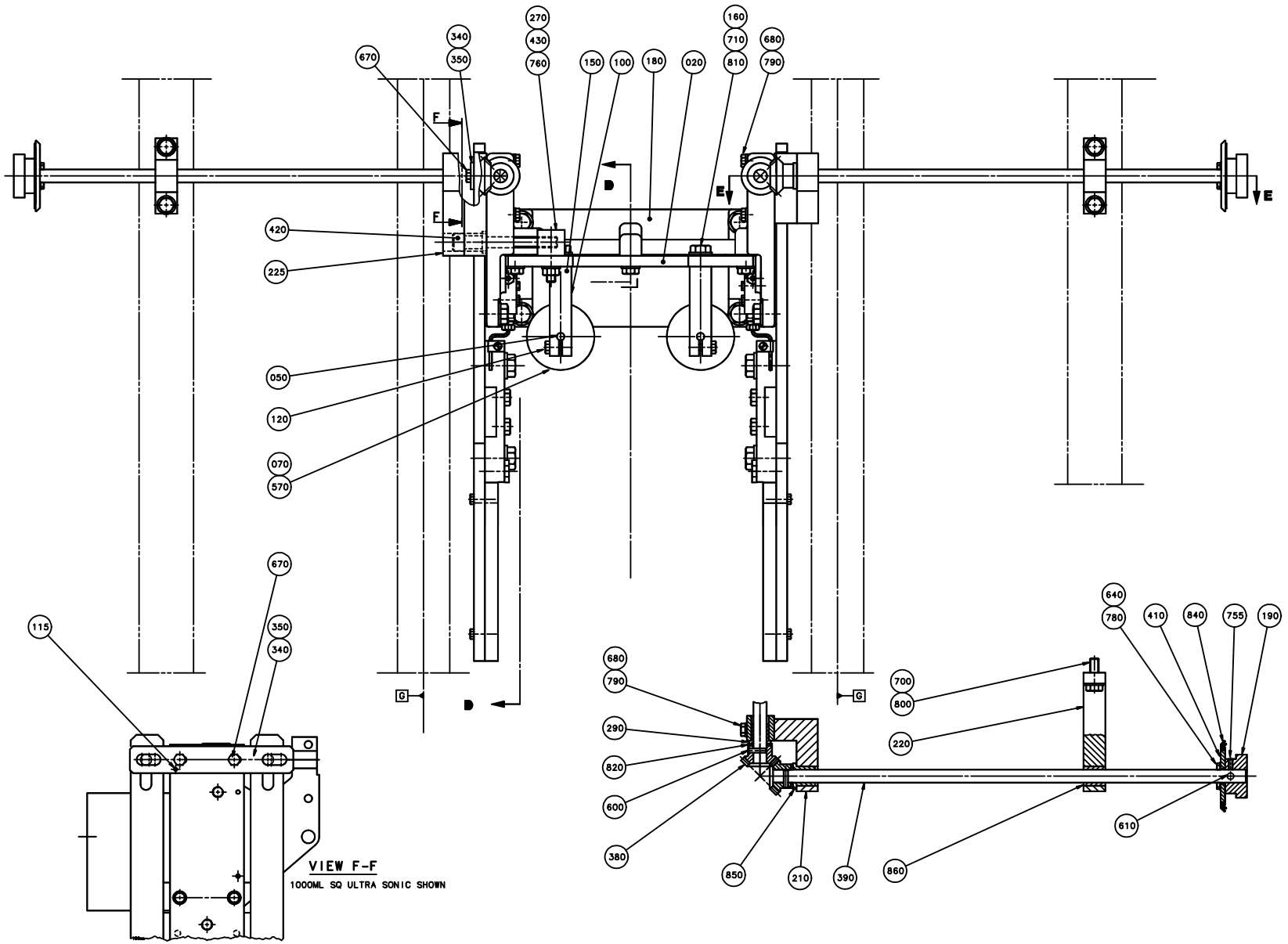
270
430
760
340
350
670
150
100
180
020
160
710
810
680
790
F
F
D
E
E
420
225
050
120
070
570
G
G
D
670
350
340
115
680
790
290
820
600
380
700
800
220
640
780
410
840
755
190
610
850
210
390
860
VIEW F-F
1000ML SQ ULTRA SONIC SHOWN

Pos	Part No	SP	UN	Qty	Description	Page No
1000B LOFIN IH (Cont'd)						
390	1360909-0000	-		2	SHAFT	
710	312105-0493	-		8	SCREW M6S M10X25 A280	
720	312105-0495	-		8	SCREW M6S M10X30 A280	
730	312105-0499	-		2	SCREW M6S M10X40 A280	
1000S IH						
010	531110-0000	D		4	RAIL BRACKET	
020	297998-0000	D		1	ADJUSTMENT PLATE	
030	279621-0000	D		2	FASTENING PLATE	
040	533955-0000	C		2	CURVE	
050	561547-0000	C		2	SHAFT	
070	569058-0000	C		2	SUPPORT ROLLER	
080	551626-0000	C		4	VOLUME CAM	
100	284124-0000	D		1	HOLDER	
110	269792-0000	C		2	DAMPER	
120	312105-0370	-		2	SCREW M6S M6X20 A280	
130	312105-0449	-		4	SCREW M6S M8X16 A280	
180	252768-0000	D		1	CANTILEVER	
190	293606-0000	-		2	SHIFTER HANDLE	
340	252793-0000	-		2	SUPPORT	
390	1360909-0000	-		2	SHAFT	
710	312105-0493	-		8	SCREW M6S M10X25 A280	
720	312105-0495	-		8	SCREW M6S M10X30 A280	
730	312105-0499	-		2	SCREW M6S M10X40 A280	
1000SQ IH						
010	544342-0000	D		4	RAIL BRACKET	
020	297998-0000	D		1	ADJUSTMENT PLATE	
030	279621-0000	D		2	FASTENING PLATE	
040	579645-0000	C		2	CURVE	
050	561547-0000	C		2	SHAFT	
070	573976-0000	C		2	SUPPORT ROLLER	
080	551626-0000	C		4	VOLUME CAM	
100	284124-0000	D		1	HOLDER	
110	574130-0000	C		2	DAMPER	
120	312105-0370	-		2	SCREW M6S M6X20 A280	
130	312105-0449	-		4	SCREW M6S M8X16 A280	
180	252768-0000	D		1	CANTILEVER	
190	293606-0000	-		2	SHIFTER HANDLE	
340	252793-0000	-		2	SUPPORT	
390	1360909-0000	-		2	SHAFT	
710	312105-0493	-		8	SCREW M6S M10X25 A280	
720	312105-0495	-		8	SCREW M6S M10X30 A280	
730	312105-0499	-		2	SCREW M6S M10X40 A280	
Common Parts						
210	293608-0000	-		1	BEARING CONSOLE	
220	293609-0000	-		2	BEARING CONSOLE	
225	434020-0000	-		1	BEARING CONSOLE	
230	37070-0000	D		2	SPRING	
240	37071-0000	-		2	WASHER	
260	252785-0000	C		2	SCREW	
270	252786-0000	D		4	WASHER	
280	252787-0000	C		3	BUSHING	
290	252788-0000	C		4	BUSHING	
300	252789-0000	D		2	NUT	
320	252791-0000	D		2	NUT	
330	252792-0000	D		2	NUT	
350	252794-0000	D		2	LACE	
360	252930-0000	D		4	SPACER SCREW	
370	268195-0000	D		4	SCREW	
380	293610-0000	C		4	GEAR WHEEL	
400	293612-0000	C		2	SCREW	
410	294042-0000	-		2	SEALING WASHER	
420	434021-0000	D		1	SCREW	
430	434073-0000	C		1	NUT	
450	90028-0020	C		4	CONE TUBE 2,5MM	
460	90028-0021	C		2	CONE TUBE 4 MM	
470	90032-0038	-		2	BLOCK 2 WAYS	
480	90087-0019	-		2	PLUG M10X1 STAINLESS	
490	90092-0053	C		4	METERING VALVE 30 MM3	
500	90134-0031	C		2	SLEEVE FOR PLASTIC TUBE	
510	90134-0038	C		2	BUSHING/NUT INLET/OUTLET 4 MM	
520	90134-0039	C		4	BUSHING VALVE CONNECTION 2,5 MM	
530	90266-0019	-	MM	800	PIPE	
540	90165-0056	-		2	PIPE CLIP FOR TUBE D=4 MM	
550	90165-0058	-		4	PIPE CLIP FOR TUBE D=25 MM	
560	90166-0109	-	MM	700	TUBE 4 MM PA,TRANSP.	
570	90240-0180	-		4	FLANGE BUSHING,10X14X15 MM NFB	
600	311103-0272	-		4	PARALLELL PIN, M6, 4X20 MM	
610	311103-0276	-		2	PARALLELL PIN, M6, 4X30 MM	
620	311103-0310	-		8	PARALLELL PIN, M6, 5X20 MM	
630	311103-0357	-		12	PARALLELL PIN, M6, 6X30 MM	

See previous drawings pages: 402, 404, 406.

Pos	Part No	SP	UN	Qty	Description	Page No
Common Parts (Cont'd)						
630	311103-0357	-		12	PARALLELL PIN, M6, 6X30 MM	
640	312105-0291	-		12	SCREW M6S M4X12 A280	
650	312105-0295	-		4	SCREW M6S M4X20 A280	
660	312105-0331	-		8	SCREW M6S M5X20 A280	
670	312105-0366	-		4	SCREW M6S M6X12 A280	
680	312105-0376	-		4	SCREW M6S M6S M6X35 A280	
690	312105-0452	-		3	SCREW M6S M8X22 A280	
700	312105-0453	-		4	SCREW M6S M8X25 A280	
750	312125-0287	-		4	SCREW PAN HEAD MCS M4X8 SS	
755	312318-0289	-		2	SCREW SOCK.SET CUP P MSK6SS M4X10 A4	
760	312605-0318	-		1	HEXAGON NUT, M6M M8 A280	
780	315105-0136	-		8	WASHER PLAIN, BRB, 4,3/8,H=0,8	
790	315105-0153	-		4	WASHER PLAIN, BRB, 6,4/12,H=1,5	
800	315105-0165	-		4	WASHER PLAIN, BRB, 8,4/16,H=1,5	
810	315105-0173	-		14	WASHER PLAIN, BRB, 10,5/22,H=2	
820	315105-0176	-		8	WASHER PLAIN, BRB, 12/22 H=2	
840	315226-0196	-		2	AXIAL SEAL WITH STEEL COVER 48X65X4,5 MM	
850	321111-0163	-		2	BEAR.BUSHING WITH FLANGE, 12/18X20 MM	
860	321116-0163	-		2	BEAR. BUSH. WITHOUT FL, 12X18X20	

Pos	Part No	SP	UN	Qty	Description	Page No

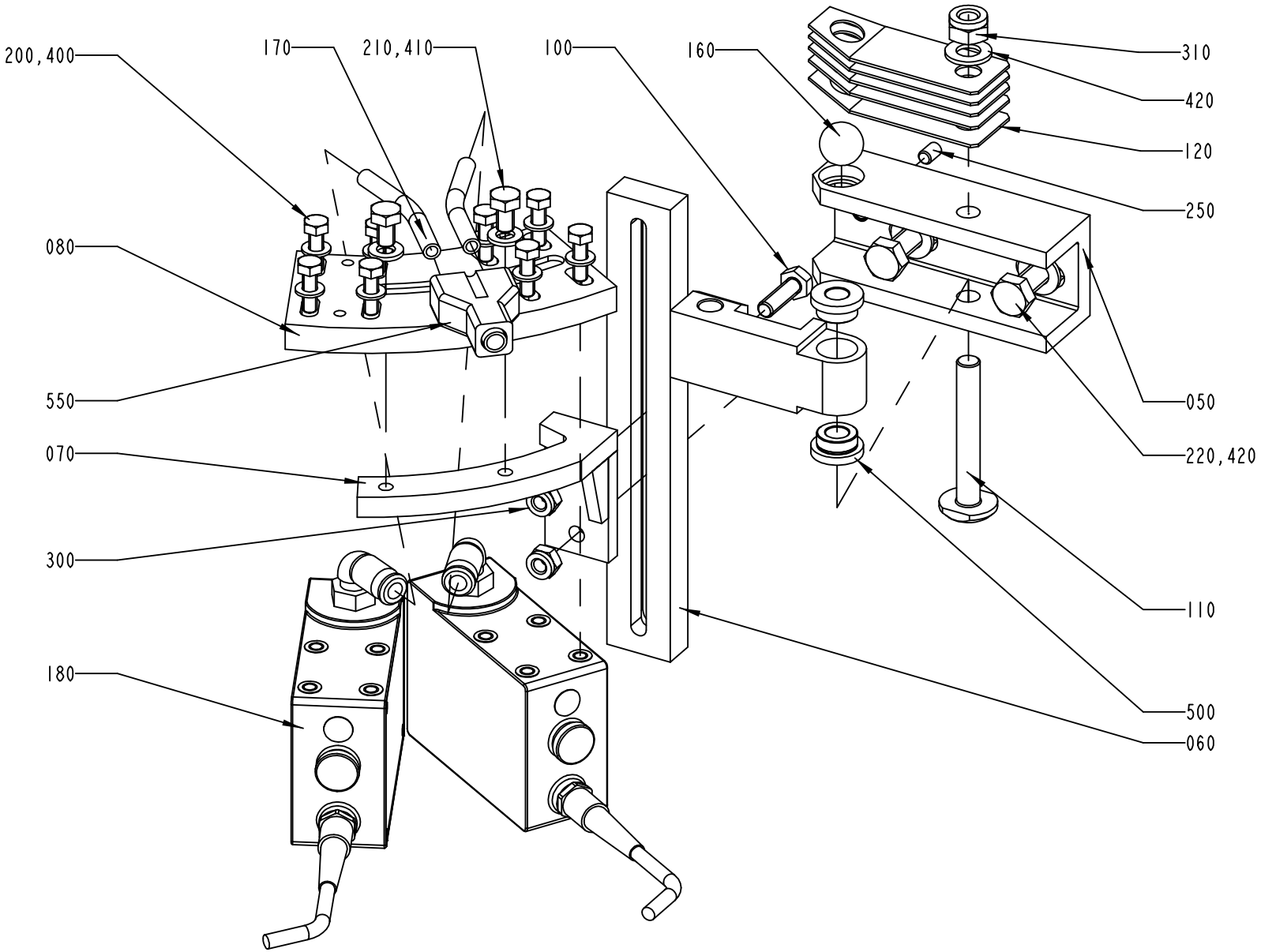
200,400
170
210,410
100
160
310
420
120
250
080
550
070
300
180
050
220,420
110
500
060

Pos	Part No	SP	UN	Qty	Description	Page No
0355B ST-ER OR 0500S ST-ER						
050	457359-0000	B		1	BRACKET	
060	545789-0000	B		1	HOLDER	
070	526677-0000	B		1	CANTILEVER	
080	457364-0000	B		1	PLATE RIGHT	
0375S ST-ER						
050	457359-0000	B		1	BRACKET	
060	545789-0000	B		1	HOLDER	
070	562971-0000	B		1	CANTILEVER	
080	457364-0000	B		1	PLATE RIGHT	
1000SQ ST-ER OR 1000S ST-ER OR 0750S ST-ER						
050	457359-0000	B		1	BRACKET	
060	535200-0000	B		1	HOLDER	
070	544343-0000	B		1	CANTILEVER	
080	457364-0000	B		1	PLATE RIGHT	
0500B ST-ER OR 1000B ST-ER OR 0750B ST-ER						
050	457359-0000	B		1	BRACKET	
060	545789-0000	B		1	HOLDER	
070	457361-0000	B		1	CANTILEVER	
080	457364-0000	B		1	PLATE RIGHT	
Common Parts						
100	312105-0370	-		2	SCREW M6S M6X20 A280	
110	457367-0000	A		1	SHAFT	
120	457368-0000	A		5	SPRING	
160	90090-0016	A		1	BALL, D=15 MM	
170	90166-0132	-	MM	200	TUBE 6 MM PA,TRANSP.	
180	B90458-0601	A		2	PHOTOCELL, SICK PHOTOCELL 1	
	342732-0102	*-*		*1*	*ELBOW PIPE JOINT, EXT.THREAD, D=6MM-G1/8*	
200	312105-0329	-		8	SCREW M6S M5X16 A280	
210	312105-0364	-		2	SCREW M6S M6X10 A280	
220	312105-0455	-		2	SCREW M6S M8X30 A280	
250	312318-0323	-		1	SCREW SOCK.SET CUP P MSK6SS M5X8 A4	
300	312812-0316	-		2	HEXAGON NUT, NY-LOCK M6 A480	
310	312812-0318	-		1	HEXAGON NUT, NY-LOCK M8 A480	
400	315105-0146	-		8	WASHER PLAIN, BRB, 5,3/10,H=1	
410	315105-0153	-		2	WASHER PLAIN, BRB, 6,4/12,H=1,5	
420	315105-0165	-		3	WASHER PLAIN, BRB, 8,4/16,H=1,5	
500	321101-0143	A		2	FLANGE BUS 8F7X8	
550	90055-0100	-		1	Y-CONNECTION, 6-6	

Machine Type | Group Description | Used-In | Group Number | Page No

Tetra Pak

SPC
Spare Parts Catalogue

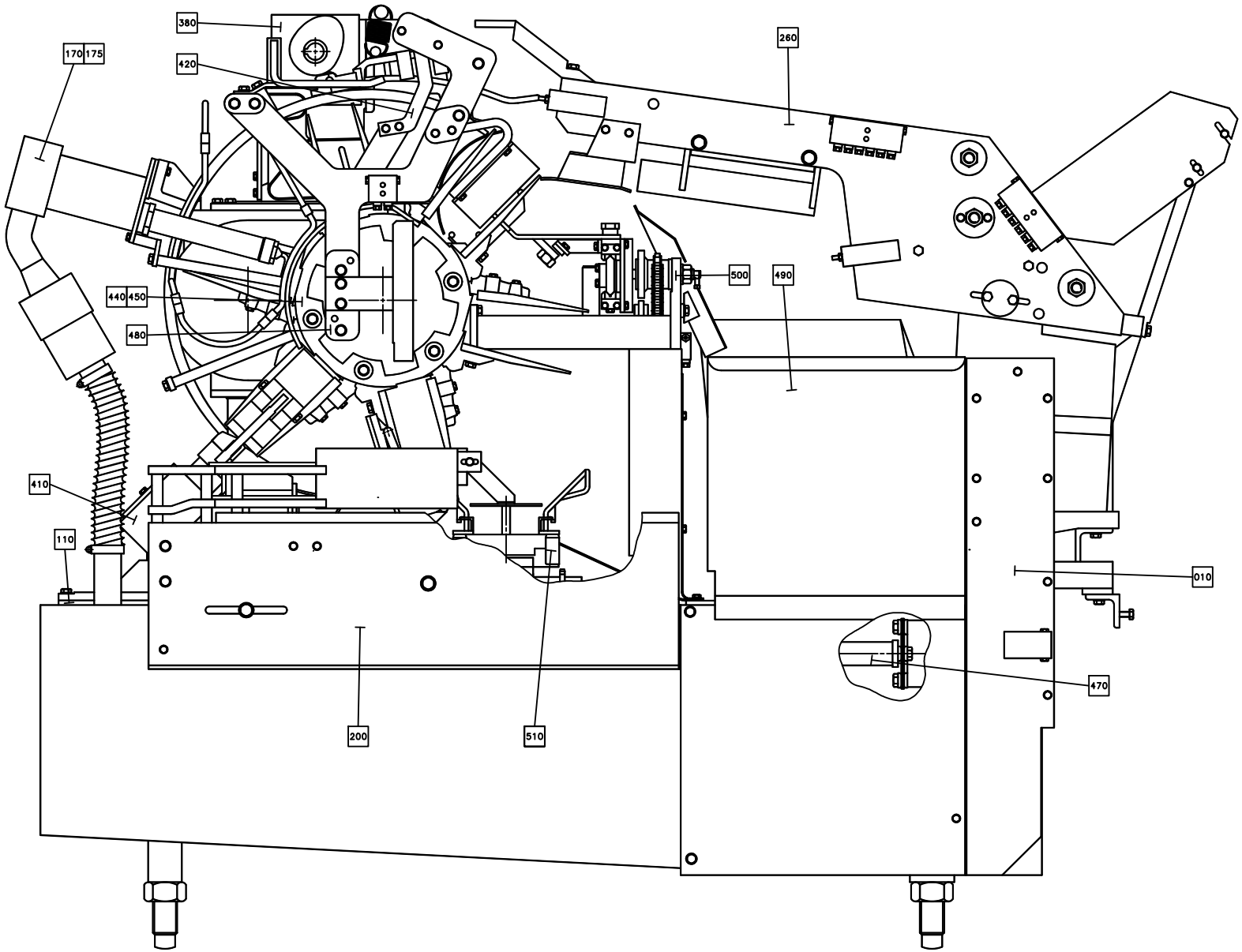
380
420
170
175
260
500
490
440
450
480
410
110
010
470
200
510

Pos	Part No	SP	UN	Qty	Description	Page No
LEFT OUT						
F010	A1362066-0100	-		1	MACHINE BODY FF LEFT OUT	**419, 421**
F200	A595087-0100	-		1	STATION	**435**
F480	A595088-0200	-		1	FOLDING PART	**437, 439**
F500	A595089-0100	-		1	INFEEDER	**441**
F510	A595090-0100	-		1	DISCHARGER	**445**
RIGHT OUT						
F010	A1362065-0100	-		1	MACHINE BODY RIGHT OUT	**447, 449**
F200	A285591-0400	-		1	STATION	**451**
F480	A525000-0300	-		1	FOLDING PART	**453, 455, 457, 459**
F500	A525213-0200	-		1	INFEEDER	**461, 463**
F510	A525325-0200	-		1	DISCHARGER	**465, 467**
Common Parts						
F110	A285303-0400	-		1	LOWER SECTION	**469**
F170	A525129-0100	-		1	ELEMENT	**481, 483**
F175	A525128-0100	-		1	FF-ELEMENT R	**489, 491**
F260	A525085-0300	-		1	LUBRICATING SYSTEM	**493, 495, 497**
F380	A285479-0600	-		1	SUPERSTRUCTURE	**535**
F410	A285456-0300	-		2	PRESSURE DEVICE	**547, 549**
F420	A285736-0300	-		1	PULL-DOWN DEVICE	**551, 553, 555**
F440	A297681-0400	-		1	WHEEL LEFT	**557, 559, 561**
F450	A297682-0400	-		1	WHEEL RIGHT	**563, 565, 567**
F470	A443173-0100	-		1	DRIVE SHAFT	**569**
F490	A442537-0500	-		1	WASTE CHUTE	**571**

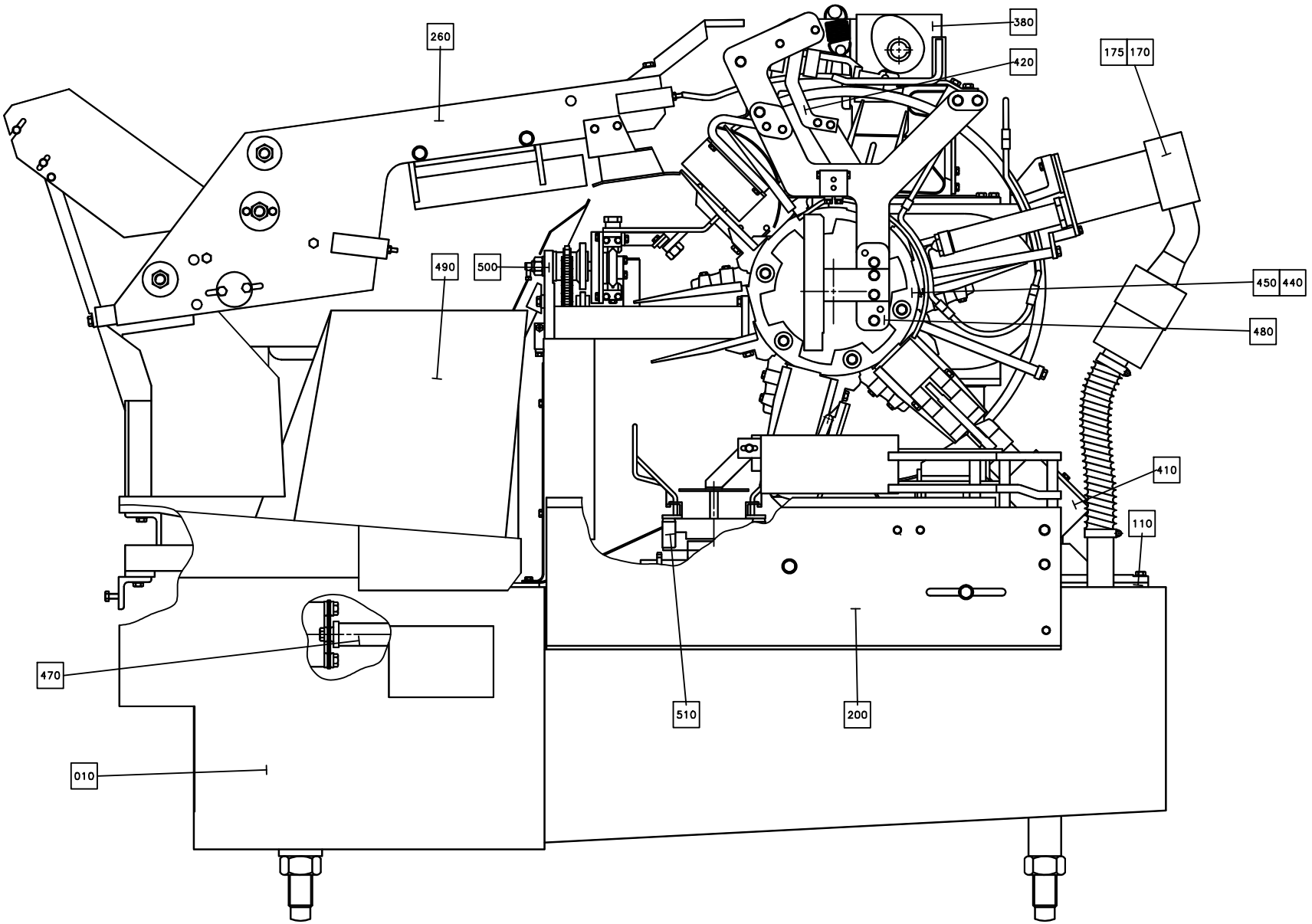
260
380
420
175
170
490
500
450
440
480
410
110
470
510
200
010

Pos	Part No	SP	UN	Qty	Description	Page No
LEFT OUT						
F010	A1362066-0100	-		1	MACHINE BODY FF LEFT OUT	**419, 421**
F200	A595087-0100	-		1	STATION	**435**
F480	A595088-0200	-		1	FOLDING PART	**437, 439**
F500	A595089-0100	-		1	INFEEDER	**441**
F510	A595090-0100	-		1	DISCHARGER	**445**
RIGHT OUT						
F010	A1362065-0100	-		1	MACHINE BODY RIGHT OUT	**447, 449**
F200	A285591-0400	-		1	STATION	**451**
F480	A525000-0300	-		1	FOLDING PART	**453, 455, 457, 459**
F500	A525213-0200	-		1	INFEEDER	**461, 463**
F510	A525325-0200	-		1	DISCHARGER	**465, 467**
Common Parts						
F110	A285303-0400	-		1	LOWER SECTION	**469**
F170	A525129-0100	-		1	ELEMENT	**481, 483**
F175	A525128-0100	-		1	FF-ELEMENT R	**489, 491**
F260	A525085-0300	-		1	LUBRICATING SYSTEM	**493, 495, 497**
F380	A285479-0600	-		1	SUPERSTRUCTURE	**535**
F410	A285456-0300	-		2	PRESSURE DEVICE	**547, 549**
F420	A285736-0300	-		1	PULL-DOWN DEVICE	**551, 553, 555**
F440	A297681-0400	-		1	WHEEL LEFT	**557, 559, 561**
F450	A297682-0400	-		1	WHEEL RIGHT	**563, 565, 567**
F470	A443173-0100	-		1	DRIVE SHAFT	**569**
F490	A442537-0500	-		1	WASTE CHUTE	**571**

Pos	Part No	SP	UN	Qty	Description	Page No

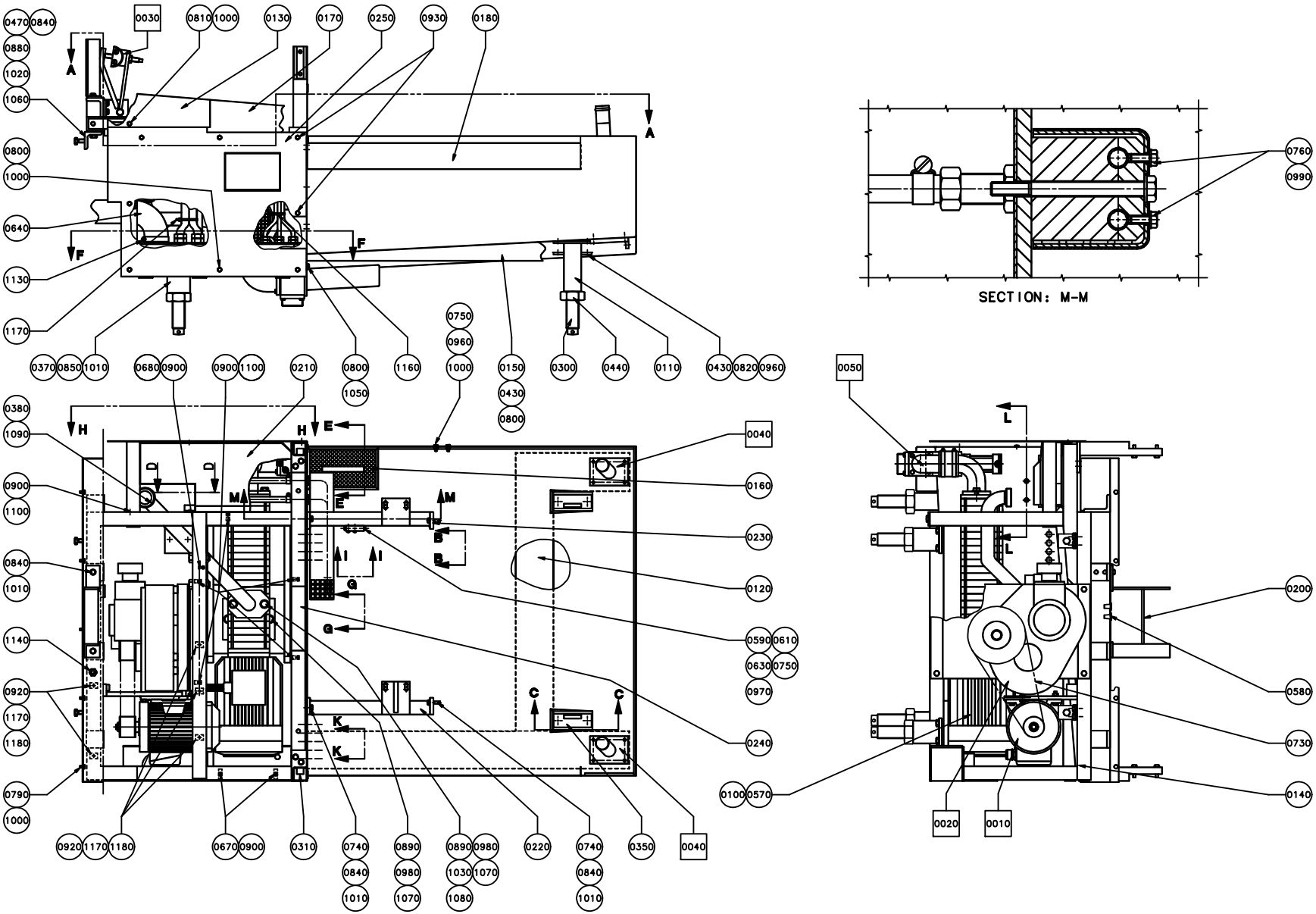
SECTION: M-M

ECM: 72615 - 19990603
Group number: 1362066-0100
Assembly Drawing: 1362066-1_1_AA

Issue: 20020121

Pos	Part No	SP	UN	Qty	Description	Page No
TBA/8 50HZ						
0100	B90321-0015	D		1	PUMP 502 CFX 7ETV 302 50HZ IP55	
	90321-0481	*C*		*1*	*GASKET*	
	90321-0466	*C*		*1*	*SPARE PART KIT*	
TBA/8 60HZ						
0100	B90321-0034	D		1	PUMP 502 CFX 5ETV 362 60HZ IP55	
	90321-0466	*C*		*1*	*SPARE PART KIT*	
	90321-0481	*C*		*1*	*GASKET*	
Common Parts						
0010	A285287-0500	-		1	DRIVE UNIT	**423**
0020	A285861-0500	D		1	GEAR REDUCTION	**425**
0030	A297638-0200	-		1	CHAIN TENSIONER	**429**
0040	A525110-0100	-		1	CABLE CONDUIT	**431**
0050	A525143-0200	D		1	BOTTOM VALVE	**433**
0110	525130-0000	-		1	LEG	
0120	525132-0000	-		1	CABLE TRENCH	
0130	525262-0000	-		1	COVERING PLATE	
0140	525274-0000	-		1	FINISH FRAME	
0150	525277-0000	-		1	CABLE TRENCH	
0160	531119-0000	-		1	STRAINER	
0170	595066-0000	-		1	COVERING PLATE	
0180	1362221-0000	-		1	CLEANING TROUGH	
0200	285330-0000	-		1	HOLDER	
0210	443186-0000	-		1	CHUTE	
0220	525272-0000	-		1	STRUT	
0230	525273-0000	-		1	STRUT	
0240	525275-0000	-		1	COVERING PLATE	
0250	525346-0000	-		1	SIDE PLATE	
0300	285923-0000	-		4	SCREW	
0310	297663-0000	-		1	POST HOLDER	
0320	B297664-0000	-		1	POST HOLDER	
	312923-0131	*-*		*1*	*NUT BLIND RIVET PO M6X16,6 SS*	
0330	442545-0000	-		1	SHEET	
0340	443187-0000	-		1	SHEET	
0350	525266-0000	-		1	LEG	
0360	525267-0000	-		1	LEG	
0370	525268-0000	-		2	LEG	
0380	B525271-0000	-		1	ELBOW PIPE	
	342811-0103	*-*		*1*	*WELD NIPPLE SMS 38 - RD 60-6*	
	342810-0103	*-*		*2*	*ELBOW PIPE38*	
	342808-0103	*-*		*2*	*PIPE ELBOW 90 DEGR. SMS3009, D=38 MM*	
	90266-0022	*-*	*M*	*1*	*DAIRY PIPE 38X1,2*	
0390	1347210-0000	-		1	HOSE HOLDER	
0400	1347211-0000	-		1	PIPE	
0410	1347212-0000	-		1	PIPE	
0420	1347217-0000	-		1	TOUCH GUARD	
0430	6278-0000	-		3	WASHER	
0440	285994-0000	-		4	NUT	
0450	295435-0000	-		2	WASHER	
0460	297551-0000	-		1	SHEET	
0470	297814-0000	-		2	BRACKET	
0480	297860-0000	-		2	BUSHING	
0490	525174-0000	-		1	BRACKET	
0500	525175-0000	-		1	BRACKET	
0510	525280-0000	-		1	SHEET	
0520	525281-0000	-		1	GASKET	
0530	1347209-0000	-		1	HOSE HOLDER	
0540	1347216-0000	-		1	PIPE	
0560	90012-0071	-		3	GLAND FITTING	
0570	90012-0072	-		3	GLAND FITTING **	
0580	90015-0020	-		11	LEAD-IN, TET5-7, E-1458016	
0590	90028-0022	-		4	CONE TUBE 6 MM	
0600	90030-0030	-		4	CONN. BULKHEAD SV 12-L/SY	
0610	90032-0044	-		1	DISTRIBUTION BLOCK 4 WAYS	
0620	90134-0030	-		1	SLEEVE FOR PLASTIC TUBE	
0630	90134-0055	-		4	BUSHING/NUT INLET/OUTLET 6 MM	
0640	90152-0044	-	MM	350	FLEXIBLE CONDUIT 3641-0070	
0650	90152-0050	-	MM	2500	SPIRAL CONDUIT, 20X13, UL 1313	
0660	90152-0051	-	MM	1000	SPIRAL CONDUIT, 25X18, UL 1816	
0670	90165-0057	-		4	PIPE CLIP FOR TUBE D=6 MM	
0680	90165-0060	-		1	PIPE CLIP FOR TUBE D=5 MM	
0690	90166-0059	-	M	1150	HOSE PVC 12/16MM TRANSP.	
0710	90166-0108	-	MM	870	TUBE 6 MM PA,TRANSP.	
0730	90417-0180	C		1	TIMING BELT T10X920X40 POLYURETHANE	
0740	311103-0399	-		8	PARALLELL PIN, CP, M6, 8X16 MM	
0750	312105-0295	-		2	SCREW M6S M4X20 A280	
0760	312105-0327	-		2	SCREW M6S M5X12 A280	
0770	312105-0329	-		1	SCREW M6S M5X16 A280	
0780	312105-0362	-		1	SCREW M6S M6X8 A280	
0790	312105-0364	-		8	SCREW M6S M6X10 A280	
0800	312105-0367	-		15	SCREW M6S M6X14 A280	
0810	312105-0368	-		6	SCREW M6S M6X16 A280	

Machine Type | Group Description | Used-In | Group Number | Page No

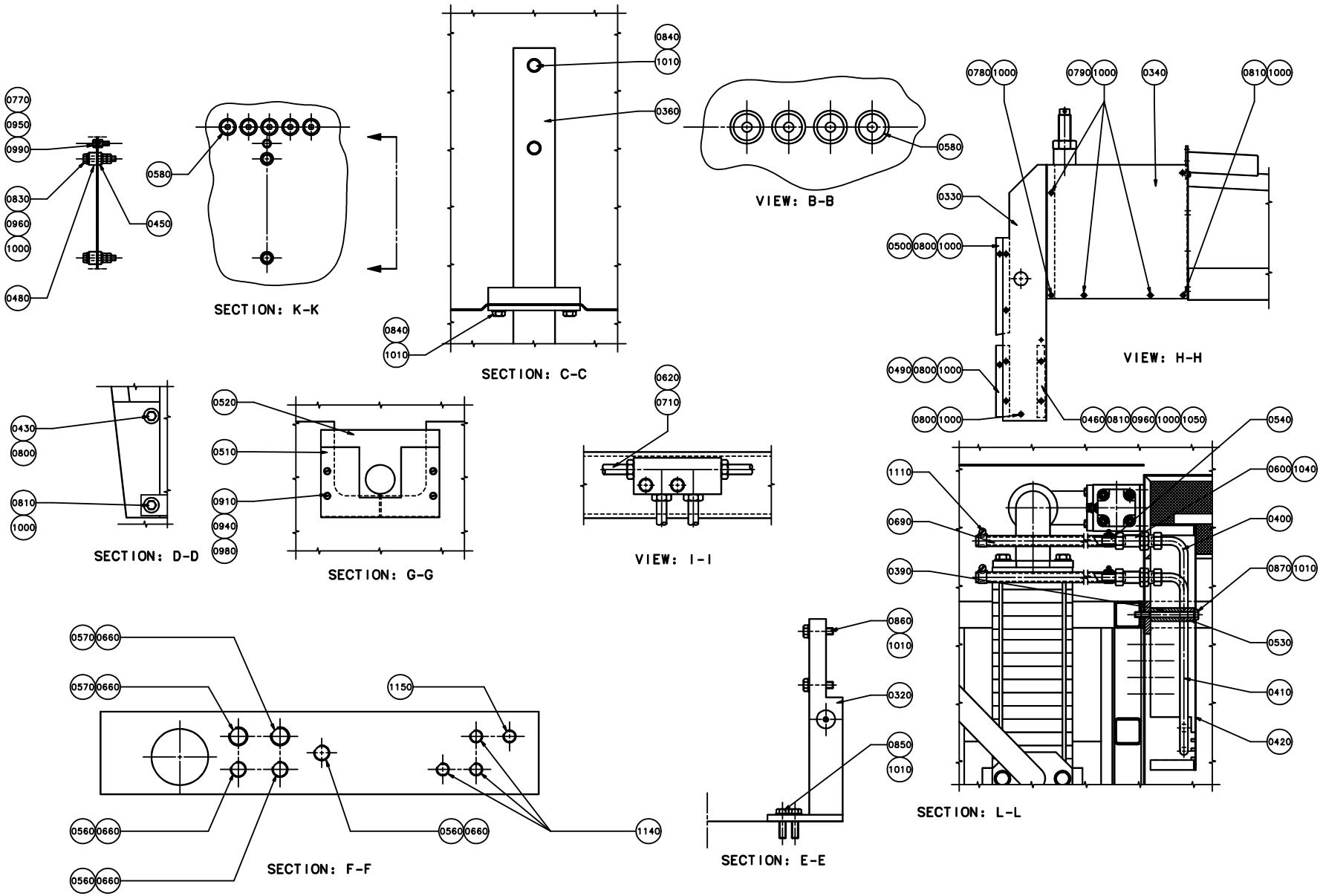
0770
0950
0990
0830
0960
1000
0480
0580
0450
SECTION: K-K
0840
1010
0360
0840
1010
SECTION: C-C
0580
VIEW: B-B
0780 1000
0790 1000
0340
0810 1000
0330
0500 0800 1000
0490 0800 1000
0800 1000
0460 0810 0960 1000 1050
VIEW: H-H
0430
0800
0810
1000
SECTION: D-D
0520
0510
0910
0940
0980
SECTION: G-G
0620
0710
VIEW: I-I
1110
0690
0390
0860
1010
0320
0850
1010
SECTION: E-E
0540
0600 1040
0400
0870 1010
0530
0410
0420
SECTION: L-L
0570 0660
0570 0660
1150
0560 0660
0560 0660
1140
SECTION: F-F

Pos	Part No	SP	UN	Qty	Description	Page No
Common Parts (Cont'd)						
0820	312105-0370	-		1	SCREW M6S M6X20 A280	
0830	312105-0376	-		2	SCREW M6S M6S M6X35 A280	
0840	312105-0451	-		23	SCREW M6S 8X20 A280	
0850	312105-0453	-		8	SCREW M6S M8X25 A280	
0860	312105-0455	-		4	SCREW M6S M8X30 A280	
0870	312105-0469	-		1	SCREW M6S M8X90 A280	
0880	312105-0495	-		2	SCREW M6S M10X30 A280	
0890	312105-0542	-		4	SCREW M6S M12X50 A280	
0900	312125-0287	-		9	SCREW PAN HEAD MCS M4X8 SS	
0910	312125-0291	-		4	SCREW PAN HEAD MCS M4X12 SS	
0920	312125-0323	-		5	SCREW PAN HEAD MCS M5X8 SS	
0930	312155-0366	-		2	SCREW HEX.SOCK.COUNT.MF6S M6X12 A280	
0940	312605-0312	-		4	HEXAGON NUT, M6M M4 A280	
0950	312605-0314	-		2	HEXAGON NUT, M6M M5 A280	
0960	312605-0316	-		7	HEXAGON NUT, M6M M6 A280	
0970	312605-0322	-		4	HEXAGON NUT, M6M M12 A280	
0980	315105-0136	-		11	WASHER PLAIN, BRB, 4,3/8,H=0,8	
0990	315105-0146	-		4	WASHER PLAIN, BRB, 5,3/10,H=1	
1000	315105-0153	-		31	WASHER PLAIN, BRB, 6,4/12,H=1,5	
1010	315105-0165	-		32	WASHER PLAIN, BRB, 8,4/16,H=1,5	
1020	315105-0173	-		2	WASHER PLAIN, BRB, 10,5/22,H=2	
1030	315105-0178	-		2	WASHER PLAIN, BRB, 13/24,H=2	
1040	315105-0192	-		2	WASHER PLAIN, BRB, 21/36,H=3	
1050	315115-0153	-		3	WASHER PLAIN, TBRB 6,4/12 H=3	
1060	315115-0165	-		4	WASHER PLAIN, TBRB 8,4/16 H=3	
1070	315115-0178	-		6	WASHER PLAIN, TBRB 13/24 H=4	
1080	315202-0229	C		1	O-RING 59,2X5,7 MM	
1090	315250-0103	C		1	GASKET 48X38X5,5 MM	
1100	316810-0106	-		7	PIPE CLIP FOR TUBE D=8 MM	
1110	342991-0101	-		5	HOSE CLIP,WORM DRIVE TYPE (13)-16	
1130	342991-0112	-		2	HOSE CLIP,WORM DRIVE TYPE (73)-83	
1140	352103-0100	-		4	CABLE GLAND, STR 9, PR15,2/PG9	
1150	352103-0101	-		1	CABLE GLAND, ST 9, PR15,2/PG9	
1160	352113-0101	-		3	CLIP STRIP BLACK 92X2,5MM	
1170	352113-0102	-		6	CLIP-STRIP, BLACK 188X4,8 MM	
1180	352113-0204	-		5	ANCHOR TM3S25-M	

Pos	Part No	SP	UN	Qty	Description	Page No

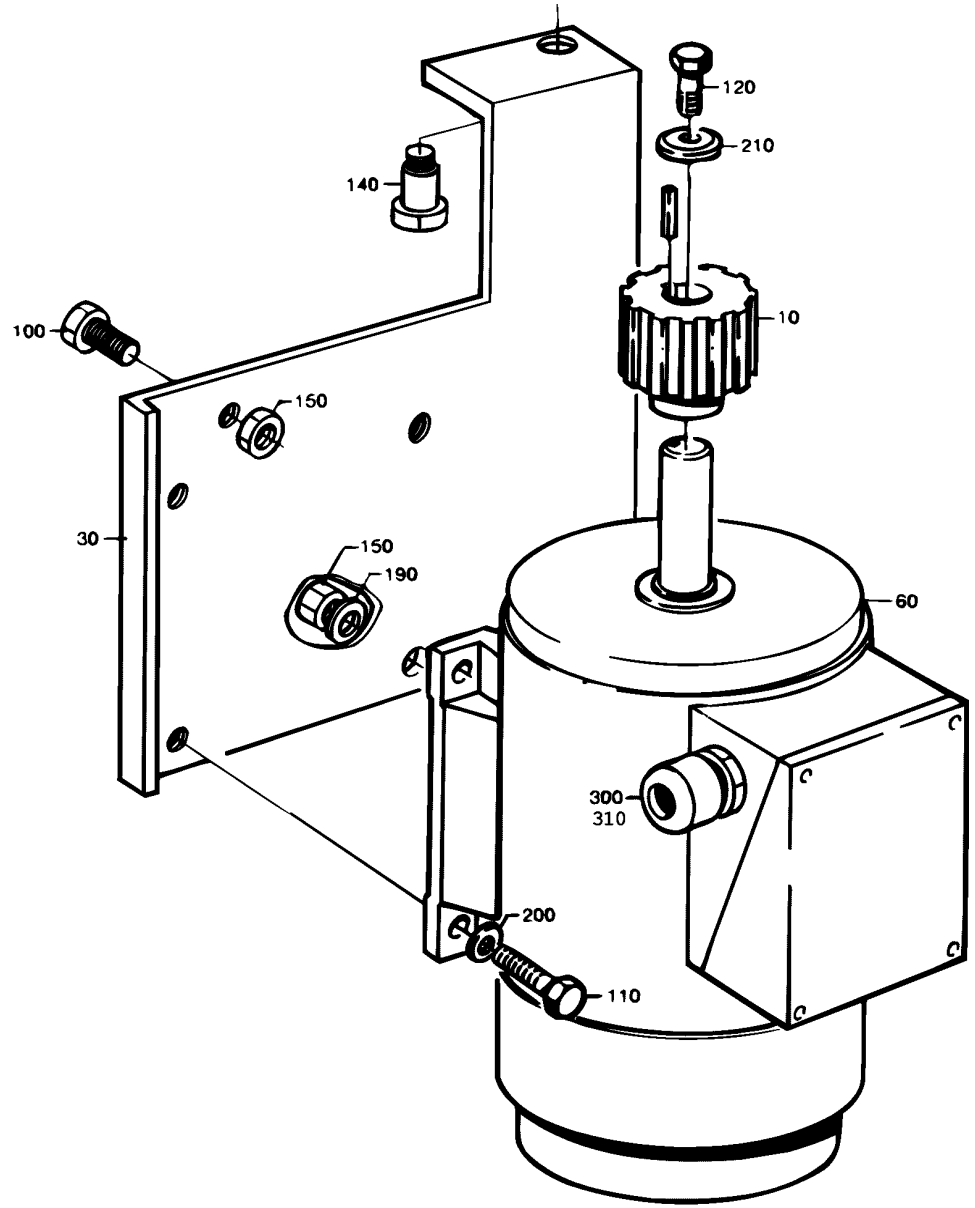
120
210
140
10
100
150
30
150
190
60
300
310
200
110

ECM: 72437 - 19990426
Group number: 285287-0500
Assembly Drawing: 285287-3_1_AA

Issue: 20020121

Pos	Part No	SP	UN	Qty	Description	Page No
Common Parts						
010	443336-0008	C		1	TIMING BELT PULLEY	
030	525166-0000	-		1	MOTOR CRADLE	
060	90045-0049	C		1	MOTOR 3GAA 082002-ASA	
100	312105-0451	-		1	SCREW M6S 8X20 A280	
110	312105-0453	-		3	SCREW M6S M8X25 A280	
120	312105-0457	-		2	SCREW M6S M8X35 A280	
140	312180-0530	-		2	SCREW, HEX.SOCK.HEAD SHOULD. M10X16	
150	312605-0318	-		2	HEXAGON NUT, M6M M8 A280	
190	315105-0165	-		1	WASHER PLAIN, BRB, 8,4/16,H=1,5	
200	315115-0165	-		4	WASHER PLAIN, TBRB 8,4/16 H=3	
210	315125-0165	-		1	WASHER PLAIN ROUND,CHAMF. 8,4/26, H=5	
300	353245-0005	-		1	GLAND, EXTENDED WITH INSERT, PG16/PR 22,	
310	90099-0178	-		1	GLAND, LOCKNUT, PG 16	

Pos	Part No	SP	UN	Qty	Description	Page No

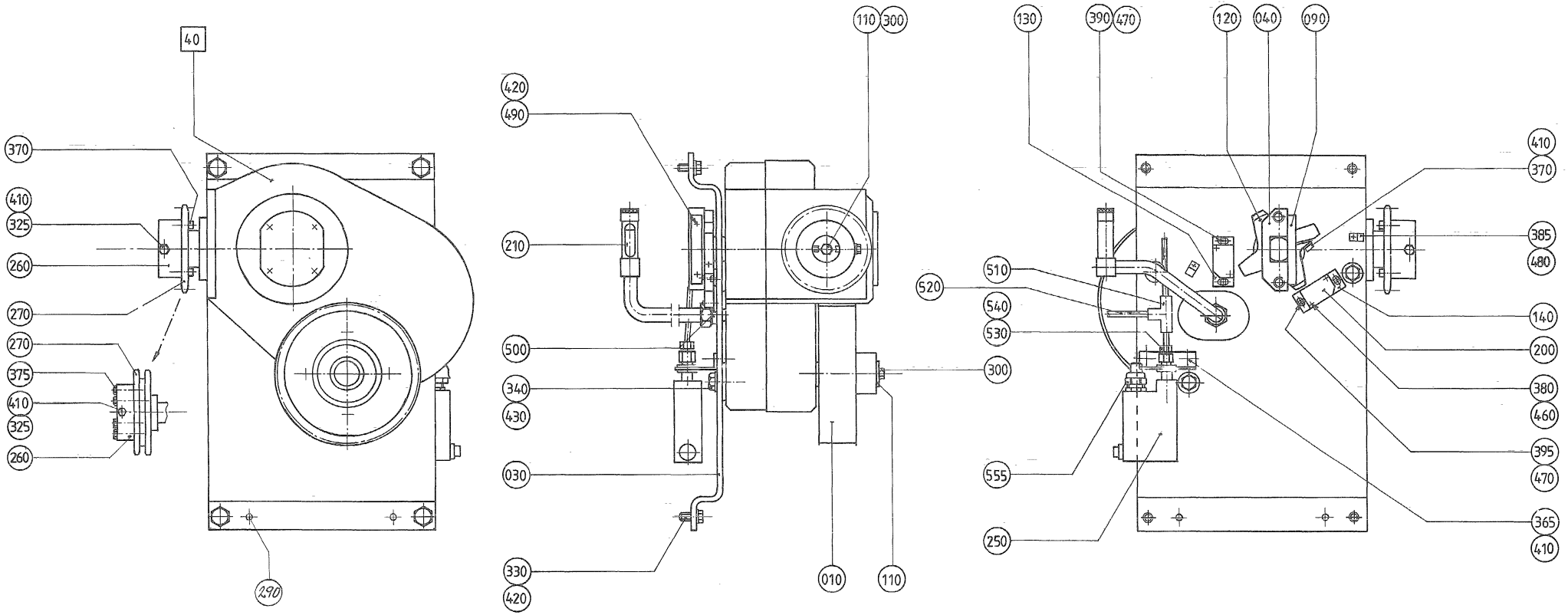
40
370
410
325
260
270
270
375
410
325
260
290
420
490
210
500
340
430
030
330
420
110
300
010
110
130
390
470
120
040
090
510
520
540
530
300
555
250
410
370
385
480
140
200
380
460
395
470
365
410

ECM: 72437 - 19990426
Group number: 285861-0500
Assembly Drawing: 285861-5_1_AB

Issue: 20020121

Pos	Part No	SP	UN	Qty	Description	Page No
0375S OR 0500B OR 0355B OR 0500S OR 1000S OR 0750B OR 0750S OR 1000B						
260	525216-0000	D		1	SLEEVE	
270	442500-0000	-		1	SPROCKET	
370	312115-0370	-		7	SCREW MC6S M6X20 A280	
1000SQ						
260	574081-0000	D		1	SLEEVE	
270	574088-0000	-		1	SPROCKET	
370	312115-0370	-		1	SCREW MC6S M6X20 A280	
375	312109-0374	-		6	SCREW M6S M6X30 A280	
Common Parts						
010	525215-0006	D		1	TIMING BELT PULLEY	
030	525109-0000	-		1	BRACKET	
040	927332-0000	C		1	BRACKET	
090	927333-0000	C		1	BAR CLAMP	
110	285403-0000	-		2	WASHER	
120	566775-0000	-		1	CARRIER	
130	525337-0000	-		1	BRACKET	
140	525232-0000	-		1	BRACKET	
200	90044-0104	C		2	PROX.SWITCH IFM IN 3002	
210	443248-0000	D		1	OIL PIPE	
250	B90274-0002	C		1	PRESSURE SWITCH XMJ, REPBY 90458-0844	
	90274-0300	*-*		*1*	*CONTACT HOUSING*	
290	311112-0341	-		2	PIN, STRAIGHT SLOTTED SPRING FRP 6X24	
300	312105-0370	-		2	SCREW M6S M6X20 A280	
325	312105-0384	-		1	SCREW M6S M6X70 A280	
330	312105-0451	-		4	SCREW M6S 8X20 A280	
340	312105-0493	-		3	SCREW M6S M10X25 A280	
365	312105-0364	-		2	SCREW M6S M6X10 A280	
380	312125-0228	-		2	SCREW PAN HEAD MCS M3X16 A480	
385	312125-0287	-		2	SCREW PAN HEAD MCS M4X8 SS	
390	312115-0295	-		2	SCREW MC6S M4X20 A280	
395	312115-0291	-		2	SCREW MC6S M4X12 A280	
410	315105-0153	-		4	WASHER PLAIN, BRB, 6,4/12,H=1,5	
420	315105-0165	-		6	WASHER PLAIN, BRB, 8,4/16,H=1,5	
430	315105-0173	-		3	WASHER PLAIN, BRB, 10,5/22,H=2	
460	315105-0124	-		2	WASHER PLAIN, BRB, 3,2/6,H=0,5	
470	315105-0136	-		4	WASHER PLAIN, BRB, 4,3/8,H=0,8	
480	90165-0056	-		2	PIPE CLIP FOR TUBE D=4 MM	
490	312105-0455	-		2	SCREW M6S M8X30 A280	
500	342720-0115	-		1	CONN. STR. GA-16-G1/2	
510	342946-0112	-		1	T-COUPLING,UNION 6/4	
520	90166-0011	-	MM	3000	TUBE 6 MM PA,TRANSP.	
530	342706-0130	-		1	ACCESSORIES, INSERT SLEEVE 6 MM	
540	342790-0202	-		1	CONN. PRESS. GAUGE MAV6-S/R3/8FZB	
555	90012-0073	-		1	GLAND FITTING	
F040	A442582-0100	D		1	DRIVE GEAR	**427**

Machine Type	Group Description	Used-In	Group Number	Page No

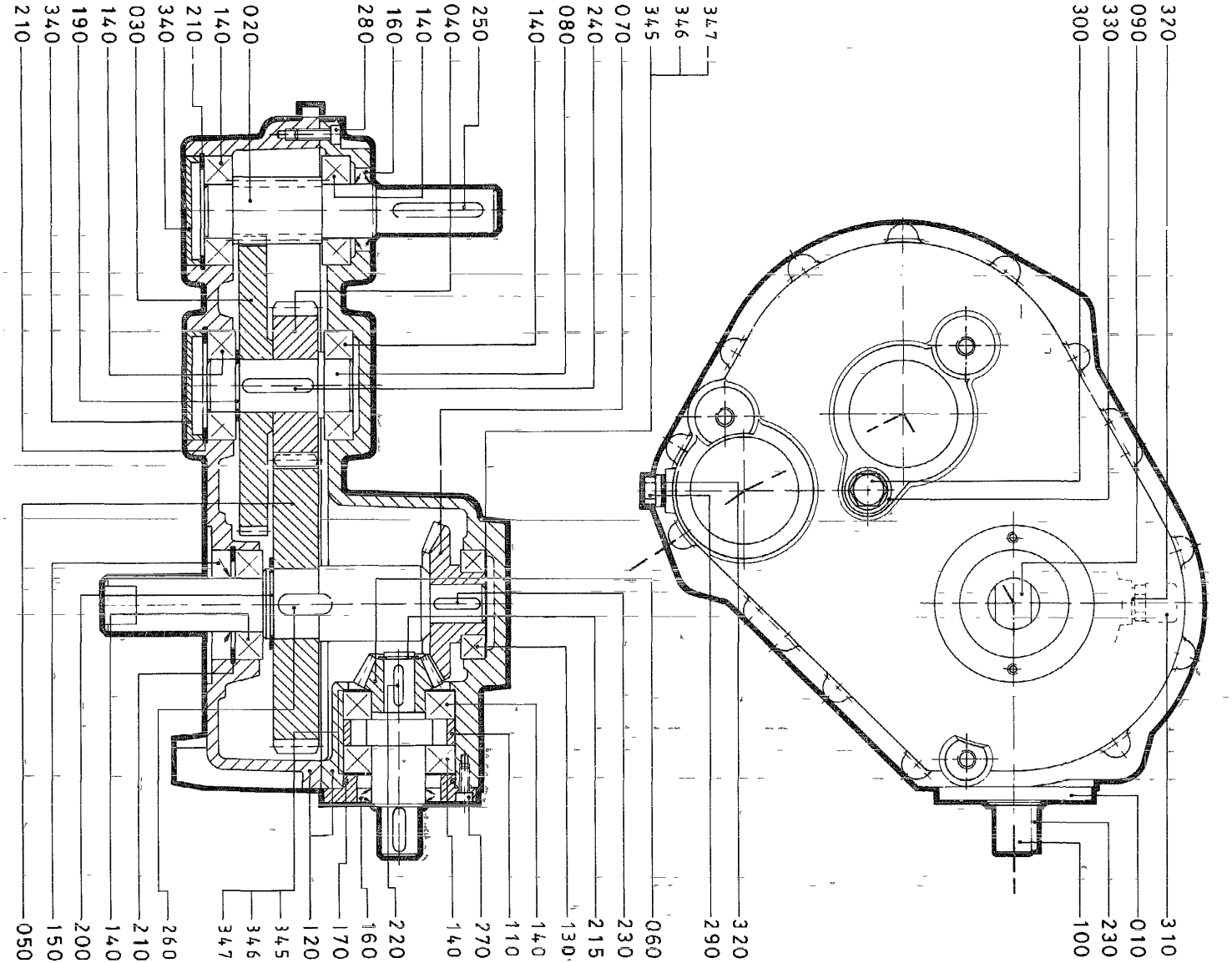
210
340
190
140
030
340
210
140
020
280
160
140
040
250
140
080
240
070
345
346
347
320
090
330
300
050
150
200
140
210
260
347
346
345
120
170
160
220
140
270
110
140
130
215
230
060
290
320
100
230
010
310

ECM: 72197 - 19990215
Group number: 442582-0100
Assembly Drawing: 442582-1_1_AA

Issue: 20020121

Pos	Part No	SP	UN	Qty	Description	Page No
Common Parts						
010	567345-0000	D		1	BEARING COVER	
020	442554-0000	C		1	GEARING	
030	442555-0000	D		1	GEAR WHEEL	
040	442556-0000	D		1	GEAR WHEEL	
050	442557-0000	C		1	GEAR WHEEL	
060	442558-0000	C		1	GEAR WHEEL	
070	442559-0000	C		1	GEAR WHEEL	
080	567347-0000	D		1	SHAFT	
090	567348-0000	C		1	SHAFT	
100	525136-0000	C		1	SHAFT	
110	567349-0000	D		1	SPACER	
120	567373-0000	D		1	GEAR HOUSING	
130	321306-0107	C		1	BALL BEARING, 35X62X14 MM	
140	321309-0106	C		7	BALL BEARING, 30X62X16 MM	
150	90091-0145	C		1	RADIAL SEAL 30X62X10 MM	
160	90091-0054	C		2	RADIAL SEAL 30X47X8 MM DUST LIP	
170	90242-0116	C		1	O-RING 55X2,5 MM	
190	315750-0122	-		1	RETAIN. RING, 30	
200	315750-0127	-		1	RETAIN. RING, 40	
210	315752-0136	-		3	RETAIN. RING, 62	
215	90141-0012	-		1	RETAINING RING FOR SHAFT,17X1,5MM	
220	315701-0202	-		1	PARALLEL KEY W. ROUND ENDS 5X5X22 MM	
230	315701-0234	-		3	PARALLEL KEY W. ROUND ENDS 6X6X25 MM	
240	315701-0270	-		2	PARALLEL KEY W. ROUND ENDS 8X7X40 MM	
250	315701-0272	-		1	PARALLEL KEY W. ROUND ENDS 8X7X50 MM	
260	567350-0000	D		2	WEDGE	
270	312111-0329	-		4	SCREW HEX.SOCK.HD.MC6S-TT 5X16 88 FZB	
280	312111-0370	-		12	SCREW HEX.SOCK.HD.MC6S-TT 6X20 88 FZB	
290	90330-0026	-		1	PLUG, EXT. G-THREAD, G1/4	
300	90330-0037	-		1	PLUG, EXT. G-THREAD, G1/2	
310	442841-0000	D		1	AIR SCREW	
320	315234-0110	-		2	WASHER,PL.RND.CU.13,5/18 H=1,5	
330	315234-0113	-		1	WASHER PL.RND.CU.21,3//26 H=1,5	
340	90214-0310	-		2	SEALING LID, 62X8 MM	
345	442903-0000	D		1	SHIM	
346	442904-0000	D		1	SHIM	
347	442905-0000	D		1	SHIM	
390	90296-0075	D	ML	2400	OIL 54322-320 ACC TO M 1254.322	

Pos	Part No	SP	UN	Qty	Description	Page No

Machine Type | Group Description | Used-In | Group Number | Page No

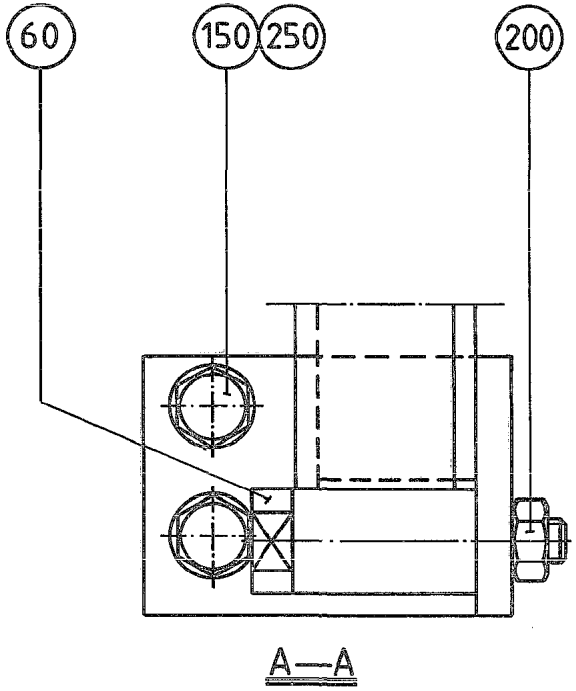
60
150
250
200
A—A

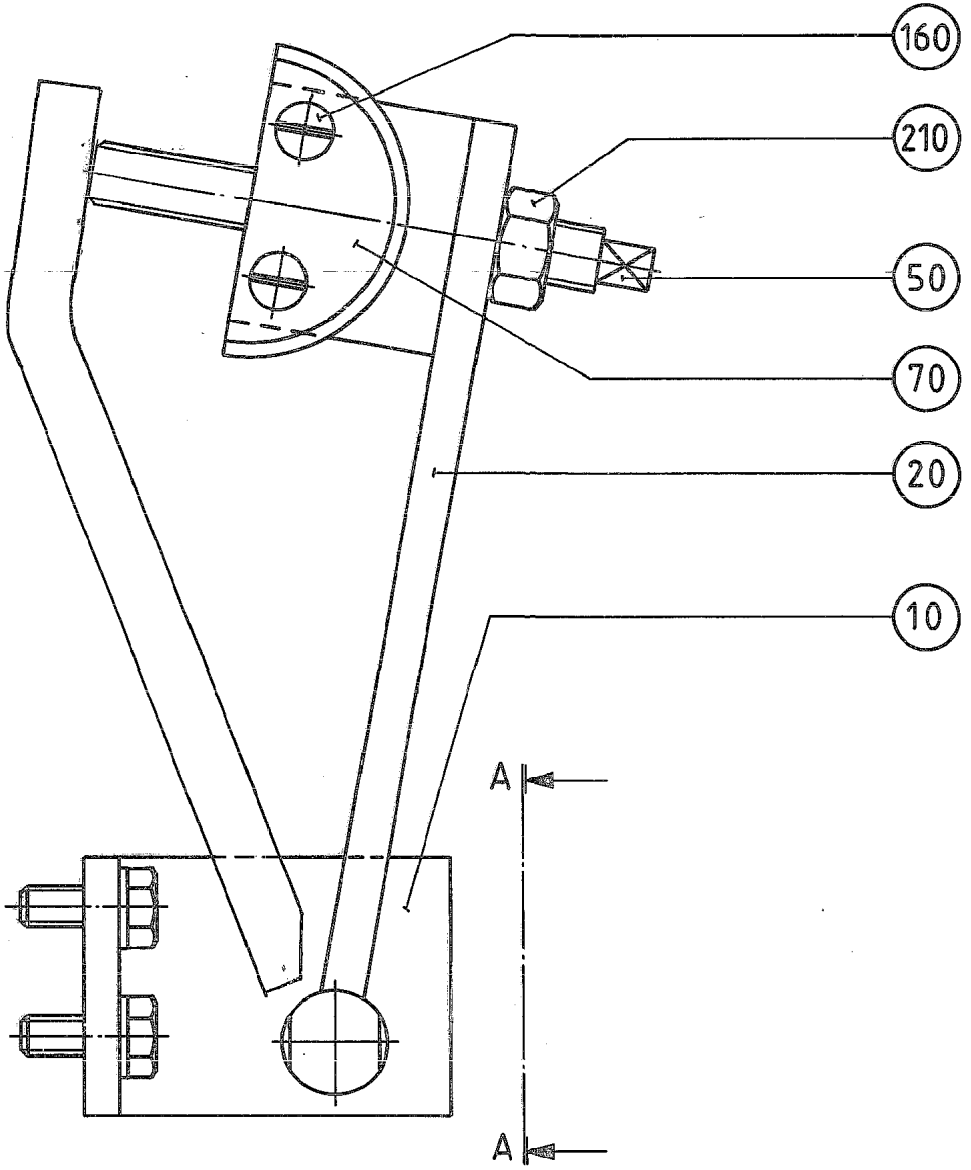
160
210
50
70
20
10
A
A

Pos	Part No	SP	UN	Qty	Description	Page No
0375S OR 0500B OR 0355B OR 0500S OR 1000S OR 0750B OR 0750S OR 1000B						
070	443367-0000	D		1	PROFILE	
1000SQ						
070	574093-0000	D		1	PROFILE	
Common Parts						
010	297608-0000	-		1	BRACKET	
020	297609-0000	-		1	ARM	
050	297610-0000	-		1	SCREW	
060	297611-0000	D		1	SHAFT	
150	312105-0451	-		2	SCREW M6S 8X20 A280	
160	312145-0378	-		2	SCREW COUNTERS.SLOT.HD. MFS 6X40 SS	
200	312605-0318	-		1	HEXAGON NUT, M6M M8 A280	
210	312605-0322	-		1	HEXAGON NUT, M6M M12 A280	
250	315105-0165	-		2	WASHER PLAIN, BRB, 8,4/16,H=1,5	

Pos	Part No	SP	UN	Qty	Description	Page No

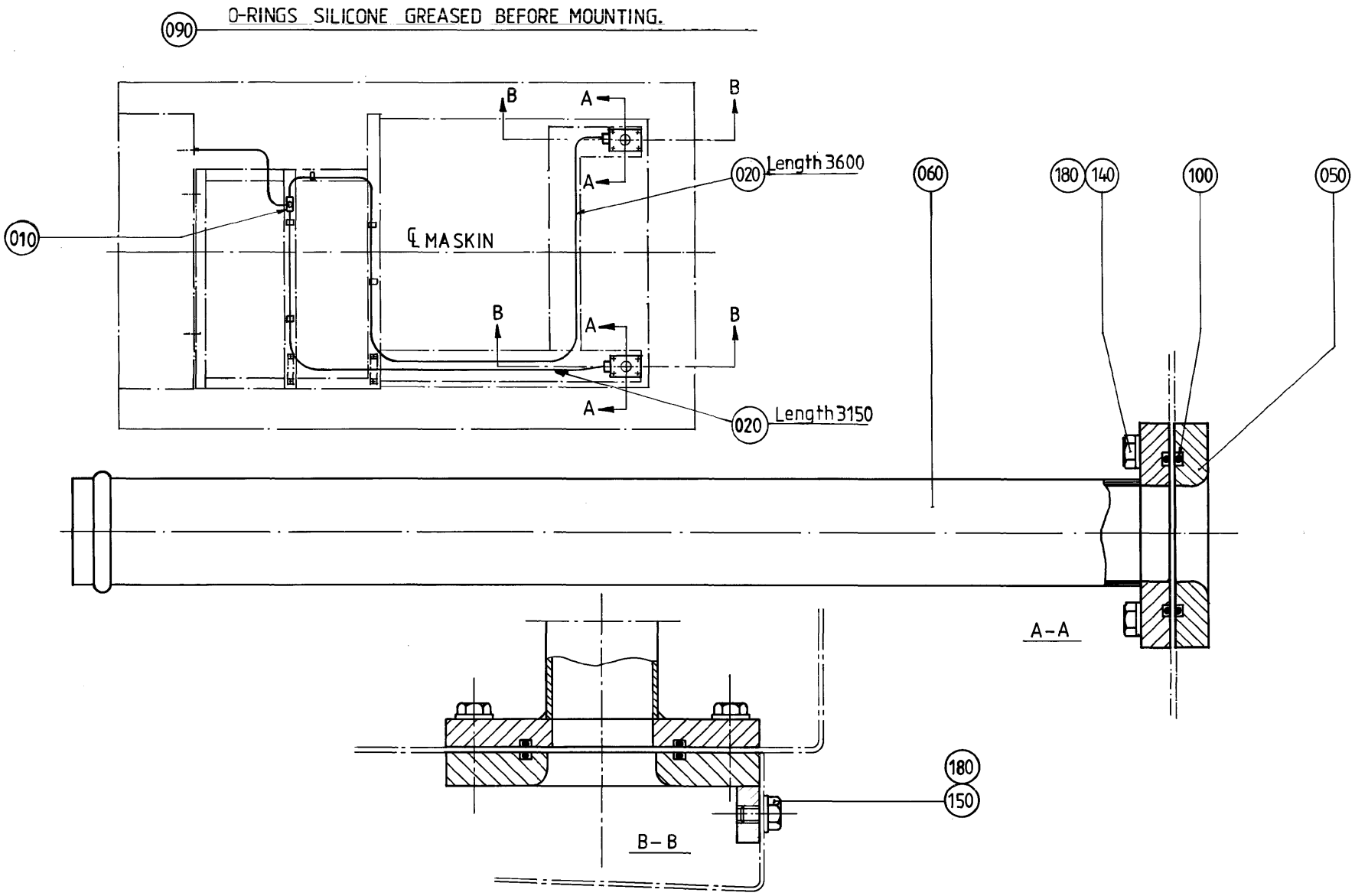
090 O-RINGS SILICONE GREASED BEFORE MOUNTING.
010
020 Length 3600
020 Length 3150
℄ MA SKIN
A
B
060
180
140
100
050
A-A
180
150
B-B

ECM: 72197 - 19990215
Group number: 525110-0100
Assembly Drawing: 525110-1_1_AA

Issue: 20020121

Pos	Part No	SP	UN	Qty	Description	Page No
Common Parts						
010	342946-0122	-		1	T-COUPLING,UNION 8/6	
020	90166-0122	-	MM	6750	TUBE 8 MM PA,TRANSP.	
050	525135-0000	-		2	PLATE	
060	297413-0000	-		2	PIPE	
090	90296-0009	-	L	1	SILICONE GREASE TUBE 100 GR.	
100	315202-0301	-		4	O-RING 49,5X3 MM	
140	312105-0370	-		8	SCREW M6S M6X20 A280	
150	312105-0364	-		2	SCREW M6S M6X10 A280	
180	315105-0153	-		10	WASHER PLAIN, BRB, 6,4/12,H=1,5	

Pos	Part No	SP	UN	Qty	Description	Page No

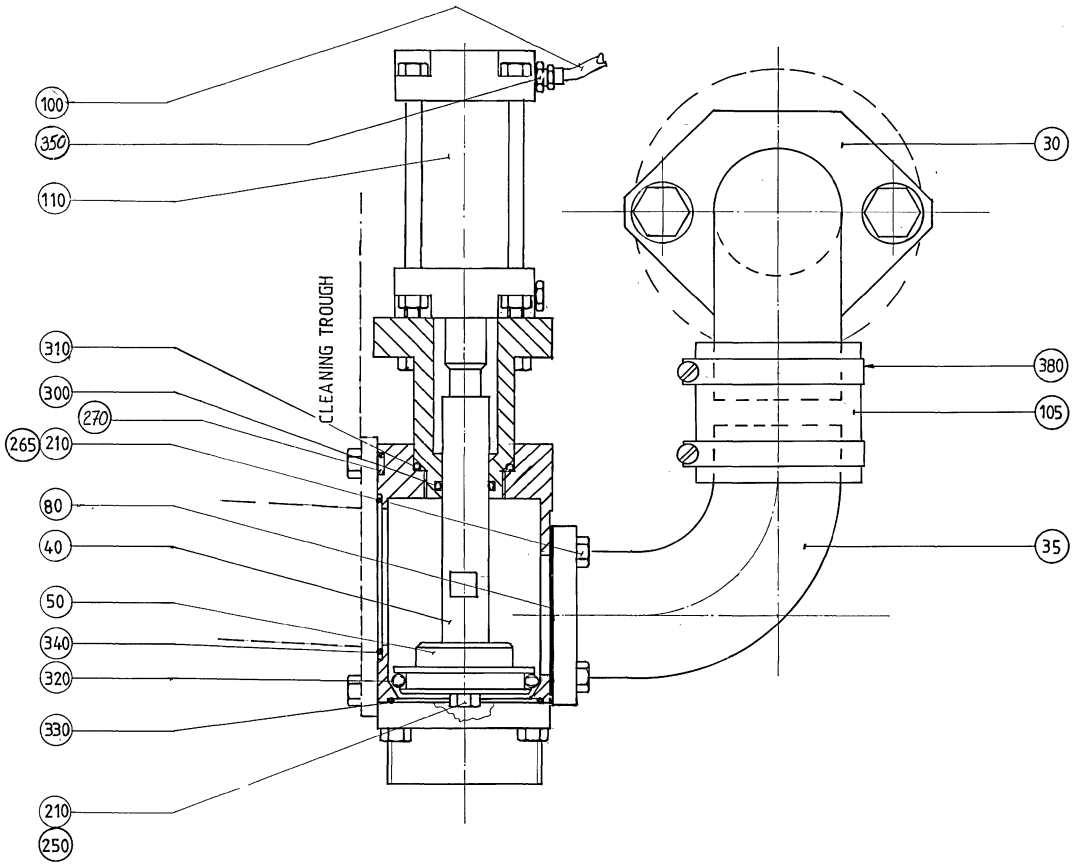
100
350
110
CLEANING TROUGH
310
300
270
265
210
80
40
50
340
320
330
210
250
30
380
105
35

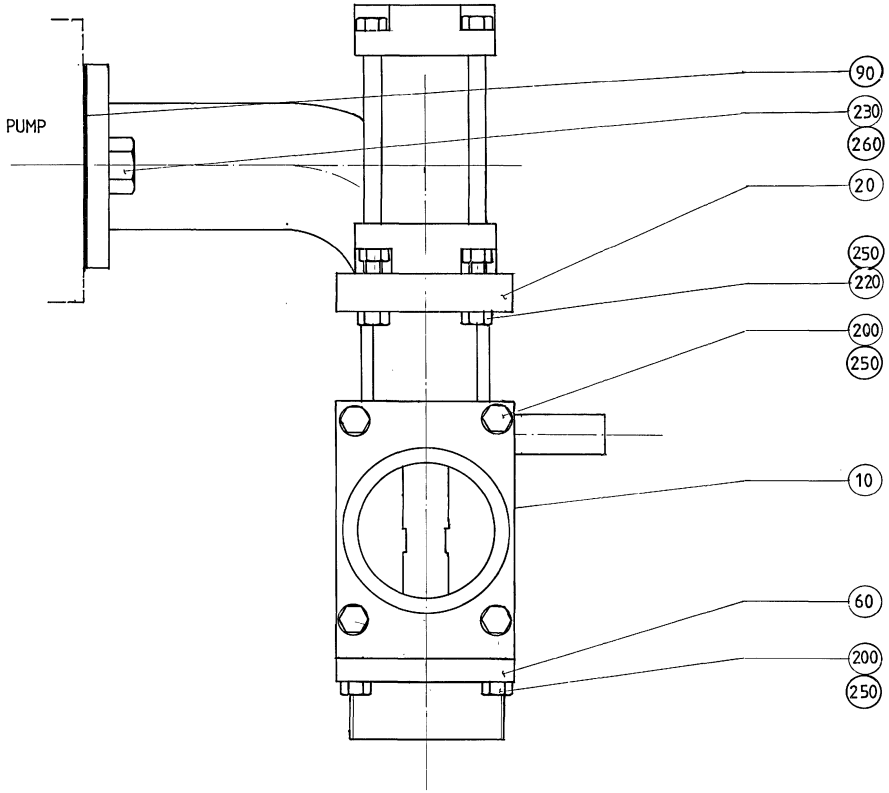
PUMP
90
230
260
20
250
220
200
250
10
60
200
250

ECM: 72197 - 19990215
Group number: 525143-0200
Assembly Drawing: 525143-2_1_AA

Issue: 20020121

Pos	Part No	SP	UN	Qty	Description	Page No
Common Parts						
010	443122-0000	D		1	HOUSE	
020	443123-0000	D		1	HOUSE	
030	525269-0000	D		1	PIPE	
035	525270-0000	D		1	PIPE	
040	442851-0000	D		1	SHAFT	
050	442852-0000	D		1	VALVE	
060	442853-0000	-		1	ATTACHMENT PIPE	
080	531116-0000	C		1	GASKET	
090	531189-0000	C		1	GASKET	
100	90166-0124	-	MM	650	TUBE 6 MM PA,TRANSP.	
105	90166-0199	-	MM	80	RUBBER HOSE	
110	90239-0960	C		1	CYLINDER	
200	312105-0368	-		8	SCREW M6S M6X16 A280	
210	312105-0370	-		5	SCREW M6S M6X20 A280	
220	312105-0374	-		4	SCREW M6S M6X30 A280	
230	312105-0534	-		2	SCREW M6S M12X25 A280	
250	315105-0153	-		13	WASHER PLAIN, BRB, 6,4/12,H=1,5	
260	315105-0178	-		2	WASHER PLAIN, BRB, 13/24,H=2	
265	315115-0153	-		4	WASHER PLAIN, TBRB 6,4/12 H=3	
270	315202-0106	C		2	O-RING 8,1X1,6 MM	
300	315202-0214	C		1	O-RING 17,3X2,4 MM	
310	315202-0220	C		1	O-RING 32,2X3 MM	
320	315202-0226	C		1	O-RING 44,2X5,7 MM	
330	315202-0302	C		1	O-RING 54,5X3 MM	
340	315202-0303	C		1	O-RING 59,5X3 MM	
350	342920-0113	-		1	STRAIGHT COUPLING,EXT.THREADED 6/4-R1/8"	
380	342991-0111	-		2	HOSE CLIP,WORM DRIVE TYPE (63)-73	

Pos	Part No	SP	UN	Qty	Description	Page No

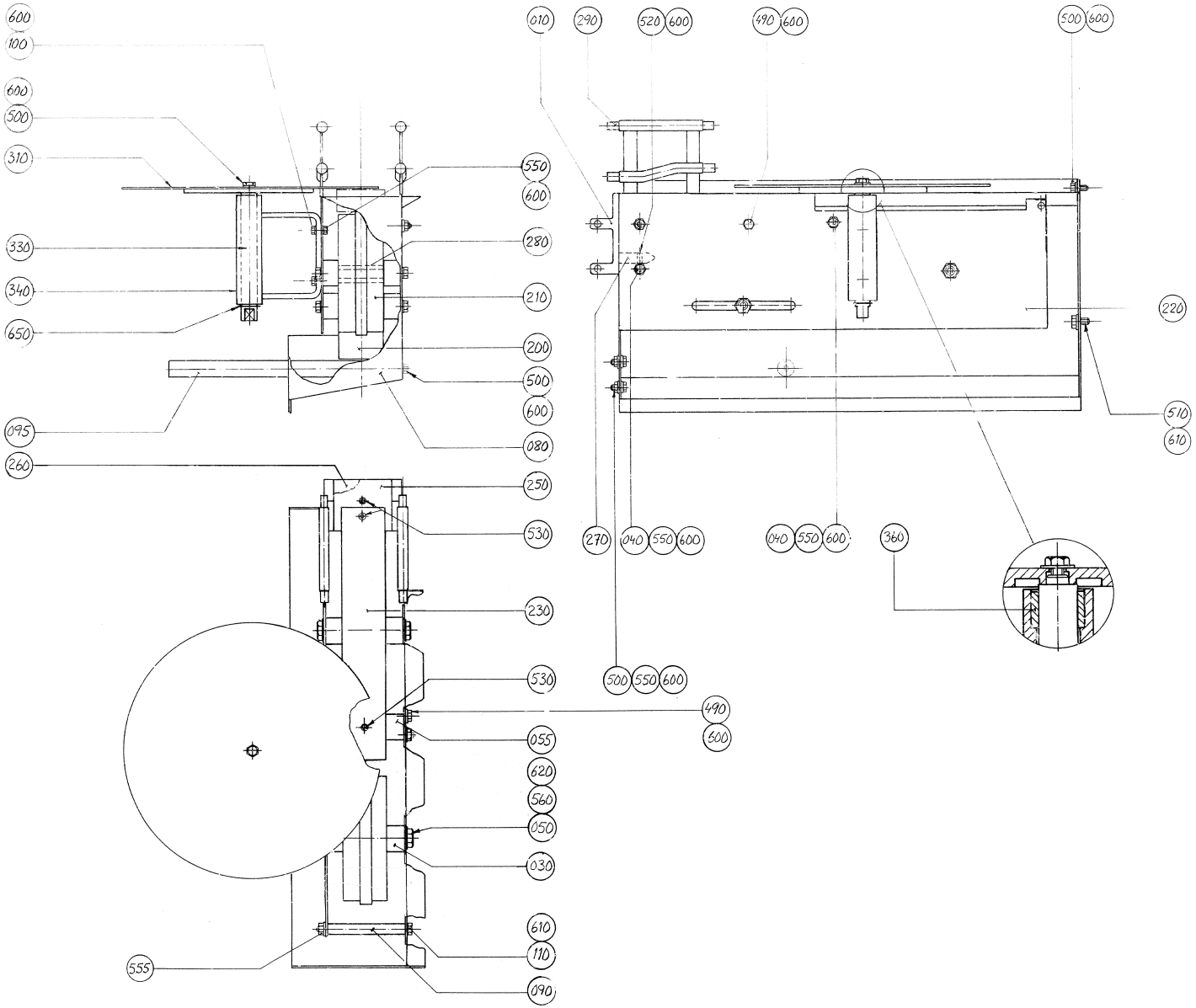
600
100
600
500
310
330
340
650
095
260
550
600
280
210
200
500
600
080
250
530
230
530
055
620
560
050
030
610
110
090
555
010
290
520 600
490 600
500 600
220
510
610
270
040 550 600
040 550 600
360
500 550 600
490
600

ECM: 72197 - 19990215
Group number: 595087-0100
Assembly Drawing: 595087-1_1_AA

Issue: 20020121

Pos	Part No	SP	UN	Qty	Description	Page No
Common Parts						
010	228843-0001	C		2	SPACER	
030	229201-0002	C		4	SPACER	
040	229508-0029	C		5	STUD SCREW	
050	229760-0013	C		2	STUD SCREW	
055	237082-0002	D		1	MOUNTING BLOCK	
080	594632-0000	D		1	SIDE PLATE	
090	297574-0002	D		1	SPACER	
095	525171-0001	D		1	BRACKET	
100	312105-0368	-		2	SCREW M6S M6X16 A280	
110	312105-0471	-		1	SCREW M6S M8X100 A280	
200	476975-0000	C		1	WHEEL	
210	245039-0000	C		1	GUIDE WHEEL	
220	297569-0000	D		1	SIDE PLATE	
230	442776-0000	C		1	SLIDE RAIL	
250	228845-0000	C		1	MOUNTING BLOCK	
260	229202-0000	C		1	MOUNTING BLOCK	
270	229206-0000	D		1	LOCATING PIECE	
280	229207-0000	C		2	BEARING SLEEVE	
290	229516-0000	C		8	PIN	
310	525053-0000	D		1	PLATE (CIRCULAR)	
330	285132-0000	C		1	SHAFT	
340	285133-0000	D		1	CANTILEVER	
360	525252-0000	C		2	BEARING	
490	312105-0362	-		2	SCREW M6S M6X8 A280	
500	312105-0367	-		5	SCREW M6S M6X14 A280	
510	312105-0449	-		1	SCREW M6S M8X16 A280	
520	312115-0368	-		1	SCREW MC6S M6X16 A280	
530	312155-0370	-		3	SCREW HEX.SOCK.COUNT.MF6S M6X20 A280	
550-02	312605-0316	-		14	HEXAGON NUT, M6M M6 A280	
555	312605-0318	-		1	HEXAGON NUT, M6M M8 A280	
560	312605-0320	-		4	HEXAGON NUT, M6M M10 A280	
600	315105-0153	-		19	WASHER PLAIN, BRB, 6,4/12,H=1,5	
610	315105-0165	-		3	WASHER PLAIN, BRB, 8,4/16,H=1,5	
620	315105-0173	-		4	WASHER PLAIN, BRB, 10,5/22,H=2	
650	315755-0113	-		1	LOCKING WASHER 15	

Pos	Part No	SP	UN	Qty	Description	Page No

Machine Type | Group Description | Used-In | Group Number | Page No

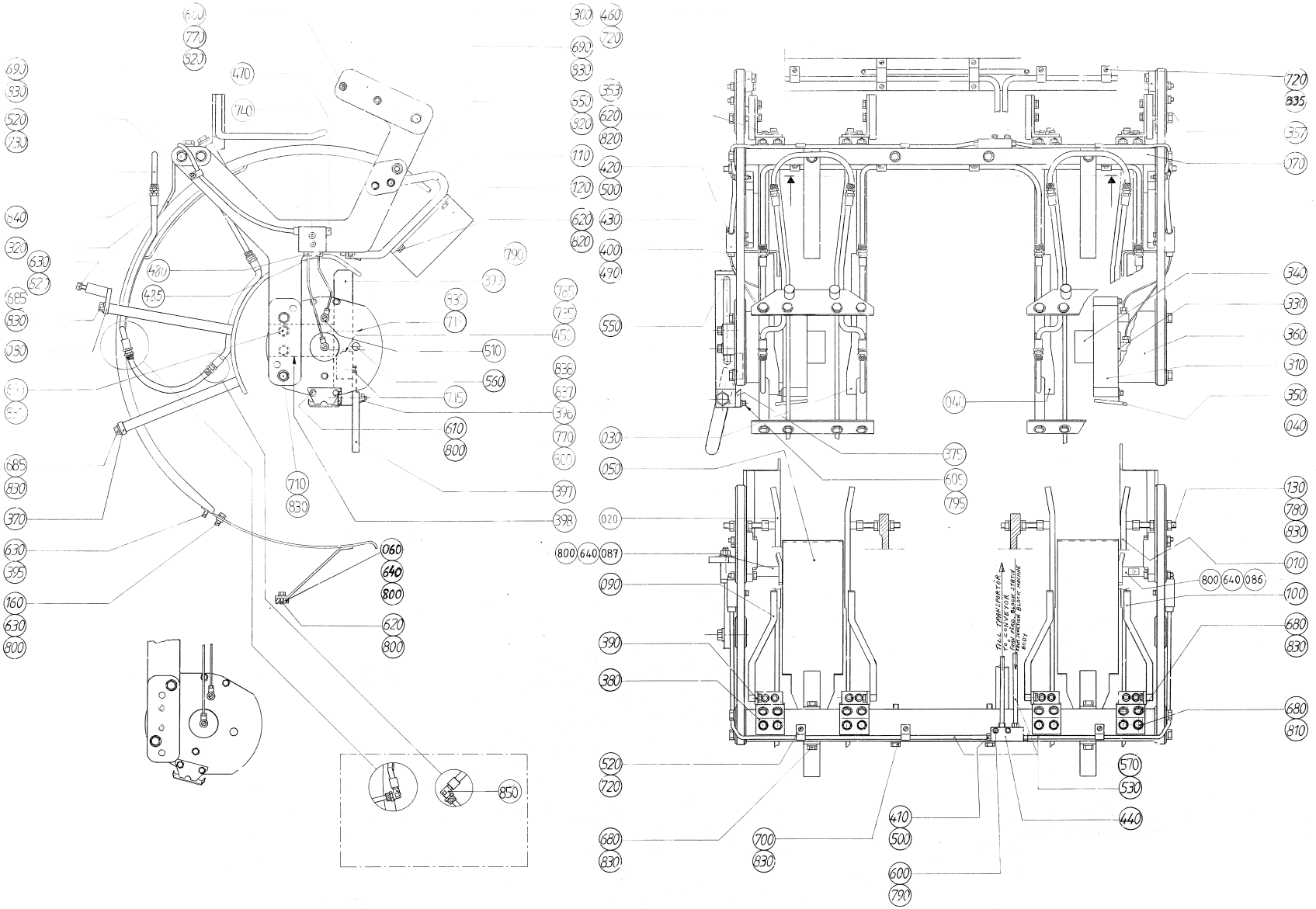
650
770
620
690
930
520
730
640
320
630
620
685
830
080
610
800
685
830
370
630
395
160
630
800
470
740
480
435
790
300
460
720
690
930
353
550
620
520
820
110
420
120
500
620
430
620
400
490
550
765
735
457
836
837
396
770
600
397
398
710
830
060
640
800
620
800
850
520
720
680
830
390
380
800
640
087
090
020
050
030
375
605
795
041
720
835
357
070
340
330
360
310
350
040
130
780
830
010
800
640
086
100
680
830
680
810
570
530
440
410
500
700
830
600
790

ECM: 72353 - 19990525
Group number: 595088-0200
Assembly Drawing: 595088-1_1_AA

Issue: 20020121

Pos	Part No	SP	UN	Qty	Description	Page No
1000SQ NORMFIN						
030	574045-0000	D		2	FOLDING BAR	
040	574046-0000	D		2	FOLDING BAR	
086	574097-0000	D		1	STEERING	
087	574098-0000	D		1	STEERING	
397	550359-0000	D		1	ARM	
399	595055-0000	D		1	BRACKET	
640	312105-0370	-		2	SCREW M6S M6X20 A280	
840	342920-0121	-		16	STRAIGHT COUPLING,EXT.THREADED 8/6-R1/8"	
1000SQ REVFIN						
030	597537-0000	D		2	FOLDING BAR	
040	597536-0000	D		2	FOLDING BAR	
086	574097-0000	D		1	STEERING	
087	574098-0000	D		1	STEERING	
397	550359-0000	D		1	ARM	
399	595055-0000	D		1	BRACKET	
640	312105-0370	-		2	SCREW M6S M6X20 A280	
840	342920-0121	-		16	STRAIGHT COUPLING,EXT.THREADED 8/6-R1/8"	
Common Parts						
010	525001-0000	D		2	FOLDING BAR	
020	525003-0000	D		2	FOLDING BAR	
050	574047-0000	C		2	LEAD RAIL	
070	B525007-0002	D		1	CANTILEVER	
	312910-0111	-		*12*	*THREADED INSERTS M4X2,0D*	
	312910-0126	-		*16*	*HELI-COIL M8X1,5D*	
080	525008-0001	D		2	BRACKET	
090	569122-0000	D		2	FOLDING ARM	
100	569123-0000	D		2	FOLDING ARM	
110	574048-0000	D		2	BRACKET	
120	574049-0000	D		2	COUNTER PLATE	
130	525015-0002	D		4	SCREW	
300	B525016-0000	D		2	FASTENING PLATE	
	312910-0127	-		*2*	*THREADED INSERTS M8X2,0D*	
	312910-0112	-		*3*	*HELI-COIL M4X2,5D*	
310	574050-0000	D		2	CURVE	
320	525017-0000	D		2	STEERING GUIDE	
330	285168-0000	D		2	BUSHING	
340	285851-0000	C		2	BEARING	
350	443240-0000	-		2	DRIP PLATE	
353	442564-0000	C		1	CURVE	
357	442565-0000	C		1	CURVE	
360	525018-0000	-		2	SPACER	
370	525019-0000	D		2	BRACKET	
375	595057-0000	D		1	BRACKET	
380	525340-0000	D		4	BRACKET	
390	525178-0000	D		4	BRACKET	
395	525181-0000	-		2	WASHER	
396	525321-0000	C		1	SCREW	
398	525296-0000	-		1	BRACKET	
400	90028-0020	C		4	CONE TUBE 2,5MM	
410	90028-0022	C		4	CONE TUBE 6 MM	
420	90028-0025	C		2	CONE TUBE 6 MM	
430	90032-0038	-		2	BLOCK 2 WAYS	
440	90032-0044	-		1	DISTRIBUTION BLOCK 4 WAYS	
450	90044-0104	C		1	PROX.SWITCH IFM IN 3002	
460	90074-0018	-		2	CLIPS, CABLE CLIPS DI=2X10 MM	
470	90087-0019	-		2	PLUG M10X1 STAINLESS	
480	90092-0052	C		2	METERING VALVE 10 MM3	
485	90092-0053	C		2	METERING VALVE 30 MM3	
490	90134-0039	C		4	BUSHING VALVE CONNECTION 2,5 MM	
500	90134-0055	C		6	BUSHING/NUT INLET/OUTLET 6 MM	
510	90134-0058	-		4	CONNECTION	
520	90165-0057	-		5	PIPE CLIP FOR TUBE D=6 MM	
530	90166-0108	-	MM	5200	TUBE 6 MM PA,TRANSP.	
540	90166-0122	-	MM	6000	TUBE 8 MM PA,TRANSP.	
550	90166-0143	-	MM	2000	TUBE 2,5 MM PA,TRANSP.	
560	90261-0032	-		4	PLUG, BLIND, PLASTIC, NO. 1073	
570	90134-0030	-		6	SLEEVE FOR PLASTIC TUBE	
600	312105-0295	-		2	SCREW M6S M4X20 A280	
605	312105-0327	-		2	SCREW M6S M5X12 A280	
610	312105-0364	-		10	SCREW M6S M6X10 A280	
620	312105-0366	-		24	SCREW M6S M6X12 A280	
630	312105-0368	-		10	SCREW M6S M6X16 A280	
650	312105-0374	-		4	SCREW M6S M6X30 A280	
660	312105-0378	-		4	SCREW M6S M6X40 A280	
680	312105-0449	-		20	SCREW M6S M8X16 A280	
685	312105-0451	-		16	SCREW M6S 8X20 A280	
690	312105-0455	-		8	SCREW M6S M8X30 A280	
700	312105-0464	-		2	SCREW M6S M8X65 A280	
710	312105-0469	-		4	SCREW M6S M8X90 A280	
715	312115-0323	-		1	SCREW MC6S M5X8 A280	
718	312115-0455	-		2	SCREW MC6S M8X30 A280	

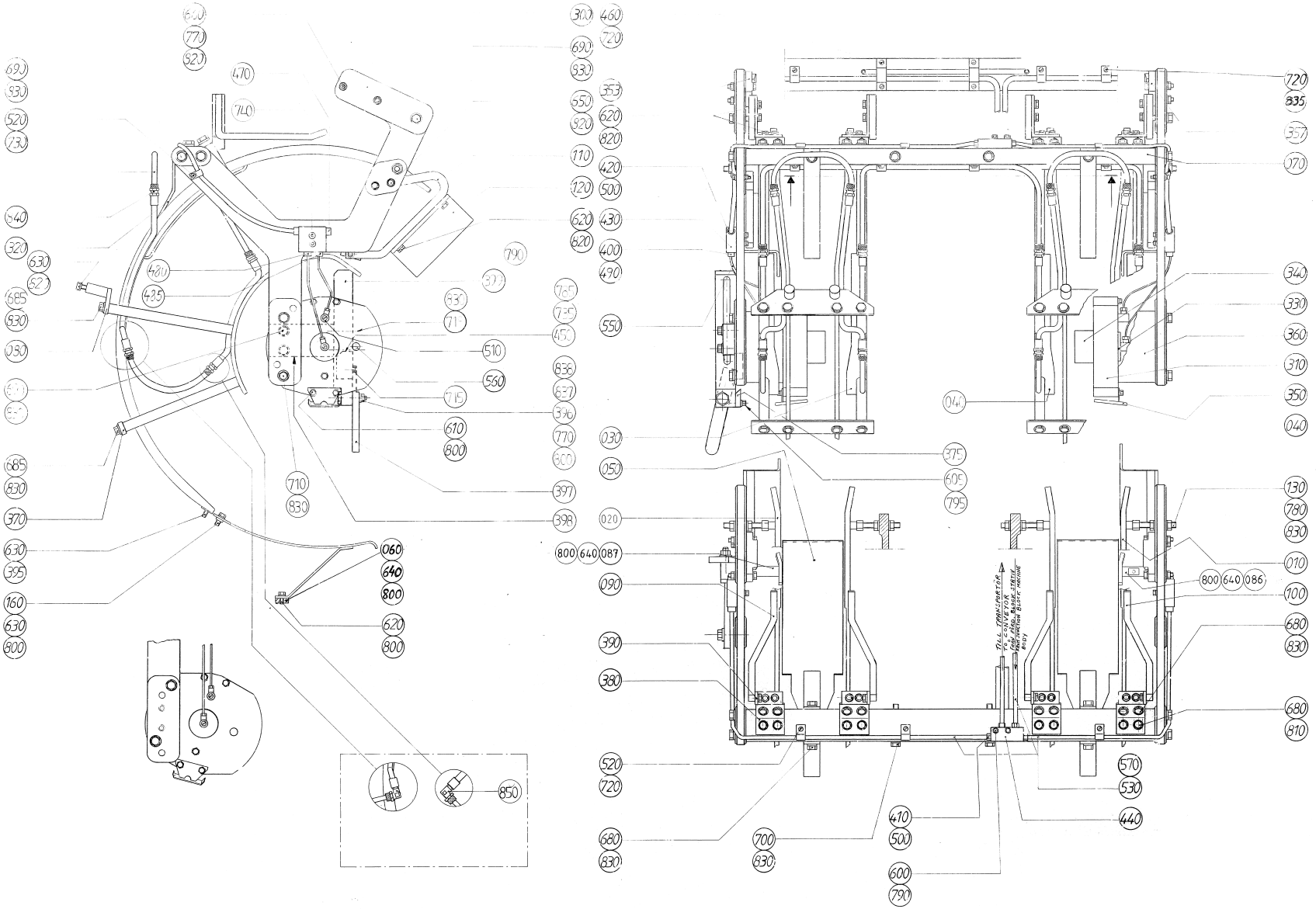
650
770
620
690
930
520
730
640
320
630
620
685
830
080
610
800
685
830
370
630
395
160
630
800
470
740
480
435
710
830
060
640
800
620
800
850
300
460
720
690
930
353
550
620
520
820
110
420
120
500
620
430
620
400
490
790
371
765
735
457
550
836
837
396
770
800
030
050
020
800
640
087
090
390
380
520
720
680
830
700
830
410
500
600
790
570
530
440
375
605
795
720
835
357
070
340
330
360
310
350
040
041
130
780
830
010
800
640
086
100
680
830
680
810

Pos	Part No	SP	UN	Qty	Description	Page No
Common Parts (Cont'd)						
720	312125-0287	-		10	SCREW PAN HEAD MCS M4X8 SS	
730	312125-0291	-		2	SCREW PAN HEAD MCS M4X12 SS	
735	312125-0230	-		2	SCREW PAN HEAD MCS M3X20 SS	
740	312155-0297	-		4	SCREW HEX.SOCK.COUNT.MF6S M4X25 A480	
770	312605-0316	-		5	HEXAGON NUT, M6M M6 A280	
780	312605-0318	-		8	HEXAGON NUT, M6M M8 A280	
785	315105-0124	-		2	WASHER PLAIN, BRB, 3,2/6,H=0,5	
790	315105-0136	-		2	WASHER PLAIN, BRB, 4,3/8,H=0,8	
795	315105-0146	-		2	WASHER PLAIN, BRB, 5,3/10,H=1	
800	315105-0153	-		19	WASHER PLAIN, BRB, 6,4/12,H=1,5	
810	315105-0165	-		8	WASHER PLAIN, BRB, 8,4/16,H=1,5	
820	315115-0153	-		40	WASHER PLAIN, TBRB 6,4/12 H=3	
830	315115-0165	-		52	WASHER PLAIN, TBRB 8,4/16 H=3	
835	316810-0106	-		3	PIPE CLIP FOR TUBE D=8 MM	
837	321116-0127	C		1	BEAR. BUSH. WITHOUT FL, 10X14X10	
838	321116-0128	C		1	BEAR. BUSH. WITHOUT FL, 10X14X16	

Pos	Part No	SP	UN	Qty	Description	Page No

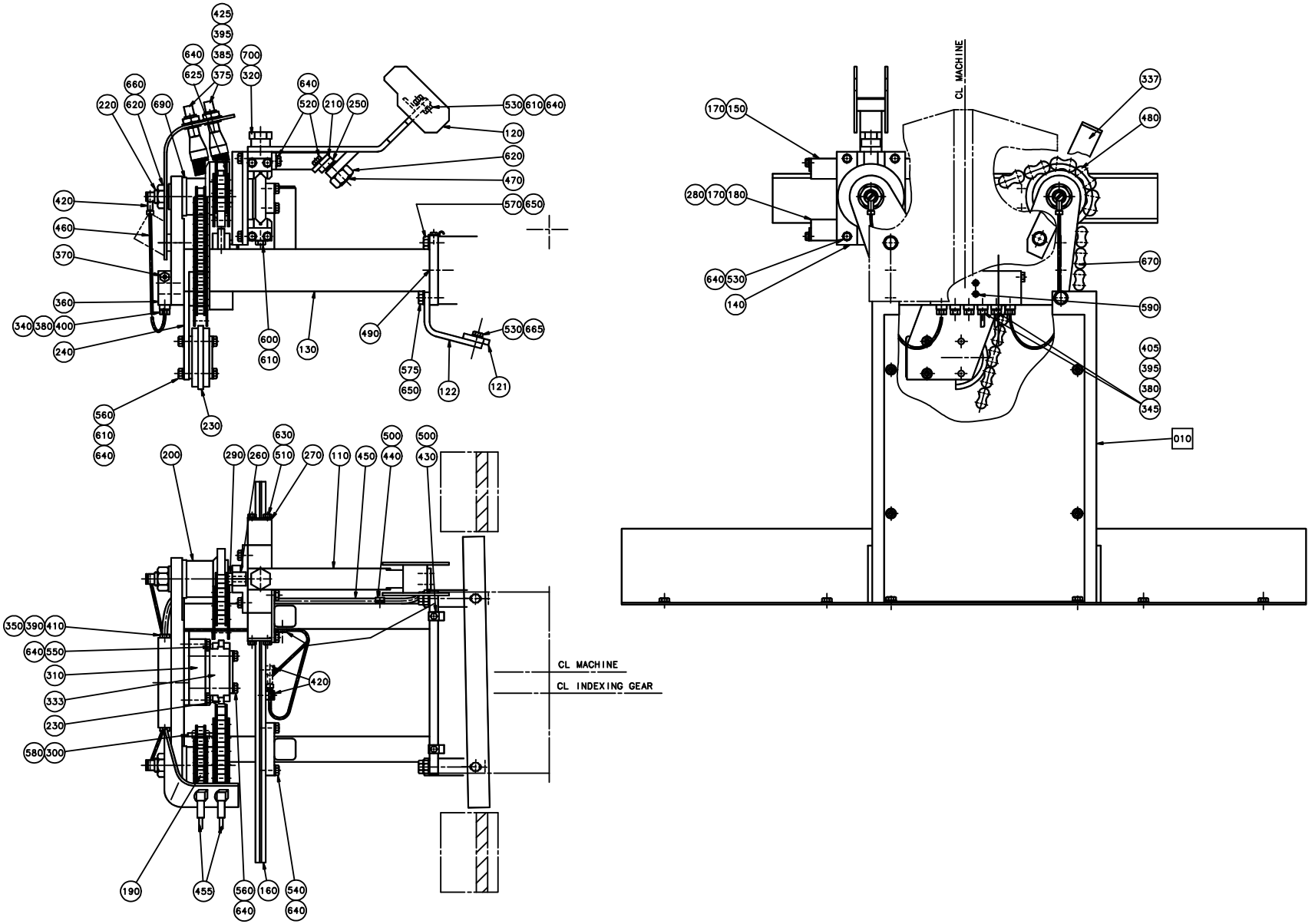
425
395
640
385
700
625
375
320
660
640
220
620
690
520
210
250
530
610
640
120
620
470
420
570
650
460
370
360
340
380
400
240
600
610
130
490
530
665
575
650
122
121
560
610
640
230
630
500
500
200
290
260
510
270
110
450
440
430
350
390
410
640
550
310
333
230
580
300
420
CL MACHINE
CL INDEXING GEAR
190
455
560
640
160
540
640
CL MACHINE
337
480
170
150
280
170
180
640
530
140
670
590
405
395
380
345
010

ECM: 72392 - 19990617
Group number: 595089-0100
Assembly Drawing: 595089-1_1_AA

Issue: 20020121

Pos	Part No	SP	UN	Qty	Description	Page No
1000SQ						
110	525301-0000	D		1	ARM	
120	574056-0000	D		1	DISTRIBUTOR	
121	595068-0000	-		1	STEERING	
122	574058-0000	-		2	HOLDER	
530	312105-0368	-		8	SCREW M6S M6X16 A280	
570	312105-0453	-		2	SCREW M6S M8X25 A280	
575	312105-0455	-		2	SCREW M6S M8X30 A280	
665	315115-0153	-		2	WASHER PLAIN, TBRB 6,4/12 H=3	
Common Parts						
010	A525320-0100	-		1	CHAIN GUARD	**443**
130	525310-0000	-		1	BRACKET	
140	443229-0000	C		1	BRACKET	
150	525140-0000	D		1	HOLDER	
160	525311-0000	C		1	GUIDE	
170	442931-0000	C		2	SLIDE RAIL	
180	443232-0000	D		1	HOLDER	
190	443235-0000	C		1	SPROCKET	
200	525194-0000	C		1	SPROCKET	
210	525200-0000	C		1	BRACKET	
220	525312-0000	C		2	SHAFT	
230	90344-0049	D		2	CHAIN TENSIONER	
240	566533-0000	D		1	BRACKET	
250	597564-0000	D		1	PLATE	
260	443237-0000	C		1	SLIDER	
270	443239-0000	-		4	WASHER	
280	525138-0000	C		1	SHEET	
290	525195-0000	C		1	WASHER	
300	525315-0000	D		1	SLIDER	
310	566312-0000	-		1	BRACKET	
320	525317-0000	C		1	FITTING BOLT	
333	566311-0000	D		1	PROFILE	
337	566315-0000	-		1	HOLDER	
340	90028-0020	C		4	CONE TUBE 2,5MM	
345	90028-0021	-		2	CONE TUBE 4 MM	
350	90028-0025	C		1	CONE TUBE 6 MM	
360	90032-0040	-		1	BLOCK 6 WAYS	
370	90087-0019	-		1	PLUG M10X1 STAINLESS	
375	90092-0048	C		2	OIL BRUSH, FLAT, 5/16-24 UNF	
380	90092-0052	C		6	METERING VALVE 10 MM3	
385	90134-0002	-		2	CONNECTOR R1/8, D=4 MM	
390	90134-0030	-		2	SLEEVE FOR PLASTIC TUBE	
395	342706-0114	-		4	ACCESSORIES, INSERT SLEEVE 4 MM	
400	90134-0039	C		4	BUSHING VALVE CONNECTION 2,5 MM	
405	90134-0040	C		2	BUSHING VALVE CONNECTION 4 MM	
410	90134-0055	C		1	BUSHING/NUT INLET/OUTLET 6 MM	
420	90134-0058	-		4	CONNECTION	
425	90137-0002	-		2	BANJO CONN. 1/8 - 5/16-24UNF	
430	90165-0056	-		3	PIPE CLIP FOR TUBE D=4 MM	
440	90165-0057	-		2	PIPE CLIP FOR TUBE D=6 MM	
450	90166-0108	-	MM	1400	TUBE 6 MM PA,TRANSP.	
455	90166-0051	-	MM	600	TUBE PA,TRANSP.	
460	90166-0143	-	MM	1200	TUBE 2,5 MM PA,TRANSP.	
470	90287-0109	C		1	SCREW SPRINGLOAD. SLOTTED HEAD M16X24	
480	B90288-0055	C		1	ROLLER CHAIN, SINGLE 5/8 -42	
	90288-0317	*C*		*1*	*CONNECTING LINK SINGLE 5/8",SS*	
	90288-0324	*C*		*1*	*CARRIER*	
490	311103-0399	-		2	PARALLELL PIN, CP, M6, 8X16 MM	
500	312105-0287	-		5	SCREW M6S M4X8 A280	
510	312105-0325	-		8	SCREW M6S M5X10 A280	
520	312105-0366	-		4	SCREW M6S M6X12 A280	
540	312105-0370	-		8	SCREW M6S M6X20 A280	
550	312105-0376	-		2	SCREW M6S M6S M6X35 A280	
560	312105-0379	-		4	SCREW M6S M6X45 A280	
580	312155-0291	-		4	SCREW HEX.SOCK.COUNT.MF6S M4X12 A480	
590	312155-0297	-		2	SCREW HEX.SOCK.COUNT.MF6S M4X25 A480	
600	312318-0368	-		2	SCREW SOCK.SET CUP P MSK6SS M6X16 A4	
610	312605-0316	-		4	HEXAGON NUT, M6M M6 A280	
620	312605-0324	-		3	HEXAGON NUT, M6M M16 A280	
625	312812-0316	-		2	HEXAGON NUT, NY-LOCK M6 A480	
630	315105-0146	-		8	WASHER PLAIN, BRB, 5,3/10,H=1	
640	315105-0153	-		28	WASHER PLAIN, BRB, 6,4/12,H=1,5	
650	315105-0165	-		4	WASHER PLAIN, BRB, 8,4/16,H=1,5	
660	315105-0186	-		2	WASHER PLAIN, BRB, 17/30,H=3	
670	318212-0119	C		1	ROLLER CHAIN, SINGLE 1/2 -119,SS	
690	321101-0252	C		4	FLANGE BUS 25F7X16	
700	321120-0122	C		1	BEARING BUSHING WITHOUT FL, 15X17X15 MM	

Machine Type | Group Description | Used-In | Group Number | Page No

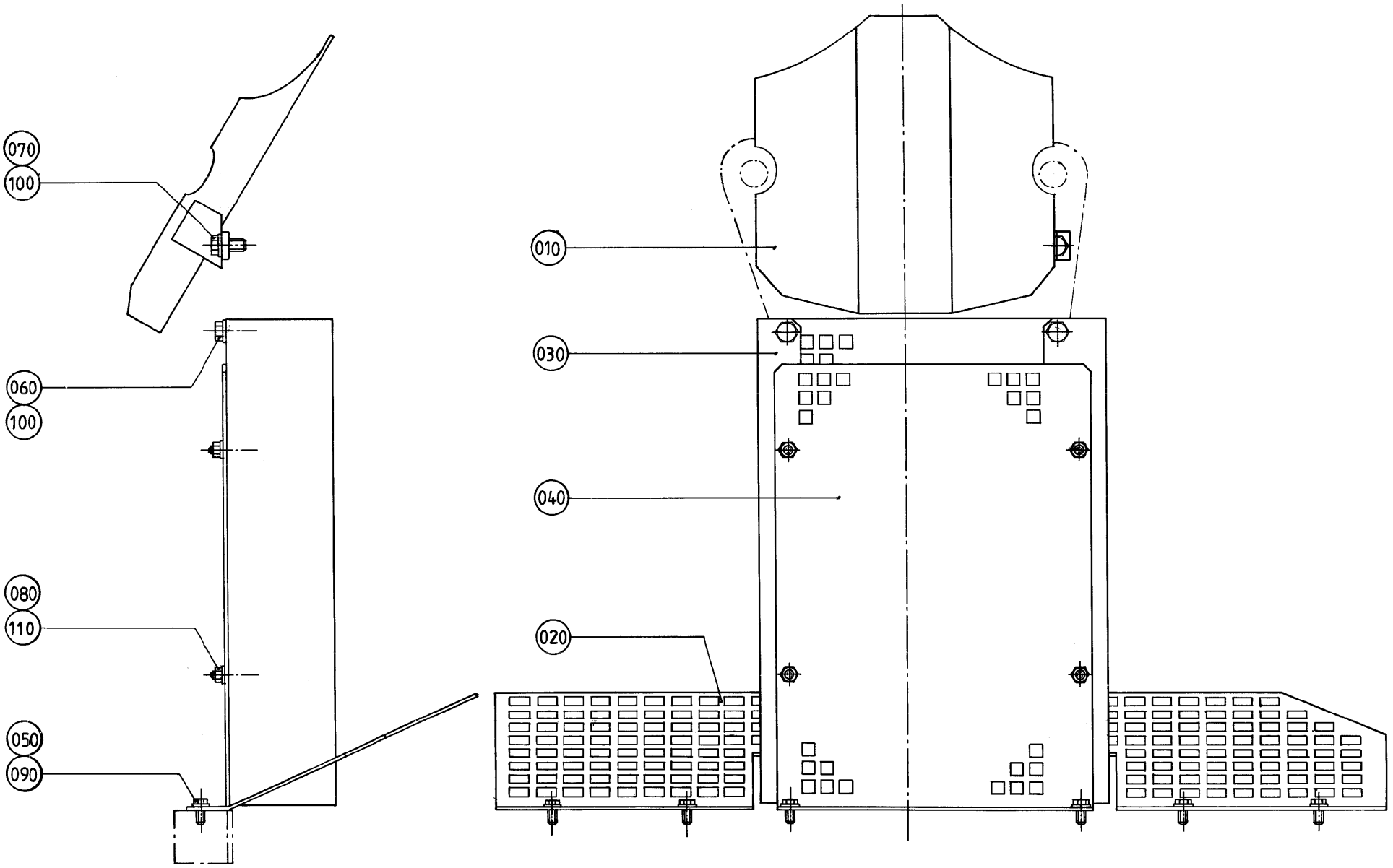
070
100
060
100
080
110
050
090
010
030
040
020

Pos	Part No	SP	UN	Qty	Description	Page No
0375S						
010	525265-0003	-		1	LEAD PLATE	
0500B OR 0355B						
010	525265-0004	-		1	LEAD PLATE	
0500S OR 0750B						
010	525265-0002	-		1	LEAD PLATE	
1000SQ						
010	574131-0000	-		1	LEAD PLATE	
1000S OR 0750S OR 1000B						
010	525265-0001	-		1	LEAD PLATE	
Common Parts						
020	525326-0000	-		1	CHAIN GUARD	
030	525327-0000	-		1	CHAIN GUARD	
040	525328-0000	-		1	CHAIN GUARD	
050	312105-0368	-		6	SCREW M6S M6X16 A280	
060	312105-0449	-		2	SCREW M6S M8X16 A280	
070	312105-0451	-		2	SCREW M6S 8X20 A280	
080	312605-0316	-		4	HEXAGON NUT, M6M M6 A280	
090	315105-0153	-		6	WASHER PLAIN, BRB, 6,4/12,H=1,5	
100	315105-0165	-		4	WASHER PLAIN, BRB, 8,4/16,H=1,5	
110	315115-0153	-		4	WASHER PLAIN, TBRB 6,4/12 H=3	

Pos	Part No	SP	UN	Qty	Description	Page No

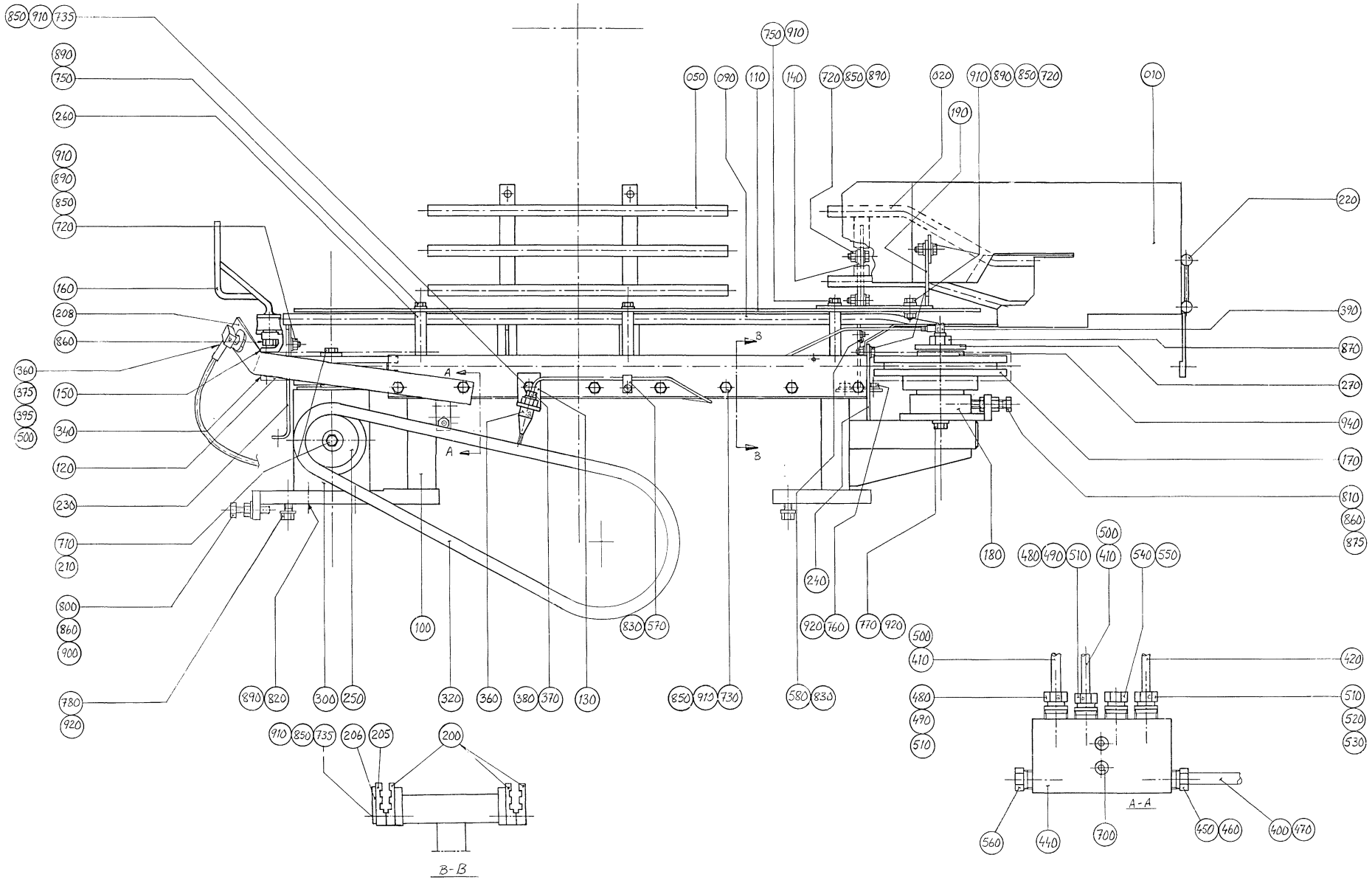
B-B
A-A

ECM: 72392 - 19990617
Group number: 595090-0100
Assembly Drawing: 595090-1_1_AB

Issue: 20020121

Pos	Part No	SP	UN	Qty	Description	Page No
1000SQ						
020	595048-0000	D		1	ARCH	
050	595060-0000	D		1	LEAD RAIL	
140	443217-0000	-		1	BRACKET	
160	595046-0000	C		4	CARRIER	
Common Parts						
010	595052-0000	D		1	ARCH	
090	594644-0000	D		1	LEAD RAIL	
100	595044-0000	D		1	MACHINE BODY	
110	443210-0000	D		1	PLATE STAINLESS	
120	443081-0000	C		1	SPROCKET	
130	443213-0000	-		1	BRACKET	
150	B525254-0000	C		4	LINK	
	318219-0687	*-*		*1*	*CONNECTING LINK, TRIPLEX 1/2", SS*	
170	525298-0000	C		1	SPROCKET	
180	525299-0000	C		1	SHAFT	
190	595053-0000	D		1	BRACKET	
200	525324-0000	C		3	PROFILE	
205	525411-0000	C		1	PROFILE	
206	525412-0000	-		1	RULER	
208	595061-0000	-		1	HOLDER	
210	6278-0000	-		2	WASHER	
220	229516-0000	C		4	PIN	
230	595056-0000	D		1	BRACKET	
240	442830-0000	D		1	BRACKET	
250	442836-0000	C		1	SPROCKET	
260	443215-0000	-		3	SPACER	
270	443295-0000	-		1	WASHER	
300	90056-0147	D		1	GEARS, BEVEL ALU-00	
320	318212-0074	C		1	ROLLER CHAIN, SINGLE 1/2 -74,SS	
340	318242-0034	C		4	ROLLER CHAIN DUPLEX 1/2"-34,SS	
360	90092-0048	C		2	OIL BRUSH, FLAT, 5/16-24 UNF	
370	90028-0001	C		1	CONE 5/32"	
375	90134-0002	-		1	CONNECTOR R1/8, D=4 MM	
380	90134-0003	C		1	BUSHING	
390	90134-0058	-		1	CONNECTION	
395	90137-0002	-		1	BANJO CONN. 1/8 - 5/16-24UNF	
400	90166-0108	-	MM	1300	TUBE 6 MM PA,TRANSP.	
410	90166-0051	-	MM	700	TUBE PA,TRANSP.	
420	90166-0143	-	MM	500	TUBE 2,5 MM PA,TRANSP.	
440	90032-0039	-		1	BLOCK 4 WAYS	
450	90028-0025	C		1	CONE TUBE 6 MM	
460	90134-0055	C		1	BUSHING/NUT INLET/OUTLET 6 MM	
470	90134-0030	-		2	SLEEVE FOR PLASTIC TUBE	
480	90028-0021	C		2	CONE TUBE 4 MM	
490	90134-0040	C		2	BUSHING VALVE CONNECTION 4 MM	
500	342706-0114	-		4	ACCESSORIES, INSERT SLEEVE 4 MM	
510	90092-0052	C		3	METERING VALVE 10 MM3	
520	90028-0020	C		1	CONE TUBE 2,5MM	
530	90134-0039	C		1	BUSHING VALVE CONNECTION 2,5 MM	
540	90134-0045	-		1	PLUG M12X1	
550	90134-0052	-		1	PLUG DOSING BLOCK	
560	90087-0019	-		1	PLUG M10X1 STAINLESS	
570	90165-0056	-		1	PIPE CLIP FOR TUBE D=4 MM	
580	90165-0060	-		1	PIPE CLIP FOR TUBE D=5 MM	
700	312155-0295	-		2	SCREW HEX.SOCK.COUNT.MF6S M4X20 A480	
710	312105-0366	-		2	SCREW M6S M6X12 A280	
720	312105-0368	-		6	SCREW M6S M6X16 A280	
730	312105-0376	-		7	SCREW M6S M6S M6X35 A280	
735	312105-0378	-		9	SCREW M6S M6X40 A280	
750	312105-0386	-		3	SCREW M6S M6X80 A280	
760	312105-0449	-		2	SCREW M6S M8X16 A280	
770	312105-0451	-		2	SCREW M6S 8X20 A280	
780	312105-0453	-		4	SCREW M6S M8X25 A280	
800	312109-0457	-		1	SCREW M6S M8X35 A280	
810	312109-0461	-		1	SCREW M6S M8X50 A280	
820	312115-0368	-		4	SCREW MC6S M6X16 A280	
830	312125-0285	-		2	SCREW SLOT.PAN HD. MCS 4X6 A480	
840	312125-0289	-		1	SCREW SLOT.PAN HD. MCS 4X10 A480	
850	312605-0316	-		22	HEXAGON NUT, M6M M6 A280	
860	312605-0318	-		6	HEXAGON NUT, M6M M8 A280	
870	312605-0322	-		1	HEXAGON NUT, M6M M12 A280	
875	312625-0318	-		1	NUT HEX. M8 SS	
890	315105-0153	-		14	WASHER PLAIN, BRB, 6,4/12,H=1,5	
900	315105-0165	-		1	WASHER PLAIN, BRB, 8,4/16,H=1,5	
910	315115-0153	-		21	WASHER PLAIN, TBRB 6,4/12 H=3	
920	315115-0165	-		8	WASHER PLAIN, TBRB 8,4/16 H=3	
940	321101-0272	C		2	FLANGE BUS 30F7X20	

Machine Type | Group Description | Used-In | Group Number | Page No

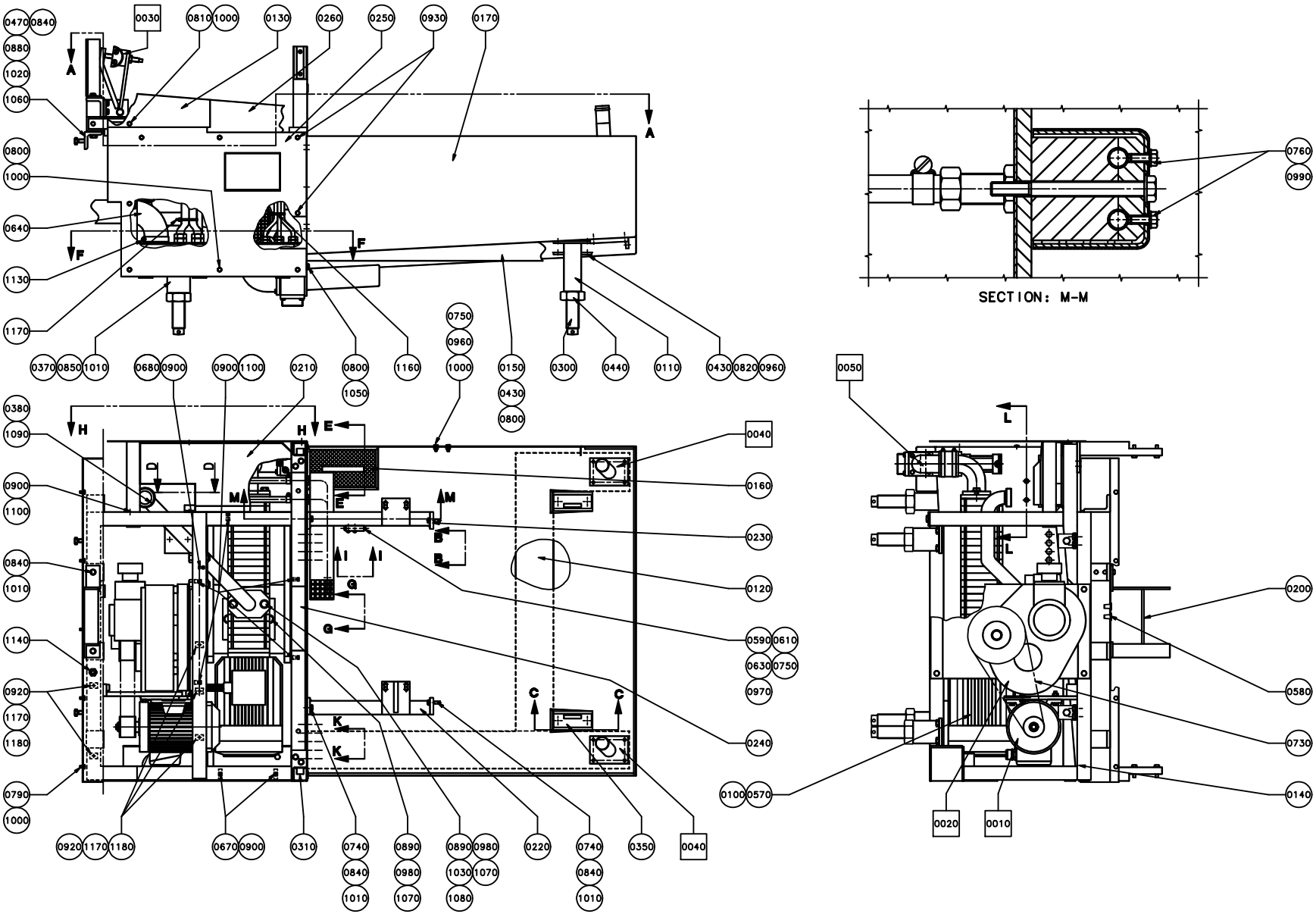
SECTION: M-M

ECM: 72615 - 19990603
Group number: 1362065-0100
Assembly Drawing: 1362065-1_1_AA

Issue: 20020121

Pos	Part No	SP	UN	Qty	Description	Page No
TBA/8 50HZ						
0100	B90321-0015	D		1	PUMP 502 CFX 7ETV 302 50HZ IP55	
	90321-0481	*C*		*1*	*GASKET*	
	90321-0466	*C*		*1*	*SPARE PART KIT*	
TBA/8 60HZ						
0100	B90321-0034	D		1	PUMP 502 CFX 5ETV 362 60HZ IP55	
	90321-0466	*C*		*1*	*SPARE PART KIT*	
	90321-0481	*C*		*1*	*GASKET*	
Common Parts						
0010	A285287-0500	-		1	DRIVE UNIT	**423**
0020	A285861-0500	D		1	GEAR REDUCTION	**425**
0030	A297638-0200	-		1	CHAIN TENSIONER	**429**
0040	A525110-0100	-		1	CABLE CONDUIT	**431**
0050	A525143-0200	D		1	BOTTOM VALVE	**433**
0110	525130-0000	-		1	LEG	
0120	525132-0000	-		1	CABLE TRENCH	
0130	525262-0000	-		1	COVERING PLATE	
0140	525274-0000	-		1	FINISH FRAME	
0150	525277-0000	-		1	CABLE TRENCH	
0160	531119-0000	-		1	STRAINER	
0170	1362220-0000	-		1	CLEANING TROUGH	
0200	285330-0000	-		1	HOLDER	
0210	443186-0000	-		1	CHUTE	
0220	525272-0000	-		1	STRUT	
0230	525273-0000	-		1	STRUT	
0240	525275-0000	-		1	COVERING PLATE	
0250	525346-0000	-		1	SIDE PLATE	
0260	529331-0000	-		1	COVERING PLATE	
0300	285923-0000	-		4	SCREW	
0310	297663-0000	-		1	POST HOLDER	
0320	B297664-0000	-		1	POST HOLDER	
	312923-0131	*-*		*1*	*NUT BLIND RIVET PO M6X16,6 SS*	
0330	442545-0000	-		1	SHEET	
0340	443187-0000	-		1	SHEET	
0350	525266-0000	-		1	LEG	
0360	525267-0000	-		1	LEG	
0370	525268-0000	-		2	LEG	
0380	B525271-0000	-		1	ELBOW PIPE	
	342811-0103	*-*		*1*	*WELD NIPPLE SMS 38 - RD 60-6*	
	342810-0103	*-*		*2*	*ELBOW PIPE38*	
	342808-0103	*-*		*2*	*PIPE ELBOW 90 DEGR. SMS3009, D=38 MM*	
	90266-0022	*-*	*M*	*1*	*DAIRY PIPE 38X1,2*	
0390	1347210-0000	-		1	HOSE HOLDER	
0400	1347211-0000	-		1	PIPE	
0410	1347212-0000	-		1	PIPE	
0420	1347217-0000	-		1	TOUCH GUARD	
0430	6278-0000	-		3	WASHER	
0440	285994-0000	-		4	NUT	
0450	295435-0000	-		2	WASHER	
0460	297551-0000	-		1	SHEET	
0470	297814-0000	-		2	BRACKET	
0480	297860-0000	-		2	BUSHING	
0490	525174-0000	-		1	BRACKET	
0500	525175-0000	-		1	BRACKET	
0510	525280-0000	-		1	SHEET	
0520	525281-0000	-		1	GASKET	
0530	1347209-0000	-		1	HOSE HOLDER	
0540	1347216-0000	-		1	PIPE	
0560	90012-0071	-		3	GLAND FITTING	
0570	90012-0072	-		3	GLAND FITTING **	
0580	90015-0020	-		11	LEAD-IN, TET5-7, E-1458016	
0590	90028-0022	-		4	CONE TUBE 6 MM	
0600	90030-0030	-		4	CONN. BULKHEAD SV 12-L/SY	
0610	90032-0044	-		1	DISTRIBUTION BLOCK 4 WAYS	
0620	90134-0030	-		1	SLEEVE FOR PLASTIC TUBE	
0630	90134-0055	-		4	BUSHING/NUT INLET/OUTLET 6 MM	
0640	90152-0044	-	MM	350	FLEXIBLE CONDUIT 3641-0070	
0650	90152-0050	-	MM	2500	SPIRAL CONDUIT, 20X13, UL 1313	
0660	90152-0051	-	MM	1000	SPIRAL CONDUIT, 25X18, UL 1816	
0670	90165-0057	-		4	PIPE CLIP FOR TUBE D=6 MM	
0680	90165-0060	-		1	PIPE CLIP FOR TUBE D=5 MM	
0690	90166-0059	-	M	1150	HOSE PVC 12/16MM TRANSP.	
0710	90166-0108	-	MM	870	TUBE 6 MM PA,TRANSP.	
0730	90417-0180	C		1	TIMING BELT T10X920X40 POLYURETHANE	
0740	311103-0399	-		8	PARALLELL PIN, CP, M6, 8X16 MM	
0750	312105-0295	-		2	SCREW M6S M4X20 A280	
0760	312105-0327	-		2	SCREW M6S M5X12 A280	
0770	312105-0329	-		1	SCREW M6S M5X16 A280	
0780	312105-0362	-		1	SCREW M6S M6X8 A280	
0790	312105-0364	-		8	SCREW M6S M6X10 A280	
0800	312105-0367	-		15	SCREW M6S M6X14 A280	
0810	312105-0368	-		6	SCREW M6S M6X16 A280	

Machine Type | Group Description | Used-In | Group Number | Page No

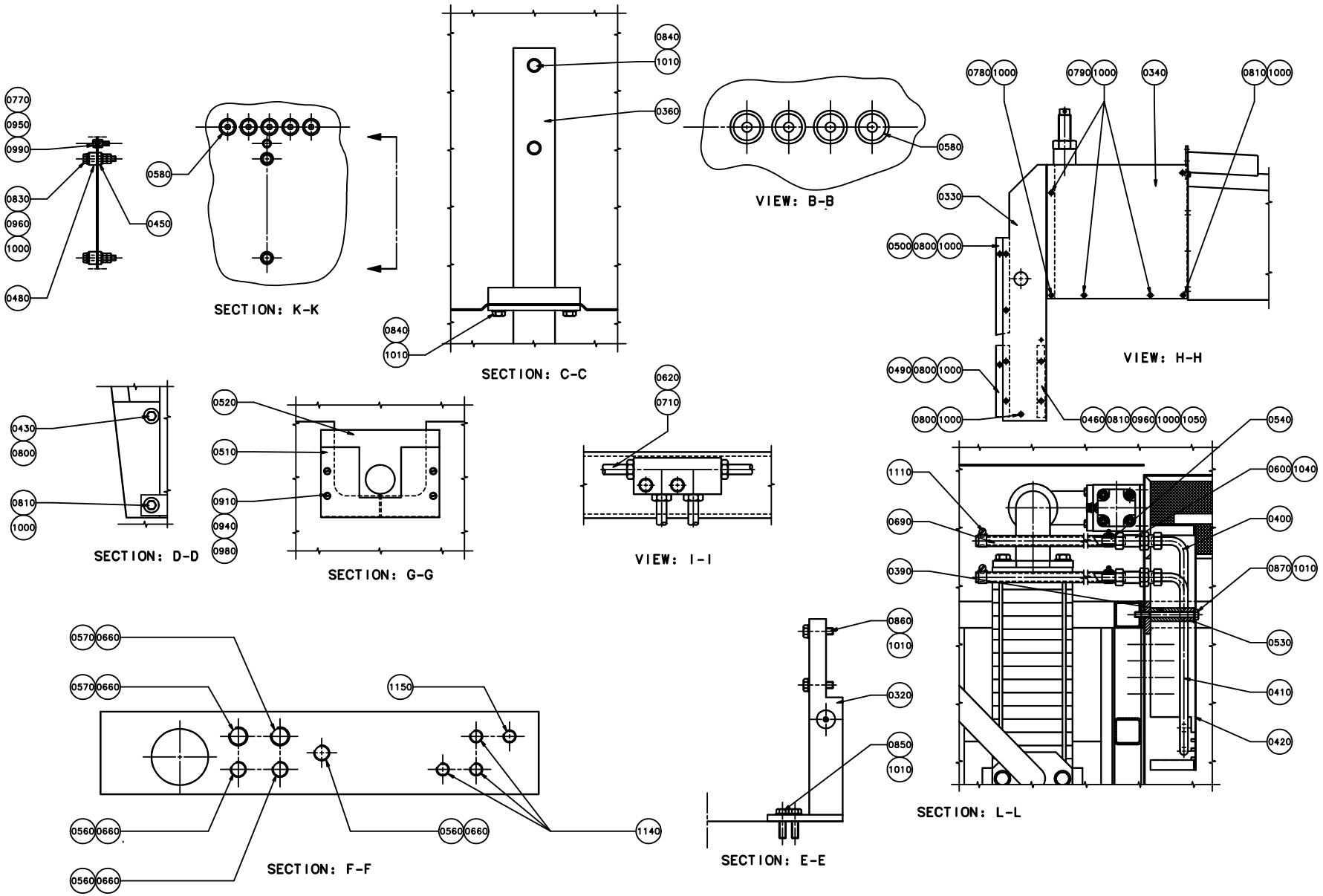
0770
0950
0990
0830
0960
1000
0480
0580
0450
SECTION: K-K
0840
1010
0360
0840
1010
SECTION: C-C
0580
VIEW: B-B
0780 1000
0790 1000
0340
0810 1000
0330
0500 0800 1000
0490 0800 1000
0800 1000
0460 0810 0960 1000 1050
VIEW: H-H
0430
0800
0810
1000
SECTION: D-D
0520
0510
0910
0940
0980
SECTION: G-G
0620
0710
VIEW: I-I
1110
0690
0390
0540
0600 1040
0400
0870 1010
0530
0410
0420
SECTION: L-L
0860
1010
0320
0850
1010
SECTION: E-E
0570 0660
0570 0660
1150
0560 0660
0560 0660
0560 0660
1140
SECTION: F-F

Pos	Part No	SP	UN	Qty	Description	Page No
Common Parts (Cont'd)						
0820	312105-0370	-		1	SCREW M6S M6X20 A280	
0830	312105-0376	-		2	SCREW M6S M6S M6X35 A280	
0840	312105-0451	-		23	SCREW M6S 8X20 A280	
0850	312105-0453	-		8	SCREW M6S M8X25 A280	
0860	312105-0455	-		4	SCREW M6S M8X30 A280	
0870	312105-0469	-		1	SCREW M6S M8X90 A280	
0880	312105-0495	-		2	SCREW M6S M10X30 A280	
0890	312105-0542	-		4	SCREW M6S M12X50 A280	
0900	312125-0287	-		9	SCREW PAN HEAD MCS M4X8 SS	
0910	312125-0291	-		4	SCREW PAN HEAD MCS M4X12 SS	
0920	312125-0323	-		5	SCREW PAN HEAD MCS M5X8 SS	
0930	312155-0366	-		2	SCREW HEX.SOCK.COUNT.MF6S M6X12 A280	
0940	312605-0312	-		4	HEXAGON NUT, M6M M4 A280	
0950	312605-0314	-		2	HEXAGON NUT, M6M M5 A280	
0960	312605-0316	-		7	HEXAGON NUT, M6M M6 A280	
0970	312605-0322	-		4	HEXAGON NUT, M6M M12 A280	
0980	315105-0136	-		11	WASHER PLAIN, BRB, 4,3/8,H=0,8	
0990	315105-0146	-		4	WASHER PLAIN, BRB, 5,3/10,H=1	
1000	315105-0153	-		31	WASHER PLAIN, BRB, 6,4/12,H=1,5	
1010	315105-0165	-		32	WASHER PLAIN, BRB, 8,4/16,H=1,5	
1020	315105-0173	-		2	WASHER PLAIN, BRB, 10,5/22,H=2	
1030	315105-0178	-		2	WASHER PLAIN, BRB, 13/24,H=2	
1040	315105-0192	-		2	WASHER PLAIN, BRB, 21/36,H=3	
1050	315115-0153	-		3	WASHER PLAIN, TBRB 6,4/12 H=3	
1060	315115-0165	-		4	WASHER PLAIN, TBRB 8,4/16 H=3	
1070	315115-0178	-		6	WASHER PLAIN, TBRB 13/24 H=4	
1080	315202-0229	C		1	O-RING 59,2X5,7 MM	
1090	315250-0103	C		1	GASKET 48X38X5,5 MM	
1100	316810-0106	-		7	PIPE CLIP FOR TUBE D=8 MM	
1110	342991-0101	-		5	HOSE CLIP,WORM DRIVE TYPE (13)-16	
1130	342991-0112	-		2	HOSE CLIP,WORM DRIVE TYPE (73)-83	
1140	352103-0100	-		4	CABLE GLAND, STR 9, PR15,2/PG9	
1150	352103-0101	-		1	CABLE GLAND, ST 9, PR15,2/PG9	
1160	352113-0101	-		3	CLIP STRIP BLACK 92X2,5MM	
1170	352113-0102	-		6	CLIP-STRIP, BLACK 188X4,8 MM	
1180	352113-0204	-		5	ANCHOR TM3S25-M	

Pos	Part No	SP	UN	Qty	Description	Page No

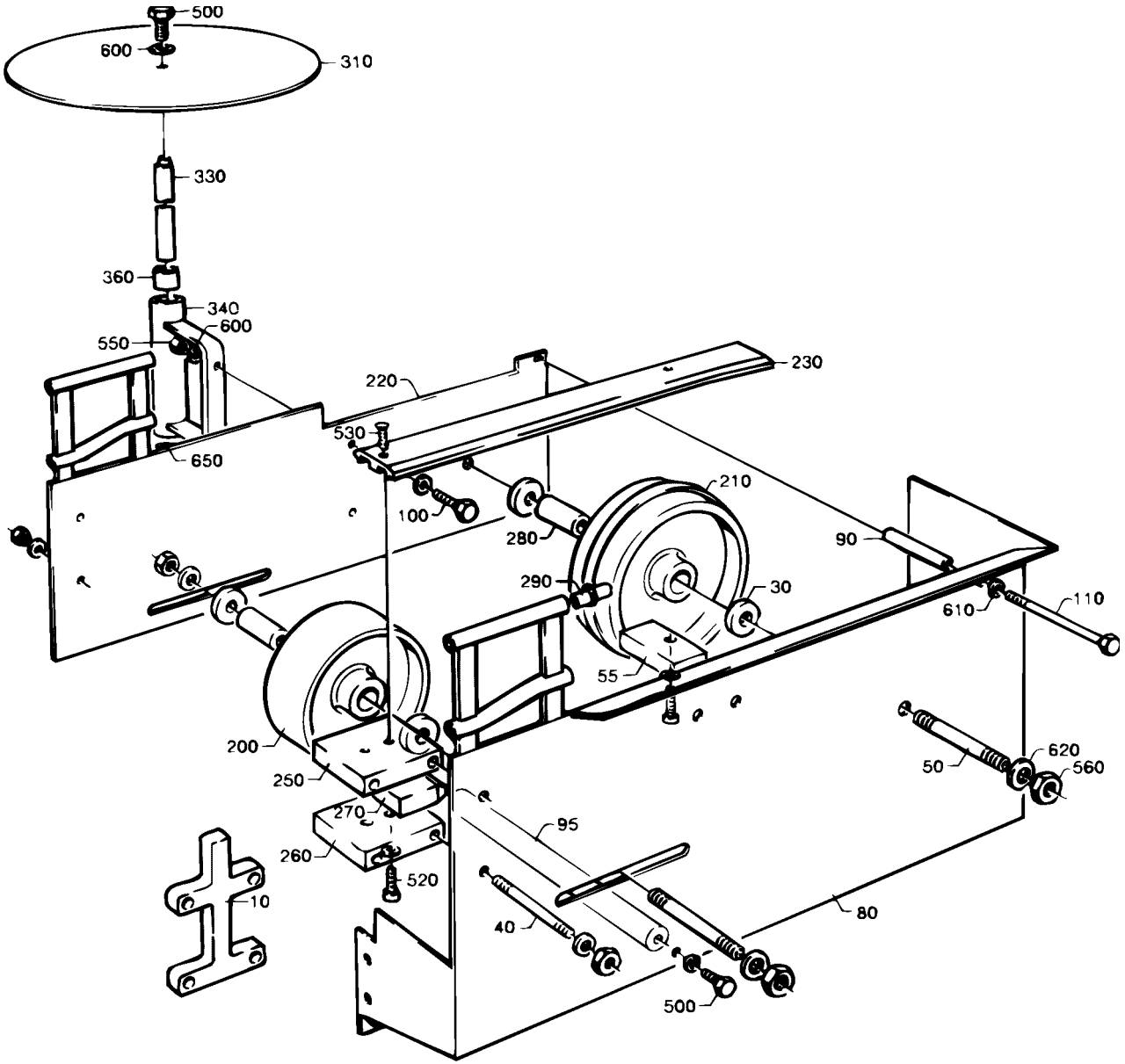
500
600
310
330
360
340
600
550
650
220
230
530
100
210
280
90
290
30
610
110
55
200
250
270
260
520
95
50
620
560
10
40
80
500

Pos	Part No	SP	UN	Qty	Description	Page No
0375S OR 0355B OR 0500S						
030	229201-0001	C		4	SPACER	
040	229508-0031	C		5	STUD SCREW	
050	229760-0012	C		2	STUD SCREW	
055	237082-0001	D		1	MOUNTING BLOCK	
080	525170-0000	D		1	SIDE PLATE	
090	297574-0001	D		1	SPACER	
095	525171-0002	D		1	BRACKET	
110	312105-0469	-		1	SCREW M6S M8X90 A280	
220	525054-0000	D		1	SIDE PLATE	
550	312605-0316	-		12	HEXAGON NUT, M6M M6 A280	
0500B OR 1000SQ OR 1000S OR 0750B OR 0750S OR 1000B						
010	228843-0001	C		2	SPACER	
030	229201-0002	C		4	SPACER	
040	229508-0029	C		5	STUD SCREW	
050	229760-0013	C		2	STUD SCREW	
055	237082-0002	D		1	MOUNTING BLOCK	
080	525169-0000	D		1	SIDE PLATE	
090	297574-0002	D		1	SPACER	
095	525171-0001	D		1	BRACKET	
110	312105-0471	-		1	SCREW M6S M8X100 A280	
220	297569-0000	D		1	SIDE PLATE	
550	312605-0316	-		14	HEXAGON NUT, M6M M6 A280	
Common Parts						
100	312105-0368	-		2	SCREW M6S M6X16 A280	
200	476975-0000	C		1	WHEEL	
210	245039-0000	C		1	GUIDE WHEEL	
230	442776-0000	D		1	SLIDE RAIL	
250	228845-0000	C		1	MOUNTING BLOCK	
260	229202-0000	C		1	MOUNTING BLOCK	
270	229206-0000	D		1	LOCATING PIECE	
280	229207-0000	C		2	BEARING SLEEVE	
290	229516-0000	C		8	PIN	
310	525053-0000	D		1	PLATE (CIRCULAR)	
330	285132-0000	C		1	SHAFT	
340	285133-0000	D		1	CANTILEVER	
360	525252-0000	C		2	BEARING	
490	312105-0362	-		2	SCREW M6S M6X8 A280	
500	312105-0367	-		5	SCREW M6S M6X14 A280	
510	312105-0449	-		1	SCREW M6S M8X16 A280	
520	312115-0368	-		1	SCREW MC6S M6X16 A280	
530	312155-0370	-		3	SCREW HEX.SOCK.COUNT.MF6S M6X20 A280	
555	312605-0318	-		1	HEXAGON NUT, M6M M8 A280	
560	312605-0320	-		4	HEXAGON NUT, M6M M10 A280	
600	315105-0153	-		19	WASHER PLAIN, BRB, 6,4/12,H=1,5	
610	315105-0165	-		3	WASHER PLAIN, BRB, 8,4/16,H=1,5	
620	315105-0173	-		4	WASHER PLAIN, BRB, 10,5/22,H=2	
650	315755-0113	-		1	LOCKING WASHER 15	

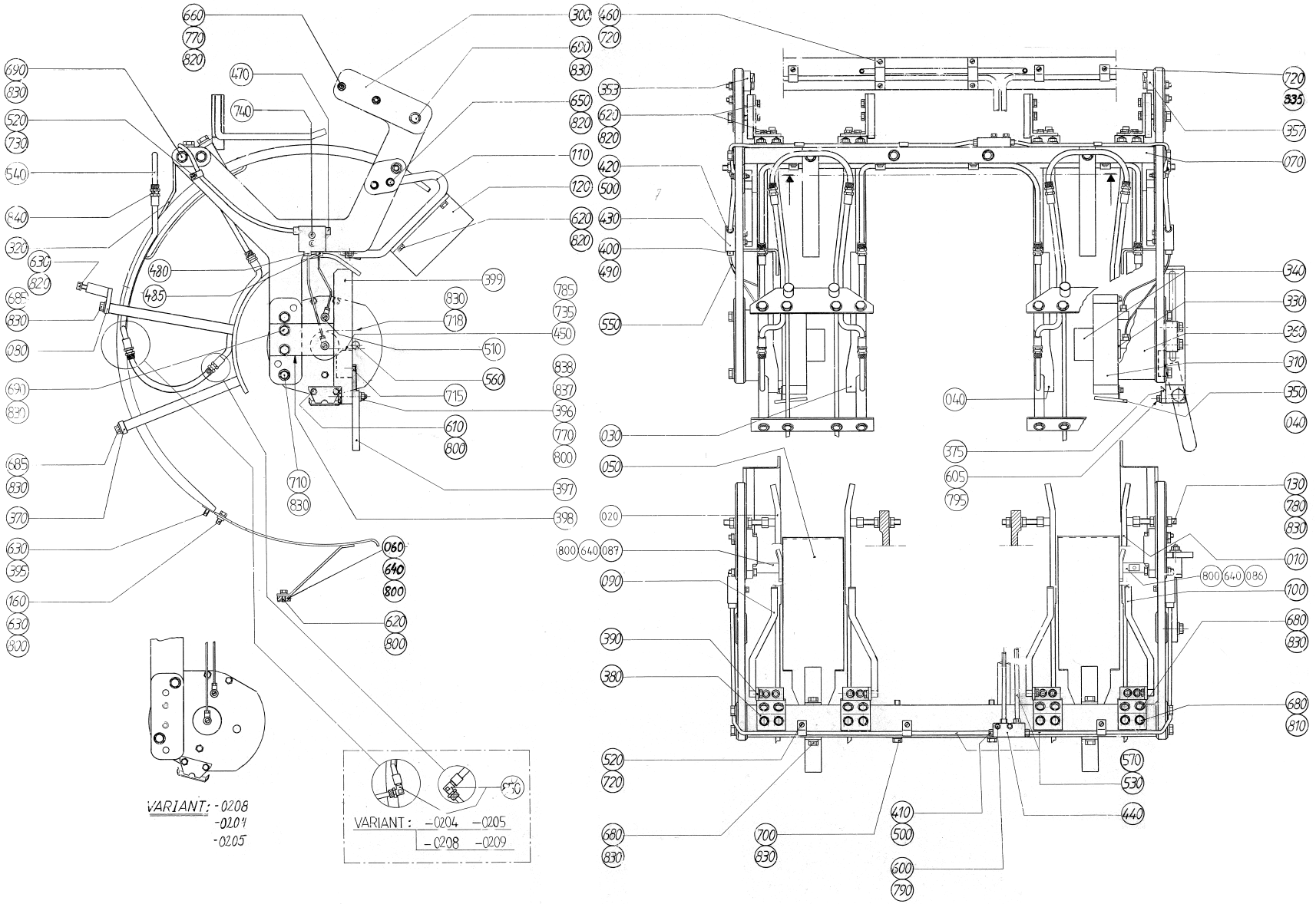
VARIANT: -0208
-0209
-0205
VARIANT : -0204 -0205
-0208 -0209

Pos	Part No	SP	UN	Qty	Description	Page No
0355B						
010	525002-0000	D		2	FOLDING BAR	
020	525004-0000	D		2	FOLDING BAR	
030	525005-0009	D		2	FOLDING BAR	
040	525006-0009	D		2	FOLDING BAR	
050	525341-0002	C		2	LEAD RAIL	
070	B525007-0002	D		1	CANTILEVER	
	312910-0111	-		*12*	*THREADED INSERTS M4X2,0D*	
	312910-0126	-		*16*	*HELI-COIL M8X1,5D*	
080	525008-0002	D		2	BRACKET	
090	525180-0002	D		2	FOLDING ARM	
100	525179-0002	D		2	FOLDING ARM	
110	525011-0009	D		2	BRACKET	
120	525182-0002	D		2	COUNTER PLATE	
130	525015-0002	D		4	SCREW	
160	315115-0153	-		2	WASHER PLAIN, TBRB 6,4/12 H=3	
397	525295-0000	D		1	ARM	
399	B525297-0000	D		1	BRACKET	
	312910-0113	-		*2*	*THREADED INSERTS M5X1,0D*	
800	315105-0153	-		17	WASHER PLAIN, BRB, 6,4/12,H=1,5	
840	342920-0121	-		8	STRAIGHT COUPLING,EXT.THREADED 8/6-R1/8"	
850	342930-0121	-		8	ELBOW 90 COUPL.,EXT.THREAD 8/6-R1/8"	
0375S						
010	525002-0000	D		2	FOLDING BAR	
020	525004-0000	D		2	FOLDING BAR	
030	525005-0007	D		2	FOLDING BAR	
040	525006-0007	D		2	FOLDING BAR	
050	525341-0002	C		2	LEAD RAIL	
070	B525007-0003	D		1	CANTILEVER	
	312910-0126	-		*16*	*HELI-COIL M8X1,5D*	
	312910-0111	-		*12*	*THREADED INSERTS M4X2,0D*	
080	525008-0002	D		2	BRACKET	
090	525180-0002	D		2	FOLDING ARM	
100	525179-0002	D		2	FOLDING ARM	
110	525011-0007	D		2	BRACKET	
120	525014-0001	D		2	COUNTER PLATE	
130	525015-0003	D		4	SCREW	
160	315115-0153	-		2	WASHER PLAIN, TBRB 6,4/12 H=3	
397	525295-0000	D		1	ARM	
399	B525297-0000	D		1	BRACKET	
	312910-0113	-		*2*	*THREADED INSERTS M5X1,0D*	
800	315105-0153	-		17	WASHER PLAIN, BRB, 6,4/12,H=1,5	
840	342920-0121	-		16	STRAIGHT COUPLING,EXT.THREADED 8/6-R1/8"	
0500B						
010	525001-0000	D		2	FOLDING BAR	
020	525003-0000	D		2	FOLDING BAR	
030	525005-0005	D		2	FOLDING BAR	
040	525006-0005	D		2	FOLDING BAR	
050	525341-0001	C		2	LEAD RAIL	
070	B525007-0001	D		1	CANTILEVER	
	312910-0126	-		*16*	*HELI-COIL M8X1,5D*	
	312910-0111	-		*12*	*THREADED INSERTS M4X2,0D*	
080	525008-0003	D		2	BRACKET	
090	525180-0001	D		2	FOLDING ARM	
100	525179-0001	D		2	FOLDING ARM	
110	525011-0005	D		2	BRACKET	
120	525012-0005	D		2	COUNTER PLATE	
130	525015-0001	D		4	SCREW	
397	525295-0000	D		1	ARM	
399	B525297-0000	D		1	BRACKET	
	312910-0113	-		*2*	*THREADED INSERTS M5X1,0D*	
800	315105-0153	-		17	WASHER PLAIN, BRB, 6,4/12,H=1,5	
840	342920-0121	-		8	STRAIGHT COUPLING,EXT.THREADED 8/6-R1/8"	
850	342930-0121	-		8	ELBOW 90 COUPL.,EXT.THREAD 8/6-R1/8"	
0500S						
010	525002-0000	D		2	FOLDING BAR	
020	525004-0000	D		2	FOLDING BAR	
030	525005-0006	D		2	FOLDING BAR	
040	525006-0006	D		2	FOLDING BAR	
050	525341-0002	C		2	LEAD RAIL	
070	B525007-0002	D		1	CANTILEVER	
	312910-0111	-		*12*	*THREADED INSERTS M4X2,0D*	
	312910-0126	-		*16*	*HELI-COIL M8X1,5D*	
080	525008-0002	D		2	BRACKET	
090	525180-0002	D		2	FOLDING ARM	
100	525179-0002	D		2	FOLDING ARM	
110	525011-0006	D		2	BRACKET	
120	525182-0001	D		2	COUNTER PLATE	
130	525015-0002	D		4	SCREW	
160	315115-0153	-		2	WASHER PLAIN, TBRB 6,4/12 H=3	
397	525295-0000	D		1	ARM	

Machine Type | Group Description | Used-In | Group Number | Page No

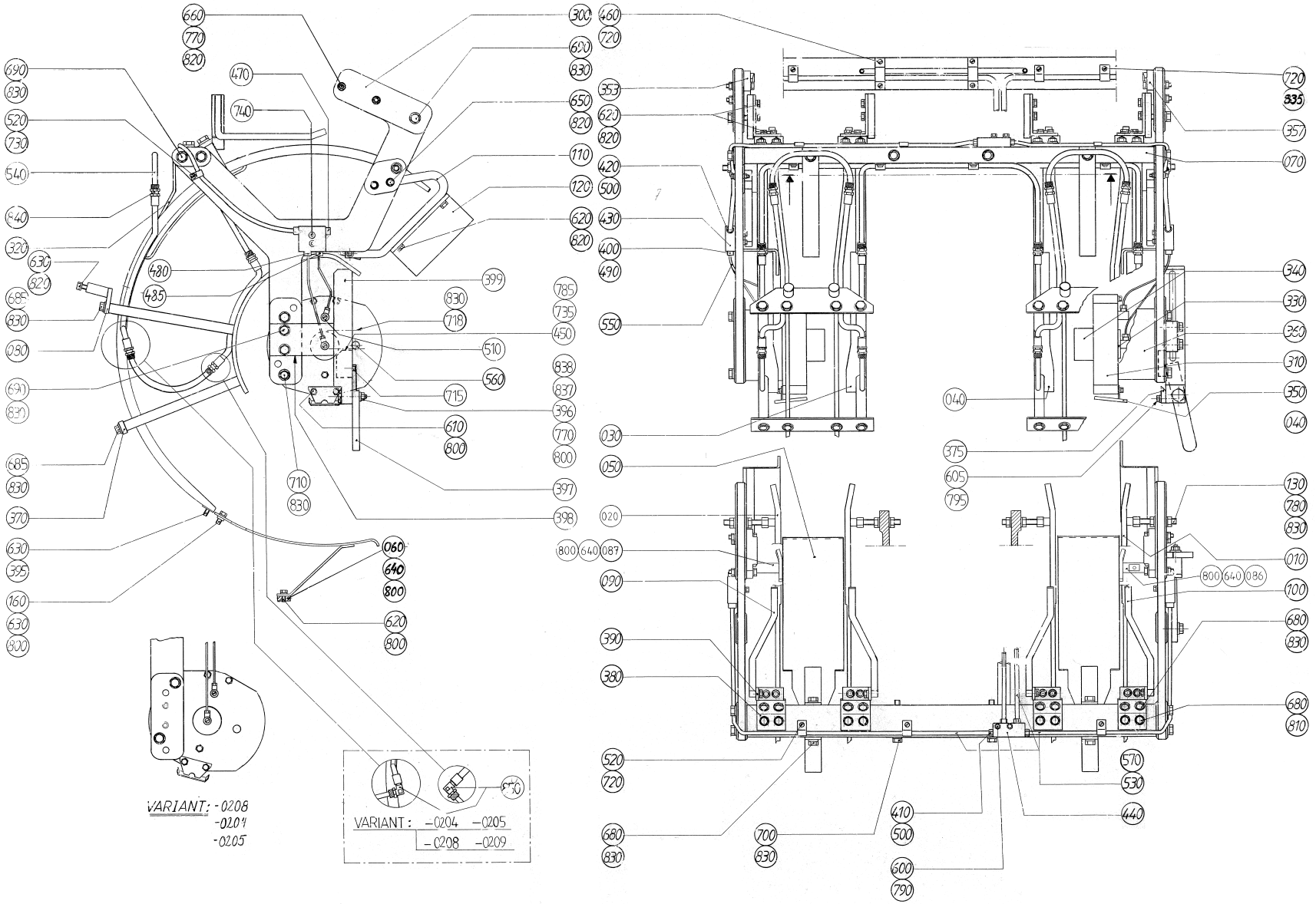
VARIANT: -0208
-0209
-0205
VARIANT : -0204 -0205
-0208 -0209

Pos	Part No	SP	UN	Qty	Description	Page No
0500S (Cont'd)						
399	B525297-0000	D		1	BRACKET	
	312910-0113	-		*2*	*THREADED INSERTS M5X1,0D*	
800	315105-0153	-		17	WASHER PLAIN, BRB, 6,4/12,H=1,5	
840	342920-0121	-		16	STRAIGHT COUPLING,EXT.THREADED 8/6-R1/8"	
0750B						
010	525001-0000	D		2	FOLDING BAR	
020	525003-0000	D		2	FOLDING BAR	
030	525005-0003	D		2	FOLDING BAR	
040	525006-0003	D		2	FOLDING BAR	
050	525341-0001	C		2	LEAD RAIL	
070	B525007-0001	D		1	CANTILEVER	
	312910-0126	-		*16*	*HELI-COIL M8X1,5D*	
	312910-0111	-		*12*	*THREADED INSERTS M4X2,0D*	
080	525008-0002	D		2	BRACKET	
090	525180-0001	D		2	FOLDING ARM	
100	525179-0001	D		2	FOLDING ARM	
110	525011-0003	D		2	BRACKET	
120	525012-0003	D		2	COUNTER PLATE	
130	525015-0001	D		4	SCREW	
397	525295-0000	D		1	ARM	
399	B525297-0000	D		1	BRACKET	
	312910-0113	-		*2*	*THREADED INSERTS M5X1,0D*	
800	315105-0153	-		17	WASHER PLAIN, BRB, 6,4/12,H=1,5	
840	342920-0121	-		16	STRAIGHT COUPLING,EXT.THREADED 8/6-R1/8"	
0750S						
010	525001-0000	D		2	FOLDING BAR	
020	525003-0000	D		2	FOLDING BAR	
030	525005-0001	D		2	FOLDING BAR	
040	525006-0001	D		2	FOLDING BAR	
050	525341-0001	C		2	LEAD RAIL	
070	525007-0004	D		1	CANTILEVER	
080	525008-0001	D		2	BRACKET	
090	525180-0002	D		2	FOLDING ARM	
100	525179-0002	D		2	FOLDING ARM	
110	525011-0002	D		2	BRACKET	
120	525438-0000	D		2	COUNTER PLATE	
130	525015-0002	D		4	SCREW	
397	525295-0000	D		1	ARM	
399	B525297-0000	D		1	BRACKET	
	312910-0113	-		*2*	*THREADED INSERTS M5X1,0D*	
800	315105-0153	-		17	WASHER PLAIN, BRB, 6,4/12,H=1,5	
840	342920-0121	-		16	STRAIGHT COUPLING,EXT.THREADED 8/6-R1/8"	
1000B						
010	525001-0000	D		2	FOLDING BAR	
020	525003-0000	D		2	FOLDING BAR	
030	525005-0002	D		2	FOLDING BAR	
040	525006-0002	D		2	FOLDING BAR	
050	525341-0001	C		2	LEAD RAIL	
070	B525007-0001	D		1	CANTILEVER	
	312910-0126	-		*16*	*HELI-COIL M8X1,5D*	
	312910-0111	-		*12*	*THREADED INSERTS M4X2,0D*	
080	525008-0001	D		2	BRACKET	
090	525180-0001	D		2	FOLDING ARM	
100	525179-0001	D		2	FOLDING ARM	
110	525011-0002	D		2	BRACKET	
120	525012-0002	D		2	COUNTER PLATE	
130	525015-0001	D		4	SCREW	
397	525295-0000	D		1	ARM	
399	B525297-0000	D		1	BRACKET	
	312910-0113	-		*2*	*THREADED INSERTS M5X1,0D*	
800	315105-0153	-		17	WASHER PLAIN, BRB, 6,4/12,H=1,5	
840	342920-0121	-		16	STRAIGHT COUPLING,EXT.THREADED 8/6-R1/8"	
1000S						
010	525001-0000	D		2	FOLDING BAR	
020	525003-0000	D		2	FOLDING BAR	
030	569120-0000	D		2	FOLDING BAR	
040	569121-0000	D		2	FOLDING BAR	
050	525410-0000	C		2	LEAD RAIL	
070	B525007-0001	D		1	CANTILEVER	
	312910-0126	-		*16*	*HELI-COIL M8X1,5D*	
	312910-0111	-		*12*	*THREADED INSERTS M4X2,0D*	
080	525008-0001	D		2	BRACKET	
086	573486-0000	D		1	STEERING	
087	573487-0000	D		1	STEERING	
090	569122-0000	D		2	FOLDING ARM	
100	569123-0000	D		2	FOLDING ARM	
110	573485-0000	D		2	BRACKET	
120	525012-0001	D		2	COUNTER PLATE	
130	525015-0001	D		4	SCREW	

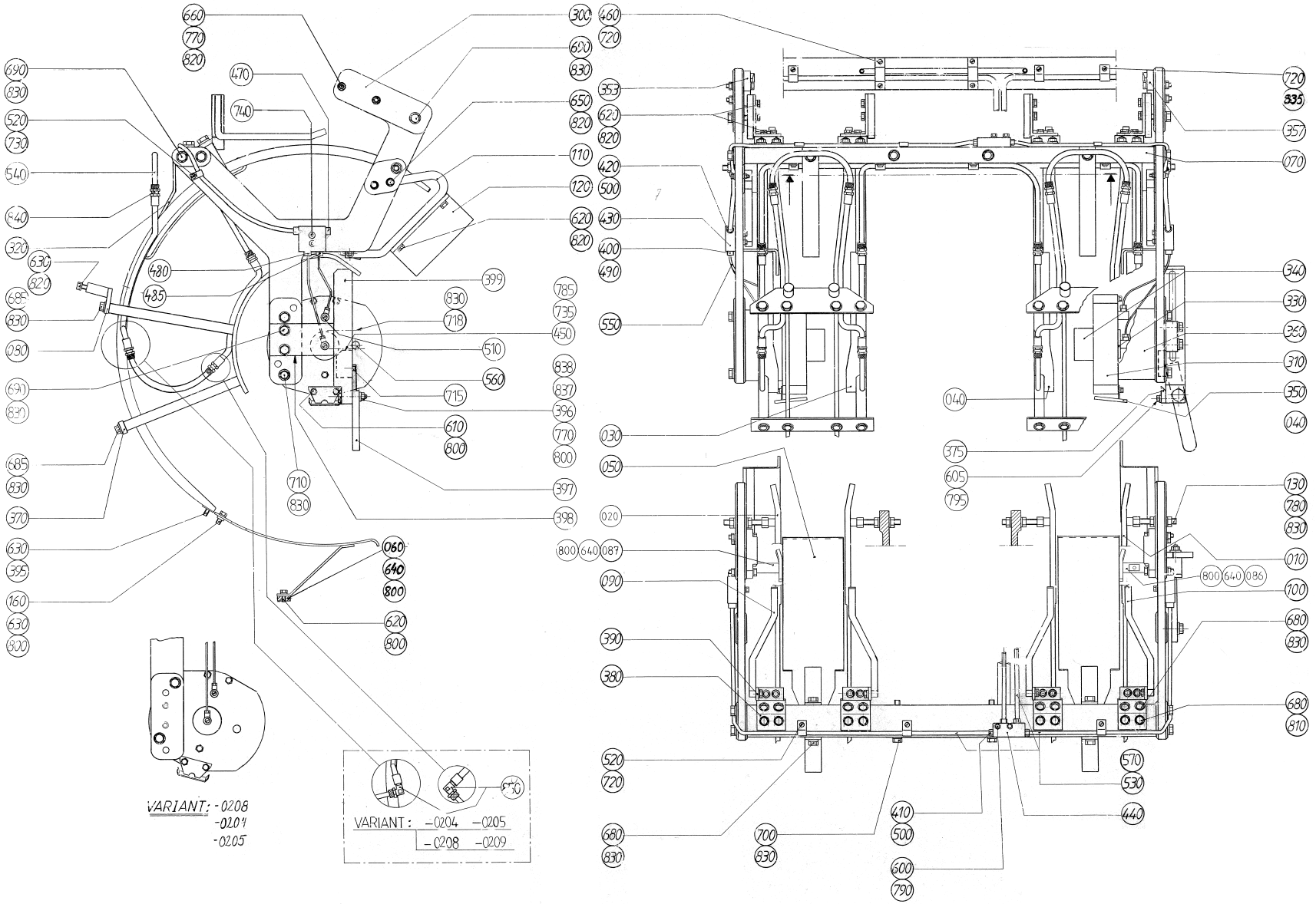
VARIANT: -0208
-0209
-0205
VARIANT : -0204 -0205
-0208 -0209

Pos	Part No	SP	UN	Qty	Description	Page No
1000S (Cont'd)						
130	525015-0001	D		4	SCREW	
397	550359-0000	D		1	ARM	
399	B525297-0000	D		1	BRACKET	
	312910-0113	-		*2*	*THREADED INSERTS M5X1,0D*	
640	312105-0370	-		2	SCREW M6S M6X20 A280	
800	315105-0153	-		19	WASHER PLAIN, BRB, 6,4/12,H=1,5	
840	342920-0121	-		16	STRAIGHT COUPLING,EXT.THREADED 8/6-R1/8"	
1000SQ NORMFIN						
010	525001-0000	D		2	FOLDING BAR	
020	525003-0000	D		2	FOLDING BAR	
030	574045-0000	D		2	FOLDING BAR	
040	574046-0000	D		2	FOLDING BAR	
050	574047-0000	C		2	LEAD RAIL	
070	B525007-0002	D		1	CANTILEVER	
	312910-0111	-		*12*	*THREADED INSERTS M4X2,0D*	
	312910-0126	-		*16*	*HELI-COIL M8X1,5D*	
080	525008-0001	D		2	BRACKET	
086	574097-0000	D		1	STEERING	
087	574098-0000	D		1	STEERING	
090	569122-0000	D		2	FOLDING ARM	
100	569123-0000	D		2	FOLDING ARM	
110	574048-0000	D		2	BRACKET	
120	574049-0000	D		2	COUNTER PLATE	
130	525015-0002	D		4	SCREW	
397	550359-0000	D		1	ARM	
399	574125-0000	D		1	BRACKET	
640	312105-0370	-		2	SCREW M6S M6X20 A280	
800	315105-0153	-		19	WASHER PLAIN, BRB, 6,4/12,H=1,5	
840	342920-0121	-		16	STRAIGHT COUPLING,EXT.THREADED 8/6-R1/8"	
1000SQ REVFIN						
010	525001-0000	D		2	FOLDING BAR	
020	525003-0000	D		2	FOLDING BAR	
030	597537-0000	D		2	FOLDING BAR	
040	597536-0000	D		2	FOLDING BAR	
050	574047-0000	C		2	LEAD RAIL	
070	B525007-0002	D		1	CANTILEVER	
	312910-0111	-		*12*	*THREADED INSERTS M4X2,0D*	
	312910-0126	-		*16*	*HELI-COIL M8X1,5D*	
080	525008-0001	D		2	BRACKET	
086	574097-0000	D		1	STEERING	
087	574098-0000	D		1	STEERING	
090	569122-0000	D		2	FOLDING ARM	
100	569123-0000	D		2	FOLDING ARM	
110	574048-0000	D		2	BRACKET	
120	574049-0000	D		2	COUNTER PLATE	
130	525015-0002	D		4	SCREW	
397	550359-0000	D		1	ARM	
399	574125-0000	D		1	BRACKET	
640	312105-0370	-		2	SCREW M6S M6X20 A280	
800	315105-0153	-		19	WASHER PLAIN, BRB, 6,4/12,H=1,5	
840	342920-0121	-		16	STRAIGHT COUPLING,EXT.THREADED 8/6-R1/8"	
Common Parts						
300	B525016-0000	D		2	FASTENING PLATE	
	312910-0127	-		*2*	*THREADED INSERTS M8X2,0D*	
	312910-0112	-		*3*	*HELI-COIL M4X2,5D*	
310	574050-0000	D		2	CURVE	
320	525017-0000	D		2	STEERING GUIDE	
330	285168-0000	D		2	BUSHING	
340	285851-0000	C		2	BEARING	
350	443240-0000	-		2	DRIP PLATE	
353	442564-0000	C		1	CURVE	
357	442565-0000	C		1	CURVE	
360	525018-0000	-		2	SPACER	
370	525019-0000	D		2	BRACKET	
375	525360-0000	D		1	BRACKET	
380	525340-0000	D		4	BRACKET	
390	525178-0000	D		4	BRACKET	
395	525181-0000	-		2	WASHER	
396	525321-0000	C		1	SCREW	
398	525296-0000	-		1	BRACKET	
400	90028-0020	C		4	CONE TUBE 2,5MM	
410	90028-0022	C		4	CONE TUBE 6 MM	
420	90028-0025	C		2	CONE TUBE 6 MM	
430	90032-0038	-		2	BLOCK 2 WAYS	
440	90032-0044	-		1	DISTRIBUTION BLOCK 4 WAYS	
450	90044-0104	C		1	PROX.SWITCH IFM IN 3002	
460	90074-0018	-		2	CLIPS, CABLE CLIPS DI=2X10 MM	
470	90087-0019	-		2	PLUG M10X1 STAINLESS	
480	90092-0052	C		2	METERING VALVE 10 MM3	
485	90092-0053	C		2	METERING VALVE 30 MM3	

Machine Type Group Description Used-In Group Number Page No

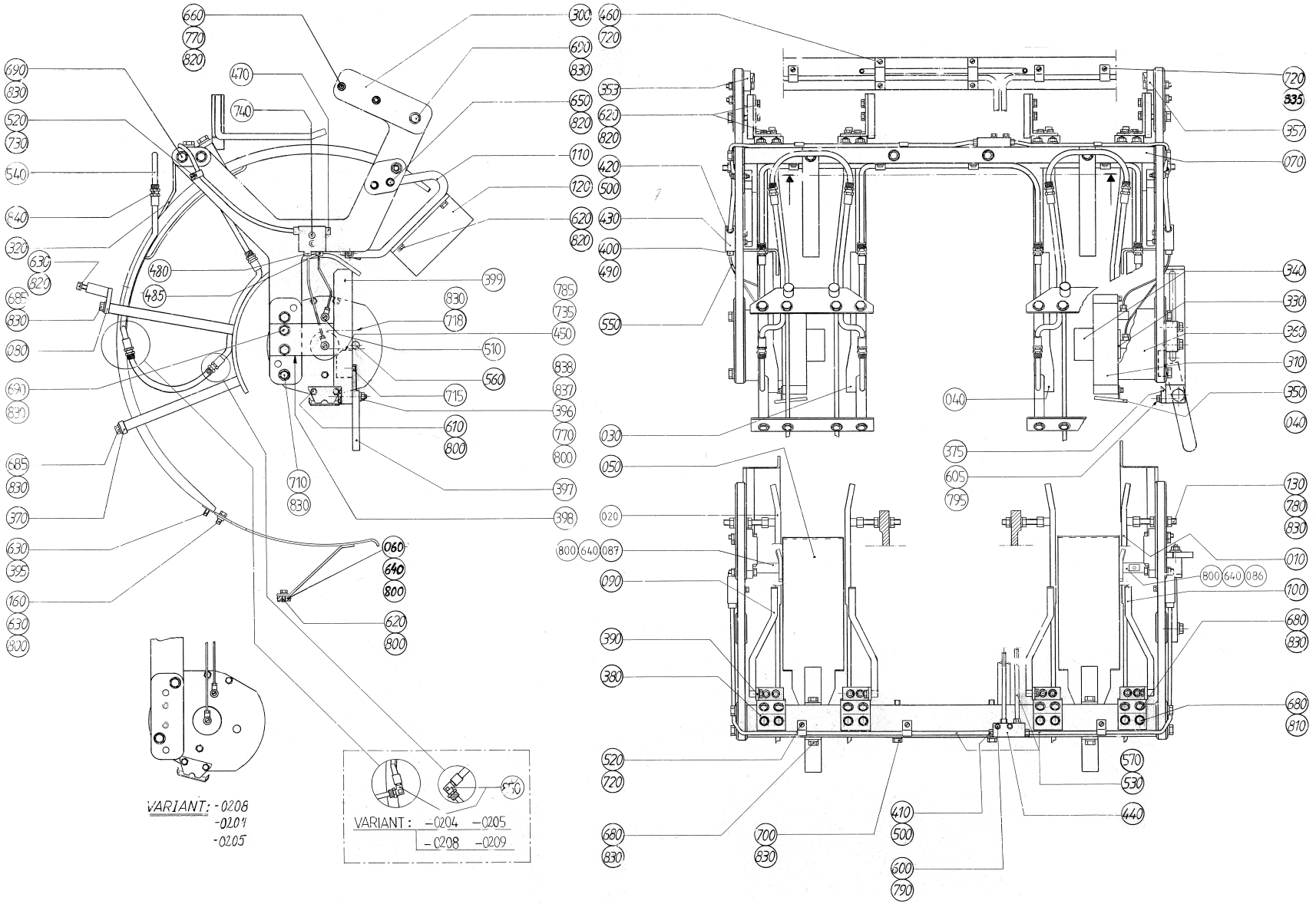
VARIANT: -0208
-0209
-0205
VARIANT : -0204 -0205
-0208 -0209

Pos	Part No	SP	UN	Qty	Description	Page No
Common Parts (Cont'd)						
485	90092-0053	C		2	METERING VALVE 30 MM3	
490	90134-0039	C		4	BUSHING VALVE CONNECTION 2,5 MM	
500	90134-0055	C		6	BUSHING/NUT INLET/OUTLET 6 MM	
510	90134-0058	-		4	CONNECTION	
520	90165-0057	-		5	PIPE CLIP FOR TUBE D=6 MM	
530	90166-0108	-	MM	5200	TUBE 6 MM PA,TRANSP.	
540	90166-0122	-	MM	6000	TUBE 8 MM PA,TRANSP.	
550	90166-0143	-	MM	2000	TUBE 2,5 MM PA,TRANSP.	
560	90261-0032	-		4	PLUG, BLIND, PLASTIC, NO. 1073	
570	90134-0030	-		6	SLEEVE FOR PLASTIC TUBE	
600	312105-0295	-		2	SCREW M6S M4X20 A280	
605	312105-0327	-		2	SCREW M6S M5X12 A280	
610	312105-0364	-		10	SCREW M6S M6X10 A280	
620	312105-0366	-		24	SCREW M6S M6X12 A280	
630	312105-0368	-		10	SCREW M6S M6X16 A280	
650	312105-0374	-		4	SCREW M6S M6X30 A280	
660	312105-0378	-		4	SCREW M6S M6X40 A280	
680	312105-0449	-		20	SCREW M6S M8X16 A280	
685	312105-0451	-		16	SCREW M6S 8X20 A280	
690	312105-0455	-		8	SCREW M6S M8X30 A280	
700	312105-0464	-		2	SCREW M6S M8X65 A280	
710	312105-0469	-		4	SCREW M6S M8X90 A280	
715	312115-0323	-		1	SCREW MC6S M5X8 A280	
718	312115-0455	-		2	SCREW MC6S M8X30 A280	
720	312125-0287	-		10	SCREW PAN HEAD MCS M4X8 SS	
730	312125-0291	-		2	SCREW PAN HEAD MCS M4X12 SS	
735	312125-0230	-		2	SCREW PAN HEAD MCS M3X20 SS	
740	312155-0297	-		4	SCREW HEX.SOCK.COUNT.MF6S M4X25 A480	
770	312605-0316	-		5	HEXAGON NUT, M6M M6 A280	
780	312605-0318	-		8	HEXAGON NUT, M6M M8 A280	
785	315105-0124	-		2	WASHER PLAIN, BRB, 3,2/6,H=0,5	
790	315105-0136	-		2	WASHER PLAIN, BRB, 4,3/8,H=0,8	
795	315105-0146	-		2	WASHER PLAIN, BRB, 5,3/10,H=1	
810	315105-0165	-		8	WASHER PLAIN, BRB, 8,4/16,H=1,5	
820	315115-0153	-		40	WASHER PLAIN, TBRB 6,4/12 H=3	
830	315115-0165	-		52	WASHER PLAIN, TBRB 8,4/16 H=3	
835	316810-0106	-		3	PIPE CLIP FOR TUBE D=8 MM	
837	321116-0127	C		1	BEAR. BUSH. WITHOUT FL, 10X14X10	
838	321116-0128	C		1	BEAR. BUSH. WITHOUT FL, 10X14X16	

Pos	Part No	SP	UN	Qty	Description	Page No

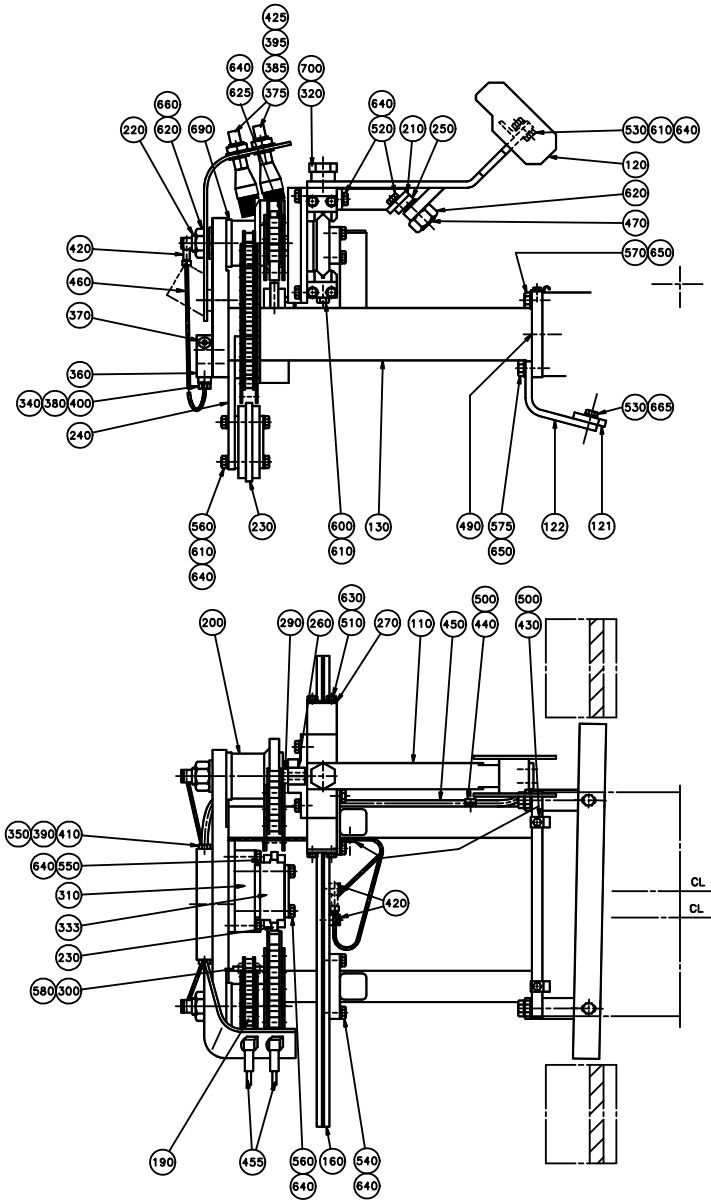
425
395
640
385
700
625
375
320
660
640
220
620
690
520
210
250
530
610
640
120
620
470
420
570
650
460
370
360
340
380
400
530
665
240
560
610
640
230
600
610
130
490
575
650
122
121
630
500
500
200
290
260
510
270
110
450
440
430
350
390
410
640
550
310
333
230
580
300
420
CL MACHINE
CL INDEXING GEAR
190
455
560
640
160
540
640

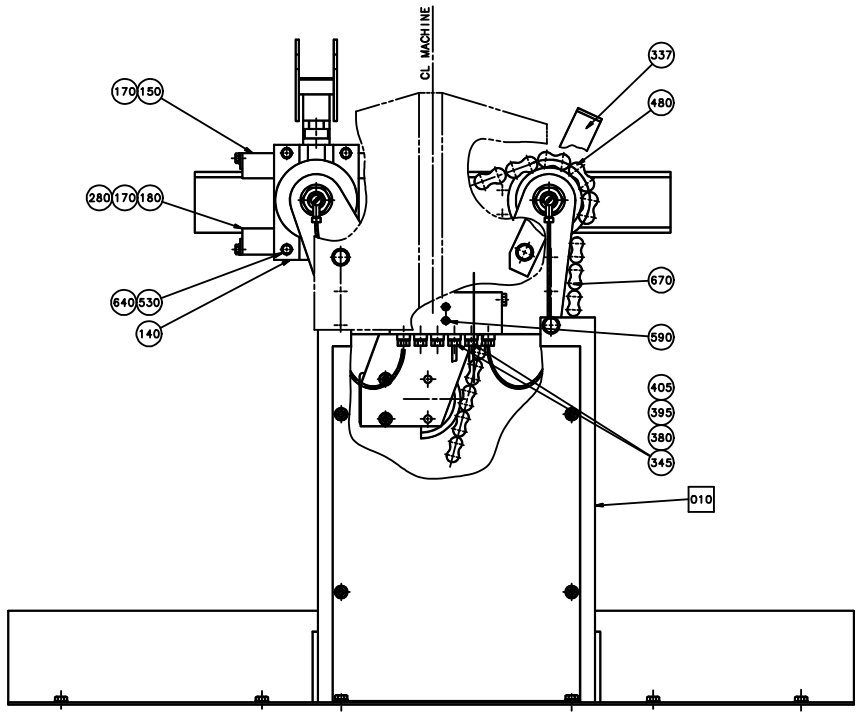
CL MACHINE
337
170
150
480
280
170
180
670
640
530
140
590
405
395
380
345
010

ECM: 80740 - 20001006
Group number: 525213-0200
Assembly Drawing: 525213-2_1_AA

Issue: 20020121

Pos	Part No	SP	UN	Qty	Description	Page No
0375S						
110	525302-0000	D		1	ARM	
120	525309-0000	D		1	DISTRIBUTOR	
530	312105-0368	-		6	SCREW M6S M6X16 A280	
570	312105-0453	-		4	SCREW M6S M8X25 A280	
0355B						
110	525304-0000	D		1	ARM	
120	525308-0000	D		1	DISTRIBUTOR	
530	312105-0368	-		6	SCREW M6S M6X16 A280	
570	312105-0453	-		4	SCREW M6S M8X25 A280	
0500B						
110	525303-0000	D		1	ARM	
120	525307-0000	D		1	DISTRIBUTOR	
530	312105-0368	-		6	SCREW M6S M6X16 A280	
570	312105-0453	-		4	SCREW M6S M8X25 A280	
0500S						
110	525304-0000	D		1	ARM	
110	525302-0000	D		1	ARM	
120	525308-0000	D		1	DISTRIBUTOR	
530	312105-0368	-		6	SCREW M6S M6X16 A280	
570	312105-0453	-		4	SCREW M6S M8X25 A280	
0750B						
110	525302-0000	D		1	ARM	
120	525306-0000	D		1	DISTRIBUTOR	
530	312105-0368	-		6	SCREW M6S M6X16 A280	
570	312105-0453	-		4	SCREW M6S M8X25 A280	
0750S						
110	525301-0000	D		1	ARM	
120	544318-0000	D		1	DISTRIBUTOR	
530	312105-0368	-		6	SCREW M6S M6X16 A280	
570	312105-0453	-		4	SCREW M6S M8X25 A280	
1000S						
110	525301-0000	D		1	ARM	
120	569129-0000	D		1	DISTRIBUTOR	
121	525417-0000	-		1	STEERING	
122	525418-0000	-		2	HOLDER	
530	312105-0368	-		8	SCREW M6S M6X16 A280	
570	312105-0453	-		2	SCREW M6S M8X25 A280	
575	312105-0455	-		2	SCREW M6S M8X30 A280	
665	315115-0153	-		2	WASHER PLAIN, TBRB 6,4/12 H=3	
1000SQ						
110	525301-0000	D		1	ARM	
120	574056-0000	D		1	DISTRIBUTOR	
121	574099-0000	-		1	STEERING	
122	574058-0000	-		2	HOLDER	
530	312105-0368	-		8	SCREW M6S M6X16 A280	
570	312105-0453	-		2	SCREW M6S M8X25 A280	
575	312105-0455	-		2	SCREW M6S M8X30 A280	
665	315115-0153	-		2	WASHER PLAIN, TBRB 6,4/12 H=3	
1000B						
110	525301-0000	D		1	ARM	
120	525305-0000	D		1	DISTRIBUTOR	
530	312105-0368	-		6	SCREW M6S M6X16 A280	
570	312105-0453	-		4	SCREW M6S M8X25 A280	
Common Parts						
130	525310-0000	-		1	BRACKET	
140	443229-0000	C		1	BRACKET	
150	525140-0000	D		1	HOLDER	
160	1478881-0000	B		1	GUIDE	
170	442931-0000	C		2	SLIDE RAIL	
180	443232-0000	D		1	HOLDER	
190	443235-0000	C		1	SPROCKET	
200	525194-0000	C		1	SPROCKET	
210	525200-0000	C		1	BRACKET	
220	525312-0000	C		2	SHAFT	
230	90344-0049	D		2	CHAIN TENSIONER	
240	566533-0000	D		1	BRACKET	
250	597564-0000	D		1	PLATE	
260	443237-0000	C		1	SLIDER	
270	443239-0000	-		4	WASHER	
280	525138-0000	C		1	SHEET	
290	525195-0000	C		1	WASHER	
300	525315-0000	D		1	SLIDER	
310	566312-0000	D		1	BRACKET	
320	525317-0000	C		1	FITTING BOLT	

Machine Type | Group Description | Used-In | Group Number | Page No

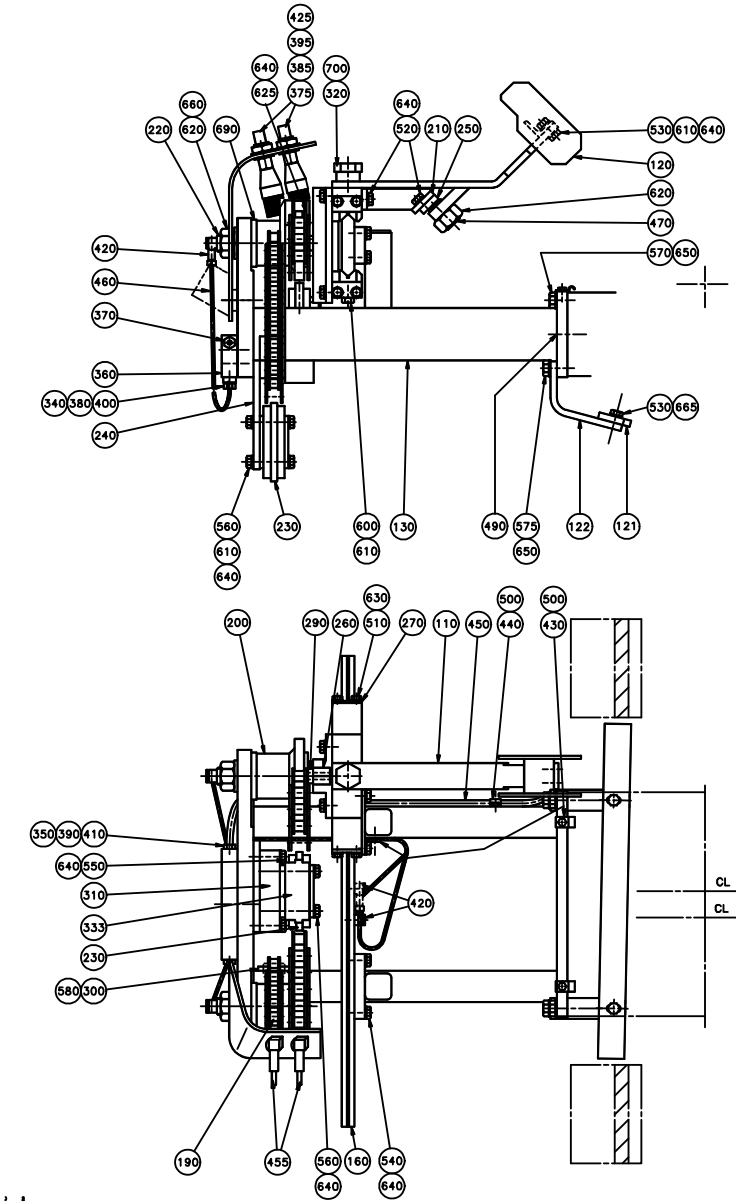
425
395
640
385
700
625
375
320
660
640
220
620
690
520
210
250
530
610
640
120
620
470
420
570
650
460
370
360
340
380
400
530
665
240
560
610
640
230
600
610
130
490
575
650
122
121
630
500
500
200
290
260
510
270
110
450
440
430
350
390
410
640
550
310
333
230
580
300
420
CL MACHINE
CL INDEXING GEAR
190
455
560
640
160
540
640

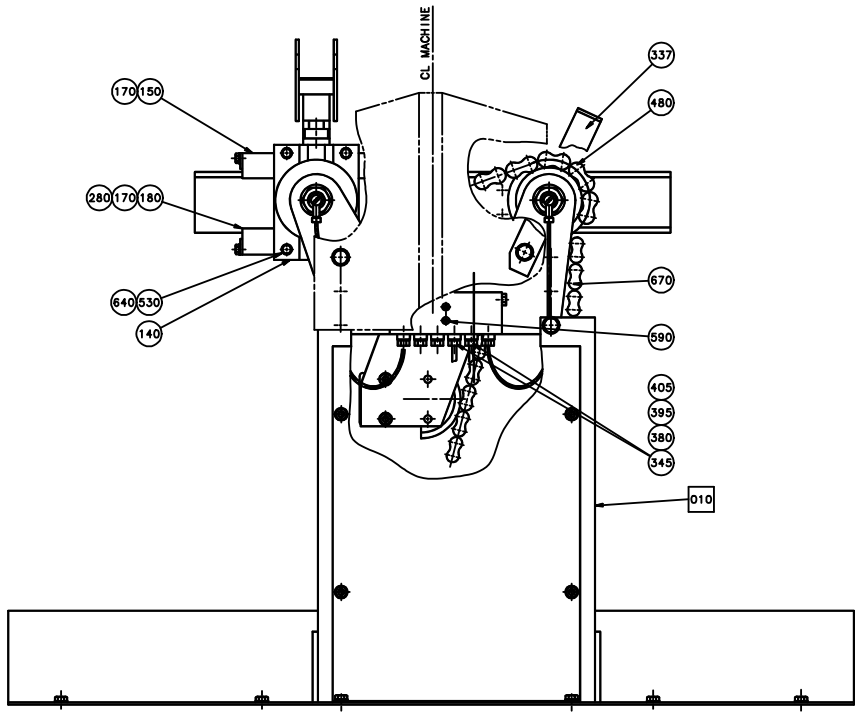
CL MACHINE
337
170
150
480
280
170
180
670
640
530
140
590
405
395
380
345
010

Pos	Part No	SP	UN	Qty	Description	Page No
Common Parts (Cont'd)						
337	566315-0000	-		1	HOLDER	
340	90028-0020	C		4	CONE TUBE 2,5MM	
345	90028-0021	-		2	CONE TUBE 4 MM	
350	90028-0025	C		1	CONE TUBE 6 MM	
360	90032-0040	-		1	BLOCK 6 WAYS	
370	90087-0019	-		1	PLUG M10X1 STAINLESS	
375	90092-0048	C		2	OIL BRUSH, FLAT, 5/16-24 UNF	
380	90092-0052	C		6	METERING VALVE 10 MM3	
385	90134-0002	-		2	CONNECTOR R1/8, D=4 MM	
390	90134-0030	-		2	SLEEVE FOR PLASTIC TUBE	
395	342706-0114	-		4	ACCESSORIES, INSERT SLEEVE 4 MM	
400	90134-0039	C		4	BUSHING VALVE CONNECTION 2,5 MM	
405	90134-0040	C		2	BUSHING VALVE CONNECTION 4 MM	
410	90134-0055	C		1	BUSHING/NUT INLET/OUTLET 6 MM	
420	90134-0058	-		4	CONNECTION	
425	90137-0002	-		2	BANJO CONN. 1/8 - 5/16-24UNF	
430	90165-0056	-		3	PIPE CLIP FOR TUBE D=4 MM	
440	90165-0057	-		2	PIPE CLIP FOR TUBE D=6 MM	
450	90166-0108	-	MM	1400	TUBE 6 MM PA,TRANSP.	
455	90166-0051	-	MM	600	TUBE PA,TRANSP.	
460	90166-0143	-	MM	1200	TUBE 2,5 MM PA,TRANSP.	
470	90287-0109	C		1	SCREW SPRINGLOAD. SLOTTED HEAD M16X24	
480	B90288-0055	C		1	ROLLER CHAIN, SINGLE 5/8 -42	
	90288-0317	*C*		*1*	*CONNECTING LINK SINGLE 5/8",SS*	
	90288-0324	*C*		*1*	*CARRIER*	
490	311103-0399	-		2	PARALLELL PIN, CP, M6, 8X16 MM	
500	312105-0287	-		5	SCREW M6S M4X8 A280	
510	312105-0325	-		8	SCREW M6S M5X10 A280	
520	312105-0366	-		4	SCREW M6S M6X12 A280	
540	312105-0370	-		8	SCREW M6S M6X20 A280	
550	312105-0376	-		2	SCREW M6S M6S M6X35 A280	
560	312105-0379	-		4	SCREW M6S M6X45 A280	
580	312155-0291	-		4	SCREW HEX.SOCK.COUNT.MF6S M4X12 A480	
590	312155-0297	-		2	SCREW HEX.SOCK.COUNT.MF6S M4X25 A480	
600	312318-0368	-		2	SCREW SOCK.SET CUP P MSK6SS M6X16 A4	
610	312605-0316	-		4	HEXAGON NUT, M6M M6 A280	
620	312605-0324	-		3	HEXAGON NUT, M6M M16 A280	
625	312812-0316	-		2	HEXAGON NUT, NY-LOCK M6 A480	
630	315105-0146	-		8	WASHER PLAIN, BRB, 5,3/10,H=1	
640	315105-0153	-		28	WASHER PLAIN, BRB, 6,4/12,H=1,5	
650	315105-0165	-		4	WASHER PLAIN, BRB, 8,4/16,H=1,5	
660	315105-0186	-		2	WASHER PLAIN, BRB, 17/30,H=3	
670	318212-0119	C		1	ROLLER CHAIN, SINGLE 1/2 -119,SS	
690	321101-0252	C		4	FLANGE BUS 25F7X16	
700	321120-0122	C		1	BEARING BUSHING WITHOUT FL, 15X17X15 MM	
F010	A525320-0100	-		1	CHAIN GUARD	**443**

Machine Type | Group Description | Used-In | Group Number | Page No

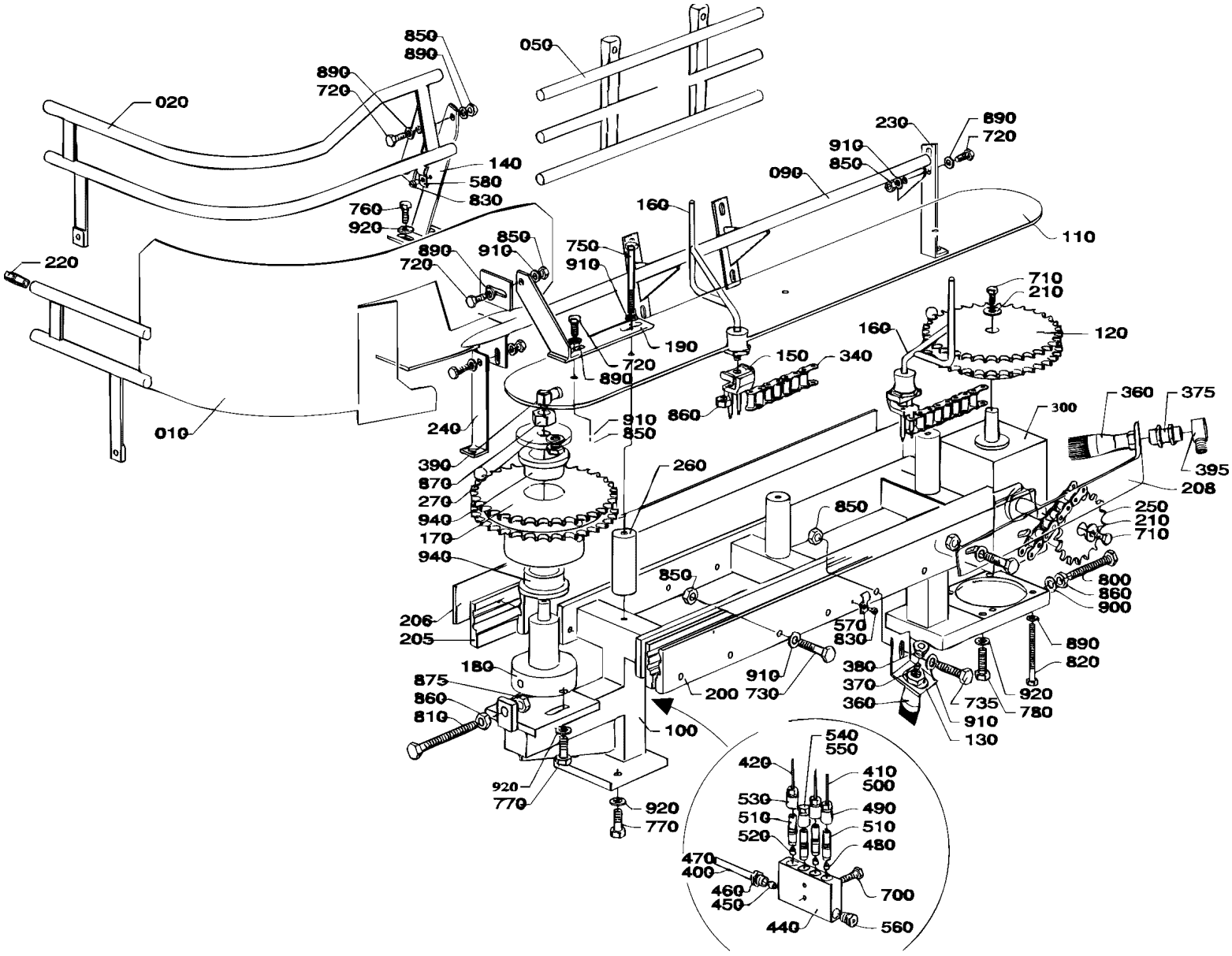
850
890
050
890
720
020
230
890
720
910
850
140
580
830
090
760
920
160
110
850
890
910
750
910
220
720
710
210
160
120
190
150
340
720
890
860
360
375
300
910
850
240
395
390
260
870
208
270
850
250
940
210
170
710
940
850
800
860
900
206
570
830
205
890
180
910
380
820
875
200
730
370
860
735
920
360
780
810
910
100
130
540
550
420
410
500
530
490
510
510
520
480
470
400
700
460
450
920
770
440
560

ECM: 72197 - 19990215
Group number: 525325-0200
Assembly Drawing: 525325-2_1_AA

Issue: 20020121

Pos	Part No	SP	UN	Qty	Description	Page No
0375S						
010	442811-0002	D		1	ARCH	
020	443206-0003	D		1	ARCH	
050	525322-0003	D		1	LEAD RAIL	
140	443217-0000	-		1	BRACKET	
160	525374-0000	C		4	CARRIER	
0355B						
010	442811-0002	D		1	ARCH	
020	443207-0002	D		1	ARCH	
050	525322-0002	D		1	LEAD RAIL	
140	443217-0000	-		1	BRACKET	
160	525374-0000	C		4	CARRIER	
0500B						
010	442811-0001	D		1	ARCH	
020	443207-0001	D		1	ARCH	
050	525322-0001	D		1	LEAD RAIL	
140	443217-0000	-		1	BRACKET	
160	525374-0000	C		4	CARRIER	
0500S						
010	525466-0000	D		1	ARCH	
020	443206-0002	D		1	ARCH	
050	525322-0002	D		1	LEAD RAIL	
140	443217-0000	-		1	BRACKET	
160	525414-0000	C		4	CARRIER	
0750B						
010	442811-0001	D		1	ARCH	
020	443206-0001	D		1	ARCH	
050	525322-0001	D		1	LEAD RAIL	
140	443217-0000	-		1	BRACKET	
160	525374-0000	C		4	CARRIER	
0750S						
010	525437-0000	D		1	ARCH	
020	443206-0004	D		1	ARCH	
050	525322-0004	D		1	LEAD RAIL	
140	443217-0000	-		1	BRACKET	
160	525414-0000	C		4	CARRIER	

Pos	Part No	SP	UN	Qty	Description	Page No
1000S						
010	525437-0000	D		1	ARCH	
020	443206-0001	D		1	ARCH	
050	569130-0000	D		1	LEAD RAIL	
140	443217-0000	-		1	BRACKET	
160	525414-0000	C		4	CARRIER	
1000SQ						
010	525437-0000	D		1	ARCH	
020	574055-0000	D		1	ARCH	
050	574057-0000	D		1	LEAD RAIL	
140	443217-0000	-		1	BRACKET	
160	525414-0000	C		4	CARRIER	
1000B						
010	525437-0000	D		1	ARCH	
020	443206-0001	D		1	ARCH	
050	525322-0001	D		1	LEAD RAIL	
140	443217-0000	-		1	BRACKET	
160	525414-0000	C		4	CARRIER	
Common Parts						
090	442809-0000	D		1	LEAD RAIL	
100	525300-0000	D		1	MACHINE BODY	
110	443210-0000	D		1	PLATE STAINLESS	
120	443081-0000	C		1	SPROCKET	
130	443213-0000	-		1	BRACKET	
150	B525254-0000	C		4	LINK	
	318219-0687	*-*		*1*	*CONNECTING LINK, TRIPLEX 1/2", SS*	
170	525298-0000	C		1	SPROCKET	
180	525299-0000	C		1	SHAFT	
190	525323-0000	D		1	BRACKET	
200	525324-0000	C		3	PROFILE	
205	525411-0000	C		1	PROFILE	
206	525412-0000	-		1	RULER	
208	566314-0000	-		1	HOLDER	
210	6278-0000	-		2	WASHER	
220	229516-0000	C		4	PIN	
230	442829-0000	D		1	BRACKET	
240	442830-0000	D		1	BRACKET	
250	442836-0000	C		1	SPROCKET	
260	443215-0000	-		3	SPACER	

Machine Type | Group Description | Used-In | Group Number | Page No

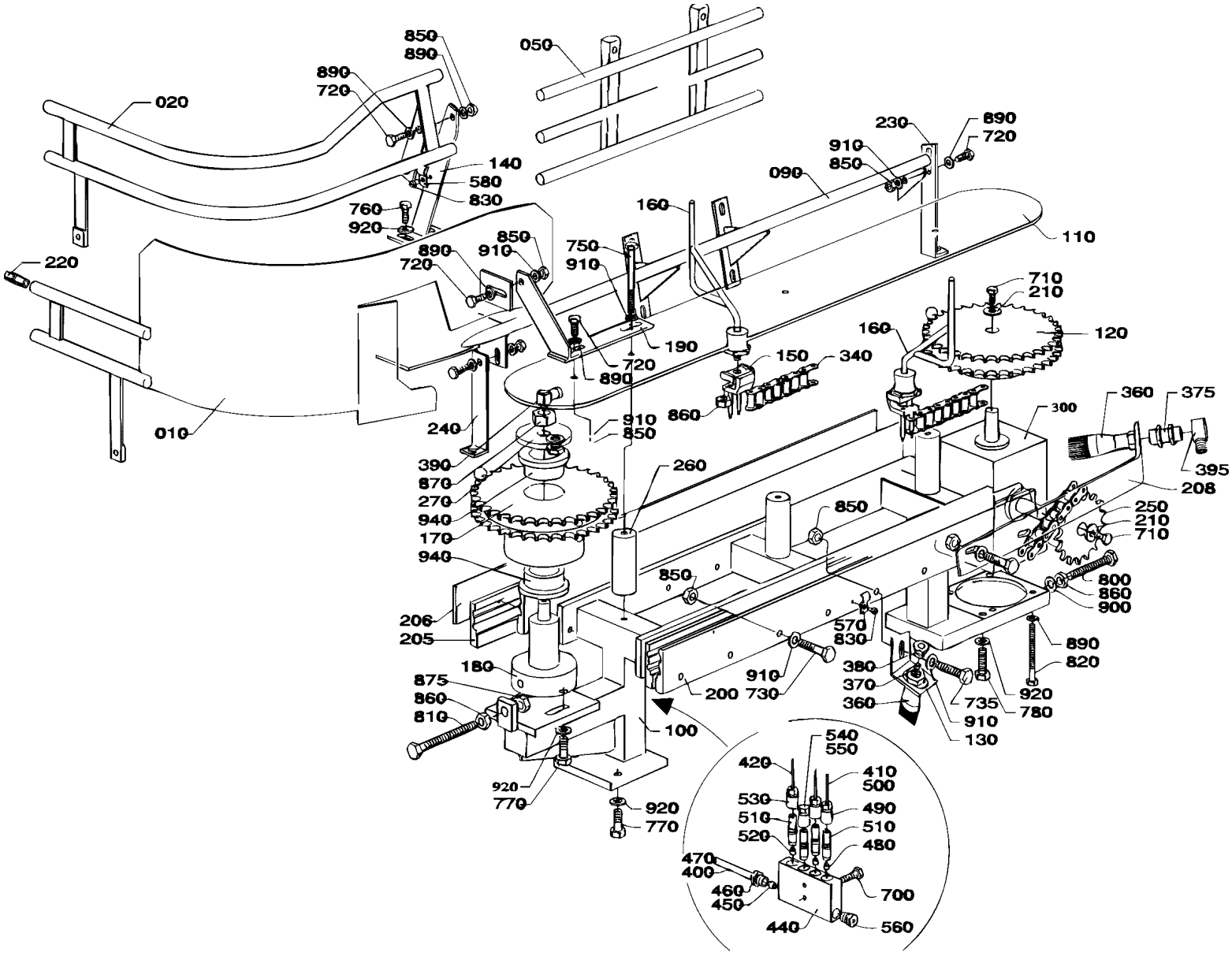
850
890
050
890
720
020
230
890
720
910
850
140
580
830
090
760
920
160
110
850
910
890
720
750
910
220
190
720
890
710
210
160
120
150
340
860
360
375
300
910
850
240
010
260
390
870
270
940
170
940
850
395
208
250
210
710
850
800
860
900
206
205
570
830
890
820
180
910
380
370
360
875
860
810
200
730
735
920
780
910
130
100
540
550
420
410
500
530
490
510
510
520
480
470
400
700
460
450
440
560
920
770
920
770

Pos	Part No	SP	UN	Qty	Description	Page No
Common Parts (Cont'd)						
270	443295-0000	-		1	WASHER	
300	90056-0099	D		1	GEARS, BEVEL ALU-00	
320	318212-0066	C		1	ROLLER CHAIN, SINGLE 1/2 -66,SS	
340	318242-0034	C		4	ROLLER CHAIN DUPLEX 1/2"-34,SS	
360	90092-0048	C		2	OIL BRUSH, FLAT, 5/16-24 UNF	
370	90028-0001	C		1	CONE 5/32"	
375	90134-0002	-		1	CONNECTOR R1/8, D=4 MM	
380	90134-0003	C		1	BUSHING	
390	90134-0058	-		1	CONNECTION	
395	90137-0002	-		1	BANJO CONN. 1/8 - 5/16-24UNF	
400	90166-0108	-	MM	1300	TUBE 6 MM PA,TRANSP.	
410	90166-0051	-	MM	1100	TUBE PA,TRANSP.	
420	90166-0143	-	MM	200	TUBE 2,5 MM PA,TRANSP.	
440	90032-0039	-		1	BLOCK 4 WAYS	
450	90028-0025	-		1	CONE TUBE 6 MM	
460	90134-0055	C		1	BUSHING/NUT INLET/OUTLET 6 MM	
470	90134-0030	-		2	SLEEVE FOR PLASTIC TUBE	
480	90028-0021	C		2	CONE TUBE 4 MM	
490	90134-0040	C		2	BUSHING VALVE CONNECTION 4 MM	
500	342706-0114	-		4	ACCESSORIES, INSERT SLEEVE 4 MM	
510	90092-0052	C		3	METERING VALVE 10 MM3	
520	90028-0020	C		1	CONE TUBE 2,5MM	
530	90134-0039	C		1	BUSHING VALVE CONNECTION 2,5 MM	
540	90134-0045	-		1	PLUG M12X1	
550	90134-0052	-		1	PLUG DOSING BLOCK	
560	90087-0019	-		1	PLUG M10X1 STAINLESS	
570	90165-0056	-		1	PIPE CLIP FOR TUBE D=4 MM	
580	90165-0060	-		1	PIPE CLIP FOR TUBE D=5 MM	
700	312155-0295	-		2	SCREW HEX.SOCK.COUNT.MF6S M4X20 A480	
710	312105-0366	-		2	SCREW M6S M6X12 A280	
720	312105-0368	-		6	SCREW M6S M6X16 A280	
730	312105-0376	-		7	SCREW M6S M6S M6X35 A280	
735	312105-0378	-		9	SCREW M6S M6X40 A280	
750	312105-0386	-		3	SCREW M6S M6X80 A280	
760	312105-0449	-		2	SCREW M6S M8X16 A280	
770	312105-0451	-		4	SCREW M6S 8X20 A280	
780	312105-0453	-		2	SCREW M6S M8X25 A280	
800	312109-0457	-		1	SCREW M6S M8X35 A280	
810	312109-0461	-		1	SCREW M6S M8X50 A280	
820	312115-0368	-		4	SCREW MC6S M6X16 A280	
830	312125-0285	-		2	SCREW SLOT.PAN HD. MCS 4X6 A480	
840	312125-0289	-		1	SCREW SLOT.PAN HD. MCS 4X10 A480	
850	312605-0316	-		22	HEXAGON NUT, M6M M6 A280	
860	312605-0318	-		6	HEXAGON NUT, M6M M8 A280	
870	312605-0322	-		1	HEXAGON NUT, M6M M12 A280	
875	312625-0318	-		1	NUT HEX. M8 SS	
890	315105-0153	-		14	WASHER PLAIN, BRB, 6,4/12,H=1,5	
900	315105-0165	-		1	WASHER PLAIN, BRB, 8,4/16,H=1,5	
910	315115-0153	-		21	WASHER PLAIN, TBRB 6,4/12 H=3	
920	315115-0165	-		8	WASHER PLAIN, TBRB 8,4/16 H=3	
940	321101-0272	C		2	FLANGE BUS 30F7X20	

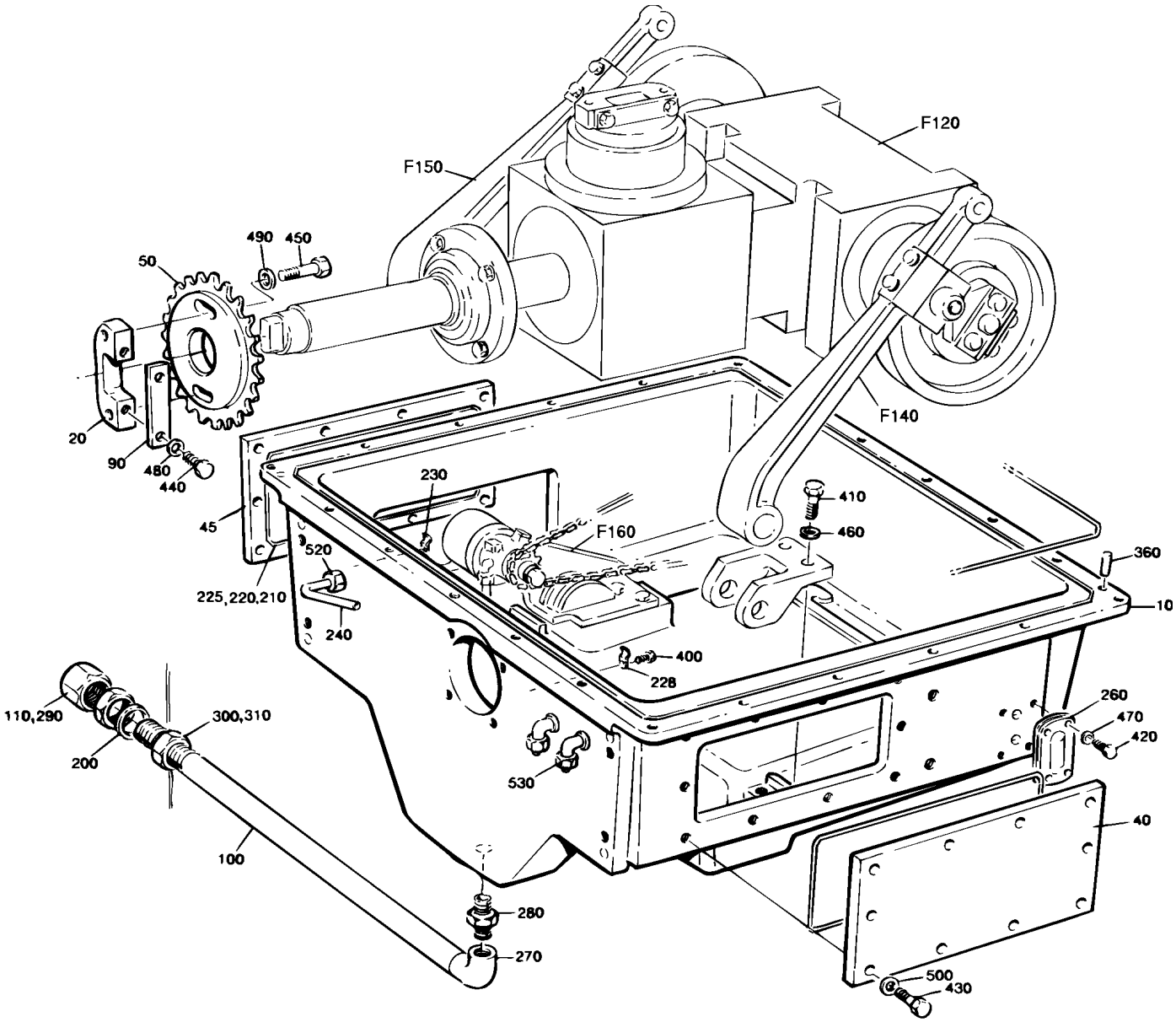
F150
F120
F140
F160
490
450
50
20
90
480
440
45
230
410
460
360
10
520
225,220,210
240
400
228
260
470
420
530
40
110,290
300,310
200
100
280
270
500
430

ECM: 72437 - 19990426
Group number: 285303-0400
Assembly Drawing: 285303-4_1_AA

Issue: 20020121

Pos	Part No	SP	UN	Qty	Description	Page No
Common Parts						
010	525276-0000	-		1	HOUSE	
020	262274-0005	D		1	BRACKET	
040	525185-0000	-		1	HATCH	
045	525377-0000	-		1	HATCH	
050	443176-0000	D		1	SPROCKET	
090	262275-0003	D		1	CAP	
100	443126-0000	-		1	CONNECTION PIPE	
110	525047-0000	D		2	GASKET	
200	525046-0000	D		2	GASKET	
210	90296-0009	-	L	1	SILICONE GREASE TUBE 100 GR.	
220	90161-0001	-	MM	3900	O-RING MATERIAL 3 MM MM	
225	90153-0043	-	KG	1	ADHESIVE LOCTITE 495	
228	90165-0056	-		2	PIPE CLIP FOR TUBE D=4 MM	
230	90165-0057	-		3	PIPE CLIP FOR TUBE D=6 MM	
240	90166-0124	-	MM	1500	TUBE 6 MM PA,TRANSP.	
260	90199-0004	C		1	LEVEL GLASS, ST60	
270	90330-0020	-		1	ELBOW, 90 INT. THREAD, R-2221/2	
280	90330-0021	-		1	NIPPLES, EXT. THREAD. R-207R1/2	
290	90330-0086	-		1	PLUG, INT. THREAD, NO. R-231-R1/2	
300	90330-0093	-		2	NUT, HEXAGON, G1/2	
310	90157-0034	-	L	1	SEALING COMPOUND LOCTITE 572 50 ML	
360	311103-0399	-		2	PARALLELL PIN, CP, M6, 8X16 MM	
400	312105-0287	-		3	SCREW M6S M4X8 A280	
410	312105-0453	-		4	SCREW M6S M8X25 A280	
420	312105-0293	-		4	SCREW M6S M4X16 A280	
430	312105-0370	-		20	SCREW M6S M6X20 A280	
440	90287-0165	-		2	SCREW M6S M8X20 A480 NY-LOCK	
450	312105-0493	-		2	SCREW M6S M10X25 A280	
460	315105-0165	-		4	WASHER PLAIN, BRB, 8,4/16,H=1,5	
470	315105-0136	-		4	WASHER PLAIN, BRB, 4,3/8,H=0,8	
480	315105-0165	-		2	WASHER PLAIN, BRB, 8,4/16,H=1,5	
490	315105-0173	-		2	WASHER PLAIN, BRB, 10,5/22,H=2	
500	315115-0153	-		20	WASHER PLAIN, TBRB 6,4/12 H=3	
520	342920-0113	-		1	STRAIGHT COUPLING,EXT.THREADED 6/4-R1/8"	
530	342930-0113	-		4	ELBOW 90 COUPL.,EXT.THREAD 6/4-R1/8"	
F120	A285291-0400	D		1	BEVEL GEAR	**471**
F140	A285299-0100	-		1	PRESSURE ARM	**475**
F150	A594621-0100	-		1	PRESSURE ARM	**477**
F160	A525102-0200	-		1	LUBRICATING SYSTEM	**479**

Pos	Part No	SP	UN	Qty	Description	Page No

Machine Type | Group Description | Used-In | Group Number | Page No

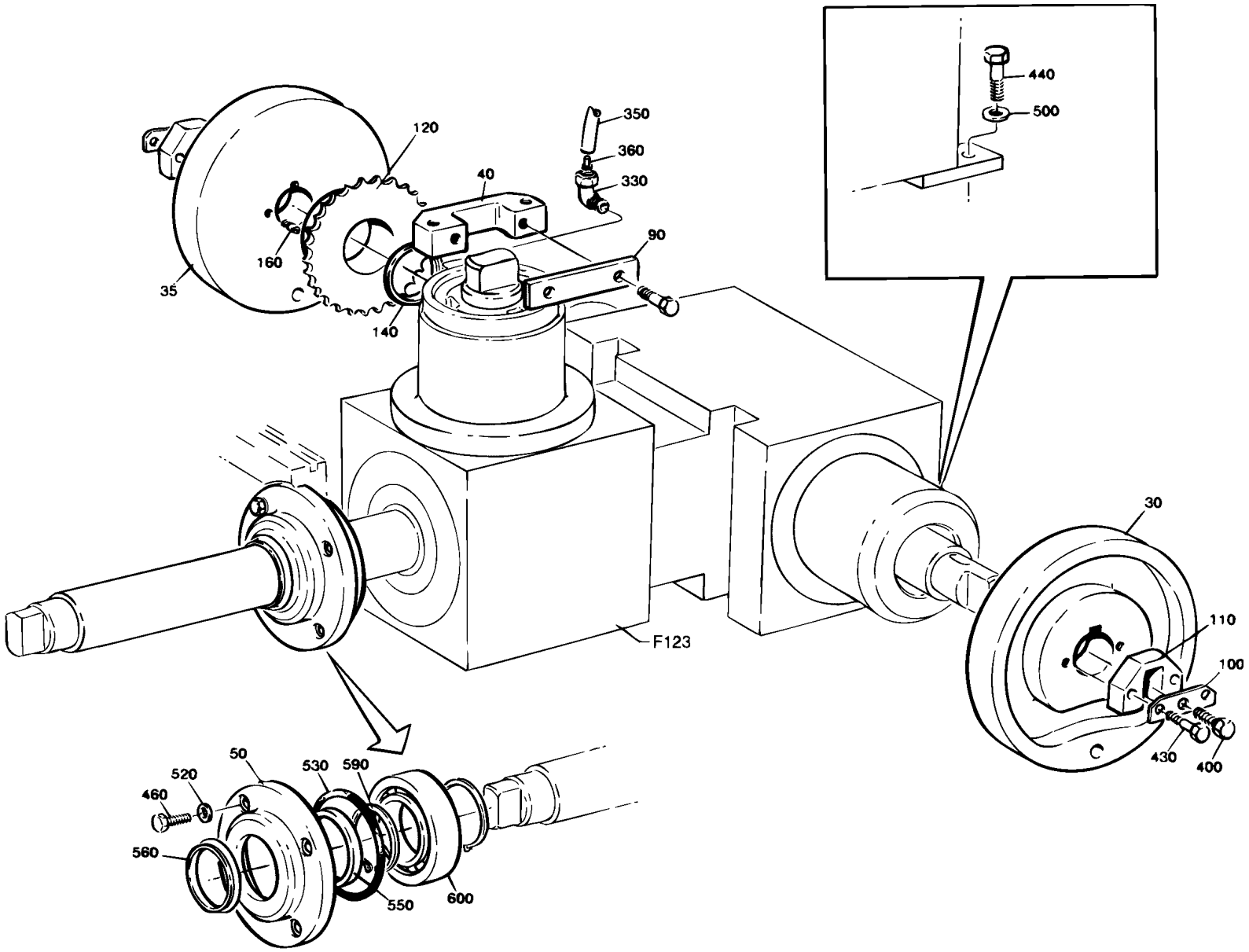
440
500
350
360
330
120
40
90
160
35
140
30
110
100
F123
430
400
50
520
530
590
460
560
550
600

ECM: 72197 - 19990215
Group number: 285291-0400
Assembly Drawing: 285291-4_1_AA

Issue: 20020121

Pos	Part No	SP	UN	Qty	Description	Page No
Common Parts						
030	285054-0000	D		1	CURVE	
035	285055-0000	D		1	CURVE	
040	262274-0002	D		1	BRACKET	
050	276613-0000	D		1	LID	
090	262275-0002	D		1	CAP	
100	276636-0000	D		2	WASHER	
110	285027-0000	D		2	CARRIER	
120	443047-0000	D		1	SPROCKET	
140	443052-0000	D		1	SPACER RING	
160	443149-0000	D		1	STUD SCREW	
330	342731-0102	-		1	CONN. ELBOW WE 6-LRFZB	
350	90166-0108	-	MM	400	TUBE 6 MM PA,TRANSP.	
360	90134-0030	C		2	SLEEVE FOR PLASTIC TUBE	
400	312101-0374	-		4	SCREW M6S M6X30 FZB	
430	312101-0451	-		4	SCREW M6S M8X20 FZB	
440	312101-0453	-		2	SCREW M6S M8X25 FZB	
460	312105-0371	-		4	SCREW M6S M6X22 A280	
500	315101-0165	-		2	WASHER PLAIN, BRB, 8,4/16 H=1,5	
520	315115-0153	-		4	WASHER PLAIN, TBRB 6,4/12 H=3	
530	315202-0309	C		1	O-RING 89,5X3 MM	
550	315221-0200	C		1	RADIAL SEAL 50X72X8 MM	
560	315226-0200	C		1	AXIAL SEAL WITH STEEL COVER 50X70X4,5 MM	
590	315750-0131	-		2	RETAIN. RING, 50	
600	321309-0110	C		1	BALL BEARING, 50X90X20 MM	
F123	A442644-0300	D		1	DOUBLE GEAR	**473**

Pos	Part No	SP	UN	Qty	Description	Page No

Machine Type | Group Description | Used-In | Group Number | Page No

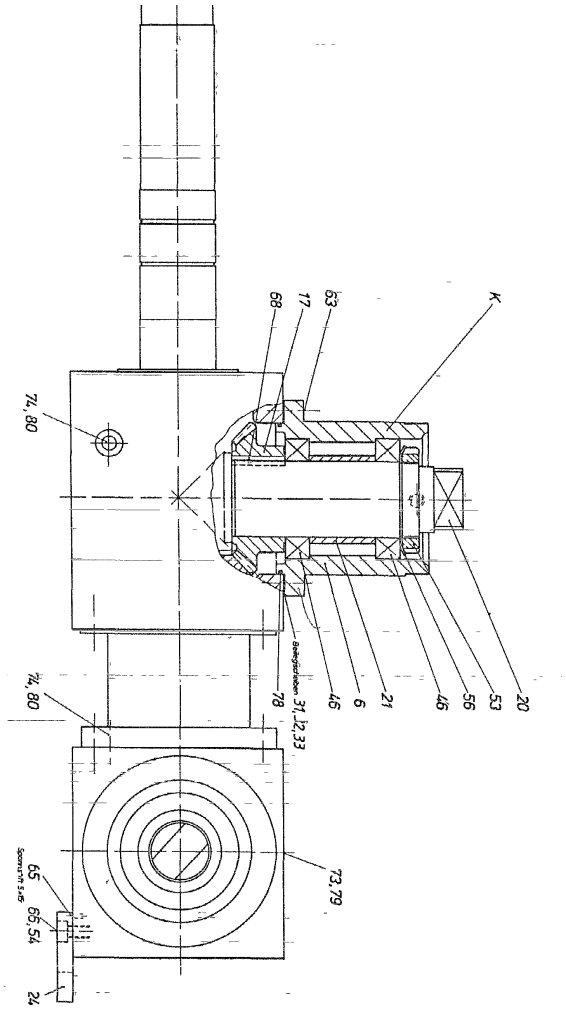
K
68
17
63
74, 80
78
46
6
21
46
56
53
20
74, 80
78
31, 32, 33
73, 79
65
65, 54
24

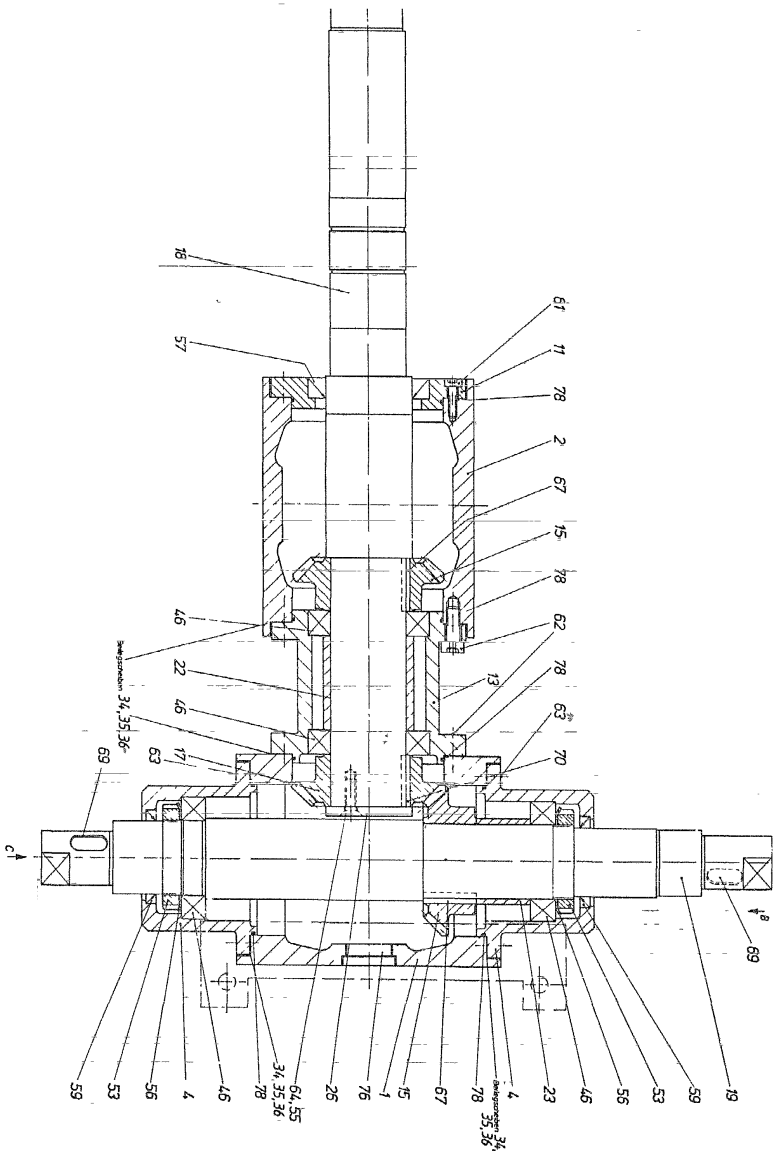
18
57
61
11
78
2
67
15
78
62
78
63
70
46
22
46
63
17
69
34, 35, 36
13
A
B
69
59
53
56
4
46
78
34, 35, 36
64, 55
26
76
1
15
67
78
4
34, 35, 36
23
46
56
53
59
19

ECM: 72197 - 19990215
Group number: 442644-0300
Assembly Drawing: 442644-2_1_AA

Issue: 20020121

Pos	Part No	SP	UN	Qty	Description	Page No
Common Parts						
001	568151-0000	D		1	GEAR HOUSING	
002	568152-0000	D		1	GEAR HOUSING	
004	568153-0000	D		2	BEARING SEAT	
006	568154-0000	D		1	BEARING SEAT	
011	568155-0000	D		1	BEARING COVER	
013	568156-0000	D		1	FLANGE	
015	442613-0000	D		2	GEAR WHEEL	
017	442614-0000	D		2	GEAR WHEEL	
018	568157-0000	D		1	SHAFT	
019	568158-0000	D		1	SHAFT	
020	568159-0000	D		1	SHAFT	
021	442615-0000	D		1	SPACER	
022	442616-0000	D		1	SPACER	
023	442617-0000	D		1	SPACER	
024	568160-0000	D		1	FASTENING PLATE	
026	568161-0000	D		1	WASHER	
031	525331-0000	D		1	SHIM	
032	443055-0000	D		1	SHIM	
033	443056-0000	D		1	SHIM	
034	525332-0000	D		4	SHIM	
035	443057-0000	D		4	SHIM	
036	443058-0000	D		4	SHIM	
046	321306-0110	C		6	BALL BEARING, 50X80X16 MM	
053	312805-0110	-		3	NUT ROUND WITH SLOTS M50X1,5 FE	
054	315402-0173	-		2	LOCK WASHER FBB 10,2	
056	315410-0110	-		3	LOCK WASHER MB 10 D=50 H=1,25	
057	90091-0202	-		1	RADIAL SEAL 58X80X13 MM DUST LIP	
059	90091-0143	-		2	RADIAL SEAL 47X62X6 MM	
061	312111-0370	-		4	SCREW HEX.SOCK.HD.MC6S-TT 6X20 88 FZB	
062	312111-0453	-		8	SCREW HEX.SOCK.HD.MC6S-TT 8X25 88 FZB	
063	312111-0451	-		12	SCREW HEX.SOCK.HD.MC6S-TT 8X20 88 FZB	
064	312151-0451	-		2	SCREW HEX.SOCK.COUNT.MF6S 8X20 FZB	
065	311111-0305	-		2	PIN, STRAIGHT SLOTTED SPRING FRP 5X14	
066	312111-0491	-		2	SCREW HEX.SOCK.HD.MC6S-TT 10X20 88 FZ	
067	315701-0363	-		2	PARALLEL KEY W. ROUND ENDS 14X9X40 MM	
068	568162-0000	D		1	WEDGE	
069	315701-0296	-		2	PARALLEL KEY W. ROUND ENDS 10X8X25 MM	
070	315701-0363	-		1	PARALLEL KEY W. ROUND ENDS 14X9X40 MM	
078	90242-0118	C		6	O-RING 90X2 MM	
079	90242-0120	C		1	O-RING 28X3,5 MM	
080	90242-0121	C		2	O-RING 11X2,5 MM	

Machine Type	Group Description	Used-In	Group Number	Page No

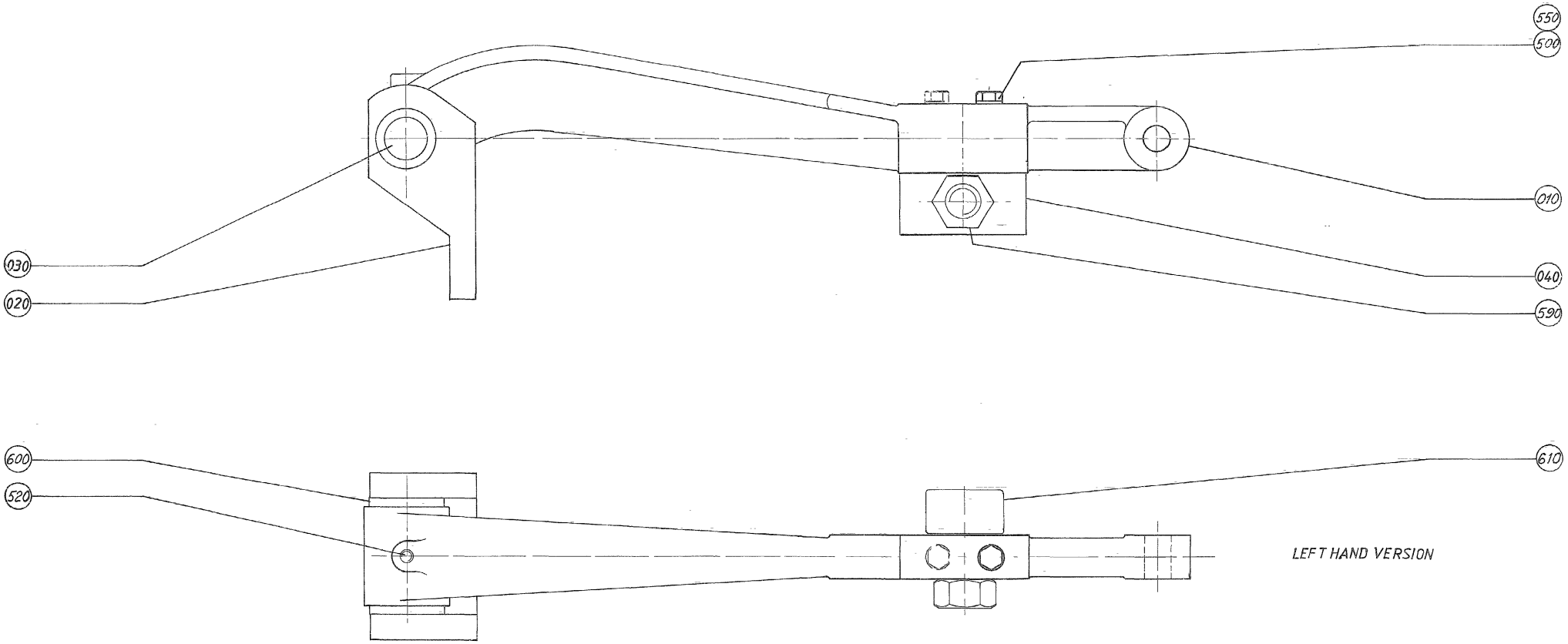
550
500
010
040
590
030
020
600
520
610
LEFT HAND VERSION

Pos	Part No	SP	UN	Qty	Description	Page No
Common Parts						
010	442524-0000	D		1	ARM	
020	285300-0000	D		1	BRACKET	
030	262261-0000	D		1	SHAFT	
040	442523-0000	-		1	HOLDER	
500	312105-0379	-		2	SCREW M6S M6X45 A280	
520	312311-0370	-		1	SCREW, SOCK.SET DOGPOINT M6X20	
550	315105-0153	-		2	WASHER PLAIN, BRB, 6,4/12,H=1,5	
590	312631-0324	-		1	NUT HEX. M16X1,5 FE FZB	
600	321101-0232	D		2	FLANGE BUS 20F7X16	
610	321582-0212	C		1	CAM ROLLER, 2 SEALS, 16X35X52 MM	

Pos	Part No	SP	UN	Qty	Description	Page No

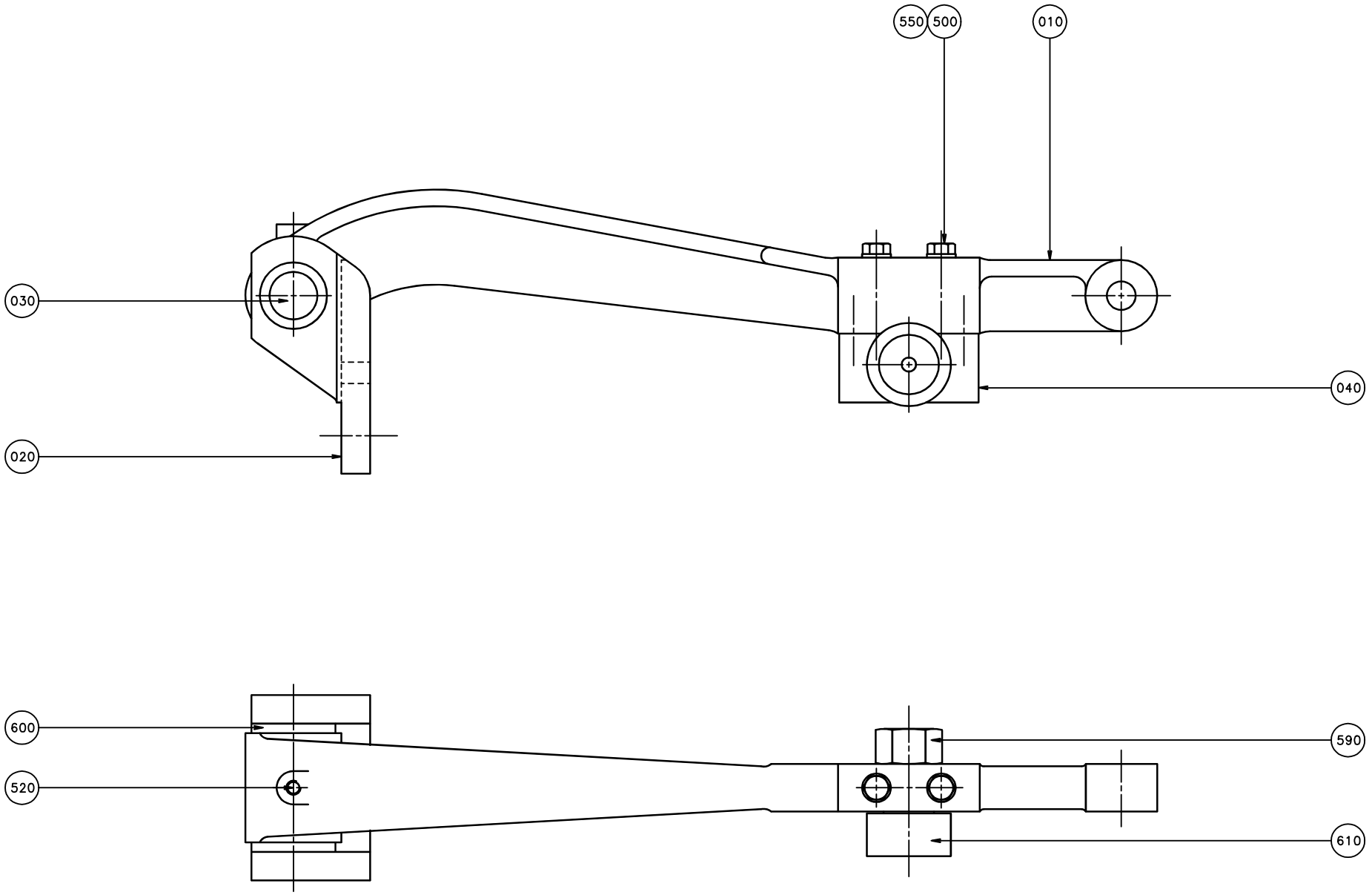
550
500
010
030
040
020
600
590
520
610

ECM: 72437 - 19990426
Group number: 594621-0100
Assembly Drawing: 594621-1_1_AA

Issue: 20020121

Pos	Part No	SP	UN	Qty	Description	Page No
Common Parts						
010	442524-0000	D		1	ARM	
020	285300-0000	D		1	BRACKET	
030	262261-0000	D		1	SHAFT	
040	442523-0000	-		1	HOLDER	
500	312105-0379	-		2	SCREW M6S M6X45 A280	
520	312311-0370	-		1	SCREW, SOCK.SET DOGPOINT M6X20	
550	315105-0153	-		2	WASHER PLAIN, BRB, 6,4/12,H=1,5	
590	312631-0324	-		1	NUT HEX. M16X1,5 FE FZB	
600	321101-0232	D		2	FLANGE BUS 20F7X16	
610	321582-0212	C		1	CAM ROLLER, 2 SEALS, 16X35X52 MM	

Pos	Part No	SP	UN	Qty	Description	Page No

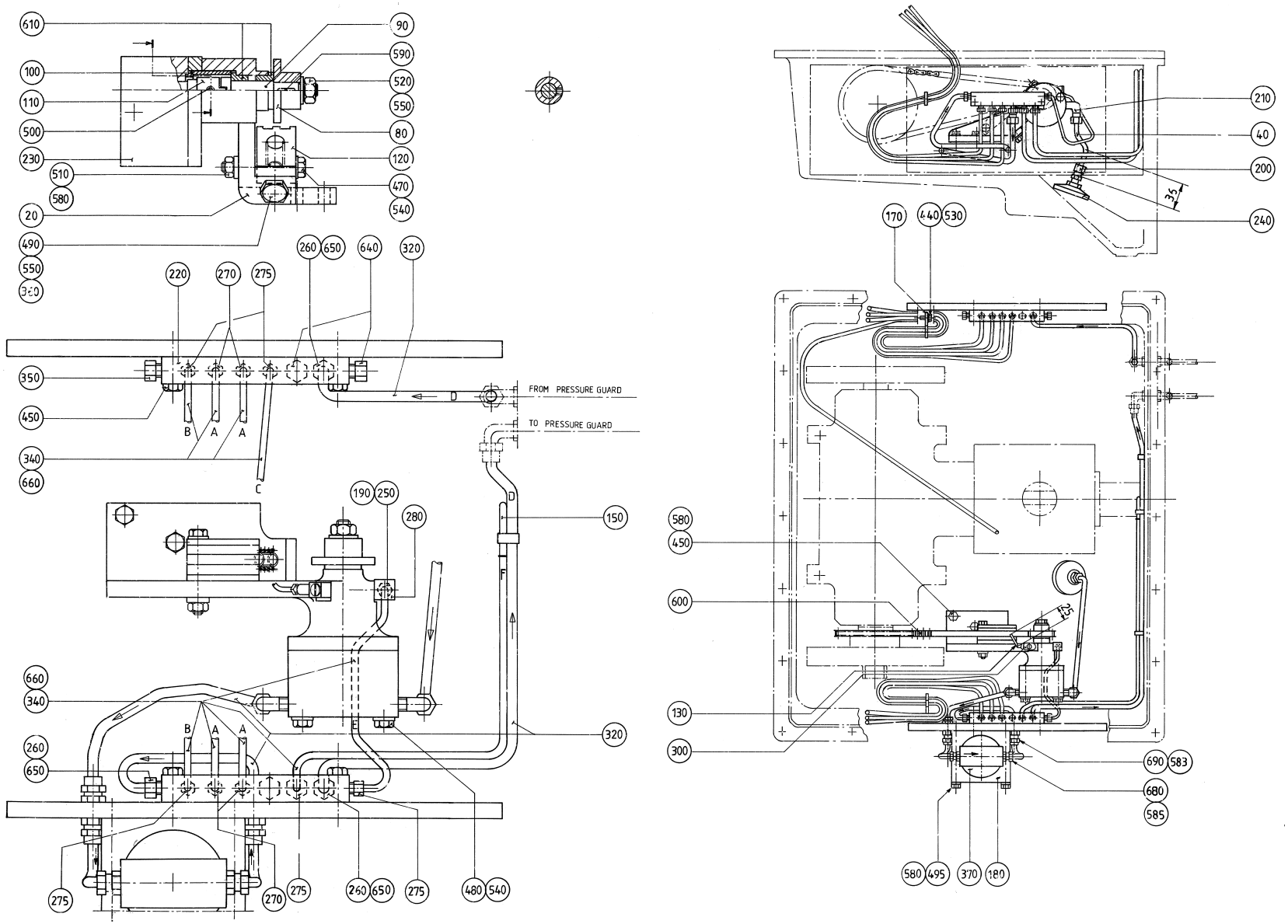
610
90
590
100
520
110
550
500
80
230
120
510
470
580
540
20
490
260
650
640
320
550
220
270
275
350
FROM PRESSURE GUARD
450
TO PRESSURE GUARD
B
A
A
340
660
C
D
190
250
280
150
660
340
320
260
650
B
A
A
275
270
275
260
650
275
480
540
210
40
200
35
240
170
440
530
580
450
600
130
300
690
583
680
585
580
495
370
180

ECM: 72437 - 19990426
Group number: 525102-0200
Assembly Drawing: 525102-2_1_AA

Issue: 20020121

Pos	Part No	SP	UN	Qty	Description	Page No
Common Parts						
020	525173-0000	-		1	CANTILEVER	
040	443150-0000	-		1	SUCTION TUBE	
080	443048-0000	D		1	SPROCKET	
090	443049-0000	D		1	SHAFT	
100	443050-0000	D		1	GUIDE SLEEVE	
110	443051-0000	D		1	CONNECTION	
120	443053-0000	D		1	CHAIN GUIDE	
130	443151-0000	D		1	PIPE	
150	525375-0000	-		1	OIL PIPE	
170	525358-0000	-		2	BRACKET	
180	525376-0000	D		2	BOW CLAMP	
190	90028-0001	C		1	CONE 5/32"	
200	90030-0107	-		1	CONN. STR. 6-1/8 NPT, EXT. TAPPERED	
210	90030-0222	-		2	CONN. ELBOW, 6-1/8 NPT, EXT.THREAD	
220	90032-0035	-		2	DISTR. BLOCK & DIST.5/16-24UNF X8	
230	90048-0033	C		1	GEAR PUMP, C 2347	
240	90048-0420	C		1	FILTER	
250	90134-0003	C		1	BUSHING	
260	B90134-0034	-		3	NIPPLE	
	90030-0101	*-*		*1*	*TAPER*	
270	90092-0038	C		4	METERING VALVE, CJB 1, 5/16-24 UNF	
275	90092-0081	C		5	MET.VALVE CONT. LUBR., 5/16-24 UNF	
280	90137-0005	-		1	BANJO CONN. M6, 5/16-24UNF	
300	90137-0010	-		1	BANJO CONN. M6, D=2,5 MM	
320	90166-0011	-	MM	1500	TUBE 6 MM PA,TRANSP.	
340	90166-0051	-	MM	4500	TUBE PA,TRANSP.	
350	90230-0031	-		1	NON-RETURN VALVE B5146	
360	90335-0012	D		1	SPRING	
370	B90415-0033	C		1	OIL FILTER REFILLING UC-HP-1229-25	
	90415-0330	*C*		*1*	*FILTER INSERT / ART NO HR-1229-25 UCC*	
440	312105-0327	-		2	SCREW M6S M5X12 A280	
450	312105-0370	-		6	SCREW M6S M6X20 A280	
470	312105-0379	-		1	SCREW M6S M6X45 A280	
480	312105-0380	-		2	SCREW M6S M6X50 A280	
490	312105-0451	-		1	SCREW M6S 8X20 A280	
495	312105-0388	-		2	SCREW M6S M6X90 A280	
500	312318-0283	-		1	SCREW SOCK.SET CUP P MSK6SS M4X4 A4	
510	312605-0316	-		1	HEXAGON NUT, M6M M6 A280	
520	312605-0318	-		1	HEXAGON NUT, M6M M8 A280	
530	315105-0146	-		2	WASHER PLAIN, BRB, 5,3/10,H=1	
540	315105-0153	-		3	WASHER PLAIN, BRB, 6,4/12,H=1,5	
550	315105-0165	-		2	WASHER PLAIN, BRB, 8,4/16,H=1,5	
580	315115-0153	-		5	WASHER PLAIN, TBRB 6,4/12 H=3	
583	315233-0109	-		2	WASHER PL.RND.NYL.10,3/14,H=1	
585	315233-0110	-		2	WASHER PL.RND.NYL.13,3/17,H=1	
590	315701-0134	-		1	PARALLEL KEY W. ROUND ENDS 3X3X10 MM	
600	318201-0076	C		1	ROLLER CHAIN, SINGLE 3/8 -76	
610	321101-0172	-		2	FLANGE BUS 12F7X10	
640	90136-0002	-		3	PLUG 5/16"24	
650	342706-0130	-		3	ACCESSORIES, INSERT SLEEVE 6 MM	
660	342706-0114	-		16	ACCESSORIES, INSERT SLEEVE 4 MM	
680	342921-0114	-		2	STRAIGHT COUPLING,EXT.THREADED 6/4-G1/4"	
690	342960-0112	-		2	BULKHEAD COUPLING 6/4	

Machine Type | Group Description | Used-In | Group Number | Page No

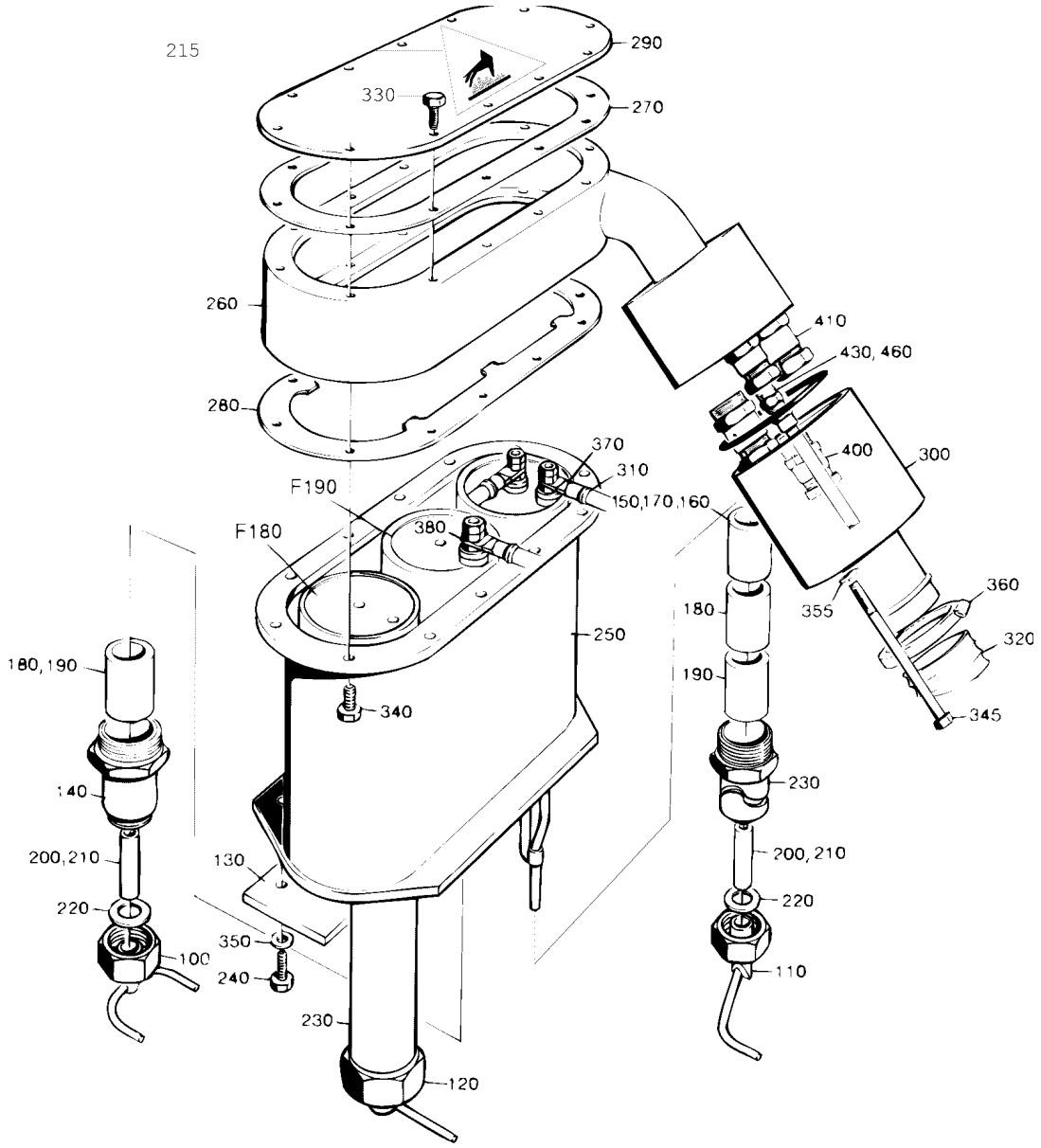
215
290
330
270
260
410
430, 460
280
370
400
300
310
F190
150,170,160
380
F180
360
180
355
320
250
180,190
190
340
345
140
230
200,210
200, 210
130
220
220
350
100
110
240
230
120

ECM: 72197 - 19990215
Group number: 525129-0100
Assembly Drawing: 525129-1_1_AA

Issue: 20020121

Pos	Part No	SP	UN	Qty	Description	Page No
0355B						
100	B442867-0000	C		1	AIR NOZZLE	
	20704-0000	-		*1*	*NUT*	
110	B285676-0000	C		1	AIR NOZZLE	
	20704-0000	-		*1*	*NUT*	
120	B285677-0000	C		1	AIR NOZZLE	
	20704-0000	-		*1*	*NUT*	
140	23763-0006	D		1	SPACER PIPE	
180	23765-0004	C		4	INSULATING PIPE	
190	23765-0005	C		1	INSULATING PIPE	
200	252766-0001	C		4	INSULATING PIPE	
210	252766-0002	C		1	INSULATING PIPE	
230	297499-0007	D		2	SIDE PIPE	
240	312105-0372	-		3	SCREW M6S M6X25 A280	
0375S						
100	B247227-0002	C		1	AIR NOZZLE	
	20704-0000	-		*1*	*NUT*	
110	B285507-0002	C		1	AIR NOZZLE	
	20704-0000	-		*1*	*NUT*	
120	B285508-0002	C		1	AIR NOZZLE	
	20704-0000	-		*1*	*NUT*	
140	23763-0010	D		1	SPACER PIPE	
170	23765-0003	C		2	INSULATING PIPE	
180	23765-0004	C		4	INSULATING PIPE	
190	23765-0005	C		1	INSULATING PIPE	
210	252766-0002	C		3	INSULATING PIPE	
230	297499-0009	D		2	SIDE PIPE	
240	312105-0372	-		3	SCREW M6S M6X25 A280	
0500B						
100	247227-0003	C		1	AIR NOZZLE	
110	B525197-0000	C		1	BLOW-OFF NOZZLE TR	
	525196-0000	-		*1*	*NUT*	
120	B525198-0000	C		1	BLOW-OFF NOZZLE TL	
	525196-0000	-		*1*	*NUT*	
130	262290-0002	-		1	LACE	
140	23763-0003	D		1	SPACER PIPE	
160	23765-0002	C		2	INSULATING PIPE	
180	23765-0004	C		1	INSULATING PIPE	
200	252766-0001	C		3	INSULATING PIPE	
230	297499-0002	D		2	SIDE PIPE	
240	312105-0376	-		3	SCREW M6S M6S M6X35 A280	
0500S						
100	B442867-0000	C		1	AIR NOZZLE	
	20704-0000	-		*1*	*NUT*	
110	B285676-0000	C		1	AIR NOZZLE	
	20704-0000	-		*1*	*NUT*	
120	B285677-0000	C		1	AIR NOZZLE	
	20704-0000	-		*1*	*NUT*	
140	23763-0006	D		1	SPACER PIPE	
170	23765-0003	C		2	INSULATING PIPE	
180	23765-0004	C		2	INSULATING PIPE	
190	23765-0005	C		3	INSULATING PIPE	
200	252766-0001	C		4	INSULATING PIPE	
210	252766-0002	C		1	INSULATING PIPE	
230	297499-0003	D		2	SIDE PIPE	
240	312105-0372	-		3	SCREW M6S M6X25 A280	
0750B						
100	247227-0003	C		1	AIR NOZZLE	
110	B525197-0000	C		1	BLOW-OFF NOZZLE TR	
	525196-0000	-		*1*	*NUT*	
120	B525198-0000	C		1	BLOW-OFF NOZZLE TL	
	525196-0000	-		*1*	*NUT*	
140	23763-0005	D		1	SPACER PIPE	
160	23765-0002	C		2	INSULATING PIPE	
180	23765-0004	C		1	INSULATING PIPE	
190	23765-0005	C		2	INSULATING PIPE	
210	252766-0002	C		3	INSULATING PIPE	
230	297499-0008	D		2	SIDE PIPE	
240	312105-0372	-		3	SCREW M6S M6X25 A280	
0750S						
100	B544298-0000	C		1	BLOWING NOZZLE B	
	20704-0000	-		*1*	*NUT*	
110	B544293-0000	C		1	BLOW-OFF NOZZLE TH	
	525196-0000	-		*1*	*NUT*	
120	B544269-0000	C		1	BLOW-OFF NOZZLE TV	
	525196-0000	-		*1*	*NUT*	
130	262290-0001	-		1	LACE	
140	23763-0004	D		1	SPACER PIPE	
160	23765-0002	C		2	INSULATING PIPE	

Machine Type Group Description Used-In Group Number Page No

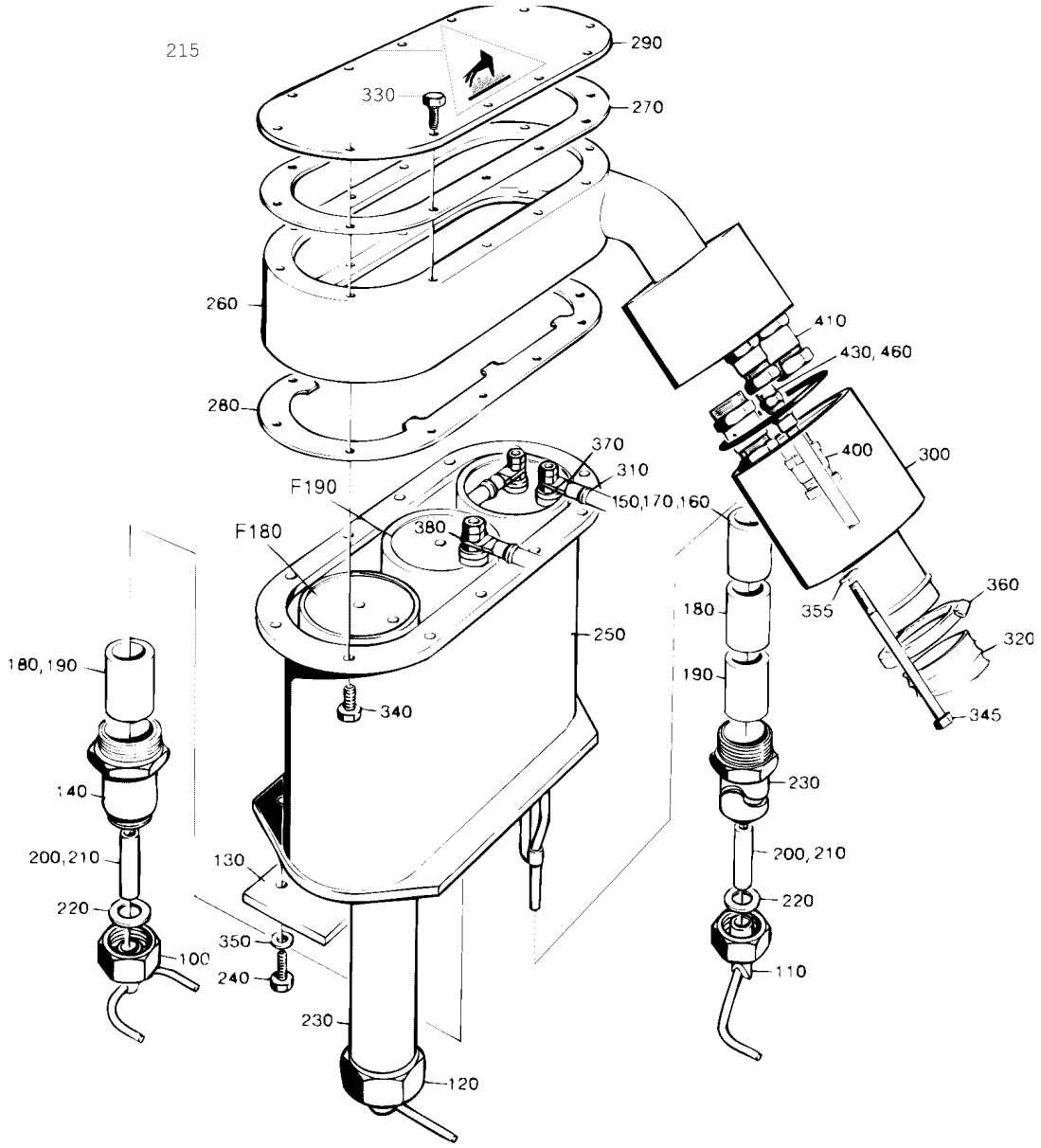
215
290
330
270
260
280
410
430, 460
400
300
370
310
150,170,160
F190
F180
380
360
355
320
345
180
190
250
340
180,190
140
200,210
220
100
130
350
240
230
120
230
200, 210
220
110

Pos	Part No	SP	UN	Qty	Description	Page No
0750S (Cont'd)						
180	23765-0004	C		5	INSULATING PIPE	
200	252766-0001	C		3	INSULATING PIPE	
230	443158-0000	D		2	SIDE PIPE	
240	312105-0374	-		3	SCREW M6S M6X30 A280	
1000B						
100	247227-0003	C		1	AIR NOZZLE	
110	B525197-0000	C		1	BLOW-OFF NOZZLE TR	
	525196-0000	*-*		*1*	*NUT*	
120	B525198-0000	C		1	BLOW-OFF NOZZLE TL	
	525196-0000	*-*		*1*	*NUT*	
130	262290-0001	-		1	LACE	
140	23763-0004	D		1	SPACER PIPE	
150	23765-0001	C		2	INSULATING PIPE	
180	23765-0004	C		1	INSULATING PIPE	
200	252766-0001	C		3	INSULATING PIPE	
230	297499-0001	D		2	SIDE PIPE	
240	312105-0374	-		3	SCREW M6S M6X30 A280	
1000S						
100	569124-0000	C		1	AIR NOZZLE	
110	569125-0000	C		1	AIR NOZZLE	
120	569126-0000	C		1	AIR NOZZLE	
130	262290-0001	-		1	LACE	
140	23763-0004	D		1	SPACER PIPE	
160	23765-0002	C		2	INSULATING PIPE	
170	23765-0003	C		2	INSULATING PIPE	
180	23765-0004	C		3	INSULATING PIPE	
200	252766-0001	C		1	INSULATING PIPE	
210	252766-0002	C		2	INSULATING PIPE	
230	548402-0000	D		2	SIDE PIPE	
240	312105-0374	-		3	SCREW M6S M6X30 A280	
1000SQ						
100	574032-0000	C		1	BLOWING NOZZLE B	
110	574033-0000	C		1	BLOWING NOZZLE TH	
120	574034-0000	C		1	BLOWING NOZZLE TV	
130	262290-0001	-		1	LACE	
140	23763-0006	D		1	SPACER PIPE	
160	23765-0002	C		2	INSULATING PIPE	
180	23765-0004	C		4	INSULATING PIPE	
190	23765-0005	C		1	INSULATING PIPE	
200	252766-0001	C		3	INSULATING PIPE	
230	443158-0000	D		2	SIDE PIPE	
240	312105-0374	-		3	SCREW M6S M6X30 A280	
Common Parts						
215	359710-0002	-		1	WARNING SIGN ISO, HOT SURFACE	
220	263673-0000	C		6	GASKET	
250	262272-0000	D		1	HEATING CHAMBER	
260	525071-0000	D		1	SPACER PIECE	
270	531730-0000	C		3	FLANGE SEAL	
280	23769-0000	C		1	STOP PLATE	
290	262288-0000	D		1	LID	
300	525073-0000	D		1	COVER	
310	B525070-0000	C		1	ELECTRICAL CONNECTION	
	351121-0109	*C*	*M*	*1*	*CABLE RHH 16*	
	353102-0168	*C*		*1*	*CABLE SHOEYAEV16-M6*	
320	352135-0116	C	MM	500	FLEXIBLE CONDUIT DIA. 40	
330	312105-0325	-		12	SCREW M6S M5X10 A280	
340	312105-0328	-		12	SCREW M6S M5X14 A280	
345	312105-0388	-		2	SCREW M6S M6X90 A280	
350	315115-0153	-		3	WASHER PLAIN, TBRB 6,4/12 H=3	
355	315105-0153	-		2	WASHER PLAIN, BRB, 6,4/12,H=1,5	
360	342991-0109	-		2	HOSE CLIP,WORM DRIVE TYPE (48)-50	
370	353104-0168	-		2	CABLE SHO YAV 16 M6*	
380	353104-0182	-		2	CABLE SHOE YAV 35 M6*	
400	352103-0106	-		2	CABLE GLAND, ST 11, PR18,6/PG11	
410	352103-0111	-		2	CABLE GLAND, ST 16, PR22,5/PG16	
430	342921-0121	-		1	STRAIGHT COUPLING,EXT.THREADED 8/6-G1/8"	
460	315234-0109	-		1	WASHER,PL.RND.CU.10,3/13,5 H=1,0	
F180	A31390-0100	-		2	FF-ELEMENT TOP	**485**
F190	A31390-0110	-		1	FF-ELEMENT BOTTOM	**487**

Machine Type Group Description Used-In Group Number Page No

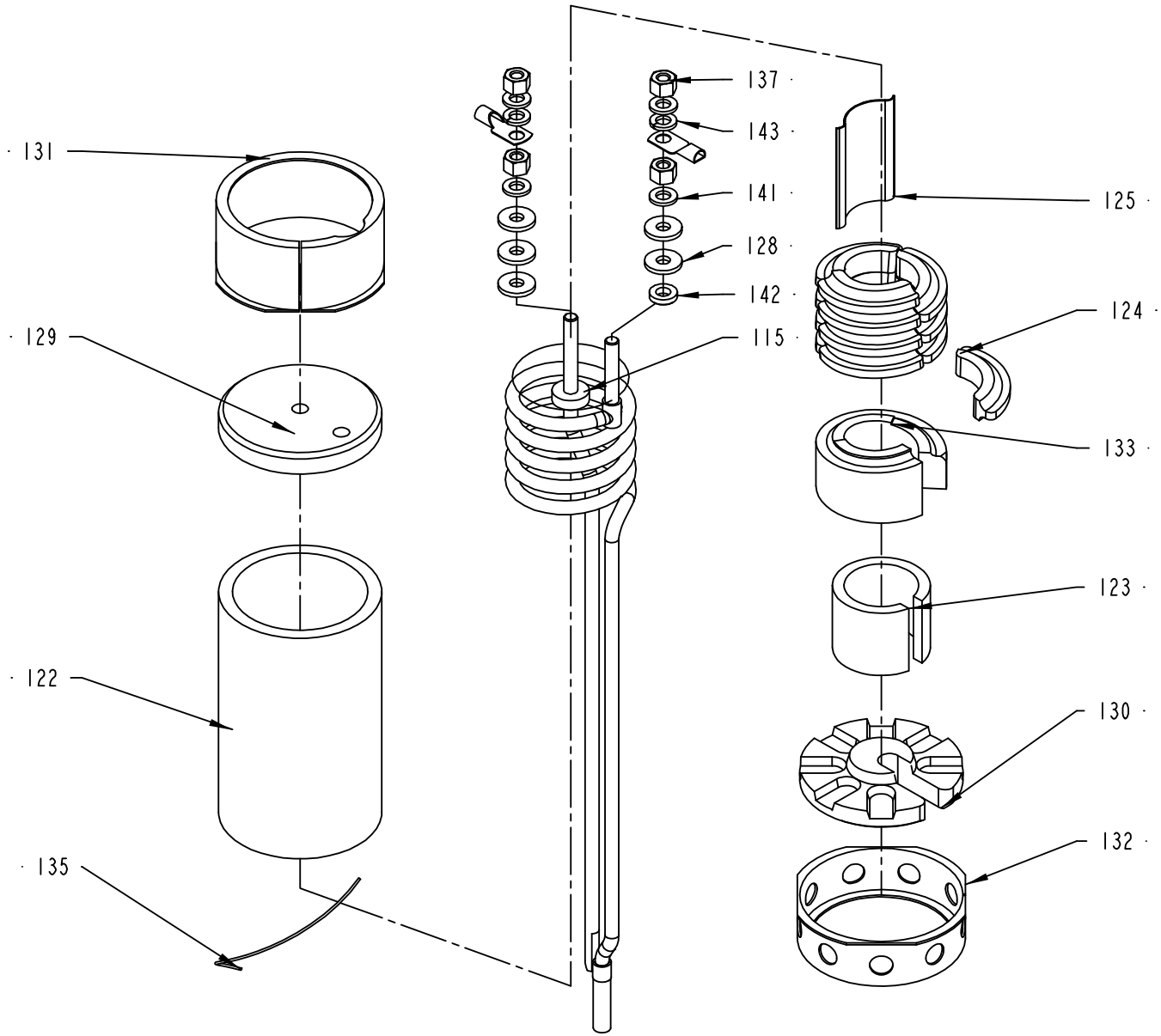
131
129
122
135
137
143
141
128
142
115
125
124
133
123
130
132

Pos	Part No	SP	UN	Qty	Description	Page No
0355B 648035						
115	30310-0003	A		1	FF HEATING ELEMENT TOP	
0375S 648035 OR 0500B 648025 OR 0500B 648035 OR 0500B 648005 OR 0500S 648035 OR 0500B 640005 OR 0750B 648035						
115	30310-0002	A		1	FF HEATING ELEMENT TOP	
1000SQ 648035 OR 1000S 648035 OR 0750S 648035 OR 1000B 648005 OR 1000B 648025 OR 1000B 648035 OR 1000B 640005						
115	30310-0001	A		1	FF HEATING ELEMENT TOP	
Common Parts						
122	20705-0001	A		1	INSULATING PIPE	
123	29411-0000	A		1	SPACER PIPE	
124	29413-0000	A		12	LACE	
125	31653-0001	A		1	SHEET	
128	525233-0000	A		5	GASKET 16X2X6MM	
129	20772-0000	A		1	INSULATOR BODY 70X70X15MM	
130	37536-0000	A		1	INSULATOR BODY LOWER 70X70X15MM	
131	23771-0000	A		1	SPACER RING 4X78X1MM	
132	37537-0000	A		1	SPACER RING LOWER 72X78X1MM	
133	37535-0000	A		1	SUPPORTING PART 56X56X31,5MM	
135	90145-0005	-	M	1	WIRE	
137	312811-0316	-		4	NUT HEX.LOCK HELI COIL MID GRIP M6 SS	
141	315105-0153	-		4	WASHER PLAIN, BRB, 6,4/12,H=1,5	
142	315115-0153	-		1	WASHER PLAIN, TBRB 6,4/12 H=3	
143	315402-0156	-		2	LOCK WASHER FBB 6,5	

Pos	Part No	SP	UN	Qty	Description	Page No

FF-ELEMENT BOTTOM

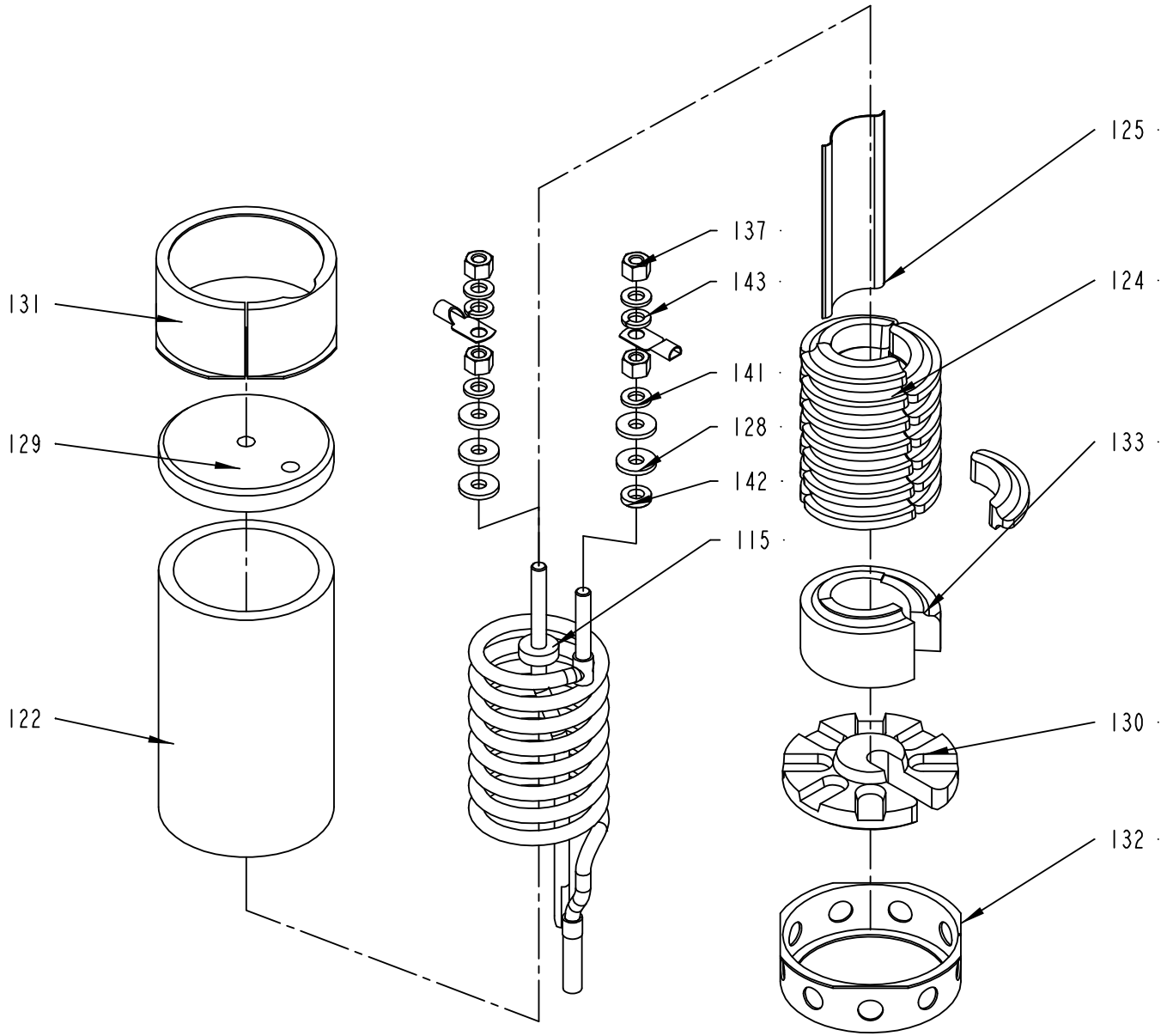

Pos	Part No	SP	UN	Qty	Description	Page No
0375S 648035 OR 0355B 648035 OR 1000SQ 648035 OR 0500S 648035 OR 0750B 648035						
115	30311-0001	A		1	FF HEATINGELEMENT BUTTOM KANTHAL 2333-02	
0500B 648025 OR 0500B 648035 OR 0500B 648005 OR 1000S 648035 OR 0500B 640005 OR 0750S 648035 OR 1000B 648005 OR 1000B 648025 OR 1000B 648035 OR 1000B 640005						
115	30311-0002	-		1	FF HEATINGELEMENT BUTTOM KANTHAL 2333-02	
Common Parts						
122	20705-0001	A		1	INSULATING PIPE	
124	29413-0000	A		21	LACE	
125	31653-0002	A		1	FIX PLATE 39X85X0,5MM	
128	525233-0000	A		5	GASKET 16X2X6MM	
129	20772-0000	A		1	INSULATOR BODY 70X70X15MM	
130	37536-0000	-		1	INSULATOR BODY LOWER 70X70X15MM	
131	23771-0000	-		1	SPACER RING 4X78X1MM	
132	37537-0000	-		1	SPACER RING LOWER 72X78X1MM	
133	37535-0000	-		1	SUPPORTING PART 56X56X31,5MM	
137	312811-0316	-		4	NUT HEX.LOCK HELI COIL MID GRIP M6 SS	
141	315105-0153	-		4	WASHER PLAIN, BRB, 6,4/12,H=1,5	
142	315115-0153	-		1	WASHER PLAIN, TBRB 6,4/12 H=3	
143	315402-0156	-		2	LOCK WASHER FBB 6,5	

Pos	Part No	SP	UN	Qty	Description	Page No

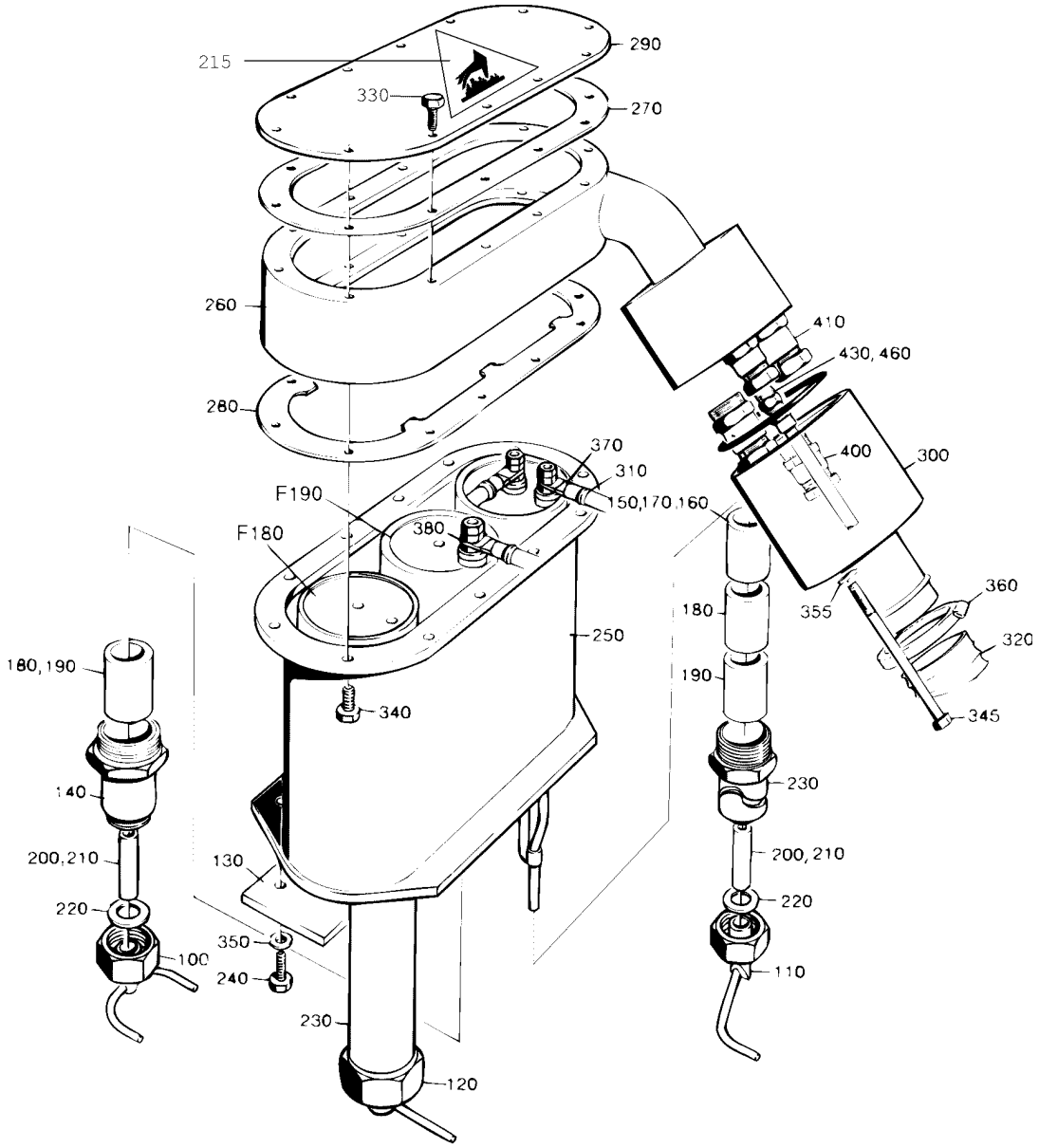
215
290
330
270
260
410
430, 460
280
370
400
300
310
F190
150,170,160
F180
380
360
180
355
320
180,190
250
190
340
345
140
230
200,210
200, 210
130
220
220
350
100
240
110
230
120

ECM: 72197 - 19990215
Group number: 525128-0100
Assembly Drawing: 525128-1_1_AA

Issue: 20020121

Pos	Part No	SP	UN	Qty	Description	Page No
0355B						
100	B442867-0000	C		1	AIR NOZZLE	
	20704-0000	-		*1*	*NUT*	
110	B285676-0000	C		1	AIR NOZZLE	
	20704-0000	-		*1*	*NUT*	
120	B285677-0000	C		1	AIR NOZZLE	
	20704-0000	-		*1*	*NUT*	
140	23763-0006	D		1	SPACER PIPE	
180	23765-0004	C		4	INSULATING PIPE	
190	23765-0005	C		1	INSULATING PIPE	
200	252766-0001	C		4	INSULATING PIPE	
210	252766-0002	C		1	INSULATING PIPE	
230	297499-0007	D		2	SIDE PIPE	
240	312105-0372	-		3	SCREW M6S M6X25 A280	
0375S						
100	B247227-0002	C		1	AIR NOZZLE	
	20704-0000	-		*1*	*NUT*	
110	B285507-0002	C		1	AIR NOZZLE	
	20704-0000	-		*1*	*NUT*	
120	B285508-0002	C		1	AIR NOZZLE	
	20704-0000	-		*1*	*NUT*	
140	23763-0010	D		1	SPACER PIPE	
170	23765-0003	C		2	INSULATING PIPE	
180	23765-0004	C		4	INSULATING PIPE	
190	23765-0005	C		1	INSULATING PIPE	
210	252766-0002	C		3	INSULATING PIPE	
230	297499-0009	D		2	SIDE PIPE	
240	312105-0372	-		3	SCREW M6S M6X25 A280	
0500B						
100	247227-0003	C		1	AIR NOZZLE	
110	B525197-0000	C		1	BLOW-OFF NOZZLE TR	
	525196-0000	-		*1*	*NUT*	
120	B525198-0000	C		1	BLOW-OFF NOZZLE TL	
	525196-0000	-		*1*	*NUT*	
130	262290-0002	-		1	LACE	
140	23763-0003	D		1	SPACER PIPE	
160	23765-0002	C		2	INSULATING PIPE	
180	23765-0004	C		1	INSULATING PIPE	
200	252766-0001	C		3	INSULATING PIPE	
230	297499-0002	D		2	SIDE PIPE	
240	312105-0376	-		3	SCREW M6S M6S M6X35 A280	
0500S						
100	B442867-0000	C		1	AIR NOZZLE	
	20704-0000	-		*1*	*NUT*	
110	B285676-0000	C		1	AIR NOZZLE	
	20704-0000	-		*1*	*NUT*	
120	B285677-0000	C		1	AIR NOZZLE	
	20704-0000	-		*1*	*NUT*	
140	23763-0006	D		1	SPACER PIPE	
170	23765-0003	C		2	INSULATING PIPE	
180	23765-0004	C		2	INSULATING PIPE	
190	23765-0005	C		3	INSULATING PIPE	
200	252766-0001	C		4	INSULATING PIPE	
210	252766-0002	C		1	INSULATING PIPE	
230	297499-0003	D		2	SIDE PIPE	
240	312105-0372	-		3	SCREW M6S M6X25 A280	
0750B						
100	247227-0003	C		1	AIR NOZZLE	
110	B525197-0000	C		1	BLOW-OFF NOZZLE TR	
	525196-0000	-		*1*	*NUT*	
120	B525198-0000	C		1	BLOW-OFF NOZZLE TL	
	525196-0000	-		*1*	*NUT*	
140	23763-0005	D		1	SPACER PIPE	
160	23765-0002	C		2	INSULATING PIPE	
190	23765-0005	C		3	INSULATING PIPE	
210	252766-0002	C		3	INSULATING PIPE	
230	297499-0008	D		2	SIDE PIPE	
240	312105-0372	-		3	SCREW M6S M6X25 A280	
0750S						
100	B544298-0000	C		1	BLOWING NOZZLE B	
	20704-0000	-		*1*	*NUT*	
110	B544293-0000	C		1	BLOW-OFF NOZZLE TH	
	525196-0000	-		*1*	*NUT*	
120	B544269-0000	C		1	BLOW-OFF NOZZLE TV	
	525196-0000	-		*1*	*NUT*	
130	262290-0001	-		1	LACE	
140	23763-0004	D		1	SPACER PIPE	
160	23765-0002	C		2	INSULATING PIPE	
180	23765-0004	C		5	INSULATING PIPE	

Machine Type Group Description Used-In Group Number Page No

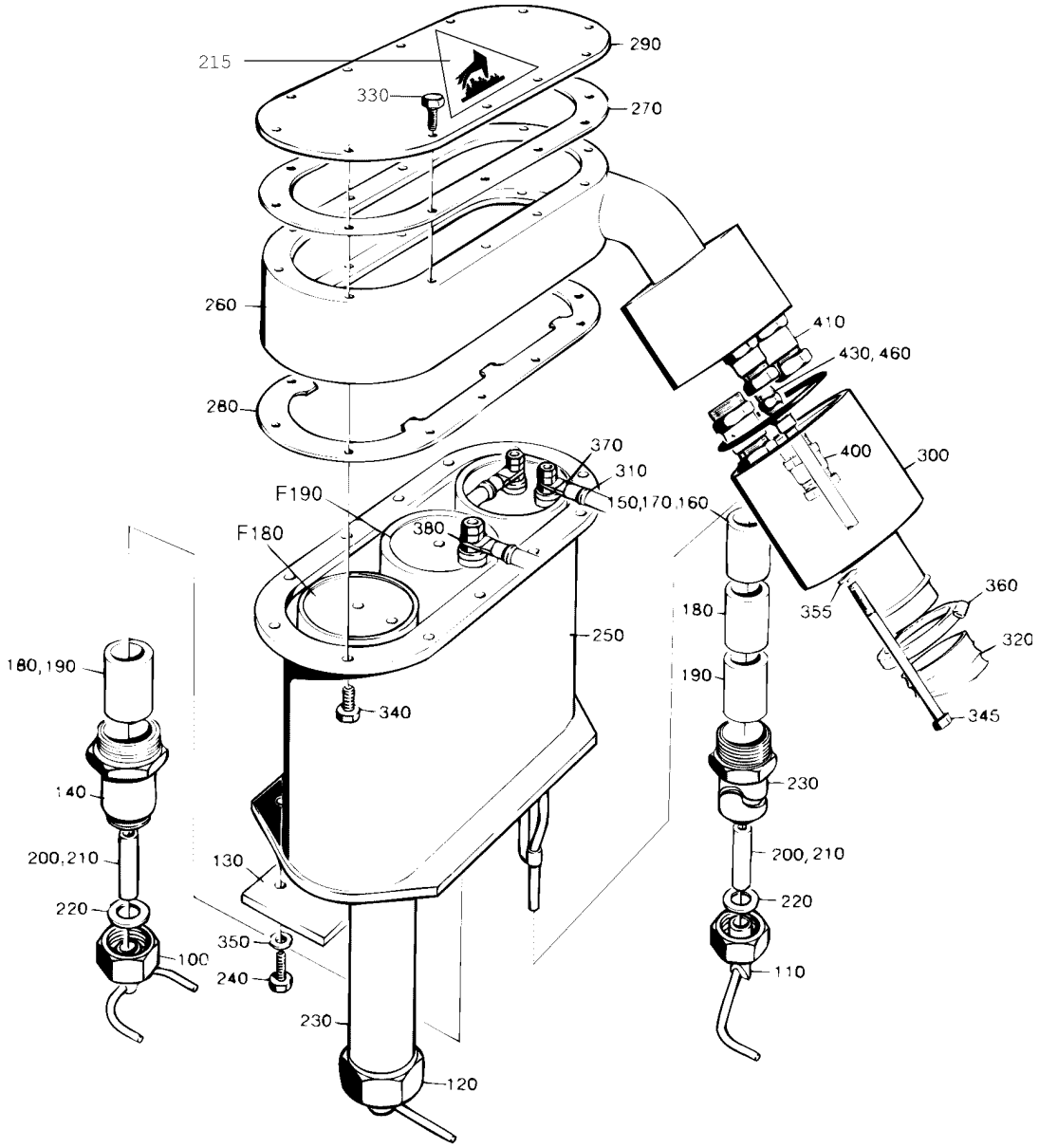
215
290
330
270
260
410
430, 460
280
370
400
300
310
F190
150,170,160
F180
380
360
180
355
320
250
180, 190
190
340
345
140
230
200, 210
130
200, 210
220
220
350
100
240
110
230
120

Pos	Part No	SP	UN	Qty	Description	Page No
0750S (Cont'd)						
200	252766-0001	C		3	INSULATING PIPE	
230	443158-0000	D		2	SIDE PIPE	
240	312105-0374	-		3	SCREW M6S M6X30 A280	
1000B						
100	247227-0003	C		1	AIR NOZZLE	
110	B525197-0000	C		1	BLOW-OFF NOZZLE TR	
	525196-0000	*-*		*1*	*NUT*	
120	B525198-0000	C		1	BLOW-OFF NOZZLE TL	
	525196-0000	*-*		*1*	*NUT*	
130	262290-0001	-		1	LACE	
140	23763-0004	D		1	SPACER PIPE	
150	23765-0001	C		2	INSULATING PIPE	
180	23765-0004	C		1	INSULATING PIPE	
200	252766-0001	C		3	INSULATING PIPE	
230	297499-0001	D		2	SIDE PIPE	
240	312105-0374	-		3	SCREW M6S M6X30 A280	
1000S						
100	569124-0000	C		1	AIR NOZZLE	
110	569125-0000	C		1	AIR NOZZLE	
120	569126-0000	C		1	AIR NOZZLE	
130	262290-0001	-		1	LACE	
140	23763-0004	D		1	SPACER PIPE	
160	23765-0002	C		2	INSULATING PIPE	
170	23765-0003	C		2	INSULATING PIPE	
180	23765-0004	C		3	INSULATING PIPE	
200	252766-0001	C		1	INSULATING PIPE	
210	252766-0002	C		2	INSULATING PIPE	
230	548402-0000	D		2	SIDE PIPE	
240	312105-0374	-		3	SCREW M6S M6X30 A280	
1000SQ						
100	574032-0000	C		1	BLOWING NOZZLE B	
110	574033-0000	C		1	BLOWING NOZZLE TH	
120	574034-0000	C		1	BLOWING NOZZLE TV	
130	262290-0001	-		1	LACE	
140	23763-0006	D		1	SPACER PIPE	
160	23765-0002	C		2	INSULATING PIPE	
180	23765-0004	C		4	INSULATING PIPE	
190	23765-0005	C		1	INSULATING PIPE	
200	252766-0001	C		3	INSULATING PIPE	
230	443158-0000	D		2	SIDE PIPE	
240	312105-0374	-		3	SCREW M6S M6X30 A280	
Common Parts						
215	359710-0002	-		1	WARNING SIGN ISO, HOT SURFACE	
220	263673-0000	C		6	GASKET	
250	262272-0000	D		1	HEATING CHAMBER	
260	525134-0000	D		1	SPACER PIECE	
270	531730-0000	C		3	FLANGE SEAL	
280	23769-0000	C		1	STOP PLATE	
290	262288-0000	D		1	LID	
300	525073-0000	D		1	COVER	
310	B525070-0000	C		1	ELECTRICAL CONNECTION	
	351121-0109	*C*	*M*	*1*	*CABLE RHH 16*	
	353102-0168	*C*		*1*	*CABLE SHOEYAEV16-M6*	
320	352135-0116	C	MM	500	FLEXIBLE CONDUIT DIA. 40	
330	312105-0325	-		12	SCREW M6S M5X10 A280	
340	312105-0328	-		12	SCREW M6S M5X14 A280	
345	312105-0388	-		2	SCREW M6S M6X90 A280	
350	315115-0153	-		3	WASHER PLAIN, TBRB 6,4/12 H=3	
355	315105-0153	-		2	WASHER PLAIN, BRB, 6,4/12,H=1,5	
360	342991-0109	-		2	HOSE CLIP,WORM DRIVE TYPE (48)-50	
370	353104-0168	-		2	CABLE SHO YAV 16 M6*	
380	353104-0182	-		2	CABLE SHOE YAV 35 M6*	
400	352103-0106	-		2	CABLE GLAND, ST 11, PR18,6/PG11	
410	352103-0111	-		2	CABLE GLAND, ST 16, PR22,5/PG16	
430	342921-0121	-		1	STRAIGHT COUPLING,EXT.THREADED 8/6-G1/8"	
460	315234-0109	-		1	WASHER,PL.RND.CU.10,3/13,5 H=1,0	
F180	A31390-0100	-		2	FF-ELEMENT TOP	**485**
F190	A31390-0110	-		1	FF-ELEMENT BOTTOM	**487**

Machine Type | Group Description | Used-In | Group Number | Page No

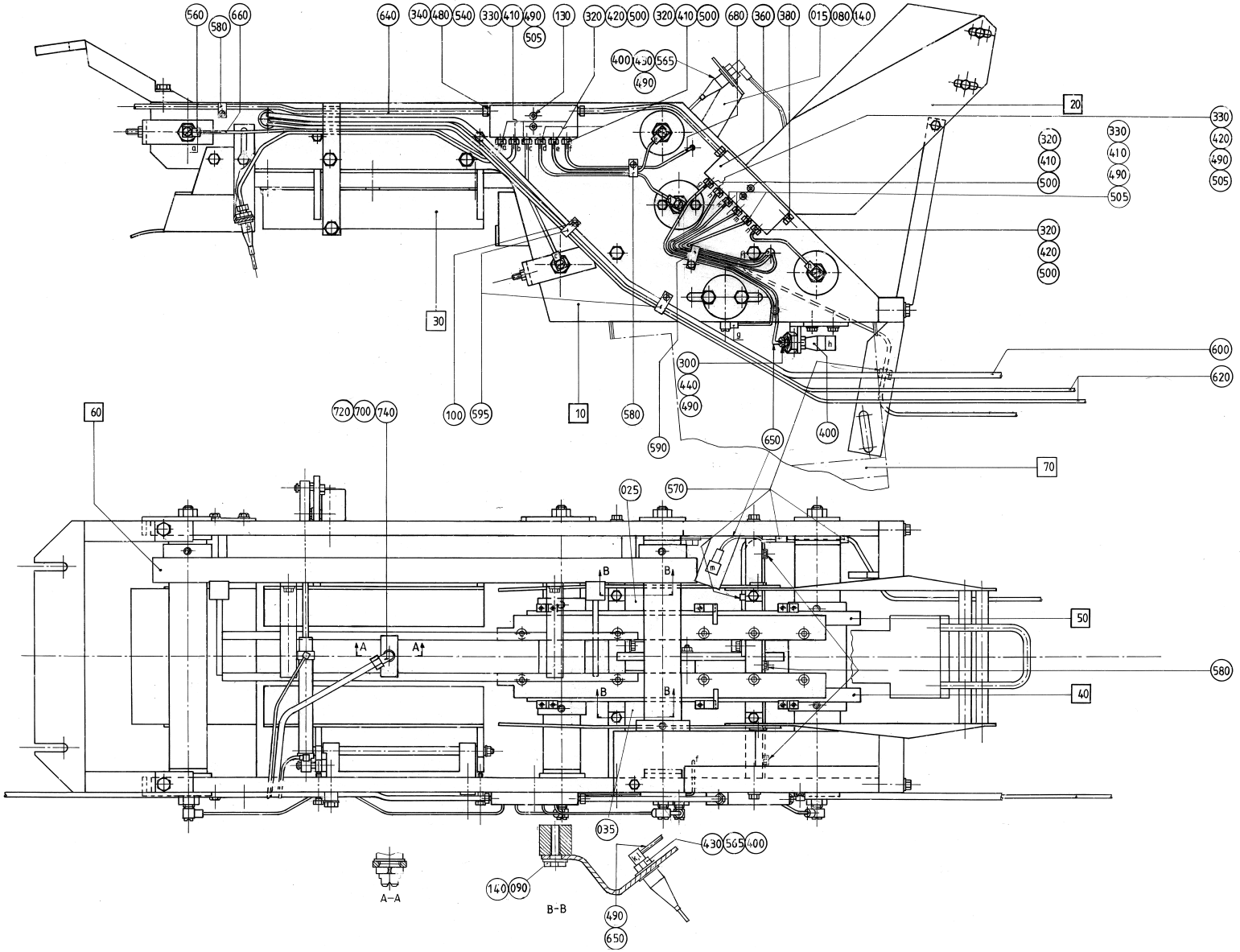
560
580
660
640
340
480
540
330
410
490
505
130
320
420
500
320
410
500
680
360
380
015
080
140
400
430
565
490
20
330
420
490
505
320
410
490
505
320
420
500
30
600
620
300
440
490
60
720
700
740
100
595
10
580
590
650
400
70
025
570
B
B
50
A
A
580
B
B
40
035
430
565
400
140
090
490
650
A–A
B–B

ECM: 81019 - 20000831
Group number: 525085-0300
Assembly Drawing: 525085-3_1_AA

Issue: 20020121

Pos	Part No	SP	UN	Qty	Description	Page No
TBA/8 0500B OR TBA/8 0375S OR TBA/8 0500S OR TBA/8 0355B OR TBA/8 1000B OR TBA/8 0750S OR TBA/8 0750B OR TBA/8 1000S						
010	A525086-0200	-		1	CONVEYING EQUIPMENT	**499, 501**
015	566313-0000	-		1	HOLDER	
025	566316-0000	-		1	HOLDER	
035	566317-0000	-		1	HOLDER	
040	A525089-0100	-		1	CHAIN RIGHT	**503, 505**
050	A525090-0100	-		1	CHAIN LEFT	**507, 509**
060	A525091-0100	-		1	CHAIN	**511**
070	A525092-0100	-		1	CHAIN GUARD	**513**
080	312105-0368	-		2	SCREW M6S M6X16 A280	
090	312105-0366	-		4	SCREW M6S M6X12 A280	
100	312125-0287	-		11	SCREW PAN HEAD MCS M4X8 SS	
140	315115-0153	-		6	WASHER PLAIN, TBRB 6,4/12 H=3	
300	90028-0001	C		2	CONE 5/32"	
320	90028-0020	C		7	CONE TUBE 2,5MM	
330	90028-0021	C		5	CONE TUBE 4 MM	
360	90032-0040	-		2	BLOCK 6 WAYS	
400	90092-0048	C		5	OIL BRUSH, FLAT, 5/16-24 UNF	
410	90092-0052	C		7	METERING VALVE 10 MM3	
420	90092-0053	C		5	METERING VALVE 30 MM3	
430	90134-0002	-		3	CONNECTOR R1/8, D=4 MM	
440	90134-0003	C		2	BUSHING	
480	90134-0030	-		4	SLEEVE FOR PLASTIC TUBE	
490	342706-0114	-		10	ACCESSORIES, INSERT SLEEVE 4 MM	
500	90134-0039	C		7	BUSHING VALVE CONNECTION 2,5 MM	
505	90134-0040	C		5	BUSHING VALVE CONNECTION 4 MM	
560	90134-0058	-		6	CONNECTION	
565	90137-0002	-		3	BANJO CONN. 1/8 - 5/16-24UNF	
570	90165-0056	-		4	PIPE CLIP FOR TUBE D=4 MM	
580	90165-0057	-		5	PIPE CLIP FOR TUBE D=6 MM	
590	316810-0106	-		1	PIPE CLIP FOR TUBE D=8 MM	
595	90074-0002	-		2	CLIPS, CABLE CLIPS DI=11 MM	
TBA/8 1000SQ NORMFIN						
010	A576251-0100	-		1	CONVEYOR	**515**
070	A576247-0100	-		1	PROTECTION	**525**
100	312125-0287	-		4	SCREW PAN HEAD MCS M4X8 SS	
300	90028-0001	C		1	CONE 5/32"	
320	90028-0020	-		10	CONE TUBE 2,5MM	
330	90028-0021	C		2	CONE TUBE 4 MM	
360	90032-0040	-		2	BLOCK 6 WAYS	
400	90092-0048	C		2	OIL BRUSH, FLAT, 5/16-24 UNF	
410	90092-0052	C		4	METERING VALVE 10 MM3	
420	90092-0053	-		8	METERING VALVE 30 MM3	
430	90134-0002	-		1	CONNECTOR R1/8, D=4 MM	
440	90134-0003	C		1	BUSHING	
480	90134-0030	-		3	SLEEVE FOR PLASTIC TUBE	
490	342706-0114	-		4	ACCESSORIES, INSERT SLEEVE 4 MM	
500	90134-0039	-		10	BUSHING VALVE CONNECTION 2,5 MM	
505	90134-0040	C		2	BUSHING VALVE CONNECTION 4 MM	
560	90134-0058	-		9	CONNECTION	
565	90137-0002	-		1	BANJO CONN. 1/8 - 5/16-24UNF	
570	90165-0056	-		1	PIPE CLIP FOR TUBE D=4 MM	
580	90165-0057	-		1	PIPE CLIP FOR TUBE D=6 MM	
590	316810-0106	-		3	PIPE CLIP FOR TUBE D=8 MM	
595	90074-0002	-		2	CLIPS, CABLE CLIPS DI=11 MM	
TBA/8 1000SQ REVFIN						
010	A576251-0100	-		1	CONVEYOR	**515**
034	597584-0000	-		2	BRACKET	
036	1143001-0000	-		1	ATTACHMENT PLATE	
037	1143002-0000	D		2	BRACKET	
039	1143000-0000	D		2	PUSHER	
070	A576247-0100	-		1	PROTECTION	**525**
080	312105-0368	-		4	SCREW M6S M6X16 A280	
100	312125-0287	-		6	SCREW PAN HEAD MCS M4X8 SS	
300	90028-0001	C		1	CONE 5/32"	
320	90028-0020	-		10	CONE TUBE 2,5MM	
330	90028-0021	C		2	CONE TUBE 4 MM	
360	90032-0040	-		2	BLOCK 6 WAYS	
400	90092-0048	C		2	OIL BRUSH, FLAT, 5/16-24 UNF	
410	90092-0052	C		4	METERING VALVE 10 MM3	
420	90092-0053	-		8	METERING VALVE 30 MM3	
430	90134-0002	-		1	CONNECTOR R1/8, D=4 MM	
440	90134-0003	C		1	BUSHING	
480	90134-0030	-		3	SLEEVE FOR PLASTIC TUBE	
490	342706-0114	-		4	ACCESSORIES, INSERT SLEEVE 4 MM	
500	90134-0039	-		10	BUSHING VALVE CONNECTION 2,5 MM	
505	90134-0040	C		2	BUSHING VALVE CONNECTION 4 MM	
560	90134-0058	-		9	CONNECTION	
565	90137-0002	-		1	BANJO CONN. 1/8 - 5/16-24UNF	
570	90165-0056	-		1	PIPE CLIP FOR TUBE D=4 MM	
580	90165-0057	-		1	PIPE CLIP FOR TUBE D=6 MM	

Machine Type | Group Description | Used-In | Group Number | Page No

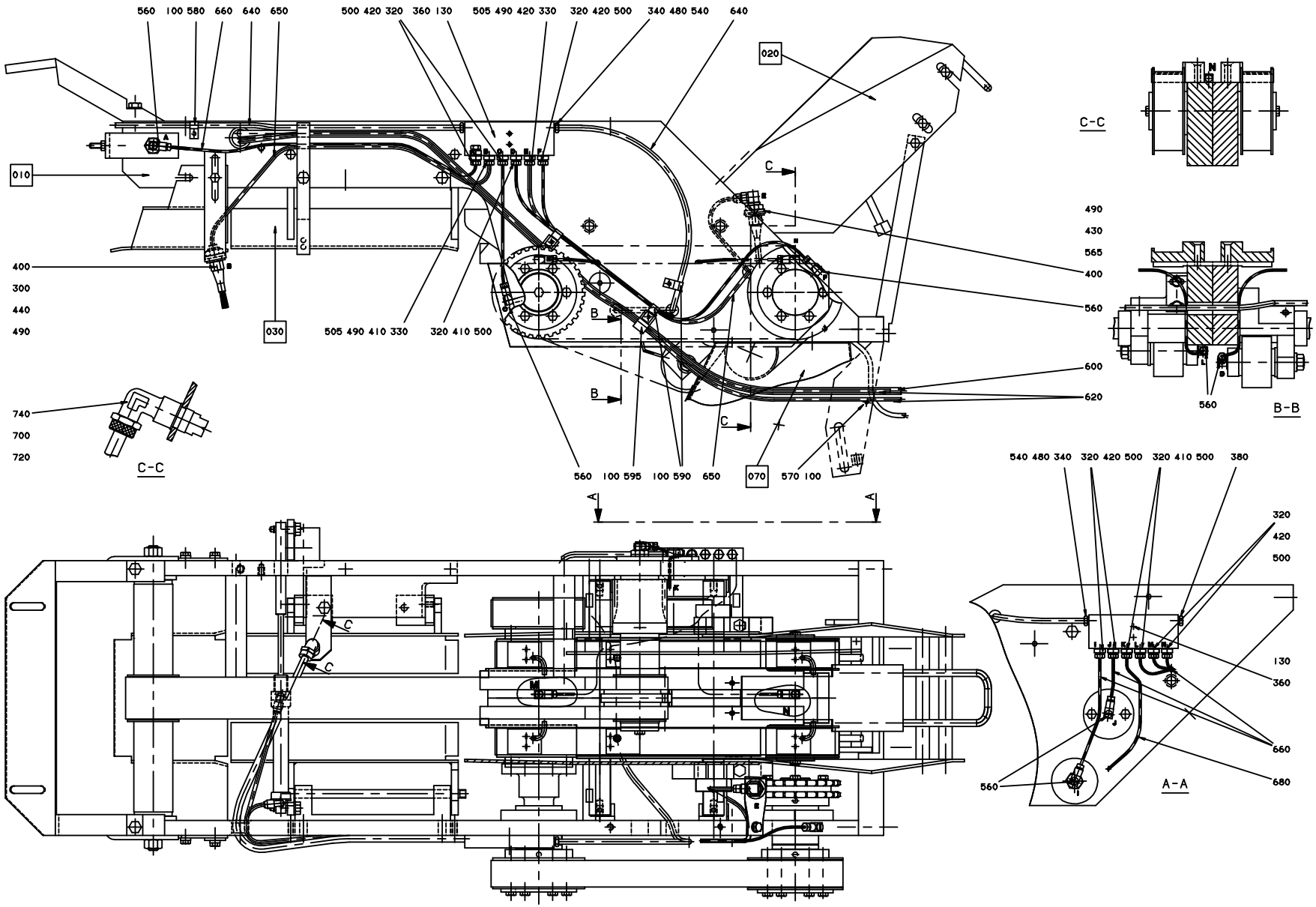
560 100 580 660 640 650
500 420 320 360 130
505 490 420 330
320 420 500
340 480 540
640
020
010
030
400
300
440
490
505 490 410 330
320 410 500
C-C
490
430
565
400
560
600
620
560
B-B
740
700
720
C-C
560 100 595 100 590 650
070
570 100
A
A
540 480 340 320 420 500 320 410 500 380
320
420
500
130
360
660
680
560
A-A

Pos	Part No	SP	UN	Qty	Description	Page No
TBA/8 1000SQ REVFIN (Cont'd)						
565	90137-0002	-		1	BANJO CONN. 1/8 - 5/16-24UNF	
570	90165-0056	-		1	PIPE CLIP FOR TUBE D=4 MM	
580	90165-0057	-		1	PIPE CLIP FOR TUBE D=6 MM	
590	316810-0106	-		3	PIPE CLIP FOR TUBE D=8 MM	
591	90450-0495	C		2	CYLINDER	
592	342732-0102	-		4	ELBOW PIPE JOINT, EXT.THREAD, D=6MM-G1/8	
593	90166-0124	-	MM	7000	TUBE 6 MM PA,TRANSP.	
594	312631-0321	-		2	NUT HEX. M10X1,25 FE FZB	
595	90074-0002	-		4	CLIPS, CABLE CLIPS DI=11 MM	
596	312105-0372	-		10	SCREW M6S M6X25 A280	
597	315101-0153	-		10	WASHER PLAIN, BRB, 6,4/12 H=1,5	
598	352113-0101	-		3	CLIP STRIP BLACK 92X2,5MM	
599	312105-0362	-		1	SCREW M6S M6X8 A280	
Common Parts						
020	A525087-0100	-		1	DROP	**527, 529**
030	A525088-0200	-		1	DISCHARGE CHUTE	**531, 533**
130	312155-0295	-		4	SCREW HEX.SOCK.COUNT.MF6S M4X20 A480	
340	90028-0025	C		3	CONE TUBE 6 MM	
380	90087-0019	-		1	PLUG M10X1 STAINLESS	
540	90134-0055	C		3	BUSHING/NUT INLET/OUTLET 6 MM	
600	90166-0122	-	MM	1300	TUBE 8 MM PA,TRANSP.	
620	90166-0095	-	MM	3000	TUBE 4 MM PA BLUE	
640	90166-0108	-	MM	1300	TUBE 6 MM PA,TRANSP.	
650	90166-0051	-	MM	2600	TUBE PA,TRANSP.	
660	90166-0143	-	MM	4000	TUBE 2,5 MM PA,TRANSP.	
680	90266-0019	-	MM	300	PIPE	
700	90424-0035	D		1	SPRAY NOZZLE 95 DEG	
720	315233-0110	-		1	WASHER PL.RND.NYL.13,3/17,H=1	
740	342933-0122	-		1	ELBOW 90 COUPL.,INT.THREAD 8/6-G1/4"	

Pos	Part No	SP	UN	Qty	Description	Page No

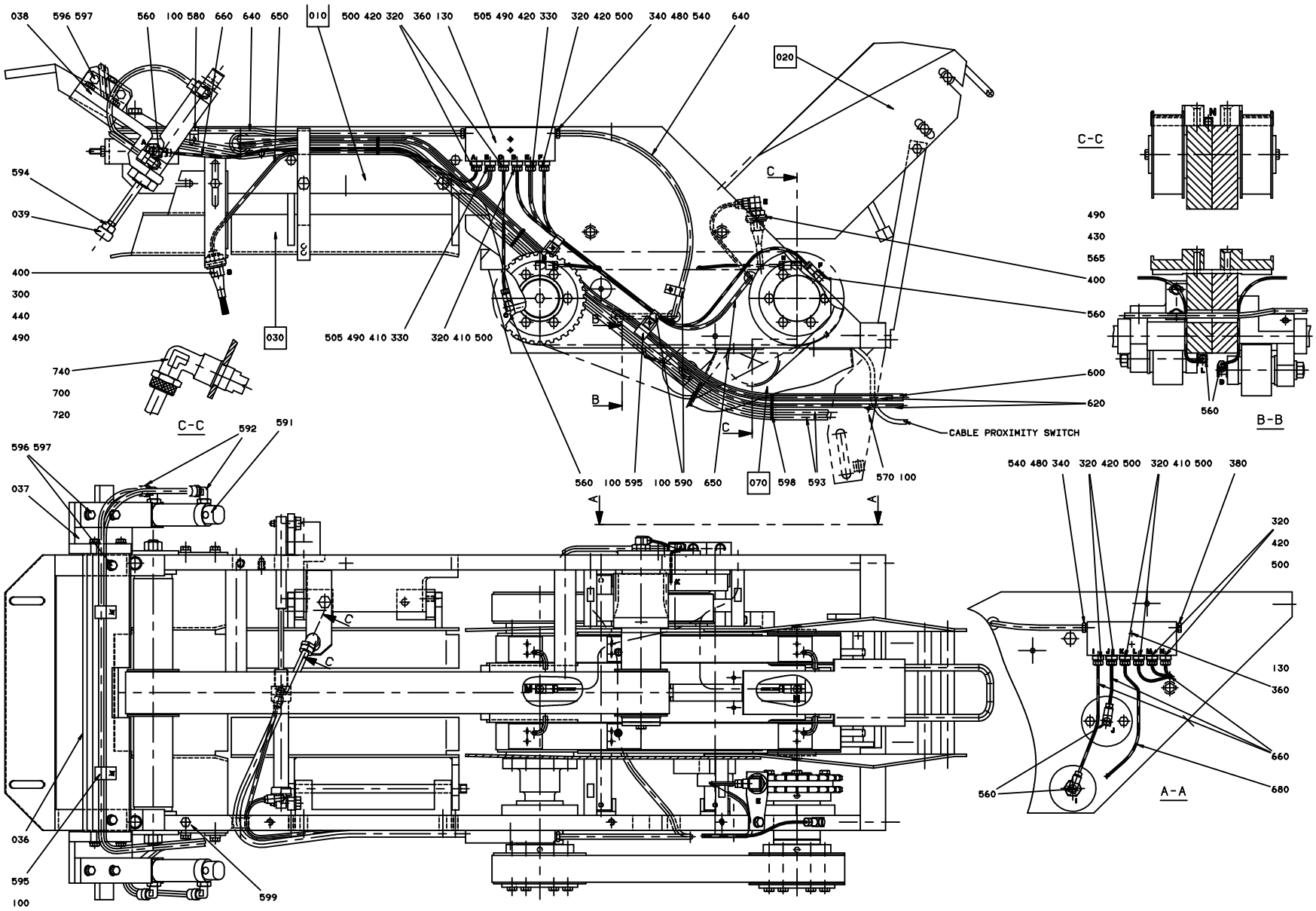
038
596 597
560
100 580
660
640
650
010
500 420 320
360 130
505 490 420 330
320 420 500
340 480 540
640
020
594
039
400
300
440
490
030
505 490 410 330
320 410 500
740
700
720
C-C
592
591
596 597
037
036
595
100
599
560
100 595
100 590
650
070
598
593
570 100
CABLE PROXIMITY SWITCH
C-C
490
430
565
400
560
600
620
560
B-B
540 480 340
320 420 500
320 410 500
380
320
420
500
130
360
660
680
560
A-A

Pos	Part No	SP	UN	Qty	Description	Page No
SEE PREVIOUS LISTS PAGES: 493, 495.						

Pos	Part No	SP	UN	Qty	Description	Page No

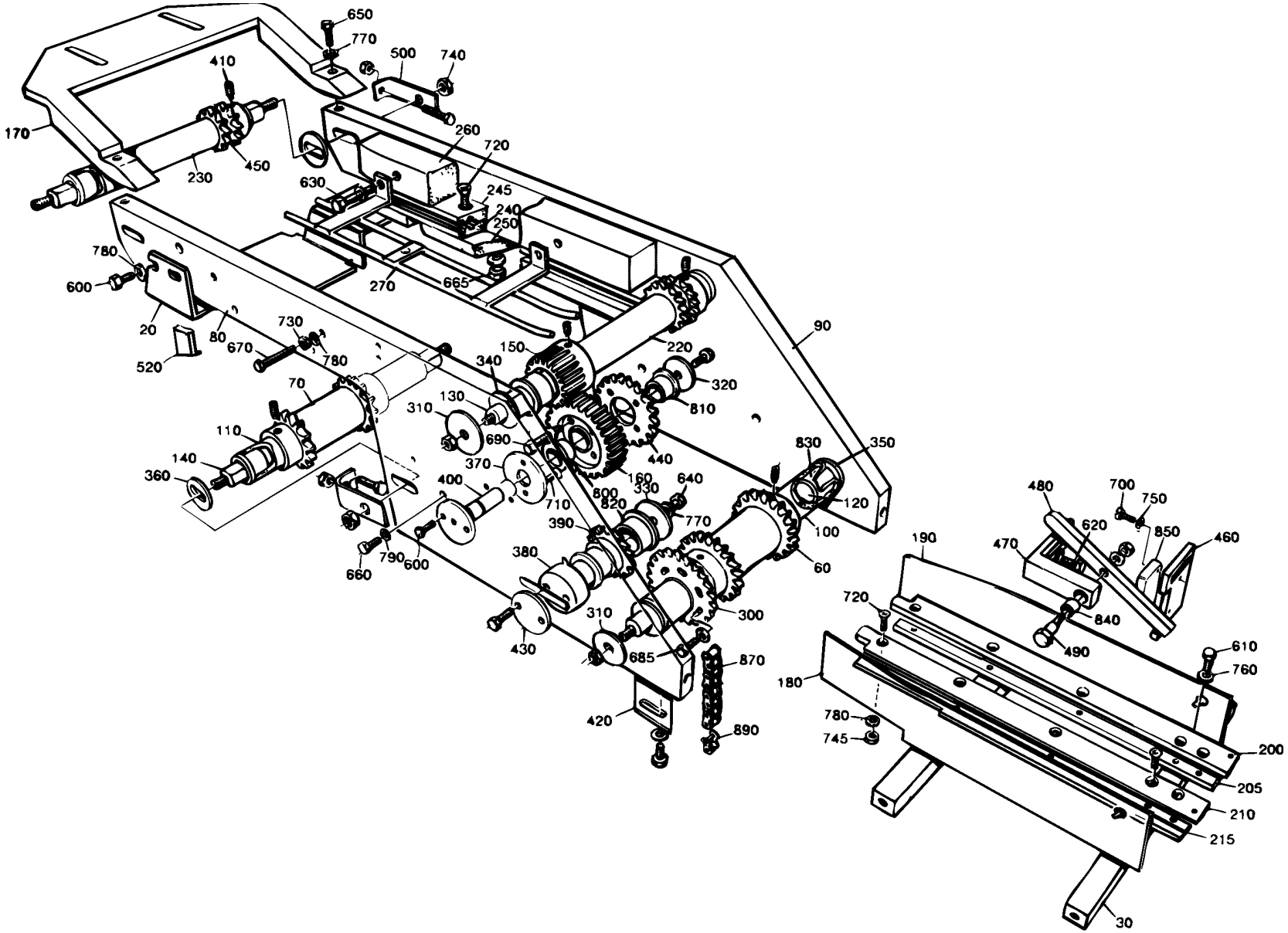
650
770
500
740
410
260
720
170
230
450
630
245
240
250
780
600
270
665
20
80
730
670
780
520
90
150
220
340
320
810
70
130
310
690
110
140
360
370
440
160
400
710
800
330
640
820
770
830
350
120
100
390
60
380
790
600
660
300
310
685
870
430
420
890
480
700
750
620
850
460
470
190
720
840
490
610
760
180
780
745
200
205
210
215
30

ECM: 72197 - 19990215
Group number: 525086-0200
Assembly Drawing: 525086-1_1_AA

Issue: 20020121

Pos	Part No	SP	UN	Qty	Description	Page No
0375S						
020	443388-0002	D		1	HEAD PLATE	
030	443481-0000	D		2	BRACKET	
060	443478-0003	D		1	SPROCKET	
070	443479-0003	D		1	SPROCKET	
200	525245-0000	D		1	PROFILE	
205	525246-0000	D		1	PROFILE	
210	525247-0000	D		1	PROFILE	
215	525248-0000	D		1	PROFILE	
0355B						
020	443388-0001	D		1	HEAD PLATE	
030	443480-0000	D		2	BRACKET	
060	443478-0002	D		1	SPROCKET	
070	443479-0002	D		1	SPROCKET	
200	525425-0000	D		1	PROFILE	
205	525426-0000	D		1	PROFILE	
210	525427-0000	D		1	PROFILE	
215	525428-0000	D		1	PROFILE	
0500B						
020	443387-0000	D		1	HEAD PLATE	
030	443454-0000	D		2	BRACKET	
060	443478-0001	D		1	SPROCKET	
070	443479-0001	D		1	SPROCKET	
200	525425-0000	D		1	PROFILE	
205	525426-0000	D		1	PROFILE	
210	525427-0000	D		1	PROFILE	
215	525428-0000	D		1	PROFILE	
0500S						
020	443388-0001	D		1	HEAD PLATE	
030	443480-0000	D		2	BRACKET	
060	443478-0002	D		1	SPROCKET	
070	443479-0002	D		1	SPROCKET	
200	525245-0000	D		1	PROFILE	
205	525246-0000	D		1	PROFILE	
210	525247-0000	D		1	PROFILE	
215	525248-0000	D		1	PROFILE	
0750S						
020	544321-0000	D		1	HEAD PLATE	
030	544322-0000	D		2	BRACKET	
060	443478-0004	D		1	SPROCKET	
070	443479-0004	D		1	SPROCKET	
200	525245-0000	D		1	PROFILE	
205	525246-0000	D		1	PROFILE	
210	525247-0000	D		1	PROFILE	
215	525248-0000	D		1	PROFILE	
1000S						
020	569132-0000	D		1	HEAD PLATE	
030	569133-0000	D		2	BRACKET	
060	443478-0004	D		1	SPROCKET	
070	443479-0004	D		1	SPROCKET	
200	525403-0000	D		1	PROFILE	
205	525404-0000	D		1	PROFILE	
210	525405-0000	D		1	PROFILE	
215	525406-0000	D		1	PROFILE	
0750B OR 1000B						
020	443387-0000	D		1	HEAD PLATE	
030	443454-0000	D		2	BRACKET	
060	443478-0001	D		1	SPROCKET	
070	443479-0001	D		1	SPROCKET	
200	525245-0000	D		1	PROFILE	
205	525246-0000	D		1	PROFILE	
210	525247-0000	D		1	PROFILE	
215	525248-0000	D		1	PROFILE	
Common Parts						
080	443445-0000	D		1	SIDE PLATE	
090	443446-0000	D		1	SIDE PLATE	
100	443455-0000	D		1	SHAFT	
110	443456-0000	D		1	SHAFT	
120	525400-0000	C		1	SHAFT	
130	525401-0000	C		1	SHAFT	
140	525402-0000	C		2	SHAFT	
150	443290-0000	D		1	GEAR WHEEL	
160	443291-0000	D		1	GEAR WHEEL	
170	443293-0000	D		1	BRACKET	
180	443450-0000	D		1	HEAD PLATE	
190	443451-0000	D		1	HEAD PLATE	
220	443457-0000	D		1	SHAFT	

Machine Type | Group Description | Used-In | Group Number | Page No

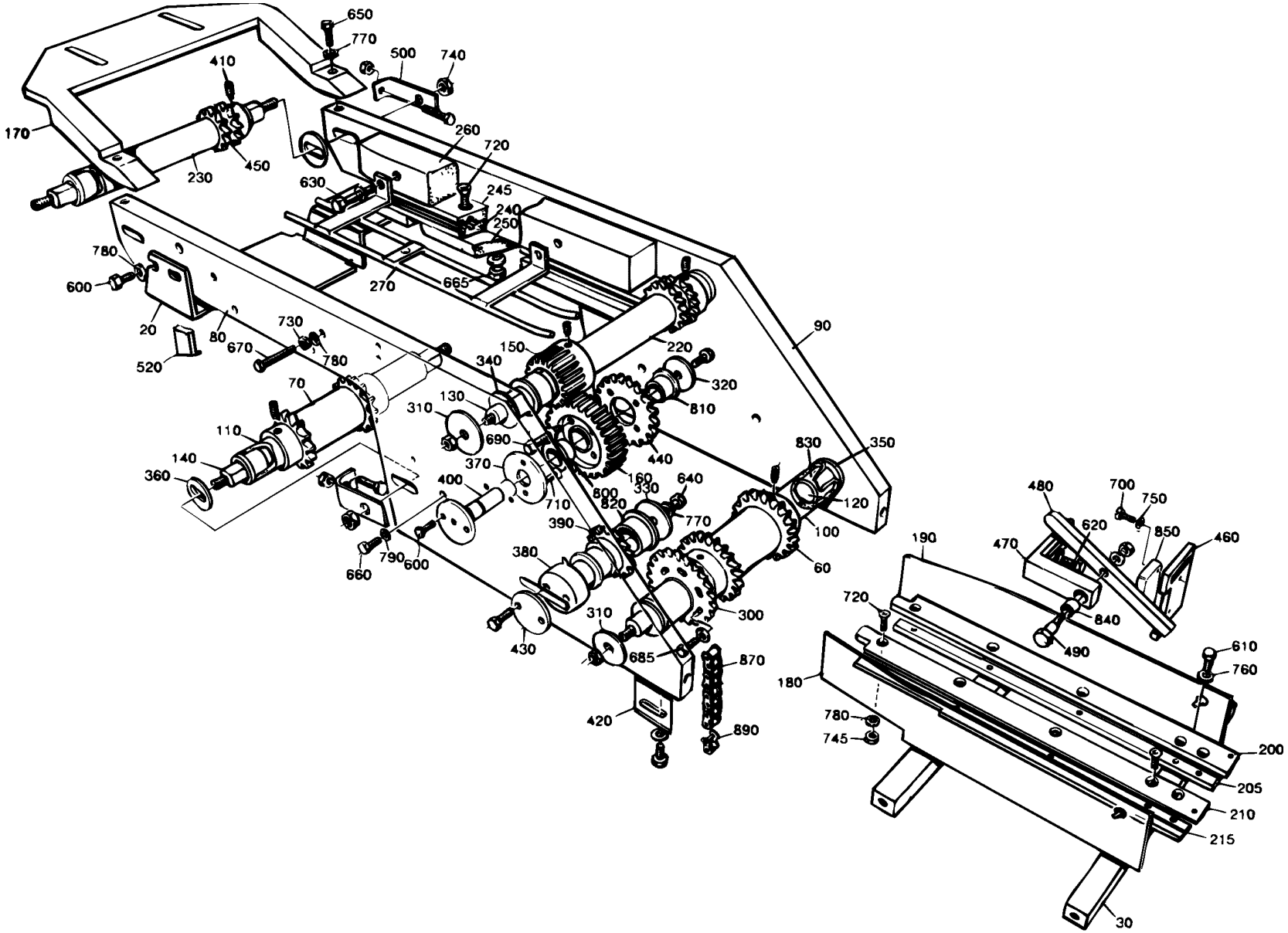
650
770
500
740
410
260
720
170
230
450
630
245
240
250
780
600
270
665
20
80
730
670
780
520
70
150
340
220
320
810
90
310
130
690
370
440
160
800
330
640
820
770
390
400
710
140
360
110
830
350
120
100
60
790
600
660
380
430
310
685
300
870
420
890
480
700
750
620
850
460
470
190
720
840
490
610
760
180
780
745
200
205
210
215
30

Pos	Part No	SP	UN	Qty	Description	Page No
Common Parts (Cont'd)						
230	443458-0000	D		1	SHAFT	
240	525243-0000	D		1	PROFILE	
245	525244-0000	D		1	PROFILE	
250	525242-0000	-		1	BRACKET	
260	443486-0000	D		1	GUIDE	
270	525419-0000	D		1	LEAD RAIL	
300	297899-0000	D		1	SPROCKET	
310	443295-0000	D		4	WASHER	
320	443296-0000	D		1	WASHER	
330	443297-0000	D		1	WASHER	
340	443298-0000	D		2	WASHER	
350	443299-0000	D		2	WASHER	
360	443300-0000	D		4	WASHER	
370	443301-0000	D		1	WASHER	
380	443305-0000	C		1	SHAFT	
390	443306-0000	D		1	SPROCKET	
400	443307-0000	C		1	SHAFT	
410	90287-0161	-		10	SCREW, SOCK.SET DOGPOINT M8X12	
420	443350-0000	-		1	BRACKET	
430	443414-0000	-		1	WASHER	
440	443464-0000	D		1	SPROCKET	
450	443467-0000	C		2	SPROCKET	
460	443482-0000	-		1	BRACKET	
470	443483-0000	-		1	BRACKET	
480	443484-0000	D		1	ARM	
490	443485-0000	C		1	SCREW	
500	443489-0000	-		2	BRACKET	
520	525334-0000	-		1	BRACKET	
530	556886-0000	-		2	BRACKET	
600	312105-0366	-		6	SCREW M6S M6X12 A280	
610	312105-0368	-		7	SCREW M6S M6X16 A280	
620	312105-0370	-		4	SCREW M6S M6X20 A280	
625	312105-0372	-		2	SCREW M6S M6X25 A280	
630	312105-0384	-		2	SCREW M6S M6X70 A280	
640	312105-0449	-		1	SCREW M6S M8X16 A280	
650	312105-0453	-		2	SCREW M6S M8X25 A280	
660	312105-0455	-		6	SCREW M6S M8X30 A280	
665	312105-0457	-		3	SCREW M6S M8X35 A280	
670	312109-0376	-		4	SCREW M6S M6X35 A280	
685	312115-0370	-		6	SCREW MC6S M6X20 A280	
690	312115-0374	-		4	SCREW MC6S M6X30 A280	
700	312125-0230	-		2	SCREW PAN HEAD MCS M3X20 SS	
710	312155-0366	-		2	SCREW HEX.SOCK.COUNT.MF6S M6X12 A280	
720	312155-0376	-		16	SCREW HEX.SOCK.COUNT.MF6S M6X35 A280	
730	312605-0316	-		7	HEXAGON NUT, M6M M6 A280	
740	312605-0322	-		8	HEXAGON NUT, M6M M12 A280	
745	312812-0316	-		6	HEXAGON NUT, NY-LOCK M6 A480	
750	315105-0124	-		2	WASHER PLAIN, BRB, 3,2/6,H=0,5	
760	315105-0153	-		7	WASHER PLAIN, BRB, 6,4/12,H=1,5	
770	315105-0165	-		6	WASHER PLAIN, BRB, 8,4/16,H=1,5	
780	315115-0153	-		28	WASHER PLAIN, TBRB 6,4/12 H=3	
790	315115-0165	-		4	WASHER PLAIN, TBRB 8,4/16 H=3	
800	321101-0252	C		1	FLANGE BUS 25F7X16	
810	321101-0253	C		7	FLANGE BUS 25F7X25	
820	321101-0272	C		2	FLANGE BUS 30F7X20	
830	321101-0283	C		2	FLANGE BUS 35F7X35	
840	321116-0128	C		1	BEAR. BUSH. WITHOUT FL, 10X14X16	
850	90044-0104	C		1	PROX.SWITCH IFM IN 3002	
870	318212-0150	C		1	ROLLER CHAIN, SINGLE 1/2 -150,SS	
890	318219-0187	C		1	CONNECTING LINK SINGLE 1/2",SS	

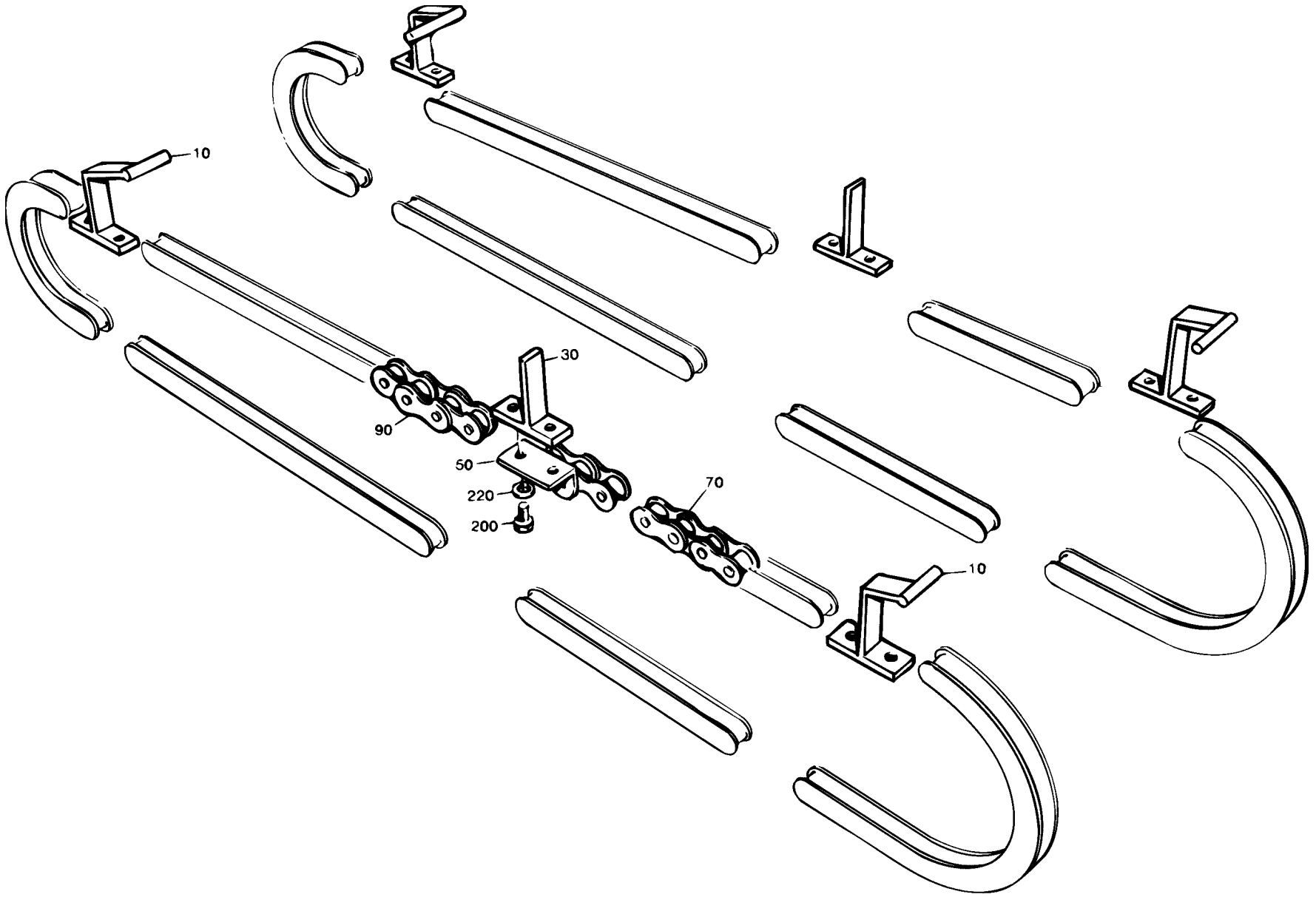
10
30
90
50
220
200
70
10

ECM: 72197 - 19990215
Group number: 525089-0100
Assembly Drawing: 525089-1_1_AA

Issue: 20020121

Pos	Part No	SP	UN	Qty	Description	Page No
0375S OR 0355B OR 0500S OR 0750S						
010	443469-0000	C		3	CARRIER	
070	318212-0008	C		3	ROLLER CHAIN, SINGLE 1/2 -8,SS	
090	90288-0053	C		3	ROLLER CHAIN, SINGLE 1/2 -14	
0500B OR 0750B OR 1000B						
010	525431-0000	C		3	CARRIER	
070	318212-0008	C		3	ROLLER CHAIN, SINGLE 1/2 -8,SS	
090	90288-0053	C		3	ROLLER CHAIN, SINGLE 1/2 -14	
1000S						
010	525431-0000	C		3	CARRIER	
070	318212-0006	C		3	ROLLER CHAIN, SINGLE 1/2 -6	
090	90288-0057	C		3	ROLLER CHAIN, SINGLE 1/2 -16	
Common Parts						
030	443468-0000	C		3	CARRIER	
050	90288-0311	C		6	LINK	
200	312105-0287	-		12	SCREW M6S M4X8 A280	
220	315105-0136	-		12	WASHER PLAIN, BRB, 4,3/8,H=0,8	

Pos	Part No	SP	UN	Qty	Description	Page No

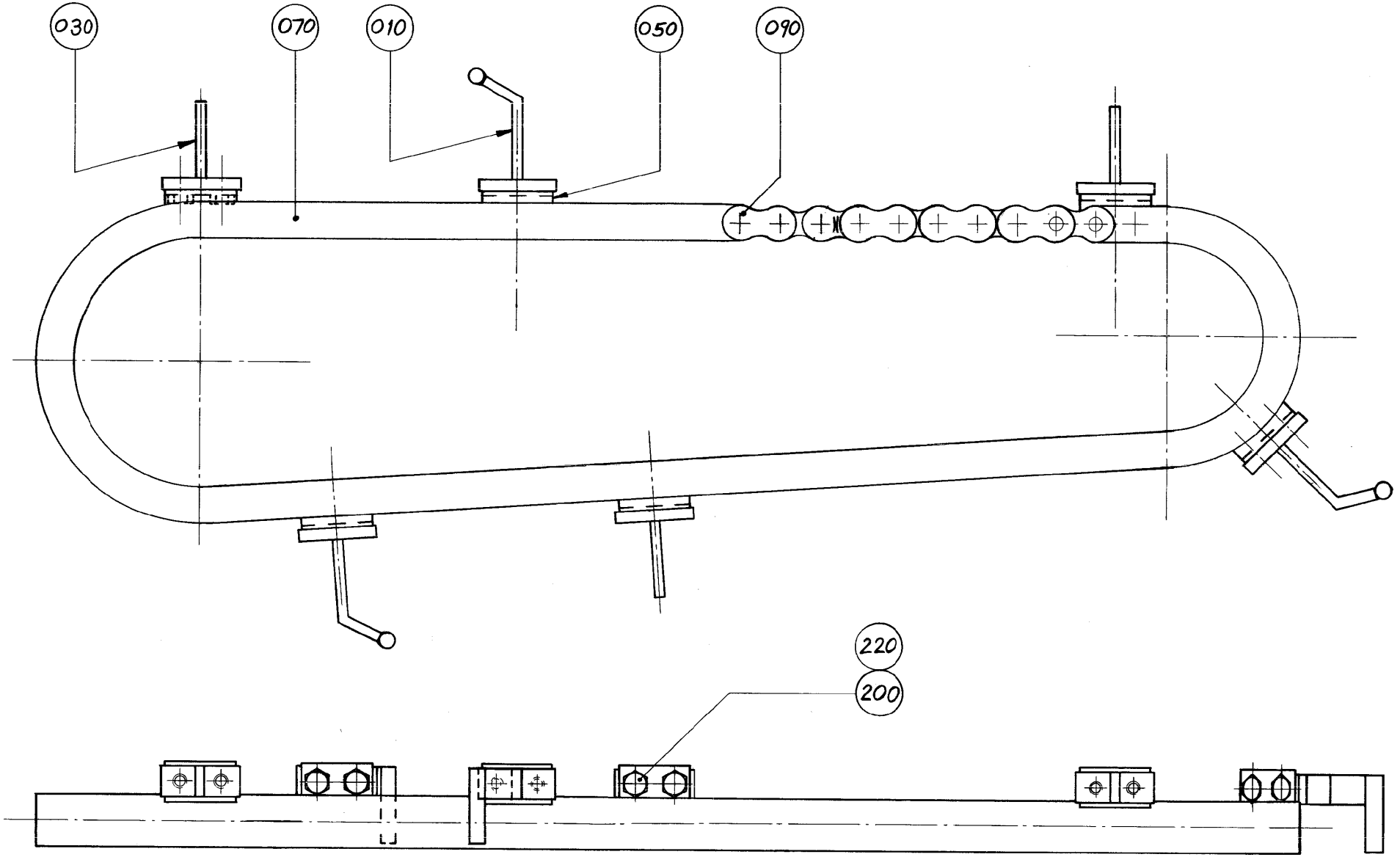
030
070
010
050
090
220
200

ECM: 72197 - 19990215
Group number: 525089-0100
Assembly Drawing: 525089-2_1_AA

Issue: 20020121

Pos	Part No	SP	UN	Qty	Description	Page No
0375S OR 0355B OR 0500S OR 0750S						
010	443469-0000	C		3	CARRIER	
070	318212-0008	C		3	ROLLER CHAIN, SINGLE 1/2 -8,SS	
090	90288-0053	C		3	ROLLER CHAIN, SINGLE 1/2 -14	
0500B OR 0750B OR 1000B						
010	525431-0000	C		3	CARRIER	
070	318212-0008	C		3	ROLLER CHAIN, SINGLE 1/2 -8,SS	
090	90288-0053	C		3	ROLLER CHAIN, SINGLE 1/2 -14	
1000S						
010	525431-0000	C		3	CARRIER	
070	318212-0006	C		3	ROLLER CHAIN, SINGLE 1/2 -6	
090	90288-0057	C		3	ROLLER CHAIN, SINGLE 1/2 -16	
Common Parts						
030	443468-0000	C		3	CARRIER	
050	90288-0311	C		6	LINK	
200	312105-0287	-		12	SCREW M6S M4X8 A280	
220	315105-0136	-		12	WASHER PLAIN, BRB, 4,3/8,H=0,8	

Pos	Part No	SP	UN	Qty	Description	Page No

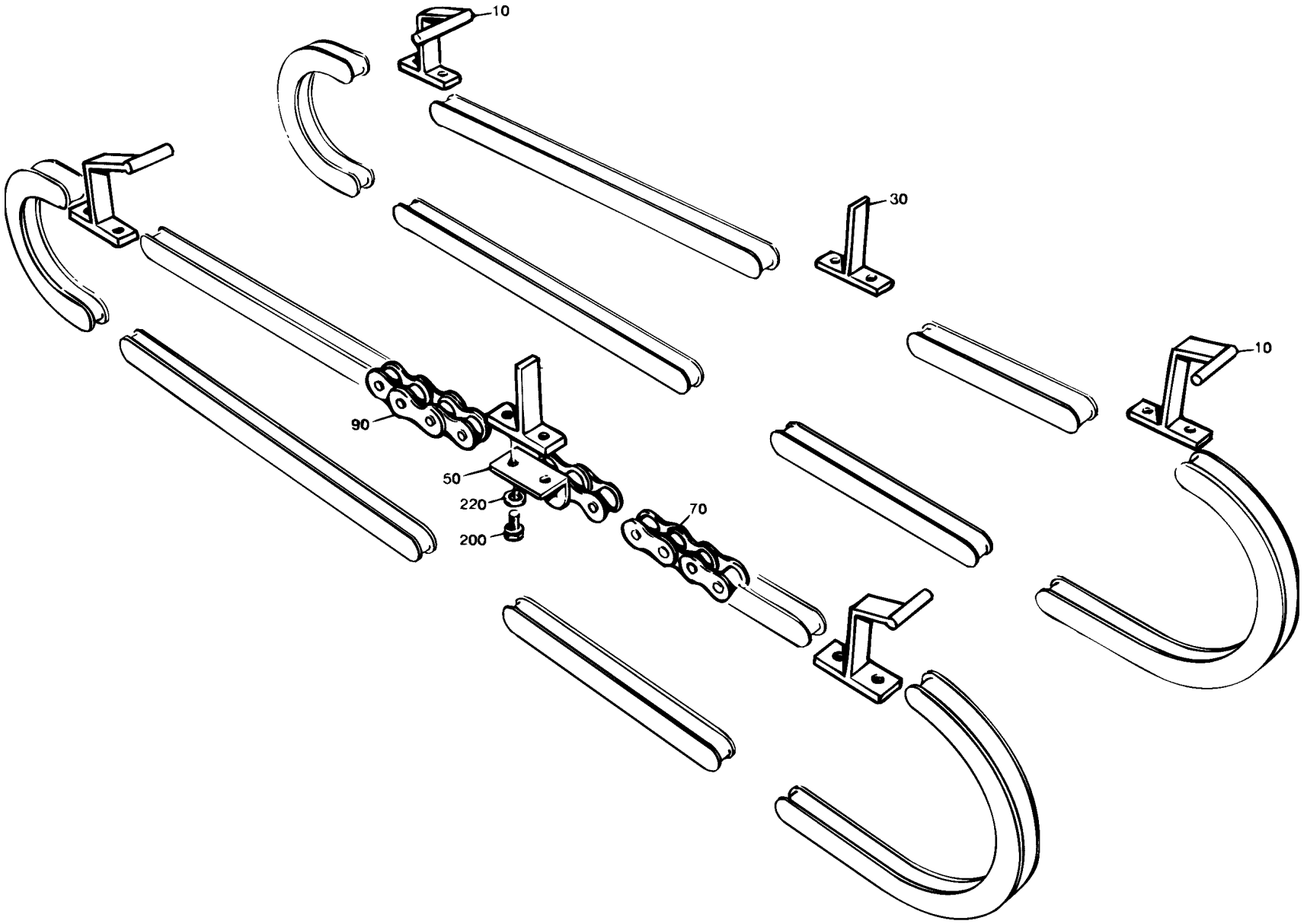
10
30
10
90
50
220
200
70

ECM: 72197 - 19990215
Group number: 525090-0100
Assembly Drawing: 525090-1_1_AA

Issue: 20020121

Pos	Part No	SP	UN	Qty	Description	Page No
0375S OR 0355B OR 0500S OR 0750S						
010	443470-0000	C		3	CARRIER	
070	318212-0008	C		3	ROLLER CHAIN, SINGLE 1/2 -8,SS	
090	90288-0053	C		3	ROLLER CHAIN, SINGLE 1/2 -14	
0500B OR 0750B OR 1000B						
010	525432-0000	C		3	CARRIER	
070	318212-0008	C		3	ROLLER CHAIN, SINGLE 1/2 -8,SS	
090	90288-0053	C		3	ROLLER CHAIN, SINGLE 1/2 -14	
1000S						
010	525432-0000	C		3	CARRIER	
070	318212-0006	C		3	ROLLER CHAIN, SINGLE 1/2 -6	
090	90288-0057	C		3	ROLLER CHAIN, SINGLE 1/2 -16	
Common Parts						
030	443468-0000	C		3	CARRIER	
050	90288-0311	C		6	LINK	
200	312105-0287	-		12	SCREW M6S M4X8 A280	
220	315105-0136	-		12	WASHER PLAIN, BRB, 4,3/8,H=0,8	

Pos	Part No	SP	UN	Qty	Description	Page No

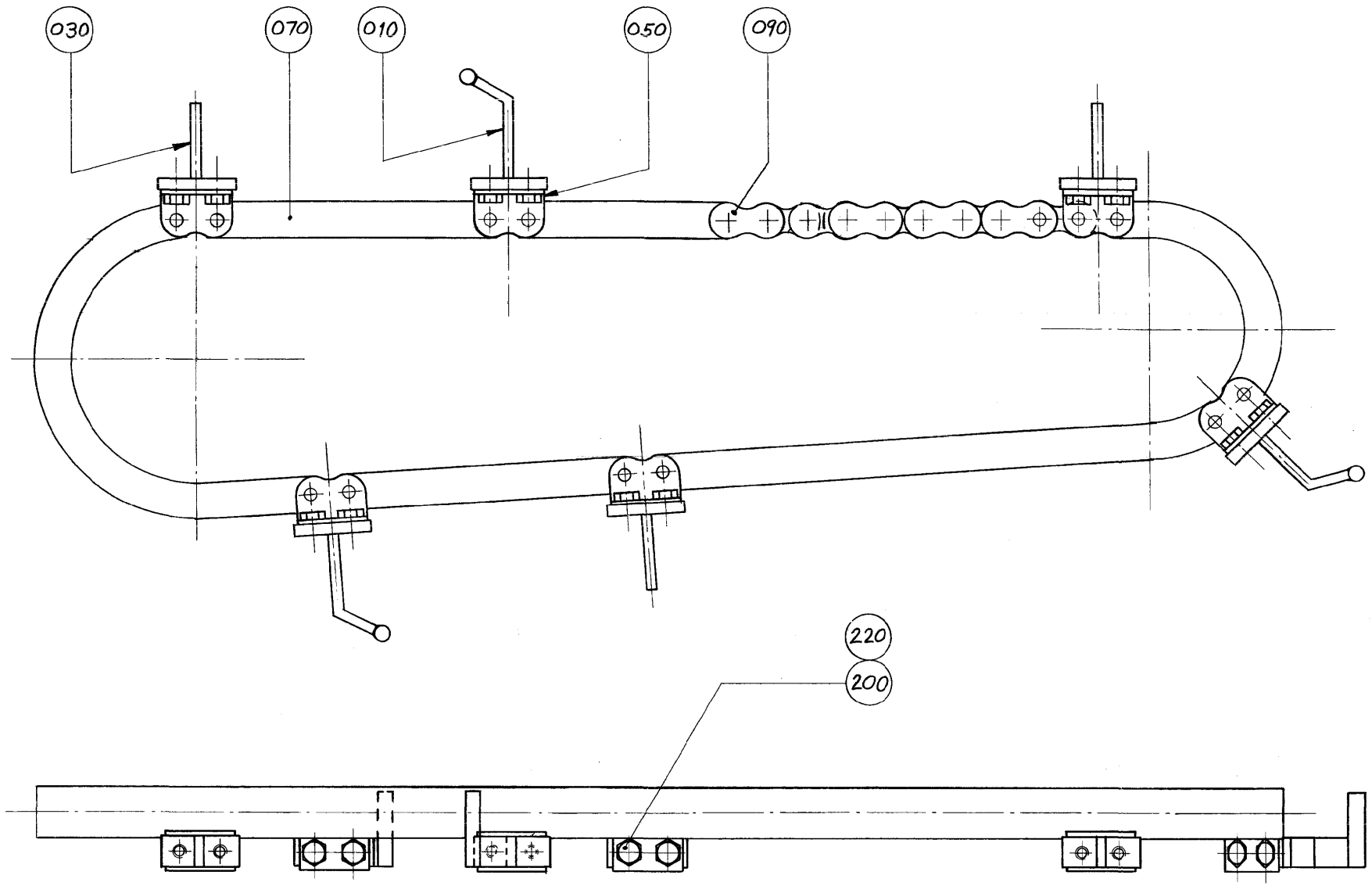
030
070
010
050
090
220
200

ECM: 72197 - 19990215
Group number: 525090-0100
Assembly Drawing: 525090-2_1_AA

Issue: 20020121

Pos	Part No	SP	UN	Qty	Description	Page No
0375S OR 0355B OR 0500S OR 0750S						
010	443470-0000	C		3	CARRIER	
070	318212-0008	C		3	ROLLER CHAIN, SINGLE 1/2 -8,SS	
090	90288-0053	C		3	ROLLER CHAIN, SINGLE 1/2 -14	
0500B OR 0750B OR 1000B						
010	525432-0000	C		3	CARRIER	
070	318212-0008	C		3	ROLLER CHAIN, SINGLE 1/2 -8,SS	
090	90288-0053	C		3	ROLLER CHAIN, SINGLE 1/2 -14	
1000S						
010	525432-0000	C		3	CARRIER	
070	318212-0006	C		3	ROLLER CHAIN, SINGLE 1/2 -6	
090	90288-0057	C		3	ROLLER CHAIN, SINGLE 1/2 -16	
Common Parts						
030	443468-0000	C		3	CARRIER	
050	90288-0311	C		6	LINK	
200	312105-0287	-		12	SCREW M6S M4X8 A280	
220	315105-0136	-		12	WASHER PLAIN, BRB, 4,3/8,H=0,8	

Pos	Part No	SP	UN	Qty	Description	Page No

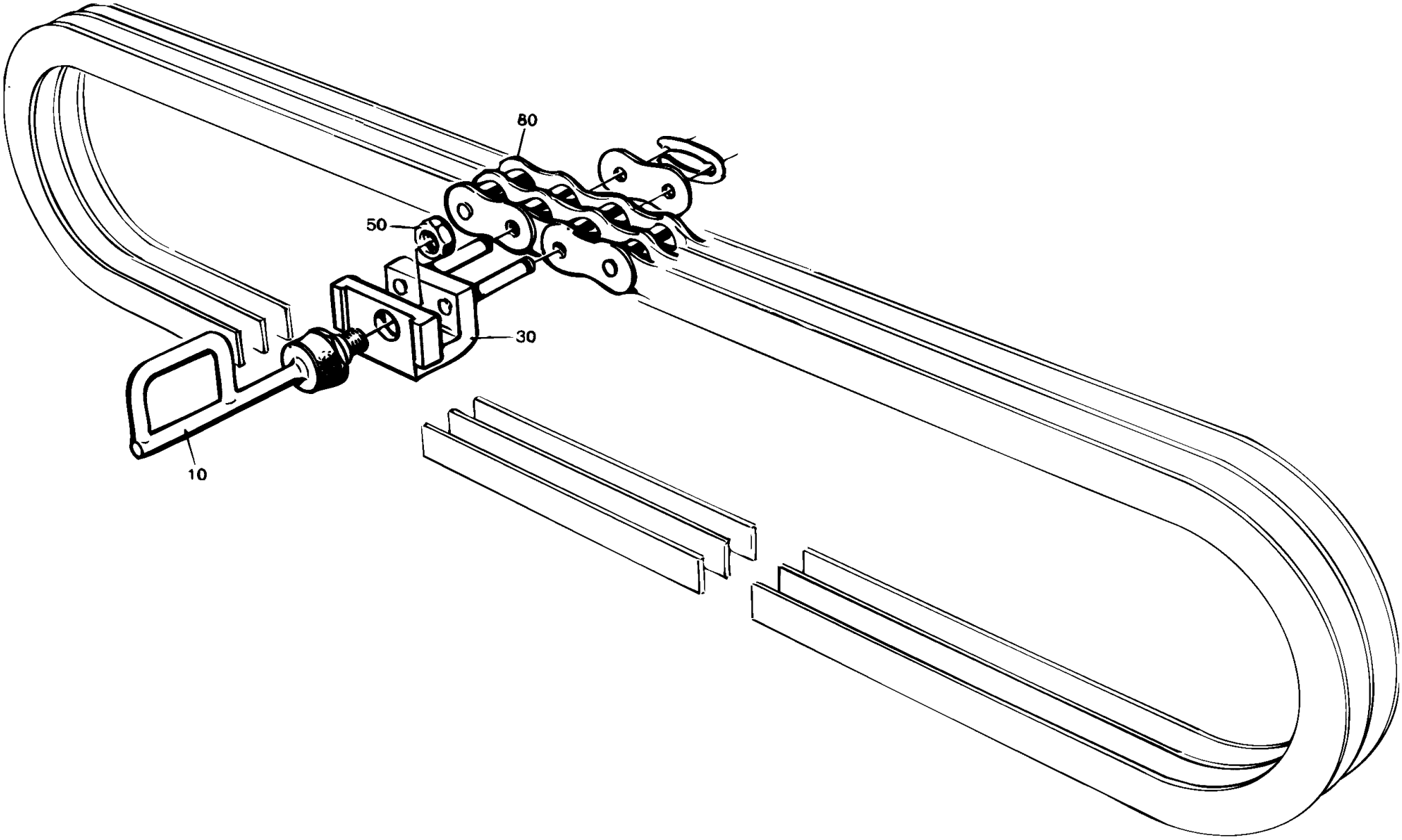
80
50
30
10

ECM: 72197 - 19990215
Group number: 525091-0100
Assembly Drawing: 525091-1_1_AA

Issue: 20020121

Pos	Part No	SP	UN	Qty	Description	Page No
0375S OR 0355B OR 0500S						
010	525208-0002	C		3	CARRIER	
0500B OR 0750B OR 1000B						
010	525208-0001	C		3	CARRIER	
1000S OR 0750S						
010	525208-0003	C		3	CARRIER	
Common Parts						
030	B525254-0000	C		3	LINK	
	318219-0687	*-*		*1*	*CONNECTING LINK, TRIPLEX 1/2", SS*	
050	312605-0318	-		3	HEXAGON NUT, M6M M8 A280	
080	318242-0036	C		3	ROLLER CHAIN DUPLEX 1/2"-36,SS	

Pos	Part No	SP	UN	Qty	Description	Page No

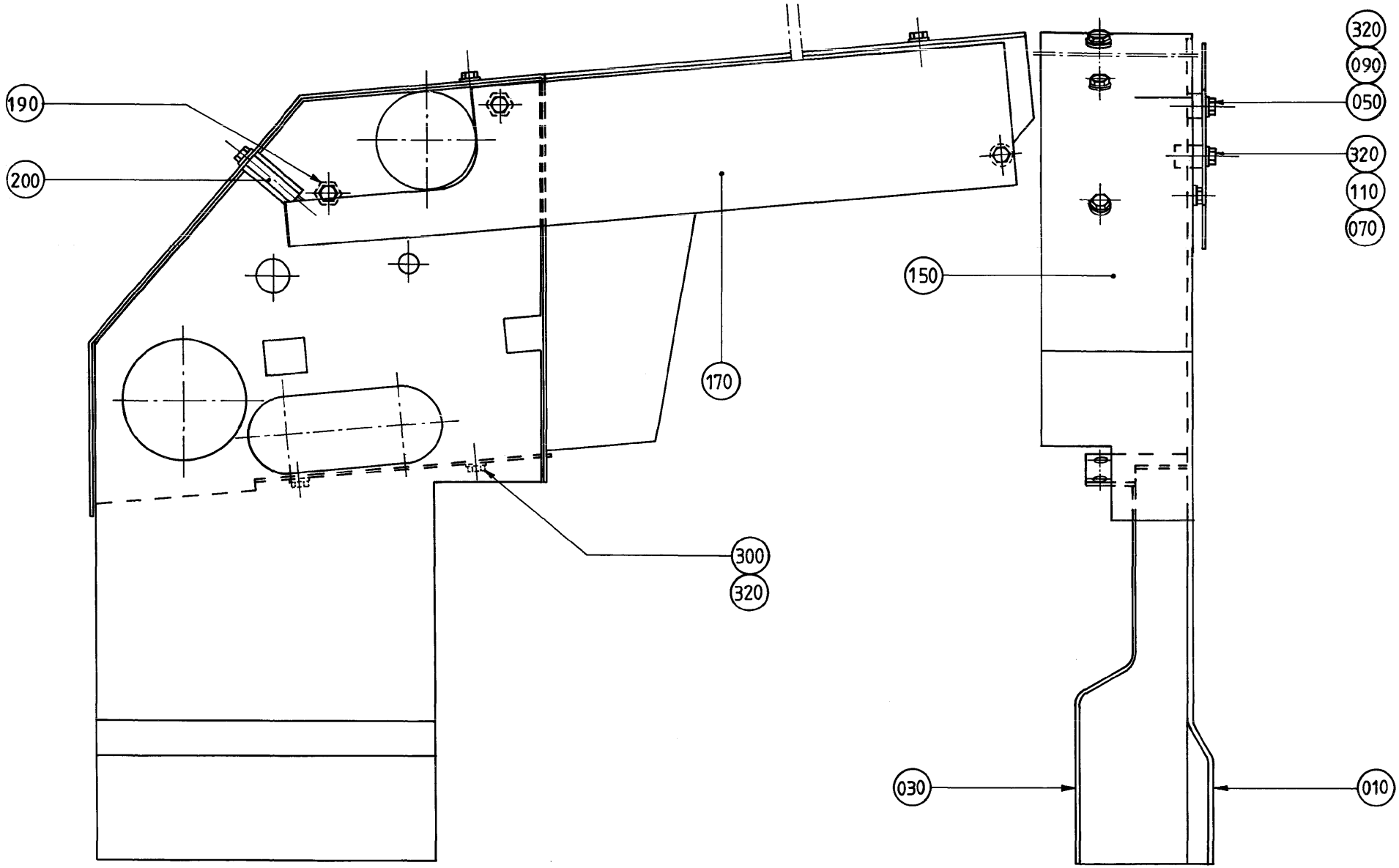
190
200
170
300
320
150
320
090
050
320
110
070
030
010

Pos	Part No	SP	UN	Qty	Description	Page No
0375S						
010	525038-0000	-		1	GABLE PLATE	
030	525039-0000	-		1	GABLE PLATE	
050	525052-0005	-		1	SPACER	
070	525052-0006	-		1	SPACER	
090	312105-0378	-		1	SCREW M6S M6X40 A280	
110	312105-0381	-		1	SCREW M6S M6X55 A280	
150	928901-0000	-		1	COVERING PLATE	
0355B						
010	525260-0000	-		1	GABLE PLATE	
030	525261-0000	-		1	GABLE PLATE	
050	525052-0003	-		1	SPACER	
070	525052-0004	-		1	SPACER	
090	312105-0376	-		1	SCREW M6S M6S M6X35 A280	
110	312105-0380	-		1	SCREW M6S M6X50 A280	
150	566416-0000	-		1	COVERING PLATE	
200	525338-0000	-		1	SPACER	
0500B OR 0750B						
010	525150-0000	-		1	GABLE PLATE	
030	525151-0000	-		1	GABLE PLATE	
050	525052-0001	-		1	SPACER	
070	525052-0002	-		1	SPACER	
090	312105-0370	-		1	SCREW M6S M6X20 A280	
110	312105-0374	-		1	SCREW M6S M6X30 A280	
150	525339-0000	-		1	COVERING PLATE	
200	525338-0000	-		1	SPACER	
0500S						
010	525038-0000	-		1	GABLE PLATE	
030	525039-0000	-		1	GABLE PLATE	
050	525052-0003	-		1	SPACER	
070	525052-0004	-		1	SPACER	
090	312105-0376	-		1	SCREW M6S M6S M6X35 A280	
110	312105-0380	-		1	SCREW M6S M6X50 A280	
150	566416-0000	-		1	COVERING PLATE	
200	525338-0000	-		1	SPACER	
1000S OR 0750S OR 1000B						
010	443476-0000	-		1	GABLE PLATE	
030	443477-0000	-		1	GABLE PLATE	
050	525052-0001	-		1	SPACER	
070	525052-0002	-		1	SPACER	
090	312105-0370	-		1	SCREW M6S M6X20 A280	
110	312105-0374	-		1	SCREW M6S M6X30 A280	
150	525339-0000	-		1	COVERING PLATE	
200	525338-0000	-		1	SPACER	
Common Parts						
170	525051-0000	-		1	HEAD PLATE	
190	443419-0000	-		2	SPACER	
300	312105-0364	-		6	SCREW M6S M6X10 A280	
320	315105-0153	-		8	WASHER PLAIN, BRB, 6,4/12,H=1,5	

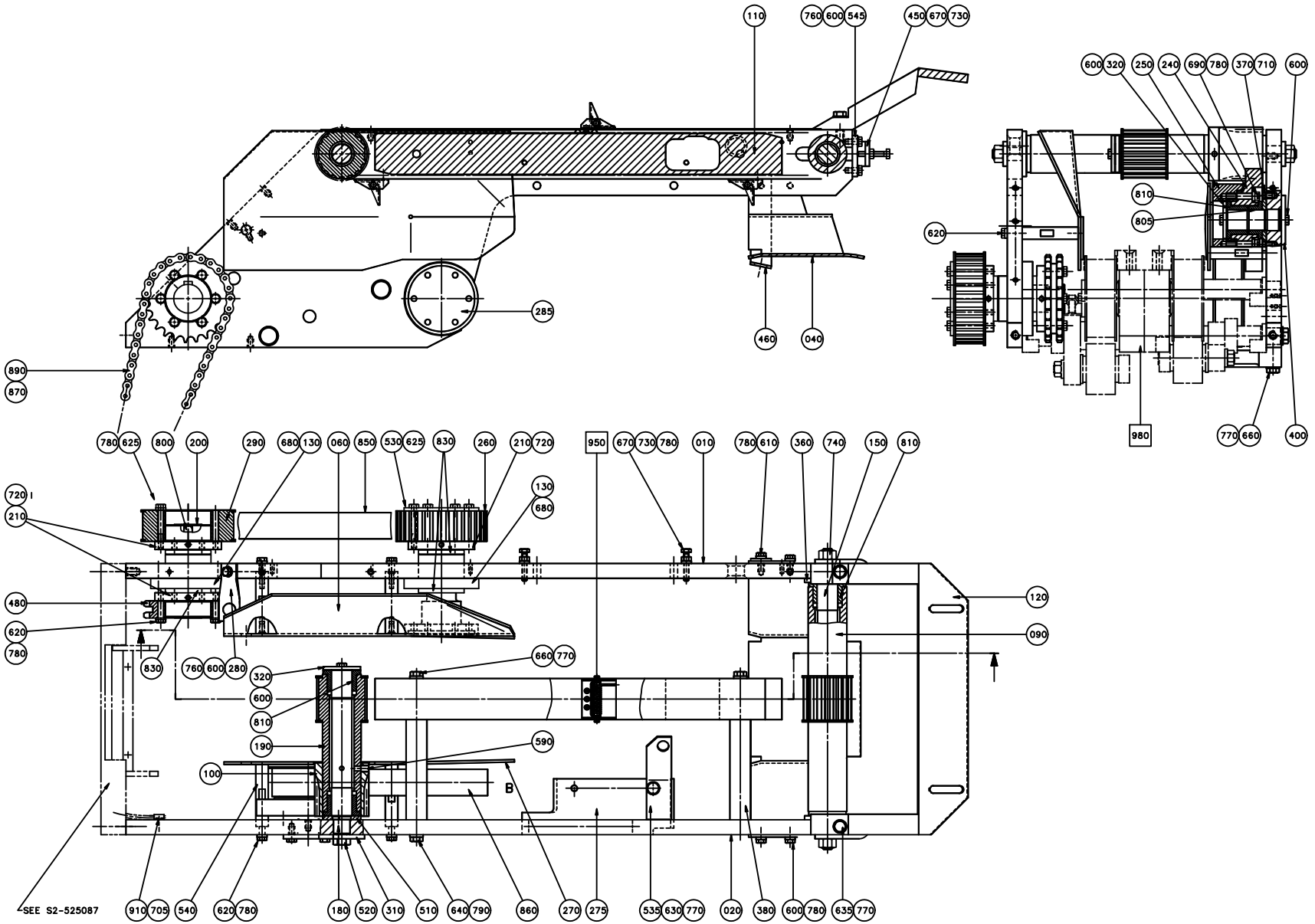
110
760 600 545
450 670 730
600 320 250 240 690 780 370 710 600
810
805
620
285
460
040
890
870
780 625 800 200 290 680 130 060 850 530 625 830 260 210 720
950 670 730 780 010 780 610 360 740 150 810
720
210
130
680
480
620
780
830
760 600 280
320
600
810
190
100
660 770
590
B
120
090
980
770 660 400
SEE S2-525087
910 705 540 620 780 180 520 310 510 640 790 860 270 275 535 630 770 020 380 600 780 635 770

ECM: 72197 - 19990215
Group number: 576251-0100
Assembly Drawing: 576251-1_1_AA

Issue: 20020121

Pos	Part No	SP	UN	Qty	Description	Page No
NORMFIN						
120	443293-0000	-		1	BRACKET	
REVFIN						
120	1143003-0000	-		1	BRACKET	
Common Parts						
010	574132-0000	D		1	SIDE PLATE	
020	574133-0000	D		1	SIDE PLATE	
040	574094-0000	D		1	HEAD PLATE	
060	574145-0000	D		1	HEAD PLATE	
090	443289-0000	D		1	TOOTHED PULLY	
100	443290-0000	C		1	GEAR WHEEL	
110	443292-0000	-		1	STEERING	
130	574139-0000	-		2	BEARING HOUSING	
150	525402-0000	C		1	SHAFT	
180	574069-0000	D		1	AXLE PIN	
190	574070-0000	D		1	TIMING BELT SHAFT	
200	574140-0000	-		1	SHAFT	
210	574150-0000	-		3	SLEEVE	
240	574082-0000	D		1	GEAR WHEEL	
250	574085-0000	D		1	TIMING BELT PULLEY	
260	574086-0000	D		1	TIMING BELT PULLEY	
270	574146-0000	-		1	HEAD PLATE	
275	574121-0000	-		1	BRACKET	
280	574122-0000	-		1	BRACKET	
285	574148-0000	-		1	SHAFT	
290	574159-0000	D		1	TIMING BELT PULLEY	
310	443295-0000	D		1	WASHER	
320	443296-0000	D		2	WASHER	
360	443300-0000	D		2	WASHER	
370	443301-0000	D		1	WASHER	
380	443312-0000	-		2	SPACER	
400	443307-0000	D		1	SHAFT	
450	443489-0000	-		2	BRACKET	
460	525334-0000	-		1	BRACKET	
480	573353-0000	D		1	SPROCKET	
510	574083-0000	D		1	WASHER	
520	574084-0000	D		1	SCREW	
530	574087-0000	-		1	WASHER	
535	574123-0000	-		1	BRACKET	
540	574147-0000	-		4	HOLDER	
545	574155-0000	-		2	PLATE	
590	90287-0161	-		2	SCREW, SOCK.SET DOGPOINT M8X12	
600	312105-0366	-		10	SCREW M6S M6X12 A280	
610	312105-0368	-		1	SCREW M6S M6X16 A280	
620	312105-0374	-		10	SCREW M6S M6X30 A280	
625	312105-0380	-		12	SCREW M6S M6X50 A280	
630	312105-0447	-		1	SCREW M6S M8X12 A280	
635	312105-0453	-		2	SCREW M6S M8X25 A280	
640	312105-0455	-		2	SCREW M6S M8X30 A280	
660	312105-0463	-		4	SCREW M6S M8X60 A280	
670	312109-0376	-		4	SCREW M6S M6X35 A280	
680	312115-0366	-		8	SCREW MC6S M6X12 A280	
690	312115-0374	-		4	SCREW MC6S M6X30 A280	
705	312125-0287	-		2	SCREW PAN HEAD MCS M4X8 SS	
710	312155-0366	-		2	SCREW HEX.SOCK.COUNT.MF6S M6X12 A280	
720	312318-0366	-		3	SCREW SOCK.SET CUP P MSK6SS M6X12 A4	
730	312605-0316	-		4	HEXAGON NUT, M6M M6 A280	
740	312605-0322	-		2	HEXAGON NUT, M6M M12 A280	
760	315105-0153	-		5	WASHER PLAIN, BRB, 6,4/12,H=1,5	
770	315105-0165	-		8	WASHER PLAIN, BRB, 8,4/16,H=1,5	
780	315115-0153	-		26	WASHER PLAIN, TBRB 6,4/12 H=3	
790	315115-0165	-		2	WASHER PLAIN, TBRB 8,4/16 H=3	
800	315705-0298	-		3	PARALLEL KEY W. ROUND ENDS 10X8X30 MM	
805	321101-0252	C		1	FLANGE BUS 25F7X16	
810	321101-0253	C		5	FLANGE BUS 25F7X25	
830	321101-0282	C		4	FLANGE BUS 35F7X20	
850	90417-0329	C		1	TIMING BELT T10X960X32 POLYURETHANE	
860	90417-0345	C		1	TIMING BELT T10X690X32 POLYURETHANE	
870	318219-0487	C		1	CONNECTING LINK, DUPLEX 1/2", SS	
890	318242-0108	C		1	ROLLER CHAIN, DUPLEX 1/2"-108, SS	
910	90165-0056	-		2	PIPE CLIP FOR TUBE D=4 MM	
F950	A574332-0100	C		1	BELT	**517**
F980	A576252-0100	-		1	INFEED SECTION	**519**

Machine Type Group Description Used-In Group Number Page No

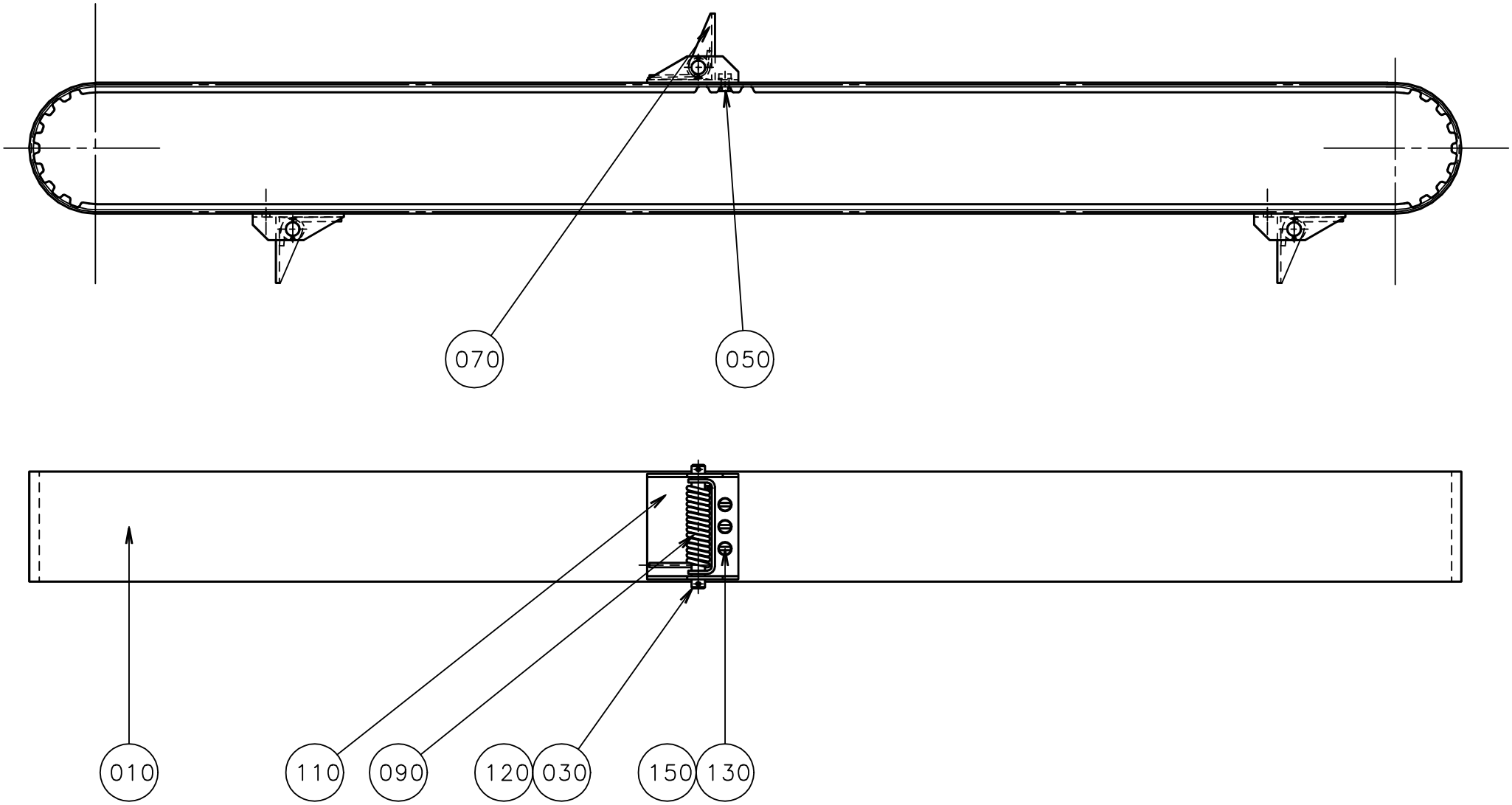
070
050
010
110
090
120
030
150
130

ECM: 72197 - 19990215
Group number: 574332-0100
Assembly Drawing: 574332-1_1_AA

Issue: 20020121

Pos	Part No	SP	UN	Qty	Description	Page No
Common Parts						
010	90417-0330	C		1	TIMING BELT T10X1350X50 POLYURETHANE	
030	297751-0000	C		3	SHAFT	
050	297755-0000	C		3	WEDGE	
070	297794-0000	C		3	SHEET	
090	297795-0000	C		3	SPRING	
110	525055-0000	C		3	BRACKET	
120	311411-0127	-		6	SPLIT PIN SP1,2X12RFR	
130	312125-0220	-		9	SCREW SLOT.PAN HD. MCS 3X6 A480	
150	315105-0124	-		9	WASHER PLAIN, BRB, 3,2/6,H=0,5	

Pos	Part No	SP	UN	Qty	Description	Page No

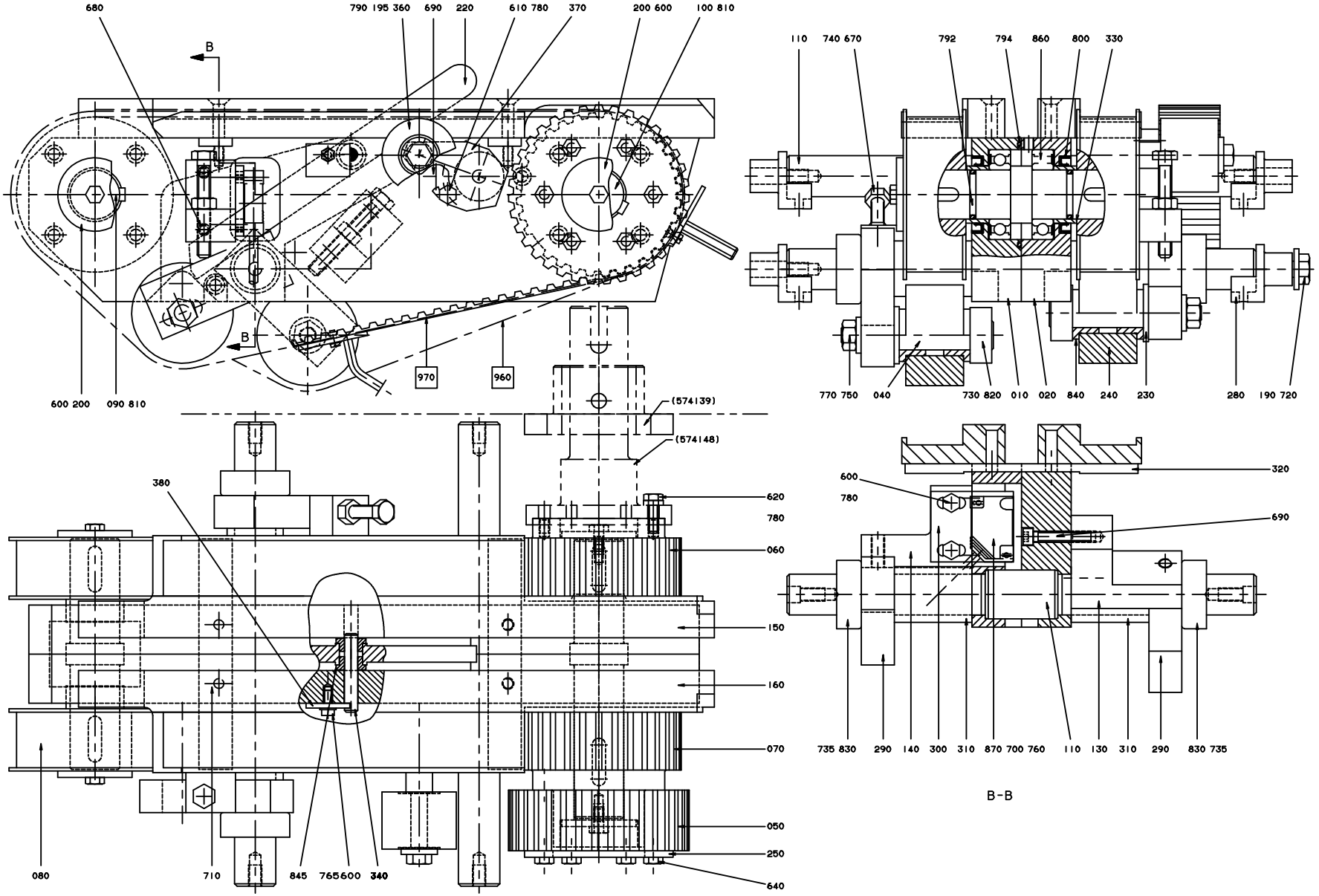
680
790 195 360
690
220
610 780
370
200 600
100 810
B
B
970
960
600 200
090 810
110
740 670
792
794
860
800
330
770 750
040
730 820
010
020
840
240
230
280
190 720
(574139)
(574148)
380
620
780
060
150
160
070
050
250
640
080
710
845
765600
340
600
780
320
690
735 830
290
140
300
310
870 700 760
110
130
310
290
830 735
B-B

ECM: 81020 - 20000831
Group number: 576252-0100
Assembly Drawing: 576252-2_1_AA

Issue: 20020121

Pos	Part No	SP	UN	Qty	Description	Page No
Common Parts						
010	1478218-0000	D		1	BEARING CONSOLE	
020	1478219-0000	D		1	BEARING CONSOLE	
040	525363-0002	C		2	SHAFT	
050	574086-0000	C		1	TIMING BELT PULLEY	
060	574136-0000	C		1	TIMING BELT PULLEY	
070	574137-0000	C		1	TIMING BELT PULLEY	
080	574138-0000	C		2	TIMING BELT PULLEY	
090	1478489-0000	C		1	SHAFT	
100	1478490-0000	C		1	SHAFT	
110	574144-0000	C		2	SHAFT	
130	574151-0000	D		1	BRACKET	
140	574152-0000	D		1	BRACKET	
150	574157-0000	D		1	PROFILE	
160	574158-0000	D		1	PROFILE	
190	26490-0000	-		4	WASHER	
195	262028-0016	C		1	FITTING BOLT	
200	443296-0000	D		4	WASHER	
220	1478220-0000	D		1	ARM	
230	285363-0000	D		2	WASHER	
240	574075-0000	D		2	ROLL	
250	574087-0000	D		1	WASHER	
280	574143-0000	C		4	AXLE SUPPORT	
290	574149-0000	D		2	ARM	
300	574153-0000	-		1	PLATE	
310	574154-0000	-		2	SPACER	
320	574156-0000	-		2	SUPPORT RAIL	
330	1478491-0000	A		4	SPACER	
340	1478216-0000	C		1	AXLE PIN	
360	580366-0000	C		1	ROLL	
370	580996-0000	-		1	ROLLER BRACKET	
380	292482-0000	-		1	WASHER	
600	312105-0366	-		7	SCREW M6S M6X12 A280	
610	312105-0368	-		1	SCREW M6S M6X16 A280	
620	312105-0370	-		6	SCREW M6S M6X20 A280	
640	312105-0380	-		6	SCREW M6S M6X50 A280	
670	312109-0463	-		2	SCREW M6S M8X60H A4 80	
680	312115-0372	-		2	SCREW MC6S M6X25 A280	
690	312115-0374	-		14	SCREW MC6S M6X30 A280	
700	312125-0228	-		2	SCREW PAN HEAD MCS M3X16 A480	
710	312155-0376	-		4	SCREW HEX.SOCK.COUNT.MF6S M6X35 A280	
720	927891-0000	-		4	SCREW	
730	312318-0362	-		2	SCREW SOCK.SET CUP P MSK6SS M6X8 A4	
735	312318-0443	-		2	SCREW SOCK.SET CUP P MSK6SS M8X8 A4	
740	312605-0318	-		2	HEXAGON NUT, M6M M8 A280	
750	312605-0320	-		2	HEXAGON NUT, M6M M10 A280	
760	315105-0124	-		2	WASHER PLAIN, BRB, 3,2/6,H=0,5	
765	315105-0153	-		1	WASHER PLAIN, BRB, 6,4/12,H=1,5	
770	315105-0173	-		2	WASHER PLAIN, BRB, 10,5/22,H=2	
780	315115-0153	-		9	WASHER PLAIN, TBRB 6,4/12 H=3	
790	315115-0173	-		1	WASHER PLAIN, TBRB 10,5/22 H=4	
792	315202-0217	B		4	O-RING 24,2X3 MM	
794	315202-0303	B		2	O-RING 59,5X3 MM	
800	315221-0175	-		4	RADIAL SEAL 35X47X7 MM	
810	315705-0266	-		4	PARALLEL KEY W. ROUND ENDS 8X7X28 MM	
820	315742-0114	-		2	COLLAR, 18/34, H=13	
830	315742-0119	-		2	COLLAR, 25/42, H=15	
840	321101-0223	C		4	BEAR.BUSHING WITH FLANGE, 18/25X16 MM	
845	321101-0143	C		2	FLANGE BUS 8F7X8	
860	321308-0106	C		4	BALL BEARING, 1 SEAL, 30X55X13 MM	
870	90044-0104	C		1	PROX.SWITCH IFM IN 3002	
F960	A576245-0100	C		1	BELT RIGHT	**521**
F970	A576246-0100	C		1	BELT LEFT	**523**

Machine Type | Group Description | Used-In | Group Number | Page No

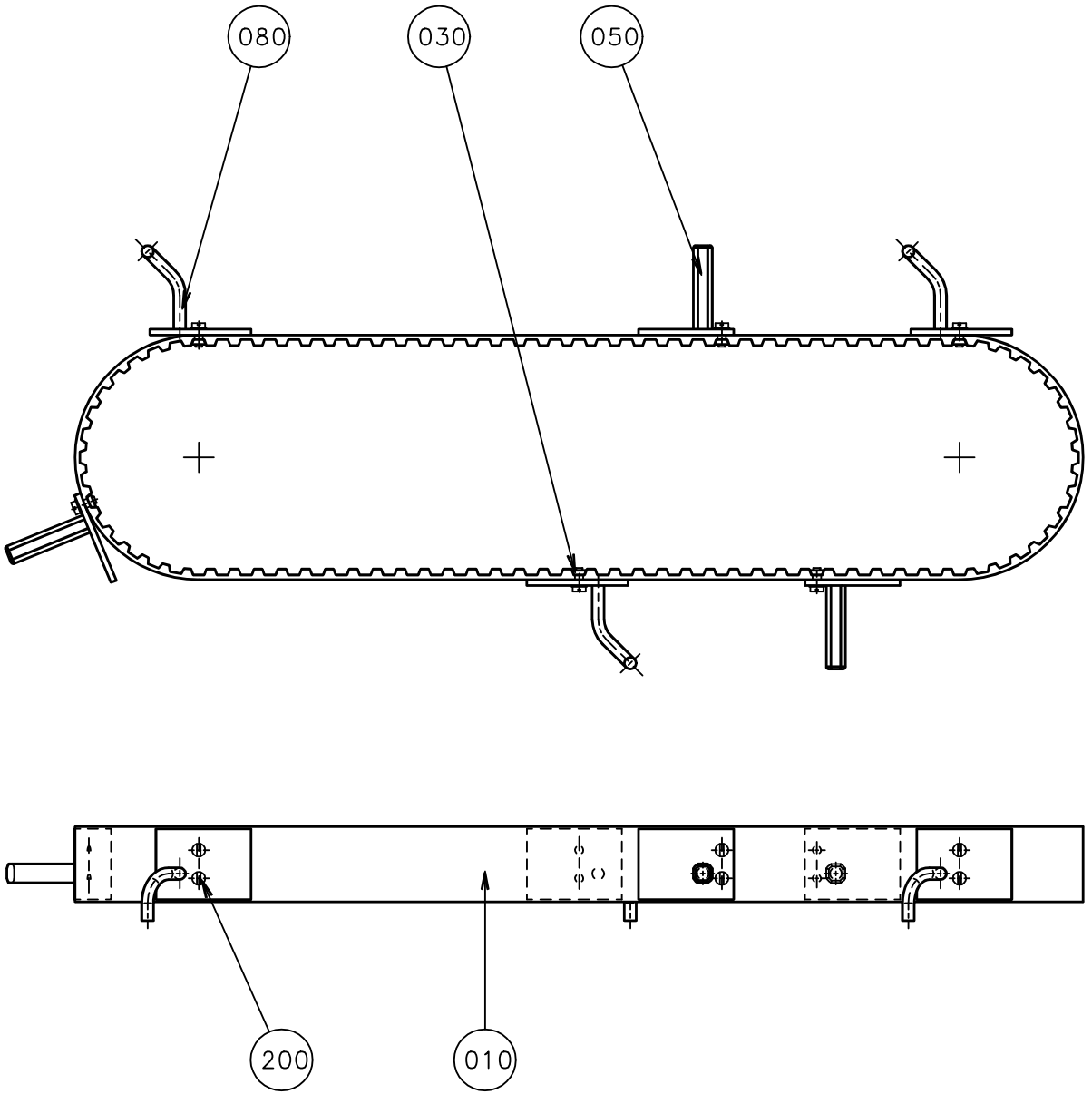
080
030
050
200
010

ECM: 72197 - 19990215
Group number: 576245-0100
Assembly Drawing: 576245-1_1_AA

Issue: 20020121

Pos	Part No	SP	UN	Qty	Description	Page No
Common Parts						
010	90417-0329	C		1	TIMING BELT T10X960X32 POLYURETHANE	
030	285380-0002	C		6	WEDGE	
050	574090-0000	C		3	CARRIER	
080	574091-0000	C		3	CARRIER	
200	312125-0220	-		12	SCREW SLOT.PAN HD. MCS 3X6 A480	

Pos	Part No	SP	UN	Qty	Description	Page No

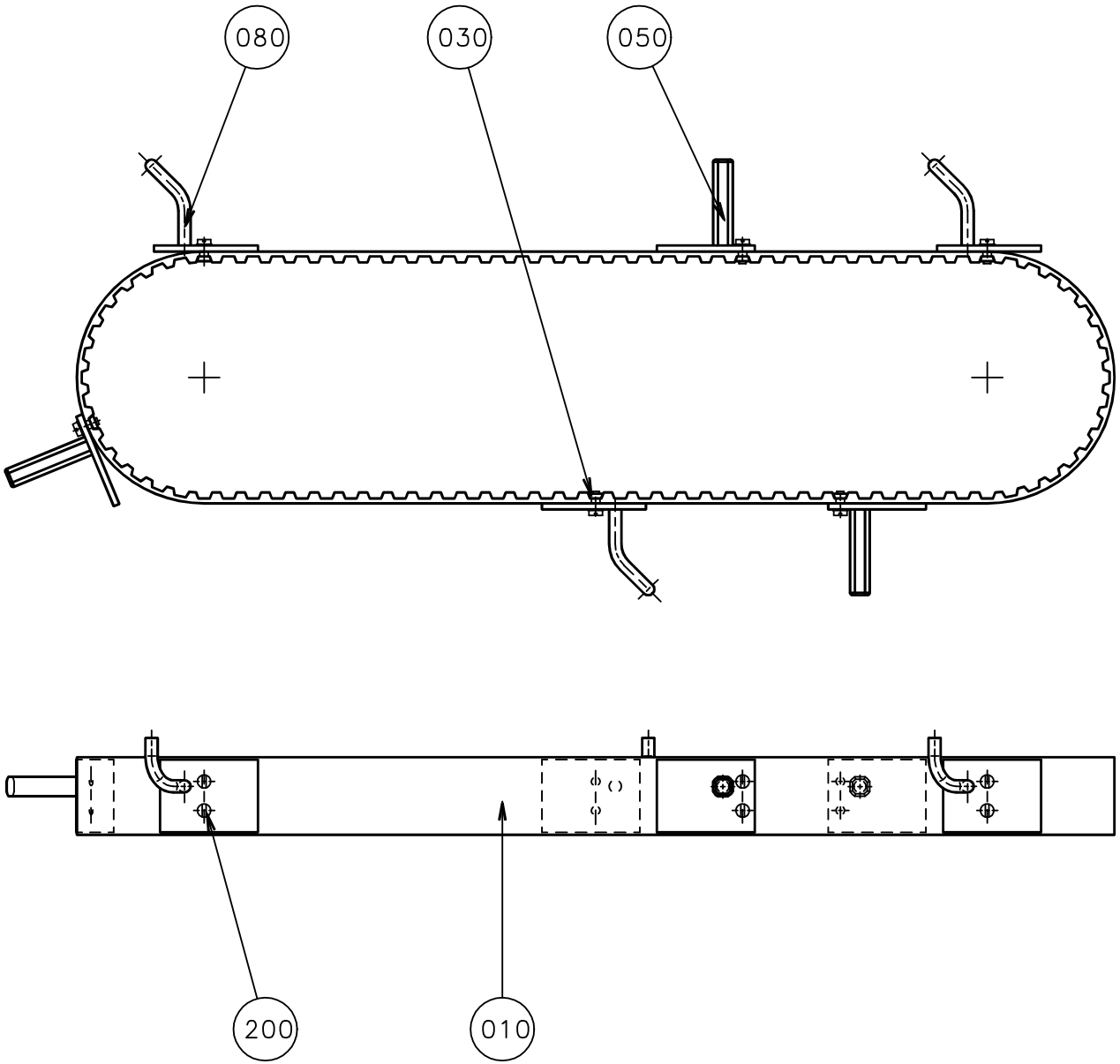
080
030
050
200
010

ECM: 72197 - 19990215
Group number: 576246-0100
Assembly Drawing: 576246-1_1_AA

Issue: 20020121

Pos	Part No	SP	UN	Qty	Description	Page No
Common Parts						
010	90417-0329	C		1	TIMING BELT T10X960X32 POLYURETHANE	
030	285380-0002	C		6	WEDGE	
050	574089-0000	C		3	CARRIER	
080	574092-0000	C		3	CARRIER	
200	312125-0220	-		12	SCREW SLOT.PAN HD. MCS 3X6 A480	

Pos	Part No	SP	UN	Qty	Description	Page No

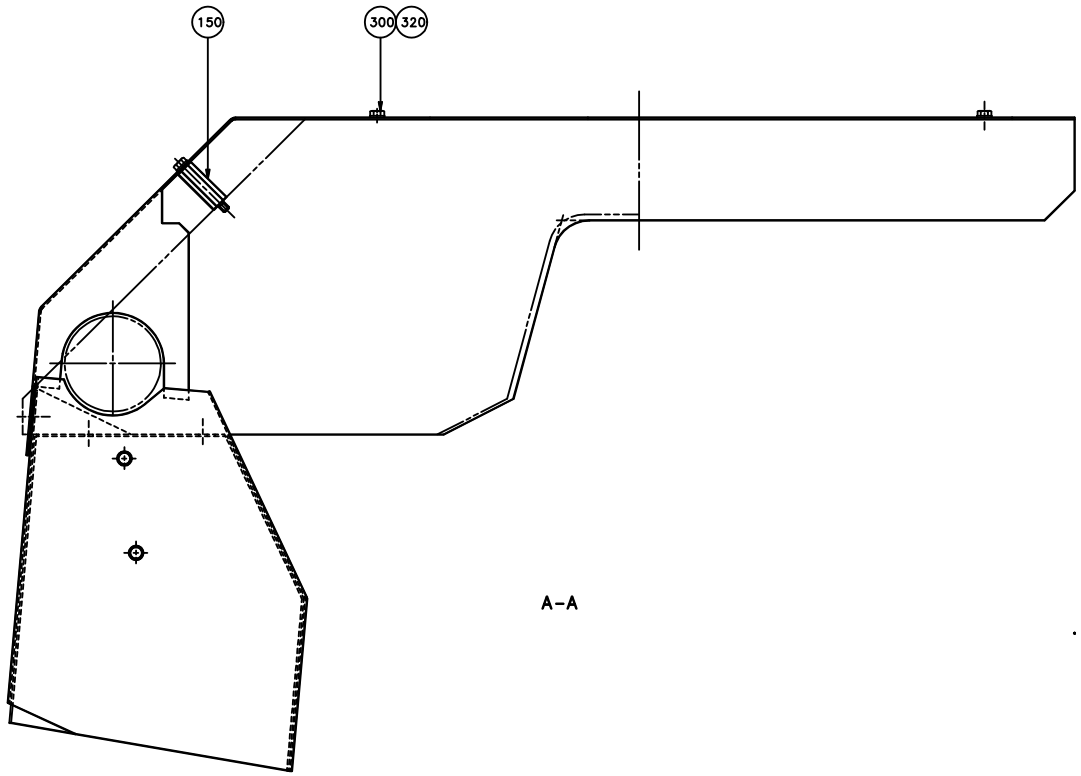
150
300
320
A-A

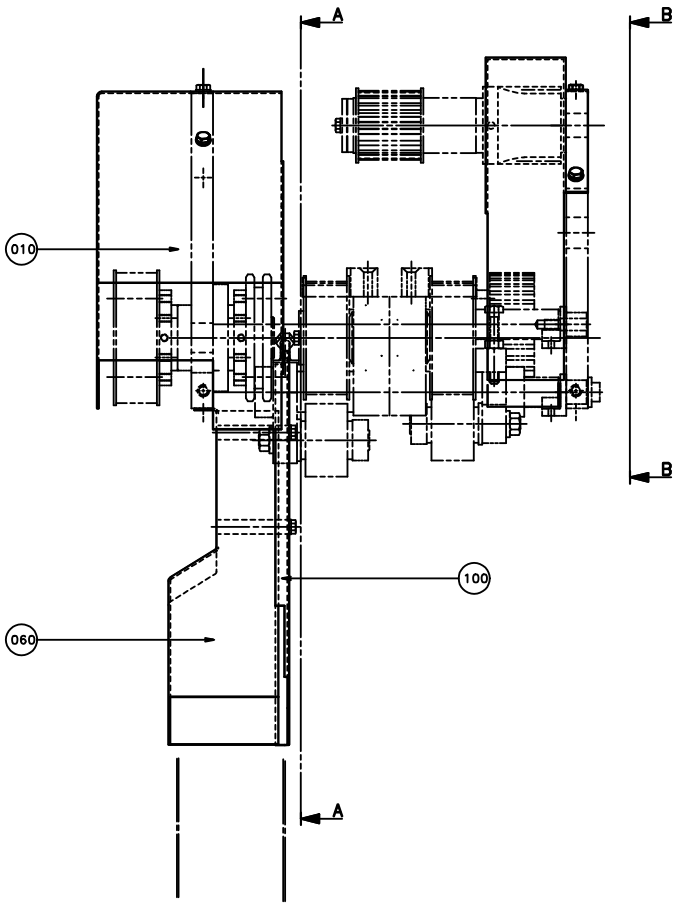
A
B
010
100
060
B
A

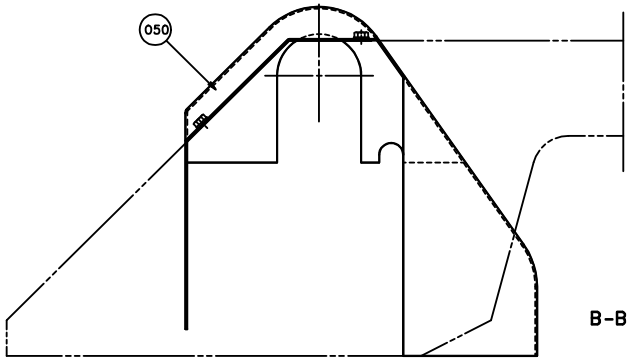
050
B-B

ECM: 71765 - 19980710
Group number: 576247-0100
Assembly Drawing: 576247-2_1_AA

Issue: 20020121

Pos	Part No	SP	UN	Qty	Description	Page No
TBA/8 1000SQ NORMFIN						
010	574164-0000	-		1	PROTECTION PLATE	
050	574165-0000	-		1	PROTECTIVE COVER	
060	580006-0000	-		1	PROTECTION PLATE	
100	580007-0000	-		1	PROTECTION PLATE	
TBA/8 1000SQ REVFIN						
010	1195332-0000	-		1	PROTECTION PLATE	
050	574165-0000	-		1	PROTECTIVE COVER	
060	580006-0000	-		1	PROTECTION PLATE	
100	580007-0000	-		1	PROTECTION PLATE	
Common Parts						
150	525338-0000	-		1	SPACER	
300	312105-0364	-		9	SCREW M6S M6X10 A280	
320	315105-0153	-		9	WASHER PLAIN, BRB, 6,4/12,H=1,5	

Pos	Part No	SP	UN	Qty	Description	Page No

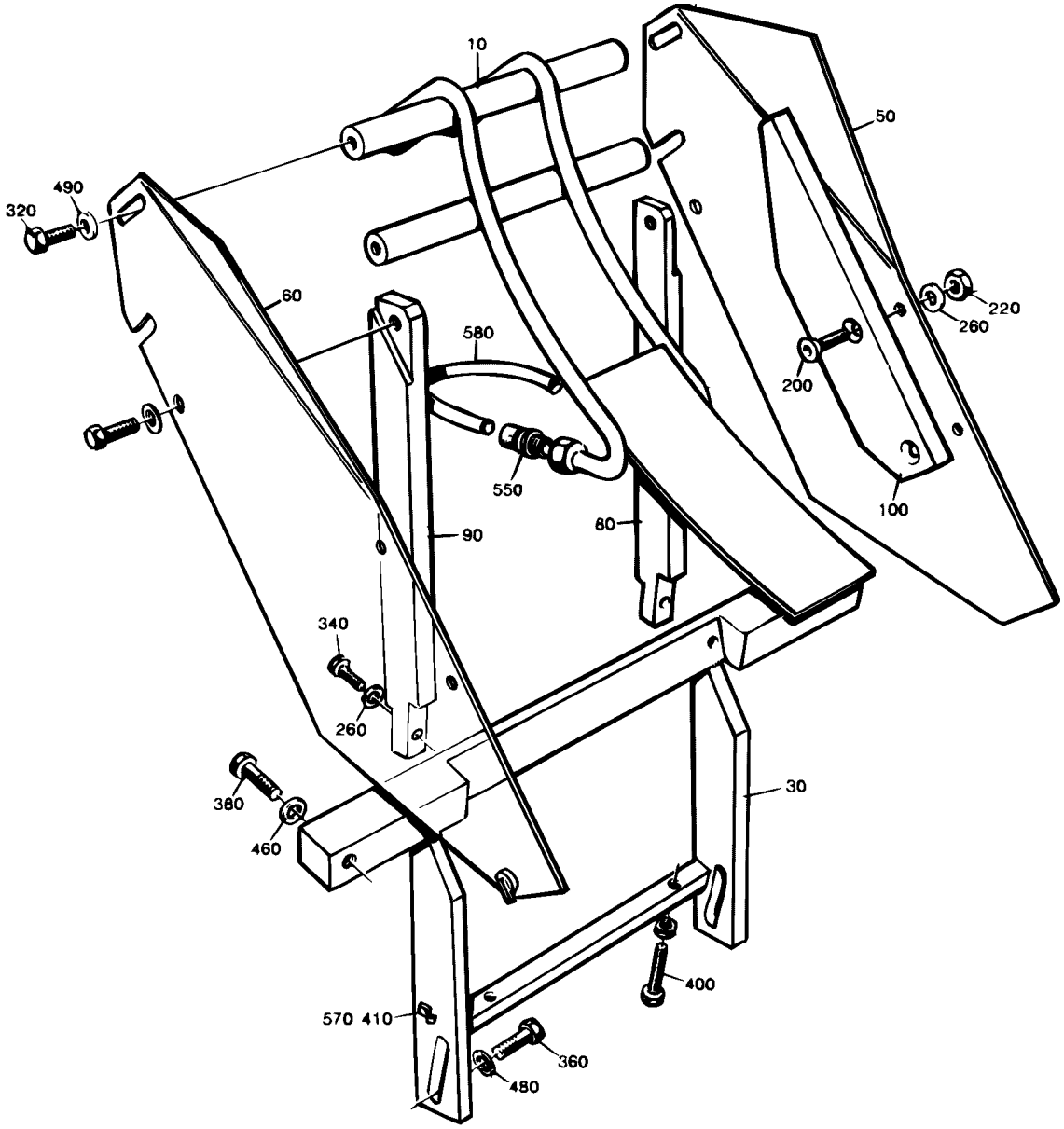
10
50
490
320
60
580
220
260
200
550
100
90
80
340
260
380
460
30
400
570 410
360
480

Pos	Part No	SP	UN	Qty	Description	Page No
TBA/8 0375S						
010	B544229-0003	D		1	DROP WING	
	90266-0167	-	*M*	*1*	*PIPE*	
	285993-0000	-		*1*	*CONNECTION*	
030	443492-0000	D		1	BRACKET	
050	443273-0000	D		1	HEAD PLATE	
060	443274-0000	D		1	HEAD PLATE	
080	443497-0000	D		1	SUPPORT	
090	443498-0000	D		1	SUPPORT	
220	312605-0316	-		2	HEXAGON NUT, M6M M6 A280	
260	315105-0153	-		4	WASHER PLAIN, BRB, 6,4/12,H=1,5	
TBA/8 0355B						
010	B544229-0002	D		1	DROP WING	
	285993-0000	-		*1*	*CONNECTION*	
	90266-0167	-	*M*	*1*	*PIPE*	
030	525259-0000	D		1	BRACKET	
050	443271-0000	D		1	HEAD PLATE	
060	443272-0000	D		1	HEAD PLATE	
080	443497-0000	D		1	SUPPORT	
090	443498-0000	D		1	SUPPORT	
220	312605-0316	-		2	HEXAGON NUT, M6M M6 A280	
260	315105-0153	-		4	WASHER PLAIN, BRB, 6,4/12,H=1,5	
TBA/8 0500B						
010	B544229-0001	D		1	DROP WING	
	90266-0167	-	*M*	*1*	*PIPE*	
	285993-0000	-		*1*	*CONNECTION*	
030	525148-0000	D		1	BRACKET	
050	443273-0000	D		1	HEAD PLATE	
060	443274-0000	D		1	HEAD PLATE	
080	443497-0000	D		1	SUPPORT	
090	443498-0000	D		1	SUPPORT	
100	525164-0000	D		2	STEERING	
200	312155-0372	-		4	SCREW HEX.SOCK.COUNT.MF6S M6X25 A280	
220	312605-0316	-		6	HEXAGON NUT, M6M M6 A280	
260	315105-0153	-		8	WASHER PLAIN, BRB, 6,4/12,H=1,5	
TBA/8 0500S						
010	B544229-0002	D		1	DROP WING	
	285993-0000	-		*1*	*CONNECTION*	
	90266-0167	-	*M*	*1*	*PIPE*	
030	443491-0000	D		1	BRACKET	
050	443271-0000	D		1	HEAD PLATE	
060	443272-0000	D		1	HEAD PLATE	
080	443497-0000	D		1	SUPPORT	
090	443498-0000	D		1	SUPPORT	
220	312605-0316	-		2	HEXAGON NUT, M6M M6 A280	
260	315105-0153	-		4	WASHER PLAIN, BRB, 6,4/12,H=1,5	
TBA/8 0750B						
010	B544229-0001	D		1	DROP WING	
	90266-0167	-	*M*	*1*	*PIPE*	
	285993-0000	-		*1*	*CONNECTION*	
030	525146-0000	D		1	BRACKET	
050	443273-0000	D		1	HEAD PLATE	
060	443274-0000	D		1	HEAD PLATE	
080	443497-0000	D		1	SUPPORT	
090	443498-0000	D		1	SUPPORT	
220	312605-0316	-		2	HEXAGON NUT, M6M M6 A280	
260	315105-0153	-		4	WASHER PLAIN, BRB, 6,4/12,H=1,5	
TBA/8 0750S						
010	B544229-0004	D		1	DROP WING	
	285993-0000	-		*1*	*CONNECTION*	
	90266-0167	-	*M*	*1*	*PIPE*	
030	443447-0000	D		1	BRACKET	
050	525255-0000	D		1	HEAD PLATE	
060	525256-0000	D		1	HEAD PLATE	
080	443462-0000	D		1	SUPPORT	
090	443463-0000	D		1	SUPPORT	
220	312605-0316	-		2	HEXAGON NUT, M6M M6 A280	
260	315105-0153	-		6	WASHER PLAIN, BRB, 6,4/12,H=1,5	
TBA/8 1000B						
010	B544229-0001	D		1	DROP WING	
	90266-0167	-	*M*	*1*	*PIPE*	
	285993-0000	-		*1*	*CONNECTION*	
030	443447-0000	D		1	BRACKET	
050	525255-0000	D		1	HEAD PLATE	
060	525256-0000	D		1	HEAD PLATE	
080	443462-0000	D		1	SUPPORT	
090	443463-0000	D		1	SUPPORT	
220	312605-0316	-		2	HEXAGON NUT, M6M M6 A280	

Machine Type | Group Description | Used-In | Group Number | Page No

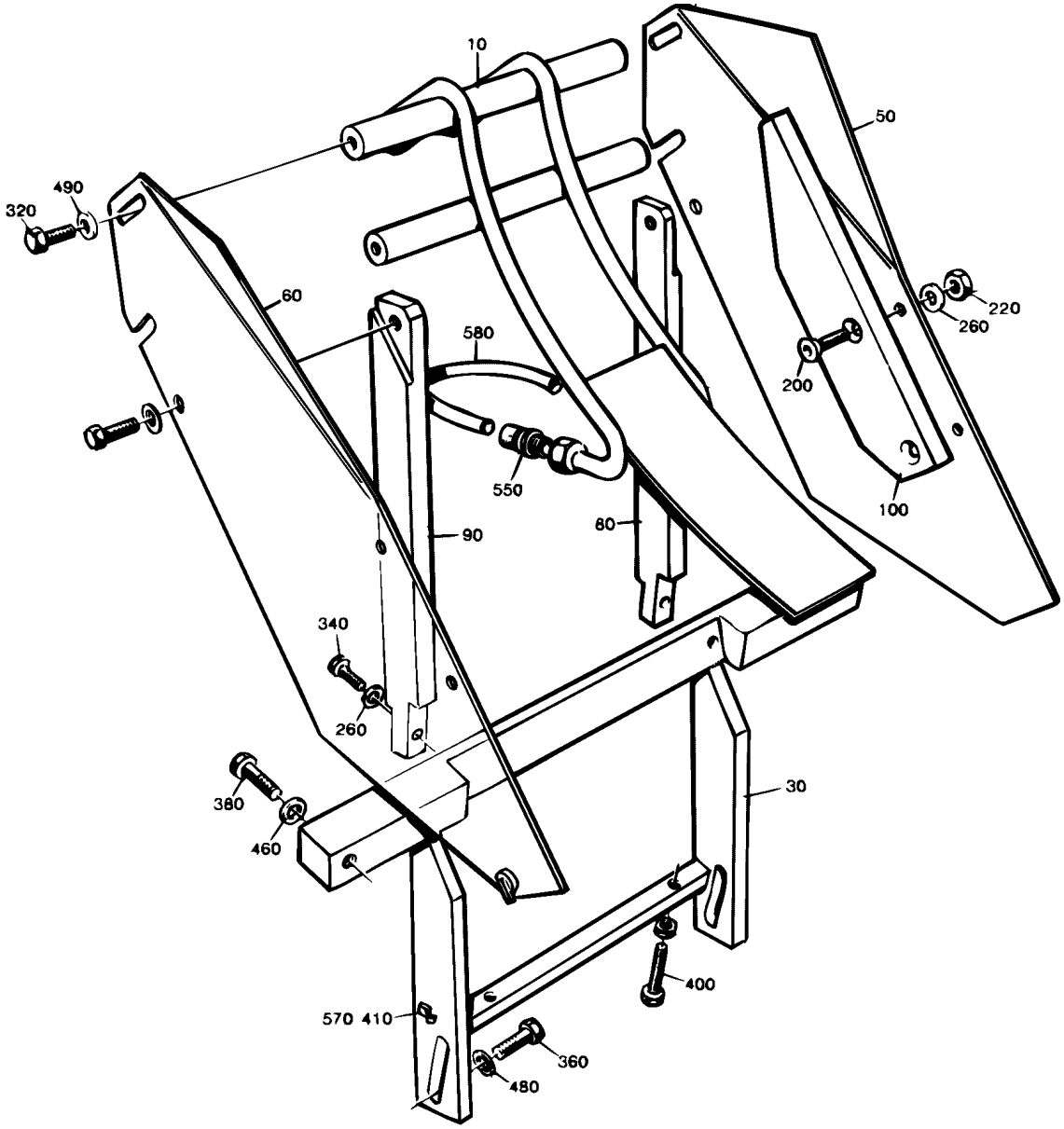
10
50
490
320
60
580
220
260
200
550
100
80
90
340
260
380
460
30
400
570 410
360
480

Pos	Part No	SP	UN	Qty	Description	Page No
TBA/8 1000B (Cont'd)						
220	312605-0316	-		2	HEXAGON NUT, M6M M6 A280	
260	315105-0153	-		4	WASHER PLAIN, BRB, 6,4/12,H=1,5	
TBA/8 1000S						
010	B544229-0005	D		1	DROP WING	
	90266-0167	-	*M*	*1*	*PIPE*	
	285993-0000	-		*1*	*CONNECTION*	
030	569131-0000	D		1	BRACKET	
050	525255-0000	D		1	HEAD PLATE	
060	525256-0000	D		1	HEAD PLATE	
080	443462-0000	D		1	SUPPORT	
090	443463-0000	D		1	SUPPORT	
220	312605-0316	-		2	HEXAGON NUT, M6M M6 A280	
260	315105-0153	-		4	WASHER PLAIN, BRB, 6,4/12,H=1,5	
TBA/8 1000SQ						
010	B574166-0000	D		1	DROP WING	
	285993-0000	-		*1*	*CONNECTION*	
	90266-0167	-	*M*	*1*	*PIPE*	
030	574080-0000	D		1	BRACKET	
050	525255-0000	D		1	HEAD PLATE	
060	525256-0000	D		1	HEAD PLATE	
080	443462-0000	D		1	SUPPORT	
090	443463-0000	D		1	SUPPORT	
220	312605-0316	-		2	HEXAGON NUT, M6M M6 A280	
260	315105-0153	-		4	WASHER PLAIN, BRB, 6,4/12,H=1,5	
Common Parts						
320	312105-0366	-		6	SCREW M6S M6X12 A280	
340	312105-0368	-		2	SCREW M6S M6X16 A280	
360	312105-0449	-		4	SCREW M6S M8X16 A280	
380	312105-0459	-		2	SCREW M6S M8X40 A280	
400	312109-0381	-		2	SCREW M6S M6X55H A480	
410	312125-0287	-		1	SCREW PAN HEAD MCS M4X8 SS	
460	315105-0165	-		2	WASHER PLAIN, BRB, 8,4/16,H=1,5	
480	315115-0165	-		4	WASHER PLAIN, TBRB 8,4/16 H=3	
490	315125-0153	-		4	WASHER PLAIN ROUND,CHAMF. 6,4/22, H=4	
550	342920-0121	-		2	STRAIGHT COUPLING,EXT.THREADED 8/6-R1/8"	
570	90165-0056	-		1	PIPE CLIP FOR TUBE D=4 MM	
580	90166-0122	-	MM	1500	TUBE 8 MM PA,TRANSP.	

Pos	Part No	SP	UN	Qty	Description	Page No

Machine Type | Group Description | Used-In | Group Number | Page No

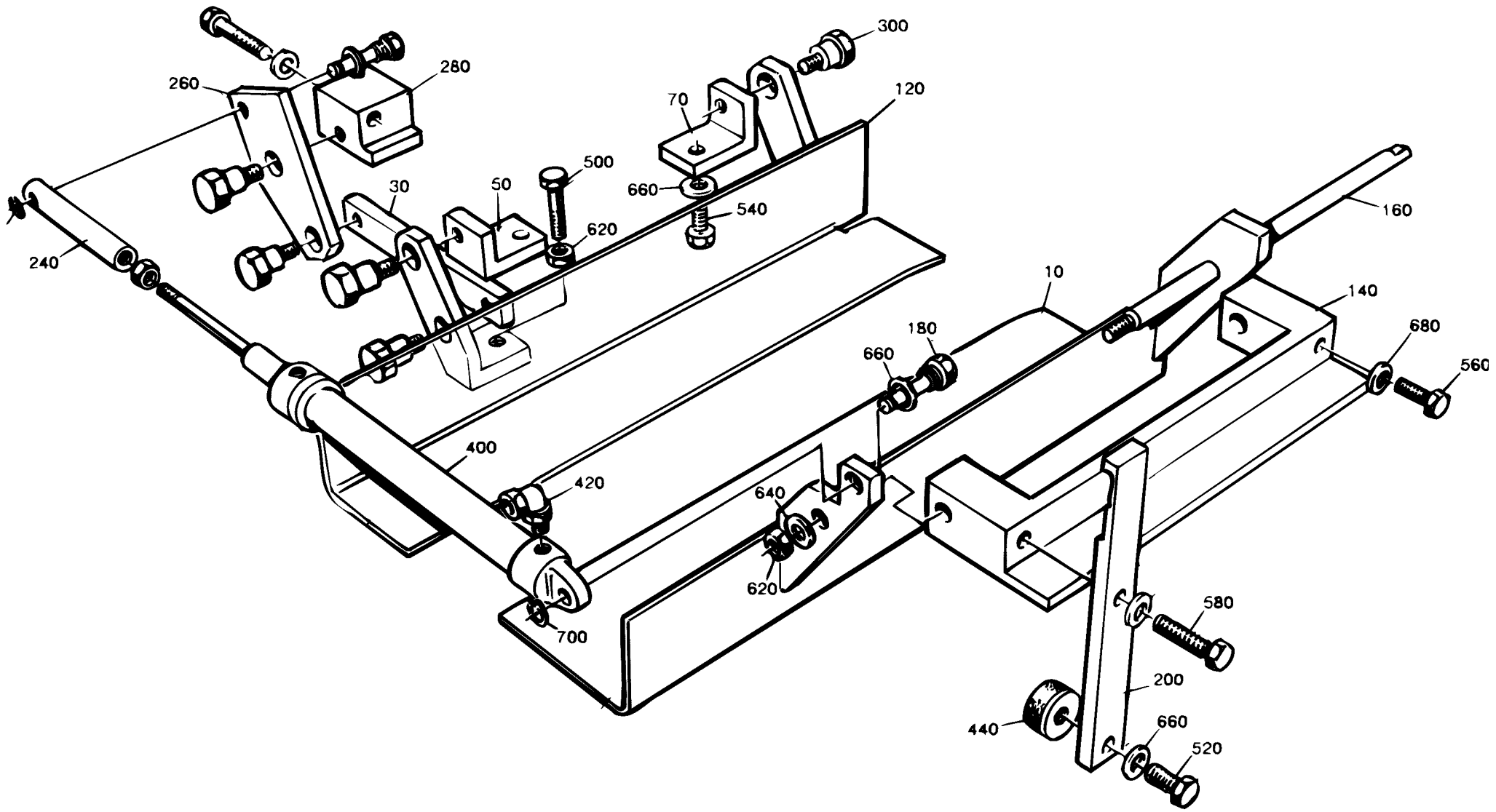
300
280
260
120
70
500
30
50
660
540
620
240
160
10
140
180
660
680
560
400
420
640
620
580
700
200
440
660
520

ECM: 72353 - 19990525
Group number: 525088-0200
Assembly Drawing: 525088-2_1_AA

Issue: 20020121

Pos	Part No	SP	UN	Qty	Description	Page No
0375S						
010	443495-0000	D		1	HEAD PLATE	
030	525075-0003	D		1	LINK	
050	525082-0000	D		1	BRACKET	
070	525083-0000	D		1	BRACKET	
120	525084-0000	D		1	HEAD PLATE	
200	525416-0000	-		1	STOP	
0355B OR 0500S						
010	443493-0000	D		1	HEAD PLATE	
030	525075-0002	D		1	LINK	
050	525080-0000	D		1	BRACKET	
070	525081-0000	D		1	BRACKET	
120	525084-0000	D		1	HEAD PLATE	
200	525416-0000	-		1	STOP	
0500B OR 0750B OR 1000B						
010	443448-0000	D		1	HEAD PLATE	
030	525075-0001	D		1	LINK	
050	525078-0000	D		1	BRACKET	
070	525079-0000	D		1	BRACKET	
120	525084-0000	D		1	HEAD PLATE	
200	525416-0000	-		1	STOP	
0750S						
010	544307-0000	D		1	HEAD PLATE	
030	525075-0004	D		1	LINK	
050	544331-0000	D		1	BRACKET	
070	544332-0000	D		1	BRACKET	
120	525084-0000	D		1	HEAD PLATE	
200	525416-0000	-		1	STOP	
1000S						
010	569134-0000	D		1	HEAD PLATE	
030	525075-0005	D		1	LINK	
050	569135-0000	D		1	BRACKET	
070	569136-0000	D		1	BRACKET	
120	525084-0000	D		1	HEAD PLATE	
200	525416-0000	-		1	STOP	
1000SQ NORMFIN OR 0500SQ						
010	574077-0000	D		1	HEAD PLATE	
030	525075-0006	D		1	LINK	
050	574078-0000	D		1	BRACKET	
070	574079-0000	D		1	BRACKET	
120	574126-0000	D		1	HEAD PLATE	
200	525416-0000	-		1	STOP	
1000SQ REVFIN						
010	574077-0000	D		1	HEAD PLATE	
030	525075-0006	D		1	LINK	
050	574078-0000	D		1	BRACKET	
070	574079-0000	D		1	BRACKET	
120	574126-0000	D		1	HEAD PLATE	
200	1195333-0000	-		1	STOP	
Common Parts						
140	443365-0000	-		1	BRACKET	
160	443309-0000	D		1	SHAFT	
180	443310-0000	C		2	AXLE PIN	
240	443474-0000	D		1	BRACKET	
260	525074-0000	-		1	ARM	
280	525465-0000	-		1	BRACKET	
300	525077-0000	D		5	AXLE PIN	
400	90239-0818	C		1	DOUBLE ACTING, MINI-ISO, CYL.16-80	
420	342732-0099	-		2	ELBOW PIPE JOINT, EXT.THREAD, D=4MM-M5	
440	90347-0007	D		1	VIBRATION DAMPER	
500	312105-0374	-		1	SCREW M6S M6X30 A280	
540	312105-0451	-		2	SCREW M6S 8X20 A280	
560	312105-0455	-		1	SCREW M6S M8X30 A280	
580	312105-0460	-		1	SCREW M6S M8X45 A280	
600	312105-0462	-		1	SCREW M6S M8X55 A280	
620	312605-0316	-		4	HEXAGON NUT, M6M M6 A280	
640	315105-0153	-		2	WASHER PLAIN, BRB, 6,4/12,H=1,5	
660	315105-0165	-		6	WASHER PLAIN, BRB, 8,4/16,H=1,5	
680	315115-0165	-		1	WASHER PLAIN, TBRB 8,4/16 H=3	
700	315755-0107	-		2	LOCKING WASHER 5	

Machine Type | Group Description | Used-In | Group Number | Page No

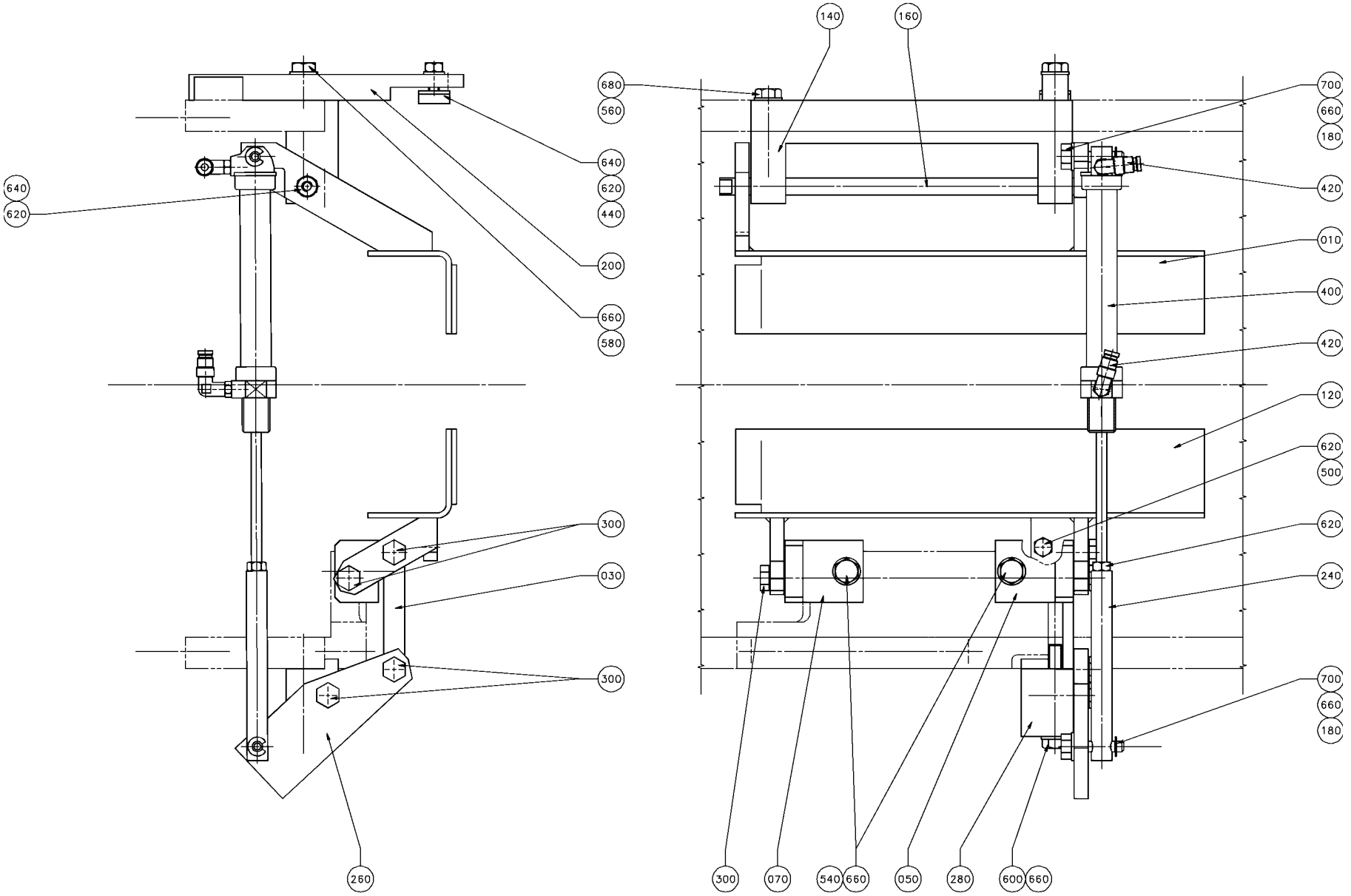
140
160
680
560
640
620
440
200
660
580
640
620
300
030
300
260
700
660
180
420
010
400
420
120
620
500
620
240
700
660
180
300
070
540
660
050
280
600
660

Pos	Part No	SP	UN	Qty	Description	Page No
0375S						
010	443495-0000	D		1	HEAD PLATE	
030	525075-0003	D		1	LINK	
050	525082-0000	D		1	BRACKET	
070	525083-0000	D		1	BRACKET	
120	525084-0000	D		1	HEAD PLATE	
200	525416-0000	-		1	STOP	
0355B OR 0500S						
010	443493-0000	D		1	HEAD PLATE	
030	525075-0002	D		1	LINK	
050	525080-0000	D		1	BRACKET	
070	525081-0000	D		1	BRACKET	
120	525084-0000	D		1	HEAD PLATE	
200	525416-0000	-		1	STOP	
0500B OR 0750B OR 1000B						
010	443448-0000	D		1	HEAD PLATE	
030	525075-0001	D		1	LINK	
050	525078-0000	D		1	BRACKET	
070	525079-0000	D		1	BRACKET	
120	525084-0000	D		1	HEAD PLATE	
200	525416-0000	-		1	STOP	
0750S						
010	544307-0000	D		1	HEAD PLATE	
030	525075-0004	D		1	LINK	
050	544331-0000	D		1	BRACKET	
070	544332-0000	D		1	BRACKET	
120	525084-0000	D		1	HEAD PLATE	
200	525416-0000	-		1	STOP	
1000S						
010	569134-0000	D		1	HEAD PLATE	
030	525075-0005	D		1	LINK	
050	569135-0000	D		1	BRACKET	
070	569136-0000	D		1	BRACKET	
120	525084-0000	D		1	HEAD PLATE	
200	525416-0000	-		1	STOP	
1000SQ NORMFIN OR 0500SQ						
010	574077-0000	D		1	HEAD PLATE	
030	525075-0006	D		1	LINK	
050	574078-0000	D		1	BRACKET	
070	574079-0000	D		1	BRACKET	
120	574126-0000	D		1	HEAD PLATE	
200	525416-0000	-		1	STOP	
1000SQ REVFIN						
010	574077-0000	D		1	HEAD PLATE	
030	525075-0006	D		1	LINK	
050	574078-0000	D		1	BRACKET	
070	574079-0000	D		1	BRACKET	
120	574126-0000	D		1	HEAD PLATE	
200	1195333-0000	-		1	STOP	
Common Parts						
140	443365-0000	-		1	BRACKET	
160	443309-0000	D		1	SHAFT	
180	443310-0000	C		2	AXLE PIN	
240	443474-0000	D		1	BRACKET	
260	525074-0000	-		1	ARM	
280	525465-0000	-		1	BRACKET	
300	525077-0000	D		5	AXLE PIN	
400	90239-0818	C		1	DOUBLE ACTING, MINI-ISO, CYL.16-80	
420	342732-0099	-		2	ELBOW PIPE JOINT, EXT.THREAD, D=4MM-M5	
440	90347-0007	D		1	VIBRATION DAMPER	
500	312105-0374	-		1	SCREW M6S M6X30 A280	
540	312105-0451	-		2	SCREW M6S 8X20 A280	
560	312105-0455	-		1	SCREW M6S M8X30 A280	
580	312105-0460	-		1	SCREW M6S M8X45 A280	
600	312105-0462	-		1	SCREW M6S M8X55 A280	
620	312605-0316	-		4	HEXAGON NUT, M6M M6 A280	
640	315105-0153	-		2	WASHER PLAIN, BRB, 6,4/12,H=1,5	
660	315105-0165	-		6	WASHER PLAIN, BRB, 8,4/16,H=1,5	
680	315115-0165	-		1	WASHER PLAIN, TBRB 8,4/16 H=3	
700	315755-0107	-		2	LOCKING WASHER 5	

Machine Type | Group Description | Used-In | Group Number | Page No

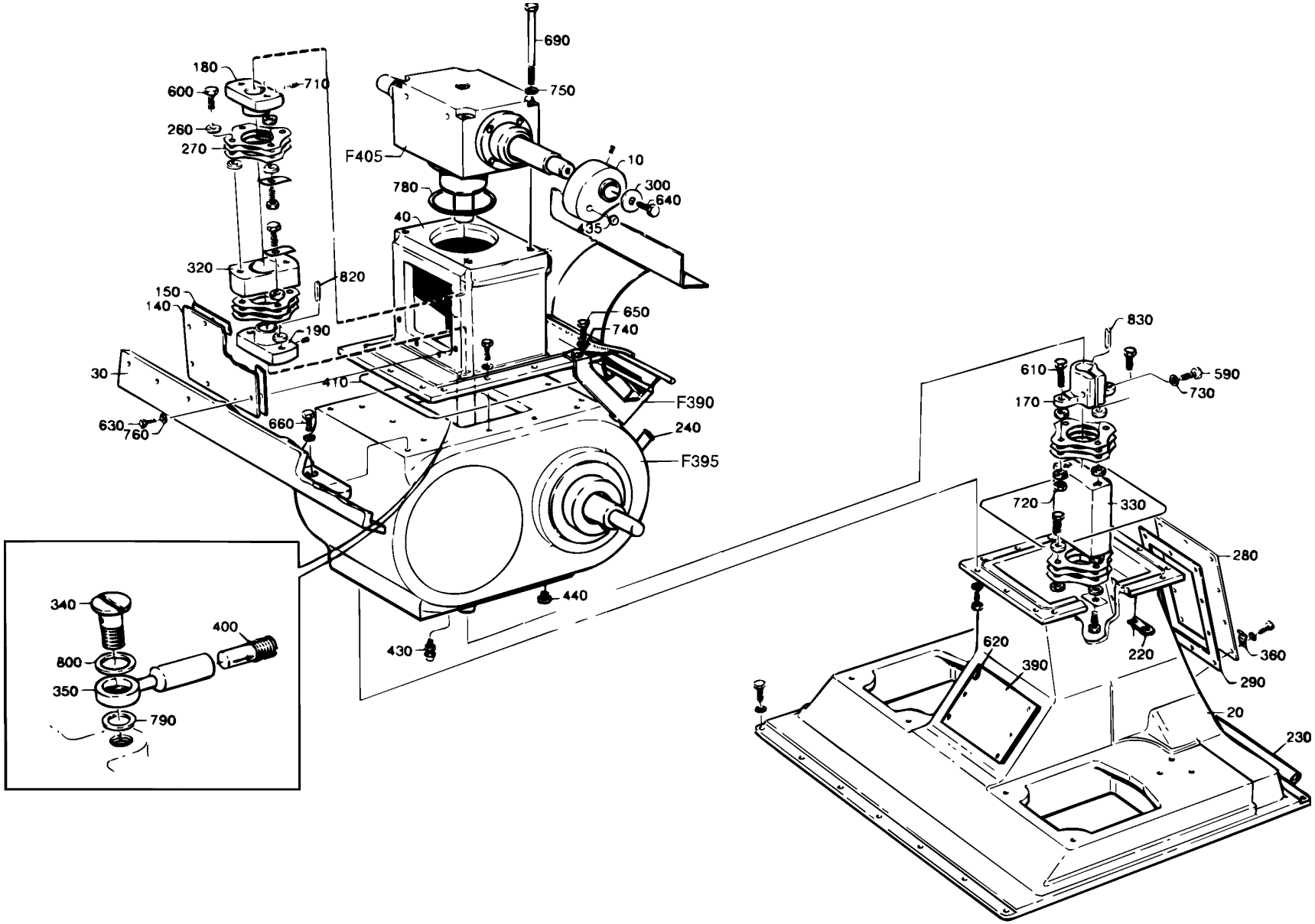
690
180
710
600
750
260
270
F405
10
780
300
640
40
435
320
820
150
140
650
740
190
30
410
F390
630
760
660
240
F395
830
610
590
730
170
720
330
280
340
400
800
620
390
220
360
350
290
790
20
230
430
440

ECM: 72353 - 19990525
Group number: 285479-0600
Assembly Drawing: 285479-4_1_AA

Issue: 20020121

Pos	Part No	SP	UN	Qty	Description	Page No
0375S OR 0355B OR 0500S						
010	525235-0000	D		2	CURVE	
0500B OR 1000SQ OR 1000S OR 0750B OR 0750S OR 1000B						
010	443362-0000	D		2	CURVE	
Common Parts						
020	443218-0000	-		1	INTERMEDIARY SECTION	
030	262264-0000	-		1	CANTILEVER	
040	262922-0000	-		1	HOUSE	
140	262932-0000	-		1	HATCH	
150	262933-0000	D		1	GASKET	
170	285141-0003	D		1	CLAMPING SLEEVE	
180	285142-0002	D		1	SLEEVE	
190	285142-0003	D		1	SLEEVE	
220	525292-0000	-		3	BRACKET	
230	525293-0000	-		1	PIPE	
240	525294-0000	-		1	PIPE	
260	31553-0002	C		32	WASHER	
270	33261-0000	C		32	SPRING PLATE	
280	262252-0000	-		1	HATCH	
290	262253-0000	D		1	GASKET	
300	276659-0000	D		2	WASHER	
320	285145-0002	D		1	INTERMEDIARY SECTION	
330	285147-0000	D		1	INTERMEDIARY SECTION	
340	285891-0000	D		1	SCREW	
350	285892-0000	D		1	CONNECTION	
390	525279-0000	-		1	HATCH	
400	90092-0077	C		1	METERING VALVE, FKD3, G1/8	
410	90143-0052	-	MM	2450	STRAP	
420	90153-0043	-		1	ADHESIVE LOCTITE 495	
425	90296-0009	-	L	1	SILICONE GREASE TUBE 100 GR.	
430	90224-0066	-		1	CONN. STRAIGHT, 160•SSA	
435	90261-0032	-		4	PLUG, BLIND, PLASTIC, NO. 1073	
440	342720-0102	-		1	CONN. STR. GA-6-G1/8	
570	311103-0399	-		10	PARALLELL PIN, CP, M6, 8X16 MM	
590	312101-0455	-		1	SCREW M6S M8X30 FZB	
600	90287-0155	-		14	SCREW M6S M10X25 88 NY-LOCK	
610	312101-0497	-		2	SCREW M6S M10X35 FZB	
620	312105-0367	-		6	SCREW M6S M6X14 A280	
630	312105-0368	-		12	SCREW M6S M6X16 A280	
635	312105-0370	-		4	SCREW M6S M6X20 A280	
638	312105-0372	-		2	SCREW M6S M6X25 A280	
640	312105-0451	-		2	SCREW M6S 8X20 A280	
650	312105-0453	-		50	SCREW M6S M8X25 A280	
660	312105-0455	-		2	SCREW M6S M8X30 A280	
690	312105-0517	-		4	SCREW M6S M10X130 A280	
710	312316-0362	-		2	SCREW HEX.SOCK.SET CUP P.MSK6SS6X8 FZB	
720	312810-0320	-		2	HEXAGON NUT, NY-LOCK M10 FZB	
730	315101-0165	-		1	WASHER PLAIN, BRB, 8,4/16 H=1,5	
735	315105-0153	-		2	WASHER PLAIN, BRB, 6,4/12,H=1,5	
740	315105-0165	-		10	WASHER PLAIN, BRB, 8,4/16,H=1,5	
750	315115-0173	-		4	WASHER PLAIN, TBRB 10,5/22 H=4	
760	315115-0153	-		22	WASHER PLAIN, TBRB 6,4/12 H=3	
770	315115-0165	-		42	WASHER PLAIN, TBRB 8,4/16 H=3	
780	315202-0311	C		1	O-RING 99,5X3 MM	
790	315233-0109	C		1	WASHER PL.RND.NYL.10,3/14,H=1	
800	315233-0110	C		1	WASHER PL.RND.NYL.13,3/17,H=1	
820	315701-0270	-		1	PARALLEL KEY W. ROUND ENDS 8X7X40 MM	
830	315701-0274	-		1	PARALLEL KEY W. ROUND ENDS 8X7X60 MM	
F390	A285853-0300	-		1	STEERING RAIL	**537, 539**
F395	A525117-0300	D		1	INDEXING GEAR	**541, 543**
F405	A442646-0200	D		1	TOP GEAR	**545**

Machine Type Group Description Used-In Group Number Page No

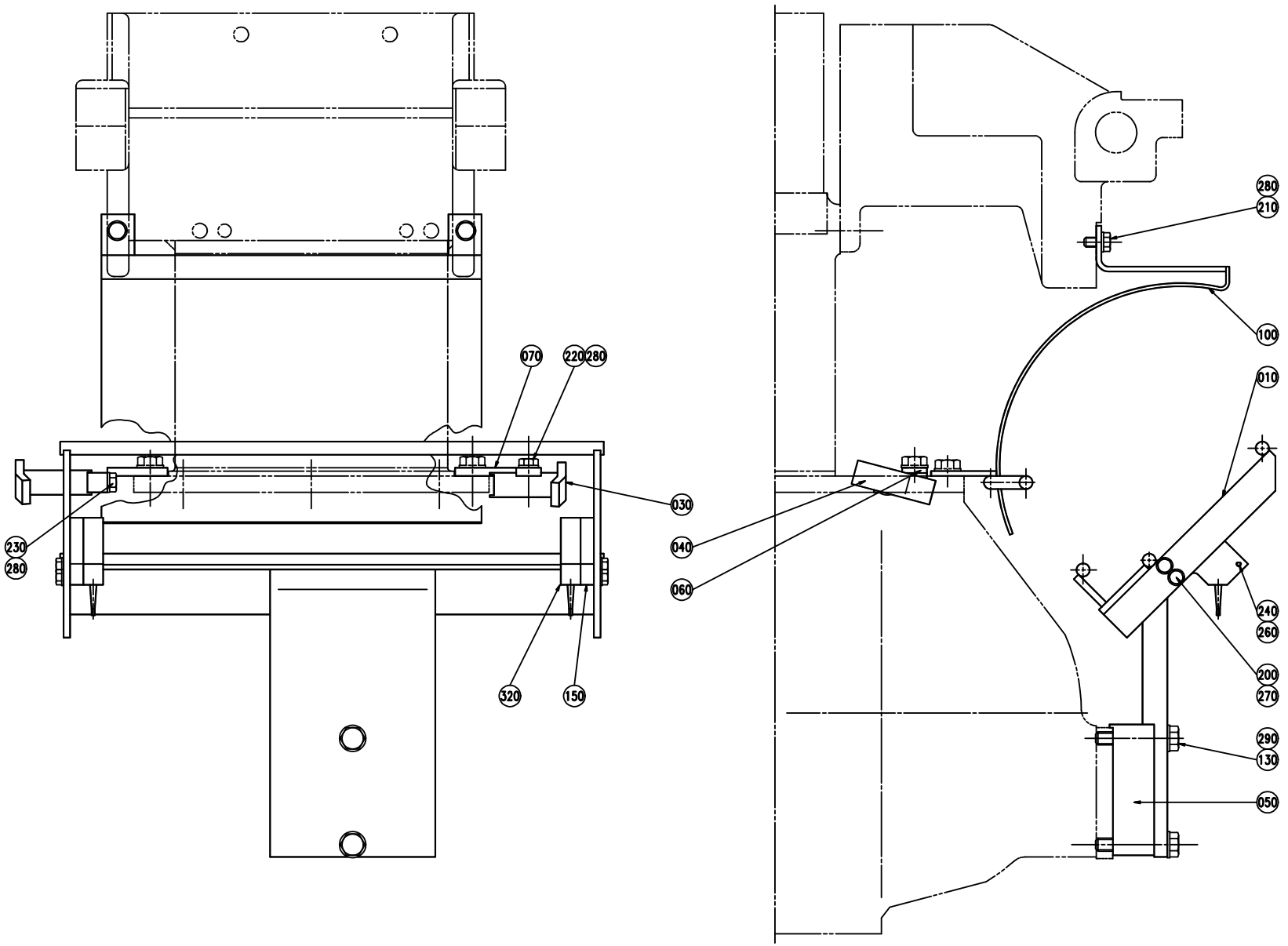
070
220
280
030
230
280
040
060
320
150
280
210
100
010
240
260
200
270
290
130
050

ECM: 72353 - 19990525
Group number: 285853-0300
Assembly Drawing: 285853-3_1_AA

Issue: 20020121

Pos	Part No	SP	UN	Qty	Description	Page No
1000SQ REVFIN						
010	597539-0000	-		1	SLIDE RAIL	
020	597542-0000	D		1	RAIL REV.FIN	
030	1143007-0000	D		1	STEERING	
040	1143006-0000	D		1	STEERING	
060	1143008-0000	D		1	BRACKET	
070	1143009-0000	D		1	BRACKET	
100	574054-0000	-		1	HEAD PLATE	
130	312105-0451	-		2	SCREW M6S 8X20 A280	
220	312105-0368	-		1	SCREW M6S M6X16 A280	
230	312105-0371	-		1	SCREW M6S M6X22 A280	
280	315105-0153	-		4	WASHER PLAIN, BRB, 6,4/12,H=1,5	
300	312105-0366	-		2	SCREW M6S M6X12 A280	
0355B						
010	525354-0000	D		1	SLIDE RAIL	
100	527861-0000	-		1	HEAD PLATE	
130	312105-0451	-		2	SCREW M6S 8X20 A280	
280	315105-0153	-		2	WASHER PLAIN, BRB, 6,4/12,H=1,5	
0375S						
010	525355-0000	D		1	SLIDE RAIL	
100	531313-0000	-		1	HEAD PLATE	
130	312105-0451	-		2	SCREW M6S 8X20 A280	
280	315105-0153	-		2	WASHER PLAIN, BRB, 6,4/12,H=1,5	
0500B						
010	525352-0000	D		1	SLIDE RAIL	
050	525357-0000	-		1	SPACER	
100	525424-0000	-		1	HEAD PLATE	
130	312105-0460	-		2	SCREW M6S M8X45 A280	
280	315105-0153	-		2	WASHER PLAIN, BRB, 6,4/12,H=1,5	
0500S						
010	525353-0000	D		1	SLIDE RAIL	
100	531312-0000	-		1	HEAD PLATE	
130	312105-0451	-		2	SCREW M6S 8X20 A280	
280	315105-0153	-		2	WASHER PLAIN, BRB, 6,4/12,H=1,5	
0750B						
010	525350-0000	D		1	SLIDE RAIL	
100	531314-0000	-		1	HEAD PLATE	
130	312105-0451	-		2	SCREW M6S 8X20 A280	
280	315105-0153	-		2	WASHER PLAIN, BRB, 6,4/12,H=1,5	
0750S						
010	543694-0000	D		1	SLIDE RAIL	
100	525378-0000	-		1	HEAD PLATE	
130	312105-0451	-		2	SCREW M6S 8X20 A280	
280	315105-0153	-		2	WASHER PLAIN, BRB, 6,4/12,H=1,5	
1000B HIFIN						
010	525349-0000	D		1	SLIDE RAIL	
100	529312-0000	-		1	HEAD PLATE	
130	312105-0451	-		2	SCREW M6S 8X20 A280	
280	315105-0153	-		2	WASHER PLAIN, BRB, 6,4/12,H=1,5	
1000B LOFIN						
010	525348-0000	D		1	SLIDE RAIL	
100	529312-0000	-		1	HEAD PLATE	
130	312105-0451	-		2	SCREW M6S 8X20 A280	
280	315105-0153	-		2	WASHER PLAIN, BRB, 6,4/12,H=1,5	
1000S						
010	569127-0000	D		1	SLIDE RAIL	
030	573486-0000	D		1	STEERING	
040	573487-0000	D		1	STEERING	
060	573488-0000	D		1	BRACKET	
070	573489-0000	D		1	BRACKET	
100	569128-0000	-		1	HEAD PLATE	
130	312105-0451	-		2	SCREW M6S 8X20 A280	
220	312105-0368	-		1	SCREW M6S M6X16 A280	
230	312105-0371	-		1	SCREW M6S M6X22 A280	
280	315105-0153	-		4	WASHER PLAIN, BRB, 6,4/12,H=1,5	
1000SQ NORMFIN						
010	597539-0000	-		1	SLIDE RAIL	
020	597543-0000	-		1	RAIL NORM.FIN	
030	574097-0000	D		1	STEERING	
040	574098-0000	D		1	STEERING	
060	573488-0000	D		1	BRACKET	
070	573489-0000	D		1	BRACKET	
100	574054-0000	-		1	HEAD PLATE	
130	312105-0451	-		2	SCREW M6S 8X20 A280	
280	315105-0153	-		2	WASHER PLAIN, BRB, 6,4/12,H=1,5	

Machine Type | Group Description | Used-In | Group Number | Page No

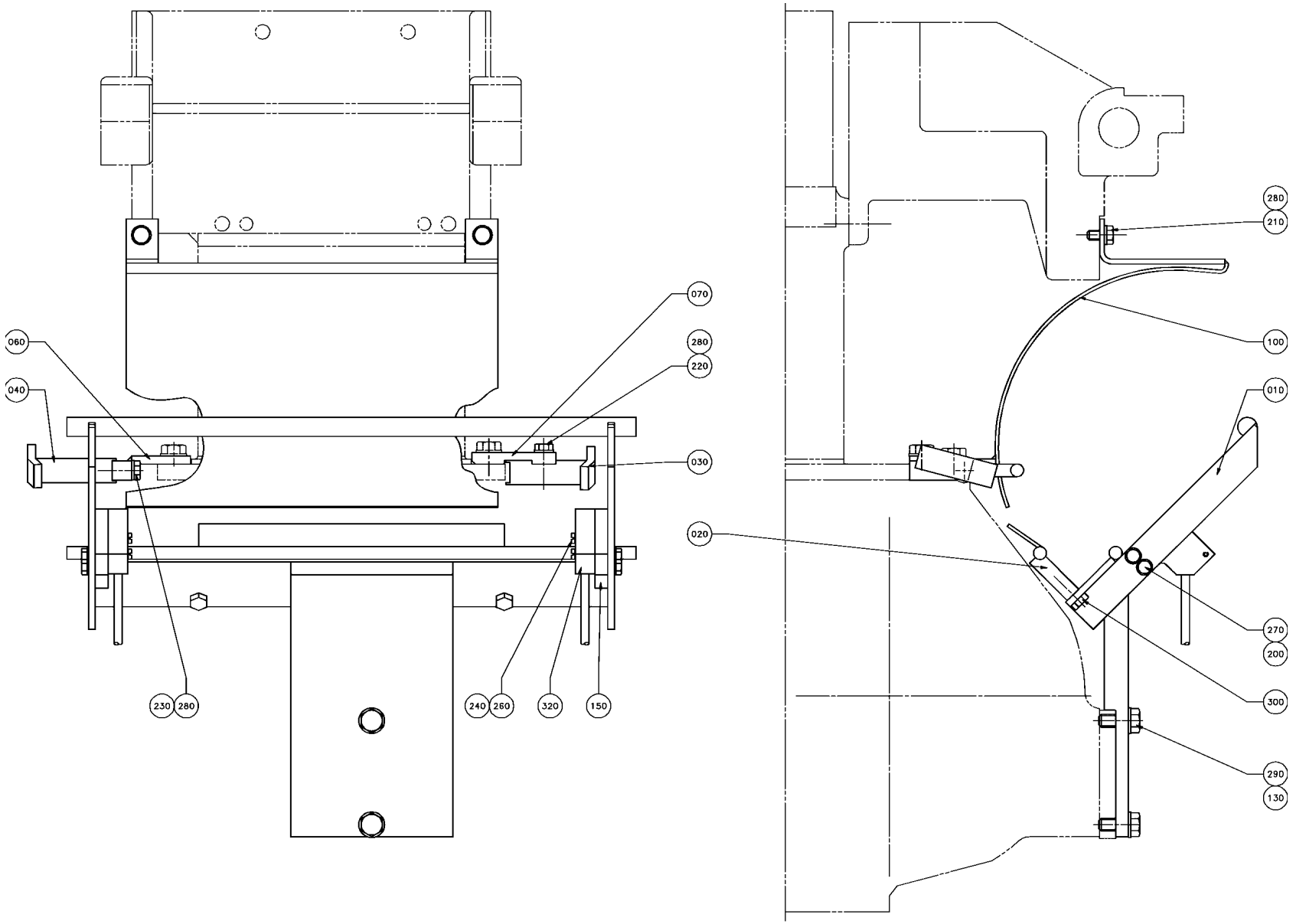
060
040
070
280
220
030
020
230
280
240
260
320
150
280
210
100
010
270
200
300
290
130

Pos	Part No	SP	UN	Qty	Description	Page No
1000SQ NORMFIN (Cont'd)						
220	312105-0368	-		1	SCREW M6S M6X16 A280	
230	312105-0371	-		1	SCREW M6S M6X22 A280	
280	315105-0153	-		4	WASHER PLAIN, BRB, 6,4/12,H=1,5	
300	312105-0366	-		2	SCREW M6S M6X12 A280	
Common Parts						
150	525172-0000	-		2	SPACER	
200	312105-0328	-		4	SCREW M6S M5X14 A280	
210	312105-0366	-		2	SCREW M6S M6X12 A280	
240	312125-0230	-		4	SCREW PAN HEAD MCS M3X20 SS	
260	315105-0124	-		4	WASHER PLAIN, BRB, 3,2/6,H=0,5	
270	315105-0146	-		4	WASHER PLAIN, BRB, 5,3/10,H=1	
290	315105-0165	-		2	WASHER PLAIN, BRB, 8,4/16,H=1,5	
320	90044-0104	C		2	PROX.SWITCH IFM IN 3002	

Pos	Part No	SP	UN	Qty	Description	Page No

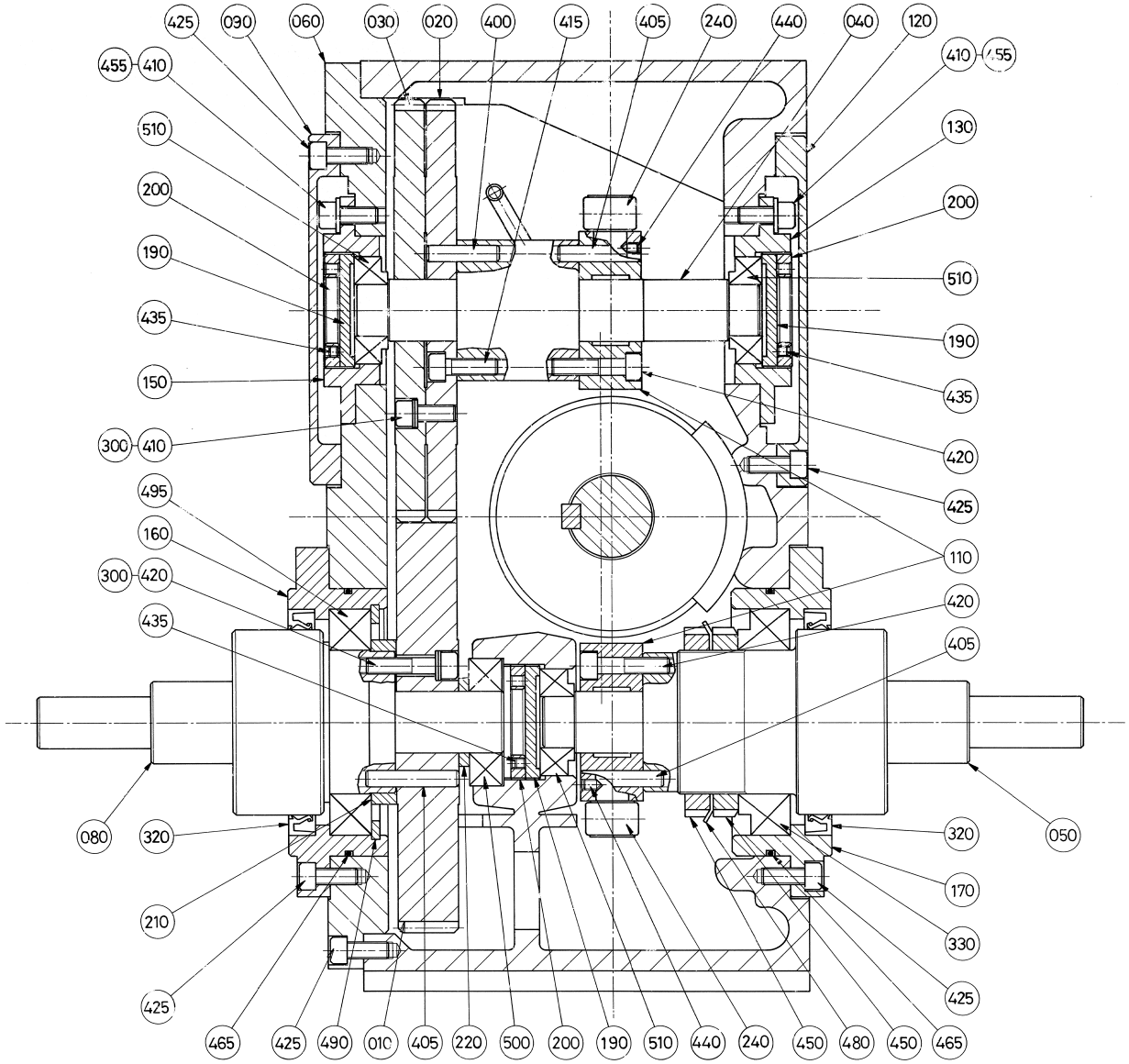
425
090
060
030
020
400
415
405
240
440
040
120
455
410
510
200
190
435
150
300
410
495
160
300
420
435
080
320
210
425
465
425
490
010
405
220
500
200
190
510
440
240
450
480
450
465
410
455
130
200
510
190
435
420
425
110
420
405
320
050
170
330
425

ECM: 72197 - 19990215
Group number: 525117-0300
Assembly Drawing: 525117-3_1_AA

Issue: 20020121

Pos	Part No	SP	UN	Qty	Description	Page No
Common Parts						
010	543705-0000	D		1	GEAR WHEEL WIDE	
020	543706-0000	D		1	GEAR WHEEL SLIM , INNER	
030	543707-0000	D		1	GEAR WHEEL SLIM , OUTER	
040	565322-0000	D		1	INTERMEDIARY SHAFT	
050	565323-0000	D		1	OUTPUT SHAFT, LONG	
060	565324-0000	D		1	LID	
070	565325-0000	D		1	INPUT SHAFT	
080	565336-0000	D		1	OUTPUT SHAFT SHORT	
090	565338-0000	D		1	GEAR HOUSING	
100	927314-0000	D		1	CAM	
110	927315-0000	D		2	TURRET	
120	565326-0000	D		2	LID	
130	565331-0000	D		1	BEARING HOLDER	
140	565332-0000	D		2	BEARING HOLDER	
150	565333-0000	D		1	BEARING HOLDER	
160	565334-0000	D		1	BEARING HOLDER	
170	565335-0000	D		1	BEARING HOLDER	
180	565339-0000	D		1	OIL PIPE	
190	565327-0000	D		3	RING NUT	
200	565328-0000	D		3	SCREW RING	
210	565329-0000	D		1	SPACER	
220	565330-0000	D		1	SPACER	
230	565340-0000	D		1	OIL LEVEL TUBE	
240	927318-0000	D		12	ROLLER	
300	90062-0049	-		18	LOCK WASHER NORD-LOCK,8,5/13,5, H=2,3	
310	90087-0015	-		1	PLUG, EXT. THREAD HEX. SOCKET VSTI 1/4-E	
320	90091-0130	C		2	RADIAL SEAL 90X110X12 MM DUST LIP	
330	90214-0087	C		1	TAPER ROLLER BEARING, 70X110X25 MM	
400	311103-0407	-		3	PARALLELL PIN, M6, 8X35 MM	
405	311103-0411	-		9	PARALLELL PIN, CP, M6, 8X45 MM	
410	312111-0451	-		12	SCREW HEX.SOCK.HD.MC6S-TT 8X20 88 FZB	
415	312111-0453	-		3	SCREW HEX.SOCK.HD.MC6S-TT 8X25 88 FZB	
420	312111-0457	-		9	SCREW HEX.SOCK.HD.MC6S-TT 8X35 88 FZB	
425	312115-0451	-		40	SCREW MC6S M8X20 A280	
430	312115-0453	-		12	SCREW MC6S M8X25 A280	
435	312316-0320	-		3	SCREW HEX.SOCK.SET CUP P.MSK6SS5X5 FZB	
440	312316-0323	-		12	SCREW HEX.SOCK.SET CUP P.MSK6SS5X8 FZB	
445	312805-0108	-		4	NUT ROUND WITH SLOTS M40X1,5 FE	
450	312805-0114	-		2	NUT ROUND WITH SLOTS M70X20 FE	
455	315101-0165	-		8	WASHER PLAIN, BRB, 8,4/16 H=1,5	
460	315105-0165	-		12	WASHER PLAIN, BRB, 8,4/16,H=1,5	
465	315202-0316	C		2	O-RING 124,5X3 MM	
470	315221-0171	C		1	RADIAL SEAL 30X62X7 MM	
475	315410-0108	-		2	LOCK WASHER MB 8 D=40 H=1,25	
480	315410-0114	-		1	LOCK WASHER MB 14 D=70 H=1,5	
485	315701-0338	-		1	PARALLEL KEY W. ROUND ENDS 12X8X70 MM	
490	315752-0149	-		1	RETAINING RING FOR HOLE, 110X4 MM	
495	321306-0114	C		1	BALL BEARING, 70X110X20 MM	
500	321309-0106	C		1	BALL BEARING, 30X62X16 MM	
505	321364-0106	C		2	TAPER ROLLER BEARING, 30X72X19 MM	
510	321361-0105	C		3	TAPER ROLLER BEARING, 25X52X16,25 MM	
515	342720-0104	-		1	CONN. STR. GA-8-G1/4	
520	342730-0104	-		2	CONN. ELBOW WA-8-1/4	

Machine Type | Group Description | Used-In | Group Number | Page No

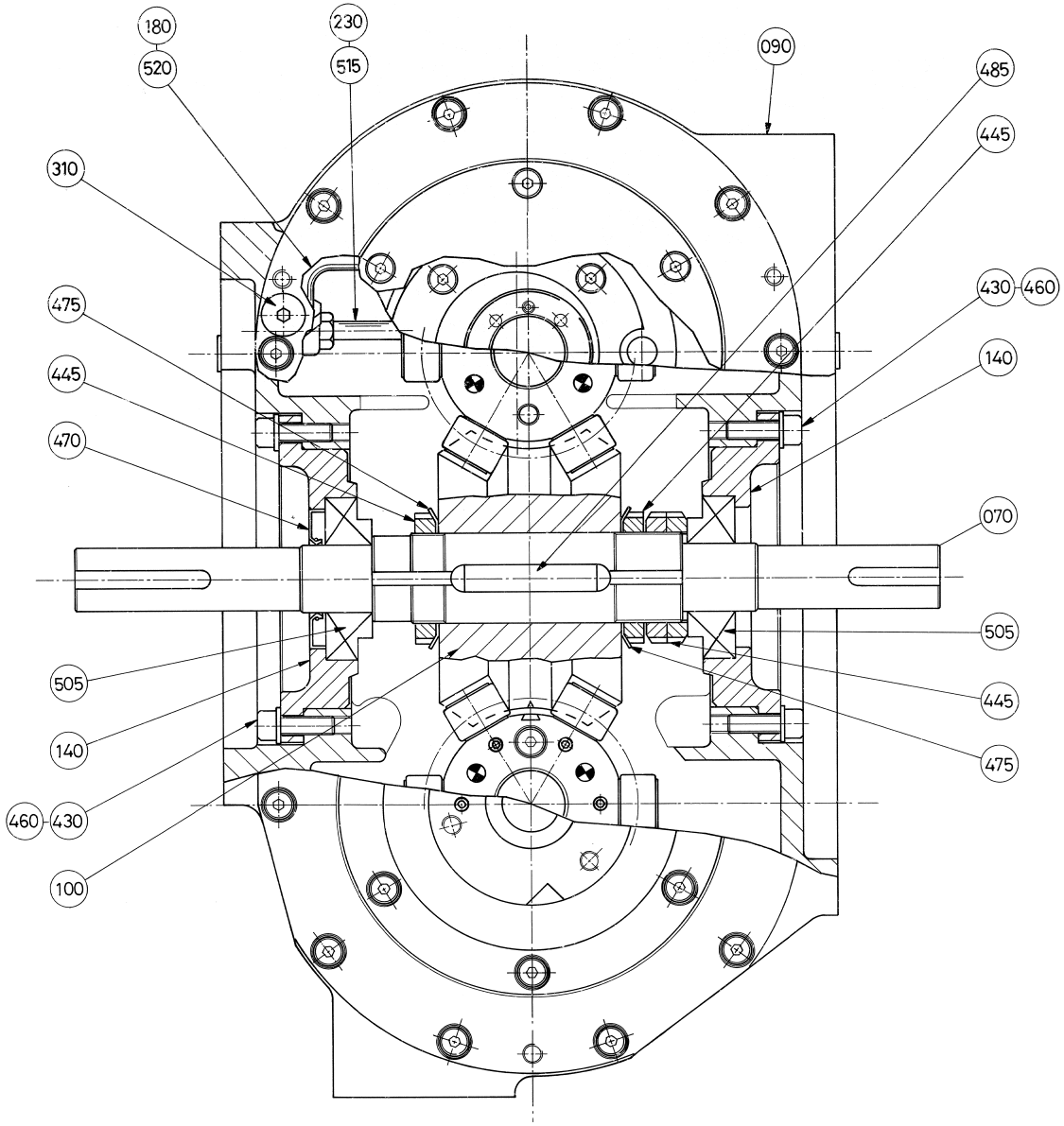
180
520
230
515
090
485
445
310
430
460
475
140
445
470
070
505
505
445
140
475
460
430
100

ECM: 72197 - 19990215
Group number: 525117-0300
Assembly Drawing: 525117-4_1_AA

Issue: 20020121

Pos	Part No	SP	UN	Qty	Description	Page No
Common Parts						
010	543705-0000	D		1	GEAR WHEEL WIDE	
020	543706-0000	D		1	GEAR WHEEL SLIM , INNER	
030	543707-0000	D		1	GEAR WHEEL SLIM , OUTER	
040	565322-0000	D		1	INTERMEDIARY SHAFT	
050	565323-0000	D		1	OUTPUT SHAFT, LONG	
060	565324-0000	D		1	LID	
070	565325-0000	D		1	INPUT SHAFT	
080	565336-0000	D		1	OUTPUT SHAFT SHORT	
090	565338-0000	D		1	GEAR HOUSING	
100	927314-0000	D		1	CAM	
110	927315-0000	D		2	TURRET	
120	565326-0000	D		2	LID	
130	565331-0000	D		1	BEARING HOLDER	
140	565332-0000	D		2	BEARING HOLDER	
150	565333-0000	D		1	BEARING HOLDER	
160	565334-0000	D		1	BEARING HOLDER	
170	565335-0000	D		1	BEARING HOLDER	
180	565339-0000	D		1	OIL PIPE	
190	565327-0000	D		3	RING NUT	
200	565328-0000	D		3	SCREW RING	
210	565329-0000	D		1	SPACER	
220	565330-0000	D		1	SPACER	
230	565340-0000	D		1	OIL LEVEL TUBE	
240	927318-0000	D		12	ROLLER	
300	90062-0049	-		18	LOCK WASHER NORD-LOCK,8,5/13,5, H=2,3	
310	90087-0015	-		1	PLUG, EXT. THREAD HEX. SOCKET VSTI 1/4-E	
320	90091-0130	C		2	RADIAL SEAL 90X110X12 MM DUST LIP	
330	90214-0087	C		1	TAPER ROLLER BEARING, 70X110X25 MM	
400	311103-0407	-		3	PARALLELL PIN, M6, 8X35 MM	
405	311103-0411	-		9	PARALLELL PIN, CP, M6, 8X45 MM	
410	312111-0451	-		12	SCREW HEX.SOCK.HD.MC6S-TT 8X20 88 FZB	
415	312111-0453	-		3	SCREW HEX.SOCK.HD.MC6S-TT 8X25 88 FZB	
420	312111-0457	-		9	SCREW HEX.SOCK.HD.MC6S-TT 8X35 88 FZB	
425	312115-0451	-		40	SCREW MC6S M8X20 A280	
430	312115-0453	-		12	SCREW MC6S M8X25 A280	
435	312316-0320	-		3	SCREW HEX.SOCK.SET CUP P.MSK6SS5X5 FZB	
440	312316-0323	-		12	SCREW HEX.SOCK.SET CUP P.MSK6SS5X8 FZB	
445	312805-0108	-		4	NUT ROUND WITH SLOTS M40X1,5 FE	
450	312805-0114	-		2	NUT ROUND WITH SLOTS M70X20 FE	
455	315101-0165	-		8	WASHER PLAIN, BRB, 8,4/16 H=1,5	
460	315105-0165	-		12	WASHER PLAIN, BRB, 8,4/16,H=1,5	
465	315202-0316	C		2	O-RING 124,5X3 MM	
470	315221-0171	C		1	RADIAL SEAL 30X62X7 MM	
475	315410-0108	-		2	LOCK WASHER MB 8 D=40 H=1,25	
480	315410-0114	-		1	LOCK WASHER MB 14 D=70 H=1,5	
485	315701-0338	-		1	PARALLEL KEY W. ROUND ENDS 12X8X70 MM	
490	315752-0149	-		1	RETAINING RING FOR HOLE, 110X4 MM	
495	321306-0114	C		1	BALL BEARING, 70X110X20 MM	
500	321309-0106	C		1	BALL BEARING, 30X62X16 MM	
505	321364-0106	C		2	TAPER ROLLER BEARING, 30X72X19 MM	
510	321361-0105	C		3	TAPER ROLLER BEARING, 25X52X16,25 MM	
515	342720-0104	-		1	CONN. STR. GA-8-G1/4	
520	342730-0104	-		2	CONN. ELBOW WA-8-1/4	

Machine Type | Group Description | Used-In | Group Number | Page No

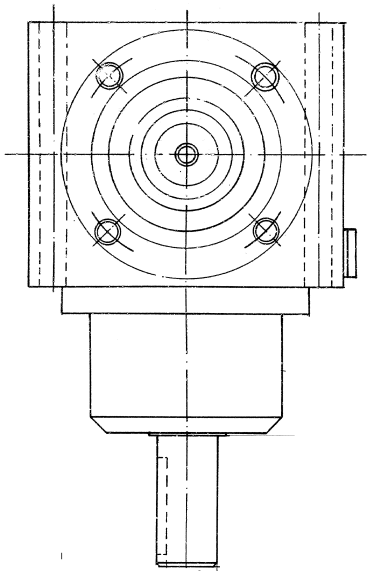

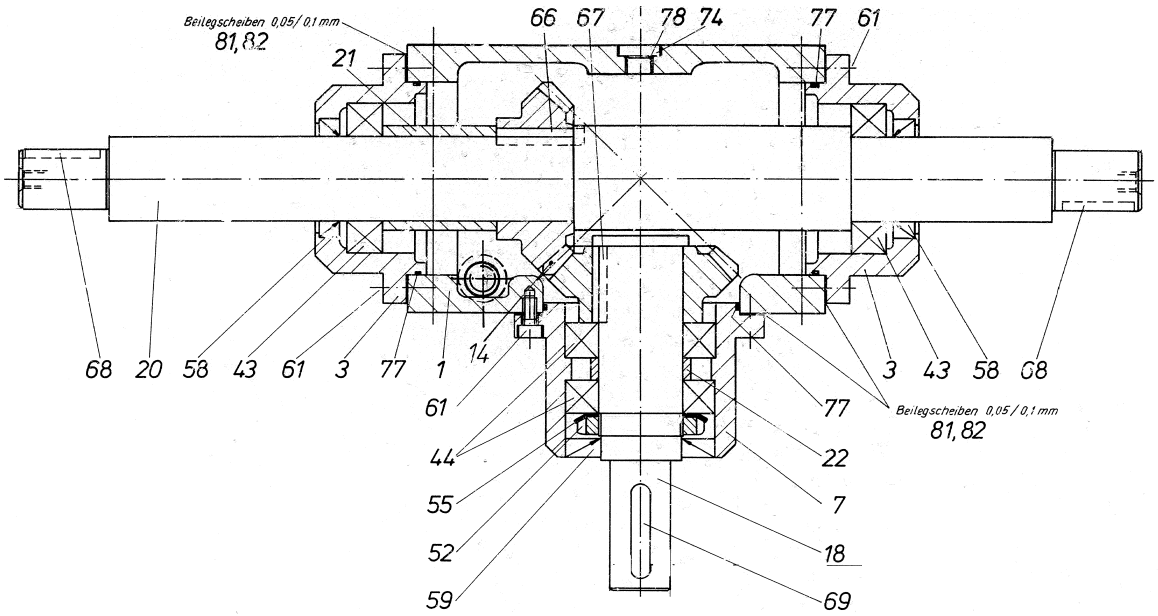
Beilegscheiben 0,05/0,1 mm
81,82
21
66
67
78
74
77
61
68
20
58
43
61
3
77
1
14
61
44
55
52
59
3
43
58
68
77
Beilegscheiben 0,05/0,1 mm
81,82
22
7
18
69

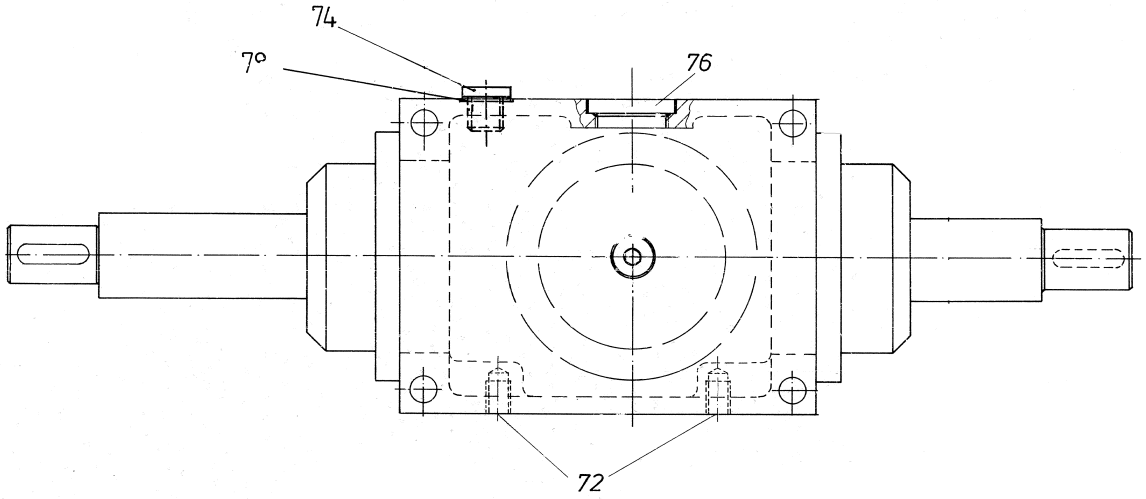
74
70
76
72

Pos	Part No	SP	UN	Qty	Description	Page No
Common Parts						
001	568070-0000	D		1	GEAR HOUSING	
003	568071-0000	D		2	BEARING SEAT	
007	568072-0000	D		1	BEARING SEAT	
014	443188-0000	D		1	GEAR WHEEL	
018	568073-0000	D		1	SHAFT	
020	568074-0000	D		1	SHAFT	
021	442621-0000	D		1	SPACER	
022	442622-0000	D		1	SPACER	
043	321306-0107	D		2	BALL BEARING, 35X62X14 MM	
044	321306-0107	D		2	BALL BEARING, 35X62X14 MM	
052	312805-0107	-		1	NUT ROUND WITH SLOTS M35X1,5 FE	
055	315410-0107	-		1	LOCK WASHER MB 7 D=35 H=1,25	
058	90091-0142	C		2	RADIAL SEAL 35X50X9 MM	
059	315221-0171	C		1	RADIAL SEAL 30X62X7 MM	
061	312111-0368	-		12	SCREW HEX.SOCK.HD.MC6S-TT 6X16 88 FZB	
066	315701-0802	-		1	PARALLEL KEY W. ROUND ENDS 10X8X36 MM	
067	315701-0299	-		1	PARALLEL KEY W. ROUND ENDS 10X8X32 MM	
068	315701-0268	-		2	PARALLEL KEY W. ROUND ENDS 8X7X32 MM	
069	315701-0270	-		1	PARALLEL KEY W. ROUND ENDS 8X7X40 MM	
072	312910-0126	-		2	HELI-COIL M8X1,5D	
077	90242-0117	D		3	O-RING 70X2 MM	
078	90242-0121	D		2	O-RING 11X2,5 MM	
081	443193-0000	D		3	SHIM	
082	443194-0000	D		3	SHIM	

Pos	Part No	SP	UN	Qty	Description	Page No

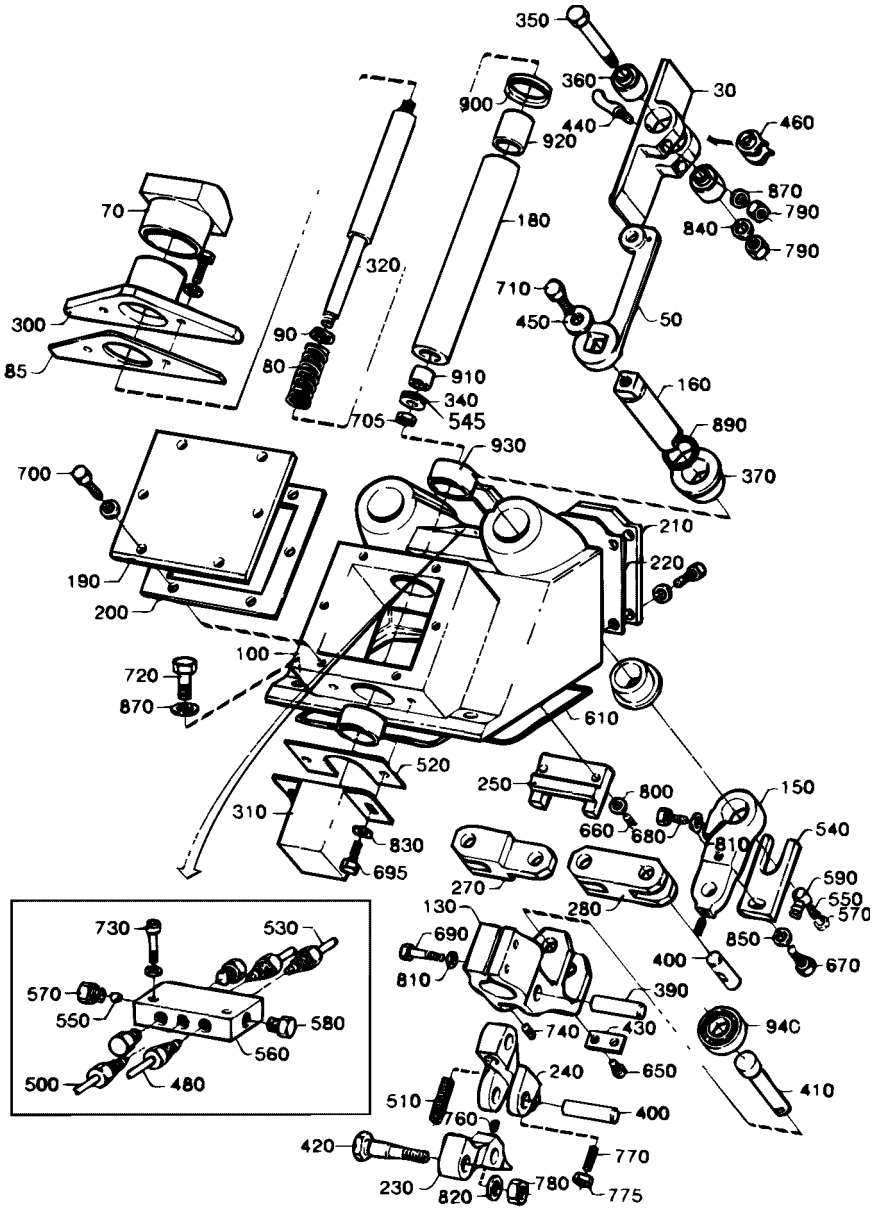
350
360
900
30
440
460
920
870
790
840
790
70
180
320
710
450
50
300
90
80
85
910
340
545
705
160
890
370
930
700
210
220
190
200
100
720
870
610
520
250
800
150
660
680
540
310
830
695
270
280
590
550
570
130
690
810
850
670
400
390
740
430
940
240
650
410
510
760
400
420
770
230
820
780
775
730
530
570
550
580
560
500
480

ECM: 72437 - 19990426
Group number: 285456-0300
Assembly Drawing: 285456-2_1_AA

Issue: 20020121

Pos	Part No	SP	UN	Qty	Description	Page No
0355B						
030	531628-0000	D		2	PRESSURE DEVICE FLAP	
050	285449-0000	D		2	ARM	
070	525101-0001	D		1	BLOCKING PIECE	
080	268830-0000	C		1	COMPRESSION SPRING	
095	312105-0370	-		2	SCREW M6S M6X20 A280	
440	525125-0000	C		4	PIN	
0375S						
030	443249-0000	D		2	FLAP	
050	442589-0000	D		2	ARM	
070	525101-0002	D		1	BLOCKING PIECE	
080	268830-0000	C		1	COMPRESSION SPRING	
095	312105-0370	-		2	SCREW M6S M6X20 A280	
440	262350-0001	C		4	PIN	
0500B						
030	442886-0000	D		2	FLAP	
050	262907-0000	D		2	ARM	
070	525100-0000	D		1	BLOCKING PIECE	
080	525379-0000	C		1	COMPRESSION SPRING	
085	297496-0000	C		1	LACE	
095	312105-0372	-		2	SCREW M6S M6X25 A280	
440	262350-0001	C		4	PIN	
0500S						
030	443038-0000	D		2	FLAP	
050	262906-0000	D		2	ARM	
070	525101-0001	D		1	BLOCKING PIECE	
080	268830-0000	C		1	COMPRESSION SPRING	
095	312105-0370	-		2	SCREW M6S M6X20 A280	
440	525125-0000	C		4	PIN	
0750B						
030	442984-0000	D		2	FLAP	
050	262906-0000	D		2	ARM	
070	525100-0000	D		1	BLOCKING PIECE	
080	525379-0000	C		1	COMPRESSION SPRING	
085	297496-0000	C		1	LACE	
095	312105-0372	-		2	SCREW M6S M6X25 A280	
440	262350-0001	C		4	PIN	
0750S						
030	544289-0000	D		2	FLAP	
050	262906-0000	D		2	ARM	
070	544255-0000	D		1	BLOCKING PIECE	
080	268830-0000	C		1	COMPRESSION SPRING	
085	297496-0000	C		1	LACE	
095	312105-0372	-		2	SCREW M6S M6X25 A280	
440	525125-0000	C		4	PIN	
1000B						
030	443182-0000	D		2	FLAP	
050	262906-0000	D		2	ARM	
070	525100-0000	D		1	BLOCKING PIECE	
080	525379-0000	C		1	COMPRESSION SPRING	
085	297496-0000	C		1	LACE	
095	312105-0372	-		2	SCREW M6S M6X25 A280	
440	262350-0001	C		4	PIN	
1000S						
030	569111-0000	D		2	FLAP	
050	262906-0000	D		2	ARM	
070	569112-0000	D		1	BLOCKING PIECE	
080	268830-0000	C		1	COMPRESSION SPRING	
085	297496-0000	C		1	LACE	
095	312105-0372	-		2	SCREW M6S M6X25 A280	
440	262350-0001	C		4	PIN	
1000SQ						
030	574035-0000	D		2	FLAP	
050	262906-0000	D		2	ARM	
070	574036-0000	D		1	BLOCKING PIECE	
080	268830-0000	C		1	COMPRESSION SPRING	
085	297496-0000	C		1	LACE	
095	312105-0372	-		2	SCREW M6S M6X25 A280	
440	262350-0001	C		4	PIN	
Common Parts						
090	442883-0000	D		2	SPACING WASHER	
100	525335-0000	D		1	HOUSE	
130	262234-0000	D		1	BRACKET	
150	262235-0000	D		2	ARM	
160	262266-0000	D		2	SHAFT	

Machine Type | Group Description | Used-In | Group Number | Page No

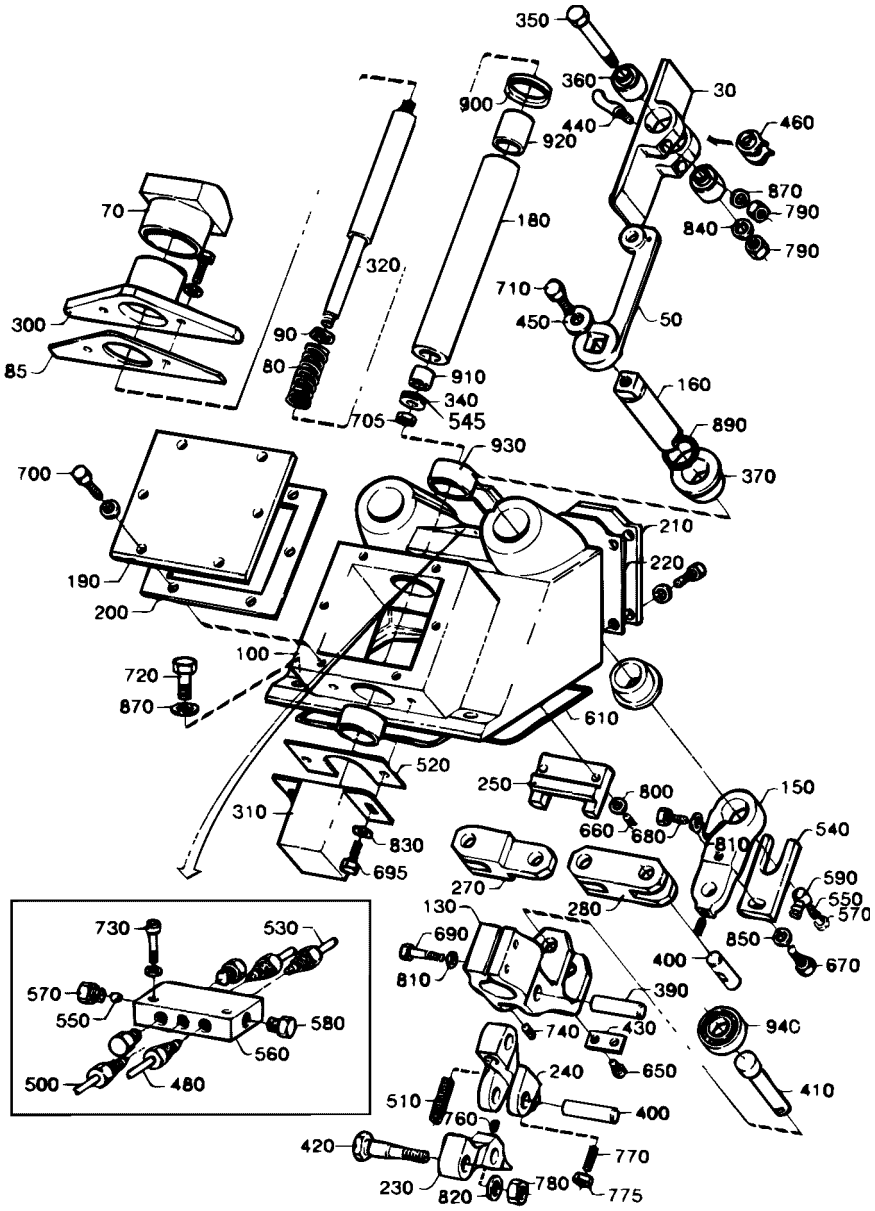
350
360
900
30
440
460
920
870
790
840
790
70
180
320
710
450
50
300
90
80
85
910
340
545
705
160
890
370
930
700
210
220
190
200
100
720
870
610
520
250
800
150
660
680
540
310
830
695
270
280
590
550
570
130
690
810
850
670
400
390
740
430
940
240
650
410
510
760
400
420
770
230
820
780
775
730
530
570
550
580
560
500
480

Pos	Part No	SP	UN	Qty	Description	Page No
Common Parts (Cont'd)						
180	262309-0000	D		1	SLEEVE	
190	262313-0000	-		1	LID	
200	262314-0000	D		1	RUBBER GASKET	
210	262315-0000	-		1	LID	
220	262316-0000	D		1	RUBBER GASKET	
230	262415-0000	D		1	LINK	
240	262610-0000	D		1	LINK	
250	262720-0000	D		1	STEERING	
270	285157-0000	D		1	LINK	
280	285158-0000	D		1	LINK	
300	285448-0000	-		1	PROTECTIVE CASING	
310	442532-0000	-		1	COVER	
320	442882-0000	D		1	SPINDLE	
340	28037-0000	-		1	WASHER	
350	262028-0011	C		2	FITTING BOLT	
360	525367-0000	C		4	SLEEVE	
370	262267-0000	C		4	BUSHING	
390	262322-0000	D		1	SHAFT	
400	262323-0000	C		3	SHAFT	
410	262324-0000	D		1	SHAFT	
420	262325-0000	D		1	SHAFT	
430	262343-0000	D		1	SECURING PLATE	
450	276659-0000	D		2	WASHER	
460	311103-0306	-		4	PARALLELL PIN, M6, 5X12 MM	
480	B285162-0000	D		1	LUBRICATING PIPE	
	90028-0002	-		*1*	*CONE*	
	90134-0022	-		*1*	*BUSHING 5/16-24UNF, 3/32*	
	90151-0004	-	*M*	*1*	*PIPE*	
500	B285164-0000	D		2	LUBRICATING PIPE	
	90151-0004	-	*M*	*1*	*PIPE*	
	90134-0022	-		*1*	*BUSHING 5/16-24UNF, 3/32*	
	90028-0002	-		*1*	*CONE*	
510	285970-0000	C		1	COMPRESSION SPRING	
520	442533-0000	C		1	RUBBER GASKET	
530	B442560-0000	D		1	LUBR.OIL PIPE	
	90151-0004	-	*M*	*1*	*PIPE*	
	90134-0022	-		*1*	*BUSHING 5/16-24UNF, 3/32*	
	90028-0002	-		*1*	*CONE*	
540	442884-0000	D		2	LOCK PLATE	
545	566016-0000	D		1	WASHER	
550	90028-0001	C		3	CONE 5/32"	
560	90032-0034	-		1	DISTR. BLOCK & DIST.5/16-24UNF X8	
570	90134-0003	C		3	BUSHING	
580	90136-0002	-		3	PLUG 5/16"24	
590	90137-0005	-		2	BANJO CONN. M6, 5/16-24UNF	
600	90153-0043	-	KG	1	ADHESIVE LOCTITE 495	
605	90157-0022	-	L	1	SEALING COMPOUND	
610	90161-0001	-	MM	900	O-RING MATERIAL 3 MM MM	
620	90296-0009	-	L	1	SILICONE GREASE TUBE 100 GR.	
650	312105-0362	-		2	SCREW M6S M6X8 A280	
660	312105-0372	-		2	SCREW M6S M6X25 A280	
670	312105-0453	-		2	SCREW M6S M8X25 A280	
680	312105-0457	-		2	SCREW M6S M8X35 A280	
690	312105-0459	-		2	SCREW M6S M8X40 A280	
695	312105-0368	-		2	SCREW M6S M6X16 A280	
700	312105-0368	-		14	SCREW M6S M6X16 A280	
705	312105-0447	-		1	SCREW M6S M8X12 A280	
710	312105-0449	-		2	SCREW M6S M8X16 A280	
720	312105-0453	-		3	SCREW M6S M8X25 A280	
730	312115-0293	-		2	SCREW MC6S M4X16 A280	
740	312318-0287	-		1	SCREW SOCK.SET CUP P MSK6SS M4X8 A4	
760	312318-0362	-		3	SCREW SOCK.SET CUP P MSK6SS M6X8 A4	
770	312318-0372	-		1	SCREW SOCK.SET CUP P MSK6SS M6X25 A4	
775	312605-0316	-		1	HEXAGON NUT, M6M M6 A280	
780	312605-0322	-		1	HEXAGON NUT, M6M M12 A280	
790	312605-0318	-		6	HEXAGON NUT, M6M M8 A280	
800	315105-0153	-		2	WASHER PLAIN, BRB, 6,4/12,H=1,5	
810	315105-0165	-		4	WASHER PLAIN, BRB, 8,4/16,H=1,5	
820	315105-0178	-		1	WASHER PLAIN, BRB, 13/24,H=2	
830	315105-0153	-		20	WASHER PLAIN, BRB, 6,4/12,H=1,5	
840	315105-0165	-		2	WASHER PLAIN, BRB, 8,4/16,H=1,5	
850	315115-0165	-		2	WASHER PLAIN, TBRB 8,4/16 H=3	
870	315115-0165	-		7	WASHER PLAIN, TBRB 8,4/16 H=3	
890	315202-0217	C		2	O-RING 24,2X3 MM	
900	315220-0175	C		1	V-RINGS 31X39X10,5 MM V-35S	
910	321120-0122	C		1	BEARING BUSHING WITHOUT FL, 15X17X15 MM	
920	321120-0160	C		1	BEARING BUSHING WITHOUT FLANGE,25/28X30	
930	321120-0183	C		2	BEARING BUSHING WITHOUT FL, 35X39X20 MM	
940	321306-0104	C		1	BALL BEARING, 20X42X12 MM	

Machine Type | Group Description | Used-In | Group Number | Page No

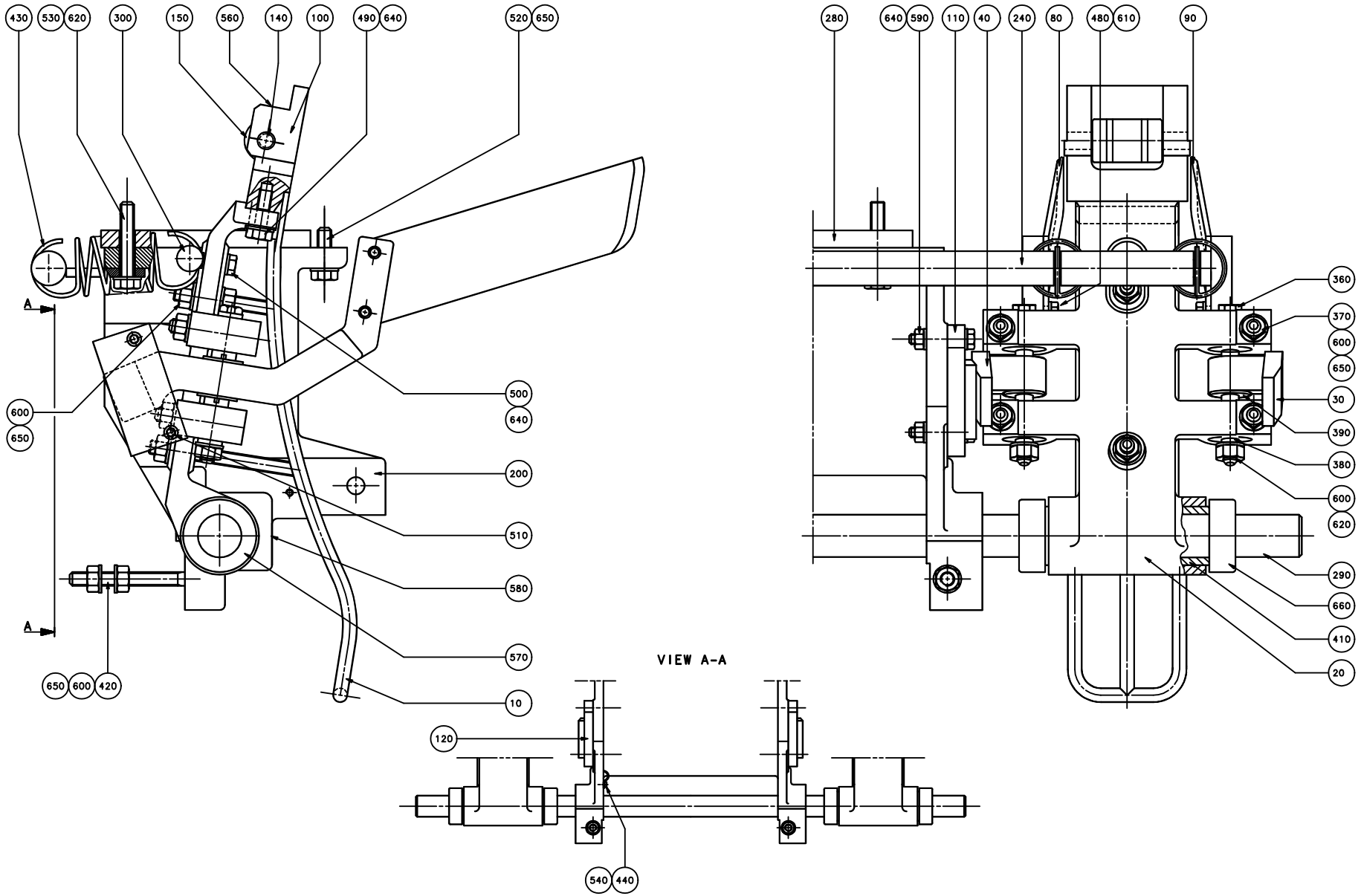
430
530
620
300
150
560
140
100
490
640
520
650
A
600
650
500
640
200
510
580
570
10
650
600
420
280
640
590
110
40
240
80
480
610
90
360
370
600
650
30
390
380
600
620
290
660
410
20
VIEW A-A
120
540
440

ECM: 72392 - 19990617
Group number: 285736-0300
Assembly Drawing: 285736-2_1_AB

Issue: 20020121

Pos	Part No	SP	UN	Qty	Description	Page No
1000SQ NORMFIN						
010	574039-0000	D		2	RAIL	
020	285723-0000	D		2	ARM	
030	285660-0000	D		2	ARM	
040	285661-0000	D		2	ARM	
080	574040-0000	D		2	SHEET	
090	574041-0000	D		2	SHEET	
100	574042-0000	C		2	PLATE	
140	262427-0008	C		2	SHAFT	
300	297644-0000	D		2	SHAFT	
410	285729-0000	C		2	BUSHING	
600	312605-0318	-		24	HEXAGON NUT, M6M M8 A280	
610	315105-0153	-		8	WASHER PLAIN, BRB, 6,4/12,H=1,5	
660	315742-0119	-		4	COLLAR, 25/42, H=15	
1000SQ REVFIN						
010	574039-0000	D		2	RAIL	
020	285723-0000	D		2	ARM	
030	285660-0000	D		2	ARM	
040	285661-0000	D		2	ARM	
080	574040-0000	D		2	SHEET	
090	574041-0000	D		2	SHEET	
100	574042-0000	C		2	PLATE	
140	262427-0008	C		2	SHAFT	
150	B443487-0000	C		2	ROLL	
	90242-0054	-		*2*	*O-RING 20X3 MM*	
160	1255161-0000	D		4	ARM	
170	1255162-0000	D		2	ROCKER ARM	
180	1255163-0000	D		2	ROCKER ARM	
185	1255160-0000	D		4	THREADED INSERT	
190	1143015-0000	C		4	BUSHING	
300	1143016-0000	D		2	AXLE PIN	
410	285729-0000	C		2	BUSHING	
600	312605-0318	-		32	HEXAGON NUT, M6M M8 A280	
605	312902-0318	-		4	NUT HEX. LEFT THREAD, M8 A280	
610	315105-0153	-		12	WASHER PLAIN, BRB, 6,4/12,H=1,5	
615	1143223-0000	D		4	WASHER	
616	315105-0146	-		4	WASHER PLAIN, BRB, 5,3/10,H=1	
617	312105-0323	-		4	SCREW M6S M5X8 A280	
660	315742-0119	-		4	COLLAR, 25/42, H=15	
670	312105-0370	-		4	SCREW M6S M6X20 A280	
680	312105-0362	-		4	SCREW M6S M6X8 A280	
690	90115-0139	C		8	ROD END, ID=8 MM, M8X1,25	
0355B						
010	285712-0000	D		2	RAIL	
020	285723-0000	D		2	ARM	
030	285656-0000	D		2	ARM	
040	285657-0000	D		2	ARM	
080	527854-0000	D		2	PLATE RIGHT	
090	527856-0000	D		2	PLATE LEFT	
100	525212-0000	C		2	PLATE	
140	262427-0005	C		2	SHAFT	
150	B443487-0000	C		2	ROLL	
	90242-0054	-		*2*	*O-RING 20X3 MM*	
300	297644-0000	D		2	SHAFT	
410	285729-0000	C		2	BUSHING	
600	312605-0318	-		24	HEXAGON NUT, M6M M8 A280	
610	315105-0153	-		8	WASHER PLAIN, BRB, 6,4/12,H=1,5	
660	315742-0119	-		4	COLLAR, 25/42, H=15	
0375S						
010	285724-0002	D		2	RAIL	
020	285723-0000	D		2	ARM	
030	285660-0000	D		2	ARM	
040	285661-0000	D		2	ARM	
080	443027-0000	D		2	SHEET	
090	443028-0000	D		2	SHEET	
100	525234-0002	C		2	PLATE	
140	262427-0002	C		2	SHAFT	
150	B443488-0000	C		2	ROLL	
	90242-0054	-		*2*	*O-RING 20X3 MM*	
300	297644-0000	D		2	SHAFT	
410	285729-0000	C		2	BUSHING	
600	312605-0318	-		24	HEXAGON NUT, M6M M8 A280	
610	315105-0153	-		8	WASHER PLAIN, BRB, 6,4/12,H=1,5	
660	315742-0119	-		4	COLLAR, 25/42, H=15	
0500B						
010	262970-0000	D		2	RAIL	
020	285655-0000	D		2	ARM	
030	285656-0000	D		2	ARM	
040	285657-0000	D		2	ARM	
080	525066-0000	D		2	SHEET	

Machine Type | Group Description | Used-In | Group Number | Page No

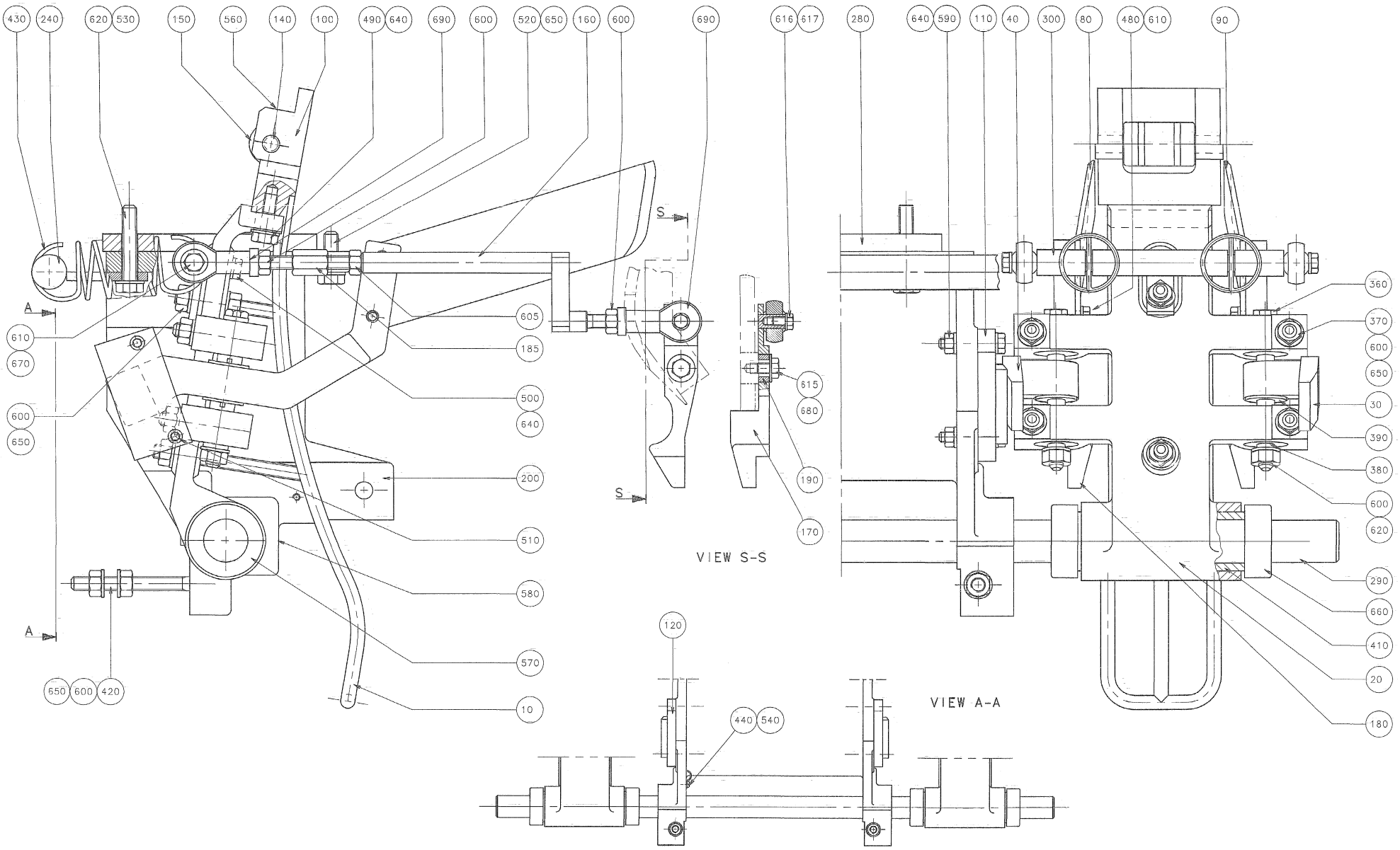
430
240
620
530
150
560
140
100
490
640
690
600
520
650
160
600
690
616
617
280
640
590
110
40
300
80
480
610
90
360
370
600
650
30
390
380
600
620
290
660
410
20
180
605
185
500
640
200
510
580
570
10
610
670
600
650
650
600
420
615
680
190
170
120
440
540
S
S
A
A
VIEW S-S
VIEW A-A

Pos	Part No	SP	UN	Qty	Description	Page No
0500B (Cont'd)						
090	525067-0000	D		2	SHEET	
100	B525429-0000	C		2	PLATE	
	312910-0119	-		*3*	*THREADED INSERTS M6X2,0D*	
140	262427-0001	C		2	SHAFT	
150	B443487-0000	C		2	ROLL	
	90242-0054	-		*2*	*O-RING 20X3 MM*	
300	297644-0000	D		2	SHAFT	
410	285729-0000	C		2	BUSHING	
600	312605-0318	-		24	HEXAGON NUT, M6M M8 A280	
610	315105-0153	-		8	WASHER PLAIN, BRB, 6,4/12,H=1,5	
660	315742-0119	-		4	COLLAR, 25/42, H=15	
0500S						
010	285712-0000	D		2	RAIL	
020	285723-0000	D		2	ARM	
030	285656-0000	D		2	ARM	
040	285657-0000	D		2	ARM	
080	443023-0000	D		2	SHEET	
090	443024-0000	D		2	SHEET	
100	525212-0000	C		2	PLATE	
140	262427-0005	C		2	SHAFT	
150	B443487-0000	C		2	ROLL	
	90242-0054	-		*2*	*O-RING 20X3 MM*	
300	297644-0000	D		2	SHAFT	
410	285729-0000	C		2	BUSHING	
600	312605-0318	-		24	HEXAGON NUT, M6M M8 A280	
610	315105-0153	-		8	WASHER PLAIN, BRB, 6,4/12,H=1,5	
660	315742-0119	-		4	COLLAR, 25/42, H=15	
0750B						
010	262970-0000	D		2	RAIL	
020	285655-0000	D		2	ARM	
030	285656-0000	D		2	ARM	
040	285657-0000	D		2	ARM	
080	442979-0000	D		2	SHEET	
090	442980-0000	D		2	SHEET	
100	B525429-0000	C		2	PLATE	
	312910-0119	-		*3*	*THREADED INSERTS M6X2,0D*	
140	262427-0001	C		2	SHAFT	
150	B443487-0000	C		2	ROLL	
	90242-0054	-		*2*	*O-RING 20X3 MM*	
300	297644-0000	D		2	SHAFT	
410	285729-0000	C		2	BUSHING	
600	312605-0318	-		24	HEXAGON NUT, M6M M8 A280	
610	315105-0153	-		8	WASHER PLAIN, BRB, 6,4/12,H=1,5	
660	315742-0119	-		4	COLLAR, 25/42, H=15	
0750S						
010	544290-0000	D		2	RAIL	
020	285723-0000	D		2	ARM	
030	285656-0000	D		2	ARM	
040	285657-0000	D		2	ARM	
080	544288-0000	D		2	SHEET	
090	544280-0000	D		2	SHEET	
100	544291-0000	C		2	PLATE	
140	262427-0006	C		2	SHAFT	
150	B443487-0000	C		2	ROLL	
	90242-0054	-		*2*	*O-RING 20X3 MM*	
300	297644-0000	D		2	SHAFT	
410	285729-0000	C		2	BUSHING	
600	312605-0318	-		24	HEXAGON NUT, M6M M8 A280	
610	315105-0153	-		8	WASHER PLAIN, BRB, 6,4/12,H=1,5	
660	315742-0119	-		4	COLLAR, 25/42, H=15	
1000B HIFIN						
010	262970-0000	D		2	RAIL	
020	285655-0000	D		2	ARM	
030	285656-0000	D		2	ARM	
040	285657-0000	D		2	ARM	
080	443021-0000	D		2	SHEET	
090	443022-0000	D		2	SHEET	
100	B443348-0000	C		2	PLATE	
	312910-0119	-		*3*	*THREADED INSERTS M6X2,0D*	
140	262427-0001	C		2	SHAFT	
150	B443487-0000	C		2	ROLL	
	90242-0054	-		*2*	*O-RING 20X3 MM*	
300	297644-0000	D		2	SHAFT	
410	285729-0000	C		2	BUSHING	
600	312605-0318	-		24	HEXAGON NUT, M6M M8 A280	
610	315105-0153	-		8	WASHER PLAIN, BRB, 6,4/12,H=1,5	
660	315742-0119	-		4	COLLAR, 25/42, H=15	
1000B LOFIN						

See previous drawings pages: 550, 552.

ECM: 72392 - 19990617
Group number: 285736-0300
Assembly Drawing: 285736-3_1_AC

Issue: 20020121

Pos	Part No	SP	UN	Qty	Description	Page No
1000B LOFIN (Cont'd)						
010	262970-0000	D		2	RAIL	
020	285655-0000	D		2	ARM	
030	285656-0000	D		2	ARM	
040	285657-0000	D		2	ARM	
080	443021-0000	D		2	SHEET	
090	443022-0000	D		2	SHEET	
100	525211-0000	C		2	PLATE	
140	262427-0001	C		2	SHAFT	
150	B443487-0000	C		2	ROLL	
	90242-0054	*-*		*2*	*O-RING 20X3 MM*	
300	297644-0000	D		2	SHAFT	
410	285729-0000	C		2	BUSHING	
600	312605-0318	-		24	HEXAGON NUT, M6M M8 A280	
610	315105-0153	-		8	WASHER PLAIN, BRB, 6,4/12,H=1,5	
660	315742-0119	-		4	COLLAR, 25/42, H=15	
1000S						
010	544290-0000	D		2	RAIL	
020	285723-0000	D		2	ARM	
030	285656-0000	D		2	ARM	
040	285657-0000	D		2	ARM	
080	569115-0000	D		2	SHEET	
090	569116-0000	D		2	SHEET	
100	569114-0000	C		2	PLATE	
140	262427-0007	C		2	SHAFT	
150	B443487-0000	C		2	ROLL	
	90242-0054	*-*		*2*	*O-RING 20X3 MM*	
300	297644-0000	D		2	SHAFT	
410	285729-0000	C		2	BUSHING	
600	312605-0318	-		24	HEXAGON NUT, M6M M8 A280	
610	315105-0153	-		8	WASHER PLAIN, BRB, 6,4/12,H=1,5	
660	315742-0119	-		4	COLLAR, 25/42, H=15	
Common Parts						
110	442564-0000	C		1	CURVE	
120	442565-0000	C		1	CURVE	
200	262924-0000	-		1	CANTILEVER	
240	297643-0000	-		1	BRACKET	
280	285444-0000	-		1	SPACER	
290	285664-0000	D		1	SHAFT	
360	262028-0002	C		4	FITTING BOLT	
370	262179-0001	C		8	PIN	
380	262183-0000	C		8	BUSHING	
390	276664-0000	C		8	WASHER	
420	443313-0000	-		2	STUD SCREW	
430	297567-0000	C		4	TENSION SPRING	
440	90165-0057	-		1	PIPE CLIP FOR TUBE D=6 MM	
480	312105-0366	-		8	SCREW M6S M6X12 A280	
490	312105-0372	-		4	SCREW M6S M6X25 A280	
500	312105-0374	-		2	SCREW M6S M6X30 A280	
510	312105-0376	-		4	SCREW M6S M6S M6X35 A280	
520	312105-0453	-		2	SCREW M6S M8X25 A280	
530	312105-0460	-		2	SCREW M6S M8X45 A280	
540	312125-0291	-		1	SCREW PAN HEAD MCS M4X12 SS	
560	312318-0370	-		2	SCREW SOCK.SET CUP P MSK6SS M6X20 A4	
570	312318-0443	-		4	SCREW SOCK.SET CUP P MSK6SS M8X8 A4	
580	312318-0449	-		2	SCREW SOCK.SET CUP P MSK6SS M8X16 A4	
590	312605-0316	-		4	HEXAGON NUT, M6M M6 A280	
620	315105-0165	-		6	WASHER PLAIN, BRB, 8,4/16,H=1,5	
640	315115-0153	-		14	WASHER PLAIN, TBRB 6,4/12 H=3	
650	315115-0165	-		22	WASHER PLAIN, TBRB 8,4/16 H=3	
675	342732-0102	-		2	ELBOW PIPE JOINT, EXT.THREAD, D=6MM-G1/8	
685	312155-0368	-		2	SCREW HEX.SOCK.COUNT.MF6S M6X16 A280	

Machine Type | Group Description | Used-In | Group Number | Page No

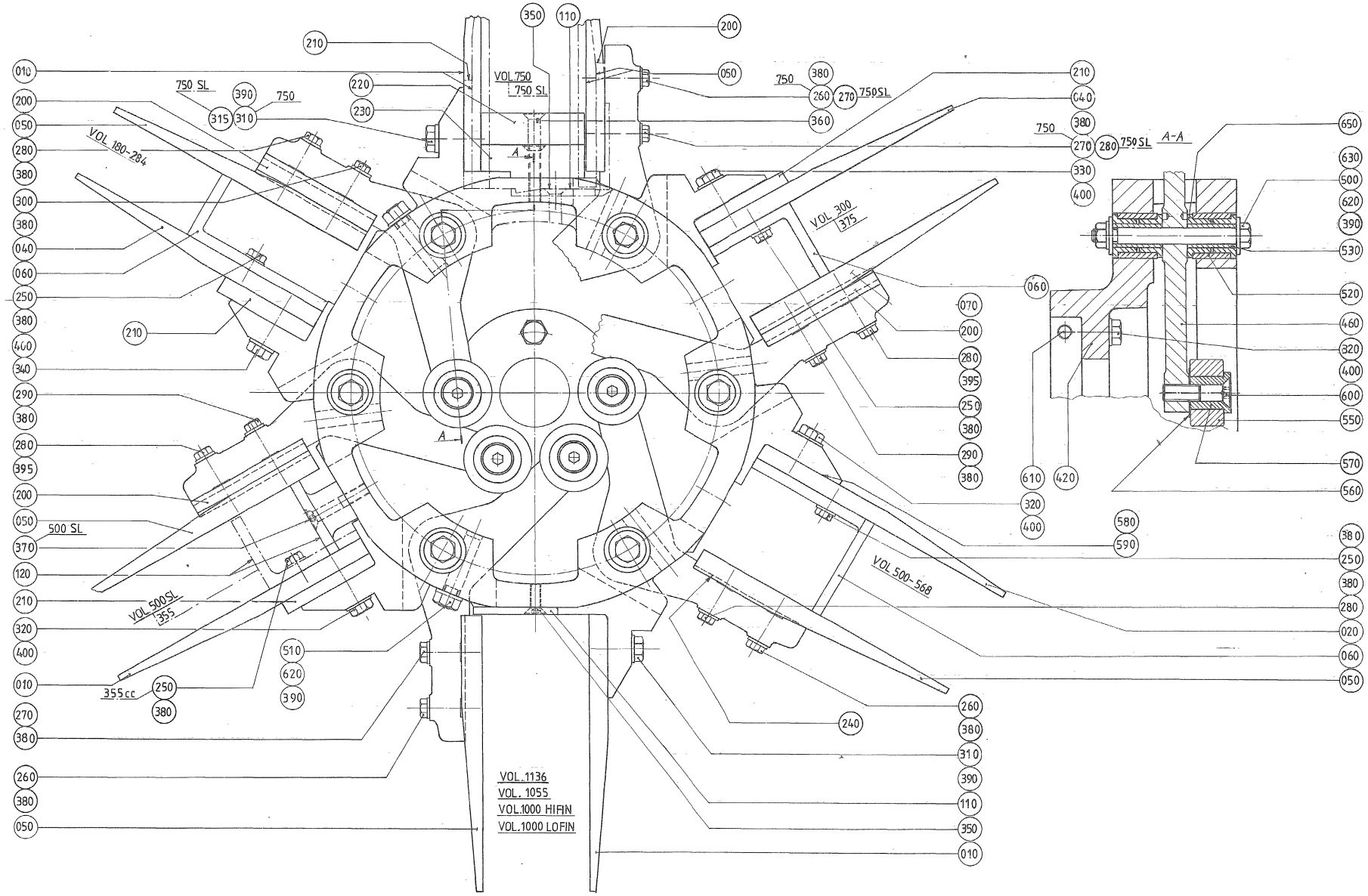
VOL.750
750 SL
750 SL
750
750
750SL
750
750SL
A-A
VOL 180-284
VOL 300
375
500 SL
VOL 500SL
355
355cc
VOL 500-568
VOL.1136
VOL. 1055
VOL.1000 HIFIN
VOL.1000 LOFIN

ECM: 72353 - 19990525
Group number: 297681-0400
Assembly Drawing: 297681-2_1_AA

Issue: 20020121

Pos	Part No	SP	UN	Qty	Description	Page No
0355B						
010	525458-0000	C		6	FLAP	
050	B285310-0002	C		6	FLAP	
	312910-0118	-		*1*	*HELI-COIL M6X1,5D*	
120	525371-0000	D		6	BOTTOM	
200	285316-0002	D		6	SPACER PIECE	
210	525461-0000	D		6	SPACER PIECE	
250	312105-0368	-		6	SCREW M6S M6X16 A280	
280	312105-0378	-		6	SCREW M6S M6X40 A280	
290	312105-0379	-		6	SCREW M6S M6X45 A280	
320	312105-0457	-		9	SCREW M6S M8X35 A280	
380	315105-0153	-		12	WASHER PLAIN, BRB, 6,4/12,H=1,5	
390	315105-0165	-		24	WASHER PLAIN, BRB, 8,4/16,H=1,5	
395	315115-0153	-		6	WASHER PLAIN, TBRB 6,4/12 H=3	
400	315115-0165	-		9	WASHER PLAIN, TBRB 8,4/16 H=3	
420	525450-0000	D		1	HUB	
460	565967-0000	C		6	ARM	
510	262179-0001	C		12	PIN	
520	525329-0000	C		12	SLEEVE	
610	312109-0459	-		2	SCREW M6S M8X40 A280	
620	312605-0318	-		18	HEXAGON NUT, M6M M8 A280	
650	321111-0185	C		24	BEAR.BUSHING WITH FLANGE, 14/20X14 MM	
0375S						
040	525430-0000	C		6	FLAP	
060	525372-0000	D		6	BOTTOM	
070	297646-0000	C		6	FLAP	
200	285316-0002	D		6	SPACER PIECE	
210	525461-0000	D		6	SPACER PIECE	
250	312105-0368	-		12	SCREW M6S M6X16 A280	
280	312105-0378	-		6	SCREW M6S M6X40 A280	
290	312105-0379	-		6	SCREW M6S M6X45 A280	
320	312105-0457	-		3	SCREW M6S M8X35 A280	
330	312105-0459	-		6	SCREW M6S M8X40 A280	
380	315105-0153	-		18	WASHER PLAIN, BRB, 6,4/12,H=1,5	
390	315105-0165	-		24	WASHER PLAIN, BRB, 8,4/16,H=1,5	
395	315115-0153	-		6	WASHER PLAIN, TBRB 6,4/12 H=3	
400	315115-0165	-		9	WASHER PLAIN, TBRB 8,4/16 H=3	
420	525450-0000	D		1	HUB	
460	565967-0000	C		6	ARM	
510	262179-0001	C		12	PIN	
520	525329-0000	C		12	SLEEVE	
610	312109-0459	-		2	SCREW M6S M8X40 A280	
620	312605-0318	-		18	HEXAGON NUT, M6M M8 A280	
650	321111-0185	C		24	BEAR.BUSHING WITH FLANGE, 14/20X14 MM	
0500B						
020	525455-0000	C		6	FLAP	
050	B285310-0001	C		6	FLAP	
	312910-0118	-		*1*	*HELI-COIL M6X1,5D*	
060	525369-0000	D		6	BOTTOM	
240	442981-0000	D		6	SHIM	
250	312105-0368	-		6	SCREW M6S M6X16 A280	
260	312105-0374	-		6	SCREW M6S M6X30 A280	
280	312105-0378	-		6	SCREW M6S M6X40 A280	
320	312105-0457	-		9	SCREW M6S M8X35 A280	
380	315105-0153	-		18	WASHER PLAIN, BRB, 6,4/12,H=1,5	
390	315105-0165	-		24	WASHER PLAIN, BRB, 8,4/16,H=1,5	
400	315115-0165	-		9	WASHER PLAIN, TBRB 8,4/16 H=3	
420	525450-0000	D		1	HUB	
460	565967-0000	C		6	ARM	
510	262179-0001	C		12	PIN	
520	525329-0000	C		12	SLEEVE	
610	312109-0459	-		2	SCREW M6S M8X40 A280	
620	312605-0318	-		18	HEXAGON NUT, M6M M8 A280	
650	321111-0185	C		24	BEAR.BUSHING WITH FLANGE, 14/20X14 MM	
0500S						
010	525456-0000	C		6	FLAP	
050	B285310-0002	C		6	FLAP	
	312910-0118	-		*1*	*HELI-COIL M6X1,5D*	
120	525370-0000	D		6	BOTTOM	
200	285316-0002	D		6	SPACER PIECE	
210	525461-0000	D		6	SPACER PIECE	
280	312105-0378	-		6	SCREW M6S M6X40 A280	
290	312105-0379	-		6	SCREW M6S M6X45 A280	
320	312105-0457	-		9	SCREW M6S M8X35 A280	
370	312155-0378	-		6	SCREW HEX.SOCK.COUNT.MF6S M6X40 A280	
380	315105-0153	-		12	WASHER PLAIN, BRB, 6,4/12,H=1,5	
390	315105-0165	-		24	WASHER PLAIN, BRB, 8,4/16,H=1,5	
395	315115-0153	-		6	WASHER PLAIN, TBRB 6,4/12 H=3	
400	315115-0165	-		9	WASHER PLAIN, TBRB 8,4/16 H=3	
420	525450-0000	D		1	HUB	
460	565967-0000	C		6	ARM	

Machine Type | Group Description | Used-In | Group Number | Page No

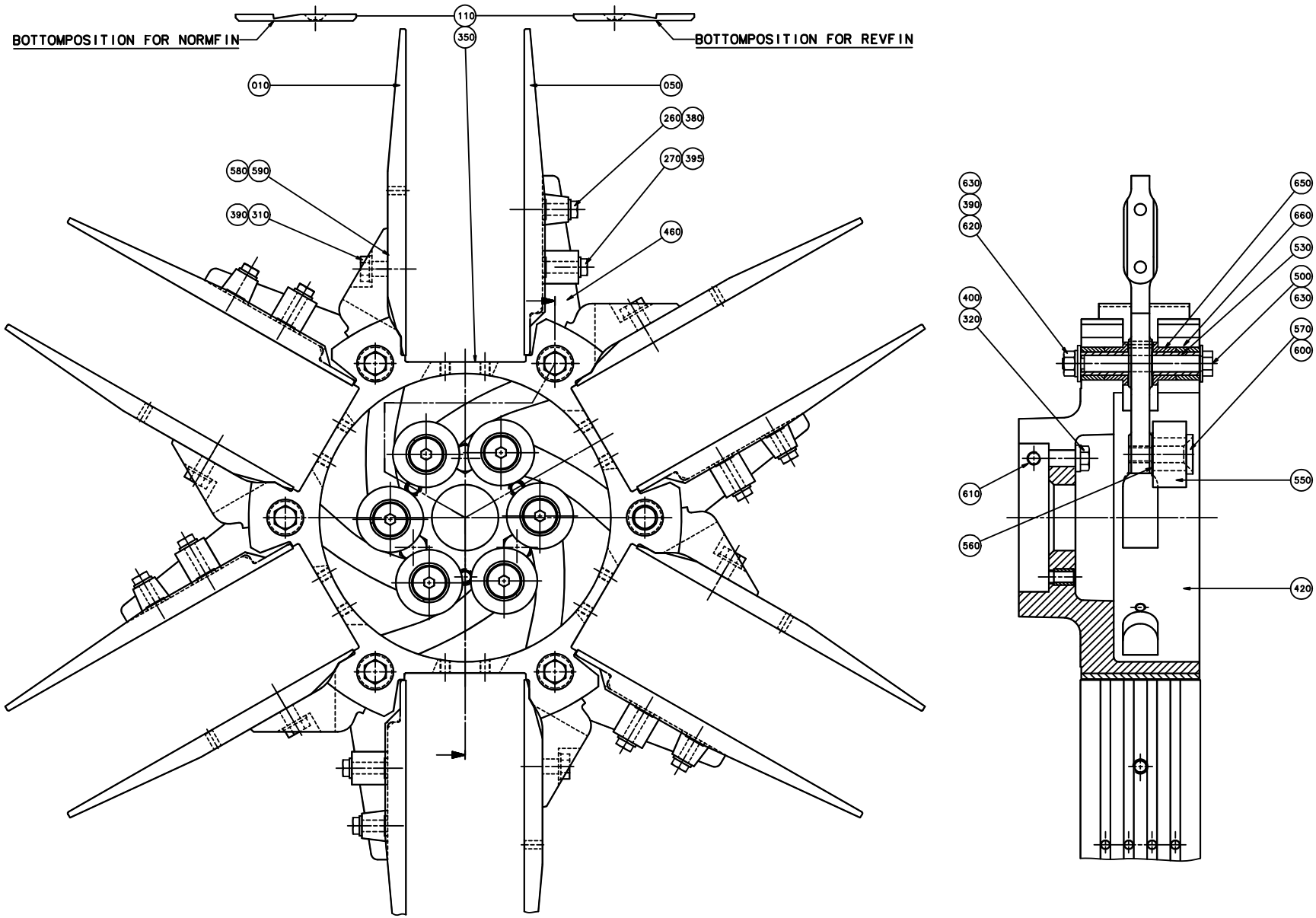
BOTTOMPOSITION FOR NORMFIN
BOTTOMPOSITION FOR REVFIN
110
350
010
050
260
380
270
395
580
590
390
310
460
630
390
620
400
320
610
560
650
660
530
500
630
570
600
550
420

Pos	Part No	SP	UN	Qty	Description	Page No
0500S (Cont'd)						
510	262179-0001	C		12	PIN	
520	525329-0000	C		12	SLEEVE	
610	312109-0459	-		2	SCREW M6S M8X40 A280	
620	312605-0318	-		18	HEXAGON NUT, M6M M8 A280	
650	321111-0185	C		24	BEAR.BUSHING WITH FLANGE, 14/20X14 MM	
0750B						
010	525453-0000	C		6	FLAP	
050	B285310-0001	C		6	FLAP	
	312910-0118	*-*		*1*	*HELI-COIL M6X1,5D*	
220	525264-0000	D		6	BOTTOM	
230	297650-0000	D		6	BOTTOM	
240	442981-0000	D		6	SHIM	
260	312105-0374	-		6	SCREW M6S M6X30 A280	
270	312105-0376	-		6	SCREW M6S M6S M6X35 A280	
310	312105-0453	-		6	SCREW M6S M8X25 A280	
320	312105-0457	-		3	SCREW M6S M8X35 A280	
360	312155-0376	-		18	SCREW HEX.SOCK.COUNT.MF6S M6X35 A280	
380	315105-0153	-		12	WASHER PLAIN, BRB, 6,4/12,H=1,5	
390	315105-0165	-		30	WASHER PLAIN, BRB, 8,4/16,H=1,5	
400	315115-0165	-		3	WASHER PLAIN, TBRB 8,4/16 H=3	
420	525450-0000	D		1	HUB	
460	565967-0000	C		6	ARM	
510	262179-0001	C		12	PIN	
520	525329-0000	C		12	SLEEVE	
610	312109-0459	-		2	SCREW M6S M8X40 A280	
620	312605-0318	-		18	HEXAGON NUT, M6M M8 A280	
650	321111-0185	C		24	BEAR.BUSHING WITH FLANGE, 14/20X14 MM	
0750S						
010	525454-0000	C		6	FLAP	
050	544252-0000	C		6	FLAP	
110	544254-0000	C		6	PLATE	
200	543697-0000	D		6	SPACER PIECE	
210	525460-0000	D		6	SPACER PIECE	
270	312105-0376	-		6	SCREW M6S M6S M6X35 A280	
280	312105-0378	-		6	SCREW M6S M6X40 A280	
315	312105-0455	-		6	SCREW M6S M8X30 A280	
320	312105-0457	-		3	SCREW M6S M8X35 A280	
350	312155-0368	-		6	SCREW HEX.SOCK.COUNT.MF6S M6X16 A280	
380	315105-0153	-		12	WASHER PLAIN, BRB, 6,4/12,H=1,5	
390	315105-0165	-		30	WASHER PLAIN, BRB, 8,4/16,H=1,5	
400	315115-0165	-		3	WASHER PLAIN, TBRB 8,4/16 H=3	
420	525448-0000	D		1	HUB	
460	565967-0000	C		6	ARM	
510	262179-0001	C		12	PIN	
520	525329-0000	C		12	SLEEVE	
610	312109-0459	-		2	SCREW M6S M8X40 A280	
620	312605-0318	-		18	HEXAGON NUT, M6M M8 A280	
650	321111-0185	C		24	BEAR.BUSHING WITH FLANGE, 14/20X14 MM	
1000B HIFIN						
010	525453-0000	C		6	FLAP	
050	B285310-0001	C		6	FLAP	
	312910-0118	*-*		*1*	*HELI-COIL M6X1,5D*	
110	525063-0000	C		6	BOTTOM	
260	312105-0374	-		6	SCREW M6S M6X30 A280	
270	312105-0376	-		6	SCREW M6S M6S M6X35 A280	
310	312105-0453	-		6	SCREW M6S M8X25 A280	
320	312105-0457	-		3	SCREW M6S M8X35 A280	
350	312155-0368	-		6	SCREW HEX.SOCK.COUNT.MF6S M6X16 A280	
380	315105-0153	-		12	WASHER PLAIN, BRB, 6,4/12,H=1,5	
390	315105-0165	-		30	WASHER PLAIN, BRB, 8,4/16,H=1,5	
400	315115-0165	-		3	WASHER PLAIN, TBRB 8,4/16 H=3	
420	525450-0000	D		1	HUB	
460	565967-0000	C		6	ARM	
510	262179-0001	C		12	PIN	
520	525329-0000	C		12	SLEEVE	
610	312109-0459	-		2	SCREW M6S M8X40 A280	
620	312605-0318	-		18	HEXAGON NUT, M6M M8 A280	
650	321111-0185	C		24	BEAR.BUSHING WITH FLANGE, 14/20X14 MM	
1000B LOFIN						
010	525453-0000	C		6	FLAP	
050	B285310-0001	C		6	FLAP	
	312910-0118	*-*		*1*	*HELI-COIL M6X1,5D*	
110	443076-0000	C		6	BOTTOM	
260	312105-0374	-		6	SCREW M6S M6X30 A280	
270	312105-0376	-		6	SCREW M6S M6S M6X35 A280	
310	312105-0453	-		6	SCREW M6S M8X25 A280	
320	312105-0457	-		3	SCREW M6S M8X35 A280	
350	312155-0368	-		6	SCREW HEX.SOCK.COUNT.MF6S M6X16 A280	
380	315105-0153	-		12	WASHER PLAIN, BRB, 6,4/12,H=1,5	

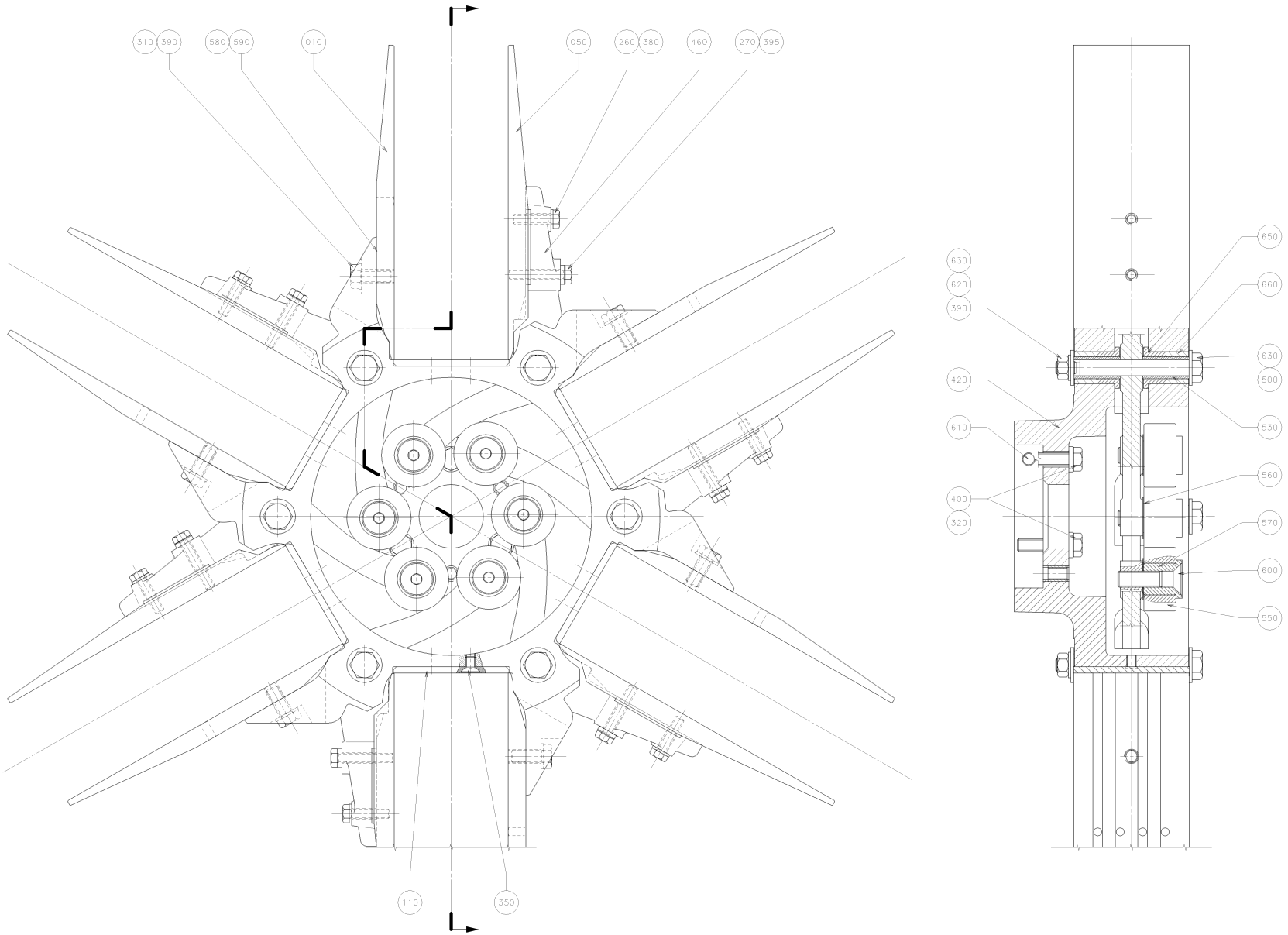
310
390
580
590
010
050
260
380
460
270
395
110
350
630
620
390
420
610
400
320
650
660
630
500
530
560
570
600
550

Pos	Part No	SP	UN	Qty	Description	Page No
1000B LOFIN (Cont'd)						
380	315105-0153	-		12	WASHER PLAIN, BRB, 6,4/12,H=1,5	
390	315105-0165	-		30	WASHER PLAIN, BRB, 8,4/16,H=1,5	
400	315115-0165	-		3	WASHER PLAIN, TBRB 8,4/16 H=3	
420	525450-0000	D		1	HUB	
460	565967-0000	C		6	ARM	
510	262179-0001	C		12	PIN	
520	525329-0000	C		12	SLEEVE	
610	312109-0459	-		2	SCREW M6S M8X40 A280	
620	312605-0318	-		18	HEXAGON NUT, M6M M8 A280	
650	321111-0185	C		24	BEAR.BUSHING WITH FLANGE, 14/20X14 MM	
1000S						
010	569117-0000	C		6	FLAP	
050	569118-0000	C		6	FLAP	
110	569119-0000	C		6	BOTTOM	
270	312105-0376	-		6	SCREW M6S M6S M6X35 A280	
280	312105-0378	-		6	SCREW M6S M6X40 A280	
310	312105-0453	-		6	SCREW M6S M8X25 A280	
350	312155-0368	-		6	SCREW HEX.SOCK.COUNT.MF6S M6X16 A280	
390	315105-0165	-		30	WASHER PLAIN, BRB, 8,4/16,H=1,5	
395	315115-0153	-		12	WASHER PLAIN, TBRB 6,4/12 H=3	
420	525446-0000	D		1	HUB	
460	565967-0000	C		6	ARM	
510	262179-0001	C		12	PIN	
520	525329-0000	C		12	SLEEVE	
610	312109-0459	-		2	SCREW M6S M8X40 A280	
620	312605-0318	-		18	HEXAGON NUT, M6M M8 A280	
650	321111-0185	C		24	BEAR.BUSHING WITH FLANGE, 14/20X14 MM	
1000SQ NORMFIN						
010	574029-0000	C		6	FLAP	
050	574030-0000	C		6	FLAP	
110	574031-0000	C		6	BOTTOM	
260	312105-0372	-		6	SCREW M6S M6X25 A280	
270	312105-0376	-		6	SCREW M6S M6S M6X35 A280	
310	312105-0451	-		6	SCREW M6S 8X20 A280	
320	312105-0457	-		3	SCREW M6S M8X35 A280	
350	312155-0364	-		6	SCREW HEX.SOCK.COUNT.MF6S M6X10 A280	
380	315105-0153	-		6	WASHER PLAIN, BRB, 6,4/12,H=1,5	
390	315105-0165	-		12	WASHER PLAIN, BRB, 8,4/16,H=1,5	
395	315115-0153	-		6	WASHER PLAIN, TBRB 6,4/12 H=3	
400	315115-0165	-		3	WASHER PLAIN, TBRB 8,4/16 H=3	
420	574026-0000	D		1	HUB	
460	574028-0000	C		6	ARM	
610	312109-0459	-		2	SCREW M6S M8X40 A280	
620	312605-0318	-		6	HEXAGON NUT, M6M M8 A280	
650	321111-0185	C		12	BEAR.BUSHING WITH FLANGE, 14/20X14 MM	
660	90240-0233	C		12	BEAR. BUSH. WITHOUT FL, 14X20X14	
1000SQ REVFIN						
010	574029-0000	C		6	FLAP	
050	574030-0000	C		6	FLAP	
260	312105-0372	-		6	SCREW M6S M6X25 A280	
270	312105-0376	-		6	SCREW M6S M6S M6X35 A280	
310	312105-0451	-		6	SCREW M6S 8X20 A280	
320	312105-0457	-		3	SCREW M6S M8X35 A280	
350	312155-0364	-		6	SCREW HEX.SOCK.COUNT.MF6S M6X10 A280	
380	315105-0153	-		6	WASHER PLAIN, BRB, 6,4/12,H=1,5	
390	315105-0165	-		12	WASHER PLAIN, BRB, 8,4/16,H=1,5	
395	315115-0153	-		6	WASHER PLAIN, TBRB 6,4/12 H=3	
400	315115-0165	-		3	WASHER PLAIN, TBRB 8,4/16 H=3	
420	574026-0000	D		1	HUB	
460	574028-0000	C		6	ARM	
610	312318-0455	-		2	SCREW HEX.SOCK.SET CUP P.MSK6SS8X30 SS	
620	312605-0318	-		6	HEXAGON NUT, M6M M8 A280	
650	321111-0185	C		12	BEAR.BUSHING WITH FLANGE, 14/20X14 MM	
660	90240-0233	C		12	BEAR. BUSH. WITHOUT FL, 14X20X14	
Common Parts						
110	597608-0000	-		6	BOTTOM	
500	262028-0001	C		6	FITTING BOLT	
530	525330-0000	C		12	SHAFT	
550	285321-0000	C		6	ROLL	
560	285322-0000	C		6	WASHER	
570	442563-0000	C		6	AXLE PIN	
580	442894-0000	-		1	SHIM	
590	442939-0000	-		1	SHIM	
600	312155-0499	-		6	SCREW HEX.SOCK.COUNT.MF6S M10X40 A280	
630	315105-0173	-		12	WASHER PLAIN, BRB, 10,5/22,H=2	

Machine Type | Group Description | Used-In | Group Number | Page No

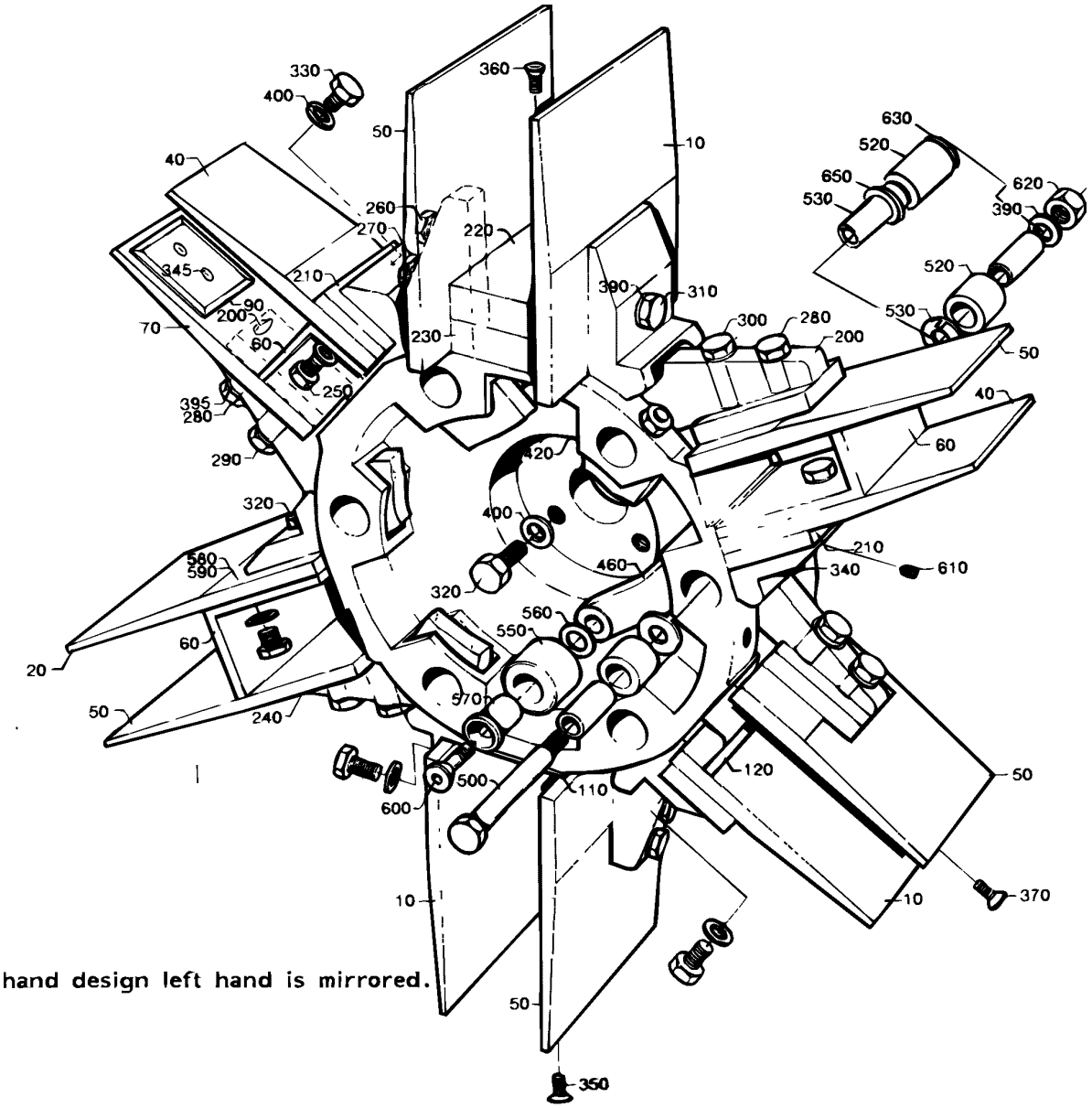

The Illustration shows right hand design left hand is mirrored.

ECM: 72353 - 19990525
Group number: 297682-0400
Assembly Drawing: 297682-2_1_AA

Issue: 20020121

Pos	Part No	SP	UN	Qty	Description	Page No
0355B						
010	525458-0000	C		6	FLAP	
050	B285310-0002	C		6	FLAP	
	312910-0118	-		*1*	*HELI-COIL M6X1,5D*	
120	525371-0000	D		6	BOTTOM	
200	285316-0002	D		6	SPACER PIECE	
210	525461-0000	D		6	SPACER PIECE	
250	312105-0368	-		6	SCREW M6S M6X16 A280	
280	312105-0378	-		6	SCREW M6S M6X40 A280	
290	312105-0379	-		6	SCREW M6S M6X45 A280	
320	312105-0457	-		9	SCREW M6S M8X35 A280	
380	315105-0153	-		12	WASHER PLAIN, BRB, 6,4/12,H=1,5	
390	315105-0165	-		24	WASHER PLAIN, BRB, 8,4/16,H=1,5	
395	315115-0153	-		6	WASHER PLAIN, TBRB 6,4/12 H=3	
400	315115-0165	-		9	WASHER PLAIN, TBRB 8,4/16 H=3	
420	525449-0000	D		1	HUB	
460	565967-0000	C		6	ARM	
510	262179-0001	C		12	PIN	
520	525329-0000	C		12	SLEEVE	
610	312109-0459	-		2	SCREW M6S M8X40 A280	
620	312605-0318	-		18	HEXAGON NUT, M6M M8 A280	
650	321111-0185	C		24	BEAR.BUSHING WITH FLANGE, 14/20X14 MM	
0375S						
040	525430-0000	C		6	FLAP	
060	525372-0000	D		6	BOTTOM	
070	297646-0000	C		6	FLAP	
200	285316-0002	D		6	SPACER PIECE	
210	525461-0000	D		6	SPACER PIECE	
250	312105-0368	-		12	SCREW M6S M6X16 A280	
280	312105-0378	-		6	SCREW M6S M6X40 A280	
290	312105-0379	-		6	SCREW M6S M6X45 A280	
320	312105-0457	-		3	SCREW M6S M8X35 A280	
330	312105-0459	-		6	SCREW M6S M8X40 A280	
380	315105-0153	-		18	WASHER PLAIN, BRB, 6,4/12,H=1,5	
390	315105-0165	-		24	WASHER PLAIN, BRB, 8,4/16,H=1,5	
395	315115-0153	-		6	WASHER PLAIN, TBRB 6,4/12 H=3	
400	315115-0165	-		9	WASHER PLAIN, TBRB 8,4/16 H=3	
420	525449-0000	D		1	HUB	
460	565967-0000	C		6	ARM	
510	262179-0001	C		12	PIN	
520	525329-0000	C		12	SLEEVE	
610	312109-0459	-		2	SCREW M6S M8X40 A280	
620	312605-0318	-		18	HEXAGON NUT, M6M M8 A280	
650	321111-0185	C		24	BEAR.BUSHING WITH FLANGE, 14/20X14 MM	
0500B						
020	525455-0000	C		6	FLAP	
050	B285310-0001	C		6	FLAP	
	312910-0118	-		*1*	*HELI-COIL M6X1,5D*	
060	525369-0000	D		6	BOTTOM	
240	442981-0000	D		6	SHIM	
250	312105-0368	-		6	SCREW M6S M6X16 A280	
260	312105-0374	-		6	SCREW M6S M6X30 A280	
280	312105-0378	-		6	SCREW M6S M6X40 A280	
320	312105-0457	-		9	SCREW M6S M8X35 A280	
380	315105-0153	-		18	WASHER PLAIN, BRB, 6,4/12,H=1,5	
390	315105-0165	-		24	WASHER PLAIN, BRB, 8,4/16,H=1,5	
400	315115-0165	-		9	WASHER PLAIN, TBRB 8,4/16 H=3	
420	525449-0000	D		1	HUB	
460	565967-0000	C		6	ARM	
510	262179-0001	C		12	PIN	
520	525329-0000	C		12	SLEEVE	
610	312109-0459	-		2	SCREW M6S M8X40 A280	
620	312605-0318	-		18	HEXAGON NUT, M6M M8 A280	
650	321111-0185	C		24	BEAR.BUSHING WITH FLANGE, 14/20X14 MM	
0500S						
010	525456-0000	C		6	FLAP	
050	B285310-0002	C		6	FLAP	
	312910-0118	-		*1*	*HELI-COIL M6X1,5D*	
120	525370-0000	D		6	BOTTOM	
200	285316-0002	D		6	SPACER PIECE	
210	525461-0000	D		6	SPACER PIECE	
280	312105-0378	-		6	SCREW M6S M6X40 A280	
290	312105-0379	-		6	SCREW M6S M6X45 A280	
320	312105-0457	-		9	SCREW M6S M8X35 A280	
370	312155-0378	-		6	SCREW HEX.SOCK.COUNT.MF6S M6X40 A280	
380	315105-0153	-		12	WASHER PLAIN, BRB, 6,4/12,H=1,5	
390	315105-0165	-		24	WASHER PLAIN, BRB, 8,4/16,H=1,5	
395	315115-0153	-		6	WASHER PLAIN, TBRB 6,4/12 H=3	
400	315115-0165	-		9	WASHER PLAIN, TBRB 8,4/16 H=3	
420	525449-0000	D		1	HUB	
460	565967-0000	C		6	ARM	

Machine Type | Group Description | Used-In | Group Number | Page No

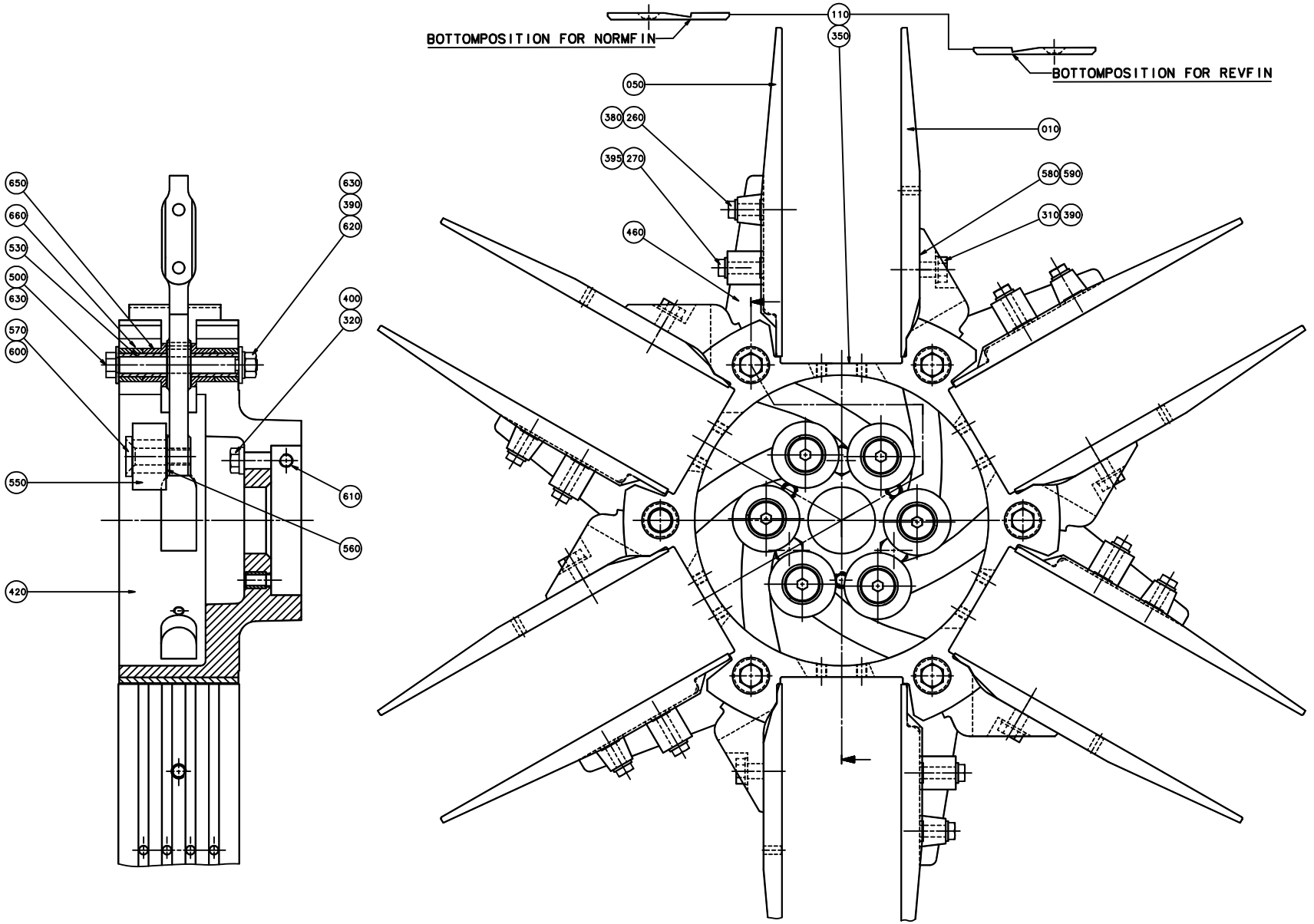
BOTTOMPOSITION FOR NORMFIN
BOTTOMPOSITION FOR REVFIN
110
350
050
380
260
010
395
270
580
590
460
310
390
650
660
530
500
630
570
600
630
390
620
400
320
550
610
560
420

Pos	Part No	SP	UN	Qty	Description	Page No
0500S (Cont'd)						
510	262179-0001	C		12	PIN	
520	525329-0000	C		12	SLEEVE	
610	312109-0459	-		2	SCREW M6S M8X40 A280	
620	312605-0318	-		18	HEXAGON NUT, M6M M8 A280	
650	321111-0185	C		24	BEAR.BUSHING WITH FLANGE, 14/20X14 MM	
0750B						
010	525453-0000	C		6	FLAP	
050	B285310-0001	C		6	FLAP	
	312910-0118	*-*		*1*	*HELI-COIL M6X1,5D*	
220	525264-0000	D		6	BOTTOM	
230	297650-0000	D		6	BOTTOM	
240	442981-0000	D		6	SHIM	
260	312105-0374	-		6	SCREW M6S M6X30 A280	
270	312105-0376	-		6	SCREW M6S M6S M6X35 A280	
310	312105-0453	-		6	SCREW M6S M8X25 A280	
320	312105-0457	-		3	SCREW M6S M8X35 A280	
360	312155-0376	-		18	SCREW HEX.SOCK.COUNT.MF6S M6X35 A280	
380	315105-0153	-		12	WASHER PLAIN, BRB, 6,4/12,H=1,5	
390	315105-0165	-		30	WASHER PLAIN, BRB, 8,4/16,H=1,5	
400	315115-0165	-		3	WASHER PLAIN, TBRB 8,4/16 H=3	
420	525449-0000	D		1	HUB	
460	565967-0000	C		6	ARM	
510	262179-0001	C		12	PIN	
520	525329-0000	C		12	SLEEVE	
610	312109-0459	-		2	SCREW M6S M8X40 A280	
620	312605-0318	-		18	HEXAGON NUT, M6M M8 A280	
650	321111-0185	C		24	BEAR.BUSHING WITH FLANGE, 14/20X14 MM	
0750S						
010	525454-0000	C		6	FLAP	
050	544252-0000	C		6	FLAP	
110	544254-0000	C		6	PLATE	
200	543697-0000	D		6	SPACER PIECE	
210	525460-0000	D		6	SPACER PIECE	
270	312105-0376	-		6	SCREW M6S M6S M6X35 A280	
280	312105-0378	-		6	SCREW M6S M6X40 A280	
315	312105-0455	-		6	SCREW M6S M8X30 A280	
320	312105-0457	-		3	SCREW M6S M8X35 A280	
350	312155-0368	-		6	SCREW HEX.SOCK.COUNT.MF6S M6X16 A280	
380	315105-0153	-		12	WASHER PLAIN, BRB, 6,4/12,H=1,5	
390	315105-0165	-		30	WASHER PLAIN, BRB, 8,4/16,H=1,5	
400	315115-0165	-		3	WASHER PLAIN, TBRB 8,4/16 H=3	
420	525447-0000	D		1	HUB	
460	565967-0000	C		6	ARM	
510	262179-0001	C		12	PIN	
520	525329-0000	C		12	SLEEVE	
610	312109-0459	-		2	SCREW M6S M8X40 A280	
620	312605-0318	-		18	HEXAGON NUT, M6M M8 A280	
650	321111-0185	C		24	BEAR.BUSHING WITH FLANGE, 14/20X14 MM	
1000B HIFIN						
010	525453-0000	C		6	FLAP	
050	B285310-0001	C		6	FLAP	
	312910-0118	*-*		*1*	*HELI-COIL M6X1,5D*	
110	525063-0000	C		6	BOTTOM	
260	312105-0374	-		6	SCREW M6S M6X30 A280	
270	312105-0376	-		6	SCREW M6S M6S M6X35 A280	
310	312105-0453	-		6	SCREW M6S M8X25 A280	
320	312105-0457	-		3	SCREW M6S M8X35 A280	
350	312155-0368	-		6	SCREW HEX.SOCK.COUNT.MF6S M6X16 A280	
380	315105-0153	-		12	WASHER PLAIN, BRB, 6,4/12,H=1,5	
390	315105-0165	-		30	WASHER PLAIN, BRB, 8,4/16,H=1,5	
400	315115-0165	-		3	WASHER PLAIN, TBRB 8,4/16 H=3	
420	525449-0000	D		1	HUB	
460	565967-0000	C		6	ARM	
510	262179-0001	C		12	PIN	
520	525329-0000	C		12	SLEEVE	
610	312109-0459	-		2	SCREW M6S M8X40 A280	
620	312605-0318	-		18	HEXAGON NUT, M6M M8 A280	
650	321111-0185	C		24	BEAR.BUSHING WITH FLANGE, 14/20X14 MM	
1000B LOFIN						
010	525453-0000	C		6	FLAP	
050	B285310-0001	C		6	FLAP	
	312910-0118	*-*		*1*	*HELI-COIL M6X1,5D*	
110	443076-0000	C		6	BOTTOM	
260	312105-0374	-		6	SCREW M6S M6X30 A280	
270	312105-0376	-		6	SCREW M6S M6S M6X35 A280	
310	312105-0453	-		6	SCREW M6S M8X25 A280	
320	312105-0457	-		3	SCREW M6S M8X35 A280	
350	312155-0368	-		6	SCREW HEX.SOCK.COUNT.MF6S M6X16 A280	
380	315105-0153	-		12	WASHER PLAIN, BRB, 6,4/12,H=1,5	

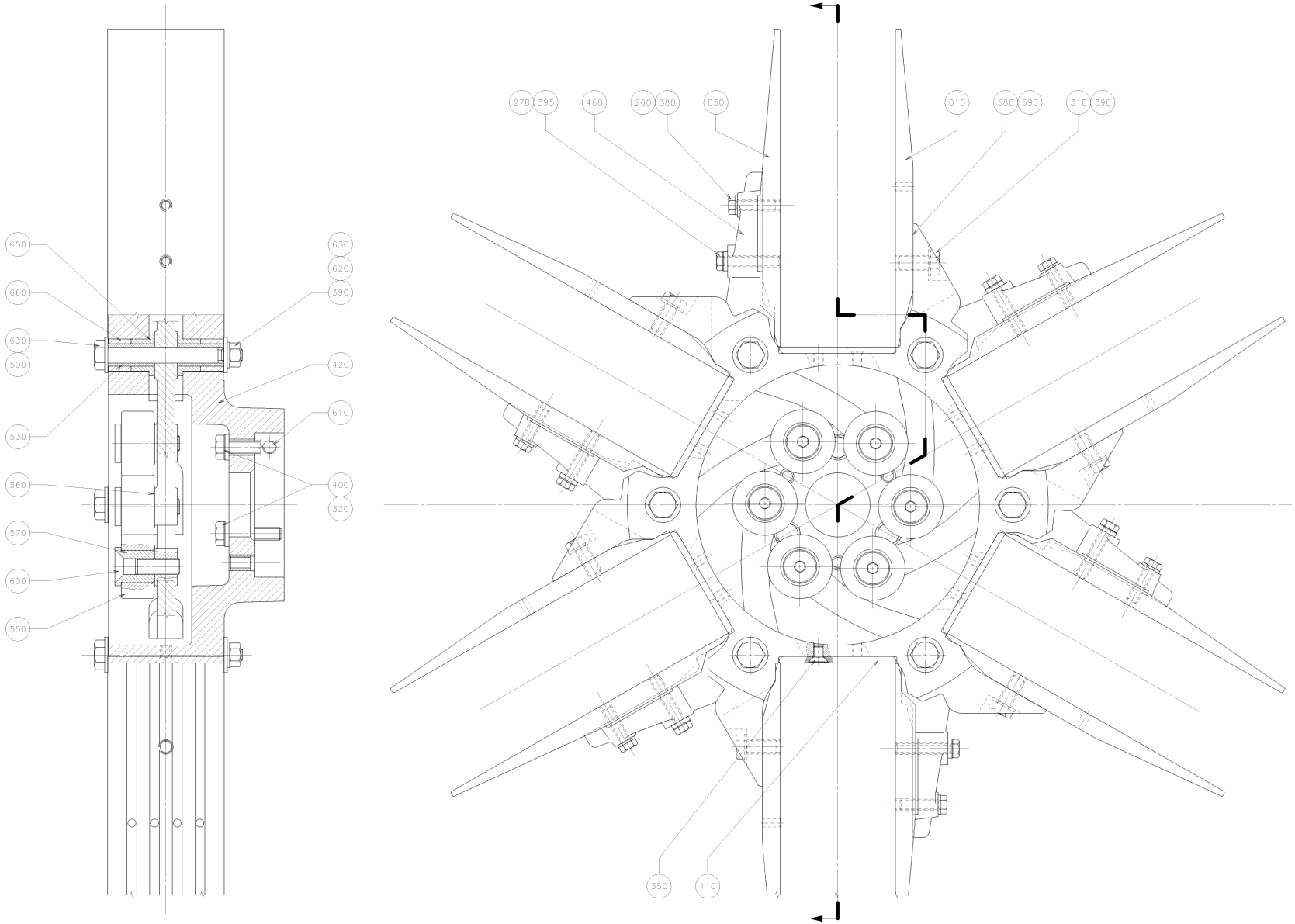
650
660
630
500
530
560
570
600
550
630
620
390
420
610
400
320
270
395
460
260
380
050
010
580
590
310
390
350
110

Pos	Part No	SP	UN	Qty	Description	Page No
1000B LOFIN (Cont'd)						
380	315105-0153	-		12	WASHER PLAIN, BRB, 6,4/12,H=1,5	
390	315105-0165	-		30	WASHER PLAIN, BRB, 8,4/16,H=1,5	
400	315115-0165	-		3	WASHER PLAIN, TBRB 8,4/16 H=3	
420	525449-0000	D		1	HUB	
460	565967-0000	C		6	ARM	
510	262179-0001	C		12	PIN	
520	525329-0000	C		12	SLEEVE	
610	312109-0459	-		2	SCREW M6S M8X40 A280	
620	312605-0318	-		18	HEXAGON NUT, M6M M8 A280	
650	321111-0185	C		24	BEAR.BUSHING WITH FLANGE, 14/20X14 MM	
1000S						
010	569117-0000	C		6	FLAP	
050	569118-0000	C		6	FLAP	
110	569119-0000	C		6	BOTTOM	
270	312105-0376	-		6	SCREW M6S M6S M6X35 A280	
280	312105-0378	-		6	SCREW M6S M6X40 A280	
310	312105-0453	-		6	SCREW M6S M8X25 A280	
390	315105-0165	-		30	WASHER PLAIN, BRB, 8,4/16,H=1,5	
395	315115-0153	-		12	WASHER PLAIN, TBRB 6,4/12 H=3	
420	525445-0000	D		1	HUB	
460	565967-0000	C		6	ARM	
510	262179-0001	C		12	PIN	
520	525329-0000	C		12	SLEEVE	
610	312109-0459	-		2	SCREW M6S M8X40 A280	
620	312605-0318	-		18	HEXAGON NUT, M6M M8 A280	
650	321111-0185	C		24	BEAR.BUSHING WITH FLANGE, 14/20X14 MM	
1000SQ NORMFIN						
010	574029-0000	C		6	FLAP	
050	574030-0000	C		6	FLAP	
110	574031-0000	C		6	BOTTOM	
260	312105-0372	-		6	SCREW M6S M6X25 A280	
270	312105-0376	-		6	SCREW M6S M6S M6X35 A280	
310	312105-0451	-		6	SCREW M6S 8X20 A280	
350	312155-0364	-		6	SCREW HEX.SOCK.COUNT.MF6S M6X10 A280	
380	315105-0153	-		6	WASHER PLAIN, BRB, 6,4/12,H=1,5	
390	315105-0165	-		12	WASHER PLAIN, BRB, 8,4/16,H=1,5	
395	315115-0153	-		6	WASHER PLAIN, TBRB 6,4/12 H=3	
400	315115-0165	-		3	WASHER PLAIN, TBRB 8,4/16 H=3	
420	574027-0000	D		1	HUB	
460	574028-0000	C		6	ARM	
610	312109-0459	-		2	SCREW M6S M8X40 A280	
620	312605-0318	-		6	HEXAGON NUT, M6M M8 A280	
650	321111-0185	C		12	BEAR.BUSHING WITH FLANGE, 14/20X14 MM	
660	90240-0233	C		12	BEAR. BUSH. WITHOUT FL, 14X20X14	
1000SQ REVFIN						
010	574029-0000	C		6	FLAP	
050	574030-0000	C		6	FLAP	
260	312105-0372	-		6	SCREW M6S M6X25 A280	
270	312105-0376	-		6	SCREW M6S M6S M6X35 A280	
310	312105-0451	-		6	SCREW M6S 8X20 A280	
350	312155-0364	-		6	SCREW HEX.SOCK.COUNT.MF6S M6X10 A280	
380	315105-0153	-		6	WASHER PLAIN, BRB, 6,4/12,H=1,5	
390	315105-0165	-		12	WASHER PLAIN, BRB, 8,4/16,H=1,5	
395	315115-0153	-		6	WASHER PLAIN, TBRB 6,4/12 H=3	
400	315115-0165	-		3	WASHER PLAIN, TBRB 8,4/16 H=3	
420	574027-0000	D		1	HUB	
460	574028-0000	C		6	ARM	
610	312318-0455	-		2	SCREW HEX.SOCK.SET CUP P.MSK6SS8X30 SS	
620	312605-0318	-		6	HEXAGON NUT, M6M M8 A280	
650	321111-0185	C		12	BEAR.BUSHING WITH FLANGE, 14/20X14 MM	
660	90240-0233	C		12	BEAR. BUSH. WITHOUT FL, 14X20X14	
Common Parts						
110	597608-0000	-		6	BOTTOM	
500	262028-0001	C		6	FITTING BOLT	
530	525330-0000	C		12	SHAFT	
550	285321-0000	C		6	ROLL	
560	285322-0000	C		6	WASHER	
570	442563-0000	C		6	AXLE PIN	
580	442894-0000	-		1	SHIM	
590	442939-0000	-		1	SHIM	
600	312155-0499	-		6	SCREW HEX.SOCK.COUNT.MF6S M10X40 A280	
630	315105-0173	-		12	WASHER PLAIN, BRB, 10,5/22,H=2	

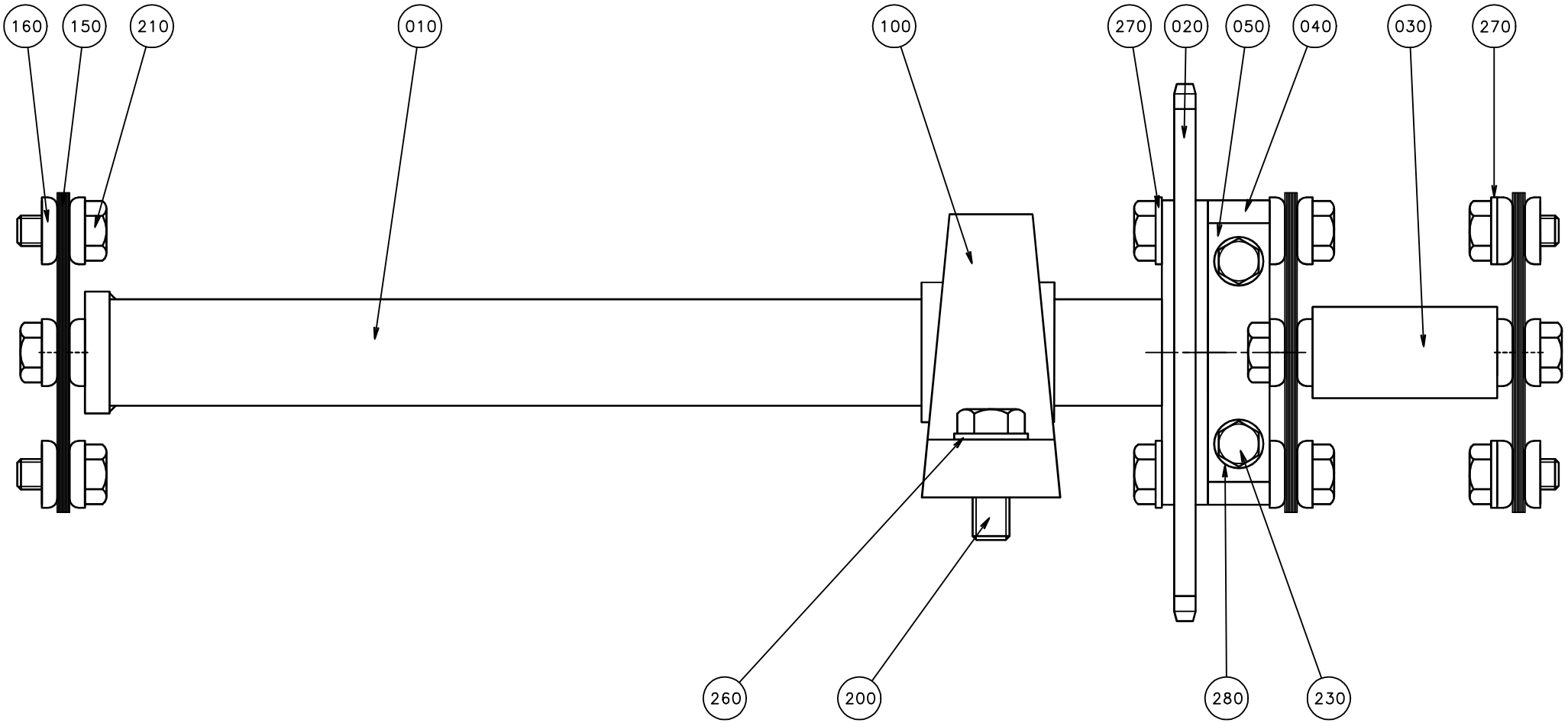
160
150
210
010
100
270
020
050
040
030
270
260
200
280
230

ECM: 73093 - 19991110
Group number: 443173-0100
Assembly Drawing: 443173-1_1_AA

Issue: 20020121

Pos	Part No	SP	UN	Qty	Description	Page No
Common Parts						
010	443175-0000	D		1	SHAFT	
020	443177-0000	D		1	SPROCKET	
030	443179-0000	-		1	SPACER	
040	443178-0000	D		1	BRACKET	
050	262275-0003	D		1	CAP	
100	90345-0038	D		1	STANDING BEARING, TYPE SY 35	
150	33261-0000	C		24	SPRING PLATE	
160	31553-0002	C		24	WASHER	
200	312105-0538	-		2	SCREW M6S M12X35 A280	
210	312105-0495	-		8	SCREW M6S M10X30 A280	
220	312105-0493	-		6	SCREW M6S M10X25 A280	
230	90287-0165	-		2	SCREW M6S M8X20 A480 NY-LOCK	
240	90062-0070	-		14	LOCK WASHER NORD-LOCK,10,3/16 H=2,4	
260	315105-0178	-		2	WASHER PLAIN, BRB, 13/24,H=2	
270	315105-0173	-		4	WASHER PLAIN, BRB, 10,5/22,H=2	
280	315105-0165	-		2	WASHER PLAIN, BRB, 8,4/16,H=1,5	

Pos	Part No	SP	UN	Qty	Description	Page No

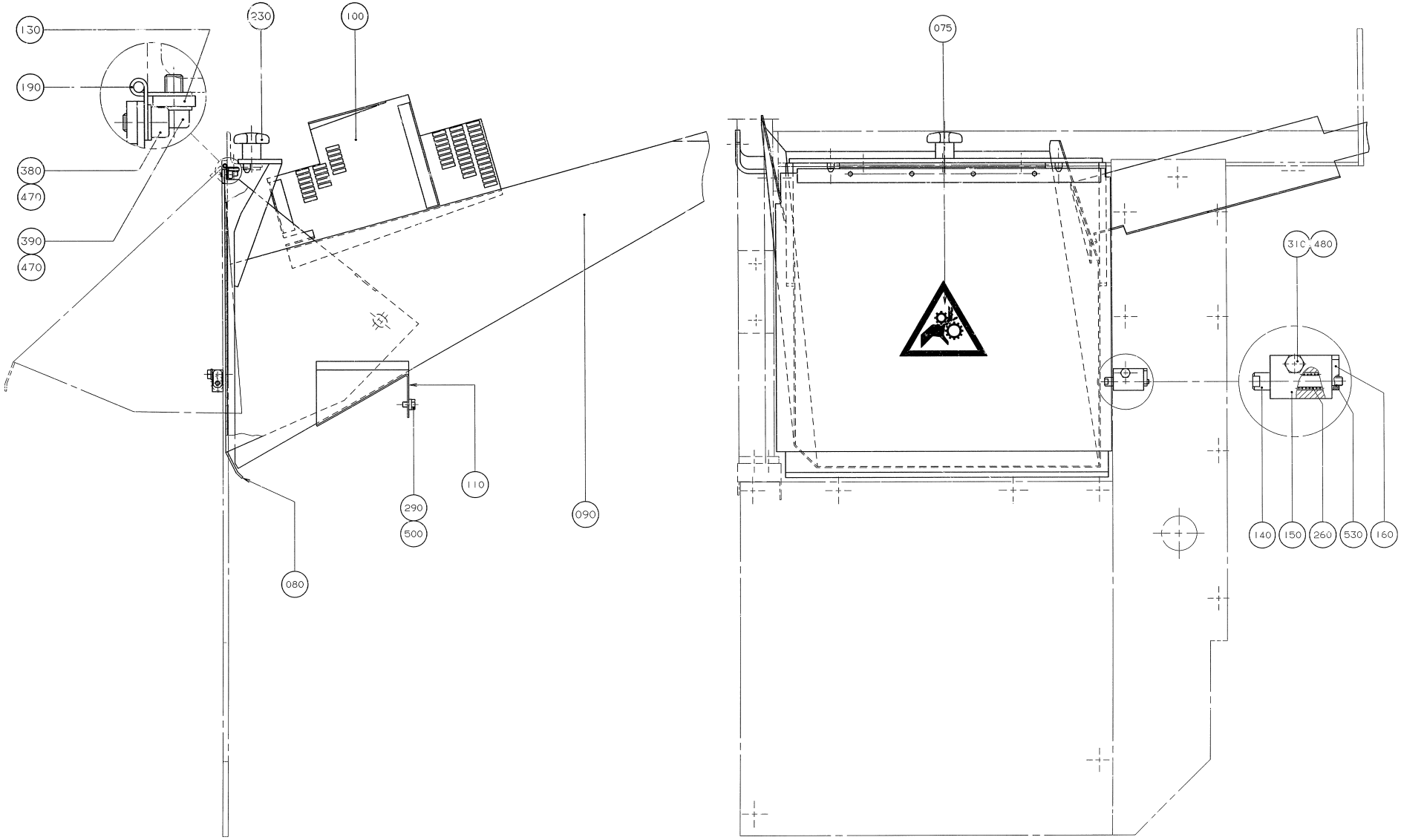
130
190
380
470
390
470
230
100
080
290
500
110
090
075
310
480
140
150
260
530
160

ECM: 72197 - 19990215
Group number: 442537-0500
Assembly Drawing: 442537-5_1_AA

Issue: 20020121

Pos	Part No	SP	UN	Qty	Description	Page No
0375S OR 0500B OR 0355B OR 0500S OR 1000S OR 0750B OR 0750S OR 1000B						
090	525409-0000	-		1	WASTE CHUTE	
1000SQ						
090	574124-0000	-		1	WASTE CHUTE	
Common Parts						
075	359705-0002	-		1	WARNING SIGN ISO, ENTAGLEMENT	
080	525380-0000	-		1	HATCH	
100	525423-0000	-		1	COVERING PLATE	
110	525439-0000	-		1	DRIP PLATE	
130	525381-0000	-		1	BRACKET	
140	525382-0000	-		1	SHAFT	
150	525383-0000	-		1	BRACKET	
160	525384-0000	-		1	DOWEL	
190	525394-0000	-		1	HINGE	
230	90051-0025	-		1	KNOB, EXTERNAL THREAD. NO. 8306-0200	
260	90335-0005	C		1	SPRING	
290	312105-0364	-		1	SCREW M6S M6X10 A280	
310	312105-0372	-		1	SCREW M6S M6X25 A280	
380	312115-0323	-		4	SCREW MC6S M5X8 A280	
390	312115-0325	-		3	SCREW HEX.SOCK.HD.MC6S-TT 5X10 A480	
470	315105-0146	-		7	WASHER PLAIN, BRB, 5,3/10,H=1	
480	315105-0153	-		1	WASHER PLAIN, BRB, 6,4/12,H=1,5	
500	315115-0153	-		1	WASHER PLAIN, TBRB 6,4/12 H=3	
530	90157-0002	-		1	SEALING COMPOUND, COLLEXIN	

Pos	Part No	SP	UN	Qty	Description	Page No

Machine Type | Group Description | Used-In | Group Number | Page No

Tetra Pak

SPC
Spare Parts Catalogue

This page is intentionally left blank.

Pos	Part No	SP	UN	Qty	Description	Page No
TBA/8 0375S OR TBA/8 0500S OR TBA/8 0355B OR TBA/8 0750S						
330	A284953-0100	-		1	HOSE	**577**
340	A292445-0100	-		1	LIFTING UNIT	**579**
360	A531345-0200	-		1	PERSONAL PROTECT. EQ H2O2	**581**
540	436512-0000	-		2	PIPE	
560	499082-0403	-		1	ADAPTER, TYPE 1	
TBA/8 0500B OR TBA/8 1000B OR TBA/8 0750B						
330	A284953-0100	-		1	HOSE	**577**
340	A292445-0100	-		1	LIFTING UNIT	**579**
360	A531345-0200	-		1	PERSONAL PROTECT. EQ H2O2	**581**
540	436512-0000	-		2	PIPE	
560	499082-0404	-		1	ADAPTER, TYPE 1	
TBA/8 1000S						
330	A284953-0100	-		1	HOSE	**577**
340	A292445-0100	-		1	LIFTING UNIT	**579**
360	A531345-0200	-		1	PERSONAL PROTECT. EQ H2O2	**581**
540	436512-0000	-		2	PIPE	
560	499082-0407	-		1	ADAPTER, TYPE 1	
TBA/8 1000SQ						
330	A284953-0100	-		1	HOSE	**577**
340	A292445-0100	-		1	LIFTING UNIT	**579**
360	A531345-0200	-		1	PERSONAL PROTECT. EQ H2O2	**581**
540	436512-0000	-		2	PIPE	
560	499082-0404	-		1	ADAPTER, TYPE 1	
610	A559141-0100	-		1	EL. RK "DCS8PLUS FOR TBA/8-1000"	**583**
Common Parts						
240	A250610-0200	-		1	TOOL KIT	**587**
300	A554171-0300	-		1	PLATFORM ADDITION	**589**
370	A551997-0100	-		1	LIFTING UNIT	**599**
480	A593634-0200	-		1	DIAGRAM	
490	90243-0133	-		1	CONTAINER	
500	90347-0111	-		4	MACHINE SHOE TFE 1201 SS	
502	90347-0110	-		4	MACHINE SHOE TFE 601 SS	
600	598878-0000	-		1	MACHINE SIGN 2 ADR. EEA	

Pos	Part No	SP	UN	Qty	Description	Page No

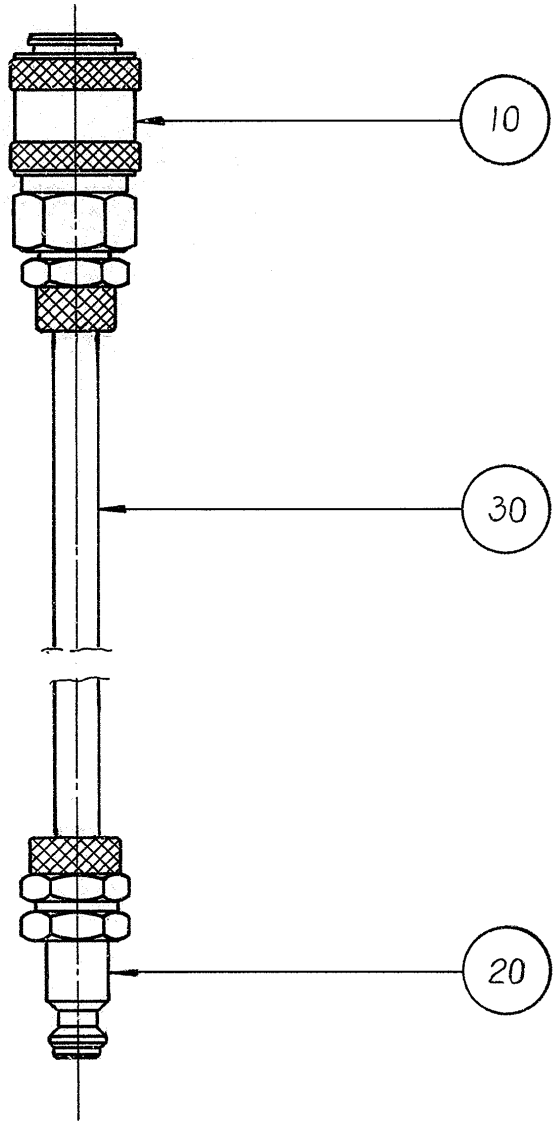
10
30
20

ECM: - -
Group number: 284953-0100
Assembly Drawing: 284953-1_1_AA

Issue: 20020121

Pos	Part No	SP	UN	Qty	Description	Page No
Common Parts						
010	90163-0056	-		1	QUICK COUPLING, (F) 5054-6/4	
020	90163-0063	-		1	QUICK COUPLING, (M) 5450-6/4	
030	90166-0124	-	MM	1500	TUBE 6 MM PA,TRANSP.	

Pos	Part No	SP	UN	Qty	Description	Page No

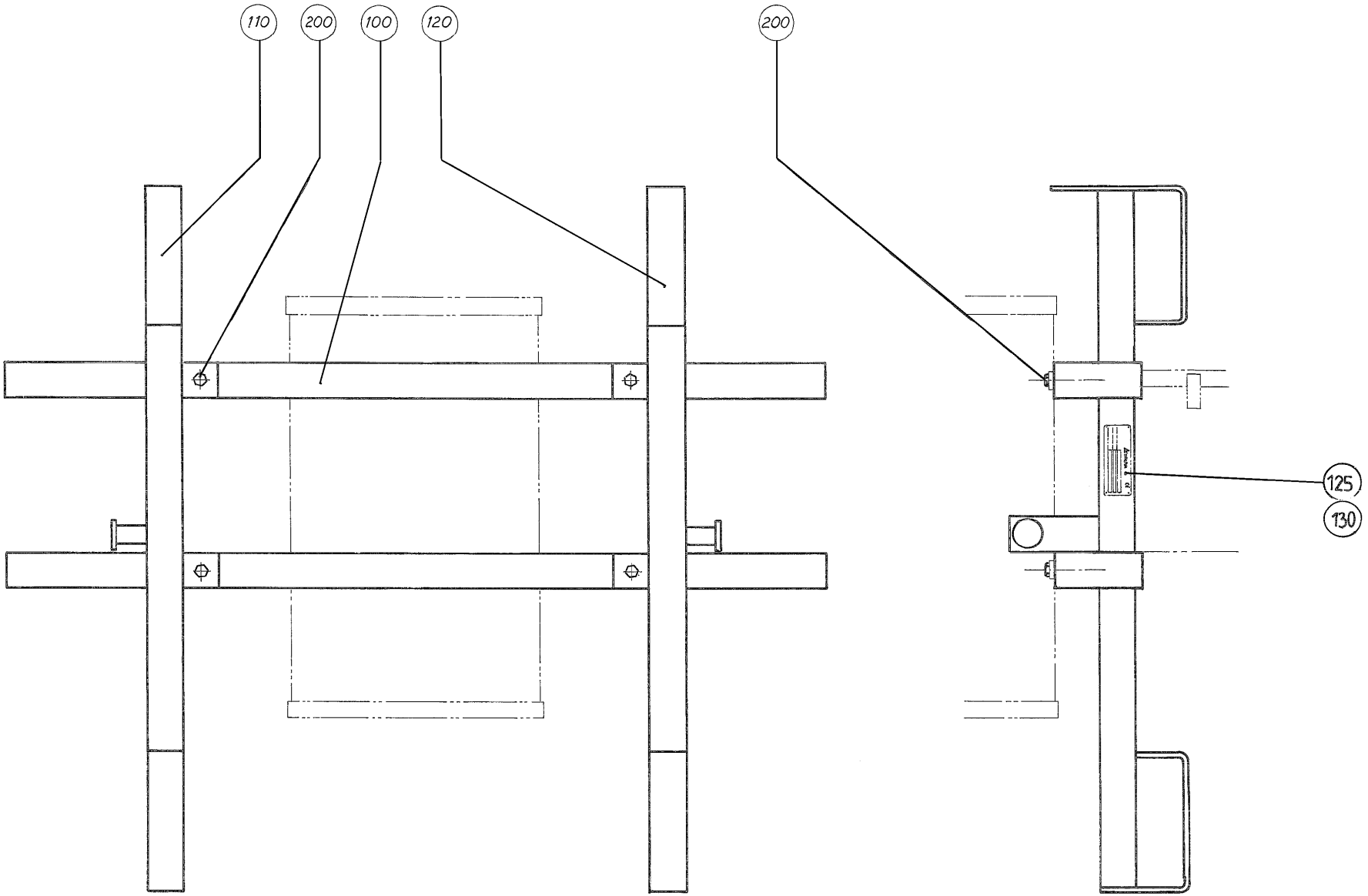
110
200
100
120
200
125
130

ECM: - -
Group number: 292445-0100
Assembly Drawing: 292445-1_1_AA

Issue: 20020121

Pos	Part No	SP	UN	Qty	Description	Page No
Common Parts						
100	292313-0000	-		2	BEAM	
110	292314-0000	-		1	BEAM	
120	292315-0000	-		1	BEAM	
125	1143455-0000	-		1	MACHINE SIGN CE	
130	311521-0144	-		4	BLANK RIVET 3,2X10	
200	312101-0491	-		8	SCREW M6S M10X20 FZB	

Pos	Part No	SP	UN	Qty	Description	Page No

This page is intentionally left blank.

ECM: 72190 - 19990628
Group number: 531345-0200
Assembly Drawing:

Issue: 20020121

Pos	Part No	SP	UN	Qty	Description	Page No
Common Parts						
	90303-0013	-		1	APRON	
	90303-0012	-		1	PROTECTIVE GLOVES	
	90303-0011	-		1	PROTECTIVE GOGGLES	

Pos	Part No	SP	UN	Qty	Description	Page No

This page is intentionally left blank.

ECM: 71572 - 19980622
Group number: 559141-0100
Assembly Drawing:

Issue: 20020121

Pos	Part No	SP	UN	Qty	Description	Page No
Common Parts						
0010	A559142-0100	-		1	ELECTRICAL DOCUMENT	
0020	A559143-0100	-		1	ELECTRIC MATERIALS	**585**

Pos	Part No	SP	UN	Qty	Description	Page No

Machine Type	Group Description	Used-In	Group Number	Page No

This page is intentionally left blank.

ECM: 71572 - 19980622
Group number: 559143-0100
Assembly Drawing:

Issue: 20020121

Pos	Part No	SP	UN	Qty	Description	Page No
Common Parts						
0010	A48393-0100	-		1	DCS8+, DESIGN CONTROL SYSTEM PLUS	
0020	351172-0102	-	MM	3000	CABLE AWM 1X 0,75 MM2 DARK-BLUE	
0030	353001-0119	-		2	END SLEEVE H 1.0/14 YELLOW	

Pos	Part No	SP	UN	Qty	Description	Page No

This page is intentionally left blank.

Pos	Part No	SP	UN	Qty	Description	Page No
IH						
015	283084-0000	-		1	GUIDE SHAFT	
020	283085-0000	-		1	SLEEVE	
025	245165-0000	-		1	ASSEMBLY TOOL	
030	315202-0224	-		1	O-RING 42,2X3 MM	
Common Parts						
040	72947-0000	-		1	HOOK SPANNER	
045	74387-0000	-		1	HOOK SPANNER	
070	76138-0000	-		1	LOCKING LOOP	
075	434841-0000	-		1	GAUGE	
130	318301-0130	-		4	LIFTING EYE BOLT, TYPE, LT, M30	
150	776422-0101	-		2	BRASS WIRESTE	
320	777200-0101	-		1	PIPE WRENCEL	
330	777510-0101	-		1	SCISSORS	

Pos	Part No	SP	UN	Qty	Description	Page No

This page is intentionally left blank.

Pos	Part No	SP	UN	Qty	Description	Page No
PFV14 OR PFV13 OR PFV11 OR PFV12						
F020	A266756-0500	-		1	PLATFORM	**591, 593**
PFV2 OR PFV3 OR PFV1						
F010	A266755-0200	-		1	PLATFORM	**597**

Pos	Part No	SP	UN	Qty	Description	Page No

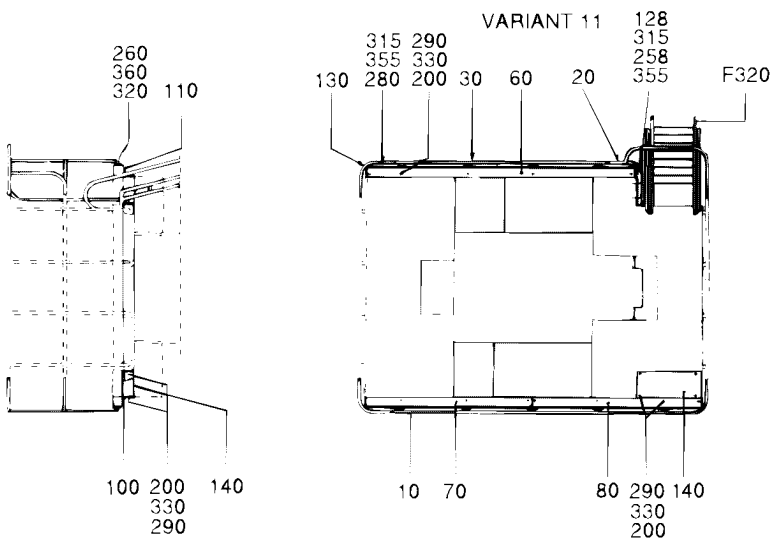
260
360
320 110
100 200 330 290 140
VARIANT 11
315 290
355 330
130 280 200 30 60 20
128
315
258
355
F320
10 70 80 290 330 200 140

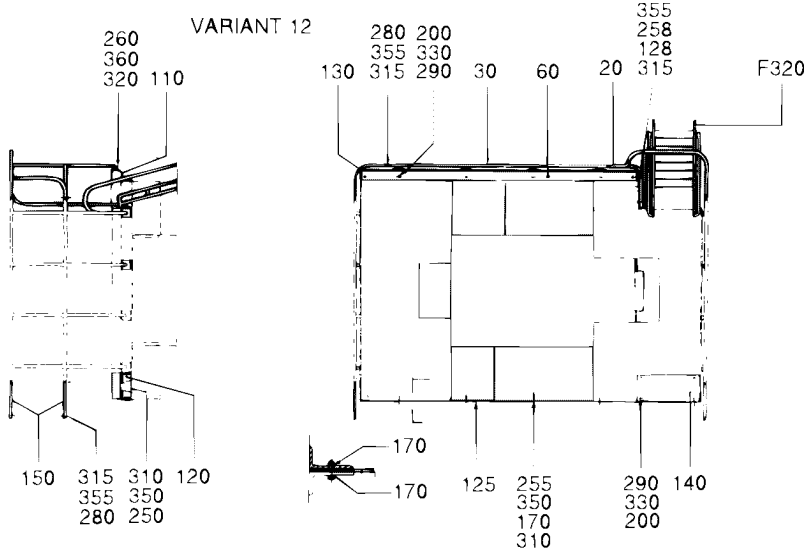
VARIANT 12
260
360
320 110
150 315 355 280 310 350 250 120
355
258
128
280 200
355 330
130 315 290 30 60 20 315
F320
170
170
125 255 350 170 310
290 330 200 140

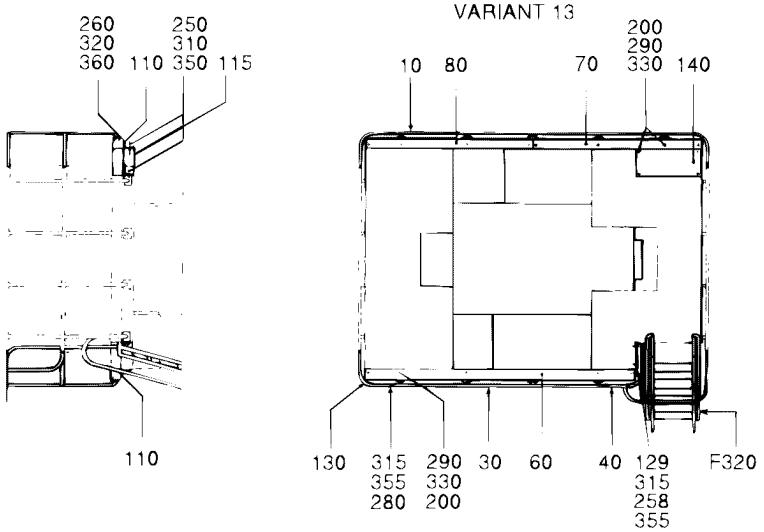
260
320
360 110
250
310
350 115
110
VARIANT 13
10 80 70
200
290
330 140
130 315 355 280 290 330 200 30 60 40
129
315
258
355
F320

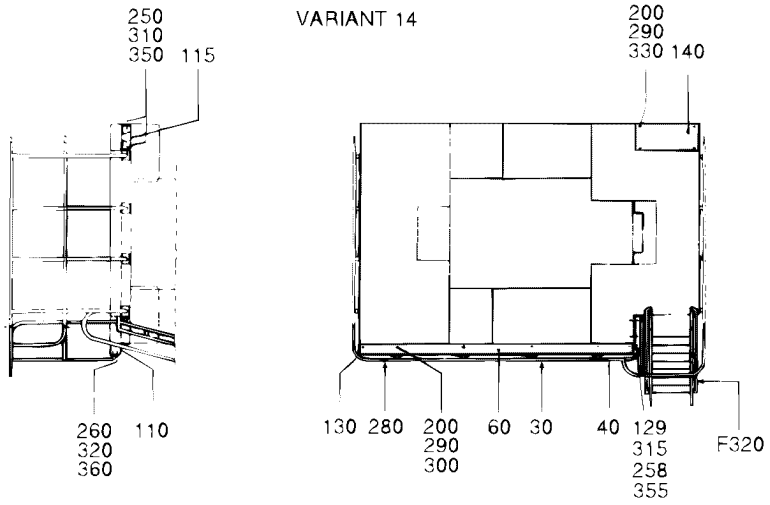
250
310
350 115
260 110
320
360
VARIANT 14
200
290
330 140
130 280 200 290 300 60 30 40
129
315
258
355
F320

ECM: 70726 - 19970304
Group number: 266756-0500
Assembly Drawing: 266756-4_1_AA

Issue: 20020121

Pos	Part No	SP	UN	Qty	Description	Page No
PFV11						
010	257845-0000	-		1	RAILING	
020	257846-0000	-		1	RAILING	
070	247146-0000	-		1	PLATFORM	
080	257852-0000	-		1	PLATFORM	
100	257854-0000	-		1	CANTILEVER	
120	269340-0000	-		1	CANTILEVER	
128	551903-0000	-		1	KICKPLATE,LEFT	
130-02	257859-0000	-		6	RAILING	
200-02	90287-0076	-		18	SCREW SLOT. PAN HEAD LKCS M6X20	
250-02	312101-0495	-		16	SCREW M6S M10X30 FZB	
260-02	312105-0493	-		40	SCREW M6S M10X25 A280	
280-02	312115-0453	-		16	SCREW MC6S M8X25 A280	
290-02	312601-0316	-		18	NUT M6M 6-8 FZB	
310-02	312601-0320	-		10	NUT M6M 10-8 FZB	
315-02	312605-0318	-		18	HEXAGON NUT, M6M M8 A280	
320-02	312605-0320	-		40	HEXAGON NUT, M6M M10 A280	
330-02	315101-0153	-		18	WASHER PLAIN, BRB, 6,4/12 H=1,5	
350-02	315101-0173	-		26	WASHER PLAIN, BRB, 10,5/22 H=2	
355-02	315105-0165	-		20	WASHER PLAIN, BRB, 8,4/16,H=1,5	
360-02	315105-0173	-		40	WASHER PLAIN, BRB, 10,5/22,H=2	
PFV12						
020	257846-0000	-		1	RAILING	
120	269340-0000	-		1	CANTILEVER	
125	451406-0000	-		1	VIBRATION DAMPER	
128	551903-0000	-		1	KICKPLATE,LEFT	
130	257859-0000	-		2	RAILING	
150	451407-0000	-		4	RAILING	
170	451408-0000	-		8	BUFFER RING	
200	90287-0076	-		10	SCREW SLOT. PAN HEAD LKCS M6X20	
250	312101-0495	-		9	SCREW M6S M10X30 FZB	
255	312101-0500	-		7	SCREW M6S M10X45 FZB	
260	312105-0493	-		20	SCREW M6S M10X25 A280	
280-02	312115-0453	-		16	SCREW MC6S M8X25 A280	
290	312601-0316	-		10	NUT M6M 6-8 FZB	
310-03	312601-0320	-		13	NUT M6M 10-8 FZB	
315-02	312605-0318	-		18	HEXAGON NUT, M6M M8 A280	
320	312605-0320	-		20	HEXAGON NUT, M6M M10 A280	
330	315101-0153	-		10	WASHER PLAIN, BRB, 6,4/12 H=1,5	
350-03	315101-0173	-		29	WASHER PLAIN, BRB, 10,5/22 H=2	
355-02	315105-0165	-		20	WASHER PLAIN, BRB, 8,4/16,H=1,5	
360	315105-0173	-		20	WASHER PLAIN, BRB, 10,5/22,H=2	
PFV13						
010	257845-0000	-		1	RAILING	
040	263619-0000	-		1	RAILING	
070	247146-0000	-		1	PLATFORM	
080	257852-0000	-		1	PLATFORM	
100	257854-0000	-		1	CANTILEVER	
115	269339-0000	-		1	CANTILEVER	
129	565961-0000	-		1	KICKPLATE,RIGHT	
130-02	257859-0000	-		6	RAILING	
200-02	90287-0076	-		18	SCREW SLOT. PAN HEAD LKCS M6X20	
250-02	312101-0495	-		16	SCREW M6S M10X30 FZB	
260-02	312105-0493	-		40	SCREW M6S M10X25 A280	
280-02	312115-0453	-		16	SCREW MC6S M8X25 A280	
290-02	312601-0316	-		18	NUT M6M 6-8 FZB	
310-02	312601-0320	-		10	NUT M6M 10-8 FZB	
315-02	312605-0318	-		18	HEXAGON NUT, M6M M8 A280	
320-02	312605-0320	-		40	HEXAGON NUT, M6M M10 A280	
330-02	315101-0153	-		18	WASHER PLAIN, BRB, 6,4/12 H=1,5	
350-02	315101-0173	-		26	WASHER PLAIN, BRB, 10,5/22 H=2	
355-02	315105-0165	-		20	WASHER PLAIN, BRB, 8,4/16,H=1,5	
360-02	315105-0173	-		40	WASHER PLAIN, BRB, 10,5/22,H=2	
PFV14						
040	263619-0000	-		1	RAILING	
115	269339-0000	-		1	CANTILEVER	
129	565961-0000	-		1	KICKPLATE,RIGHT	
130	257859-0000	-		2	RAILING	
200	90287-0076	-		10	SCREW SLOT. PAN HEAD LKCS M6X20	
250	312101-0495	-		9	SCREW M6S M10X30 FZB	
260	312105-0493	-		20	SCREW M6S M10X25 A280	
280	312115-0453	-		8	SCREW MC6S M8X25 A280	
290	312601-0316	-		10	NUT M6M 6-8 FZB	
310	312601-0320	-		6	NUT M6M 10-8 FZB	
315	312605-0318	-		10	HEXAGON NUT, M6M M8 A280	
320	312605-0320	-		20	HEXAGON NUT, M6M M10 A280	
330	315101-0153	-		10	WASHER PLAIN, BRB, 6,4/12 H=1,5	
350	315101-0173	-		15	WASHER PLAIN, BRB, 10,5/22 H=2	
355	315105-0165	-		12	WASHER PLAIN, BRB, 8,4/16,H=1,5	
360	315105-0173	-		20	WASHER PLAIN, BRB, 10,5/22,H=2	

Machine Type | Group Description | Used-In | Group Number | Page No

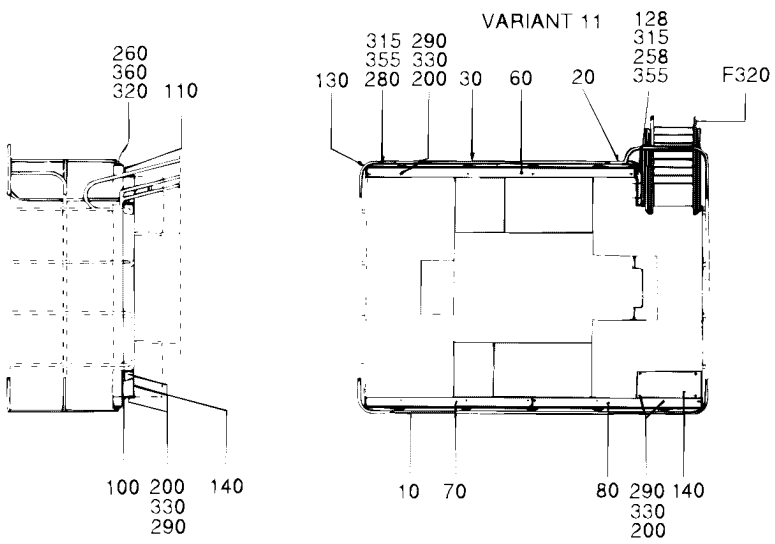
260
360
320 110
100 200
330
290 140
VARIANT 11
315 290
355 330
130 280 200 30 60 20
128
315
258
355
F320
10 70
80 290 140
330
200

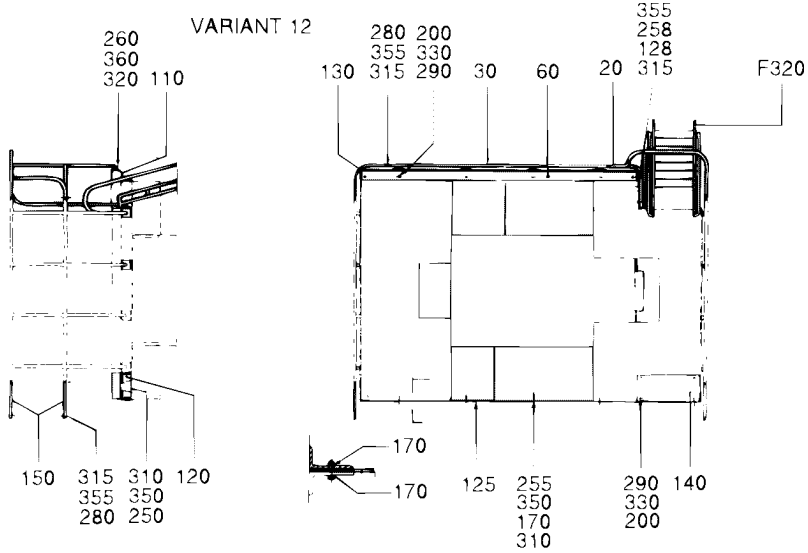
VARIANT 12
260
360
320 110
150 315 310 120
355 350
280 250
280 200
355 330
130 315 290 30 60 20
355
258
128
315
F320
170
170
125 255
350
170
310
290 140
330
200

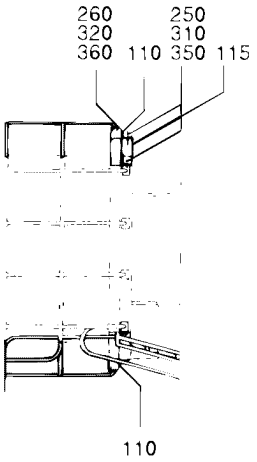
260
320
360 110
250
310
350 115
110

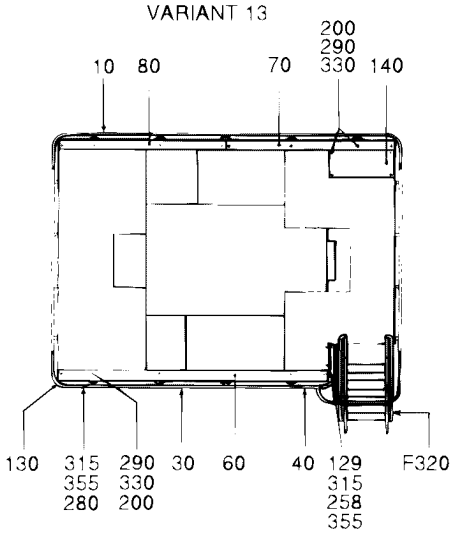
VARIANT 13
10 80 70
200
290
330 140
130 315 290 30 60 40
355 330
280 200
129
315
258
355
F320

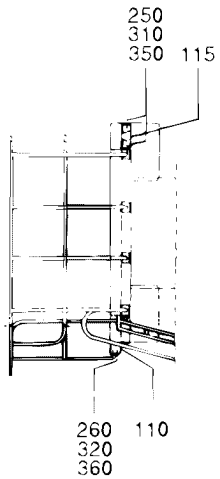
250
310
350 115
260 110
320
360

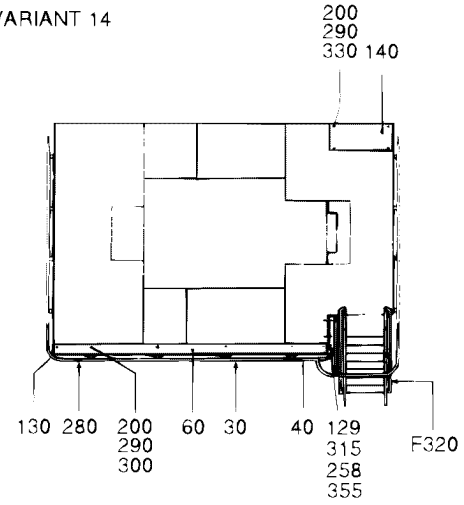
VARIANT 14
200
290
330 140
130 280 200 60 30 40
290
300
129
315
258
355
F320

Pos	Part No	SP	UN	Qty	Description	Page No
Common Parts (Cont'd)						
030	263322-0000	-		1	RAILING	
060	247145-0000	-		1	PLATFORM	
110	257855-0000	-		1	CANTILEVER	
140	257862-0000	-		1	PLATFORM	
258	312105-0453	-		2	SCREW M6S M8X25 A280	
F320	A243171-0200	-		1	LADDER	**595**

Pos	Part No	SP	UN	Qty	Description	Page No

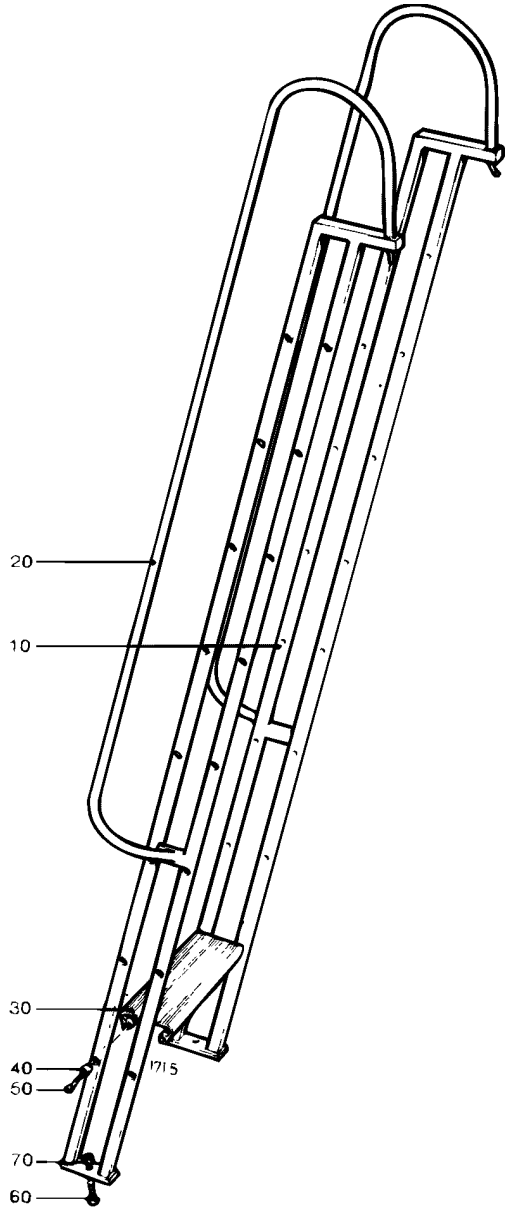
20
10
30
40
50
70
60
1715

ECM: - -
Group number: 243171-0200
Assembly Drawing: 243171-2_1_AA

Issue: 20020121

Pos	Part No	SP	UN	Qty	Description	Page No
Common Parts						
010	243172-0001	-		1	SIDE PIECE	
020	243172-0002	-		1	SIDE PIECE	
030	208361-0001	-		8	STAIR	
040	208658-0001	-		32	SPACER	
050	90287-0056	-		32	SCREW MC6S-TT M8X40	
060	312101-0495	-		2	SCREW M6S M10X30 FZB	
070	312601-0320	-		2	NUT M6M 10-8 FZB	

Pos	Part No	SP	UN	Qty	Description	Page No

VARIANT 01

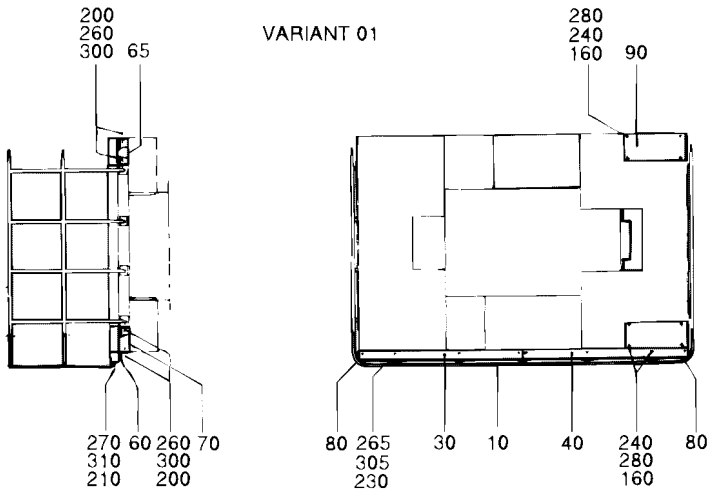

VARIANT 02

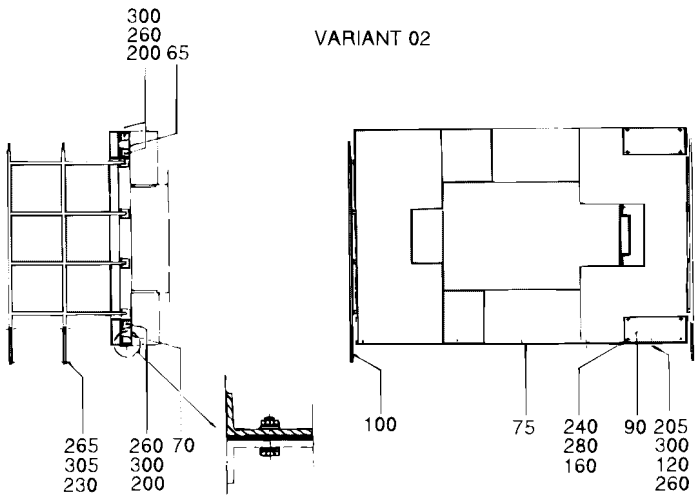

VARIANT 03

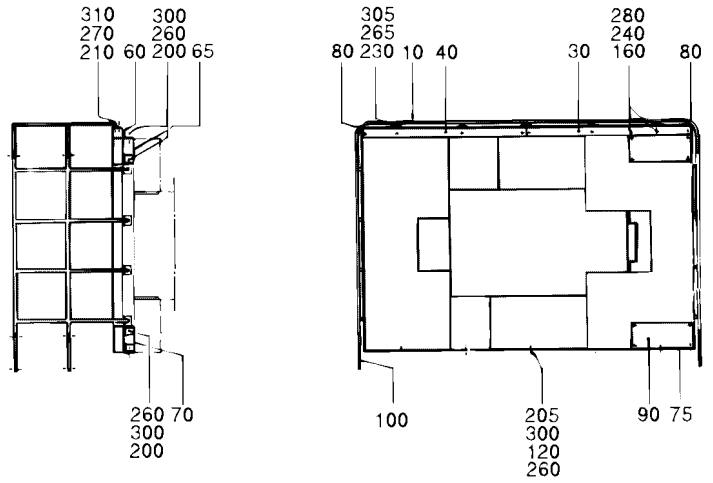

ECM: - -
Group number: 266755-0200
Assembly Drawing: 266755-2_1_AA

Issue: 20020121

Pos	Part No	SP	UN	Qty	Description	Page No
PFV1						
010	257845-0000	-		1	RAILING	
030	247146-0000	-		1	PLATFORM	
040	257852-0000	-		1	PLATFORM	
060	257854-0000	-		1	CANTILEVER	
080	257859-0000	-		4	RAILING	
160-02	90287-0076	-		16	SCREW SLOT. PAN HEAD LKCS M6X20	
200	312101-0495	-		13	SCREW M6S M10X30 FZB	
210	312105-0493	-		20	SCREW M6S M10X25 A280	
230	312115-0453	-		8	SCREW MC6S M8X25 A280	
240-02	312601-0316	-		16	NUT M6M 6-8 FZB	
260	312601-0320	-		10	NUT M6M 10-8 FZB	
265	312605-0318	-		8	HEXAGON NUT, M6M M8 A280	
270	312605-0320	-		20	HEXAGON NUT, M6M M10 A280	
280-02	315101-0153	-		16	WASHER PLAIN, BRB, 6,4/12 H=1,5	
300	315101-0173	-		23	WASHER PLAIN, BRB, 10,5/22 H=2	
305	315105-0165	-		8	WASHER PLAIN, BRB, 8,4/16,H=1,5	
310	315105-0173	-		20	WASHER PLAIN, BRB, 10,5/22,H=2	
PFV2						
075	451406-0000	-		1	VIBRATION DAMPER	
100	451407-0000	-		4	RAILING	
120	451408-0000	-		14	BUFFER RING	
160	90287-0076	-		8	SCREW SLOT. PAN HEAD LKCS M6X20	
205	312101-0500	-		7	SCREW M6S M10X45 FZB	
230	312115-0453	-		8	SCREW MC6S M8X25 A280	
240	312601-0316	-		8	NUT M6M 6-8 FZB	
260-02	312601-0320	-		13	NUT M6M 10-8 FZB	
265	312605-0318	-		8	HEXAGON NUT, M6M M8 A280	
280	315101-0153	-		8	WASHER PLAIN, BRB, 6,4/12 H=1,5	
300-02	315101-0173	-		26	WASHER PLAIN, BRB, 10,5/22 H=2	
305	315105-0165	-		8	WASHER PLAIN, BRB, 8,4/16,H=1,5	
PFV3						
010	257845-0000	-		1	RAILING	
030	247146-0000	-		1	PLATFORM	
040	257852-0000	-		1	PLATFORM	
060	257854-0000	-		1	CANTILEVER	
075	451406-0000	-		1	VIBRATION DAMPER	
080	257859-0000	-		4	RAILING	
100	451407-0000	-		4	RAILING	
120	451408-0000	-		14	BUFFER RING	
160-02	90287-0076	-		16	SCREW SLOT. PAN HEAD LKCS M6X20	
200	312101-0495	-		13	SCREW M6S M10X30 FZB	
205	312101-0500	-		7	SCREW M6S M10X45 FZB	
210	312105-0493	-		20	SCREW M6S M10X25 A280	
230-02	312115-0453	-		16	SCREW MC6S M8X25 A280	
240-02	312601-0316	-		16	NUT M6M 6-8 FZB	
260-03	312601-0320	-		17	NUT M6M 10-8 FZB	
265-02	312605-0318	-		16	HEXAGON NUT, M6M M8 A280	
270	312605-0320	-		20	HEXAGON NUT, M6M M10 A280	
280-02	315101-0153	-		16	WASHER PLAIN, BRB, 6,4/12 H=1,5	
300-03	315101-0173	-		37	WASHER PLAIN, BRB, 10,5/22 H=2	
305-02	315105-0165	-		16	WASHER PLAIN, BRB, 8,4/16,H=1,5	
310	315105-0173	-		20	WASHER PLAIN, BRB, 10,5/22,H=2	
Common Parts						
065	269339-0000	-		1	CANTILEVER	
070	269340-0000	-		1	CANTILEVER	
090	257862-0000	-		2	PLATFORM	

Machine Type | Group Description | Used-In | Group Number | Page No

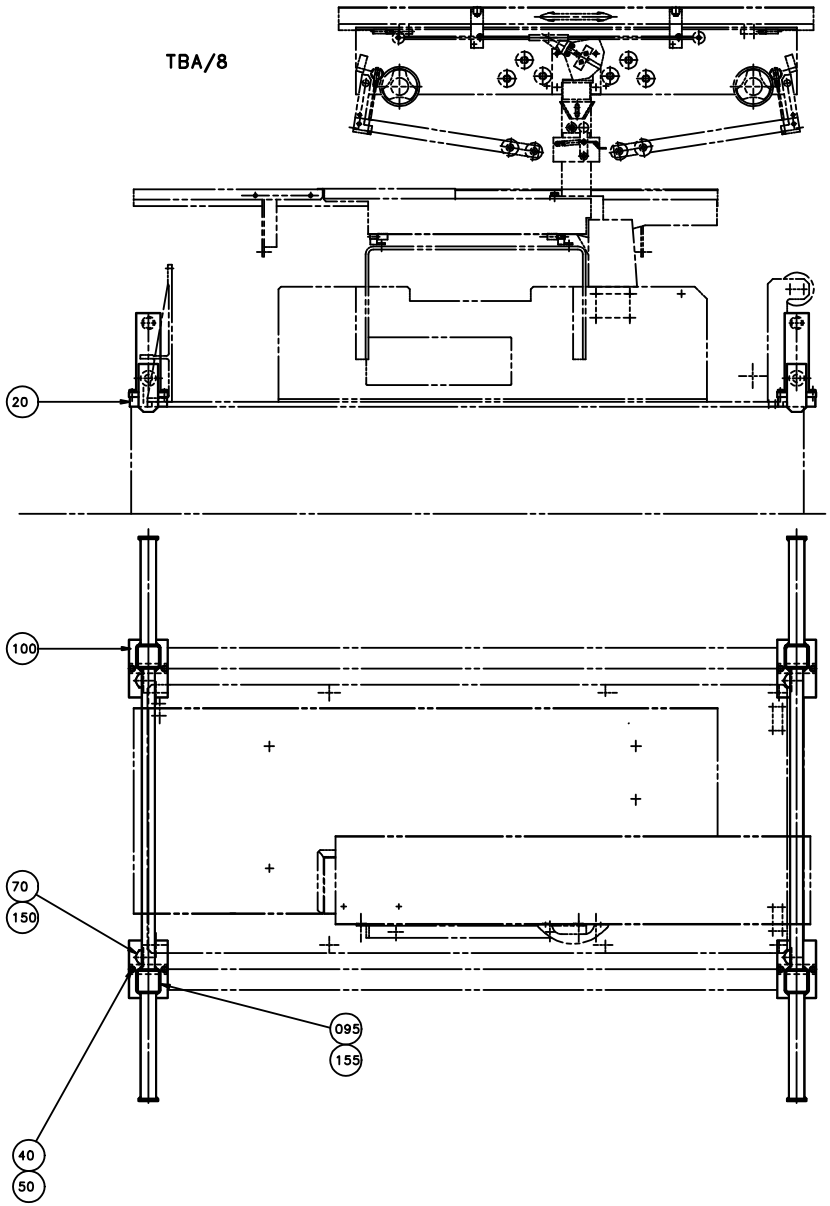
TBA/8
20
100
70
150
095
155
40
50

Pos	Part No	SP	UN	Qty	Description	Page No
TBA/8						
020	551998-0000	-		4	SUPPORT LUG	
040	312101-0370	-		8	SCREW M6S M6X20 FZB	
050	315101-0153	-		8	WASHER PLAIN, BRB, 6,4/12 H=1,5	
070	90287-0127	-		4	SCREW M6S M20X60 88	
Common Parts						
095	1143456-0000	-		1	MACHINE SIGN CE	
100	548778-0000	-		2	LIFTING UNIT	
150	315102-0192	-		4	WASHER PLAIN, BRFB 21/36 H=3	
155	311521-0144	-		4	BLANK RIVET 3,2X10	

Pos	Part No	SP	UN	Qty	Description	Page No

Tetra Pak

SPC
Spare Parts Catalogue

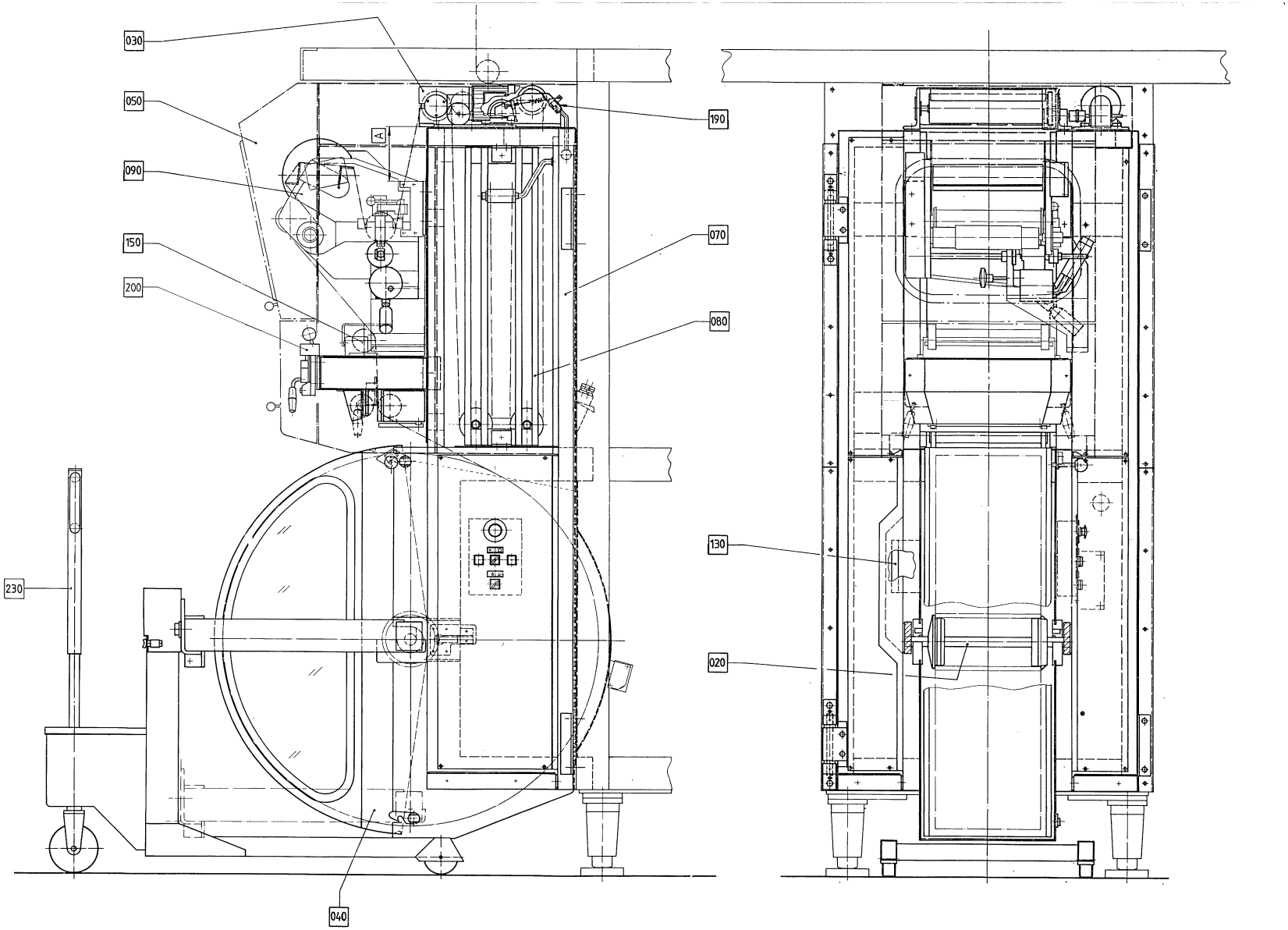
030
050
090
150
200
230
040
190
070
080
130
020
A

ECM: 71843 - 19981215
Group number: 648013-0700
Assembly Drawing: 648013-6_1_AA

Issue: 20020222

Pos	Part No	SP	UN	Qty	Description	Page No
TBA/8 ST-ER						
030	A445840-0100	-		1	DRIVE UNIT	**607**
090	A1361947-0100	-		1	DATING UNIT NSS	**609, 611, 613, 615, 617, 619**
190	A445930-0100	-		1	BENDING UNIT	**639**
TBA/8 ST-R						
030	A445840-0100	-		1	DRIVE UNIT	**607**
090	A1361950-0100	-		1	DATING UNIT SS	**643, 645**
190	A445930-0100	-		1	BENDING UNIT	**639**
Common Parts						
020	A440285-0100	-		2	PAPER REEL HOLDER	**653, 655**
040	A556875-0100	-		1	COVER	**657**
050	A1361946-0100	-		1	SIDE GUARDS	**659, 661**
070	A440133-0400	-		1	MACHINE BODY	**663**
080	A440210-0200	-		1	ROLL	**665**
130	A1360783-0100	-		1	EL-PNEUMATIC EQUIPMENT	**667, 669**
150	A1362931-0100	-		1	SPLICING DEVICE	**673, 675, 677**
200	A522121-0200	-		1	CUTTING TABLE	**687, 689**
220	A440132-0200	-		1	START-UP KIT	**691**
230	A576739-0200	-		1	(PAPER)REEL TROLLEY	**693**

Pos	Part No	SP	UN	Qty	Description	Page No

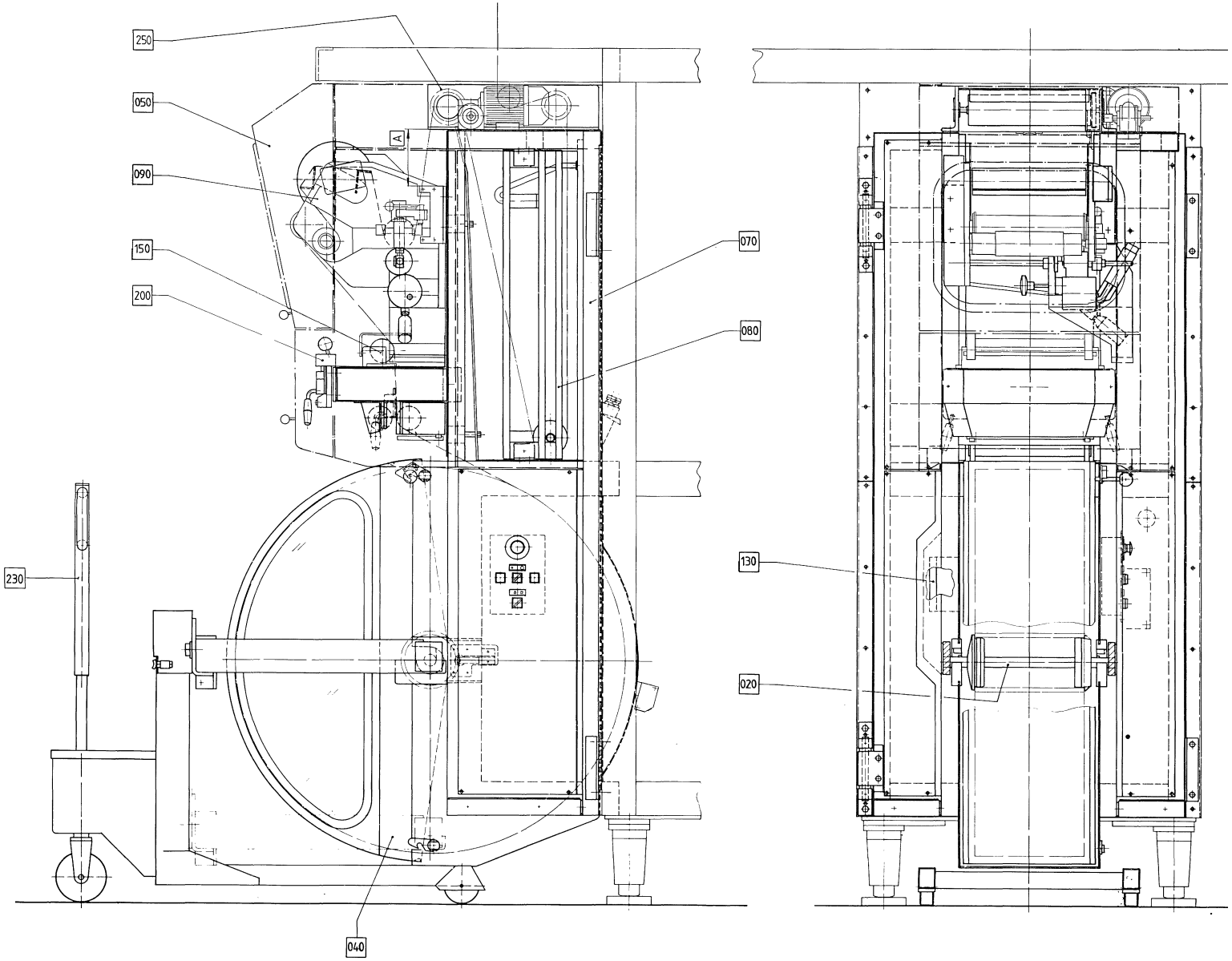
250
050
090
150
200
230
040
070
080
130
020
A

ECM: 71843 - 19981215
Group number: 648013-0700
Assembly Drawing: 648013-7_1_AA

Issue: 20020222

Pos	Part No	SP	UN	Qty	Description	Page No
TBA/8 ST-ER						
030	A445840-0100	-		1	DRIVE UNIT	**607**
090	A1361947-0100	-		1	DATING UNIT NSS	**609, 611, 613, 615, 617, 619**
190	A445930-0100	-		1	BENDING UNIT	**639**
TBA/8 ST-R						
030	A445840-0100	-		1	DRIVE UNIT	**607**
090	A1361950-0100	-		1	DATING UNIT SS	**643, 645**
190	A445930-0100	-		1	BENDING UNIT	**639**
Common Parts						
020	A440285-0100	-		2	PAPER REEL HOLDER	**653, 655**
040	A556875-0100	-		1	COVER	**657**
050	A1361946-0100	-		1	SIDE GUARDS	**659, 661**
070	A440133-0400	-		1	MACHINE BODY	**663**
080	A440210-0200	-		1	ROLL	**665**
130	A1360783-0100	-		1	EL-PNEUMATIC EQUIPMENT	**667, 669**
150	A1362931-0100	-		1	SPLICING DEVICE	**673, 675, 677**
200	A522121-0200	-		1	CUTTING TABLE	**687, 689**
220	A440132-0200	-		1	START-UP KIT	**691**
230	A576739-0200	-		1	(PAPER)REEL TROLLEY	**693**

Pos	Part No	SP	UN	Qty	Description	Page No

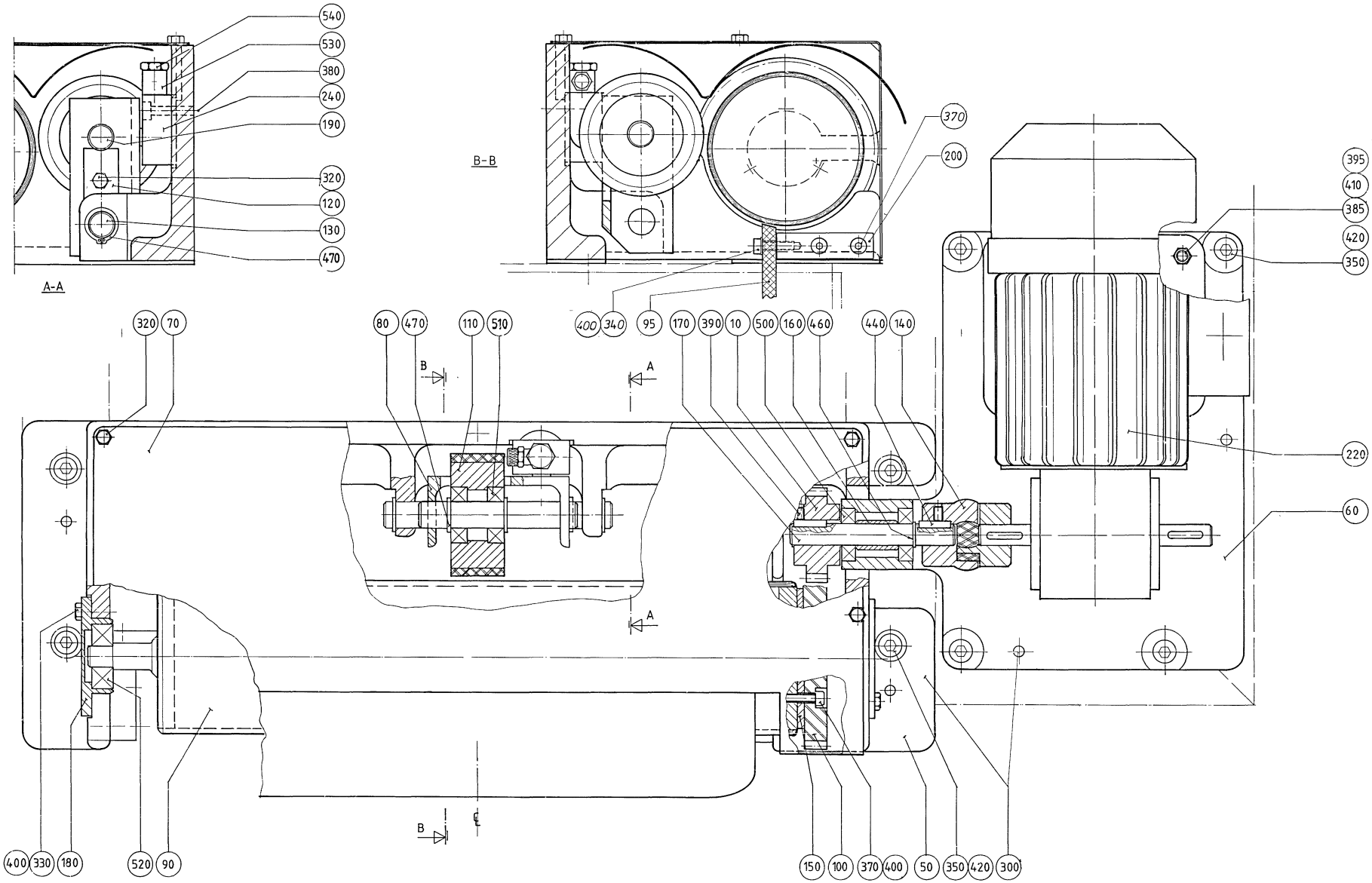
A-A
B-B
540
530
380
240
190
320
120
130
470
370
200
395
410
385
420
350
320
70
80
470
110
510
400
340
95
170
390
10
500
160
460
440
140
B
A
220
60
400
330
180
520
90
150
100
370
400
50
350
420
300

ECM: 72192 - 19990218
Group number: 445840-0100
Assembly Drawing: 445840-1_1_AA

Issue: 20020222

Pos	Part No	SP	UN	Qty	Description	Page No
TBA/8						
010	445854-0002	D		1	GEAR WHEEL	
050	445841-0000	D		1	CANTILEVER	
070	450363-0000	-		1	LID	
Common Parts						
060	445842-0000	-		1	MOTOR PLATE	
080	445837-0000	-		1	CANTILEVER	
090	445845-0000	D		1	DRIVE ROLLER	
095	526680-0000	-		1	FENDER WALING	
100	207019-0003	C		1	GEAR WHEEL	
110	266710-0000	C		1	WHEEL	
120	445839-0000	-		1	SECURING PLATE	
130	445847-0000	D		1	SHAFT	
140	445848-0000	C		1	ELASTIC COUPLING	
150	445849-0000	-		1	SPACER DISC	
160	445850-0000	D		1	SPACER SLEEVE	
170	445851-0000	D		1	SHAFT	
180	445852-0000	D		2	LID	
190	445838-0000	-		1	SHAFT	
200	476503-0000	-		2	BRACKET	
220	B90069-0116	C		1	GEARS, WORM MOTOR REPBY 90069-0281	
	90069-0365	*C*		*1*	*CARBON BRUSH*	
	90069-0364	*C*		*1*	*CARBON BRUSH*	
	90056-0096	*C*		*1*	*WORM GEAR E3*	
	90069-0365	*C*		*1*	*CARBON BRUSH*	
	90069-0364	*C*		*1*	*CARBON BRUSH*	
	90056-0096	*C*		*1*	*WORM GEAR E3*	
240	90239-0259	C		1	CYLINDER	
300	311102-0353	-		4	PARALLELL PIN, CP, M6, 6X20 MM	
320	312101-0323	-		6	SCREW M6S M5X8 FZB	
330	312101-0329	-		6	SCREW M6S M5X16 FZB	
340	312105-0331	-		2	SCREW M6S M5X20 A280	
350	312111-0449	-		8	SCREW HEX.SOCK.HD.MC6S-TT 8X16 88 FZB	
370	312111-0331	-		7	SCREW HEX.SOCK.HD.MC6S-TT 5X20 88 FZB	
380	312111-0333	-		2	SCREW HEX.SOCK.HD.MC6S-TT 5X25 88 FZB	
385	312111-0371	-		4	SCREW HEX.SOCK.HD.MC6S-TT 6X22 88 FZB	
390	312316-0285	-		1	SCREW HEX.SOCK.SET CUP P.MSK6SS4X6 FZB	
395	312601-0316	-		4	NUT M6M 6-8 FZB	
400	315101-0146	-		11	WASHER PLAIN, BRB, 5,3/10 H=1	
410	315101-0153	-		4	WASHER PLAIN, BRB, 6,4/12 H=1,5	
420	315101-0165	-		8	WASHER PLAIN, BRB, 8,4/16 H=1,5	
440	315701-0169	-		2	PARALLEL KEY W. ROUND ENDS 4X4X18 MM	
460	315750-0109	-		1	RETAIN. RING, 12	
470	315750-0112	-		4	RETAIN. RING, 15	
500	321308-0201	-		2	BALL BEARING, 2 SEALS, 12X28X8 MM	
510	321308-0202	-		2	BALL BEARING, 2 SEALS, 15X32X9 MM	
520	321316-0201	-		2	BALL BEARING, 2 SEALS, 12X37X12 MM	
530	342980-0113	-		1	BANJO-CONNECTION,RING 6/4-G1/8"	
540	342980-0303	-		1	BANJO-HOLLOW BOLT COUPL,EXT.THR.01-G1/8"	

Machine Type	Group Description	Used-In	Group Number	Page No

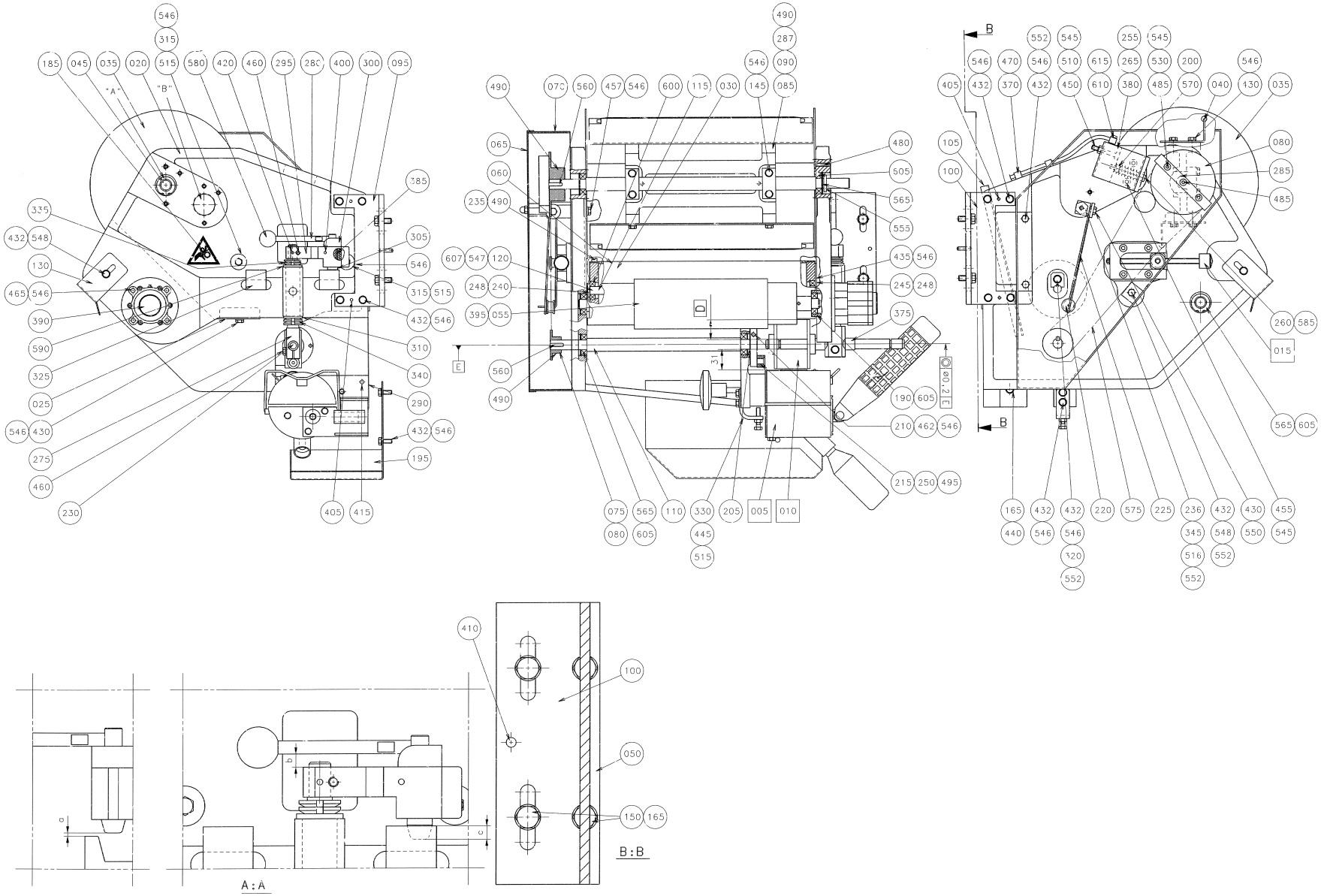
"A"
"B"
A : A
B : B

ECM: 72623 - 19990618
Group number: 1361947-0100
Assembly Drawing: 1361947-1_1_AB

Issue: 20020222

Pos	Part No	SP	UN	Qty	Description	Page No
0355B						
020	484848-0002	-		1	MACHINE BODY	
025	573827-0002	-		1	PROTECTION	
030	293621-0001	D		1	BENDING ROLLER	
035	293624-0001	-		2	PROTECTION PLATE	
040	529139-0000	C		2	CREASE FORMER	
045	486960-0001	D		1	SHAFT	
050	486961-0000	-		1	PLATE	
055	532719-0001	D		1	FEEDING ROLLER	
060	533449-0001	D		1	BENDING ROLLER	
065	533453-0000	-		1	LID	
070	533454-0000	-		1	FRAME	
075	32629-0000	C		1	SPROCKET	
080	32630-0000	C		1	SPROCKET	
085	543137-0002	-		1	SPACER	
090	539338-0000	-		2	CAP	
095	486962-0002	-		1	FASTENING BRACKET	
100	486962-0004	-		1	FASTENING BRACKET	
105	486964-0000	-		1	HEAD PLATE	
110	486966-0001	-		1	SHAFT	
115	486968-0001	-		1	SHAFT FOR BENDINGROLLER	
120	533457-0001	-		1	SHAFT	
130	575786-0000	-		1	PAPER SUPPORT	
150	312105-0451	-		6	SCREW M6S 8X20 A280	
165	315105-0165	-		7	WASHER PLAIN, BRB, 8,4/16,H=1,5	
215	32926-0000	C		1	ROLL	
230	228653-0000	C		1	SHAFT	
235	544706-0000	-		2	FLANGE	
240	293646-0001	C		1	WASHER	
245	293646-0002	C		1	WASHER	
250	293674-0000	C		1	DOWEL	
290	458489-0000	-		1	CANTILEVER	
435	312105-0370	-		4	SCREW M6S M6X20 A280	
490	312318-0323	-		8	SCREW SOCK.SET CUP P MSK6SS M5X8 A4	
546	315105-0153	-		42	WASHER PLAIN, BRB, 6,4/12,H=1,5	
0375S						
020	533448-0000	-		1	MACHINE BODY	
030	293621-0002	D		1	BENDING ROLLER	
035	293624-0002	-		2	PROTECTION PLATE	
040	458109-0000	C		2	CREASE FORMER	
045	486960-0002	D		1	SHAFT	
055	532719-0002	D		1	FEEDING ROLLER	
060	533449-0002	D		1	BENDING ROLLER	
065	533455-0000	-		1	LID	
070	533456-0000	-		1	FRAME	
075	32629-0000	C		1	SPROCKET	
080	32630-0000	C		1	SPROCKET	
085	543138-0000	-		1	SPACER	
090	539338-0000	-		2	CAP	
095	486962-0003	-		2	FASTENING BRACKET	
105	486965-0000	-		1	HEAD PLATE	
110	486966-0002	-		1	SHAFT FOR CARRIER	
115	486968-0002	-		1	SHAFT FOR BENDINGROLLER	
120	533457-0002	-		1	SHAFT	
130	576218-0000	-		1	PAPER SUPPORT	
150	312105-0451	-		4	SCREW M6S 8X20 A280	
165	315105-0165	-		5	WASHER PLAIN, BRB, 8,4/16,H=1,5	
215	32926-0000	C		1	ROLL	
230	228653-0000	C		1	SHAFT	
235	544706-0000	-		2	FLANGE	
240	293646-0001	C		1	WASHER	
245	293646-0002	C		1	WASHER	
250	293674-0000	C		1	DOWEL	
290	458489-0000	-		1	CANTILEVER	
435	312105-0370	-		4	SCREW M6S M6X20 A280	
490	312318-0323	-		8	SCREW SOCK.SET CUP P MSK6SS M5X8 A4	
546	315105-0153	-		40	WASHER PLAIN, BRB, 6,4/12,H=1,5	
0500B						
020	484848-0003	-		1	MACHINE BODY	
025	573827-0003	-		1	PROTECTION	
030	293621-0001	D		1	BENDING ROLLER	
035	293624-0002	-		2	PROTECTION PLATE	
040	458106-0000	C		2	CREASE FORMER	
045	544367-0000	D		1	SHAFT	
055	532719-0001	D		1	FEEDING ROLLER	
060	533449-0001	D		1	BENDING ROLLER	
065	533453-0000	-		1	LID	
070	533454-0000	-		1	FRAME	
080	32630-0000	C		2	SPROCKET	
085	440282-0004	-		2	SPACER	
095	486962-0001	-		2	FASTENING BRACKET	
105	486964-0000	-		1	HEAD PLATE	

Machine Type | Group Description | Used-In | Group Number | Page No

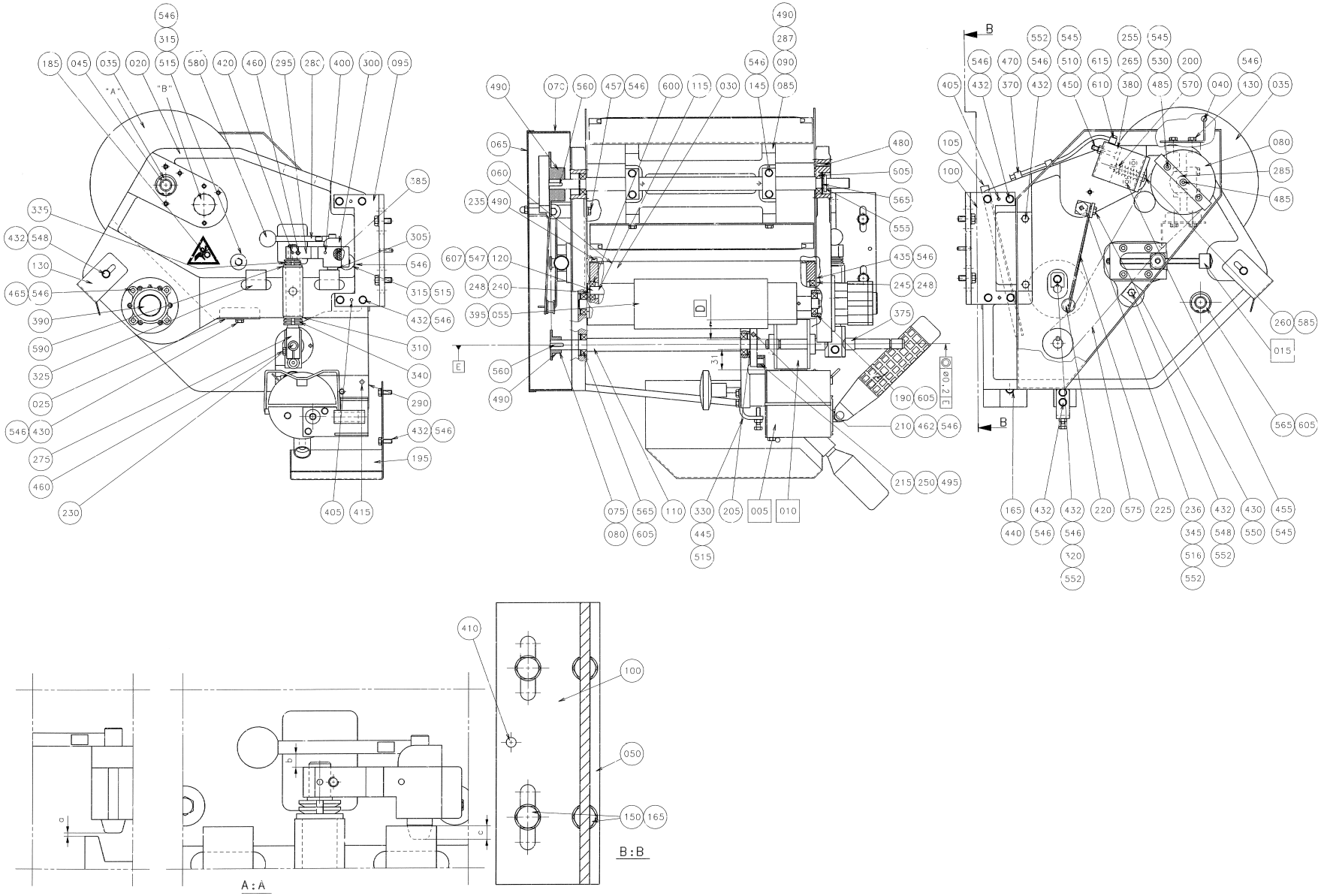
"A"
"B"
A : A
B : B

Pos	Part No	SP	UN	Qty	Description	Page No
0500B (Cont'd)						
110	486966-0001	-		1	SHAFT	
115	486968-0001	-		1	SHAFT FOR BENDINGROLLER	
120	533457-0001	-		1	SHAFT	
130	576217-0000	-		1	PAPER SUPPORT	
150	312105-0451	-		4	SCREW M6S 8X20 A280	
165	315105-0165	-		5	WASHER PLAIN, BRB, 8,4/16,H=1,5	
215	32926-0000	C		1	ROLL	
230	228653-0000	C		1	SHAFT	
235	544706-0000	-		2	FLANGE	
240	293646-0001	C		1	WASHER	
245	293646-0002	C		1	WASHER	
250	293674-0000	C		1	DOWEL	
290	458489-0000	-		1	CANTILEVER	
435	312105-0370	-		4	SCREW M6S M6X20 A280	
490	312318-0323	-		6	SCREW SOCK.SET CUP P MSK6SS M5X8 A4	
546	315105-0153	-		42	WASHER PLAIN, BRB, 6,4/12,H=1,5	
0500S						
020	484848-0002	-		1	MACHINE BODY	
025	573827-0002	-		1	PROTECTION	
030	293621-0001	D		1	BENDING ROLLER	
035	293624-0001	-		2	PROTECTION PLATE	
040	458108-0000	C		2	CREASE FORMER	
045	486960-0001	D		1	SHAFT	
050	486961-0000	-		1	PLATE	
055	532719-0001	D		1	FEEDING ROLLER	
060	533449-0001	D		1	BENDING ROLLER	
065	533453-0000	-		1	LID	
070	533454-0000	-		1	FRAME	
075	32629-0000	C		1	SPROCKET	
080	32630-0000	C		1	SPROCKET	
085	538241-0004	-		1	SPACER	
090	539338-0000	-		2	CAP	
095	486962-0002	-		1	FASTENING BRACKET	
100	486962-0004	-		1	FASTENING BRACKET	
105	486964-0000	-		1	HEAD PLATE	
110	486966-0001	-		1	SHAFT	
115	486968-0001	-		1	SHAFT FOR BENDINGROLLER	
120	533457-0001	-		1	SHAFT	
130	575786-0000	-		1	PAPER SUPPORT	
150	312105-0451	-		6	SCREW M6S 8X20 A280	
165	315105-0165	-		7	WASHER PLAIN, BRB, 8,4/16,H=1,5	
215	32926-0000	C		1	ROLL	
230	228653-0000	C		1	SHAFT	
235	544706-0000	-		2	FLANGE	
240	293646-0001	C		1	WASHER	
245	293646-0002	C		1	WASHER	
250	293674-0000	C		1	DOWEL	
290	458489-0000	-		1	CANTILEVER	
435	312105-0370	-		4	SCREW M6S M6X20 A280	
490	312318-0323	-		8	SCREW SOCK.SET CUP P MSK6SS M5X8 A4	
546	315105-0153	-		42	WASHER PLAIN, BRB, 6,4/12,H=1,5	
0750B						
020	484848-0002	-		1	MACHINE BODY	
025	573827-0002	-		1	PROTECTION	
030	293621-0001	D		1	BENDING ROLLER	
035	293624-0001	-		2	PROTECTION PLATE	
040	458105-0000	C		2	CREASE FORMER	
045	486960-0001	D		1	SHAFT	
055	532719-0001	D		1	FEEDING ROLLER	
060	533449-0001	D		1	BENDING ROLLER	
065	533453-0000	-		1	LID	
070	533454-0000	-		1	FRAME	
075	32629-0000	C		1	SPROCKET	
080	32630-0000	C		1	SPROCKET	
085	543137-0001	-		1	SPACER	
090	539338-0000	-		2	CAP	
095	486962-0001	-		2	FASTENING BRACKET	
105	486964-0000	-		1	HEAD PLATE	
110	486966-0001	-		1	SHAFT	
115	486968-0001	-		1	SHAFT FOR BENDINGROLLER	
120	533457-0001	-		1	SHAFT	
130	575786-0000	-		1	PAPER SUPPORT	
150	312105-0451	-		4	SCREW M6S 8X20 A280	
165	315105-0165	-		5	WASHER PLAIN, BRB, 8,4/16,H=1,5	
215	32926-0000	C		1	ROLL	
230	228653-0000	C		1	SHAFT	
235	544706-0000	-		2	FLANGE	
240	293646-0001	C		1	WASHER	
245	293646-0002	C		1	WASHER	
250	293674-0000	C		1	DOWEL	
290	458489-0000	-		1	CANTILEVER	

Machine Type | Group Description | Used-In | Group Number | Page No

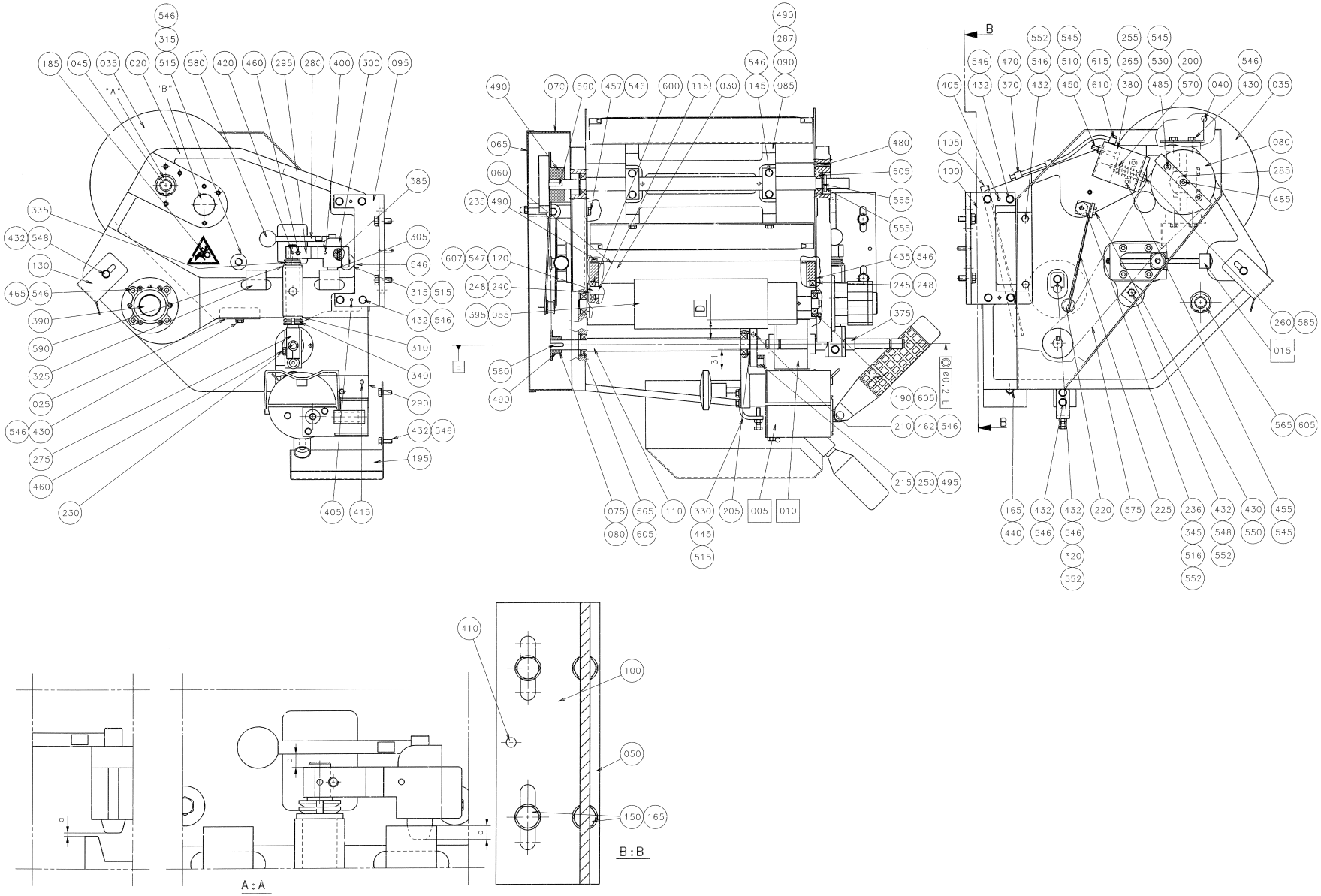
"A"
"B"
D
E
B
A : A
B : B

Pos	Part No	SP	UN	Qty	Description	Page No
0750B (Cont'd)						
290	458489-0000	-		1	CANTILEVER	
435	312105-0370	-		4	SCREW M6S M6X20 A280	
490	312318-0323	-		8	SCREW SOCK.SET CUP P MSK6SS M5X8 A4	
546	315105-0153	-		42	WASHER PLAIN, BRB, 6,4/12,H=1,5	
0750S						
020	484848-0001	-		1	MACHINE BODY	
025	573827-0001	-		1	PROTECTION	
030	293621-0001	D		1	BENDING ROLLER	
035	293624-0001	-		2	PROTECTION PLATE	
040	544279-0000	C		2	CREASE FORMER	
045	486960-0001	D		1	SHAFT	
050	486961-0000	-		1	PLATE	
055	532719-0001	D		1	FEEDING ROLLER	
060	533449-0001	D		1	BENDING ROLLER	
065	533453-0000	-		1	LID	
070	533454-0000	-		1	FRAME	
075	32629-0000	C		1	SPROCKET	
080	32630-0000	C		1	SPROCKET	
085	538241-0005	-		1	SPACER	
090	539338-0000	-		2	CAP	
095	486962-0007	-		1	FASTENING BRACKET	
100	486962-0008	-		1	FASTENING BRACKET	
105	486964-0000	-		1	HEAD PLATE	
110	486966-0001	-		1	SHAFT	
115	486968-0001	-		1	SHAFT FOR BENDINGROLLER	
120	533457-0001	-		1	SHAFT	
130	575786-0000	-		1	PAPER SUPPORT	
150	312105-0451	-		6	SCREW M6S 8X20 A280	
165	315105-0165	-		7	WASHER PLAIN, BRB, 8,4/16,H=1,5	
215	32926-0000	C		1	ROLL	
230	228653-0000	C		1	SHAFT	
235	544706-0000	-		2	FLANGE	
240	293646-0001	C		1	WASHER	
245	293646-0002	C		1	WASHER	
250	293674-0000	C		1	DOWEL	
290	458489-0000	-		1	CANTILEVER	
435	312105-0370	-		4	SCREW M6S M6X20 A280	
490	312318-0323	-		8	SCREW SOCK.SET CUP P MSK6SS M5X8 A4	
546	315105-0153	-		42	WASHER PLAIN, BRB, 6,4/12,H=1,5	

Pos	Part No	SP	UN	Qty	Description	Page No
1000B HIFIN						
020	484848-0001	-		1	MACHINE BODY	
025	573827-0001	-		1	PROTECTION	
030	293621-0001	D		1	BENDING ROLLER	
035	293624-0001	-		2	PROTECTION PLATE	
040	458104-0000	C		2	CREASE FORMER	
045	486960-0001	D		1	SHAFT	
055	532719-0001	D		1	FEEDING ROLLER	
060	533449-0001	D		1	BENDING ROLLER	
065	533453-0000	-		1	LID	
070	533454-0000	-		1	FRAME	
075	32629-0000	C		1	SPROCKET	
080	32630-0000	C		1	SPROCKET	
085	538241-0003	-		1	SPACER	
090	539338-0000	-		2	CAP	
095	486962-0001	-		2	FASTENING BRACKET	
105	486964-0000	-		1	HEAD PLATE	
110	486966-0001	-		1	SHAFT	
115	486968-0001	-		1	SHAFT FOR BENDINGROLLER	
120	533457-0001	-		1	SHAFT	
130	575786-0000	-		1	PAPER SUPPORT	
150	312105-0451	-		4	SCREW M6S 8X20 A280	
165	315105-0165	-		5	WASHER PLAIN, BRB, 8,4/16,H=1,5	
215	32926-0000	C		1	ROLL	
230	228653-0000	C		1	SHAFT	
235	544706-0000	-		2	FLANGE	
240	293646-0001	C		1	WASHER	
245	293646-0002	C		1	WASHER	
250	293674-0000	C		1	DOWEL	
290	458489-0000	-		1	CANTILEVER	
435	312105-0370	-		4	SCREW M6S M6X20 A280	
490	312318-0323	-		8	SCREW SOCK.SET CUP P MSK6SS M5X8 A4	
546	315105-0153	-		42	WASHER PLAIN, BRB, 6,4/12,H=1,5	
1000B LOFIN						
020	484848-0001	-		1	MACHINE BODY	
025	573827-0001	-		1	PROTECTION	
030	293621-0001	D		1	BENDING ROLLER	
035	293624-0001	-		2	PROTECTION PLATE	
040	458105-0000	C		2	CREASE FORMER	
045	486960-0001	D		1	SHAFT	
055	532719-0001	D		1	FEEDING ROLLER	

Machine Type | Group Description | Used-In | Group Number | Page No

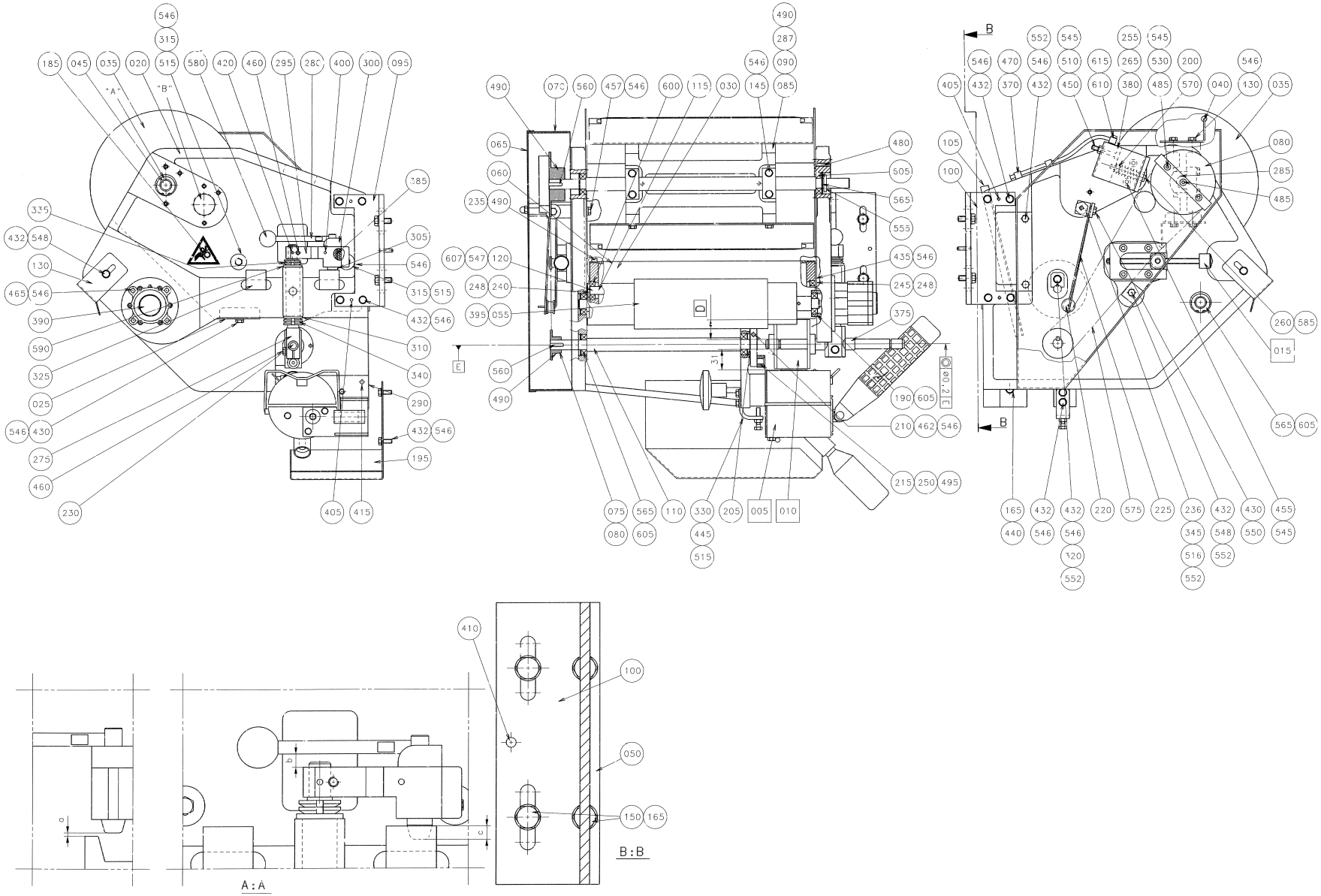
"A"
"B"
A : A
B : B

Pos	Part No	SP	UN	Qty	Description	Page No
1000B LOFIN (Cont'd)						
055	532719-0001	D		1	FEEDING ROLLER	
060	533449-0001	D		1	BENDING ROLLER	
065	533453-0000	-		1	LID	
070	533454-0000	-		1	FRAME	
075	32629-0000	C		1	SPROCKET	
080	32630-0000	C		1	SPROCKET	
085	538241-0002	-		1	SPACER	
090	539338-0000	-		2	CAP	
095	486962-0001	-		2	FASTENING BRACKET	
105	486964-0000	-		1	HEAD PLATE	
110	486966-0001	-		1	SHAFT	
115	486968-0001	-		1	SHAFT FOR BENDINGROLLER	
120	533457-0001	-		1	SHAFT	
130	575786-0000	-		1	PAPER SUPPORT	
150	312105-0451	-		4	SCREW M6S 8X20 A280	
165	315105-0165	-		5	WASHER PLAIN, BRB, 8,4/16,H=1,5	
215	32926-0000	C		1	ROLL	
230	228653-0000	C		1	SHAFT	
235	544706-0000	-		2	FLANGE	
240	293646-0001	C		1	WASHER	
245	293646-0002	C		1	WASHER	
250	293674-0000	C		1	DOWEL	
290	458489-0000	-		1	CANTILEVER	
435	312105-0370	-		4	SCREW M6S M6X20 A280	
490	312318-0323	-		8	SCREW SOCK.SET CUP P MSK6SS M5X8 A4	
546	315105-0153	-		42	WASHER PLAIN, BRB, 6,4/12,H=1,5	
1000S						
020	484848-0001	-		1	MACHINE BODY	
025	573827-0001	-		1	PROTECTION	
030	293621-0001	D		1	BENDING ROLLER	
035	293624-0001	-		2	PROTECTION PLATE	
040	569651-0000	C		2	CREASE FORMER	
045	486960-0001	D		1	SHAFT	
055	532719-0001	D		1	FEEDING ROLLER	
060	533449-0001	D		1	BENDING ROLLER	
065	533453-0000	-		1	LID	
070	533454-0000	-		1	FRAME	
075	32629-0000	C		1	SPROCKET	
080	32630-0000	C		1	SPROCKET	
085	569652-0002	-		1	SPACER	
090	539338-0000	-		2	CAP	
095	486962-0009	-		1	FASTENING BRACKET	
100	486962-0010	-		1	FASTENING BRACKET	
105	486964-0000	-		1	HEAD PLATE	
110	486966-0001	-		1	SHAFT	
115	486968-0001	-		1	SHAFT FOR BENDINGROLLER	
120	533457-0001	-		1	SHAFT	
130	575786-0000	-		1	PAPER SUPPORT	
150	312105-0451	-		4	SCREW M6S 8X20 A280	
165	315105-0165	-		5	WASHER PLAIN, BRB, 8,4/16,H=1,5	
215	32926-0000	C		1	ROLL	
230	228653-0000	C		1	SHAFT	
235	544706-0000	-		2	FLANGE	
240	293646-0001	C		1	WASHER	
245	293646-0002	C		1	WASHER	
250	293674-0000	C		1	DOWEL	
290	458489-0000	-		1	CANTILEVER	
435	312105-0370	-		4	SCREW M6S M6X20 A280	
490	312318-0323	-		8	SCREW SOCK.SET CUP P MSK6SS M5X8 A4	
546	315105-0153	-		42	WASHER PLAIN, BRB, 6,4/12,H=1,5	
1000SQ						
020	484848-0001	-		1	MACHINE BODY	
025	573827-0001	-		1	PROTECTION	
030	293621-0001	D		1	BENDING ROLLER	
035	293624-0001	-		2	PROTECTION PLATE	
040	574043-0000	C		2	CREASE FORMER	
045	486960-0001	D		1	SHAFT	
055	532719-0001	D		1	FEEDING ROLLER	
060	533449-0001	D		1	BENDING ROLLER	
065	533453-0000	-		1	LID	
070	533454-0000	-		1	FRAME	
075	32629-0000	C		1	SPROCKET	
080	32630-0000	C		1	SPROCKET	
085	569652-0003	-		1	SPACER	
090	539338-0000	-		2	CAP	
095	486962-0011	-		1	FASTENING BRACKET	
100	574044-0000	-		1	FASTENING BRACKET	
105	486964-0000	-		1	HEAD PLATE	
110	486966-0001	-		1	SHAFT	
115	486968-0001	-		1	SHAFT FOR BENDINGROLLER	
120	533457-0001	-		1	SHAFT	

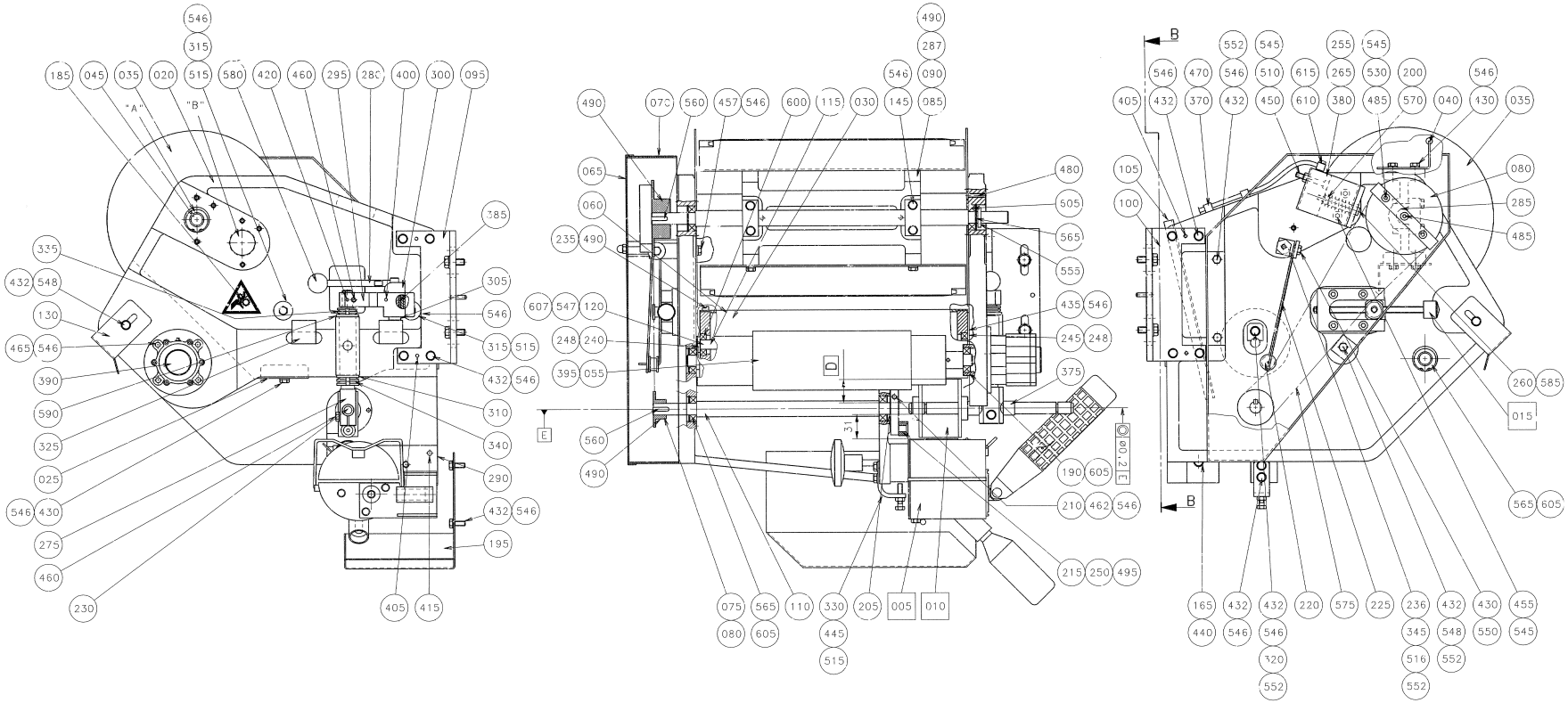
"A"
"B"
D
E
B
A : A
B : B

ECM: 72623 - 19990618
Group number: 1361947-0100
Assembly Drawing: 1361947-1_1_AB

Issue: 20020222

Pos	Part No	SP	UN	Qty	Description	Page No
1000SQ (Cont'd)						
120	533457-0001	-		1	SHAFT	
130	575786-0000	-		1	PAPER SUPPORT	
150	312105-0451	-		4	SCREW M6S 8X20 A280	
165	315105-0165	-		5	WASHER PLAIN, BRB, 8,4/16,H=1,5	
215	32926-0000	C		1	ROLL	
230	228653-0000	C		1	SHAFT	
235	544706-0000	-		2	FLANGE	
240	293646-0001	C		1	WASHER	
245	293646-0002	C		1	WASHER	
250	293674-0000	C		1	DOWEL	
290	458489-0000	-		1	CANTILEVER	
435	312105-0370	-		4	SCREW M6S M6X20 A280	
490	312318-0323	-		8	SCREW SOCK.SET CUP P MSK6SS M5X8 A4	
546	315105-0153	-		42	WASHER PLAIN, BRB, 6,4/12,H=1,5	
Common Parts						
005	A440286-0300	-		1	INK UNIT NSS	**621, 623**
010	A293684-0200	-		2	PRINTING WHEEL NSS	**625, 627, 629, 631, 633**
015	A543143-0100	-		1	ADJUSTMENT DEVICE	**635, 637**
145	312105-0372	-		4	SCREW M6S M6X25 A280	
185	359705-0001	-		1	WARNING SIGN ISO, ENTAGLEMENT	
190	522408-0000	-		1	BEARING HOUSING	
195	549832-0000	-		1	WASTE CHUTE	
200	90335-0037	C		1	COMPRESSION SPRING, NO. 22900	
205	533458-0000	-		1	WASHER	
210	32925-0000	C		1	CARRIER	
220	33182-0000	C		1	ROLL	
225	33183-0000	C		1	SPRING	
236	293645-0000	D		1	BRACKET	
255	595204-0000	D		1	CYLINDER BRACKET	
260	595202-0000	D		1	SHAFT	
265	595203-0000	D		1	LACE	
275	450497-0000	C		1	SHAFT	
280	450500-0000	-		1	DOWEL	
285	457430-0000	-		1	BEATER	
287	458193-0002	C		4	WASHER	
287	458193-0003	C		4	WASHER	
287	458193-0001	C		4	WASHER	
295	464010-0000	-		1	ARM	
300	464012-0000	D		1	CURVE	
305	464011-0000	C		1	LOCK STUD	
310	B466430-0000	-		1	BUSHING	
	321111-0212	-		*1*	*BEAR.BUSHING WITH FLANGE, 15/21X15 MM*	
315	B476377-0000	-		2	SCREW	
	312105-0371	-		*1*	*SCREW M6S M6X22 A280*	
320	486967-0000	-		1	SHEET	
325	486969-0000	-		2	GUIDE LUG	
330	486971-0000	-		1	ANGLE	
335	B532082-0000	-		2	ROUND NUT	
	312805-0102	-		*1*	*NUT ROUND WITH SLOTS M15X1 FE*	
340	B532083-0000	-		2	ROUND NUT	
	312805-0103	-		*1*	*NUT ROUND WITH SLOTS M17X1 FE*	
345	533459-0000	-		1	SCREW	
370	90165-0057	-		2	PIPE CLIP FOR TUBE D=6 MM	
375	90166-0059	C	MM	18	HOSE PVC 12/16MM TRANSP.	
380	90450-0454	C		1	CYLINDER	
385	90335-0064	-		1	SPRING	
390	90347-0054	D		1	DAMPER	
395	311103-0273	-		1	PIN,STRAIGHT M6 4X22 RFR	
400	311103-0274	-		1	PARALLELL PIN, M6, 4X25 MM	
405	311103-0310	-		4	PARALLELL PIN, M6, 5X20 MM	
410	311103-0353	-		2	PARALLELL PIN, M6, 6X20 MM	
415	311103-0357	-		1	PARALLELL PIN, M6, 6X30 MM	
420	311202-0241	-		1	PIN, TAPERED, KP, 4X25 GROUND	
430	312105-0366	-		12	SCREW M6S M6X12 A280	
432	312105-0368	-		17	SCREW M6S M6X16 A280	
440	312105-0457	-		1	SCREW M6S M8X35 A280	
445	312109-0374	-		1	SCREW M6S M6X30 A280	
450	312111-0337	-		2	SCREW HEX.SOCK.HD.MC6S-TT 5X35 88 FZB	
455	312111-0335	-		2	SCREW HEX.SOCK.HD.MC6S-TT 5X30 88 FZB	
457	312111-0364	-		3	SCREW HEX.SOCK.HD.MC6S-TT 6X10 88 FZB	
460	312115-0370	-		2	SCREW MC6S M6X20 A280	
462	312115-0372	-		1	SCREW MC6S M6X25 A280	
465	312115-0376	-		4	SCREW MC6S M6X35 A280	
470	312125-0285	-		2	SCREW SLOT.PAN HD. MCS 4X6 A480	
480	312155-0329	-		4	SCREW HEX.SOCK.COUNT.MF6S M5X16 A280	
485	312155-0333	-		3	SCREW HEX.SOCK.COUNT.MF6S M5X25 A280	
495	312318-0362	-		1	SCREW SOCK.SET CUP P MSK6SS M6X8 A4	
510	312605-0314	-		2	HEXAGON NUT, M6M M5 A280	
515	312605-0316	-		3	HEXAGON NUT, M6M M6 A280	
516	312705-0316	-		1	NUT HEX. DOMED CAP MHM-6 M6 A280	
530	312812-0314	-		2	HEXAGON NUT, NY-LOCK M5 A480	
545	315105-0146	-		10	WASHER PLAIN, BRB, 5,3/10,H=1	

Machine Type | Group Description | Used-In | Group Number | Page No

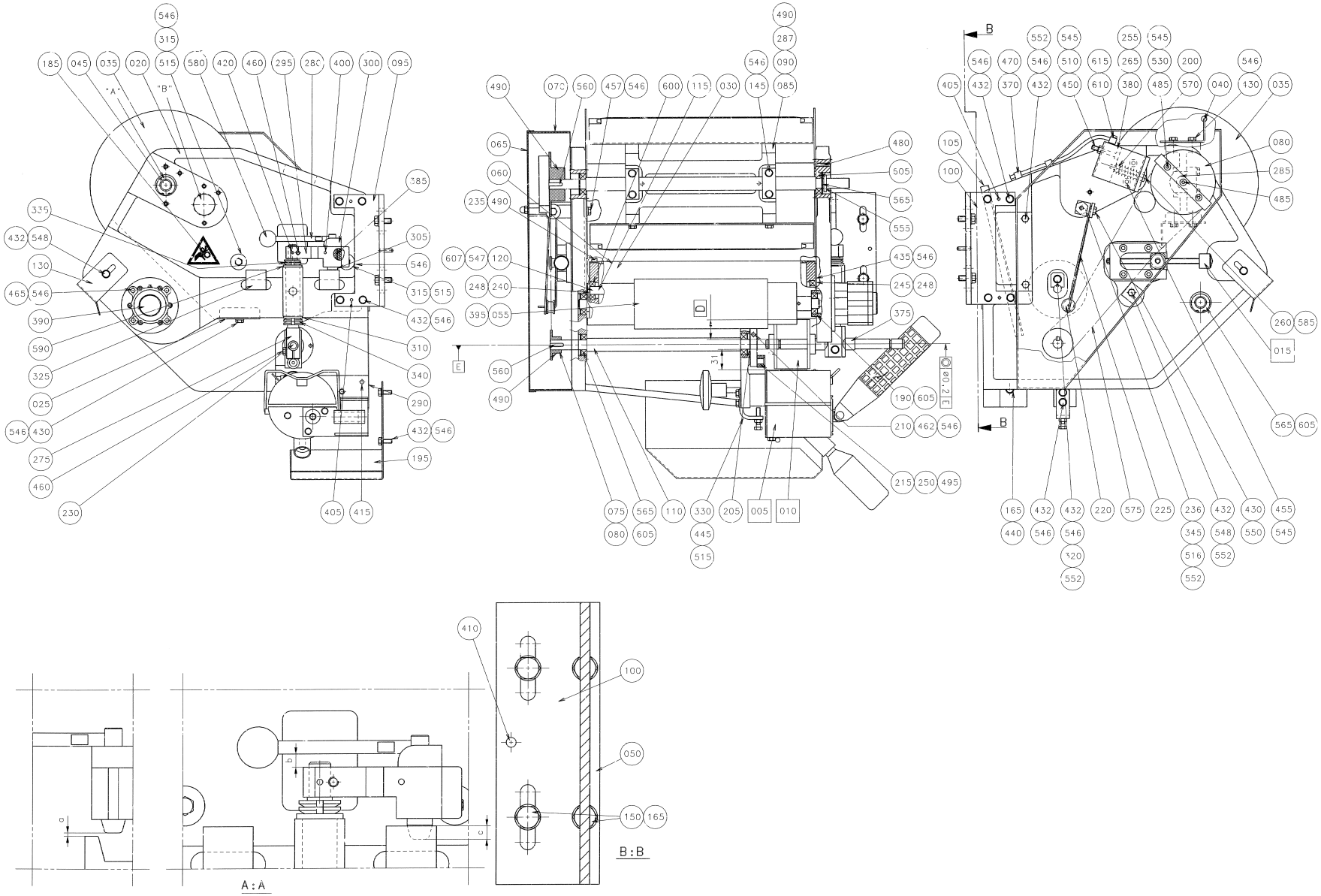
"A"
"B"
A : A
B : B

Pos	Part No	SP	UN	Qty	Description	Page No
Common Parts (Cont'd)						
548	315115-0153	-		4	WASHER PLAIN, TBRB 6,4/12 H=3	
550	315121-0153	-		1	WASHER PLAIN, TBRSB 6,4/22 H=4	
552	315125-0153	-		4	WASHER PLAIN ROUND,CHAMF. 6,4/22, H=4	
555	315220-0121	C		1	V-RINGS 12,5X18,5X7,7 MM V-14S	
560	315701-0201	C		2	PARALLEL KEY W. ROUND ENDS 5X5X20 MM	
565	315752-0123	C		5	RETAIN. RING, 32	
570	315755-0801	C		1	LOCKING WASHER 8	
575	318207-0168	C		1	ROLLER CHAIN, SINGLE 6MM-168	
580	318800-0103	-		1	HANDLES,SPHERICAL KNOB,INT.THRE.,D.25-M6	
585	321111-0135	C		1	BEAR.BUSHING WITH FLANGE, 10/16X10 MM	
590	321111-0212	C		1	BEAR.BUSHING WITH FLANGE, 15/21X15 MM	
600	321308-0101	C		2	BALL BEARING, 1 SEAL, 12X28X8 MM	
605	321308-0202	C		6	BALL BEARING, 2 SEALS, 15X32X9 MM	
607	321316-0200	C		2	BALL BEARING, 2 SEALS, 10X35X11 MM	
610	342980-0113	-		1	BANJO-CONNECTION,RING 6/4-G1/8"	
615	342980-0303	-		1	BANJO-HOLLOW BOLT COUPL,EXT.THR.01-G1/8"	

Pos	Part No	SP	UN	Qty	Description	Page No

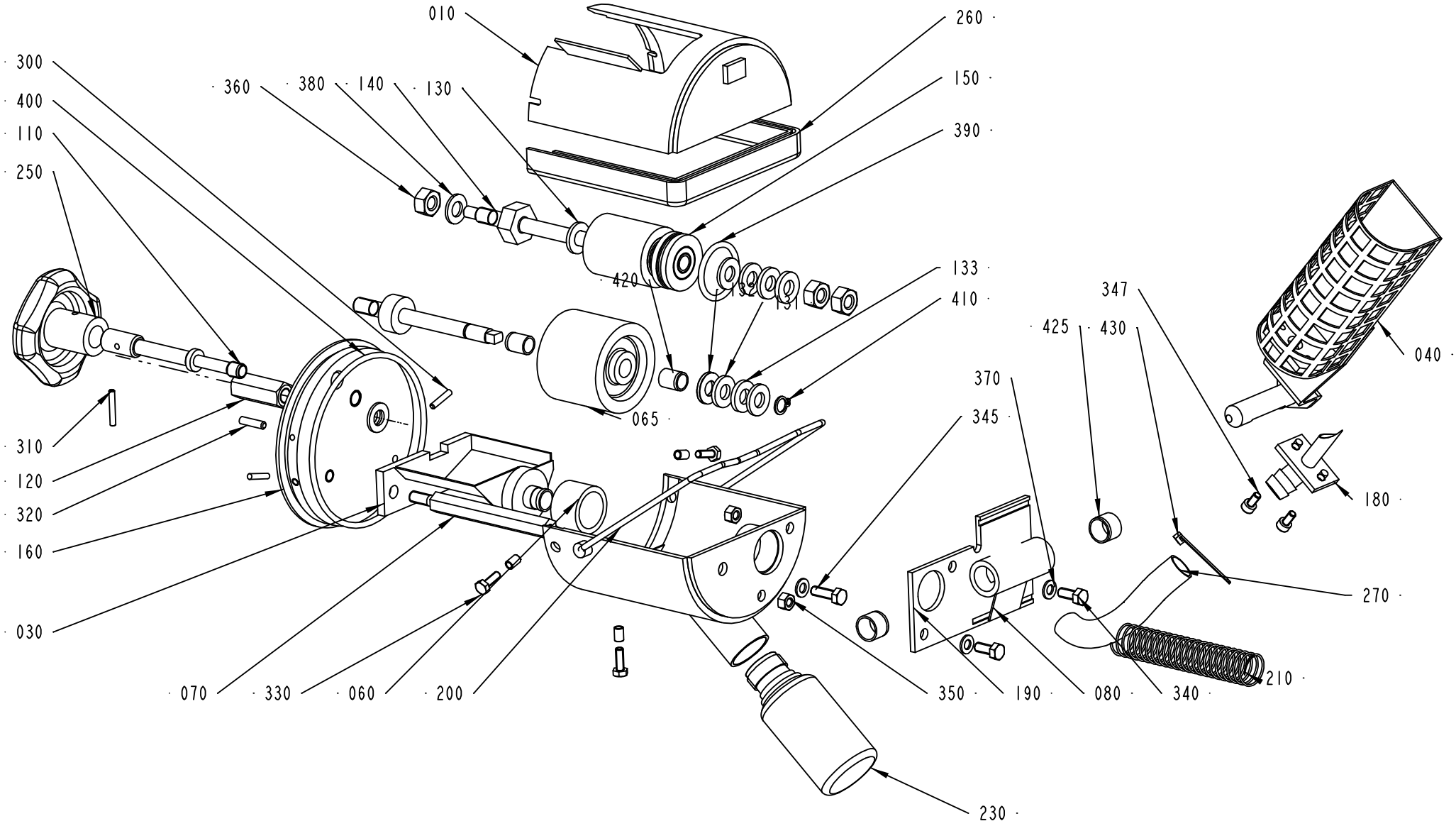
010
260
300
150
400
360
380
140
130
390
110
250
420
133
132
131
410
065
347
425
430
040
370
345
310
120
320
160
180
270
030
070
330
060
200
350
190
080
340
210
230

ECM: 96143 - 20011129
Group number: 440286-0300
Assembly Drawing: 440286-3_1_AC

Issue: 20020222

Pos	Part No	SP	UN	Qty	Description	Page No
TBA/8						
230	90050-0008	-		1	BOTTLE	
Common Parts						
010	440287-0000	-		1	COVER	
030	297211-0000	B		1	INK WELL	
040	476356-0000	B		1	HOLDER FOR INK BOTTLE	
060	445542-0000	A		1	MANTEL RUBBER	
065	450355-0000	A		1	INK ROLLER	
070	33010-0000	B		1	SCREW	
080	35547-0000	B		1	SPRING	
100	292044-0000	A		1	SHAFT	
110	293667-0000	A		1	DOWEL	
120	436927-0000	B		1	NUT	
130	293669-0001	A		4	WASHER	
131	293669-0002	A		2	WASHER	
132	293669-0003	A		2	WASHER	
133	293669-0004	A		2	WASHER	
140	293670-0000	A		1	SHAFT	
150	B543135-0000	A		1	INK TRANSFER ROLLER	
	321120-0100	-		*1*	*BEARING BUSHING WITHOUT FLANGE,8/10X12*	
	90153-0050	-		*1*	*ADHESIVE*	
160	293697-0000	B		1	END SECTION	
180	476354-0000	B		1	CANNULAR TUBE	
190	456773-0000	B		1	PIVOT BRACKET	
200	434747-0000	A		1	BOW CLAMP	
210	537308-0000	B		1	SPRING	
250	90051-0077	-		1	HANDLE	
260	90143-0029	-	MM	295	STRIP	
270	90166-0138	-	MM	100	HOSE	
280	90299-0072	A		48	INK	
300	311103-0236	-		2	PARALLELL PIN, M6, 3X16 MM	
310	311103-0238	-		1	PARALLELL PIN, M6, 3X20 MM	
320	311103-0270	-		1	PARALLELL PIN, M6, 4X16 MM	
330	312105-0291	-		3	SCREW M6S M4X12 A280	
340	312105-0327	-		2	SCREW M6S M5X12 A280	
345	312105-0329	-		1	SCREW M6S M5X16 A280	
347	312115-0287	-		2	SCREW MC6S M4X8 A280	
350	312605-0314	-		2	HEXAGON NUT, M6M M5 A280	
360	312605-0318	-		3	HEXAGON NUT, M6M M8 A280	
370	315105-0146	-		3	WASHER PLAIN, BRB, 5,3/10,H=1	
380	315105-0165	-		2	WASHER PLAIN, BRB, 8,4/16,H=1,5	
390	315202-0218	A		1	O-RING 26,2X3 MM	
400	315202-0309	A		1	O-RING 89,5X3 MM	
410	315750-0105	-		1	RETAIN. RING, 8	
420	321120-0100	A		2	BEARING BUSHING WITHOUT FLANGE,8/10X12	
425	321120-0109	A		2	BEARING BUSHING WITHOUT FLANGE,12/14X10	
430	352113-0101	-		1	CLIP STRIP, 92X2,5 MM	

Machine Type | Group Description | Used-In | Group Number | Page No

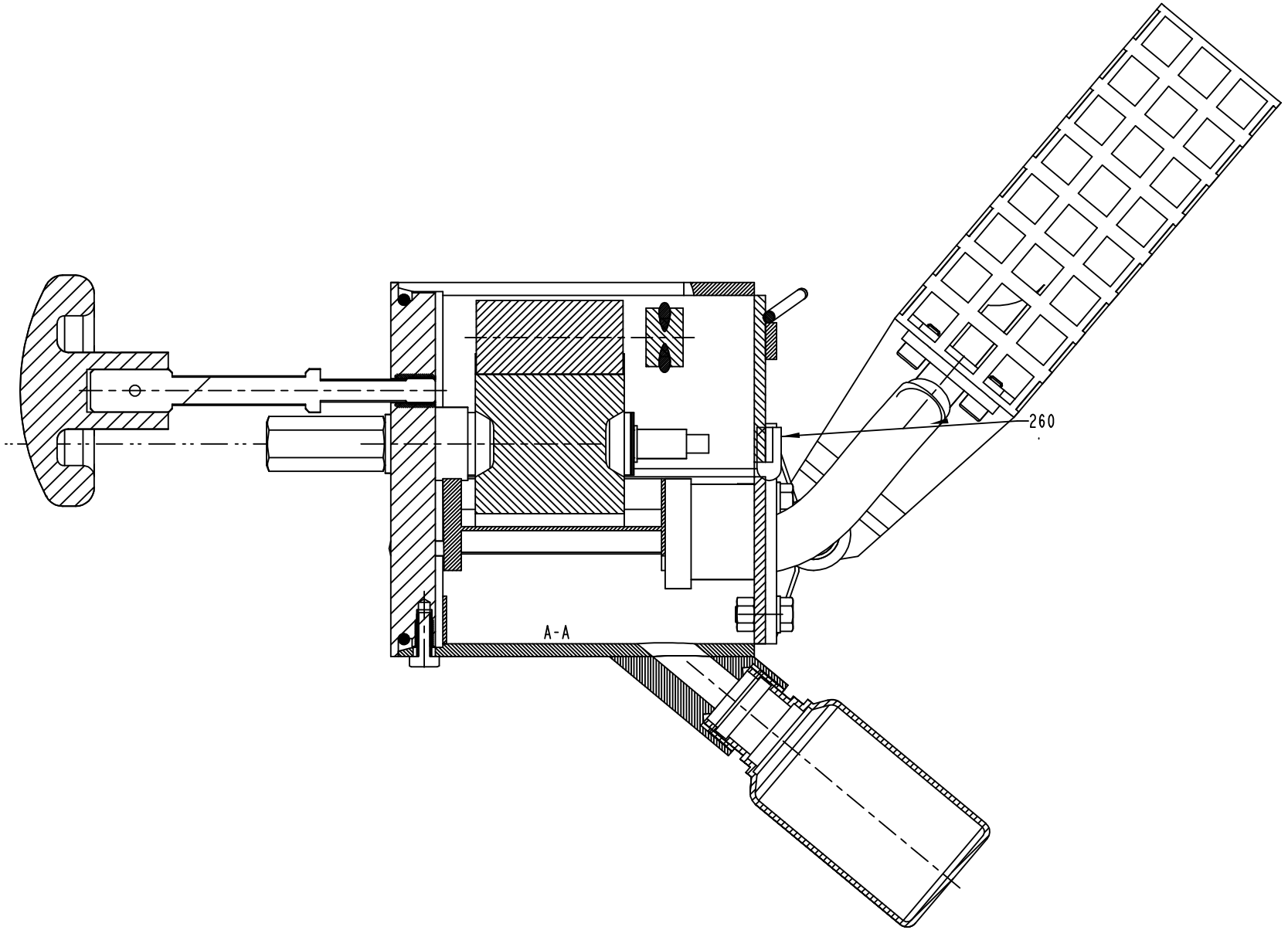
260
A-A

ECM: 96143 - 20011129
Group number: 440286-0300
Assembly Drawing: 440286-3_2_AC

Issue: 20020222

Pos	Part No	SP	UN	Qty	Description	Page No
TBA/8						
230	90050-0008	-		1	BOTTLE	
Common Parts						
010	440287-0000	-		1	COVER	
030	297211-0000	B		1	INK WELL	
040	476356-0000	B		1	HOLDER FOR INK BOTTLE	
060	445542-0000	A		1	MANTEL RUBBER	
065	450355-0000	A		1	INK ROLLER	
070	33010-0000	B		1	SCREW	
080	35547-0000	B		1	SPRING	
100	292044-0000	A		1	SHAFT	
110	293667-0000	A		1	DOWEL	
120	436927-0000	B		1	NUT	
130	293669-0001	A		4	WASHER	
131	293669-0002	A		2	WASHER	
132	293669-0003	A		2	WASHER	
133	293669-0004	A		2	WASHER	
140	293670-0000	A		1	SHAFT	
150	B543135-0000	A		1	INK TRANSFER ROLLER	
	321120-0100	-		*1*	*BEARING BUSHING WITHOUT FLANGE,8/10X12*	
	90153-0050	-		*1*	*ADHESIVE*	
160	293697-0000	B		1	END SECTION	
180	476354-0000	B		1	CANNULAR TUBE	
190	456773-0000	B		1	PIVOT BRACKET	
200	434747-0000	A		1	BOW CLAMP	
210	537308-0000	B		1	SPRING	
250	90051-0077	-		1	HANDLE	
260	90143-0029	-	MM	295	STRIP	
270	90166-0138	-	MM	100	HOSE	
280	90299-0072	A		48	INK	
300	311103-0236	-		2	PARALLELL PIN, M6, 3X16 MM	
310	311103-0238	-		1	PARALLELL PIN, M6, 3X20 MM	
320	311103-0270	-		1	PARALLELL PIN, M6, 4X16 MM	
330	312105-0291	-		3	SCREW M6S M4X12 A280	
340	312105-0327	-		2	SCREW M6S M5X12 A280	
345	312105-0329	-		1	SCREW M6S M5X16 A280	
347	312115-0287	-		2	SCREW MC6S M4X8 A280	
350	312605-0314	-		2	HEXAGON NUT, M6M M5 A280	
360	312605-0318	-		3	HEXAGON NUT, M6M M8 A280	
370	315105-0146	-		3	WASHER PLAIN, BRB, 5,3/10,H=1	
380	315105-0165	-		2	WASHER PLAIN, BRB, 8,4/16,H=1,5	
390	315202-0218	A		1	O-RING 26,2X3 MM	
400	315202-0309	A		1	O-RING 89,5X3 MM	
410	315750-0105	-		1	RETAIN. RING, 8	
420	321120-0100	A		2	BEARING BUSHING WITHOUT FLANGE,8/10X12	
425	321120-0109	A		2	BEARING BUSHING WITHOUT FLANGE,12/14X10	
430	352113-0101	-		1	CLIP STRIP, 92X2,5 MM	

Machine Type | Group Description | Used-In | Group Number | Page No

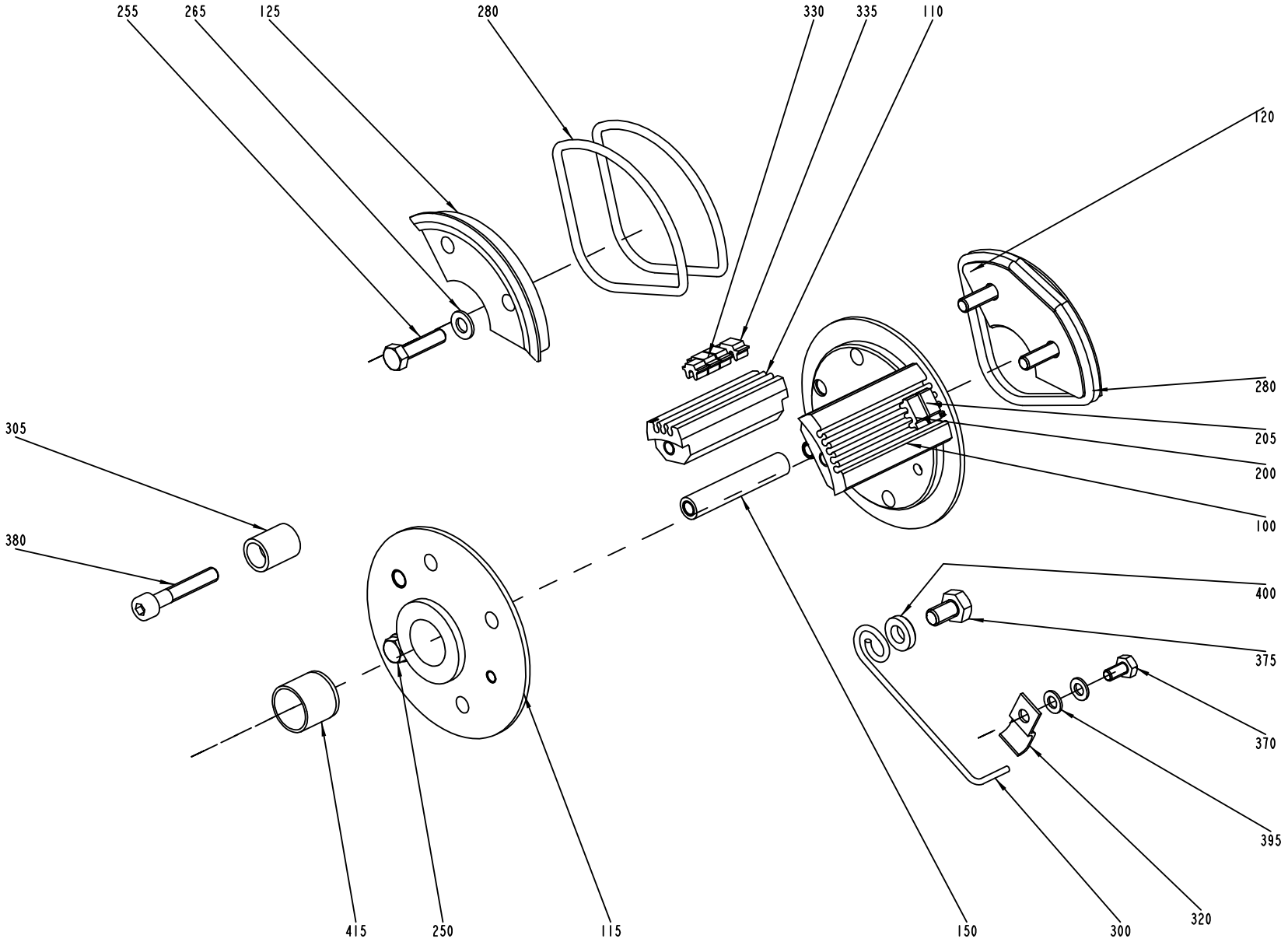
255
265
125
280
330
335
110
120
280
205
200
100
305
380
400
375
370
395
320
300
150
115
250
415

ECM: 92416 - 20011221
Group number: 293684-0200
Assembly Drawing: 293684-3_1_AB

Issue: 20020222

Pos	Part No	SP	UN	Qty	Description	Page No
TBA 0500B						
100	293395-0003	A		2	TYPE HOLDER	
110	293395-0001	A		2	TYPE HOLDER	
115	434787-0000	A		1	END SECTION	
120	292410-0000	A		1	END SECTION	
155	293676-0000	A		1	CARRIER	
200	90413-0048	A		1	CODE INSERT SET	
205	90413-0049	A		1	CODE INSERT SET	
255	312101-0331	-		7	SCREW M6S M5X20 FZB	
265	315101-0146	-		7	WASHER PLAIN, BRB, 5,3/10 H=1	
285	315202-0304	A		2	O-RING 64,5X3 MM	
410	315202-0305	A		2	O-RING 69,5X3 MM	
TBA 0500S OR TBA 0355B OR TBA 0375S OR TBA 0750S						
105	293395-0002	A		1	TYPE HOLDER	
110	293395-0001	A		1	TYPE HOLDER	
125	479237-0000	A		1	CARRIER	
140	479236-0000	A		2	END SECTION	
145	479238-0000	A		1	CARRIER	
150	293671-0000	A		1	SPACER	
250	312101-0329	-		2	SCREW M6S M5X16 FZB	
255	312101-0331	-		3	SCREW M6S M5X20 FZB	
265	315101-0146	-		5	WASHER PLAIN, BRB, 5,3/10 H=1	
275	315202-0224	A		4	O-RING 42,2X3 MM	
TBA 0750B OR TBA 1000S OR TBA 1000SQ OR TBA 1000B LOFIN						
100	293395-0003	A		1	TYPE HOLDER	
110	293395-0001	A		1	TYPE HOLDER	
115	292409-0000	A		2	END SECTION	
120	442072-0000	A		1	CARRIER	
125	292411-0000	A		1	CARRIER	
150	293671-0000	A		1	SPACER	
200	90413-0048	A		1	CODE INSERT SET	
205	90413-0049	A		1	CODE INSERT SET	
250	312101-0329	-		2	SCREW M6S M5X16 FZB	
255	312101-0331	-		3	SCREW M6S M5X20 FZB	
265	315101-0146	-		5	WASHER PLAIN, BRB, 5,3/10 H=1	
280	315202-0301	A		4	O-RING 49,5X3 MM	
TBA 1000B HIFIN						
100	293395-0003	A		1	TYPE HOLDER	
110	293395-0001	A		1	TYPE HOLDER	
115	293690-0000	A		2	END SECTION	
120	442431-0000	A		1	CARRIER	
125	293688-0000	A		1	CARRIER	
150	293671-0000	A		1	SPACER	
200	90413-0048	A		1	CODE INSERT SET	
205	90413-0049	A		1	CODE INSERT SET	
250	312101-0329	-		2	SCREW M6S M5X16 FZB	
255	312101-0331	-		3	SCREW M6S M5X20 FZB	
265	315101-0146	-		5	WASHER PLAIN, BRB, 5,3/10 H=1	
280	315202-0301	A		4	O-RING 49,5X3 MM	
Common Parts						
300	32691-0000	A		1	LOCKING SPRING	
305	33011-0000	A		1	SLEEVE	
320	1511572-0000	-		1	CLIP	
330	90413-0043	A		1	CODE INSERT SET	
330	90413-0033	A		1	CODE INSERT SET 0-9	
335	90413-0047	A		1	CODE INSERT SET	
335	90413-0044	A		1	CODE INSERT SET	
370	312101-0287	-		1	SCREW M6S M4X8 FZB	
375	312101-0364	-		1	SCREW M6S M6X10 FZB	
380	312111-0335	-		1	SCREW HEX.SOCK.HD.MC6S-TT 5X30 88 FZB	
395	315101-0136	-		2	WASHER PLAIN, BRB, 4,3/8 H=0,8	
400	315111-0153	-		1	WASHER PLAIN, TBRB 6,4/12 H=3	
415	321120-0122	A		2	BEARING BUSHING WITHOUT FL, 15X17X15 MM	

Machine Type | Group Description | Used-In | Group Number | Page No

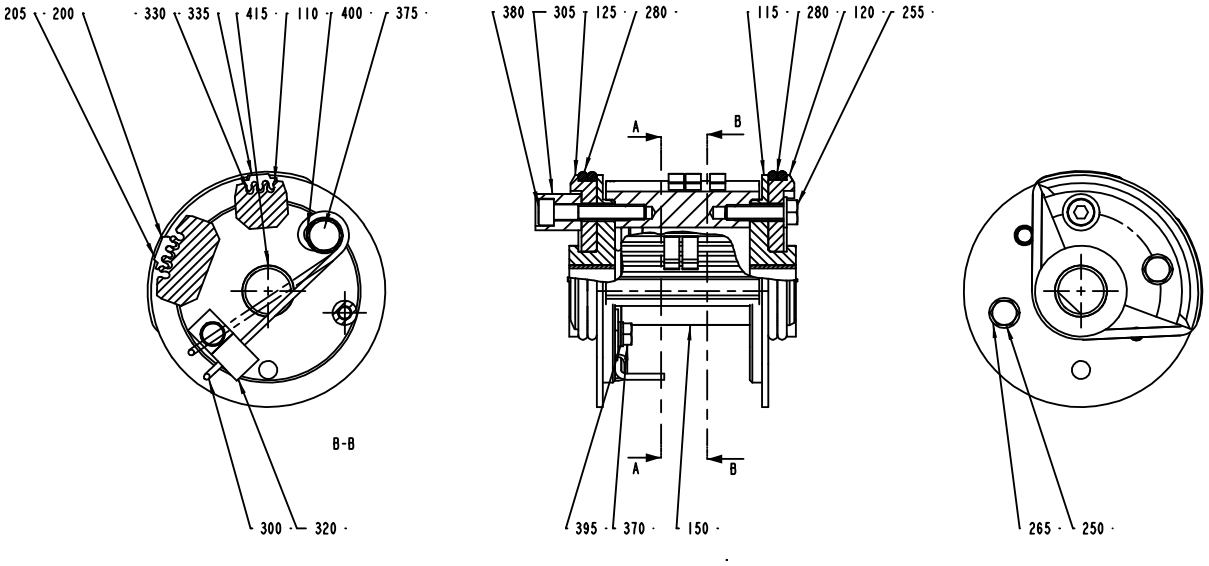

Volume: TBA- 500B.ml

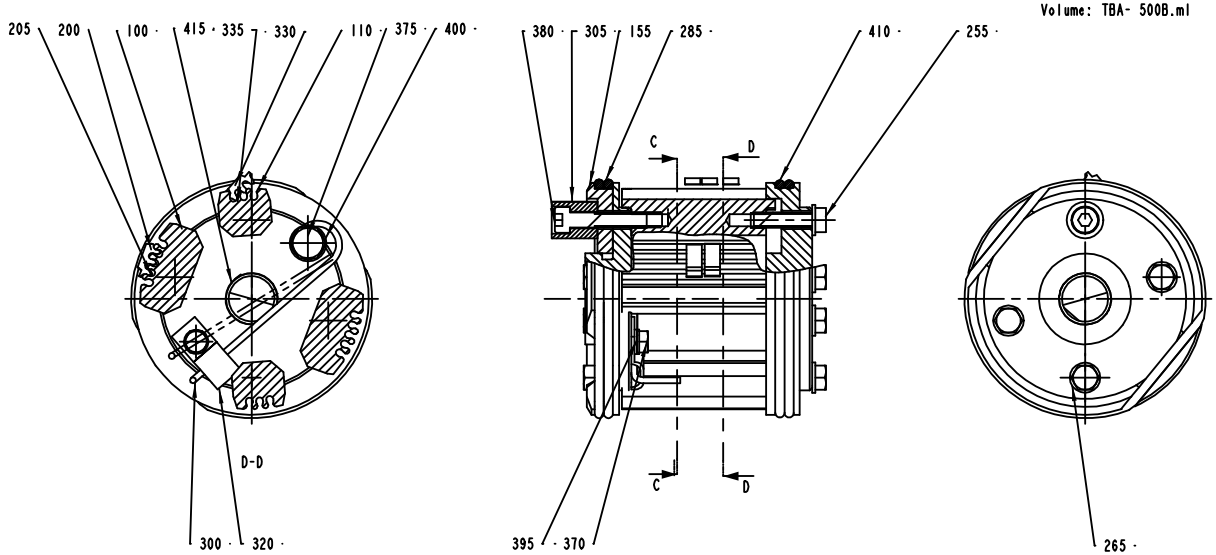

Volume: TBA- 500SQ. 750B. 1000B LOFIN. 1000S. 1000SQ. 1055B. 1500S.ml

ECM: 92416 - 20011221
Group number: 293684-0200
Assembly Drawing: 293684-3_2_AB

Issue: 20020222

Pos	Part No	SP	UN	Qty	Description	Page No
TBA 0500B						
100	293395-0003	A		2	TYPE HOLDER	
110	293395-0001	A		2	TYPE HOLDER	
115	434787-0000	A		1	END SECTION	
120	292410-0000	A		1	END SECTION	
155	293676-0000	A		1	CARRIER	
200	90413-0048	A		1	CODE INSERT SET	
205	90413-0049	A		1	CODE INSERT SET	
255	312101-0331	-		7	SCREW M6S M5X20 FZB	
265	315101-0146	-		7	WASHER PLAIN, BRB, 5,3/10 H=1	
285	315202-0304	A		2	O-RING 64,5X3 MM	
410	315202-0305	A		2	O-RING 69,5X3 MM	
TBA 0500S OR TBA 0355B OR TBA 0375S OR TBA 0750S						
105	293395-0002	A		1	TYPE HOLDER	
110	293395-0001	A		1	TYPE HOLDER	
125	479237-0000	A		1	CARRIER	
140	479236-0000	A		2	END SECTION	
145	479238-0000	A		1	CARRIER	
150	293671-0000	A		1	SPACER	
250	312101-0329	-		2	SCREW M6S M5X16 FZB	
255	312101-0331	-		3	SCREW M6S M5X20 FZB	
265	315101-0146	-		5	WASHER PLAIN, BRB, 5,3/10 H=1	
275	315202-0224	A		4	O-RING 42,2X3 MM	
TBA 0750B OR TBA 1000S OR TBA 1000SQ OR TBA 1000B LOFIN						
100	293395-0003	A		1	TYPE HOLDER	
110	293395-0001	A		1	TYPE HOLDER	
115	292409-0000	A		2	END SECTION	
120	442072-0000	A		1	CARRIER	
125	292411-0000	A		1	CARRIER	
150	293671-0000	A		1	SPACER	
200	90413-0048	A		1	CODE INSERT SET	
205	90413-0049	A		1	CODE INSERT SET	
250	312101-0329	-		2	SCREW M6S M5X16 FZB	
255	312101-0331	-		3	SCREW M6S M5X20 FZB	
265	315101-0146	-		5	WASHER PLAIN, BRB, 5,3/10 H=1	
280	315202-0301	A		4	O-RING 49,5X3 MM	
TBA 1000B HIFIN						
100	293395-0003	A		1	TYPE HOLDER	
110	293395-0001	A		1	TYPE HOLDER	
115	293690-0000	A		2	END SECTION	
120	442431-0000	A		1	CARRIER	
125	293688-0000	A		1	CARRIER	
150	293671-0000	A		1	SPACER	
200	90413-0048	A		1	CODE INSERT SET	
205	90413-0049	A		1	CODE INSERT SET	
250	312101-0329	-		2	SCREW M6S M5X16 FZB	
255	312101-0331	-		3	SCREW M6S M5X20 FZB	
265	315101-0146	-		5	WASHER PLAIN, BRB, 5,3/10 H=1	
280	315202-0301	A		4	O-RING 49,5X3 MM	
Common Parts						
300	32691-0000	A		1	LOCKING SPRING	
305	33011-0000	A		1	SLEEVE	
320	1511572-0000	-		1	CLIP	
330	90413-0043	A		1	CODE INSERT SET	
330	90413-0033	A		1	CODE INSERT SET 0-9	
335	90413-0047	A		1	CODE INSERT SET	
335	90413-0044	A		1	CODE INSERT SET	
370	312101-0287	-		1	SCREW M6S M4X8 FZB	
375	312101-0364	-		1	SCREW M6S M6X10 FZB	
380	312111-0335	-		1	SCREW HEX.SOCK.HD.MC6S-TT 5X30 88 FZB	
395	315101-0136	-		2	WASHER PLAIN, BRB, 4,3/8 H=0,8	
400	315111-0153	-		1	WASHER PLAIN, TBRB 6,4/12 H=3	
415	321120-0122	A		2	BEARING BUSHING WITHOUT FL, 15X17X15 MM	

Machine Type | Group Description | Used-In | Group Number | Page No

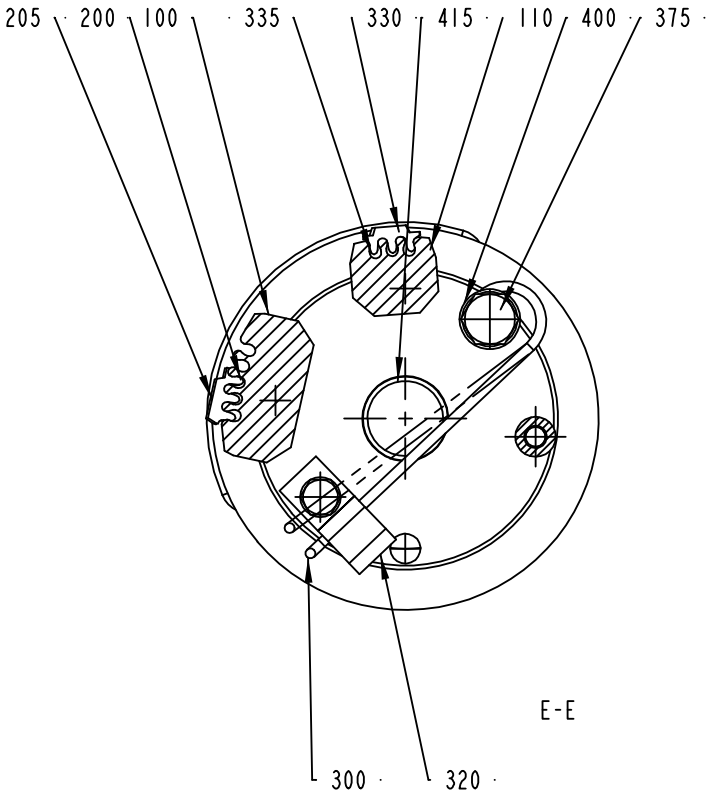

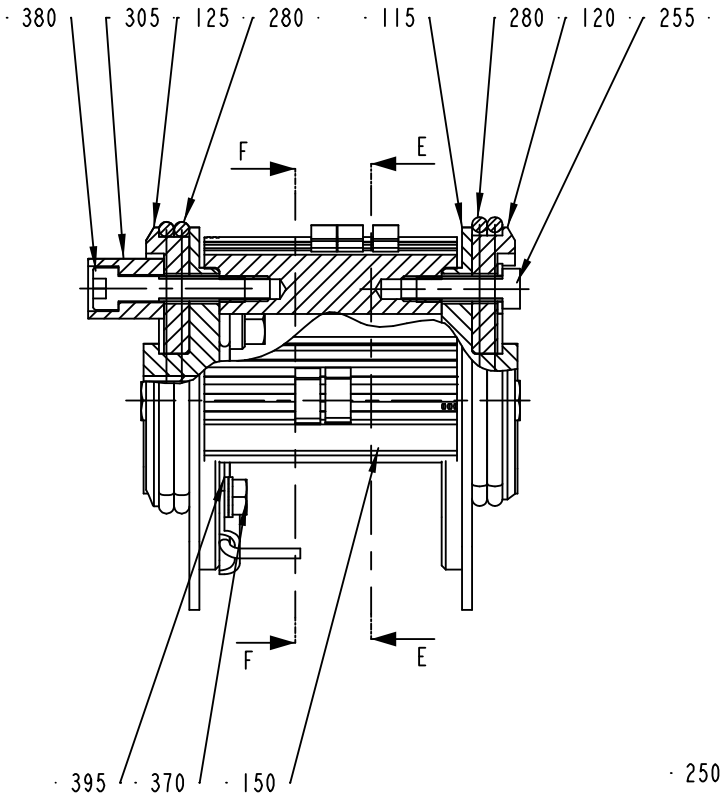

Volume: TBA 1000B HIFIN ml.

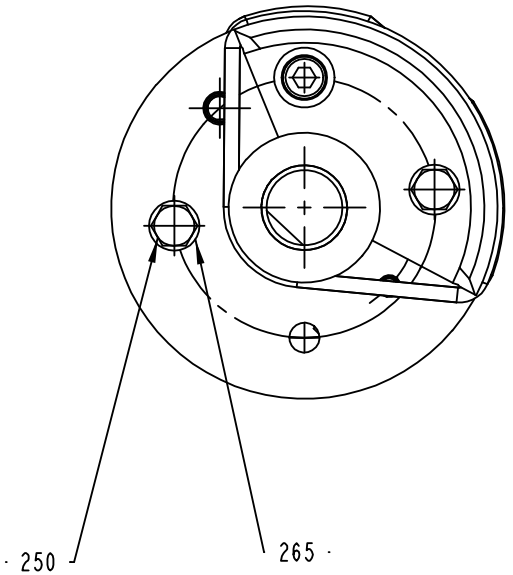

ECM: 92416 - 20011221
Group number: 293684-0200
Assembly Drawing: 293684-3_3_AB

Issue: 20020222

Pos	Part No	SP	UN	Qty	Description	Page No
TBA 0500B						
100	293395-0003	A		2	TYPE HOLDER	
110	293395-0001	A		2	TYPE HOLDER	
115	434787-0000	A		1	END SECTION	
120	292410-0000	A		1	END SECTION	
155	293676-0000	A		1	CARRIER	
200	90413-0048	A		1	CODE INSERT SET	
205	90413-0049	A		1	CODE INSERT SET	
255	312101-0331	-		7	SCREW M6S M5X20 FZB	
265	315101-0146	-		7	WASHER PLAIN, BRB, 5,3/10 H=1	
285	315202-0304	A		2	O-RING 64,5X3 MM	
410	315202-0305	A		2	O-RING 69,5X3 MM	
TBA 0500S OR TBA 0355B OR TBA 0375S OR TBA 0750S						
105	293395-0002	A		1	TYPE HOLDER	
110	293395-0001	A		1	TYPE HOLDER	
125	479237-0000	A		1	CARRIER	
140	479236-0000	A		2	END SECTION	
145	479238-0000	A		1	CARRIER	
150	293671-0000	A		1	SPACER	
250	312101-0329	-		2	SCREW M6S M5X16 FZB	
255	312101-0331	-		3	SCREW M6S M5X20 FZB	
265	315101-0146	-		5	WASHER PLAIN, BRB, 5,3/10 H=1	
275	315202-0224	A		4	O-RING 42,2X3 MM	
TBA 0750B OR TBA 1000S OR TBA 1000SQ OR TBA 1000B LOFIN						
100	293395-0003	A		1	TYPE HOLDER	
110	293395-0001	A		1	TYPE HOLDER	
115	292409-0000	A		2	END SECTION	
120	442072-0000	A		1	CARRIER	
125	292411-0000	A		1	CARRIER	
150	293671-0000	A		1	SPACER	
200	90413-0048	A		1	CODE INSERT SET	
205	90413-0049	A		1	CODE INSERT SET	
250	312101-0329	-		2	SCREW M6S M5X16 FZB	
255	312101-0331	-		3	SCREW M6S M5X20 FZB	
265	315101-0146	-		5	WASHER PLAIN, BRB, 5,3/10 H=1	
280	315202-0301	A		4	O-RING 49,5X3 MM	
TBA 1000B HIFIN						
100	293395-0003	A		1	TYPE HOLDER	
110	293395-0001	A		1	TYPE HOLDER	
115	293690-0000	A		2	END SECTION	
120	442431-0000	A		1	CARRIER	
125	293688-0000	A		1	CARRIER	
150	293671-0000	A		1	SPACER	
200	90413-0048	A		1	CODE INSERT SET	
205	90413-0049	A		1	CODE INSERT SET	
250	312101-0329	-		2	SCREW M6S M5X16 FZB	
255	312101-0331	-		3	SCREW M6S M5X20 FZB	
265	315101-0146	-		5	WASHER PLAIN, BRB, 5,3/10 H=1	
280	315202-0301	A		4	O-RING 49,5X3 MM	
Common Parts						
300	32691-0000	A		1	LOCKING SPRING	
305	33011-0000	A		1	SLEEVE	
320	1511572-0000	-		1	CLIP	
330	90413-0043	A		1	CODE INSERT SET	
330	90413-0033	A		1	CODE INSERT SET 0-9	
335	90413-0047	A		1	CODE INSERT SET	
335	90413-0044	A		1	CODE INSERT SET	
370	312101-0287	-		1	SCREW M6S M4X8 FZB	
375	312101-0364	-		1	SCREW M6S M6X10 FZB	
380	312111-0335	-		1	SCREW HEX.SOCK.HD.MC6S-TT 5X30 88 FZB	
395	315101-0136	-		2	WASHER PLAIN, BRB, 4,3/8 H=0,8	
400	315111-0153	-		1	WASHER PLAIN, TBRB 6,4/12 H=3	
415	321120-0122	A		2	BEARING BUSHING WITHOUT FL, 15X17X15 MM	

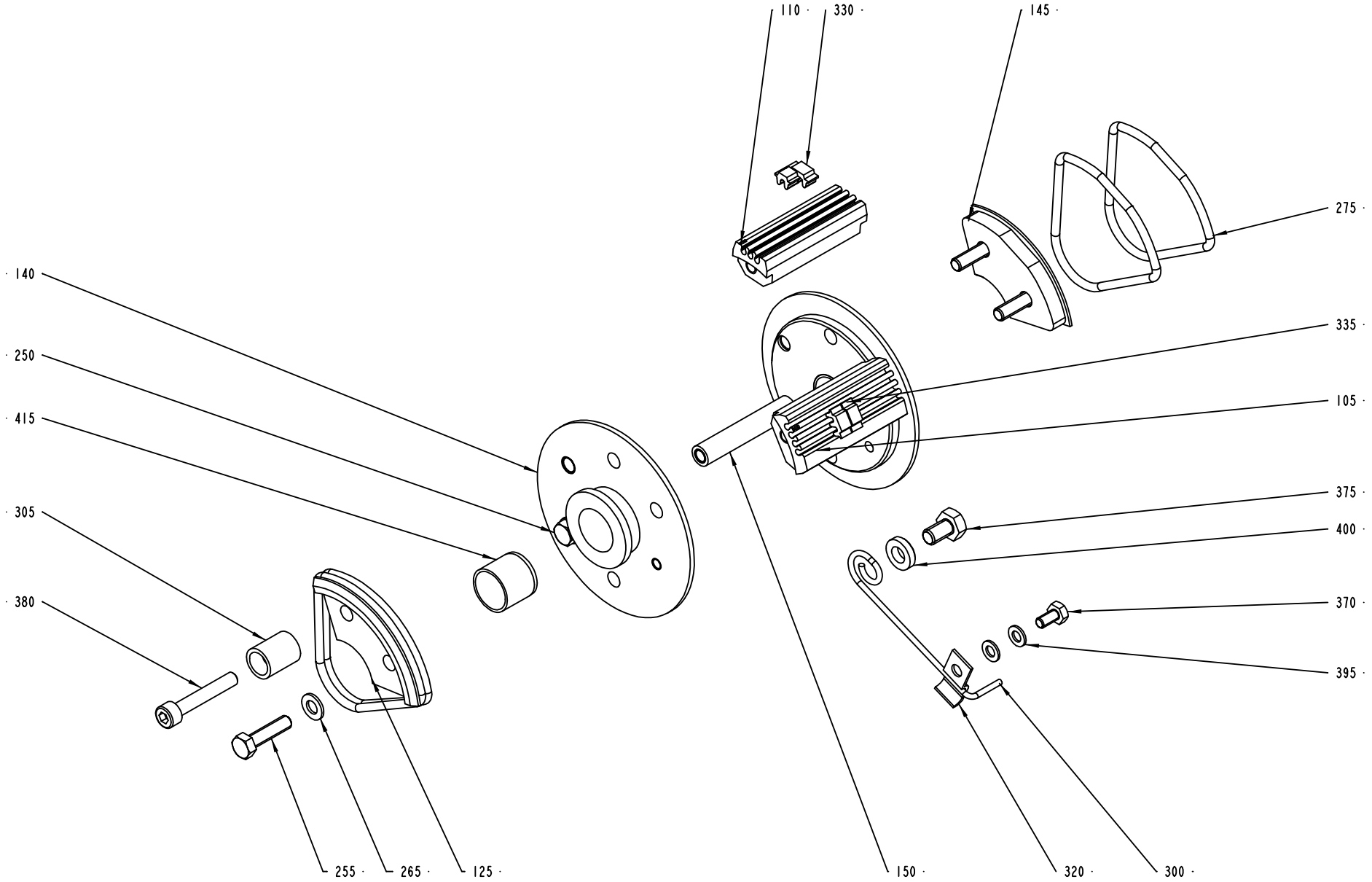
110
330
145
275
140
335
250
105
415
375
400
305
370
380
395
255
265
125
150
320
300

ECM: 92416 - 20011221
Group number: 293684-0200
Assembly Drawing: 293684-4_1_AB

Issue: 20020222

Pos	Part No	SP	UN	Qty	Description	Page No
TBA 0500B						
100	293395-0003	A		2	TYPE HOLDER	
110	293395-0001	A		2	TYPE HOLDER	
115	434787-0000	A		1	END SECTION	
120	292410-0000	A		1	END SECTION	
155	293676-0000	A		1	CARRIER	
200	90413-0048	A		1	CODE INSERT SET	
205	90413-0049	A		1	CODE INSERT SET	
255	312101-0331	-		7	SCREW M6S M5X20 FZB	
265	315101-0146	-		7	WASHER PLAIN, BRB, 5,3/10 H=1	
285	315202-0304	A		2	O-RING 64,5X3 MM	
410	315202-0305	A		2	O-RING 69,5X3 MM	
TBA 0500S OR TBA 0355B OR TBA 0375S OR TBA 0750S						
105	293395-0002	A		1	TYPE HOLDER	
110	293395-0001	A		1	TYPE HOLDER	
125	479237-0000	A		1	CARRIER	
140	479236-0000	A		2	END SECTION	
145	479238-0000	A		1	CARRIER	
150	293671-0000	A		1	SPACER	
250	312101-0329	-		2	SCREW M6S M5X16 FZB	
255	312101-0331	-		3	SCREW M6S M5X20 FZB	
265	315101-0146	-		5	WASHER PLAIN, BRB, 5,3/10 H=1	
275	315202-0224	A		4	O-RING 42,2X3 MM	
TBA 0750B OR TBA 1000S OR TBA 1000SQ OR TBA 1000B LOFIN						
100	293395-0003	A		1	TYPE HOLDER	
110	293395-0001	A		1	TYPE HOLDER	
115	292409-0000	A		2	END SECTION	
120	442072-0000	A		1	CARRIER	
125	292411-0000	A		1	CARRIER	
150	293671-0000	A		1	SPACER	
200	90413-0048	A		1	CODE INSERT SET	
205	90413-0049	A		1	CODE INSERT SET	
250	312101-0329	-		2	SCREW M6S M5X16 FZB	
255	312101-0331	-		3	SCREW M6S M5X20 FZB	
265	315101-0146	-		5	WASHER PLAIN, BRB, 5,3/10 H=1	
280	315202-0301	A		4	O-RING 49,5X3 MM	
TBA 1000B HIFIN						
100	293395-0003	A		1	TYPE HOLDER	
110	293395-0001	A		1	TYPE HOLDER	
115	293690-0000	A		2	END SECTION	
120	442431-0000	A		1	CARRIER	
125	293688-0000	A		1	CARRIER	
150	293671-0000	A		1	SPACER	
200	90413-0048	A		1	CODE INSERT SET	
205	90413-0049	A		1	CODE INSERT SET	
250	312101-0329	-		2	SCREW M6S M5X16 FZB	
255	312101-0331	-		3	SCREW M6S M5X20 FZB	
265	315101-0146	-		5	WASHER PLAIN, BRB, 5,3/10 H=1	
280	315202-0301	A		4	O-RING 49,5X3 MM	
Common Parts						
300	32691-0000	A		1	LOCKING SPRING	
305	33011-0000	A		1	SLEEVE	
320	1511572-0000	-		1	CLIP	
330	90413-0043	A		1	CODE INSERT SET	
330	90413-0033	A		1	CODE INSERT SET 0-9	
335	90413-0047	A		1	CODE INSERT SET	
335	90413-0044	A		1	CODE INSERT SET	
370	312101-0287	-		1	SCREW M6S M4X8 FZB	
375	312101-0364	-		1	SCREW M6S M6X10 FZB	
380	312111-0335	-		1	SCREW HEX.SOCK.HD.MC6S-TT 5X30 88 FZB	
395	315101-0136	-		2	WASHER PLAIN, BRB, 4,3/8 H=0,8	
400	315111-0153	-		1	WASHER PLAIN, TBRB 6,4/12 H=3	
415	321120-0122	A		2	BEARING BUSHING WITHOUT FL, 15X17X15 MM	

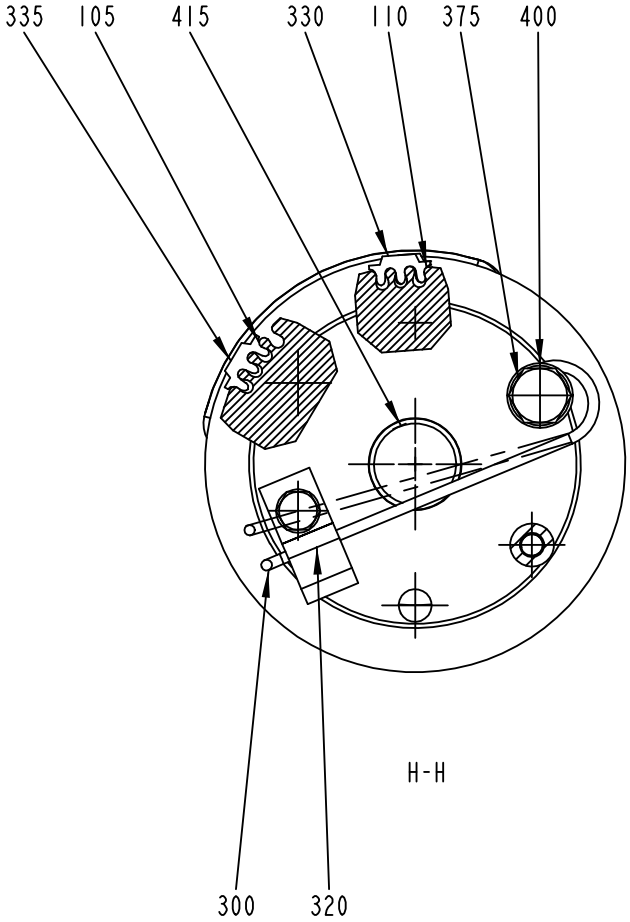

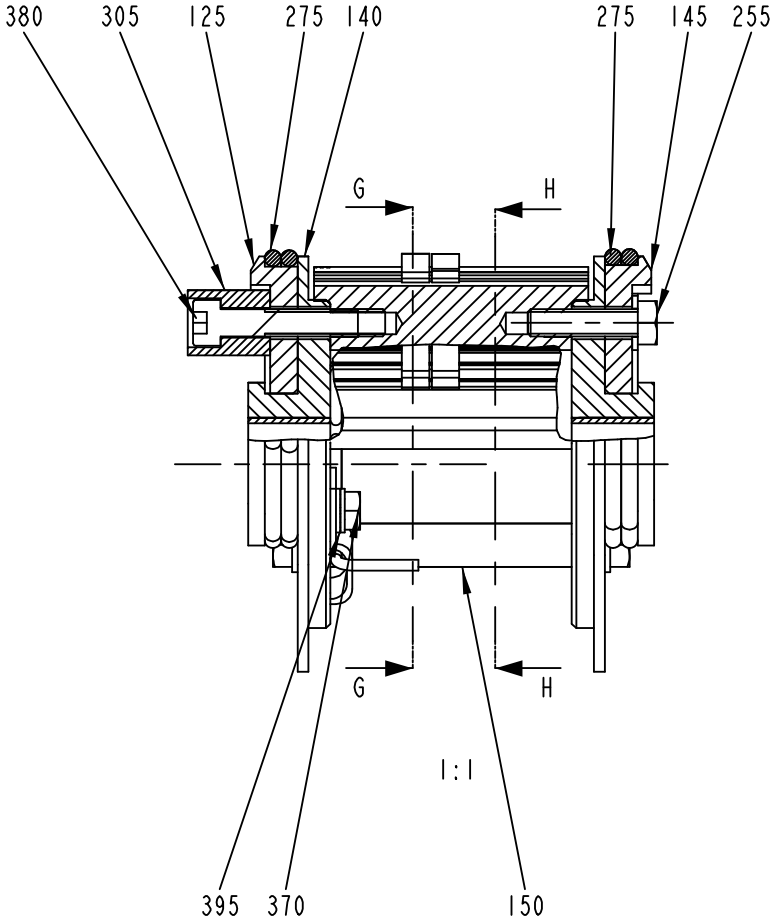

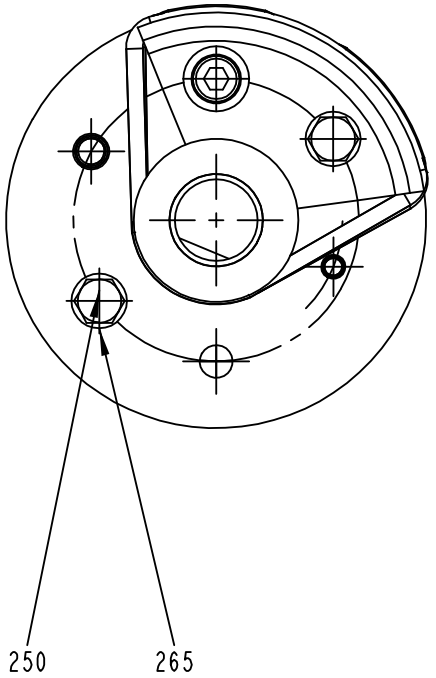

Volume: TBA- 355B. 375S. 400B. 500S. 750S.ml

ECM: 92416 - 20011221
Group number: 293684-0200
Assembly Drawing: 293684-4_2_AB

Issue: 20020222

Pos	Part No	SP	UN	Qty	Description	Page No
TBA 0500B						
100	293395-0003	A		2	TYPE HOLDER	
110	293395-0001	A		2	TYPE HOLDER	
115	434787-0000	A		1	END SECTION	
120	292410-0000	A		1	END SECTION	
155	293676-0000	A		1	CARRIER	
200	90413-0048	A		1	CODE INSERT SET	
205	90413-0049	A		1	CODE INSERT SET	
255	312101-0331	-		7	SCREW M6S M5X20 FZB	
265	315101-0146	-		7	WASHER PLAIN, BRB, 5,3/10 H=1	
285	315202-0304	A		2	O-RING 64,5X3 MM	
410	315202-0305	A		2	O-RING 69,5X3 MM	
TBA 0500S OR TBA 0355B OR TBA 0375S OR TBA 0750S						
105	293395-0002	A		1	TYPE HOLDER	
110	293395-0001	A		1	TYPE HOLDER	
125	479237-0000	A		1	CARRIER	
140	479236-0000	A		2	END SECTION	
145	479238-0000	A		1	CARRIER	
150	293671-0000	A		1	SPACER	
250	312101-0329	-		2	SCREW M6S M5X16 FZB	
255	312101-0331	-		3	SCREW M6S M5X20 FZB	
265	315101-0146	-		5	WASHER PLAIN, BRB, 5,3/10 H=1	
275	315202-0224	A		4	O-RING 42,2X3 MM	
TBA 0750B OR TBA 1000S OR TBA 1000SQ OR TBA 1000B LOFIN						
100	293395-0003	A		1	TYPE HOLDER	
110	293395-0001	A		1	TYPE HOLDER	
115	292409-0000	A		2	END SECTION	
120	442072-0000	A		1	CARRIER	
125	292411-0000	A		1	CARRIER	
150	293671-0000	A		1	SPACER	
200	90413-0048	A		1	CODE INSERT SET	
205	90413-0049	A		1	CODE INSERT SET	
250	312101-0329	-		2	SCREW M6S M5X16 FZB	
255	312101-0331	-		3	SCREW M6S M5X20 FZB	
265	315101-0146	-		5	WASHER PLAIN, BRB, 5,3/10 H=1	
280	315202-0301	A		4	O-RING 49,5X3 MM	
TBA 1000B HIFIN						
100	293395-0003	A		1	TYPE HOLDER	
110	293395-0001	A		1	TYPE HOLDER	
115	293690-0000	A		2	END SECTION	
120	442431-0000	A		1	CARRIER	
125	293688-0000	A		1	CARRIER	
150	293671-0000	A		1	SPACER	
200	90413-0048	A		1	CODE INSERT SET	
205	90413-0049	A		1	CODE INSERT SET	
250	312101-0329	-		2	SCREW M6S M5X16 FZB	
255	312101-0331	-		3	SCREW M6S M5X20 FZB	
265	315101-0146	-		5	WASHER PLAIN, BRB, 5,3/10 H=1	
280	315202-0301	A		4	O-RING 49,5X3 MM	
Common Parts						
300	32691-0000	A		1	LOCKING SPRING	
305	33011-0000	A		1	SLEEVE	
320	1511572-0000	-		1	CLIP	
330	90413-0043	A		1	CODE INSERT SET	
330	90413-0033	A		1	CODE INSERT SET 0-9	
335	90413-0047	A		1	CODE INSERT SET	
335	90413-0044	A		1	CODE INSERT SET	
370	312101-0287	-		1	SCREW M6S M4X8 FZB	
375	312101-0364	-		1	SCREW M6S M6X10 FZB	
380	312111-0335	-		1	SCREW HEX.SOCK.HD.MC6S-TT 5X30 88 FZB	
395	315101-0136	-		2	WASHER PLAIN, BRB, 4,3/8 H=0,8	
400	315111-0153	-		1	WASHER PLAIN, TBRB 6,4/12 H=3	
415	321120-0122	A		2	BEARING BUSHING WITHOUT FL, 15X17X15 MM	

Machine Type | Group Description | Used-In | Group Number | Page No

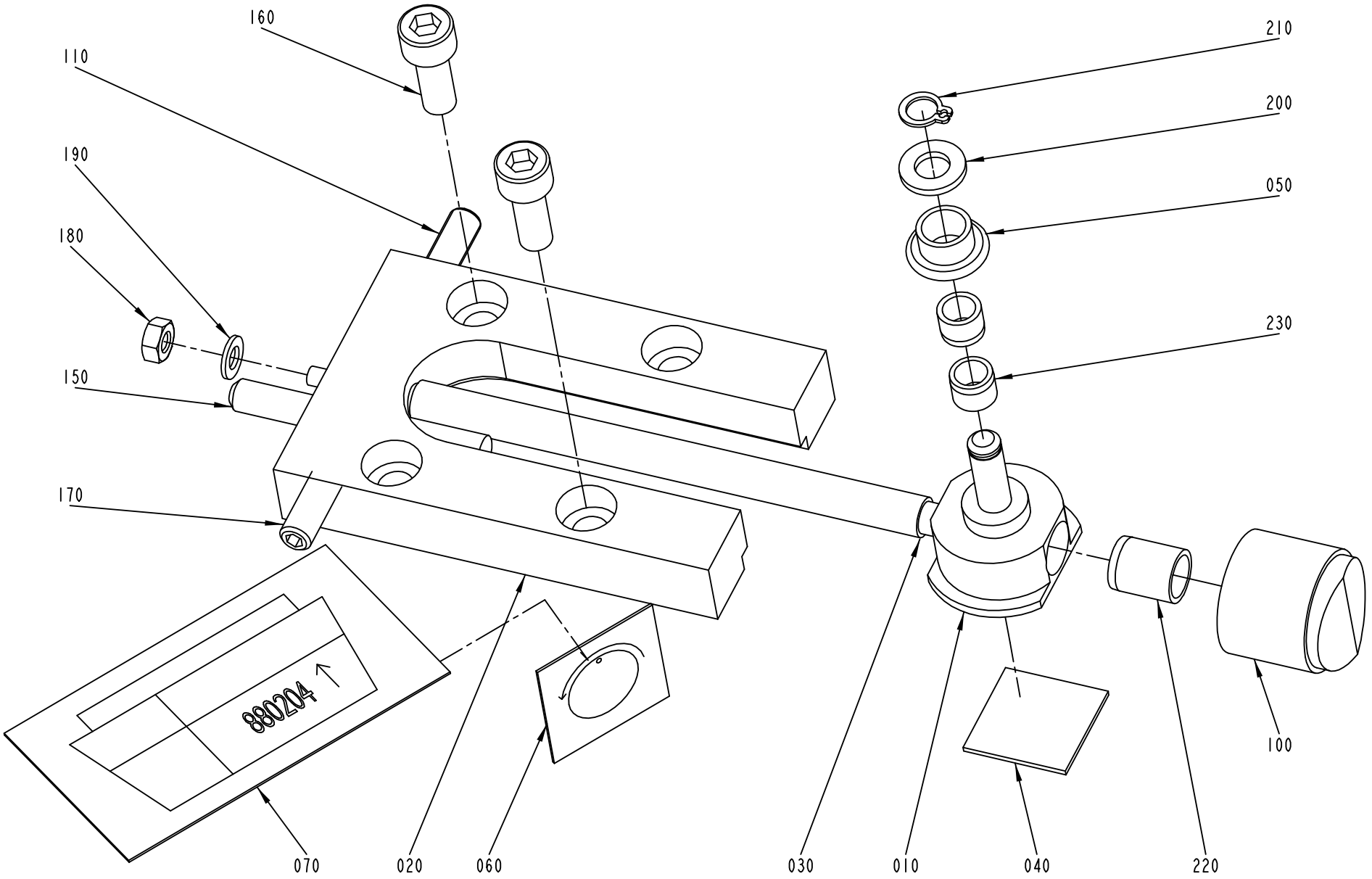
160
110
190
180
150
170
210
200
050
230
100
880204
070
020
060
030
010
040
220

ECM: 99112 - 20011129
Group number: 543143-0100
Assembly Drawing: 543143-1_1_AC

Issue: 20020222

Pos	Part No	SP	UN	Qty	Description	Page No
Common Parts						
010	526984-0000	A		1	SADDLE	
020	526985-0000	B		1	PLATE	
030	526986-0001	B		1	SHAFT	
040	527649-0000	B		1	DISTANCE RUBBER	
050	529362-0000	A		1	SPROCKET	
060	543141-0000	-		1	SIGN	
070	543142-0000	-		1	SIGN	
100	90051-0089	-		1	SHIFTER HANDLE	
110	90287-0167	-		1	SCREW SPRINGLOAD. SOCK. HEX HEAD M6X20	
150	311103-0365	-		1	PARALLELL PIN, M6, 6X50 MM	
160	312115-0368	-		2	SCREW MC6S M6X16 A280	
170	312318-0368	-		1	SCREW SOCK.SET CUP P MSK6SS M6X16 A4	
180	312605-0312	-		1	HEXAGON NUT, M6M M4 A280	
190	315105-0136	-		1	WASHER PLAIN, BRB, 4,3/8,H=0,8	
200	315105-0153	-		1	WASHER PLAIN, BRB, 6,4/12,H=1,5	
210	315751-0103	-		1	RETAIN. RING, 6	
220	321120-0100	A		1	BEARING BUSHING WITHOUT FLANGE,8/10X12	
230	321120-0101	A		2	BEARING BUSHING WITHOUT FLANGE,6/8X6	

Pos	Part No	SP	UN	Qty	Description	Page No

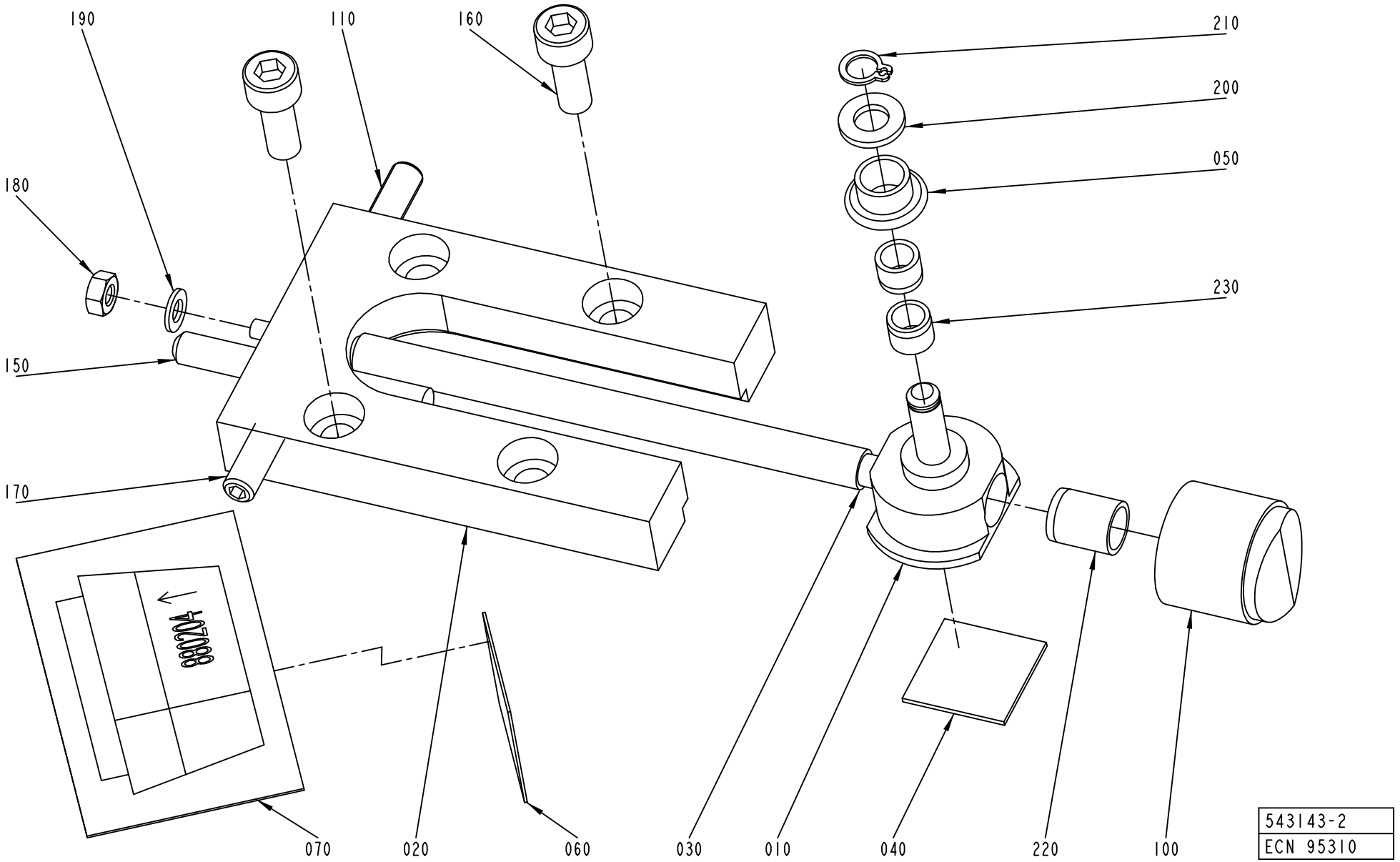
190
110
160
210
200
180
050
230
150
170
070
020
060
030
010
040
220
100
543143-2
ECN 95310

ECM: 99112 - 20011129
Group number: 543143-0100
Assembly Drawing: 543143-2_1_AB

Issue: 20020222

Pos	Part No	SP	UN	Qty	Description	Page No
Common Parts						
010	526984-0000	A		1	SADDLE	
020	526985-0000	B		1	PLATE	
030	526986-0001	B		1	SHAFT	
040	527649-0000	B		1	DISTANCE RUBBER	
050	529362-0000	A		1	SPROCKET	
060	543141-0000	-		1	SIGN	
070	543142-0000	-		1	SIGN	
100	90051-0089	-		1	SHIFTER HANDLE	
110	90287-0167	-		1	SCREW SPRINGLOAD. SOCK. HEX HEAD M6X20	
150	311103-0365	-		1	PARALLELL PIN, M6, 6X50 MM	
160	312115-0368	-		2	SCREW MC6S M6X16 A280	
170	312318-0368	-		1	SCREW SOCK.SET CUP P MSK6SS M6X16 A4	
180	312605-0312	-		1	HEXAGON NUT, M6M M4 A280	
190	315105-0136	-		1	WASHER PLAIN, BRB, 4,3/8,H=0,8	
200	315105-0153	-		1	WASHER PLAIN, BRB, 6,4/12,H=1,5	
210	315751-0103	-		1	RETAIN. RING, 6	
220	321120-0100	A		1	BEARING BUSHING WITHOUT FLANGE,8/10X12	
230	321120-0101	A		2	BEARING BUSHING WITHOUT FLANGE,6/8X6	

Pos	Part No	SP	UN	Qty	Description	Page No

BENDING UNIT

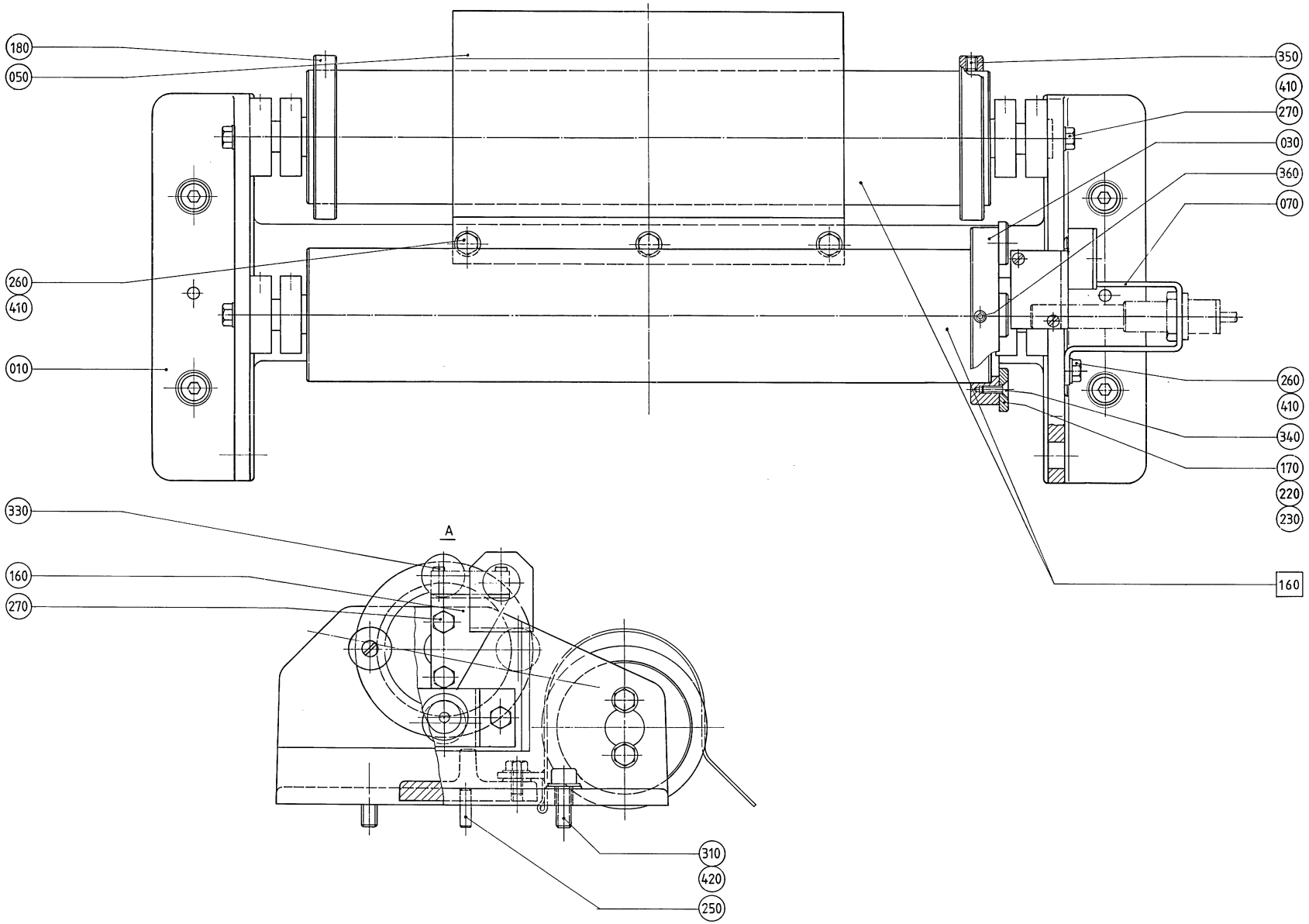

ECM: 72192 - 19990218
Group number: 445930-0100
Assembly Drawing: 445930-1_1_AA

Issue: 20020222

Pos	Part No	SP	UN	Qty	Description	Page No
Common Parts						
010	445931-0000	-		1	CANTILEVER	
030	440157-0000	-		1	MAGNET BRACKET	
050	476403-0000	-		1	HEAD PLATE	
180	250588-0000	D		2	FLANGE	
250	311102-0353	-		2	PARALLELL PIN, CP, M6, 6X20 MM	
270	312105-0368	-		8	SCREW M6S M6X16 A280	
310	312115-0451	-		4	SCREW MC6S M8X20 A280	
350	312316-0323	-		4	SCREW HEX.SOCK.SET CUP P.MSK6SS5X8 FZB	
360	312316-0362	-		3	SCREW HEX.SOCK.SET CUP P.MSK6SS6X8 FZB	
420	315105-0165	-		4	WASHER PLAIN, BRB, 8,4/16,H=1,5	
F160	A440135-0100	-		2	BENDING ROLLER	**641**

Pos	Part No	SP	UN	Qty	Description	Page No

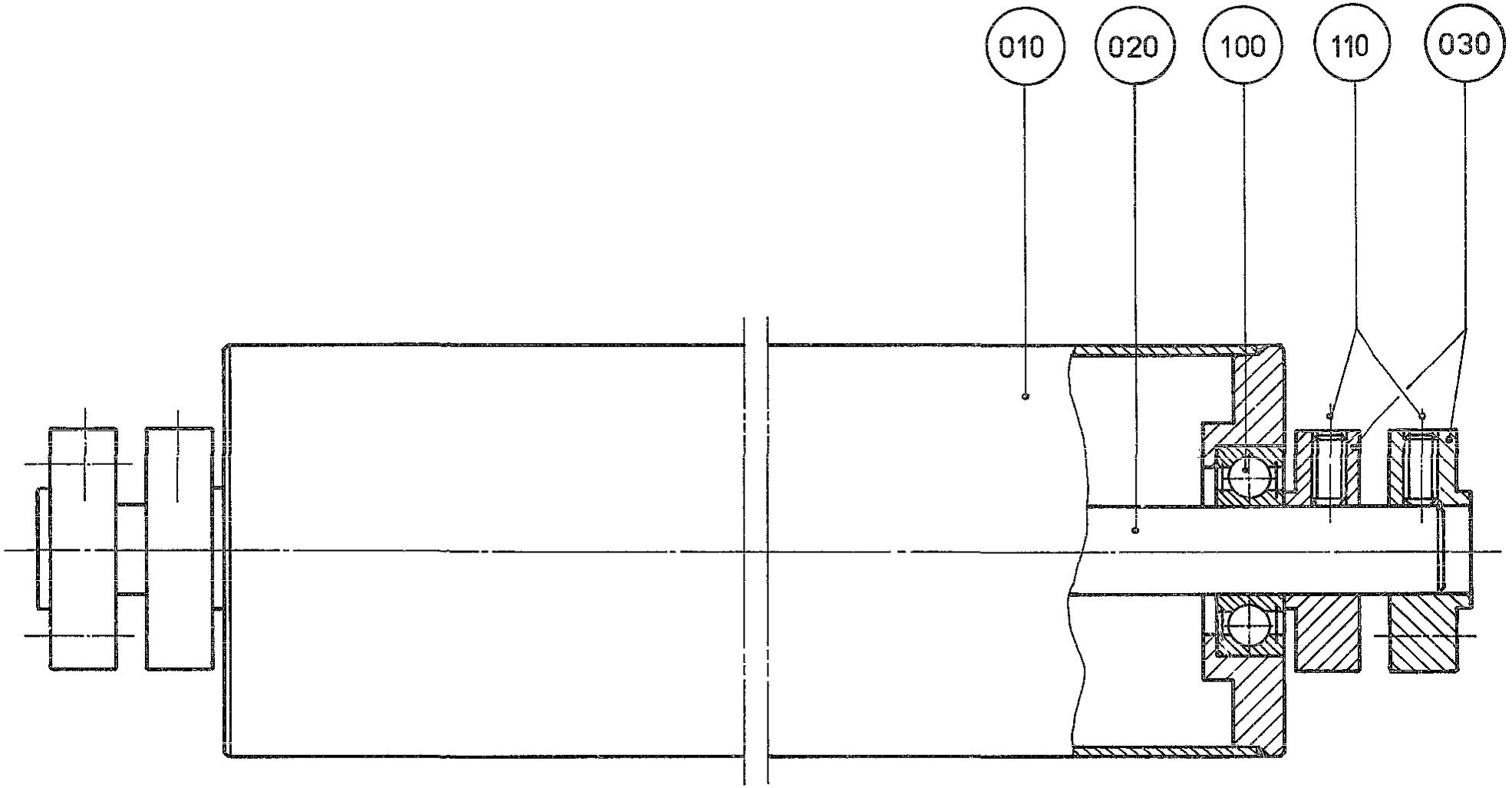
010
020
100
110
030

ECM: 72192 - 19990218
Group number: 440135-0100
Assembly Drawing: 440135-1_1_AA

Issue: 20020222

Pos	Part No	SP	UN	Qty	Description	Page No
Common Parts						
010	440136-0001	D		1	ROLL	
020	440137-0001	D		1	SHAFT	
030	440138-0000	-		4	LOCKING CIRCLIP	
100	321313-0102	C		2	BALL BEARING, 2 SEALS, 15X35X11 MM	
110	312306-0366	-		4	SCREW HEX.SOCK.SET FLAT P.MP6SS 6X12FZB	

Pos	Part No	SP	UN	Qty	Description	Page No

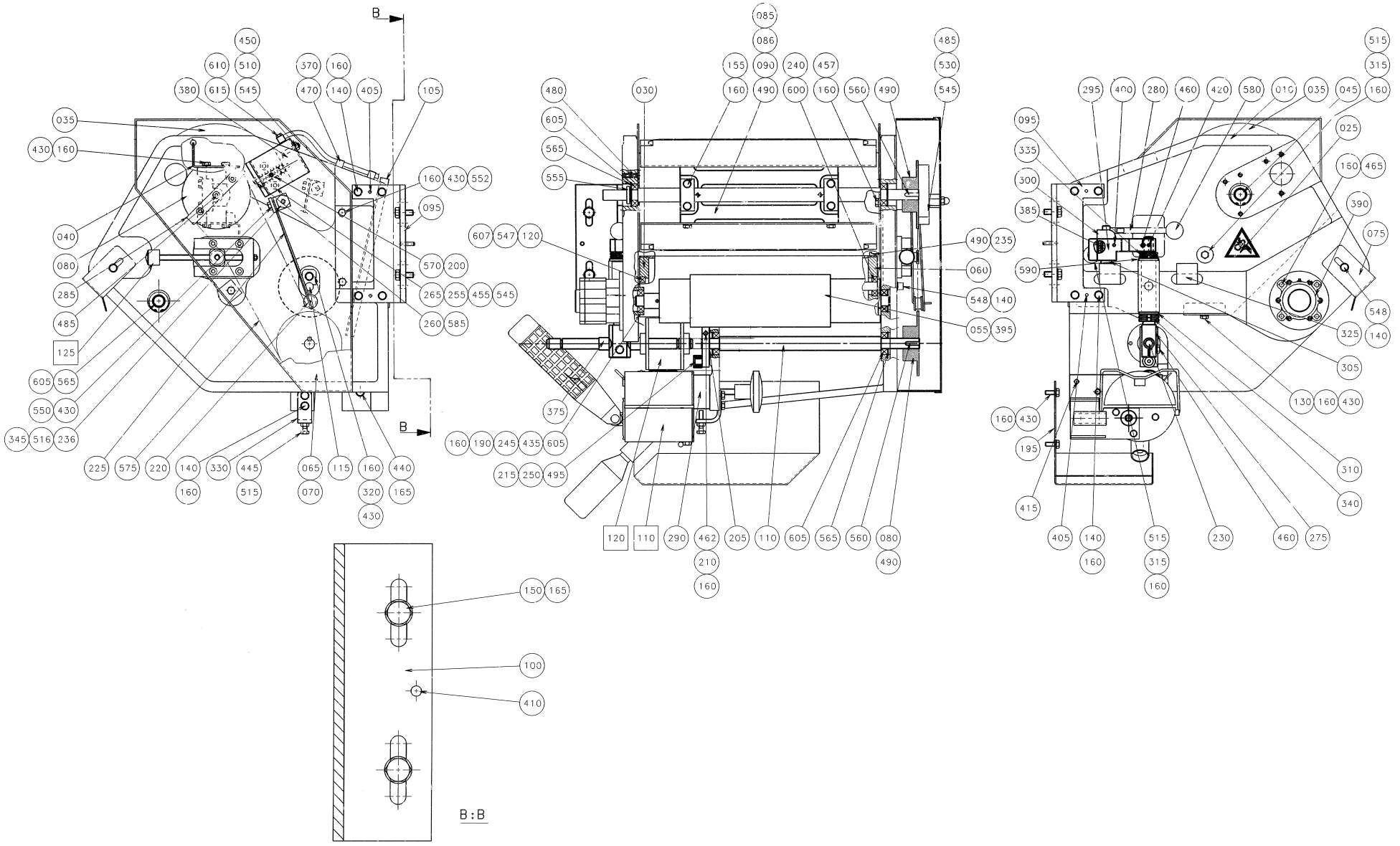
B
B
B:B
450
610
510
380
615
545
370
160
470
140
405
105
035
430
160
160
430
552
095
040
080
285
485
125
605
565
550
430
345
516
236
570
200
265
255
455
545
260
585
225
575
220
140
160
330
445
515
065
070
115
160
320
430
440
165
085
086
155
090
240
457
160
490
600
160
560
490
485
530
545
480
030
605
565
555
607
547
120
490
235
060
548
140
055
395
375
160
190
245
435
605
215
250
495
120
110
290
462
210
160
205
110
605
565
560
080
490
515
315
295
400
280
460
420
580
010
035
045
160
095
335
300
385
590
025
150
465
390
075
548
140
325
305
130
160
430
160
430
195
415
310
340
405
140
160
515
315
160
230
460
275
150
165
100
410

ECM: 71843 - 19981215
Group number: 1361950-0100
Assembly Drawing: 1361950-1_1_AA

Issue: 20020222

Pos	Part No	SP	UN	Qty	Description	Page No
Common Parts						
010	538236-0002	-		1	MACHINE BODY	
025	359705-0001	-		1	WARNING SIGN ISO, ENTAGLEMENT	
030	293621-0002	-		1	BENDING ROLLER	
035	293624-0002	-		2	PROTECTION PLATE	
040	458107-0000	C		2	CREASE FORMER	
045	486960-0002	D		1	SHAFT	
055	532719-0002	D		1	FEEDING ROLLER	
060	533449-0002	D		1	BENDING ROLLER	
065	538237-0001	-		1	LID	
070	538238-0000	-		1	FRAME	
075	576220-0000	-		1	PAPER SUPPORT	
080	32630-0000	C		2	SPROCKET	
085	543139-0000	-		1	SPACER	
086	539338-0000	-		2	CAP	
090	458194-0001	C		4	WASHER	
090	458194-0002	C		4	WASHER	
090	458194-0003	C		4	WASHER	
095	486962-0003	-		2	FASTENING BRACKET	
105	538239-0000	-		1	HEAD PLATE	
110	486966-0002	-		1	SHAFT FOR CARRIER	
115	486968-0002	-		1	SHAFT FOR BENDINGROLLER	
120	533457-0002	-		1	SHAFT	
130	572243-0000	-		1	PROTECTION	
140	312105-0368	-		12	SCREW M6S M6X16 A280	
150	312105-0451	-		4	SCREW M6S 8X20 A280	
155	312105-0372	-		8	SCREW M6S M6X25 A280	
160	315105-0153	-		42	WASHER PLAIN, BRB, 6,4/12,H=1,5	
165	315105-0165	-		5	WASHER PLAIN, BRB, 8,4/16,H=1,5	
190	522408-0000	-		1	BEARING HOUSING	
195	544380-0000	-		1	WASTE CHUTE	
200	90335-0037	C		1	COMPRESSION SPRING, NO. 22900	
205	533458-0000	-		1	WASHER	
210	32925-0000	C		1	CARRIER	
215	32926-0000	C		1	ROLL	
220	33182-0000	C		1	ROLL	
225	33183-0000	C		1	SPRING	
230	228653-0000	C		1	SHAFT	
235	544706-0000	-		2	FLANGE	
236	293645-0000	D		1	BRACKET	
240	293646-0001	C		1	WASHER	
245	293646-0002	C		1	WASHER	
250	293674-0000	C		1	DOWEL	
255	595204-0000	D		1	CYLINDER BRACKET	
260	595202-0000	D		1	SHAFT	
265	595203-0000	D		1	LACE	
275	450497-0000	C		1	SHAFT	
280	450500-0000	-		1	DOWEL	
285	457430-0000	-		1	BEATER	
290	292047-0000	-		1	CANTILEVER	
295	464010-0000	-		1	ARM	
300	464012-0000	D		1	CURVE	
305	464011-0000	C		1	LOCK STUD	
310	B466430-0000	-		1	BUSHING	
	321111-0212	-		*1*	*BEAR.BUSHING WITH FLANGE, 15/21X15 MM*	
315	B476377-0000	-		2	SCREW	
	312105-0371	-		*1*	*SCREW M6S M6X22 A280*	
320	486967-0000	-		1	SHEET	
325	486969-0000	-		2	GUIDE LUG	
330	486971-0000	-		1	ANGLE	
335	B532082-0000	-		2	ROUND NUT	
	312805-0102	-		*1*	*NUT ROUND WITH SLOTS M15X1 FE*	
340	B532083-0000	-		2	ROUND NUT	
	312805-0103	-		*1*	*NUT ROUND WITH SLOTS M17X1 FE*	
345	533459-0000	-		1	SCREW	
370	90165-0057	-		2	PIPE CLIP FOR TUBE D=6 MM	
375	90166-0059	C	MM	18	HOSE PVC 12/16MM TRANSP.	
380	90450-0454	C		1	CYLINDER	
385	90335-0064	-		1	SPRING	
390	90347-0054	D		1	DAMPER	
395	311103-0273	-		1	PIN,STRAIGHT M6 4X22 RFR	
400	311103-0274	-		1	PARALLELL PIN, M6, 4X25 MM	
405	311103-0310	-		4	PARALLELL PIN, M6, 5X20 MM	
410	311103-0353	-		2	PARALLELL PIN, M6, 6X20 MM	
415	311103-0357	-		1	PARALLELL PIN, M6, 6X30 MM	
420	311202-0241	-		1	PIN, TAPERED, KP, 4X25 GROUND	
430	312105-0366	-		16	SCREW M6S M6X12 A280	
435	312105-0370	-		4	SCREW M6S M6X20 A280	
440	312105-0457	-		1	SCREW M6S M8X35 A280	
445	312109-0374	-		1	SCREW M6S M6X30 A280	
450	312111-0337	-		2	SCREW HEX.SOCK.HD.MC6S-TT 5X35 88 FZB	
455	312111-0335	-		2	SCREW HEX.SOCK.HD.MC6S-TT 5X30 88 FZB	
457	312111-0364	-		3	SCREW HEX.SOCK.HD.MC6S-TT 6X10 88 FZB	
460	312115-0370	-		2	SCREW MC6S M6X20 A280	

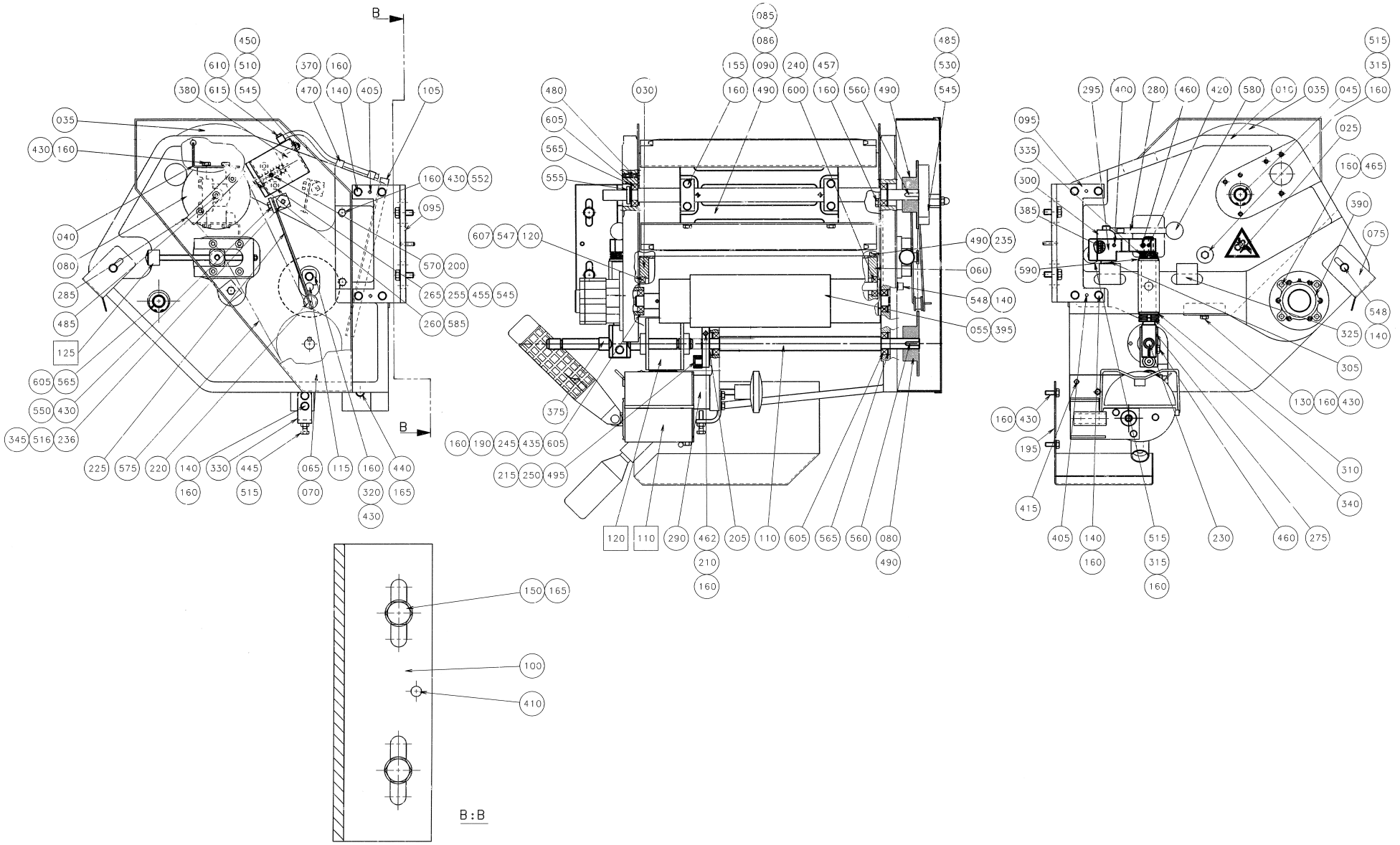
B
B
B:B
450
610
510
380
615
545
370
160
470
140
405
105
035
430
160
160
430
552
095
040
080
285
485
125
605
565
550
430
345
516
236
570
200
265
255
455
545
260
585
225
575
220
140
160
330
445
515
065
070
115
160
320
430
440
165
085
086
155
090
240
457
160
490
600
160
560
490
485
530
545
480
030
605
565
555
607
547
120
490
235
060
548
140
055
395
375
160
190
245
435
605
215
250
495
120
110
290
462
210
160
205
110
605
565
560
080
490
515
315
295
400
280
460
420
580
010
035
045
160
095
335
300
385
590
025
150
465
390
075
548
140
325
305
130
160
430
160
430
195
415
310
340
405
140
160
515
315
160
230
460
275
150
165
100
410

Pos	Part No	SP	UN	Qty	Description	Page No
Common Parts (Cont'd)						
470	312125-0285	-		2	SCREW SLOT.PAN HD. MCS 4X6 A480	
480	312155-0329	-		4	SCREW HEX.SOCK.COUNT.MF6S M5X16 A280	
485	312155-0333	-		3	SCREW HEX.SOCK.COUNT.MF6S M5X25 A280	
490	312318-0323	-		8	SCREW SOCK.SET CUP P MSK6SS M5X8 A4	
495	312318-0362	-		1	SCREW SOCK.SET CUP P MSK6SS M6X8 A4	
510	312605-0314	-		2	HEXAGON NUT, M6M M5 A280	
515	312605-0316	-		3	HEXAGON NUT, M6M M6 A280	
516	312705-0316	-		1	NUT HEX. DOMED CAP MHM-6 M6 A280	
530	312812-0314	-		2	HEXAGON NUT, NY-LOCK M5 A480	
545	315105-0146	-		6	WASHER PLAIN, BRB, 5,3/10,H=1	
547	315105-0173	-		2	WASHER PLAIN, BRB, 10,5/22,H=2	
548	315115-0153	-		2	WASHER PLAIN, TBRB 6,4/12 H=3	
550	315121-0153	-		1	WASHER PLAIN, TBRSB 6,4/22 H=4	
552	315125-0153	-		4	WASHER PLAIN ROUND,CHAMF. 6,4/22, H=4	
555	315220-0121	C		1	V-RINGS 12,5X18,5X7,7 MM V-14S	
560	315701-0201	C		2	PARALLEL KEY W. ROUND ENDS 5X5X20 MM	
565	315752-0123	C		5	RETAIN. RING, 32	
570	315755-0801	C		1	LOCKING WASHER 8	
575	318207-0168	C		1	ROLLER CHAIN, SINGLE 6MM-168	
580	318800-0103	-		1	HANDLES,SPHERICAL KNOB,INT.THRE.,D.25-M6	
585	321111-0135	C		1	BEAR.BUSHING WITH FLANGE, 10/16X10 MM	
590	321111-0212	C		1	BEAR.BUSHING WITH FLANGE, 15/21X15 MM	
600	321308-0101	C		2	BALL BEARING, 1 SEAL, 12X28X8 MM	
605	321308-0202	C		6	BALL BEARING, 2 SEALS, 15X32X9 MM	
607	321316-0200	C		2	BALL BEARING, 2 SEALS, 10X35X11 MM	
610	342980-0113	-		1	BANJO-CONNECTION,RING 6/4-G1/8"	
615	342980-0303	-		1	BANJO-HOLLOW BOLT COUPL,EXT.THR.01-G1/8"	
F110	A458192-0300	-		1	INK UNIT SS	**647**
F120	A293685-0200	-		2	PRINTING WHEEL SS	**649, 651**
F125	A543143-0100	-		1	ADJUSTMENT DEVICE	**635, 637**

Pos	Part No	SP	UN	Qty	Description	Page No

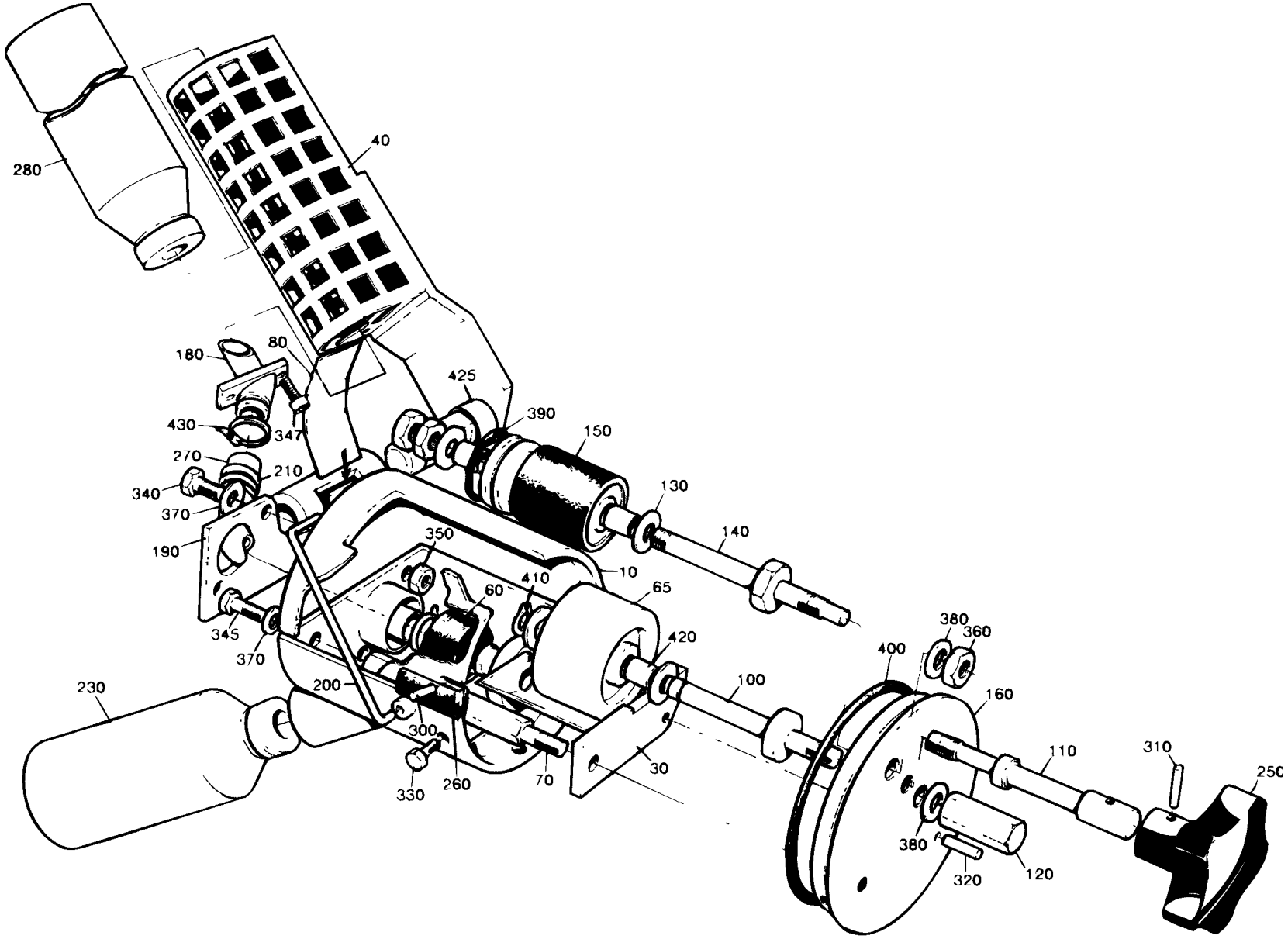
280
40
180
80
425
390
150
430
347
270
210
130
340
370
140
190
350
10
410
65
60
345
370
420
380
360
400
230
200
100
160
300
110
310
250
30
330
260
70
380
320
120

ECM: 99740 - 20011105
Group number: 458192-0300
Assembly Drawing: 458192-3_1_AA

Issue: 20020222

Pos	Part No	SP	UN	Qty	Description	Page No
TBA/8						
230	90050-0008	A		1	BOTTLE	
Common Parts						
010	458364-0000	B		1	COVER	
030	297210-0000	B		1	INK WELL	
040	476356-0000	B		1	HOLDER FOR INK BOTTLE	
060	445542-0000	A		1	MANTEL RUBBER	
065	450355-0000	A		1	INK ROLLER	
070	33010-0000	B		1	SCREW	
080	35547-0000	B		1	SPRING	
100	292044-0000	A		1	SHAFT	
110	293667-0000	A		1	DOWEL	
120	436927-0000	B		1	NUT	
130	293669-0001	A		4	WASHER	
130	293669-0004	A		2	WASHER	
130	293669-0003	A		2	WASHER	
130	293669-0002	A		2	WASHER	
140	293670-0000	A		1	SHAFT	
150	B543135-0000	A		1	INK TRANSFER ROLLER	
	321120-0100	-		*1*	*BEARING BUSHING WITHOUT FLANGE,8/10X12*	
	90153-0050	-		*1*	*ADHESIVE*	
160	297213-0000	B		1	END SECTION	
180	476355-0000	B		1	CANNULAR TUBE	
190	456772-0000	B		1	PIVOT BRACKET	
200	434747-0000	A		1	BOW CLAMP	
210	537308-0000	B		1	SPRING	
250	90051-0077	-		1	HANDLE	
260	90143-0029	-	MM	295	STRIP	
270	90166-0138	-	MM	100	HOSE	
280	90299-0072	A		48	INK	
300	311103-0236	-		2	PARALLELL PIN, M6, 3X16 MM	
310	311103-0238	-		1	PARALLELL PIN, M6, 3X20 MM	
320	311103-0270	-		1	PARALLELL PIN, M6, 4X16 MM	
330	312105-0291	-		3	SCREW M6S M4X12 A280	
340	312105-0327	-		2	SCREW M6S M5X12 A280	
345	312105-0329	-		1	SCREW M6S M5X16 A280	
347	312115-0287	-		2	SCREW MC6S M4X8 A280	
350	312605-0314	-		2	HEXAGON NUT, M6M M5 A280	
360	312605-0318	-		3	HEXAGON NUT, M6M M8 A280	
370	315105-0146	-		3	WASHER PLAIN, BRB, 5,3/10,H=1	
380	315105-0165	-		2	WASHER PLAIN, BRB, 8,4/16,H=1,5	
390	315202-0218	A		1	O-RING 26,2X3 MM	
400	315202-0309	A		1	O-RING 89,5X3 MM	
410	315750-0105	-		1	RETAIN. RING, 8	
420	321120-0100	A		2	BEARING BUSHING WITHOUT FLANGE,8/10X12	
425	321120-0109	A		2	BEARING BUSHING WITHOUT FLANGE,12/14X10	
430	352113-0101	-		1	CLIP STRIP, 92X2,5 MM	

Machine Type | Group Description | Used-In | Group Number | Page No

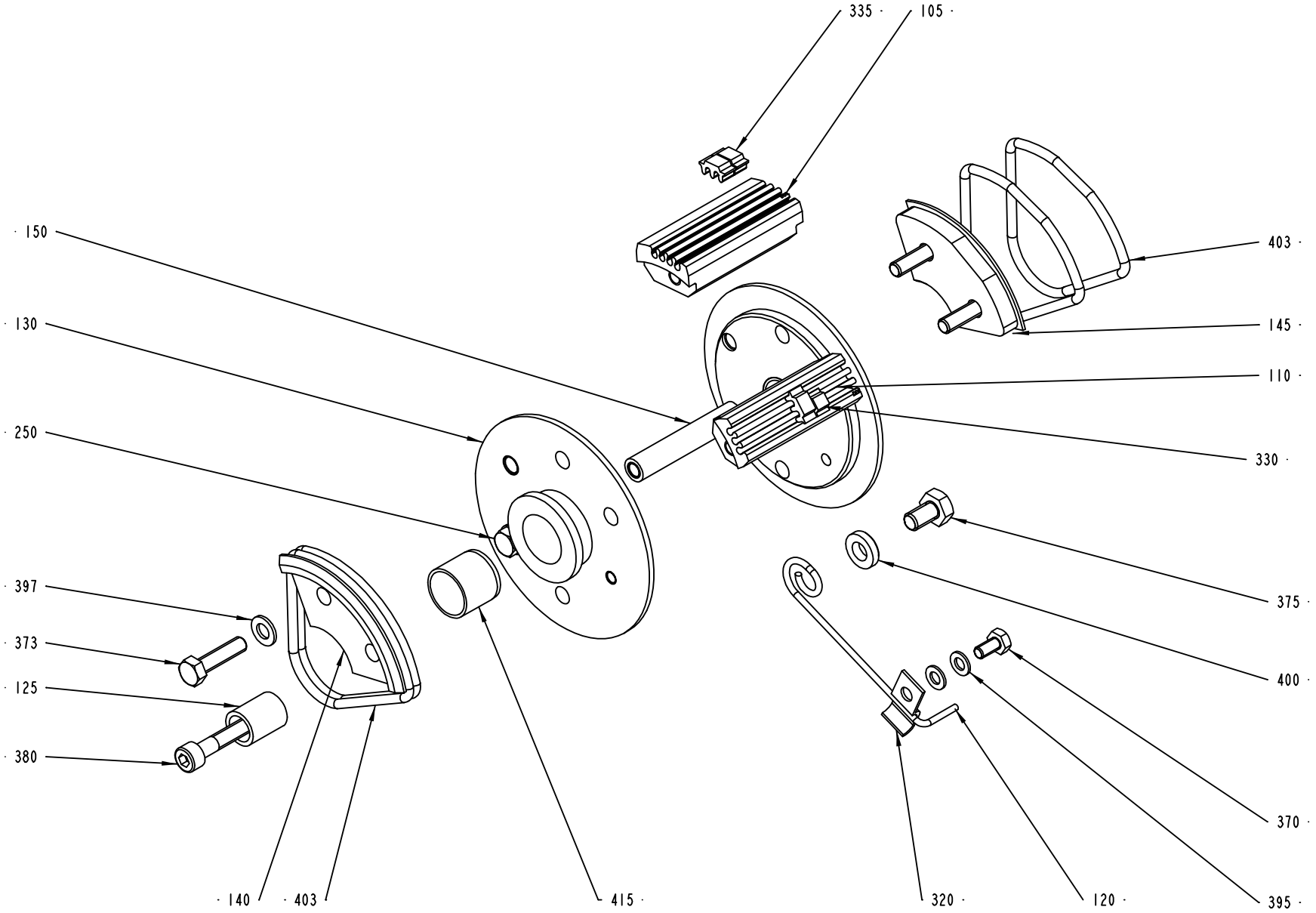
335
105
150
403
130
145
110
250
330
375
397
373
400
125
380
370
140
403
415
320
120
395

ECM: 102361 - 20011206
Group number: 293685-0200
Assembly Drawing: 293685-2_1_AB

Issue: 20020222

Pos	Part No	SP	UN	Qty	Description	Page No
0375S						
105	293395-0002	A		1	TYPE HOLDER	
110	293395-0001	A		1	TYPE HOLDER	
130	479236-0000	A		2	END SECTION	
140	479239-0000	A		1	CARRIER	
145	479240-0000	A		1	CARRIER	
150	293671-0000	A		1	SPACER	
250	312101-0329	-		2	SCREW M6S M5X16 FZB	
373	312101-0331	-		3	SCREW M6S M5X20 FZB	
397	315101-0146	-		5	WASHER PLAIN, BRB, 5,3/10 H=1	
403	315202-0224	A		4	O-RING 42,2X3 MM	
Common Parts						
120	32691-0000	A		1	LOCKING SPRING	
125	33011-0000	A		1	SLEEVE	
320	90165-0010	-		1	CLIP	
330	90413-0043	A		1	CODE INSERT SET	
330	90413-0033	A		1	CODE INSERT SET 0-9	
335	90413-0044	A		1	CODE INSERT SET	
335	90413-0047	A		1	CODE INSERT SET	
370	312101-0287	-		1	SCREW M6S M4X8 FZB	
375	312101-0364	-		1	SCREW M6S M6X10 FZB	
380	312111-0335	-		1	SCREW HEX.SOCK.HD.MC6S-TT 5X30 88 FZB	
395	315101-0136	-		1	WASHER PLAIN, BRB, 4,3/8 H=0,8	
400	315111-0153	-		1	WASHER PLAIN, TBRB 6,4/12 H=3	
415	321120-0122	A		2	BEARING BUSHING WITHOUT FL, 15X17X15 MM	

Pos	Part No	SP	UN	Qty	Description	Page No

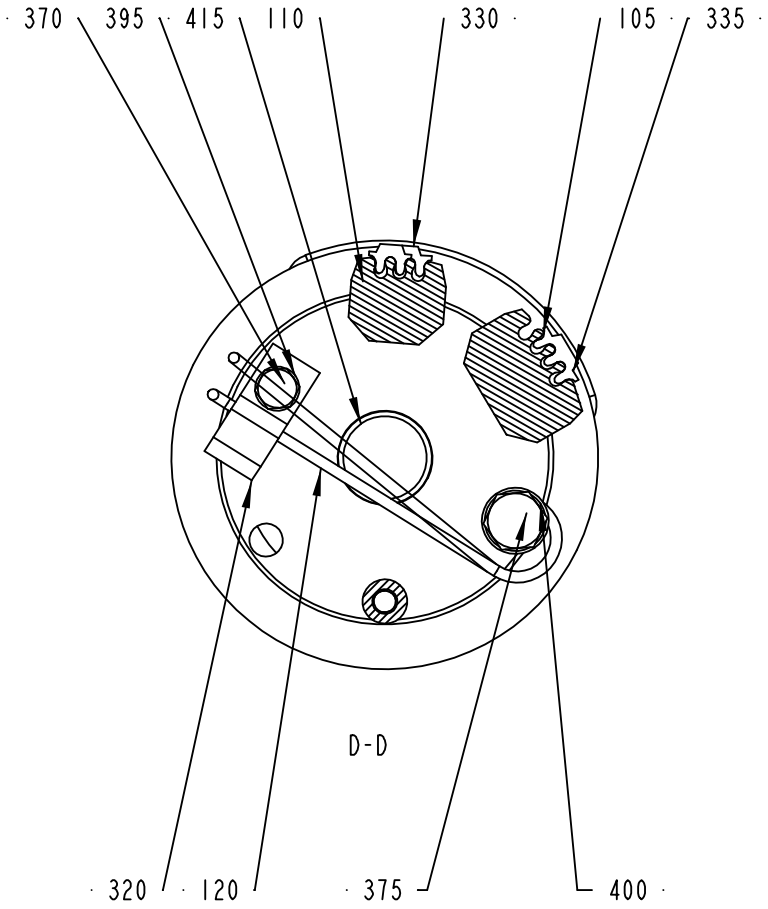

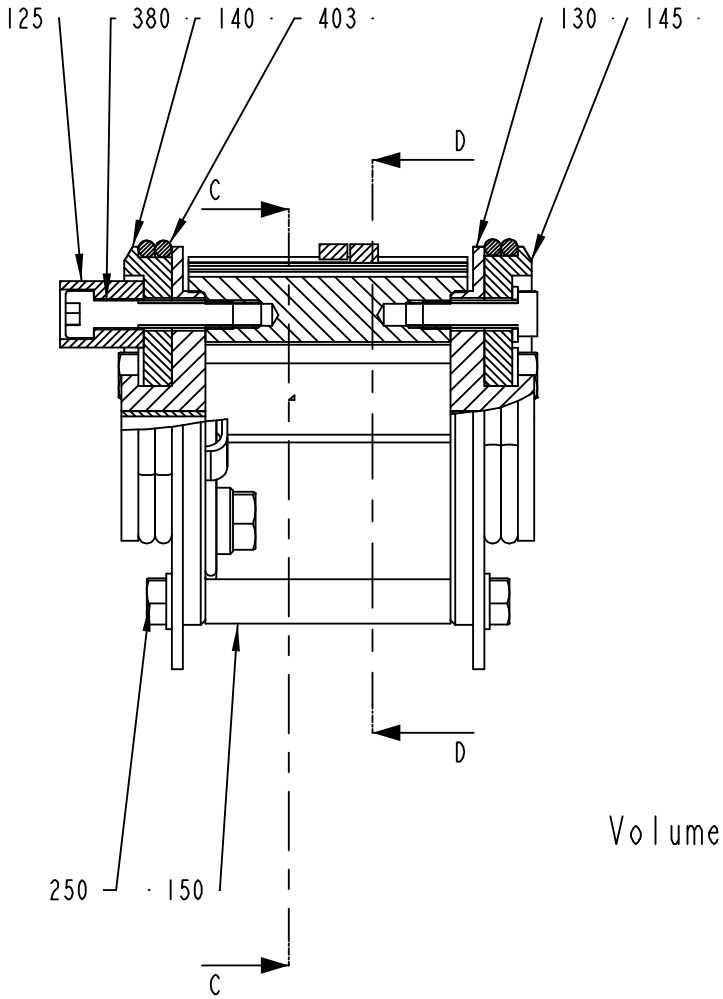

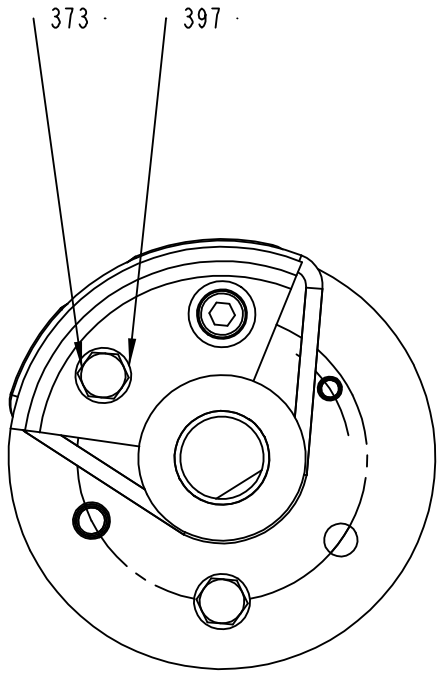

Volume: 375S ml.

ECM: 102361 - 20011206
Group number: 293685-0200
Assembly Drawing: 293685-2_2_AB

Issue: 20020222

Pos	Part No	SP	UN	Qty	Description	Page No
0375S						
105	293395-0002	A		1	TYPE HOLDER	
110	293395-0001	A		1	TYPE HOLDER	
130	479236-0000	A		2	END SECTION	
140	479239-0000	A		1	CARRIER	
145	479240-0000	A		1	CARRIER	
150	293671-0000	A		1	SPACER	
250	312101-0329	-		2	SCREW M6S M5X16 FZB	
373	312101-0331	-		3	SCREW M6S M5X20 FZB	
397	315101-0146	-		5	WASHER PLAIN, BRB, 5,3/10 H=1	
403	315202-0224	A		4	O-RING 42,2X3 MM	
Common Parts						
120	32691-0000	A		1	LOCKING SPRING	
125	33011-0000	A		1	SLEEVE	
320	90165-0010	-		1	CLIP	
330	90413-0043	A		1	CODE INSERT SET	
330	90413-0033	A		1	CODE INSERT SET 0-9	
335	90413-0044	A		1	CODE INSERT SET	
335	90413-0047	A		1	CODE INSERT SET	
370	312101-0287	-		1	SCREW M6S M4X8 FZB	
375	312101-0364	-		1	SCREW M6S M6X10 FZB	
380	312111-0335	-		1	SCREW HEX.SOCK.HD.MC6S-TT 5X30 88 FZB	
395	315101-0136	-		1	WASHER PLAIN, BRB, 4,3/8 H=0,8	
400	315111-0153	-		1	WASHER PLAIN, TBRB 6,4/12 H=3	
415	321120-0122	A		2	BEARING BUSHING WITHOUT FL, 15X17X15 MM	

Pos	Part No	SP	UN	Qty	Description	Page No

PAPER REEL HOLDER

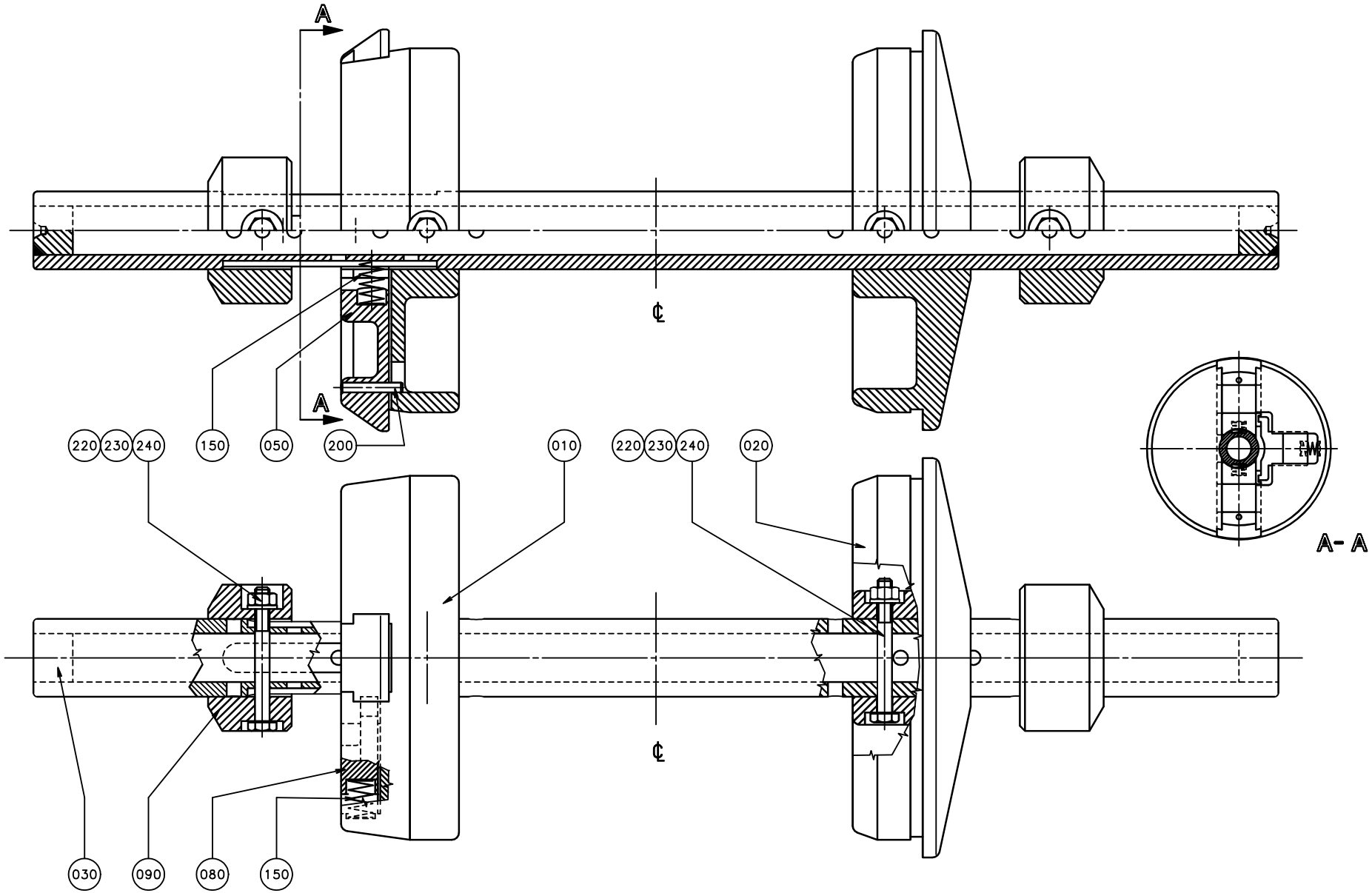

Pos	Part No	SP	UN	Qty	Description	Page No
TBA 0500B OR TBA 0750B OR TBA 1000B						
010	272814-0000	C		1	SLEEVE	
020	272815-0001	C		1	SLEEVE	
050	575002-0000	C		2	PLUNGER	
220	312101-0381	-		2	SCREW M6S M6X55 FZB	
230	312812-0316	-		2	HEXAGON NUT, NY-LOCK M6 A480	
240	315101-0153	-		2	WASHER PLAIN, BRB, 6,4/12 H=1,5	
TBA 0500S OR TBA 0355B OR TBA 0375S						
010	272814-0000	C		1	SLEEVE	
020	272815-0001	C		1	SLEEVE	
050	575002-0000	C		2	PLUNGER	
090	440259-0000	D		2	RETAINING RING	
220	312101-0381	-		4	SCREW M6S M6X55 FZB	
230	312812-0316	-		4	HEXAGON NUT, NY-LOCK M6 A480	
240	315101-0153	-		4	WASHER PLAIN, BRB, 6,4/12 H=1,5	
TBA 1000SQ						
010	272814-0000	C		1	SLEEVE	
020	272815-0001	C		1	SLEEVE	
050	575002-0000	C		2	PLUNGER	
090	574051-0000	D		2	RETAINING RING	
TBA 0750S						
010	272814-0000	C		1	SLEEVE	
020	272815-0001	C		1	SLEEVE	
050	575002-0000	C		2	PLUNGER	
090	544277-0000	D		2	RETAINING RING	
210	311112-0350	-		2	PIN, STRAIGHT SLOTTED SPRING FRP 6X55	
220	312101-0381	-		2	SCREW M6S M6X55 FZB	
230	312812-0316	-		2	HEXAGON NUT, NY-LOCK M6 A480	
240	315101-0153	-		2	WASHER PLAIN, BRB, 6,4/12 H=1,5	
TBA 1000S						
010	569944-0000	C		1	SLEEVE	
020	569945-0000	C		1	SLEEVE	
050	575003-0000	C		2	PLUNGER	
220	312101-0381	-		2	SCREW M6S M6X55 FZB	
230	312812-0316	-		2	HEXAGON NUT, NY-LOCK M6 A480	
240	315101-0153	-		2	WASHER PLAIN, BRB, 6,4/12 H=1,5	
Common Parts						
030	440260-0000	D		1	SHAFT	
080	272728-0000	C		1	BARRIER	
150	90335-0025	C		3	SPRING BARNES 22010	
200	311103-0274	-		2	PARALLELL PIN, M6, 4X25 MM	

Machine Type | Group Description | Used-In | Group Number | Page No

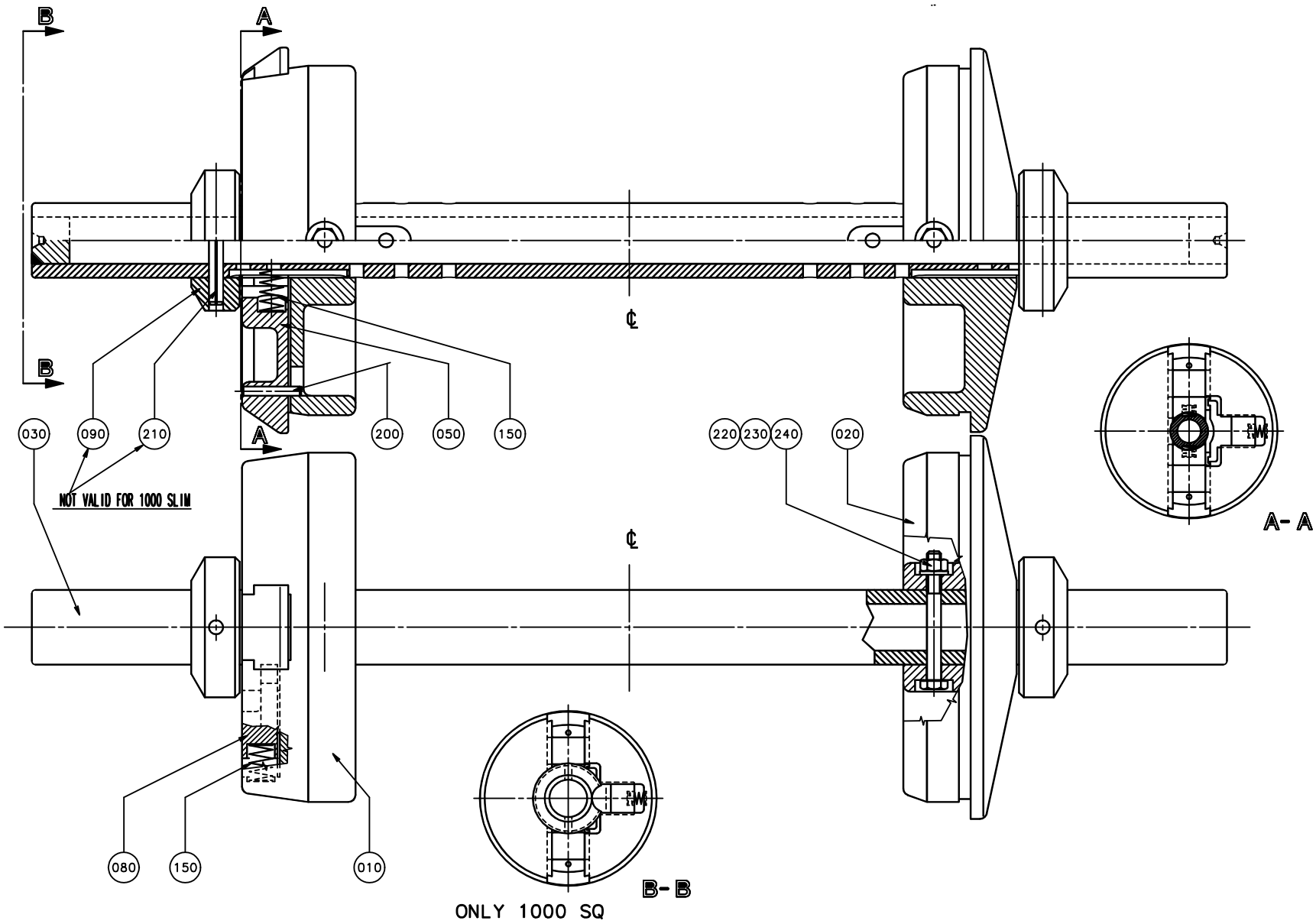
B
A
B
A
030
090
210
200
050
150
220
230
240
020
NOT VALID FOR 1000 SLIM
A- A
080
150
010
B- B
ONLY 1000 SQ

Pos	Part No	SP	UN	Qty	Description	Page No
TBA 0500B OR TBA 0750B OR TBA 1000B						
010	272814-0000	C		1	SLEEVE	
020	272815-0001	C		1	SLEEVE	
050	575002-0000	C		2	PLUNGER	
220	312101-0381	-		2	SCREW M6S M6X55 FZB	
230	312812-0316	-		2	HEXAGON NUT, NY-LOCK M6 A480	
240	315101-0153	-		2	WASHER PLAIN, BRB, 6,4/12 H=1,5	
TBA 0500S OR TBA 0355B OR TBA 0375S						
010	272814-0000	C		1	SLEEVE	
020	272815-0001	C		1	SLEEVE	
050	575002-0000	C		2	PLUNGER	
090	440259-0000	D		2	RETAINING RING	
220	312101-0381	-		4	SCREW M6S M6X55 FZB	
230	312812-0316	-		4	HEXAGON NUT, NY-LOCK M6 A480	
240	315101-0153	-		4	WASHER PLAIN, BRB, 6,4/12 H=1,5	
TBA 1000SQ						
010	272814-0000	C		1	SLEEVE	
020	272815-0001	C		1	SLEEVE	
050	575002-0000	C		2	PLUNGER	
090	574051-0000	D		2	RETAINING RING	
TBA 0750S						
010	272814-0000	C		1	SLEEVE	
020	272815-0001	C		1	SLEEVE	
050	575002-0000	C		2	PLUNGER	
090	544277-0000	D		2	RETAINING RING	
210	311112-0350	-		2	PIN, STRAIGHT SLOTTED SPRING FRP 6X55	
220	312101-0381	-		2	SCREW M6S M6X55 FZB	
230	312812-0316	-		2	HEXAGON NUT, NY-LOCK M6 A480	
240	315101-0153	-		2	WASHER PLAIN, BRB, 6,4/12 H=1,5	
TBA 1000S						
010	569944-0000	C		1	SLEEVE	
020	569945-0000	C		1	SLEEVE	
050	575003-0000	C		2	PLUNGER	
220	312101-0381	-		2	SCREW M6S M6X55 FZB	
230	312812-0316	-		2	HEXAGON NUT, NY-LOCK M6 A480	
240	315101-0153	-		2	WASHER PLAIN, BRB, 6,4/12 H=1,5	
Common Parts						
030	440260-0000	D		1	SHAFT	
080	272728-0000	C		1	BARRIER	
150	90335-0025	C		3	SPRING BARNES 22010	
200	311103-0274	-		2	PARALLELL PIN, M6, 4X25 MM	

Machine Type | Group Description | Used-In | Group Number | Page No

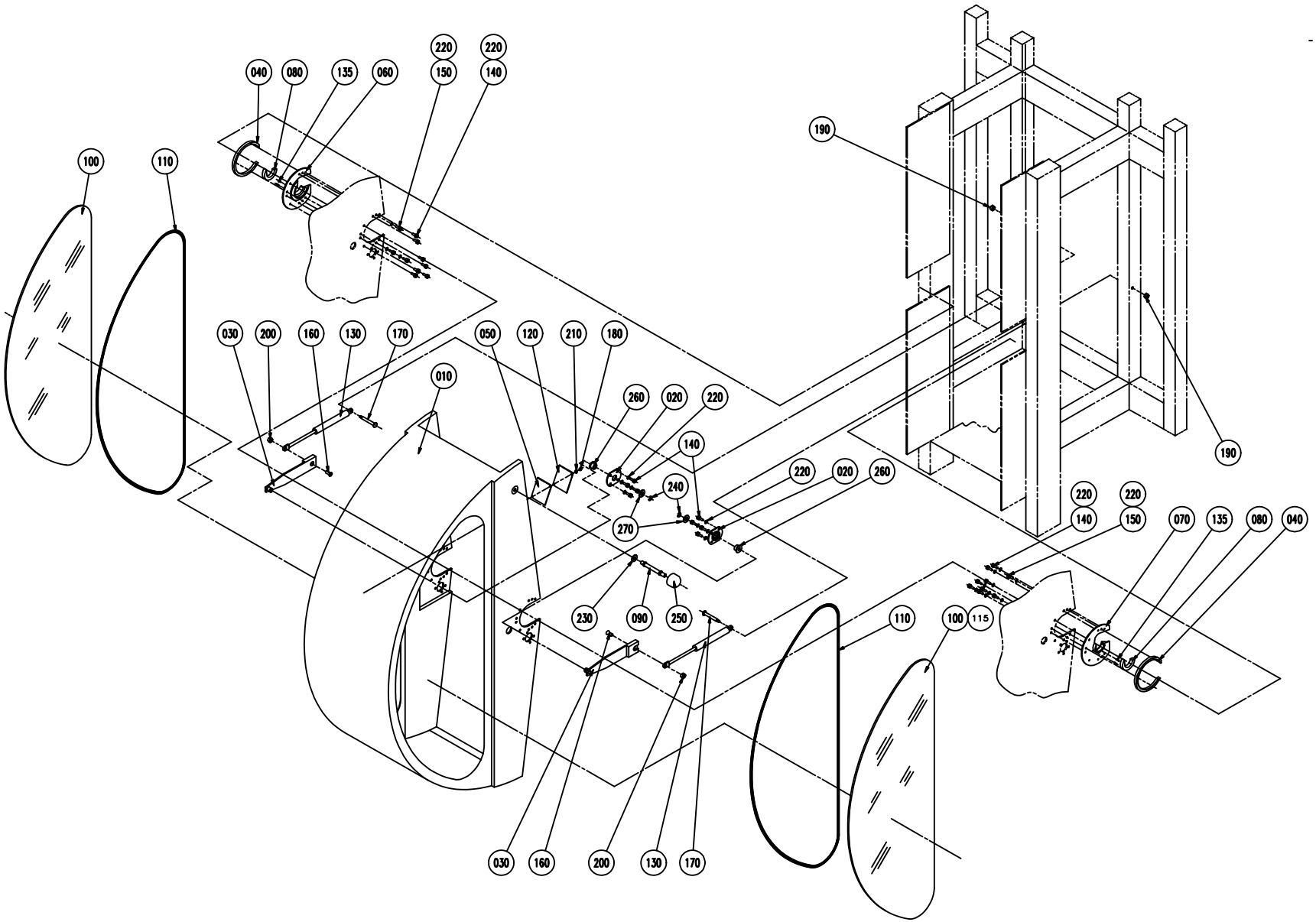
040
080
135
060
220
150
220
140
100
110
190
030
200
160
130
170
050
120
210
180
010
260
020
220
140
240
270
230
090
250
115
070

Pos	Part No	SP	UN	Qty	Description	Page No
TBA 0500S OR TBA 0500B OR TBA 0750B OR TBA 0355B OR TBA 0375S OR TBA 1000S OR TBA 1000SQ OR TBA 1000B OR TBA 0750S						
010	556879-0000	-		1	COVER	
100	440251-0000	D		2	GLASS PANE	
110	90143-0039	-	MM	5200	STRIP	
Common Parts						
020	556872-0000	-		2	BEARING UNIT	
030	556873-0000	-		2	EXTENSION PIECE	
040	556874-0000	D		2	BLOCKING RING	
050	1143605-0000	-		1	SPACER	
060	440247-0000	-		1	HOLDER	
070	440248-0000	-		1	HOLDER	
080	440249-0000	C		2	SLIDE BELT	
090	440250-0000	D		1	AXLE PIN	
120	90232-0333	D		1	REFLECTOR E39-R1	
130	90347-0108	D		2	GAS SPRING NO. 03-08-100-084174	
135	311103-0233	-		4	PARALLELL PIN, M6, 3X10 MM	
140	312105-0323	-		22	SCREW M6S M5X8 A280	
150	312105-0331	-		6	SCREW M6S M5X20 A280	
160	312155-0453	-		2	SCREW HEX.SOCK.COUNT.MF6S M8X25 A280	
170	568166-0000	-		2	REAMED BOLT	
180	312605-0310	-		2	HEXAGON NUT, M6M M3 A280	
190	312605-0316	-		2	HEXAGON NUT, M6M M6 A280	
200	312811-0318	-		2	NUT HEX.LOCK HELI COIL MID GRIP M8 SS	
210	315105-0124	-		2	WASHER PLAIN, BRB, 3,2/6,H=0,5	
220	315105-0146	-		28	WASHER PLAIN, BRB, 5,3/10,H=1	
230	315105-0173	-		1	WASHER PLAIN, BRB, 10,5/22,H=2	
240	315755-0111	-		2	LOCKING WASHER 10	
250	318800-0106	-		1	HANDLE,SPHERICAL KNOB,INT.THRE,D.40-M10	
260	321111-0157	C		2	BEAR.BUSHING WITH FLANGE, 12/18X8 MM	
270	321129-0104	-		2	THRUST WASHER, 12/24X1,5	

Pos	Part No	SP	UN	Qty	Description	Page No

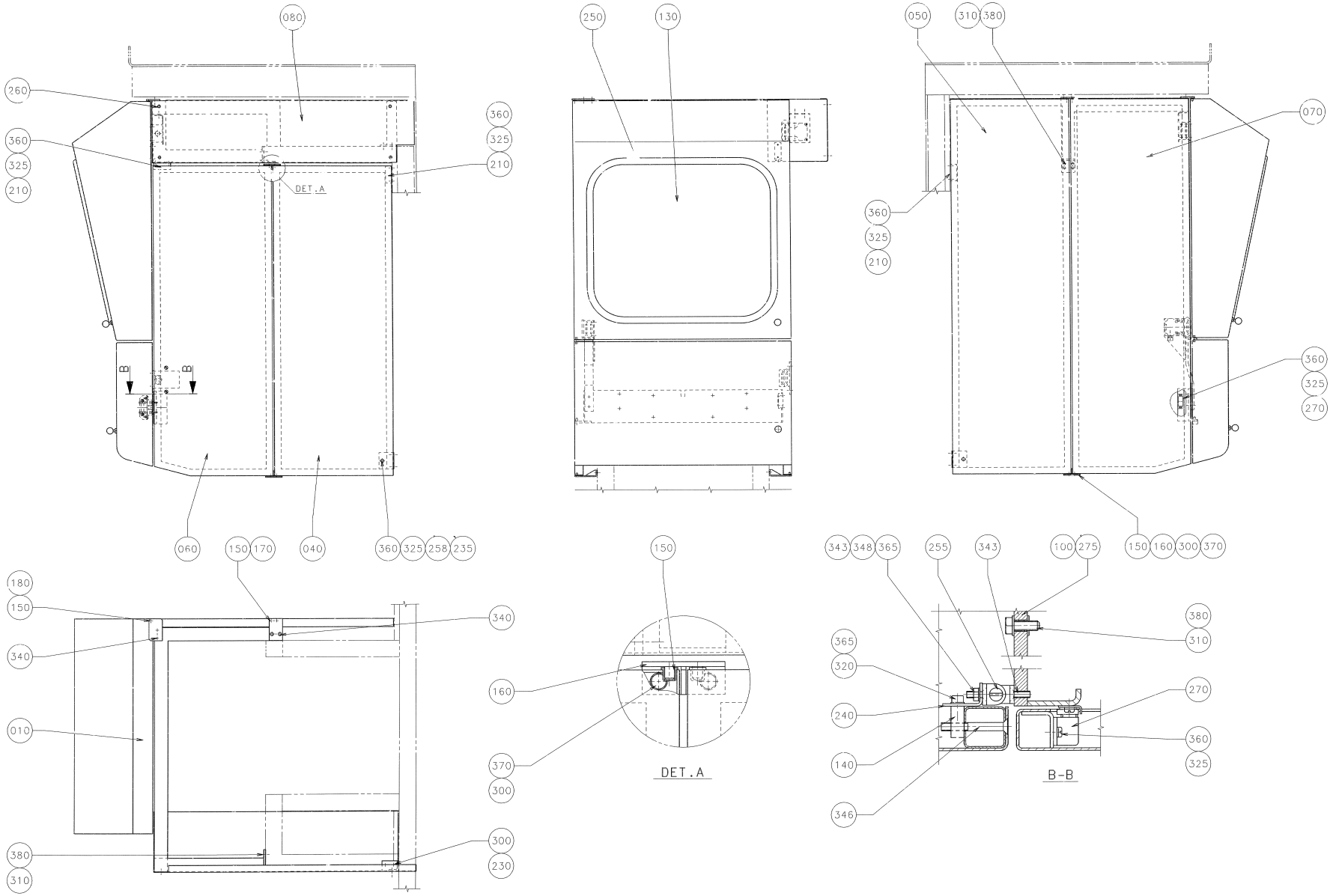
080
260
360
325
210
DET.A
B
B
060
150
170
040
360
325
258
235
250
130
050
310
380
070
360
325
210
360
325
270
343
348
365
255
343
100
275
150
160
300
370
180
150
340
010
380
310
340
300
230
150
160
370
300
DET.A
365
320
240
140
346
380
310
270
360
325
B-B

ECM: 72623 - 19990618
Group number: 1361946-0100
Assembly Drawing: 1361946-1_1_AB

Issue: 20020222

Pos	Part No	SP	UN	Qty	Description	Page No
Common Parts						
010	445861-0000	-		1	FRAME	
020	1361945-0000	-		1	HOOD	
030	1360788-0000	-		1	HOOD	
040	445863-0000	-		1	PROTECTION	
050	529498-0000	-		1	SIDE GUARD RIGHT	
060	573507-0000	-		1	SIDE GUARD	
070	529476-0000	-		1	SIDE GUARD	
080	1360787-0000	-		1	COVER	
100	1360786-0000	-		1	MOUNTING BAR	
115	571424-0000	-		1	HINGE	
120	571425-0000	-		1	BRACKET	
125	572246-0000	-		1	BRACKET	
130	571423-0000	-		1	GLASS PANE	
135	576410-0000	-		1	BRACKET	
140	1347154-0000	-		2	BRACKET	
150	436991-0000	C		10	BEARING	
160	445872-0000	-		3	HINGE	
170	445873-0000	-		1	HINGE	
180	445874-0000	-		1	HINGE	
210	445877-0000	-		3	SUPPORT	
230	445879-0000	-		1	SUPPORT	
235	525385-0000	-		2	BRACKET	
240	1347153-0000	-		2	ANGLE BRACKET	
247	B90044-0103	C		2	KEY SAFETY SWITCH AZ 15 ZVR	
	90044-0310	*A*		*1*	*KEY FOR SAFETY SWITCH, AZ 15/16 B1*	
248	90044-0139	C		1	KEY SAF.SW. AZ16-02 ZVR K-2254	
250	90143-0039	-	MM	2000	STRIP	
255	90237-0070	-		2	SNAP-IN BALL LOCK, 69X19 MM	
258	90237-0075	-		2	FAST LOCK, SK-M8	
260	90287-0075	-		6	SCREW SLOT. PAN HEAD LKCS M6X12	
265	90287-0076	-		2	SCREW SLOT. PAN HEAD LKCS M6X20	
270	90339-0011	-		2	MAGNETIC LOCK, 40X18X14 MM	
275	311102-0350	-		2	PARALLELL PIN, CP, M6, 6X14 MM	
278	311103-0270	-		2	PARALLELL PIN, M6, 4X16 MM	
300	312105-0327	-		12	SCREW M6S M5X12 A280	
310	312105-0368	-		10	SCREW M6S M6X16 A280	
315	312105-0455	-		2	SCREW M6S M8X30 A280	
320	312115-0287	-		4	SCREW MC6S M4X8 A280	
325	312125-0222	-		20	SCREW PAN HEAD MCS M3X8 SS	
330	312125-0329	-		6	SCREW PAN HEAD MCS M5X16 SS	
335	312145-0323	-		6	SCREW COUNTERS.SLOT.HD. MFS 5X8 SS	
340	312155-0327	-		4	SCREW HEX.SOCK.COUNT.MF6S M5X12 A280	
343	312155-0291	-		8	SCREW HEX.SOCK.COUNT.MF6S M4X12 A480	
346	312155-0339	-		4	SCREW HEX.SOCK.COUNT.MF6S M5X40 A280	
348	312605-0312	-		4	HEXAGON NUT, M6M M4 A280	
350	312605-0314	-		4	HEXAGON NUT, M6M M5 A280	
355	312605-0318	-		2	HEXAGON NUT, M6M M8 A280	
358	312812-0316	-		2	HEXAGON NUT, NY-LOCK M6 A480	
360	315105-0124	-		20	WASHER PLAIN, BRB, 3,2/6,H=0,5	
365	315105-0136	-		8	WASHER PLAIN, BRB, 4,3/8,H=0,8	
370	315105-0146	-		18	WASHER PLAIN, BRB, 5,3/10,H=1	
380	315105-0153	-		16	WASHER PLAIN, BRB, 6,4/12,H=1,5	
390	318800-0104	-		2	HANDLE,SPHERICAL KNOB,INT.THRE.,D.30-M8	

Machine Type | Group Description | Used-In | Group Number | Page No

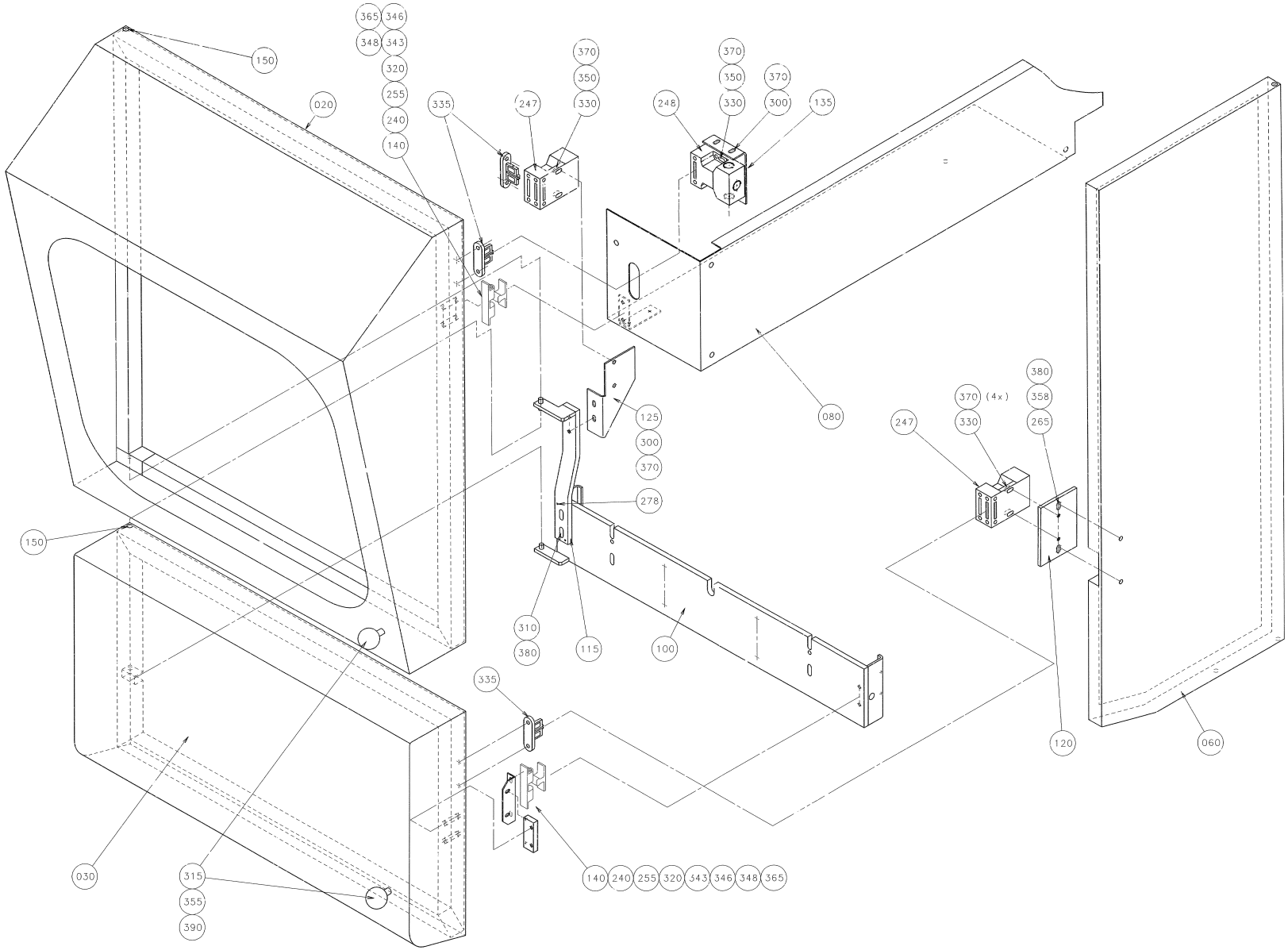
365
346
348
343
320
255
240
140
150
020
335
247
370
350
330
248
370
350
330
370
300
135
080
125
300
370
278
150
310
380
115
100
335
030
315
355
390
140
240
255
320
343
346
348
365
380
358
265
370 (4x)
330
247
120
060

ECM: 72623 - 19990618
Group number: 1361946-0100
Assembly Drawing: 1361946-2_1_AB

Issue: 20020222

Pos	Part No	SP	UN	Qty	Description	Page No
Common Parts						
010	445861-0000	-		1	FRAME	
020	1361945-0000	-		1	HOOD	
030	1360788-0000	-		1	HOOD	
040	445863-0000	-		1	PROTECTION	
050	529498-0000	-		1	SIDE GUARD RIGHT	
060	573507-0000	-		1	SIDE GUARD	
070	529476-0000	-		1	SIDE GUARD	
080	1360787-0000	-		1	COVER	
100	1360786-0000	-		1	MOUNTING BAR	
115	571424-0000	-		1	HINGE	
120	571425-0000	-		1	BRACKET	
125	572246-0000	-		1	BRACKET	
130	571423-0000	-		1	GLASS PANE	
135	576410-0000	-		1	BRACKET	
140	1347154-0000	-		2	BRACKET	
150	436991-0000	C		10	BEARING	
160	445872-0000	-		3	HINGE	
170	445873-0000	-		1	HINGE	
180	445874-0000	-		1	HINGE	
210	445877-0000	-		3	SUPPORT	
230	445879-0000	-		1	SUPPORT	
235	525385-0000	-		2	BRACKET	
240	1347153-0000	-		2	ANGLE BRACKET	
247	B90044-0103	C		2	KEY SAFETY SWITCH AZ 15 ZVR	
	90044-0310	*A*		*1*	*KEY FOR SAFETY SWITCH, AZ 15/16 B1*	
248	90044-0139	C		1	KEY SAF.SW. AZ16-02 ZVR K-2254	
250	90143-0039	-	MM	2000	STRIP	
255	90237-0070	-		2	SNAP-IN BALL LOCK, 69X19 MM	
258	90237-0075	-		2	FAST LOCK, SK-M8	
260	90287-0075	-		6	SCREW SLOT. PAN HEAD LKCS M6X12	
265	90287-0076	-		2	SCREW SLOT. PAN HEAD LKCS M6X20	
270	90339-0011	-		2	MAGNETIC LOCK, 40X18X14 MM	
275	311102-0350	-		2	PARALLELL PIN, CP, M6, 6X14 MM	
278	311103-0270	-		2	PARALLELL PIN, M6, 4X16 MM	
300	312105-0327	-		12	SCREW M6S M5X12 A280	
310	312105-0368	-		10	SCREW M6S M6X16 A280	
315	312105-0455	-		2	SCREW M6S M8X30 A280	
320	312115-0287	-		4	SCREW MC6S M4X8 A280	
325	312125-0222	-		20	SCREW PAN HEAD MCS M3X8 SS	
330	312125-0329	-		6	SCREW PAN HEAD MCS M5X16 SS	
335	312145-0323	-		6	SCREW COUNTERS.SLOT.HD. MFS 5X8 SS	
340	312155-0327	-		4	SCREW HEX.SOCK.COUNT.MF6S M5X12 A280	
343	312155-0291	-		8	SCREW HEX.SOCK.COUNT.MF6S M4X12 A480	
346	312155-0339	-		4	SCREW HEX.SOCK.COUNT.MF6S M5X40 A280	
348	312605-0312	-		4	HEXAGON NUT, M6M M4 A280	
350	312605-0314	-		4	HEXAGON NUT, M6M M5 A280	
355	312605-0318	-		2	HEXAGON NUT, M6M M8 A280	
358	312812-0316	-		2	HEXAGON NUT, NY-LOCK M6 A480	
360	315105-0124	-		20	WASHER PLAIN, BRB, 3,2/6,H=0,5	
365	315105-0136	-		8	WASHER PLAIN, BRB, 4,3/8,H=0,8	
370	315105-0146	-		18	WASHER PLAIN, BRB, 5,3/10,H=1	
380	315105-0153	-		16	WASHER PLAIN, BRB, 6,4/12,H=1,5	
390	318800-0104	-		2	HANDLE,SPHERICAL KNOB,INT.THRE.,D.30-M8	

Machine Type | Group Description | Used-In | Group Number | Page No

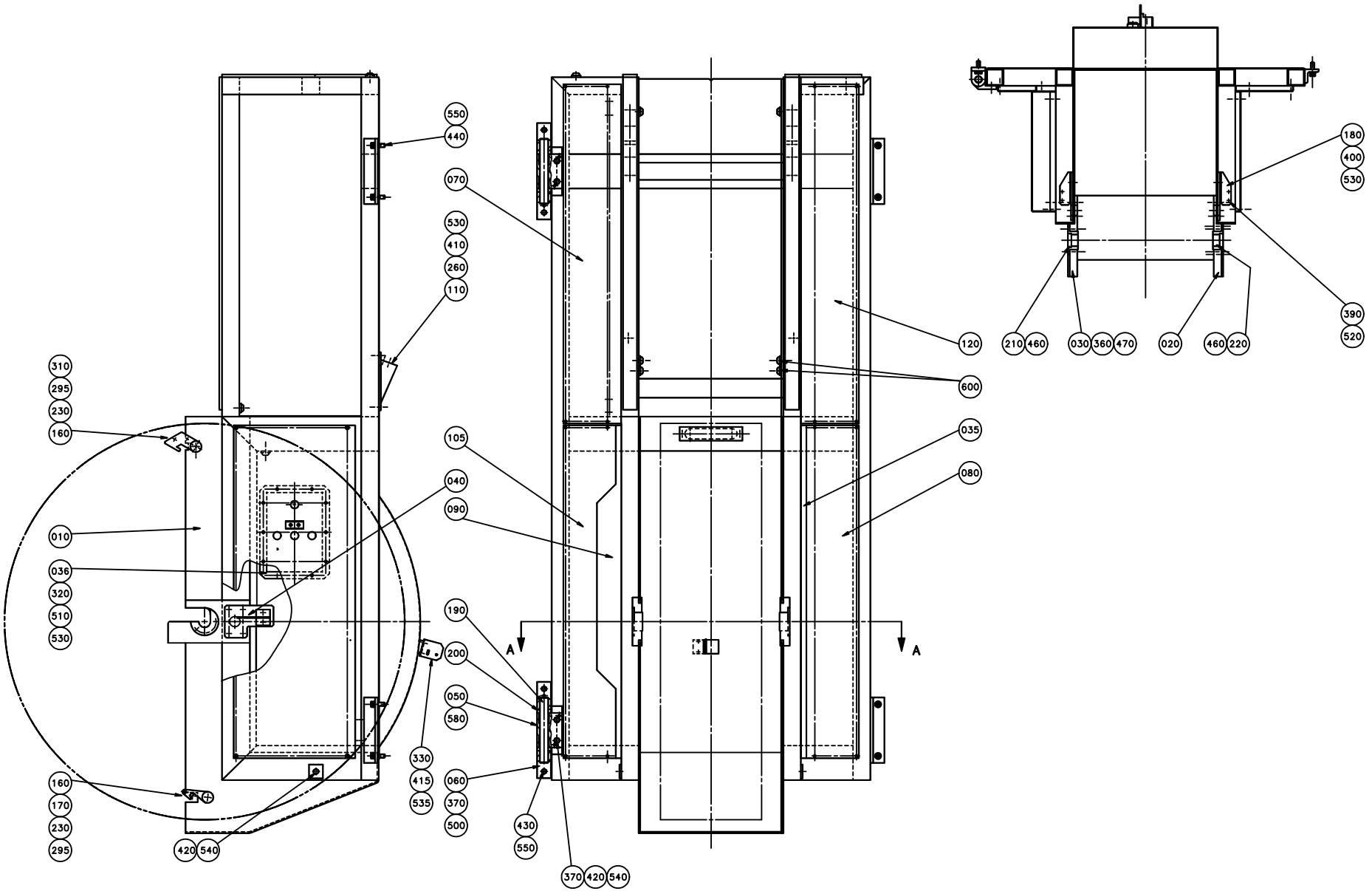
550
440
070
530
410
260
110
310
295
230
160
105
040
090
010
036
320
510
530
190
200
050
580
330
415
535
160
170
230
295
420
540
060
370
500
430
550
370
420
540
120
600
035
080
A
A
180
400
530
390
520
210
460
030
360
470
020
460
220

ECM: 72192 - 19990218
Group number: 440133-0400
Assembly Drawing: 440133-5_1_AD

Issue: 20020222

Pos	Part No	SP	UN	Qty	Description	Page No
Common Parts						
010	531337-0000	-		1	MACHINE BODY	
020	440185-0000	-		1	HOLDER	
030	440186-0000	-		1	HOLDER	
035	549830-0000	-		1	PROTECTION PLATE	
036	532026-0000	-		1	SEAL COVER	
040	440192-0000	-		2	BRACKET	
050	440195-0000	-		2	JOINT	
060	440196-0000	-		2	HANGER	
070	B440199-0000	-		1	PROTECTION PLATE	
	312125-0372	-		*4*	*SCREW PAN HEAD MCS M6X25 SS*	
	90166-0116	-		*4*	*HOSE 5/7 PVC TRANSP.*	
080	440200-0000	-		1	PROTECTION PLATE	
090	440202-0000	-		1	PROTECTION PLATE	
105	445857-0000	-		1	PROTECTION PLATE	
110	464141-0000	-		1	LEAD-IN PLATE	
120	B445935-0000	-		1	PROTECTION PLATE	
	90166-0116	-		*4*	*HOSE 5/7 PVC TRANSP.*	
	312125-0372	-		*4*	*SCREW PAN HEAD MCS M6X25 SS*	
160	1013-0000	-		2	SHAFT	
170	476117-0000	-		1	CATCH	
180	440193-0000	-		2	HOLDER	
190	440197-0000	-		2	SHAFT	
200	440198-0000	-		4	WASHER	
210	440252-0000	C		1	SLEEVE	
220	440253-0000	C		1	SLEEVE	
230	440271-0000	-		2	SCREW	
240	445934-0000	-		1	LID	
260	445929-0000	-		1	GASKET	
295	457358-0000	-		2	SLEEVE	
310	568167-0000	-		1	CATCH	
320	532024-0000	-		1	GASKET	
330	1195094-0000	-		1	BRACKET	
360	311103-0353	-		4	PARALLELL PIN, M6, 6X20 MM	
370	311103-0355	-		6	PARALLELL PIN, M6, 6X25 MM	
390	312105-0293	-		4	SCREW M6S M4X16 A280	
400	312105-0325	-		6	SCREW M6S M5X10 A280	
410	312105-0329	-		4	SCREW M6S M5X16 A280	
415	312105-0368	-		2	SCREW M6S M6X16 A280	
420	312105-0451	-		6	SCREW M6S 8X20 A280	
430	312105-0495	-		4	SCREW M6S M10X30 A280	
440	312115-0495	-		4	SCREW MC6S M10X30 A280	
450	312125-0323	-		2	SCREW PAN HEAD MCS M5X8 SS	
460	312155-0327	-		4	SCREW HEX.SOCK.COUNT.MF6S M5X12 A280	
470	312155-0451	-		8	SCREW HEX.SOCK.COUNT.MF6S M8X20 A280	
500	312318-0362	-		4	SCREW SOCK.SET CUP P MSK6SS M6X8 A4	
510	312605-0314	-		10	HEXAGON NUT, M6M M5 A280	
520	315105-0136	-		4	WASHER PLAIN, BRB, 4,3/8,H=0,8	
530	315105-0146	-		18	WASHER PLAIN, BRB, 5,3/10,H=1	
535	315105-0153	-		2	WASHER PLAIN, BRB, 6,4/12,H=1,5	
540	315105-0165	-		6	WASHER PLAIN, BRB, 8,4/16,H=1,5	
550	315105-0173	-		8	WASHER PLAIN, BRB, 10,5/22,H=2	
580	321105-0234	-		4	BUSHING 20F7X28X30	
600	352101-0103	-		18	LEAD-IN, PR18,6/PG11, E-1457518	

Machine Type | Group Description | Used-In | Group Number | Page No

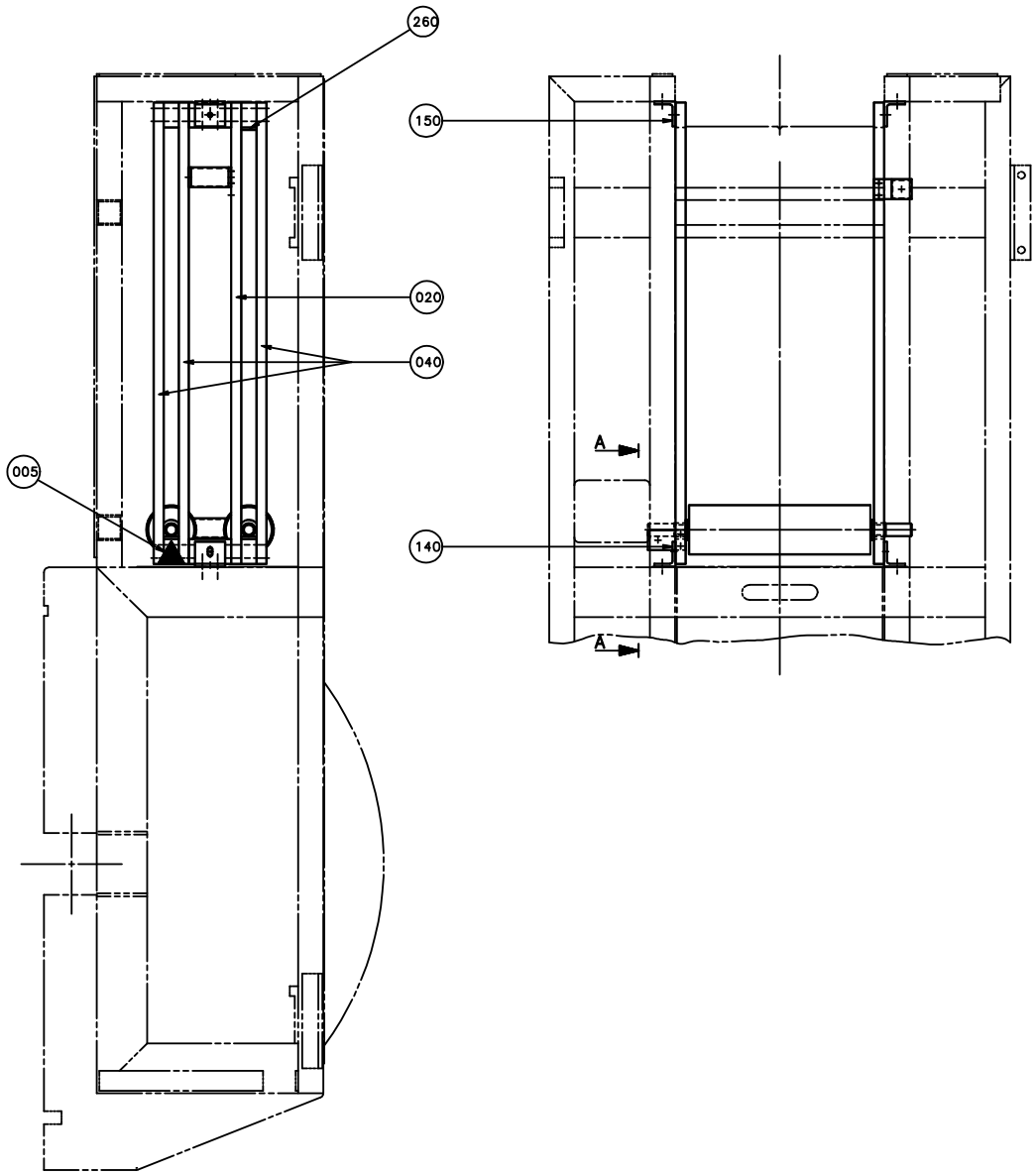
260
150
020
040
005
140
A
A

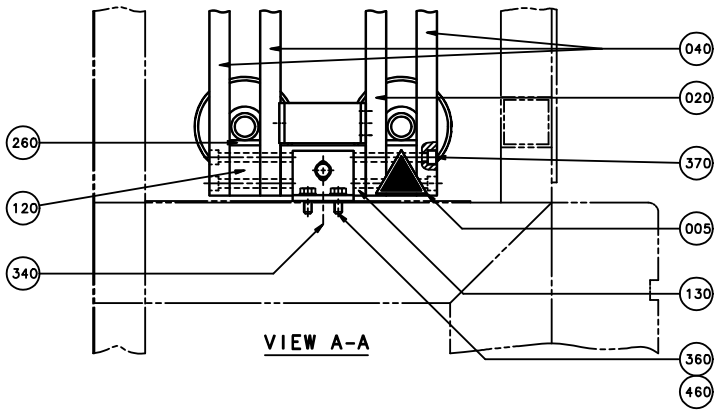
040
020
260
370
120
005
340
130
VIEW A-A
360
460

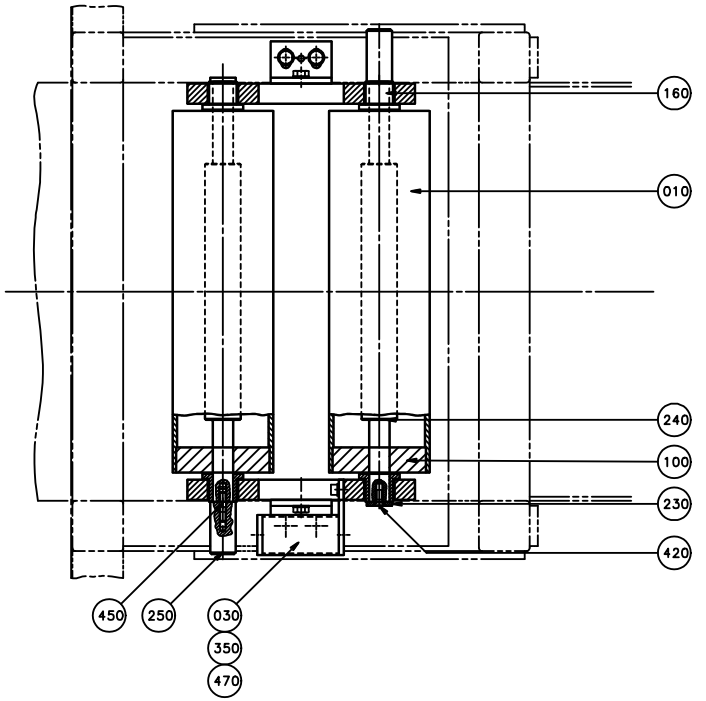
160
010
240
100
230
420
450
250
030
350
470

Pos	Part No	SP	UN	Qty	Description	Page No
TBA/8 0375S OR TBA/8 0500S OR TBA/8 0355B						
130	440213-0000	-		4	LUG	
240	466086-0000	D		2	SHAFT	
460	315105-0165	-		12	WASHER PLAIN, BRB, 8,4/16,H=1,5	
TBA/8 0500B OR TBA/8 1000B OR TBA/8 0750S OR TBA/8 0750B OR TBA/8 1000SQ OR TBA/8 1000S						
130	440213-0000	-		4	LUG	
240	476401-0000	D		2	SHAFT	
460	315105-0165	-		12	WASHER PLAIN, BRB, 8,4/16,H=1,5	
Common Parts						
005	359705-0005	-		2	WARNING SIGN ISO, MOVING PART	
010	226097-0002	D		2	BENDING ROLLER	
020	440211-0000	-		2	GUIDE	
030	445927-0000	-		2	HOLDER	
040	476556-0000	-		6	GUIDE	
100	226098-0000	D		4	BEARING	
120	440212-0000	-		8	LUG	
140	440214-0000	-		2	HOLDER	
150	440215-0000	-		2	HOLDER	
160	440217-0000	C		4	BUSHING	
230	445926-0000	-		2	WASHER	
250	476015-0000	D		2	DOWEL	
260	476016-0000	C		6	RUBBER	
340	311103-0350	-		4	PARALLELL PIN, CP, M6, 6X14 MM	
350	312115-0370	-		4	SCREW MC6S M6X20 A280	
360	312105-0451	-		12	SCREW M6S 8X20 A280	
370	312111-0467	-		16	SCREW HEX.SOCK.HD.MC6S-TT 8X80 88 FZB	
420	312155-0368	-		2	SCREW HEX.SOCK.COUNT.MF6S M6X16 A280	
450	312303-0374	-		2	SCREW STUD, METAL END=1D, PS 6X25 SS	
470	315105-0153	-		4	WASHER PLAIN, BRB, 6,4/12,H=1,5	

Pos	Part No	SP	UN	Qty	Description	Page No

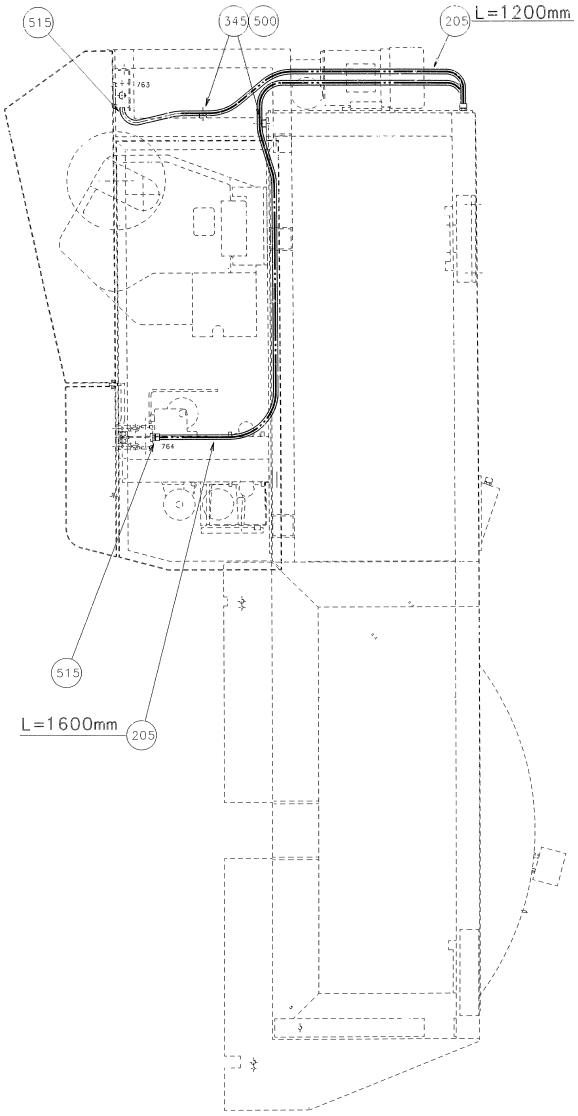
515
345
500
205
L=1200mm
763
764
515
L=1600mm
205

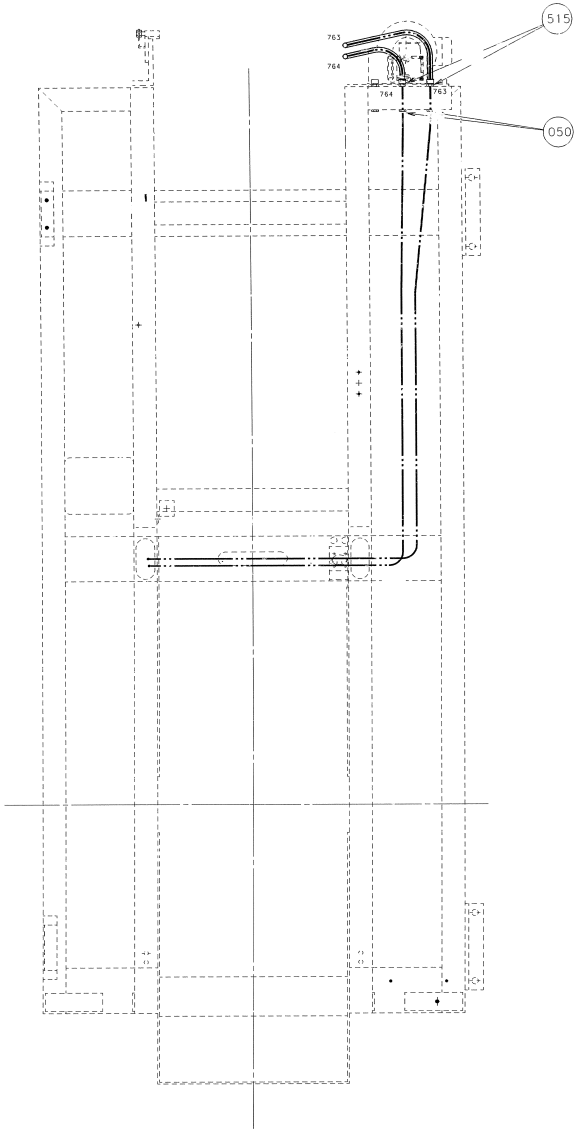
515
763
764
764
763
050

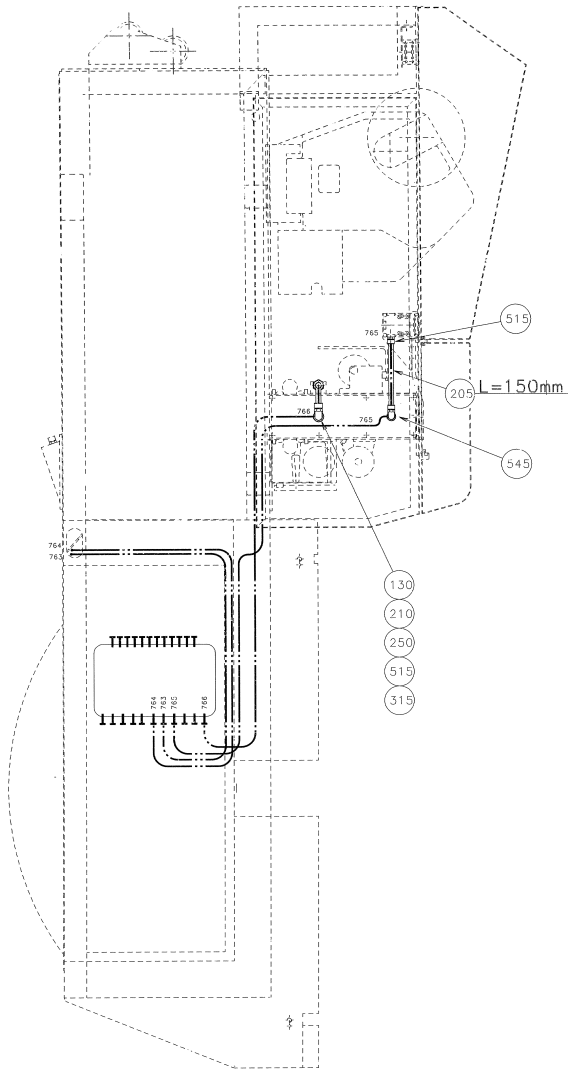
515
765
205
L=150mm
766
765
545
764
765
130
210
250
515
315

ECM: 72623 - 19990618
Group number: 1360783-0100
Assembly Drawing: 1360783-1_1_AB

Issue: 20020222

Pos	Part No	SP	UN	Qty	Description	Page No
TBA/8						
010	445844-0000	-		2	SLEEVE	
020	458362-0000	-		1	PLUG	
050	352101-0103	-		4	LEAD-IN, PR18,6/PG11, E-1457518	
Common Parts						
005	A1360782-0100	-		1	CONNECTION BOX	**671**
030	90166-0081	-	MM	7800	TUBE 6 MM PA BLUE	
040	352135-0106	-	MM	4100	SPIRAL CONDUIT DI=16 MM	
060	B466337-0000	-		1	CONNECTION BOX	
	90265-0028	-		*1*	*APPLIANCE BOX ROSE*	
070	486826-0001	-		1	SIGN "EMERGENCY STOP"	
075	B529456-0000	-		1	PLATE	
	312911-0113	-		*2*	*THREADED INSERTS M5X1,0D*	
080	B529455-0000	-		1	PLATE	
	312911-0101	-		*5*	*THREADED I M3X1,0D*	
100	440256-0000	-		1	ARM	
110	445846-0000	-		1	SLEEVE	
120	90002-0004	-		1	BLANK-OFF PLUG, PR 22,5 SKINDICHT-BLK16	
125	90002-0009	-		1	BLANK-OFF PLUG, PR 18.6 SKINDICHT-BLK11	
130	90012-0064	-		1	GLAND	
140	90044-0104	C		5	PROX.SWITCH IFM IN 3002	
145	90044-0122	C		2	PROX.SW. 922AA4XM-A9P-050-LZ-87	
150	90064-0084	D		2	PUSH BUTTON, YELLOW	
160	90064-0085	D		1	PUSH BUTTON, RED	
170	90064-0124	D		1	SWITCH,EMERGENCY STOP	
180	90099-0003	-		1	NUT	
190	90110-0128	-		1	MALE INSERT, HAN 24 E-M 933 024 2631	
200	90111-0150	D		1	SWITCH GEAR, 704.502 .0+704.901.3	
205	90152-0033	-	DM	30	SPIRAL CONDUIT FOR PR 15,2(PG 9)	
210	90152-0033	-	M		SPIRAL CONDUIT FOR PR 15,2(PG 9)	
215	90166-0013	-	DM	25	TUBE 8 MM PA BLUE	
220	90194-0016	-		2	SIGN, FLASH, ELECTRIC EQUIPMENT SYMBOL	
230	90232-0103	C		1	PH.CELL E3S-CT61-L-5M	
235	90232-0104	C		1	PH.CELL E3S-CT61-D-5M	
240	90232-0106	C		1	PH.CELL E3S-CR11-5M	
250	90232-0118	C		1	PH.CELL WT18-2P115S14	
310	312111-0323	-		2	SCREW HEX.SOCK.HD.MC6S-TT 5X8 88 FZB	
315	312121-0230	-		2	SCREW SLOT.PAN HD. MCS 3X20 FZB	
320	312121-0228	-		2	SCREW SLOT.PAN HD. MCS 3X16 FZB	
330	312125-0228	-		2	SCREW PAN HEAD MCS M3X16 A480	
340	312125-0234	-		2	SCREW PAN HEAD MCS M3X30 SS	
345	312125-0323	-		2	SCREW PAN HEAD MCS M5X8 SS	
350	312155-0329	-		3	SCREW HEX.SOCK.COUNT.MF6S M5X16 A280	
360	312316-0360	-		1	STOP SCREW SK6SS6X6FZB	
365	312605-0310	-		2	HEXAGON NUT, M6M M3 A280	
370	312605-0312	-		3	HEXAGON NUT, M6M M4 A280	
380	315105-0124	-		6	WASHER PLAIN, BRB, 3,2/6,H=0,5	
390	315101-0136	-		2	WASHER PLAIN, BRB, 4,3/8 H=0,8	
400	315105-0146	-		2	WASHER PLAIN, BRB, 5,3/10,H=1	
430	342946-0112	-		1	T-COUPLING,UNION 6/4	
460	352101-0105	-		1	LEAD-IN, PR22,5/PG16, E-1457522	
470	352103-0100	-		1	CABLE GLAND, STR 9, PR15,2/PG9	
480	352103-0111	-		2	CABLE GLAND, ST 16, PR22,5/PG16	
490	352110-0099	-		3	CABLE CLIPS, D=3-5 MM	
500	352113-0204	-		2	ANCHOR PLATES FOR STRIPS, TYPE TM3S25-M	
510	352135-0109	-	DM	10	HOSE .022	
515	352136-0113	-		7	GLAND FITTING PR18,6/PG11 DI=12MM	
520	352136-0127	-		7	GLAND FITTING PR 18,6	
530	352136-0129	-		4	GLAND FITTING PR22,5/PG16 DI=16MM	
540	352136-0143	-		2	GLAND FITTING	
545	352137-0113	-		1	COND.FITTING PR 18,6 DI=12MM	
550	352137-0127	-		3	COND.FITTING PR 18,6 DI=16MM	
560	359241-0269	-		1	SIGN, SMALL-LARGE REEL, REDUCT.OF WASTE	
570	359301-0100	-		1	SIGN "SPLICING"	
580	359301-0110	-		1	SIGN "SHORT STOP"	
590	359301-0335	-		1	SIGN T	
595	90012-0137	-		1	GLAND, EXTENDED WITH INSERT, PG11	

Machine Type | Group Description | Used-In | Group Number | Page No

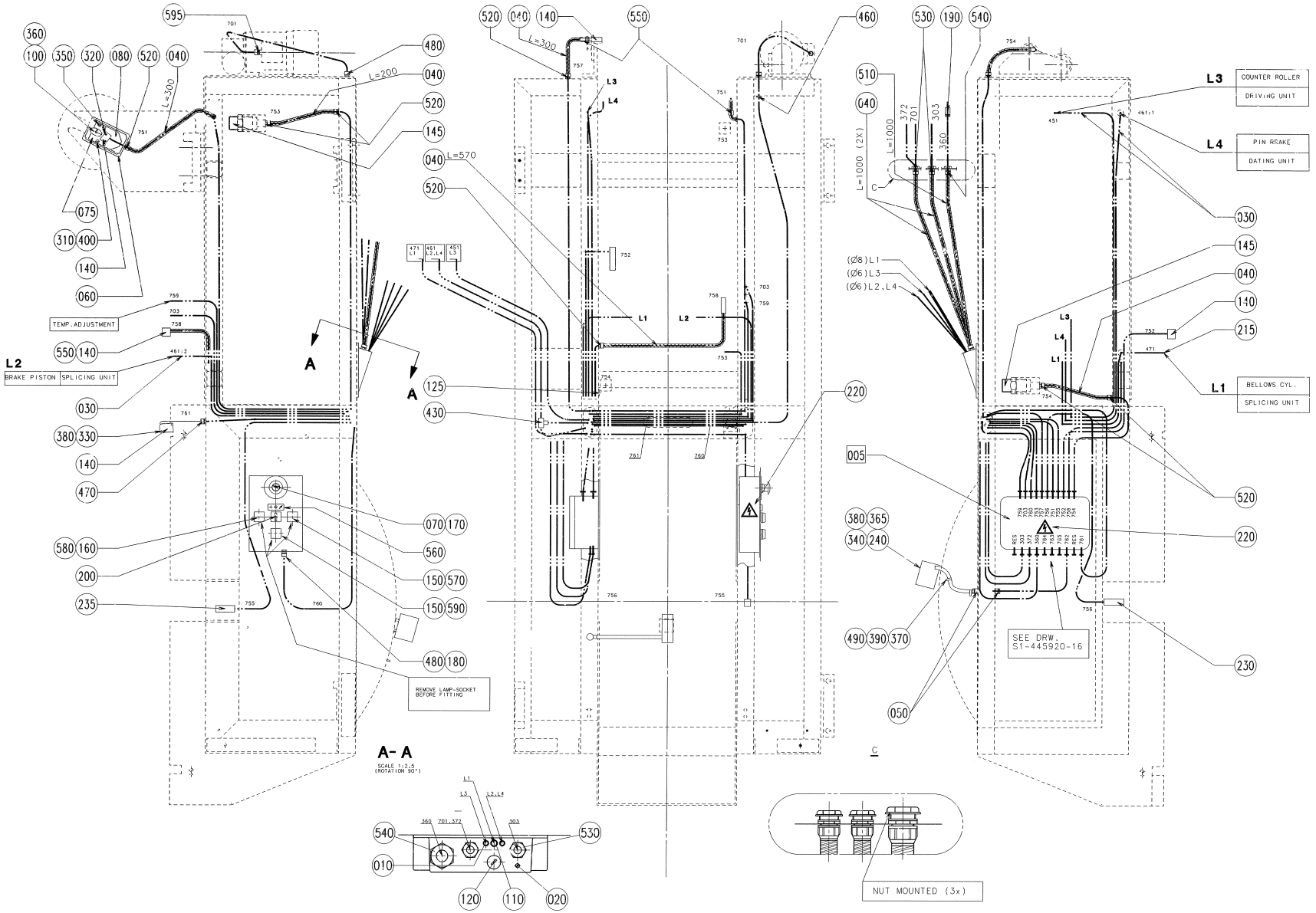
L2
BRAKE PISTON
SPLICING UNIT
TEMP.ADJUSTMENT
REMOVE LAMP-SOCKET BEFORE FITTING
A- A
SCALE 1:2,5 (ROTATION 90°)
L3
COUNTER ROLLER DRIVING UNIT
L4
PIN BRAKE DATING UNIT
L1
BELLOWS CYL. SPLICING UNIT
SEE DRW. S1-445920-16
NUT MOUNTED (3x)

ECM: 72623 - 19990618
Group number: 1360783-0100
Assembly Drawing: 1360783-3_1_AA

Issue: 20020222

Pos	Part No	SP	UN	Qty	Description	Page No
TBA/8						
010	445844-0000	-		2	SLEEVE	
020	458362-0000	-		1	PLUG	
050	352101-0103	-		4	LEAD-IN, PR18,6/PG11, E-1457518	
Common Parts						
005	A1360782-0100	-		1	CONNECTION BOX	**671**
030	90166-0081	-	MM	7800	TUBE 6 MM PA BLUE	
040	352135-0106	-	MM	4100	SPIRAL CONDUIT DI=16 MM	
060	B466337-0000	-		1	CONNECTION BOX	
	90265-0028	-		*1*	*APPLIANCE BOX ROSE*	
070	486826-0001	-		1	SIGN "EMERGENCY STOP"	
075	B529456-0000	-		1	PLATE	
	312911-0113	-		*2*	*THREADED INSERTS M5X1,0D*	
080	B529455-0000	-		1	PLATE	
	312911-0101	-		*5*	*THREADED I M3X1,0D*	
100	440256-0000	-		1	ARM	
110	445846-0000	-		1	SLEEVE	
120	90002-0004	-		1	BLANK-OFF PLUG, PR 22,5 SKINDICHT-BLK16	
125	90002-0009	-		1	BLANK-OFF PLUG, PR 18.6 SKINDICHT-BLK11	
130	90012-0064	-		1	GLAND	
140	90044-0104	C		5	PROX.SWITCH IFM IN 3002	
145	90044-0122	C		2	PROX.SW. 922AA4XM-A9P-050-LZ-87	
150	90064-0084	D		2	PUSH BUTTON, YELLOW	
160	90064-0085	D		1	PUSH BUTTON, RED	
170	90064-0124	D		1	SWITCH,EMERGENCY STOP	
180	90099-0003	-		1	NUT	
190	90110-0128	-		1	MALE INSERT, HAN 24 E-M 933 024 2631	
200	90111-0150	D		1	SWITCH GEAR, 704.502 .0+704.901.3	
205	90152-0033	-	DM	30	SPIRAL CONDUIT FOR PR 15,2(PG 9)	
210	90152-0033	-	M		SPIRAL CONDUIT FOR PR 15,2(PG 9)	
215	90166-0013	-	DM	25	TUBE 8 MM PA BLUE	
220	90194-0016	-		2	SIGN, FLASH, ELECTRIC EQUIPMENT SYMBOL	
230	90232-0103	C		1	PH.CELL E3S-CT61-L-5M	
235	90232-0104	C		1	PH.CELL E3S-CT61-D-5M	
240	90232-0106	C		1	PH.CELL E3S-CR11-5M	
250	90232-0118	C		1	PH.CELL WT18-2P115S14	
310	312111-0323	-		2	SCREW HEX.SOCK.HD.MC6S-TT 5X8 88 FZB	
315	312121-0230	-		2	SCREW SLOT.PAN HD. MCS 3X20 FZB	
320	312121-0228	-		2	SCREW SLOT.PAN HD. MCS 3X16 FZB	
330	312125-0228	-		2	SCREW PAN HEAD MCS M3X16 A480	
340	312125-0234	-		2	SCREW PAN HEAD MCS M3X30 SS	
345	312125-0323	-		2	SCREW PAN HEAD MCS M5X8 SS	
350	312155-0329	-		3	SCREW HEX.SOCK.COUNT.MF6S M5X16 A280	
360	312316-0360	-		1	STOP SCREW SK6SS6X6FZB	
365	312605-0310	-		2	HEXAGON NUT, M6M M3 A280	
370	312605-0312	-		3	HEXAGON NUT, M6M M4 A280	
380	315105-0124	-		6	WASHER PLAIN, BRB, 3,2/6,H=0,5	
390	315101-0136	-		2	WASHER PLAIN, BRB, 4,3/8 H=0,8	
400	315105-0146	-		2	WASHER PLAIN, BRB, 5,3/10,H=1	
430	342946-0112	-		1	T-COUPLING,UNION 6/4	
460	352101-0105	-		1	LEAD-IN, PR22,5/PG16, E-1457522	
470	352103-0100	-		1	CABLE GLAND, STR 9, PR15,2/PG9	
480	352103-0111	-		2	CABLE GLAND, ST 16, PR22,5/PG16	
490	352110-0099	-		3	CABLE CLIPS, D=3-5 MM	
500	352113-0204	-		2	ANCHOR PLATES FOR STRIPS, TYPE TM3S25-M	
510	352135-0109	-	DM	10	HOSE .022	
515	352136-0113	-		7	GLAND FITTING PR18,6/PG11 DI=12MM	
520	352136-0127	-		7	GLAND FITTING PR 18,6	
530	352136-0129	-		4	GLAND FITTING PR22,5/PG16 DI=16MM	
540	352136-0143	-		2	GLAND FITTING	
545	352137-0113	-		1	COND.FITTING PR 18,6 DI=12MM	
550	352137-0127	-		3	COND.FITTING PR 18,6 DI=16MM	
560	359241-0269	-		1	SIGN, SMALL-LARGE REEL, REDUCT.OF WASTE	
570	359301-0100	-		1	SIGN "SPLICING"	
580	359301-0110	-		1	SIGN "SHORT STOP"	
590	359301-0335	-		1	SIGN T	
595	90012-0137	-		1	GLAND, EXTENDED WITH INSERT, PG11	

Machine Type | Group Description | Used-In | Group Number | Page No

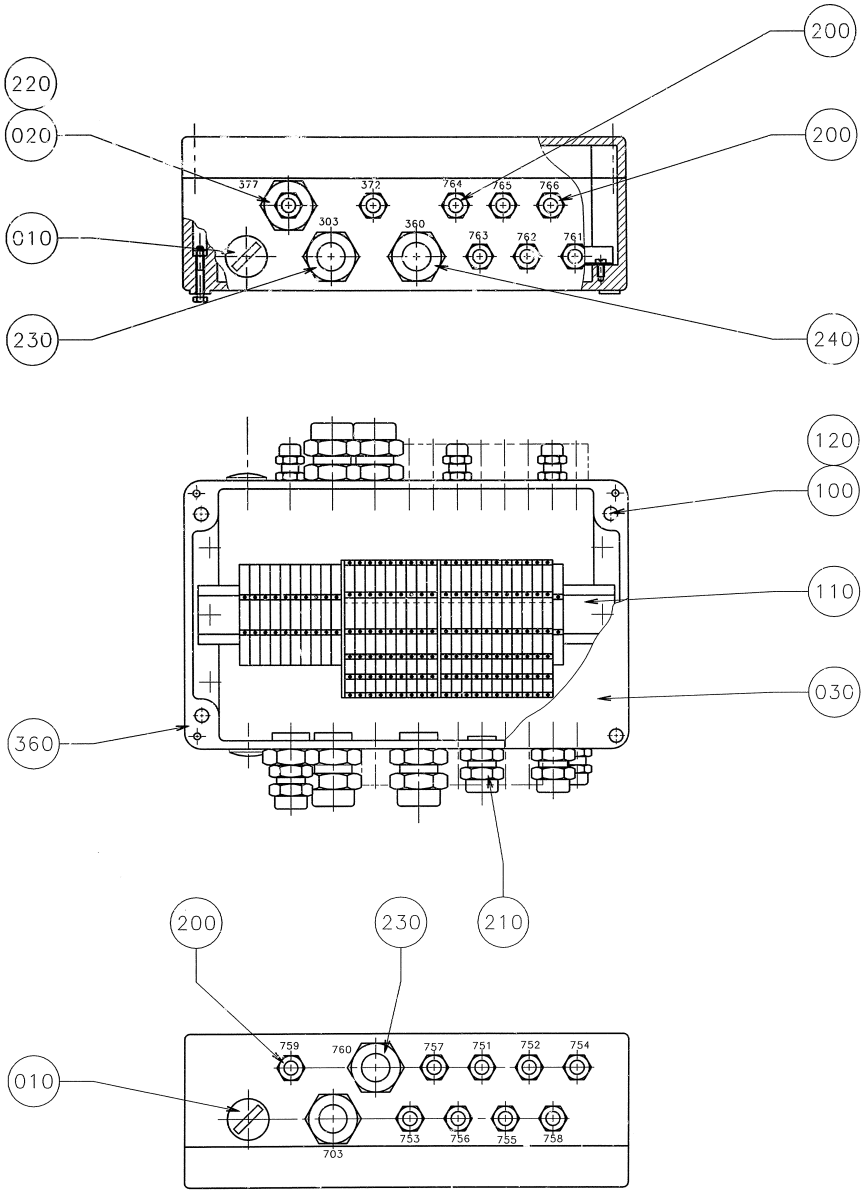
200
220
020
200
377
372
764
765
766
010
303
360
763
762
761
230
240
120
100
110
030
360
210
200
230
010
759
760
757
751
752
754
753
756
755
758
703

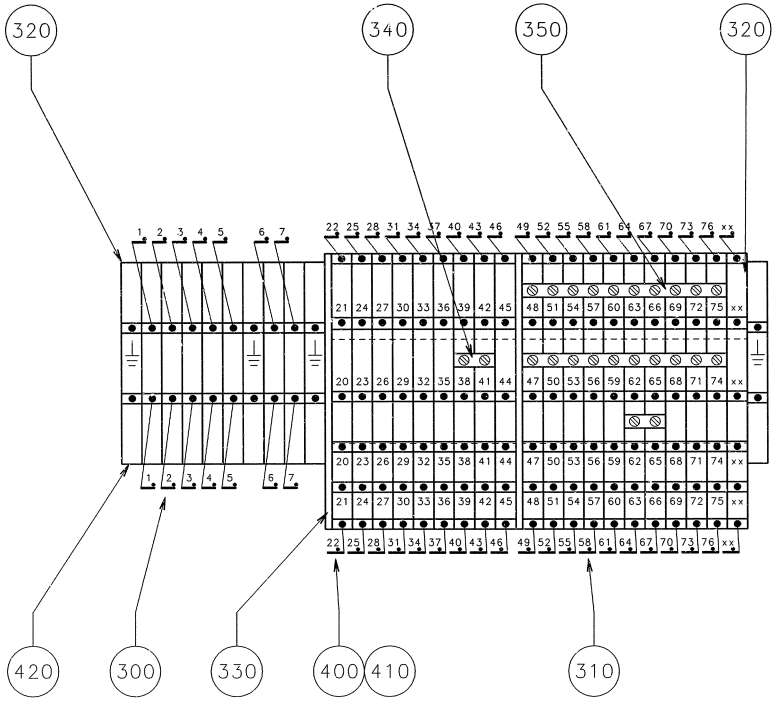
320
340
350
320
420
300
330
400
410
310

ECM: 71843 - 19981215
Group number: 1360782-0100
Assembly Drawing: 1360782-1_1_AA

Issue: 20020222

Pos	Part No	SP	UN	Qty	Description	Page No
Common Parts						
010	90002-0012	-		2	BLANK-OFF PLUG, PR 28,3 SKINDICHT-BLK21	
020	90089-0004	-		1	REDUCING SLEEVE, PR28,3/PR22,5	
030	90265-0081	-		1	CONNECTION BOX 01 1626 09	
100	312111-0372	-		4	SCREW HEX.SOCK.HD.MC6S-TT 6X25 88 FZB	
110	312121-0364	-		2	SCREW SLOT.PAN HD. MCS 6X10 FZB	
120	312601-0316	-		4	NUT M6M 6-8 FZB	
200	352103-0101	-		15	CABLE GLAND, ST 9, PR15,2/PG9	
210	352103-0106	-		1	CABLE GLAND, ST 11, PR18,6/PG11	
220	352103-0110	-		1	CABLE GLAND, STR 16, PR22,5/PG16	
230	352103-0115	-		3	CABLE GLAND, STR 21, PR28,3/PG21	
240	352103-0116	-		1	CABLE GLAND, ST 21, PR28,3/PG21	
300	353021-0213	-		7	FEED THROUGH TERMINAL, 10201.0	
310	353021-0302	-		20	TERMINALS,TRIPLE-LEVEL, DLD 2,5/35 PA	
320	353024-0205	-		4	EARTH TERMINAL, 1010.1	
330	353032-0302	-		2	END PLATE WAP	
340	353034-0401	-		2	BRIDGE CONNECTOR Q2, 13125.0	
350	353034-0404	-		2	BRIDGE CONNECTOR Q10, 13131.0	
360	353042-0005	-	MM	240	RAIL TS 35/7.5	
400	359011-0807	-		2	MARKING PLATES 5-FW 1-50	
410	359011-0808	-		2	MARKING PLATES 5-FW 51-100	
420	359011-0819	-		1	MARKING PLATES 5-GW (EARTH)	

Pos	Part No	SP	UN	Qty	Description	Page No

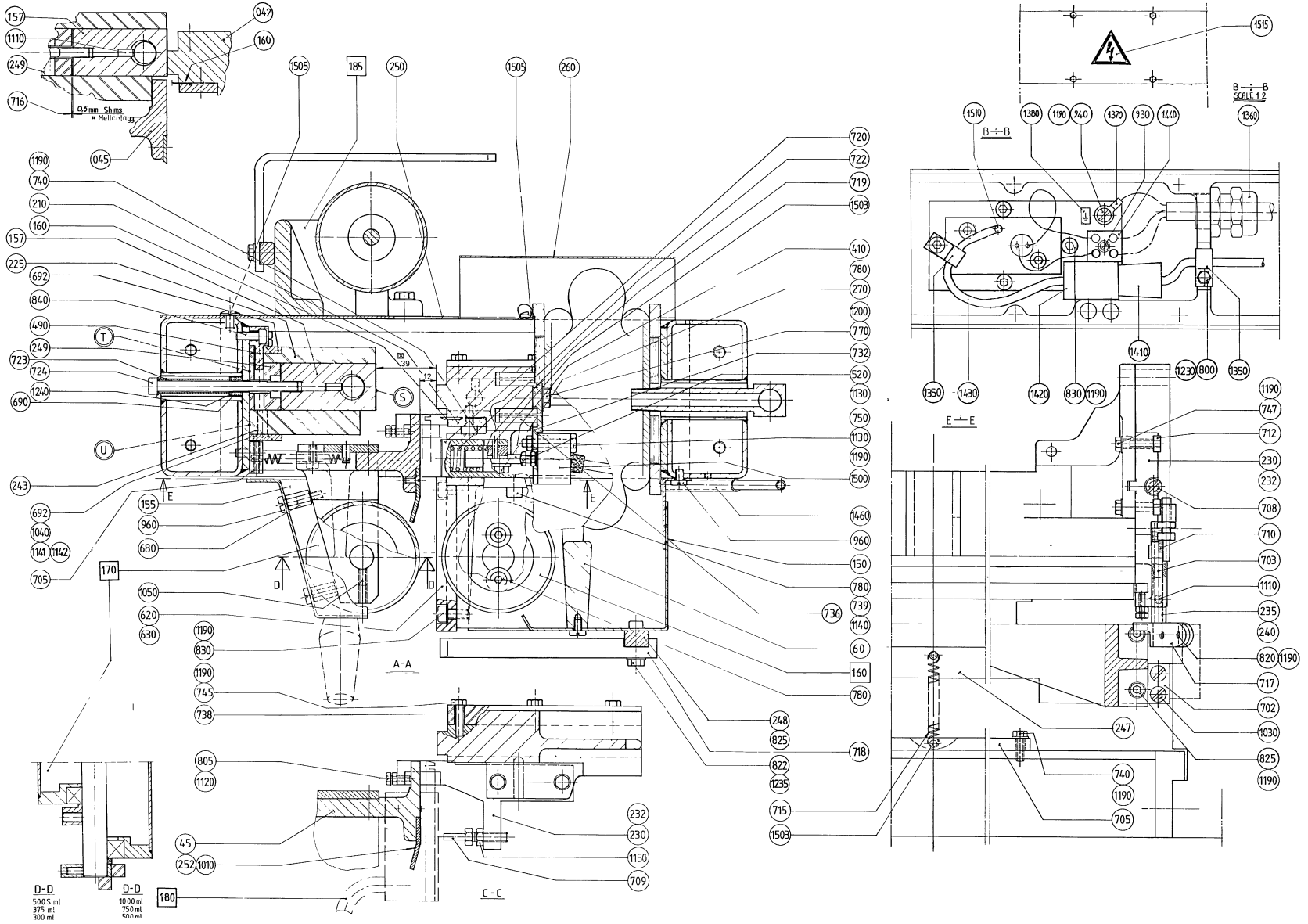
A-A
B-B
SCALE 1:2
C-C
D-D
D-D
E-E
0.5mm Shims
Mellanlägg

ECM: 72623 - 19990618
Group number: 1362931-0100
Assembly Drawing: 1362931-8_1_AA

Issue: 20020222

Pos	Part No	SP	UN	Qty	Description	Page No
0375S						
010	445881-0000	D		1	BRACKET LEFT	
020	445882-0000	D		1	BRACKET RIGHT	
042	B553770-0002	D		1	PRESSURE JAW	
	553771-0000	-		*6*	*THREADED INSERT*	
	312911-0118	-		*1*	*HELI-COIL M6X1,5D*	
	312910-0114	-		*12*	*HELI-COIL M5X1,5D*	
	312910-0113	-		*4*	*THREADED INSERTS M5X1,0D*	
230	458908-0000	D		1	BRACKET	
232	458909-0000	D		1	BRACKET	
252	484895-0003	-		1	SHEET	
0355B OR 0500S						
010	445881-0000	D		1	BRACKET LEFT	
020	445882-0000	D		1	BRACKET RIGHT	
042	B553770-0002	D		1	PRESSURE JAW	
	553771-0000	-		*6*	*THREADED INSERT*	
	312911-0118	-		*1*	*HELI-COIL M6X1,5D*	
	312910-0114	-		*12*	*HELI-COIL M5X1,5D*	
	312910-0113	-		*4*	*THREADED INSERTS M5X1,0D*	
230	458908-0000	D		1	BRACKET	
232	458909-0000	D		1	BRACKET	
252	484895-0002	-		1	SHEET	
0500B OR 0750B OR 1000B						
010	445881-0000	D		1	BRACKET LEFT	
020	445882-0000	D		1	BRACKET RIGHT	
042	B553770-0001	D		1	PRESSURE JAW	
	553771-0000	-		*2*	*THREADED INSERT*	
	312911-0118	-		*1*	*HELI-COIL M6X1,5D*	
	312910-0114	-		*12*	*HELI-COIL M5X1,5D*	
	312910-0113	-		*4*	*THREADED INSERTS M5X1,0D*	
230	458908-0000	D		1	BRACKET	
232	458909-0000	D		1	BRACKET	
252	484895-0001	-		1	SHEET	
0750S						
010	445881-0000	D		1	BRACKET LEFT	
020	445882-0000	D		1	BRACKET RIGHT	
042	B553770-0001	D		1	PRESSURE JAW	
	553771-0000	-		*2*	*THREADED INSERT*	
	312911-0118	-		*1*	*HELI-COIL M6X1,5D*	
	312910-0114	-		*12*	*HELI-COIL M5X1,5D*	
	312910-0113	-		*4*	*THREADED INSERTS M5X1,0D*	
230	458908-0000	D		1	BRACKET	
232	458909-0000	D		1	BRACKET	
252	484895-0005	-		1	SHEET	
1000S						
010	445881-0000	D		1	BRACKET LEFT	
020	445882-0000	D		1	BRACKET RIGHT	
042	B553770-0001	D		1	PRESSURE JAW	
	553771-0000	-		*2*	*THREADED INSERT*	
	312911-0118	-		*1*	*HELI-COIL M6X1,5D*	
	312910-0114	-		*12*	*HELI-COIL M5X1,5D*	
	312910-0113	-		*4*	*THREADED INSERTS M5X1,0D*	
230	458908-0000	D		1	BRACKET	
232	458909-0000	D		1	BRACKET	
252	484895-0006	-		1	SHEET	
1000SQ						
010	445881-0000	D		1	BRACKET LEFT	
020	445882-0000	D		1	BRACKET RIGHT	
042	B553770-0001	D		1	PRESSURE JAW	
	553771-0000	-		*2*	*THREADED INSERT*	
	312911-0118	-		*1*	*HELI-COIL M6X1,5D*	
	312910-0114	-		*12*	*HELI-COIL M5X1,5D*	
	312910-0113	-		*4*	*THREADED INSERTS M5X1,0D*	
230	458908-0000	D		1	BRACKET	
232	458909-0000	D		1	BRACKET	
252	484895-0007	-		1	SHEET	
Common Parts						
045	457627-0000	D		1	DOLLY	
060	445911-0000	-		1	CANTILEVER	
080	445885-0000	-		1	BEAM	
090	445886-0000	-		1	BEAM	
1010	312145-0289	C		7	SCREW COUNTERS.SLOT.HD. MFS 4X10 SS	
1020	312145-0327	-		8	SCREW COUNTERS.SLOT.HD. MFS 5X12 SS	
1021	312145-0335	-		2	SCREW COUNTERS.SLOT.HD. MFS 5X30 SS	
1030	312145-0329	-		4	SCREW COUNTERS.SLOT.HD. MFS 5X16 SS	
1035	312151-0368	-		4	SCREW HEX.SOCK.COUNT.MF6S 6X16 FZB	
1040	312151-0384	-		6	SCREW HEX.SOCK.COUNT.MF6S 6X70 FZB	
1050	312306-0287	-		2	SCREW HEX.SOCK.SET FLAT P.MP6SS 4X8 FZB	

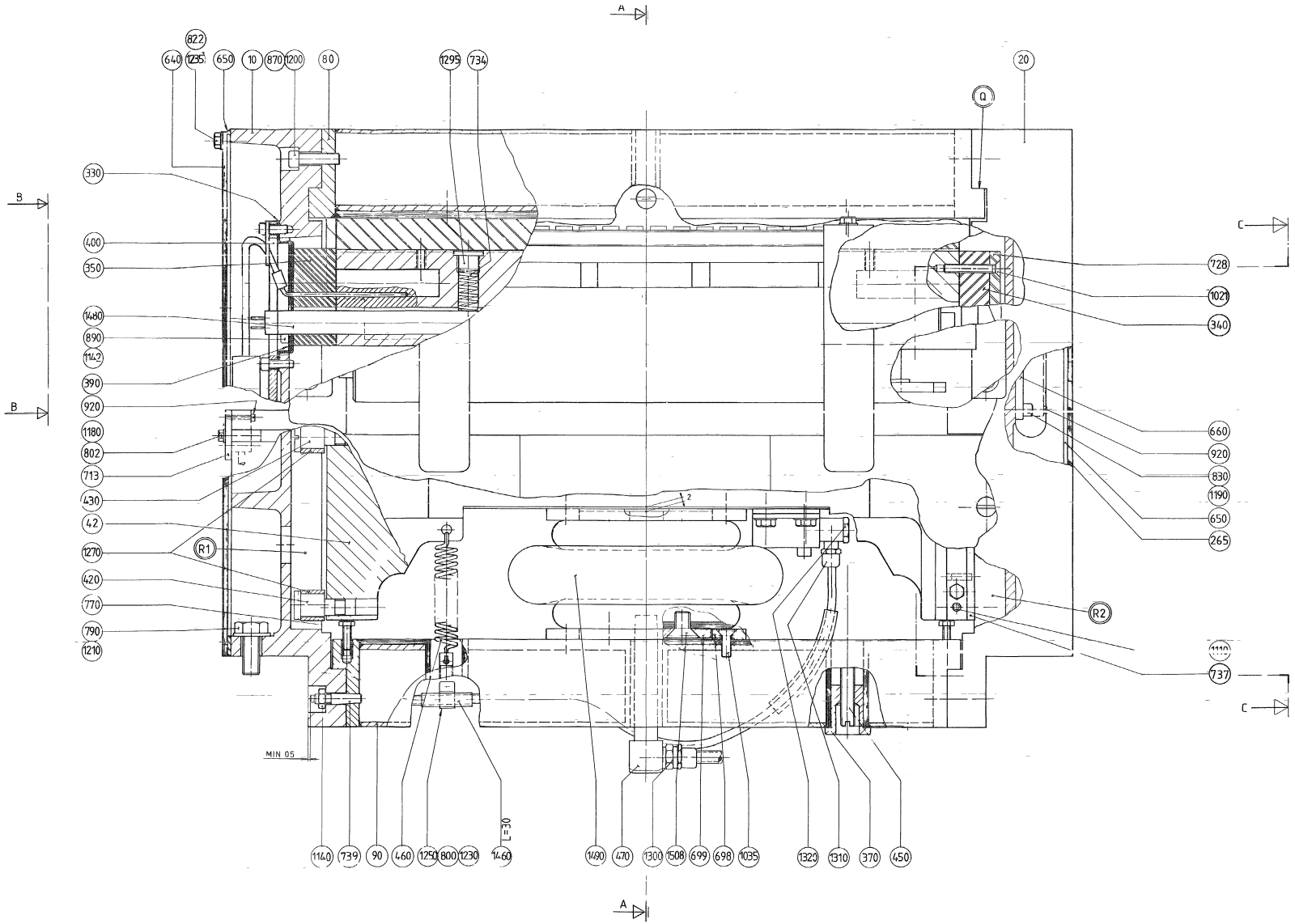
A
822
640
1235
650
10
870
1200
80
1295
734
20
Q
330
B
400
350
1480
890
1142
390
920
1180
802
713
430
42
1270
420
770
790
1210
R1
728
1021
340
660
920
830
1190
650
265
R2
737
C
MIN 05
L=30
1140
739
90
460
1250
800
1230
1460
1490
470
1300
1508
699
698
1035
1329
1310
370
450

Pos	Part No	SP	UN	Qty	Description	Page No
Common Parts (Cont'd)						
1110	312318-0321	C		7	SCREW HEX.SOCK.SET CUP P.MSK6SS 5X6 SS	
1120	312601-0312	-		2	NUT M6M 4-8 FZB	
1130	312601-0314	-		3	NUT M6M5FZB	
1140	312601-0316	-		6	NUT M6M 6-8 FZB	
1141	312811-0316	-		6	NUT HEX.LOCK HELI COIL MID GRIP M6 SS	
1142	319030-0125	-		40	DISC SPRING, CONICAL 12,5X6,2X0,5 MM	
1150	312605-0316	-		2	HEXAGON NUT, M6M M6 A280	
1180	315101-0136	-		2	WASHER PLAIN, BRB, 4,3/8 H=0,8	
1190	315101-0146	-		43	WASHER PLAIN, BRB, 5,3/10 H=1	
1200	315101-0153	-		16	WASHER PLAIN, BRB, 6,4/12 H=1,5	
1210	315101-0173	-		2	WASHER PLAIN, BRB, 10,5/22 H=2	
1230	315105-0136	-		2	WASHER PLAIN, BRB, 4,3/8,H=0,8	
1235	315105-0146	-		10	WASHER PLAIN, BRB, 5,3/10,H=1	
1240	315105-0153	-		2	WASHER PLAIN, BRB, 6,4/12,H=1,5	
1250	316810-0106	-		1	PIPE CLIP FOR TUBE D=8 MM	
1270	321116-0179	C		4	BEAR. BUSH. WITHOUT FL, 14X18X14	
1295	342713-0210	D		2	PLUG, EXT THREAD HEX SOCKET 8638-00-140	
1300	342722-0205	-		1	STRAIGHT COUPLING D=8-G1/4"	
1310	342980-0113	-		1	BANJO-CONNECTION,RING 6/4-G1/8"	
1320	342980-0303	-		1	BANJO-HOLLOW BOLT COUPL,EXT.THR.01-G1/8"	
1350	352110-0099	-		2	CABLE CLIPS, D=3-5 MM	
1360	352103-0108	-		1	CABLE GLAND, ST 13,5 , PR20,4/PG13,5	
1370	353101-0132	-		1	CABLE SHOE, RING ø5,3MM	
1380	359020-0202	-		1	SHEET OF SELF ADHESIVE DIG.& LETT. 4 MM	
1410	90326-0020	-		1	PLUG, FEMALE YELLOW CR-AL	
1420	90326-0022	-		1	PLUG, MALE YELLOW CR-AL	
1430	90326-0060	C		1	THERMOCOUPLE CR-AL	
1440	90195-0020	D		1	TERMINAL BLOCK, 1977.2	
1460	90166-0122	C	MM	100	TUBE 8 MM PA,TRANSP.	
1480	90206-0097	C		1	HEATING CARTRIDGE 500W 220V	
1490	90239-0231	D		1	BELLOWS	
150	449751-0000	-		1	PROTECTION	
1500	90239-0259	C		1	CYLINDER	
1503	90258-0031	-		2	PIN, STRAIGHT SLOTTED SPRING FRP 3X20	
1505	90287-0075	-		3	SCREW SLOT. PAN HEAD LKCS M6X12	
1508	312155-0449	-		4	SCREW HEX.SOCK.COUNT.MF6S M8X16 A280	
1510	90296-0051	-		1	PASTE	
1515	90194-0016	-		1	SIGN, FLASH, ELECTRIC EQUIPMENT SYMBOL	
155	450853-0000	-		1	PROTECTION	
157	548794-0000	C		1	HEATING JAW	
160	294009-0000	C		2	KNIFE	
210	1346514-0000	C		1	KNIFE HOLDER	
225	449770-0000	D		1	INSULATION	
235	466618-0000	C		1	CATCH	
240	466619-0000	C		1	CATCH	
243	457658-0000	C		1	INSULATION	
247	458912-0000	-		1	BRACKET	
248	479223-0000	-		1	RAIL	
249	484844-0000	C		1	INSULATION	
250	531886-0000	-		1	PROTECTION PLATE	
260	1360784-0000	-		1	PROTECTION PLATE	
265	1362926-0000	-		1	COVERING PLATE	
270	32079-0000	-		1	WASHER	
330	445894-0000	D		1	SEAL	
340	556316-0000	-		1	INSULATION	
350	556317-0000	D		1	INSULATION	
370	445898-0000	-		2	NUT	
390	556318-0000	D		1	INSULATION	
400	445901-0000	-		1	FRAME	
410	445902-0000	-		1	ARM	
420	445903-0000	D		2	ECCENTRIC SHAFT	
430	445904-0000	D		2	SHAFT	
450	445907-0000	-		2	SCREW	
460	458062-0000	C		2	TENSION SPRING	
470	445909-0000	-		1	NIPPLE	
490	445915-0000	-		1	STEERING	
520	445918-0000	-		1	SCREW	
620	449623-0000	D		1	STEERING	
630	449624-0000	D		1	STEERING	
640	927428-0000	-		1	COVERING PLATE	
650	449626-0000	D		2	SEAL	
660	449629-0000	-		1	BRACKET	
680	449753-0000	-		4	SCREW	
690	449761-0000	D		1	WASHER	
692	450017-0000	D		2	PLATE	
698	451412-0000	-		2	WASHER	
699	451413-0000	-		2	WASHER	
702	458915-0000	C		2	HEAD RAIL	
703	458916-0000	D		2	SHAFT	
705	458917-0000	-		1	SUPPORT	
708	553763-0000	D		2	ADJUSTING SCREW	
709	464983-0000	D		2	SCREW	
710	458929-0000	C		2	TURN SPRING	

Machine Type | Group Description | Used-In | Group Number | Page No

See previous drawings pages: 672, 674.

ECM: 72623 - 19990618
Group number: 1362931-0100
Assembly Drawing: 1362931-9_1_AA

Issue: 20020222

Pos	Part No	SP	UN	Qty	Description	Page No
Common Parts (Cont'd)						
710	458929-0000	C		2	TURN SPRING	
712	464547-0000	D		4	NUT	
713	464548-0000	-		1	BRACKET	
715	464854-0000	C		1	TENSION SPRING	
716	561426-0000	C		1	LACE	
717	466446-0000	-		2	HANDLE	
718	479224-0000	D		2	STEERING	
719	466620-0000	D		1	PISTON	
720	466621-0000	D		1	PISTON	
722	466623-0000	D		1	COMPRESSION SPRING	
723	476288-0000	-		1	PIPE	
724	B476289-0000	-		1	SCREW	
	312111-0390	-		*1*	*SCREW HEX.SOCK.HD.MC6S-TT 6X100 88 FZ*	
728	479188-0000	D		1	INSULATION	
732	484529-0000	D		1	CYLINDER BRACKET	
734	484682-0000	C		2	COMPRESSION SPRING	
736	484783-0000	D		2	RAIL	
737	484877-0000	C		2	STEERING	
738	B484878-0000	-		2	HOLDER	
	311103-0268	-		*2*	*PARALLELL PIN, M6, 4X12 MM*	
739	311211-0292	C		6	TAPER PIN GKP6X6X30	
740	312101-0329	-		8	SCREW M6S M5X16 FZB	
745	312101-0331	-		6	SCREW M6S M5X20 FZB	
747	312101-0333	-		4	SCREW M6S M5X25 FZB	
750	312101-0335	-		2	SCREW M6S M5X30 FZB	
770	312101-0366	-		4	SCREW M6S M6X12 FZB	
780	312101-0368	-		9	SCREW M6S M6X16 FZB	
790	312101-0493	-		2	SCREW M6S M10X25 FZB	
800	312105-0287	-		2	SCREW M6S M4X8 A280	
802	312101-0289	-		2	SCREW M6S M4X10 FZB	
805	312101-0291	-		2	SCREW M6S M4X12 FZB	
820	312101-0323	-		4	SCREW M6S M5X8 FZB	
822	312105-0329	-		10	SCREW M6S M5X16 A280	
825	312111-0325	-		6	SCREW HEX.SOCK.HD.MC6S-TT 5X10 88 FZB	
830	312111-0327	-		10	SCREW HEX.SOCK.HD.MC6S-TT 5X12 88 FZB	
840	312111-0329	-		2	SCREW HEX.SOCK.HD.MC6S-TT 5X16 88 FZB	
870	312111-0372	-		8	SCREW HEX.SOCK.HD.MC6S-TT 6X25 88 FZB	
890	312115-0340	-		2	SCREW MC6S M5X45 A280	
920	312121-0228	-		4	SCREW SLOT.PAN HD. MCS 3X16 FZB	
930	312121-0230	-		1	SCREW SLOT.PAN HD. MCS 3X20 FZB	
940	312121-0321	-		1	SCREW SLOT.PAN HD. MCS 5X6 FZB	
960	312132-0323	C		8	SCREW SLOT. PAN HEAD MSCS M5X8	
F160	A440135-0100	-		1	BENDING ROLLER	**641**
F170	A440184-0100	-		1	BENDING ROLLER	**679**
F180	A1360785-0100	D		1	PAPER HOLDER	**681, 683**
F185	A522410-0200	-		1	BENDING ROLLER	**685**

Machine Type | Group Description | Used-In | Group Number | Page No

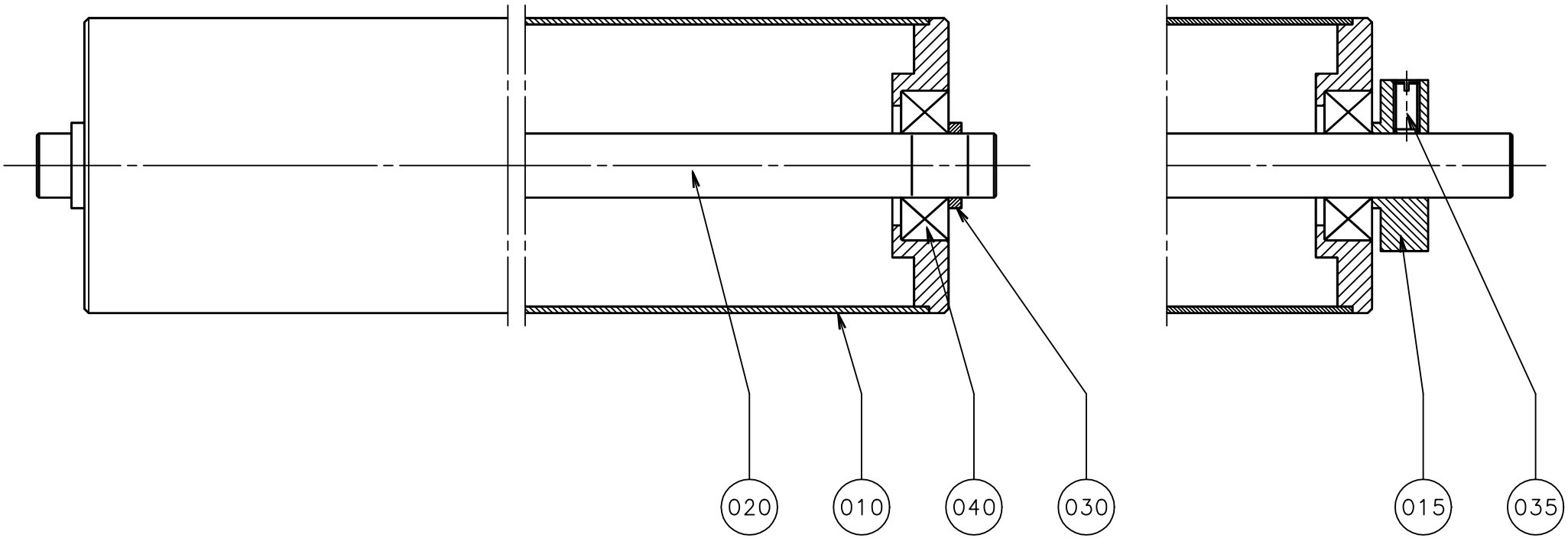
020
010
040
030
015
035

ECM: 72192 - 19990218
Group number: 440184-0100
Assembly Drawing: 440184-1_1_AA

Issue: 20020222

Pos	Part No	SP	UN	Qty	Description	Page No
TBA 0375S						
010	440136-0004	D		1	ROLL	
015	440138-0000	D		2	LOCKING CIRCLIP	
035	312306-0366	-		2	SCREW HEX.SOCK.SET FLAT P.MP6SS 6X12FZB	
TBA 0500B OR TBA 0750B OR TBA 1000B						
010	440136-0002	D		1	ROLL	
030	440194-0000	-		2	WASHER	
TBA 0500S OR TBA 0355B						
010	440136-0003	D		1	ROLL	
015	440138-0000	D		2	LOCKING CIRCLIP	
035	312306-0366	-		2	SCREW HEX.SOCK.SET FLAT P.MP6SS 6X12FZB	
TBA 1000SQ						
010	440136-0008	D		1	ROLL	
015	440138-0000	D		2	LOCKING CIRCLIP	
035	312306-0366	-		2	SCREW HEX.SOCK.SET FLAT P.MP6SS 6X12FZB	
TBA 0750S						
010	440136-0006	D		1	ROLL	
015	440138-0000	D		2	LOCKING CIRCLIP	
035	312306-0366	-		2	SCREW HEX.SOCK.SET FLAT P.MP6SS 6X12FZB	
TBA 1000S						
010	440136-0007	D		1	ROLL	
015	569917-0000	D		2	LOCKING CIRCLIP	
035	312306-0366	-		2	SCREW HEX.SOCK.SET FLAT P.MP6SS 6X12FZB	
Common Parts						
020	440137-0002	D		1	SHAFT	
040	321313-0102	C		2	BALL BEARING, 2 SEALS, 15X35X11 MM	

Pos	Part No	SP	UN	Qty	Description	Page No

Machine Type | Group Description | Used-In | Group Number | Page No

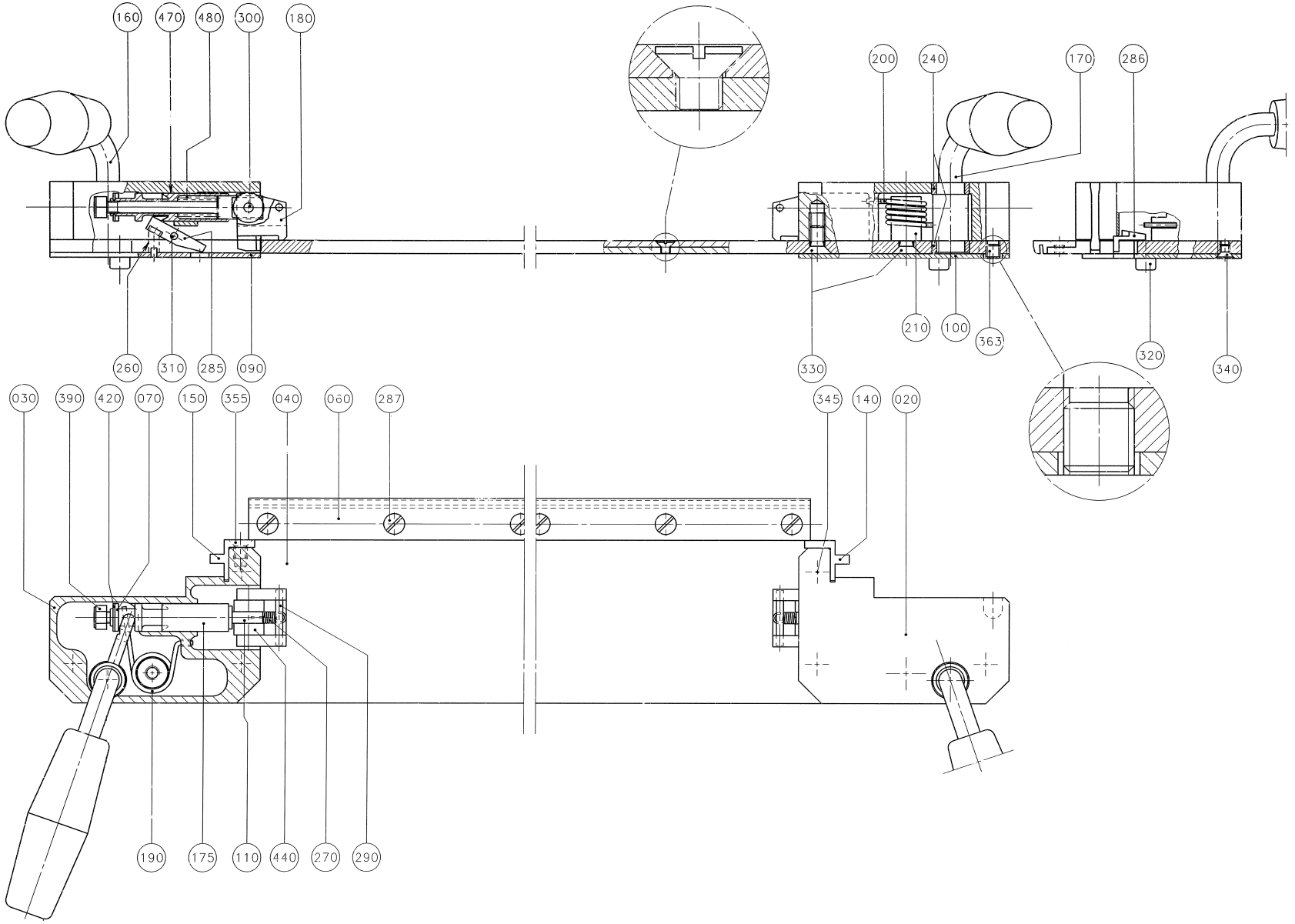
160
470
480
300
180
200
240
170
286
260
310
285
090
210
100
363
330
320
340
030
390
420
070
150
355
040
060
287
345
140
020
190
175
110
440
270
290

ECM: 71843 - 19981215
Group number: 1360785-0100
Assembly Drawing: 1360785-1_1_AA

Issue: 20020222

Pos	Part No	SP	UN	Qty	Description	Page No
TBA 0375S						
020	457487-0000	D		1	BEARING HOUSING	
030	457489-0000	D		1	BEARING HOUSING	
040	556395-0000	D		1	CUTTING RAIL	
090	457493-0000	D		1	COVERING PLATE	
100	457495-0000	D		1	COVERING PLATE	
110	556325-0000	-		2	SHAFT	
140	522474-0000	C		1	BLOCK L	
150	522475-0000	C		1	BLOCK R	
330	312141-0366	-		8	SCREW COUNTERS.SLOT.HD. MFS 6X12 FZB	
355	312145-0323	-		4	SCREW COUNTERS.SLOT.HD. MFS 5X8 SS	
TBA 0500B OR TBA 0750B OR TBA 1000B						
020	449631-0000	D		1	BEARING HOUSING	
030	449632-0000	D		1	BEARING HOUSING	
040	549834-0000	D		1	CUTTING RAIL	
090	449634-0000	D		1	COVERING PLATE	
100	449635-0000	D		1	COVERING PLATE	
110	556322-0000	-		2	SHAFT	
140	522474-0000	C		1	BLOCK L	
150	522475-0000	C		1	BLOCK R	
330	312141-0366	-		8	SCREW COUNTERS.SLOT.HD. MFS 6X12 FZB	
355	312145-0323	-		4	SCREW COUNTERS.SLOT.HD. MFS 5X8 SS	
TBA 0500S OR TBA 0355B						
020	457486-0000	D		1	BEARING HOUSING	
030	457488-0000	D		1	BEARING HOUSING	
040	556394-0000	D		1	CUTTING RAIL	
090	457492-0000	D		1	COVERING PLATE	
100	457494-0000	D		1	COVERING PLATE	
110	556324-0000	-		2	SHAFT	
140	522474-0000	C		1	BLOCK L	
150	522475-0000	C		1	BLOCK R	
330	312141-0366	-		8	SCREW COUNTERS.SLOT.HD. MFS 6X12 FZB	
355	312145-0323	-		4	SCREW COUNTERS.SLOT.HD. MFS 5X8 SS	
TBA 1000SQ						
020	574059-0000	D		1	BEARING HOUSING	
030	574060-0000	D		1	BEARING HOUSING	
040	574061-0000	D		1	CUTTING RAIL	
090	574062-0000	D		1	COVERING PLATE	
100	574063-0000	D		1	COVERING PLATE	
110	574064-0000	-		2	SHAFT	
140	522474-0000	C		1	BLOCK L	
150	522475-0000	C		1	BLOCK R	
330	312141-0366	-		8	SCREW COUNTERS.SLOT.HD. MFS 6X12 FZB	
355	312145-0323	-		4	SCREW COUNTERS.SLOT.HD. MFS 5X8 SS	
TBA 0750S						
020	544272-0000	D		1	BEARING HOUSING	
030	544273-0000	D		1	BEARING HOUSING	
040	556393-0000	D		1	CUTTING RAIL	
090	544274-0000	D		1	COVERING PLATE	
100	544275-0000	D		1	COVERING PLATE	
110	556323-0000	-		2	SHAFT	
140	522474-0000	C		1	BLOCK L	
150	522475-0000	C		1	BLOCK R	
330	312141-0366	-		8	SCREW COUNTERS.SLOT.HD. MFS 6X12 FZB	
355	312145-0323	-		4	SCREW COUNTERS.SLOT.HD. MFS 5X8 SS	
TBA 1000S						
020	569921-0000	D		1	BEARING HOUSE L.	
030	569922-0000	D		1	BEARING HOUSE R.	
040	569923-0000	D		1	CUTTING RAIL	
090	569919-0000	D		1	COVER PLATE R.	
100	569918-0000	D		1	COVER PLATE L.	
110	569920-0000	-		2	SHAFT	
140	522474-0000	C		1	BLOCK L	
150	522475-0000	C		1	BLOCK R	
330	312141-0366	-		8	SCREW COUNTERS.SLOT.HD. MFS 6X12 FZB	
355	312145-0323	-		4	SCREW COUNTERS.SLOT.HD. MFS 5X8 SS	
Common Parts						
060	549835-0000	D		1	CUTTING RAIL	
070	556319-0000	D		2	WASHER	
160	556391-0000	D		1	HANDLE	
170	556392-0000	D		1	HANDLE	
175	556320-0000	D		2	SLEEVE	
180	1317719-0000	-		2	CLAMP	
190	449744-0000	C		1	TURN SPRING	
200	449745-0000	C		1	TURN SPRING	
210	449746-0000	-		2	STEERING	
240	449748-0000	C		4	BEARING	
260	458041-0000	C		2	COMPRESSION SPRING	

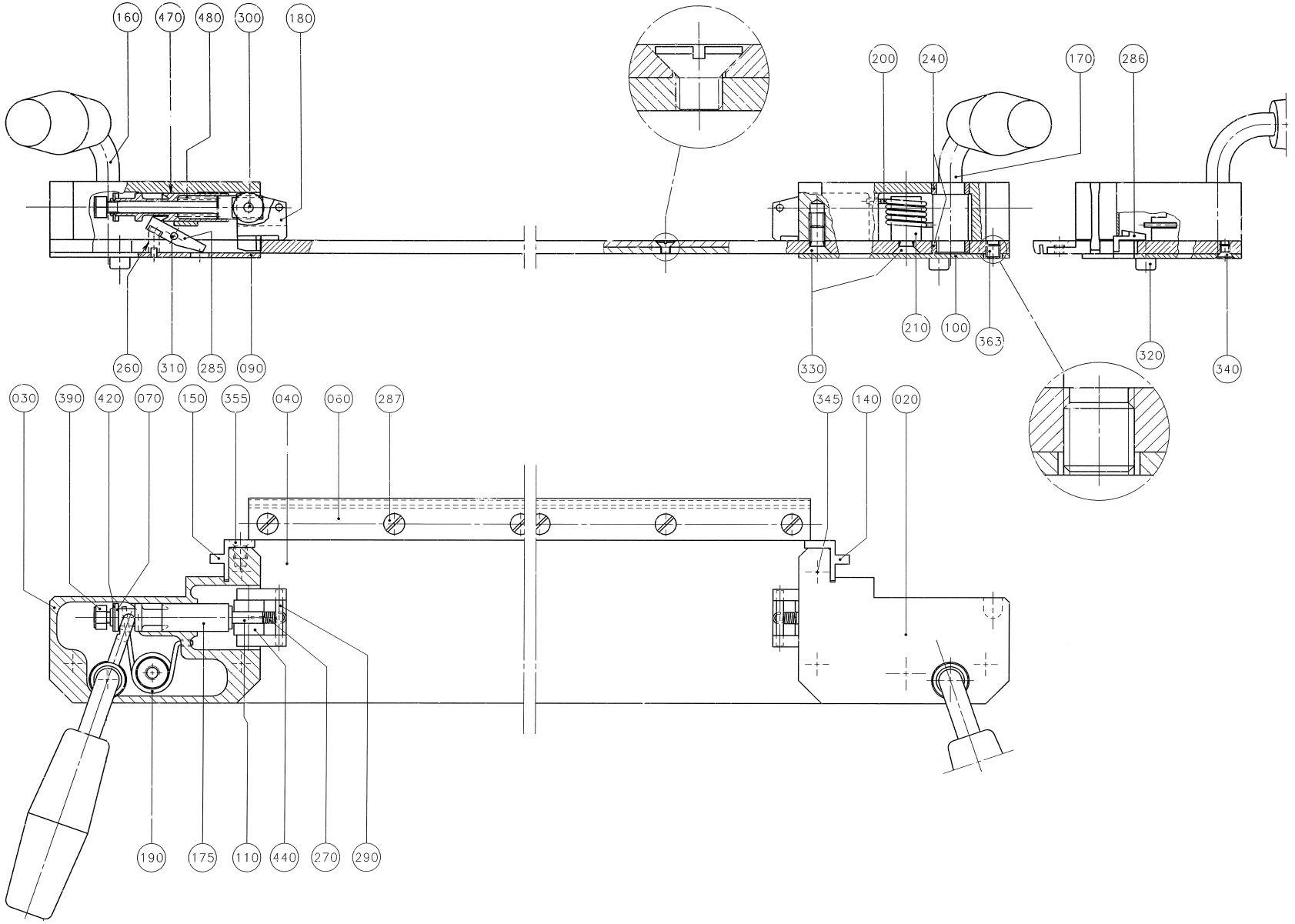
160
470
480
300
180
200
240
170
286
260
310
285
090
210
100
363
330
320
340
030
390
420
070
150
355
040
060
287
345
140
020
190
175
110
440
270
290

Pos	Part No	SP	UN	Qty	Description	Page No
Common Parts (Cont'd)						
240	449748-0000	C		4	BEARING	
260	458041-0000	C		2	COMPRESSION SPRING	
270	458042-0000	C		2	SPRING	
285	457370-0000	D		2	CATCH	
286	457586-0000	C		1	SLIDE	
287	90287-0206	-		7	SLOTTED SCREW	
290	90258-0030	C		2	PIN, STRAIGHT SLOTTED SPRING FRP 3X24	
300	311101-0274	C		2	PARALLELL PIN, CP, H6, 4X25 MM	
310	311102-0236	C		2	PARALLELL PIN, CP, M6, 3X16 MM	
320	312115-0323	-		2	SCREW MC6S M5X8 A280	
340	312145-0285	-		6	SCREW COUNTERS.SLOT.HD. MFS 4X6 SS	
363	312306-0360	-		1	SCREW HEX.SOCK.SET FLAT P.MP6SS 6X6FZB	
390	312812-0314	-		2	HEXAGON NUT, NY-LOCK M5 A480	
420	315755-0108	C		2	LOCKING WASHER 6	
440	321300-0094	C		4	BALL BEARING, 4X13X5 MM	
470	90296-0009	-	ML	2	SILICONE GREASE TUBE 100 GR.	
480	90335-0237	D		2	COMPRESSION SPRING	

Pos	Part No	SP	UN	Qty	Description	Page No

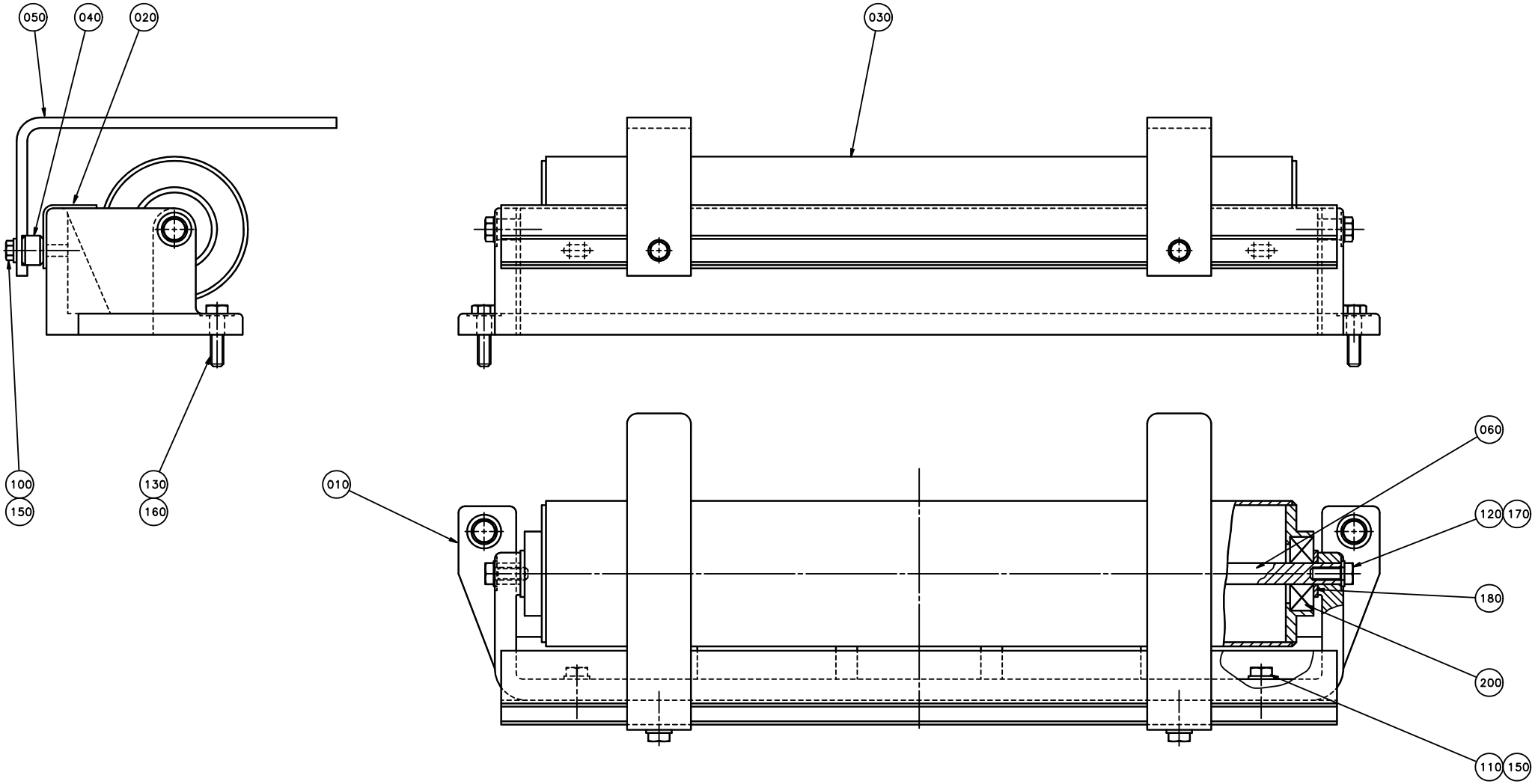
050
040
020
030
100
150
130
160
010
060
120
170
180
200
110
150

ECM: 72192 - 19990218
Group number: 522410-0200
Assembly Drawing: 522410-2_1_AA

Issue: 20020222

Pos	Part No	SP	UN	Qty	Description	Page No
Common Parts						
010	522173-0000	-		1	CANTILEVER	
020	574651-0000	-		1	SHEET	
030	265564-0000	D		1	BENDING ROLLER	
040	479223-0000	-		1	RAIL	
050	531885-0000	-		2	STEERING	
060	499132-0002	D		1	SHAFT	
100	312105-0327	-		2	SCREW M6S M5X12 A280	
110	312105-0331	-		2	SCREW M6S M5X20 A280	
120	312105-0368	-		2	SCREW M6S M6X16 A280	
130	312105-0372	-		2	SCREW M6S M6X25 A280	
150	315105-0146	-		4	WASHER PLAIN, BRB, 5,3/10,H=1	
160	315105-0153	-		2	WASHER PLAIN, BRB, 6,4/12,H=1,5	
170	315115-0153	-		2	WASHER PLAIN, TBRB 6,4/12 H=3	
180	315105-0173	-		2	WASHER PLAIN, BRB, 10,5/22,H=2	
200	321316-0200	C		2	BALL BEARING, 2 SEALS, 10X35X11 MM	

Pos	Part No	SP	UN	Qty	Description	Page No

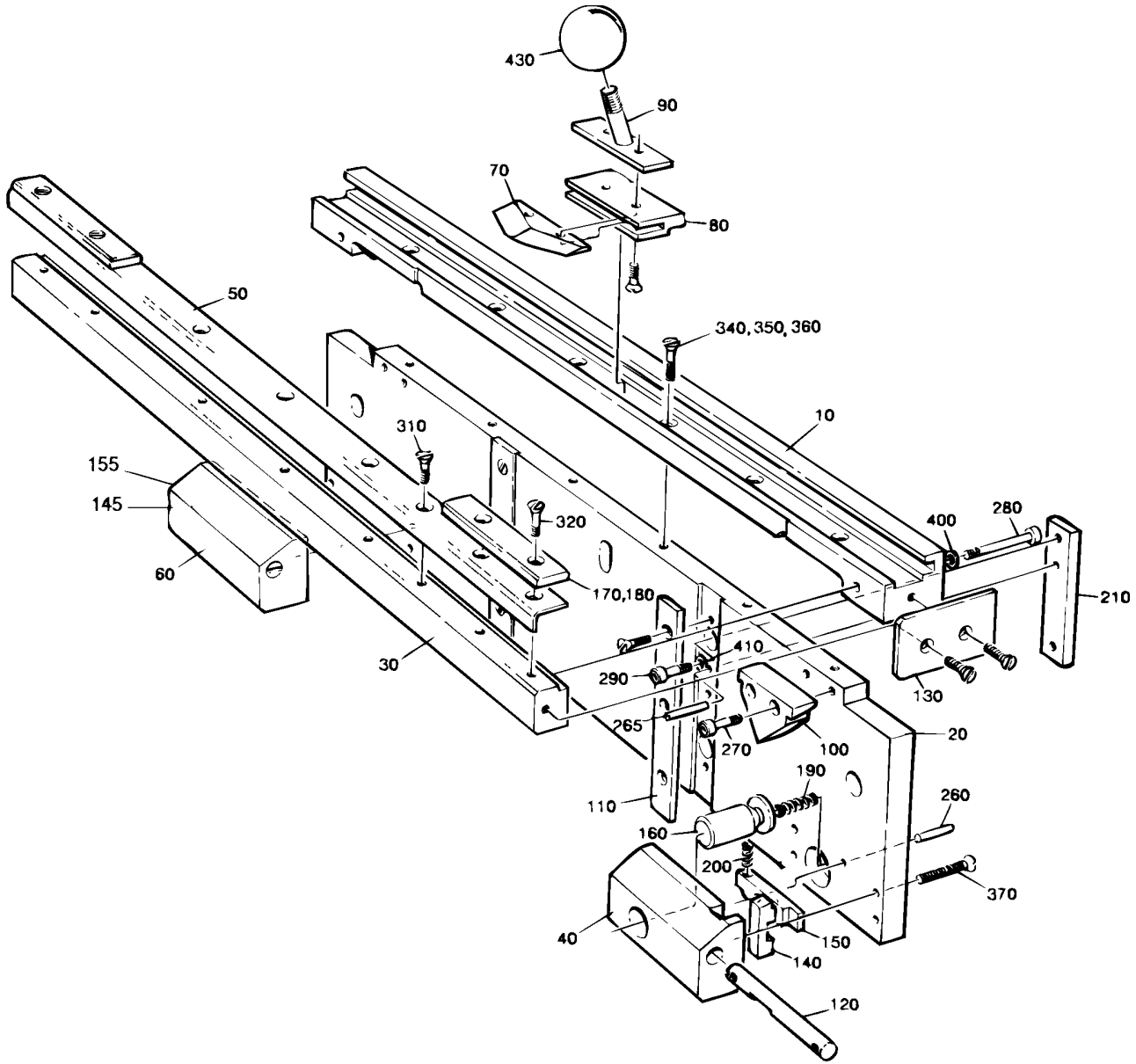
430
90
70
80
50
340, 350, 360
10
310
155
145
320
400
280
60
170,180
210
410
30
290
130
265
270
100
20
190
110
260
160
200
370
40
150
140
120

Pos	Part No	SP	UN	Qty	Description	Page No
TBA 0375S						
010	B522122-0002	D		1	RAIL	
	312910-0111	-		*2*	*THREADED INSERTS M4X2,0D*	
020	B522123-0000	-		1	PLATE	
	312910-0114	-		*12*	*HELI-COIL M5X1,5D*	
	312910-0115	-		*4*	*THREADED INSERTS M5X2,0D*	
030	B522124-0000	-		1	RULER	
	312911-0115	-		*2*	*THREADED INSERTS M5X2,0D*	
	312910-0111	-		*10*	*THREADED INSERTS M4X2,0D*	
100	522131-0000	D		2	STEERING	
180	522139-0002	D		1	STOPPER	
350	312145-0329	-		6	SCREW COUNTERS.SLOT.HD. MFS 5X16 SS	
TBA 0500B OR TBA 0750B OR TBA 1000B						
010	B522122-0001	D		1	RAIL	
	312910-0111	-		*2*	*THREADED INSERTS M4X2,0D*	
020	B522123-0000	-		1	PLATE	
	312910-0114	-		*12*	*HELI-COIL M5X1,5D*	
	312910-0115	-		*4*	*THREADED INSERTS M5X2,0D*	
030	B522124-0000	-		1	RULER	
	312911-0115	-		*2*	*THREADED INSERTS M5X2,0D*	
	312910-0111	-		*10*	*THREADED INSERTS M4X2,0D*	
100	522131-0000	D		2	STEERING	
170	522138-0000	D		1	STOPPER	
360	312145-0331	-		6	SCREW COUNTERS.SLOT.HD. MFS 5X20 SS	
TBA 0500S OR TBA 0355B						
010	B522122-0002	D		1	RAIL	
	312910-0111	-		*2*	*THREADED INSERTS M4X2,0D*	
020	B522123-0000	-		1	PLATE	
	312910-0114	-		*12*	*HELI-COIL M5X1,5D*	
	312910-0115	-		*4*	*THREADED INSERTS M5X2,0D*	
030	B522124-0000	-		1	RULER	
	312911-0115	-		*2*	*THREADED INSERTS M5X2,0D*	
	312910-0111	-		*10*	*THREADED INSERTS M4X2,0D*	
100	522131-0000	D		2	STEERING	
180	522139-0001	D		1	STOPPER	
350	312145-0329	-		6	SCREW COUNTERS.SLOT.HD. MFS 5X16 SS	
TBA 1000SQ						
010	B522122-0001	D		1	RAIL	
	312910-0111	-		*2*	*THREADED INSERTS M4X2,0D*	
020	B522123-0000	-		1	PLATE	
	312910-0114	-		*12*	*HELI-COIL M5X1,5D*	
	312910-0115	-		*4*	*THREADED INSERTS M5X2,0D*	
030	B522124-0000	-		1	RULER	
	312911-0115	-		*2*	*THREADED INSERTS M5X2,0D*	
	312910-0111	-		*10*	*THREADED INSERTS M4X2,0D*	
100	522131-0000	D		2	STEERING	
170	574052-0000	D		1	STOPPER	
360	312145-0331	-		6	SCREW COUNTERS.SLOT.HD. MFS 5X20 SS	
TBA 0750S						
010	B522122-0001	D		1	RAIL	
	312910-0111	-		*2*	*THREADED INSERTS M4X2,0D*	
020	B522123-0000	-		1	PLATE	
	312910-0114	-		*12*	*HELI-COIL M5X1,5D*	
	312910-0115	-		*4*	*THREADED INSERTS M5X2,0D*	
030	B522124-0000	-		1	RULER	
	312911-0115	-		*2*	*THREADED INSERTS M5X2,0D*	
	312910-0111	-		*10*	*THREADED INSERTS M4X2,0D*	
100	522131-0000	D		2	STEERING	
170	544270-0000	D		1	STOPPER	
360	312145-0331	-		6	SCREW COUNTERS.SLOT.HD. MFS 5X20 SS	
TBA 1000S						
010	B522122-0001	D		1	RAIL	
	312910-0111	-		*2*	*THREADED INSERTS M4X2,0D*	
020	B522123-0000	-		1	PLATE	
	312910-0114	-		*12*	*HELI-COIL M5X1,5D*	
	312910-0115	-		*4*	*THREADED INSERTS M5X2,0D*	
030	B522124-0000	-		1	RULER	
	312911-0115	-		*2*	*THREADED INSERTS M5X2,0D*	
	312910-0111	-		*10*	*THREADED INSERTS M4X2,0D*	
100	522131-0000	D		2	STEERING	
170	569924-0000	D		1	STOPPER	
360	312145-0331	-		6	SCREW COUNTERS.SLOT.HD. MFS 5X20 SS	
Common Parts						
040	522125-0000	D		1	BEARING HOUSING	
050	522126-0000	-		1	SHEET	
060	556443-0000	D		1	BEARING HOUSING	
070	522128-0000	C		1	KNIFE	
080	522129-0000	D		1	KNIFE HOLDER	

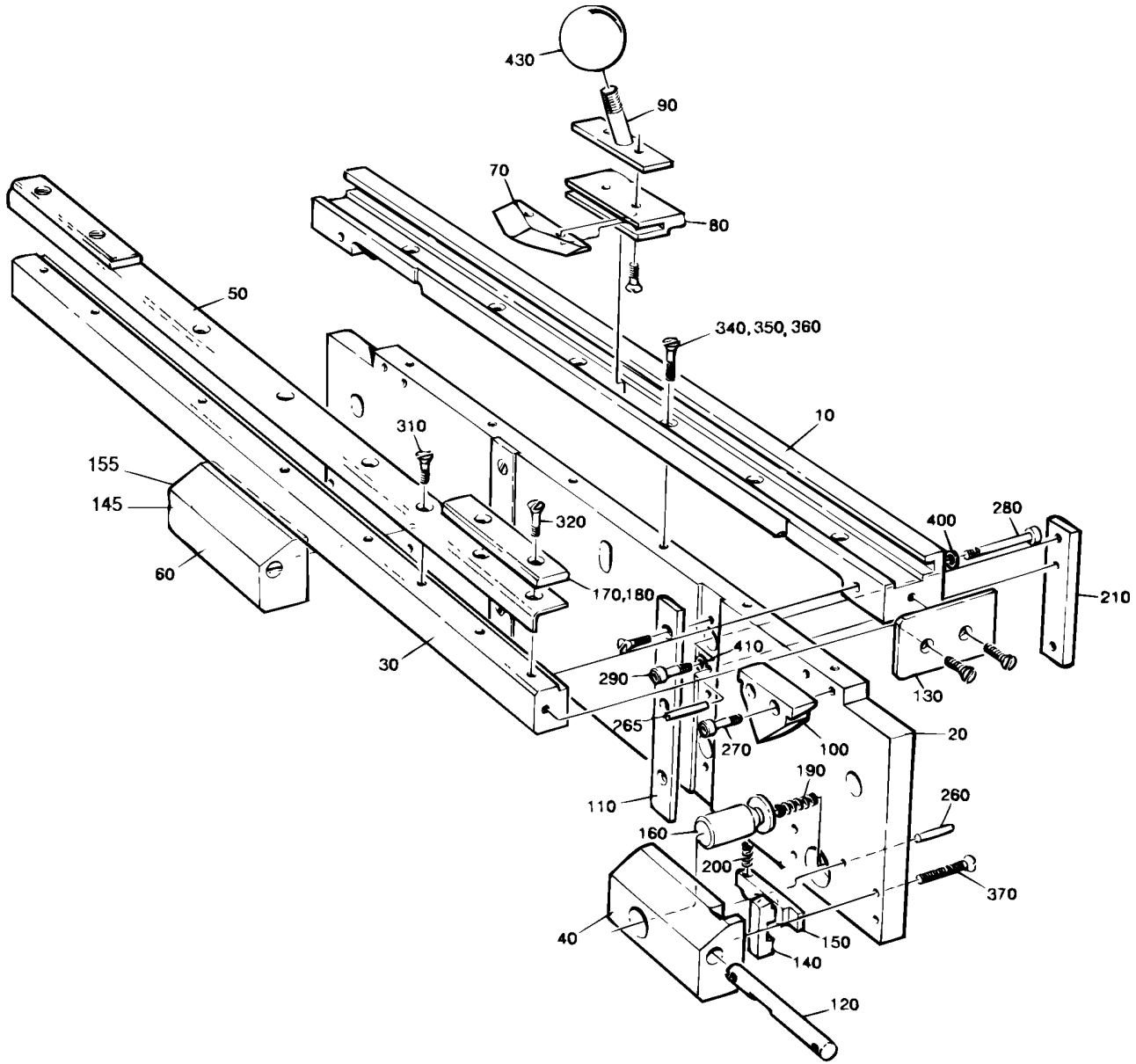
430
90
70
80
50
340, 350, 360
10
310
155
145
320
400
280
60
170,180
210
410
30
290
130
265
270
100
20
190
110
260
160
200
370
40
150
140
120

Pos	Part No	SP	UN	Qty	Description	Page No
Common Parts (Cont'd)						
070	522128-0000	C		1	KNIFE	
080	522129-0000	D		1	KNIFE HOLDER	
090	522130-0000	D		1	HANDLE	
110	522132-0000	-		2	SLIDE BELT	
120	522133-0000	D		2	SHAFT	
130	522134-0000	-		2	END PLATE	
140	556439-0000	D		1	BARRIER	
145	556440-0000	D		1	BARRIER	
150	556441-0000	-		1	ARM	
155	556442-0000	-		1	ARM	
160	522137-0000	D		2	PUSH BUTTON	
190	522158-0000	C		2	COMPRESSION SPRING	
200	458041-0000	C		2	COMPRESSION SPRING	
210	530778-0000	-		2	LACE	
250	311103-0272	-		2	PARALLELL PIN, M6, 4X20 MM	
260	311112-0256	-		4	PIN, STRAIGHT SLOTTED SPRING FRP 4X20	
265	311112-0258	-		2	PIN, STRAIGHT SLOTTED SPRING FRP 4X24	
270	312115-0329	-		4	SCREW MC6S M5X16 A280	
280	312115-0339	-		2	SCREW MC6S M5X40 A280	
290	312115-0370	-		4	SCREW MC6S M6X20 A280	
310	312145-0289	-		8	SCREW COUNTERS.SLOT.HD. MFS 4X10 SS	
320	312145-0291	-		6	SCREW COUNTERS.SLOT.HD. MFS 4X12 A4	
340	312145-0327	-		6	SCREW COUNTERS.SLOT.HD. MFS 5X12 SS	
370	312105-0337	-		4	SCREW M6S M5X35 A280	
400	315105-0146	-		6	WASHER PLAIN, BRB, 5,3/10,H=1	
410	315105-0153	-		4	WASHER PLAIN, BRB, 6,4/12,H=1,5	
430	318800-0107	-		1	HANDLE,SPHERICAL KNOB,INT.THRE.,D45-M10	

Pos	Part No	SP	UN	Qty	Description	Page No

This page is intentionally left blank.

ECM: - -
Group number: 440132-0200
Assembly Drawing:

Issue: 20020222

Pos	Part No	SP	UN	Qty	Description	Page No
Common Parts						
030	294009-0000	-		2	KNIFE	

Pos	Part No	SP	UN	Qty	Description	Page No

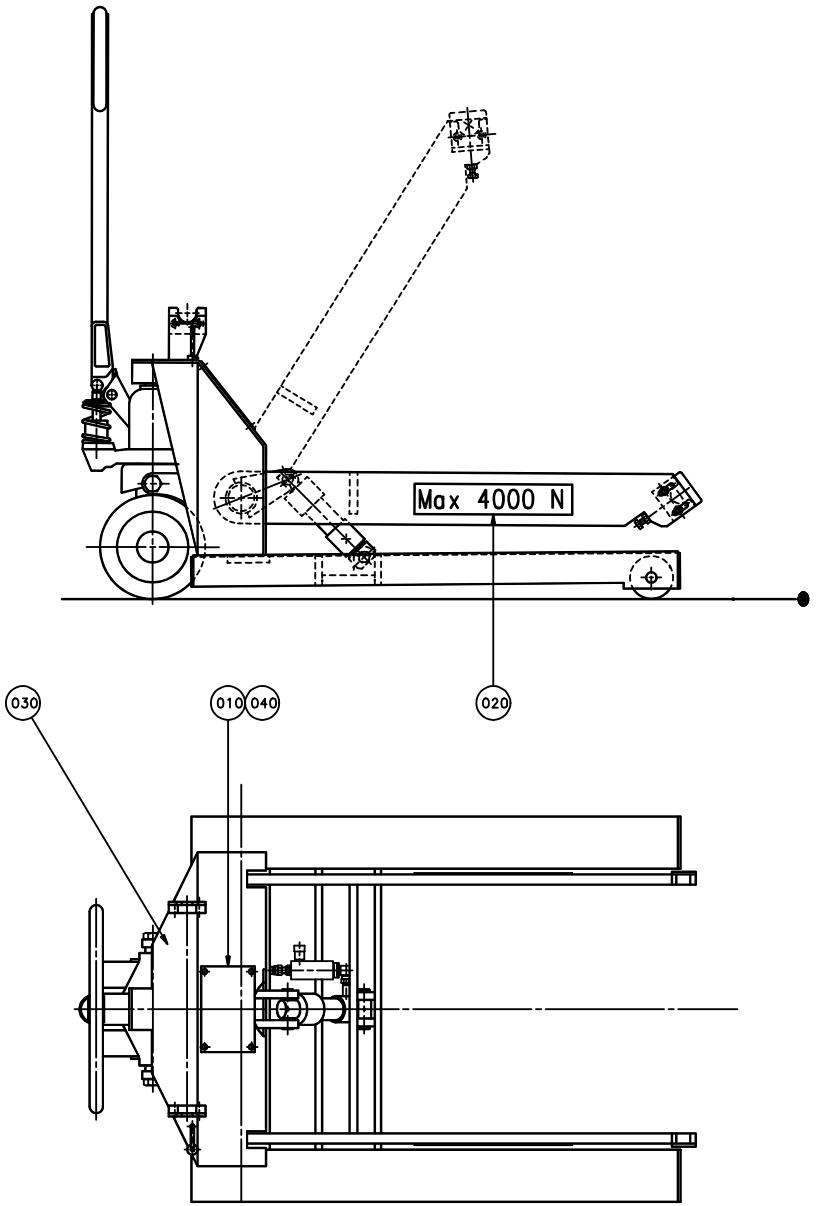
Max 4000 N
030
010
040
020

ECM: 72192 - 19990218
Group number: 576739-0200
Assembly Drawing: 576739-4_1_AA

Issue: 20020222

Pos	Part No	SP	UN	Qty	Description	Page No
Common Parts						
010	574658-0000	-		1	LOGOTYPE TP	
020	522308-0000	-		2	SIGN	
030	B90067-0021	D		1	CARRIAGE 32 04 129 5	
100	*90067-0301*	*C*		*1*	*BRAKE WIRE*	
110	*90067-0302*	*D*		*2*	*TORSION SPRING*	
120	*90067-0317*	*D*		*2*	*BRAKE LINING*	
130	*90067-0320*	*C*		*1*	*COTTER FOR 90067-301*	
140	*90067-0334*	*D*		*1*	*AXIAL BEARING KIT*	
150	*90067-0336*	*D*		*1*	*GUIDE SHAFT UNIT*	
160	*90067-0337*	*D*		*2*	*BRAKE DRUM*	
170	*90067-0338*	*C*		*2*	*GUIDE ROLLER 32 44 117 2*	
180	*90067-0370*	*C*		*2*	*WHEEL*	
190	*90067-0371*	*D*		*4*	*WASHER PLAIN, BRB, 21/29 H=2,5*	
200	*90067-0372*	*D*		*2*	*SHAFT*	
210	*90067-0342*	*D*		*4*	*TENSION SPRING*	
220	*90067-0346*	*C*		*1*	*PISTON ROD*	
230	*90067-0347*	*C*		*1*	*CYLINDER SHELL*	
240	*90067-0348*	*C*		*1*	*REPAIR KIT*	
250	*90067-0349*	*C*		*1*	*ROLL*	
260	*90067-0350*	*D*		*1*	*AXLE PIN*	
270	*90067-0351*	*C*		*1*	*SEAL KIT*	
280	*90067-0352*	*C*		*1*	*SINK VALVE COMPL.*	
290	*90067-0353*	*C*		*1*	*PUMP CYLINDER*	
300	*90067-0354*	*C*		*1*	*PUMP PISTON*	
310	*90067-0355*	*D*		*1*	*COMPRESSION SPRING*	
320	*90067-0356*	*D*		*1*	*TOP WASHER*	
330	*90067-0357*	*C*		*1*	*REPAIR KIT*	
340	*90067-0358*	*D*		*1*	*SINK HANDLE*	
350	*90067-0359*	*D*		*1*	*SINK ROD*	
360	*90067-0360*	*C*		*1*	*POSITIONING DEVICE*	
370	*90067-0361*	*D*		*1*	*TIE ROD*	
380	*90067-0362*	*-*		*1*	*CIRCLIP*	
390	*90067-0363*	*C*		*4*	*SLIDER*	
400	*90067-0364*	*D*		*1*	*BRAKE HANDLE*	
410	*90067-0365*	*C*		*1*	*HYDRAULIC HOSE*	
420	*90067-0366*	*C*		*1*	*INDICATOR L=278MM;D=6MM*	
430	*90067-0367*	*D*		*1*	*INDICATOR L=83MM;D=6MM*	
440	*90067-0368*	*D*		*1*	*YOKE*	
450	*90067-0369*	*D*		*1*	*VALVE ARM*	
500	*90055-0042*	*C*		*1*	*NIPPLES, EXT. THREAD, HEXAGON, NO. 6835-*	
510	*90055-0145*	*C*		*1*	*ELBOW ADAPTOR-R1/4*	
550	*90091-0106*	*-*		*1*	*SCRAPER 30X40X10 MM*	
570	*90201-0098*	*C*		*1*	*ADJ. FLOW CON. VALVE, NO. 32 04 149 4*	
600	*311111-0251*	*-*		*1*	*PIN, STRAIGHT SLOTTED SPRING FRP 4X10*	
610	*311111-0345*	*-*		*1*	*PIN, STRAIGHT SLOTTED SPRING FRP 6X32*	
620	*311103-0271*	*-*		*2*	*PIN,STRAIGHT CP M6 4X18 RFR*	
650	*312101-0678*	*-*		*2*	*SCREW M6S M20X70 FZB*	
670	*312104-0501*	*-*		*2*	*SCREW M6S M10X50H FZB*	
680	*312151-0451*	*-*		*4*	*SCREW HEX.SOCK.COUNT.MF6S 8X20 FZB*	
690	*312151-0455*	*-*		*4*	*SCREW HEX.SOCK.COUNT.MF6S 8X30 FZB*	
750	*312601-0318*	*-*		*4*	*NUT M6M8FZB*	
760	*312601-0320*	*-*		*2*	*NUT M6M 10-8 FZB*	
800	*315101-0165*	*-*		*4*	*WASHER PLAIN, BRB, 8,4/16 H=1,5*	
840	*315234-0110*	*C*		*2*	*WASHER,PL.RND.CU.13,5/18 H=1,5*	
850	*315750-0119*	*C*		*4*	*RETAIN. RING, 25*	
860	*315750-0131*	*C*		*1*	*RETAIN. RING, 50*	
900	*321120-0137*	*D*		*2*	*BEARING BUSHING WITHOUT FLANGE,20/23X15*	
040	311521-0143	-		4	BLANK RIVET 3,2X8	

Machine Type | Group Description | Used-In | Group Number | Page No

Tetra Pak

SPC
Spare Parts Catalogue

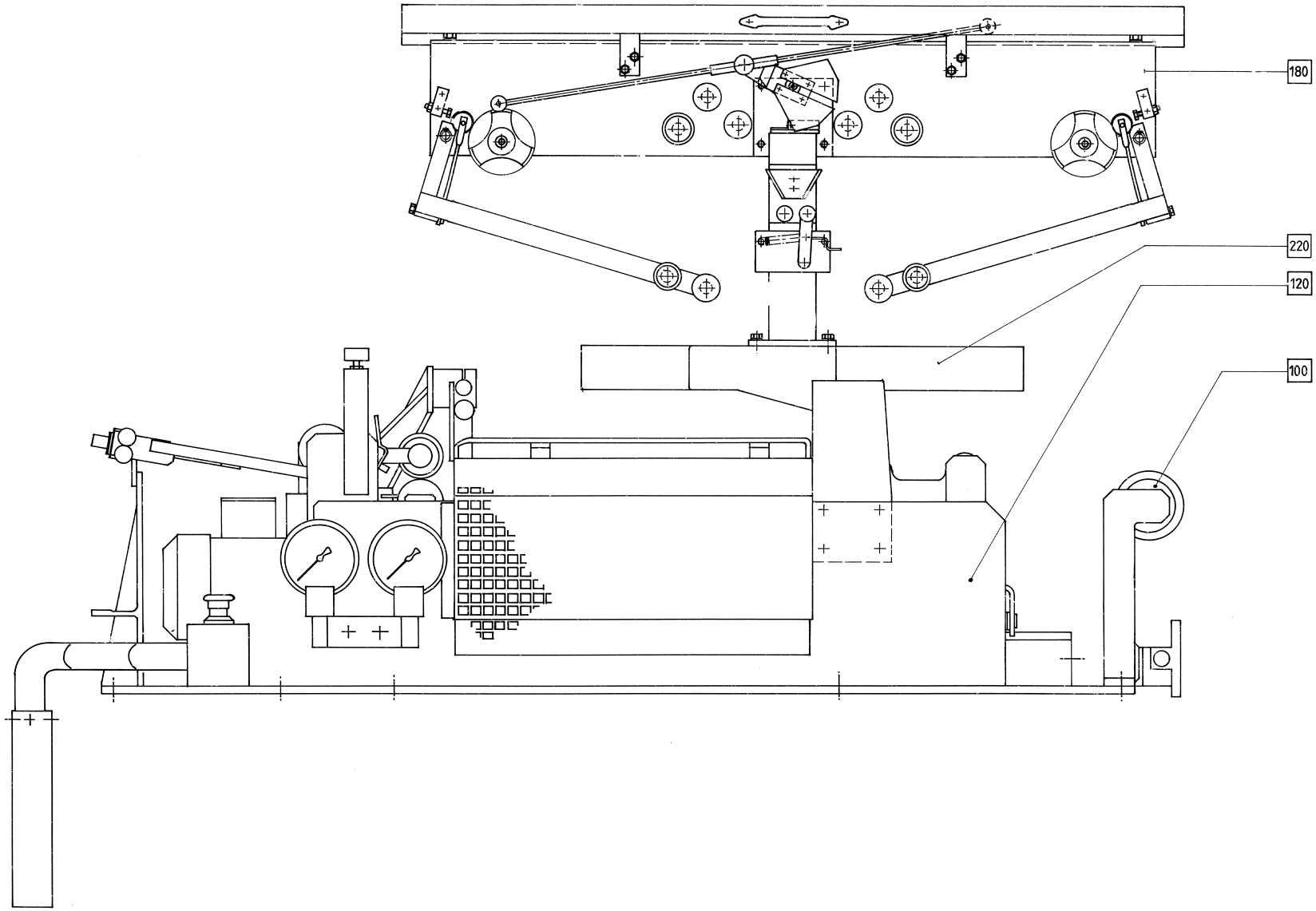
180
220
120
100

ECM: 72719 - 19990803
Group number: 648007-0500
Assembly Drawing: 648007-5_1_AA

Issue: 20020121

Pos	Part No	SP	UN	Qty	Description	Page No
Common Parts						
040	A282509-0300	-		1	BENDING ROLLER	**701**
065	A1361281-0100	-		1	SUPPORT ROLLER	**703**
070	A1498072-0100	-		1	CONNECTION BOX	**705**
080	A526931-0300	-		1	BOTTOM PLATE	**707**
090	A1487979-0100	-		1	PIPE WORK TBA/8	**709**
095	A1361275-0100	-		1	PAPER GUIDE	**711**
100	A265565-0200	-		1	BENDING ROLLER BRACKET	**715**
110	A266726-0300	-		1	PRESSURE ROLLER	**717**
120	A269112-0600	-		1	STRIP APPLICATOR	**719, 721**
130	A282528-0200	-		1	PRESSURE ROLLER	**723**
135	A1348231-0100	-		1	STRIP GUIDE	**725**
160	A546180-0100	-		1	SPLICE DETECTOR	**727**
170	A526954-0100	-		1	START-UP KIT	**729**
180	A543823-0100	-		1	STRIP MAGAZINE	**731**
220	A544973-0100	-		1	PILLAR	**741**

Pos	Part No	SP	UN	Qty	Description	Page No

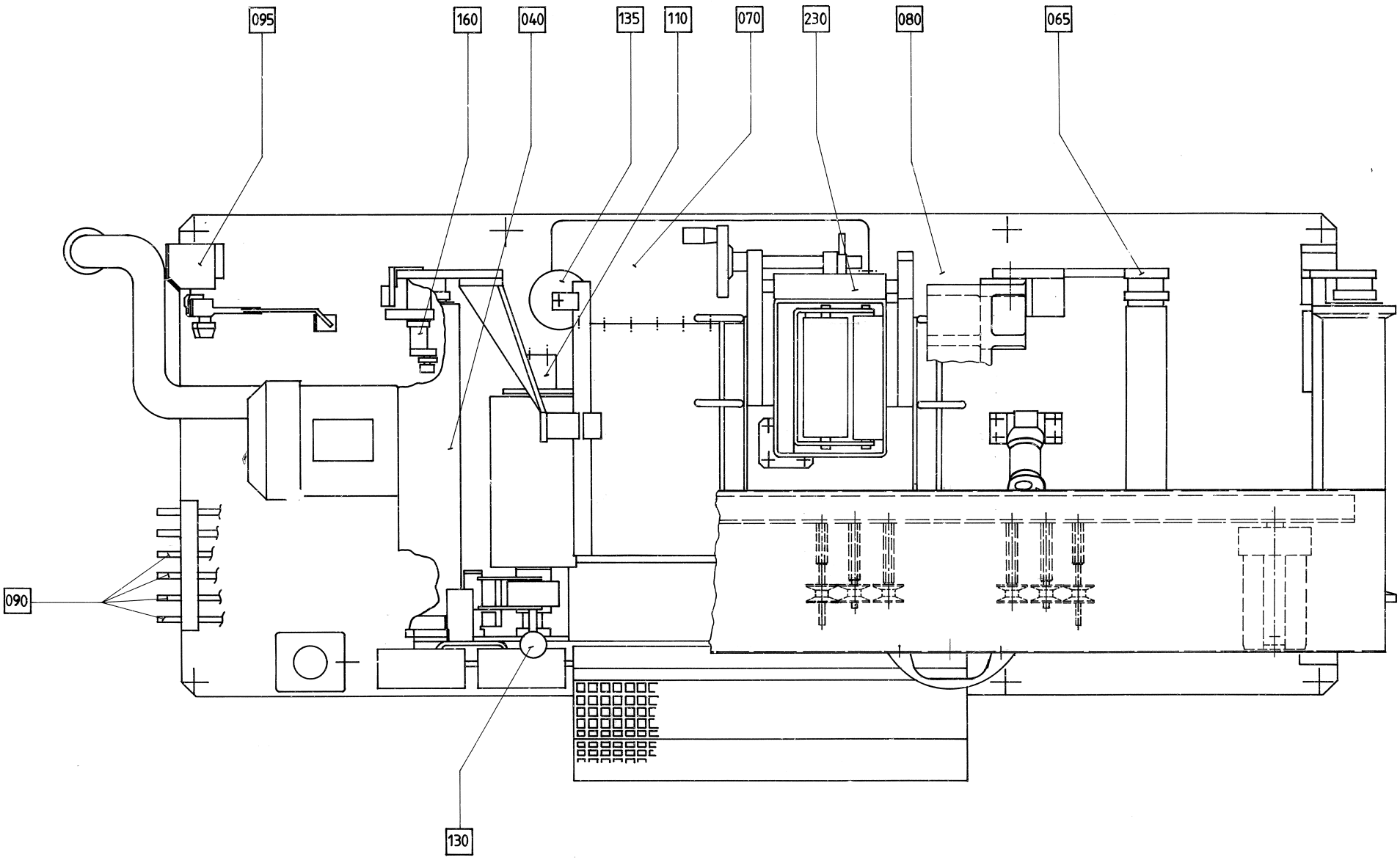
095
160
040
135
110
070
230
080
065
090
130

ECM: 72719 - 19990803
Group number: 648007-0500
Assembly Drawing: 648007-6_1_AA

Issue: 20020121

Pos	Part No	SP	UN	Qty	Description	Page No
Common Parts						
040	A282509-0300	-		1	BENDING ROLLER	**701**
065	A1361281-0100	-		1	SUPPORT ROLLER	**703**
070	A1498072-0100	-		1	CONNECTION BOX	**705**
080	A526931-0300	-		1	BOTTOM PLATE	**707**
090	A1487979-0100	-		1	PIPE WORK TBA/8	**709**
095	A1361275-0100	-		1	PAPER GUIDE	**711**
100	A265565-0200	-		1	BENDING ROLLER BRACKET	**715**
110	A266726-0300	-		1	PRESSURE ROLLER	**717**
120	A269112-0600	-		1	STRIP APPLICATOR	**719, 721**
130	A282528-0200	-		1	PRESSURE ROLLER	**723**
135	A1348231-0100	-		1	STRIP GUIDE	**725**
160	A546180-0100	-		1	SPLICE DETECTOR	**727**
170	A526954-0100	-		1	START-UP KIT	**729**
180	A543823-0100	-		1	STRIP MAGAZINE	**731**
220	A544973-0100	-		1	PILLAR	**741**

Pos	Part No	SP	UN	Qty	Description	Page No

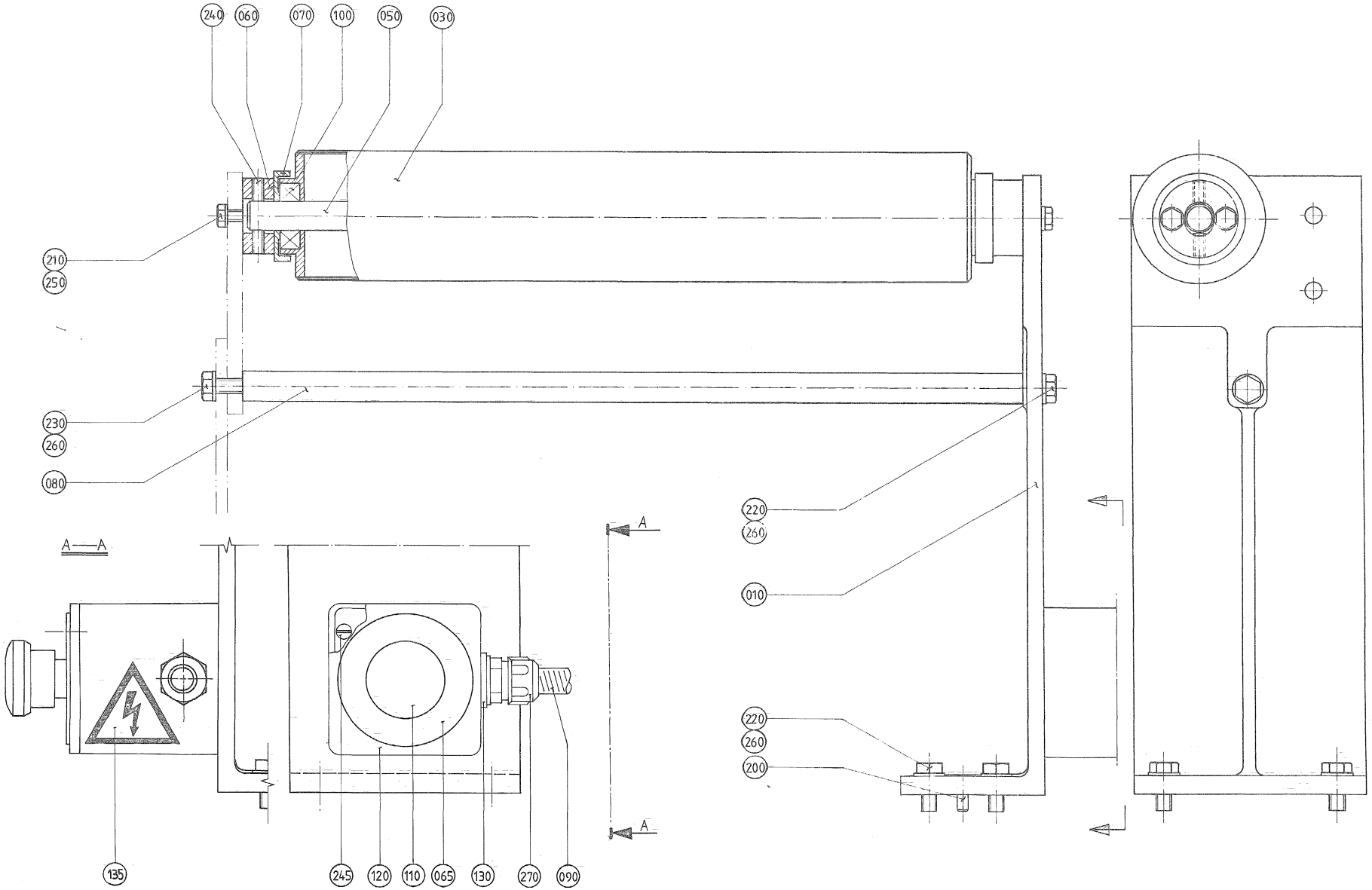
240
060
070
100
050
030
210
250
230
260
080
A—A
A
A
135
245
120
110
065
130
270
090
220
260
010
220
260
200

Pos	Part No	SP	UN	Qty	Description	Page No
TBA 0500B OR TBA 0750B OR TBA 1000S OR TBA 1000B						
030	449843-0001	D		1	BENDING ROLLER	
050	265566-0001	D		1	SHAFT	
080	265569-0001	-		1	STRUT	
TBA 0500S OR TBA 0355B OR TBA 0375S						
030	449843-0002	D		1	BENDING ROLLER	
050	265566-0003	D		1	SHAFT	
080	265569-0003	-		1	STRUT	
TBA 1000SQ						
030	449843-0004	D		1	BENDING ROLLER	
050	265566-0005	D		1	SHAFT	
080	265569-0006	-		1	STRUT	
TBA 0750S						
030	449843-0003	D		1	BENDING ROLLER	
050	265566-0004	D		1	SHAFT	
080	265569-0005	-		1	STRUT	
Common Parts						
010	265756-0000	-		1	CANTILEVER	
060	265567-0000	D		2	BEARING UNIT	
065	486826-0001	-		1	SIGN "EMERGENCY STOP"	
070	265568-0000	C		2	DUST COVER	
090	90152-0033	-	M	1	SPIRAL CONDUIT FOR PR 15,2(PG 9)	
100	90214-0098	C		2	BALL BEARING, 15X35X11 MM	
110	90064-0105	D		1	EMERGENCY STOP BUTTON REPL.BY 90064-124	
120	90066-0021	-		1	PUSH BUTTON BOX XAP-M1501 TELEMECANIQUE	
130	90089-0003	-		1	REDUCING SLEEVE, PR22,5/PR18,6	
135	90194-0016	-		1	SIGN, FLASH, ELECTRIC EQUIPMENT SYMBOL	
200	311305-0308	-		2	SLOTTED PIRPC5X16FZB	
210	312105-0370	-		4	SCREW M6S M6X20 A280	
220	312105-0451	-		5	SCREW M6S 8X20 A280	
230	312105-0453	-		1	SCREW M6S M8X25 A280	
240	312318-0364	-		4	SCREW HEX.SOCK.SET CUP P.MSK6SS6X10 SS	
245	312125-0333	-		2	SCREW PAN HEAD MCS M5X25 SS	
250	315105-0153	-		4	WASHER PLAIN, BRB, 6,4/12,H=1,5	
260	315105-0165	-		6	WASHER PLAIN, BRB, 8,4/16,H=1,5	
270	352136-0113	-		1	GLAND FITTING PR18,6/PG11 DI=12MM	

Pos	Part No	SP	UN	Qty	Description	Page No

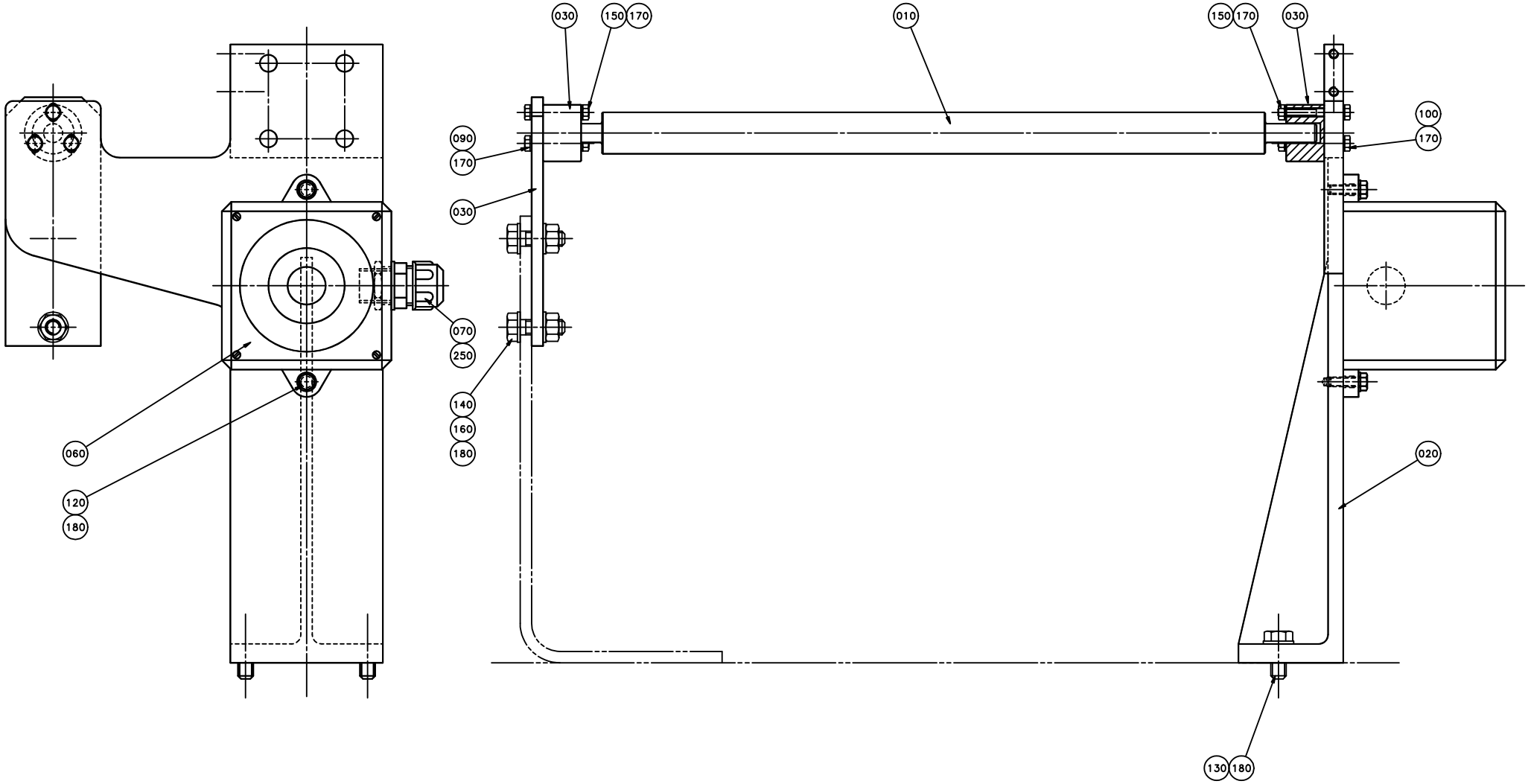
030
150
170
010
150
170
030
090
170
030
070
250
140
160
180
060
120
180
100
170
020
130
180

Pos	Part No	SP	UN	Qty	Description	Page No
TBA 0500B OR TBA 0750B OR TBA 1000S OR TBA 1000B						
010	573666-0000	D		1	SUPPORT ROLLER	
190	315105-0146	-		2	WASHER PLAIN, BRB, 5,3/10,H=1	
TBA 0500S OR TBA 0355B OR TBA 0375S						
010	573667-0000	D		1	SUPPORT ROLLER	
190	315105-0146	-		2	WASHER PLAIN, BRB, 5,3/10,H=1	
TBA 1000SQ						
010	574038-0000	D		1	SUPPORT ROLLER	
190	315105-0146	-		2	WASHER PLAIN, BRB, 5,3/10,H=1	
TBA 0750S						
010	573668-0000	D		1	SUPPORT ROLLER	
190	315105-0146	-		2	WASHER PLAIN, BRB, 5,3/10,H=1	
Common Parts						
020	573664-0000	-		1	CANTILEVER	
030	24206-0000	C		2	BEARING	
040	573665-0000	-		1	FASTENING PLATE	
060	90052-0011	-		1	HORN	
070	90099-0002	-		1	NUT PR 18,6 BRASS	
090	312105-0299	-		3	SCREW M6S M4X30 A280	
100	312105-0301	-		3	SCREW M6S M4X35 A280	
120	312105-0329	-		2	SCREW M6S M5X16 A280	
130	312105-0451	-		2	SCREW M6S 8X20 A280	
140	312105-0453	-		2	SCREW M6S M8X25 A280	
150	312605-0312	-		6	HEXAGON NUT, M6M M4 A280	
160	312605-0318	-		2	HEXAGON NUT, M6M M8 A280	
170	315105-0136	-		12	WASHER PLAIN, BRB, 4,3/8,H=0,8	
180	315105-0165	-		6	WASHER PLAIN, BRB, 8,4/16,H=1,5	
250	352136-0113	-		1	GLAND FITTING PR18,6/PG11 DI=12MM	

Pos	Part No	SP	UN	Qty	Description	Page No

Machine Type | Group Description | Used-In | Group Number | Page No

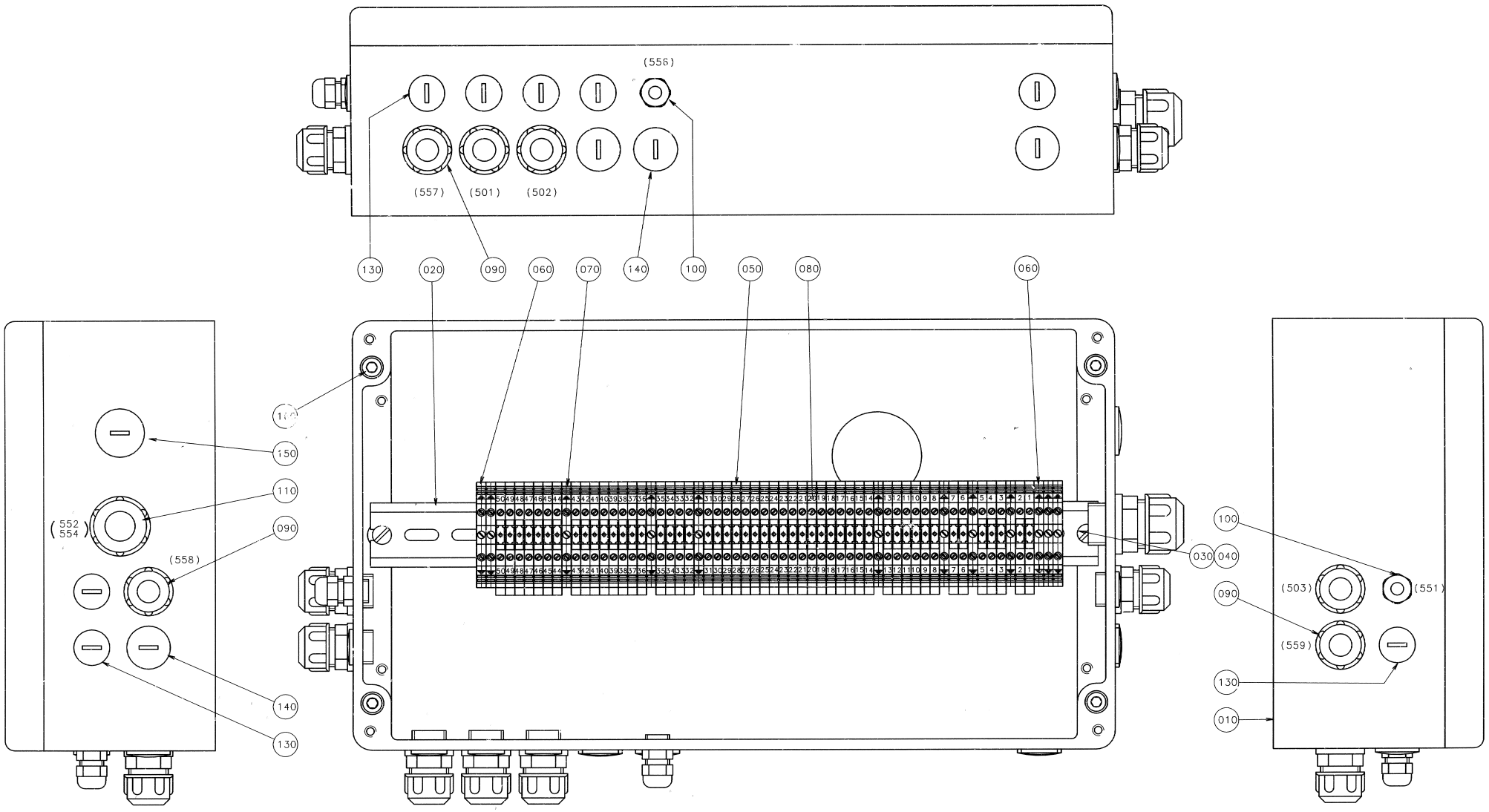
(556)
(557)
(501)
(502)
130
020
090
060
070
140
100
050
080
060
150
110
090
(552
554)
(558)
140
130
100
030
040
090
(503)
(551)
(559)
130
010

Pos	Part No	SP	UN	Qty	Description	Page No
TBA/8						
150	90002-0004	-		1	BLANK-OFF PLUG, PR 22,5 SKINDICHT-BLK16	
Common Parts						
010	1487980-0000	-		1	CONNECTION BOX	
020	353042-0005	-	MM	385	RAIL TS 35/7.5	
030	312125-0366	-		2	SCREW PAN HEAD MCS M6X12 SS	
040	315105-0153	-		2	WASHER PLAIN, BRB, 6,4/12,H=1,5	
050	353021-0212	-		50	FEED THROUGH TERMINAL, 10200.0	
060	353024-0205	-		2	EARTH TERMINAL, 1010.1	
070	353024-0204	-		10	EARTH TERMINAL WPE 2,5	
080	359011-0821	-		2	SET OF SIGNS 6-FW 1-50	
090	352136-0113	-		6	GLAND FITTING PR18,6/PG11 DI=12MM	
100	352103-0100	-		2	CABLE GLAND, STR 9, PR15,2/PG9	
110	352136-0129	-		1	GLAND FITTING PR22,5/PG16 DI=16MM	
130	90002-0013	-		8	BLANK-OFF PLUG, PR 15,2 SKINDICHT-BLK9	
140	90002-0009	-		4	BLANK-OFF PLUG, PR 18.6 SKINDICHT-BLK11	
160	312115-0376	-		4	SCREW MC6S M6X35 A280	

Pos	Part No	SP	UN	Qty	Description	Page No

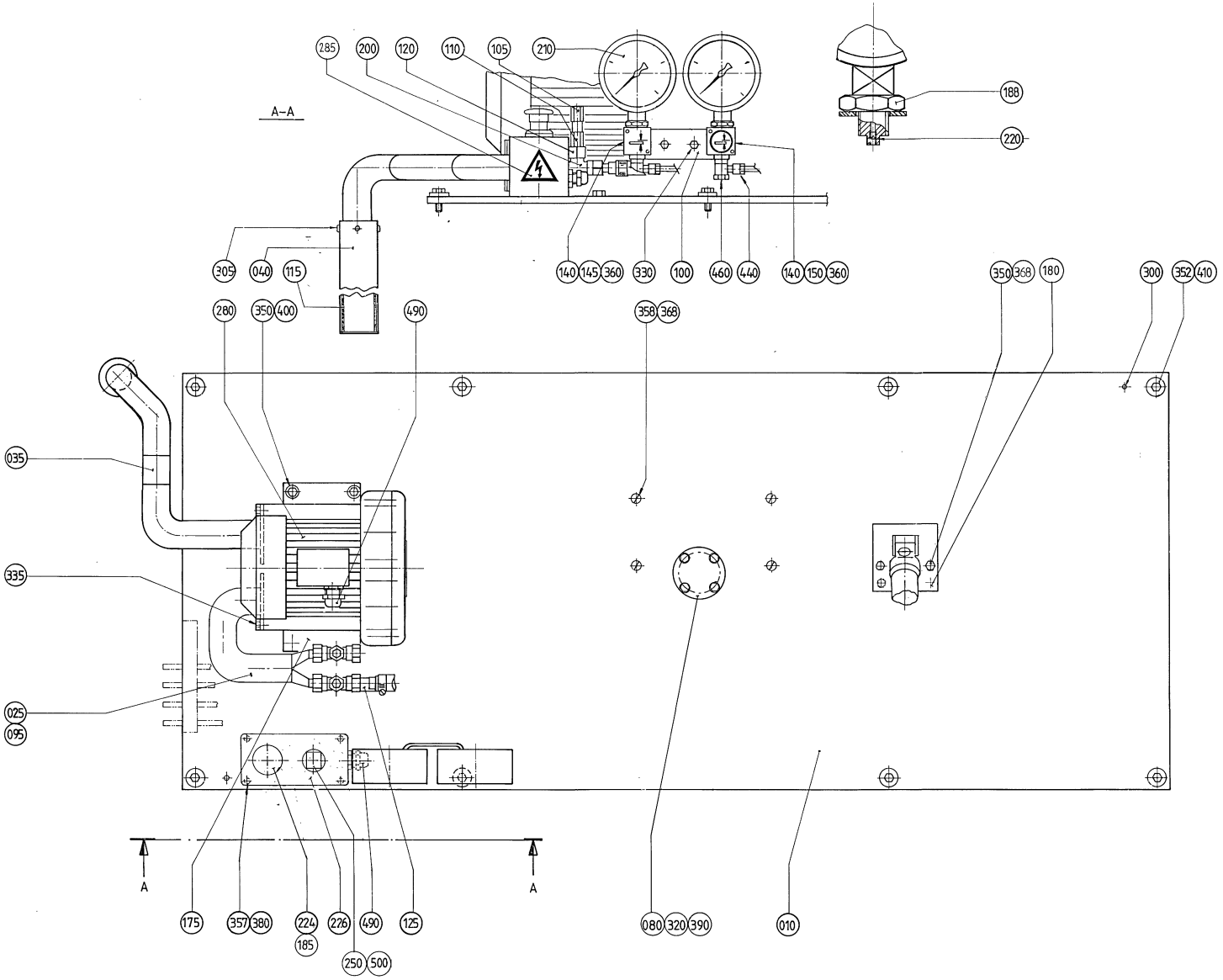
285
200
120
110
105
210
A–A
188
220
305
040
115
140
145
360
330
100
460
440
140
150
360
350
368
180
300
352
410
280
350
400
490
358
368
035
335
025
095
A
A
175
357
380
224
185
276
490
125
250
500
080
320
390
010

ECM: 71712 - 19990803
Group number: 526931-0300
Assembly Drawing: 526931-3_1_AA

Issue: 20020121

Pos	Part No	SP	UN	Qty	Description	Page No
TBA 0375S						
010	450850-0003	-		1	SHEET	
250	90064-0084	D		1	PUSH BUTTON YELLOW	
500	359301-0051	-		1	SIGN"STRIP SPLICE"	
TBA 0500B OR TBA 0750B OR TBA 1000B						
010	450850-0001	-		1	SHEET	
250	90064-0084	D		1	PUSH BUTTON YELLOW	
500	359301-0051	-		1	SIGN"STRIP SPLICE"	
TBA 0500S OR TBA 0355B						
010	450850-0002	-		1	SHEET	
250	90064-0084	D		1	PUSH BUTTON YELLOW	
500	359301-0051	-		1	SIGN"STRIP SPLICE"	
TBA 1000SQ						
010	450850-0006	-		1	SHEET	
250	90064-0084	D		1	PUSH BUTTON YELLOW	
500	359301-0051	-		1	SIGN"STRIP SPLICE"	
TBA 0750S						
010	450850-0004	-		1	SHEET	
250	90064-0084	D		1	PUSH BUTTON YELLOW	
500	359301-0051	-		1	SIGN"STRIP SPLICE"	
TBA 1000S						
010	450850-0005	-		1	SHEET	
250	90064-0084	D		1	PUSH BUTTON YELLOW	
500	359301-0051	-		1	SIGN"STRIP SPLICE"	
Common Parts						
025	B535613-0000	-		1	BRANCH	
	342808-0103	-		*2*	*PIPE ELBOW 90 DEGR. SMS3009, D=38 MM*	
	90266-0174	-	*M*	*2*	*TUBE 12X1 SS 2333-22*	
035	B535614-0000	-		1	INNER PIPE	
	90266-0022	-	*M*	*1*	*DAIRY PIPE 38X1,2*	
	342808-0103	-		*2*	*PIPE ELBOW 90 DEGR. SMS3009, D=38 MM*	
	342810-0103	-		*1*	*ELBOW PIPE38*	
040	450882-0000	-		1	OUTER PIPE	
080	247171-0000	-		1	BEARING COVER	
095	535608-0000	C		1	GASKET	
100	33577-0000	-		1	CANTILEVER	
105	209145-0000	C		2	THROTTLE SCREW	
110	209146-0000	C		2	BARRIER NUT	
115	526582-0000	D		1	NET	
120	279589-0000	D		2	NUT	
125	279590-0000	-		1	REDUCTION	
140	464173-0000	-		2	LABEL HOLDER	
145	464176-0000	-		1	SIGN	
150	464177-0000	-		1	SIGN	
175	450812-0000	-		2	SPACER	
180	556549-0000	-		1	FASTENING PLATE	
185	486826-0001	-		1	SIGN "EMERGENCY STOP"	
188	90330-0105	-		2	NUT, HEXAGON, R3/8	
200	90030-0058	-		2	CONN. T-PIPE T-12	
210	90043-0034	D		2	PRESSURE GAUGE	
220	90043-0302	D		2	SCREW	
224	90064-0105	D		1	EMERGENCY STOP BUTTON REPL.BY 90064-124	
226	90066-0029	-		1	PUSH BUTTON BOX XB2-SLS12	
280	B90264-0042	D		1	FAN SIEMENS 2BH1 300-1AH	
	90264-0306	-		*1*	*SILENCER*	
285	90194-0016	-		1	SIGN, FLASH, ELECTRIC EQUIPMENT SYMBOL	
300	311305-0308	-		2	SLOTTED PIRPC5X16FZB	
305	312105-0287	-		4	SCREW M6S M4X8 A280	
320	312105-0325	-		4	SCREW M6S M5X10 A280	
330	312105-0364	-		2	SCREW M6S M6X10 A280	
335	312105-0368	-		4	SCREW M6S M6X16 A280	
350	312105-0451	-		8	SCREW M6S 8X20 A280	
352	312105-0455	-		8	SCREW M6S M8X30 A280	
357	312125-0289	-		5	SCREW SLOT.PAN HD. MCS 4X10 A480	
358	312125-0447	-		4	SCREW PAN HEAD MCS M8X12 A480	
360	312502-0120	-		4	DRIVE SCREW ROUND HEAD KDS 0X5	
368	315111-0165	-		8	WASHER PLAIN, TBRB 8,4/16 H=3	
380	315105-0136	-		4	WASHER PLAIN, BRB, 4,3/8,H=0,8	
390	315105-0146	-		4	WASHER PLAIN, BRB, 5,3/10,H=1	
400	315105-0165	-		4	WASHER PLAIN, BRB, 8,4/16,H=1,5	
410	315121-0165	-		8	WASHER PLAIN, TBRSB 8,4/26 H=5	
440	342797-0122	-		2	CONN. BANJO, RINGPIECE 6-1/4	
460	342980-0304	-		2	BANJO-HOLLOW BOLT COUPL,EXT.THR.01-G1/4"	
490	352136-0113	-		3	GLAND FITTING PR18,6/PG11 DI=12MM	

Machine Type | Group Description | Used-In | Group Number | Page No

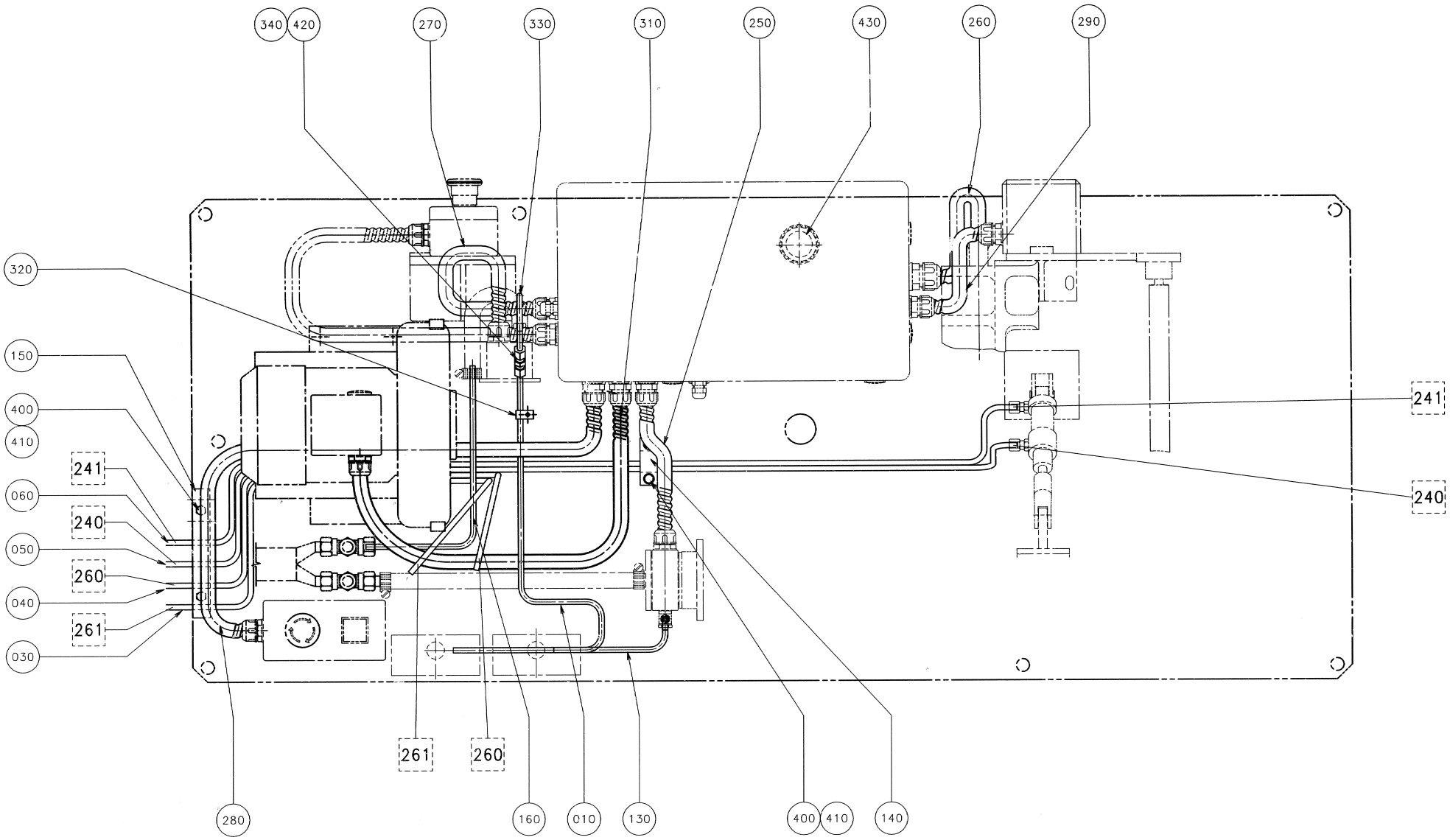
340
420
270
330
310
250
430
260
290
320
150
400
410
241
060
240
050
260
040
261
030
241
240
261
260
280
160
010
130
400
410
140

Pos	Part No	SP	UN	Qty	Description	Page No
TBA 0375S						
010	458199-0003	-		1	PIPE	
030	556557-0003	-		1	PIPE	
040	556558-0003	-		1	PIPE	
050	556559-0003	-		1	PIPE	
060	556560-0003	-		1	PIPE	
260	90152-0033	-	MM	400	SPIRAL CONDUIT FOR PR 15,2(PG 9)	
TBA 0500B OR TBA 0750B OR TBA 1000B						
010	458199-0001	-		1	PIPE	
030	556557-0001	-		1	PIPE	
040	556558-0001	-		1	PIPE	
050	556559-0001	-		1	PIPE	
060	556560-0001	-		1	PIPE	
260	90152-0033	-	MM	400	SPIRAL CONDUIT FOR PR 15,2(PG 9)	
TBA 0500S OR TBA 0355B						
010	458199-0002	-		1	PIPE	
030	556557-0002	-		1	PIPE	
040	556558-0002	-		1	PIPE	
050	556559-0002	-		1	PIPE	
060	556560-0002	-		1	PIPE	
260	90152-0033	-	MM	400	SPIRAL CONDUIT FOR PR 15,2(PG 9)	
TBA 1000SQ						
010	458199-0001	-		1	PIPE	
030	556557-0006	-		1	PIPE	
040	556558-0006	-		1	PIPE	
050	556559-0006	-		1	PIPE	
060	556560-0006	-		1	PIPE	
260	90152-0033	-	MM	400	SPIRAL CONDUIT FOR PR 15,2(PG 9)	
TBA 0750S						
010	458199-0001	-		1	PIPE	
030	556557-0004	-		1	PIPE	
040	556558-0004	-		1	PIPE	
050	556559-0004	-		1	PIPE	
060	556560-0004	-		1	PIPE	
260	90152-0033	-	MM	400	SPIRAL CONDUIT FOR PR 15,2(PG 9)	
TBA 1000S						
010	458199-0001	-		1	PIPE	
030	556557-0005	-		1	PIPE	
040	556558-0005	-		1	PIPE	
050	556559-0005	-		1	PIPE	
060	556560-0005	-		1	PIPE	
260	90152-0033	-	MM	400	SPIRAL CONDUIT FOR PR 15,2(PG 9)	
Common Parts						
130	282802-0000	-		1	PIPE	
140	450813-0000	-		1	HOLDER	
150	450814-0000	-		1	HOLDER	
160	535612-0000	-		1	PIPE	
250	90152-0033	-	MM	300	SPIRAL CONDUIT FOR PR 15,2(PG 9)	
270	90152-0033	-	MM	400	SPIRAL CONDUIT FOR PR 15,2(PG 9)	
280	90152-0033	-	MM	850	SPIRAL CONDUIT FOR PR 15,2(PG 9)	
290	90152-0033	-	MM	300	SPIRAL CONDUIT FOR PR 15,2(PG 9)	
310	90152-0033	-	MM	800	SPIRAL CONDUIT FOR PR 15,2(PG 9)	
320	90165-0005	-		1	PIPE CLIP FOR TUBE D=6 MM	
330	90166-0124	-	MM	200	TUBE 6 MM PA,TRANSP.	
340	90224-0304	-		1	CONNECTION	
400	312105-0370	-		6	SCREW M6S M6X20 A280	
410	315105-0153	-		8	WASHER PLAIN, BRB, 6,4/12,H=1,5	
420	342706-0130	-		1	ACCESSORIES, INSERT SLEEVE 6 MM	
430	352101-0107	-		1	LEAD-IN, PR37/PG29, E-1457537	

Machine Type | Group Description | Used-In | Group Number | Page No

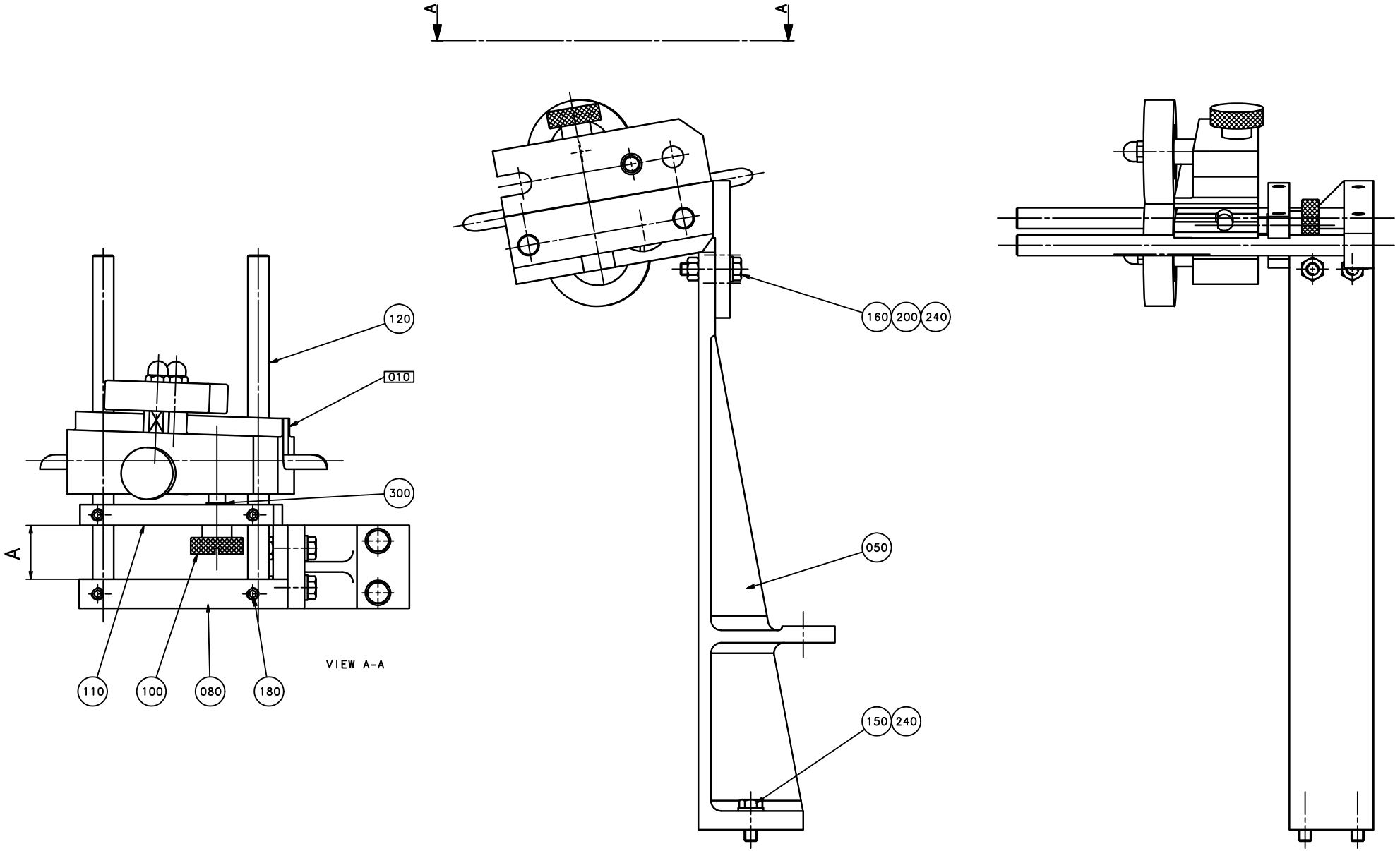
A
A
120
010
300
A
110
100
080
180
VIEW A-A
160
200
240
050
150
240

ECM: 72611 - 19990603
Group number: 1361275-0100
Assembly Drawing: 1361275-1_1_AA

Issue: 20020121

Pos	Part No	SP	UN	Qty	Description	Page No
Common Parts						
010	A1334620-0100	-		1	PAPER GUIDE	**713**
050	279211-0000	-		1	CANTILEVER	
080	1317717-0000	-		1	BRACKET	
100	1317713-0000	D		1	SHAFT	
110	1317715-0000	D		1	HOLDER	
120	1317718-0000	D		2	SHAFT	
150	312105-0368	-		2	SCREW M6S M6X16 A280	
160	312105-0372	-		2	SCREW M6S M6X25 A280	
180	312318-0362	-		4	SCREW SOCK.SET CUP P MSK6SS M6X8 A4	
200	312605-0316	-		2	HEXAGON NUT, M6M M6 A280	
240	315105-0153	-		4	WASHER PLAIN, BRB, 6,4/12,H=1,5	
300	315755-0108	-		1	LOCKING WASHER 6	

Pos	Part No	SP	UN	Qty	Description	Page No

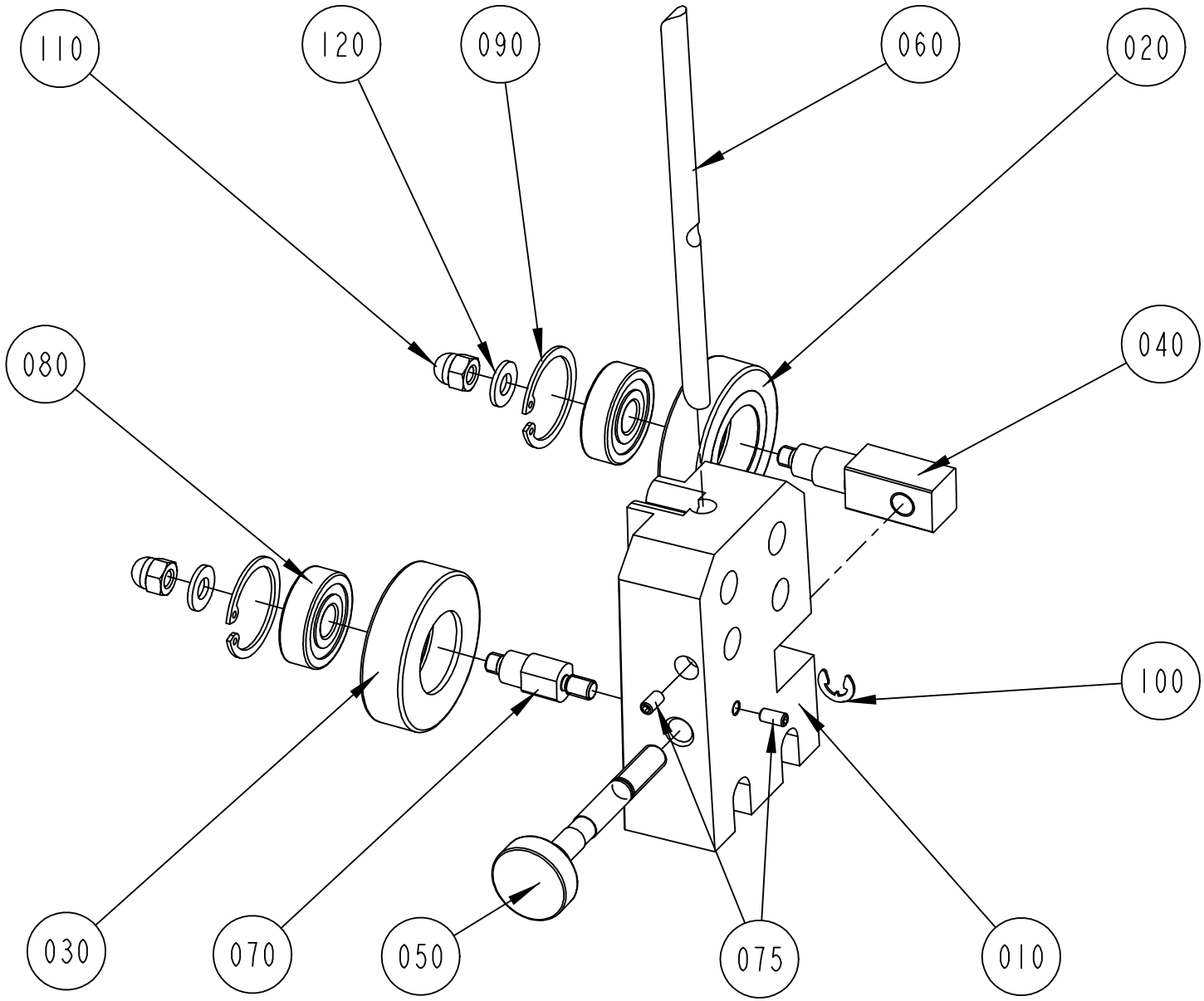
110
120
090
060
020
080
040
100
030
070
050
075
010

ECM: 84975 - 20001108
Group number: 1334620-0100
Assembly Drawing: 1334620-1_1_AC

Issue: 20020121

Pos	Part No	SP	UN	Qty	Description	Page No
Common Parts						
010	1317716-0000	-		1	BRACKET	
020	1036623-0000	A		1	GUIDE ROLLER	
030	1036622-0000	A		1	GUIDE ROLLER	
040	1317711-0000	A		1	SHAFT	
050	1317712-0000	-		1	SHAFT	
060	1317714-0000	-		1	STEERING	
070	583727-0000	A		1	SHAFT	
075	312318-0287	-		2	SCREW SOCK.SET CUP P MSK6SS M4X8 A4	
080	321313-0100	A		2	BALL BEARING, 2 SEALS, 10X30X9 MM	
090	315753-0122	-		2	RETAIN. RING, 30	
100	315755-0108	-		1	LOCKING WASHER 6	
110	312705-0316	-		2	NUT HEX. DOMED CAP MHM-6 M6 A280	
120	315105-0156	-		2	WASHER PLAIN, BRB, 6,7/14,H=1,5	

Pos	Part No	SP	UN	Qty	Description	Page No

BENDING ROLLER BRACKET

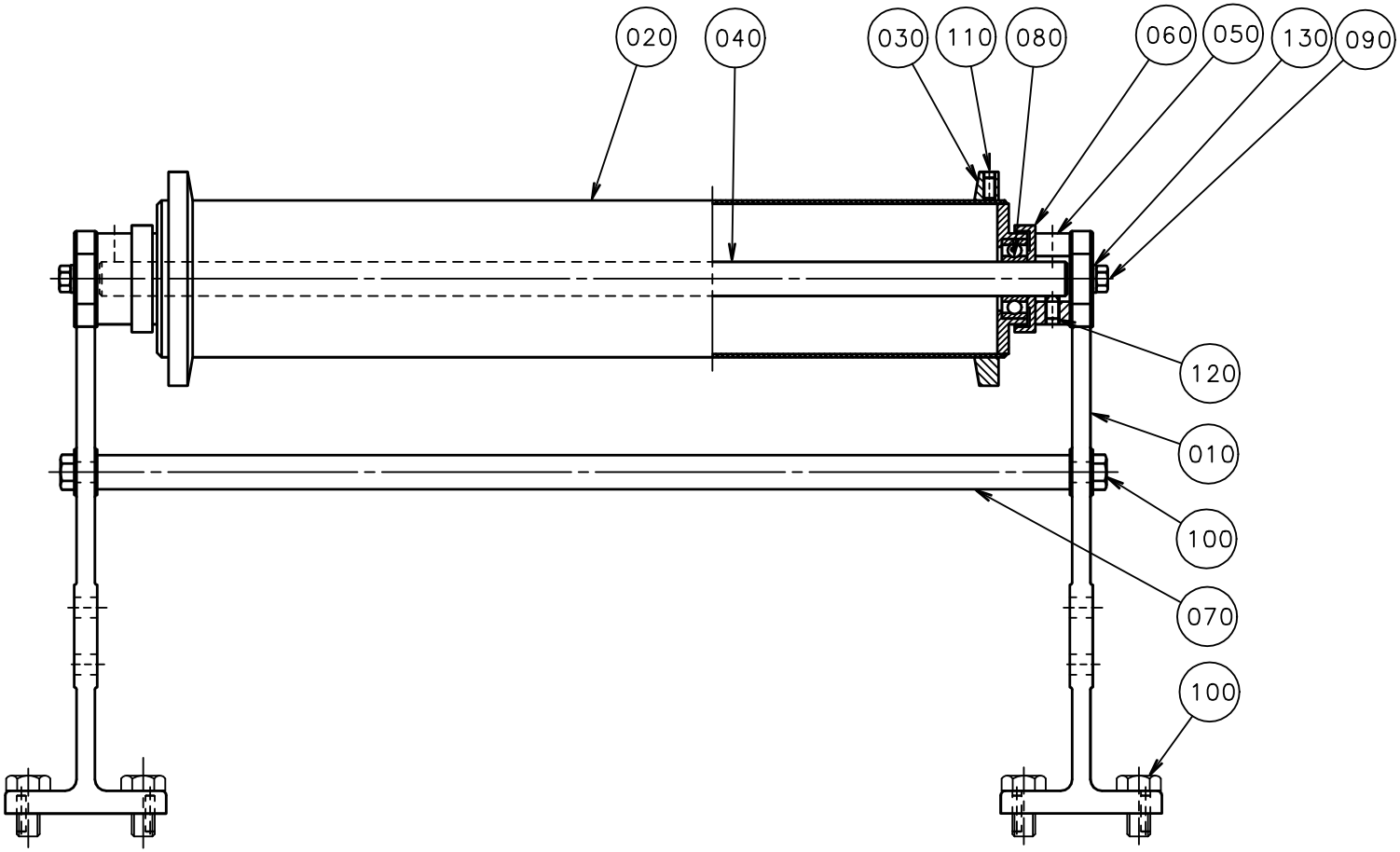

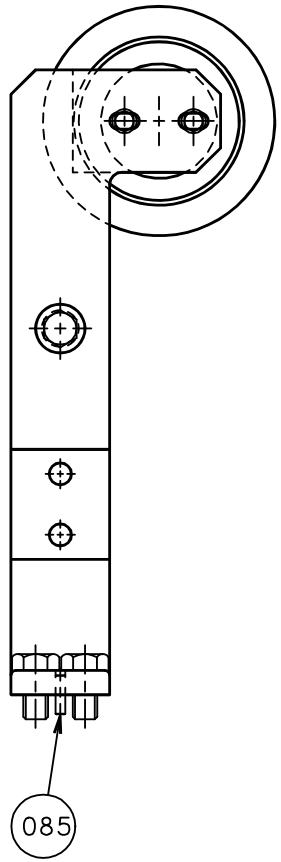

Pos	Part No	SP	UN	Qty	Description	Page No
TBA/8 0500B OR TBA/8 0375S OR TBA/8 0500S OR TBA/8 0355B OR TBA/8 1000B OR TBA/8 0750S OR TBA/8 0750B OR TBA/8 1000SQ OR TBA/8 1000S						
020	265564-0000	D		1	BENDING ROLLER	
040	265566-0001	D		1	SHAFT	
070	265569-0001	-		1	STRUT	
Common Parts						
010	546116-0000	-		2	CANTILEVER	
030	250588-0000	D		2	FLANGE	
050	265567-0000	D		2	BEARING UNIT	
060	265568-0000	C		2	DUST COVER	
080	90214-0098	C		2	BALL BEARING, 15X35X11 MM	
085	311305-0308	-		4	SLOTTED PIRPC5X16FZB	
090	312105-0370	-		4	SCREW M6S M6X20 A280	
100	312105-0451	-		10	SCREW M6S 8X20 A280	
110	312318-0289	-		4	SCREW SOCK.SET CUP P MSK6SS M4X10 A4	
120	312318-0364	-		4	SCREW HEX.SOCK.SET CUP P.MSK6SS6X10 SS	
130	315105-0153	-		4	WASHER PLAIN, BRB, 6,4/12,H=1,5	

Pos	Part No	SP	UN	Qty	Description	Page No

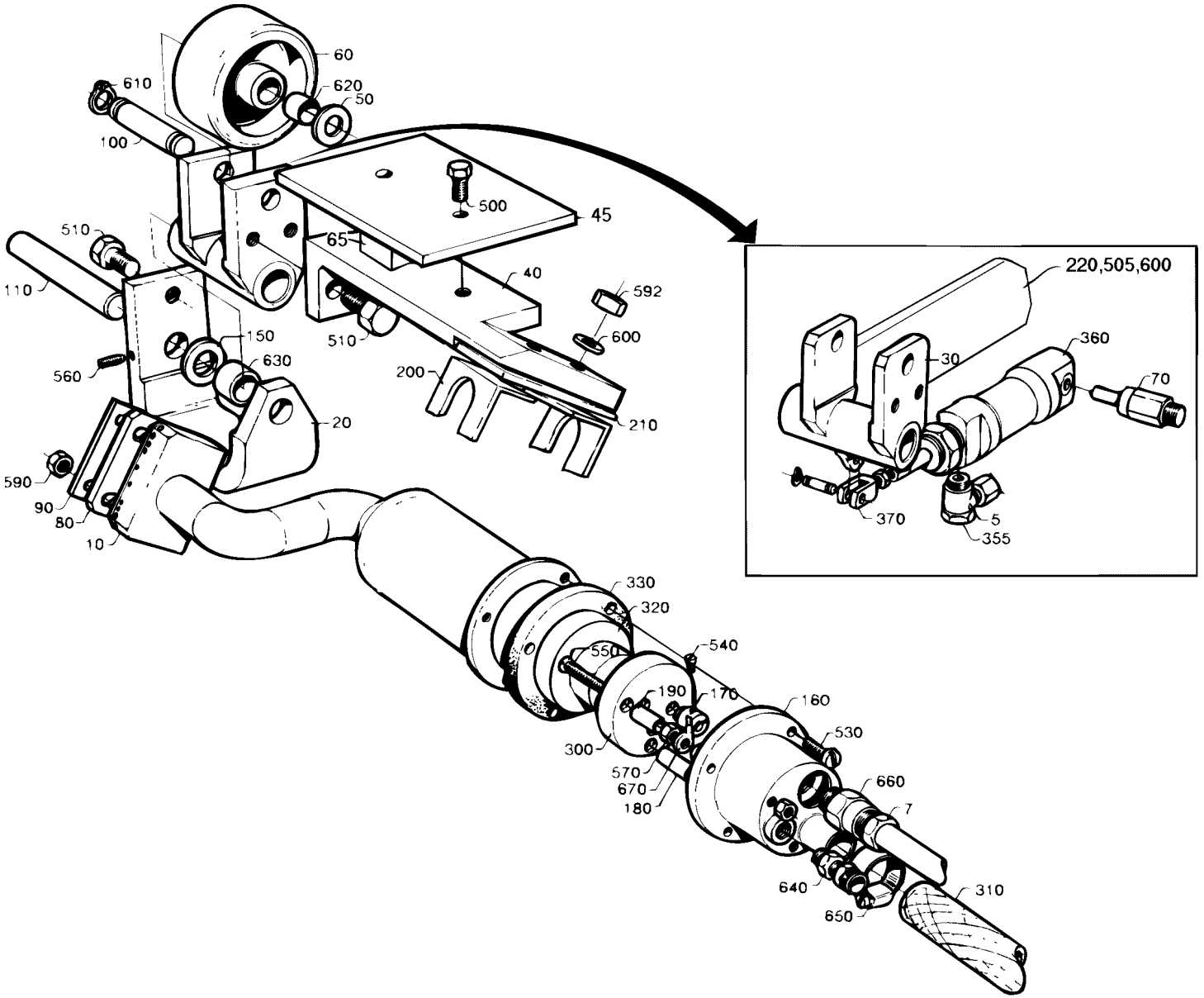
60
610
620
50
100
500
45
65
40
592
600
510
510
110
150
630
560
200
210
20
590
90
80
10
220,505,600
30
360
70
370
5
355
330
320
550
540
190
170
160
530
300
570
670
180
660
7
640
650
310

ECM: 72191 - 19990215
Group number: 266726-0300
Assembly Drawing: 266726-3_1_AA

Issue: 20020121

Pos	Part No	SP	UN	Qty	Description	Page No
Common Parts						
005	342797-0121	-		2	CONN. BANJO, RINGPIECE 6-1/8	
007	352136-0113	-		1	GLAND FITTING PR18,6/PG11 DI=12MM	
010	464197-0000	D		1	AIR NOZZLE	
020	266728-0000	-		1	CANTILEVER	
030	556565-0000	-		1	ROCKER ARM	
040	266730-0000	-		1	HOLDER	
045	542090-0000	-		1	HEAT GUARD	
050	2033-0009	C		2	WASHER	
060	21903-0000	C		1	ROLL	
065	242954-0000	-		2	WASHER	
070	556551-0000	D		1	CYLINDER BRACKET	
080	466412-0000	D		1	PLATE	
090	255417-0000	D		1	WASHER	
100	266731-0000	D		1	SHAFT	
110	266732-0000	D		1	SHAFT	
150	266737-0000	D		2	WASHER	
160	266738-0000	-		1	COVER	
170	266739-0000	D		3	CABLE GLAND	
180	266740-0001	D		2	SPACER	
190	266740-0002	D		1	SPACER	
200	450887-0000	-		1	CRAMP	
210	450888-0000	-		1	INSULATING PLATE	
220	556552-0000	-		1	BRACKET	
300	B90125-0020	-		1	PLATE	
	294464-0000	*A*		*1*	*BASE PLATE*	
	270927-0000	*A*		*3*	*SCREW*	
	270926-0000	*A*		*6*	*NUT*	
	294464-0000	*A*		*1*	*BASE PLATE*	
	270927-0000	*A*		*3*	*SCREW*	
	270926-0000	*A*		*6*	*NUT*	
310	90166-0087	-	MM	600	HOSE 15/23 REINF.PVC TRANSP.	
320	90206-0085	C		1	HEATING CARTRIDGE 460W 105 OHM	
330	90206-0322	C		1	GASKET	
355	90235-0274	D		2	THROTTLE CHECK VALVES,G1/8"	
360	90239-0821	C		1	DOUBLE ACTING, MINI-ISO, CYL.20-25	
370	90239-0532	D		1	ROD END,CLEVIS WITH AXLE M8	
500	312105-0370	-		2	SCREW M6S M6X20 A280	
505	312105-0447	-		2	SCREW M6S M8X12 A280	
510	312105-0451	-		4	SCREW M6S 8X20 A280	
530	312125-0291	-		4	SCREW PAN HEAD MCS M4X12 SS	
540	312125-0220	-		3	SCREW SLOT.PAN HD. MCS 3X6 A480	
550	312145-0238	-		3	SCREW COUNTERS.SLOT.HD. MFS 3X40 SS	
560	312311-0292	-		1	SCREW HEX.SOCK.SET DOG P.MT6SS 4X14 FZB	
570	312605-0310	-		7	HEXAGON NUT, M6M M3 A280	
590	312605-0314	-		2	HEXAGON NUT, M6M M5 A280	
592	312605-0318	-		2	HEXAGON NUT, M6M M8 A280	
595	315105-0153	-		2	WASHER PLAIN, BRB, 6,4/12,H=1,5	
600	315105-0165	-		4	WASHER PLAIN, BRB, 8,4/16,H=1,5	
610	315750-0107	-		2	RETAIN. RING, 10	
620	321120-0104	C		2	BEARING BUSHING WITHOUT FLANGE,10/12X10	
630	321120-0110	C		2	BEARING BUSHING WITHOUT FL, 12X14X12 MM	
640	342921-0113	-		1	STRAIGHT COUPLING,EXT.THREADED 6/4-G1/8"	
650	342991-0103	-		2	HOSE CLIP,WORM DRIVE TYPE (19)-23	
660	352100-0106	-		1	CABLE GLANR.18,6-10,5	
670	353101-0130	-		1	CABLE SHOE 1,5-2,5MM2 BLUE	

Machine Type | Group Description | Used-In | Group Number | Page No

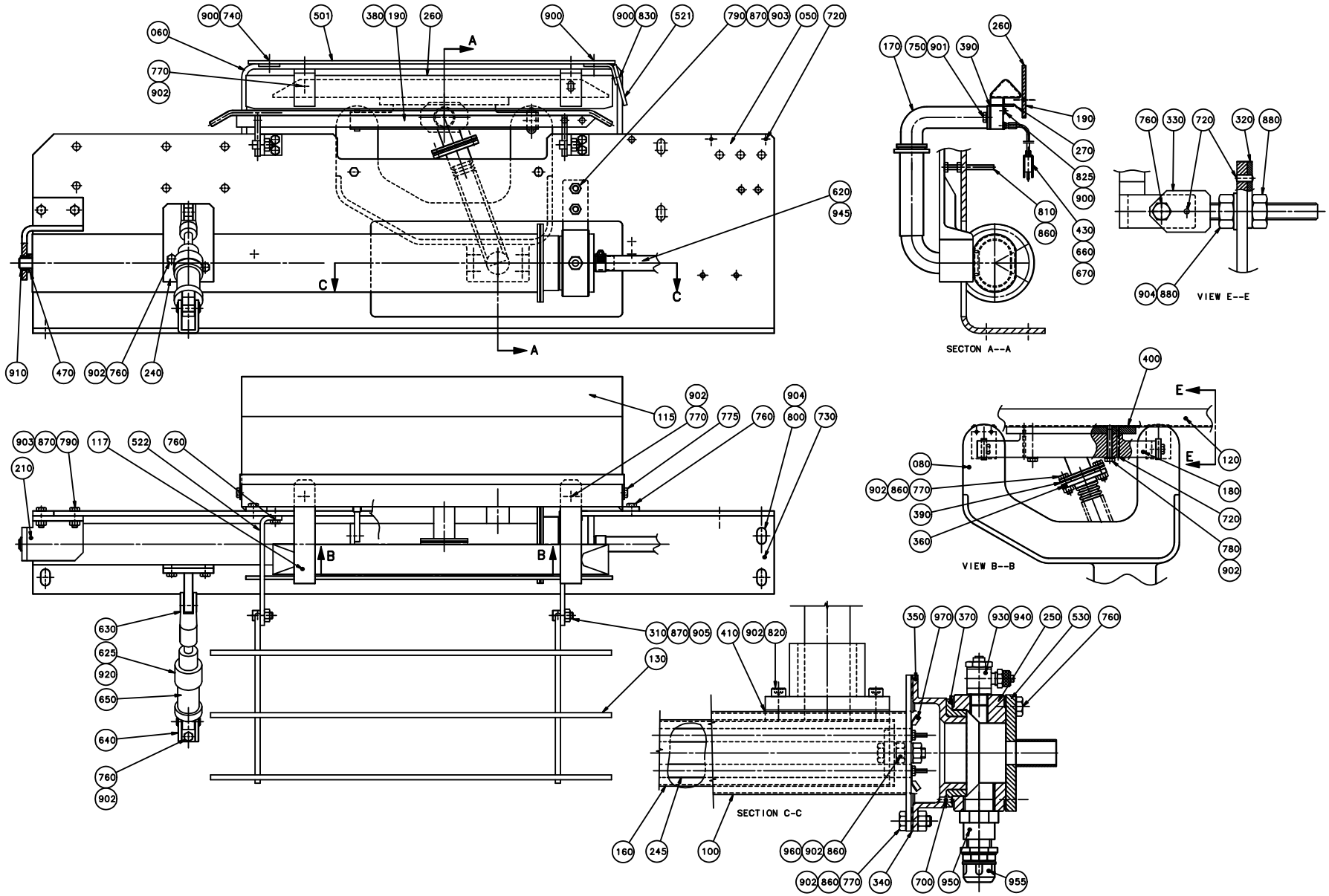
SECTON A--A
VIEW E--E
VIEW B--B
SECTION C-C

ECM: 73078 - 19991216
Group number: 269112-0600
Assembly Drawing: 269112-5_1_AA

Issue: 20020121

Pos	Part No	SP	UN	Qty	Description	Page No
TBA 0375S IH						
130	1143677-0000	-		1	PAPER SUPPORT	
245	267494-0000	C		1	COIL HEATER	
501	246344-0000	D		1	HEAT GUARD	
TBA 0500S IH OR TBA 0355B IH						
130	1296003-0000	-		1	PAPER SUPPORT	
245	267494-0000	C		1	COIL HEATER	
501	246344-0000	D		1	HEAT GUARD	
TBA 0500B IH OR TBA 1000S IH OR TBA 1000SQ IH OR TBA 0750S IH OR TBA 0750B IH OR TBA 1000B IH						
130	22560-0000	-		1	PAPER SUPPORT	
245	267494-0000	C		1	COIL HEATER	
501	246344-0000	D		1	HEAT GUARD	
Common Parts						
050	526948-0000	-		1	MOUNTING SHEET	
060	442480-0000	-		1	BOW CLAMP	
080	32668-0000	-		1	ARM	
100	36749-0000	-		1	MANTLE	
115	571428-0000	-		1	TOUCH GUARD	
117	445669-0000	-		1	HOLDER	
120	283361-0000	D		1	AIR NOZZLE	
150	32451-0000	D		1	AIR DUCT	
160	32453-0000	-		1	MANTLE	
170	32474-0000	-		1	ATTACHMENT	
180	245189-0001	-		1	ATTACHMENT	
190	246342-0000	D		1	PAPER SUPPORT	
210	251490-0000	D		1	FASTENING BRACKET	
240	556550-0000	D		1	BRACKET	
250	283172-0000	-		1	BEARING HOUSING	
260	445670-0000	D		1	PAPER SUPPORT	
270	445688-0000	D		1	AIR GUIDE	
310	22559-0000	C		4	GRUB SCREW	
320	32213-0000	-		2	WASHER	
330	32215-0000	D		2	HOLDER	
340	531733-0000	C		1	GASKET	
350	32217-0000	-		1	BOTTOM SECTION	
360	32219-0000	-		1	WASHER	
370	32223-0000	C		1	BEARING	
380	32400-0000	-		2	HOLDER	
390	531734-0000	C		2	GASKET	
400	531735-0000	C		1	GASKET	
410	531736-0000	C		1	GASKET	
430	37768-0000	C		1	THERMOCOUPLE CR-AL	
470	230107-0000	D		1	WASHER	
521	251502-0000	D		1	HEAT GUARD	
522	592586-0000	-		2	HOLDER	
530	279672-0000	-		1	ATTACHMENT	
620	90166-0087	-	MM	600	HOSE 15/23 REINF.PVC TRANSP.	
625	90235-0274	-		2	THROTTLE CHECK VALVES,G1/8"	
630	90239-0516	D		1	ROD END,CLEVIS WITH AXLE M10X1,25	
640	90239-0487	D		1	REAR,CLEVIS,MINI-ISO 20-25	
650	90239-0829	C		1	DOUBLE ACTING, MINI-ISO, CYL.25-50	
660	90326-0012	D		1	PROTECTIVE COVER	
670	90326-0020	-		1	PLUG,FEMALE YELLOW CR-AL	
700	311103-0232	-		1	PARALLELL PIN, M6, 3X8 MM	
720	311103-0267	-		10	PARALLELL PIN, M6, 4X10 MM	
730	311305-0308	-		2	SLOTTED PIRPC5X16FZB	
740	312105-0291	-		4	SCREW M6S M4X12 A280	
750	312105-0325	-		2	SCREW M6S M5X10 A280	
755	312105-0364	-		4	SCREW M6S M6X10 A280	
760	312105-0366	-		18	SCREW M6S M6X12 A280	
770	312105-0368	-		16	SCREW M6S M6X16 A280	
780	312105-0378	-		2	SCREW M6S M6X40 A280	
790	312105-0451	-		4	SCREW M6S 8X20 A280	
800	312105-0489	-		6	SCREW M6S M10X16 A280	
810	312109-0381	-		2	SCREW M6S M6X55H A480	
820	312115-0368	-		4	SCREW MC6S M6X16 A280	
825	312125-0285	-		1	SCREW SLOT.PAN HD. MCS 4X6 A480	
830	312125-0287	-		2	SCREW PAN HEAD MCS M4X8 SS	
860	312605-0316	-		12	HEXAGON NUT, M6M M6 A280	
870	312605-0318	-		8	HEXAGON NUT, M6M M8 A280	
880	312605-0320	-		4	HEXAGON NUT, M6M M10 A280	
900	315105-0136	-		7	WASHER PLAIN, BRB, 4,3/8,H=0,8	
901	315105-0146	-		2	WASHER PLAIN, BRB, 5,3/10,H=1	
902	315105-0153	-		27	WASHER PLAIN, BRB, 6,4/12,H=1,5	
903	315105-0165	-		4	WASHER PLAIN, BRB, 8,4/16,H=1,5	
904	315105-0173	-		6	WASHER PLAIN, BRB, 10,5/22,H=2	
905	315121-0165	-		4	WASHER PLAIN, TBRSB 8,4/26 H=5	
910	321101-0173	C		1	FLANGE BUS 12F7X12	
920	342797-0121	-		2	CONN. BANJO, RINGPIECE 6-1/8	
930	342797-0122	-		2	CONN. BANJO, RINGPIECE 6-1/4	
940	342980-0304	-		1	BANJO-HOLLOW BOLT COUPL,EXT.THR.01-G1/4"	

Machine Type | Group Description | Used-In | Group Number | Page No

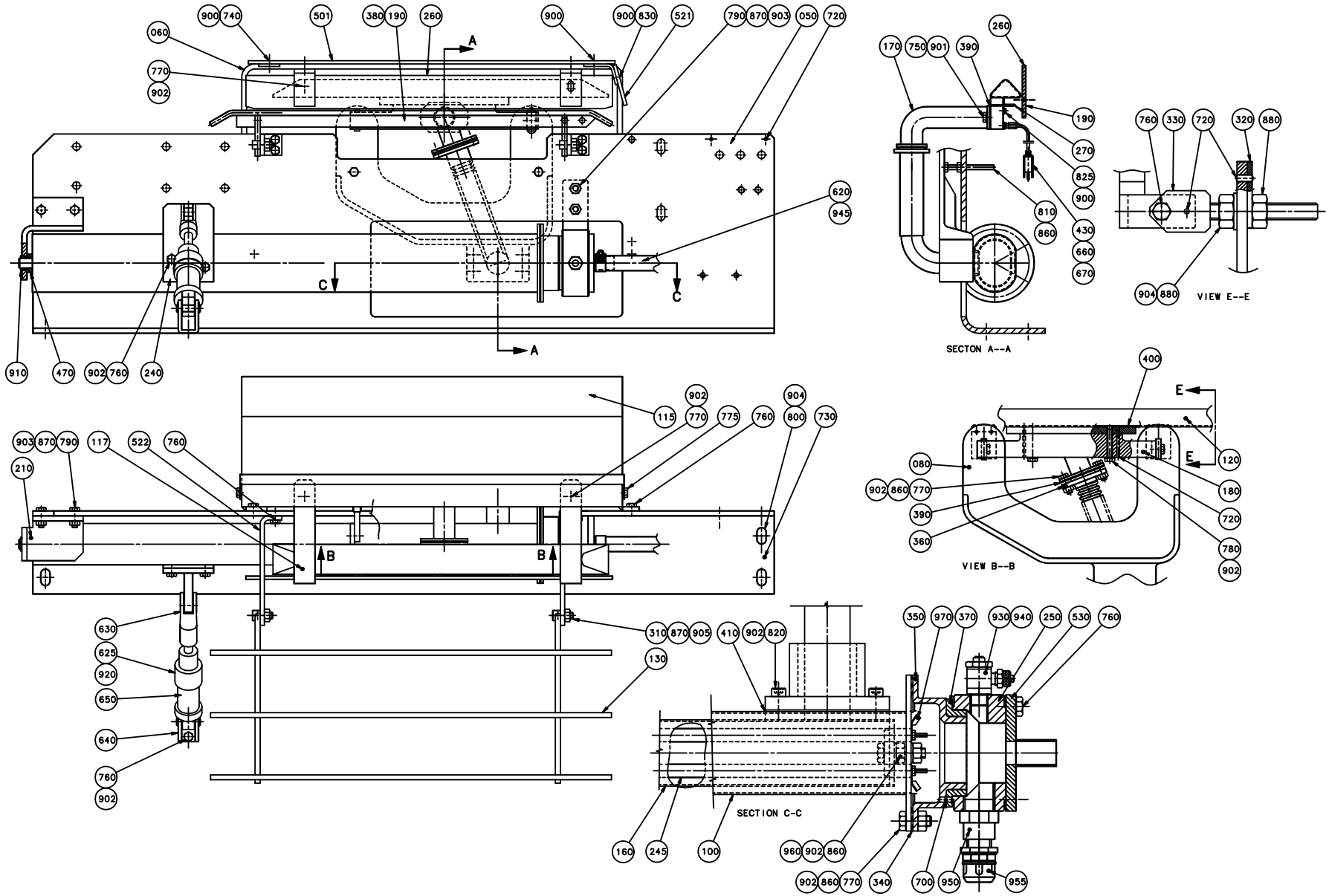
SECTON A--A
VIEW E--E
VIEW B--B
SECTION C-C

Pos	Part No	SP	UN	Qty	Description	Page No
Common Parts (Cont'd)						
930	342797-0122	-		2	CONN. BANJO, RINGPIECE 6-1/4	
940	342980-0304	-		1	BANJO-HOLLOW BOLT COUPL,EXT.THR.01-G1/4"	
945	342991-0103	-		2	HOSE CLIP,WORM DRIVE TYPE (19)-23	
950	352100-0106	-		1	CABLE GLANR.18,6-10,5	
955	352136-0113	-		1	GLAND FITTING PR18,6/PG11 DI=12MM	
960	353101-0134	-		1	CABLE SHOE	
970	353104-0130	-		2	CABLE SHOEYAV 025 M 4*	

Pos	Part No	SP	UN	Qty	Description	Page No

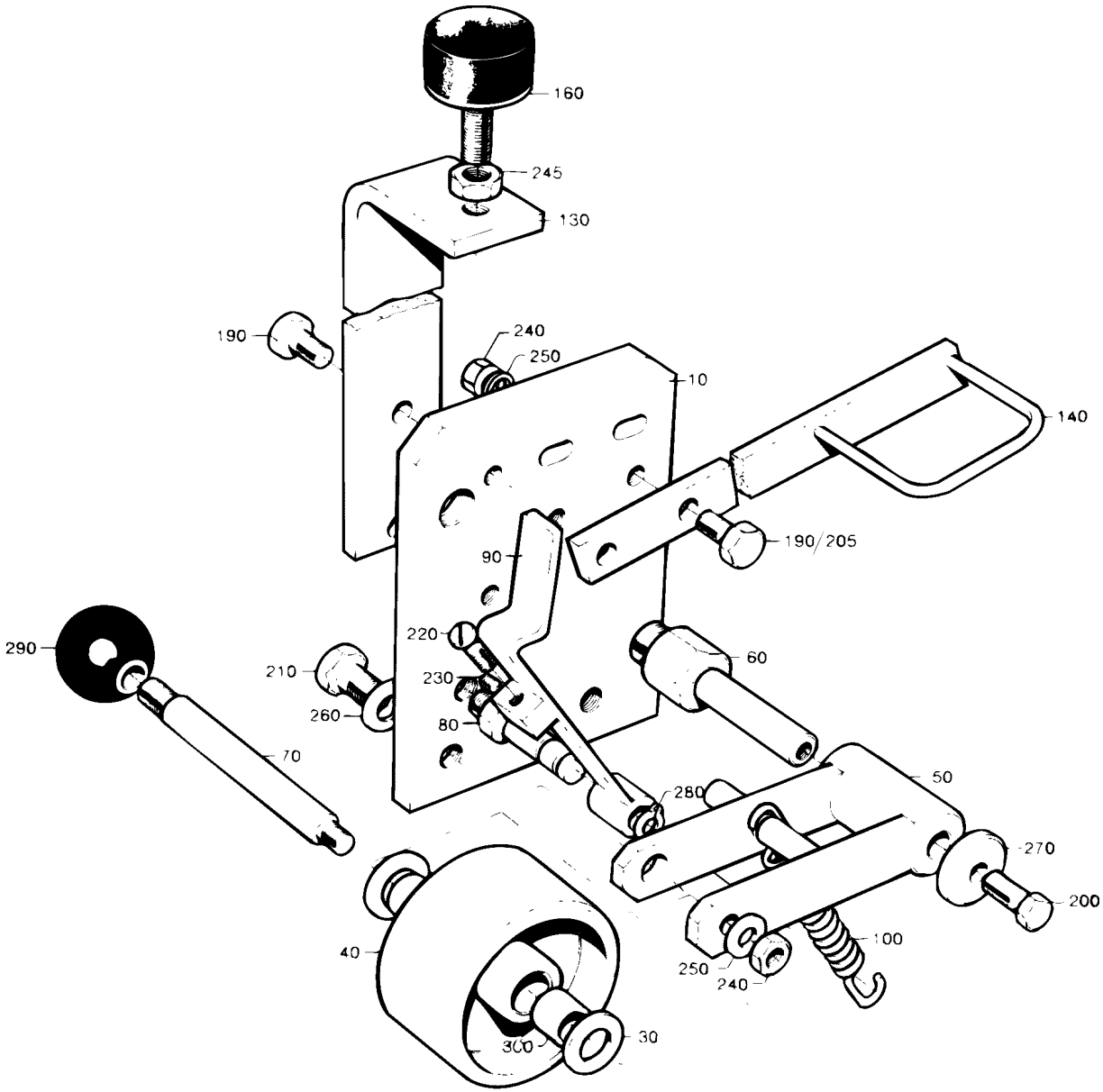
160
245
130
190
240
250
10
140
190/205
90
220
290
210
230
60
260
80
70
50
280
270
200
100
250
240
40
300
30

Pos	Part No	SP	UN	Qty	Description	Page No
TBA/8						
140	282625-0000	-		1	EYELET	
190	312105-0366	-		3	SCREW M6S M6X12 A280	
205	312105-0370	-		1	SCREW M6S M6X20 A280	
240	312605-0316	-		2	HEXAGON NUT, M6M M6 A280	
250	315105-0153	-		3	WASHER PLAIN, BRB, 6,4/12,H=1,5	
Common Parts						
010	526947-0000	-		1	MOUNTING SHEET	
030	2033-0009	C		2	WASHER	
040	21903-0000	C		1	ROLL	
050	251493-0000	D		1	FORK	
060	251494-0000	D		1	SHAFT	
070	251495-0000	D		1	SHAFT	
080	251496-0000	D		1	SHAFT	
090	251498-0000	D		1	BARRIER	
100	279074-0000	C		1	TENSION SPRING	
130	282596-0000	-		1	SUPPORT	
160	90347-0004	C		1	VIBRATION DAMPER D=30 TH=M8 H=17 H2=21MM	
200	312105-0368	-		1	SCREW M6S M6X16 A280	
210	312105-0449	-		2	SCREW M6S M8X16 A280	
220	312125-0329	-		1	SCREW PAN HEAD MCS M5X16 SS	
230	312318-0285	-		1	SCREW SOCK.SET CUP P MSK6SS M4X6 A4	
245	312605-0318	-		1	HEXAGON NUT, M6M M8 A280	
260	315105-0165	-		2	WASHER PLAIN, BRB, 8,4/16,H=1,5	
270	315121-0153	-		1	WASHER PLAIN, TBRSB 6,4/22 H=4	
280	315750-0105	-		1	RETAIN. RING, 8	
290	318800-0104	-		1	HANDLE,SPHERICAL KNOB,INT.THRE.,D.30-M8	
300	321120-0104	C		2	BEARING BUSHING WITHOUT FLANGE,10/12X10	

Pos	Part No	SP	UN	Qty	Description	Page No

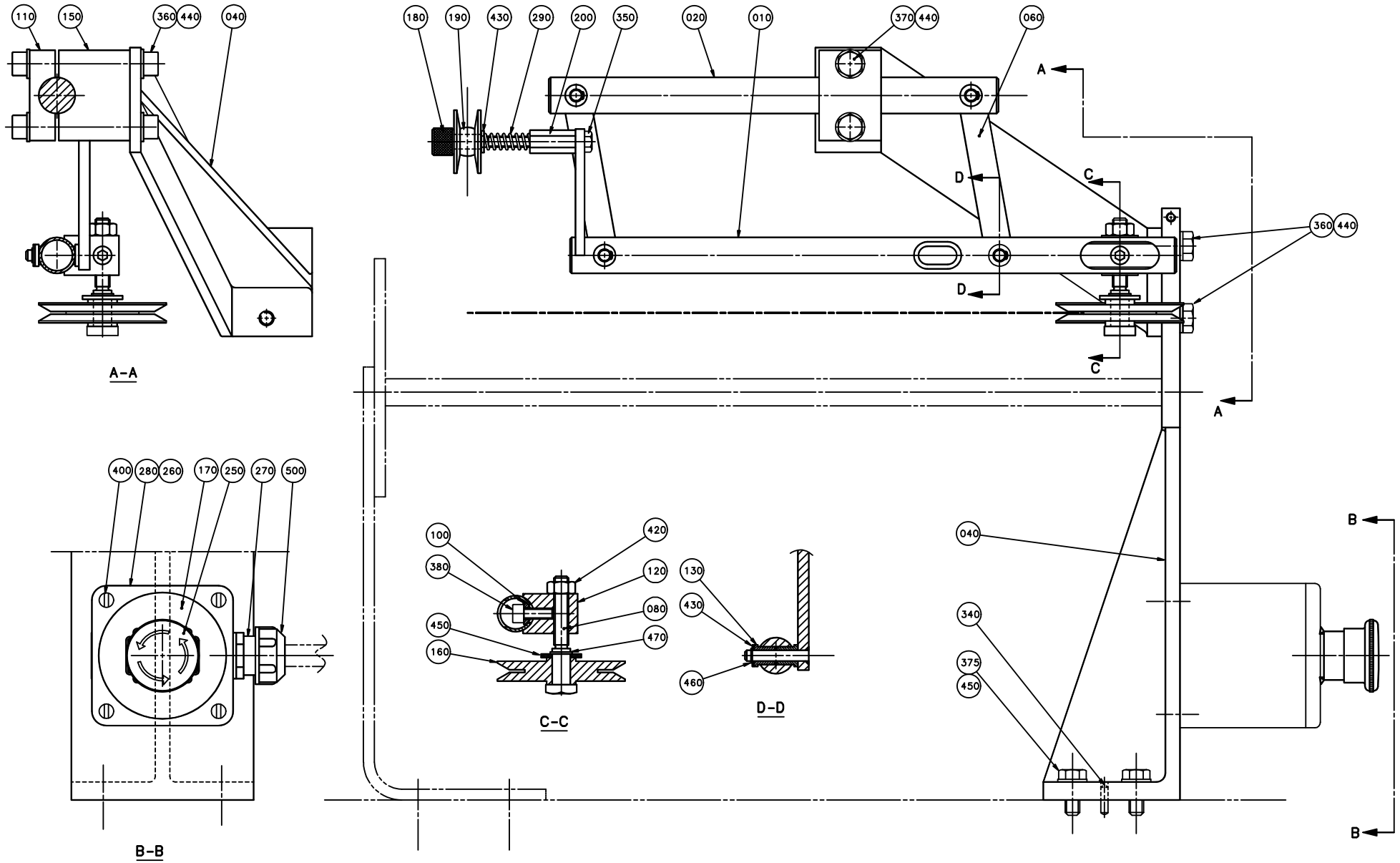
110
150
360
440
040
A-A
180
190
430
290
200
350
020
010
370
440
060
A
D
C
D
C
360
440
A
400
280
260
170
250
270
500
B-B
100
380
420
120
080
450
470
160
C-C
130
430
460
D-D
040
340
375
450
B
B

ECM: 72719 - 19990803
Group number: 1348231-0100
Assembly Drawing: 1348231-1_1_AB

Issue: 20020121

Pos	Part No	SP	UN	Qty	Description	Page No
TBA/8 0375S						
010	1361278-0000	-		1	GUIDE SHAFT	
020	450461-0000	-		1	SHAFT	
TBA/8 0500S OR TBA/8 0355B						
010	1361277-0000	-		1	GUIDE SHAFT	
020	450461-0000	-		1	SHAFT	
TBA/8 0500B OR TBA/8 1000B OR TBA/8 0750B OR TBA/8 1000S						
010	1361276-0000	-		1	GUIDE SHAFT	
020	243151-0000	-		1	SHAFT	
TBA/8 0750S OR TBA/8 1000SQ						
010	1361279-0000	-		1	GUIDE SHAFT	
020	450461-0000	-		1	SHAFT	
Common Parts						
050	243218-0000	-		1	CANTILEVER	
060	31417-0000	-		2	LINK	
080	31418-0000	D		1	SHAFT	
090	31419-0000	D		1	SHAFT	
100	31420-0000	C		1	WASHER	
110	31423-0000	-		1	MOUNTING LUG	
120	31424-0000	D		1	ROLLER BRACKET	
130	255064-0000	C		8	BUSHING	
140	257923-0000	C		1	GUIDE WHEEL	
150	266761-0000	-		1	MOUNTING LUG	
160	282635-0000	C		1	GUIDE WHEEL	
180	1035893-0000	-		1	ADJUSTING SCREW	
190	B1285546-0000	D		1	ROLL	
010	*321120-0100*	*C*		*1*	*BEARING BUSHING WITHOUT FLANGE,8/10X12*	
200	1346505-0000	-		1	SPACER	
290	90335-0027	C		1	SPRING	
350	312105-0366	-		1	SCREW M6S M6X12 A280	
360	312105-0451	-		4	SCREW M6S 8X20 A280	
370	312105-0455	-		2	SCREW M6S M8X30 A280	
380	312115-0368	-		1	SCREW MC6S M6X16 A280	
390	312125-0323	-		1	SCREW PAN HEAD MCS M5X8 SS	
410	312605-0316	-		1	HEXAGON NUT, M6M M6 A280	
420	312605-0318	-		1	HEXAGON NUT, M6M M8 A280	
430	315105-0153	-		6	WASHER PLAIN, BRB, 6,4/12,H=1,5	
440	315105-0165	-		6	WASHER PLAIN, BRB, 8,4/16,H=1,5	
450	315105-0173	-		1	WASHER PLAIN, BRB, 10,5/22,H=2	
460	315754-0107	-		4	LOCKING WAE 5	
470	315754-0110	-		1	LOCKING WAE 9	

Machine Type Group Description Used-In Group Number Page No

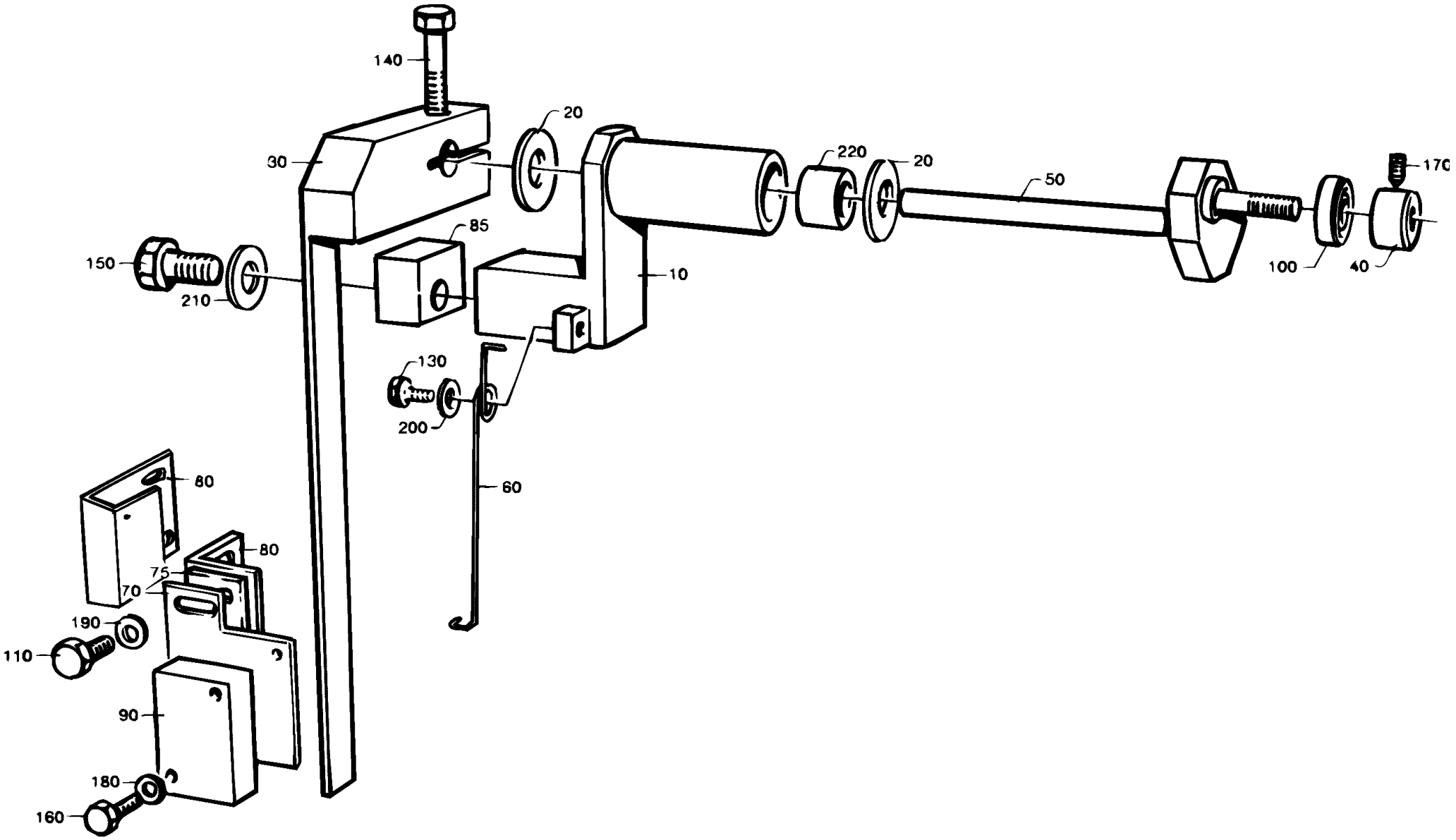
140
20
30
220
20
50
170
85
150
10
100
40
210
130
200
60
80
80
75
70
190
110
90
180
160

Pos	Part No	SP	UN	Qty	Description	Page No
TBA/8						
060	272466-0000	C		1	SPRING	
070	450117-0000	-		1	HOLDER	
210	315105-0153	-		2	WASHER PLAIN, BRB, 6,4/12,H=1,5	
Common Parts						
010	450116-0000	-		1	CANTILEVER	
020	271211-0000	C		2	WASHER	
030	271653-0000	-		1	ARM	
040	271654-0000	D		1	RETAINING RING	
050	271655-0000	-		1	HOLDER	
090	90044-0104	C		1	PROX.SWITCH IFM IN 3002	
100	90214-0138	C		1	BALL BEARING, 5X19X6 MM	
110	312105-0287	-		2	SCREW M6S M4X8 A280	
130	312105-0327	-		1	SCREW M6S M5X12 A280	
140	312105-0370	-		1	SCREW M6S M6X20 A280	
150	312105-0372	-		2	SCREW M6S M6X25 A280	
160	312115-0228	-		2	SCREW MC6S M3X16 A280	
170	312318-0283	-		1	SCREW SOCK.SET CUP P MSK6SS M4X4 A4	
180	315105-0124	-		2	WASHER PLAIN, BRB, 3,2/6,H=0,5	
190	315105-0136	-		2	WASHER PLAIN, BRB, 4,3/8,H=0,8	
200	315105-0146	-		1	WASHER PLAIN, BRB, 5,3/10,H=1	
220	321127-0100	C		2	BEARING BUSHING WITHOUT FL, 10X13X10 MM	

Pos	Part No	SP	UN	Qty	Description	Page No

This page is intentionally left blank.

ECM: 71166 - 19980121
Group number: 526954-0100
Assembly Drawing:

Issue: 20020121

Pos	Part No	SP	UN	Qty	Description	Page No
TBA/8						
010	267494-0000	-		1	COIL HEATER	
Common Parts						
020	21903-0000	-		1	ROLL	
030	531733-0000	-		1	GASKET	
040	531734-0000	-		2	GASKET	
050	531735-0000	-		1	GASKET	
060	531736-0000	-		1	GASKET	

Pos	Part No	SP	UN	Qty	Description	Page No

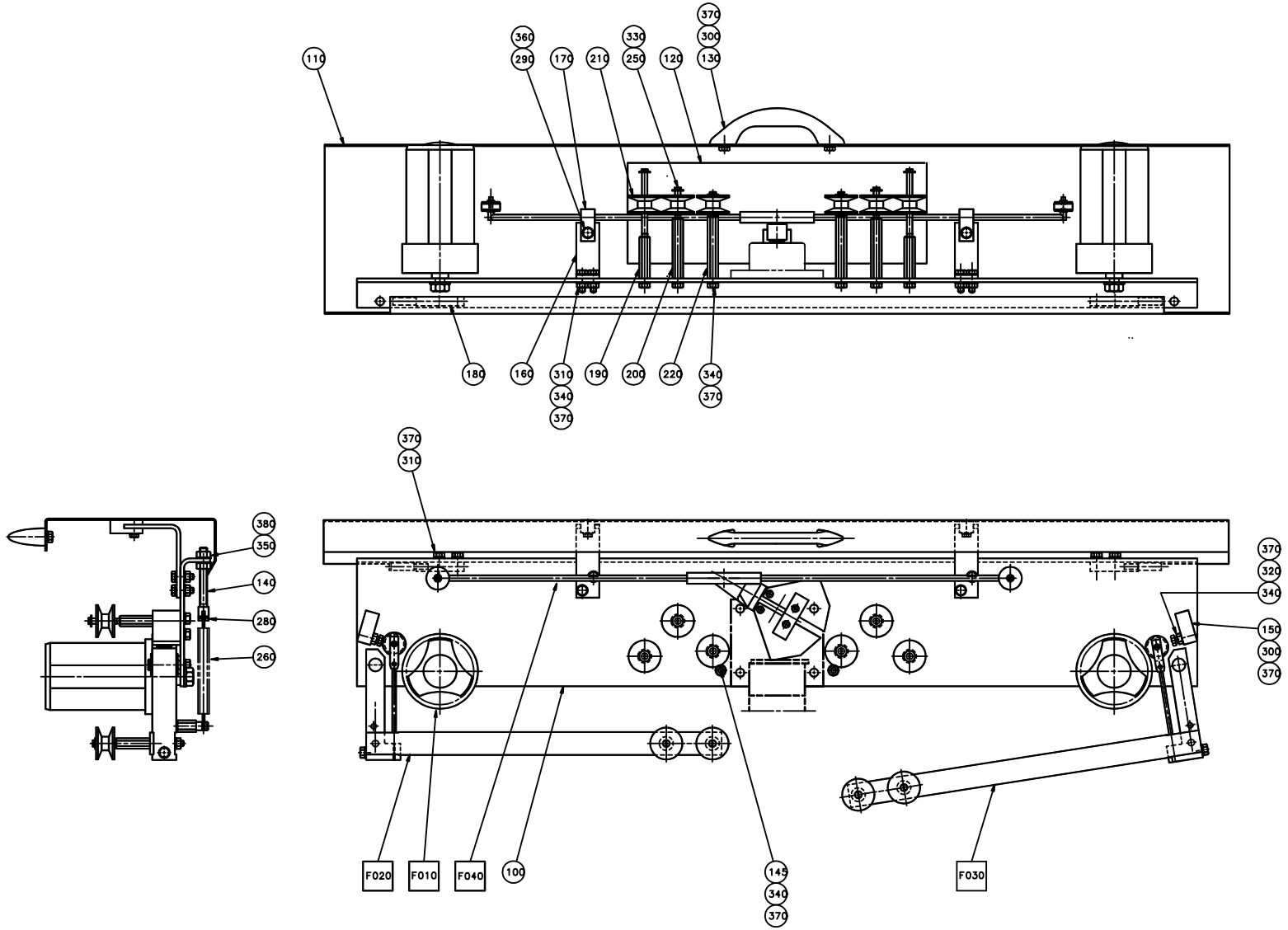
110
360
290
170
210
330
250
120
370
300
130
180
160
310
340
370
190
200
220
340
370
370
310
380
350
140
280
260
370
320
340
150
300
370
F020
F010
F040
100
145
340
370
F030

ECM: 102345 - 20011206
Group number: 543823-0100
Assembly Drawing: 543823-1_1_AB

Issue: 20020121

Pos	Part No	SP	UN	Qty	Description	Page No
Common Parts						
100	540869-0000	-		1	SHEET	
110	543818-0000	-		1	PROTECTION PLATE	
120	545113-0000	-		1	SIGN STRIP MAGAZINE	
130	7309-0000	-		1	HANDLE	
140	541068-0000	B		2	SPRING HOLDER	
145	541172-0000	-		2	SET SCREW	
150	541173-0000	-		2	STOP	
160	543125-0000	-		2	ANGLE	
170	543126-0000	-		2	STOP LUG	
180	543819-0000	-		2	HINGE	
190	544725-0000	A		2	AXLE PIN	
200	544727-0000	A		2	AXLE PIN	
210	B544730-0000	A		6	ROLL	
	321120-0101	*-*		*2*	*BEARING BUSHING WITHOUT FLANGE,6/8X6*	
220	536916-0000	A		2	AXLE PIN	
250	90005-0082	-		6	WASHER PLAIN ROUND 4,3(M4)/12,H=1	
260	90335-0015	A		2	SPRING 42360 BARNES	
280	311112-0205	-		2	PIN, STRAIGHT SLOTTED SPRING FRP 3X10	
290	312105-0327	-		2	SCREW M6S M5X12 A280	
300	312105-0366	-		6	SCREW M6S M6X12 A280	
310	312105-0368	-		8	SCREW M6S M6X16 A280	
320	312109-0374	-		2	SCREW M6S M6X30 A280	
330	312125-0287	-		6	SCREW PAN HEAD MCS M4X8 SS	
340	312605-0316	-		14	HEXAGON NUT, M6M M6 A280	
350	312605-0318	-		4	HEXAGON NUT, M6M M8 A280	
360	315105-0146	-		2	WASHER PLAIN, BRB, 5,3/10,H=1	
370	315105-0153	-		24	WASHER PLAIN, BRB, 6,4/12,H=1,5	
380	315105-0165	-		4	WASHER PLAIN, BRB, 8,4/16,H=1,5	
F010	A537329-0100	-		2	HUB JUMBO	**733**
F020	A543822-0100	-		1	BRAKE ARM	**735**
F030	A594620-0100	-		1	BRAKE ARM	**737**
F040	A543821-0100	-		1	LEVEL PROBE	**739**

Pos	Part No	SP	UN	Qty	Description	Page No

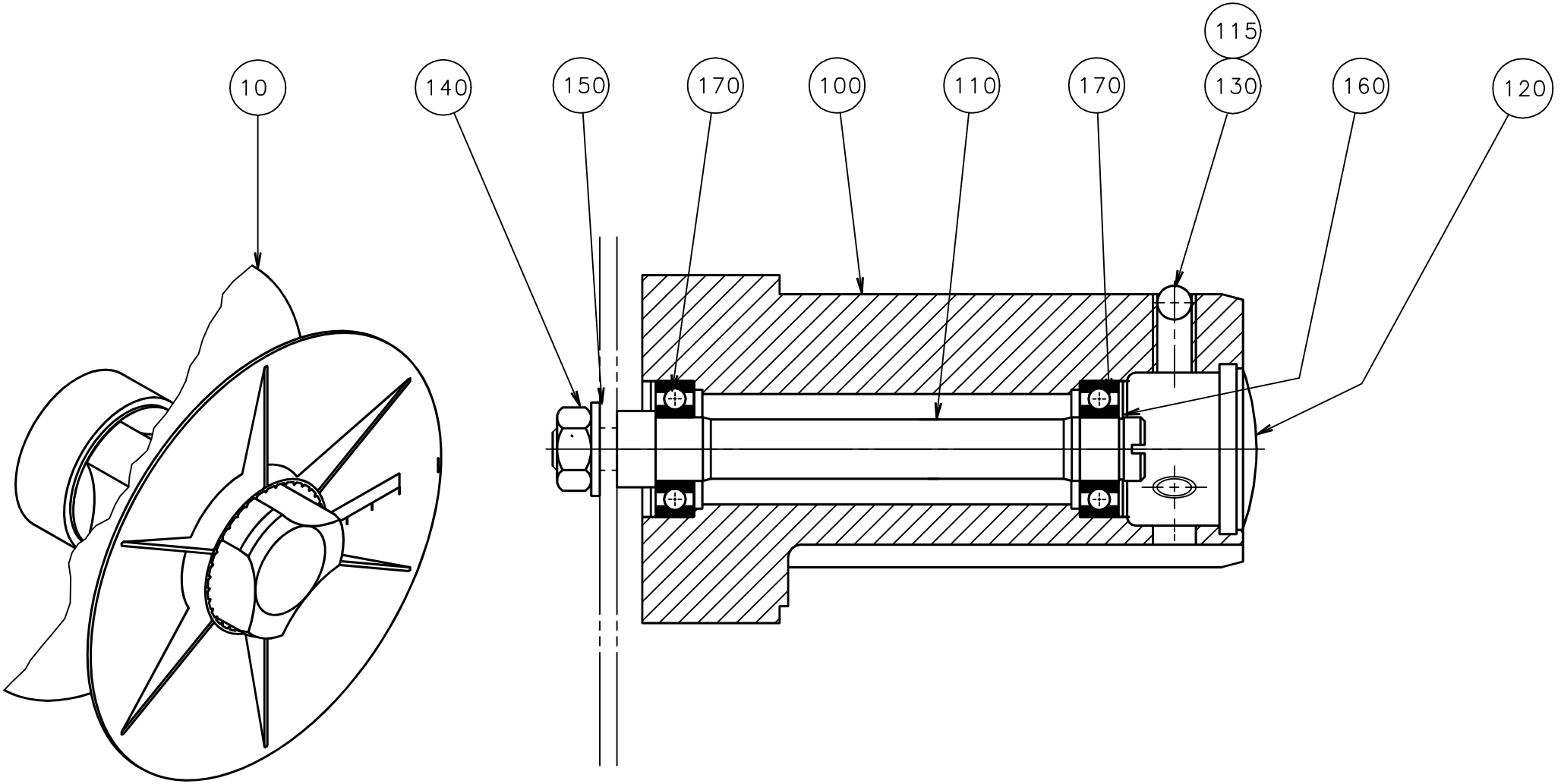
115
10
140
150
170
100
110
170
130
160
120

ECM: 72191 - 19990215
Group number: 537329-0100
Assembly Drawing: 537329-1_1_AA

Issue: 20020121

Pos	Part No	SP	UN	Qty	Description	Page No
Common Parts						
010	541751-0000	-		1	CONICAL BOBBIN	
100	536913-0000	D		1	HUB	
110	537327-0000	D		1	SHAFT	
115	90157-0016	-		1	LOCKING FLUID	
120	90261-0049	-		1	PLUG, BLIND, PLASTIC, NO. SR1750	
130	90287-0106	-		3	SCREW SPRINGLOAD. SLOTTED HEAD M10X21	
140	312605-0320	-		1	HEXAGON NUT, M6M M10 A280	
150	315105-0173	-		1	WASHER PLAIN, BRB, 10,5/22,H=2	
160	315751-0112	-		1	RETAIN. RING, 15	
170	321308-0202	C		2	BALL BEARING, 2 SEALS, 15X32X9 MM	

Pos	Part No	SP	UN	Qty	Description	Page No

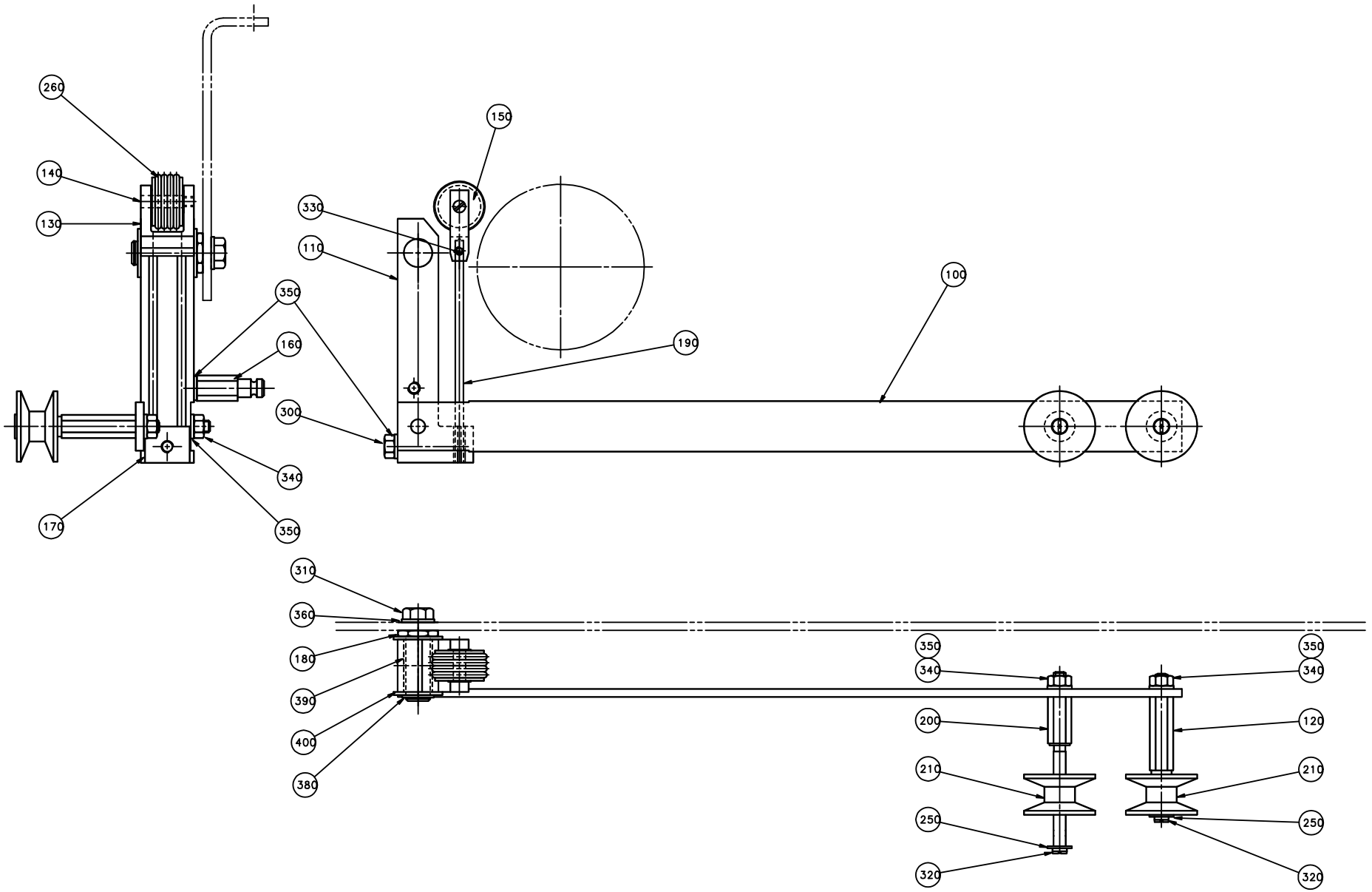
260
140
130
150
330
110
100
350
160
190
300
340
170
350
310
360
180
390
400
380
350
340
200
210
250
320
350
340
120
210
250
320

ECM: 102350 - 20011206
Group number: 543822-0100
Assembly Drawing: 543822-1_1_AA

Issue: 20020121

Pos	Part No	SP	UN	Qty	Description	Page No
Common Parts						
100	540870-0000	B		1	ARM	
110	541057-0000	B		1	ARM	
120	536917-0000	A		1	AXLE PIN	
130	541064-0000	B		1	FORK	
140	541065-0000	B		1	SHAFT	
150	541066-0000	A		1	ROLL	
160	541067-0000	B		1	SPRING BRACKET	
170	541069-0000	B		1	SPRING BRACKET	
180	541070-0000	B		1	SHAFT	
190	543820-0000	A		2	SPRING	
200	544726-0000	A		1	AXLE PIN	
210	B544730-0000	A		2	ROLL	
	321120-0101	*-*		*2*	*BEARING BUSHING WITHOUT FLANGE,6/8X6*	
250	90005-0082	-		2	WASHER PLAIN ROUND 4,3(M4)/12,H=1	
260	90242-0148	A		4	O-RING 19,2X3 MM	
300	312105-0378	-		1	SCREW M6S M6X40 A280	
310	312105-0449	-		1	SCREW M6S M8X16 A280	
320	312125-0287	-		2	SCREW PAN HEAD MCS M4X8 SS	
330	312318-0283	-		2	SCREW SOCK.SET CUP P MSK6SS M4X4 A4	
340	312605-0316	-		3	HEXAGON NUT, M6M M6 A280	
350	315105-0153	-		5	WASHER PLAIN, BRB, 6,4/12,H=1,5	
360	315105-0165	-		1	WASHER PLAIN, BRB, 8,4/16,H=1,5	
380	315751-0109	-		1	RETAIN. RING, 12	
390	321120-0113	A		1	BEARING BUSHING WITHOUT FLANGE,12/14X25	
400	321129-0104	-		1	THRUST WASHER, 12/24X1,5	

Pos	Part No	SP	UN	Qty	Description	Page No

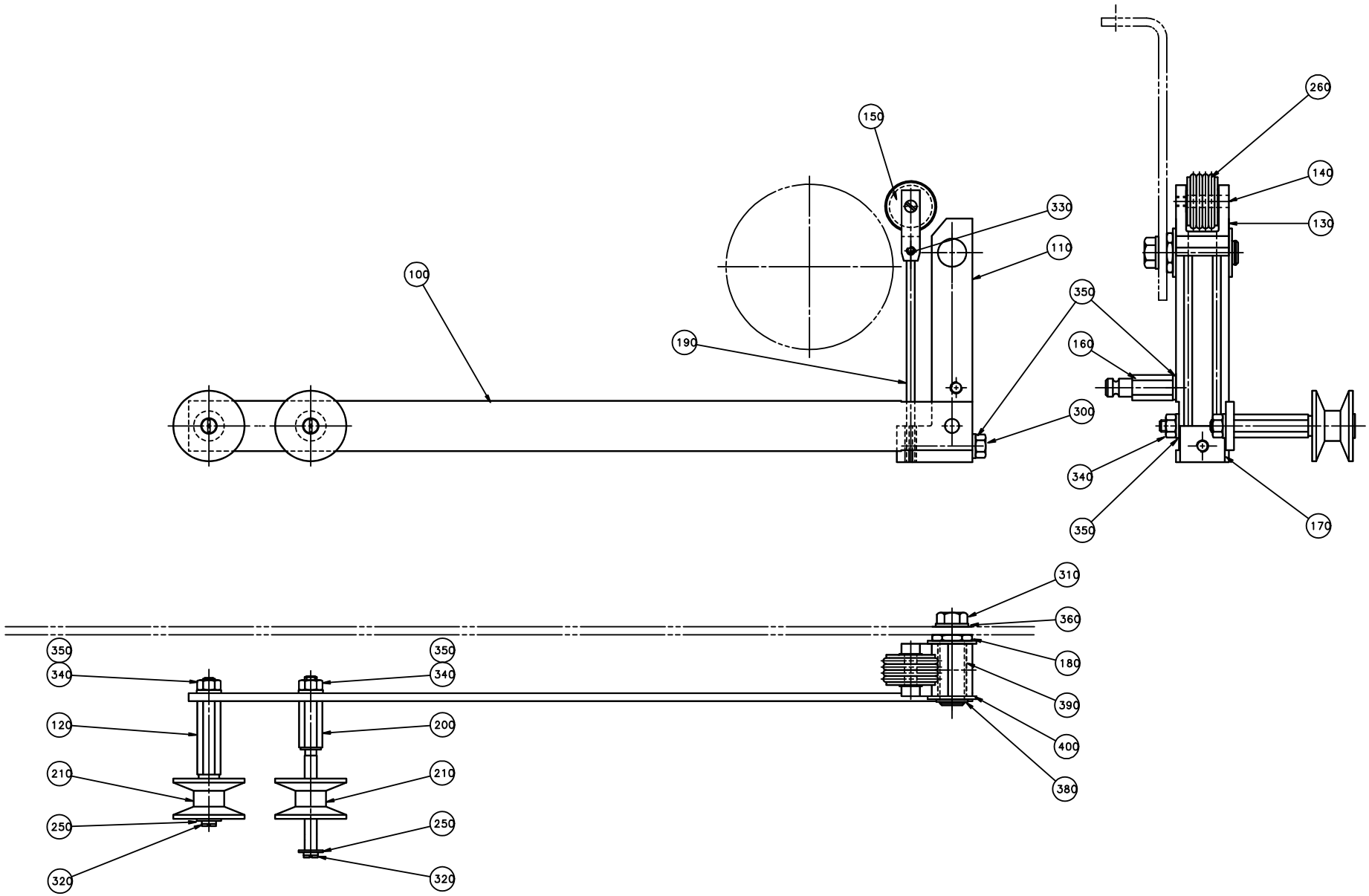
260
150
140
330
130
110
100
350
190
160
300
340
350
170
310
360
180
390
400
380
350
340
120
210
250
320
350
340
200
210
250
320

ECM: 102351 - 20011206
Group number: 594620-0100
Assembly Drawing: 594620-1_1_AA

Issue: 20020121

Pos	Part No	SP	UN	Qty	Description	Page No
Common Parts						
100	540870-0000	B		1	ARM	
110	541057-0000	B		1	ARM	
120	536917-0000	A		1	AXLE PIN	
130	541064-0000	B		1	FORK	
140	541065-0000	B		1	SHAFT	
150	541066-0000	A		1	ROLL	
160	541067-0000	B		1	SPRING BRACKET	
170	541069-0000	B		1	SPRING BRACKET	
180	541070-0000	B		1	SHAFT	
190	543820-0000	A		2	SPRING	
200	544726-0000	A		1	AXLE PIN	
210	B544730-0000	A		2	ROLL	
	321120-0101	*-*		*2*	*BEARING BUSHING WITHOUT FLANGE,6/8X6*	
250	90005-0082	-		2	WASHER PLAIN ROUND 4,3(M4)/12,H=1	
260	90242-0148	A		4	O-RING 19,2X3 MM	
300	312105-0378	-		1	SCREW M6S M6X40 A280	
310	312105-0449	-		1	SCREW M6S M8X16 A280	
320	312125-0287	-		2	SCREW PAN HEAD MCS M4X8 SS	
330	312318-0283	-		2	SCREW SOCK.SET CUP P MSK6SS M4X4 A4	
340	312605-0316	-		3	HEXAGON NUT, M6M M6 A280	
350	315105-0153	-		5	WASHER PLAIN, BRB, 6,4/12,H=1,5	
360	315105-0165	-		1	WASHER PLAIN, BRB, 8,4/16,H=1,5	
380	315751-0109	-		1	RETAIN. RING, 12	
390	321120-0113	A		1	BEARING BUSHING WITHOUT FLANGE,12/14X25	
400	321129-0104	-		1	THRUST WASHER, 12/24X1,5	

Pos	Part No	SP	UN	Qty	Description	Page No

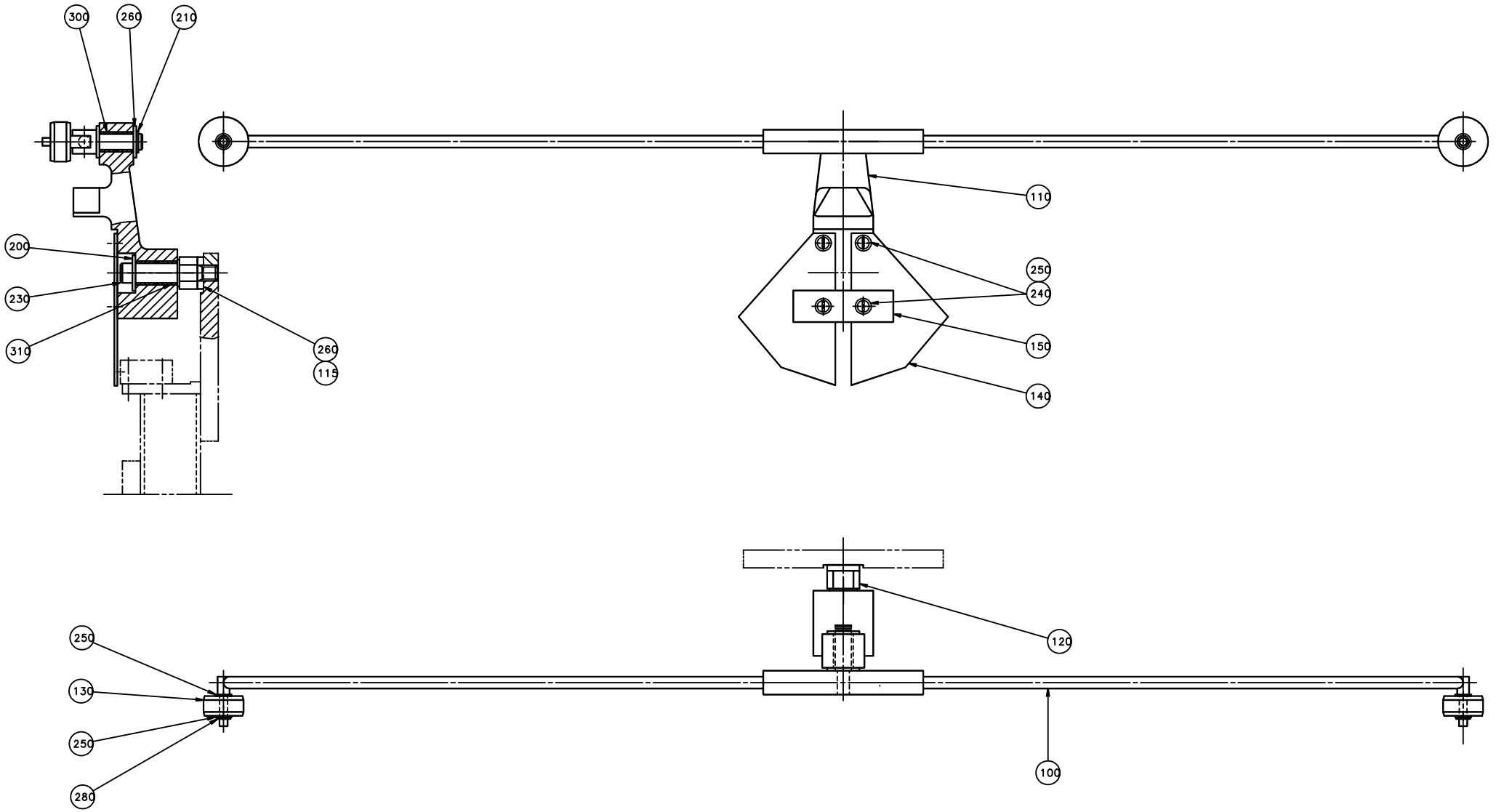
300
260
210
200
230
310
260
115
110
250
240
150
140
250
130
250
280
120
100

ECM: 102352 - 20011206
Group number: 543821-0100
Assembly Drawing: 543821-1_1_AA

Issue: 20020121

Pos	Part No	SP	UN	Qty	Description	Page No
Common Parts						
100	542781-0000	B		1	ARM	
110	542784-0000	B		1	LINK ARM	
115	2033-0008	B		3	WASHER	
120	542782-0000	B		1	AXLE PIN	
130	542785-0000	A		2	ROLL	
140	542786-0000	B		2	FLAG	
150	543575-0000	-		1	LOCK SHEET	
200	90005-0060	-		1	WASHER PLAIN, RBS 6,4/M6)/18,H=1,5	
210	90141-0015	-		1	RETAIN. RING, 8	
230	312115-0366	-		1	SCREW MC6S M6X12 A280	
240	312125-0287	-		4	SCREW PAN HEAD MCS M4X8 SS	
250	315105-0136	-		8	WASHER PLAIN, BRB, 4,3/8,H=0,8	
260	315105-0165	-		3	WASHER PLAIN, BRB, 8,4/16,H=1,5	
280	315755-0105	-		2	LOCKING WASHER 3,2	
300	321120-0103	A		2	BEARING BUSHING WITHOUT FLANGE,8/10X8	
310	321120-0104	A		2	BEARING BUSHING WITHOUT FLANGE,10/12X10	

Pos	Part No	SP	UN	Qty	Description	Page No

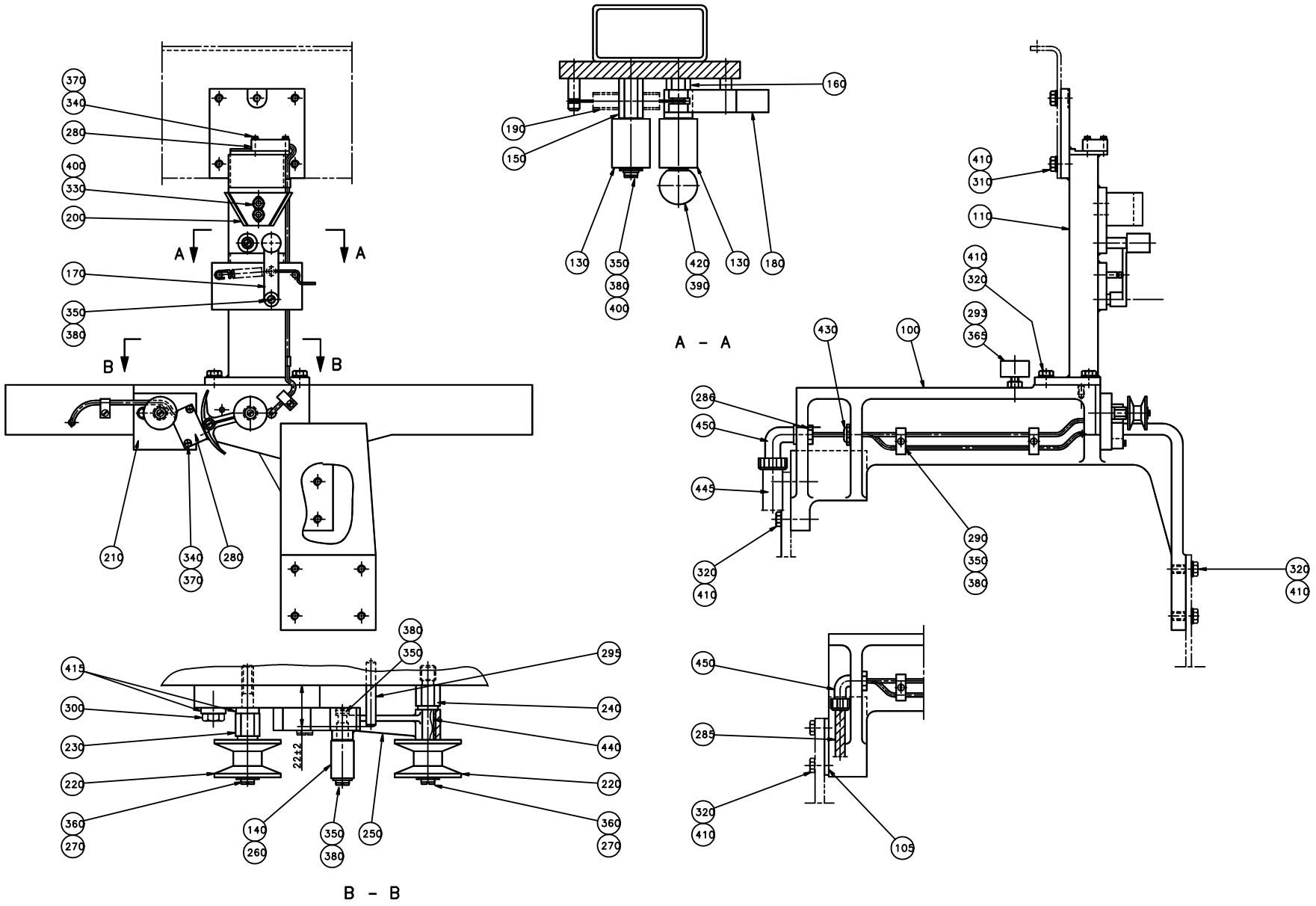
370
340
280
400
330
200
A
A
170
350
380
B
B
210
340
370
280
160
190
150
130
350
380
400
420
390
130
180
A - A
410
310
110
410
320
293
365
430
100
286
450
445
290
350
380
320
410
320
410
380
350
415
300
230
220
360
270
295
240
440
220
360
270
22±2
140
260
350
380
250
B - B
450
285
320
410
105

ECM: 72191 - 19990215
Group number: 544973-0100
Assembly Drawing: 544973-1_1_AA

Issue: 20020121

Pos	Part No	SP	UN	Qty	Description	Page No
TBA/8 0375S OR TBA/8 0500S OR TBA/8 0355B						
100	546030-0001	D		1	CANTILEVER	
TBA/8 0500B OR TBA/8 1000B OR TBA/8 0750B OR TBA/8 1000S						
100	545138-0000	D		1	CANTILEVER	
430	352101-0103	-		1	LEAD-IN, PR18,6/PG11, E-1457518	
TBA/8 1000SQ						
100	546030-0002	D		1	CANTILEVER	
105	574037-0000	D		1	SPACER	
TBA/8 0750S						
100	546030-0002	D		1	CANTILEVER	
105	546031-0000	D		1	SPACER	
Common Parts						
110	544974-0000	D		1	PILLAR	
130	232979-0000	C		2	PRESSURE ROLLER	
140	249298-0000	C		1	ROLL	
150	269053-0001	C		1	SHAFT	
160	269053-0003	C		1	SHAFT	
170	269054-0000	D		1	ARM	
180	269056-0000	D		1	CATCH	
190	269057-0000	C		1	TENSION SPRING	
200	279480-0000	D		1	STEERING RAIL	
210	547571-0000	D		1	PLATE	
220	B544730-0000	C		2	ROLL	
	321120-0101	-		*2*	*BEARING BUSHING WITHOUT FLANGE,6/8X6*	
230	547924-0000	C		1	AXLE PIN	
240	547925-0000	C		1	AXLE PIN	
250	545111-0000	D		1	ARM	
260	545112-0000	D		1	SHAFT 6X29,5	
270	90005-0082	-		2	WASHER PLAIN ROUND 4,3(M4)/12,H=1	
280	90044-0104	C		2	PROX.SWITCH IFM IN 3002	
286	90099-0002	-		1	NUT PR 18,6 BRASS	
290	90165-0060	-		11	PIPE CLIP FOR TUBE D=5 MM	
293	90347-0004	C		1	VIBRATION DAMPER D=30 TH=M8 H=17 H2=21MM	
295	311103-0316	-		1	PARALLELL PIN, M6, 5X35 MM	
300	312105-0372	-		1	SCREW M6S M6X25 A280	
310	312105-0449	-		4	SCREW M6S M8X16 A280	
320	312105-0452	-		10	SCREW M6S M8X22 A280	
330	312115-0366	-		2	SCREW MC6S M6X12 A280	
340	312125-0228	-		4	SCREW PAN HEAD MCS M3X16 A480	
350	312125-0285	-		12	SCREW SLOT.PAN HD. MCS 4X6 A480	
360	312125-0287	-		2	SCREW PAN HEAD MCS M4X8 SS	
365	312605-0318	-		1	HEXAGON NUT, M6M M8 A280	
370	315105-0124	-		4	WASHER PLAIN, BRB, 3,2/6,H=0,5	
380	315105-0136	-		12	WASHER PLAIN, BRB, 4,3/8,H=0,8	
390	315105-0146	-		1	WASHER PLAIN, BRB, 5,3/10,H=1	
400	315105-0153	-		3	WASHER PLAIN, BRB, 6,4/12,H=1,5	
410	315105-0165	-		14	WASHER PLAIN, BRB, 8,4/16,H=1,5	
415	315115-0153	-		2	WASHER PLAIN, TBRB 6,4/12 H=3	
420	318800-0102	-		1	HANDLES,SPHERICAL KNOB,INT.THRE.,D.20-M5	
440	321120-0101	C		2	BEARING BUSHING WITHOUT FLANGE,6/8X6	
445	352135-0106	-	MM	430	SPIRAL CONDUIT DI=16 MM	
450	352137-0127	-		1	COND.FITTING PR 18,6 DI=16MM	

Tetra Pak

SPC
Spare Parts Catalogue

Part No	Description	Page No
1013-0000	SHAFT	663
1881-0001	COMPRESSION SPRING	13, 15, 17, 19
2033-0008	WASHER	13, 15, 17, 19, 25, 27, 31, 33, 35, 739
2033-0009	WASHER	717, 723
6161-0000	ROLL	61
6278-0000	WASHER	39, 125, 419, 421, 445, 447, 449, 465, 467
7309-0000	HANDLE	23, 245, 247, 277, 731
10793-0036	MOUNTINGRAIL TS32 L=400MM	137
12242-0001	GASKET	43, 105, 119
12242-0003	GASKET	71, 73, 77, 95, 97, 105, 113, 139
12242-0005	GASKET	71, 73, 77, 95, 123, 139
12922-0000	WASHER	345, 347, 349, 351
14600-0000	HOOD	45
14729-0000	NUT	383, 385
19972-0000	WASHER	335, 337, 339
20494-0000	COMPRESSION SPRING	379, 381
20705-0001	INSULATING PIPE	485, 487
20718-0000	BEARING	323, 325, 327, 329
20770-0000	WASHER	255
20772-0000	INSULATOR BODY 70X70X15MM	485, 487
21521-0000	COMPRESSION SPRING	65, 101, 103
21903-0000	ROLL	717, 723, 729
22462-0000	SHAFT	373, 377
22463-0000	ROLL	373, 377
22473-0000	ROLLER BRACKET	373
22483-0000	FORK	323, 325, 327, 329
22485-0000	DOWEL	323, 325, 327, 329
22486-0000	DOWEL	323, 325, 327, 329
22488-0000	ELBOW PIPE	355
22489-0000	ELBOW PIPE	355
22504-0000	STOP LUG	323, 325, 327, 329
22559-0000	GRUB SCREW	719, 721
22560-0000	PAPER SUPPORT	719, 721
23127-0101	TRANSFORMER	191
23229-0000	BRACKET	373, 377
23270-0000	BUSHING	305
23291-0000	BEARING COVER	323, 325, 327, 329
23292-0000	BEARING HOUSING	323, 325, 327, 329
23312-0000	BUSHING	323, 325, 327, 329
23361-0000	ROLLER BRACKET	377
23458-0000	SHAFT	301, 303
23462-0000	SPACER RING	301, 303
23582-0000	HOLDER	13, 15, 17, 19
23583-0000	GUIDE FINGER	13, 15, 17, 19
23584-0000	SCREW	13, 15, 17, 19
23763-0003	SPACER PIPE	481, 483, 489, 491
23763-0004	SPACER PIPE	481, 483, 489, 491
23763-0005	SPACER PIPE	481, 483, 489, 491
23763-0006	SPACER PIPE	481, 483, 489, 491
23763-0010	SPACER PIPE	481, 483, 489, 491
23765-0001	INSULATING PIPE	481, 483, 489, 491
23765-0002	INSULATING PIPE	481, 483, 489, 491
23765-0003	INSULATING PIPE	481, 483, 489, 491
23765-0004	INSULATING PIPE	481, 483, 489, 491
23765-0005	INSULATING PIPE	481, 483, 489, 491
23769-0000	STOP PLATE	481, 483, 489, 491
23771-0000	SPACER RING 4X78X1MM	485, 487
24206-0000	BEARING	703
24351-0000	BOW CLAMP	13, 15, 17, 19
24355-0000	DOWEL	13, 15, 17, 19
24356-0000	PIECE	13, 15, 17, 19
24928-0000	LOCKING RUBBER	45
25640-0000	CARRIER	375
25641-0000	REAMED BOLT	375
26075-0000	VOLUME BULGE	335, 337, 339
26423-0000	LACE	373, 377
26425-0000	LACE	383, 385
26426-0000	LACE	323, 325, 327, 329
26490-0000	WASHER	519
26642-0200	CARRIER	373, 377
26760-0000	LOCATING PIECE	379, 381
28036-0000	WASHER	31, 33, 35, 309
28037-0000	WASHER	13, 15, 17, 19, 547, 549
28334-0000	CURVE ROLLER	315
28509-0000	WASHER	341, 343
28880-0000	PLUNGER	345, 347, 349, 351
29411-0000	SPACER PIPE	485
29413-0000	LACE	485, 487
29876-0000	COVER	111
29886-0000	LACE	379, 381
30298-0000	INSULATION	111
30310-0001	FF HEATING ELEMENT TOP	485
30310-0002	FF HEATING ELEMENT TOP	485
30310-0003	FF HEATING ELEMENT TOP	485

Part No	Description	Page No
30311-0001	FF HEATINGELEMENT BUTTOM KANTHAL 2333-02	487
30311-0002	FF HEATINGELEMENT BUTTOM KANTHAL 2333-02	487
31390-0100	FF-ELEMENT TOP	481, 483, 489, 491
31390-0110	FF-ELEMENT BOTTOM	481, 483, 489, 491
31417-0000	LINK	725
31418-0000	SHAFT	725
31419-0000	SHAFT	725
31420-0000	WASHER	725
31423-0000	MOUNTING LUG	725
31424-0000	ROLLER BRACKET	725
31553-0002	WASHER	535, 569
31653-0001	SHEET	485
31653-0002	FIX PLATE 39X85X0,5MM	487
31837-0000	SPRING HOUSING	379, 381
31838-0000	PLUNGER	379, 381
32079-0000	WASHER	673, 675, 677
32116-0000	END PIECE	345, 347, 349, 351, 369, 371
32213-0000	WASHER	719, 721
32215-0000	HOLDER	55, 57, 719, 721
32217-0000	BOTTOM SECTION	719, 721
32219-0000	WASHER	719, 721
32223-0000	BEARING	719, 721
32400-0000	HOLDER	719, 721
32451-0000	AIR DUCT	719, 721
32453-0000	MANTLE	719, 721
32462-0000	SHAFT	375
32463-0000	BEARING	373, 377
32464-0000	SHAFT	345, 347, 349, 351
32468-0000	OPERATING ROD	373, 377
32474-0000	ATTACHMENT	719, 721
32494-0000	OPERATING ROD	373, 377
32544-0000	INSULATION NUT	341, 343, 369, 371
32629-0000	SPROCKET	609, 611, 613, 615, 617, 619
32630-0000	SPROCKET	609, 611, 613, 615, 617, 619, 643, 645
32644-0000	WASHER	341, 343
32668-0000	ARM	719, 721
32691-0000	LOCKING SPRING	625, 627, 629, 631, 633, 649, 651
32925-0000	CARRIER	609, 611, 613, 615, 617, 619, 643, 645
32926-0000	ROLL	609, 611, 613, 615, 617, 619, 643, 645
32957-0000	SCREW	383, 385
33010-0000	SCREW	621, 623, 647
33011-0000	SLEEVE	625, 627, 629, 631, 633, 649, 651
33150-0000	GUIDE STUD	387, 389
33152-0000	STOPPER	387, 389
33182-0000	ROLL	609, 611, 613, 615, 617, 619, 643, 645
33183-0000	SPRING	609, 611, 613, 615, 617, 619, 643, 645
33261-0000	SPRING PLATE	535, 569
33408-0000	BEARING	373, 377
33409-0000	SCREW	323, 325, 327, 329
33442-0000	ROLL	39
33577-0000	CANTILEVER	123, 707
33648-0000	HOLDER	13, 15, 17
35547-0000	SPRING	621, 623, 647
35827-0000	BRACKET	305
35962-0000	LID	275
36133-0000	BUSHING	335, 337, 339
36749-0000	MANTLE	719, 721
36753-0000	RING	379, 381
36804-0000	ARM	51, 53
36805-0000	LINK	51, 53
36806-0000	CLAMPING ELEMENT	51, 53
36816-0000	LINK	51, 53
36817-0000	CLAMPING ELEMENT	51, 53
36885-0000	CRANK ARM	295
36953-0001	ROLL	25, 27
36953-0010	ROLL	37
37070-0000	SPRING	403, 405, 407, 409
37071-0000	WASHER	403, 405, 407, 409
37097-0000	CARRIER	299
37258-0000	BUSHING	373, 377
37296-0000	ARM	51, 53
37535-0000	SUPPORTING PART 56X56X31,5MM	485, 487
37536-0000	INSULATOR BODY LOWER 70X70X15MM	485, 487
37537-0000	SPACER RING LOWER 72X78X1MM	485, 487
37638-0000	PENDULUM SUSPENSION	107
37768-0000	THERMOCOUPLE CR-AL	719, 721
37782-0000	THROTTLE	51, 53
38087-0000	WASHER	75, 281
38490-0000	END PIECE	345, 347, 349, 351, 369, 371
38603-0002	SPACER	403, 405, 407, 409
38630-0001	COUNTER ROLLER	25, 27
48393-0100	DCS8+, DESIGN CONTROL SYSTEM PLUS	585
67379-0101	IMPEDANCE TRANSFORMER	331, 333
67379-0102	IMPEDANCE TRANSFORMER	331, 333

Part No	Description	Page No
68917-0100	ANGLE INDICATOR	283
72947-0000	HOOK SPANNER	587
74387-0000	HOOK SPANNER	587
76138-0000	LOCKING LOOP	587
90002-0004	BLANK-OFF PLUG, PR 22,5 SKINDICHT-BLK16	205, 273, 667, 669, 705
90002-0009	BLANK-OFF PLUG, PR 18.6 SKINDICHT-BLK11	135, 205, 271, 273, 667, 669, 705
90002-0010	BLANK-OFF PLUG, PR 37 SKINDICHT-BLK29	153, 273
90002-0012	BLANK-OFF PLUG, PR 28,3 SKINDICHT-BLK21	153, 671
90002-0013	BLANK-OFF PLUG, PR 15,2 SKINDICHT-BLK9	135, 197, 273, 705
90005-0005	GASKET BOLT HEAD 13,7X20,6X2,1 MM G1/4"	157
90005-0007	GASKET BOLT HEAD 8,7X14X1 MM M8	341, 343
90005-0009	GASKET BOLT HEAD 10,4X15,9X2,1 MM G1/8"	157
90005-0060	WASHER PLAIN, RBS 6,4/M6)/18,H=1,5	739
90005-0082	WASHER PLAIN ROUND 4,3(M4)/12,H=1	731, 735, 737, 741
90007-0100	FUSE	191
90007-0101	FUSE	191
90012-0059	GLAND	135
90012-0061	GLAND	111, 205, 273
90012-0062	GLAND	111
90012-0063	CABLE GLAND PR 15,2	63, 135, 157, 197, 205, 249, 263, 265, 273
90012-0064	GLAND	135, 667, 669
90012-0071	GLAND FITTING	419, 421, 447, 449
90012-0072	GLAND FITTING **	419, 421, 447, 449
90012-0073	GLAND FITTING	425
90012-0137	GLAND, EXTENDED WITH INSERT, PG11	117, 667, 669
90015-0010	BUSHING	199, 201, 203
90015-0011	BUSHING	199, 201, 203
90015-0020	LEAD-IN, TET5-7, E-1458016	419, 421, 447, 449
90015-0021	LEAD-IN, TET10-14, E-1458023	199, 201, 203
90017-0009	HANDLE, SWIVWLLING, SIZE32 /M12 THREAD	295
90020-0027	SLEEVE	85
90020-0028	SLEEVE	81, 83
90028-0001	CONE 5/32"	445, 465, 467, 479, 493, 495, 547, 549
90028-0020	CONE TUBE 2,5MM	249, 305, 307, 315, 323, 325, 327, 329, 331, 333, 335, 337, 339, 379, 381 383, 385, 403, 405, 407, 409, 437, 439, 441, 445, 453, 455, 457, 459, 461, 463, 465, 467, 493, 495
90028-0021	CONE TUBE 4 MM	249, 323, 325, 327, 329, 331, 333, 379, 381, 383, 385, 403, 405, 407, 409 441, 445, 461, 463, 465, 467, 493, 495
90028-0022	CONE TUBE 6 MM	249, 305, 419, 421, 437, 439, 447, 449, 453, 455, 457, 459
90028-0024	CONE TUBE 4 MM	249, 305
90028-0025	CONE TUBE 6 MM	249, 305, 437, 439, 441, 445, 453, 455, 457, 459, 461, 463, 465, 467, 493, 495
90030-0030	CONN. BULKHEAD SV 12-L/SY	193, 199, 201, 203, 225, 227, 229, 231, 233, 235, 419, 421, 447, 449
90030-0051	CONN. STR., 6-R1/8, EXT. THREAD	105, 123
90030-0058	CONN. T-PIPE T-12	121, 707
90030-0066	CONN. BULKHEAD SV 6-L/SY	199, 201, 203
90030-0067	CONN. BULKHEAD SV 8-L/SY	199, 201, 203
90030-0070	CONN. ELBOW WA 10-R1/4	77
90030-0076	CONN. T-PIPE T-6	261
90030-0088	CONN. STR., 12-R1/4, EXT. THREAD	77
90030-0091	CONN. PIPE G-8	215, 217
90030-0092	STRAIGHT CONN., 6-R1/4,EXT. TAPPERED	55, 57
90030-0096	CONN. ELBOW W-12	77, 129, 131
90030-0098	ACCESSORIES, FERRULE 8	355
90030-0106	CONN. PIPE G-12	215, 217
90030-0107	CONN. STR. 6-1/8 NPT, EXT. TAPPERED	479
90030-0109	CONN. STR., 12-R1/2, EXT. THREAD	71, 73, 77
90030-0115	CONN. ELBOW WA 12-R3/8	63, 71, 73, 211
90030-0119	PIPE CONNECTION	77
90030-0120	ADJ. L-PIPE CONNECTION EVL, INT.T-10	253
90030-0121	CONN. ELBOW ADJ.,INT 10	251, 253
90030-0137	CONN. ELBOW WA 6-R1/8	121
90030-0146	ADJUSTABLE ELBOW CONNECTION,EXT 6-G1/8	253
90030-0155	CONN. STR., 8-R3/8, EXT. THREAD	209
90030-0157	CONN. STR. 10-R3/8, EXT. THREAD	209, 251, 253
90030-0159	CONN. BULKHEAD SV 15-L/SY	199, 201, 203, 215, 217
90030-0162	CONN. STR. 6-M10X1, EXT. THREAD	315
90030-0178	CONN. STR., 10-R1/4, EXT. THREAD	251
90030-0179	CONN. BULKHEAD SV 22-L/SY	199, 201, 203
90030-0180	CONN. STR. GE 12-1/2-14 NPTF	77
90030-0184	CONN. STR. GA-6-G1/8	121, 157
90030-0187	CONN. STR. GA-12-G3/8	55, 57, 63, 77, 105, 211
90030-0201	CONN. STR., 8-R1/4, EXT. THREAD	345, 347, 349, 351
90030-0207	NIPPLE	95
90030-0221	CONN. ELBOW BULKHEAD WSV 12	193
90030-0222	CONN. ELBOW, 6-1/8 NPT, EXT.THREAD	479
90030-0253	CONN. STR. 12-1/4 NPT, EXT. TAPPERED	215, 217
90032-0034	DISTR. BLOCK & DIST.5/16-24UNF X8	547, 549
90032-0035	DISTR. BLOCK & DIST.5/16-24UNF X8	479
90032-0038	BLOCK 2 WAYS	249, 307, 323, 325, 327, 329, 403, 405, 407, 409, 437, 439, 453, 455, 457, 459
90032-0039	BLOCK 4 WAYS	305, 315, 331, 333, 379, 381, 383, 385, 445, 465, 467
90032-0040	BLOCK 6 WAYS	441, 461, 463, 493, 495
90032-0043	DISTRIBUTION BLOCK 3 WAYS	249, 305
90032-0044	DISTRIBUTION BLOCK 4 WAYS	249, 419, 421, 437, 439, 447, 449, 453, 455, 457, 459
90032-0046	DISTRIBUTION BLOCK 6 WAYS	249
90036-0068	BULB 6.5W 24V	259

Part No	Description	Page No
90042-0172	SOLENOID VALVE 4023/1005/1032 24VDC	263, 265
90042-0187	SOLENOID VALVE BUERKERT	69
90042-0203	SOLENOID VALVE BURKERT	41
90042-0206	SOLENOID VALVE 444-111-000-1	157
90042-0215	VALVE BODY 5/2 UNISTABLE	267, 269
90042-0481	CONNECTION TABLE 583-471-000 MECMAN	263, 265
90042-0487	COIL 24 VDC MECMAN	157
90042-0519	BLANK PLATE ISO SIZE 1	267, 269
90042-0520	BASE PLATE ISO SIZE 1	267, 269
90042-0522	PORTED END PIECE ISO SIZE 1	267, 269
90042-0527	SEAL KIT PILOT VALVE	267, 269
90042-0528	BLANKING KIT SEALS ISO SIZE 1	267, 269
90042-0532	BASE PLATE ISO SIZE 1	267, 269
90042-0535	TERMINAL BOARD 19 CORDS	263, 265, 267, 269
90042-0536	PILOT CABLE MECMAN 440-728-000-1	263, 265
90042-0538	PILOT VALVE L=500MM	267, 269
90042-0539	PILOT VALVE L=350MM	267, 269
90042-0550	PROTECTION PLUG FOR UNUSED CONNECTION	263, 265, 267, 269
90043-0004	PRESSURE GAUGE, 2040 D=63 MM	157
90043-0006	PRESSURE GAUGE, 2041 D=63 MM	263, 265
90043-0021	PRESSURE GAUGE WIEGAND 0-1 BAR 1/8"	267, 269
90043-0034	PRESSURE GAUGE	123, 707
90043-0043	PRESSURE GAUGE WIEGAND 0-10 BAR 1/8"	263, 265, 267, 269
90043-0062	MANOMETER	253
90043-0095	PRESSURE GAUGE, 2740, D=63 MM, GLYC.	67
90043-0302	SCREW	123, 707
90044-0084	LIMIT SW. 14 CE1-4	71, 73, 109
90044-0094	LIMIT SW. 924 CE31-Y20-X5	173, 175, 255, 307
90044-0099	PROXIMITY SWITCH IG REPL.BY 90044-126	95, 133
90044-0103	KEY SAFETY SWITCH AZ 15 ZVR	113, 123, 659, 661
90044-0104	PROX.SWITCH IFM IN 3002	77, 115, 117, 119, 425, 437, 439, 453, 455, 457, 459, 499, 501, 519, 537, 539, 667, 669, 727, 741
90044-0122	PROX.SW. 922AA4XM-A9P-050-LZ-87	667, 669
90044-0126	PROX.SW. 922AA3XM-A9P-060-LZ876	105
90044-0139	KEY SAF.SW. AZ16-02 ZVR K-2254	659, 661
90045-0049	MOTOR 3GAA 082002-ASA	423
90045-0087	MOTOR 3GAA 071002-CSA M2AA 71B	163
90046-0015	DRIVE BRAKE MOTOR 50HZ	299
90046-0016	DRIVE BRAKE MOTOR 60HZ	299
90048-0033	GEAR PUMP, C 2347	479
90048-0034	OIL PUMP INCL. CONTAINER 4,5 L	249
90048-0420	FILTER	479
90050-0008	BOTTLE	621, 623, 647
90050-0011	BOTTLE	275
90051-0025	KNOB, EXTERNAL THREAD. NO. 8306-0200	571
90051-0053	KNOB, INTERNAL THREAD, M6 24X17	95
90051-0065	HANDLE, THREADED TAP. NO. 8305-2151	75
90051-0077	HANDLE	621, 623, 647
90051-0089	SHIFTER HANDLE	635, 637
90052-0011	HORN	703
90055-0033	HOSE NIPPLE, EXT.THR. R1/2-13 MM	199, 201, 203
90055-0071	HOSE NIPPLE, EXT.THR. R1/2X13 MM	21
90055-0096	STRAIGHT COUPLING	267, 269
90055-0100	Y-CONNECTION, 6-6	225, 227, 229, 231, 233, 235, 411
90055-0118	ELBOW PIPE JOINT -8MM	267, 269
90055-0217	ELBOW PIPE JOINT	267, 269
90056-0099	GEARS, BEVEL ALU-00	465, 467
90056-0147	GEARS, BEVEL ALU-00	445
90061-0018	ANGLE ENC 8BIT GRAY (REPL BY 90061-27)	309
90062-0049	LOCK WASHER NORD-LOCK,8,5/13,5, H=2,3	541, 543
90062-0070	LOCK WASHER NORD-LOCK,10,3/16 H=2,4	569
90064-0084	PUSH BUTTON YELLOW	271, 667, 669, 707
90064-0085	PUSH BUTTON, RED	667, 669
90064-0094	PUSH BUTTON RED	271
90064-0095	PUSH BUTTON YELLOW	271
90064-0096	PUSH BUTTON GREEN	271
90064-0105	EMERGENCY STOP BUTTON REPL.BY 90064-124	701, 707
90064-0124	SWITCH,EMERGENCY STOP	667, 669
90064-0317	TOUCHGUARD OLTEN PUSHB.REPL.BY 90064-335	271
90066-0021	PUSH BUTTON BOX XAP-M1501 TELEMECANIQUE	701
90066-0029	PUSH BUTTON BOX XB2-SLS12	707
90067-0021	CARRIAGE 32 04 129 5	693
90069-0116	GEARS, WORM MOTOR REPBY 90069-0281	117, 607
90074-0001	CLIPS, CABLE CLIPS DI=10 MM	199, 201, 203
90074-0002	CLIPS, CABLE CLIPS DI=11 MM	275, 493, 495
90074-0004	CLIPS, CABLE CLIPS DI=16 MM	195
90074-0006	CLIPS, CABLE CLIPS DI=2X12 MM	209
90074-0018	CLIPS, CABLE CLIPS DI=2X10 MM	437, 439, 453, 455, 457, 459
90074-0026	CLIPS, CABLE CLIPS DI=24 MM	267, 269
90077-0090	FEED THROUGH TERMINAL, 10-00035546-1	137
90077-0102	TERMINAL BLOCK, 1952.2	197
90077-0113	FEED THROUGH TERMINAL, 10-00102150-1	205
90077-0115	TERMINALS, DISCONNECTABLE	271
90077-0302	RAIL, TS/35X7,5 REPL.BY 353042-5	271

Part No	Description	Page No
90077-0309	END PLATE	137
90087-0002	PIPE PLUG	153, 215, 217
90087-0003	PIPE PLUG	299
90087-0015	PLUG, EXT. THREAD HEX. SOCKET VSTI 1/4-E	541, 543
90087-0019	PLUG M10X1 STAINLESS	249, 305, 307, 315, 323, 325, 327, 329, 331, 333, 383, 385, 403, 405, 407, 409, 437, 439, 441, 445, 453, 455, 457, 459, 461, 463, 465, 467, 493, 495
90089-0003	REDUCING SLEEVE, PR22,5/PR18,6	701
90089-0004	REDUCING SLEEVE, PR28,3/PR22,5	671
90089-0018	REDUCING SLEEVE, 3/4NPT /PR22,5	215, 217
90090-0013	BALL, D=4 MM	357, 359, 363, 365, 369, 371
90090-0014	BALL, D=7,938 MM	199, 201, 203
90090-0016	BALL, D=15 MM	411
90090-0020	BALL, D=5 MM	179, 181, 187, 189, 213, 239
90091-0029	RADIAL SEAL 80X105X13 MM	301, 303
90091-0054	RADIAL SEAL 30X47X8 MM DUST LIP	427
90091-0078	ROD SEAL, GLIDORING 18X25X3 MM	357, 359, 363, 365, 369, 371
90091-0079	PISTON SEAL, GLIDORING 27X35X3,1 MM	357, 359, 363, 365, 369, 371
90091-0080	SCRAPER 48X60X10 MM	379, 381
90091-0130	RADIAL SEAL 90X110X12 MM DUST LIP	541, 543
90091-0137	RADIAL SEAL TYPE VARILIP 20X35X7 MM	163
90091-0142	RADIAL SEAL 35X50X9 MM	545
90091-0143	RADIAL SEAL 47X62X6 MM	473
90091-0145	RADIAL SEAL 30X62X10 MM	427
90091-0159	GASKET 330X308X9 MM	251
90091-0180	GASKET 32X25X4,8 MM	55, 57
90091-0182	GASKET 48X38X4,8 MM	107, 109
90091-0202	RADIAL SEAL 58X80X13 MM DUST LIP	473
90092-0038	METERING VALVE, CJB 1, 5/16-24 UNF	479
90092-0048	OIL BRUSH, FLAT, 5/16-24 UNF	441, 445, 461, 463, 465, 467, 493, 495
90092-0052	METERING VALVE 10 MM3	249, 315, 323, 325, 327, 329, 331, 333, 379, 381, 383, 385, 437, 439, 441, 445, 453, 455, 457, 459, 461, 463, 465, 467, 493, 495
90092-0053	METERING VALVE 30 MM3	249, 305, 307, 315, 331, 333, 379, 381, 383, 385, 403, 405, 407, 409, 437, 439, 453, 455, 457, 459, 493, 495
90092-0054	METERING VALVE 50 MM3	305, 323, 325, 327, 329, 383, 385
90092-0077	METERING VALVE, FKD3, G1/8	535
90092-0081	MET.VALVE CONT. LUBR., 5/16-24 UNF	479
90097-0017	FLAT PIN PLUG 6,3MM	55, 57
90099-0001	NUT PR 15,2 BRASS	135, 273
90099-0002	NUT PR 18,6 BRASS	135, 271, 273, 703, 741
90099-0003	NUT	135, 273, 275, 667, 669
90099-0004	NUT	199, 201, 203
90099-0011	NUT PR 37 BRASS	199, 201, 203, 273
90099-0012	NUT HEX. M18X1,5, FE	315
90099-0015	NUT HEX. ML6M, M12X1,5, FE	309
90099-0085	NUT	193
90099-0178	GLAND, LOCKNUT, PG 16	423
90110-0095	CONNECTOR 3 POLE + EARTH	157, 263, 265
90110-0128	MALE INSERT, HAN 24 E-M 933 024 2631	135, 263, 265, 267, 269, 283, 667, 669
90111-0121	SWITCH 3 POS.EA OLTEN	271
90111-0150	SWITCH GEAR, 704.502 .0+704.901.3	667, 669
90113-0044	PRESSURE REGULATOR	253
90113-0056	REGULATOR	157
90113-0069	PRESSURE REGULATOR	267, 269
90113-0076	PRESSURE REGULATOR	267, 269
90113-0114	REGULATOR	263, 265
90113-0379	NUT	267, 269
90113-0407	YOKE, SINGLE	263, 265
90115-0067	ROD END, ID=16 MM, M16X2	315
90115-0105	ROD END, ID=10 MM, M10X1,5	299
90115-0106	ROD END, ID=8 MM, M8X1,25	313
90115-0107	ROD END, ID=8 MM, M8X1,25 LH	313
90115-0111	ROD END, ID=22 MM, M22X1,5 LH	237
90115-0122	ROD END, ID=8 MM, M8X1,25	315
90115-0133	ROD END, ID=12 MM, M12X1,25	307
90115-0139	ROD END, ID=8 MM, M8X1,25	551, 553, 555
90125-0020	PLATE	39, 717
90131-0004	HOSE COUPLING	275
90132-0021	HOSE CLIP 6-10MM	171, 267, 269
90134-0002	CONNECTOR R1/8, D=4 MM	441, 445, 461, 463, 465, 467, 493, 495
90134-0003	BUSHING	445, 465, 467, 479, 493, 495, 547, 549
90134-0004	PIPE CONNECTION R1/8	199, 201, 203
90134-0030	SLEEVE FOR PLASTIC TUBE	249, 305, 315, 419, 421, 437, 439, 441, 445, 447, 449, 453, 455, 457, 459, 461, 463, 465, 467, 471, 493, 495
90134-0031	SLEEVE FOR PLASTIC TUBE	249, 305, 307, 323, 325, 327, 329, 331, 333, 379, 381, 383, 385, 403, 405, 407, 409
90134-0034	NIPPLE	479
90134-0038	BUSHING/NUT INLET/OUTLET 4 MM	249, 305, 307, 323, 325, 327, 329, 331, 333, 379, 381, 383, 385, 403, 405, 407, 409
90134-0039	BUSHING VALVE CONNECTION 2,5 MM	249, 305, 307, 315, 323, 325, 327, 329, 331, 333, 379, 381, 383, 385, 403, 405, 407, 409, 437, 439, 441, 445, 453, 455, 457, 459, 461, 463, 465, 467, 493, 495
90134-0040	BUSHING VALVE CONNECTION 4 MM	379, 381, 441, 445, 461, 463, 465, 467, 493, 495
90134-0045	PLUG M12X1	445, 465, 467
90134-0051	SPACING COLLAR DOSING BLOCK	379, 381

Part No	Description	Page No
90134-0052	PLUG DOSING BLOCK	249, 305, 307, 315, 445, 465, 467
90134-0054	BLOCK CONNECTION M10X1	249
90134-0055	BUSHING/NUT INLET/OUTLET 6 MM	249, 305, 419, 421, 437, 439, 441, 445, 447, 449, 453, 455, 457, 459, 461, 463, 465, 467, 493, 495
90134-0058	CONNECTION	305, 307, 315, 323, 325, 327, 329, 331, 333, 345, 347, 349, 351, 357, 359, 363, 365, 373, 377, 379, 381, 437, 439, 441, 445, 453, 455, 457, 459, 461, 463, 465, 467, 493, 495
90134-0063	BUSHING/NUT M8X1, D=2,5 MM	335, 337, 339
90135-0021	EARTH CLAMP	137
90136-0002	PLUG 5/16"24	479, 547, 549
90137-0002	BANJO CONN. 1/8 - 5/16-24UNF	441, 445, 461, 463, 465, 467, 493, 495
90137-0005	BANJO CONN. M6, 5/16-24UNF	479, 547, 549
90137-0010	BANJO CONN. M6, D=2,5 MM	479
90140-0010	T-PIPE, INT. THREAD, 20031/2	263, 265
90140-0011	T-PIPE, INT. THREAD, NO. 2070-1/2-1/2	263, 265
90140-0012	ELBOW, 90 INT/EXT, 2020-1/2-1/2	263, 265
90140-0021	ELBOW, 90 INT/EXT, 20201/8-1/8	129, 131
90141-0012	RETAINING RING FOR SHAFT,17X1,5MM	427
90141-0015	RETAIN. RING, 8	739
90141-0022	SNAP RING B 16	107, 109
90143-0018	STRIP	123
90143-0020	STRIP	71, 73, 165
90143-0029	STRIP	621, 623, 647
90143-0035	STRIP	173, 175, 183, 185
90143-0039	STRIP	173, 175, 183, 185, 657, 659, 661
90143-0049	RUBBERSTRIP 11X21MM	245, 247, 277
90143-0052	STRAP	535
90143-0054	STRIP	199, 201, 203
90143-0068	RUBBERSTRIP EMKA 1011-06	183, 185
90144-0073	TREBOFLON-TAPE W=13MM	71, 73
90145-0005	WIRE	485
90148-0021	HOSE	21
90148-0036	HOSE	253
90148-0040	HOSE	355
90151-0001	BRASS PIPE DI=2,6 MM	323, 325, 327, 329, 379, 381
90152-0016	HOSE	241
90152-0017	HOSE	243
90152-0029	HOSE 35/41	135, 273
90152-0031	HOSE	111, 273
90152-0032	HOSE 5"=127MM	195
90152-0033	SPIRAL CONDUIT FOR PR 15,2(PG 9)	55, 57, 135, 197, 263, 265, 271, 273, 667, 669, 701, 709
90152-0044	FLEXIBLE CONDUIT 3641-0070	419, 421, 447, 449
90152-0050	SPIRAL CONDUIT, 20X13, UL 1313	419, 421, 447, 449
90152-0051	SPIRAL CONDUIT, 25X18, UL 1816	419, 421, 447, 449
90153-0016	ADHESIVE TUBE 100G RHODORSIL CAF 3	71, 73
90153-0020	ADHESIVE BOSTIK 1782 125ML	111
90153-0023	ADHESIVE	165
90153-0043	ADHESIVE LOCTITE 495	469, 535, 547, 549
90157-0002	SEALING COMPOUND, COLLEXIN	571
90157-0016	LOCKING FLUID	99, 177, 315, 357, 359, 363, 365, 379, 381, 733
90157-0021	LOCKING FLUID	357, 359, 363, 365
90157-0022	SEALING COMPOUND	199, 201, 203, 547, 549
90157-0034	SEALING COMPOUND LOCTITE 572 50 ML	469
90161-0001	O-RING MATERIAL 3 MM MM	469, 547, 549
90163-0041	HOSE NIPPLE, EXT.THR. 3/8-12 MM	209
90163-0050	QUICK COUPLING, (M) 5089 / 9	249
90163-0056	QUICK COUPLING, (F) 5054-6/4	577
90163-0057	NIPPLE 1/8" BRASS	77, 193
90163-0062	QUICK COUPLING, (F) 5053-1/8	77
90163-0063	QUICK COUPLING, (M) 5450-6/4	577
90163-0064	QUICK COUPLING, (M) LP-006-2-WR517	249
90163-0076	QUICK COUPLING, (F) LP-006-0-WR021	209
90163-0133	QUICK COUPLING, (F) LP-004-0-WR013-21-1	223
90163-0134	QUICK COUPLING, LP-004-1-SL006-21	223
90164-0003	LIGHT FIXTURE	237
90164-0016	LIGHT FIXTURE	273
90165-0003	PIPE CLIP FOR TUBE D=4 MM	249, 305
90165-0005	PIPE CLIP FOR TUBE D=6 MM	249, 305, 709
90165-0007	PIPE CLIP FOR TUBE D=8 MM	215, 217
90165-0010	CLIP	649, 651
90165-0022	PIPE CLIP, FOR TUBE D=2,5 MM, B-3570	249, 315
90165-0056	PIPE CLIP FOR TUBE D=4 MM	331, 333, 373, 377, 383, 385, 403, 405, 407, 409, 425, 441, 445, 461, 463, 465, 467, 469, 493, 495, 515, 527, 529
90165-0057	PIPE CLIP FOR TUBE D=6 MM	345, 347, 349, 351, 419, 421, 437, 439, 441, 447, 449, 453, 455, 457, 459, 461, 463, 469, 493, 495, 551, 553, 555, 609, 611, 613, 615, 617, 619, 643, 645
90165-0058	PIPE CLIP FOR TUBE D=25 MM	323, 325, 327, 329, 345, 347, 349, 351, 403, 405, 407, 409
90165-0060	PIPE CLIP FOR TUBE D=5 MM	379, 381, 419, 421, 445, 447, 449, 465, 467, 741
90165-0086	PIPE CLAMP, RSGU 1.24/15-V4, D=24 MM	257
90166-0007	HOSE PVC 10/14 TRANSP.	195, 209
90166-0011	TUBE 6 MM PA,TRANSP.	425, 479
90166-0013	TUBE 8 MM PA BLUE	225, 227, 229, 231, 233, 235, 263, 265, 267, 269, 667, 669
90166-0051	TUBE PA,TRANSP.	441, 445, 461, 463, 465, 467, 479, 493, 495
90166-0059	HOSE PVC 12/16MM TRANSP.	419, 421, 447, 449, 609, 611, 613, 615, 617, 619, 643, 645
90166-0060	HOSE 19/26-27 REINF.PVC	167, 225, 227, 229, 231, 233, 235
90166-0068	TUBE 12 MM PA BLUE	267, 269

Part No	Description	Page No
90166-0081	TUBE 6 MM PA BLUE	225, 227, 229, 231, 233, 235, 263, 265, 267, 269, 667, 669
90166-0087	HOSE 15/23 REINF.PVC TRANSP.	717, 719, 721
90166-0095	TUBE 4 MM PA BLUE	493, 495
90166-0101	HOSE, SILICONE, 60 SHORE, 6/10 MM	171
90166-0108	TUBE 6 MM PA,TRANSP.	249, 305, 419, 421, 437, 439, 441, 445, 447, 449, 453, 455, 457, 459, 461, 463, 465, 467, 471, 493, 495
90166-0109	TUBE 4 MM PA,TRANSP.	249, 305, 331, 333, 379, 381, 383, 385, 403, 405, 407, 409
90166-0113	HOSE	249, 309
90166-0121	HOSE	199, 201, 203, 215, 217
90166-0122	TUBE 8 MM PA,TRANSP.	209, 215, 217, 345, 347, 349, 351, 357, 359, 363, 365, 431, 437, 439, 453, 455, 457, 459, 493, 495, 527, 529, 673, 675, 677
90166-0123	HOSE	355
90166-0124	TUBE 6 MM PA,TRANSP.	157, 215, 217, 323, 325, 327, 329, 433, 469, 493, 495, 577, 709
90166-0132	TUBE 6 MM PA,TRANSP.	129, 131, 345, 347, 349, 351, 411
90166-0133	TUBE 8 MM PA,TRANSP.	223
90166-0138	HOSE	171, 621, 623, 647
90166-0142	HOSE	177, 183, 185
90166-0143	TUBE 2,5 MM PA,TRANSP.	305, 307, 315, 323, 325, 327, 329, 331, 333, 373, 377, 379, 381, 383, 385, 437, 439, 441, 445, 453, 455, 457, 459, 461, 463, 465, 467, 493, 495
90166-0194	TUBE 8 MM PUR BLUE	267, 269
90166-0199	RUBBER HOSE	433
90166-0206	TUBE 14 MM PUR BLUE	267, 269
90187-0029	BALL VALVE G1/2, NPBR	199, 201, 203, 263, 265
90187-0054	BALL VALVE G3/8	209
90187-0062	BALL VALVE G1/2, NPBR	263, 265
90187-0081	BALL VALVE G1/2	71, 73
90187-0082	BALL VALVE G1/2	21, 77
90194-0016	SIGN, FLASH, ELECTRIC EQUIPMENT SYMBOL	71, 73, 111, 135, 197, 199, 201, 203, 205, 271, 283, 667, 669, 673, 675, 677, 701, 707
90194-0039	FLASH SIGN 18X37MM	309
90195-0020	TERMINAL BLOCK, 1977.2	275, 673, 675, 677
90195-0028	TERM.BLOCK 6-POLE STEATIT	111
90195-0029	CONN. LINK NO324 FOR -28	111
90196-0055	PULLEY	299
90196-0061	PULLEY	299
90196-0062	PULLEY	299
90196-0065	PULLEY	299
90196-0066	PULLEY	299
90196-0067	PULLEY	297
90196-0079	TIMING BELT PULLEY	299
90196-0090	TIMING BELT PULLEY	299
90199-0004	LEVEL GLASS, ST60	469
90199-0010	LEVEL GLASS	71, 73
90201-0010	VALVE	311
90201-0014	VALVE	253
90201-0057	VALVE	311
90201-0300	MOUNTING PLATE, NO. A1-89 57B	311
90201-0303	SPARE PARTS KIT	311
90201-0307	BLANKING, NO. DGMA-3-C1-10	253
90201-0308	BLANKING, NO. DGVM-3-10-R	253
90206-0070	HEATING ELEMENT 6000W 380/220V	71, 73
90206-0085	HEATING CARTRIDGE 460W 105 OHM	39, 717
90206-0097	HEATING CARTRIDGE 500W 220V	673, 675, 677
90206-0322	GASKET	39, 717
90207-0363	GASKET	79, 141
90207-0365	GASKET	79, 141
90208-0067	CLAMPING ELEMENT	297
90214-0028	BALL BEARING REPL.BY 90214-98	115
90214-0087	TAPER ROLLER BEARING, 70X110X25 MM	541, 543
90214-0098	BALL BEARING, 15X35X11 MM	113, 117, 151, 701, 715
90214-0138	BALL BEARING, 5X19X6 MM	13, 15, 17, 19, 139, 727
90214-0163	BALL BEARING SOLID OIL 25X47X12 MM	307
90214-0169	BALL BEARING SOLID OIL 15X35X11 MM	305, 315
90214-0303	SEALING RING, 18,6X35X2 MM	113, 115, 117
90214-0310	SEALING LID, 62X8 MM	427
90217-0026	NUT	63
90217-0047	BLANKING OFF NUT, RD 70-6 (SMS 51)	71, 73
90217-0053	NIPPLE, RD 60-6 - R1 1/2 M	177
90217-0312	CLAMP, ISO2852 FOR PIPE 101,6 MM	67
90217-0313	GASKET 97,8X119X5,5 MM	67
90224-0066	CONN. STRAIGHT, 160•SSA	535
90224-0078	PIPE SOCKET, ART.NO RAN 1612	71, 73
90224-0284	CONN. BANJO, ART. NO LJK-1/4	25, 27, 39
90224-0301	CONNECTION	39
90224-0304	CONNECTION	709
90224-0307	STRAIGHT FITTING, 6MM, 1/8",	39, 77, 193
90224-0308	CONN. BANJO, ART. NO. 2023-1/8-1/8	77
90224-0309	CONNECTION	129, 131
90224-0310	CONNECTION	129, 131
90224-0316	CONNECTION	225, 227, 229, 231, 233, 235
90224-0317	CONNECTION	215, 217
90224-0318	CONNECTION	215, 217
90224-0319	CONN. STR., 8-R1/4, EXT. THREAD	193, 215, 217, 225, 227, 229, 231, 233, 235, 263, 265
90224-0320	CONNECTION	215, 217

Part No	Description	Page No
90224-0321	CONNECTION	215, 217
90224-0322	CONNECTION	215, 217
90224-0323	CONNECTION	215, 217, 225, 227, 229, 231, 233, 235
90224-0329	ELBOW 90 COUPL.,EXT.THREAD 6/4-G1/4"	157
90224-0331	CONN. STR., 6-R1/4, EXT. THREAD	193
90230-0011	NON RETURN VALVE RHD-115L	209
90230-0017	NON RETURN VALVE RHD 10-L	251
90230-0021	NON RETURN VALVE, NO. RHD-15-L/MS 59	275
90230-0023	NON RETURN VALVE	215, 217
90230-0031	NON-RETURN VALVE B5146	479
90232-0103	PH.CELL E3S-CT61-L-5M	667, 669
90232-0104	PH.CELL E3S-CT61-D-5M	667, 669
90232-0106	PH.CELL E3S-CR11-5M	667, 669
90232-0118	PH.CELL WT18-2P115S14	667, 669
90232-0333	REFLECTOR E39-R1	657
90235-0048	VALVE	129, 131
90235-0259	VALVE	77
90235-0274	THROTTLE CHECK VALVES,G1/8"	77, 97, 717, 719, 721
90235-0275	THROTTLE CHECK VALVES,G1/4"	25, 27, 39, 55, 57, 119
90235-0295	THROTTLE CHECK VALVES,G1/4"	215, 217
90235-0450	PLATE	267, 269
90235-0708	VALVE	267, 269
90235-0767	VALVE	263, 265
90236-0041	BRACKET	263, 265
90237-0011	BAR CLAMP	173, 175
90237-0046	MAGNETIC LOCK, 46X33X15 MM	191, 275
90237-0061	HANDLE, FIX 0035-0230	173, 175
90237-0066	LOCK, FIX 590, L=1820 MM	173
90237-0067	LOCK, FIX 590, L=1198 MM	175
90237-0070	SNAP-IN BALL LOCK, 69X19 MM	277, 659, 661
90237-0075	FAST LOCK, SK-M8	659, 661
90237-0319	LOCK HOUSING, 1000-U134	271
90237-0320	LOCK HOUSING, 1000-U136	271
90237-0335	LOCKING CATCH	271
90239-0127	BRACKET	25, 27, 39, 115
90239-0166	CYLINDER	25, 27, 39, 107, 109
90239-0189	CYLINDER	115
90239-0196	CYLINDER	119
90239-0231	BELLOWS	673, 675, 677
90239-0259	CYLINDER	607, 673, 675, 677
90239-0321	BRACKET	119
90239-0346	ROD END,CLEVIS WITH AXLE M12X1,25	55, 57
90239-0453	BRACKET	65, 101, 103
90239-0487	REAR,CLEVIS,MINI-ISO 20-25	719, 721
90239-0490	ROD END,CLEVIS WITH AXLE M8	97
90239-0516	ROD END,CLEVIS WITH AXLE M10X1,25	65, 101, 103, 719, 721
90239-0532	ROD END,CLEVIS WITH AXLE M8	717
90239-0779	CYLINDER	65, 101, 103
90239-0818	DOUBLE ACTING, MINI-ISO, CYL.16-80	531, 533
90239-0821	DOUBLE ACTING, MINI-ISO, CYL.20-25	717
90239-0822	DOUBLE ACTING, MINI-ISO, CYL.20-50	97
90239-0829	DOUBLE ACTING, MINI-ISO, CYL.25-50	719, 721
90239-0951	CYLINDER	55, 57
90239-0960	CYLINDER	433
90240-0097	FLANGE BUSHING, 12X14X9 MM	315
90240-0146	FLANGE BUSHING,15X21X20 MM	71, 73
90240-0172	FLANGE BUSHING,8X12X10 MM NFB	15, 17, 19, 25, 27, 31, 33, 35, 37
90240-0180	FLANGE BUSHING,10X14X15 MM NFB	403, 405, 407, 409
90240-0233	BEAR. BUSH. WITHOUT FL, 14X20X14	557, 559, 561, 563, 565, 567
90242-0084	O-RING 203,0X3 MM	139
90242-0115	O-RING	199, 201, 203
90242-0116	O-RING 55X2,5 MM	427
90242-0117	O-RING 70X2 MM	545
90242-0118	O-RING 90X2 MM	473
90242-0120	O-RING 28X3,5 MM	473
90242-0121	O-RING 11X2,5 MM	473, 545
90242-0148	O-RING 19,2X3 MM	735, 737
90242-0163	O-RING	171
90243-0061	FAN NOZZLE	241
90243-0133	CONTAINER	575
90243-0169	BINDER CLIP, DIAM.29 MM, NO. 4670819	281
90248-0013	HINGE 3562E STUV	277
90258-0001	PIN, STRAIGHT SLOTTED SPRING FRP 2X20	373, 377
90258-0030	PIN, STRAIGHT SLOTTED SPRING FRP 3X24	681, 683
90258-0031	PIN, STRAIGHT SLOTTED SPRING FRP 3X20	673, 675, 677
90261-0003	PLUG, BLIND, PLASTIC GPN300V-10	199, 201, 203
90261-0008	PLUG, BLIND, PLASTIC GPN300F26	267, 269
90261-0011	PLUG, BLIND, PLASTIC GPN300F233	199, 201, 203
90261-0018	PLUG, BLIND, PLASTIC GPN300F-183	199, 201, 203
90261-0032	PLUG, BLIND, PLASTIC, NO. 1073	437, 439, 453, 455, 457, 459, 535
90261-0035	PLUG, BLIND, PLASTIC, F7	267, 269
90261-0036	PIPE PLUG "REPL.BY 90261-71"	323, 325, 327, 329
90261-0049	PLUG, BLIND, PLASTIC, NO. SR1750	733
90264-0019	FAN ZIEHL 230V 250W 1,15A 595 M3/H	197

Part No	Description	Page No
90264-0042	FAN SIEMENS 2BH1 300-1AH	707
90264-0344	FAN CASING	197
90265-0081	CONNECTION BOX 01 1626 09	671
90266-0006	TUBE	305
90266-0007	TUBE	215, 217, 225, 227, 229, 231, 233, 235
90266-0010	TUBE	199, 201, 203
90266-0019	PIPE	249, 305, 373, 377, 379, 381, 403, 405, 407, 409, 493, 495
90266-0165	BRASS PIPE	331, 333, 383, 385
90270-0011	COMPRESSOR RA112 "REPL.BY 90270-17"	63
90270-0347	VALVE	63
90274-0002	PRESSURE SWITCH XMJ, REPBY 90458-0844	425
90274-0042	PRESSURE SWITCH 2BAR NACOV	263, 265
90274-0044	PRESSURE SWITCH 4BAR NACOV	263, 265
90274-0045	PRESSURE GUARD, 14 KPA	63
90274-0053	LEVEL PROBE	253
90274-0065	PRESSURE SWITCH	215, 217
90274-0084	PRESSURE SWITCH	249
90277-0041	TANK BREATH. FILTER / UC-SAB-3101 UCC	253
90277-0045	FILTER / 9900-05-BK	267, 269
90277-0046	FILTER / 9933-05-101	267, 269
90277-0055	FILTER HOUSING / MDS 4463 G 08 H	77
90287-0056	SCREW MC6S-TT M8X40	93, 595
90287-0062	SCREW M6	257
90287-0070	SCREW MLC6S M6X23	345, 347, 349, 351
90287-0073	SCREW MC6S M5X70 129	311
90287-0074	SCREW SLOT. PAN HEAD LKCS M4X12	257
90287-0075	SCREW SLOT. PAN HEAD LKCS M6X12	91, 153, 193, 195, 199, 201, 203, 257, 659, 661, 673, 675, 677
90287-0076	SCREW SLOT. PAN HEAD LKCS M6X20	257, 591, 593, 597, 659, 661
90287-0106	SCREW SPRINGLOAD. SLOTTED HEAD M10X21	733
90287-0109	SCREW SPRINGLOAD. SLOTTED HEAD M16X24	441, 461, 463
90287-0127	SCREW M6S M20X60 88	599
90287-0136	SCREW MC6S M10X150 129	307
90287-0155	SCREW M6S M10X25 88 NY-LOCK	535
90287-0159	SCREW, SOCK.SET DOGPOINT M6X16	163
90287-0161	SCREW, SOCK.SET DOGPOINT M8X12	499, 501, 515
90287-0165	SCREW M6S M8X20 A480 NY-LOCK	469, 569
90287-0167	SCREW SPRINGLOAD. SOCK. HEX HEAD M6X20	635, 637
90287-0206	SLOTTED SCREW	681, 683
90288-0053	ROLLER CHAIN, SINGLE 1/2 -14	503, 505, 507, 509
90288-0055	ROLLER CHAIN, SINGLE 5/8 -42	441, 461, 463
90288-0057	ROLLER CHAIN, SINGLE 1/2 -16	503, 505, 507, 509
90288-0062	ROLLER CHAIN, SINGLE 3/8 -100	75
90288-0305	CONNECTING LINK SINGLE 3/4",SS	373, 377
90288-0311	LINK	503, 505, 507, 509
90296-0009	SILICONE GREASE TUBE 100 GR.	431, 469, 535, 547, 549, 681, 683
90296-0051	PASTE	673, 675, 677
90296-0075	OIL 54322-320 ACC TO M 1254.322	427
90297-0300	BALLAST COIL 50HZ	271
90298-0022	ZERUST CAPSULE	205
90299-0072	INK	621, 623, 647
90303-0011	PROTECTIVE GOGGLES	581
90303-0012	PROTECTIVE GLOVES	581
90303-0013	APRON	581
90321-0015	PUMP 502 CFX 7ETV 302 50HZ IP55	419, 421, 447, 449
90321-0018	GEAR PUMP MLPS/T124D	251
90321-0034	PUMP 502 CFX 5ETV 362 60HZ IP55	419, 421, 447, 449
90321-0037	"PUMP C-6125P EP 220V;50HZ"	275
90321-0381	HYDR.ACCUMULATOR, SBO-210-0.75E1/112-0/1	251
90321-0382	FLANGE, RG 26/12-3/8	251
90321-0383	PUMP CONN. ELBOW FLANGE RG 26/12-1/2	251
90321-0384	DISTANCE PIECE	251
90321-0385	COUPLING	251
90326-0012	PROTECTIVE COVER	55, 57, 71, 73, 77, 105, 111, 719, 721
90326-0017	GLAND 1/8".REPL.BY 90326-306	111
90326-0019	THERMOELEMENT	71, 73
90326-0020	PLUG, FEMALE YELLOW CR-AL	55, 57, 71, 73, 77, 105, 111, 673, 675, 677, 719, 721
90326-0022	PLUG, MALE YELLOW CR-AL	673, 675, 677
90326-0043	THERMOCOUPLE CR-ALPREM.G	71, 73, 111
90326-0048	THERMOELEMENT	55, 57
90326-0052	THERMO ELEMENT	105
90326-0053	THERMO ELEMENT	105
90326-0060	THERMOCOUPLE CR-AL	673, 675, 677
90326-0089	THERMOCOUPLE	77
90326-0304	LEAD IN	55, 57
90326-0306	GLAND FITTING 9041-45-KS-KR.1/8"D=4,5MM	55, 57, 71, 73
90328-0001	SILENCER	263, 265
90328-0003	SILENCER	77
90328-0024	SILENCER G3/8	267, 269
90330-0012	SLEEVE, REDUCTION, INT, R-2021/4X1/8	63
90330-0020	ELBOW, 90 INT. THREAD, R-2221/2	469
90330-0021	NIPPLES, EXT. THREAD. R-207R1/2	77, 469
90330-0024	T-PIPE, INT. THREAD, RP1/4	183, 185
90330-0026	PLUG, EXT. G-THREAD, G1/4	95, 177, 427

Part No	Description	Page No
90330-0032	NIPPLES, EXT. THREAD. ISO 7/1 R1/8-R1/8	77
90330-0034	NUT, HEXAGON, G1/4	179, 181, 187, 189, 213, 239
90330-0037	PLUG, EXT. G-THREAD, G1/2	427
90330-0042	BUSHING, INT/EXT. THR. R3/8-RP1/4	67, 119
90330-0048	BUSHING, INT/EXT. THR. R1/2-RP3/8	71, 73
90330-0059	NIPPLES, EXT. THREAD WELD. R-208/KR1/2	167
90330-0066	PLUG, EXT. G-THREAD, G1/8	71, 73, 123, 199, 201, 203
90330-0078	BUSHING, INT/EXT. THR. R3/4-RP3/8	63
90330-0083	NIPPLES, EXT. THREAD. R3/8-R1/4	183, 185
90330-0086	PLUG, INT. THREAD, NO. R-231-R1/2	469
90330-0093	NUT, HEXAGON, G1/2	209, 469
90330-0105	NUT, HEXAGON, R3/8	123, 707
90330-0106	PIPE COUPLING	77
90335-0005	SPRING	571
90335-0012	SPRING	479
90335-0015	SPRING 42360 BARNES	731
90335-0025	SPRING BARNES 22010	653, 655
90335-0027	SPRING	725
90335-0034	SPRING	69
90335-0037	COMPRESSION SPRING, NO. 22900	609, 611, 613, 615, 617, 619, 643, 645
90335-0064	SPRING	609, 611, 613, 615, 617, 619, 643, 645
90335-0073	SPRING	59
90335-0237	COMPRESSION SPRING	681, 683
90337-0315	FILTERINSERT / MCS 4463	77
90339-0011	MAGNETIC LOCK, 40X18X14 MM	659, 661
90344-0049	CHAIN TENSIONER	441, 461, 463
90345-0038	STANDING BEARING, TYPE SY 35	569
90347-0004	VIBRATION DAMPER D=30 TH=M8 H=17 H2=21MM	245, 247, 723, 741
90347-0007	VIBRATION DAMPER	531, 533
90347-0026	DAMPER	63
90347-0036	DAMPER	237
90347-0038	DAMPER	237
90347-0054	DAMPER	609, 611, 613, 615, 617, 619, 643, 645
90347-0108	GAS SPRING NO. 03-08-100-084174	657
90347-0110	MACHINE SHOE TFE 601 SS	575
90347-0111	MACHINE SHOE TFE 1201 SS	575
90347-0300	ROD END, ID=10 MM, M10 FOR 90347-36;-38	237
90348-0007	FREE WHEEL COUPLING	117
90355-0031	TORQUE RIGID COUPLING, 10X10 MM	309
90360-0009	STEAM TRAP / 1/4 BSP TD 18	77
90360-0020	STEAM TRAP / MK36/51 3/8"	77
90360-0305	FLOAT	67
90411-0005	INSULATOR	111
90413-0033	CODE INSERT SET 0-9	625, 627, 629, 631, 633, 649, 651
90413-0043	CODE INSERT SET	625, 627, 629, 631, 633, 649, 651
90413-0044	CODE INSERT SET	625, 627, 629, 631, 633, 649, 651
90413-0047	CODE INSERT SET	625, 627, 629, 631, 633, 649, 651
90413-0048	CODE INSERT SET	625, 627, 629, 631, 633
90413-0049	CODE INSERT SET	625, 627, 629, 631, 633
90415-0018	FILTER FOR LIME SEPARATING / D MOD.AD	263, 265
90415-0019	FILTER / ART.NO. HH-M15-RG	263, 265
90415-0029	FULL PR. FILTER / MDF BN 30 G 10 B1-BYP	251
90415-0032	FILTER / 3-02-00-1 1/2"	177
90415-0033	OIL FILTER REFILLING UC-HP-1229-25	479
90417-0133	TIMING BELT 12,7X990,6X38,1	299
90417-0134	TIMING BELT 12,7X1600,2X38,1	299
90417-0180	TIMING BELT T10X920X40 POLYURETHANE	419, 421, 447, 449
90417-0329	TIMING BELT T10X960X32 POLYURETHANE	515, 521, 523
90417-0330	TIMING BELT T10X1350X50 POLYURETHANE	517
90417-0345	TIMING BELT T10X690X32 POLYURETHANE	515
90418-0014	ELBOW PIPE	263, 265
90418-0039	ELBOW PIPE	263, 265
90418-0048	T-PIPE, INT. CONN. NO. 7130-15	263, 265
90418-0050	T-PIPE, REDUCTION, INT, NO. 7130-15X12X1	263, 265
90418-0053	ELBOW, 90, INT. CONN. NO. 7090-15	263, 265
90418-0054	ELBOW, 45, INT. CONN. NO. 7041-15	263, 265
90418-0055	ELBOW, 45, INT/EXT. CONN. NO. 7040-15	263, 265
90418-0056	T-PIPE, REDUCTION, INT, NO. 7130-15X15X1	263, 265
90418-0058	ELBOW, 90, INT/EXT. CONN. NO. 7092-15	263, 265
90418-0063	ADAPTER, INT. CONN. NO. 7272CU/15-G1/2	263, 265
90418-0068	T-PIPE, REDUCTION, INT, NO. 7130-15X8X15	263, 265
90422-0008	COOLER	251
90424-0025	SPRAY NOZZLE 145 DEG	183, 185
90424-0026	SPRAY NOZZLE 95 DEG	179, 181, 187, 189, 213, 239
90424-0031	SPRAY NOZZLE 60 DEG	105, 123
90424-0035	SPRAY NOZZLE 95 DEG	211, 237, 493, 495
90424-0054	SPRAY NOZZLE 120 DEG	69
90425-0009	HESKEL ENERGY SYSTEM 27238	95
90426-0003	HAND SHOWER	243
90450-0105	5 STEPS CYLINDER MECMAN	323, 325, 327, 329
90450-0454	CYLINDER	609, 611, 613, 615, 617, 619, 643, 645
90450-0495	CYLINDER	493, 495
90457-0036	3-PHASE MOTOR,FOOT MOUNT.1,1KW,1410 RPM	251
90458-0256	PROXIMITY SWITCH IIA 3010-BPKG/6M	199, 201, 203

Part No	Description	Page No
90458-0292	BASE KT70-1001	259
90458-0293	LIGHT ELEMENT KL70-401R	259
90458-0294	LIGHT ELEMENT YELLOW KL70-401Y	259
90458-0295	LIGHT ELEMENT BLUE KL70-401L	259
90458-0601	PHOTOCELL, SICK PHOTOCELL 1	411
90458-0921	FILTER SP 122-200	263, 265
90458-1849	CONN. STR., 6-R1/8, EXT. THREAD	129, 131
107000-0000 ..	SPRING	373, 377
107062-0000 ..	LID	301, 303
107095-0000 ..	LID	297
107334-0000 ..	SPACER SLEEVE	323, 325, 327, 329
107335-0000 ..	SPACER RING	323, 325, 327, 329
107339-0000 ..	DOWEL	323, 325, 327, 329
111017-0000 ..	SPACER RING	297
111543-0000 ..	GUIDE CONE	13, 15, 17, 19
113653-0000 ..	BEARING PLATE	373, 377
113654-0000 ..	RING	373, 377
207019-0003 ..	GEAR WHEEL	607
208361-0001 ..	STAIR	595
208361-0002 ..	STAIR	93
208658-0001 ..	SPACER	93, 595
208709-0000 ..	VOLUME SHIM	335, 337, 339, 369, 371
208843-0000 ..	ANGLE BRACKET	37
209145-0000 ..	THROTTLE SCREW	121, 707
209146-0000 ..	BARRIER NUT	121, 707
209331-0007 ..	GEAR WHEEL	117
209331-0009 ..	GEAR WHEEL	117
209331-0012 ..	GEAR WHEEL	117
209331-0013 ..	GEAR WHEEL	117
209331-0014 ..	GEAR WHEEL	117
226097-0002 ..	BENDING ROLLER	665
226098-0000 ..	BEARING	665
228653-0000 ..	SHAFT	609, 611, 613, 615, 617, 619, 643, 645
228843-0001 ..	SPACER	435, 451
228845-0000 ..	MOUNTING BLOCK	435, 451
228943-0000 ..	THROTTLE	51, 53
229201-0001 ..	SPACER	451
229201-0002 ..	SPACER	435, 451
229202-0000 ..	MOUNTING BLOCK	435, 451
229206-0000 ..	LOCATING PIECE	435, 451
229207-0000 ..	BEARING SLEEVE	435, 451
229508-0029 ..	STUD SCREW	435, 451
229508-0031 ..	STUD SCREW	451
229516-0000 ..	PIN	435, 445, 451, 465, 467
229760-0012 ..	STUD SCREW	451
229760-0013 ..	STUD SCREW	435, 451
230107-0000 ..	WASHER	719, 721
230226-0000 ..	BLOCKING PIECE	277
230462-0000 ..	BUSHING	315
230551-0000 ..	GASKET	63, 139
230922-0100 ..	AIR JET GUN	145, 147
232236-0000 ..	TOOTH PART	331, 333
232237-0000 ..	SCREW	331, 333
232238-0000 ..	TOOTH PART	383, 385
232979-0000 ..	PRESSURE ROLLER	45, 139, 741
237082-0001 ..	MOUNTING BLOCK	451
237082-0002 ..	MOUNTING BLOCK	435, 451
237725-0000 ..	BEARING HOUSING	297
239383-0000 ..	SLEEVE	307
239440-0000 ..	SHAFT	39
239441-0000 ..	BRACKET	39
239476-0000 ..	ROD	383, 385
239533-0000 ..	DRUM	301, 303
239534-0000 ..	FLANGE	301, 303
239535-0000 ..	FLANGE	301, 303
239536-0000 ..	GEAR WHEEL	301, 303
239538-0000 ..	WASHER	315
239847-0000 ..	HINGE	257
239870-0000 ..	SPACER SLEEVE	297
239874-0000 ..	WASHER	379, 381
239890-0300 ..	INTERMEDIARY SHAFT	289, 291, 293
242954-0000 ..	WASHER	717
243016-0000 ..	GEARING	301, 303
243017-0000 ..	GEAR WHEEL	309
243143-0000 ..	SCREW	345, 347, 349, 351
243144-0000 ..	BUSHING	345, 347, 349, 351
243151-0000 ..	SHAFT	725
243171-0200 ..	LADDER	591, 593
243172-0001 ..	SIDE PIECE	595
243172-0002 ..	SIDE PIECE	595
243218-0000 ..	CANTILEVER	725
243573-0000 ..	LACE	199, 201, 203
243851-0000 ..	GASKET	139
243927-0700 ..	ARM	289, 291, 293

Part No	Description	Page No
243928-0000 ..	BRACKET	305
243930-0000 ..	SHAFT	305
243931-0000 ..	SECURING PLATE	305
243942-0400 ..	YOKE	319, 321
243943-0000 ..	BUSHING	379, 381
243951-0000 ..	YOKE	381
243952-0000 ..	YOKE	379
243971-0000 ..	SPRING	307
245039-0000 ..	GUIDE WHEEL	435, 451
245165-0000 ..	ASSEMBLY TOOL	587
245189-0001 ..	ATTACHMENT	719, 721
245190-0000 ..	FLOAT	51, 53
245271-0000 ..	GASKET	345, 347, 349, 351
245272-0000 ..	GASKET	345, 347, 349, 351
246327-0500 ..	SHOCK ABSORBER	319, 321
246328-0000 ..	SPRING	387, 389
246329-0000 ..	SPRING	387, 389
246342-0000 ..	PAPER SUPPORT	719, 721
246344-0000 ..	HEAT GUARD	719, 721
246374-0000 ..	BRACKET	273
246494-0000 ..	ATTACHMENT	357, 359
246495-0000 ..	ATTACHMENT	363, 365
246499-0600 ..	ARM WITH AXLE,CUT L	319, 321
246513-0000 ..	BEARING	379, 381
246739-0000 ..	BRACKET	277
246787-0000 ..	SCREW	305
246790-0000 ..	LINK	305
246885-0000 ..	WASHER	211
246948-0000 ..	BRACKET	307
246964-0000 ..	CYLINDER BRACKET	119
246965-0000 ..	STOP	119
246966-0000 ..	SCREW	115, 119
246982-0000 ..	PROTRACTOR	301, 303
247080-0000 ..	BRACKET	199, 201, 203
247082-0000 ..	LEG	199, 201, 203
247112-0000 ..	SHAFT	379, 381
247119-0000 ..	ROD	315
247145-0000 ..	PLATFORM	591, 593
247146-0000 ..	PLATFORM	591, 593, 597
247159-0000 ..	AXLE SUPPORT	115
247160-0000 ..	AXLE SUPPORT	71, 73, 115
247161-0000 ..	AXLE SUPPORT	115
247162-0000 ..	BRACKET	115
247168-0000 ..	CYLINDER BRACKET	115
247170-0000 ..	BEARING COVER	115
247171-0000 ..	BEARING COVER	113, 117, 707
247172-0000 ..	SPACER RING	113, 117
247173-0000 ..	BEARING SEAT	113, 117
247227-0002 ..	AIR NOZZLE	481, 483, 489, 491
247227-0003 ..	AIR NOZZLE	481, 483, 489, 491
247236-0000 ..	CARRIER	71, 73
247240-0000 ..	WHEEL	115
247241-0000 ..	AXLE SUPPORT	71, 73
247248-0000 ..	PIN	71, 73
247252-0000 ..	GASKET	71, 73
247262-0000 ..	SPRING BRACKET	387, 389
247263-0000 ..	SPACER	387, 389
247271-0000 ..	LACE	387, 389
247296-0001 ..	SIDE PIECE	93
247296-0002 ..	SIDE PIECE	93
247349-0000 ..	STEERING	113
247355-0000 ..	LOCK WASHER	113
247357-0000 ..	SPROCKET	75, 113
247358-0000 ..	SHIFTER HANDLE	113
247385-0000 ..	SIGN	253
247386-0000 ..	SIGN	253
247422-0000 ..	DRIP PLATE	113
249298-0000 ..	ROLL	741
250588-0000 ..	FLANGE	113, 639, 715
250590-0000 ..	BEARING COVER	117
250591-0000 ..	SHAFT	117
250592-0000 ..	WASHER	117
250594-0000 ..	FORMING RING	31, 33, 35
250610-0200 ..	TOOL KIT	575
250633-0000 ..	CABLE CLAMP	369, 371
250656-0000 ..	ATTACHMENT PIPE	55, 57
250663-0000 ..	BEARING	39
250664-0000 ..	TIE ROD	55, 57
250668-0000 ..	SPACER	55, 57
251454-0000 ..	LID	97
251455-0000 ..	SEAL	97
251490-0000 ..	FASTENING BRACKET	719, 721
251493-0000 ..	FORK	723
251494-0000 ..	SHAFT	723

Part No	Description	Page No
251495-0000 ..	SHAFT	723
251496-0000 ..	SHAFT	723
251498-0000 ..	BARRIER	723
251502-0000 ..	HEAT GUARD	719, 721
251544-0000 ..	SHEET	113
251561-0000 ..	LINK	305
251562-0000 ..	SHAFT	305
252707-0000 ..	SPRING	315
252732-0000 ..	GLASS PANE	47
252733-0000 ..	GLASS PANE	49
252766-0001 ..	INSULATING PIPE	481, 483, 489, 491
252766-0002 ..	INSULATING PIPE	481, 483, 489, 491
252768-0000 ..	CANTILEVER	403, 405, 407, 409
252770-0000 ..	RAIL BRACKET	403, 405, 407, 409
252773-0000 ..	FASTENING PLATE	403, 405, 407, 409
252774-0000 ..	FASTENING PLATE	403, 405, 407, 409
252775-0000 ..	CURVE	403, 405, 407, 409
252776-0000 ..	VOLUME CAM	403, 405, 407, 409
252780-0000 ..	RULER	403, 405, 407, 409
252785-0000 ..	SCREW	403, 405, 407, 409
252786-0000 ..	WASHER	403, 405, 407, 409
252787-0000 ..	BUSHING	403, 405, 407, 409
252788-0000 ..	BUSHING	403, 405, 407, 409
252789-0000 ..	NUT	403, 405, 407, 409
252791-0000 ..	NUT	403, 405, 407, 409
252792-0000 ..	NUT	403, 405, 407, 409
252793-0000 ..	SUPPORT	403, 405, 407, 409
252794-0000 ..	LACE	403, 405, 407, 409
252797-0000 ..	RUBBER STRIP	47
252798-0000 ..	RUBBER STRIP	49
252930-0000 ..	SPACER SCREW	403, 405, 407, 409
252953-0000 ..	TANK	251
252972-0000 ..	SHOULDER SCREW	23
255017-0000 ..	BRACKET	209
255064-0000 ..	BUSHING	725
255227-0001 ..	VOLUME BULGE	335, 337
255228-0001 ..	VOLUME SHIM	335, 337, 369, 371
255278-0000 ..	PLUG FINISHER	345, 347, 349, 351
255335-0000 ..	SHAFT	315
255368-0000 ..	PRESSURE GAUGE TUBE	77
255398-0000 ..	SLEEVE	315
255417-0000 ..	WASHER	717
255874-0000 ..	BEARING COVER	65, 101, 103
255875-0000 ..	BUSHING	65, 101, 103
257090-0000 ..	SHIFTER HANDLE	13, 15, 17, 19
257783-0000 ..	CUTTING JAW	345, 347, 349, 351
257835-0300 ..	CUTTING JAW,LEFT IH	319, 321
257835-0350 ..	CUTTING JAW, RIHGT IH	319, 321
257845-0000 ..	RAILING	591, 593, 597
257846-0000 ..	RAILING	591, 593
257852-0000 ..	PLATFORM	591, 593, 597
257854-0000 ..	CANTILEVER	591, 593, 597
257855-0000 ..	CANTILEVER	591, 593
257859-0000 ..	RAILING	591, 593, 597
257862-0000 ..	PLATFORM	591, 593, 597
257903-0000 ..	AIR NOZZLE	39
257904-0000 ..	HEAT GUARD	39
257923-0000 ..	GUIDE WHEEL	725
257987-0000 ..	AXLE SUPPORT	15, 17, 19, 31, 33, 35
257988-0000 ..	AXLE SUPPORT	15, 17, 19
259414-0500 ..	CARRIER PRESSURE L IH	319, 321
259415-0500 ..	CARRIER PRESSURE R IH	319, 321
259534-0700 ..	PRESSURE JAW LEFT IH	319, 321
259534-0750 ..	PRESSURE JAW RIGHT IH	319, 321
259760-0000 ..	BENDING ROLLER BRACKET	151
259835-0000 ..	FLANGE SEAL	161
259867-0000 ..	HOSE CLAMP	275
259902-0000 ..	FLOAT	51, 53
262028-0001 ..	FITTING BOLT	557, 559, 561, 563, 565, 567
262028-0002 ..	FITTING BOLT	551, 553, 555
262028-0011 ..	FITTING BOLT	547, 549
262028-0016 ..	FITTING BOLT	519
262179-0001 ..	PIN	551, 553, 555, 557, 559, 561, 563, 565, 567
262183-0000 ..	BUSHING	551, 553, 555
262234-0000 ..	BRACKET	547, 549
262235-0000 ..	ARM	547, 549
262252-0000 ..	HATCH	535
262253-0000 ..	GASKET	535
262261-0000 ..	SHAFT	475, 477
262264-0000 ..	CANTILEVER	535
262266-0000 ..	SHAFT	547, 549
262267-0000 ..	BUSHING	547, 549
262272-0000 ..	HEATING CHAMBER	481, 483, 489, 491
262274-0002 ..	BRACKET	471

Part No	Description	Page No
262274-0005 ..	BRACKET	469
262275-0002 ..	CAP	471
262275-0003 ..	CAP	469, 569
262288-0000 ..	LID	481, 483, 489, 491
262290-0001 ..	LACE	481, 483, 489, 491
262290-0002 ..	LACE	481, 483, 489, 491
262309-0000 ..	SLEEVE	547, 549
262313-0000 ..	LID	547, 549
262314-0000 ..	RUBBER GASKET	547, 549
262315-0000 ..	LID	547, 549
262316-0000 ..	RUBBER GASKET	547, 549
262322-0000 ..	SHAFT	547, 549
262323-0000 ..	SHAFT	547, 549
262324-0000 ..	SHAFT	547, 549
262325-0000 ..	SHAFT	547, 549
262343-0000 ..	SECURING PLATE	547, 549
262350-0001 ..	PIN	547, 549
262415-0000 ..	LINK	547, 549
262427-0001 ..	SHAFT	551, 553, 555
262427-0002 ..	SHAFT	551, 553, 555
262427-0005 ..	SHAFT	551, 553, 555
262427-0006 ..	SHAFT	551, 553, 555
262427-0007 ..	SHAFT	551, 553, 555
262427-0008 ..	SHAFT	551, 553, 555
262610-0000 ..	LINK	547, 549
262720-0000 ..	STEERING	547, 549
262774-0009 ..	GLASS PANE	183, 185
262906-0000 ..	ARM	547, 549
262907-0000 ..	ARM	547, 549
262922-0000 ..	HOUSE	535
262924-0000 ..	CANTILEVER	551, 553, 555
262932-0000 ..	HATCH	535
262933-0000 ..	GASKET	535
262970-0000 ..	RAIL	551, 553, 555
263249-0000 ..	PIVOT ARM	39
263250-0000 ..	TOOTH PART	39
263251-0000 ..	GEAR WHEEL	39
263252-0000 ..	SHAFT	39
263254-0000 ..	BRACKET	39
263256-0000 ..	ROCKER ARM	39
263257-0000 ..	CYLINDER BRACKET	25, 27, 39
263262-0000 ..	BUSHING	25, 27
263313-0000 ..	LINK HEAD	315
263314-0000 ..	LINK HEAD	315
263322-0000 ..	RAILING	591, 593
263323-0000 ..	RAILING	257
263328-0000 ..	SPACER	315
263329-0000 ..	NUT	315
263391-0400 ..	CALENDER ROLLER	113
263394-0300 ..	BENDING ROLLER	113
263509-0000 ..	LID	379, 381
263572-0000 ..	CANTILEVER	75
263574-0000 ..	BEARING CONSOLE	75
263575-0000 ..	GASKET	75
263576-0000 ..	GUIDE STUD	75
263579-0000 ..	WASHER	75
263585-0000 ..	BUSHING	75
263586-0000 ..	BUSHING	75
263587-0000 ..	CRANK	75
263588-0000 ..	JOINT	75
263589-0000 ..	RATCHET	75
263590-0000 ..	BARRIER	75
263592-0000 ..	WHEEL	75
263593-0000 ..	SHAFT	75
263612-0000 ..	RAIL	257
263619-0000 ..	RAILING	591, 593
263655-0002 ..	SHAFT	15, 17
263655-0003 ..	SHAFT	15, 17
263655-0004 ..	SHAFT	15, 17
263655-0006 ..	SHAFT	13
263655-0007 ..	SHAFT	125
263655-0008 ..	SHAFT	15, 17, 31, 33, 35, 125
263655-0009 ..	SHAFT	25, 27, 31, 33, 35, 125
263655-0010 ..	SHAFT	31, 33, 35
263655-0012 ..	SHAFT	15, 17, 19
263655-0018 ..	SHAFT	13
263655-0021 ..	SHAFT	15, 17
263655-0022 ..	SHAFT	19, 25, 27
263655-0023 ..	SHAFT	15, 17
263655-0024 ..	SHAFT	15, 17, 19
263656-0002 ..	SHAFT	15, 17
263673-0000 ..	GASKET	481, 483, 489, 491
263684-0000 ..	SPACER	387, 389
263805-0200 ..	FORM CLAMP	11

Part No	Description	Page No
263828-0000 ..	JUNCTION RAIL	199, 201, 203
263948-0400 ..	CUP	11
265564-0000 ..	BENDING ROLLER	151, 685, 715
265565-0200 ..	BENDING ROLLER BRACKET	697, 699
265566-0001 ..	SHAFT	151, 701, 715
265566-0003 ..	SHAFT	701
265566-0004 ..	SHAFT	701
265566-0005 ..	SHAFT	701
265567-0000 ..	BEARING UNIT	151, 701, 715
265568-0000 ..	DUST COVER	151, 701, 715
265569-0001 ..	STRUT	701, 715
265569-0003 ..	STRUT	701
265569-0005 ..	STRUT	701
265569-0006 ..	STRUT	701
265756-0000 ..	CANTILEVER	701
265809-0300 ..	PAPER GUARD	11
265872-0001 ..	GEAR WHEEL	117
265889-0300 ..	SWITCH (MONITOR)	145, 147
265957-0000 ..	SHAFT	61
266182-0000 ..	BUSHING	97
266389-0000 ..	PISTON ROD	107, 109
266390-0000 ..	NUT	107, 109
266391-0000 ..	RING	107, 109
266394-0000 ..	BRACKET	107
266446-0500 ..	DESIGN CORRECTION DEVICE	319, 321
266447-0500 ..	DESIGN CORRECTION DEVICE	319, 321
266550-0400 ..	FILTER HOUSING	155
266557-0000 ..	GASKET	159
266710-0000 ..	WHEEL	607
266726-0300 ..	PRESSURE ROLLER	697, 699
266728-0000 ..	CANTILEVER	717
266730-0000 ..	HOLDER	717
266731-0000 ..	SHAFT	717
266732-0000 ..	SHAFT	717
266737-0000 ..	WASHER	65, 101, 103, 717
266738-0000 ..	COVER	717
266739-0000 ..	CABLE GLAND	39, 717
266740-0001 ..	SPACER	717
266740-0002 ..	SPACER	717
266755-0200 ..	PLATFORM	589
266756-0500 ..	PLATFORM	589
266761-0000 ..	MOUNTING LUG	725
266797-0002 ..	PAPER GUARD	23
266986-0500 ..	CURVE SHAFT	289, 291, 293
267033-0000 ..	WASHER	113
267056-0000 ..	BEARING CONSOLE	71, 73
267327-0000 ..	HOLDER	403, 405, 407, 409
267462-0000 ..	LOCK SHEET	199, 201, 203
267463-0000 ..	LOCK SHEET	199, 201, 203
267494-0000 ..	COIL HEATER	719, 721, 729
267564-0000 ..	BRACKET	123
267646-0000 ..	BLOCKING PIECE	127
267665-0000 ..	BRACKET	127
267676-0000 ..	HOLDER	403, 405, 407, 409
267727-0000 ..	FORK	45
267728-0000 ..	SHAFT	45
267754-0000 ..	BOW CLAMP	383, 385
267835-0000 ..	CANTILEVER	199, 201, 203
268015-0100 ..	BENDING ROLLER BRACKET	145, 147
268195-0000 ..	SCREW	403, 405, 407, 409
268614-0500 ..	START-UP KIT IH	319, 321
268746-0000 ..	SCREW	149
268830-0000 ..	COMPRESSION SPRING	547, 549
268954-0000 ..	FOLDING FLAP CAM L	323, 325
268955-0000 ..	FOLDING FLAP CAM R	327, 329
269053-0001 ..	SHAFT	741
269053-0003 ..	SHAFT	741
269054-0000 ..	ARM	741
269056-0000 ..	CATCH	741
269057-0000 ..	TENSION SPRING	741
269059-0000 ..	COUNTER CAM	323, 325
269060-0000 ..	COUNTER CAM	327, 329
269108-0000 ..	FOLDING FLAP CAM L	323, 325
269109-0000 ..	FOLDING FLAP CAM R	327, 329
269110-0000 ..	COUNTER CAM	323, 325
269111-0000 ..	COUNTER CAM	327, 329
269112-0600 ..	STRIP APPLICATOR	697, 699
269113-0600 ..	LOWER FORMING RING	11
269115-0500 ..	UPPER FORMING RING	11
269136-0200 ..	EDGE ROLLER	11
269147-0000 ..	SHAFT	25, 27
269152-0000 ..	ROCKER ARM	25, 27
269153-0000 ..	STOP	25, 27
269154-0000 ..	BUSHING	25, 27, 39

Part No	Description	Page No
269158-0400 ..	HOT AIR ELEMENT	11
269242-0000 ..	BEARING HOUSING	39
269274-0000 ..	PLATFORM COVER	257
269275-0000 ..	PLATFORM COVER	257
269285-0000 ..	PROTECTION PLATE	199, 201, 203
269291-0000 ..	RULER	199, 201, 203
269294-0000 ..	RULER	199, 201, 203
269295-0000 ..	PROTECTION PLATE	199, 201, 203
269296-0000 ..	PROTECTION PLATE	199, 201, 203
269297-0000 ..	PROTECTION PLATE	199, 201, 203
269313-0000 ..	FASTENING PLATE	39
269314-0000 ..	CANTILEVER	39
269315-0000 ..	WASHER	39
269316-0000 ..	BEARING HOUSING	39
269320-0000 ..	RAIL	277
269321-0000 ..	RAIL	277
269322-0300 ..	COVER UPPER	145, 147
269324-0400 ..	HATCH	145, 147
269339-0000 ..	CANTILEVER	591, 593, 597
269340-0000 ..	CANTILEVER	591, 593, 597
269366-0000 ..	DOWEL	373, 377
269405-0000 ..	PIPE	105
269522-0000 ..	PIPE	95
269575-0000 ..	HOLDER	111
269576-0000 ..	CAP	111
269577-0000 ..	DISCHARGE TRAY	111
269578-0000 ..	DISCHARGE TRAY	111
269715-0100 ..	PIPE HOLDER	11
269716-0000 ..	FASTENING PLATE	43
269717-0000 ..	GASKET HOLDER	43
269718-0000 ..	GASKET	43
269719-0000 ..	SCREW	43
269720-0300 ..	FILLER TUBE	11
269792-0000 ..	DAMPER	403, 405, 407, 409
269828-0600 ..	FILLER TUBE	11
269859-0000 ..	BRACKET	63
269903-0000 ..	FILTER INSERT	159
269904-0000 ..	FILTER MESH	159
269905-0000 ..	WASHER	159
269913-0000 ..	STOPPER	55, 57
269914-0000 ..	SHOULDER SCREW	55, 57
269915-0800 ..	HOT AIR ELEMENT	11
269930-0000 ..	SCREW	75
269932-0600 ..	BOTTOM COVER	71, 73
269941-0600 ..	BATH	11
269970-0500 ..	PLATFORM	11
269971-0200 ..	LADDER	91
269988-0600 ..	VENTILATION SYSTEM	11
269989-0300 ..	VALVE	105
271211-0000 ..	WASHER	727
271653-0000 ..	ARM	727
271654-0000 ..	RETAINING RING	727
271655-0000 ..	HOLDER	727
272466-0000 ..	SPRING	727
272728-0000 ..	BARRIER	653, 655
272814-0000 ..	SLEEVE	653, 655
272815-0001 ..	SLEEVE	653, 655
273400-0700 ..	STERILE AIR SYSTEM	11
273401-0300 ..	CHANGE-OVER VALVE	95
273402-0400 ..	AIR SUPER-HEATER	105
273429-0000 ..	WASHER	55, 57, 71, 73
273449-0000 ..	SIGN	267, 269
273450-0000 ..	SIGN	267, 269
273452-0000 ..	SIGN	267, 269
273455-0000 ..	LABEL (COLD WATER)	263, 265
273456-0000 ..	SIGN	263, 265
273458-0000 ..	LABEL (AIR)	263, 265
273514-0000 ..	TOUCH GUARD	105
273515-0000 ..	TOUCH GUARD	105
273547-0001 ..	TOUCH GUARD	77
273547-0002 ..	TOUCH GUARD	105
273548-0001 ..	TOUCH GUARD	77
273548-0002 ..	TOUCH GUARD	105
273728-0300 ..	VALVE GROUP	309
273751-0000 ..	FRONT PLATE	199, 201, 203
273753-0000 ..	PROTECTION PLATE	199, 201, 203
273934-0000 ..	LID	71, 73
273937-0000 ..	DIAPHRAGM	71, 73
273938-0000 ..	WASHER	71, 73
273944-0000 ..	DIAPHRAGM	99
273950-0000 ..	FILTER	95
273951-0000 ..	VALVE HOUSING	99
273961-0000 ..	SEAL	71, 73
273977-0000 ..	NUT	169

Part No	Description	Page No
273978-0000 ..	LEVEL GLASS	169
273980-0000 ..	SPRING	169
273981-0000 ..	GASKET	171
273982-0000 ..	WEIGHT	171
273996-0000 ..	NUT	169
276164-0000 ..	VALVE HOUSING	107, 109
276165-0000 ..	HOUSE	107, 109
276166-0000 ..	PIPE	105
276167-0000 ..	PIPE	105
276172-0000 ..	AXLE PIN	373, 377
276173-0000 ..	CURVE ROLLER	373, 377
276189-0000 ..	DAMPER	403, 405, 407, 409
276304-0000 ..	PIPE	105
276305-0000 ..	PIPE	105
276343-0300 ..	LID	251
276345-0300 ..	AIR KNIFE	113
276346-0000 ..	AIR GUIDE	119
276347-0000 ..	AIR DISTRIBUTOR	119
276348-0000 ..	AIR DISTRIBUTOR	119
276350-0000 ..	GEAR WHEEL	119
276351-0000 ..	GEAR WHEEL	119
276354-0000 ..	ATTACHMENT	119
276355-0000 ..	SLEEVE	119
276356-0000 ..	BEARING HOUSING	119
276357-0000 ..	BUSHING	119
276358-0000 ..	BUSHING	119
276359-0000 ..	LEVER	119
276360-0000 ..	SPRING	119
276361-0000 ..	BRACKET	119
276373-0700 ..	DRIER	11
276398-0000 ..	HEXAGON NIPPLE	215, 217
276480-0500 ..	PIPE WORK	11
276490-0000 ..	PIPE	121
276613-0000 ..	LID	471
276636-0000 ..	WASHER	471
276659-0000 ..	WASHER	535, 547, 549
276664-0000 ..	WASHER	551, 553, 555
278954-0000 ..	NET	105
278955-0000 ..	NET	105
278956-0700 ..	PILLAR	11
279006-0000 ..	BENDING ROLLER	113
279007-0000 ..	BENDING ROLLER	113
279009-0000 ..	BEARING PLATE	113
279010-0000 ..	BEARING PLATE	113
279011-0000 ..	COVERING PLATE	113
279074-0000 ..	TENSION SPRING	723
279103-0000 ..	CONNECTION CLAMP	355
279105-0000 ..	WASHER	215, 217
279134-0500 ..	TRANSMISSION	319, 321
279208-0000 ..	BEARING HOUSING	55, 57
279209-0000 ..	ROCKER ARM	55, 57
279211-0000 ..	CANTILEVER	711
279213-0000 ..	DOWEL	55, 57
279370-0000 ..	STEERING	199, 201, 203
279466-0000 ..	BRACKET	305
279471-0000 ..	CANTILEVER	71, 73
279472-0000 ..	FASTENING BRACKET	71, 73
279478-0000 ..	BEARING PLATE	71, 73
279480-0000 ..	STEERING RAIL	741
279526-0000 ..	BRACKET	215, 217
279564-0300 ..	FOLDING DEVICE	319, 321
279565-0300 ..	FOLDING DEVICE	319, 321
279589-0000 ..	NUT	121, 707
279590-0000 ..	REDUCTION	707
279619-0000 ..	BRACKET	127
279621-0000 ..	FASTENING PLATE	403, 405, 407, 409
279651-0600 ..	TOUCH GUARD	11
279672-0000 ..	ATTACHMENT	719, 721
279804-0000 ..	BUSHING	193
279807-0000 ..	COVER	257
279860-0000 ..	ADJUSTMENT PLATE	123
279885-0000 ..	COVER	257
279979-0500 ..	CENTRAL LUBRICATION	145, 147
279983-0000 ..	SPLASH PROTECTION	313
279984-0000 ..	SPLASH PROTECTION	313
279985-0000 ..	BRACKET	313
279987-0000 ..	BRACKET	313
279989-0000 ..	SPACER	313
279991-0000 ..	BRACKET	313
279992-0000 ..	BRACKET	313
279993-0000 ..	BRACKET	313
279997-0000 ..	BRACKET	313
279998-0000 ..	SHAFT	313
279999-0000 ..	COVERING PLATE	313

Part No	Description	Page No
282507-0000 ..	BRACKET LEFT	245, 247
282509-0300 ..	BENDING ROLLER	697, 699
282511-0000 ..	COVERING PLATE	313
282512-0000 ..	BRACKET	313
282513-0000 ..	BRACKET	313
282528-0200 ..	PRESSURE ROLLER	697, 699
282596-0000 ..	SUPPORT	723
282608-0000 ..	ANGLE	123
282625-0000 ..	EYELET	723
282635-0000 ..	GUIDE WHEEL	725
282682-0000 ..	BRACKET	63
282683-0000 ..	BRACKET	63
282766-0000 ..	LINK	115
282767-0000 ..	BRACKET	115
282802-0000 ..	PIPE	709
282805-0900 ..	PIPE WORK-PNEUMATIC TBA/8	11
282893-0000 ..	SAFETY GUARD	91
283084-0000 ..	GUIDE SHAFT	587
283085-0000 ..	SLEEVE	587
283157-0000 ..	MAIN CAM	301, 303
283160-0000 ..	COUNTER CAM	301, 303
283172-0000 ..	BEARING HOUSING	719, 721
283271-0000 ..	BRACKET	23
283361-0000 ..	AIR NOZZLE	719, 721
283774-0000 ..	BEARING	313
283775-0000 ..	SLIDE	313
283884-0000 ..	OIL TROUGH	199, 201, 203
283926-0400 ..	AIR NOZZLE	55, 57
283992-0000 ..	RULER	199, 201, 203
284124-0000 ..	HOLDER	403, 405, 407, 409
284138-0000 ..	CATCH	387, 389
284139-0000 ..	CATCH	387, 389
284163-0500 ..	START-UP KIT	11
284232-0000 ..	FOLDING FLAP CAM L	323, 325
284233-0000 ..	FOLDING FLAP CAM R	327, 329
284234-0000 ..	COUNTER CAM	323, 325
284235-0000 ..	COUNTER CAM	327, 329
284578-0000 ..	CUTTING JAW	345, 347, 349, 351
284581-0000 ..	RAIL	357, 359
284582-0000 ..	RAIL	363, 365
284833-0000 ..	LID	357, 359, 363, 365
284840-0000 ..	NUT	159
284953-0100 ..	HOSE	575
284974-0000 ..	HUB	117
285027-0000 ..	CARRIER	471
285054-0000 ..	CURVE	471
285055-0000 ..	CURVE	471
285132-0000 ..	SHAFT	435, 451
285133-0000 ..	CANTILEVER	435, 451
285141-0003 ..	CLAMPING SLEEVE	535
285142-0002 ..	SLEEVE	535
285142-0003 ..	SLEEVE	535
285145-0002 ..	INTERMEDIARY SECTION	535
285147-0000 ..	INTERMEDIARY SECTION	535
285157-0000 ..	LINK	547, 549
285158-0000 ..	LINK	547, 549
285162-0000 ..	LUBRICATING PIPE	547, 549
285164-0000 ..	LUBRICATING PIPE	547, 549
285168-0000 ..	BUSHING	437, 439, 453, 455, 457, 459
285287-0500 ..	DRIVE UNIT	419, 421, 447, 449
285291-0400 ..	BEVEL GEAR	469
285299-0100 ..	PRESSURE ARM	469
285300-0000 ..	BRACKET	475, 477
285303-0400 ..	LOWER SECTION	415, 417
285310-0001 ..	FLAP	557, 559, 561, 563, 565, 567
285310-0002 ..	FLAP	557, 559, 561, 563, 565, 567
285316-0002 ..	SPACER PIECE	557, 559, 561, 563, 565, 567
285321-0000 ..	ROLL	557, 559, 561, 563, 565, 567
285322-0000 ..	WASHER	557, 559, 561, 563, 565, 567
285330-0000 ..	HOLDER	419, 421, 447, 449
285363-0000 ..	WASHER	519
285380-0002 ..	WEDGE	521, 523
285403-0000 ..	WASHER	425
285444-0000 ..	SPACER	551, 553, 555
285448-0000 ..	PROTECTIVE CASING	547, 549
285449-0000 ..	ARM	547, 549
285456-0300 ..	PRESSURE DEVICE	415, 417
285479-0600 ..	SUPERSTRUCTURE	415, 417
285507-0002 ..	AIR NOZZLE	481, 483, 489, 491
285508-0002 ..	AIR NOZZLE	481, 483, 489, 491
285591-0400 ..	STATION	415, 417
285655-0000 ..	ARM	551, 553, 555
285656-0000 ..	ARM	551, 553, 555
285657-0000 ..	ARM	551, 553, 555

Part No	Description	Page No
285660-0000 ..	ARM	551, 553, 555
285661-0000 ..	ARM	551, 553, 555
285664-0000 ..	SHAFT	551, 553, 555
285676-0000 ..	AIR NOZZLE	481, 483, 489, 491
285677-0000 ..	AIR NOZZLE	481, 483, 489, 491
285712-0000 ..	RAIL	551, 553, 555
285723-0000 ..	ARM	551, 553, 555
285724-0002 ..	RAIL	551, 553, 555
285729-0000 ..	BUSHING	551, 553, 555
285736-0300 ..	PULL-DOWN DEVICE	415, 417
285801-0000 ..	BEAM	199, 201, 203
285825-0000 ..	SHAFT	237
285851-0000 ..	BEARING	437, 439, 453, 455, 457, 459
285853-0300 ..	STEERING RAIL	535
285861-0500 ..	GEAR REDUCTION	419, 421, 447, 449
285891-0000 ..	SCREW	535
285892-0000 ..	CONNECTION	535
285923-0000 ..	SCREW	419, 421, 447, 449
285956-0000 ..	HANDLE	183, 185
285970-0000 ..	COMPRESSION SPRING	547, 549
285979-0000 ..	PIPE	237
285994-0000 ..	NUT	419, 421, 447, 449
292037-0000 ..	SCREW	357, 359, 363, 365
292044-0000 ..	SHAFT	621, 623, 647
292047-0000 ..	CANTILEVER	643, 645
292071-0200 ..	SPLASH PROTECTION	289, 291, 293
292313-0000 ..	BEAM	579
292314-0000 ..	BEAM	579
292315-0000 ..	BEAM	579
292367-0000 ..	PISTON	357, 359, 363, 365
292409-0000 ..	END SECTION	625, 627, 629, 631, 633
292410-0000 ..	END SECTION	625, 627, 629, 631, 633
292411-0000 ..	CARRIER	625, 627, 629, 631, 633
292445-0100 ..	LIFTING UNIT	575
292449-0000 ..	PUMP HOUSING	163
292451-0500 ..	PEROXIDE PUMP	161
292452-0000 ..	EXTENSION PIPE	163
292456-0000 ..	BEARING COVER	163
292464-0000 ..	FLANGE	163
292472-0000 ..	HOLDER	309
292473-0000 ..	CANTILEVER	309
292477-0000 ..	SHAFT	309
292482-0000 ..	WASHER	309, 519
292565-0000 ..	PROTECTION	119
293158-0000 ..	HATCH	199, 201, 203
293159-0000 ..	HATCH	199, 201, 203
293160-0000 ..	COVERING PLATE	199, 201, 203
293161-0000 ..	COVERING PLATE	199, 201, 203
293198-0002 ..	BRACKET	249
293201-0000 ..	PIPE	263, 265
293351-0000 ..	CRAMP	215, 217
293352-0000 ..	CRAMP	215, 217
293395-0001 ..	TYPE HOLDER	625, 627, 629, 631, 633, 649, 651
293395-0002 ..	TYPE HOLDER	625, 627, 629, 631, 633, 649, 651
293395-0003 ..	TYPE HOLDER	625, 627, 629, 631, 633
293405-0000 ..	GASKET	71, 73
293566-0000 ..	MOUNTINGS	173, 175
293598-0000 ..	GLASS PANE	173, 175
293605-0600 ..	VOLUM CURVE PIECE	319, 321
293606-0000 ..	SHIFTER HANDLE	403, 405, 407, 409
293608-0000 ..	BEARING CONSOLE	403, 405, 407, 409
293609-0000 ..	BEARING CONSOLE	403, 405, 407, 409
293610-0000 ..	GEAR WHEEL	403, 405, 407, 409
293612-0000 ..	SCREW	403, 405, 407, 409
293621-0001 ..	BENDING ROLLER	609, 611, 613, 615, 617, 619
293621-0002 ..	BENDING ROLLER	609, 611, 613, 615, 617, 619, 643, 645
293624-0001 ..	PROTECTION PLATE	609, 611, 613, 615, 617, 619
293624-0002 ..	PROTECTION PLATE	609, 611, 613, 615, 617, 619, 643, 645
293645-0000 ..	BRACKET	609, 611, 613, 615, 617, 619, 643, 645
293646-0001 ..	WASHER	609, 611, 613, 615, 617, 619, 643, 645
293646-0002 ..	WASHER	609, 611, 613, 615, 617, 619, 643, 645
293667-0000 ..	DOWEL	621, 623, 647
293669-0001 ..	WASHER	621, 623, 647
293669-0002 ..	WASHER	621, 623, 647
293669-0003 ..	WASHER	621, 623, 647
293669-0004 ..	WASHER	621, 623, 647
293670-0000 ..	SHAFT	621, 623, 647
293671-0000 ..	SPACER	625, 627, 629, 631, 633, 649, 651
293674-0000 ..	DOWEL	609, 611, 613, 615, 617, 619, 643, 645
293676-0000 ..	CARRIER	625, 627, 629, 631, 633
293684-0200 ..	PRINTING WHEEL NSS	609, 611, 613, 615, 617, 619
293685-0200 ..	PRINTING WHEEL SS	643, 645
293688-0000 ..	CARRIER	625, 627, 629, 631, 633
293690-0000 ..	END SECTION	625, 627, 629, 631, 633

Part No	Description	Page No
293697-0000 ..	END SECTION	621, 623
294009-0000 ..	KNIFE	673, 675, 677, 691
294042-0000 ..	SEALING WASHER	403, 405, 407, 409
294472-0000 ..	CANTILEVER	127
294474-0000 ..	ROLL	15, 17
294475-0000 ..	ROLL	15, 17
294476-0000 ..	ROLL	15, 17
294477-0000 ..	ROLL	15, 17
294480-0000 ..	ROLL	15, 17
294493-0000 ..	HYDRAULIC PIPE	209
294494-0000 ..	HYDRAULIC PIPE	209
294495-0000 ..	HYDRAULIC PIPE	209
294496-0000 ..	HYDRAULIC PIPE	209
295391-0003 ..	THROTTLE SCREW	311
295435-0000 ..	WASHER	419, 421, 447, 449
295878-0000 ..	THROTTLE SCREW	63
295879-0000 ..	NUT	63
297054-0000 ..	WASHER	55, 57
297091-0000 ..	ARM	309
297092-0000 ..	ARM	309
297142-0000 ..	BUSHING	115
297163-0000 ..	CARRIER	75
297195-0000 ..	SPACER	77
297210-0000 ..	INK WELL	647
297211-0000 ..	INK WELL	621, 623
297213-0000 ..	END SECTION	647
297309-0000 ..	PIPE-LINE	39
297310-0000 ..	FLANGE	39
297311-0000 ..	COVER	39
297347-0000 ..	PIPE	121
297413-0000 ..	PIPE	431
297488-0000 ..	GLASS PANE	183, 185
297496-0000 ..	LACE	547, 549
297499-0001 ..	SIDE PIPE	481, 483, 489, 491
297499-0002 ..	SIDE PIPE	481, 483, 489, 491
297499-0003 ..	SIDE PIPE	481, 483, 489, 491
297499-0007 ..	SIDE PIPE	481, 483, 489, 491
297499-0008 ..	SIDE PIPE	481, 483, 489, 491
297499-0009 ..	SIDE PIPE	481, 483, 489, 491
297551-0000 ..	SHEET	419, 421, 447, 449
297567-0000 ..	TENSION SPRING	551, 553, 555
297569-0000 ..	SIDE PLATE	435, 451
297574-0001 ..	SPACER	451
297574-0002 ..	SPACER	435, 451
297576-0000 ..	BEAM	199, 201, 203
297604-0400 ..	HOOD	145, 147
297608-0000 ..	BRACKET	429
297609-0000 ..	ARM	429
297610-0000 ..	SCREW	429
297611-0000 ..	SHAFT	429
297638-0200 ..	CHAIN TENSIONER	419, 421, 447, 449
297643-0000 ..	BRACKET	551, 553, 555
297644-0000 ..	SHAFT	551, 553, 555
297646-0000 ..	FLAP	557, 559, 561, 563, 565, 567
297650-0000 ..	BOTTOM	557, 559, 561, 563, 565, 567
297663-0000 ..	POST HOLDER	419, 421, 447, 449
297664-0000 ..	POST HOLDER	419, 421, 447, 449
297669-0000 ..	POST	199, 201, 203
297670-0000 ..	POST	199, 201, 203
297679-0000 ..	PIPE	183, 185
297681-0400 ..	WHEEL LEFT	415, 417
297682-0400 ..	WHEEL RIGHT	415, 417
297751-0000 ..	SHAFT	517
297755-0000 ..	WEDGE	517
297770-0000 ..	SCREW	237
297794-0000 ..	SHEET	517
297795-0000 ..	SPRING	517
297800-0000 ..	PIPE	177
297802-0000 ..	BRACKET	177
297805-0000 ..	PIPE	177
297808-0500 ..	CLEANING EQUIPMENT	145, 147
297814-0000 ..	BRACKET	419, 421, 447, 449
297860-0000 ..	BUSHING	419, 421, 447, 449
297899-0000 ..	SPROCKET	499, 501
297969-0000 ..	FASTENING PLATE	119
297970-0000 ..	CATCH LEVER	119
297998-0000 ..	ADJUSTMENT PLATE	403, 405, 407, 409
297999-0000 ..	ADJUSTMENT PLATE	403, 405, 407, 409
311101-0274 ..	PARALLELL PIN, CP, H6, 4X25 MM	681, 683
311102-0236 ..	PARALLELL PIN, CP, M6, 3X16 MM	681, 683
311102-0350 ..	PARALLELL PIN, CP, M6, 6X14 MM	659, 661
311102-0353 ..	PARALLELL PIN, CP, M6, 6X20 MM	607, 639
311103-0209 ..	PARALLELL PIN, CP, M6, 2,5X14 MM	39
311103-0212 ..	PARALLELL PIN, CP, M6, 2,5X20 MM	25, 27

Part No	Description	Page No
311103-0232 ..	PARALLELL PIN, M6, 3X8 MM	719, 721
311103-0233 ..	PARALLELL PIN, M6, 3X10 MM	25, 27, 55, 57, 657
311103-0235 ..	PARALLELL PIN, CP, M6, 3X14 MM	31, 33, 35
311103-0236 ..	PARALLELL PIN, M6, 3X16 MM	13, 15, 17, 19, 97, 621, 623, 647
311103-0238 ..	PARALLELL PIN, M6, 3X20 MM	123, 621, 623, 647
311103-0239 ..	CYLINDRICAL PIN CP M6 3X22 RFR	59
311103-0267 ..	PARALLELL PIN, M6, 4X10 MM	719, 721
311103-0270 ..	PARALLELL PIN, M6, 4X16 MM	21, 621, 623, 647, 659, 661
311103-0272 ..	PARALLELL PIN, M6, 4X20 MM	25, 27, 403, 405, 407, 409, 687, 689
311103-0273 ..	PIN,STRAIGHT M6 4X22 RFR	171, 609, 611, 613, 615, 617, 619, 643, 645
311103-0274 ..	PARALLELL PIN, M6, 4X25 MM	39, 609, 611, 613, 615, 617, 619, 643, 645, 653, 655
311103-0275 ..	PIN,STRAIGHT M6 4X28 RFR	113
311103-0276 ..	PARALLELL PIN, M6, 4X30 MM	25, 27, 75, 403, 405, 407, 409
311103-0278 ..	PARALLELL PIN, M6, 4X35 MM	113
311103-0306 ..	PARALLELL PIN, M6, 5X12 MM	547, 549
311103-0310 ..	PARALLELL PIN, M6, 5X20 MM	71, 73, 75, 113, 323, 325, 327, 329, 373, 377, 403, 405, 407, 409, 609, 611, 613, 615, 617, 619, 643, 645
311103-0314 ..	PARALLELL PIN, M6, 5X30 MM	199, 201, 203
311103-0316 ..	PARALLELL PIN, M6, 5X35 MM	741
311103-0350 ..	PARALLELL PIN, CP, M6, 6X14 MM	665
311103-0353 ..	PARALLELL PIN, M6, 6X20 MM	609, 611, 613, 615, 617, 619, 643, 645, 663
311103-0355 ..	PARALLELL PIN, M6, 6X25 MM	663
311103-0357 ..	PARALLELL PIN, M6, 6X30 MM	75, 323, 325, 327, 329, 403, 405, 407, 409, 609, 611, 613, 615, 617, 619, 643, 645
311103-0365 ..	PARALLELL PIN, M6, 6X50 MM	635, 637
311103-0367 ..	PARALLELL PIN, CP, M6, 6X55 MM	119
311103-0399 ..	PARALLELL PIN, CP, M6, 8X16 MM	419, 421, 441, 447, 449, 461, 463, 469, 535
311103-0401 ..	PARALLELL PIN, M6, 8X20 MM	75
311103-0403 ..	PARALLELL PIN, M6, 8X25 MM	277
311103-0407 ..	PARALLELL PIN, M6, 8X35 MM	541, 543
311103-0411 ..	PARALLELL PIN, CP, M6, 8X45 MM	541, 543
311103-0413 ..	PARALLELL PIN, M6, 8X50 MM	47, 49, 199, 201, 203
311111-0305 ..	PIN, STRAIGHT SLOTTED SPRING FRP 5X14	473
311112-0192 ..	PIN, STRAIGHT SLOTTED SPRING FRP 2,5X24	323, 325, 327, 329
311112-0205 ..	PIN, STRAIGHT SLOTTED SPRING FRP 3X10	731
311112-0256 ..	PIN, STRAIGHT SLOTTED SPRING FRP 4X20	163, 687, 689
311112-0258 ..	PIN, STRAIGHT SLOTTED SPRING FRP 4X24	687, 689
311112-0341 ..	PIN, STRAIGHT SLOTTED SPRING FRP 6X24	425
311112-0350 ..	PIN, STRAIGHT SLOTTED SPRING FRP 6X55	653, 655
311202-0241 ..	PIN, TAPERED, KP, 4X25 GROUND	609, 611, 613, 615, 617, 619, 643, 645
311202-0320 ..	PIN, TAPERED, KP, 8X35 GROUND	199, 201, 203
311211-0267 ..	TAPER PIN GKP5X5X30	199, 201, 203
311211-0292 ..	TAPER PIN GKP6X6X30	279, 673, 675, 677
311303-0310 ..	SLOTTED PIRPB5X20FZB	151
311303-0356 ..	SLOTTED PIN RPB 6X30 ZINC COATED	307
311305-0308 ..	SLOTTED PIRPC5X16FZB	701, 707, 715, 719, 721
311411-0127 ..	SPLIT PIN SP1,2X12RFR	517
311411-0140 ..	SPLIT PIN SP1,6X16RFR	39
311411-0169 ..	SPLIT PIN SP2,5X25RFR	163
311508-0416 ..	RIVET, ROUND HEAD, KN, 4X10	345, 347, 349, 351
311520-0329 ..	RIVET, BLANK 2,4X8	271
311520-0420 ..	RIVET, BLANK 3,2X4	245, 277
311521-0143 ..	BLANK RIVET 3,2X8	693
311521-0144 ..	BLANK RIVET 3,2X10	579, 599
312101-0287 ..	SCREW M6S M4X8 FZB	197, 625, 627, 629, 631, 633, 649, 651
312101-0289 ..	SCREW M6S M4X10 FZB	255, 673, 675, 677
312101-0291 ..	SCREW M6S M4X12 FZB	673, 675, 677
312101-0295 ..	SCREW M6S M4X20 FZB	249, 305, 307
312101-0323 ..	SCREW M6S M5X8 FZB	315, 607, 673, 675, 677
312101-0325 ..	SCREW M6S M5X10 FZB	273, 309
312101-0327 ..	SCREW M6S M5X12 FZB	215, 217
312101-0329 ..	SCREW M6S M5X16 FZB	607, 625, 627, 629, 631, 633, 649, 651, 673, 675, 677
312101-0331 ..	SCREW M6S M5X20 FZB	209, 625, 627, 629, 631, 633, 649, 651, 673, 675, 677
312101-0333 ..	SCREW M6S M5X25 FZB	673, 675, 677
312101-0335 ..	SCREW M6S M5X30 FZB	673, 675, 677
312101-0362 ..	SCREW M6S M6X8 FZB	305
312101-0364 ..	SCREW M6S M6X10 FZB	197, 215, 217, 245, 247, 273, 299, 625, 627, 629, 631, 633, 649, 651
312101-0366 ..	SCREW M6S M6X12 FZB	197, 199, 201, 203, 249, 279, 309, 315, 673, 675, 677
312101-0368 ..	SCREW M6S M6X16 FZB	199, 201, 203, 251, 255, 305, 673, 675, 677
312101-0370 ..	SCREW M6S M6X20 FZB	151, 599
312101-0372 ..	SCREW M6S M6X25 FZB	215, 217, 307, 309
312101-0374 ..	SCREW M6S M6X30 FZB	471
312101-0378 ..	SCREW M6S M6X40 FZB	193
312101-0380 ..	SCREW M6S M6X50 FZB	273
312101-0381 ..	SCREW M6S M6X55 FZB	653, 655
312101-0383 ..	SCREW M6S M6X65 FZB	313
312101-0447 ..	SCREW M6S M8X12 FZB	273
312101-0449 ..	SCREW M6S M8X16 FZB	197, 245, 247, 297
312101-0451 ..	SCREW M6S M8X20 FZB	191, 255, 471
312101-0453 ..	SCREW M6S M8X25 FZB	151, 199, 201, 203, 251, 257, 307, 309, 471
312101-0455 ..	SCREW M6S M8X30 FZB	299, 535
312101-0459 ..	SCREW M6S M8X40 FZB	307
312101-0461 ..	SCREW M6S M8X50 FZB	191
312101-0463 ..	SCREW M6S M8X60 FZB	251

Part No	Description	Page No
312101-0465 ..	SCREW M6S M8X70 FZB	305, 315
312101-0467 ..	SCREW M6S M8X80 FZB	249
312101-0473 ..	SCREW M6S M8X110 FZB	245, 247
312101-0491 ..	SCREW M6S M10X20 FZB	579
312101-0493 ..	SCREW M6S M10X25 FZB	91, 673, 675, 677
312101-0495 ..	SCREW M6S M10X30 FZB	251, 591, 593, 595, 597
312101-0497 ..	SCREW M6S M10X35 FZB	535
312101-0499 ..	SCREW M6S M10X40 FZB	199, 201, 203, 297
312101-0500 ..	SCREW M6S M10X45 FZB	591, 593, 597
312101-0501 ..	SCREW M6S M10X50 FZB	299
312101-0518 ..	SCREW M6S M10X140 FZB	199, 201, 203
312101-0536 ..	SCREW M6S M12X30 FZB	299
312101-0538 ..	SCREW M6S M12X35 FZB	199, 201, 203
312101-0540 ..	SCREW M6S M12X40 FZB	153, 195, 257, 299
312101-0546 ..	SCREW M6S M12X70 FZB	307
312104-0460 ..	SCREW M6S M8X45H FZB	309
312104-0465 ..	SCREW M6S M8X70H FZB	299, 315
312104-0505 ..	SCREW M6S M10X70H FZB	299
312105-0287 ..	SCREW M6S M4X8 A280	111, 135, 331, 333, 379, 381, 383, 385, 441, 461, 463, 469, 503, 505, 507, 509, 673, 675, 677, 707, 727
312105-0289 ..	SCREW M6S M4X10 A280	55, 57
312105-0291 ..	SCREW M6S M4X12 A280	39, 277, 403, 405, 407, 409, 621, 623, 647, 719, 721
312105-0293 ..	SCREW M6S M4X16 A280	469, 663
312105-0295 ..	SCREW M6S M4X20 A280	323, 325, 327, 329, 341, 343, 379, 381, 403, 405, 407, 409, 419, 421, 437, 439, 447, 449, 453, 455, 457, 459
312105-0299 ..	SCREW M6S M4X30 A280	703
312105-0301 ..	SCREW M6S M4X35 A280	703
312105-0323 ..	SCREW M6S M5X8 A280	267, 269, 275, 551, 553, 555, 657
312105-0325 ..	SCREW M6S M5X10 A280	71, 73, 97, 113, 119, 261, 387, 389, 441, 461, 463, 481, 483, 489, 491, 663, 707, 719, 721
312105-0327 ..	SCREW M6S M5X12 A280	55, 57, 121, 129, 131, 173, 175, 199, 201, 203, 215, 217, 277, 331, 333, 387, 389, 419, 421, 437, 439, 447, 449, 453, 455, 457, 459, 479, 621, 623, 647, 659, 661, 685, 727, 731
312105-0328 ..	SCREW M6S M5X14 A280	481, 483, 489, 491, 537, 539
312105-0329 ..	SCREW M6S M5X16 A280	75, 323, 325, 327, 329, 387, 389, 411, 419, 421, 447, 449, 621, 623, 647, 663, 673, 675, 677, 703
312105-0331 ..	SCREW M6S M5X20 A280	47, 49, 77, 387, 389, 403, 405, 407, 409, 607, 657, 685
312105-0332 ..	SCREW M6S M5X22 A280	71, 73
312105-0333 ..	SCREW M6S M5X25 A280	193, 387, 389
312105-0335 ..	SCREW M6S M5X30 A280	331, 333, 379, 381
312105-0337 ..	SCREW M6S M5X35 A280	387, 389, 687, 689
312105-0339 ..	SCREW M6S M5X40 A280	267, 269, 387, 389
312105-0340 ..	SCREW M6S M5X45 A280	387, 389
312105-0343 ..	SCREW M6S M5X60 A280	331, 333
312105-0362 ..	SCREW M6S M6X8 A280	23, 95, 171, 263, 265, 271, 419, 421, 435, 447, 449, 451, 493, 495, 547, 549, 551, 553, 555
312105-0364 ..	SCREW M6S M6X10 A280	25, 27, 39, 65, 71, 73, 77, 95, 97, 101, 103, 113, 115, 119, 123, 133, 135, 157, 173, 175, 199, 201, 203, 267, 269, 313, 411, 419, 421, 425, 431, 437, 439, 447, 449, 453, 455, 457, 459, 513, 525, 571, 707, 719, 721
312105-0366 ..	SCREW M6S M6X12 A280	23, 37, 39, 63, 71, 73, 75, 107, 109, 111, 115, 117, 121, 123, 127, 153, 191, 207, 277, 313, 403, 405, 407, 409, 437, 439, 441, 445, 453, 455, 457, 459, 461, 463, 465, 467, 493, 495, 499, 501, 515, 519, 527, 529, 537, 539, 551, 553, 555, 609, 611, 613, 615, 617, 619, 643, 645, 719, 721, 723, 725, 731
312105-0367 ..	SCREW M6S M6X14 A280	71, 73, 113, 161, 419, 421, 435, 447, 449, 451, 535
312105-0368 ..	SCREW M6S M6X16 A280	15, 17, 41, 43, 55, 57, 63, 65, 71, 73, 75, 101, 103, 113, 119, 129, 131, 159, 173, 175, 177, 183, 185, 199, 201, 203, 207, 223, 237, 275, 277, 419, 421, 433, 435, 437, 439, 441, 443, 445, 447, 449, 451, 453, 455, 457, 459, 461, 463, 465, 467, 493, 495, 499, 501, 515, 519, 527, 529, 535, 537, 539, 547, 549, 557, 559, 561, 563, 565, 567, 609, 611, 613, 615, 617, 619, 639, 643, 645, 659, 661, 663, 685, 707, 711, 719, 721, 723, 731
312105-0370 ..	SCREW M6S M6X20 A280	25, 27, 37, 55, 57, 63, 65, 71, 73, 97, 101, 103, 105, 111, 115, 119, 159, 161, 171, 173, 177, 207, 313, 323, 325, 327, 329, 403, 405, 407, 409, 411, 419, 421, 425, 431, 433, 437, 439, 441, 447, 449, 453, 455, 457, 459, 461, 463, 469, 479, 499, 501, 513, 519, 535, 547, 549, 551, 553, 555, 609, 611, 613, 615, 617, 619, 643, 645, 701, 709, 715, 717, 723, 727
312105-0371 ..	SCREW M6S M6X22 A280	71, 73, 471, 537, 539
312105-0372 ..	SCREW M6S M6X25 A280	55, 57, 63, 67, 75, 113, 127, 133, 163, 207, 211, 323, 325, 327, 329, 357, 359, 363, 365, 403, 405, 407, 409, 481, 483, 489, 491, 493, 495, 499, 501, 535, 547, 549, 551, 553, 555, 557, 559, 561, 563, 565, 567, 571, 609, 611, 613, 615, 617, 619, 643, 645, 685, 711, 727, 741
312105-0374 ..	SCREW M6S M6X30 A280	39, 55, 57, 63, 117, 163, 167, 305, 313, 433, 437, 439, 453, 455, 457, 459, 481, 483, 489, 491, 513, 515, 531, 533, 551, 553, 555, 557, 559, 561, 563, 565, 567
312105-0376 ..	SCREW M6S M6S M6X35 A280	25, 27, 61, 71, 73, 119, 267, 269, 313, 403, 405, 407, 409, 419, 421, 441, 445, 447, 449, 461, 463, 465, 467, 481, 483, 489, 491, 513, 551, 553, 555, 557, 559, 561, 563, 565, 567
312105-0378 ..	SCREW M6S M6X40 A280	157, 171, 355, 437, 439, 445, 453, 455, 457, 459, 465, 467, 513, 557, 559, 561, 563, 565, 567, 719, 721, 735, 737
312105-0379 ..	SCREW M6S M6X45 A280	125, 441, 461, 463, 475, 477, 479, 557, 559, 561, 563, 565, 567
312105-0380 ..	SCREW M6S M6X50 A280	25, 27, 39, 55, 57, 479, 513, 515, 519
312105-0381 ..	SCREW M6S M6X55 A280	223, 513
312105-0382 ..	SCREW M6S M6X60 A280	95, 105, 163
312105-0384 ..	SCREW M6S M6X70 A280	91, 313, 425, 499, 501
312105-0386 ..	SCREW M6S M6X80 A280	445, 465, 467
312105-0388 ..	SCREW M6S M6X90 A280	479, 481, 483, 489, 491
312105-0447 ..	SCREW M6S M8X12 A280	63, 105, 111, 119, 123, 127, 133, 341, 343, 515, 547, 549, 717
312105-0449 ..	SCREW M6S M8X16 A280	25, 27, 55, 57, 91, 107, 123, 133, 199, 201, 203, 267, 269, 305, 315, 403, 405, 407, 409, 435, 437, 439, 443, 445, 451, 453, 455, 457, 459, 465, 467, 499, 501, 527, 529

Part No	Description	Page No
		547, 549, 723, 735, 737, 741
312105-0451 ..	SCREW M6S 8X20 A280	13, 15, 17, 19, 25, 27, 39, 47, 49, 69, 71, 73, 77, 113, 117, 167, 173 175, 183, 185, 419, 421, 423, 425, 429, 437, 439, 443, 445, 447, 449, 453, 455, 457, 459, 465, 467 479, 531, 533, 535, 537, 539, 557, 559, 561, 563, 565, 567, 609, 611, 613, 615, 617, 619, 643, 645 663, 665, 701, 703, 707, 715, 717, 719, 721, 725
312105-0452 ..	SCREW M6S M8X22 A280	71, 73, 111, 159, 403, 405, 407, 409, 741
312105-0453 ..	SCREW M6S M8X25 A280	13, 31, 33, 35, 39, 55, 57, 91, 263, 265, 313, 315, 383, 385, 403, 405 407, 409, 419, 421, 423, 441, 445, 447, 449, 461, 463, 465, 467, 469, 499, 501, 515, 535, 547, 549 551, 553, 555, 557, 559, 561, 563, 565, 567, 591, 593, 701, 703
312105-0455 ..	SCREW M6S M8X30 A280	39, 411, 419, 421, 425, 437, 439, 441, 447, 449, 453, 455, 457, 459 461, 463, 499, 501, 515, 531, 533, 535, 557, 559, 561, 563, 565, 567, 659, 661, 707, 725
312105-0457 ..	SCREW M6S M8X35 A280	111, 341, 343, 383, 385, 423, 499, 501, 547, 549, 557, 559, 561, 563 565, 567, 609, 611, 613, 615, 617, 619, 643, 645
312105-0459 ..	SCREW M6S M8X40 A280	527, 529, 547, 549, 557, 559, 561, 563, 565, 567
312105-0460 ..	SCREW M6S M8X45 A280	531, 533, 537, 539, 551, 553, 555
312105-0462 ..	SCREW M6S M8X55 A280	15, 17, 31, 33, 35, 531, 533
312105-0463 ..	SCREW M6S M8X60 A280	15, 17, 19, 515
312105-0464 ..	SCREW M6S M8X65 A280	13, 31, 33, 35, 437, 439, 453, 455, 457, 459
312105-0466 ..	SCREW M6S M8X75 A280	165, 383, 385
312105-0467 ..	SCREW M6S M8X80 A280	119
312105-0469 ..	SCREW M6S M8X90 A280	419, 421, 437, 439, 447, 449, 451, 453, 455, 457, 459
312105-0471 ..	SCREW M6S M8X100 A280	435, 451
312105-0489 ..	SCREW M6S M10X16 A280	105, 719, 721
312105-0491 ..	SCREW M6S M10X20 A280	63, 91, 119, 135, 257
312105-0493 ..	SCREW M6S M10X25 A280	39, 113, 199, 201, 203, 237, 257, 403, 405, 407, 409, 425, 469, 569 591, 593, 597
312105-0495 ..	SCREW M6S M10X30 A280	237, 403, 405, 407, 409, 419, 421, 447, 449, 569, 663
312105-0497 ..	SCREW M6S M10X35 A280	25, 27, 63, 237, 331, 333
312105-0499 ..	SCREW M6S M10X40 A280	403, 405, 407, 409
312105-0509 ..	SCREW M6S M10X90 A280	403, 405, 407, 409
312105-0517 ..	SCREW M6S M10X130 A280	535
312105-0532 ..	SCREW M6S M12X20 A280	123
312105-0534 ..	SCREW M6S M12X25 A280	433
312105-0536 ..	SCREW M6S M12X30 A280	39
312105-0538 ..	SCREW M6S M12X35 A280	569
312105-0540 ..	SCREW M6S M12X40 A280	13, 15, 17, 19, 31, 33, 35, 123, 199, 201, 203
312105-0542 ..	SCREW M6S M12X50 A280	199, 201, 203, 419, 421, 447, 449
312109-0374 ..	SCREW M6S M6X30 A280	41, 425, 609, 611, 613, 615, 617, 619, 643, 645, 731
312109-0376 ..	SCREW M6S M6X35 A280	499, 501, 515
312109-0381 ..	SCREW M6S M6X55H A480	527, 529, 719, 721
312109-0457 ..	SCREW M6S M8X35 A280	331, 333, 445, 465, 467
312109-0459 ..	SCREW M6S M8X40 A280	383, 385, 557, 559, 561, 563, 565, 567
312109-0461 ..	SCREW M6S M8X50 A280	445, 465, 467
312109-0463 ..	SCREW M6S M8X60H A4 80	305, 307, 323, 325, 327, 329, 341, 343, 519
312111-0297 ..	SCREW HEX.SOCK.HD.MC6S-TT 4X25 88 FZB	249
312111-0323 ..	SCREW HEX.SOCK.HD.MC6S-TT 5X8 88 FZB	667, 669
312111-0325 ..	SCREW HEX.SOCK.HD.MC6S-TT 5X10 88 FZB	673, 675, 677
312111-0327 ..	SCREW HEX.SOCK.HD.MC6S-TT 5X12 88 FZB	673, 675, 677
312111-0329 ..	SCREW HEX.SOCK.HD.MC6S-TT 5X16 88 FZB	255, 427, 673, 675, 677
312111-0331 ..	SCREW HEX.SOCK.HD.MC6S-TT 5X20 88 FZB	607
312111-0333 ..	SCREW HEX.SOCK.HD.MC6S-TT 5X25 88 FZB	253, 607
312111-0335 ..	SCREW HEX.SOCK.HD.MC6S-TT 5X30 88 FZB	307, 609, 611, 613, 615, 617, 619, 625, 627 629, 631, 633, 643, 645, 649, 651
312111-0337 ..	SCREW HEX.SOCK.HD.MC6S-TT 5X35 88 FZB	609, 611, 613, 615, 617, 619, 643, 645
312111-0343 ..	SCREW HEX.SOCK.HD.MC6S-TT 5X60 88 FZB	253
312111-0364 ..	SCREW HEX.SOCK.HD.MC6S-TT 6X10 88 FZB	199, 201, 203, 609, 611, 613, 615, 617, 619 643, 645
312111-0368 ..	SCREW HEX.SOCK.HD.MC6S-TT 6X16 88 FZB	253, 307, 545
312111-0370 ..	SCREW HEX.SOCK.HD.MC6S-TT 6X20 88 FZB	427, 473
312111-0371 ..	SCREW HEX.SOCK.HD.MC6S-TT 6X22 88 FZB	607
312111-0372 ..	SCREW HEX.SOCK.HD.MC6S-TT 6X25 88 FZB	671, 673, 675, 677
312111-0374 ..	SCREW HEX.SOCK.HD.MC6S-TT 6X30 88 FZB	21, 301, 303
312111-0449 ..	SCREW HEX.SOCK.HD.MC6S-TT 8X16 88 FZB	607
312111-0451 ..	SCREW HEX.SOCK.HD.MC6S-TT 8X20 88 FZB	299, 473, 541, 543
312111-0453 ..	SCREW HEX.SOCK.HD.MC6S-TT 8X25 88 FZB	473, 541, 543
312111-0455 ..	SCREW HEX.SOCK.HD.MC6S-TT 8X30 88 FZB	315
312111-0457 ..	SCREW HEX.SOCK.HD.MC6S-TT 8X35 88 FZB	541, 543
312111-0459 ..	SCREW HEX.SOCK.HD.MC6S-TT 8X40 88 FZB	149
312111-0467 ..	SCREW HEX.SOCK.HD.MC6S-TT 8X80 88 FZB	665
312111-0491 ..	SCREW HEX.SOCK.HD.MC6S-TT 10X20 88 FZ	473
312111-0492 ..	SCREW HEX.SOCK.HD.MC6S-TT 10X22 88 FZ	301, 303
312111-0497 ..	SCREW HEX.SOCK.HD.MC6S-TT 10X35 88 FZ	301, 303
312111-0499 ..	SCREW HEX.SOCK.HD.MC6S-TT 10X40 88 FZ	301, 303
312111-0501 ..	SCREW HEX.SOCK.HD.MC6S-TT 10X50 88 FZ	301, 303
312111-0504 ..	SCREW HEX.SOCK.HD.MC6S-TT 10X65 88 FZ	301, 303
312111-0506 ..	SCREW HEX.SOCK.HD.MC6S-TT 10X75 88 FZ	301, 303
312115-0224 ..	SCREW HEX.SOCK.HD.MC6S-TT 3X10 A480	65, 101
312115-0228 ..	SCREW MC6S M3X16 A280	77, 727
312115-0232 ..	SCREW HEX.SOCK.HD.MC6S-TT 3X25 A480	117
312115-0287 ..	SCREW MC6S M4X8 A280	271, 621, 623, 647, 659, 661
312115-0289 ..	SCREW HEX.SOCK.HD.MC6S-TT 4X10 A480	383, 385
312115-0291 ..	SCREW MC6S M4X12 A280	55, 57, 83, 425
312115-0293 ..	SCREW MC6S M4X16 A280	547, 549
312115-0295 ..	SCREW MC6S M4X20 A280	117, 357, 359, 363, 365, 425

Part No	Description	Page No
312115-0297 ..	SCREW MC6S M4X25 A280	357, 359, 363, 365, 369, 371
312115-0303 ..	SCREW MC6S M4X40 A280	331, 333
312115-0305 ..	SCREW MC6S M4X50 A280	77
312115-0323 ..	SCREW MC6S M5X8 A280	437, 439, 453, 455, 457, 459, 571, 681, 683
312115-0325 ..	SCREW HEX.SOCK.HD.MC6S-TT 5X10 A480	119, 173, 175, 277, 281, 571
312115-0327 ..	SCREW MC6S M5X12 A280	387, 389
312115-0328 ..	SCREW HEX.SOCK.HD.MC6S-TT 5X14 A480	113, 117, 123
312115-0329 ..	SCREW MC6S M5X16 A280	71, 73, 77, 97, 173, 175, 379, 381, 387, 389, 687, 689
312115-0331 ..	SCREW MC6S M5X20 A280	105, 109, 345, 347, 349, 351
312115-0332 ..	SCREW HEX.SOCK.HD.MC6S-TT 5X22 A480	119
312115-0333 ..	SCREW MC6S M5X25 A280	263, 265
312115-0339 ..	SCREW MC6S M5X40 A280	687, 689
312115-0340 ..	SCREW MC6S M5X45 A280	387, 389, 673, 675, 677
312115-0364 ..	SCREW HEX.SOCK.HD.MC6S-TT 6X10 A480	65, 101, 137, 163
312115-0366 ..	SCREW MC6S M6X12 A280	13, 15, 17, 19, 173, 175, 263, 265, 341, 343, 373, 377, 515, 739, 741
312115-0368 ..	SCREW MC6S M6X16 A280	199, 201, 203, 373, 377, 435, 445, 451, 465, 467, 635, 637, 719, 721, 725
312115-0370 ..	SCREW MC6S M6X20 A280	163, 357, 359, 363, 365, 369, 371, 425, 499, 501, 609, 611, 613, 615, 617, 619, 643, 645, 665, 687, 689
312115-0372 ..	SCREW MC6S M6X25 A280	205, 357, 359, 363, 365, 519, 609, 611, 613, 615, 617, 619, 643, 645
312115-0374 ..	SCREW MC6S M6X30 A280	345, 347, 349, 351, 357, 359, 363, 365, 369, 371, 499, 501, 515, 519
312115-0376 ..	SCREW MC6S M6X35 A280	313, 609, 611, 613, 615, 617, 619, 643, 645, 705
312115-0378 ..	SCREW MC6S M6X40 A280	199, 201, 203
312115-0382 ..	SCREW MC6S M6X60 A280	125
312115-0449 ..	SCREW MC6S M8X16 A280	373, 377
312115-0451 ..	SCREW MC6S M8X20 A280	135, 199, 201, 203, 541, 543, 639
312115-0453 ..	SCREW MC6S M8X25 A280	305, 541, 543, 591, 593, 597
312115-0455 ..	SCREW MC6S M8X30 A280	43, 173, 175, 331, 333, 383, 385, 437, 439, 453, 455, 457, 459
312115-0459 ..	SCREW MC6S M8X40 A280	87, 89
312115-0461 ..	SCREW MC6S M8X50 A280	323, 325, 327, 329, 345, 347, 349, 351
312115-0467 ..	SCREW MC6S M8X80 A280	119
312115-0495 ..	SCREW MC6S M10X30 A280	663
312115-0501 ..	SCREW MC6S M10X50 A280	199, 201, 203
312115-0503 ..	SCREW MC6S M10X60 A280	199, 201, 203
312121-0228 ..	SCREW SLOT.PAN HD. MCS 3X16 FZB	667, 669, 673, 675, 677
312121-0230 ..	SCREW SLOT.PAN HD. MCS 3X20 FZB	197, 667, 669, 673, 675, 677
312121-0285 ..	SCREW SLOT.PAN HD. MCS 4X6 FZB	249, 301, 303, 305
312121-0287 ..	SCREW SLOT.PAN HD. MCS 4X8 FZB	195, 215, 217, 273, 315
312121-0291 ..	SCREW SLOT.PAN HD. MCS 4X12 FZB	191
312121-0293 ..	SCREW SLOT.PAN HD. MCS 4X16 FZB	197
312121-0321 ..	SCREW SLOT.PAN HD. MCS 5X6 FZB	193, 673, 675, 677
312121-0323 ..	SCREW SLOT.PAN HD. MCS 5X8 FZB	271
312121-0364 ..	SCREW SLOT.PAN HD. MCS 6X10 FZB	671
312125-0220 ..	SCREW SLOT.PAN HD. MCS 3X6 A480	39, 71, 73, 191, 215, 217, 267, 269, 275, 283, 517, 521, 523, 717
312125-0222 ..	SCREW PAN HEAD MCS M3X8 SS	173, 659, 661
312125-0224 ..	SCREW SLOT.PAN HD. MCS 3X10 A480	263, 265
312125-0228 ..	SCREW PAN HEAD MCS M3X16 A480	425, 519, 667, 669, 741
312125-0230 ..	SCREW PAN HEAD MCS M3X20 SS	115, 119, 437, 439, 453, 455, 457, 459, 499, 501, 537, 539
312125-0232 ..	SCREW PAN HEAD MCS M3X25 SS	379, 381
312125-0234 ..	SCREW PAN HEAD MCS M3X30 SS	667, 669
312125-0285 ..	SCREW SLOT.PAN HD. MCS 4X6 A480	41, 67, 71, 73, 105, 161, 237, 323, 325, 327, 329, 357, 359, 363, 365, 379, 381, 445, 465, 467, 609, 611, 613, 615, 617, 619, 643, 645, 719, 721, 741
312125-0287 ..	SCREW PAN HEAD MCS M4X8 SS	199, 201, 203, 345, 347, 349, 351, 373, 377, 403, 405, 407 409, 419, 421, 425, 437, 439, 447, 449, 453, 455, 457, 459, 493, 495, 515, 527, 529, 719, 721, 731 735, 737, 739, 741
312125-0289 ..	SCREW SLOT.PAN HD. MCS 4X10 A480	445, 465, 467, 707
312125-0291 ..	SCREW PAN HEAD MCS M4X12 SS	117, 283, 419, 421, 437, 439, 447, 449, 453, 455, 457 459, 551, 553, 555, 717
312125-0295 ..	SCREW PAN HEAD MCS M4X20 SS	39
312125-0323 ..	SCREW PAN HEAD MCS M5X8 SS	81, 83, 85, 111, 209, 215, 217, 419, 421, 447, 449, 663 667, 669, 725
312125-0327 ..	SCREW PAN HEAD MCS M5X12 SS	55, 57, 69
312125-0329 ..	SCREW PAN HEAD MCS M5X16 SS	659, 661, 723
312125-0331 ..	SCREW PAN HEAD MCS M5X20 SS	111
312125-0333 ..	SCREW PAN HEAD MCS M5X25 SS	701
312125-0364 ..	SCREW SLOT.PAN HD. MCS 6X10 A480	111
312125-0366 ..	SCREW PAN HEAD MCS M6X12 SS	705
312125-0370 ..	SCREW PAN HEAD MCS M6X20 SS	171
312125-0376 ..	SCREW PAN HEAD MCS M6X35 SS	205
312125-0378 ..	SCREW PAN HEAD MCS M6X40 SS	99
312125-0447 ..	SCREW PAN HEAD MCS M8X12 A480	707
312132-0323 ..	SCREW SLOT. PAN HEAD MSCS M5X8	673, 675, 677
312141-0295 ..	SCREW COUNTERS.SLOT.HD. MFS 4X20 FZB	315
312141-0325 ..	SCREW COUNTERS.SLOT.HD. MFS 5X10 FZB	273
312141-0366 ..	SCREW COUNTERS.SLOT.HD. MFS 6X12 FZB	681, 683
312145-0222 ..	SCREW COUNTERS.SLOT.HD. MFS 3X8 SS	335, 337
312145-0228 ..	SCREW COUNTERS.SLOT.HD. MFS 3X16 SS	39
312145-0238 ..	SCREW COUNTERS.SLOT.HD. MFS 3X40 SS	345, 347, 349, 351, 369, 371, 717
312145-0285 ..	SCREW COUNTERS.SLOT.HD. MFS 4X6 SS	277, 331, 333, 383, 385, 681, 683
312145-0289 ..	SCREW COUNTERS.SLOT.HD. MFS 4X10 SS	335, 337, 339, 673, 675, 677, 687, 689
312145-0291 ..	SCREW COUNTERS.SLOT.HD. MFS 4X12 A4	687, 689
312145-0297 ..	SCREW COUNTERS.SLOT.HD. MFS 4X25 SS	383, 385
312145-0305 ..	SCREW COUNTERS.SLOT.HD. MFS 4X50 SS	379, 381

Part No	Description	Page No
312145-0323 ..	SCREW COUNTERS.SLOT.HD. MFS 5X8 SS	659, 661, 681, 683
312145-0325 ..	SCREW COUNTERS.SLOT.HD. MFS 5X10 SS	277, 387, 389
312145-0327 ..	SCREW COUNTERS.SLOT.HD. MFS 5X12 SS	277, 673, 675, 677, 687, 689
312145-0329 ..	SCREW COUNTERS.SLOT.HD. MFS 5X16 SS	673, 675, 677, 687, 689
312145-0331 ..	SCREW COUNTERS.SLOT.HD. MFS 5X20 SS	687, 689
312145-0335 ..	SCREW COUNTERS.SLOT.HD. MFS 5X30 SS	673, 675, 677
312145-0366 ..	SCREW COUNTERS.SLOT.HD. MFS 6X12 SS	191, 403, 405, 407, 409
312145-0378 ..	SCREW COUNTERS.SLOT.HD. MFS 6X40 SS	429
312145-0449 ..	SCREW COUNTERS.SLOT.HD. MFS 8X16 SS	159
312151-0366 ..	SCREW HEX.SOCK.COUNT.MF6S 6X12 FZB	199, 201, 203
312151-0368 ..	SCREW HEX.SOCK.COUNT.MF6S 6X16 FZB	673, 675, 677
312151-0384 ..	SCREW HEX.SOCK.COUNT.MF6S 6X70 FZB	673, 675, 677
312151-0451 ..	SCREW HEX.SOCK.COUNT.MF6S 8X20 FZB	473
312155-0289 ..	SCREW HEX.SOCK.COUNT.MF6S M4X10 A480	309
312155-0291 ..	SCREW HEX.SOCK.COUNT.MF6S M4X12 A480	441, 461, 463, 659, 661
312155-0295 ..	SCREW HEX.SOCK.COUNT.MF6S M4X20 A480	445, 465, 467, 493, 495
312155-0297 ..	SCREW HEX.SOCK.COUNT.MF6S M4X25 A480	437, 439, 441, 453, 455, 457, 459, 461, 463
312155-0301 ..	SCREW HEX.SOCK.COUNT.MF6S M4X35 A480	331, 333
312155-0327 ..	SCREW HEX.SOCK.COUNT.MF6S M5X12 A280	199, 201, 203, 659, 661, 663
312155-0329 ..	SCREW HEX.SOCK.COUNT.MF6S M5X16 A280	23, 113, 123, 609, 611, 613, 615, 617, 619, 643, 645, 667, 669
312155-0333 ..	SCREW HEX.SOCK.COUNT.MF6S M5X25 A280	609, 611, 613, 615, 617, 619, 643, 645
312155-0339 ..	SCREW HEX.SOCK.COUNT.MF6S M5X40 A280	659, 661
312155-0364 ..	SCREW HEX.SOCK.COUNT.MF6S M6X10 A280	65, 101, 103, 557, 559, 561, 563, 565, 567
312155-0366 ..	SCREW HEX.SOCK.COUNT.MF6S M6X12 A280	171, 199, 201, 203, 387, 389, 419, 421, 447, 449, 499, 501, 515
312155-0368 ..	SCREW HEX.SOCK.COUNT.MF6S M6X16 A280	199, 201, 203, 551, 553, 555, 557, 559, 561, 563, 565, 567, 665
312155-0370 ..	SCREW HEX.SOCK.COUNT.MF6S M6X20 A280	65, 101, 103, 199, 201, 203, 257, 435, 451
312155-0372 ..	SCREW HEX.SOCK.COUNT.MF6S M6X25 A280	191, 341, 343, 527, 529
312155-0374 ..	SCREW HEX.SOCK.COUNT.MF6S M6X30 A280	373, 377
312155-0376 ..	SCREW HEX.SOCK.COUNT.MF6S M6X35 A280	499, 501, 519, 557, 559, 561, 563, 565, 567
312155-0378 ..	SCREW HEX.SOCK.COUNT.MF6S M6X40 A280	557, 559, 561, 563, 565, 567
312155-0382 ..	SCREW HEX.SOCK.COUNT.MF6S 6X60 A270	323, 325, 327, 329
312155-0449 ..	SCREW HEX.SOCK.COUNT.MF6S M8X16 A280	109, 673, 675, 677
312155-0451 ..	SCREW HEX.SOCK.COUNT.MF6S M8X20 A280	199, 201, 203, 663
312155-0453 ..	SCREW HEX.SOCK.COUNT.MF6S M8X25 A280	657
312155-0499 ..	SCREW HEX.SOCK.COUNT.MF6S M10X40 A280	557, 559, 561, 563, 565, 567
312155-0532 ..	SCREW HEX.SOCK.COUNT.MF6S 12X20 SS	77
312180-0447 ..	SCREW, HEX.SOCK.HEAD SHOULD. M6X12	255
312180-0489 ..	SCREW, HEX.SOCK.HEAD SHOULD. M8X16	307, 315
312180-0493 ..	SCREW, HEX.SOCK.HEAD SHOULD. M8X25	75
312180-0499 ..	SCREW, HEX.SOCK.HEAD SHOULD. M8X40	379, 381
312180-0530 ..	SCREW, HEX.SOCK.HEAD SHOULD. M10X16	119, 423
312303-0374 ..	SCREW STUD, METAL END=1D, PS 6X25 SS	665
312303-0497 ..	SCREW STUD, METAL END=1D, PS 10X25 SS	63
312306-0287 ..	SCREW HEX.SOCK.SET FLAT P.MP6SS 4X8 FZB	673, 675, 677
312306-0360 ..	SCREW HEX.SOCK.SET FLAT P.MP6SS 6X6FZB	681, 683
312306-0366 ..	SCREW HEX.SOCK.SET FLAT P.MP6SS 6X12FZB	641, 679
312311-0292 ..	SCREW HEX.SOCK.SET DOG P.MT6SS 4X14 FZB	717
312311-0370 ..	SCREW, SOCK.SET DOGPOINT M6X20	475, 477
312316-0283 ..	SCREW HEX.SOCK.SET CUP P.MSK6SS4X4 FZB	315
312316-0285 ..	SCREW HEX.SOCK.SET CUP P.MSK6SS4X6 FZB	607
312316-0320 ..	SCREW HEX.SOCK.SET CUP P.MSK6SS5X5 FZB	119, 541, 543
312316-0323 ..	SCREW HEX.SOCK.SET CUP P.MSK6SS5X8 FZB	541, 543, 639
312316-0360 ..	STOP SCREW SK6SS6X6FZB	667, 669
312316-0362 ..	SCREW HEX.SOCK.SET CUP P.MSK6SS6X8 FZB	535, 639
312318-0283 ..	SCREW SOCK.SET CUP P MSK6SS M4X4 A4	13, 15, 17, 19, 479, 727, 735, 737
312318-0285 ..	SCREW SOCK.SET CUP P MSK6SS M4X6 A4	13, 15, 17, 19, 335, 337, 339, 723
312318-0287 ..	SCREW SOCK.SET CUP P MSK6SS M4X8 A4	547, 549, 713
312318-0289 ..	SCREW SOCK.SET CUP P MSK6SS M4X10 A4	403, 405, 407, 409, 715
312318-0291 ..	SCREW SOCK.SET CUP P MSK6SS M4X12 A4	13, 15, 17, 19
312318-0321 ..	SCREW HEX.SOCK.SET CUP P.MSK6SS 5X6 SS	345, 347, 349, 351, 673, 675, 677
312318-0323 ..	SCREW SOCK.SET CUP P MSK6SS M5X8 A4	411, 609, 611, 613, 615, 617, 619, 643, 645
312318-0325 ..	SCREW HEX.SOCK.SET CUP P.MSK6SS5X10 SS	75
312318-0327 ..	SCREW SOCK.SET CUP P MSK6SS M5X12 A4	113
312318-0360 ..	SCREW HEX.SOCK.SET CUP P.MSK6SS6X6 SS	309
312318-0362 ..	SCREW SOCK.SET CUP P MSK6SS M6X8 A4	55, 57, 117, 237, 519, 547, 549, 609, 611, 613, 615, 617, 619, 643, 645, 663, 711
312318-0364 ..	SCREW HEX.SOCK.SET CUP P.MSK6SS6X10 SS	151, 701, 715
312318-0366 ..	SCREW SOCK.SET CUP P MSK6SS M6X12 A4	515
312318-0368 ..	SCREW SOCK.SET CUP P MSK6SS M6X16 A4	117, 441, 461, 463, 635, 637
312318-0370 ..	SCREW SOCK.SET CUP P MSK6SS M6X20 A4	373, 377, 551, 553, 555
312318-0372 ..	SCREW SOCK.SET CUP P MSK6SS M6X25 A4	547, 549
312318-0443 ..	SCREW SOCK.SET CUP P MSK6SS M8X8 A4	519, 551, 553, 555
312318-0449 ..	SCREW SOCK.SET CUP P MSK6SS M8X16 A4	551, 553, 555
312318-0455 ..	SCREW HEX.SOCK.SET CUP P.MSK6SS8X30 SS	557, 559, 561, 563, 565, 567
312318-0459 ..	SCREW SOCK.SET CUP P MSK6SS M8X40 A4	323, 325, 327, 329
312318-0499 ..	SCREW SOCK.SET CUP P MSK6SS M10X40 A4	323, 325, 327, 329
312502-0120 ..	DRIVE SCREW ROUND HEAD KDS 0X5	123, 263, 265, 267, 269, 707
312502-0171 ..	DRIVE SCREW ROUND HEAD KDS 2X6	253
312601-0312 ..	NUT M6M 4-8 FZB	257, 673, 675, 677
312601-0314 ..	NUT M6M5FZB	271, 673, 675, 677
312601-0316 ..	NUT M6M 6-8 FZB	197, 251, 257, 307, 309, 591, 593, 597, 607, 671, 673, 675, 677

Part No	Description	Page No
312601-0318 ..	NUT M6M8FZB	151, 245, 247, 249, 251, 257, 299, 309
312601-0320 ..	NUT M6M 10-8 FZB	199, 201, 203, 299, 591, 593, 595, 597
312601-0322 ..	NUT M6M 12-8 FZB	257, 295, 299, 307
312601-0324 ..	NUT M6M 16-8 FZB	315
312605-0310 ..	HEXAGON NUT, M6M M3 A280	39, 115, 119, 173, 175, 275, 657, 667, 669, 717
312605-0312 ..	HEXAGON NUT, M6M M4 A280	13, 15, 17, 19, 25, 27, 41, 67, 71, 73, 161, 173, 175, 277, 341, 343, 379, 381, 419, 421, 447, 449, 635, 637, 659, 661, 667, 669, 703
312605-0314 ..	HEXAGON NUT, M6M M5 A280	41, 47, 49, 55, 57, 75, 109, 173, 175, 199, 201, 203, 263, 265, 281, 375, 419, 421, 447, 449, 609, 611, 613, 615, 617, 619, 621, 623, 643, 645, 647, 659, 661, 663, 717
312605-0316 ..	HEXAGON NUT, M6M M6 A280	13, 15, 17, 19, 25, 27, 37, 55, 57, 63, 67, 71, 73, 91, 97, 99, 105, 111, 117, 119, 157, 163, 167, 171, 173, 175, 177, 183, 185, 191, 199, 201, 203, 207, 211, 223, 237, 267, 269, 419, 421, 435, 437, 439, 441, 443, 445, 447, 449, 451, 453, 455, 457, 459, 461, 463, 465, 467, 479, 499, 501, 515, 527, 529, 531, 533, 547, 549, 551, 553, 555, 609, 611, 613, 615, 617, 619, 643, 645, 657, 673, 675, 677, 711, 719, 721, 723, 725, 731, 735, 737
312605-0318 ..	HEXAGON NUT, M6M M8 A280	13, 43, 55, 57, 75, 115, 123, 149, 159, 165, 171, 305, 313, 315, 323, 325, 327, 329, 331, 333, 341, 343, 373, 377, 383, 385, 403, 405, 407, 409, 423, 429, 435, 437, 439, 445, 451, 453, 455, 457, 459, 465, 467, 479, 511, 519, 547, 549, 551, 553, 555, 557, 559, 561, 563, 565, 567, 591, 593, 597, 621, 623, 647, 659, 661, 703, 717, 719, 721, 723, 725, 731, 741
312605-0320 ..	HEXAGON NUT, M6M M10 A280	39, 55, 57, 63, 115, 119, 163, 199, 201, 203, 257, 331, 333, 387, 389, 435, 451, 519, 591, 593, 597, 719, 721, 733
312605-0322 ..	HEXAGON NUT, M6M M12 A280	43, 237, 419, 421, 429, 445, 447, 449, 465, 467, 499, 501, 515, 547, 549
312605-0324 ..	HEXAGON NUT, M6M M16 A280	441, 461, 463
312621-0318 ..	ROD END,NUT M8	315
312621-0324 ..	NUT ML6M16FZB	315
312625-0318 ..	NUT HEX. M8 SS	445, 465, 467
312631-0321 ..	NUT HEX. M10X1,25 FE FZB	493, 495
312631-0324 ..	NUT HEX. M16X1,5 FE FZB	475, 477
312635-0320 ..	NUT M6M 10X1 STAINLESS A2 80	323, 325, 327, 329, 383, 385
312705-0314 ..	NUT HEX. DOMED CAP MHM-6 M5 A280	59
312705-0316 ..	NUT HEX. DOMED CAP MHM-6 M6 A280	21, 135, 609, 611, 613, 615, 617, 619, 643, 645, 713
312705-0318 ..	NUT HEX. DOMED CAP MHM-6 M8 A280	21
312715-0114 ..	NUT WING COLD WORK.MVM-K M5 A280	191
312805-0100 ..	NUT ROUND WITH SLOTS M10X0,75 FE	323, 325, 327, 329
312805-0101 ..	NUT ROUND WITH SLOTS M12X1 FE	323, 325, 327, 329
312805-0107 ..	NUT ROUND WITH SLOTS M35X1,5 FE	545
312805-0108 ..	NUT ROUND WITH SLOTS M40X1,5 FE	541, 543
312805-0110 ..	NUT ROUND WITH SLOTS M50X1,5 FE	473
312805-0114 ..	NUT ROUND WITH SLOTS M70X20 FE	541, 543
312810-0310 ..	HEXAGON NUT, NY-LOCK M3 FZB	173
312810-0320 ..	HEXAGON NUT, NY-LOCK M10 FZB	535
312810-0322 ..	HEXAGON NUT, NY-LOCK M12 FZB	307
312810-0324 ..	HEXAGON NUT, NY-LOCK M16 FZB	307
312811-0316 ..	NUT HEX.LOCK HELI COIL MID GRIP M6 SS	97, 313, 485, 487, 673, 675, 677
312811-0318 ..	NUT HEX.LOCK HELI COIL MID GRIP M8 SS	323, 325, 327, 329, 379, 381, 657
312811-0322 ..	NUT HEX.LOCK HELI COIL MID GRIP M12 SS	315
312811-0324 ..	NUT HEX.LOCK HELI COIL MID GRIP M16 SS	305
312812-0314 ..	HEXAGON NUT, NY-LOCK M5 A480	113, 123, 609, 611, 613, 615, 617, 619, 643, 645, 681, 683
312812-0316 ..	HEXAGON NUT, NY-LOCK M6 A480	95, 97, 105, 171, 257, 411, 441, 461, 463, 499, 501, 653, 655, 659, 661
312812-0318 ..	HEXAGON NUT, NY-LOCK M8 A480	411
312812-0320 ..	HEXAGON NUT, NY-LOCK M10 A480	299
312821-0102 ..	HEXAGON WELDING NUT M4 RFR	197
312902-0318 ..	NUT HEX. LEFT THREAD, M8 A280	313, 315, 551, 553, 555
312910-0126 ..	HELI-COIL M8X1,5D	545
315101-0124 ..	WASHER PLAIN, BRB, 3,2/6 H=0,5	197
315101-0136 ..	WASHER PLAIN, BRB, 4,3/8 H=0,8	191, 197, 255, 273, 625, 627, 629, 631, 633, 649, 651, 667, 669, 673, 675, 677
315101-0146 ..	WASHER PLAIN, BRB, 5,3/10 H=1	255, 273, 607, 625, 627, 629, 631, 633, 649, 651, 673, 675, 677
315101-0153 ..	WASHER PLAIN, BRB, 6,4/12 H=1,5	151, 153, 193, 197, 215, 217, 249, 255, 257, 273, 279, 307, 315, 493, 495, 591, 593, 597, 599, 607, 653, 655, 673, 675, 677
315101-0165 ..	WASHER PLAIN, BRB, 8,4/16 H=1,5	151, 191, 197, 249, 257, 299, 305, 309, 471, 535, 541, 543, 607
315101-0173 ..	WASHER PLAIN, BRB, 10,5/22 H=2	199, 201, 203, 297, 299, 591, 593, 597, 673, 675, 677
315101-0178 ..	WASHER PLAIN, BRB, 13/24 H=2	153, 195, 257, 299, 307
315101-0186 ..	WASHER PLAIN, BRB, 17/30 H=3	307
315102-0192 ..	WASHER PLAIN, BRFB 21/36 H=3	599
315103-0195 ..	WASHER PLAIN, BRB, 23/40,H=3 NI PL BR	237
315105-0124 ..	WASHER PLAIN, BRB, 3,2/6,H=0,5	77, 115, 119, 173, 175, 191, 215, 217, 425, 437, 439, 453, 455, 457, 459, 499, 501, 517, 519, 537, 539, 657, 659, 661, 667, 669, 727, 741
315105-0136 ..	WASHER PLAIN, BRB, 4,3/8,H=0,8	41, 61, 67, 71, 73, 77, 117, 135, 161, 173, 175, 277, 331, 333, 341, 343, 379, 381, 383, 385, 403, 405, 407, 409, 419, 421, 425, 437, 439, 447, 449, 453, 455, 457, 459, 469, 503, 505, 507, 509, 635, 637, 659, 661, 663, 673, 675, 677, 703, 707, 719, 721, 727, 739, 741
315105-0146 ..	WASHER PLAIN, BRB, 5,3/10,H=1	13, 15, 17, 19, 41, 55, 57, 59, 71, 73, 77, 111, 113, 117, 119, 121, 123, 129, 131, 173, 175, 191, 193, 267, 269, 277, 331, 333, 387, 389, 411, 419, 421, 437, 439, 441, 447, 449, 453, 455, 457, 459, 461, 463, 479, 537, 539, 551, 553, 555, 571, 609, 611, 613, 615, 617, 619, 621, 623, 643, 645, 647, 657, 659, 661, 663, 667, 669, 673, 675, 677, 685, 687, 689, 703, 707, 719, 721, 727, 731, 741
315105-0153 ..	WASHER PLAIN, BRB, 6,4/12,H=1,5	23, 25, 27, 37, 39, 41, 55, 57, 63, 65, 67, 71, 73, 95, 101, 103, 105, 113, 117, 119, 121, 127, 133, 135, 159, 161, 163, 171, 173, 175, 177, 183, 185, 191, 199, 201, 203, 205, 207, 223, 237, 263, 265, 267, 269, 271, 275, 277, 305, 309, 313, 323, 325, 327, 329, 355, 403, 405, 407, 409, 411, 419, 421, 425, 431, 433, 435, 437, 439, 441, 443, 445, 447, 449, 451, 453, 455, 457, 459, 461, 463, 465, 467, 475, 477, 479, 481, 483, 485, 487, 489, 491, 499, 501, 513, 515, 519, 525, 527, 529, 531, 533, 535, 537, 539, 547, 549, 551, 553, 555, 557, 559, 561, 563, 565

Part No	Description	Page No
		567, 571, 609, 611, 613, 615, 617, 619, 635, 637, 643, 645, 659, 661, 663, 665, 673, 675, 677, 685
		687, 689, 701, 705, 709, 711, 715, 717, 719, 721, 723, 725, 727, 731, 735, 737, 741
315105-0156 ..	WASHER PLAIN, BRB, 6,7/14,H=1,5	91, 309, 713
315105-0165 ..	WASHER PLAIN, BRB, 8,4/16,H=1,5	13, 15, 17, 19, 25, 27, 39, 55, 57, 63, 69, 71, 73, 75, 91
		113, 117, 123, 127, 133, 135, 159, 173, 175, 183, 185, 199, 201, 203, 263, 265, 313, 315, 323, 325
		327, 329, 331, 333, 341, 343, 373, 377, 383, 385, 403, 405, 407, 409, 411, 419, 421, 423, 425, 429
		435, 437, 439, 441, 443, 445, 447, 449, 451, 453, 455, 457, 459, 461, 463, 465, 467, 469, 479, 499
		501, 515, 527, 529, 531, 533, 535, 537, 539, 541, 543, 547, 549, 551, 553, 555, 557, 559, 561, 563
		565, 567, 569, 591, 593, 597, 609, 611, 613, 615, 617, 619, 621, 623, 639, 643, 645, 647, 663, 665
		701, 703, 707, 717, 719, 721, 723, 725, 731, 735, 737, 739, 741
315105-0173 ..	WASHER PLAIN, BRB, 10,5/22,H=2	25, 27, 39, 55, 57, 63, 75, 115, 135, 163, 199, 201, 203, 237
		257, 331, 333, 403, 405, 407, 409, 419, 421, 425, 435, 447, 449, 451, 469, 519, 557, 559, 561, 563
		565, 567, 569, 591, 593, 597, 609, 611, 613, 615, 617, 619, 643, 645, 657, 663, 685, 719, 721, 725, 733
315105-0176 ..	WASHER PLAIN, BRB, 12/22 H=2	403, 405, 407, 409
315105-0178 ..	WASHER PLAIN, BRB, 13/24,H=2	13, 15, 17, 19, 31, 33, 35, 39, 419, 421, 433, 447, 449, 547
		549, 569
315105-0186 ..	WASHER PLAIN, BRB, 17/30,H=3	441, 461, 463
315105-0192 ..	WASHER PLAIN, BRB, 21/36,H=3	43, 419, 421, 447, 449
315111-0153 ..	WASHER PLAIN, TBRB 6,4/12 H=3	625, 627, 629, 631, 633, 649, 651
315111-0165 ..	WASHER PLAIN, TBRB 8,4/16 H=3	251, 255, 707
315111-0178 ..	WASHER PLAIN, TBRB 13/24 H=4	199, 201, 203
315115-0153 ..	WASHER PLAIN, TBRB 6,4/12 H=3	113, 419, 421, 433, 437, 439, 441, 443, 445, 447, 449, 453
		455, 457, 459, 461, 463, 465, 467, 469, 471, 479, 481, 483, 485, 487, 489, 491, 493, 495, 499, 501
		515, 519, 535, 551, 553, 555, 557, 559, 561, 563, 565, 567, 571, 609, 611, 613, 615, 617, 619, 643
		645, 685, 741
315115-0165 ..	WASHER PLAIN, TBRB 8,4/16 H=3	13, 15, 17, 31, 33, 35, 167, 173, 383, 385, 419, 421, 423
		437, 439, 445, 447, 449, 453, 455, 457, 459, 465, 467, 499, 501, 515, 527, 529, 531, 533, 535, 547
		549, 551, 553, 555, 557, 559, 561, 563, 565, 567
315115-0171 ..	WASHER PLAIN, TBRB 10/18 H=4	373, 377
315115-0173 ..	WASHER PLAIN, TBRB 10,5/22 H=4	379, 381, 519, 535
315115-0178 ..	WASHER PLAIN, TBRB 13/24 H=4	123, 199, 201, 203, 419, 421, 447, 449
315121-0153 ..	WASHER PLAIN, TBRSB 6,4/22 H=4	115, 191, 199, 201, 203, 609, 611, 613, 615, 617, 619, 643
		645, 723
315121-0165 ..	WASHER PLAIN, TBRSB 8,4/26 H=5	119, 305, 315, 707, 719, 721
315125-0153 ..	WASHER PLAIN ROUND,CHAMF. 6,4/22, H=4	461, 527, 529, 609, 611, 613, 615, 617, 619, 643, 645
315125-0165 ..	WASHER PLAIN ROUND,CHAMF. 8,4/26, H=5	267, 269, 423
315202-0101 ..	O-RING 3,1X1,6 MM	357, 359, 363, 365, 369, 371
315202-0102 ..	O-RING 4,1X1,6 MM	369, 371
315202-0104 ..	O-RING 6,1X1,6 MM	357, 359, 363, 365, 369, 371
315202-0106 ..	O-RING 8,1X1,6 MM	433
315202-0111 ..	O-RING 13,1X1,6 MM	345, 347, 349, 351, 369, 371
315202-0114 ..	O-RING 16,1X1,6 MM	369, 371, 373, 377
315202-0119 ..	O-RING 25,1X1,6 MM	63
315202-0203 ..	O-RING 4,3X2,4 MM	357, 359, 363, 365
315202-0206 ..	O-RING 7,3X2,4 MM	245, 247, 369, 371
315202-0207 ..	O-RING 8,3X2,4 MM	345, 347, 349, 351, 369, 371
315202-0208 ..	O-RING 9,3X2,4 MM	369, 371, 373, 377
315202-0211 ..	O-RING 13,3X2,4 MM	179, 181, 187, 189, 213, 239
315202-0212 ..	O-RING 14,3X2,4 MM	345, 347, 349, 351, 369, 371
315202-0214 ..	O-RING 17,3X2,4 MM	433
315202-0216 ..	O-RING 22,2X3 MM	183, 185, 237
315202-0217 ..	O-RING 24,2X3 MM	519, 547, 549
315202-0218 ..	O-RING 26,2X3 MM	621, 623, 647
315202-0220 ..	O-RING 32,2X3 MM	433
315202-0224 ..	O-RING 42,2X3 MM	587, 625, 627, 629, 631, 633, 649, 651
315202-0226 ..	O-RING 44,2X5,7 MM	433
315202-0229 ..	O-RING 59,2X5,7 MM	419, 421, 447, 449
315202-0244 ..	O-RING 134,3X5,7 MM	67
315202-0265 ..	O-RING 12,3X2,4 MM	355
315202-0301 ..	O-RING 49,5X3 MM	141, 431, 625, 627, 629, 631, 633
315202-0302 ..	O-RING 54,5X3 MM	433
315202-0303 ..	O-RING 59,5X3 MM	433, 519
315202-0304 ..	O-RING 64,5X3 MM	85, 625, 627, 629, 631, 633
315202-0305 ..	O-RING 69,5X3 MM	625, 627, 629, 631, 633
315202-0308 ..	O-RING 84,5X3 MM	81, 83
315202-0309 ..	O-RING 89,5X3 MM	471, 621, 623, 647
315202-0311 ..	O-RING 99,5X3 MM	535
315202-0316 ..	O-RING 124,5X3 MM	541, 543
315202-0317 ..	O-RING 129,5X3 MM	69
315202-0702 ..	O-RING 12,42X1,78 MM	369, 371
315204-0109 ..	O-RING 11,1X1,6 MM	113
315204-0110 ..	O-RING 12,1X1,6 MM	65, 101, 103
315204-0111 ..	O-RING 13,1X1,6 MM	97
315204-0208 ..	O-RING 9,3X2,4 MM	129, 131
315204-0209 ..	O-RING 10,3X2,4 MM	123
315204-0213 ..	O-RING 15,2X2,4 MM	67
315204-0215 ..	O-RING 19,2X3 MM	81, 83, 85, 141
315204-0217 ..	O-RING 24,2X3 MM	45, 139
315204-0221 ..	O-RING 34,2X3 MM	113
315204-0222 ..	O-RING 36,2X3 MM	63, 65, 95, 101
315204-0223 ..	O-RING 39,2X3 MM	63
315204-0301 ..	O-RING 49,5X3 MM	85
315204-0302 ..	O-RING 54,5X3 MM	63, 65, 101, 103
315204-0304 ..	O-RING 64,5X3 MM	63

Part No	Description	Page No
315204-0324 ..	O-RING 164,3X5,7 MM	125
315211-0103 ..	GASKET BOLT HEAD 6,7X11X1 MM M6	167
315220-0121 ..	V-RINGS 12,5X18,5X7,7 MM V-14S	609, 611, 613, 615, 617, 619, 643, 645
315220-0175 ..	V-RINGS 31X39X10,5 MM V-35S	547, 549
315220-0198 ..	V-RINGS 45X55X13 MM V-50S	297
315221-0171 ..	RADIAL SEAL 30X62X7 MM	541, 543, 545
315221-0175 ..	RADIAL SEAL 35X47X7 MM	519
315221-0197 ..	RADIAL SEAL 48X72X8 MM	297
315221-0200 ..	RADIAL SEAL 50X72X8 MM	471
315221-0221 ..	RADIAL SEAL 70X90X10 MM	301, 303
315226-0196 ..	AXIAL SEAL WITH STEEL COVER 48X65X4,5 MM	403, 405, 407, 409
315226-0200 ..	AXIAL SEAL WITH STEEL COVER 50X70X4,5 MM	471
315230-0157 ..	BEARING SEAL 12X16X3 MM	373, 377
315233-0101 ..	WASHER PL.RND.NYL.5,2/8,H=1	81, 83, 85
315233-0109 ..	WASHER PL.RND.NYL.10,3/14,H=1	193, 479, 535
315233-0110 ..	WASHER PL.RND.NYL.13,3/17,H=1	95, 193, 215, 217, 225, 227, 229, 231, 233, 235, 243, 263, 265, 355, 479, 493, 495, 535
315233-0111 ..	WASHER PL.RND.NYL.17/22,H=1	249, 263, 265
315233-0113 ..	WASHER PL.RND.NYL.21,4/27,H=1,2	21, 63, 215, 217, 223, 225, 227, 229, 231, 233, 235, 243, 263, 265, 267, 269
315234-0109 ..	WASHER,PL.RND.CU.10,3/13,5 H=1,0	481, 483, 489, 491
315234-0110 ..	WASHER,PL.RND.CU.13,5/18 H=1,5	105, 345, 347, 349, 351, 427
315234-0113 ..	WASHER PL.RND.CU.21,3//26 H=1,5	211, 215, 217, 427
315237-0109 ..	WASHER,PL.RND.AL.10/14,H=1,5	39
315250-0101 ..	GASKET 32X25X5,5 MM	63, 133
315250-0103 ..	GASKET 48X38X5,5 MM	95, 133, 177, 419, 421, 447, 449
315259-0103 ..	FELT SEAL 47-67 MM	379, 381
315401-0153 ..	WASHER FBH6,1FZB	301, 303
315401-0173 ..	WASHER FBH10,2FZB	301, 303
315401-0178 ..	WASHER FBH12,2FZB	295
315402-0136 ..	LOCK WASHER FBB 4,1	83
315402-0156 ..	LOCK WASHER FBB 6,5	485, 487
315402-0173 ..	LOCK WASHER FBB 10,2	199, 201, 203, 473
315410-0100 ..	LOCK WASHER MB 0 D=10 H=1	323, 325, 327, 329
315410-0101 ..	LOCK WASHER MB 1 D=12 H=1	323, 325, 327, 329
315410-0107 ..	LOCK WASHER MB 7 D=35 H=1,25	545
315410-0108 ..	LOCK WASHER MB 8 D=40 H=1,25	541, 543
315410-0110 ..	LOCK WASHER MB 10 D=50 H=1,25	473
315410-0114 ..	LOCK WASHER MB 14 D=70 H=1,5	541, 543
315701-0134 ..	PARALLEL KEY W. ROUND ENDS 3X3X10 MM	479
315701-0169 ..	PARALLEL KEY W. ROUND ENDS 4X4X18 MM	607
315701-0201 ..	PARALLEL KEY W. ROUND ENDS 5X5X20 MM	609, 611, 613, 615, 617, 619, 643, 645
315701-0202 ..	PARALLEL KEY W. ROUND ENDS 5X5X22 MM	427
315701-0234 ..	PARALLEL KEY W. ROUND ENDS 6X6X25 MM	427
315701-0262 ..	PARALLEL KEY W. ROUND ENDS 8X7X18 MM	309
315701-0263 ..	PARALLEL KEY W. ROUND ENDS 8X7X20 MM	309
315701-0268 ..	PARALLEL KEY W. ROUND ENDS 8X7X32 MM	545
315701-0270 ..	PARALLEL KEY W. ROUND ENDS 8X7X40 MM	305, 427, 535, 545
315701-0272 ..	PARALLEL KEY W. ROUND ENDS 8X7X50 MM	427
315701-0274 ..	PARALLEL KEY W. ROUND ENDS 8X7X60 MM	535
315701-0296 ..	PARALLEL KEY W. ROUND ENDS 10X8X25 MM	473
315701-0299 ..	PARALLEL KEY W. ROUND ENDS 10X8X32 MM	545
315701-0307 ..	PARALLEL KEY W. ROUND ENDS 10X8X70 MM	299
315701-0330 ..	PARALLEL KEY W. ROUND ENDS 12X8X32 MM	199, 201, 203
315701-0336 ..	PARALLEL KEY W. ROUND ENDS 12X8X63 MM	199, 201, 203
315701-0338 ..	PARALLEL KEY W. ROUND ENDS 12X8X70 MM	541, 543
315701-0363 ..	PARALLEL KEY W. ROUND ENDS 14X9X40 MM	473
315701-0802 ..	PARALLEL KEY W. ROUND ENDS 10X8X36 MM	545
315705-0196 ..	PARALLEL KEY W. ROUND ENDS 5X5X10 MM	163
315705-0266 ..	PARALLEL KEY W. ROUND ENDS 8X7X28 MM	519
315705-0298 ..	PARALLEL KEY W. ROUND ENDS 10X8X30 MM	515
315742-0114 ..	COLLAR, 18/34, H=13	519
315742-0119 ..	COLLAR, 25/42, H=15	519, 551, 553, 555
315750-0105 ..	RETAIN. RING, 8	621, 623, 647, 723
315750-0107 ..	RETAIN. RING, 10	323, 325, 327, 329, 717
315750-0109 ..	RETAIN. RING, 12	607
315750-0112 ..	RETAIN. RING, 15	607
315750-0119 ..	RETAIN. RING, 25	309
315750-0122 ..	RETAIN. RING, 30	427
315750-0127 ..	RETAIN. RING, 40	427
315750-0131 ..	RETAIN. RING, 50	471
315751-0103 ..	RETAIN. RING, 6	635, 637
315751-0109 ..	RETAIN. RING, 12	735, 737
315751-0112 ..	RETAIN. RING, 15	733
315752-0123 ..	RETAIN. RING, 32	609, 611, 613, 615, 617, 619, 643, 645
315752-0136 ..	RETAIN. RING, 62	379, 381, 427
315752-0149 ..	RETAINING RING FOR HOLE, 110X4 MM	541, 543
315753-0122 ..	RETAIN. RING, 30	713
315754-0107 ..	LOCKING WAE 5	725
315754-0110 ..	LOCKING WAE 9	725
315754-0113 ..	LOCKING WAE 15	81, 83, 85
315755-0105 ..	LOCKING WASHER 3,2	59, 739
315755-0107 ..	LOCKING WASHER 5	531, 533
315755-0108 ..	LOCKING WASHER 6	681, 683, 711, 713

Part No	Description	Page No
315755-0109 ..	LOCKING WASHER 7	313
315755-0111 ..	LOCKING WASHER 10	657
315755-0113 ..	LOCKING WASHER 15	435, 451
315755-0801 ..	LOCKING WASHER 8	609, 611, 613, 615, 617, 619, 643, 645
316810-0106 ..	PIPE CLIP FOR TUBE D=8 MM	345, 347, 349, 351, 357, 359, 363, 365, 419, 421, 437, 439, 447, 449, 453, 455, 457, 459, 493, 495, 673, 675, 677
318201-0076 ..	ROLLER CHAIN, SINGLE 3/8 -76	479
318207-0168 ..	ROLLER CHAIN, SINGLE 6MM-168	609, 611, 613, 615, 617, 619, 643, 645
318212-0006 ..	ROLLER CHAIN, SINGLE 1/2 -6	503, 505, 507, 509
318212-0008 ..	ROLLER CHAIN, SINGLE 1/2 -8,SS	503, 505, 507, 509
318212-0066 ..	ROLLER CHAIN, SINGLE 1/2 -66,SS	465, 467
318212-0074 ..	ROLLER CHAIN, SINGLE 1/2 -74,SS	445
318212-0119 ..	ROLLER CHAIN, SINGLE 1/2 -119,SS	441, 461, 463
318212-0150 ..	ROLLER CHAIN, SINGLE 1/2 -150,SS	499, 501
318219-0187 ..	CONNECTING LINK SINGLE 1/2",SS	499, 501
318219-0487 ..	CONNECTING LINK, DUPLEX 1/2", SS	515
318242-0034 ..	ROLLER CHAIN DUPLEX 1/2"-34,SS	445, 465, 467
318242-0036 ..	ROLLER CHAIN DUPLEX 1/2"-36,SS	511
318242-0108 ..	ROLLER CHAIN, DUPLEX 1/2"-108, SS	515
318301-0130 ..	LIFTING EYE BOLT, TYPE, LT, M30	587
318800-0102 ..	HANDLES,SPHERICAL KNOB,INT.THRE.,D.20-M5	741
318800-0103 ..	HANDLES,SPHERICAL KNOB,INT.THRE.,D.25-M6	609, 611, 613, 615, 617, 619, 643, 645
318800-0104 ..	HANDLE,SPHERICAL KNOB,INT.THRE.,D.30-M8	123, 659, 661, 723
318800-0105 ..	HANDLE,SPHERICAL KNOB,INT.THRE.,D.35-M10	119
318800-0106 ..	HANDLE,SPHERICAL KNOB,INT.THRE,D.40-M10	657
318800-0107 ..	HANDLE,SPHERICAL KNOB,INT.THRE.,D45-M10	687, 689
319030-0125 ..	DISC SPRING, CONICAL 12,5X6,2X0,5 MM	673, 675, 677
321101-0143 ..	FLANGE BUS 8F7X8	411, 519
321101-0163 ..	FLANGE BUS 10F7X10	373, 377
321101-0172 ..	FLANGE BUS 12F7X10	479
321101-0173 ..	FLANGE BUS 12F7X12	237, 719, 721
321101-0223 ..	BEAR.BUSHING WITH FLANGE, 18/25X16 MM	519
321101-0232 ..	FLANGE BUS 20F7X16	475, 477
321101-0233 ..	FLANGE BUS 20F7X20	237
321101-0252 ..	FLANGE BUS 25F7X16	441, 461, 463, 499, 501, 515
321101-0253 ..	FLANGE BUS 25F7X25	499, 501, 515
321101-0272 ..	FLANGE BUS 30F7X20	445, 465, 467, 499, 501
321101-0282 ..	FLANGE BUS 35F7X20	515
321101-0283 ..	FLANGE BUS 35F7X35	499, 501
321105-0234 ..	BUSHING 20F7X28X30	379, 381, 663
321111-0095 ..	BEAR.BUSHING WITH FLANGE, 8/12X6 MM	313
321111-0135 ..	BEAR.BUSHING WITH FLANGE, 10/16X10 MM	609, 611, 613, 615, 617, 619, 643, 645
321111-0157 ..	BEAR.BUSHING WITH FLANGE, 12/18X8 MM	657
321111-0159 ..	BEAR.BUSHING WITH FLANGE, 12/18X12 MM	55, 57
321111-0163 ..	BEAR.BUSHING WITH FLANGE, 12/18X20 MM	403, 405, 407, 409
321111-0185 ..	BEAR.BUSHING WITH FLANGE, 14/20X14 MM	557, 559, 561, 563, 565, 567
321111-0212 ..	BEAR.BUSHING WITH FLANGE, 15/21X15 MM	609, 611, 613, 615, 617, 619, 643, 645
321111-0240 ..	BEAR.BUSHING WITH FLANGE, 16/22X12 MM	309
321116-0127 ..	BEAR. BUSH. WITHOUT FL, 10X14X10	437, 439, 453, 455, 457, 459
321116-0128 ..	BEAR. BUSH. WITHOUT FL, 10X14X16	437, 439, 453, 455, 457, 459, 499, 501
321116-0163 ..	BEAR. BUSH. WITHOUT FL, 12X18X20	403, 405, 407, 409
321116-0179 ..	BEAR. BUSH. WITHOUT FL, 14X18X14	673, 675, 677
321120-0100 ..	BEARING BUSHING WITHOUT FLANGE,8/10X12	621, 623, 635, 637, 647
321120-0101 ..	BEARING BUSHING WITHOUT FLANGE,6/8X6	635, 637, 741
321120-0103 ..	BEARING BUSHING WITHOUT FLANGE,8/10X8	739
321120-0104 ..	BEARING BUSHING WITHOUT FLANGE,10/12X10	717, 723, 739
321120-0109 ..	BEARING BUSHING WITHOUT FLANGE,12/14X10	621, 623, 647
321120-0110 ..	BEARING BUSHING WITHOUT FL, 12X14X12 MM	717
321120-0113 ..	BEARING BUSHING WITHOUT FLANGE,12/14X25	735, 737
321120-0122 ..	BEARING BUSHING WITHOUT FL, 15X17X15 MM	441, 461, 463, 547, 549, 625, 627, 629, 631, 633, 649, 651
321120-0160 ..	BEARING BUSHING WITHOUT FLANGE,25/28X30	547, 549
321120-0183 ..	BEARING BUSHING WITHOUT FL, 35X39X20 MM	547, 549
321127-0100 ..	BEARING BUSHING WITHOUT FL, 10X13X10 MM	727
321129-0104 ..	THRUST WASHER, 12/24X1,5	657, 735, 737
321300-0094 ..	BALL BEARING, 4X13X5 MM	681, 683
321306-0104 ..	BALL BEARING, 20X42X12 MM	547, 549
321306-0107 ..	BALL BEARING, 35X62X14 MM	427, 545
321306-0110 ..	BALL BEARING, 50X80X16 MM	297, 473
321306-0114 ..	BALL BEARING, 70X110X20 MM	541, 543
321308-0101 ..	BALL BEARING, 1 SEAL, 12X28X8 MM	609, 611, 613, 615, 617, 619, 643, 645
321308-0106 ..	BALL BEARING, 1 SEAL, 30X55X13 MM	519
321308-0201 ..	BALL BEARING, 2 SEALS, 12X28X8 MM	607
321308-0202 ..	BALL BEARING, 2 SEALS, 15X32X9 MM	607, 609, 611, 613, 615, 617, 619, 643, 645, 733
321308-0205 ..	BALL BEARING, 2 SEALS, 25X47X12 MM	309
321309-0100 ..	BALL BEARING, 10X30X9 MM	323, 325, 327, 329
321309-0106 ..	BALL BEARING, 30X62X16 MM	427, 541, 543
321309-0108 ..	BALL BEARING, 40X80X18 MM	297
321309-0110 ..	BALL BEARING, 50X90X20 MM	471
321309-0114 ..	BALL BEARING, 70X125X24 MM	301, 303
321312-0100 ..	BALL BEARING, 1 SEAL, 10X30X9 MM	323, 325, 327, 329
321312-0101 ..	BALL BEARING, 1 SEAL, 12X32X10 MM	323, 325, 327, 329
321313-0100 ..	BALL BEARING, 2 SEALS, 10X30X9 MM	713
321313-0102 ..	BALL BEARING, 2 SEALS, 15X35X11 MM	641, 679

Part No	Description	Page No
321316-0108 ..	BALL BEARING, 1 SEAL, 40X90X23 MM	299
321316-0200 ..	BALL BEARING, 2 SEALS, 10X35X11 MM	609, 611, 613, 615, 617, 619, 643, 645, 685
321316-0201 ..	BALL BEARING, 2 SEALS, 12X37X12 MM	607
321361-0105 ..	TAPER ROLLER BEARING, 25X52X16,25 MM	541, 543
321364-0106 ..	TAPER ROLLER BEARING, 30X72X19 MM	541, 543
321576-0360 ..	BEARING ROLLER, 2 SEALS, 30X62X29 MM	305, 307
321580-0165 ..	CAM ROLLER, 12X30X40 MM	309
321582-0212 ..	CAM ROLLER, 2 SEALS, 16X35X52 MM	475, 477
341001-0148 ..	COPPER TUBE	263, 265
341001-0192 ..	COPPER TUBE	263, 265
341001-0228 ..	COPPER TUBE	199, 201, 203, 215, 217, 263, 265
342701-0205 ..	BUSHING,INT./EXT.G-THREAD G1/2"-G1/4"	211, 243, 263, 265
342701-0206 ..	BUSHING,INT./EXT.G-THREAD G1/2"-G3/8"	211, 267, 269
342701-0208 ..	BUSHING, INT/EXT. G-THREAD NO. 3/4-1/4	251
342703-0103 ..	NUT, PIPES & CONNECTORS,NUT M-8 FE	209
342703-0208 ..	NUT, PIPES & CONNECTORS,NUT M-8 SS	355
342705-0103 ..	ACCESSORIES, FERRULE 8-LFZB	209
342706-0114 ..	ACCESSORIES, INSERT SLEEVE 4 MM	441, 445, 461, 463, 465, 467, 479, 493, 495
342706-0130 ..	ACCESSORIES, INSERT SLEEVE 6 MM	129, 131, 425, 479, 709
342710-0115 ..	REDUCTION RBM 16/8	263, 265
342711-0115 ..	ACCESSORIES, PLUG PL-15 AND 16	263, 265
342712-0205 ..	BUSHING, INT/EXT. G-THREAD NO. 1/2X1/4	251
342713-0209 ..	PLUG, EXT THREAD HEX SOCKET 8638-00-180	193, 345, 347, 349, 351, 357, 359, 363, 365
342713-0210 ..	PLUG, EXT THREAD HEX SOCKET 8638-00-140	215, 217, 225, 227, 229, 231, 233, 235, 267, 269, 673, 675, 677
342713-0211 ..	PLUG, EXT THREAD HEX SOCKET 8638-00-380	267, 269
342713-0213 ..	PLUG, EXT THREAD HEX SOCKET 8638-00-120	63, 263, 265
342713-0311 ..	PLUG, EXT. THREAD HEX. SOCKET. BPS38	253
342714-0202 ..	REDUCTION KOR 10/6-LFZB	253
342715-0102 ..	BLIND PLUG 6 MM	267, 269
342715-0103 ..	BLIND PLUG 8 MM	267, 269
342716-0203 ..	REDUCER 6-8	267, 269
342716-0209 ..	REDUCER 8-12	267, 269
342716-0210 ..	REDUCER 6-12	267, 269
342716-0211 ..	REDUCER 12-14	267, 269
342720-0102 ..	CONN. STR. GA-6-G1/8	535
342720-0103 ..	CONN. STR. GA-8-G1/8	263, 265
342720-0104 ..	CONN. STR. GA-8-G1/4	541, 543
342720-0114 ..	CONN. STR. GA-15-G1/2	211, 215, 217, 223, 225, 227, 229, 231, 233, 235, 263, 265
342720-0115 ..	CONN. STR. GA-16-G1/2	425
342721-0108 ..	PIPE COUPLGA10-LRFZB REPBY 0342752-0104	251, 253
342721-0114 ..	PIPE COUPLGA15-LRFZB REPBY 0342752-0114	251
342722-0202 ..	PIPE COUPLING 1/8" D=6MM	193, 267, 269
342722-0203 ..	STRAIGHT COUPLING	267, 269
342722-0204 ..	PIPE COUPLING	193
342722-0205 ..	STRAIGHT COUPLING D=8-G1/4"	673, 675, 677
342722-0206 ..	STRAIGHT COUPLING D=8-G3/8"	267, 269
342723-0109 ..	CONN. STR. PIPE GI-12-G3/8	263, 265
342723-0114 ..	CONN. STR. PIPE GI-15-G1/2	197
342730-0104 ..	CONN. ELBOW WA-8-1/4	541, 543
342730-0114 ..	CONN. ELBOW WA-15-1/2	263, 265
342731-0102 ..	CONN. ELBOW WE 6-LRFZB	471
342731-0108 ..	CONN. ELBOW WE 10-LRFZB	253
342731-0114 ..	CONN. ELBOW WE 15-LRFZB	209, 251
342732-0099 ..	ELBOW PIPE JOINT, EXT.THREAD, D=4MM-M5	531, 533
342732-0102 ..	ELBOW PIPE JOINT, EXT.THREAD, D=6MM-G1/8	199, 201, 203, 493, 495, 551, 553, 555
342732-0103 ..	ELBOW PIPE JOINT, EXT.THREAD, D=6MM-G1/4	207, 267, 269
342732-0104 ..	ELBOW PIPE JOINT, EXT.THREAD, D=8MM-G1/4	267, 269
342732-0109 ..	ELBOW PIPE JOINT, EXT.THREAD, D=1MM-G1/4	267, 269
342733-0114 ..	CONN. ELBOW WI-15-G1/2	263, 265, 267, 269
342735-0103 ..	ELBOW PIPE JOINT	267, 269
342736-0114 ..	CONN. ELBOW W-15	215, 217, 263, 265
342737-0212 ..	CONN. ELBOW W-10 LRFR	77
342740-0114 ..	CONN. T-PIPE TA-15-G1/2	263, 265
342741-0108 ..	CONN. T-PIPE TA-10-R1/4	251
342748-0102 ..	T-CONNECTION	267, 269
342748-0103 ..	T-CONNECTION	267, 269
342748-0110 ..	T-CONNECTION	267, 269
342750-0114 ..	CONN. L-PIPE, EXT. LA-15-G1/2	263, 265
342764-0108 ..	CONN. ELBOW BULKHEAD LWSV10-LFZB	253
342764-0114 ..	CONN. ELBOW BULKHEAD LWSV15-LFZB	253
342767-0114 ..	CONN. BULKHEAD G1/2	211
342768-0103 ..	BULKHEAD CONNECTOR, 8 MM	267, 269
342770-0105 ..	STRAIGHT COUPLING INT, D=6 MM - G1/8	267, 269
342790-0102 ..	CONN. PRESS. GAUGE MAV6-LRFZB	253
342790-0202 ..	CONN. PRESS. GAUGE MAV6-S/R3/8FZB	425
342797-0121 ..	CONN. BANJO, RINGPIECE 6-1/8	63, 65, 101, 103, 717, 719, 721
342797-0122 ..	CONN. BANJO, RINGPIECE 6-1/4	25, 27, 39, 55, 57, 71, 73, 107, 109, 115, 119, 123, 707, 719, 721
342803-0103 ..	UNION NUT, RD 60-6 (SMS 38)	133
342803-0104 ..	UNION NUT, RD 70-6 (SMS 51)	77
342803-0106 ..	UNION NUT, RD 98-6 (SMS 76)	77
342812-0203 ..	FERRULE, SMS 1145, 2343, NO.190996	133
342903-0111 ..	NUT WITH SPRING 6/4-M10X1	157
342920-0113 ..	STRAIGHT COUPLING,EXT.THREADED 6/4-R1/8"	199, 201, 203, 323, 325, 327, 329, 433, 469

Machine Type Group Description Page No

Part No	Description	Page No
342920-0121 ..	STRAIGHT COUPLING,EXT.THREADED 8/6-R1/8"	199, 201, 203, 437, 439, 453, 455, 457, 459, 527, 529
342921-0113 ..	STRAIGHT COUPLING,EXT.THREADED 6/4-G1/8"	157, 717
342921-0114 ..	STRAIGHT COUPLING,EXT.THREADED 6/4-G1/4"	479
342921-0121 ..	STRAIGHT COUPLING,EXT.THREADED 8/6-G1/8"	481, 483, 489, 491
342923-0114 ..	STRAIGHT COUPL.,INT.THREADED 6/4-G1/4"	157, 215, 217, 225, 227, 229, 231, 233, 235
342923-0122 ..	STRAIGHT COUPL.,INT.THREADED 8/6-G1/4"	215, 217
342929-0121 ..	STRAIGHT COUPLING,SOLDER 8/6-8	199, 201, 203, 225, 227, 229, 231, 233, 235, 263, 265
342930-0113 ..	ELBOW 90 COUPL.,EXT.THREAD 6/4-R1/8"	263, 265, 469
342930-0121 ..	ELBOW 90 COUPL.,EXT.THREAD 8/6-R1/8"	453, 455, 457, 459
342930-0122 ..	ELBOW 90 COUPL.,EXT.THREAD 8/6-R1/4"	251
342931-0113 ..	ELBOW 90 COUPL.,EXT.THREAD 6/4-G1/8"	249
342933-0122 ..	ELBOW 90 COUPL.,INT.THREAD 8/6-G1/4"	493, 495
342946-0112 ..	T-COUPLING,UNION 6/4	323, 325, 327, 329, 425, 667, 669
342946-0122 ..	T-COUPLING,UNION 8/6	431
342950-0114 ..	L-COUPLING,EXT.THREAD 6/4-R1/4"	157
342960-0112 ..	BULKHEAD COUPLING 6/4	199, 201, 203, 225, 227, 229, 231, 233, 235, 479
342960-0122 ..	BULKHEAD COUPLING 8/6	199, 201, 203
342980-0113 ..	BANJO-CONNECTION,RING 6/4-G1/8"	97, 323, 325, 327, 329, 607, 609, 611, 613, 615, 617, 619, 643, 645, 673, 675, 677
342980-0122 ..	BANJO-CONNECTION,RING 8/6-G1/4"	215, 217, 355
342980-0303 ..	BANJO-HOLLOW BOLT COUPL,EXT.THR.01-G1/8"	63, 65, 77, 101, 103, 323, 325, 327, 329, 607, 609, 611, 613, 615, 617, 619, 643, 645, 673, 675, 677
342980-0304 ..	BANJO-HOLLOW BOLT COUPL,EXT.THR.01-G1/4"	25, 27, 39, 71, 73, 109, 115, 123, 355, 707, 719, 721
342980-0314 ..	BANJO-HOLLOW BOLT COUPL,EXT.THR.02-G1/4"	107, 115
342991-0100 ..	HOSE CLIP,WORM DRIVE TYPE 10-13	249
342991-0101 ..	HOSE CLIP,WORM DRIVE TYPE (13)-16	171, 195, 209, 309, 419, 421, 447, 449
342991-0102 ..	HOSE CLIP,WORM DRIVE TYPE (16)-19	215, 217
342991-0103 ..	HOSE CLIP,WORM DRIVE TYPE (19)-23	199, 201, 203, 717, 719, 721
342991-0104 ..	HOSE CLIP,WORM DRIVE TYPE (23)-27	21, 167, 225, 227, 229, 231, 233, 235
342991-0106 ..	HOSE CLIP,WORM DRIVE TYPE (30)-36	177, 183, 185
342991-0108 ..	HOSE CLIP 38-50MMRFR	273
342991-0109 ..	HOSE CLIP,WORM DRIVE TYPE (48)-50	481, 483, 489, 491
342991-0111 ..	HOSE CLIP,WORM DRIVE TYPE (63)-73	433
342991-0112 ..	HOSE CLIP,WORM DRIVE TYPE (73)-83	419, 421, 447, 449
342991-0115 ..	HOSE CLIP,WORM DRIVE TYPE (110)-136	195
344502-0026 ..	GREASE NIPPLE STRAIGHT R1/8 CON.	301, 303
344502-0046 ..	GREASE NIPPLE 45§ R1/8 CON.	299
344502-0066 ..	GREASE NIPPLE 90§ R1/8 CON.	297, 301, 303
346800-0109 ..	SILENCER FILTER R1/8"	77
351172-0102 ..	CABLE AWM 1X 0,75 MM2 DARK-BLUE	585

Part No	Description	Page No
352100-0100 ..	CABLE GLANR.15,2-7,5	197
352100-0106 ..	CABLE GLANR.18,6-10,5	39, 55, 57, 197, 717, 719, 721
352100-0108 ..	CABLE GLANR.20,4-12	251
352100-0115 ..	CABLE GLANR.28,3-15,5	299
352100-0126 ..	CABLE GLANR.47-32,5	153
352100-0127 ..	CABLE GLANR.47-34,5	193
352100-0227 ..	CABLE GLANR.31-34,5	153
352101-0103 ..	LEAD-IN, PR18,6/PG11, E-1457518	191, 199, 201, 203, 249, 663, 667, 669, 741
352101-0105 ..	LEAD-IN, PR22,5/PG16, E-1457522	667, 669
352101-0107 ..	LEAD-IN, PR37/PG29, E-1457537	709
352103-0100 ..	CABLE GLAND, STR 9, PR15,2/PG9	135, 263, 265, 419, 421, 447, 449, 667, 669, 705
352103-0101 ..	CABLE GLAND, ST 9, PR15,2/PG9	135, 197, 419, 421, 447, 449, 671
352103-0105 ..	CABLE GLAND, STR 11, PR 18,6/PG11	199, 201, 203
352103-0106 ..	CABLE GLAND, ST 11, PR18,6/PG11	205, 273, 283, 481, 483, 489, 491, 671
352103-0108 ..	CABLE GLAND, ST 13,5 , PR20,4/PG13,5	673, 675, 677
352103-0110 ..	CABLE GLAND, STR 16, PR22,5/PG16	671
352103-0111 ..	CABLE GLAND, ST 16, PR22,5/PG16	63, 135, 481, 483, 489, 491, 667, 669
352103-0115 ..	CABLE GLAND, STR 21, PR28,3/PG21	671
352103-0116 ..	CABLE GLAND, ST 21, PR28,3/PG21	199, 201, 203, 205, 671
352103-0120 ..	CABLE GLAND, STR 29, PR37,0/PG29	205
352103-0121 ..	CABLE GLAND, ST 29, PR37,0/PG29	199, 201, 203
352110-0099 ..	CABLE CLIPS, D=3-5 MM	667, 669, 673, 675, 677
352110-0101 ..	CLIP, TK 7-10	199, 201, 203
352113-0101 ..	CLIP STRIP BLACK 92X2,5MM	305, 355, 419, 421, 447, 449, 493, 495, 621, 623, 647
352113-0102 ..	CLIP-STRIP, BLACK 188X4,8 MM	419, 421, 447, 449
352113-0204 ..	ANCHOR TM3S25-M	419, 421, 447, 449, 667, 669
352135-0106 ..	SPIRAL CONDUIT DI=16 MM	135, 197, 263, 265, 267, 269, 271, 273, 283, 667, 669, 741
352135-0109 ..	HOSE .022	273, 667, 669
352135-0116 ..	FLEXIBLE CONDUIT DIA. 40	273, 481, 483, 489, 491
352135-0201 ..	CLIP, 12 MM, 913.012	199, 201, 203, 237
352135-0202 ..	CLIP, 16 MM, 913.016	199, 201, 203
352136-0113 ..	GLAND FITTING PR18,6/PG11 DI=12MM	41, 55, 57, 69, 135, 205, 253, 259, 263, 265, 271, 273, 667, 669, 701, 703, 705, 707, 717, 719, 721
352136-0127 ..	GLAND FITTING PR 18,6	39, 63, 135, 197, 237, 263, 265, 267, 269, 271, 273, 275, 283, 667, 669
352136-0128 ..	GLAND FITTING	251
352136-0129 ..	GLAND FITTING PR22,5/PG16 DI=16MM	163, 215, 217, 667, 669, 705
352136-0142 ..	GLAND FITTING	205, 273
352136-0143 ..	GLAND FITTING	273, 299, 667, 669
352136-0167 ..	GLAND FITTING	173, 175, 273
352137-0113 ..	COND.FITTING PR 18,6 DI=12MM	135, 271, 667, 669
352137-0127 ..	COND.FITTING PR 18,6 DI=16MM	271, 667, 669, 741
352137-0129 ..	CABLE GLAND;PR22,5(PG16)	271

Part No	Description	Page No
353001-0119 ..	END SLEEVE H 1.0/14 YELLOW	585
353021-0212 ..	FEED THROUGH TERMINAL, 10200.0	205, 705
353021-0213 ..	FEED THROUGH TERMINAL, 10201.0	271, 671
353021-0217 ..	FEED THROUGH TERMINAL, 10201.8	271
353021-0302 ..	TERMINALS,TRIPLE-LEVEL, DLD 2,5/35 PA	205, 671
353024-0204 ..	EARTH TERMINAL WPE 2,5	705
353024-0205 ..	EARTH TERMINAL, 1010.1	205, 271, 671, 705
353031-0201 ..	END BRACKET EW35	205, 271
353032-0004 ..	END PLATE WAP 2,5-10 BEIGE	205
353032-0005 ..	END PLATE WAP 2,5-10 BLUE	271
353032-0009 ..	END PLATE, WAP 16/35	205
353032-0302 ..	END PLATE WAP	205, 671
353034-0031 ..	BRIDGE CONNECTOR, WQV 4/10, 10520.6	271
353034-0401 ..	BRIDGE CONNECTOR Q2, 13125.0	205, 671
353034-0404 ..	BRIDGE CONNECTOR Q10, 13131.0	205, 671
353042-0004 ..	RAIL TS 35/7,5	205
353042-0005 ..	RAIL TS 35/7.5	671, 705
353101-0130 ..	CABLE SHOE 1,5-2,5MM2 BLUE	717
353101-0132 ..	CABLE SHOE, RING ø5,3MM	673, 675, 677
353101-0134 ..	CABLE SHOE	719, 721
353104-0129 ..	CABLE SHOEYAV 025 M 35*	39
353104-0130 ..	CABLE SHOEYAV 025 M 4*	55, 57, 719, 721
353104-0168 ..	CABLE SHO YAV 16 M6*	481, 483, 489, 491
353104-0182 ..	CABLE SHOE YAV 35 M6*	481, 483, 489, 491
353240-0004 ..	NORMAL WITHOUT INSERT, PG 16	205
353245-0005 ..	GLAND, EXTENDED WITH INSERT, PG16/PR 22,	423
353249-0027 ..	INSERT, MULTI HOLE, E153M3X7	205
353249-0306 ..	SEALING PIN, 7X25	205
359011-0202 ..	SIGN BOARD(GROUND)	137
359011-0800 ..	MARKING PLATES BSFW 51-100	137
359011-0807 ..	MARKING PLATES 5-FW 1-50	205, 271, 671
359011-0808 ..	MARKING PLATES 5-FW 51-100	205, 671
359011-0809 ..	MARKING PLATES 5-FW 101-150	205
359011-0819 ..	MARKING PLATES 5-GW (EARTH)	671
359011-0821 ..	SET OF SIGNS 6-FW 1-50	705
359020-0202 ..	SHEET OF SELF ADHESIVE DIG.& LETT. 4 MM	673, 675, 677
359240-0100 ..	SIGN HOLDER FOR 359240-0001	271
359241-0127 ..	SIGN, LIGHT, JAW SYSTEM & MACHINE	271
359241-0158 ..	SIGN "LEVEL HYDR.OIL TANK"	271
359241-0269 ..	SIGN, SMALL-LARGE REEL, REDUCT.OF WASTE	667, 669
359301-0051 ..	SIGN"STRIP SPLICE"	707
359301-0100 ..	SIGN "SPLICING"	667, 669
359301-0110 ..	SIGN "SHORT STOP"	667, 669
359301-0125 ..	SIGN "LUBRICATION"	271
359301-0335 ..	SIGN T	667, 669
359705-0001 ..	WARNING SIGN ISO, ENTAGLEMENT	609, 611, 613, 615, 617, 619, 643, 645
359705-0002 ..	WARNING SIGN ISO, ENTAGLEMENT	571
359705-0003 ..	WARNING SIGN ISO, DANGEROUS CHEMICALS	21, 41, 71, 73, 159
359705-0005 ..	WARNING SIGN ISO, MOVING PART	665
359710-0002 ..	WARNING SIGN ISO, HOT SURFACE	481, 483, 489, 491
434020-0000 ..	BEARING CONSOLE	403, 405, 407, 409
434021-0000 ..	SCREW	403, 405, 407, 409
434062-0000 ..	SHAFT	307
434073-0000 ..	NUT	403, 405, 407, 409
434098-0000 ..	STRUT	307
434101-0000 ..	WASHER	25, 27
434142-0000 ..	PISTON	315
434143-0000 ..	END SECTION	315
434168-0000 ..	PIPE	215, 217
434171-0000 ..	PIPE	215, 217
434222-0000 ..	FILLER TUBE	45
434270-0000 ..	RAILING	91
434273-0000 ..	STRUT	91
434274-0000 ..	PIPE	105
434309-0000 ..	FASTENING PLATE	403, 405, 407, 409
434320-0000 ..	AXLE PIN	335, 337, 339
434321-0000 ..	CURVE ROLLER	335, 337, 339
434379-0000 ..	TIE ROD	299
434380-0000 ..	SHAFT	299
434387-0000 ..	BRACKET	323, 325, 327, 329
434388-0000 ..	SHAFT	323, 325, 327, 329
434469-0000 ..	HEATING PIPE	111
434490-0001 ..	SHAFT	13
434490-0002 ..	SHAFT	13
434490-0003 ..	SHAFT	13
434493-0000 ..	FORMING RING	31, 33, 35
434499-0000 ..	FORK	25, 27
434500-0000 ..	SHAFT	25, 27
434504-0000 ..	SHAFT	25, 27
434507-0000 ..	SHAFT	25, 27
434659-0000 ..	CRANK BRACKET	255
434661-0000 ..	BUSHING	255
434664-0000 ..	BRACKET	255
434665-0000 ..	HOOD	45

Part No	Description	Page No
434668-0400 ..	DRIVE UNIT	289, 291, 293
434669-0400 ..	IMPULSE TRANSMITTER	289, 291, 293
434670-0600 ..	LINK SYSTEM	289, 291, 293
434707-0300 ..	HYDRAULIC SYSTEM	145, 147
434708-0000 ..	PIPE	253
434709-0000 ..	PIPE	253
434710-0000 ..	PIPE	251
434711-0000 ..	PIPE	253
434712-0001 ..	PIPE	253
434712-0002 ..	PIPE	253
434713-0000 ..	PIPE	253
434714-0000 ..	PIPE	251
434715-0000 ..	PIPE	253
434716-0000 ..	PIPE	253
434717-0000 ..	PIPE	251
434718-0000 ..	PIPE	251
434719-0000 ..	PIPE	251
434747-0000 ..	BOW CLAMP	621, 623, 647
434749-0000 ..	FLOAT	51, 53
434751-0000 ..	ARM	51, 53
434752-0000 ..	LINK	51, 53
434787-0000 ..	END SECTION	625, 627, 629, 631, 633
434841-0000 ..	GAUGE	587
434858-0000 ..	CUSHION	173, 175
434919-0000 ..	COLUMN LEFT	199, 201, 203
434920-0000 ..	COLUMN RIGHT	199, 201, 203
434972-0000 ..	AIR GUIDE	119
434973-0000 ..	AIR DISTRIBUTOR	119
434974-0000 ..	AIR DISTRIBUTOR	119
434976-0000 ..	STOP	119
436302-0000 ..	ROLLER	13, 15, 17, 19
436342-0000 ..	SPACER	25, 27
436355-0000 ..	REAMED BOLT	13, 15, 17, 19
436356-0000 ..	BUSHING	13, 15, 17, 19
436357-0000 ..	NUT	13, 15, 17, 19
436377-0000 ..	JOINT	15, 17
436378-0000 ..	SHAFT	15, 17
436395-0000 ..	CANTILEVER	13, 15, 17, 19
436403-0000 ..	WASHER	13, 15, 17, 19
436404-0000 ..	BOW CLAMP	15, 17
436405-0000 ..	FORK	13, 15, 17, 19
436482-0000 ..	BEARING BRACKET	299
436483-0000 ..	SHAFT	299
436484-0000 ..	BRACKET	299
436485-0000 ..	LACE	299
436486-0000 ..	LID	299
436487-0000 ..	SPACER	299
436488-0000 ..	WASHER	299
436502-0000 ..	CURVE	403, 405, 407, 409
436512-0000 ..	PIPE	575
436556-0000 ..	CURVE ROLLER	335, 337
436580-0000 ..	COVERING PLATE	313
436648-0000 ..	CANTILEVER	31, 33, 35
436671-0000 ..	ECCENTRIC SHAFT	323, 325, 327, 329
436672-0000 ..	LINK	313
436740-0000 ..	LINK	323, 325, 327, 329
436776-0000 ..	MACHINE BODY	199, 201, 203
436778-0000 ..	PIPE	77
436779-0000 ..	PRESSURE GAUGE TUBE	77
436781-0000 ..	GASKET	77
436927-0000 ..	NUT	621, 623, 647
436991-0000 ..	BEARING	659, 661
440023-0000 ..	PROTECTION PLATE	199, 201, 203
440024-0000 ..	PROTECTION PLATE	199, 201, 203
440025-0000 ..	PROTECTION PLATE	199, 201, 203
440026-0000 ..	CANTILEVER	199, 201, 203
440043-0000 ..	END PIECE	345, 347, 349, 351, 369, 371
440068-0000 ..	ROLL	31, 33, 35
440077-0000 ..	COVERING PLATE	199, 201, 203
440098-0300 ..	CRANK BRACKET	145, 147
440132-0200 ..	START-UP KIT	603, 605
440133-0400 ..	MACHINE BODY	603, 605
440135-0100 ..	BENDING ROLLER	639, 673, 675, 677
440136-0001 ..	ROLL	641
440136-0002 ..	ROLL	679
440136-0003 ..	ROLL	679
440136-0004 ..	ROLL	679
440136-0006 ..	ROLL	679
440136-0007 ..	ROLL	679
440136-0008 ..	ROLL	679
440137-0001 ..	SHAFT	641
440137-0002 ..	SHAFT	679
440138-0000 ..	LOCKING CIRCLIP	641, 679
440157-0000 ..	MAGNET BRACKET	639

Part No	Description	Page No
440184-0100 ..	BENDING ROLLER	673, 675, 677
440185-0000 ..	HOLDER	663
440186-0000 ..	HOLDER	663
440192-0000 ..	BRACKET	663
440193-0000 ..	HOLDER	663
440194-0000 ..	WASHER	679
440195-0000 ..	JOINT	663
440196-0000 ..	HANGER	663
440197-0000 ..	SHAFT	663
440198-0000 ..	WASHER	663
440199-0000 ..	PROTECTION PLATE	663
440200-0000 ..	PROTECTION PLATE	663
440202-0000 ..	PROTECTION PLATE	663
440203-0000 ..	RULER	199, 201, 203
440204-0000 ..	RULER	199, 201, 203
440205-0000 ..	RULER	199, 201, 203
440206-0000 ..	RULER	199, 201, 203
440210-0200 ..	ROLL	603, 605
440211-0000 ..	GUIDE	665
440212-0000 ..	LUG	665
440213-0000 ..	LUG	665
440214-0000 ..	HOLDER	665
440215-0000 ..	HOLDER	665
440217-0000 ..	BUSHING	665
440247-0000 ..	HOLDER	657
440248-0000 ..	HOLDER	657
440249-0000 ..	SLIDE BELT	657
440250-0000 ..	AXLE PIN	657
440251-0000 ..	GLASS PANE	657
440252-0000 ..	SLEEVE	663
440253-0000 ..	SLEEVE	663
440256-0000 ..	ARM	667, 669
440259-0000 ..	RETAINING RING	653, 655
440260-0000 ..	SHAFT	653, 655
440271-0000 ..	SCREW	663
440282-0004 ..	SPACER	609, 611, 613, 615, 617, 619
440285-0100 ..	PAPER REEL HOLDER	603, 605
440286-0300 ..	INK UNIT NSS	609, 611, 613, 615, 617, 619
440287-0000 ..	COVER	621, 623
440349-0000 ..	FASTENING IRON	197
440384-0600 ..	PLATFORM	145, 147
440385-0000 ..	CANTILEVER	257
440386-0000 ..	PLATFORM REAR	257
440389-0000 ..	HATCH	257
440415-0200 ..	TRANSFORMER	145, 147
440424-0000 ..	DRUM	193
440474-0100 ..	TUBE FLUSHING DEVICE	145, 147
440482-0000 ..	PROTECTION	279
440491-0000 ..	NIPPLE	357, 359, 363, 365
440507-0000 ..	FASTENING PLATE	403, 405, 407, 409
440510-0000 ..	COUNTER CAM	323, 325
440511-0000 ..	COUNTER CAM	327, 329
440537-0500 ..	MACHINE BODY	145, 147
440565-0000 ..	CYLINDER	357, 359, 363, 365
440588-0200 ..	CRANK	289, 291, 293
440600-0000 ..	ROTOR	179, 181, 187, 189, 213, 239
440604-0001 ..	PIPE	179, 181, 189, 239
440605-0001 ..	PIPE	179, 187, 189, 213
440630-0200 ..	AP-VALVE	77
440631-0000 ..	VALVE BODY 51	79
440632-0000 ..	CYLINDER HOUSING	81, 83
440633-0000 ..	CYLINDER HOUSING	85
440634-0000 ..	HOUSE	79
440635-0000 ..	PISTON ROD	83
440636-0000 ..	PISTON ROD	85
440637-0000 ..	PISTON ROD	81
440638-0000 ..	PISTON	81, 83
440646-0000 ..	PISTON	85
440647-0000 ..	SLEEVE	77
440648-0000 ..	SEALING WASHER	83
440650-0000 ..	WASHER	83
440651-0000 ..	WASHER	81, 83
440652-0000 ..	WASHER	85
440654-0000 ..	SPACER SLEEVE	85
440655-0000 ..	RING	81
440656-0000 ..	WASHER	85
440659-0000 ..	CYLINDRICAL PIN	83
440660-0000 ..	COMPRESSION SPRING	83
440661-0000 ..	COMPRESSION SPRING	83
440662-0000 ..	COMPRESSION SPRING	85
440663-0000 ..	COMPRESSION SPRING	81, 83
440664-0000 ..	SEALING WASHER	85
440695-0000 ..	END SECTION	85
440702-0000 ..	BEAM	199, 201, 203

Part No	Description	Page No
440731-0000 ..	PLATE	77
440925-0000 ..	CUTTING RAIL	345, 347, 349, 351
440930-0000 ..	COUNTER CAM	323, 325
440931-0000 ..	COUNTER CAM	327, 329
440977-0000 ..	ATTACHMENT PIPE	77
440978-0000 ..	PIPE BEND	77
441483-0000 ..	CYLINDER BRACKET	65, 101, 103
441718-0000 ..	SPACER	47, 49
441737-0000 ..	WASHER	47, 49
441739-0000 ..	WASHER	47, 49
441740-0000 ..	HINGE FLANGE	47, 49
441741-0000 ..	HINGE FLANGE	47, 49
442072-0000 ..	CARRIER	625, 627, 629, 631, 633
442076-0000 ..	LID	253
442193-0000 ..	PROTECTIVE CASING	173
442194-0000 ..	PROTECTIVE CASING	175
442195-0000 ..	LID	173
442236-0000 ..	THROTTLE SCREW	63
442237-0000 ..	NUT	63
442431-0000 ..	CARRIER	625, 627, 629, 631, 633
442463-0400 ..	PIPE WORK	145, 147
442466-0000 ..	PIPE CONNECTION	207
442480-0000 ..	BOW CLAMP	719, 721
442500-0000 ..	SPROCKET	425
442523-0000 ..	HOLDER	475, 477
442524-0000 ..	ARM	475, 477
442532-0000 ..	COVER	547, 549
442533-0000 ..	RUBBER GASKET	547, 549
442537-0500 ..	WASTE CHUTE	415, 417
442545-0000 ..	SHEET	419, 421, 447, 449
442554-0000 ..	GEARING	427
442555-0000 ..	GEAR WHEEL	427
442556-0000 ..	GEAR WHEEL	427
442557-0000 ..	GEAR WHEEL	427
442558-0000 ..	GEAR WHEEL	427
442559-0000 ..	GEAR WHEEL	427
442560-0000 ..	LUBR.OIL PIPE	547, 549
442563-0000 ..	AXLE PIN	557, 559, 561, 563, 565, 567
442564-0000 ..	CURVE	437, 439, 453, 455, 457, 459, 551, 553, 555
442565-0000 ..	CURVE	437, 439, 453, 455, 457, 459, 551, 553, 555
442566-0000 ..	BRACKET	237
442582-0100 ..	DRIVE GEAR	425
442589-0000 ..	ARM	547, 549
442613-0000 ..	GEAR WHEEL	473
442614-0000 ..	GEAR WHEEL	473
442615-0000 ..	SPACER	473
442616-0000 ..	SPACER	473
442617-0000 ..	SPACER	473
442621-0000 ..	SPACER	545
442622-0000 ..	SPACER	545
442644-0300 ..	DOUBLE GEAR	471
442646-0200 ..	TOP GEAR	535
442776-0000 ..	SLIDE RAIL	435, 451
442809-0000 ..	LEAD RAIL	465, 467
442811-0001 ..	ARCH	465, 467
442811-0002 ..	ARCH	465, 467
442829-0000 ..	BRACKET	465, 467
442830-0000 ..	BRACKET	445, 465, 467
442836-0000 ..	SPROCKET	445, 465, 467
442841-0000 ..	AIR SCREW	427
442851-0000 ..	SHAFT	433
442852-0000 ..	VALVE	433
442853-0000 ..	ATTACHMENT PIPE	433
442867-0000 ..	AIR NOZZLE	481, 483, 489, 491
442882-0000 ..	SPINDLE	547, 549
442883-0000 ..	SPACING WASHER	547, 549
442884-0000 ..	LOCK PLATE	547, 549
442886-0000 ..	FLAP	547, 549
442894-0000 ..	SHIM	557, 559, 561, 563, 565, 567
442903-0000 ..	SHIM	427
442904-0000 ..	SHIM	427
442905-0000 ..	SHIM	427
442931-0000 ..	SLIDE RAIL	441, 461, 463
442939-0000 ..	SHIM	557, 559, 561, 563, 565, 567
442979-0000 ..	SHEET	551, 553, 555
442980-0000 ..	SHEET	551, 553, 555
442981-0000 ..	SHIM	557, 559, 561, 563, 565, 567
442984-0000 ..	FLAP	547, 549
443021-0000 ..	SHEET	551, 553, 555
443022-0000 ..	SHEET	551, 553, 555
443023-0000 ..	SHEET	551, 553, 555
443024-0000 ..	SHEET	551, 553, 555
443027-0000 ..	SHEET	551, 553, 555
443028-0000 ..	SHEET	551, 553, 555

Part No	Description	Page No
443038-0000 ..	FLAP	547, 549
443047-0000 ..	SPROCKET	471
443048-0000 ..	SPROCKET	479
443049-0000 ..	SHAFT	479
443050-0000 ..	GUIDE SLEEVE	479
443051-0000 ..	CONNECTION	479
443052-0000 ..	SPACER RING	471
443053-0000 ..	CHAIN GUIDE	479
443055-0000 ..	SHIM	473
443056-0000 ..	SHIM	473
443057-0000 ..	SHIM	473
443058-0000 ..	SHIM	473
443076-0000 ..	BOTTOM	557, 559, 561, 563, 565, 567
443081-0000 ..	SPROCKET	445, 465, 467
443122-0000 ..	HOUSE	433
443123-0000 ..	HOUSE	433
443126-0000 ..	CONNECTION PIPE	469
443149-0000 ..	STUD SCREW	471
443150-0000 ..	SUCTION TUBE	479
443151-0000 ..	PIPE	479
443158-0000 ..	SIDE PIPE	481, 483, 489, 491
443173-0100 ..	DRIVE SHAFT	415, 417
443175-0000 ..	SHAFT	569
443176-0000 ..	SPROCKET	469
443177-0000 ..	SPROCKET	569
443178-0000 ..	BRACKET	569
443179-0000 ..	SPACER	569
443182-0000 ..	FLAP	547, 549
443186-0000 ..	CHUTE	419, 421, 447, 449
443187-0000 ..	SHEET	419, 421, 447, 449
443188-0000 ..	GEAR WHEEL	545
443193-0000 ..	SHIM	545
443194-0000 ..	SHIM	545
443206-0001 ..	ARCH	465, 467
443206-0002 ..	ARCH	465, 467
443206-0003 ..	ARCH	465, 467
443206-0004 ..	ARCH	465, 467
443207-0001 ..	ARCH	465, 467
443207-0002 ..	ARCH	465, 467
443210-0000 ..	PLATE STAINLESS	445, 465, 467
443213-0000 ..	BRACKET	445, 465, 467
443215-0000 ..	SPACER	445, 465, 467
443217-0000 ..	BRACKET	445, 465, 467
443218-0000 ..	INTERMEDIARY SECTION	535
443229-0000 ..	BRACKET	441, 461, 463
443232-0000 ..	HOLDER	441, 461, 463
443235-0000 ..	SPROCKET	441, 461, 463
443237-0000 ..	SLIDER	441, 461, 463
443239-0000 ..	WASHER	441, 461, 463
443240-0000 ..	DRIP PLATE	437, 439, 453, 455, 457, 459
443248-0000 ..	OIL PIPE	425
443249-0000 ..	FLAP	547, 549
443271-0000 ..	HEAD PLATE	527, 529
443272-0000 ..	HEAD PLATE	527, 529
443273-0000 ..	HEAD PLATE	527, 529
443274-0000 ..	HEAD PLATE	527, 529
443289-0000 ..	TOOTHED PULLY	515
443290-0000 ..	GEAR WHEEL	499, 501, 515
443291-0000 ..	GEAR WHEEL	499, 501
443292-0000 ..	STEERING	515
443293-0000 ..	BRACKET	499, 501, 515
443295-0000 ..	WASHER	445, 465, 467, 499, 501, 515
443296-0000 ..	WASHER	499, 501, 515, 519
443297-0000 ..	WASHER	499, 501
443298-0000 ..	WASHER	499, 501
443299-0000 ..	WASHER	499, 501
443300-0000 ..	WASHER	499, 501, 515
443301-0000 ..	WASHER	499, 501, 515
443305-0000 ..	SHAFT	499, 501
443306-0000 ..	SPROCKET	499, 501
443307-0000 ..	SHAFT	499, 501, 515
443309-0000 ..	SHAFT	531, 533
443310-0000 ..	AXLE PIN	531, 533
443312-0000 ..	SPACER	515
443313-0000 ..	STUD SCREW	551, 553, 555
443336-0008 ..	TIMING BELT PULLEY	423
443348-0000 ..	PLATE	551, 553, 555
443350-0000 ..	BRACKET	499, 501
443362-0000 ..	CURVE	535
443365-0000 ..	BRACKET	531, 533
443367-0000 ..	PROFILE	429
443387-0000 ..	HEAD PLATE	499, 501
443388-0001 ..	HEAD PLATE	499, 501
443388-0002 ..	HEAD PLATE	499, 501

Part No	Description	Page No
443414-0000 ..	WASHER	499, 501
443419-0000 ..	SPACER	513
443445-0000 ..	SIDE PLATE	499, 501
443446-0000 ..	SIDE PLATE	499, 501
443447-0000 ..	BRACKET	527, 529
443448-0000 ..	HEAD PLATE	531, 533
443450-0000 ..	HEAD PLATE	499, 501
443451-0000 ..	HEAD PLATE	499, 501
443454-0000 ..	BRACKET	499, 501
443455-0000 ..	SHAFT	499, 501
443456-0000 ..	SHAFT	499, 501
443457-0000 ..	SHAFT	499, 501
443458-0000 ..	SHAFT	499, 501
443462-0000 ..	SUPPORT	527, 529
443463-0000 ..	SUPPORT	527, 529
443464-0000 ..	SPROCKET	499, 501
443467-0000 ..	SPROCKET	499, 501
443468-0000 ..	CARRIER	503, 505, 507, 509
443469-0000 ..	CARRIER	503, 505
443470-0000 ..	CARRIER	507, 509
443474-0000 ..	BRACKET	531, 533
443476-0000 ..	GABLE PLATE	513
443477-0000 ..	GABLE PLATE	513
443478-0001 ..	SPROCKET	499, 501
443478-0002 ..	SPROCKET	499, 501
443478-0003 ..	SPROCKET	499, 501
443478-0004 ..	SPROCKET	499, 501
443479-0001 ..	SPROCKET	499, 501
443479-0002 ..	SPROCKET	499, 501
443479-0003 ..	SPROCKET	499, 501
443479-0004 ..	SPROCKET	499, 501
443480-0000 ..	BRACKET	499, 501
443481-0000 ..	BRACKET	499, 501
443482-0000 ..	BRACKET	499, 501
443483-0000 ..	BRACKET	499, 501
443484-0000 ..	ARM	499, 501
443485-0000 ..	SCREW	499, 501
443486-0000 ..	GUIDE	499, 501
443487-0000 ..	ROLL	551, 553, 555
443488-0000 ..	ROLL	551, 553, 555
443489-0000 ..	BRACKET	499, 501, 515
443491-0000 ..	BRACKET	527, 529
443492-0000 ..	BRACKET	527, 529
443493-0000 ..	HEAD PLATE	531, 533
443495-0000 ..	HEAD PLATE	531, 533
443497-0000 ..	SUPPORT	527, 529
443498-0000 ..	SUPPORT	527, 529
445502-0000 ..	LOCKING PIN LOWER	51, 53
445504-0000 ..	LOCKING PIN UPPER	51, 53
445515-0000 ..	PIPE BEND	77
445537-0200 ..	PIPE WORK-HYDRAULIC	145, 147
445538-0000 ..	HYDRAULIC PIPE	209
445539-0000 ..	HYDRAULIC PIPE	209
445540-0000 ..	HYDRAULIC PIPE	209
445541-0000 ..	HYDRAULIC PIPE	209
445542-0000 ..	MANTEL RUBBER	621, 623, 647
445583-0000 ..	VALVE	261
445669-0000 ..	HOLDER	719, 721
445670-0000 ..	PAPER SUPPORT	719, 721
445688-0000 ..	AIR GUIDE	719, 721
445736-0000 ..	HINGE	267, 269
445776-0000 ..	ROLL	13
445777-0000 ..	ROLL	13
445778-0000 ..	ROLL	13
445779-0000 ..	ROLL	13
445780-0000 ..	ROLL	13
445781-0000 ..	ROLL	13
445782-0000 ..	ROLL	13
445783-0000 ..	ROLL	13
445784-0000 ..	ROLL	13
445785-0000 ..	ROLL	13
445786-0000 ..	ROLL	13
445787-0000 ..	ROLL	13
445788-0002 ..	SHAFT	13
445788-0003 ..	SHAFT	13
445788-0005 ..	SHAFT	13
445788-0006 ..	SHAFT	13
445790-0000 ..	AXLE SUPPORT	13
445791-0000 ..	AXLE SUPPORT	13
445837-0000 ..	CANTILEVER	607
445838-0000 ..	SHAFT	607
445839-0000 ..	SECURING PLATE	607
445840-0100 ..	DRIVE UNIT	603, 605
445841-0000 ..	CANTILEVER	607

Part No	Description	Page No
445842-0000 ..	MOTOR PLATE	607
445844-0000 ..	SLEEVE	667, 669
445845-0000 ..	DRIVE ROLLER	607
445846-0000 ..	SLEEVE	667, 669
445847-0000 ..	SHAFT	607
445848-0000 ..	ELASTIC COUPLING	607
445849-0000 ..	SPACER DISC	607
445850-0000 ..	SPACER SLEEVE	607
445851-0000 ..	SHAFT	607
445852-0000 ..	LID	607
445854-0002 ..	GEAR WHEEL	607
445857-0000 ..	PROTECTION PLATE	663
445858-0000 ..	WASHER	257
445861-0000 ..	FRAME	659, 661
445863-0000 ..	PROTECTION	659, 661
445872-0000 ..	HINGE	659, 661
445873-0000 ..	HINGE	659, 661
445874-0000 ..	HINGE	659, 661
445877-0000 ..	SUPPORT	659, 661
445879-0000 ..	SUPPORT	659, 661
445881-0000 ..	BRACKET LEFT	673, 675, 677
445882-0000 ..	BRACKET RIGHT	673, 675, 677
445885-0000 ..	BEAM	673, 675, 677
445886-0000 ..	BEAM	673, 675, 677
445894-0000 ..	SEAL	673, 675, 677
445898-0000 ..	NUT	673, 675, 677
445901-0000 ..	FRAME	673, 675, 677
445902-0000 ..	ARM	673, 675, 677
445903-0000 ..	ECCENTRIC SHAFT	673, 675, 677
445904-0000 ..	SHAFT	673, 675, 677
445907-0000 ..	SCREW	673, 675, 677
445909-0000 ..	NIPPLE	673, 675, 677
445911-0000 ..	CANTILEVER	673, 675, 677
445915-0000 ..	STEERING	673, 675, 677
445918-0000 ..	SCREW	673, 675, 677
445926-0000 ..	WASHER	665
445927-0000 ..	HOLDER	665
445929-0000 ..	GASKET	663
445930-0100 ..	BENDING UNIT	603, 605
445931-0000 ..	CANTILEVER	639
445934-0000 ..	LID	663
445935-0000 ..	PROTECTION PLATE	663
445950-0000 ..	RAIL	357, 359, 363, 365
449000-0000 ..	BRACKET	23
449130-0000 ..	CONNECTING PIPE	63
449168-0300 ..	CLEANING SYSTEM	145, 147
449170-0000 ..	CLEANING PIPE	211
449414-0000 ..	BRACKET	109
449415-0000 ..	PENDULUM SUSPENSION	109
449586-0000 ..	ROLL	31, 33, 35
449589-0001 ..	ROLLER, (STD.SIZE)	25, 27
449623-0000 ..	STEERING	673, 675, 677
449624-0000 ..	STEERING	673, 675, 677
449626-0000 ..	SEAL	673, 675, 677
449629-0000 ..	BRACKET	673, 675, 677
449631-0000 ..	BEARING HOUSING	681, 683
449632-0000 ..	BEARING HOUSING	681, 683
449634-0000 ..	COVERING PLATE	681, 683
449635-0000 ..	COVERING PLATE	681, 683
449678-0000 ..	VALVE BODY 76	79
449716-0000 ..	MAIN CAM	301, 303
449719-0000 ..	COUNTER CAM	301, 303
449727-0000 ..	CUTTING JAW	345, 347, 349, 351
449734-0000 ..	HOLDER	403, 405, 407, 409
449744-0000 ..	TURN SPRING	681, 683
449745-0000 ..	TURN SPRING	681, 683
449746-0000 ..	STEERING	681, 683
449748-0000 ..	BEARING	681, 683
449751-0000 ..	PROTECTION	673, 675, 677
449753-0000 ..	SCREW	673, 675, 677
449761-0000 ..	WASHER	673, 675, 677
449770-0000 ..	INSULATION	673, 675, 677
449817-0000 ..	U-TUBE	105
449818-0000 ..	PIPE	105
449840-0001 ..	ROLLER, (STD.SIZE)	25, 27
449843-0001 ..	BENDING ROLLER	701
449843-0002 ..	BENDING ROLLER	701
449843-0003 ..	BENDING ROLLER	701
449843-0004 ..	BENDING ROLLER	701
449908-0000 ..	BUSHING	335, 337
449926-0000 ..	HOLDER	403, 405, 407, 409
449930-0500 ..	CONNECTION BOX	145, 147
449939-0001 ..	HEATING ELEMENT 15KW	111
449960-0000 ..	BRACKET	105, 133

Part No	Description	Page No
449963-0000 ..	U-TUBE	105
449964-0000 ..	PIPE	133
449966-0000 ..	PIPE	133
449967-0000 ..	PIPE	133
450010-0000 ..	FILLER TUBE	45
450017-0000 ..	PLATE	673, 675, 677
450022-0000 ..	WASHER	105
450023-0000 ..	BRACKET	105
450116-0000 ..	CANTILEVER	727
450117-0000 ..	HOLDER	727
450145-0000 ..	STRUT	299
450146-0000 ..	STRUT	299
450284-0000 ..	CABLE DUCT	273
450285-0000 ..	CABLE DUCT	273
450286-0000 ..	LID	273
450287-0000 ..	LID	273
450290-0000 ..	LID	273
450291-0000 ..	ATTACHMENT PIPE	273
450292-0000 ..	ATTACHMENT PIPE	273
450298-0000 ..	COVERING PLATE	199, 201, 203
450299-0000 ..	SWIVEL PLATE	191
450300-0000 ..	BEAM	191
450301-0000 ..	FASTENING PLATE	191
450335-0000 ..	PIPE	133
450340-0000 ..	PIPE	261
450342-0000 ..	COVERING PLATE	199, 201, 203
450355-0000 ..	INK ROLLER	621, 623, 647
450363-0000 ..	LID	607
450457-0000 ..	FLANGE	199, 201, 203
450459-0001 ..	FORMING RING	25, 27
450459-0002 ..	FORMING RING	25, 27
450461-0000 ..	SHAFT	725
450490-0100 ..	FORM CLAMP	11
450491-0000 ..	BOW CLAMP	13
450492-0000 ..	BOW CLAMP	13
450493-0000 ..	BOW CLAMP	13
450495-0000 ..	CONNECTION BOX	197
450497-0000 ..	SHAFT	609, 611, 613, 615, 617, 619, 643, 645
450500-0000 ..	DOWEL	609, 611, 613, 615, 617, 619, 643, 645
450503-0000 ..	BEARING HOUSING	345, 347, 349, 351
450505-0000 ..	CARRIER RULER LEFT	373
450506-0000 ..	CARRIER RULER	377
450509-0000 ..	PIPE	71, 73
450512-0000 ..	COVER	71, 73
450667-0000 ..	SPLASH GUARD	191
450668-0000 ..	SPLASH GUARD	191
450669-0000 ..	TOUCH GUARD	191
450716-0000 ..	PIPE	215, 217
450717-0000 ..	PIPE	215, 217
450719-0000 ..	PIPE	215, 217
450722-0000 ..	PIPE	215, 217
450723-0000 ..	PIPE	215, 217
450724-0000 ..	PIPE	215, 217
450725-0000 ..	ATTACHMENT PLATE	215, 217
450730-0000 ..	PIPE	215, 217
450731-0000 ..	PIPE	215, 217
450733-0000 ..	PIPE	215, 217
450735-0000 ..	PIPE	215, 217
450736-0000 ..	PIPE	215, 217
450737-0000 ..	PIPE	215, 217
450738-0000 ..	PIPE	215, 217
450739-0000 ..	PIPE	215, 217
450740-0000 ..	PIPE	215, 217
450742-0000 ..	PIPE	215, 217
450744-0000 ..	CRAMP	215, 217
450745-0000 ..	SPACER	215, 217
450746-0000 ..	HOLDER	215, 217
450747-0000 ..	PIPE	215, 217
450748-0000 ..	PIPE	215, 217
450781-0000 ..	VOLUME BULGE	335, 337
450782-0000 ..	VOLUME SHIM	335, 337, 369, 371
450788-0600 ..	PIPE WORK-PNEUMATIC	145, 147
450791-0000 ..	PIPE	225, 227, 229, 231, 233, 235
450792-0100 ..	DETERGENT PUMP	145, 147
450793-0000 ..	PIPE	275
450794-0000 ..	PIPE	275
450795-0000 ..	PIPE	275
450796-0000 ..	BRACKET	275
450812-0000 ..	SPACER	707
450813-0000 ..	HOLDER	709
450814-0000 ..	HOLDER	129, 131, 709
450824-0200 ..	DOOR	145, 147
450826-0000 ..	BRACKET	277
450840-0400 ..	LIFTING UNIT	145, 147

Part No	Description	Page No
450841-0000 ..	CANTILEVER	237
450846-0000 ..	CANTILEVER	75
450850-0001 ..	SHEET	707
450850-0002 ..	SHEET	707
450850-0003 ..	SHEET	707
450850-0004 ..	SHEET	707
450850-0005 ..	SHEET	707
450850-0006 ..	SHEET	707
450853-0000 ..	PROTECTION	673, 675, 677
450869-0000 ..	BRACKET RIGHT	245, 247
450882-0000 ..	OUTER PIPE	707
450883-0400 ..	PROTECTION	145, 147
450884-0000 ..	PROTECTION	279
450887-0000 ..	CRAMP	717
450888-0000 ..	INSULATING PLATE	717
450899-0001 ..	SPACER	205
450973-0000 ..	BRACKET	277
451053-0000 ..	PIPE	121
451085-0002 ..	SPACER SCREW	135
451085-0003 ..	SPACER SCREW	135
451085-0004 ..	SPACER SCREW	135
451085-0005 ..	SPACER SCREW	135
451088-0000 ..	PROTECTION	191
451089-0000 ..	BRACKET	191
451099-0000 ..	CABLE TRENCH	135
451101-0000 ..	CABLE TRENCH	135
451102-0000 ..	COVER STAINLESS	135
451103-0000 ..	LID	135
451104-0000 ..	LID	135
451127-0000 ..	CHUTE, LEFT FRONT	173
451128-0000 ..	CHUTE, RIGHT FRONT	175
451131-0100 ..	CLEANING PIPE	11
451277-0000 ..	PIPE	129, 131
451280-0000 ..	PIPE	129, 131
451281-0000 ..	PIPE	129, 131
451284-0000 ..	PIPE	129, 131
451285-0000 ..	PIPE	129, 131
451286-0000 ..	PIPE	129, 131
451287-0000 ..	PIPE	129, 131
451288-0000 ..	PIPE	129, 131
451289-0000 ..	PIPE	129, 131
451290-0000 ..	PIPE	129, 131
451296-0000 ..	PIPE	129, 131
451297-0000 ..	PIPE	129, 131
451298-0000 ..	PIPE	129, 131
451299-0000 ..	PIPE	129, 131
451300-0000 ..	PIPE	129, 131
451301-0000 ..	PIPE	129, 131
451302-0000 ..	PIPE	129, 131
451303-0001 ..	PIPE	129, 131
451303-0002 ..	PIPE	129, 131
451303-0003 ..	PIPE	129, 131
451303-0004 ..	PIPE	129, 131
451304-0000 ..	PIPE	129, 131
451305-0000 ..	PIPE	129, 131
451306-0000 ..	PIPE	129, 131
451307-0000 ..	PIPE	129, 131
451321-0000 ..	COVER	63
451323-0000 ..	SHEET	63
451324-0000 ..	PIPE	63
451326-0000 ..	CLAMPING PLATE	129, 131
451338-0000 ..	PIPE	135
451339-0000 ..	BOXSTAINLESS	135
451340-0000 ..	CHANNELSTAINLESS	135
451341-0001 ..	LID	135
451341-0002 ..	LID	135
451342-0500 ..	CABLE DUCT	11
451348-0200 ..	CONNECTION BOX	145, 147
451365-0200 ..	TERMINAL PLINTH	135
451389-0000 ..	PLATFORM	91
451390-0000 ..	PLATFORM	91
451391-0000 ..	PLATFORM	91
451406-0000 ..	VIBRATION DAMPER	591, 593, 597
451407-0000 ..	RAILING	591, 593, 597
451408-0000 ..	BUFFER RING	591, 593, 597
451412-0000 ..	WASHER	673, 675, 677
451413-0000 ..	WASHER	673, 675, 677
451423-0000 ..	CIRCUIT BOARD	283
451430-0000 ..	CONNECTION HOUS.(MINOR)	111
456011-0000 ..	PIN	369, 371
456256-0000 ..	PROTECTIVE COVER	197
456772-0000 ..	PIVOT BRACKET	647
456773-0000 ..	PIVOT BRACKET	621, 623
457354-0000 ..	SCREW	237

Part No	Description	Page No
457355-0000 ..	NUT	237
457357-0000 ..	BRACKET	199, 201, 203
457358-0000 ..	SLEEVE	663
457359-0000 ..	BRACKET	411
457361-0000 ..	CANTILEVER	411
457364-0000 ..	PLATE RIGHT	411
457367-0000 ..	SHAFT	411
457368-0000 ..	SPRING	411
457370-0000 ..	CATCH	681, 683
457430-0000 ..	BEATER	609, 611, 613, 615, 617, 619, 643, 645
457486-0000 ..	BEARING HOUSING	681, 683
457487-0000 ..	BEARING HOUSING	681, 683
457488-0000 ..	BEARING HOUSING	681, 683
457489-0000 ..	BEARING HOUSING	681, 683
457492-0000 ..	COVERING PLATE	681, 683
457493-0000 ..	COVERING PLATE	681, 683
457494-0000 ..	COVERING PLATE	681, 683
457495-0000 ..	COVERING PLATE	681, 683
457586-0000 ..	SLIDE	681, 683
457614-0001 ..	CLAMPING PIECE	133
457614-0002 ..	CLAMPING PIECE	133
457627-0000 ..	DOLLY	673, 675, 677
457658-0000 ..	INSULATION	673, 675, 677
457752-0000 ..	CANTILEVER	127
457753-0000 ..	BRACKET	127
458019-0000 ..	BEARING HOUSING	357, 359, 363, 365
458030-0000 ..	CARRIER RULER	373
458031-0000 ..	CARRIER RULER	377
458038-0000 ..	CARRIER RULER	373
458039-0000 ..	CARRIER RULER	377
458041-0000 ..	COMPRESSION SPRING	681, 683, 687, 689
458042-0000 ..	SPRING	681, 683
458046-0000 ..	PIPE	39
458062-0000 ..	TENSION SPRING	673, 675, 677
458104-0000 ..	CREASE FORMER	609, 611, 613, 615, 617, 619
458105-0000 ..	CREASE FORMER	609, 611, 613, 615, 617, 619
458106-0000 ..	CREASE FORMER	609, 611, 613, 615, 617, 619
458107-0000 ..	CREASE FORMER	643, 645
458108-0000 ..	CREASE FORMER	609, 611, 613, 615, 617, 619
458109-0000 ..	CREASE FORMER	609, 611, 613, 615, 617, 619
458164-0000 ..	SHAFT	335, 337, 339
458165-0000 ..	SHAFT	335, 337
458192-0300 ..	INK UNIT SS	643, 645
458193-0001 ..	WASHER	609, 611, 613, 615, 617, 619
458193-0002 ..	WASHER	609, 611, 613, 615, 617, 619
458193-0003 ..	WASHER	609, 611, 613, 615, 617, 619
458194-0001 ..	WASHER	643, 645
458194-0002 ..	WASHER	643, 645
458194-0003 ..	WASHER	643, 645
458199-0001 ..	PIPE	709
458199-0002 ..	PIPE	709
458199-0003 ..	PIPE	709
458362-0000 ..	PLUG	667, 669
458364-0000 ..	COVER	647
458467-0000 ..	VOLUME BULGE	335, 337
458481-0001 ..	SHIM	123
458481-0002 ..	SHIM	123
458481-0003 ..	SHIM	123
458489-0000 ..	CANTILEVER	609, 611, 613, 615, 617, 619
458791-0000 ..	SHAFT	37
458908-0000 ..	BRACKET	673, 675, 677
458909-0000 ..	BRACKET	673, 675, 677
458912-0000 ..	BRACKET	673, 675, 677
458915-0000 ..	HEAD RAIL	673, 675, 677
458916-0000 ..	SHAFT	673, 675, 677
458917-0000 ..	SUPPORT	673, 675, 677
458929-0000 ..	TURN SPRING	673, 675, 677
464010-0000 ..	ARM	609, 611, 613, 615, 617, 619, 643, 645
464011-0000 ..	LOCK STUD	609, 611, 613, 615, 617, 619, 643, 645
464012-0000 ..	CURVE	609, 611, 613, 615, 617, 619, 643, 645
464018-0000 ..	JUNCTION BLOCK	121
464141-0000 ..	LEAD-IN PLATE	663
464162-0000 ..	CUTTING JAW	345, 347, 349, 351
464164-0000 ..	CARRIER CUT LEFT	345, 347
464171-0000 ..	CARRIER CUT RIGHT	349, 351
464173-0000 ..	LABEL HOLDER	123, 707
464174-0000 ..	SIGN	123
464175-0000 ..	SIGN	123
464176-0000 ..	SIGN	707
464177-0000 ..	SIGN	707
464197-0000 ..	AIR NOZZLE	717
464297-0000 ..	CONNECTION BOX	283
464307-0000 ..	PIPE BEND	121
464308-0000 ..	PIPE	121

Part No	Description	Page No
464309-0000 ..	PIPE	121
464310-0000 ..	FOLDING FLAP	373, 377
464311-0000 ..	FOLDING FLAP	373, 377
464314-0000 ..	VOLUME BULGE	335, 337
464315-0000 ..	VOLUME SHIM	335, 337, 369, 371
464363-0000 ..	HOLDER	315
464366-0000 ..	LID	331, 333
464367-0000 ..	CRAMP	331, 333
464368-0000 ..	CRAMP	331, 333
464370-0000 ..	SPACER	355
464431-0000 ..	PIPE	215, 217
464432-0000 ..	PIPE	215, 217
464520-0000 ..	PIPE	215, 217
464547-0000 ..	NUT	673, 675, 677
464548-0000 ..	BRACKET	673, 675, 677
464719-0000 ..	SIGN	215, 217
464854-0000 ..	TENSION SPRING	673, 675, 677
464983-0000 ..	SCREW	673, 675, 677
466040-0000 ..	AXLE SUPPORT	125
466041-0000 ..	WASHER	125
466042-0000 ..	SEAL	125, 139
466046-0000 ..	ROLLER	125
466086-0000 ..	SHAFT	665
466089-0000 ..	SEAL	125, 139
466092-0000 ..	ROLL	125
466099-0000 ..	SEAL	125, 139
466102-0000 ..	ROLL	125
466337-0000 ..	CONNECTION BOX	667, 669
466395-0000 ..	BEARING HOUSING	357, 359, 363, 365
466399-0100 ..	SEAL	123
466400-0000 ..	RING	125
466401-0000 ..	RING	125
466402-0000 ..	RING	125
466403-0000 ..	RING	125
466404-0000 ..	RING	125
466405-0000 ..	RING	125
466412-0000 ..	PLATE	717
466430-0000 ..	BUSHING	609, 611, 613, 615, 617, 619, 643, 645
466431-0000 ..	BEARING HOUSING	345, 347, 349, 351
466432-0000 ..	BEARING HOUSING	345, 347, 349, 351
466446-0000 ..	HANDLE	673, 675, 677
466463-0000 ..	PRESSURE FLANGE	51, 53
466471-0000 ..	PIPE	95
466474-0000 ..	VALVE HOUSING	65, 101, 103
466477-0000 ..	INNER PIPE	65, 101
466478-0000 ..	OUTER PIPE	65, 101
466479-0000 ..	PIECE	65, 101, 103
466483-0000 ..	CLAMPING PIECE	65, 101
466484-0000 ..	NET	65, 101
466618-0000 ..	CATCH	673, 675, 677
466619-0000 ..	CATCH	673, 675, 677
466620-0000 ..	PISTON	673, 675, 677
466621-0000 ..	PISTON	673, 675, 677
466623-0000 ..	COMPRESSION SPRING	673, 675, 677
469463-0000 ..	SHAFT	25, 27
469464-0000 ..	ROLL	25, 27
469795-0000 ..	HOLDER	173
476015-0000 ..	DOWEL	665
476016-0000 ..	RUBBER	665
476087-0000 ..	LID	71, 73
476115-0000 ..	VOLUME FLAP	335, 337
476117-0000 ..	CATCH	663
476185-0000 ..	VALVE CONE	85
476203-0000 ..	PROTECTION	81
476288-0000 ..	PIPE	673, 675, 677
476289-0000 ..	SCREW	673, 675, 677
476354-0000 ..	CANNULAR TUBE	621, 623
476355-0000 ..	CANNULAR TUBE	647
476356-0000 ..	HOLDER FOR INK BOTTLE	621, 623, 647
476358-0000 ..	COIL HEATER	139
476360-0000 ..	LID	55, 57
476377-0000 ..	SCREW	609, 611, 613, 615, 617, 619, 643, 645
476398-0000 ..	LID	71, 73
476400-0000 ..	PIPE	71, 73
476401-0000 ..	SHAFT	665
476403-0000 ..	HEAD PLATE	639
476449-0000 ..	PIPE	95
476503-0000 ..	BRACKET	607
476556-0000 ..	GUIDE	665
476599-0000 ..	PLATFORM	91
476600-0000 ..	PIPE HOLDER	91, 95, 105
476794-0001 ..	PIPE	129, 131
476794-0002 ..	PIPE	129, 131
476796-0000 ..	PIPE	129, 131

Part No	Description	Page No
476824-0000 ..	COVERING PLATE	199, 201, 203
476849-0100 ..	VALVE	95
476859-0200 ..	CHANGE-OVER VALVE	95
476877-0000 ..	SPACER	403, 405, 407, 409
476884-0200 ..	CLEANING HEAD	177
476885-0200 ..	CLEANING HEAD	183, 185
476886-0200 ..	CLEANING HEAD	183, 185
476887-0200 ..	CLEANING HEAD	177
476894-0000 ..	PIPE HOLDER	237
476975-0000 ..	WHEEL	435, 451
479025-0000 ..	WASHER	71, 73
479032-0000 ..	HATCH	161
479033-0000 ..	PIPE CONNECTION	207
479034-0000 ..	PIPE CONNECTION	207
479036-0000 ..	PIPE CONNECTION	207
479040-0000 ..	PIPE CONNECTION	207
479061-0000 ..	PIPE	129, 131
479072-0000 ..	PIPE	129, 131
479073-0000 ..	PIPE	129, 131
479074-0000 ..	PIPE	129, 131
479176-0000 ..	PIPE	55, 57
479188-0000 ..	INSULATION	673, 675, 677
479223-0000 ..	RAIL	673, 675, 677, 685
479224-0000 ..	STEERING	673, 675, 677
479230-0000 ..	PIPE	121
479231-0000 ..	PIPE	121
479232-0000 ..	PIPE	121
479234-0000 ..	WASHER	63
479236-0000 ..	END SECTION	625, 627, 629, 631, 633, 649, 651
479237-0000 ..	CARRIER	625, 627, 629, 631, 633
479238-0000 ..	CARRIER	625, 627, 629, 631, 633
479239-0000 ..	CARRIER	649, 651
479240-0000 ..	CARRIER	649, 651
479245-0000 ..	VOLUME SHIM	335, 337, 369, 371
479261-0000 ..	NIPPLE	263, 265
479354-0000 ..	SCREW	309
479374-0000 ..	DRIP PLATE	199, 201, 203
479743-0000 ..	COMPRESSION SPRING	357, 359, 363, 365
479744-0000 ..	COMPRESSION SPRING	357, 359, 363, 365
479753-0000 ..	STRIPPER	309
479858-0000 ..	HYDRAULIC DIAGRAM	281
479964-0000 ..	SIGN	267, 269
484047-0000 ..	PIPE	77
484189-0000 ..	HIGH PRESSURE HOSE	75
484212-0000 ..	BRACKET	199, 201, 203
484213-0000 ..	BRACKET	199, 201, 203
484219-0000 ..	SHAFT	237
484220-0000 ..	BRACKET	237
484221-0000 ..	BRACKET	237
484222-0000 ..	SHAFT	237
484223-0000 ..	NUT	237
484529-0000 ..	CYLINDER BRACKET	673, 675, 677
484536-0000 ..	VALVE	159, 167
484682-0000 ..	COMPRESSION SPRING	673, 675, 677
484783-0000 ..	RAIL	673, 675, 677
484791-0000 ..	GASKET	163
484843-0000 ..	GASKET	331, 333
484844-0000 ..	INSULATION	673, 675, 677
484848-0001 ..	MACHINE BODY	609, 611, 613, 615, 617, 619
484848-0002 ..	MACHINE BODY	609, 611, 613, 615, 617, 619
484848-0003 ..	MACHINE BODY	609, 611, 613, 615, 617, 619
484877-0000 ..	STEERING	673, 675, 677
484878-0000 ..	HOLDER	673, 675, 677
484895-0001 ..	SHEET	673, 675, 677
484895-0002 ..	SHEET	673, 675, 677
484895-0003 ..	SHEET	673, 675, 677
484895-0005 ..	SHEET	673, 675, 677
484895-0006 ..	SHEET	673, 675, 677
484895-0007 ..	SHEET	673, 675, 677
484975-0000 ..	WASHER	81, 83
484998-0000 ..	END SECTION	81, 83
486803-0000 ..	BEARING HOUSING	25, 27
486826-0001 ..	SIGN "EMERGENCY STOP"	667, 669, 701, 707
486960-0001 ..	SHAFT	609, 611, 613, 615, 617, 619
486960-0002 ..	SHAFT	609, 611, 613, 615, 617, 619, 643, 645
486961-0000 ..	PLATE	609, 611, 613, 615, 617, 619
486962-0001 ..	FASTENING BRACKET	609, 611, 613, 615, 617, 619
486962-0002 ..	FASTENING BRACKET	609, 611, 613, 615, 617, 619
486962-0003 ..	FASTENING BRACKET	609, 611, 613, 615, 617, 619, 643, 645
486962-0004 ..	FASTENING BRACKET	609, 611, 613, 615, 617, 619
486962-0007 ..	FASTENING BRACKET	609, 611, 613, 615, 617, 619
486962-0008 ..	FASTENING BRACKET	609, 611, 613, 615, 617, 619
486962-0009 ..	FASTENING BRACKET	609, 611, 613, 615, 617, 619
486962-0010 ..	FASTENING BRACKET	609, 611, 613, 615, 617, 619

Part No	Description	Page No
486962-0011 ..	FASTENING BRACKET	609, 611, 613, 615, 617, 619
486964-0000 ..	HEAD PLATE	609, 611, 613, 615, 617, 619
486965-0000 ..	HEAD PLATE	609, 611, 613, 615, 617, 619
486966-0001 ..	SHAFT	609, 611, 613, 615, 617, 619
486966-0002 ..	SHAFT FOR CARRIER	609, 611, 613, 615, 617, 619, 643, 645
486967-0000 ..	SHEET	609, 611, 613, 615, 617, 619, 643, 645
486968-0001 ..	SHAFT FOR BENDINGROLLER	609, 611, 613, 615, 617, 619
486968-0002 ..	SHAFT FOR BENDINGROLLER	609, 611, 613, 615, 617, 619, 643, 645
486969-0000 ..	GUIDE LUG	609, 611, 613, 615, 617, 619, 643, 645
486971-0000 ..	ANGLE	609, 611, 613, 615, 617, 619, 643, 645
491126-0000 ..	SCREW	71, 73
491128-0000 ..	GASKET	113
491602-0000 ..	GASKET HOLDER	113
491770-0000 ..	BUSHING	163
491929-0000 ..	IMPELLER WHEEL	163
493021-0000 ..	ARM	237
493022-0000 ..	ARM	237
493091-0000 ..	CLAMP RAIL	123
493614-0100 ..	SPRAY GUN	145, 147
493653-0000 ..	GASKET	95
493658-0000 ..	AXLE SUPPORT	125
493710-0000 ..	FOLDING FLAP	373, 377
493711-0000 ..	FOLDING FLAP	373, 377
493747-0000 ..	GUIDE STUD	13, 19
493886-0000 ..	SHAFT	13, 19
493948-0000 ..	CANTILEVER	31, 33, 35
495201-0000 ..	COOLING ELEMENT	197
497040-0000 ..	STEERING	357, 359, 363, 365
497121-0000 ..	SPLASH GUARD	161
497131-0000 ..	FILLER TUBE	45
497572-0000 ..	BEARING HOUSING	345, 347, 349, 351
497579-0000 ..	CLAMP HALF	39
497580-0000 ..	CLAMP HALF	39
497583-0000 ..	HOUSING	357, 359, 363, 365
497716-0000 ..	GASKET	345, 347, 349, 351
497719-0000 ..	WASHER	113
497720-0000 ..	WASHER	13, 15, 17, 19
497748-0000 ..	PIN	87, 89
497921-0000 ..	CUTTING RAIL	345, 347, 349, 351
497933-0000 ..	BUSHING	81, 83, 85
499011-0000 ..	SHAFT	45
499016-0000 ..	FORK	45
499082-0403 ..	ADAPTER, TYPE 1	575
499082-0404 ..	ADAPTER, TYPE 1	575
499082-0407 ..	ADAPTER, TYPE 1	575
499132-0002 ..	SHAFT	685
499181-0000 ..	WASHER	95
499255-0200 ..	SEAL KIT	139
499387-0000 ..	PRESSURE ROLLER	45, 139
499473-0000 ..	GEAR WHEEL	297
499474-0000 ..	SHAFT	297
499825-0000 ..	GASKET	95
499826-0000 ..	PIPE	95
499833-0000 ..	PIPE RIGHT	183, 185
499834-0000 ..	PIPE LEFT	183, 185
522090-0000 ..	HEAT EXCHANGER	105
522121-0200 ..	CUTTING TABLE	603, 605
522122-0001 ..	RAIL	687, 689
522122-0002 ..	RAIL	687, 689
522123-0000 ..	PLATE	687, 689
522124-0000 ..	RULER	687, 689
522125-0000 ..	BEARING HOUSING	687, 689
522126-0000 ..	SHEET	687, 689
522128-0000 ..	KNIFE	687, 689
522129-0000 ..	KNIFE HOLDER	687, 689
522130-0000 ..	HANDLE	687, 689
522131-0000 ..	STEERING	687, 689
522132-0000 ..	SLIDE BELT	687, 689
522133-0000 ..	SHAFT	687, 689
522134-0000 ..	END PLATE	687, 689
522137-0000 ..	PUSH BUTTON	687, 689
522138-0000 ..	STOPPER	687, 689
522139-0001 ..	STOPPER	687, 689
522139-0002 ..	STOPPER	687, 689
522152-0000 ..	RAIL BRACKET	403, 405, 407, 409
522153-0000 ..	VOLUME CAM	403, 405, 407, 409
522158-0000 ..	COMPRESSION SPRING	687, 689
522173-0000 ..	CANTILEVER	685
522308-0000 ..	SIGN	693
522408-0000 ..	BEARING HOUSING	609, 611, 613, 615, 617, 619, 643, 645
522410-0200 ..	BENDING ROLLER	673, 675, 677
522474-0000 ..	BLOCK L	681, 683
522475-0000 ..	BLOCK R	681, 683
525000-0300 ..	FOLDING PART	415, 417

Part No	Description	Page No
525001-0000 ..	FOLDING BAR	437, 439, 453, 455, 457, 459
525002-0000 ..	FOLDING BAR	453, 455, 457, 459
525003-0000 ..	FOLDING BAR	437, 439, 453, 455, 457, 459
525004-0000 ..	FOLDING BAR	453, 455, 457, 459
525005-0001 ..	FOLDING BAR	453, 455, 457, 459
525005-0002 ..	FOLDING BAR	453, 455, 457, 459
525005-0003 ..	FOLDING BAR	453, 455, 457, 459
525005-0005 ..	FOLDING BAR	453, 455, 457, 459
525005-0006 ..	FOLDING BAR	453, 455, 457, 459
525005-0007 ..	FOLDING BAR	453, 455, 457, 459
525005-0009 ..	FOLDING BAR	453, 455, 457, 459
525006-0001 ..	FOLDING BAR	453, 455, 457, 459
525006-0002 ..	FOLDING BAR	453, 455, 457, 459
525006-0003 ..	FOLDING BAR	453, 455, 457, 459
525006-0005 ..	FOLDING BAR	453, 455, 457, 459
525006-0006 ..	FOLDING BAR	453, 455, 457, 459
525006-0007 ..	FOLDING BAR	453, 455, 457, 459
525006-0009 ..	FOLDING BAR	453, 455, 457, 459
525007-0001 ..	CANTILEVER	453, 455, 457, 459
525007-0002 ..	CANTILEVER	437, 439, 453, 455, 457, 459
525007-0003 ..	CANTILEVER	453, 455, 457, 459
525007-0004 ..	CANTILEVER	453, 455, 457, 459
525008-0001 ..	BRACKET	437, 439, 453, 455, 457, 459
525008-0002 ..	BRACKET	453, 455, 457, 459
525008-0003 ..	BRACKET	453, 455, 457, 459
525011-0002 ..	BRACKET	453, 455, 457, 459
525011-0003 ..	BRACKET	453, 455, 457, 459
525011-0005 ..	BRACKET	453, 455, 457, 459
525011-0006 ..	BRACKET	453, 455, 457, 459
525011-0007 ..	BRACKET	453, 455, 457, 459
525011-0009 ..	BRACKET	453, 455, 457, 459
525012-0001 ..	COUNTER PLATE	453, 455, 457, 459
525012-0002 ..	COUNTER PLATE	453, 455, 457, 459
525012-0003 ..	COUNTER PLATE	453, 455, 457, 459
525012-0005 ..	COUNTER PLATE	453, 455, 457, 459
525014-0001 ..	COUNTER PLATE	453, 455, 457, 459
525015-0001 ..	SCREW	453, 455, 457, 459
525015-0002 ..	SCREW	437, 439, 453, 455, 457, 459
525015-0003 ..	SCREW	453, 455, 457, 459
525016-0000 ..	FASTENING PLATE	437, 439, 453, 455, 457, 459
525017-0000 ..	STEERING GUIDE	437, 439, 453, 455, 457, 459
525018-0000 ..	SPACER	437, 439, 453, 455, 457, 459
525019-0000 ..	BRACKET	437, 439, 453, 455, 457, 459
525038-0000 ..	GABLE PLATE	513
525039-0000 ..	GABLE PLATE	513
525046-0000 ..	GASKET	469
525047-0000 ..	GASKET	469
525051-0000 ..	HEAD PLATE	513
525052-0001 ..	SPACER	513
525052-0002 ..	SPACER	513
525052-0003 ..	SPACER	513
525052-0004 ..	SPACER	513
525052-0005 ..	SPACER	513
525052-0006 ..	SPACER	513
525053-0000 ..	PLATE (CIRCULAR)	435, 451
525054-0000 ..	SIDE PLATE	451
525055-0000 ..	BRACKET	517
525063-0000 ..	BOTTOM	557, 559, 561, 563, 565, 567
525066-0000 ..	SHEET	551, 553, 555
525067-0000 ..	SHEET	551, 553, 555
525070-0000 ..	ELECTRICAL CONNECTION	481, 483, 489, 491
525071-0000 ..	SPACER PIECE	481, 483
525073-0000 ..	COVER	481, 483, 489, 491
525074-0000 ..	ARM	531, 533
525075-0001 ..	LINK	531, 533
525075-0002 ..	LINK	531, 533
525075-0003 ..	LINK	531, 533
525075-0004 ..	LINK	531, 533
525075-0005 ..	LINK	531, 533
525075-0006 ..	LINK	531, 533
525077-0000 ..	AXLE PIN	531, 533
525078-0000 ..	BRACKET	531, 533
525079-0000 ..	BRACKET	531, 533
525080-0000 ..	BRACKET	531, 533
525081-0000 ..	BRACKET	531, 533
525082-0000 ..	BRACKET	531, 533
525083-0000 ..	BRACKET	531, 533
525084-0000 ..	HEAD PLATE	531, 533
525085-0300 ..	LUBRICATING SYSTEM	415, 417
525086-0200 ..	CONVEYING EQUIPMENT	493, 495
525087-0100 ..	DROP	493, 495
525088-0200 ..	DISCHARGE CHUTE	493, 495
525089-0100 ..	CHAIN RIGHT	493, 495
525090-0100 ..	CHAIN LEFT	493, 495

Part No	Description	Page No
525091-0100 ..	CHAIN	493, 495
525092-0100 ..	CHAIN GUARD	493, 495
525100-0000 ..	BLOCKING PIECE	547, 549
525101-0001 ..	BLOCKING PIECE	547, 549
525101-0002 ..	BLOCKING PIECE	547, 549
525102-0200 ..	LUBRICATING SYSTEM	469
525109-0000 ..	BRACKET	425
525110-0100 ..	CABLE CONDUIT	419, 421, 447, 449
525117-0300 ..	INDEXING GEAR	535
525125-0000 ..	PIN	547, 549
525128-0100 ..	FF-ELEMENT R	415, 417
525129-0100 ..	ELEMENT	415, 417
525130-0000 ..	LEG	419, 421, 447, 449
525132-0000 ..	CABLE TRENCH	419, 421, 447, 449
525134-0000 ..	SPACER PIECE	489, 491
525135-0000 ..	PLATE	431
525136-0000 ..	SHAFT	427
525138-0000 ..	SHEET	441, 461, 463
525140-0000 ..	HOLDER	441, 461, 463
525143-0200 ..	BOTTOM VALVE	419, 421, 447, 449
525146-0000 ..	BRACKET	527, 529
525148-0000 ..	BRACKET	527, 529
525150-0000 ..	GABLE PLATE	513
525151-0000 ..	GABLE PLATE	513
525164-0000 ..	STEERING	527, 529
525166-0000 ..	MOTOR CRADLE	423
525169-0000 ..	SIDE PLATE	451
525170-0000 ..	SIDE PLATE	451
525171-0001 ..	BRACKET	435, 451
525171-0002 ..	BRACKET	451
525172-0000 ..	SPACER	537, 539
525173-0000 ..	CANTILEVER	479
525174-0000 ..	BRACKET	419, 421, 447, 449
525175-0000 ..	BRACKET	419, 421, 447, 449
525178-0000 ..	BRACKET	437, 439, 453, 455, 457, 459
525179-0001 ..	FOLDING ARM	453, 455, 457, 459
525179-0002 ..	FOLDING ARM	453, 455, 457, 459
525180-0001 ..	FOLDING ARM	453, 455, 457, 459
525180-0002 ..	FOLDING ARM	453, 455, 457, 459
525181-0000 ..	WASHER	437, 439, 453, 455, 457, 459
525182-0001 ..	COUNTER PLATE	453, 455, 457, 459
525182-0002 ..	COUNTER PLATE	453, 455, 457, 459
525185-0000 ..	HATCH	469
525194-0000 ..	SPROCKET	441, 461, 463
525195-0000 ..	WASHER	441, 461, 463
525197-0000 ..	BLOW-OFF NOZZLE TR	481, 483, 489, 491
525198-0000 ..	BLOW-OFF NOZZLE TL	481, 483, 489, 491
525200-0000 ..	BRACKET	441, 461, 463
525208-0001 ..	CARRIER	511
525208-0002 ..	CARRIER	511
525208-0003 ..	CARRIER	511
525211-0000 ..	PLATE	551, 553, 555
525212-0000 ..	PLATE	551, 553, 555
525213-0200 ..	INFEEDER	415, 417
525215-0006 ..	TIMING BELT PULLEY	425
525216-0000 ..	SLEEVE	425
525232-0000 ..	BRACKET	425
525233-0000 ..	GASKET 16X2X6MM	485, 487
525234-0002 ..	PLATE	551, 553, 555
525235-0000 ..	CURVE	535
525242-0000 ..	BRACKET	499, 501
525243-0000 ..	PROFILE	499, 501
525244-0000 ..	PROFILE	499, 501
525245-0000 ..	PROFILE	499, 501
525246-0000 ..	PROFILE	499, 501
525247-0000 ..	PROFILE	499, 501
525248-0000 ..	PROFILE	499, 501
525252-0000 ..	BEARING	435, 451
525254-0000 ..	LINK	445, 465, 467, 511
525255-0000 ..	HEAD PLATE	527, 529
525256-0000 ..	HEAD PLATE	527, 529
525259-0000 ..	BRACKET	527, 529
525260-0000 ..	GABLE PLATE	513
525261-0000 ..	GABLE PLATE	513
525262-0000 ..	COVERING PLATE	419, 421, 447, 449
525264-0000 ..	BOTTOM	557, 559, 561, 563, 565, 567
525265-0001 ..	LEAD PLATE	443
525265-0002 ..	LEAD PLATE	443
525265-0003 ..	LEAD PLATE	443
525265-0004 ..	LEAD PLATE	443
525266-0000 ..	LEG	419, 421, 447, 449
525267-0000 ..	LEG	419, 421, 447, 449
525268-0000 ..	LEG	419, 421, 447, 449
525269-0000 ..	PIPE	433

Part No	Description	Page No
525270-0000 ..	PIPE	433
525271-0000 ..	ELBOW PIPE	419, 421, 447, 449
525272-0000 ..	STRUT	419, 421, 447, 449
525273-0000 ..	STRUT	419, 421, 447, 449
525274-0000 ..	FINISH FRAME	419, 421, 447, 449
525275-0000 ..	COVERING PLATE	419, 421, 447, 449
525276-0000 ..	HOUSE	469
525277-0000 ..	CABLE TRENCH	419, 421, 447, 449
525279-0000 ..	HATCH	535
525280-0000 ..	SHEET	419, 421, 447, 449
525281-0000 ..	GASKET	419, 421, 447, 449
525292-0000 ..	BRACKET	535
525293-0000 ..	PIPE	535
525294-0000 ..	PIPE	535
525295-0000 ..	ARM	453, 455, 457, 459
525296-0000 ..	BRACKET	437, 439, 453, 455, 457, 459
525297-0000 ..	BRACKET	453, 455, 457, 459
525298-0000 ..	SPROCKET	445, 465, 467
525299-0000 ..	SHAFT	445, 465, 467
525300-0000 ..	MACHINE BODY	465, 467
525301-0000 ..	ARM	441, 461, 463
525302-0000 ..	ARM	461, 463
525303-0000 ..	ARM	461, 463
525304-0000 ..	ARM	461, 463
525305-0000 ..	DISTRIBUTOR	461, 463
525306-0000 ..	DISTRIBUTOR	461, 463
525307-0000 ..	DISTRIBUTOR	461, 463
525308-0000 ..	DISTRIBUTOR	461, 463
525309-0000 ..	DISTRIBUTOR	461, 463
525310-0000 ..	BRACKET	441, 461, 463
525311-0000 ..	GUIDE	441
525312-0000 ..	SHAFT	441, 461, 463
525315-0000 ..	SLIDER	441, 461, 463
525317-0000 ..	FITTING BOLT	441, 461, 463
525320-0100 ..	CHAIN GUARD	441, 461, 463
525321-0000 ..	SCREW	437, 439, 453, 455, 457, 459
525322-0001 ..	LEAD RAIL	465, 467
525322-0002 ..	LEAD RAIL	465, 467
525322-0003 ..	LEAD RAIL	465, 467
525322-0004 ..	LEAD RAIL	465, 467
525323-0000 ..	BRACKET	465, 467
525324-0000 ..	PROFILE	445, 465, 467
525325-0200 ..	DISCHARGER	415, 417
525326-0000 ..	CHAIN GUARD	443
525327-0000 ..	CHAIN GUARD	443
525328-0000 ..	CHAIN GUARD	443
525329-0000 ..	SLEEVE	557, 559, 561, 563, 565, 567
525330-0000 ..	SHAFT	557, 559, 561, 563, 565, 567
525331-0000 ..	SHIM	473
525332-0000 ..	SHIM	473
525334-0000 ..	BRACKET	499, 501, 515
525335-0000 ..	HOUSE	547, 549
525337-0000 ..	BRACKET	425
525338-0000 ..	SPACER	513, 525
525339-0000 ..	COVERING PLATE	513
525340-0000 ..	BRACKET	437, 439, 453, 455, 457, 459
525341-0001 ..	LEAD RAIL	453, 455, 457, 459
525341-0002 ..	LEAD RAIL	453, 455, 457, 459
525346-0000 ..	SIDE PLATE	419, 421, 447, 449
525348-0000 ..	SLIDE RAIL	537, 539
525349-0000 ..	SLIDE RAIL	537, 539
525350-0000 ..	SLIDE RAIL	537, 539
525352-0000 ..	SLIDE RAIL	537, 539
525353-0000 ..	SLIDE RAIL	537, 539
525354-0000 ..	SLIDE RAIL	537, 539
525355-0000 ..	SLIDE RAIL	537, 539
525357-0000 ..	SPACER	537, 539
525358-0000 ..	BRACKET	479
525360-0000 ..	BRACKET	453, 455, 457, 459
525363-0002 ..	SHAFT	519
525367-0000 ..	SLEEVE	547, 549
525369-0000 ..	BOTTOM	557, 559, 561, 563, 565, 567
525370-0000 ..	BOTTOM	557, 559, 561, 563, 565, 567
525371-0000 ..	BOTTOM	557, 559, 561, 563, 565, 567
525372-0000 ..	BOTTOM	557, 559, 561, 563, 565, 567
525374-0000 ..	CARRIER	465, 467
525375-0000 ..	OIL PIPE	479
525376-0000 ..	BOW CLAMP	479
525377-0000 ..	HATCH	469
525378-0000 ..	HEAD PLATE	537, 539
525379-0000 ..	COMPRESSION SPRING	547, 549
525380-0000 ..	HATCH	571
525381-0000 ..	BRACKET	571
525382-0000 ..	SHAFT	571

Part No	Description	Page No
525383-0000 ..	BRACKET	571
525384-0000 ..	DOWEL	571
525385-0000 ..	BRACKET	659, 661
525394-0000 ..	HINGE	571
525400-0000 ..	SHAFT	499, 501
525401-0000 ..	SHAFT	499, 501
525402-0000 ..	SHAFT	499, 501, 515
525403-0000 ..	PROFILE	499, 501
525404-0000 ..	PROFILE	499, 501
525405-0000 ..	PROFILE	499, 501
525406-0000 ..	PROFILE	499, 501
525409-0000 ..	WASTE CHUTE	571
525410-0000 ..	LEAD RAIL	453, 455, 457, 459
525411-0000 ..	PROFILE	445, 465, 467
525412-0000 ..	RULER	445, 465, 467
525414-0000 ..	CARRIER	465, 467
525416-0000 ..	STOP	531, 533
525417-0000 ..	STEERING	461, 463
525418-0000 ..	HOLDER	461, 463
525419-0000 ..	LEAD RAIL	499, 501
525423-0000 ..	COVERING PLATE	571
525424-0000 ..	HEAD PLATE	537, 539
525425-0000 ..	PROFILE	499, 501
525426-0000 ..	PROFILE	499, 501
525427-0000 ..	PROFILE	499, 501
525428-0000 ..	PROFILE	499, 501
525429-0000 ..	PLATE	551, 553, 555
525430-0000 ..	FLAP	557, 559, 561, 563, 565, 567
525431-0000 ..	CARRIER	503, 505
525432-0000 ..	CARRIER	507, 509
525437-0000 ..	ARCH	465, 467
525438-0000 ..	COUNTER PLATE	453, 455, 457, 459
525439-0000 ..	DRIP PLATE	571
525445-0000 ..	HUB	563, 565, 567
525446-0000 ..	HUB	557, 559, 561
525447-0000 ..	HUB	563, 565, 567
525448-0000 ..	HUB	557, 559, 561
525449-0000 ..	HUB	563, 565, 567
525450-0000 ..	HUB	557, 559, 561
525453-0000 ..	FLAP	557, 559, 561, 563, 565, 567
525454-0000 ..	FLAP	557, 559, 561, 563, 565, 567
525455-0000 ..	FLAP	557, 559, 561, 563, 565, 567
525456-0000 ..	FLAP	557, 559, 561, 563, 565, 567
525458-0000 ..	FLAP	557, 559, 561, 563, 565, 567
525460-0000 ..	SPACER PIECE	557, 559, 561, 563, 565, 567
525461-0000 ..	SPACER PIECE	557, 559, 561, 563, 565, 567
525465-0000 ..	BRACKET	531, 533
525466-0000 ..	ARCH	465, 467
526502-0000 ..	STEERING RAIL	119
526582-0000 ..	NET	707
526587-0000 ..	AIR NOZZLE	61
526677-0000 ..	CANTILEVER	411
526680-0000 ..	FENDER WALING	607
526682-0000 ..	HOOD	45
526688-0000 ..	HEAD PLATE	61
526689-0000 ..	DISTRIBUTOR WING	61, 139
526690-0000 ..	SHAFT	61
526691-0000 ..	ROLL	61
526692-0000 ..	ROLL	61
526696-0000 ..	AIR NOZZLE	39
526697-0000 ..	HEAT GUARD	39
526782-0000 ..	COVERING PLATE	63
526904-0000 ..	LINK HEAD	315
526931-0300 ..	BOTTOM PLATE	697, 699
526947-0000 ..	MOUNTING SHEET	723
526948-0000 ..	MOUNTING SHEET	719, 721
526954-0100 ..	START-UP KIT	697, 699
526958-0000 ..	AXLE SUPPORT	31, 33, 35
526984-0000 ..	SADDLE	635, 637
526985-0000 ..	PLATE	635, 637
526986-0001 ..	SHAFT	635, 637
527120-0000 ..	STEERING	171
527121-0001 ..	BOW CLAMP	171
527121-0002 ..	BOW CLAMP	171
527122-0000 ..	ATTACHMENT	171
527124-0000 ..	BEARING	171
527125-0000 ..	STEERING	171
527126-0000 ..	LEAF SPRING	171
527127-0000 ..	DOWEL	171
527128-0000 ..	GUIDE PIN	171
527129-0000 ..	BRACKET	171
527130-0000 ..	SCREW	171
527647-0001 ..	STEERING RAIL	119
527647-0002 ..	STEERING RAIL	119

Part No	Description	Page No
527648-0000 ..	WASHER	307
527649-0000 ..	DISTANCE RUBBER	635, 637
527750-0000 ..	CALENDER ROLLER	115
527854-0000 ..	PLATE RIGHT	551, 553, 555
527856-0000 ..	PLATE LEFT	551, 553, 555
527861-0000 ..	HEAD PLATE	537, 539
527898-0100 ..	CONTAINER H2O2	155
527902-0000 ..	SHEET	157
527905-0000 ..	GASKET	167
527906-0000 ..	GASKET	167
527907-0000 ..	PIPE	225, 227, 229, 231, 233, 235
527910-0000 ..	PIPE	161
527912-0000 ..	NON-RETURN VALVE	171
529000-0000 ..	VOLUME FLAP	335, 337
529039-0000 ..	EDGE ROLLER	31, 33, 35
529040-0000 ..	GUIDE ROLLER	31, 33, 35
529041-0000 ..	GUIDE ROLLER	31, 33, 35
529137-0000 ..	CURVE LEFT	323, 325
529138-0000 ..	CURVE RIGHT	327, 329
529139-0000 ..	CREASE FORMER	609, 611, 613, 615, 617, 619
529141-0000 ..	VOLUME SHIM	369, 371
529180-0000 ..	FORK	45
529181-0000 ..	COUNTER ROLLER	25, 27
529184-0000 ..	HOLDER	25, 27
529196-0000 ..	HOLDER	403, 405, 407, 409
529312-0000 ..	HEAD PLATE	537, 539
529331-0000 ..	COVERING PLATE	447, 449
529362-0000 ..	SPROCKET	635, 637
529376-0000 ..	ARM	51, 53
529377-0000 ..	CLAMP	51, 53
529378-0000 ..	LINK	51, 53
529455-0000 ..	PLATE	667, 669
529456-0000 ..	PLATE	667, 669
529476-0000 ..	SIDE GUARD	659, 661
529498-0000 ..	SIDE GUARD RIGHT	659, 661
530469-0000 ..	FRONT PLATE	199, 201, 203
530529-0000 ..	MAIN CAM	301, 303
530532-0000 ..	COUNTER CAM	301, 303
530550-0000 ..	PIPE	157
530551-0000 ..	WASHER	171
530556-0000 ..	JUNCTION PIPE UPPER	211
530566-0000 ..	EDGE ROLLER	31, 33, 35
530567-0000 ..	GUIDE ROLLER	31, 33, 35
530568-0000 ..	GUIDE ROLLER	31, 33, 35
530587-0000 ..	WASHER	85
530588-0000 ..	SEAL RING	85, 107, 109, 141
530589-0000 ..	SEAL RING	81, 83, 141
530590-0000 ..	VALVE CONE	81, 83
530591-0000 ..	HOLDER	83
530592-0000 ..	SEAL RING HOLDER	81
530595-0000 ..	SEAL RING HOLDER	81
530597-0000 ..	WASHER	83
530598-0000 ..	WASHER	83
530599-0000 ..	RING	83
530622-0000 ..	BUSHING	55, 57
530708-0000 ..	ARM	305
530754-0000 ..	FASTENING BRACKET	299
530755-0000 ..	SCREW	299
530778-0000 ..	LACE	687, 689
530808-0000 ..	CLAMP RAIL	123
531002-0000 ..	CURVE	403, 405, 407, 409
531034-0000 ..	VALVE HOUSING	97
531035-0000 ..	ARM	97
531036-0000 ..	SHAFT	97
531037-0000 ..	FLAP	97
531038-0000 ..	GASKET	97
531039-0000 ..	WASHER	97
531040-0000 ..	BRACKET	97
531041-0000 ..	WEDGE	97
531109-0000 ..	VOLUME CAM	403, 405, 407, 409
531110-0000 ..	RAIL BRACKET	403, 405, 407, 409
531116-0000 ..	GASKET	433
531119-0000 ..	STRAINER	419, 421, 447, 449
531167-0000 ..	SHAFT	71, 73
531168-0000 ..	WHEEL	71, 73
531169-0000 ..	WASHER	71, 73
531182-0000 ..	CANTILEVER	199, 201, 203
531189-0000 ..	GASKET	433
531190-0000 ..	SHAFT	113
531191-0000 ..	BUSHING	113
531309-0000 ..	GASKET	123
531312-0000 ..	HEAD PLATE	537, 539
531313-0000 ..	HEAD PLATE	537, 539
531314-0000 ..	HEAD PLATE	537, 539

Part No	Description	Page No
531337-0000 ..	MACHINE BODY	663
531345-0200 ..	PERSONAL PROTECT. EQ H2O2	575
531365-0000 ..	BRACKET	199, 201, 203
531592-0000 ..	PIPE	207
531595-0000 ..	STRAIGHT PIPE UNION	207
531597-0000 ..	PIPE	207
531616-0000 ..	HOLDER	173, 175
531628-0000 ..	PRESSURE DEVICE FLAP	547, 549
531730-0000 ..	FLANGE SEAL	481, 483, 489, 491
531731-0000 ..	GASKET	111
531733-0000 ..	GASKET	719, 721, 729
531734-0000 ..	GASKET	139, 719, 721, 729
531735-0000 ..	GASKET	719, 721, 729
531736-0000 ..	GASKET	719, 721, 729
531737-0000 ..	GASKET	105, 111
531738-0000 ..	GASKET	55, 57, 139
531739-0000 ..	GASKET	55, 57, 139
531740-0000 ..	GASKET	55, 57, 139
531741-0000 ..	GASKET	39
531742-0000 ..	GASKET	63, 105, 139
531744-0000 ..	GASKET	55, 57, 139
531745-0000 ..	GASKET	55, 57, 139
531761-0000 ..	HOLDER	175
531764-0000 ..	GASKET	55, 57, 139
531765-0000 ..	GASKET	107, 109
531885-0000 ..	STEERING	685
531886-0000 ..	PROTECTION PLATE	673, 675, 677
532024-0000 ..	GASKET	663
532026-0000 ..	SEAL COVER	663
532032-0000 ..	MAIN CAM	301, 303
532033-0000 ..	COUNTER CAM	301, 303
532082-0000 ..	ROUND NUT	609, 611, 613, 615, 617, 619, 643, 645
532083-0000 ..	ROUND NUT	609, 611, 613, 615, 617, 619, 643, 645
532097-0000 ..	COUNTER CAM	301, 303
532117-0000 ..	CLAMP RING	87
532118-0000 ..	CLAMP RING	89
532143-0000 ..	ARM	115
532144-0000 ..	SHAFT	115
532145-0000 ..	SHAFT	115
532146-0000 ..	SHAFT	115
532147-0000 ..	WASHER	115
532148-0000 ..	SCREW	115
532205-0000 ..	LID	167
532206-0000 ..	GASKET	167
532261-0000 ..	SLEEVE	115
532318-0000 ..	CATCH GUARD RIGHT	149
532319-0000 ..	CATCH GUARD LEFT	149
532348-0000 ..	SPINDLE GUIDE	107, 109
532349-0000 ..	PLAIN BEARING	107, 109
532352-0000 ..	PIPE	129, 131
532354-0000 ..	PIPE	129, 131
532355-0000 ..	PIPE	129, 131
532356-0000 ..	PIPE	129, 131
532366-0000 ..	PIPE	129, 131
532371-0000 ..	STOP LUG	237
532655-0000 ..	CAUTION SIGN	169
532719-0001 ..	FEEDING ROLLER	609, 611, 613, 615, 617, 619
532719-0002 ..	FEEDING ROLLER	609, 611, 613, 615, 617, 619, 643, 645
533012-0001 ..	END PIECE	345, 347, 349, 351, 369, 371
533169-0000 ..	DIAPHRAGM	81, 141
533195-0000 ..	MANTLE	55, 57
533196-0000 ..	FASTENING PLATE	55, 57
533426-0000 ..	STOP PLATE	173
533442-0000 ..	COUNTER ROLLER	25, 27
533448-0000 ..	MACHINE BODY	609, 611, 613, 615, 617, 619
533449-0001 ..	BENDING ROLLER	609, 611, 613, 615, 617, 619
533449-0002 ..	BENDING ROLLER	609, 611, 613, 615, 617, 619, 643, 645
533453-0000 ..	LID	609, 611, 613, 615, 617, 619
533454-0000 ..	FRAME	609, 611, 613, 615, 617, 619
533455-0000 ..	LID	609, 611, 613, 615, 617, 619
533456-0000 ..	FRAME	609, 611, 613, 615, 617, 619
533457-0001 ..	SHAFT	609, 611, 613, 615, 617, 619
533457-0002 ..	SHAFT	609, 611, 613, 615, 617, 619, 643, 645
533458-0000 ..	WASHER	609, 611, 613, 615, 617, 619, 643, 645
533459-0000 ..	SCREW	609, 611, 613, 615, 617, 619, 643, 645
533818-0000 ..	HOLDER	331, 333, 383, 385
533955-0000 ..	CURVE	403, 405, 407, 409
534176-0000 ..	AIR NOZZLE	39
534177-0000 ..	HOLDER	25, 27
534237-0000 ..	SEAL	331, 333
534426-0000 ..	PIPE	105
534486-0000 ..	PIPE HOLDER	237
534878-0000 ..	SHAFT	179, 181, 187, 189, 213, 239
534879-0000 ..	BEARING HOUSING	179, 181, 187, 189, 213, 239

Part No	Description	Page No
534880-0000 ..	END SECTION	179, 181, 187, 189, 213, 239
535016-0000 ..	FORCE SPRING	211
535017-0000 ..	BRACKET	211
535200-0000 ..	HOLDER	411
535608-0000 ..	GASKET	707
535612-0000 ..	PIPE	709
535613-0000 ..	BRANCH	707
535614-0000 ..	INNER PIPE	707
536686-0000 ..	VOLUME BULGE	335, 337
536687-0000 ..	VOLUME SHIM	335, 337
536703-0000 ..	SHAFT	315
536704-0000 ..	WASHER	331, 333, 383, 385
536705-0000 ..	BRACKET	331, 333
536913-0000 ..	HUB	733
536916-0000 ..	AXLE PIN	731
536917-0000 ..	AXLE PIN	735, 737
536987-0000 ..	WASHER	13
537308-0000 ..	SPRING	621, 623, 647
537327-0000 ..	SHAFT	733
537329-0100 ..	HUB JUMBO	731
537901-0000 ..	FOLDING FLAP CAM L	323, 325
537902-0000 ..	FOLDING FLAP CAM R	327, 329
537918-0000 ..	PIPE	211
537919-0000 ..	PIPE HOLDER	211
538236-0002 ..	MACHINE BODY	643, 645
538237-0001 ..	LID	643, 645
538238-0000 ..	FRAME	643, 645
538239-0000 ..	HEAD PLATE	643, 645
538241-0002 ..	SPACER	609, 611, 613, 615, 617, 619
538241-0003 ..	SPACER	609, 611, 613, 615, 617, 619
538241-0004 ..	SPACER	609, 611, 613, 615, 617, 619
538241-0005 ..	SPACER	609, 611, 613, 615, 617, 619
538245-0000 ..	SHIM	199, 201, 203
538399-0000 ..	SHAFT	331, 333, 383, 385
538400-0000 ..	ARM LEFT	383
538401-0000 ..	ARM RIGHT	385
539209-0100 ..	A-CYLINDER	79
539210-0100 ..	C-CYLINDER	79
539211-0100 ..	B-CYLINDER	79
539212-0000 ..	GASKET	79, 141
539338-0000 ..	CAP	609, 611, 613, 615, 617, 619, 643, 645
539612-0000 ..	SPREADER	261
539613-0000 ..	SPREADER	261
539761-0000 ..	CUTTING RAIL	345, 347, 349, 351
540270-0000 ..	MAIN CAM	301, 303
540306-0001 ..	COMPONENTS WITHOUT TP-NO	285
540307-0000 ..	PRINTED CIRCUIT BOARD	285
540335-0000 ..	LINK	315
540367-0000 ..	CARRIER	343
540368-0000 ..	CARRIER	341
540718-0000 ..	ELBOW PIPE JOINT	209
540721-0000 ..	CABLE DUCT	273
540722-0000 ..	LID	273
540723-0100 ..	CONNECTION BOX	199, 201, 203
540724-0000 ..	CONNECTION BOX	205
540725-0000 ..	FRONT PLATE, LOWER	199, 201, 203
540726-0000 ..	HOOK HOLDER	199, 201, 203
540727-0000 ..	FASTENING BRACKET	199, 201, 203
540743-0000 ..	BUSBAR	343
540744-0000 ..	BUSBAR	341
540869-0000 ..	SHEET	731
540870-0000 ..	ARM	735, 737
540886-0000 ..	TANK	161
540949-0000 ..	SHAFT	309
541009-0000 ..	CRANK HOLDER	255
541052-0100 ..	ARM WITH AXLE PRESSURE L	319, 321
541053-0100 ..	ARM WITH AXLE PRESSURE R	319, 321
541057-0000 ..	ARM	735, 737
541064-0000 ..	FORK	735, 737
541065-0000 ..	SHAFT	735, 737
541066-0000 ..	ROLL	735, 737
541067-0000 ..	SPRING BRACKET	735, 737
541068-0000 ..	SPRING HOLDER	731
541069-0000 ..	SPRING BRACKET	735, 737
541070-0000 ..	SHAFT	735, 737
541163-0100 ..	CLAMP RING	79
541164-0100 ..	CLAMP RING	79
541165-0000 ..	WASHER	87, 89
541166-0000 ..	WASHER	81
541167-0000 ..	SPACER SLEEVE	81
541172-0000 ..	SET SCREW	731
541173-0000 ..	STOP	731
541177-0000 ..	BENDING ROLLER	71, 73
541188-0300 ..	BAR CODE	319, 321

Part No	Description	Page No
541697-0000 ..	CATCH	357, 359, 363, 365
541751-0000 ..	CONICAL BOBBIN	733
542063-0000 ..	FLANGE	309
542074-0000 ..	PIPE	207
542075-0000 ..	PIPE	71, 73
542090-0000 ..	HEAT GUARD	717
542262-0000 ..	CRANK	295
542398-0000 ..	HOLDER	199, 201, 203
542399-0000 ..	HOLDER	199, 201, 203
542695-0000 ..	COVERPLATE R	153
542697-0000 ..	COVER PLATE L	195
542700-0000 ..	VALVEPANEL LOWER	263, 265
542702-0000 ..	COVER PLATE L	199, 201, 203
542703-0000 ..	COVER PLATE R	199, 201, 203
542706-0000 ..	PIPE	177
542781-0000 ..	ARM	739
542782-0000 ..	AXLE PIN	739
542784-0000 ..	LINK ARM	739
542785-0000 ..	ROLL	739
542786-0000 ..	FLAG	739
542847-0000 ..	PAPER GUARD	23
542848-0000 ..	HATCH	23
542849-0000 ..	CANTILEVER	23
542850-0000 ..	COVERING PLATE	23
542851-0000 ..	HINGE	23
542852-0000 ..	CANTILEVER	91
542860-0000 ..	COVER PLATE	173
543125-0000 ..	ANGLE	731
543126-0000 ..	STOP LUG	731
543127-0000 ..	BRACKET	263, 265
543128-0000 ..	VALVE BRACKET	263, 265
543130-0000 ..	BRACKET	263, 265
543131-0000 ..	BRACKET	263, 265
543134-0000 ..	PLATE	263, 265
543135-0000 ..	INK TRANSFER ROLLER	621, 623, 647
543137-0001 ..	SPACER	609, 611, 613, 615, 617, 619
543137-0002 ..	SPACER	609, 611, 613, 615, 617, 619
543138-0000 ..	SPACER	609, 611, 613, 615, 617, 619
543139-0000 ..	SPACER	643, 645
543141-0000 ..	SIGN	635, 637
543142-0000 ..	SIGN	635, 637
543143-0100 ..	ADJUSTMENT DEVICE	609, 611, 613, 615, 617, 619, 643, 645
543148-0000 ..	HOOD	183, 185
543151-0000 ..	CANTILEVER	199, 201, 203
543152-0000 ..	HOSE ATTACHMENT	199, 201, 203
543470-0000 ..	LEVEL GLASS	71, 73
543471-0000 ..	ROLL	31, 33, 35
543476-0000 ..	TROUGH	309
543575-0000 ..	LOCK SHEET	739
543694-0000 ..	SLIDE RAIL	537, 539
543697-0000 ..	SPACER PIECE	557, 559, 561, 563, 565, 567
543705-0000 ..	GEAR WHEEL WIDE	541, 543
543706-0000 ..	GEAR WHEEL SLIM , INNER	541, 543
543707-0000 ..	GEAR WHEEL SLIM , OUTER	541, 543
543818-0000 ..	PROTECTION PLATE	731
543819-0000 ..	HINGE	731
543820-0000 ..	SPRING	735, 737
543821-0100 ..	LEVEL PROBE	731
543822-0100 ..	BRAKE ARM	731
543823-0100 ..	STRIP MAGAZINE	697, 699
543950-0000 ..	BENDING ROLLER	113
544012-0000 ..	ROLLER	125
544013-0000 ..	RING	125
544014-0000 ..	RING	125
544015-0000 ..	SEAL	125, 139
544229-0001 ..	DROP WING	527, 529
544229-0002 ..	DROP WING	527, 529
544229-0003 ..	DROP WING	527, 529
544229-0004 ..	DROP WING	527, 529
544229-0005 ..	DROP WING	527, 529
544252-0000 ..	FLAP	557, 559, 561, 563, 565, 567
544254-0000 ..	PLATE	557, 559, 561, 563, 565, 567
544255-0000 ..	BLOCKING PIECE	547, 549
544263-0000 ..	FORMING RING	31, 33, 35
544269-0000 ..	BLOW-OFF NOZZLE TV	481, 483, 489, 491
544270-0000 ..	STOPPER	687, 689
544272-0000 ..	BEARING HOUSING	681, 683
544273-0000 ..	BEARING HOUSING	681, 683
544274-0000 ..	COVERING PLATE	681, 683
544275-0000 ..	COVERING PLATE	681, 683
544277-0000 ..	RETAINING RING	653, 655
544278-0000 ..	BEARING HOUSING	357, 359, 363, 365
544279-0000 ..	CREASE FORMER	609, 611, 613, 615, 617, 619
544280-0000 ..	SHEET	551, 553, 555

Part No	Description	Page No
544286-0000 ..	BOW CLAMP	15, 17
544287-0000 ..	FILLER TUBE	45
544288-0000 ..	SHEET	551, 553, 555
544289-0000 ..	FLAP	547, 549
544290-0000 ..	RAIL	551, 553, 555
544291-0000 ..	PLATE	551, 553, 555
544292-0000 ..	SHAFT	335, 337, 339
544293-0000 ..	BLOW-OFF NOZZLE TH	481, 483, 489, 491
544294-0000 ..	FILLER TUBE	51, 53
544295-0000 ..	FLOAT	51, 53
544298-0000 ..	BLOWING NOZZLE B	481, 483, 489, 491
544301-0000 ..	STEERING RAIL	119
544303-0000 ..	HOLDER	403, 405, 407, 409
544305-0000 ..	VOLUME SHIM	369, 371
544306-0000 ..	BEARING HOUSING	25, 27
544307-0000 ..	HEAD PLATE	531, 533
544314-0000 ..	FOLDING FLAP	373, 377
544315-0000 ..	FOLDING FLAP	373, 377
544317-0000 ..	BEARING HOUSING	345, 347, 349, 351
544318-0000 ..	DISTRIBUTOR	461, 463
544319-0000 ..	CARRIER RULER	373
544320-0000 ..	CARRIER RULER	377
544321-0000 ..	HEAD PLATE	499, 501
544322-0000 ..	BRACKET	499, 501
544323-0000 ..	CUTTING JAW	345, 347, 349, 351
544331-0000 ..	BRACKET	531, 533
544332-0000 ..	BRACKET	531, 533
544333-0000 ..	FORMING RING	25, 27
544334-0000 ..	CUTTING RAIL	345, 347, 349, 351
544335-0000 ..	FORK	25, 27
544336-0000 ..	SHAFT	25, 27
544337-0000 ..	END PIECE	345, 347, 349, 351, 369, 371
544342-0000 ..	RAIL BRACKET	403, 405, 407, 409
544343-0000 ..	CANTILEVER	411
544367-0000 ..	SHAFT	609, 611, 613, 615, 617, 619
544380-0000 ..	WASTE CHUTE	643, 645
544435-0000 ..	PIPE	95
544436-0000 ..	FILTER PIPE	95
544437-0000 ..	BRANCH PIPE	105
544439-0000 ..	INTERMEDIATE PIPE	95
544445-0000 ..	SPACER	25, 27
544504-0000 ..	VOLUME FLAP	335, 337
544506-0000 ..	PIPE	95
544508-0000 ..	BRACKET	175
544510-0000 ..	BRACKET	173
544516-0000 ..	CUTTING RAIL	345, 347, 349, 351
544527-0000 ..	MACHINE PLATE TBA	257
544533-0000 ..	PLASTIC PEHD 21172-10	257
544539-0000 ..	HOUSEMARK REPBY 0574658-0000	245, 277
544688-0000 ..	PIPE	215, 217
544689-0000 ..	PIPE	215, 217
544690-0000 ..	PIPE	215, 217
544691-0000 ..	PIPE	215, 217
544692-0000 ..	PIPE	225, 227, 229, 231, 233, 235
544693-0000 ..	PIPE	215, 217
544694-0000 ..	PIPE	215, 217
544695-0000 ..	PIPE	215, 217
544696-0000 ..	PIPE	215, 217
544697-0000 ..	PIPE	225, 227, 229, 231, 233, 235
544703-0000 ..	MOUNTING SHEET	199, 201, 203
544706-0000 ..	FLANGE	609, 611, 613, 615, 617, 619, 643, 645
544725-0000 ..	AXLE PIN	731
544726-0000 ..	AXLE PIN	735, 737
544727-0000 ..	AXLE PIN	731
544730-0000 ..	ROLL	731, 735, 737, 741
544892-0000 ..	SPRING	45
544893-0000 ..	SPRING	45
544899-0000 ..	SIDECOVER LEFT FRONT	173
544900-0000 ..	SIDECOVER RIGHT FRONT	175
544973-0100 ..	PILLAR	697, 699
544974-0000 ..	PILLAR	741
545101-0000 ..	MAIN CAM	301, 303
545111-0000 ..	ARM	741
545112-0000 ..	SHAFT 6X29,5	741
545113-0000 ..	SIGN STRIP MAGAZINE	731
545125-0000 ..	STOPPER	387, 389
545126-0000 ..	STOPPER	387, 389
545127-0000 ..	CATCH	387, 389
545136-0000 ..	CATCH	387, 389
545138-0000 ..	CANTILEVER	741
545409-0000 ..	ARM RIGHT	333
545410-0000 ..	ARM LEFT	331
545651-0000 ..	GUIDE STUD	387, 389
545789-0000 ..	HOLDER	411

Part No	Description	Page No
545801-0000 ..	SPRING	387, 389
545802-0000 ..	SPRING	387, 389
545995-0000 ..	WIRING DIAGRAM	111
546030-0001 ..	CANTILEVER	741
546030-0002 ..	CANTILEVER	741
546031-0000 ..	SPACER	741
546116-0000 ..	CANTILEVER	715
546180-0100 ..	SPLICE DETECTOR	697, 699
546929-0000 ..	FILTER	67, 69, 197
547220-0000 ..	CABLE DUCT	273
547567-0000 ..	SHAFT	75
547568-0000 ..	SPACER	75
547571-0000 ..	PLATE	741
547793-0000 ..	SHAFT	163
547902-0000 ..	BRACKET	249
547904-0000 ..	TUBE	249
547906-0000 ..	SHELF	275
547924-0000 ..	AXLE PIN	741
547925-0000 ..	AXLE PIN	741
548346-0000 ..	FRONT GUARD	257
548348-0000 ..	HATCH	257
548402-0000 ..	SIDE PIPE	481, 483, 489, 491
548493-0000 ..	STOPPER	387, 389
548778-0000 ..	LIFTING UNIT	599
548794-0000 ..	HEATING JAW	673, 675, 677
549044-0000 ..	DOOR	277
549045-0000 ..	HATCH	245
549093-0000 ..	PIPE	129, 131
549263-0000 ..	BLOCK	41
549264-0000 ..	CONTAINER	41
549267-0000 ..	LID	41
549830-0000 ..	PROTECTION PLATE	663
549832-0000 ..	WASTE CHUTE	609, 611, 613, 615, 617, 619
549834-0000 ..	CUTTING RAIL	681, 683
549835-0000 ..	CUTTING RAIL	681, 683
549928-0000 ..	COUNTER CAM	301, 303
550301-0000 ..	CURVE	403, 405, 407, 409
550337-0000 ..	FOLDING FLAP CAM L	323, 325
550338-0000 ..	FOLDING FLAP CAM R	327, 329
550359-0000 ..	ARM	437, 439, 453, 455, 457, 459
550503-0000 ..	PROTECTION	183, 185
551281-0000 ..	RAIL BRACKET	403, 405, 407, 409
551282-0000 ..	FASTENING PLATE	403, 405, 407, 409
551283-0000 ..	CURVE	403, 405, 407, 409
551284-0000 ..	VOLUME CAM	403, 405, 407, 409
551285-0000 ..	FOLDING FLAP CAM	323, 325
551286-0000 ..	FOLDING FLAP CAM	327, 329
551340-0000 ..	FILLER TUBE	71, 73
551626-0000 ..	VOLUME CAM	403, 405, 407, 409
551784-0000 ..	FITTING BOLT	123
551786-0000 ..	LEVER	123
551825-0000 ..	COUNTER CAM	301, 303
551903-0000 ..	KICKPLATE,LEFT	591, 593
551907-0000 ..	MAIN CAM	301, 303
551910-0000 ..	COUNTER CAM	301, 303
551997-0100 ..	LIFTING UNIT	575
551998-0000 ..	SUPPORT LUG	599
552158-0000 ..	RAIL BRACKET	403, 405, 407, 409
552159-0000 ..	VOLUME CAM	403, 405, 407, 409
553162-0000 ..	STOP PLATE	173
553164-0000 ..	LOW IMPEDANCELITZ L=150MM	173, 175
553763-0000 ..	ADJUSTING SCREW	673, 675, 677
553770-0001 ..	PRESSURE JAW	673, 675, 677
553770-0002 ..	PRESSURE JAW	673, 675, 677
553842-0000 ..	BOTTOM PLATE	193
553851-0000 ..	SCREW	357, 359, 363, 365
554139-0000 ..	PIPE	129, 131
554141-0000 ..	FILTER	41
554142-0000 ..	FILTER HOUSING	41
554171-0300 ..	PLATFORM ADDITION	575
554448-0000 ..	PIPE	121
554449-0000 ..	PIPE	121
554582-0000 ..	CANTILEVER	77
554583-0000 ..	PIPE	121
554585-0000 ..	STUD SCREW	41
554850-0000 ..	PIPE	129, 131
554962-0000 ..	SPRING	387, 389
554963-0000 ..	SPRING	387, 389
555540-0000 ..	SPACER	65, 101, 103
555541-0000 ..	BRACKET	65, 101, 103
555542-0000 ..	BRACKET	65, 101, 103
555544-0000 ..	PIPE	63
555545-0000 ..	COIL HEATER	55, 57
555546-0000 ..	INSULATING PLATE	55, 57

Part No	Description	Page No
555547-0000 ..	PIPE	129, 131
555548-0000 ..	PIPE	129, 131
555551-0000 ..	PIPE	129, 131
555552-0000 ..	PIPE	129, 131
555553-0000 ..	PIPE	129, 131
555554-0000 ..	PIPE	129, 131
555888-0000 ..	BRACKET	313
555892-0000 ..	VOLUME BULGE	335, 337
555926-0000 ..	VOLUME FLAP	335, 337
555928-0000 ..	VOLUME SHIM	335, 337
556139-0000 ..	ROLL	25, 27
556316-0000 ..	INSULATION	673, 675, 677
556317-0000 ..	INSULATION	673, 675, 677
556318-0000 ..	INSULATION	673, 675, 677
556319-0000 ..	WASHER	681, 683
556320-0000 ..	SLEEVE	681, 683
556322-0000 ..	SHAFT	681, 683
556323-0000 ..	SHAFT	681, 683
556324-0000 ..	SHAFT	681, 683
556325-0000 ..	SHAFT	681, 683
556391-0000 ..	HANDLE	681, 683
556392-0000 ..	HANDLE	681, 683
556393-0000 ..	CUTTING RAIL	681, 683
556394-0000 ..	CUTTING RAIL	681, 683
556395-0000 ..	CUTTING RAIL	681, 683
556439-0000 ..	BARRIER	687, 689
556440-0000 ..	BARRIER	687, 689
556441-0000 ..	ARM	687, 689
556442-0000 ..	ARM	687, 689
556443-0000 ..	BEARING HOUSING	687, 689
556549-0000 ..	FASTENING PLATE	707
556550-0000 ..	BRACKET	719, 721
556551-0000 ..	CYLINDER BRACKET	717
556552-0000 ..	BRACKET	717
556557-0001 ..	PIPE	709
556557-0002 ..	PIPE	709
556557-0003 ..	PIPE	709
556557-0004 ..	PIPE	709
556557-0005 ..	PIPE	709
556557-0006 ..	PIPE	709
556558-0001 ..	PIPE	709
556558-0002 ..	PIPE	709
556558-0003 ..	PIPE	709
556558-0004 ..	PIPE	709
556558-0005 ..	PIPE	709
556558-0006 ..	PIPE	709
556559-0001 ..	PIPE	709
556559-0002 ..	PIPE	709
556559-0003 ..	PIPE	709
556559-0004 ..	PIPE	709
556559-0005 ..	PIPE	709
556559-0006 ..	PIPE	709
556560-0001 ..	PIPE	709
556560-0002 ..	PIPE	709
556560-0003 ..	PIPE	709
556560-0004 ..	PIPE	709
556560-0005 ..	PIPE	709
556560-0006 ..	PIPE	709
556565-0000 ..	ROCKER ARM	717
556579-0000 ..	CURVE	309
556682-0000 ..	CABLE INLET PLATE 93X140MM	135
556683-0000 ..	RUBBERGASKET 90X140MM	135
556872-0000 ..	BEARING UNIT	657
556873-0000 ..	EXTENSION PIECE	657
556874-0000 ..	BLOCKING RING	657
556875-0100 ..	COVER	603, 605
556879-0000 ..	COVER	657
556886-0000 ..	BRACKET	499, 501
559141-0100 ..	EL. RK "DCS8PLUS FOR TBA/8-1000"	575
559142-0100 ..	ELECTRICAL DOCUMENT	583
559143-0100 ..	ELECTRIC MATERIALS	583
560122-0000 ..	SUPPORT ROLLER	403, 405, 407, 409
560391-0000 ..	CAM LEFT	301, 303
560392-0000 ..	CAM RIGHT	301, 303
560417-0000 ..	ROCKER ARM	307
560418-0000 ..	SHAFT	307
560472-0000 ..	PIPE	71, 73
560614-0000 ..	BATH	71, 73
560615-0000 ..	PIPE	71, 73
560616-0000 ..	PILLAR	75
560617-0000 ..	ROLLER CHAIN	71, 73
560799-0000 ..	FRONT GUARD	257
560800-0000 ..	BEARING UNIT	173, 175
560872-0000 ..	PLATE	173, 175

Part No	Description	Page No
560880-0000 ..	HATCH	247
560881-0000 ..	PIPE	225, 227, 229, 231, 233, 235
560922-0100 ..	VALVE PANEL	155
560923-0000 ..	PIPE	163
560927-0000 ..	PIPE	77
560928-0000 ..	PIPE	129, 131
560929-0000 ..	TOUCH GUARD	77
560930-0100 ..	CONTAINER	11
560931-0000 ..	BRACKET	41, 71, 73, 161
560932-0000 ..	INTERMEDIATE PART	41
560933-0000 ..	ELECTRODE	41
560934-0000 ..	ELECTRODE	41
561256-0300 ..	PEROXIDE PIPE	145, 147
561257-0200 ..	PEROXIDE TANK	155
561258-0200 ..	DRAINING PEROXIDE	155
561259-0100 ..	CONNECTION HOUSING	155
561391-0000 ..	SPRING	387, 389
561392-0000 ..	SPRING	387, 389
561393-0000 ..	SPRING	387, 389
561394-0000 ..	SPRING	387, 389
561416-0000 ..	BRACKET	323, 325, 327, 329
561420-0000 ..	OVERFLOW TUBE	71, 73
561421-0000 ..	OVERFLOW TUBE	71, 73
561422-0000 ..	OVERFLOW TUBE	71, 73
561423-0000 ..	BRACKET	153
561424-0000 ..	PIPE	215, 217
561426-0000 ..	LACE	673, 675, 677
561427-0000 ..	CONTAINER	169
561543-0000 ..	SUPPORT ROLLER	403, 405, 407, 409
561544-0000 ..	SUPPORT ROLLER	403, 405, 407, 409
561545-0000 ..	SHAFT	403, 405, 407, 409
561547-0000 ..	SHAFT	403, 405, 407, 409
561549-0000 ..	TANK	167
561571-0000 ..	CABLE TRENCH	135
561583-0000 ..	U-TUBE	105
561590-0000 ..	CENTRAL LUBRIC. DIAGRAM	281
561591-0000 ..	PIPE	215, 217
561592-0000 ..	PIPE	215, 217
561595-0000 ..	SIGN MULTISTEP 35X35MM	267, 269
562136-0000 ..	CATCH	387, 389
562137-0000 ..	CATCH	387, 389
562140-0000 ..	CAP	315
562746-0000 ..	ARM	315
562747-0000 ..	ARM	315
562748-0000 ..	BRACKET	315
562749-0000 ..	BRACKET	315
562971-0000 ..	CANTILEVER	411
563061-0000 ..	REAMED BOLT	315
563285-0000 ..	BLIND PLUG	157
563728-0000 ..	CAM LEFT	301, 303
563729-0000 ..	CAM RIGHT	301, 303
564519-0000 ..	SIDE PLATE	195
564520-0000 ..	SIDE PLATE	195
564521-0000 ..	SIDE PLATE	153
564522-0000 ..	SIDE PLATE	153
564523-0000 ..	RIM	153, 195
564524-0000 ..	CAM LEFT	301, 303
564525-0000 ..	CAM RIGHT	301, 303
564526-0000 ..	CAM LEFT	301, 303
564527-0000 ..	CAM RIGHT	301, 303
564528-0000 ..	CAM LEFT	301, 303
564529-0000 ..	CAM RIGHT	301, 303
564533-0001 ..	DOLLY	345, 347, 349, 351, 369, 371
564533-0002 ..	DOLLY	345, 347, 349, 351, 369, 371
564533-0005 ..	DOLLY	345, 347, 349, 351, 369, 371
564533-0007 ..	DOLLY	345, 347, 349, 351, 369, 371
564600-0000 ..	PIPE	129, 131
564621-0000 ..	CAM LEFT	301, 303
564622-0000 ..	CAM RIGHT	301, 303
564623-0000 ..	CAM LEFT	301, 303
564624-0000 ..	CAM RIGHT	301, 303
564933-0000 ..	CAM LEFT	301, 303
564934-0000 ..	CAM RIGHT	301, 303
565104-0000 ..	SWEEP	171
565188-0000 ..	FOLDING FLAP CAM	323, 325
565189-0000 ..	FOLDING FLAP CAM	327, 329
565250-0000 ..	WASHER	169
565251-0000 ..	VALVE	169
565259-0000 ..	VOLUME CAM	403, 405, 407, 409
565322-0000 ..	INTERMEDIARY SHAFT	541, 543
565323-0000 ..	OUTPUT SHAFT, LONG	541, 543
565324-0000 ..	LID	541, 543
565325-0000 ..	INPUT SHAFT	541, 543
565326-0000 ..	LID	541, 543

Part No	Description	Page No
565327-0000 ..	RING NUT	541, 543
565328-0000 ..	SCREW RING	541, 543
565329-0000 ..	SPACER	541, 543
565330-0000 ..	SPACER	541, 543
565331-0000 ..	BEARING HOLDER	541, 543
565332-0000 ..	BEARING HOLDER	541, 543
565333-0000 ..	BEARING HOLDER	541, 543
565334-0000 ..	BEARING HOLDER	541, 543
565335-0000 ..	BEARING HOLDER	541, 543
565336-0000 ..	OUTPUT SHAFT SHORT	541, 543
565338-0000 ..	GEAR HOUSING	541, 543
565339-0000 ..	OIL PIPE	541, 543
565340-0000 ..	OIL LEVEL TUBE	541, 543
565668-0000 ..	MAIN CAM	301, 303
565961-0000 ..	KICKPLATE,RIGHT	591, 593
565967-0000 ..	ARM	557, 559, 561, 563, 565, 567
566016-0000 ..	WASHER	547, 549
566171-0000 ..	CUP SPRING	165
566192-0000 ..	METERING DEVICE	167
566194-0000 ..	WEIGHT	165
566195-0000 ..	LID	165
566196-0100 ..	LID WITH WEIGHT	161, 167
566228-0000 ..	BRACKET	95
566229-0000 ..	BRACKET	105
566311-0000 ..	PROFILE	441, 461, 463
566312-0000 ..	BRACKET	441, 461, 463
566313-0000 ..	HOLDER	493, 495
566314-0000 ..	HOLDER	465, 467
566315-0000 ..	HOLDER	441, 461, 463
566316-0000 ..	HOLDER	493, 495
566317-0000 ..	HOLDER	493, 495
566416-0000 ..	COVERING PLATE	513
566526-0000 ..	CLUTCH PIECE	357, 359, 363, 365
566527-0000 ..	CLUTCH PIECE	357, 359, 363, 365
566533-0000 ..	BRACKET	441, 461, 463
566645-0000 ..	SIDE GUARD	199, 201, 203
566646-0000 ..	SIDE GUARD	199, 201, 203
566683-0100 ..	AIR COOLER	195
566685-0000 ..	BRACKET	197
566686-0000 ..	CONDENSATE TRAY	197
566687-0000 ..	NOZZLE	197
566775-0000 ..	CARRIER	425
567023-0000 ..	TOUCH GUARD	127
567033-0000 ..	ARM	307
567070-0002 ..	ELECTRODE	161
567070-0006 ..	ELECTRODE	161
567070-0007 ..	ELECTRODE	161
567070-0011 ..	ELECTRODE	161
567070-0012 ..	ELECTRODE	71, 73
567070-0013 ..	ELECTRODE	67
567070-0018 ..	ELECTRODE	161
567266-0000 ..	TUBE	215, 217
567267-0000 ..	TUBE	215, 217
567345-0000 ..	BEARING COVER	427
567347-0000 ..	SHAFT	427
567348-0000 ..	SHAFT	427
567349-0000 ..	SPACER	427
567350-0000 ..	WEDGE	427
567373-0000 ..	GEAR HOUSING	427
567702-0000 ..	CURVE	307
567703-0000 ..	LINK	307
567734-0000 ..	AIR NOZZLE	61
567735-0000 ..	HEAD PLATE	61
567736-0000 ..	EDGE ROLLER	31, 33, 35
567737-0000 ..	GUIDE ROLLER	31, 33, 35
567738-0000 ..	GUIDE ROLLER	31, 33, 35
567743-0000 ..	SEAL	125, 139
567744-0000 ..	FORMING RING	25, 27
567746-0001 ..	ROLLER, (STD.SIZE)	25, 27
567747-0000 ..	ROLL	25, 27
567748-0000 ..	FORK	25, 27
568070-0000 ..	GEAR HOUSING	545
568071-0000 ..	BEARING SEAT	545
568072-0000 ..	BEARING SEAT	545
568073-0000 ..	SHAFT	545
568074-0000 ..	SHAFT	545
568151-0000 ..	GEAR HOUSING	473
568152-0000 ..	GEAR HOUSING	473
568153-0000 ..	BEARING SEAT	473
568154-0000 ..	BEARING SEAT	473
568155-0000 ..	BEARING COVER	473
568156-0000 ..	FLANGE	473
568157-0000 ..	SHAFT	473
568158-0000 ..	SHAFT	473

Part No	Description	Page No
568159-0000 ..	SHAFT	473
568160-0000 ..	FASTENING PLATE	473
568161-0000 ..	WASHER	473
568162-0000 ..	WEDGE	473
568166-0000 ..	REAMED BOLT	657
568167-0000 ..	CATCH	663
568286-0000 ..	SLEEVE	307
568287-0000 ..	RING	307
568802-0000 ..	CONTAINER	67
568803-0000 ..	CONTAINER	69
568804-0000 ..	PIPE	63
568806-0000 ..	LID	69
568807-0000 ..	PIPE	63
568808-0000 ..	PIPE	63
568809-0000 ..	PIPE	63
568810-0000 ..	PIPE	63
568827-0000 ..	LID	67
568828-0000 ..	FLOAT GUARD	67
568983-0000 ..	INDUCTOR	357, 359, 363, 365, 369, 371
569003-0100 ..	SEPARATION INSERT	63
569016-0000 ..	GASKET	71, 73
569049-0000 ..	MAIN CAM	301, 303
569050-0000 ..	COUNTER CAM	301, 303
569051-0000 ..	CAM LEFT	301, 303
569052-0000 ..	CAM RIGHT	301, 303
569053-0000 ..	BEARING HOUSING	357, 359, 363, 365
569055-0000 ..	VOLUME BULGE	335, 337, 339
569056-0000 ..	VOLUME SHIM	335, 337, 339, 369, 371
569057-0000 ..	BEARING HOUSING	345, 347, 349, 351
569058-0000 ..	SUPPORT ROLLER	403, 405, 407, 409
569059-0000 ..	CUTTING JAW	345, 347, 349, 351
569060-0000 ..	FOLDING FLAP	373, 377
569061-0000 ..	FOLDING FLAP	373, 377
569062-0000 ..	CARRIER RULER	373
569063-0000 ..	CARRIER RULER	377
569085-0000 ..	SHAFT	25, 27
569086-0000 ..	ROLL	31, 33, 35
569087-0000 ..	ROLL	31, 33, 35
569088-0000 ..	ROLL	31, 33, 35
569089-0000 ..	ROLL	31, 33, 35
569090-0000 ..	FORMING RING	31, 33, 35
569091-0000 ..	SHAFT	15, 17
569092-0000 ..	ROLL	15, 17
569093-0000 ..	ROLL	15, 17
569094-0000 ..	ROLLER	15, 17, 19
569095-0000 ..	ROLLER	15, 17, 19
569096-0000 ..	BOW CLAMP	15, 17
569097-0000 ..	FILLER TUBE	45
569099-0000 ..	HOLDER	25, 27
569100-0000 ..	SHAFT	25, 27
569104-0000 ..	DISTRIBUTOR WING	61, 139
569111-0000 ..	FLAP	547, 549
569112-0000 ..	BLOCKING PIECE	547, 549
569114-0000 ..	PLATE	551, 553, 555
569115-0000 ..	SHEET	551, 553, 555
569116-0000 ..	SHEET	551, 553, 555
569117-0000 ..	FLAP	557, 559, 561, 563, 565, 567
569118-0000 ..	FLAP	557, 559, 561, 563, 565, 567
569119-0000 ..	BOTTOM	557, 559, 561, 563, 565, 567
569120-0000 ..	FOLDING BAR	453, 455, 457, 459
569121-0000 ..	FOLDING BAR	453, 455, 457, 459
569122-0000 ..	FOLDING ARM	437, 439, 453, 455, 457, 459
569123-0000 ..	FOLDING ARM	437, 439, 453, 455, 457, 459
569124-0000 ..	AIR NOZZLE	481, 483, 489, 491
569125-0000 ..	AIR NOZZLE	481, 483, 489, 491
569126-0000 ..	AIR NOZZLE	481, 483, 489, 491
569127-0000 ..	SLIDE RAIL	537, 539
569128-0000 ..	HEAD PLATE	537, 539
569129-0000 ..	DISTRIBUTOR	461, 463
569130-0000 ..	LEAD RAIL	465, 467
569131-0000 ..	BRACKET	527, 529
569132-0000 ..	HEAD PLATE	499, 501
569133-0000 ..	BRACKET	499, 501
569134-0000 ..	HEAD PLATE	531, 533
569135-0000 ..	BRACKET	531, 533
569136-0000 ..	BRACKET	531, 533
569163-0000 ..	ARM	255
569651-0000 ..	CREASE FORMER	609, 611, 613, 615, 617, 619
569652-0002 ..	SPACER	609, 611, 613, 615, 617, 619
569652-0003 ..	SPACER	609, 611, 613, 615, 617, 619
569917-0000 ..	LOCKING CIRCLIP	679
569918-0000 ..	COVER PLATE L.	681, 683
569919-0000 ..	COVER PLATE R.	681, 683
569920-0000 ..	SHAFT	681, 683

Part No	Description	Page No
569921-0000 ..	BEARING HOUSE L.	681, 683
569922-0000 ..	BEARING HOUSE R.	681, 683
569923-0000 ..	CUTTING RAIL	681, 683
569924-0000 ..	STOPPER	687, 689
569944-0000 ..	SLEEVE	653, 655
569945-0000 ..	SLEEVE	653, 655
570066-0000 ..	SHAFT	305, 315
570067-0000 ..	RING	305, 315
570125-0000 ..	SLEEVE	305, 315
570126-0000 ..	SLEEVE	305, 315
571086-0000 ..	BRACKET	63
571087-0000 ..	RETAINING RING	69
571088-0000 ..	DRAINING	67
571277-0000 ..	PUMP HOUSING	163
571296-0000 ..	SPRING BRACKET	387, 389
571297-0000 ..	LACE	387, 389
571298-0000 ..	LACE	387, 389
571423-0000 ..	GLASS PANE	659, 661
571424-0000 ..	HINGE	659, 661
571425-0000 ..	BRACKET	659, 661
571428-0000 ..	TOUCH GUARD	719, 721
571486-0000 ..	VOLUME FLAP	335, 337
571654-0000 ..	NOZZLE	211
571942-0000 ..	SUPPORT ROLLER	403, 405, 407, 409
571945-0000 ..	FASTENING BRACKET	25, 27
572243-0000 ..	PROTECTION	643, 645
572246-0000 ..	BRACKET	659, 661
573058-0000 ..	AIR NOZZLE	61
573277-0000 ..	PIPE	263, 265
573278-0000 ..	PIPE	263, 265
573353-0000 ..	SPROCKET	515
573428-0000 ..	BENDING ROLLER	117
573429-0000 ..	MOTOR PLATE	117
573430-0000 ..	DRYING HOUSE	113
573445-0000 ..	FILTER HOUSING	159
573446-0000 ..	STRAIGHT CONNECTION	159
573485-0000 ..	BRACKET	453, 455, 457, 459
573486-0000 ..	STEERING	453, 455, 457, 459, 537, 539
573487-0000 ..	STEERING	453, 455, 457, 459, 537, 539
573488-0000 ..	BRACKET	537, 539
573489-0000 ..	BRACKET	537, 539
573504-0000 ..	ROLLER	125
573507-0000 ..	SIDE GUARD	659, 661
573583-0000 ..	SCREW	345, 347, 349, 351
573612-0100 ..	DOOR	11
573613-0000 ..	DOOR	47
573614-0000 ..	DOOR	49
573615-0000 ..	COVER SLIP	47, 49
573616-0000 ..	COVER SLIP	47
573617-0000 ..	COVER SLIP	49
573619-0000 ..	PILLAR	123
573625-0000 ..	INDUCTOR	357, 359, 363, 365, 369, 371
573664-0000 ..	CANTILEVER	703
573665-0000 ..	FASTENING PLATE	703
573666-0000 ..	SUPPORT ROLLER	703
573667-0000 ..	SUPPORT ROLLER	703
573668-0000 ..	SUPPORT ROLLER	703
573827-0001 ..	PROTECTION	609, 611, 613, 615, 617, 619
573827-0002 ..	PROTECTION	609, 611, 613, 615, 617, 619
573827-0003 ..	PROTECTION	609, 611, 613, 615, 617, 619
573841-0000 ..	STEERING RAIL	119
573976-0000 ..	SUPPORT ROLLER	403, 405, 407, 409
573979-0000 ..	CARRIER RULER	373
573980-0000 ..	CARRIER RULER	377
573985-0000 ..	BEARING HOUSING	345, 347, 349, 351
573988-0000 ..	GASKET	345, 347, 349, 351
574026-0000 ..	HUB	557, 559, 561
574027-0000 ..	HUB	563, 565, 567
574028-0000 ..	ARM	557, 559, 561, 563, 565, 567
574029-0000 ..	FLAP	557, 559, 561, 563, 565, 567
574030-0000 ..	FLAP	557, 559, 561, 563, 565, 567
574031-0000 ..	BOTTOM	557, 559, 561, 563, 565, 567
574032-0000 ..	BLOWING NOZZLE B	481, 483, 489, 491
574033-0000 ..	BLOWING NOZZLE TH	481, 483, 489, 491
574034-0000 ..	BLOWING NOZZLE TV	481, 483, 489, 491
574035-0000 ..	FLAP	547, 549
574036-0000 ..	BLOCKING PIECE	547, 549
574037-0000 ..	SPACER	741
574038-0000 ..	SUPPORT ROLLER	703
574039-0000 ..	RAIL	551, 553, 555
574040-0000 ..	SHEET	551, 553, 555
574041-0000 ..	SHEET	551, 553, 555
574042-0000 ..	PLATE	551, 553, 555
574043-0000 ..	CREASE FORMER	609, 611, 613, 615, 617, 619

Part No	Description	Page No
574044-0000 ..	FASTENING BRACKET	609, 611, 613, 615, 617, 619
574045-0000 ..	FOLDING BAR	437, 439, 453, 455, 457, 459
574046-0000 ..	FOLDING BAR	437, 439, 453, 455, 457, 459
574047-0000 ..	LEAD RAIL	437, 439, 453, 455, 457, 459
574048-0000 ..	BRACKET	437, 439, 453, 455, 457, 459
574049-0000 ..	COUNTER PLATE	437, 439, 453, 455, 457, 459
574050-0000 ..	CURVE	437, 439, 453, 455, 457, 459
574051-0000 ..	RETAINING RING	653, 655
574052-0000 ..	STOPPER	687, 689
574054-0000 ..	HEAD PLATE	537, 539
574055-0000 ..	ARCH	465, 467
574056-0000 ..	DISTRIBUTOR	441, 461, 463
574057-0000 ..	LEAD RAIL	465, 467
574058-0000 ..	HOLDER	441, 461, 463
574059-0000 ..	BEARING HOUSING	681, 683
574060-0000 ..	BEARING HOUSING	681, 683
574061-0000 ..	CUTTING RAIL	681, 683
574062-0000 ..	COVERING PLATE	681, 683
574063-0000 ..	COVERING PLATE	681, 683
574064-0000 ..	SHAFT	681, 683
574069-0000 ..	AXLE PIN	515
574070-0000 ..	TIMING BELT SHAFT	515
574075-0000 ..	ROLL	519
574077-0000 ..	HEAD PLATE	531, 533
574078-0000 ..	BRACKET	531, 533
574079-0000 ..	BRACKET	531, 533
574080-0000 ..	BRACKET	527, 529
574081-0000 ..	SLEEVE	425
574082-0000 ..	GEAR WHEEL	515
574083-0000 ..	WASHER	515
574084-0000 ..	SCREW	515
574085-0000 ..	TIMING BELT PULLEY	515
574086-0000 ..	TIMING BELT PULLEY	515, 519
574087-0000 ..	WASHER	515, 519
574088-0000 ..	SPROCKET	425
574089-0000 ..	CARRIER	523
574090-0000 ..	CARRIER	521
574091-0000 ..	CARRIER	521
574092-0000 ..	CARRIER	523
574093-0000 ..	PROFILE	429
574094-0000 ..	HEAD PLATE	515
574097-0000 ..	STEERING	437, 439, 453, 455, 457, 459, 537, 539
574098-0000 ..	STEERING	437, 439, 453, 455, 457, 459, 537, 539
574099-0000 ..	STEERING	461, 463
574121-0000 ..	BRACKET	515
574122-0000 ..	BRACKET	515
574123-0000 ..	BRACKET	515
574124-0000 ..	WASTE CHUTE	571
574125-0000 ..	BRACKET	453, 455, 457, 459
574126-0000 ..	HEAD PLATE	531, 533
574130-0000 ..	DAMPER	403, 405, 407, 409
574131-0000 ..	LEAD PLATE	443
574132-0000 ..	SIDE PLATE	515
574133-0000 ..	SIDE PLATE	515
574136-0000 ..	TIMING BELT PULLEY	519
574137-0000 ..	TIMING BELT PULLEY	519
574138-0000 ..	TIMING BELT PULLEY	519
574139-0000 ..	BEARING HOUSING	515
574140-0000 ..	SHAFT	515
574143-0000 ..	AXLE SUPPORT	519
574144-0000 ..	SHAFT	519
574145-0000 ..	HEAD PLATE	515
574146-0000 ..	HEAD PLATE	515
574147-0000 ..	HOLDER	515
574148-0000 ..	SHAFT	515
574149-0000 ..	ARM	519
574150-0000 ..	SLEEVE	515
574151-0000 ..	BRACKET	519
574152-0000 ..	BRACKET	519
574153-0000 ..	PLATE	519
574154-0000 ..	SPACER	519
574155-0000 ..	PLATE	515
574156-0000 ..	SUPPORT RAIL	519
574157-0000 ..	PROFILE	519
574158-0000 ..	PROFILE	519
574159-0000 ..	TIMING BELT PULLEY	515
574164-0000 ..	PROTECTION PLATE	525
574165-0000 ..	PROTECTIVE COVER	525
574166-0000 ..	DROP WING	527, 529
574167-0000 ..	LIMIT PLATE	313
574214-0000 ..	SPRING	45
574332-0100 ..	BELT	515
574600-0000 ..	PNEUMATIC DIAGRAM	281
574603-0000 ..	BRACKET	267, 269

Part No	Description	Page No
574604-0000 ..	BRACKET	267, 269
574605-0000 ..	CONNECTION BOX	271
574606-0000 ..	SHEET	271
574651-0000 ..	SHEET	685
574652-0000 ..	PROTECTION	255
574653-0000 ..	PROTECTION	109
574654-0000 ..	PIPE	95
574658-0000 ..	LOGOTYPE TP	693
575002-0000 ..	PLUNGER	653, 655
575003-0000 ..	PLUNGER	653, 655
575392-0100 ..	VALVE PANEL LOWER	145, 147
575464-0000 ..	CABLE DUCT	273
575474-0100 ..	COMPRESSOR	11
575475-0100 ..	SCRUBBER	63
575786-0000 ..	PAPER SUPPORT	609, 611, 613, 615, 617, 619
575791-0000 ..	JUNCTION BLOCK	223
575792-0000 ..	ANGLE STRUT	223
575795-0000 ..	WATER PIPE	215, 217
575797-0100 ..	FLOWMETER GROUP	145, 147
576217-0000 ..	PAPER SUPPORT	609, 611, 613, 615, 617, 619
576218-0000 ..	PAPER SUPPORT	609, 611, 613, 615, 617, 619
576220-0000 ..	PAPER SUPPORT	643, 645
576245-0100 ..	BELT RIGHT	519
576246-0100 ..	BELT LEFT	519
576247-0100 ..	PROTECTION	493, 495
576251-0100 ..	CONVEYOR	493, 495
576252-0100 ..	INFEED SECTION	515
576410-0000 ..	BRACKET	659, 661
576730-0000 ..	WATER DIAGRAM	281
576738-0000 ..	TOUCH GUARD	127
576739-0200 ..	(PAPER)REEL TROLLEY	603, 605
576742-0000 ..	OIL TROUGH	307
576833-0000 ..	PLATFORM	257
576835-0000 ..	PLATFORM COVER	257
579306-0000 ..	ROLLER	15, 17, 19
579307-0000 ..	ROLL	15, 17
579308-0000 ..	ROLLER	15, 17, 19
579309-0000 ..	ROLL	15, 17
579310-0001 ..	ROLLER, (STD.SIZE)	25, 27
579311-0000 ..	COUNTER ROLLER	25, 27
579316-0000 ..	FILLER TUBE	45
579318-0000 ..	SEAL	125, 139
579319-0000 ..	ROLL	125
579641-0000 ..	MAIN CAM	301, 303
579642-0000 ..	COUNTER CAM	301, 303
579643-0000 ..	CAM LEFT	301, 303
579644-0000 ..	CAM RIGHT	301, 303
579645-0000 ..	CURVE	403, 405, 407, 409
579772-0000 ..	CUTTING JAW	345, 347, 349, 351
579773-0000 ..	BEARING HOUSING	357, 359, 363, 365
580006-0000 ..	PROTECTION PLATE	525
580007-0000 ..	PROTECTION PLATE	525
580366-0000 ..	ROLL	519
580958-0000 ..	AXLE SUPPORT	125
580959-0000 ..	AXLE SUPPORT	125
580996-0000 ..	ROLLER BRACKET	519
583727-0000 ..	SHAFT	713
591245-0000 ..	ARM	307
591246-0000 ..	SHAFT	307
591247-0000 ..	SLEEVE	307
591981-0000 ..	CATCH	345, 347, 349, 351
591982-0000 ..	CATCH	345, 347, 349, 351
592586-0000 ..	HOLDER	719, 721
592923-0000 ..	VOLUME FLAP	335, 337
593270-0000 ..	CATCH	387, 389
593271-0000 ..	CATCH	387, 389
593634-0200 ..	DIAGRAM	575
593749-0100 ..	YOKE	319, 321
593750-0100 ..	ARM WITH AXLE,CUT R	319, 321
593763-0100 ..	HOLD-DOWN DEVICE	289, 291, 293
594588-0000 ..	HOOD	183, 185
594613-0100 ..	CLEANING HEAD	237
594614-0100 ..	CLEANING HEAD	211
594616-0100 ..	VALVE	105
594617-0100 ..	DOOR	11
594618-0100 ..	CHANGE-OVER VALVE	95
594619-0100 ..	CHANGE-OVER VALVE	63
594620-0100 ..	BRAKE ARM	731
594621-0100 ..	PRESSURE ARM	469
594632-0000 ..	SIDE PLATE	435
594644-0000 ..	LEAD RAIL	445
595044-0000 ..	MACHINE BODY	445
595046-0000 ..	CARRIER	445
595048-0000 ..	ARCH	445

Part No	Description	Page No
595052-0000 ..	ARCH	445
595053-0000 ..	BRACKET	445
595054-0000 ..	PROTECTION	183, 185
595055-0000 ..	BRACKET	437, 439
595056-0000 ..	BRACKET	445
595057-0000 ..	BRACKET	437, 439
595060-0000 ..	LEAD RAIL	445
595061-0000 ..	HOLDER	445
595066-0000 ..	COVERING PLATE	419, 421
595068-0000 ..	STEERING	441
595087-0100 ..	STATION	415, 417
595088-0200 ..	FOLDING PART	415, 417
595089-0100 ..	INFEEDER	415, 417
595090-0100 ..	DISCHARGER	415, 417
595202-0000 ..	SHAFT	609, 611, 613, 615, 617, 619, 643, 645
595203-0000 ..	LACE	609, 611, 613, 615, 617, 619, 643, 645
595204-0000 ..	CYLINDER BRACKET	609, 611, 613, 615, 617, 619, 643, 645
597536-0000 ..	FOLDING BAR	437, 439, 453, 455, 457, 459
597537-0000 ..	FOLDING BAR	437, 439, 453, 455, 457, 459
597539-0000 ..	SLIDE RAIL	537, 539
597542-0000 ..	RAIL REV.FIN	537, 539
597543-0000 ..	RAIL NORM.FIN	537, 539
597545-0000 ..	HOLDER	19
597564-0000 ..	PLATE	441, 461, 463
597574-0000 ..	SPRING BRACKET	387, 389
597584-0000 ..	BRACKET	493, 495
597608-0000 ..	BOTTOM	557, 559, 561, 563, 565, 567
598878-0000 ..	MACHINE SIGN 2 ADR. EEA	575
751009-0000 ..	INSULATION	111
751316-0000 ..	ELBOW PIPE	163
752156-0000 ..	FLANGE BUSHING	15, 17
752176-0000 ..	PROTECTIVE CASING	77
752578-0001 ..	ROLLER, (STD.SIZE)	25, 27
752583-0000 ..	ROLLER	15, 17
752584-0000 ..	ROLLER	15, 17
752585-0000 ..	ROLL	15, 17
752586-0000 ..	ROLL	15, 17
752587-0000 ..	LINK	51, 53
752590-0000 ..	THROTTLE	51, 53
752711-0000 ..	PIPE	77
752718-0000 ..	ROLL	31, 33, 35
752719-0000 ..	ROLL	31, 33, 35
752720-0000 ..	ROLL	31, 33, 35
752721-0000 ..	ROLL	31, 33, 35
752740-0000 ..	ROLLER	37
752771-0000 ..	TOUCH GUARD	127
776422-0101 ..	BRASS WIRESTE	587
777200-0101 ..	PIPE WRENCEL	587
777510-0101 ..	SCISSORS	587
795581-0000 ..	PLATE	117
924641-0000 ..	SCREW	21
927085-0000 ..	OVERFLOW TUBE	71, 73
927198-0000 ..	PIPE	77
927200-0000 ..	PIPE	77
927226-0000 ..	PIPE	77
927258-0000 ..	BRACKET	117
927311-0000 ..	PIPE	77
927314-0000 ..	CAM	541, 543
927315-0000 ..	TURRET	541, 543
927318-0000 ..	ROLLER	541, 543
927319-0000 ..	PLATFORM	257
927332-0000 ..	BRACKET	425
927333-0000 ..	BAR CLAMP	425
927420-0001 ..	O-RING 5.1X1.6 SILICON	41
927421-0001 ..	O-RING 9.3X2.4 SILICON	71, 73, 121
927421-0002 ..	O-RING 12.3X2.4 SILICON	41
927421-0003 ..	O-RING 13.3X2.4 SILICON	71, 73, 121, 207
927421-0004 ..	O-RING 15.3X2.4 SILICON	41, 161
927422-0001 ..	O-RING 19.2X3 SILICON	41, 71, 73
927422-0003 ..	O.RING 24.2X3 SILICON	169
927422-0004 ..	O-RING 29.2X3 SILICON	71, 73, 121, 163
927422-0006 ..	O-RING 42.2X3 SILICON	71, 73, 159, 163, 207
927422-0007 ..	O-RING 44.2X3 SILICON	41
927422-0009 ..	O-RING 54.5X3 SILICON	41, 71, 73
927422-0011 ..	O-RING 69.5X3 SILICON	159
927428-0000 ..	COVERING PLATE	673, 675, 677
927448-0000 ..	LINK	373, 377
927449-0000 ..	SECURITY PLATE LEFT	373
927450-0000 ..	SECURITY PLATE RIGHT	377
927495-0000 ..	INDUCTOR	369, 371
927891-0000 ..	SCREW	519
928837-0000 ..	AIR DISTRIBUTOR	197
928901-0000 ..	COVERING PLATE	513
978603-0000 ..	SIGN	267, 269

Part No	Description	Page No
1035893-0000	.ADJUSTING SCREW	725
1036622-0000	.GUIDE ROLLER	713
1036623-0000	.GUIDE ROLLER	713
1038128-0001	.DOLLY	345, 347, 349, 351, 369, 371
1038517-0003	.CUTTING RAIL	345, 347, 349, 351
1110761-0000	.INDUCTOR	357, 359, 363, 365
1143000-0000	.PUSHER	493, 495
1143001-0000	.ATTACHMENT PLATE	493, 495
1143002-0000	.BRACKET	493, 495
1143003-0000	.BRACKET	515
1143006-0000	.STEERING	537, 539
1143007-0000	.STEERING	537, 539
1143008-0000	.BRACKET	537, 539
1143009-0000	.BRACKET	537, 539
1143015-0000	.BUSHING	551, 553, 555
1143016-0000	.AXLE PIN	551, 553, 555
1143049-0000	.VOLUME BULGE	335, 337, 339
1143050-0000	.VOLUME SHIM	335, 337, 339, 369, 371
1143215-0000	.SPRING	387, 389
1143216-0000	.SPRING	387, 389
1143223-0000	.WASHER	551, 553, 555
1143455-0000	.MACHINE SIGN CE	579
1143456-0000	.MACHINE SIGN CE	599
1143605-0000	.SPACER	657
1143677-0000	.PAPER SUPPORT	719, 721
1195094-0000	.BRACKET	663
1195327-0000	.PNEUMATIC DIAGRAM	281
1195332-0000	.PROTECTION PLATE	525
1195333-0000	.STOP	531, 533
1255160-0000	.THREADED INSERT	551, 553, 555
1255161-0000	.ARM	551, 553, 555
1255162-0000	.ROCKER ARM	551, 553, 555
1255163-0000	.ROCKER ARM	551, 553, 555
1260492-0000	.PRESSURE FLANGE	51, 53
1260493-0000	.FILLING PIPE	51, 53
1279457-0000	.BRACKET	67
1282391-0000	.OVERFLOW TUBE	71, 73
1282592-0000	.STOPPER	387, 389
1282593-0000	.STOPPER	387, 389
1282595-0000	.CATCH	387, 389
1282596-0000	.CATCH	387, 389
1285003-0000	.LINK	353, 369, 371
1285005-0000	.NUT	353, 369, 371
1285006-0000	.SPACER	353
1285367-0000	.HOLDER	341, 343
1285546-0000	.ROLL	725
1285923-0100	.WARNING BEACON	257
1285924-0000	.HOLDER	259
1296003-0000	.PAPER SUPPORT	719, 721
1296222-0000	.SPRING	387, 389
1296223-0000	.SPRING	387, 389
1296884-0000	.SCREW	345, 347, 349, 351, 357, 359, 363, 365
1296885-0000	.SCREW	345, 347, 349, 351, 357, 359, 363, 365
1296886-0000	.SCREW	345, 347, 349, 351, 357, 359, 363, 365
1296981-0000	.SCREW	345, 347, 349, 351, 357, 359, 363, 365
1296982-0000	.SCREW	345, 347, 349, 351, 357, 359, 363, 365
1317711-0000	.SHAFT	713
1317712-0000	.SHAFT	713
1317713-0000	.SHAFT	711
1317714-0000	.STEERING	713
1317715-0000	.HOLDER	711
1317716-0000	.BRACKET	713
1317717-0000	.BRACKET	711
1317718-0000	.SHAFT	711
1317719-0000	.CLAMP	681, 683
1317808-0000	.FOLDING FLAP	373, 377
1317809-0000	.FOLDING FLAP	373, 377
1317955-0000	.SPRING BRACKET	387, 389
1334620-0100	.PAPER GUIDE	711
1346505-0000	.SPACER	725
1346514-0000	.KNIFE HOLDER	673, 675, 677
1347153-0000	.ANGLE BRACKET	659, 661
1347154-0000	.BRACKET	659, 661
1347209-0000	.HOSE HOLDER	419, 421, 447, 449
1347210-0000	.HOSE HOLDER	419, 421, 447, 449
1347211-0000	.PIPE	419, 421, 447, 449
1347212-0000	.PIPE	419, 421, 447, 449
1347213-0000	.PIPE	77
1347214-0000	.HOSE	215, 217
1347216-0000	.PIPE	419, 421, 447, 449
1347217-0000	.TOUCH GUARD	419, 421, 447, 449
1347915-0000	.PIPE	63
1347920-0000	.PIPE	55, 57
1347921-0000	.PIPE	63

Part No	Description	Page No
1347923-0000	.GASKET	55, 57
1348113-0000	.CUP	21
1348115-0000	.LID	21
1348199-0000	.PRESSURE FLANGE	51, 53
1348200-0000	.FILLING PIPE	51, 53
1348201-0000	.PRESSURE FLANGE	51, 53
1348231-0100	.STRIP GUIDE	697, 699
1348692-0000	.STOPPER	387, 389
1348696-0000	.CATCH	387, 389
1348697-0000	.CATCH	387, 389
1348955-0000	.KNIFE	353
1348956-0000	.KNIFE	353
1349007-0000	.COVER	75
1349920-0000	.GASKET	163
1360782-0100	.CONNECTION BOX	667, 669
1360783-0100	.EL-PNEUMATIC EQUIPMENT	603, 605
1360784-0000	.PROTECTION PLATE	673, 675, 677
1360785-0100	.PAPER HOLDER	673, 675, 677
1360786-0000	.MOUNTING BAR	659, 661
1360787-0000	.COVER	659, 661
1360788-0000	.HOOD	659, 661
1360889-0100	.SIDE GUARD LEFT	145, 147
1360890-0000	.SIDEGUARD LEFT	173
1360891-0000	.NUT	173, 175
1360892-0000	.PLATE	173, 175
1360893-0000	.BRACKET LEFT	173
1360894-0000	.HOLDER	173, 175
1360895-0000	.BEARING	173, 175
1360896-0000	.CHUTE LEFT	173
1360897-0000	.PLATE	173, 175
1360898-0100	.SIDE GUARD, RIGHT	145, 147
1360899-0000	.SIDE GUARD RIGHT	175
1360900-0000	.BRACKET RIGHT	175
1360901-0000	.CHUTE RIGHT	175
1360902-0000	.COVER	175
1360903-0100	.SIDE BOX LEFT	145, 147
1360904-0000	.SIDE BOX LEFT	195
1360905-0000	.BOTTOM PLATE LEFT	195
1360906-0100	.SIDE BOX RIGHT	145, 147
1360907-0000	.SIDE BOX RIGHT	153
1360908-0000	.BOTTOM PLATE	153
1360909-0000	.SHAFT	403, 405, 407, 409
1361275-0100	.PAPER GUIDE	697, 699
1361276-0000	.GUIDE SHAFT	725
1361277-0000	.GUIDE SHAFT	725
1361278-0000	.GUIDE SHAFT	725
1361279-0000	.GUIDE SHAFT	725
1361281-0100	.SUPPORT ROLLER	697, 699
1361566-0100	.PLACING OF CABLE DUCT	145, 147
1361730-0100	.FORM CLAMP TBA/8	11
1361731-0000	.BOW	19
1361732-0000	.ROLL	19
1361733-0000	.ROLL	19
1361734-0000	.WASHER	19
1361801-0000	.SPACER	387, 389
1361945-0000	.HOOD	659, 661
1361946-0100	.SIDE GUARDS	603, 605
1361947-0100	.DATING UNIT NSS	603, 605
1361950-0100	.DATING UNIT SS	603, 605
1362065-0100	.MACHINE BODY RIGHT OUT	415, 417
1362066-0100	.MACHINE BODY FF LEFT OUT	415, 417
1362220-0000	.CLEANING TROUGH	447, 449
1362221-0000	.CLEANING TROUGH	419, 421
1362425-0000	.LEAD-IN PLATE	193
1362426-0100	.BOTTOM PLATE	145, 147
1362427-0100	.PIPE WORK-WATER TBA/8	145, 147
1362505-0000	.SPREADER	261
1362608-0100	.PRODUCT VALVE	11
1362926-0000	.COVERING PLATE	673, 675, 677
1362931-0100	.SPLICING DEVICE	603, 605
1364976-0000	.FORK	25, 27
1364979-0000	.SHAFT	25, 27
1367794-0000	.LID	21
1367795-0000	.CUP	21
1367796-0000	.GASKET	21
1367798-0000	.LID	21
1367799-0000	.CUP	21
1367800-0000	.GASKET	21
1367802-0000	.LID	21
1367803-0000	.CUP	21
1367804-0000	.GASKET	21
1367806-0000	.LID	21
1367807-0000	.CUP	21
1367808-0000	.GASKET	21

Part No	Description	Page No
1367814-0100	.VOLUME FLAP	319, 321
1369843-0001	.SLEEVE	355
1369869-0000	.SCREW	387, 389
1478135-0000	.NUT	21
1478136-0000	.PIN	21
1478137-0000	.GASKET	21
1478216-0000	.AXLE PIN	519
1478218-0000	.BEARING CONSOLE	519
1478219-0000	.BEARING CONSOLE	519
1478220-0000	.ARM	519
1478489-0000	.SHAFT	519
1478490-0000	.SHAFT	519
1478491-0000	.SPACER	519
1478691-0000	.GASKET	55, 57
1478881-0000	.GUIDE	461, 463
1478882-0000	.FILLING PIPE	51, 53
1478883-0000	.FILLING PIPE	51, 53
1478885-0000	.FILLING PIPE	51, 53
1478886-0000	.PRESSURE FLANGE	51, 53
1478887-0000	.PRESSURE FLANGE	51, 53
1478888-0000	.FILLING PIPE	51, 53
1478889-0000	.PRESSURE FLANGE	51, 53
1478890-0000	.PRESSURE FLANGE	51, 53
1478891-0000	.FILLING PIPE	51, 53
1478893-0000	.LOCKING PIN	51, 53
1478894-0000	.LOCKING PIN	51, 53
1484163-0000	.KNIFE	353
1484831-0000	.VOLUME FLAP	335, 337
1484832-0000	.VOLUME FLAP	339
1484846-0000	.RAIL	363, 365
1484847-0000	.RAIL	357, 359
1487404-0200	.KNIFE HOLDER	319, 321
1487405-0100	.VOLUME FLAP	319, 321
1487412-0000	.VALVE PANEL	267, 269
1487413-0100	.VALVE PANEL	145, 147
1487414-0100	.HOLDER	279
1487415-0000	.VALVE PANEL	281
1487416-0000	.VALVE PANEL	281
1487685-0000	.PLUG	205
1487972-0000	.BEARING HOLDER	55, 57
1487975-0000	.BUSHING	55, 57
1487976-0000	.GASKET	55, 57
1487979-0100	.PIPE WORK TBA/8	697, 699
1487980-0000	.CONNECTION BOX	705
1490099-0000	.PIN	51, 53
1498072-0100	.CONNECTION BOX	697, 699
1499055-0000	.LEAD	55, 57
1499056-0000	.LEAD	55, 57
1499057-0000	.GASKET	55, 57
1511572-0000	.CLIP	625, 627, 629, 631, 633
1511688-0000	.PLATE	193
1512505-0000	.VOLUME FLAP	339
1512506-0000	.VOLUME FLAP	335, 337
1512513-0000	.STOP	387, 389
1517062-0000	.ATTACHMENT	61
1519368-0000	.CONNECTION	55, 57
1519369-0000	.PISTON	59
1519643-0000	.VOLUME FLAP	335, 337
1519645-0000	.VOLUME FLAP	339
1519657-0000	.CANTILEVER	387, 389
1519658-0000	.CANTILEVER	387, 389
1538109-0000	.COMPRESSION SPRING	353, 369, 371
2500150-0000	.PIVOT ARM	55, 57
2500151-0000	.ATTACHMENT	61
2501271-0000	.CATCH	387, 389
2501272-0000	.CATCH	387, 389
2510290-0000	.PIPE	55, 57
2510374-0000	.SEAT VALVE	71, 73
2520233-0000	.BUSHING	59
2520234-0000	.BUSHING	59
2520235-0000	.VALVE	59
2520236-0000	.PISTON ROD	59
2520237-0000	.PIN	59
2520238-0000	.LINK	59
2520239-0000	.LINK	59
2524514-0100	.VALVE	55, 57
2525460-0000	.SEAT VALVE	207
2525464-0000	.PIPE	129, 131

Part No	Description	Page No

Part No	Description	Page No

Machine Type	Group Description	Page No

Part No	Description	Page No	Part No	Description	Page No

Part No	Description	Page No	Part No	Description	Page No

Machine Type	Group Description	Page No

Part No	Description	Page No	Part No	Description	Page No

Part No	Description	Page No	Part No	Description	Page No

Machine Type	Group Description	Page No

Tetra Pak

SPC binder labels. 40 mm Full width *Note! This page is generated* **automatically.** *using the* **variable definitions** *made in the* **front page** *file!!*

TBA/8 110V
648022-1100
Issue: 2002-01 Doc No: SPC-81524-0103

TBA/8 110V
648022-1100
Issue: 2002-01 Doc No: SPC-81524-0103

TBA/8 110V
648022-1100
Issue: 2002-01 Doc No: SPC-81524-0103

TBA/8 110V
648022-1100
Issue: 2002-01 Doc No: SPC-81524-0103

TBA/8 110V
648022-1100
Issue: 2002-01 Doc No: SPC-81524-0103

TBA/8 110V
648022-1100
Issue: 2002-01 Doc No: SPC-81524-0103

TBA/8 110V
648022-1100
Issue: 2002-01 Doc No: SPC-81524-0103

TBA/8 110V
648022-1100
Issue: 2002-01 Doc No: SPC-81524-0103

TBA/8 110V
648022-1100
Issue: 2002-01 Doc No: SPC-81524-0103

TBA/8 110V
648022-1100
Issue: 2002-01 Doc No: SPC-81524-0103

TBA/8 110V
648022-1100
Issue: 2002-01 Doc No: SPC-81524-0103