SPC
Spare Parts Catalogue

HVA 040V

648022-090V / 100V

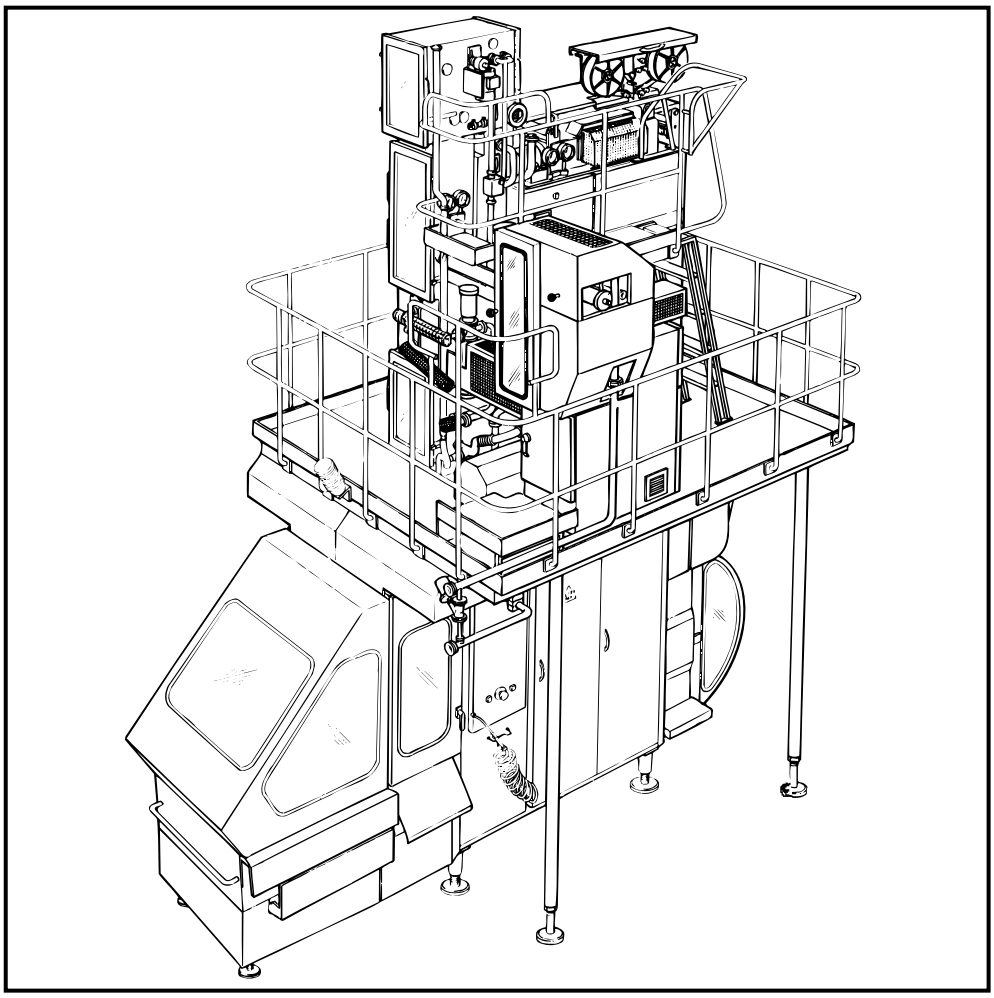

Tetra Pak

Doc No: SPC-82379-0102

Main Groups of the Machine

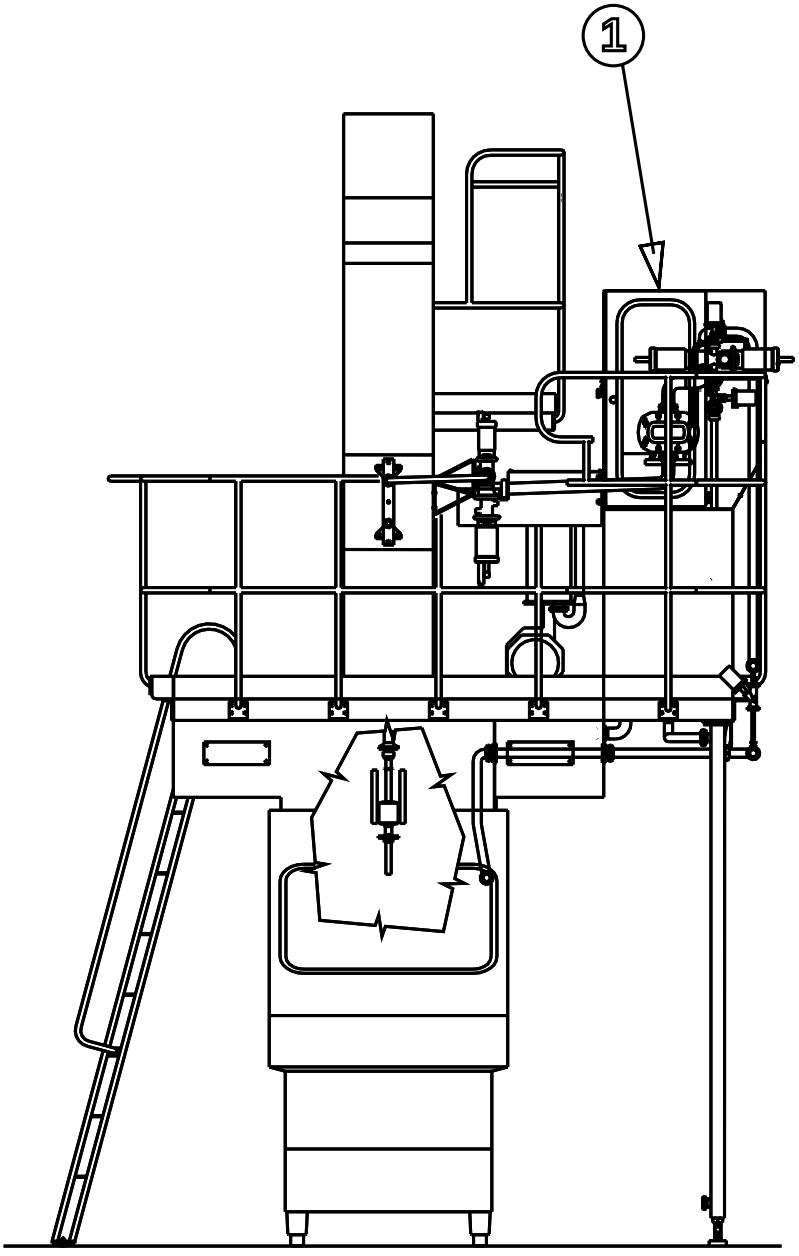

1 - High Viscosity Aseptic

For the correct machine data, check your machine specification, supplied with the machine!

This document is valid for:

Series No/ Machine No Sign.

SPC
Spare Parts Catalogue

HVA 040V
C - 925400-040V

For Tetra Brik Aseptic TBA/8:

648022-090V
648022-100V

Doc No: SPC-82379-0102

Issue 9807

Tetra Pak

Tetra Brik Packaging Systems S.p.A.

Table of Content:

Introduction **5**

HVA 040V
C- 925400-040V ....., **9**

Part number index ..... , **103**

General information

Manufacturer

This machine is produced by:
Tetra Brik Packaging Systems S.p.A.
Via Delfini 1
41100 Modena /Italy

Document producer

This document has been produced by:
Tetra Brik Packaging Systems S.p.A.
Technical Publications
Via Delfini 1
41100 Modena /Italy

Number of pages

This document contains totally **112 pages,** including the first **8** introduction pages.

Copyright © 1998 Tetra Brik Packaging Systems S.p.A.

All rights reserved. No parts of this document may be reproduced or copied in any forms or by any means, without written permission from Tetra Brik Packaging Systems S.p.A..

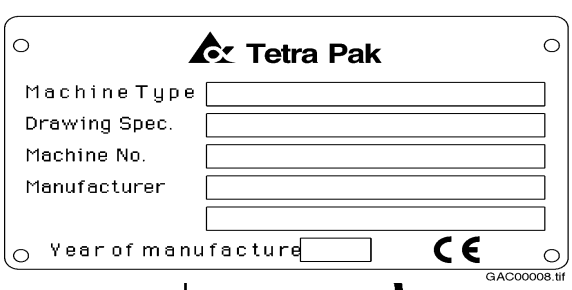

Figure 1

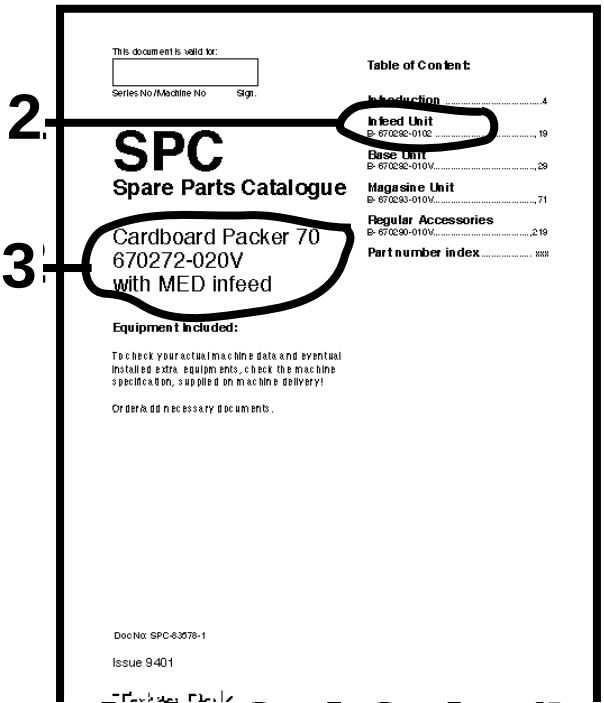

Figure 2

Figure 3

A-678544-0401 (V)

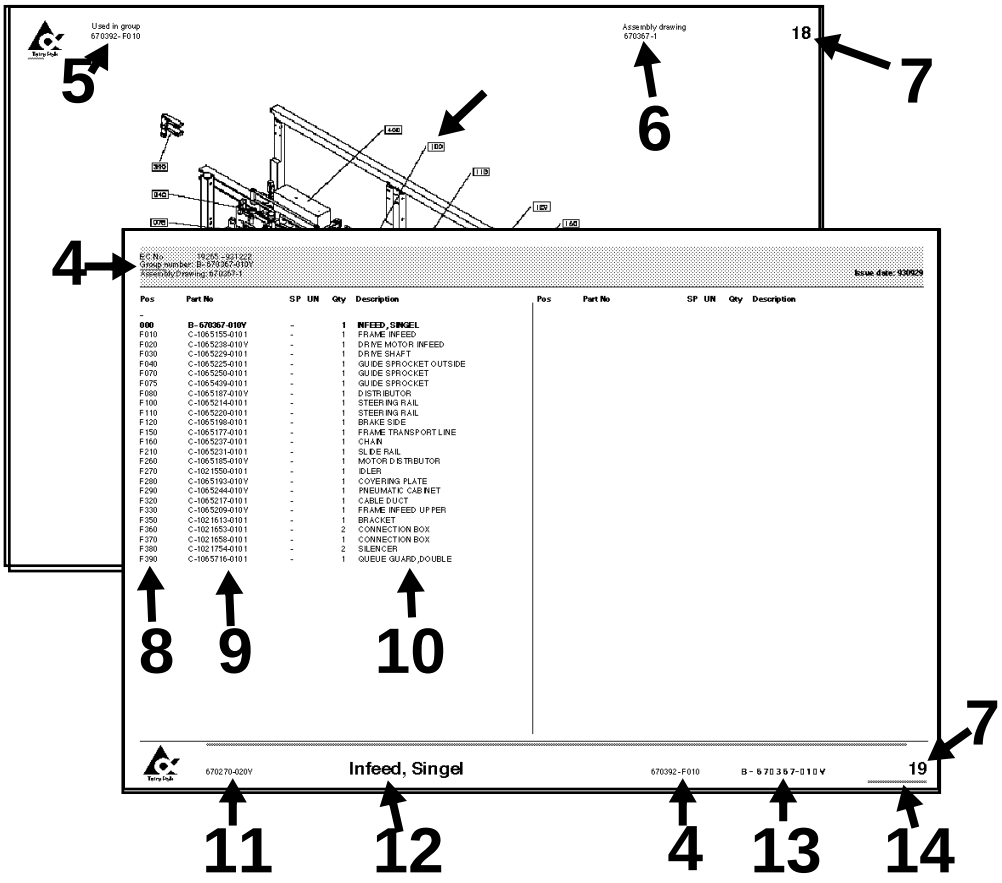

Figure 4

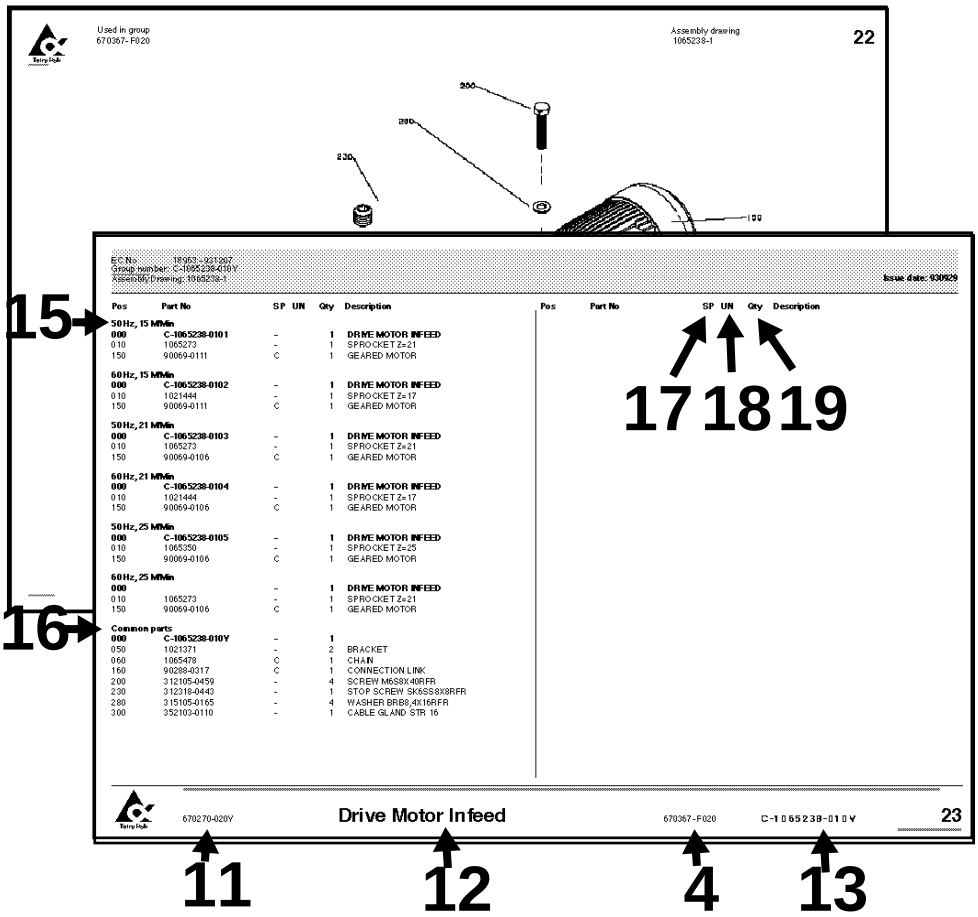

Figure 5

General information

Service

When ordering spare parts for your machine, contact the nearest Tetra Pak service station.

Machine identification

This machine plate is an example of the type of machine plate, attached to the machine frame. The plate carries data needed when contacting Tetra Pak concerning this particular machine.
The location of the different machine plates is shown on the page “Location of machine number plates”, **see page 2**

Purpose of the Spare Parts Catalogue.

The purpose of the Spare Parts Catalogue (SPC) is to provide the technicians and contact personnel with information on how to find and order spare parts for maintenance and service of the machine.
For instructions of how to replace parts and adjust machine setup, see the Maintenance Manual (MM).

Delivered documentation

The technical documentation delivered with this machine is stated in the Machine Specification.
Note! If any of these documents is missing, it must be reported in the document **Start Up Machine Quality Report.** For more information, see chapter 8 Preparation for Commissioning in the Installation Manual.
It is important that you keep these documents for the life of the equipment, and pass the documents on to any subsequent holder or user of the equipment.

Design modification

The content of this document is in accordance with the design and construction of the machine at the time it was delivered from the Tetra Pak machine production facility.

Copyright © 1997 Tetra Brik Packaging Systems S.p.A.

All rights reserved. No parts of this document may be reproduced or copied in any forms or by any means, without written permission from Tetra Brik Packaging Systems S.p.A..

Further copies

Additional copies can be ordered from the nearest Tetra Pak service station. When ordering technical publications, always quote the document number printed on the front cover of the document concerned.

Tetra Pak Part numbering system

The third and forth digits in the subnumber, specify one unique group which can be ordered. If the forth digit is replaced by a “V”, the number combination only points to a bill-of-material document.
The first and second digits in the sub-number, specify the development step (model) of the machine or group. **(see fig. 3)**
Main number of machine /group /article, depending on level.
Prefix, giving information about level, eg.
A = Machine
B = Main section (*****)
C = Groups and subgroups
***)** Customized distribution machines are registered as B-level as well.

How to find the correct Spare Part Number

A. Check that the data on your machine sign, and /or machine specification, corresponds with the catalogue. **(see fig.1)**

1) Main groups of the machine

B. The second catalogue sheet contains a table of content for the main groups, included in the catalogue. The information regarding machine and main group status MUST correspond with your machine specification.
Locate and choose the main groups page number (1), in which you want to search for spare parts.
(see fig. 2)

2) Main group
3) Machine type

C. Search in the main group illustration, the item number, which may hold your wanted spare part. Go to the text page below and find the page number for the actual group. **(see fig. 4)**

4) Internal information, such as latest Engineering Change, bill-of-material included in the catalogue page.
5) Used-In reference to next higher level in the machine structure
6) Assembly drawing number
7) Continuous page numbering through the document
8) Pos number corresponding to illustration
9) Group or article number.
10) Group or article description. The letter “B” in front of some article numbers indicates that this article contains other parts, shown in an additional page at the end the section. Letter “A” indicatates a subgroup number with an own page directly after the actual page.
11) Machine type including development staus
12) Group description
13) Group number (bill-of-material) including development status
14) Document number

D. Continue to the found page number, and search in the illustration for your spare part. Go to the text row for the found item number, and read the part number. Take eventual variant headings in consideration; if you are unsure, read your machine specification. **(see fig. 5)**

15) Variant heading, eg volume, left /right etc.
16) Heading for common parts
17) SP = Code for articles, which are included into various spare part kits.

A = Stop function, no rep/available/bypassed	I = 1000 operating hours
B = Stop function, rep/available/bypassed	J = 2000 operating hours
C = Don't stop function, can be bypassed	K = 3000 operating hours
D = Seldom break, long time production	L = 4000 operating hours
E = 100 operating hours	M = 5000 operating hours
F = 250 operating hours	N = 6000 operating hours
G = 500 operating hours	O = 7000 operating hours
H = 750 operating hours	P = 8000 operating hours

18) UN = Short code for measure units, eg mm, kg etc.
19) Qty = Number of items needed in the complete assembly.

SPC

Spare Parts Catalogue

HIGH VISCOSITY ASEPTIC HVA

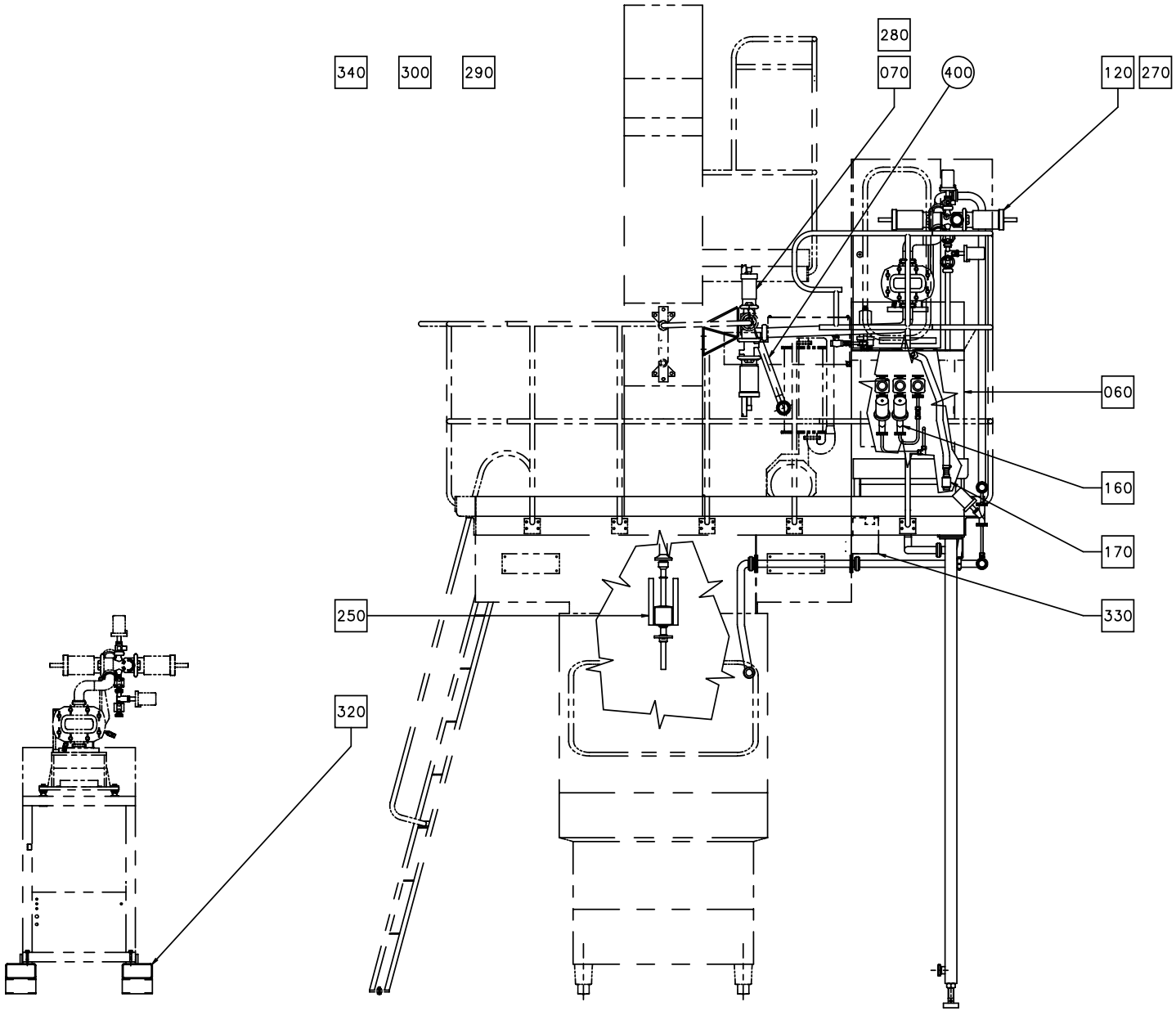

S-925400-1
ECN 16402

Pos	Part No	SP	UN	Qty	Description	Page No
TBA/8-090V						
340	A 925421-0100	-		1	REGULAR ACCESSORIES	**87**
370	A 558282-0300	-		1	EL.RK."DOCKING OF HVA KIT"	**95**
TBA/8-100V						
340	A 925421-0200	-		1	REGULAR ACCESSORIES	**87**
370	A 558660-0300	-		1	EL.RK."DOCKING OF HVA KIT"	**93**
Common parts						
020	A 925401-0300	-		1	PUMP GROUP	**15**, **17**, **19**, **21**
050	A 925402-0100	-		1	PLATFORM	**27**
060	A 925403-0100	-		1	FRAME	**29**
070	A 925404-0100	-		1	VALVE GROUP B-C	**31**
120	A 925405-0100	-		1	EXTERNAL VALVE GROUP	**41**
160	A 925406-0100	-		1	STEAM CIRCUIT	**47**, **49**
170	A 925407-0100	-		1	DISCHARGE UNIT	**51**
180	A 925408-0100	-		1	PNEUMATIC CIRCUIT	**53**, **55**
190	A 925409-0100	-		1	VALVE PANEL	**57**
200	A 925410-0100	-		1	CLEANING CIRCUIT	**59**, **61**
210	A 925411-0100	-		1	AIR SUPPLY	**63**
250	A 925414-0200	-		1	LEVEL CONTROL DEVICE	**65**, **67**
270	A 925415-0100	-		1	EXT. PRODUCT VALVE SUPPLY	**73**
280	A 925416-0100	-		1	PRODUCT VALVE B-C SUPPLY	**75**
290	A 925417-0100	-		1	START-UP KIT	**77**
300	A 925418-0100	-		1	ASSEMBLY TOOL	**79**
320	A 925419-0100	-		1	BED	**81**
330	A 925420-0100	-		1	ELECTRIC CONDUIT	**83**, **85**
360	A 925422-0200	-		1	TOUCH GUARD	**89**, **91**
390	A 649440-0300	-		1	ELECTRIC EQUIPMENT	**97**
	598069-0000	-		1	DOCUMENT FOLDER	
400	924716-0000	-		1	U-TUBE	

Pos	Part No	SP	UN	Qty	Description	Page No

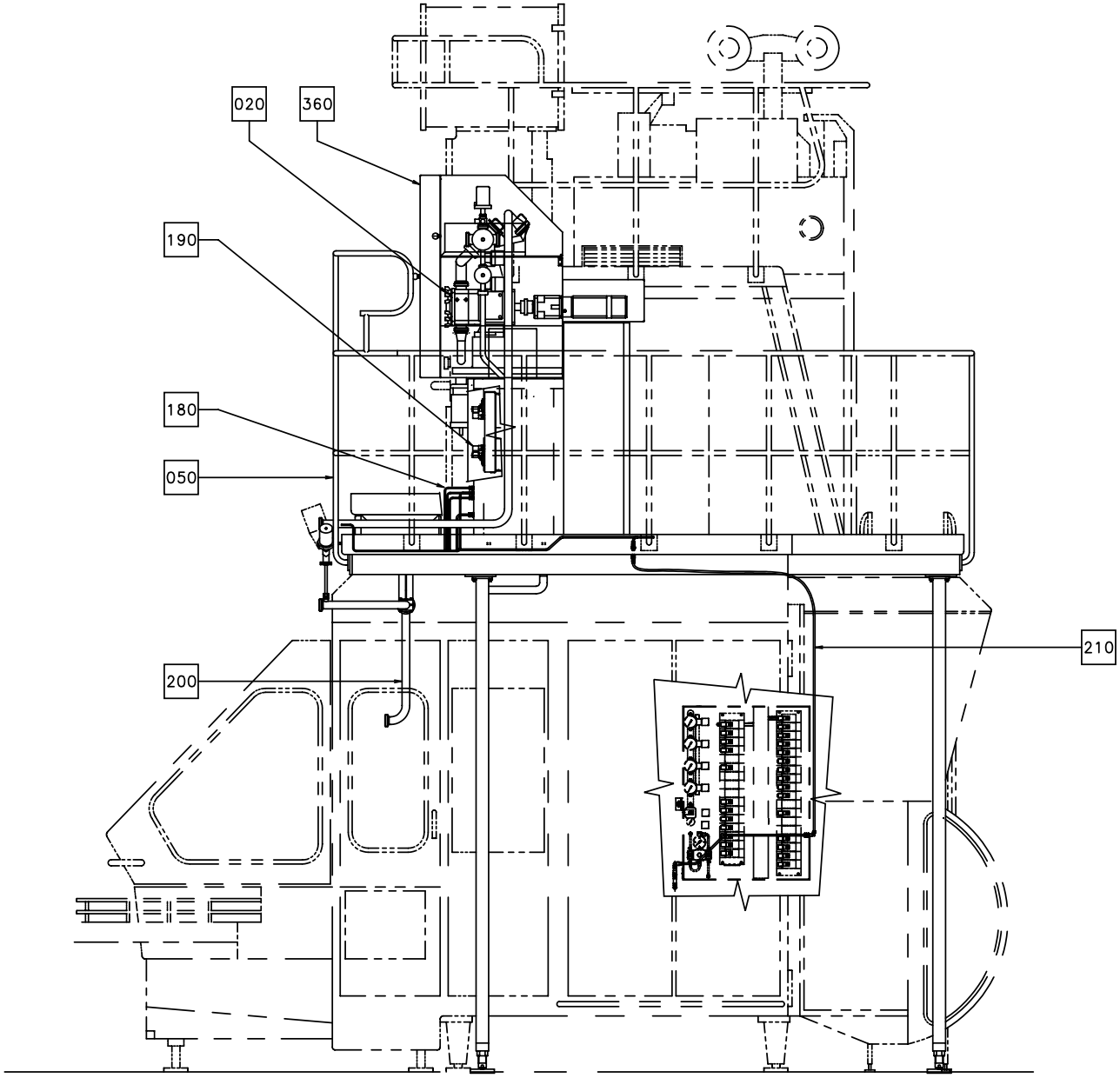

S-925400-2
ECN 16402

Pos	Part No	SP	UN	Qty	Description	Page No
TBA/8-090V						
340	A 925421-0100	-		1	REGULAR ACCESSORIES	**87**
370	A 558282-0300	-		1	EL.RK."DOCKING OF HVA KIT"	**95**
TBA/8-100V						
340	A 925421-0200	-		1	REGULAR ACCESSORIES	**87**
370	A 558660-0300	-		1	EL.RK."DOCKING OF HVA KIT"	**93**
Common parts						
020	A 925401-0300	-		1	PUMP GROUP	**15**, **17**, **19**, **21**
050	A 925402-0100	-		1	PLATFORM	**27**
060	A 925403-0100	-		1	FRAME	**29**
070	A 925404-0100	-		1	VALVE GROUP B-C	**31**
120	A 925405-0100	-		1	EXTERNAL VALVE GROUP	**41**
160	A 925406-0100	-		1	STEAM CIRCUIT	**47**, **49**
170	A 925407-0100	-		1	DISCHARGE UNIT	**51**
180	A 925408-0100	-		1	PNEUMATIC CIRCUIT	**53**, **55**
190	A 925409-0100	-		1	VALVE PANEL	**57**
200	A 925410-0100	-		1	CLEANING CIRCUIT	**59**, **61**
210	A 925411-0100	-		1	AIR SUPPLY	**63**
250	A 925414-0200	-		1	LEVEL CONTROL DEVICE	**65**, **67**
270	A 925415-0100	-		1	EXT. PRODUCT VALVE SUPPLY	**73**
280	A 925416-0100	-		1	PRODUCT VALVE B-C SUPPLY	**75**
290	A 925417-0100	-		1	START-UP KIT	**77**
300	A 925418-0100	-		1	ASSEMBLY TOOL	**79**
320	A 925419-0100	-		1	BED	**81**
330	A 925420-0100	-		1	ELECTRIC CONDUIT	**83**, **85**
360	A 925422-0200	-		1	TOUCH GUARD	**89**, **91**
390	A 649440-0300	-		1	ELECTRIC EQUIPMENT	**97**
	598069-0000	-		1	DOCUMENT FOLDER	
400	924716-0000	-		1	U-TUBE	

Pos	Part No	SP	UN	Qty	Description	Page No

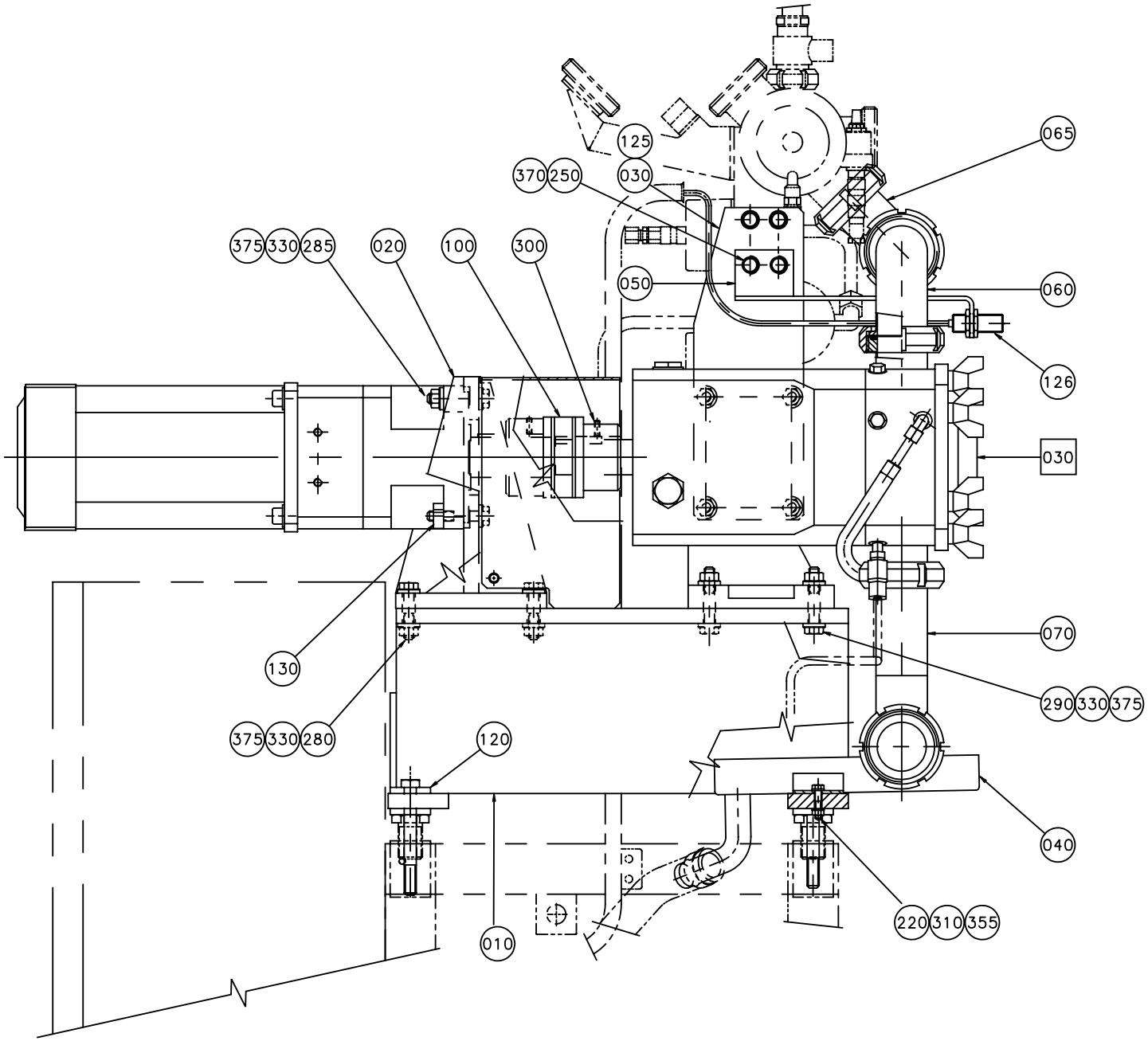

S-925401-9
ECN 71319

Pos	Part No	SP	UN	Qty	Description	Page No
0355B or 0375S						
F030	A 925425-0100	-		1	PUMP	**25**
020	925633-0000	-		1	SUPPORT	
030	925635-0000	-		1	HOLDER	
060	925638-0000	-		1	PRODUCT PIPE	
065	926757-0000	-		1	PRODUCT PIPE	
070	925640-0000	-		1	PRODUCT PIPE	
090	925642-0000	-		1	COVER	
100	925644-0000	-		1	JOINT	
110	12242-0003	-		1	GASKET	
130	925648-0000	-		2	NUT	
150	90045-0194	-		1	Servo motor	
160	90056-0149	-		1	Gear Reduction	
230	312115-0455	-		4	SCREW MC6S ISO 4762 M8X30 A280	
235	312105-0451	-		2	SCREW M6S ISO 4017 8X20 A280	
240	312105-0460	-		4	SCREW O4017 M8X45A280	
295	312316-0325	-		2	STOP SCREW SK6SS5X10FZB	
320	312605-0318	-		2	NUT M6M8RFR	
330	312812-0320	-		8	LOCK NUT A2-M10RFR	
360	315105-0165	-		4	WASHER BRB8,4X16RFR	
370	315115-0165	-		12	WASHER TBRB8,4X16RFR	
375	315115-0173	-		20	WASHER B 10,5X22 RFR	
0500B or 0500S or 0750B or 1000B or 1000SQ						
F030	A 925424-0100	-		1	PUMP	**23**
020	925632-0000	-		1	SUPPORT	
030	925634-0000	-		1	HOLDER	
060	925637-0000	-		1	PRODUCT PIPE	
065	926756-0000	-		1	PRODUCT PIPE	
070	925639-0000	-		1	PRODUCT PIPE	
090	925641-0000	-		1	COVER	
100	925643-0000	-		1	JOINT	
110	12242-0005	-		1	GASKET	
130	925647-0000	-		2	NUT	
150	90045-0197	-		1	Servo motor	
160	90056-0125	-		1	GEAR	
270	312115-0495	-		4	SCREW MC6S ISO 4762 M10X30 A280	
290	312105-0503	-		4	SCREW M6S ISO 4014 M10X60 A280	
300	312316-0329	-		2	STOP SCREW SK6SS5X16FZB	
330	312812-0320	-		10	LOCK NUT A2-M10RFR	
365	315105-0173	-		4	WASHER BRB10,5X22RFR	
370	315115-0165	-		4	WASHER TBRB8,4X16RFR	
375	315115-0173	-		26	WASHER B 10,5X22 RFR	

Pos	Part No	SP	UN	Qty	Description	Page No
Common parts						
010	925631-0000	-		1	SUPPORT	
040	925636-0000	-		1	SPLASH GUARD	
050	1347497-0000	-		1	HOLDER	
120	735922-0000	-		4	WASHER	
125	735934-0000	-		2	SPACER	
126	90044-0126	-		1	INDUCTIVE SWITCH	
127	926732-0000	-		1	SLEEVE	
128	1350713-0000	-		1	SLEEVE	
200	312104-0552	-		4	SCREW 6S12X100H8.8FZB	
210	312105-0327	-		2	SCREW M6S ISO 4017 M5X12 A280	
220	312105-0374	-		2	SCREW M6S ISO 4017 M6X30 A280	
250	312105-0464	-		4	SCREW M6S ISO 4014 M8X65 A280	
260	312105-0493	-		4	SCREW M6S ISO 4017 M10X25 A280	
280	312105-0501	-		4	SCREW 4017 M10X50A280	
285	312105-0502	-		4	SCREW M6S ISO 4014 M10X55 A280	
310	312605-0316	-		2	NUT M6M6RFR	
350	315105-0146	-		2	WASHER BRB5,3X10RFR	
355	315105-0153	-		4	WASHER BRB6,4X12RFR	
380	315701-0266	-		1	FLAT WEDGE8X7X28	
400	352135-0106	-	M	2	HOSE .016	
410	352135-0109	-	M	2	HOSE .022	
420	352103-0108	-		1	CABLE GLAND ST 13	
430	352103-0116	-		1	CABLE GLAND ST 21	
440	353245-0005	-		1	GLAND FITTING	
450	352136-0128	-		1	GLAND FITTING	
460	352136-0143	-		1	GLAND FITTING	

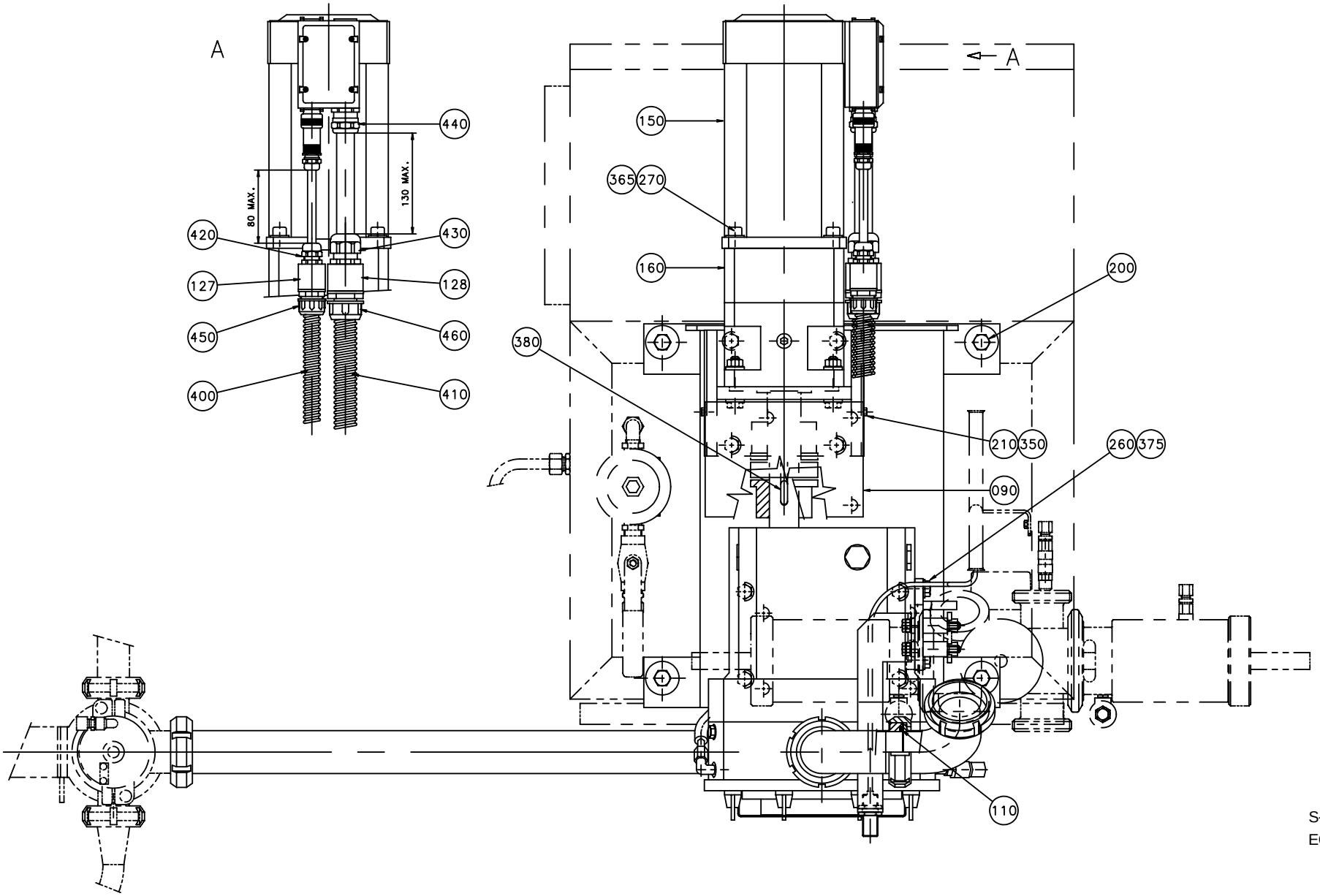

S-925401-10
ECN 71319

Pos	Part No	SP	UN	Qty	Description	Page No
0355B or 0375S						
F030	A 925425-0100	-		1	PUMP	**25**
020	925633-0000	-		1	SUPPORT	
030	925635-0000	-		1	HOLDER	
060	925638-0000	-		1	PRODUCT PIPE	
065	926757-0000	-		1	PRODUCT PIPE	
070	925640-0000	-		1	PRODUCT PIPE	
090	925642-0000	-		1	COVER	
100	925644-0000	-		1	JOINT	
110	12242-0003	-		1	GASKET	
130	925648-0000	-		2	NUT	
150	90045-0194	-		1	Servo motor	
160	90056-0149	-		1	Gear Reduction	
230	312115-0455	-		4	SCREW MC6S ISO 4762 M8X30 A280	
235	312105-0451	-		2	SCREW M6S ISO 4017 8X20 A280	
240	312105-0460	-		4	SCREW O4017 M8X45A280	
295	312316-0325	-		2	STOP SCREW SK6SS5X10FZB	
320	312605-0318	-		2	NUT M6M8RFR	
330	312812-0320	-		8	LOCK NUT A2-M10RFR	
360	315105-0165	-		4	WASHER BRB8,4X16RFR	
370	315115-0165	-		12	WASHER TBRB8,4X16RFR	
375	315115-0173	-		20	WASHER B 10,5X22 RFR	
0500B or 0500S or 0750B or 1000B or 1000SQ						
F030	A 925424-0100	-		1	PUMP	**23**
020	925632-0000	-		1	SUPPORT	
030	925634-0000	-		1	HOLDER	
060	925637-0000	-		1	PRODUCT PIPE	
065	926756-0000	-		1	PRODUCT PIPE	
070	925639-0000	-		1	PRODUCT PIPE	
090	925641-0000	-		1	COVER	
100	925643-0000	-		1	JOINT	
110	12242-0005	-		1	GASKET	
130	925647-0000	-		2	NUT	
150	90045-0197	-		1	Servo motor	
160	90056-0125	-		1	GEAR	
270	312115-0495	-		4	SCREW MC6S ISO 4762 M10X30 A280	
290	312105-0503	-		4	SCREW M6S ISO 4014 M10X60 A280	
300	312316-0329	-		2	STOP SCREW SK6SS5X16FZB	
330	312812-0320	-		10	LOCK NUT A2-M10RFR	
365	315105-0173	-		4	WASHER BRB10,5X22RFR	
370	315115-0165	-		4	WASHER TBRB8,4X16RFR	
375	315115-0173	-		26	WASHER B 10,5X22 RFR	

Pos	Part No	SP	UN	Qty	Description	Page No
Common parts						
010	925631-0000	-		1	SUPPORT	
040	925636-0000	-		1	SPLASH GUARD	
050	1347497-0000	-		1	HOLDER	
120	735922-0000	-		4	WASHER	
125	735934-0000	-		2	SPACER	
126	90044-0126	-		1	INDUCTIVE SWITCH	
127	926732-0000	-		1	SLEEVE	
128	1350713-0000	-		1	SLEEVE	
200	312104-0552	-		4	SCREW 6S12X100H8.8FZB	
210	312105-0327	-		2	SCREW M6S ISO 4017 M5X12 A280	
220	312105-0374	-		2	SCREW M6S ISO 4017 M6X30 A280	
250	312105-0464	-		4	SCREW M6S ISO 4014 M8X65 A280	
260	312105-0493	-		4	SCREW M6S ISO 4017 M10X25 A280	
280	312105-0501	-		4	SCREW 4017 M10X50A280	
285	312105-0502	-		4	SCREW M6S ISO 4014 M10X55 A280	
310	312605-0316	-		2	NUT M6M6RFR	
350	315105-0146	-		2	WASHER BRB5,3X10RFR	
355	315105-0153	-		4	WASHER BRB6,4X12RFR	
380	315701-0266	-		1	FLAT WEDGE8X7X28	
400	352135-0106	-	M	2	HOSE .016	
410	352135-0109	-	M	2	HOSE .022	
420	352103-0108	-		1	CABLE GLAND ST 13	
430	352103-0116	-		1	CABLE GLAND ST 21	
440	353245-0005	-		1	GLAND FITTING	
450	352136-0128	-		1	GLAND FITTING	
460	352136-0143	-		1	GLAND FITTING	

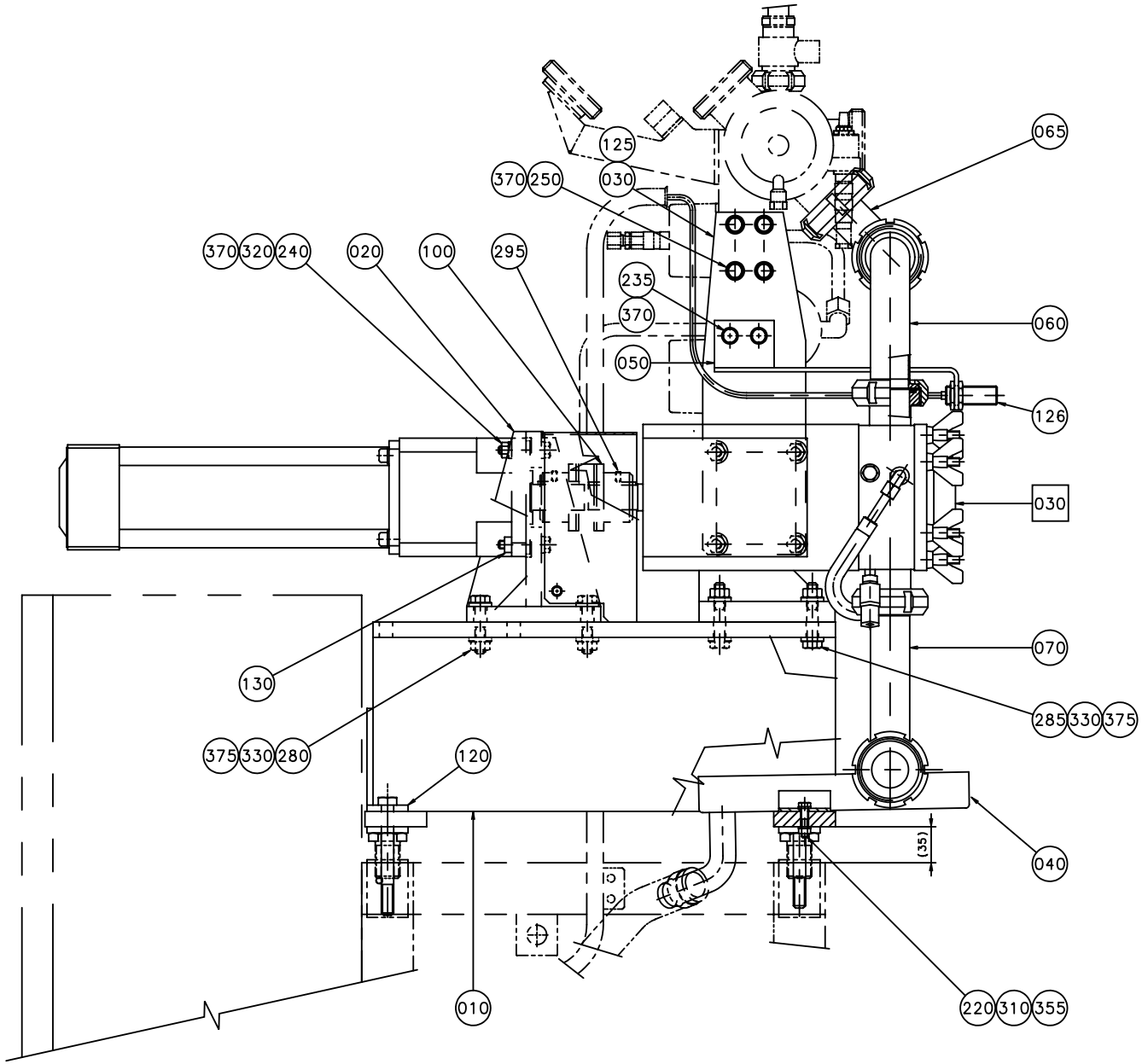

S-925401-11
ECN 71319

Pos	Part No	SP	UN	Qty	Description	Page No
0355B or 0375S						
F030	A 925425-0100	-		1	PUMP	**25**
020	925633-0000	-		1	SUPPORT	
030	925635-0000	-		1	HOLDER	
060	925638-0000	-		1	PRODUCT PIPE	
065	926757-0000	-		1	PRODUCT PIPE	
070	925640-0000	-		1	PRODUCT PIPE	
090	925642-0000	-		1	COVER	
100	925644-0000	-		1	JOINT	
110	12242-0003	-		1	GASKET	
130	925648-0000	-		2	NUT	
150	90045-0194	-		1	Servo motor	
160	90056-0149	-		1	Gear Reduction	
230	312115-0455	-		4	SCREW MC6S ISO 4762 M8X30 A280	
235	312105-0451	-		2	SCREW M6S ISO 4017 8X20 A280	
240	312105-0460	-		4	SCREW O4017 M8X45A280	
295	312316-0325	-		2	STOP SCREW SK6SS5X10FZB	
320	312605-0318	-		2	NUT M6M8RFR	
330	312812-0320	-		8	LOCK NUT A2-M10RFR	
360	315105-0165	-		4	WASHER BRB8,4X16RFR	
370	315115-0165	-		12	WASHER TBRB8,4X16RFR	
375	315115-0173	-		20	WASHER B 10,5X22 RFR	
0500B or 0500S or 0750B or 1000B or 1000SQ						
F030	A 925424-0100	-		1	PUMP	**23**
020	925632-0000	-		1	SUPPORT	
030	925634-0000	-		1	HOLDER	
060	925637-0000	-		1	PRODUCT PIPE	
065	926756-0000	-		1	PRODUCT PIPE	
070	925639-0000	-		1	PRODUCT PIPE	
090	925641-0000	-		1	COVER	
100	925643-0000	-		1	JOINT	
110	12242-0005	-		1	GASKET	
130	925647-0000	-		2	NUT	
150	90045-0197	-		1	Servo motor	
160	90056-0125	-		1	GEAR	
270	312115-0495	-		4	SCREW MC6S ISO 4762 M10X30 A280	
290	312105-0503	-		4	SCREW M6S ISO 4014 M10X60 A280	
300	312316-0329	-		2	STOP SCREW SK6SS5X16FZB	
330	312812-0320	-		10	LOCK NUT A2-M10RFR	
365	315105-0173	-		4	WASHER BRB10,5X22RFR	
370	315115-0165	-		4	WASHER TBRB8,4X16RFR	
375	315115-0173	-		26	WASHER B 10,5X22 RFR	

Pos	Part No	SP	UN	Qty	Description	Page No
Common parts						
010	925631-0000	-		1	SUPPORT	
040	925636-0000	-		1	SPLASH GUARD	
050	1347497-0000	-		1	HOLDER	
120	735922-0000	-		4	WASHER	
125	735934-0000	-		2	SPACER	
126	90044-0126	-		1	INDUCTIVE SWITCH	
127	926732-0000	-		1	SLEEVE	
128	1350713-0000	-		1	SLEEVE	
200	312104-0552	-		4	SCREW 6S12X100H8.8FZB	
210	312105-0327	-		2	SCREW M6S ISO 4017 M5X12 A280	
220	312105-0374	-		2	SCREW M6S ISO 4017 M6X30 A280	
250	312105-0464	-		4	SCREW M6S ISO 4014 M8X65 A280	
260	312105-0493	-		4	SCREW M6S ISO 4017 M10X25 A280	
280	312105-0501	-		4	SCREW 4017 M10X50A280	
285	312105-0502	-		4	SCREW M6S ISO 4014 M10X55 A280	
310	312605-0316	-		2	NUT M6M6RFR	
350	315105-0146	-		2	WASHER BRB5,3X10RFR	
355	315105-0153	-		4	WASHER BRB6,4X12RFR	
380	315701-0266	-		1	FLAT WEDGE8X7X28	
400	352135-0106	-	M	2	HOSE .016	
410	352135-0109	-	M	2	HOSE .022	
420	352103-0108	-		1	CABLE GLAND ST 13	
430	352103-0116	-		1	CABLE GLAND ST 21	
440	353245-0005	-		1	GLAND FITTING	
450	352136-0128	-		1	GLAND FITTING	
460	352136-0143	-		1	GLAND FITTING	

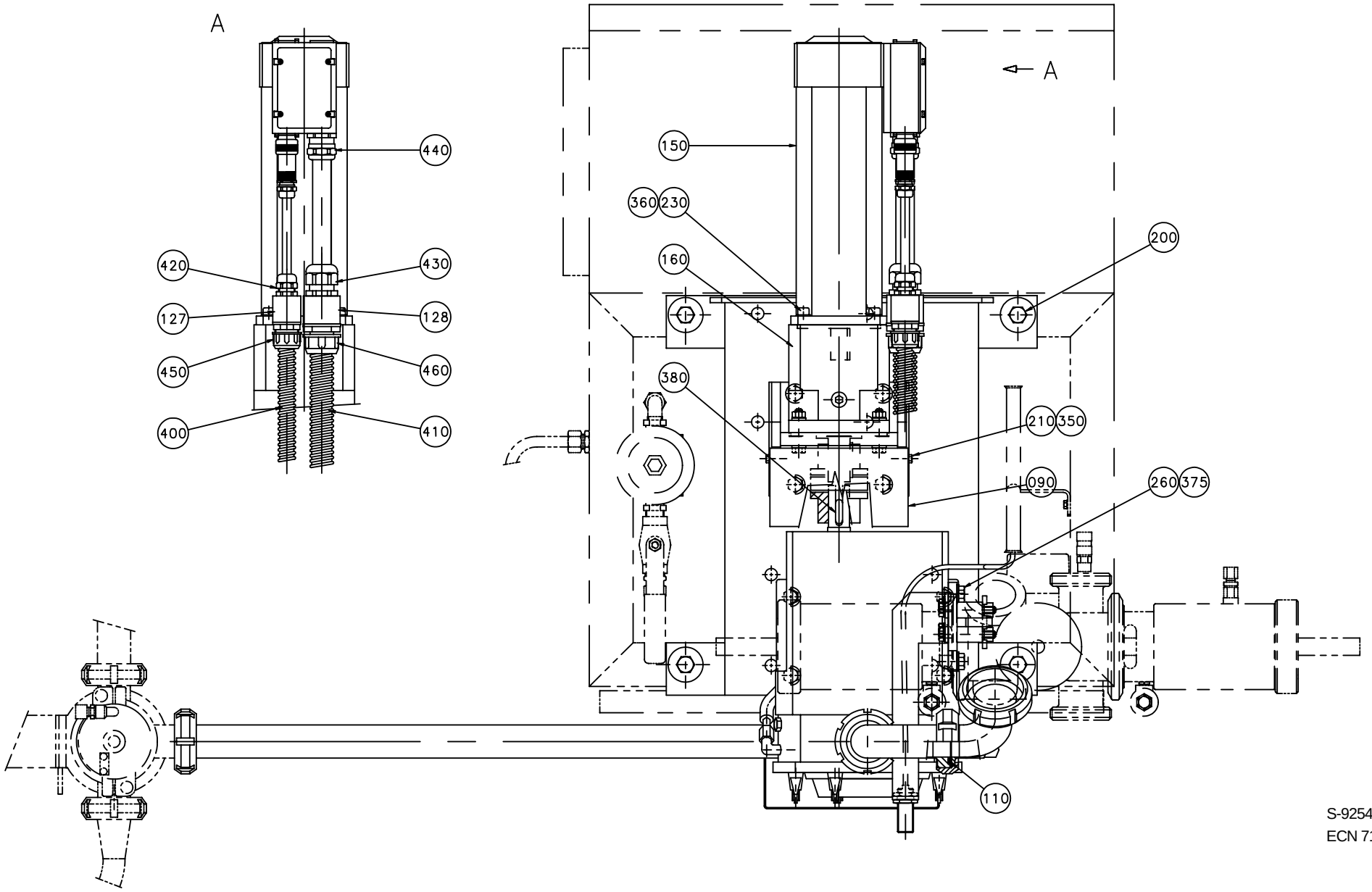

S-925401-12
ECN 71319

Pos	Part No	SP	UN	Qty	Description	Page No
0355B or 0375S						
F030	A 925425-0100	-		1	PUMP	**25**
020	925633-0000	-		1	SUPPORT	
030	925635-0000	-		1	HOLDER	
060	925638-0000	-		1	PRODUCT PIPE	
065	926757-0000	-		1	PRODUCT PIPE	
070	925640-0000	-		1	PRODUCT PIPE	
090	925642-0000	-		1	COVER	
100	925644-0000	-		1	JOINT	
110	12242-0003	-		1	GASKET	
130	925648-0000	-		2	NUT	
150	90045-0194	-		1	Servo motor	
160	90056-0149	-		1	Gear Reduction	
230	312115-0455	-		4	SCREW MC6S ISO 4762 M8X30 A280	
235	312105-0451	-		2	SCREW M6S ISO 4017 8X20 A280	
240	312105-0460	-		4	SCREW O4017 M8X45A280	
295	312316-0325	-		2	STOP SCREW SK6SS5X10FZB	
320	312605-0318	-		2	NUT M6M8RFR	
330	312812-0320	-		8	LOCK NUT A2-M10RFR	
360	315105-0165	-		4	WASHER BRB8,4X16RFR	
370	315115-0165	-		12	WASHER TBRB8,4X16RFR	
375	315115-0173	-		20	WASHER B 10,5X22 RFR	
0500B or 0500S or 0750B or 1000B or 1000SQ						
F030	A 925424-0100	-		1	PUMP	**23**
020	925632-0000	-		1	SUPPORT	
030	925634-0000	-		1	HOLDER	
060	925637-0000	-		1	PRODUCT PIPE	
065	926756-0000	-		1	PRODUCT PIPE	
070	925639-0000	-		1	PRODUCT PIPE	
090	925641-0000	-		1	COVER	
100	925643-0000	-		1	JOINT	
110	12242-0005	-		1	GASKET	
130	925647-0000	-		2	NUT	
150	90045-0197	-		1	Servo motor	
160	90056-0125	-		1	GEAR	
270	312115-0495	-		4	SCREW MC6S ISO 4762 M10X30 A280	
290	312105-0503	-		4	SCREW M6S ISO 4014 M10X60 A280	
300	312316-0329	-		2	STOP SCREW SK6SS5X16FZB	
330	312812-0320	-		10	LOCK NUT A2-M10RFR	
365	315105-0173	-		4	WASHER BRB10,5X22RFR	
370	315115-0165	-		4	WASHER TBRB8,4X16RFR	
375	315115-0173	-		26	WASHER B 10,5X22 RFR	

Pos	Part No	SP	UN	Qty	Description	Page No
Common parts						
010	925631-0000	-		1	SUPPORT	
040	925636-0000	-		1	SPLASH GUARD	
050	1347497-0000	-		1	HOLDER	
120	735922-0000	-		4	WASHER	
125	735934-0000	-		2	SPACER	
126	90044-0126	-		1	INDUCTIVE SWITCH	
127	926732-0000	-		1	SLEEVE	
128	1350713-0000	-		1	SLEEVE	
200	312104-0552	-		4	SCREW 6S12X100H8.8FZB	
210	312105-0327	-		2	SCREW M6S ISO 4017 M5X12 A280	
220	312105-0374	-		2	SCREW M6S ISO 4017 M6X30 A280	
250	312105-0464	-		4	SCREW M6S ISO 4014 M8X65 A280	
260	312105-0493	-		4	SCREW M6S ISO 4017 M10X25 A280	
280	312105-0501	-		4	SCREW 4017 M10X50A280	
285	312105-0502	-		4	SCREW M6S ISO 4014 M10X55 A280	
310	312605-0316	-		2	NUT M6M6RFR	
350	315105-0146	-		2	WASHER BRB5,3X10RFR	
355	315105-0153	-		4	WASHER BRB6,4X12RFR	
380	315701-0266	-		1	FLAT WEDGE8X7X28	
400	352135-0106	-	M	2	HOSE .016	
410	352135-0109	-	M	2	HOSE .022	
420	352103-0108	-		1	CABLE GLAND ST 13	
430	352103-0116	-		1	CABLE GLAND ST 21	
440	353245-0005	-		1	GLAND FITTING	
450	352136-0128	-		1	GLAND FITTING	
460	352136-0143	-		1	GLAND FITTING	

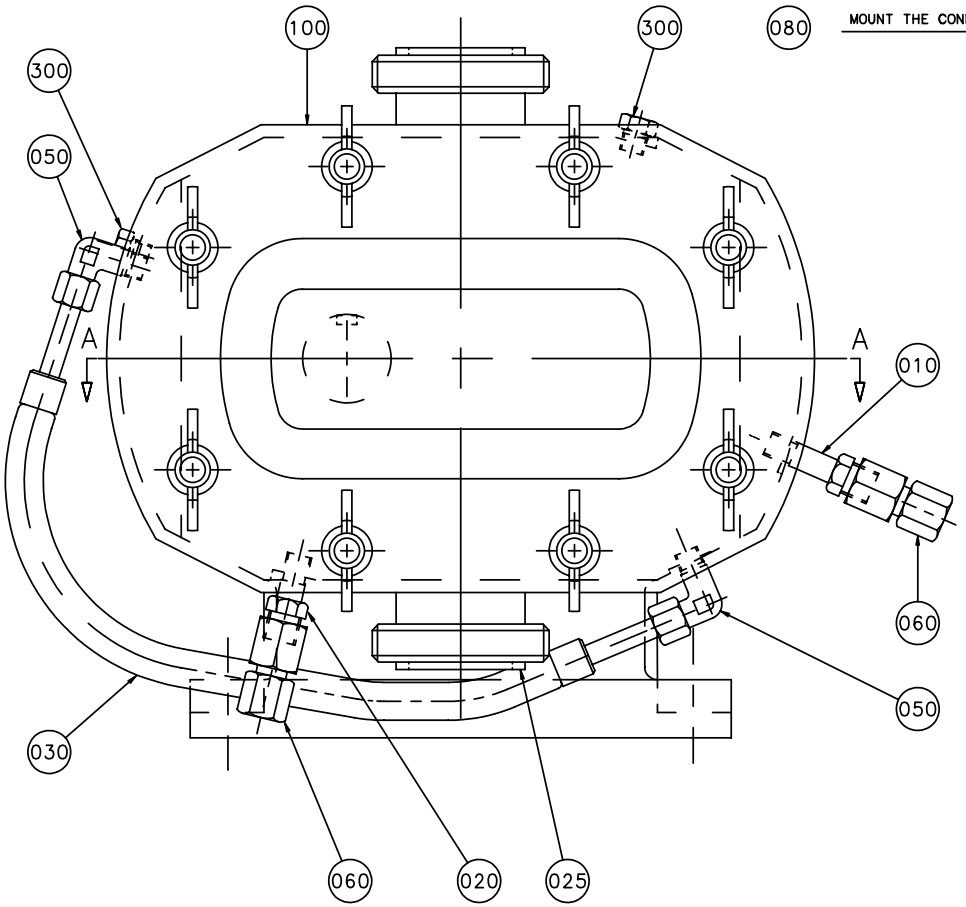

MOUNT THE CONNECTIONS USING TEFLON TAPE

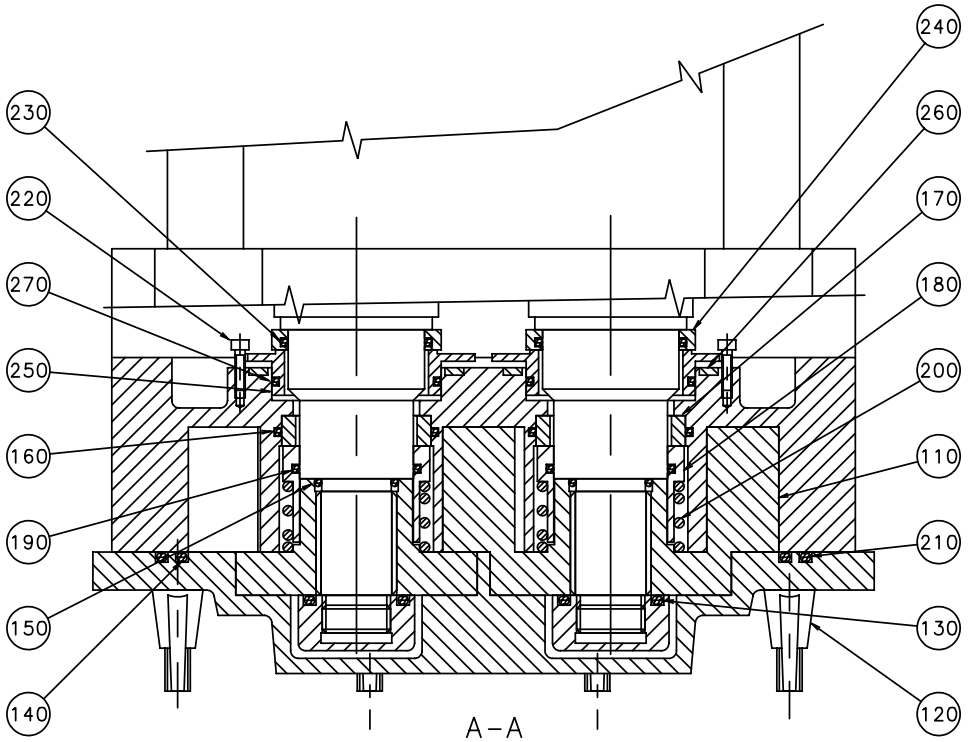

S-925424-1
ECN 16402

Pos	Part No	SP	UN	Qty	Description	Page No
-						
010	925330-0000	-		1	NIPPLE	
020	925331-0000	-		1	NIPPLE	
025	12242-0005	-		2	GASKET	
030	925645-0000	-		1	HOSE	
050	90030-0257	-		2	ELBOW PIPE JOINT	
060	90030-0258	-		2	PIPE CONNECTION	
080	90144-0004	-	MM	1	TAPE	
100	B 90321-0057	-		1	PUMP	
300	342219-0201	-		2	PLUG	

Pos	Part No	SP	UN	Qty	Description	Page No

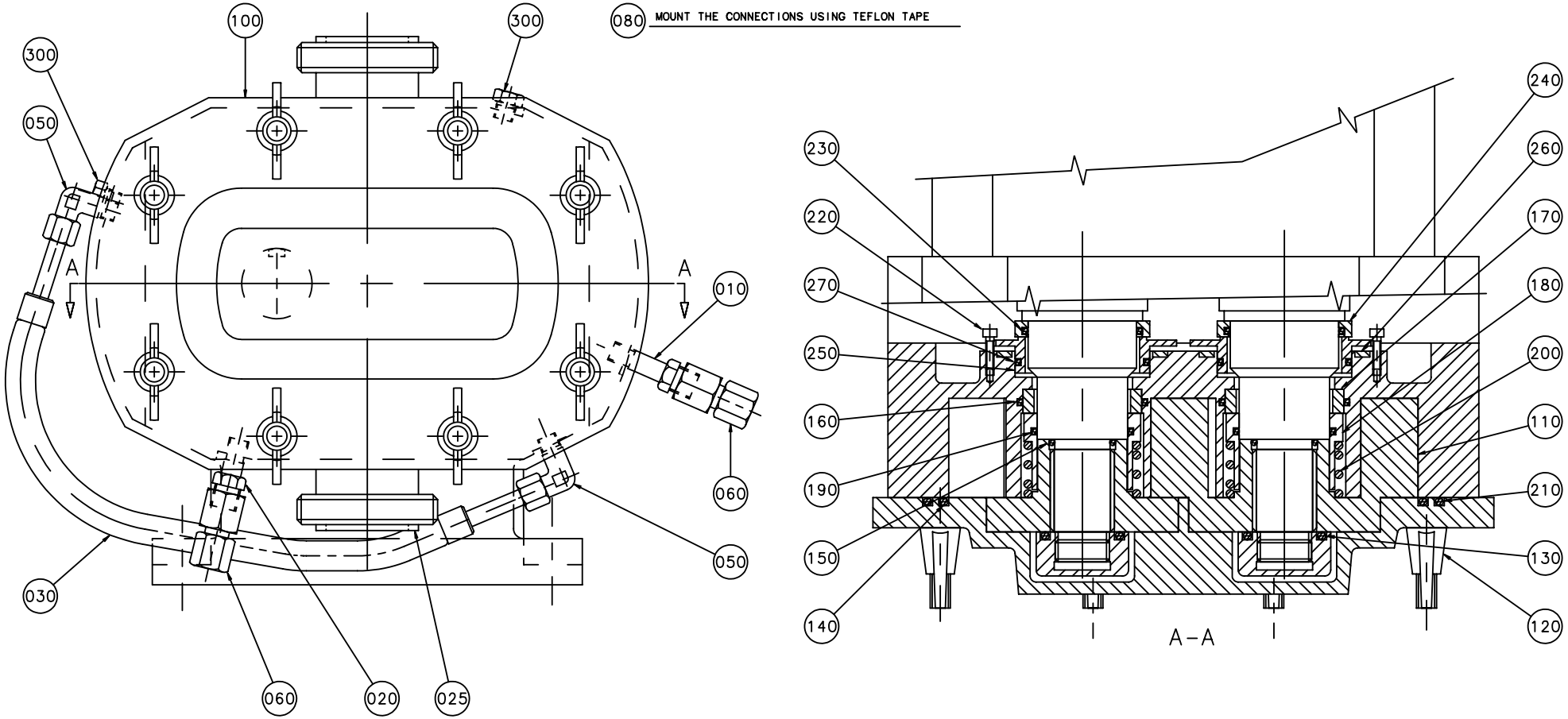
080 MOUNT THE CONNECTIONS USING TEFLON TAPE
100
300
300
050
A
A
010
060
050
030
060
020
025
230
220
270
250
160
190
150
140
240
260
170
180
200
110
210
130
120
A–A

Pos	Part No	SP	UN	Qty	Description	Page No
-						
010	925330-0000	-		1	NIPPLE	
020	925331-0000	-		1	NIPPLE	
025	12242-0003	-		2	GASKET	
030	925646-0000	-		1	HOSE	
050	90030-0257	-		2	ELBOW PIPE JOINT	
060	90030-0258	-		2	PIPE CONNECTION	
080	90144-0004	-	MM	1	TAPE	
100	B 90321-0059	-		1	PUMP	
300	342219-0201	-		2	PLUG	

Pos	Part No	SP	UN	Qty	Description	Page No

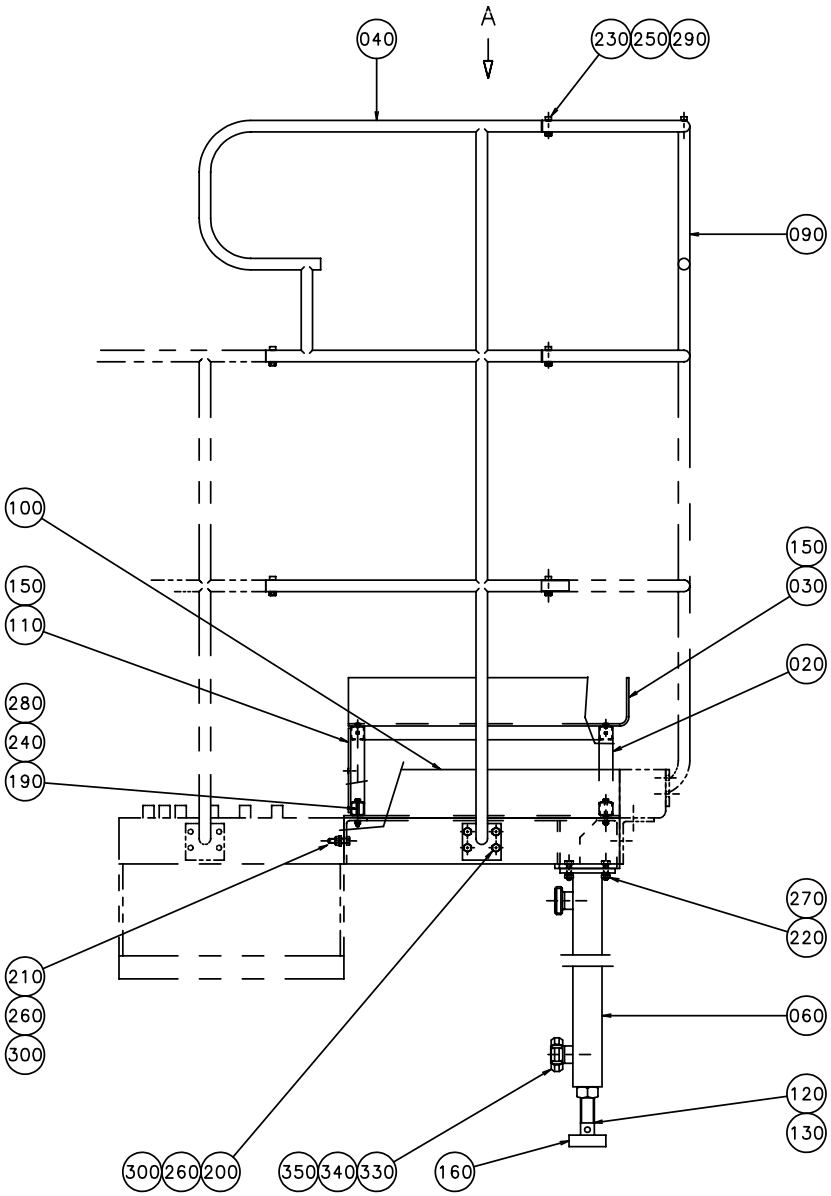
A
040
230
250
290
090
100
150
110
280
240
190
150
030
020
270
220
210
260
300
060
120
130
300
260
200
350
340
330
160

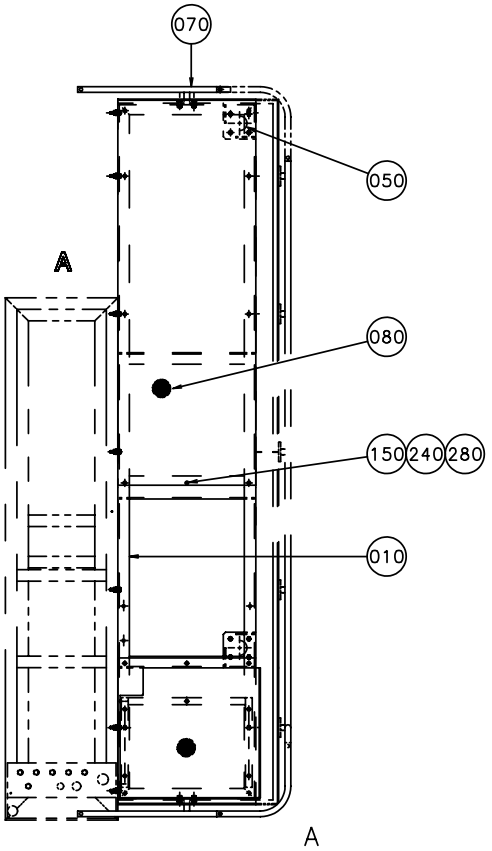
070
050
A
080
150
240
280
010
A

Pos	Part No	SP	UN	Qty	Description	Page No
-						
010	924740-0000	-		1	FRAME	
020	926798-0000	-		1	FRAME	
030	926799-0000	-		1	PLATFORM	
040	926800-0000	-		1	RAILING	
050	736876-0000	-		1	COLUMN	
060	736877-0000	-		1	COLUMN	
070	795853-0000	-		1	RAILING	
080	924749-0000	-		1	PLATFORM	
090	926801-0000	-		1	RAILING	
100	924748-0000	-		1	PLATFORM	
110	926802-0000	-		1	SIDE PLATE	
120	469096-0000	-		2	LEG	
130	735738-0000	-		2	NUT	
150	90287-0076	-		21	SCREW	
160	90347-0079	-		2	DAMPER	
190	312105-0381	-		2	SCREW M6S ISO 4014 M6X55 A280	
200	312105-0493	-		8	SCREW M6S ISO 4017 M10X25 A280	
210	312105-0495	-		7	SCREW M6S ISO 4017 M10X30 A280	
220	312105-0497	-		8	SCREW M6S ISO 4017 M10X35 A280	
230	312115-0453	-		5	SCREW MC6S ISO 4762 M8X25 A280	
240	312605-0316	-		16	NUT M6M6RFR	
250	312605-0318	-		4	NUT M6M8RFR	
260	312605-0320	-		15	NUT M6M10RFR	
270	312812-0320	-		8	LOCK NUT A2-M10RFR	
280	315105-0153	-		18	WASHER BRB6,4X12RFR	
290	315105-0165	-		5	WASHER BRB8,4X16RFR	
300	315105-0173	-		15	WASHER BRB10,5X22RFR	
330	315250-0103	-		2	GASKET 48/38	
340	342803-0103	-		1	NUT 38	
350	342812-0103	-		1	SLEEVE ANSL.38	

Pos	Part No	SP	UN	Qty	Description	Page No

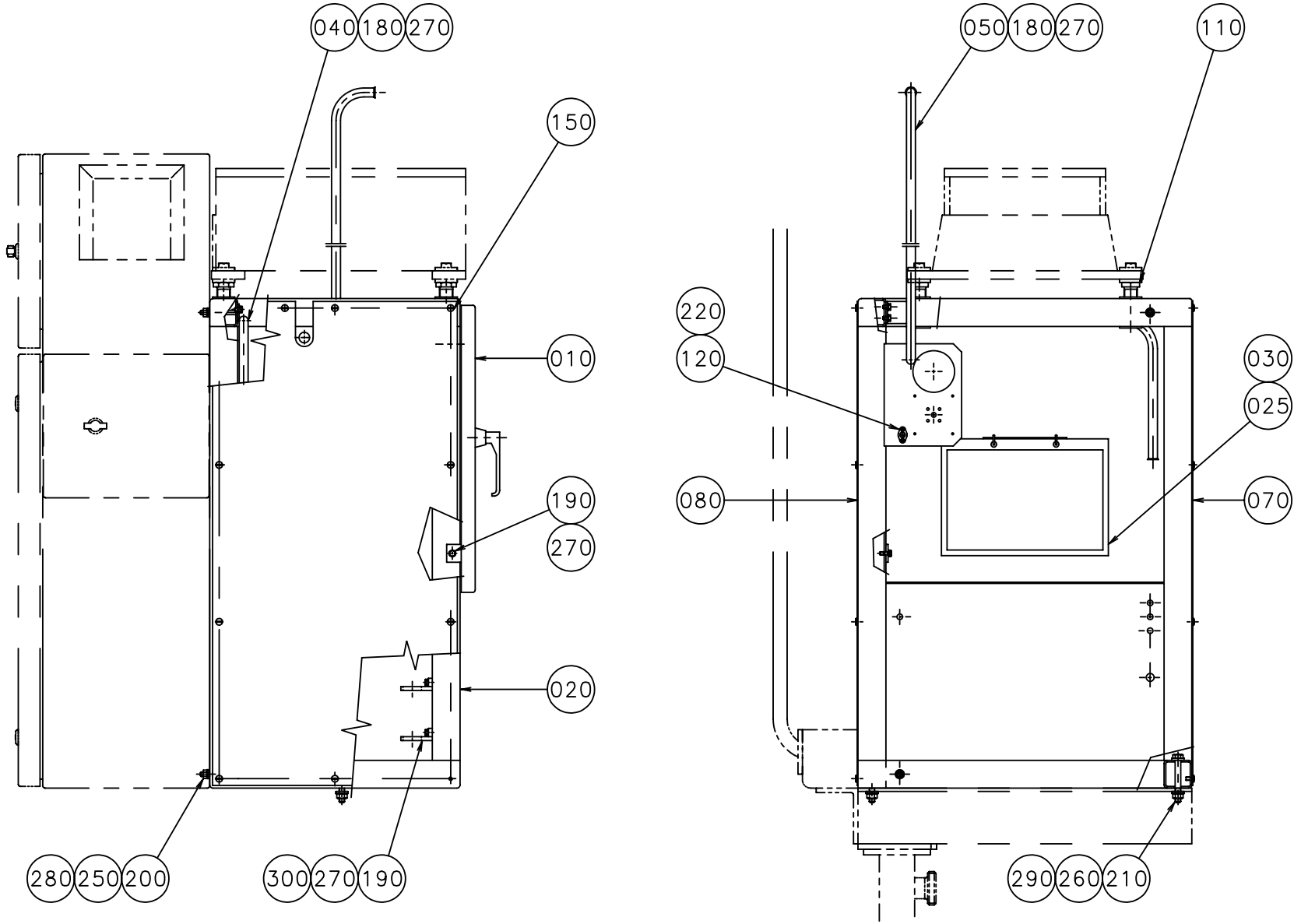

S-925403-1
ECN 71319

Pos	Part No	SP	UN	Qty	Description	Page No
-						
010	735509-0000	-		1	DOOR	
020	925452-0000	-		1	FRAME	
025	925676-0000	-		1	AIR/STEAM DIAGRAM	
030	925675-0000	-		1	VALVE PANEL	
040	925766-0000	-		1	CABLE CONDUIT	
050	925767-0000	-		1	CABLE CONDUIT	
070	736113-0000	-		1	PANEL	
080	925090-0000	-		1	PANEL	
110	735921-0000	-		4	SCREW	
120	736378-0000	-		1	BASE	
150	90287-0075	-		22	SCREW	
180	312105-0364	-		4	SCREW M6S6X10RFR	
190	312105-0368	-		6	SCREW M6S ISO 4017 M6X16 A280	
200	312105-0465	-		4	SCREW M6S ISO 4014 M8X70 A280	
210	312105-0507	-		2	SCREW M6S ISO 4014 M10X80 A280	
220	312145-0222	-		2	SLOTTED HEMFS3X8RFR	
250	312605-0318	-		4	NUT M6M8RFR	
260	312605-0320	-		2	NUT M6M10RFR	
270	315105-0153	-		10	WASHER BRB6,4X12RFR	
280	315115-0165	-		8	WASHER TBRB8,4X16RFR	
290	315115-0173	-		4	WASHER B 10,5X22 RFR	
300	352135-0204	-		2	CRAMP 28	

Pos	Part No	SP	UN	Qty	Description	Page No

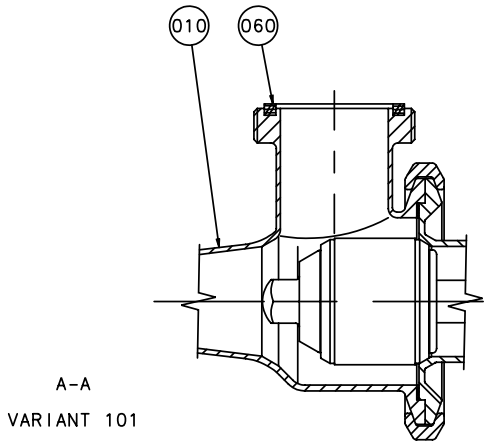

A-A
VARIANT 101

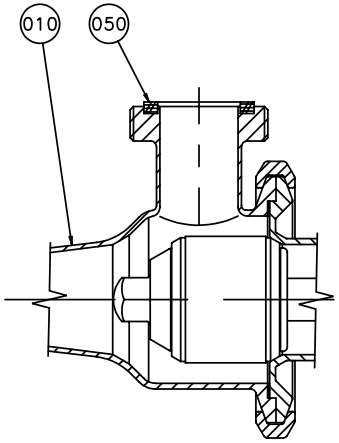

A-A
VARIANT 102

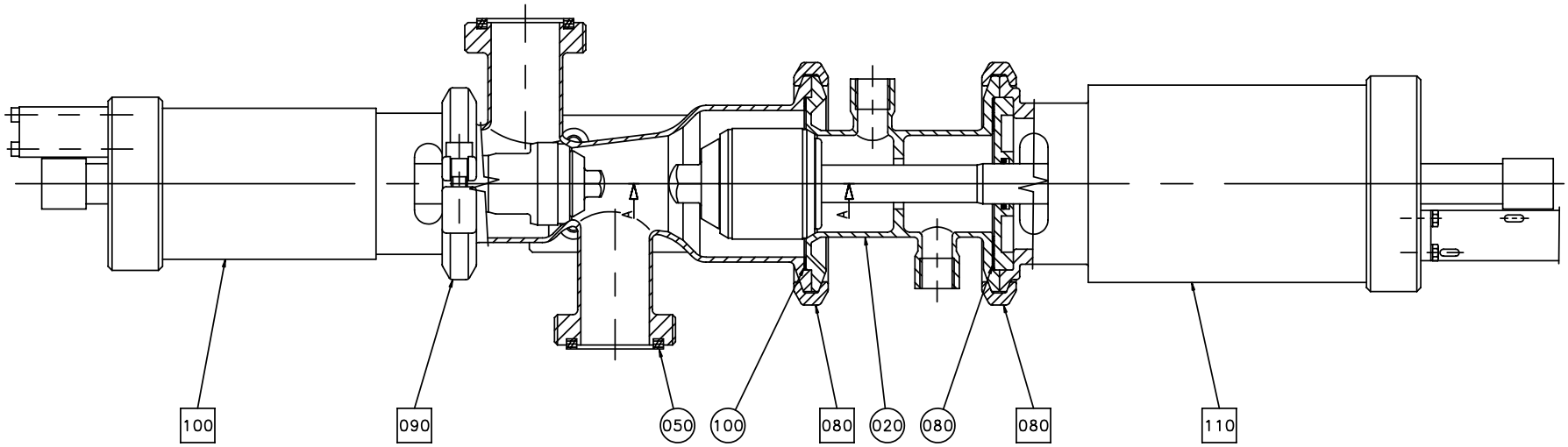

Pos	Part No	SP	UN	Qty	Description	Page No
0355B or 0375S						
010	735891-0000	-		1	VALVE HOUSING	
050	12242-0003	-		3	GASKET	
0500B or 0500S or 0750B or 1000B or 1000SQ						
010	529795-0000	-		1	VALVE HOUSING	
050	12242-0003	-		2	GASKET	
060	12242-0005	-		1	GASKET	
Common parts						
F080	A 541163-0100	-		2	CLAMP RING	**33**
F090	A 541164-0100	-		1	CLAMP RING	**35**
F100	A 794243-0100	-		1	B-CYLINDER	**37**
F110	A 926937-0100	-		1	CYLINDER C	**39**
020	440634-0000	-		1	HOUSE	
080	539212-0000	-		1	GASKET	
100	90207-0363	-		1	GASKET	

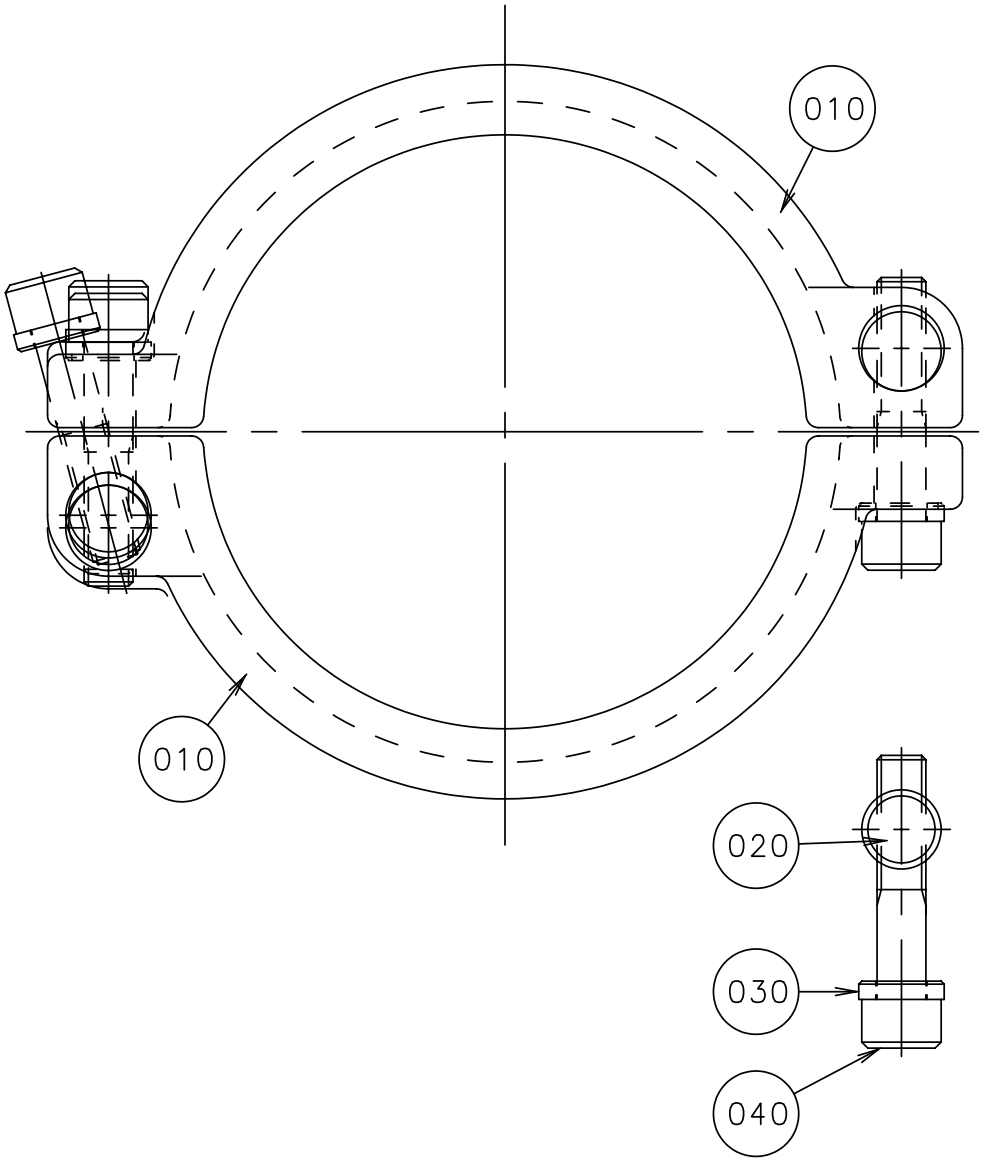
010
010
020
030
040

Pos	Part No	SP	UN	Qty	Description	Page No
-						
010	532117-0000	-		2	CLAMP RING	
020	497748-0000	-		2	PIN	
030	541165-0000	-		2	WASHER	
040	312115-0459	-		2	SCREW MC6S ISO 4762 M8X40 A280	

Pos	Part No	SP	UN	Qty	Description	Page No

CLAMP RING

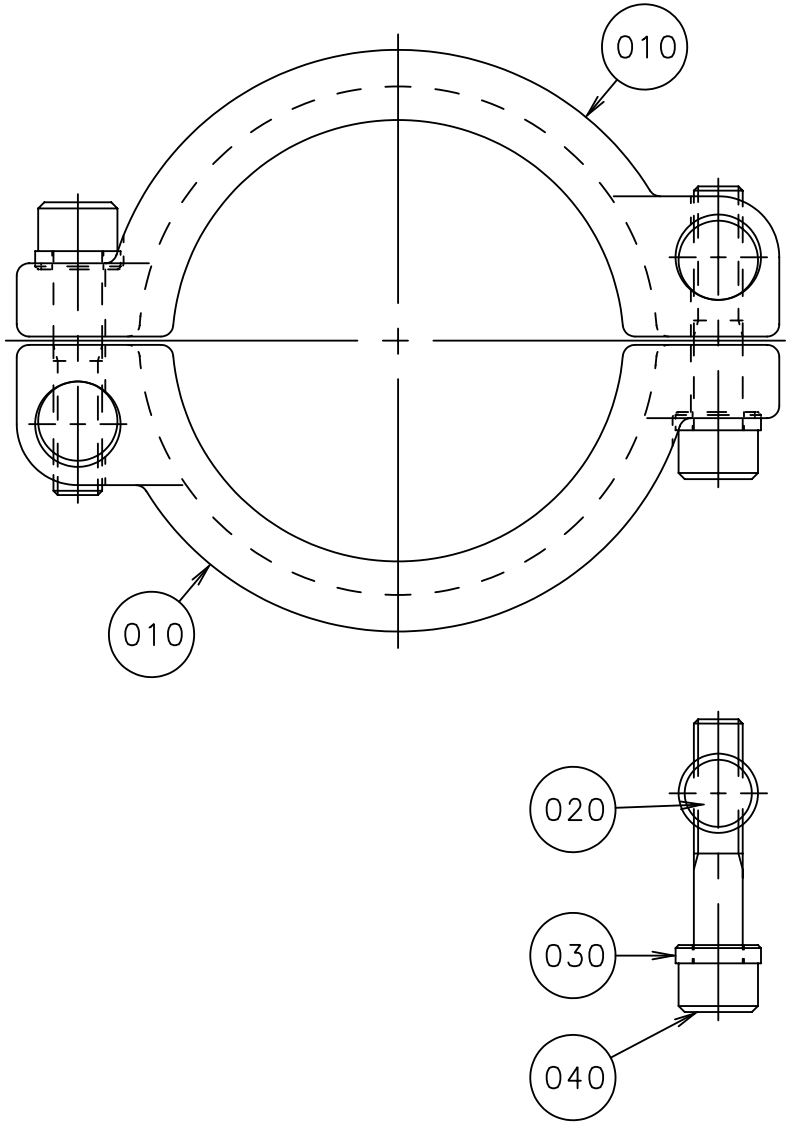

Pos	Part No	SP	UN	Qty	Description	Page No
-						
010	532118-0000	-		2	CLAMP RING	
020	497748-0000	-		2	PIN	
030	541165-0000	-		2	WASHER	
040	312115-0459	-		2	SCREW MC6S ISO 4762 M8X40 A280	

Pos	Part No	SP	UN	Qty	Description	Page No

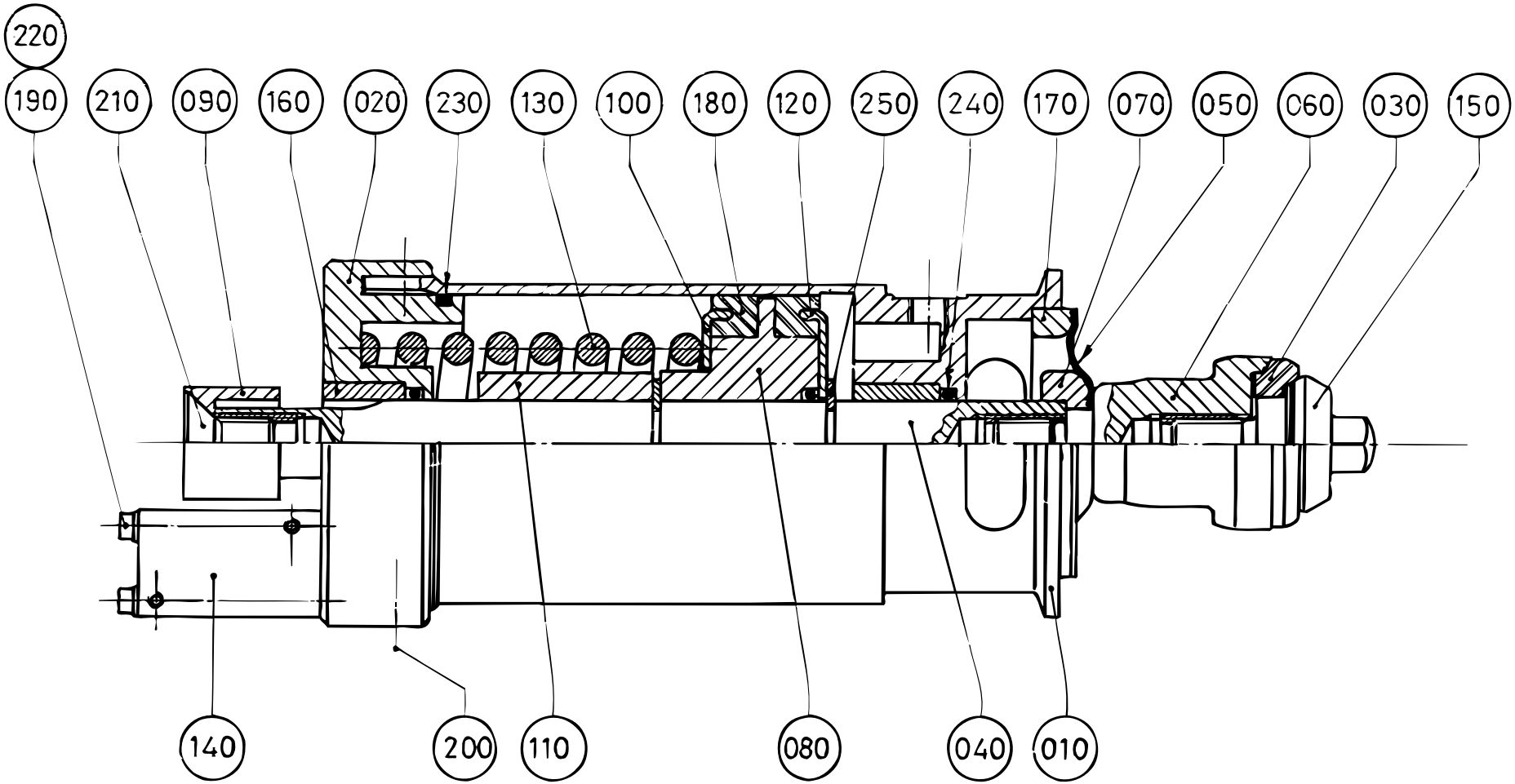

S-794243-1
ECN 13593

Pos	Part No	SP	UN	Qty	Description	Page No
-						
010	440633-0000	-		1	CYLINDER HOUSING	
020	440695-0000	-		1	END SECTION	
030	530588-0000	-		1	SEAL RING	
040	735632-0000	-		1	PISTON ROD	
050	794246-0000	F		1	DIAPHRAGM	
060	794247-0000	-		1	SEAL RING HOLDER	
070	794248-0000	-		1	WASHER	
080	440646-0000	-		1	PISTON	
090	440647-0000	-		1	SLEEVE	
100	440652-0000	-		1	WASHER	
110	440654-0000	-		1	SPACER SLEEVE	
120	440656-0000	-		1	WASHER	
130	440662-0000	-		1	COMPRESSION SPRING	
140	440731-0000	-		1	PLATE	
150	476185-0000	-		1	VALVE CONE	
160	497933-0000	-		2	BUSHING	
170	735630-0000	-		1	RING	
180	90020-0027	-		2	SLEEVE	
190	312115-0304	-		2	SCREW MC6S ISO 4762 M4X45 A280	
200	312155-0323	-		1	SCREW MF6S DIN 7991 M5X8 A280	
210	312155-0532	-		1	SCREW MF6S12X20RFR	
220	315105-0136	-		2	WASHER BRB4,3X8RFR	
230	315202-0304	-		1	O-RING 64,5X3	
240	315204-0215	-		3	O-RING 19,2X3VITON	
250	315754-0113	-		2	LOCKING WAE 15	

Pos	Part No	SP	UN	Qty	Description	Page No

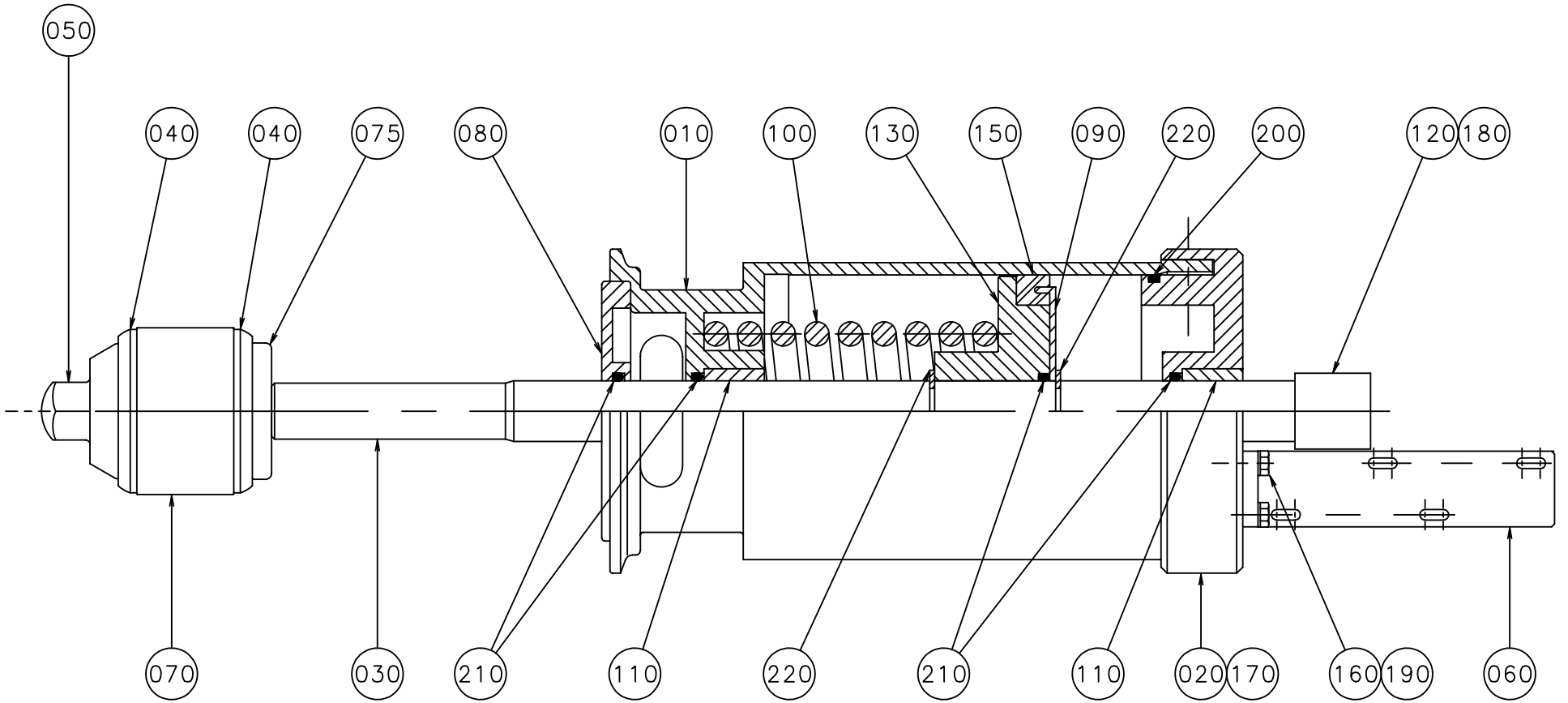

S-926937-1
ECN 16402

Pos	Part No	SP	UN	Qty	Description	Page No
-						
010	440632-0000	-		1	CYLINDER HOUSING	
020	484998-0000	-		1	END SECTION	
030	735663-0000	-		1	PISTON ROD	
040	530589-0000	-		2	SEAL RING	
050	530590-0000	-		1	VALVE CONE	
060	735549-0000	-		1	HOOK HOLDER	
070	925471-0000	-		1	SEAL HOLDER	
075	925472-0000	-		1	SEAL HOLDER	
080	440648-0000	-		1	SEALING WASHER	
090	440651-0000	-		1	WASHER	
100	440663-0000	-		1	COMPRESSION SPRING	
110	497933-0000	-		2	BUSHING	
120	735550-0000	-		1	BUSHING	
130	794117-0000	-		1	PISTON	
150	90020-0028	-		1	SLEEVE	
160	312105-0289	-		2	SCREW M6S4X10 A2 80	
170	312155-0323	-		1	SCREW MF6S DIN 7991 M5X8 A280	
180	312155-0538	-		1	SCREW MF6S12X35RFR	
190	315105-0136	-		2	WASHER BRB4,3X8RFR	
200	315202-0308	-		1	O-RING 84,5X3	
210	315204-0215	-		4	O-RING 19,2X3VITON	
220	315754-0113	-		2	LOCKING WAE 15	

Pos	Part No	SP	UN	Qty	Description	Page No

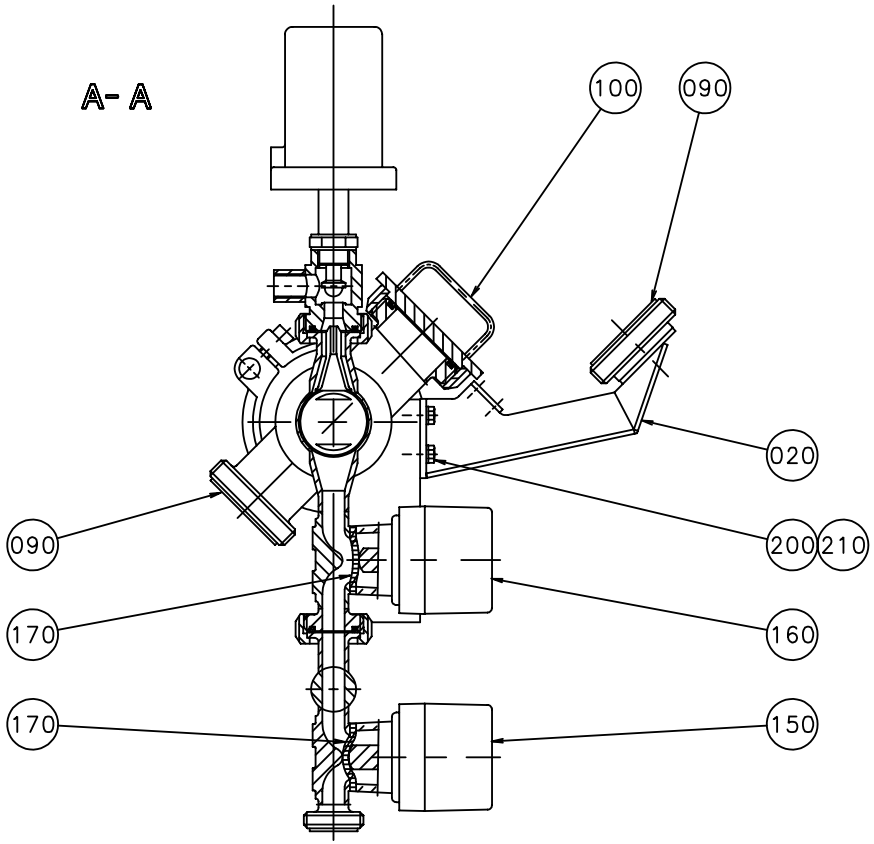
A- A
100
090
020
090
200
210
170
160
170
150

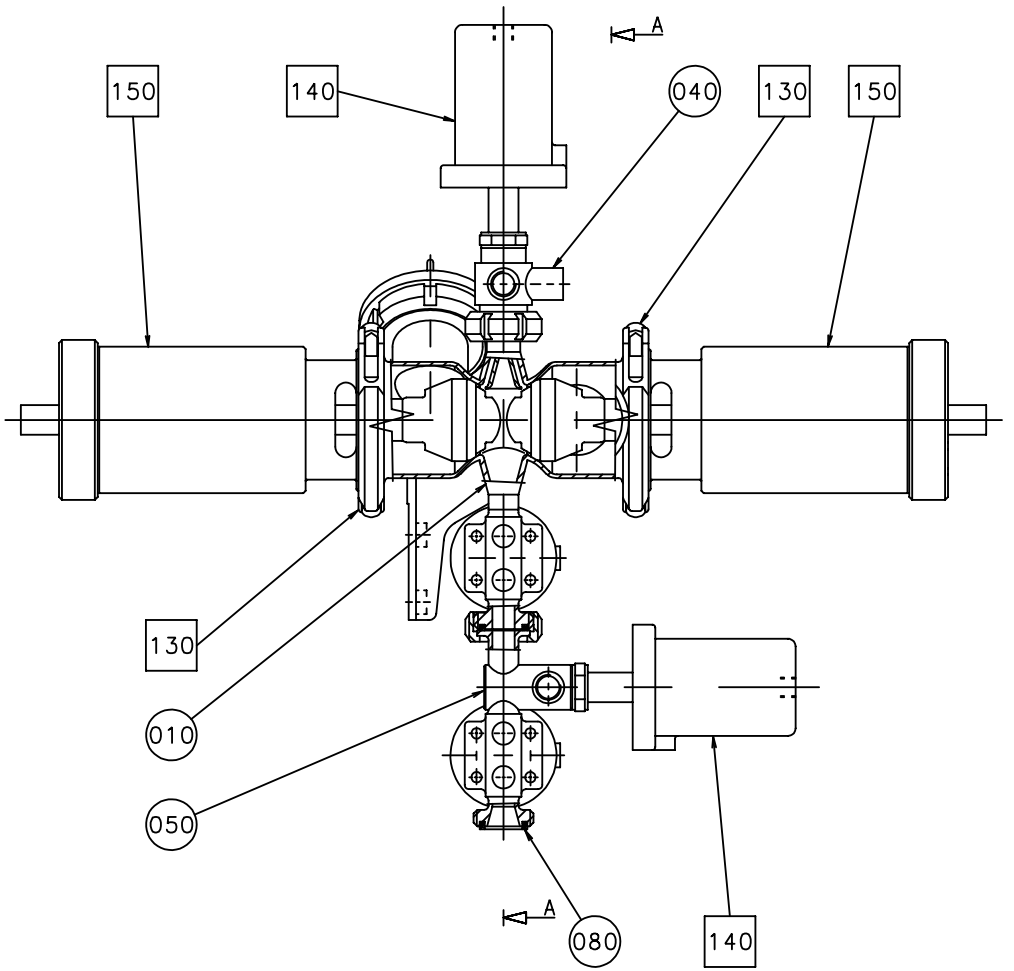
A
150
140
040
130
150
130
010
050
A
080
140

Pos	Part No	SP	UN	Qty	Description	Page No
-						
F130	A 541163-0100	-		2	CLAMP RING	**33**
F140	A 794226-0100	-		2	VALVE	**43**
F150	A 926938-0100	-		2	CYLINDER A	**45**
010	735342-0000	-		1	VALVE BODY 2"	
020	794276-0000	-		1	SUPPORT	
040	925426-0000	-		1	VALVE SEAT	
050	925427-0000	-		1	VALVE SEAT	
080	12242-0001	-		3	GASKET	
090	12242-0005	-		5	GASKET	
100	735521-0000	-		1	BLANK NUT	
150	90187-0110	K		1	ACTUATOR	
160	90187-0111	K		1	SAUNDERS VALVE	
170	90187-0312	K		2	DIAPHRAGM	
200	312105-0366	-		2	SCREW M6S ISO 4017 M6X12 A280	
210	315105-0153	-		2	WASHER BRB6,4X12RFR	

Pos	Part No	SP	UN	Qty	Description	Page No

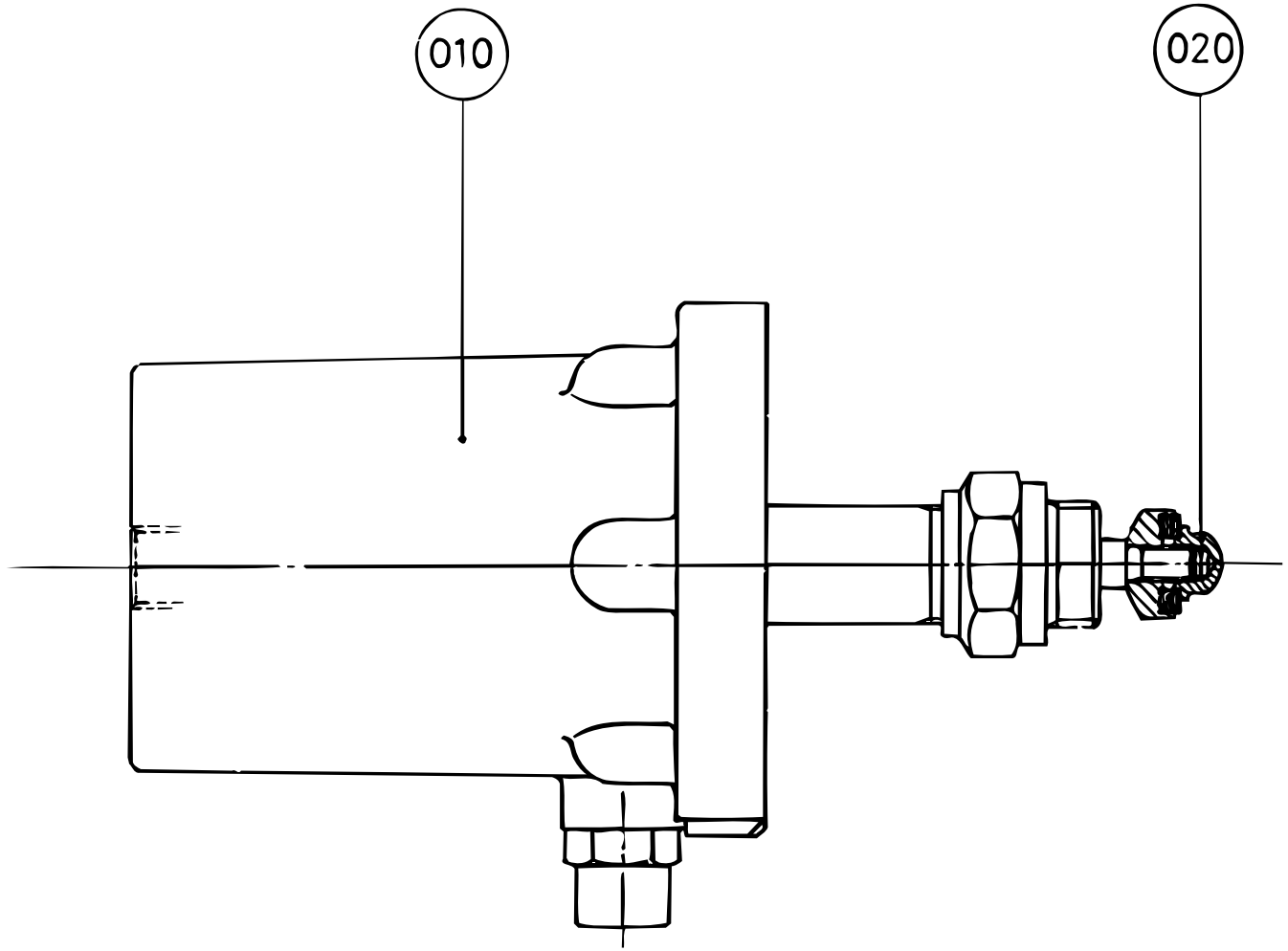
010
020

Pos	Part No	SP	UN	Qty	Description	Page No
-						
010	735911-0000	K		1	VALVE 1/2"	
020	735846-0000	-		1	CAP NUT	

Pos	Part No	SP	UN	Qty	Description	Page No

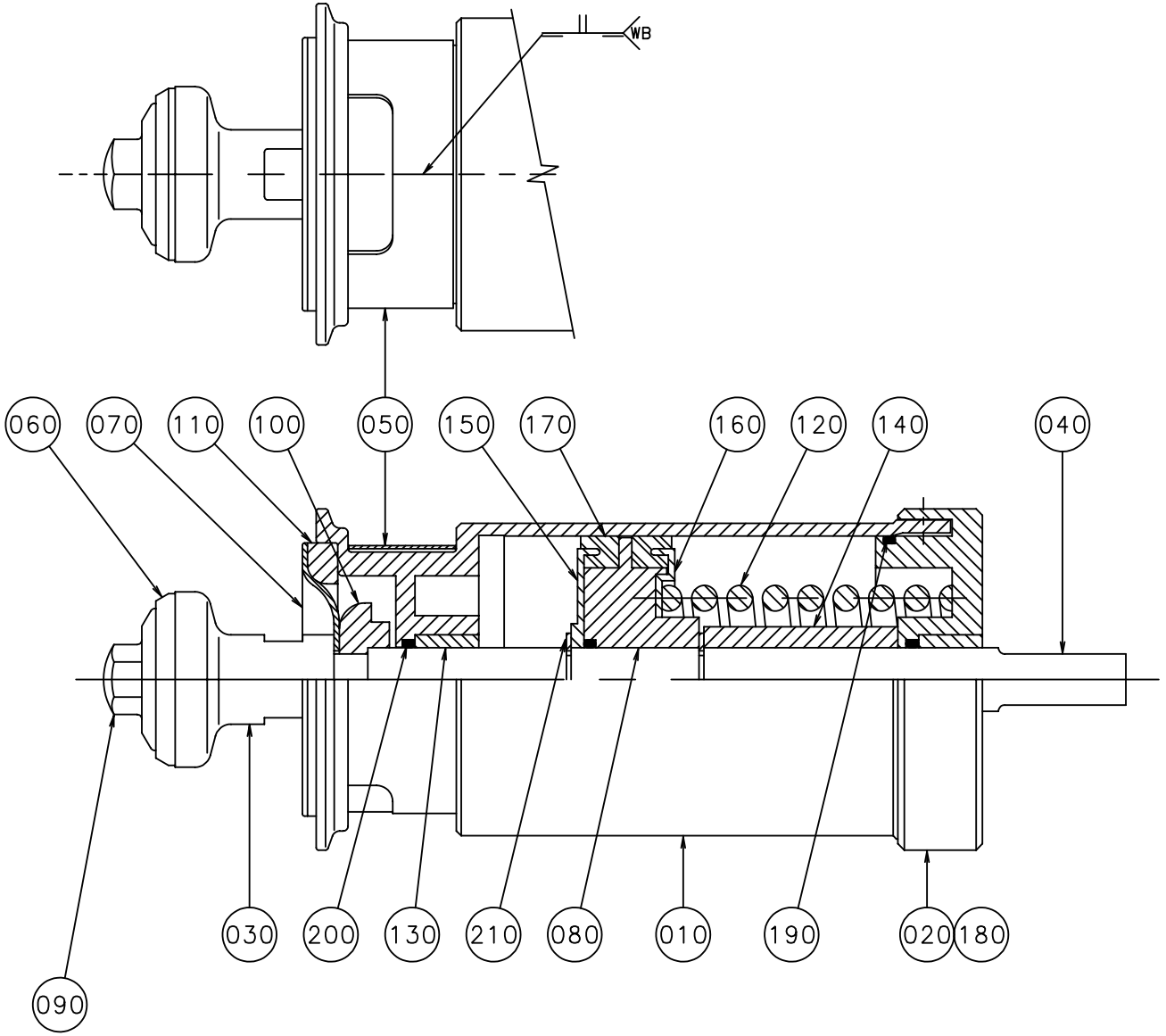
WB
060
070
110
100
050
150
170
160
120
140
040
030
200
130
210
080
010
190
020
180
090

Pos	Part No	SP	UN	Qty	Description	Page No
-						
010	440632-0000	-		1	CYLINDER HOUSING	
020	484998-0000	-		1	END SECTION	
030	924895-0000	-		1	SEAL HOLDER	
040	440637-0000	-		1	PISTON ROD	
050	476203-0000	-		1	PROTECTION	
060	530589-0000	-		1	SEAL RING	
070	533169-0000	-		1	DIAPHRAGM	
080	924063-0000	-		1	PISTON	
090	924897-0000	-		1	SCREW	
100	926194-0000	-		1	SPACER	
110	440655-0000	-		1	RING	
120	440663-0000	-		1	COMPRESSION SPRING	
130	497933-0000	-		2	BUSHING	
140	924062-0000	-		1	SPACER	
150	924064-0000	-		1	WASHER	
160	924065-0000	-		1	WASHER	
170	90020-0028	-		2	SLEEVE	
180	312155-0323	-		1	SCREW MF6S DIN 7991 M5X8 A280	
190	315202-0308	-		1	O-RING 84,5X3	
200	315204-0215	-		3	O-RING 19,2X3VITON	
210	315754-0113	-		2	LOCKING WAE 15	

Pos	Part No	SP	UN	Qty	Description	Page No

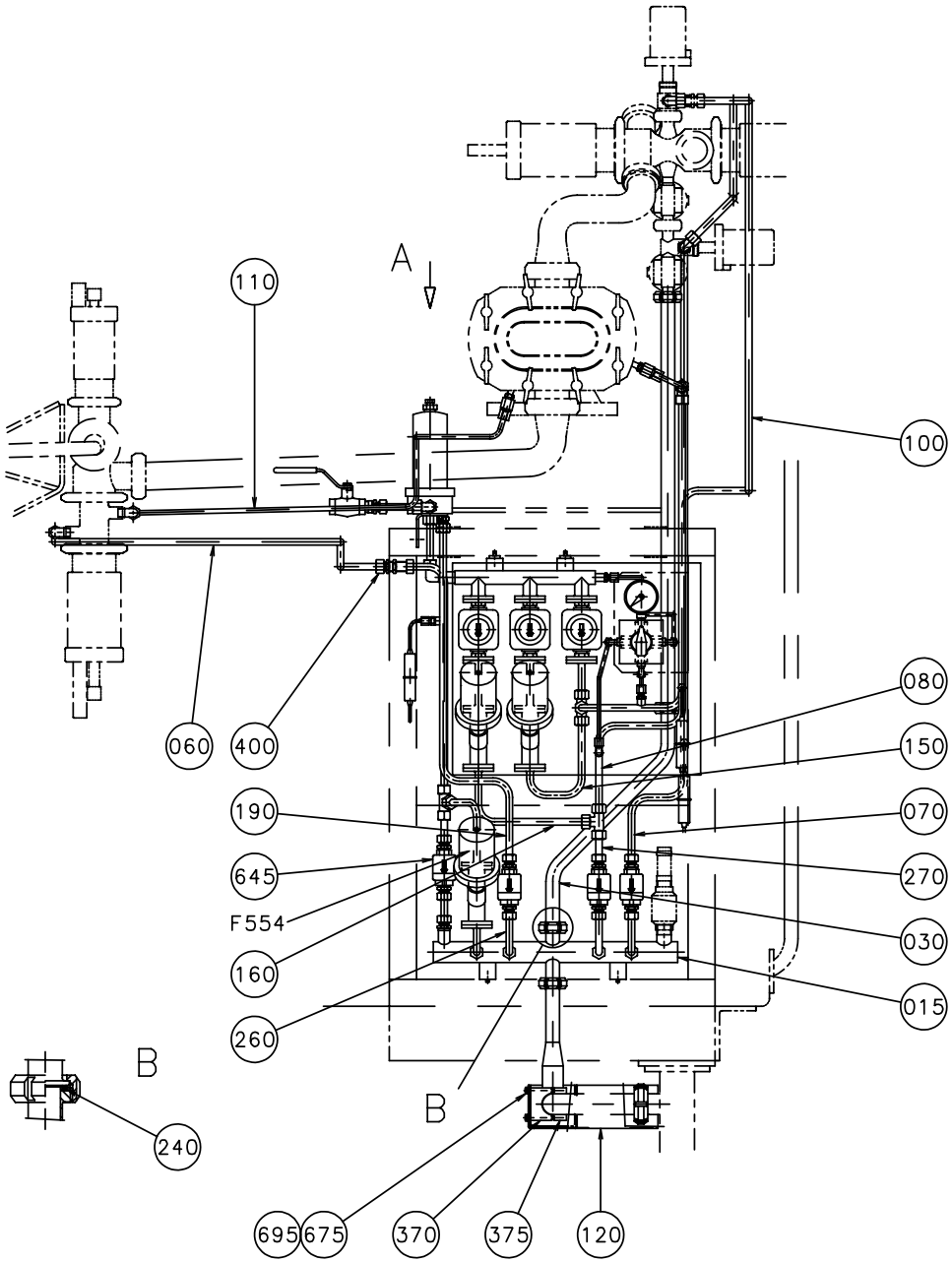

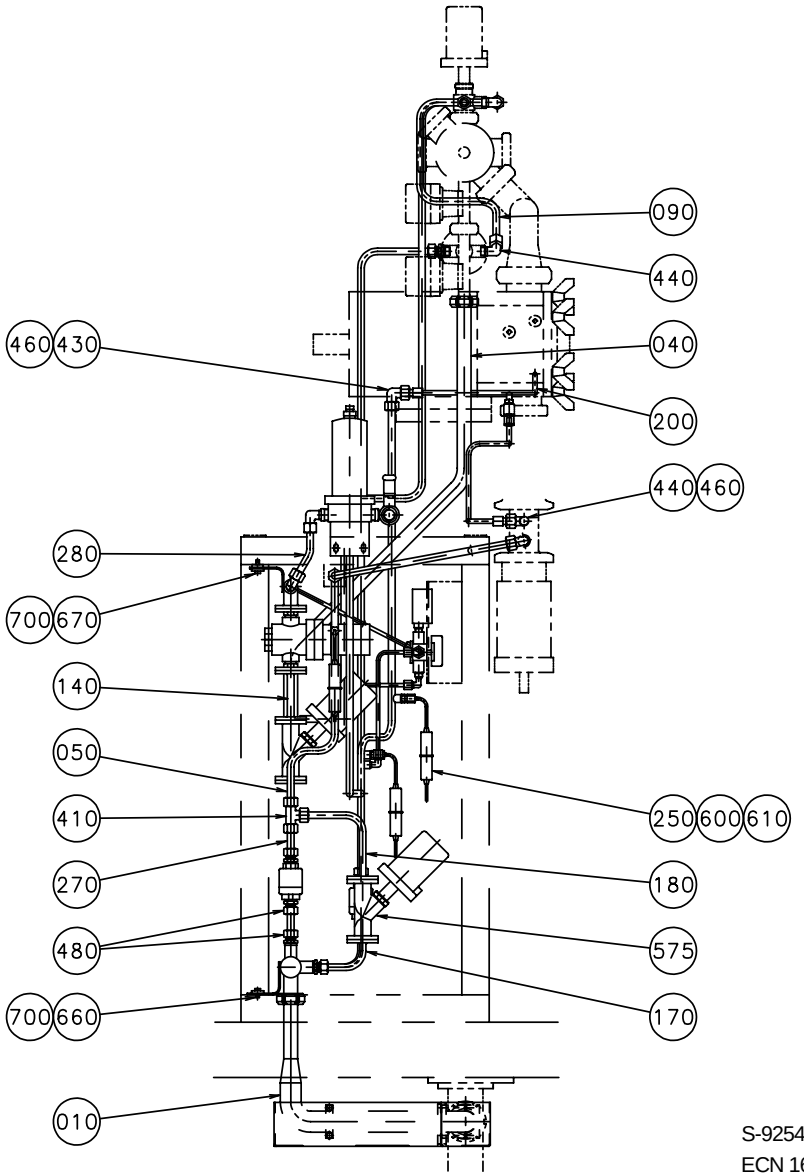

S-925406-1
ECN 16402

Pos	Part No	SP	UN	Qty	Description	Page No
0355B or 0375S						
110	925455-0000	-		1	STEAM PIPE	
200	925456-0000	-		1	STEAM PIPE	
0500B or 0500S or 0750B or 1000B or 1000SQ						
110	925454-0000	-		1	STEAM PIPE	
200	925453-0000	-		1	STEAM PIPE	
Common parts						
010	924774-0000	-		1	PIPE	
015	925428-0000	-		1	PIPE	
020	925429-0000	-		1	PIPE	
030	925430-0000	-		1	PIPE	
040	925431-0000	-		1	PIPE	
050	925439-0000	-		1	STEAM PIPE	
060	925440-0000	-		1	STEAM PIPE	
070	925443-0000	-		1	STEAM PIPE	
080	925444-0000	-		1	STEAM PIPE	
090	925445-0000	-		1	STEAM PIPE	
100	925446-0000	-		1	STEAM PIPE	
120	926761-0000	-		1	TOUCH GUARD	
130	736040-0000	-		1	FILTER SUPPORT	
140	925432-0000	-		2	STEAM PIPE	
150	925433-0000	-		1	STEAM PIPE	
160	925434-0000	-		1	STEAM PIPE	
170	925435-0000	-		1	STEAM PIPE	
180	925436-0000	-		1	STEAM PIPE	
190	925441-0000	-		1	STEAM PIPE	
210	925451-0000	-		1	STEAM PIPE	
240	12242-0001	-		3	GASKET	
250	37768-0000	-		3	THERMOCOUPLE CR-AL	
255	736146-0000	-		1	SIGN BOARD	
260	925437-0000	-		3	STEAM PIPE	
270	925438-0000	-		3	STEAM PIPE	
280	925442-0000	-		1	STEAM PIPE	
290	925449-0000	-		1	STEAM PIPE	
300	925450-0000	-		1	STEAM PIPE	
330	926283-0000	-		6	FLANGE	
350	926485-0000	-		1	TUBE	
360	926755-0000	-		1	TUBE	
370	926762-0000	-		2	CLAMP HOLDER	
375	926763-0000	-		2	CLAMP HOLDER	
400	90030-0030	-		1	BULKHEAD CONNECTOR SV 12-L/SY	
410	90030-0058	-		3	T-PIPE CONNECTION T-12	
420	90030-0088	-		1	PIPE CONNECTION	
430	90030-0096	-		1	ELBOW CONNECTION W-12	
440	90030-0115	-		7	ELBOW CONNECTION WA 12-R3/8	
450	90030-0137	-		4	ELBOW CONNECTION WA 6-R1/8"	
460	90030-0167	-		2	REDUCTION KOR 12/8-L/SY	
470	90030-0184	-		2	STRAIGHT CONNECTION GA-6-G1/8"	
480	90030-0187	-		16	STRAIGHT CONNECTION GA-12-G3/8"	
500	90043-0082	-		1	GAUGE	
530	90113-0063	-		1	PRESSURE REGULATOR	
540	90113-0064	-		2	PRESSURE REGULATOR	
550	90187-0082	-		1	BALL VALVE	
560	90187-0112	-		1	COCK	
570	90235-0271	-		2	VALVE	
575	90235-0743	-		1	VALVE	
580	B 90277-0055	-		1	FILTER	
585	90277-0333	-		1	Gasket Kit	
590	90277-0336	-		1	FILTER REPBY 0090337-0315	
600	90326-0012	-		3	PROTECTIVE COVER	
610	90326-0020	-		3	PLUG,FEMALE YELLOW CR-AL	
630	90330-0025	-		3	BUSHING,INT./EXT.R-THREAD R1/4"-Rp1/8"	
640	90330-0048	-		3	BUSHING,INT./EXT.R-THREAD R1/2"-Rp3/8"	
645	90360-0020	-		4	STEAM TRAP	
650	311521-0143	-		4	BLANK RIVE2X8,0 RFR	
660	312105-0366	-		4	SCREW M6S ISO 4017 M6X12 A280	
670	312105-0370	-		2	SCREW M6S ISO 4017 M6X20 A280	
675	312105-0382	-		4	SCREW M6S ISO 4014 M6X60 A280	
680	312115-0368	-		48	SCREW MC6S ISO 4762 M6X16 A280	
690	312155-0289	-		4	SCREW MF6S4X10RFR	
692	312205-0107	-		2	SCREW U6S1/4X13RFR	
695	315105-0153	-		10	WASHER BRB6,4X12RFR	
700	315125-0153	-		4	WASHER SB 6,4X22X4 RFR	
720	315204-0219	-		12	O-RING 29,2X3VITON	

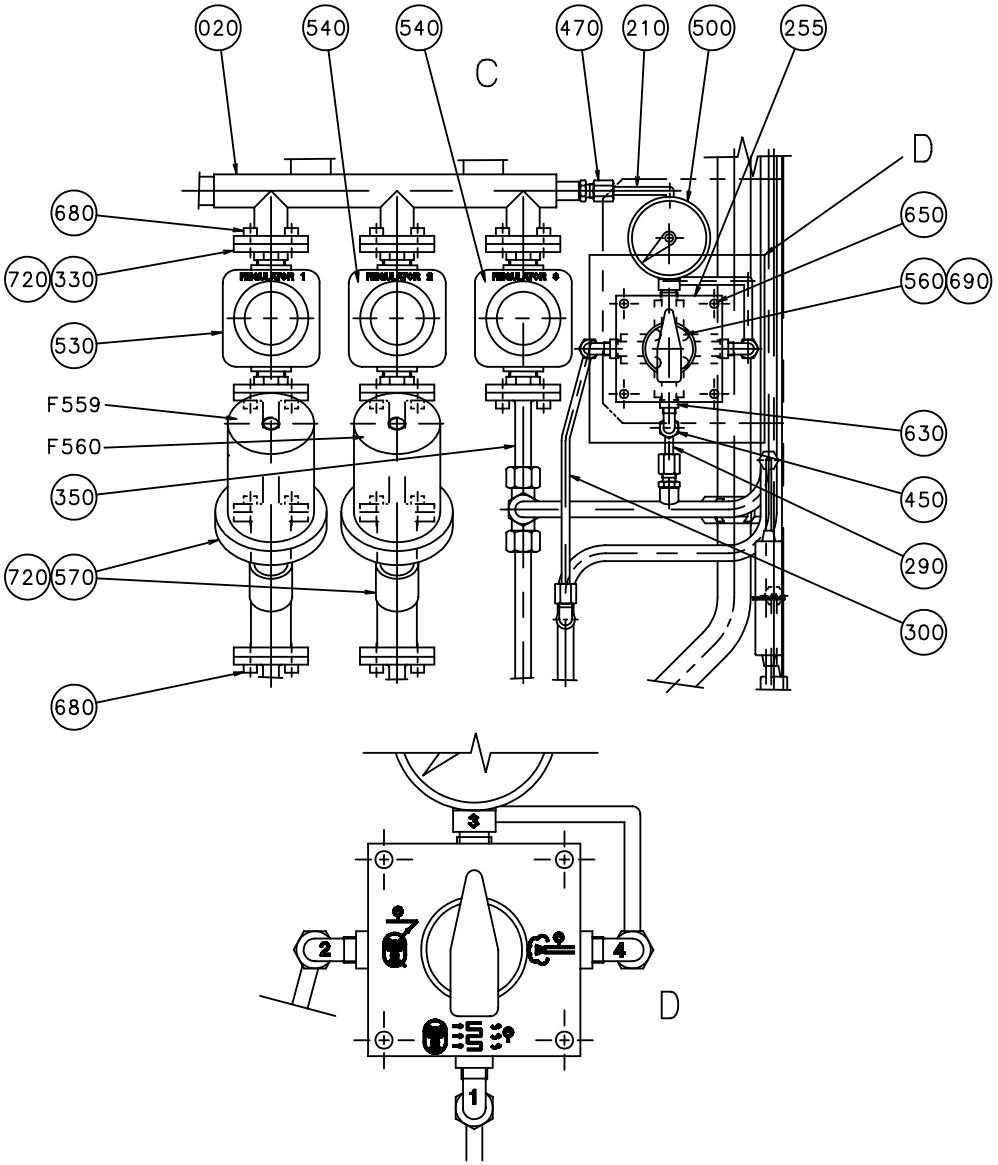

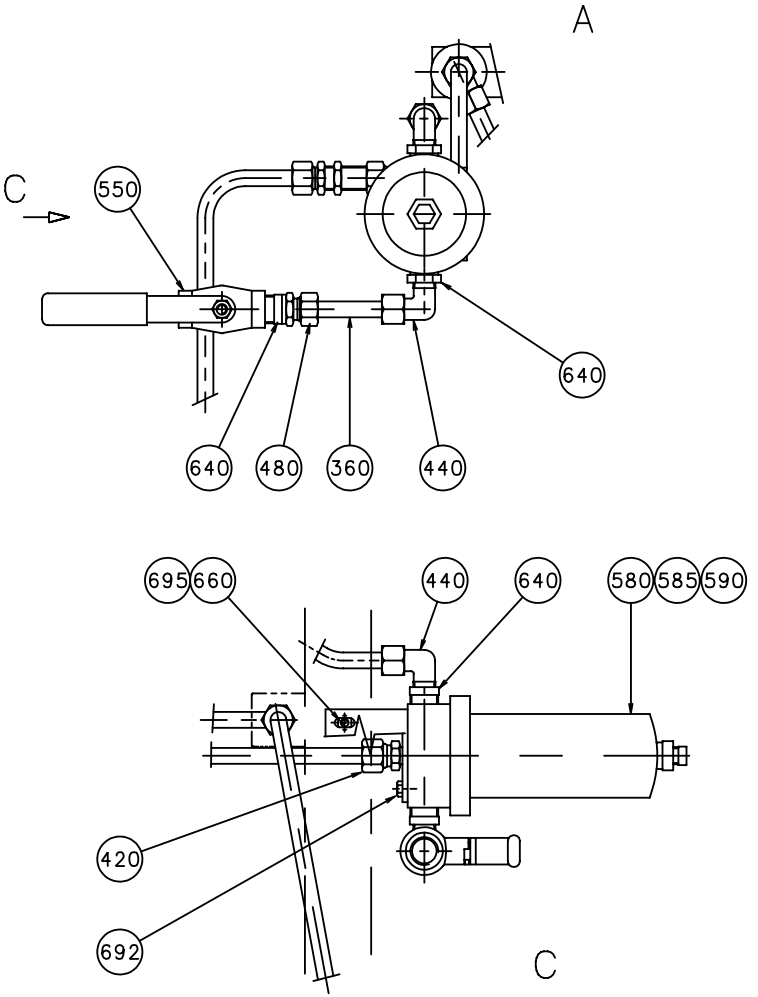

S-925406-2
ECN 71319

Pos	Part No	SP	UN	Qty	Description	Page No
0355B or 0375S						
110	925455-0000	-		1	STEAM PIPE	
200	925456-0000	-		1	STEAM PIPE	
0500B or 0500S or 0750B or 1000B or 1000SQ						
110	925454-0000	-		1	STEAM PIPE	
200	925453-0000	-		1	STEAM PIPE	
Common parts						
010	924774-0000	-		1	PIPE	
015	925428-0000	-		1	PIPE	
020	925429-0000	-		1	PIPE	
030	925430-0000	-		1	PIPE	
040	925431-0000	-		1	PIPE	
050	925439-0000	-		1	STEAM PIPE	
060	925440-0000	-		1	STEAM PIPE	
070	925443-0000	-		1	STEAM PIPE	
080	925444-0000	-		1	STEAM PIPE	
090	925445-0000	-		1	STEAM PIPE	
100	925446-0000	-		1	STEAM PIPE	
120	926761-0000	-		1	TOUCH GUARD	
130	736040-0000	-		1	FILTER SUPPORT	
140	925432-0000	-		2	STEAM PIPE	
150	925433-0000	-		1	STEAM PIPE	
160	925434-0000	-		1	STEAM PIPE	
170	925435-0000	-		1	STEAM PIPE	
180	925436-0000	-		1	STEAM PIPE	
190	925441-0000	-		1	STEAM PIPE	
210	925451-0000	-		1	STEAM PIPE	
240	12242-0001	-		3	GASKET	
250	37768-0000	-		3	THERMOCOUPLE CR-AL	
255	736146-0000	-		1	SIGN BOARD	
260	925437-0000	-		3	STEAM PIPE	
270	925438-0000	-		3	STEAM PIPE	
280	925442-0000	-		1	STEAM PIPE	
290	925449-0000	-		1	STEAM PIPE	
300	925450-0000	-		1	STEAM PIPE	
330	926283-0000	-		6	FLANGE	
350	926485-0000	-		1	TUBE	
360	926755-0000	-		1	TUBE	
370	926762-0000	-		2	CLAMP HOLDER	
375	926763-0000	-		2	CLAMP HOLDER	
400	90030-0030	-		1	BULKHEAD CONNECTOR SV 12-L/SY	
410	90030-0058	-		3	T-PIPE CONNECTION T-12	
420	90030-0088	-		1	PIPE CONNECTION	
430	90030-0096	-		1	ELBOW CONNECTION W-12	
440	90030-0115	-		7	ELBOW CONNECTION WA 12-R3/8	
450	90030-0137	-		4	ELBOW CONNECTION WA 6-R1/8"	
460	90030-0167	-		2	REDUCTION KOR 12/8-L/SY	
470	90030-0184	-		2	STRAIGHT CONNECTION GA-6-G1/8"	
480	90030-0187	-		16	STRAIGHT CONNECTION GA-12-G3/8"	
500	90043-0082	-		1	GAUGE	
530	90113-0063	-		1	PRESSURE REGULATOR	
540	90113-0064	-		2	PRESSURE REGULATOR	
550	90187-0082	-		1	BALL VALVE	
560	90187-0112	-		1	COCK	
570	90235-0271	-		2	VALVE	
575	90235-0743	-		1	VALVE	
580	B 90277-0055	-		1	FILTER	
585	90277-0333	-		1	Gasket Kit	
590	90277-0336	-		1	FILTER REPBY 0090337-0315	
600	90326-0012	-		3	PROTECTIVE COVER	
610	90326-0020	-		3	PLUG,FEMALE YELLOW CR-AL	
630	90330-0025	-		3	BUSHING,INT./EXT.R-THREAD R1/4"-Rp1/8"	
640	90330-0048	-		3	BUSHING,INT./EXT.R-THREAD R1/2"-Rp3/8"	
645	90360-0020	-		4	STEAM TRAP	
650	311521-0143	-		4	BLANK RIVE2X8,0 RFR	
660	312105-0366	-		4	SCREW M6S ISO 4017 M6X12 A280	
670	312105-0370	-		2	SCREW M6S ISO 4017 M6X20 A280	
675	312105-0382	-		4	SCREW M6S ISO 4014 M6X60 A280	
680	312115-0368	-		48	SCREW MC6S ISO 4762 M6X16 A280	
690	312155-0289	-		4	SCREW MF6S4X10RFR	
692	312205-0107	-		2	SCREW U6S1/4X13RFR	
695	315105-0153	-		10	WASHER BRB6,4X12RFR	
700	315125-0153	-		4	WASHER SB 6,4X22X4 RFR	
720	315204-0219	-		12	O-RING 29,2X3VITON	

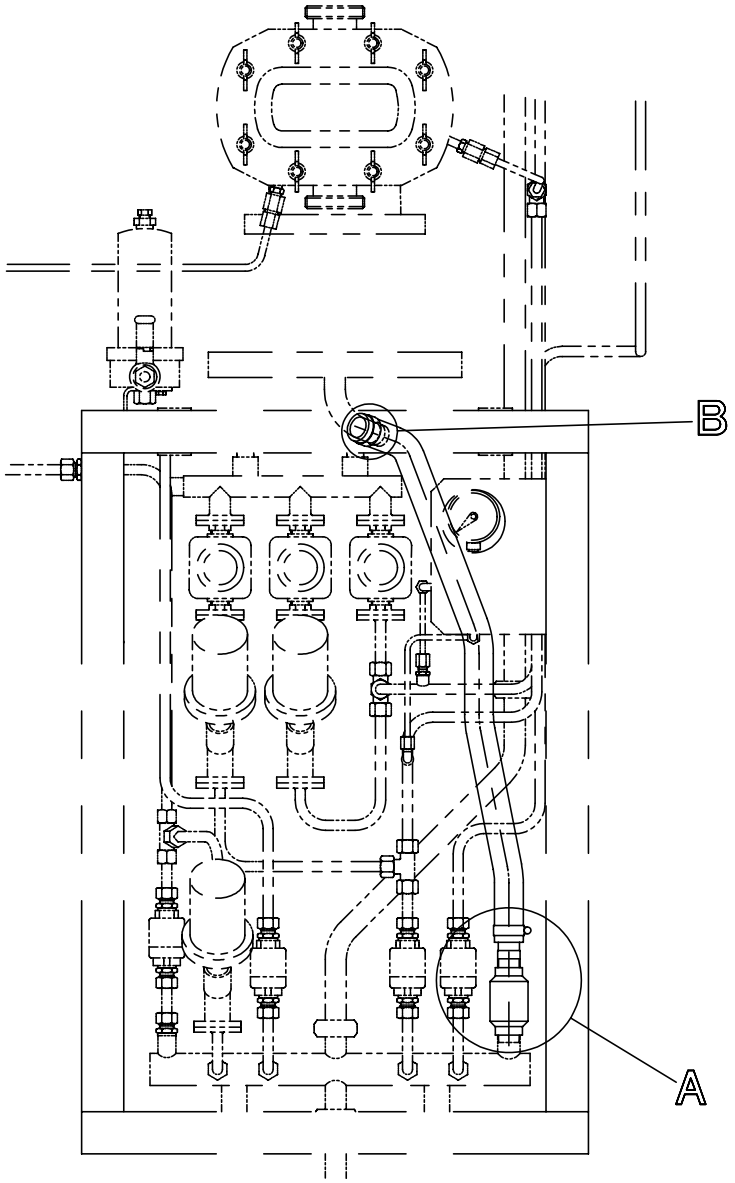
B
A

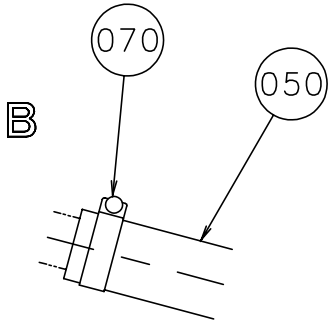
070
050
B

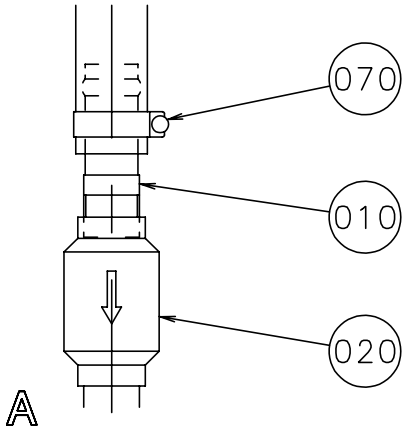
070
010
020
A

Pos	Part No	SP	UN	Qty	Description	Page No
-						
010	794039-0000	-		1	HOSE CONNECTION	
020	B 794040-0000	-		1	NON-RETURN VALVE	
050	90166-0049	-	M	1	HOSE	
070	342991-0106	-		2	HOSE CLIP,WORM DRIVE TYPE (30)-36	

Pos	Part No	SP	UN	Qty	Description	Page No

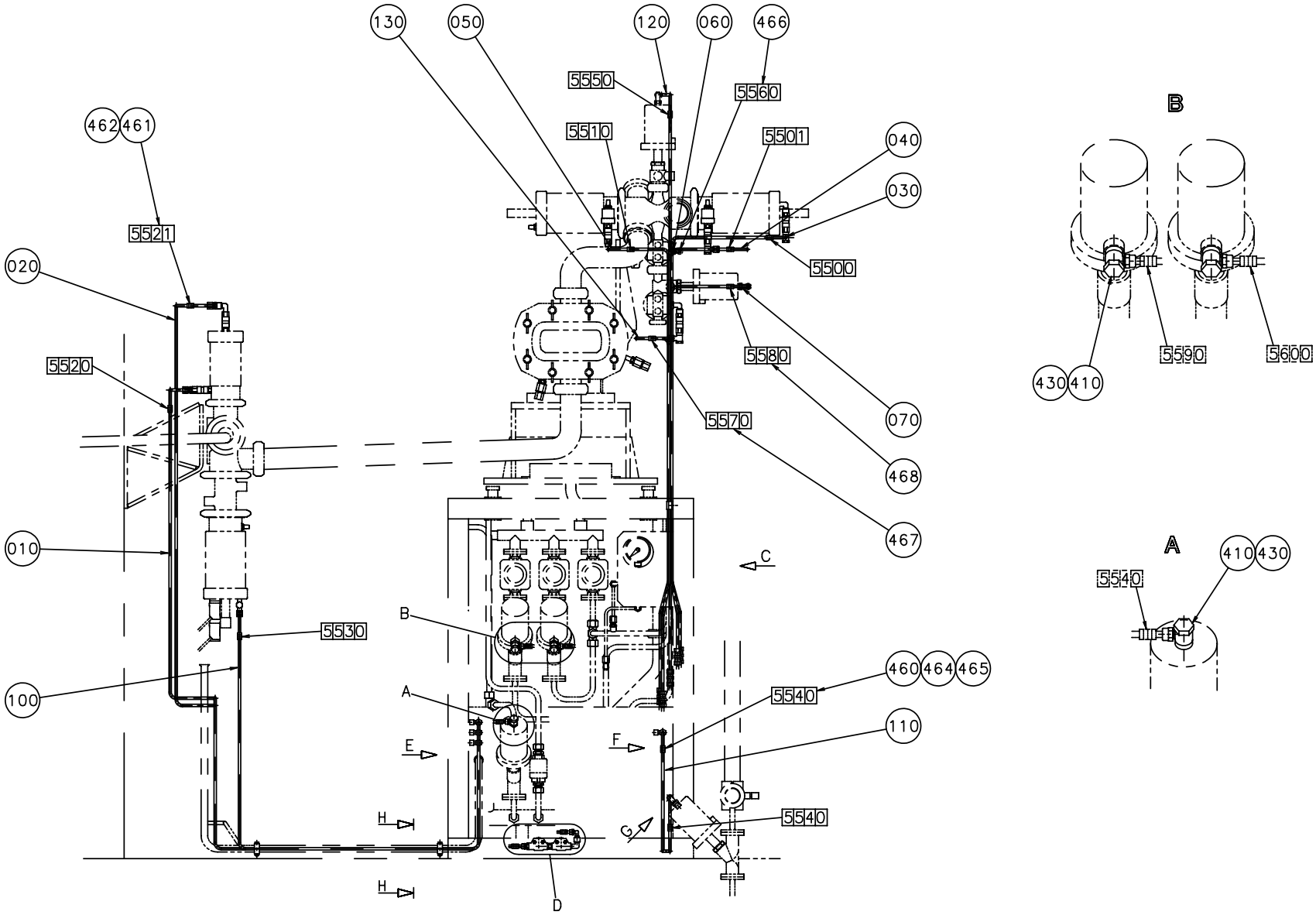

S-925408-1
ECN 16402

Pos	Part No	SP	UN	Qty	Description	Page No
-						
010	925651-0000	-		1	AIR PIPE	
020	925652-0000	-		1	AIR PIPE	
030	925754-0000	-		1	AIR PIPE	
040	925755-0000	-		1	AIR PIPE	
050	925758-0000	-		1	AIR PIPE	
060	925759-0000	-		1	AIR PIPE	
070	925760-0000	-		1	AIR PIPE	
100	925650-0000	-		1	AIR PIPE	
110	925653-0000	-		1	AIR PIPE	
120	925756-0000	-		1	AIR PIPE	
130	925757-0000	-		1	AIR PIPE	
160	736358-0000	-		1	CLAMPING PIECE	
170	794239-0000	-		4	ATTACHMENT	
180	925761-0000	-		4	CONNECTION CLAMP	
210	90030-0075	-		7	PIPE CONNECTION G-6	
220	90030-0184	-		5	STRAIGHT CONNECTION GA-6-G1/8"	
230	90140-0021	-		2	ELBOW 90,INT./EXT.THREAD R1/8"	
240	90163-0057	-		1	NIPPLE	
250	90163-0062	-		1	SLEEVE	
260	90166-0132	-	M	1	HOSE	
270	90235-0048	-		2	VALVE	
280	90330-0025	-		1	BUSHING,INT./EXT.R-THREAD R1/4"-Rp1/8"	
290	90330-0032	-		1	NIPPLE	
320	312105-0335	-		4	SCREW M6S ISO 4017 M5X30 A280	
330	312105-0362	-		2	SCREW M6S ISO 4017 M6X8 A280	
340	312115-0297	-		4	SCREW MC6S ISO 4762 M4X25 A280	
350	312605-0314	-		4	NUT M6M5RFR	
360	315233-0109	-		4	SEAL RING R1/8"	
370	342706-0130	-		7	ACCESSORIES,INSERT SLEEVE 6	
380	342921-0113	-		1	STRAIGHT COUP.,EXT.THREADED 6/4-G1/8"	
390	342930-0113	-		1	ELBOW 90 COUPL.,EXT.THREAD 6/4-R1/8"	
400	342980-0113	-		4	BANJO-CONNECTION,RING 6/4-G1/8"	
410	342980-0114	-		3	BANJO-CONNECTION,RING 6/4-G1/4"	
420	342980-0303	-		4	BANJO-HOLLOW .COUP.,EXT.THR.01-G1/8"	
430	342980-0304	-		3	BANJO-HOLLOW .COUP,EXT.THR.01-G1/4"	
460	359000-0400	-		24	MARKING CO2/4"0"	
461	359000-0401	-		6	MARKING CO2/4"1"	
462	359000-0402	-		4	MARKING CO2/4"2"	
463	359000-0403	-		4	MARKING CO2/4"3"	
464	359000-0404	-		2	MARKING CO2/4"4"	
465	359000-0405	-		50	MARKING CO2/4"5"	
466	359000-0406	-		2	MARKING CO2/4"6"	
467	359000-0407	-		2	MARKING CO2/4"7"	
468	359000-0408	-		2	MARKING CO2/4"8"	

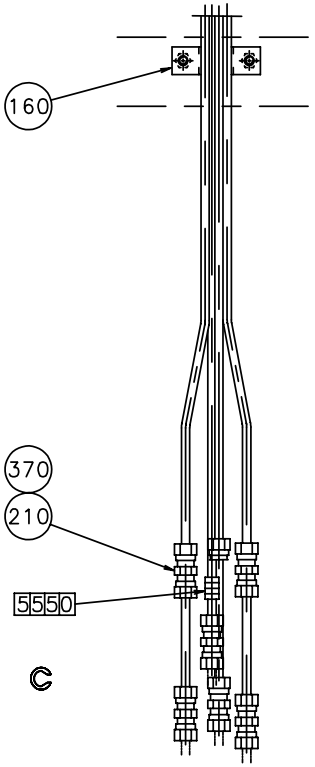

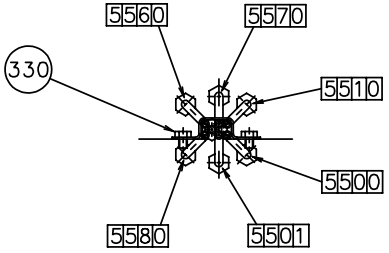

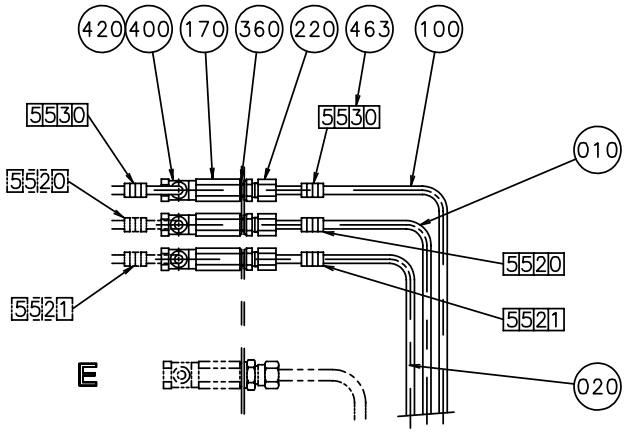

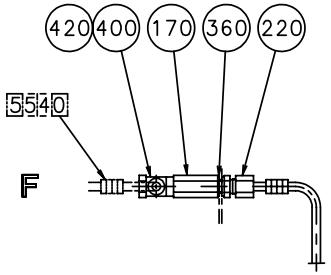

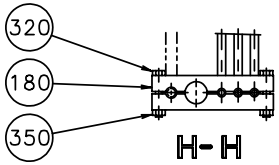

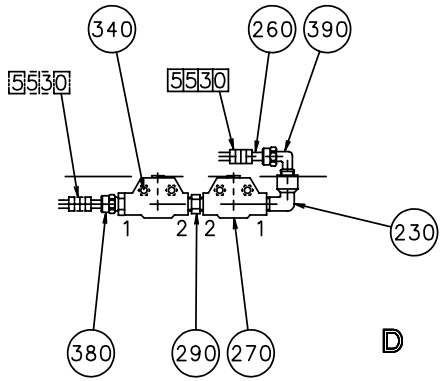

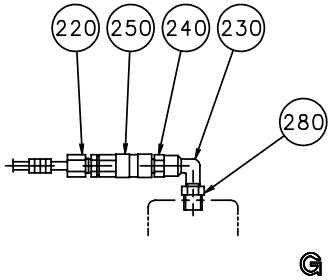

S-925408-2
ECN 16402

Pos	Part No	SP	UN	Qty	Description	Page No
-						
010	925651-0000	-		1	AIR PIPE	
020	925652-0000	-		1	AIR PIPE	
030	925754-0000	-		1	AIR PIPE	
040	925755-0000	-		1	AIR PIPE	
050	925758-0000	-		1	AIR PIPE	
060	925759-0000	-		1	AIR PIPE	
070	925760-0000	-		1	AIR PIPE	
100	925650-0000	-		1	AIR PIPE	
110	925653-0000	-		1	AIR PIPE	
120	925756-0000	-		1	AIR PIPE	
130	925757-0000	-		1	AIR PIPE	
160	736358-0000	-		1	CLAMPING PIECE	
170	794239-0000	-		4	ATTACHMENT	
180	925761-0000	-		4	CONNECTION CLAMP	
210	90030-0075	-		7	PIPE CONNECTION G-6	
220	90030-0184	-		5	STRAIGHT CONNECTION GA-6-G1/8"	
230	90140-0021	-		2	ELBOW 90,INT./EXT.THREAD R1/8"	
240	90163-0057	-		1	NIPPLE	
250	90163-0062	-		1	SLEEVE	
260	90166-0132	-	M	1	HOSE	
270	90235-0048	-		2	VALVE	
280	90330-0025	-		1	BUSHING,INT./EXT.R-THREAD R1/4"-Rp1/8"	
290	90330-0032	-		1	NIPPLE	
320	312105-0335	-		4	SCREW M6S ISO 4017 M5X30 A280	
330	312105-0362	-		2	SCREW M6S ISO 4017 M6X8 A280	
340	312115-0297	-		4	SCREW MC6S ISO 4762 M4X25 A280	
350	312605-0314	-		4	NUT M6M5RFR	
360	315233-0109	-		4	SEAL RING R1/8"	
370	342706-0130	-		7	ACCESSORIES,INSERT SLEEVE 6	
380	342921-0113	-		1	STRAIGHT COUP.,EXT.THREADED 6/4-G1/8"	
390	342930-0113	-		1	ELBOW 90 COUPL.,EXT.THREAD 6/4-R1/8"	
400	342980-0113	-		4	BANJO-CONNECTION,RING 6/4-G1/8"	
410	342980-0114	-		3	BANJO-CONNECTION,RING 6/4-G1/4"	
420	342980-0303	-		4	BANJO-HOLLOW .COUP.,EXT.THR.01-G1/8"	
430	342980-0304	-		3	BANJO-HOLLOW .COUP,EXT.THR.01-G1/4"	
460	359000-0400	-		24	MARKING CO2/4"0"	
461	359000-0401	-		6	MARKING CO2/4"1"	
462	359000-0402	-		4	MARKING CO2/4"2"	
463	359000-0403	-		4	MARKING CO2/4"3"	
464	359000-0404	-		2	MARKING CO2/4"4"	
465	359000-0405	-		50	MARKING CO2/4"5"	
466	359000-0406	-		2	MARKING CO2/4"6"	
467	359000-0407	-		2	MARKING CO2/4"7"	
468	359000-0408	-		2	MARKING CO2/4"8"	

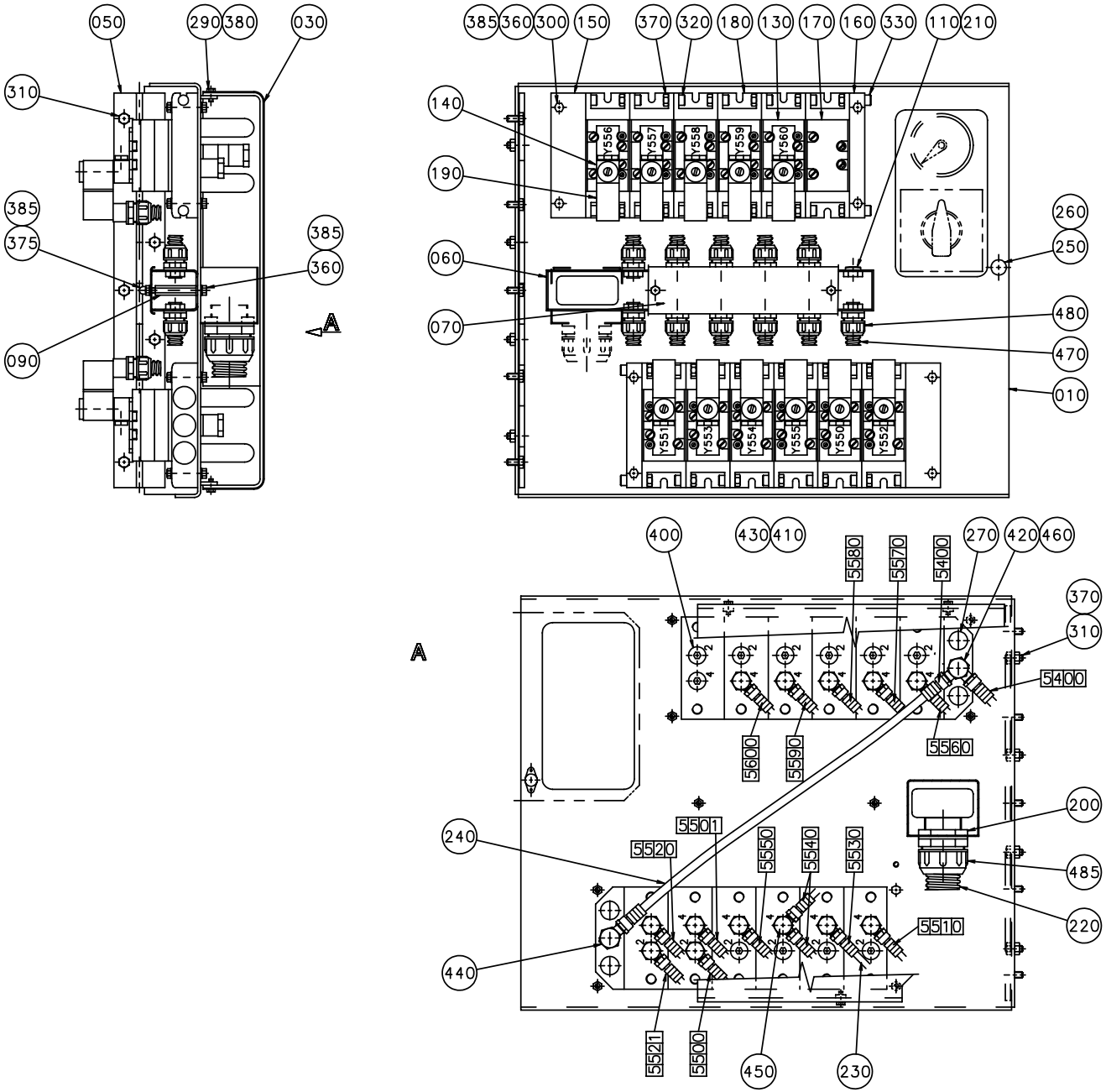

S-925409-1
ECN 16402

Pos	Part No	SP	UN	Qty	Description	Page No
-						
010	925461-0000	-		1	SUPPORT	
030	925457-0000	-		1	TOUCH GUARD	
050	735503-0000	-		1	HINGE	
060	925458-0000	-		1	CABLE DUCT	
070	925460-0000	-		1	COVER	
090	925459-0000	-		2	SPACER	
110	90002-0018	-		1	BLANK-OFF PLUG 12,5	
130	B 90042-0108	-		11	SOLENOID VALVE	
140	90042-0345	-		11	COIL 24V DC	
150	90042-0368	-		2	CONNECTION	
160	90042-0369	-		2	END PIECE	
170	90042-0404	-		1	PLATE	
180	90042-0431	-		12	PLATE	
190	90042-0476	-		11	CONTACT	
200	90099-0011	-		1	NUT PR 37 BRASS	
210	90099-0116	-		1	NUT PR 12,5 (PG7)	
220	90152-0029	-	M	1	HOSE	
230	90166-0132	-	M	10	HOSE	
240	90166-0133	-	M	2	HOSE	
250	90237-0114	-		1	LOCK	
260	90237-0308	-		1	WASHER	
270	90328-0024	-		4	SILENCERS,THREADED CONNECT. G3/8"	
290	312105-0289	-		3	SCREW M6S4X10 A2 80	
300	312105-0337	-		8	SCREW M6S ISO 4014 M5X35 A280	
310	312105-0366	-		9	SCREW M6S ISO 4017 M6X12 A280	
320	312115-0368	-		24	SCREW MC6S ISO 4762 M6X16 A280	
330	312115-0372	-		4	SCREW MC6S ISO 4762 M6X25 A280	
360	312605-0314	-		10	NUT M6M5RFR	
370	312605-0316	-		32	NUT M6M6RFR	
375	312705-0314	-		2	CAP NUT MHM 5 A2	
380	315105-0136	-		3	WASHER BRB4,3X8RFR	
385	315105-0146	-		20	WASHER BRB5,3X10RFR	
400	342713-0210	-		11	PLUG,EXT.G-THREAD,HEXA. SOCKET G1/4"	
410	342980-0114	-		14	BANJO-CONNECTION,RING 6/4-G1/4"	
420	342980-0123	-		3	BANJO-CONNECTION,RING 8/6-G3/8"	
430	342980-0304	-		12	BANJO-HOLLOW B. COUP,EXT.THR.01-G1/4"	
440	342980-0305	-		1	BANJO-HOLLOW B. COUP,EXT.THR.01-G3/8"	
450	342980-0314	-		1	BANJO-HOLLOW B. COUP,EXT.THR.02-G1/4"	
460	342980-0315	-		1	BANJO-HALLOW B. COUP,EXT.THR.02-G3/8"	
470	352135-0102	-	M	2	HOSE .010	
480	352136-0107	-		22	GLAND FITTING	
485	352136-0167	-		1	GLAND FITTING	
490	359000-0400	-		38	MARKING CO2/4"0"	
491	359000-0401	-		6	MARKING CO2/4"1"	
492	359000-0402	-		4	MARKING CO2/4"2"	
493	359000-0403	-		2	MARKING CO2/4"3"	
494	359000-0404	-		8	MARKING CO2/4"4"	
495	359000-0405	-		60	MARKING CO2/4"5"	
496	359000-0406	-		4	MARKING CO2/4"6"	
497	359000-0407	-		2	MARKING CO2/4"7"	
498	359000-0408	-		2	MARKING CO2/4"8"	
499	359000-0409	-		2	MARKING CO2/4"9"	

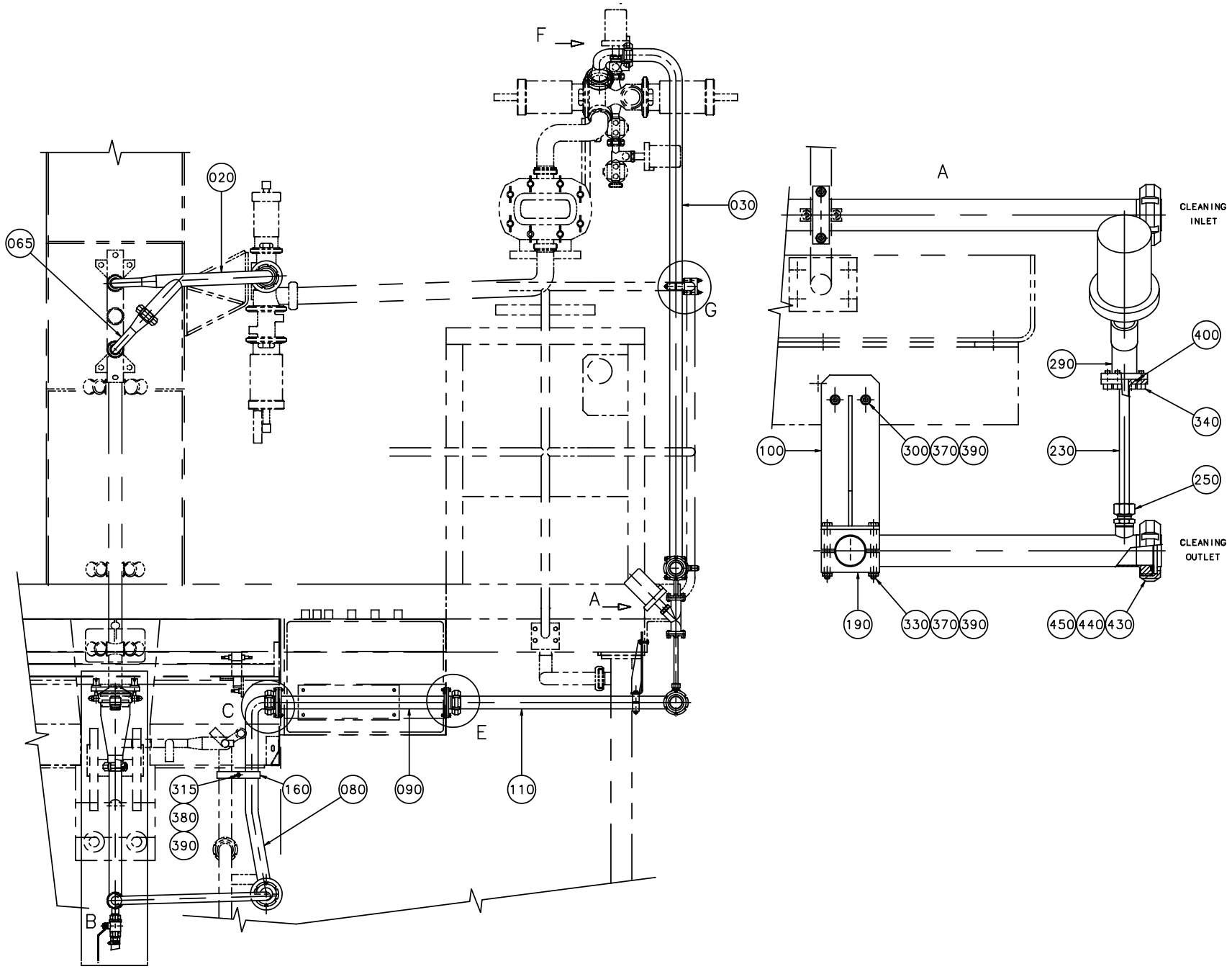

S-925410-1
ECN 16402

Pos	Part No	SP	UN	Qty	Description	Page No
0355B or 0500S						
010	924634-0000	-		1	CLEANING CUP	
050	924638-0000	-		1	COVER	
180	449992-0000	-		1	GASKET	
0375S						
010	924635-0000	-		1	CLEANING CUP	
050	924639-0000	-		1	COVER	
180	449993-0000	-		1	GASKET	
0500B or 0750B or 1000B						
010	924632-0000	-		1	CLEANING CUP	
050	924636-0000	-		1	COVER	
180	458786-0000	-		1	GASKET	
1000SQ						
010	1347019-0000	-		1	CLEANING CUP	
050	1347020-0000	-		1	COVER	
180	569106-0000	-		1	GASKET	
Common parts						
020	924792-0000	-		1	CLEANING PIPE	
030	925462-0000	-		1	CLEANING PIPE	
060	924806-0000	-		1	CLEANING PIPE	
065	924842-0000	-		1	CLEANING PIPE	
070	924847-0000	-		1	CLEANING PIPE	
080	925463-0000	-		1	CLEANING PIPE	
090	925464-0000	-		1	CLEANING PIPE	
100	925465-0000	-		1	HOLDER	
110	925466-0000	-		1	CLEANING PIPE	
120	457614-0001	-		2	CLAMPING PIECE	
130	924845-0000	-		2	BRACKET	
140	925467-0000	-		2	FLANGE	
150	925468-0000	-		2	FLANGE	
160	926754-0000	-		2	CLAMP HOLDER	
190	735041-0000	-		4	CONNECTION CLAMP	
200	924640-0000	-		2	NUT	
210	924641-0000	-		2	SCREW	
220	925469-0000	-		1	GASKET	
230	925470-0000	-		1	TUBE	
250	90030-0187	-		1	STRAIGHT CONNECTION GA-12-G3/8"	
260	90055-0071	-		1	HOSE NIPPLE	
270	90148-0021	-	M	1	HOSE	
280	90187-0082	-		1	BALL VALVE	
290	90235-0743	-		1	VALVE	
300	312105-0372	-		2	SCREW M6S ISO 4017 M6X25 A280	
310	312105-0380	-		4	SCREW M6S ISO 4014 M6X50 A280	
315	312105-0381	-		1	SCREW M6S ISO 4014 M6X55 A280	
320	312105-0382	-		4	SCREW M6S ISO 4014 M6X60 A280	
330	312105-0383	-		2	SCREW M6S ISO 4014 M6X65 A280	
340	312115-0368	-		20	SCREW MC6S ISO 4762 M6X16 A280	
360	312115-0374	-		1	SCREW MC6S ISO O4762 M6X30 A280	
370	312605-0316	-		12	NUT M6M6RFR	
380	312705-0316	-		2	CAP NUT MHM 6 A2	
385	312705-0318	-		2	CAP NUT MHM 8 A2	
390	315105-0153	-		13	WASHER BRB6,4X12RFR	
400	315204-0219	-		2	O-RING 29,2X3VITON	
410	315233-0113	-		1	SEAL RING R1/2"	
420	315250-0101	-		1	GASKET 32/25	
430	315250-0103	-		9	GASKET 48/38	
440	342803-0103	-		2	NUT 38	
450	342812-0103	-		2	SLEEVE ANSL.38	
460	342991-0104	-		1	HOSE CLIP,WORM DRIVE TYPE (23)-27	

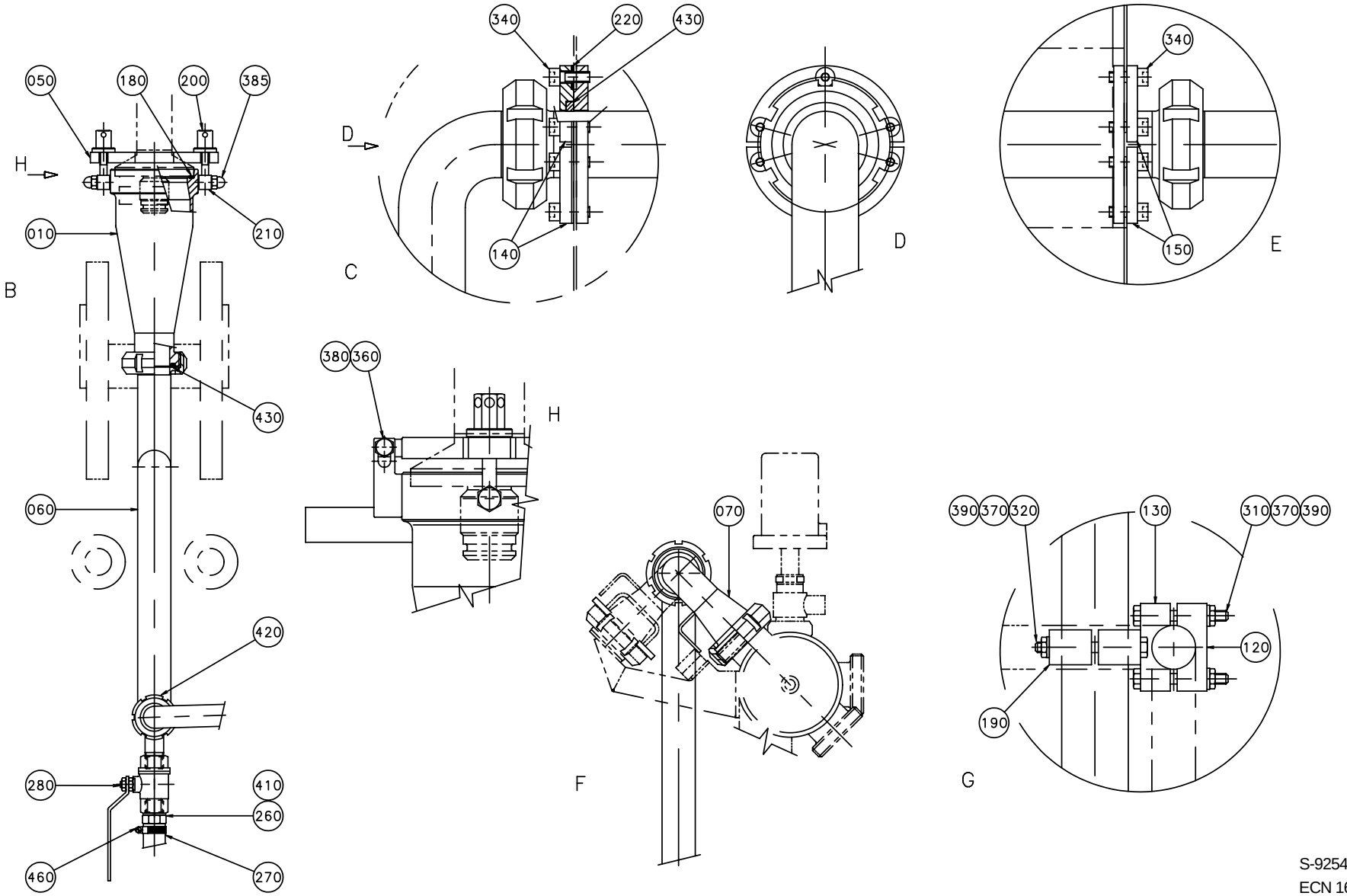

S-925410-2
ECN 16402

Pos	Part No	SP	UN	Qty	Description	Page No
0355B or 0500S						
010	924634-0000	-		1	CLEANING CUP	
050	924638-0000	-		1	COVER	
180	449992-0000	-		1	GASKET	
0375S						
010	924635-0000	-		1	CLEANING CUP	
050	924639-0000	-		1	COVER	
180	449993-0000	-		1	GASKET	
0500B or 0750B or 1000B						
010	924632-0000	-		1	CLEANING CUP	
050	924636-0000	-		1	COVER	
180	458786-0000	-		1	GASKET	
1000SQ						
010	1347019-0000	-		1	CLEANING CUP	
050	1347020-0000	-		1	COVER	
180	569106-0000	-		1	GASKET	
Common parts						
020	924792-0000	-		1	CLEANING PIPE	
030	925462-0000	-		1	CLEANING PIPE	
060	924806-0000	-		1	CLEANING PIPE	
065	924842-0000	-		1	CLEANING PIPE	
070	924847-0000	-		1	CLEANING PIPE	
080	925463-0000	-		1	CLEANING PIPE	
090	925464-0000	-		1	CLEANING PIPE	
100	925465-0000	-		1	HOLDER	
110	925466-0000	-		1	CLEANING PIPE	
120	457614-0001	-		2	CLAMPING PIECE	
130	924845-0000	-		2	BRACKET	
140	925467-0000	-		2	FLANGE	
150	925468-0000	-		2	FLANGE	
160	926754-0000	-		2	CLAMP HOLDER	
190	735041-0000	-		4	CONNECTION CLAMP	
200	924640-0000	-		2	NUT	
210	924641-0000	-		2	SCREW	
220	925469-0000	-		1	GASKET	
230	925470-0000	-		1	TUBE	
250	90030-0187	-		1	STRAIGHT CONNECTION GA-12-G3/8"	
260	90055-0071	-		1	HOSE NIPPLE	
270	90148-0021	-	M	1	HOSE	
280	90187-0082	-		1	BALL VALVE	
290	90235-0743	-		1	VALVE	
300	312105-0372	-		2	SCREW M6S ISO 4017 M6X25 A280	
310	312105-0380	-		4	SCREW M6S ISO 4014 M6X50 A280	
315	312105-0381	-		1	SCREW M6S ISO 4014 M6X55 A280	
320	312105-0382	-		4	SCREW M6S ISO 4014 M6X60 A280	
330	312105-0383	-		2	SCREW M6S ISO 4014 M6X65 A280	
340	312115-0368	-		20	SCREW MC6S ISO 4762 M6X16 A280	
360	312115-0374	-		1	SCREW MC6S ISO O4762 M6X30 A280	
370	312605-0316	-		12	NUT M6M6RFR	
380	312705-0316	-		2	CAP NUT MHM 6 A2	
385	312705-0318	-		2	CAP NUT MHM 8 A2	
390	315105-0153	-		13	WASHER BRB6,4X12RFR	
400	315204-0219	-		2	O-RING 29,2X3VITON	
410	315233-0113	-		1	SEAL RING R1/2"	
420	315250-0101	-		1	GASKET 32/25	
430	315250-0103	-		9	GASKET 48/38	
440	342803-0103	-		2	NUT 38	
450	342812-0103	-		2	SLEEVE ANSL.38	
460	342991-0104	-		1	HOSE CLIP,WORM DRIVE TYPE (23)-27	

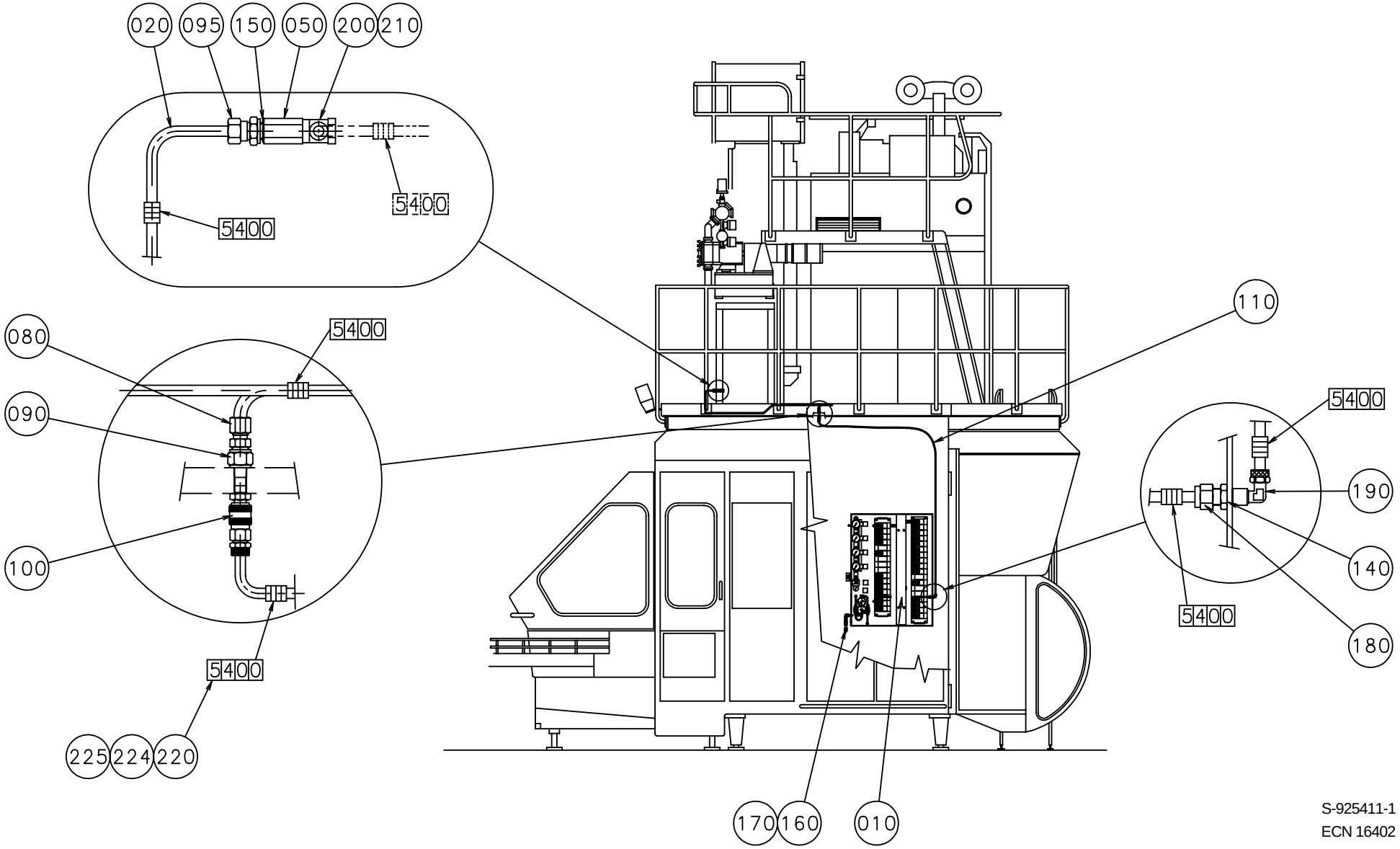

S-925411-1
ECN 16402

Pos	Part No	SP	UN	Qty	Description	Page No
-						
010	561548-0000	-		1	PIPE	
020	925762-0000	-		1	AIR PIPE	
050	794238-0000	-		1	ATTACHMENT	
080	90030-0086	-		2	PIPE CONNECTION	
090	90030-0116	-		1	REDUCER	
095	90030-0185	-		1	STRAIGHT CONNECTION GA-8-G1/4"	
100	90163-0079	-		1	SLEEVE	
110	90166-0133	-	M	2	HOSE	
140	315233-0109	-		1	SEAL RING R1/8"	
150	315233-0110	-		1	SEAL RING R1/4"	
160	342702-0115	-		2	ACCESSORIES,NUT M-16 MSG	
170	342704-0114	-		4	ACCESSORIES,FERRULE 15-MSG	
180	342720-0103	-		1	STRAIGHT CONNECTION GA-8-G1/8"	
190	342933-0121	-		1	ELBOW 90 COUPL.,INT.THREAD 8/6-G1/8"	
200	342980-0122	-		1	BANJO-CONNECTION,RING 8/6-G1/4"	
210	342980-0304	-		1	BANJO-HOLLOW B. COUP,EXT.THR.01-G1/4"	
220	359000-0400	-		12	MARKING CO2/4"0"	
224	359000-0404	-		6	MARKING CO2/4"4"	
225	359000-0405	-		6	MARKING CO2/4"5"	

Pos	Part No	SP	UN	Qty	Description	Page No

LEVEL CONTROL DEVICE

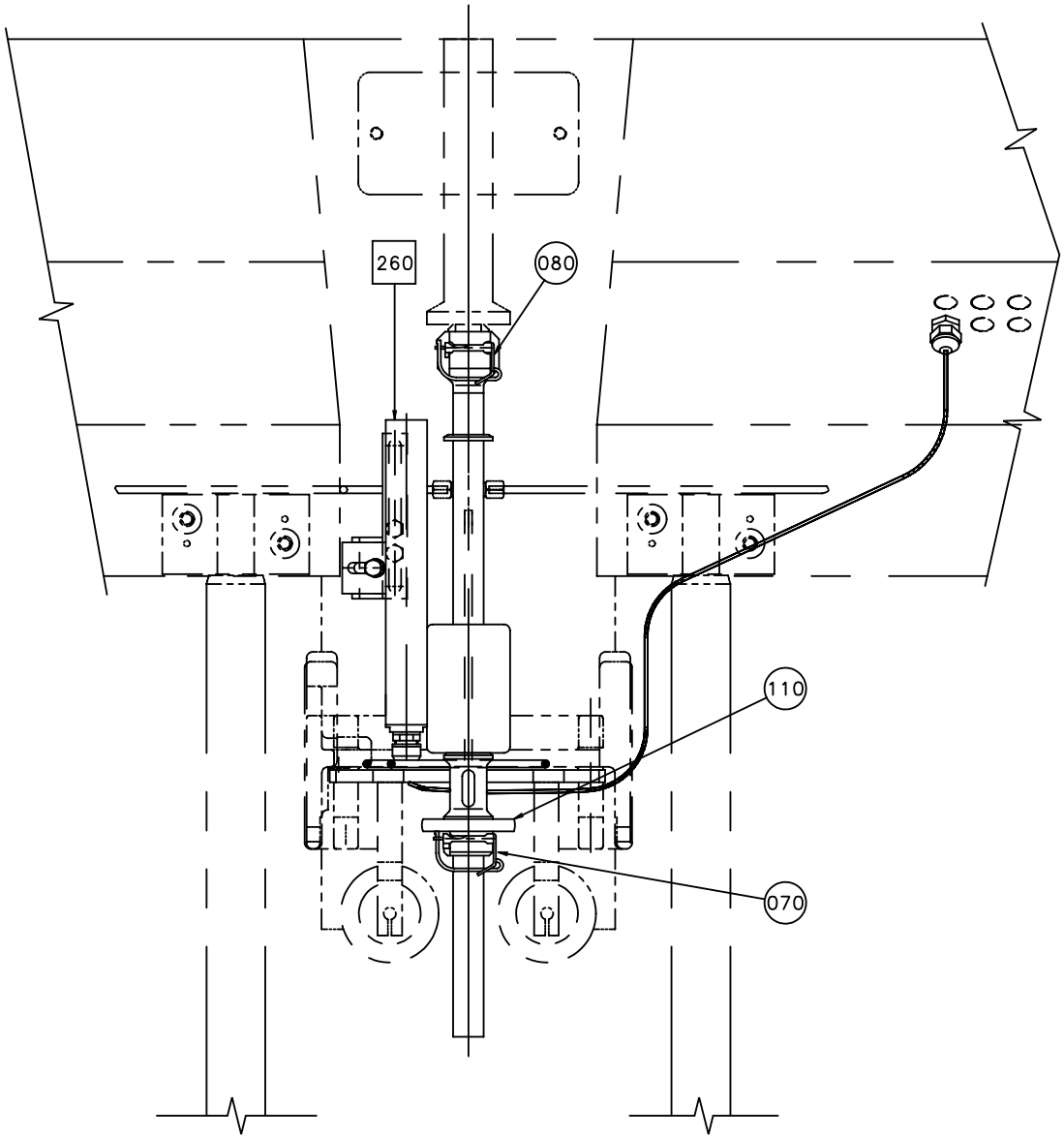

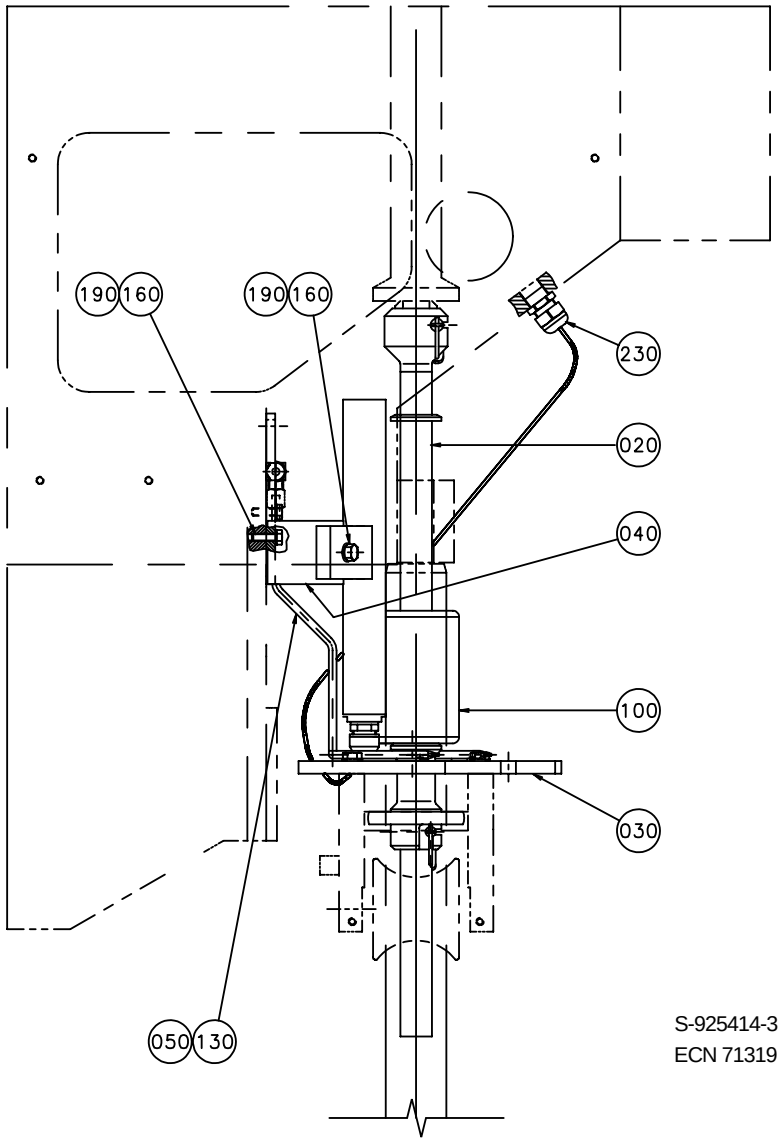

S-925414-3
ECN 71319

Pos	Part No	SP	UN	Qty	Description	Page No
0355B						
010	924683-0000	-		1	HOLDER	
020	924682-0000	-		1	FILLING PIPE	
070	493734-0000	F		1	LOCKING PIN LOWER	
080	493733-0000	F		1	LOCKING PIN UPPER	
100	1347138-0000	K		1	FLOAT	
110	924679-0000	-		1	FLANGE	
0375S						
020	1347887-0000	-		1	FILLING PIPE	
070	445503-0000	F		1	LOCKING PIN LOWER	
080	493733-0000	F		1	LOCKING PIN UPPER	
100	1347139-0000	K		1	FLOAT	
110	925626-0000	-		1	FLANGE	
0500B						
010	736256-0000	-		1	HOLDER	
020	795944-0001	-		1	FILLING PIPE	
070	445502-0000	F		1	LOCKING PIN LOWER	
080	445504-0000	F		1	LOCKING PIN UPPER	
100	1334016-0000	K		1	FLOAT	
110	795946-0000	-		1	FLANGE	
0500S						
020	1347888-0000	-		1	FILLING PIPE	
070	493734-0000	F		1	LOCKING PIN LOWER	
080	493733-0000	F		1	LOCKING PIN UPPER	
100	1347138-0000	K		1	FLOAT	
110	795960-0000	-		1	FLANGE	
0750B						
020	1347889-0000	-		1	FILLING PIPE	
070	445502-0000	F		1	LOCKING PIN LOWER	
080	445504-0000	F		1	LOCKING PIN UPPER	
100	1334016-0000	K		1	FLOAT	
110	925620-0000	-		1	FLANGE	
1000B						
020	1347886-0000	-		1	FILLING PIPE	
070	445502-0000	F		1	LOCKING PIN LOWER	
080	445504-0000	F		1	LOCKING PIN UPPER	
100	1334016-0000	K		1	FLOAT	
110	795947-0000	-		1	FLANGE	
1000SQ						
020	1334481-0000	-		1	FILLING PIPE	
070	493734-0000	F		1	LOCKING PIN LOWER	
080	493733-0000	F		1	LOCKING PIN UPPER	
100	1334485-0000	K		1	FLOAT	
110	1334482-0000	-		1	FLANGE	
Common parts						
F260	A 42062-0100	-		1	LEVEL PROBE	**69**
030	1346081-0000	-		1	BRACKET	
040	1346079-0000	-		1	HOLDER	
050	1346080-0000	-		1	SPREADER	
130	90030-0097	-		1	ACCESSORIES,FERRULE 6	
160	312105-0460	-		3	SCREW O4017 M8X45A280	
190	315105-0165	-		3	WASHER BRB8,4X16RFR	
230	352103-0105	-		1	CABLE GLAND STR 11	

LEVEL CONTROL DEVICE

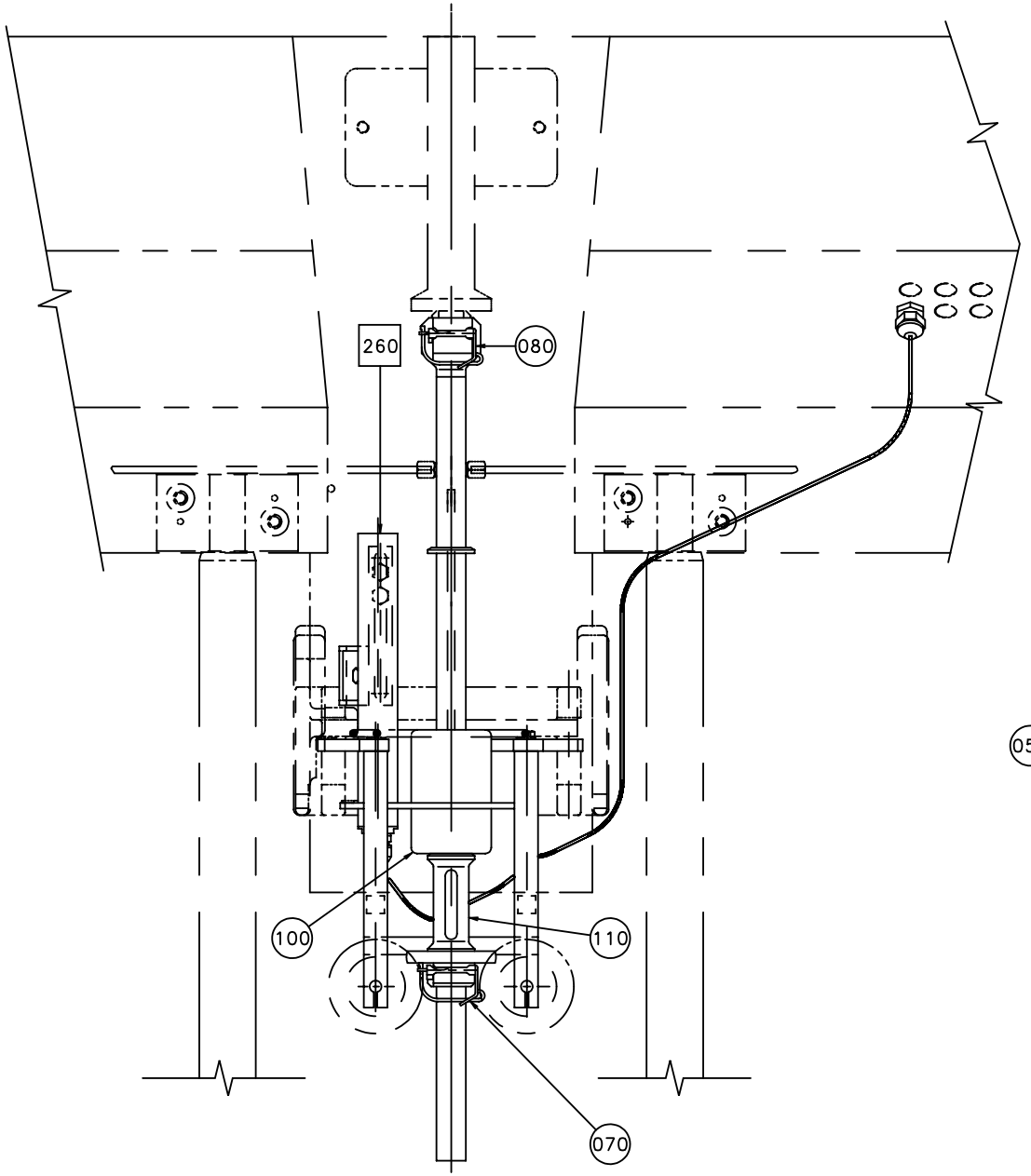

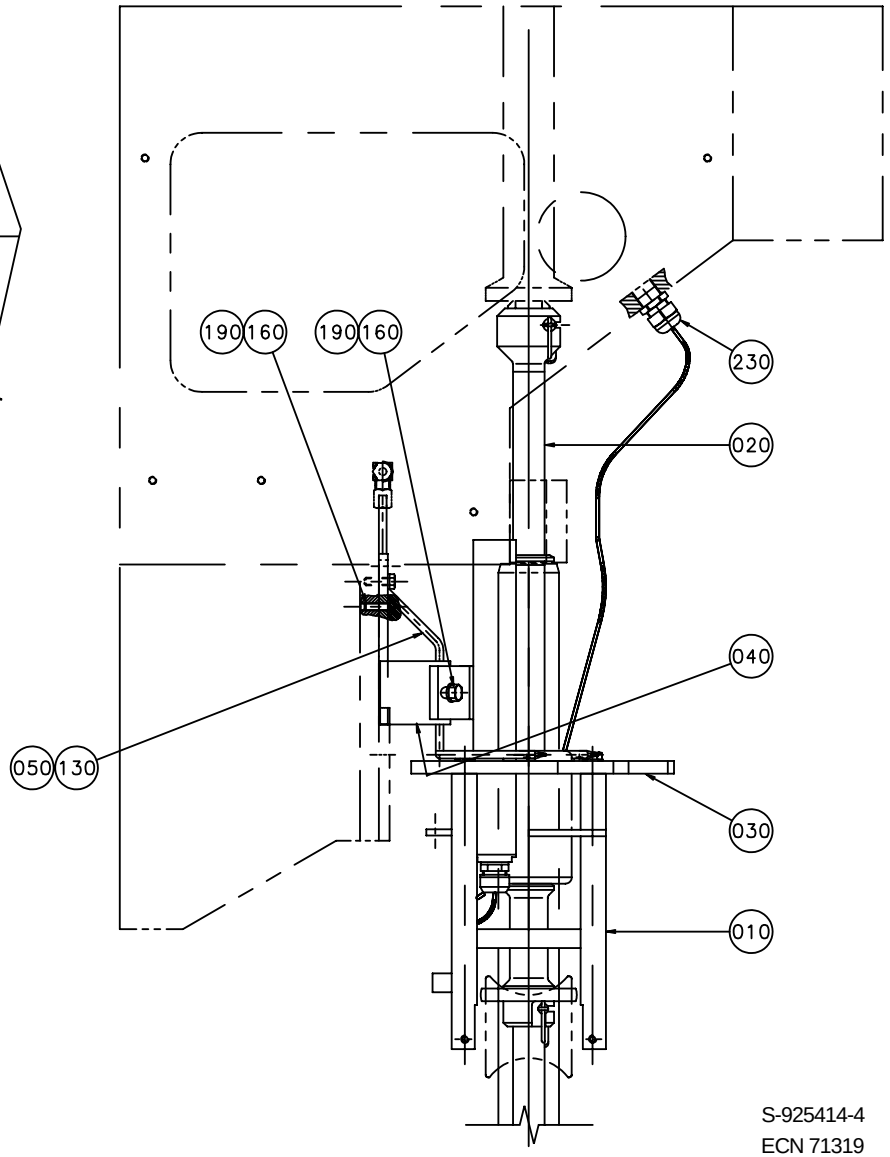

S-925414-4
ECN 71319

Pos	Part No	SP	UN	Qty	Description	Page No
0355B						
010	924683-0000	-		1	HOLDER	
020	924682-0000	-		1	FILLING PIPE	
070	493734-0000	F		1	LOCKING PIN LOWER	
080	493733-0000	F		1	LOCKING PIN UPPER	
100	1347138-0000	K		1	FLOAT	
110	924679-0000	-		1	FLANGE	
0375S						
020	1347887-0000	-		1	FILLING PIPE	
070	445503-0000	F		1	LOCKING PIN LOWER	
080	493733-0000	F		1	LOCKING PIN UPPER	
100	1347139-0000	K		1	FLOAT	
110	925626-0000	-		1	FLANGE	
0500B						
010	736256-0000	-		1	HOLDER	
020	795944-0001	-		1	FILLING PIPE	
070	445502-0000	F		1	LOCKING PIN LOWER	
080	445504-0000	F		1	LOCKING PIN UPPER	
100	1334016-0000	K		1	FLOAT	
110	795946-0000	-		1	FLANGE	
0500S						
020	1347888-0000	-		1	FILLING PIPE	
070	493734-0000	F		1	LOCKING PIN LOWER	
080	493733-0000	F		1	LOCKING PIN UPPER	
100	1347138-0000	K		1	FLOAT	
110	795960-0000	-		1	FLANGE	
0750B						
020	1347889-0000	-		1	FILLING PIPE	
070	445502-0000	F		1	LOCKING PIN LOWER	
080	445504-0000	F		1	LOCKING PIN UPPER	
100	1334016-0000	K		1	FLOAT	
110	925620-0000	-		1	FLANGE	
1000B						
020	1347886-0000	-		1	FILLING PIPE	
070	445502-0000	F		1	LOCKING PIN LOWER	
080	445504-0000	F		1	LOCKING PIN UPPER	
100	1334016-0000	K		1	FLOAT	
110	795947-0000	-		1	FLANGE	
1000SQ						
020	1334481-0000	-		1	FILLING PIPE	
070	493734-0000	F		1	LOCKING PIN LOWER	
080	493733-0000	F		1	LOCKING PIN UPPER	
100	1334485-0000	K		1	FLOAT	
110	1334482-0000	-		1	FLANGE	
Common parts						
F260	A 42062-0100	-		1	LEVEL PROBE	**69**
030	1346081-0000	-		1	BRACKET	
040	1346079-0000	-		1	HOLDER	
050	1346080-0000	-		1	SPREADER	
130	90030-0097	-		1	ACCESSORIES,FERRULE 6	
160	312105-0460	-		3	SCREW O4017 M8X45A280	
190	315105-0165	-		3	WASHER BRB8,4X16RFR	
230	352103-0105	-		1	CABLE GLAND STR 11	

LEVEL PROBE

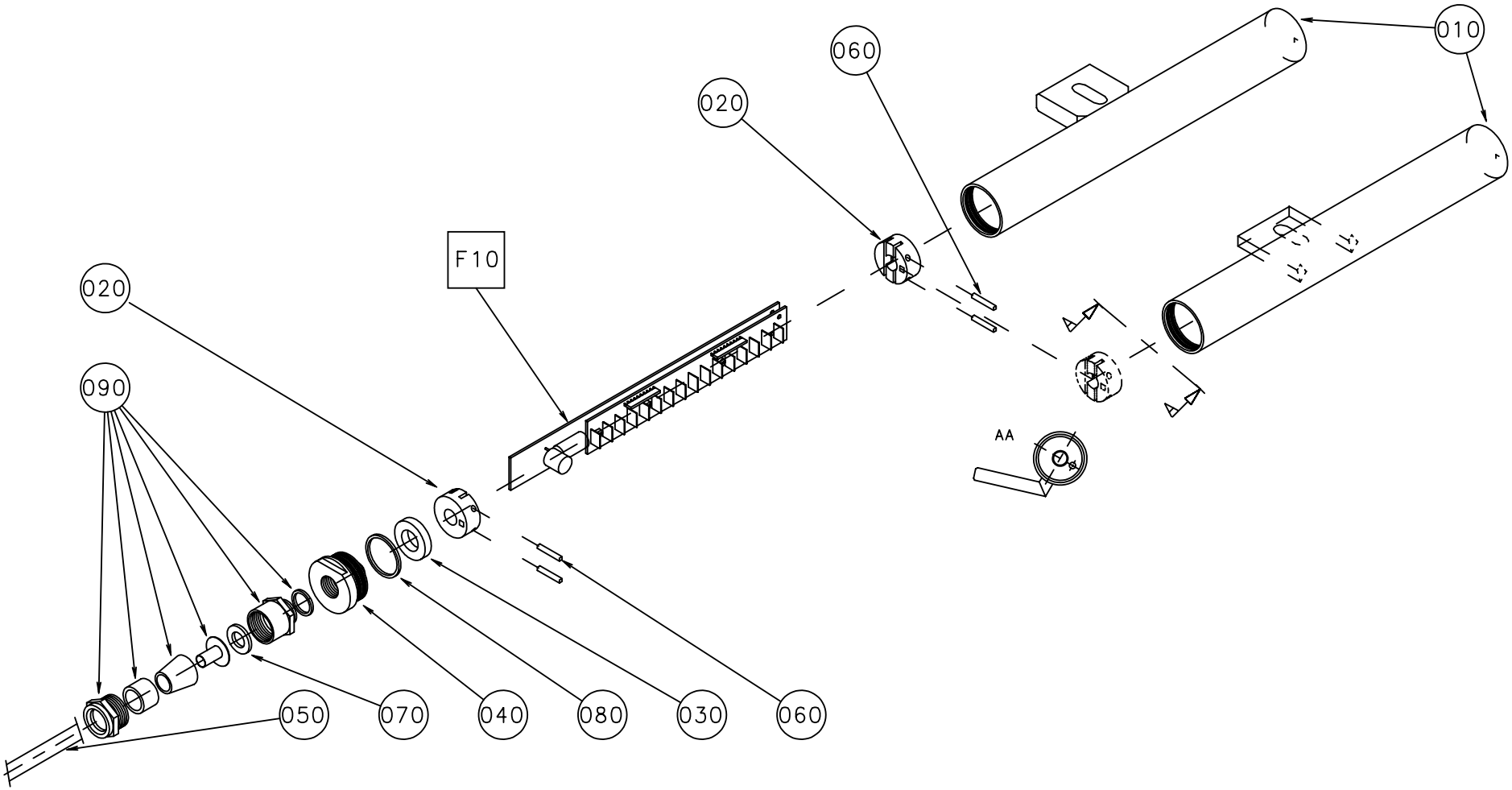

S-42062-1
ECN 71319

Pos	Part No	SP	UN	Qty	Description	Page No
TBA/8 0355B or TBA/8 0500B						
010	1347417-0000	-		1	PROTECTION PIPE	
TBA/8 1000B or 1000SQ or 750B or 500S or 375S						
F010	A 42063-0100	-		1	LEVEL DETECTOR	**71**
Common parts						
010	925999-0000	-		1	PROTECTION PIPE	
020	925877-0000	-		2	SUPPORT	
030	736514-0000	-		1	SHOCK ABSORBER	
040	926820-0000	-		1	PLUG	
050	90220-0085	-	M	6	CABLE 4 X 0.75	
060	311111-0209	-		4	SLOTTED TUFRP3X18	
070	315105-0171	-		1	WASHER BRB10X18RFR	
080	315202-0120	-		1	O-RING 27,1X1,6	
090	90012-0119	-		1	GLAND FITTING	

Pos	Part No	SP	UN	Qty	Description	Page No

This page is intentionally left blank

Pos	Part No	SP	UN	Qty	Description	Page No
-						
030	57595-0000	-		x	GENERAL DESCRIPTION	
040	57596-0000	-		x	CONTROL,TEST&SETTINGS PRO	
055	598432-0000	-		x	COMPONENT WITHOUT TP NUMBER	
010	A 42067-0100	-		1	SENSOR BOARD	
020	A 42068-0100	-		1	CONVERTER BOARD	
060	312125-0228	-		3	SLOTTED CHEESE HEAD 1207 M3X16 RFR	
070	312812-0310	-		3	LOCK NUT A2-M3RFR	
080	315105-0124	-		9	WASHER BRB3,2X6RFR	

Pos	Part No	SP	UN	Qty	Description	Page No

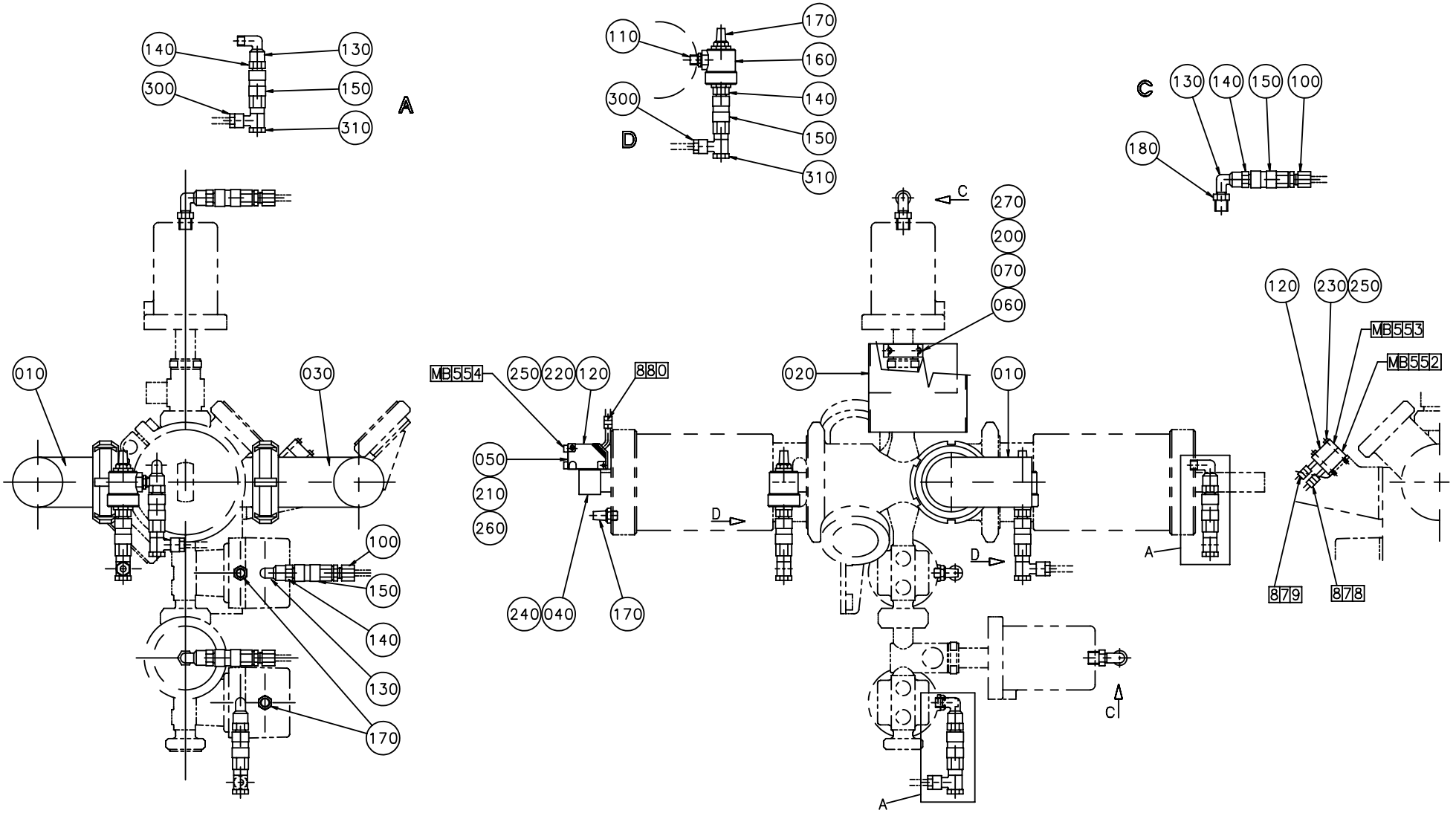

S-925415-1
ECN 16402

Pos	Part No	SP	UN	Qty	Description	Page No
-						
010	926760-0000	-		1	PRODUCT PIPE	
020	926764-0000	-		1	TOUCH GUARD	
030	927480-0000	-		1	PRODUCT PIPE	
040	440647-0000	-		1	SLEEVE	
050	440731-0000	-		1	PLATE	
060	926765-0000	-		1	CLAMP HOLDER	
070	926766-0000	-		1	CLAMP HOLDER	
100	90030-0184	-		3	STRAIGHT CONNECTION GA-6-G1/8"	
110	90030-0207	-		2	NIPPLE	
120	90044-0104	-		3	PROX.SWITCHIFM IN 3002	
130	90140-0021	-		5	ELBOW 90,INT./EXT.THREAD R1/8"	
140	90163-0057	-		7	NIPPLE	
150	90163-0062	-		7	SLEEVE	
160	90235-0259	-		2	VALVE	
170	90328-0003	-		5	SILENCER	
180	90330-0025	-		2	BUSHING,INT./EXT.R-THREAD R1/4"-Rp1/8"	
200	312105-0337	-		2	SCREW M6S ISO 4014 M5X35 A280	
210	312115-0305	-		2	SCREW MC6S ISO 4762 M4X50 A280	
220	312125-0228	-		2	SLOTTED CHEESE HEAD 1207 M3X16 RFR	
230	312125-0234	-		2	SLOTTED CHEESE HEAD 1207 M3X30 RFR	
240	312155-0532	-		1	SCREW MF6S12X20RFR	
250	315105-0124	-		4	WASHER BRB3,2X6RFR	
260	315105-0136	-		2	WASHER BRB4,3X8RFR	
270	315105-0146	-		2	WASHER BRB5,3X10RFR	
300	342797-0121	-		4	BANJO CONNECTION,RINGPIECE 6-1/8"	
310	342980-0303	-		4	BANJO-HOLLOW B. COUP,EXT.THR.01-G1/8"	

Pos	Part No	SP	UN	Qty	Description	Page No

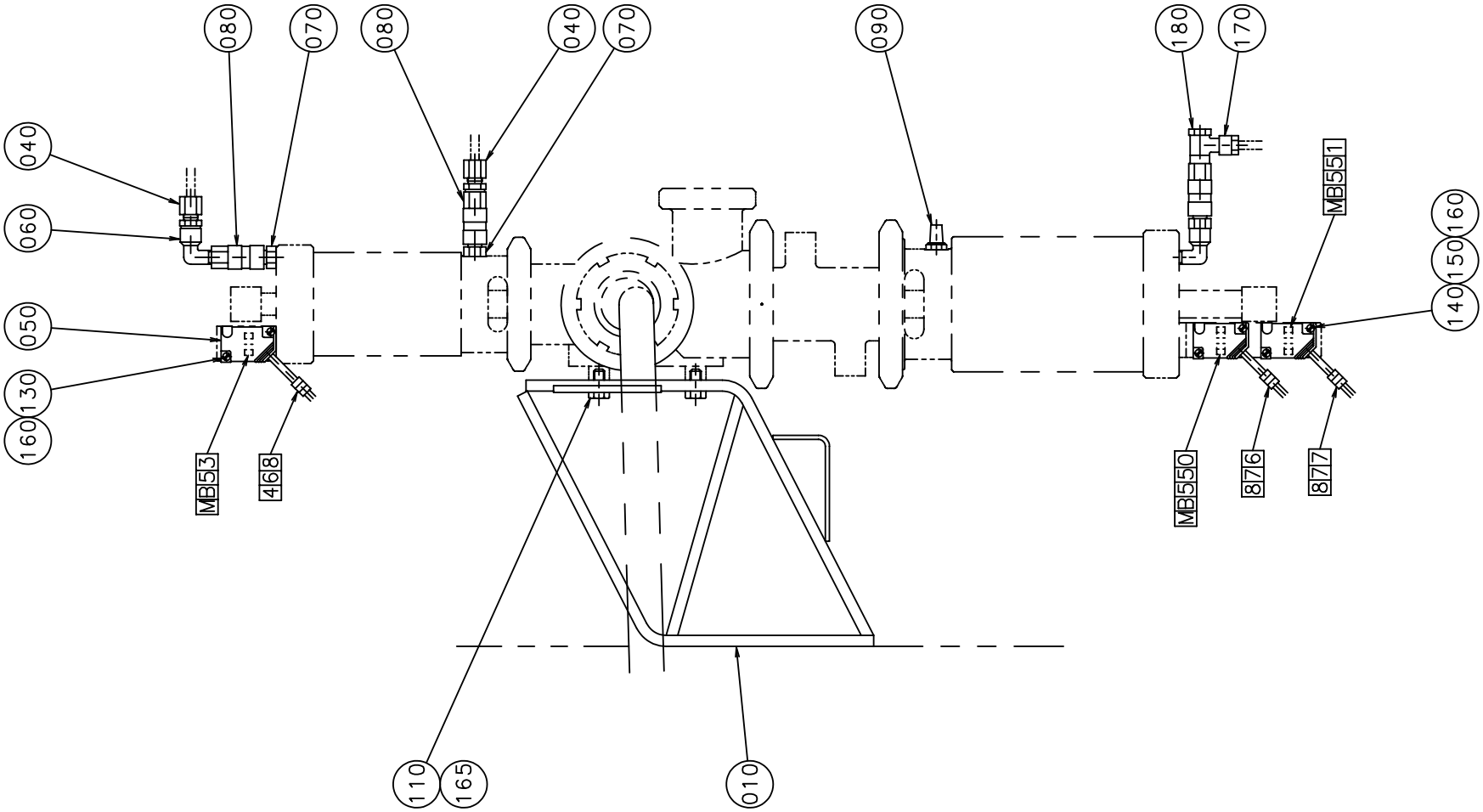

S-925416-1
ECN 16402

Pos	Part No	SP	UN	Qty	Description	Page No
-						
010	794223-0000	-		1	SUPPORT	
040	90030-0184	-		2	STRAIGHT CONNECTION GA-6-G1/8"	
050	90044-0104	-		3	PROX.SWITCHIFM IN 3002	
060	90140-0021	-		2	ELBOW 90,INT./EXT.THREAD R1/8"	
070	90163-0057	-		3	NIPPLE	
080	90163-0062	-		3	SLEEVE	
090	90328-0003	-		1	SILENCER	
110	312105-0453	-		4	SCREW M6S ISO 4017 M8X25 A280	
130	312125-0228	-		2	SLOTTED CHEESE HEAD 1207 M3X16 RFR	
140	312125-0230	-		4	SLOTTED CHEESE HEAD 1207 M3X20 RFR	
150	312605-0310	-		4	NUT M6M3RFR	
160	315105-0124	-		10	WASHER BRB3,2X6RFR	
165	315115-0165	-		4	WASHER TBRB8,4X16RFR	
170	342797-0121	-		1	BANJO CONNECTION,RINGPIECE 6-1/8"	
180	342980-0303	-		1	BANJO-HOLLOW B. COUP,EXT.THR.01-G1/8"	

Pos	Part No	SP	UN	Qty	Description	Page No

This page is intentionally left blank

Pos	Part No	SP	UN	Qty	Description	Page No
0355B or 0375S						
130	90321-0490	-		2	O-RING	
140	90321-0491	-		1	O-RING	
150	90321-0492	-		2	O-RING	
160	90321-0493	-		2	O-RING	
190	90321-0496	-		2	O-RING	
210	90321-0498	-		1	O-RING	
230	90321-0500	-		2	O-RING	
270	90321-0504	-		2	O-RING	
0500B or 0500S or 0750B or 1000B or 1000SQ						
130	90321-0472	-		2	O-RING	
140	90321-0473	-		1	O-RING	
150	90321-0474	-		2	O-RING	
160	90321-0475	-		2	O-RING	
190	90321-0478	-		2	O-RING	
210	90321-0482	-		1	O-RING	
230	90321-0484	-		2	O-RING	
270	90321-0488	-		2	O-RING	
Common parts						
300	794246-0000	-		1	DIAPHRAGM	
330	12242-0001	-		5	GASKET	
340	12242-0003	-		5	GASKET	
350	12242-0005	-		5	GASKET	
380	90277-0333	-		1	Gasket Kit	

Pos	Part No	SP	UN	Qty	Description	Page No

This page is intentionally left blank

Pos	Part No	SP	UN	Qty	Description	Page No
-						
010	295730-0000	-		2	SPACER SHEET	
020	794420-0000	-		10	SPACER	
030	925125-0000	-		1	COVER	
040	925126-0000	-		1	GASKET	
050	90144-0004	-	MM	1	TAPE	
070	90321-0558	-		1	ROTOR	
090	90333-0004	-		10	GRAPH PAPER 12 HRS	
150	767181-0138	-		1	TAP	
160	767181-0238	-		1	TAP	
180	769211-0117	-		1	SAW BLADE	
190	769211-0165	-		1	SAW BLADE	
200	769219-0100	-		1	HOLDER	
210	769219-0103	-		1	HANDLE BRACKET	

Pos	Part No	SP	UN	Qty	Description	Page No

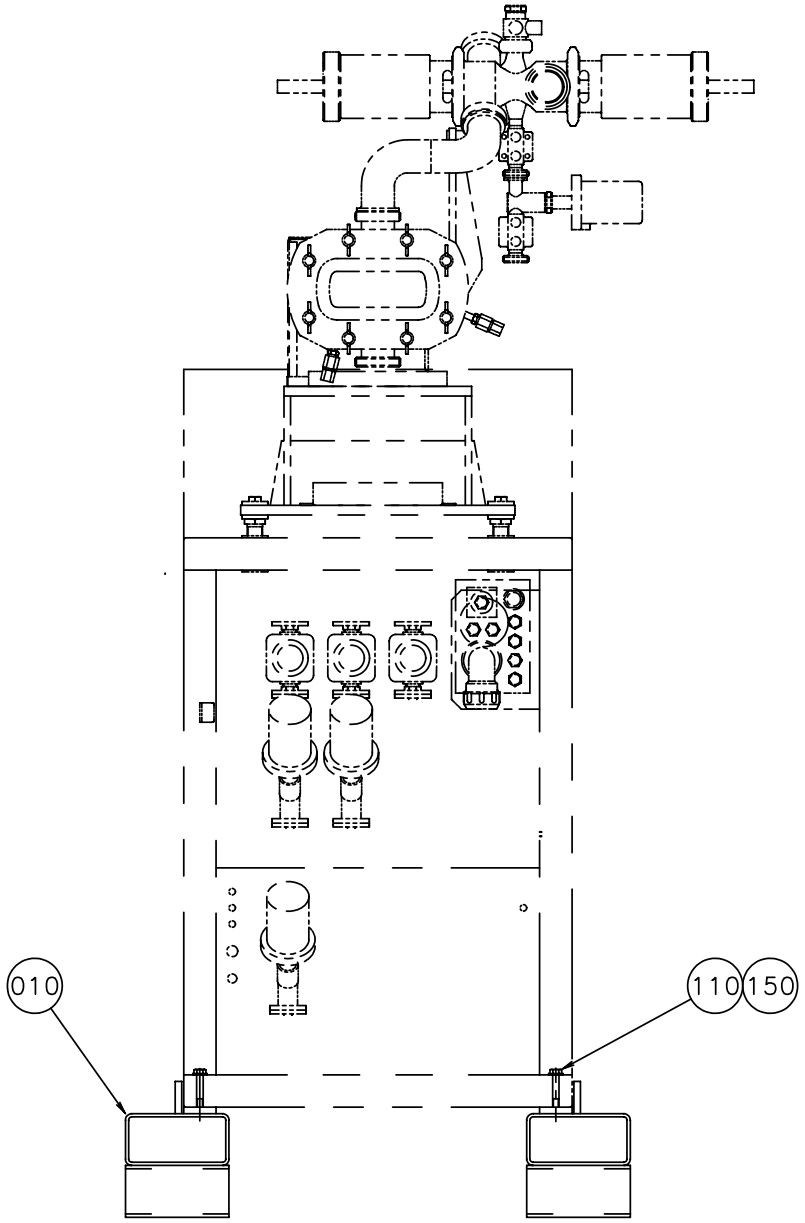

S-925419-1
ECN 16402

Pos	Part No	SP	UN	Qty	Description	Page No
-						
010	925765-0000	-		2	BED	
110	312101-0504	-		2	SCREW M6S10X65FZB	
150	315101-0173	-		2	WASHER BRB10,5X22FZB	

Pos	Part No	SP	UN	Qty	Description	Page No

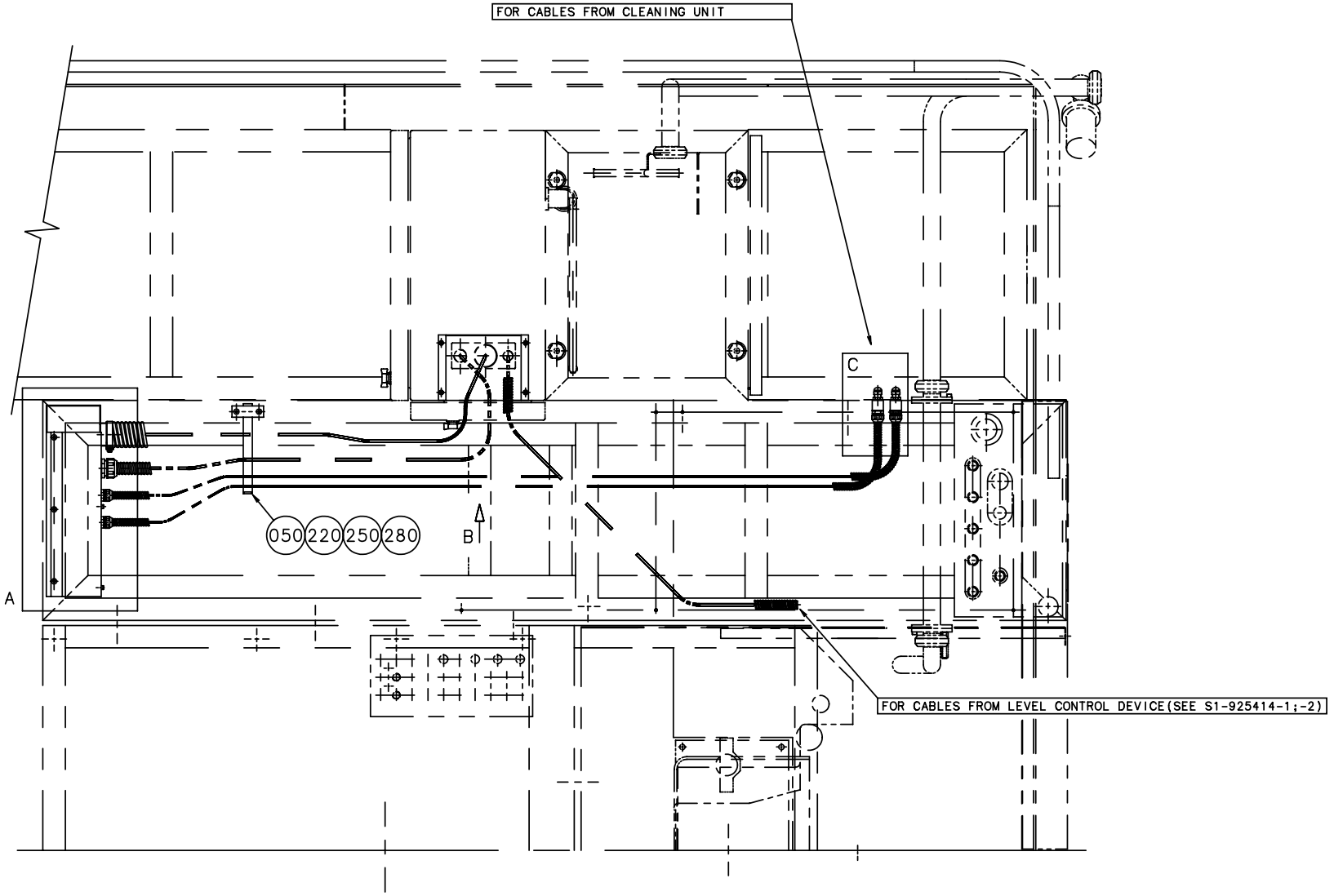
FOR CABLES FROM CLEANING UNIT
C
050 220 250 280
B
A
FOR CABLES FROM LEVEL CONTROL DEVICE(SEE S1-925414-1;-2)

Pos	Part No	SP	UN	Qty	Description	Page No
-						
010	925785-0000	-		1	PROTECTION	
030	925950-0000	-		1	CABLE TRACK	
050	794542-0000	-		1	SUPPORT	
060	795758-0000	-		1	COVER	
080	925952-0000	-		2	SLEEVE	
100	90012-0063	-		4	GLAND	
120	90152-0033	-	MM	3500	HOSE	
125	90152-0033	-	MM	3500	HOSE	
200	312105-0327	-		4	SCREW M6S ISO 4017 M5X12 A280	
210	312115-0325	-		2	SCREW 5X10 A4 80	
220	312155-0370	-		2	SCREW MF6S DIN 7991 M6X20 A280	
230	312155-0378	-		3	SCREW MF6S DIN 7991 M6X40 A280	
250	312605-0316	-		5	NUT M6M6RFR	
270	315105-0146	-		4	WASHER BRB5,3X10RFR	
280	315105-0153	-		5	WASHER BRB6,4X12RFR	
300	342991-0110	-		2	HOSE CLIP,WORM DRIVE TYPE (54)-63	
320	352103-0101	-		2	CABLE GLAND ST 9	
330	352135-0106	-	M	2	HOSE .016	
340	352135-0109	-	M	2	HOSE .022	
350	352135-0118	-	M	2	HOSE .050	
360	352136-0143	-		1	GLAND FITTING	

Pos	Part No	SP	UN	Qty	Description	Page No

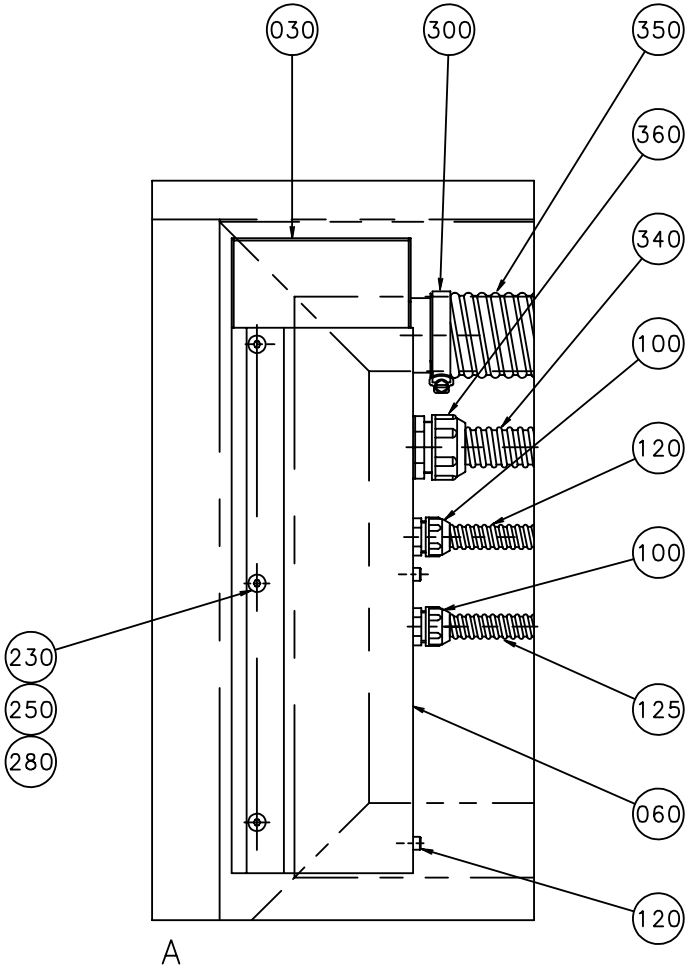
030
300
350
360
340
100
120
100
230
250
280
125
060
120
A

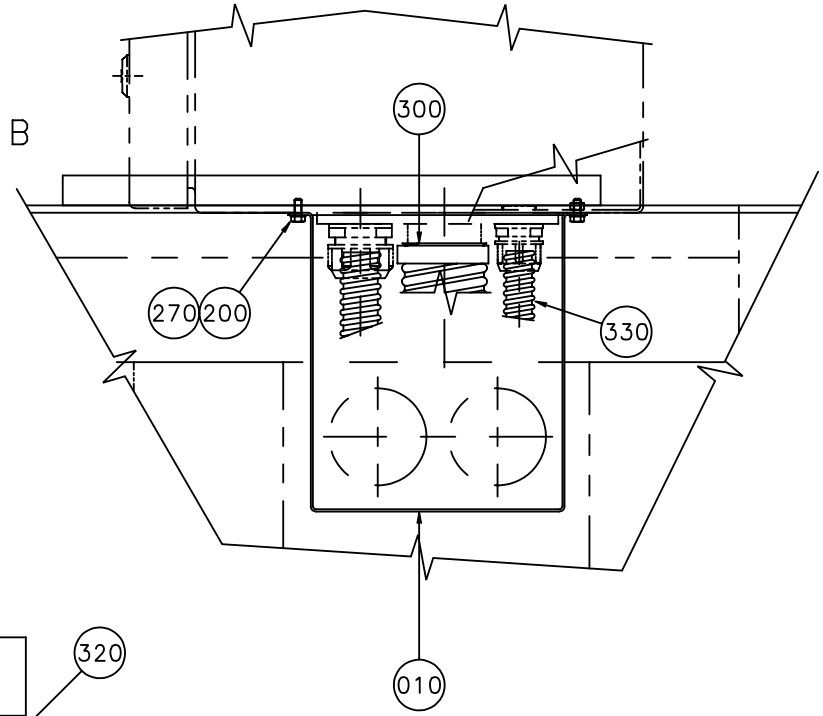
B
300
270
200
330
010

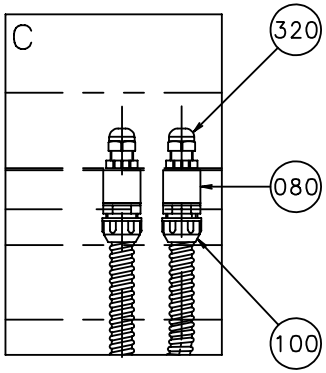
C
320
080
100

Pos	Part No	SP	UN	Qty	Description	Page No
-						
010	925785-0000	-		1	PROTECTION	
030	925950-0000	-		1	CABLE TRACK	
050	794542-0000	-		1	SUPPORT	
060	795758-0000	-		1	COVER	
080	925952-0000	-		2	SLEEVE	
100	90012-0063	-		4	GLAND	
120	90152-0033	-	MM	3500	HOSE	
125	90152-0033	-	MM	3500	HOSE	
200	312105-0327	-		4	SCREW M6S ISO 4017 M5X12 A280	
210	312115-0325	-		2	SCREW 5X10 A4 80	
220	312155-0370	-		2	SCREW MF6S DIN 7991 M6X20 A280	
230	312155-0378	-		3	SCREW MF6S DIN 7991 M6X40 A280	
250	312605-0316	-		5	NUT M6M6RFR	
270	315105-0146	-		4	WASHER BRB5,3X10RFR	
280	315105-0153	-		5	WASHER BRB6,4X12RFR	
300	342991-0110	-		2	HOSE CLIP,WORM DRIVE TYPE (54)-63	
320	352103-0101	-		2	CABLE GLAND ST 9	
330	352135-0106	-	M	2	HOSE .016	
340	352135-0109	-	M	2	HOSE .022	
350	352135-0118	-	M	2	HOSE .050	
360	352136-0143	-		1	GLAND FITTING	

Pos	Part No	SP	UN	Qty	Description	Page No

This page is intentionally left blank

Pos	Part No	SP	UN	Qty	Description	Page No
0355B						
060	926759-0000	-		1	PRODUCT PIPE	
070	925625-0000	-		1	FLANGE	
080	927407-0000	-		1	FLANGE	
100	90217-0035	-		1	NUT	
0375S						
060	926759-0000	-		1	PRODUCT PIPE	
070	925627-0000	-		1	FLANGE	
080	927408-0000	-		1	FLANGE	
100	90217-0035	-		1	NUT	
0500B						
060	926758-0000	-		1	PRODUCT PIPE	
070	925623-0000	-		1	FLANGE	
070	925624-0000	-		1	FLANGE	
080	927404-0000	-		1	FLANGE	
100	90217-0047	-		1	NUT	
0500S						
060	926758-0000	-		1	PRODUCT PIPE	
080	927406-0000	-		1	FLANGE	
100	90217-0047	-		1	NUT	
0750B						
060	926758-0000	-		1	PRODUCT PIPE	
070	925621-0000	-		1	FLANGE	
080	927405-0000	-		1	FLANGE	
100	90217-0047	-		1	NUT	
1000B						
060	926758-0000	-		1	PRODUCT PIPE	
070	925622-0000	-		1	FLANGE	
080	927404-0000	-		1	FLANGE	
100	90217-0047	-		1	NUT	
1000SQ						
060	926758-0000	-		1	PRODUCT PIPE	
070	1334483-0000	-		1	FLANGE	
080	1334484-0000	-		1	FLANGE	
100	90217-0047	-		1	NUT	
Common parts						
340	A 925670-0100	-		1	PULLER	
350	A 795900-0100	-		1	TOOL	
010	925676-0000	-		1	AIR/STEAM DIAGRAM	
030	1334319-0000	-		1	PNEUMATIC DIAGRAM	
050	925675-0000	-		1	VALVE PANEL	
130	90321-0553	-		1	MANDREL	
140	90321-0554	-		1	KEY	

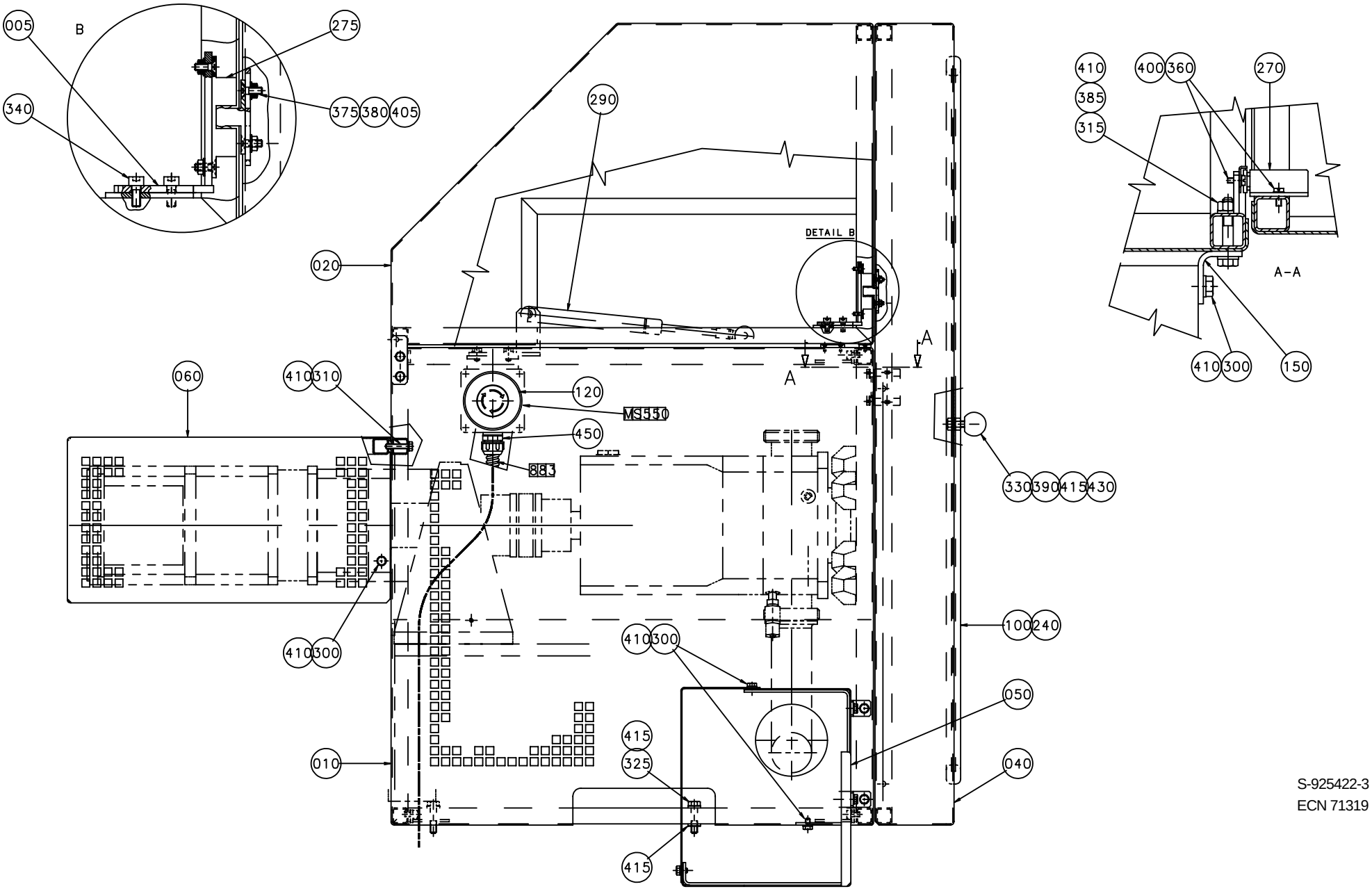

S-925422-3
ECN 71319

Pos	Part No	SP	UN	Qty	Description	Page No
-						
005	1347661-0000	-		1	HOLDER	
010	926767-0000	-		1	FRAME	
020	926768-0000	-		1	COVER	
030	926769-0000	-		1	SIDE PLATE	
040	926770-0000	-		1	DOOR	
050	926771-0000	-		1	TOUCH GUARD	
060	926772-0000	-		1	TOUCH GUARD	
070	926773-0000	-		1	TOUCH GUARD	
080	926791-0000	-		1	HINGE	
090	926792-0000	-		1	HOLDER	
100	926793-0000	-		1	WINDOW	
120	486826-0001	-		1	SIGN "EMERGENCY STOP"	
130	926794-0000	-		1	HINGE	
150	926796-0000	-		2	HOLDER	
160	926797-0000	-		2	SPACER	
205	90064-0124	-		1	EMERGENCY STOP BUTTON	
210	90066-0021	-		1	PUSH BUTTON BOX	
230	90115-0020	-		1	LINK HEAD	
240	90143-0039	-	MM	2500	STRIP	
260	90194-0075	-		2	SIGN	
270	90237-0046	-		1	LOCK PART	
275	90237-0070	-		1	LOCK	
280	90248-0019	-		2	HINGE	
290	90347-0014	-		1	DAMPER	
295	979548-0000	-		1	MACHINE PLATE	
296	311521-0142	-		4	BLANK RIVE2X6,0 RFR	
300	312105-0364	-		17	SCREW M6S6X10RFR	
305	312105-0366	-		12	SCREW M6S ISO 4017 M6X12 A280	
310	312105-0374	-		3	SCREW M6S ISO 4017 M6X30 A280	
315	312105-0376	-		2	SCREW M6S ISO 4017 M6X35 A280	
325	312105-0457	-		4	SCREW O4017 M8X35A280	
330	312109-0457	-		2	SCREW M6S ISO 4017 M8X35 A280	
340	312115-0327	-		2	SCREW MC6S ISO 4762 M5X12 A280	
350	312115-0364	-		8	SCREW 6X10 A4 80	
360	312125-0222	-		4	SLOTTED CHEESE HEAD 1207 M3X8 RFR	
365	312125-0333	-		2	SLOTTED CHEESE HEAD 1207 M5X25 RFR	
375	312155-0291	-		4	SCREW MF6S DIN 7991 M4X12 A280	
380	312605-0312	-		4	NUT M6M4RFR	
385	312605-0316	-		12	NUT M6M6RFR	
390	312605-0318	-		2	NUT M6M8RFR	
395	312812-0316	-		2	LOCK NUT A2-M6RFR	
400	315105-0124	-		4	WASHER BRB3,2X6RFR	
405	315105-0136	-		4	WASHER BRB4,3X8RFR	
410	315105-0153	-		48	WASHER BRB6,4X12RFR	
415	315105-0165	-		5	WASHER BRB8,4X16RFR	
420	315115-0165	-		4	WASHER TBRB8,4X16RFR	
430	318800-0104	-		2	HANDLE BALLA D.30-M8	
435	352135-0106	-	MM	1500	HOSE .016	
450	352136-0129	-		1	GLAND FITTING	

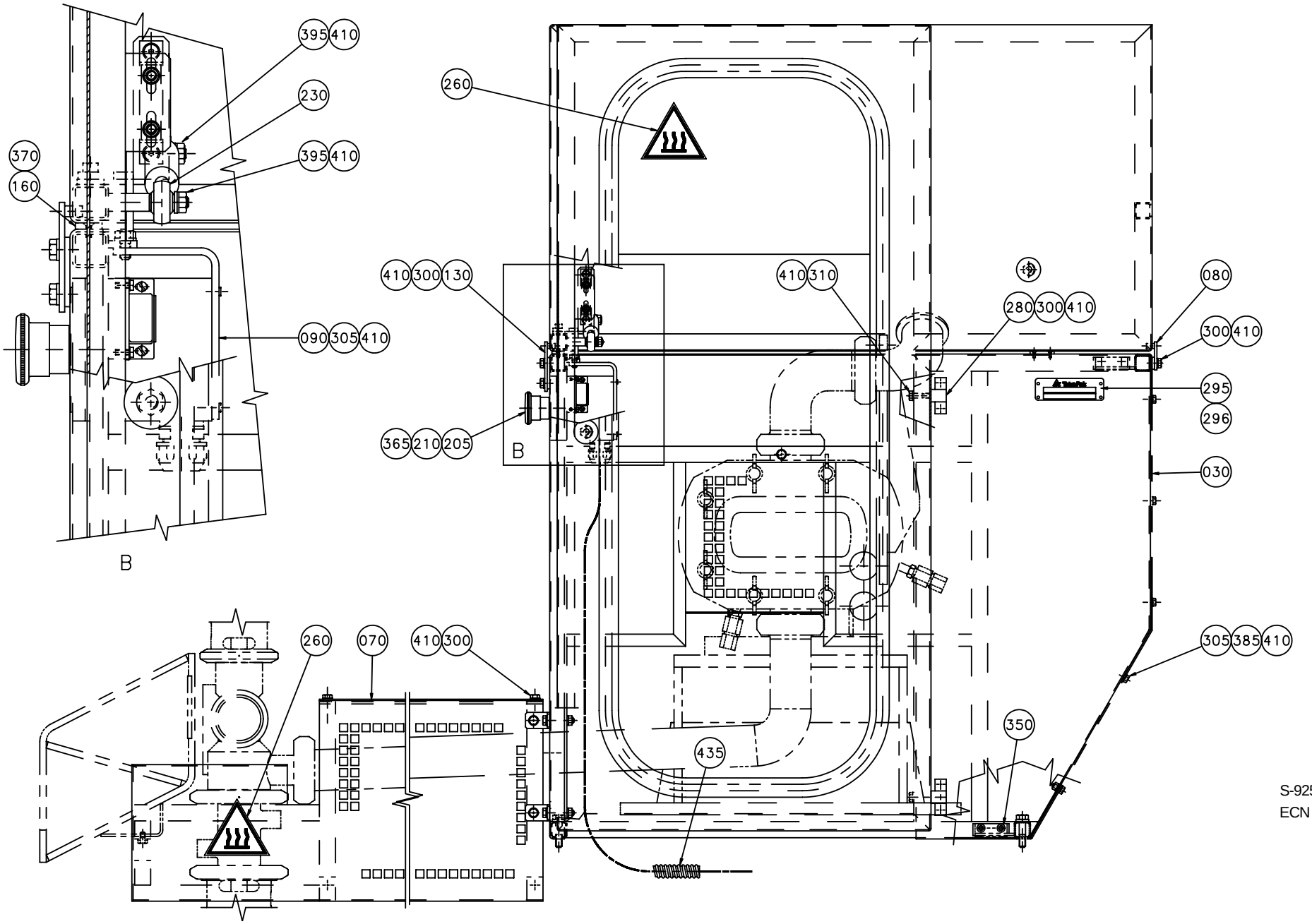

S-925422-4
ECN 71319

Pos	Part No	SP	UN	Qty	Description	Page No
-						
005	1347661-0000	-		1	HOLDER	
010	926767-0000	-		1	FRAME	
020	926768-0000	-		1	COVER	
030	926769-0000	-		1	SIDE PLATE	
040	926770-0000	-		1	DOOR	
050	926771-0000	-		1	TOUCH GUARD	
060	926772-0000	-		1	TOUCH GUARD	
070	926773-0000	-		1	TOUCH GUARD	
080	926791-0000	-		1	HINGE	
090	926792-0000	-		1	HOLDER	
100	926793-0000	-		1	WINDOW	
120	486826-0001	-		1	SIGN "EMERGENCY STOP"	
130	926794-0000	-		1	HINGE	
150	926796-0000	-		2	HOLDER	
160	926797-0000	-		2	SPACER	
205	90064-0124	-		1	EMERGENCY STOP BUTTON	
210	90066-0021	-		1	PUSH BUTTON BOX	
230	90115-0020	-		1	LINK HEAD	
240	90143-0039	-	MM	2500	STRIP	
260	90194-0075	-		2	SIGN	
270	90237-0046	-		1	LOCK PART	
275	90237-0070	-		1	LOCK	
280	90248-0019	-		2	HINGE	
290	90347-0014	-		1	DAMPER	
295	979548-0000	-		1	MACHINE PLATE	
296	311521-0142	-		4	BLANK RIVE2X6,0 RFR	
300	312105-0364	-		17	SCREW M6S6X10RFR	
305	312105-0366	-		12	SCREW M6S ISO 4017 M6X12 A280	
310	312105-0374	-		3	SCREW M6S ISO 4017 M6X30 A280	
315	312105-0376	-		2	SCREW M6S ISO 4017 M6X35 A280	
325	312105-0457	-		4	SCREW O4017 M8X35A280	
330	312109-0457	-		2	SCREW M6S ISO 4017 M8X35 A280	
340	312115-0327	-		2	SCREW MC6S ISO 4762 M5X12 A280	
350	312115-0364	-		8	SCREW 6X10 A4 80	
360	312125-0222	-		4	SLOTTED CHEESE HEAD 1207 M3X8 RFR	
365	312125-0333	-		2	SLOTTED CHEESE HEAD 1207 M5X25 RFR	
375	312155-0291	-		4	SCREW MF6S DIN 7991 M4X12 A280	
380	312605-0312	-		4	NUT M6M4RFR	
385	312605-0316	-		12	NUT M6M6RFR	
390	312605-0318	-		2	NUT M6M8RFR	
395	312812-0316	-		2	LOCK NUT A2-M6RFR	
400	315105-0124	-		4	WASHER BRB3,2X6RFR	
405	315105-0136	-		4	WASHER BRB4,3X8RFR	
410	315105-0153	-		48	WASHER BRB6,4X12RFR	
415	315105-0165	-		5	WASHER BRB8,4X16RFR	
420	315115-0165	-		4	WASHER TBRB8,4X16RFR	
430	318800-0104	-		2	HANDLE BALLA D.30-M8	
435	352135-0106	-	MM	1500	HOSE .016	
450	352136-0129	-		1	GLAND FITTING	

This page is intentionally left blank

Pos	Part No	SP	UN	Qty	Description	Page No
-						
0010	A 42453-0300	-		1	ELECTRICAL DOCUMENT	
0020	A 42451-0300	-		1	ELECTRIC MATERIALS	

Pos	Part No	SP	UN	Qty	Description	Page No

This page is intentionally left blank

Pos	Part No	SP	UN	Qty	Description	Page No
-						
0010	A 42001-0300	-		1	ELECTRIC MATERIALS	
0020	A 42002-0300	-		1	ELECTRICAL DOCUMENT	

Pos	Part No	SP	UN	Qty	Description	Page No

This page is intentionally left blank

Pos	Part No	SP	UN	Qty	Description	Page No
-						
0010	A 42003-0300	-		1	MACHINE	
0020	A 42004-0300	-		1	ELECTRICAL DOCUMENT	
0030	A 42005-0300	-		1	ELECTRICAL CABINET	

Pos	Part No	SP	UN	Qty	Description	Page No

This page is intentionally left blank

Pos	Part No	SP	UN	Qty	Description	Page No
90042-0108						
	90042-0451	K		1	WEAR & TEAR PARTS KIT	
90277-0055						
	90277-0339	-		1	O-RING	
90321-0057						
	90321-0470	K		2	ROTOR	
	90321-0471	K		8	WING NUT	
	90321-0472	K		2	O-RING	
	90321-0473	K		1	O-RING	
	90321-0474	K		2	O-RING	
	90321-0475	K		2	O-RING	
	90321-0476	K		2	SEAL RING	
	90321-0477	K		2	SEAL RING	
	90321-0478	K		2	O-RING	
	90321-0479	K		2	SPRING	
	90321-0482	K		1	O-RING	
	90321-0483	K		6	SCREW	
	90321-0484	K		2	O-RING	
	90321-0485	K		2	SEAL RING	
	90321-0486	K		2	SEAL RING	
	90321-0487	K		2	SPRING	
	90321-0488	K		2	O-RING	
90321-0059						
	90321-0490	K		2	O-RING	
	90321-0491	K		1	O-RING	
	90321-0492	K		2	O-RING	
	90321-0493	K		2	O-RING	
	90321-0494	K		2	SEAL RING	
	90321-0495	K		2	SEAL RING	
	90321-0496	K		2	O-RING	
	90321-0497	K		2	SPRING	
	90321-0498	K		1	O-RING	
	90321-0500	K		2	O-RING	
	90321-0501	K		2	SEAL RING	
	90321-0502	K		2	SEAL RING	
	90321-0503	K		2	SPRING	
	90321-0504	K		2	O-RING	
	90321-0505	K		2	ROTOR	
794040-0000						
	794041-0000	K		1	COMPRESSION SPRING	
925915-0000						
:1	359011-0819	-		2	MARKING PL5-GW (JORD)	
:2	353024-0206	-		1	EARTH TERMINAL WPE 6	
:3	359011-0807	-		2	MARKING PL5-FW 1-50	
:4	353021-0214	-		4	FEED TRHOUGH TERMINAL WDU 6	
:5	353024-0204	-		2	EARTH TERMINAL WPE 2,5	
:6	353021-0216	-		5	FEED THROUGH TERMINAL WDU 2,5	
:7	353032-0004	-		1	END PLATE WAP	
:8	353031-0203	-		2	END BRACKET WEW 35/2	
1334787-0000						
:1	353042-0005	-	MM	200	RAIL TS35//7.5	
:10	353032-0302	-		1	END PLATE WAP	
:11	353034-0403	-		2	BRIDGE CONLECK Q4	
:12	353021-0302	-		4	FEED THROUGH TERMINAL DLD 2,5/	
:13	353021-0127	-		1	TERMINAL BLOCK	
:2	353031-0203	-		2	END BRACKET WEW 35/2	
:3	359011-0807	-		2	MARKING PL5-FW 1-50	
:4	353024-0205	-		2	EARTH TERMINAL WPE 4	
:5	359011-0819	-		2	MARKING PL5-GW (JORD)	
:6	353021-0213	-		5	FEED THROUGH TERMINAL WDU 4	
:7	353021-0212	-		7	FEED THROUGH TERMINAL WDU 2,5	
:8	90077-0113	-		12	FEED THROUGH TERMINAL	
:9	353032-0009	-		1	END PLATE WAP	
1334788-0000						
:1	353042-0005	-	MM	200	RAIL TS35//7.5	
:2	353031-0203	-		2	END BRACKET WEW 35/2	
:3	359011-0807	-		3	MARKING PL5-FW 1-50	
:4	353024-0205	-		3	EARTH TERMINAL WPE 4	
:5	353032-0004	-		2	END PLATE WAP	
:6	353021-0213	-		4	FEED THROUGH TERMINAL WDU 4	
:7	353024-0206	-		2	EARTH TERMINAL WPE 6	
:8	353034-0031	-		1	BRIDGE CONLECK WQV 4/10	
1347206-0000						
:1	359011-0820	-		1	MARKING PL5-FW 501-550	
1347207-0000						
:1	353024-0206	-		1	EARTH TERMINAL WPE 6	
:2	353021-0214	-		4	FEED TRHOUGH TERMINAL WDU 6	
:3	359011-0807	-		2	MARKING PL5-FW 1-50	
:4	353031-0203	-		1	END BRACKET WEW 35/2	
:5	359011-0819	-		2	MARKING PL5-GW (JORD)	
1347208-0000						
:1	353024-0204	-		2	EARTH TERMINAL WPE 2,5	
:2	353021-0216	-		5	FEED THROUGH TERMINAL WDU 2,5	
:3	353031-0203	-		1	END BRACKET WEW 35/2	

This page is intentionally left blank

Pos	Part No	SP	UN	Qty	Description	Page No
:4	353032-0004	-		1	END PLATE WAP	
:5	359011-0807	-		2	MARKING PL5-FW 1-50	
:6	359011-0819	-		2	MARKING PL5-GW (JORD)	

Pos	Part No	SP	UN	Qty	Description	Page No

Tetra Pak

SPC

Spare Parts Catalogue

Part No	Description	Page No
12242-0001	GASKET	41, 47, 49, 77
12242-0003	GASKET	15, 17, 19, 21, 25, 31, 77
12242-0005	GASKET	15, 17, 19, 21, 23, 31, 41, 77
1334016-0000	FLOAT	65, 67
1334319-0000	PNEUMATIC DIAGRAM	87
1334481-0000	FILLING PIPE	65, 67
1334482-0000	FLANGE	65, 67
1334483-0000	FLANGE	87
1334484-0000	FLANGE	87
1334485-0000	FLOAT	65, 67
1346079-0000	HOLDER	65, 67
1346080-0000	SPREADER	65, 67
1346081-0000	BRACKET	65, 67
1347019-0000	CLEANING CUP	59, 61
1347020-0000	COVER	59, 61
1347138-0000	FLOAT	65, 67
1347139-0000	FLOAT	65, 67
1347417-0000	PROTECTION PIPE	69
1347497-0000	HOLDER	15, 17, 19, 21
1347661-0000	HOLDER	89, 91
1347886-0000	FILLING PIPE	65, 67
1347887-0000	FILLING PIPE	65, 67
1347888-0000	FILLING PIPE	65, 67
1347889-0000	FILLING PIPE	65, 67
1350713-0000	SLEEVE	15, 17, 19, 21
295730-0000	SPACER SHEET	79
311111-0209	SLOTTED TUFRP3X18	69
311521-0142	BLANK RIVE2X6,0 RFR	89, 91
311521-0143	BLANK RIVE2X8,0 RFR	47, 49
312101-0504	SCREW M6S10X65FZB	81
312104-0552	SCREW 6S12X100H8.8FZB	15, 17, 19, 21
312105-0289	SCREW M6S4X10 A2 80	39, 57
312105-0327	SCREW M6S ISO 4017 M5X12 A280	15, 17, 19, 21, 83, 85
312105-0335	SCREW M6S ISO 4017 M5X30 A280	53, 55
312105-0337	SCREW M6S ISO 4014 M5X35 A280	57, 73
312105-0362	SCREW M6S ISO 4017 M6X8 A280	53, 55
312105-0364	SCREW M6S6X10RFR	29, 89, 91
312105-0366	SCREW M6S ISO 4017 M6X12 A280	41, 47, 49, 57, 89, 91
312105-0368	SCREW M6S ISO 4017 M6X16 A280	29
312105-0370	SCREW M6S ISO 4017 M6X20 A280	47, 49
312105-0372	SCREW M6S ISO 4017 M6X25 A280	59, 61
312105-0374	SCREW M6S ISO 4017 M6X30 A280	15, 17, 19, 21, 89, 91
312105-0376	SCREW M6S ISO 4017 M6X35 A280	89, 91
312105-0380	SCREW M6S ISO 4014 M6X50 A280	59, 61
312105-0381	SCREW M6S ISO 4014 M6X55 A280	27, 59, 61
312105-0382	SCREW M6S ISO 4014 M6X60 A280	47, 49, 59, 61
312105-0383	SCREW M6S ISO 4014 M6X65 A280	59, 61
312105-0451	SCREW M6S ISO 4017 8X20 A280	15, 17, 19, 21
312105-0453	SCREW M6S ISO 4017 M8X25 A280	75
312105-0457	SCREW O4017 M8X35A280	89, 91
312105-0460	SCREW O4017 M8X45A280	15, 17, 19, 21, 65, 67
312105-0464	SCREW M6S ISO 4014 M8X65 A280	15, 17, 19, 21
312105-0465	SCREW M6S ISO 4014 M8X70 A280	29
312105-0493	SCREW M6S ISO 4017 M10X25 A280	15, 17, 19, 21, 27
312105-0495	SCREW M6S ISO 4017 M10X30 A280	27
312105-0497	SCREW M6S ISO 4017 M10X35 A280	27
312105-0501	SCREW 4017 M10X50A280	15, 17, 19, 21
312105-0502	SCREW M6S ISO 4014 M10X55 A280	15, 17, 19, 21
312105-0503	SCREW M6S ISO 4014 M10X60 A280	15, 17, 19, 21
312105-0507	SCREW M6S ISO 4014 M10X80 A280	29
312109-0457	SCREW M6S ISO 4017 M8X35 A280	89, 91
312115-0297	SCREW MC6S ISO 4762 M4X25 A280	53, 55
312115-0304	SCREW MC6S ISO 4762 M4X45 A280	37
312115-0305	SCREW MC6S ISO 4762 M4X50 A280	73
312115-0325	SCREW 5X10 A4 80	83, 85
312115-0327	SCREW MC6S ISO 4762 M5X12 A280	89, 91
312115-0364	SCREW 6X10 A4 80	89, 91
312115-0368	SCREW MC6S ISO 4762 M6X16 A280	47, 49, 57, 59, 61
312115-0372	SCREW MC6S ISO 4762 M6X25 A280	57
312115-0374	SCREW MC6S ISO O4762 M6X30 A280	59, 61
312115-0453	SCREW MC6S ISO 4762 M8X25 A280	27
312115-0455	SCREW MC6S ISO 4762 M8X30 A280	15, 17, 19, 21
312115-0459	SCREW MC6S ISO 4762 M8X40 A280	33, 35
312115-0495	SCREW MC6S ISO 4762 M10X30 A280	15, 17, 19, 21
312125-0222	SLOTTED CHEESE HEAD ISO 1207 M3X8 RFR	89, 91
312125-0228	SLOTTED CHEESE HEAD ISO 1207 M3X16 RFR	71, 73, 75
312125-0230	SLOTTED CHEESE HEAD ISO 1207 M3X20 RFR	75
312125-0234	SLOTTED CHEESE HEAD ISO 1207 M3X30 RFR	73
312125-0333	SLOTTED CHEESE HEAD ISO 1207 M5X25 RFR	89, 91
312145-0222	SLOTTED HEMFS3X8RFR	29
312155-0289	SCREW MF6S4X10RFR	47, 49
312155-0291	SCREW MF6S DIN 7991 M4X12 A280	89, 91
312155-0323	SCREW MF6S DIN 7991 M5X8 A280	37, 39, 45
312155-0370	SCREW MF6S DIN 7991 M6X20 A280	83, 85
312155-0378	SCREW MF6S DIN 7991 M6X40 A280	83, 85
312155-0532	SCREW MF6S12X20RFR	37, 73

Part No	Description	Page No
312155-0538	SCREW MF6S12X35RFR	39
312205-0107	SCREW U6S1/4X13RFR	47, 49
312316-0325	STOP SCREW SK6SS5X10FZB	15, 17, 19, 21
312316-0329	STOP SCREW SK6SS5X16FZB	15, 17, 19, 21
312605-0310	NUT M6M3RFR	75
312605-0312	NUT M6M4RFR	89, 91
312605-0314	NUT M6M5RFR	53, 55, 57
312605-0316	NUT M6M6RFR	15, 17, 19, 21, 27, 57, 59, 61, 83, 85, 89, 91
312605-0318	NUT M6M8RFR	15, 17, 19, 21, 27, 29, 89, 91
312605-0320	NUT M6M10RFR	27, 29
312705-0314	CAP NUT MHM 5 A2	57
312705-0316	CAP NUT MHM 6 A2	59, 61
312705-0318	CAP NUT MHM 8 A2	59, 61
312812-0310	LOCK NUT A2-M3RFR	71
312812-0316	LOCK NUT A2-M6RFR	89, 91
312812-0320	LOCK NUT A2-M10RFR	15, 17, 19, 21, 27
315101-0173	WASHER BRB10,5X22FZB	81
315105-0124	WASHER BRB3,2X6RFR	71, 73, 75, 89, 91
315105-0136	WASHER BRB4,3X8RFR	37, 39, 57, 73, 89, 91
315105-0146	WASHER BRB5,3X10RFR	15, 17, 19, 21, 57, 73, 83, 85
315105-0153	WASHER BRB6,4X12RFR	15, 17, 19, 21, 27, 29, 41, 47, 49, 59, 61, 83, 85, 89, 91
315105-0165	WASHER BRB8,4X16RFR	15, 17, 19, 21, 27, 65, 67, 89, 91
315105-0171	WASHER BRB10X18RFR	69
315105-0173	WASHER BRB10,5X22RFR	15, 17, 19, 21, 27
315115-0165	WASHER TBRB8,4X16RFR	15, 17, 19, 21, 29, 75, 89, 91
315115-0173	WASHER B 10,5X22 RFR	15, 17, 19, 21, 29
315125-0153	WASHER SB 6,4X22X4 RFR	47, 49
315202-0120	O-RING 27,1X1,6	69
315202-0304	O-RING 64,5X3	37
315202-0308	O-RING 84,5X3	39, 45
315204-0215	O-RING 19,2X3VITON	37, 39, 45
315204-0219	O-RING 29,2X3VITON	47, 49, 59, 61
315233-0109	SEAL RING R1/8"	53, 55, 63
315233-0110	SEAL RING R1/4"	63
315233-0113	SEAL RING R1/2"	59, 61
315250-0101	GASKET 32/25	59, 61
315250-0103	GASKET 48/38	27, 59, 61
315701-0266	FLAT WEDGE8X7X28	15, 17, 19, 21
315754-0113	LOCKING WAE 15	37, 39, 45
318800-0104	HANDLE BALLA D.30-M8	89, 91
342219-0201	PLUG	23, 25
342702-0115	ACCESSORIES,NUT M-16 MSG	63
342704-0114	ACCESSORIES,FERRULE 15-MSG	63
342706-0130	ACCESSORIES,INSERT SLEEVE 6	53, 55
342713-0210	PLUG,EXT.G-THREAD,HEXAGON SOCKET G1/4"	57
342720-0103	STRAIGHT CONNECTION GA-8-G1/8"	63
342797-0121	BANJO CONNECTION,RINGPIECE 6-1/8"	73, 75
342803-0103	NUT 38	27, 59, 61
342812-0103	SLEEVE ANSL.38	27, 59, 61
342921-0113	STRAIGHT COUPLING,EXT.THREADED 6/4-G1/8"	53, 55
342930-0113	ELBOW 90 COUPL.,EXT.THREAD 6/4-R1/8"	53, 55
342933-0121	ELBOW 90 COUPL.,INT.THREAD 8/6-G1/8"	63
342980-0113	BANJO-CONNECTION,RING 6/4-G1/8"	53, 55
342980-0114	BANJO-CONNECTION,RING 6/4-G1/4"	53, 55, 57
342980-0122	BANJO-CONNECTION,RING 8/6-G1/4"	63
342980-0123	BANJO-CONNECTION,RING 8/6-G3/8"	57
342980-0303	BANJO-HOLLOW BOLT COUPL,EXT.THR.01-G1/8"	53, 55, 73, 75
342980-0304	BANJO-HOLLOW BOLT COUPL,EXT.THR.01-G1/4"	53, 55, 57, 63
342980-0305	BANJO-HOLLOW BOLT COUPL,EXT.THR.01-G3/8"	57
342980-0314	BANJO-HOLLOW BOLT COUPL,EXT.THR.02-G1/4"	57
342980-0315	BANJO-HALLOW BOLT COUPL,EXT.THR.02-G3/8"	57
342991-0104	HOSE CLIP,WORM DRIVE TYPE (23)-27	59, 61
342991-0106	HOSE CLIP,WORM DRIVE TYPE (30)-36	51
342991-0110	HOSE CLIP,WORM DRIVE TYPE (54)-63	83, 85
352103-0101	CABLE GLAND ST 9	83, 85
352103-0105	CABLE GLAND STR 11	65, 67
352103-0108	CABLE GLAND ST 13	15, 17, 19, 21
352103-0116	CABLE GLAND ST 21	15, 17, 19, 21
352135-0102	HOSE .010	57
352135-0106	HOSE .016	15, 17, 19, 21, 83, 85, 89, 91
352135-0109	HOSE .022	15, 17, 19, 21, 83, 85
352135-0118	HOSE .050	83, 85
352135-0204	CRAMP 28	29
352136-0107	GLAND FITTING	57
352136-0128	GLAND FITTING	15, 17, 19, 21
352136-0129	GLAND FITTING	89, 91
352136-0143	GLAND FITTING	15, 17, 19, 21, 83, 85
352136-0167	GLAND FITTING	57
353021-0127	TERMINAL BLOCK	99
353021-0212	FEED THROUGH TERMINAL WDU 2,5	99
353021-0213	FEED THROUGH TERMINAL WDU 4	99
353021-0214	FEED TRHOUGH TERMINAL WDU 6	99
353021-0216	FEED THROUGH TERMINAL WDU 2,5	99
353021-0302	FEED THROUGH TERMINAL DLD 2,5/	99
353024-0204	EARTH TERMINAL WPE 2,5	99

Part No	Description	Page No
353024-0205	EARTH TERMINAL WPE 4	99
353024-0206	EARTH TERMINAL WPE 6	99
353031-0203	END BRACKET WEW 35/2	99
353032-0004	END PLATE WAP	99, 101
353032-0009	END PLATE WAP	99
353032-0302	END PLATE WAP	99
353034-0031	BRIDGE CONLECK WQV 4/10	99
353034-0403	BRIDGE CONLECK Q4	99
353042-0005	RAIL TS35//7.5	99
353245-0005	GLAND FITTING	15, 17, 19, 21
359000-0400	MARKING CO2/4"0"	53, 55, 57, 63
359000-0401	MARKING CO2/4"1"	53, 55, 57
359000-0402	MARKING CO2/4"2"	53, 55, 57
359000-0403	MARKING CO2/4"3"	53, 55, 57
359000-0404	MARKING CO2/4"4"	53, 55, 57, 63
359000-0405	MARKING CO2/4"5"	53, 55, 57, 63
359000-0406	MARKING CO2/4"6"	53, 55, 57
359000-0407	MARKING CO2/4"7"	53, 55, 57
359000-0408	MARKING CO2/4"8"	53, 55, 57
359000-0409	MARKING CO2/4"9"	57
359011-0807	MARKING PL5-FW 1-50	99, 101
359011-0819	MARKING PL5-GW (JORD)	99, 101
359011-0820	MARKING PL5-FW 501-550	99
37768-0000	THERMOCOUPLE CR-AL	47, 49
42001-0300	ELECTRIC MATERIALS	95
42002-0300	ELECTRICAL DOCUMENT	95
42003-0300	MACHINE	97
42004-0300	ELECTRICAL DOCUMENT	97
42005-0300	ELECTRICAL CABINET	97
42062-0100	LEVEL PROBE	65, 67
42063-0100	LEVEL DETECTOR	69
42067-0100	SENSOR BOARD	71
42068-0100	CONVERTER BOARD	71
42451-0300	ELECTRIC MATERIALS	93
42453-0300	ELECTRICAL DOCUMENT	93
440632-0000	CYLINDER HOUSING	39, 45
440633-0000	CYLINDER HOUSING	37
440634-0000	HOUSE	31
440637-0000	PISTON ROD	45
440646-0000	PISTON	37
440647-0000	SLEEVE	37, 73
440648-0000	SEALING WASHER	39
440651-0000	WASHER	39
440652-0000	WASHER	37
440654-0000	SPACER SLEEVE	37
440655-0000	RING	45
440656-0000	WASHER	37
440662-0000	COMPRESSION SPRING	37
440663-0000	COMPRESSION SPRING	39, 45
440695-0000	END SECTION	37
440731-0000	PLATE	37, 73
445502-0000	LOCKING PIN LOWER	65, 67
445503-0000	LOCKING PIN LOWER	65, 67
445504-0000	LOCKING PIN UPPER	65, 67
449992-0000	GASKET	59, 61
449993-0000	GASKET	59, 61
457614-0001	CLAMPING PIECE	59, 61
458786-0000	GASKET	59, 61
469096-0000	LEG	27
476185-0000	VALVE CONE	37
476203-0000	PROTECTION	45
484998-0000	END SECTION	39, 45
486826-0001	SIGN "EMERGENCY STOP"	89, 91
493733-0000	LOCKING PIN UPPER	65, 67
493734-0000	LOCKING PIN LOWER	65, 67
497748-0000	PIN	33, 35
497933-0000	BUSHING	37, 39, 45
529795-0000	VALVE HOUSING	31
530588-0000	SEAL RING	37
530589-0000	SEAL RING	39, 45
530590-0000	VALVE CONE	39
532117-0000	CLAMP RING	33
532118-0000	CLAMP RING	35
533169-0000	DIAPHRAGM	45
539212-0000	GASKET	31
541163-0100	CLAMP RING	31, 41
541164-0100	CLAMP RING	31
541165-0000	WASHER	33, 35
558282-0300	EL.RK."DOCKING OF HVA KIT"	11, 13
558660-0300	EL.RK."DOCKING OF HVA KIT"	11, 13
561548-0000	PIPE	63
569106-0000	GASKET	59, 61
57595-0000	GENERAL DESCRIPTION	71
57596-0000	CONTROL,TEST&SETTINGS PRO	71
598069-0000	DOCUMENT FOLDER	11, 13
598432-0000	COMPONENT WITHOUT TP NUMBER	71

Part No	Description	Page No
649440-0300	ELECTRIC EQUIPMENT	11, 13
735041-0000	CONNECTION CLAMP	59, 61
735342-0000	VALVE BODY 2"	41
735503-0000	HINGE	57
735509-0000	DOOR	29
735521-0000	BLANK NUT	41
735549-0000	HOOK HOLDER	39
735550-0000	BUSHING	39
735630-0000	RING	37
735632-0000	PISTON ROD	37
735663-0000	PISTON ROD	39
735738-0000	NUT	27
735846-0000	CAP NUT	43
735891-0000	VALVE HOUSING	31
735911-0000	VALVE 1/2"	43
735921-0000	SCREW	29
735922-0000	WASHER	15, 17, 19, 21
735934-0000	SPACER	15, 17, 19, 21
736040-0000	FILTER SUPPORT	47, 49
736113-0000	PANEL	29
736146-0000	SIGN BOARD	47, 49
736256-0000	HOLDER	65, 67
736358-0000	CLAMPING PIECE	53, 55
736378-0000	BASE	29
736514-0000	SHOCK ABSORBER	69
736876-0000	COLUMN	27
736877-0000	COLUMN	27
767181-0138	TAP	79
767181-0238	TAP	79
769211-0117	SAW BLADE	79
769211-0165	SAW BLADE	79
769219-0100	HOLDER	79
769219-0103	HANDLE BRACKET	79
794039-0000	HOSE CONNECTION	51
794040-0000	NON-RETURN VALVE	51
794041-0000	COMPRESSION SPRING	99
794117-0000	PISTON	39
794223-0000	SUPPORT	75
794226-0100	VALVE	41
794238-0000	ATTACHMENT	63
794239-0000	ATTACHMENT	53, 55
794243-0100	B-CYLINDER	31
794246-0000	DIAPHRAGM	37, 77
794247-0000	SEAL RING HOLDER	37
794248-0000	WASHER	37
794276-0000	SUPPORT	41
794420-0000	SPACER	79
794542-0000	SUPPORT	83, 85
795758-0000	COVER	83, 85
795853-0000	RAILING	27
795900-0100	TOOL	87
795944-0001	FILLING PIPE	65, 67
795946-0000	FLANGE	65, 67
795947-0000	FLANGE	65, 67
795960-0000	FLANGE	65, 67
90002-0018	BLANK-OFF PLUG 12,5	57
90012-0063	GLAND	83, 85
90012-0119	GLAND FITTING	69
90020-0027	SLEEVE	37
90020-0028	SLEEVE	39, 45
90030-0030	BULKHEAD CONNECTOR SV 12-L/SY	47, 49
90030-0058	T-PIPE CONNECTION T-12	47, 49
90030-0075	PIPE CONNECTION G-6	53, 55
90030-0086	PIPE CONNECTION	63
90030-0088	PIPE CONNECTION	47, 49
90030-0096	ELBOW CONNECTION W-12	47, 49
90030-0097	ACCESSORIES,FERRULE 6	65, 67
90030-0115	ELBOW CONNECTION WA 12-R3/8	47, 49
90030-0116	REDUCER	63
90030-0137	ELBOW CONNECTION WA 6-R1/8"	47, 49
90030-0167	REDUCTION KOR 12/8-L/SY	47, 49
90030-0184	STRAIGHT CONNECTION GA-6-G1/8"	47, 49, 53, 55, 73, 75
90030-0185	STRAIGHT CONNECTION GA-8-G1/4"	63
90030-0187	STRAIGHT CONNECTION GA-12-G3/8"	47, 49, 59, 61
90030-0207	NIPPLE	73
90030-0257	ELBOW PIPE JOINT	23, 25
90030-0258	PIPE CONNECTION	23, 25
90042-0108	SOLENOID VALVE	57
90042-0345	COIL 24V DC	57
90042-0368	CONNECTION	57
90042-0369	END PIECE	57
90042-0404	PLATE	57
90042-0431	PLATE	57
90042-0451	WEAR & TEAR PARTS KIT	99
90042-0476	CONTACT	57
90043-0082	GAUGE	47, 49

Part No	Description	Page No
90044-0104	PROX.SWITCHIFM IN 3002	73, 75
90044-0126	INDUCTIVE SWITCH	15, 17, 19, 21
90045-0194	Servo motor	15, 17, 19, 21
90045-0197	Servo motor	15, 17, 19, 21
90055-0071	HOSE NIPPLE	59, 61
90056-0125	GEAR	15, 17, 19, 21
90056-0149	Gear Reduction	15, 17, 19, 21
90064-0124	EMERGENCY STOP BUTTON	89, 91
90066-0021	PUSH BUTTON BOX	89, 91
90077-0113	FEED THROUGH TERMINAL	99
90099-0011	NUT PR 37 BRASS	57
90099-0116	NUT PR 12,5 (PG7)	57
90113-0063	PRESSURE REGULATOR	47, 49
90113-0064	PRESSURE REGULATOR	47, 49
90115-0020	LINK HEAD	89, 91
90140-0021	ELBOW 90,INT./EXT.THREAD R1/8"	53, 55, 73, 75
90143-0039	STRIP	89, 91
90144-0004	TAPE	23, 25, 79
90148-0021	HOSE	59, 61
90152-0029	HOSE	57
90152-0033	HOSE	83, 85
90163-0057	NIPPLE	53, 55, 73, 75
90163-0062	SLEEVE	53, 55, 73, 75
90163-0079	SLEEVE	63
90166-0049	HOSE	51
90166-0132	HOSE	53, 55, 57
90166-0133	HOSE	57, 63
90187-0082	BALL VALVE	47, 49, 59, 61
90187-0110	ACTUATOR	41
90187-0111	SAUNDERS VALVE	41
90187-0112	COCK	47, 49
90187-0312	DIAPHRAGM	41
90194-0075	SIGN	89, 91
90207-0363	GASKET	31
90217-0035	NUT	87
90217-0047	NUT	87
90220-0085	CABLE 4 X 0.75	69
90235-0048	VALVE	53, 55
90235-0259	VALVE	73
90235-0271	VALVE	47, 49
90235-0743	VALVE	47, 49, 59, 61
90237-0046	LOCK PART	89, 91
90237-0070	LOCK	89, 91
90237-0114	LOCK	57
90237-0308	WASHER	57
90248-0019	HINGE	89, 91
90277-0055	FILTER	47, 49
90277-0333	Gasket Kit	47, 49, 77
90277-0336	FILTER REPBY 0090337-0315	47, 49
90277-0339	O-RING	99
90287-0075	SCREW	29
90287-0076	SCREW	27
90321-0057	PUMP	23
90321-0059	PUMP	25
90321-0470	ROTOR	99
90321-0471	WING NUT	99
90321-0472	O-RING	77, 99
90321-0473	O-RING	77, 99
90321-0474	O-RING	77, 99
90321-0475	O-RING	77, 99
90321-0476	SEAL RING	99
90321-0477	SEAL RING	99
90321-0478	O-RING	77, 99
90321-0479	SPRING	99
90321-0482	O-RING	77, 99
90321-0483	SCREW	99
90321-0484	O-RING	77, 99
90321-0485	SEAL RING	99
90321-0486	SEAL RING	99
90321-0487	SPRING	99
90321-0488	O-RING	77, 99
90321-0490	O-RING	77, 99
90321-0491	O-RING	77, 99
90321-0492	O-RING	77, 99
90321-0493	O-RING	77, 99
90321-0494	SEAL RING	99
90321-0495	SEAL RING	99
90321-0496	O-RING	77, 99
90321-0497	SPRING	99
90321-0498	O-RING	77, 99
90321-0500	O-RING	77, 99
90321-0501	SEAL RING	99
90321-0502	SEAL RING	99
90321-0503	SPRING	99
90321-0504	O-RING	77, 99
90321-0505	ROTOR	99

Part No	Description	Page No
90321-0553	MANDREL	87
90321-0554	KEY	87
90321-0558	ROTOR	79
90326-0012	PROTECTIVE COVER	47, 49
90326-0020	PLUG,FEMALE YELLOW CR-AL	47, 49
90328-0003	SILENCER	73, 75
90328-0024	SILENCERS,THREADED CONNECTION G3/8"	57
90330-0025	BUSHING,INT./EXT.R-THREAD R1/4"-Rp1/8"	47, 49, 53, 55, 73
90330-0032	NIPPLE	53, 55
90330-0048	BUSHING,INT./EXT.R-THREAD R1/2"-Rp3/8"	47, 49
90333-0004	GRAPH PAPER 12 HRS	79
90347-0014	DAMPER	89, 91
90347-0079	DAMPER	27
90360-0020	STEAM TRAP	47, 49
924062-0000	SPACER	45
924063-0000	PISTON	45
924064-0000	WASHER	45
924065-0000	WASHER	45
924632-0000	CLEANING CUP	59, 61
924634-0000	CLEANING CUP	59, 61
924635-0000	CLEANING CUP	59, 61
924636-0000	COVER	59, 61
924638-0000	COVER	59, 61
924639-0000	COVER	59, 61
924640-0000	NUT	59, 61
924641-0000	SCREW	59, 61
924679-0000	FLANGE	65, 67
924682-0000	FILLING PIPE	65, 67
924683-0000	HOLDER	65, 67
924716-0000	U-TUBE	11, 13
924740-0000	FRAME	27
924748-0000	PLATFORM	27
924749-0000	PLATFORM	27
924774-0000	PIPE	47, 49
924792-0000	CLEANING PIPE	59, 61
924806-0000	CLEANING PIPE	59, 61
924842-0000	CLEANING PIPE	59, 61
924845-0000	BRACKET	59, 61
924847-0000	CLEANING PIPE	59, 61
924895-0000	SEAL HOLDER	45
924897-0000	SCREW	45
925090-0000	PANEL	29
925125-0000	COVER	79
925126-0000	GASKET	79
925330-0000	NIPPLE	23, 25
925331-0000	NIPPLE	23, 25
925401-0300	PUMP GROUP	11, 13
925402-0100	PLATFORM	11, 13
925403-0100	FRAME	11, 13
925404-0100	VALVE GROUP B-C	11, 13
925405-0100	EXTERNAL VALVE GROUP	11, 13
925406-0100	STEAM CIRCUIT	11, 13
925407-0100	DISCHARGE UNIT	11, 13
925408-0100	PNEUMATIC CIRCUIT	11, 13
925409-0100	VALVE PANEL	11, 13
925410-0100	CLEANING CIRCUIT	11, 13
925411-0100	AIR SUPPLY	11, 13
925414-0200	LEVEL CONTROL DEVICE	11, 13
925415-0100	EXT. PRODUCT VALVE SUPPLY	11, 13
925416-0100	PRODUCT VALVE B-C SUPPLY	11, 13
925417-0100	START-UP KIT	11, 13
925418-0100	ASSEMBLY TOOL	11, 13
925419-0100	BED	11, 13
925420-0100	ELECTRIC CONDUIT	11, 13
925421-0100	REGULAR ACCESSORIES	11, 13
925421-0200	REGULAR ACCESSORIES	11, 13
925422-0200	TOUCH GUARD	11, 13
925424-0100	PUMP	15, 17, 19, 21
925425-0100	PUMP	15, 17, 19, 21
925426-0000	VALVE SEAT	41
925427-0000	VALVE SEAT	41
925428-0000	PIPE	47, 49
925429-0000	PIPE	47, 49
925430-0000	PIPE	47, 49
925431-0000	PIPE	47, 49
925432-0000	STEAM PIPE	47, 49
925433-0000	STEAM PIPE	47, 49
925434-0000	STEAM PIPE	47, 49
925435-0000	STEAM PIPE	47, 49
925436-0000	STEAM PIPE	47, 49
925437-0000	STEAM PIPE	47, 49
925438-0000	STEAM PIPE	47, 49
925439-0000	STEAM PIPE	47, 49
925440-0000	STEAM PIPE	47, 49
925441-0000	STEAM PIPE	47, 49
925442-0000	STEAM PIPE	47, 49

Part No	Description	Page No
925443-0000	STEAM PIPE	47, 49
925444-0000	STEAM PIPE	47, 49
925445-0000	STEAM PIPE	47, 49
925446-0000	STEAM PIPE	47, 49
925449-0000	STEAM PIPE	47, 49
925450-0000	STEAM PIPE	47, 49
925451-0000	STEAM PIPE	47, 49
925452-0000	FRAME	29
925453-0000	STEAM PIPE	47, 49
925454-0000	STEAM PIPE	47, 49
925455-0000	STEAM PIPE	47, 49
925456-0000	STEAM PIPE	47, 49
925457-0000	TOUCH GUARD	57
925458-0000	CABLE DUCT	57
925459-0000	SPACER	57
925460-0000	COVER	57
925461-0000	SUPPORT	57
925462-0000	CLEANING PIPE	59, 61
925463-0000	CLEANING PIPE	59, 61
925464-0000	CLEANING PIPE	59, 61
925465-0000	HOLDER	59, 61
925466-0000	CLEANING PIPE	59, 61
925467-0000	FLANGE	59, 61
925468-0000	FLANGE	59, 61
925469-0000	GASKET	59, 61
925470-0000	TUBE	59, 61
925471-0000	SEAL HOLDER	39
925472-0000	SEAL HOLDER	39
925620-0000	FLANGE	65, 67
925621-0000	FLANGE	87
925622-0000	FLANGE	87
925623-0000	FLANGE	87
925624-0000	FLANGE	87
925625-0000	FLANGE	87
925626-0000	FLANGE	65, 67
925627-0000	FLANGE	87
925631-0000	SUPPORT	15, 17, 19, 21
925632-0000	SUPPORT	15, 17, 19, 21
925633-0000	SUPPORT	15, 17, 19, 21
925634-0000	HOLDER	15, 17, 19, 21
925635-0000	HOLDER	15, 17, 19, 21
925636-0000	SPLASH GUARD	15, 17, 19, 21
925637-0000	PRODUCT PIPE	15, 17, 19, 21
925638-0000	PRODUCT PIPE	15, 17, 19, 21
925639-0000	PRODUCT PIPE	15, 17, 19, 21
925640-0000	PRODUCT PIPE	15, 17, 19, 21
925641-0000	COVER	15, 17, 19, 21
925642-0000	COVER	15, 17, 19, 21
925643-0000	JOINT	15, 17, 19, 21
925644-0000	JOINT	15, 17, 19, 21
925645-0000	HOSE	23
925646-0000	HOSE	25
925647-0000	NUT	15, 17, 19, 21
925648-0000	NUT	15, 17, 19, 21
925650-0000	AIR PIPE	53, 55
925651-0000	AIR PIPE	53, 55
925652-0000	AIR PIPE	53, 55
925653-0000	AIR PIPE	53, 55
925670-0100	PULLER	87
925675-0000	VALVE PANEL	29, 87
925676-0000	AIR/STEAM DIAGRAM	29, 87
925754-0000	AIR PIPE	53, 55
925755-0000	AIR PIPE	53, 55
925756-0000	AIR PIPE	53, 55
925757-0000	AIR PIPE	53, 55
925758-0000	AIR PIPE	53, 55
925759-0000	AIR PIPE	53, 55
925760-0000	AIR PIPE	53, 55
925761-0000	CONNECTION CLAMP	53, 55
925762-0000	AIR PIPE	63
925765-0000	BED	81
925766-0000	CABLE CONDUIT	29
925767-0000	CABLE CONDUIT	29
925785-0000	PROTECTION	83, 85
925877-0000	SUPPORT	69
925950-0000	CABLE TRACK	83, 85
925952-0000	SLEEVE	83, 85
925999-0000	PROTECTION PIPE	69
926194-0000	SPACER	45
926283-0000	FLANGE	47, 49
926485-0000	TUBE	47, 49
926732-0000	SLEEVE	15, 17, 19, 21
926754-0000	CLAMP HOLDER	59, 61
926755-0000	TUBE	47, 49
926756-0000	PRODUCT PIPE	15, 17, 19, 21
926757-0000	PRODUCT PIPE	15, 17, 19, 21

Part No	Description	Page No
926758-0000	PRODUCT PIPE	87
926759-0000	PRODUCT PIPE	87
926760-0000	PRODUCT PIPE	73
926761-0000	TOUCH GUARD	47, 49
926762-0000	CLAMP HOLDER	47, 49
926763-0000	CLAMP HOLDER	47, 49
926764-0000	TOUCH GUARD	73
926765-0000	CLAMP HOLDER	73
926766-0000	CLAMP HOLDER	73
926767-0000	FRAME	89, 91
926768-0000	COVER	89, 91
926769-0000	SIDE PLATE	89, 91
926770-0000	DOOR	89, 91
926771-0000	TOUCH GUARD	89, 91
926772-0000	TOUCH GUARD	89, 91
926773-0000	TOUCH GUARD	89, 91
926791-0000	HINGE	89, 91
926792-0000	HOLDER	89, 91
926793-0000	WINDOW	89, 91
926794-0000	HINGE	89, 91
926796-0000	HOLDER	89, 91
926797-0000	SPACER	89, 91
926798-0000	FRAME	27
926799-0000	PLATFORM	27
926800-0000	RAILING	27
926801-0000	RAILING	27
926802-0000	SIDE PLATE	27
926820-0000	PLUG	69
926937-0100	CYLINDER C	31
926938-0100	CYLINDER A	41
927404-0000	FLANGE	87
927405-0000	FLANGE	87
927406-0000	FLANGE	87
927407-0000	FLANGE	87
927408-0000	FLANGE	87
927480-0000	PRODUCT PIPE	73
979548-0000	MACHINE PLATE	89, 91

Part No	Description	Page No

Tetra Pak