SPC
Spare Parts Catalogue

Tetra Brik Aseptic

648022-6000

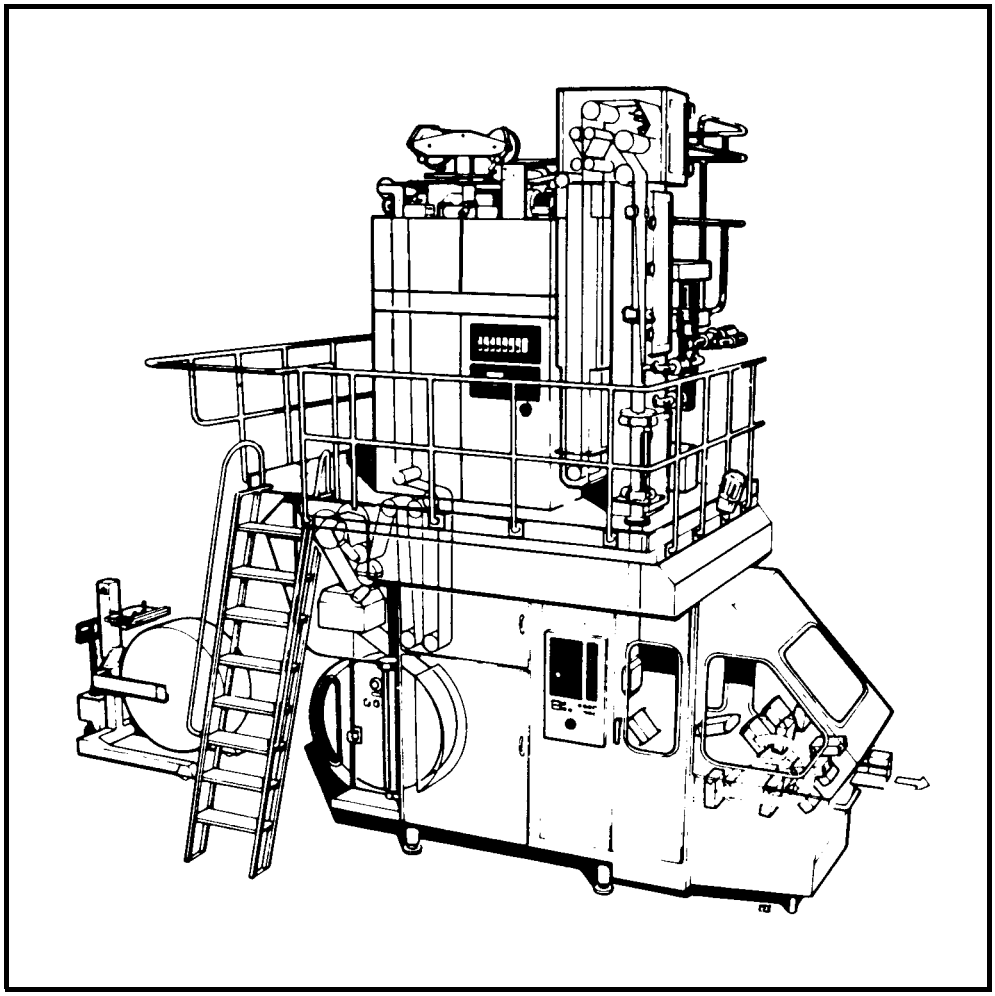

Tetra Pak

Doc No: SPC-80278-0101

For the correct machine data, check your machine specification, supplied with the machine!

This document is valid for:

Series No/ Machine No Sign.

SPC
Spare Parts Catalogue

Tetra Brik Aseptic
648022-6000

Equipment Included:

To check your actual machine data and eventual installed extra equipments, check the machine specification, supplied with the machine delivery!

Order/add necessary documents.

Table of Content:

Introduction **4**

Superstructure
B- 648011-6000 ..... **1**

Machine Body
B- 648012-6000 ..... **123**

Drive System
B- 648003-6000 ..... **277**

Jaw System
B- 648004-6000 ..... **309**

Final Folder
B- 648035-0700 ..... **399**

Final Folder
B- 648035-6000 ..... **577**

Strip Applicator
B- 648007-6000 ..... **713**

Automatic Splicing Unit
B- 648013-6000 ..... **763**

Regular Accessories
B- 648009-6000 ..... **833**

Part number index **861**

Doc No: SPC-80278-0101

Issue 9808

Tetra Pak

Tetra Brik Packaging Systems AB

General information

Manufacturer

This machine is produced by:
Tetra Brik Packaging Systems AB
Ruben Rausings gata
221 86 Lund /Sweden

Document producer

This document has been produced by:
Tetra Brik Packaging Systems AB
Technical Publications
Ruben Rausings gata
221 86 Lund /Sweden

Number of pages

This document contains totally **935 pages,** including the first **14** introduction pages.

Copyright © 1998 Tetra Brik Packaging Systems AB

All rights reserved. No parts of this document may be reproduced or copied in any forms or by any means, without written permission from Tetra Brik Packaging Systems AB.

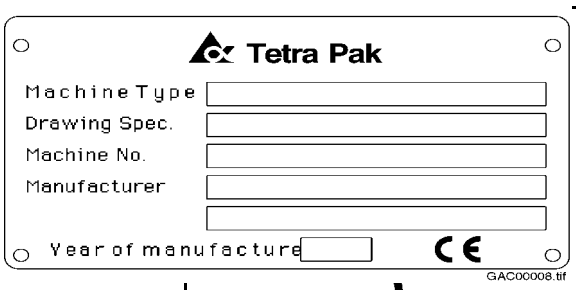

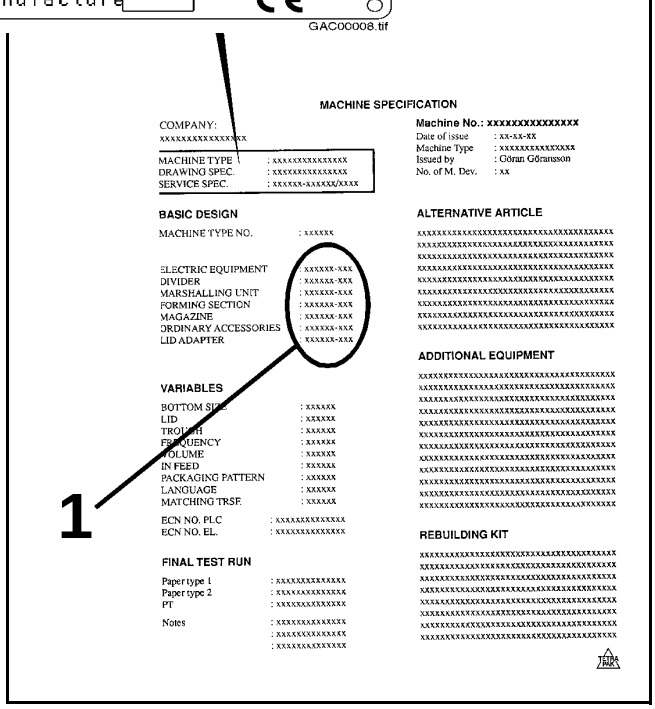

Figure 1

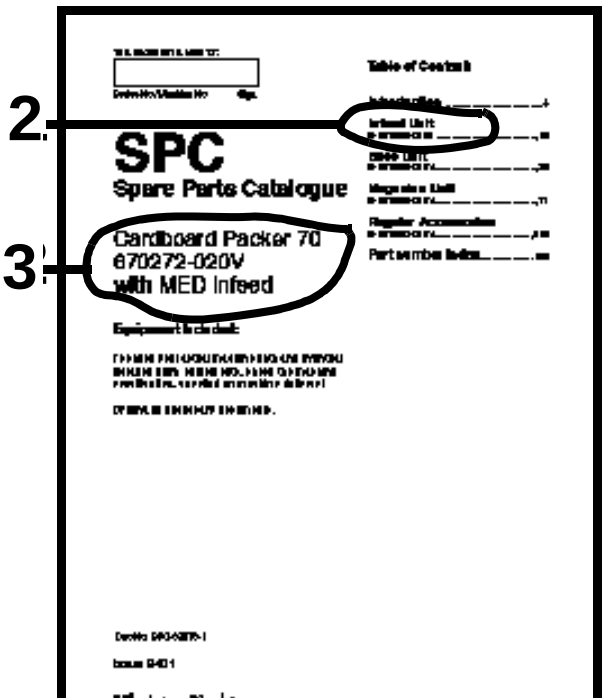

Figure 2

Figure 3



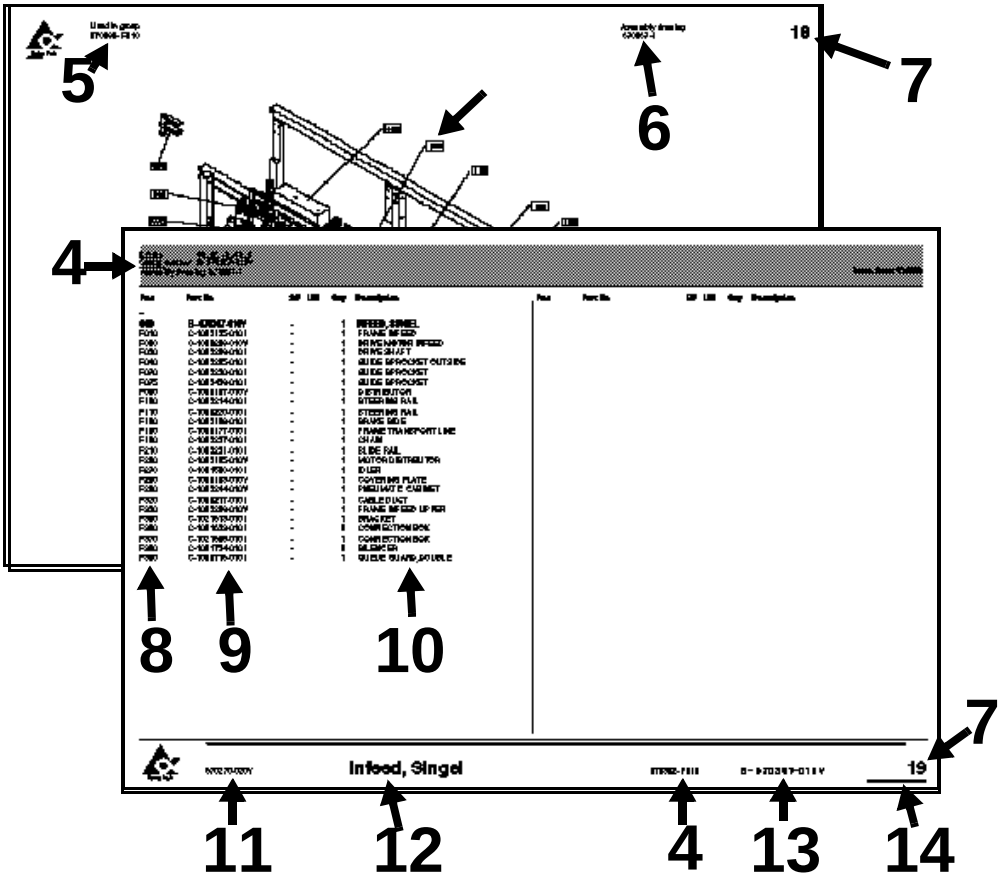

Figure 4

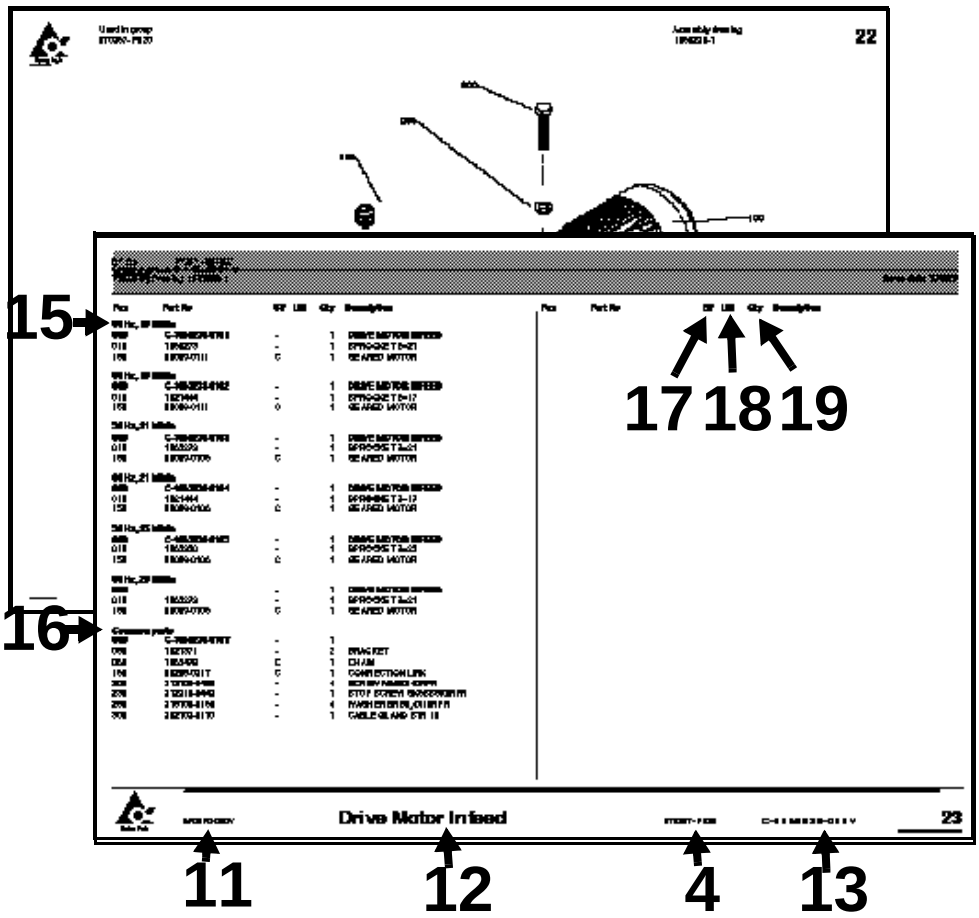

Figure 5

General information

Service

When ordering spare parts for your machine, contact the nearest Tetra Pak service station.

Machine identification

This machine plate is an example of the type of machine plate, attached to the machine frame. The plate carries data needed when contacting Tetra Pak concerning this particular machine.
The location of the different machine plates is shown on the page “Location of machine number plates”, **see page 2**

Purpose of the Spare Parts Catalogue.

The purpose of the Spare Parts Catalogue (SPC) is to provide the technicians and contact personnel with information on how to find and order spare parts for maintenance and service of the machine.
For instructions of how to replace parts and adjust machine setup, see the Maintenance Manual (MM).

Delivered documentation

The technical documentation delivered with this machine is stated in the Machine Specification.
Note! If any of these documents is missing, it must be reported in the document **Start Up Machine Quality Report.** For more information, see chapter 8 Preparation for Commissioning in the Installation Manual.
It is important that you keep these documents for the life of the equipment, and pass the documents on to any subsequent holder or user of the equipment.

Design modification

The content of this document is in accordance with the design and construction of the machine at the time it was delivered from the Tetra Pak machine production facility.

Copyright © 1999 Tetra Brik Packaging Systems AB

All rights reserved. No parts of this document may be reproduced or copied in any forms or by any means, without written permission from Tetra Brik Packaging Systems AB.

Further copies

Additional copies can be ordered from the nearest Tetra Pak service station. When ordering technical publications, always quote the document number printed on the front cover of the document concerned.

Tetra Pak Part numbering system

The third and forth digits in the subnumber, specify one unique group which can be ordered. If the forth digit is replaced by a “V”, the number combination only points to a bill-of-material document.
The first and second digits in the sub-number, specify the development step (model) of the machine or group. **(see fig. 3)**
Main number of machine /group /article, depending on level.
Prefix, giving information about level, eg.
A = Machine
B = Main section (*****)
C = Groups and subgroups
***)** Customized distribution machines are registered as B-level as well.

How to find the correct Spare Part Number

A. Check that the data on your machine sign, and /or machine specification, corresponds with the catalogue. **(see fig.1)**

1) Main groups of the machine

B. The second catalogue sheet contains a table of content for the main groups, included in the catalogue. The information regarding machine and main group status MUST correspond with your machine specification.
Locate and choose the main groups page number (1), in which you want to search for spare parts.
(see fig. 2)

2) Main group
3) Machine type

C. Search in the main group illustration, the item number, which may hold your wanted spare part. Go to the text page below and find the page number for the actual group. **(see fig. 4)**

4) Internal information, such as latest Engineering Change, bill-of-material included in the catalogue page.
5) Used-In reference to next higher level in the machine structure
6) Assembly drawing number
7) Continuous page numbering through the document
8) Pos number corresponding to illustration
9) Group or article number.
10) Group or article description. The letter “B” in front of some article numbers indicates that this article contains other parts, shown in an additional page at the end the section. Letter “A” indicatates a subgroup number with an own page directly after the actual page.
11) Machine type including development staus
12) Group description
13) Group number (bill-of-material) including development status
14) Document number

D. Continue to the found page number, and search in the illustration for your spare part. Go to the text row for the found item number, and read the part number. Take eventual variant headings in consideration; if you are unsure, read your machine specification. **(see fig. 5)**

15) Variant heading, eg volume, left /right etc.
16) Heading for common parts
17) SP = Code for articles, which are included into various spare part kits.

A = Stop function, no rep/available/bypassed	I = 1000 operating hours
B = Stop function, rep/available/bypassed	J = 2000 operating hours
C = Don’t stop function, can be bypassed	K = 3000 operating hours
D = Seldom break, long time production	L = 4000 operating hours
E = 100 operating hours	M = 5000 operating hours
F = 250 operating hours	N = 6000 operating hours
G = 500 operating hours	O = 7000 operating hours
H = 750 operating hours	P = 8000 operating hours

18) UN = Short code for measure units, eg mm, kg etc.
19) Qty = Number of items needed in the complete assembly.

SPC

Spare Parts Catalogue

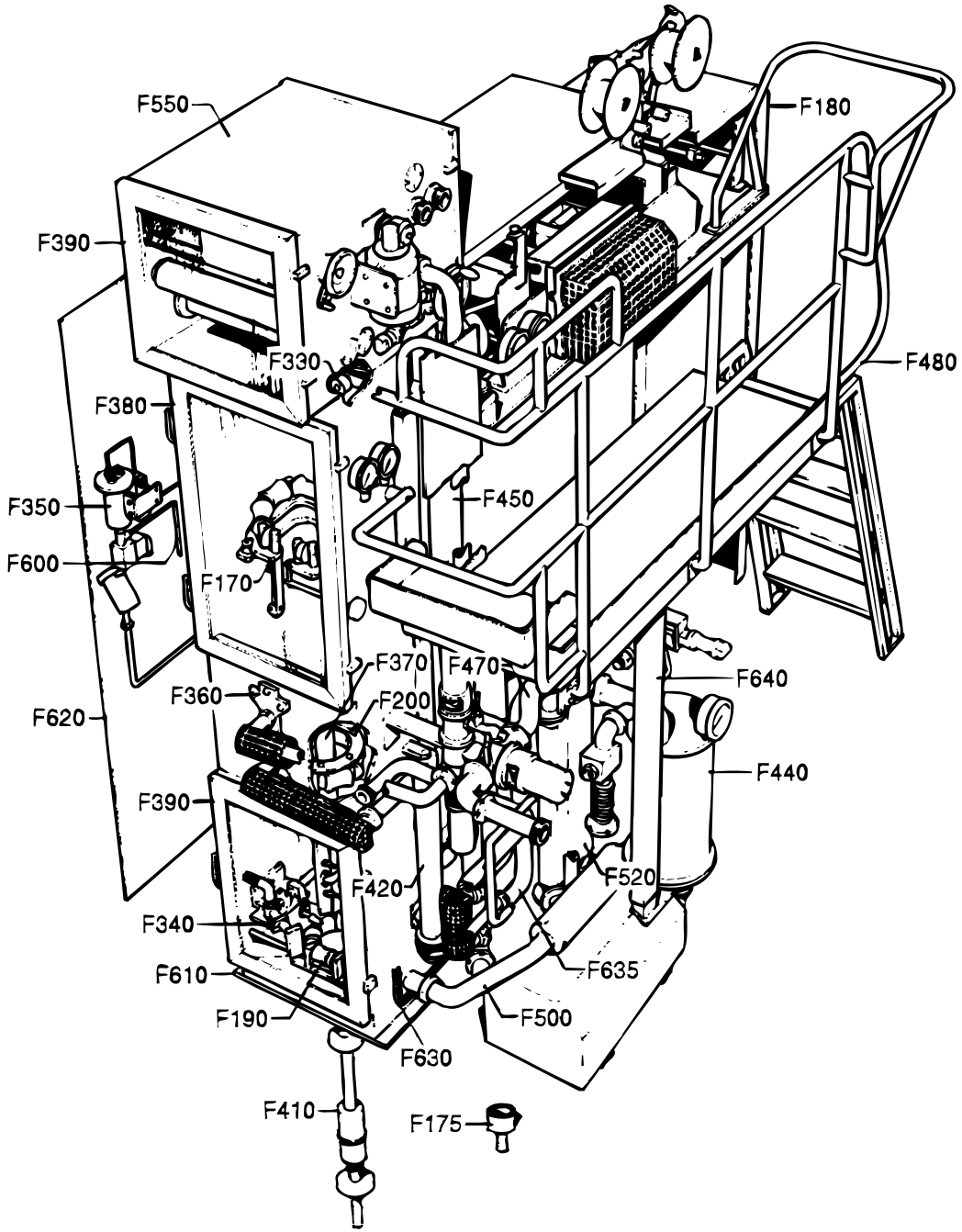

S-648011-14-15-16
ECN 19041

Pos	Part No	SP	UN	Qty	Description	Page No
-						
F170	A 263805-0200	-		1	FORM CLAMP	5
F175	A 263948-0300	-		1	CUP	9
F180	A 265809-0300	-		1	PAPER GUARD	11
F190	A 269113-0600	-		1	LOWER FORMING RING	13
F200	A 269115-0500	-		1	UPPER FORMING RING	19
F330	A 269136-0200	-		1	EDGE ROLLER	21
F340	A 269158-0400	-		1	HOT AIR ELEMENT	23
F350	A 560930-0100	-		1	CONTAINER	25
F360	A 269715-0100	-		1	PIPE HOLDER	27
F370	A 269720-0300	-		1	FILLER TUBE	29
F380	A 596728-0100	-		1	DOOR	31
F390	A 596725-0100	-		2	DOOR	33
F400	A 596727-0100	-		1	DOOR	35
F410	A 269828-0500	K		1	FILLER TUBE	37
F420	A 269915-0700	-		1	HOT AIR ELEMENT	41
F440	A 575474-0100	-		1	COMPRESSOR	45
F450	A 269941-0600	-		1	BATH	53
F470	A 561268-0200	-		1	CONNECTION ASSEMBLY	59
F480	A 596731-0100	-		1	PLATFORM	67
F500	A 269988-0600	-		1	VENTILATION SYSTEM	71
F520	A 273400-0700	-		1	STERILE AIR SYSTEM	81
F550	A 597841-0100	-		1	DRIER	89
F600	A 276480-0500	-		1	PIPE WORK	97
F610	A 599182-0100	-		1	PILLAR	99
F620	A 279651-0600	-		1	TOUCH GUARD	105
F630	A 282805-0800	-		1	PIPE WORK-PNEUMATIC	107
F635	A 451131-0100	-		1	CLEANING PIPE	111
F640	A 451342-0500	-		1	CABLE DUCT	113
F650	A 284163-0500	-		1	START-UP KIT	117

FORM CLAMP

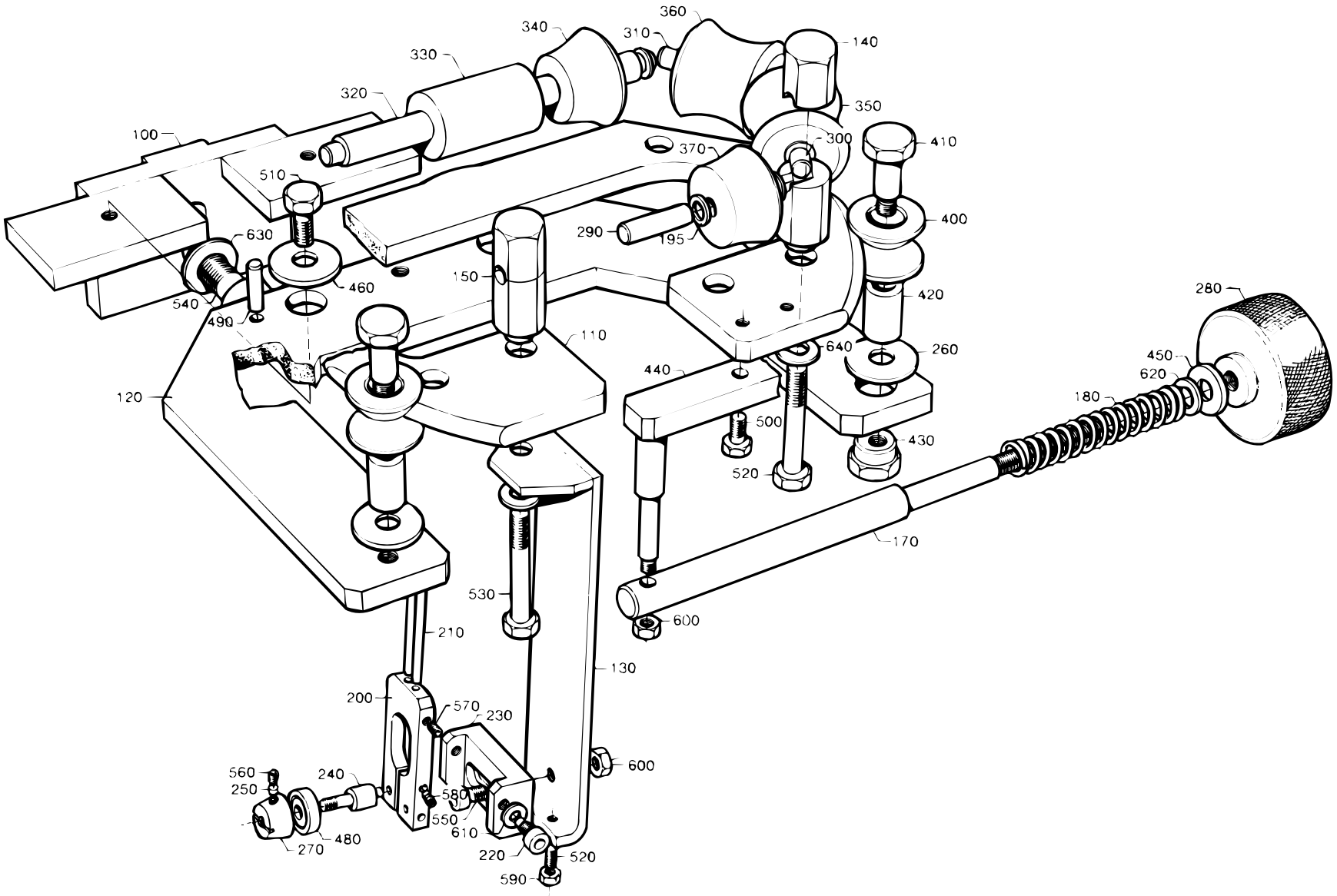

S-263805-2
ECN 14605

Pos	Part No	SP	UN	Qty	Description	Page No
TBA 1000S						
110	569096-0000	-		1	BOW CLAMP	
290	263655-0002	K		2	SHAFT	
300	569091-0000	K		2	SHAFT	
310	263655-0012	K		2	SHAFT	
320	263655-0024	K		1	SHAFT	
340	569095-0000	F		1	ROLL	
350	569093-0000	F		2	ROLL	
360	569094-0000	F		2	ROLL	
370	569092-0000	F		2	ROLL	
380	90240-0172	-		10	FLANGE BUSHING	
390	752156-0000	-		4	FLANGE BUSHING	
TBA 0500B or TBA 0750B or TBA 1000B or TBA 1055B or TBA 1500S						
110	436404-0000	-		1	BOW CLAMP	
290	263655-0003	K		2	SHAFT	
300	263655-0004	K		2	SHAFT	
310	263655-0008	K		2	SHAFT	
320	263656-0002	K		1	SHAFT	
330	294474-0000	F		2	ROLL	
340	294475-0000	F		2	ROLL	
350	294476-0000	F		2	ROLL	
360	294477-0000	F		2	ROLL	
370	294480-0000	F		2	ROLL	
TBA 0750S or TPA 1000S						
110	544286-0000	-		1	BOW CLAMP	
290	263655-0021	K		2	SHAFT	
300	263655-0023	K		2	SHAFT	
310	263655-0012	K		2	SHAFT	
320	263655-0024	K		1	SHAFT	
340	752583-0000	F		1	ROLL	
350	752585-0000	F		2	ROLL	
360	752584-0000	F		2	ROLL	
370	752586-0000	F		2	ROLL	
380	90240-0172	-		10	FLANGE BUSHING	
390	752156-0000	-		4	FLANGE BUSHING	
TBA 1000SQ						
110	569096-0000	-		1	BOW CLAMP	
290	263655-0002	K		2	SHAFT	
300	569091-0000	K		2	SHAFT	
310	263655-0012	K		2	SHAFT	
320	263655-0024	K		1	SHAFT	
340	579306-0000	F		1	ROLL	
350	579307-0000	F		2	ROLL	
360	579308-0000	F		2	ROLL	
370	579309-0000	F		2	ROLL	
380	90240-0172	-		10	FLANGE BUSHING	
390	752156-0000	-		4	FLANGE BUSHING	

FORM CLAMP

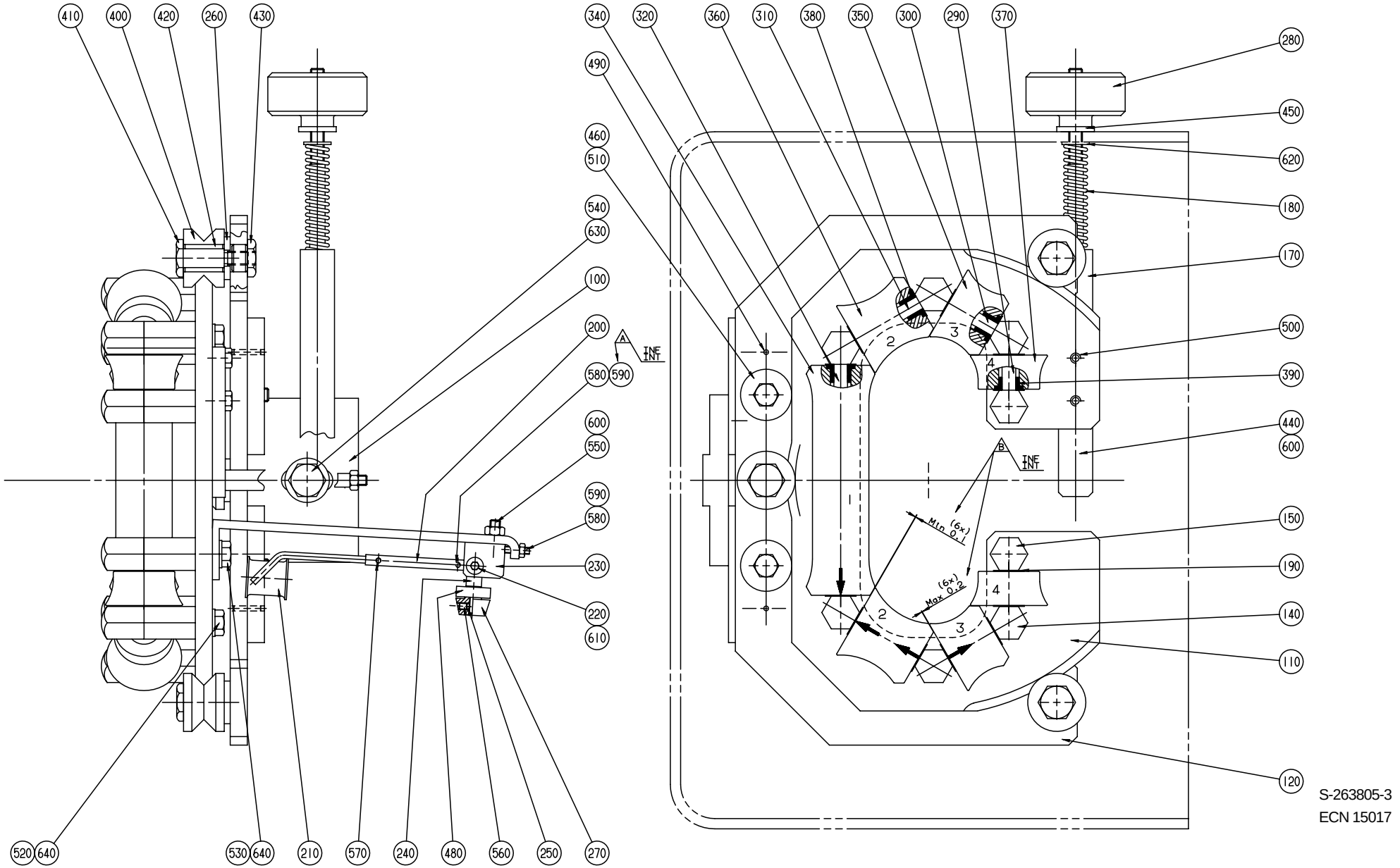
410
400
420
260
430
340
320
360
310
380
350
300
290
370
280
490
450
460
510
620
540
630
180
100
170
200
500
A
INF
580
590
390
600
440
550
600
B
INF
590
580
150
Mln (6x) 0.1
230
190
Max (6x) 0.2
220
140
610
110
520
640
530
640
210
570
240
480
560
250
270
120
S-263805-3
ECN 15017

Pos	Part No	SP	UN	Qty	Description	Page No
Common parts						
100	436395-0000	-		1	CANTILEVER	
120	436405-0000	-		1	FORK	
130	33648-0000	-		1	HOLDER	
140	257987-0000	-		6	AXLE SUPPORT	
150	257988-0000	-		2	AXLE SUPPORT	
170	436378-0000	D		1	SHAFT	
180	1881-0001	F		1	COMPRESSION SPRING	
190	2033-0008	F		14	WASHER	
200	23582-0000	-		1	HOLDER	
210	23583-0000	-		1	GUIDE FINGER	
220	23584-0000	-		2	SCREW	
230	24351-0000	-		1	BOW CLAMP	
240	24355-0000	-		2	DOWEL	
250	24356-0000	-		4	PIECE	
260	28037-0000	-		3	WASHER	
270	111543-0000	F		2	GUIDE CONE	
280	257090-0000	-		1	SHIFTER HANDLE	
400	436302-0000	D		3	ROLL	
410	436355-0000	K		3	REAMED BOLT	
420	436356-0000	K		3	BUSHING	
430	436357-0000	D		1	NUT	
440	436377-0000	D		1	JOINT	
450	436403-0000	F		1	WASHER	
460	497720-0000	-		2	WASHER	
480	90214-0138	K		2	BALL BEARING	
490	311103-0236	-		2	CYLINDRICACP M6 3X16 RFR	
500	312105-0368	-		2	SCREW M6S ISO 4017 M6X16 A280	
510	312105-0451	-		2	SCREW M6S ISO 4017 8X20 A280	
520	312105-0462	-		7	SCREW M6S ISO 4014 M8X55 A280	
530	312105-0463	-		1	SCREW M6S ISO 4014 M8X60 A280	
540	312105-0540	-		1	SCREW M6S ISO 4017 M12X40 A280	
550	312115-0366	-		1	SCREW MC6S ISO 4762 M6X12 A280	
560	312318-0283	-		4	SET SCREW CUP POINT ISO 4029 M4X4 RFR	
570	312318-0285	-		2	SET SCREW CUP POINT ISO 4029 M4X6 RFR	
580	312318-0291	-		3	SET SCREW CUP POINT ISO 4029 M4X12 RFR	
590	312605-0312	-		3	NUT M6M4RFR	
600	312605-0316	-		2	NUT M6M6RFR	
610	315105-0146	-		2	WASHER BRB5,3X10RFR	
620	315105-0165	-		1	WASHER BRB8,4X16RFR	
630	315105-0178	-		1	WASHER BRB13X24RFR	
640	315115-0165	-		8	WASHER TBRB8,4X16RFR	

Pos	Part No	SP	UN	Qty	Description	Page No

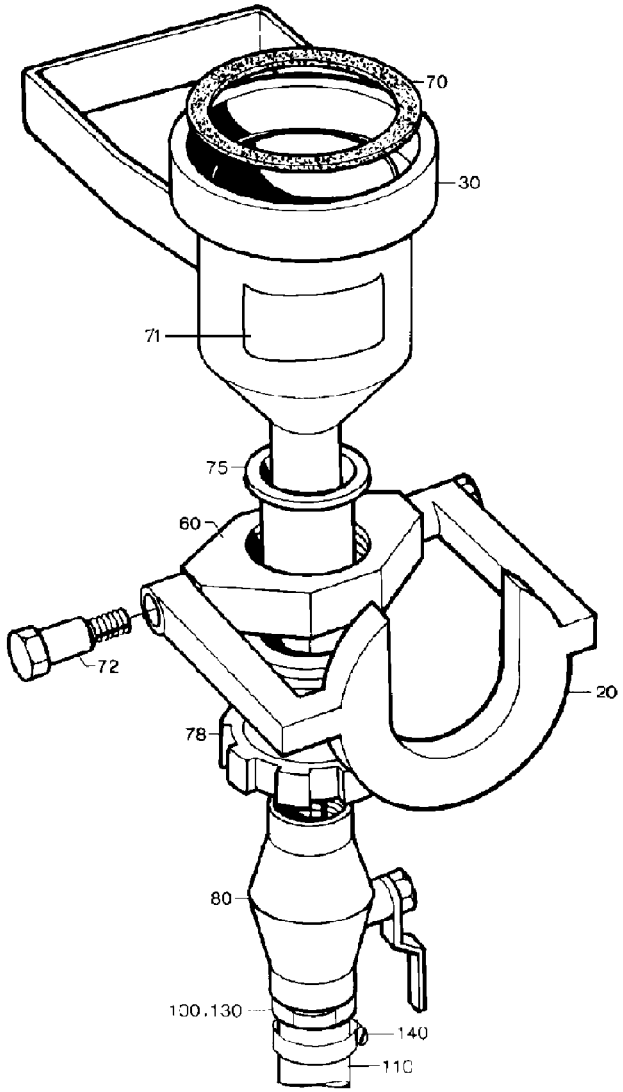

26394803.TIF
263948-3
AM

Pos	Part No	SP	UN	Qty	Description	Page No
TBA 1000S or TBA 1000SQ						
020	579951-0000	-		1	BOW CLAMP	
030	569105-0000	-		1	CUP	
060	458785-0000	-		1	BRACKET	
070	569106-0000	-		1	GASKET	
TBA 0500B or TBA 0568B or TBA 0750B or TBA 1000B or TBA 1055B or TBA 1500S						
020	458783-0000	-		1	BOW CLAMP	
030	458784-0000	-		1	CUP	
060	458785-0000	-		1	BRACKET	
070	458786-0000	-		1	GASKET	
TBA 0750S or TPA 1000S						
020	449853-0000	-		1	BOW CLAMP	
030	544299-0000	-		1	CUP	
060	449991-0000	-		1	BRACKET	
070	544300-0000	-		1	GASKET	
TBA 0300B or TBA 0375S						
020	449853-0000	-		1	BOW CLAMP	
030	449855-0000	-		1	CUP	
060	449991-0000	-		1	BRACKET	
070	449993-0000	-		1	GASKET	
TBA 0355B or TBA 0400B or TBA 0500S						
020	449853-0000	-		1	BOW CLAMP	
030	449854-0000	-		1	CUP	
060	449991-0000	-		1	BRACKET	
070	449992-0000	-		1	GASKET	
Common parts						
071	359705-0003	-		1	WARNING SIGN"CORROSION"	
072	449190-0000	-		2	SHAFT	
075	458787-0000	-		1	BUSHING	
078	458788-0000	-		1	NUT	
080	90187-0082	-		1	BALL VALVE	
100	90055-0071	-		1	HOSE NIPPLE	
110	90148-0021	-	MM	2500	HOSE	
130	315233-0113	-		1	SEAL RING R1/2"	
140	342991-0104	-		1	HOSE CLIP,WORM DRIVE TYPE (23)-27	

Pos	Part No	SP	UN	Qty	Description	Page No

PAPER GUARD

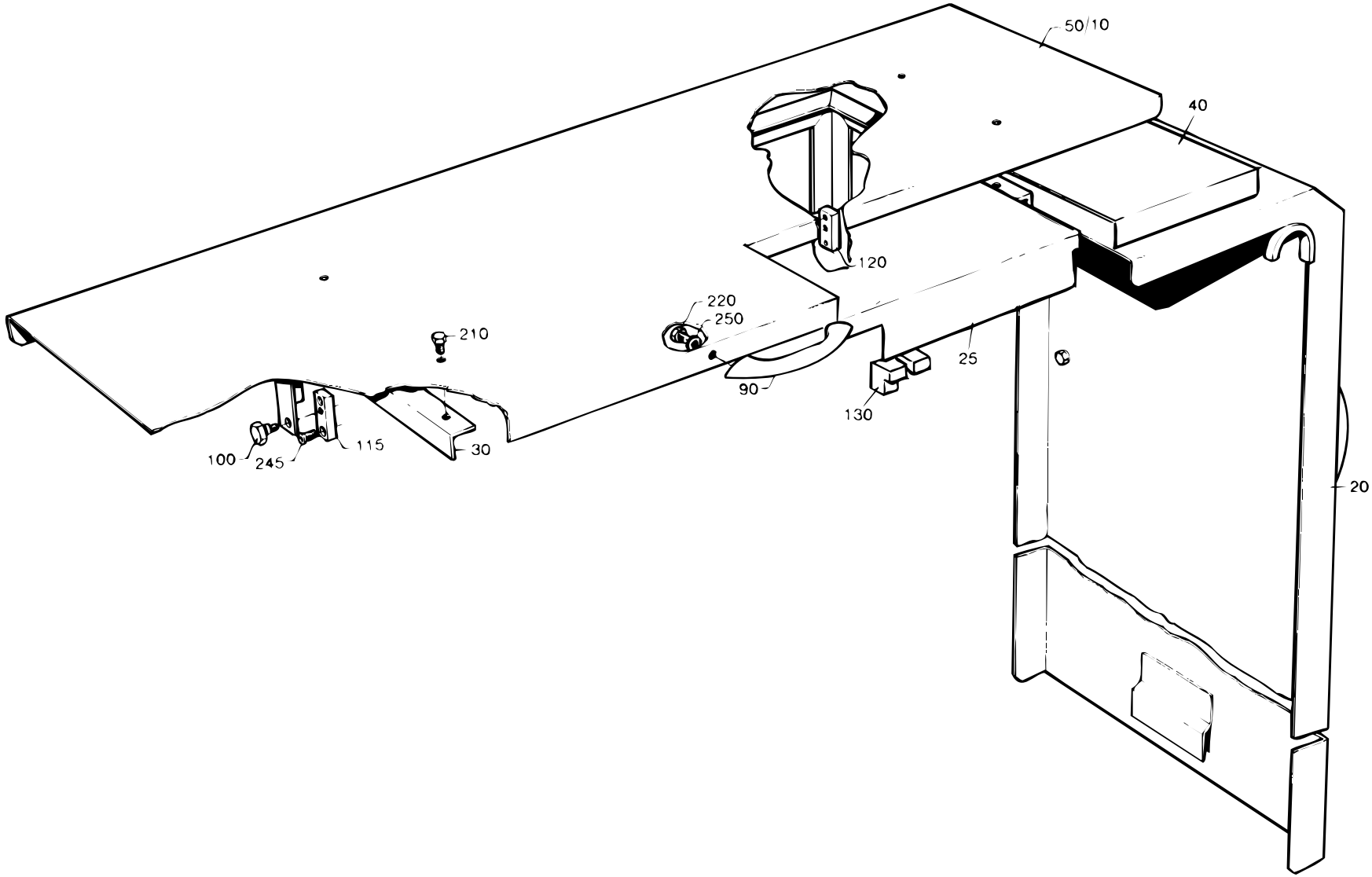

S-265809-3
ECN 12311

Pos	Part No	SP	UN	Qty	Description	Page No
-						
010	542847-0000	-		1	PAPER GUARD	
020	266797-0002	-		1	PAPER GUARD	
025	542848-0000	-		1	HATCH	
030	542849-0000	-		1	CANTILEVER	
040	542850-0000	-		1	COVERING PLATE	
090	7309-0000	-		4	HANDLE	
100	252972-0000	-		2	SHOULDER SCREW	
115	283271-0000	-		1	BRACKET	
120	449000-0000	-		1	BRACKET	
130	542851-0000	-		2	HINGE	
210	312105-0362	-		4	SCREW M6S ISO 4017 M6X8 A280	
220	312105-0366	-		10	SCREW M6S ISO 4017 M6X12 A280	
245	312155-0329	-		4	SCREW MF6S DIN 7991 M5X16 A280	
250	315105-0153	-		12	WASHER BRB6,4X12RFR	

Pos	Part No	SP	UN	Qty	Description	Page No

LOWER FORMING RING

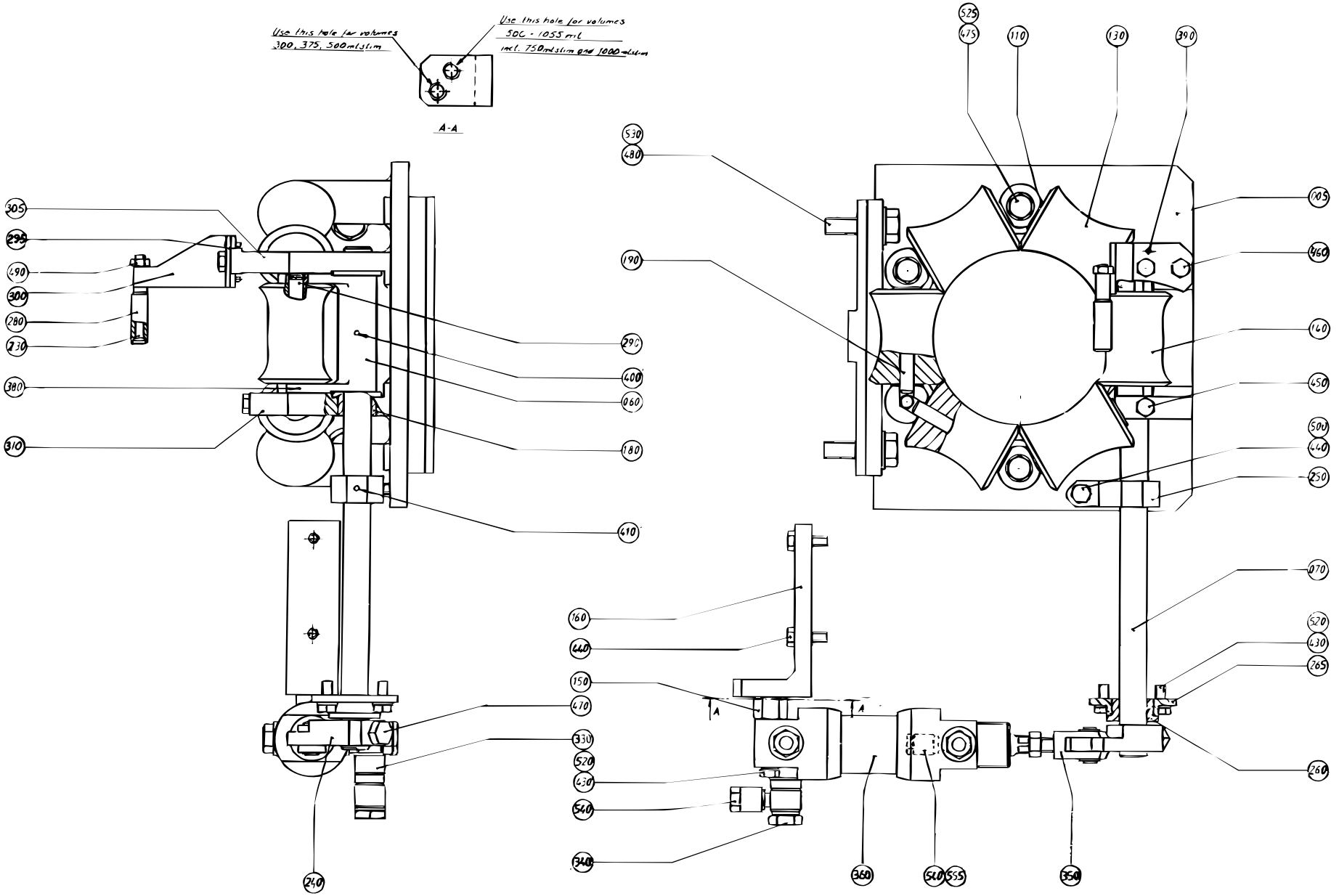

S-269113-3
ECN 18018

Pos	Part No	SP	UN	Qty	Description	Page No
0355B or 0400B or 0500S						
005	450459-0002	-		1	FORMING RING	
060	434499-0000	-		1	FORK	
070	434500-0000	K		1	SHAFT	
130	449840-0001	F		5	ROLLER, (STD.SIZE)	
140	533442-0000	F		1	COUNTER ROLLER	
190	434504-0000	F		5	SHAFT	
265	486803-0000	K		1	BEARING HOUSING	
290	434507-0000	F		1	SHAFT	
300	534177-0000	-		1	HOLDER	
0375S						
005	450459-0002	-		1	FORMING RING	
060	434499-0000	-		1	FORK	
070	434500-0000	K		1	SHAFT	
130	449589-0001	F		5	ROLLER, (STD.SIZE)	
140	529181-0000	F		1	COUNTER ROLLER	
190	434504-0000	F		5	SHAFT	
265	486803-0000	K		1	BEARING HOUSING	
290	434507-0000	F		1	SHAFT	
300	529184-0000	-		1	HOLDER	
0500B or 0750B or 1000B or 1055B or 1500S						
005	450459-0001	-		1	FORMING RING	
060	269146-0000	-		1	FORK	
070	269147-0000	K		1	SHAFT	
130	36953-0001	F		5	ROLL	
140	38630-0001	F		1	COUNTER ROLLER	
190	263655-0009	F		5	SHAFT	
265	486803-0000	K		1	BEARING HOUSING	
290	284973-0000	F		1	SHAFT	
300	569099-0000	-		1	HOLDER	
0750S						
005	544333-0000	-		1	FORMING RING	
060	544335-0000	-		1	FORK	
070	269147-0000	K		1	SHAFT	
130	752578-0001	F		5	ROLLER, (STD.SIZE)	
140	556139-0000	F		1	ROLL	
190	263655-0022	F		5	SHAFT	
200	90240-0172	-		12	FLANGE BUSHING	
265	544306-0000	K		1	BEARING HOUSING	
290	544336-0000	F		1	SHAFT	
300	534177-0000	-		1	HOLDER	
1000S						
005	567744-0000	-		1	FORMING RING	
060	567748-0000	-		1	FORK	
070	269147-0000	K		1	SHAFT	
130	567746-0001	F		5	ROLLER, (STD.SIZE)	
140	567747-0000	F		1	ROLL	
190	569100-0000	-		5	SHAFT	
200	90240-0172	-		12	FLANGE BUSHING	
265	544306-0000	K		1	BEARING HOUSING	
290	569085-0000	-		1	SHAFT	
300	569099-0000	-		1	HOLDER	
1000SQ						
005	567744-0000	-		1	FORMING RING	
060	567748-0000	-		1	FORK	
070	269147-0000	K		1	SHAFT	
130	579310-0001	F		5	ROLLER, (STD.SIZE)	
140	579311-0000	F		1	COUNTER ROLLER	
190	569100-0000	-		5	SHAFT	
200	90240-0172	-		12	FLANGE BUSHING	
265	544306-0000	K		1	BEARING HOUSING	
290	569085-0000	-		1	SHAFT	
300	569099-0000	-		1	HOLDER	

LOWER FORMING RING

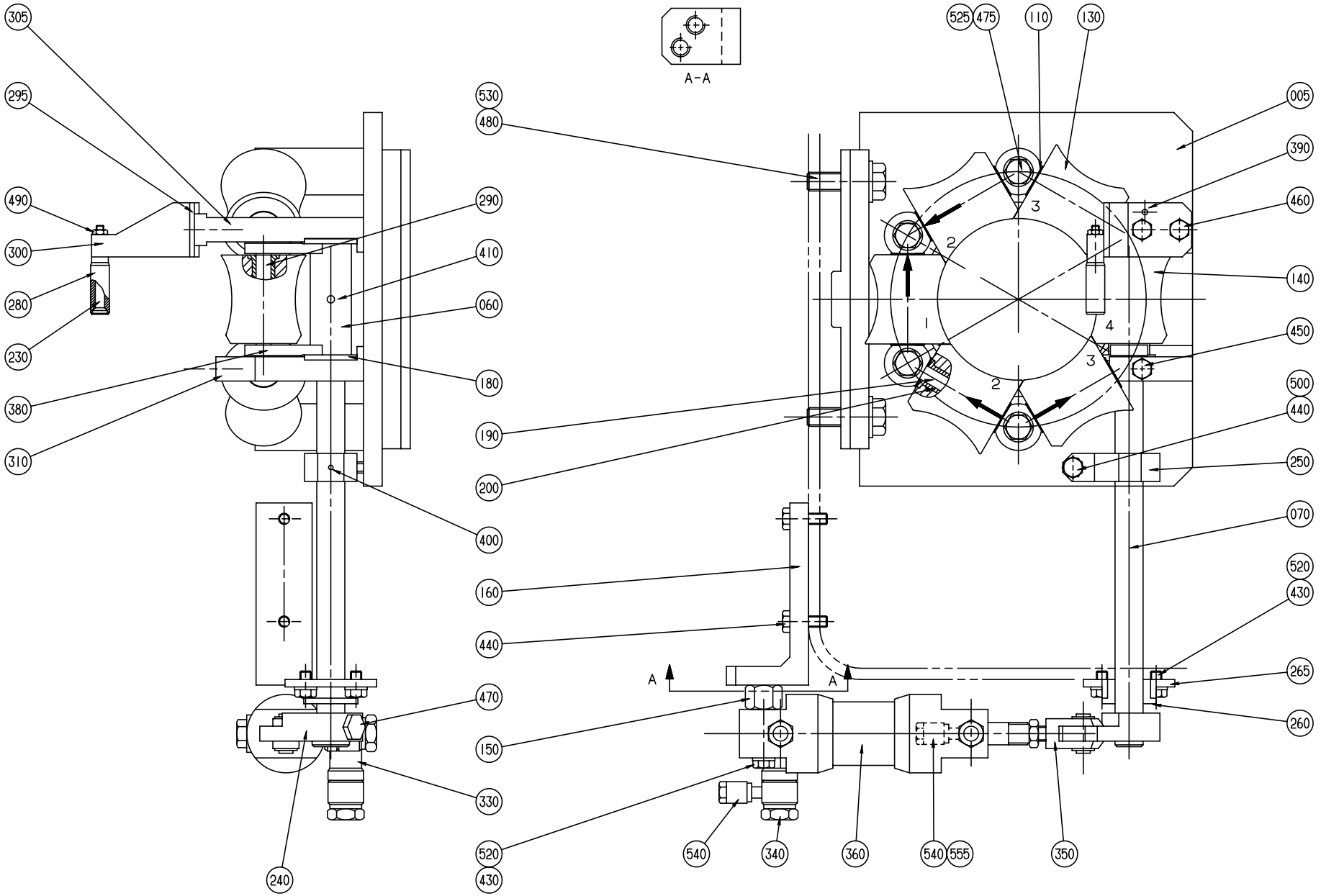

S-269113-4
ECN 18018

Pos	Part No	SP	UN	Qty	Description	Page No
Common parts						
110	2033-0008	F		10	WASHER	
150	263257-0000	D		1	CYLINDER BRACKET	
160	571945-0000	-		1	FASTENING BRACKET	
180	263262-0000	K		2	BUSHING	
230	469463-0000	-		1	SHAFT	
240	269152-0000	D		1	ROCKER ARM	
250	269153-0000	-		1	STOP	
260	269154-0000	K		1	BUSHING	
280	469464-0000	F		1	ROLL	
295	434101-0000	-		1	WASHER	
305	544445-0000	-		1	SPACER	
310	436342-0000	-		1	SPACER	
330	90224-0284	K		1	SWIVEL	
340	90235-0275	K		1	THROTTLE CHECK VALVES,G1/4"	
350	90239-0127	K		1	BRACKET	
360	B 90239-0166	F		1	CYLINDER	
380	311103-0212	-		1	CYLINDRICACP M6 2,5X20RFR	
390	311103-0233	-		2	CYLINDRICACP M6 3X10 RFR	
400	311103-0272	-		1	CYLINDRICACP M6 4X20 RFR	
410	311103-0276	-		1	CYLINDRICACP M6 4X30 RFR	
430	312105-0364	-		5	SCREW M6S6X10RFR	
440	312105-0370	-		3	SCREW M6S ISO 4017 M6X20 A280	
450	312105-0376	-		1	SCREW M6S ISO 4017 M6X35 A280	
460	312105-0380	-		2	SCREW M6S ISO 4014 M6X50 A280	
470	312105-0449	-		1	SCREW M6S ISO 4017 M8X16 A280	
475	312105-0451	-		4	SCREW M6S ISO 4017 8X20 A280	
480	312105-0497	-		2	SCREW M6S ISO 4017 M10X35 A280	
490	312605-0312	-		1	NUT M6M4RFR	
500	312605-0316	-		1	NUT M6M6RFR	
520	315105-0153	-		5	WASHER BRB6,4X12RFR	
525	315105-0165	-		4	WASHER BRB8,4X16RFR	
530	315105-0173	-		2	WASHER BRB10,5X22RFR	
540	342797-0122	K		2	BANJO CONNECTION,RINGPIECE 6-1/4"	
555	342980-0304	K		1	BANJO-HOLLOW BOLT COUPL,EXT.THR.01-G1/4"	

Pos	Part No	SP	UN	Qty	Description	Page No

LOWER FORMING RING

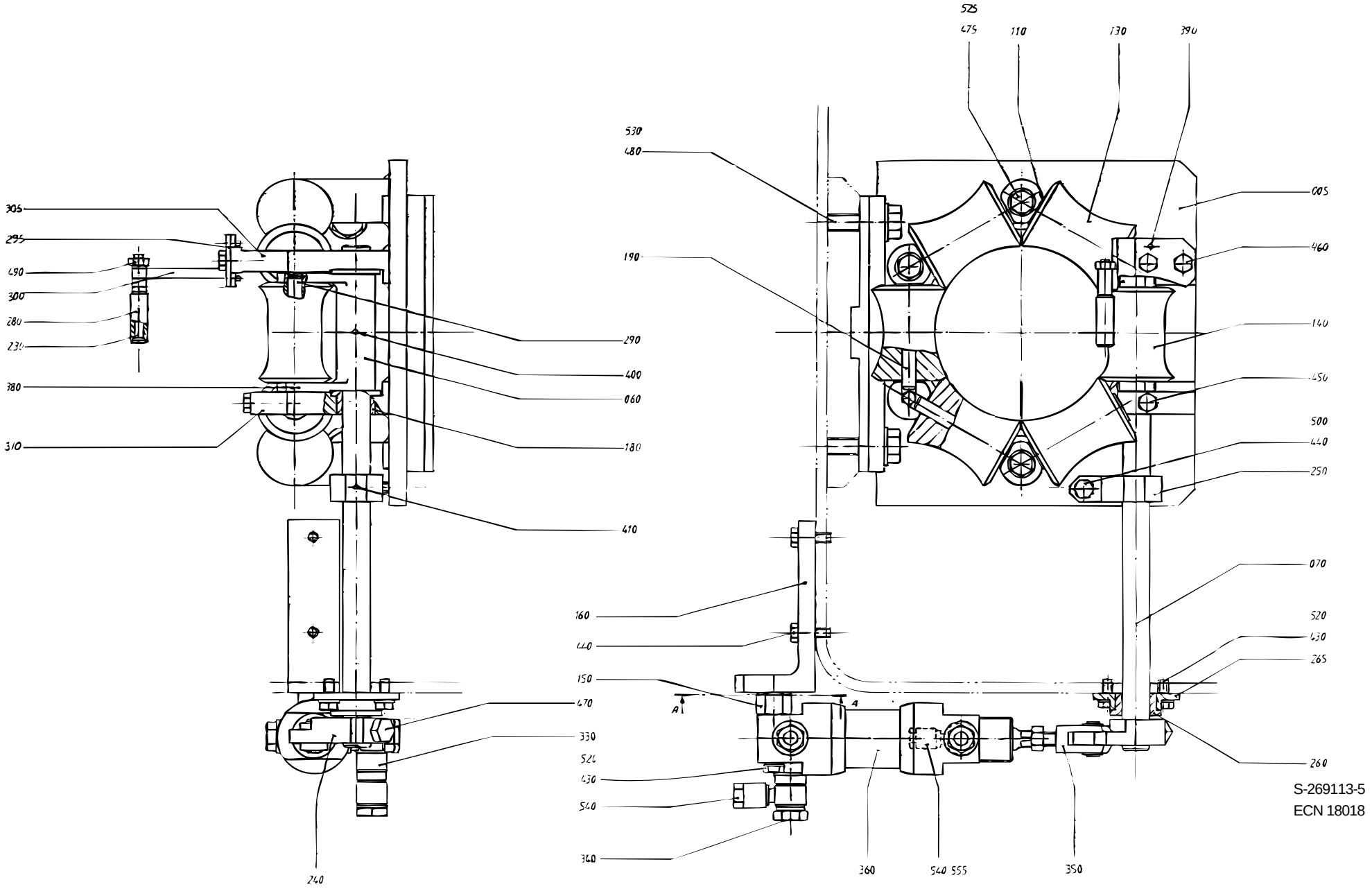

S-269113-5
ECN 18018

Pos	Part No	SP	UN	Qty	Description	Page No
Common parts						
110	2033-0008	F		10	WASHER	
150	263257-0000	D		1	CYLINDER BRACKET	
160	571945-0000	-		1	FASTENING BRACKET	
180	263262-0000	K		2	BUSHING	
230	469463-0000	-		1	SHAFT	
240	269152-0000	D		1	ROCKER ARM	
250	269153-0000	-		1	STOP	
260	269154-0000	K		1	BUSHING	
280	469464-0000	F		1	ROLL	
295	434101-0000	-		1	WASHER	
305	544445-0000	-		1	SPACER	
310	436342-0000	-		1	SPACER	
330	90224-0284	K		1	SWIVEL	
340	90235-0275	K		1	THROTTLE CHECK VALVES,G1/4"	
350	90239-0127	K		1	BRACKET	
360	B 90239-0166	F		1	CYLINDER	
380	311103-0212	-		1	CYLINDRICACP M6 2,5X20RFR	
390	311103-0233	-		2	CYLINDRICACP M6 3X10 RFR	
400	311103-0272	-		1	CYLINDRICACP M6 4X20 RFR	
410	311103-0276	-		1	CYLINDRICACP M6 4X30 RFR	
430	312105-0364	-		5	SCREW M6S6X10RFR	
440	312105-0370	-		3	SCREW M6S ISO 4017 M6X20 A280	
450	312105-0376	-		1	SCREW M6S ISO 4017 M6X35 A280	
460	312105-0380	-		2	SCREW M6S ISO 4014 M6X50 A280	
470	312105-0449	-		1	SCREW M6S ISO 4017 M8X16 A280	
475	312105-0451	-		4	SCREW M6S ISO 4017 8X20 A280	
480	312105-0497	-		2	SCREW M6S ISO 4017 M10X35 A280	
490	312605-0312	-		1	NUT M6M4RFR	
500	312605-0316	-		1	NUT M6M6RFR	
520	315105-0153	-		5	WASHER BRB6,4X12RFR	
525	315105-0165	-		4	WASHER BRB8,4X16RFR	
530	315105-0173	-		2	WASHER BRB10,5X22RFR	
540	342797-0122	K		2	BANJO CONNECTION,RINGPIECE 6-1/4"	
555	342980-0304	K		1	BANJO-HOLLOW BOLT COUPL,EXT.THR.01-G1/4"	

Pos	Part No	SP	UN	Qty	Description	Page No

UPPER FORMING RING

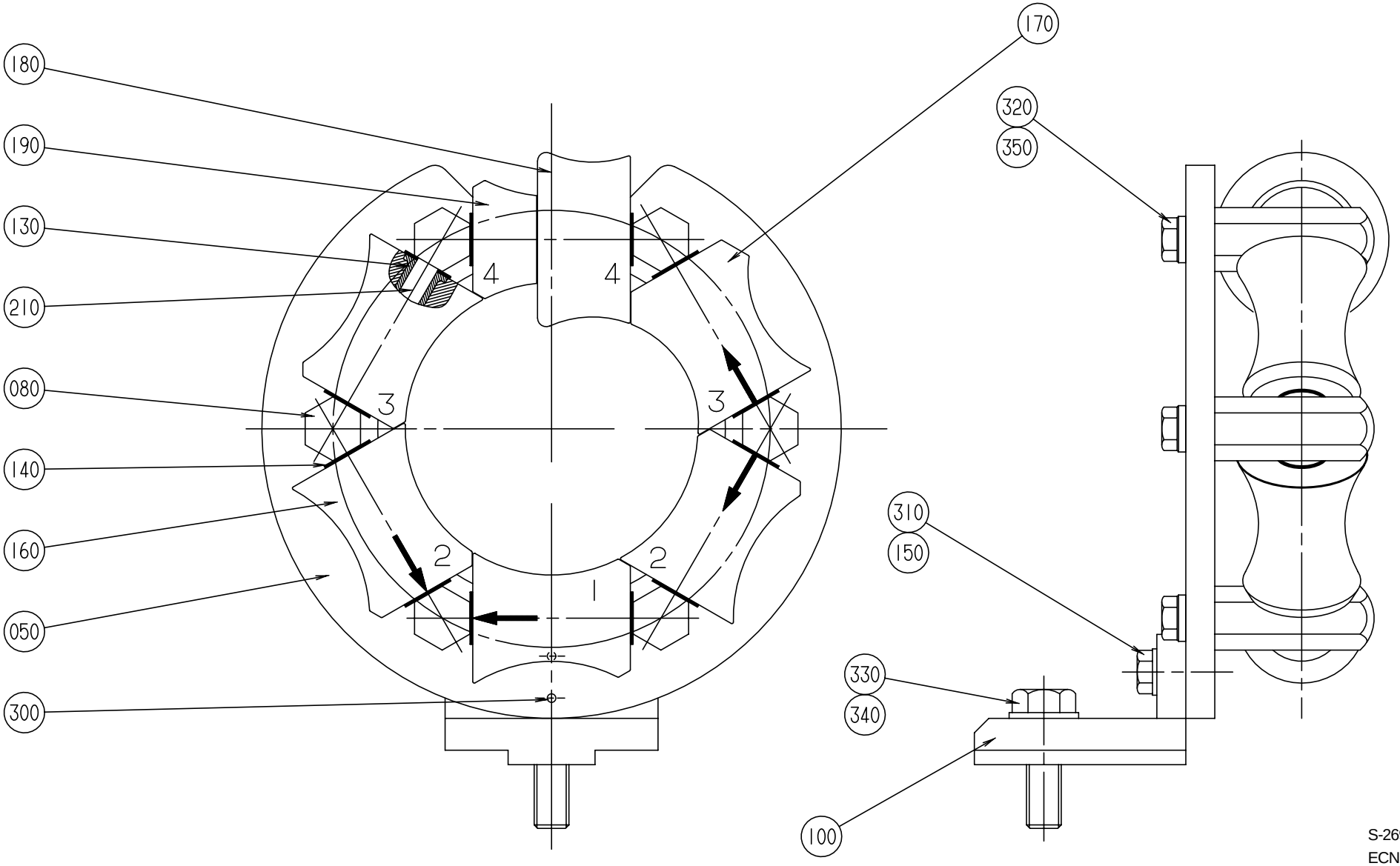

S-269115-4
ECN 15017

Pos	Part No	SP	UN	Qty	Description	Page No
TBA 1000S or TBA 1000SQ						
050	569090-0000	-		1	FORMING RING	
080	257987-0000	-		6	AXLE SUPPORT	
100	493948-0000	-		1	CANTILEVER	
130	90240-0172	-		14	FLANGE BUSHING	
140	2033-0008	F		13	WASHER	
160	569087-0000	-		4	ROLL	
170	569086-0000	-		1	ROLL	
180	569089-0000	-		1	ROLL	
190	569088-0000	-		1	ROLL	
210	263655-0009	K		6	SHAFT	
320	312105-0462	-		6	SCREW M6S ISO 4014 M8X55 A280	
TBA 0500B or TBA 0750B or TBA 1000B or TBA 1055B or TBA 1500S						
050	250594-0000	-		1	FORMING RING	
080	257987-0000	-		6	AXLE SUPPORT	
100	436648-0000	-		1	CANTILEVER	
140	2033-0008	F		13	WASHER	
160	543471-0000	-		4	ROLL	
170	567736-0000	-		1	EDGE ROLLER	
180	567737-0000	-		1	GUIDE ROLLER	
190	567738-0000	-		1	GUIDE ROLLER	
210	263655-0010	K		6	SHAFT	
320	312105-0462	-		6	SCREW M6S ISO 4014 M8X55 A280	
TBA 0750S or TPA 1000S						
050	544263-0000	-		1	FORMING RING	
080	257987-0000	-		6	AXLE SUPPORT	
100	493948-0000	-		1	CANTILEVER	
130	90240-0172	-		14	FLANGE BUSHING	
140	2033-0008	F		12	WASHER	
160	752719-0000	-		4	ROLL	
170	752721-0000	-		1	ROLL	
180	752720-0000	-		1	ROLL	
190	752718-0000	-		1	ROLL	
210	263655-0009	K		6	SHAFT	
320	312105-0462	-		6	SCREW M6S ISO 4014 M8X55 A280	
TBA 0375S						
050	434493-0000	-		1	FORMING RING	
080	526958-0000	-		6	AXLE SUPPORT	
100	493948-0000	-		1	CANTILEVER	
140	2033-0008	F		13	WASHER	
160	449586-0000	-		4	ROLL	
170	529039-0000	-		1	EDGE ROLLER	
180	529040-0000	-		1	GUIDE ROLLER	
190	529041-0000	-		1	GUIDE ROLLER	
210	263655-0008	K		6	SHAFT	
320	312105-0464	-		6	SCREW M6S ISO 4014 M8X65 A280	
TBA 0355B or TBA 0400B or TBA 0500S						
050	434493-0000	-		1	FORMING RING	
080	257987-0000	-		6	AXLE SUPPORT	
100	493948-0000	-		1	CANTILEVER	
140	2033-0008	F		13	WASHER	
160	440068-0000	-		4	ROLL	
170	530566-0000	-		1	EDGE ROLLER	
180	530567-0000	-		1	GUIDE ROLLER	
190	530568-0000	-		1	GUIDE ROLLER	
210	263655-0008	K		6	SHAFT	
320	312105-0462	-		6	SCREW M6S ISO 4014 M8X55 A280	
Common parts						
150	28036-0000	-		2	WASHER	
300	311103-0235	-		2	CYLINDRICACP M6 3X14 RFR	
310	312105-0453	-		2	SCREW M6S ISO 4017 M8X25 A280	
330	312105-0540	-		1	SCREW M6S ISO 4017 M12X40 A280	
340	315105-0178	-		1	WASHER BRB13X24RFR	
350	315115-0165	-		6	WASHER TBRB8,4X16RFR	

EDGE ROLLER

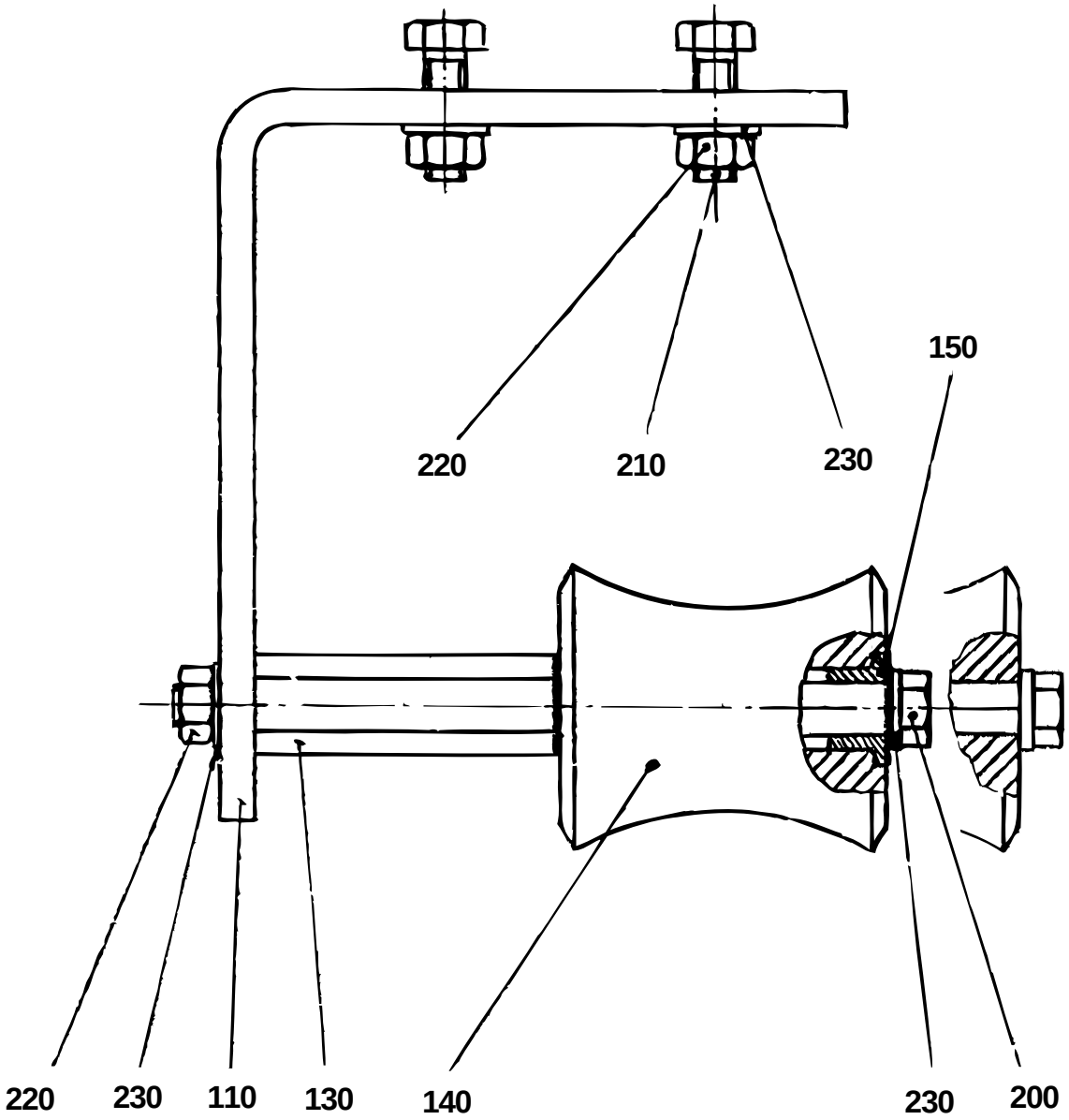

S-269136-1
ECN 13584

Pos	Part No	SP	UN	Qty	Description	Page No
0300B or 0355B or 0375S or 0400B or 0500B or 0500S or 0568B or 0750B or 1000B or 1055B or 1500S						
140	36953-0010	F		1	ROLL	
0500SQ or 0750S or 1000S or 1000SQ or 1500B						
140	752740-0000	F		1	ROLL	
150	90240-0172	-		2	FLANGE BUSHING	
Common parts						
110	208843-0000	-		1	ANGLE BRACKET	
130	458791-0000	-		1	SHAFT	
200	312105-0366	-		1	SCREW M6S ISO 4017 M6X12 A280	
210	312105-0370	-		2	SCREW M6S ISO 4017 M6X20 A280	
220	312605-0316	-		3	NUT M6M6RFR	
230	315105-0153	-		4	WASHER BRB6,4X12RFR	

Pos	Part No	SP	UN	Qty	Description	Page No

HOT AIR ELEMENT

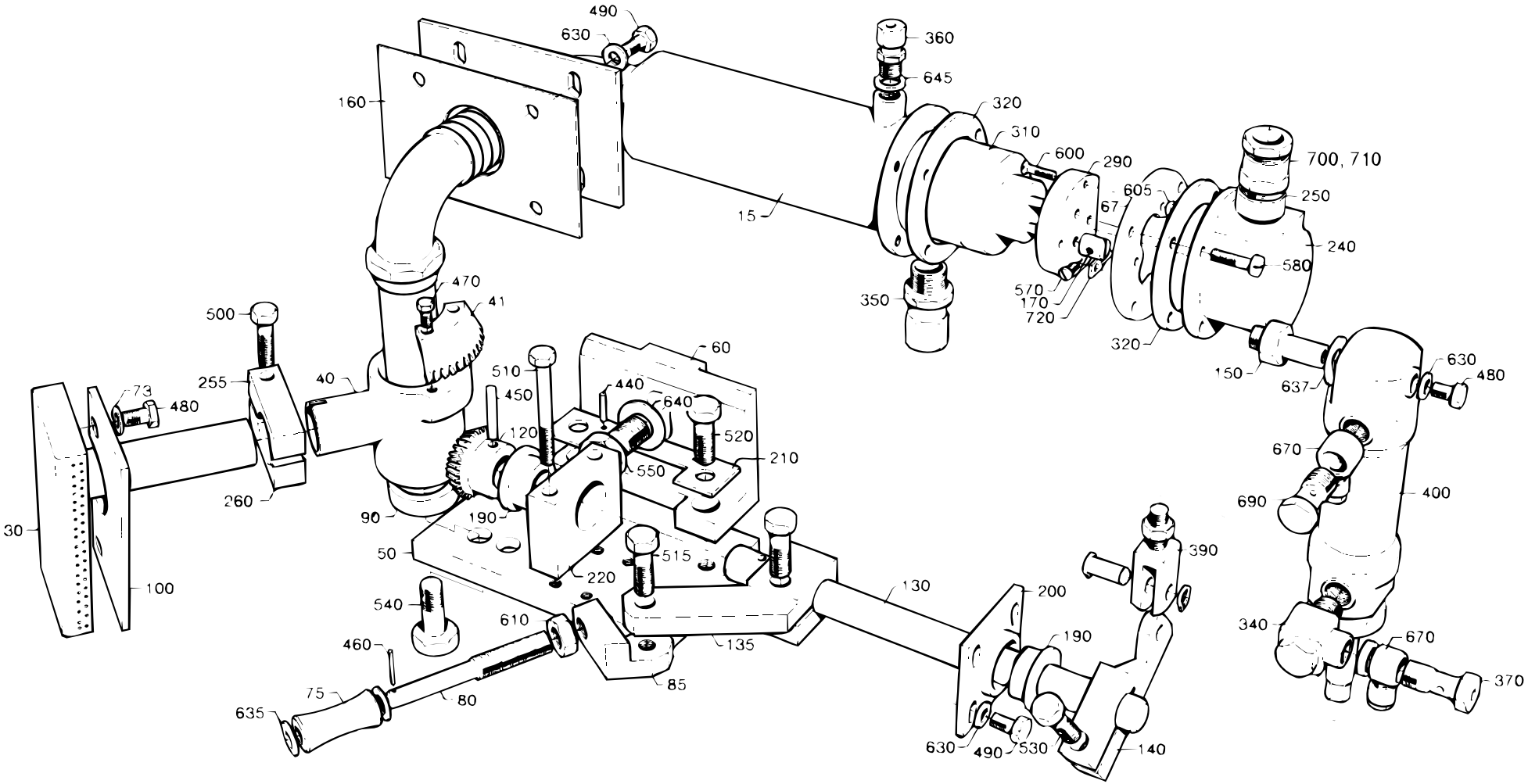

S-269158-2
ECN 17647

Pos	Part No	SP	UN	Qty	Description	Page No
0300B or 0375S						
030	526696-0000	K		1	AIR NOZZLE	
100	526697-0000	K		1	HEAT GUARD	
0355B or 0400B or 0500S or 0750S						
030	534176-0000	K		1	AIR NOZZLE	
100	526697-0000	K		1	HEAT GUARD	
0500B or 0568B or 0750B or 1000B or 1000S or 1000SQ or 1055B or 1500S						
030	257903-0000	K		1	AIR NOZZLE	
100	257904-0000	K		1	HEAT GUARD	
Common parts						
015	297309-0000	D		1	PIPE-LINE	
040	263249-0000	D		1	PIVOT ARM	
041	263250-0000	D		1	TOOTH PART	
050	269313-0000	D		1	FASTENING PLATE	
060	269314-0000	D		1	CANTILEVER	
067	297310-0000	-		1	FLANGE	
073	6278-0000	-		2	WASHER	
075	33442-0000	K		1	ROLL	
080	239440-0000	K		1	SHAFT	
085	239441-0000	K		1	BRACKET	
090	250663-0000	K		2	BEARING	
120	263251-0000	D		1	GEAR WHEEL	
130	263252-0000	-		1	SHAFT	
135	263254-0000	K		1	BRACKET	
140	263256-0000	D		1	ROCKER ARM	
150	263257-0000	K		1	CYLINDER BRACKET	
160	531741-0000	K		1	GASKET	
170	266739-0000	K		3	CABLE GLAND	
190	269154-0000	K		2	BUSHING	
200	269242-0000	K		1	BEARING HOUSING	
210	269315-0000	K		1	WASHER	
220	269316-0000	K		1	BEARING HOUSING	
240	297311-0000	-		1	COVER	
250	458046-0000	-		1	PIPE	
255	497579-0000	K		1	CLAMP HALF	
260	497580-0000	K		1	CLAMP HALF	
290	B 90125-0020	K		1	PLATE	
310	90206-0085	F		1	HEATING CARTRIDGE	
320	90206-0322	F		2	GASKET	
340	90224-0284	K		1	SWIVEL	
350	90224-0301	K		1	CONNECTION	
360	90224-0307	K		1	CONNECTION	
370	90235-0275	K		1	THROTTLE CHECK VALVES,G1/4"	
390	90239-0127	K		1	BRACKET	
400	B 90239-0166	F		1	CYLINDER	
440	311103-0209	-		2	CYLINDRICACP M6 2,5X14RFR	
450	311103-0274	-		1	CYLINDRICACP 4X25 RFR	
460	311411-0140	-		1	SPLIT PIN SP1,6X16RFR	
470	312105-0291	-		2	SCREW M6S ISO 4017 M4X12 A280	
480	312105-0364	-		3	SCREW M6S6X10RFR	
490	312105-0366	-		8	SCREW M6S ISO 4017 M6X12 A280	
500	312105-0374	-		2	SCREW M6S ISO 4017 M6X30 A280	
510	312105-0380	-		2	SCREW M6S ISO 4014 M6X50 A280	
515	312105-0451	-		1	SCREW M6S ISO 4017 8X20 A280	
520	312105-0453	-		3	SCREW M6S ISO 4017 M8X25 A280	
530	312105-0455	-		1	SCREW M6S ISO 4017 M8X30 A280	
540	312105-0493	-		1	SCREW M6S ISO 4017 M10X25 A280	
550	312105-0536	-		1	SCREW M6S ISO 4017 M12X30 A280	
570	312125-0220	-		3	SLOTTED HEMCS3X6RFR	
580	312125-0295	-		4	SLOTTED CHEESE HEAD ISO 1207 M4X20 RFR	
600	312145-0228	-		3	SLOTTED HEMFS3X16RFR	
605	312605-0310	-		3	NUT M6M3RFR	
610	312605-0320	-		1	NUT M6M10RFR	
630	315105-0153	-		9	WASHER BRB6,4X12RFR	
635	315105-0165	-		2	WASHER BRB8,4X16RFR	
637	315105-0173	-		1	WASHER BRB10,5X22RFR	
640	315105-0178	-		1	WASHER BRB13X24RFR	
645	315237-0109	-		1	SEAL RING 1/8"	
670	342797-0122	-		2	BANJO CONNECTION,RINGPIECE 6-1/4"	
690	342980-0304	-		1	BANJO-HOLLOW BOLT COUPL,EXT.THR.01-G1/4"	
700	352136-0127	D		1	GLAND FITTING	
710	352100-0106	D		1	CABLE GLANR.18,6-10,5	
720	353104-0129	-		1	CABLE SHOEYAV 025 M 35*	

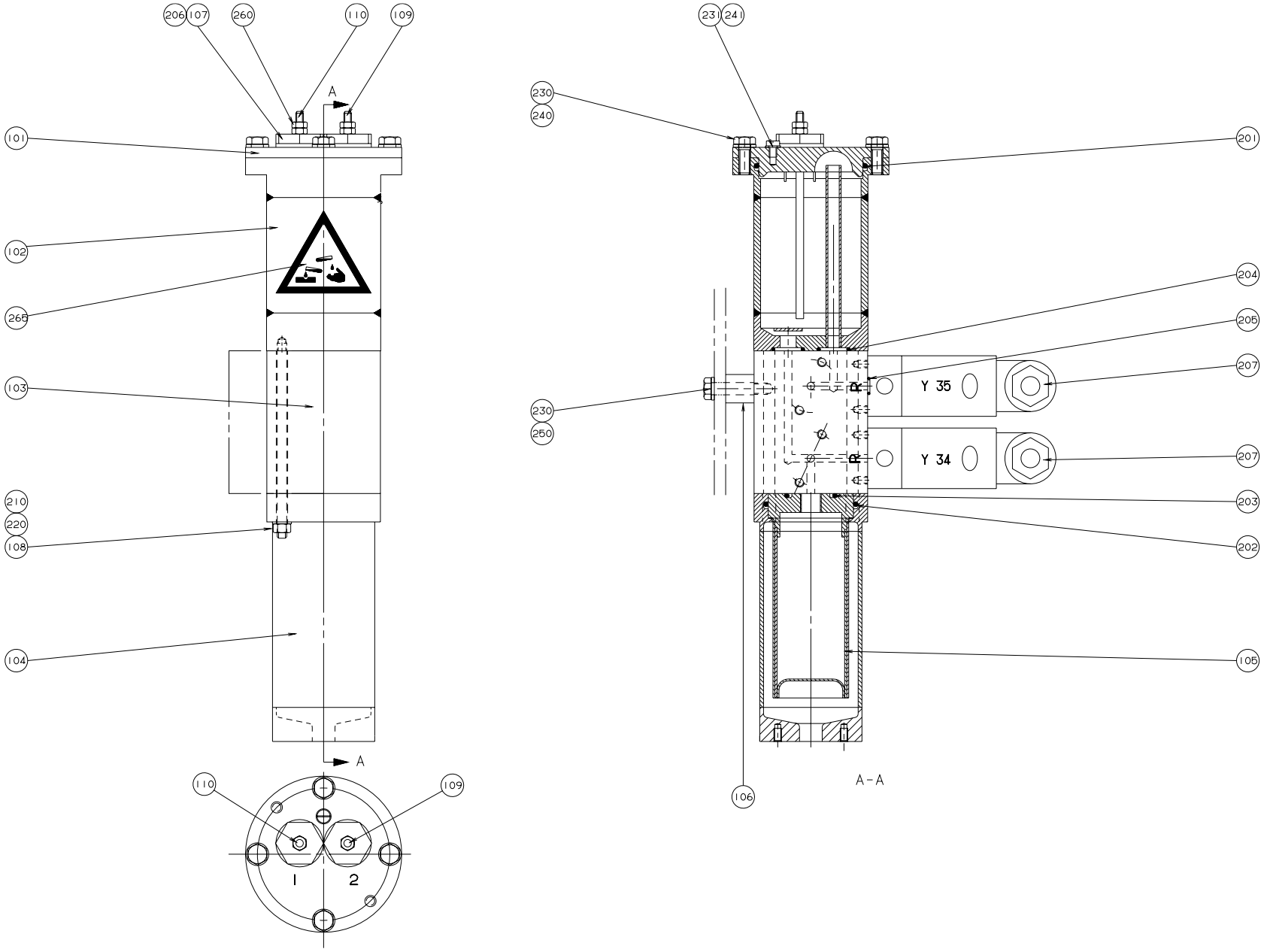

S-560930-1
ECN 22848

Pos	Part No	SP	UN	Qty	Description	Page No
-						
101	549267-0000	-		1	LID	
102	549264-0000	-		1	CONTAINER	
103	549263-0000	-		1	BLOCK	
104	554142-0000	-		1	FILTER HOUSING	
105	554141-0000	-		1	FILTER	
106	560932-0000	-		1	INTERMEDIATE PART	
107	560931-0000	-		2	BRACKET	
108	554585-0000	-		4	STUD SCREW	
109	560934-0000	-		1	ELECTRODE	
110	560933-0000	-		1	ELECTRODE	
201	927422-0009	-		1	O-RING 54.5X3 SILICON	
202	927422-0007	-		1	O-RING 44.2X3 SILICON	
203	927422-0001	-		1	O-RING 19.2X3 SILICON	
204	927421-0002	-		2	O-RING 12.3X2.4 SILICON	
205	927420-0001	-		6	O-RING 5.1X1.6 SILICON	
206	927421-0004	-		2	O-RING 15.3X2.4 SILICON	
207	90042-0203	F		2	SOLENOID VALVE	
210	315105-0146	-		4	WASHER BRB5,3X10RFR	
220	312605-0314	-		4	NUT M6M5RFR	
230	315105-0153	-		6	WASHER BRB6,4X12RFR	
231	315105-0136	-		3	WASHER BRB4,3X8RFR	
240	312105-0368	-		4	SCREW M6S ISO 4017 M6X16 A280	
241	312125-0285	-		1	SLOTTED HEMCS4X6RFR	
250	312109-0374	-		2	SCREW M6S ISO 4017 M6X30 A280	
260	312605-0312	-		4	NUT M6M4RFR	
263	352136-0113	-		2	GLAND FITTING	
265	359705-0003	-		1	WARNING SIGN"CORROSION"	

Pos	Part No	SP	UN	Qty	Description	Page No

PIPE HOLDER

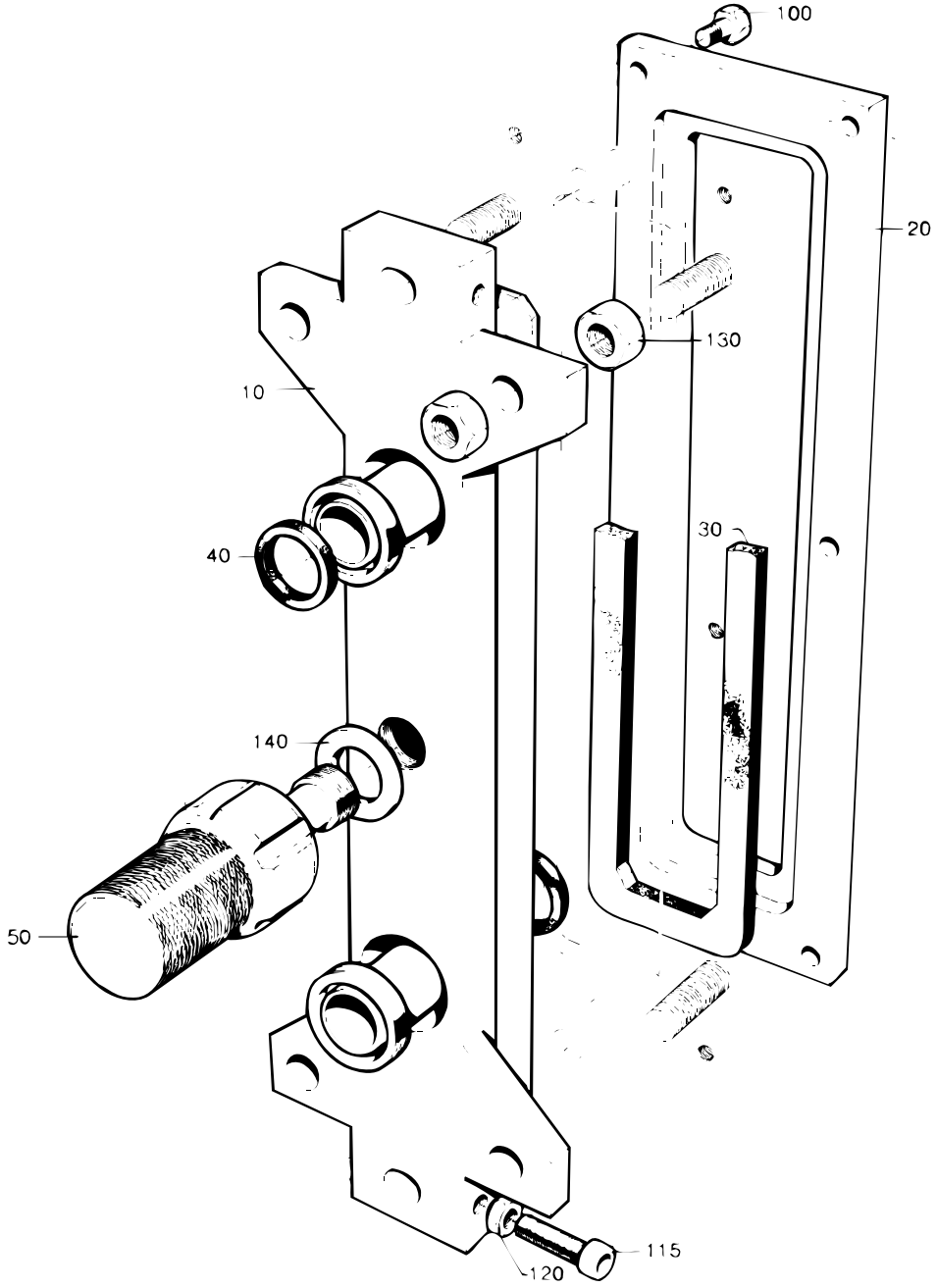

S-269715-1
ECN 5058

Pos	Part No	SP	UN	Qty	Description	Page No
-						
010	269716-0000	D		1	FASTENING PLATE	
020	269717-0000	D		1	GASKET HOLDER	
030	269718-0000	F		1	GASKET	
040	12242-0001	F		4	GASKET	
050	269719-0000	K		1	SCREW	
100	312105-0368	-		6	SCREW M6S ISO 4017 M6X16 A280	
115	312115-0455	-		4	SCREW MC6S ISO 4762 M8X30 A280	
120	312605-0318	-		4	NUT M6M8RFR	
130	312605-0322	-		8	NUT M6M12RFR	
140	315105-0192	-		1	WASHER BRB21X36RFR	

Pos	Part No	SP	UN	Qty	Description	Page No

FILLER TUBE

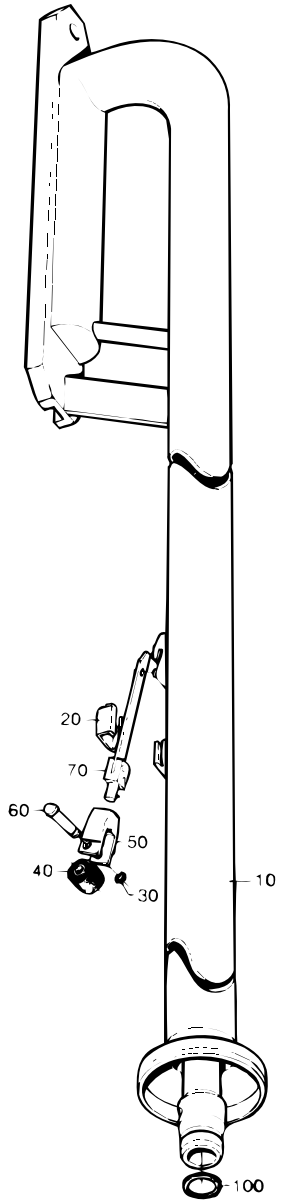

Pos	Part No	SP	UN	Qty	Description	Page No
TBA 1000S						
010	569097-0000	D		1	FILLER TUBE	
020	434665-0000	-		1	HOOD	
040	499387-0000	F		1	PRESSURE ROLLER	
050	499016-0000	F		1	FORK	
060	499011-0000	F		1	SHAFT	
070	574214-0000	F		1	SPRING	
TBA 0500B or TBA 0568B or TBA 0750B or TBA 1000B or TBA 1055B or TBA 1500S						
010	434222-0000	D		1	FILLER TUBE	
020	14600-0000	-		1	HOOD	
040	232979-0000	F		1	PRESSURE ROLLER	
050	267727-0000	F		1	FORK	
060	267728-0000	F		1	SHAFT	
070	544892-0000	F		1	SPRING	
TBA 0750S or TPA 1000S						
010	544287-0000	D		1	FILLER TUBE	
020	434665-0000	-		1	HOOD	
040	499387-0000	F		1	PRESSURE ROLLER	
050	499016-0000	F		1	FORK	
060	499011-0000	F		1	SHAFT	
070	544892-0000	F		1	SPRING	
TBA 1000SQ						
010	579316-0000	D		1	FILLER TUBE	
020	434665-0000	-		1	HOOD	
040	499387-0000	F		1	PRESSURE ROLLER	
050	499016-0000	F		1	FORK	
060	499011-0000	F		1	SHAFT	
070	544892-0000	F		1	SPRING	
TBA 0300B or TBA 0375S						
010	497131-0000	D		1	FILLER TUBE	
020	526682-0000	-		1	HOOD	
040	499387-0000	F		1	PRESSURE ROLLER	
050	529180-0000	F		1	FORK	
060	499011-0000	F		1	SHAFT	
070	544893-0000	F		1	SPRING	
TBA 0355B or TBA 0400B or TBA 0500S						
010	450010-0000	D		1	FILLER TUBE	
020	434665-0000	-		1	HOOD	
040	499387-0000	F		1	PRESSURE ROLLER	
050	499016-0000	F		1	FORK	
060	499011-0000	F		1	SHAFT	
070	544892-0000	F		1	SPRING	

Pos	Part No	SP	UN	Qty	Description	Page No
Common parts						
030	24928-0000	F		1	LOCKING RUBBER	
100	315204-0217	F		1	O-RING 24,2X3VITON	

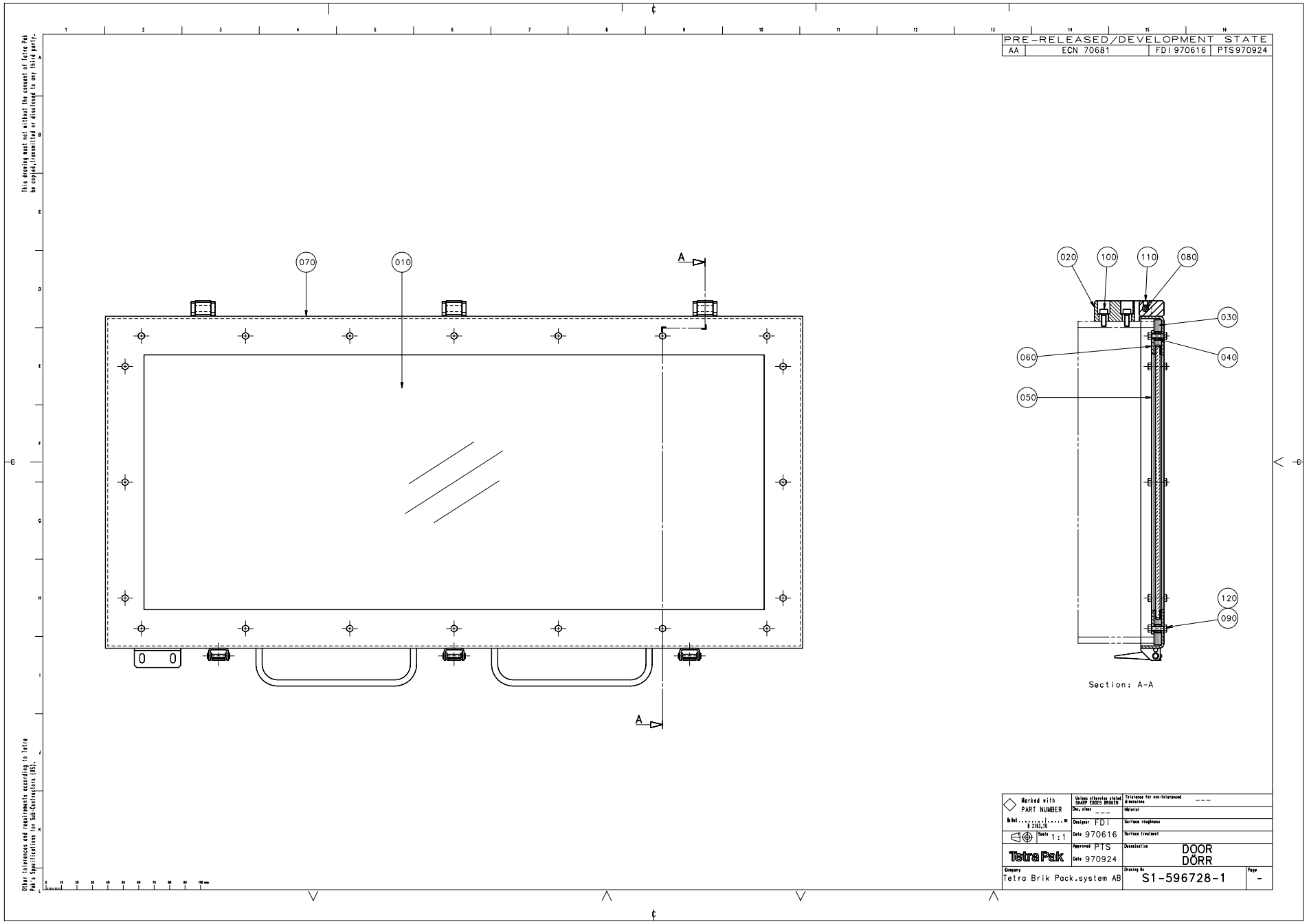
PRE-RELEASED/DEVELOPMENT STATE
AA ECN 70681 FDI 970616 PTS970924
070
010
A
020
100
110
080
030
060
040
050
120
090
Section: A-A
Marked with PART NUMBER
Unless otherwise stated SHARP EDGES BROKEN
Tolerance for non-toleranced dimensions ---
Dev. class
Material
Designer FDI
Surface roughness
Date 970616
Surface treatment
Approved PTS
Date 970924
Denomination DOOR DÖRR
Company Tetra Brik Pack.system AB
Drawing No S1-596728-1
Page -
This drawing must not without the consent of Tetra Pak be copied, transmitted or disclosed to any third party.
Other tolerances and requirements according to Tetra Pak's Specifications for Sub-Contractors (SS).

Pos	Part No	SP	UN	Qty	Description	Page No
-						
010	252732-0000	-		1	GLASS PANE	
020	252734-0000	-		3	HINGE	
030	252797-0000	-		1	RUBBER STRIP	
040	441718-0000	-		20	SPACER	
050	573615-0000	-		2	COVER SLIP	
060	573616-0000	-		2	COVER SLIP	
070	596729-0000	-		1	DOOR	
080	311103-0405	-		3	CYLINDRICACP M6 8X30 RFR	
090	312105-0331	-		20	SCREW M6S ISO 4017 M5X20 A280	
100	312115-0368	-		6	SCREW MC6S ISO 4762 M6X16 A280	
110	312318-0360	-		3	STOP SCREW SK6SS6X6RFR	
120	312605-0314	-		20	NUT M6M5RFR	

Pos	Part No	SP	UN	Qty	Description	Page No

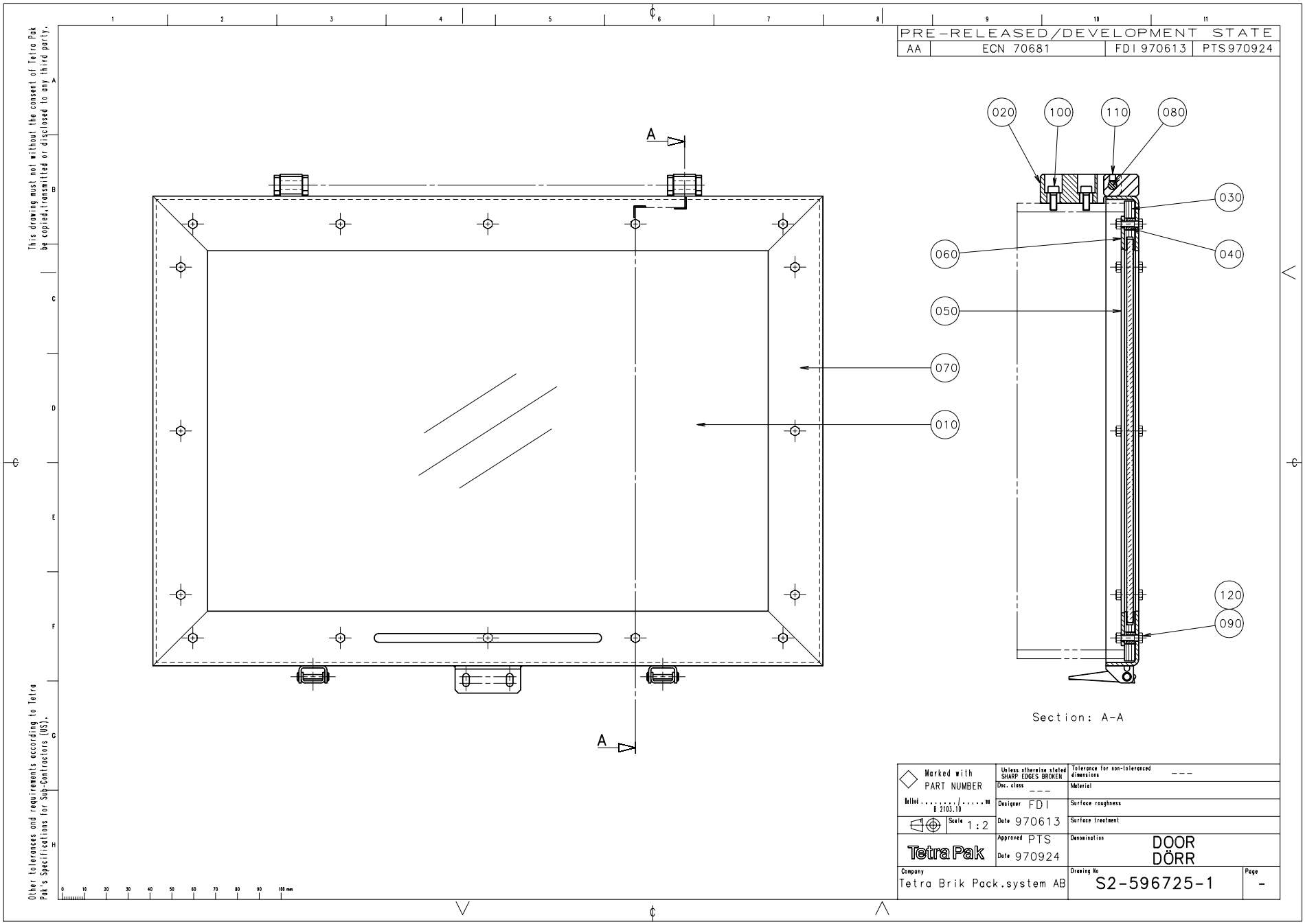
PRE-RELEASED/DEVELOPMENT STATE
AA
ECN 70681
FDI 970613
PTS970924
020
100
110
080
030
040
060
050
070
010
120
090
A
A
Section: A-A
This drawing must not without the consent of Tetra Pak be copied, transmitted or disclosed to any third party.
Other tolerances and requirements according to Tetra Pak's Specifications for Sub-Contractors (US).
Marked with PART NUMBER
Unless otherwise stated SHARP EDGES BROKEN
Tolerance for non-toleranced dimensions ---
Dec. class ---
Material
Designer FDI
Surface roughness
Date 970613
Scale 1:2
Surface treatment
Approved PTS
Date 970924
Denomination
DOOR
DÖRR
Company
Tetra Brik Pack.system AB
Drawing No
S2-596725-1
Page
-

Pos	Part No	SP	UN	Qty	Description	Page No
-						
010	252733-0000	-		1	GLASS PANE	
020	252734-0000	-		2	HINGE	
030	252798-0000	-		1	RUBBER STRIP	
040	441718-0000	-		16	SPACER	
050	573615-0000	-		2	COVER SLIP	
060	573617-0000	-		2	COVER SLIP	
070	596726-0000	-		1	DOOR	
080	311103-0405	-		2	CYLINDRICACP M6 8X30 RFR	
090	312105-0331	-		16	SCREW M6S ISO 4017 M5X20 A280	
100	312115-0368	-		4	SCREW MC6S ISO 4762 M6X16 A280	
110	312318-0360	-		2	STOP SCREW SK6SS6X6RFR	
120	312605-0314	-		16	NUT M6M5RFR	

Pos	Part No	SP	UN	Qty	Description	Page No

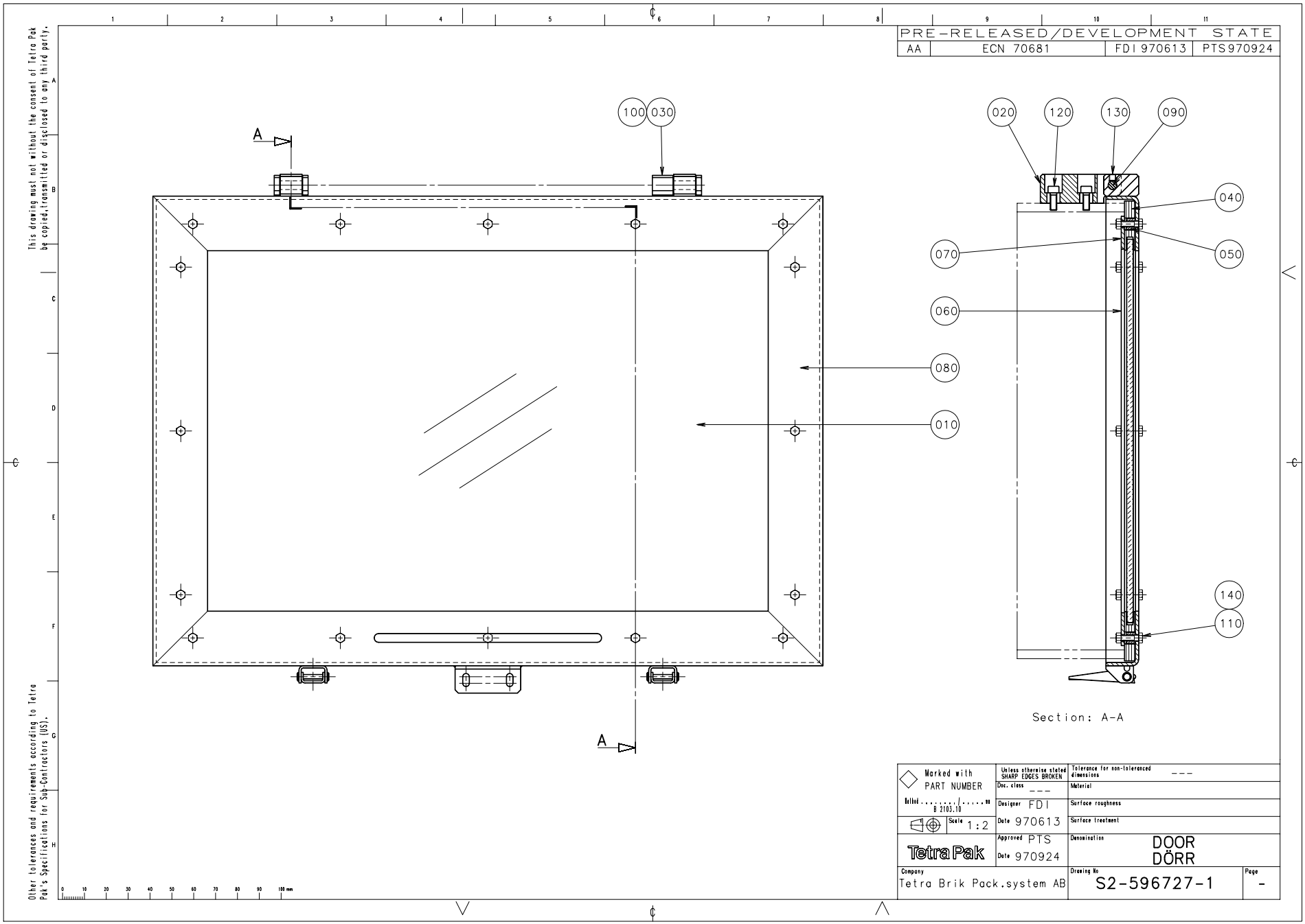
PRE-RELEASED/DEVELOPMENT STATE
AA
ECN 70681
FDI 970613
PTS970924
100
030
020
120
130
090
040
070
050
060
080
010
140
110
A
A
Section: A-A
This drawing must not without the consent of Tetra Pak be copied, transmitted or disclosed to any third party.
Other tolerances and requirements according to Tetra Pak's Specifications for Sub-Contractors (US).
Marked with PART NUMBER
Unless otherwise stated SHARP EDGES BROKEN
Tolerance for non-tolerances dimensions ---
Dec. class ---
Material
Designer FDI
Surface roughness
Date 970613
Scale 1:2
Surface treatment
Approved PTS
Date 970924
Denomination
DOOR
DÖRR
Company
Tetra Brik Pack.system AB
Drawing No
S2-596727-1
Page
-

Pos	Part No	SP	UN	Qty	Description	Page No
-						
010	252733-0000	-		1	GLASS PANE	
020	252734-0000	-		1	HINGE	
030	252735-0000	-		1	HINGE	
040	252798-0000	-		1	RUBBER STRIP	
050	441718-0000	-		16	SPACER	
060	573615-0000	-		2	COVER SLIP	
070	573617-0000	-		2	COVER SLIP	
080	596726-0000	-		1	DOOR	
090	311103-0405	-		1	CYLINDRICACP M6 8X30 RFR	
100	311103-0411	-		1	CYLINDRICACP M6 8X45 RFR	
110	312105-0331	-		16	SCREW M6S ISO 4017 M5X20 A280	
120	312115-0368	-		4	SCREW MC6S ISO 4762 M6X16 A280	
130	312318-0360	-		2	STOP SCREW SK6SS6X6RFR	
140	312605-0314	-		16	NUT M6M5RFR	

Pos	Part No	SP	UN	Qty	Description	Page No

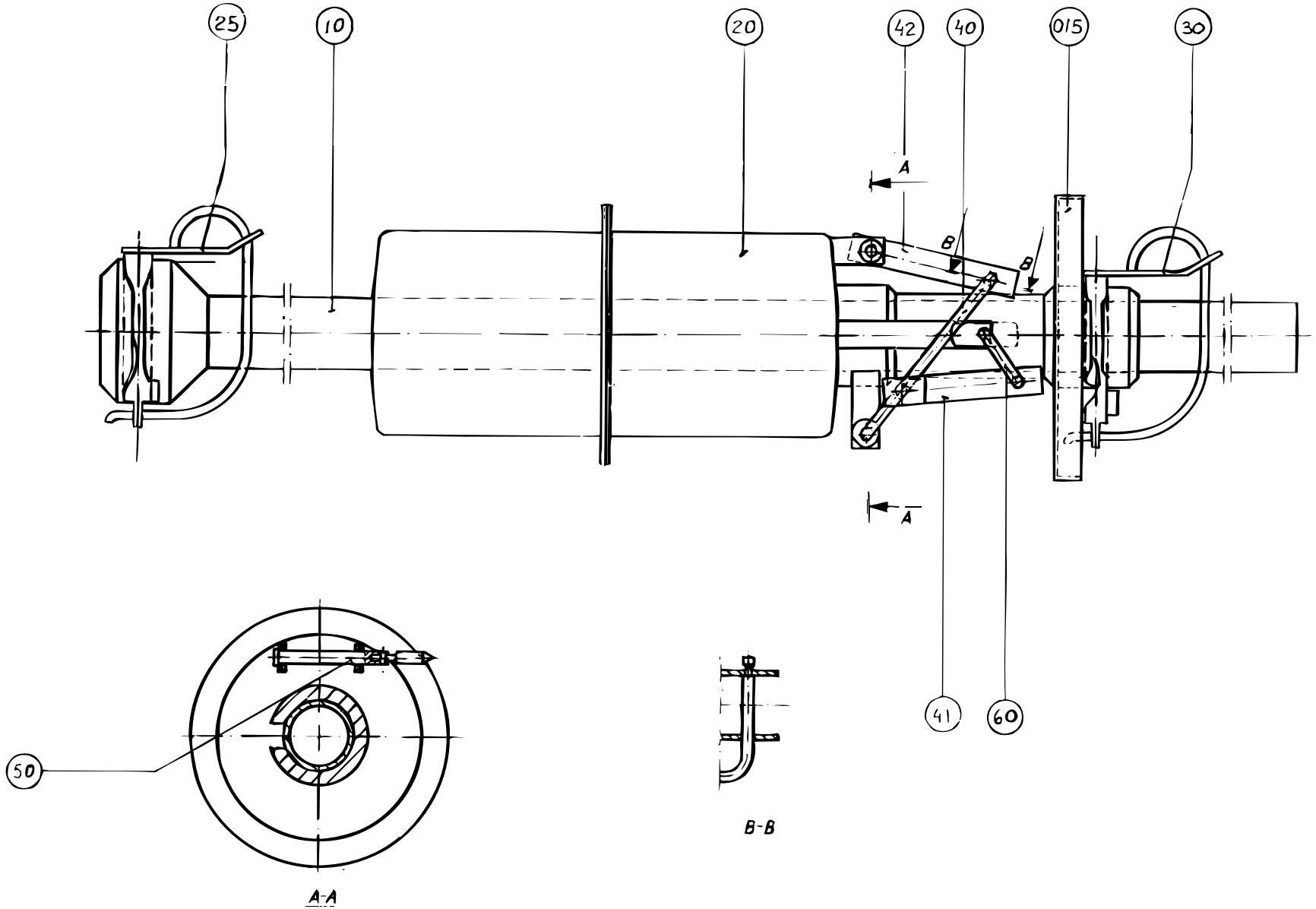

S-269828-2
ECN 5695

Pos	Part No	SP	UN	Qty	Description	Page No
0300B or 0375S						
010	529033-0000	-		1	FILLING TUBE LOWER	
015	526960-0000	-		1	PRESSURE FLANGE	
020	259902-0000	K		1	FLOAT	
025	493733-0000	F		1	LOCKING PIN UPPER	
030	445503-0000	F		1	LOCKING PIN LOWER	
040	37296-0000	K		1	ARM	
041	36816-0000	K		1	LINK	
042	36817-0000	K		1	CLAMPING ELEMENT	
050	36821-0002	F		1	SHEAR PIN	
060	228943-0000	K		1	THROTTLE	
0355B						
010	530826-0000	-		1	FILLING TUBE LOWER	
015	434750-0000	-		1	PRESSURE FLANGE	
020	434749-0000	K		1	FLOAT	
025	493733-0000	F		1	LOCKING PIN UPPER	
030	493734-0000	F		1	LOCKING PIN LOWER	
040	434751-0000	K		1	ARM	
041	752587-0000	K		1	LINK	
042	36817-0000	K		1	CLAMPING ELEMENT	
050	36821-0002	F		1	SHEAR PIN	
060	37782-0000	K		1	THROTTLE	
0400B						
010	574013-0000	-		1	FILLING PIPE LOWER	
015	434750-0000	-		1	PRESSURE FLANGE	
020	434749-0000	K		1	FLOAT	
025	493733-0000	F		1	LOCKING PIN UPPER	
030	493734-0000	F		1	LOCKING PIN LOWER	
040	434751-0000	K		1	ARM	
041	434752-0000	K		1	LINK	
042	36817-0000	K		1	CLAMPING ELEMENT	
050	36821-0002	F		1	SHEAR PIN	
060	37782-0000	K		1	THROTTLE	
0500B or 0568B						
010	476878-0000	-		1	FILLER TUBE	
015	476879-0000	-		1	PRESSURE FLANGE	
020	245190-0000	K		1	FLOAT	
025	445504-0000	F		1	LOCKING PIN UPPER	
030	445502-0000	F		1	LOCKING PIN LOWER	
040	36804-0000	K		1	ARM	
041	36805-0000	K		1	LINK	
042	36806-0000	K		1	CLAMPING ELEMENT	
050	36821-0001	F		1	SHEAR PIN	
060	37782-0000	K		1	THROTTLE	
0500S						
010	493875-0000	-		1	FILLING TUBE LOWER	
015	434750-0000	-		1	PRESSURE FLANGE	
020	434749-0000	K		1	FLOAT	
025	493733-0000	F		1	LOCKING PIN UPPER	
030	493734-0000	F		1	LOCKING PIN LOWER	
040	434751-0000	K		1	ARM	
041	434752-0000	K		1	LINK	
042	36817-0000	K		1	CLAMPING ELEMENT	
050	36821-0002	F		1	SHEAR PIN	
060	37782-0000	K		1	THROTTLE	
0750B						
010	269827-0002	-		1	FILLER TUBE	
015	466463-0000	-		1	PRESSURE FLANGE	
020	245190-0000	K		1	FLOAT	
025	445504-0000	F		1	LOCKING PIN UPPER	
030	445502-0000	F		1	LOCKING PIN LOWER	
040	36804-0000	K		1	ARM	
041	36805-0000	K		1	LINK	
042	36806-0000	K		1	CLAMPING ELEMENT	
050	36821-0001	F		1	SHEAR PIN	
060	37782-0000	K		1	THROTTLE	
0750S						
010	544294-0000	-		1	FILLER TUBE	
015	752860-0000	-		1	PRESSURE FLANGE	
020	544295-0000	K		1	FLOAT	
025	493733-0000	F		1	LOCKING PIN UPPER	
030	493734-0000	F		1	LOCKING PIN LOWER	
040	434751-0000	K		1	ARM	
041	434752-0000	K		1	LINK	
042	36817-0000	K		1	CLAMPING ELEMENT	
050	36821-0002	F		1	SHEAR PIN	
060	752590-0000	K		1	THROTTLE	

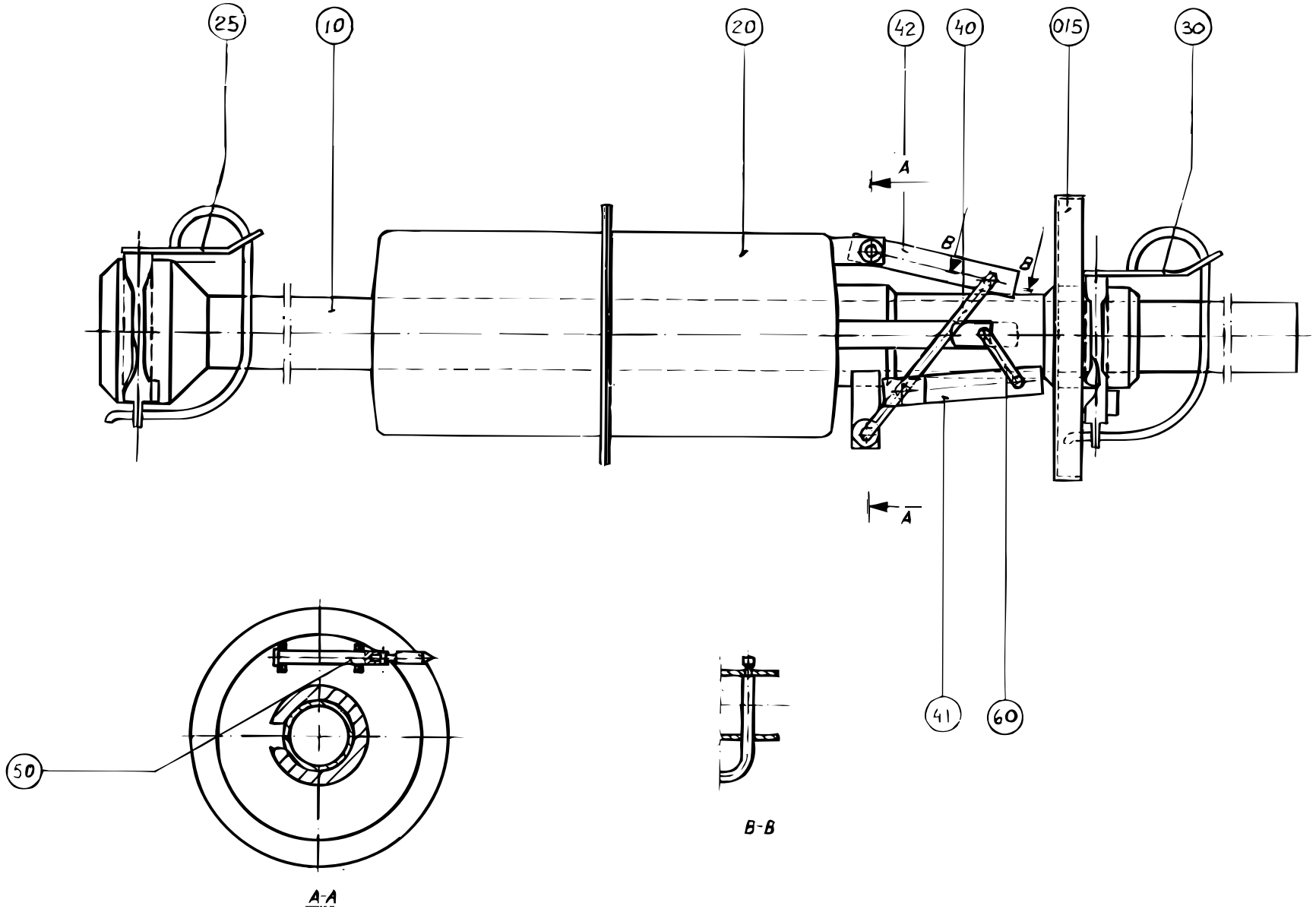

S-269828-2
ECN 5695

Pos	Part No	SP	UN	Qty	Description	Page No
1000B HIFIN or 1055B						
010	544294-0000	-		1	FILLER TUBE	
015	466463-0000	-		1	PRESSURE FLANGE	
020	245190-0000	K		1	FLOAT	
025	445504-0000	F		1	LOCKING PIN UPPER	
030	445502-0000	F		1	LOCKING PIN LOWER	
040	529376-0000	-		1	ARM	
041	529378-0000	-		1	LINK	
042	529377-0000	-		1	CLAMP	
050	36821-0001	F		1	SHEAR PIN	
060	37782-0000	K		1	THROTTLE	
1000S						
010	544294-0000	-		1	FILLER TUBE	
015	569098-0000	-		1	PRESSURE FLANGE	
020	544295-0000	K		1	FLOAT	
025	493733-0000	F		1	LOCKING PIN UPPER	
030	493734-0000	F		1	LOCKING PIN LOWER	
040	434751-0000	K		1	ARM	
041	434752-0000	K		1	LINK	
042	36817-0000	K		1	CLAMPING ELEMENT	
050	36821-0002	F		1	SHEAR PIN	
060	752590-0000	K		1	THROTTLE	
1000SQ						
010	544294-0000	-		1	FILLER TUBE	
015	574006-0000	-		1	PRESSURE FLANGE	
020	544295-0000	K		1	FLOAT	
025	493733-0000	F		1	LOCKING PIN UPPER	
030	493734-0000	F		1	LOCKING PIN LOWER	
040	434751-0000	K		1	ARM	
041	434752-0000	K		1	LINK	
042	36817-0000	K		1	CLAMPING ELEMENT	
050	36821-0002	F		1	SHEAR PIN	
060	752590-0000	K		1	THROTTLE	
1000B LOFIN						
010	269827-0001	-		1	FILLER TUBE	
015	466463-0000	-		1	PRESSURE FLANGE	
020	245190-0000	K		1	FLOAT	
025	445504-0000	F		1	LOCKING PIN UPPER	
030	445502-0000	F		1	LOCKING PIN LOWER	
040	36804-0000	K		1	ARM	
041	36805-0000	K		1	LINK	
042	36806-0000	K		1	CLAMPING ELEMENT	
050	36821-0001	F		1	SHEAR PIN	
060	37782-0000	K		1	THROTTLE	

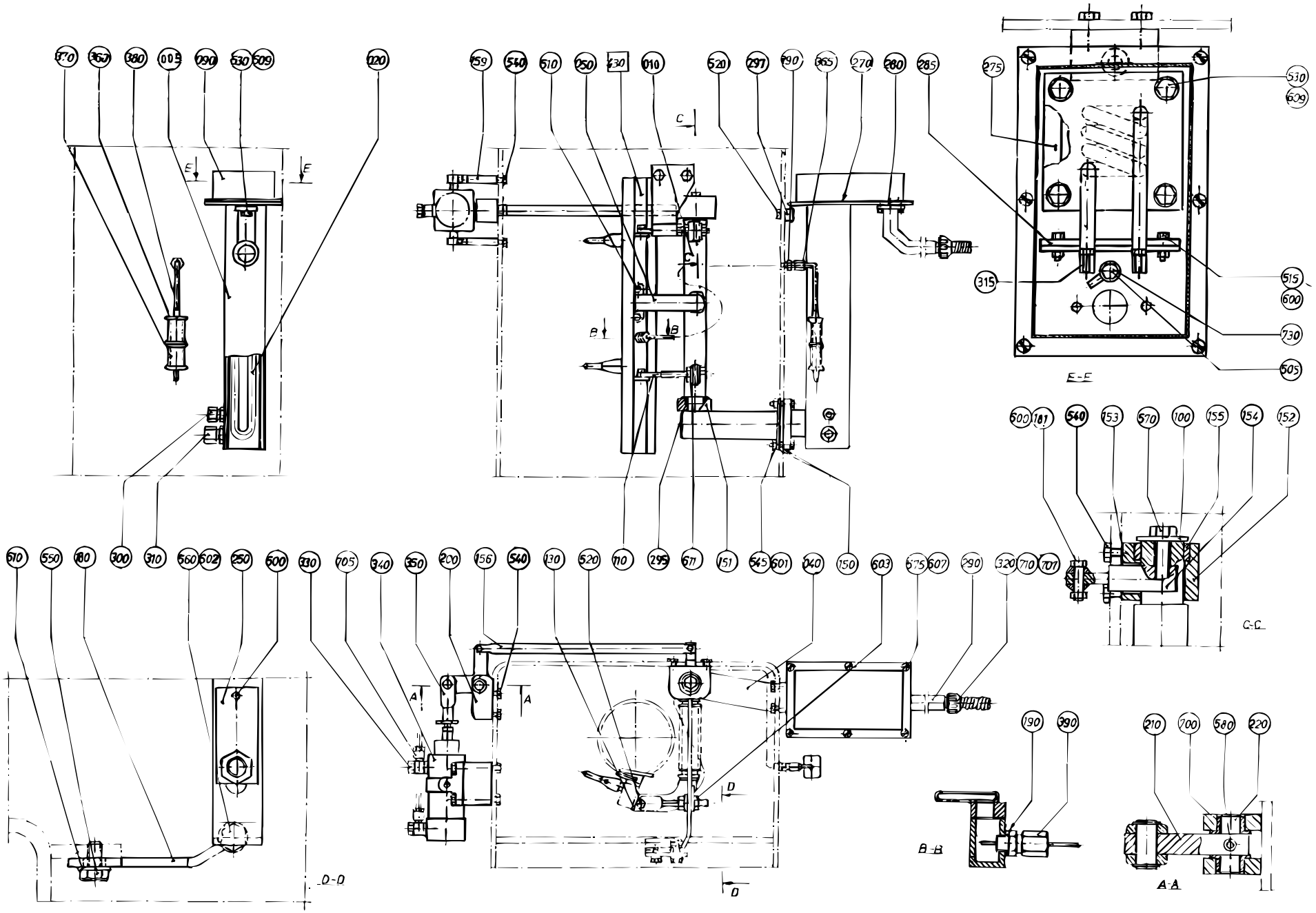

S-269915-5
ECN 17647

Pos	Part No	SP	UN	Qty	Description	Page No
-						
F430	A 283926-0300	-		1	AIR NOZZLE	
005	533195-0000	D		1	MANTLE	
010	250654-0000	D		1	PIVOT ARM	
020	555545-0000	-		1	COIL HEATER	
040	250656-0000	D		1	ATTACHMENT PIPE	
050	434829-0000	D		1	LEAD	
090	476360-0000	-		1	LID	
100	28037-0000	-		1	WASHER	
110	32215-0000	-		2	HOLDER	
130	531734-0000	F		1	GASKET	
150	531738-0000	F		2	GASKET	
151	531739-0000	F		1	GASKET	
152	250660-0000	K		1	BEARING CONSOLE	
153	531740-0000	F		1	GASKET	
154	250662-0000	-		1	LEVER	
155	250663-0000	K		1	BEARING	
156	250664-0000	D		1	TIE ROD	
159	250668-0000	-		2	SPACER	
180	269913-0000	K		1	STOPPER	
181	269914-0000	K		2	SHOULDER SCREW	
190	273429-0000	K		2	WASHER	
200	279208-0000	K		1	BEARING HOUSING	
210	279209-0000	D		1	ROCKER ARM	
220	279213-0000	K		1	DOWEL	
250	297054-0000	-		2	WASHER	
270	531744-0000	F		1	GASKET	
275	531745-0000	F		1	GASKET	
280	531764-0000	F		1	GASKET	
285	555546-0000	-		1	INSULATING PLATE	
290	479176-0000	-		1	PIPE	
295	530622-0000	K		1	BUSHING	
297	533196-0000	D		1	FASTENING PLATE	
300	90030-0092	K		1	PIPE CONNECTION	
310	90030-0187	K		1	STRAIGHT CONNECTION GA-12-G3/8"	
315	90097-0017	-		2	FLAT PIN PLUG	
320	90152-0033	D	MM	500	HOSE	
330	90235-0275	K		2	THROTTLE CHECK VALVES,G1/4"	
340	B 90239-0951	F		1	CYLINDER	
350	90239-0346	K		1	BRACKET	
360	90326-0012	F		1	PROTECTIVE COVER	
365	90326-0017	F		1	GLAND "REPBY 90326-306"	
370	90326-0020	F		1	PLUG,FEMALE YELLOW CR-AL	
380	B 90326-0048	F		1	THERMOELEMENT	
390	90326-0304	K		1	LEAD IN	
500	311103-0233	-		2	CYLINDRICACP M6 3X10 RFR	
505	312105-0289	-		1	SCREW M6S4X10 A2 80	
510	312105-0325	-		2	SCREW M6S5X10 A2 80	
515	312105-0327	-		2	SCREW M6S ISO 4017 M5X12 A280	
520	312105-0364	-		4	SCREW M6S6X10RFR	
530	312105-0368	-		6	SCREW M6S ISO 4017 M6X16 A280	
540	312105-0370	-		16	SCREW M6S ISO 4017 M6X20 A280	
545	312105-0372	-		4	SCREW M6S ISO 4017 M6X25 A280	
550	312105-0449	-		2	SCREW M6S ISO 4017 M8X16 A280	
560	312105-0453	-		1	SCREW M6S ISO 4017 M8X25 A280	
570	312105-0455	-		1	SCREW M6S ISO 4017 M8X30 A280	
575	312125-0327	-		6	SLOTTED CHEESE HEAD ISO 1207 M5X12 RFR	
580	312318-0362	-		1	SET SCREW CUP POINT ISO 4029 M6X8 RFR	
600	312605-0314	-		4	NUT M6M5RFR	
601	312605-0316	-		4	NUT M6M6RFR	
602	312605-0318	-		1	NUT M6M8RFR	
603	312605-0320	-		4	NUT M6M10RFR	
607	315105-0146	-		6	WASHER BRB5,3X10RFR	
609	315105-0153	-		6	WASHER BRB6,4X12RFR	
610	315105-0165	-		2	WASHER BRB8,4X16RFR	
611	315105-0173	-		4	WASHER BRB10,5X22RFR	
700	321111-0159	-		2	FLANGE BUS 12E7X12	
705	342797-0122	-		2	BANJO CONNECTION,RINGPIECE 6-1/4"	
707	352100-0106	D		1	CABLE GLANR.18,6-10,5	
710	352136-0113	D		1	GLAND FITTING	
730	353104-0130	-		1	CABLE SHOEYAV 025 M 4*	

AIR NOZZLE

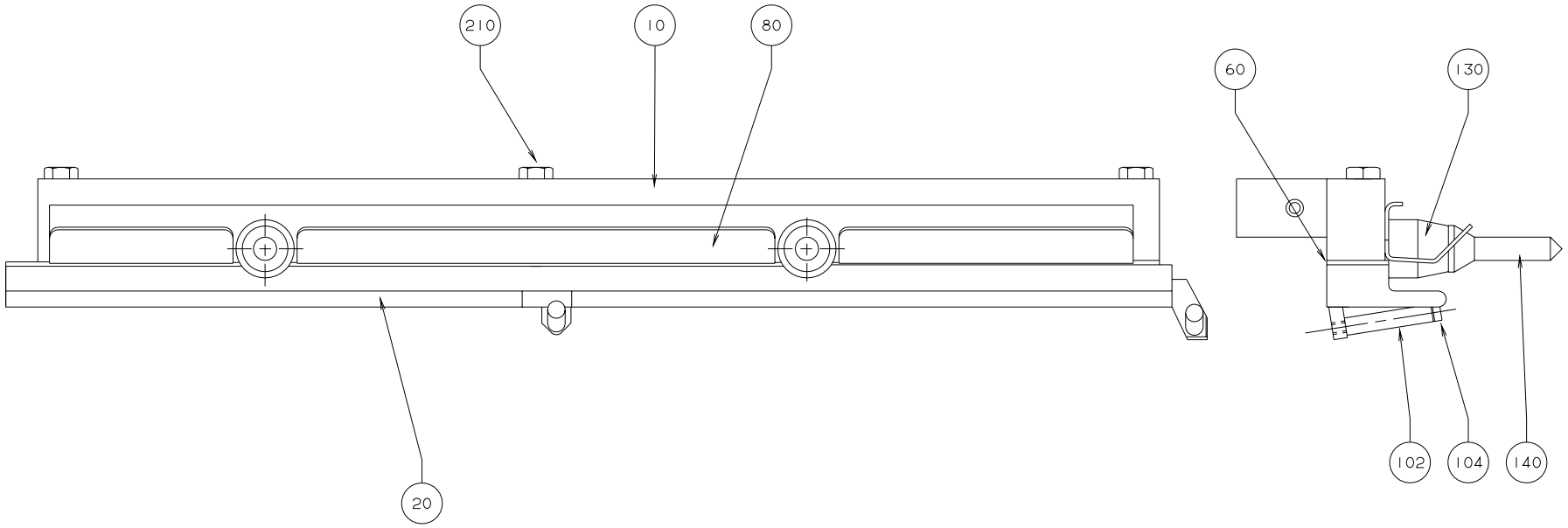

Pos	Part No	SP	UN	Qty	Description	Page No
0355B or 0375S or 0400B or 0500S or 0750S						
010	526687-0000	-		1	ATTACHMENT	
020	526587-0000	-		1	AIR NOZZLE	
060	526689-0000	-		1	DISTRIBUTOR WING	
080	526688-0000	-		1	HEAD PLATE	
130	526692-0000	-		2	ROLL	
0500B or 0750B or 1000B or 1055B or 1500S						
010	243846-0000	-		1	ATTACHMENT	
020	567734-0000	-		1	AIR NOZZLE	
060	569104-0000	-		1	DISTRIBUTOR WING	
080	567735-0000	-		1	HEAD PLATE	
130	6161-0000	F		2	ROLL	
1000S or 1000SQ						
010	243846-0000	-		1	ATTACHMENT	
020	573058-0000	-		1	AIR NOZZLE	
060	569104-0000	-		1	DISTRIBUTOR WING	
080	567735-0000	-		1	HEAD PLATE	
130	6161-0000	F		2	ROLL	
Common parts						
102	526691-0000	-		2	ROLL	
104	526690-0000	-		2	SHAFT	
140	265957-0000	K		2	SHAFT	
210	312105-0376	-		3	SCREW M6S ISO 4017 M6X35 A280	
240	315105-0136	-		2	WASHER BRB4,3X8RFR	

Pos	Part No	SP	UN	Qty	Description	Page No

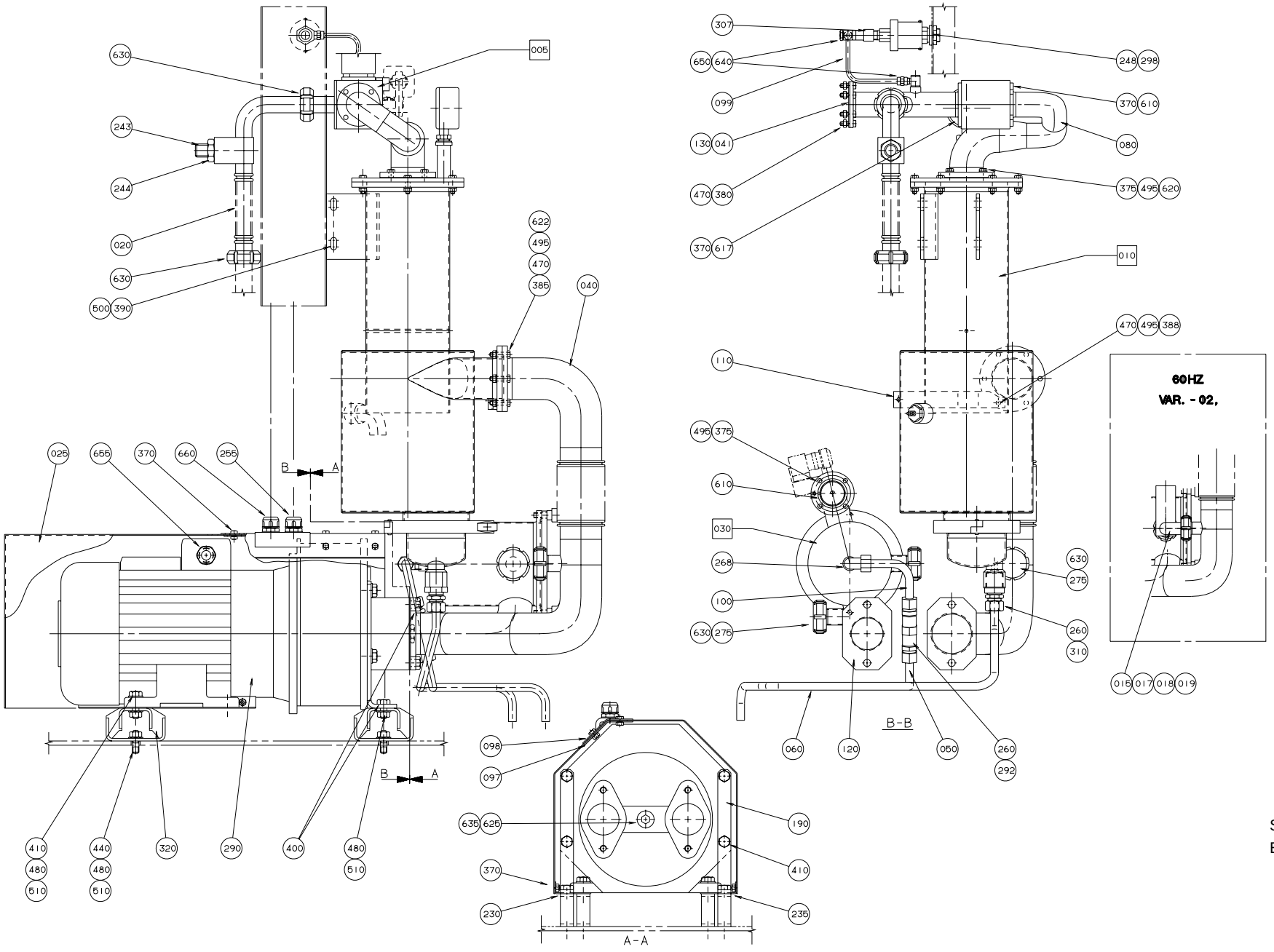

S-575474-1
ECN 20650

Pos	Part No	SP	UN	Qty	Description	Page No
50HZ						
275-02	90217-0026	-		3	NUT	
60HZ						
015	568805-0000	-		1	PIPE	
017	442236-0000	-		1	THROTTLE SCREW	
018	442237-0000	-		1	NUT	
019	315202-0119	-		1	O-RING 25,1X1,6	
275	90217-0026	-		1	NUT	
Common parts						
F005	A 594619-0100	-		1	CHANGE-OVER VALVE	**47**
F010	A 569003-0100	-		1	SEPARATION INSERT	**49**
F030	A 575475-0100	-		1	SCRUBBER	**51**
020	449130-0000	D		1	CONNECTING PIPE	
025	451321-0000	-		1	COVER	
040	568804-0000	-		1	PIPE	
041	555544-0000	-		1	PIPE	
050	568807-0000	D		1	PIPE	
060	568808-0000	D		1	PIPE	
080	568809-0000	-		1	PIPE	
097	526782-0000	-		1	COVERING PLATE	
098	451323-0000	-		1	SHEET	
099	451324-0000	D		1	PIPE	
100	568810-0000	D		1	PIPE	
110	571086-0000	D		1	BRACKET	
120	230551-0000	F		2	GASKET	
130	531742-0000	F		1	GASKET	
190	269859-0000	D		2	BRACKET	
230	282682-0000	D		1	BRACKET	
235	282683-0000	D		1	BRACKET	
243	295878-0000	D		1	THROTTLE SCREW	
244	295879-0000	D		1	NUT	
248	479234-0000	-		1	WASHER	
255	90012-0063	D		1	GLAND	
260	90030-0187	K		3	STRAIGHT CONNECTION GA-12-G3/8"	
268	90030-0115	-		1	ELBOW CONNECTION WA 12-R3/8	
290	B 90270-0011	D		1	COMPRESSOR ELMO RA112"REPBY 90270-	
17"						
292	90270-0347	-		1	VALVE	
298	90274-0045	K		1	GUARD	
307	90330-0012	K		1	SLEEVE,REDUCTION Rp1/8"-Rp1/4"	
310	90330-0078	-		1	BUSHING,INT./EXT.R-THREAD R3/4"-Rp3/8"	
320	90347-0026	K		4	DAMPER	
370	312105-0366	-		18	SCREW M6S ISO 4017 M6X12 A280	
375	312105-0368	-		8	SCREW M6S ISO 4017 M6X16 A280	
380	312105-0370	-		6	SCREW M6S ISO 4017 M6X20 A280	
385	312105-0372	-		5	SCREW M6S ISO 4017 M6X25 A280	
388	312105-0374	-		1	SCREW M6S ISO 4017 M6X30 A280	
390	312105-0447	-		4	SCREW M6S ISO 4017 M8X12 A280	
400	312105-0491	-		6	SCREW M6S ISO 4017 M10X20 A280	
410	312105-0497	-		8	SCREW M6S ISO 4017 M10X35 A280	
440	312303-0497	-		4	STUD SCREWMPS 10X25 RFR	
470	312605-0316	-		12	NUT M6M6RFR	
480	312605-0320	-		10	NUT M6M10RFR	
495	315105-0153	-		14	WASHER BRB6,4X12RFR	
500	315105-0165	-		4	WASHER BRB8,4X16RFR	
510	315105-0173	-		14	WASHER BRB10,5X22RFR	
610	315204-0222	-		2	O-RING 36,2X3VITON	
617	315204-0223	-		2	O-RING 39,39,2X3VITON	
620	315204-0302	-		1	O-RING 54,5X3VITON	
622	315204-0304	-		1	O-RING 64,5X3 VITON	
625	315233-0113	-		1	SEAL RING R1/2"	
630	315250-0101	-		5	GASKET 32/25	
635	342713-0213	-		1	PLUG,EXT.G-THREAD,HEXAGON SOCKET	
G1/2"						
640	342797-0121	-		2	BANJO CONNECTION,RINGPIECE 6-1/8"	
650	342980-0303	-		2	BANJO-HOLLOW BOLT COUPL,EXT.THR.01-	
G1/8"						
655	352103-0111	-		1	CABLE GLAND ST 16	
660	352136-0127	D		1	GLAND FITTING	

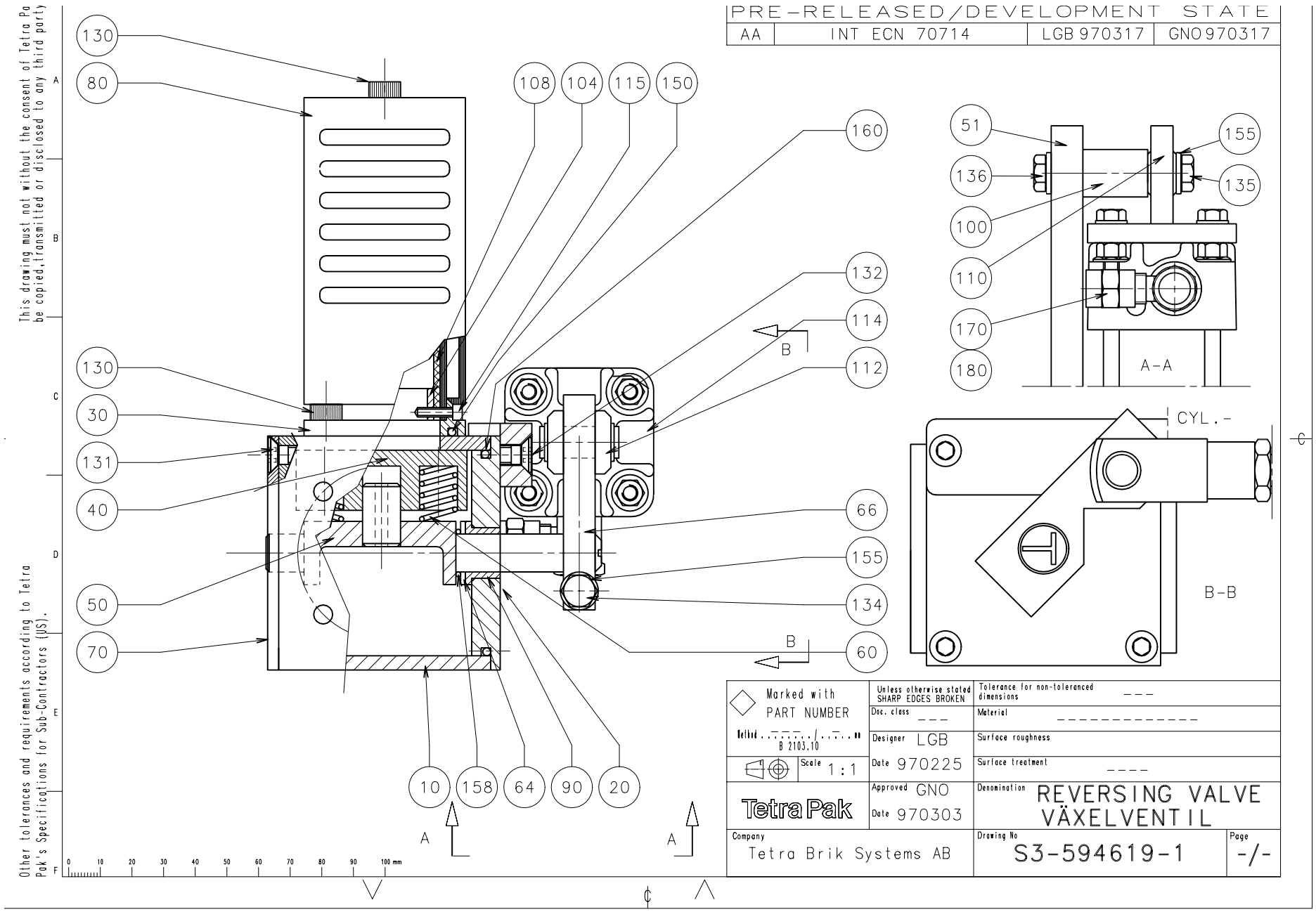
PRE-RELEASED/DEVELOPMENT STATE
AA | INT ECN 70714 | LGB 970317 | GNO 970317
130
80
108
104
115
150
160
132
114
112
B
130
30
131
40
66
155
134
50
70
60
B
51
136
100
110
170
180
155
135
A-A
CYL.-
B-B
10
158
64
90
20
A
A
This drawing must not without the consent of Tetra Pa be copied,transmitted or disclosed to any third party
Other tolerances and requirements according to Tetra Pak's Specifications for Sub-Contractors (US).
0 10 20 30 40 50 60 70 80 90 100 mm
Marked with PART NUMBER
Method ... / ... B 2103.10
Scale 1:1
Tetra Pak
Unless otherwise stated SHARP EDGES BROKEN
Doc. class ---
Designer LGB
Date 970225
Approved GNO
Date 970303
Company Tetra Brik Systems AB
Tolerance for non-toleranced dimensions ---
Material ---
Surface roughness
Surface treatment ----
Denomination REVERSING VALVE VÄXELVENTIL
Drawing No S3-594619-1
Page -/-

Pos	Part No	SP	UN	Qty	Description	Page No
-						
010	B 466474-0000	-		1	VALVE HOUSING	
020	441957-0000	-		1	BEARING COVER	
030	466477-0000	-		1	INNER PIPE	
040	466479-0000	K		1	PIECE	
050	555541-0000	-		1	BRACKET	
051	555542-0000	-		1	BRACKET	
060	21521-0000	K		2	COMPRESSION SPRING	
064	266737-0000	-		1	WASHER	
066	441483-0000	-		1	CYLINDER BRACKET	
070	255874-0000	-		1	BEARING COVER	
080	466478-0000	-		1	OUTER PIPE	
090	255875-0000	K		2	BUSHING	
100	555540-0000	-		1	SPACER	
104	466483-0000	-		1	CLAMPING PIECE	
108	466484-0000	-		1	NET	
110	90239-0453	-		1	BRACKET	
112	90239-0516	-		1	PISTON ROD HEAD	
114	B 90239-0779	-		1	CYLINDER	
115	312115-0224	-		2	SCREW S 3X10 A4 80	
130	312115-0364	-		5	SCREW 6X10 A4 80	
131	312155-0364	-		6	SCREW MF6S6X10RFR	
132	312155-0370	-		2	SCREW MF6S DIN 7991 M6X20 A280	
134	312105-0370	-		1	SCREW M6S ISO 4017 M6X20 A280	
135	312105-0364	-		2	SCREW M6S6X10RFR	
136	312105-0368	-		1	SCREW M6S ISO 4017 M6X16 A280	
150	315204-0222	-		1	O-RING 36,2X3VITON	
155	315105-0153	-		3	WASHER BRB6,4X12RFR	
158	315204-0110	-		1	O-RING 1X1,6 VITON	
160	315204-0302	K		2	O-RING 54,5X3VITON	
170	342797-0121	-		2	BANJO CONNECTION,RINGPIECE 6-1/8"	
180	342980-0303	-		2	BANJO-HOLLOW BOLT COUPL,EXT.THR.01-G1/8"	

Pos	Part No	SP	UN	Qty	Description	Page No

SEPARATION INSERT

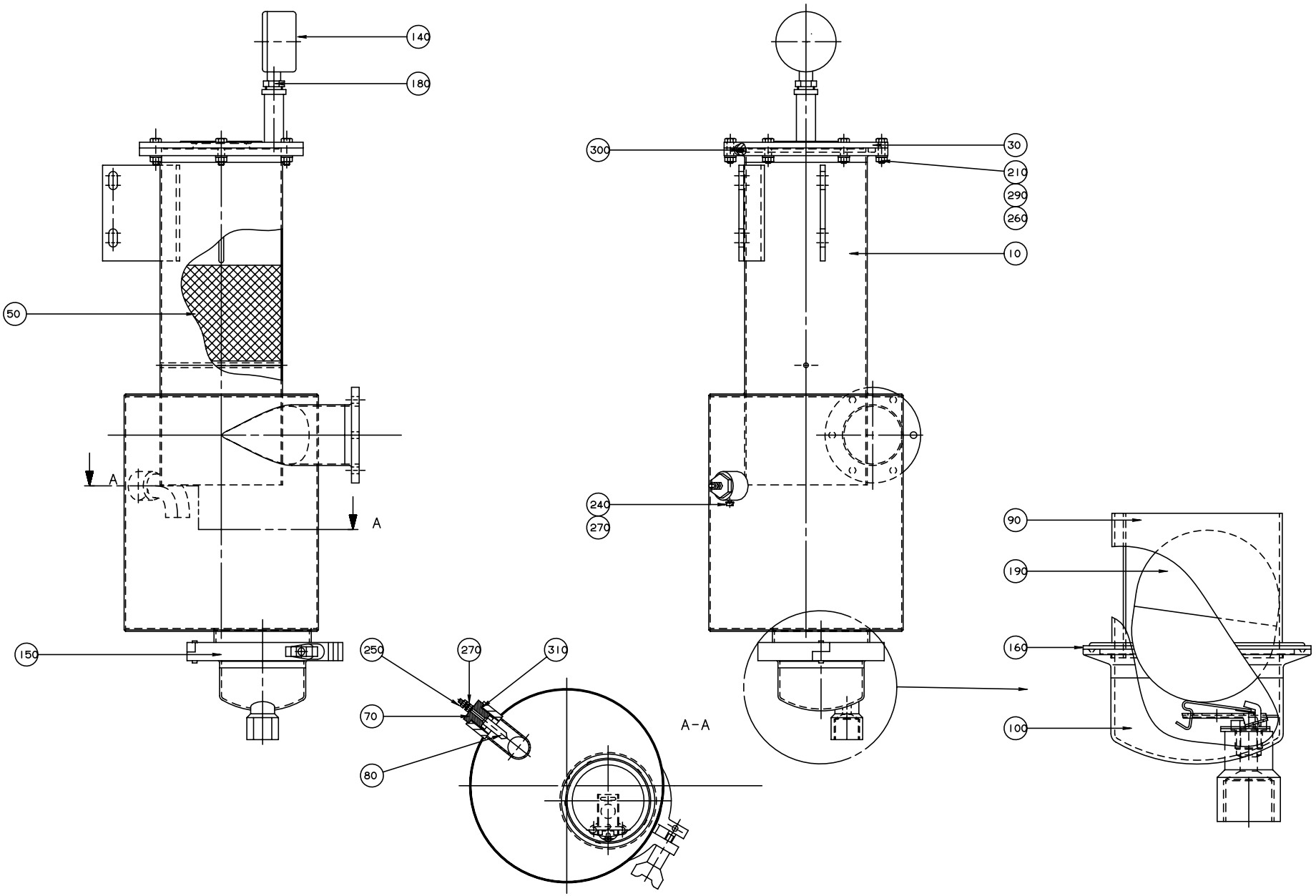

S-569003-1
ECN 16831

Pos	Part No	SP	UN	Qty	Description	Page No
-						
010	568802-0000	-		1	CONTAINER	
030	568827-0000	-		1	LID	
050	546929-0000	D		1	FILTER	
070	1279457-0000	R		1	BRACKET	
080	567070-0013	R		1	ELECTRODE	
090	568828-0000	-		1	FLOAT GUARD	
100	B 571088-0000	-		1	DRAINING	
140	90043-0095	D		1	PRESSURE GAUGE	
150	90217-0312	-		1	CRAMP	
160	90217-0313	K		1	SEAL	
180	90330-0042	-		1	BUSHING,INT./EXT.R-THREAD R3/8"-Rp1/4"	
190	90360-0305	D		1	FLOAT	
210	312105-0372	-		6	SCREW M6S ISO 4017 M6X25 A280	
240	312125-0285	-		1	SLOTTED HEMCS4X6RFR	
250	312605-0312	-		2	NUT M6M4RFR	
260	312605-0316	-		6	NUT M6M6RFR	
270	315105-0136	-		5	WASHER BRB4,3X8RFR	
290	315105-0153	-		6	WASHER BRB6,4X12RFR	
300	315202-0244	F		1	O-RING 134,3X5,7	
310	315204-0213	-		1	O-RING 15,3X2,4VITON	

Pos	Part No	SP	UN	Qty	Description	Page No

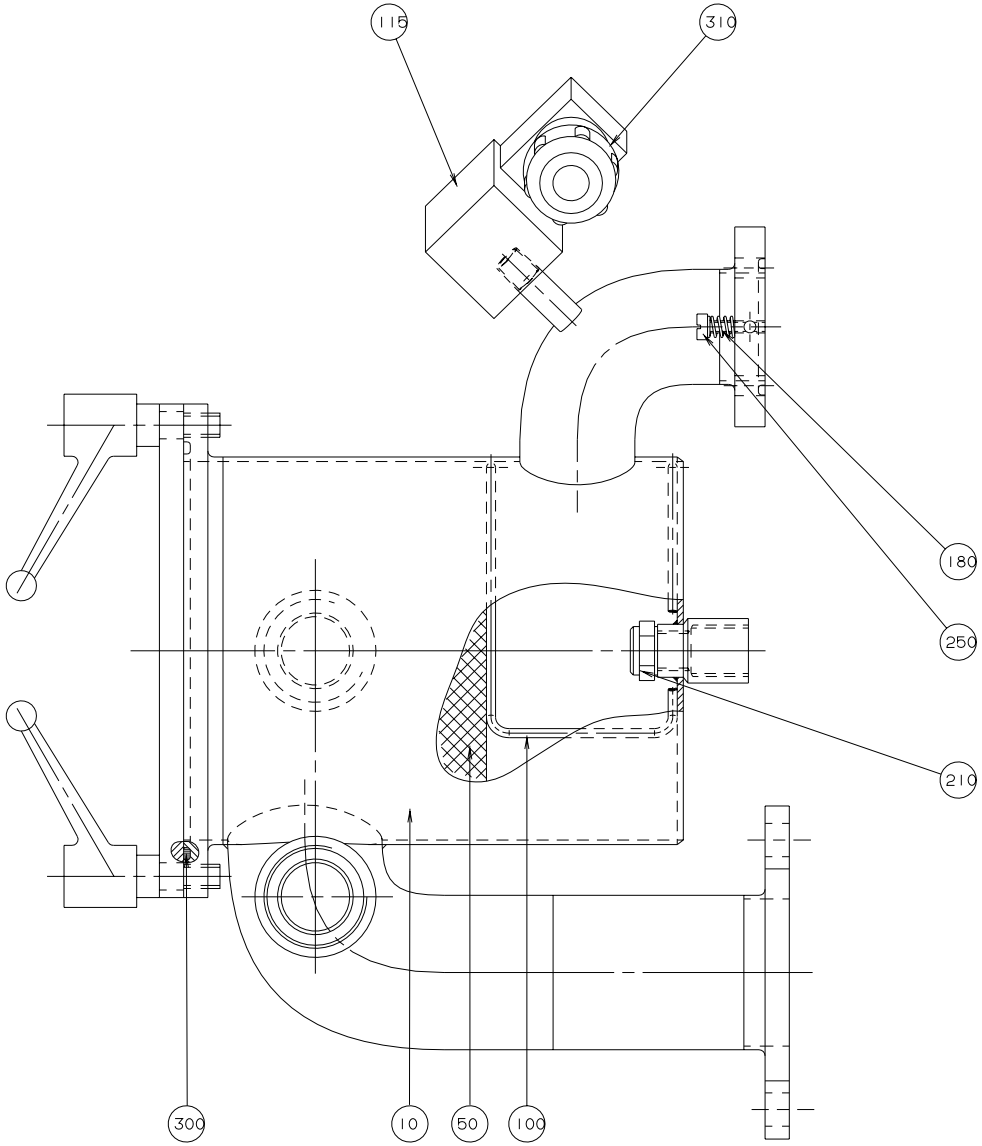

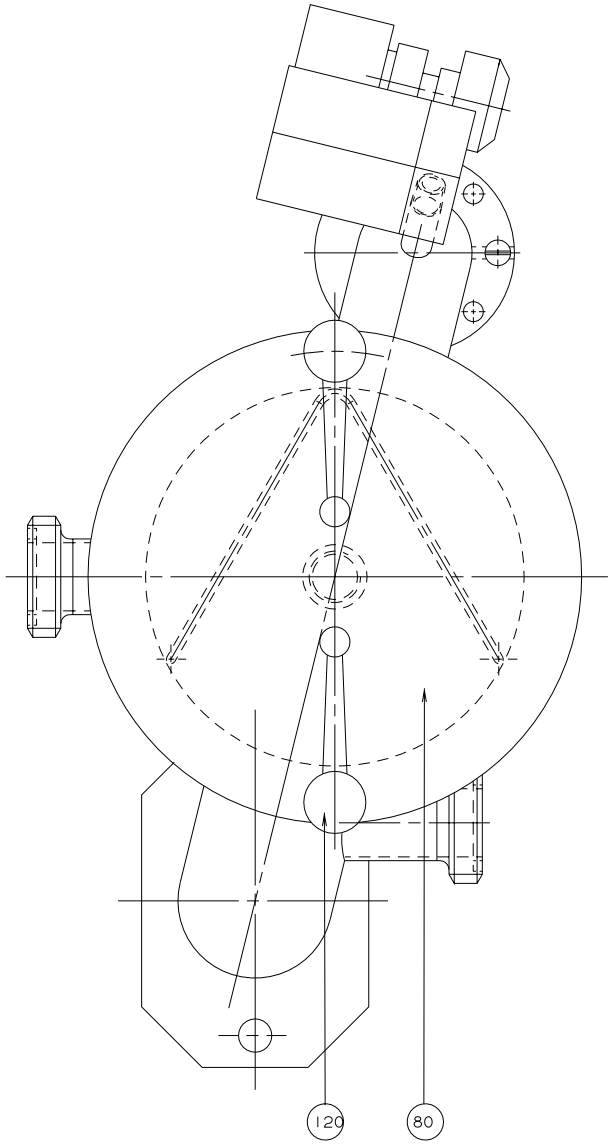

S-575475-1
ECN 19538

Pos	Part No	SP	UN	Qty	Description	Page No
-						
010	568803-0000	-		1	CONTAINER	
050	546929-0000	D		1	FILTER	
080	568806-0000	-		1	LID	
100	571087-0000	-		1	RETAINING RING	
115	90042-0187	-		1	SOLENOID VALVE	
120	90117-0008	-		2	HANDLE	
180	90335-0034	-		1	SPRING	
210	90424-0054	D		1	NOZZLE	
250	312125-0327	-		1	SLOTTED CHEESE HEAD ISO 1207 M5X12	
RFR						
300	315202-0317	K		1	O-RING 129,5X3	
310	352136-0113	-		1	GLAND FITTING	

Pos	Part No	SP	UN	Qty	Description	Page No

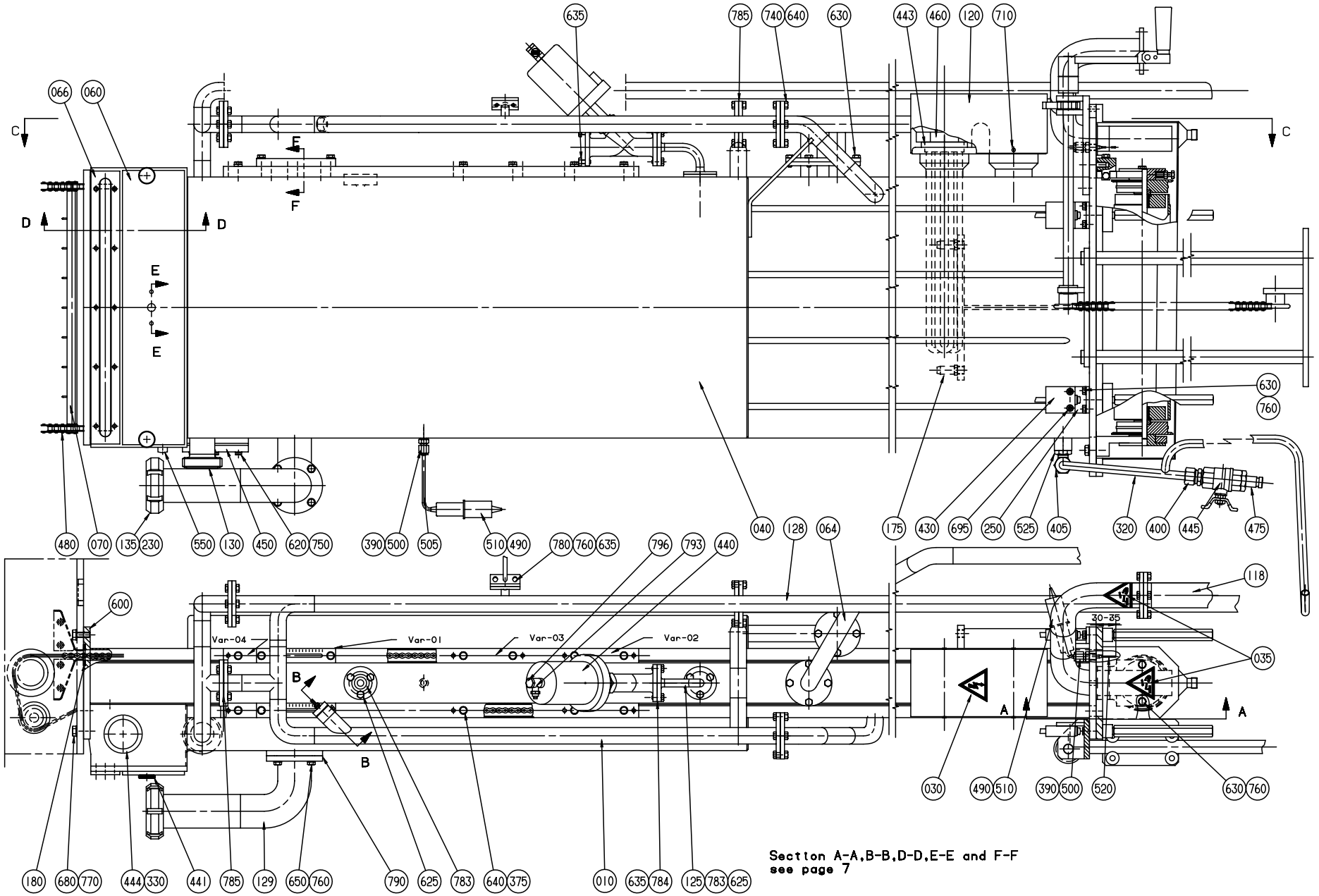

Section A-A,B-B,D-D,E-E and F-F
see page 7

S-269941-6
ECN 22848

Pos	Part No	SP	UN	Qty	Description	Page No
0355B or 0400B or 0500B						
010	561421-0000	D		1	OVERFLOW TUBE	
0375S or 0500S or 0750B						
010	561422-0000	D		1	OVERFLOW TUBE	
0750S or 1000B or 1055B						
010	561420-0000	D		1	OVERFLOW TUBE	
1000S or 1000SQ						
010	927085-0000	-		1	OVERFLOW TUBE	
Common parts						
F460	A 269932-0500	-		1	BOTTOM COVER	**57**
030	90194-0016	-		1	SIGN "FLASH SIGN" 50X50MM	
035	359705-0003	-		2	WARNING SIGN"CORROSION"	
040	560614-0000	D		1	BATH	
060	273934-0000	D		1	LID	
062	273961-0000	F		1	SEAL	
064	450509-0000	-		1	PIPE	
066	476087-0000	D		1	LID	
070	247236-0000	K		1	CARRIER	
075	541177-0000	D		1	BENDING ROLLER	
100	279471-0000	-		1	CANTILEVER	
118	560615-0000	-		1	PIPE	
120	450512-0000	-		1	COVER	
125	476400-0000	-		1	PIPE	
128	542075-0000	-		1	PIPE	
129	551340-0000	-		1	FILLER TUBE	
130	12242-0003	F		1	GASKET	
135	12242-0005	F		1	GASKET	
150	247160-0000	-		1	AXLE SUPPORT	
160	531167-0000	D		1	SHAFT	
165	531168-0000	K		2	WHEEL	
170	247241-0000	-		1	AXLE SUPPORT	
175	247248-0000	-		2	PIN	
180	247252-0000	K		1	GASKET	
185	531169-0000	K		2	WASHER	
215	267056-0000	D		1	BEARING CONSOLE	
230	90217-0047	D		1	NUT	
235	273937-0000	F		1	DIAPHRAGM	
240	273938-0000	D		1	WASHER	
250	279472-0000	-		4	FASTENING BRACKET	
280	279478-0000	-		1	BEARING PLATE	
320	560472-0000	-		1	PIPE	
330	293405-0000	D		2	GASKET	
350	567070-0012	K		1	ELECTRODE	
351	560931-0000	-		1	BRACKET	
355	543470-0000	K		2	LEVEL GLASS	
360	476398-0000	K		2	LID	
365	569016-0000	K		4	GASKET	
375	479025-0000	K		10	WASHER	
390	273429-0000	K		2	WASHER	
400	90030-0109	K		1	PIPE CONNECTION	
405	90030-0115	-		1	ELBOW CONNECTION WA 12-R3/8	
430	90044-0084	F		4	LIMITSW.14CE1-4 HONEYWELL	
440	544896-0000	K		1	VALVE	
441	491126-0000	-		2	SCREW	
442	90143-0020	F	MM	900	STRIP	
443	90144-0004	-	MM	x	TAPE	
444	90153-0016	-	ML	x	ADHESIVE	
445	90187-0081	-		1	BALL VALVE	
450	90199-0010	K		1	LEVEL GLASS	
460	B 90206-0070	F		2	HEATING ELEMENT	
470	90240-0146	K		2	FLANGE BUSHING	
475	90224-0078	-		1	CONNECTION	
480	560617-0000	K		2	ROLLER CHAIN	
490	90326-0012	F		2	PROTECTIVE COVER	
500	90326-0017	K		2	GLAND "REPBY 90326-306"	
505	90326-0019	F		1	THERMOELEMENT	
510	90326-0020	F		2	PLUG,FEMALE YELLOW CR-AL	
520	90326-0043	F		1	THERMOCOUPLE CR-ALPREM.G	
525	90330-0048	-		1	BUSHING,INT./EXT.R-THREAD R1/2"-Rp3/8"	
550	90330-0066	-		1	PLUG,EXTERNAL G-THREAD G1/8"	
600	311103-0310	-		2	CYLINDRICACP M6 5X20 RFR	
615	312105-0325	-		2	SCREW M6S5X10 A2 80	
620	312105-0332	-		6	SCREW M6S5X22RFR	
625	312105-0364	-		6	SCREW M6S6X10RFR	
630	312105-0366	-		20	SCREW M6S ISO 4017 M6X12 A280	
635	312105-0367	-		10	SCREW M6S6X14RFR	
640	312105-0368	-		40	SCREW M6S ISO 4017 M6X16 A280	
650	312105-0370	-		10	SCREW M6S ISO 4017 M6X20 A280	
660	312105-0371	-		2	SCREW M6S6X22RFR	
670	312105-0376	-		2	SCREW M6S ISO 4017 M6X35 A280	
680	312105-0451	-		6	SCREW M6S ISO 4017 8X20 A280	
690	312105-0452	-		4	SCREW M6S8X22RFR	
695	312115-0329	-		8	SCREW MC6S ISO 4762 M5X16 A280	
710	312125-0220	-		4	SLOTTED HEMCS3X6RFR	
720	312125-0285	-		1	SLOTTED HEMCS4X6RFR	

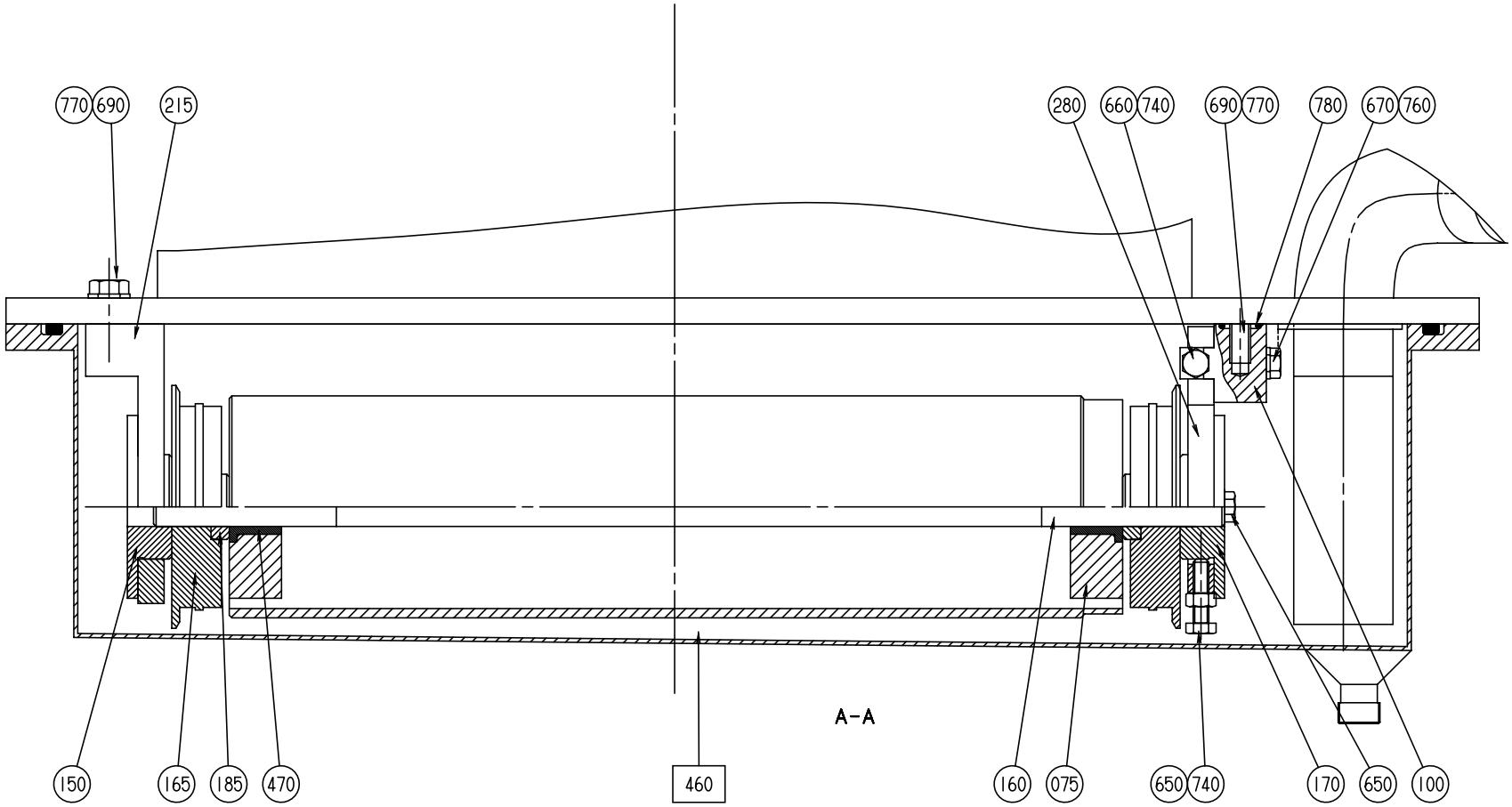

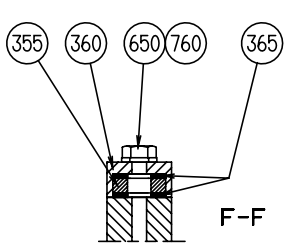

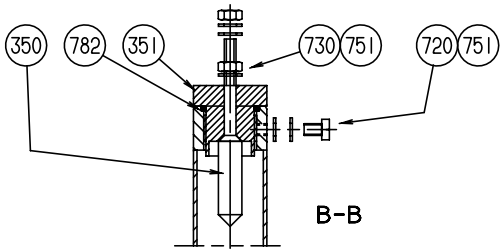

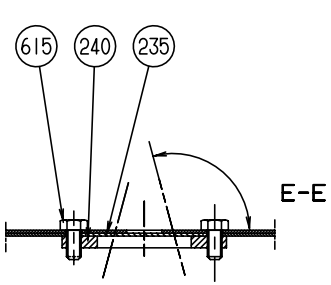

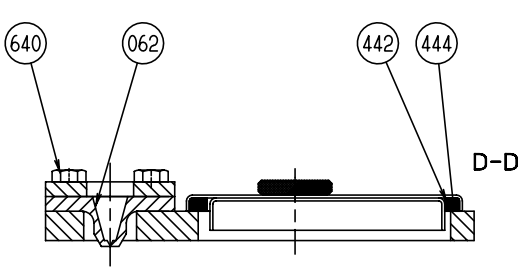

S-269941-7
ECN 18018

Pos	Part No	SP	UN	Qty	Description	Page No
730	312605-0312	-		2	NUT M6M4RFR	
740	312605-0316	-		23	NUT M6M6RFR	
750	315105-0146	-		6	WASHER BRB5,3X10RFR	
751	315105-0136	-		5	WASHER BRB4,3X8RFR	
760	315105-0153	-		22	WASHER BRB6,4X12RFR	
770	315105-0165	-		10	WASHER BRB8,4X16RFR	
780	927421-0001	-		5	O-RING 9.3X2.4 SILICON	
782	927421-0003	-		1	O-RING 13.3X2.4 SILICON	
783	927422-0001	-		1	O-RING 19.2X3 SILICON	
784	927422-0004	-		1	O-RING 29.2X3 SILICON	
785	927422-0006	-		7	O-RING 42.2X3 SILICON	
790	927422-0009	-		1	O-RING 54.5X3 SILICON	
793	342797-0122	-		1	BANJO CONNECTION,RINGPIECE 6-1/4"	
796	342980-0304	-		1	BANJO-HOLLOW BOLT COUPL,EXT.THR.01-G1/4"	

Pos	Part No	SP	UN	Qty	Description	Page No

BOTTOM COVER

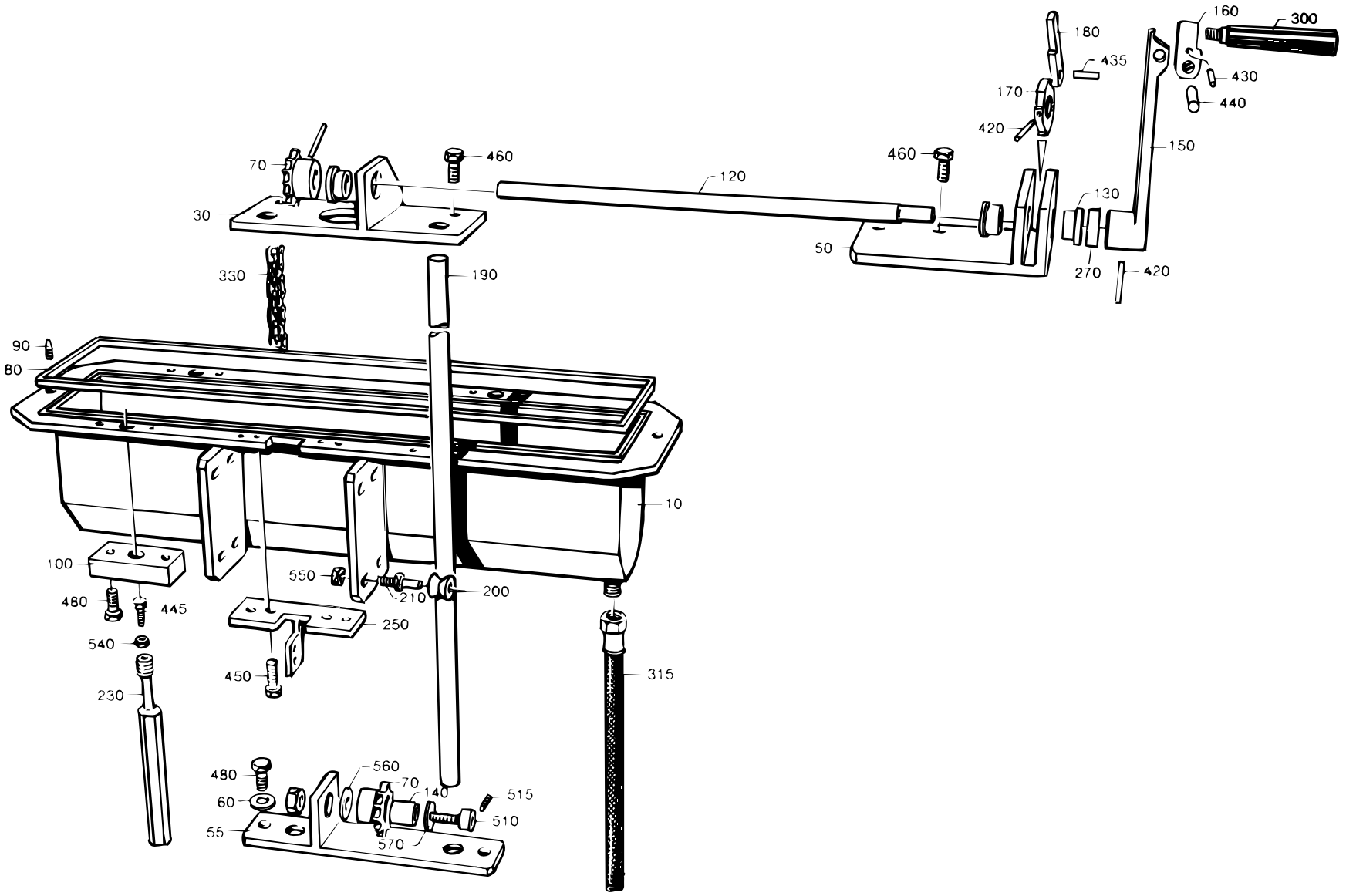

S-269932-4
ECN 20817

Pos	Part No	SP	UN	Qty	Description	Page No
-						
010	269929-0000	D		1	COVER	
030	263572-0000	D		1	CANTILEVER	
050	263574-0000	D		1	BEARING CONSOLE	
055	450846-0000	-		1	CANTILEVER	
060	38087-0000	-		2	WASHER	
070	247357-0000	K		2	SPROCKET	
080	263575-0000	F		1	GASKET	
090	263576-0000	K		2	GUIDE STUD	
100	263579-0000	K		4	WASHER	
130	263585-0000	F		3	BUSHING	
140	263586-0000	F		1	BUSHING	
150	263587-0000	D		1	CRANK	
160	263588-0000	K		1	JOINT	
170	263589-0000	K		1	RATCHET	
180	263590-0000	K		1	BARRIER	
190	560616-0000	D		2	PILLAR	
200	263592-0000	F		8	WHEEL	
210	263593-0000	F		8	SHAFT	
230	269930-0000	K		4	SCREW	
250	297163-0000	D		1	CARRIER	
260	547567-0000	D		1	SHAFT	
270	547568-0000	-		1	SPACER	
300	90051-0065	D		1	HANDLE	
315	B 484189-0000	-		1	HIGH PRESSURE HOSE	
330	90288-0062	K		1	ROLLER CHAIN	
420	311103-0276	-		3	CYLINDRICACP M6 4X30 RFR	
430	311103-0310	-		1	CYLINDRICACP M6 5X20 RFR	
435	311103-0357	-		1	CYLINDRICACP M6 6X30 RFR	
440	311103-0401	-		1	CYLINDRICACP M6 8X20 RFR	
445	312105-0329	-		4	SCREW M6S ISO 4017 M5X16 A280	
450	312105-0366	-		4	SCREW M6S ISO 4017 M6X12 A280	
460	312105-0368	-		4	SCREW M6S ISO 4017 M6X16 A280	
480	312105-0372	-		10	SCREW M6S ISO 4017 M6X25 A280	
510	312180-0493	-		1	HEX. SOCKET HEAD SHOULD. ISO 7379	
M8X25						
515	312318-0325	-		2	STOP SCREW SK6SS5X10RFR	
540	312605-0314	-		4	NUT M6M5RFR	
550	312605-0318	-		9	NUT M6M8RFR	
560	315105-0165	-		1	WASHER BRB8,4X16RFR	
570	315105-0173	-		1	WASHER BRB10,5X22RFR	

Pos	Part No	SP	UN	Qty	Description	Page No

CONNECTION ASSEMBLY

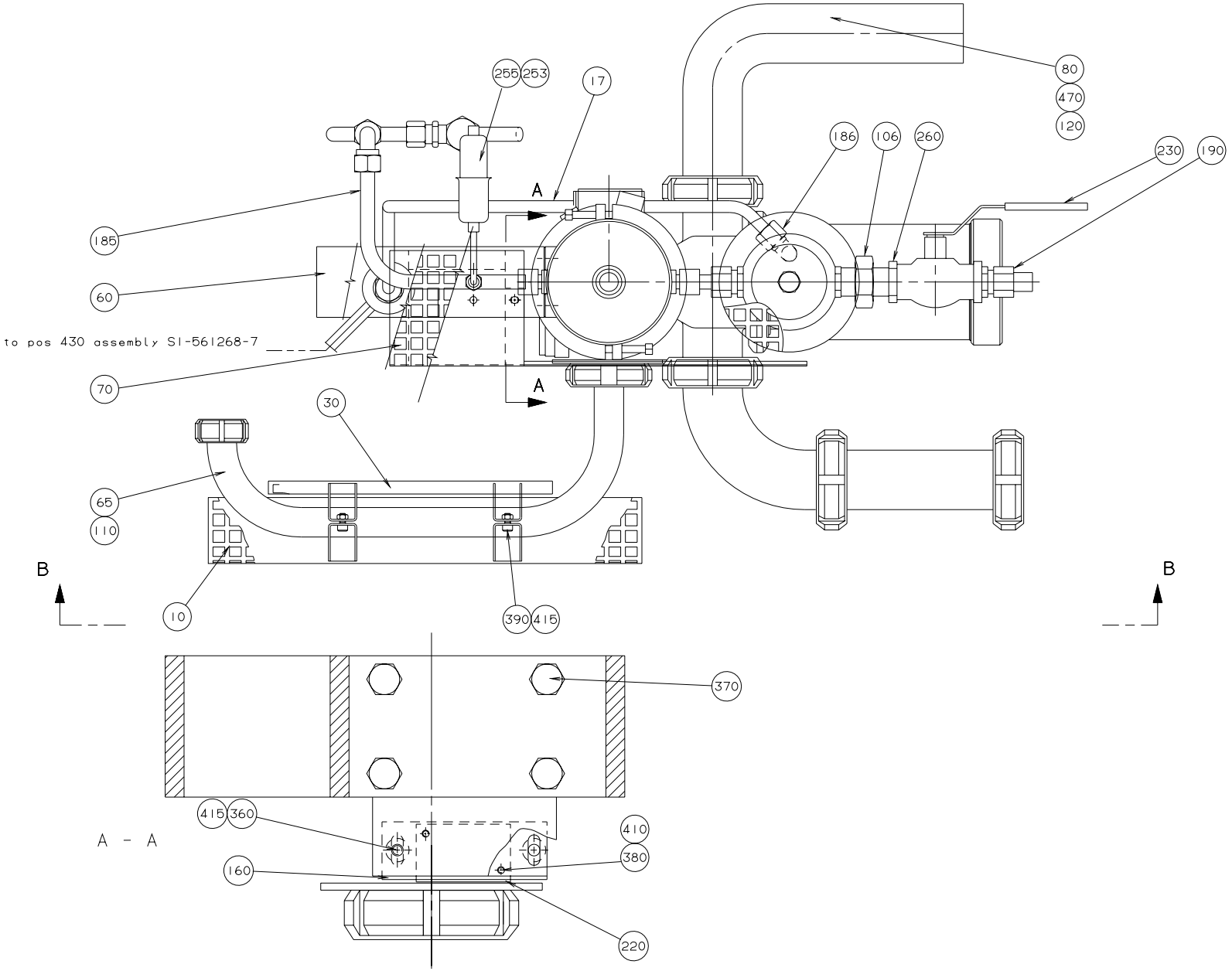

S-561268-5
ECN 20501

Pos	Part No	SP	UN	Qty	Description	Page No
2"						
050	255368-0000	D		1	PRESSURE GAUGE TUBE	
080	440977-0000	D		1	ATTACHMENT PIPE	
090	440978-0000	D		1	PIPE BEND	
120	12242-0005	F		4	GASKET	
470	342803-0104	-		1	NUT 51	
3"						
050	436779-0000	D		1	PRESSURE GAUGE TUBE	
080	436778-0000	D		1	PIPE	
090	445515-0000	D		1	PIPE BEND	
120	436781-0000	F		4	GASKET	
470	342803-0106	-		1	NUT 76	
Common parts						
F475	A 440630-0200	-		1	AP-VALVE	**65**
010	273547-0001	D		1	TOUCH GUARD	
015	927195-0000	-		1	PIPE	
016	927196-0000	-		1	PIPE	
017	927198-0000	-		1	PIPE	
030	273548-0001	D		1	TOUCH GUARD	
060	554582-0000	-		1	CANTILEVER	
065	484047-0000	D		1	PIPE	
070	560929-0000	-		1	TOUCH GUARD	
075	752176-0000	-		1	PROTECTIVE CASING	
082	927197-0000	-		1	PIPE	
084	927199-0000	-		2	CLAMP BRACKET	
086	927200-0000	-		1	PIPE	
095	927226-0000	-		1	PIPE	
100	927311-0000	-		1	PIPE	
106	90330-0106	-		1	PIPE COUPLING	
110	12242-0003	F		2	GASKET	
130	37768-0000	F		1	THERMOCOUPLE CR-AL	
160	297195-0000	-		1	SPACER	
170	440647-0000	-		1	SLEEVE	
175	752711-0000	-		1	PIPE	
180	440731-0000	-		1	PLATE	
185	560927-0000	-		1	PIPE	
186	90030-0070	-		1	ELBOW CONNECTION WA 10-R1/4"	
187	90030-0096	-		1	ELBOW CONNECTION W-12	
190	90030-0109	K		1	PIPE CONNECTION	
191	90030-0180	-		1	STRAIGHT CONNECTION GE 12-1/2-14 NPTF	
194	90030-0083	-		2	STRAIGHT CONNECTION GE 10-1/4-18 NPTF	
195	90030-0187	D		2	STRAIGHT CONNECTION GA-12-G3/8"	
220	90044-0104	F		2	PROX.SWITCHIFM IN 3002	
223	90163-0057	D		4	NIPPLE	
225	90030-0088	-		2	PIPE CONNECTION	
226	90163-0062	D		4	SLEEVE	
230	90187-0082	K		1	BALL VALVE	
243	90224-0307	D		4	CONNECTION	
246	90224-0308	D		3	BANJO CONNECTION	
248	90235-0259	-		1	VALVE	
250	90235-0274	K		1	THROTTLE CHECK VALVES,G1/8"	
253	90326-0012	F		1	PROTECTIVE COVER	
255	90326-0020	F		1	PLUG,FEMALE YELLOW CR-AL	
258	90328-0003	-		1	SILENCER	
260	90330-0021	-		1	NIPPLES,HEXAGON,EXT.R-THREAD R1/2"- R1/2"	
270	90330-0032	-		1	NIPPLE	
335	B 90277-0055	-		1	FILTER	
340	90337-0315	-		1	FILTER	
341	90360-0011	-		1	STEAM TRAP "REPBY 90360-25	
345	90360-0009	-		1	STEAM TRAP	
350	315105-0136	-		2	WASHER BRB4,3X8RFR	
360	312105-0331	-		2	SCREW M6S ISO 4017 M5X20 A280	
365	312105-0364	-		2	SCREW M6S6X10RFR	
370	312105-0451	-		8	SCREW M6S ISO 4017 8X20 A280	
380	312115-0228	-		4	SCREW MC6S ISO 4762 M3X16 A280	
385	312115-0305	-		2	SCREW MC6S ISO 4762 M4X50 A280	
390	312115-0329	-		4	SCREW MC6S ISO 4762 M5X16 A280	
400	312155-0532	-		1	SCREW MF6S12X20RFR	
410	315105-0124	-		4	WASHER BRB3,2X6RFR	
415	315105-0146	-		6	WASHER BRB5,3X10RFR	
418	342727-0208	-		1	PIPE CONNECTION G-10-L/SY	
420	342737-0212	-		1	ELBOW CONNECTION W-10 LRFR	
430	342739-0108	-		1	ELBOW BULKHEAD CONNECTOR WSV 10	
500	342980-0303	-		2	BANJO-HOLLOW BOLT COUPL,EXT.THR.01-G1/8"	
510	346800-0109	D		2	SILENCER FILTER R1/8"	

CONNECTION ASSEMBLY

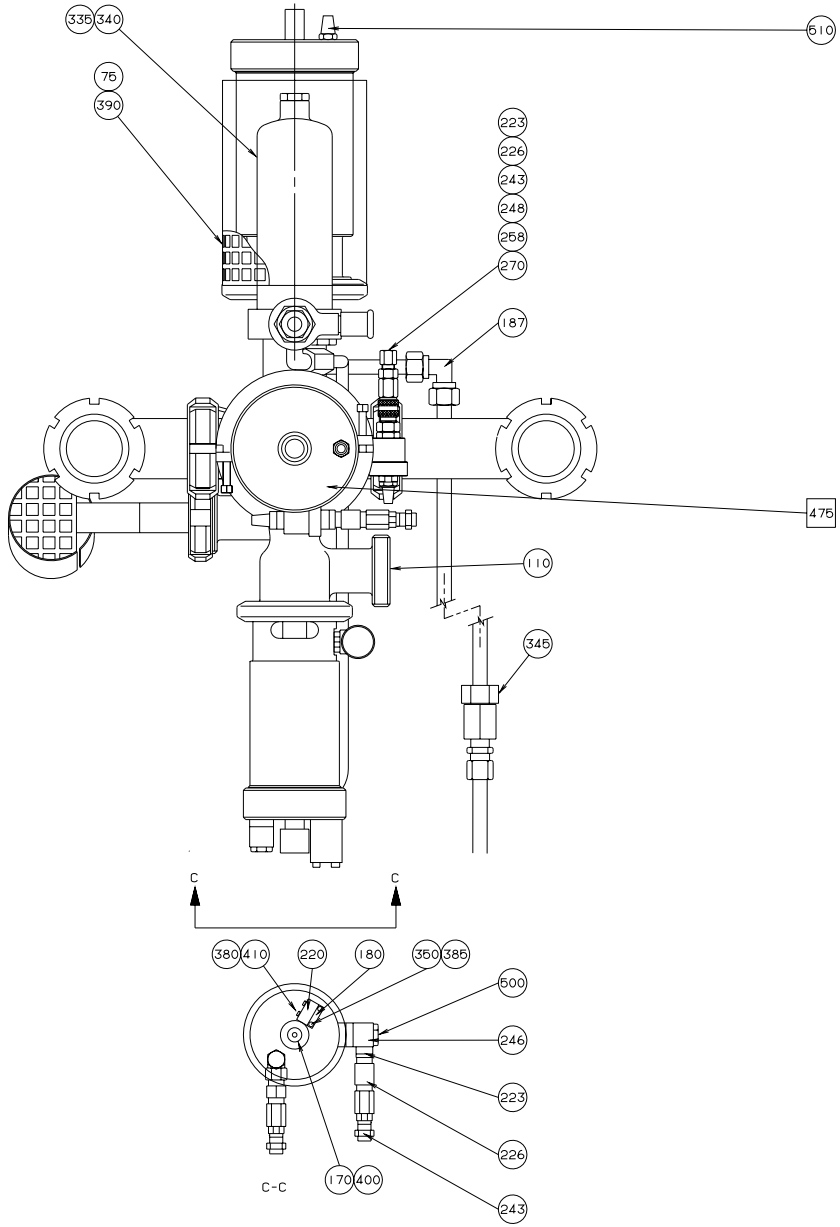

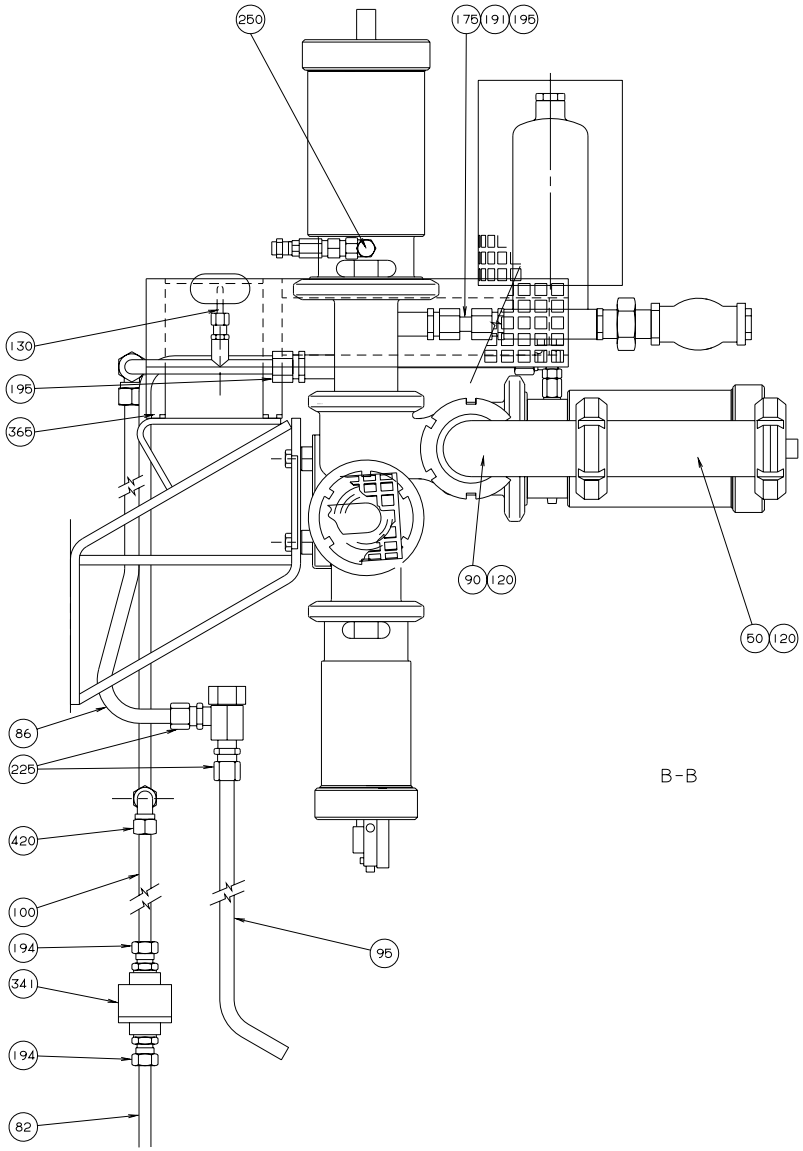

S-561268-6
ECN 21064

Pos	Part No	SP	UN	Qty	Description	Page No
2"						
050	255368-0000	D		1	PRESSURE GAUGE TUBE	
080	440977-0000	D		1	ATTACHMENT PIPE	
090	440978-0000	D		1	PIPE BEND	
120	12242-0005	F		4	GASKET	
470	342803-0104	-		1	NUT 51	
3"						
050	436779-0000	D		1	PRESSURE GAUGE TUBE	
080	436778-0000	D		1	PIPE	
090	445515-0000	D		1	PIPE BEND	
120	436781-0000	F		4	GASKET	
470	342803-0106	-		1	NUT 76	
Common parts						
F475	A 440630-0200	-		1	AP-VALVE	
010	273547-0001	D		1	TOUCH GUARD	
015	927195-0000	-		1	PIPE	
016	927196-0000	-		1	PIPE	
017	927198-0000	-		1	PIPE	
030	273548-0001	D		1	TOUCH GUARD	
060	554582-0000	-		1	CANTILEVER	
065	484047-0000	D		1	PIPE	
070	560929-0000	-		1	TOUCH GUARD	
075	752176-0000	-		1	PROTECTIVE CASING	
082	927197-0000	-		1	PIPE	
084	927199-0000	-		2	CLAMP BRACKET	
086	927200-0000	-		1	PIPE	
095	927226-0000	-		1	PIPE	
100	927311-0000	-		1	PIPE	
106	90330-0106	-		1	PIPE COUPLING	
110	12242-0003	F		2	GASKET	
130	37768-0000	F		1	THERMOCOUPLE CR-AL	
160	297195-0000	-		1	SPACER	
170	440647-0000	-		1	SLEEVE	
175	752711-0000	-		1	PIPE	
180	440731-0000	-		1	PLATE	
185	560927-0000	-		1	PIPE	
186	90030-0070	-		1	ELBOW CONNECTION WA 10-R1/4"	
187	90030-0096	-		1	ELBOW CONNECTION W-12	
190	90030-0109	K		1	PIPE CONNECTION	
191	90030-0180	-		1	STRAIGHT CONNECTION GE 12-1/2-14 NPTF	
194	90030-0083	-		2	STRAIGHT CONNECTION GE 10-1/4-18 NPTF	
195	90030-0187	D		2	STRAIGHT CONNECTION GA-12-G3/8"	
220	90044-0104	F		2	PROX.SWITCHIFM IN 3002	
223	90163-0057	D		4	NIPPLE	
225	90030-0088	-		2	PIPE CONNECTION	
226	90163-0062	D		4	SLEEVE	
230	90187-0082	K		1	BALL VALVE	
243	90224-0307	D		4	CONNECTION	
246	90224-0308	D		3	BANJO CONNECTION	
248	90235-0259	-		1	VALVE	
250	90235-0274	K		1	THROTTLE CHECK VALVES,G1/8"	
253	90326-0012	F		1	PROTECTIVE COVER	
255	90326-0020	F		1	PLUG,FEMALE YELLOW CR-AL	
258	90328-0003	-		1	SILENCER	
260	90330-0021	-		1	NIPPLES,HEXAGON,EXT.R-THREAD R1/2"- R1/2"	
270	90330-0032	-		1	NIPPLE	
335	B 90277-0055	-		1	FILTER	
340	90337-0315	-		1	FILTER	
341	90360-0011	-		1	STEAM TRAP "REPBY 90360-25	
345	90360-0009	-		1	STEAM TRAP	
350	315105-0136	-		2	WASHER BRB4,3X8RFR	
360	312105-0331	-		2	SCREW M6S ISO 4017 M5X20 A280	
365	312105-0364	-		2	SCREW M6S6X10RFR	
370	312105-0451	-		8	SCREW M6S ISO 4017 8X20 A280	
380	312115-0228	-		4	SCREW MC6S ISO 4762 M3X16 A280	
385	312115-0305	-		2	SCREW MC6S ISO 4762 M4X50 A280	
390	312115-0329	-		4	SCREW MC6S ISO 4762 M5X16 A280	
400	312155-0532	-		1	SCREW MF6S12X20RFR	
410	315105-0124	-		4	WASHER BRB3,2X6RFR	
415	315105-0146	-		6	WASHER BRB5,3X10RFR	
418	342727-0208	-		1	PIPE CONNECTION G-10-L/SY	
420	342737-0212	-		1	ELBOW CONNECTION W-10 LRFR	
430	342739-0108	-		1	ELBOW BULKHEAD CONNECTOR WSV 10	
500	342980-0303	-		2	BANJO-HOLLOW BOLT COUPL,EXT.THR.01-G1/8"	
510	346800-0109	D		2	SILENCER FILTER R1/8"	

CONNECTION ASSEMBLY

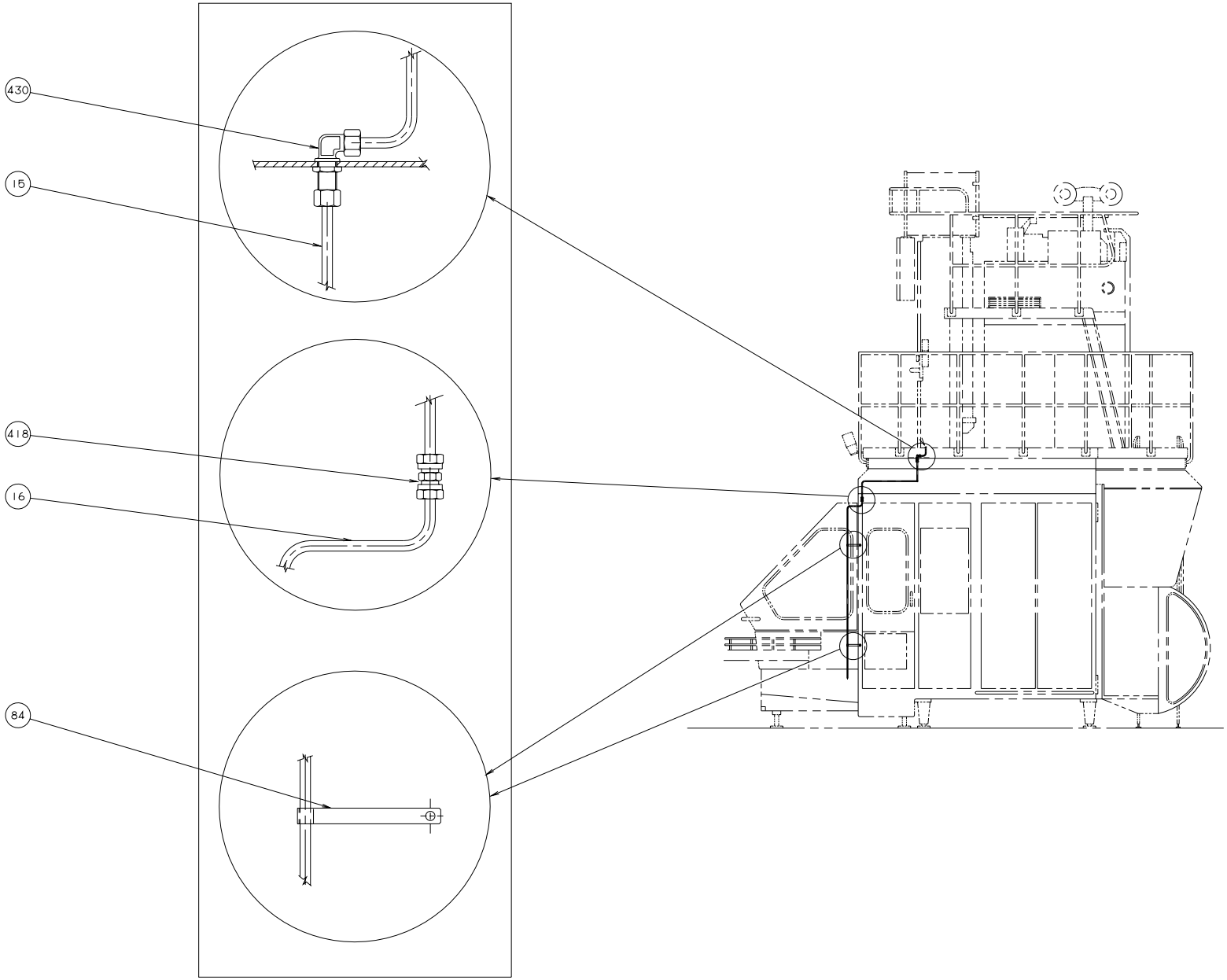

S-561268-7
ECN 20501

Pos	Part No	SP	UN	Qty	Description	Page No
2"						
050	255368-0000	D		1	PRESSURE GAUGE TUBE	
080	440977-0000	D		1	ATTACHMENT PIPE	
090	440978-0000	D		1	PIPE BEND	
120	12242-0005	F		4	GASKET	
470	342803-0104	-		1	NUT 51	
3"						
050	436779-0000	D		1	PRESSURE GAUGE TUBE	
080	436778-0000	D		1	PIPE	
090	445515-0000	D		1	PIPE BEND	
120	436781-0000	F		4	GASKET	
470	342803-0106	-		1	NUT 76	
Common parts						
F475	A 440630-0200	-		1	AP-VALVE	
010	273547-0001	D		1	TOUCH GUARD	
015	927195-0000	-		1	PIPE	
016	927196-0000	-		1	PIPE	
017	927198-0000	-		1	PIPE	
030	273548-0001	D		1	TOUCH GUARD	
060	554582-0000	-		1	CANTILEVER	
065	484047-0000	D		1	PIPE	
070	560929-0000	-		1	TOUCH GUARD	
075	752176-0000	-		1	PROTECTIVE CASING	
082	927197-0000	-		1	PIPE	
084	927199-0000	-		2	CLAMP BRACKET	
086	927200-0000	-		1	PIPE	
095	927226-0000	-		1	PIPE	
100	927311-0000	-		1	PIPE	
106	90330-0106	-		1	PIPE COUPLING	
110	12242-0003	F		2	GASKET	
130	37768-0000	F		1	THERMOCOUPLE CR-AL	
160	297195-0000	-		1	SPACER	
170	440647-0000	-		1	SLEEVE	
175	752711-0000	-		1	PIPE	
180	440731-0000	-		1	PLATE	
185	560927-0000	-		1	PIPE	
186	90030-0070	-		1	ELBOW CONNECTION WA 10-R1/4"	
187	90030-0096	-		1	ELBOW CONNECTION W-12	
190	90030-0109	K		1	PIPE CONNECTION	
191	90030-0180	-		1	STRAIGHT CONNECTION GE 12-1/2-14 NPTF	
194	90030-0083	-		2	STRAIGHT CONNECTION GE 10-1/4-18 NPTF	
195	90030-0187	D		2	STRAIGHT CONNECTION GA-12-G3/8"	
220	90044-0104	F		2	PROX.SWITCHIFM IN 3002	
223	90163-0057	D		4	NIPPLE	
225	90030-0088	-		2	PIPE CONNECTION	
226	90163-0062	D		4	SLEEVE	
230	90187-0082	K		1	BALL VALVE	
243	90224-0307	D		4	CONNECTION	
246	90224-0308	D		3	BANJO CONNECTION	
248	90235-0259	-		1	VALVE	
250	90235-0274	K		1	THROTTLE CHECK VALVES,G1/8"	
253	90326-0012	F		1	PROTECTIVE COVER	
255	90326-0020	F		1	PLUG,FEMALE YELLOW CR-AL	
258	90328-0003	-		1	SILENCER	
260	90330-0021	-		1	NIPPLES,HEXAGON,EXT.R-THREAD R1/2"- R1/2"	
270	90330-0032	-		1	NIPPLE	
335	B 90277-0055	-		1	FILTER	
340	90337-0315	-		1	FILTER	
341	90360-0011	-		1	STEAM TRAP "REPBY 90360-25	
345	90360-0009	-		1	STEAM TRAP	
350	315105-0136	-		2	WASHER BRB4,3X8RFR	
360	312105-0331	-		2	SCREW M6S ISO 4017 M5X20 A280	
365	312105-0364	-		2	SCREW M6S6X10RFR	
370	312105-0451	-		8	SCREW M6S ISO 4017 8X20 A280	
380	312115-0228	-		4	SCREW MC6S ISO 4762 M3X16 A280	
385	312115-0305	-		2	SCREW MC6S ISO 4762 M4X50 A280	
390	312115-0329	-		4	SCREW MC6S ISO 4762 M5X16 A280	
400	312155-0532	-		1	SCREW MF6S12X20RFR	
410	315105-0124	-		4	WASHER BRB3,2X6RFR	
415	315105-0146	-		6	WASHER BRB5,3X10RFR	
418	342727-0208	-		1	PIPE CONNECTION G-10-L/SY	
420	342737-0212	-		1	ELBOW CONNECTION W-10 LRFR	
430	342739-0108	-		1	ELBOW BULKHEAD CONNECTOR WSV 10	
500	342980-0303	-		2	BANJO-HOLLOW BOLT COUPL,EXT.THR.01-G1/8"	
510	346800-0109	D		2	SILENCER FILTER R1/8"	

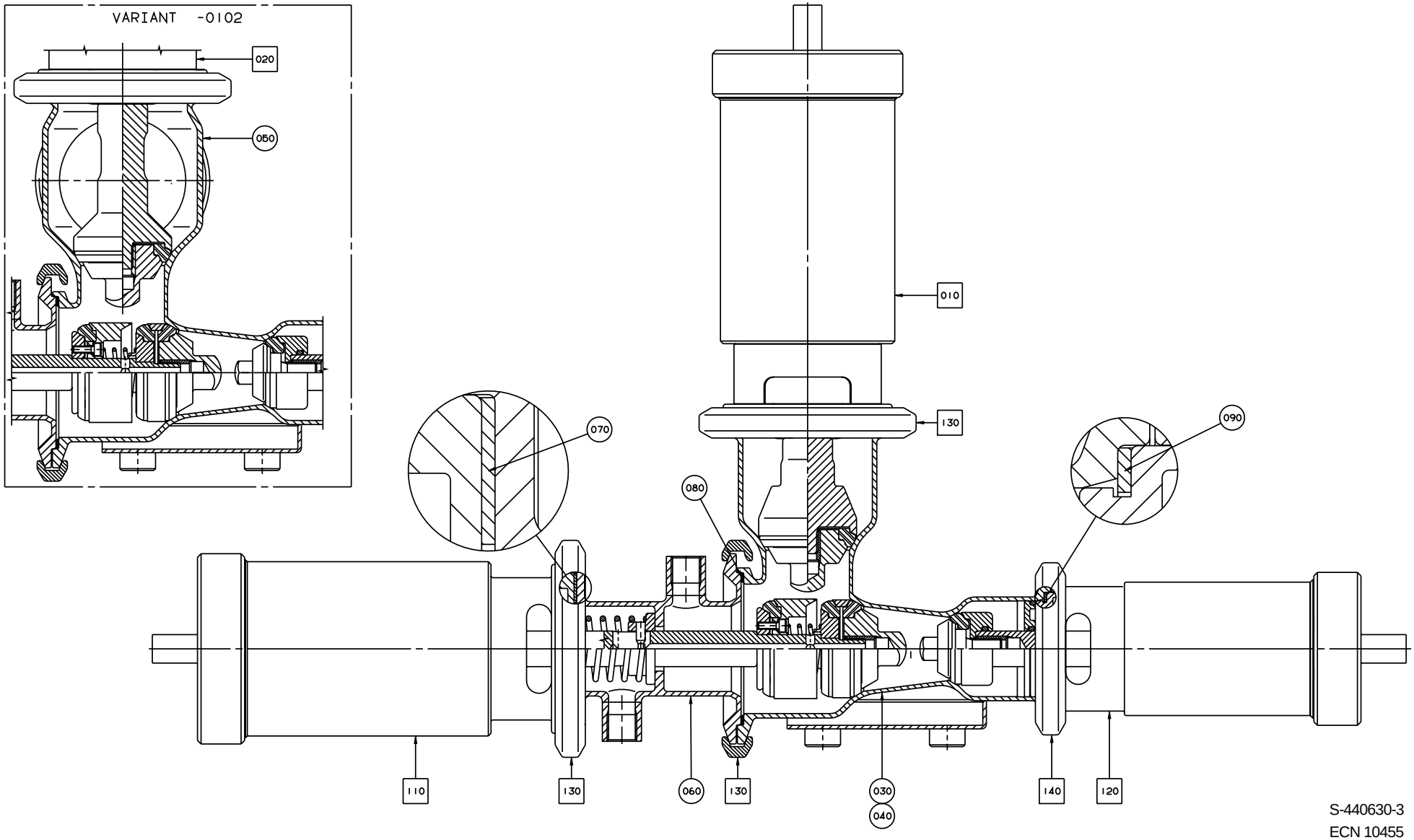

S-440630-3
ECN 10455

Pos	Part No	SP	UN	Qty	Description	Page No
TBA/8 2" or TBA/8PRISMA 2" or TBA/9 2"						
030	440631-0000	-		1	VALVE BODY 51	
TBA/8 3" or TBA/8PRISMA 3"						
050	449678-0000	-		1	VALVE BODY 76	
TBA/3 2" or TBA/3R 2" or TCA/150 2" or TCA/300 2" or TCA/500 2"						
040	484997-0000	-		1	VALVE BODY 51	
Common parts						
010	A 539209-0100	-		1	A-CYLINDER	
110	A 539210-0100	-		1	C-CYLINDER	
120	A 539211-0100	-		1	B-CYLINDER	
130	A 541163-0100	-		3	CLAMP RING	
140	A 541164-0100	-		1	CLAMP RING	
060	440634-0000	-		1	HOUSE	
070	539212-0000	-		1	GASKET	
080	90207-0363	-		1	GASKET	
090	90207-0365	-		1	GASKET	

Pos	Part No	SP	UN	Qty	Description	Page No

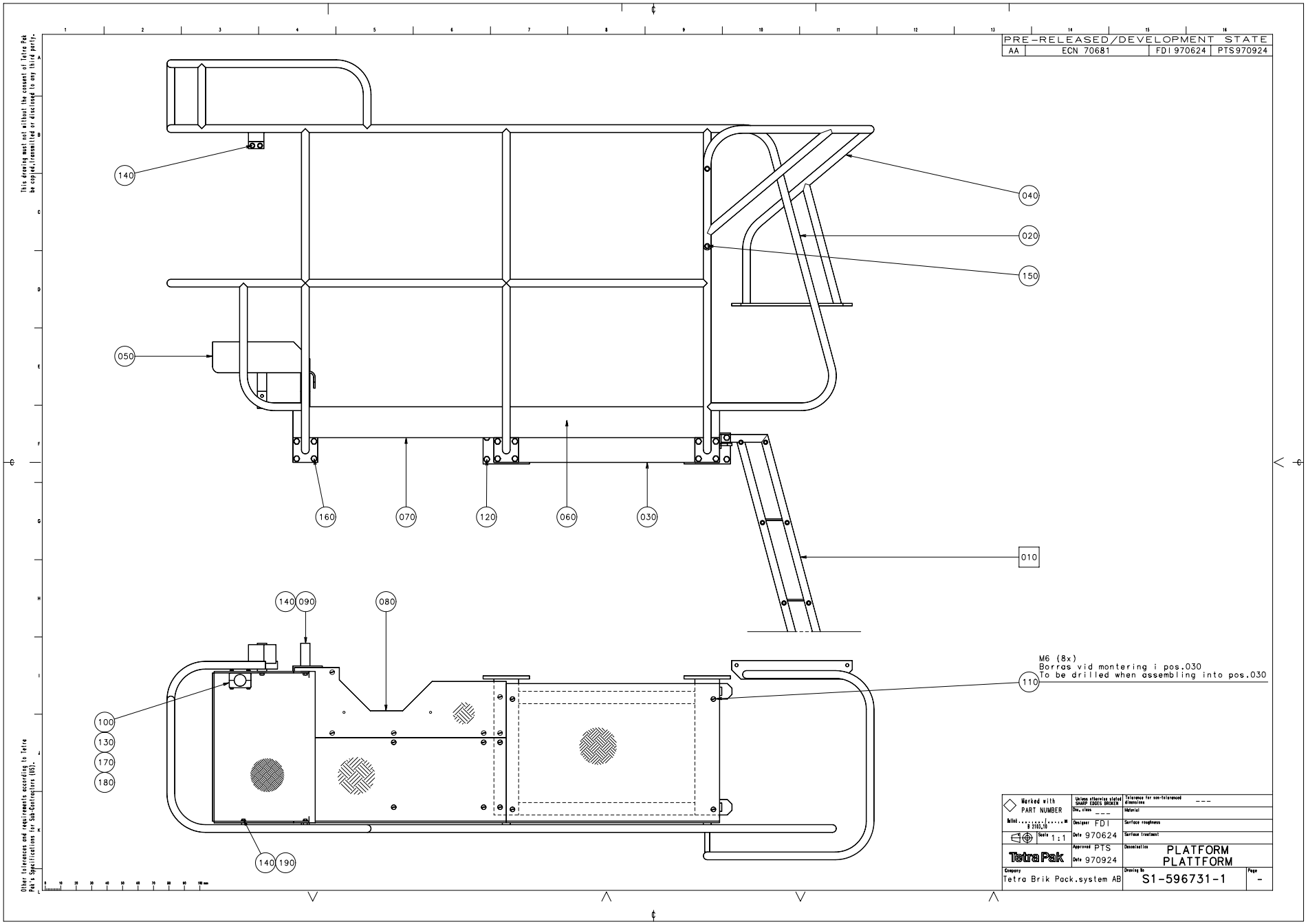
PRE-RELEASED/DEVELOPMENT STATE
AA ECN 70681 FDI 970624 PTS970924
This drawing must not without the consent of Tetra Pak be copied,transmitted or disclosed to any third party.
140
040
020
150
050
160
070
120
060
030
010
140 090
080
M6 (8x)
Borras vid montering i pos.030
To be drilled when assembling into pos.030
110
100
130
170
180
140 190
Other tolerances and requirements according to Tetra Pak's Specifications for Sub-Contractors (SS).
Marked with PART NUMBER
Unless otherwise stated SHARP EDGES BROKEN
Tolerance for non-toleranced dimensions ---
Dec. class ---
Material
Weight ..... g 2183,10
Designer FDI
Surface roughness
Scale 1:1
Date 970624
Surface treatment
Approved PTS
Date 970924
Denomination
PLATFORM
PLATTFORM
Tetra Pak
Company
Tetra Brik Pack.system AB
Drawing No
S1-596731-1
Page
-

Pos	Part No	SP	UN	Qty	Description	Page No
-						
F010	A 269971-0100	-		1	LADDER	69
020	434270-0000	-		1	RAILING	
030	247297-0000	-		1	CANTILEVER	
040	282893-0000	-		1	SAFETY GUARD	
050	476599-0000	-		1	PLATFORM	
060	451389-0000	-		1	PLATFORM	
070	451390-0000	-		1	PLATFORM	
080	451391-0000	-		1	PLATFORM	
090	434273-0000	-		2	STRUT	
100	476600-0000	-		2	PIPE HOLDER	
110	90287-0075	-		20	SCREW	
120	312101-0493	-		8	SCREW M6S10X25FZB	
130	312105-0384	-		2	SCREW M6S ISO 4014 M6X70 A280	
140	312105-0449	-		12	SCREW M6S ISO 4017 M8X16 A280	
150	312105-0453	-		2	SCREW M6S ISO 4017 M8X25 A280	
160	312105-0491	-		12	SCREW M6S ISO 4017 M10X20 A280	
170	312605-0316	-		2	NUT M6M6RFR	
180	315105-0156	-		4	WASHER BRB6,7X14RFR	
190	315105-0165	-		4	WASHER BRB8,4X16RFR	

Pos	Part No	SP	UN	Qty	Description	Page No

LADDER

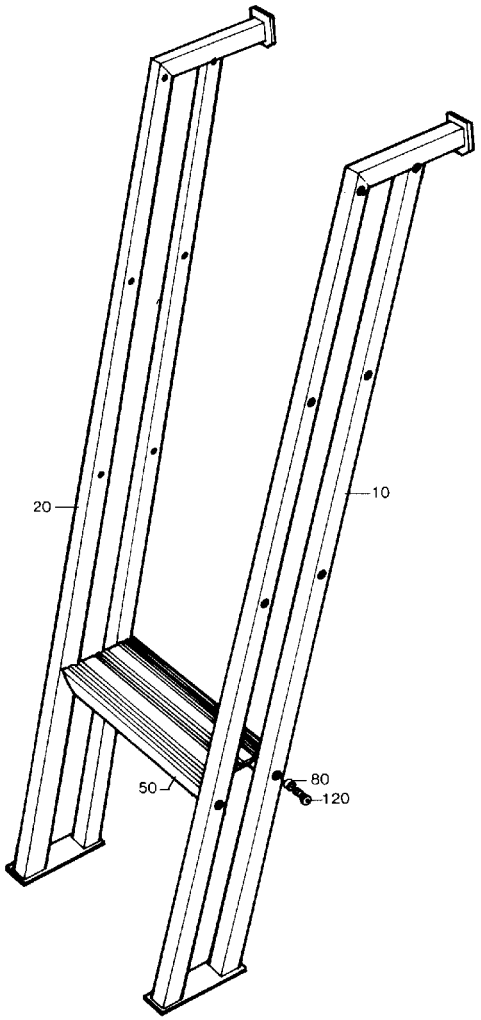

26997101.TIF
269971-1
AM

Pos	Part No	SP	UN	Qty	Description	Page No
-						
010	247296-0001	-		1	SIDE PIECE	
020	247296-0002	-		1	SIDE PIECE	
050	208361-0001	-		5	STAIR	
080	208658-0001	-		20	SPACER	
120	90287-0056	-		20	SCREW	

Pos	Part No	SP	UN	Qty	Description	Page No

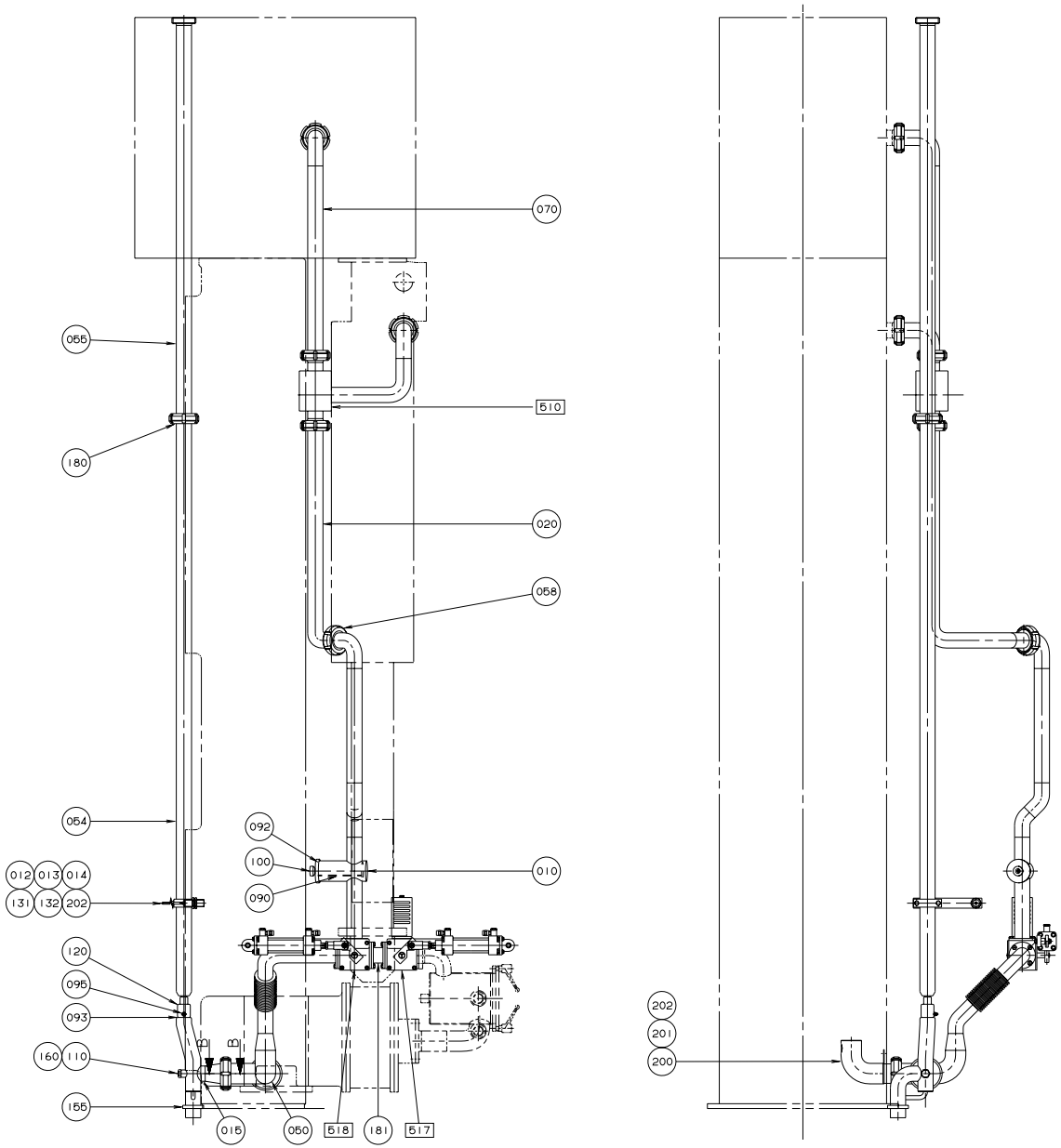

S-269988-5
ECN 19538

Pos	Part No	SP	UN	Qty	Description	Page No
-						
F510	A 273401-0300	-		1	CHANGE-OVER VALVE	
F515	A 476849-0100	-		1	VALVE	
F517	A 476859-0200	-		1	CHANGE-OVER VALVE	
F518	A 594618-0100	-		1	CHANGE-OVER VALVE	
010	544436-0000	-		1	FILTER PIPE	
012	90044-0099	-		1	PROXIMITY SWITCH IG REPBY 0090044-0126	
013	566228-0000	-		1	BRACKET	
014	476600-0000	-		2	PIPE HOLDER	
015	476449-0000	-		1	PIPE	
020	466471-0000	-		1	PIPE	
050	544435-0000	-		1	PIPE	
054	B 499826-0000	-		1	PIPE	
055	574654-0000	-		1	PIPE	
058	12242-0003	F		1	GASKET	
060	12242-0005	F		1	GASKET	
070	269522-0000	-		1	PIPE	
090	273950-0000	D		1	FILTER	
092	493653-0000	F		1	GASKET	
093	499181-0000	-		4	WASHER	
095	90030-0207	-		1	NIPPLE	
100	90051-0053	F		1	HANDLE	
110	90330-0026	-		1	PLUG,EXTERNAL G-THREAD G1/4"	
120	90425-0009	D		1	EJECTOR	
131	312105-0382	-		2	SCREW M6S ISO 4014 M6X60 A280	
132	312812-0316	-		2	LOCK NUT A2-M6RFR	
140	312105-0364	-		16	SCREW M6S6X10RFR	
150	315204-0222	F		4	O-RING 36,2X3VITON	
155	499825-0000	-		1	GASKET	
160	315233-0110	-		1	SEAL RING R1/4"	
180	315250-0103	-		1	GASKET 48/38	
181	544439-0000	-		1	INTERMEDIATE PIPE	
200	544506-0000	-		1	PIPE	
201	312105-0362	-		1	SCREW M6S ISO 4017 M6X8 A280	
202	315105-0153	-		5	WASHER BRB6,4X12RFR	

Pos	Part No	SP	UN	Qty	Description	Page No

CHANGE-OVER VALVE

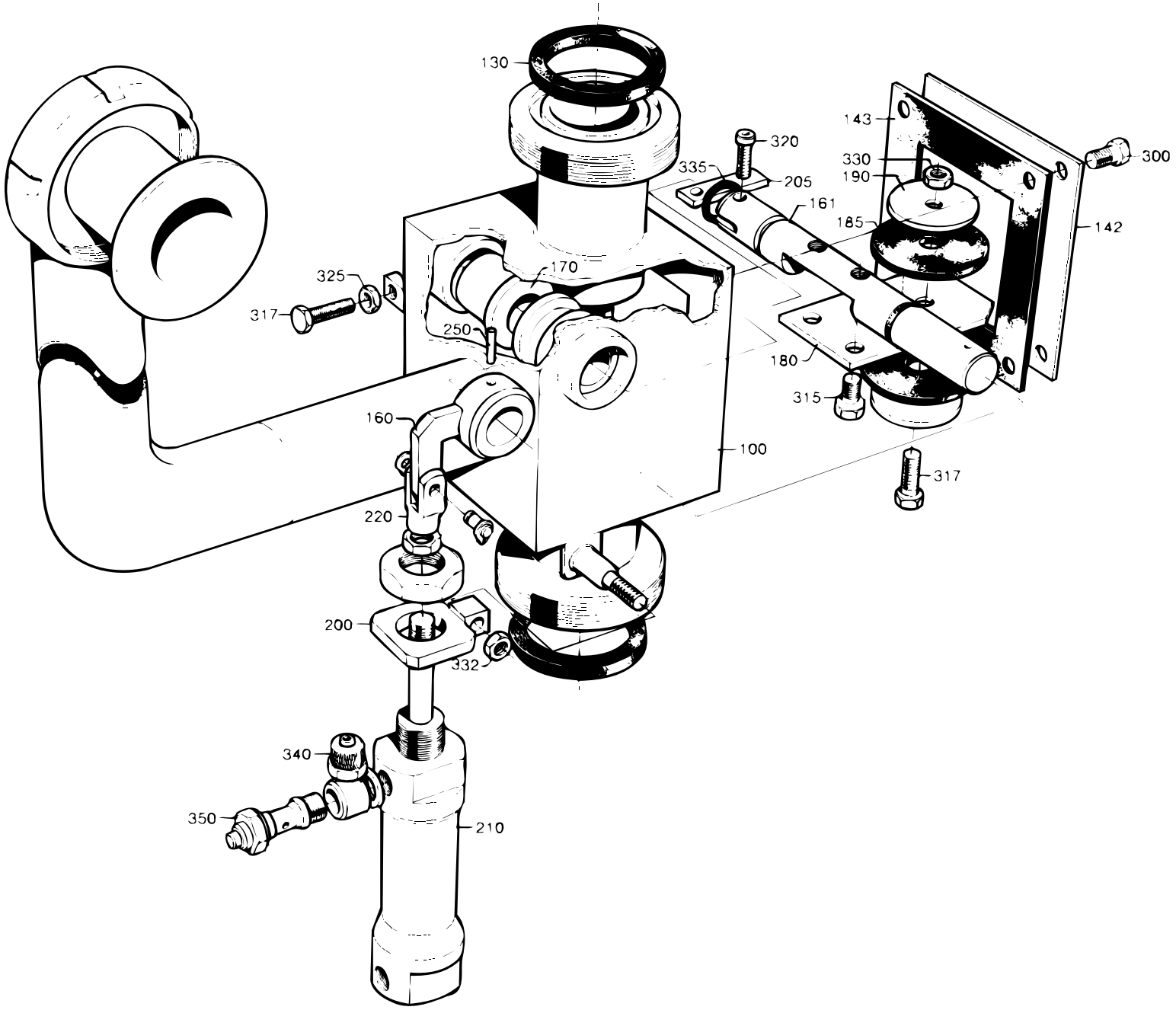

S-273401-3
ECN 8756

Pos	Part No	SP	UN	Qty	Description	Page No
-						
100	B 531034-0000	D		1	VALVE HOUSING	
130	12242-0003	F		2	GASKET	
142	251454-0000	-		1	LID	
143	251455-0000	F		1	SEAL	
160	531035-0000	-		1	ARM	
161	531036-0000	-		1	SHAFT	
170	266182-0000	F		2	BUSHING	
180	531037-0000	-		1	FLAP	
185	531038-0000	F		2	GASKET	
190	531039-0000	K		2	WASHER	
200	531040-0000	-		1	BRACKET	
205	531041-0000	-		1	WEDGE	
210	90239-0822	F		1	DOUBLE ACTING,MINI-ISO,CYL.20-50	
220	90239-0490	K		1	BRACKET	
250	311103-0236	-		1	CYLINDRICACP M6 3X16 RFR	
300	312105-0325	-		4	SCREW M6S5X10 A2 80	
315	312105-0364	-		2	SCREW M6S6X10RFR	
317	312105-0370	-		2	SCREW M6S ISO 4017 M6X20 A280	
320	312115-0329	-		1	SCREW MC6S ISO 4762 M5X16 A280	
325	312605-0316	-		1	NUT M6M6RFR	
330	312811-0316	-		1	LOCK NUT M6RFR	
332	312812-0316	-		1	LOCK NUT A2-M6RFR	
335	315204-0111	-		2	O-RING 1X1,6 VITON	
340	342980-0113	-		2	BANJO-CONNECTION,RING 6/4-G1/8"	
350	90235-0274	-		2	THROTTLE CHECK VALVES,G1/8"	

Pos	Part No	SP	UN	Qty	Description	Page No

VALVE

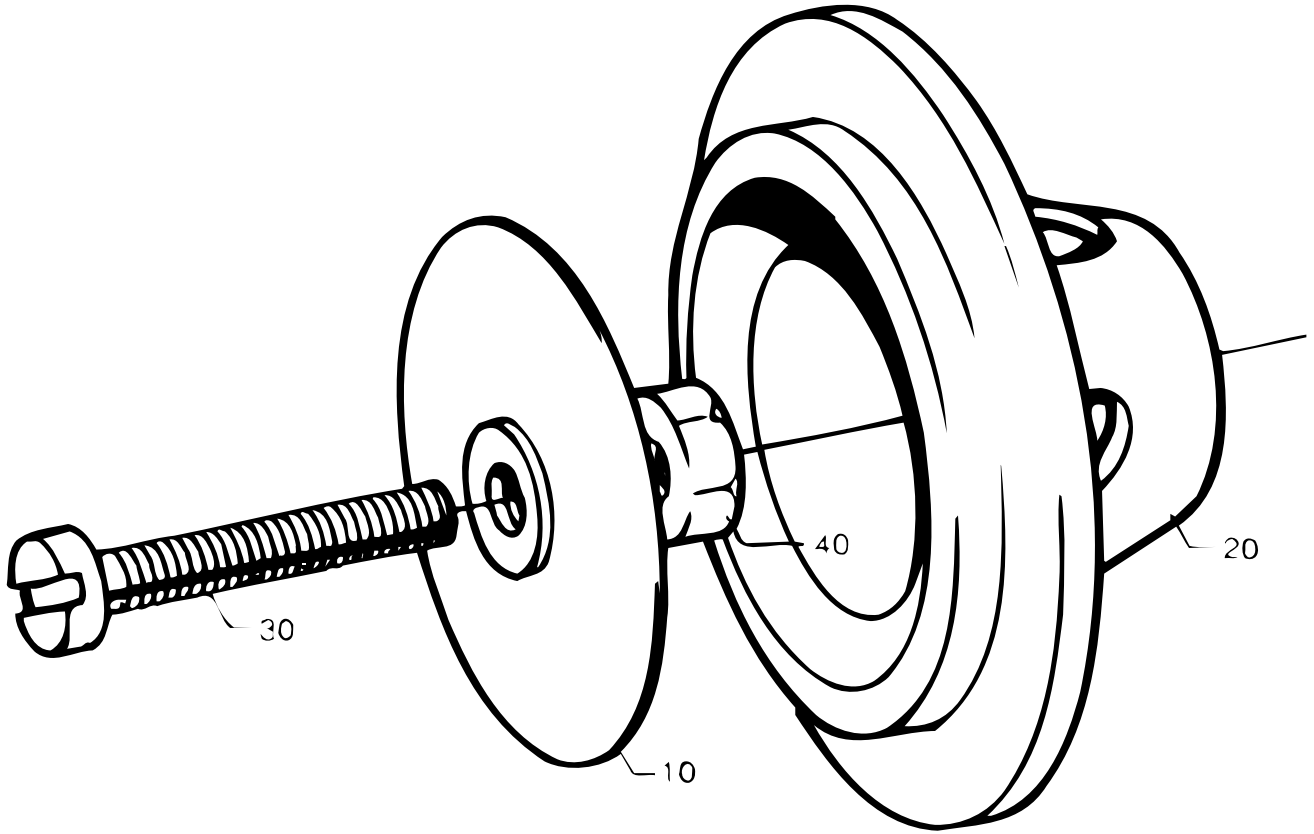

Pos	Part No	SP	UN	Qty	Description	Page No
-						
010	273944-0000	F		1	DIAPHRAGM	
020	273951-0000	-		1	VALVE HOUSING	
025	90157-0016	-	ML	1	LOCKING FLUID	
030	312125-0378	-		1	SLOTTED CHEESE HEAD ISO 1207 M6X40 RFR	
040	312605-0316	-		1	NUT M6M6RFR	

Pos	Part No	SP	UN	Qty	Description	Page No

CHANGE-OVER VALVE

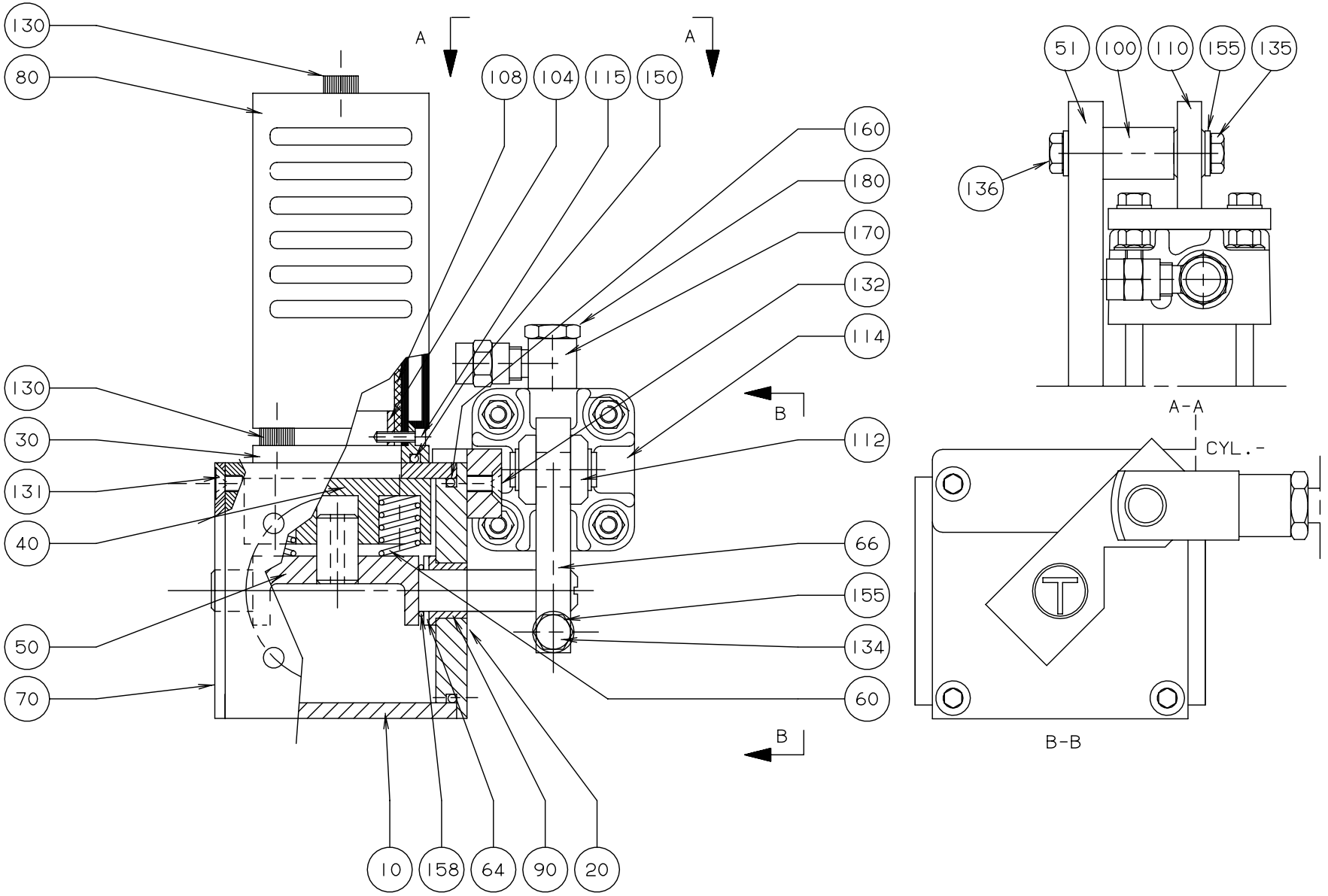

S-476859-3
ECN 17647

Pos	Part No	SP	UN	Qty	Description	Page No
-						
010	B 466474-0000	-		1	VALVE HOUSING	
020	441957-0000	-		1	BEARING COVER	
030	466477-0000	-		1	INNER PIPE	
040	466479-0000	K		1	PIECE	
050	555541-0000	-		1	BRACKET	
051	555542-0000	-		1	BRACKET	
060	21521-0000	K		2	COMPRESSION SPRING	
064	266737-0000	-		1	WASHER	
066	441483-0000	-		1	CYLINDER BRACKET	
070	255874-0000	-		1	BEARING COVER	
080	466478-0000	-		1	OUTER PIPE	
090	255875-0000	K		2	BUSHING	
100	555540-0000	-		1	SPACER	
104	466483-0000	-		1	CLAMPING PIECE	
108	466484-0000	-		1	NET	
110	90239-0453	-		1	BRACKET	
112	90239-0516	-		1	PISTON ROD HEAD	
114	B 90239-0779	-		1	CYLINDER	
115	312115-0224	-		2	SCREW S 3X10 A4 80	
130	312115-0364	-		5	SCREW 6X10 A4 80	
131	312155-0364	-		6	SCREW MF6S6X10RFR	
132	312155-0370	-		2	SCREW MF6S DIN 7991 M6X20 A280	
134	312105-0370	-		1	SCREW M6S ISO 4017 M6X20 A280	
135	312105-0364	-		2	SCREW M6S6X10RFR	
136	312105-0368	-		1	SCREW M6S ISO 4017 M6X16 A280	
150	315204-0222	-		1	O-RING 36,2X3VITON	
155	315105-0153	-		3	WASHER BRB6,4X12RFR	
158	315204-0110	-		1	O-RING 1X1,6 VITON	
160	315204-0302	K		2	O-RING 54,5X3VITON	
170	342797-0121	-		2	BANJO CONNECTION,RINGPIECE 6-1/8"	
180	342980-0303	-		2	BANJO-HOLLOW BOLT COUPL,EXT.THR.01-G1/8"	

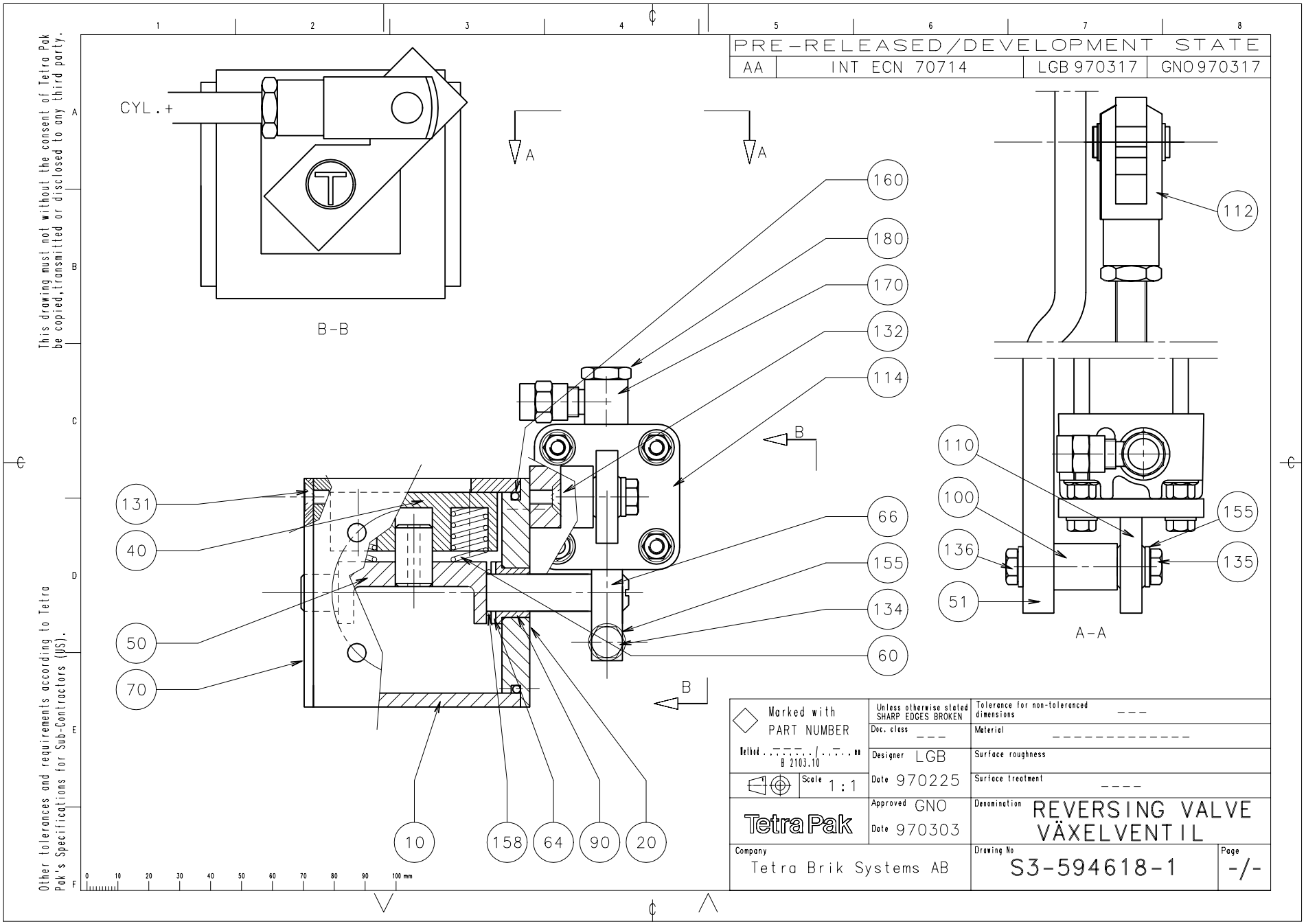
PRE-RELEASED/DEVELOPMENT STATE
AA | INT ECN 70714 | LGB 970317 | GNO 970317
CYL.+
B-B
A-A
160
180
170
132
114
112
131
40
50
70
66
155
134
60
110
100
136
51
155
135
10
158
64
90
20
This drawing must not without the consent of Tetra Pak be copied, transmitted or disclosed to any third party.
Other tolerances and requirements according to Tetra Pak's Specifications for Sub-Contractors (JS).
Marked with PART NUMBER
Unless otherwise stated SHARP EDGES BROKEN
Tolerance for non-toleranced dimensions ---
Doc. class ---
Material ---
Designer LGB
Surface roughness
Scale 1:1
Date 970225
Surface treatment ----
Approved GNO
Date 970303
Denomination REVERSING VALVE VÄXELVENTIL
Company Tetra Brik Systems AB
Drawing No S3-594618-1
Page -/-

Pos	Part No	SP	UN	Qty	Description	Page No
-						
010	B 466474-0000	-		1	VALVE HOUSING	
020	441957-0000	-		1	BEARING COVER	
040	466479-0000	K		1	PIECE	
050	555541-0000	-		1	BRACKET	
051	555542-0000	-		1	BRACKET	
060	21521-0000	K		2	COMPRESSION SPRING	
064	266737-0000	-		1	WASHER	
066	441483-0000	-		1	CYLINDER BRACKET	
070	255874-0000	-		1	BEARING COVER	
090	255875-0000	K		2	BUSHING	
100	555540-0000	-		1	SPACER	
110	90239-0453	-		1	BRACKET	
112	90239-0516	-		1	PISTON ROD HEAD	
114	B 90239-0779	-		1	CYLINDER	
131	312155-0364	-		6	SCREW MF6S6X10RFR	
132	312155-0370	-		2	SCREW MF6S DIN 7991 M6X20 A280	
134	312105-0370	-		1	SCREW M6S ISO 4017 M6X20 A280	
135	312105-0364	-		2	SCREW M6S6X10RFR	
136	312105-0368	-		1	SCREW M6S ISO 4017 M6X16 A280	
155	315105-0153	-		3	WASHER BRB6,4X12RFR	
158	315204-0110	-		1	O-RING 1X1,6 VITON	
160	315204-0302	K		2	O-RING 54,5X3VITON	
170	342797-0121	-		2	BANJO CONNECTION,RINGPIECE 6-1/8"	
180	342980-0303	-		2	BANJO-HOLLOW BOLT COUPL,EXT.THR.01-G1/8"	

STERILE AIR SYSTEM

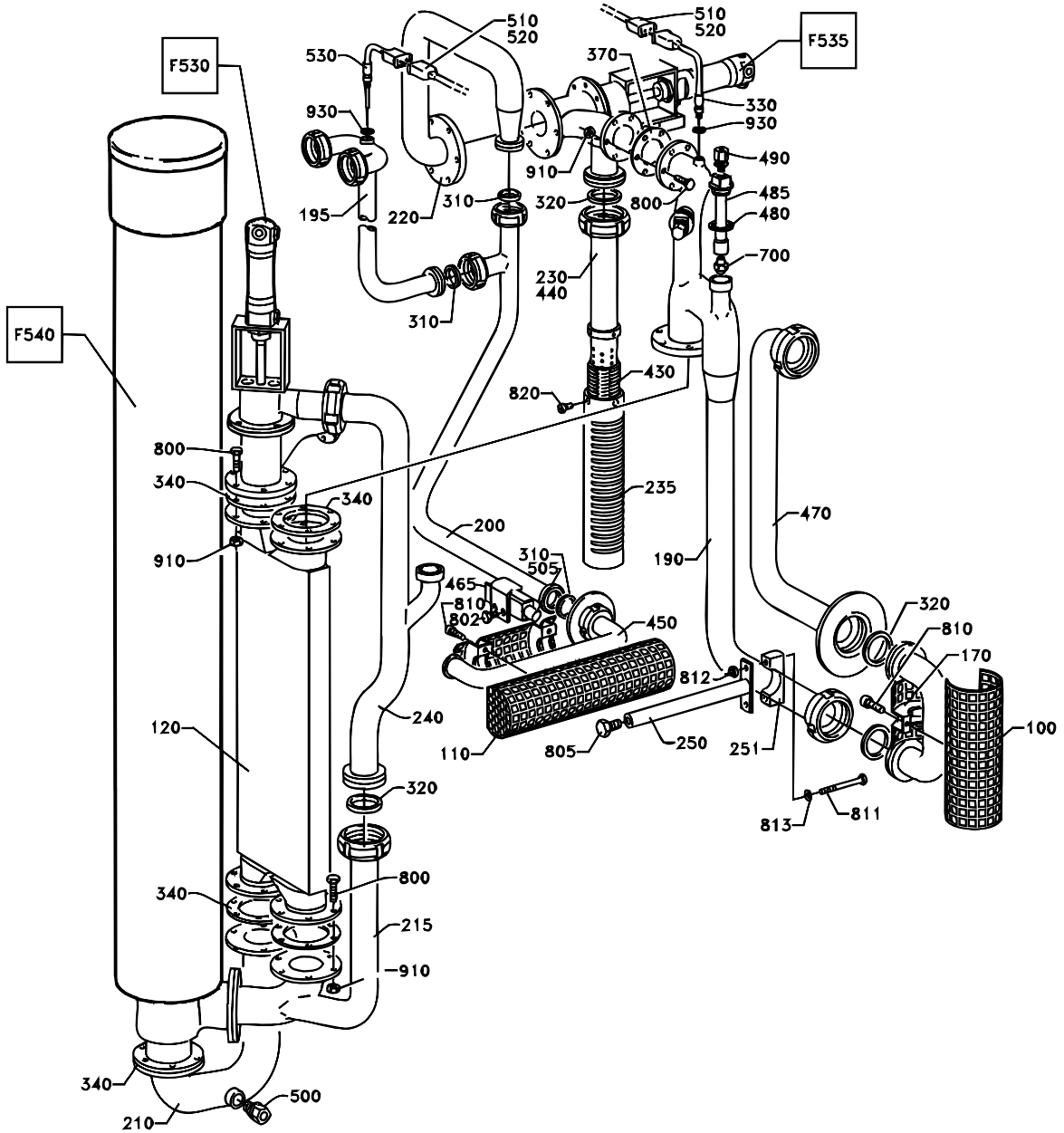

S-273400-5
ECN 17647

Pos	Part No	SP	UN	Qty	Description	Page No
-						
F530	A 269989-0300	-		1	VALVE	83
F535	A 594616-0100	-		1	VALVE	85
F540	A 273402-0400	-		1	AIR SUPER-HEATER	87
100	273514-0000	D		1	TOUCH GUARD	
110	273547-0002	D		1	TOUCH GUARD	
120	522090-0000	D		1	HEAT EXCHANGER	
170	273515-0000	D		1	TOUCH GUARD	
180	273548-0002	D		1	TOUCH GUARD	
190	434274-0000	D		1	PIPE	
195	534426-0000	D		1	PIPE	
200	449818-0000	-		1	PIPE	
210	269405-0000	D		1	PIPE	
215	276166-0000	D		1	PIPE	
220	276167-0000	D		1	PIPE	
230	276304-0000	D		1	PIPE	
235	276305-0000	D		1	PIPE	
240	544437-0000	D		1	BRANCH PIPE	
250	566229-0000	-		1	BRACKET	
251	476600-0000	-		2	PIPE HOLDER	
310	12242-0001	F		3	GASKET	
320	12242-0003	F		3	GASKET	
330	90326-0052	F		1	THERMO ELEMENT	
340	531737-0000	F		5	GASKET	
370	531742-0000	F		1	GASKET	
430	278954-0000	K		1	NET	
440	278955-0000	K		1	NET	
450	449817-0000	D		1	U-TUBE	
460	561583-0000	-		1	U-TUBE	
465	449960-0000	-		1	BRACKET	
470	449963-0000	D		1	U-TUBE	
480	450022-0000	F		2	WASHER	
485	450023-0000	D		2	BRACKET	
490	90030-0051	K		2	PIPE CONNECTION	
500	90030-0187	K		1	STRAIGHT CONNECTION GA-12-G3/8"	
505	90044-0126	-		1	INDUCTIVE SWITCH	
510	90326-0012	F		2	PROTECTIVE COVER	
520	90326-0020	F		2	PLUG,FEMALE YELLOW CR-AL	
530	90326-0053	-		1	THERMO ELEMENT	
700	90424-0031	K		2	NOZZLE	
800	312105-0370	-		30	SCREW M6S ISO 4017 M6X20 A280	
802	312105-0447	-		2	SCREW M6S ISO 4017 M8X12 A280	
805	312105-0489	-		1	SCREW M6S ISO 4017 M10X16 A280	
810	312115-0331	-		6	SCREW MC6S ISO 4762 M5X20 A280	
811	312105-0382	-		2	SCREW M6S ISO 4014 M6X60 A280	
812	312812-0316	-		2	LOCK NUT A2-M6RFR	
813	315105-0153	-		2	WASHER BRB6,4X12RFR	
820	312125-0285	-		4	SLOTTED HEMCS4X6RFR	
910	312605-0316	-		30	NUT M6M6RFR	
930	315234-0110	-		1	SEAL RING R1/4"	

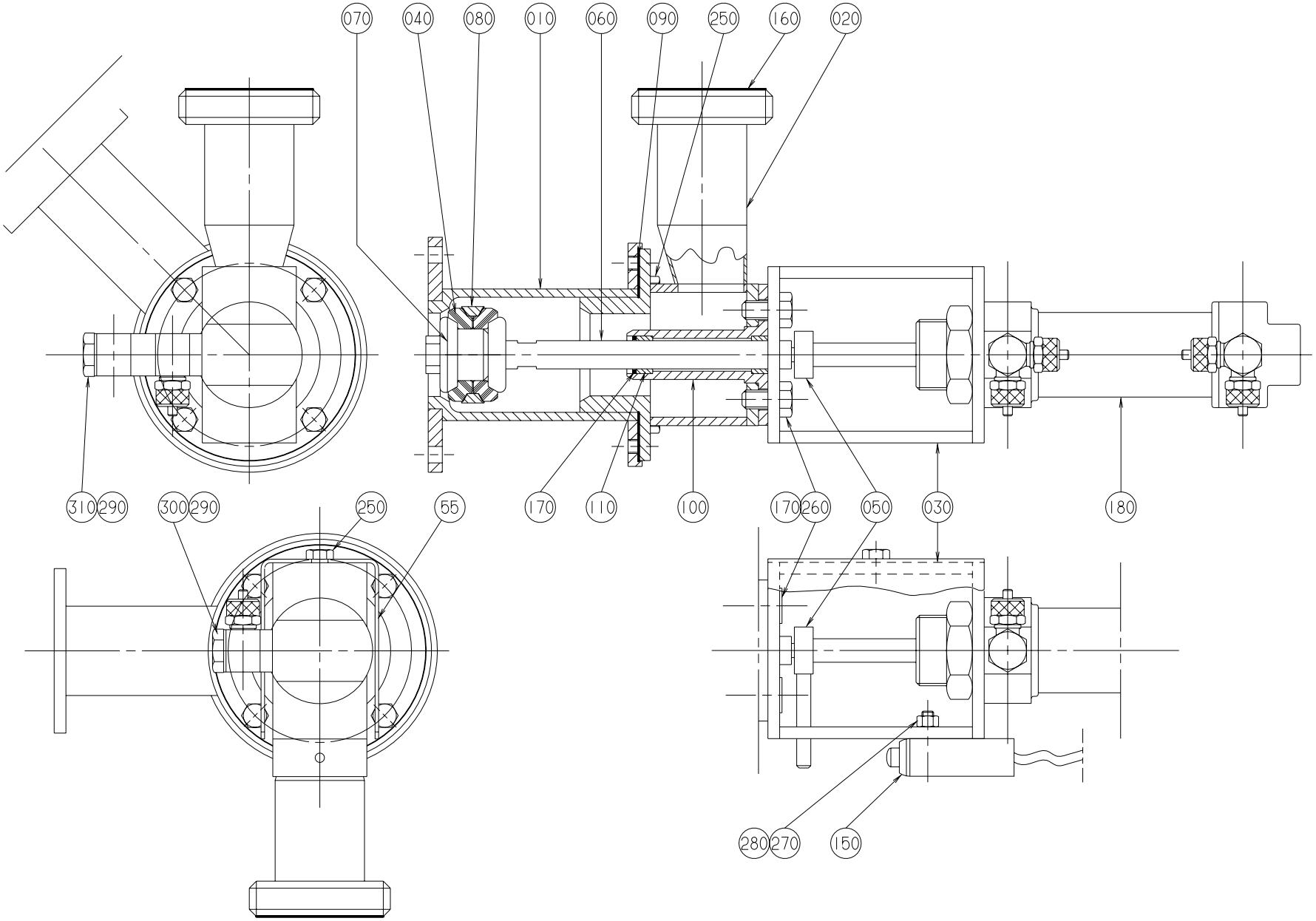

S-269989-3
ECN 19396

Pos	Part No	SP	UN	Qty	Description	Page No
-						
010	276164-0000	D		1	VALVE HOUSING	
020	276165-0000	D		1	HOUSE	
030	266394-0000	-		1	BRACKET	
040	530588-0000	F		2	SEAL RING	
050	37638-0000	D		1	PENDULUM SUSPENSION	
060	266389-0000	D		1	PISTON ROD	
070	266390-0000	D		1	NUT	
080	266391-0000	D		1	RING	
090	531765-0000	F		1	GASKET	
100	532348-0000	K		1	SPINDLE GUIDE	
110	532349-0000	K		2	PLAIN BEARING	
160	90091-0182	F		1	GASKET	
170	90141-0022	K		1	RING	
180	B 90239-0166	F		1	CYLINDER	
250	312105-0366	-		6	SCREW M6S ISO 4017 M6X12 A280	
260	312105-0449	-		2	SCREW M6S ISO 4017 M8X16 A280	
290	342797-0122	-		4	BANJO CONNECTION,RINGPIECE 6-1/4"	
310	342980-0314	-		2	BANJO-HOLLOW BOLT COUPL,EXT.THR.02-G1/4"	

Pos	Part No	SP	UN	Qty	Description	Page No

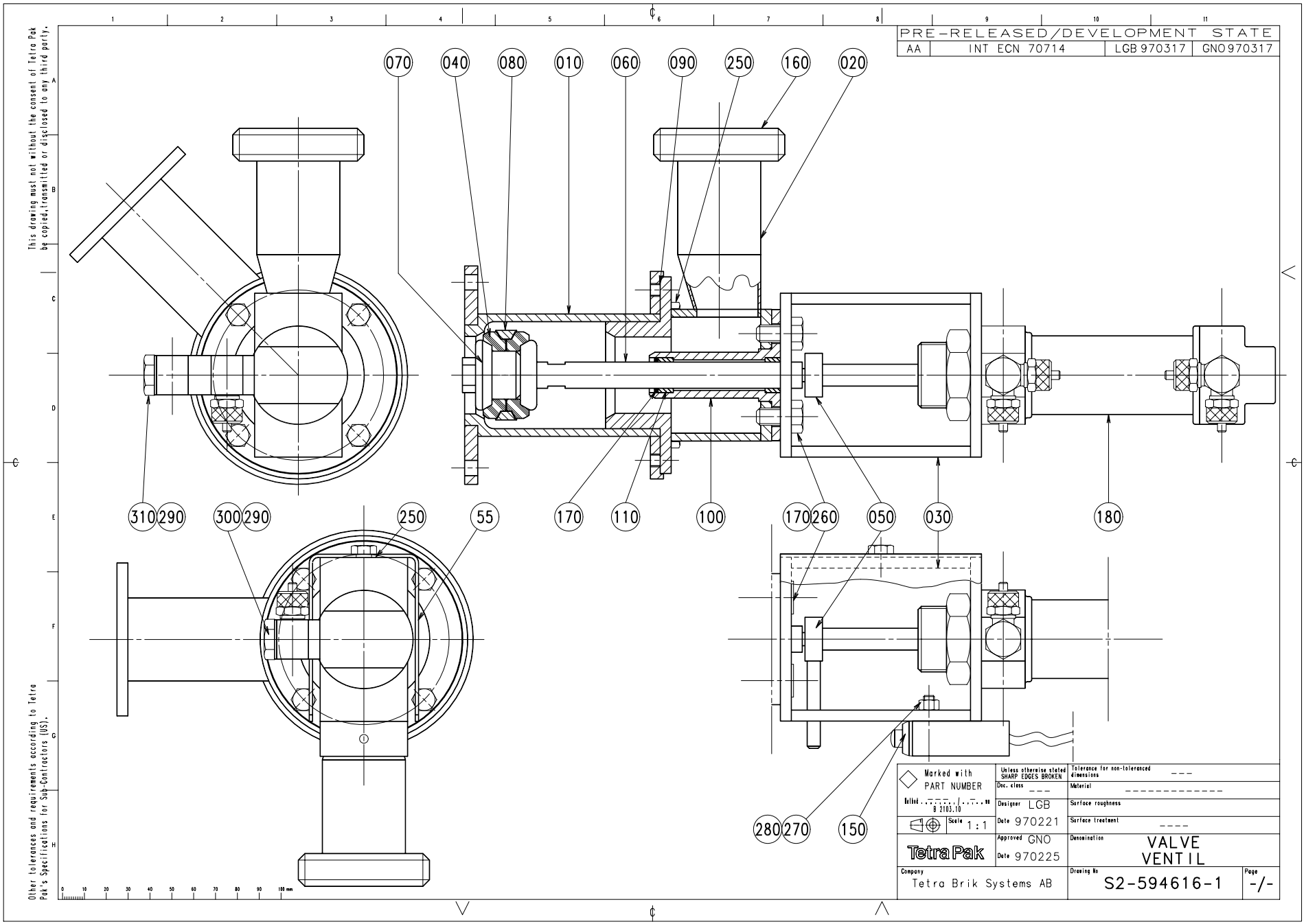
PRE-RELEASED/DEVELOPMENT STATE
AA | INT ECN 70714 | LGB 970317 | GNO 970317
070 040 080 010 060 090 250 160 020
310 290 300 290 250 55 170 110 100 170 260 050 030 180
280 270 150
This drawing must not without the consent of Tetra Pak be copied, transmitted or disclosed to any third party.
Other tolerances and requirements according to Tetra Pak's Specifications for Sub-Contractors (US).
Marked with PART NUMBER
Unless otherwise stated SHARP EDGES BROKEN
Tolerance for non-toleranced dimensions ---
Dec. class ---
Material
Designer LGB
Surface roughness
Date 970221
Scale 1:1
Surface treatment ----
Approved GNO
Date 970225
Denomination VALVE VENTIL
Company Tetra Brik Systems AB
Drawing No S2-594616-1
Page -/-

Pos	Part No	SP	UN	Qty	Description	Page No
-						
010	276164-0000	D		1	VALVE HOUSING	
020	276165-0000	D		1	HOUSE	
030	449414-0000	-		1	BRACKET	
040	530588-0000	F		2	SEAL RING	
050	449415-0000	D		1	PENDULUM SUSPENSION	
055	574653-0000	-		1	PROTECTION	
060	266389-0000	D		1	PISTON ROD	
070	266390-0000	D		1	NUT	
080	266391-0000	D		1	RING	
090	531765-0000	F		1	GASKET	
100	532348-0000	K		1	SPINDLE GUIDE	
110	532349-0000	K		2	PLAIN BEARING	
150	90044-0084	F		1	LIMITSW.14CE1-4 HONEYWELL	
160	90091-0182	F		1	GASKET	
170	90141-0022	K		1	RING	
180	B 90239-0166	-		1	CYLINDER	
250-02	312105-0366	-		7	SCREW M6S ISO 4017 M6X12 A280	
260	312155-0449	-		2	SCREW MF6S DIN 7991 M8X16 A280	
270	312115-0331	-		2	SCREW MC6S ISO 4762 M5X20 A280	
280	312605-0314	-		2	NUT M6M5RFR	
290	342797-0122	-		2	BANJO CONNECTION,RINGPIECE 6-1/4"	
300	342980-0304	-		2	BANJO-HOLLOW BOLT COUPL,EXT.THR.01-G1/4"	

Pos	Part No	SP	UN	Qty	Description	Page No

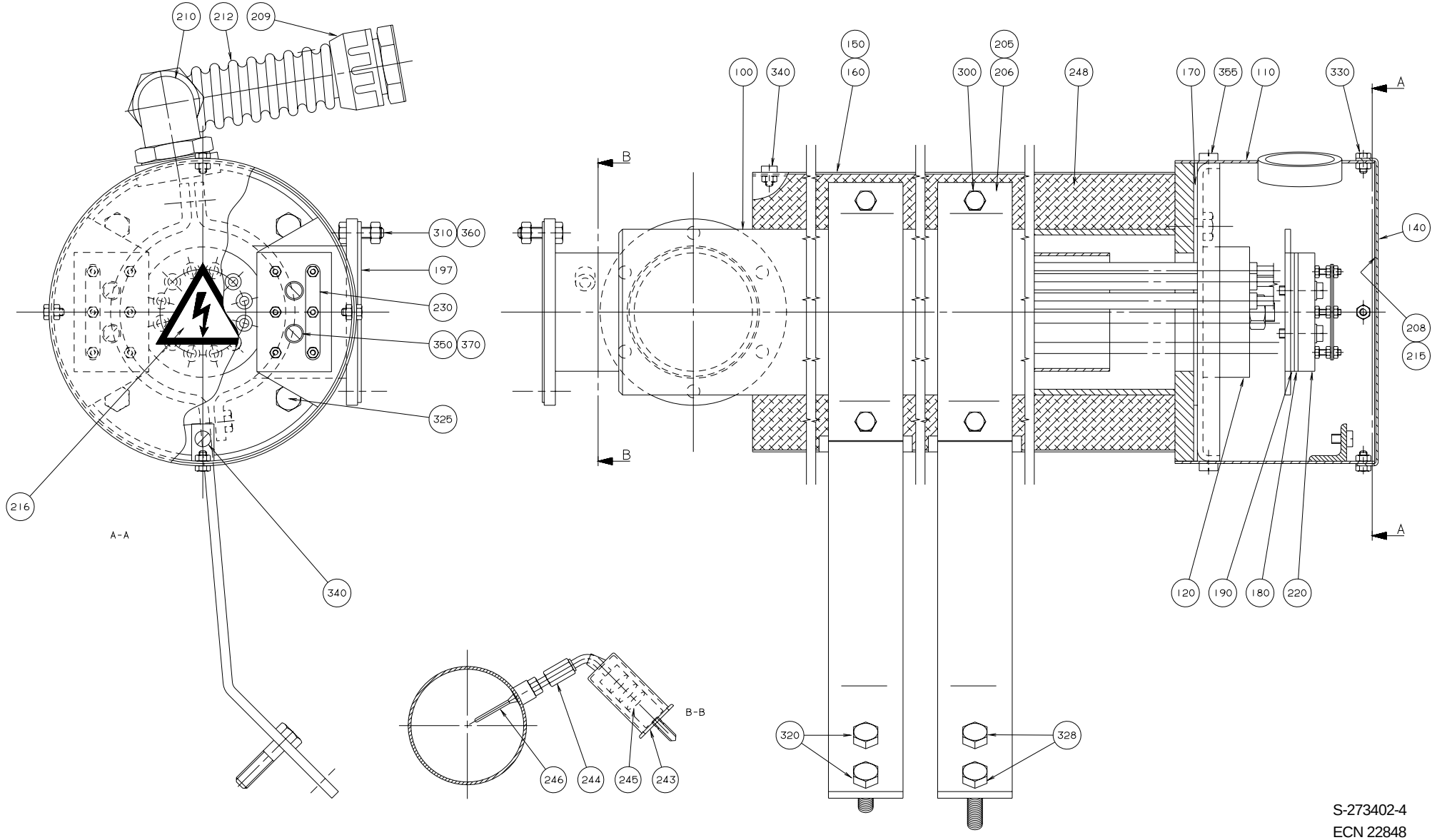

S-273402-4
ECN 22848

Pos	Part No	SP	UN	Qty	Description	Page No
-						
100	434469-0000	D		1	HEATING PIPE	
110	B 451430-0000	D		1	CONNECTION HOUS.(MINOR)	
120	B 449939-0001	D		1	HEATING ELEMENT 15KW	
140	29876-0000	-		1	COVER	
150	269577-0000	-		1	DISCHARGE TRAY	
160	269578-0000	-		1	DISCHARGE TRAY	
170	531731-0000	F		1	GASKET	
180	751009-0000	F		2	INSULATION	
190	30298-0000	F		2	INSULATION	
197	531737-0000	F		2	GASKET	
205	269575-0000	-		2	HOLDER	
206	269576-0000	-		2	CAP	
208	545995-0000	-		1	WIRING DIAGRAM	
209	90012-0061	K		1	GLAND	
210	90012-0062	K		1	GLAND	
212	90152-0031	D	MM	500	HOSE	
215	90153-0020	F	ML	x	ADHESIVE	
216	90194-0016	-		1	SIGN "FLASH SIGN" 50X50MM	
220	90195-0028	F		2	TERM.BLOCK 6-POLE STEATIT	
230	90195-0029	F		4	CONN. LINK NO324 FOR -28	
243	90326-0012	F		1	PROTECTIVE COVER	
244	90326-0017	F		1	GLAND "REPBY 90326-306"	
245	90326-0020	F		1	PLUG,FEMALE YELLOW CR-AL	
246	90326-0043	F		1	THERMOCOUPLE CR-ALPREM.G	
248	90411-0005	K	MM	1232	INSULATOR	
300	312105-0366	-		4	SCREW M6S ISO 4017 M6X12 A280	
310	312105-0370	-		12	SCREW M6S ISO 4017 M6X20 A280	
320	312105-0447	-		2	SCREW M6S ISO 4017 M8X12 A280	
325	312105-0452	-		4	SCREW M6S8X22RFR	
328	312105-0457	-		2	SCREW O4017 M8X35A280	
330	312105-0287	-		4	SCREW M6S ISO 4017 M4X8 A280	
340	312125-0323	-		17	SLOTTED CHEESE HEAD ISO 1207 M5X8 RFR	
350	312125-0331	-		4	SLOTTED CHEESE HEAD ISO 1207 M5X20 RFR	
355	312125-0364	-		4	SLOTTED HEMCS6X10RFR	
360	312605-0316	-		12	NUT M6M6RFR	
370	315105-0146	-		4	WASHER BRB5,3X10RFR	

Pos	Part No	SP	UN	Qty	Description	Page No

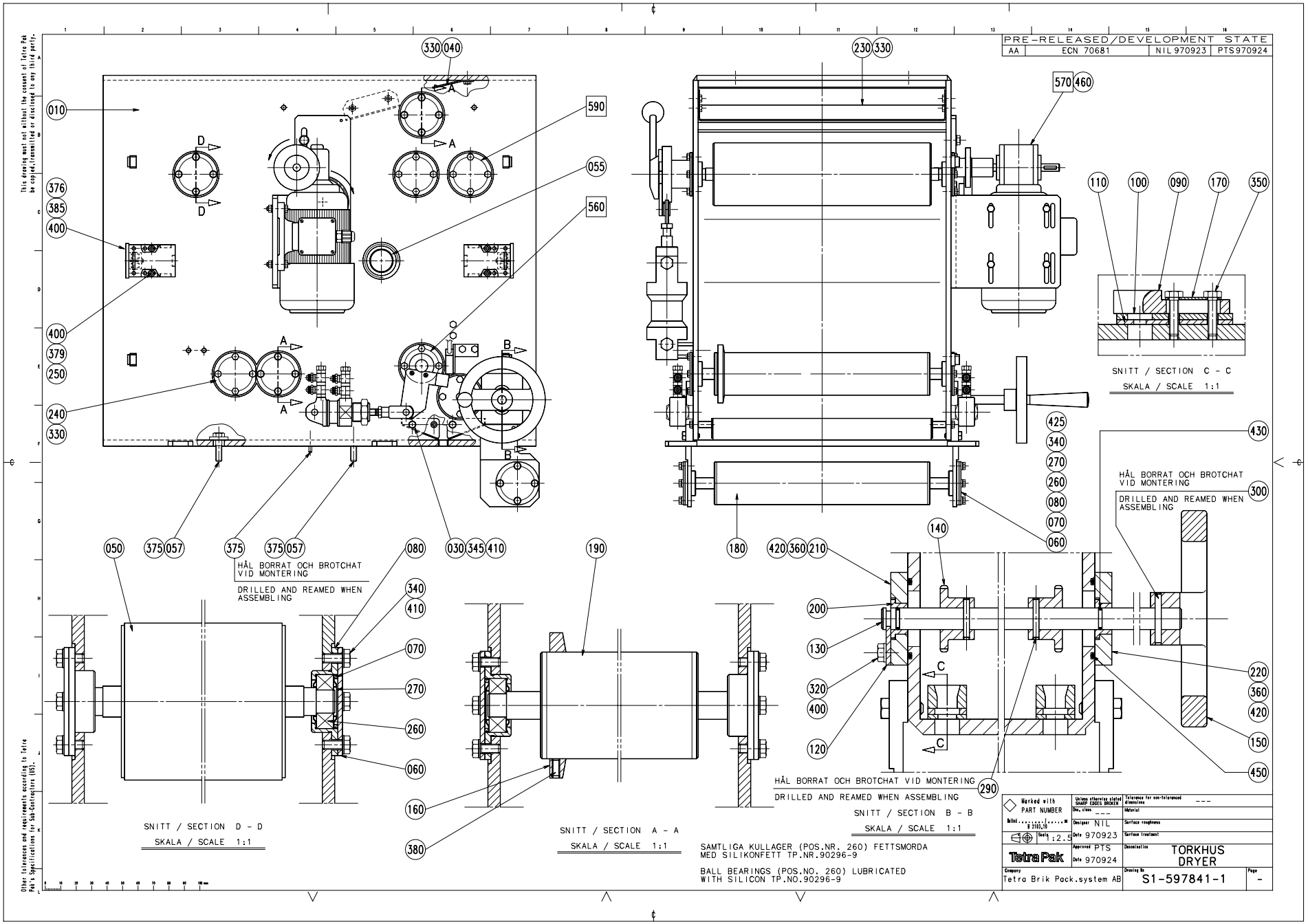
PRE-RELEASED/DEVELOPMENT STATE
AA ECN 70681 NIL 970923 PTS 970924
SNITT / SECTION C - C
SKALA / SCALE 1:1
SNITT / SECTION D - D
SKALA / SCALE 1:1
SNITT / SECTION A - A
SKALA / SCALE 1:1
SNITT / SECTION B - B
SKALA / SCALE 1:1
HÅL BORRAT OCH BROTCHAT VID MONTERING
DRILLED AND REAMED WHEN ASSEMBLING
SAMTLIGA KULLAGER (POS.NR. 260) FETTSMORDA MED SILIKONFETT TP.NR.90296-9
BALL BEARINGS (POS.NO. 260) LUBRICATED WITH SILICON TP.NO.90296-9
Tetra Pak
TORKHUS DRYER
Tetra Brik Pack.system AB
S1-597841-1

Pos	Part No	SP	UN	Qty	Description	Page No
-						
F560	A 263391-0400	-		1	CALENDER ROLLER	91
F570	A 597840-0100	-		1	BENDING ROLLER	93
F590	A 276345-0300	-		1	AIR KNIFE	95
010	597837-0000	-		1	HOUSE	
030	247422-0000	-		2	DRIP PLATE	
040	251544-0000	-		1	SHEET	
050	543950-0000	-		1	BENDING ROLLER	
055	12242-0003	-		1	GASKET	
057	497719-0000	-		6	WASHER	
060	247171-0000	-		8	BEARING COVER	
070	247172-0000	K		8	SPACER RING	
080	247173-0000	D		8	BEARING SEAT	
090	247349-0000	F		2	STEERING	
100	491602-0000	-		2	GASKET HOLDER	
110	491128-0000	F		2	GASKET	
120	247355-0000	-		1	LOCK WASHER	
130	531190-0000	K		1	SHAFT	
140	247357-0000	D		2	SPROCKET	
150	247358-0000	D		1	SHIFTER HANDLE	
160	250588-0000	-		2	FLANGE	
170	267033-0000	K		2	WASHER	
180	279006-0000	D		1	BENDING ROLLER	
190	279007-0000	D		2	BENDING ROLLER	
200	531191-0000	F		2	BUSHING	
210	279009-0000	-		1	BEARING PLATE	
220	279010-0000	-		1	BEARING PLATE	
230	279011-0000	-		1	COVERING PLATE	
240	283475-0000	-		2	COVER DISC	
250	B 90044-0103	-		2	KEY SAFETY SWITCH	
260	90214-0098	F		8	BALL BEARING	
270	90214-0303	F		16	RING	
290	311103-0275	-		2	CYLINDRICACP M6 4X28 RFR	
300	311103-0278	-		1	CYLINDRICACP M6 4X35 RFR	
310	311103-0310	-		2	CYLINDRICACP M6 5X20 RFR	
320	312105-0325	-		2	SCREW M6S5X10 A2 80	
330	312105-0364	-		7	SCREW M6S6X10RFR	
340	312105-0367	-		32	SCREW M6S6X14RFR	
345	312105-0368	-		8	SCREW M6S ISO 4017 M6X16 A280	
350	312105-0372	-		4	SCREW M6S ISO 4017 M6X25 A280	
360	312105-0451	-		4	SCREW M6S ISO 4017 8X20 A280	
375	312105-0493	-		6	SCREW M6S ISO 4017 M10X25 A280	
376	312155-0329	-		4	SCREW MF6S DIN 7991 M5X16 A280	
378	312115-0329	-		4	SCREW MC6S ISO 4762 M5X16 A280	
379	312115-0328	-		4	SCREW 5X14 A4 80	
380	312318-0327	-		4	SET SCREW CUP POINT ISO 4029 M5X12 RFR	
385	312812-0314	-		4	LOCK NUT A2-M5RFR	
400	315105-0146	-		10	WASHER BRB5,3X10RFR	
410	315105-0153	-		32	WASHER BRB6,4X12RFR	
420	315105-0165	-		4	WASHER BRB8,4X16RFR	
425	315115-0153	-		8	WASHER TBRB6,4X12RFR	
430	315204-0109	-		2	O-RING 11,1X1,6VITON	
450	315204-0221	-		2	O-RING 34,2X3VITON	
460	315204-0310	-		2	O-RING 5X3 VITON	

CALENDER ROLLER

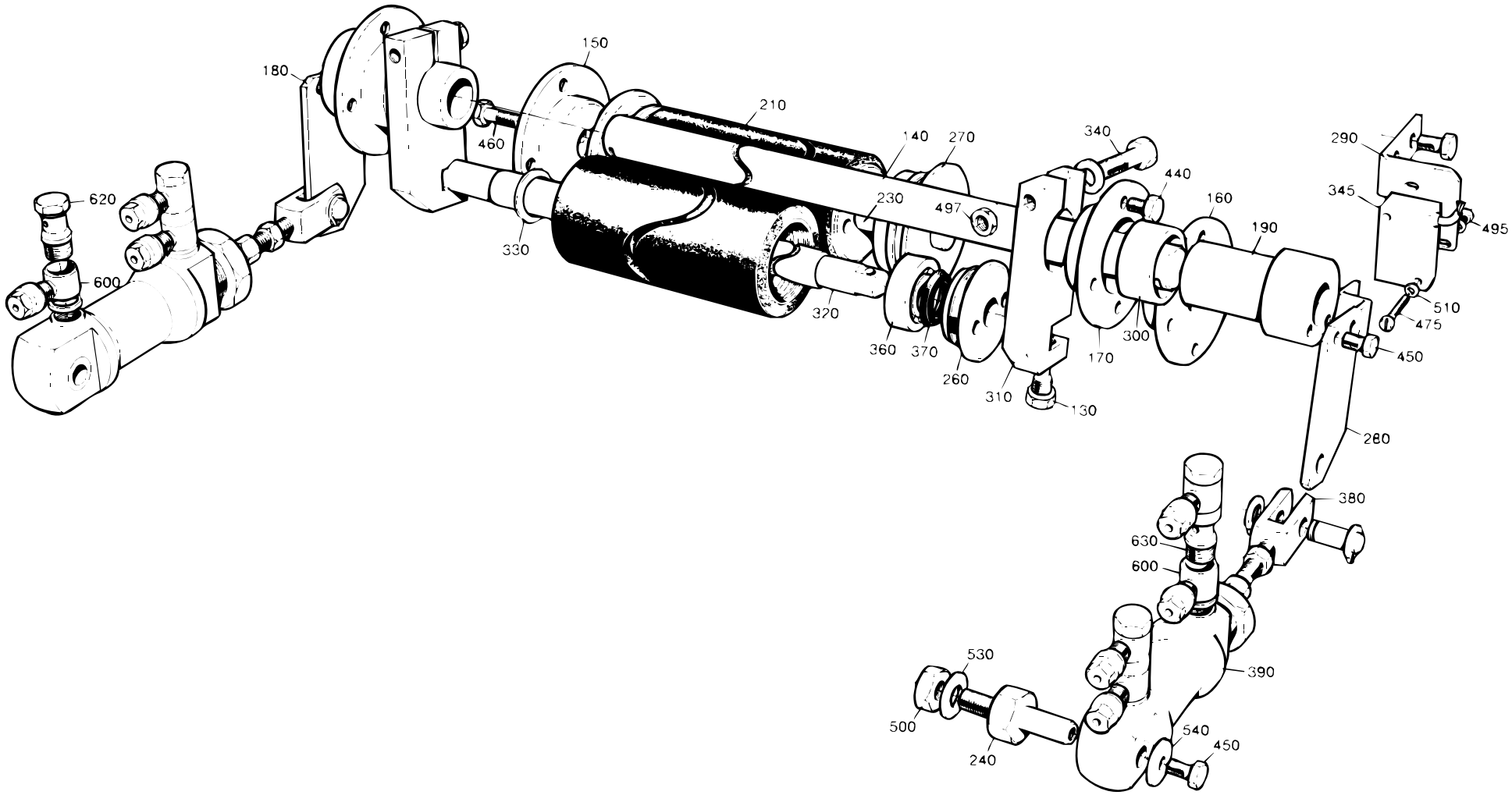

S-263391-4
ECN 9647

Pos	Part No	SP	UN	Qty	Description	Page No
-						
130	246966-0000	-		2	SCREW	
140	532145-0000	K		1	SHAFT	
150	247159-0000	D		1	AXLE SUPPORT	
160	247160-0000	D		1	AXLE SUPPORT	
170	247161-0000	D		2	AXLE SUPPORT	
180	247162-0000	-		1	BRACKET	
190	532261-0000	D		2	SLEEVE	
210	527750-0000	F		2	CALENDER ROLLER	
230	532144-0000	K		1	SHAFT	
240	247168-0000	D		2	CYLINDER BRACKET	
260	247170-0000	D		4	BEARING COVER	
270	247240-0000	K		2	WHEEL	
280	282766-0000	K		1	LINK	
290	282767-0000	D		1	BRACKET	
300	297142-0000	F		2	BUSHING	
310	532143-0000	D		2	ARM	
320	532146-0000	K		1	SHAFT	
330	532147-0000	-		2	WASHER	
340	532148-0000	-		2	SCREW	
345	90044-0104	F		1	PROX.SWITCHIFM IN 3002	
360	90214-0028	K		4	BALL BEARING REPBY 0090214-0098	
370	90214-0303	K		8	RING	
380	90239-0127	K		2	BRACKET	
390	B 90239-0189	K		2	CYLINDER	
440	312105-0364	-		16	SCREW M6S6X10RFR	
450	312105-0366	-		6	SCREW M6S ISO 4017 M6X12 A280	
460	312105-0370	-		1	SCREW M6S ISO 4017 M6X20 A280	
475	312125-0230	-		2	SLOTTED CHEESE HEAD ISO 1207 M3X20 RFR	
495	312605-0310	-		2	NUT M6M3RFR	
497	312605-0318	-		2	NUT M6M8RFR	
500	312605-0320	-		2	NUT M6M10RFR	
510	315105-0124	-		4	WASHER BRB3,2X6RFR	
530	315105-0173	-		2	WASHER BRB10,5X22RFR	
540	315121-0153	-		2	WASHER TBRSB6,4X22FZB	
600	342797-0122	-		7	BANJO CONNECTION,RINGPIECE 6-1/4"	
620	342980-0304	-		1	BANJO-HOLLOW BOLT COUPL,EXT.THR.01-G1/4"	
630	342980-0314	-		3	BANJO-HOLLOW BOLT COUPL,EXT.THR.02-G1/4"	

Pos	Part No	SP	UN	Qty	Description	Page No

BENDING ROLLER

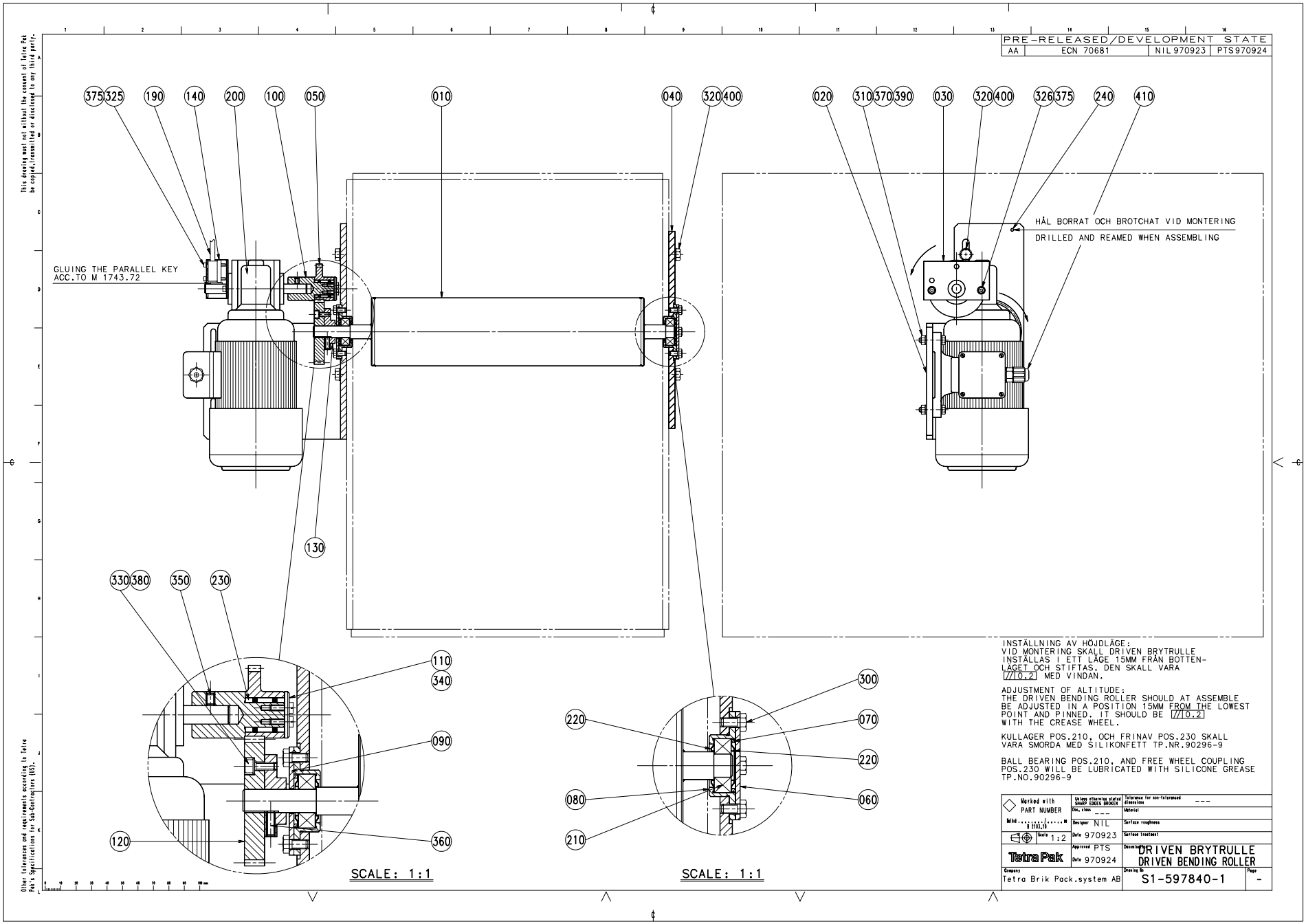

Pos	Part No	SP	UN	Qty	Description	Page No
1000B						
050	209331-0012	K		1	GEAR WHEEL	
1000S						
050	209331-0013	K		1	GEAR WHEEL	
Common parts						
010	276394-0000	-		1	BENDING ROLLER	
020	436361-0000	-		1	MOTOR PLATE	
030	927258-0000	-		1	BRACKET	
040	250586-0000	-		1	BEARING PANEL	
060	247171-0000	-		1	BEARING COVER	
070	247172-0000	K		2	SPACER RING	
080	247173-0000	D		2	BEARING SEAT	
090	250590-0000	-		1	BEARING COVER	
100	250591-0000	K		1	SHAFT	
110	250592-0000	-		1	WASHER	
120	265872-0001	K		1	GEAR WHEEL	
130	284974-0000	-		1	HUB	
140	795581-0000	-		1	PLATE	
190	90044-0104	-		1	PROX.SWITCHIFM IN 3002	
200	B 90069-0116	D		1	WORM GEAR MOTOR REPBY 90069-281	
210	90214-0098	F		2	BALL BEARING	
220	90214-0303	F		4	RING	
230	90348-0007	K		1	FREE WHEEL COUPLING	
240	311103-0270	-		2	CYLINDRICACP M6 4X16 RFR	
300	312105-0366	-		8	SCREW M6S ISO 4017 M6X12 A280	
310	312105-0374	-		4	SCREW M6S ISO 4017 M6X30 A280	
320	312105-0451	-		2	SCREW M6S ISO 4017 8X20 A280	
325	312115-0232	-		4	SCREW 3X25 A4 80	
326	312115-0295	-		2	SCREW MC6S ISO 4762 M4X20 A280	
330	312115-0328	-		3	SCREW 5X14 A4 80	
340	312125-0291	-		2	SLOTTED CHEESE HEAD ISO 1207 M4X12 RFR	
350	312318-0362	-		1	SET SCREW CUP POINT ISO 4029 M6X8 RFR	
360	312318-0368	-		1	SET SCREW CUP POINT ISO 4029 M6X16 RFR	
370	312605-0316	-		4	NUT M6M6RFR	
375	315105-0136	-		4	WASHER BRB4,3X8RFR	
380	315105-0146	-		3	WASHER BRB5,3X10RFR	
390	315105-0153	-		8	WASHER BRB6,4X12RFR	
400	315105-0165	-		4	WASHER BRB8,4X16RFR	
410	90012-0137	D		1	CABLE GLAND SCREENED	

Pos	Part No	SP	UN	Qty	Description	Page No

AIR KNIFE

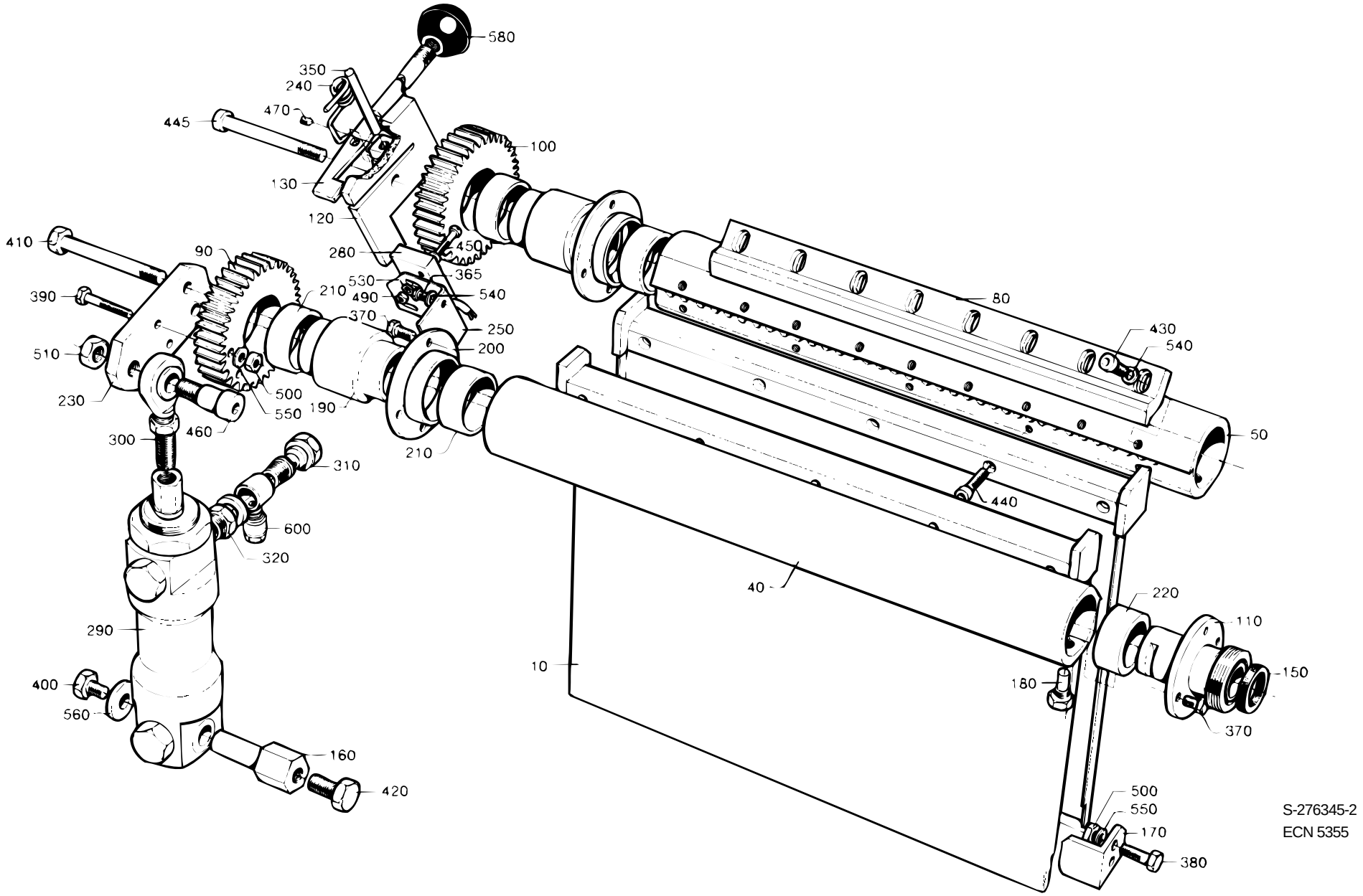
580
350
240
470
445
100
130
120
280
450
365
530
540
490
370
250
200
210
90
410
390
510
230
500
550
190
460
300
310
600
320
290
400
560
160
420
80
430
540
50
440
40
220
110
150
180
370
10
500
550
170
380
S-276345-2
ECN 5355

Pos	Part No	SP	UN	Qty	Description	Page No
TBA 1000S or TBA 1000SQ						
010	276346-0000	D		2	AIR GUIDE	
040	276347-0000	D		1	AIR DISTRIBUTOR	
050	276348-0000	D		1	AIR DISTRIBUTOR	
080	573841-0000	-		2	STEERING RAIL	
170	246965-0000	-		2	STOP	
TBA 0500B or TBA 0568B or TBA 0750B or TBA 1000B or TBA 1055B or TBA 1500S						
010	276346-0000	D		2	AIR GUIDE	
040	276347-0000	D		1	AIR DISTRIBUTOR	
050	276348-0000	D		1	AIR DISTRIBUTOR	
080	526502-0000	K		2	STEERING RAIL	
170	246965-0000	-		2	STOP	
TBA 0750S or TPA 1000S						
010	276346-0000	D		2	AIR GUIDE	
040	276347-0000	D		1	AIR DISTRIBUTOR	
050	276348-0000	D		1	AIR DISTRIBUTOR	
080	544301-0000	-		2	STEERING RAIL	
170	246965-0000	-		2	STOP	
TBA 0300B or TBA 0375S						
010	434972-0000	-		2	AIR GUIDE	
040	434973-0000	-		1	AIR DISTRIBUTOR	
050	434974-0000	-		1	AIR DISTRIBUTOR	
080	527647-0001	-		2	STEERING RAIL	
170	434976-0000	-		2	STOP	
TBA 0355B or TBA 0400B or TBA 0500S						
010	434972-0000	-		2	AIR GUIDE	
040	434973-0000	-		1	AIR DISTRIBUTOR	
050	434974-0000	-		1	AIR DISTRIBUTOR	
080	527647-0002	-		2	STEERING RAIL	
170	434976-0000	-		2	STOP	
Common parts						
060	292565-0000	-		1	PROTECTION	
090	276350-0000	D		1	GEAR WHEEL	
100	276351-0000	D		1	GEAR WHEEL	
110	276354-0000	D		2	ATTACHMENT	
120	297969-0000	-		1	FASTENING PLATE	
130	297970-0000	-		1	CATCH LEVER	
150	12242-0001	-		2	GASKET	
160	246964-0000	-		1	CYLINDER BRACKET	
180	246966-0000	D		2	SCREW	
190	276355-0000	D		2	SLEEVE	
200	276356-0000	D		2	BEARING HOUSING	
210	276357-0000	K		4	BUSHING	
220	276358-0000	K		2	BUSHING	
230	276359-0000	-		1	LEVER	
240	276360-0000	K		1	SPRING	
250	276361-0000	-		1	BRACKET	
280	90044-0104	K		1	PROX.SWITCHIFM IN 3002	
290	B 90239-0196	D		1	CYLINDER	
300	90239-0321	-		1	BRACKET	
310	90235-0275	-		2	THROTTLE CHECK VALVES,G1/4"	
320	90330-0042	-		2	BUSHING,INT./EXT.R-THREAD R3/8"-Rp1/4"	
350	311103-0367	-		1	CYLINDRICACP M6 6X55 RFR	
365	312105-0325	-		2	SCREW M6S5X10 A2 80	
370	312105-0364	-		14	SCREW M6S6X10RFR	
375	312105-0368	-		2	SCREW M6S ISO 4017 M6X16 A280	
380	312105-0370	-		4	SCREW M6S ISO 4017 M6X20 A280	
390	312105-0376	-		2	SCREW M6S ISO 4017 M6X35 A280	
400	312105-0447	-		1	SCREW M6S ISO 4017 M8X12 A280	
410	312105-0467	-		2	SCREW M6S ISO 4014 M8X80 A280	
420	312105-0491	-		1	SCREW M6S ISO 4017 M10X20 A280	
430	312115-0325	-		18	SCREW 5X10 A4 80	
440	312115-0332	-		10	SCREW 5X22 A4 80	
445	312115-0467	-		2	SCREW MC6S ISO 4762 M8X80 A280	
450	312125-0230	-		2	SLOTTED CHEESE HEAD ISO 1207 M3X20 RFR	
460	312180-0530	-		1	HEX. S0CKET HEAD SHOULD. ISO 7379 M10X16	
470	312316-0320	-		1	STOP SCREW SK6SS5X5FZB	
490	312605-0310	-		2	NUT M6M3RFR	
500	312605-0316	-		6	NUT M6M6RFR	
510	312605-0320	-		1	NUT M6M10RFR	
530	315105-0124	-		4	WASHER BRB3,2X6RFR	
540	315105-0146	-		20	WASHER BRB5,3X10RFR	
550	315105-0153	-		8	WASHER BRB6,4X12RFR	
560	315121-0165	-		1	WASHER TBRSB8,4X26FZB	
580	318800-0105	-		1	HANDLE BALLA D.35-M10	
600	342797-0122	-		2	BANJO CONNECTION,RINGPIECE 6-1/4"	

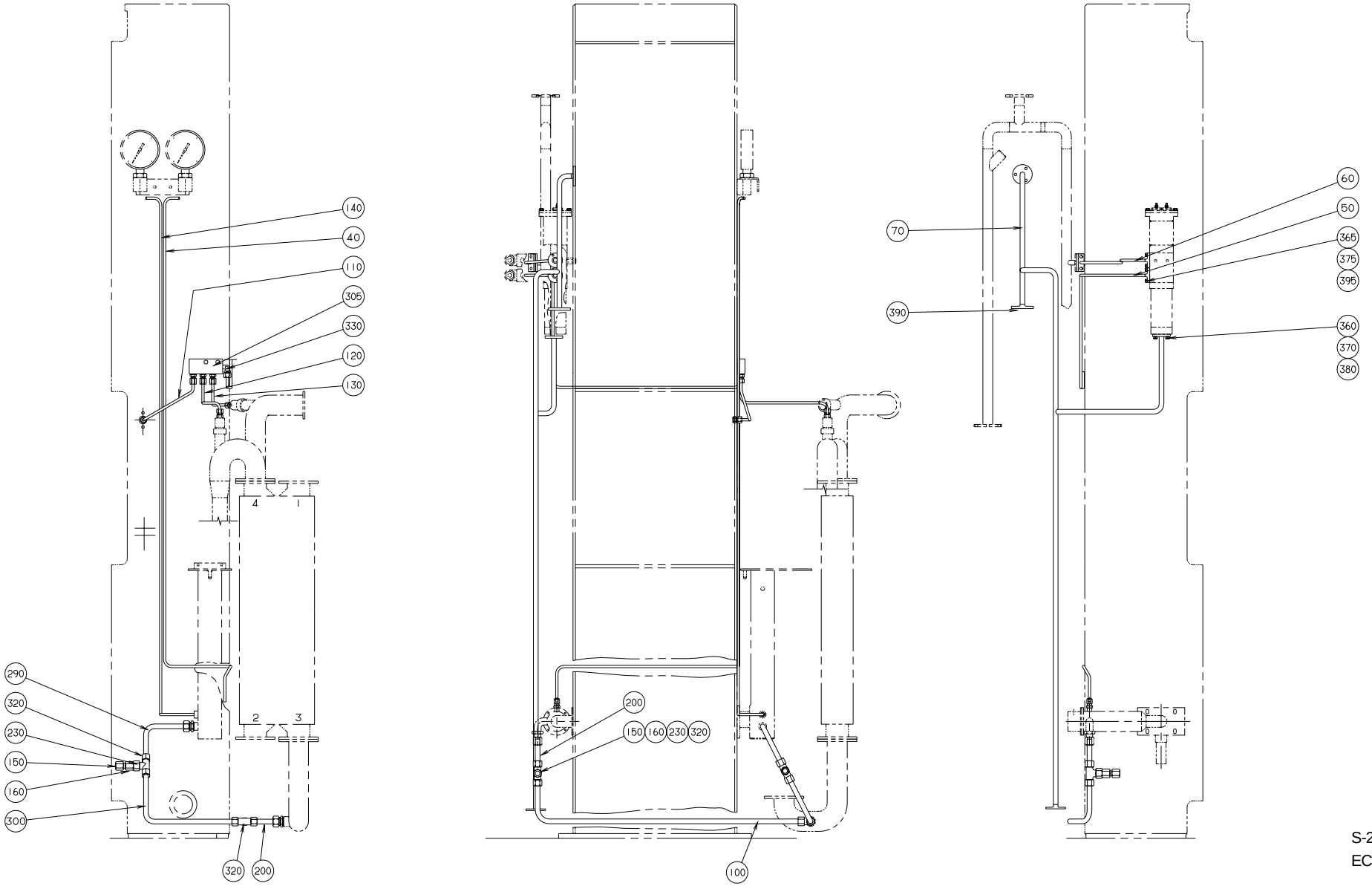

S-276480-5
ECN 17647

Pos	Part No	SP	UN	Qty	Description	Page No
-						
040	451053-0000	-		1	PIPE	
050	554448-0000	-		1	PIPE	
060	554449-0000	-		1	PIPE	
070	554583-0000	-		1	PIPE	
100	297347-0000	-		1	PIPE	
110	464307-0000	-		1	PIPE BEND	
120	464308-0000	-		1	PIPE	
130	464309-0000	-		1	PIPE	
140	479230-0000	-		1	PIPE	
150	209145-0000	K		2	THROTTLE SCREW	
160	209146-0000	K		2	BARRIER NUT	
200	276490-0000	-		2	PIPE	
230	279589-0000	K		2	NUT	
290	479231-0000	-		1	PIPE	
300	479232-0000	-		1	PIPE	
305	464018-0000	-		1	JUNCTION BLOCK	
320	90030-0058	K		3	T-PIPE CONNECTION T-12	
330	90030-0137	-		1	ELBOW CONNECTION WA 6-R1/8"	
340	90030-0184	-		3	STRAIGHT CONNECTION GA-6-G1/8"	
360	312105-0366	-		2	SCREW M6S ISO 4017 M6X12 A280	
365	312105-0327	-		4	SCREW M6S ISO 4017 M5X12 A280	
370	315105-0153	-		2	WASHER BRB6,4X12RFR	
375	315105-0146	-		4	WASHER BRB5,3X10RFR	
380	927421-0003	-		1	O-RING 13.3X2.4 SILICON	
390	927422-0004	-		1	O-RING 29.2X3 SILICON	
395	927421-0001	-		2	O-RING 9.3X2.4 SILICON	

Pos	Part No	SP	UN	Qty	Description	Page No

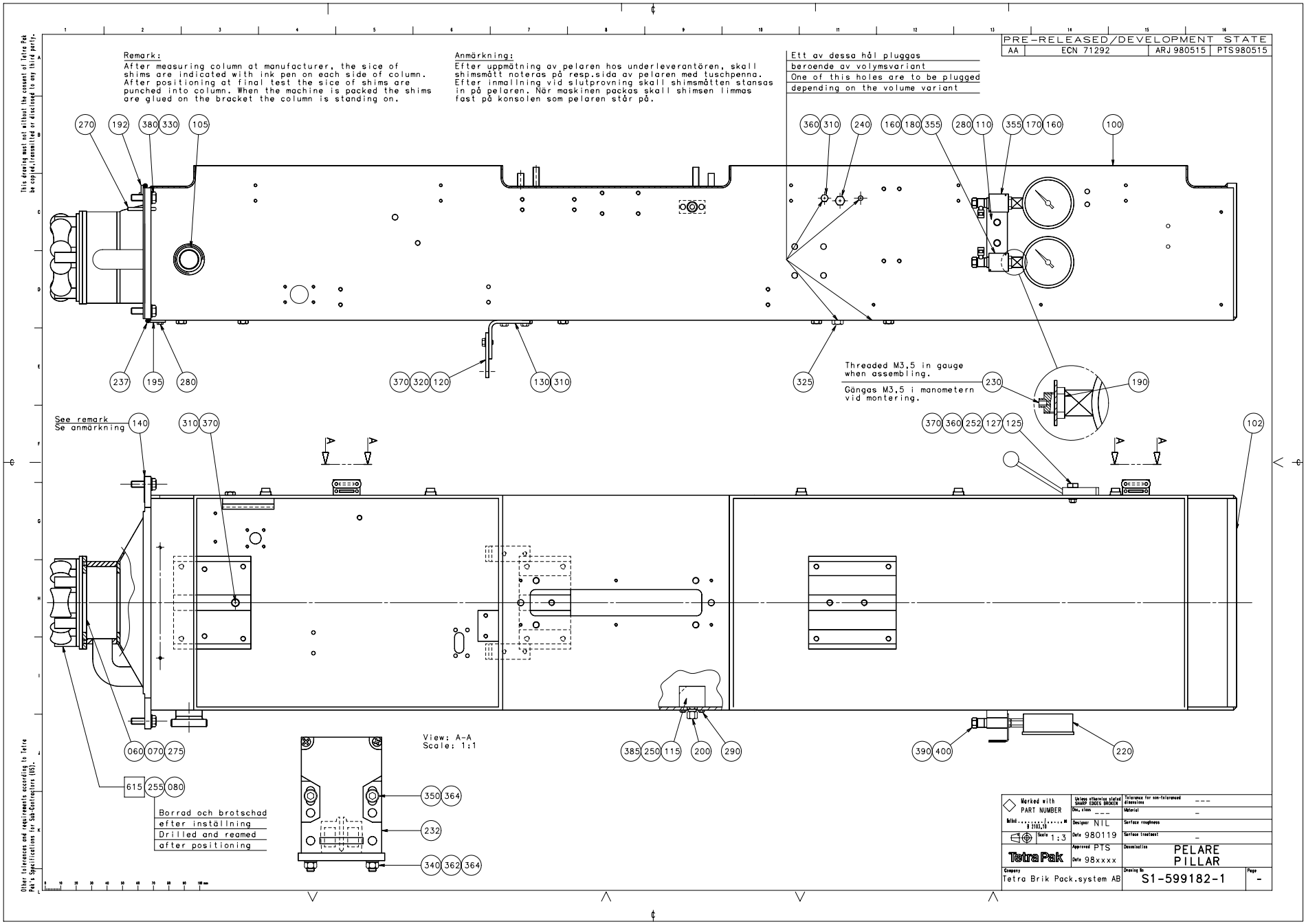
PRE-RELEASED/DEVELOPMENT STATE
AA ECN 71292 ARJ 980515 PTS980515
Remark:
After measuring column at manufacturer, the sice of shims are indicated with ink pen on each side of column. After positioning at final test the sice of shims are punched into column. When the machine is packed the shims are glued on the bracket the column is standing on.
Anmärkning:
Efter uppmätning av pelaren hos underleverantören, skall shimsmått noteras på resp.sida av pelaren med tuschpenna. Efter inmallning vid slutprovning skall shimsmåtten stansas in på pelaren. När maskinen packas skall shimsen limmas fast på konsolen som pelaren står på.
Ett av dessa hål pluggas
beroende av volymsvariant
One of this holes are to be plugged
depending on the volume variant
Threaded M3,5 in gauge when assembling.
Gängas M3,5 i manometern vid montering.
See remark
Se anmärkning
Borrad och brotschad
efter inställning
Drilled and reamed
after positioning
View: A-A
Scale: 1:1
Tetra Pak
Tetra Brik Pack.system AB
PELARE
PILLAR
S1-599182-1

Pos	Part No	SP	UN	Qty	Description	Page No
SOURCE,TBA/8-030V						
060	476498-0000	-		1	PLATE	
070	476500-0000	-		1	SEAL	
080	493615-0000	-		1	SEAL	
100	596723-0000	-		1	PILLAR	
255	311103-0239	-		2	CYLINDRICACP M6 3X22 RFR	
275	312145-0368	-		4	SLOTTED HEMFS6X16RFR	
SOURCE,TBA/8-040V or SOURCE,TBA/8-050V or SOURCE,TBA/8-060V or SOURCE,TBA/8-090V						
100	599183-0000	-		1	PILLAR	
255	311103-0238	-		2	CYLINDRICACP M6 3X20 RFR	
SOURCE,TBA/8-100V						
100	573619-0000	-		1	PILLAR	
255	311103-0238	-		2	CYLINDRICACP M6 3X20 RFR	
Common parts						
F615	A 466399-0100	-		1	SEAL	**103**
102	531309-0000	-		1	GASKET	
105	12242-0005	F		1	GASKET	
110	33577-0000	-		1	CANTILEVER	
115	267564-0000	D		1	BRACKET	
120	279860-0000	D		2	ADJUSTMENT PLATE	
125	551786-0000	-		1	LEVER	
127	551784-0000	-		1	FITTING BOLT	
130	282608-0000	-		2	ANGLE	
140	458481-0001	-		1	SHIM	
140	458481-0002	-		1	SHIM	
140	458481-0003	-		1	SHIM	
160	464173-0000	-		2	LABEL HOLDER	
170	464174-0000	-		1	SIGN	
180	464175-0000	-		1	SIGN	
190	90330-0105	K		2	NUT	
192	493091-0000	-		1	CLAMP RAIL	
195	530808-0000	-		1	CLAMP RAIL	
200	90030-0051	K		1	PIPE CONNECTION	
220	90043-0034	K		2	PRESSURE GAUGE	
230	90043-0302	K		2	SCREW	
232	B 90044-0103	-		2	KEY SAFETY SWITCH	
237	90143-0018	-	MM	950	STRIP	
240	90330-0066	-		1	PLUG,EXTERNAL G-THREAD G1/8"	
250	90424-0031	K		1	NOZZLE	
252	318800-0104	-		1	HANDLE BALLA D.30-M8	
270	311211-0299	-		2	TAPER PIN GKP6X6X55	
280	312105-0364	-		6	SCREW M6S6X10RFR	
290	312105-0366	-		2	SCREW M6S ISO 4017 M6X12 A280	
310	312105-0447	-		6	SCREW M6S ISO 4017 M8X12 A280	
320	312105-0449	-		2	SCREW M6S ISO 4017 M8X16 A280	
325	312105-0532	-		1	SCREW M6S ISO 4017 M12X20 A280	
330	312105-0540	-		4	SCREW M6S ISO 4017 M12X40 A280	
340	312155-0329	-		4	SCREW MF6S DIN 7991 M5X16 A280	
350	312115-0328	-		4	SCREW 5X14 A4 80	
355	312502-0120	-		4	DRIVE SCREW ROUND HEAD SMS 1549 KDS 0X5	
360	312605-0318	-		2	NUT M6M8RFR	
362	312812-0314	-		4	LOCK NUT A2-M5RFR	
364	315105-0146	-		8	WASHER BRB5,3X10RFR	
370	315105-0165	-		4	WASHER BRB8,4X16RFR	
380	315115-0178	-		4	WASHER TBRB13X24RFR	
385	315204-0209	K		1	O-RING 3X2,4 VITON	
390	342797-0122	-		2	BANJO CONNECTION,RINGPIECE 6-1/4"	
400	342980-0304	-		2	BANJO-HOLLOW BOLT COUPL,EXT.THR.01-G1/4"	

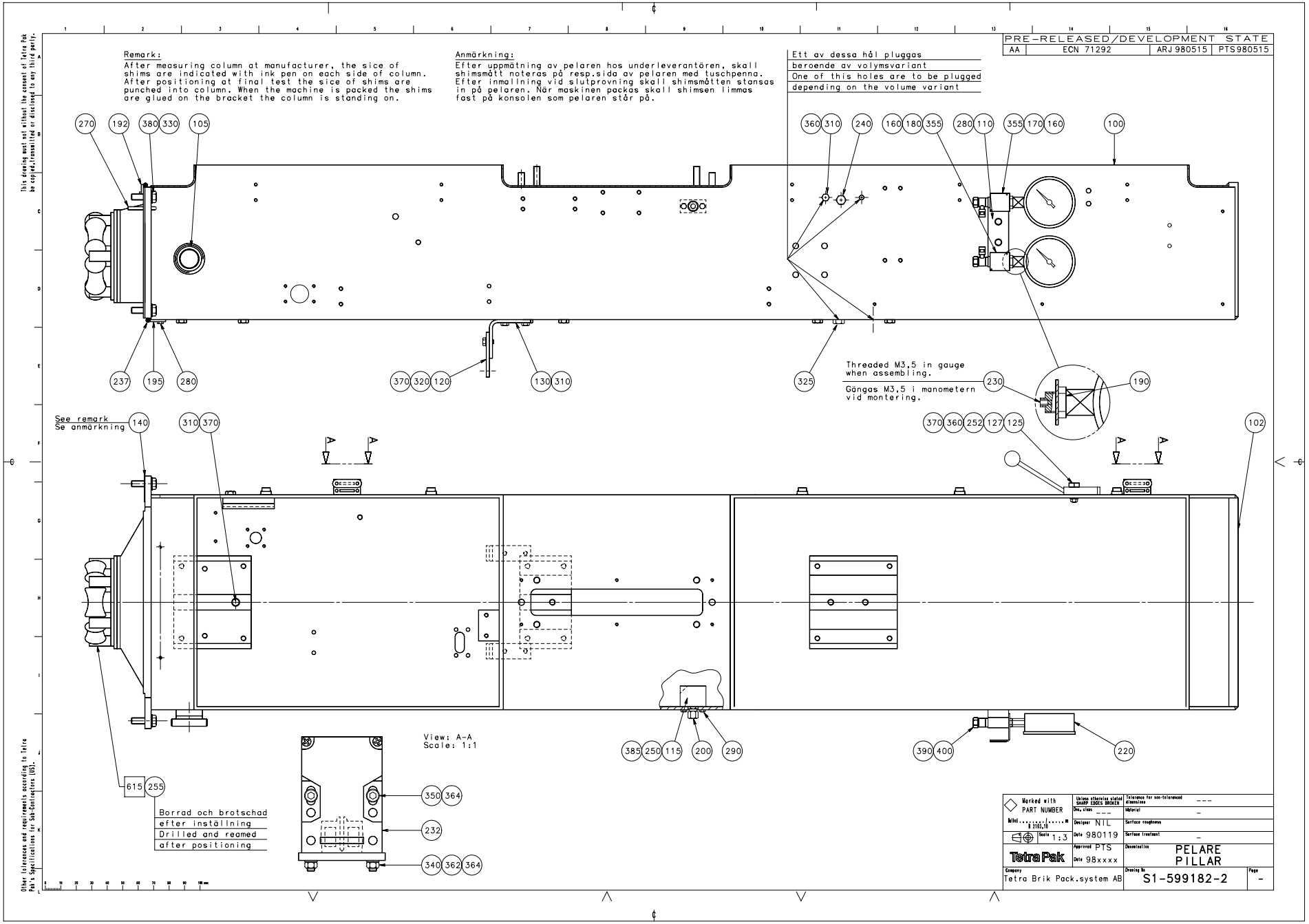
PRE-RELEASED/DEVELOPMENT STATE
AA | ECN 71292 | ARJ 980515 | PTS980515
Remark:
After measuring column at manufacturer, the sice of shims are indicated with ink pen on each side of column. After positioning at final test the sice of shims are punched into column. When the machine is packed the shims are glued on the bracket the column is standing on.
Anmärkning:
Efter uppmätning av pelaren hos underleverantören, skall shimsmått noteras på resp.sida av pelaren med tuschpenna. Efter inmallning vid slutprovning skall shimsmåtten stansas in på pelaren. När maskinen packas skall shimsen limmas fast på konsolen som pelaren står på.
Ett av dessa hål pluggas
beroende av volymsvariant
One of this holes are to be plugged
depending on the volume variant
Threaded M3,5 in gauge when assembling.
Gängas M3,5 i manometern vid montering.
See remark
Se anmärkning
Borrad och brotschad
efter inställning
Drilled and reamed
after positioning
View: A-A
Scale: 1:1
PELARE
PILLAR
Tetra Brik Pack.system AB
S1-599182-2

Pos	Part No	SP	UN	Qty	Description	Page No
SOURCE,TBA/8-030V						
060	476498-0000	-		1	PLATE	
070	476500-0000	-		1	SEAL	
080	493615-0000	-		1	SEAL	
100	596723-0000	-		1	PILLAR	
255	311103-0239	-		2	CYLINDRICACP M6 3X22 RFR	
275	312145-0368	-		4	SLOTTED HEMFS6X16RFR	
SOURCE,TBA/8-040V or SOURCE,TBA/8-050V or SOURCE,TBA/8-060V or SOURCE,TBA/8-090V						
100	599183-0000	-		1	PILLAR	
255	311103-0238	-		2	CYLINDRICACP M6 3X20 RFR	
SOURCE,TBA/8-100V						
100	573619-0000	-		1	PILLAR	
255	311103-0238	-		2	CYLINDRICACP M6 3X20 RFR	
Common parts						
F615	A 466399-0100	-		1	SEAL	
102	531309-0000	-		1	GASKET	
105	12242-0005	F		1	GASKET	
110	33577-0000	-		1	CANTILEVER	
115	267564-0000	D		1	BRACKET	
120	279860-0000	D		2	ADJUSTMENT PLATE	
125	551786-0000	-		1	LEVER	
127	551784-0000	-		1	FITTING BOLT	
130	282608-0000	-		2	ANGLE	
140	458481-0001	-		1	SHIM	
140	458481-0002	-		1	SHIM	
140	458481-0003	-		1	SHIM	
160	464173-0000	-		2	LABEL HOLDER	
170	464174-0000	-		1	SIGN	
180	464175-0000	-		1	SIGN	
190	90330-0105	K		2	NUT	
192	493091-0000	-		1	CLAMP RAIL	
195	530808-0000	-		1	CLAMP RAIL	
200	90030-0051	K		1	PIPE CONNECTION	
220	90043-0034	K		2	PRESSURE GAUGE	
230	90043-0302	K		2	SCREW	
232	B 90044-0103	-		2	KEY SAFETY SWITCH	
237	90143-0018	-	MM	950	STRIP	
240	90330-0066	-		1	PLUG,EXTERNAL G-THREAD G1/8"	
250	90424-0031	K		1	NOZZLE	
252	318800-0104	-		1	HANDLE BALLA D.30-M8	
270	311211-0299	-		2	TAPER PIN GKP6X6X55	
280	312105-0364	-		6	SCREW M6S6X10RFR	
290	312105-0366	-		2	SCREW M6S ISO 4017 M6X12 A280	
310	312105-0447	-		6	SCREW M6S ISO 4017 M8X12 A280	
320	312105-0449	-		2	SCREW M6S ISO 4017 M8X16 A280	
325	312105-0532	-		1	SCREW M6S ISO 4017 M12X20 A280	
330	312105-0540	-		4	SCREW M6S ISO 4017 M12X40 A280	
340	312155-0329	-		4	SCREW MF6S DIN 7991 M5X16 A280	
350	312115-0328	-		4	SCREW 5X14 A4 80	
355	312502-0120	-		4	DRIVE SCREW ROUND HEAD SMS 1549 KDS 0X5	
360	312605-0318	-		2	NUT M6M8RFR	
362	312812-0314	-		4	LOCK NUT A2-M5RFR	
364	315105-0146	-		8	WASHER BRB5,3X10RFR	
370	315105-0165	-		4	WASHER BRB8,4X16RFR	
380	315115-0178	-		4	WASHER TBRB13X24RFR	
385	315204-0209	K		1	O-RING 3X2,4 VITON	
390	342797-0122	-		2	BANJO CONNECTION,RINGPIECE 6-1/4"	
400	342980-0304	-		2	BANJO-HOLLOW BOLT COUPL,EXT.THR.01-G1/4"	

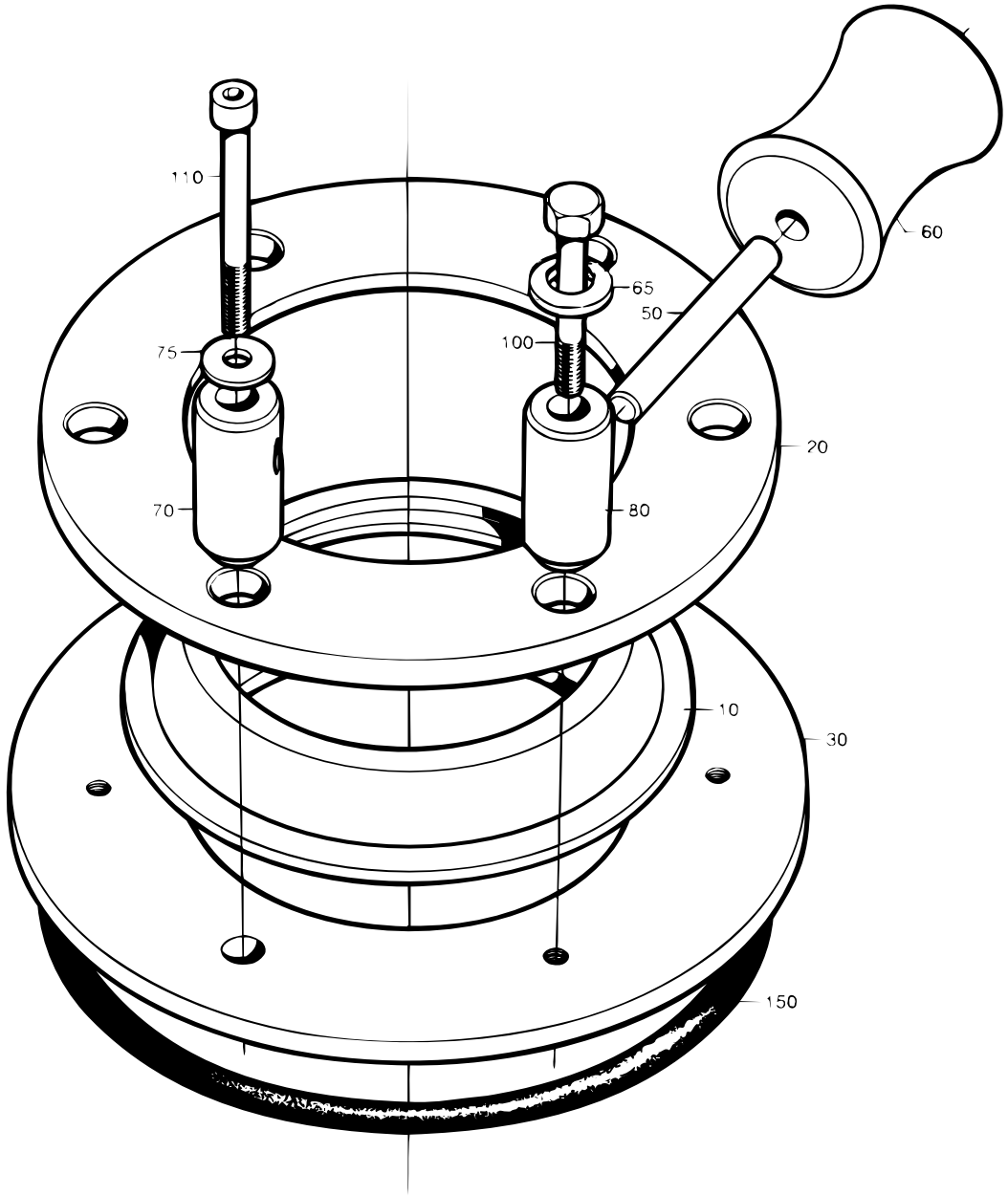

S-466399-1
ECN 20561

Pos	Part No	SP	UN	Qty	Description	Page No
TBA 1000S						
010	567743-0000	F		1	SEAL	
020	466400-0000	-		1	RING	
030	466403-0000	-		1	RING	
050	263655-0009	-		6	SHAFT	
060	573504-0000	F		6	ROLL	
070	466040-0000	-		2	AXLE SUPPORT	
080	493658-0000	-		4	AXLE SUPPORT	
TBA 0500B or TBA 0568B or TBA 0750B or TBA 1000B or TBA 1055B or TBA 1500S						
010	466042-0000	F		1	SEAL	
020	466400-0000	-		1	RING	
030	466403-0000	-		1	RING	
050	263655-0009	-		6	SHAFT	
060	466046-0000	F		6	ROLL	
070	466040-0000	-		2	AXLE SUPPORT	
080	493658-0000	-		4	AXLE SUPPORT	
TBA 0750S or TPA 1000S						
010	544015-0000	F		1	SEAL	
020	544013-0000	-		1	RING	
030	544014-0000	-		1	RING	
050	263655-0008	-		6	SHAFT	
060	544012-0000	F		6	ROLL	
070	466040-0000	-		2	AXLE SUPPORT	
080	493658-0000	-		4	AXLE SUPPORT	
TBA 1000SQ						
010	579318-0000	F		1	SEAL	
020	466400-0000	-		1	RING	
030	466403-0000	-		1	RING	
050	263655-0009	-		6	SHAFT	
060	579319-0000	F		6	ROLL	
070	580958-0000	-		2	AXLE SUPPORT	
080	580959-0000	-		4	AXLE SUPPORT	
TBA 0300B or TBA 0375S						
010	466099-0000	F		1	SEAL	
020	466402-0000	-		1	RING	
030	466405-0000	-		1	RING	
050	263655-0007	-		6	SHAFT	
060	466102-0000	F		6	ROLL	
070	466040-0000	-		2	AXLE SUPPORT	
080	493658-0000	-		4	AXLE SUPPORT	
TBA 0355B or TBA 0400B or TBA 0500S						
010	466089-0000	F		1	SEAL	
020	466401-0000	-		1	RING	
030	466404-0000	-		1	RING	
050	263655-0007	-		6	SHAFT	
060	466092-0000	F		6	ROLL	
070	466040-0000	-		2	AXLE SUPPORT	
080	493658-0000	-		4	AXLE SUPPORT	
Common parts						
065	6278-0000	-		4	WASHER	
075	466041-0000	-		2	WASHER	
100	312105-0379	-		4	SCREW M6S ISO 4014 M6X45 A280	
110	312115-0382	-		2	SCREW MC6S ISO 4762 M6X60 A280	
150	315204-0324	K		1	O-RING164,3X5,7 VITON	

TOUCH GUARD

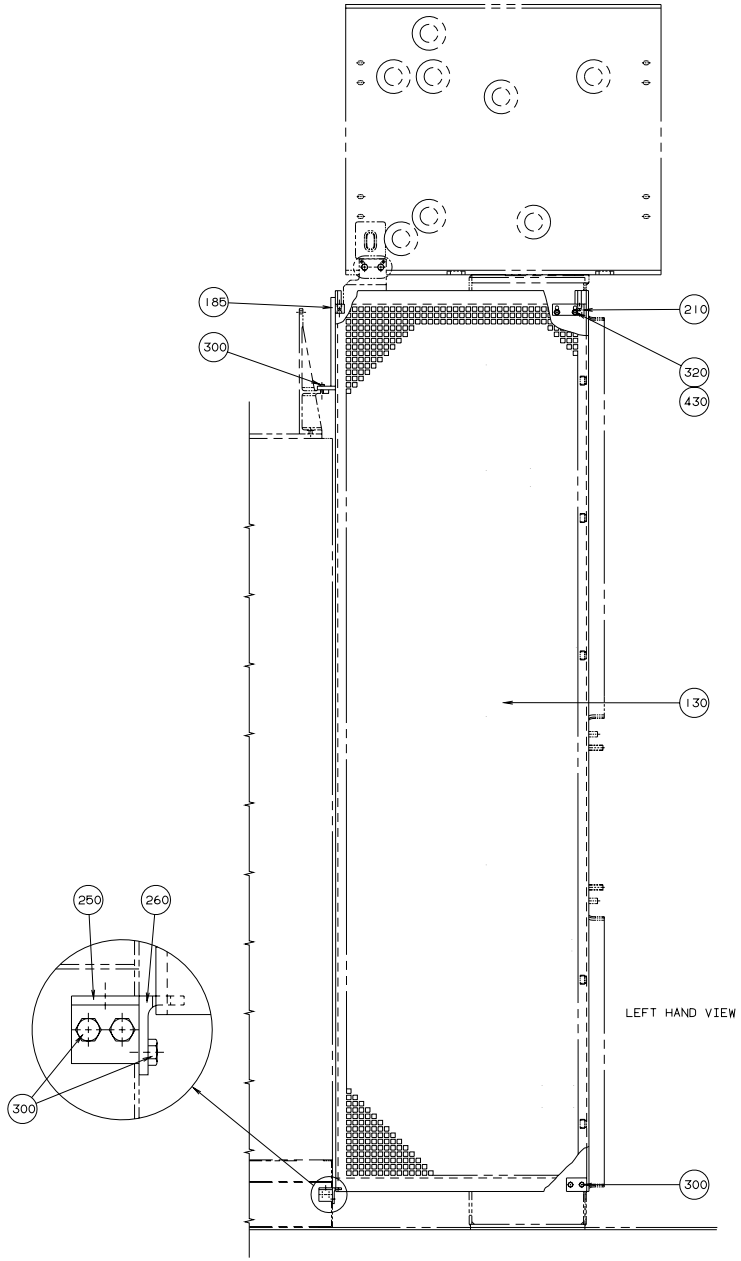

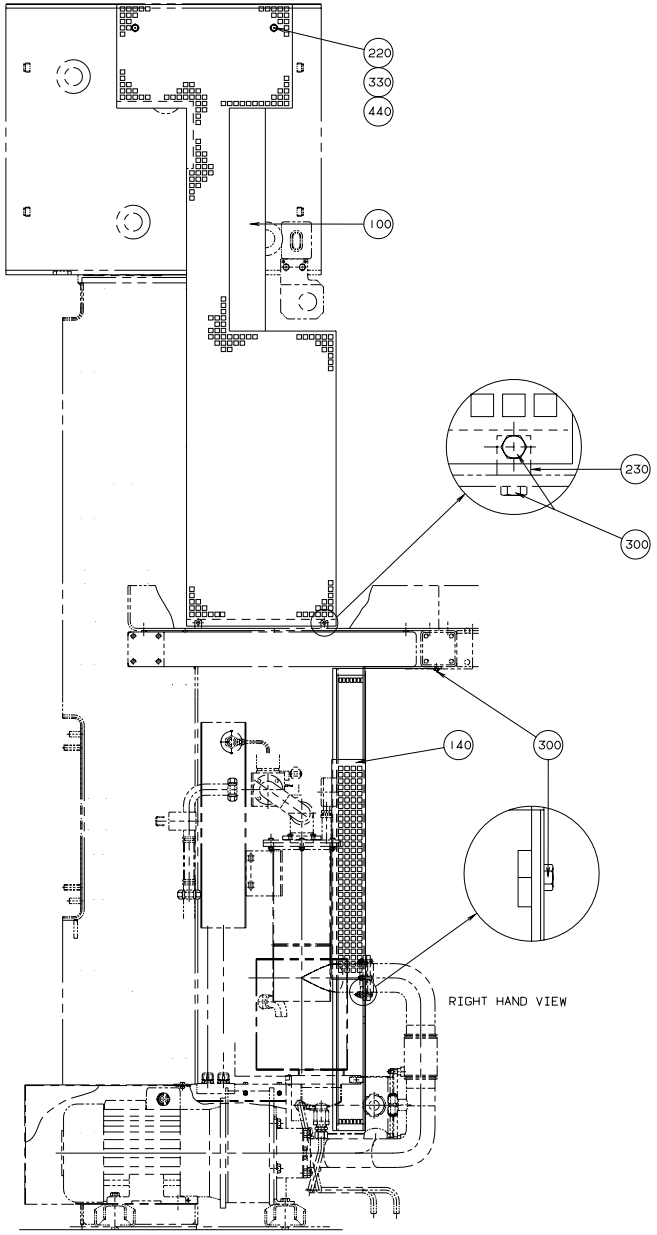

S-279651-5
ECN 19396

Pos	Part No	SP	UN	Qty	Description	Page No
-						
100	752771-0000	-		1	TOUCH GUARD	
130	567023-0000	-		1	TOUCH GUARD	
140	576738-0000	-		1	TOUCH GUARD	
185	294472-0000	-		1	CANTILEVER	
210	267646-0000	-		1	BLOCKING PIECE	
220	267665-0000	-		2	BRACKET	
230	279619-0000	-		2	BRACKET	
250	457752-0000	-		1	CANTILEVER	
260	457753-0000	-		1	BRACKET	
300	312105-0366	-		15	SCREW M6S ISO 4017 M6X12 A280	
320	312105-0372	-		2	SCREW M6S ISO 4017 M6X25 A280	
330	312105-0447	-		2	SCREW M6S ISO 4017 M8X12 A280	
430	315105-0153	-		2	WASHER BRB6,4X12RFR	
440	315105-0165	-		2	WASHER BRB8,4X16RFR	

Pos	Part No	SP	UN	Qty	Description	Page No

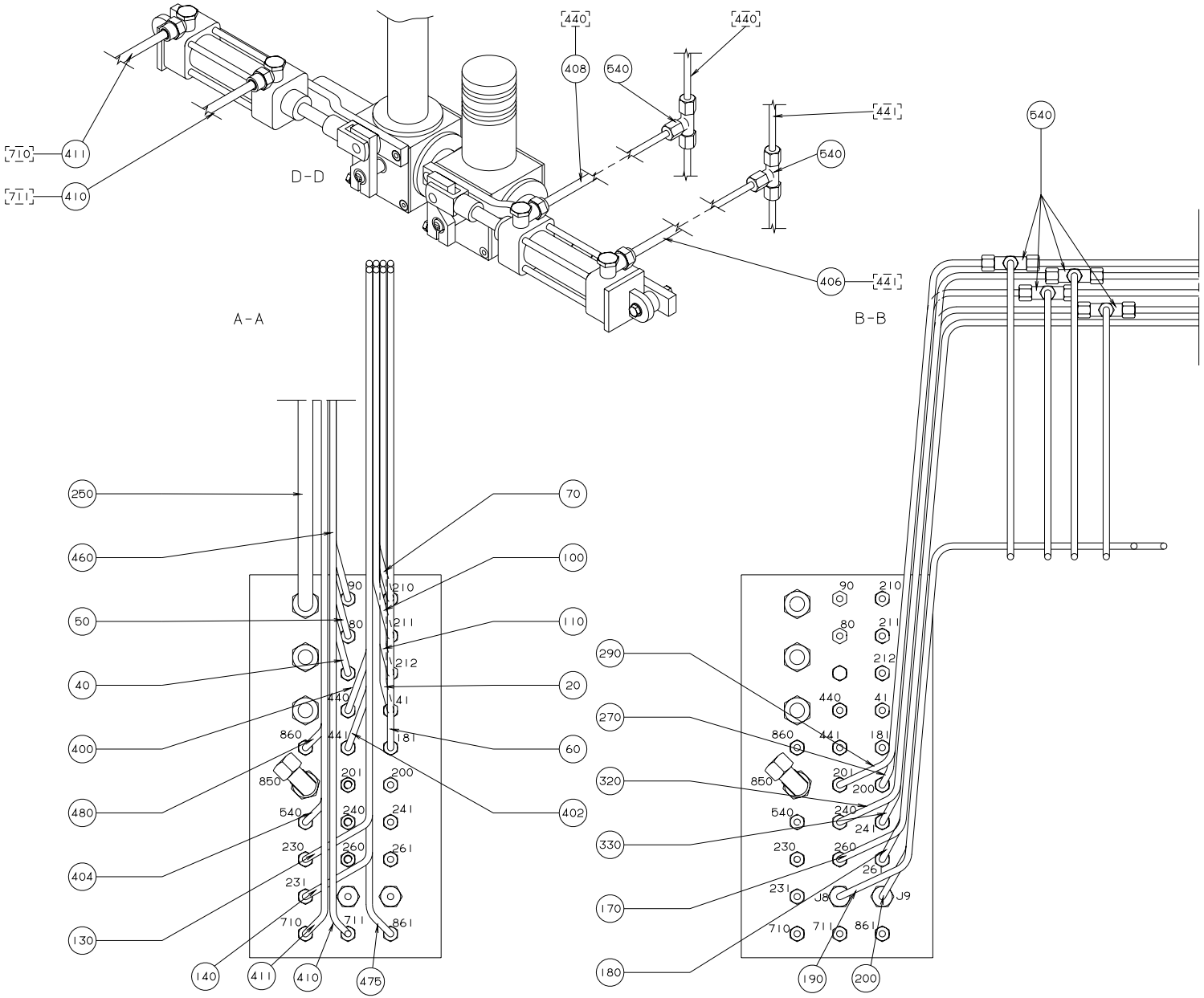

S-282805-13
ECN 17885

Pos	Part No	SP	UN	Qty	Description	Page No
2"						
010	476794-0001	-		1	PIPE	
3"						
010	476794-0002	-		1	PIPE	
Common parts						
020	532352-0000	-		1	PIPE	
040	554850-0000	-		1	PIPE	
050	451277-0000	-		1	PIPE	
060	544913-0000	-		1	PIPE	
070	532354-0000	-		1	PIPE	
080	451280-0000	-		1	PIPE	
090	451281-0000	-		1	PIPE	
100	532355-0000	-		1	PIPE	
110	532356-0000	-		1	PIPE	
120	451284-0000	-		1	PIPE	
130	451285-0000	-		1	PIPE	
140	451286-0000	-		1	PIPE	
150	451287-0000	-		1	PIPE	
160	451288-0000	-		1	PIPE	
170	451289-0000	-		1	PIPE	
180	451290-0000	-		1	PIPE	
190	451291-0000	-		1	PIPE	
200	451292-0000	-		1	PIPE	
230	564600-0000	-		1	PIPE	
250	549093-0000	-		1	PIPE	
260	560928-0000	-		1	PIPE	
270	451296-0000	-		1	PIPE	
280	451297-0000	-		1	PIPE	
290	451298-0000	-		1	PIPE	
300	451299-0000	-		1	PIPE	
310	451300-0000	-		1	PIPE	
320	451301-0000	-		1	PIPE	
330	451302-0000	-		1	PIPE	
340	451303-0001	-		1	PIPE	
350	451303-0002	-		1	PIPE	
360	451303-0003	-		1	PIPE	
370	451303-0004	-		1	PIPE	
380	451304-0000	-		1	PIPE	
390	451305-0000	-		1	PIPE	
396	479061-0000	-		1	PIPE	
398	479072-0000	-		1	PIPE	
400	479073-0000	-		1	PIPE	
402	479074-0000	-		1	PIPE	
404	532366-0000	-		1	PIPE	
406	555553-0000	-		1	PIPE	
408	555554-0000	-		1	PIPE	
410	555547-0000	-		1	PIPE	
411	555548-0000	-		1	PIPE	
420	450814-0000	-		1	HOLDER	
430	451306-0000	-		1	PIPE	
440	451307-0000	-		1	PIPE	
450	451326-0000	-		1	CLAMPING PLATE	
460	554139-0000	-		1	PIPE	
470	476796-0000	-		1	PIPE	
475	555551-0000	-		1	PIPE	
480	555552-0000	-		1	PIPE	
510	90030-0096	-		1	ELBOW CONNECTION W-12	
515	90140-0021	-		1	ELBOW 90,INT./EXT.THREAD R1/8"	
520	90166-0124	-	MM	520	HOSE	
530	90224-0309	-		12	CONNECTION	
540	90224-0310	-		7	CONNECTION	
550	90235-0048	-		1	VALVE	
553	311103-0361	-		2	CYLINDRICACP M6 6X40 RFR	
555	312105-0327	-		2	SCREW M6S ISO 4017 M5X12 A280	
560	312105-0368	-		2	SCREW M6S ISO 4017 M6X16 A280	
562	315105-0146	-		2	WASHER BRB5,3X10RFR	
563	315204-0208	-		1	O-RING 9,3X2,4VITON	
565	315233-0109	-		1	SEAL RING R1/8"	
570	342706-0130	-		2	ACCESSORIES,INSERT SLEEVE 6	
580	90224-0307	-		1	CONNECTION	

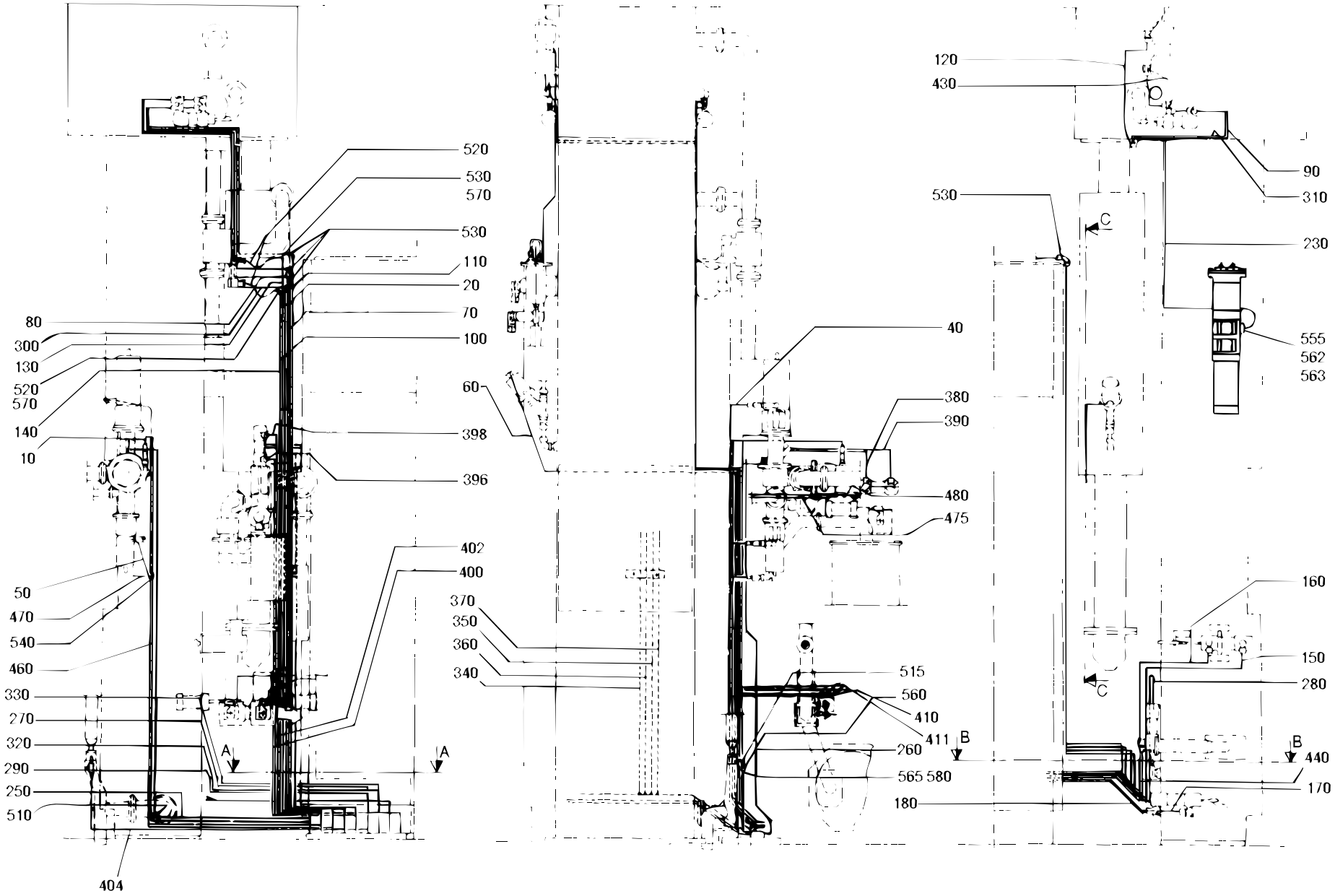

S-282805-14
ECN 20501

Pos	Part No	SP	UN	Qty	Description	Page No
2"						
010	476794-0001	-		1	PIPE	
3"						
010	476794-0002	-		1	PIPE	
Common parts						
020	532352-0000	-		1	PIPE	
040	554850-0000	-		1	PIPE	
050	451277-0000	-		1	PIPE	
060	544913-0000	-		1	PIPE	
070	532354-0000	-		1	PIPE	
080	451280-0000	-		1	PIPE	
090	451281-0000	-		1	PIPE	
100	532355-0000	-		1	PIPE	
110	532356-0000	-		1	PIPE	
120	451284-0000	-		1	PIPE	
130	451285-0000	-		1	PIPE	
140	451286-0000	-		1	PIPE	
150	451287-0000	-		1	PIPE	
160	451288-0000	-		1	PIPE	
170	451289-0000	-		1	PIPE	
180	451290-0000	-		1	PIPE	
190	451291-0000	-		1	PIPE	
200	451292-0000	-		1	PIPE	
230	564600-0000	-		1	PIPE	
250	549093-0000	-		1	PIPE	
260	560928-0000	-		1	PIPE	
270	451296-0000	-		1	PIPE	
280	451297-0000	-		1	PIPE	
290	451298-0000	-		1	PIPE	
300	451299-0000	-		1	PIPE	
310	451300-0000	-		1	PIPE	
320	451301-0000	-		1	PIPE	
330	451302-0000	-		1	PIPE	
340	451303-0001	-		1	PIPE	
350	451303-0002	-		1	PIPE	
360	451303-0003	-		1	PIPE	
370	451303-0004	-		1	PIPE	
380	451304-0000	-		1	PIPE	
390	451305-0000	-		1	PIPE	
396	479061-0000	-		1	PIPE	
398	479072-0000	-		1	PIPE	
400	479073-0000	-		1	PIPE	
402	479074-0000	-		1	PIPE	
404	532366-0000	-		1	PIPE	
406	555553-0000	-		1	PIPE	
408	555554-0000	-		1	PIPE	
410	555547-0000	-		1	PIPE	
411	555548-0000	-		1	PIPE	
420	450814-0000	-		1	HOLDER	
430	451306-0000	-		1	PIPE	
440	451307-0000	-		1	PIPE	
450	451326-0000	-		1	CLAMPING PLATE	
460	554139-0000	-		1	PIPE	
470	476796-0000	-		1	PIPE	
475	555551-0000	-		1	PIPE	
480	555552-0000	-		1	PIPE	
510	90030-0096	-		1	ELBOW CONNECTION W-12	
515	90140-0021	-		1	ELBOW 90,INT./EXT.THREAD R1/8"	
520	90166-0124	-	MM	520	HOSE	
530	90224-0309	-		12	CONNECTION	
540	90224-0310	-		7	CONNECTION	
550	90235-0048	-		1	VALVE	
553	311103-0361	-		2	CYLINDRICACP M6 6X40 RFR	
555	312105-0327	-		2	SCREW M6S ISO 4017 M5X12 A280	
560	312105-0368	-		2	SCREW M6S ISO 4017 M6X16 A280	
562	315105-0146	-		2	WASHER BRB5,3X10RFR	
563	315204-0208	-		1	O-RING 9,3X2,4VITON	
565	315233-0109	-		1	SEAL RING R1/8"	
570	342706-0130	-		2	ACCESSORIES,INSERT SLEEVE 6	
580	90224-0307	-		1	CONNECTION	

CLEANING PIPE

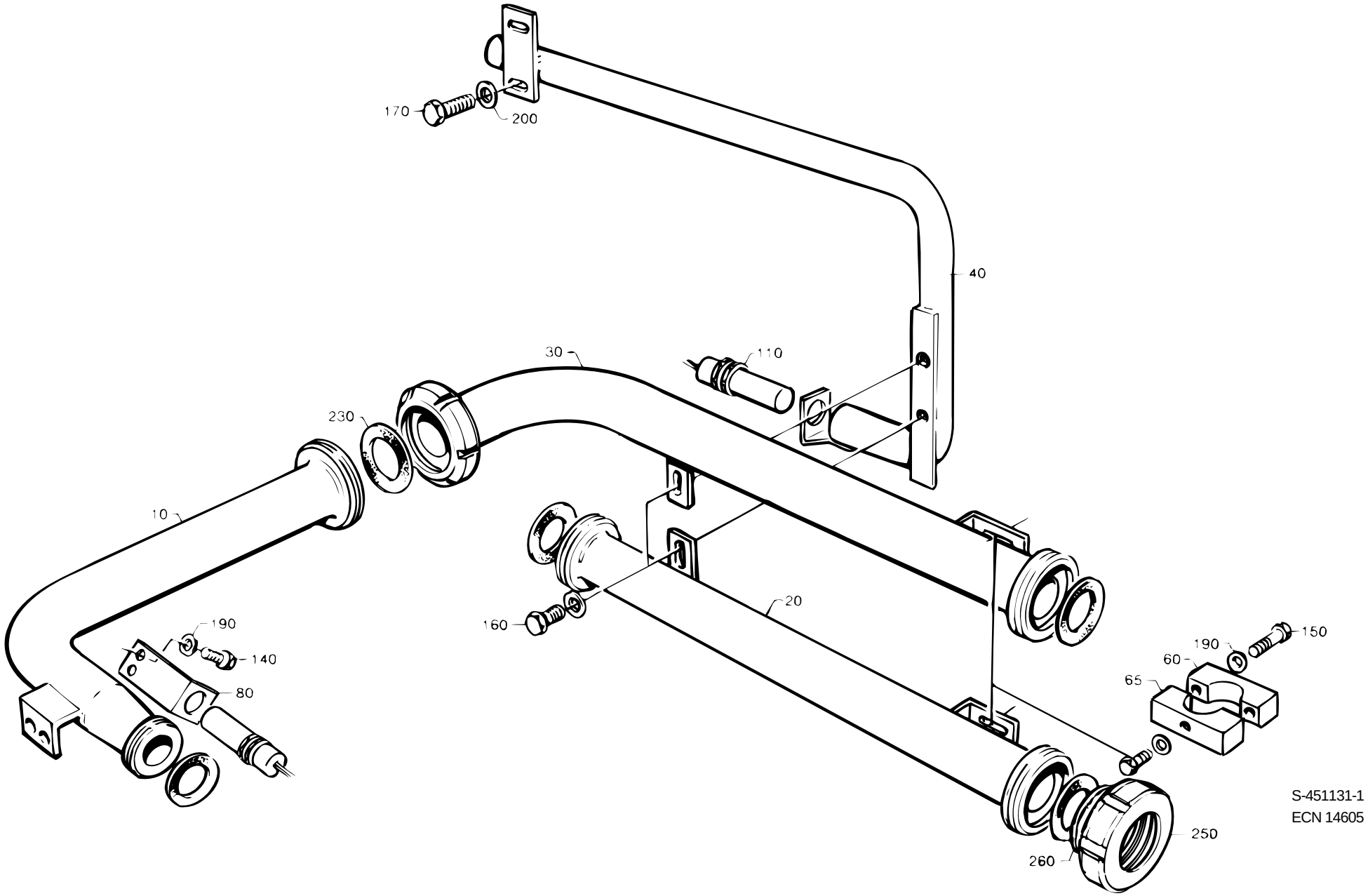

S-451131-1
ECN 14605

Pos	Part No	SP	UN	Qty	Description	Page No
-						
010	449964-0000	-		1	PIPE	
020	449966-0000	-		1	PIPE	
030	449967-0000	-		1	PIPE	
040	450335-0000	-		1	PIPE	
060	457614-0001	-		2	CLAMPING PIECE	
065	457614-0002	-		2	CLAMPING PIECE	
080	449960-0000	-		1	BRACKET	
110	90044-0099	F		2	PROXIMITY SWITCH IG REPBY 0090044-0126	
140	312105-0364	-		4	SCREW M6S6X10RFR	
150	312105-0372	-		4	SCREW M6S ISO 4017 M6X25 A280	
160	312105-0447	-		2	SCREW M6S ISO 4017 M8X12 A280	
170	312105-0449	-		2	SCREW M6S ISO 4017 M8X16 A280	
190	315105-0153	-		6	WASHER BRB6,4X12RFR	
200	315105-0165	-		4	WASHER BRB8,4X16RFR	
220	315250-0101	F		1	GASKET 32/25	
230	315250-0103	F		3	GASKET 48/38	
250	342803-0103	-		2	NUT 38	
260	342812-0203	-		2	SLEEVE	

Pos	Part No	SP	UN	Qty	Description	Page No

CABLE DUCT

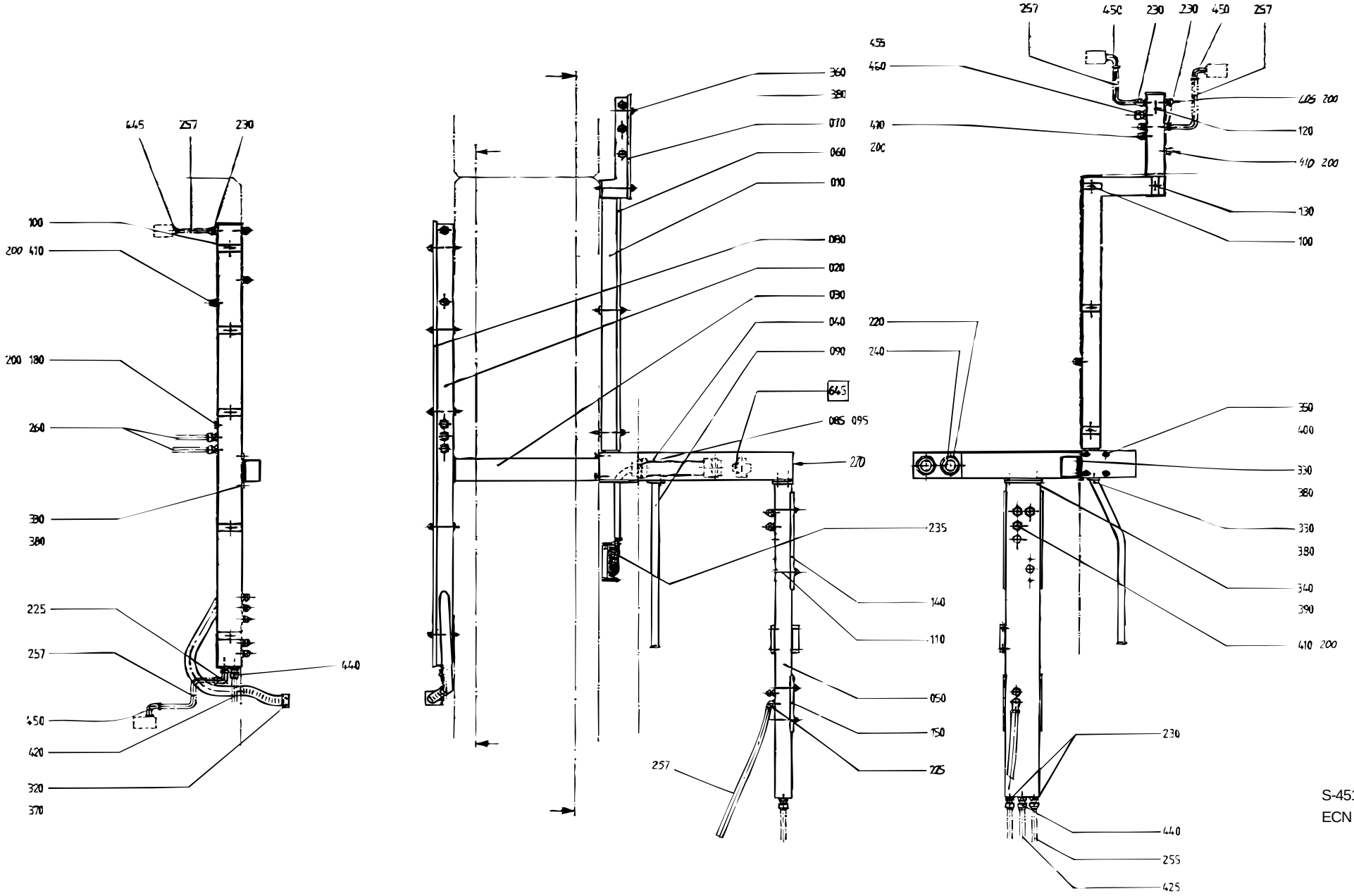

S-451342-4
ECN 22848

Pos	Part No	SP	UN	Qty	Description	Page No
-						
F645	A 451365-0200	-		1	TERMINAL PLINTH	115
010	451099-0000	-		1	CABLE TRENCH	
020	561571-0000	-		1	CABLE TRENCH	
030	B 451101-0000	-		1	CABLE TRENCH	
040	B 451339-0000	-		1	BOXSTAINLESS	
050	451340-0000	-		1	CHANNELSTAINLESS	
060	B 451102-0000	-		1	COVER STAINLESS	
070	B 451103-0000	D		1	LID	
080	B 451104-0000	D		1	LID	
085	556682-0000	-		1	PLATE	
090	451338-0000	-		1	PIPE	
095	556683-0000	-		1	GASKET	
100	451085-0002	D		8	SPACER SCREW	
110	451085-0003	D		4	SPACER SCREW	
120	451085-0004	D		1	SPACER SCREW	
130	451085-0005	D		1	SPACER SCREW	
140	B 451341-0001	D		1	LID	
150	B 451341-0002	D		1	LID	
170	90002-0009	-		1	BLANK-OFF PLUG 18.6	
200	90099-0001	-		21	NUT PR 15,2 BRASS	
210	90099-0002	-		3	NUT	
220	90012-0059	D		4	GLAND	
225	90012-0064	-		2	GLAND	
230	90012-0063	D		7	GLAND	
235	90110-0128	-		2	PLUG 24-POL	
240	90152-0029	D	MM	500	HOSE	
255	90152-0033	D	MM	180	HOSE	
257	90152-0033	-	MM	2000	HOSE	
260	90152-0033	D	MM	480	HOSE	
270	90194-0016	-		1	SIGN "FLASH SIGN" 50X50MM	
320	312105-0287	-		2	SCREW M6S ISO 4017 M4X8 A280	
330	312105-0364	-		6	SCREW M6S6X10RFR	
340	312115-0451	-		2	SCREW MC6S ISO 4762 M8X20 A280	
350	312105-0491	-		4	SCREW M6S ISO 4017 M10X20 A280	
360	312705-0316	-		14	CAP NUT MHM 6 A2	
370	315105-0136	-		2	WASHER BRB4,3X8RFR	
380	315105-0153	-		20	WASHER BRB6,4X12RFR	
390	315105-0165	-		2	WASHER BRB8,4X16RFR	
400	315105-0173	-		4	WASHER BRB10,5X22RFR	
405	352103-0100	-		1	CABLE GLAND STR 9	
410	352103-0101	D		15	CABLE GLAND ST 9	
420	352135-0106	D	MM	240	HOSE .016	
425	352135-0106	D	MM	180	HOSE .016	
440	352136-0127	D		2	GLAND FITTING	
445	352136-0113	-		2	GLAND FITTING	
450	352137-0113	-		3	GLAND FITTING	
455	352103-0111	-		1	CABLE GLAND ST 16	
460	90099-0003	-		1	NUT	

TERMINAL PLINTH

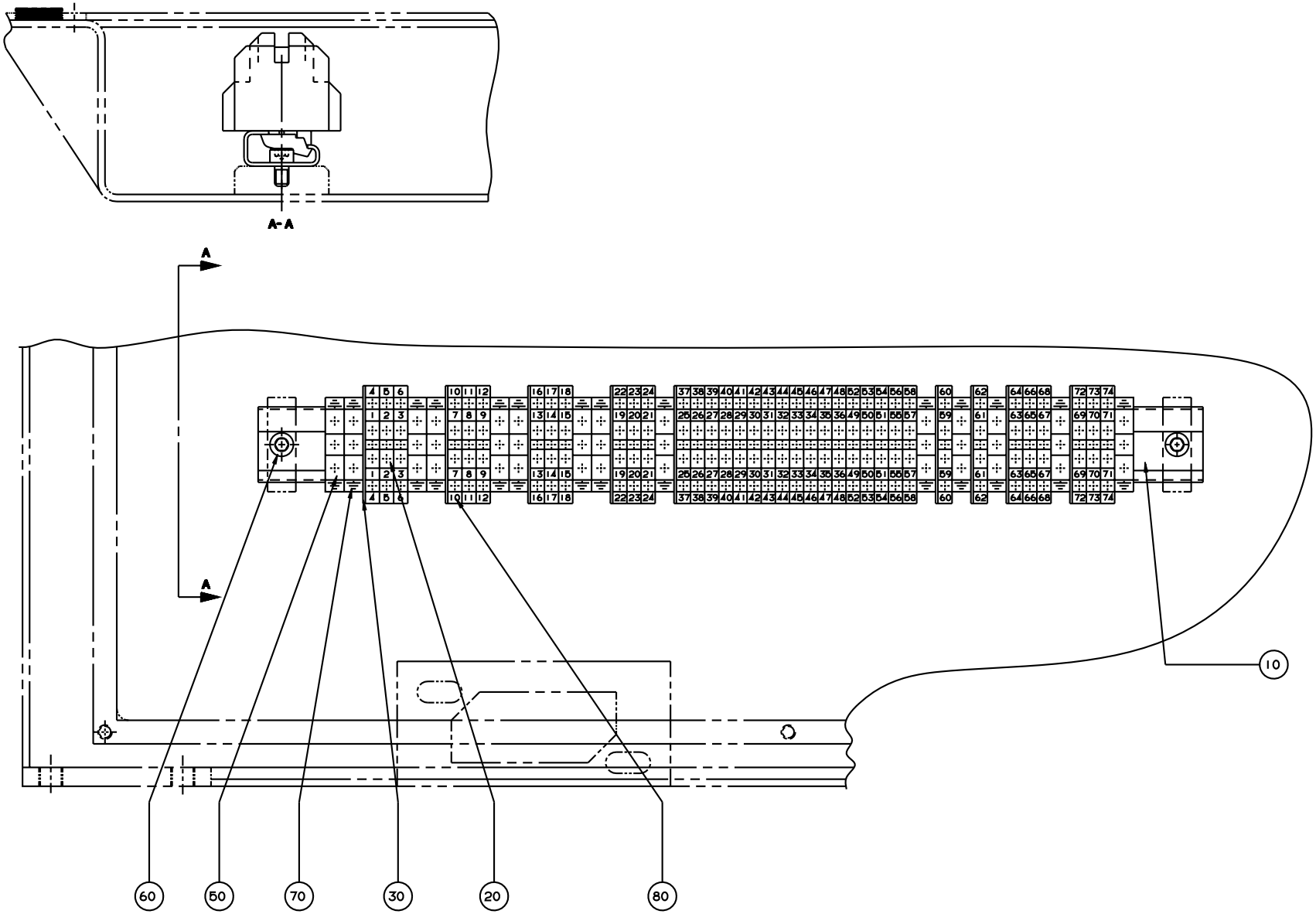

S-451365-2
ECN 14875

Pos	Part No	SP	UN	Qty	Description	Page No
-						
010	10793-0036	-		1	MOUNTINGRAIL TS32 L=400MM	
020	90077-0090	-		37	FEED THROUGH TERMINAL	
030	90077-0309	-		9	END PLATE	
050	90135-0021	-		14	EARTHING CLAMP	
060	312115-0364	-		2	SCREW 6X10 A4 80	
070	359011-0202	-		18	SIGN BOARD(GROUND)	
080	359011-0800	-		2	MARKING PLBSFW 51-100	

Pos	Part No	SP	UN	Qty	Description	Page No

This page is intentionally left blank

Pos	Part No	SP	UN	Qty	Description	Page No
0300B or 0375S						
030	526689-0000	-		1	DISTRIBUTOR WING	
110	499387-0000	-		1	PRESSURE ROLLER	
115	466099-0000	-		1	SEAL	
0355B or 0400B or 0500S						
030	526689-0000	-		1	DISTRIBUTOR WING	
110	499387-0000	-		1	PRESSURE ROLLER	
115	466089-0000	-		1	SEAL	
0500B or 0750B or 1000B or 1055B or 1500S						
030	243851-0000	-		1	GASKET	
110	232979-0000	-		1	PRESSURE ROLLER	
115	466042-0000	-		1	SEAL	
0750S						
030	526689-0000	-		1	DISTRIBUTOR WING	
110	499387-0000	-		1	PRESSURE ROLLER	
115	544015-0000	-		1	SEAL	
1000S						
030	569104-0000	-		1	DISTRIBUTOR WING	
110	499387-0000	-		1	PRESSURE ROLLER	
115	567743-0000	-		1	SEAL	
1000SQ						
030	569104-0000	-		1	DISTRIBUTOR WING	
110	499387-0000	-		1	PRESSURE ROLLER	
115	579318-0000	-		1	SEAL	
Common parts						
F010	A 499255-0200	-		1	SEAL KIT	**119**
033	476358-0000	-		1	COIL HEATER	
040	12242-0003	-		1	GASKET	
050	12242-0005	-		1	GASKET	
100	230551-0000	-		1	GASKET	
120	531738-0000	-		2	GASKET	
130	531739-0000	-		1	GASKET	
140	531740-0000	-		1	GASKET	
160	531742-0000	-		1	GASKET	
190	531744-0000	-		1	GASKET	
195	531745-0000	-		1	GASKET	
200	531764-0000	-		1	GASKET	
205	531734-0000	-		1	GASKET	
210	90214-0138	-		2	BALL BEARING	
220	90242-0084	-		2	O-RING	
230	315204-0217	-		2	O-RING 24,2X3VITON	

Pos	Part No	SP	UN	Qty	Description	Page No

This page is intentionally left blank

Pos	Part No	SP	UN	Qty	Description	Page No
-						
010	530589-0000	-		4	SEAL RING	
020	530588-0000	-		1	SEAL RING	
030	533169-0000	-		1	DIAPHRAGM	
060	90207-0363	-		1	GASKET	
070	90207-0365	-		1	GASKET	
080	539212-0000	-		1	GASKET	
100	315204-0215	-		4	O-RING 19,2X3VITON	
110	315202-0301	-		1	O-RING 49,5X3	

Pos	Part No	SP	UN	Qty	Description	Page No

This page is intentionally left blank

Pos	Part No	SP	UN	Qty	Description	Page No
90044-0103						
	90044-0310	-		1	KEY FOR KEY SAFETY SWITCH	
90069-0116						
	90056-0096	K		1	WORM GEAR	
	90069-0364	K		1	CARBON BRUSH	
	90069-0365	K		1	CARBON BRUSH	
90125-0020						
	270926-0000	K		6	NUT	
	270927-0000	K		3	SCREW	
	294464-0000	K		1	BASE PLATE	
90206-0070						
	90206-0326	-		1	CONNECTION BOX	
90239-0166						
	90285-0094	K		1	SEAL KIT	
90239-0189						
	90285-0094	K		1	SEAL KIT	
90239-0196						
	90285-0119	K		1	SEAL AND WEAR-AND-TEAR PA	
90239-0779						
	90239-0442	K		1	SEAL KIT	
90239-0951						
	90239-0443	K		1	SEAL KIT	
90270-0011						
	90270-0338	K		1	SPARE PARTS KIT	
	90270-0345	K		1	SHIMS	
	90270-0346	K		1	GASKET	
	90270-0348	-		1	MOTOR ELMO RA112/MB42083	
90277-0055						
	90277-0339	-		1	O-RING	
90326-0048						
	90326-0304	-		1	LEAD IN	
451101-0000						
	90143-0014	D	M	1	STRIP	
	90153-0017	D	L	1	ADHESIVE	
451102-0000						
	90143-0011	D	M	1	STRIP	
	90153-0017	D	L	1	ADHESIVE	
451103-0000						
	90143-0011	D	M	1	STRIP	
	90153-0017	D	L	1	ADHESIVE	
451104-0000						
	90143-0011	D	M	1	STRIP	
	90153-0017	D	L	1	ADHESIVE	
451339-0000						
	90143-0011	D	M	1	STRIP	
	90153-0017	D	L	1	ADHESIVE	
451430-0000						
	312605-0312	-		4	NUT M6M4RFR	
466474-0000						
0010	1282023-0001	-		1	CAST WORKPIECE	
484189-0000						
	90148-0032	-		1	HOSE	
499826-0000						
	342811-0103	-		1	NIPPLE ANSL.38	
531034-0000						
	342803-0103	-		1	NUT 38	
	342808-0103	-		2	ELBOW PIPE38	
	342811-0103	-		2	NIPPLE ANSL.38	
	342812-0103	-		1	SLEEVE ANSL.38	
571088-0000						
	90360-0304	D		1	SPARE PART KIT	

Tetra Pak

SPC

Spare Parts Catalogue

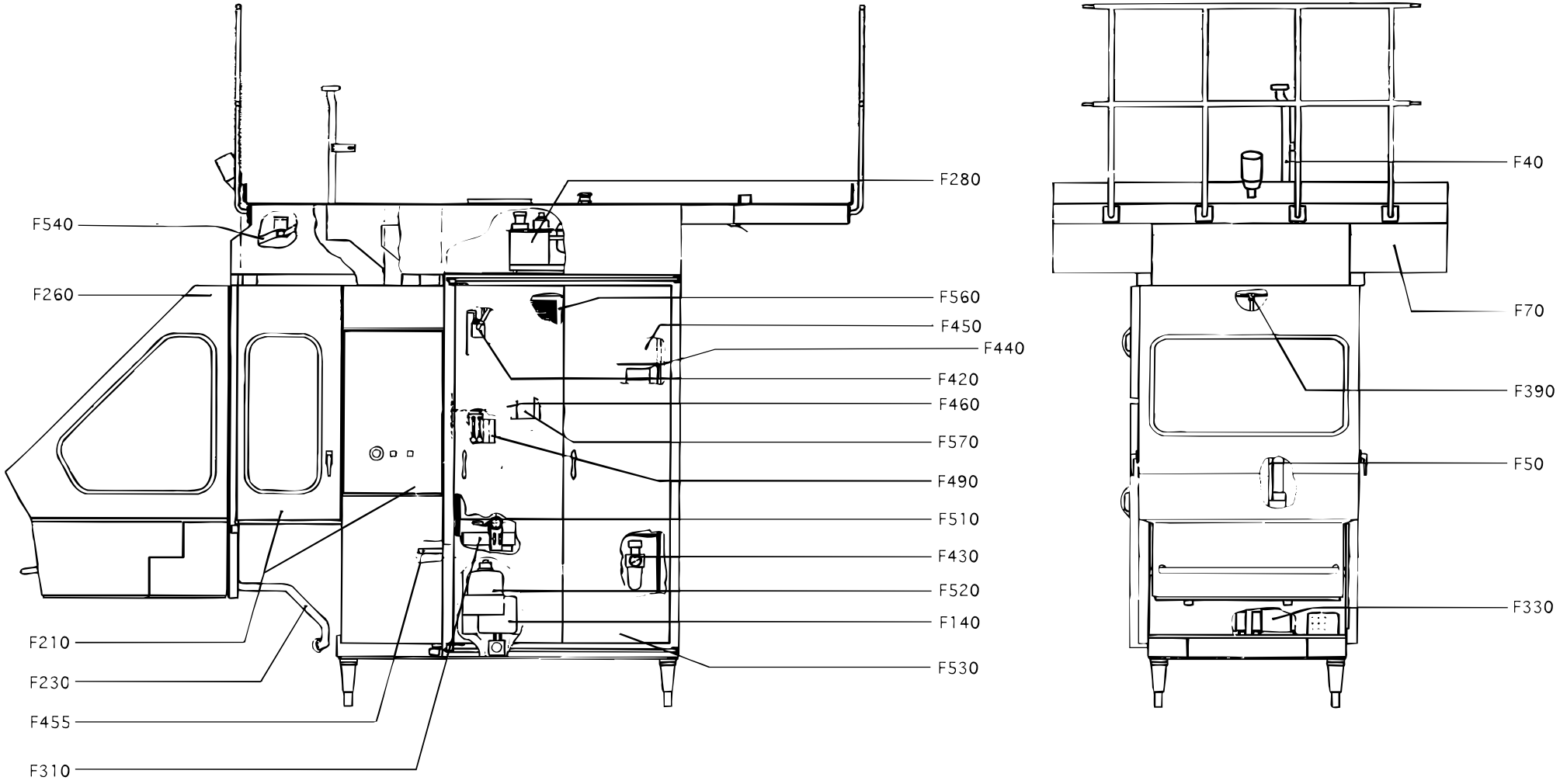

S-648012-12
ECN 22773

Pos	Part No	SP	UN	Qty	Description	Page No
F020	A 230922-0100	-		1	AIR JET GUN	129
F030	A 493614-0100	-		1	SPRAY GUN	131
F050	A 265889-0300	-		1	SWITCH (MONITOR)	133
F065	A 268015-0100	-		1	BENDING ROLLER BRACKET	135
F070	A 593766-0100	-		1	SIDE PIECE, RIGHT	137
F100	A 269322-0200	-		1	HATCH	139
F110	A 593760-0100	-		1	COVER, LOWER	141
F140	A 279979-0500	-		1	CENTRAL LUBRICATION	143
F160	A 282604-0200	-		1	START-UP KIT MACHINE BODY	145
F170	A 561256-0300	-		1	PEROXIDE PIPE	147
F190	A 593773-0100	-		1	SIDE GUARD, LEFT	165
F210	A 593772-0100	-		1	SIDE GUARD, RIGHT	167
F230	A 297808-0500	-		1	CLEANING EQUIPMENT	169
F260	A 297604-6000	-		1	HOOD	175
F280	A 434707-0300	-		1	HYDRAULIC SYSTEM	181
F310	A 440098-0300	-		1	CRANK BRACKET	189
F320	A 593756-0100	-		1	PLATFORM	191
F330	A 440415-0200	-		1	TRANSFORMER	193
F340	A 598442-0100	-		1	BOTTOM PLATE	195
F350	A 593771-0100	-		1	SIDE PIECE, Left	199
F390	A 440474-0100	-		1	TUBE FLUSHING DEVICE	203
F400	A 593786-0100	-		1	MACHINE BODY	205
F410	A 442463-0400	-		1	PIPE WORK	213
F420	A 445537-0200	-		1	PIPE WORK-HYDRAULIC	215
F430	A 575392-0100	-		1	VALVE PANEL LOWER	221
F440	A 598494-0100	-		1	VALVE PANEL	225
F450	A 449930-0500	-		1	CONNECTION BOX	227
F455	A 449168-0300	-		1	CLEANING SYSTEM	229
F460	A 449932-6000	-		1	PIPE WORK-WATER	233
F470	A 450293-0500	-		1	CABLE DUCT	237
F490	A 575797-0100	-		1	FLOWMETER GROUP	239
F510	A 598495-0100	-		1	PIPE WORK-PNEUMATIC	241
F520	A 450792-0100	-		1	DETERGENT PUMP	253
F530	A 450824-0100	-		1	DOOR	255
F540	A 450840-0400	-		1	LIFTING UNIT	257
F560	A 597843-0100	-		1	PROTECTION	261
F570	A 451348-0200	-		1	CONNECTION BOX	265

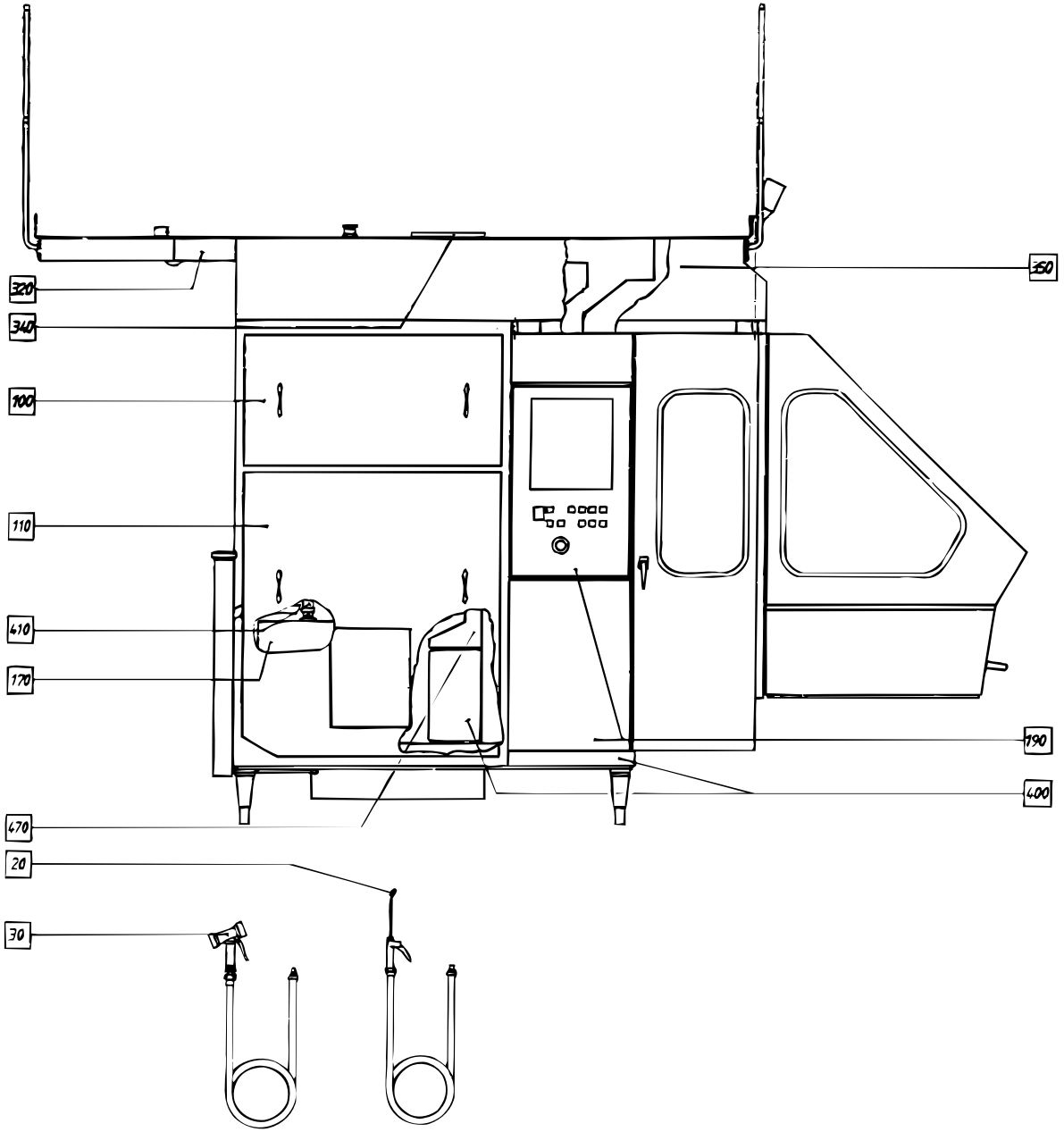

S-648012-11
ECN 15046

Pos	Part No	SP	UN	Qty	Description	Page No
F020	A 230922-0100	-		1	AIR JET GUN	129
F030	A 493614-0100	-		1	SPRAY GUN	131
F050	A 265889-0300	-		1	SWITCH (MONITOR)	133
F065	A 268015-0100	-		1	BENDING ROLLER BRACKET	135
F070	A 593766-0100	-		1	SIDE PIECE, RIGHT	137
F100	A 269322-0200	-		1	HATCH	139
F110	A 593760-0100	-		1	COVER, LOWER	141
F140	A 279979-0500	-		1	CENTRAL LUBRICATION	143
F160	A 282604-0200	-		1	START-UP KIT MACHINE BODY	145
F170	A 561256-0300	-		1	PEROXIDE PIPE	147
F190	A 593773-0100	-		1	SIDE GUARD, LEFT	165
F210	A 593772-0100	-		1	SIDE GUARD, RIGHT	167
F230	A 297808-0500	-		1	CLEANING EQUIPMENT	169
F260	A 297604-6000	-		1	HOOD	175
F280	A 434707-0300	-		1	HYDRAULIC SYSTEM	181
F310	A 440098-0300	-		1	CRANK BRACKET	189
F320	A 593756-0100	-		1	PLATFORM	191
F330	A 440415-0200	-		1	TRANSFORMER	193
F340	A 598442-0100	-		1	BOTTOM PLATE	195
F350	A 593771-0100	-		1	SIDE PIECE, Left	199
F390	A 440474-0100	-		1	TUBE FLUSHING DEVICE	203
F400	A 593786-0100	-		1	MACHINE BODY	205
F410	A 442463-0400	-		1	PIPE WORK	213
F420	A 445537-0200	-		1	PIPE WORK-HYDRAULIC	215
F430	A 575392-0100	-		1	VALVE PANEL LOWER	221
F440	A 598494-0100	-		1	VALVE PANEL	225
F450	A 449930-0500	-		1	CONNECTION BOX	227
F455	A 449168-0300	-		1	CLEANING SYSTEM	229
F460	A 449932-6000	-		1	PIPE WORK-WATER	233
F470	A 450293-0500	-		1	CABLE DUCT	237
F490	A 575797-0100	-		1	FLOWMETER GROUP	239
F510	A 598495-0100	-		1	PIPE WORK-PNEUMATIC	241
F520	A 450792-0100	-		1	DETERGENT PUMP	253
F530	A 450824-0100	-		1	DOOR	255
F540	A 450840-0400	-		1	LIFTING UNIT	257
F560	A 597843-0100	-		1	PROTECTION	261
F570	A 451348-0200	-		1	CONNECTION BOX	265

Pos	Part No	SP	UN	Qty	Description	Page No

AIR JET GUN

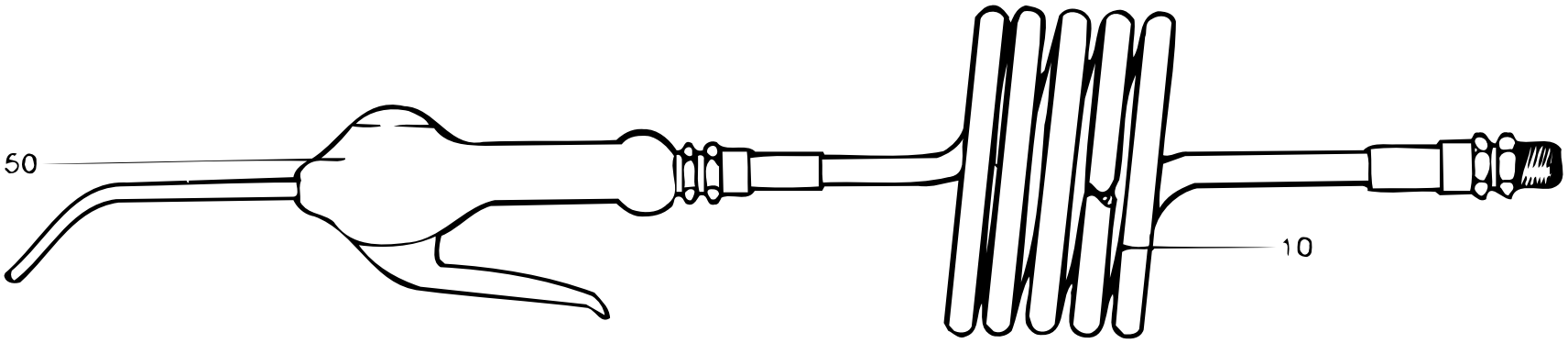

S-230922-1
ECN 5061

Pos	Part No	SP	UN	Qty	Description	Page No
-						
010	90152-0016	K		1	HOSE	
050	90243-0061	K		1	FAN NOZZLE	

Pos	Part No	SP	UN	Qty	Description	Page No

SPRAY GUN

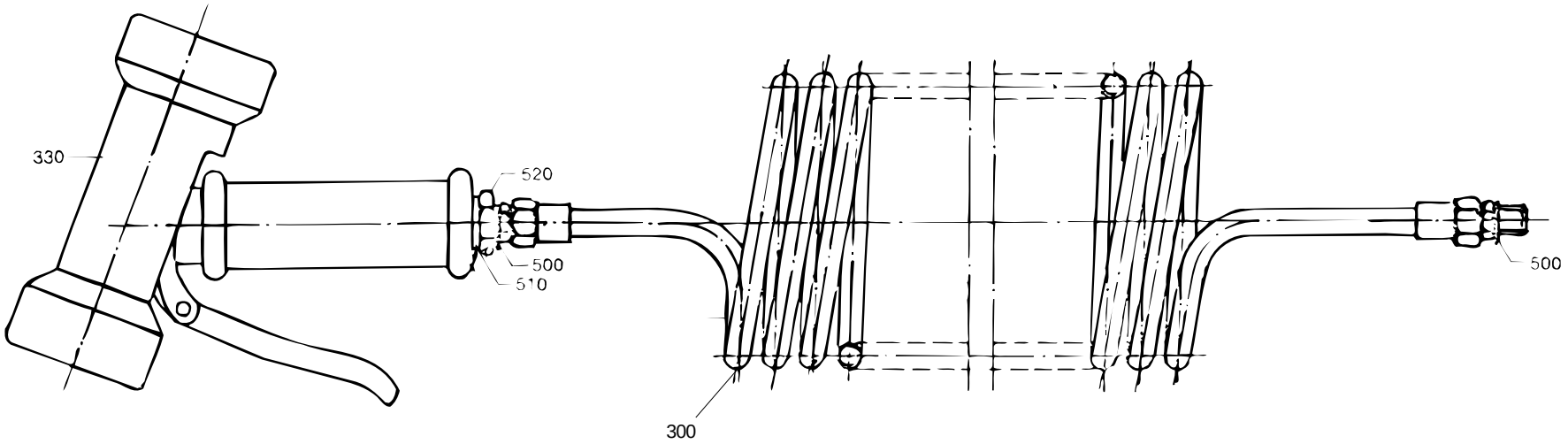

S-493614-1
ECN 14358

Pos	Part No	SP	UN	Qty	Description	Page No
-						
300	90152-0017	K		1	HOSE	
330	90426-0003	K		1	HAND SHOWER	
500	315233-0110	-		2	SEAL RING R1/4"	
510	315233-0113	-		1	SEAL RING R1/2"	
520	342701-0205	-		1	BUSHING,INT./EXT.G-THREAD G1/2"-G1/4"	

Pos	Part No	SP	UN	Qty	Description	Page No

SWITCH (MONITOR)

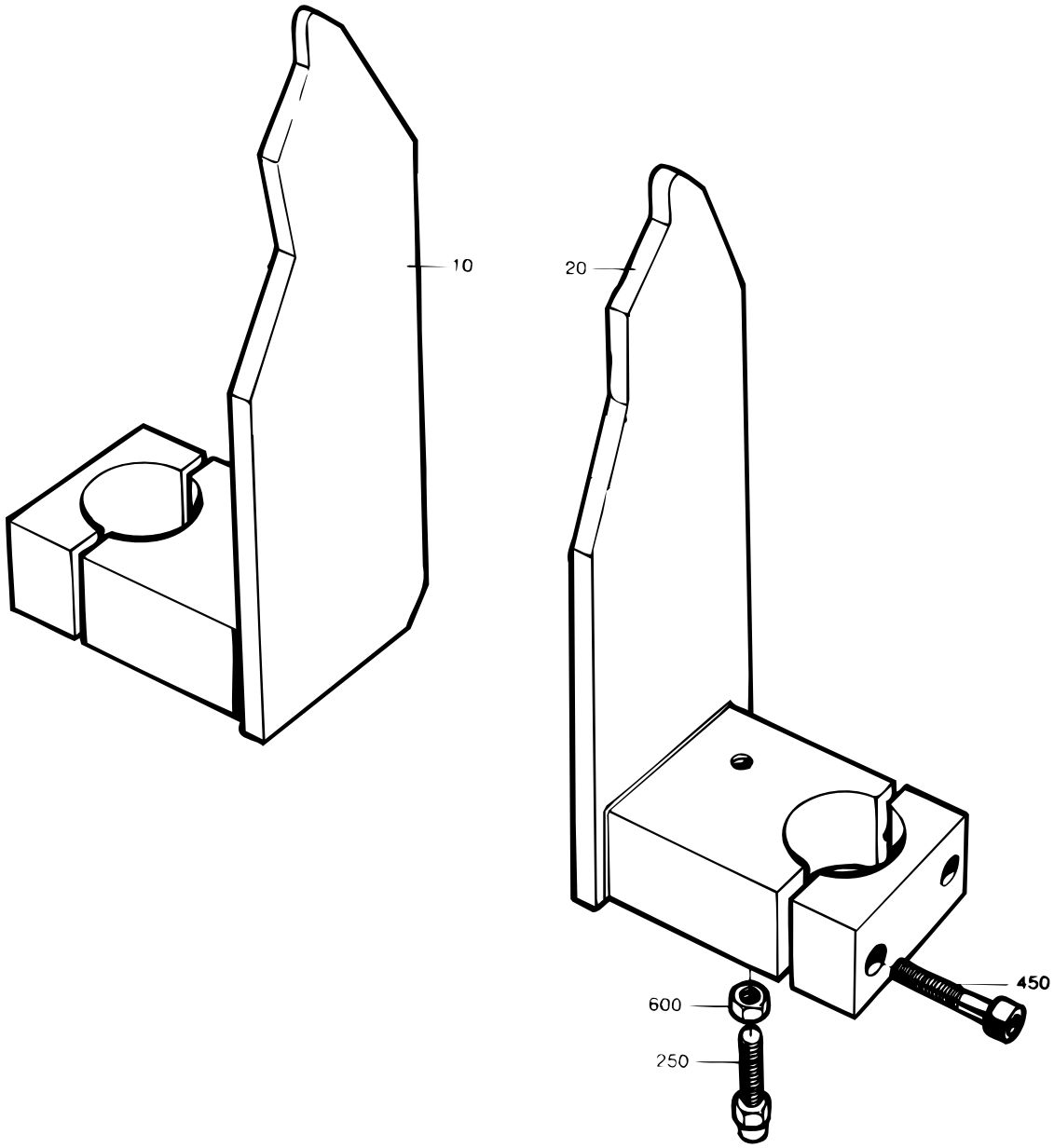

S-265889-3
ECN 12311

Pos	Part No	SP	UN	Qty	Description	Page No
-						
010	532319-0000	-		1	CATCH GUARD LEFT	
020	532318-0000	-		1	CATCH GUARD RIGHT	
250	268746-0000	-		2	SCREW	
450	312111-0459	-		4	SCREW MC6S8X40FZB	
600	312605-0318	-		2	NUT M6M8RFR	

Pos	Part No	SP	UN	Qty	Description	Page No

BENDING ROLLER BRACKET

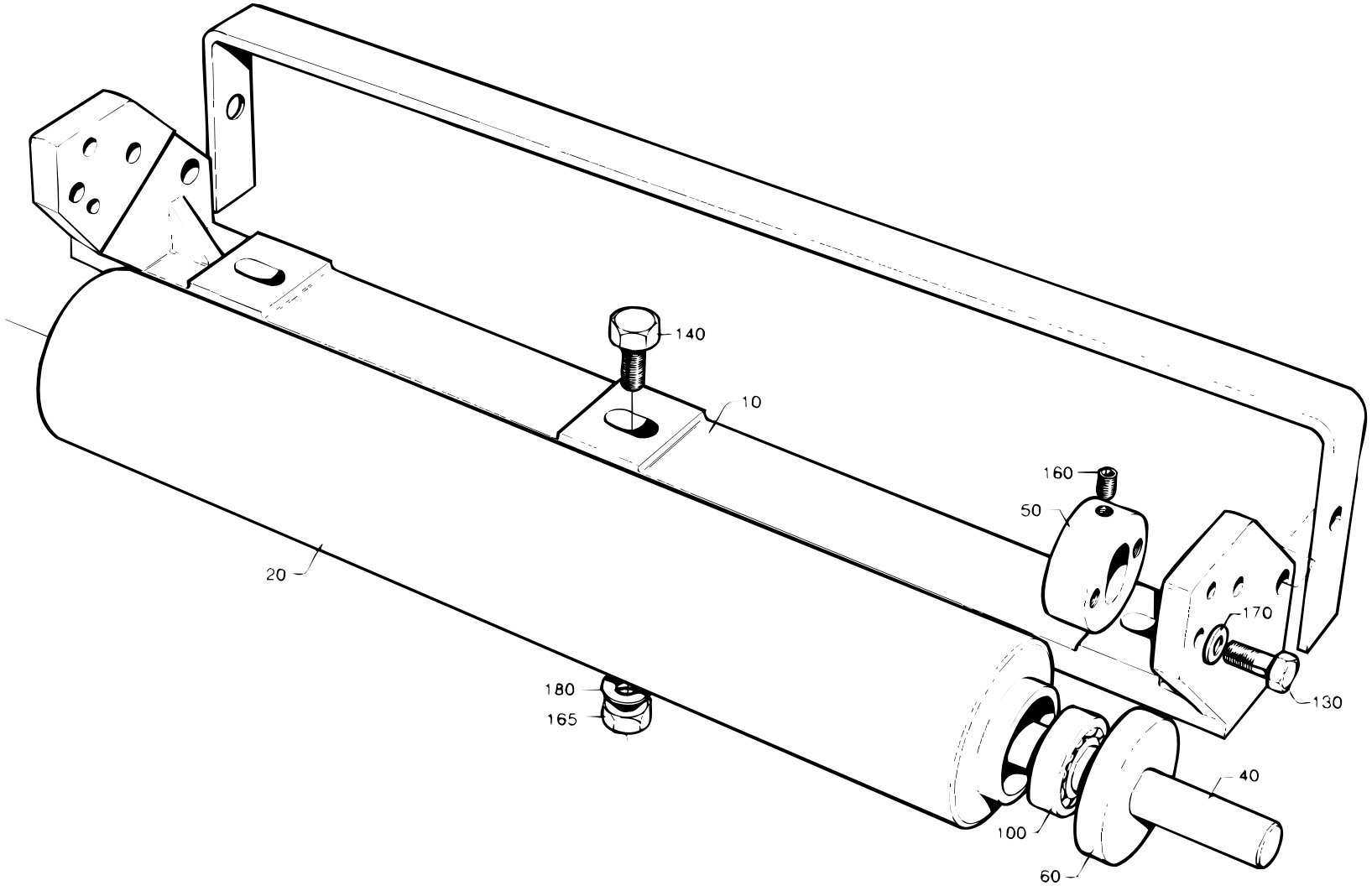

S-268015-1
ECN 20095

Pos	Part No	SP	UN	Qty	Description	Page No
-						
010	259760-0000	-		1	BENDING ROLLER BRACKET	
020	265564-0000	-		1	BENDING ROLLER	
040	265566-0001	-		1	SHAFT	
050	265567-0000	-		2	BEARING UNIT	
060	265568-0000	-		2	DUST COVER	
100	90214-0098	K		2	BALL BEARING	
120	311303-0310	-		2	SLOTTED PIRPB5X20FZB	
130	312101-0370	-		4	SCREW M6S6X20FZB	
140	312101-0453	-		3	SCREW M6S8X25FZB	
160	312318-0364	-		4	STOP SCREW SK6SS6X10RFR	
165	312601-0318	-		3	NUT M6M8FZB	
170	315101-0153	-		4	WASHER BRB6,4X12FZB	
180	315101-0165	-		6	WASHER BRB8,4X16FZB	

Pos	Part No	SP	UN	Qty	Description	Page No

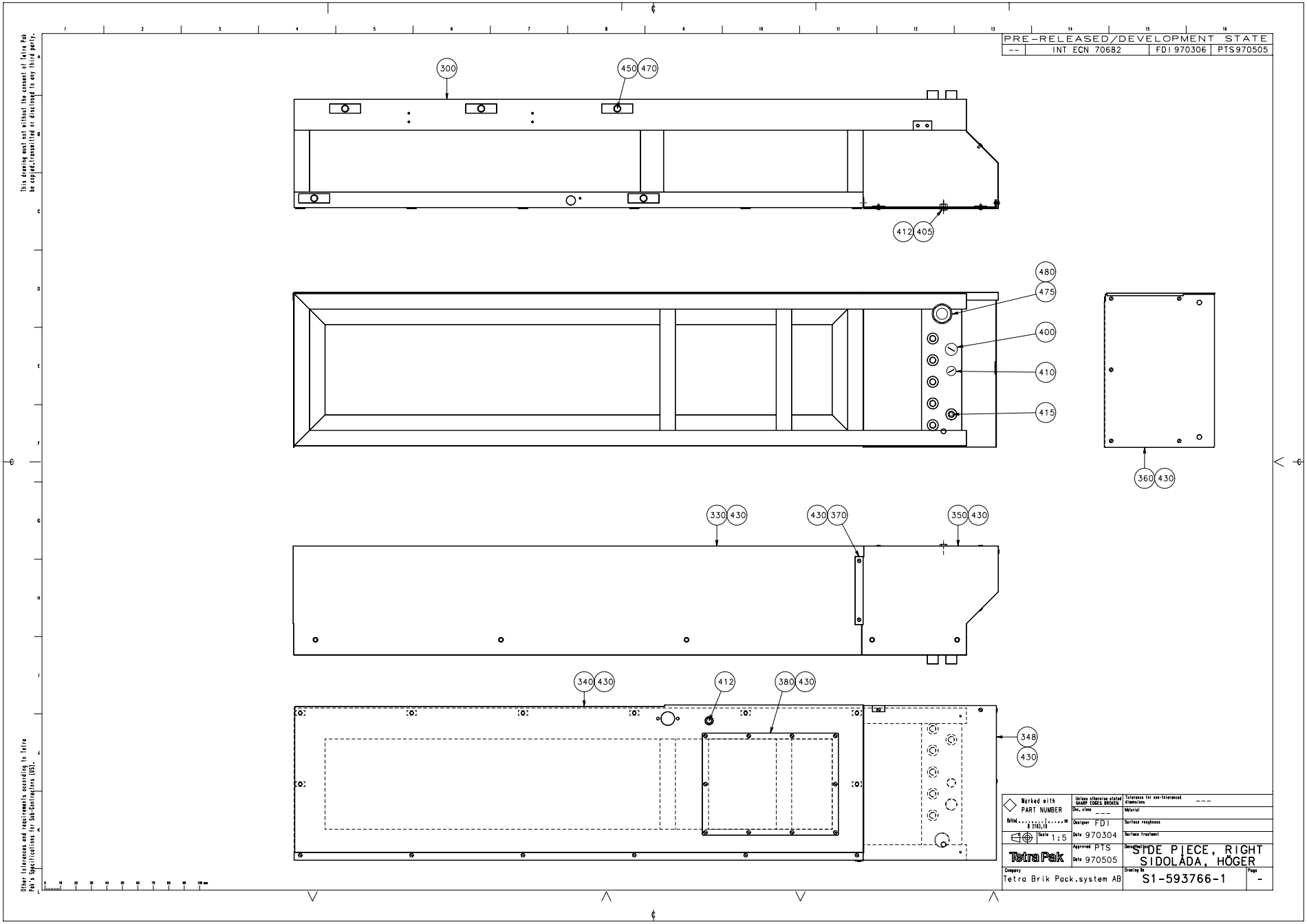
PRE-RELEASED/DEVELOPMENT STATE
-- INT ECN 70682 FDI 970306 PTS970505
This drawing must not without the consent of Tetra Pak be copied, transmitted or disclosed to any third party.
300
450 470
412 405
480
475
400
410
415
360 430
330 430
430 370
350 430
340 430
412
380 430
348
430
Other tolerances and requirements according to Tetra Pak's specifications no 940-0401(EN).
Marked with PART NUMBER
Unless otherwise stated SHARP EDGES BROKEN
Tolerance for non-toleranced dimensions ---
Material
Designer FDI
Surface roughness
Date 970304
Surface treatment
Scale 1:5
Approved PTS
Date 970505
Drawing title SIDE PIECE, RIGHT
SIDOLÅDA, HÖGER
Company Tetra Brik Pack.system AB
Drawing No S1-593766-1
Page -

Pos	Part No	SP	UN	Qty	Description	Page No
-						
300	593767-0000	-		1	BOX	
330	269305-0000	-		1	SIDE PLATE	
340	593769-0000	-		1	BOTTOM PANEL	
348	293563-0000	-		1	BOTTOM PANEL	
350	293565-0000	-		1	SIDE PLATE	
360	542695-0000	-		1	COVERPLATE R	
370	267842-0000	-		1	COVER SLIP	
380	593765-0000	-		1	COVER	
400	90002-0010	-		1	BLANK-OFF PLUG 37	
405	90099-0001	-		1	NUT PR 15,2 BRASS	
410	90002-0012	-		1	BLANK-OFF PLUG 28,3	
412	90012-0063	-		2	GLAND	
415	90087-0002	-		1	PIPE PLUG	
430	90287-0075	-		37	SCREW	
450	312101-0540	-		5	SCREW M6S12X40FZB	
470	315101-0178	-		5	WASHER BRB13X24FZB	
475	352100-0126	-		1	CABLE GLANR.47-32,5	
480	352100-0227	-		1	CABLE GLANR.31-34,5	

Pos	Part No	SP	UN	Qty	Description	Page No

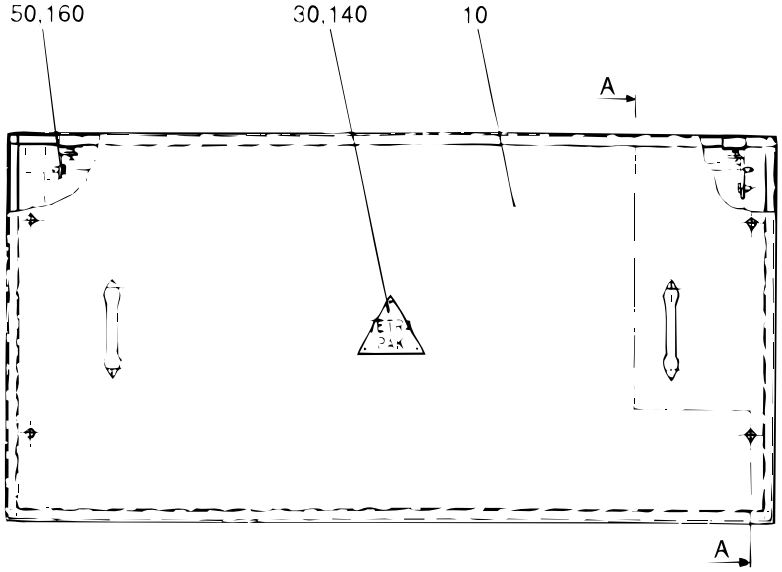

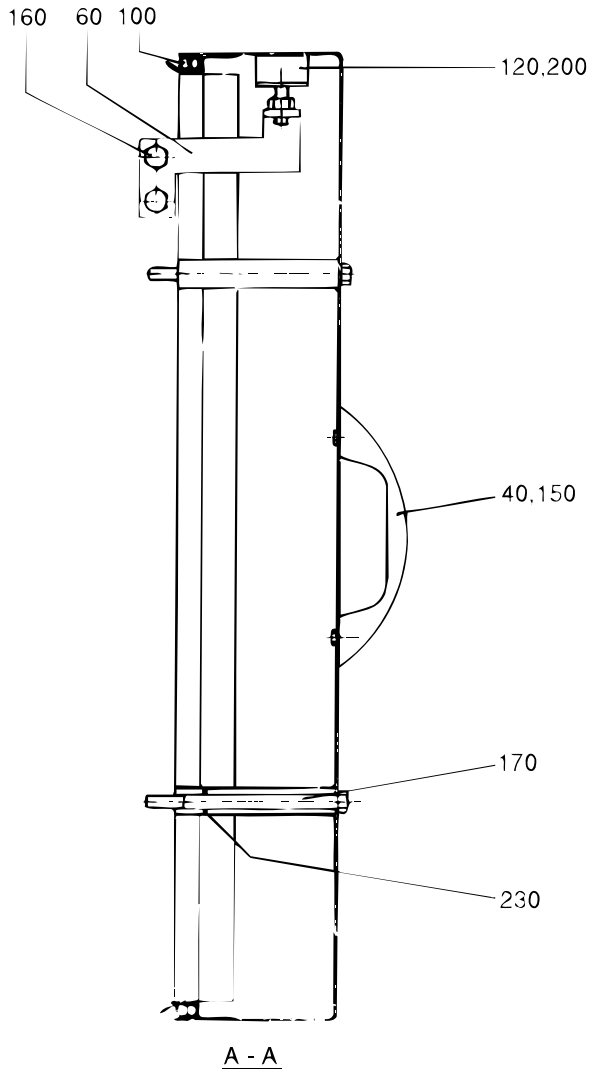

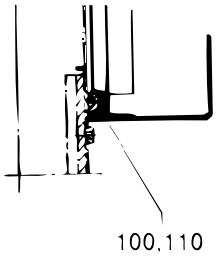

S-269322-3
ECN 12609

Pos	Part No	SP	UN	Qty	Description	Page No
-						
010	269323-0000	-		1	HATCH	
030	574658-0000	-		1	LOGOTYPE TP	
040	7309-0000	-		2	HANDLE	
050	282507-0000	-		1	BRACKET LEFT	
060	450869-0000	-		1	BRACKET RIGHT	
100	90143-0017	K	MM	4000	FOAMRUBBERSTRIP B68205	
110	90153-0017	K	G	x	ADHESIVE	
120	90347-0004	-		2	VIBRATION DAMPER	
140	311520-0420	-		4	BLANK RIVE3,2X4	
150	312105-0366	-		4	SCREW M6S ISO 4017 M6X12 A280	
160	312105-0449	-		4	SCREW M6S ISO 4017 M8X16 A280	
170	312105-0473	-		4	SCREW M6S8X110RFR	
200	312605-0318	-		2	NUT M6M8RFR	
210	315105-0153	-		4	WASHER BRB6,4X12RFR	
220	315105-0165	-		4	WASHER BRB8,4X16RFR	
230	315202-0206	-		4	O-RING 7,3X2,4	

Pos	Part No	SP	UN	Qty	Description	Page No

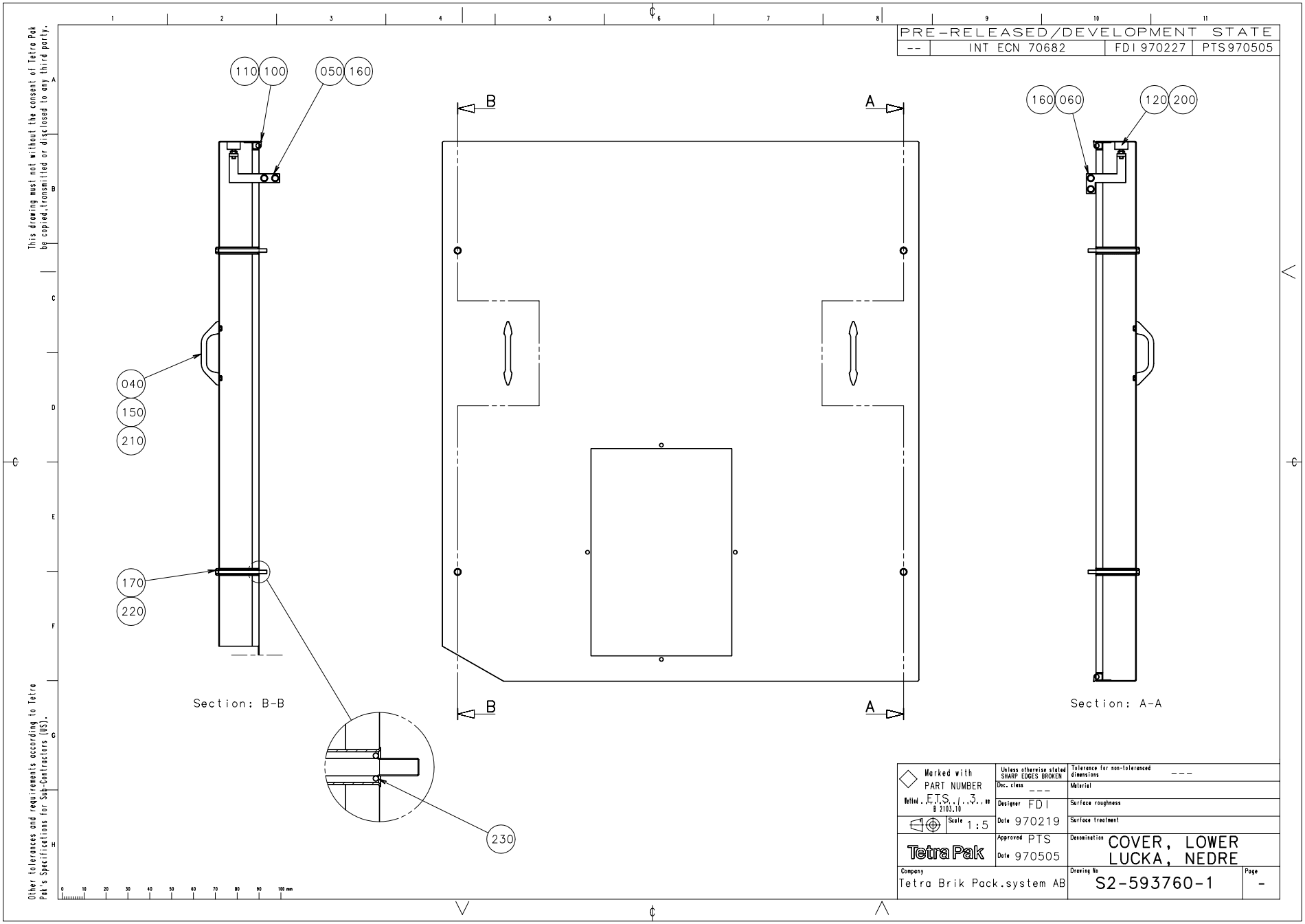
PRE-RELEASED/DEVELOPMENT STATE
-- | INT ECN 70682 | FDI 970227 | PTS970505
110 100
050 160
040
150
210
170
220
230
160 060
120 200
B
A
Section: B-B
Section: A-A
This drawing must not without the consent of Tetra Pak be copied, transmitted or disclosed to any third party.
Other tolerances and requirements according to Tetra Pak's Specifications for Sub-Contractors (US).
Marked with PART NUMBER
Unless otherwise stated SHARP EDGES BROKEN
Tolerance for non-toleranced dimensions ---
Material
Surface roughness
Surface treatment
Doc. class ---
Designer FDI
Date 970219
Scale 1:5
Approved PTS
Date 970505
Tetra Pak
Denomination COVER, LOWER
LUCKA, NEDRE
Company Tetra Brik Pack.system AB
Drawing No S2-593760-1
Page -

Pos	Part No	SP	UN	Qty	Description	Page No
-						
010	593761-0000	-		1	COVER LOWER	
040	7309-0000	-		2	HANDLE	
050	282507-0000	-		1	BRACKET LEFT	
060	450869-0000	-		1	BRACKET RIGHT	
100	90143-0017	-	MM	5000	FOAMRUBBERSTRIP B68205	
110	90153-0017	-		1	ADHESIVE	
120	90347-0004	-		2	VIBRATION DAMPER	
150	312105-0366	-		4	SCREW M6S ISO 4017 M6X12 A280	
160	312105-0449	-		4	SCREW M6S ISO 4017 M8X16 A280	
170	312105-0473	-		4	SCREW M6S8X110RFR	
200	312605-0318	-		2	NUT M6M8RFR	
210	315105-0153	-		4	WASHER BRB6,4X12RFR	
220	315105-0165	-		4	WASHER BRB8,4X16RFR	
230	315202-0206	-		4	O-RING 7,3X2,4	

Pos	Part No	SP	UN	Qty	Description	Page No

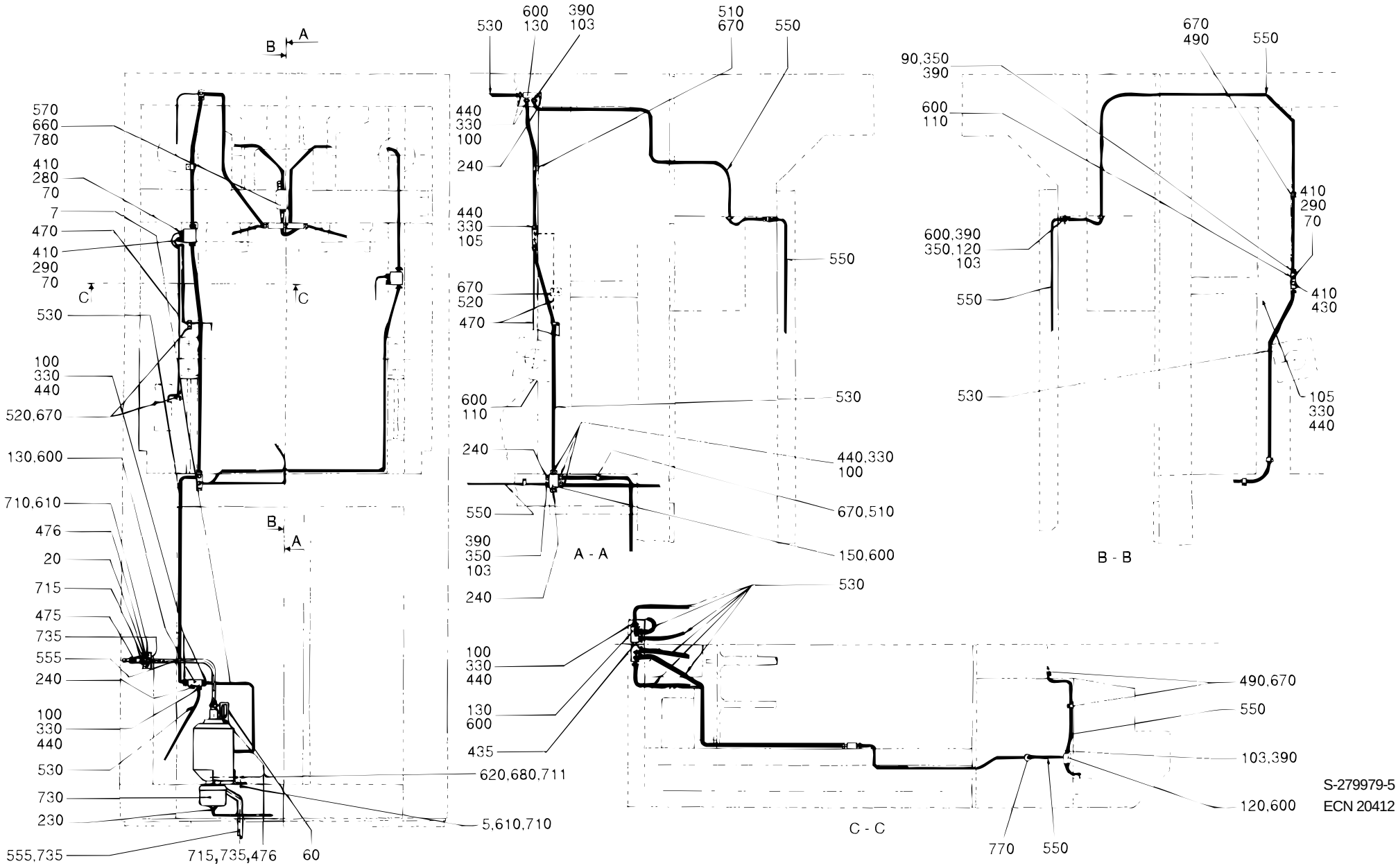
570
660
780
410
280
70
7
470
410
290
70
530
100
330
440
520,670
130,600
710,610
476
20
715
475
735
555
240
100
330
440
530
730
230
555,735
715,735,476
60
620,680,711
5,610,710
B
A
C
C
B
A
530
600
130
390
103
510
670
550
440
330
100
240
440
330
105
550
670
520
470
600
110
530
240
440,330
100
670,510
150,600
550
390
350
103
240
A - A
530
100
330
440
130
600
435
C - C
770
550
490,670
550
103,390
120,600
90,350
390
600
110
670
490
550
410
290
70
600,390
350,120
103
550
530
410
430
105
330
440
B - B
S-279979-5
ECN 20412

Pos	Part No	SP	UN	Qty	Description	Page No
-						
005	547902-0000	-		1	BRACKET	
007	547904-0000	-		1	TUBE	
020	293198-0002	-		1	BRACKET	
060	90012-0063	-		1	GLAND	
070	90028-0020	F		3	CONE	
090	90028-0021	F		1	CONE	
100	90028-0022	-		14	CONE	
103	90028-0024	-		8	CONE	
105	90028-0025	-		3	CONE	
110	90032-0038	-		2	BLOCK	
120	90032-0043	-		2	JUNKTION BLOCK	
130	90032-0044	-		4	JUNCTION BLOCK	
150	90032-0046	-		1	JUNCTION BLOCK	
230	B 90048-0034	-		1	OIL PUMP	
240	90087-0019	-		4	PLUG	
280	90092-0052	K		1	VALVE	
290	90092-0053	K		2	VALVE	
330	90134-0030	F		16	SLEEVE	
350	90134-0031	F		9	SLEEVE	
390	90134-0038	F		9	BUSHING	
410	90134-0039	F		4	BUSHING	
430	90134-0052	-		1	PLUG	
435	90134-0054	-		1	CONNECTION	
440	90134-0055	-		14	BUSHING	
470	90266-0019	-	MM	800	PIPE	
475	90163-0064	-		1	NIPPLE	
476	90163-0050	-		2	NIPPLE	
490	90165-0003	-		5	CLIP	
510	90165-0005	-		13	CLIP	
520	90165-0022	-		3	CLIP	
530	90166-0108	F	M	6	HOSE	
550	90166-0109	F	M	7	HOSE	
555	90166-0113	F	MM	900	HOSE	
570	90274-0084	-		1	PRESSURE SWITCH	
600	312101-0295	-		18	SCREW M6S4X20FZB	
610	312101-0366	-		6	SCREW M6S6X12FZB	
620	312101-0467	-		2	SCREW M6S8X80FZB	
660	312111-0297	-		2	SCREW MC6S4X25FZB	
670	312121-0285	-		20	SLOTTED HEMCS4X6FZB	
680	312601-0318	-		2	NUT M6M8FZB	
710	315101-0153	-		6	WASHER BRB6,4X12FZB	
711	315101-0165	-		2	WASHER BRB8,4X16FZB	
715	315233-0111	-		2	SEAL RING R3/8"	
730	342931-0113	-		1	ELBOW 90 COUPL.,EXT.THREAD 6/4-G1/8"	
735	342991-0100	-		3	HOSE CLIP,WORM DRIVE TYPE 10-13	
770	352101-0103	-		2	LEAD IN G 18,6	

This page is intentionally left blank

Pos	Part No	SP	UN	Qty	Description	Page No
-						
010	90036-0009	-		1	BULB 24V 5W BA15D	
020	90036-0038	-		1	BULB 24V 25W E27	
030	90296-0028	-	ML	2500	OIL (QTY OF STOCK REFLECTS LITERS)	
035	90296-0053	-	L	10	OIL	
040	90296-0068	-		1	GREASE	
045	90296-0075	-	ML	2500	OIL	
060	90298-0019	-		1	DETERGENT	

Pos	Part No	SP	UN	Qty	Description	Page No

PEROXIDE PIPE

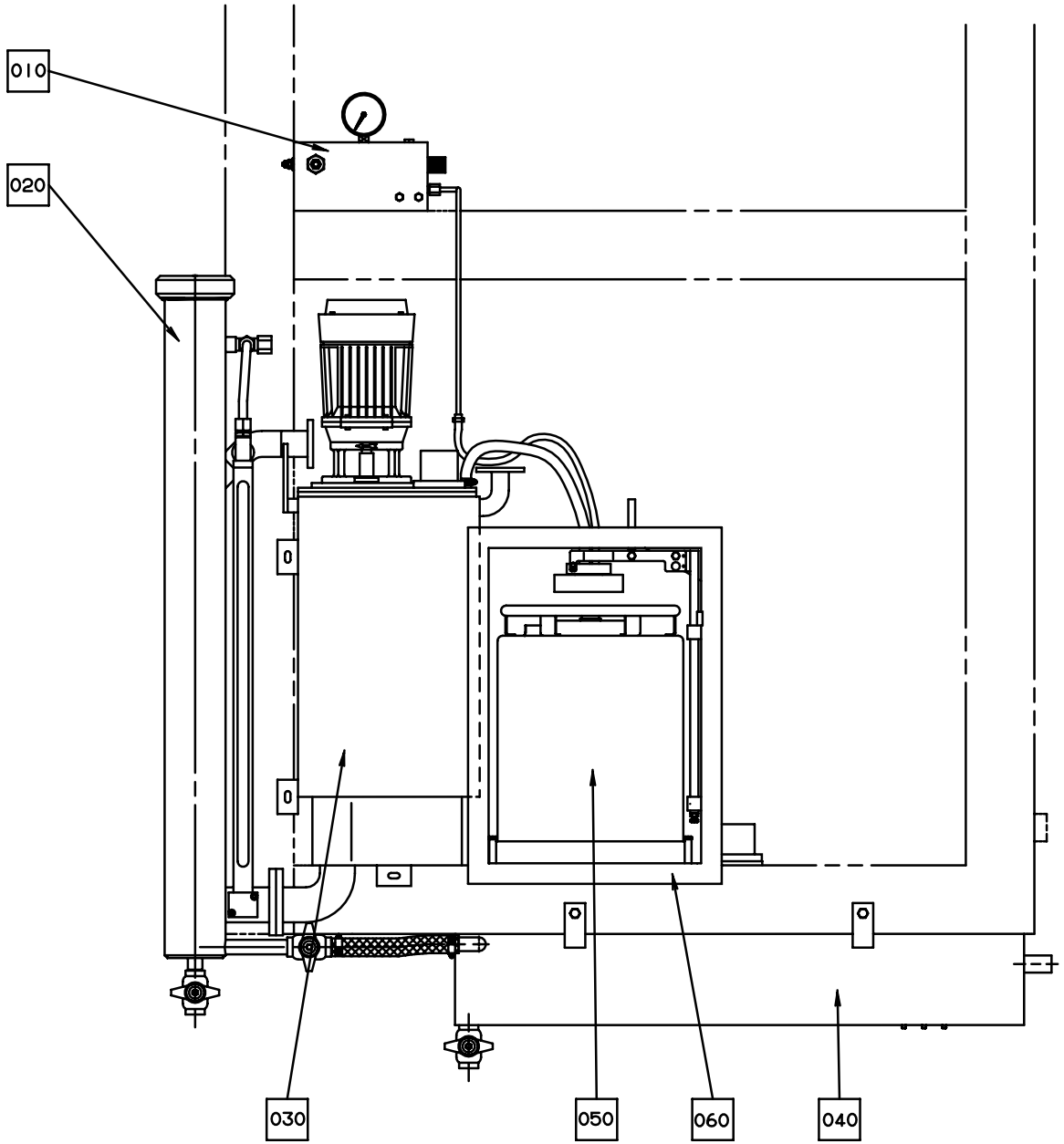

S-561256-1
ECN17024

Pos	Part No	SP	UN	Qty	Description	Page No
-						
F010	A 560922-0100	-		1	VALVE PANEL	149
F020	A 266550-0400	-		1	FILTER HOUSING	151
F030	A 561257-0200	-		1	PEROXIDE TANK	153
F040	A 561258-0200	-		1	DRAINING PEROXIDE	159
F050	A 527898-0100	-		2	CONTAINER H2O2	161
F060	A 561259-0100	-		1	CONNECTION HOUSING	163

Pos	Part No	SP	UN	Qty	Description	Page No

VALVE PANEL

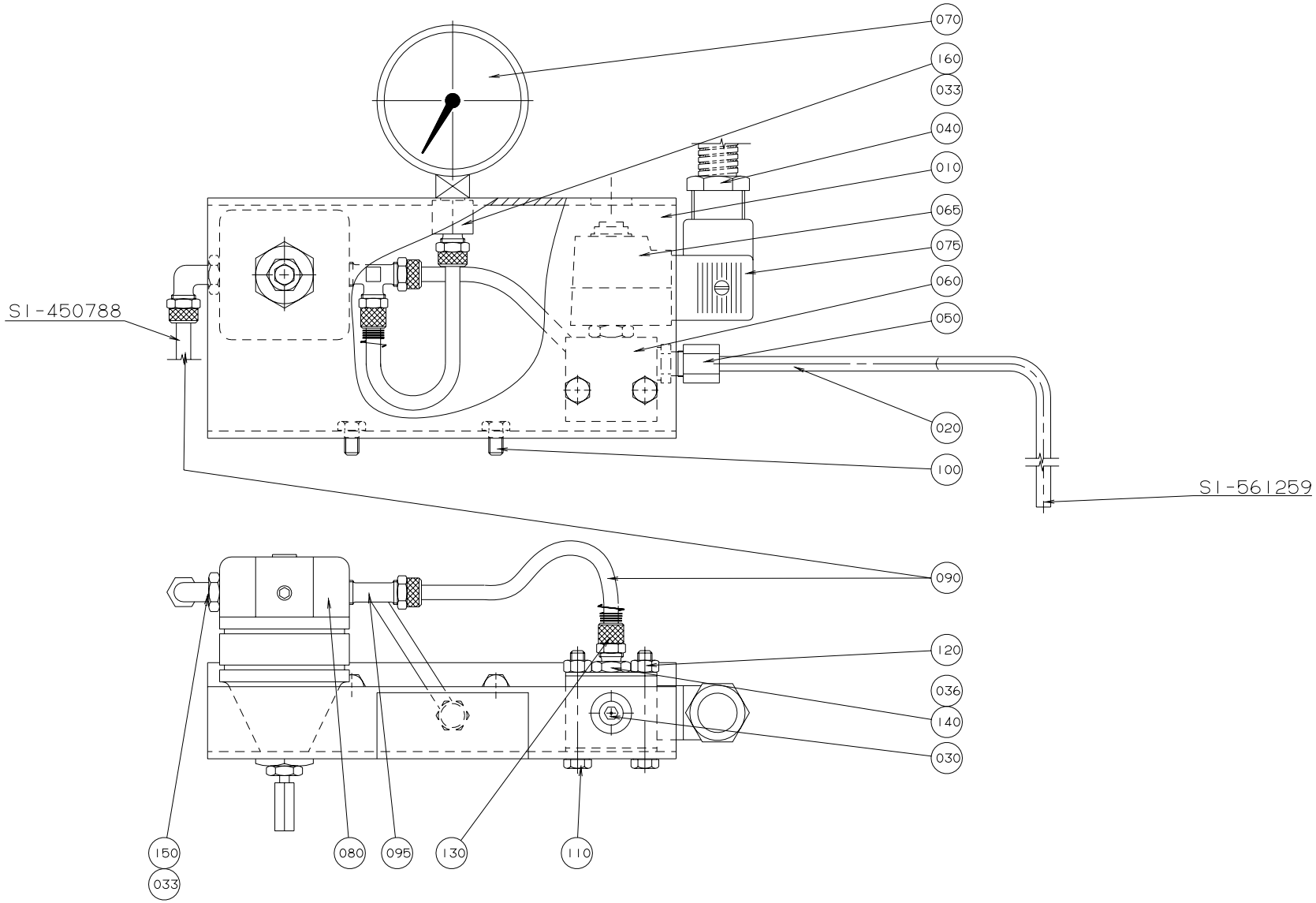

S-560922-1
ECN 17572

Pos	Part No	SP	UN	Qty	Description	Page No
-						
010	527902-0000	-		1	SHEET	
020	530550-0000	-		1	PIPE	
030	563285-0000	-		1	BLIND PLUG	
033	90005-0005	K		2	WASHER	
036	90005-0009	K		1	WASHER	
040	90012-0063	-		2	GLAND	
050	90030-0184	-		1	STRAIGHT CONNECTION GA-6-G1/8"	
060	90042-0206	-		1	SOLENOID VALVE	
065	90042-0487	-		1	COIL	
070	90043-0004	-		1	PRESSURE GAUGE	
075	90110-0095	-		1	CONTACT 3 POLE+EARTH	
080	90113-0056	-		1	REGULATOR	
090	90166-0124	-	MM	3000	HOSE	
095	342950-0114	-		1	L-COUPLING,EXT.THREAD 6/4-R1/4"	
100	312105-0364	-		2	SCREW M6S6X10RFR	
110	312105-0378	-		2	SCREW O4017 M6X40A280	
120	312605-0316	-		2	NUT M6M6RFR	
130	342903-0111	-		2	NUT WITH SPRING 6/4-M10X1	
140	342921-0113	-		1	STRAIGHT COUPLING,EXT.THREADED 6/4-G1/8"	
150	90224-0329	-		1	ELBOW 90 COUPL.,EXT.THREAD 6/4-G1/4"	
160	342923-0114	-		1	STRAIGHT COUPL.,INT.THREADED 6/4-G1/4"	

Pos	Part No	SP	UN	Qty	Description	Page No

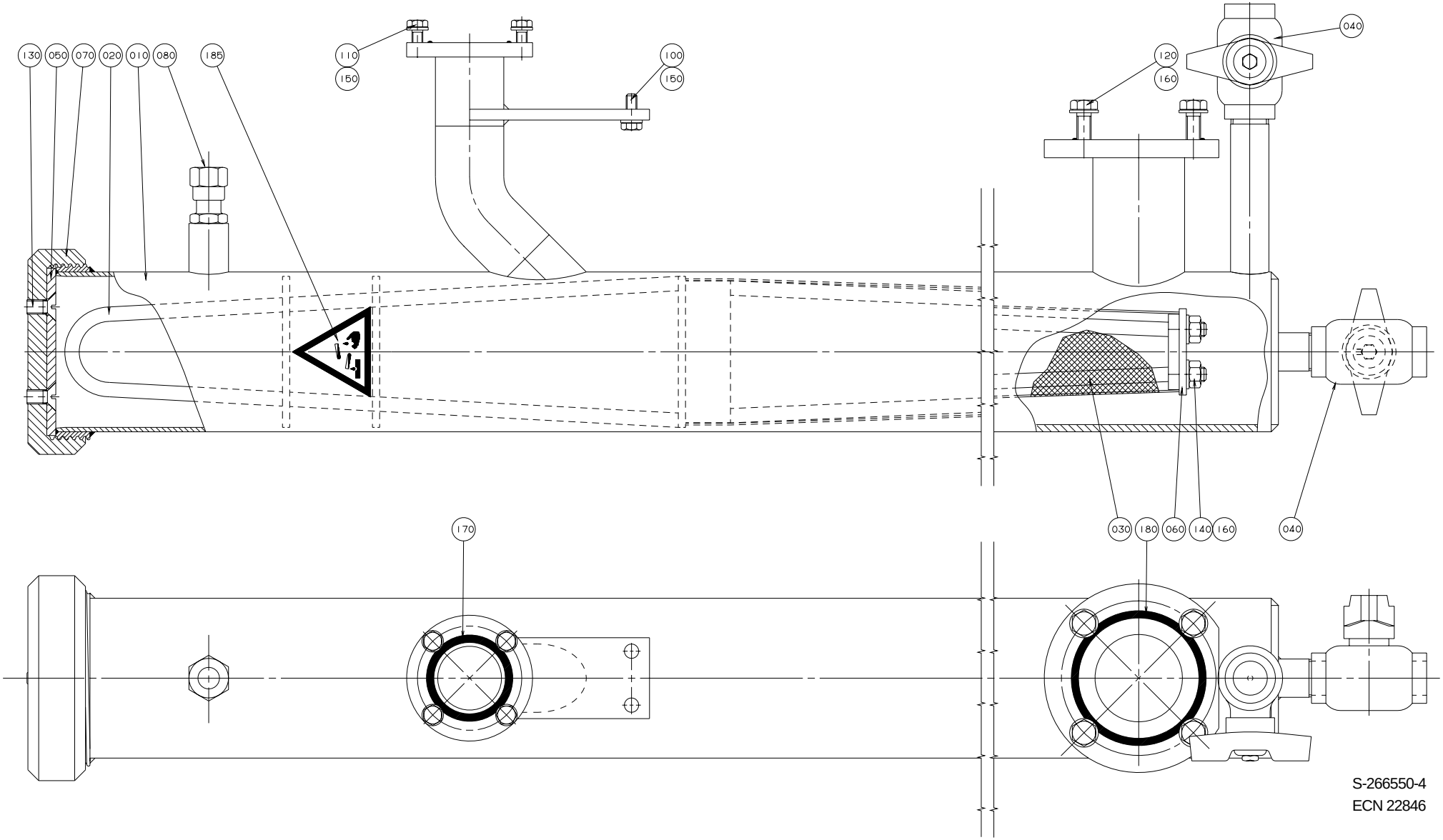
130
050
070
020
010
080
185
110
150
100
150
120
160
040
170
030
180
060
140
160
040
S-266550-4
ECN 22846

Pos	Part No	SP	UN	Qty	Description	Page No
-						
010	573445-0000	-		1	FILTER HOUSING	
020	269903-0000	-		1	FILTER INSERT	
030	269904-0000	F		1	FILTER MESH	
040	B 484536-0000	K		2	VALVE	
050	266557-0000	F		1	GASKET	
060	269905-0000	-		1	WASHER	
070	284840-0000	-		1	NUT	
080	573446-0000	-		1	STRAIGHT CONNECTION	
100	312105-0368	-		2	SCREW M6S ISO 4017 M6X16 A280	
110	312105-0370	-		4	SCREW M6S ISO 4017 M6X20 A280	
120	312105-0452	-		4	SCREW M6S8X22RFR	
130	312145-0449	-		2	SLOTTED HEMFS8X16RFR	
140	312605-0318	-		2	NUT M6M8RFR	
150	315105-0153	-		6	WASHER BRB6,4X12RFR	
160	315105-0165	-		6	WASHER BRB8,4X16RFR	
170	927422-0006	-		1	O-RING 42.2X3 SILICON	
180	927422-0011	-		1	O-RING 69.5X3 SILICON	
185	359705-0003	-		1	WARNING SIGN"CORROSION"	

Pos	Part No	SP	UN	Qty	Description	Page No

PEROXIDE TANK

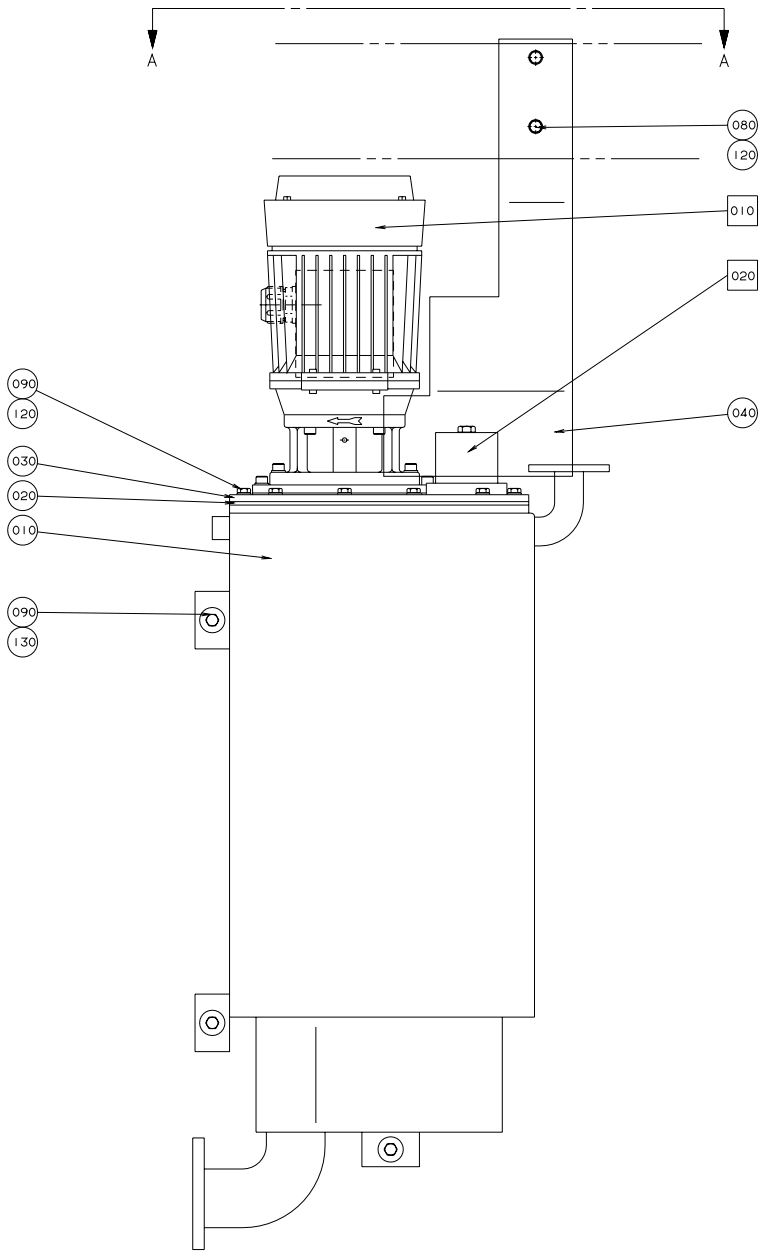

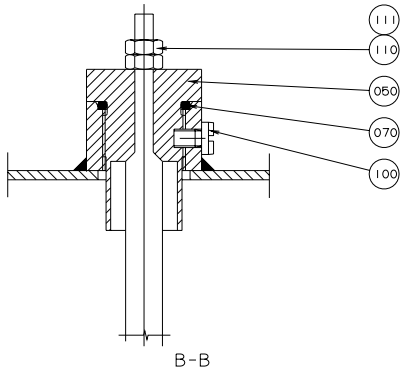

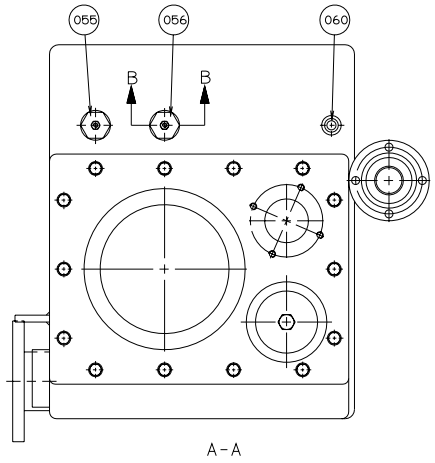

S-561257-1
ECN 16337

Pos	Part No	SP	UN	Qty	Description	Page No
0355B or 0400B or 0500B						
055	567070-0006	D		1	ELECTRODE	
056	567070-0002	-		1	ELECTRODE	
0375S or 0500S or 0750B						
055	567070-0007	D		1	ELECTRODE	
056	567070-0002	-		1	ELECTRODE	
0750S or 1000B or 1055B						
055	567070-0011	D		1	ELECTRODE	
056	567070-0002	-		1	ELECTRODE	
1000S or 1000SQ or 1500S						
055	567070-0011	D		1	ELECTRODE	
056	567070-0018	-		1	ELECTRODE	
Common parts						
F010	A 292451-0500	-		1	PEROXIDE PUMP	**155**
F020	A 566196-0100	-		1	LID WITH WEIGHT	**157**
010	540886-0000	-		1	TANK	
020	259835-0000	F		1	FLANGE SEAL	
030	479032-0000	-		1	HATCH	
040	497121-0000	-		1	SPLASH GUARD	
050	560931-0000	D		2	BRACKET	
060	527910-0000	-		1	PIPE	
070	927421-0004	-		2	O-RING 15.3X2.4 SILICON	
080	312105-0367	-		2	SCREW M6S6X14RFR	
090	312105-0370	-		17	SCREW M6S ISO 4017 M6X20 A280	
100	312125-0285	-		2	SLOTTED HEMCS4X6RFR	
110	312605-0312	-		4	NUT M6M4RFR	
111	315105-0136	-		6	WASHER BRB4,3X8RFR	
120	315105-0153	-		16	WASHER BRB6,4X12RFR	
130	315125-0153	-		3	WASHER SB 6,4X22X4 RFR	

Pos	Part No	SP	UN	Qty	Description	Page No

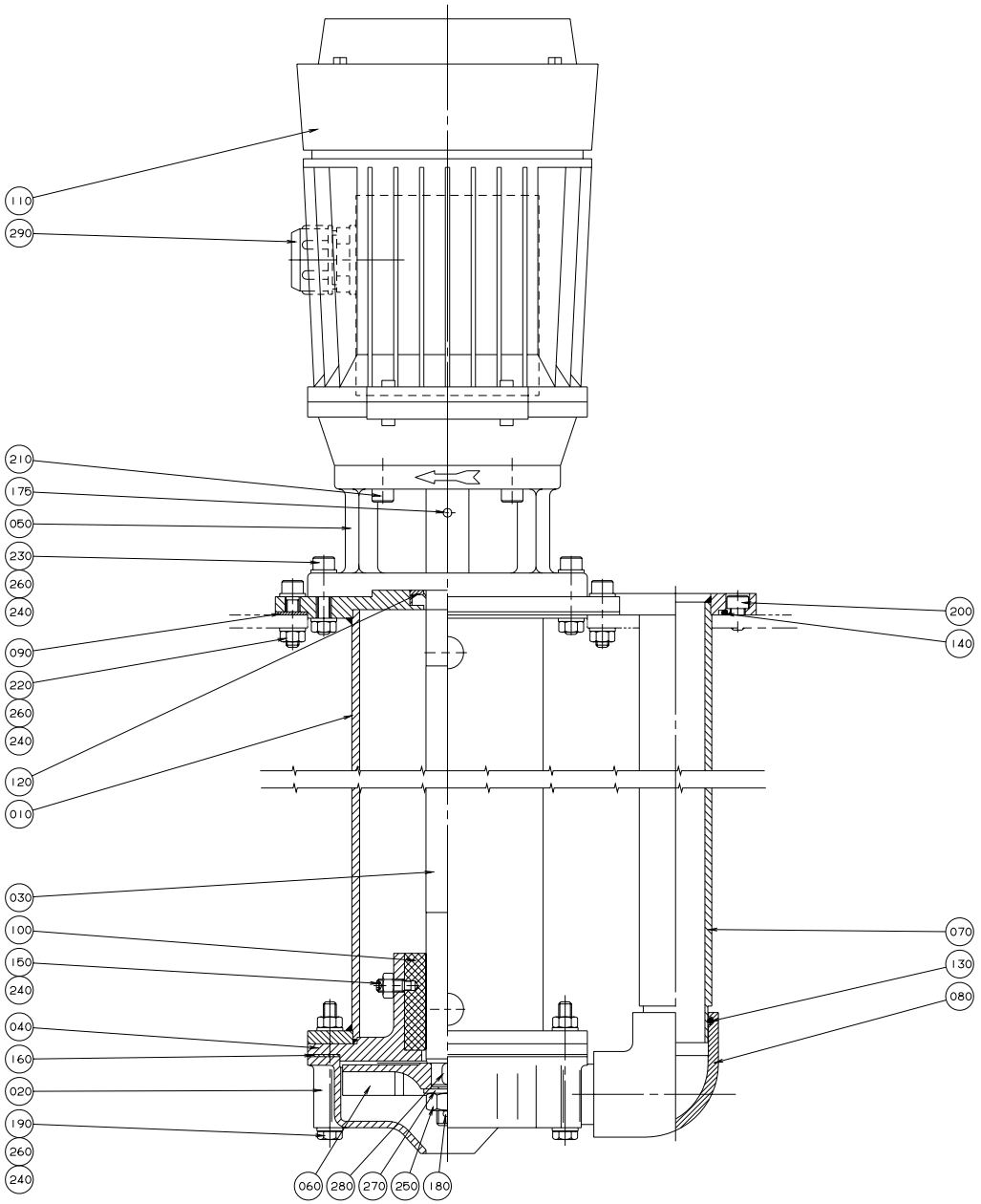

S-292451-5
ECN 14773

Pos	Part No	SP	UN	Qty	Description	Page No
50HZ						
020	B 571277-0000	-		1	PUMP HOUSING	
60HZ						
020	292449-0000	-		1	PUMP HOUSING	
Common parts						
010	292452-0000	-		1	EXTENSION PIPE	
030	547793-0000	K		1	SHAFT	
040	292456-0000	-		1	BEARING COVER	
050	292464-0000	-		1	FLANGE	
060	491929-0000	-		1	IMPELLER WHEEL	
070	560923-0000	-		1	PIPE	
080	751316-0000	-		1	ELBOW PIPE	
090	484791-0000	F		1	GASKET	
100	491770-0000	K		1	BUSHING	
110	90045-0087	K		1	PUMPMOTOR ABB 0,55KW;1,4A	
120	90091-0137	F		1	SEAL RING	
130	927422-0004	-		1	O-RING 29.2X3 SILICON	
140	927422-0006	-		1	O-RING 42.2X3 SILICON	
150	90287-0159	-		2	GRUB SCREW	
160	90321-0411	F		1	GASKET	
175	311112-0256	-		1	SLOTTED TURP 4X20 RFR	
180	311411-0169	F		1	SPLIT PIN SP2,5X25RFR	
190	312105-0382	-		5	SCREW M6S ISO 4014 M6X60 A280	
200	312115-0364	-		4	SCREW 6X10 A4 80	
210	312115-0370	-		4	SCREW MC6S ISO 4762 M6X20 A280	
220	312105-0372	-		4	SCREW M6S ISO 4017 M6X25 A280	
230	312105-0374	-		5	SCREW M6S ISO 4017 M6X30 A280	
240	312605-0316	-		16	NUT M6M6RFR	
250	312605-0320	-		1	NUT M6M10RFR	
260	315105-0153	-		28	WASHER BRB6,4X12RFR	
270	315105-0173	-		1	WASHER BRB10,5X22RFR	
280	315705-0196	K		1	FLAT WEDGE	
290	352136-0129	-		1	GLAND FITTING	

Pos	Part No	SP	UN	Qty	Description	Page No

LID WITH WEIGHT

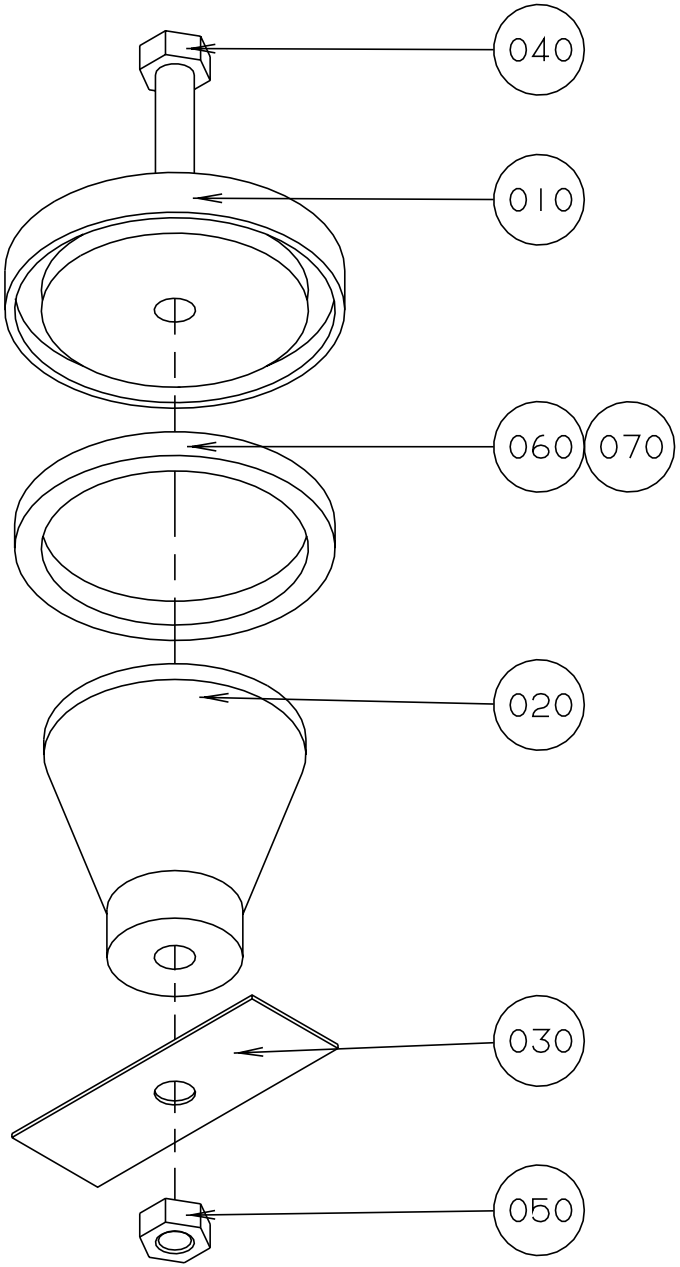

S-566196-1
ECN 16248

Pos	Part No	SP	UN	Qty	Description	Page No
-						
010	566195-0000	-		1	LID	
020	566194-0000	-		1	WEIGHT	
030	566171-0000	-		1	CUP SPRING	
040	312105-0466	-		1	SCREW M6S ISO 4014 M8X75 A280	
050	312605-0318	-		1	NUT M6M8RFR	
060	90143-0020	K	MM	190	STRIP	
070	90153-0023	K		1	ADHESIVE	

Pos	Part No	SP	UN	Qty	Description	Page No

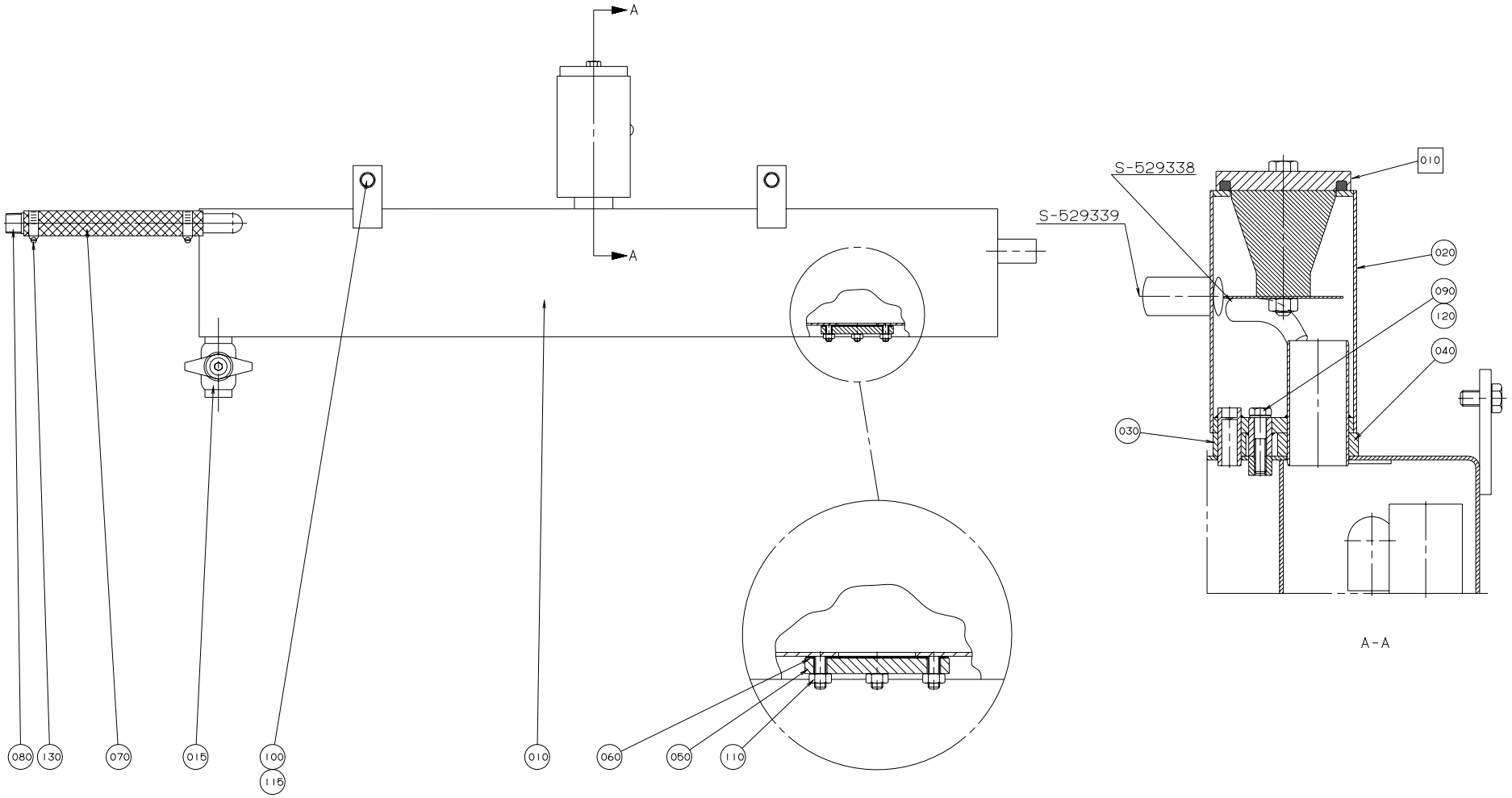
A
A
S-529338
S-529339
010
020
090
120
040
030
A-A
080
130
070
015
100
115
010
060
050
110

Pos	Part No	SP	UN	Qty	Description	Page No
-						
F010	A 566196-0100	-		1	LID WITH WEIGHT	
010	561549-0000	-		1	TANK	
015	B 484536-0000	K		1	VALVE	
020	566192-0000	-		1	METERING DEVICE	
030	527905-0000	D		1	GASKET	
040	527906-0000	D		1	GASKET	
050	532205-0000	-		1	LID	
060	532206-0000	K		1	GASKET	
070	90166-0060	-	MM	200	HOSE	
080	90330-0059	-		1	NIPPLE	
090	312105-0374	-		1	SCREW M6S ISO 4017 M6X30 A280	
100	312105-0451	-		4	SCREW M6S ISO 4017 8X20 A280	
110	312605-0316	-		4	NUT M6M6RFR	
115	315115-0165	-		4	WASHER TBRB8,4X16RFR	
120	315211-0103	-		1	SEALING WASHER	
130	342991-0104	-		2	HOSE CLIP,WORM DRIVE TYPE (23)-27	

Pos	Part No	SP	UN	Qty	Description	Page No

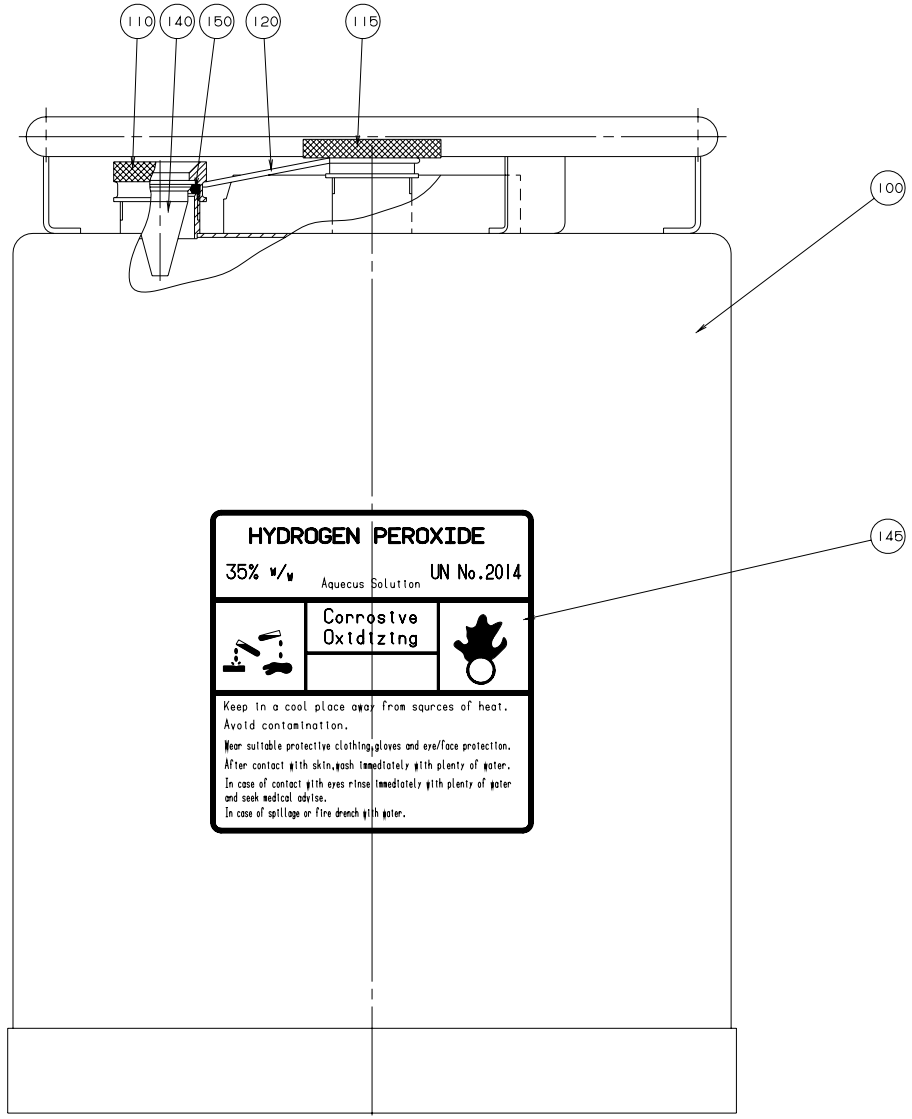

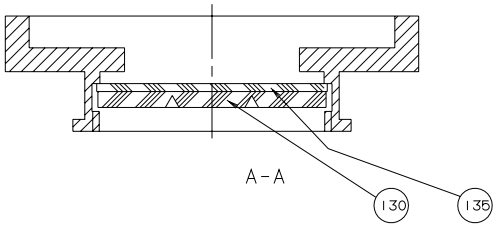

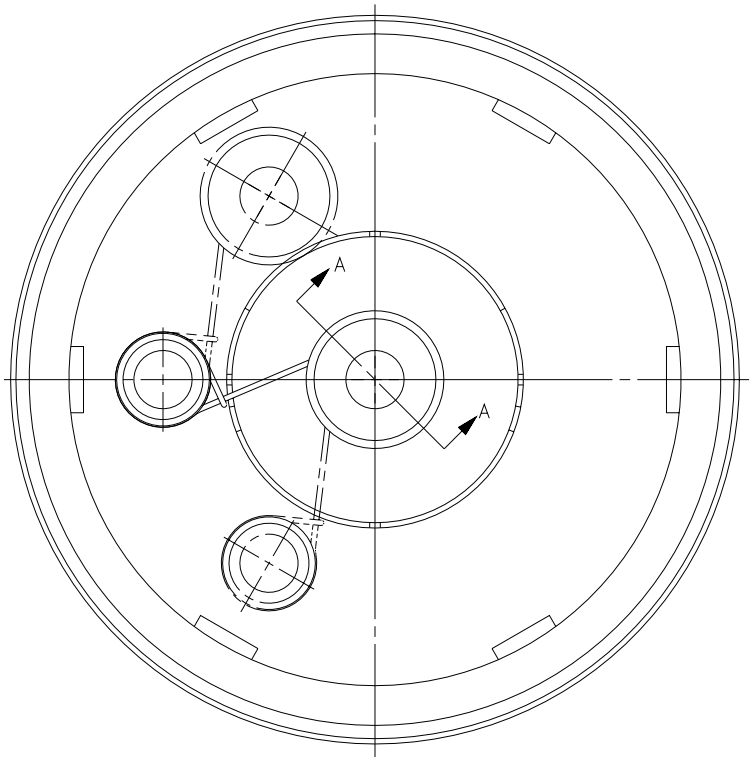

S-527898-1
ECN 15566

Pos	Part No	SP	UN	Qty	Description	Page No
-						
100	561427-0000	D		1	CONTAINER	
110	273977-0000	D		1	NUT	
115	273996-0000	D		1	NUT	
120	273980-0000	D		1	SPRING	
130	565250-0000	K		1	WASHER	
135	565251-0000	K		1	VALVE	
140	273978-0000	D		1	LEVEL GLASS	
145	532655-0000	D		1	CAUTION SIGN	
150	927422-0003	-		1	O.RING 24.2X3 SILICON	

Pos	Part No	SP	UN	Qty	Description	Page No

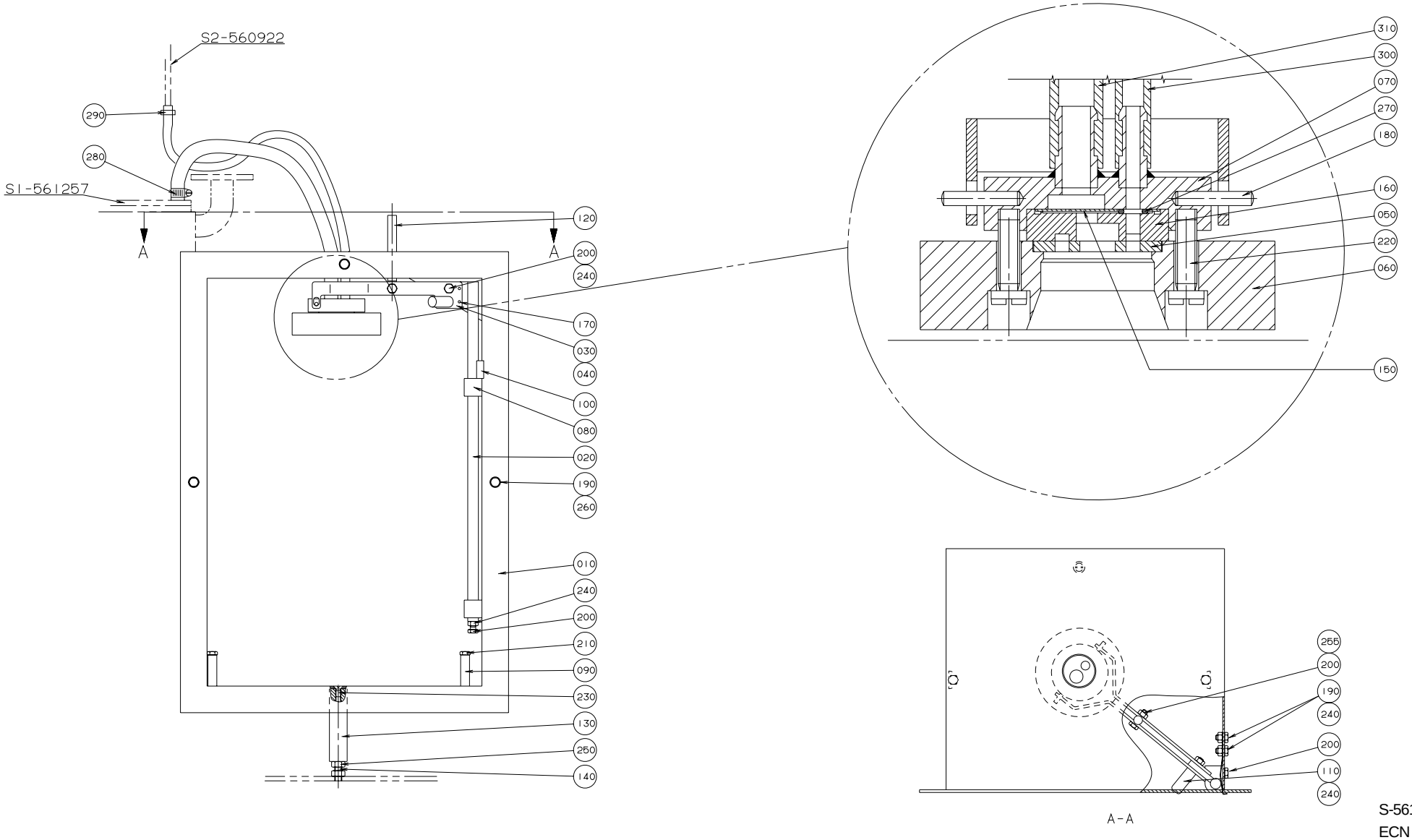

S-561259-1
ECN 14773

Pos	Part No	SP	UN	Qty	Description	Page No
-						
010	565104-0000	-		1	SWEEP	
020	527120-0000	-		1	STEERING	
030	527121-0001	-		1	BOW CLAMP	
040	527121-0002	-		1	BOW CLAMP	
050	273981-0000	K		1	GASKET	
060	273982-0000	-		1	WEIGHT	
070	527122-0000	-		1	ATTACHMENT	
080	527124-0000	-		2	BEARING	
090	527125-0000	-		2	STEERING	
100	527126-0000	D		1	LEAF SPRING	
110	527127-0000	-		1	DOWEL	
120	527128-0000	-		1	GUIDE PIN	
130	527129-0000	-		1	BRACKET	
140	527130-0000	-		1	SCREW	
150	527912-0000	K		1	NON-RETURN VALVE	
160	530551-0000	-		1	WASHER	
170	311103-0234	-		2	CYLINDRICACP M6 3X12 RFR	
180	311103-0273	-		2	CYLINDRICAM6 4X22 RFR	
190	312105-0362	-		6	SCREW M6S ISO 4017 M6X8 A280	
200	312105-0370	-		5	SCREW M6S ISO 4017 M6X20 A280	
210	312105-0378	-		2	SCREW O4017 M6X40A280	
220	312125-0370	-		2	SLOTTED CHEESE HEAD ISO 1207 M6X20 RFR	
230	312155-0366	-		1	SCREW MF6S DIN 7991 M6X12 A280	
240	312605-0316	-		5	NUT M6M6RFR	
250	312605-0318	-		2	NUT M6M8RFR	
255	312812-0316	-		1	LOCK NUT A2-M6RFR	
260	315105-0153	-		4	WASHER BRB6,4X12RFR	
270	90242-0163	-		1	O-RING REPBY 0315204-0103	
280	342991-0101	-		2	HOSE CLIP,WORM DRIVE TYPE (13)-16	
290	90132-0021	-		2	HOSE CLIP	
300	90166-0101	-	MM	350	HOSE	
310	90166-0138	-	MM	500	HOSE	

Pos	Part No	SP	UN	Qty	Description	Page No

SIDE GUARD, LEFT

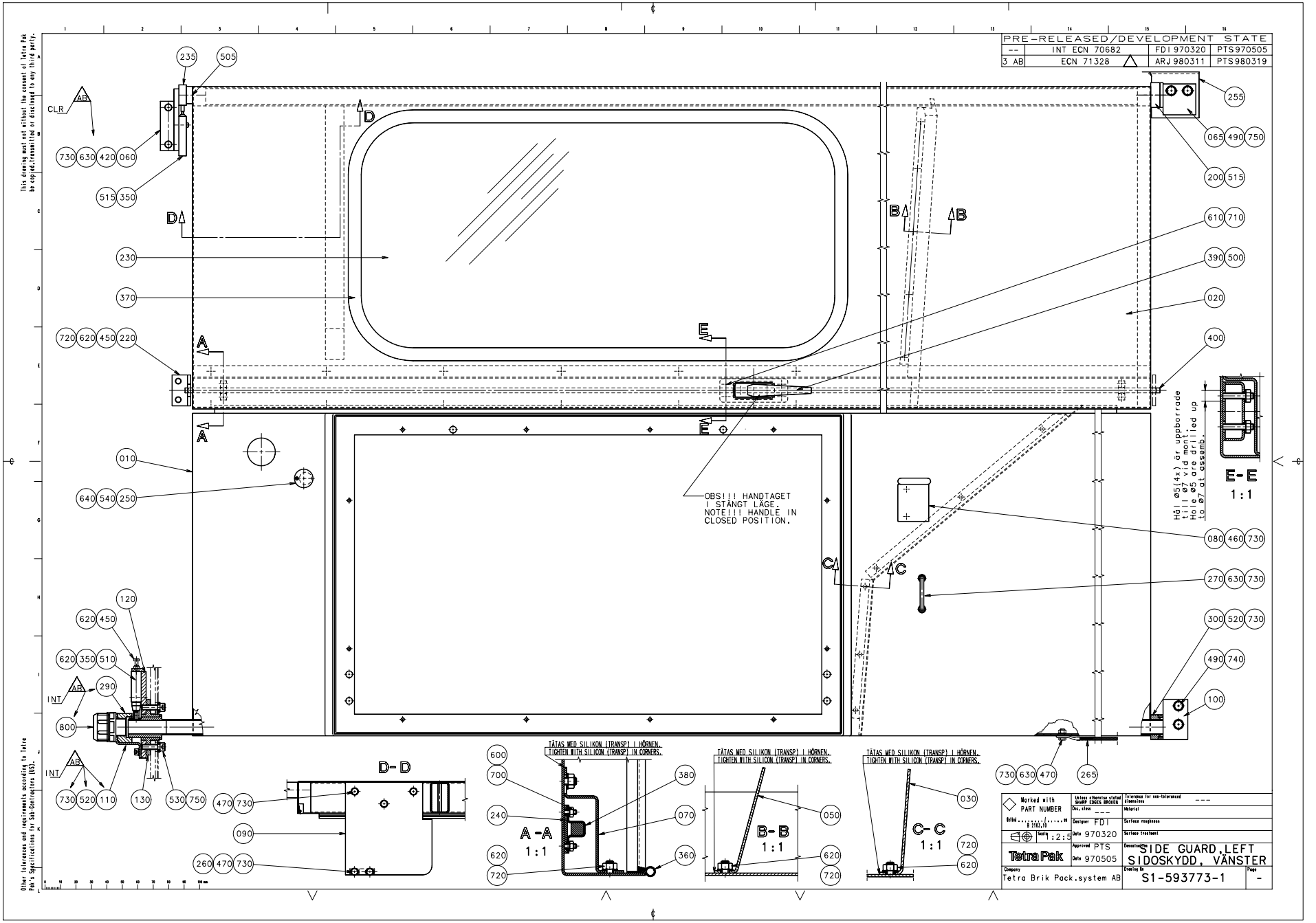

Pos	Part No	SP	UN	Qty	Description	Page No
-						
010	544681-0000	-		1	SIDEGUARD L	
020	451125-0000	-		1	SIDE GUARD	
030	545107-0000	-		1	CHUTE LEFT	
050	451127-0000	-		1	CHUTE, LEFT FRONT	
060	294114-0000	-		1	HOLDER	
065	297366-0000	-		1	BRACKET	
070	442193-0000	-		1	PROTECTIVE CASING	
080	B 469795-0000	-		1	HOLDER	
090	451316-0000	-		1	STOP PLATE	
100	544483-0000	-		1	BRACKET	
110	544484-0000	-		1	HOLDER	
120	560873-0000	-		1	PLATE	
130	544486-0000	-		1	BEARING UNIT	
200	293478-0000	-		2	BEARING	
220	293566-0000	-		1	MOUNTINGS	
230	293598-0000	-		1	GLASS PANE	
235	294172-0000	-		1	CURVE	
240	434858-0000	-		2	CUSHION	
250	442195-0000	-		1	LID	
255	442401-0000	-		1	COVER PLATE	
260	451317-0000	-		1	STOP LUG	
265	553164-0000	-		1	LOW IMPEDANCELITZ L=150MM	
270	531616-0000	-		1	HOLDER	
290	544480-0000	K		1	NUT	
300	544481-0000	-		1	PLATE	
350	90044-0094	-		2	LIMIT SWITCH HONEYWELL	
360	90143-0035	-	MM	5450	STRIP	
370	90143-0039	-	MM	2400	STRIP	
380	90237-0011	-		2	BAR CLAMP	
390	90237-0061	-		1	HANDLE	
400	90237-0066	-		1	LOCKING DEVICE	
420	312105-0370	-		2	SCREW M6S ISO 4017 M6X20 A280	
450	312105-0327	-		6	SCREW M6S ISO 4017 M5X12 A280	
460	312105-0364	-		2	SCREW M6S6X10RFR	
470	312105-0368	-		6	SCREW M6S ISO 4017 M6X16 A280	
490	312105-0451	-		4	SCREW M6S ISO 4017 8X20 A280	
500	312115-0325	-		2	SCREW 5X10 A4 80	
505	312115-0327	-		2	SCREW MC6S ISO 4762 M5X12 A280	
510	312115-0329	-		2	SCREW MC6S ISO 4762 M5X16 A280	
515	312115-0331	-		4	SCREW MC6S ISO 4762 M5X20 A280	
520	312115-0366	-		4	SCREW MC6S ISO 4762 M6X12 A280	
530	312115-0455	-		2	SCREW MC6S ISO 4762 M8X30 A280	
540	312125-0222	-		1	SLOTTED CHEESE HEAD ISO 1207 M3X8 RFR	
600	312605-0310	-		4	NUT M6M3RFR	
610	312605-0312	-		4	NUT M6M4RFR	
620	312605-0314	-		38	NUT M6M5RFR	
630	312605-0316	-		5	NUT M6M6RFR	
640	312810-0310	-		1	LOCK NUT 3FZB	
700	315105-0124	-		4	WASHER BRB3,2X6RFR	
710	315105-0136	-		4	WASHER BRB4,3X8RFR	
720	315105-0146	-		33	WASHER BRB5,3X10RFR	
730	315105-0153	-		18	WASHER BRB6,4X12RFR	
740	315105-0165	-		2	WASHER BRB8,4X16RFR	
750	315115-0165	-		6	WASHER TBRB8,4X16RFR	
800	352136-0152	K		2	GLAND FITTING	

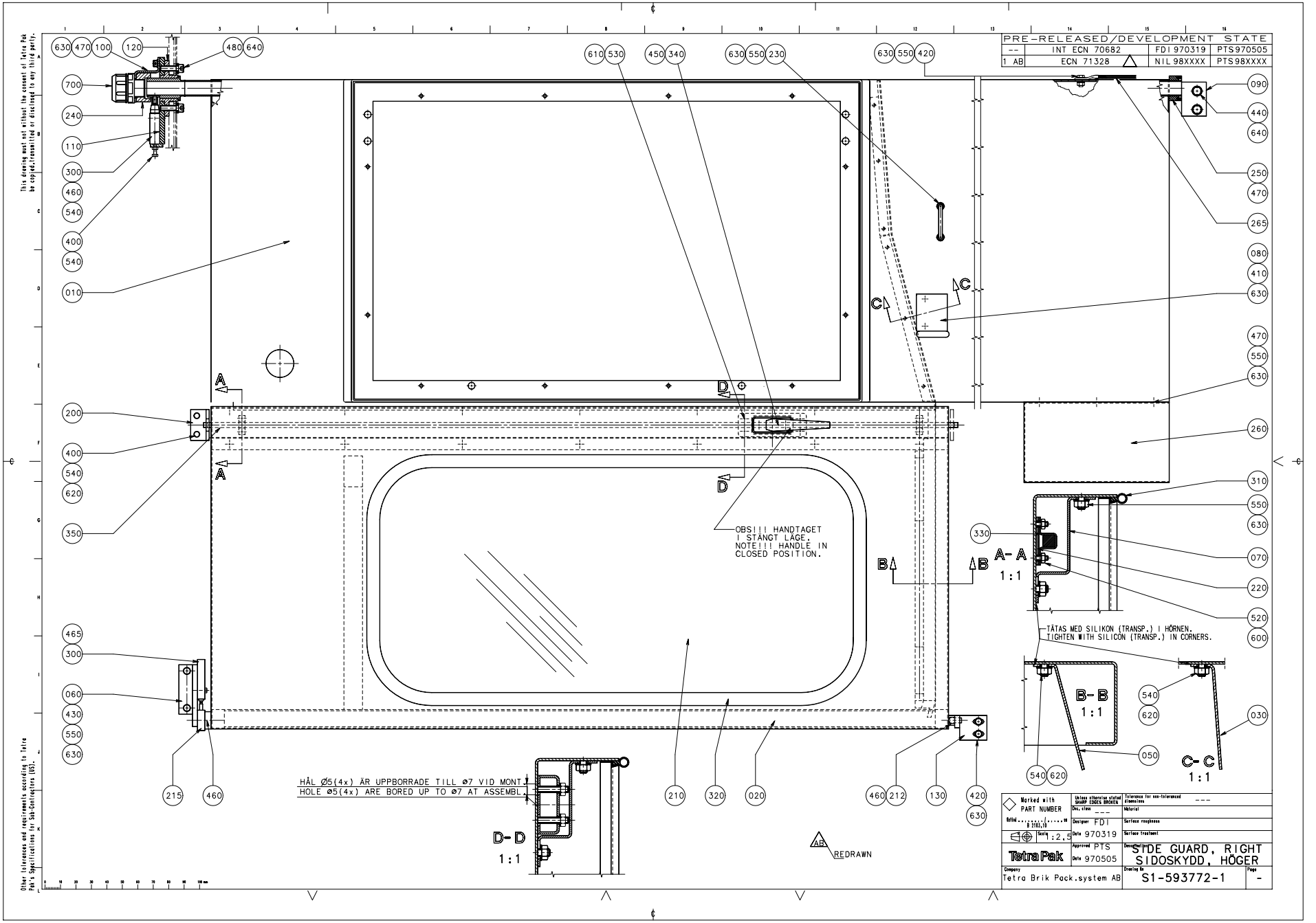
PRE-RELEASED/DEVELOPMENT STATE
-- INT ECN 70682 FDI 970319 PTS970505
1 AB ECN 71328 NIL 98XXXX PTS98XXXX
OBS!!! HANDTAGET I STÄNGT LÄGE.
NOTE!!! HANDLE IN CLOSED POSITION.
HÅL Ø5(4x) ÄR UPPBORRADE TILL Ø7 VID MONT.
HOLE Ø5(4x) ARE BORED UP TO Ø7 AT ASSEMBL.
TÄTAS MED SILIKON (TRANSP.) I HÖRNEN.
TIGHTEN WITH SILICON (TRANSP.) IN CORNERS.
A-A 1:1
B-B 1:1
C-C 1:1
D-D 1:1
REDRAWN
Tetra Pak
Tetra Brik Pack.system AB
SIDE GUARD, RIGHT
SIDOSKYDD, HÖGER
S1-593772-1

Pos	Part No	SP	UN	Qty	Description	Page No
-						
010	544680-0000	-		1	SIDE GUARD R	
020	451126-0000	-		1	SIDE GUARD	
030	545108-0000	-		1	CHUTE	
050	451128-0000	-		1	CHUTE, RIGHT FRONT	
060	294113-0000	-		1	HOLDER	
070	442194-0000	-		1	PROTECTIVE CASING	
080	B 531761-0000	-		1	HOLDER	
090	544482-0000	-		1	BRACKET	
100	544484-0000	-		1	HOLDER	
110	560873-0000	-		1	PLATE	
120	544486-0000	-		1	BEARING UNIT	
130	294054-0000	-		1	BRACKET	
200	293566-0000	-		1	MOUNTINGS	
210	293598-0000	-		1	GLASS PANE	
212	294053-0000	-		1	BEARING	
215	294172-0000	-		1	CURVE	
220	434858-0000	-		2	CUSHION	
230	531616-0000	-		1	HOLDER	
240	544480-0000	K		1	NUT	
250	544481-0000	-		1	PLATE	
260	1143628-0000	-		1	COVERING PLATE	
265	553164-0000	-		1	LOW IMPEDANCELITZ L=150MM	
300	90044-0094	-		2	LIMIT SWITCH HONEYWELL	
310	90143-0035	-	MM	4550	STRIP	
320	90143-0039	-	MM	2400	STRIP	
330	90237-0011	-		2	BAR CLAMP	
340	90237-0061	-		1	HANDLE	
350	90237-0067	-		1	LOCKING DEVICE	
400	312105-0327	-		6	SCREW M6S ISO 4017 M5X12 A280	
410	312105-0364	-		2	SCREW M6S6X10RFR	
420	312105-0368	-		3	SCREW M6S ISO 4017 M6X16 A280	
430	312105-0370	-		2	SCREW M6S ISO 4017 M6X20 A280	
440	312105-0451	-		2	SCREW M6S ISO 4017 8X20 A280	
450	312115-0325	-		2	SCREW 5X10 A4 80	
460	312115-0327	-		4	SCREW MC6S ISO 4762 M5X12 A280	
465	312115-0331	-		2	SCREW MC6S ISO 4762 M5X20 A280	
470	312115-0366	-		7	SCREW MC6S ISO 4762 M6X12 A280	
520	312605-0310	-		4	NUT M6M3RFR	
530	312605-0312	-		4	NUT M6M4RFR	
540	312605-0314	-		32	NUT M6M5RFR	
550	312605-0316	-		12	NUT M6M6RFR	
600	315105-0124	-		4	WASHER BRB3,2X6RFR	
610	315105-0136	-		4	WASHER BRB4,3X8RFR	
620	315105-0146	-		27	WASHER BRB5,3X10RFR	
630	315105-0153	-		15	WASHER BRB6,4X12RFR	
640	315105-0165	-		5	WASHER BRB8,4X16RFR	
700	352136-0152	K		1	GLAND FITTING	

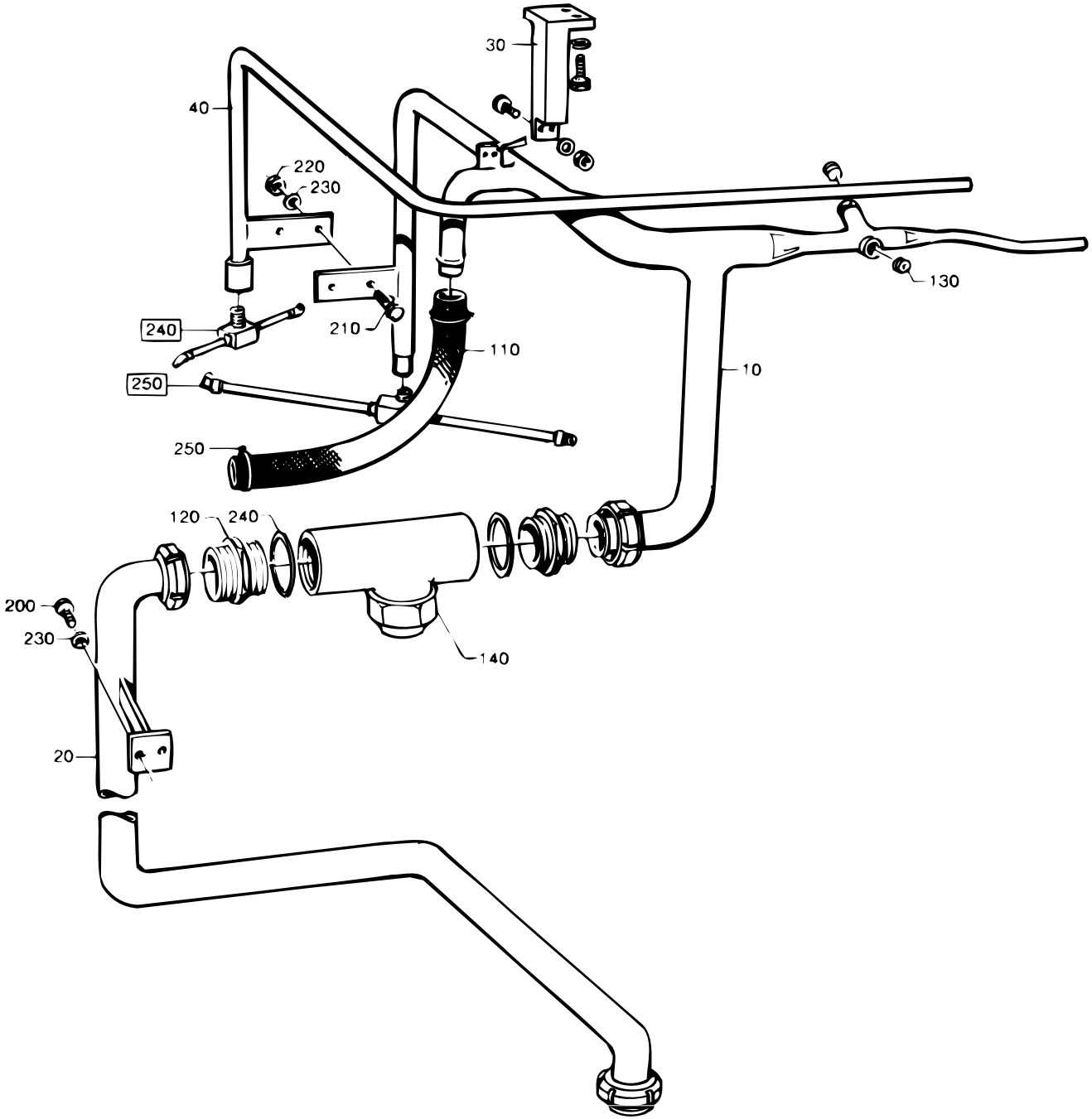

S-297808-3
ECN 8580

Pos	Part No	SP	UN	Qty	Description	Page No
-						
F240	A 476887-0200	-		1	CLEANING HEAD	171
F250	A 476884-0200	-		1	CLEANING HEAD	173
010	542706-0000	-		1	PIPE	
020	297800-0000	-		1	PIPE	
030	297802-0000	-		1	BRACKET	
040	297805-0000	-		1	PIPE	
100	90157-0016	K	ML	x	LOCKING FLUID	
110	90166-0142	K	MM	750	HOSE	
120	90217-0053	-		2	NIPPLE	
130	90330-0026	K		2	PLUG,EXTERNAL G-THREAD G1/4"	
140	B 90415-0032	K		1	FILTER	
200	312105-0368	-		2	SCREW M6S ISO 4017 M6X16 A280	
210	312105-0370	-		6	SCREW M6S ISO 4017 M6X20 A280	
220	312605-0316	-		4	NUT M6M6RFR	
230	315105-0153	-		10	WASHER BRB6,4X12RFR	
240	315250-0103	F		2	GASKET 48/38	
250	342991-0106	K		2	HOSE CLIP,WORM DRIVE TYPE (30)-36	

Pos	Part No	SP	UN	Qty	Description	Page No

CLEANING HEAD

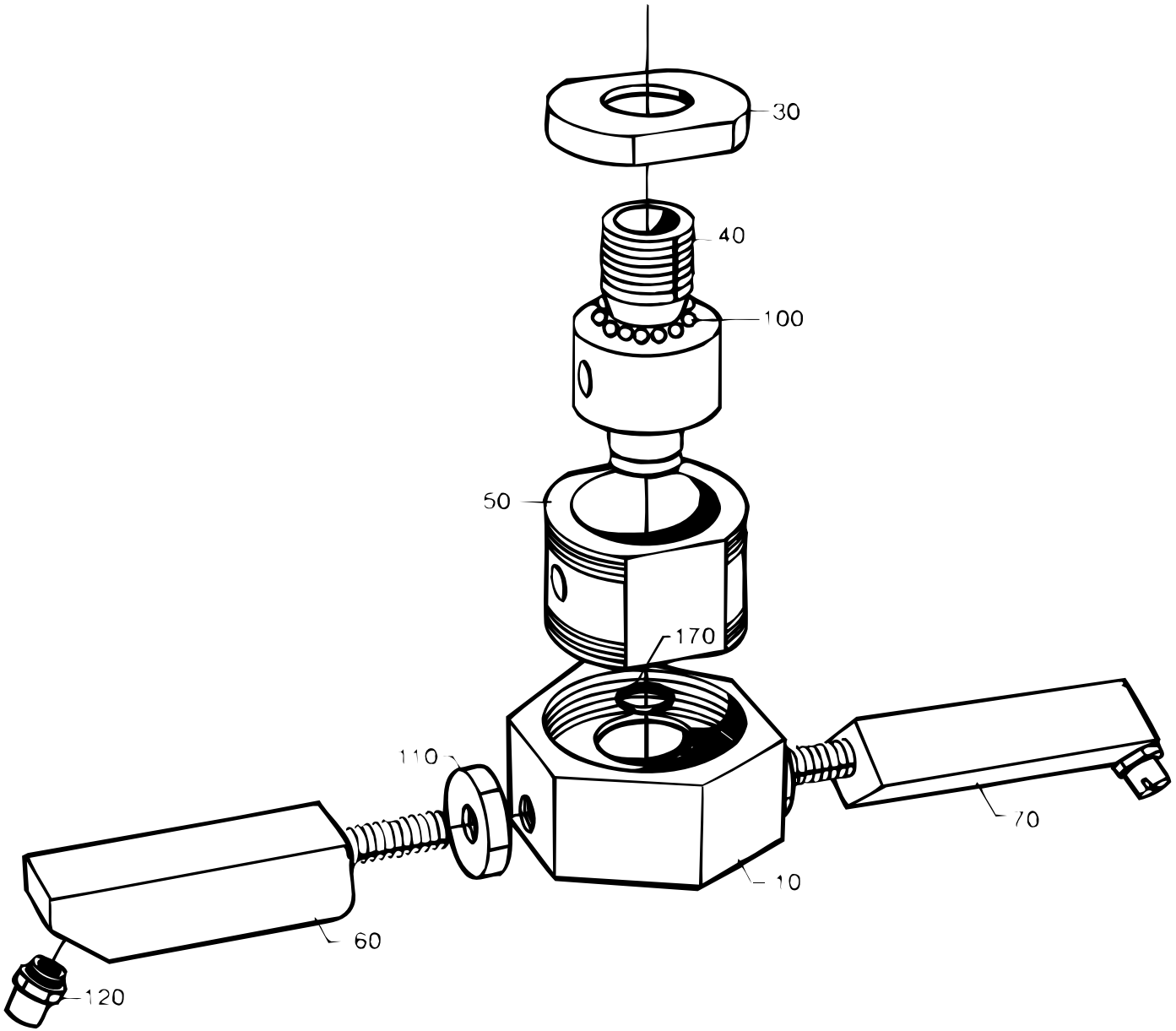

S-476887-1
ECN 14358

Pos	Part No	SP	UN	Qty	Description	Page No
-						
010	440600-0000	D		1	ROTOR	
030	534880-0000	K		1	END SECTION	
040	534878-0000	K		1	SHAFT	
050	534879-0000	K		1	BEARING HOUSING	
060	440604-0001	D		1	PIPE	
070	440605-0001	D		1	PIPE	
100	90090-0020	K		24	BALL	
110	90330-0034	-		2	NUT,HEXAGON G1/4"	
120	90424-0026	K		2	NOZZLE	
170	315202-0211	F		1	O-RING 13,3X2,4	

Pos	Part No	SP	UN	Qty	Description	Page No

CLEANING HEAD

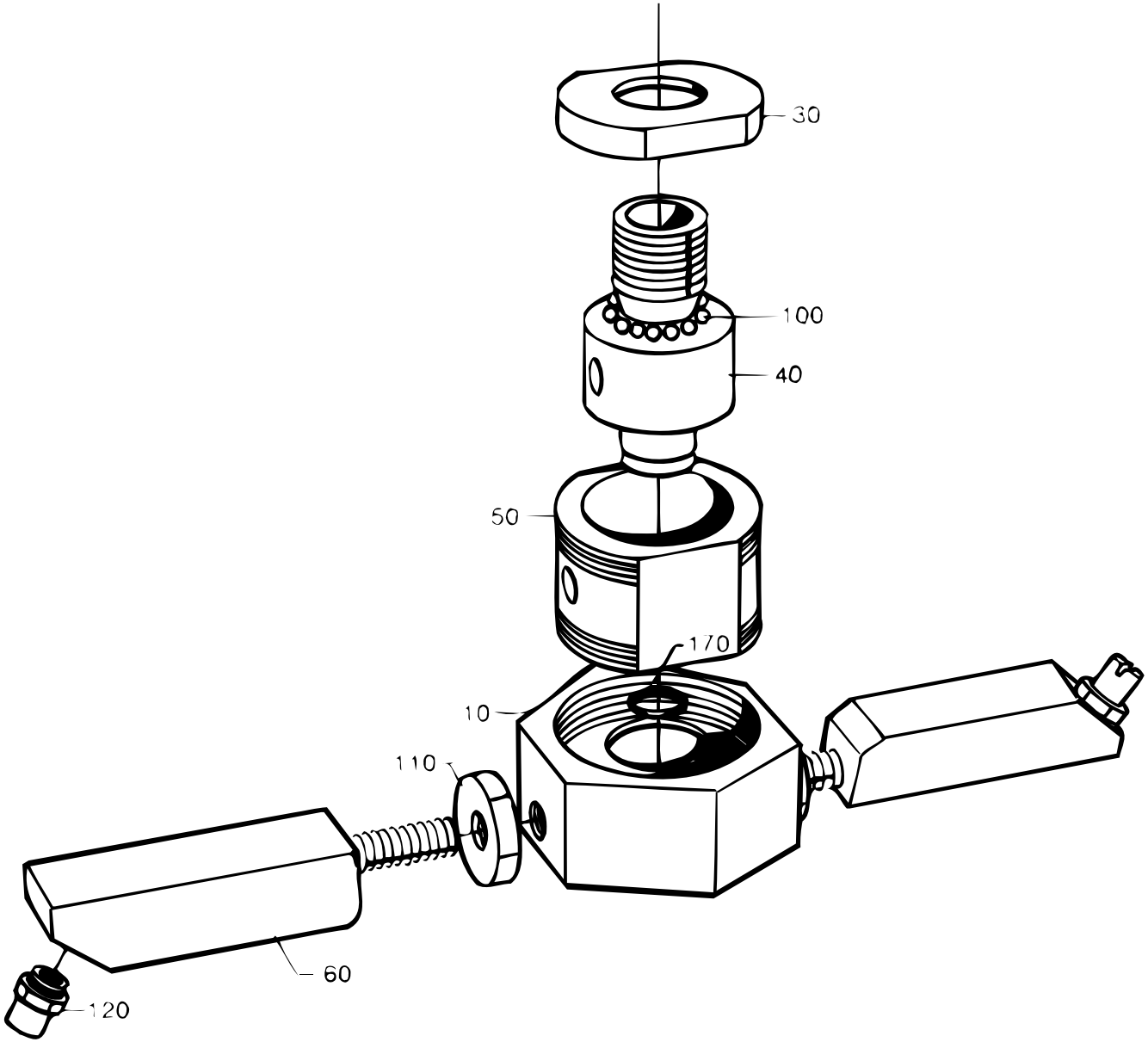

S-476884-1
ECN 8145

Pos	Part No	SP	UN	Qty	Description	Page No
-						
010	440600-0000	D		1	ROTOR	
030	534880-0000	K		1	END SECTION	
040	534878-0000	K		1	SHAFT	
050	534879-0000	K		1	BEARING HOUSING	
060	440604-0001	D		2	PIPE	
100	90090-0020	K		24	BALL	
110	90330-0034	-		2	NUT,HEXAGON G1/4"	
120	90424-0026	K		2	NOZZLE	
170	315202-0211	K		1	O-RING 13,3X2,4	

Pos	Part No	SP	UN	Qty	Description	Page No

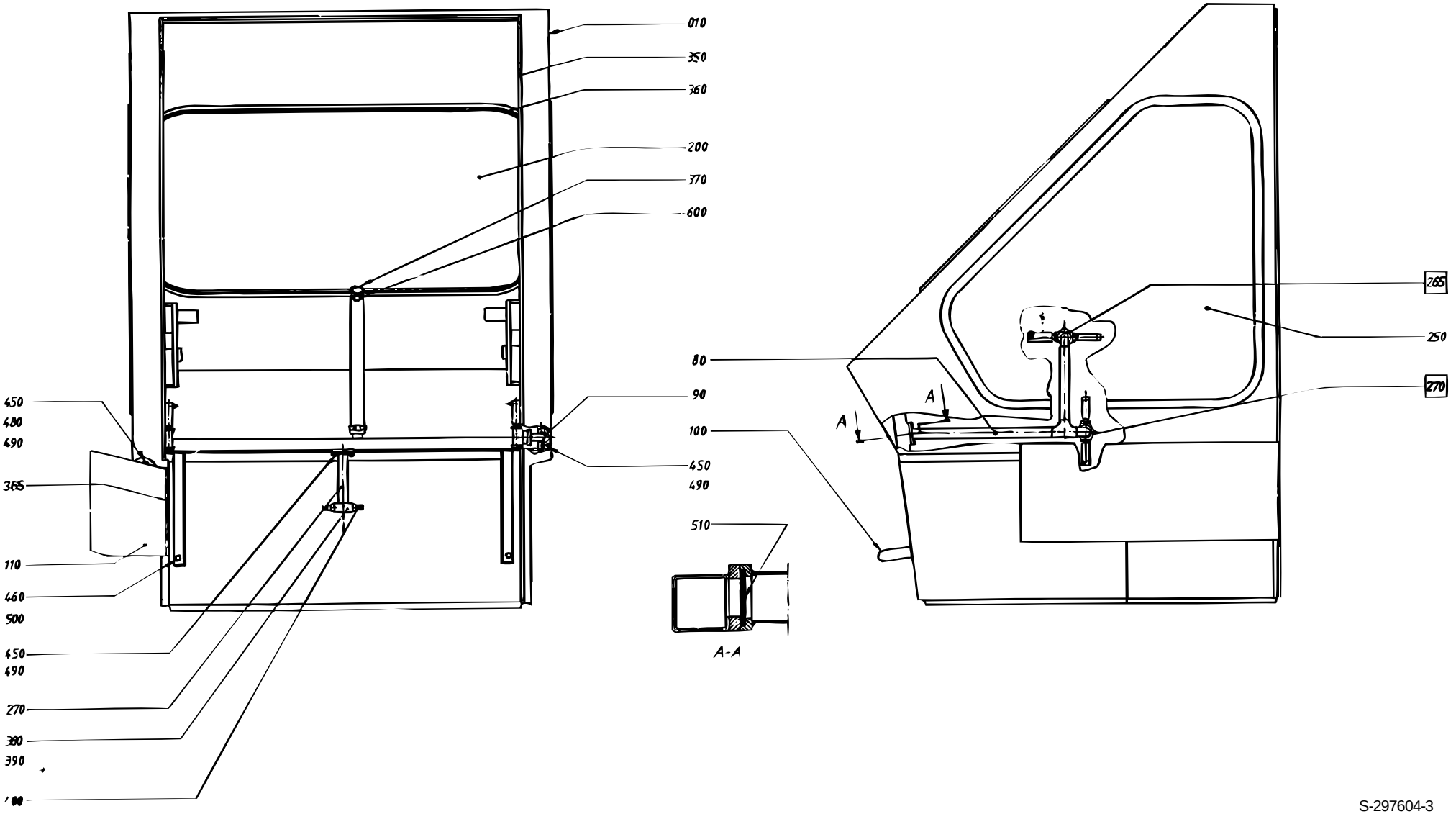

S-297604-3
ECN 11880

Pos	Part No	SP	UN	Qty	Description	Page No
1000B						
010	476865-0000	-		1	HOOD	
110	297769-0000	-		1	HOOD	
365	90143-0068	K	MM	160	RUBBERSTRIP EMKA 1011-06	
1000S						
010	543148-0000	-		1	HOOD	
110	550503-0000	-		1	PROTECTION	
365	90143-0068	K	MM	200	RUBBERSTRIP EMKA 1011-06	
Common parts						
F265	A 476885-0200	-		2	CLEANING HEAD	
F270	A 476886-0200	-		2	CLEANING HEAD	
080	499833-0000	-		1	PIPE RIGHT	
090	499834-0000	-		1	PIPE LEFT	
100	285956-0000	-		1	HANDLE	
200	262774-0009	D		1	GLASS PANE	
250	297488-0000	D		2	GLASS PANE	
270	297679-0000	-		1	PIPE	
350	90143-0035	K	MM	4500	STRIP	
360	90143-0039	-	MM	9500	STRIP	
370	90166-0142	K	MM	600	HOSE	
380	90330-0024	-		1	T-PIPE,INTERNAL THREAD Rp1/4"	
390	90330-0083	-		1	NIPPLES,HEXAGON,EXT.R-THREAD R3/8"-R1/4"	
400	90424-0025	K		2	NOZZLE	
450	312105-0368	-		11	SCREW M6S ISO 4017 M6X16 A280	
460	312105-0451	-		2	SCREW M6S ISO 4017 8X20 A280	
480	312605-0316	-		4	NUT M6M6RFR	
490	315105-0153	-		10	WASHER BRB6,4X12RFR	
500	315105-0165	-		2	WASHER BRB8,4X16RFR	
510	315202-0216	F		3	O-RING 22,2X3	
600	342991-0106	K		2	HOSE CLIP,WORM DRIVE TYPE (30)-36	

Pos	Part No	SP	UN	Qty	Description	Page No

CLEANING HEAD

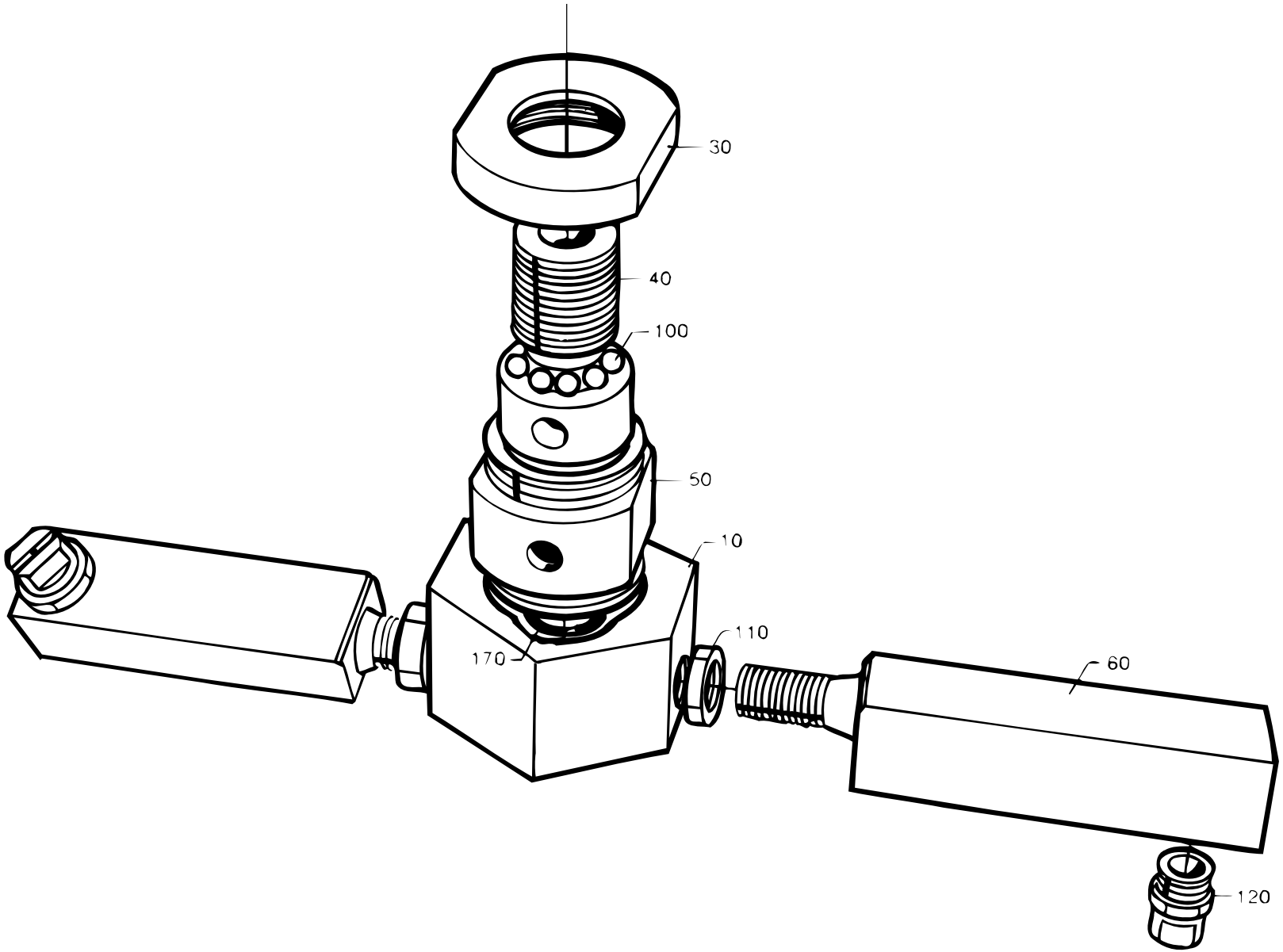

S-476885-1-2
ECN 14358

Pos	Part No	SP	UN	Qty	Description	Page No
-						
010	440600-0000	D		1	ROTOR	
030	534880-0000	K		1	END SECTION	
040	534878-0000	K		1	SHAFT	
050	534879-0000	K		1	BEARING HOUSING	
060	440605-0001	D		2	PIPE	
100	90090-0020	K		24	BALL	
110	90330-0034	-		2	NUT,HEXAGON G1/4"	
120	90424-0026	K		2	NOZZLE	
170	315202-0211	K		1	O-RING 13,3X2,4	

Pos	Part No	SP	UN	Qty	Description	Page No

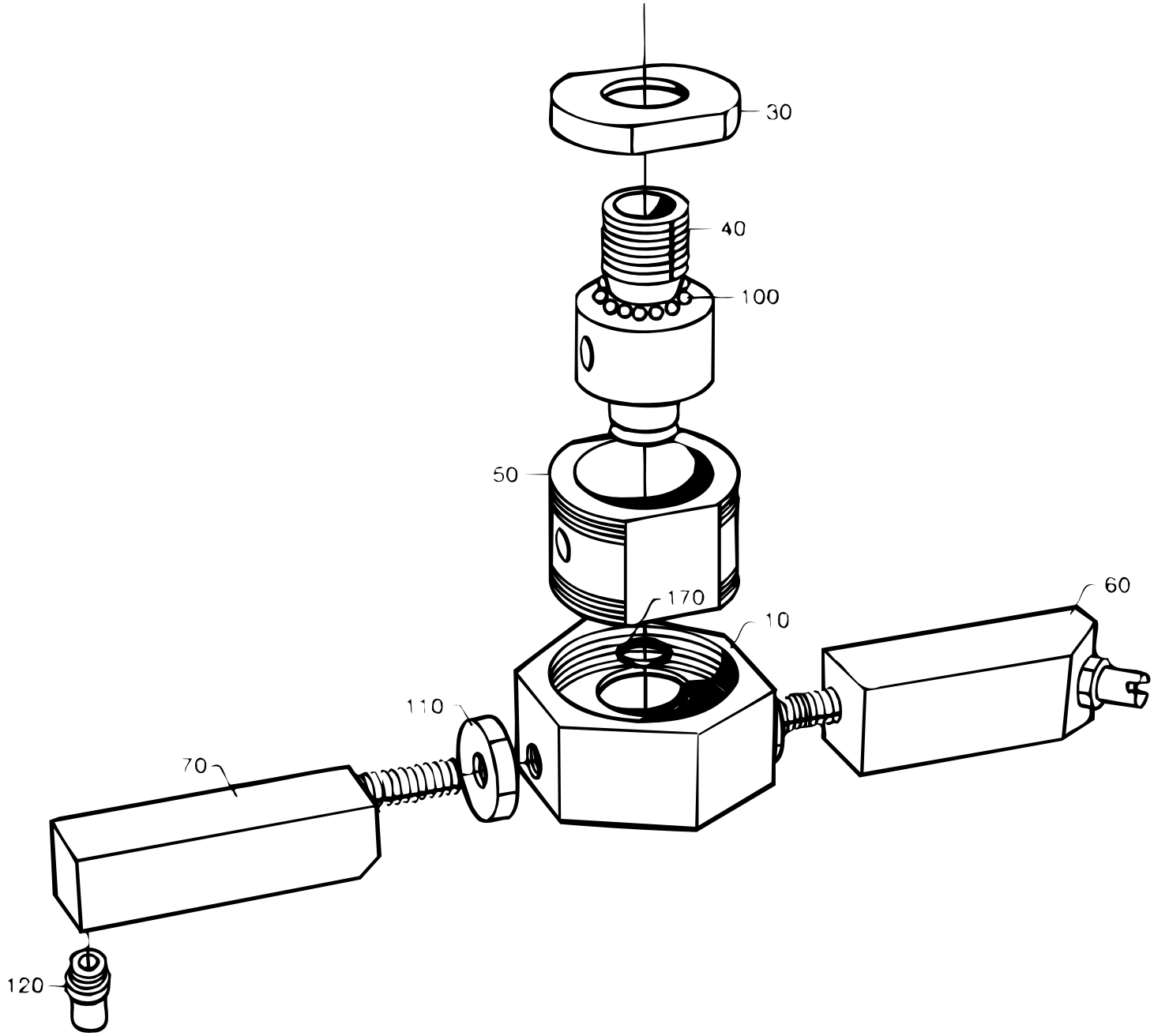

S-476886-1
ECN 14358

Pos	Part No	SP	UN	Qty	Description	Page No
-						
010	440600-0000	D		1	ROTOR	
030	534880-0000	K		1	END SECTION	
040	534878-0000	K		1	SHAFT	
050	534879-0000	K		1	BEARING HOUSING	
060	440604-0001	D		1	PIPE	
070	440605-0001	D		1	PIPE	
100	90090-0020	K		24	BALL	
110	90330-0034	-		2	NUT,HEXAGON G1/4"	
120	90424-0026	K		2	NOZZLE	
170	315202-0211	F		1	O-RING 13,3X2,4	

Pos	Part No	SP	UN	Qty	Description	Page No

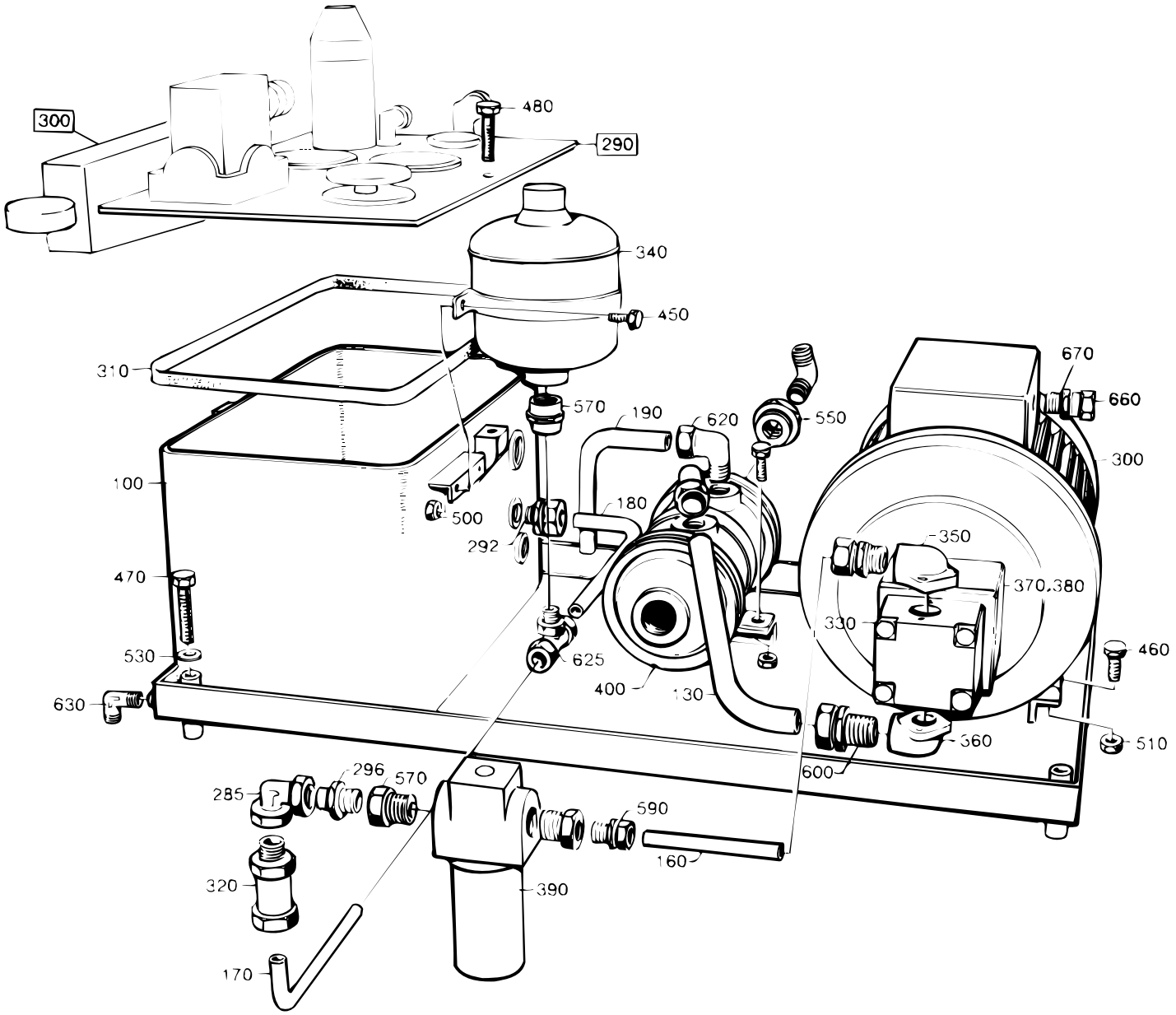

S-434707-1
ECN 15284

Pos	Part No	SP	UN	Qty	Description	Page No
TB/8 0300B TPC						
F300	A 442077-0200	-		1	DECREASE OF PRESSURE	
TB/8 0500B TPC or TB/8 0500S TPC or TB/8 0500SQ TPC or TB/8 0568B TPC or TB/8 1000B TPC or TB/8 1000S TPC or TB/8 1000SQ TPC or TB/8 1000SQ US or TB/8 1136B TPC or TBA/8 or TBA/8LSC or TBA/8PRISMA or TBO/8						
F290	A 276343-0300	-		1	LID	**183**
TB/8 0500SQ US or TB/8 1500B US						
F290	A 592564-0100	-		1	LID	**185**
Common parts						
100	252953-0000	-		1	TANK	
130	434710-0000	-		1	PIPE	
160	434714-0000	-		1	PIPE	
170	434717-0000	-		1	PIPE	
180	434718-0000	-		1	PIPE	
190	434719-0000	-		1	PIPE	
285	90030-0121	-		2	ELBOW CONNECTION EVW,INT 10	
292	90030-0157	-		3	CONNECTION	
296	90030-0178	-		1	CONNECTION	
300	90045-0079	-		1	MOTOR	
310	90091-0159	-		1	GASKET	
320	90230-0017	-		1	NON RETURN VALVE	
330	90321-0018	-		1	PUMP	
340	90321-0381	-		1	ACCUMULATOR	
350	90321-0382	-		1	FLANGE	
360	90321-0383	-		1	FLANGE	
370	90321-0384	-		1	DISTANCE PIECE	
380	90321-0385	-		1	COUPLING	
390	B 90415-0029	-		1	FILTER	
400	B 90422-0008	-		1	COOLER	
450	312101-0368	-		2	SCREW M6S6X16FZB	
460	312101-0453	-		4	SCREW M6S8X25FZB	
470	312101-0463	-		4	SCREW M6S8X60FZB	
480	312101-0495	-		2	SCREW M6S10X30FZB	
500	312601-0316	-		2	NUT M6M6FZB	
510	312601-0318	-		4	NUT M6M8FZB	
530	315111-0165	-		4	WASHER TBRB8,4X16FZB	
550	342701-0208	-		2	BUSHING RNI3/4"-1/4"	
570	342712-0205	-		3	REDUCER RI1/2"-1/4"	
590	342721-0108	-		1	PIPE COUPLGA10-LRFZB REPBY 0342752-0104	
600	342721-0114	-		1	PIPE COUPLGA15-LRFZB REPBY 0342752-0114	
620	342731-0114	-		3	ELBOW CONNECTION WE 15-LRFZB	
625	342741-0108	-		1	T-PIPE CONNECTION TA-10-R1/4"	
630	342930-0122	-		3	ELBOW 90 COUPL.,EXT.THREAD 8/6-R1/4"	
660	352136-0129	-		1	GLAND FITTING	
670	352100-0111	-		1	CABLE GLANR.22,5-13,5	

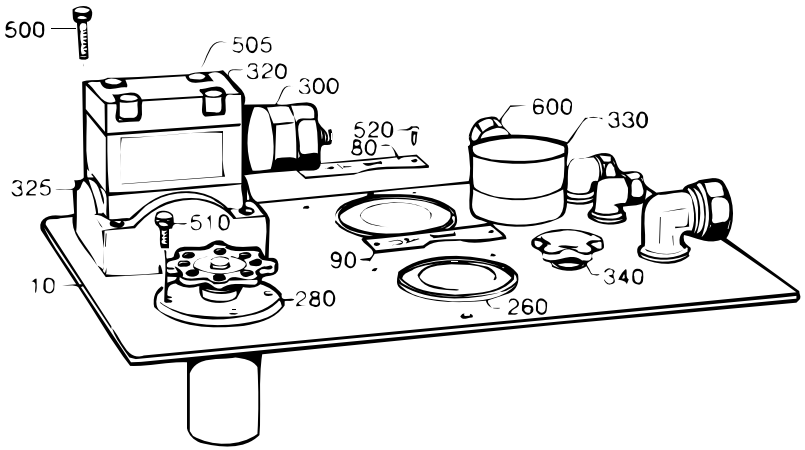
500
505
320
300
520
80
600
330
325
510
90
340
10
280
260

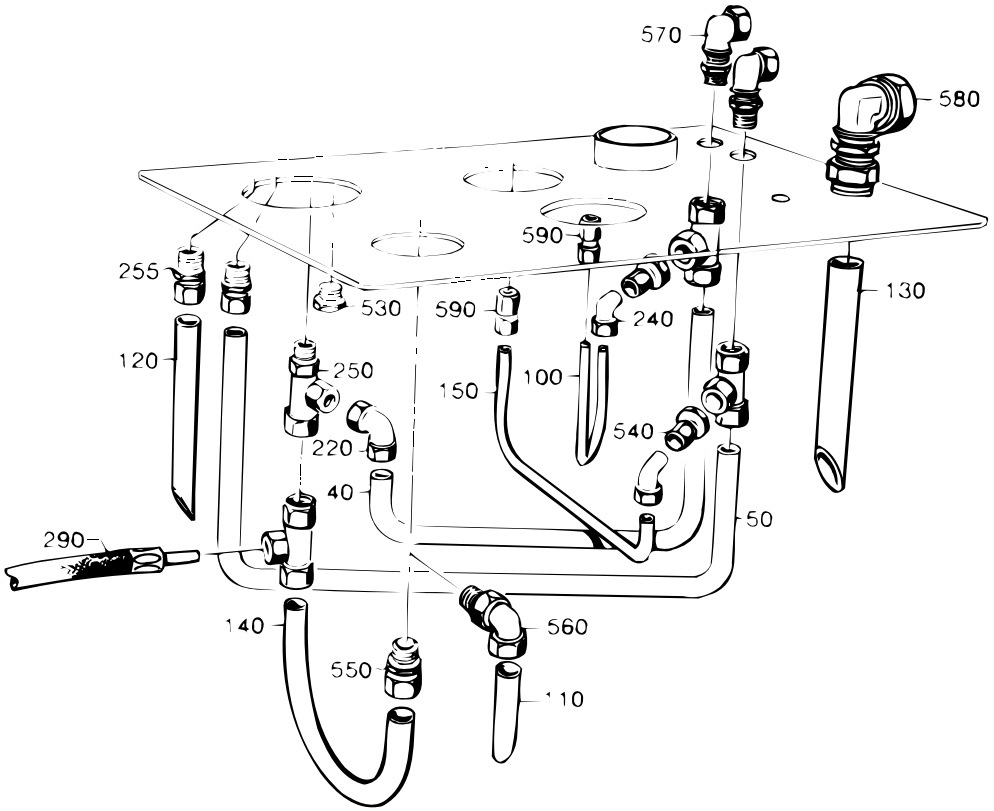
570
580
590
255
530
590
240
130
120
250
150
100
540
220
40
50
290
140
560
550
110

Pos	Part No	SP	UN	Qty	Description	Page No
-						
010	442076-0000	-		1	LID	
040	434708-0000	-		1	PIPE	
050	434709-0000	-		1	PIPE	
080	247385-0000	-		1	SIGN	
090	247386-0000	-		1	SIGN	
100	434711-0000	-		1	PIPE	
110	434712-0001	-		1	PIPE	
120	434712-0002	-		1	PIPE	
130	434713-0000	-		1	PIPE	
140	434715-0000	-		1	PIPE	
150	434716-0000	-		1	PIPE	
220	90030-0121	-		1	ELBOW CONNECTION EVW,INT 10	
240	90030-0146	-		2	ELBOW CONNECTION EVW,EXT 6-G1/8"	
250	90030-0120	-		4	L-PIPE CONNECTION,EVL,INT.T-8	
255	90030-0157	-		3	CONNECTION	
260	90043-0062	K		2	MANOMETER	
280	90113-0044	K		1	PRESSURE REGULATOR	
290	90148-0036	-		1	HOSE	
300	90201-0014	K		1	VALVE	
320	90201-0307	-		1	PLATE	
325	90201-0308	-		1	PLATE	
330	90274-0053	-		1	LEVEL PROBE	
340	90277-0041	-		1	FILTER	
500	312111-0333	-		4	SCREW MC6S5X25FZB	
505	312111-0343	-		4	SCREW MC6S5X60FZB	
510	312111-0368	-		4	SCREW MC6S6X16FZB	
520	312502-0171	-		4	DRIVE SCREW ROUND HEAD SMS 1549 KDS 2X6	
530	342713-0311	-		1	BLIND PLUG BPS38	
540	342714-0202	-		2	REDUCTION KOR 10/6-LFZB	
550	342721-0108	-		1	PIPE COUPLGA10-LRFZB REPBY 0342752-0104	
560	342731-0108	-		1	ELBOW CONNECTION WE 10-LRFZB	
570	342764-0108	-		2	BULKHEAD LWSV10-LFZB	
580	342764-0114	-		1	BULKHEAD LWSV15-LFZB	
590	342790-0102	-		2	PRESSURE GAUGE CONNECTION MAV6-LR-FZB	
600	352136-0113	-		1	GLAND FITTING	

Pos	Part No	SP	UN	Qty	Description	Page No

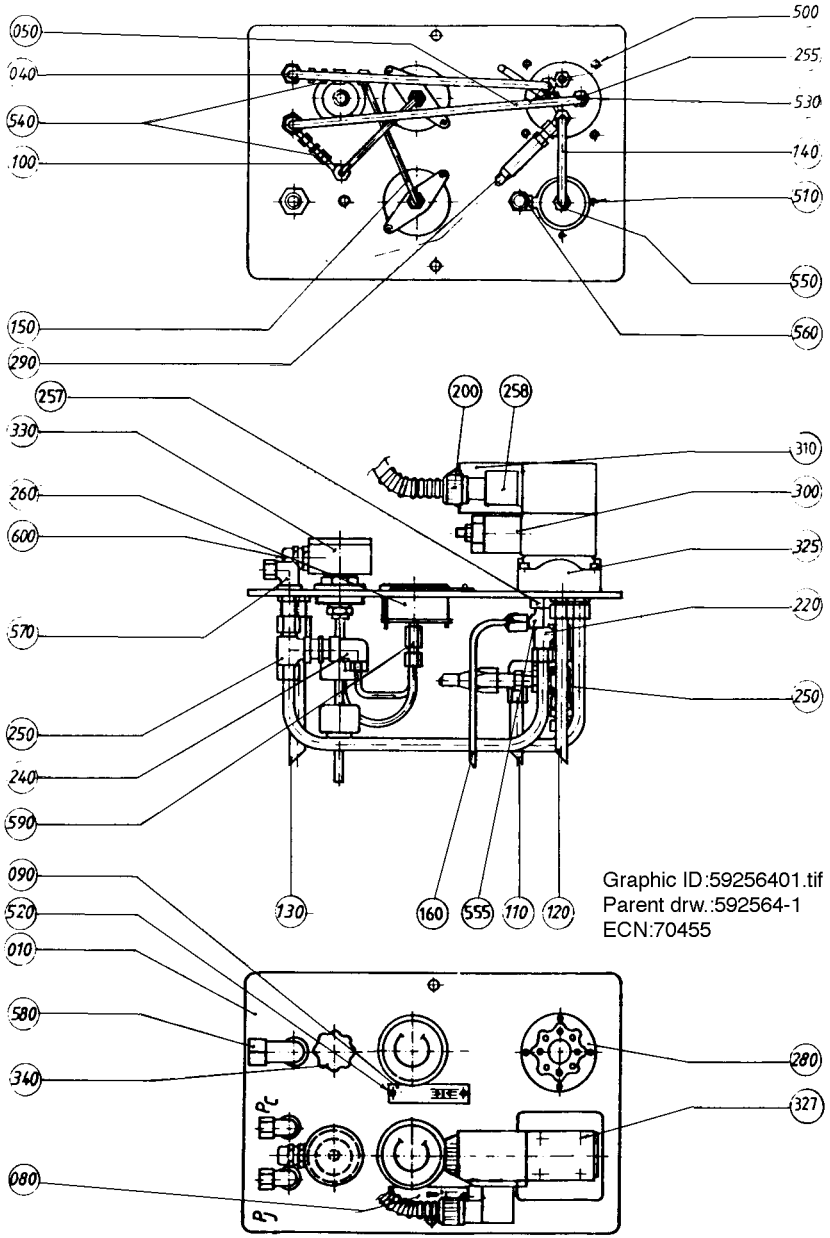
050
040
540
100
500
255
530
140
510
550
560
150
290
257
330
260
600
570
250
240
590
200
258
310
300
325
220
250
090
520
010
580
340
080
280
327
130
160
555
110
120
Graphic ID:59256401.tif
Parent drw.:592564-1
ECN:70455

Pos	Part No	SP	UN	Qty	Description	Page No
-						
010	442076-0000	-		1	LID	
040	434708-0000	-		1	PIPE	
050	434709-0000	-		1	PIPE	
080	247385-0000	-		1	SIGN	
090	247386-0000	-		1	SIGN	
100	434711-0000	-		1	PIPE	
110	434712-0001	-		1	PIPE	
120	434712-0002	-		1	PIPE	
130	434713-0000	-		1	PIPE	
140	434715-0000	-		1	PIPE	
150	434716-0000	-		1	PIPE	
160	592558-0000	-		1	TUBE	
200	90012-0063	-		1	GLAND	
220	90030-0121	-		1	ELBOW CONNECTION EVW,INT 10	
240	90030-0146	-		2	ELBOW CONNECTION EVW,EXT 6-G1/8"	
250	90030-0120	-		4	L-PIPE CONNECTION,EVL,INT.T-8	
255	90030-0157	-		3	CONNECTION	
257	90030-0594	-		1	Reducing adapter	
258	90042-0398	-		1	CONTACT	
260	90043-0062	K		2	MANOMETER	
280	90113-0044	K		1	PRESSURE REGULATOR	
290	90148-0036	-		1	HOSE	
300	90201-0014	K		1	VALVE	
310	B 90201-0058	-		1	SOLENOID VALVE	
325	90201-0308	-		1	PLATE	
327	90201-0407	-		1	BOLT KIT	
330	90274-0053	-		1	LEVEL PROBE	
340	90277-0041	-		1	FILTER	
500	312111-0333	-		4	SCREW MC6S5X25FZB	
510	312111-0368	-		4	SCREW MC6S6X16FZB	
520	312502-0171	-		4	DRIVE SCREW ROUND HEAD SMS 1549 KDS 2X6	
530	342713-0311	-		1	BLIND PLUG BPS38	
540	342714-0202	-		2	REDUCTION KOR 10/6-LFZB	
550	342752-0104	-		1	STRAIGHT CONNECTION GA-10-G1/4"	
555	342731-0102	-		1	ELBOW CONNECTION WE 6-LRFZB	
560	342731-0108	-		1	ELBOW CONNECTION WE 10-LRFZB	
570	342764-0108	-		2	BULKHEAD LWSV10-LFZB	
580	342764-0114	-		1	BULKHEAD LWSV15-LFZB	
590	342790-0102	-		2	PRESSURE GAUGE CONNECTION MAV6-LR-FZB	
600	352136-0113	-		1	GLAND FITTING	

Pos	Part No	SP	UN	Qty	Description	Page No

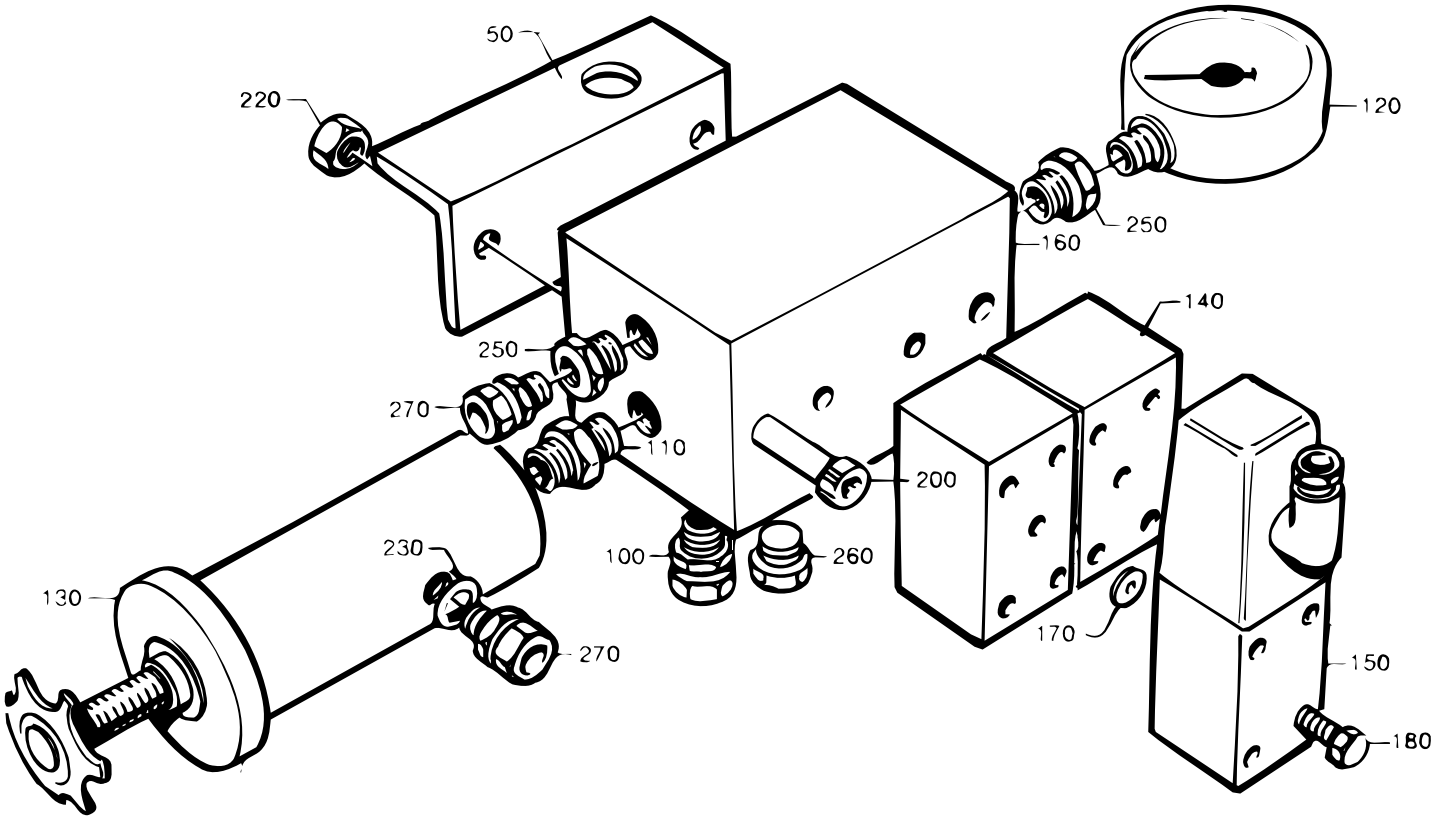
50
220
120
250
160
140
250
270
110
200
230
100
260
130
270
170
150
180

Pos	Part No	SP	UN	Qty	Description	Page No
-						
050	442078-0000	-		1	CANTILEVER	
100	90030-0157	-		2	CONNECTION	
110	90030-0183	-		1	NIPPLE	
120	90043-0075	-		1	PRESSURE GAUGE	
130	90113-0044	-		1	PRESSURE REGULATOR	
140	B 90201-0010	-		2	VALVE	
150	B 90201-0058	-		2	SOLENOID VALVE	
160	90201-0309	-		1	BLOCK	
170	90201-0302	-		2	WASHER	
180	90201-0303	-		2	SPARE PARTS KIT	
200	312111-0345	-		2	SCREW MC6S5X70FZB	
220	312601-0314	-		2	NUT M6M5FZB	
230	315111-0179	-		1	WASHER	
250	342712-0205	-		2	REDUCER RI1/2"-1/4"	
260	342713-0311	-		2	BLIND PLUG BPS38	
270	342721-0108	-		2	PIPE COUPLGA10-LRFZB REPBY 0342752-0104	

Pos	Part No	SP	UN	Qty	Description	Page No

CRANK BRACKET

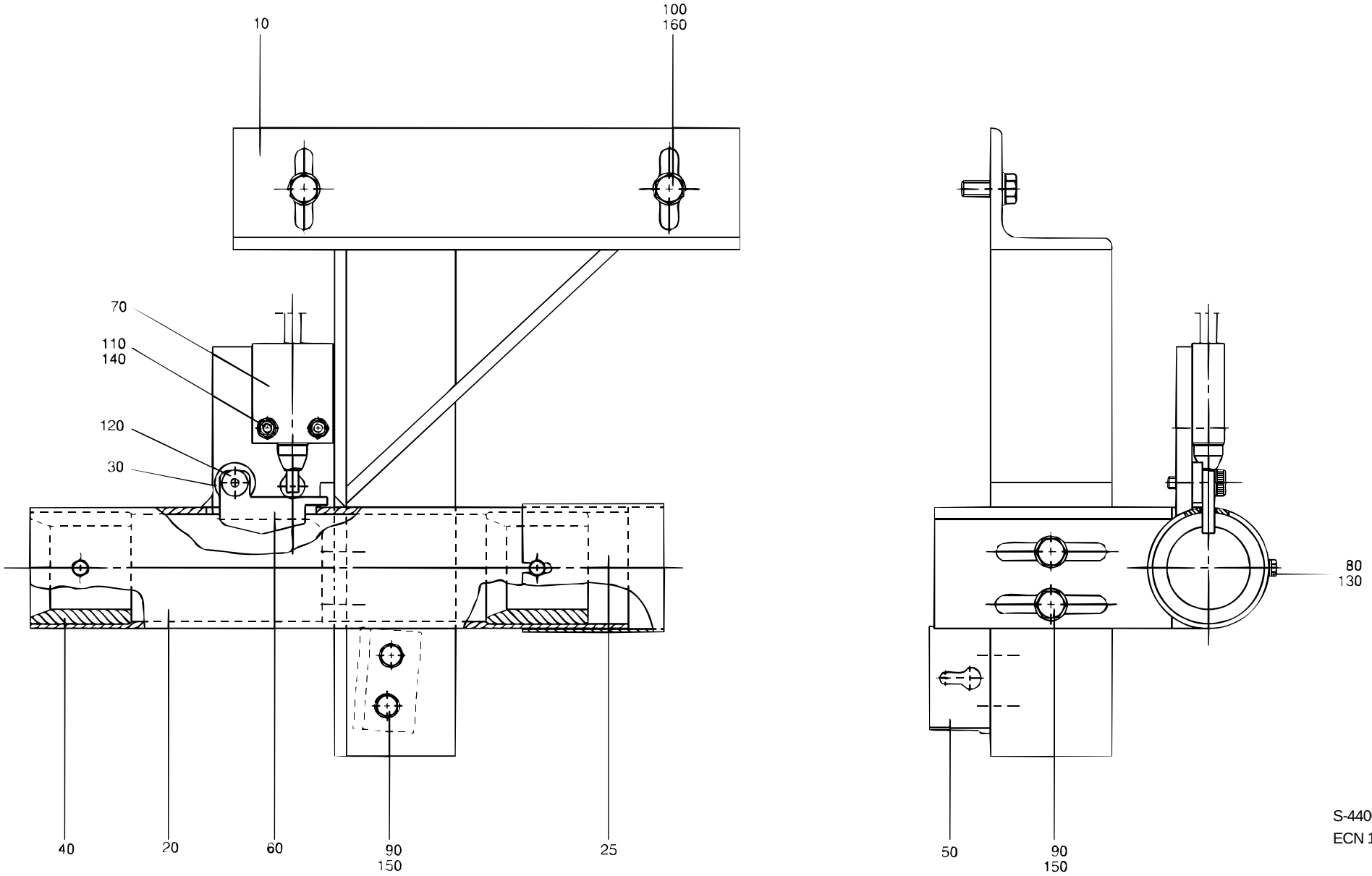

S-440098-3
ECN 19395

Pos	Part No	SP	UN	Qty	Description	Page No
-						
010	434659-0000	-		1	CRANK BRACKET	
020	541009-0000	-		1	CRANK HOLDER	
025	574652-0000	-		1	PROTECTION	
030	20770-0000	-		1	WASHER	
040	434661-0000	-		2	BUSHING	
050	434664-0000	-		1	BRACKET	
060	569163-0000	-		1	ARM	
070	90044-0094	K		1	LIMIT SWITCH HONEYWELL	
080	312101-0289	-		2	SCREW M6S4X10FZB	
090	312101-0368	-		2	SCREW M6S6X16FZB	
100	312101-0451	-		4	SCREW M6S8X20FZB	
110	312111-0329	-		2	SCREW MC6S5X16FZB	
120	312180-0447	-		1	HEX. SOCKET HEAD SHOULD. ISO 7379	
M6X12						
130	315101-0136	-		2	WASHER BRB4,3X8FZB	
140	315101-0146	-		2	WASHER BRB5,3X10FZB	
150	315101-0153	-		2	WASHER BRB6,4X12FZB	
160	315111-0165	-		4	WASHER TBRB8,4X16FZB	

Pos	Part No	SP	UN	Qty	Description	Page No

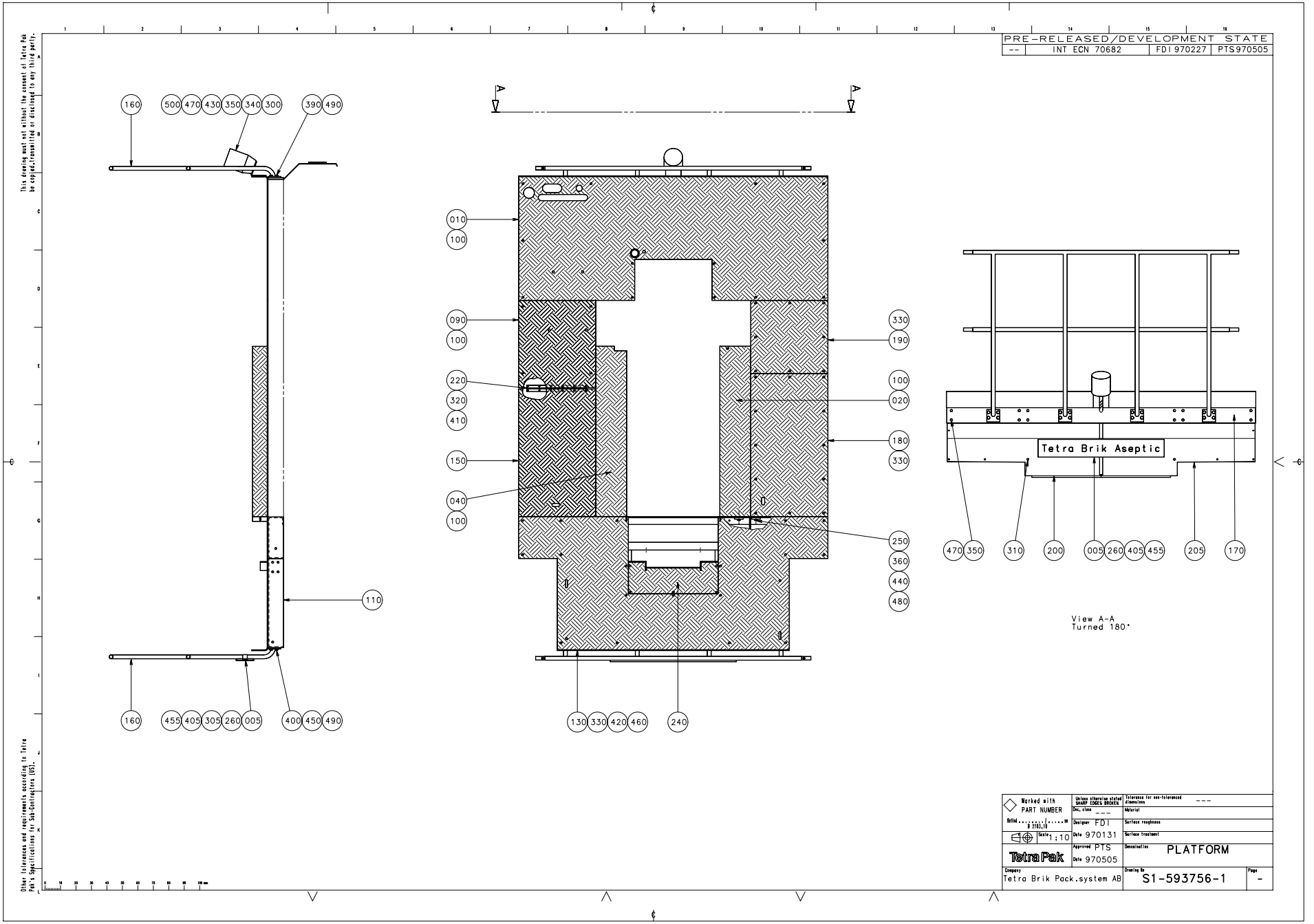
PRE-RELEASED/DEVELOPMENT STATE
-- INT ECN 70682 FDI 970227 PTS970505
This drawing must not without the consent of Tetra Pak be copied, transmitted or disclosed to any third party.
Other tolerances and requirements according to Tetra Pak's specifications for Sub-Contractors (SS).
160 500 470 430 350 340 300 390 490
110
160 455 405 305 260 005 400 450 490
010 100 090 100 220 320 410 150 040 100
330 190 100 020 180 330 250 360 440 480
130 330 420 460 240
A A
Tetra Brik Aseptic
470 350 310 200 005 260 405 455 205 170
View A-A
Turned 180°
Marked with PART NUMBER
Unless otherwise stated SHARP EDGES BROKEN
Tolerance for non-tolerance dimensions ---
Dec. class ---
Material
Designer FDI
Surface roughness
Date 970131
Surface treatment
Scale 1:10
Approved PTS
Date 970505
Denomination PLATFORM
Tetra Pak
Company Tetra Brik Pack.system AB
Drawing No S1-593756-1
Page -

Pos	Part No	SP	UN	Qty	Description	Page No
-						
005	544527-0000	-		2	MACHINE PLATE TBA	
010	927319-0000	-		1	PLATFORM	
020	279807-0000	-		1	COVER	
040	279885-0000	-		1	COVER	
090	576833-0000	-		1	PLATFORM	
100	90287-0075	-		27	SCREW	
110	440385-0000	-		1	CANTILEVER	
130	440386-0000	-		1	PLATFORM REAR	
150	576835-0000	-		1	PLATFORM COVER	
160	263323-0000	-		2	RAILING	
170	263612-0000	-		1	RAIL	
180	269274-0000	-		1	PLATFORM COVER	
190	269275-0000	-		1	PLATFORM COVER	
200	464000-0000	-		1	FRONT GUARD	
205	464001-0000	-		1	FRONT GUARD	
220	239847-0000	-		1	HINGE	
240	440389-0000	-		1	HATCH	
250	445858-0000	-		4	WASHER	
260	544533-0000	-		4	PLASTIC PEHD 21172-10	
300	90036-0038	-		1	BULB 24V 25W E27	
305	90165-0086	-		2	CRAMP	
310	90287-0062	-		2	SCREW	
320	90287-0074	-		12	SCREW	
330	90287-0076	-		39	SCREW	
340	B 90419-0005	-		1	ALARM BEACON,RED24V	
350	312101-0453	-		10	SCREW M6S8X25FZB	
360	312101-0540	-		6	SCREW M6S12X40FZB	
390	312105-0491	-		16	SCREW M6S ISO 4017 M10X20 A280	
400	312105-0493	-		16	SCREW M6S ISO 4017 M10X25 A280	
405	312155-0370	-		4	SCREW MF6S DIN 7991 M6X20 A280	
410	312601-0312	-		12	NUT M6M4FZB	
420	312601-0316	-		19	NUT M6M6FZB	
430	312601-0318	-		2	NUT M6M8FZB	
440	312601-0322	-		4	NUT M6M12FZB	
450	312605-0320	-		32	NUT M6M10RFR	
455	312812-0316	-		4	LOCK NUT A2-M6RFR	
460	315101-0153	-		19	WASHER BRB6,4X12FZB	
470	315101-0165	-		10	WASHER BRB8,4X16FZB	
480	315101-0178	-		6	WASHER BRB13X24FZB	
490	315101-0173	-		32	WASHER BRB10,5X22FZB	
500	352136-0113	-		1	GLAND FITTING	

Pos	Part No	SP	UN	Qty	Description	Page No

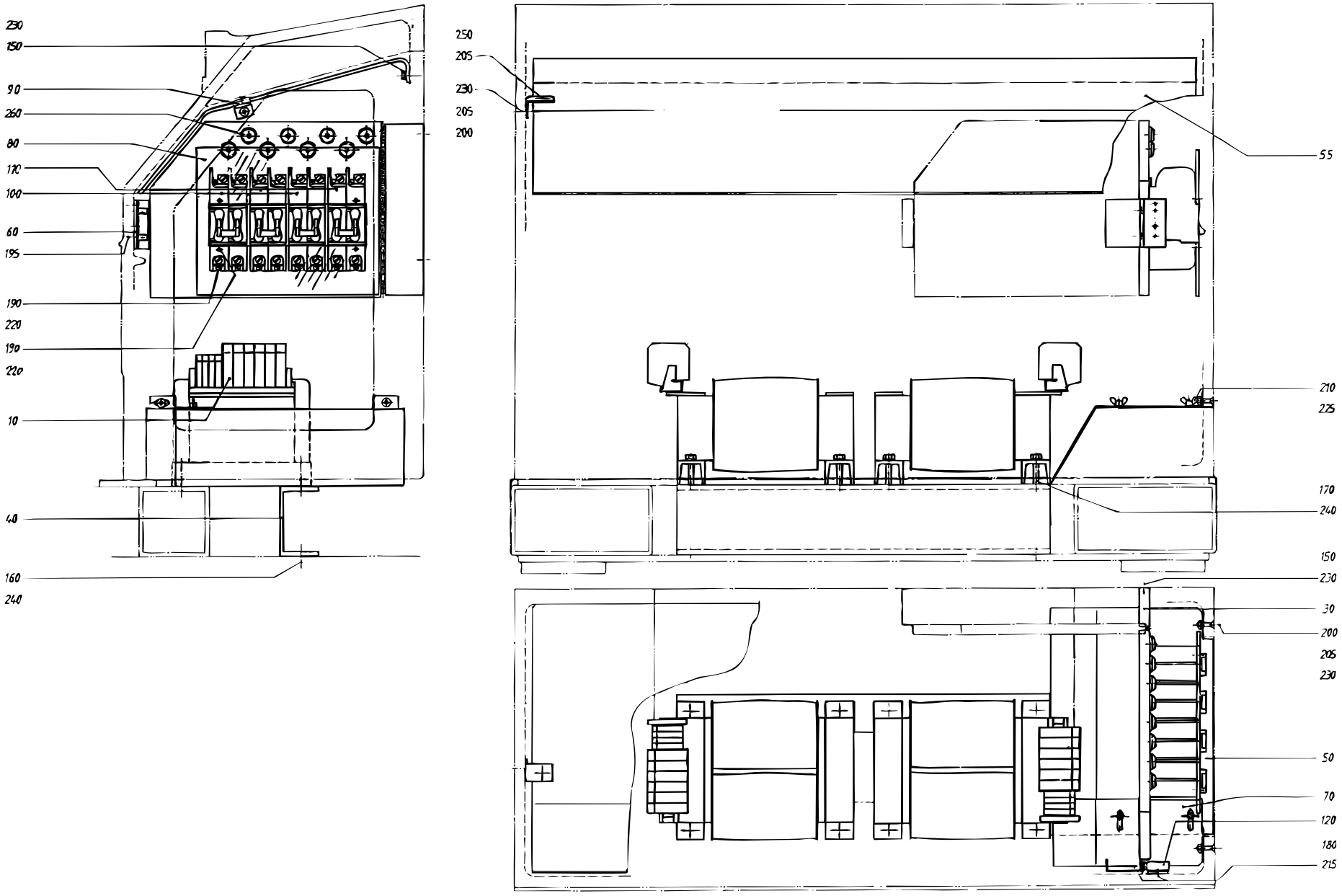

S-440415-3
ECN 20547

Pos	Part No	SP	UN	Qty	Description	Page No
-						
010	23127-0101	-		2	TRANSFORMER	
030	450299-0000	-		1	SWIVEL PLATE	
040	450300-0000	-		1	BEAM	
050	450667-0000	-		1	SPLASH GUARD	
055	451088-0000	-		1	PROTECTION	
060	450301-0000	-		1	FASTENING PLATE	
070	450668-0000	-		1	SPLASH GUARD	
080	450669-0000	-		1	TOUCH GUARD	
090	451089-0000	-		2	BRACKET	
100	90007-0100	-		2	FUSE H.MANN 2P 60A 2	
110	90007-0101	-		2	FUSE H.MANN 2P 100A 2	
120	90237-0046	-		1	LOCK PART	
150	312105-0366	-		4	SCREW M6S ISO 4017 M6X12 A280	
160	312101-0451	-		4	SCREW M6S8X20FZB	
170	312101-0461	-		8	SCREW M6S8X50FZB	
180	312125-0220	-		4	SLOTTED HEMCS3X6RFR	
190	312121-0291	-		20	SLOTTED HEMCS4X12FZB	
195	312145-0366	-		2	SLOTTED HEMFS6X12RFR	
200	312155-0372	-		4	SCREW MF6S DIN 7991 M6X25 A280	
205	312605-0316	-		6	NUT M6M6RFR	
210	312715-0114	-		2	WING NUT MVM-K 5 A2	
215	315105-0124	-		4	WASHER BRB3,2X6RFR	
220	315101-0136	-		12	WASHER BRB4,3X8FZB	
225	315105-0146	-		2	WASHER BRB5,3X10RFR	
230	315105-0153	-		8	WASHER BRB6,4X12RFR	
240	315101-0165	-		12	WASHER BRB8,4X16FZB	
250	315121-0153	-		2	WASHER TBRSB6,4X22FZB	
260	352101-0103	-		8	LEAD IN G 18,6	

Pos	Part No	SP	UN	Qty	Description	Page No

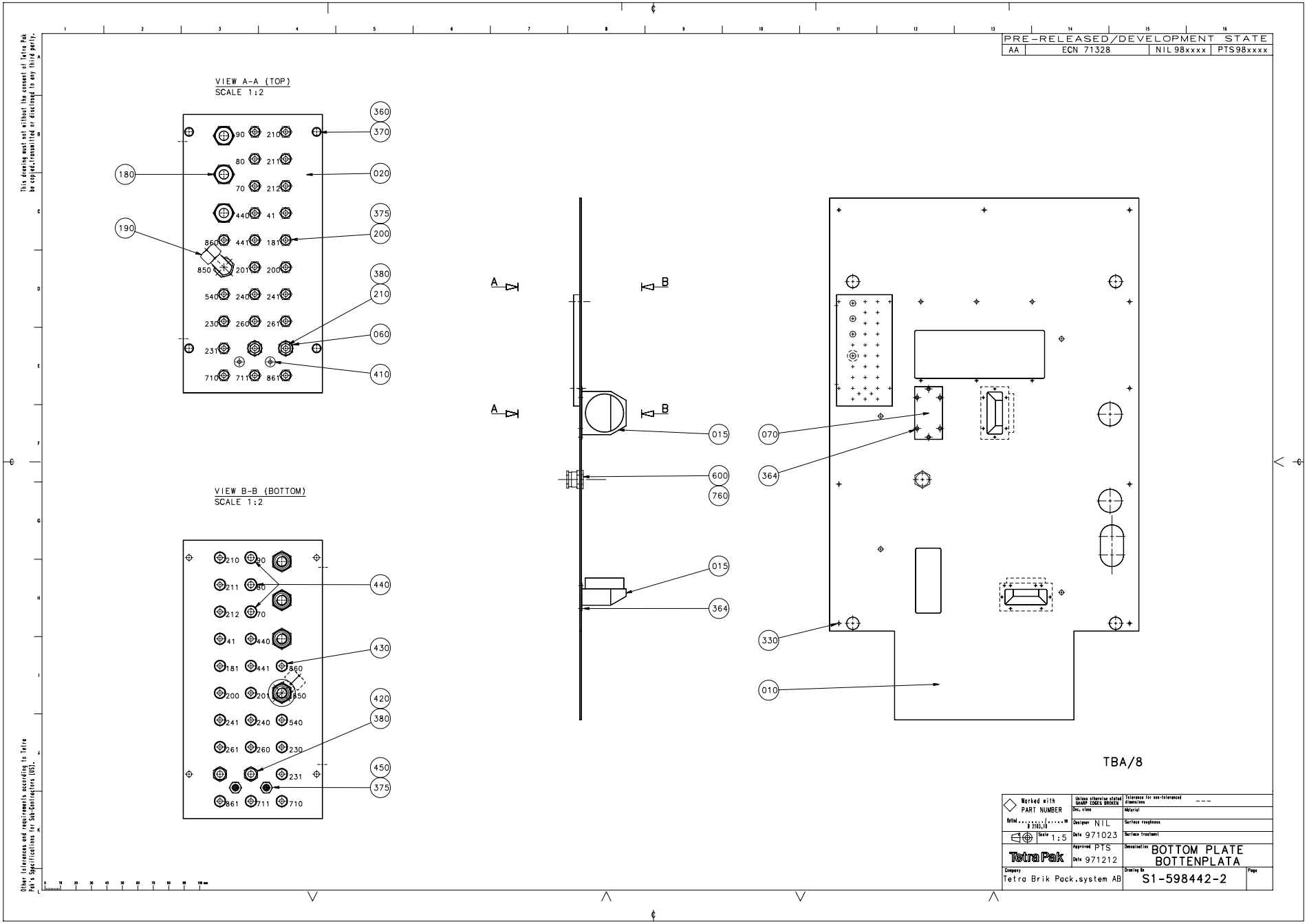
PRE-RELEASED/DEVELOPMENT STATE
AA | ECN 71328 | NIL 98xxxx | PTS98xxxx
VIEW A-A (TOP)
SCALE 1:2
VIEW B-B (BOTTOM)
SCALE 1:2
TBA/8
Tetra Pak
BOTTOM PLATE
BOTTENPLATA
S1-598442-2
Tetra Brik Pack.system AB

Pos	Part No	SP	UN	Qty	Description	Page No
SOURCE,TBA/8-030V						
010	599561-0000	-		1	BOTTOM PLATE	
070	479311-0000	-		1	COVERING PLATE	
364	312121-0321	-		18	SLOTTED HEMCS5X6FZB	
SOURCE,TBA/8-040V or SOURCE,TBA/8-050V or SOURCE,TBA/8-060V or SOURCE,TBA/8-090V or SOURCE,TBA/8-100V						
010	598441-0000	-		1	BOTTOM PLATE	
364	312121-0321	-		12	SLOTTED HEMCS5X6FZB	
Common parts						
015	440424-0000	-		2	DRUM	
020	553841-0000	-		1	LEAD-IN PLATE	
060	279804-0000	-		2	BUSHING	
180	90030-0030	-		3	BULKHEAD CONNECTOR SV 12-L/SY	
190	90030-0221	-		1	ELBOW BULKHEAD CONNECTOR WSV 12	
200	90224-0307	-		23	CONNECTION	
210	90224-0331	-		2	CONNECTION	
330	90287-0075	-		9	SCREW	
360	312101-0378	-		4	SCREW M6S6X40FZB	
370	315101-0153	-		4	WASHER BRB6,4X12FZB	
375	315233-0109	-		25	SEAL RING R1/8"	
380	315233-0110	-		4	SEAL RING R1/4"	
410	342713-0209	-		2	PLUG,EXT.G-THREAD,HEXAGON SOCKET G1/8"	
420	90224-0319	-		2	CONNECTION	
430	342722-0202	-		20	STRAIGHT COUPL,FOR PLASTIC TUBE 6-G1/8"	
440	342722-0204	-		3	STRAIGHT COUPL,FOR PLASTIC TUBE 8-G1/8"	
450	90163-0057	-		2	NIPPLE	
600	90099-0085	-		1	NUT	
760	352100-0127	-		1	CABLE GLANR.47-34,5	

Pos	Part No	SP	UN	Qty	Description	Page No

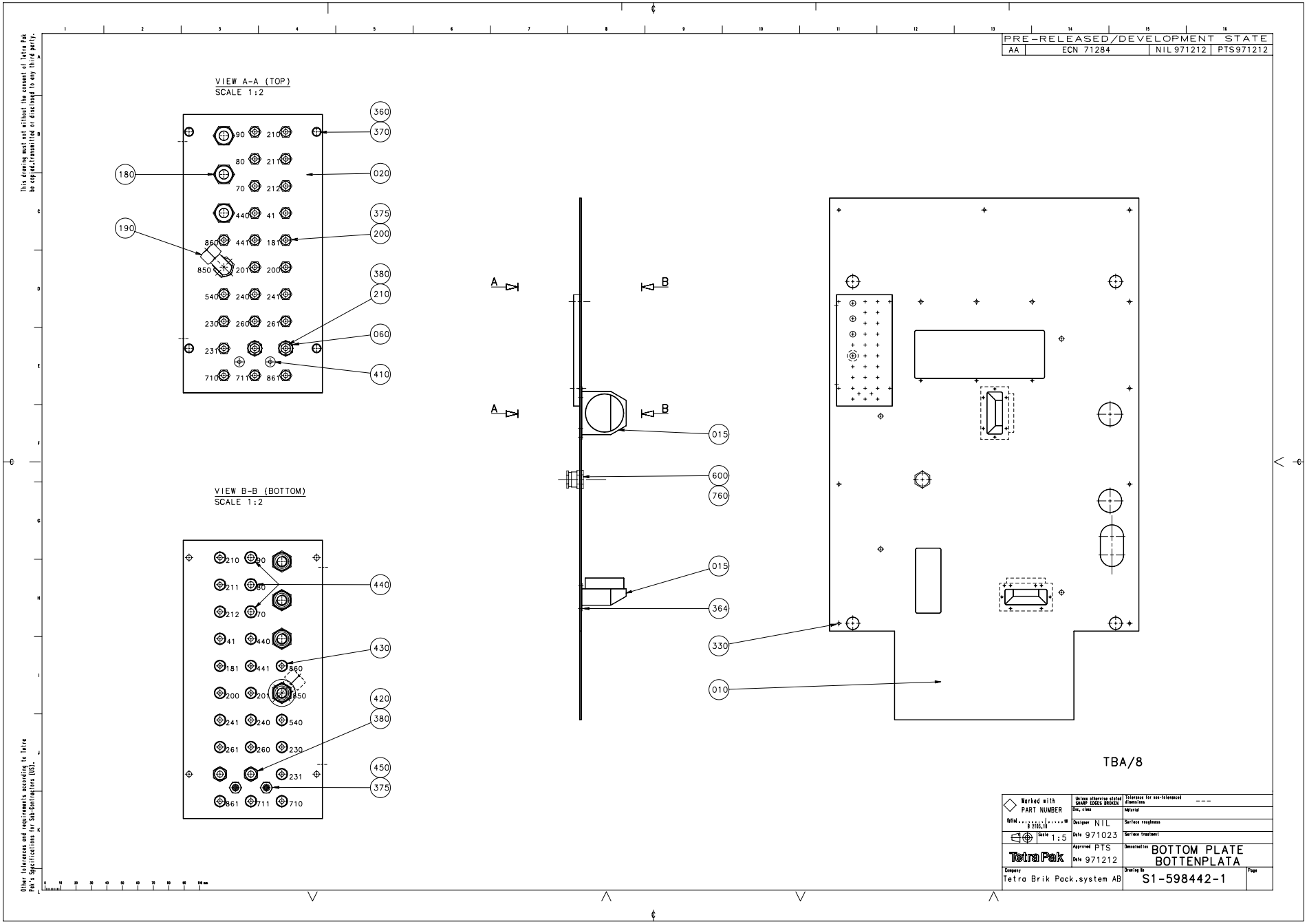
PRE-RELEASED/DEVELOPMENT STATE
AA ECN 71284 NIL 971212 PTS971212
VIEW A-A (TOP)
SCALE 1:2
VIEW B-B (BOTTOM)
SCALE 1:2
TBA/8
BOTTOM PLATE
BOTTENPLATA
S1-598442-1
Tetra Brik Pack.system AB
Tetra Pak
Designer NIL
Date 971023
Approved PTS
Date 971212
Scale 1:5

Pos	Part No	SP	UN	Qty	Description	Page No
SOURCE,TBA/8-030V						
010	599561-0000	-		1	BOTTOM PLATE	
070	479311-0000	-		1	COVERING PLATE	
364	312121-0321	-		18	SLOTTED HEMCS5X6FZB	
SOURCE,TBA/8-040V or SOURCE,TBA/8-050V or SOURCE,TBA/8-060V or SOURCE,TBA/8-090V or SOURCE,TBA/8-100V						
010	598441-0000	-		1	BOTTOM PLATE	
364	312121-0321	-		12	SLOTTED HEMCS5X6FZB	
Common parts						
015	440424-0000	-		2	DRUM	
020	553841-0000	-		1	LEAD-IN PLATE	
060	279804-0000	-		2	BUSHING	
180	90030-0030	-		3	BULKHEAD CONNECTOR SV 12-L/SY	
190	90030-0221	-		1	ELBOW BULKHEAD CONNECTOR WSV 12	
200	90224-0307	-		23	CONNECTION	
210	90224-0331	-		2	CONNECTION	
330	90287-0075	-		9	SCREW	
360	312101-0378	-		4	SCREW M6S6X40FZB	
370	315101-0153	-		4	WASHER BRB6,4X12FZB	
375	315233-0109	-		25	SEAL RING R1/8"	
380	315233-0110	-		4	SEAL RING R1/4"	
410	342713-0209	-		2	PLUG,EXT.G-THREAD,HEXAGON SOCKET G1/8"	
420	90224-0319	-		2	CONNECTION	
430	342722-0202	-		20	STRAIGHT COUPL,FOR PLASTIC TUBE 6-G1/8"	
440	342722-0204	-		3	STRAIGHT COUPL,FOR PLASTIC TUBE 8-G1/8"	
450	90163-0057	-		2	NIPPLE	
600	90099-0085	-		1	NUT	
760	352100-0127	-		1	CABLE GLANR.47-34,5	

Pos	Part No	SP	UN	Qty	Description	Page No

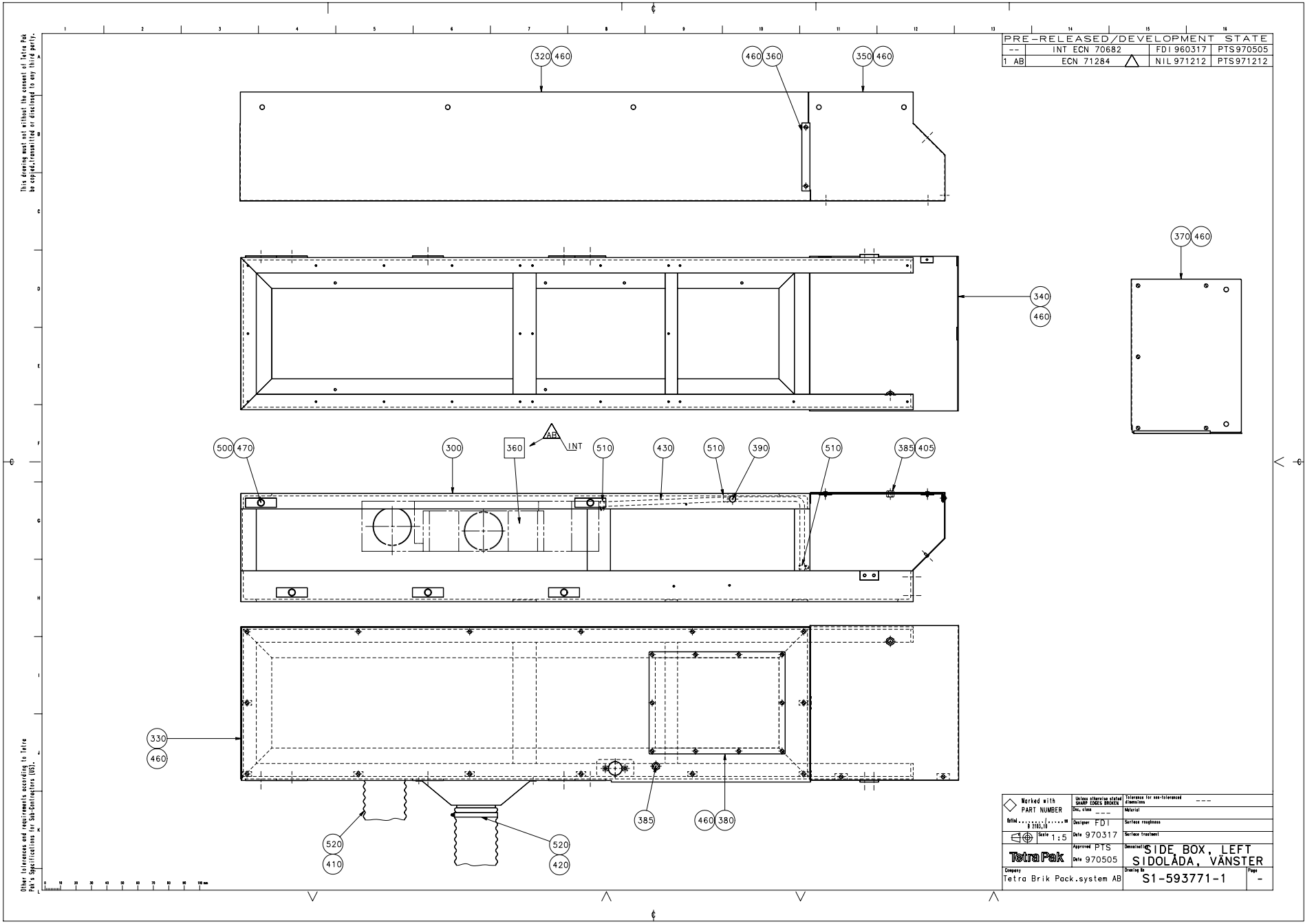
PRE-RELEASED/DEVELOPMENT STATE
-- INT ECN 70682 FDI 960317 PTS970505
1 AB ECN 71284 NIL 971212 PTS971212
320 460
460 360
350 460
370 460
340 460
500 470
300
360
AB INT
510
430
510
390
510
385 405
330 460
520 410
520 420
385
460 380
Tetra Pak
Tetra Brik Pack.system AB
SIDE BOX, LEFT
SIDOLÅDA, VÄNSTER
S1-593771-1

Pos	Part No	SP	UN	Qty	Description	Page No
-						
F360	A 436957-0100	-		1	AIR COOLER	201
300	593768-0000	-		1	BOX	
320	269304-0000	-		1	SIDE PLATE	
330	593770-0000	-		1	BOTTOM PANEL	
340	293562-0000	-		1	BOTTOM PANEL	
350	293564-0000	-		1	SIDE PLATE	
360	267842-0000	-		1	COVER SLIP	
370	542697-0000	-		1	COVER PLATE L	
380	593765-0000	-		1	COVER	
385	90012-0063	-		2	GLAND	
390	90055-0067	-		1	HOSE CLAMP	
405	90099-0001	-		1	NUT PR 15,2 BRASS	
410	90152-0032	-	MM	1000	HOSE	
420	90152-0032	-	MM	1300	HOSE	
430	90166-0007	-	MM	1000	HOSE	
460	90287-0075	-		37	SCREW	
470	312101-0540	-		5	SCREW M6S12X40FZB	
500	315101-0178	-		5	WASHER BRB13X24FZB	
510	342991-0101	-		3	HOSE CLIP,WORM DRIVE TYPE (13)-16	
520	342991-0115	-		4	HOSE CLIP,WORM DRIVE TYPE (110)-136	

Pos	Part No	SP	UN	Qty	Description	Page No

AIR COOLER

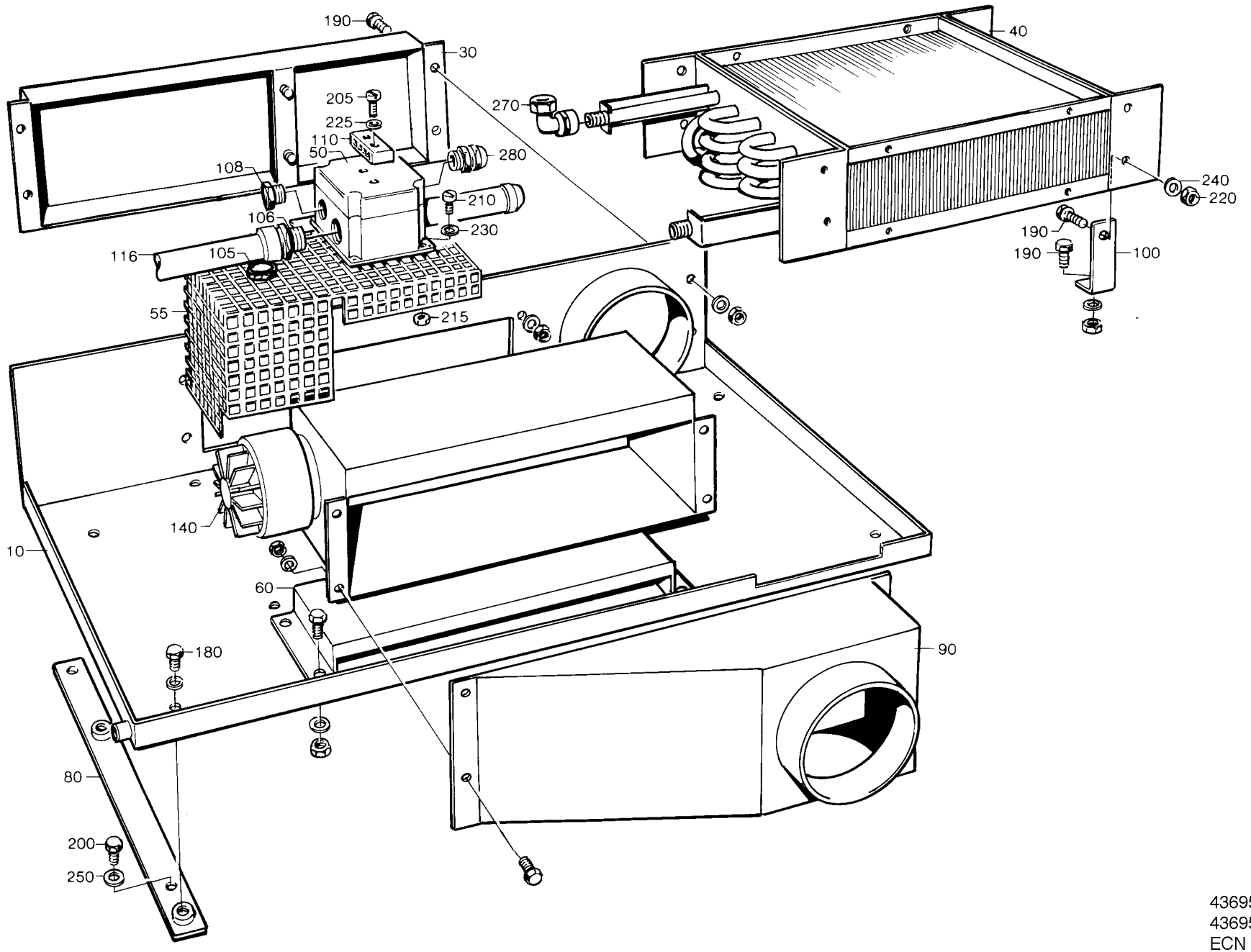

43695701.TIF
436957-1
ECN

Pos	Part No	SP	UN	Qty	Description	Page No
-						
010	436956-0000	-		1	CONDENSATE TRAY	
030	436953-0000	-		1	AIR DISTRIBUTOR	
040	436955-0000	-		1	WATER/AIR COOLER	
050	450495-0000	-		1	CONNECTION BOX	
055	479260-0000	-		1	TOUCH GUARD	
060	436952-0000	-		1	CANTILEVER	
080	440349-0000	-		2	FASTENING IRON	
090	449613-0000	-		1	NOZZLE UNIT	
100	436951-0000	-		4	CANTILEVER	
106	352136-0127	-		1	GLAND FITTING	
108	90002-0013	-		1	BLANK-OFF PLUG 15,2	
110	90077-0102	-		1	TERMINAL BK4 KRG 4-POLE	
116	352135-0106	-	MM	500	HOSE .016	
140	B 90264-0037	-		1	FAN	
180	312101-0362	-		4	SCREW M6S6X8FZB	
190	312101-0364	-		16	SCREW M6S6X10FZB	
200	312101-0449	-		4	SCREW M6S8X16FZB	
205	312121-0230	-		2	SLOTTED HEMCS3X20FZB	
210	312121-0293	-		2	SLOTTED HEMCS4X16FZB	
215	312601-0312	-		2	NUT M6M4FZB	
220	312601-0316	-		20	NUT M6M6FZB	
225	315101-0124	-		2	WASHER BRB3,2X6FZB	
230	315101-0136	-		2	WASHER BRB4,3X8FZB	
240	315101-0153	-		24	WASHER BRB6,4X12FZB	
250	315101-0165	-		4	WASHER BRB8,4X16FZB	
270	342733-0114	-		2	ELBOW CONNECTION WI-15-G1/2"	
280	352103-0101	-		2	CABLE GLAND ST 9	

Pos	Part No	SP	UN	Qty	Description	Page No

TUBE FLUSHING DEVICE

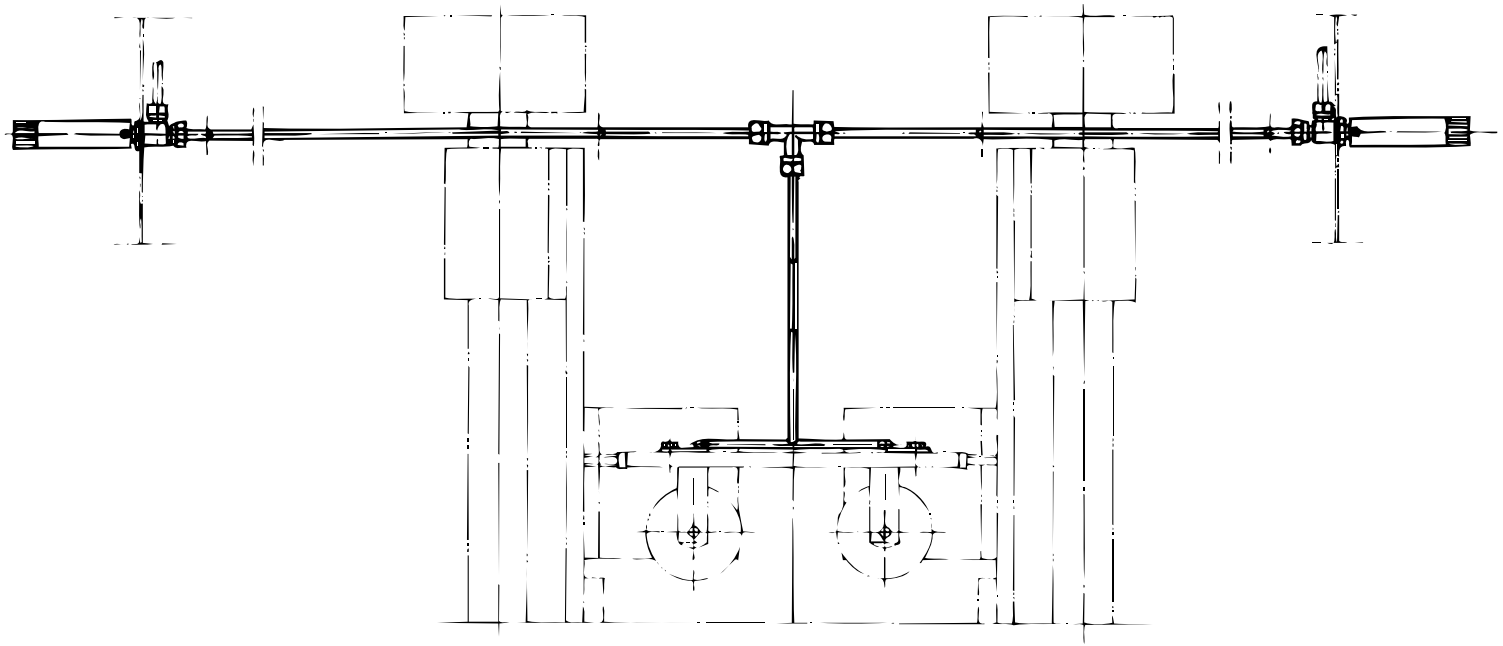

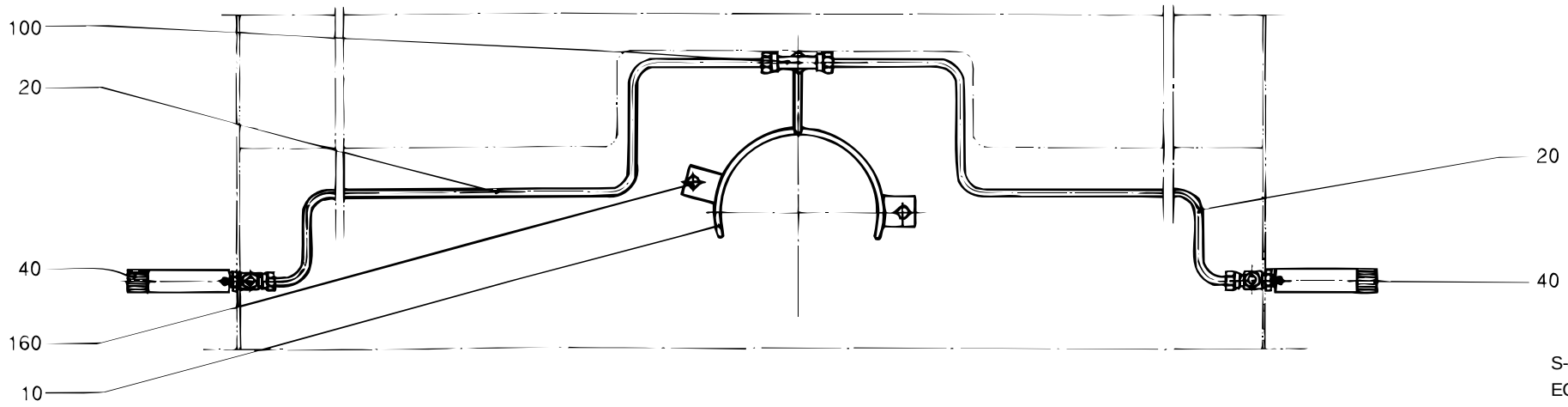

S-440474-1
ECN 6042

Pos	Part No	SP	UN	Qty	Description	Page No
0300B or 0375S						
010	539613-0000	-		1	SPREADER	
0355B or 0400B or 0500B or 0500S or 0500SQ or 0568B or 0750B or 0750S or 1000B or 1000S or 1000SQ or 1055B or 1136B or 1500S						
010	539612-0000	-		1	SPREADER	
1500B						
010	595208-0000	-		1	SPREADER	
Common parts						
020	450340-0000	-		2	PIPE	
040	B 445583-0000	K		2	VALVE	
100	90030-0076	-		1	T-PIPE CONNECTION T-6	
160	312105-0325	-		2	SCREW M6S5X10 A2 80	

Pos	Part No	SP	UN	Qty	Description	Page No

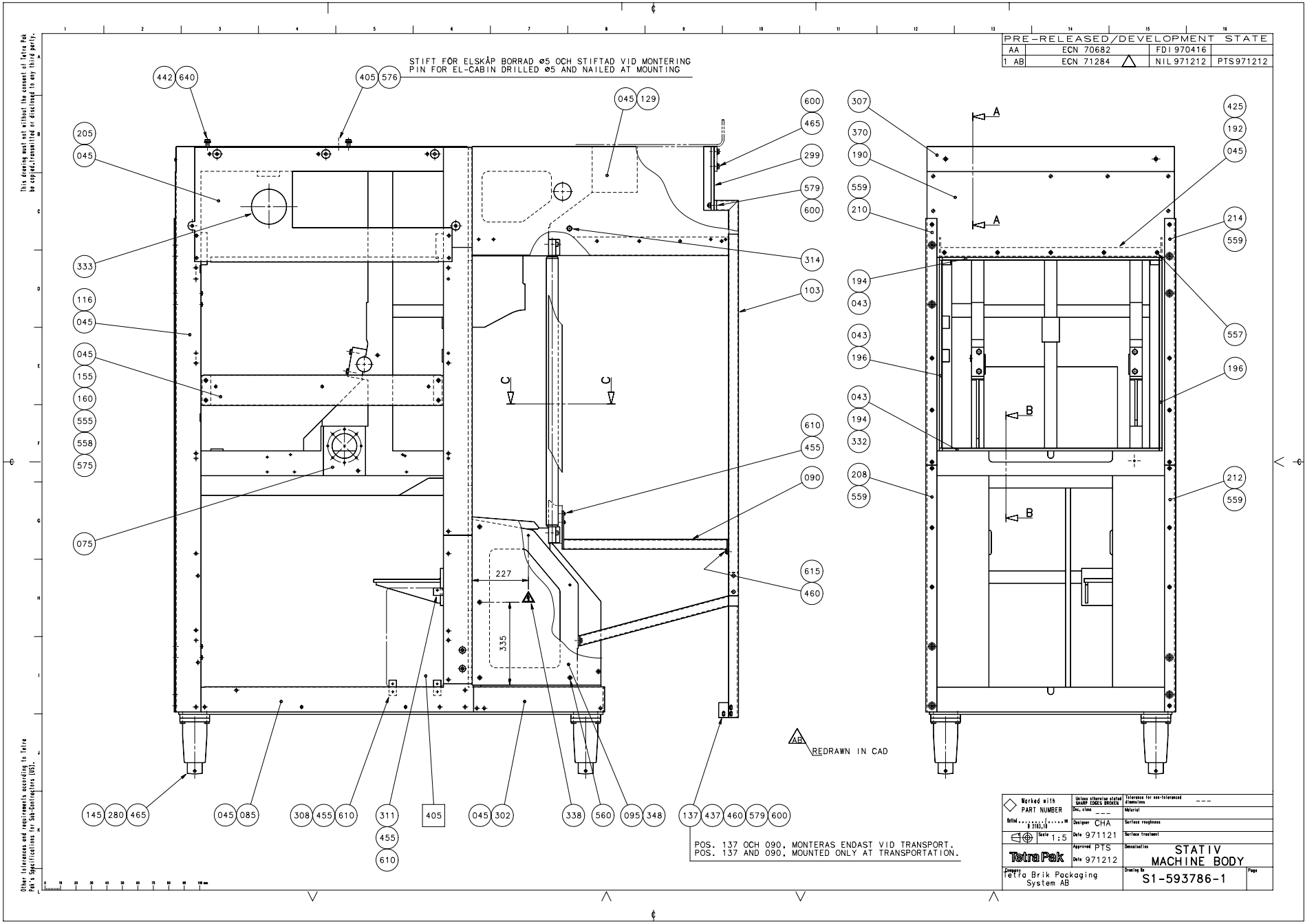
PRE-RELEASED/DEVELOPMENT STATE
AA ECN 70682 FDI 970416
1 AB ECN 71284 NIL 971212 PTS 971212
STIFT FÖR ELSKÅP BORRAD ø5 OCH STIFTAD VID MONTERING
PIN FOR EL-CABIN DRILLED ø5 AND NAILED AT MOUNTING
442 640
405 576
045 129
600 465 299 579 600
205 045
333
116 045
045 155 160 555 558 575
075
314
103
610 455 090
615 460
227
335
307 370 190 559 210
194 043
043 196
043 194 332
208 559
425 192 045
214 559
557
196
212 559
A
B
C
AB REDRAWN IN CAD
145 280 465
045 085
308 455 610
311 455 610
405
045 302
338
560
095 348
137 437 460 579 600
POS. 137 OCH 090, MONTERAS ENDAST VID TRANSPORT.
POS. 137 AND 090, MOUNTED ONLY AT TRANSPORTATION.
This drawing may not without the consent of Tetra Pak be copied, transmitted or disclosed to any third party.
Other tolerances and requirements according to Tetra Pak's Specifications no 345-Contractors (00).
Marked with PART NUMBER
Unless otherwise stated SHARP EDGES BROKEN
Tolerance for non-toleranced dimensions ---
Material
Surface roughness
Surface treatment
Designation STATIV MACHINE BODY
Drawing No S1-593786-1
Page
Designer CHA
Date 971121
Approved PTS
Date 971212
Scale 1:5
Tetra Pak
Company Tetra Brik Packaging System AB

Pos	Part No	SP	UN	Qty	Description	Page No
1000B SOURCE,TBA/8-030V						
060	598855-0000	-		1	CANTILEVER	
129	440470-0000	-		1	PROTECTION	
130	440471-0000	-		1	PROTECTION	
138	598864-0000	-		1	FRONT PLATE LOWER	
165	273508-0000	-		1	COVERING PLATE	
695	342920-0113	-		14	STRAIGHT COUPLING,EXT.THREADED 6/4-	
R1/8"						
1000B SOURCE,TBA/8-040V						
060	598855-0000	-		1	CANTILEVER	
129	440470-0000	-		1	PROTECTION	
130	440471-0000	-		1	PROTECTION	
138	598864-0000	-		1	FRONT PLATE LOWER	
165	479275-0000	-		1	COVERING PLATE	
695	342920-0113	-		14	STRAIGHT COUPLING,EXT.THREADED 6/4-	
R1/8"						
1000S SOURCE,TBA/8-030V						
060	598855-0000	-		1	CANTILEVER	
129	440470-0000	-		1	PROTECTION	
130	440471-0000	-		1	PROTECTION	
138	598864-0000	-		1	FRONT PLATE LOWER	
165	273508-0000	-		1	COVERING PLATE	
331	90134-0004	-		2	PIPE CONNECTION	
695	342920-0113	-		8	STRAIGHT COUPLING,EXT.THREADED 6/4-	
R1/8"						
700	342920-0121	-		2	STRAIGHT COUPLING,EXT.THREADED 8/6-	
R1/8"						
1000S SOURCE,TBA/8-040V						
060	598855-0000	-		1	CANTILEVER	
129	440470-0000	-		1	PROTECTION	
130	440471-0000	-		1	PROTECTION	
138	598864-0000	-		1	FRONT PLATE LOWER	
165	479275-0000	-		1	COVERING PLATE	
331	90134-0004	-		2	PIPE CONNECTION	
695	342920-0113	-		8	STRAIGHT COUPLING,EXT.THREADED 6/4-	
R1/8"						
700	342920-0121	-		2	STRAIGHT COUPLING,EXT.THREADED 8/6-	
R1/8"						
Common parts						
F405	A 540723-0100	-		1	CONNECTION BOX	211
005	530469-0000	-		1	FRONT PLATE	
015	544703-0000	-		2	MOUNTING SHEET	
016	542702-0000	-		1	COVER PLATE L	
017	542703-0000	-		1	COVER PLATE R	
020	450457-0000	-		1	FLANGE	
027	542398-0000	-		2	HOLDER	
028	542399-0000	-		2	HOLDER	
030	90030-0030	-		1	BULKHEAD CONNECTOR SV 12-L/SY	
032	90044-0095	-		1	PROX.SWITCH IFM 3010BPKG	
035	90261-0018	-		1	PLUG,BLIND PLASTIC	
037	90074-0006	-		5	CABLE CLIP JR212STAINLESS	
040	90266-0010	-	MM	35	TUBE	
043	312105-0323	-		22	SCREW M6S ISO 4017 M5X8 A280	
045	312105-0364	-		112	SCREW M6S6X10RFR	
047	312125-0287	-		13	SLOTTED CHEESE HEAD ISO 1207 M4X8	
RFR						
050	312115-0368	-		4	SCREW MC6S ISO 4762 M6X16 A280	
051	352101-0103	-		5	LEAD IN G 18,6	
052	352103-0105	-		2	CABLE GLAND STR 11	
053	352135-0202	-		4	CRAMP 16	
055	543151-0000	-		1	CANTILEVER	
070	267835-0000	-		1	CANTILEVER	
072	283884-0000	-		1	OIL TROUGH	
075	436776-0000	-		1	MACHINE BODY	
078	269285-0000	-		1	PROTECTION PLATE	
080	273751-0000	-		1	FRONT PLATE	
085	273753-0000	-		1	PROTECTION PLATE	
090	285801-0000	-		1	BEAM	
095	293158-0000	-		1	HATCH	
097	293159-0000	-		1	HATCH	
100	297576-0000	-		1	BEAM	
103	297669-0000	-		1	POST	
105	297670-0000	-		1	POST	
108	B 434919-0000	-		1	COLUMN LEFT	
110	B 434920-0000	-		1	COLUMN RIGHT	
114	440023-0000	-		1	PROTECTION PLATE	
116	440024-0000	-		1	PROTECTION PLATE	
137	440702-0000	-		1	BEAM	
140	283992-0000	-		2	RULER	
145	247080-0000	-		4	BRACKET	
150	269291-0000	-		1	RULER	
155	269294-0000	-		1	RULER	
160	269295-0000	-		1	PROTECTION PLATE	
170	279370-0000	-		2	STEERING	
190	440025-0000	-		1	PROTECTION PLATE	

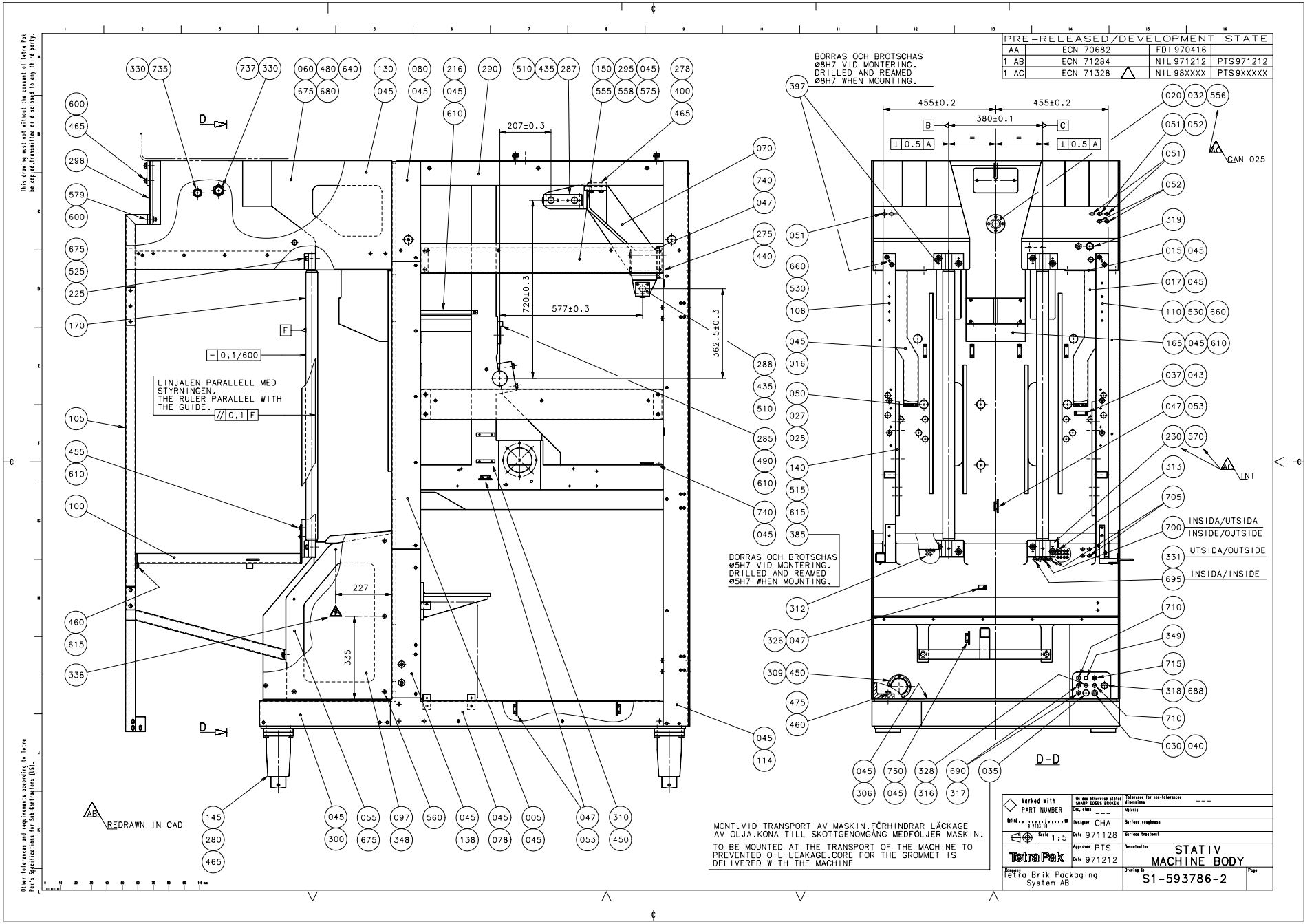
PRE-RELEASED/DEVELOPMENT STATE
AA ECN 70682 FDI 970416
1 AB ECN 71284 NIL 971212 PTS971212
1 AC ECN 71328 NIL 98XXXX PTS9XXXXX
BORRAS OCH BROTSCHAS ø8H7 VID MONTERING. DRILLED AND REAMED ø8H7 WHEN MOUNTING.
LINJALEN PARALLELL MED STYRNINGEN. THE RULER PARALLEL WITH THE GUIDE.
BORRAS OCH BROTSCHAS ø5H7 VID MONTERING. DRILLED AND REAMED ø5H7 WHEN MOUNTING.
REDRAWN IN CAD
CAN 025
INSIDA/UTSIDA
INSIDE/OUTSIDE
UTSIDA/OUTSIDE
INSIDA/INSIDE
D-D
MONT.VID TRANSPORT AV MASKIN.FÖRHINDRAR LÄCKAGE AV OLJA.KONA TILL SKOTTGENOMGÅNG MEDFÖLJER MASKIN.
TO BE MOUNTED AT THE TRANSPORT OF THE MACHINE TO PREVENTED OIL LEAKAGE.CORE FOR THE GROMMET IS DELIVERED WITH THE MACHINE
Tetra Pak
Tetra Brik Packaging System AB
STATIV
MACHINE BODY
S1-593786-2

Pos	Part No	SP	UN	Qty	Description	Page No
192	440026-0000	-		1	CANTILEVER	
194	440027-0000	-		2	RIM	
196	440028-0000	-		2	RIM	
205	440077-0000	-		1	COVERING PLATE	
208	440203-0000	-		1	RULER	
210	440204-0000	-		1	RULER	
212	440205-0000	-		1	RULER	
214	440206-0000	-		1	RULER	
216	479374-0000	-		1	DRIP PLATE	
225	111433-0000	-		2	BRACKET REPBY 0531365-0000	
230	599185-0000	-		2	BRACKET	
275	243573-0000	-		2	LACE	
278	538245-0000	-		2	SHIM	
280	247082-0000	-		4	LEG	
285	263828-0000	-		1	JUNCTION RAIL	
287	267462-0000	-		2	LOCK SHEET	
288	267463-0000	-		2	LOCK SHEET	
290	269296-0000	-		1	PROTECTION PLATE	
295	269297-0000	-		1	PROTECTION PLATE	
298	484212-0000	-		1	BRACKET	
299	484213-0000	-		1	BRACKET	
300	293160-0000	-		1	COVERING PLATE	
302	293161-0000	-		1	COVERING PLATE	
306	450298-0000	-		1	COVERING PLATE	
307	450342-0000	-		1	COVERING PLATE	
308	540726-0000	-		2	HOOK HOLDER	
309	543152-0000	-		1	HOSE ATTACHMENT	
310	457357-0000	-		2	BRACKET	
311	540727-0000	-		1	FASTENING BRACKET	
312	90015-0010	-		16	BUSHING	
313	90015-0011	-		1	BUSHING	
314	90015-0021	-		1	BUSHING	
316	90030-0066	-		1	BULKHEAD CONNECTOR SV 6-L/SY	
317	90030-0067	-		2	BULKHEAD CONNECTOR SV 8-L/SY	
318	90030-0159	-		2	BULKHEAD CONNECTOR SV 15-L/SY	
319	90030-0179	-		1	BULKHEAD CONNECTOR SV 22-L/SY	
325	90055-0033	-		1	HOSE NIPPLE,EXT. THREADED G1/2"-13	
326	90074-0001	-		1	CABLE CLIP JR10 STAINLESS	
328	90090-0014	-		1	STEEL BALL	
329	90099-0004	-		1	NUT	
330	90099-0011	-		1	NUT PR 37 BRASS	
332	90143-0049	-	MM	3400	RUBBERSTRIP 11X21MM	
333	90143-0054	-	MM	500	STRIP	
335	90157-0022	-		1	SEALING COMPOUND	
338	90194-0016	-		2	SIGN "FLASH SIGN" 50X50MM	
340	90166-0121	-	MM	1500	HOSE	
345	90187-0029	-		1	VALVE	
348	90242-0115	-	MM	3200	O-RING	
349	90261-0003	-		1	PLUG,BLIND PLASTIC	
350	90261-0011	-		4	PLUG,BLIND PLASTIC FOR M30/M28X1,5	
360	90261-0035	-		1	PIPE PLUG	
370	90287-0075	-		6	SCREW	
385	311103-0314	-		4	CYLINDRICACP M6 5X30 RFR	
397	311103-0413	-		16	CYLINDRICACP M6 8X50 RFR	
400	311202-0320	-		2	TAPER PIN KP8X35RFR	
405	311211-0267	-		2	TAPER PIN GKP5X5X30	
425	312105-0366	-		8	SCREW M6S ISO 4017 M6X12 A280	
435	312105-0453	-		20	SCREW M6S ISO 4017 M8X25 A280	
437	312109-0499	-		2	SCREW M6S ISO 4017 M10X40 A280	
440	312101-0518	-		4	SCREW M6S10X140FZB	
442	312105-0538	-		4	SCREW M6S ISO 4017 M12X35 A280	
450	312105-0327	-		8	SCREW M6S ISO 4017 M5X12 A280	
455	312105-0368	-		15	SCREW M6S ISO 4017 M6X16 A280	
460	312105-0449	-		6	SCREW M6S ISO 4017 M8X16 A280	
465	312105-0493	-		24	SCREW M6S ISO 4017 M10X25 A280	
475	312105-0540	-		10	SCREW M6S ISO 4017 M12X40 A280	
480	312105-0542	-		12	SCREW M6S ISO 4014 M12X50 A280	
490	312115-0364	-		2	SCREW 6X10 A4 80	
510	312115-0378	-		6	SCREW MC6S ISO 4762 M6X40 A280	
515	312115-0451	-		8	SCREW MC6S ISO 4762 M8X20 A280	
525	312115-0501	-		7	SCREW MC6S ISO 4762 M10X50 A280	
530	312115-0503	-		8	SCREW MC6S ISO 4762 M10X60 A280	
555	312155-0366	-		4	SCREW MF6S DIN 7991 M6X12 A280	
556	312155-0327	-		4	SCREW MF6S DIN 7991 M5X12 A280	
557	312155-0366	-		5	SCREW MF6S DIN 7991 M6X12 A280	
558	312155-0370	-		4	SCREW MF6S DIN 7991 M6X20 A280	
559	312155-0368	-		15	SCREW MF6S DIN7991 M6X16 A280	
560	312155-0451	-		12	SCREW MF6S8X20RFR	
570	312318-0447	-		2	SET SCREW CUP POINT ISO 4029 M8X12 RFR	
575	312605-0316	-		4	NUT M6M6RFR	
576	312605-0314	-		2	NUT M6M5RFR	
579	312605-0320	-		4	NUT M6M10RFR	
600	315105-0173	-		14	WASHER BRB10,5X22RFR	
610	315105-0153	-		31	WASHER BRB6,4X12RFR	

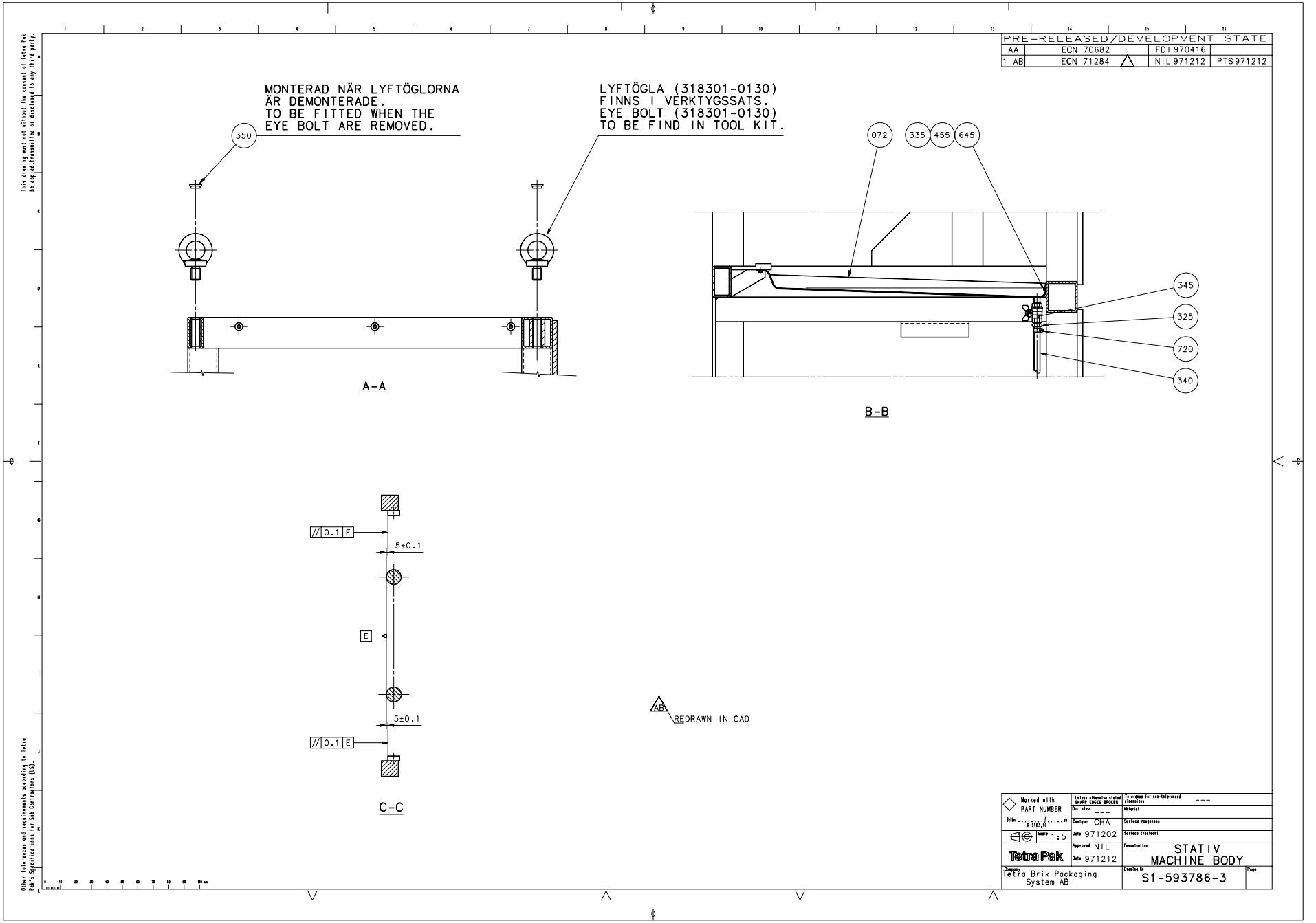
PRE-RELEASED/DEVELOPMENT STATE
AA ECN 70682 FDI 970416
1 AB ECN 71284 NIL 971212 PTS 971212
MONTERAD NÄR LYFTÖGLORNA ÄR DEMONTERADE.
TO BE FITTED WHEN THE EYE BOLT ARE REMOVED.
LYFTÖGLA (318301-0130) FINNS I VERKTYGSSATS.
EYE BOLT (318301-0130) TO BE FIND IN TOOL KIT.
350
072
335
455
645
345
325
720
340
A-A
B-B
//0.1 E
5±0.1
E
5±0.1
//0.1 E
C-C
AB REDRAWN IN CAD
Marked with PART NUMBER
Scale 1:5
Tetra Pak
Tetra Brik Packaging System AB
Designer CHA
Date 971202
Approved NTL
Date 971212
STATIV
MACHINE BODY
S1-593786-3

Pos	Part No	SP	UN	Qty	Description	Page No
615	315105-0165	-		14	WASHER BRB8,4X16RFR	
640	315115-0178	-		26	WASHER TBRB13X24RFR	
645	315125-0153	-		8	WASHER SB 6,4X22X4 RFR	
660	315402-0173	-		15	WASHER FBB10,2RFR	
675	315701-0330	-		2	FLAT WEDGE12X8X32	
680	315701-0336	-		3	FLAT WEDGE12X8X63	
688	341001-0228	-	MM	35	COPPER TUBE	
690	342929-0121	-		2	STRAIGHT COUPLING,SOLDER 8/6-8	
710	342960-0112	-		2	BULKHEAD COUPLING 6/4	
715	342960-0122	-		1	BULKHEAD COUPLING 8/6	
720	342991-0103	-		1	HOSE CLIP,WORM DRIVE TYPE (19)-23	
735	352103-0116	-		1	CABLE GLAND ST 21	
737	352103-0121	-		1	CABLE GLAND ST 29	
740	352110-0101	-		2	CRAMP TK 7-10	
750	352135-0201	-		1	CRAMP 12	

Pos	Part No	SP	UN	Qty	Description	Page No

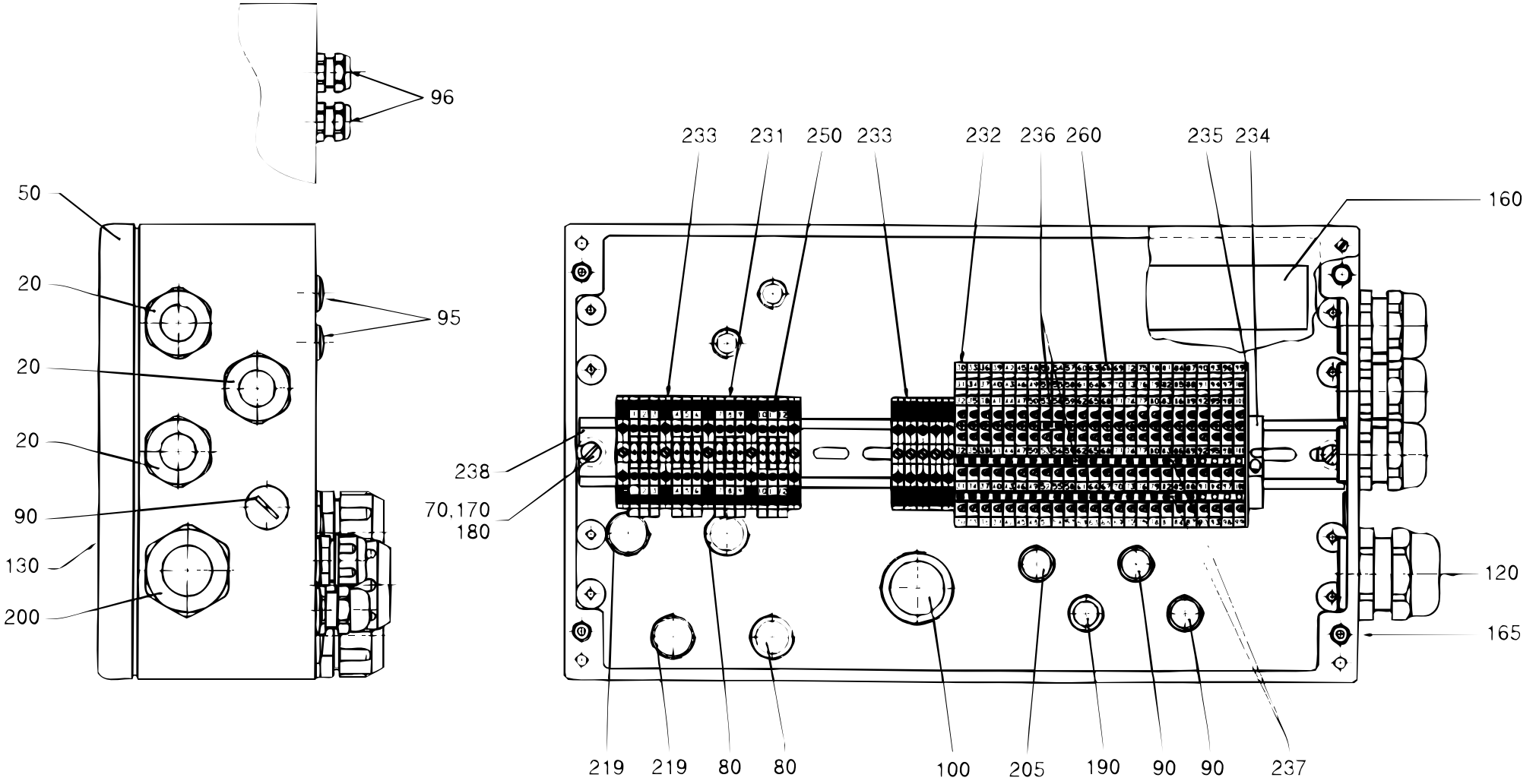

S-540723-1
ECN 22846

Pos	Part No	SP	UN	Qty	Description	Page No
TB/8 or TBO/8						
090	90002-0009	-		3	BLANK-OFF PLUG 18.6	
095	90002-0013	-		2	BLANK-OFF PLUG 15,2	
190	352103-0106	-		1	CABLE GLAND ST 11	
231	353021-0212	-		13	FEED THROUGH TERMINAL WDU 2,5	
233	353024-0205	-		10	EARTH TERMINAL WPE 4	
236	353034-0401	-		3	BRIDGE CONLECK Q2	
TBA/8						
090	90002-0009	-		2	BLANK-OFF PLUG 18.6	
096	90012-0063	-		2	GLAND	
190	352103-0106	-		2	CABLE GLAND ST 11	
231	353021-0212	-		17	FEED THROUGH TERMINAL WDU 2,5	
233	353024-0205	-		11	EARTH TERMINAL WPE 4	
236	353034-0401	-		2	BRIDGE CONLECK Q2	
239	353032-0004	-		1	END PLATE WAP	
Common parts						
020	352103-0116	-		3	CABLE GLAND ST 21	
050	540724-0000	-		1	CONNECTION BOX	
070	450899-0001	-		2	SPACER	
080	90002-0004	-		2	BLANK-OFF PLUG 22,5	
100	90012-0061	-		1	GLAND	
120	90110-0128	-		2	PLUG 24-POL	
130	90194-0016	-		1	SIGN "FLASH SIGN" 50X50MM	
160	90298-0022	-		1	ZERUST CAPSULE	
165	312115-0372	-		3	SCREW MC6S ISO 4762 M6X25 A280	
170	312125-0376	-		2	SLOTTED CHEESE HEAD ISO 1207 M6X35	
RFR						
180	315105-0153	-		2	WASHER BRB6,4X12RFR	
200	352103-0120	-		1	CABLE GLAND STR 29	
205	352136-0113	-		1	GLAND FITTING	
219	352136-0142	-		2	GLAND FITTING	
232	353021-0302	-		24	FEED THROUGH TERMINAL DLD 2,5/	
234	353031-0201	-		1	END BRACKE 35	
235	353032-0302	-		1	END PLATE WAP	
237	353034-0404	-		4	BRIDGE CONLECK Q10	
238	353042-0004	-	MM	385	RAIL TS 35/7,5	
250	359011-0807	-		2	MARKING PL5-FW 1-50	
260	359011-0808	-		2	MARKING PL5-FW 51-100	
270	359011-0809	-		2	FIGURES 105-FW 101-150	

Pos	Part No	SP	UN	Qty	Description	Page No

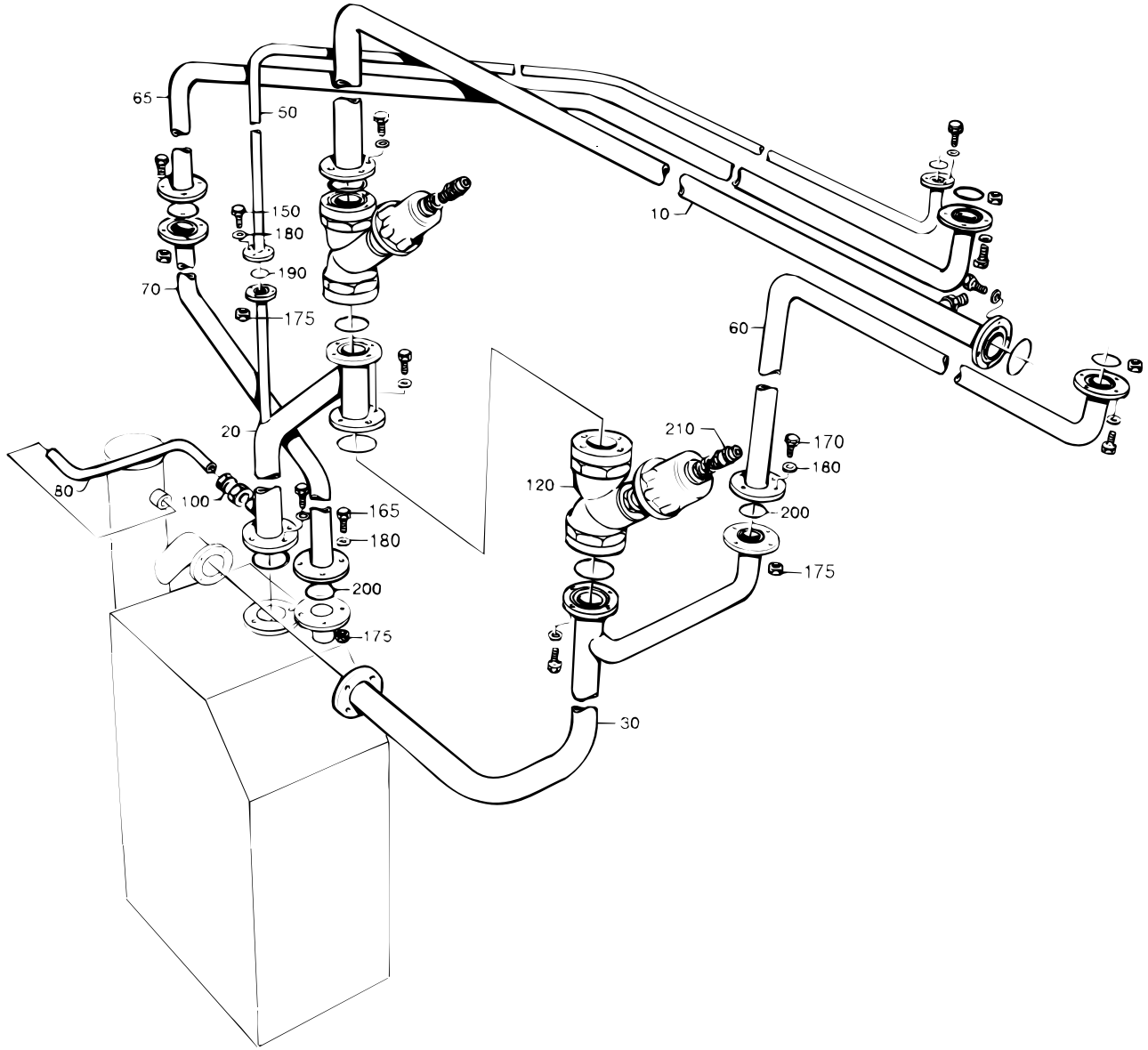

S-442463-3
ECN 20095

Pos	Part No	SP	UN	Qty	Description	Page No
-						
010	442466-0000	-		1	PIPE CONNECTION	
020	479033-0000	-		1	PIPE CONNECTION	
030	479034-0000	-		1	PIPE CONNECTION	
050	479036-0000	-		1	PIPE CONNECTION	
060	479040-0000	-		1	PIPE CONNECTION	
065	B 542074-0000	-		1	PIPE	
070	B 531592-0000	-		1	PIPE	
080	531597-0000	-		1	PIPE	
100	531595-0000	-		1	STRAIGHT PIPE UNION	
120	B 484538-0000	K		2	VALVE	
150	312105-0366	-		6	SCREW M6S ISO 4017 M6X12 A280	
160	312105-0368	-		20	SCREW M6S ISO 4017 M6X16 A280	
165	312105-0370	-		20	SCREW M6S ISO 4017 M6X20 A280	
170	312105-0372	-		4	SCREW M6S ISO 4017 M6X25 A280	
175	312605-0316	-		24	NUT M6M6RFR	
180	315105-0153	-		50	WASHER BRB6,4X12RFR	
190	927421-0003	-		2	O-RING 13.3X2.4 SILICON	
200	927422-0006	-		12	O-RING 42.2X3 SILICON	
210	342920-0114	-		2	STRAIGHT COUPLING,EXT.THREADED 6/4-R1/4"	

Pos	Part No	SP	UN	Qty	Description	Page No

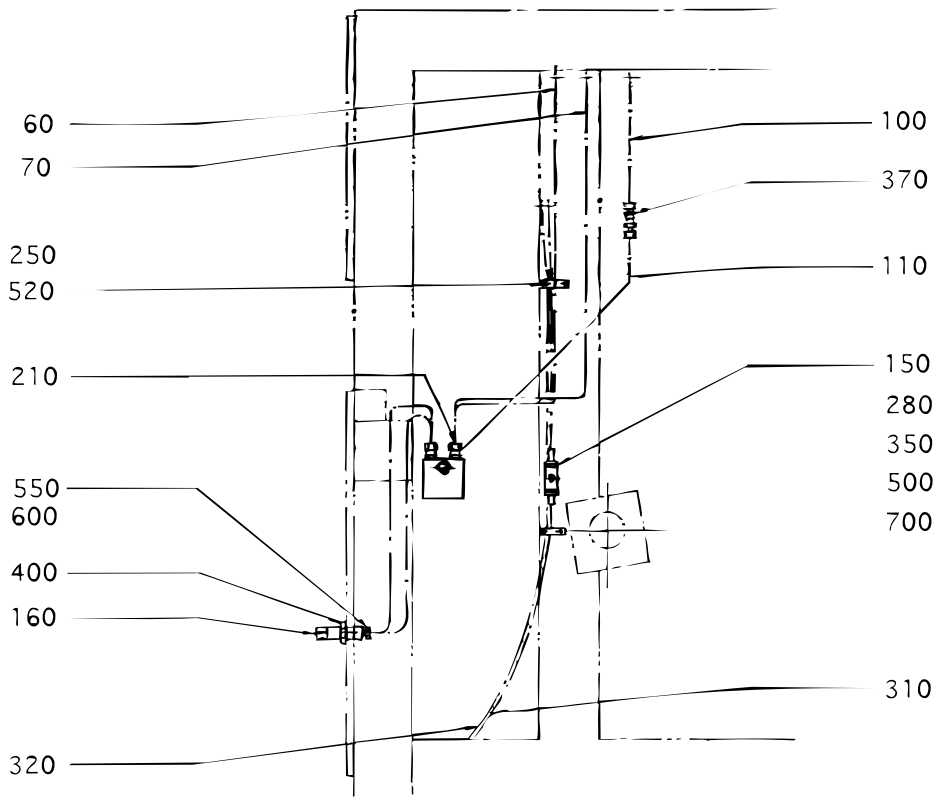

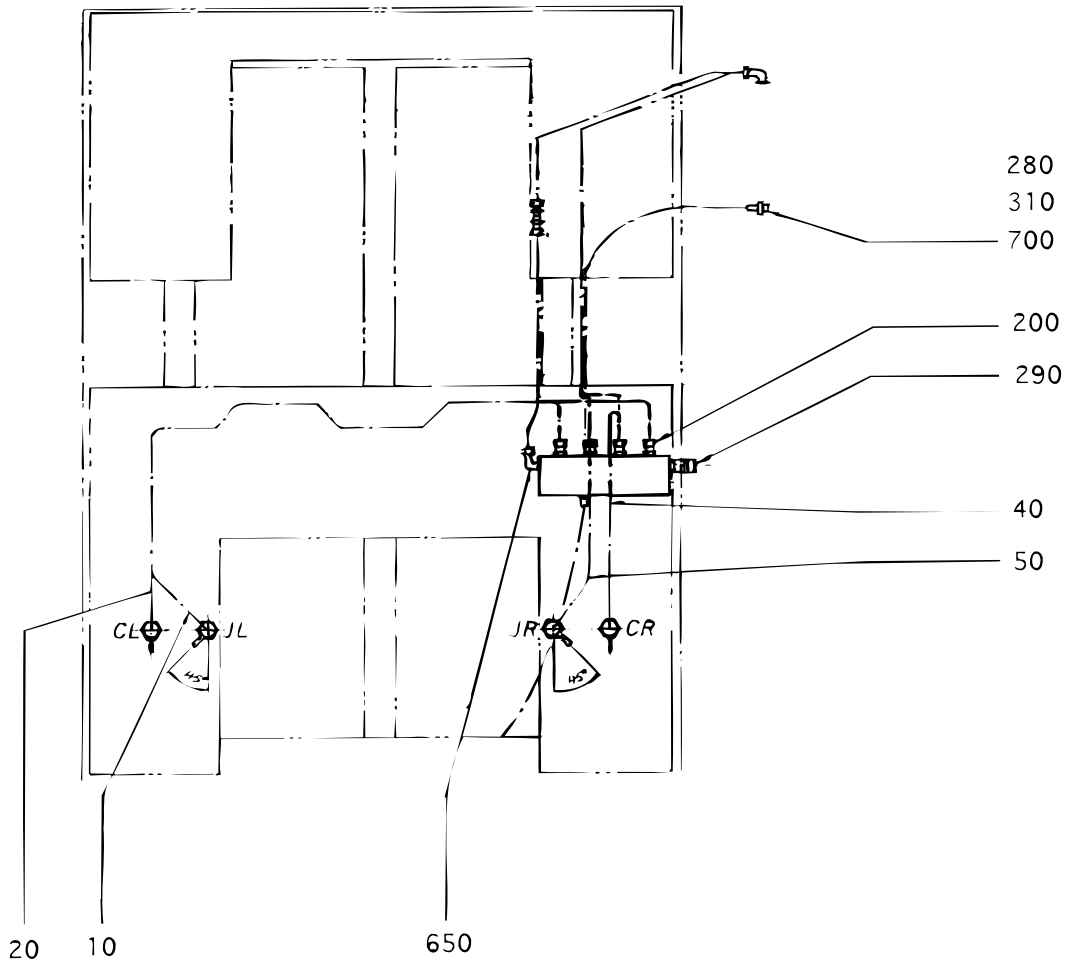

S-445537-3
ECN 10836

Pos	Part No	SP	UN	Qty	Description	Page No
TB/8 0300B						
075	442079-0000	-		1	PIPE	
080	497172-0000	-		1	PIPE	
085	497173-0000	-		1	PIPE	
120	497175-0000	-		1	PIPE	
125	497176-0000	-		1	PIPE	
130	497174-0000	-		1	PIPE	
210-02	90030-0157	-		3	CONNECTION	
610	342714-0209	-		1	REDUCTION KOR 15/10-LFZB	
620	342747-0114	-		1	T-PIPE CONNECTION T-15	
TB/8 0500B or TB/8 0500S or TB/8 0500SQ or TB/8 0568B or TB/8 1000B or TB/8 1000S or TB/8 1000SQ or TB/8 1136B or TBA/8 or TBA/8LSC or TBA/8PRISMA or TBO/8						
060	445538-0000	-		1	HYDRAULIC PIPE	
100	445540-0000	-		1	HYDRAULIC PIPE	
210	90030-0157	-		2	CONNECTION	
Common parts						
010	294493-0000	-		1	HYDRAULIC PIPE	
020	294494-0000	-		1	HYDRAULIC PIPE	
040	294495-0000	-		1	HYDRAULIC PIPE	
050	294496-0000	-		1	HYDRAULIC PIPE	
070	445539-0000	-		1	HYDRAULIC PIPE	
110	445541-0000	-		1	HYDRAULIC PIPE	
150	255017-0000	-		1	BRACKET	
160	540718-0000	-		4	ELBOW PIPE JOINT	
200	90030-0155	-		4	CONNECTION	
250	90074-0006	-		2	CABLE CLIP JR212STAINLESS	
280	90163-0041	-		3	HOSE NIPPLE,EXT. THREADED G3/8"-12	
290	90163-0076	-		1	SLEEVE	
310	90166-0007	K	MM	2000	HOSE	
320	90166-0122	K	MM	2000	HOSE	
350	90187-0054	K		1	VALVE	
370	90230-0011	K		1	NON RETURN VALVE	
400	90330-0093	-		4	NUT,HEXAGON G1/2"	
500	312101-0331	-		2	SCREW M6S5X20FZB	
520	312125-0323	-		4	SLOTTED CHEESE HEAD ISO 1207 M5X8 RFR	
550	342703-0103	-		4	ACCESSORIES,NUT M-8 LFZB	
600	342705-0103	-		4	ACCESSORIES,FERRULE 8-LFZB	
650	342731-0114	-		1	ELBOW CONNECTION WE 15-LRFZB	
700	342991-0101	F		3	HOSE CLIP,WORM DRIVE TYPE (13)-16	

Pos	Part No	SP	UN	Qty	Description	Page No

VALVE PANEL LOWER

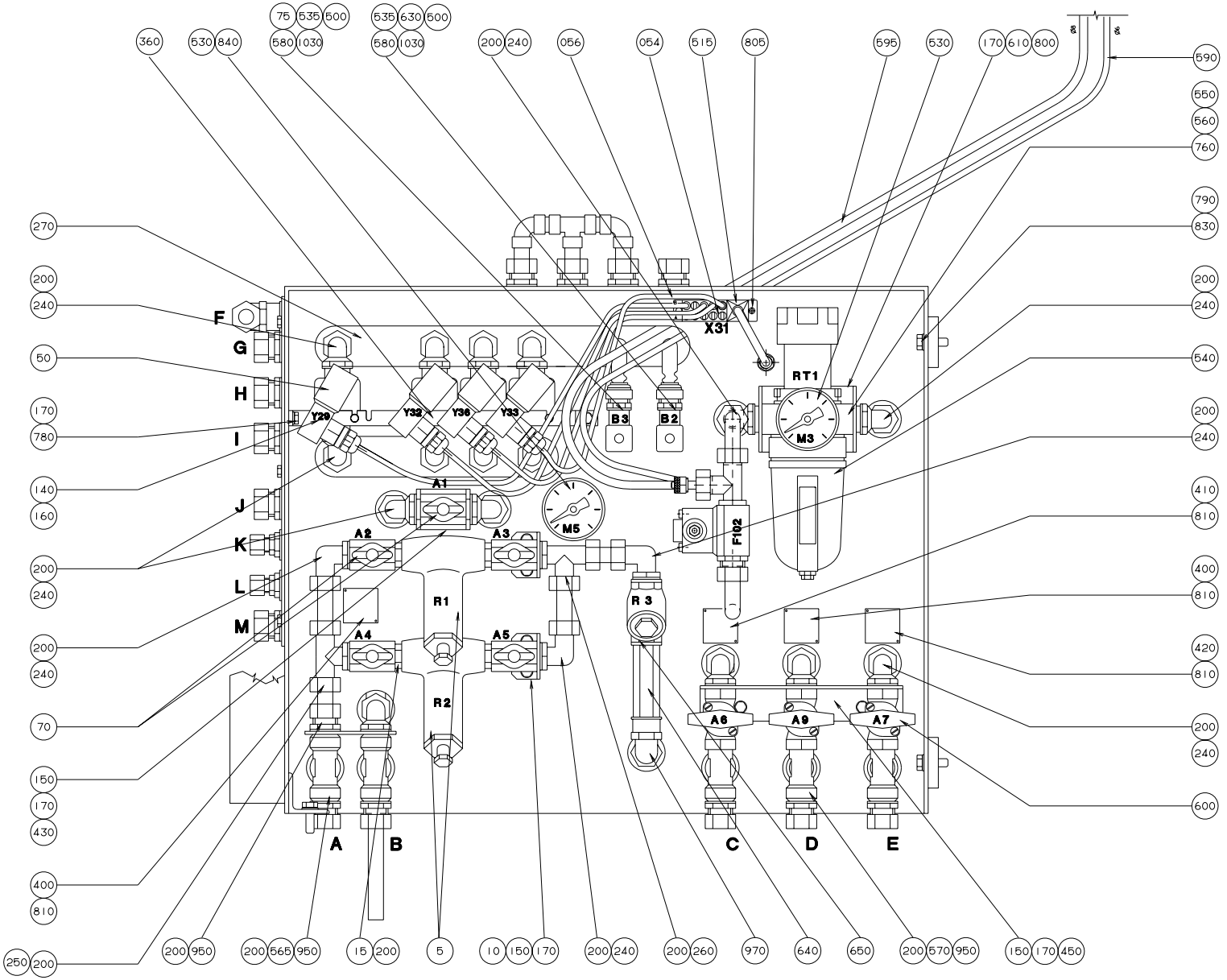

S-575392-1
ECN 20547

Pos	Part No	SP	UN	Qty	Description	Page No
TB/8 TPC						
005	B 271823-0000	-		1	FILTER	
010	543127-0000	-		1	BRACKET	
015	479261-0000	-		2	NIPPLE	
050	B 90042-0172	F		3	SOLENOID VALVE 24VDC	
056	90042-0536	-		3	CONTACT FOR SOL.VALVE	
070-02	90187-0062	K		3	VALVE	
080	90274-0043	K		1	PRESSURE SWITCH 3BAR	
090	90418-0053	-		24	ELBOW 90,INTERNAL CONNECTION 15	
100-02	90418-0054	-		6	ELBOW 45,INTERNAL CONNECTION 15	
110-02	90418-0063	-		12	ADAPTER,INTERNAL CONNECTION 15-G1/2"	
140	312115-0333	-		6	SCREW MC6S ISO 4762 M5X25 A280	
150-02	312105-0362	-		9	SCREW M6S ISO 4017 M6X8 A280	
160	312605-0314	-		12	NUT M6M5RFR	
170-02	315105-0153	-		27	WASHER BRB6,4X12RFR	
200-02	315233-0113	D		44	SEAL RING R1/2"	
240-02	342730-0114	-		16	ELBOW CONNECTION WA-15-1/2"	
260	342750-0114	-		1	L-PIPE CONNECTION LA-15-G1/2"	
270	352103-0100	-		3	CABLE GLAND STR 9	
410	273456-0000	-		1	SIGN	
430	543130-0000	-		1	BRACKET	
440	293201-0000	-		1	PIPE	
680-02	90418-0048	-		3	T-PIPE,INTERNAL CONNECTION 15	
920	342710-0115	-		1	REDUCTION RBM 16/8	
930	342711-0115	-		1	ACCESSORIES,PLUG PL-15 AND 16	
960-02	342720-0114	-		20	STRAIGHT CONNECTION GA-15-G1/2"	
TB/8 US						
005	B 271823-0000	-		1	FILTER	
010	543127-0000	-		1	BRACKET	
015	479261-0000	-		2	NIPPLE	
050	B 90042-0172	F		3	SOLENOID VALVE 24VDC	
056-03	90042-0536	-		5	CONTACT FOR SOL.VALVE	
058	90055-0101	-		1	Y-CONNECTION,PARALLEL 8-8	
070	90187-0062	K		2	VALVE	
080	90274-0043	K		1	PRESSURE SWITCH 3BAR	
090	90418-0053	-		24	ELBOW 90,INTERNAL CONNECTION 15	
100	90418-0054	-		5	ELBOW 45,INTERNAL CONNECTION 15	
110	90418-0063	-		11	ADAPTER,INTERNAL CONNECTION 15-G1/2"	
140	312115-0333	-		6	SCREW MC6S ISO 4762 M5X25 A280	
150	312105-0362	-		7	SCREW M6S ISO 4017 M6X8 A280	
160	312605-0314	-		12	NUT M6M5RFR	
170	315105-0153	-		25	WASHER BRB6,4X12RFR	
200	315233-0113	D		41	SEAL RING R1/2"	
240	342730-0114	-		14	ELBOW CONNECTION WA-15-1/2"	
260	342750-0114	-		1	L-PIPE CONNECTION LA-15-G1/2"	
270	352103-0100	-		3	CABLE GLAND STR 9	
410	273456-0000	-		1	SIGN	
440	293201-0000	-		1	PIPE	
680	90418-0048	-		2	T-PIPE,INTERNAL CONNECTION 15	
920-02	342710-0115	-		2	REDUCTION RBM 16/8	
930	342711-0115	-		1	ACCESSORIES,PLUG PL-15 AND 16	
960	342720-0114	-		18	STRAIGHT CONNECTION GA-15-G1/2"	
TBA/8 or TBA/8LSC or TBA/8PRISMA						
005-02	B 271823-0000	-		2	FILTER	
010-02	543127-0000	-		2	BRACKET	
015-02	479261-0000	-		4	NIPPLE	
050-02	B 90042-0172	-		4	SOLENOID VALVE 24VDC	
056-02	90042-0536	-		4	CONTACT FOR SOL.VALVE	
070-03	90187-0062	K		5	VALVE	
075	90274-0042	-		1	PRESSURE SWITCH 2BAR	
090-02	90418-0053	-		25	ELBOW 90,INTERNAL CONNECTION 15	
100-03	90418-0054	-		7	ELBOW 45,INTERNAL CONNECTION 15	
110-03	90418-0063	-		13	ADAPTER,INTERNAL CONNECTION 15-G1/2"	
140-02	312115-0333	-		8	SCREW MC6S ISO 4762 M5X25 A280	
150-03	312105-0362	-		11	SCREW M6S ISO 4017 M6X8 A280	
160-02	312605-0314	-		16	NUT M6M5RFR	
170-03	315105-0153	-		29	WASHER BRB6,4X12RFR	
200-03	315233-0113	D		53	SEAL RING R1/2"	
240-03	342730-0114	-		19	ELBOW CONNECTION WA-15-1/2"	
250	342740-0114	-		1	T-PIPE CONNECTION TA-15-G1/2"	
260-02	342750-0114	-		2	L-PIPE CONNECTION LA-15-G1/2"	
270-02	352103-0100	-		4	CABLE GLAND STR 9	
410	273456-0000	-		1	SIGN	
430	543130-0000	-		1	BRACKET	
440	293201-0000	-		1	PIPE	
680-02	90418-0048	-		3	T-PIPE,INTERNAL CONNECTION 15	
920	342710-0115	-		1	REDUCTION RBM 16/8	
930	342711-0115	-		1	ACCESSORIES,PLUG PL-15 AND 16	
960-02	342720-0114	-		20	STRAIGHT CONNECTION GA-15-G1/2"	
TBO/8						
005	B 271823-0000	-		1	FILTER	
010	543127-0000	-		1	BRACKET	
015	479261-0000	-		2	NIPPLE	
030	436471-0000	-		1	PIPE	
050	B 90042-0172	F		3	SOLENOID VALVE 24VDC	
056	90042-0536	-		3	CONTACT FOR SOL.VALVE	

VALVE PANEL LOWER

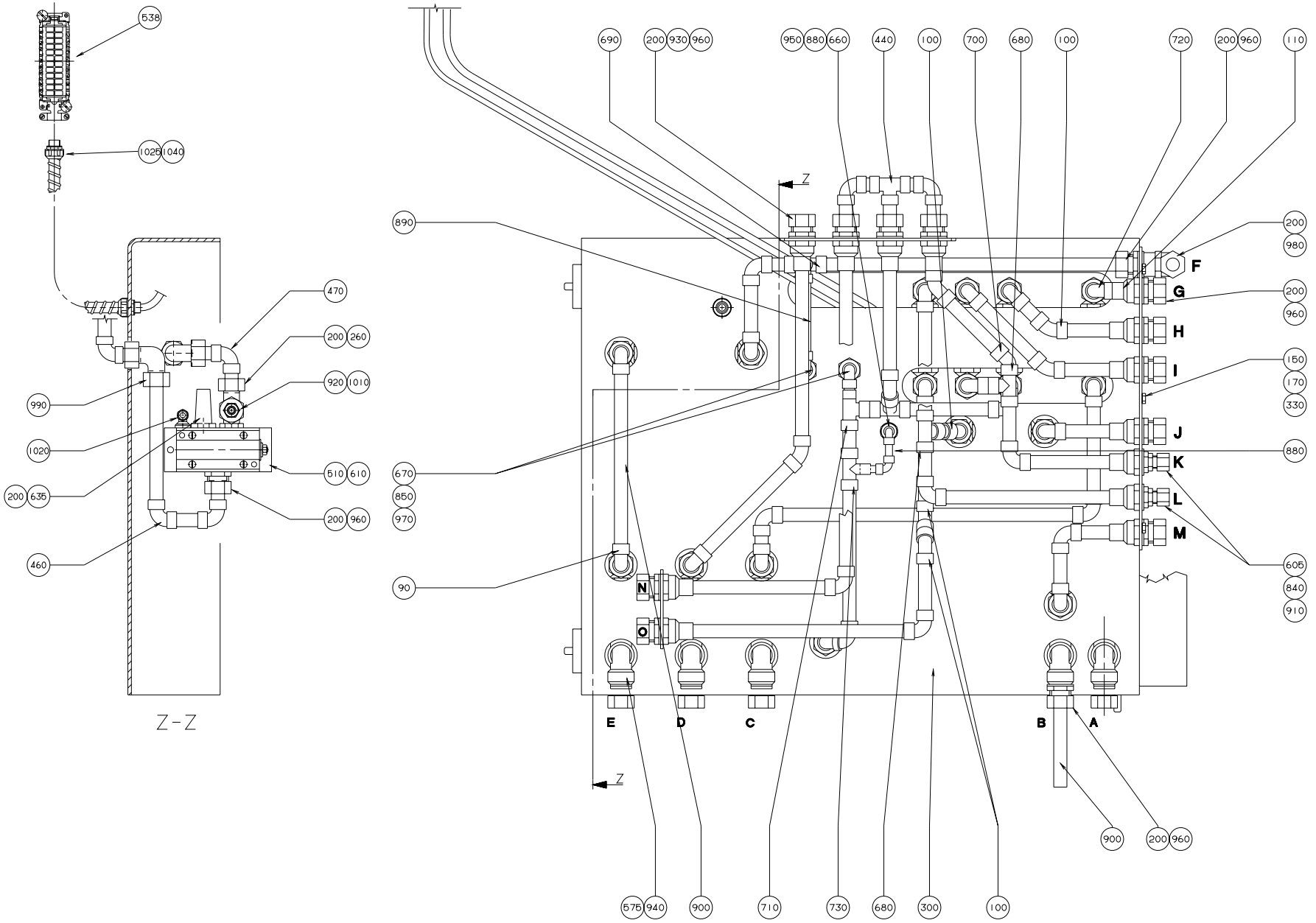

S-575392-2
ECN 19406

Pos	Part No	SP	UN	Qty	Description	Page No
070-02	90187-0062	K		3	VALVE	
080	90274-0043	K		1	PRESSURE SWITCH 3BAR	
090	90418-0053	-		24	ELBOW 90,INTERNAL CONNECTION 15	
100-02	90418-0054	-		6	ELBOW 45,INTERNAL CONNECTION 15	
110-02	90418-0063	-		12	ADAPTER,INTERNAL CONNECTION 15-G1/2"	
140	312115-0333	-		6	SCREW MC6S ISO 4762 M5X25 A280	
150-02	312105-0362	-		9	SCREW M6S ISO 4017 M6X8 A280	
160	312605-0314	-		12	NUT M6M5RFR	
170-02	315105-0153	-		27	WASHER BRB6,4X12RFR	
200-02	315233-0113	D		44	SEAL RING R1/2"	
240-02	342730-0114	-		16	ELBOW CONNECTION WA-15-1/2"	
260	342750-0114	-		1	L-PIPE CONNECTION LA-15-G1/2"	
270	352103-0100	-		3	CABLE GLAND STR 9	
410-02	273456-0000	-		2	SIGN	
430	543130-0000	-		1	BRACKET	
440	436512-0000	-		1	PIPE	
680-02	90418-0048	-		3	T-PIPE,INTERNAL CONNECTION 15	
920	342710-0115	-		1	REDUCTION RBM 16/8	
960-02	342720-0114	-		20	STRAIGHT CONNECTION GA-15-G1/2"	
Common parts						
054	90042-0550	-		1	PROTECTIVE COVER	
300	542700-0000	-		1	VALVEPANEL LOWER	
330	543134-0000	-		1	PLATE	
360	543128-0000	-		1	VALVE BRACKET	
400	273455-0000	-		2	LABEL (COLD WATER)	
420	273458-0000	-		1	LABEL (AIR)	
450	543131-0000	-		1	BRACKET	
460	573277-0000	-		1	PIPE	
470	573278-0000	-		1	PIPE	
500	90012-0063	-		2	GLAND	
510	90042-0481	-		1	CONNECTION TABLE	
515	90042-0535	-		1	TERMINAL FOR SOL.VALVE	
530	90043-0006	K		1	PRESSURE GAUGE	
532	90043-0043	K		1	PRESSURE GAUGE	
535	90110-0095	-		2	CONTACT 3 POLE+EARTH	
538	90110-0128	-		1	PLUG 24-POL	
540	90113-0114	K		1	REGULATOR	
560	90113-0407	-		1	Single Yoke 1/2"	
565	90140-0010	-		2	T-PIPE,INTERNAL THREAD Rp1/2"	
570	90140-0011	-		3	T-PIECE	
575	90140-0012	-		5	ELBOW 90,INT./EXT.THREAD R1/2"	
580	90152-0033	-	M	6	HOSE	
590	90166-0081	-	MM	1700	HOSE	
595	90166-0013	-	MM	1700	HOSE	
600	90187-0029	K		3	VALVE	
605	90224-0319	-		2	CONNECTION	
610	90235-0767	-		1	VALVE	
620	90236-0041	-		2	BRACKET	
630	90274-0044	-		1	PRESSURE SWITCH 4BAR	
635	90328-0001	K		1	SILENCER	
640	90415-0018	-		1	FILTER	
650	90415-0019	-		1	FILTER	
660	90418-0014	-		2	ELBOW PIPE	
670	90418-0039	-		3	ELBOW PIPE	
690	90418-0050	-		1	T-PIPE,REDUCTION INTERNAL CONNE.15X12X15	
700	90418-0055	-		2	ELBOW 45,INTERNAL AND EXTERNAL CONN.15	
710	90418-0056	-		1	T-PIPE,REDUCTION INTERNAL CONNE.15X15X12	
720	90418-0058	-		3	ELBOW 90,INTERNAL AND EXTERNAL CONNEC.15	
730	90418-0068	-		1	T-PIPE,REDUCTION INTERNAL CONNEC.15X8X15	
780	312115-0366	-		8	SCREW MC6S ISO 4762 M6X12 A280	
790	312105-0453	-		3	SCREW M6S ISO 4017 M8X25 A280	
805	312125-0224	-		2	SLOTTED HEMCS3X10RFR	
810	312502-0120	-		8	DRIVE SCREW ROUND HEAD SMS 1549 KDS 0X5	
830	315105-0165	-		3	WASHER BRB8,4X16RFR	
840	315233-0110	-		1	SEAL RING R1/4"	
850	315233-0111	-		2	SEAL RING R3/8"	
880	341001-0148	-	MM	100	COPPER TUBE	
890	341001-0192	-	MM	300	COPPER TUBE	
900	341001-0228	-	MM	5000	COPPER TUBE	
910	342701-0205	-		2	BUSHING,INT./EXT.G-THREAD G1/2"-G1/4"	
940	342713-0213	-		4	PLUG,EXT.G-THREAD,HEXAGON SOCKET G1/2"	
950	342720-0103	-		1	STRAIGHT CONNECTION GA-8-G1/8"	
970	342723-0109	-		2	STRAIGHT PIPE CONNECTION GAI-12-G3/8"	
980	342733-0114	-		2	ELBOW CONNECTION WI-15-G1/2"	
990	342736-0114	-		1	ELBOW CONNECTION W-15	
1010	342929-0121	-		1	STRAIGHT COUPLING,SOLDER 8/6-8	
1020	342930-0113	-		1	ELBOW 90 COUPL.,EXT.THREAD 6/4-R1/8"	
1025	352135-0106	-	M	3	HOSE .016	

VALVE PANEL LOWER

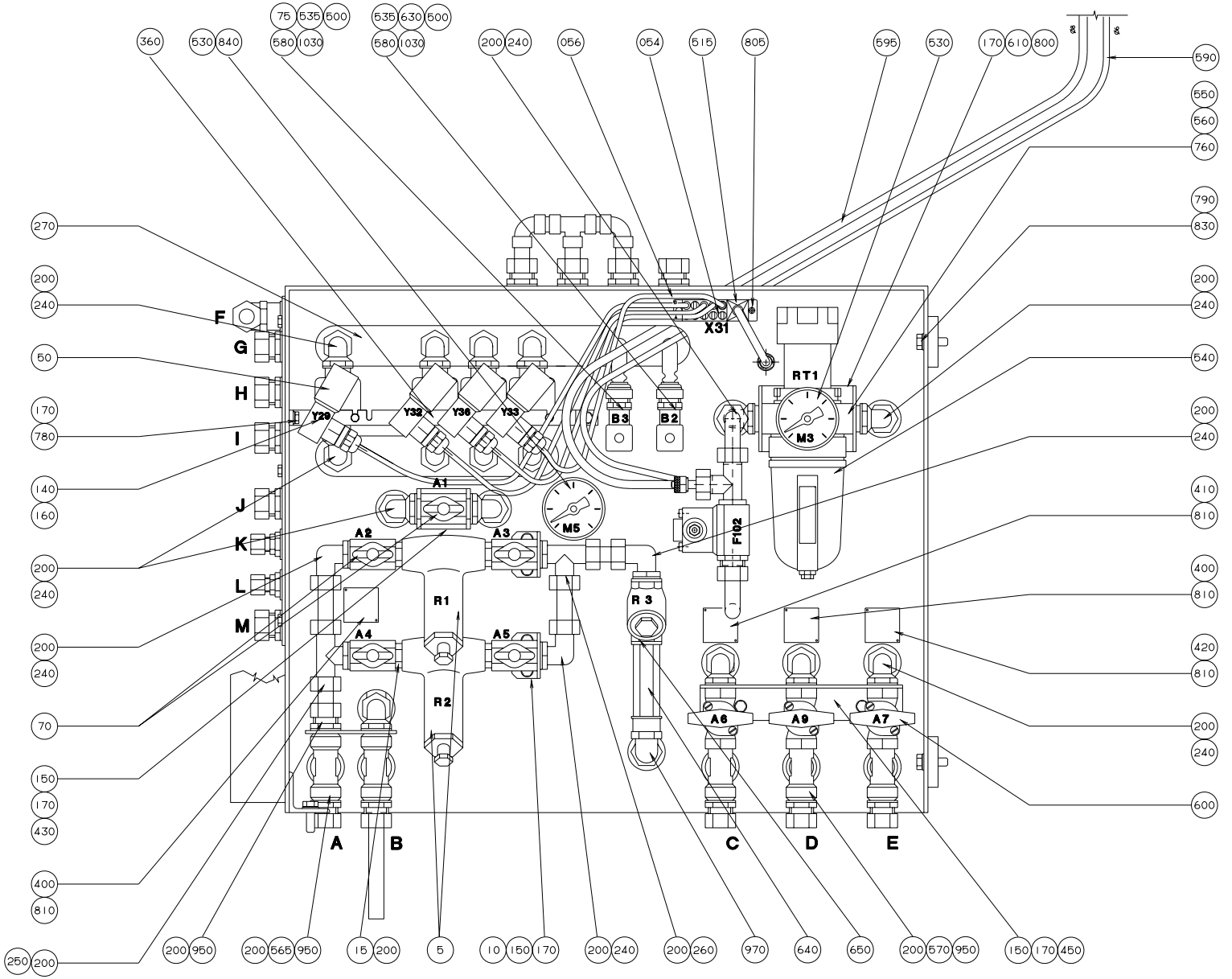

S-575392-1
ECN 20547

Pos	Part No	SP	UN	Qty	Description	Page No
1030	352136-0113	-		3	GLAND FITTING	
1040	352136-0127	-		2	GLAND FITTING	

Pos	Part No	SP	UN	Qty	Description	Page No

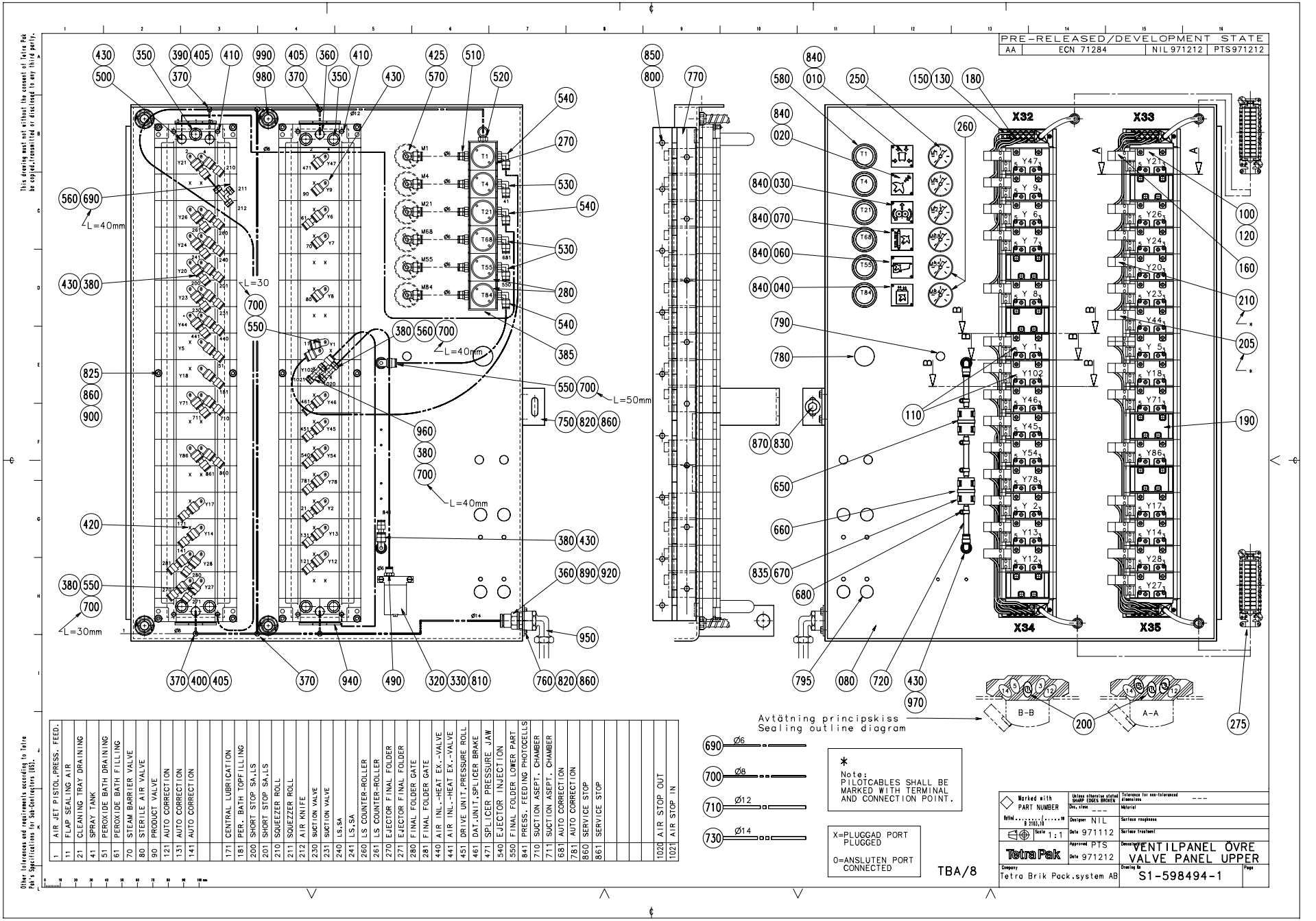

1	AIR JET PISTOL,PRESS. FEED.
11	FLAP SEALING AIR
21	CLEANING TRAY DRAINING
41	SPRAY TANK
51	PEROXIDE BATH DRAINING
61	PEROXIDE BATH FILLING
70	STEAM BARRIER VALVE
80	STERILE AIR VALVE
90	PRODUCT VALVE
121	AUTO CORRECTION
131	AUTO CORRECTION
141	AUTO CORRECTION
171	CENTRAL LUBRICATION
181	PER. BATH TOPFILLING
200	SHORT STOP SA,LS
201	SHORT STOP SA,LS
210	SQUEEZER ROLL
211	SQUEZZER ROLL
212	AIR KNIFE
230	SUCTION VALVE
231	SUCTION VALVE
240	LS,SA
241	LS,SA
260	LS COUNTER-ROLLER
261	LS COUNTER-ROLLER
270	EJECTOR FINAL FOLDER
271	EJECTOR FINAL FOLDER
280	FINAL FOLDER GATE
281	FINAL FOLDER GATE
440	AIR INL.-HEAT EX.-VALVE
441	AIR INL.-HEAT EX.-VALVE
451	DRIVE UNIT,PRESSURE ROLL
461	DAT.UNIT,SPLICER BRAKE
471	SPLICER PRESSURE JAW
540	EJECTOR INJECTION
550	FINAL FOLDER LOWER PART
841	PRESS. FEEDING PHOTOCELLS
710	SUCTION ASEPT. CHAMBER
711	SUCTION ASEPT. CHAMBER
681	AUTO CORRECTION
781	AUTO CORRECTION
860	SERVICE STOP
861	SERVICE STOP
1020	AIR STOP OUT
1021	AIR STOP IN

Pos	Part No	SP	UN	Qty	Description	Page No
1000B						
380	342716-0203	-		35	REDUCER,FOR PLASTIC TUBE 6-8	
420	342715-0103	-		34	BLIND PLUG,FOR QUICK COUPLING D=8	
430	90055-0118	-		40	ELBOW PIPE JOINT	
1000S						
380	342716-0203	-		33	REDUCER,FOR PLASTIC TUBE 6-8	
420	342715-0103	-		35	BLIND PLUG,FOR QUICK COUPLING D=8	
430	90055-0118	-		39	ELBOW PIPE JOINT	
Common parts						
010	273449-0000	-		1	SIGN	
020	273450-0000	-		1	SIGN	
030	273452-0000	-		1	SIGN	
040	978603-0000	-		1	SIGN	
060	479964-0000	-		1	SIGN	
070	561595-0000	-		1	SIGN	
080	574602-0000	-		1	VALVE PANEL UPPER	
100	90042-0215	-		28	SOL.VALVE PACKAGE	
110	90042-0520	-		2	CONNECTION TABLE	
120	90042-0532	-		32	CONNECTION TABLE	
130	90042-0522	-		4	END PIECE	
150	90042-0535	-		4	TERMINAL FOR SOL.VALVE	
160	90042-0527	-		28	SEALING DISC	
180	90042-0550	-		2	PROTECTIVE COVER	
190	90042-0519	-		6	COVER PLATE	
200	90042-0528	-		6	SEALING DISC	
205	90042-0538	-		8	EL.COIL	
210	90042-0539	-		20	EL.COIL	
250	90043-0043	D		4	PRESSURE GAUGE	
260	90043-0021	-		2	PRESSURE GAUGE	
270	90113-0069	D		4	PRESSURE REGULATOR	
275	90110-0128	-		2	PLUG 24-POL	
280	90113-0076	-		2	PRESSURE REGULATOR	
320	90235-0450	-		1	PLATE	
330	90235-0708	-		1	VALVE	
350	90328-0024	-		7	SILENCERS,THREADED CONNECTION G3/8"	
360	90055-0096	-		5	STRAIGHT COUPL,FOR PLASTIC TUBE 14-G3/8"	
370	342748-0110	-		6	T-JUNCTION COUPLING,FOR PLASTIC TUBE 14	
385	342713-0210	-		1	PLUG,EXT.G-THREAD,HEXAGON SOCKET G1/4"	
390	342716-0210	-		1	REDUCER,FOR PLASTIC TUBE 6-12	
400	342716-0209	-		1	REDUCER,FOR PLASTIC TUBE 8-12	
405	342716-0211	-		3	REDUCER,FOR PLASTIC TUBE 12-14	
410	342715-0102	-		2	BLIND PLUG,FOR QUICK COUPLING D=6	
425	90055-0117	-		6	ELBOW PIPE JOINT "REPBY 90055-217"	
490	342722-0202	-		8	STRAIGHT COUPL,FOR PLASTIC TUBE 6-G1/8"	
500	342722-0206	-		1	STRAIGHT COUPL,FOR PLASTIC TUBE 8-G3/8"	
510	342722-0203	-		6	STRAIGHT COUPL,FOR PLASTIC TUBE 6-G1/4"	
520	342732-0109	-		1	V-COUPL,ADJUST,FOR PLASTIC TUBE 12-G1/4"	
530	342732-0103	-		3	V-COUPL,ADJUST,FOR PLASTIC TUBE 6-G1/4"	
540	342732-0104	-		3	V-COUPL,ADJUST,FOR PLASTIC TUBE 8-G1/4"	
550	342735-0103	-		4	V-JUNCTION COUPLING,FOR PLASTIC TUBE 8	
560	342748-0102	-		2	T-JUNCTION COUPLING,FOR PLASTIC TUBE 6	
570	342770-0105	-		6	STRAIGHT COUPL,FOR PLASTIC TUBE 6-G1/8"	
580	90113-0379	-		6	NUT	
650	90277-0045	-		1	FILTER	
660	90277-0046	-		1	FILTER	
670	90074-0026	-		4	CLIP	
680	90132-0021	-		4	HOSE CLIP	
690	90166-0081	-	M	3	HOSE	
700	90166-0013	-	M	2	HOSE	
710	90166-0068	-	MM	400	HOSE	
720	90166-0194	-	MM	500	PLASTIC HOSE	
730	90166-0206	-	M	2	PLASTIC HOSE	
750	574603-0000	-		1	BRACKET	
760	574604-0000	-		1	BRACKET	
770	445736-0000	-		1	HINGE	
780	90261-0008	-		1	PLUG,BLIND PLASTIC M35X1,5/M36X3	
790	90261-0013	-		3	PLUG	
795	90261-0033	-		4	PLUG,BLIND PLASTIC FOR M24X2	
800	312105-0323	-		17	SCREW M6S ISO 4017 M5X8 A280	
810	312105-0339	-		2	SCREW M6S ISO 4014 M5X40 A280	
820	312105-0364	-		4	SCREW M6S6X10RFR	
825	312105-0376	-		12	SCREW M6S ISO 4017 M6X35 A280	
830	312105-0449	-		1	SCREW M6S ISO 4017 M8X16 A280	
835	312125-0220	-		4	SLOTTED HEMCS3X6RFR	

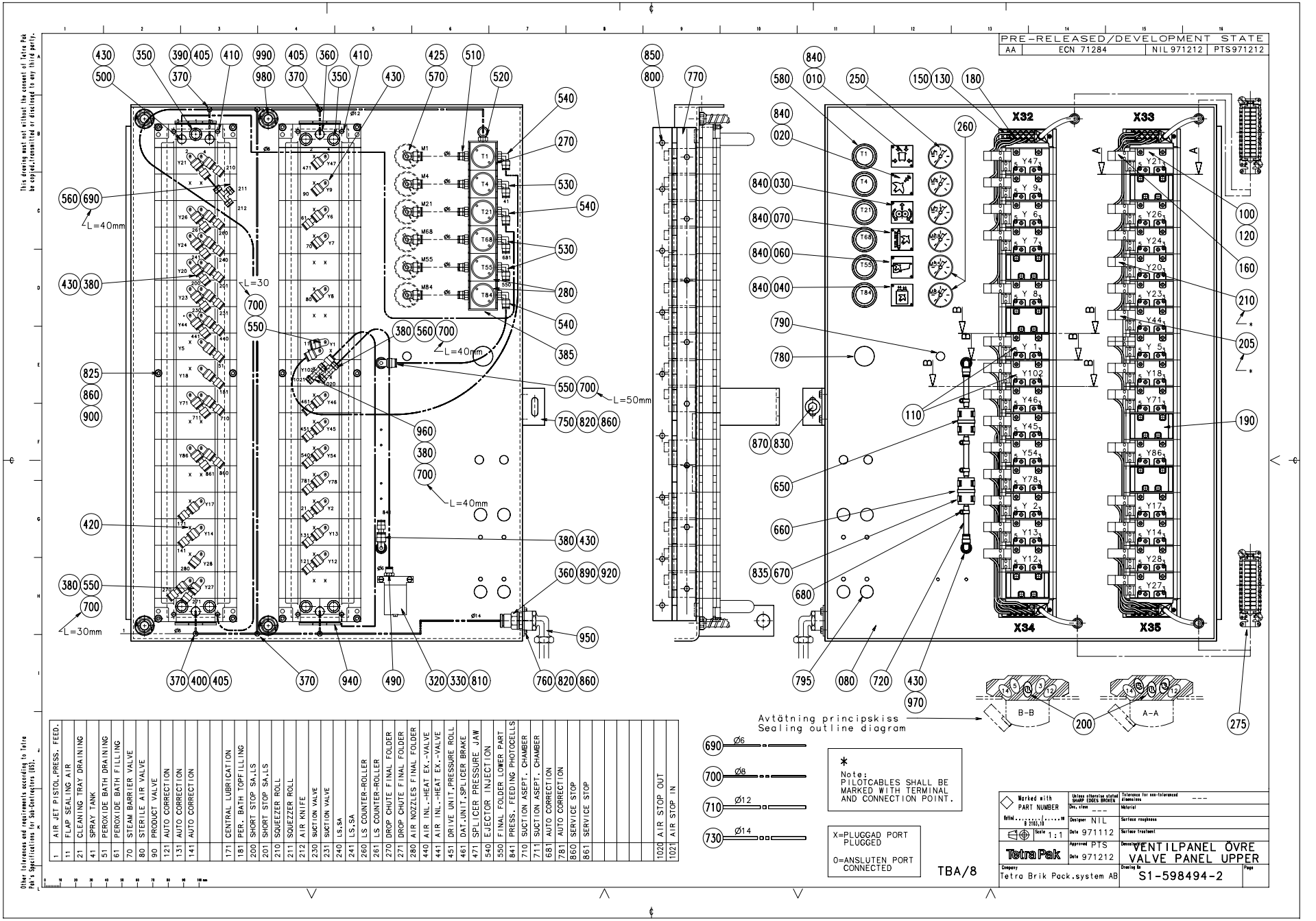

1	AIR JET PISTOL,PRESS. FEED.
11	FLAP SEALING AIR
21	CLEANING TRAY DRAINING
41	SPRAY TANK
51	PEROXIDE BATH DRAINING
61	PEROXIDE BATH FILLING
70	STEAM BARRIER VALVE
80	STERILE AIR VALVE
90	PRODUCT VALVE
121	AUTO CORRECTION
131	AUTO CORRECTION
141	AUTO CORRECTION
171	CENTRAL LUBRICATION
181	PER. BATH TOPFILLING
200	SHORT STOP SA,LS
201	SHORT STOP SA,LS
210	SQUEEZER ROLL
211	SQUEEZER ROLL
212	AIR KNIFE
230	SUCTION VALVE
231	SUCTION VALVE
240	LS,SA
241	LS,SA
260	LS COUNTER-ROLLER
261	LS COUNTER-ROLLER
270	DROP CHUTE FINAL FOLDER
271	DROP CHUTE FINAL FOLDER
280	AIR NOZZLES FINAL FOLDER
440	AIR INL.-HEAT EX.-VALVE
441	AIR INL.-HEAT EX.-VALVE
451	DRIVE UNIT,PRESSURE ROLL
461	DAT.UNIT,SPLICER BRAKE
471	SPLICER PRESSURE JAW
540	EJECTOR INJECTION
550	FINAL FOLDER LOWER PART
841	PRESS. FEEDING PHOTOCELLS
710	SUCTION ASEPT. CHAMBER
711	SUCTION ASEPT. CHAMBER
681	AUTO CORRECTION
781	AUTO CORRECTION
860	SERVICE STOP
861	SERVICE STOP
1020	AIR STOP OUT
1021	AIR STOP IN

Pos	Part No	SP	UN	Qty	Description	Page No
840	312502-0120	-		12	DRIVE SCREW ROUND HEAD SMS 1549 KDS 0X5	
850	315105-0146	-		17	WASHER BRB5,3X10RFR	
860	315105-0153	-		16	WASHER BRB6,4X12RFR	
870	315125-0165	-		1	WASHER SB 8,4X26X5 RFR	
890	315233-0113	-		1	SEAL RING R1/2"	
900	312605-0316	-		12	NUT M6M6RFR	
920	342701-0206	-		1	BUSHING,INT./EXT.G-THREAD G1/2"-G3/8"	
940	342713-0211	-		12	PLUG,EXT.G-THREAD,HEXAGON SOCKET G3/8"	
950	342733-0114	-		1	ELBOW CONNECTION WI-15-G1/2"	
960	342748-0103	-		1	T-JUNCTION COUPLING,FOR PLASTIC TUBE 8	
970	342768-0103	-		2	BULKHEAD COUPLING,FOR PLASTIC TUBE 8	
980	352135-0106	-	M	8	HOSE .016	
990	352136-0127	-		8	GLAND FITTING	

Pos	Part No	SP	UN	Qty	Description	Page No

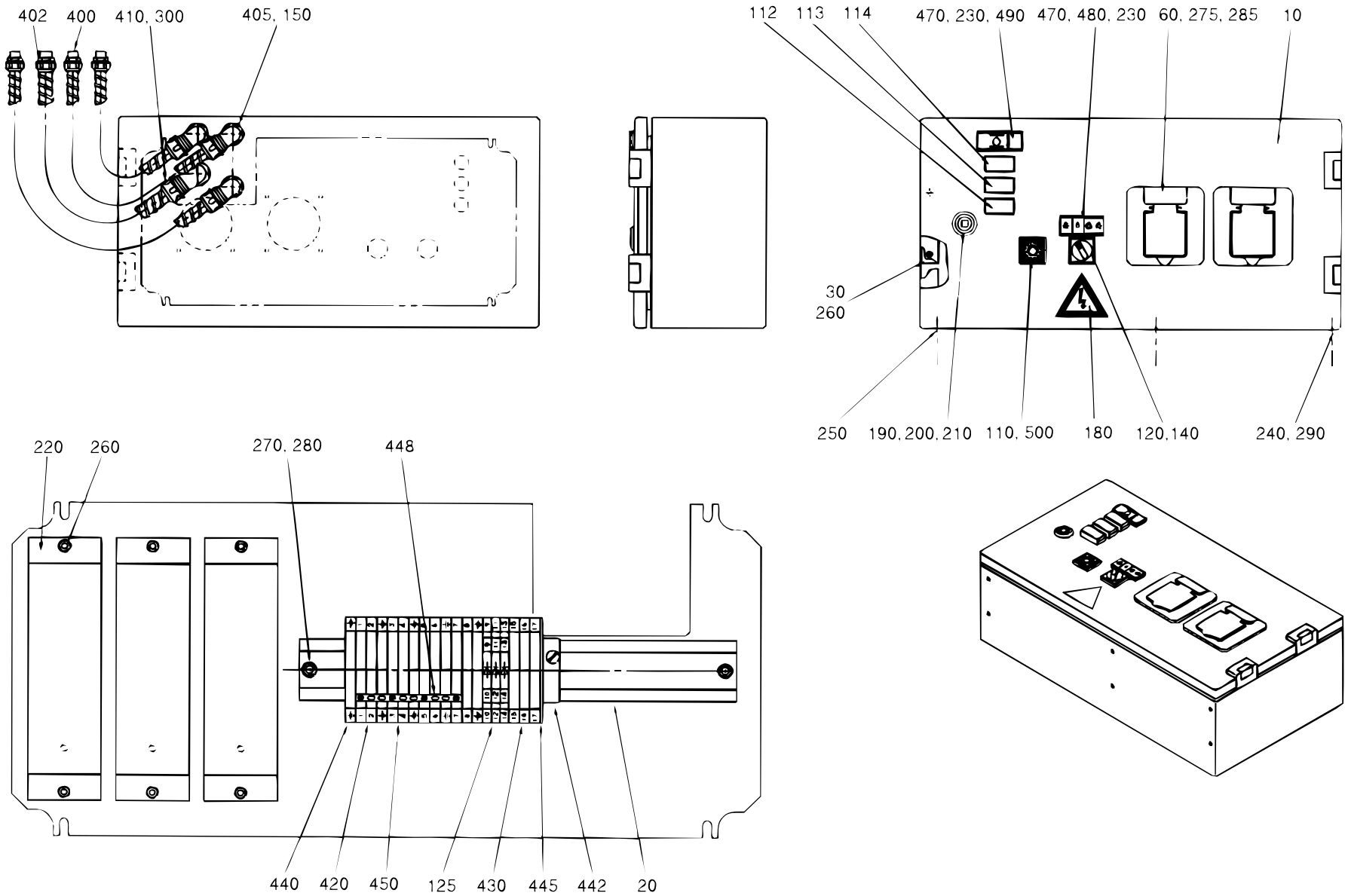

S-449930-5
ECN 19406

Pos	Part No	SP	UN	Qty	Description	Page No
-						
010	574605-0000	-		1	CONNECTION BOX	
020	90077-0302	-	MM	250	RAIL REPBY 0353042-0005	
030	574606-0000	-		1	SHEET	
070	90002-0009	-		2	BLANK-OFF PLUG 18.6	
110	90064-0084	K		1	PUSH BUTTON YELLOW	
112	B 90064-0094	-		1	PUSH BUTTON	
113	B 90064-0095	-		1	PUSH BUTTON	
114	B 90064-0096	-		1	PUSH BUTTON	
120	90064-0317	-		1	TOUCH GUARD REPBY 90064-335	
125	90077-0115	-		3	FEED THROUGH TERMINAL REPBY 0353021-0122	
130	90099-0002	-		2	NUT	
140	90111-0121	-		1	SWITCH 3 POS. EA OLTEN	
150	90152-0033	-	M	1	HOSE	
180	90194-0016	-		1	SIGN "FLASH SIGN" 50X50MM	
190	90237-0319	-		1	LOCK HOUSING	
200	90237-0320	-		1	LOCK COMPONENT	
210	90237-0335	-		1	LOCKING CATCH	
220	90297-0300	-		3	BALLAST COIL 50HZ	
230	311520-0329	-		4	BLANK RIVE2,4X8	
240	312105-0362	-		6	SCREW M6S ISO 4017 M6X8 A280	
260	312115-0287	-		10	SCREW MC6S ISO 4762 M4X8 A280	
270	312121-0323	-		2	SLOTTED HEMCS5X8FZB	
280	312601-0314	-		2	NUT M6M5FZB	
290	315105-0153	-		6	WASHER BRB6,4X12RFR	
300	352135-0106	-	M	3	HOSE .016	
400	352136-0113	-		1	GLAND FITTING	
402	352136-0127	-		3	GLAND FITTING	
405	352137-0113	-		1	GLAND FITTING	
407	352137-0127	-		2	GLAND FITTING	
410	352137-0129	-		1	CABLE GLAND;PR22,5(PG16)	
420	353021-0213	-		8	FEED THROUGH TERMINAL WDU 4	
430	353021-0217	-		3	FEED TRHOUGH TERMINAL WDU 4	
440	353024-0205	-		5	EARTH TERMINAL WPE 4	
442	353031-0201	-		1	END BRACKE 35	
445	353032-0005	-		1	END PLATE WAP	
448	353034-0031	-		1	BRIDGE CONLECK WQV 4/10	
450	359011-0807	-		2	MARKING PL5-FW 1-50	
470	359240-0100	-		2	SIGN HOLDER	
480	359241-0127	-		1	SIGN "LIGH BACKSY & STAT"	
490	359241-0158	-		1	SIGN"LEVEL HYD OLJETANK"	
500	359301-0125	-		1	SIGN "LUBRJNING"	

Pos	Part No	SP	UN	Qty	Description	Page No

CLEANING SYSTEM

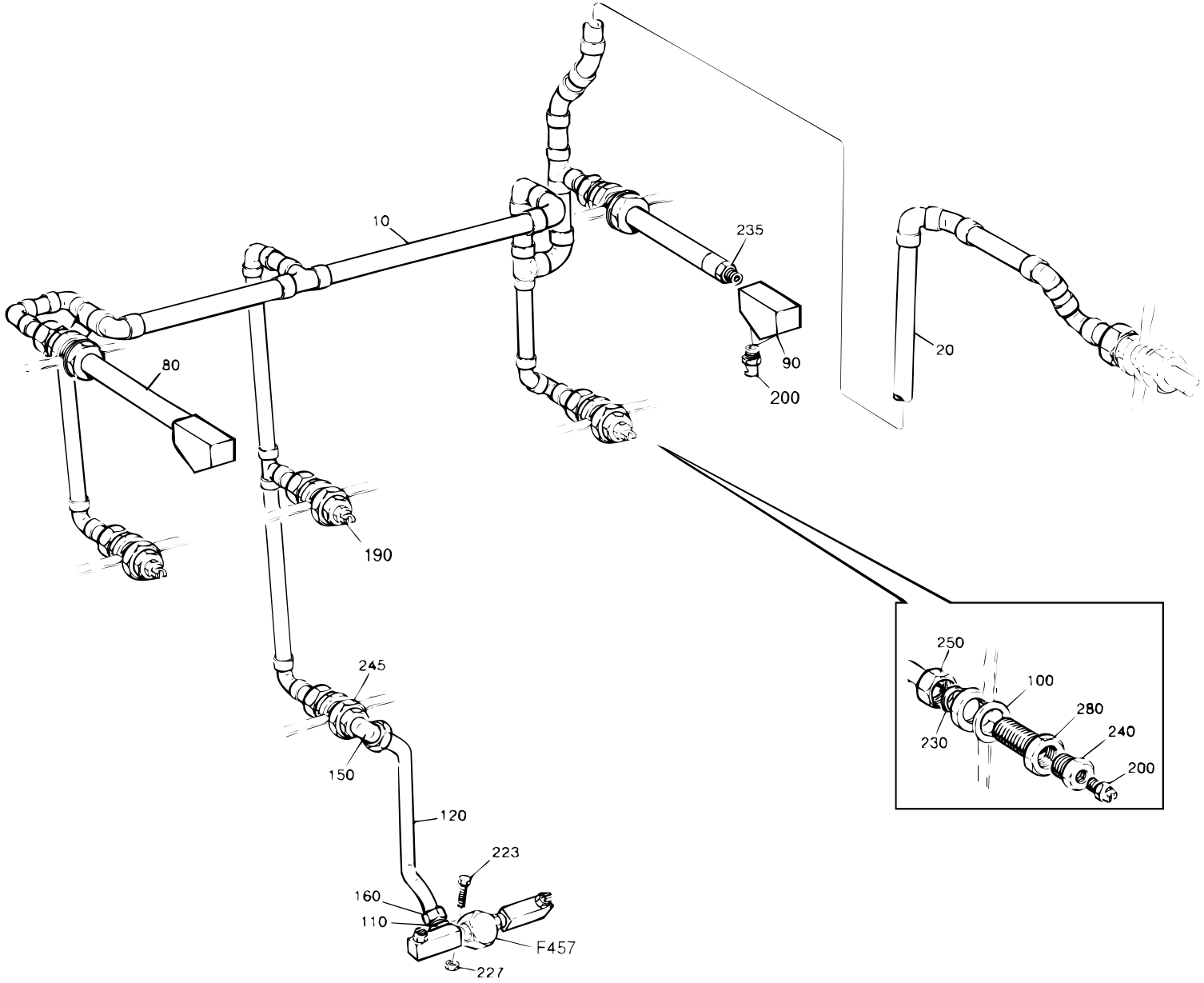

S-449168-3
ECN 17879

Pos	Part No	SP	UN	Qty	Description	Page No
TB/8 0300B or TB/8 0500B or TB/8 0500S or TB/8 0500SQ or TB/8 0568B or TB/8 1000B or TBA/8 0355B or TBA/8 0375S or TBA/8 0400B or TBA/8 0500B or TBA/8 0500S or TBA/8 0750B or TBA/8 0750S or TBA/8 1000B or TBA/8 1055B or TBO/8 1000B						
200-02	90424-0035	K		7	NOZZLE	
240-02	342701-0205	-		3	BUSHING,INT./EXT.G-THREAD G1/2"-G1/4"	
TB/8 1000S or TB/8 1000SQ or TB/8 1136B or TBA/8 1000S or TBA/8 1000SQ or TBO/8 1000SQ						
190	571654-0000	-		1	NOZZLE	
200	90424-0035	K		6	NOZZLE	
240	342701-0205	-		2	BUSHING,INT./EXT.G-THREAD G1/2"-G1/4"	
Common parts						
F457	A 594614-0100	-		1	CLEANING HEAD	**231**
010	530556-0000	-		1	JUNCTION PIPE UPPER	
020	449170-0000	-		1	CLEANING PIPE	
080	535016-0000	-		2	FORCE SPRING	
090	535017-0000	-		2	BRACKET	
100	246885-0000	-		6	WASHER	
110	537919-0000	-		1	PIPE HOLDER	
120	537918-0000	-		1	PIPE	
150	90030-0115	-		1	ELBOW CONNECTION WA 12-R3/8	
160	90030-0187	-		1	STRAIGHT CONNECTION GA-12-G3/8"	
223	312105-0372	-		1	SCREW M6S ISO 4017 M6X25 A280	
227	312605-0316	-		2	NUT M6M6RFR	
230	315234-0113	-		6	SEAL RING R1/2"	
245	342701-0206	-		1	BUSHING,INT./EXT.G-THREAD G1/2"-G3/8"	
250	342720-0114	-		6	STRAIGHT CONNECTION GA-15-G1/2"	
280	342767-0114	-		6	BULKHEAD CONNECTOR G1/2"	

Pos	Part No	SP	UN	Qty	Description	Page No

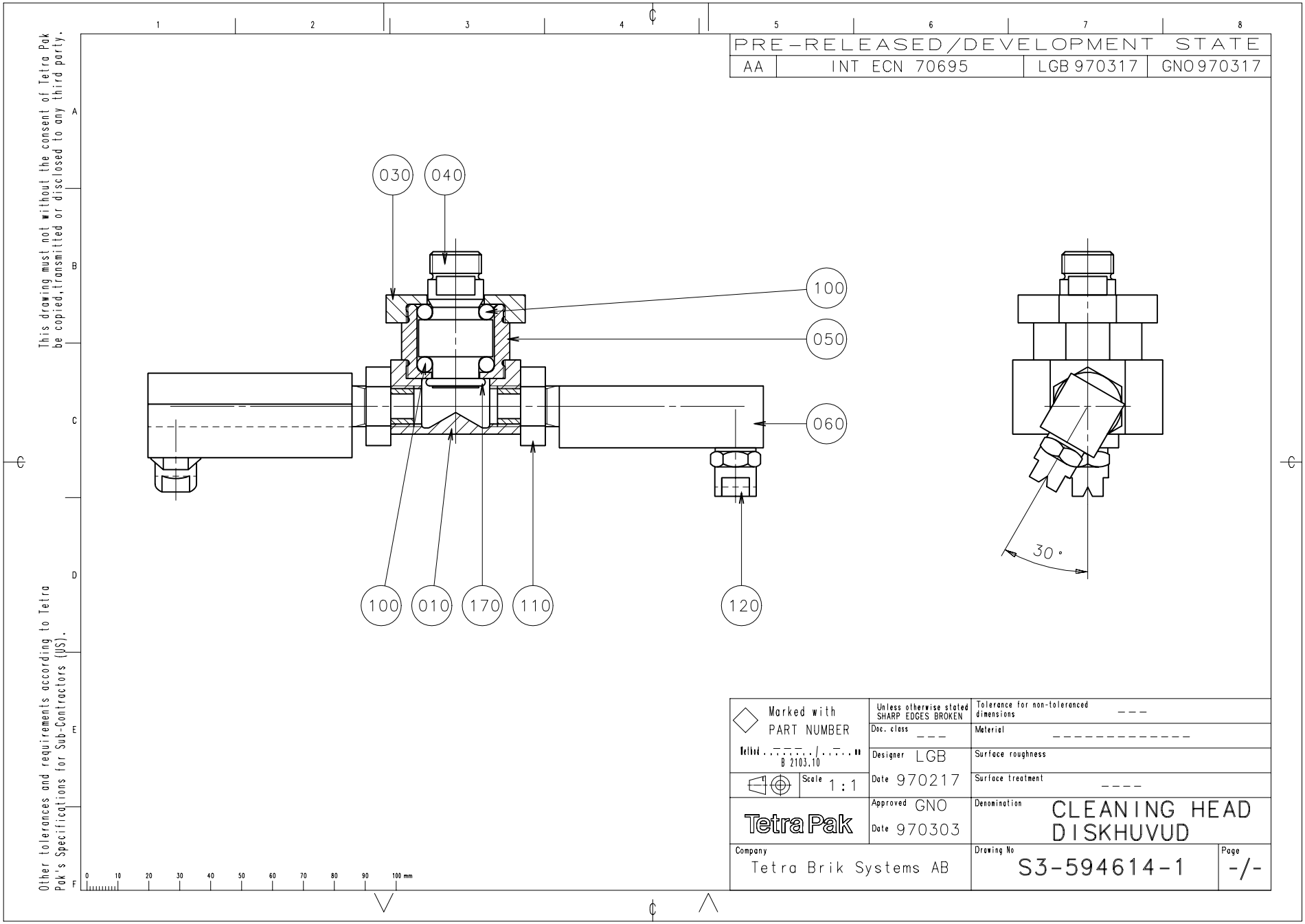
PRE-RELEASED/DEVELOPMENT STATE
AA | INT ECN 70695 | LGB 970317 | GNO 970317
This drawing must not be copied, transmitted or disclosed to any third party.
Other tolerances and requirements according to Tetra Pak's Specifications for Sub-Contractors (JS).
030
040
100
050
060
100
010
170
110
120
30°
Marked with PART NUMBER
B 2103.10
Scale 1:1
Unless otherwise stated SHARP EDGES BROKEN
Doc. class ---
Designer LGB
Date 970217
Approved GNO
Date 970303
Tolerance for non-toleranced dimensions ---
Material ----------
Surface roughness
Surface treatment ----
Denomination CLEANING HEAD DISKHUVUD
Company Tetra Brik Systems AB
Drawing No S3-594614-1
Page -/-

Pos	Part No	SP	UN	Qty	Description	Page No
-						
010	440600-0000	D		1	ROTOR	
030	534880-0000	K		1	END SECTION	
040	534878-0000	K		1	SHAFT	
050	534879-0000	K		1	BEARING HOUSING	
060	440605-0001	D		2	PIPE	
100	90090-0020	K		24	BALL	
110	90330-0034	-		2	NUT,HEXAGON G1/4"	
120	90424-0026	K		2	NOZZLE	
170	315202-0211	F		1	O-RING 13,3X2,4	

Pos	Part No	SP	UN	Qty	Description	Page No

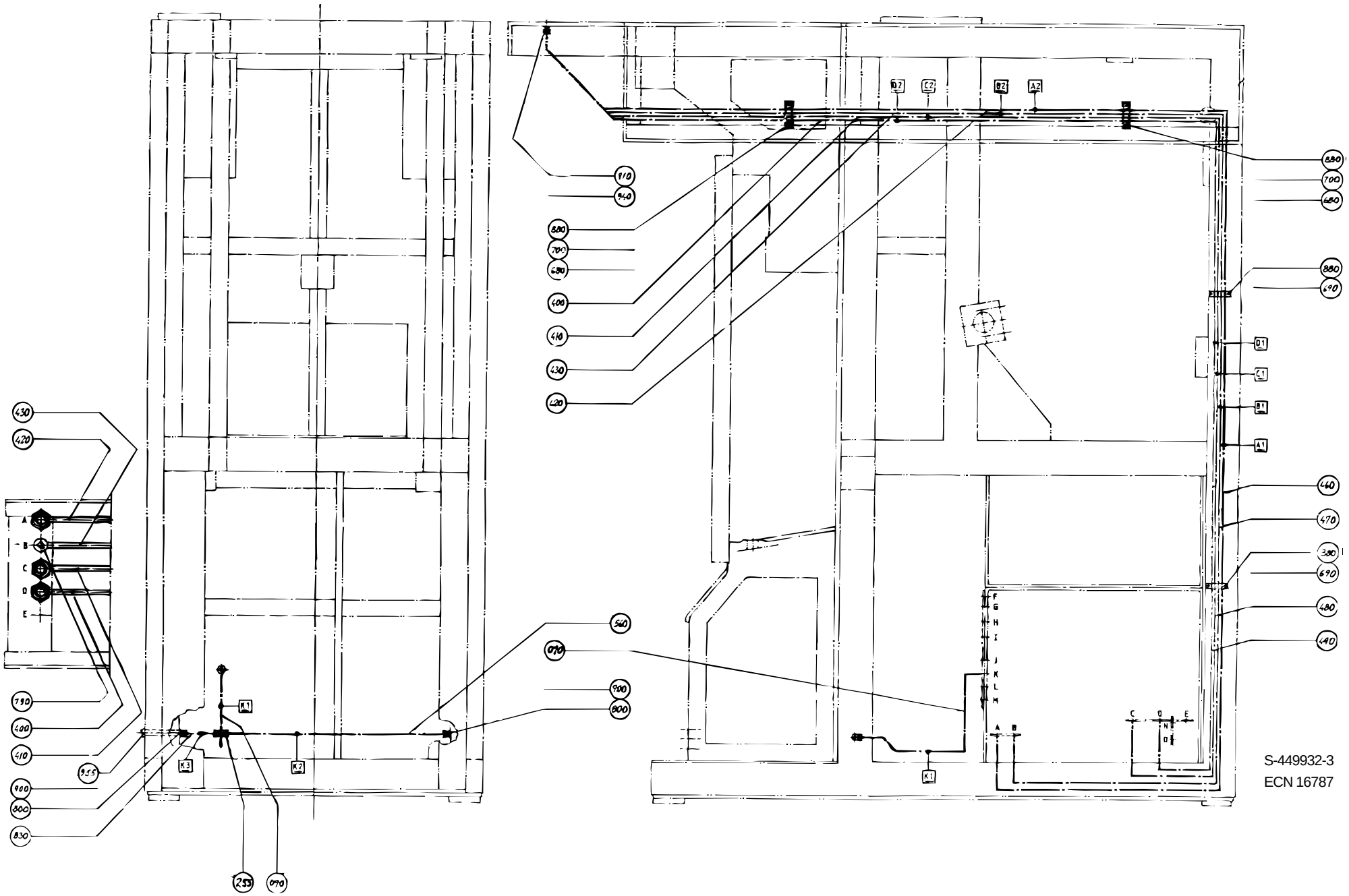
S-449932-3
ECN 16787

Pos	Part No	SP	UN	Qty	Description	Page No
SOURCE,TBA/8-030V or SOURCE,TBA/8-040V or SOURCE,TBA/8-050V or SOURCE,TBA/8-060V						
610	B 450741-0000	-		1	PIPE	
630	B 450743-0000	-		1	PIPE	
Common parts						
010	434168-0000	-		1	PIPE	
030	B 450716-0000	-		1	PIPE	
040	450717-0000	-		1	PIPE	
050	464520-0000	-		1	PIPE	
060	450719-0000	-		1	PIPE	
070	561591-0000	-		1	PIPE	
080	561592-0000	-		1	PIPE	
090	450735-0000	-		1	PIPE	
105	561424-0000	-		1	PIPE	
110	450722-0000	-		1	PIPE	
120	450723-0000	-		1	PIPE	
125	90166-0121	-	MM	1200	HOSE	
140	464719-0000	-		1	SIGN	
165	90030-0106	-		1	PIPE CONNECTION G-12	
175	342991-0102	-		2	HOSE CLIP,WORM DRIVE TYPE (16)-19	
190	90030-0253	-		1	PIPE COUPLING	
195	90089-0018	-		1	TRANSITIONAL NIPPLE	
210	90224-0317	-		1	CONNECTION	
220	90224-0318	-		2	CONNECTION	
230	90224-0320	-		2	CONNECTION	
240	90224-0321	-		1	CONNECTION	
250	90224-0322	-		1	CONNECTION	
255	90224-0323	-		1	CONNECTION	
258	90274-0065	-		1	PRESSURE SWITCH	
290	312105-0327	-		2	SCREW M6S ISO 4017 M5X12 A280	
300	315105-0124	-		2	WASHER BRB3,2X6RFR	
310	315234-0113	-		1	SEAL RING R1/2"	
335	342923-0114	-		2	STRAIGHT COUPL.,INT.THREADED 6/4-G1/4"	
400	B 544688-0000	-		1	PIPE	
410	B 544689-0000	-		1	PIPE	
420	B 544690-0000	-		1	PIPE	
430	B 544691-0000	-		1	PIPE	
440	434171-0000	-		1	PIPE	
450	450725-0000	-		1	ATTACHMENT PLATE	
460	B 544693-0000	-		1	PIPE	
470	B 544694-0000	-		1	PIPE	
480	B 544695-0000	-		1	PIPE	
490	B 544696-0000	-		1	PIPE	
500	B 450730-0000	-		1	PIPE	
510	B 450731-0000	-		1	PIPE	
520	B 464431-0000	-		1	PIPE	
530	450733-0000	-		1	PIPE	
540	464432-0000	-		1	PIPE	
560	450736-0000	-		1	PIPE	
570	450737-0000	-		1	PIPE	
580	450738-0000	-		1	PIPE	
590	450739-0000	-		1	PIPE	
600	B 450740-0000	-		1	PIPE	
620	B 450742-0000	-		1	PIPE	
660	276398-0000	-		4	HEXAGON NIPPLE	
670	279105-0000	-		2	WASHER	
680	279526-0000	-		2	BRACKET	
690	293351-0000	-		2	CRAMP	
700	293352-0000	-		2	CRAMP	
705	450724-0000	-		1	PIPE	
710	450744-0000	-		2	CRAMP	
720	450745-0000	-		2	SPACER	
730	450746-0000	-		1	HOLDER	
740	450747-0000	-		1	PIPE	
750	B 450748-0000	-		1	PIPE	
760	B 575795-0000	-		1	WATER PIPE	
770	341001-0228	-	MM	80	COPPER TUBE	
780	90030-0091	-		1	PIPE CONNECTION G-8	
785	90030-0159	-		2	BULKHEAD CONNECTOR SV 15-L/SY	
790	90087-0002	-		1	PIPE PLUG	
792	90165-0007	-		3	CLIP	
794	90166-0122	F	M	2	HOSE	
796	90166-0124	-	M	2	HOSE	
800	90224-0319	-		13	CONNECTION	
820	90230-0023	-		1	NON RETURN VALVE	
825	90235-0295	-		4	THROTTLE CHECK VALVES,G1/4"	
830	90266-0007	-	MM	63	TUBE	
850	312101-0327	-		4	SCREW M6S5X12FZB	
860	312101-0364	-		2	SCREW M6S6X10FZB	
870	312101-0372	-		1	SCREW M6S6X25FZB	
872	312121-0287	-		3	SLOTTED HEMCS4X8FZB	
875	312125-0220	-		4	SLOTTED HEMCS3X6RFR	
880	312125-0323	-		8	SLOTTED CHEESE HEAD ISO 1207 M5X8 RFR	
890	315101-0153	-		2	WASHER BRB6,4X12FZB	
900	315233-0110	-		6	SEAL RING R1/4"	
910	315233-0113	-		4	SEAL RING R1/2"	

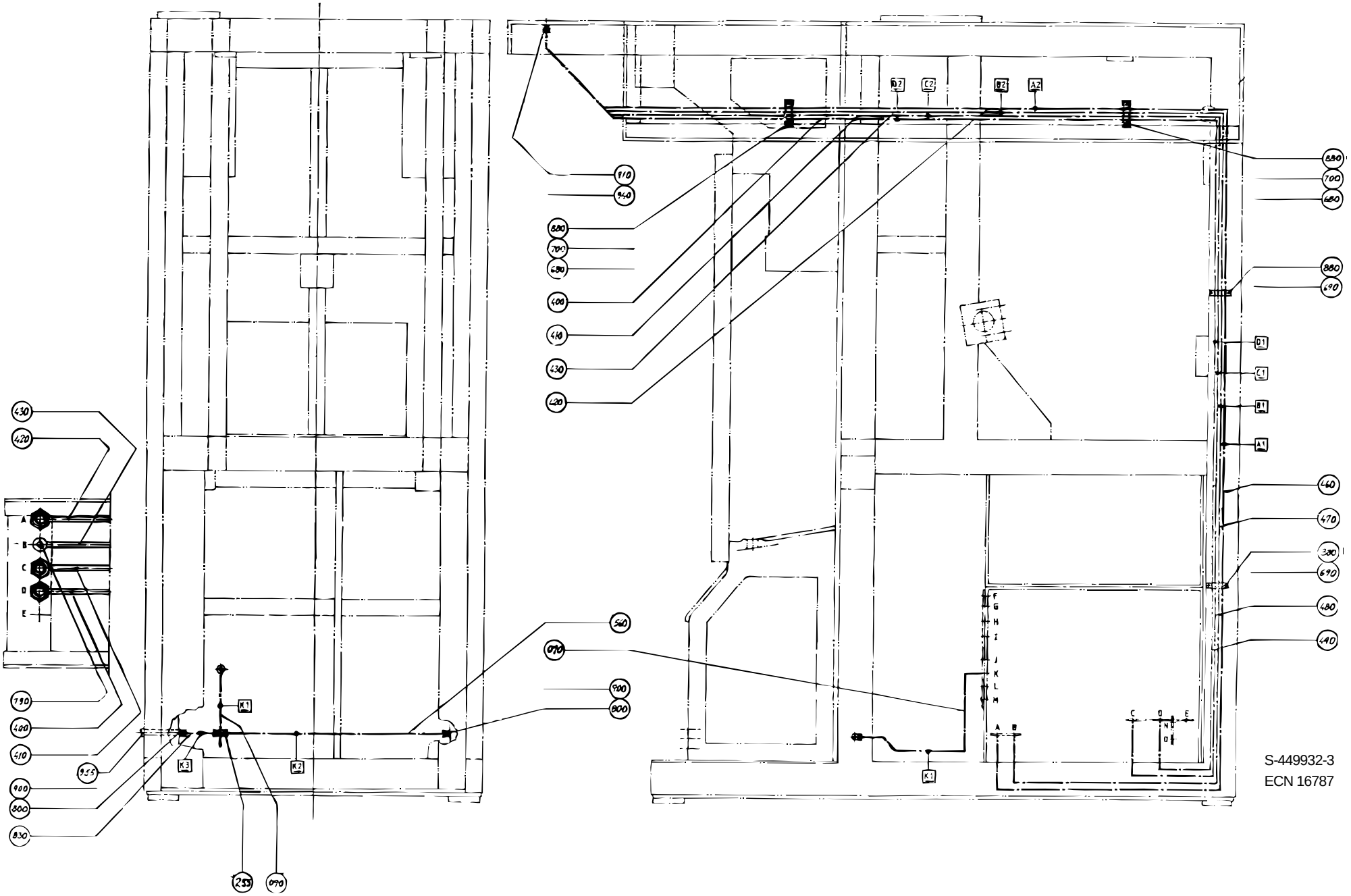
S-449932-3
ECN 16787

Pos	Part No	SP	UN	Qty	Description	Page No
920	341001-0228	-	MM	300	COPPER TUBE	
930	341001-0228	-	MM	1792	COPPER TUBE	
935	342713-0210	-		1	PLUG,EXT.G-THREAD,HEXAGON SOCKET G1/4"	
940	342720-0114	-		4	STRAIGHT CONNECTION GA-15-G1/2"	
950	342736-0114	-		1	ELBOW CONNECTION W-15	
955	342923-0122	-		6	STRAIGHT COUPL.,INT.THREADED 8/6-G1/4"	
960	342980-0122	-		4	BANJO-CONNECTION,RING 8/6-G1/4"	

Pos	Part No	SP	UN	Qty	Description	Page No

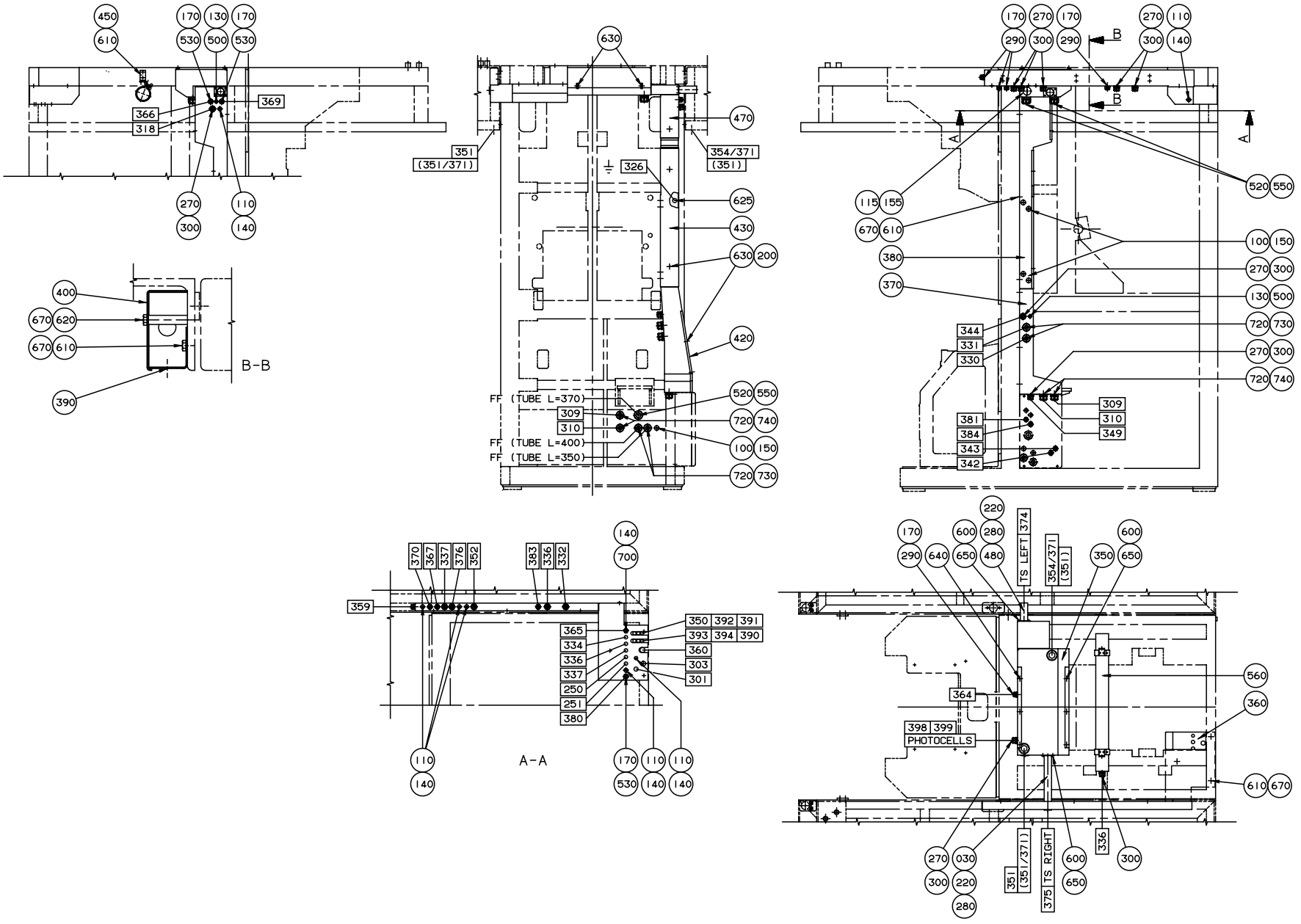

S-450293-5
ECN 20500

Pos	Part No	SP	UN	Qty	Description	Page No
TB/8 TPC						
040	464193-0000	-		1	ATTACHMENT PLATE	
100	90002-0004	-		2	BLANK-OFF PLUG 22,5	
110-02	90002-0009	-		10	BLANK-OFF PLUG 18.6	
130-02	90099-0001	-		3	NUT PR 15,2 BRASS	
140-02	90099-0002	-		10	NUT	
150-02	90099-0003	-		6	NUT	
170	90152-0033	-	MM	6300	HOSE	
200-02	315101-0136	-		7	WASHER BRB4,3X8FZB	
220	342991-0108	-		1	HOSE CLIP 38-50MMRFR	
240	352103-0101	-		1	CABLE GLAND ST 9	
250	352103-0110	-		4	CABLE GLAND STR 16	
260	352113-0202	-		2	ANCHOR TM2S8-M "REPBY 352113-205"	
270	352135-0106	-	MM	3200	HOSE .016	
280	352135-0116	-	MM	500	FLEXIBLE CG DIA 40	
290	352136-0113	-		3	GLAND FITTING	
300	352136-0127	-		9	GLAND FITTING	
350	547220-0000	-		1	CABLE DUCT	
TB/8 US						
010	1143661-0000	-		1	CABLE DUCT	
040	464193-0000	-		1	ATTACHMENT PLATE	
060	1143839-0000	-		1	NUT PLATE	
100	90002-0004	-		2	BLANK-OFF PLUG 22,5	
110-02	90002-0009	-		10	BLANK-OFF PLUG 18.6	
130-02	90099-0001	-		3	NUT PR 15,2 BRASS	
140-02	90099-0002	-		10	NUT	
150	90099-0003	-		2	NUT	
170	90152-0033	-	MM	6300	HOSE	
180	90261-0019	-		4	PIPE PLUG	
200-02	315101-0136	-		7	WASHER BRB4,3X8FZB	
220	342991-0108	-		1	HOSE CLIP 38-50MMRFR	
240	352103-0101	-		1	CABLE GLAND ST 9	
260	352113-0202	-		2	ANCHOR TM2S8-M "REPBY 352113-205"	
270	352135-0106	-	MM	3200	HOSE .016	
280	352135-0116	-	MM	500	FLEXIBLE CG DIA 40	
290	352136-0113	-		3	GLAND FITTING	
300	352136-0127	-		9	GLAND FITTING	
750	353246-0001	-		2	Gland fitting	
760	353249-0058	-		2	INSERT	
TBA/8 or TBO/8						
030	450292-0000	-		1	ATTACHMENT PIPE	
100-02	90002-0004	-		5	BLANK-OFF PLUG 22,5	
110	90002-0009	-		8	BLANK-OFF PLUG 18.6	
130	90099-0001	-		2	NUT PR 15,2 BRASS	
140	90099-0002	-		8	NUT	
150-02	90099-0003	-		6	NUT	
170-02	90152-0033	-	MM	6800	HOSE	
200	315101-0136	-		5	WASHER BRB4,3X8FZB	
220-02	342991-0108	-		2	HOSE CLIP 38-50MMRFR	
270-02	352135-0106	-	MM	6400	HOSE .016	
280-02	352135-0116	-	MM	3800	FLEXIBLE CG DIA 40	
290-02	352136-0113	-		4	GLAND FITTING	
300-02	352136-0127	-		11	GLAND FITTING	
350	547220-0000	-		1	CABLE DUCT	
Common parts						
115	90002-0010	-		1	BLANK-OFF PLUG 37	
155	90099-0011	-		1	NUT PR 37 BRASS	
360	575464-0000	-		1	CABLE DUCT	
370	540721-0000	-		1	CABLE DUCT	
380	450284-0000	-		1	CABLE DUCT	
390	450285-0000	-		1	CABLE DUCT	
400	450286-0000	-		1	LID	
420	540722-0000	-		1	LID	
430	450287-0000	-		1	LID	
450	246374-0000	-		2	BRACKET	
470	450290-0000	-		1	LID	
480	450291-0000	-		1	ATTACHMENT PIPE	
500	90002-0013	-		2	BLANK-OFF PLUG 15,2	
520	90012-0061	-		3	GLAND	
530	90012-0063	-		4	GLAND	
550	90152-0031	-	MM	2270	HOSE	
560	B 90164-0003	-		1	LIGHT FIXTURE 1X20W IP67	
600	312101-0325	-		11	SCREW M6S5X10FZB	
610	312101-0364	-		18	SCREW M6S6X10FZB	
620	312101-0380	-		3	SCREW M6S6X50FZB	
625	312101-0447	-		1	SCREW M6S8X12FZB	
630	312121-0287	-		7	SLOTTED HEMCS4X8FZB	
640	312141-0325	-		3	SLOTTED HEMFS5X10FZB	
650	315101-0146	-		11	WASHER BRB5,3X10FZB	
670	315101-0153	-		15	WASHER BRB6,4X12FZB	
700	352103-0106	-		1	CABLE GLAND ST 11	
720	352135-0109	-	MM	3700	HOSE .022	
730	352136-0142	-		4	GLAND FITTING	
740	352136-0143	-		4	GLAND FITTING	

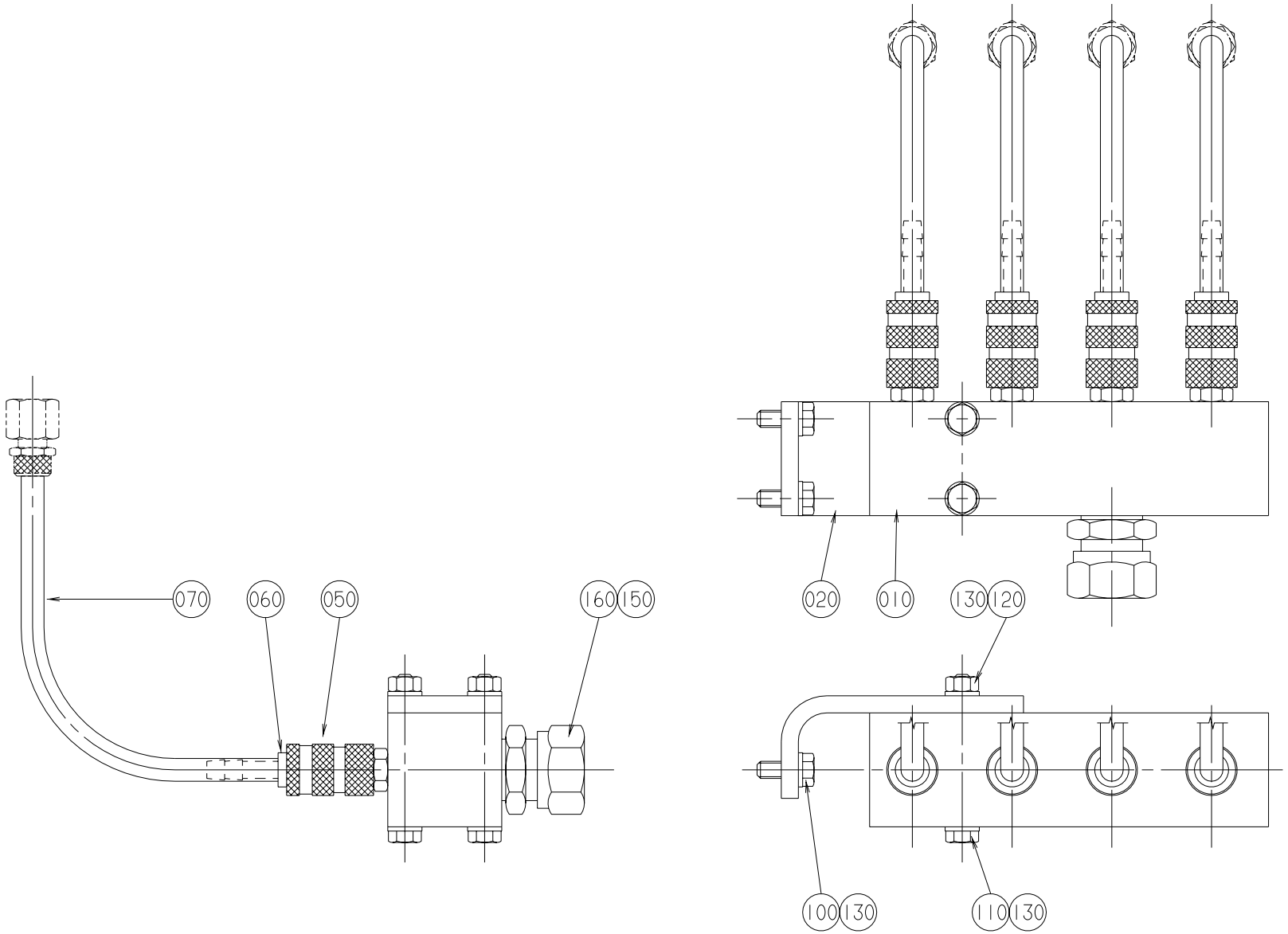

S-575797-1
ECN 20289-1

Pos	Part No	SP	UN	Qty	Description	Page No
TB/8 or TBO/8						
010	576111-0000	-		1	JUNCTION BLOCK	
050	90163-0133	-		3	QUICK-RELEASE COUPLING	
060	90163-0134	-		3	COUPLING NIPPLE	
070	90166-0133	-	MM	700	HOSE	
TBA/8 or TBA/8LSC or TBA/8PRISMA						
010	575791-0000	-		1	JUNCTION BLOCK	
050-02	90163-0133	-		4	QUICK-RELEASE COUPLING	
060-02	90163-0134	-		4	COUPLING NIPPLE	
070-02	90166-0133	-	MM	900	HOSE	
Common parts						
020	575792-0000	-		1	ANGLE STRUT	
100	312105-0368	-		2	SCREW M6S ISO 4017 M6X16 A280	
110	312105-0381	-		2	SCREW M6S ISO 4014 M6X55 A280	
120	312605-0316	-		2	NUT M6M6RFR	
130	315105-0153	-		6	WASHER BRB6,4X12RFR	
150	315233-0113	-		1	SEAL RING R1/2"	
160	342720-0114	-		1	STRAIGHT CONNECTION GA-15-G1/2"	

Pos	Part No	SP	UN	Qty	Description	Page No

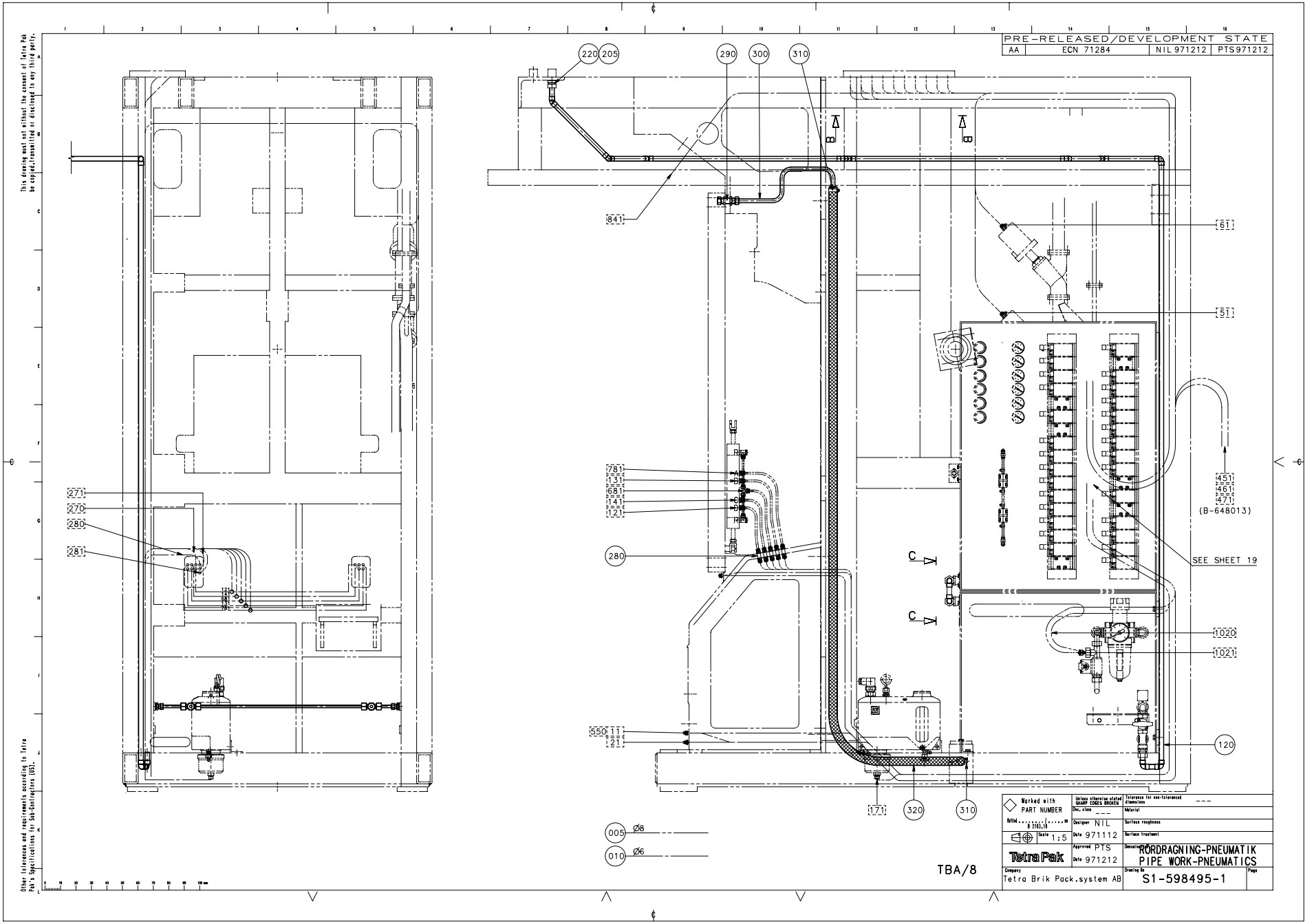
PRE-RELEASED/DEVELOPMENT STATE
AA ECN 71284 NIL 971212 PTS971212
220
205
290
300
310
841
61
51
451
461
471
(B-648013)
SEE SHEET 19
78
131
681
141
121
280
271
270
280
281
1020
1021
120
550
11
21
171
320
310
005 Ø8
010 Ø6
TBA/8
Tetra Pak
Tetra Brik Pack.system AB
RÖRDRAGNING-PNEUMATIK
PIPE WORK-PNEUMATICS
S1-598495-1
Designer NTL
Date 971112
Approved PTS
Date 971212
Scale 1:5

Pos	Part No	SP	UN	Qty	Description	Page No
1000B						
005	90166-0013	-	M	26	HOSE	
010	90166-0081	-	M	102	HOSE	
1000S						
005	90166-0013	-	M	19	HOSE	
010	90166-0081	-	M	105	HOSE	
Common parts						
080	B 544692-0000	-		1	PIPE	
115	560881-0000	-		1	PIPE	
120	B 544697-0000	-		1	PIPE	
140	B 450791-0000	-		1	PIPE	
170	90224-0319	-		2	CONNECTION	
180	90224-0323	-		1	CONNECTION	
190	90266-0007	-	MM	58	TUBE	
195	90266-0007	-	MM	72	TUBE	
200	315233-0110	-		2	SEAL RING R1/4"	
205	315233-0113	-		1	SEAL RING R1/2"	
210	342713-0210	-		1	PLUG,EXT.G-THREAD,HEXAGON SOCKET G1/4"	
220	342720-0114	-		1	STRAIGHT CONNECTION GA-15-G1/2"	
240	342929-0121	-		1	STRAIGHT COUPLING,SOLDER 8/6-8	
260	90055-0100	-		5	Y-CONNECTION,PARALLEL 6-6	
265	342923-0114	-		1	STRAIGHT COUPL.,INT.THREADED 6/4-G1/4"	
275	90224-0316	-		1	CONNECTION	
280	342960-0112	-		10	BULKHEAD COUPLING 6/4	
290	90030-0030	-		1	BULKHEAD CONNECTOR SV 12-L/SY	
300	527907-0000	-		1	PIPE	
310	342991-0104	-		2	HOSE CLIP,WORM DRIVE TYPE (23)-27	

Pos	Part No	SP	UN	Qty	Description	Page No

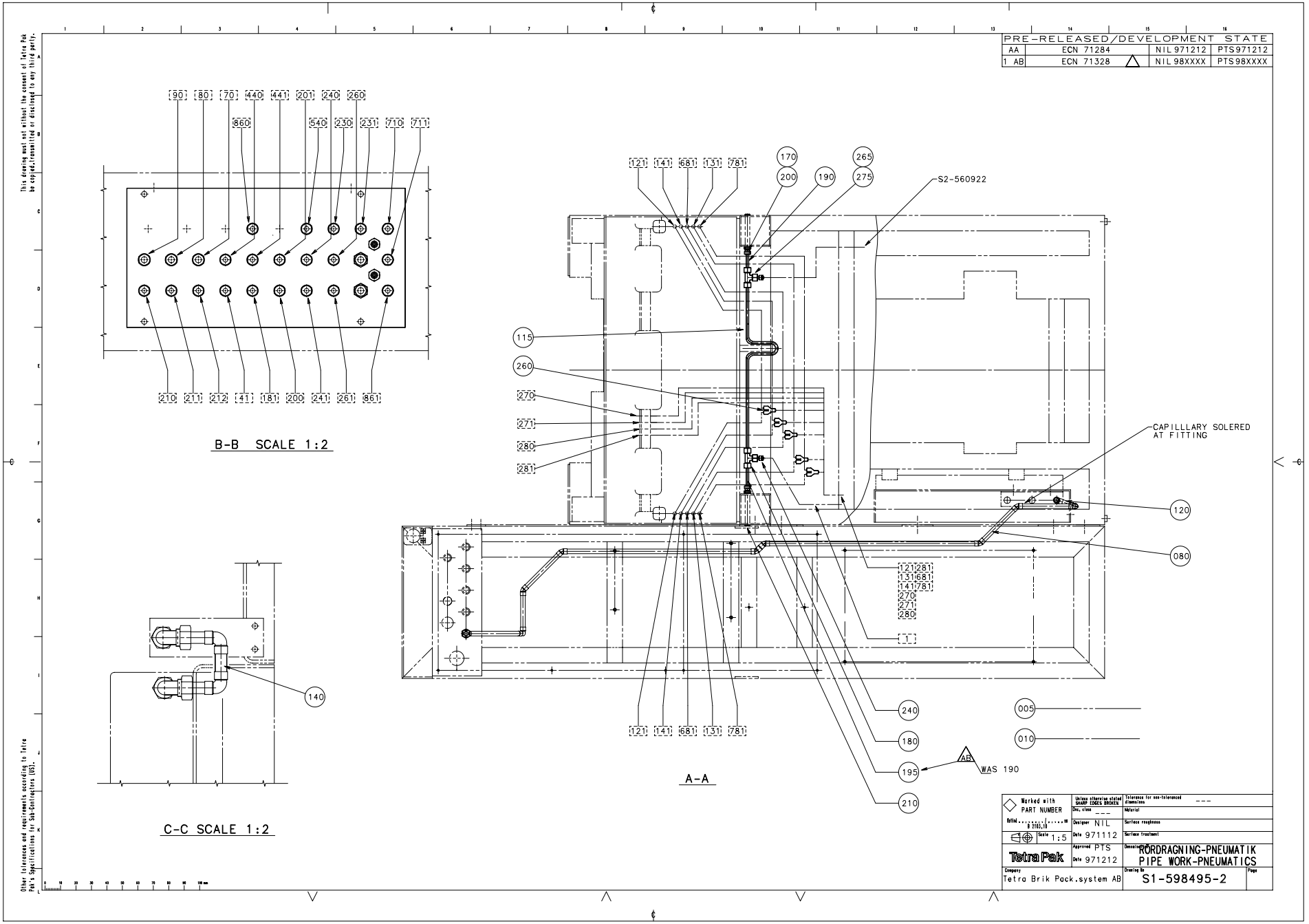
PRE-RELEASED/DEVELOPMENT STATE
AA ECN 71284 NIL 971212 PTS971212
1 AB ECN 71328 NIL 98XXXX PTS98XXXX
90 80 70 440 441 201 240 260
860 540 230 231 710 711
210 211 212 41 181 200 241 261 861
B-B SCALE 1:2
121 141 681 131 781
170 200 190 265 275
S2-560922
115 260 270 271 280 281
CAPILLLARY SOLERED AT FITTING
120 080
121 281 131 681 141 781 270 271 280 1
240 180 195 210
AB WAS 190
005 010
A-A
140
C-C SCALE 1:2
Worked with PART NUMBER
Unless otherwise stated SHARP EDGES BROKEN
Tolerance for non-toleranced dimensions ---
Material
Surface roughness
Surface treatment
Designer NIL
Date 971112
Scale 1:5
Approved PTS
Date 971212
Tetra Pak
Company Tetra Brik Pack.system AB
RÖRDRAGNING-PNEUMATIK
PIPE WORK-PNEUMATICS
Drawing No S1-598495-2
Pages
This drawing must not without the consent of Tetra Pak be copied, transmitted or disclosed to any third party.
Other tolerances and requirements according to Tetra Pak's specifications for sub-contractors (DS).

Pos	Part No	SP	UN	Qty	Description	Page No
1000B						
005	90166-0013	-	M	26	HOSE	
010	90166-0081	-	M	102	HOSE	
1000S						
005	90166-0013	-	M	19	HOSE	
010	90166-0081	-	M	105	HOSE	
Common parts						
080	B 544692-0000	-		1	PIPE	
115	560881-0000	-		1	PIPE	
120	B 544697-0000	-		1	PIPE	
140	B 450791-0000	-		1	PIPE	
170	90224-0319	-		2	CONNECTION	
180	90224-0323	-		1	CONNECTION	
190	90266-0007	-	MM	58	TUBE	
195	90266-0007	-	MM	72	TUBE	
200	315233-0110	-		2	SEAL RING R1/4"	
205	315233-0113	-		1	SEAL RING R1/2"	
210	342713-0210	-		1	PLUG,EXT.G-THREAD,HEXAGON SOCKET G1/4"	
220	342720-0114	-		1	STRAIGHT CONNECTION GA-15-G1/2"	
240	342929-0121	-		1	STRAIGHT COUPLING,SOLDER 8/6-8	
260	90055-0100	-		5	Y-CONNECTION,PARALLEL 6-6	
265	342923-0114	-		1	STRAIGHT COUPL.,INT.THREADED 6/4-G1/4"	
275	90224-0316	-		1	CONNECTION	
280	342960-0112	-		10	BULKHEAD COUPLING 6/4	
290	90030-0030	-		1	BULKHEAD CONNECTOR SV 12-L/SY	
300	527907-0000	-		1	PIPE	
310	342991-0104	-		2	HOSE CLIP,WORM DRIVE TYPE (23)-27	
320	90166-0060	-	MM	3000	HOSE	
320	90166-0060	-	MM	3000	HOSE	

Pos	Part No	SP	UN	Qty	Description	Page No

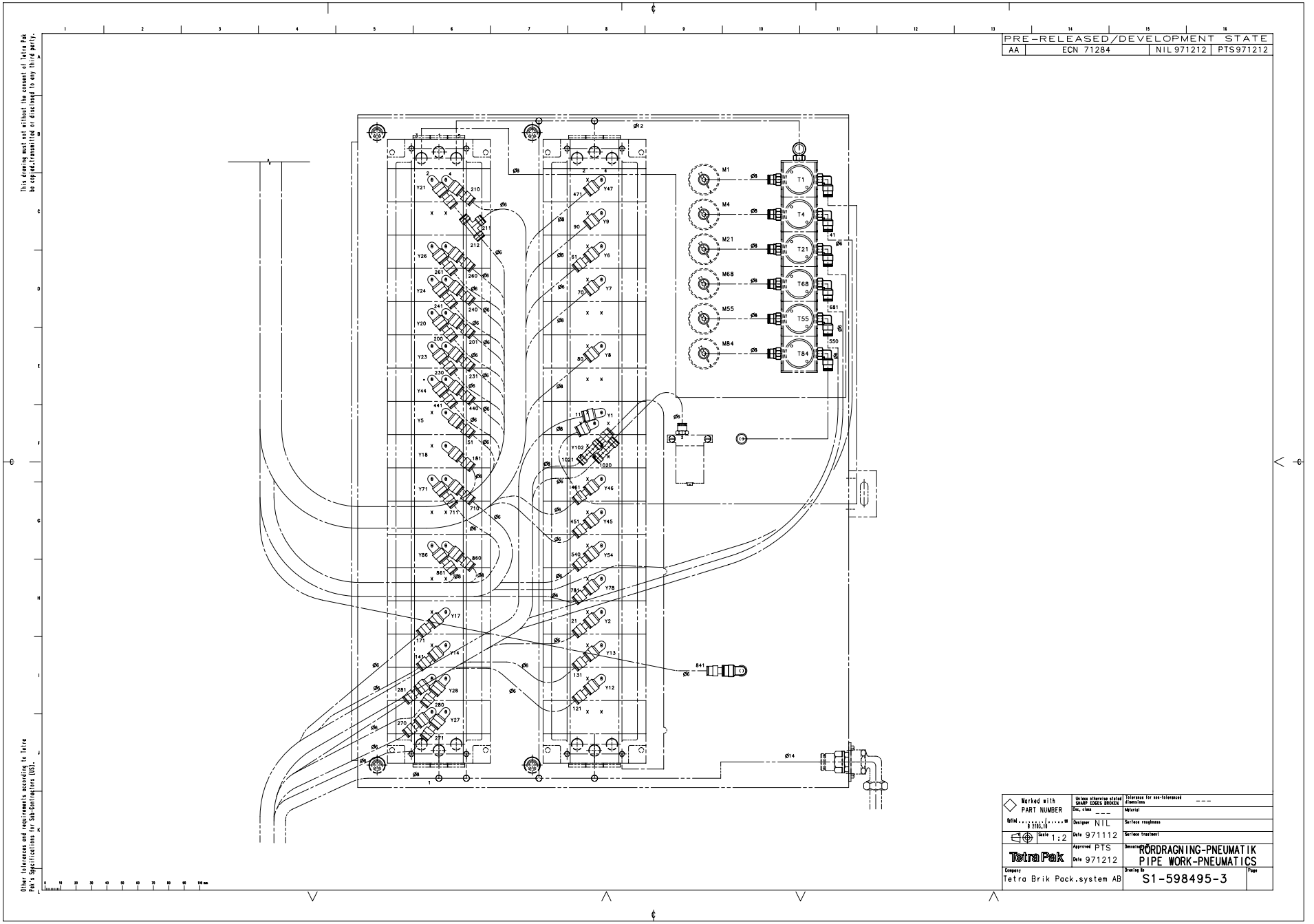
PRE-RELEASED/DEVELOPMENT STATE
AA | ECN 71284 | NIL 971212 | PTS971212
This drawing must not without the consent of Tetra Pak be copied, transmitted or disclosed to any third party.
Other tolerances and requirements according to Tetra Pak's Specifications for Sub-Contractors (SS).
M1
M4
M21
M68
M55
M84
T1
T4
T21
T68
T55
T84
Marked with PART NUMBER
Unless otherwise stated SHARP EDGES BROKEN
Tolerance for non-toleranced dimensions ---
Material
Surface roughness
Surface treatment
Designer NIL
Date 971112
Approved PTS
Date 971212
Scale 1:2
Tetra Pak
RÖRDRAGNING-PNEUMATIK
PIPE WORK-PNEUMATICS
Company
Tetra Brik Pack.system AB
Drawing No
S1-598495-3

Pos	Part No	SP	UN	Qty	Description	Page No
1000B						
005	90166-0013	-	M	26	HOSE	
010	90166-0081	-	M	102	HOSE	
1000S						
005	90166-0013	-	M	19	HOSE	
010	90166-0081	-	M	105	HOSE	
Common parts						
080	B 544692-0000	-		1	PIPE	
115	560881-0000	-		1	PIPE	
120	B 544697-0000	-		1	PIPE	
140	B 450791-0000	-		1	PIPE	
170	90224-0319	-		2	CONNECTION	
180	90224-0323	-		1	CONNECTION	
190	90266-0007	-	MM	58	TUBE	
195	90266-0007	-	MM	72	TUBE	
200	315233-0110	-		2	SEAL RING R1/4"	
205	315233-0113	-		1	SEAL RING R1/2"	
210	342713-0210	-		1	PLUG,EXT.G-THREAD,HEXAGON SOCKET G1/4"	
220	342720-0114	-		1	STRAIGHT CONNECTION GA-15-G1/2"	
240	342929-0121	-		1	STRAIGHT COUPLING,SOLDER 8/6-8	
260	90055-0100	-		5	Y-CONNECTION,PARALLEL 6-6	
265	342923-0114	-		1	STRAIGHT COUPL.,INT.THREADED 6/4-G1/4"	
275	90224-0316	-		1	CONNECTION	
280	342960-0112	-		10	BULKHEAD COUPLING 6/4	
290	90030-0030	-		1	BULKHEAD CONNECTOR SV 12-L/SY	
300	527907-0000	-		1	PIPE	
310	342991-0104	-		2	HOSE CLIP,WORM DRIVE TYPE (23)-27	
320	90166-0060	-	MM	3000	HOSE	
320	90166-0060	-	MM	3000	HOSE	

Pos	Part No	SP	UN	Qty	Description	Page No

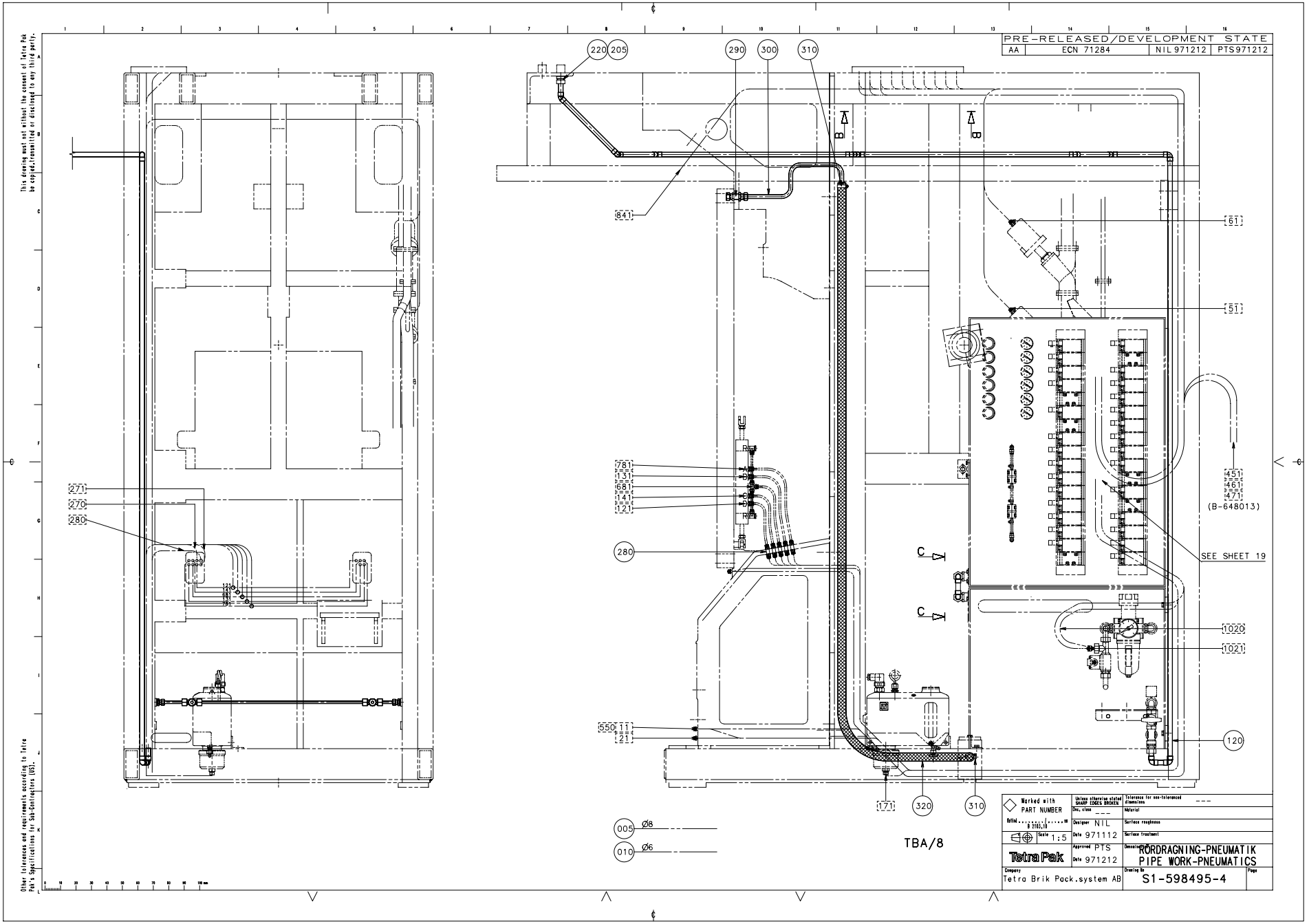
PRE-RELEASED/DEVELOPMENT STATE
AA ECN 71284 NIL 971212 PTS971212
220 205
290 300 310
84
61
51
45 46 47
(B-648013)
SEE SHEET 19
78 13 68 14 12
280
271 270 280
550 11 21
1020
1021
120
171 320 310
005 Ø8
010 Ø6
TBA/8
Tetra Pak
Tetra Brik Pack.system AB
RÖRDRAGNING-PNEUMATIK
PIPE WORK-PNEUMATICS
S1-598495-4
Designer NTL
Date 971112
Approved PTS
Date 971212
Scale 1:5

Pos	Part No	SP	UN	Qty	Description	Page No
1000B						
005	90166-0013	-	M	26	HOSE	
010	90166-0081	-	M	102	HOSE	
1000S						
005	90166-0013	-	M	19	HOSE	
010	90166-0081	-	M	105	HOSE	
Common parts						
080	B 544692-0000	-		1	PIPE	
115	560881-0000	-		1	PIPE	
120	B 544697-0000	-		1	PIPE	
140	B 450791-0000	-		1	PIPE	
170	90224-0319	-		2	CONNECTION	
180	90224-0323	-		1	CONNECTION	
190	90266-0007	-	MM	58	TUBE	
195	90266-0007	-	MM	72	TUBE	
200	315233-0110	-		2	SEAL RING R1/4"	
205	315233-0113	-		1	SEAL RING R1/2"	
210	342713-0210	-		1	PLUG,EXT.G-THREAD,HEXAGON SOCKET G1/4"	
220	342720-0114	-		1	STRAIGHT CONNECTION GA-15-G1/2"	
240	342929-0121	-		1	STRAIGHT COUPLING,SOLDER 8/6-8	
260	90055-0100	-		5	Y-CONNECTION,PARALLEL 6-6	
265	342923-0114	-		1	STRAIGHT COUPL.,INT.THREADED 6/4-G1/4"	
275	90224-0316	-		1	CONNECTION	
280	342960-0112	-		10	BULKHEAD COUPLING 6/4	
290	90030-0030	-		1	BULKHEAD CONNECTOR SV 12-L/SY	
300	527907-0000	-		1	PIPE	
310	342991-0104	-		2	HOSE CLIP,WORM DRIVE TYPE (23)-27	

Pos	Part No	SP	UN	Qty	Description	Page No

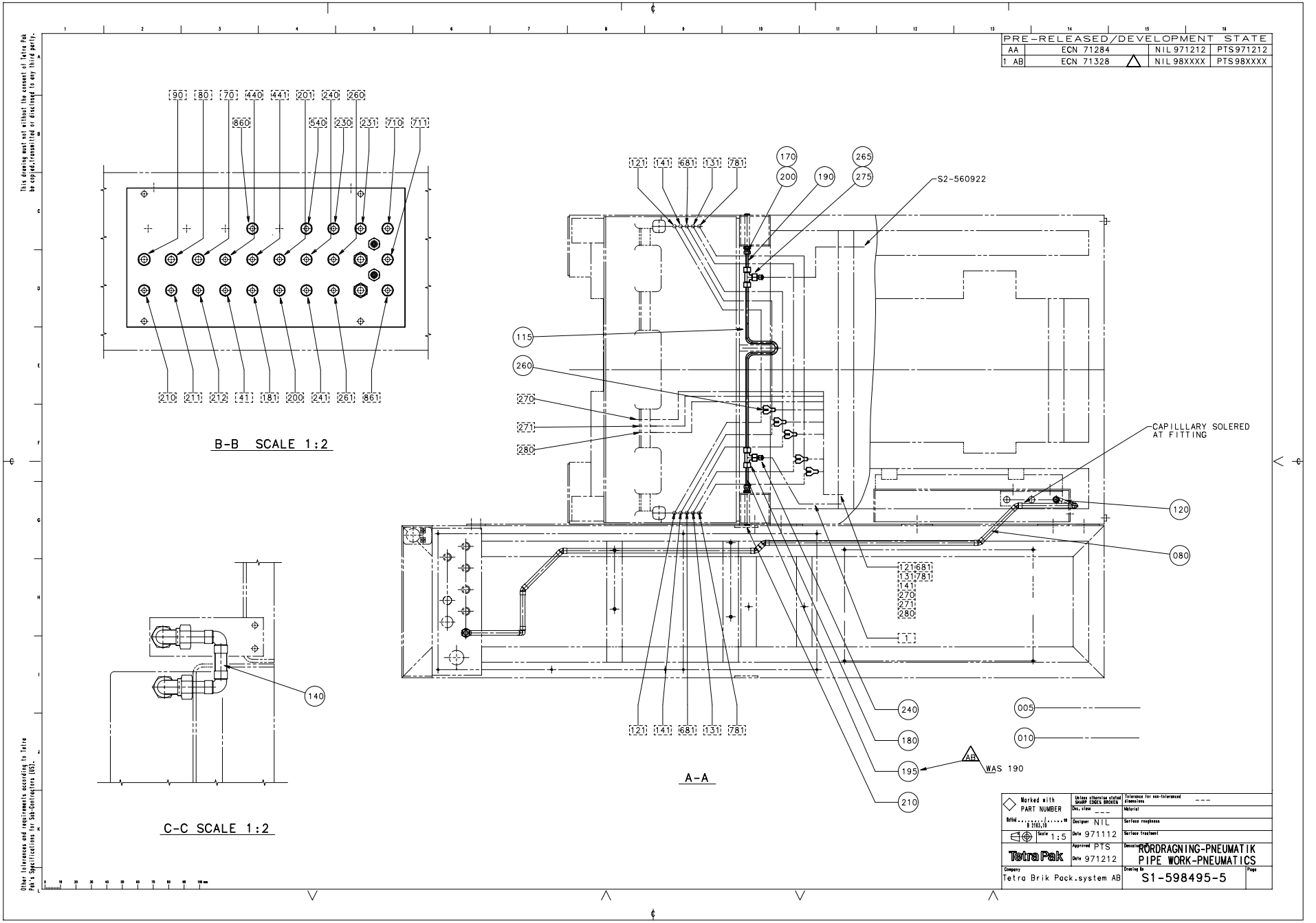
PRE-RELEASED/DEVELOPMENT STATE
AA ECN 71284 NIL 971212 PTS971212
1 AB ECN 71328 NIL 98XXXX PTS98XXXX
90 80 70 440 441 201 240 260
860 540 230 231 710 711
210 211 212 41 181 200 241 261 861
B-B SCALE 1:2
121 141 681 131 781
170 200 190 265 275
S2-560922
115 260 270 271 280
CAPILLLARY SOLERED AT FITTING
120 080
121 681 131 781 141 270 271 280 1
240 180 195 210
005 010
AB WAS 190
A-A
140
C-C SCALE 1:2
Marked with PART NUMBER
Unless otherwise stated SHARP EDGES BROKEN
Tolerance for non-tolerance dimensions ---
Dec. class ---
Material
Designer NTL
Surface roughness
Date 971112
Surface treatment
Scale 1:5
Approved PTS
Date 971212
Tetra Pak
RÖRDRAGNING-PNEUMATIK
PIPE WORK-PNEUMATICS
Company
Tetra Brik Pack.system AB
Drawing No
S1-598495-5
Pages
This drawing must not without the consent of Tetra Pak be copied, transmitted or disclosed to any third party.
Other tolerances and requirements according to Tetra Pak's specifications for Sub-Contractors (SS).

Pos	Part No	SP	UN	Qty	Description	Page No
1000B						
005	90166-0013	-	M	26	HOSE	
010	90166-0081	-	M	102	HOSE	
1000S						
005	90166-0013	-	M	19	HOSE	
010	90166-0081	-	M	105	HOSE	
Common parts						
080	B 544692-0000	-		1	PIPE	
115	560881-0000	-		1	PIPE	
120	B 544697-0000	-		1	PIPE	
140	B 450791-0000	-		1	PIPE	
170	90224-0319	-		2	CONNECTION	
180	90224-0323	-		1	CONNECTION	
190	90266-0007	-	MM	58	TUBE	
195	90266-0007	-	MM	72	TUBE	
200	315233-0110	-		2	SEAL RING R1/4"	
205	315233-0113	-		1	SEAL RING R1/2"	
210	342713-0210	-		1	PLUG,EXT.G-THREAD,HEXAGON SOCKET G1/4"	
220	342720-0114	-		1	STRAIGHT CONNECTION GA-15-G1/2"	
240	342929-0121	-		1	STRAIGHT COUPLING,SOLDER 8/6-8	
260	90055-0100	-		5	Y-CONNECTION,PARALLEL 6-6	
265	342923-0114	-		1	STRAIGHT COUPL.,INT.THREADED 6/4-G1/4"	
275	90224-0316	-		1	CONNECTION	
280	342960-0112	-		10	BULKHEAD COUPLING 6/4	
290	90030-0030	-		1	BULKHEAD CONNECTOR SV 12-L/SY	
300	527907-0000	-		1	PIPE	
310	342991-0104	-		2	HOSE CLIP,WORM DRIVE TYPE (23)-27	
320	90166-0060	-	MM	3000	HOSE	
320	90166-0060	-	MM	3000	HOSE	

Pos	Part No	SP	UN	Qty	Description	Page No

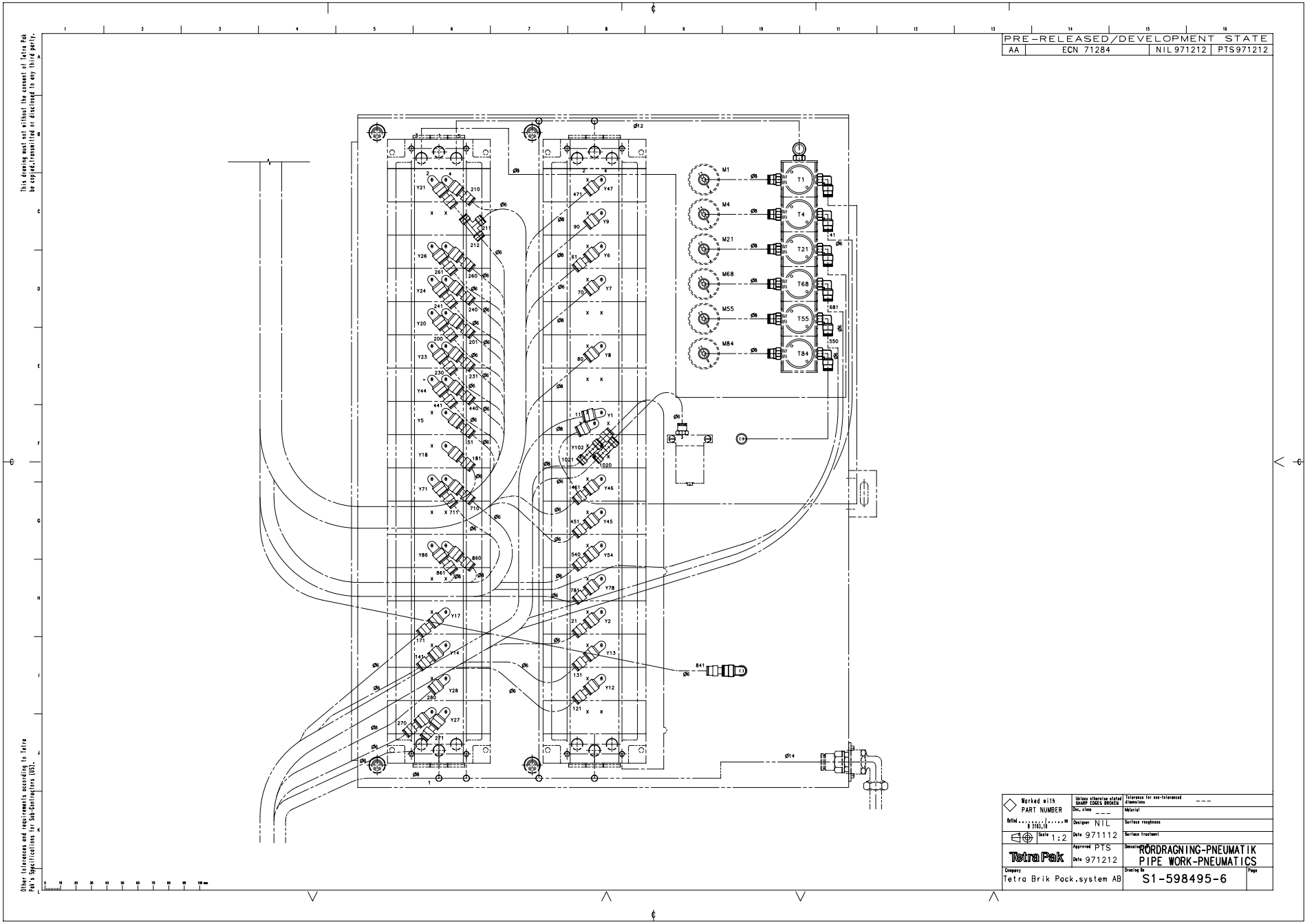
PRE-RELEASED/DEVELOPMENT STATE
AA | ECN 71284 | NIL 971212 | PTS971212
This drawing must not without the consent of Tetra Pak be copied, transmitted or disclosed to any third party.
Other tolerances and requirements according to Tetra Pak's Specifications for Sub-Contractors (SS).
M1
M4
M21
M68
M55
M84
T1
T4
T21
T68
T55
T84
Marked with PART NUMBER
Unless otherwise stated SHARP EDGES BROKEN
Tolerance for non-toleranced dimensions ---
Material
Surface roughness
Surface treatment
Designer NIL
Date 971112
Approved PTS
Date 971212
Scale 1:2
Tetra Pak
RÖRDRAGNING-PNEUMATIK
PIPE WORK-PNEUMATICS
Company
Tetra Brik Pack.system AB
Drawing No
S1-598495-6

Pos	Part No	SP	UN	Qty	Description	Page No
1000B						
005	90166-0013	-	M	26	HOSE	
010	90166-0081	-	M	102	HOSE	
1000S						
005	90166-0013	-	M	19	HOSE	
010	90166-0081	-	M	105	HOSE	
Common parts						
080	B 544692-0000	-		1	PIPE	
115	560881-0000	-		1	PIPE	
120	B 544697-0000	-		1	PIPE	
140	B 450791-0000	-		1	PIPE	
170	90224-0319	-		2	CONNECTION	
180	90224-0323	-		1	CONNECTION	
190	90266-0007	-	MM	58	TUBE	
195	90266-0007	-	MM	72	TUBE	
200	315233-0110	-		2	SEAL RING R1/4"	
205	315233-0113	-		1	SEAL RING R1/2"	
210	342713-0210	-		1	PLUG,EXT.G-THREAD,HEXAGON SOCKET G1/4"	
220	342720-0114	-		1	STRAIGHT CONNECTION GA-15-G1/2"	
240	342929-0121	-		1	STRAIGHT COUPLING,SOLDER 8/6-8	
260	90055-0100	-		5	Y-CONNECTION,PARALLEL 6-6	
265	342923-0114	-		1	STRAIGHT COUPL.,INT.THREADED 6/4-G1/4"	
275	90224-0316	-		1	CONNECTION	
280	342960-0112	-		10	BULKHEAD COUPLING 6/4	
290	90030-0030	-		1	BULKHEAD CONNECTOR SV 12-L/SY	
300	527907-0000	-		1	PIPE	
310	342991-0104	-		2	HOSE CLIP,WORM DRIVE TYPE (23)-27	
320	90166-0060	-	MM	3000	HOSE	
320	90166-0060	-	MM	3000	HOSE	

Pos	Part No	SP	UN	Qty	Description	Page No

DETERGENT PUMP

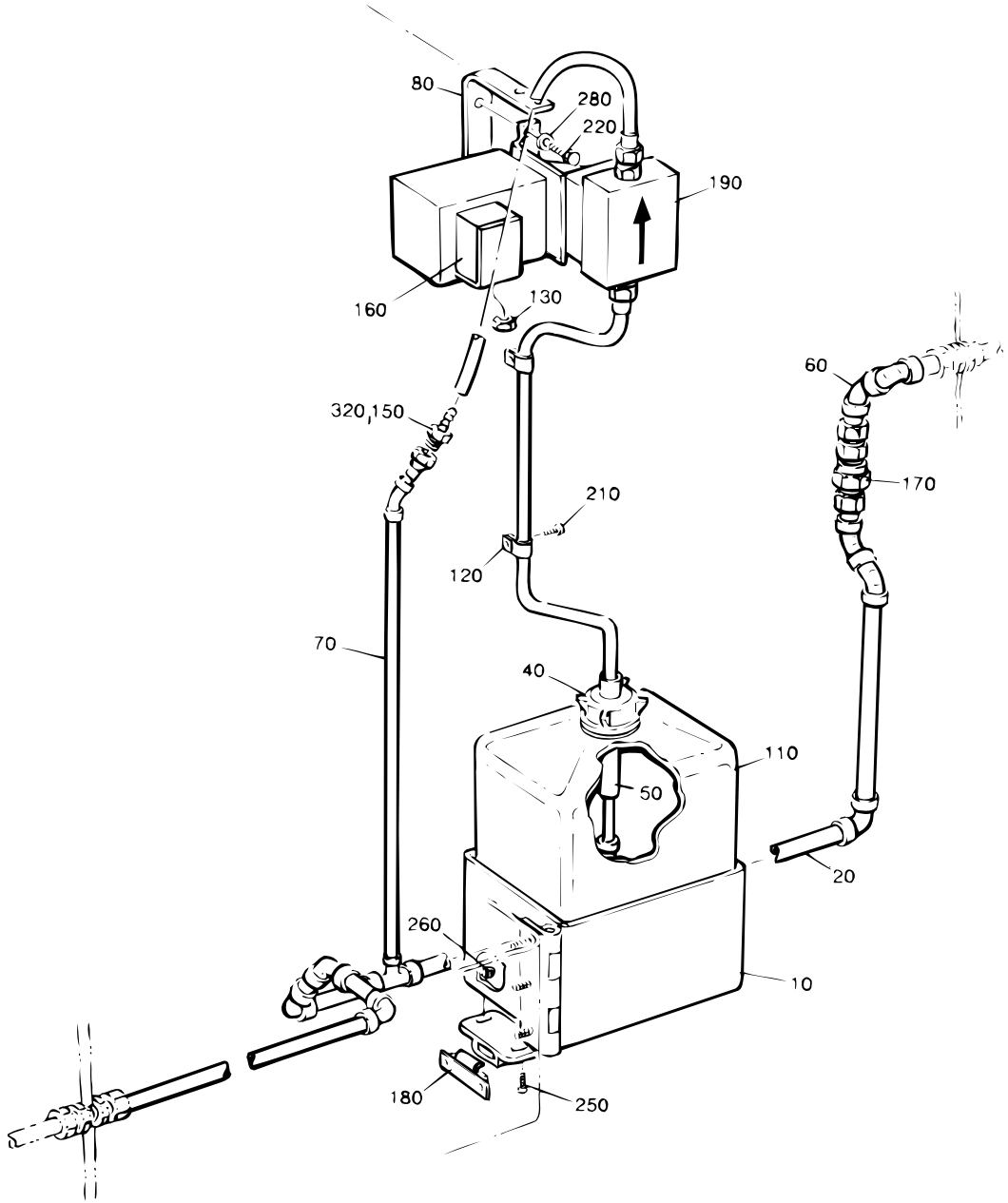

S-450792-1
ECN 6321

Pos	Part No	SP	UN	Qty	Description	Page No
-						
010	547906-0000	-		1	SHELF	
020	B 450793-0000	-		1	PIPE	
040	35962-0000	K		1	LID	
050	259867-0000	-		1	HOSE CLAMP	
060	B 450794-0000	-		1	PIPE	
070	B 450795-0000	-		1	PIPE	
080	450796-0000	-		1	BRACKET	
110	90050-0011	-		1	BOTTLE	
120	90074-0002	-		2	CABLE CLIP JR11 STAINLESS	
130	90099-0003	-		1	NUT	
150	90131-0004	-		1	HOSE COUPLING	
160	90195-0020	-		1	TERMINAL BK2 KRG 2-POLE	
170	90230-0021	-		1	NON-RETURN VALVE	
180	90237-0046	-		1	LOCK PART	
190	B 90321-0037	F		1	PUMP	
210	312105-0323	-		5	SCREW M6S ISO 4017 M5X8 A280	
220	312105-0368	-		4	SCREW M6S ISO 4017 M6X16 A280	
250	312125-0220	-		2	SLOTTED HEMCS3X6RFR	
260	312605-0310	-		2	NUT M6M3RFR	
280	315105-0153	-		3	WASHER BRB6,4X12RFR	
320	352136-0127	-		1	GLAND FITTING	

Pos	Part No	SP	UN	Qty	Description	Page No

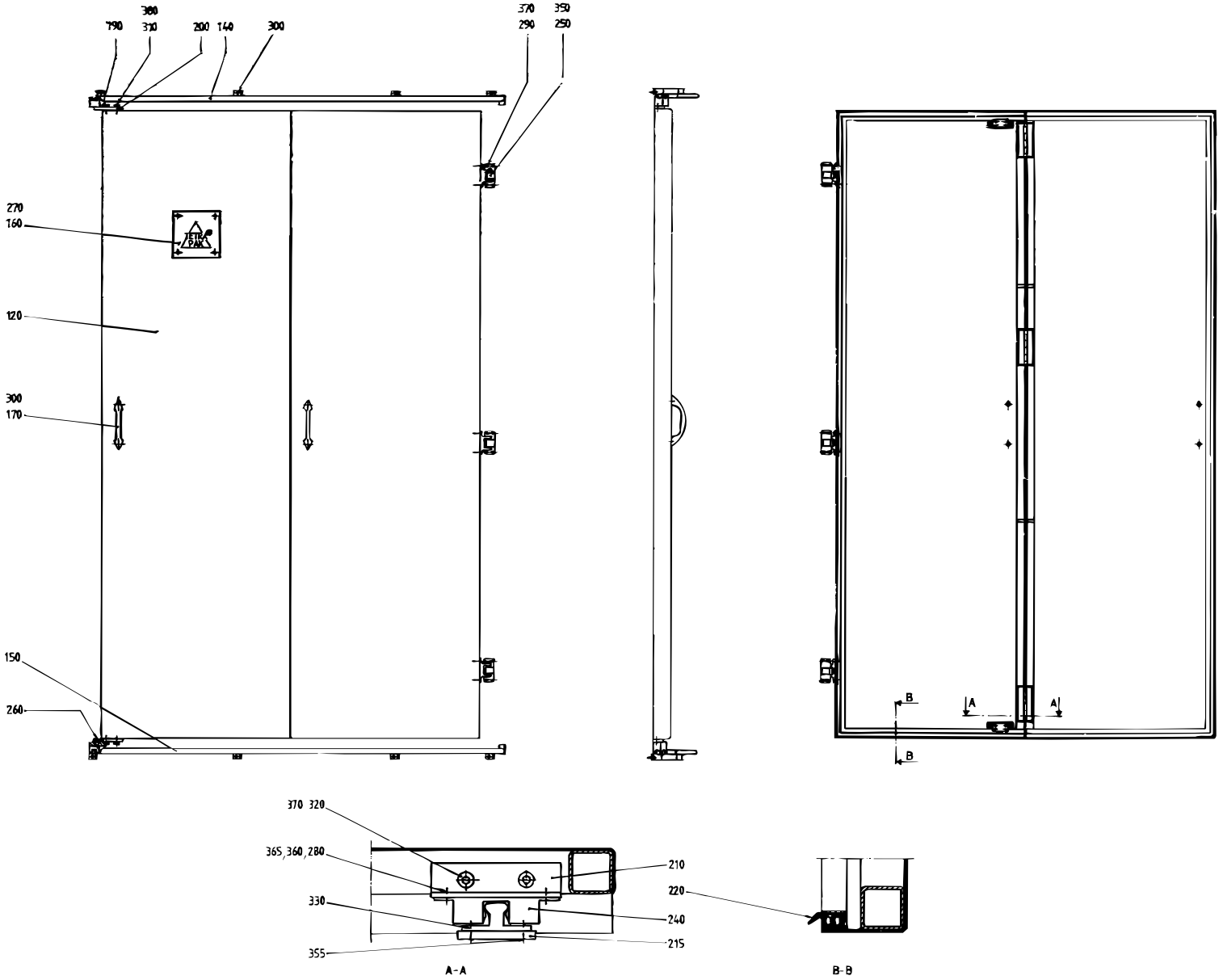

S-450824-2
ECN 12609

Pos	Part No	SP	UN	Qty	Description	Page No
-						
120	450825-0000	-		1	DOOR	
140	269320-0000	-		1	RAIL	
150	269321-0000	-		1	RAIL	
160	3675-0000	-		1	TETRA PAK NAME PLATE	
170	7309-0000	-		2	HANDLE	
190	230226-0000	-		2	BLOCKING PIECE	
200	246739-0000	-		2	BRACKET	
210	450826-0000	-		2	BRACKET	
215	450973-0000	-		2	BRACKET	
220	90143-0017	K	MM	6000	FOAMRUBBERSTRIP B68205	
230	90153-0017	K	G	x	ADHESIVE	
240	90237-0070	-		2	LOCK	
260	90248-0013	-		3	HINGE 3562E STUV	
280	311103-0403	-		2	CYLINDRICACP M6 8X25 RFR	
282	311520-0329	-		3	BLANK RIVE2,4X8	
285	312105-0291	-		4	SCREW M6S ISO 4017 M4X12 A280	
290	312105-0327	-		12	SCREW M6S ISO 4017 M5X12 A280	
300	312105-0366	-		12	SCREW M6S ISO 4017 M6X12 A280	
310	312105-0368	-		4	SCREW M6S ISO 4017 M6X16 A280	
320	312115-0325	-		4	SCREW 5X10 A4 80	
330	312145-0285	-		4	SLOTTED HEMFS4X6RFR	
350	312145-0325	-		12	SLOTTED HEMFS5X10RFR	
355	312145-0327	-		4	SLOTTED HEMFS5X12RFR	
362	312605-0312	-		4	NUT M6M4RFR	
365	315105-0146	-		4	WASHER BRB5,3X10RFR	
370	315105-0146	-		16	WASHER BRB5,3X10RFR	
380	315105-0153	-		4	WASHER BRB6,4X12RFR	

Pos	Part No	SP	UN	Qty	Description	Page No

LIFTING UNIT

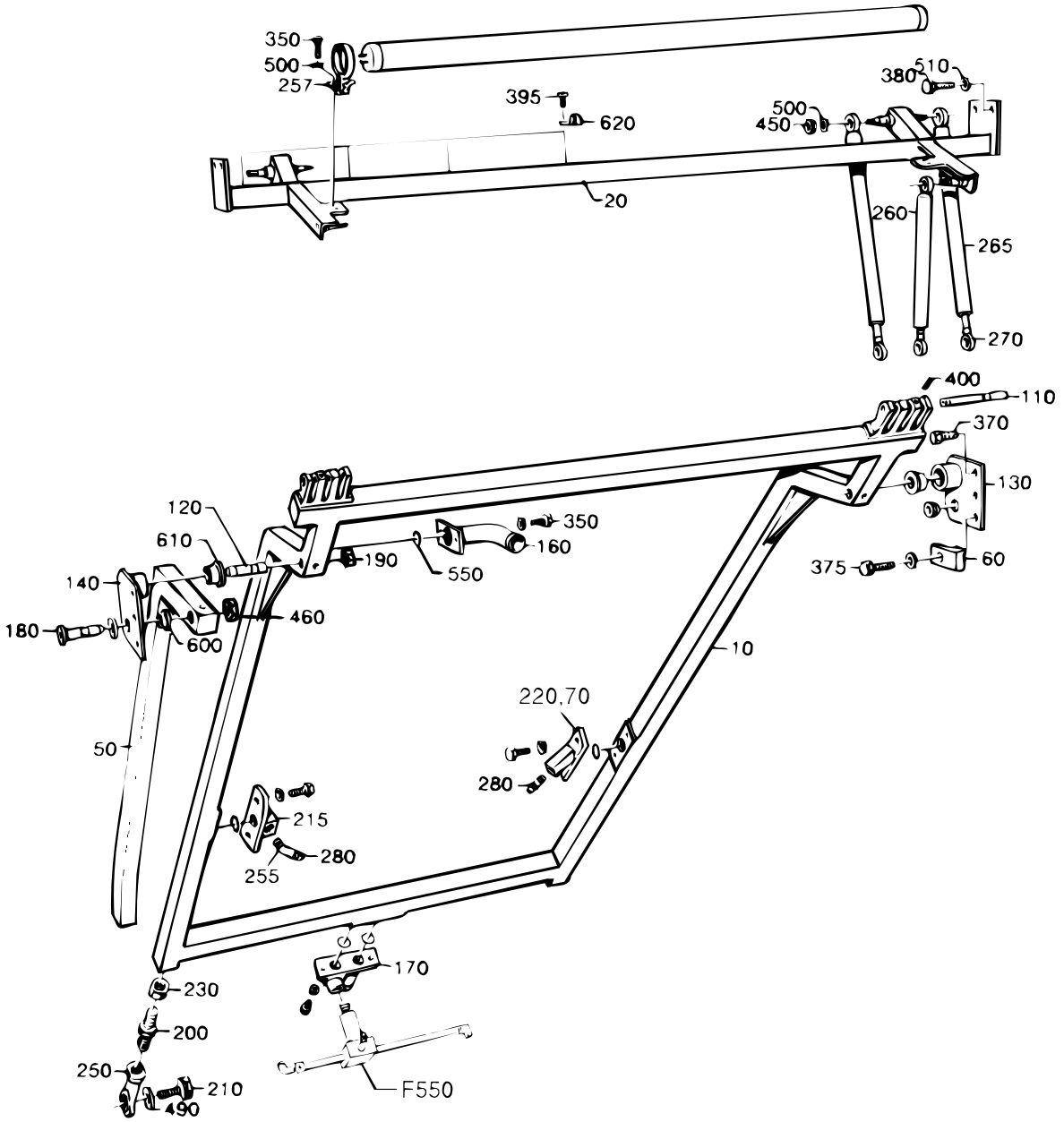

S-450840-4
ECN 16850

Pos	Part No	SP	UN	Qty	Description	Page No
-						
F550	A 594613-0100	-		1	CLEANING HEAD	259
010	493021-0000	-		1	ARM	
020	450841-0000	-		1	CANTILEVER	
050	493022-0000	-		2	ARM	
060	532371-0000	-		1	STOP LUG	
070	534486-0000	-		1	PIPE HOLDER	
110	285825-0000	K		2	SHAFT	
120	484219-0000	K		2	SHAFT	
130	484220-0000	D		1	BRACKET	
140	484221-0000	D		1	BRACKET	
160	285979-0000	-		1	PIPE	
170	B 476894-0000	-		1	PIPE HOLDER	
180	484222-0000	K		2	SHAFT	
190	484223-0000	K		2	NUT	
200	457354-0000	K		4	SCREW	
210	297770-0000	-		4	SCREW	
215	442566-0000	-		1	BRACKET	
230	457355-0000	-		4	NUT	
250	90115-0111	-		4	JOINT	
257	B 90164-0003	D		1	LIGHT FIXTURE 1X20W IP67	
260	90347-0036	K		2	DAMPER	
265	90347-0038	K		4	DAMPER	
270	90347-0300	K		6	BRACKET	
280	90424-0035	-		2	NOZZLE	
350	312105-0368	-		12	SCREW M6S ISO 4017 M6X16 A280	
370	312105-0493	-		5	SCREW M6S ISO 4017 M10X25 A280	
375	312105-0495	-		1	SCREW M6S ISO 4017 M10X30 A280	
380	312105-0497	-		2	SCREW M6S ISO 4017 M10X35 A280	
395	312125-0285	-		4	SLOTTED HEMCS4X6RFR	
400	312318-0362	K		2	SET SCREW CUP POINT ISO 4029 M6X8 RFR	
450	312605-0316	-		6	NUT M6M6RFR	
460	312605-0322	-		2	NUT M6M12RFR	
490	315103-0195	-		4	WASHER BRB23X40MSGFN	
500	315105-0153	-		18	WASHER BRB6,4X12RFR	
510	315105-0173	-		10	WASHER BRB10,5X22RFR	
550	315202-0216	K		5	O-RING 22,2X3	
600	321101-0173	-		4	FLANGE BUS 12F7X12	
610	321101-0233	K		4	FLANGE BUS 20F7X20	
620	352135-0201	-		4	CRAMP 12	
630	352136-0127	-		1	GLAND FITTING	

Pos	Part No	SP	UN	Qty	Description	Page No

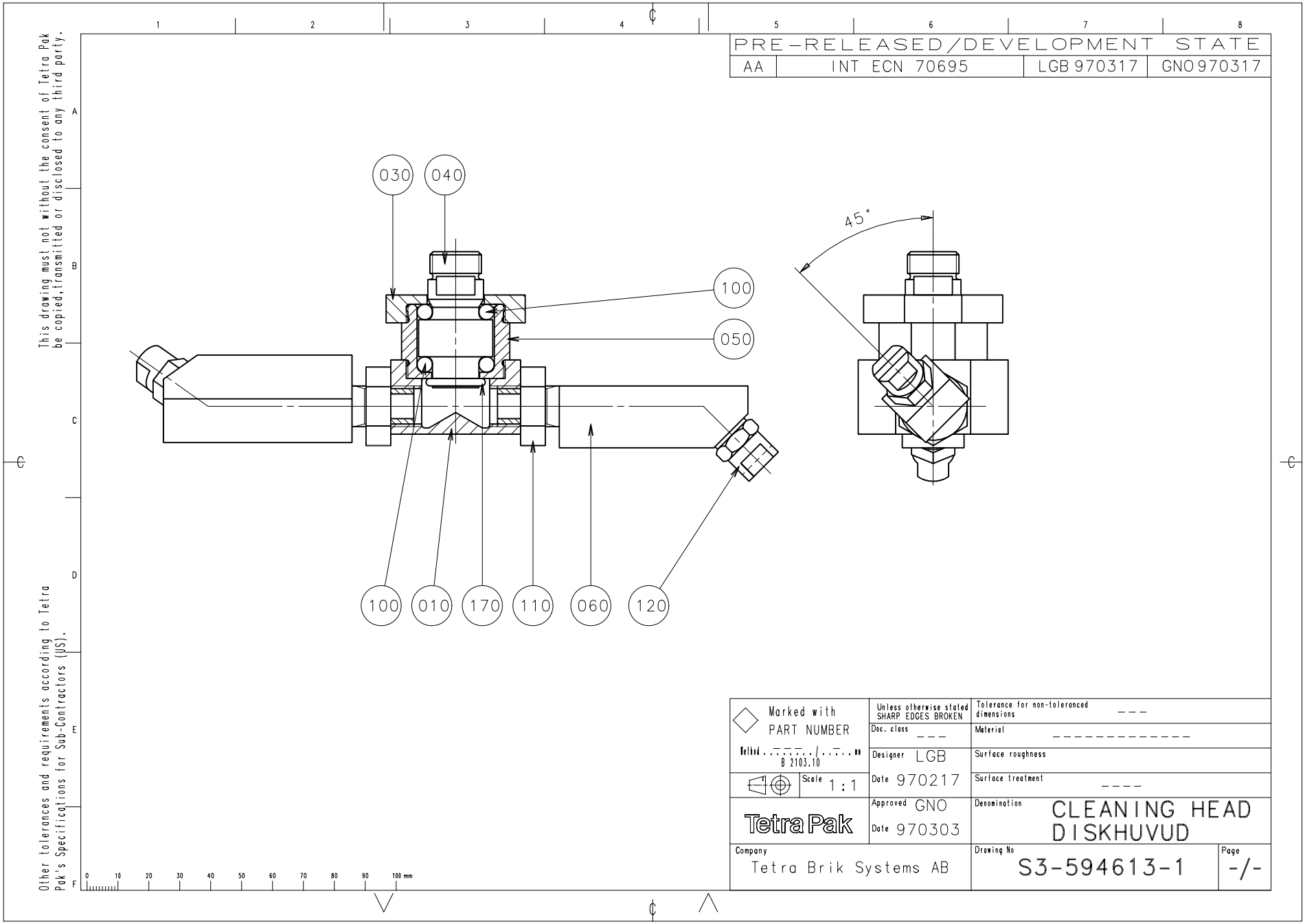
PRE-RELEASED/DEVELOPMENT STATE
AA | INT ECN 70695 | LGB 970317 | GNO 970317
This drawing must not without the consent of Tetra Pak be copied, transmitted or disclosed to any third party.
Other tolerances and requirements according to Tetra Pak's Specifications for Sub-Contractors (JS).
030
040
100
050
100
010
170
110
060
120
45°
Marked with PART NUMBER
Method ISO B 2103.10
Scale 1:1
Unless otherwise stated SHARP EDGES BROKEN
Doc. class ---
Designer LGB
Date 970217
Approved GNO
Date 970303
Tolerance for non-toleranced dimensions ---
Material ----------
Surface roughness
Surface treatment ----
Denomination CLEANING HEAD DISKHUVUD
Company Tetra Brik Systems AB
Drawing No S3-594613-1
Page -/-
0 10 20 30 40 50 60 70 80 90 100 mm

Pos	Part No	SP	UN	Qty	Description	Page No
-						
010	440600-0000	D		1	ROTOR	
030	534880-0000	K		1	END SECTION	
040	534878-0000	K		1	SHAFT	
050	534879-0000	K		1	BEARING HOUSING	
060	440604-0001	D		2	PIPE	
100	90090-0020	K		24	BALL	
110	90330-0034	-		2	NUT,HEXAGON G1/4"	
120	90424-0026	K		2	NOZZLE	
170	315202-0211	F		1	O-RING 13,3X2,4	

Pos	Part No	SP	UN	Qty	Description	Page No

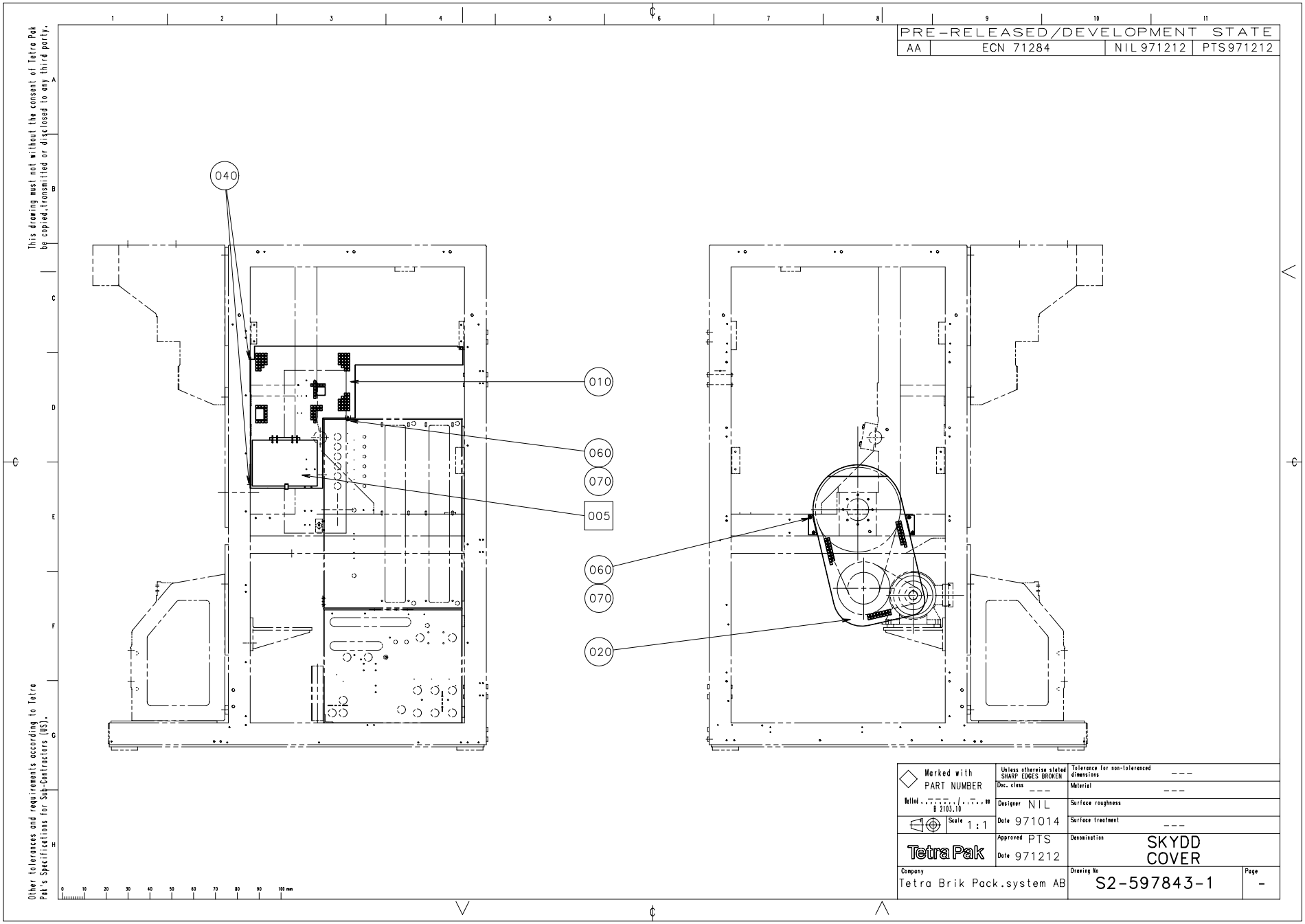
PRE-RELEASED/DEVELOPMENT STATE
AA
ECN 71284
NIL 971212
PTS 971212
040
010
060
070
005
060
070
020
This drawing must not without the consent of Tetra Pak be copied,transmitted or disclosed to any third party.
Other tolerances and requirements according to Tetra Pak's Specifications for Sub-Contractors (US).
Marked with PART NUMBER
Unless otherwise stated SHARP EDGES BROKEN
Tolerance for non-toleranced dimensions ---
Doc. class ---
Material ---
Designer NIL
Surface roughness
Date 971014
Surface treatment ---
Scale 1:1
Approved PTS
Date 971212
Denomination SKYDD COVER
Company Tetra Brik Pack.system AB
Drawing No S2-597843-1
Page -

Pos	Part No	SP	UN	Qty	Description	Page No
-						
F005	A 597842-0100	-		1	HOLDER	
010	440482-0000	-		1	PROTECTION	
020	450884-0000	-		1	PROTECTION	
040	311211-0292	-		2	TAPER PIN GKP6X6X30	
060	312101-0366	-		6	SCREW M6S6X12FZB	
070	315101-0153	-		6	WASHER BRB6,4X12FZB	

Pos	Part No	SP	UN	Qty	Description	Page No

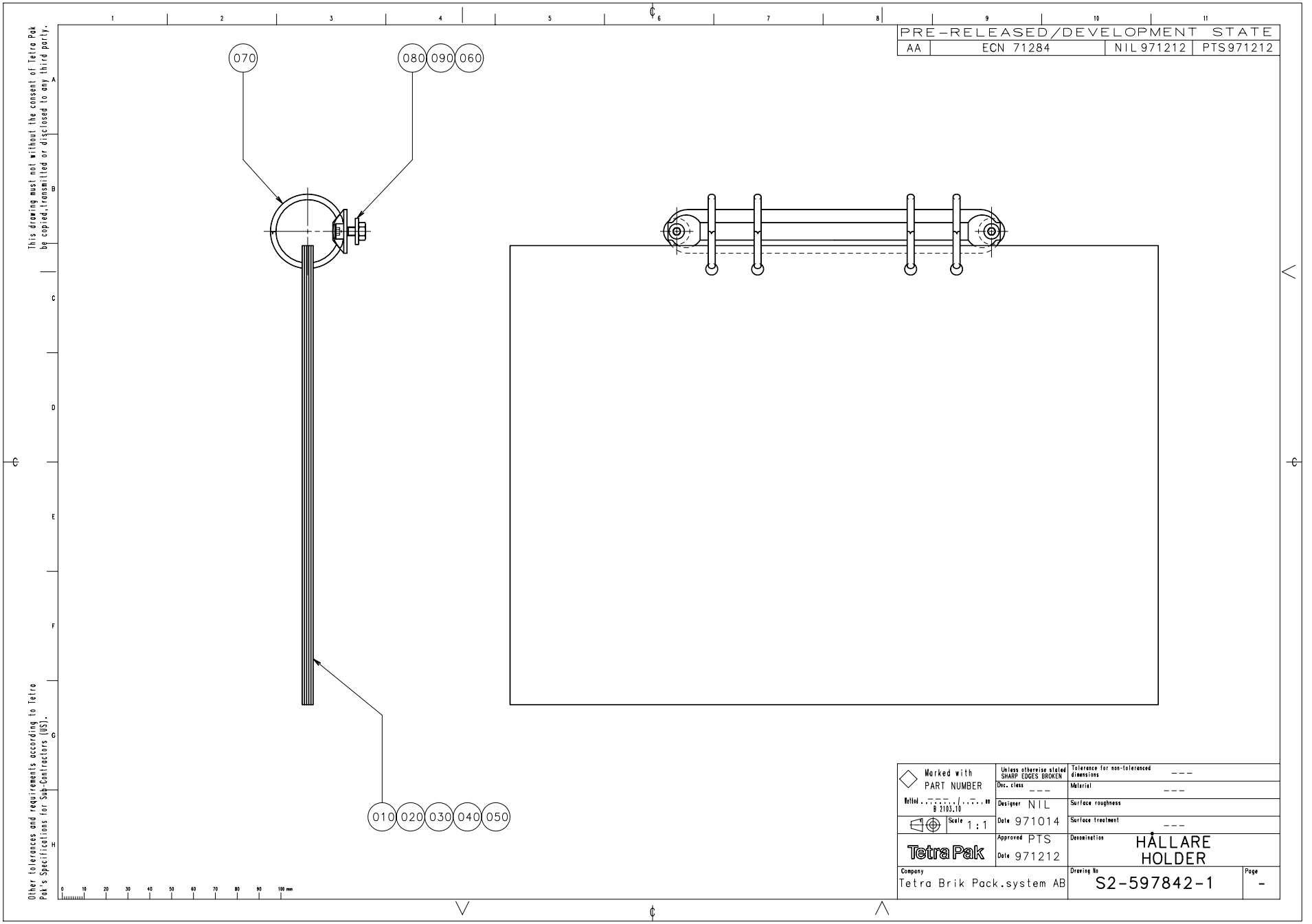
PRE-RELEASED/DEVELOPMENT STATE
AA
ECN 71284
NIL 971212
PTS971212
070
080
090
060
010
020
030
040
050
This drawing must not without the consent of Tetra Pak be copied, transmitted or disclosed to any third party.
Other tolerances and requirements according to Tetra Pak's Specifications for Sub-Contractors (US).
Marked with PART NUMBER
Unless otherwise stated SHARP EDGES BROKEN
Tolerance for non-toleranced dimensions ---
Doc. class ---
Material ---
Designer NIL
Surface roughness
Date 971014
Surface treatment ---
Scale 1:1
Approved PTS
Date 971212
Denomination HÅLLARE HOLDER
Tetra Pak
Company Tetra Brik Pack.system AB
Drawing No S2-597842-1
Page -

Pos	Part No	SP	UN	Qty	Description	Page No
1000B						
020	597846-0000	-		1	PNEUMATIC DIAGRAM	
050	597838-0000	-		1	CENTRAL LUBRIC. DIAGRAM	
1000S						
020	574600-0000	-		1	PNEUMATIC DIAGRAM	
050	597844-0000	-		1	CENTRAL LUBRIC. DIAGRAM	
Common parts						
010	575448-0000	-		1	VALVE PANEL	
030	479858-0000	-		1	HYDRAULIC DIAGRAM	
040	576730-0000	-		1	WATER DIAGRAM	
060	38087-0000	-		2	WASHER	
070	90243-0169	-		1	PAPER HOLDER	
080	312115-0325	-		2	SCREW 5X10 A4 80	
090	312605-0314	-		2	NUT M6M5RFR	

Pos	Part No	SP	UN	Qty	Description	Page No

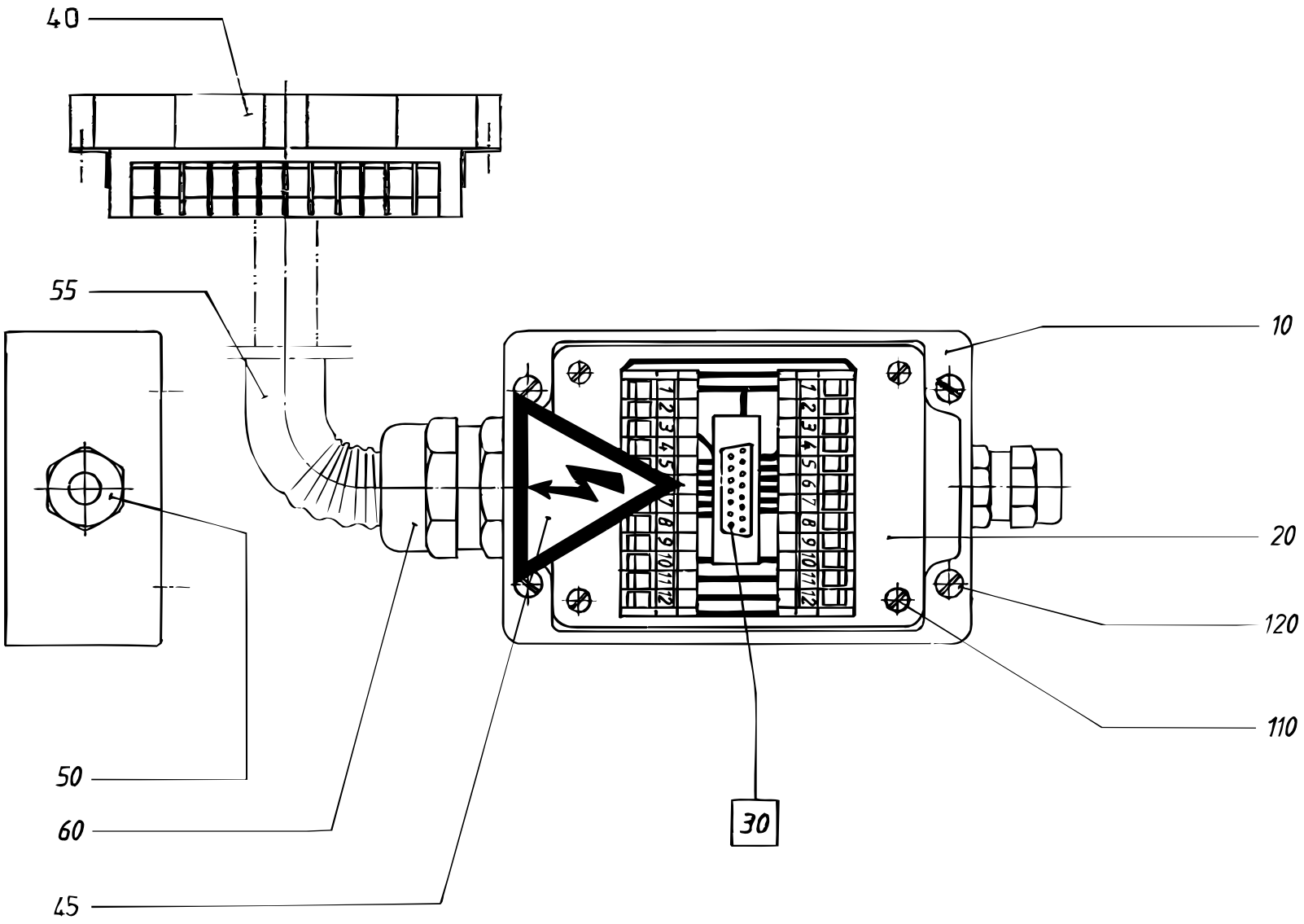

S-451348-2
ECN 22846

Pos	Part No	SP	UN	Qty	Description	Page No
TB/8 or TBA/8 or TBA/8LSC or TBA/8PRISMA or TBO/8						
F030	A 68917-0100	-		1	ANGLE INDICATOR	**267**
010	464297-0000	D		1	CONNECTION BOX	
040	90110-0128	K		1	PLUG 24-POL	
045	90194-0016	-		1	SIGN "FLASH SIGN" 50X50MM	
050	352103-0106	K		1	CABLE GLAND ST 11	
055	352135-0106	D	MM	1400	HOSE .016	
060	352136-0127	K		1	GLAND FITTING	
TB/9 or TBA/19 or TBA/9						
F030	A 68917-0100	-		1	ANGLE INDICATOR	**267**
010	751631-0000	D		1	CONNECTION BOX	
045	90194-0016	-		1	SIGN "FLASH SIGN" 50X50MM	
050	352103-0106	K		1	CABLE GLAND ST 11	
060	352103-0110	K		1	CABLE GLAND STR 16	
TK or TT/1 or TTA/5 ONEMACHINE						
010	451409-0000	D		1	CONNECTION BOX	
050	352103-0101	K		1	CABLE GLAND ST 9	
060	352103-0115	K		1	CABLE GLAND STR 21	
TT/2						
F030	A 68917-0100	-		1	ANGLE INDICATOR	**267**
010	451409-0000	D		1	CONNECTION BOX	
050	352103-0101	K		1	CABLE GLAND ST 9	
060	352103-0115	K		1	CABLE GLAND STR 21	
TB/19						
F030	A 68917-0100	-		1	ANGLE INDICATOR	**267**
010	751631-0000	D		1	CONNECTION BOX	
045	90194-0016	-		1	SIGN "FLASH SIGN" 50X50MM	
050	352103-0106	K		1	CABLE GLAND ST 11	
060	352103-0110	K		1	CABLE GLAND STR 16	
Common parts						
020	451423-0000	K		1	CIRCUIT BOARD	
110	312125-0220	K		4	SLOTTED HEMCS3X6RFR	
120	312125-0291	K		4	SLOTTED CHEESE HEAD ISO 1207 M4X12 RFR	

Pos	Part No	SP	UN	Qty	Description	Page No

This page is intentionally left blank

Pos	Part No	SP	UN	Qty	Description	Page No
-						
D001	B 49915-0000	-		x	CIRCUIT DIAGRAM	
D002	B 49916-0000	-		x	COMPONENT LAYOUT	
D003	B 57008-0000	-		x	BACKPLANE	
010	540306-0001	-		1	COMPONENTS WITHOUT TP-NO	
020	540307-0000	-		1	PRINTED CIRCUIT BOARD	

Pos	Part No	SP	UN	Qty	Description	Page No

This page is intentionally left blank

Pos	Part No	SP	UN	Qty	Description	Page No
90042-0172	90042-0467	F		1	COIL	
90048-0034	90048-0450	-		1	SPARE PARTS KIT	
90048-0034	90274-0052	-		1	SWITCH (MONITOR)	
90064-0094	90064-0318	K		1	SIGNAL LAMP	
90064-0095	90064-0319	K		1	SIGNAL LAMP	
90064-0096	90064-0320	K		1	SIGNAL LAMP	
90164-0003	90297-0002	F		1	FLUORESCENT TUBE 18W	
90201-0010	90201-0300	-		1	PLATE	
90201-0010	90201-0301	-		1	SPRING	
90201-0010	90201-0302	-		1	WASHER	
90201-0010	90201-0303	-		1	SPARE PARTS KIT	
90201-0058	90201-0334	-		1	COIL	
90264-0037	90264-0310	-		1	CAPACITOR 2MF 460V	
90264-0037	90264-0316	-		1	TOUCH GUARD	
90264-0037	90264-0325	-		1	SPARE MOTOR ZIEHL	
90264-0037	90264-0328	-		1	CONE	
90321-0037	90166-0157	K	MM	1500	HOSE	
90321-0037	90321-0380	K		1	DIAPHRAGM	
90321-0037	90321-0396	K		1	FILTER	
90415-0029	90415-0323	-		1	FILTERINSERT FOR -29	
90415-0032	90415-0328	K		1	FILTER INSERT	
90419-0005	90036-0038	-		1	BULB 24V 25W E27	
90419-0005	90419-0302	K		1	LENS RED FOR -304	
90422-0008	315202-0612	F		1	O-RING 75,80X3,53	
271823-0000	90415-0314	F		1	FILTERINSERT 5594-36	
271823-0000	90415-0325	F		1	GASKET	
434919-0000	311103-0413	-		1	CYLINDRICACP M6 8X50 RFR	
434919-0000	312911-0119	-		4	THREADED I M6X2,0D	
434919-0000	312911-0125	-		2	THREADED I M8X1,0D	
434920-0000	311103-0413	-		1	CYLINDRICACP M6 8X50 RFR	
434920-0000	312911-0119	-		4	THREADED I M6X2,0D	
434920-0000	312911-0125	-		2	THREADED I M8X1,0D	
445583-0000	315202-0500	K		1	O-RING ,42X1,53	
445583-0000	315202-0501	K		1	O-RING 2,90X1,78	
450716-0000	90418-0053	-		1	ELBOW 90,INTERNAL CONNECTION 15	
450716-0000	90418-0058	-		1	ELBOW 90,INTERNAL AND EXTERNAL CON-NEC.15	
450716-0000	90418-0063	-		1	ADAPTER,INTERNAL CONNECTION 15-G1/2"	
450716-0000	341001-0228	-	M	1	COPPER TUBE	

450730-0000

This page is intentionally left blank

Pos	Part No	SP	UN	Qty	Description	Page No
	90418-0053	-		1	ELBOW 90,INTERNAL CONNECTION 15	
450730-0000						
	90418-0058	-		1	ELBOW 90,INTERNAL AND EXTERNAL CON-	
NEC.15						
450730-0000						
	341001-0228	-	M	1	COPPER TUBE	
450731-0000						
	90418-0053	-		1	ELBOW 90,INTERNAL CONNECTION 15	
450731-0000						
	90418-0054	-		1	ELBOW 45,INTERNAL CONNECTION 15	
450731-0000						
	90418-0055	-		1	ELBOW 45,INTERNAL AND EXTERNAL	
CONN.15						
450731-0000						
	341001-0228	-	M	1	COPPER TUBE	
450740-0000						
	90418-0053	-		1	ELBOW 90,INTERNAL CONNECTION 15	
450740-0000						
	341001-0228	-	M	1	COPPER TUBE	
450741-0000						
	90418-0053	-		2	ELBOW 90,INTERNAL CONNECTION 15	
450741-0000						
	341001-0228	-	M	1	COPPER TUBE	
450742-0000						
	90418-0053	-		1	ELBOW 90,INTERNAL CONNECTION 15	
450742-0000						
	341001-0228	-	M	1	COPPER TUBE	
450743-0000						
	90418-0053	-		1	ELBOW 90,INTERNAL CONNECTION 15	
450743-0000						
	90418-0054	-		2	ELBOW 45,INTERNAL CONNECTION 15	
450743-0000						
	90418-0058	-		1	ELBOW 90,INTERNAL AND EXTERNAL CON-	
NEC.15						
450743-0000						
	341001-0228	-	M	1	COPPER TUBE	
450748-0000						
	90418-0053	-		1	ELBOW 90,INTERNAL CONNECTION 15	
450748-0000						
	341001-0228	-	M	1	COPPER TUBE	
450791-0000						
	90418-0053	-		1	ELBOW 90,INTERNAL CONNECTION 15	
450791-0000						
	341001-0228	-	M	1	COPPER TUBE	
450793-0000						
	90418-0053	-		1	ELBOW 90,INTERNAL CONNECTION 15	
450793-0000						
	90418-0054	-		1	ELBOW 45,INTERNAL CONNECTION 15	
450793-0000						
	90418-0055	-		1	ELBOW 45,INTERNAL AND EXTERNAL	
CONN.15						
450793-0000						
	90418-0068	-		1	T-PIPE,REDUCTION INTERNAL CON-	
NEC.15X8X15						
450793-0000						
	341001-0228	-	M	1	COPPER TUBE	
450794-0000						
	90418-0054	-		1	ELBOW 45,INTERNAL CONNECTION 15	
450794-0000						
	90418-0058	-		1	ELBOW 90,INTERNAL AND EXTERNAL CON-	
NEC.15						
450794-0000						
	341001-0228	-	M	1	COPPER TUBE	
450795-0000						
	90418-0018	-		1	ELBOW 45,INTERNAL CONNECTION 8	
450795-0000						
	90418-0035	-		1	ADAPTER,INTERNAL CONNECTION 8-G1/4"	
450795-0000						
	341001-0148	-	M	1	COPPER TUBE	
464431-0000						
	90418-0003	-		1	SLEEVE,REDUCTION 12-8	
464431-0000						
	90418-0016	-		2	ADAPTER	
464431-0000						
	90418-0049	-		1	T-PIPE,REDUCTION INTERNAL	
CONNE.15X12X12						
464431-0000						
	90418-0050	-		1	T-PIPE,REDUCTION INTERNAL	
CONNE.15X12X15						

This page is intentionally left blank

Pos	Part No	SP	UN	Qty	Description	Page No
464431-0000	90418-0054	-		1	ELBOW 45,INTERNAL CONNECTION 15	
464431-0000	90418-0055	-		1	ELBOW 45,INTERNAL AND EXTERNAL CONN.15	
464431-0000	341001-0148	-	M	1	COPPER TUBE	
464431-0000	341001-0228	-	M	1	COPPER TUBE	
469795-0000	312911-0118	-		2	THREADED I M6X1,5D	
476894-0000	90330-0065	-		1	ELBOW PIPE	
484536-0000	90187-0059	-		1	VALVE	
484538-0000	90235-0270	-		1	VALVE	
484538-0000	90235-0460	K		1	WEAR & TEAR PARTS KIT	
531592-0000	90266-0021	-	M	1	DAIRY PIPE	
531592-0000	342810-0101	-		4	ELBOW PIPE25	
531761-0000	312911-0118	-		2	THREADED I M6X1,5D	
542074-0000	90266-0021	-	M	1	DAIRY PIPE	
542074-0000	342808-0101	-		2	ELBOW PIPE25	
542074-0000	342810-0101	-		1	ELBOW PIPE25	
544688-0000	90418-0053	-		1	ELBOW 90,INTERNAL CONNECTION 15	
544688-0000	90418-0054	-		1	ELBOW 45,INTERNAL CONNECTION 15	
544688-0000	341001-0228	-	M	1	COPPER TUBE	
544689-0000	90418-0054	-		1	ELBOW 45,INTERNAL CONNECTION 15	
544689-0000	90418-0055	-		1	ELBOW 45,INTERNAL AND EXTERNAL CONN.15	
544689-0000	341001-0228	-	M	1	COPPER TUBE	
544690-0000	90418-0054	-		1	ELBOW 45,INTERNAL CONNECTION 15	
544690-0000	341001-0228	-	M	1	COPPER TUBE	
544691-0000	90418-0054	-		1	ELBOW 45,INTERNAL CONNECTION 15	
544691-0000	90418-0055	-		1	ELBOW 45,INTERNAL AND EXTERNAL CONN.15	
544691-0000	341001-0228	-	M	1	COPPER TUBE	
544692-0000	90418-0053	-		1	ELBOW 90,INTERNAL CONNECTION 15	
544692-0000	90418-0054	-		5	ELBOW 45,INTERNAL CONNECTION 15	
544692-0000	341001-0228	-	M	1	COPPER TUBE	
544693-0000	90418-0053	-		1	ELBOW 90,INTERNAL CONNECTION 15	
544693-0000	90418-0055	-		1	ELBOW 45,INTERNAL AND EXTERNAL CONN.15	
544693-0000	341001-0228	-	M	1	COPPER TUBE	
544694-0000	90418-0053	-		1	ELBOW 90,INTERNAL CONNECTION 15	
544694-0000	90418-0055	-		1	ELBOW 45,INTERNAL AND EXTERNAL CONN.15	
544694-0000	341001-0228	-	M	1	COPPER TUBE	
544695-0000	90418-0053	-		1	ELBOW 90,INTERNAL CONNECTION 15	

This page is intentionally left blank

Pos	Part No	SP	UN	Qty	Description	Page No
544695-0000						
	341001-0228	-	M	1	COPPER TUBE	
544696-0000						
	90418-0053	-		1	ELBOW 90,INTERNAL CONNECTION 15	
544696-0000						
	341001-0228	-	M	1	COPPER TUBE	
544697-0000						
	90418-0053	-		3	ELBOW 90,INTERNAL CONNECTION 15	
544697-0000						
	341001-0228	-	M	1	COPPER TUBE	
571277-0000						
	292449-0000	-		1	PUMP HOUSING	
575795-0000						
	90418-0053	-		2	ELBOW 90,INTERNAL CONNECTION 15	
575795-0000						
	341001-0228	-	MM	900	COPPER TUBE	

Pos	Part No	SP	UN	Qty	Description	Page No

Tetra Pak

SPC

Spare Parts Catalogue

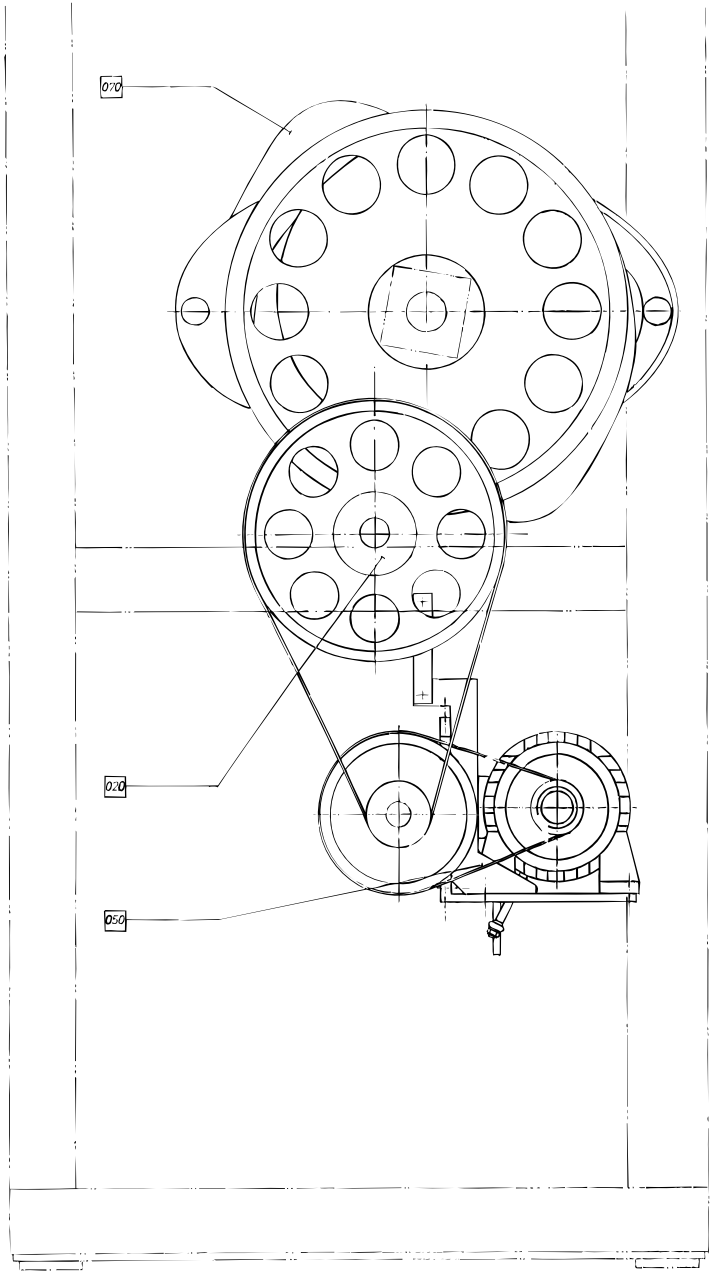

S-648003-1
ECN 6214

Pos	Part No	SP	UN	Qty	Description	Page No
F010	A 440588-0200	-		1	CRANK	283
F020	A 239890-0300	-		1	INTERMEDIARY SHAFT	285
F050	A 434668-0400	-		1	DRIVE UNIT	287
F070	A 266986-0500	-		1	CURVE SHAFT	289
F080	A 243927-0700	-		2	ARM	293
F090	A 593763-0100	-		1	HOLD-DOWN DEVICE	295
F100	A 434669-0400	-		1	IMPULSE TRANSMITTER	297
F120	A 292071-0200	-		1	SPLASH PROTECTION	301
F130	A 434670-0600	-		1	LINK SYSTEM	303

Pos	Part No	SP	UN	Qty	Description	Page No

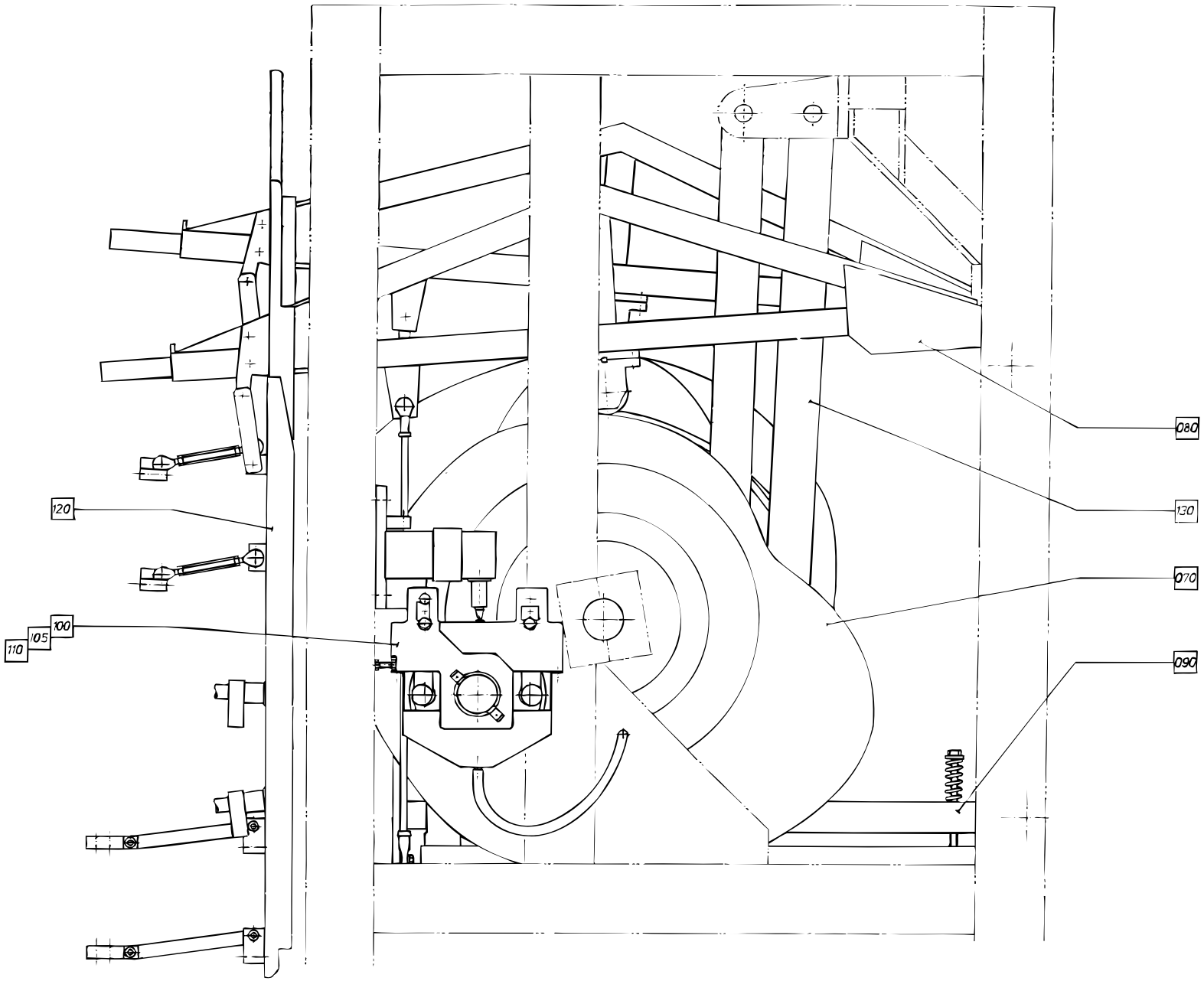

S-648003-2
ECN 5692

Pos	Part No	SP	UN	Qty	Description	Page No
F010	A 440588-0200	-		1	CRANK	283
F020	A 239890-0300	-		1	INTERMEDIARY SHAFT	285
F050	A 434668-0400	-		1	DRIVE UNIT	287
F070	A 266986-0500	-		1	CURVE SHAFT	289
F080	A 243927-0700	-		2	ARM	293
F090	A 593763-0100	-		1	HOLD-DOWN DEVICE	295
F100	A 434669-0400	-		1	IMPULSE TRANSMITTER	297
F120	A 292071-0200	-		1	SPLASH PROTECTION	301
F130	A 434670-0600	-		1	LINK SYSTEM	303

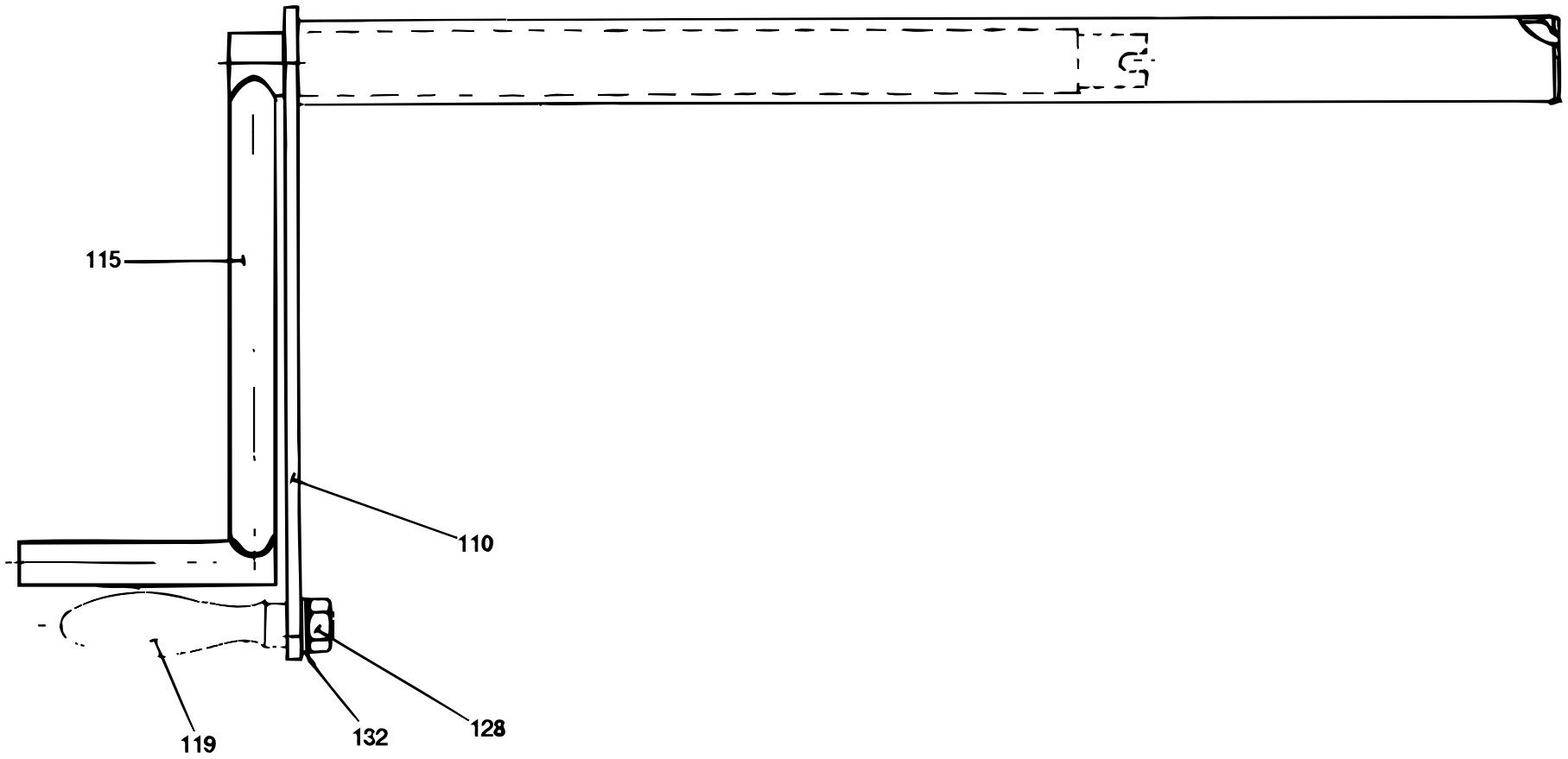

S-440588-1
ECN 5627

Pos	Part No	SP	UN	Qty	Description	Page No
-						
110	36885-0000	-		1	CRANK ARM	
115	542262-0000	-		1	CRANK	
119	90017-0009	-		1	HANDLE	
128	312601-0322	-		1	NUT M6M12FZB	
132	315401-0178	-		1	WASHER FBH12,2FZB	

Pos	Part No	SP	UN	Qty	Description	Page No

INTERMEDIARY SHAFT

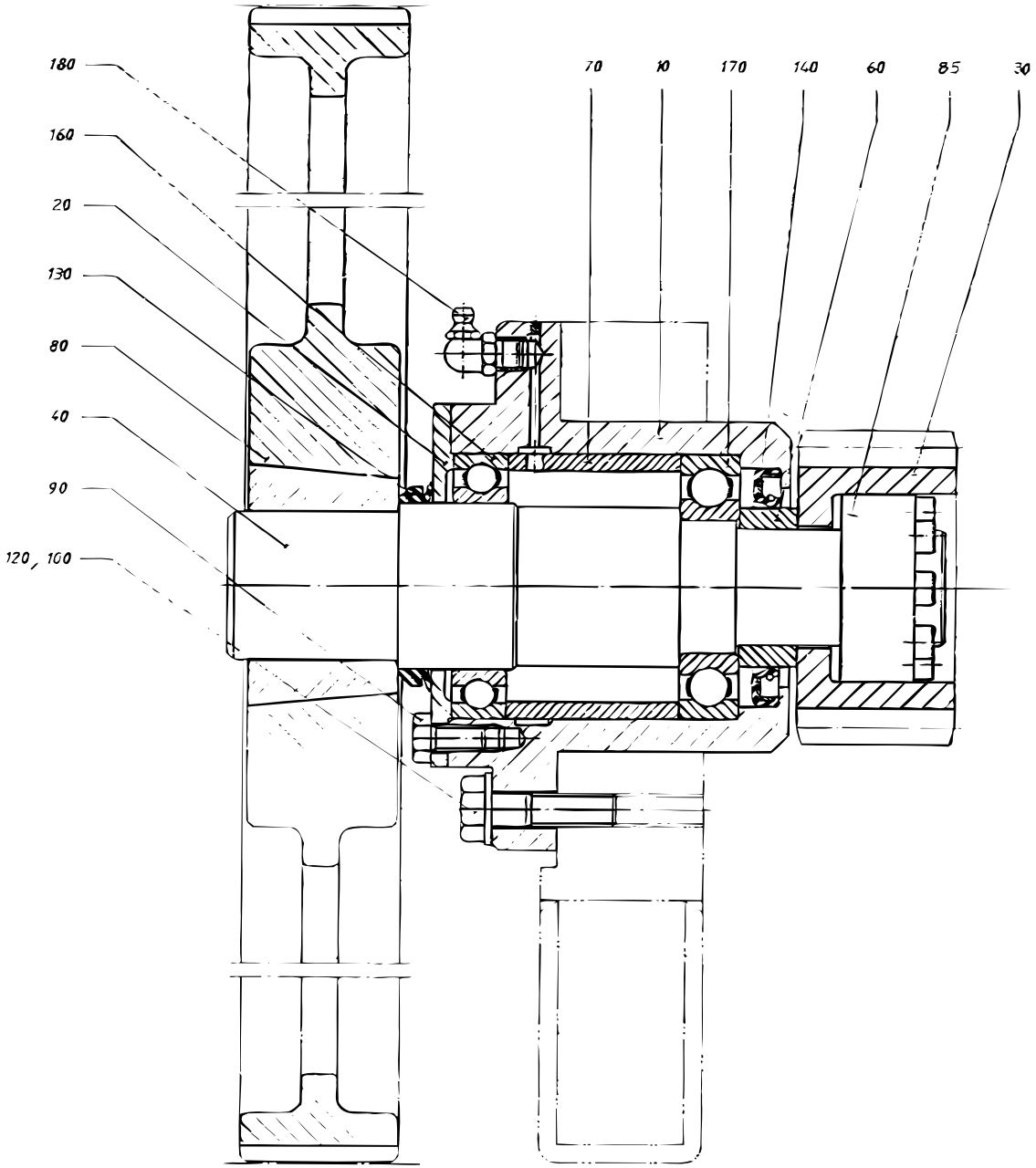

S-239890-2
ECN 8608

Pos	Part No	SP	UN	Qty	Description	Page No
-						
010	237725-0000	-		1	BEARING HOUSING	
020	107095-0000	-		1	LID	
030	499473-0000	D		1	GEAR WHEEL	
040	499474-0000	D		1	SHAFT	
060	111017-0000	-		1	SPACER RING	
070	239870-0000	-		1	SPACER SLEEVE	
080	90196-0067	-		1	PULLEY	
085	90208-0067	-		1	CLAMPING ELEMENT	
090	312101-0449	-		6	SCREW M6S8X16FZB	
100	312101-0499	-		4	SCREW M6S10X40FZB	
120	315101-0173	-		4	WASHER BRB10,5X22FZB	
130	315220-0198	K		1	SEAL RING V-50S	
140	315221-0197	K		1	SEAL RING CB48X72X8	
160	321306-0110	K		1	BALL BEARISKF6010*	
170	321309-0108	K		1	BALL BEARISKF6208	
180	344502-0066	-		1	NIPPLE L CHKR1/8"	

Pos	Part No	SP	UN	Qty	Description	Page No

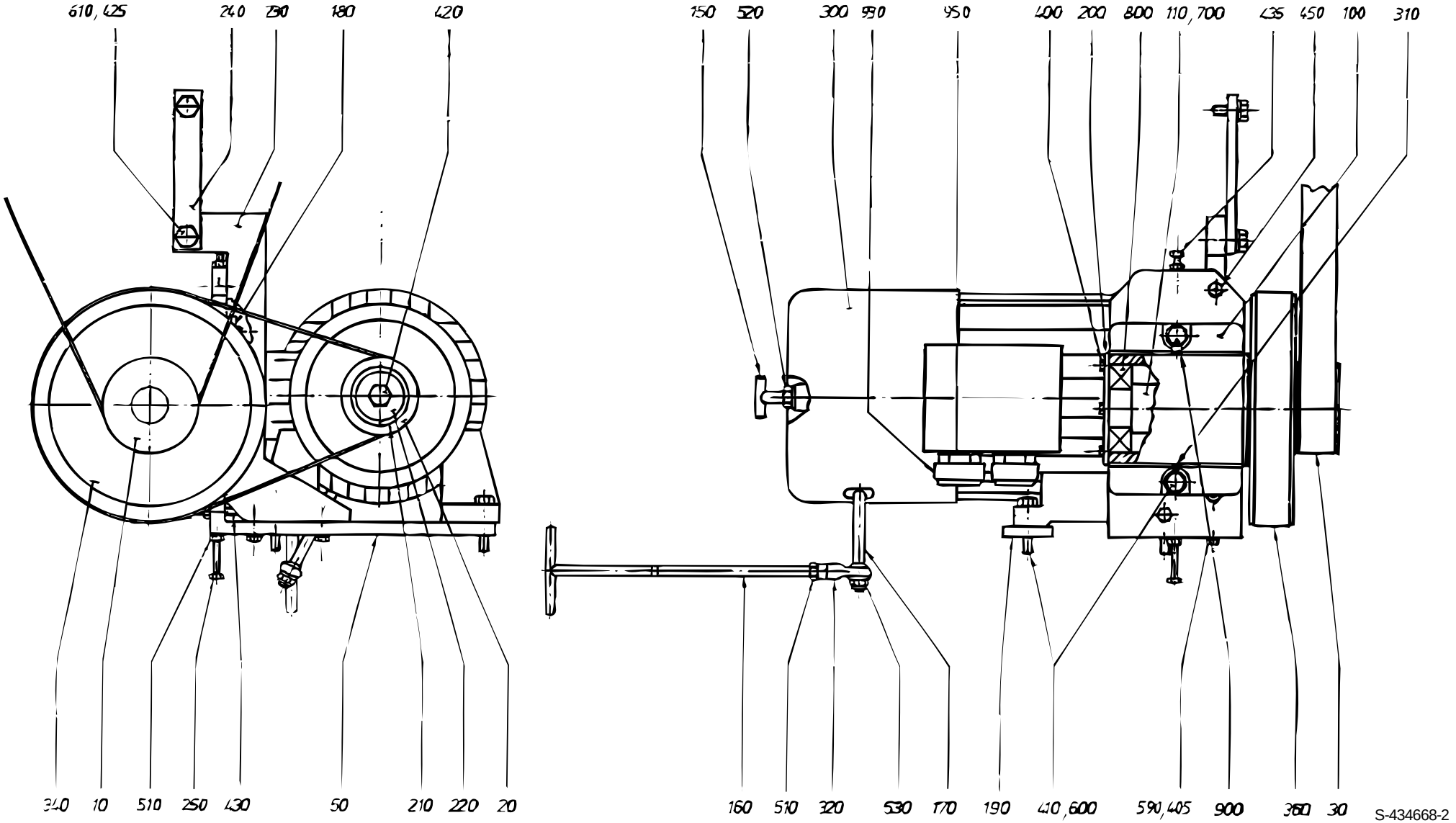

S-434668-2
ECN 10007

Pos	Part No	SP	UN	Qty	Description	Page No
0300B TPC 50HZ or 0500B TPC 50HZ or 0568B TPC 50HZ or 1000B TPC 50HZ or 1136B TPC 50HZ						
010	90196-0064	-		1	PULLEY	
020	90196-0062	-		1	PULLEY	
300	B 90046-0015	D		1	DRIVE BRAKE MOTOR 50HZ	
0300B TPC 60HZ or 0500B TPC 60HZ or 0568B TPC 60HZ or 1000B TPC 60HZ or 1136B TPC 60HZ						
010	90196-0063	-		1	PULLEY	
020	90196-0061	-		1	PULLEY	
300	B 90046-0016	D		1	BRAKE MOTOR	
0355B IH 50HZ or 0375S IH 50HZ or 0400B IH 50HZ or 0500B IH 50HZ or 0500S IH 50HZ or 0500SQ US 50HZ or 0750B IH 50HZ or 0750S IH 50HZ or 1000B IH 50HZ or 1000S IH 50HZ or 1000SQ US 50HZ or 1055B IH 50HZ						
010	90196-0055	-		1	PULLEY	
020	90196-0062	-		1	PULLEY	
300	B 90046-0015	D		1	DRIVE BRAKE MOTOR 50HZ	
0355B IH 60HZ or 0375S IH 60HZ or 0400B IH 60HZ or 0500B IH 60HZ or 0500S IH 60HZ or 0500SQ US 60HZ or 0750B IH 60HZ or 0750S IH 60HZ or 1000B IH 60HZ or 1000S IH 60HZ or 1000SQ US 60HZ or 1055B IH 60HZ						
010	90196-0065	-		1	PULLEY	
020	90196-0062	-		1	PULLEY	
300	B 90046-0016	D		1	BRAKE MOTOR	
0500S TPC 50HZ or 0500SQ TPC 50HZ or 1000S TPC 50HZ or 1000SQ TPC 50HZ						
010	90196-0079	-		1	TIMING BELT PULLEY	
020	90196-0061	-		1	PULLEY	
300	B 90046-0015	D		1	DRIVE BRAKE MOTOR 50HZ	
0500S TPC 60HZ or 0500SQ TPC 60HZ or 1000S TPC 60HZ or 1000SQ TPC 60HZ						
010	90196-0086	-		1	TIMING BELT PULLEY	
020	90196-0062	-		1	PULLEY	
300	B 90046-0016	D		1	BRAKE MOTOR	
1000SQ IH 50HZ						
010	90196-0079	-		1	TIMING BELT PULLEY	
020	90196-0062	-		1	PULLEY	
300	B 90046-0015	D		1	DRIVE BRAKE MOTOR 50HZ	
1000SQ IH 60HZ						
010	90196-0090	-		1	TIMING BELT PULLEY	
020	90196-0061	-		1	PULLEY	
300	B 90046-0016	D		1	BRAKE MOTOR	
1500B US 50HZ						
010	90196-0065	-		1	PULLEY	
020	90196-0062	-		1	PULLEY	
300	B 90046-0015	D		1	DRIVE BRAKE MOTOR 50HZ	
1500B US 60HZ						
010	90196-0086	-		1	TIMING BELT PULLEY	
020	90196-0061	-		1	PULLEY	
300	B 90046-0016	D		1	BRAKE MOTOR	
Common parts						
030	90417-0134	K		1	TOOTHED BELT	
050	530754-0000	-		1	FASTENING BRACKET	
100	436482-0000	-		1	BEARING BRACKET	
110	436483-0000	-		1	SHAFT	
150	37097-0000	-		1	CARRIER	
160	434379-0000	-		1	TIE ROD	
170	434380-0000	-		1	SHAFT	
180	436484-0000	-		1	BRACKET	
190	436485-0000	-		1	LACE	
200	436486-0000	-		2	LID	
210	436487-0000	-		1	SPACER	
220	436488-0000	-		1	WASHER	
230	450145-0000	-		1	STRUT	
240	450146-0000	-		1	STRUT	
250	530755-0000	-		1	SCREW	
310	90087-0003	-		1	PIPE PLUG	
320	90115-0105	K		1	JOINT	
340	90196-0066	-		1	PULLEY	
360	90417-0133	K		1	TOOTHED BELT	
400	312101-0364	-		6	SCREW M6S6X10FZB	
405	312101-0455	-		2	SCREW M6S8X30FZB	
410	312101-0501	-		6	SCREW M6S10X50FZB	
420	312101-0540	-		1	SCREW M6S12X40FZB	
425	312101-0536	-		2	SCREW M6S12X30FZB	
430	312104-0465	-		1	SCREW M6S8X70H8.8 FZB	
435	312105-0382	-		1	SCREW M6S ISO 4014 M6X60 A280	
450	312111-0451	-		2	SCREW MC6S8X20FZB	
510	312601-0320	-		3	NUT M6M10FZB	
520	312601-0322	-		1	NUT M6M12FZB	
530	312812-0320	-		1	LOCK NUT A2-M10RFR	
590	315101-0165	-		2	WASHER BRB8,4X16FZB	
600	315101-0173	-		6	WASHER BRB10,5X22FZB	
610	315101-0178	-		2	WASHER BRB13X24FZB	
700	315701-0307	-		1	FLAT WEDGE10X8X70	
800	321316-0108	K		2	BALL BEARISKF6308RS	
900	344502-0046	-		1	NIPPLE L BHKR1/8"	
930	352136-0143	-		2	GLAND FITTING	
950	352100-0115	-		2	CABLE GLANR.28,3-15,5	

CURVE SHAFT

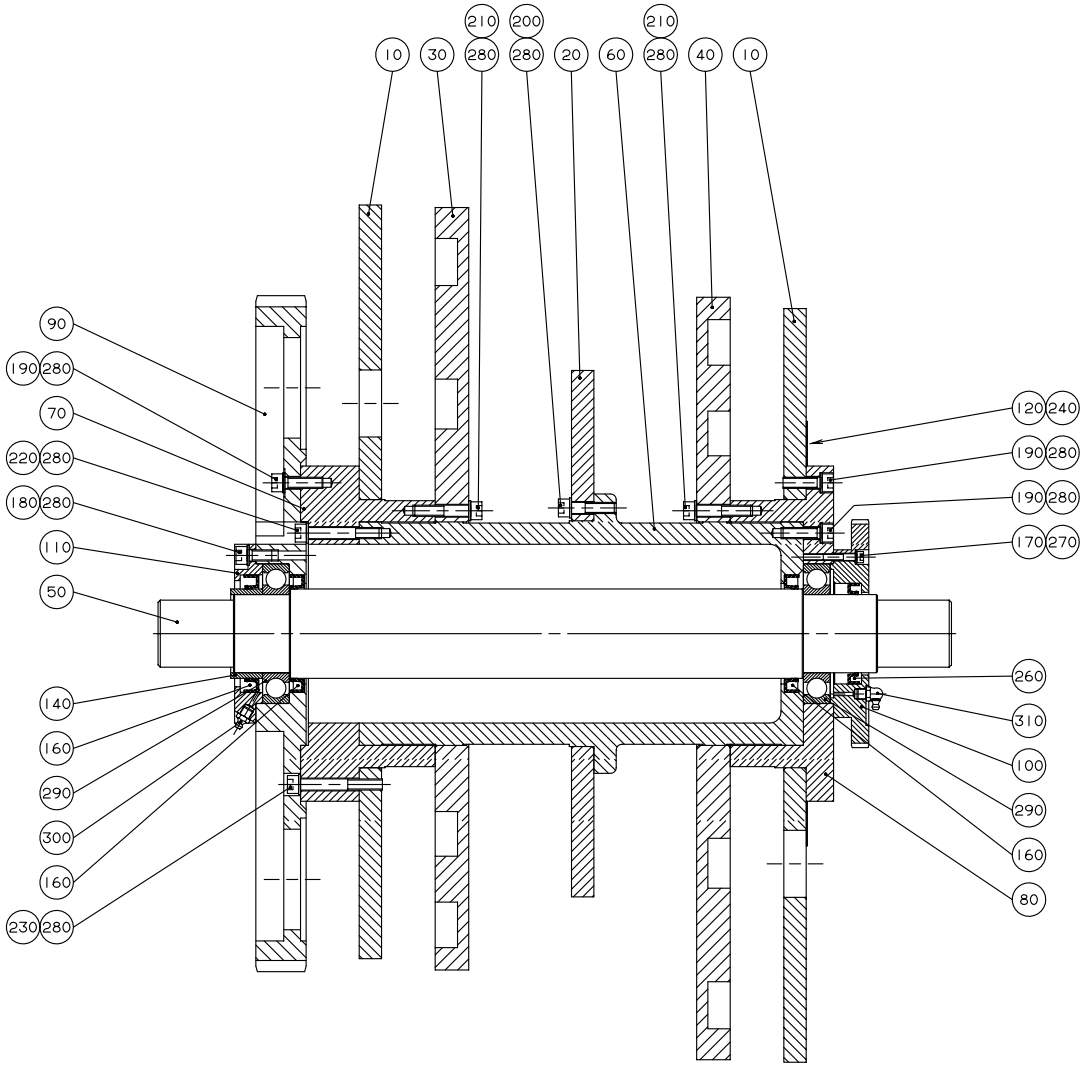

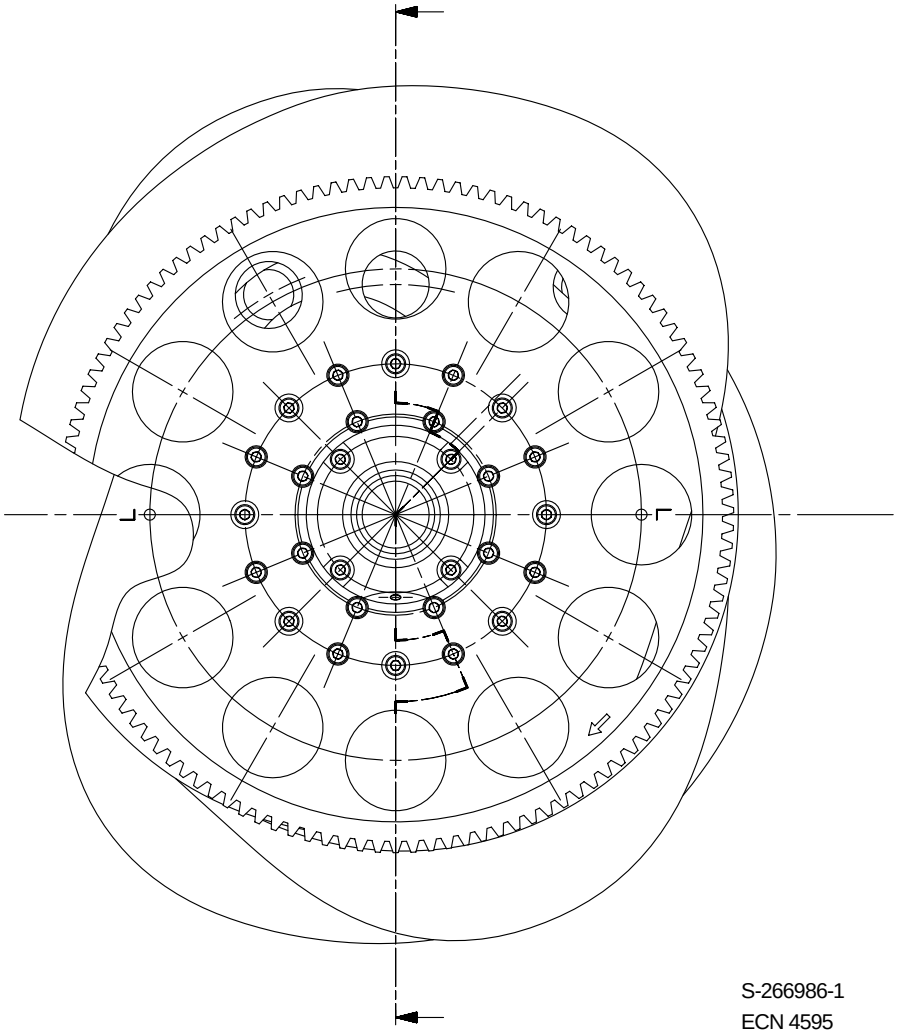

S-266986-1
ECN 4595

Pos	Part No	SP	UN	Qty	Description	Page No
0355B						
010	551907-0000	D		2	MAIN CAM	
020	551910-0000	D		1	COUNTER CAM	
030	564623-0000	D		1	CAM LEFT	
040	564624-0000	D		1	CAM RIGHT	
0375S						
010	449716-0000	D		2	MAIN CAM	
020	449719-0000	D		1	COUNTER CAM	
030	564528-0000	D		1	CAM LEFT	
040	564529-0000	D		1	CAM RIGHT	
0400B						
010	575782-0000	D		2	MAIN CAM	
020	575783-0000	D		1	COUNTER CAM	
030	576836-0000	D		1	CAM LEFT	
040	576837-0000	D		1	CAM RIGHT	
0500B						
010	283157-0000	D		2	MAIN CAM	
020	283160-0000	D		1	COUNTER CAM	
030	563728-0000	D		1	CAM LEFT	
040	563729-0000	D		1	CAM RIGHT	
0500S						
010	532032-0000	D		2	MAIN CAM	
020	532033-0000	D		1	COUNTER CAM	
030	564621-0000	D		1	CAM LEFT	
040	564622-0000	D		1	CAM RIGHT	
0750B						
010	565668-0000	D		2	MAIN CAM	
020	532097-0000	D		1	COUNTER CAM	
030	564526-0000	D		1	CAM LEFT	
040	564527-0000	D		1	CAM RIGHT	
0750S						
010	545101-0000	D		2	MAIN CAM	
020	551825-0000	D		1	COUNTER CAM	
030	564933-0000	D		1	CAM LEFT	
040	564934-0000	D		1	CAM RIGHT	
1000B HIFIN						
010	540270-0000	D		2	MAIN CAM	
020	549928-0000	D		1	COUNTER CAM	
030	564524-0000	D		1	CAM LEFT	
040	564525-0000	D		1	CAM RIGHT	
1000S						
010	569049-0000	D		2	MAIN CAM	
020	569050-0000	D		1	COUNTER CAM	
030	569051-0000	D		1	CAM LEFT	
040	569052-0000	D		1	CAM RIGHT	
1000SQ						
010	579641-0000	D		2	MAIN CAM	
020	579642-0000	D		1	COUNTER CAM	
030	579643-0000	D		1	CAM LEFT	
040	579644-0000	D		1	CAM RIGHT	
Common parts						
050	23458-0000	-		1	SHAFT	
060	239533-0000	-		1	DRUM	
070	239534-0000	-		1	FLANGE	
080	239535-0000	-		1	FLANGE	
090	239536-0000	D		1	GEAR WHEEL	
100	243016-0000	D		1	GEARING	
110	107062-0000	-		1	LID	
120	246982-0000	-		1	PROTRACTOR	
140	23462-0000	-		1	SPACER RING	
160	90091-0029	K		3	SEAL RING	
170	312111-0374	-		8	SCREW MC6S6X30FZB	
180	312111-0492	-		4	SCREW MC6S10X22FZB	
190	312111-0497	-		24	SCREW MC6S10X35FZB	
200	312111-0499	-		8	SCREW MC6S10X40FZB	
210	312111-0501	-		16	SCREW MC6S10X50FZB	
220	312111-0504	-		8	SCREW MMC6S10X65FZB	
230	312111-0506	-		8	SCREW MC6S10X75FZB	
240	312121-0285	-		10	SLOTTED HEMCS4X6FZB	
260	315221-0221	K		1	SEAL RING CB70X90X10	
270	315401-0153	-		8	WASHER FBH6,1FZB	
280	315401-0173	-		68	WASHER FBH10,2FZB	
290	321309-0114	K		2	BALL BEARISKF6214	
300	344502-0026	-		1	NIPPLE L AHKR1/8"	
310	344502-0066	-		1	NIPPLE L CHKR1/8"	
1055B						
010	533961-0000	D		2	MAIN CAM	
020	533962-0000	D		1	COUNTER CAM	
030	564625-0000	D		1	CAM LEFT	
040	564626-0000	D		1	CAM RIGHT	

CURVE SHAFT

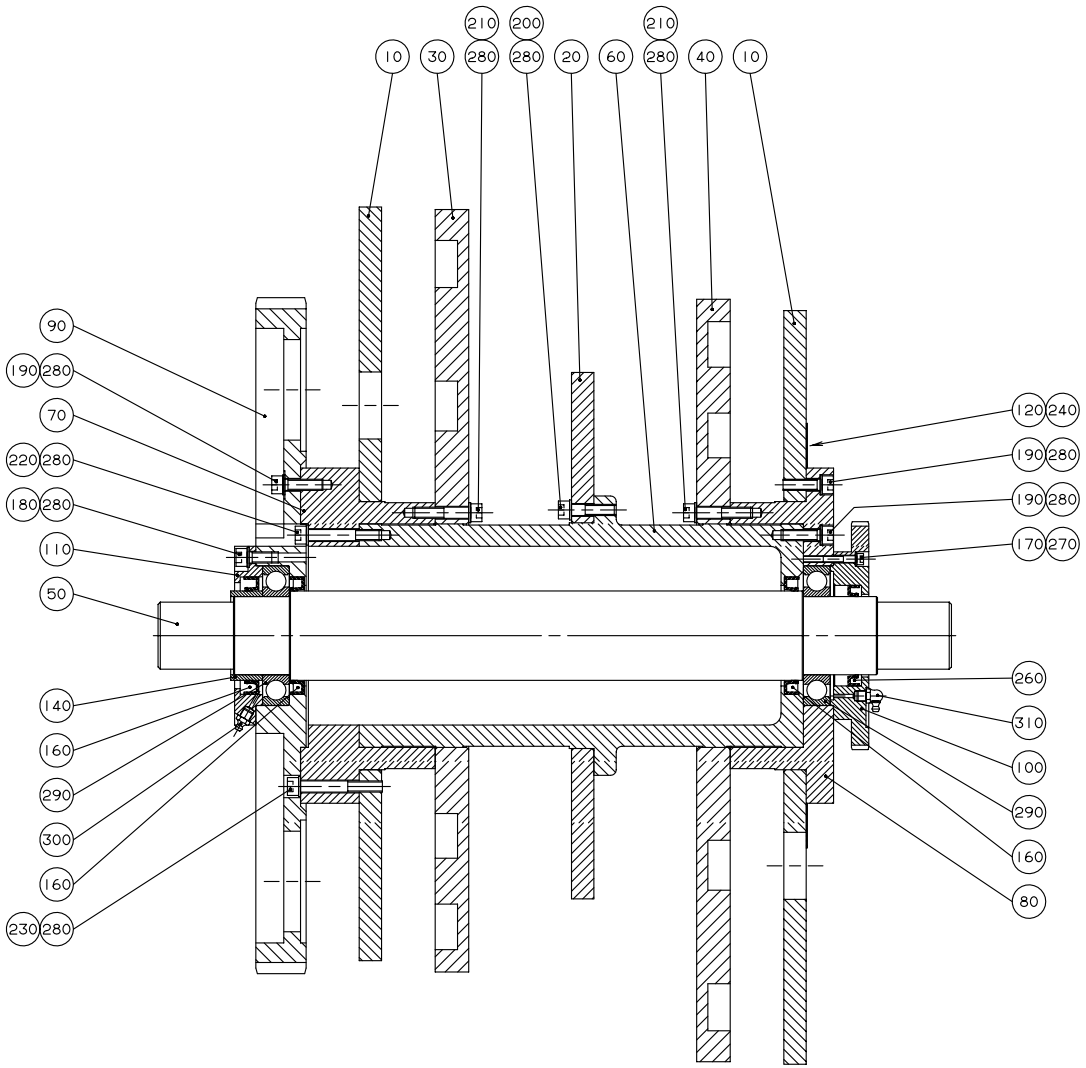

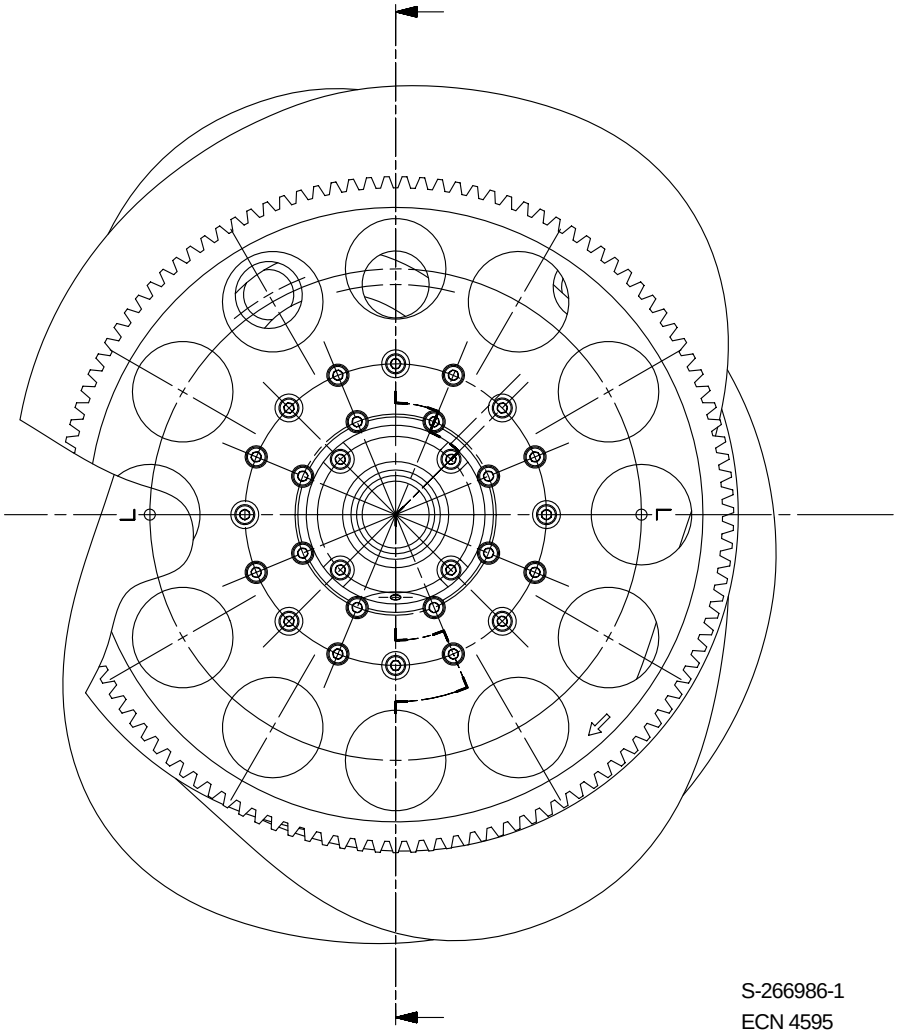

S-266986-1
ECN 4595

Pos	Part No	SP	UN	Qty	Description	Page No
1000B LOFIN						
010	530529-0000	D		2	MAIN CAM	
020	530532-0000	D		1	COUNTER CAM	
030	560391-0000	D		1	CAM LEFT	
040	560392-0000	D		1	CAM RIGHT	

Pos	Part No	SP	UN	Qty	Description	Page No

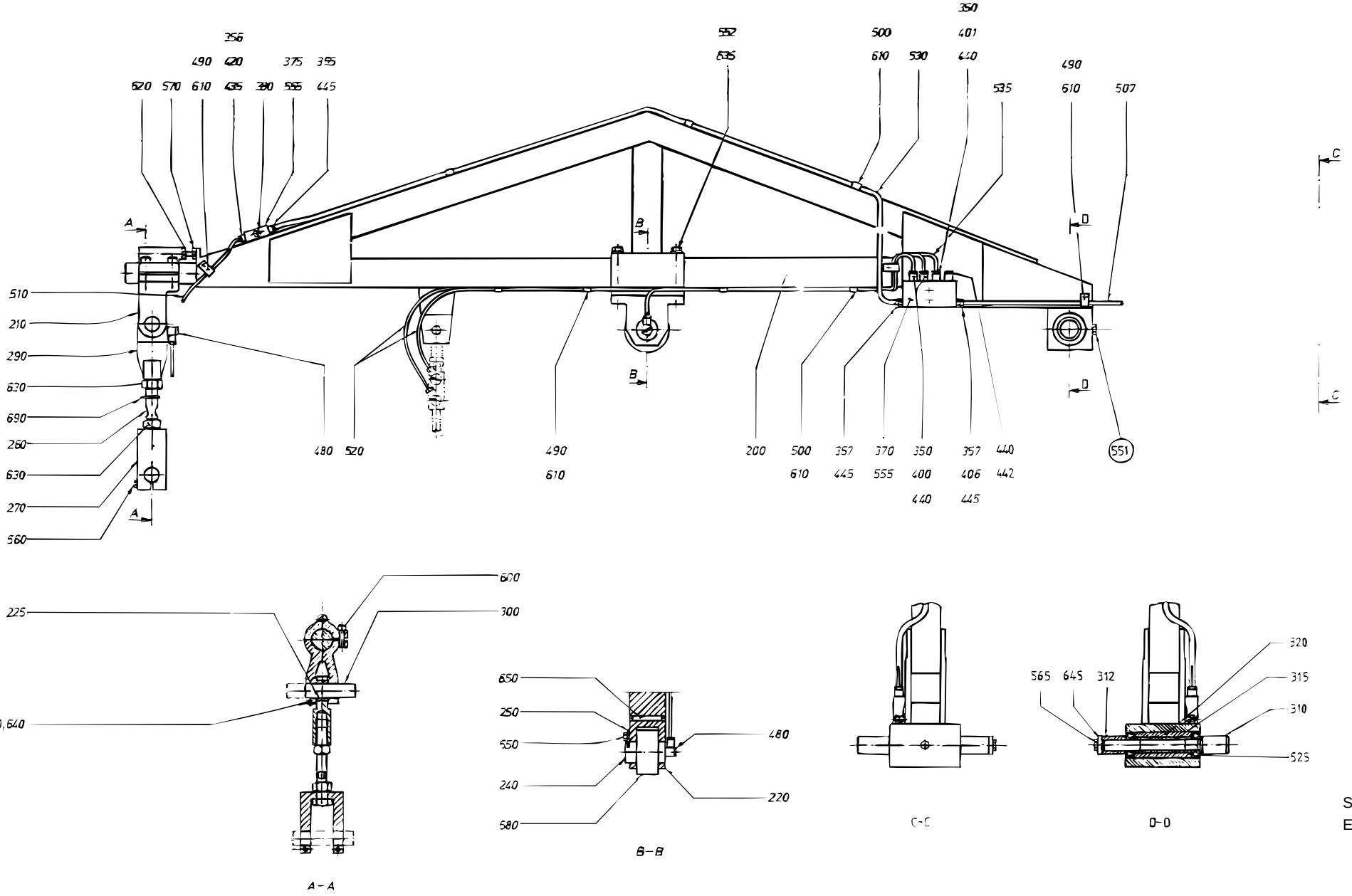

S-243927-7
ECN 19499

Pos	Part No	SP	UN	Qty	Description	Page No
0300B or 0355B or 0375S or 0400B or 0500B or 0500S or 0500SQ or 0568B or 0750B or 0750S or 1000B LOFIN						
220	243928-0000	D		1	BRACKET	
1000B HIFIN or 1000S or 1000SQ or 1055B or 1136B or 1500B						
220	279466-0000	D		1	BRACKET	
Common parts						
200	530708-0000	-		1	ARM	
210	35827-0000	D		1	BRACKET	
225	23270-0000	K		1	BUSHING	
240	243930-0000	K		1	SHAFT	
250	243931-0000	-		1	SECURING PLATE	
260	246787-0000	K		1	SCREW	
270	246790-0000	D		1	LINK	
290	251561-0000	D		1	LINK	
300	251562-0000	K		1	SHAFT	
310	570066-0000	-		1	SHAFT	
312	570067-0000	-		1	RING	
315	570125-0000	-		1	SLEEVE	
320	570126-0000	-		1	SLEEVE	
350	90028-0020	-		3	CONE	
355	90028-0022	-		1	CONE	
356	90028-0024	-		1	CONE	
357	90028-0025	-		2	CONE	
370	90032-0039	-		1	BLOCK	
375	90032-0043	-		1	JUNKTION BLOCK	
380	90087-0019	-		1	PLUG	
400	90092-0053	K		2	VALVE	
401	90092-0054	K		1	VALVE	
406	90134-0030	-		1	SLEEVE	
420	90134-0031	-		1	SLEEVE	
435	90134-0038	-		1	BUSHING	
440	90134-0039	-		4	BUSHING	
442	90134-0052	-		1	PLUG	
445	90134-0055	-		3	BUSHING	
480	90134-0058	-		2	BANJO CONNECTION	
490	90165-0003	-		4	CLIP	
500	90165-0005	-		6	CLIP	
507	90166-0108	F	MM	2700	HOSE	
510	90166-0109	F	MM	2700	HOSE	
520	90166-0143	F	MM	2000	HOSE	
525	90214-0169	K		2	BALL BEARING	
530	90266-0006	-	MM	1500	TUBE	
535	90266-0019	F	MM	1000	PIPE	
550	312101-0362	-		2	SCREW M6S6X8FZB	
551	312101-0368	-		1	SCREW M6S6X16FZB	
552	312101-0465	-		2	SCREW M6S8X70FZB	
555	312101-0295	-		4	SCREW M6S4X20FZB	
560	312105-0374	-		3	SCREW M6S ISO 4017 M6X30 A280	
565	312105-0449	-		1	SCREW M6S ISO 4017 M8X16 A280	
570	312109-0463	-		1	SCREW M6S8X60H A4 80	
600	312115-0453	-		2	SCREW MC6S ISO 4762 M8X25 A280	
610	312121-0285	-		10	SLOTTED HEMCS4X6FZB	
620	312605-0318	-		1	NUT M6M8RFR	
630	312811-0324	-		2	LOCK NUT M16RFR	
635	315101-0165	-		2	WASHER BRB8,4X16FZB	
640	315105-0153	-		1	WASHER BRB6,4X12RFR	
645	315121-0165	-		1	WASHER TBRSB8,4X26FZB	
650	315701-0270	-		1	FLAT WEDGE8X7X40	
680	321576-0360	F		1	SUPPORT RONUTR30	
690	352113-0101	-		1	RIBBON CLAMP	

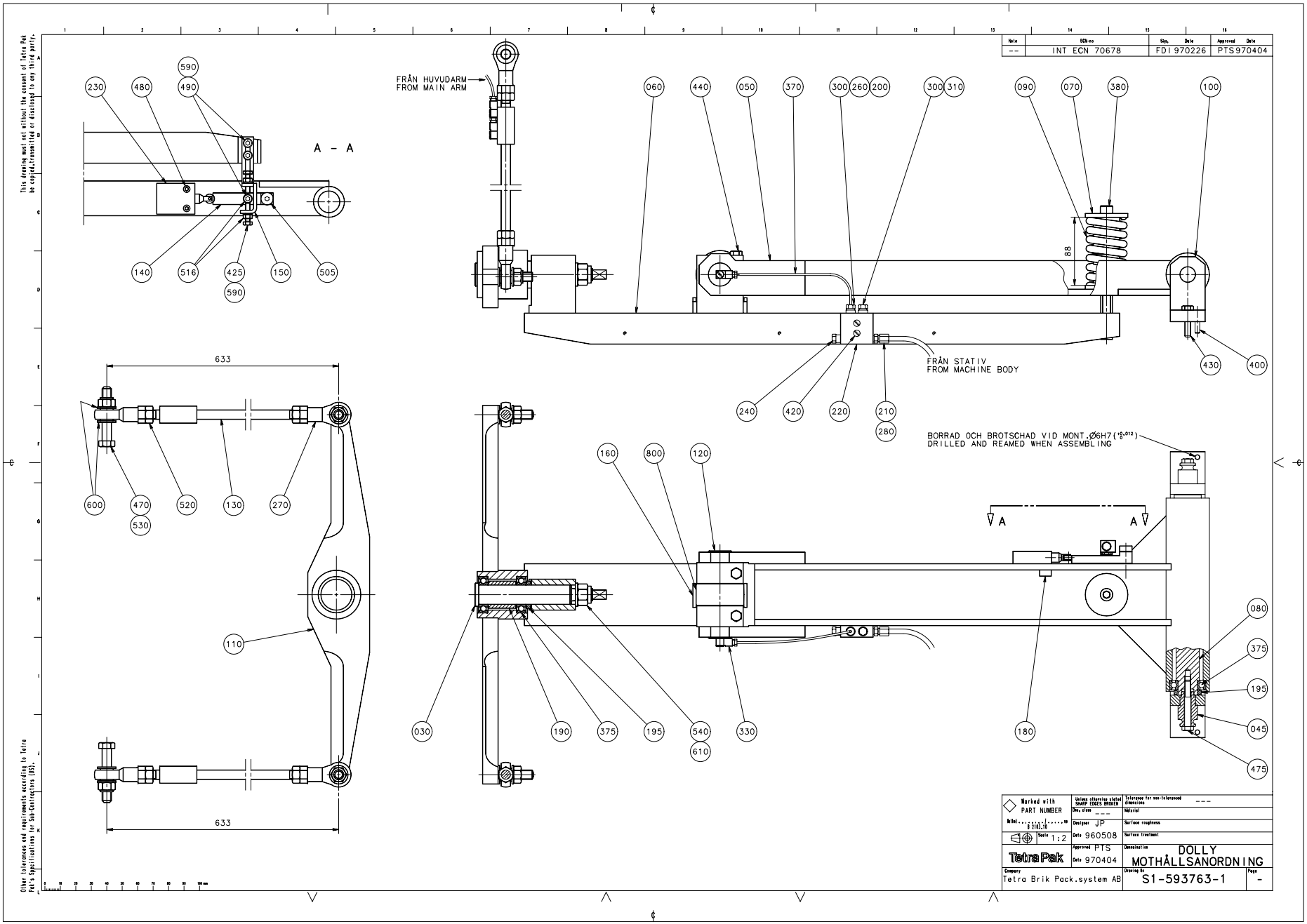
FRÅN HUVUDARM
FROM MAIN ARM
FRÅN STATIV
FROM MACHINE BODY
A – A
BORRAD OCH BROTSCHAD VID MONT. Ø6H7(+0,012 0)
DRILLED AND REAMED WHEN ASSEMBLING
633
633
88
INT ECN 70678
FDI 970226
PTS970404
PART NUMBER
Designer JP
Date 960508
Approved PTS
Date 970404
Scale 1:2
DOLLY
MOTHÅLLSANORDNING
Tetra Brik Pack.system AB
S1-593763-1

Pos	Part No	SP	UN	Qty	Description	Page No
-						
030	560418-0000	-		1	SHAFT	
045	591247-0000	-		2	SLEEVE	
050	591245-0000	-		1	ARM	
060	567033-0000	-		1	ARM	
070	239383-0000	-		2	SLEEVE	
080	591246-0000	-		1	SHAFT	
090	243971-0000	-		1	SPRING	
100	246948-0000	-		1	BRACKET	
110	560417-0000	-		1	ROCKER ARM	
120	434062-0000	-		1	SHAFT	
130	434098-0000	-		2	STRUT	
140	567702-0000	-		1	CURVE	
150	567703-0000	-		1	LINK	
160	576742-0000	-		1	OIL TROUGH	
180	527648-0000	-		2	WASHER	
190	568286-0000	-		1	SLEEVE	
195	568287-0000	-		3	RING	
200	90028-0020	-		2	CONE	
210	90134-0038	-		1	BUSHING	
220	90032-0038	-		1	BLOCK	
230	90044-0094	-		1	LIMIT SWITCH HONEYWELL	
240	90087-0019	-		1	PLUG	
260	90092-0053	-		1	VALVE	
270	90115-0133	-		4	JOINT	
280	90134-0031	-		1	SLEEVE	
300	90134-0039	-		2	BUSHING	
310	90134-0052	-		1	PLUG	
330	90134-0058	-		5	BANJO CONNECTION	
370	90166-0143	-	MM	600	HOSE	
375	90214-0163	-		4	BALL BEARING	
380	90287-0136	-		1	SCREW	
400	311303-0356	-		2	SLOTTED PIRPB6X30FZB	
420	312101-0295	-		2	SCREW M6S4X20FZB	
425	312101-0372	-		2	SCREW M6S6X25FZB	
430	312101-0453	-		3	SCREW M6S8X25FZB	
440	312101-0459	-		2	SCREW M6S8X40FZB	
470	312101-0546	-		2	SCREW M6S12X70FZB	
475	312109-0463	-		2	SCREW M6S8X60H A4 80	
480	312111-0335	-		2	SCREW MC6S5X30FZB	
490	312111-0368	-		3	SCREW MC6S6X16FZB	
505	312180-0489	-		1	HEX. SOCKET HEAD SHOULD. ISO 7379 M8X16	
516	312601-0316	-		3	NUT M6M6FZB	
520	312601-0322	-		4	NUT M6M12FZB	
530	312810-0322	-		4	LOCK NUT 12FZB	
540	312810-0324	-		1	LOCK NUT 16FZB	
590	315101-0153	-		5	WASHER BRB6,4X12FZB	
600	315101-0178	-		8	WASHER BRB13X24FZB	
610	315101-0186	-		1	WASHER BRB17X30FZB	
800	321576-0360	-		1	SUPPORT RONUTR30	

IMPULSE TRANSMITTER

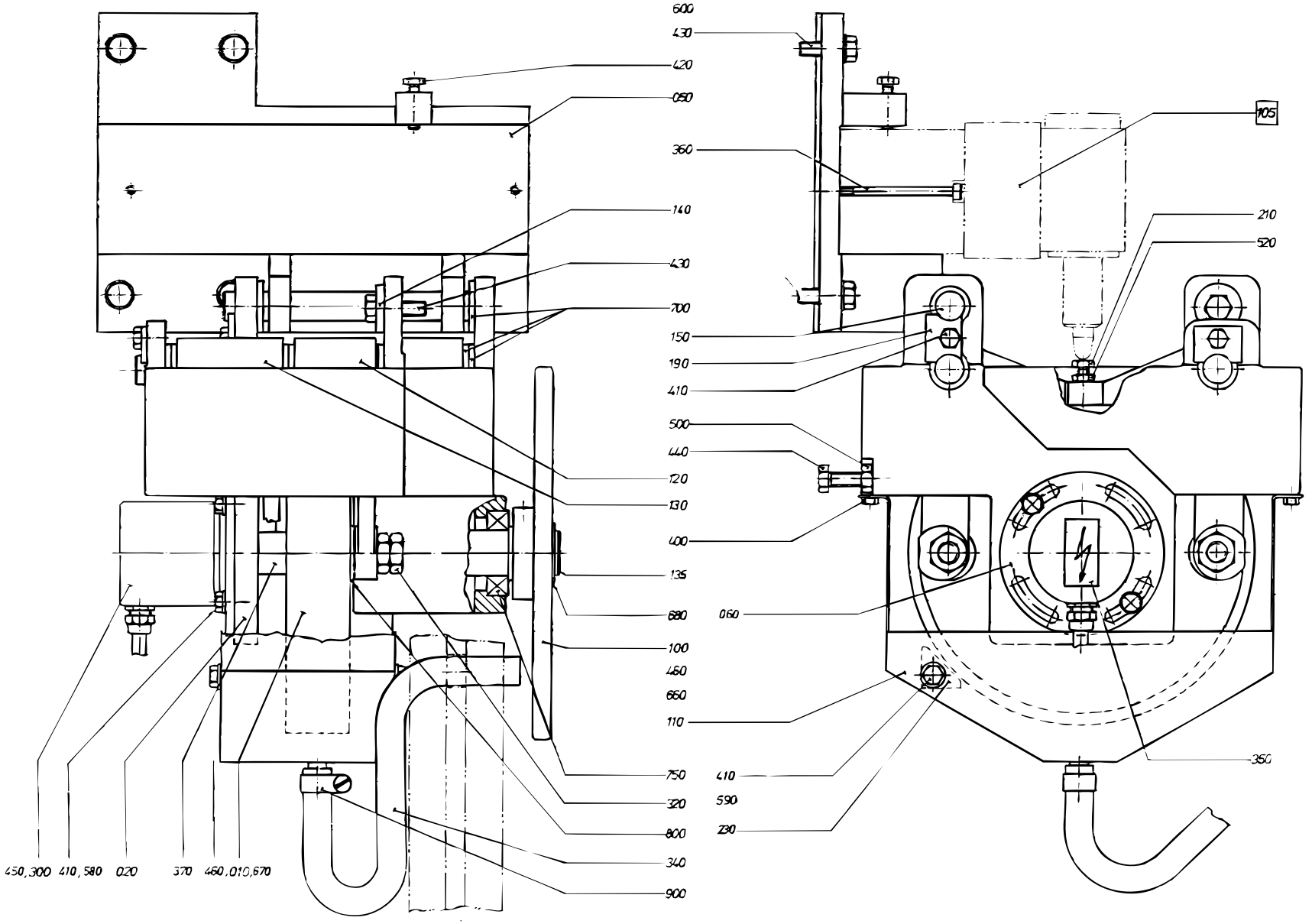

S-434669-2
ECN 11449

Pos	Part No	SP	UN	Qty	Description	Page No
IH						
010	556579-0000	D		1	CURVE	
TPC						
010	573994-0000	D		1	CURVE	
1000SQ US						
010	929669-0000	D		1	CURVE	
Common parts						
F105	A 273728-0300	-		1	VALVE GROUP	**299**
020	292473-0000	-		1	CANTILEVER	
050	292472-0000	-		1	HOLDER	
060	542063-0000	D		1	FLANGE	
100	243017-0000	D		1	GEAR WHEEL	
110	543476-0000	-		1	TROUGH	
120	297091-0000	-		2	ARM	
130	297092-0000	-		2	ARM	
135	540949-0000	D		1	SHAFT	
140	28036-0000	-		1	WASHER	
150	292477-0000	D		3	SHAFT	
190	292482-0000	-		2	WASHER	
210	479354-0000	D		4	SCREW	
230	479753-0000	D		1	STRIPPER	
300	90061-0018	D		1	ANGLE ENCODER 8BIT GRAY	
320	90099-0015	-		8	NUT	
340	90166-0113	-	MM	700	HOSE	
350	90194-0039	-		1	FLASH SIGN 18X37MM	
360	90287-0073	-		2	SCREW	
370	90355-0031	D		1	FLEXIBLE COUPLING	
400	312101-0325	-		2	SCREW M6S5X10FZB	
410	312101-0366	-		6	SCREW M6S6X12FZB	
420	312101-0372	-		1	SCREW M6S6X25FZB	
430	312101-0453	-		5	SCREW M6S8X25FZB	
440	312104-0460	-		1	SCREW M6S8X45H8.8FZB	
450	312155-0289	-		3	SCREW MF6S4X10RFR	
460	312318-0360	-		2	STOP SCREW SK6SS6X6RFR	
500	312601-0318	-		1	NUT M6M8FZB	
520	312601-0316	-		4	NUT M6M6FZB	
580	315105-0153	-		2	WASHER BRB6,4X12RFR	
590	315105-0156	-		2	WASHER BRB6,7X14RFR	
600	315101-0165	-		4	WASHER BRB8,4X16FZB	
660	315701-0262	-		1	FLAT WEDGE8X7X18	
670	315701-0263	-		1	FLAT WEDGE8X7X20	
680	315750-0119	K		2	CIRCLIP SGA25	
700	321111-0240	K		14	FLANGE BUS 16E7X12	
750	321308-0205	K		2	BALL BEARISKF6005-2RS	
800	321580-0165	F		4	CURVE ROLLKR30	
900	342991-0101	-		1	HOSE CLIP,WORM DRIVE TYPE (13)-16	

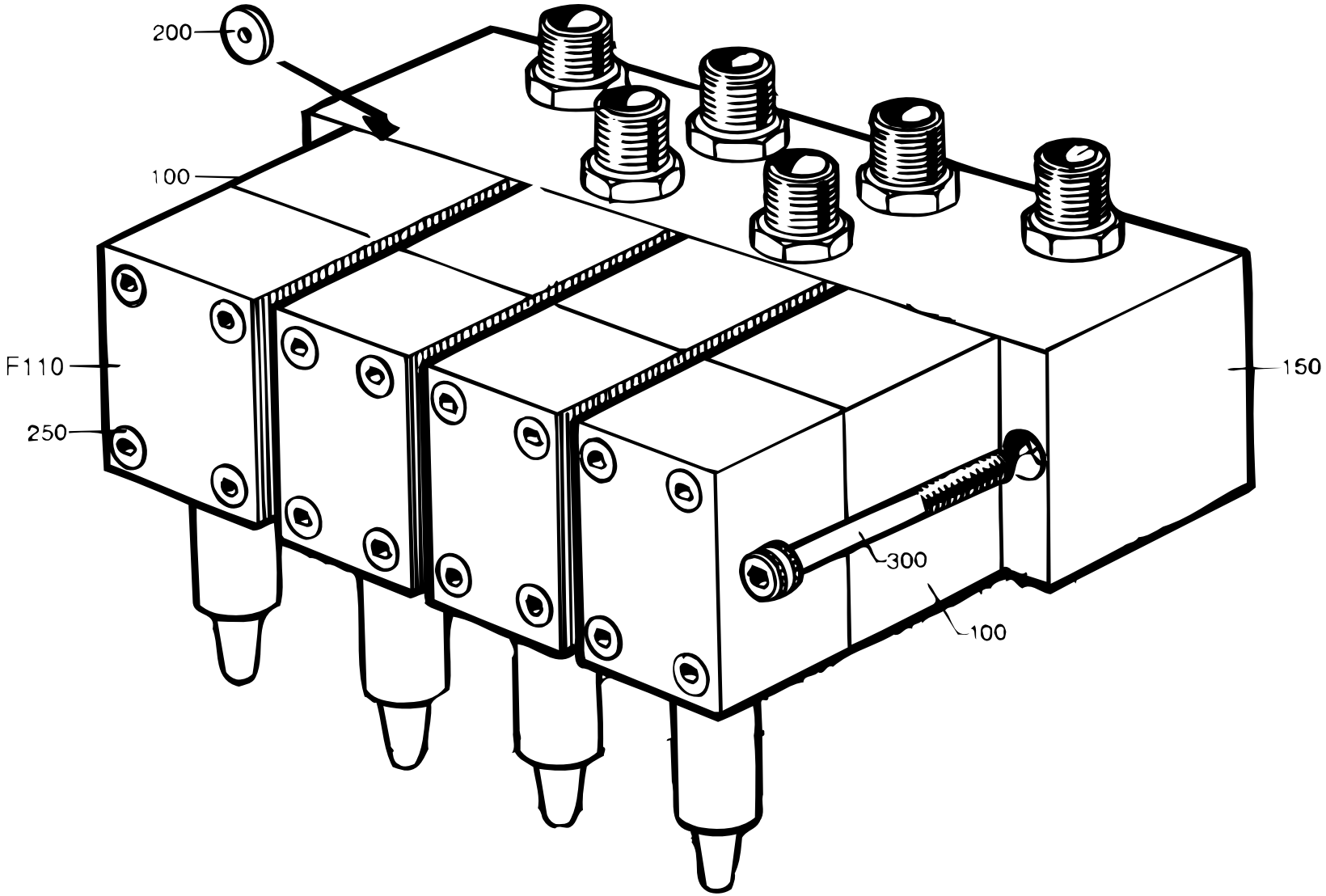

S-273728-4
ECN 19589

Pos	Part No	SP	UN	Qty	Description	Page No
0300B						
100	B 90201-0010	D		2	VALVE	
210	90201-0311	D		2	PLATE	
220	90201-0310	D		1	BLOCK	
0355B or 0375S or 0400B or 0500B or 0500S or 0500SQ or 0568B or 0750B or 0750S or 1000B or 1000S or 1000SQ or 1055B or 1136B or 1500B or 1500S						
100	B 90201-0010	D		4	VALVE	
150	90201-0300	D		1	PLATE	
200	295391-0003	D		2	THROTTLE SCREW	
Common parts						
110	90201-0057	-		4	VALVE	
250	90201-0303	D		4	SPARE PARTS KIT	
300	90287-0073	-		2	SCREW	

Pos	Part No	SP	UN	Qty	Description	Page No

SPLASH PROTECTION

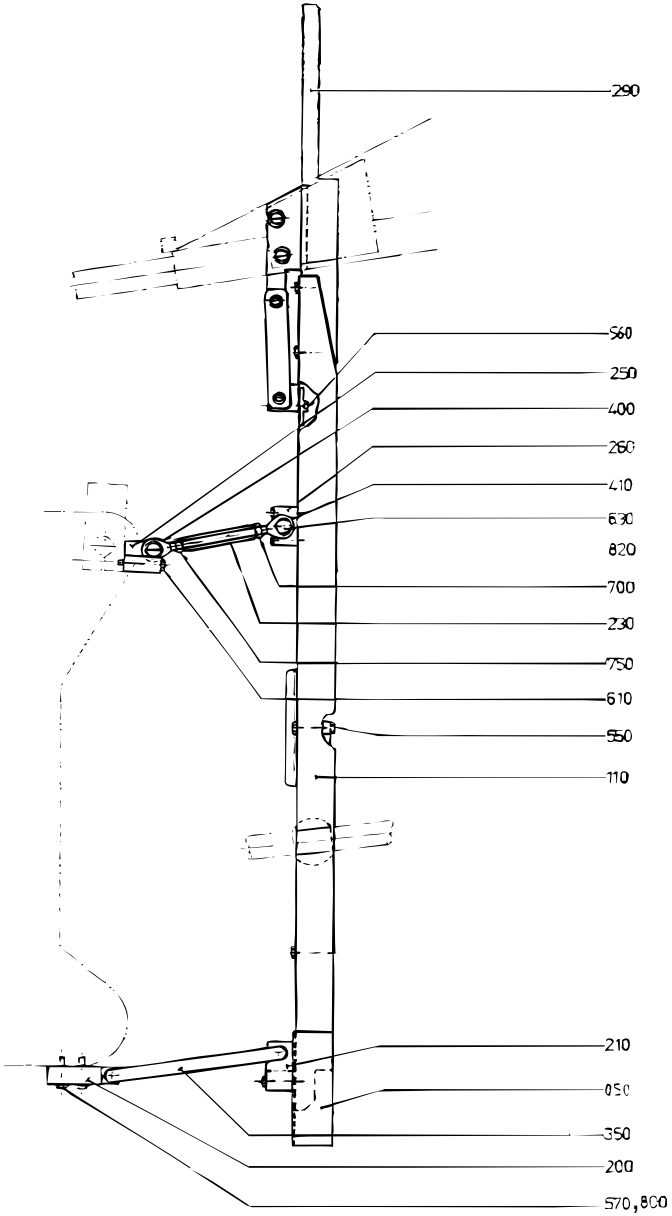

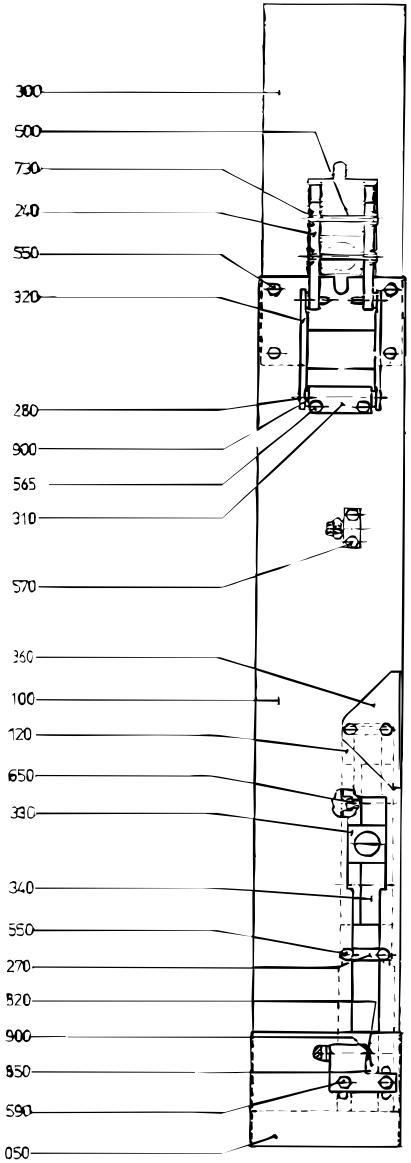

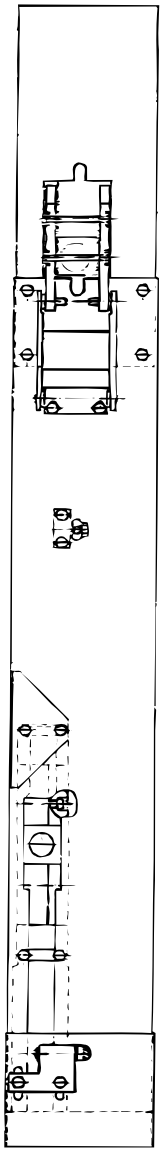

S-292071-2
ECN 21168

Pos	Part No	SP	UN	Qty	Description	Page No
IH						
050	436580-0000	D		2	COVERING PLATE	
330	283774-0000	K		4	BEARING	
TPC						
330	283774-0000	K		4	BEARING	
US						
330	928948-0000	K		4	BEARING	
Common parts						
100	279983-0000	D		1	SPLASH PROTECTION	
110	279984-0000	D		1	SPLASH PROTECTION	
120	279985-0000	D		2	BRACKET	
200	555888-0000	-		2	BRACKET	
210	279987-0000	-		2	BRACKET	
230	279989-0000	D		2	SPACER	
240	279991-0000	D		4	BRACKET	
250	279992-0000	-		2	BRACKET	
260	279993-0000	-		2	BRACKET	
270	279997-0000	-		4	BRACKET	
280	279998-0000	K		2	SHAFT	
290	279999-0000	D		1	COVERING PLATE	
300	282511-0000	D		1	COVERING PLATE	
310	282512-0000	-		2	BRACKET	
320	282513-0000	D		2	BRACKET	
340	283775-0000	K		4	SLIDE	
350	436672-0000	D		2	LINK	
360	574167-0000	-		2	LIMIT PLATE	
400	90115-0107	-		2	JOINT	
410	90115-0106	-		2	JOINT	
500	312101-0383	-		4	SCREW M6S6X65FZB	
550	312105-0364	-		24	SCREW M6S6X10RFR	
560	312105-0366	-		8	SCREW M6S ISO 4017 M6X12 A280	
565	312105-0370	-		4	SCREW M6S ISO 4017 M6X20 A280	
570	312105-0374	-		4	SCREW M6S ISO 4017 M6X30 A280	
590	312105-0376	-		4	SCREW M6S ISO 4017 M6X35 A280	
610	312105-0379	-		4	SCREW M6S ISO 4014 M6X45 A280	
630	312105-0453	-		4	SCREW M6S ISO 4017 M8X25 A280	
650	312115-0376	-		4	SCREW MC6S ISO 4762 M6X35 A280	
700	312605-0318	-		2	NUT M6M8RFR	
730	312811-0316	-		4	LOCK NUT M6RFR	
750	312902-0318	-		2	NUT M6M8VRFR	
800	315105-0153	-		4	WASHER BRB6,4X12RFR	
820	315105-0165	-		8	WASHER BRB8,4X16RFR	
850	315755-0109	K		4	LOCKING WAE 7RFR	
900	321111-0095	K		16	FLANGE BUS 8E7X6	

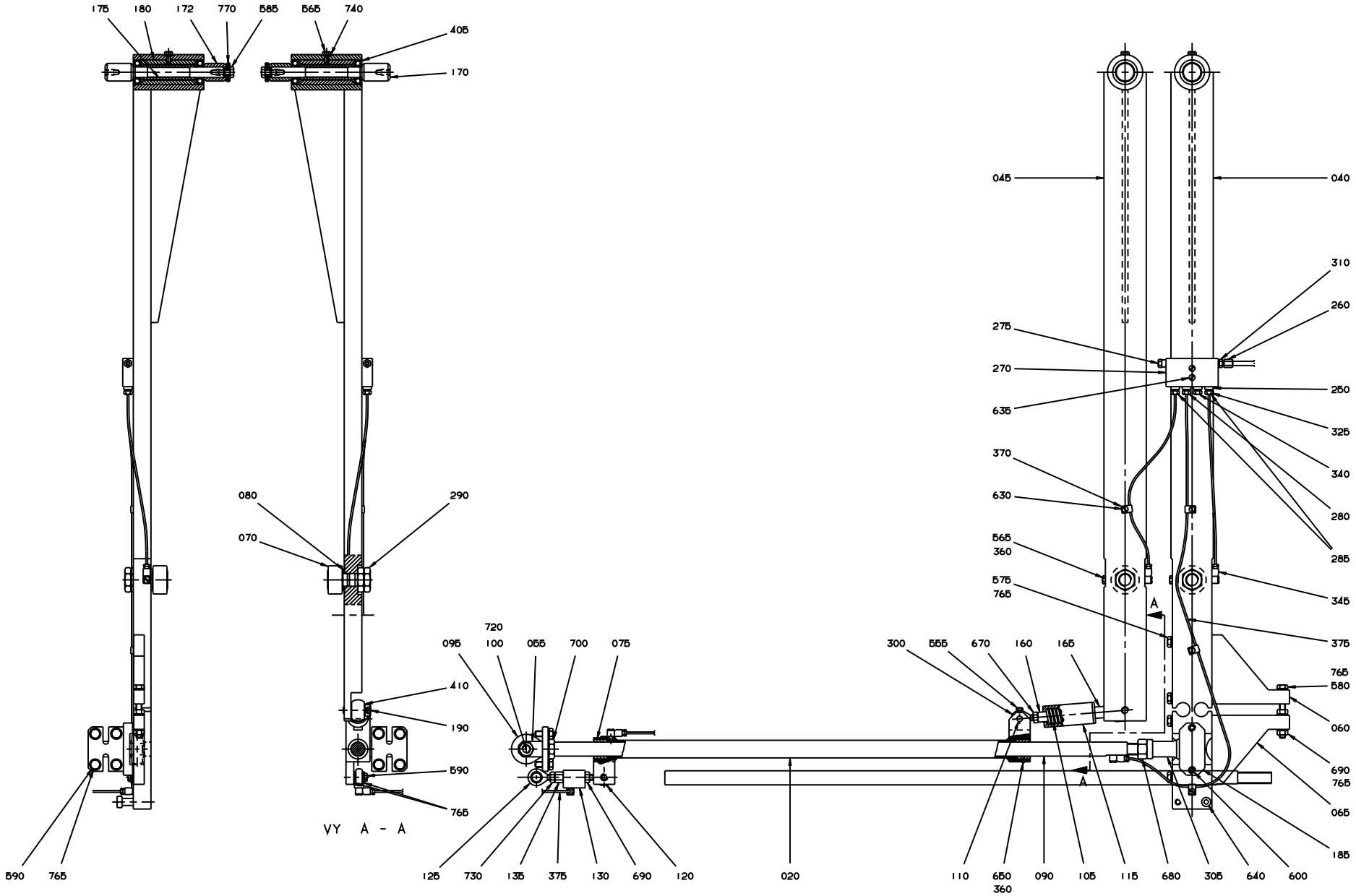

S-434670-6
ECN 19499

Pos	Part No	SP	UN	Qty	Description	Page No
IH or TPC						
020	540335-0000	D		2	LINK	
045	562747-0000	-		2	ARM	
070	28334-0000	F		4	CURVE ROLLER	
075	230462-0000	K		4	BUSHING	
080	239538-0000	-		4	WASHER	
105	252707-0000	D		2	SPRING	
110	255335-0000	K		2	SHAFT	
115	255398-0000	-		2	SLEEVE	
120	263313-0000	K		2	LINK HEAD	
125	263314-0000	K		2	LINK HEAD	
130	263328-0000	-		2	SPACER	
135	263329-0000	-		2	NUT	
160	434142-0000	D		2	PISTON	
165	434143-0000	-		2	END SECTION	
170	570066-0000	-		4	SHAFT	
172	570067-0000	-		4	RING	
175	570125-0000	-		4	SLEEVE	
180	570126-0000	-		4	SLEEVE	
190	563061-0000	-		2	REAMED BOLT	
250	90028-0020	-		6	CONE	
285	90092-0053	K		4	VALVE	
290	90099-0012	-		8	NUT	
300	90115-0122	K		2	JOINT	
340	90134-0052	-		2	PLUG	
370	90165-0022	-		8	CLIP	
405	90214-0169	K		8	BALL BEARING	
410	90240-0097	K		4	RICTION BEARING	
555	312101-0323	-		4	SCREW M6S5X8FZB	
565	312101-0366	-		8	SCREW M6S6X12FZB	
585	312105-0449	-		4	SCREW M6S ISO 4017 M8X16 A280	
590	312105-0453	-		12	SCREW M6S ISO 4017 M8X25 A280	
630	312121-0287	-		8	SLOTTED HEMCS4X8FZB	
650	312316-0283	-		4	STOP SCREW SK6SS4X4FZB	
670	312621-0318	-		2	NUT ML6M8FZB	
690	312605-0318	-		6	NUT M6M8RFR	
730	312902-0318	-		2	NUT M6M8VRFR	
740	315101-0153	-		4	WASHER BRB6,4X12FZB	
765	315105-0165	-		30	WASHER BRB8,4X16RFR	
770	315121-0165	-		4	WASHER TBRSB8,4X26FZB	
US						
070	28334-0000	F		2	CURVE ROLLER	
080	239538-0000	-		2	WASHER	
170	570066-0000	-		2	SHAFT	
172	570067-0000	-		2	RING	
175	570125-0000	-		2	SLEEVE	
180	570126-0000	-		2	SLEEVE	
250	90028-0020	-		4	CONE	
285	90092-0053	K		3	VALVE	
290	90099-0012	-		4	NUT	
340	90134-0052	-		4	PLUG	
370	90165-0022	-		6	CLIP	
405	90214-0169	K		4	BALL BEARING	
565	312101-0366	-		4	SCREW M6S6X12FZB	
585	312105-0449	-		2	SCREW M6S ISO 4017 M8X16 A280	
590	312105-0453	-		10	SCREW M6S ISO 4017 M8X25 A280	
630	312121-0287	-		6	SLOTTED HEMCS4X8FZB	
690	312605-0318	-		4	NUT M6M8RFR	
740	315101-0153	-		2	WASHER BRB6,4X12FZB	
765	315105-0165	-		26	WASHER BRB8,4X16RFR	
770	315121-0165	-		2	WASHER TBRSB8,4X26FZB	
Common parts						
040	562746-0000	-		2	ARM	
055	464363-0000	D		2	HOLDER	
060	562748-0000	-		2	BRACKET	
065	562749-0000	-		2	BRACKET	
090	247119-0000	D		2	ROD	
095	526904-0000	K		2	LINK HEAD	
100	536703-0000	K		2	SHAFT	
185	562140-0000	-		2	CAP	
260	90030-0162	-		2	CONNECTION	
270	90032-0039	-		2	BLOCK	
275	90087-0019	-		2	PLUG	
280	90092-0052	K		2	VALVE	
305	90115-0067	K		2	JOINT	
310	90134-0030	-		2	SLEEVE	
325	90134-0039	-		8	BUSHING	
345	90134-0058	-		10	BANJO CONNECTION	
360	90157-0016	-	ML	x	LOCKING FLUID	
375	90166-0143	F	MM	2500	HOSE	
575	312101-0465	-		8	SCREW M6S8X70FZB	
580	312104-0465	-		2	SCREW M6S8X70H8.8 FZB	
600	312111-0455	-		4	SCREW MC6S8X30FZB	
635	312141-0295	-		4	SLOTTED HEMFS4X20FZB	
640	312180-0489	-		2	HEX. SOCKET HEAD SHOULD. ISO 7379 M8X16	

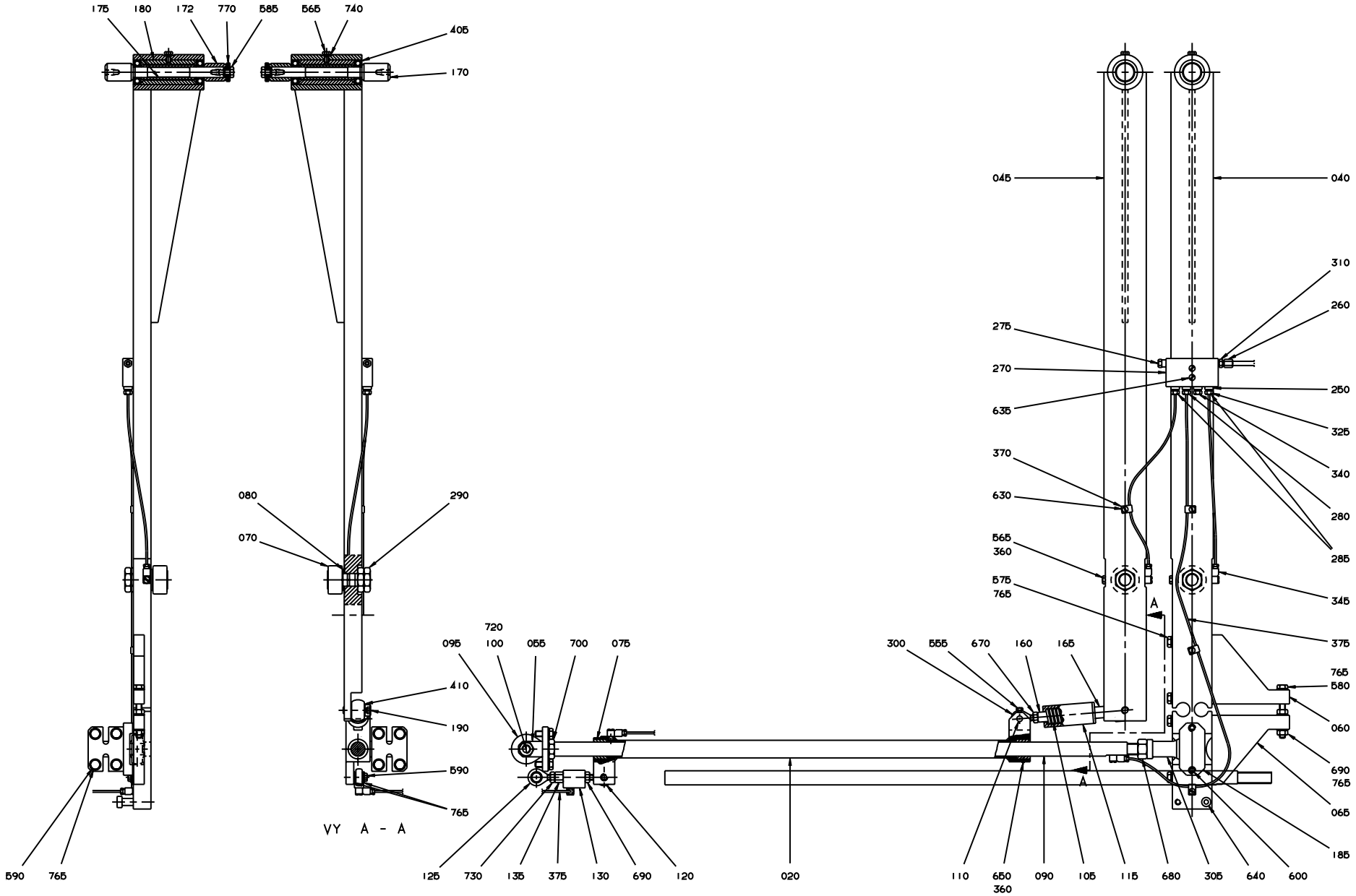

S-434670-6
ECN 19499

Pos	Part No	SP	UN	Qty	Description	Page No
680	312601-0324	-		2	NUT M6M16FZB	
700	312621-0324	-		2	NUT ML6M16FZB	
720	312811-0322	-		2	LOCK NUT M12RFR	

Pos	Part No	SP	UN	Qty	Description	Page No

This page is intentionally left blank

Pos	Part No	SP	UN	Qty	Description	Page No
90046-0015						
	90046-0304	K		1	STATOR	
90046-0015						
	90046-0312	K		1	RECTIFIER	
90046-0015						
	90046-0313	K		1	COIL	
90046-0015						
	90046-0314	K		1	BRAKE DISC	
90046-0016						
	90046-0308	K		1	STATOR	
90046-0016						
	90046-0312	K		1	RECTIFIER	
90046-0016						
	90046-0313	K		1	COIL	
90046-0016						
	90046-0314	K		1	BRAKE DISC	
90201-0010						
	90201-0300	-		1	PLATE	
90201-0010						
	90201-0301	-		1	SPRING	
90201-0010						
	90201-0302	-		1	WASHER	
90201-0010						
	90201-0303	-		1	SPARE PARTS KIT	

Pos	Part No	SP	UN	Qty	Description	Page No

Tetra Pak

SPC

Spare Parts Catalogue

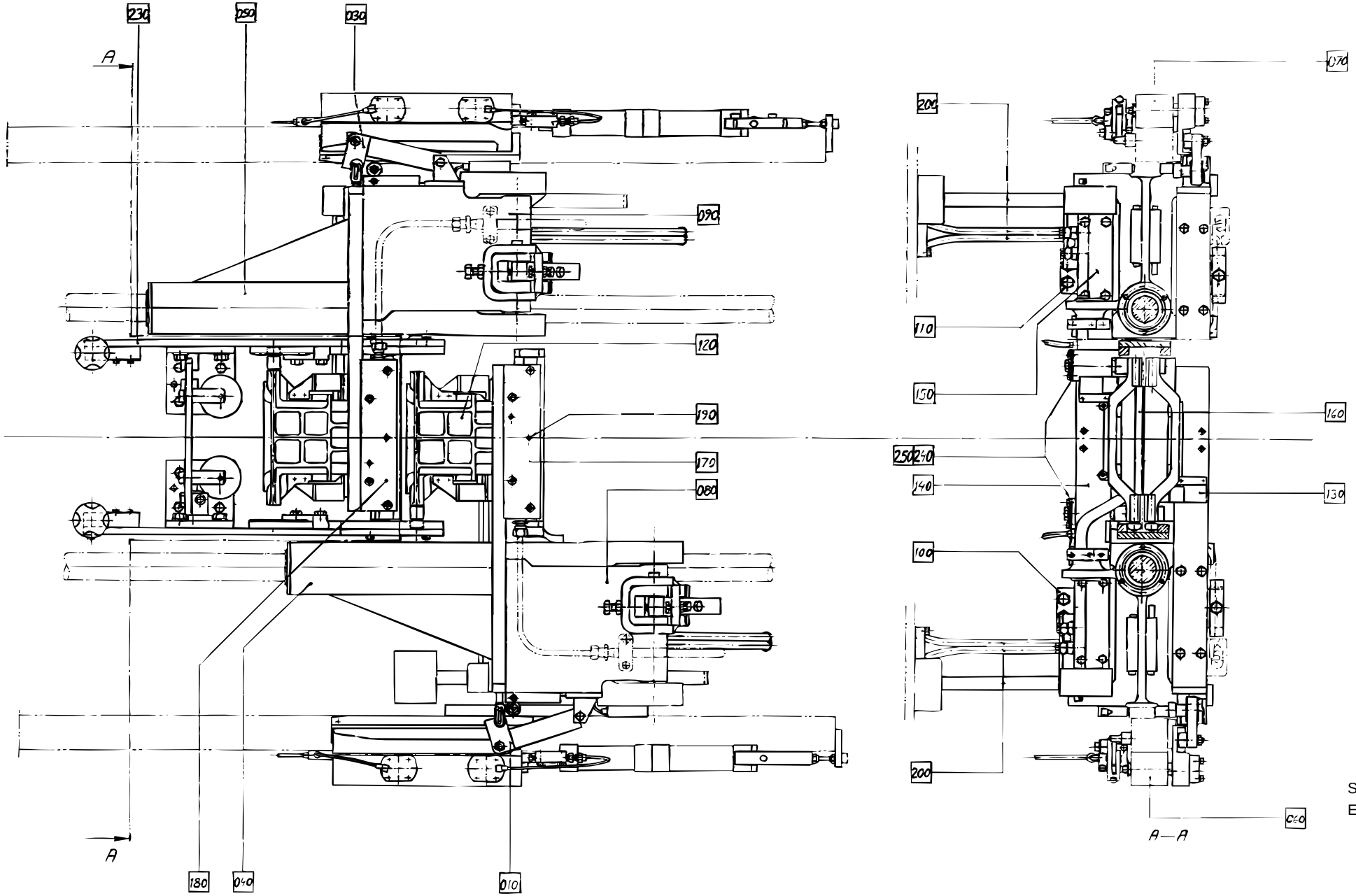

S-648004-1
ECN 9417

Pos	Part No	SP	UN	Qty	Description	Page No
F010	A 279564-0300	-		1	FOLDING DEVICE	315
F030	A 279565-0300	-		1	FOLDING DEVICE	319
F040	A 243942-0400	-		1	YOKE	321
F050	A 593749-0100	-		1	YOKE	323
F060	A 266446-0500	-		1	DESIGN CORRECTION DEVICE	325
F070	A 266447-0500	-		1	DESIGN CORRECTION DEVICE	329
F080	A 246499-0600	-		1	ARM	333
F090	A 593750-0100	-		1	ARM	335
F100	A 541052-0100	-		1	ARM WITH AXLE PRESSURE L	339
F110	A 541053-0100	-		1	ARM WITH AXLE PRESSURE R	341
F120	A 246468-0800	-		4	VOLUME FLAP	343
F130	A1360383-0100	-		1	SHOCK ABSORBER	351
F140	A 259414-0400	-		1	CARRIER PRESSURE L IH	355
F150	A 259415-0400	-		1	CARRIER	357
F170	A 257835-0300	-		1	CUTTING JAW	359
F180	A 257835-0350	-		1	CUTTING JAW	363
F190	A 32966-0400	-		2	KNIFE HOLDER	367
F200	A 279134-0500	-		1	TRANSMISSION	369
F230	A 293605-0500	-		1	VOLUM CURVE PIECE	371
F240	A 259534-0700	-		1	PRESSURE JAW	383
F250	A 259534-0750	-		1	PRESSURE JAW	387
F270	A 268614-0500	-		1	START-UP KIT	391
F280	A 541188-0200	-		1	BAR CODE	395

Pos	Part No	SP	UN	Qty	Description	Page No

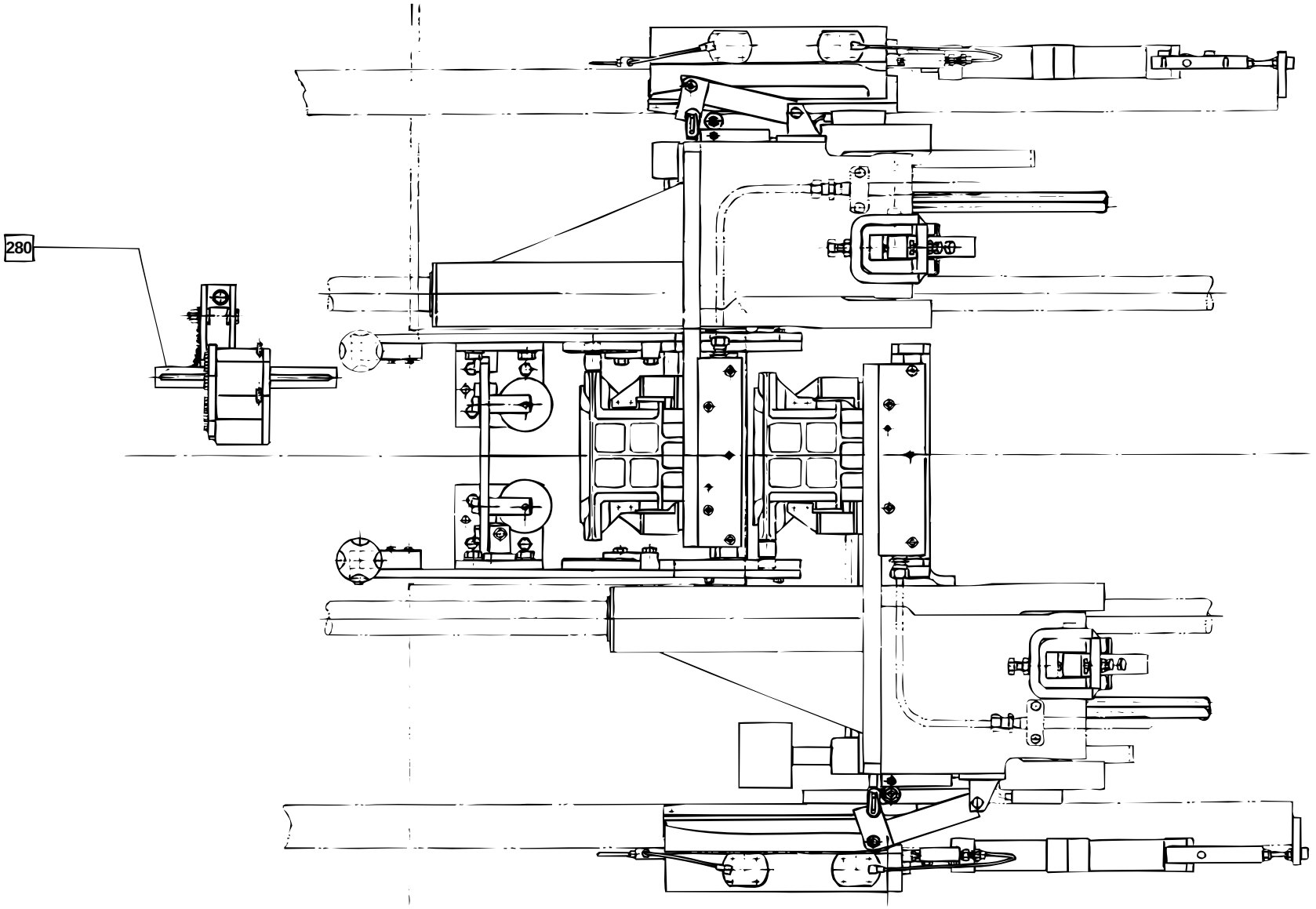

S-648004-3
ECN 9417

Pos	Part No	SP	UN	Qty	Description	Page No
F010	A 279564-0300	-		1	FOLDING DEVICE	315
F030	A 279565-0300	-		1	FOLDING DEVICE	319
F040	A 243942-0400	-		1	YOKE	321
F050	A 593749-0100	-		1	YOKE	323
F060	A 266446-0500	-		1	DESIGN CORRECTION DEVICE	325
F070	A 266447-0500	-		1	DESIGN CORRECTION DEVICE	329
F080	A 246499-0600	-		1	ARM	333
F090	A 593750-0100	-		1	ARM	335
F100	A 541052-0100	-		1	ARM WITH AXLE PRESSURE L	339
F110	A 541053-0100	-		1	ARM WITH AXLE PRESSURE R	341
F120	A 246468-0800	-		4	VOLUME FLAP	343
F130	A1360383-0100	-		1	SHOCK ABSORBER	351
F140	A 259414-0400	-		1	CARRIER PRESSURE L IH	355
F150	A 259415-0400	-		1	CARRIER	357
F170	A 257835-0300	-		1	CUTTING JAW	359
F180	A 257835-0350	-		1	CUTTING JAW	363
F190	A 32966-0400	-		2	KNIFE HOLDER	367
F200	A 279134-0500	-		1	TRANSMISSION	369
F230	A 293605-0500	-		1	VOLUM CURVE PIECE	371
F240	A 259534-0700	-		1	PRESSURE JAW	383
F250	A 259534-0750	-		1	PRESSURE JAW	387
F270	A 268614-0500	-		1	START-UP KIT	391
F280	A 541188-0200	-		1	BAR CODE	395

Pos	Part No	SP	UN	Qty	Description	Page No

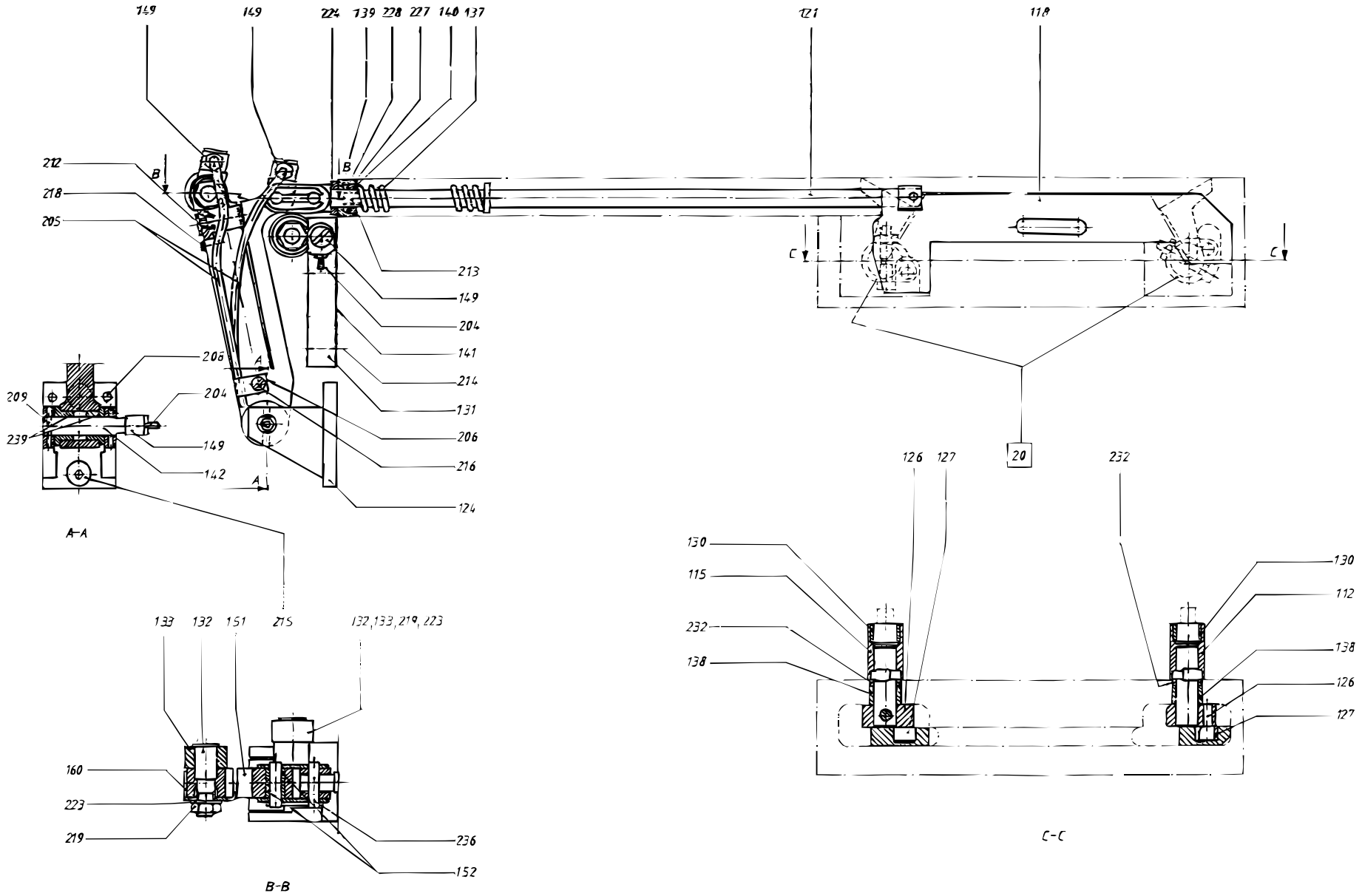

S-279564-2
ECN 20524

Pos	Part No	SP	UN	Qty	Description	Page No
0180B or 0189B or 0200B or 0236B or 0250B or 0284B						
112	36302-0000	K		1	FOLDING FLAP	
115	36301-0000	K		1	FOLDING FLAP	
118	458032-0000	K		1	CARRIER RULER	
121	32494-0000	K		1	OPERATING ROD	
0300B or 0375S						
112	493711-0000	K		1	FOLDING FLAP	
115	493710-0000	K		1	FOLDING FLAP	
118	458038-0000	K		1	CARRIER RULER	
121	32494-0000	K		1	OPERATING ROD	
0355B or 0400B or 0500S						
112	493711-0000	K		1	FOLDING FLAP	
115	493710-0000	K		1	FOLDING FLAP	
118	458030-0000	K		1	CARRIER RULER	
121	32494-0000	K		1	OPERATING ROD	
0500B or 0568B or 0750B or 1000B or 1055B or 1136B						
112	464311-0000	K		1	FOLDING FLAP	
115	464310-0000	K		1	FOLDING FLAP	
118	450505-0000	K		1	CARRIER RULER LEFT	
121	32468-0000	K		1	OPERATING ROD	
0500SQ or 1000SQ						
112	1317809-0000	K		1	FOLDING FLAP	
115	1317808-0000	K		1	FOLDING FLAP	
118	573979-0000	K		1	CARRIER RULER	
121	32468-0000	K		1	OPERATING ROD	
0750S						
112	544315-0000	K		1	FOLDING FLAP	
115	544314-0000	K		1	FOLDING FLAP	
118	544319-0000	K		1	CARRIER RULER	
121	32494-0000	K		1	OPERATING ROD	
1000S						
112	569061-0000	K		1	FOLDING FLAP	
115	569060-0000	K		1	FOLDING FLAP	
118	569062-0000	K		1	CARRIER RULER	
121	32468-0000	K		1	OPERATING ROD	
1500B						
112	1317809-0000	K		1	FOLDING FLAP	
115	1317808-0000	K		1	FOLDING FLAP	
118	593580-0000	K		1	CARRIER RULER	
121	32468-0000	K		1	OPERATING ROD	
Common parts						
F020	A 26642-0200	-		2	CARRIER	317
124	23229-0000	D		1	BRACKET	
126	22462-0000	K		2	SHAFT	
127	22463-0000	K		2	ROLL	
130	32463-0000	K		2	BEARING	
131	22473-0000	K		1	ROLLER BRACKET	
132	276172-0000	F		2	AXLE PIN	
133	276173-0000	F		2	CURVE ROLLER	
137	107000-0000	K		1	SPRING	
138	33408-0000	K		2	BEARING	
139	113653-0000	K		1	BEARING PLATE	
140	113654-0000	K		1	RING	
141	26423-0000	K		2	LACE	
142	269366-0000	K		1	DOWEL	
149	90134-0058	-		4	BANJO CONNECTION	
151	927448-0000	K		1	LINK	
152	37258-0000	K		2	BUSHING	
160	927449-0000	-		1	SECURITY PLATE LEFT	
204	90266-0019	F	MM	400	PIPE	
205	90166-0143	F	MM	800	HOSE	
206	90165-0056	-		1	CLIP	
208	311103-0310	-		2	CYLINDRICACP M6 5X20 RFR	
209	90258-0001	-		1	HOLLOW PIN	
212	312155-0374	-		1	SCREW MF6S6X30RFR	
213	312115-0366	-		2	SCREW MC6S ISO 4762 M6X12 A280	
214	312115-0368	-		2	SCREW MC6S ISO 4762 M6X16 A280	
215	312115-0449	-		2	SCREW MC6S ISO 4762 M8X16 A280	
216	312125-0287	-		1	SLOTTED CHEESE HEAD ISO 1207 M4X8 RFR	
218	312318-0370	-		1	SET SCREW CUP POINT ISO 4029 M6X20 RFR	
219	312605-0318	-		2	NUT M6M8RFR	
223	315105-0165	-		2	WASHER BRB8,4X16RFR	
224	315115-0171	-		1	WASHER TBRB10X18RFR	
227	315202-0114	F		1	O-RING 16,1X1,6	
228	315202-0208	F		1	O-RING 9,3X2,4	
232	315230-0157	-		2	SEAL RING G12X16X3	
236	90288-0305	F		1	CONNECTION LINK	
239	321101-0163	K		2	FLANGE BUS 10F7X10	

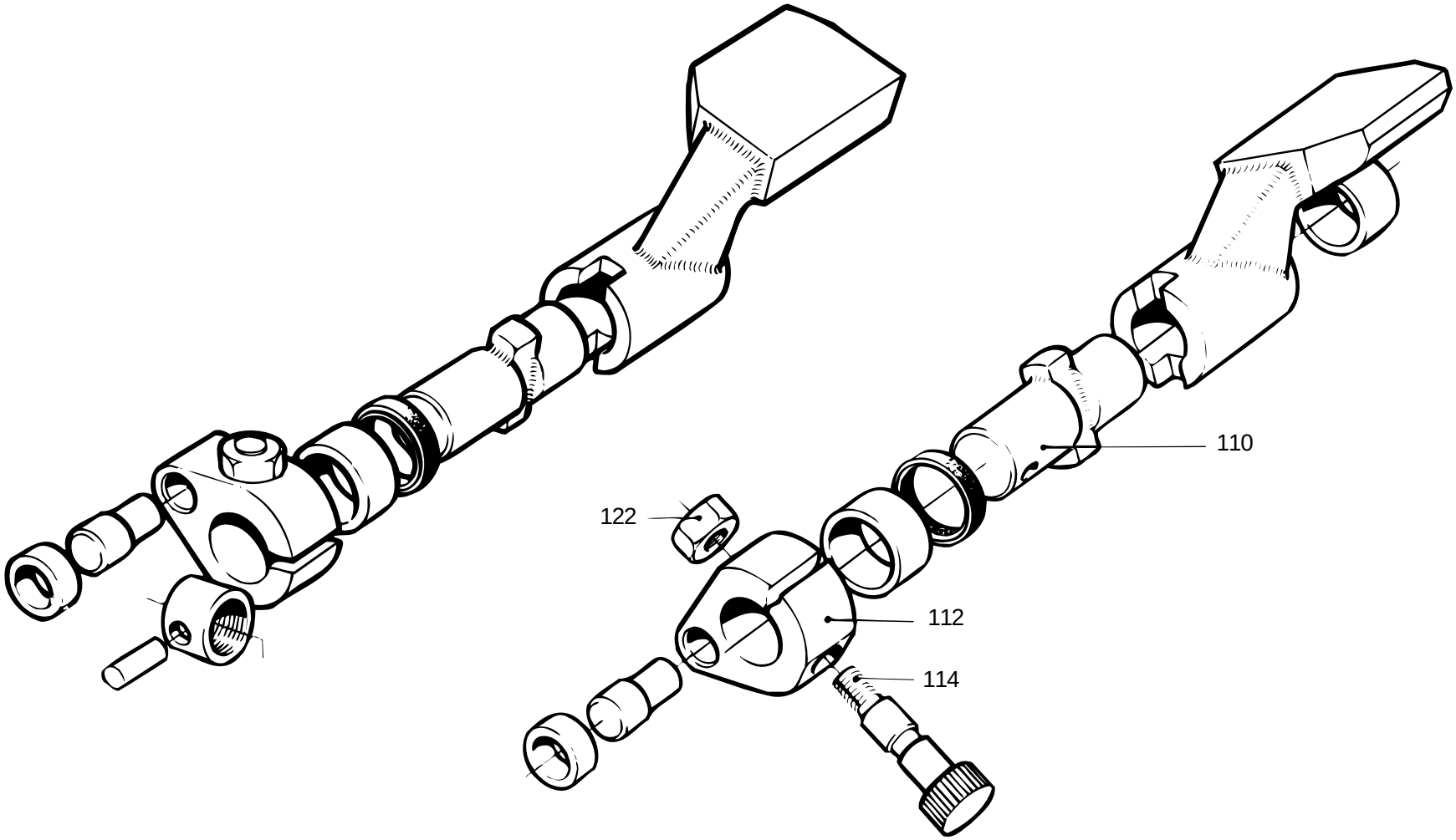

S-26642-2
ECN 3657

Pos	Part No	SP	UN	Qty	Description	Page No
-						
110	32462-0000	K		1	SHAFT	
112	25640-0000	K		1	CARRIER	
114	25641-0000	K		1	REAMED BOLT	
122	312605-0314	K		1	NUT M6M5RFR	

Pos	Part No	SP	UN	Qty	Description	Page No

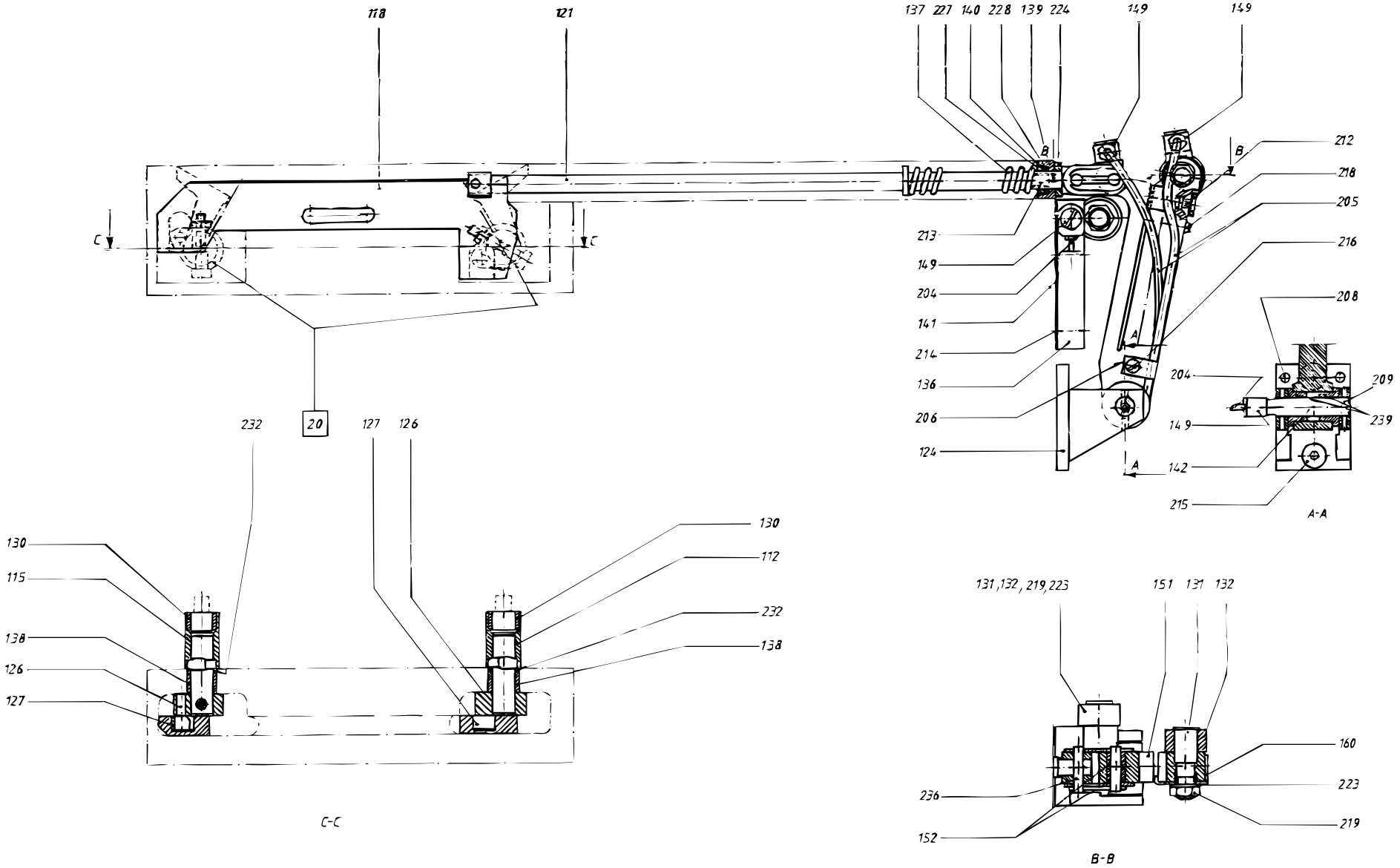
118
121
137 227 140 228 139 224
149
149
212
218
205
216
208
213
149
204
141
214
136
206
124
204
209
239
149
142
215
A-A
232
20
127
126
130
112
232
138
130
115
138
126
127
C-C
131,132, 219,223
151 131 132
160
223
219
236
152
B-B

Pos	Part No	SP	UN	Qty	Description	Page No
0180B or 0189B or 0200B or 0236B or 0250B or 0284B						
112	36302-0000	K		1	FOLDING FLAP	
115	36301-0000	K		1	FOLDING FLAP	
118	458033-0000	K		1	CARRIER RULER	
121	32494-0000	K		1	OPERATING ROD	
0300B or 0375S						
112	493711-0000	K		1	FOLDING FLAP	
115	493710-0000	K		1	FOLDING FLAP	
118	458039-0000	K		1	CARRIER RULER	
121	32494-0000	K		1	OPERATING ROD	
0355B or 0400B or 0500S						
112	493711-0000	K		1	FOLDING FLAP	
115	493710-0000	K		1	FOLDING FLAP	
118	458031-0000	K		1	CARRIER RULER	
121	32494-0000	K		1	OPERATING ROD	
0500B or 0568B or 0750B or 1000B or 1055B or 1136B						
112	464311-0000	K		1	FOLDING FLAP	
115	464310-0000	K		1	FOLDING FLAP	
118	450506-0000	K		1	CARRIER RULER	
121	32468-0000	K		1	OPERATING ROD	
0500SQ or 1000SQ						
112	1317809-0000	K		1	FOLDING FLAP	
115	1317808-0000	K		1	FOLDING FLAP	
118	573980-0000	K		1	CARRIER RULER	
121	32468-0000	K		1	OPERATING ROD	
0750S						
112	544315-0000	K		1	FOLDING FLAP	
115	544314-0000	K		1	FOLDING FLAP	
118	544320-0000	K		1	CARRIER RULER	
121	32494-0000	K		1	OPERATING ROD	
1000S						
112	569061-0000	K		1	FOLDING FLAP	
115	569060-0000	K		1	FOLDING FLAP	
118	569063-0000	K		1	CARRIER RULER	
121	32468-0000	K		1	OPERATING ROD	
1500B						
112	1317809-0000	K		1	FOLDING FLAP	
115	1317808-0000	K		1	FOLDING FLAP	
118	593581-0000	K		1	CARRIER RULER	
121	32468-0000	K		1	OPERATING ROD	
Common parts						
F020	A 26642-0200	-		2	CARRIER	317
124	23229-0000	D		1	BRACKET	
126	22462-0000	K		2	SHAFT	
127	22463-0000	K		2	ROLL	
130	32463-0000	K		2	BEARING	
131	276172-0000	F		2	AXLE PIN	
132	276173-0000	F		2	CURVE ROLLER	
136	23361-0000	K		1	ROLLER BRACKET	
137	107000-0000	K		1	SPRING	
138	33408-0000	K		2	BEARING	
139	113653-0000	K		1	BEARING PLATE	
140	113654-0000	K		1	RING	
141	26423-0000	K		2	LACE	
142	269366-0000	K		1	DOWEL	
149	90134-0058	-		4	BANJO CONNECTION	
151	927448-0000	K		1	LINK	
152	37258-0000	K		2	BUSHING	
160	927450-0000	-		1	SECURITY PLATE RIGHT	
204	90266-0019	F	MM	400	PIPE	
205	90166-0143	F	MM	800	HOSE	
206	90165-0056	-		1	CLIP	
208	311103-0310	-		2	CYLINDRICACP M6 5X20 RFR	
209	90258-0001	-		1	HOLLOW PIN	
212	312155-0374	-		1	SCREW MF6S6X30RFR	
213	312115-0366	-		2	SCREW MC6S ISO 4762 M6X12 A280	
214	312115-0368	-		2	SCREW MC6S ISO 4762 M6X16 A280	
215	312115-0449	-		2	SCREW MC6S ISO 4762 M8X16 A280	
216	312125-0287	-		1	SLOTTED CHEESE HEAD ISO 1207 M4X8 RFR	
218	312318-0370	-		1	SET SCREW CUP POINT ISO 4029 M6X20 RFR	
219	312605-0318	-		2	NUT M6M8RFR	
223	315105-0165	-		2	WASHER BRB8,4X16RFR	
224	315115-0171	-		1	WASHER TBRB10X18RFR	
227	315202-0114	F		1	O-RING 16,1X1,6	
228	315202-0208	F		1	O-RING 9,3X2,4	
232	315230-0157	-		2	SEAL RING G12X16X3	
236	90288-0305	F		1	CONNECTION LINK	
239	321101-0163	K		2	FLANGE BUS 10F7X10	

YOKE

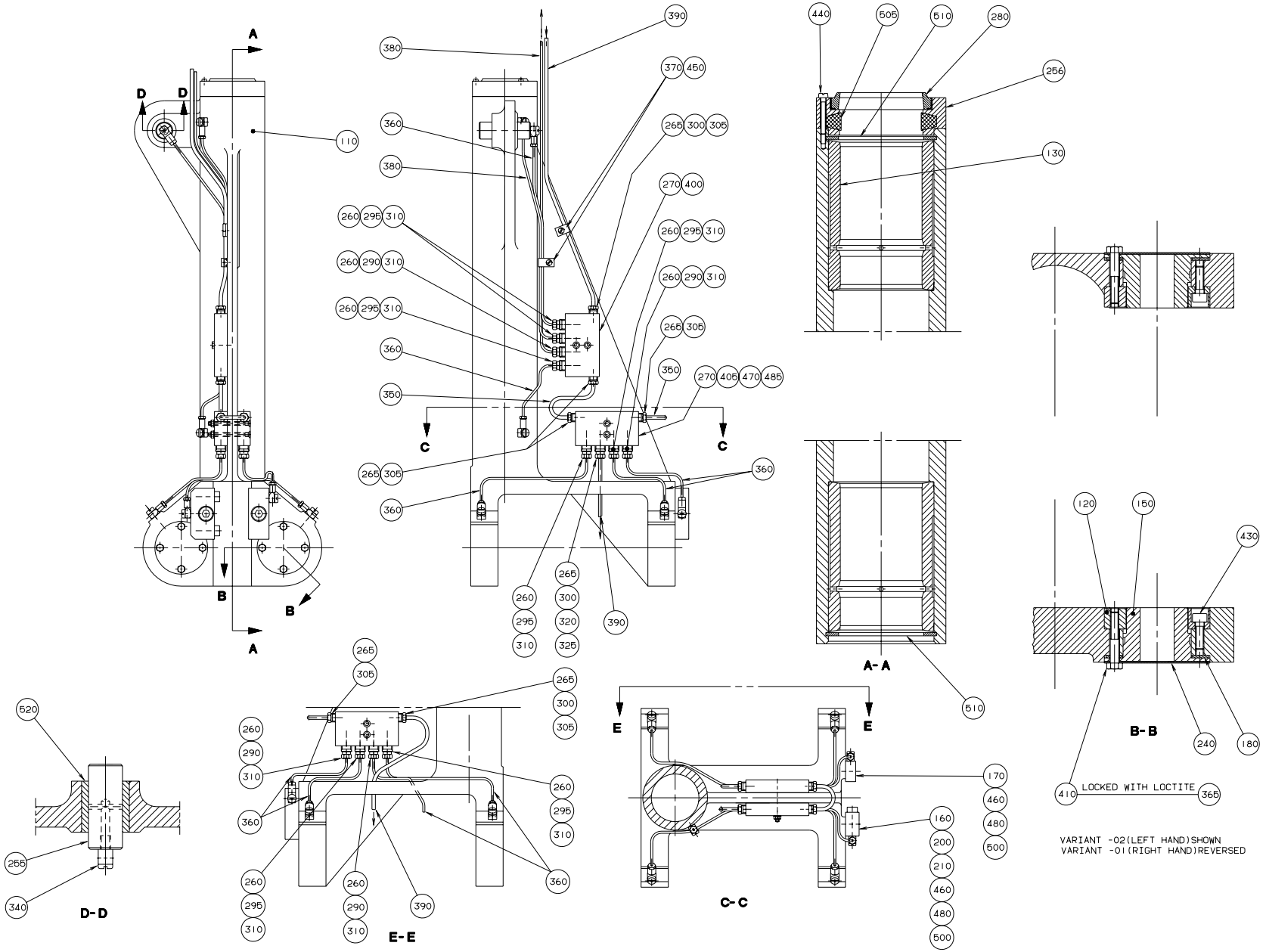

S-243942-2
ECN 16717

Pos	Part No	SP	UN	Qty	Description	Page No
-						
110	243952-0000	-		1	YOKE	
120	36753-0000	D		4	RING	
130	243943-0000	K		2	BUSHING	
150	246513-0000	K		4	BEARING	
160	20494-0000	K		2	COMPRESSION SPRING	
170	26760-0000	K		1	LOCATING PIECE	
180	29886-0000	K		4	LACE	
200	31837-0000	K		1	SPRING HOUSING	
210	31838-0000	K		2	PLUNGER	
240	239874-0000	D		4	WASHER	
255	247112-0000	K		1	SHAFT	
256	263509-0000	K		1	LID	
260	90028-0020	-		11	CONE	
265	90028-0021	-		7	CONE	
270	90032-0039	-		3	BLOCK	
280	90091-0080	K		1	SCRAPER	
290	90092-0052	-		4	VALVE	
295	90092-0053	-		7	VALVE	
300	90134-0031	-		3	SLEEVE	
305	90134-0038	-		6	BUSHING	
310	90134-0039	-		11	BUSHING	
320	90134-0040	-		1	BUSHING	
325	90134-0051	-		1	SPACER COLLAR	
340	90134-0058	-		9	BANJO CONNECTION	
350	90151-0001	-	MM	200	BRASS PIPE	
360	90266-0019	-	MM	1400	PIPE	
365	90157-0016	-	ML	x	LOCKING FLUID	
370	90165-0060	-		4	CLAMP	
380	90166-0143	-	MM	900	HOSE	
390	90166-0109	-	MM	500	HOSE	
395	312105-0287	-		2	SCREW M6S ISO 4017 M4X8 A280	
400	312105-0295	-		2	SCREW M6S ISO 4017 M4X20 A280	
405	312145-0305	-		2	SLOTTED HEMFS4X50RFR	
410	312105-0335	-		16	SCREW M6S ISO 4017 M5X30 A280	
430	312115-0329	-		4	SCREW MC6S ISO 4762 M5X16 A280	
440	312125-0232	-		3	SLOTTED CHEESE HEAD ISO 1207 M3X25	
RFR						
450	312125-0285	-		2	SLOTTED HEMCS4X6RFR	
460	312180-0499	-		2	HEX. SOCKET HEAD SHOULD. ISO 7379	
M8X40						
470	312605-0312	-		2	NUT M6M4RFR	
480	312811-0318	-		2	LOCK NUT M8RFR	
485	315105-0136	-		4	WASHER BRB4,3X8RFR	
500	315115-0173	-		2	WASHER B 10,5X22 RFR	
505	315259-0103	K		1	FELT SEAL SKFFI260	
510	315752-0136	K		4	CIRCLIP SGH62	
520	321105-0234	K		1	BUSHING 20F7X28X30	

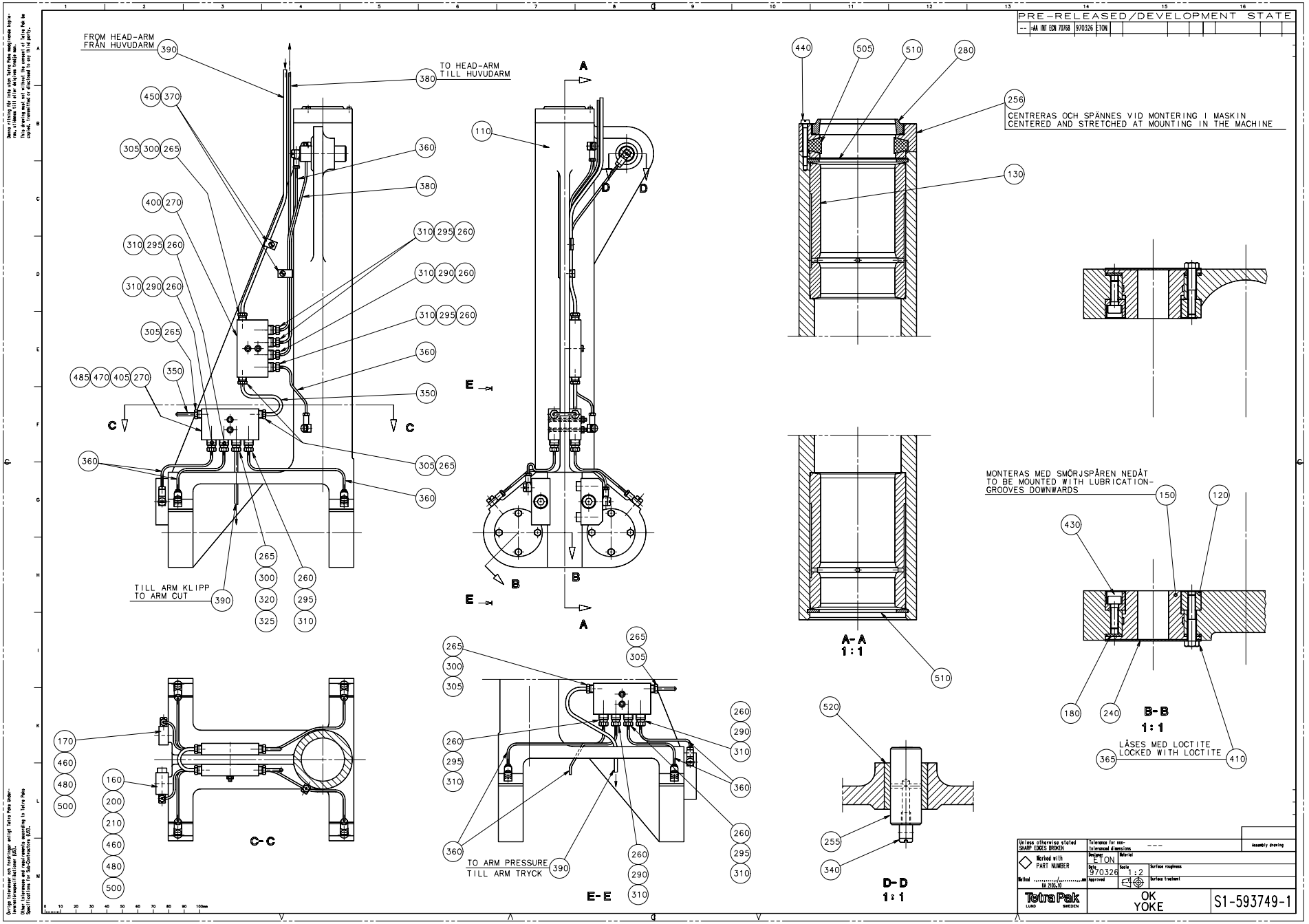
PRE-RELEASED/DEVELOPMENT STATE
FROM HEAD-ARM
FRÅN HUVUDARM
TO HEAD-ARM
TILL HUVUDARM
TILL ARM KLIPP
TO ARM CUT
TO ARM PRESSURE
TILL ARM TRYCK
CENTRERAS OCH SPÄNNES VID MONTERING I MASKIN
CENTERED AND STRETCHED AT MOUNTING IN THE MACHINE
MONTERAS MED SMÖRJSPÅREN NEDÅT
TO BE MOUNTED WITH LUBRICATION-GROOVES DOWNWARDS
LÄSES MED LOCTITE
LOCKED WITH LOCTITE
A-A
1:1
B-B
1:1
C-C
D-D
1:1
E-E
OK
YOKE
S1-593749-1

Pos	Part No	SP	UN	Qty	Description	Page No
-						
110	243951-0000	-		1	YOKE	
120	36753-0000	D		4	RING	
130	243943-0000	K		2	BUSHING	
150	246513-0000	K		4	BEARING	
160	20494-0000	K		2	COMPRESSION SPRING	
170	26760-0000	K		1	LOCATING PIECE	
180	29886-0000	K		4	LACE	
200	31837-0000	K		1	SPRING HOUSING	
210	31838-0000	K		2	PLUNGER	
240	239874-0000	D		4	WASHER	
255	247112-0000	K		1	SHAFT	
256	263509-0000	K		1	LID	
260	90028-0020	-		11	CONE	
265	90028-0021	-		7	CONE	
270	90032-0039	-		3	BLOCK	
280	90091-0080	K		1	SCRAPER	
290	90092-0052	-		4	VALVE	
295	90092-0053	-		7	VALVE	
300	90134-0031	-		3	SLEEVE	
305	90134-0038	-		6	BUSHING	
310	90134-0039	-		11	BUSHING	
320	90134-0040	-		1	BUSHING	
325	90134-0051	-		1	SPACER COLLAR	
340	90134-0058	-		9	BANJO CONNECTION	
350	90151-0001	-	MM	200	BRASS PIPE	
360	90266-0019	-	MM	1400	PIPE	
365	90157-0016	-	ML	x	LOCKING FLUID	
370	90165-0060	-		4	CLAMP	
380	90166-0143	-	MM	900	HOSE	
390	90166-0109	-	MM	500	HOSE	
395	312105-0287	-		2	SCREW M6S ISO 4017 M4X8 A280	
400	312105-0295	-		2	SCREW M6S ISO 4017 M4X20 A280	
405	312145-0305	-		2	SLOTTED HEMFS4X50RFR	
410	312105-0335	-		16	SCREW M6S ISO 4017 M5X30 A280	
430	312115-0329	-		4	SCREW MC6S ISO 4762 M5X16 A280	
440	312125-0232	-		3	SLOTTED CHEESE HEAD ISO 1207 M3X25	
RFR						
450	312125-0285	-		2	SLOTTED HEMCS4X6RFR	
460	312180-0499	-		2	HEX. SOCKET HEAD SHOULD. ISO 7379	
M8X40						
470	312605-0312	-		2	NUT M6M4RFR	
480	312811-0318	-		2	LOCK NUT M8RFR	
485	315105-0136	-		4	WASHER BRB4,3X8RFR	
500	315115-0173	-		2	WASHER B 10,5X22 RFR	
505	315259-0103	K		1	FELT SEAL SKFFI260	
510	315752-0136	K		4	CIRCLIP SGH62	
520	321105-0234	K		1	BUSHING 20F7X28X30	

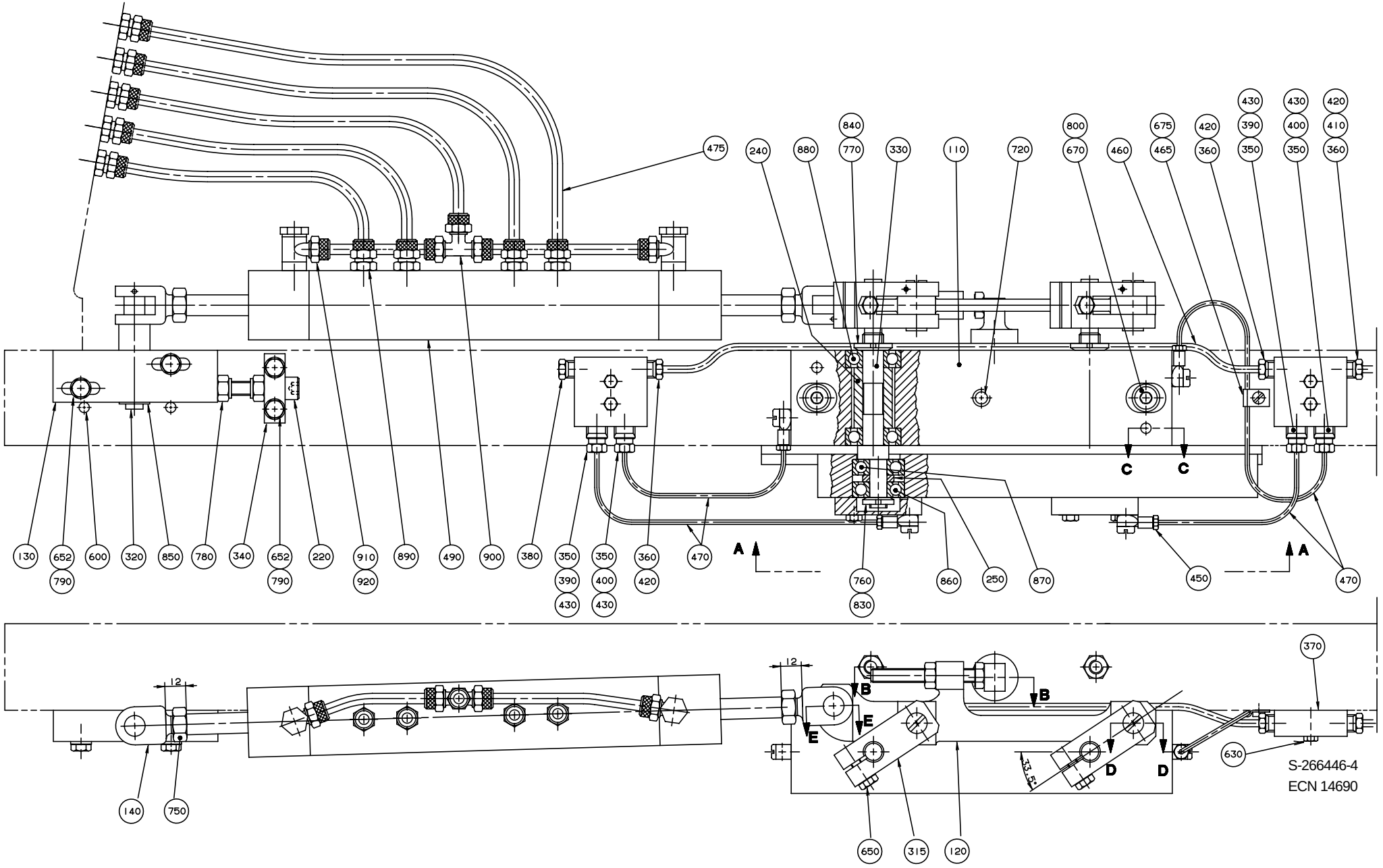

S-266446-4
ECN 14690

Pos	Part No	SP	UN	Qty	Description	Page No
0300B						
010	449728-0000	K		1	FOLDING FLAP CAM L	
020	449730-0000	D		1	COUNTER CAM	
0355B or 0400B						
010	537901-0000	K		1	FOLDING FLAP CAM L	
020	B 529137-0000	D		1	CURVE LEFT	
0375S or 0750B						
010	550337-0000	K		1	FOLDING FLAP CAM L	
020	440510-0000	D		1	COUNTER CAM	
0500B						
010	269108-0000	K		1	FOLDING FLAP CAM L	
020	269110-0000	D		1	COUNTER CAM	
0500S						
010	551285-0000	K		1	FOLDING FLAP CAM	
020	440930-0000	D		1	COUNTER CAM	
0568B						
010	533112-0000	K		1	FOLDING FLAP CAM L	
020	252653-0001	D		1	COUNTER CAM	
0750S or 1000B LOFIN						
010	268954-0000	K		1	FOLDING FLAP CAM L	
020	269059-0000	D		1	COUNTER CAM	
1000B HIFIN						
010	284232-0000	K		1	FOLDING FLAP CAM L	
020	284234-0000	D		1	COUNTER CAM	
1000S or 1000SQ						
010	565188-0000	K		1	FOLDING FLAP CAM	
020	269059-0000	D		1	COUNTER CAM	
1055B						
010	533959-0000	K		1	FOLDING FLAP CAM L	
020	B 533957-0000	D		1	CURVE LEFT	
Common parts						
110	23292-0000	D		1	BEARING HOUSING	
120	436740-0000	D		1	LINK	
130	20718-0000	-		1	BEARING	
140	22483-0000	K		2	FORK	
150	22485-0000	K		1	DOWEL	
160	22486-0000	K		2	DOWEL	
170	22504-0000	K		1	STOP LUG	
180	23291-0000	D		2	BEARING COVER	
200	23312-0000	K		3	BUSHING	
210	26426-0000	F		5	LACE	
220	33409-0000	K		1	SCREW	
240	107334-0000	-		2	SPACER SLEEVE	
250	107335-0000	-		2	SPACER RING	
260	107339-0000	-		2	DOWEL	
315	434387-0000	K		2	BRACKET	
320	434388-0000	D		1	SHAFT	
330	436671-0000	K		2	ECCENTRIC SHAFT	
340	561416-0000	-		1	BRACKET	
350	90028-0020	-		4	CONE	
360	90028-0021	-		3	CONE	
370	90032-0038	-		2	BLOCK	
380	90087-0019	-		1	PLUG	
390	90092-0052	K		2	VALVE	
400	90092-0054	K		2	VALVE	
410	90134-0031	-		1	SLEEVE	
420	90134-0038	-		3	BUSHING	
430	90134-0039	-		4	BUSHING	
450	90134-0058	-		4	BANJO CONNECTION	
460	90151-0001	-	MM	400	BRASS PIPE	
465	90165-0058	-		1	CLAMP	
470	90166-0143	-	MM	700	HOSE	
475	90166-0124	-	MM	1600	HOSE	
490	B 90450-0105	-		1	CYLINDER	
500	90261-0036	-		2	PIPE PLUG "REPBY 90261-71"	
600	311103-0357	-		4	CYLINDRICACP M6 6X30 RFR	
610	311103-0310	-		2	CYLINDRICACP M6 5X20 RFR	
620	311112-0192	K		4	SLOTTED TURP 2,5X24	
630	312105-0295	-		4	SCREW M6S ISO 4017 M4X20 A280	
640	312105-0329	-		8	SCREW M6S ISO 4017 M5X16 A280	
650	312105-0370	-		2	SCREW M6S ISO 4017 M6X20 A280	
652	312105-0372	-		4	SCREW M6S ISO 4017 M6X25 A280	
655	312109-0463	-		1	SCREW M6S8X60H A4 80	
670	312115-0461	-		2	SCREW MC6S ISO 4762 M8X50 A280	
675	312125-0285	-		1	SLOTTED HEMCS4X6RFR	
690	312155-0382	-		4	SCREW MF6S6X60 A2 70	
700	312318-0459	-		2	SET SCREW CUP POINT ISO 4029 M8X40 RFR	
720	312318-0499	-		1	SET SCREW CUP POINT ISO 4029 M10X40 RFR	
740	312605-0318	-		2	NUT M6M8RFR	
750	312635-0320	-		2	NUT 10X1 RFR	
760	312805-0100	K		2	ROUND NUT KM0	
770	312805-0101	K		2	ROUND NUT KM1	

DESIGN CORRECTION DEVICE

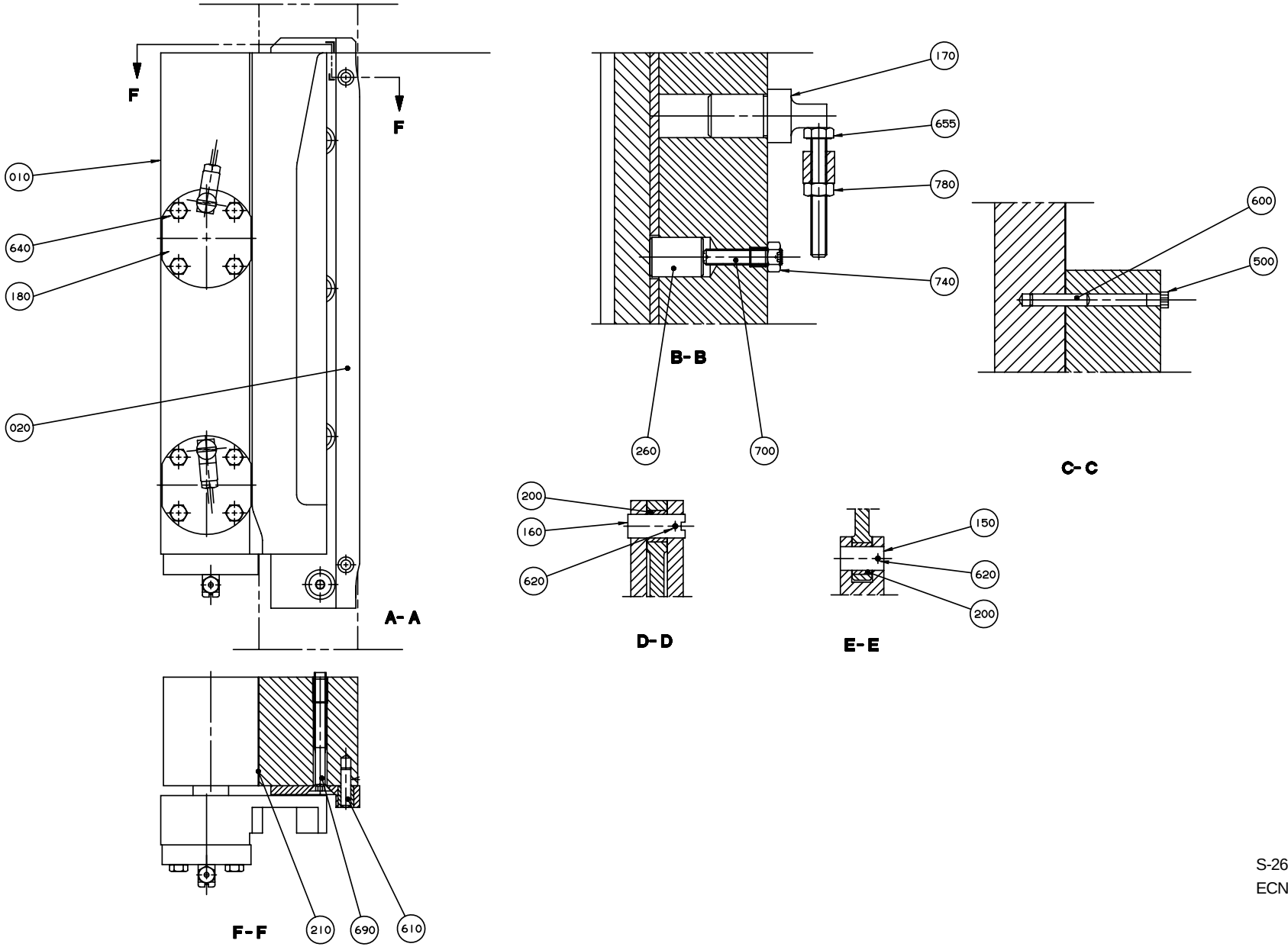

S-266446-5
ECN 20339

Pos	Part No	SP	UN	Qty	Description	Page No
780	312811-0318	-		3	LOCK NUT M8RFR	
790	315105-0153	-		4	WASHER BRB6,4X12RFR	
800	315105-0165	-		2	WASHER BRB8,4X16RFR	
830	315410-0100	K		2	LOCK WASHESKFMB0	
840	315410-0101	K		2	LOCK WASHESKFMB1	
850	315750-0107	-		1	CIRCLIP SGA10	
860	321309-0100	K		2	BALL BEARISKF6200	
870	321312-0100	K		2	BALL BEARISKF6200RS	
880	321312-0101	K		4	BALL BEARISKF6201RS	
890	342920-0113	-		4	STRAIGHT COUPLING,EXT.THREADED 6/4-R1/8"	
900	342946-0112	-		1	T-COUPLING,UNION 6/4	
910	342980-0113	-		2	BANJO-CONNECTION,RING 6/4-G1/8"	
920	342980-0303	-		2	BANJO-HOLLOW BOLT COUPL,EXT.THR.01-G1/8"	

Pos	Part No	SP	UN	Qty	Description	Page No

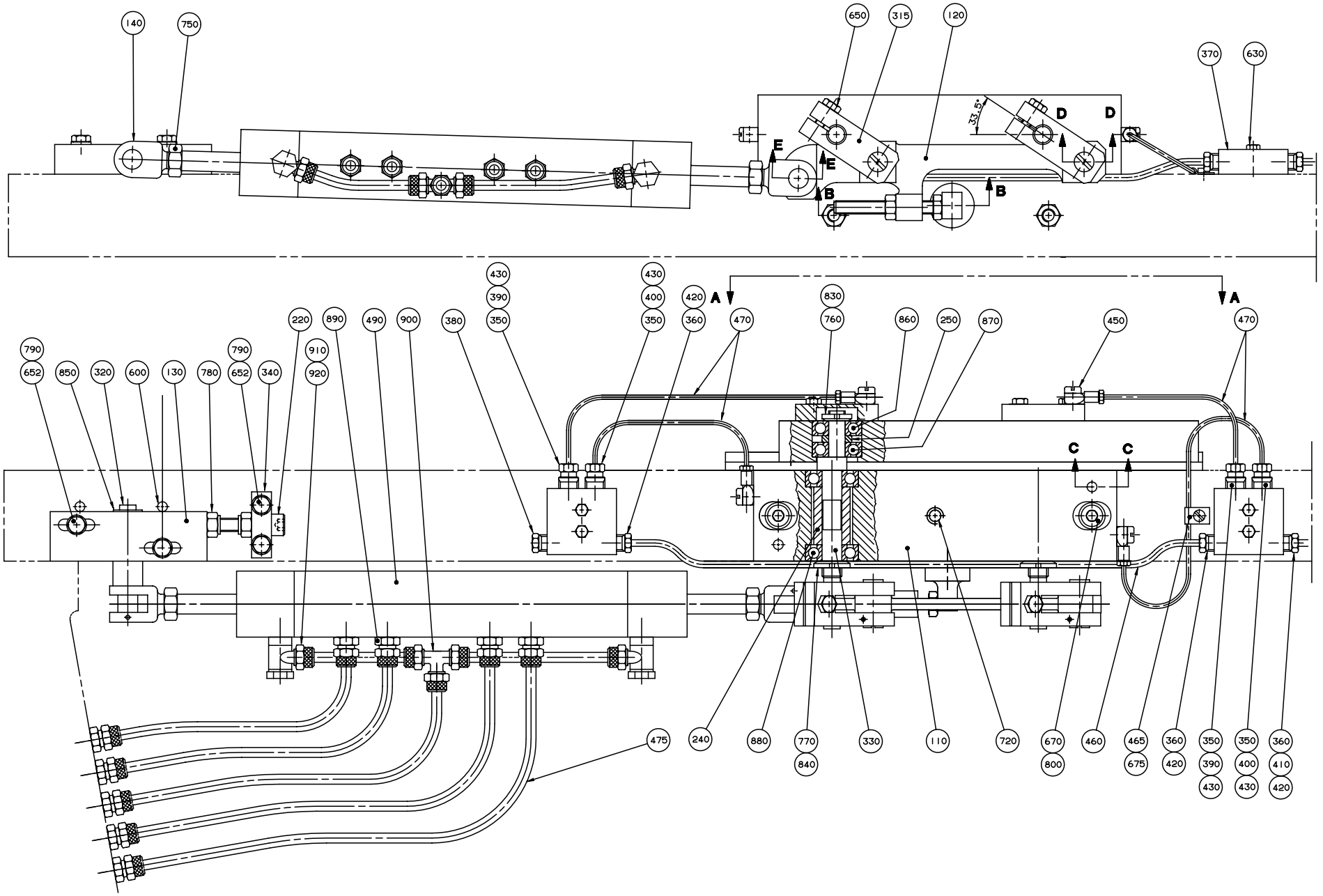

S-266447-4
ECN 14690

Pos	Part No	SP	UN	Qty	Description	Page No
0300B						
010	449729-0000	K		1	FOLDING FLAP CAM R	
020	449731-0000	D		1	COUNTER CAM	
0355B or 0400B						
010	537902-0000	K		1	FOLDING FLAP CAM R	
020	B 529138-0000	D		1	CURVE RIGHT	
0375S or 0750B						
010	550338-0000	K		1	FOLDING FLAP CAM R	
020	440511-0000	D		1	COUNTER CAM	
0500B						
010	269109-0000	K		1	FOLDING FLAP CAM R	
020	269111-0000	D		1	COUNTER CAM	
0500S						
010	551286-0000	K		1	FOLDING FLAP CAM	
020	440931-0000	D		1	COUNTER CAM	
0568B						
010	533113-0000	K		1	FOLDING FLAP CAM R	
020	252654-0001	D		1	COUNTER CAM	
0750S or 1000B LOFIN						
010	268955-0000	K		1	FOLDING FLAP CAM R	
020	269060-0000	D		1	COUNTER CAM	
1000B HIFIN						
010	284233-0000	K		1	FOLDING FLAP CAM R	
020	284235-0000	D		1	COUNTER CAM	
1000S or 1000SQ						
010	565189-0000	K		1	FOLDING FLAP CAM	
020	269060-0000	D		1	COUNTER CAM	
1055B						
010	533958-0000	K		1	FOLDING FLAP CAM R	
020	B 533956-0000	D		1	CURVE RIGHT	
Common parts						
110	23292-0000	D		1	BEARING HOUSING	
120	436740-0000	D		1	LINK	
130	20718-0000	-		1	BEARING	
140	22483-0000	K		2	FORK	
150	22485-0000	K		1	DOWEL	
160	22486-0000	K		2	DOWEL	
170	22504-0000	K		1	STOP LUG	
180	23291-0000	D		2	BEARING COVER	
200	23312-0000	K		3	BUSHING	
210	26426-0000	F		5	LACE	
220	33409-0000	K		1	SCREW	
240	107334-0000	-		2	SPACER SLEEVE	
250	107335-0000	-		2	SPACER RING	
260	107339-0000	-		2	DOWEL	
315	434387-0000	K		2	BRACKET	
320	434388-0000	D		1	SHAFT	
330	436671-0000	K		2	ECCENTRIC SHAFT	
340	561416-0000	-		1	BRACKET	
350	90028-0020	-		4	CONE	
360	90028-0021	-		3	CONE	
370	90032-0038	-		2	BLOCK	
380	90087-0019	-		1	PLUG	
390	90092-0052	K		2	VALVE	
400	90092-0054	K		2	VALVE	
410	90134-0031	-		1	SLEEVE	
420	90134-0038	-		3	BUSHING	
430	90134-0039	-		4	BUSHING	
450	90134-0058	-		4	BANJO CONNECTION	
460	90151-0001	-	MM	400	BRASS PIPE	
465	90165-0058	-		1	CLAMP	
470	90166-0143	-	MM	700	HOSE	
475	90166-0124	-	MM	1600	HOSE	
490	B 90450-0105	-		1	CYLINDER	
500	90261-0036	-		2	PIPE PLUG "REPBY 90261-71"	
600	311103-0357	-		4	CYLINDRICACP M6 6X30 RFR	
610	311103-0310	-		2	CYLINDRICACP M6 5X20 RFR	
620	311112-0192	K		4	SLOTTED TURP 2,5X24	
630	312105-0295	-		4	SCREW M6S ISO 4017 M4X20 A280	
640	312105-0329	-		8	SCREW M6S ISO 4017 M5X16 A280	
650	312105-0370	-		2	SCREW M6S ISO 4017 M6X20 A280	
652	312105-0372	-		4	SCREW M6S ISO 4017 M6X25 A280	
655	312109-0463	-		1	SCREW M6S8X60H A4 80	
670	312115-0461	-		2	SCREW MC6S ISO 4762 M8X50 A280	
675	312125-0285	-		1	SLOTTED HEMCS4X6RFR	
690	312155-0382	-		4	SCREW MF6S6X60 A2 70	
700	312318-0459	-		2	SET SCREW CUP POINT ISO 4029 M8X40 RFR	
720	312318-0499	-		1	SET SCREW CUP POINT ISO 4029 M10X40 RFR	
740	312605-0318	-		2	NUT M6M8RFR	
750	312635-0320	-		2	NUT 10X1 RFR	
760	312805-0100	K		2	ROUND NUT KM0	
770	312805-0101	K		2	ROUND NUT KM1	

DESIGN CORRECTION DEVICE

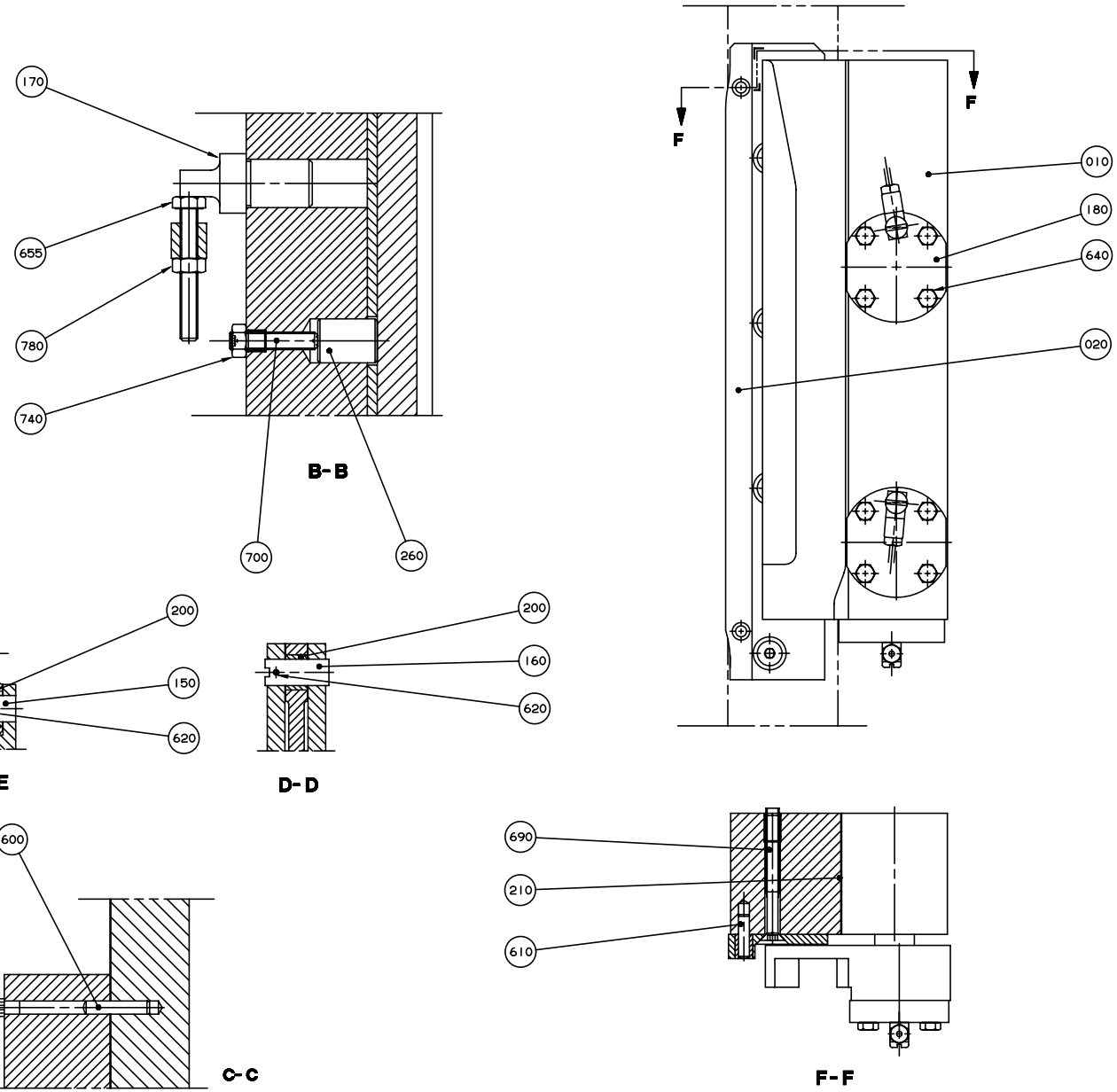

S-266447-5
ECN 16244

Pos	Part No	SP	UN	Qty	Description	Page No
780	312811-0318	-		3	LOCK NUT M8RFR	
790	315105-0153	-		4	WASHER BRB6,4X12RFR	
800	315105-0165	-		2	WASHER BRB8,4X16RFR	
830	315410-0100	K		2	LOCK WASHESKFMB0	
840	315410-0101	K		2	LOCK WASHESKFMB1	
850	315750-0107	-		1	CIRCLIP SGA10	
860	321309-0100	K		2	BALL BEARISKF6200	
870	321312-0100	K		2	BALL BEARISKF6200RS	
880	321312-0101	K		4	BALL BEARISKF6201RS	
890	342920-0113	-		4	STRAIGHT COUPLING,EXT.THREADED 6/4-R1/8"	
900	342946-0112	-		1	T-COUPLING,UNION 6/4	
910	342980-0113	-		2	BANJO-CONNECTION,RING 6/4-G1/8"	
920	342980-0303	-		2	BANJO-HOLLOW BOLT COUPL,EXT.THR.01-G1/8"	

Pos	Part No	SP	UN	Qty	Description	Page No

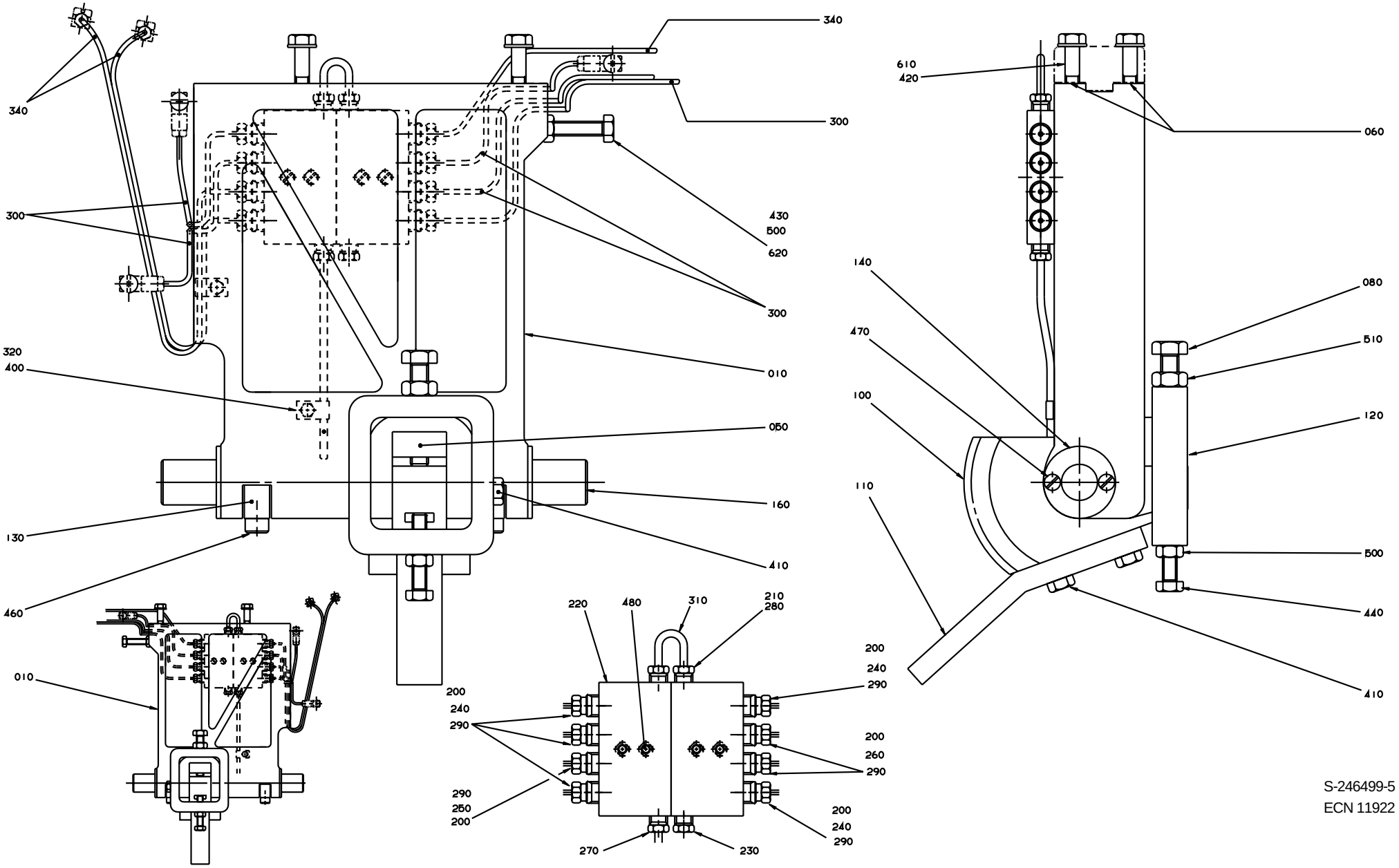

S-246499-5
ECN 11922

Pos	Part No	SP	UN	Qty	Description	Page No
0500SQ US or 1000SQ US or IH or TPC						
200	90028-0020	-		8	CONE	
220	90032-0039	-		2	BLOCK	
240	90092-0052	K		5	VALVE	
290	90134-0039	-		8	BUSHING	
1500B US						
200	90028-0020	-		9	CONE	
220	90032-0039	-		1	BLOCK	
225	90032-0040	-		1	BLOCK	
240	90092-0052	-		6	VALVE	
290	90134-0039	-		10	BUSHING	
295	90134-0052	-		1	PLUG	
Common parts						
010	538400-0000	D		1	ARM LEFT	
050	14729-0000	K		1	NUT	
060	26425-0000	F		6	LACE	
080	32957-0000	K		1	SCREW	
100	232238-0000	D		1	TOOTH PART	
110	239476-0000	-		1	ROD	
120	267754-0000	K		1	BOW CLAMP	
130	533818-0000	-		2	HOLDER	
140	536704-0000	K		2	WASHER	
160	538399-0000	K		1	SHAFT	
210	90028-0021	-		3	CONE	
230	90087-0019	-		1	PLUG	
250	90092-0053	K		1	VALVE	
260	90092-0054	K		2	VALVE	
270	90134-0031	-		1	SLEEVE	
280	90134-0038	-		3	BUSHING	
300	90266-0019	-	MM	1800	PIPE	
310	90266-0165	-	MM	100	BRASS PIPE	
320	90165-0056	-		2	CLIP	
330	90166-0109	-	MM	400	HOSE	
340	90166-0143	-	MM	1100	HOSE	
400	312105-0287	-		2	SCREW M6S ISO 4017 M4X8 A280	
410	312105-0453	-		3	SCREW M6S ISO 4017 M8X25 A280	
420	312105-0457	-		1	SCREW O4017 M8X35A280	
430	312105-0466	-		1	SCREW M6S ISO 4014 M8X75 A280	
440	312109-0459	-		1	SCREW M6S ISO 4017 M8X40 A280	
450	312115-0289	-		2	SCREW S4X10 A4 80	
460	312115-0455	-		2	SCREW MC6S ISO 4762 M8X30 A280	
470	312145-0285	-		4	SLOTTED HEMFS4X6RFR	
480	312145-0297	-		4	SLOTTED HEMFS4X25RFR	
500	312605-0318	-		2	NUT M6M8RFR	
510	312635-0320	-		1	NUT 10X1 RFR	
600	315105-0136	-		2	WASHER BRB4,3X8RFR	
610	315105-0165	-		4	WASHER BRB8,4X16RFR	
620	315115-0165	-		1	WASHER TBRB8,4X16RFR	

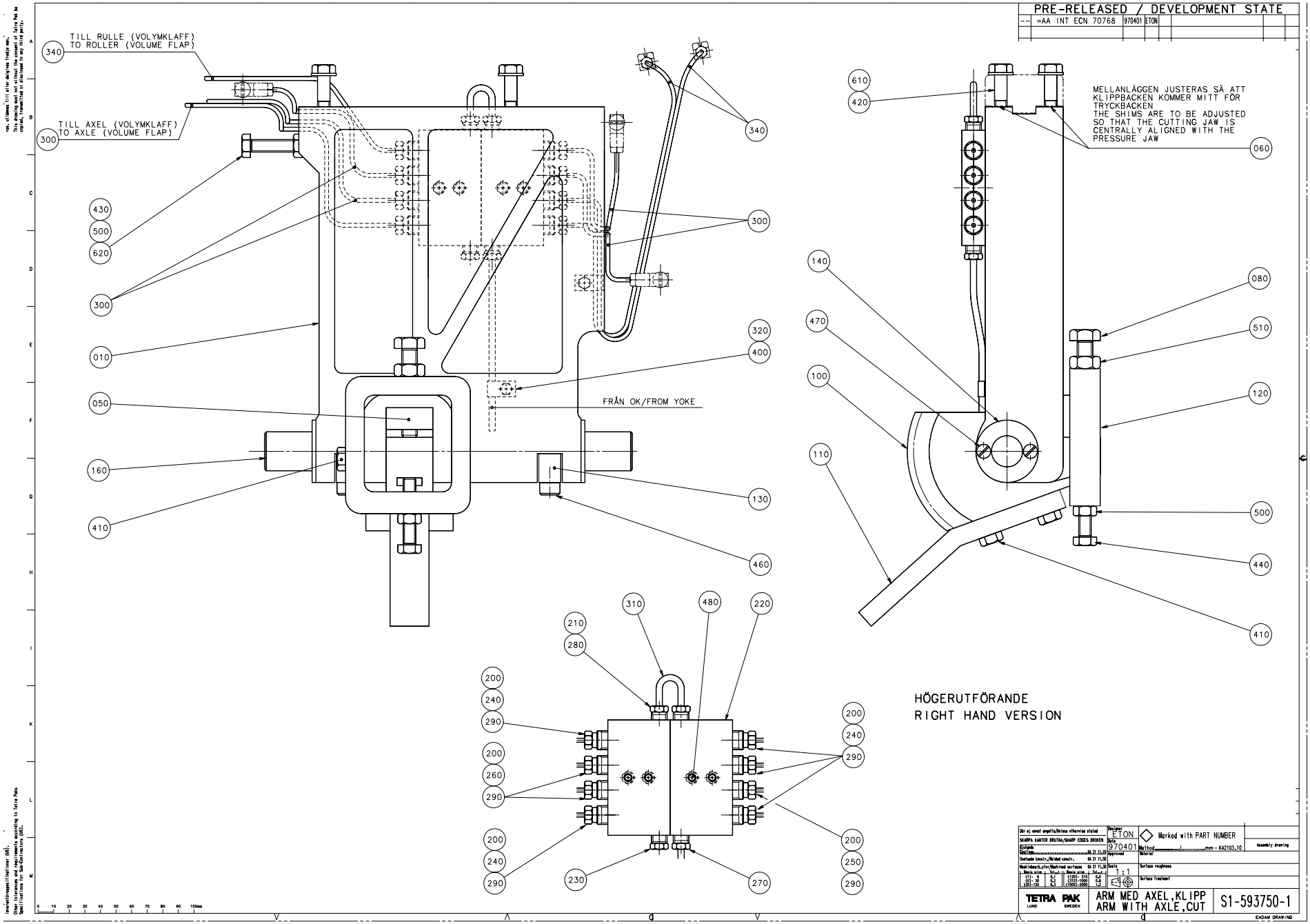
PRE-RELEASED / DEVELOPMENT STATE
--- =AA INT ECN 70768 970401 ETON
TILL RULLE (VOLYMKLAFF)
TO ROLLER (VOLUME FLAP)
TILL AXEL (VOLYMKLAFF)
TO AXLE (VOLUME FLAP)
FRÅN OK/FROM YOKE
MELLANLÄGGEN JUSTERAS SÅ ATT KLIPPBACKEN KOMMER MITT FÖR TRYCKBACKEN
THE SHIMS ARE TO BE ADJUSTED SO THAT THE CUTTING JAW IS CENTRALLY ALIGNED WITH THE PRESSURE JAW
HÖGERUTFÖRANDE
RIGHT HAND VERSION
Marked with PART NUMBER
Assembly drawing
ETON
970401
1:1
TETRA PAK LUND SWEDEN
ARM MED AXEL,KLIPP
ARM WITH AXLE,CUT
S1-593750-1
CADAM DRAWING

Pos	Part No	SP	UN	Qty	Description	Page No
0500SQ US or 1000SQ US or IH or TPC						
200	90028-0020	-		8	CONE	
220	90032-0039	-		2	BLOCK	
240	90092-0052	K		5	VALVE	
290	90134-0039	-		8	BUSHING	
1500B US						
200	90028-0020	-		9	CONE	
220	90032-0039	-		1	BLOCK	
225	90032-0040	-		1	BLOCK	
240	90092-0052	-		6	VALVE	
290	90134-0039	-		10	BUSHING	
295	90134-0052	-		1	PLUG	
Common parts						
010	538401-0000	D		1	ARM RIGHT	
050	14729-0000	K		1	NUT	
060	26425-0000	F		6	LACE	
080	32957-0000	K		1	SCREW	
100	232238-0000	D		1	TOOTH PART	
110	239476-0000	-		1	ROD	
120	267754-0000	K		1	BOW CLAMP	
130	533818-0000	-		2	HOLDER	
140	536704-0000	K		2	WASHER	
160	538399-0000	K		1	SHAFT	
210	90028-0021	-		3	CONE	
230	90087-0019	-		1	PLUG	
250	90092-0053	K		1	VALVE	
260	90092-0054	K		2	VALVE	
270	90134-0031	-		1	SLEEVE	
280	90134-0038	-		3	BUSHING	
300	90266-0019	-	MM	1800	PIPE	
310	90266-0165	-	MM	100	BRASS PIPE	
320	90165-0056	-		2	CLIP	
330	90166-0109	-	MM	400	HOSE	
340	90166-0143	-	MM	1100	HOSE	
400	312105-0287	-		2	SCREW M6S ISO 4017 M4X8 A280	
410	312105-0453	-		3	SCREW M6S ISO 4017 M8X25 A280	
420	312105-0457	-		1	SCREW O4017 M8X35A280	
430	312105-0466	-		1	SCREW M6S ISO 4014 M8X75 A280	
440	312109-0459	-		1	SCREW M6S ISO 4017 M8X40 A280	
450	312115-0289	-		2	SCREW S4X10 A4 80	
460	312115-0455	-		2	SCREW MC6S ISO 4762 M8X30 A280	
470	312145-0285	-		4	SLOTTED HEMFS4X6RFR	
480	312145-0297	-		4	SLOTTED HEMFS4X25RFR	
500	312605-0318	-		2	NUT M6M8RFR	
510	312635-0320	-		1	NUT 10X1 RFR	
600	315105-0136	-		2	WASHER BRB4,3X8RFR	
610	315105-0165	-		4	WASHER BRB8,4X16RFR	
620	315115-0165	-		1	WASHER TBRB8,4X16RFR	

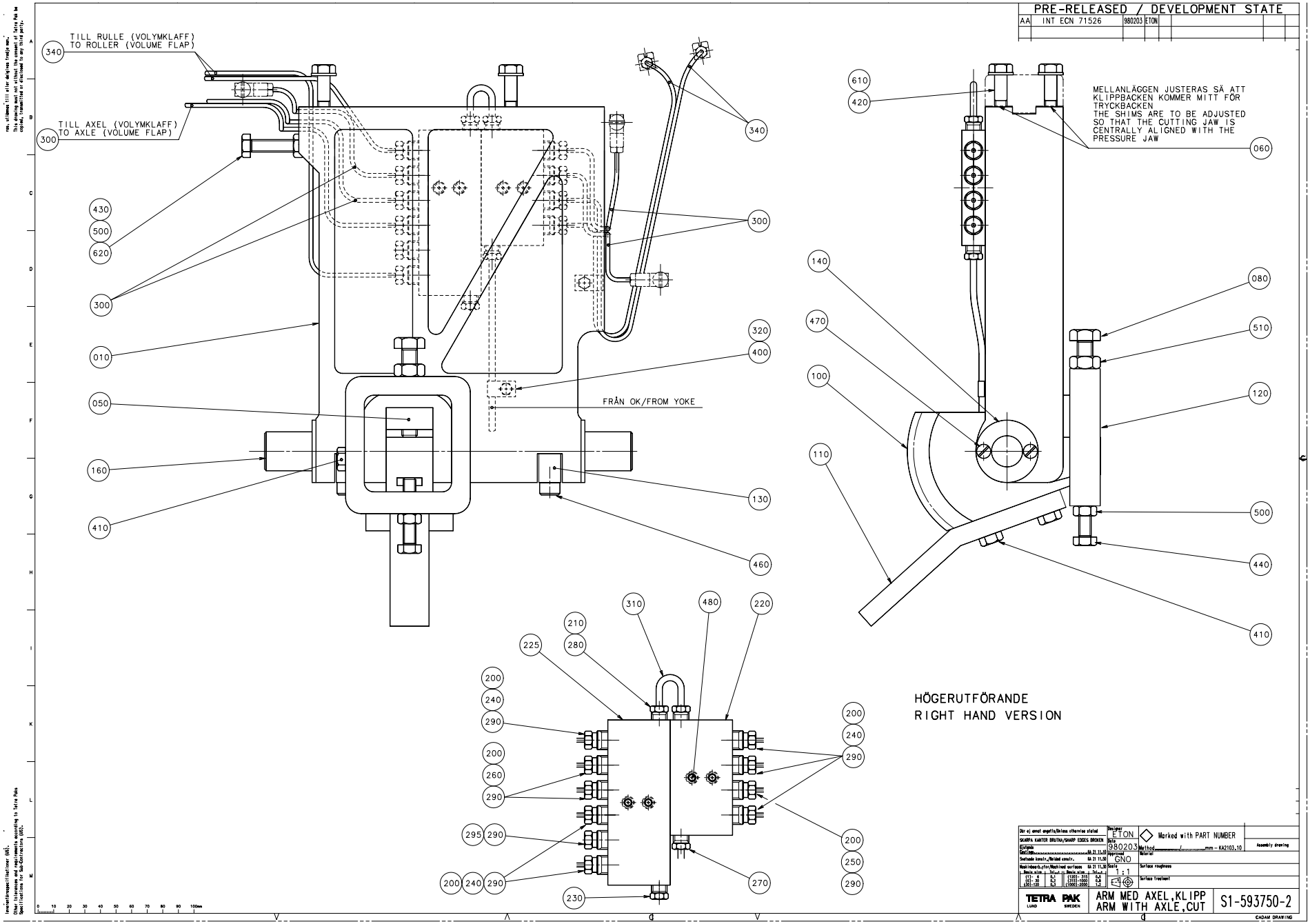
PRE-RELEASED / DEVELOPMENT STATE
AA INT ECN 71526 980203 ETON
TILL RULLE (VOLYMKLAFF)
TO ROLLER (VOLUME FLAP)
TILL AXEL (VOLYMKLAFF)
TO AXLE (VOLUME FLAP)
FRÅN OK/FROM YOKE
MELLANLÄGGEN JUSTERAS SÄ ATT KLIPPBACKEN KOMMER MITT FÖR TRYCKBACKEN
THE SHIMS ARE TO BE ADJUSTED SO THAT THE CUTTING JAW IS CENTRALLY ALIGNED WITH THE PRESSURE JAW
HÖGERUTFÖRANDE
RIGHT HAND VERSION
Marked with PART NUMBER
ARM MED AXEL,KLIPP
ARM WITH AXLE,CUT
S1-593750-2
CADAM DRAWING

Pos	Part No	SP	UN	Qty	Description	Page No
0500SQ US or 1000SQ US or IH or TPC						
200	90028-0020	-		8	CONE	
220	90032-0039	-		2	BLOCK	
240	90092-0052	K		5	VALVE	
290	90134-0039	-		8	BUSHING	
1500B US						
200	90028-0020	-		9	CONE	
220	90032-0039	-		1	BLOCK	
225	90032-0040	-		1	BLOCK	
240	90092-0052	-		6	VALVE	
290	90134-0039	-		10	BUSHING	
295	90134-0052	-		1	PLUG	
Common parts						
010	538401-0000	D		1	ARM RIGHT	
050	14729-0000	K		1	NUT	
060	26425-0000	F		6	LACE	
080	32957-0000	K		1	SCREW	
100	232238-0000	D		1	TOOTH PART	
110	239476-0000	-		1	ROD	
120	267754-0000	K		1	BOW CLAMP	
130	533818-0000	-		2	HOLDER	
140	536704-0000	K		2	WASHER	
160	538399-0000	K		1	SHAFT	
210	90028-0021	-		3	CONE	
230	90087-0019	-		1	PLUG	
250	90092-0053	K		1	VALVE	
260	90092-0054	K		2	VALVE	
270	90134-0031	-		1	SLEEVE	
280	90134-0038	-		3	BUSHING	
300	90266-0019	-	MM	1800	PIPE	
310	90266-0165	-	MM	100	BRASS PIPE	
320	90165-0056	-		2	CLIP	
330	90166-0109	-	MM	400	HOSE	
340	90166-0143	-	MM	1100	HOSE	
400	312105-0287	-		2	SCREW M6S ISO 4017 M4X8 A280	
410	312105-0453	-		3	SCREW M6S ISO 4017 M8X25 A280	
420	312105-0457	-		1	SCREW O4017 M8X35A280	
430	312105-0466	-		1	SCREW M6S ISO 4014 M8X75 A280	
440	312109-0459	-		1	SCREW M6S ISO 4017 M8X40 A280	
450	312115-0289	-		2	SCREW S4X10 A4 80	
460	312115-0455	-		2	SCREW MC6S ISO 4762 M8X30 A280	
470	312145-0285	-		4	SLOTTED HEMFS4X6RFR	
480	312145-0297	-		4	SLOTTED HEMFS4X25RFR	
500	312605-0318	-		2	NUT M6M8RFR	
510	312635-0320	-		1	NUT 10X1 RFR	
600	315105-0136	-		2	WASHER BRB4,3X8RFR	
610	315105-0165	-		4	WASHER BRB8,4X16RFR	
620	315115-0165	-		1	WASHER TBRB8,4X16RFR	

ARM WITH AXLE PRESSURE L

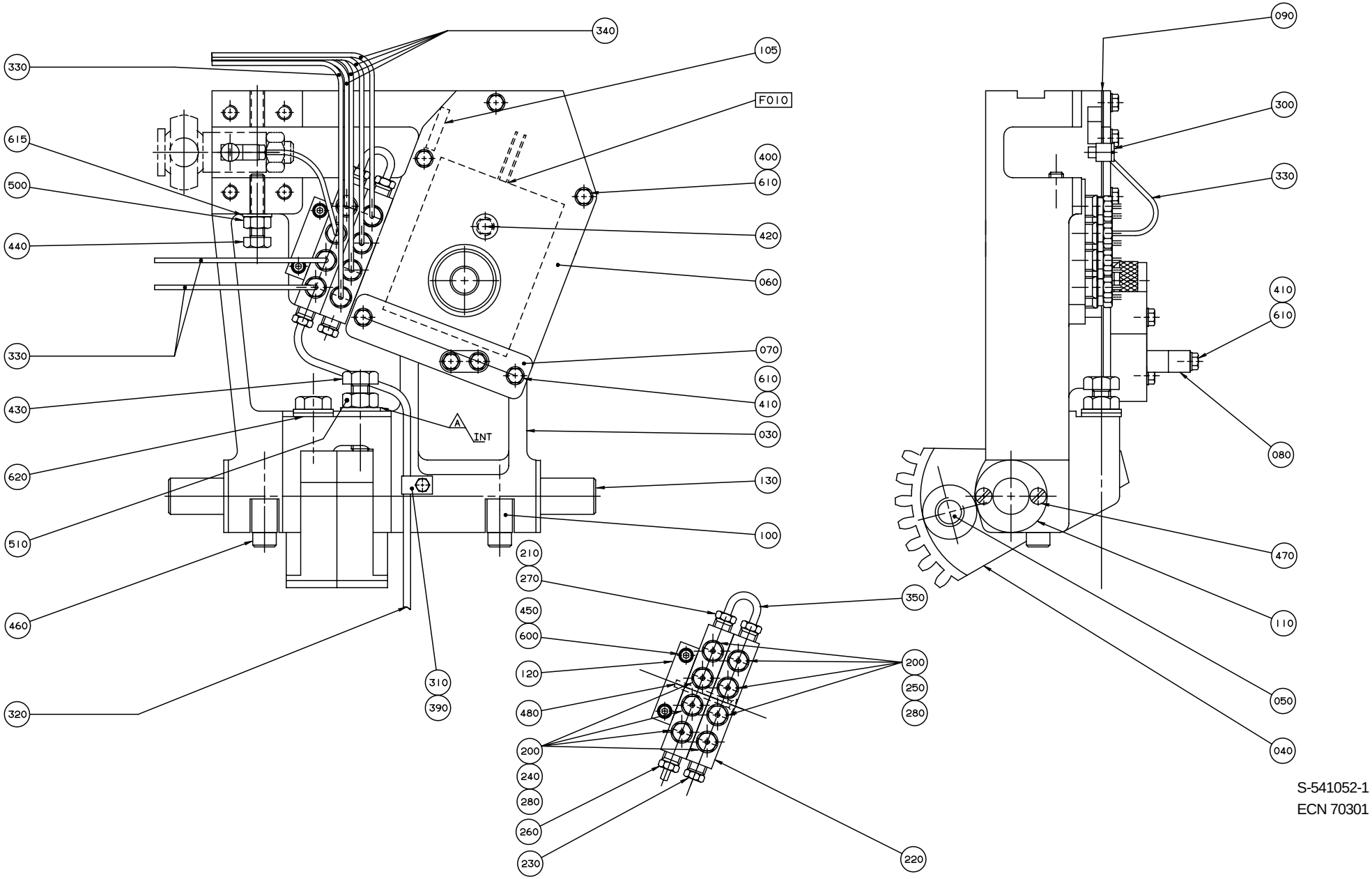

S-541052-1
ECN 70301

Pos	Part No	SP	UN	Qty	Description	Page No
TB 0500B or TB 1000B or TB 1000S or TBA 0500B or TBA 0750B or TBA 0750S or TBA 1000B or TBA 1000S or TBA 1055B or TBA 1500S or TPA 1000S						
010	67379-0101	-		1	IH TRANSF.1.PRIM:5;21,6NF	
TB 0500S or TB 1000SQ or TBA 0355B or TBA 0375S or TBA 0400B or TBA 0500S or TBA 1000SQ or TPA 2000S						
010	67379-0102	-		1	IH TRANSF.1.PRIM:4;30,9NF	
Common parts						
030	545410-0000	D		1	ARM LEFT	
040	232236-0000	D		2	TOOTH PART	
050	232237-0000	K		1	SCREW	
060	464366-0000	D		1	LID	
070	464367-0000	D		1	CRAMP	
080	464368-0000	D		2	CRAMP	
090	484843-0000	K		1	GASKET	
100	533818-0000	D		2	HOLDER	
105	534237-0000	K		1	SEAL	
110	536704-0000	F		2	WASHER	
120	536705-0000	D		1	BRACKET	
130	538399-0000	D		1	SHAFT	
200	90028-0020	-		8	CONE	
210	90028-0021	-		3	CONE	
220	90032-0039	-		2	BLOCK	
230	90087-0019	-		1	PLUG	
240	90092-0052	K		4	VALVE	
250	90092-0053	K		4	VALVE	
260	90134-0031	-		1	SLEEVE	
270	90134-0038	-		3	BUSHING	
280	90134-0039	-		8	BUSHING	
300	90134-0058	-		1	BANJO CONNECTION	
310	90165-0056	-		1	CLIP	
320	90166-0109	-	MM	800	HOSE	
330	90166-0143	-	MM	1200	HOSE	
340	90266-0019	-	MM	2000	PIPE	
350	90266-0165	-	MM	100	BRASS PIPE	
390	312105-0287	-		1	SCREW M6S ISO 4017 M4X8 A280	
400	312105-0327	-		3	SCREW M6S ISO 4017 M5X12 A280	
410	312105-0335	-		4	SCREW M6S ISO 4017 M5X30 A280	
420	312105-0343	-		1	SCREW M6S5X60 A2 80	
430	312105-0497	-		2	SCREW M6S ISO 4017 M10X35 A280	
440	312109-0457	-		1	SCREW M6S ISO 4017 M8X35 A280	
450	312115-0303	-		2	SCREW MC6S ISO 4762 M4X40 A280	
460	312115-0455	-		2	SCREW MC6S ISO 4762 M8X30 A280	
470	312145-0285	-		4	SLOTTED HEMFS4X6RFR	
480	312155-0301	-		1	SCREW MF6S4X35RFR	
500	312605-0318	-		1	NUT M6M8RFR	
510	312605-0320	-		1	NUT M6M10RFR	
600	315105-0136	-		2	WASHER BRB4,3X8RFR	
610	315105-0146	-		7	WASHER BRB5,3X10RFR	
615	315105-0165	-		1	WASHER BRB8,4X16RFR	
620	315105-0173	-		3	WASHER BRB10,5X22RFR	

ARM WITH AXLE PRESSURE R

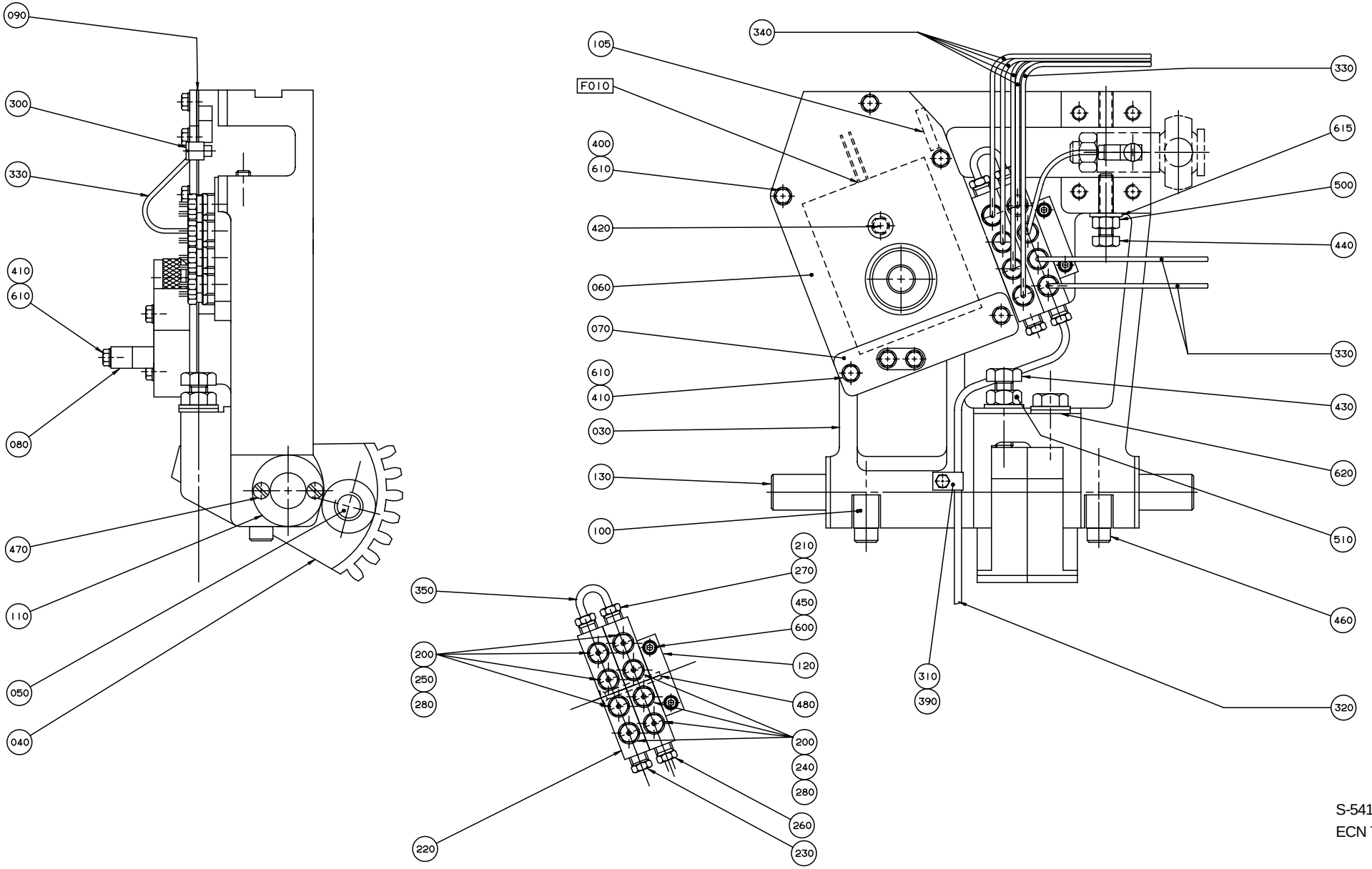

S-541053-1
ECN 70301

Pos	Part No	SP	UN	Qty	Description	Page No
TB 0500B or TB 1000B or TB 1000S or TBA 0500B or TBA 0750B or TBA 0750S or TBA 1000B or TBA 1000S or TBA 1055B or TBA 1500S or TPA 1000S						
010	67379-0101	-		1	IH TRANSF.1.PRIM:5;21,6NF	
TB 0500S or TB 1000SQ or TBA 0355B or TBA 0375S or TBA 0400B or TBA 0500S or TBA 1000SQ or TPA 2000S						
010	67379-0102	-		1	IH TRANSF.1.PRIM:4;30,9NF	
Common parts						
030	545409-0000	D		1	ARM RIGHT	
040	232236-0000	D		2	TOOTH PART	
050	232237-0000	K		1	SCREW	
060	464366-0000	D		1	LID	
070	464367-0000	D		1	CRAMP	
080	464368-0000	D		2	CRAMP	
090	484843-0000	K		1	GASKET	
100	533818-0000	D		2	HOLDER	
105	534237-0000	K		1	SEAL	
110	536704-0000	F		2	WASHER	
120	536705-0000	D		1	BRACKET	
130	538399-0000	D		1	SHAFT	
200	90028-0020	-		8	CONE	
210	90028-0021	-		3	CONE	
220	90032-0039	-		2	BLOCK	
230	90087-0019	-		1	PLUG	
240	90092-0052	K		4	VALVE	
250	90092-0053	K		4	VALVE	
260	90134-0031	-		1	SLEEVE	
270	90134-0038	-		3	BUSHING	
280	90134-0039	-		8	BUSHING	
300	90134-0058	-		1	BANJO CONNECTION	
310	90165-0056	-		1	CLIP	
320	90166-0109	-	MM	800	HOSE	
330	90166-0143	-	MM	1200	HOSE	
340	90266-0019	-	MM	2000	PIPE	
350	90266-0165	-	MM	100	BRASS PIPE	
390	312105-0287	-		1	SCREW M6S ISO 4017 M4X8 A280	
400	312105-0327	-		3	SCREW M6S ISO 4017 M5X12 A280	
410	312105-0335	-		4	SCREW M6S ISO 4017 M5X30 A280	
420	312105-0343	-		1	SCREW M6S5X60 A2 80	
430	312105-0497	-		2	SCREW M6S ISO 4017 M10X35 A280	
440	312109-0457	-		1	SCREW M6S ISO 4017 M8X35 A280	
450	312115-0303	-		2	SCREW MC6S ISO 4762 M4X40 A280	
460	312115-0455	-		2	SCREW MC6S ISO 4762 M8X30 A280	
470	312145-0285	-		4	SLOTTED HEMFS4X6RFR	
480	312155-0301	-		1	SCREW MF6S4X35RFR	
500	312605-0318	-		1	NUT M6M8RFR	
510	312605-0320	-		1	NUT M6M10RFR	
600	315105-0136	-		2	WASHER BRB4,3X8RFR	
610	315105-0146	-		7	WASHER BRB5,3X10RFR	
615	315105-0165	-		1	WASHER BRB8,4X16RFR	
620	315105-0173	-		3	WASHER BRB10,5X22RFR	

VOLUME FLAP

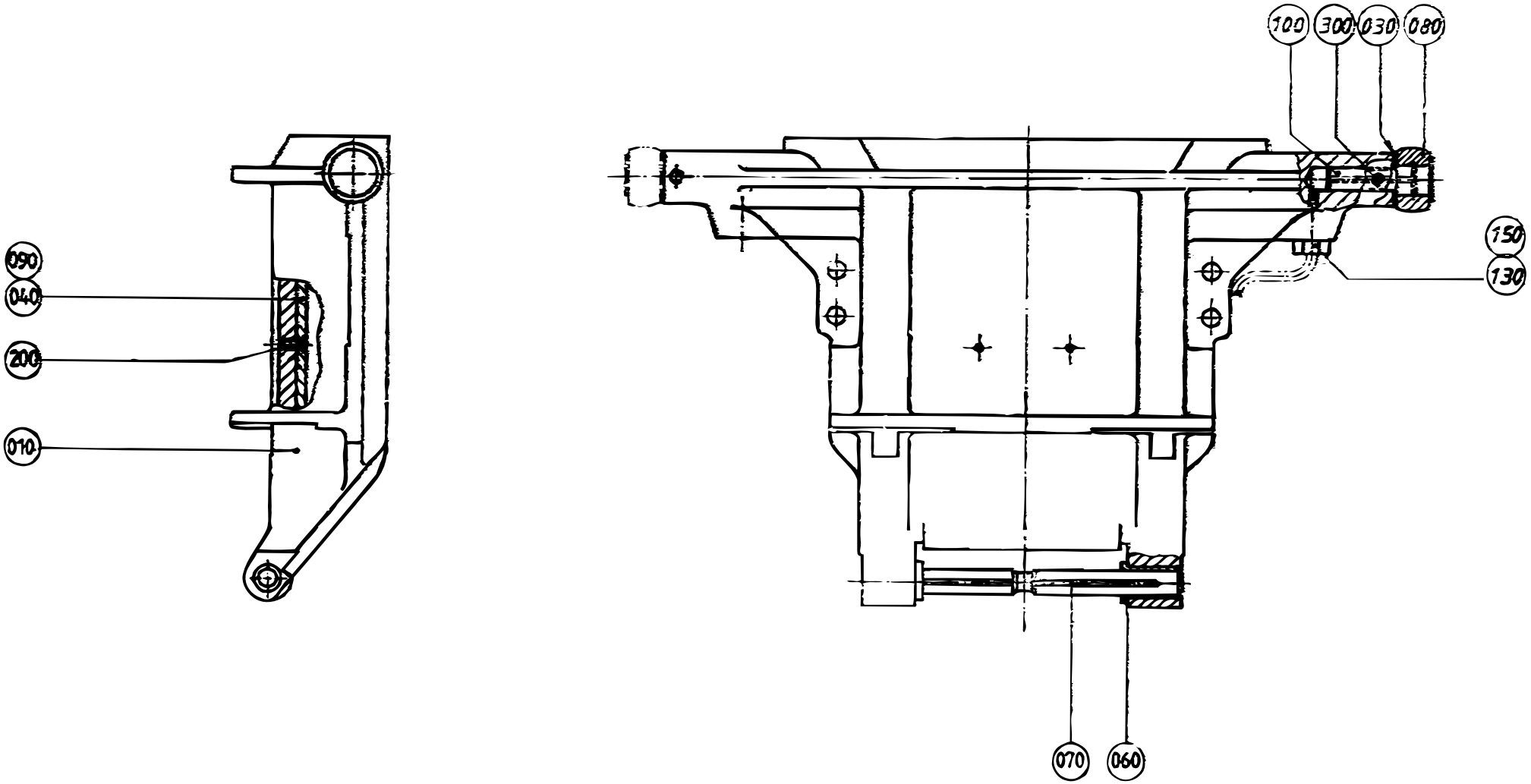

S-246468-10
ECN 6786

Pos	Part No	SP	UN	Qty	Description	Page No
TB/8 0300B TPC						
010	582911-0000	F		1	VOLUME FLAP	
020	449908-0000	F		2	BUSHING	
030	19972-0000	F		1	WASHER	
040	449584-0000	K		1	VOLUME BULGE	
070	458165-0000	F		1	SHAFT	
080	436556-0000	F		1	CURVE ROLLER	
090	450302-0000	K		3	VOLUME SHIM	
100	434320-0000	F		1	AXLE PIN	
130	90028-0020	-		1	CONE	
150	90134-0063	-		1	BUSHING	
210	312145-0289	-		2	SLOTTED HEMFS4X10RFR	
300	312318-0285	-		1	SET SCREW CUP POINT ISO 4029 M4X6 RFR	
TB/8 0500B TPC						
010	563609-0000	F		1	VOLUME FLAP	
030	19972-0000	F		1	WASHER	
040	458467-0000	K		1	VOLUME BULGE	
060	36133-0000	F		2	BUSHING	
070	458164-0000	F		1	SHAFT	
080	436556-0000	F		1	CURVE ROLLER	
090	479245-0000	K		3	VOLUME SHIM	
100	434320-0000	F		1	AXLE PIN	
130	90028-0020	-		1	CONE	
150	90134-0063	-		1	BUSHING	
210	312145-0289	-		2	SLOTTED HEMFS4X10RFR	
300	312318-0285	-		1	SET SCREW CUP POINT ISO 4029 M4X6 RFR	
TB/8 0500S TPC						
010	592923-0000	F		1	VOLUME FLAP	
020	449908-0000	F		2	BUSHING	
030	19972-0000	F		1	WASHER	
040	464314-0000	K		1	VOLUME BULGE	
070	458165-0000	F		1	SHAFT	
080	434321-0000	F		1	CURVE ROLLER	
090	464315-0000	K		3	VOLUME SHIM	
100	434320-0000	F		1	AXLE PIN	
130	90028-0020	-		1	CONE	
150	90134-0063	-		1	BUSHING	
200	312145-0222	-		2	SLOTTED HEMFS3X8RFR	
300	312318-0285	-		1	SET SCREW CUP POINT ISO 4029 M4X6 RFR	
TB/8 0500SQ US						
010	592581-0000	F		1	VOLUME FLAP	
030	19972-0000	F		1	WASHER	
040	593655-0000	K		1	VOLUME BULGE	
060	36133-0000	F		2	BUSHING	
070	544292-0000	F		1	SHAFT	
080	436556-0000	F		1	CURVE ROLLER	
090	583827-0000	K		3	VOLUME SHIM	
100	434320-0000	F		1	AXLE PIN	
130	90028-0020	-		1	CONE	
150	90134-0063	-		1	BUSHING	
210	312145-0289	-		2	SLOTTED HEMFS4X10RFR	
300	312318-0285	-		1	SET SCREW CUP POINT ISO 4029 M4X6 RFR	
TB/8 0568B TPC						
010	533441-0000	F		1	VOLUME FLAP	
030	19972-0000	F		1	WASHER	
040	541204-0000	K		1	VOLUME BULGE	
060	36133-0000	F		2	BUSHING	
070	458164-0000	F		1	SHAFT	
080	436556-0000	F		1	CURVE ROLLER	
090	479246-0000	K		3	VOLUME SHIM	
100	434320-0000	F		1	AXLE PIN	
130	90028-0020	-		1	CONE	
150	90134-0063	-		1	BUSHING	
210	312145-0289	-		2	SLOTTED HEMFS4X10RFR	
300	312318-0285	-		1	SET SCREW CUP POINT ISO 4029 M4X6 RFR	
TB/8 1000B HIFIN TPC or TB/8 1000B LOFIN TPC or TBA/8 1000B HIFIN IH or TBA/8 1000B LOFIN IH						
010	532718-0000	F		1	VOLUME FLAP	
030	19972-0000	F		1	WASHER	
040	26075-0000	K		1	VOLUME BULGE	
060	36133-0000	F		2	BUSHING	
070	458164-0000	F		1	SHAFT	
080	434321-0000	F		1	CURVE ROLLER	
090	208709-0000	K		3	VOLUME SHIM	
100	434320-0000	F		1	AXLE PIN	
130	90028-0020	-		1	CONE	
150	90134-0063	-		1	BUSHING	
200	312145-0222	-		2	SLOTTED HEMFS3X8RFR	
300	312318-0285	-		1	SET SCREW CUP POINT ISO 4029 M4X6 RFR	
TB/8 1000S TPC or TBA/8 1000S IH						
010	1260781-0000	F		1	VOLUME FLAP	
030	19972-0000	F		1	WASHER	
040	569055-0000	K		1	VOLUME BULGE	
060	36133-0000	F		2	BUSHING	
070	458164-0000	F		1	SHAFT	
080	434321-0000	F		1	CURVE ROLLER	

VOLUME FLAP

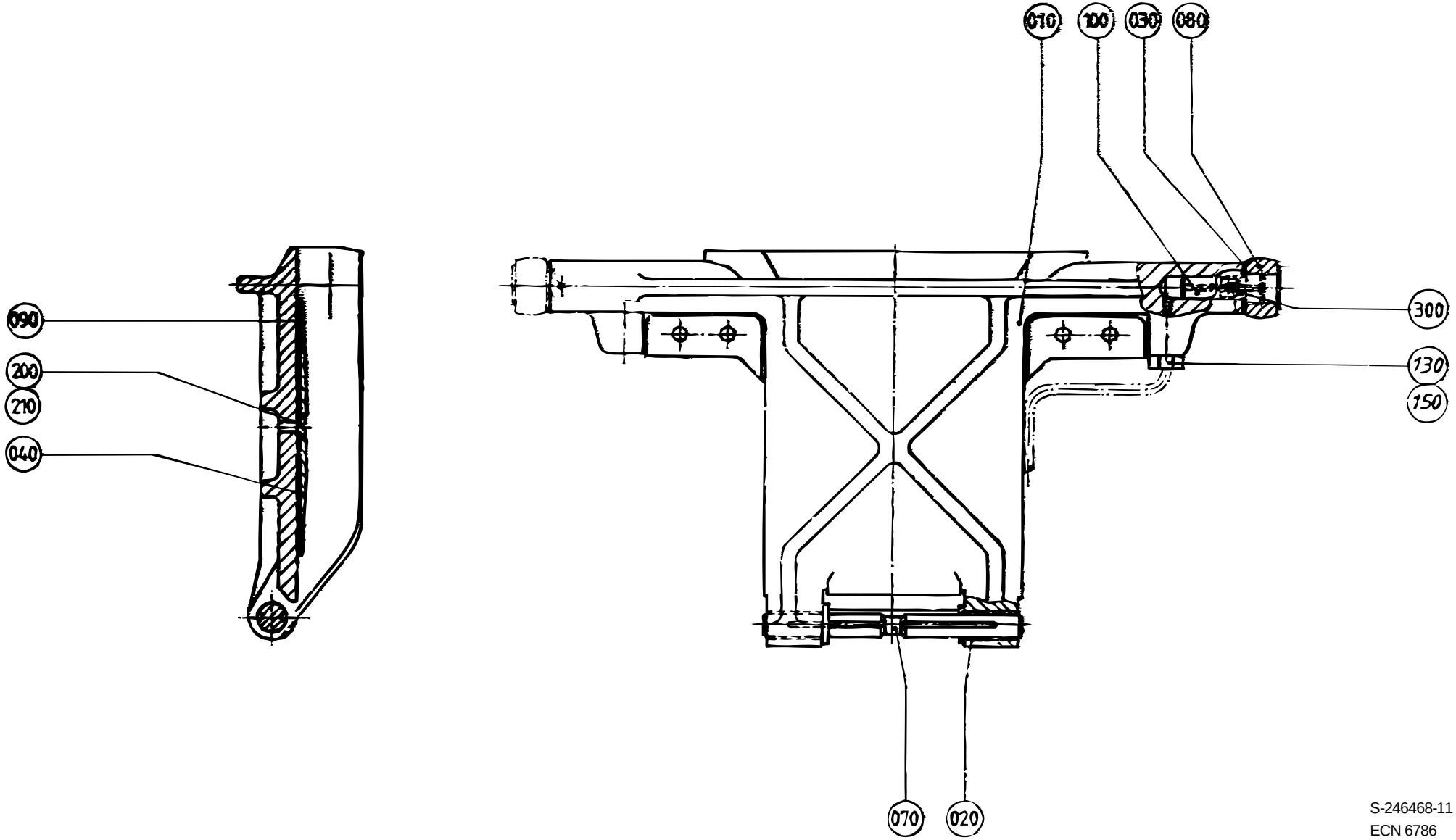

S-246468-11
ECN 6786

Pos	Part No	SP	UN	Qty	Description	Page No
090	569056-0000	K		3	VOLUME SHIM	
100	434320-0000	F		1	AXLE PIN	
130	90028-0020	-		1	CONE	
150	90134-0063	-		1	BUSHING	
210	312145-0289	-		2	SLOTTED HEMFS4X10RFR	
300	312318-0285	-		1	SET SCREW CUP POINT ISO 4029 M4X6 RFR	
TB/8 1000SQ TPC or TBA/8 1000SQ IH or TBO/8 1000SQ IH						
010	1195070-0000	F		1	VOLUME FLAP	
030	19972-0000	F		1	WASHER	
040	1143049-0000	K		1	VOLUME BULGE	
060	36133-0000	F		2	BUSHING	
070	544292-0000	F		1	SHAFT	
080	434321-0000	F		1	CURVE ROLLER	
090	1143050-0000	K		3	VOLUME SHIM	
100	434320-0000	F		1	AXLE PIN	
130	90028-0020	-		1	CONE	
150	90134-0063	-		1	BUSHING	
210	312145-0289	-		2	SLOTTED HEMFS4X10RFR	
300	312318-0285	-		1	SET SCREW CUP POINT ISO 4029 M4X6 RFR	
TB/8 1000SQ US						
010	929541-0000	F		1	VOLUME FLAP	
030	19972-0000	F		1	WASHER	
040	1143049-0000	K		1	VOLUME BULGE	
060	36133-0000	F		2	BUSHING	
070	544292-0000	F		1	SHAFT	
080	434321-0000	F		1	CURVE ROLLER	
090	1143050-0000	K		3	VOLUME SHIM	
100	434320-0000	F		1	AXLE PIN	
130	90028-0020	-		1	CONE	
150	90134-0063	-		1	BUSHING	
210	312145-0289	-		2	SLOTTED HEMFS4X10RFR	
300	312318-0285	-		1	SET SCREW CUP POINT ISO 4029 M4X6 RFR	
TB/8 1136B TPC						
010	544344-0000	F		1	VOLUME FLAP	
030	19972-0000	F		1	WASHER	
040	544345-0000	K		1	VOLUME BULGE	
060	36133-0000	F		2	BUSHING	
070	458164-0000	F		1	SHAFT	
080	434321-0000	F		1	CURVE ROLLER	
090	544346-0000	K		3	VOLUME SHIM	
100	434320-0000	F		1	AXLE PIN	
130	90028-0020	-		1	CONE	
150	90134-0063	-		1	BUSHING	
200	312145-0222	-		2	SLOTTED HEMFS3X8RFR	
300	312318-0285	-		1	SET SCREW CUP POINT ISO 4029 M4X6 RFR	
TBA/8 0355B IH						
010	529000-0000	F		1	VOLUME FLAP	
020	449908-0000	F		2	BUSHING	
030	19972-0000	F		1	WASHER	
040	536686-0000	K		1	VOLUME BULGE	
070	458165-0000	F		1	SHAFT	
080	436556-0000	F		1	CURVE ROLLER	
090	536687-0000	K		3	VOLUME SHIM	
100	434320-0000	F		1	AXLE PIN	
130	90028-0020	-		1	CONE	
150	90134-0063	-		1	BUSHING	
210	312145-0289	-		2	SLOTTED HEMFS4X10RFR	
300	312318-0285	-		1	SET SCREW CUP POINT ISO 4029 M4X6 RFR	
TBA/8 0375S IH						
010	571486-0000	F		1	VOLUME FLAP	
020	449908-0000	F		2	BUSHING	
030	19972-0000	F		1	WASHER	
040	255227-0001	K		1	VOLUME BULGE	
070	458165-0000	F		1	SHAFT	
080	436556-0000	F		1	CURVE ROLLER	
090	255228-0001	K		3	VOLUME SHIM	
100	434320-0000	F		1	AXLE PIN	
130	90028-0020	-		1	CONE	
150	90134-0063	-		1	BUSHING	
200	312145-0222	-		2	SLOTTED HEMFS3X8RFR	
300	312318-0285	-		1	SET SCREW CUP POINT ISO 4029 M4X6 RFR	
TBA/8 0400B IH						
010	575639-0000	F		1	VOLUME FLAP	
020	449908-0000	F		2	BUSHING	
030	19972-0000	F		1	WASHER	
040	575640-0000	K		1	VOLUME BULGE	
070	458165-0000	F		1	SHAFT	
080	436556-0000	F		1	CURVE ROLLER	
090	575641-0000	K		3	VOLUME SHIM	
100	434320-0000	F		1	AXLE PIN	
130	90028-0020	-		1	CONE	
150	90134-0063	-		1	BUSHING	
200	312145-0222	-		2	SLOTTED HEMFS3X8RFR	
300	312318-0285	-		1	SET SCREW CUP POINT ISO 4029 M4X6 RFR	

VOLUME FLAP

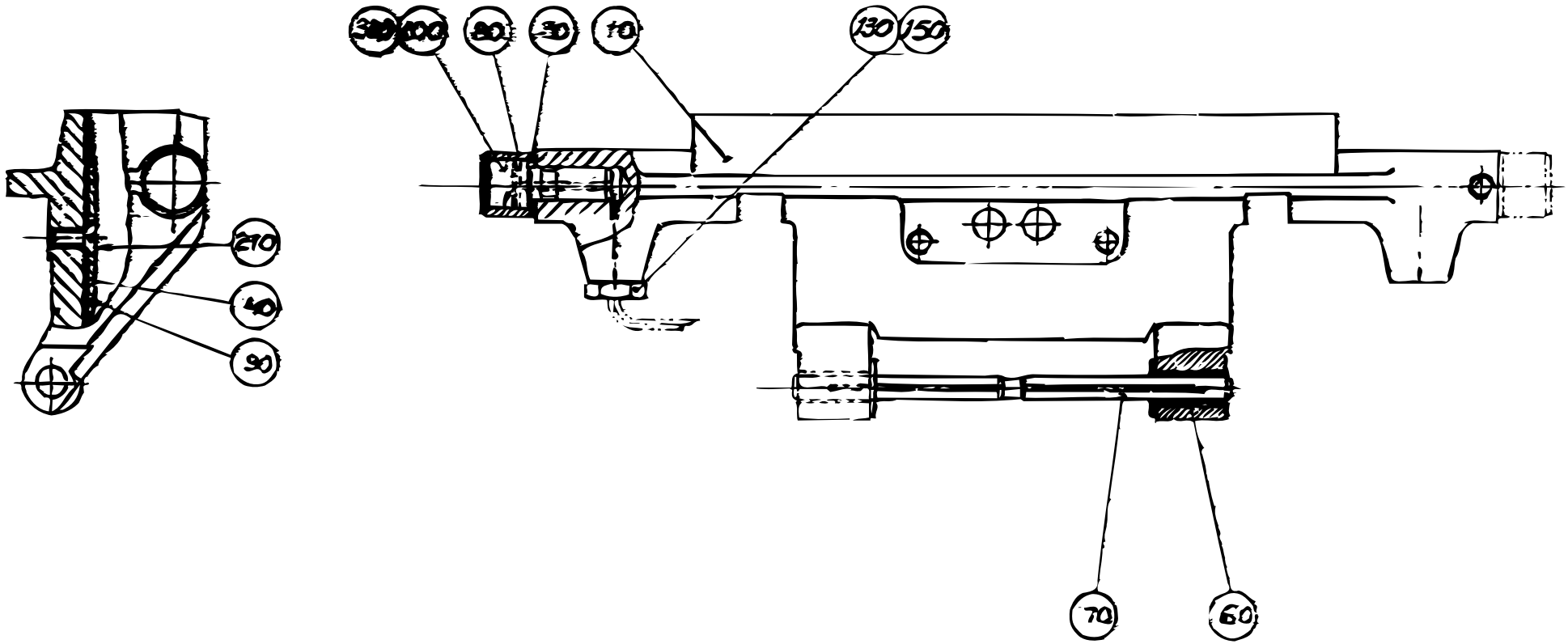

Pos	Part No	SP	UN	Qty	Description	Page No
TBA/8 0500B IH						
010	476115-0000	F		1	VOLUME FLAP	
030	19972-0000	F		1	WASHER	
040	458467-0000	K		1	VOLUME BULGE	
060	36133-0000	F		2	BUSHING	
070	458164-0000	F		1	SHAFT	
080	436556-0000	F		1	CURVE ROLLER	
090	479245-0000	K		3	VOLUME SHIM	
100	434320-0000	F		1	AXLE PIN	
130	90028-0020	-		1	CONE	
150	90134-0063	-		1	BUSHING	
210	312145-0289	-		2	SLOTTED HEMFS4X10RFR	
300	312318-0285	-		1	SET SCREW CUP POINT ISO 4029 M4X6 RFR	
TBA/8 0500S IH						
010	548601-0000	F		1	VOLUME FLAP	
020	449908-0000	F		2	BUSHING	
030	19972-0000	F		1	WASHER	
040	464314-0000	K		1	VOLUME BULGE	
070	458165-0000	F		1	SHAFT	
080	434321-0000	F		1	CURVE ROLLER	
090	464315-0000	K		3	VOLUME SHIM	
100	434320-0000	F		1	AXLE PIN	
130	90028-0020	-		1	CONE	
150	90134-0063	-		1	BUSHING	
200	312145-0222	-		2	SLOTTED HEMFS3X8RFR	
300	312318-0285	-		1	SET SCREW CUP POINT ISO 4029 M4X6 RFR	
TBA/8 0750B IH						
010	544504-0000	F		1	VOLUME FLAP	
030	19972-0000	F		1	WASHER	
040	450781-0000	K		1	VOLUME BULGE	
060	36133-0000	F		2	BUSHING	
070	458164-0000	F		1	SHAFT	
080	436556-0000	F		1	CURVE ROLLER	
090	450782-0000	K		3	VOLUME SHIM	
100	434320-0000	F		1	AXLE PIN	
130	90028-0020	-		1	CONE	
150	90134-0063	-		1	BUSHING	
200	312145-0222	-		2	SLOTTED HEMFS3X8RFR	
300	312318-0285	-		1	SET SCREW CUP POINT ISO 4029 M4X6 RFR	
TBA/8 0750S IH						
010	555926-0000	F		1	VOLUME FLAP	
030	19972-0000	F		1	WASHER	
040	555892-0000	K		1	VOLUME BULGE	
070	544292-0000	F		1	SHAFT	
080	434321-0000	F		1	CURVE ROLLER	
090	555928-0000	K		3	VOLUME SHIM	
100	434320-0000	F		1	AXLE PIN	
130	90028-0020	-		1	CONE	
150	90134-0063	-		1	BUSHING	
210	312145-0289	-		2	SLOTTED HEMFS4X10RFR	
300	312318-0285	-		1	SET SCREW CUP POINT ISO 4029 M4X6 RFR	
TBA/8 1055B IH						
010	B 529002-0000	F		1	VOLUME FLAP	
030	19972-0000	F		1	WASHER	
040	532129-0000	K		1	VOLUME BULGE	
060	36133-0000	F		2	BUSHING	
070	458164-0000	F		1	SHAFT	
080	434321-0000	F		1	CURVE ROLLER	
090	531320-0000	K		3	VOLUME SHIM	
100	434320-0000	F		1	AXLE PIN	
130	90028-0020	-		1	CONE	
150	90134-0063	-		1	BUSHING	
200	312145-0222	-		2	SLOTTED HEMFS3X8RFR	
300	312318-0285	-		1	SET SCREW CUP POINT ISO 4029 M4X6 RFR	
TBO/8 1000B IH						
010	582352-0000	F		1	VOLUME FLAP	
030	19972-0000	F		1	WASHER	
040	26075-0000	K		1	VOLUME BULGE	
060	36133-0000	F		2	BUSHING	
070	458164-0000	F		1	SHAFT	
080	434321-0000	F		1	CURVE ROLLER	
090	208709-0000	K		3	VOLUME SHIM	
100	434320-0000	F		1	AXLE PIN	
130	90028-0020	-		1	CONE	
150	90134-0063	-		1	BUSHING	
200	312145-0222	-		2	SLOTTED HEMFS3X8RFR	
300	312318-0285	-		1	SET SCREW CUP POINT ISO 4029 M4X6 RFR	

VOLUME FLAP

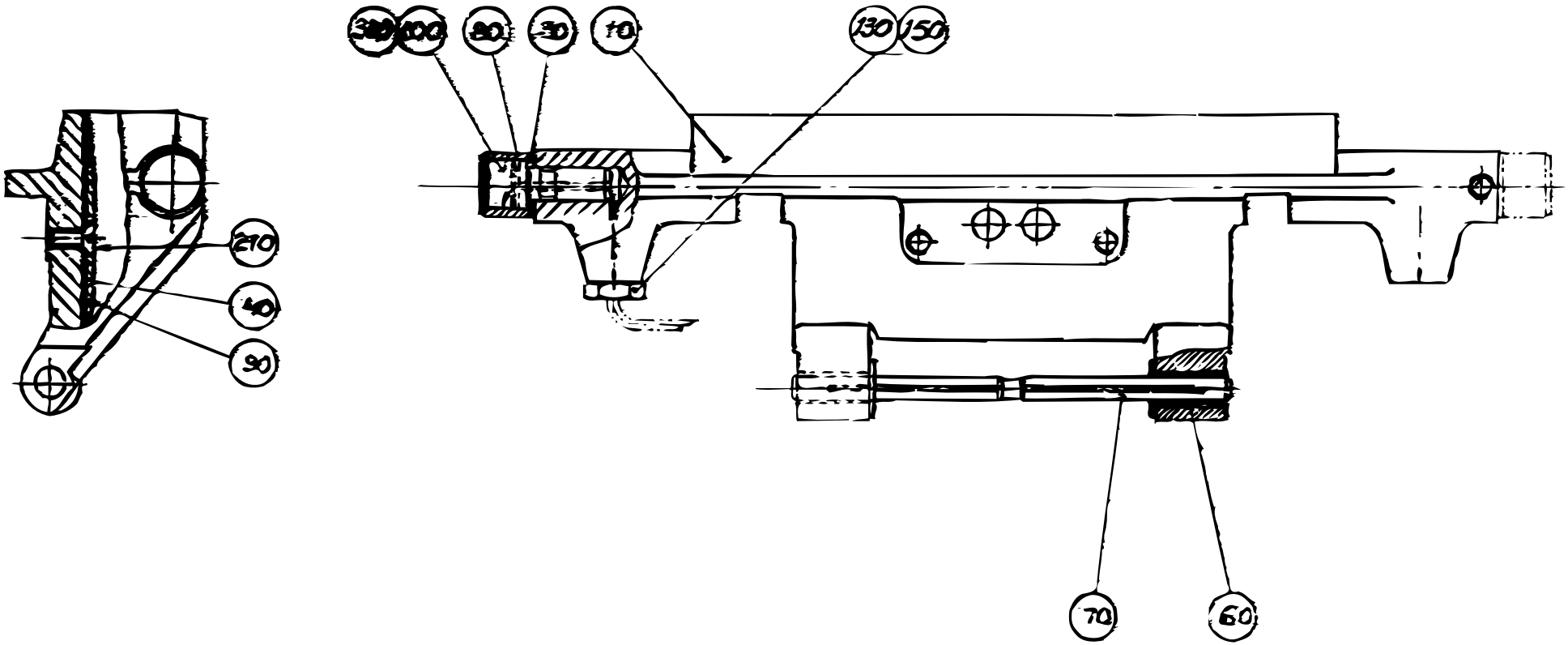

Pos	Part No	SP	UN	Qty	Description	Page No
TB/8 0500SQ TPC						
010	589924-0000	F		1	VOLUME FLAP	
030	19972-0000	F		1	WASHER	
040	589925-0000	K		1	VOLUME BULGE	
060	36133-0000	F		2	BUSHING	
070	544292-0000	F		1	SHAFT	
080	436556-0000	F		1	CURVE ROLLER	
090	589926-0000	K		3	VOLUME SHIM	
100	434320-0000	F		1	AXLE PIN	
130	90028-0020	-		1	CONE	
150	90134-0063	-		1	BUSHING	
210	312145-0289	-		2	SLOTTED HEMFS4X10RFR	
300	312318-0285	-		1	SET SCREW CUP POINT ISO 4029 M4X6 RFR	
TB/8 1500B US						
010	593280-0000	F		1	VOLUME FLAP	
030	19972-0000	F		2	WASHER	
040	596085-0000	K		1	VOLUME BULGE	
060	36133-0000	F		2	BUSHING	
070	458164-0000	F		1	SHAFT	
080	434321-0000	F		2	CURVE ROLLER	
090	1143050-0000	K		3	VOLUME SHIM	
100	434320-0000	F		2	AXLE PIN	
130	90028-0020	-		2	CONE	
150	90134-0063	-		2	BUSHING	
210	312145-0289	-		2	SLOTTED HEMFS4X10RFR	
300	312318-0285	-		2	SET SCREW CUP POINT ISO 4029 M4X6 RFR	

Pos	Part No	SP	UN	Qty	Description	Page No

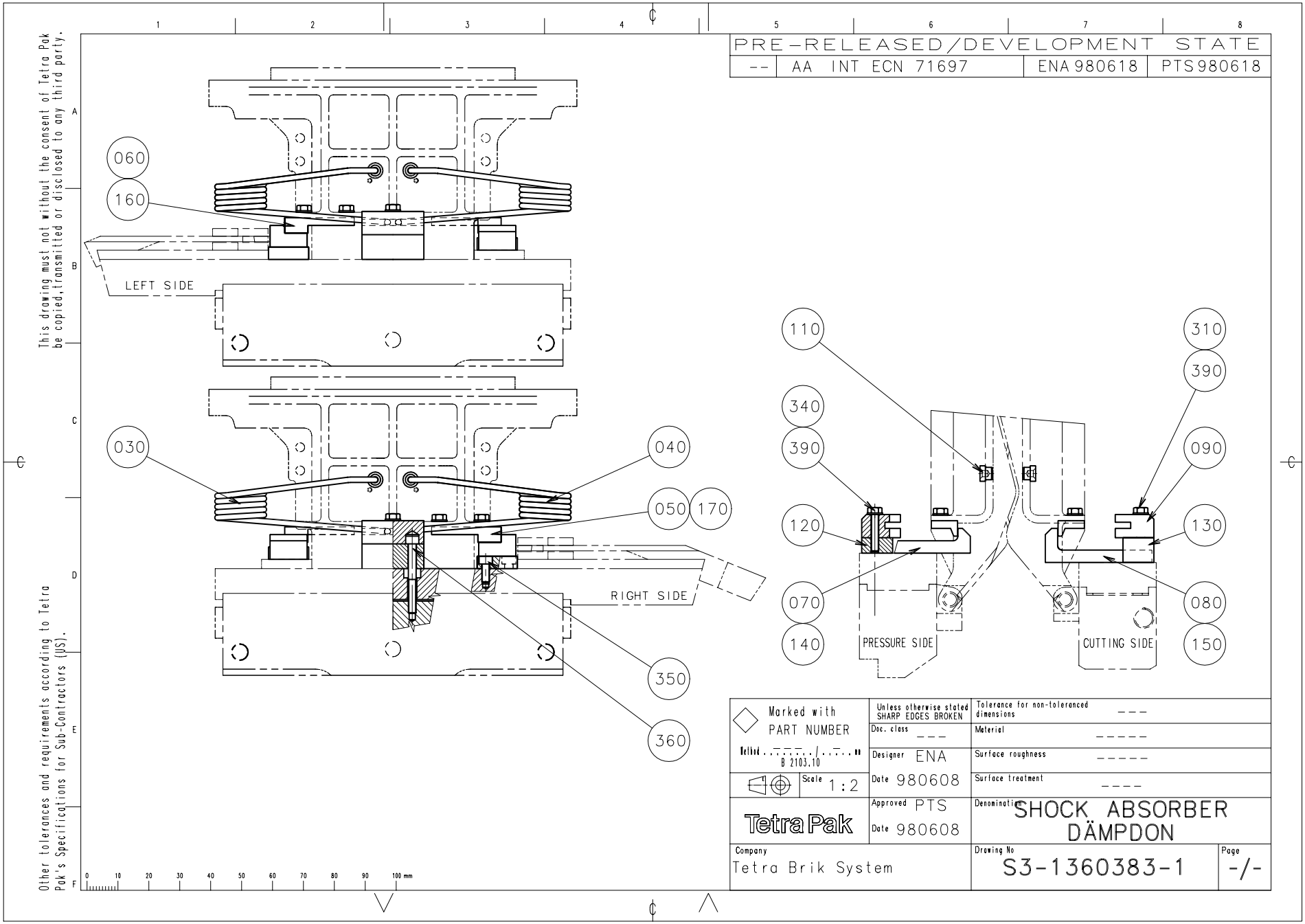
PRE-RELEASED/DEVELOPMENT STATE
-- AA INT ECN 71697 ENA 980618 PTS 980618
This drawing must not without the consent of Tetra Pak be copied, transmitted or disclosed to any third party.
Other tolerances and requirements according to Tetra Pak's Specifications for Sub-Contractors (JS).
060
160
LEFT SIDE
030
040
050
170
RIGHT SIDE
350
360
110
340
390
120
070
140
PRESSURE SIDE
310
390
090
130
080
150
CUTTING SIDE
Marked with PART NUMBER
ISO 2103.10
Scale 1:2
Unless otherwise stated SHARP EDGES BROKEN
Doc. class ---
Designer ENA
Date 980608
Approved PTS
Date 980608
Tolerance for non-toleranced dimensions ---
Material ---
Surface roughness ---
Surface treatment ---
Denomination SHOCK ABSORBER DÄMPDON
Company Tetra Brik System
Drawing No S3-1360383-1
Page -/-
0 10 20 30 40 50 60 70 80 90 100 mm

Pos	Part No	SP	UN	Qty	Description	Page No
1000B						
070	1282595-0000	-		2	CATCH	
080	1282596-0000	-		2	CATCH	
160	1282592-0000	-		2	STOPPER	
170	1282593-0000	-		2	STOPPER	
180	1285367-0000	-		2	HOLDER	
310	312105-0325	-		8	SCREW M6S5X10 A2 80	
340	312105-0335	-		4	SCREW M6S ISO 4017 M5X30 A280	
350	312115-0329	-		8	SCREW MC6S ISO 4762 M5X16 A280	
390	315105-0146	-		12	WASHER BRB5,3X10RFR	
1000S						
050	1255207-0000	-		2	STOPPER	
060	1255208-0000	-		2	STOPPER	
100	263684-0000	-		4	SPACER	
140	593270-0000	-		2	CATCH	
150	593271-0000	-		2	CATCH	
300	312105-0325	-		12	SCREW M6S5X10 A2 80	
320	312105-0331	-		8	SCREW M6S ISO 4017 M5X20 A280	
330	312105-0333	-		4	SCREW M6S ISO 4017 M5X25 A280	
380	315105-0146	-		24	WASHER BRB5,3X10RFR	
Common parts						
030	1143215-0000	-		4	SPRING	
040	1143216-0000	-		4	SPRING	
090	1317955-0000	-		4	SPRING BRACKET	
110	545651-0000	-		8	GUIDE STUD	
120	571297-0000	-		2	LACE	
130	571298-0000	-		2	LACE	
360	312115-0340	-		8	SCREW MC6S ISO 4762 M5X45 A280	
370	312155-0372	-		2	SCREW MF6S DIN 7991 M6X25 A280	

Pos	Part No	SP	UN	Qty	Description	Page No

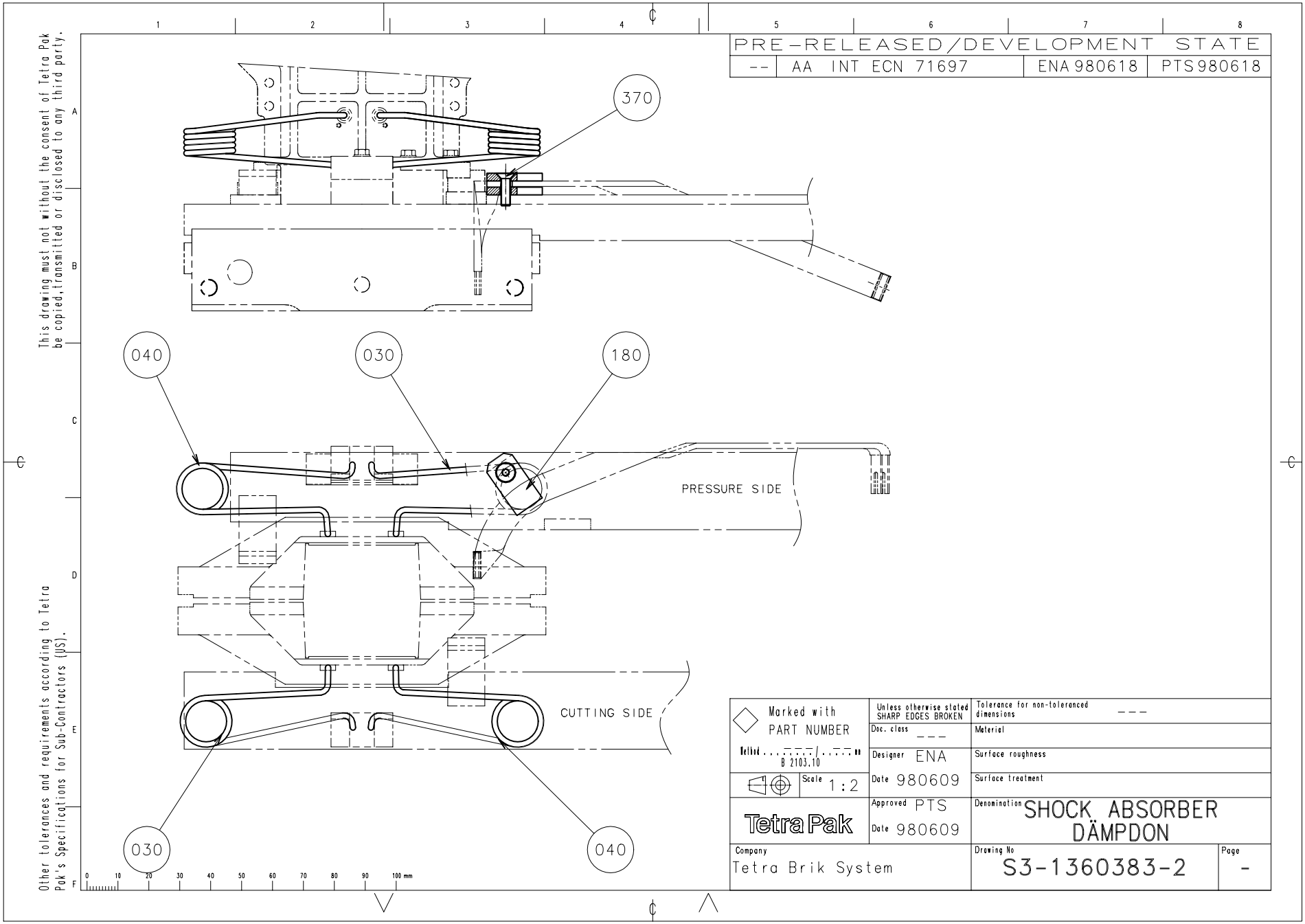
PRE-RELEASED/DEVELOPMENT STATE
-- AA INT ECN 71697 ENA 980618 PTS 980618
370
040
030
180
PRESSURE SIDE
CUTTING SIDE
030
040
This drawing must not without the consent of Tetra Pak be copied, transmitted or disclosed to any third party.
Other tolerances and requirements according to Tetra Pak's Specifications for Sub-Contractors (US).
Marked with PART NUMBER
B 2103.10
Scale 1:2
Unless otherwise stated SHARP EDGES BROKEN
Tolerance for non-toleranced dimensions ---
Doc. class ---
Material
Designer ENA
Surface roughness
Date 980609
Surface treatment
Tetra Pak
Approved PTS
Date 980609
Denomination SHOCK ABSORBER DÄMPDON
Company Tetra Brik System
Drawing No S3-1360383-2
Page -

Pos	Part No	SP	UN	Qty	Description	Page No
1000B						
070	1282595-0000	-		2	CATCH	
080	1282596-0000	-		2	CATCH	
160	1282592-0000	-		2	STOPPER	
170	1282593-0000	-		2	STOPPER	
180	1285367-0000	-		2	HOLDER	
310	312105-0325	-		8	SCREW M6S5X10 A2 80	
340	312105-0335	-		4	SCREW M6S ISO 4017 M5X30 A280	
350	312115-0329	-		8	SCREW MC6S ISO 4762 M5X16 A280	
390	315105-0146	-		12	WASHER BRB5,3X10RFR	
1000S						
050	1255207-0000	-		2	STOPPER	
060	1255208-0000	-		2	STOPPER	
100	263684-0000	-		4	SPACER	
140	593270-0000	-		2	CATCH	
150	593271-0000	-		2	CATCH	
300	312105-0325	-		12	SCREW M6S5X10 A2 80	
320	312105-0331	-		8	SCREW M6S ISO 4017 M5X20 A280	
330	312105-0333	-		4	SCREW M6S ISO 4017 M5X25 A280	
380	315105-0146	-		24	WASHER BRB5,3X10RFR	
Common parts						
030	1143215-0000	-		4	SPRING	
040	1143216-0000	-		4	SPRING	
090	1317955-0000	-		4	SPRING BRACKET	
110	545651-0000	-		8	GUIDE STUD	
120	571297-0000	-		2	LACE	
130	571298-0000	-		2	LACE	
360	312115-0340	-		8	SCREW MC6S ISO 4762 M5X45 A280	
370	312155-0372	-		2	SCREW MF6S DIN 7991 M6X25 A280	

Pos	Part No	SP	UN	Qty	Description	Page No

CARRIER PRESSURE L IH

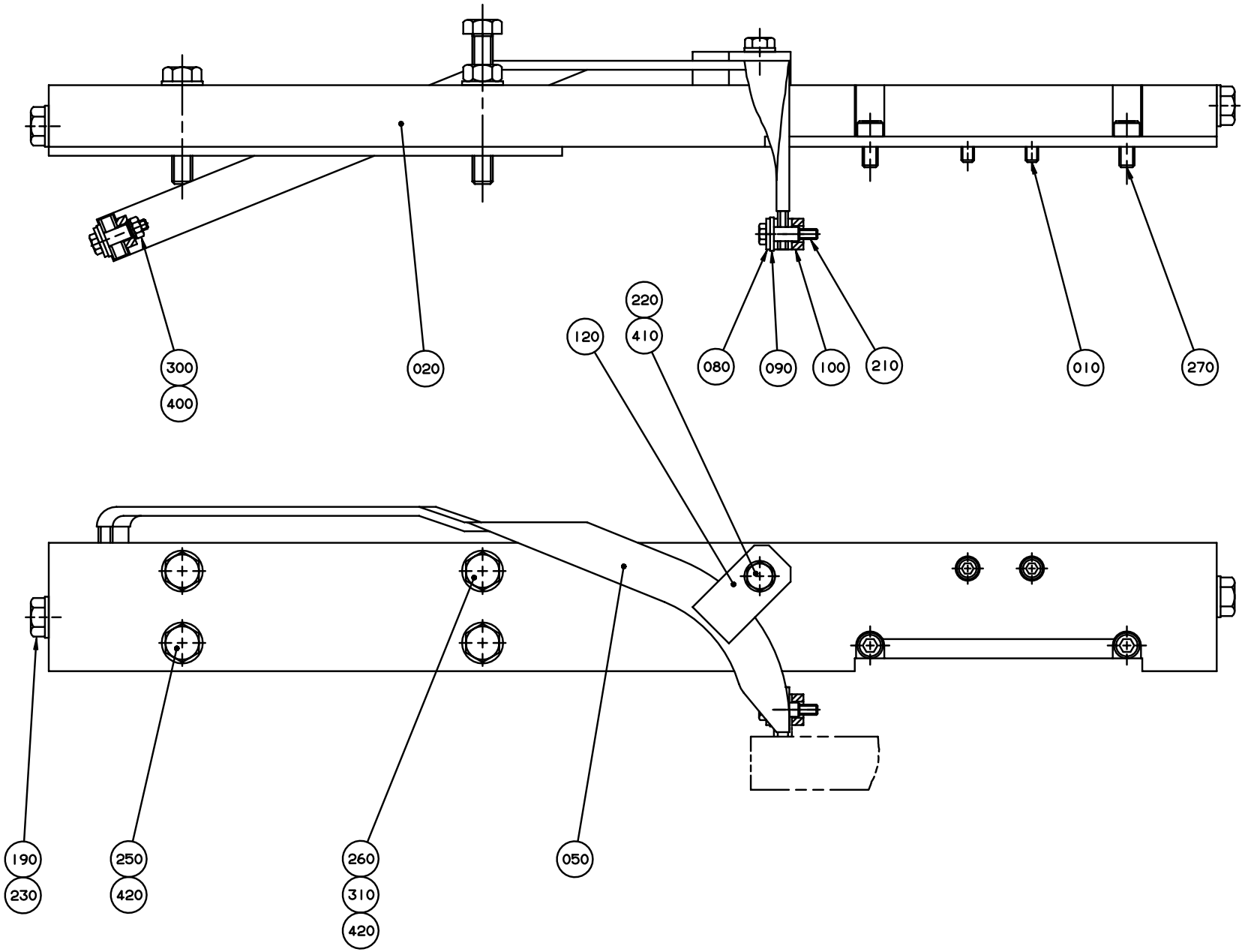

S-259414-2
ECN 10777

Pos	Part No	SP	UN	Qty	Description	Page No
TB 0300B or TB 0500S or TB 1000B or TB 1000S or TB 1000SQ or TBA 0355B or TBA 0375S or TBA 0400B or TBA 0500S or TBA 0750B or TBA 0750S or TBA 1000B or TBA 1000S or TBA 1000SQ or TBA 1055B or TBA 1500S or TPA 1000S						
010	312115-0331	-		2	SCREW MC6S ISO 4762 M5X20 A280	
-						
020	540368-0000	K		1	CARRIER	
050	540744-0000	-		1	BUSBAR	
080	28509-0000	F		2	WASHER	
090	32544-0000	K		2	INSULATION NUT	
100	32644-0000	F		2	WASHER	
120	484834-0000	F		1	HOLDER	
190	90005-0007	-		2	WASHER	
210	312105-0295	-		2	SCREW M6S ISO 4017 M4X20 A280	
220	312105-0370	-		1	SCREW M6S ISO 4017 M6X20 A280	
230	312105-0447	-		2	SCREW M6S ISO 4017 M8X12 A280	
250	312105-0457	-		3	SCREW O4017 M8X35A280	
260	312109-0463	-		1	SCREW M6S8X60H A4 80	
270	312115-0366	-		2	SCREW MC6S ISO 4762 M6X12 A280	
300	312605-0312	-		1	NUT M6M4RFR	
310	312605-0318	-		1	NUT M6M8RFR	
400	315105-0136	-		1	WASHER BRB4,3X8RFR	
410	315105-0153	-		1	WASHER BRB6,4X12RFR	
420	315105-0165	-		4	WASHER BRB8,4X16RFR	

Pos	Part No	SP	UN	Qty	Description	Page No

CARRIER

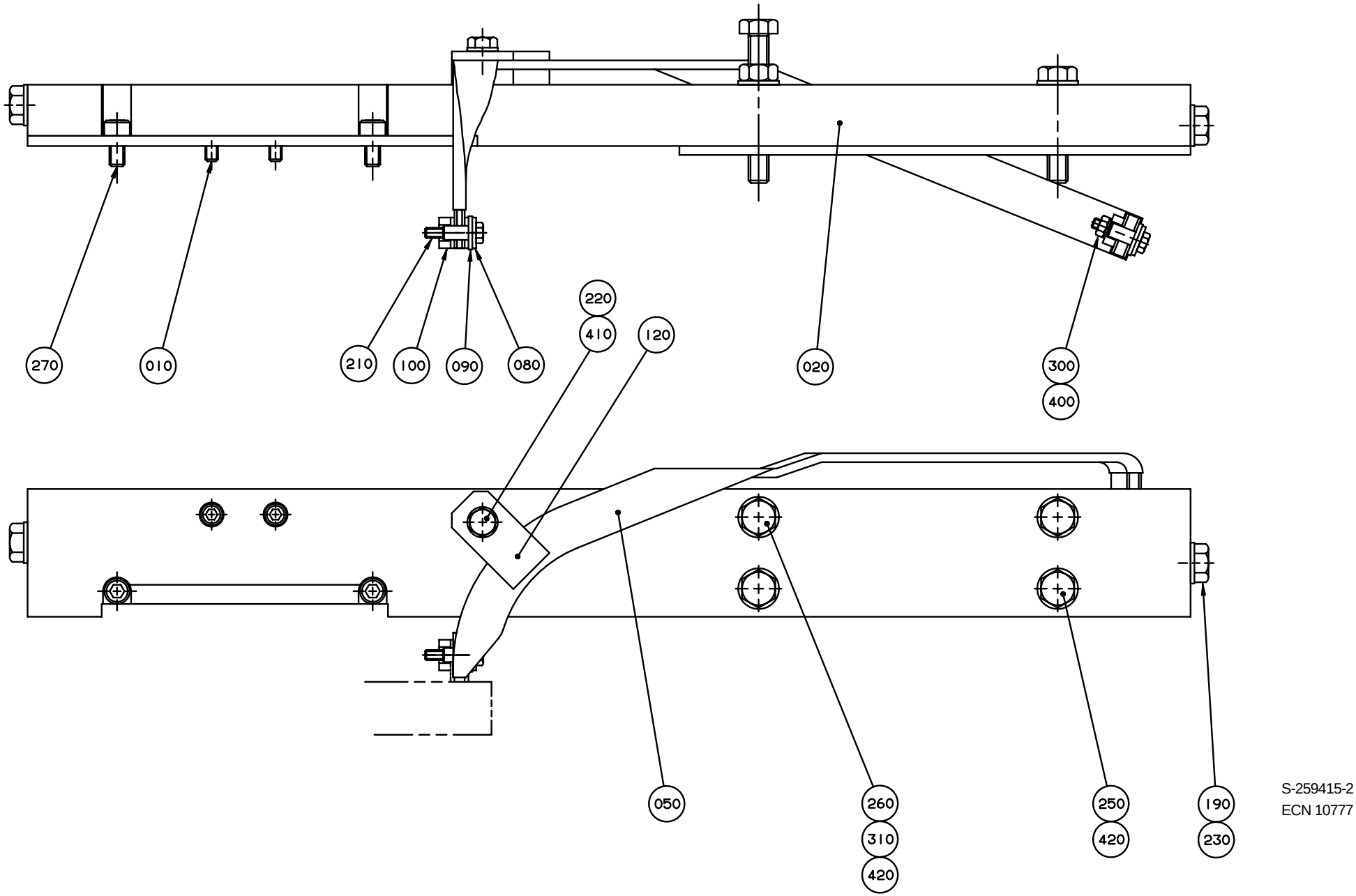

S-259415-2
ECN 10777

Pos	Part No	SP	UN	Qty	Description	Page No
TB 0300B or TB 0500S or TB 1000B or TB 1000S or TB 1000SQ or TBA 0355B or TBA 0375S or TBA 0400B or TBA 0500S or TBA 0750B or TBA 0750S or TBA 1000B or TBA 1000S or TBA 1000SQ or TBA 1055B or TBA 1500S or TPA 1000S						
010	312115-0331	-		2	SCREW MC6S ISO 4762 M5X20 A280	
-						
020	540367-0000	K		1	CARRIER	
050	540743-0000	K		1	BUSBAR	
080	28509-0000	F		2	WASHER	
090	32544-0000	K		2	INSULATION NUT	
100	32644-0000	F		2	WASHER	
120	484834-0000	F		1	HOLDER	
190	90005-0007	-		2	WASHER	
210	312105-0295	-		2	SCREW M6S ISO 4017 M4X20 A280	
220	312105-0370	-		1	SCREW M6S ISO 4017 M6X20 A280	
230	312105-0447	-		2	SCREW M6S ISO 4017 M8X12 A280	
250	312105-0457	-		3	SCREW O4017 M8X35A280	
260	312109-0463	-		1	SCREW M6S8X60H A4 80	
270	312115-0366	-		2	SCREW MC6S ISO 4762 M6X12 A280	
300	312605-0312	-		1	NUT M6M4RFR	
310	312605-0318	-		1	NUT M6M8RFR	
400	315105-0136	-		1	WASHER BRB4,3X8RFR	
410	315105-0153	-		1	WASHER BRB6,4X12RFR	
420	315105-0165	-		4	WASHER BRB8,4X16RFR	

Pos	Part No	SP	UN	Qty	Description	Page No

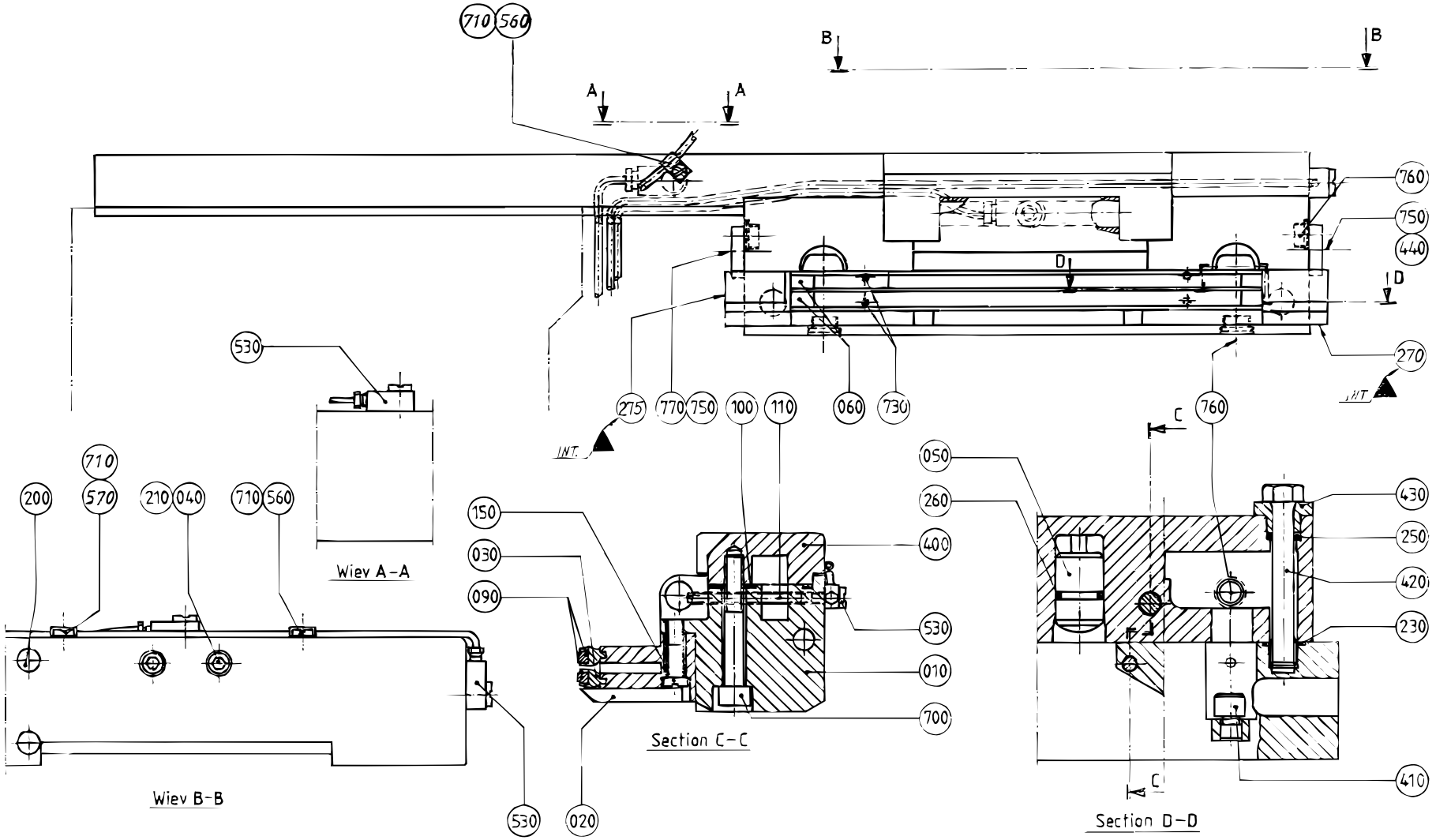

S-257835-6
ECN 21002

Pos	Part No	SP	UN	Qty	Description	Page No
TBO/8 1000B						
010	450503-0000	K		1	BEARING HOUSING	
020	257783-0000	K		1	CUTTING JAW	
030	1038517-0002	F		2	CUTTING RAIL	
040	12922-0000	K		2	WASHER	
060	533012-0001	F		4	END PIECE	
090	1038128-0001	F		2	DOLLY	
100	245271-0000	F		1	GASKET	
110	1296982-0000	R		1	SCREW	
150	90287-0070	-		2	SCREW	
210	312115-0331	-		2	SCREW MC6S ISO 4762 M5X20 A280	
230	315202-0111	F		2	O-RING 13,1X1,6	
250	315202-0207	F		2	O-RING 8,3X2,4	
420	243143-0000	F		2	SCREW	
0300B or 0375S						
010	466432-0000	K		1	BEARING HOUSING	
020	449727-0000	K		1	CUTTING JAW	
030	544516-0000	F		2	CUTTING RAIL	
060	38490-0000	F		4	END PIECE	
090	564533-0002	F		2	DOLLY	
100	245272-0000	F		1	GASKET	
110	1296886-0000	R		1	SCREW	
150	90287-0070	-		2	SCREW	
420	243143-0000	F		2	SCREW	
0355B or 0400B or 0500S						
010	466431-0000	K		1	BEARING HOUSING	
020	464162-0000	K		1	CUTTING JAW	
030	440925-0000	F		2	CUTTING RAIL	
040	12922-0000	K		2	WASHER	
060	440043-0000	F		4	END PIECE	
090	564533-0005	F		2	DOLLY	
100	497716-0000	F		1	GASKET	
110	1296886-0000	R		1	SCREW	
150	90287-0070	-		2	SCREW	
210	312115-0331	-		2	SCREW MC6S ISO 4762 M5X20 A280	
230	315202-0111	F		2	O-RING 13,1X1,6	
250	315202-0207	F		2	O-RING 8,3X2,4	
420	243143-0000	F		2	SCREW	
0500B or 0568B						
010	450503-0000	K		1	BEARING HOUSING	
020	257783-0000	K		1	CUTTING JAW	
030	497921-0000	F		2	CUTTING RAIL	
060	32116-0000	F		4	END PIECE	
090	564533-0001	F		2	DOLLY	
100	245271-0000	F		1	GASKET	
110	1296982-0000	R		1	SCREW	
150	90287-0070	-		2	SCREW	
200	311508-0416	-		1	RIVET KN4X10ALUM.	
230	315202-0111	F		2	O-RING 13,1X1,6	
250	315202-0207	F		2	O-RING 8,3X2,4	
420	243143-0000	F		2	SCREW	
0750B or 1055B or TBA/8 1000B LOFIN						
010	450503-0000	K		1	BEARING HOUSING	
020	257783-0000	K		1	CUTTING JAW	
030	497921-0000	F		2	CUTTING RAIL	
040	12922-0000	K		2	WASHER	
060	32116-0000	F		4	END PIECE	
090	564533-0001	F		2	DOLLY	
100	245271-0000	F		1	GASKET	
110	1296982-0000	R		1	SCREW	
150	90287-0070	-		2	SCREW	
210	312115-0331	-		2	SCREW MC6S ISO 4762 M5X20 A280	
230	315202-0111	F		2	O-RING 13,1X1,6	
250	315202-0207	F		2	O-RING 8,3X2,4	
420	243143-0000	F		2	SCREW	
0750S						
010	544317-0000	K		1	BEARING HOUSING	
020	544323-0000	K		1	CUTTING JAW	
030	544334-0000	F		2	CUTTING RAIL	
040	12922-0000	K		2	WASHER	
060	544337-0000	F		4	END PIECE	
090	564533-0007	F		2	DOLLY	
100	497716-0000	F		1	GASKET	
110	1296885-0000	R		1	SCREW	
150	90287-0070	-		2	SCREW	
210	312115-0331	-		2	SCREW MC6S ISO 4762 M5X20 A280	
230	315202-0111	F		2	O-RING 13,1X1,6	
250	315202-0207	F		2	O-RING 8,3X2,4	
420	243143-0000	F		2	SCREW	

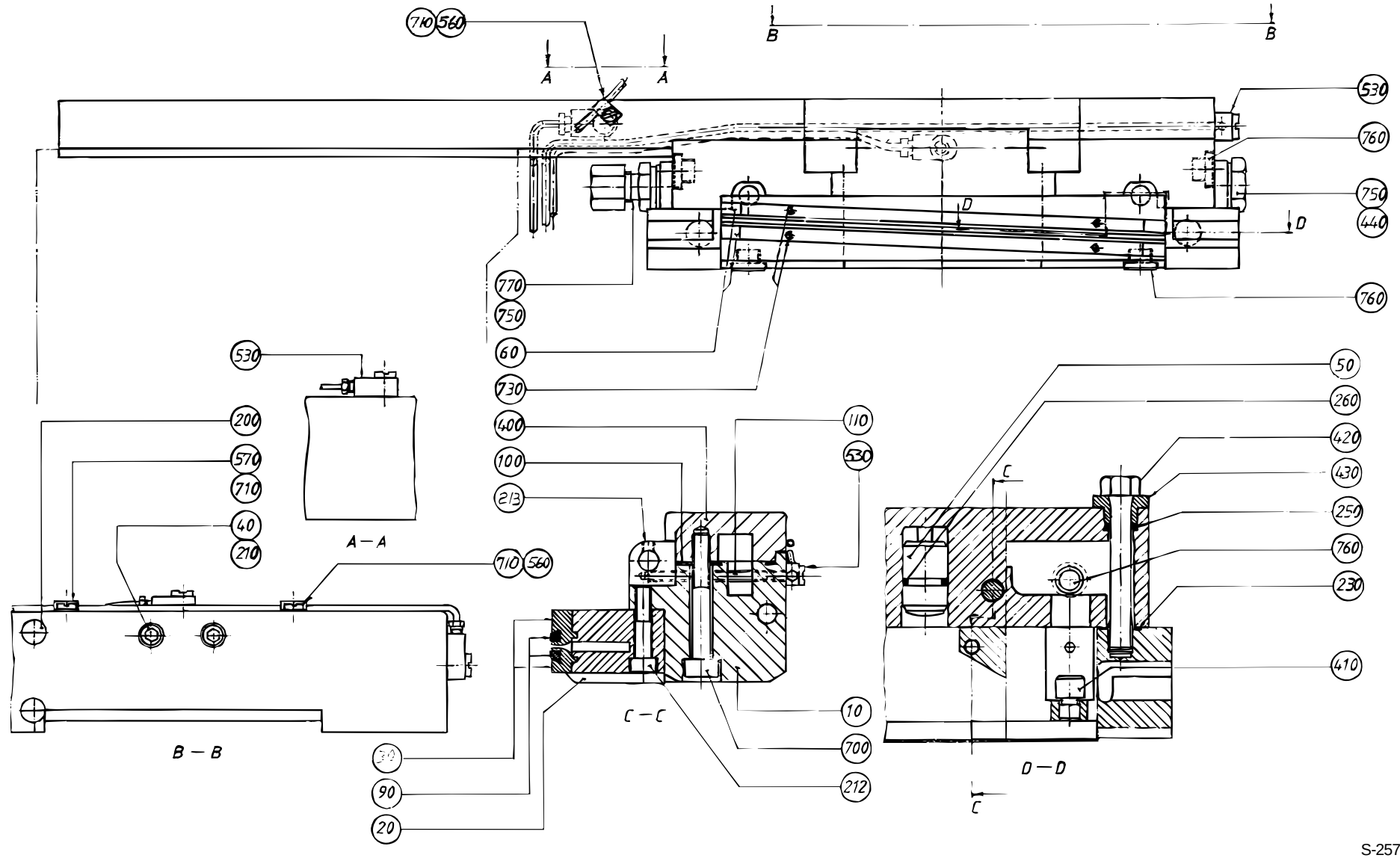

S-257835-7
ECN 16778

Pos	Part No	SP	UN	Qty	Description	Page No
1000S						
010	569057-0000	K		1	BEARING HOUSING	
020	569059-0000	K		1	CUTTING JAW	
030	544334-0000	F		2	CUTTING RAIL	
060	32116-0000	F		4	END PIECE	
090	564533-0001	F		2	DOLLY	
100	245271-0000	F		1	GASKET	
110	1296884-0000	R		1	SCREW	
150	90287-0070	-		2	SCREW	
230	315202-0111	F		2	O-RING 13,1X1,6	
250	315202-0207	F		2	O-RING 8,3X2,4	
420	243143-0000	F		2	SCREW	
1000SQ						
010	573985-0000	K		1	BEARING HOUSING	
020	579772-0000	K		1	CUTTING JAW	
030	1038517-0003	F		2	CUTTING RAIL	
060	533012-0001	F		4	END PIECE	
090	1038128-0001	F		2	DOLLY	
100	573988-0000	F		1	GASKET	
110	1296981-0000	R		1	SCREW	
150	90287-0070	-		2	SCREW	
230	315202-0111	F		2	O-RING 13,1X1,6	
250	315202-0207	F		2	O-RING 8,3X2,4	
270	591981-0000	F		1	CATCH	
275	591982-0000	F		1	CATCH	
420	573583-0000	F		2	SCREW	
TBA/8 1000B HIFIN						
010	497572-0000	K		1	BEARING HOUSING	
020	284578-0000	K		1	CUTTING JAW	
030	539761-0000	F		2	CUTTING RAIL	
040	12922-0000	K		2	WASHER	
060	32116-0000	F		4	END PIECE	
090	564533-0001	F		2	DOLLY	
100	245271-0000	F		1	GASKET	
110	1296982-0000	R		1	SCREW	
210	312115-0331	-		2	SCREW MC6S ISO 4762 M5X20 A280	
212	312115-0374	-		2	SCREW MC6S ISO O4762 M6X30 A280	
213	312318-0321	-		1	STOP SCREW SK6SS5X6RFR	
230	315202-0111	F		2	O-RING 13,1X1,6	
250	315202-0207	F		2	O-RING 8,3X2,4	
420	243143-0000	F		2	SCREW	
Common parts						
050	28880-0000	K		2	PLUNGER	
260	315202-0212	F		2	O-RING 14,3X2,4	
400	B 464164-0000	K		1	CARRIER CUT LEFT	
410	32464-0000	K		2	SHAFT	
430	243144-0000	F		2	BUSHING	
440	255278-0000	K		1	PLUG FINISHER	
530	90134-0058	-		3	BANJO CONNECTION	
560	90165-0058	-		2	CLAMP	
570	90165-0060	-		1	CLAMP	
700	312115-0461	-		2	SCREW MC6S ISO 4762 M8X50 A280	
710	312125-0287	-		3	SLOTTED CHEESE HEAD ISO 1207 M4X8 RFR	
730	312145-0238	F		4	SLOTTED HEMFS3X40RFR	
750	315234-0110	F		2	SEAL RING R1/4"	
760	342713-0209	-		4	PLUG,EXT.G-THREAD,HEXAGON SOCKET G1/8"	
770	90030-0201	F		1	PIPE CONNECTION	

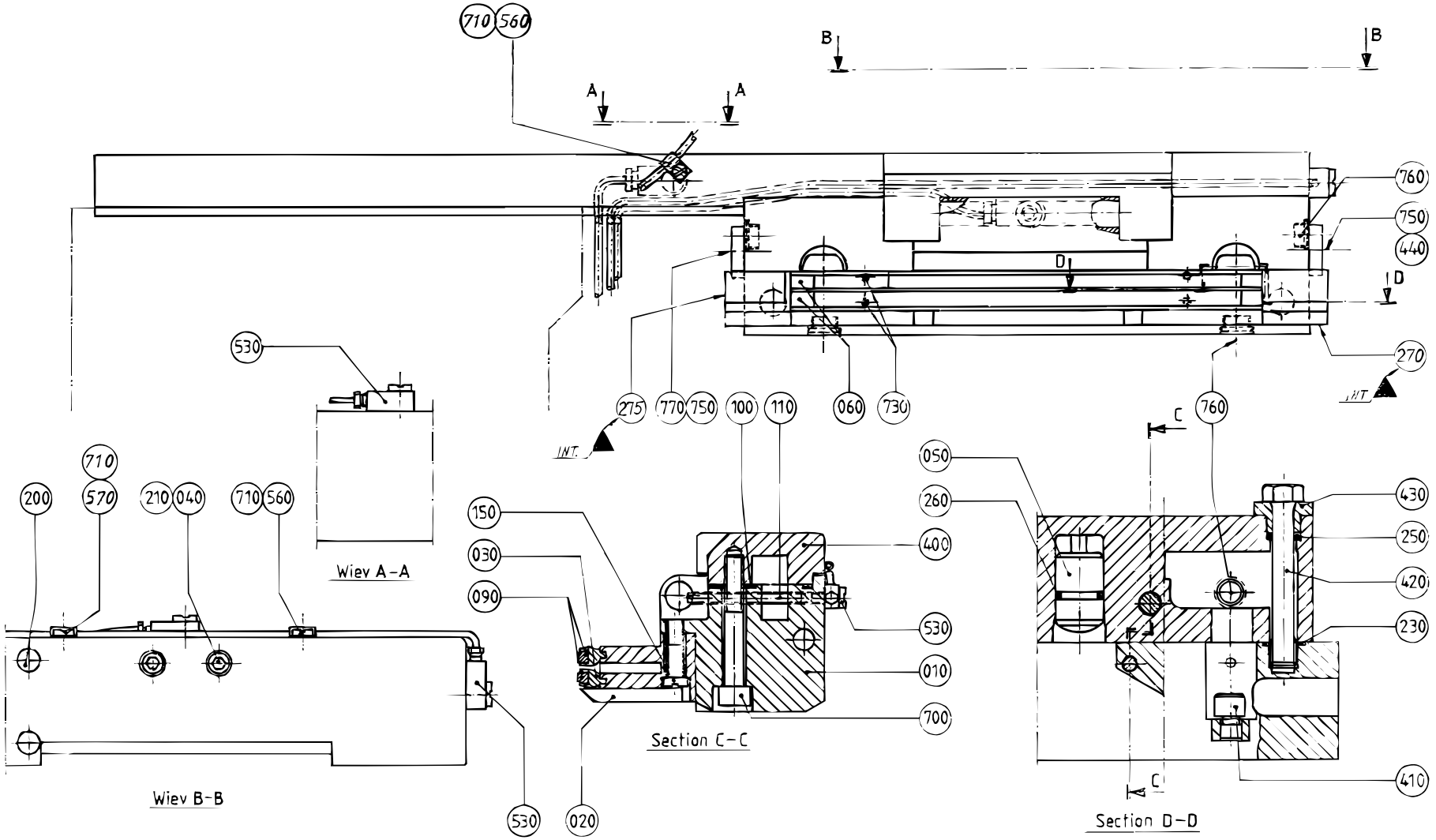

S-257835-6
ECN 21002

Pos	Part No	SP	UN	Qty	Description	Page No
TBO/8 1000B						
010	450503-0000	K		1	BEARING HOUSING	
020	257783-0000	K		1	CUTTING JAW	
030	1038517-0002	F		2	CUTTING RAIL	
040	12922-0000	K		2	WASHER	
060	533012-0001	F		4	END PIECE	
090	1038128-0001	F		2	DOLLY	
100	245271-0000	F		1	GASKET	
110	1296982-0000	R		1	SCREW	
150	90287-0070	-		2	SCREW	
210	312115-0331	-		2	SCREW MC6S ISO 4762 M5X20 A280	
230	315202-0111	F		2	O-RING 13,1X1,6	
250	315202-0207	F		2	O-RING 8,3X2,4	
420	243143-0000	F		2	SCREW	
0300B or 0375S						
010	466432-0000	K		1	BEARING HOUSING	
020	449727-0000	K		1	CUTTING JAW	
030	544516-0000	F		2	CUTTING RAIL	
060	38490-0000	F		4	END PIECE	
090	564533-0002	F		2	DOLLY	
100	245272-0000	F		1	GASKET	
110	1296886-0000	R		1	SCREW	
150	90287-0070	-		2	SCREW	
210	312115-0331	-		2	SCREW MC6S ISO 4762 M5X20 A280	
420	243143-0000	F		2	SCREW	
0355B or 0400B or 0500S						
010	466431-0000	K		1	BEARING HOUSING	
020	464162-0000	K		1	CUTTING JAW	
030	440925-0000	F		2	CUTTING RAIL	
040	12922-0000	K		2	WASHER	
060	440043-0000	F		4	END PIECE	
090	564533-0005	F		2	DOLLY	
100	497716-0000	F		1	GASKET	
110	1296886-0000	R		1	SCREW	
150	90287-0070	-		2	SCREW	
210	312115-0331	-		2	SCREW MC6S ISO 4762 M5X20 A280	
230	315202-0111	F		2	O-RING 13,1X1,6	
250	315202-0207	F		2	O-RING 8,3X2,4	
420	243143-0000	F		2	SCREW	
0500B or 0568B						
010	450503-0000	K		1	BEARING HOUSING	
020	257783-0000	K		1	CUTTING JAW	
030	497921-0000	F		2	CUTTING RAIL	
060	32116-0000	F		4	END PIECE	
090	564533-0001	F		2	DOLLY	
100	245271-0000	F		1	GASKET	
110	1296982-0000	R		1	SCREW	
150	90287-0070	-		2	SCREW	
200	311508-0416	-		1	RIVET KN4X10ALUM.	
230	315202-0111	F		2	O-RING 13,1X1,6	
250	315202-0207	F		2	O-RING 8,3X2,4	
420	243143-0000	F		2	SCREW	
0750B or 1055B or TBA/8 1000B LOFIN						
010	450503-0000	K		1	BEARING HOUSING	
020	257783-0000	K		1	CUTTING JAW	
030	497921-0000	F		2	CUTTING RAIL	
040	12922-0000	K		2	WASHER	
060	32116-0000	F		4	END PIECE	
090	564533-0001	F		2	DOLLY	
100	245271-0000	F		1	GASKET	
110	1296982-0000	R		1	SCREW	
150	90287-0070	-		2	SCREW	
210	312115-0331	-		2	SCREW MC6S ISO 4762 M5X20 A280	
230	315202-0111	F		2	O-RING 13,1X1,6	
250	315202-0207	F		2	O-RING 8,3X2,4	
420	243143-0000	F		2	SCREW	
0750S						
010	544317-0000	K		1	BEARING HOUSING	
020	544323-0000	K		1	CUTTING JAW	
030	544334-0000	F		2	CUTTING RAIL	
040	12922-0000	K		2	WASHER	
060	544337-0000	F		4	END PIECE	
090	564533-0007	F		2	DOLLY	
100	497716-0000	F		1	GASKET	
110	1296885-0000	R		1	SCREW	
150	90287-0070	-		2	SCREW	
210	312115-0331	-		2	SCREW MC6S ISO 4762 M5X20 A280	
230	315202-0111	F		2	O-RING 13,1X1,6	
250	315202-0207	F		2	O-RING 8,3X2,4	
420	243143-0000	F		2	SCREW	

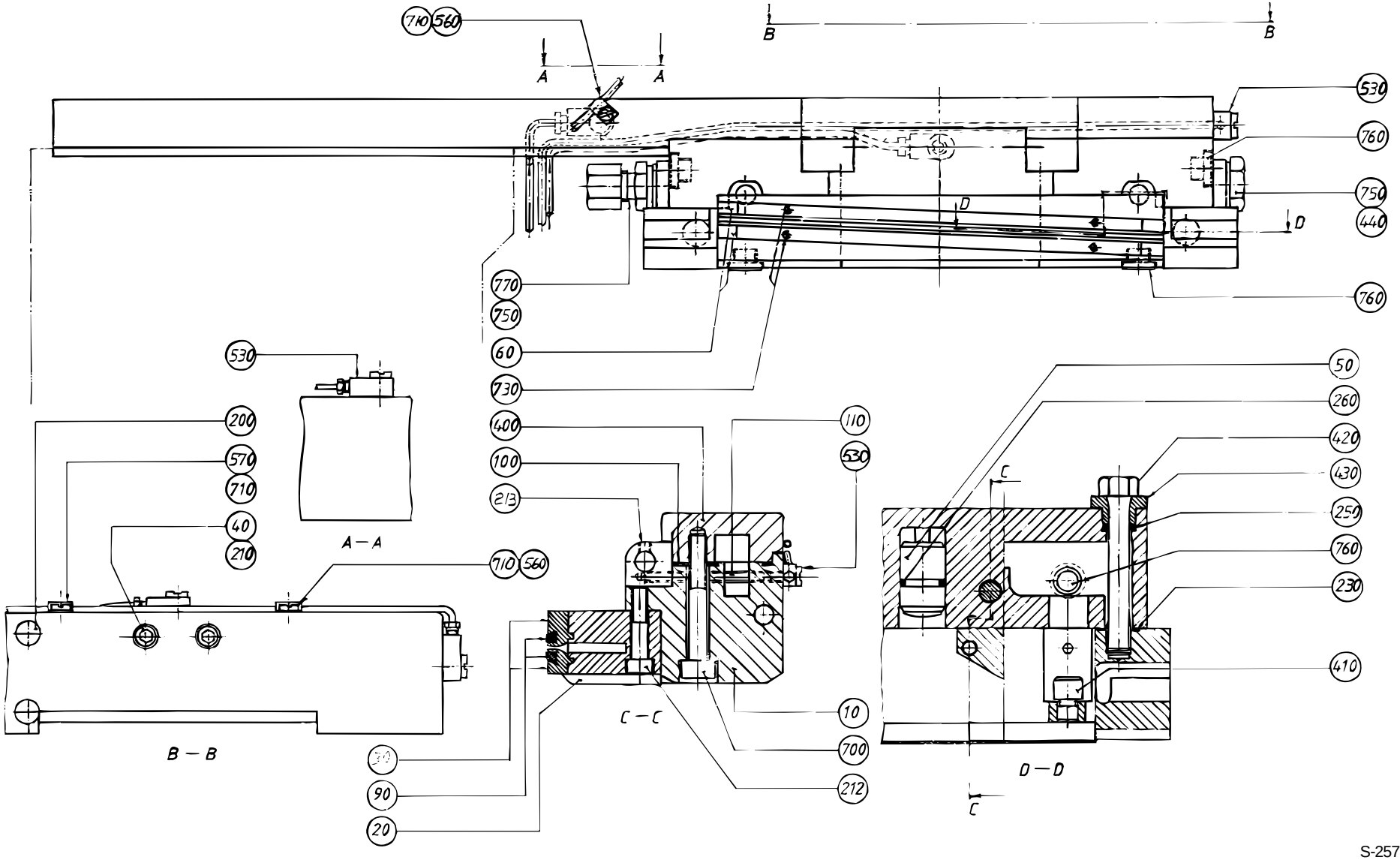

S-257835-7
ECN 16778

Pos	Part No	SP	UN	Qty	Description	Page No
1000S						
010	569057-0000	K		1	BEARING HOUSING	
020	569059-0000	K		1	CUTTING JAW	
030	544334-0000	F		2	CUTTING RAIL	
060	32116-0000	F		4	END PIECE	
090	564533-0001	F		2	DOLLY	
100	245271-0000	F		1	GASKET	
110	1296884-0000	R		1	SCREW	
150	90287-0070	-		2	SCREW	
210	312115-0331	-		2	SCREW MC6S ISO 4762 M5X20 A280	
230	315202-0111	F		2	O-RING 13,1X1,6	
250	315202-0207	F		2	O-RING 8,3X2,4	
420	243143-0000	F		2	SCREW	
1000SQ						
010	573985-0000	K		1	BEARING HOUSING	
020	579772-0000	K		1	CUTTING JAW	
030	1038517-0003	F		2	CUTTING RAIL	
060	533012-0001	F		4	END PIECE	
090	1038128-0001	F		2	DOLLY	
100	573988-0000	F		1	GASKET	
110	1296981-0000	R		1	SCREW	
150	90287-0070	-		2	SCREW	
230	315202-0111	F		2	O-RING 13,1X1,6	
250	315202-0207	F		2	O-RING 8,3X2,4	
270	591981-0000	F		1	CATCH	
275	591982-0000	F		1	CATCH	
420	573583-0000	F		2	SCREW	
TBA/8 1000B HIFIN						
010	497572-0000	K		1	BEARING HOUSING	
020	284578-0000	K		1	CUTTING JAW	
030	539761-0000	F		2	CUTTING RAIL	
040	12922-0000	K		2	WASHER	
060	32116-0000	F		4	END PIECE	
090	564533-0001	F		2	DOLLY	
100	245271-0000	F		1	GASKET	
110	1296982-0000	R		1	SCREW	
210	312115-0331	-		2	SCREW MC6S ISO 4762 M5X20 A280	
212	312115-0374	-		2	SCREW MC6S ISO O4762 M6X30 A280	
213	312318-0321	-		1	STOP SCREW SK6SS5X6RFR	
230	315202-0111	F		2	O-RING 13,1X1,6	
250	315202-0207	F		2	O-RING 8,3X2,4	
420	243143-0000	F		2	SCREW	
Common parts						
050	28880-0000	K		2	PLUNGER	
260	315202-0212	F		2	O-RING 14,3X2,4	
400	B 464171-0000	K		1	CARRIER CUT RIGHT	
410	32464-0000	K		2	SHAFT	
430	243144-0000	F		2	BUSHING	
440	255278-0000	K		1	PLUG FINISHER	
530	90134-0058	-		3	BANJO CONNECTION	
560	90165-0058	-		2	CLAMP	
570	90165-0060	-		1	CLAMP	
700	312115-0461	-		2	SCREW MC6S ISO 4762 M8X50 A280	
710	312125-0287	-		3	SLOTTED CHEESE HEAD ISO 1207 M4X8 RFR	
730	312145-0238	F		4	SLOTTED HEMFS3X40RFR	
750	315234-0110	F		2	SEAL RING R1/4"	
760	342713-0209	-		4	PLUG,EXT.G-THREAD,HEXAGON SOCKET G1/8"	
770	90030-0201	F		1	PIPE CONNECTION	

KNIFE HOLDER

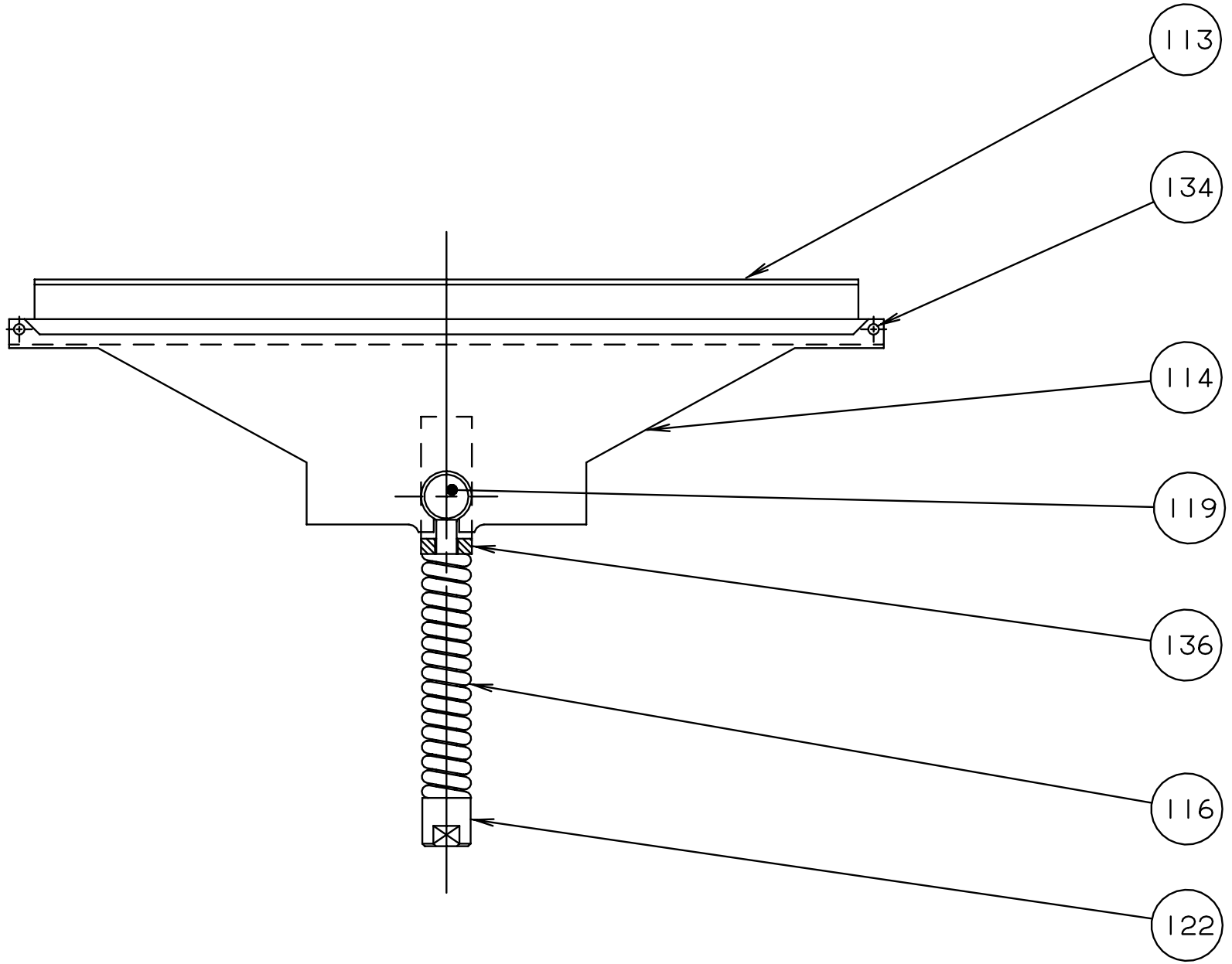

S-32966-4
ECN 20524

Pos	Part No	SP	UN	Qty	Description	Page No
TBA/8 0355B or TBA/8 0375S or TBA/8 0400B or TBA/8 0500S						
113	434338-0000	G		1	KNIFE	
114	556473-0000	I		1	KNIFE HOLDER	
TBA/8 0500B or TBA/8 0750B or TBA/8 1000B or TBA/8 1000S or TBA/8 1055B or TBA/8LSC 1500S						
113	436930-0000	G		1	KNIFE	
114	556471-0000	I		1	KNIFE HOLDER	
TBA/8 0750S or TBA/8 1000SQ or TBA/8PRISMA TPA 1000S						
113	544327-0000	G		1	KNIFE	
114	556472-0000	I		1	KNIFE HOLDER	
TBO/8 1000B						
113	436930-0000	G		1	KNIFE	
114	581889-0000	I		1	KNIFE HOLDER	
TBO/8 1000SQ						
113	544327-0000	G		1	KNIFE	
114	581890-0000	I		1	KNIFE HOLDER	
Common parts						
116	927252-0000	J		1	COMPRESSION SPRING	
119	927440-0000	K		1	LINK	
122	927441-0000	K		1	NUT	
134	456011-0000	F		2	PIN	
136	927323-0000	K		1	SPACER	

Pos	Part No	SP	UN	Qty	Description	Page No

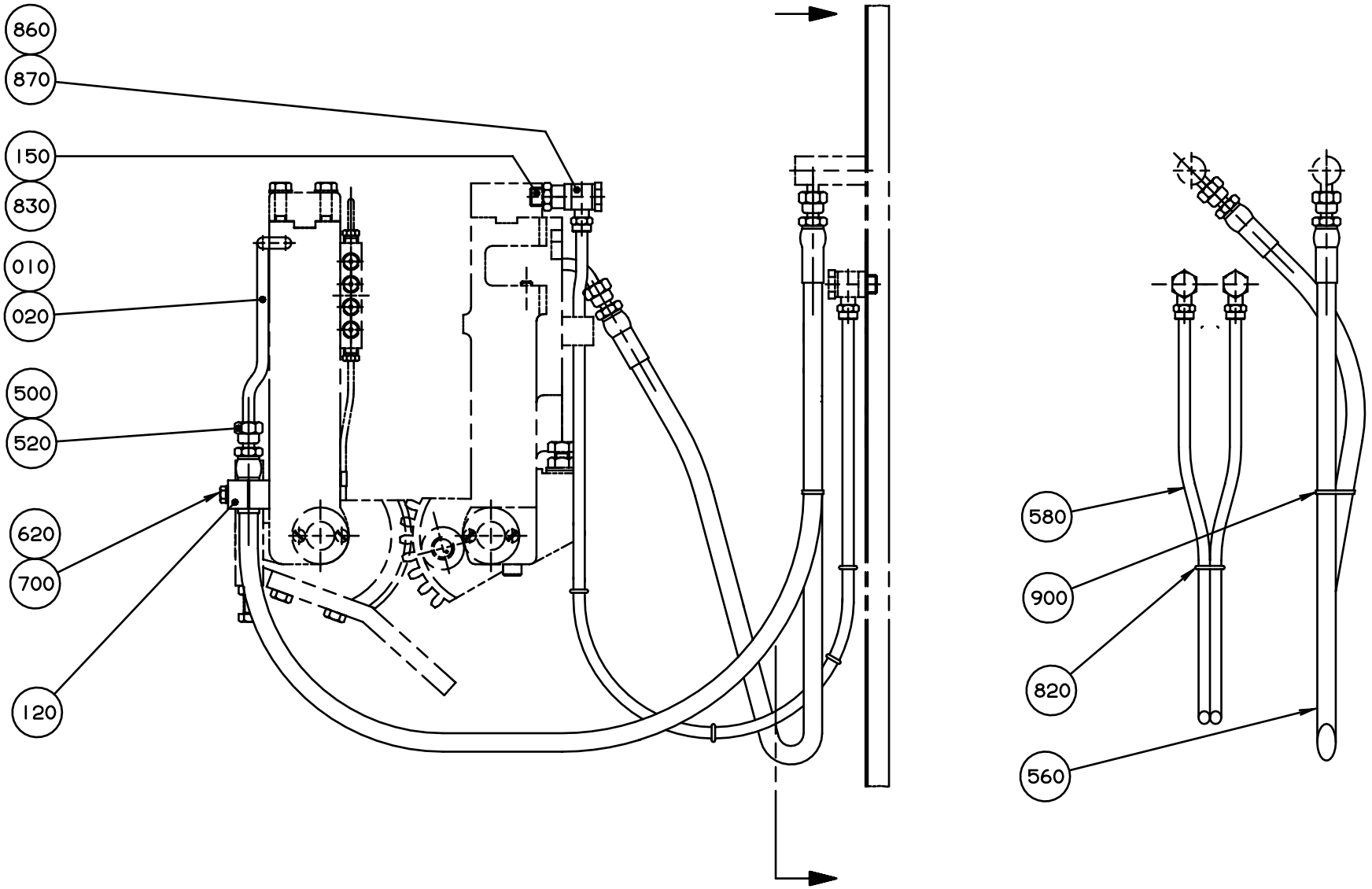

S-279134-5
ECN 11922

Pos	Part No	SP	UN	Qty	Description	Page No
-						
010	22488-0000	-		1	ELBOW PIPE	
020	22489-0000	-		1	ELBOW PIPE	
120	279103-0000	K		4	CONNECTION CLAMP	
150	464370-0000	K		4	SPACER	
500	90030-0098	K		8	ACCESSORIES,FERRULE 8	
520	90030-0172	K		8	NUT "REPBY 342703-208"	
560	90148-0040	K		4	HOSE	
580	90166-0123	-	MM	2900	HOSE	
620	312105-0378	-		4	SCREW O4017 M6X40A280	
700	315105-0153	-		8	WASHER BRB6,4X12RFR	
820	315202-0265	K		8	O-RING 12,3X2,4	
830	315233-0110	-		4	SEAL RING R1/4"	
860	342980-0122	-		4	BANJO-CONNECTION,RING 8/6-G1/4"	
870	342980-0304	-		4	BANJO-HOLLOW BOLT COUPL,EXT.THR.01-G1/4"	
900	352113-0101	F		2	RIBBON CLAMP	

Pos	Part No	SP	UN	Qty	Description	Page No

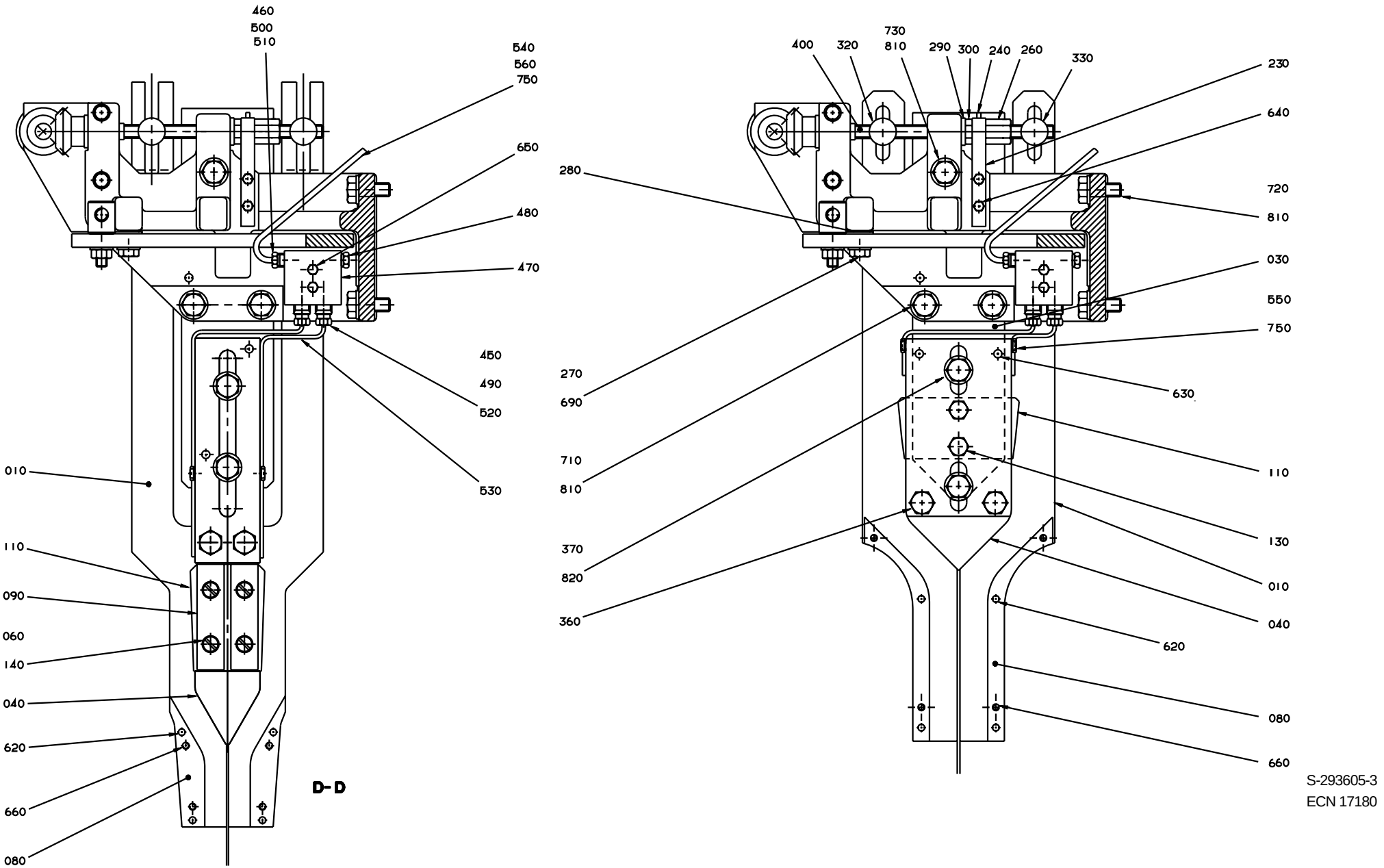

S-293605-3
ECN 17180

Pos	Part No	SP	UN	Qty	Description	Page No
0300B TPC						
010	252770-0000	D		4	RAIL BRACKET	
020	297999-0000	D		1	ADJUSTMENT PLATE	
030	252774-0000	D		2	FASTENING PLATE	
040	252775-0000	D		2	CURVE	
050	561545-0000	K		2	SHAFT	
060	38603-0002	D		8	SPACER	
070	561542-0000	K		2	SUPPORT ROLLER	
080	252776-0000	K		4	VOLUME CAM	
090	252780-0000	-		4	RULER	
100	450315-0000	-		1	HOLDER	
110	276189-0000	F		2	DAMPER	
120	312105-0370	-		2	SCREW M6S ISO 4017 M6X20 A280	
140	312145-0366	-		8	SLOTTED HEMFS6X12RFR	
180	252768-0000	-		1	CANTILEVER	
190	293606-0000	-		2	SHIFTER HANDLE	
340	252793-0000	-		2	SUPPORT	
390	293611-0000	-		2	SHAFT	
710	312105-0493	-		8	SCREW M6S ISO 4017 M10X25 A280	
720	312105-0495	-		8	SCREW M6S ISO 4017 M10X30 A280	
730	312105-0499	-		2	SCREW 4017 M10X40A280	
0355B IH						
010	552158-0000	D		4	RAIL BRACKET	
020	297998-0000	D		1	ADJUSTMENT PLATE	
030	434309-0000	D		2	FASTENING PLATE	
040	531002-0000	-		2	CURVE	
050	561547-0000	K		2	SHAFT	
060	38603-0002	D		8	SPACER	
070	561543-0000	K		2	SUPPORT ROLLER	
080	552159-0000	K		4	VOLUME CAM	
090	252780-0000	-		4	RULER	
100	529196-0000	-		1	HOLDER	
110	276189-0000	F		2	DAMPER	
120	312105-0370	-		2	SCREW M6S ISO 4017 M6X20 A280	
140	312145-0366	-		8	SLOTTED HEMFS6X12RFR	
180	252768-0000	-		1	CANTILEVER	
190	293606-0000	-		2	SHIFTER HANDLE	
340	252793-0000	-		2	SUPPORT	
390	293611-0000	-		2	SHAFT	
710	312105-0493	-		8	SCREW M6S ISO 4017 M10X25 A280	
720	312105-0495	-		8	SCREW M6S ISO 4017 M10X30 A280	
730	312105-0499	-		2	SCREW 4017 M10X40A280	
0375S IH						
010	522152-0000	D		4	RAIL BRACKET	
020	297999-0000	D		1	ADJUSTMENT PLATE	
030	440507-0000	D		2	FASTENING PLATE	
040	436502-0000	D		2	CURVE	
050	561545-0000	K		2	SHAFT	
060	38603-0002	D		8	SPACER	
070	571942-0000	K		2	SUPPORT ROLLER	
080	522153-0000	K		4	VOLUME CAM	
090	252780-0000	-		4	RULER	
100	449734-0000	-		1	HOLDER	
110	276189-0000	F		2	DAMPER	
120	312105-0370	-		2	SCREW M6S ISO 4017 M6X20 A280	
140	312145-0366	-		8	SLOTTED HEMFS6X12RFR	
180	252768-0000	-		1	CANTILEVER	
190	293606-0000	-		2	SHIFTER HANDLE	
340	252793-0000	-		2	SUPPORT	
390	293611-0000	-		2	SHAFT	
710	312105-0493	-		8	SCREW M6S ISO 4017 M10X25 A280	
720	312105-0495	-		8	SCREW M6S ISO 4017 M10X30 A280	
730	312105-0499	-		2	SCREW 4017 M10X40A280	
0400B IH						
010	552158-0000	D		4	RAIL BRACKET	
020	297998-0000	D		1	ADJUSTMENT PLATE	
030	252774-0000	D		2	FASTENING PLATE	
040	531002-0000	-		2	CURVE	
050	561547-0000	K		2	SHAFT	
060	38603-0002	D		8	SPACER	
070	561543-0000	K		2	SUPPORT ROLLER	
080	552159-0000	K		4	VOLUME CAM	
090	252780-0000	-		4	RULER	
100	928720-0000	-		1	HOLDER	
110	276189-0000	F		2	DAMPER	
120	312105-0370	-		2	SCREW M6S ISO 4017 M6X20 A280	
140	312145-0366	-		8	SLOTTED HEMFS6X12RFR	
180	252768-0000	-		1	CANTILEVER	
190	293606-0000	-		2	SHIFTER HANDLE	
340	252793-0000	-		2	SUPPORT	
390	293611-0000	-		2	SHAFT	
710	312105-0493	-		8	SCREW M6S ISO 4017 M10X25 A280	
720	312105-0495	-		8	SCREW M6S ISO 4017 M10X30 A280	
730	312105-0499	-		2	SCREW 4017 M10X40A280	

VOLUM CURVE PIECE

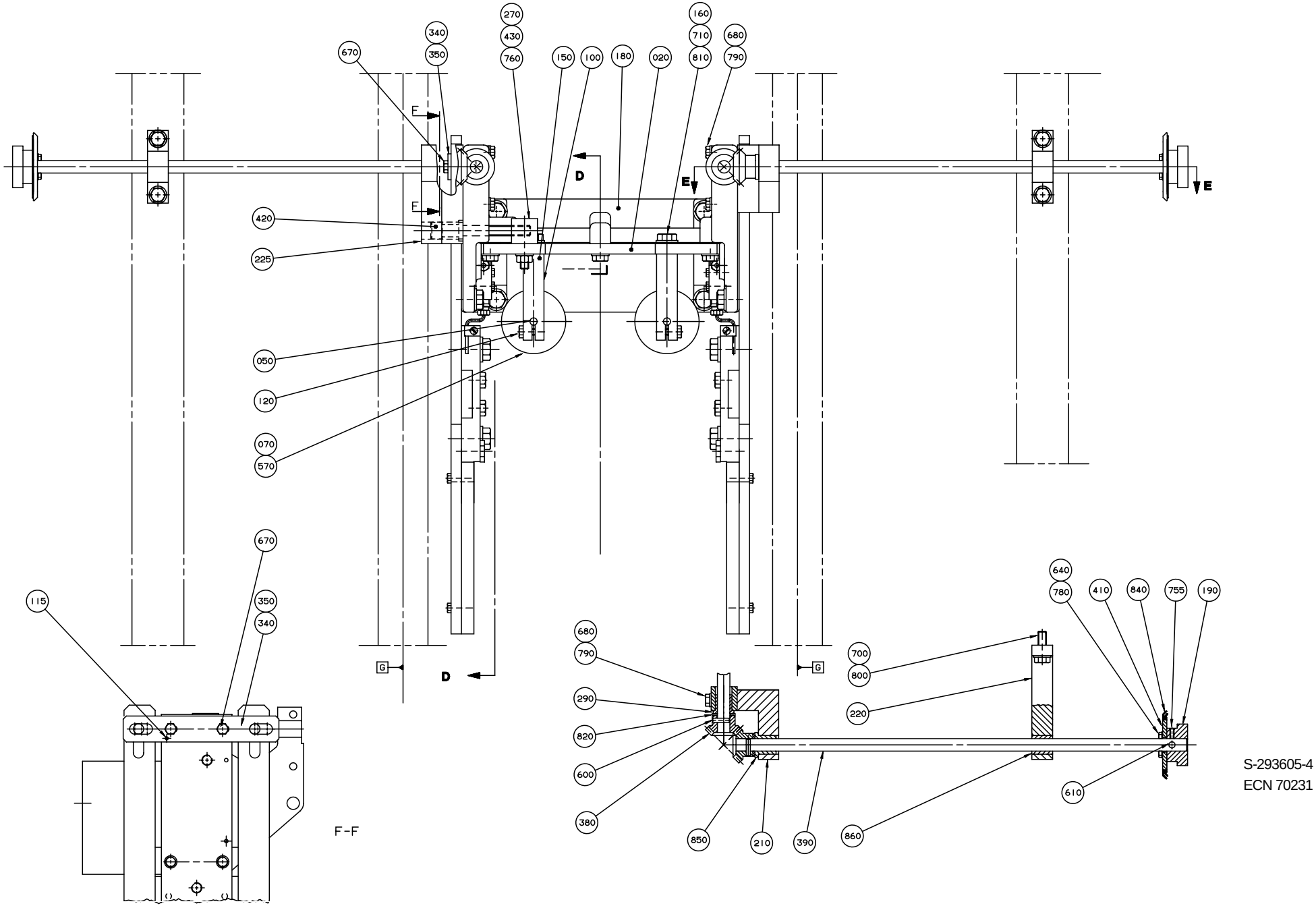

S-293605-4
ECN 70231

Pos	Part No	SP	UN	Qty	Description	Page No
0500B IH						
010	252770-0000	D		4	RAIL BRACKET	
020	297998-0000	D		1	ADJUSTMENT PLATE	
030	252774-0000	D		2	FASTENING PLATE	
040	252775-0000	D		2	CURVE	
050	561547-0000	K		2	SHAFT	
060	38603-0002	D		8	SPACER	
070	560122-0000	K		2	SUPPORT ROLLER	
080	252776-0000	K		4	VOLUME CAM	
090	252780-0000	-		4	RULER	
100	267327-0000	-		1	HOLDER	
110	276189-0000	F		2	DAMPER	
120	312105-0370	-		2	SCREW M6S ISO 4017 M6X20 A280	
140	312145-0366	-		8	SLOTTED HEMFS6X12RFR	
150	476877-0000	-		4	SPACER	
160	312105-0509	-		4	SCREW M6S ISO 4014 M10X90 A280	
180	252768-0000	-		1	CANTILEVER	
190	293606-0000	-		2	SHIFTER HANDLE	
340	252793-0000	-		2	SUPPORT	
390	293611-0000	-		2	SHAFT	
710	312105-0493	-		4	SCREW M6S ISO 4017 M10X25 A280	
720	312105-0495	-		8	SCREW M6S ISO 4017 M10X30 A280	
730	312105-0499	-		2	SCREW 4017 M10X40A280	
0500B TPC or 0568B TPC						
010	563205-0000	D		4	RAIL BRACKET	
020	297998-0000	D		1	ADJUSTMENT PLATE	
030	252774-0000	D		2	FASTENING PLATE	
040	252775-0000	D		2	CURVE	
050	561547-0000	K		2	SHAFT	
060	38603-0002	D		8	SPACER	
070	560122-0000	K		2	SUPPORT ROLLER	
080	252776-0000	K		4	VOLUME CAM	
090	252780-0000	-		4	RULER	
100	267327-0000	-		1	HOLDER	
110	276189-0000	F		2	DAMPER	
120	312105-0370	-		2	SCREW M6S ISO 4017 M6X20 A280	
140	312145-0366	-		8	SLOTTED HEMFS6X12RFR	
180	252768-0000	-		1	CANTILEVER	
190	293606-0000	-		2	SHIFTER HANDLE	
340	252793-0000	-		2	SUPPORT	
390	293611-0000	-		2	SHAFT	
710	312105-0493	-		8	SCREW M6S ISO 4017 M10X25 A280	
720	312105-0495	-		8	SCREW M6S ISO 4017 M10X30 A280	
730	312105-0499	-		2	SCREW 4017 M10X40A280	
0500S IH or 0500S TPC						
010	551281-0000	D		4	RAIL BRACKET	
020	297998-0000	D		1	ADJUSTMENT PLATE	
030	551282-0000	D		2	FASTENING PLATE	
040	551283-0000	D		2	CURVE	
050	561547-0000	K		2	SHAFT	
060	38603-0002	D		8	SPACER	
070	561543-0000	K		2	SUPPORT ROLLER	
080	551284-0000	K		4	VOLUME CAM	
090	252780-0000	-		4	RULER	
100	449926-0000	-		1	HOLDER	
110	276189-0000	F		2	DAMPER	
120	312105-0370	-		2	SCREW M6S ISO 4017 M6X20 A280	
140	312145-0366	-		8	SLOTTED HEMFS6X12RFR	
180	252768-0000	-		1	CANTILEVER	
190	293606-0000	-		2	SHIFTER HANDLE	
340	252793-0000	-		2	SUPPORT	
390	293611-0000	-		2	SHAFT	
710	312105-0493	-		8	SCREW M6S ISO 4017 M10X25 A280	
720	312105-0495	-		8	SCREW M6S ISO 4017 M10X30 A280	
730	312105-0499	-		2	SCREW 4017 M10X40A280	
0500SQ TPC or 0500SQ US						
010	252770-0000	D		4	RAIL BRACKET	
020	297998-0000	D		1	ADJUSTMENT PLATE	
030	252774-0000	D		2	FASTENING PLATE	
040	252775-0000	D		2	CURVE	
050	561547-0000	K		2	SHAFT	
070	573976-0000	K		2	SUPPORT ROLLER	
080	252776-0000	K		4	VOLUME CAM	
100	267327-0000	-		1	HOLDER	
110	276189-0000	F		2	DAMPER	
120	312105-0370	-		2	SCREW M6S ISO 4017 M6X20 A280	
140	312145-0366	-		8	SLOTTED HEMFS6X12RFR	
180	252768-0000	-		1	CANTILEVER	
190	293606-0000	-		2	SHIFTER HANDLE	
340	252793-0000	-		2	SUPPORT	
390	293611-0000	-		2	SHAFT	
710	312105-0493	-		8	SCREW M6S ISO 4017 M10X25 A280	
720	312105-0495	-		8	SCREW M6S ISO 4017 M10X30 A280	
730	312105-0499	-		2	SCREW 4017 M10X40A280	

VOLUM CURVE PIECE

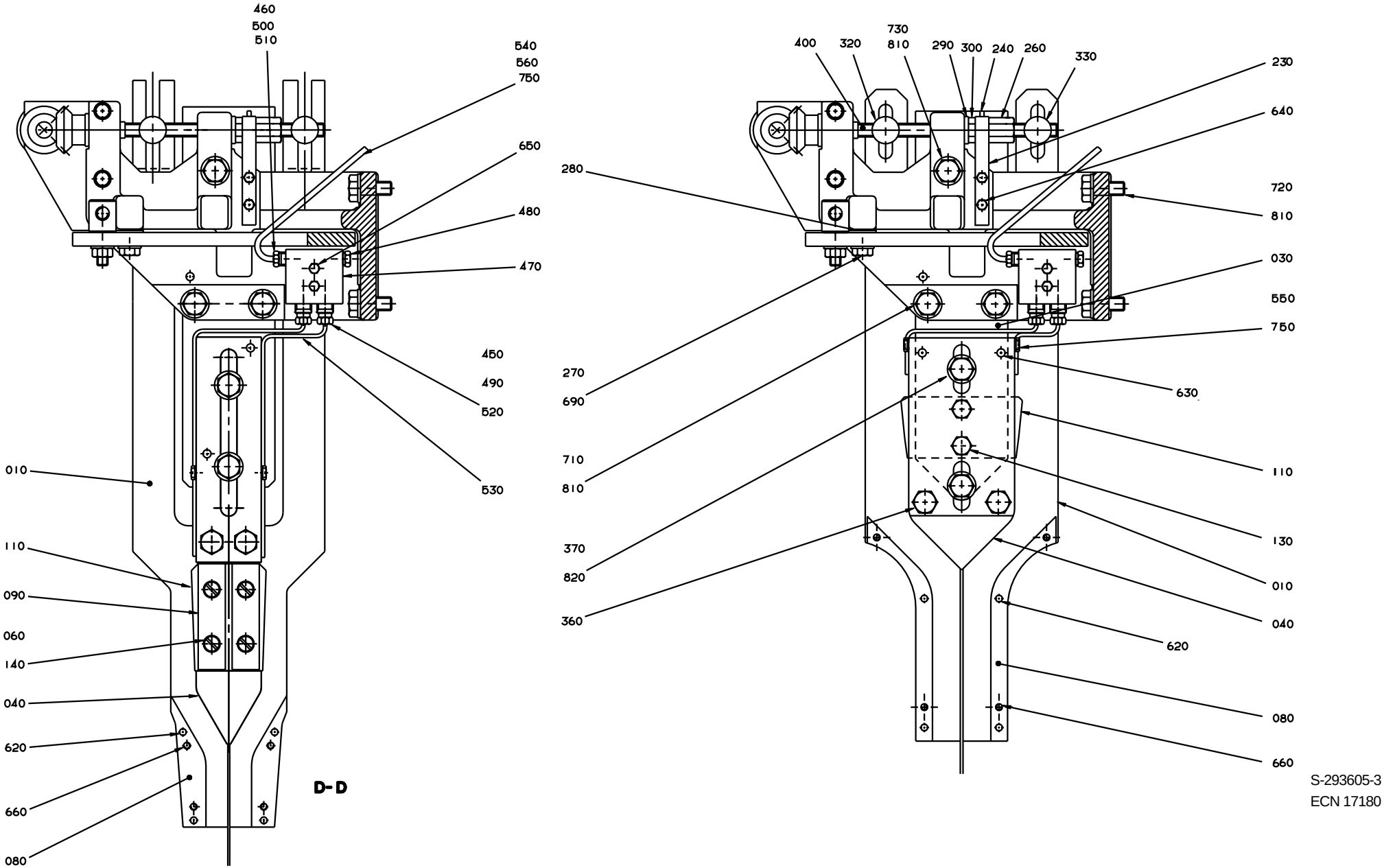

S-293605-3
ECN 17180

Pos	Part No	SP	UN	Qty	Description	Page No
0750B IH						
010	522152-0000	D		4	RAIL BRACKET	
020	297998-0000	D		1	ADJUSTMENT PLATE	
030	440507-0000	D		2	FASTENING PLATE	
040	550301-0000	D		2	CURVE	
050	561547-0000	K		2	SHAFT	
060	38603-0002	D		8	SPACER	
070	560122-0000	K		2	SUPPORT ROLLER	
080	522153-0000	K		4	VOLUME CAM	
090	252780-0000	-		4	RULER	
100	267327-0000	-		1	HOLDER	
110	276189-0000	F		2	DAMPER	
120	312105-0370	-		2	SCREW M6S ISO 4017 M6X20 A280	
140	312145-0366	-		8	SLOTTED HEMFS6X12RFR	
180	252768-0000	-		1	CANTILEVER	
190	293606-0000	-		2	SHIFTER HANDLE	
340	252793-0000	-		2	SUPPORT	
390	293611-0000	-		2	SHAFT	
710	312105-0493	-		8	SCREW M6S ISO 4017 M10X25 A280	
720	312105-0495	-		8	SCREW M6S ISO 4017 M10X30 A280	
730	312105-0499	-		2	SCREW 4017 M10X40A280	
0750S IH						
010	544342-0000	D		4	RAIL BRACKET	
020	297998-0000	D		1	ADJUSTMENT PLATE	
030	252773-0000	D		2	FASTENING PLATE	
040	533955-0000	D		2	CURVE	
050	561547-0000	K		2	SHAFT	
070	561544-0000	K		2	SUPPORT ROLLER	
080	565259-0000	K		4	VOLUME CAM	
100	544303-0000	-		1	HOLDER	
110	269792-0000	F		2	DAMPER	
120	312105-0372	-		2	SCREW M6S ISO 4017 M6X25 A280	
180	252768-0000	-		1	CANTILEVER	
190	293606-0000	-		2	SHIFTER HANDLE	
340	252793-0000	-		2	SUPPORT	
390	293611-0000	-		2	SHAFT	
710	312105-0493	-		8	SCREW M6S ISO 4017 M10X25 A280	
720	312105-0495	-		8	SCREW M6S ISO 4017 M10X30 A280	
730	312105-0499	-		2	SCREW 4017 M10X40A280	
Common parts						
210	293608-0000	-		1	BEARING CONSOLE	
220	293609-0000	-		2	BEARING CONSOLE	
225	434020-0000	-		1	BEARING CONSOLE	
230	37070-0000	-		2	SPRING	
240	37071-0000	-		2	WASHER	
260	252785-0000	-		2	SCREW	
270	252786-0000	-		4	WASHER	
280	252787-0000	-		3	BUSHING	
290	252788-0000	-		4	BUSHING	
300	252789-0000	-		2	NUT	
320	252791-0000	-		2	NUT	
330	252792-0000	-		2	NUT	
350	252794-0000	F		2	LACE	
360	252930-0000	-		4	SPACER SCREW	
370	268195-0000	-		4	SCREW	
380	293610-0000	-		4	GEAR WHEEL	
400	293612-0000	-		2	SCREW	
410	294042-0000	-		2	SEALING WASHER	
420	434021-0000	-		1	SCREW	
430	434073-0000	-		1	NUT	
450	90028-0020	-		4	CONE	
460	90028-0021	-		2	CONE	
470	90032-0038	-		2	BLOCK	
480	90087-0019	-		2	PLUG	
490	90092-0053	K		4	VALVE	
500	90134-0031	-		2	SLEEVE	
510	90134-0038	-		2	BUSHING	
520	90134-0039	-		4	BUSHING	
530	90266-0019	-	MM	800	PIPE	
540	90165-0056	-		2	CLIP	
550	90165-0058	-		4	CLAMP	
560	90166-0109	-	MM	700	HOSE	
570	90240-0180	-		4	FLANGE BUSHING	
600	311103-0272	-		4	CYLINDRICACP M6 4X20 RFR	
610	311103-0276	-		2	CYLINDRICACP M6 4X30 RFR	
620	311103-0310	-		8	CYLINDRICACP M6 5X20 RFR	
630	311103-0357	-		12	CYLINDRICACP M6 6X30 RFR	
640	312105-0291	-		12	SCREW M6S ISO 4017 M4X12 A280	
650	312105-0295	-		4	SCREW M6S ISO 4017 M4X20 A280	
660	312105-0331	-		8	SCREW M6S ISO 4017 M5X20 A280	
670	312105-0366	-		4	SCREW M6S ISO 4017 M6X12 A280	
680	312105-0376	-		4	SCREW M6S ISO 4017 M6X35 A280	
690	312105-0452	-		3	SCREW M6S8X22RFR	
700	312105-0453	-		4	SCREW M6S ISO 4017 M8X25 A280	
750	312125-0287	-		4	SLOTTED CHEESE HEAD ISO 1207 M4X8	
RFR						

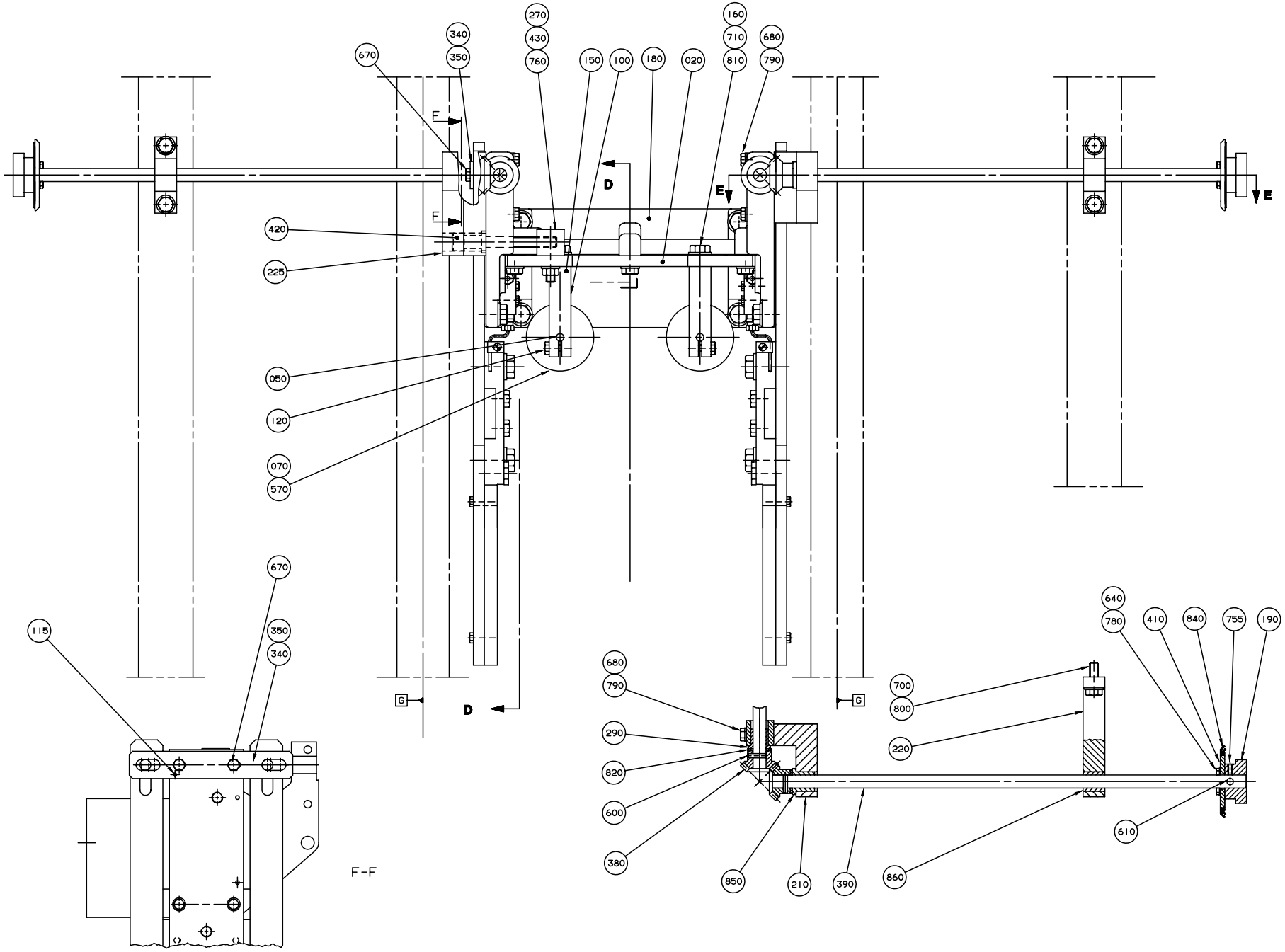

S-293605-4
ECN 70231

Pos	Part No	SP	UN	Qty	Description	Page No
755	312318-0289	-		2	SET SCREW CUP POINT ISO 4029 M4X10	
RFR						
760	312605-0318	-		1	NUT M6M8RFR	
780	315105-0136	-		8	WASHER BRB4,3X8RFR	
790	315105-0153	-		4	WASHER BRB6,4X12RFR	
800	315105-0165	-		4	WASHER BRB8,4X16RFR	
810	315105-0173	-		14	WASHER BRB10,5X22RFR	
820	315105-0176	-		8	WASHER BRB12X22RFR	
840	315226-0196	-		2	SEAL RING RB48X65X4,5	
850	321111-0163	-		2	FLANGE BUS 12E7X20	
860	321116-0163	-		2	BUSHING 12E7/18X20	
1000B HIFIN IH or 1055B IH						
010	531110-0000	D		4	RAIL BRACKET	
020	297998-0000	D		1	ADJUSTMENT PLATE	
030	279621-0000	D		2	FASTENING PLATE	
040	533955-0000	D		2	CURVE	
050	561547-0000	K		2	SHAFT	
070	560122-0000	K		2	SUPPORT ROLLER	
080	531109-0000	K		4	VOLUME CAM	
100	284124-0000	-		1	HOLDER	
110	269792-0000	F		2	DAMPER	
120	312105-0370	-		2	SCREW M6S ISO 4017 M6X20 A280	
130	312105-0449	-		4	SCREW M6S ISO 4017 M8X16 A280	
180	252768-0000	-		1	CANTILEVER	
190	293606-0000	-		2	SHIFTER HANDLE	
340	252793-0000	-		2	SUPPORT	
390	293611-0000	-		2	SHAFT	
710	312105-0493	-		8	SCREW M6S ISO 4017 M10X25 A280	
720	312105-0495	-		8	SCREW M6S ISO 4017 M10X30 A280	
730	312105-0499	-		2	SCREW 4017 M10X40A280	
1000B HIFIN TPC or 1000B LOFIN IH or 1000B LOFIN TPC						
010	544342-0000	D		4	RAIL BRACKET	
020	297998-0000	D		1	ADJUSTMENT PLATE	
030	252773-0000	D		2	FASTENING PLATE	
040	533955-0000	D		2	CURVE	
050	561547-0000	K		2	SHAFT	
070	560122-0000	K		2	SUPPORT ROLLER	
080	531109-0000	K		4	VOLUME CAM	
100	267676-0000	-		1	HOLDER	
110	269792-0000	F		2	DAMPER	
120	312105-0370	-		2	SCREW M6S ISO 4017 M6X20 A280	
130	312105-0449	-		4	SCREW M6S ISO 4017 M8X16 A280	
180	252768-0000	-		1	CANTILEVER	
190	293606-0000	-		2	SHIFTER HANDLE	
340	252793-0000	-		2	SUPPORT	
390	293611-0000	-		2	SHAFT	
710	312105-0493	-		8	SCREW M6S ISO 4017 M10X25 A280	
720	312105-0495	-		8	SCREW M6S ISO 4017 M10X30 A280	
730	312105-0499	-		2	SCREW 4017 M10X40A280	
1000S IH or 1000S TPC						
010	531110-0000	D		4	RAIL BRACKET	
020	297998-0000	D		1	ADJUSTMENT PLATE	
030	279621-0000	D		2	FASTENING PLATE	
040	533955-0000	D		2	CURVE	
050	561547-0000	K		2	SHAFT	
070	569058-0000	K		2	SUPPORT ROLLER	
080	551626-0000	K		4	VOLUME CAM	
100	284124-0000	-		1	HOLDER	
110	269792-0000	F		2	DAMPER	
120	312105-0370	-		2	SCREW M6S ISO 4017 M6X20 A280	
130	312105-0449	-		4	SCREW M6S ISO 4017 M8X16 A280	
180	252768-0000	-		1	CANTILEVER	
190	293606-0000	-		2	SHIFTER HANDLE	
340	252793-0000	-		2	SUPPORT	
390	293611-0000	-		2	SHAFT	
710	312105-0493	-		8	SCREW M6S ISO 4017 M10X25 A280	
720	312105-0495	-		8	SCREW M6S ISO 4017 M10X30 A280	
730	312105-0499	-		2	SCREW 4017 M10X40A280	

VOLUM CURVE PIECE

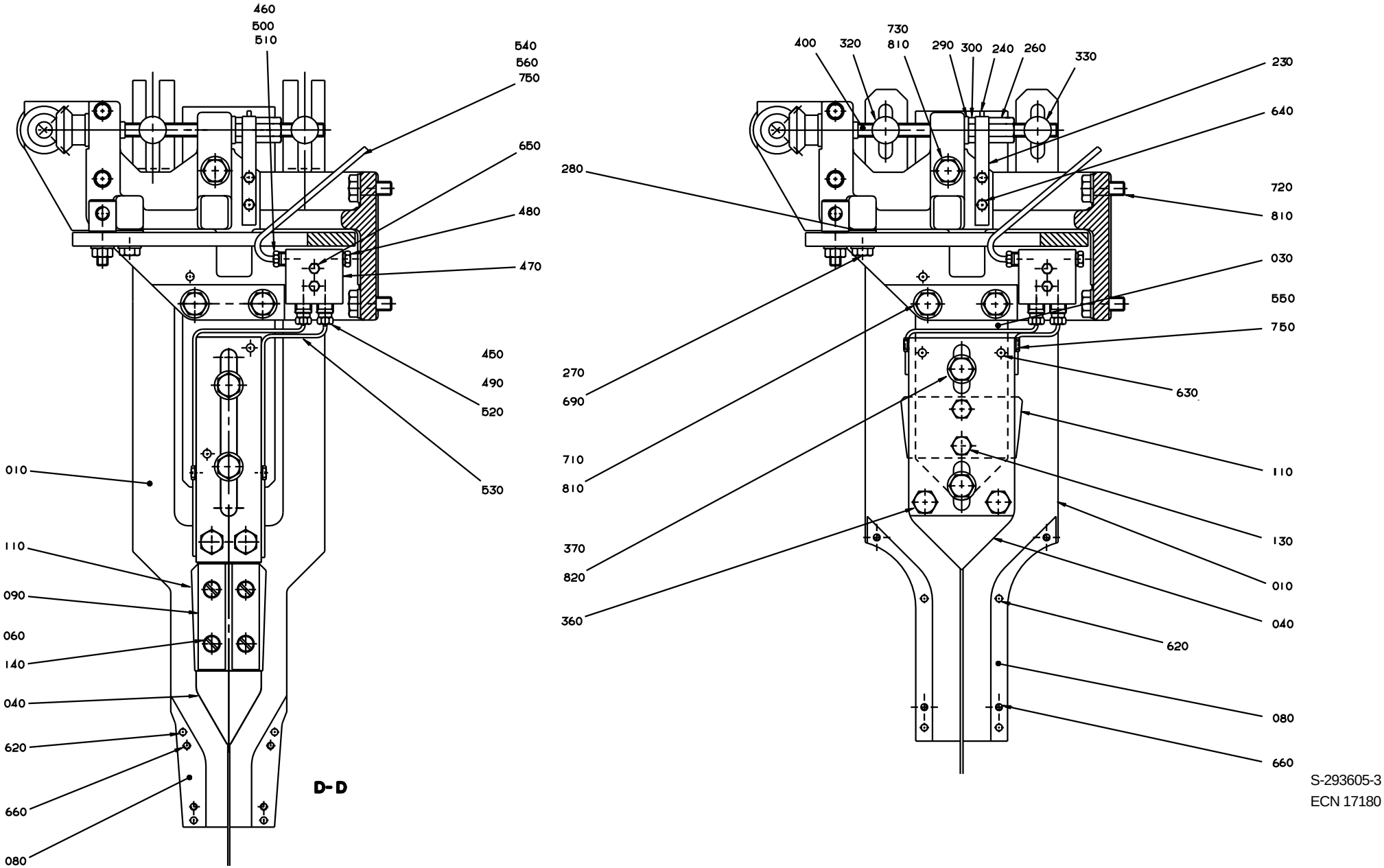

S-293605-3
ECN 17180

Pos	Part No	SP	UN	Qty	Description	Page No
1000SQ IH						
010	544342-0000	D		4	RAIL BRACKET	
020	297998-0000	D		1	ADJUSTMENT PLATE	
030	279621-0000	D		2	FASTENING PLATE	
040	579645-0000	D		2	CURVE	
050	561547-0000	K		2	SHAFT	
070	573976-0000	K		2	SUPPORT ROLLER	
080	551626-0000	K		4	VOLUME CAM	
100	284124-0000	-		1	HOLDER	
110	574130-0000	F		2	DAMPER	
120	312105-0370	-		2	SCREW M6S ISO 4017 M6X20 A280	
130	312105-0449	-		4	SCREW M6S ISO 4017 M8X16 A280	
180	252768-0000	-		1	CANTILEVER	
190	293606-0000	-		2	SHIFTER HANDLE	
340	252793-0000	-		2	SUPPORT	
390	293611-0000	-		2	SHAFT	
710	312105-0493	-		8	SCREW M6S ISO 4017 M10X25 A280	
720	312105-0495	-		8	SCREW M6S ISO 4017 M10X30 A280	
730	312105-0499	-		2	SCREW 4017 M10X40A280	
1000SQ TPC						
010	531110-0000	D		4	RAIL BRACKET	
020	297998-0000	D		1	ADJUSTMENT PLATE	
030	279621-0000	D		2	FASTENING PLATE	
040	574129-0000	D		2	CURVE	
050	561547-0000	K		2	SHAFT	
070	573976-0000	K		2	SUPPORT ROLLER	
080	551626-0000	K		4	VOLUME CAM	
100	284124-0000	-		1	HOLDER	
110	574130-0000	F		2	DAMPER	
120	312105-0370	-		2	SCREW M6S ISO 4017 M6X20 A280	
130	312105-0449	-		4	SCREW M6S ISO 4017 M8X16 A280	
180	252768-0000	-		1	CANTILEVER	
190	293606-0000	-		2	SHIFTER HANDLE	
340	252793-0000	-		2	SUPPORT	
390	293611-0000	-		2	SHAFT	
710	312105-0493	-		8	SCREW M6S ISO 4017 M10X25 A280	
720	312105-0495	-		8	SCREW M6S ISO 4017 M10X30 A280	
730	312105-0499	-		2	SCREW 4017 M10X40A280	
1000SQ US						
010	531110-0000	D		4	RAIL BRACKET	
020	297998-0000	D		1	ADJUSTMENT PLATE	
030	279621-0000	D		2	FASTENING PLATE	
040	574129-0000	D		2	CURVE	
050	561547-0000	K		2	SHAFT	
070	573976-0000	K		2	SUPPORT ROLLER	
080	551626-0000	K		4	VOLUME CAM	
100	284124-0000	-		1	HOLDER	
110	574130-0000	F		2	DAMPER	
115	311112-0204	-		2	SLOTTED TURP 3X8 RFR	
120	312105-0370	-		2	SCREW M6S ISO 4017 M6X20 A280	
130	312105-0449	-		4	SCREW M6S ISO 4017 M8X16 A280	
180	252768-0000	-		1	CANTILEVER	
190	293606-0000	-		2	SHIFTER HANDLE	
340	591086-0000	-		2	SUPPORT	
390	293611-0000	-		2	SHAFT	
710	312105-0493	-		8	SCREW M6S ISO 4017 M10X25 A280	
720	312105-0495	-		8	SCREW M6S ISO 4017 M10X30 A280	
730	312105-0499	-		2	SCREW 4017 M10X40A280	
1136B TPC						
010	531110-0000	D		4	RAIL BRACKET	
020	297998-0000	D		1	ADJUSTMENT PLATE	
030	279621-0000	D		2	FASTENING PLATE	
040	533955-0000	D		2	CURVE	
050	561547-0000	K		2	SHAFT	
070	560122-0000	K		2	SUPPORT ROLLER	
080	551626-0000	K		4	VOLUME CAM	
100	284124-0000	-		1	HOLDER	
110	269792-0000	F		2	DAMPER	
120	312105-0370	-		2	SCREW M6S ISO 4017 M6X20 A280	
130	312105-0449	-		4	SCREW M6S ISO 4017 M8X16 A280	
180	252768-0000	-		1	CANTILEVER	
190	293606-0000	-		2	SHIFTER HANDLE	
340	252793-0000	-		2	SUPPORT	
390	293611-0000	-		2	SHAFT	
710	312105-0493	-		8	SCREW M6S ISO 4017 M10X25 A280	
720	312105-0495	-		8	SCREW M6S ISO 4017 M10X30 A280	
730	312105-0499	-		2	SCREW 4017 M10X40A280	

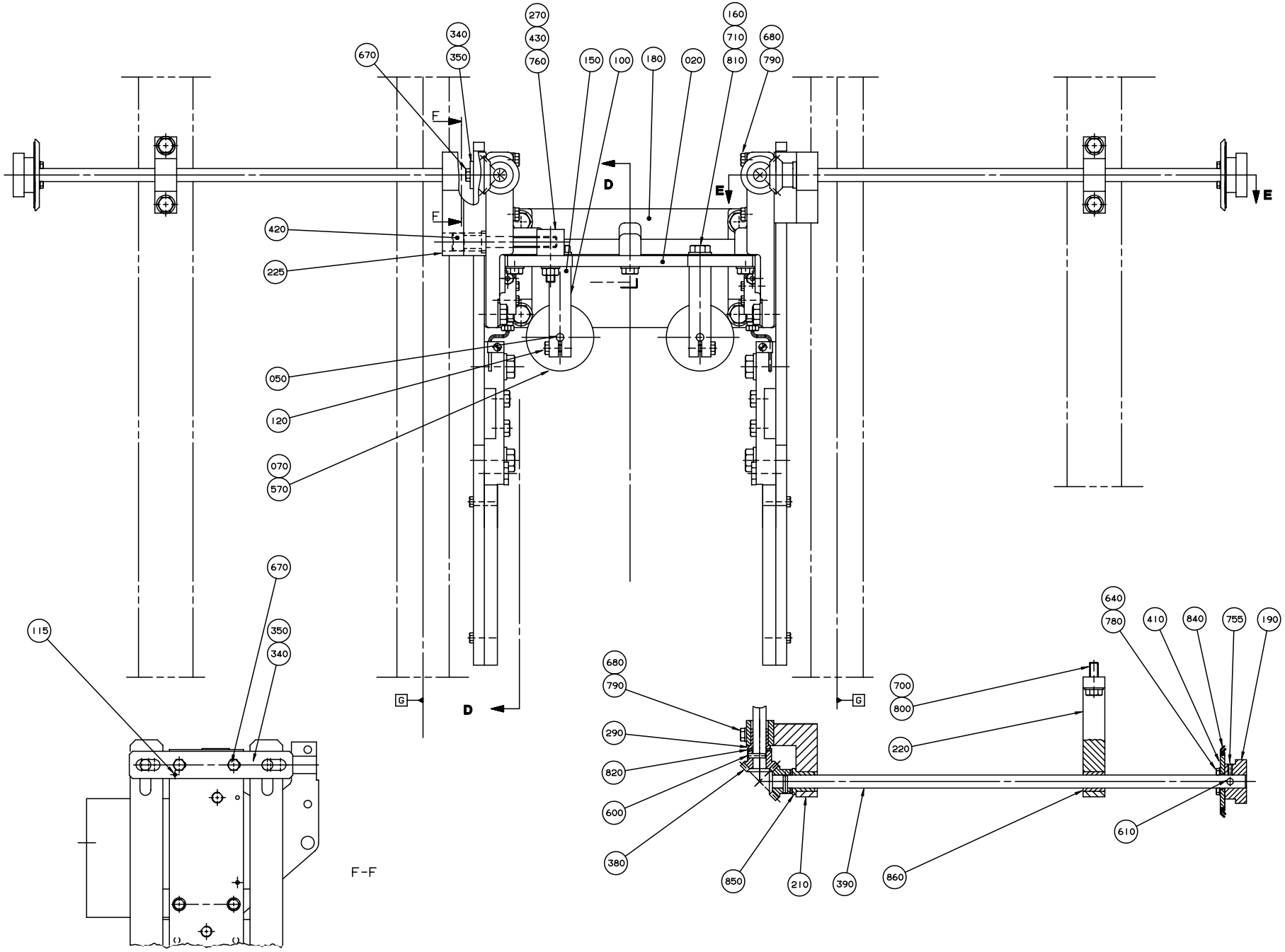

S-293605-4
ECN 70231

Pos	Part No	SP	UN	Qty	Description	Page No
1500B US						
010	581823-0000	D		4	RAIL BRACKET	
020	297998-0000	D		1	ADJUSTMENT PLATE	
030	279621-0000	D		2	FASTENING PLATE	
040	595209-0000	D		2	CURVE	
050	561547-0000	K		2	SHAFT	
070	593585-0000	K		2	SUPPORT ROLLER	
080	593279-0000	K		4	VOLUME CAM	
100	284124-0000	-		1	HOLDER	
110	581826-0000	F		2	DAMPER	
115	311112-0204	-		2	SLOTTED TURP 3X8 RFR	
120	312105-0370	-		2	SCREW M6S ISO 4017 M6X20 A280	
130	312105-0449	-		4	SCREW M6S ISO 4017 M8X16 A280	
180	581807-0000	-		1	CANTILEVER	
185	581814-0000	-		2	SPACER	
190	293606-0000	-		1	SHIFTER HANDLE	
195	598975-0000	-		1	SHIFTER HANDLE	
340	591086-0000	-		2	SUPPORT	
390	598976-0000	-		1	SHAFT	
710	312105-0493	-		8	SCREW M6S ISO 4017 M10X25 A280	
720	312105-0495	-		6	SCREW M6S ISO 4017 M10X30 A280	
730	312105-0499	-		4	SCREW 4017 M10X40A280	

Pos	Part No	SP	UN	Qty	Description	Page No

PRESSURE JAW

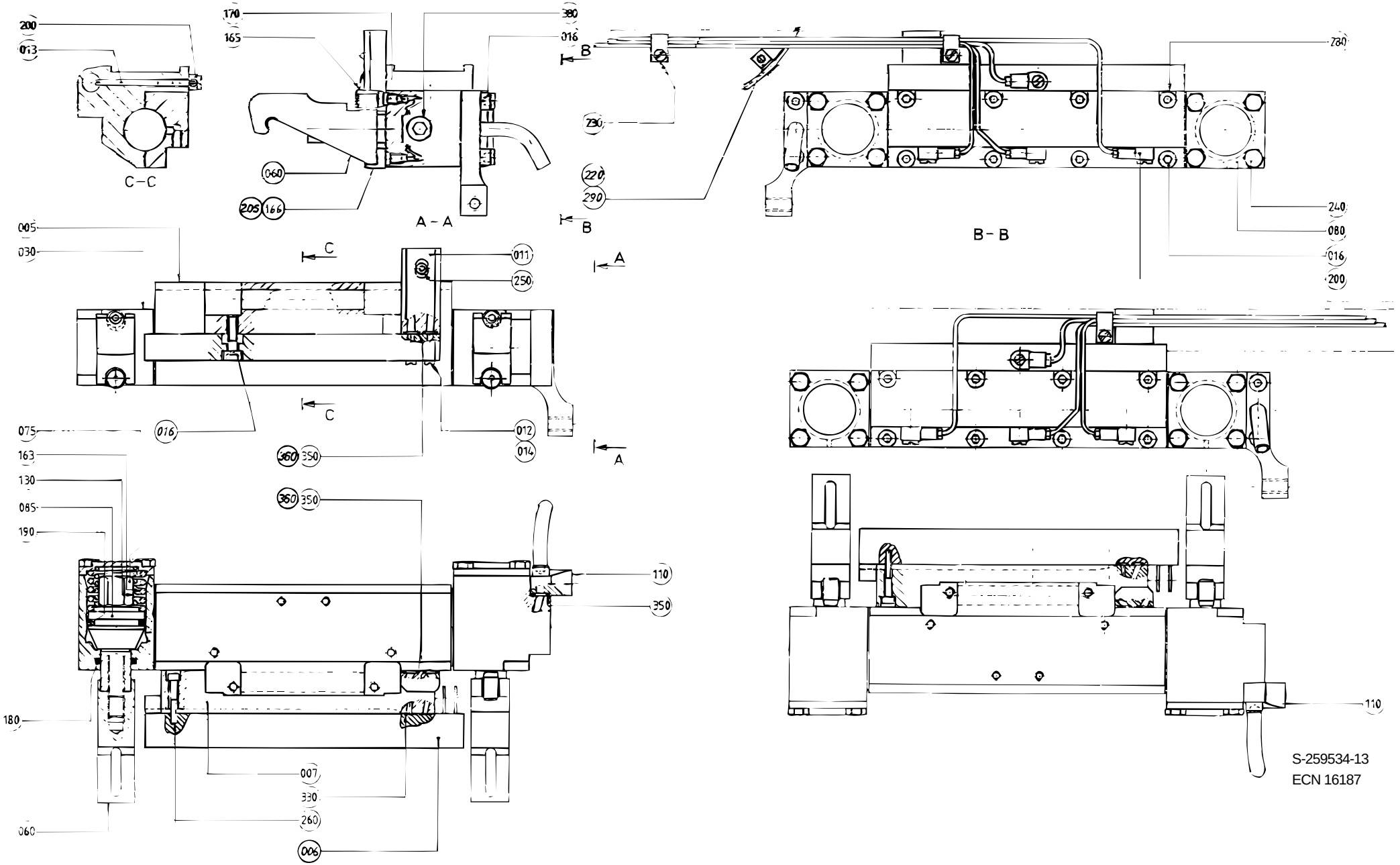

S-259534-13
ECN 16187

Pos	Part No	SP	UN	Qty	Description	Page No
TBO/8 1000B						
005	458019-0000	K		1	BEARING HOUSING	
006	B 927493-0000	F		1	INDUCTOR	
007	445950-0000	K		1	RAIL	
011	566526-0000	D		1	CLUTCH PIECE	
012	292037-0000	F		2	SCREW	
013	1296982-0000	R		1	SCREW	
014	90157-0021	-	KG	x	LOCKING FLUID	
016-02	312115-0370	F		8	SCREW MC6S ISO 4762 M6X20 A280	
0300B or 0355B or 0375S or 0400B or 0500S						
005	466395-0000	K		1	BEARING HOUSING	
006	B 568983-0000	F		1	INDUCTOR	
007	445950-0000	K		1	RAIL	
011	566526-0000	D		1	CLUTCH PIECE	
012	292037-0000	F		2	SCREW	
013	1296886-0000	R		1	SCREW	
014	90157-0021	-	KG	x	LOCKING FLUID	
016-02	312115-0370	F		8	SCREW MC6S ISO 4762 M6X20 A280	
0500B or 0568B or 0750B or 1055B or TB/8 1000B LOFIN or TBA/8 1000B LOFIN						
005	458019-0000	K		1	BEARING HOUSING	
006	B 573625-0000	F		1	INDUCTOR	
007	445950-0000	K		1	RAIL	
011	566526-0000	D		1	CLUTCH PIECE	
012	292037-0000	F		2	SCREW	
013	1296982-0000	R		1	SCREW	
014	90157-0021	-	KG	x	LOCKING FLUID	
016-02	312115-0370	F		8	SCREW MC6S ISO 4762 M6X20 A280	
0750S						
005	544278-0000	K		1	BEARING HOUSING	
006	B 568983-0000	F		1	INDUCTOR	
007	445950-0000	K		1	RAIL	
011	566526-0000	D		1	CLUTCH PIECE	
012	292037-0000	F		2	SCREW	
013	1296885-0000	R		1	SCREW	
014	90157-0021	-	KG	x	LOCKING FLUID	
016-02	312115-0370	F		8	SCREW MC6S ISO 4762 M6X20 A280	
1000S						
005	569053-0000	K		1	BEARING HOUSING	
006	B 568983-0000	F		1	INDUCTOR	
007	445950-0000	K		1	RAIL	
011	566526-0000	D		1	CLUTCH PIECE	
012	292037-0000	F		2	SCREW	
013	1296884-0000	R		1	SCREW	
014	90157-0021	-	KG	x	LOCKING FLUID	
016-02	312115-0370	F		8	SCREW MC6S ISO 4762 M6X20 A280	
1000SQ						
005	579773-0000	K		1	BEARING HOUSING	
006	B 927495-0000	F		1	INDUCTOR	
007	579898-0000	K		1	RAIL	
011	566526-0000	D		1	CLUTCH PIECE	
012	292037-0000	F		2	SCREW	
013	1296981-0000	R		1	SCREW	
014	90157-0021	-	KG	x	LOCKING FLUID	
016-02	312115-0370	F		8	SCREW MC6S ISO 4762 M6X20 A280	
TB/8 1000B HIFIN or TBA/8 1000B HIFIN						
005	497583-0000	K		1	HOUSING	
006	B 573625-0000	F		1	INDUCTOR	
007	284581-0000	K		1	RAIL	
011	566527-0000	D		1	CLUTCH PIECE	
013	1296982-0000	R		1	SCREW	
016	312115-0370	F		6	SCREW MC6S ISO 4762 M6X20 A280	
017	312115-0374	F		2	SCREW MC6S ISO O4762 M6X30 A280	

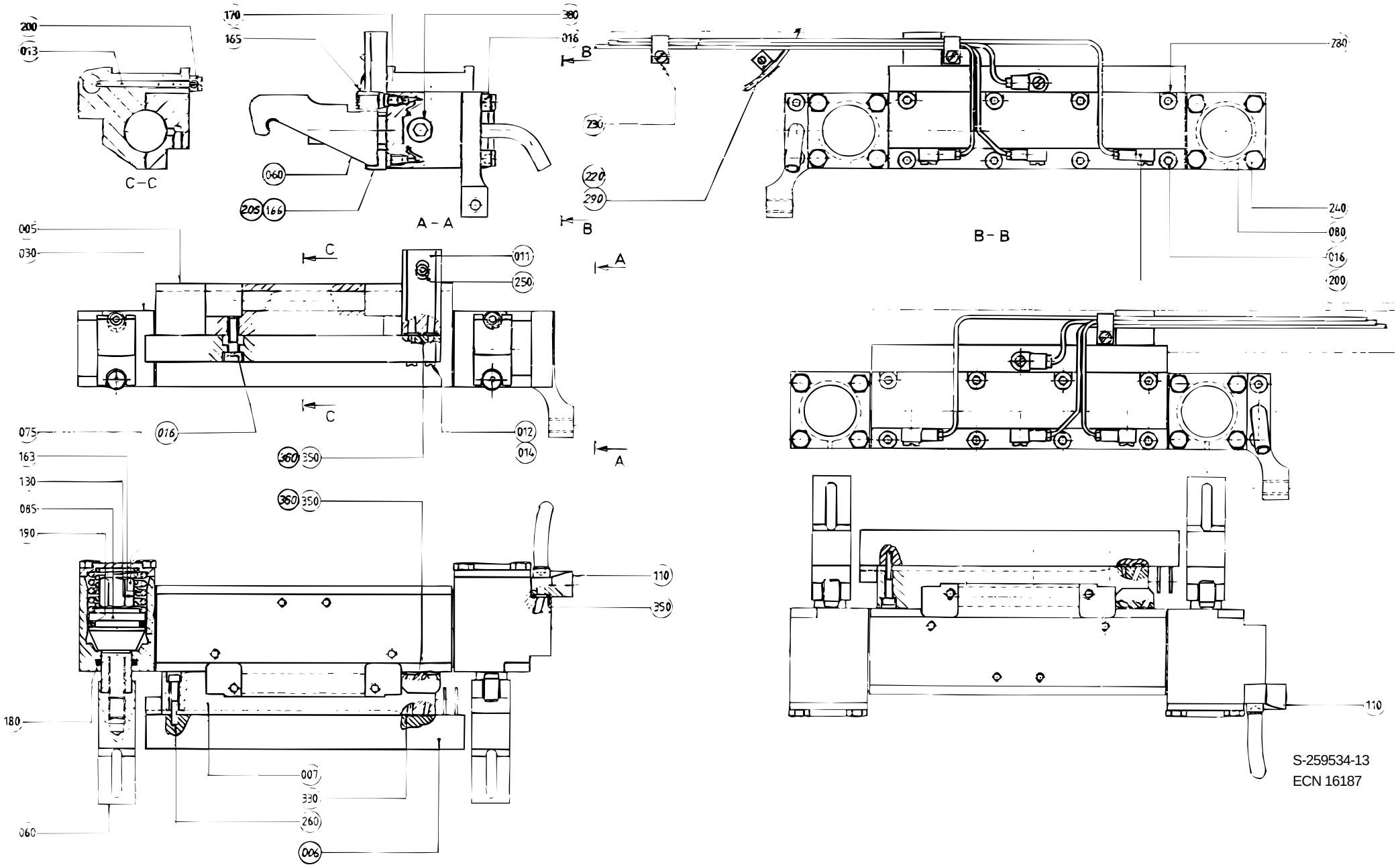

S-259534-13
ECN 16187

Pos	Part No	SP	UN	Qty	Description	Page No
Common parts						
030	440565-0000	K		1	CYLINDER	
060	541697-0000	K		2	CATCH	
075	553851-0000	F		2	SCREW	
080	284833-0000	D		2	LID	
085	292367-0000	K		2	PISTON	
110	246494-0000	F		1	ATTACHMENT	
130	479744-0000	F		2	COMPRESSION SPRING	
163	479743-0000	F		2	COMPRESSION SPRING	
165	440491-0000	F		2	NIPPLE	
166	497040-0000	F		2	STEERING	
170	90090-0013	K		2	STEEL BALL	
180	90091-0078	F		2	SEAL	
190	90091-0079	F		2	SEAL	
200	90134-0058	-		4	BANJO CONNECTION	
205	90157-0016	-	ML	x	LOCKING FLUID	
220	90165-0058	-		1	CLAMP	
230	316810-0106	-		2	PIPE CLAMP 8MM RFR	
240	312105-0372	-		8	SCREW M6S ISO 4017 M6X25 A280	
250	312115-0295	-		1	SCREW MC6S ISO 4762 M4X20 A280	
260	312115-0297	F		4	SCREW MC6S ISO 4762 M4X25 A280	
280	312115-0372	F		4	SCREW MC6S ISO 4762 M6X25 A280	
290	312125-0285	-		3	SLOTTED HEMCS4X6RFR	
330	315202-0101	F		2	O-RING 3,1X1,6	
350	315202-0104	F		1	O-RING 6,1X1,6	
360	315202-0203	F		4	O-RING 4,3X2,4	
380	342713-0209	-		1	PLUG,EXT.G-THREAD,HEXAGON SOCKET	
G1/8"						

Pos	Part No	SP	UN	Qty	Description	Page No

PRESSURE JAW

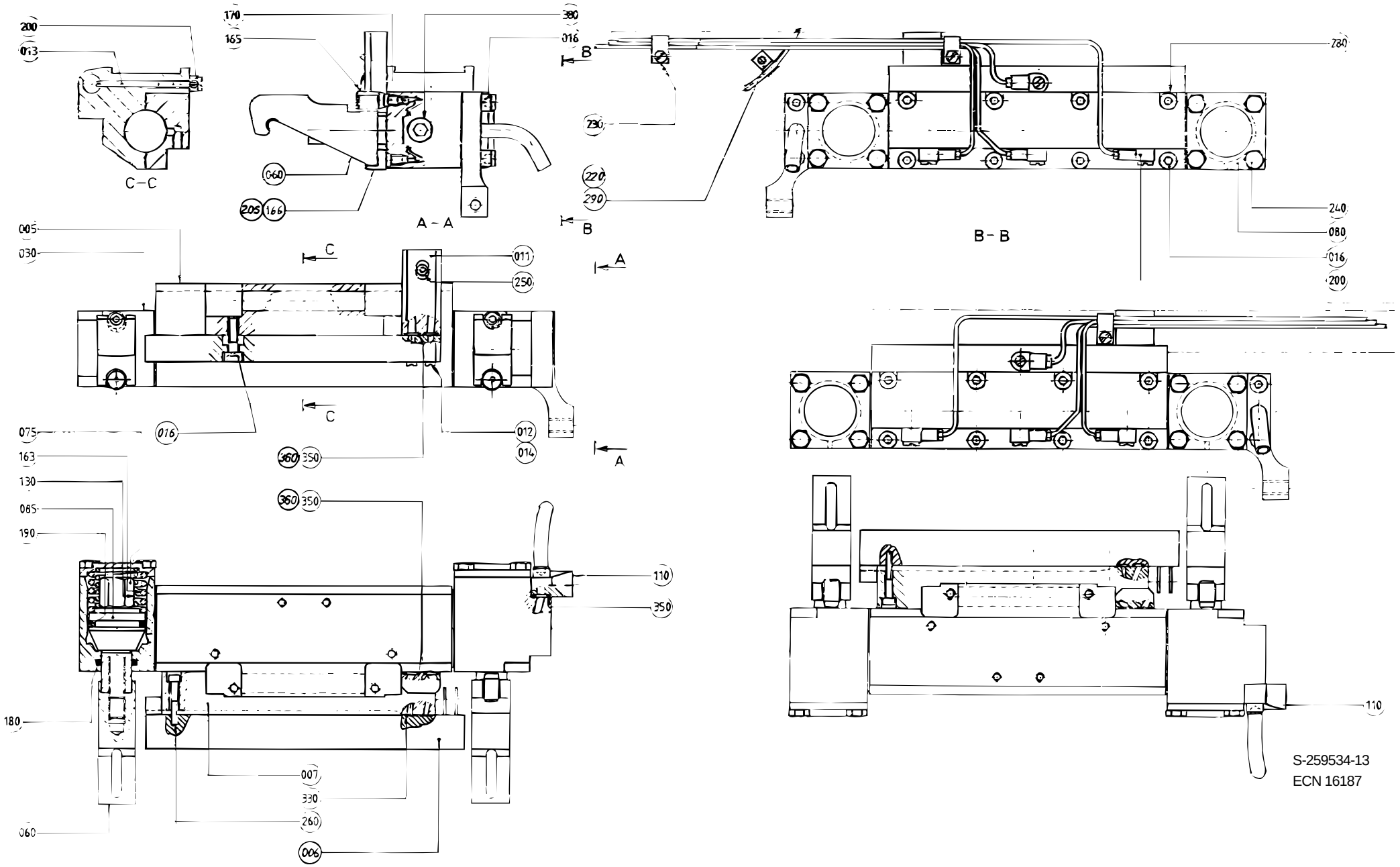

S-259534-13
ECN 16187

Pos	Part No	SP	UN	Qty	Description	Page No
TBO/8 1000B						
005	458019-0000	K		1	BEARING HOUSING	
006	B 927493-0000	F		1	INDUCTOR	
007	445950-0000	K		1	RAIL	
011	566526-0000	D		1	CLUTCH PIECE	
012	292037-0000	F		2	SCREW	
013	1296982-0000	R		1	SCREW	
014	90157-0021	-	KG	x	LOCKING FLUID	
016-02	312115-0370	F		8	SCREW MC6S ISO 4762 M6X20 A280	
0300B or 0355B or 0375S or 0400B or 0500S						
005	466395-0000	K		1	BEARING HOUSING	
006	B 568983-0000	F		1	INDUCTOR	
007	445950-0000	K		1	RAIL	
011	566526-0000	D		1	CLUTCH PIECE	
012	292037-0000	F		2	SCREW	
013	1296886-0000	R		1	SCREW	
014	90157-0021	-	KG	x	LOCKING FLUID	
016-02	312115-0370	F		8	SCREW MC6S ISO 4762 M6X20 A280	
0500B or 0568B or 0750B or 1055B or TB/8 1000B LOFIN or TBA/8 1000B LOFIN						
005	458019-0000	K		1	BEARING HOUSING	
006	B 573625-0000	F		1	INDUCTOR	
007	445950-0000	K		1	RAIL	
011	566526-0000	D		1	CLUTCH PIECE	
012	292037-0000	F		2	SCREW	
013	1296982-0000	R		1	SCREW	
014	90157-0021	-	KG	x	LOCKING FLUID	
016-02	312115-0370	F		8	SCREW MC6S ISO 4762 M6X20 A280	
0750S						
005	544278-0000	K		1	BEARING HOUSING	
006	B 568983-0000	F		1	INDUCTOR	
007	445950-0000	K		1	RAIL	
011	566526-0000	D		1	CLUTCH PIECE	
012	292037-0000	F		2	SCREW	
013	1296885-0000	R		1	SCREW	
014	90157-0021	-	KG	x	LOCKING FLUID	
016-02	312115-0370	F		8	SCREW MC6S ISO 4762 M6X20 A280	
1000S						
005	569053-0000	K		1	BEARING HOUSING	
006	B 568983-0000	F		1	INDUCTOR	
007	445950-0000	K		1	RAIL	
011	566526-0000	D		1	CLUTCH PIECE	
012	292037-0000	F		2	SCREW	
013	1296884-0000	R		1	SCREW	
014	90157-0021	-	KG	x	LOCKING FLUID	
016-02	312115-0370	F		8	SCREW MC6S ISO 4762 M6X20 A280	
1000SQ						
005	579773-0000	K		1	BEARING HOUSING	
006	B 927495-0000	F		1	INDUCTOR	
007	579898-0000	K		1	RAIL	
011	566526-0000	D		1	CLUTCH PIECE	
012	292037-0000	F		2	SCREW	
013	1296981-0000	R		1	SCREW	
014	90157-0021	-	KG	x	LOCKING FLUID	
016-02	312115-0370	F		8	SCREW MC6S ISO 4762 M6X20 A280	
TB/8 1000B HIFIN or TBA/8 1000B HIFIN						
005	497583-0000	K		1	HOUSING	
006	B 573625-0000	F		1	INDUCTOR	
007	284582-0000	K		1	RAIL	
011	566527-0000	D		1	CLUTCH PIECE	
013	1296982-0000	R		1	SCREW	
016	312115-0370	F		6	SCREW MC6S ISO 4762 M6X20 A280	
017	312115-0374	F		2	SCREW MC6S ISO O4762 M6X30 A280	

PRESSURE JAW

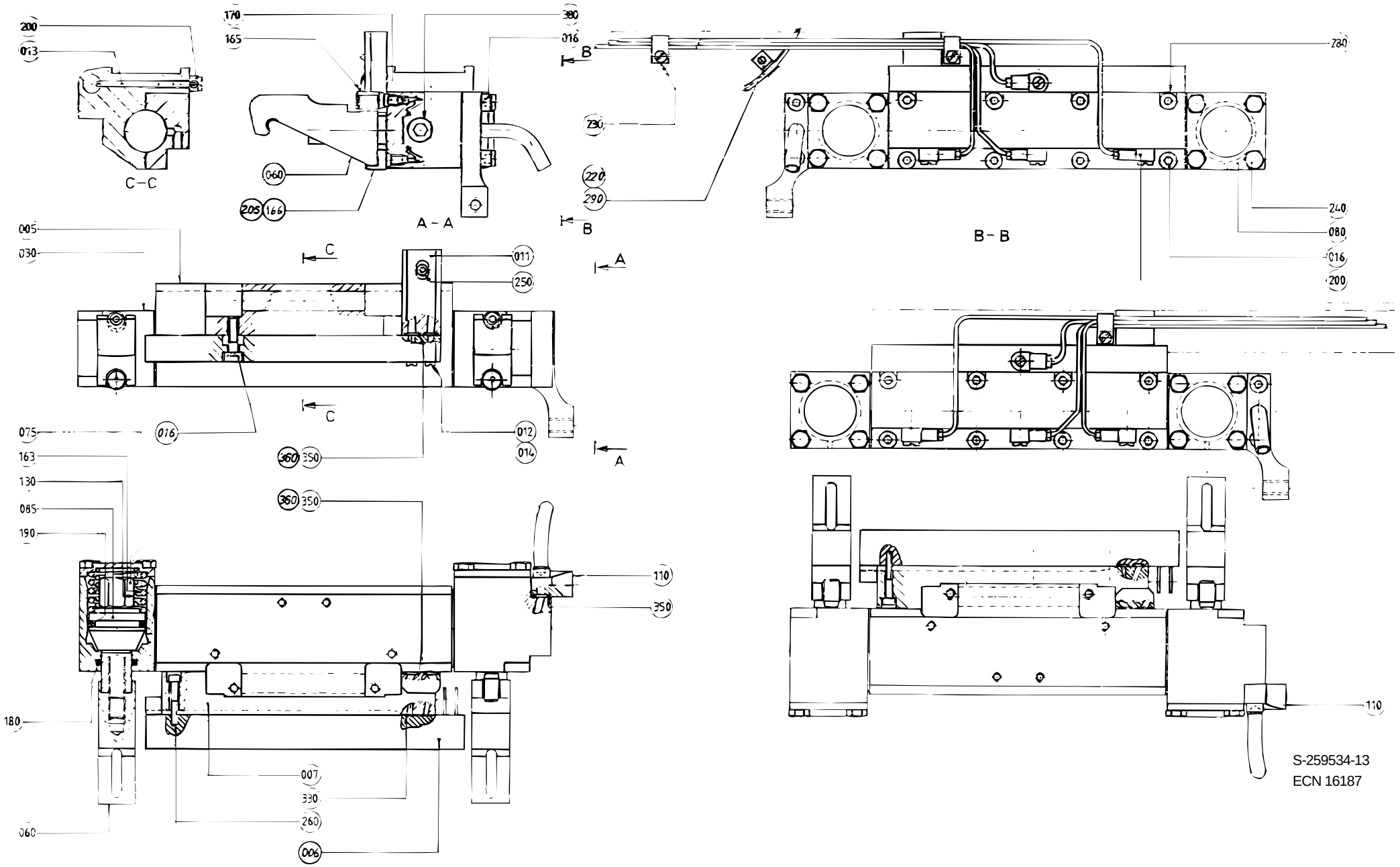

S-259534-13
ECN 16187

Pos	Part No	SP	UN	Qty	Description	Page No
Common parts						
030	440565-0000	K		1	CYLINDER	
060	541697-0000	K		2	CATCH	
075	553851-0000	F		2	SCREW	
080	284833-0000	D		2	LID	
085	292367-0000	K		2	PISTON	
110	246495-0000	F		1	ATTACHMENT	
130	479744-0000	F		2	COMPRESSION SPRING	
163	479743-0000	F		2	COMPRESSION SPRING	
165	440491-0000	F		2	NIPPLE	
166	497040-0000	F		2	STEERING	
170	90090-0013	K		2	STEEL BALL	
180	90091-0078	K		2	SEAL	
190	90091-0079	F		2	SEAL	
200	90134-0058	-		4	BANJO CONNECTION	
205	90157-0016	-	ML	x	LOCKING FLUID	
220	90165-0058	-		1	CLAMP	
230	316810-0106	-		2	PIPE CLAMP 8MM RFR	
240	312105-0372	-		8	SCREW M6S ISO 4017 M6X25 A280	
250	312115-0295	-		1	SCREW MC6S ISO 4762 M4X20 A280	
260	312115-0297	F		4	SCREW MC6S ISO 4762 M4X25 A280	
280	312115-0372	F		4	SCREW MC6S ISO 4762 M6X25 A280	
290	312125-0285	-		3	SLOTTED HEMCS4X6RFR	
330	315202-0101	F		2	O-RING 3,1X1,6	
350	315202-0104	F		1	O-RING 6,1X1,6	
360	315202-0203	F		4	O-RING 4,3X2,4	
380	342713-0209	-		1	PLUG,EXT.G-THREAD,HEXAGON SOCKET	
G1/8"						

Pos	Part No	SP	UN	Qty	Description	Page No

This page is intentionally left blank

Pos	Part No	SP	UN	Qty	Description	Page No
0300B						
200	440043-0000	-		4	END PIECE	
210	450302-0000	-		8	VOLUME SHIM	
260	564533-0005	-		4	DOLLY	
410	315202-0206	-		5	O-RING 7,3X2,4	
450	B 568983-0000	-		2	INDUCTOR	
0355B						
200	440043-0000	-		4	END PIECE	
210	529141-0000	-		8	VOLUME SHIM	
260	564533-0005	-		4	DOLLY	
410	315202-0206	-		5	O-RING 7,3X2,4	
450	B 568983-0000	-		2	INDUCTOR	
0375S						
200	440043-0000	-		4	END PIECE	
210	255228-0001	-		8	VOLUME SHIM	
260	564533-0005	-		4	DOLLY	
410	315202-0206	-		5	O-RING 7,3X2,4	
450	B 568983-0000	-		2	INDUCTOR	
0400B						
200	440043-0000	-		4	END PIECE	
210	575641-0000	-		8	VOLUME SHIM	
410	315202-0206	-		5	O-RING 7,3X2,4	
450	B 568983-0000	-		2	INDUCTOR	
0500B						
200	32116-0000	-		4	END PIECE	
210	479245-0000	-		8	VOLUME SHIM	
260	564533-0001	-		4	DOLLY	
400	315202-0111	-		10	O-RING 13,1X1,6	
420	315202-0207	-		10	O-RING 8,3X2,4	
430	315202-0212	-		5	O-RING 14,3X2,4	
450	B 573625-0000	-		2	INDUCTOR	
0500S						
200	440043-0000	-		4	END PIECE	
210	464315-0000	-		8	VOLUME SHIM	
260	564533-0005	-		4	DOLLY	
410	315202-0206	-		5	O-RING 7,3X2,4	
450	B 568983-0000	-		2	INDUCTOR	
0568B						
200	32116-0000	-		4	END PIECE	
210	479246-0000	-		8	VOLUME SHIM	
260	564533-0001	-		4	DOLLY	
400	315202-0111	-		10	O-RING 13,1X1,6	
420	315202-0207	-		10	O-RING 8,3X2,4	
430	315202-0212	-		5	O-RING 14,3X2,4	
450	B 573625-0000	-		2	INDUCTOR	
0750B						
200	32116-0000	-		4	END PIECE	
210	450782-0000	-		8	VOLUME SHIM	
260	564533-0001	-		4	DOLLY	
400	315202-0111	-		10	O-RING 13,1X1,6	
420	315202-0207	-		10	O-RING 8,3X2,4	
430	315202-0212	-		5	O-RING 14,3X2,4	
450	B 573625-0000	-		2	INDUCTOR	
0750S						
200	544337-0000	-		8	END PIECE	
210	544305-0000	-		8	VOLUME SHIM	
260	564533-0007	-		4	DOLLY	
450	B 568983-0000	-		2	INDUCTOR	
1000B HIFIN						
200	32116-0000	-		4	END PIECE	
210	208709-0000	-		8	VOLUME SHIM	
260	564533-0001	-		4	DOLLY	
370	312115-0374	-		5	SCREW MC6S ISO O4762 M6X30 A280	
410	315202-0206	-		5	O-RING 7,3X2,4	
450	B 573625-0000	-		2	INDUCTOR	

This page is intentionally left blank

Pos	Part No	SP	UN	Qty	Description	Page No
Common parts						
500	927440-0000	-		1	LINK	
510	927441-0000	-		1	NUT	
520	32544-0000	-		2	INSULATION NUT	
530	250633-0000	-		2	CABLE CLAMP	
600	90090-0013	-		10	STEEL BALL	
610	90091-0078	-		10	SEAL	
620	90091-0079	-		10	SEAL	
700	456011-0000	-		10	PIN	
710	312115-0297	-		10	SCREW MC6S ISO 4762 M4X25 A280	
720	312115-0370	-		10	SCREW MC6S ISO 4762 M6X20 A280	
730	312145-0238	-		10	SLOTTED HEMFS3X40RFR	
740	315202-0101	-		20	O-RING 3,1X1,6	
750	315202-0102	-		20	O-RING 4,1X1,6	
760	315202-0104	-		20	O-RING 6,1X1,6	
770	315202-0114	-		10	O-RING 16,1X1,6	
780	315202-0208	-		10	O-RING 9,3X2,4	
790	315202-0702	-		10	O-RING 12,42X1,78	
1000S						
200	32116-0000	-		4	END PIECE	
210	569056-0000	-		8	VOLUME SHIM	
260	564533-0001	-		4	DOLLY	
400	315202-0111	-		10	O-RING 13,1X1,6	
420	315202-0207	-		10	O-RING 8,3X2,4	
430	315202-0212	-		5	O-RING 14,3X2,4	
450	B 568983-0000	-		2	INDUCTOR	
1000SQ						
200	533012-0001	-		4	END PIECE	
210	1143050-0000	-		8	VOLUME SHIM	
260	1038128-0001	-		4	DOLLY	
400	315202-0111	-		10	O-RING 13,1X1,6	
420	315202-0207	-		10	O-RING 8,3X2,4	
430	315202-0212	-		5	O-RING 14,3X2,4	
450	B 927495-0000	-		2	INDUCTOR	
1055B						
200	32116-0000	-		4	END PIECE	
210	531320-0000	-		8	VOLUME SHIM	
260	564533-0001	-		4	DOLLY	
400	315202-0111	-		10	O-RING 13,1X1,6	
420	315202-0207	-		10	O-RING 8,3X2,4	
430	315202-0212	-		5	O-RING 14,3X2,4	
450	B 573625-0000	-		2	INDUCTOR	

Pos	Part No	SP	UN	Qty	Description	Page No
1000B LOFIN						
200	32116-0000	-		4	END PIECE	
210	208709-0000	-		8	VOLUME SHIM	
260	564533-0001	-		4	DOLLY	
400	315202-0111	-		10	O-RING 13,1X1,6	
420	315202-0207	-		10	O-RING 8,3X2,4	
430	315202-0212	-		5	O-RING 14,3X2,4	
450	B 573625-0000	-		2	INDUCTOR	

BAR CODE

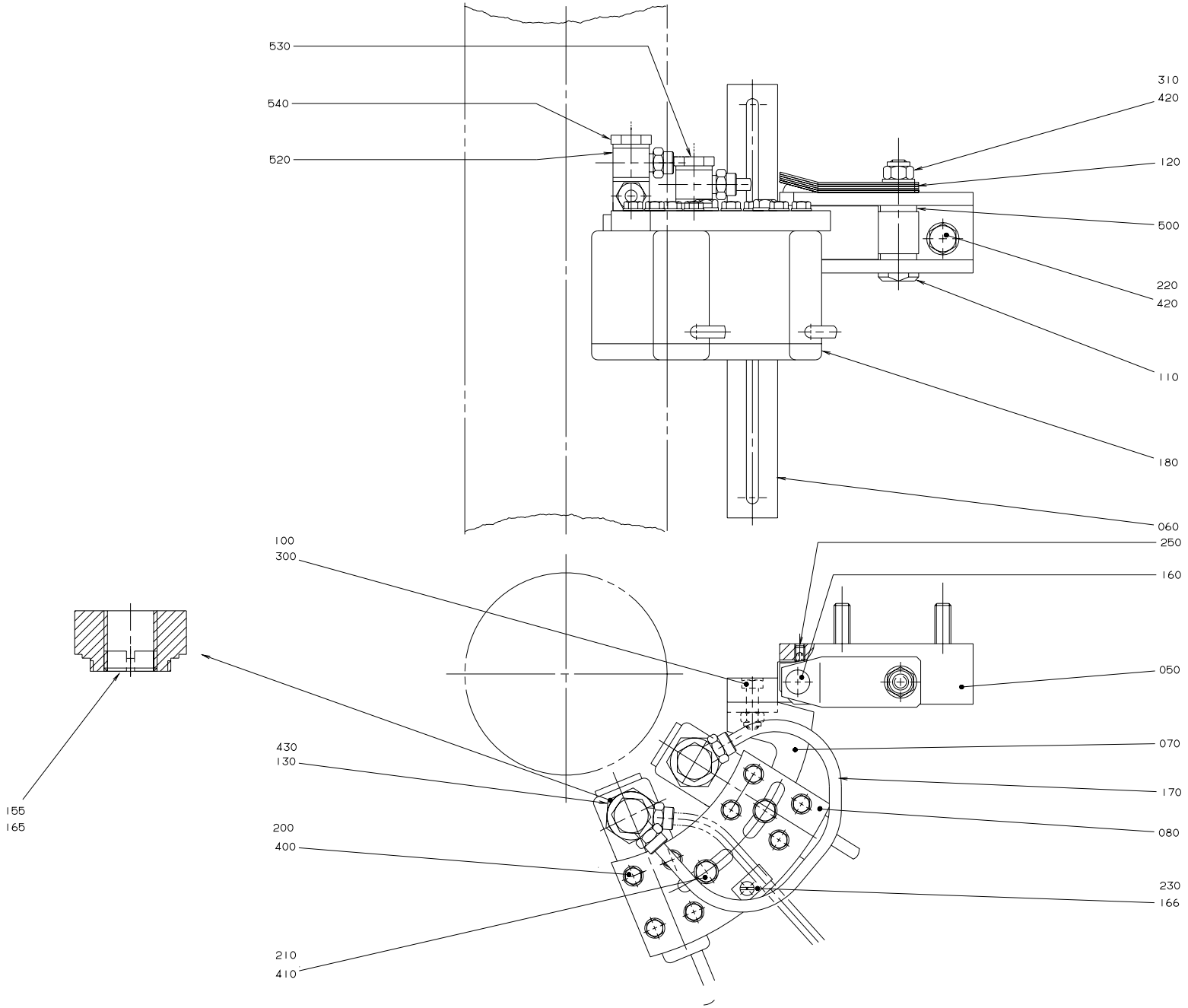

S-541188-3
ECN 14696

Pos	Part No	SP	UN	Qty	Description	Page No
0300B ST-ER or 0375S ST-ER						
050	457359-0000	D		1	BRACKET	
060	545789-0000	D		1	HOLDER	
070	562971-0000	D		1	CANTILEVER	
080	457364-0000	D		1	PLATE RIGHT	
0300B ST-R						
050	B 486790-0000	D		1	BRACKET	
060	486794-0000	D		1	HOLDER	
070	526949-0000	D		1	CANTILEVER	
080	457365-0000	D		1	PLATE LEFT	
0500B ST-ER or 0568B ST-ER or 0750B ST-ER or 1000B ST-ER or 1055B ST-ER or 1136B ST-ER						
050	457359-0000	D		1	BRACKET	
060	545789-0000	D		1	HOLDER	
070	457361-0000	D		1	CANTILEVER	
080	457364-0000	D		1	PLATE RIGHT	
0355B ST-ER or 0400B ST-ER or 0500S ST-ER						
050	457359-0000	D		1	BRACKET	
060	545789-0000	D		1	HOLDER	
070	526677-0000	D		1	CANTILEVER	
080	457364-0000	D		1	PLATE RIGHT	
0500SQ ST-ER or 0750S ST-ER or 1000S ST-ER or 1000SQ ST-ER						
050	457359-0000	D		1	BRACKET	
060	535200-0000	D		1	HOLDER	
070	544343-0000	D		1	CANTILEVER	
080	457364-0000	D		1	PLATE RIGHT	
1500B ST-ER						
050	457359-0000	D		1	BRACKET	
060	929753-0000	D		1	HOLDER	
070	457361-0000	D		1	CANTILEVER	
080	457364-0000	D		1	PLATE RIGHT	
Common parts						
100	312105-0370	D		2	SCREW M6S ISO 4017 M6X20 A280	
110	457367-0000	K		1	SHAFT	
120	457368-0000	K		5	SPRING	
130	548337-0000	K		2	BUSHING	
155	548336-0000	K		2	WASHER	
160	90090-0016	-		1	BALL	
165	90157-0016	-		x	LOCKING FLUID	
166	90165-0057	-		1	CLIP	
170	90166-0124	-	MM	200	HOSE	
180	90232-0075	K		2	PH.CELL SICK NT6-14900S12	
200	312105-0329	-		8	SCREW M6S ISO 4017 M5X16 A280	
210	312105-0364	-		2	SCREW M6S6X10RFR	
220	312105-0455	-		2	SCREW M6S ISO 4017 M8X30 A280	
230	312125-0285	-		1	SLOTTED HEMCS4X6RFR	
250	312318-0323	-		1	SET SCREW CUP POINT ISO 4029 M5X8 RFR	
300	312812-0316	-		2	LOCK NUT A2-M6RFR	
310	312812-0318	-		1	LOCK NUT A2-M8RFR	
400	315105-0146	-		8	WASHER BRB5,3X10RFR	
410	315105-0153	-		2	WASHER BRB6,4X12RFR	
420	315105-0165	-		3	WASHER BRB8,4X16RFR	
430	315204-0116	-		2	O-RING 18,1X1,6VITON	
500	321101-0143	-		2	FLANGE BUS 8F7X8	
520	342980-0114	-		3	BANJO-CONNECTION,RING 6/4-G1/4"	
530	90030-0265	-		1	HOLLOW SCREW	
540	90030-0266	-		1	HOLLOW SCREW	

This page is intentionally left blank

Pos	Part No	SP	UN	Qty	Description	Page No
90450-0105	90450-0634	K		1	OVERHAUL KIT	
464164-0000	312911-0111	-		1	THREADED I M4X2,0D	
464164-0000	312911-0114	-		1	THREADED I M5X1,5D	
464164-0000	312911-0117	-		1	THREADED I M6X1,0D	
464164-0000	312911-0118	-		1	THREADED I M6X1,5D	
464171-0000	312911-0111	-		1	THREADED I M4X2,0D	
464171-0000	312911-0114	-		1	THREADED I M5X1,5D	
464171-0000	312911-0117	-		1	THREADED I M6X1,0D	
464171-0000	312911-0118	-		1	THREADED I M6X1,5D	
486790-0000	312911-0113	-		1	THREADED I M5X1,0D	
529002-0000	312911-0103	-		2	THREADED I M3X2,0D	
529002-0000	312911-0109	-		2	THREADED I M4X1,0D	
529137-0000	311103-0401	-		2	CYLINDRICACP M6 8X20 RFR	
529138-0000	311103-0401	-		2	CYLINDRICACP M6 8X20 RFR	
533956-0000	311103-0401	-		2	CYLINDRICACP M6 8X20 RFR	
533957-0000	311103-0401	-		2	CYLINDRICACP M6 8X20 RFR	
568983-0000	315202-0101	-		4	O-RING 3,1X1,6	
568983-0000	568530-0000	-		1	COIL	
568983-0000	568531-0000	-		1	CORE	
568983-0000	568532-0000	-		4	NIPPLE	
573625-0000	315202-0101	-		2	O-RING 3,1X1,6	
573625-0000	568530-0000	-		1	COIL	
573625-0000	568532-0000	-		4	NIPPLE	
573625-0000	570545-0001	-		3	FERROTRONEINSERT	
573625-0000	573624-0000	-		1	CORE	
927493-0000	315202-0101	-		2	O-RING 3,1X1,6	
927493-0000	568532-0000	-		4	NIPPLE	
927493-0000	580828-0001	-		1	CORE	
927493-0000	580829-0000	-		1	CURRENT RAIL	
927493-0000	580833-0001	-		3	FERROTRONE INSERT	
927495-0000	315202-0101	-		2	O-RING 3,1X1,6	
927495-0000	568532-0000	-		4	NIPPLE	
927495-0000	580828-0002	-		1	CORE	
927495-0000	580829-0000	-		1	CURRENT RAIL	
927495-0000	580833-0001	-		2	FERROTRONE INSERT	
927495-0000	580833-0002	-		1	FERROTRONE INSERT	

Tetra Pak

SPC

Spare Parts Catalogue

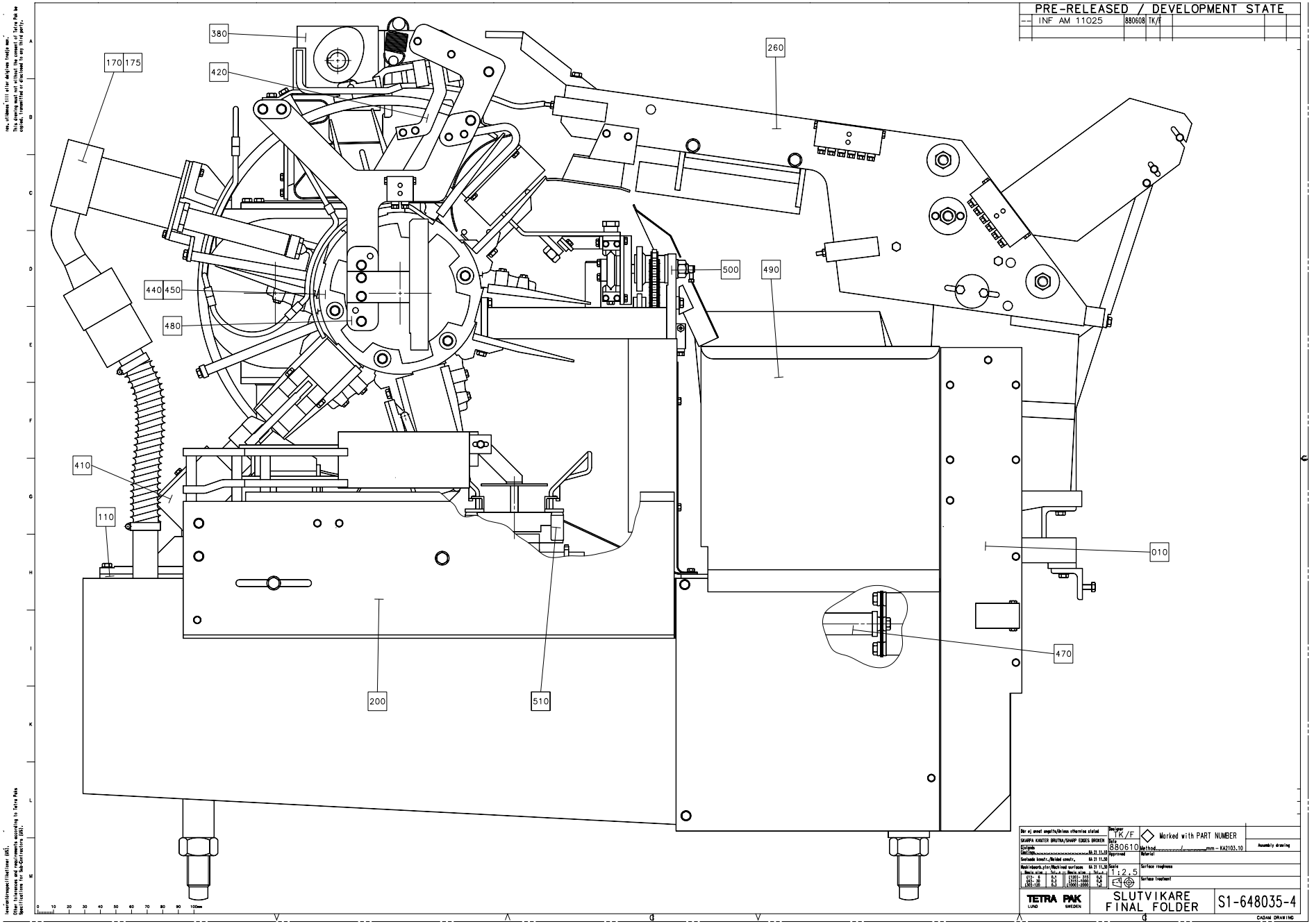
PRE-RELEASED / DEVELOPMENT STATE
INF AM 11025
380
420
170 175
260
500
490
440 450
480
410
110
010
470
200
510
TETRA PAK
LUND SWEDEN
SLUTVIKARE
FINAL FOLDER
S1-648035-4
CADAM DRAWING

Pos	Part No	SP	UN	Qty	Description	Page No
RIGHT OUT						
F010	A 285592-0600	-		1	MACHINE BODY	**405**
F200	A 285591-0400	-		1	STATION	**453**
F480	A 525000-0200	-		1	FOLDING PART	**543**
F500	A 525213-0200	-		1	INFEEDER	**559**
F510	A 525325-0200	-		1	DISCHARGER	**567**
LEFT OUT						
F010	A 595086-0100	-		1	MACHINE BODY	**421**
F200	A 595087-0100	-		1	STATION	**455**
F480	A 595088-0100	-		1	FOLDING PART	**485**
F500	A 595089-0100	-		1	INFEEDER	**487**
F510	A 595090-0100	-		1	DISCHARGER	**489**
Common parts						
F110	A 285303-0400	-		1	LOWER SECTION	**425**
F170	A 525129-0100	-		1	ELEMENT	**437**
F175	A 525128-0100	-		1	FF-ELEMENT R	**447**
F260	A 525085-0200	-		1	LUBRICATING SYSTEM	**457**
F380	A 285479-0500	-		1	SUPERSTRUCTURE	**497**
F410	A 285456-0300	-		2	PRESSURE DEVICE	**507**
F420	A 285736-0300	-		1	PULL-DOWN DEVICE	**513**
F440	A 297681-0300	-		1	WHEEL	**521**
F450	A 297682-0300	-		1	WHEEL	**531**
F470	A 443173-0100	-		1	DRIVE SHAFT	**541**
F490	A 442537-0500	-		1	WASTE CHUTE	**557**

Pos	Part No	SP	UN	Qty	Description	Page No

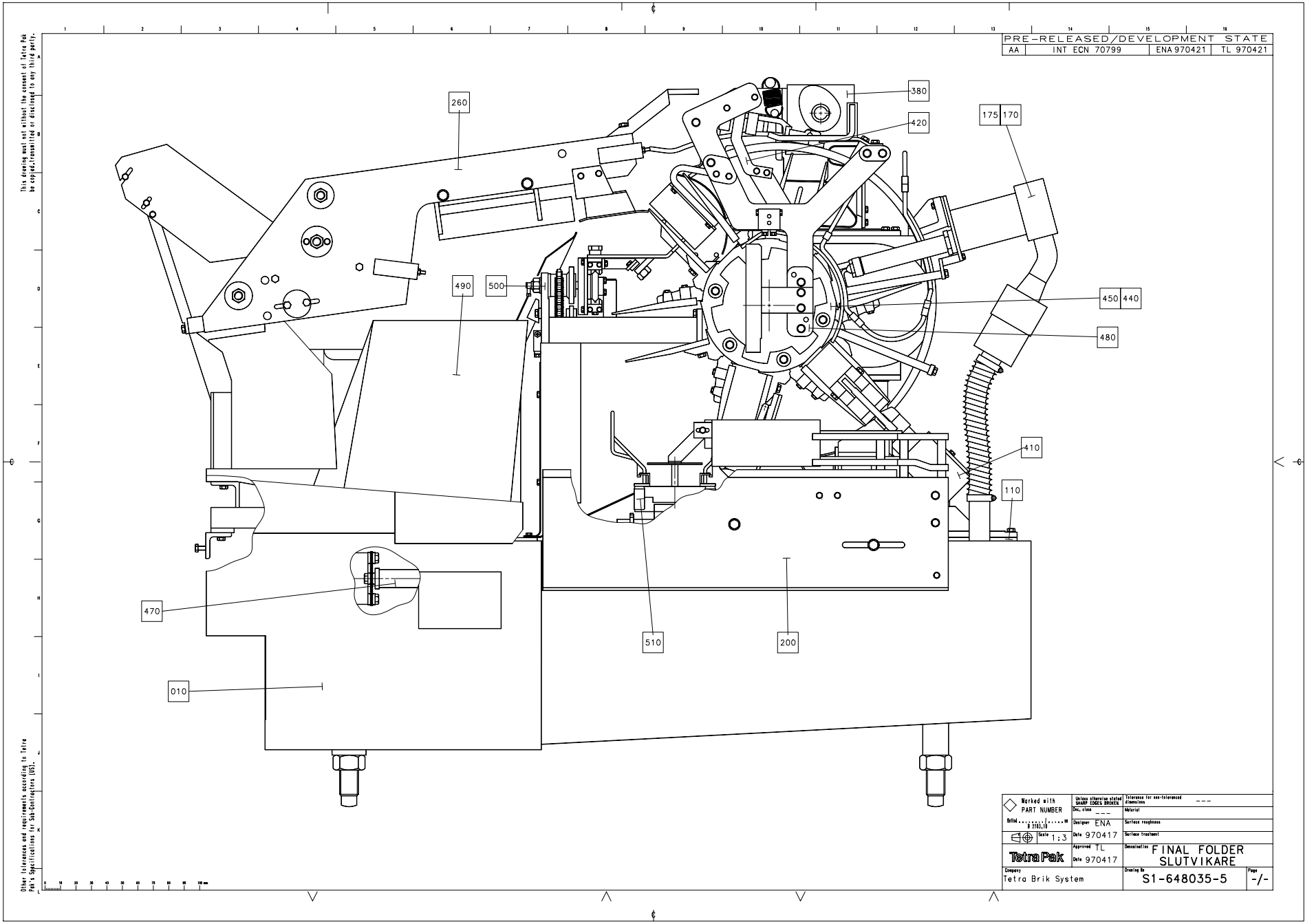
PRE-RELEASED/DEVELOPMENT STATE
AA
INT ECN 70799
ENA 970421
TL 970421
260
380
420
175
170
490
500
450
440
480
410
110
470
510
200
010
Marked with PART NUMBER
Scale 1:3
Designer ENA
Date 970417
Approved TL
Date 970417
Tetra Pak
Tetra Brik System
FINAL FOLDER
SLUTVIKARE
S1-648035-5
-/-

Pos	Part No	SP	UN	Qty	Description	Page No
RIGHT OUT						
F010	A 285592-0600	-		1	MACHINE BODY	**405**
F200	A 285591-0400	-		1	STATION	**453**
F480	A 525000-0200	-		1	FOLDING PART	**543**
F500	A 525213-0200	-		1	INFEEDER	**559**
F510	A 525325-0200	-		1	DISCHARGER	**567**
LEFT OUT						
F010	A 595086-0100	-		1	MACHINE BODY	**421**
F200	A 595087-0100	-		1	STATION	**455**
F480	A 595088-0100	-		1	FOLDING PART	**485**
F500	A 595089-0100	-		1	INFEEDER	**487**
F510	A 595090-0100	-		1	DISCHARGER	**489**
Common parts						
F110	A 285303-0400	-		1	LOWER SECTION	**425**
F170	A 525129-0100	-		1	ELEMENT	**437**
F175	A 525128-0100	-		1	FF-ELEMENT R	**447**
F260	A 525085-0200	-		1	LUBRICATING SYSTEM	**457**
F380	A 285479-0500	-		1	SUPERSTRUCTURE	**497**
F410	A 285456-0300	-		2	PRESSURE DEVICE	**507**
F420	A 285736-0300	-		1	PULL-DOWN DEVICE	**513**
F440	A 297681-0300	-		1	WHEEL	**521**
F450	A 297682-0300	-		1	WHEEL	**531**
F470	A 443173-0100	-		1	DRIVE SHAFT	**541**
F490	A 442537-0500	-		1	WASTE CHUTE	**557**

Pos	Part No	SP	UN	Qty	Description	Page No

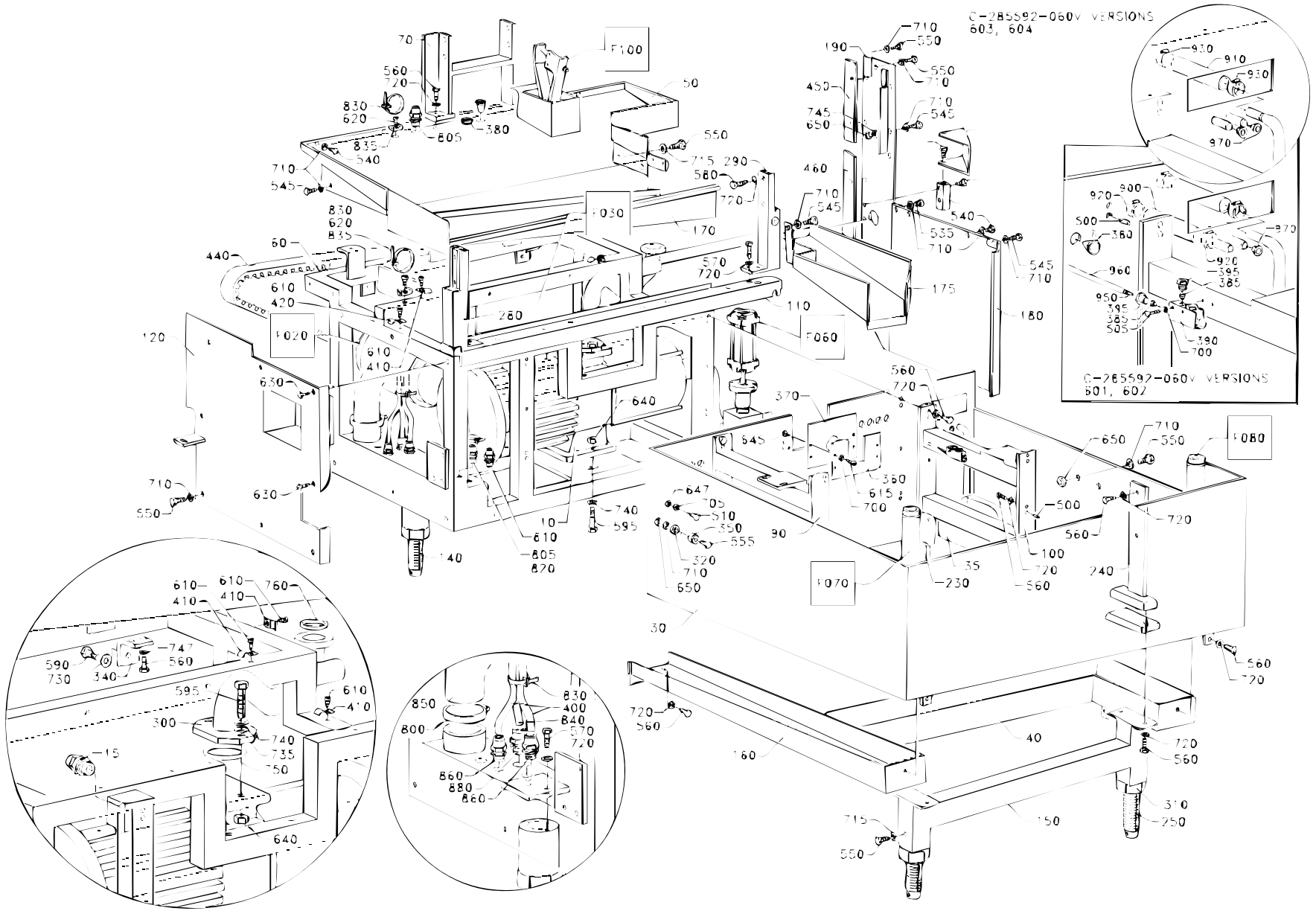

S-285592-6
ECN 22834

Pos	Part No	SP	UN	Qty	Description	Page No
TB/8 50HZ or TBO/8 50HZ						
010	B 90321-0015	D		1	PUMP	
970-02	90261-0004	-		2	PIPE PLUG	
TB/8 60HZ or TBO/8 60HZ						
010	B 90321-0034	D		1	PUMP	
970-02	90261-0004	-		2	PIPE PLUG	
TBA/8 50HZ						
010	B 90321-0015	D		1	PUMP	
900	90166-0059	-	MM	630	HOSE	
920	342991-0101	-		2	HOSE CLIP,WORM DRIVE TYPE (13)-16	
970	90261-0004	-		1	PIPE PLUG	
TBA/8 60HZ						
010	B 90321-0034	D		1	PUMP	
900	90166-0059	-	MM	630	HOSE	
920	342991-0101	-		2	HOSE CLIP,WORM DRIVE TYPE (13)-16	
970	90261-0004	-		1	PIPE PLUG	
Common parts						
F020	A 285287-0500	-		1	DRIVE UNIT	**409**
F030	A 285861-0500	-		1	GEAR REDUCTION	**411**
F060	A 525143-0200	-		1	BOTTOM VALVE	**415**
F070	A 525110-0100	-		1	CABLE CONDUIT	**417**
F100	A 297638-0200	-		1	CHAIN TENSIONER	**419**
015	90012-0072	F		3	GLAND FITTING **	
030	525278-0000	-		1	CLEANING TROUGH	
035	531119-0000	-		1	STRAINER	
040	525132-0000	-		1	CABLE TRENCH	
050	525262-0000	-		1	COVERING PLATE	
060	525274-0000	-		1	FINISH FRAME 525274	
070	285330-0000	-		1	HOLDER	
090	525272-0000	-		1	STRUT	
100	525273-0000	-		1	STRUT	
110	525275-0000	-		1	COVERING PLATE	
120	525346-0000	-		1	SIDE PLATE	
140	525268-0000	-		2	LEG	
150	525130-0000	-		1	LEG	
160	525277-0000	-		1	CABLE TRENCH	
170	529331-0000	-		1	COVERING PLATE	
175	443186-0000	-		1	CHUTE	
180	443187-0000	-		1	SHEET	
190	442545-0000	-		1	SHEET	
230	525266-0000	-		1	LEG	
240	525267-0000	-		1	LEG	
250	285923-0000	-		4	SCREW	
280	297663-0000	-		1	POST HOLDER	
290	B 297664-0000	-		1	POST HOLDER	
300	B 525271-0000	-		1	ELBOW PIPE	
310	285994-0000	-		4	NUT	
320	295435-0000	-		2	WASHER	
340	297814-0000	-		2	BRACKET	
350	297860-0000	-		2	BUSHING	
360	525280-0000	-		1	SHEET	
370	525281-0000	-		1	GASKET	
380	90015-0020	F		11	BUSHING	
385	90028-0022	-		4	CONE	
390	90032-0044	-		1	JUNCTION BLOCK	
395	90134-0055	-		4	BUSHING	
400	90152-0050	-	MM	2500	FLEXIBLE CONDUIT	
405	90165-0060	-		1	CLAMP	
410	316810-0106	-		7	PIPE CLAMP 8MM RFR	
420	90165-0057	-		4	CLIP	
440	90417-0180	F		1	TIMING BELT	
450	525174-0000	-		1	BRACKET	
460	525175-0000	-		1	BRACKET	
470	297551-0000	-		1	SHEET	
500	311103-0399	-		8	CYLINDRICACP M6 8X16 RFR	
505	312105-0295	-		2	SCREW M6S ISO 4017 M4X20 A280	
510	312105-0329	-		1	SCREW M6S ISO 4017 M5X16 A280	
535	312105-0362	-		1	SCREW M6S ISO 4017 M6X8 A280	
540	312105-0364	-		8	SCREW M6S6X10RFR	
545	312105-0368	-		6	SCREW M6S ISO 4017 M6X16 A280	
550	312105-0367	-		15	SCREW M6S6X14RFR	
553	312105-0370	-		1	SCREW M6S ISO 4017 M6X20 A280	
555	312105-0376	-		2	SCREW M6S ISO 4017 M6X35 A280	
560	312105-0451	-		23	SCREW M6S ISO 4017 8X20 A280	
570	312105-0453	-		8	SCREW M6S ISO 4017 M8X25 A280	
580	312105-0455	-		4	SCREW M6S ISO 4017 M8X30 A280	
590	312105-0495	-		2	SCREW M6S ISO 4017 M10X30 A280	
595	312105-0542	-		4	SCREW M6S ISO 4014 M12X50 A280	
610	312125-0287	-		9	SLOTTED CHEESE HEAD ISO 1207 M4X8 RFR	
615	312125-0291	-		4	SLOTTED CHEESE HEAD ISO 1207 M4X12 RFR	
620	312125-0323	-		5	SLOTTED CHEESE HEAD ISO 1207 M5X8 RFR	
630	312155-0366	-		2	SCREW MF6S DIN 7991 M6X12 A280	

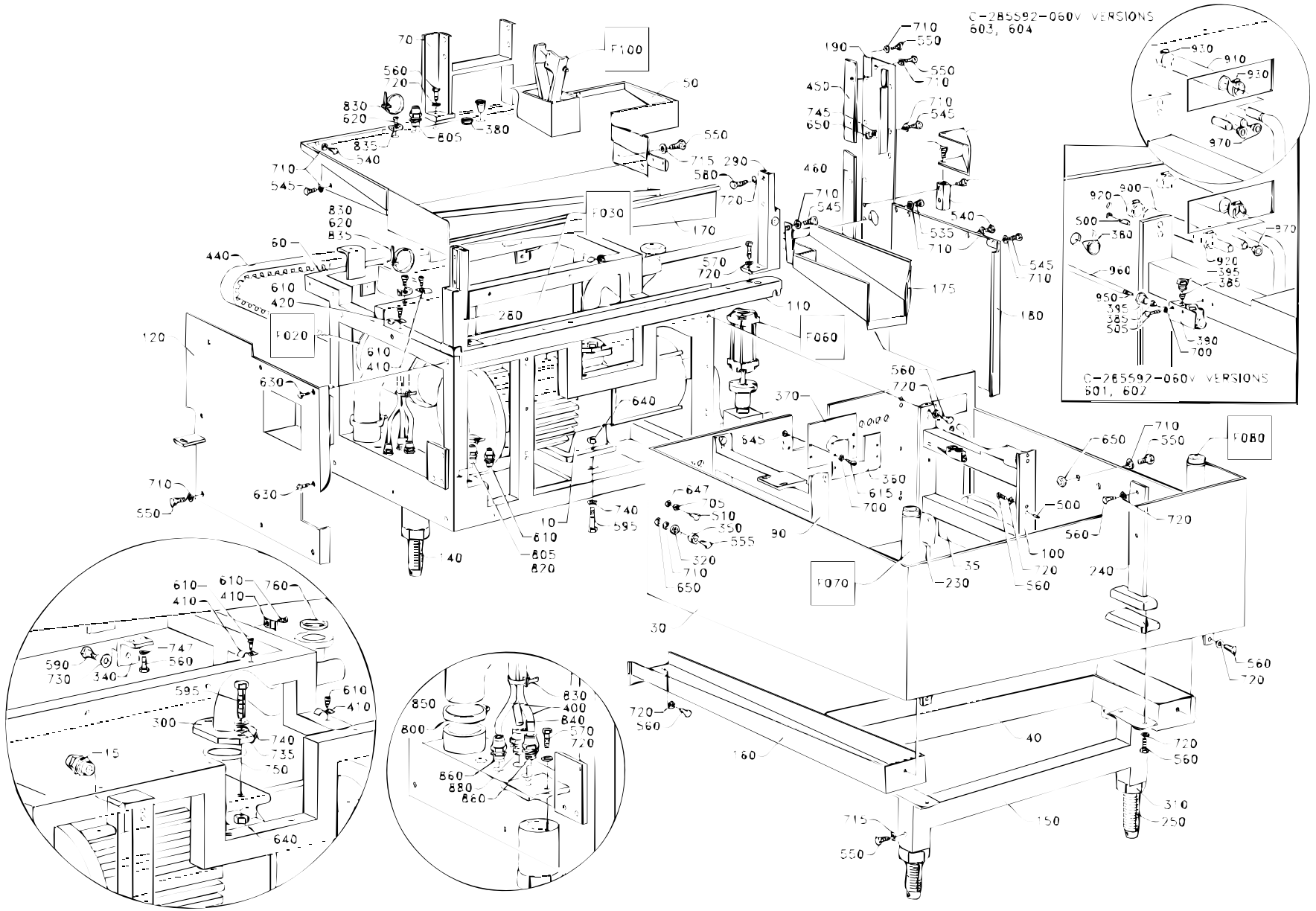

S-285592-6
ECN 22834

Pos	Part No	SP	UN	Qty	Description	Page No
640	312605-0322	-		4	NUT M6M12RFR	
645	312605-0312	-		4	NUT M6M4RFR	
647	312605-0314	-		2	NUT M6M5RFR	
650	312605-0316	-		7	NUT M6M6RFR	
700	315105-0136	-		11	WASHER BRB4,3X8RFR	
705	315105-0146	-		2	WASHER BRB5,3X10RFR	
710	315105-0153	-		31	WASHER BRB6,4X12RFR	
715	6278-0000	-		3	WASHER	
720	315105-0165	-		31	WASHER BRB8,4X16RFR	
730	315105-0173	-		2	WASHER BRB10,5X22RFR	
735	315105-0178	-		2	WASHER BRB13X24RFR	
740	315115-0178	-		6	WASHER TBRB13X24RFR	
745	315115-0153	-		3	WASHER TBRB6,4X12RFR	
747	315115-0165	-		4	WASHER TBRB8,4X16RFR	
750	315202-0229	F		1	O-RING 59,2X5,7	
760	315250-0103	F		1	GASKET 48/38	
800	342991-0112	-		2	HOSE CLIP,WORM DRIVE TYPE (73)-83	
805	352103-0100	-		4	CABLE GLAND STR 9	
810	352103-0101	-		1	CABLE GLAND ST 9	
820	352113-0101	-		3	RIBBON CLAMP	
830	352113-0102	-		6	RIBBON CLAMP	
835	352113-0204	-		5	ANCHOR TM3S25-M	
840	90152-0051	-	MM	1000	FLEXIBLE CONDUIT	
850	90152-0044	-	MM	350	FLEXIBLE CONDUIT	
880	90012-0071	-		3	GLAND FITTING	
910	90166-0087	-	MM	630	HOSE	
930	342991-0103	-		2	HOSE CLIP,WORM DRIVE TYPE (19)-23	
950	90134-0030	-		1	SLEEVE	
960	90166-0108	-	MM	870	HOSE	

Pos	Part No	SP	UN	Qty	Description	Page No

DRIVE UNIT

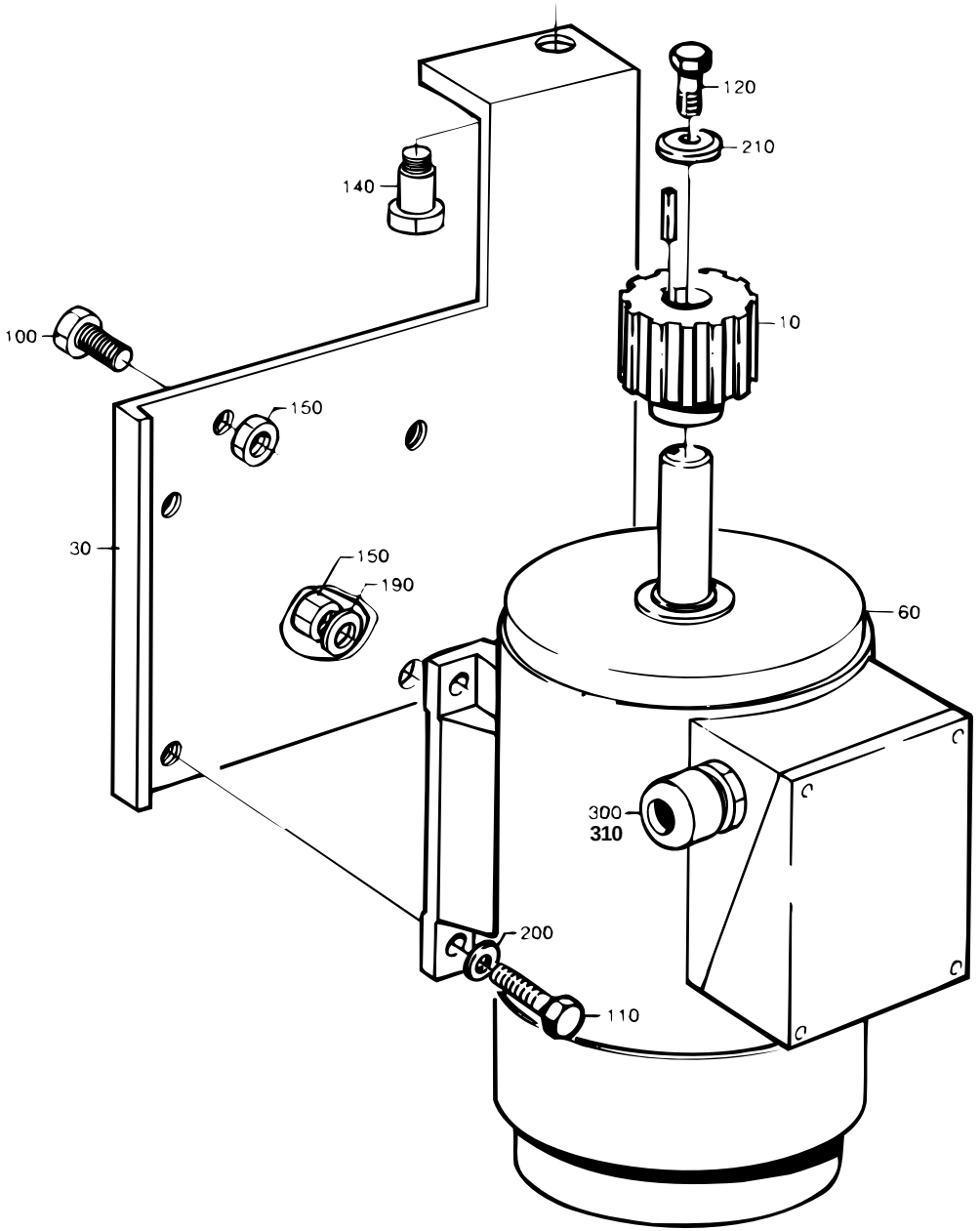

S-285287-3
ECN 22847

Pos	Part No	SP	UN	Qty	Description	Page No
-						
010	443336-0008	K		1	TIMING BELT PULLEY	
030	525166-0000	-		1	MOTOR CRADLE	
060	90045-0049	K		1	MOTOR	
100	312101-0451	-		1	SCREW M6S8X20FZB	
110	312101-0453	-		3	SCREW M6S8X25FZB	
120	312101-0457	-		2	SCREW M6S8X35FZB	
140	312180-0530	-		2	HEX. S0CKET HEAD SHOULD. ISO 7379	
M10X16						
150	312601-0318	-		2	NUT M6M8FZB	
190	315101-0165	-		1	WASHER BRB8,4X16FZB	
200	315111-0165	-		4	WASHER TBRB8,4X16FZB	
210	315121-0165	-		1	WASHER TBRSB8,4X26FZB	
300	353245-0005	-		1	GLAND FITTING	
310	90099-0178	-		1	LOOKING NUT PG 16	

Pos	Part No	SP	UN	Qty	Description	Page No

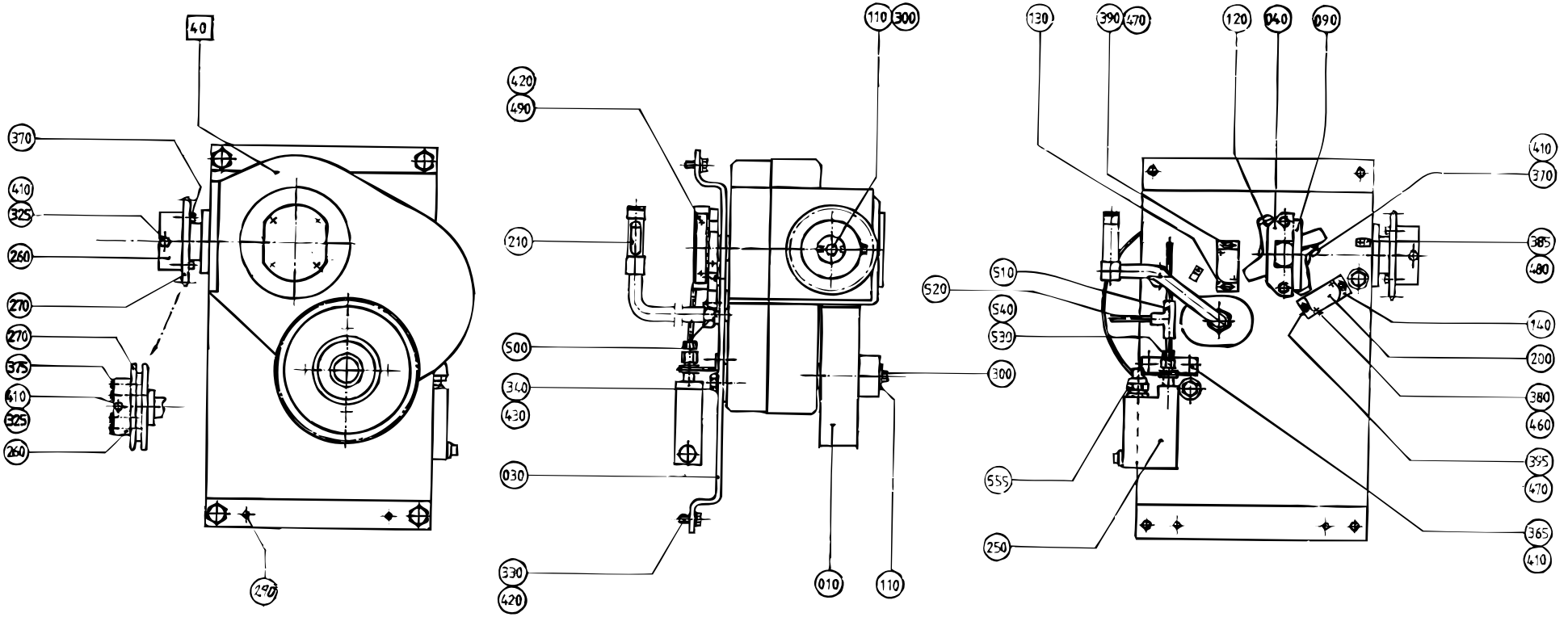

S-285861-5
ECN 70373

Pos	Part No	SP	UN	Qty	Description	Page No
0300B or 0355B or 0375S or 0400B or 0500B or 0500S or 0568B or 0750B or 0750S or 1000B or 1000S or 1055B or 1136B						
260	525216-0000	-		1	SLEEVE	
270	442500-0000	K		1	SPROCKET	
370-02	312111-0370	-		7	SCREW MC6S6X20FZB	
0500SQ or 1000SQ						
260	574081-0000	-		1	SLEEVE	
270	574088-0000	K		1	SPROCKET	
370	312111-0370	-		1	SCREW MC6S6X20FZB	
375	312104-0374	-		6	SCREW M6S6X30H8.8 FZB	
Common parts						
F040	A 442582-0100	D		1	DRIVE GEAR	**413**
010	525215-0006	-		1	TIMING BELT PULLEY	
030	525109-0000	-		1	BRACKET	
040	927332-0000	-		1	BRACKET	
090	927333-0000	-		1	BAR CLAMP	
110	285403-0000	-		2	WASHER	
120	566775-0000	-		1	CARRIER	
130	525337-0000	-		1	BRACKET	
140	525232-0000	-		1	BRACKET	
200	90044-0104	F		2	PROX.SWITCHIFM IN 3002	
210	443248-0000	K		1	OIL PIPE	
250	B 90274-0002	K		1	PRESSURE SWITCH	
290	311112-0341	-		2	SLOTTED TURP 6X24 RFR	
300	312101-0370	-		2	SCREW M6S6X20FZB	
325	312101-0384	-		1	SCREW M6S6X70FZB	
330	312101-0451	-		4	SCREW M6S8X20FZB	
340	312101-0493	-		3	SCREW M6S10X25FZB	
365	312101-0364	-		2	SCREW M6S6X10FZB	
380	312125-0228	-		2	SLOTTED CHEESE HEAD ISO 1207 M3X16 RFR	
385	312125-0287	-		2	SLOTTED CHEESE HEAD ISO 1207 M4X8 RFR	
390	312115-0295	-		2	SCREW MC6S ISO 4762 M4X20 A280	
395	312115-0291	-		2	SCREW MC6S ISO 4762 M4X12 A280	
410	315101-0153	-		4	WASHER BRB6,4X12FZB	
420	315101-0165	-		6	WASHER BRB8,4X16FZB	
430	315101-0173	-		3	WASHER BRB10,5X22FZB	
460	315105-0124	-		2	WASHER BRB3,2X6RFR	
470	315105-0136	-		4	WASHER BRB4,3X8RFR	
480	90165-0056	-		2	CLIP	
490	312105-0455	-		2	SCREW M6S ISO 4017 M8X30 A280	
500	342720-0115	-		1	STRAIGHT CONNECTION GA-16-G1/2"	
510	342946-0112	-		1	T-COUPLING,UNION 6/4	
520	90166-0011	-	MM	3000	HOSE	
530	342706-0130	-		1	ACCESSORIES,INSERT SLEEVE 6	
540	342790-0202	-		1	PRESSURE GAUGE CONNECTION MAV6-S/R3/8FZB	
555	90012-0073	-		1	GLAND FITTING	

DRIVE GEAR

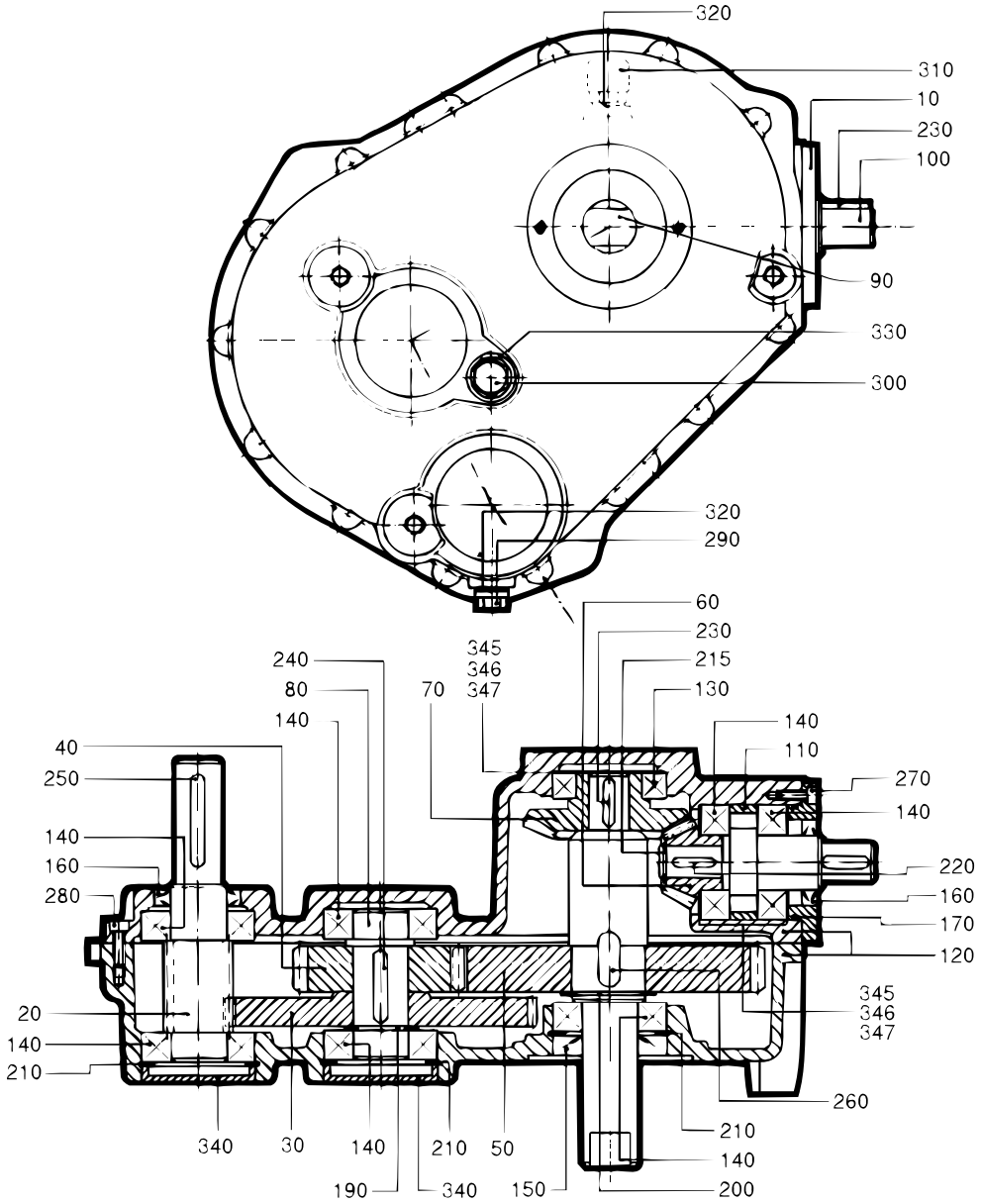

S-442582-1
ECN 5999

Pos	Part No	SP	UN	Qty	Description	Page No
-						
	442581-0001	-	M	x	MEASURE DRAWING	
010	567345-0000	-		1	BEARING COVER	
020	442554-0000	K		1	GEARING	
030	442555-0000	K		1	GEAR WHEEL	
040	442556-0000	K		1	GEAR WHEEL	
050	442557-0000	K		1	GEAR WHEEL	
060	442558-0000	K		1	GEAR WHEEL	
070	442559-0000	K		1	GEAR WHEEL	
080	567347-0000	K		1	SHAFT	
090	567348-0000	K		1	SHAFT	
100	525136-0000	K		1	SHAFT	
110	567349-0000	K		1	SPACER	
120	567373-0000	-		1	GEAR HOUSING	
130	321306-0107	K		1	BALL BEARISKF6007	
140	321309-0106	K		7	BALL BEARISKF6206	
150	90091-0145	K		1	SEAL RING	
160	90091-0054	K		2	SEAL RING	
170	90242-0116	K		1	O-RING	
190	315750-0122	K		1	CIRCLIP SGA30	
200	315750-0127	K		1	CIRCLIP SGA40	
210	315752-0136	K		3	CIRCLIP SGH62	
215	90141-0012	K		1	LOCK RING	
220	315701-0202	K		1	FLAT WEDGE5X5X22	
230	315701-0234	K		3	FLAT WEDGE6X6X25	
240	315701-0270	K		2	FLAT WEDGE8X7X40	
250	315701-0272	K		1	FLAT WEDGE8X7X50	
260	567350-0000	K		2	WEDGE	
270	312111-0329	-		4	SCREW MC6S5X16FZB	
280	312111-0370	-		12	SCREW MC6S6X20FZB	
290	90330-0026	K		1	PLUG,EXTERNAL G-THREAD G1/4"	
300	90330-0037	K		1	PLUG,EXTERNAL G-THREAD G1/2"	
310	442841-0000	K		1	AIR SCREW	
320	315234-0110	K		2	SEAL RING R1/4"	
330	315234-0113	K		1	SEAL RING R1/2"	
340	90214-0310	K		2	LID	
345	442903-0000	K		x	SHIM	
346	442904-0000	K		x	SHIM	
347	442905-0000	K		x	SHIM	
390	90296-0075	K	ML	2400	OIL	

Pos	Part No	SP	UN	Qty	Description	Page No

BOTTOM VALVE

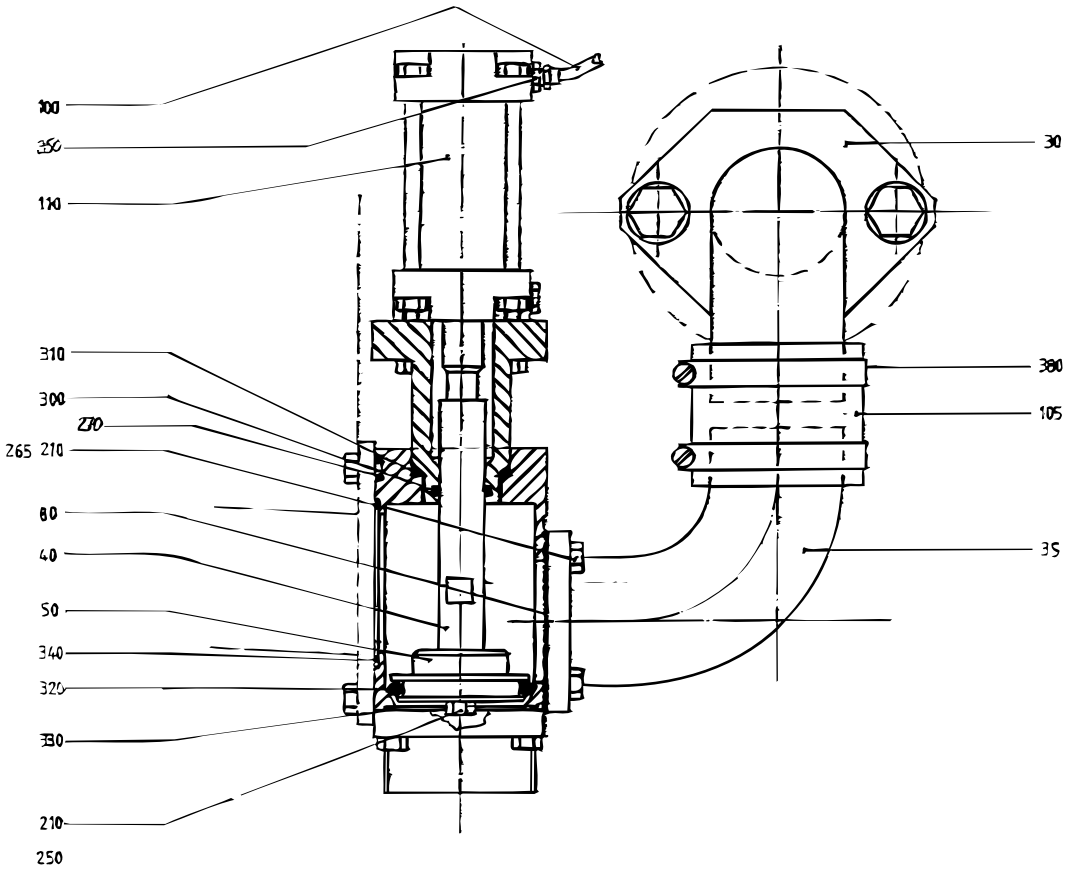

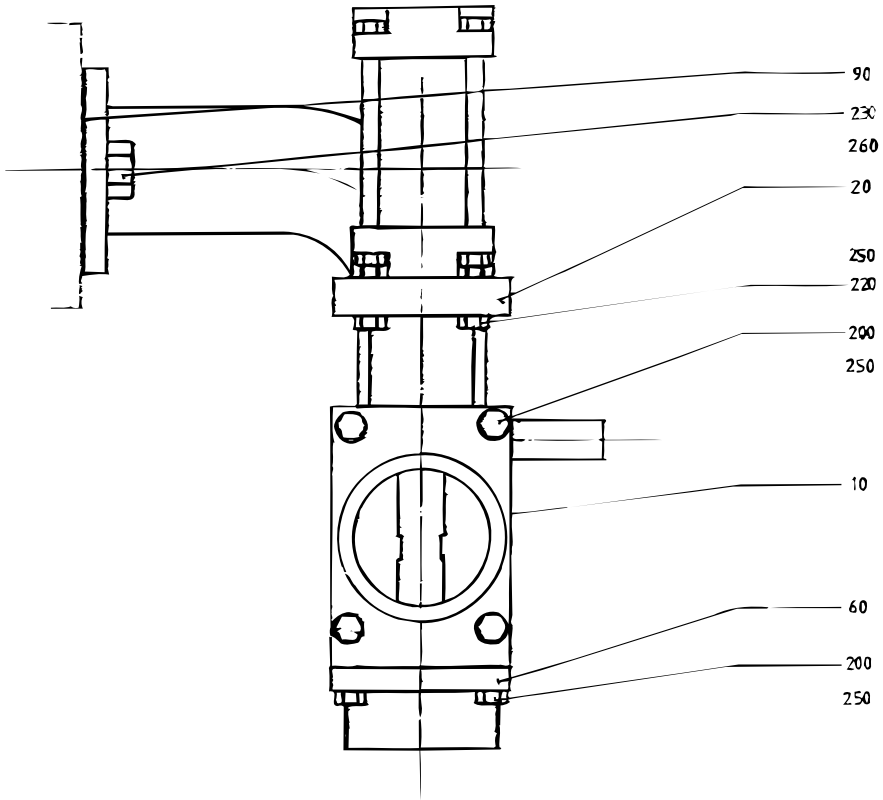

Pos	Part No	SP	UN	Qty	Description	Page No
-						
010	443122-0000	D		1	HOUSE	
020	443123-0000	D		1	HOUSE	
030	525269-0000	D		1	PIPE	
035	525270-0000	D		1	PIPE	
040	442851-0000	D		1	SHAFT	
050	442852-0000	D		1	VALVE	
060	442853-0000	-		1	ATTACHMENT PIPE	
080	531116-0000	-		1	GASKET	
090	531189-0000	-		1	GASKET	
100	90166-0124	K	MM	650	HOSE	
105	90166-0199	K	MM	80	RUBBER HOSE	
110	90239-0960	K		1	CYLINDER	
200	312105-0368	F		8	SCREW M6S ISO 4017 M6X16 A280	
210	312105-0370	F		5	SCREW M6S ISO 4017 M6X20 A280	
220	312105-0374	F		4	SCREW M6S ISO 4017 M6X30 A280	
230	312105-0534	F		2	SCREW M6S ISO 4017 M12X25 A280	
250	315105-0153	-		13	WASHER BRB6,4X12RFR	
260	315105-0178	-		2	WASHER BRB13X24RFR	
265	315115-0153	-		4	WASHER TBRB6,4X12RFR	
270	315202-0106	F		2	O-RING 8,1X1,6	
300	315202-0214	F		1	O-RING 17,3X2,4	
310	315202-0220	F		1	O-RING 32,2X3	
320	315202-0226	F		1	O-RING 44,2X5,7	
330	315202-0302	F		1	O-RING 54,5X3	
340	315202-0303	F		1	O-RING 59,5X3	
350	342920-0113	F		1	STRAIGHT COUPLING,EXT.THREADED 6/4-R1/8"	
380	342991-0111	K		2	HOSE CLIP,WORM DRIVE TYPE (63)-73	

Pos	Part No	SP	UN	Qty	Description	Page No

CABLE CONDUIT

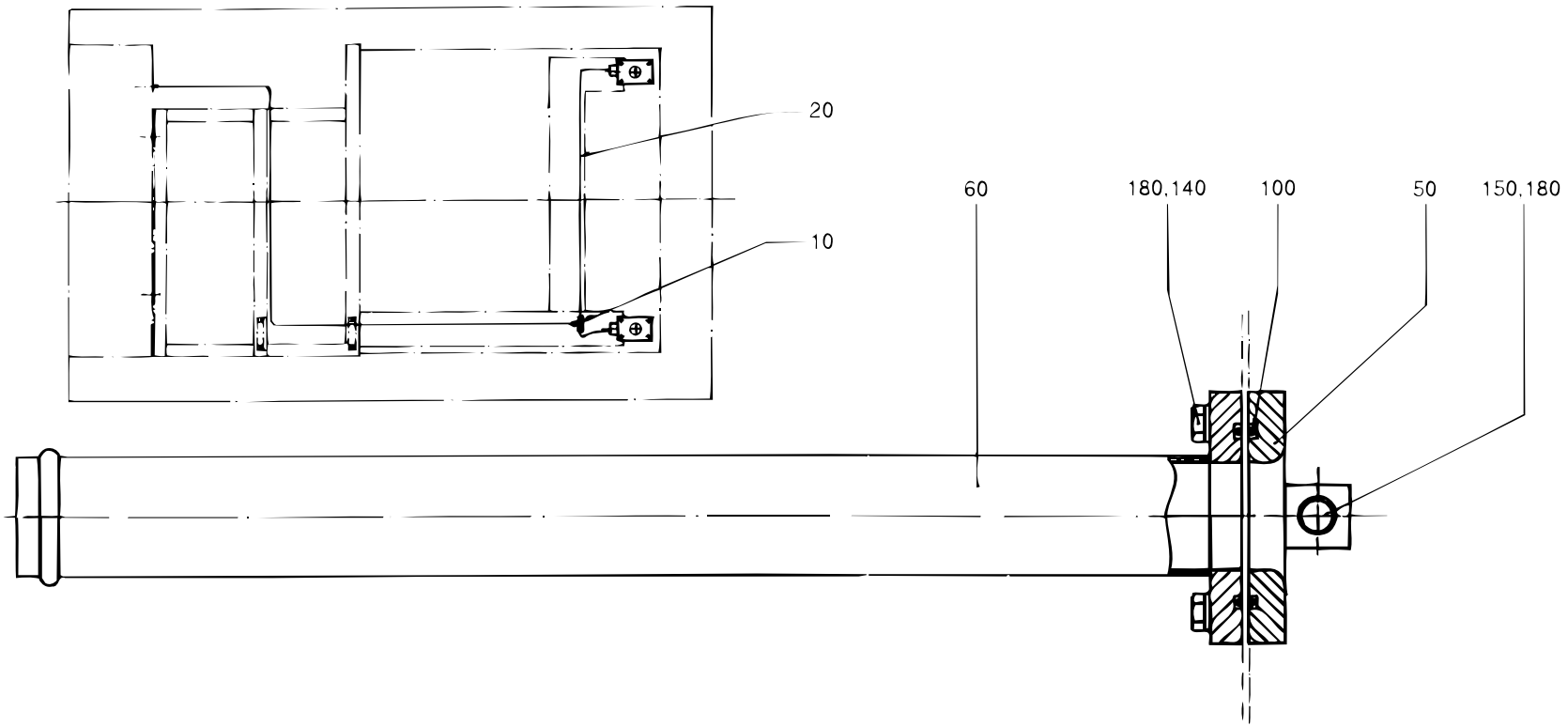

S-525110-1
ECN 12203

Pos	Part No	SP	UN	Qty	Description	Page No
-						
010	342946-0122	-		1	T-COUPLING,UNION 8/6	
020	90166-0122	-	MM	6750	HOSE	
050	525135-0000	-		2	PLATE	
060	297413-0000	-		2	PIPE	
090	90296-0009	K	KG	x	GREASE	
100	315202-0301	-		4	O-RING 49,5X3	
140	312105-0370	-		8	SCREW M6S ISO 4017 M6X20 A280	
150	312105-0364	-		2	SCREW M6S6X10RFR	
180	315105-0153	-		10	WASHER BRB6,4X12RFR	

Pos	Part No	SP	UN	Qty	Description	Page No

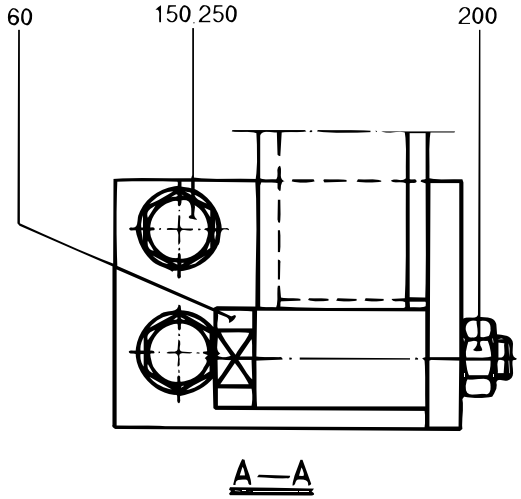

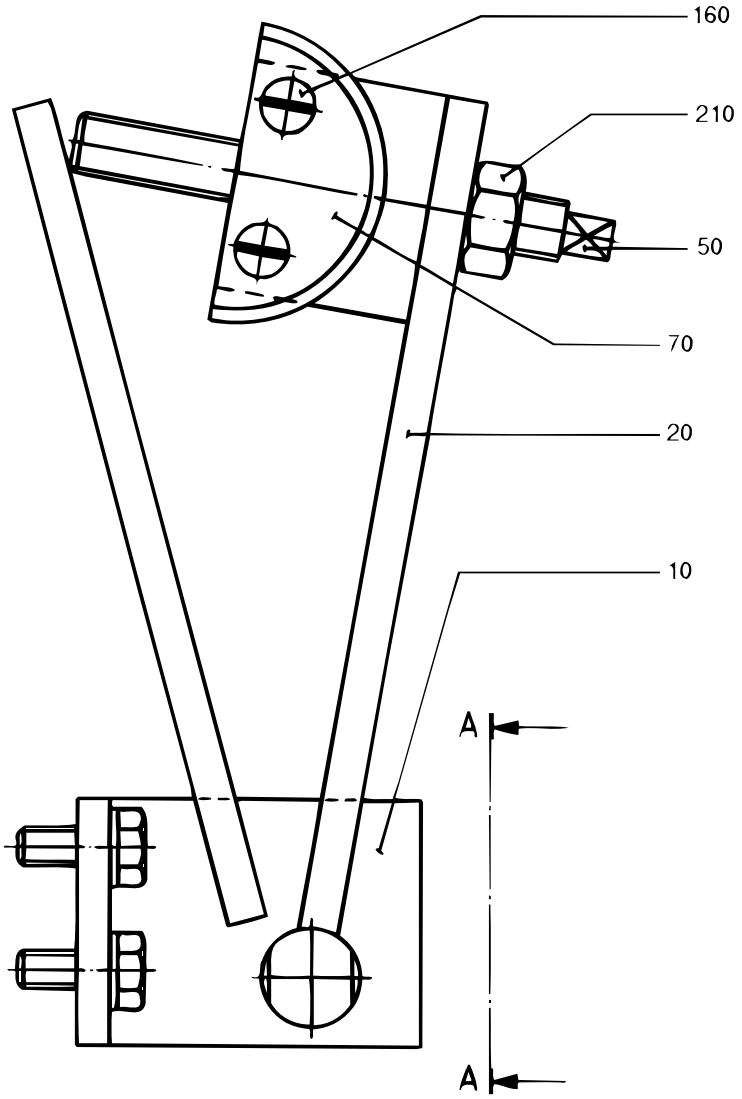

S-297638-1
ECN 16142

Pos	Part No	SP	UN	Qty	Description	Page No
0300B or 0355B or 0375S or 0400B or 0500B or 0500S or 0568B or 0750B or 0750S or 1000B or 1000S or 1055B or 1136B						
070	443367-0000	F		1	PROFILE	
0500SQ or 1000SQ						
070	574093-0000	F		1	PROFILE	
Common parts						
010	297608-0000	-		1	BRACKET	
020	297609-0000	-		1	ARM	
050	297610-0000	-		1	SCREW	
060	297611-0000	-		1	SHAFT	
150	312105-0451	-		2	SCREW M6S ISO 4017 8X20 A280	
160	312145-0378	-		2	SLOTTED HEMFS6X40RFR	
200	312605-0318	-		1	NUT M6M8RFR	
210	312605-0322	-		1	NUT M6M12RFR	
250	315105-0165	-		2	WASHER BRB8,4X16RFR	

Pos	Part No	SP	UN	Qty	Description	Page No

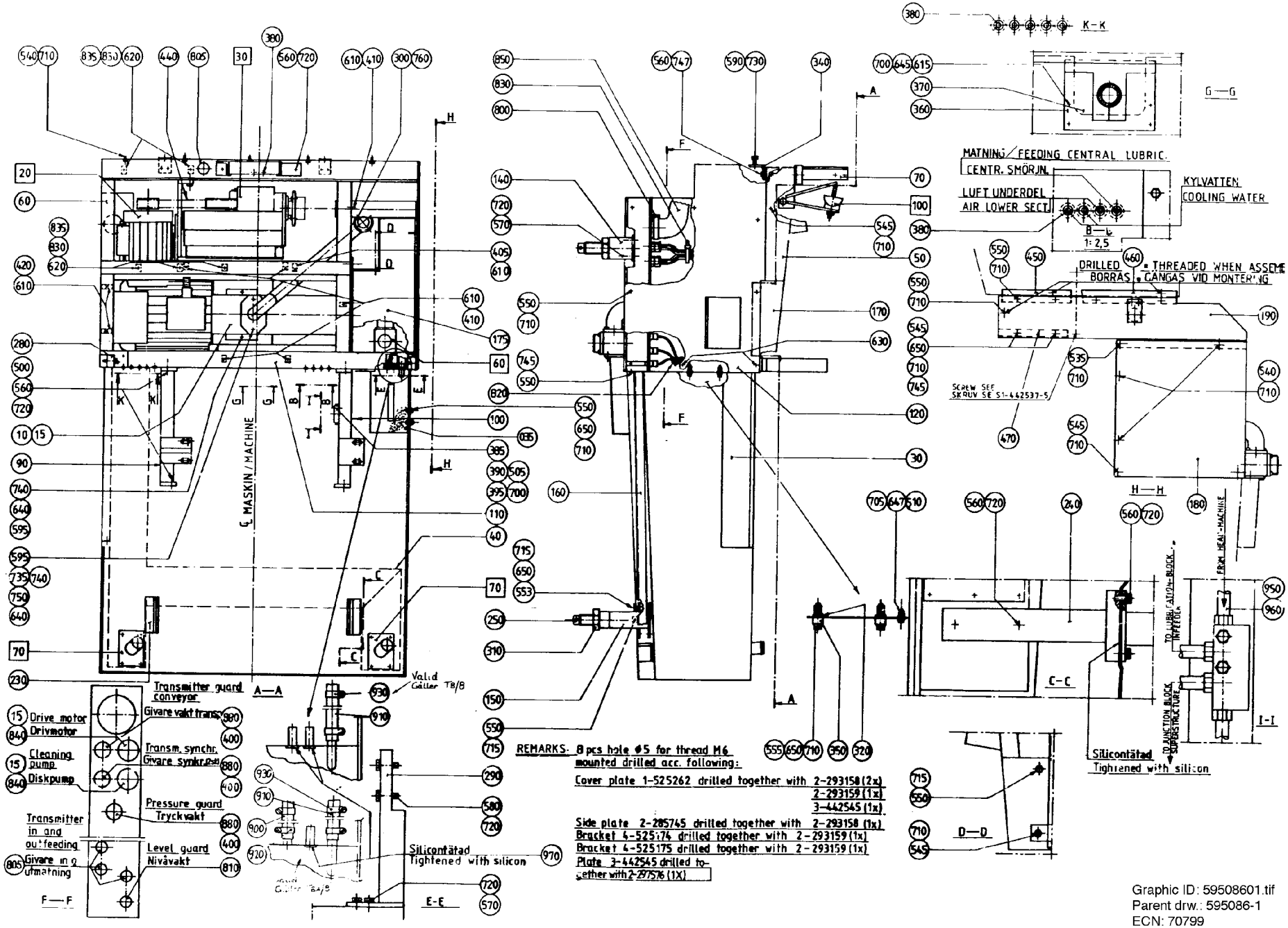

Graphic ID: 59508601.tif
Parent drw.: 595086-1
ECN: 70799

Pos	Part No	SP	UN	Qty	Description	Page No
TB/8 50HZ or TBO/8 50HZ						
010	B 90321-0015	D		1	PUMP	
970-02	90261-0004	-		2	PIPE PLUG	
TB/8 60HZ or TBO/8 60HZ						
010	B 90321-0034	D		1	PUMP	
970-02	90261-0004	-		2	PIPE PLUG	
TBA/8 50HZ						
010	B 90321-0015	D		1	PUMP	
900	90166-0059	-	MM	630	HOSE	
920	342991-0101	-		2	HOSE CLIP,WORM DRIVE TYPE (13)-16	
970	90261-0004	-		1	PIPE PLUG	
TBA/8 60HZ						
010	B 90321-0034	D		1	PUMP	
900	90166-0059	-	MM	630	HOSE	
920	342991-0101	-		2	HOSE CLIP,WORM DRIVE TYPE (13)-16	
970	90261-0004	-		1	PIPE PLUG	
Common parts						
F020	A 285287-0500	-		1	DRIVE UNIT	**409**
F030	A 285861-0500	-		1	GEAR REDUCTION	**411**
F060	A 525143-0200	-		1	BOTTOM VALVE	**415**
F070	A 525110-0100	-		1	CABLE CONDUIT	**417**
F100	A 297638-0200	-		1	CHAIN TENSIONER	**419**
015	90012-0072	F		3	GLAND FITTING **	
030	594589-0000	-		1	CLEANING TROUGH	
035	531119-0000	-		1	STRAINER	
040	525132-0000	-		1	CABLE TRENCH	
050	525262-0000	-		1	COVERING PLATE	
060	525274-0000	-		1	FINISH FRAME 525274	
070	285330-0000	-		1	HOLDER	
090	525272-0000	-		1	STRUT	
100	525273-0000	-		1	STRUT	
110	525275-0000	-		1	COVERING PLATE	
120	525346-0000	-		1	SIDE PLATE	
140	525268-0000	-		2	LEG	
150	525130-0000	-		1	LEG	
160	525277-0000	-		1	CABLE TRENCH	
170	595066-0000	-		1	COVERING PLATE	
175	443186-0000	-		1	CHUTE	
180	443187-0000	-		1	SHEET	
190	442545-0000	-		1	SHEET	
230	525266-0000	-		1	LEG	
240	525267-0000	-		1	LEG	

Pos	Part No	SP	UN	Qty	Description	Page No
250	285923-0000	-		4	SCREW	
280	297663-0000	-		1	POST HOLDER	
290	B 297664-0000	-		1	POST HOLDER	
300	B 525271-0000	-		1	ELBOW PIPE	
310	285994-0000	-		4	NUT	
320	295435-0000	-		2	WASHER	
340	297814-0000	-		2	BRACKET	
350	297860-0000	-		2	BUSHING	
360	525280-0000	-		1	SHEET	
370	525281-0000	-		1	GASKET	
380	90015-0020	F		11	BUSHING	
385	90028-0022	-		4	CONE	
390	90032-0044	-		1	JUNCTION BLOCK	
395	90134-0055	-		4	BUSHING	
400	90152-0050	-	MM	2500	FLEXIBLE CONDUIT	
405	90165-0060	-		1	CLAMP	
410	316810-0106	-		7	PIPE CLAMP 8MM RFR	
420	90165-0057	-		4	CLIP	
440	90417-0180	F		1	TIMING BELT	
450	525174-0000	-		1	BRACKET	
460	525175-0000	-		1	BRACKET	
470	297551-0000	-		1	SHEET	
500	311103-0399	-		8	CYLINDRICACP M6 8X16 RFR	
505	312105-0295	-		2	SCREW M6S ISO 4017 M4X20 A280	
510	312105-0329	-		1	SCREW M6S ISO 4017 M5X16 A280	
535	312105-0362	-		1	SCREW M6S ISO 4017 M6X8 A280	
540	312105-0364	-		8	SCREW M6S6X10RFR	
545	312105-0368	-		6	SCREW M6S ISO 4017 M6X16 A280	
550	312105-0367	-		15	SCREW M6S6X14RFR	
553	312105-0370	-		1	SCREW M6S ISO 4017 M6X20 A280	
555	312105-0376	-		2	SCREW M6S ISO 4017 M6X35 A280	
560	312105-0451	-		23	SCREW M6S ISO 4017 8X20 A280	
570	312105-0453	-		8	SCREW M6S ISO 4017 M8X25 A280	
580	312105-0455	-		4	SCREW M6S ISO 4017 M8X30 A280	
590	312105-0495	-		2	SCREW M6S ISO 4017 M10X30 A280	
595	312105-0542	-		4	SCREW M6S ISO 4014 M12X50 A280	
610	312125-0287	-		9	SLOTTED CHEESE HEAD ISO 1207 M4X8 RFR	
615	312125-0291	-		4	SLOTTED CHEESE HEAD ISO 1207 M4X12 RFR	
620	312125-0323	-		5	SLOTTED CHEESE HEAD ISO 1207 M5X8 RFR	
630	312155-0366	-		2	SCREW MF6S DIN 7991 M6X12 A280	

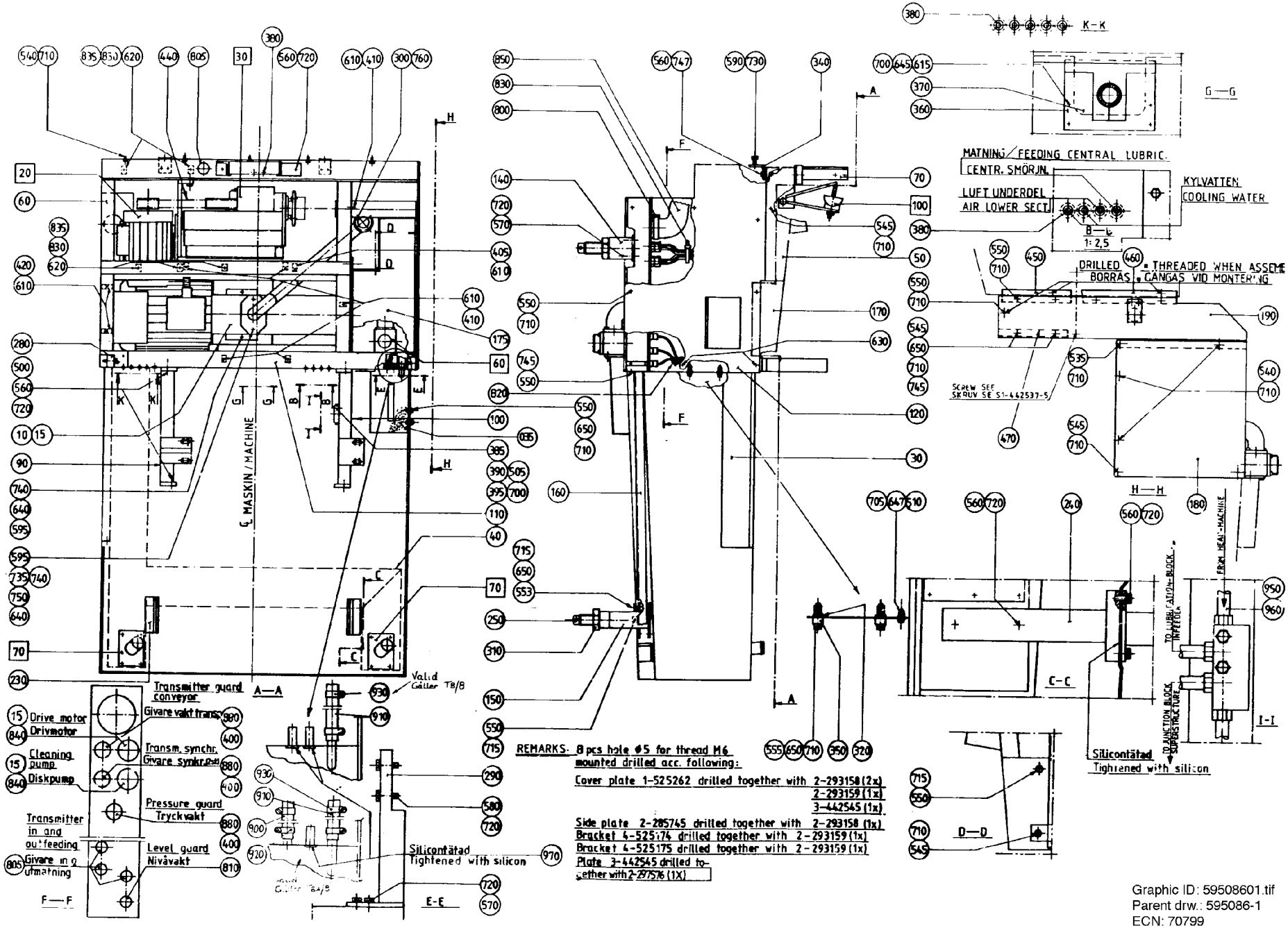

Graphic ID: 59508601.tif
Parent drw.: 595086-1
ECN: 70799

Pos	Part No	SP	UN	Qty	Description	Page No
640	312605-0322	-		4	NUT M6M12RFR	
645	312605-0312	-		4	NUT M6M4RFR	
647	312605-0314	-		2	NUT M6M5RFR	
650	312605-0316	-		7	NUT M6M6RFR	
700	315105-0136	-		11	WASHER BRB4,3X8RFR	
705	315105-0146	-		2	WASHER BRB5,3X10RFR	
710	315105-0153	-		31	WASHER BRB6,4X12RFR	
715	6278-0000	-		3	WASHER	
720	315105-0165	-		31	WASHER BRB8,4X16RFR	
730	315105-0173	-		2	WASHER BRB10,5X22RFR	
735	315105-0178	-		2	WASHER BRB13X24RFR	
740	315115-0178	-		6	WASHER TBRB13X24RFR	
745	315115-0153	-		3	WASHER TBRB6,4X12RFR	
747	315115-0165	-		4	WASHER TBRB8,4X16RFR	
750	315202-0229	F		1	O-RING 59,2X5,7	
760	315250-0103	F		1	GASKET 48/38	
800	342991-0112	-		2	HOSE CLIP,WORM DRIVE TYPE (73)-83	
805	352103-0100	-		4	CABLE GLAND STR 9	
810	352103-0101	-		1	CABLE GLAND ST 9	
820	352113-0101	-		3	RIBBON CLAMP	
830	352113-0102	-		6	RIBBON CLAMP	
835	352113-0204	-		5	ANCHOR TM3S25-M	
840	90152-0051	-	MM	1000	FLEXIBLE CONDUIT	
850	90152-0044	-	MM	350	FLEXIBLE CONDUIT	
880	90012-0071	-		3	GLAND FITTING	
910	90166-0087	-	MM	630	HOSE	
930	342991-0103	-		2	HOSE CLIP,WORM DRIVE TYPE (19)-23	
950	90134-0030	-		1	SLEEVE	
960	90166-0108	-	MM	870	HOSE	

Pos	Part No	SP	UN	Qty	Description	Page No

LOWER SECTION

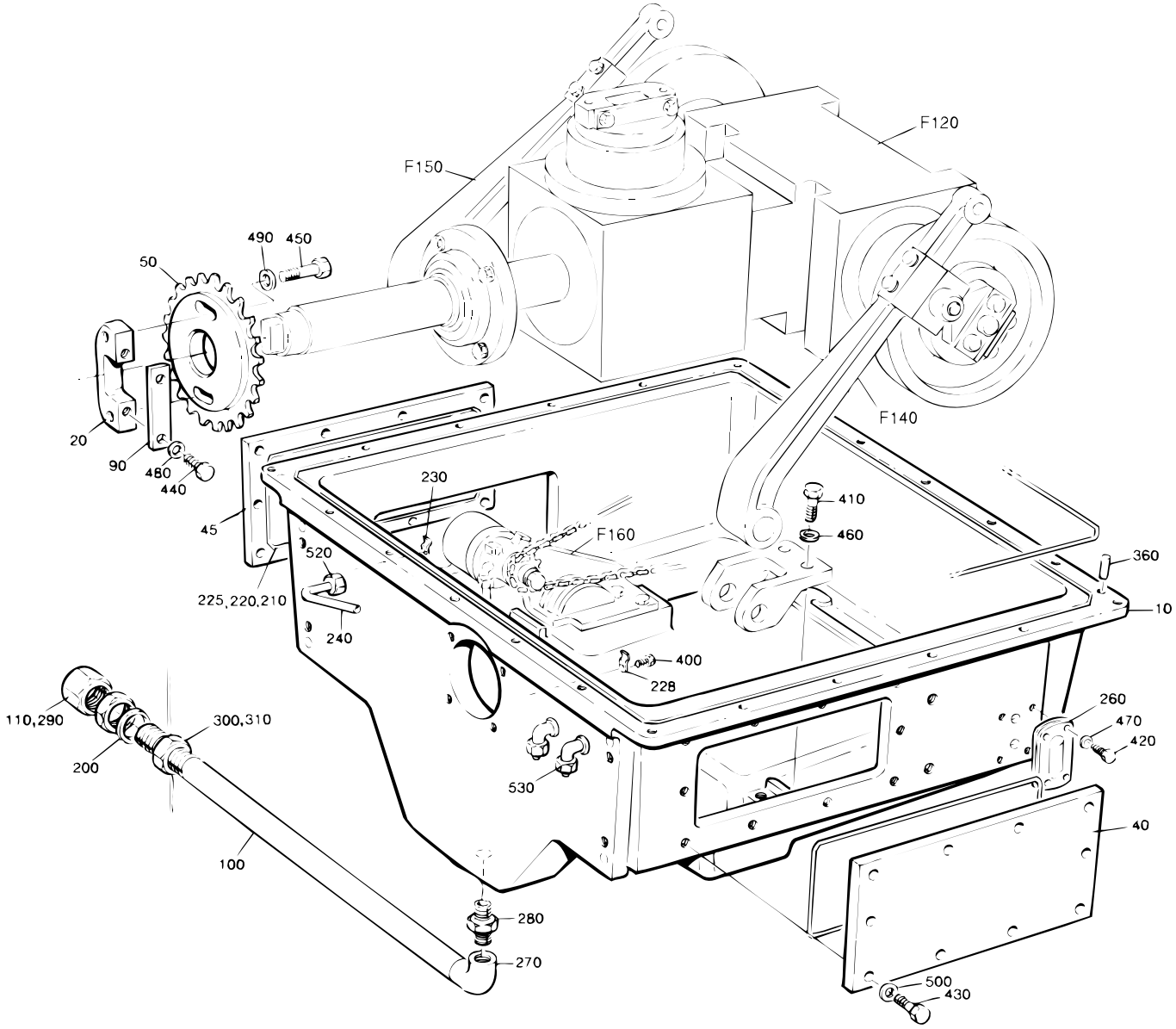

S-285303-4
ECN 12903

Pos	Part No	SP	UN	Qty	Description	Page No
-						
F120	A 285291-0400	-		1	BEVEL GEAR	427
F140	A 285299-0100	-		1	PRESSURE ARM	431
F150	A 594621-0100	-		1	PRESSURE ARM	433
F160	A 525102-0200	-		1	LUBRICATING SYSTEM	435
010	525276-0000	-		1	HOUSE	
020	262274-0005	K		1	BRACKET	
040	525185-0000	-		1	HATCH	
045	525377-0000	-		1	HATCH	
050	443176-0000	K		1	SPROCKET	
090	262275-0003	K		1	CAP	
100	443126-0000	-		1	CONNECTION PIPE	
110	525047-0000	-		2	GASKET	
200	525046-0000	-		2	GASKET	
210	90296-0009	-	KG	1	GREASE	
220	90161-0001	K	MM	3900	STRIP	
225	90153-0043	K	KG	x	ADHESIVE	
228	90165-0003	-		2	CLIP	
230	90165-0005	-		3	CLIP	
240	90166-0124	F	MM	1500	HOSE	
260	90199-0004	K		1	LEVEL INDICATOR	
270	90330-0020	-		1	ELBOW 90,INTERNAL THREAD Rp1/2"	
280	90330-0021	-		1	NIPPLES,HEXAGON,EXT.R-THREAD R1/2"-R1/2"	
290	90330-0086	-		1	COVER	
300	90330-0093	-		2	NUT,HEXAGON G1/2"	
310	90157-0034	-	L	1	SEALING COMPOUND	
360	311103-0399	-		2	CYLINDRICACP M6 8X16 RFR	
400	312101-0287	-		3	SCREW M6S4X8FZB	
410	312101-0453	-		4	SCREW M6S8X25FZB	
420	312105-0293	-		4	SCREW M6S ISO 4017 M4X16 A280	
430	312105-0370	-		20	SCREW M6S ISO 4017 M6X20 A280	
440	90287-0165	-		2	SCREW	
450	312105-0493	-		2	SCREW M6S ISO 4017 M10X25 A280	
460	315101-0165	-		4	WASHER BRB8,4X16FZB	
470	315105-0136	-		4	WASHER BRB4,3X8RFR	
480	315105-0165	-		2	WASHER BRB8,4X16RFR	
490	315105-0173	-		2	WASHER BRB10,5X22RFR	
500	315115-0153	-		20	WASHER TBRB6,4X12RFR	
520	342920-0113	-		1	STRAIGHT COUPLING,EXT.THREADED 6/4-R1/8"	
530	342930-0113	-		4	ELBOW 90 COUPL.,EXT.THREAD 6/4-R1/8"	

Pos	Part No	SP	UN	Qty	Description	Page No

BEVEL GEAR

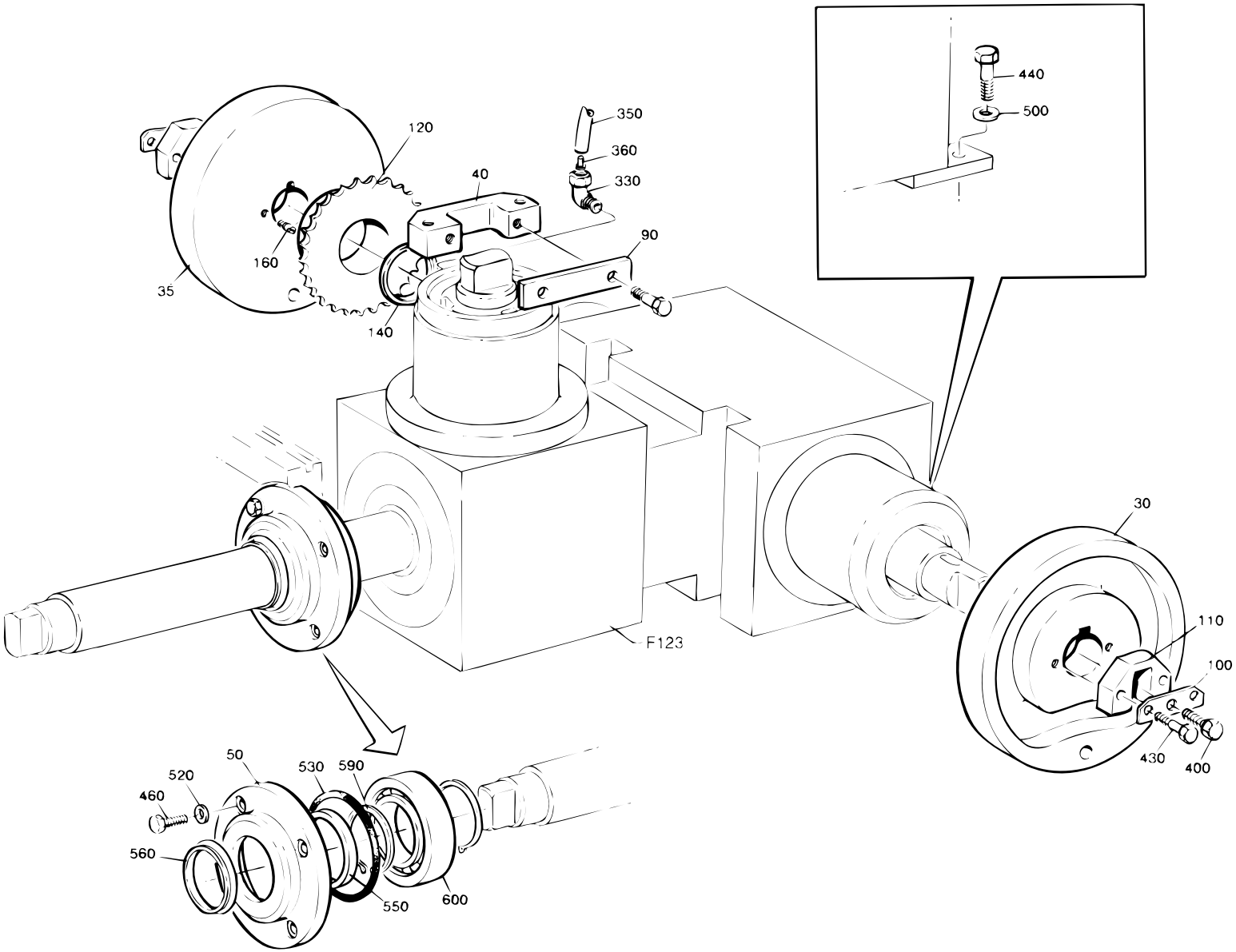

S-285291-4
ECN 11736

Pos	Part No	SP	UN	Qty	Description	Page No
-						
F123	A 442644-0300	D		1	DOUBLE GEAR	429
030	285054-0000	K		1	CURVE	
035	285055-0000	K		1	CURVE	
040	262274-0002	K		1	BRACKET	
050	276613-0000	-		1	LID	
090	262275-0002	K		1	CAP	
100	276636-0000	K		2	WASHER	
110	285027-0000	K		2	CARRIER	
120	443047-0000	K		1	SPROCKET	
140	443052-0000	-		1	SPACER RING	
160	443149-0000	K		1	STUD SCREW	
330	342731-0102	K		1	ELBOW CONNECTION WE 6-LRFZB	
350	90166-0108	K	MM	400	HOSE	
360	90134-0030	K		2	SLEEVE	
400	312101-0374	-		4	SCREW M6S6X30FZB	
430	312101-0451	-		4	SCREW M6S8X20FZB	
440	312101-0453	-		2	SCREW M6S8X25FZB	
460	312105-0371	-		4	SCREW M6S6X22RFR	
500	315101-0165	-		2	WASHER BRB8,4X16FZB	
520	315115-0153	-		4	WASHER TBRB6,4X12RFR	
530	315202-0309	K		1	O-RING 89,5X3	
550	315221-0200	K		1	SEAL RING CB50X72X8	
560	315226-0200	K		1	SEAL RING RB50X70X5,5	
590	315750-0131	K		2	CIRCLIP SGA50	
600	321309-0110	K		1	BALL BEARISKF6210	

Pos	Part No	SP	UN	Qty	Description	Page No

DOUBLE GEAR

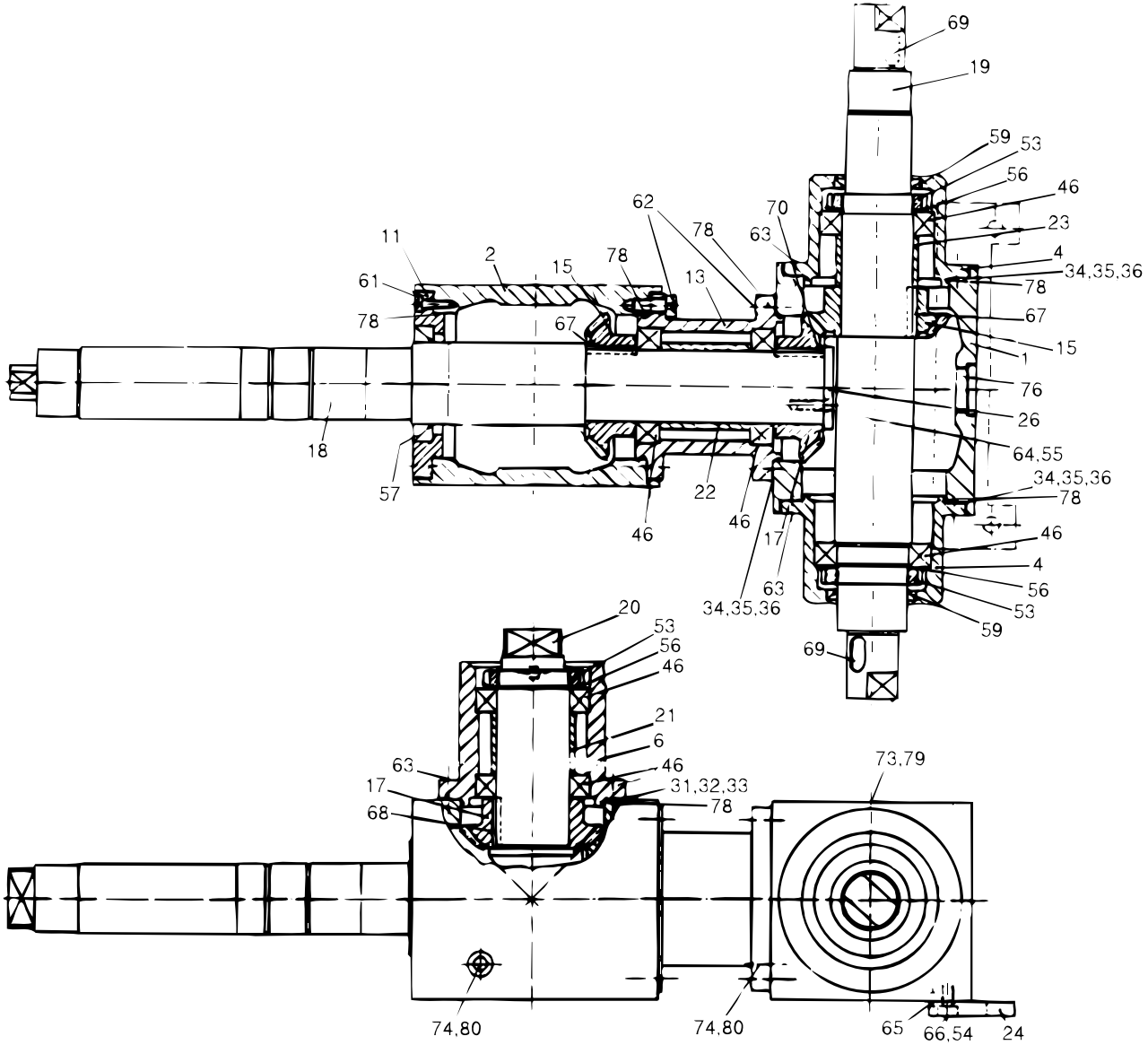
69
19
59
53
56
46
23
4
34,35,36
78
67
15
1
76
26
64,55
34,35,36
78
46
4
56
53
59
69
62
78
70
63
11
2
15
78
13
61
78
67
18
57
46
22
46
17
63
34,35,36
20
53
56
46
21
6
63
17
68
46
31,32,33
78
73,79
74,80
74,80
65
66,54
24

Pos	Part No	SP	UN	Qty	Description	Page No
-						
	443174-0001	-	ML	x	MEASURE DRAWING	
001	568151-0000	-		1	GEAR HOUSING	
002	568152-0000	-		1	GEAR HOUSING	
004	568153-0000	-		2	BEARING SEAT	
006	568154-0000	-		1	BEARING SEAT	
011	568155-0000	-		1	BEARING COVER	
013	568156-0000	-		1	FLANGE	
015	442613-0000	K		2	GEAR WHEEL	
017	442614-0000	K		2	GEAR WHEEL	
018	568157-0000	K		1	SHAFT	
019	568158-0000	K		1	SHAFT	
020	568159-0000	K		1	SHAFT	
021	442615-0000	K		1	SPACER	
022	442616-0000	K		1	SPACER	
023	442617-0000	K		1	SPACER	
024	568160-0000	K		1	FASTENING PLATE	
026	568161-0000	K		1	WASHER	
031	525331-0000	K		1	SHIM	
032	443055-0000	K		1	SHIM	
033	443056-0000	K		1	SHIM	
034	525332-0000	K		4	SHIM	
035	443057-0000	K		4	SHIM	
036	443058-0000	K		4	SHIM	
046	321306-0110	K		6	BALL BEARISKF6010*	
053	312805-0110	K		3	ROUND NUT KM10	
054	315402-0173	K		2	WASHER FBB10,2RFR	
056	315410-0110	K		3	LOCK WASHESKFMB10	
057	90091-0202	K		1	SEAL RING	
059	90091-0143	K		2	SEAL RING	
061	312111-0370	K		4	SCREW MC6S6X20FZB	
062	312111-0453	K		8	SCREW MC6S8X25FZB	
063	312111-0451	K		12	SCREW MC6S8X20FZB	
064	312151-0451	K		2	SCREW MF6S8X20FZB	
065	311111-0305	K		2	SLOTTED TUFRP5X14	
066	312111-0491	K		2	SCREW MC6S10X20FZB	
067	315701-0363	K		2	FLAT WEDGE14X9X40	
068	568162-0000	K		1	WEDGE	
069	315701-0296	K		2	FLAT WEDGE10X8X25	
070	315701-0363	K		1	FLAT WEDGE14X9X40	
078	90242-0118	K		6	O-RING	
079	90242-0120	K		1	O-RING	
080	90242-0121	K		2	O-RING	

Pos	Part No	SP	UN	Qty	Description	Page No

PRESSURE ARM

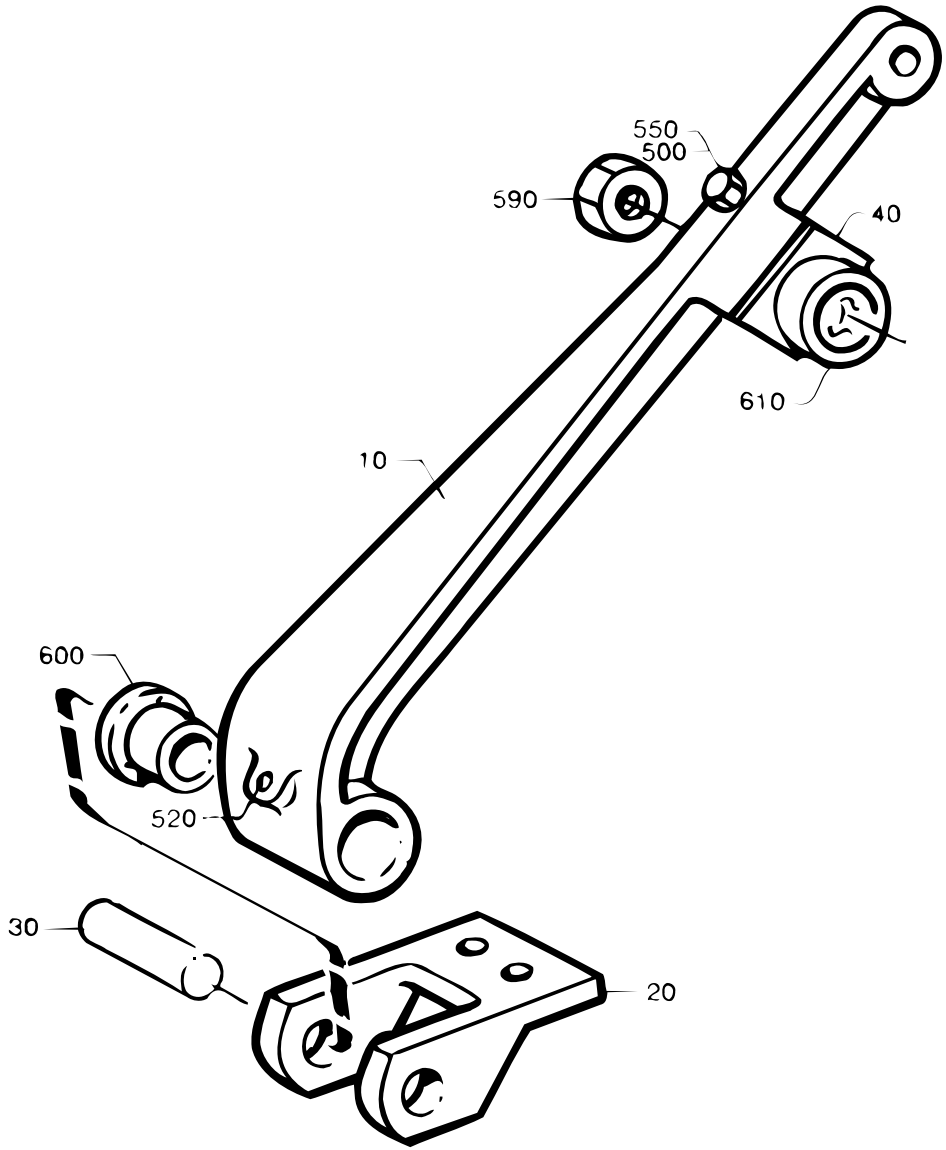

Pos	Part No	SP	UN	Qty	Description	Page No
-						
010	442524-0000	D		1	ARM	
020	285300-0000	D		1	BRACKET	
030	262261-0000	K		1	SHAFT	
040	442523-0000	-		1	HOLDER	
500	312101-0379	-		2	SCREW M6S6X45FZB	
520	312311-0370	K		1	SET SCREW FULL DOGPOINT ISO 4028	
M6X20						
550	315101-0153	-		2	WASHER BRB6,4X12FZB	
590	312631-0324	-		1	NUT M6M16X1,5FZB	
600	321101-0232	K		2	FLANGE BUS 20F7X16	
610	321582-0212	K		1	CURVE ROLLNUKR35	

Pos	Part No	SP	UN	Qty	Description	Page No

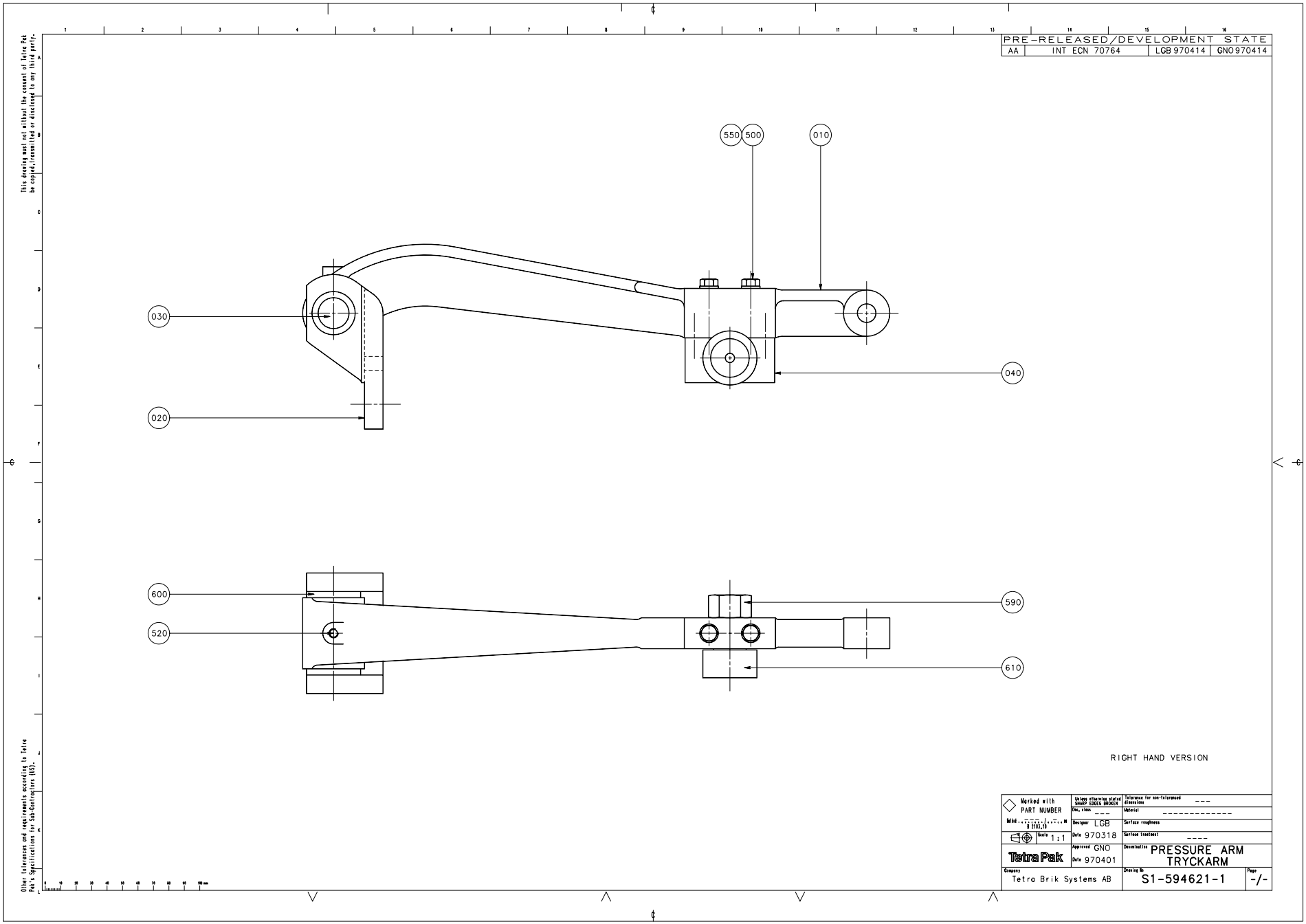
PRE-RELEASED/DEVELOPMENT STATE
AA
INT ECN 70764
LGB 970414
GNO 970414
550
500
010
030
040
020
600
590
520
610
RIGHT HAND VERSION
Marked with PART NUMBER
Unless otherwise stated SHARP EDGES BROKEN
Tolerance for non-toleranced dimensions ---
Dec. class ---
Material ----------
Designer LGB
Surface roughness
Date 970318
Surface treatment ----
Scale 1:1
Approved GNO
Date 970401
Denomination PRESSURE ARM TRYCKARM
Tetra Pak
Company Tetra Brik Systems AB
Drawing No S1-594621-1
Page -/-
This drawing must not without the consent of Tetra Pak be copied, transmitted or disclosed to any third party.
Other tolerances and requirements according to Tetra Pak's Specifications for Sub-Contractors (SS).

Pos	Part No	SP	UN	Qty	Description	Page No
-						
010	442524-0000	D		1	ARM	
020	285300-0000	D		1	BRACKET	
030	262261-0000	K		1	SHAFT	
040	442523-0000	-		1	HOLDER	
500	312101-0379	-		2	SCREW M6S6X45FZB	
520	312311-0370	K		1	SET SCREW FULL DOGPOINT ISO 4028	
M6X20						
550	315101-0153	-		2	WASHER BRB6,4X12FZB	
590	312631-0324	-		1	NUT M6M16X1,5FZB	
600	321101-0232	K		2	FLANGE BUS 20F7X16	
610	321582-0212	K		1	CURVE ROLLNUKR35	

Pos	Part No	SP	UN	Qty	Description	Page No

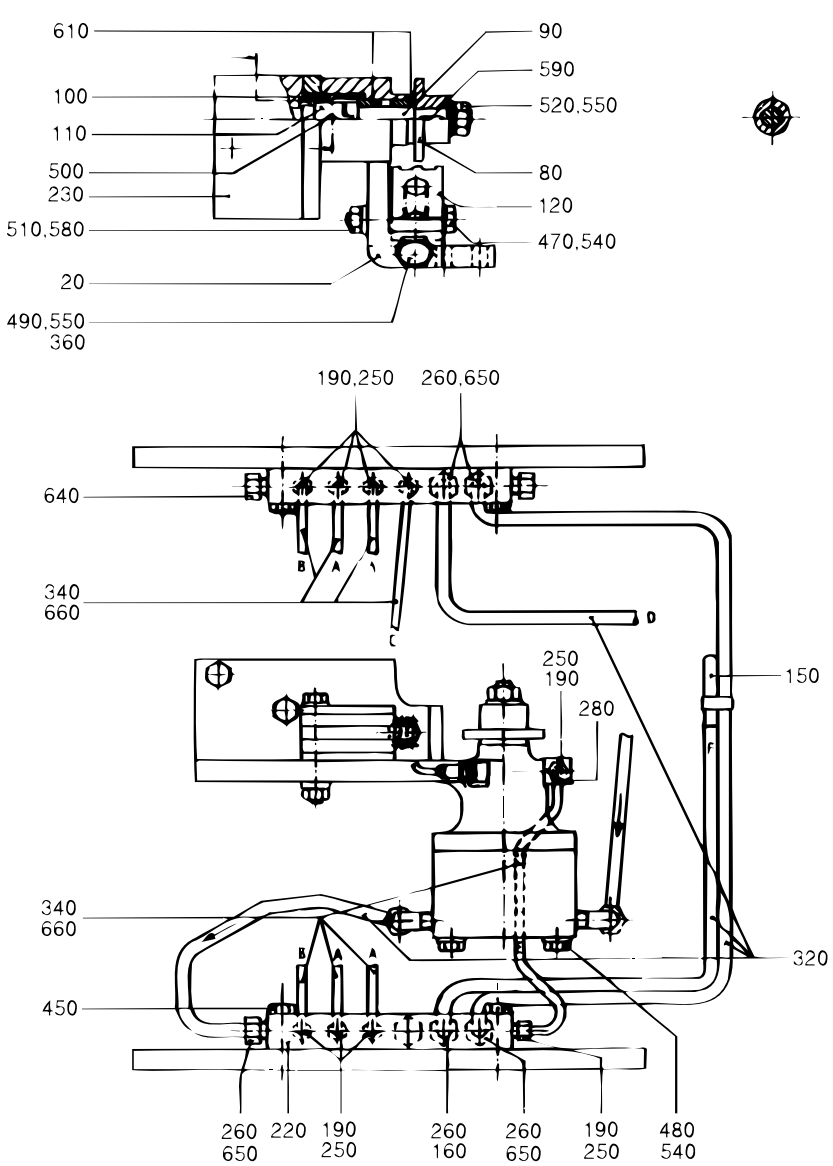

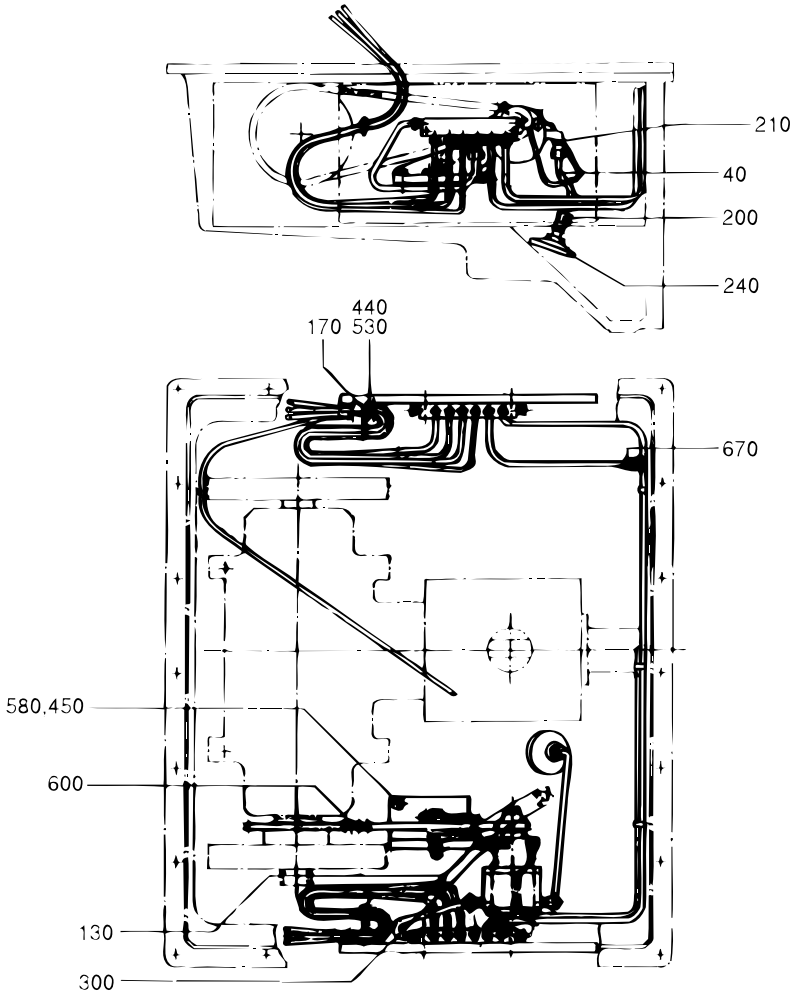

S-525102-2
ECN 12903

Pos	Part No	SP	UN	Qty	Description	Page No
-						
020	525173-0000	-		1	CANTILEVER	
040	443150-0000	-		1	SUCTION TUBE	
080	443048-0000	K		1	SPROCKET	
090	443049-0000	K		1	SHAFT	
100	443050-0000	-		1	GUIDE SLEEVE	
110	443051-0000	K		1	CONNECTION	
120	443053-0000	K		1	CHAIN GUIDE	
130	443151-0000	K		1	PIPE	
150	525375-0000	-		1	OIL PIPE	
170	525358-0000	-		2	BRACKET	
180	525376-0000	-		2	BOW CLAMP	
190	90028-0001	-		1	CONE	
200	90030-0107	-		1	PIPE CONNECTION	
210	90030-0222	-		2	ELBOW PIPE JOINT	
220	90032-0035	-		2	JUNCTION BLOCK	
230	90048-0033	-		1	GEAR PUMP	
240	90048-0420	-		1	FILTER	
250	90134-0003	-		1	BUSHING	
260	B 90134-0034	-		3	NIPPLE	
270	90092-0038	-		4	METERING VALVE	
275	90092-0081	-		5	METERING VALVE	
280	90137-0005	-		1	PIPE JOINT	
300	90137-0010	-		1	PIPE JOINT	
320	90166-0011	-	MM	1500	HOSE	
340	90166-0051	-	MM	4500	HOSE	
350	90230-0031	-		1	NON-RETURN VALVE	
360	90335-0012	-		1	SPRING	
370	B 90415-0033	-		1	OIL FILTER	
440	312101-0327	-		2	SCREW M6S5X12FZB	
450	312101-0370	-		6	SCREW M6S6X20FZB	
470	312101-0379	-		1	SCREW M6S6X45FZB	
480	312101-0380	-		2	SCREW M6S6X50FZB	
490	312101-0451	-		1	SCREW M6S8X20FZB	
495	312105-0388	-		2	SCREW M6S ISO 4014 M6X90 A280	
500	312316-0283	-		1	STOP SCREW SK6SS4X4FZB	
510	312601-0316	-		1	NUT M6M6FZB	
520	312601-0318	-		1	NUT M6M8FZB	
530	315101-0146	-		2	WASHER BRB5,3X10FZB	
540	315101-0153	-		3	WASHER BRB6,4X12FZB	
550	315101-0165	-		2	WASHER BRB8,4X16FZB	
580	315111-0153	-		5	WASHER TBRB6,4X12FZB	
583	315233-0109	-		2	SEAL RING R1/8"	
585	315233-0110	-		2	SEAL RING R1/4"	
590	315701-0134	-		1	FLAT WEDGE3X3X10	
600	318201-0076	-		1	ROLLER CHA3/8"	
610	321101-0172	-		2	FLANGE BUS 12F7X10	
640	90136-0002	-		3	PLUG	
650	342706-0130	-		3	ACCESSORIES,INSERT SLEEVE 6	
660	342706-0114	-		16	ACCESSORIES,INSERT SLEEVE 4	
680	342921-0114	-		2	STRAIGHT COUPLING,EXT.THREADED 6/4-G1/4"	
690	342960-0112	-		2	BULKHEAD COUPLING 6/4	

ELEMENT

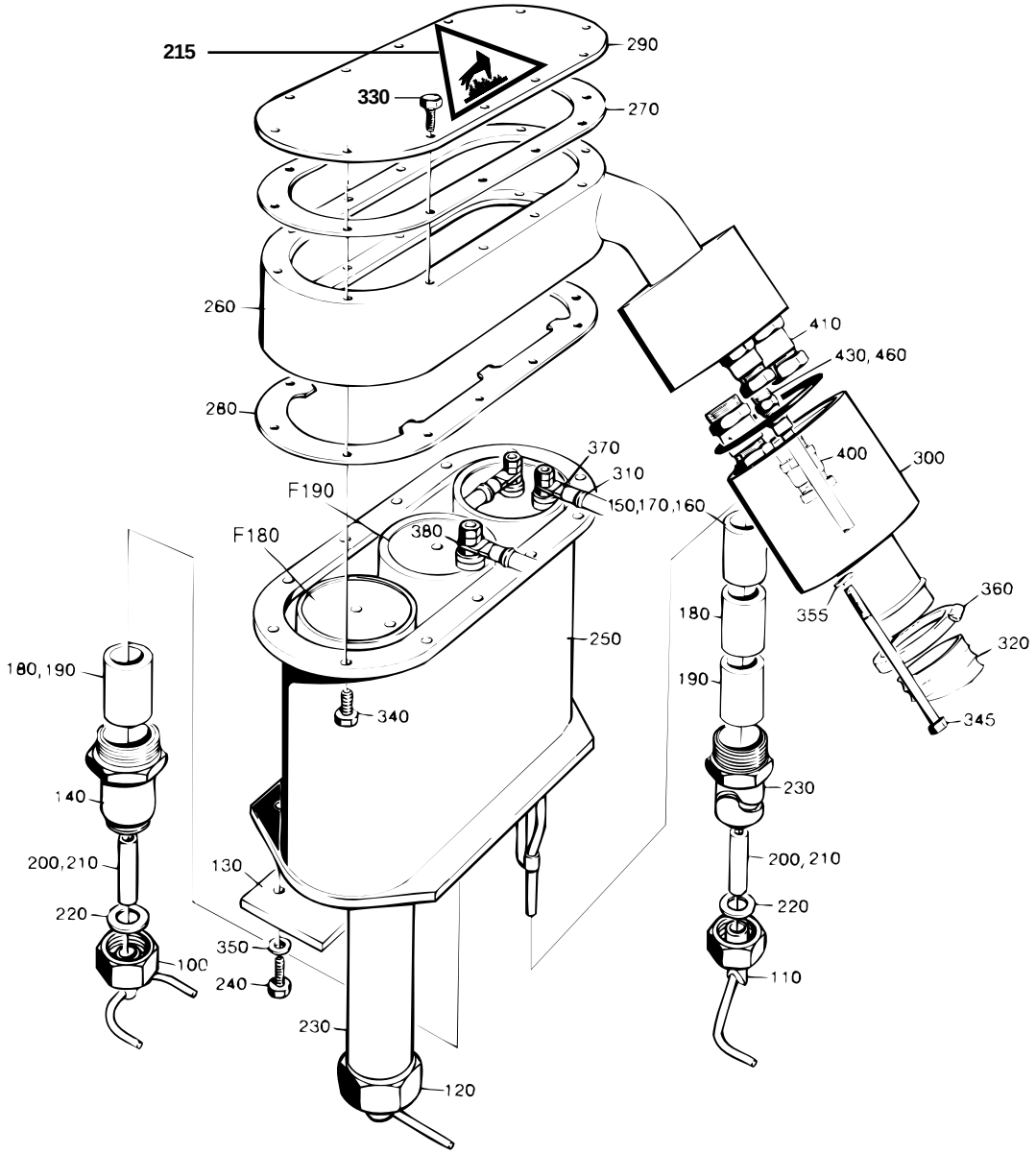

S-525129-1
ECN 22847

Pos	Part No	SP	UN	Qty	Description	Page No
0300B						
100	B 247227-0002	K		1	AIR NOZZLE	
110	B 285507-0002	K		1	AIR NOZZLE	
120	B 285508-0002	K		1	AIR NOZZLE	
140	23763-0010	-		1	SPACER PIPE	
160	23765-0002	K		2	INSULATING PIPE	
190	23765-0005	K		1	INSULATING PIPE	
200	252766-0001	K		2	INSULATING PIPE	
210	252766-0002	K		1	INSULATING PIPE	
230	297499-0002	-		2	SIDE PIPE	
240	312105-0372	-		3	SCREW M6S ISO 4017 M6X25 A280	
0355B						
100	B 442867-0000	K		1	AIR NOZZLE	
110	B 285676-0000	K		1	AIR NOZZLE	
120	B 285677-0000	K		1	AIR NOZZLE	
140	23763-0006	-		1	SPACER PIPE	
180	23765-0004	K		4	INSULATING PIPE	
190	23765-0005	K		1	INSULATING PIPE	
200	252766-0001	K		4	INSULATING PIPE	
210	252766-0002	K		1	INSULATING PIPE	
230	297499-0007	-		2	SIDE PIPE	
240	312105-0372	-		3	SCREW M6S ISO 4017 M6X25 A280	
0375S						
100	B 247227-0002	K		1	AIR NOZZLE	
110	B 285507-0002	K		1	AIR NOZZLE	
120	B 285508-0002	K		1	AIR NOZZLE	
140	23763-0010	-		1	SPACER PIPE	
170	23765-0003	K		2	INSULATING PIPE	
180	23765-0004	K		4	INSULATING PIPE	
190	23765-0005	K		1	INSULATING PIPE	
210	252766-0002	K		3	INSULATING PIPE	
230	297499-0009	-		2	SIDE PIPE	
240	312105-0372	-		3	SCREW M6S ISO 4017 M6X25 A280	
0400B						
100	B 442867-0000	K		1	AIR NOZZLE	
110	B 574676-0000	K		1	AIR NOZZLE	
120	B 574677-0000	K		1	AIR NOZZLE	
140	23763-0006	-		1	SPACER PIPE	
170	23765-0003	K		2	INSULATING PIPE	
180	23765-0004	K		2	INSULATING PIPE	
190	23765-0005	K		3	INSULATING PIPE	
210	252766-0002	K		3	INSULATING PIPE	
230	297499-0003	-		2	SIDE PIPE	
240	312105-0372	-		3	SCREW M6S ISO 4017 M6X25 A280	
0500B						
100	247227-0003	K		1	AIR NOZZLE	
110	B 525197-0000	K		1	BLOW-OFF NOZZLE TR	
120	B 525198-0000	K		1	BLOW-OFF NOZZLE TL	
130	262290-0002	-		1	LACE	
140	23763-0003	-		1	SPACER PIPE	
160	23765-0002	K		2	INSULATING PIPE	
180	23765-0004	K		1	INSULATING PIPE	
200	252766-0001	K		3	INSULATING PIPE	
230	297499-0002	-		2	SIDE PIPE	
240	312105-0376	-		3	SCREW M6S ISO 4017 M6X35 A280	
0500S						
100	B 442867-0000	K		1	AIR NOZZLE	
110	B 285676-0000	K		1	AIR NOZZLE	
120	B 285677-0000	K		1	AIR NOZZLE	
140	23763-0006	-		1	SPACER PIPE	
170	23765-0003	K		2	INSULATING PIPE	
180	23765-0004	K		2	INSULATING PIPE	
190	23765-0005	K		3	INSULATING PIPE	
200	252766-0001	K		4	INSULATING PIPE	
210	252766-0002	K		1	INSULATING PIPE	
230	297499-0003	-		2	SIDE PIPE	
240	312105-0372	-		3	SCREW M6S ISO 4017 M6X25 A280	
0500SQ						
100	574032-0000	K		1	BLOWING NOZZLE B	
110	574033-0000	K		1	BLOWING NOZZLE TH	
120	574034-0000	K		1	BLOWING NOZZLE TV	
130	262290-0001	-		1	LACE	
140	23763-0006	-		1	SPACER PIPE	
170	23765-0003	K		2	INSULATING PIPE	
180	23765-0004	K		2	INSULATING PIPE	
190	23765-0005	K		1	INSULATING PIPE	
200	252766-0001	K		1	INSULATING PIPE	
210	252766-0002	K		2	INSULATING PIPE	
230	583448-0000	-		2	SIDE PIPE	
240	312105-0374	-		3	SCREW M6S ISO 4017 M6X30 A280	

ELEMENT

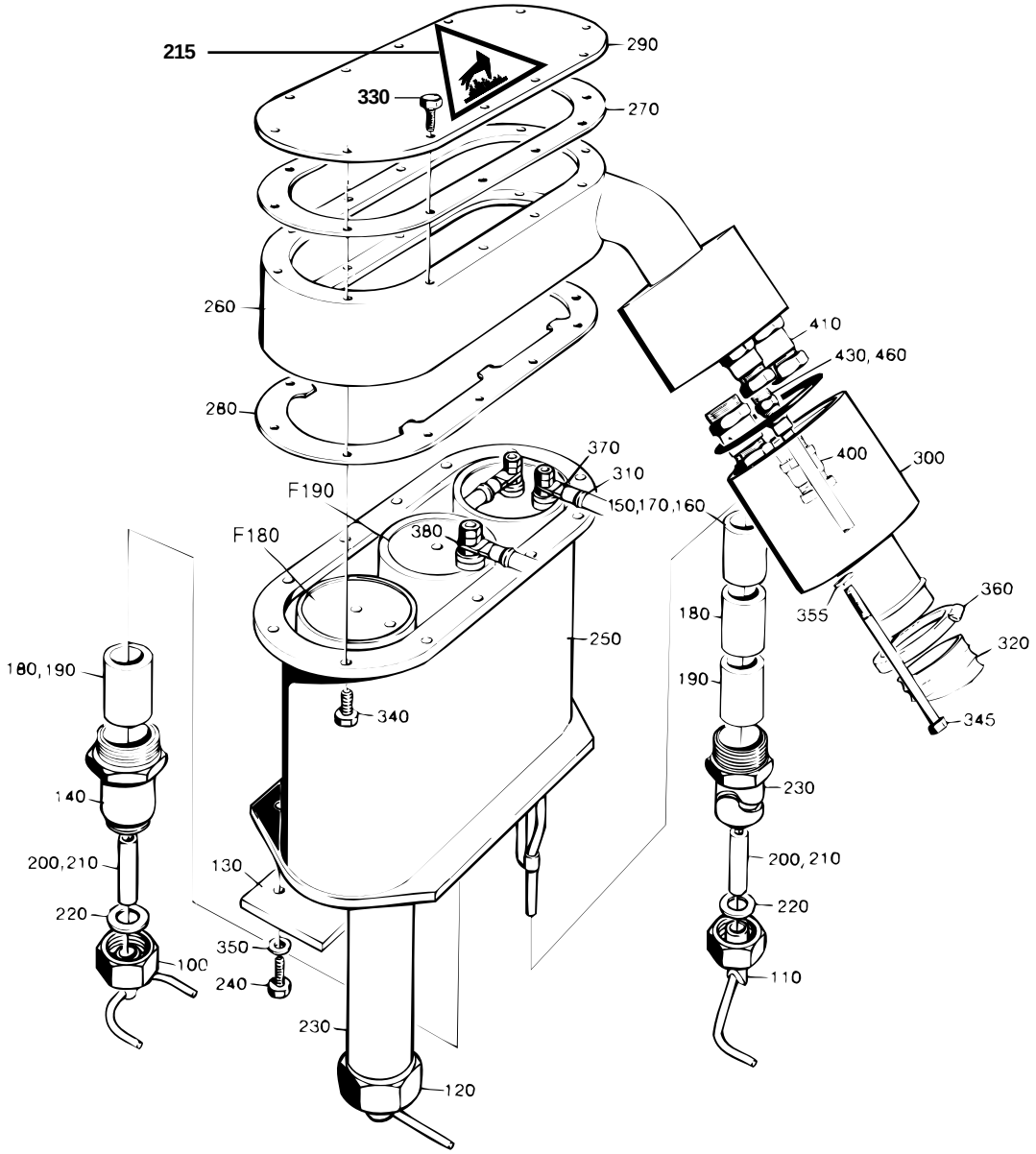

S-525129-1
ECN 22847

Pos	Part No	SP	UN	Qty	Description	Page No
0568B						
100	247227-0003	K		1	AIR NOZZLE	
110	B 525197-0000	K		1	BLOW-OFF NOZZLE TR	
120	B 525198-0000	K		1	BLOW-OFF NOZZLE TL	
140	23763-0005	-		1	SPACER PIPE	
160	23765-0002	K		2	INSULATING PIPE	
190	23765-0005	K		1	INSULATING PIPE	
200	252766-0001	K		2	INSULATING PIPE	
210	252766-0002	K		1	INSULATING PIPE	
230	297499-0002	-		2	SIDE PIPE	
240	312105-0372	-		3	SCREW M6S ISO 4017 M6X25 A280	
0750B						
100	247227-0003	K		1	AIR NOZZLE	
110	B 525197-0000	K		1	BLOW-OFF NOZZLE TR	
120	B 525198-0000	K		1	BLOW-OFF NOZZLE TL	
140	23763-0005	-		1	SPACER PIPE	
160	23765-0002	K		2	INSULATING PIPE	
180	23765-0004	K		1	INSULATING PIPE	
190	23765-0005	K		2	INSULATING PIPE	
210	252766-0002	K		3	INSULATING PIPE	
230	297499-0008	-		2	SIDE PIPE	
240	312105-0372	-		3	SCREW M6S ISO 4017 M6X25 A280	
0750S						
100	B 544298-0000	K		1	BLOWING NOZZLE B	
110	B 544293-0000	K		1	BLOW-OFF NOZZLE TH	
120	B 544269-0000	K		1	BLOW-OFF NOZZLE TV	
130	262290-0001	-		1	LACE	
140	23763-0004	-		1	SPACER PIPE	
160	23765-0002	K		2	INSULATING PIPE	
180	23765-0004	K		5	INSULATING PIPE	
200	252766-0001	K		3	INSULATING PIPE	
230	443158-0000	-		2	SIDE PIPE	
240	312105-0374	-		3	SCREW M6S ISO 4017 M6X30 A280	
Common parts						
F180	A 31390-0100	-		2	ELEMENT	**443**
F190	A 31390-0110	-		1	ELEMENT	**445**
215	359710-0002	-		1	WARNING SIGN"HOT SURFACE"	
220	263673-0000	F		6	GASKET	
250	262272-0000	-		1	HEATING CHAMBER	
260	525071-0000	-		1	SPACER PIECE	
270	531730-0000	K		3	FLANGE SEAL	
280	23769-0000	-		1	STOP PLATE	
290	262288-0000	-		1	LID	

Pos	Part No	SP	UN	Qty	Description	Page No
300	525073-0000	-		1	COVER	
310	B 525070-0000	-		1	ELECTRICAL CONNECTION	
320	352135-0116	K	MM	500	FLEXIBLE CG DIA 40	
330	312105-0325	-		12	SCREW M6S5X10 A2 80	
340	312105-0328	-		12	SCREW M6S5X14 A2 80	
345	312105-0388	-		2	SCREW M6S ISO 4014 M6X90 A280	
350	315115-0153	-		3	WASHER TBRB6,4X12RFR	
355	315105-0153	-		2	WASHER BRB6,4X12RFR	
360	342991-0109	K		2	HOSE CLIP,WORM DRIVE TYPE (48)-50	
370	353104-0168	F		2	CABLE SHOEYAV 16 M6*	
380	353104-0182	F		2	CABLE SHOEYAV 35 M6*	
400	352103-0106	-		2	CABLE GLAND ST 11	
410	352103-0111	-		2	CABLE GLAND ST 16	
430	342921-0121	-		1	STRAIGHT COUPLING,EXT.THREADED 8/6- G1/8"	
460	315234-0109	-		1	SEAL RING R1/8"	
1000B						
100	247227-0003	K		1	AIR NOZZLE	
110	B 525197-0000	K		1	BLOW-OFF NOZZLE TR	
120	B 525198-0000	K		1	BLOW-OFF NOZZLE TL	
130	262290-0001	-		1	LACE	
140	23763-0004	-		1	SPACER PIPE	
150	23765-0001	K		2	INSULATING PIPE	
180	23765-0004	K		1	INSULATING PIPE	
200	252766-0001	K		3	INSULATING PIPE	
230	297499-0001	-		2	SIDE PIPE	
240	312105-0374	-		3	SCREW M6S ISO 4017 M6X30 A280	
1000S						
100	569124-0000	K		1	AIR NOZZLE	
110	569125-0000	K		1	AIR NOZZLE	
120	569126-0000	K		1	AIR NOZZLE	
130	262290-0001	-		1	LACE	
140	23763-0004	-		1	SPACER PIPE	
160	23765-0002	K		2	INSULATING PIPE	
170	23765-0003	K		2	INSULATING PIPE	
180	23765-0004	K		3	INSULATING PIPE	
200	252766-0001	K		1	INSULATING PIPE	
210	252766-0002	K		2	INSULATING PIPE	
230	548402-0000	-		2	SIDE PIPE	
240	312105-0374	-		3	SCREW M6S ISO 4017 M6X30 A280	

ELEMENT

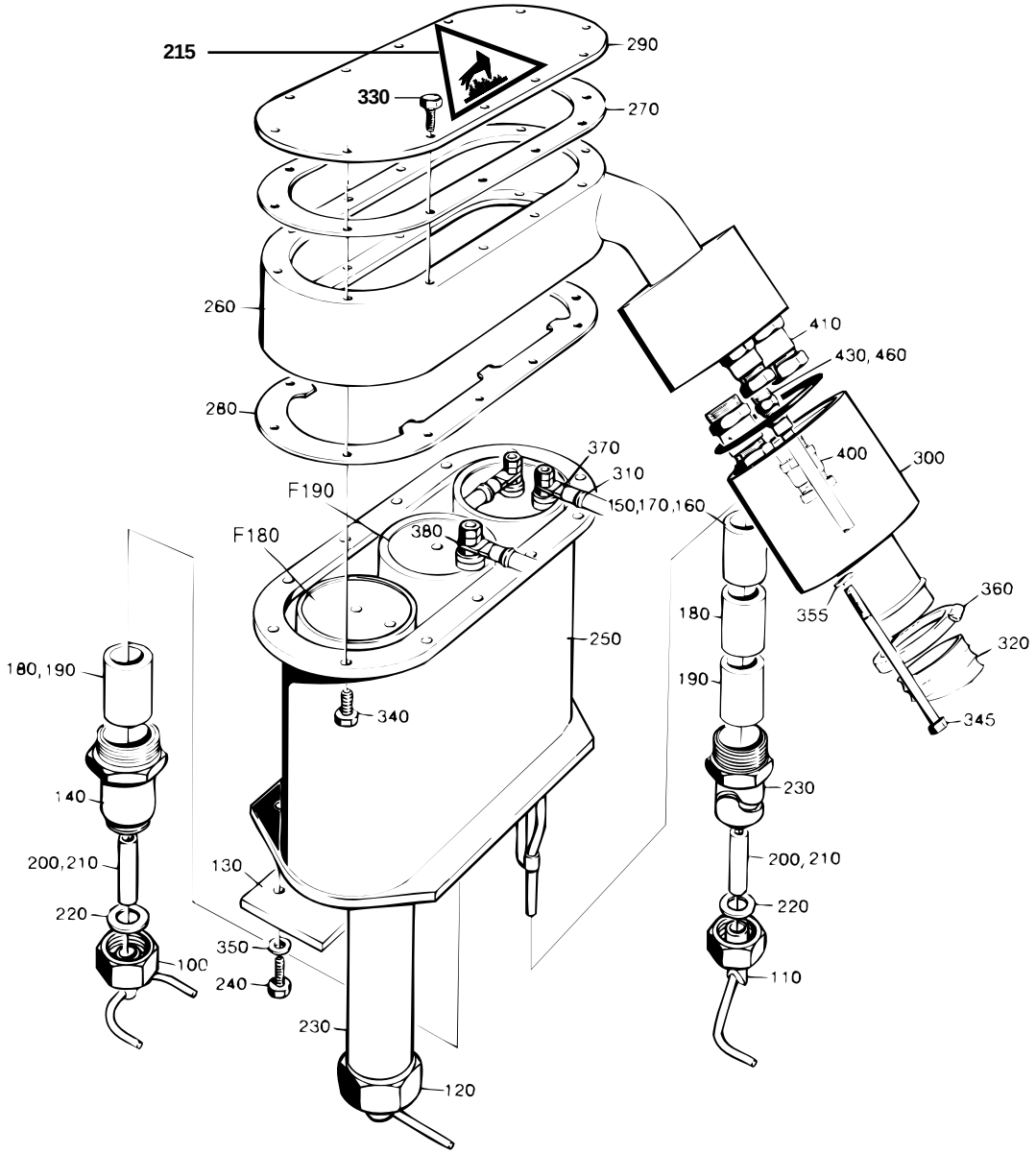

S-525129-1
ECN 22847

Pos	Part No	SP	UN	Qty	Description	Page No
1000SQ						
100	574032-0000	K		1	BLOWING NOZZLE B	
110	574033-0000	K		1	BLOWING NOZZLE TH	
120	574034-0000	K		1	BLOWING NOZZLE TV	
130	262290-0001	-		1	LACE	
140	23763-0006	-		1	SPACER PIPE	
160	23765-0002	K		2	INSULATING PIPE	
180	23765-0004	K		4	INSULATING PIPE	
190	23765-0005	K		1	INSULATING PIPE	
200	252766-0001	K		3	INSULATING PIPE	
230	443158-0000	-		2	SIDE PIPE	
240	312105-0374	-		3	SCREW M6S ISO 4017 M6X30 A280	
1055B						
100	247227-0003	K		1	AIR NOZZLE	
110	B 525197-0000	K		1	BLOW-OFF NOZZLE TR	
120	B 525198-0000	K		1	BLOW-OFF NOZZLE TL	
130	262290-0001	-		1	LACE	
140	23763-0004	-		1	SPACER PIPE	
160	23765-0002	K		2	INSULATING PIPE	
180	23765-0004	K		5	INSULATING PIPE	
200	252766-0001	K		3	INSULATING PIPE	
230	443158-0000	-		2	SIDE PIPE	
240	312105-0374	-		3	SCREW M6S ISO 4017 M6X30 A280	
1136B						
100	247227-0003	K		1	AIR NOZZLE	
110	B 525197-0000	K		1	BLOW-OFF NOZZLE TR	
120	B 525198-0000	K		1	BLOW-OFF NOZZLE TL	
130	262290-0001	-		1	LACE	
140	23763-0004	-		1	SPACER PIPE	
160	23765-0002	K		2	INSULATING PIPE	
170	23765-0003	K		2	INSULATING PIPE	
180	23765-0004	K		3	INSULATING PIPE	
200	252766-0001	K		1	INSULATING PIPE	
210	252766-0002	K		2	INSULATING PIPE	
230	548402-0000	-		2	SIDE PIPE	
240	312105-0374	-		3	SCREW M6S ISO 4017 M6X30 A280	

Pos	Part No	SP	UN	Qty	Description	Page No

ELEMENT

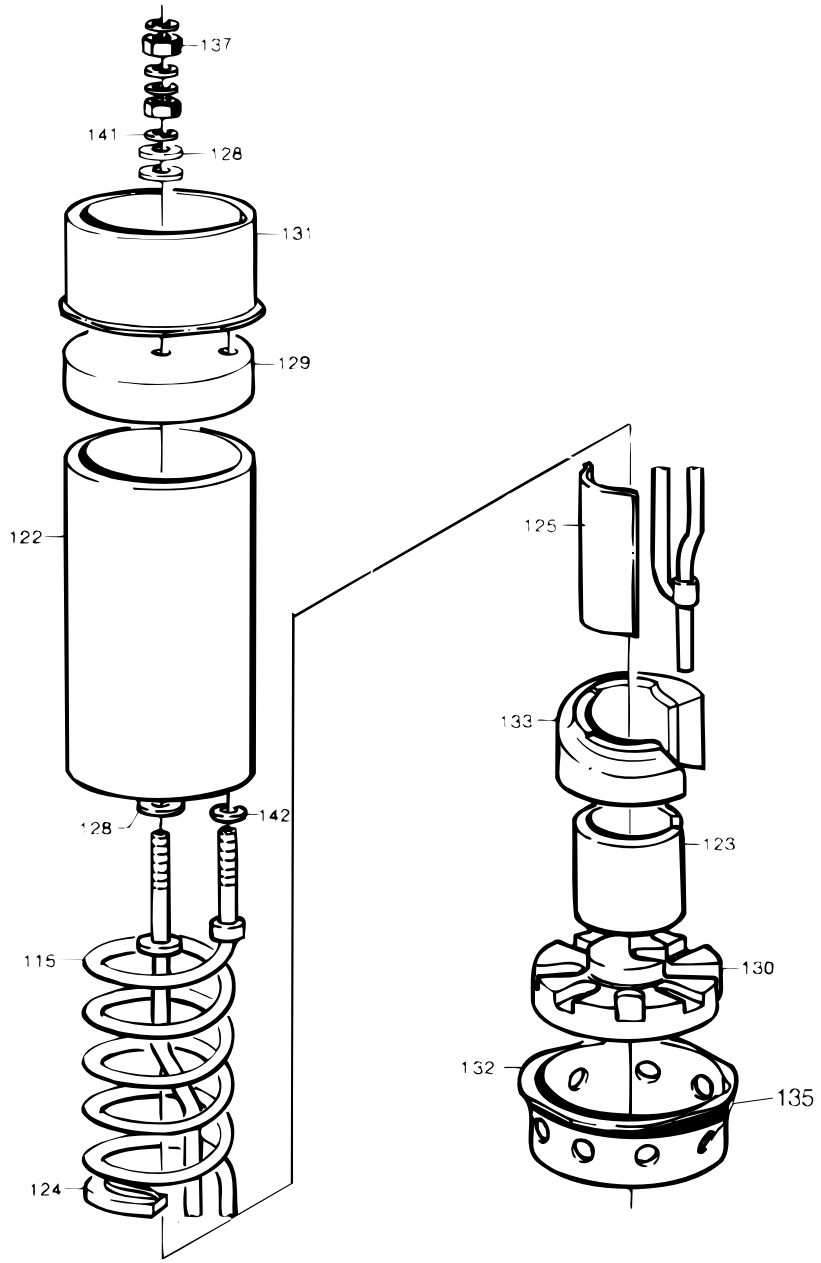

S-31390-1
ECN 13601

Pos	Part No	SP	UN	Qty	Description	Page No
0300B 640005 or 0300B 648005 or 0300B 648035 or 0375S 648035 or 0400B 648035 or 0500B 640005 or 0500B 648005 or 0500B 648025 or 0500B 648035 or 0500S 648035 or 0568B 640005 or 0568B 648005 or 0568B 648025 or 0568B 648035 or 0750B 648035 or TBA 0100B 648105 or TBA 0125S 648105 or TBA 0160S 648105 or TBA 0180B 640005 or TBA 0180B 648005 or TBA 0180B 648105 or TBA 0189B 640005 or TBA 0189B 648005 or TBA 0200B 640005 or TBA 0200B 648005 or TBA 0200B 648105 or TBA 0200S 648105 or TBA 0236B 640005 or TBA 0236B 648005 or TBA 0236B 648105 or TBA 0250B 640005 or TBA 0250B 648005 or TBA 0250B 648035 or TBA 0250B 648105 or TBA 0250S 648105 or TBA 0284B 640005 or TBA 0284B 648005 or TBA 0284B 648035 or TBA 0284B 648105 or TBA 0300S 648105 or TBA 0330S 648105						
115	30310-0002	F		1	HEATING ELEMENT	
0750S 648035 or 1000B 640005 or 1000B 648005 or 1000B 648025 or 1000B 648035 or 1000S 648035 or 1000SQ 648035 or 1055B 648035 or 1136B 640005 or 1136B 648005 or 1136B 648035 or TBA 0180B 648035 or TBA 0189B 648035 or TBA 0200B 648035 or TBA 0236B 648035						
115	30310-0001	K		1	HEATING ELEMENT	
0355B 648035 or 0500SQ 648035 or TBA 0180B 648035 or TBA 0189B 648035 or TBA 0200B 648035 or TBA 0236B 648035						
115	30310-0003	-		1	HEATING ELEMENT	
Common parts						
122	20705-0001	K		1	INSULATING PIPE	
123	29411-0000	K		1	SPACER PIPE	
124	29413-0000	K		12	LACE	
125	31653-0001	K		1	SHEET	
128	525233-0000	K		5	GASKET	
129	20772-0000	K		1	INSULATOR BODY	
130	37536-0000	K		1	INSULATOR BODY	
131	23771-0000	K		1	SPACER RING	
132	37537-0000	K		1	SPACER RING	
133	37535-0000	K		1	SUPPORTING PART	
135	90145-0005	-	M	1	WIRE	
137	312605-0316	-		6	NUT M6M6RFR	
141	315105-0153	-		4	WASHER BRB6,4X12RFR	
142	315115-0153	-		1	WASHER TBRB6,4X12RFR	

Pos	Part No	SP	UN	Qty	Description	Page No

ELEMENT

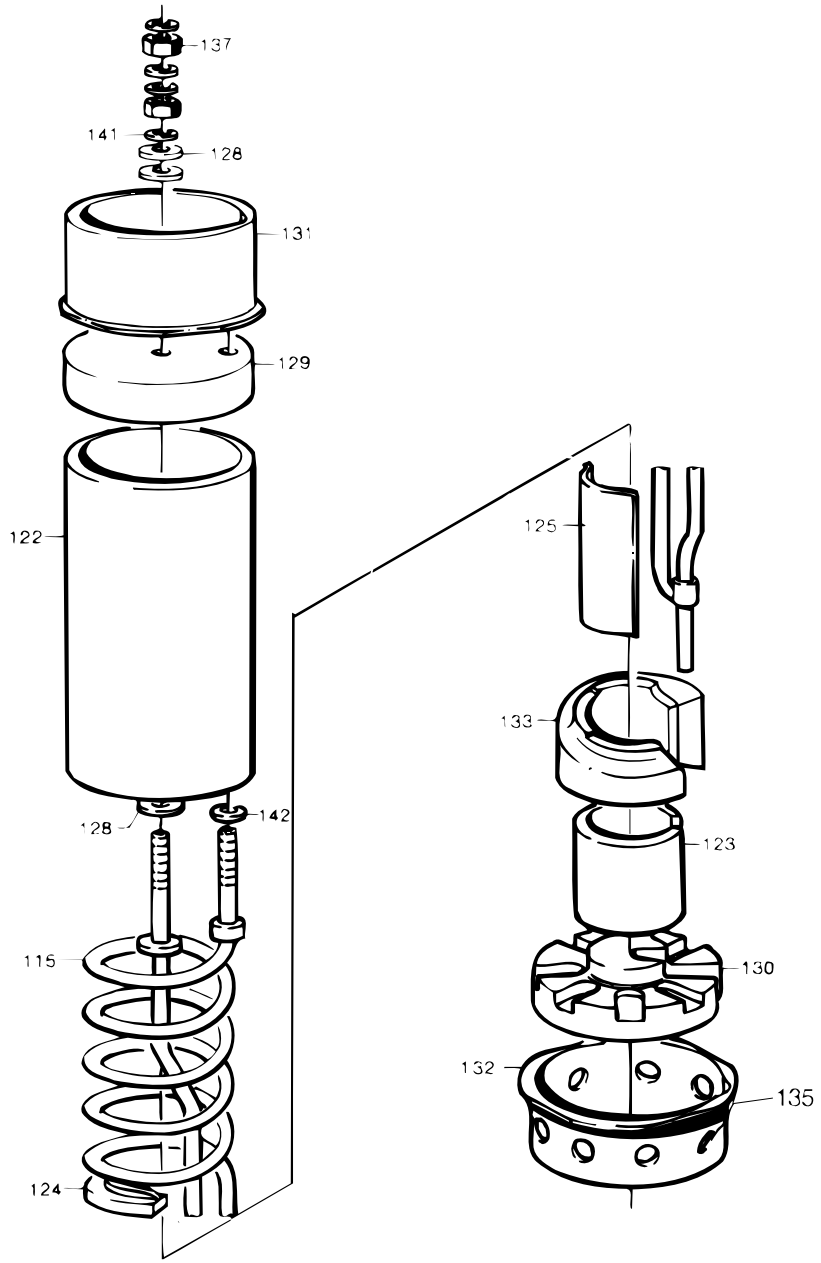

S-31390-1
ECN 13601

Pos	Part No	SP	UN	Qty	Description	Page No
0300B 640005 or 0300B 648005 or 0300B 648035 or 0355B 648035 or 0375S 648035 or 0400B 648035 or 0500S 648035 or 0500SQ 648035 or 0568B 640005 or 0568B 648005 or 0568B 648025 or 0568B 648035 or 0750B 648035 or 1000SQ 648035 or 1136B 640005 or 1136B 648005 or TBA 0200B 648105 or TBA 0236B 640005 or TBA 0236B 648005 or TBA 0236B 648035 or TBA 0236B 648105 or TBA 0250B 640005 or TBA 0250B 648005 or TBA 0250B 648035 or TBA 0250B 648105 or TBA 0250S 648105 or TBA 0284B 640005 or TBA 0284B 648005 or TBA 0284B 648035 or TBA 0284B 648105 or TWA						
115	30311-0001	F		1	HEATING ELEMENT	
0500B 640005 or 0500B 648005 or 0500B 648025 or 0500B 648035 or 0750S 648035 or 1000B 640005 or 1000B 648005 or 1000B 648025 or 1000B 648035 or 1000S 648035 or 1055B 648035 or 1136B 648035 or TBA 0100B 648105 or TBA 0125S 648105 or TBA 0180B 640005 or TBA 0180B 648005 or TBA 0180B 648105 or TBA 0189B 640005 or TBA 0189B 648005 or TBA 0189B 648105 or TBA 0200B 640005 or TBA 0200B 648005 or TBA 0200S 648105						
115	30311-0002	F		1	HEATING ELEMENT	
Common parts						
122	20705-0001	K		1	INSULATING PIPE	
124	29413-0000	K		21	LACE	
125	31653-0002	K		1	SHEET	
128	525233-0000	K		5	GASKET	
129	20772-0000	K		1	INSULATOR BODY	
130	37536-0000	K		1	INSULATOR BODY	
131	23771-0000	K		1	SPACER RING	
132	37537-0000	K		1	SPACER RING	
133	37535-0000	K		1	SUPPORTING PART	
137	312605-0316	-		6	NUT M6M6RFR	
141	315105-0153	-		4	WASHER BRB6,4X12RFR	
142	315115-0153	-		1	WASHER TBRB6,4X12RFR	

Pos	Part No	SP	UN	Qty	Description	Page No

FF-ELEMENT R

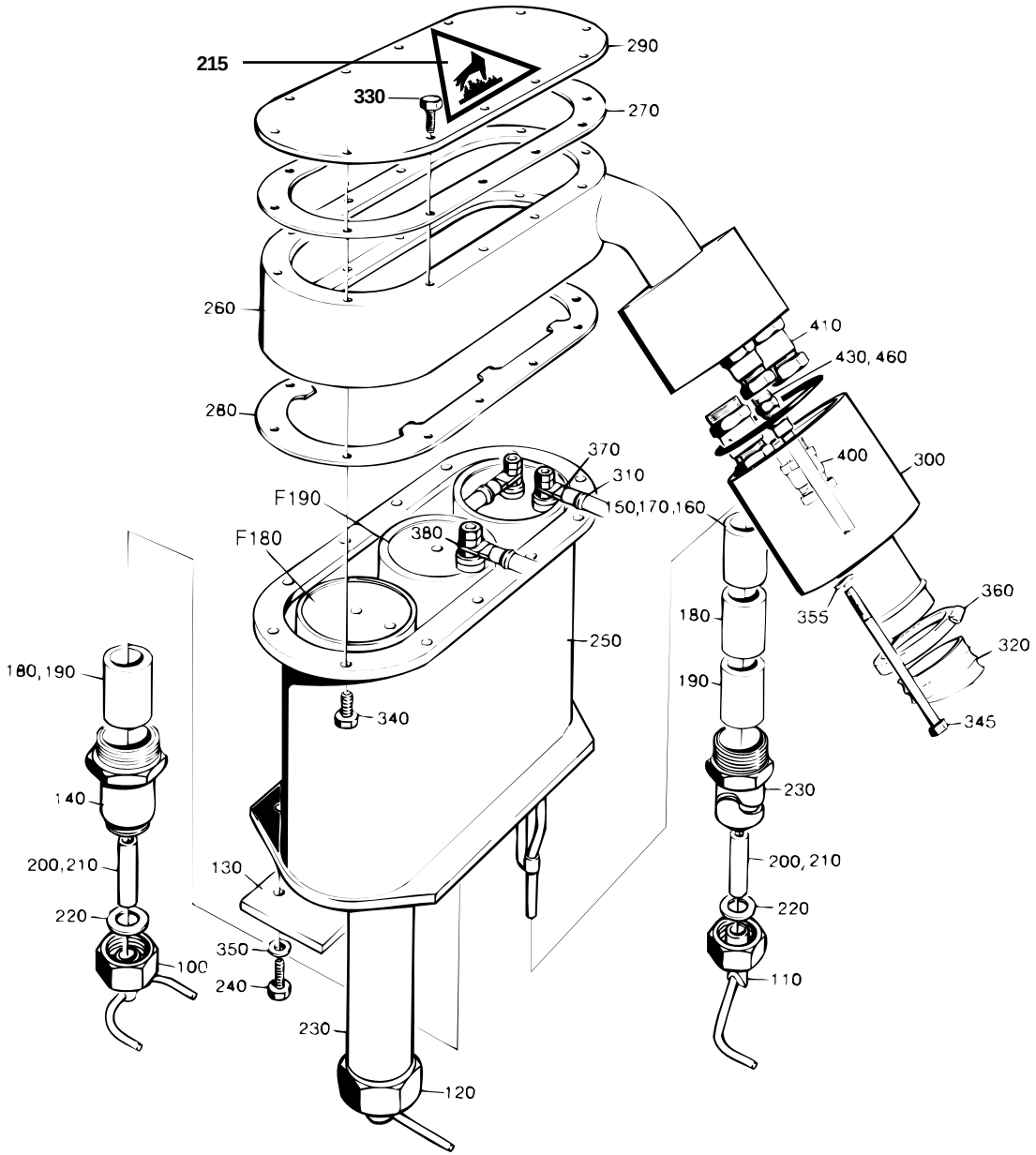

S-525128-1
ECN 22847

Pos	Part No	SP	UN	Qty	Description	Page No
0300B						
100	B 247227-0002	K		1	AIR NOZZLE	
110	B 285507-0002	K		1	AIR NOZZLE	
120	B 285508-0002	K		1	AIR NOZZLE	
140	23763-0010	-		1	SPACER PIPE	
160	23765-0002	K		2	INSULATING PIPE	
190	23765-0005	K		1	INSULATING PIPE	
200	252766-0001	K		2	INSULATING PIPE	
210	252766-0002	K		1	INSULATING PIPE	
230	297499-0002	-		2	SIDE PIPE	
240	312105-0372	-		3	SCREW M6S ISO 4017 M6X25 A280	
0355B						
100	B 442867-0000	K		1	AIR NOZZLE	
110	B 285676-0000	K		1	AIR NOZZLE	
120	B 285677-0000	K		1	AIR NOZZLE	
140	23763-0006	-		1	SPACER PIPE	
180	23765-0004	K		4	INSULATING PIPE	
190	23765-0005	K		1	INSULATING PIPE	
200	252766-0001	K		4	INSULATING PIPE	
210	252766-0002	K		1	INSULATING PIPE	
230	297499-0007	-		2	SIDE PIPE	
240	312105-0372	-		3	SCREW M6S ISO 4017 M6X25 A280	
0375S						
100	B 247227-0002	K		1	AIR NOZZLE	
110	B 285507-0002	K		1	AIR NOZZLE	
120	B 285508-0002	K		1	AIR NOZZLE	
140	23763-0010	-		1	SPACER PIPE	
170	23765-0003	K		2	INSULATING PIPE	
180	23765-0004	K		4	INSULATING PIPE	
190	23765-0005	K		1	INSULATING PIPE	
210	252766-0002	K		3	INSULATING PIPE	
230	297499-0009	-		2	SIDE PIPE	
240	312105-0372	-		3	SCREW M6S ISO 4017 M6X25 A280	
0400B						
100	B 442867-0000	K		1	AIR NOZZLE	
110	B 574676-0000	K		1	AIR NOZZLE	
120	B 574677-0000	K		1	AIR NOZZLE	
140	23763-0006	-		1	SPACER PIPE	
170	23765-0003	K		2	INSULATING PIPE	
180	23765-0004	K		2	INSULATING PIPE	
190	23765-0005	K		3	INSULATING PIPE	
210	252766-0002	K		3	INSULATING PIPE	
230	297499-0003	-		2	SIDE PIPE	
240	312105-0372	-		3	SCREW M6S ISO 4017 M6X25 A280	
0500B						
100	247227-0003	K		1	AIR NOZZLE	
110	B 525197-0000	K		1	BLOW-OFF NOZZLE TR	
120	B 525198-0000	K		1	BLOW-OFF NOZZLE TL	
130	262290-0002	-		1	LACE	
140	23763-0003	-		1	SPACER PIPE	
160	23765-0002	K		2	INSULATING PIPE	
180	23765-0004	K		1	INSULATING PIPE	
200	252766-0001	K		3	INSULATING PIPE	
230	297499-0002	-		2	SIDE PIPE	
240	312105-0376	-		3	SCREW M6S ISO 4017 M6X35 A280	
0500S						
100	B 442867-0000	K		1	AIR NOZZLE	
110	B 285676-0000	K		1	AIR NOZZLE	
120	B 285677-0000	K		1	AIR NOZZLE	
140	23763-0006	-		1	SPACER PIPE	
170	23765-0003	K		2	INSULATING PIPE	
180	23765-0004	K		2	INSULATING PIPE	
190	23765-0005	K		3	INSULATING PIPE	
200	252766-0001	K		4	INSULATING PIPE	
210	252766-0002	K		1	INSULATING PIPE	
230	297499-0003	-		2	SIDE PIPE	
240	312105-0372	-		3	SCREW M6S ISO 4017 M6X25 A280	
0500SQ						
100	574032-0000	K		1	BLOWING NOZZLE B	
110	574033-0000	K		1	BLOWING NOZZLE TH	
120	574034-0000	K		1	BLOWING NOZZLE TV	
130	262290-0001	-		1	LACE	
140	23763-0006	-		1	SPACER PIPE	
170	23765-0003	K		2	INSULATING PIPE	
180	23765-0004	K		2	INSULATING PIPE	
190	23765-0005	K		1	INSULATING PIPE	
200	252766-0001	K		1	INSULATING PIPE	
210	252766-0002	K		2	INSULATING PIPE	
230	583448-0000	-		2	SIDE PIPE	
240	312105-0374	-		3	SCREW M6S ISO 4017 M6X30 A280	

FF-ELEMENT R

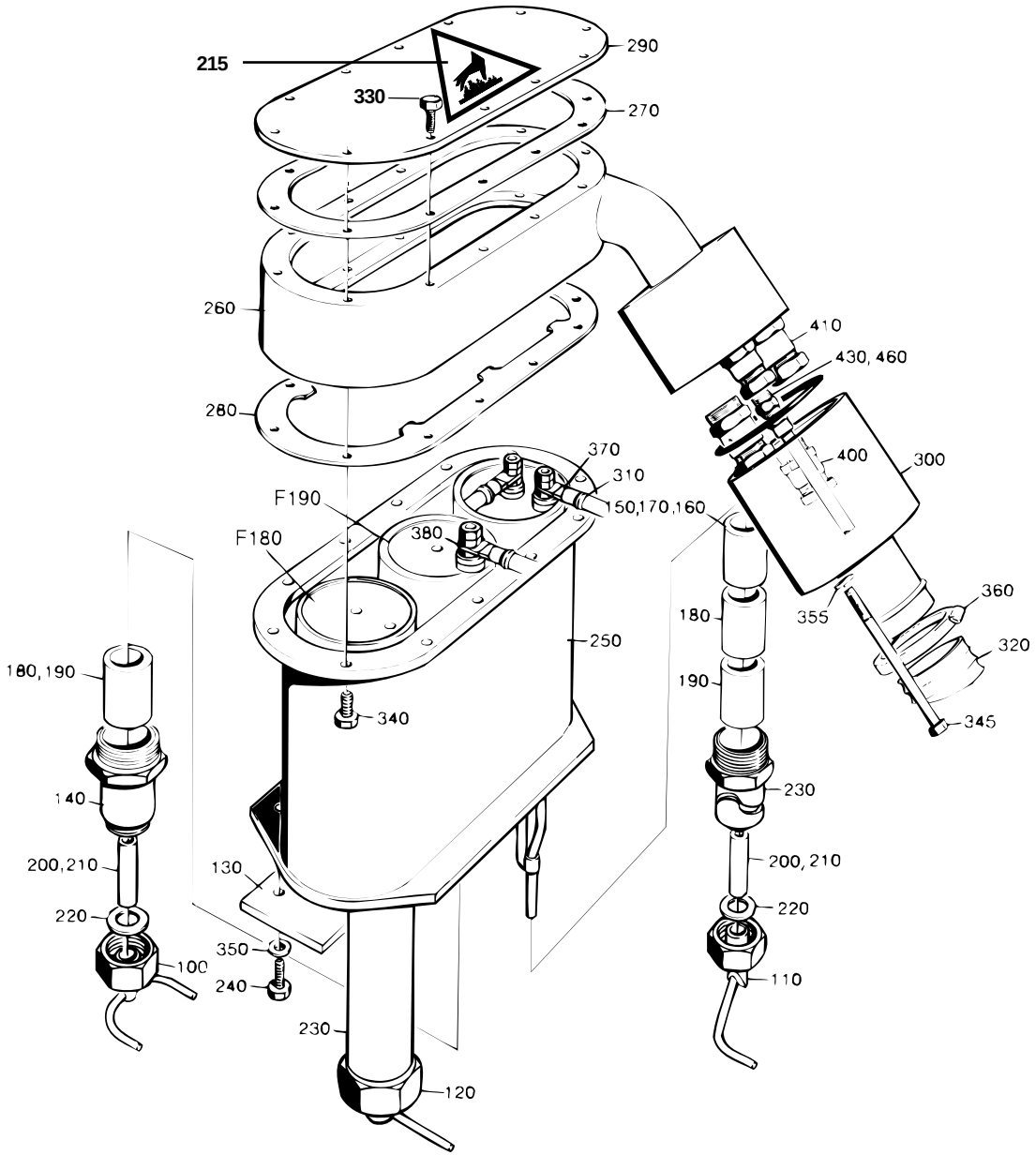

S-525128-1
ECN 22847

Pos	Part No	SP	UN	Qty	Description	Page No
0568B						
100	247227-0003	K		1	AIR NOZZLE	
110	B 525197-0000	K		1	BLOW-OFF NOZZLE TR	
120	B 525198-0000	K		1	BLOW-OFF NOZZLE TL	
140	23763-0005	-		1	SPACER PIPE	
160	23765-0002	K		2	INSULATING PIPE	
190	23765-0005	K		1	INSULATING PIPE	
200	252766-0001	K		2	INSULATING PIPE	
210	252766-0002	K		1	INSULATING PIPE	
230	297499-0002	-		2	SIDE PIPE	
240	312105-0372	-		3	SCREW M6S ISO 4017 M6X25 A280	
0750B						
100	247227-0003	K		1	AIR NOZZLE	
110	B 525197-0000	K		1	BLOW-OFF NOZZLE TR	
120	B 525198-0000	K		1	BLOW-OFF NOZZLE TL	
140	23763-0005	-		1	SPACER PIPE	
160	23765-0002	K		2	INSULATING PIPE	
190	23765-0005	K		3	INSULATING PIPE	
210	252766-0002	K		3	INSULATING PIPE	
230	297499-0008	-		2	SIDE PIPE	
240	312105-0372	-		3	SCREW M6S ISO 4017 M6X25 A280	
0750S						
100	B 544298-0000	K		1	BLOWING NOZZLE B	
110	B 544293-0000	K		1	BLOW-OFF NOZZLE TH	
120	B 544269-0000	K		1	BLOW-OFF NOZZLE TV	
130	262290-0001	-		1	LACE	
140	23763-0004	-		1	SPACER PIPE	
160	23765-0002	K		2	INSULATING PIPE	
180	23765-0004	K		5	INSULATING PIPE	
200	252766-0001	K		3	INSULATING PIPE	
230	443158-0000	-		2	SIDE PIPE	
240	312105-0374	-		3	SCREW M6S ISO 4017 M6X30 A280	
Common parts						
F180	A 31390-0100	-		2	ELEMENT	**443**
F190	A 31390-0110	-		1	ELEMENT	**445**
215	359710-0002	-		1	WARNING SIGN"HOT SURFACE"	
220	263673-0000	F		6	GASKET	
250	262272-0000	-		1	HEATING CHAMBER	
260	525134-0000	-		1	SPACER PIECE	
270	531730-0000	K		3	FLANGE SEAL	
280	23769-0000	-		1	STOP PLATE	
290	262288-0000	-		1	LID	
300	525073-0000	-		1	COVER	
310	B 525070-0000	-		1	ELECTRICAL CONNECTION	
320	352135-0116	K	MM	500	FLEXIBLE CG DIA 40	
330	312105-0325	-		12	SCREW M6S5X10 A2 80	
340	312105-0328	-		12	SCREW M6S5X14 A2 80	
345	312105-0388	-		2	SCREW M6S ISO 4014 M6X90 A280	
350	315115-0153	-		3	WASHER TBRB6,4X12RFR	
355	315105-0153	-		2	WASHER BRB6,4X12RFR	
360	342991-0109	K		2	HOSE CLIP,WORM DRIVE TYPE (48)-50	
370	353104-0168	F		2	CABLE SHOEYAV 16 M6*	
380	353104-0182	F		2	CABLE SHOEYAV 35 M6*	
400	352103-0106	-		2	CABLE GLAND ST 11	
410	352103-0111	-		2	CABLE GLAND ST 16	
430	342921-0121	-		1	STRAIGHT COUPLING,EXT.THREADED 8/6-G1/8"	
460	315234-0109	-		1	SEAL RING R1/8"	
1000B						
100	247227-0003	K		1	AIR NOZZLE	
110	B 525197-0000	K		1	BLOW-OFF NOZZLE TR	
120	B 525198-0000	K		1	BLOW-OFF NOZZLE TL	
130	262290-0001	-		1	LACE	
140	23763-0004	-		1	SPACER PIPE	
150	23765-0001	K		2	INSULATING PIPE	
180	23765-0004	K		1	INSULATING PIPE	
200	252766-0001	K		3	INSULATING PIPE	
230	297499-0001	-		2	SIDE PIPE	
240	312105-0374	-		3	SCREW M6S ISO 4017 M6X30 A280	
1000S						
100	569124-0000	K		1	AIR NOZZLE	
110	569125-0000	K		1	AIR NOZZLE	
120	569126-0000	K		1	AIR NOZZLE	
130	262290-0001	-		1	LACE	
140	23763-0004	-		1	SPACER PIPE	
160	23765-0002	K		2	INSULATING PIPE	
170	23765-0003	K		2	INSULATING PIPE	
180	23765-0004	K		3	INSULATING PIPE	
200	252766-0001	K		1	INSULATING PIPE	
210	252766-0002	K		2	INSULATING PIPE	
230	548402-0000	-		2	SIDE PIPE	
240	312105-0374	-		3	SCREW M6S ISO 4017 M6X30 A280	

FF-ELEMENT R

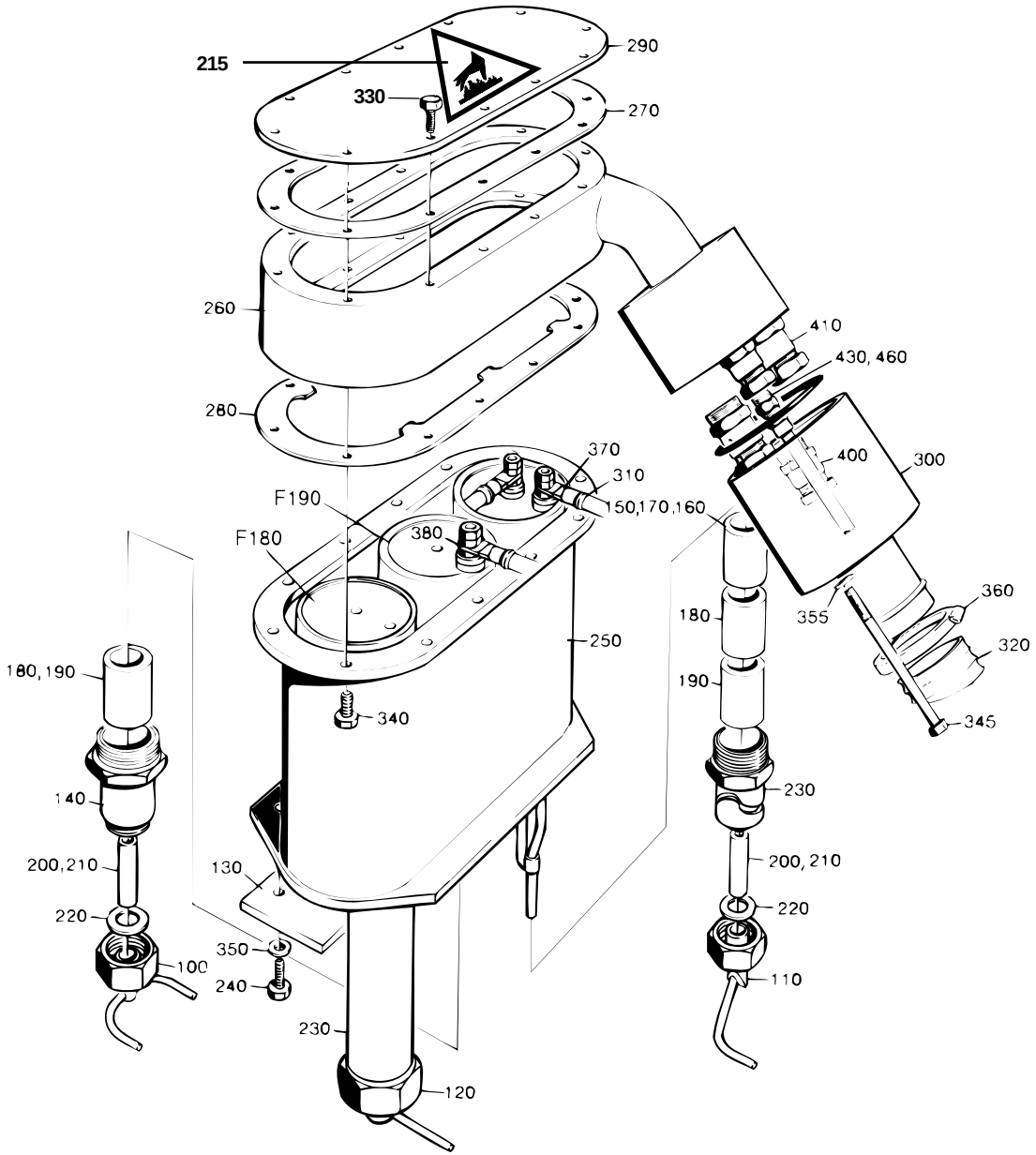

S-525128-1
ECN 22847

Pos	Part No	SP	UN	Qty	Description	Page No
1000SQ						
100	574032-0000	K		1	BLOWING NOZZLE B	
110	574033-0000	K		1	BLOWING NOZZLE TH	
120	574034-0000	K		1	BLOWING NOZZLE TV	
130	262290-0001	-		1	LACE	
140	23763-0006	-		1	SPACER PIPE	
160	23765-0002	K		2	INSULATING PIPE	
180	23765-0004	K		4	INSULATING PIPE	
190	23765-0005	K		1	INSULATING PIPE	
200	252766-0001	K		3	INSULATING PIPE	
230	443158-0000	-		2	SIDE PIPE	
240	312105-0374	-		3	SCREW M6S ISO 4017 M6X30 A280	
1055B						
100	247227-0003	K		1	AIR NOZZLE	
110	B 525197-0000	K		1	BLOW-OFF NOZZLE TR	
120	B 525198-0000	K		1	BLOW-OFF NOZZLE TL	
130	262290-0001	-		1	LACE	
140	23763-0004	-		1	SPACER PIPE	
160	23765-0002	K		2	INSULATING PIPE	
180	23765-0004	K		5	INSULATING PIPE	
200	252766-0001	K		3	INSULATING PIPE	
230	443158-0000	-		2	SIDE PIPE	
240	312105-0374	-		3	SCREW M6S ISO 4017 M6X30 A280	
1136B						
100	247227-0003	K		1	AIR NOZZLE	
110	B 525197-0000	K		1	BLOW-OFF NOZZLE TR	
120	B 525198-0000	K		1	BLOW-OFF NOZZLE TL	
130	262290-0001	-		1	LACE	
140	23763-0004	-		1	SPACER PIPE	
160	23765-0002	K		2	INSULATING PIPE	
170	23765-0003	K		2	INSULATING PIPE	
180	23765-0004	K		3	INSULATING PIPE	
200	252766-0001	K		1	INSULATING PIPE	
210	252766-0002	K		2	INSULATING PIPE	
230	548402-0000	-		2	SIDE PIPE	
240	312105-0374	-		3	SCREW M6S ISO 4017 M6X30 A280	

Pos	Part No	SP	UN	Qty	Description	Page No

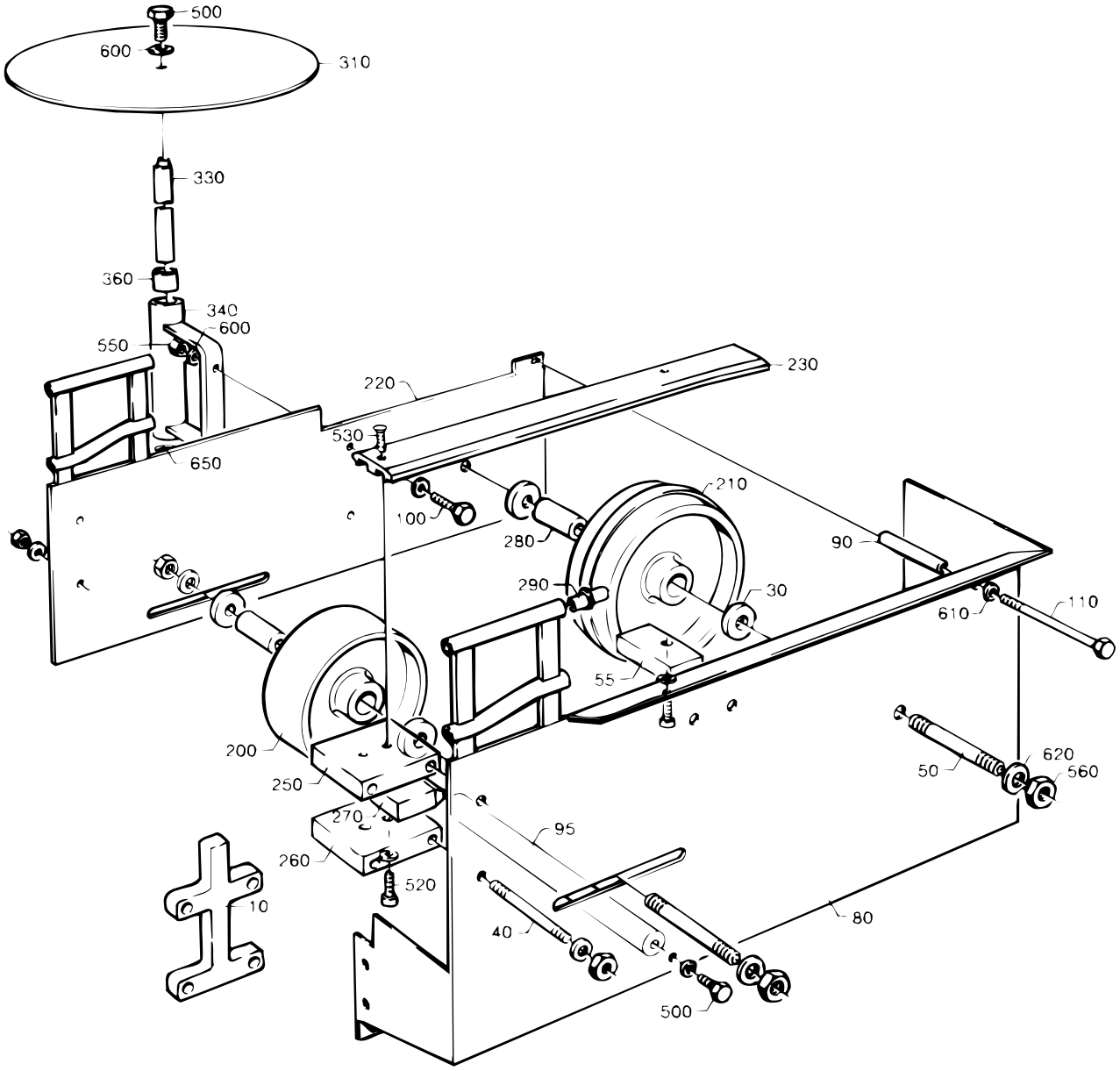

S-285591-4
ECN 11752

Pos	Part No	SP	UN	Qty	Description	Page No
0300B or 0355B or 0375S or 0400B or 0500S						
030	229201-0001	-		4	SPACER	
040	229508-0031	-		5	STUD SCREW	
050	229760-0012	-		2	STUD SCREW	
055	237082-0001	-		1	MOUNTING BLOCK	
080	525170-0000	-		1	SIDE PLATE	
090	297574-0001	-		1	SPACER	
095	525171-0002	-		1	BRACKET	
110	312105-0469	-		1	SCREW M6S ISO 4014 M8X90 A280	
220	525054-0000	-		1	SIDE PLATE	
550	312605-0316	-		12	NUT M6M6RFR	
0500B or 0500SQ or 0568B or 0750B or 0750S or 1000B or 1000S or 1000SQ or 1055B or 1136B						
010	228843-0001	-		2	SPACER	
030	229201-0002	-		4	SPACER	
040	229508-0029	-		5	STUD SCREW	
050	229760-0013	-		2	STUD SCREW	
055	237082-0002	-		1	MOUNTING BLOCK	
080	525169-0000	-		1	SIDE PLATE	
090	297574-0002	-		1	SPACER	
095	525171-0001	-		1	BRACKET	
110	312105-0471	-		1	SCREW M6S ISO 4014 M8X100 A280	
220	297569-0000	-		1	SIDE PLATE	
550-02	312605-0316	-		14	NUT M6M6RFR	
Common parts						
100	312105-0368	-		2	SCREW M6S ISO 4017 M6X16 A280	
200	476975-0000	K		1	WHEEL	
210	245039-0000	K		1	GUIDE WHEEL	
230	442776-0000	-		1	SLIDE RAIL	
250	228845-0000	-		1	MOUNTING BLOCK	
260	229202-0000	-		1	MOUNTING BLOCK	
270	229206-0000	-		1	LOCATING PIECE	
280	229207-0000	-		2	BEARING SLEEVE	
290	229516-0000	-		8	PIN	
310	525053-0000	-		1	PLATE (CIRCULAR)	
330	285132-0000	-		1	SHAFT	
340	285133-0000	-		1	CANTILEVER	
360	525252-0000	K		2	BEARING	
490	312105-0362	-		2	SCREW M6S ISO 4017 M6X8 A280	
500	312105-0367	-		5	SCREW M6S6X14RFR	
510	312105-0449	-		1	SCREW M6S ISO 4017 M8X16 A280	
520	312115-0368	-		1	SCREW MC6S ISO 4762 M6X16 A280	
530	312155-0370	-		3	SCREW MF6S DIN 7991 M6X20 A280	
555	312605-0318	-		1	NUT M6M8RFR	
560	312605-0320	-		4	NUT M6M10RFR	
600	315105-0153	-		19	WASHER BRB6,4X12RFR	
610	315105-0165	-		3	WASHER BRB8,4X16RFR	
620	315105-0173	-		4	WASHER BRB10,5X22RFR	
650	315755-0113	K		1	LOCKING WAE 15 RFR	

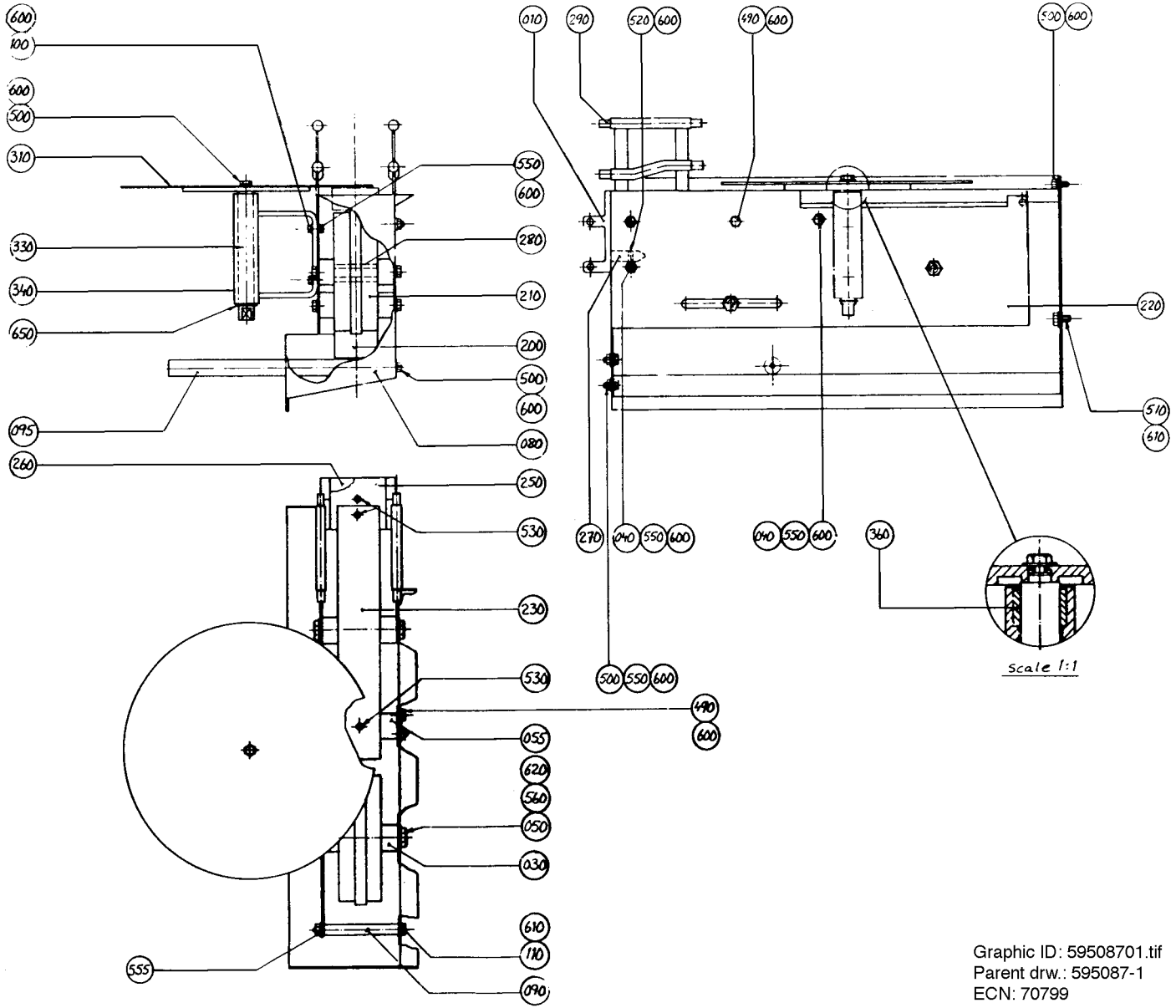

Graphic ID: 59508701.tif
Parent drw.: 595087-1
ECN: 70799

Pos	Part No	SP	UN	Qty	Description	Page No
-						
010	228843-0001	-		2	SPACER	
030	229201-0002	-		4	SPACER	
040	229508-0029	-		5	STUD SCREW	
050	229760-0013	-		2	STUD SCREW	
055	237082-0002	-		1	MOUNTING BLOCK	
080	594632-0000	-		1	SIDE PLATE	
090	297574-0002	-		1	SPACER	
095	525171-0001	-		1	BRACKET	
100	312105-0368	-		2	SCREW M6S ISO 4017 M6X16 A280	
110	312105-0471	-		1	SCREW M6S ISO 4014 M8X100 A280	
200	476975-0000	K		1	WHEEL	
210	245039-0000	K		1	GUIDE WHEEL	
220	297569-0000	-		1	SIDE PLATE	
230	442776-0000	-		1	SLIDE RAIL	
250	228845-0000	-		1	MOUNTING BLOCK	
260	229202-0000	-		1	MOUNTING BLOCK	
270	229206-0000	-		1	LOCATING PIECE	
280	229207-0000	-		2	BEARING SLEEVE	
290	229516-0000	-		8	PIN	
310	525053-0000	-		1	PLATE (CIRCULAR)	
330	285132-0000	-		1	SHAFT	
340	285133-0000	-		1	CANTILEVER	
360	525252-0000	K		2	BEARING	
490	312105-0362	-		2	SCREW M6S ISO 4017 M6X8 A280	
500	312105-0367	-		5	SCREW M6S6X14RFR	
510	312105-0449	-		1	SCREW M6S ISO 4017 M8X16 A280	
520	312115-0368	-		1	SCREW MC6S ISO 4762 M6X16 A280	
530	312155-0370	-		3	SCREW MF6S DIN 7991 M6X20 A280	
550-02	312605-0316	-		14	NUT M6M6RFR	
555	312605-0318	-		1	NUT M6M8RFR	
560	312605-0320	-		4	NUT M6M10RFR	
600	315105-0153	-		19	WASHER BRB6,4X12RFR	
610	315105-0165	-		3	WASHER BRB8,4X16RFR	
620	315105-0173	-		4	WASHER BRB10,5X22RFR	
650	315755-0113	K		1	LOCKING WAE 15 RFR	

Pos	Part No	SP	UN	Qty	Description	Page No

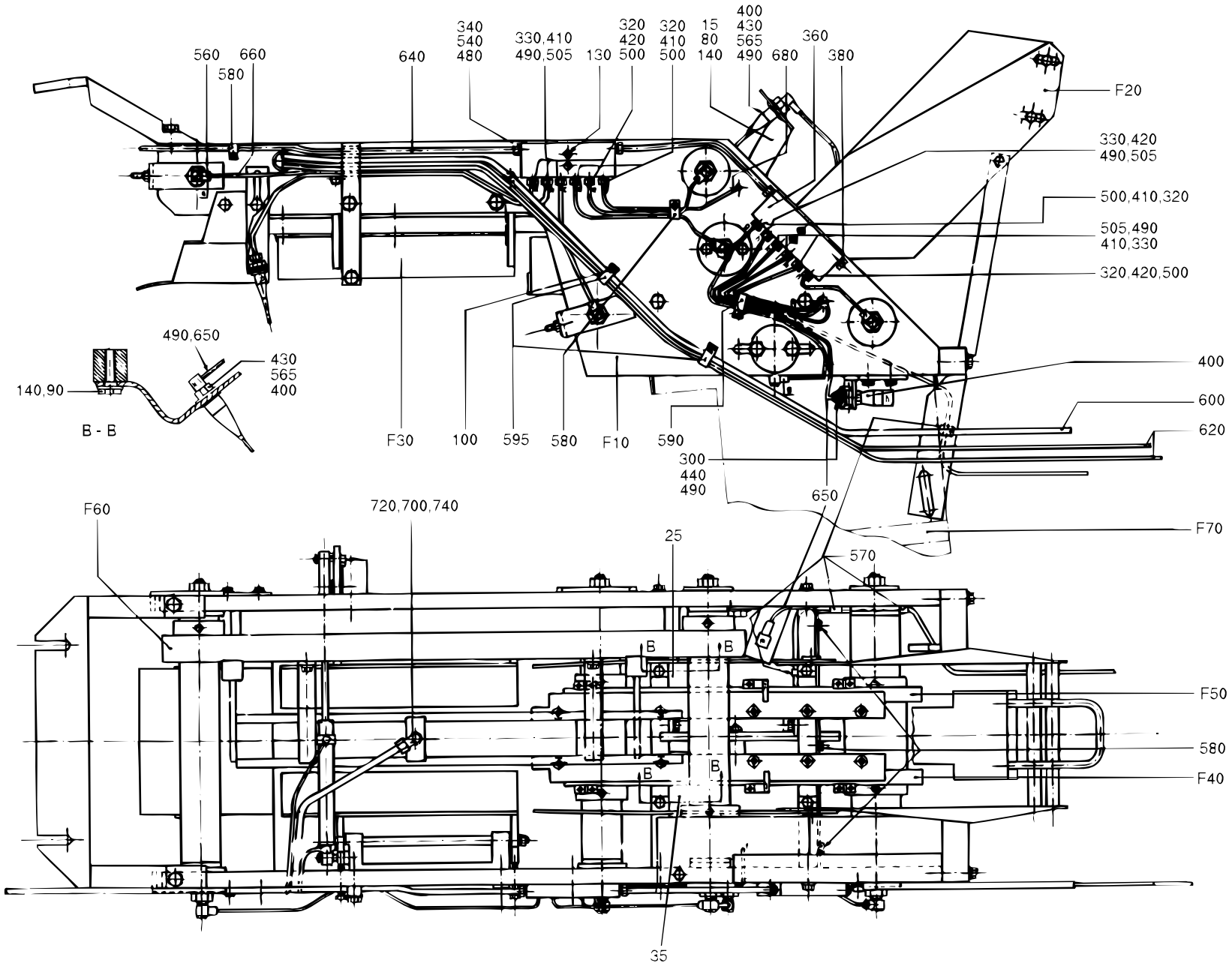

S-525085-3
ECN 16630

Pos	Part No	SP	UN	Qty	Description	Page No
TB/8 0300B or TB/8 0500B or TB/8 0500S or TB/8 0568B or TB/8 1000B or TB/8 1000S or TB/8 1136B or TBA/8 0355B or TBA/8 0375S or TBA/8 0400B or TBA/8 0500B or TBA/8 0500S or TBA/8 0750B or TBA/8 0750S or TBA/8 1000B or TBA/8 1000S or TBA/8 1055B or TBO/8 1000B						
F010	A 525086-0200	-		1	CONVEYING EQUIPMENT	
F040	A 525089-0100	-		1	CHAIN RIGHT	
F050	A 525090-0100	-		1	CHAIN LEFT	
F060	A 525091-0100	-		1	CHAIN	
F070	A 525092-0100	-		1	CHAIN GUARD	
015	566313-0000	-		1	HOLDER	
025	566316-0000	-		1	HOLDER	
035	566317-0000	-		1	HOLDER	
080	312105-0368	-		2	SCREW M6S ISO 4017 M6X16 A280	
090	312105-0366	-		4	SCREW M6S ISO 4017 M6X12 A280	
100	312125-0287	-		11	SLOTTED CHEESE HEAD ISO 1207 M4X8 RFR	
140	315115-0153	-		6	WASHER TBRB6,4X12RFR	
300	90028-0001	F		2	CONE	
320	90028-0020	F		7	CONE	
330	90028-0021	F		5	CONE	
360	90032-0040	K		2	BLOCK	
400	90092-0048	F		5	OIL BRUSH	
410	90092-0052	F		7	VALVE	
420	90092-0053	F		5	VALVE	
430	90134-0002	F		3	PIPE CONNECTION	
440	90134-0003	F		2	BUSHING	
480	90134-0030	F		4	SLEEVE	
490	342706-0114	F		10	ACCESSORIES,INSERT SLEEVE 4	
500	90134-0039	F		7	BUSHING	
505	90134-0040	F		5	BUSHING	
560	90134-0058	K		6	BANJO CONNECTION	
565	90137-0002	F		3	ELBOW PIPE	
570	90165-0056	K		4	CLIP	
580	90165-0057	K		5	CLIP	
590	316810-0106	K		1	PIPE CLAMP 8MM RFR	
595	90074-0002	K		2	CABLE CLIP JR11 STAINLESS	
TB/8 0500SQ or TB/8 1000SQ NORMFIN or TBO/8 1000SQ						
F010	A 574323-0100	-		1	CONVEYING EQUIPMENT	
F070	A 576247-0100	-		1	PROTECTION	
100	312125-0287	-		4	SLOTTED CHEESE HEAD ISO 1207 M4X8 RFR	
300	90028-0001	F		1	CONE	
320	90028-0020	F		8	CONE	
330	90028-0021	F		2	CONE	
350	90032-0039	-		1	BLOCK	
360	90032-0040	K		1	BLOCK	
400	90092-0048	F		2	OIL BRUSH	
410	90092-0052	F		4	VALVE	
420	90092-0053	F		6	VALVE	
430	90134-0002	F		1	PIPE CONNECTION	
440	90134-0003	F		1	BUSHING	
480	90134-0030	F		3	SLEEVE	
490	342706-0114	F		4	ACCESSORIES,INSERT SLEEVE 4	
500	90134-0039	F		8	BUSHING	
505	90134-0040	F		2	BUSHING	
560	90134-0058	K		7	BANJO CONNECTION	
565	90137-0002	F		1	ELBOW PIPE	
570	90165-0056	K		1	CLIP	
580	90165-0057	K		1	CLIP	
590	316810-0106	K		3	PIPE CLAMP 8MM RFR	
595	90074-0002	K		2	CABLE CLIP JR11 STAINLESS	
TB/8 1000SQ REVFIN						
F010	A 574323-0100	-		1	CONVEYING EQUIPMENT	
F070	A 576247-0100	-		1	PROTECTION	
036	1143001-0000	-		1	ATTACHMENT PLATE	
037	1143002-0000	-		2	BRACKET	
038	1143004-0000	-		2	CYLINDER BRACKET	
039	1143000-0000	-		2	PUSHER	
100	312125-0287	-		6	SLOTTED CHEESE HEAD ISO 1207 M4X8 RFR	
300	90028-0001	F		1	CONE	
320	90028-0020	F		8	CONE	
330	90028-0021	F		2	CONE	
350	90032-0039	-		1	BLOCK	
360	90032-0040	K		1	BLOCK	
400	90092-0048	F		2	OIL BRUSH	
410	90092-0052	F		4	VALVE	
420	90092-0053	F		6	VALVE	
430	90134-0002	F		1	PIPE CONNECTION	
440	90134-0003	F		1	BUSHING	
480	90134-0030	F		3	SLEEVE	
490	342706-0114	F		4	ACCESSORIES,INSERT SLEEVE 4	
500	90134-0039	F		8	BUSHING	
505	90134-0040	F		2	BUSHING	
560	90134-0058	K		7	BANJO CONNECTION	
565	90137-0002	F		1	ELBOW PIPE	
570	90165-0056	K		1	CLIP	

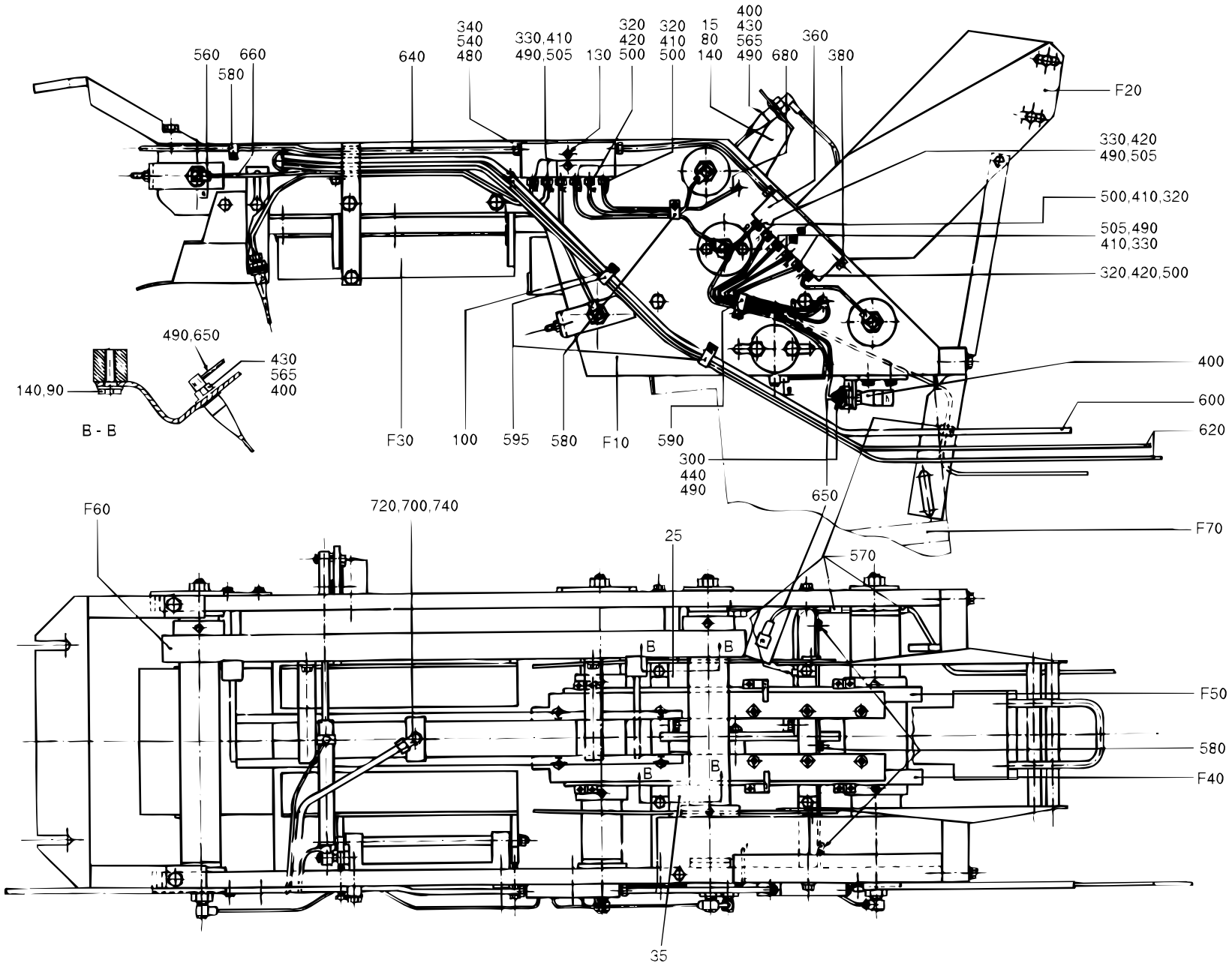

S-525085-3
ECN 16630

Pos	Part No	SP	UN	Qty	Description	Page No
580	90165-0057	K		1	CLIP	
590	316810-0106	K		3	PIPE CLAMP 8MM RFR	
591	90450-0377	K		2	CYLINDER	
592	342732-0102	-		4	V-COUPL,ADJUST,FOR PLASTIC TUBE 6-G1/8"	
593	90166-0124	-	MM	7000	HOSE	
594	312631-0321	-		2	NUT TER M6M 10X1,25	
595	90074-0002	K		4	CABLE CLIP JR11 STAINLESS	
596	312105-0372	-		10	SCREW M6S ISO 4017 M6X25 A280	
597	315101-0153	-		10	WASHER BRB6,4X12FZB	
598	352113-0101	-		3	RIBBON CLAMP	
599	312105-0362	-		1	SCREW M6S ISO 4017 M6X8 A280	
TBA/8 1000SQ REVFIN						
F010	A 576251-0100	-		1	CONVEYOR	
F070	A 576247-0100	-		1	PROTECTION	
036	1143001-0000	-		1	ATTACHMENT PLATE	
037	1143002-0000	-		2	BRACKET	
038	1143004-0000	-		2	CYLINDER BRACKET	
039	1143000-0000	-		2	PUSHER	
100	312125-0287	-		6	SLOTTED CHEESE HEAD ISO 1207 M4X8	
RFR						
300	90028-0001	F		1	CONE	
320	90028-0020	F		8	CONE	
330	90028-0021	F		2	CONE	
350	90032-0039	-		1	BLOCK	
360	90032-0040	K		1	BLOCK	
400	90092-0048	F		2	OIL BRUSH	
410	90092-0052	F		4	VALVE	
420	90092-0053	F		6	VALVE	
430	90134-0002	F		1	PIPE CONNECTION	
440	90134-0003	F		1	BUSHING	
480	90134-0030	F		3	SLEEVE	
490	342706-0114	F		4	ACCESSORIES,INSERT SLEEVE 4	
500	90134-0039	F		8	BUSHING	
505	90134-0040	F		2	BUSHING	
560	90134-0058	K		7	BANJO CONNECTION	
565	90137-0002	F		1	ELBOW PIPE	
570	90165-0056	K		1	CLIP	
580	90165-0057	K		1	CLIP	
590	316810-0106	K		3	PIPE CLAMP 8MM RFR	
591	90450-0377	K		2	CYLINDER	
592	342732-0102	-		4	V-COUPL,ADJUST,FOR PLASTIC TUBE 6-G1/8"	
593	90166-0124	-	MM	7000	HOSE	
594	312631-0321	-		2	NUT TER M6M 10X1,25	
595	90074-0002	K		4	CABLE CLIP JR11 STAINLESS	
596	312105-0372	-		10	SCREW M6S ISO 4017 M6X25 A280	
597	315101-0153	-		10	WASHER BRB6,4X12FZB	
598	352113-0101	-		3	RIBBON CLAMP	
599	312105-0362	-		1	SCREW M6S ISO 4017 M6X8 A280	
TBA/8 1000SQ NORMFIN						
F010	A 576251-0100	-		1	CONVEYOR	
F070	A 576247-0100	-		1	PROTECTION	
100	312125-0287	-		4	SLOTTED CHEESE HEAD ISO 1207 M4X8	
RFR						
300	90028-0001	F		1	CONE	
320	90028-0020	F		8	CONE	
330	90028-0021	F		2	CONE	
350	90032-0039	-		1	BLOCK	
360	90032-0040	K		1	BLOCK	
400	90092-0048	F		2	OIL BRUSH	
410	90092-0052	F		4	VALVE	
420	90092-0053	F		6	VALVE	
430	90134-0002	F		1	PIPE CONNECTION	
440	90134-0003	F		1	BUSHING	
480	90134-0030	F		3	SLEEVE	
490	342706-0114	F		4	ACCESSORIES,INSERT SLEEVE 4	
500	90134-0039	F		8	BUSHING	
505	90134-0040	F		2	BUSHING	
560	90134-0058	K		7	BANJO CONNECTION	
565	90137-0002	F		1	ELBOW PIPE	
570	90165-0056	K		1	CLIP	
580	90165-0057	K		1	CLIP	
590	316810-0106	K		3	PIPE CLAMP 8MM RFR	
595	90074-0002	K		2	CABLE CLIP JR11 STAINLESS	

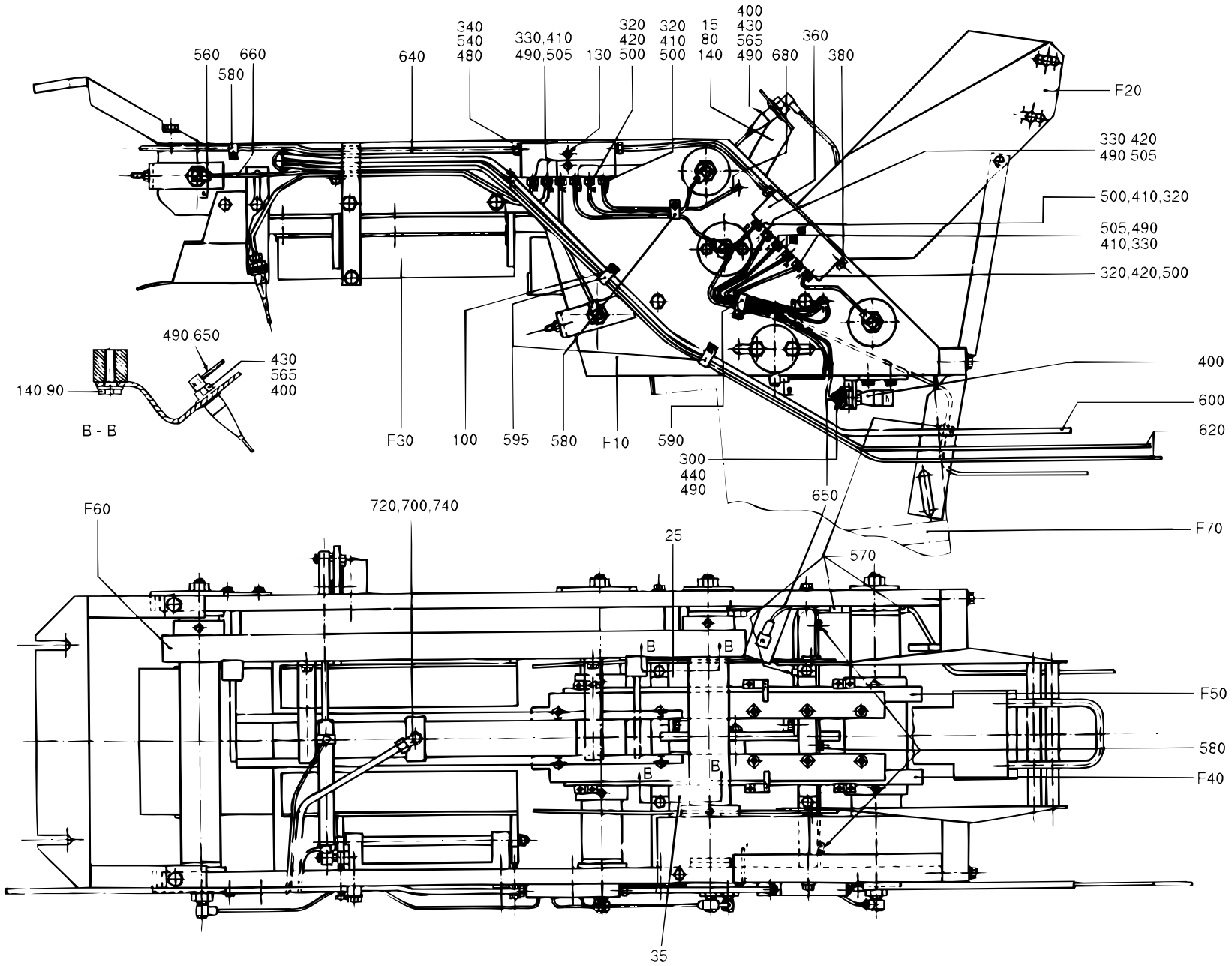

S-525085-3
ECN 16630

Pos	Part No	SP	UN	Qty	Description	Page No
Common parts						
F020	A 525087-0100	-		1	DROP	
F030	A 525088-0200	-		1	DISCHARGE CHUTE	
130	312155-0295	-		4	SCREW MF6S DIN 7991 M4X20 A280	
340	90028-0025	F		3	CONE	
380	90087-0019	K		1	PLUG	
540	90134-0055	F		3	BUSHING	
600	90166-0122	F	MM	1300	HOSE	
620	90166-0095	F	MM	3000	HOSE	
640	90166-0108	F	MM	1300	HOSE	
650	90166-0051	F	MM	2600	HOSE	
660	90166-0143	F	MM	2500	HOSE	
680	90266-0019	F	MM	300	PIPE	
700	90424-0035	F		1	NOZZLE	
720	315233-0110	F		1	SEAL RING R1/4"	
740	342933-0122	F		1	ELBOW 90 COUPL.,INT.THREAD 8/6-G1/4"	

Pos	Part No	SP	UN	Qty	Description	Page No

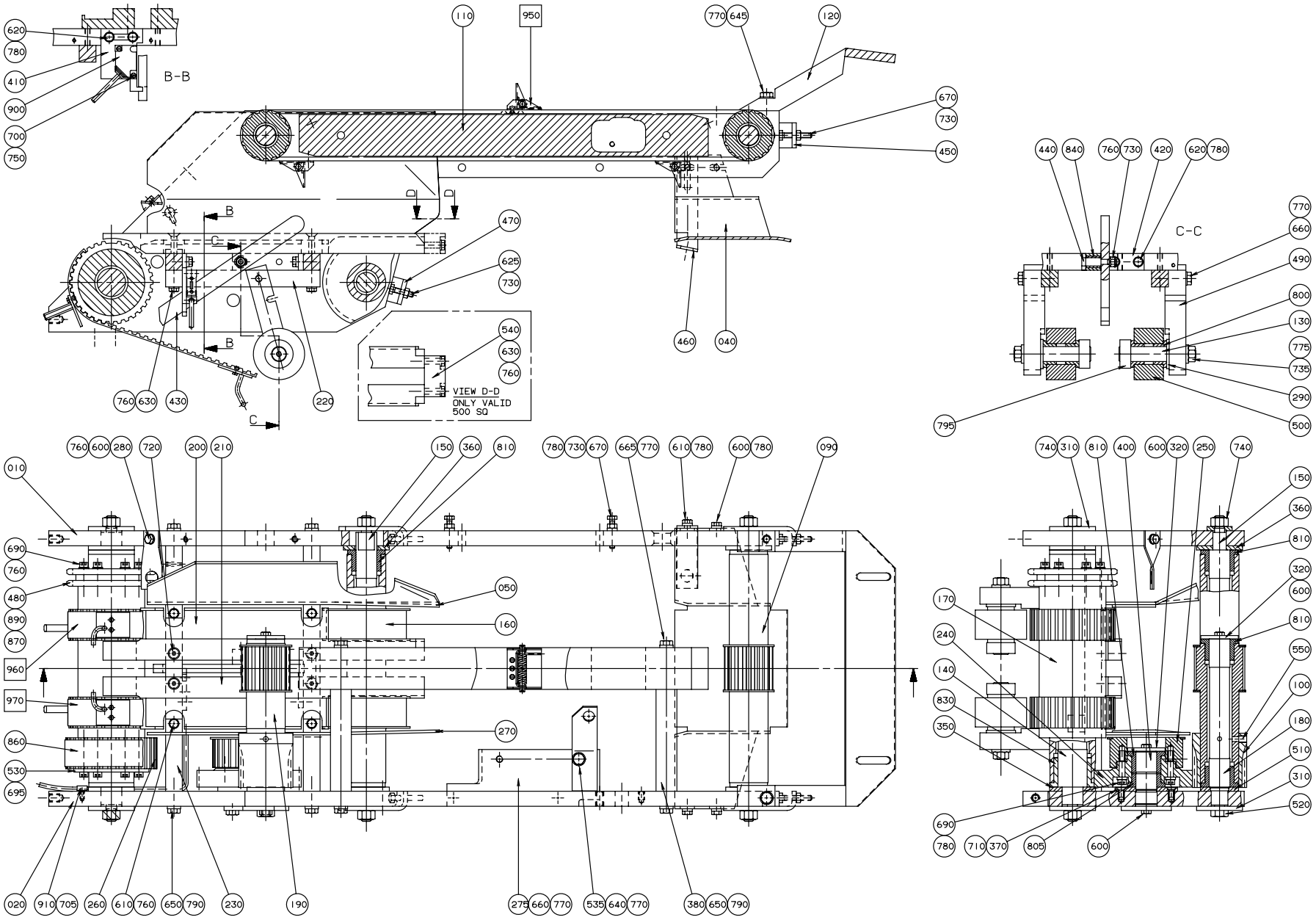

S-574323-1
ECN 70165

Pos	Part No	SP	UN	Qty	Description	Page No
0500SQ						
120	443293-0000	-		1	BRACKET	
540	591084-0000	-		1	GUIDE LUG	
630	312105-0374	-		6	SCREW M6S ISO 4017 M6X30 A280	
760	315105-0153	-		18	WASHER BRB6,4X12RFR	
1000SQ REVFIN						
120	1143003-0000	-		1	BRACKET	
630	312105-0374	-		4	SCREW M6S ISO 4017 M6X30 A280	
760	315105-0153	-		16	WASHER BRB6,4X12RFR	
1000SQ NORMFIN						
120	443293-0000	-		1	BRACKET	
630	312105-0374	-		4	SCREW M6S ISO 4017 M6X30 A280	
760	315105-0153	-		16	WASHER BRB6,4X12RFR	
Common parts						
F950	A 574332-0100	-		1	BELT	
F960	A 576245-0100	-		1	BELT RIGHT	
F970	A 576246-0100	-		1	BELT LEFT	
010	574065-0000	-		1	SIDE PLATE	
020	574066-0000	-		1	SIDE PLATE	
040	574094-0000	-		1	HEAD PLATE	
050	574119-0000	-		1	HEAD PLATE	
090	443289-0000	D		1	TOOTHED PULLY	
100	443290-0000	K		1	GEAR WHEEL	
110	443292-0000	-		1	STEERING	
130	525363-0002	K		2	SHAFT	
140	525400-0000	D		1	SHAFT	
150	525402-0000	D		2	SHAFT	
160	574067-0000	D		1	TIMING BELT SHAFT	
170	574068-0000	D		1	TIMING BELT SHAFT	
180	574069-0000	D		1	AXLE PIN	
190	574070-0000	D		1	TIMING BELT SHAFT	
200	574071-0000	-		1	PROFILE	
210	574072-0000	-		1	PROFILE	
220	574073-0000	-		2	BRACKET	
230	574076-0000	-		2	BRACKET	
240	574082-0000	K		1	GEAR WHEEL	
250	574085-0000	K		1	TIMING BELT PULLEY	
260	574086-0000	K		1	TIMING BELT PULLEY	
270	574120-0000	-		1	HEAD PLATE	
275	574121-0000	-		1	BRACKET	
280	574122-0000	-		1	BRACKET	
290	285363-0000	-		2	WASHER	
310	443295-0000	-		3	WASHER	
320	443296-0000	D		2	WASHER	
350	443299-0000	D		2	WASHER	
360	443300-0000	D		4	WASHER	
370	443301-0000	D		1	WASHER	
380	443312-0000	-		2	SPACER	
400	443307-0000	D		1	SHAFT	
410	443482-0000	-		1	BRACKET	
420	443483-0000	-		1	BRACKET	
430	443484-0000	-		1	ARM	
440	443485-0000	K		1	SCREW	
450	443489-0000	-		2	BRACKET	
460	525334-0000	-		1	BRACKET	
470	556886-0000	-		2	BRACKET	
480	573353-0000	K		1	SPROCKET	
490	574074-0000	-		2	ROLLER BRACKET	
500	574075-0000	D		2	ROLL	
510	574083-0000	D		1	WASHER	
520	574084-0000	K		1	SCREW	
530	574087-0000	-		1	WASHER	
535	574123-0000	-		1	BRACKET	
550	90287-0161	K		2	STOP SCREW	
600	312105-0366	-		7	SCREW M6S ISO 4017 M6X12 A280	
610	312105-0368	-		5	SCREW M6S ISO 4017 M6X16 A280	
620	312105-0370	-		4	SCREW M6S ISO 4017 M6X20 A280	
625	312105-0372	-		2	SCREW M6S ISO 4017 M6X25 A280	
640	312105-0447	-		1	SCREW M6S ISO 4017 M8X12 A280	
645	312105-0453	-		2	SCREW M6S ISO 4017 M8X25 A280	
650	312105-0455	-		4	SCREW M6S ISO 4017 M8X30 A280	
660	312105-0457	-		2	SCREW O4017 M8X35A280	
665	312105-0463	-		2	SCREW M6S ISO 4014 M8X60 A280	
670	312109-0376	-		4	SCREW M6S ISO 4017 M6X35 A280	
690	312115-0374	-		10	SCREW MC6S ISO O4762 M6X30 A280	
695	312115-0380	-		6	SCREW MC6S ISO 4762 M6X50 A280	
700	312125-0230	-		2	SLOTTED CHEESE HEAD ISO 1207 M3X20	
RFR						
705	312125-0287	-		2	SLOTTED CHEESE HEAD ISO 1207 M4X8	
RFR						
710	312155-0366	-		2	SCREW MF6S DIN 7991 M6X12 A280	
720	312155-0376	-		4	SCREW MF6S DIN 7991 M6X35 A280	
730	312605-0316	-		7	NUT M6M6RFR	
735	312605-0320	-		2	NUT M6M10RFR	
740	312605-0322	-		6	NUT M6M12RFR	
750	315105-0124	-		2	WASHER BRB3,2X6RFR	

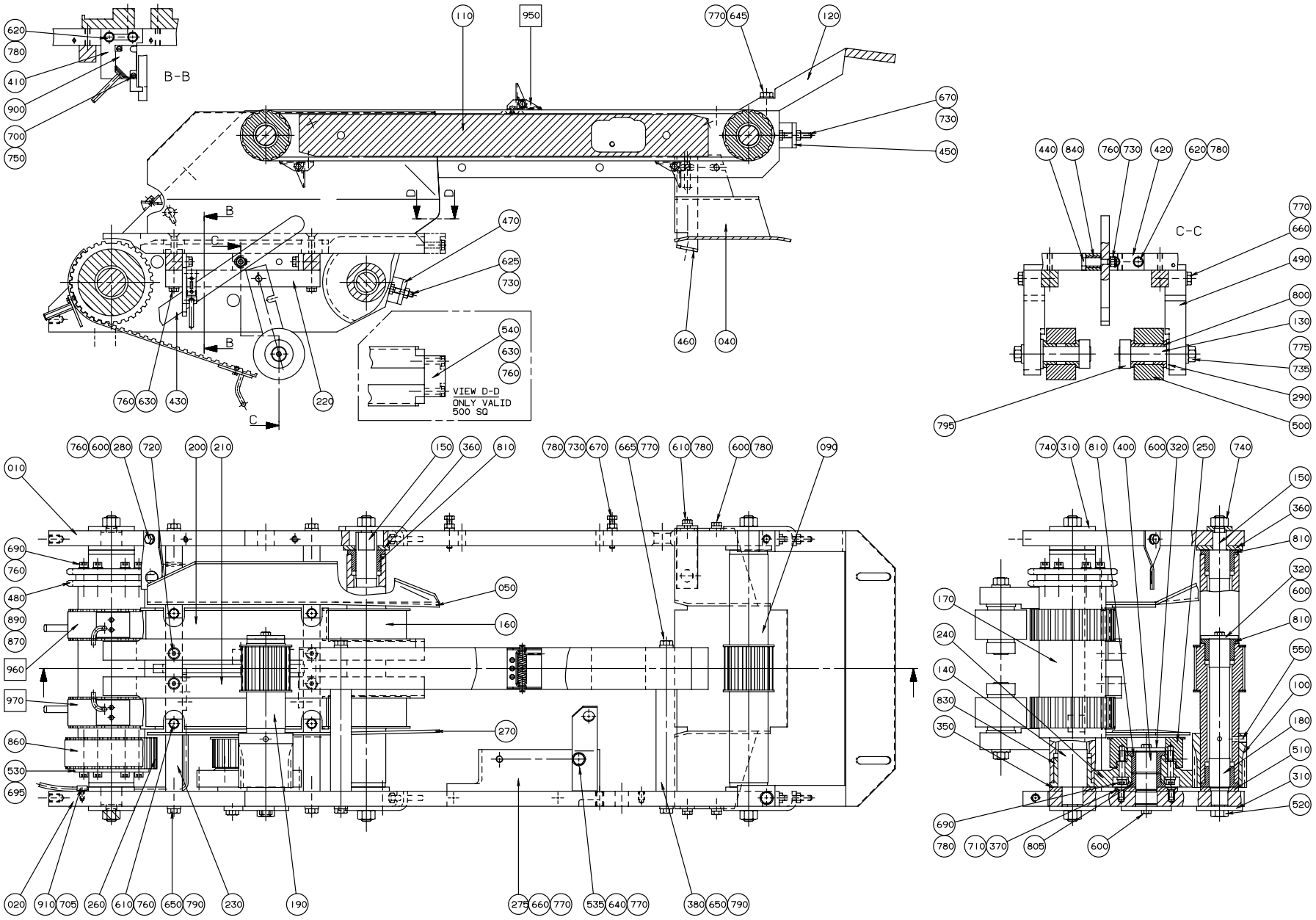
B-B
C-C
VIEW D-D
ONLY VALID
500 SQ
S-574323-1
ECN 70165

Pos	Part No	SP	UN	Qty	Description	Page No
770	315105-0165	-		9	WASHER BRB8,4X16RFR	
775	315105-0173	-		2	WASHER BRB10,5X22RFR	
780	315115-0153	-		14	WASHER TBRB6,4X12RFR	
790	315115-0165	-		6	WASHER TBRB8,4X16RFR	
795	315742-0114	-		2	RETAINING 18SMS199RFR	
800	321101-0223	K		4	FLANGE BUS 18F7X16	
805	321101-0252	K		1	FLANGE BUS 25F7X16	
810	321101-0253	K		7	FLANGE BUS 25F7X25	
830	321101-0283	K		2	FLANGE BUS 35F7X35	
840	321116-0128	K		1	BUSHING 10E7/14X16	
860	90417-0345	K		1	TIMING BELT	
870	318219-0487	F		1	CONNECTION LINK	
890	318242-0108	K		1	ROLLER CHAIN	
900	90044-0104	F		1	PROX.SWITCHIFM IN 3002	
910	90165-0056	-		2	CLIP	

Pos	Part No	SP	UN	Qty	Description	Page No

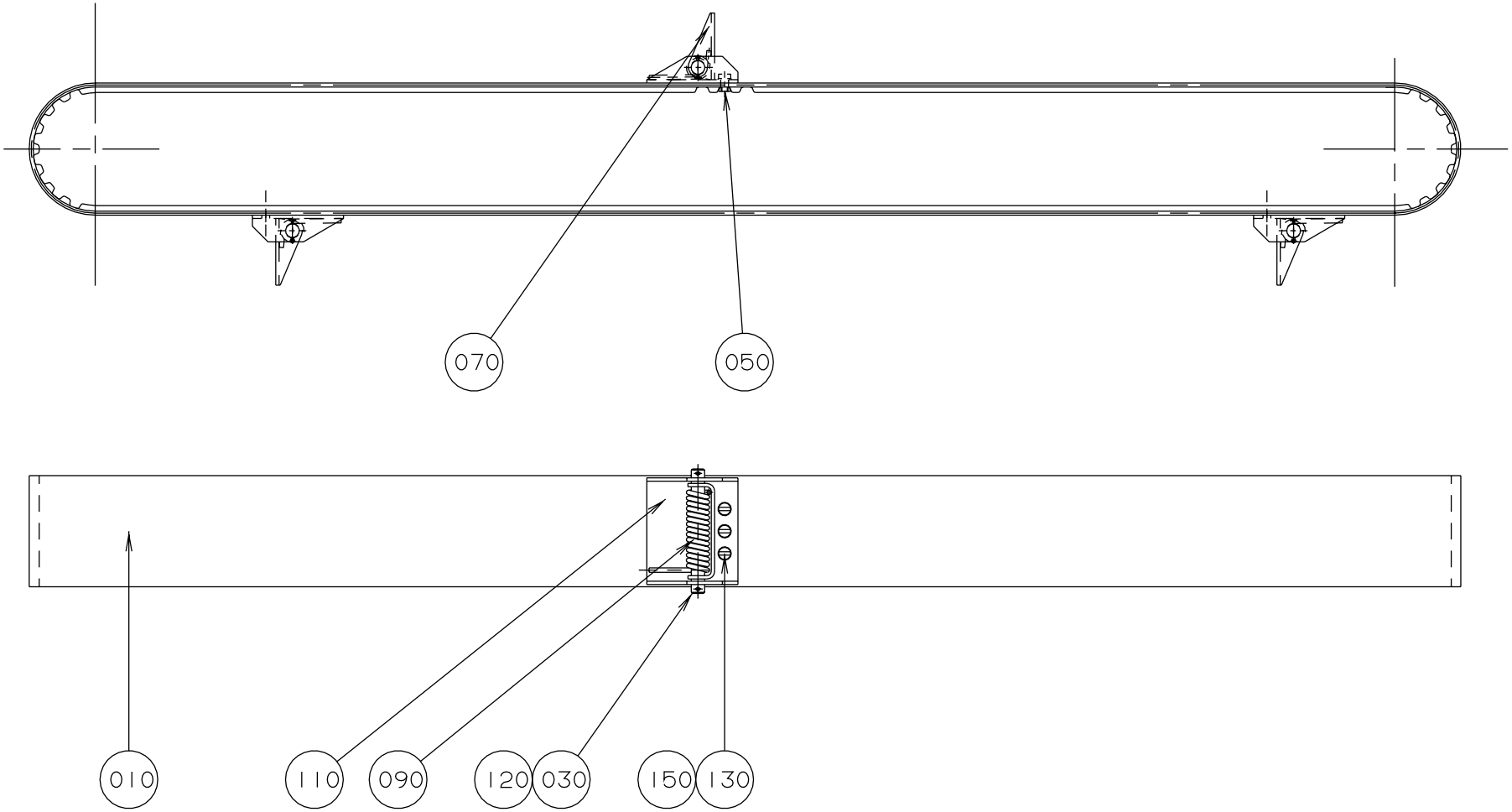

S-574332-1
ECN 19244

Pos	Part No	SP	UN	Qty	Description	Page No
-						
010	90417-0330	K		1	TIMING BELT	
030	297751-0000	F		3	SHAFT	
050	297755-0000	-		3	WEDGE	
070	297794-0000	K		3	SHEET	
090	297795-0000	K		3	SPRING	
110	525055-0000	-		3	BRACKET	
120	311411-0127	-		6	SPLIT PIN SP1,2X12RFR	
130	312125-0220	-		9	SLOTTED HEMCS3X6RFR	
150	315105-0124	-		9	WASHER BRB3,2X6RFR	

Pos	Part No	SP	UN	Qty	Description	Page No

BELT LEFT

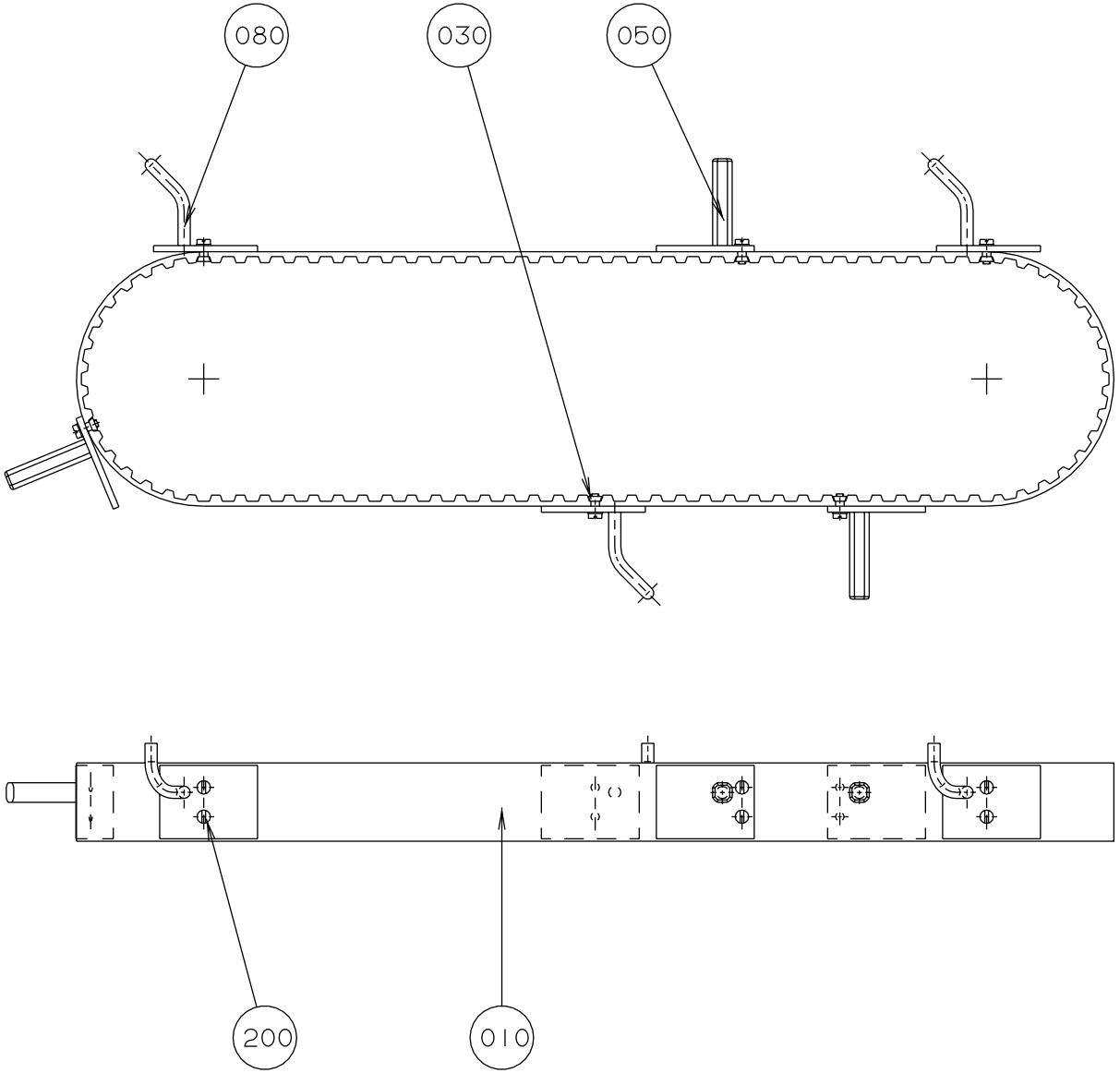

Pos	Part No	SP	UN	Qty	Description	Page No
-						
010	90417-0329	K		1	TIMING BELT	
030	285380-0002	F		6	WEDGE	
050	574089-0000	F		3	CARRIER	
080	574092-0000	F		3	CARRIER	
200	312125-0220	F		12	SLOTTED HEMCS3X6RFR	

Pos	Part No	SP	UN	Qty	Description	Page No

BELT RIGHT

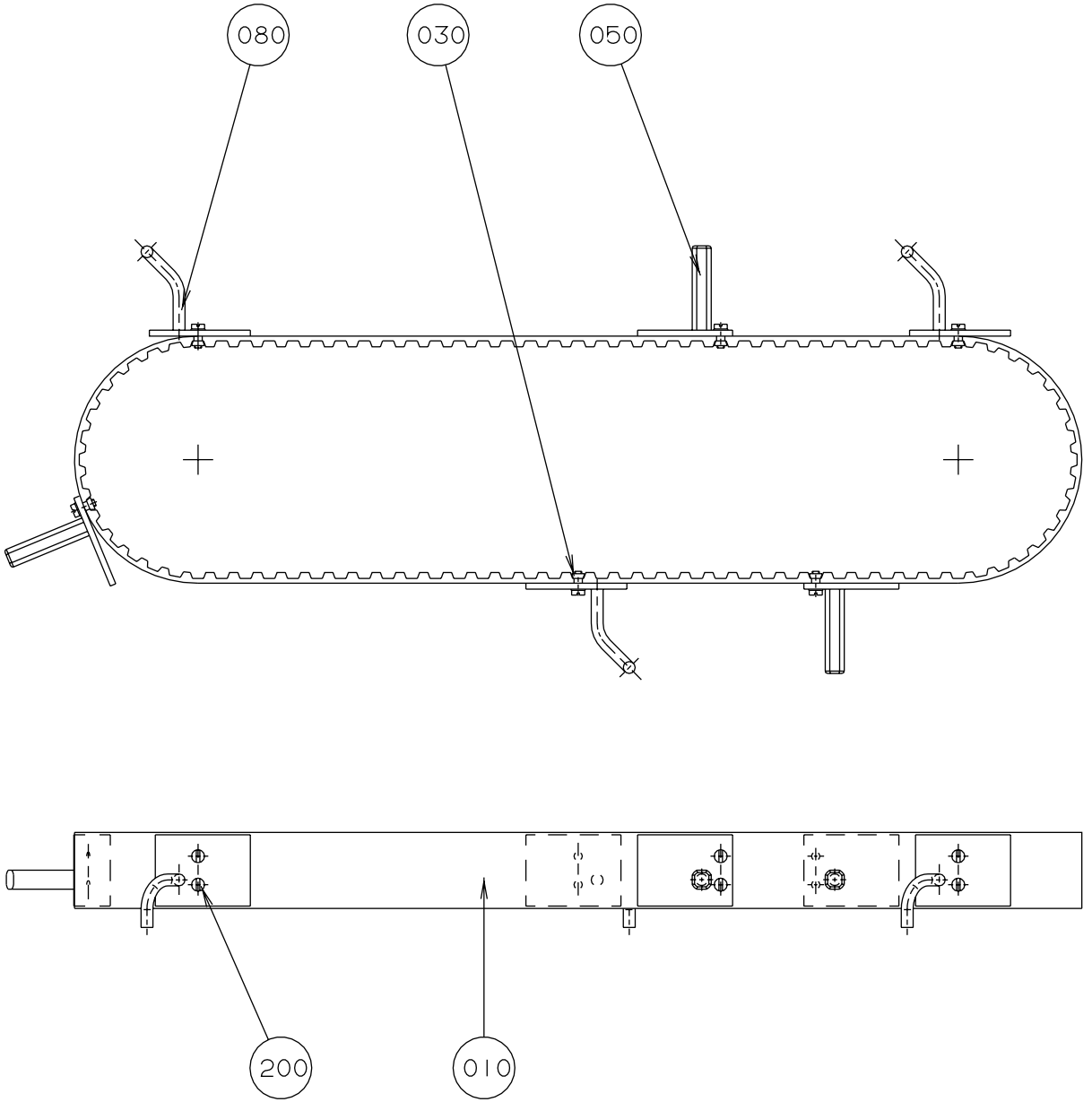

S-576245-1
ECN 19244

Pos	Part No	SP	UN	Qty	Description	Page No
-						
010	90417-0329	K		1	TIMING BELT	
030	285380-0002	F		6	WEDGE	
050	574090-0000	F		3	CARRIER	
080	574091-0000	F		3	CARRIER	
200	312125-0220	F		12	SLOTTED HEMCS3X6RFR	

Pos	Part No	SP	UN	Qty	Description	Page No

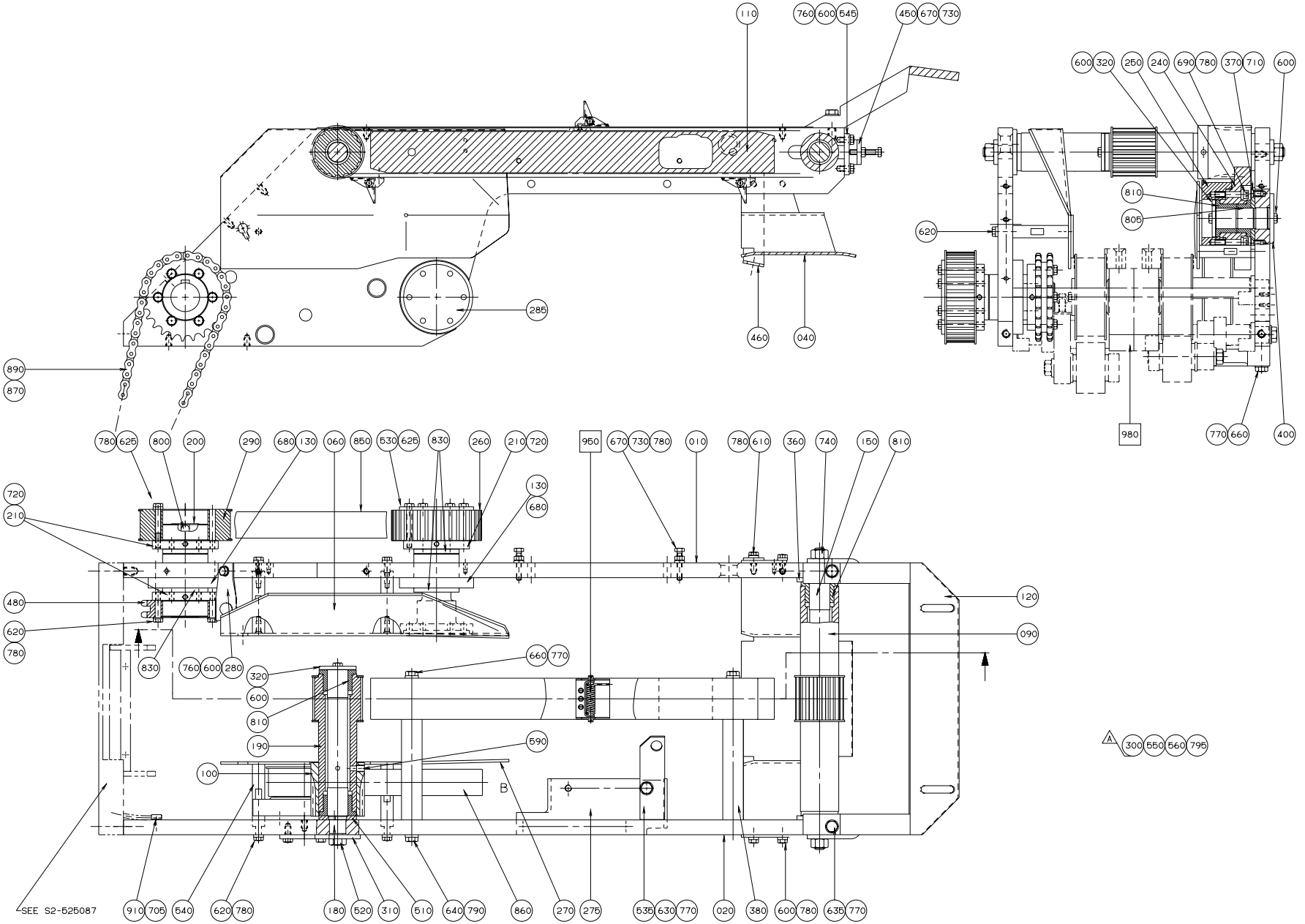

S-576251-1
ECN 20622

Pos	Part No	SP	UN	Qty	Description	Page No
REVFIN						
120	1143003-0000	-		1	BRACKET	
NORMFIN						
120	443293-0000	-		1	BRACKET	
Common parts						
F950	A 574332-0100	-		1	BELT	
F980	A 576252-0100	-		1	INFEED SECTION	
010	574132-0000	-		1	SIDE PLATE	
020	574133-0000	-		1	SIDE PLATE	
040	574094-0000	-		1	HEAD PLATE	
060	574145-0000	-		1	HEAD PLATE	
090	443289-0000	D		1	TOOTHED PULLY	
100	443290-0000	K		1	GEAR WHEEL	
110	443292-0000	-		1	STEERING	
130	574139-0000	-		2	BEARING HOUSING	
150	525402-0000	-		1	SHAFT	
180	574069-0000	D		1	AXLE PIN	
190	574070-0000	D		1	TIMING BELT SHAFT	
200	574140-0000	-		1	SHAFT	
210	574150-0000	-		3	SLEEVE	
240	574082-0000	K		1	GEAR WHEEL	
250	574085-0000	K		1	TIMING BELT PULLEY	
260	574086-0000	K		1	TIMING BELT PULLEY	
270	574146-0000	-		1	HEAD PLATE	
275	574121-0000	-		1	BRACKET	
280	574122-0000	-		1	BRACKET	
285	574148-0000	-		1	SHAFT	
290	574159-0000	-		1	TIMING BELT PULLEY	
310	443295-0000	-		1	WASHER	
320	443296-0000	D		2	WASHER	
360	443300-0000	D		2	WASHER	
370	443301-0000	D		1	WASHER	
380	443312-0000	-		2	SPACER	
400	443307-0000	D		1	SHAFT	
450	443489-0000	-		2	BRACKET	
460	525334-0000	-		1	BRACKET	
480	573353-0000	K		1	SPROCKET	
510	574083-0000	D		1	WASHER	
520	574084-0000	K		1	SCREW	
530	574087-0000	-		1	WASHER	
535	574123-0000	-		1	BRACKET	
540	574147-0000	-		4	HOLDER	
545	574155-0000	-		2	PLATE	
590	90287-0161	K		2	STOP SCREW	
600	312105-0366	-		10	SCREW M6S ISO 4017 M6X12 A280	
610	312105-0368	-		1	SCREW M6S ISO 4017 M6X16 A280	
620	312105-0374	-		10	SCREW M6S ISO 4017 M6X30 A280	
625	312105-0380	-		12	SCREW M6S ISO 4014 M6X50 A280	
630	312105-0447	-		1	SCREW M6S ISO 4017 M8X12 A280	
635	312105-0453	-		2	SCREW M6S ISO 4017 M8X25 A280	
640	312105-0455	-		2	SCREW M6S ISO 4017 M8X30 A280	
660	312105-0463	-		4	SCREW M6S ISO 4014 M8X60 A280	
670	312109-0376	-		4	SCREW M6S ISO 4017 M6X35 A280	
680	312115-0366	-		8	SCREW MC6S ISO 4762 M6X12 A280	
690	312115-0374	-		4	SCREW MC6S ISO O4762 M6X30 A280	
705	312125-0287	-		2	SLOTTED CHEESE HEAD ISO 1207 M4X8	
RFR						
710	312155-0366	-		2	SCREW MF6S DIN 7991 M6X12 A280	
720	312318-0366	-		3	SET SCREW CUP POINT ISO 4029 M6X12	
RFR						
730	312605-0316	-		4	NUT M6M6RFR	
740	312605-0322	-		2	NUT M6M12RFR	
760	315105-0153	-		5	WASHER BRB6,4X12RFR	
770	315105-0165	-		8	WASHER BRB8,4X16RFR	
780	315115-0153	-		26	WASHER TBRB6,4X12RFR	
790	315115-0165	-		2	WASHER TBRB8,4X16RFR	
800	315705-0298	-		3	FLAT WEDGE	
805	321101-0252	K		1	FLANGE BUS 25F7X16	
810	321101-0253	K		5	FLANGE BUS 25F7X25	
830	321101-0282	K		4	FLANGE BUS 35F7X20	
850	90417-0329	K		1	TIMING BELT	
860	90417-0345	K		1	TIMING BELT	
870	318219-0487	F		1	CONNECTION LINK	
890	318242-0108	K		1	ROLLER CHAIN	
910	90165-0056	-		2	CLIP	

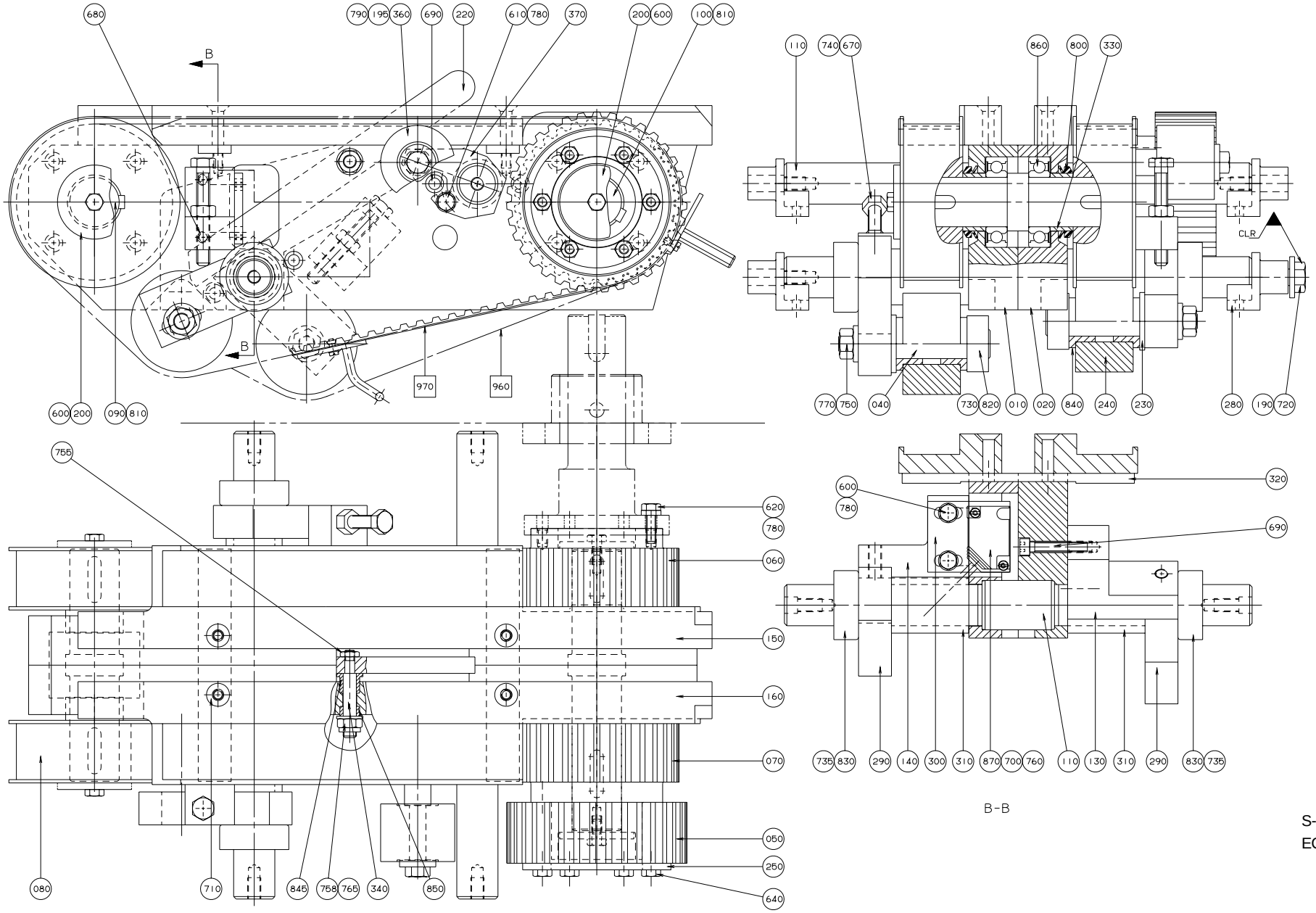

S-576252-1
ECN 20662

Pos	Part No	SP	UN	Qty	Description	Page No
-						
F960	A 576245-0100	-		1	BELT RIGHT	
F970	A 576246-0100	-		1	BELT LEFT	
010	574134-0000	D		1	BEARING CONSOLE	
020	574135-0000	D		1	BEARING CONSOLE	
040	525363-0002	K		2	SHAFT	
050	574086-0000	K		1	TIMING BELT PULLEY	
060	574136-0000	D		1	TIMING BELT PULLEY	
070	574137-0000	D		1	TIMING BELT PULLEY	
080	574138-0000	D		2	TIMING BELT PULLEY	
090	574141-0000	K		1	SHAFT	
100	574142-0000	K		1	SHAFT	
110	574144-0000	-		2	SHAFT	
130	574151-0000	D		1	BRACKET	
140	574152-0000	D		1	BRACKET	
150	574157-0000	D		1	PROFILE	
160	574158-0000	D		1	PROFILE	
190	26490-0000	-		4	WASHER	
195	262028-0016	K		1	FITTING BOLT	
200	443296-0000	D		4	WASHER	
220	443484-0000	-		1	ARM	
230	285363-0000	-		2	WASHER	
240	574075-0000	D		2	ROLL	
250	574087-0000	-		1	WASHER	
280	574143-0000	-		4	AXLE SUPPORT	
290	574149-0000	D		2	ARM	
300	574153-0000	-		1	PLATE	
310	574154-0000	-		2	SPACER	
320	574156-0000	-		2	SUPPORT RAIL	
330	574160-0000	-		4	SPACER	
340	574161-0000	D		1	SHAFT	
360	580366-0000	K		1	ROLL	
370	580996-0000	-		1	ROLLER BRACKET	
600	312105-0366	-		6	SCREW M6S ISO 4017 M6X12 A280	
610	312105-0368	-		1	SCREW M6S ISO 4017 M6X16 A280	
620	312105-0370	-		6	SCREW M6S ISO 4017 M6X20 A280	
640	312105-0380	-		6	SCREW M6S ISO 4014 M6X50 A280	
670	312109-0463	-		2	SCREW M6S8X60H A4 80	
680	312115-0372	-		2	SCREW MC6S ISO 4762 M6X25 A280	
690	312115-0374	-		14	SCREW MC6S ISO O4762 M6X30 A280	
700	312125-0228	-		2	SLOTTED CHEESE HEAD ISO 1207 M3X16 RFR	
710	312155-0376	-		4	SCREW MF6S DIN 7991 M6X35 A280	
720	927891-0000	-		4	SCREW	
730	312318-0362	-		2	SET SCREW CUP POINT ISO 4029 M6X8 RFR	
735	312318-0443	-		2	SET SCREW CUP POINT ISO 4029 M8X8 RFR	
740	312605-0318	-		2	NUT M6M8RFR	
750	312605-0320	-		2	NUT M6M10RFR	
755	312625-0316	-		1	NUT M 6	
758	312812-0318	-		1	LOCK NUT A2-M8RFR	
760	315105-0124	-		2	WASHER BRB3,2X6RFR	
765	315105-0165	-		1	WASHER BRB8,4X16RFR	
770	315105-0173	-		2	WASHER BRB10,5X22RFR	
780	315115-0153	-		9	WASHER TBRB6,4X12RFR	
790	315115-0173	-		1	WASHER B 10,5X22 RFR	
800	315220-0175	-		4	SEAL RING V-35S	
810	315705-0266	-		4	FLAT WEDGE	
820	315742-0114	-		2	RETAINING 18SMS199RFR	
830	315742-0119	-		2	RETAINING 25SMS199RFR	
840	321101-0223	K		4	FLANGE BUS 18F7X16	
845	321111-0097	-		1	FLANGE BUS 8E7X12	
850	321116-0095	-		1	BUSHING 8E7/12X6	
860	321308-0106	K		4	BALL BEARISKF6006RS	
870	90044-0104	K		1	PROX.SWITCHIFM IN 3002	

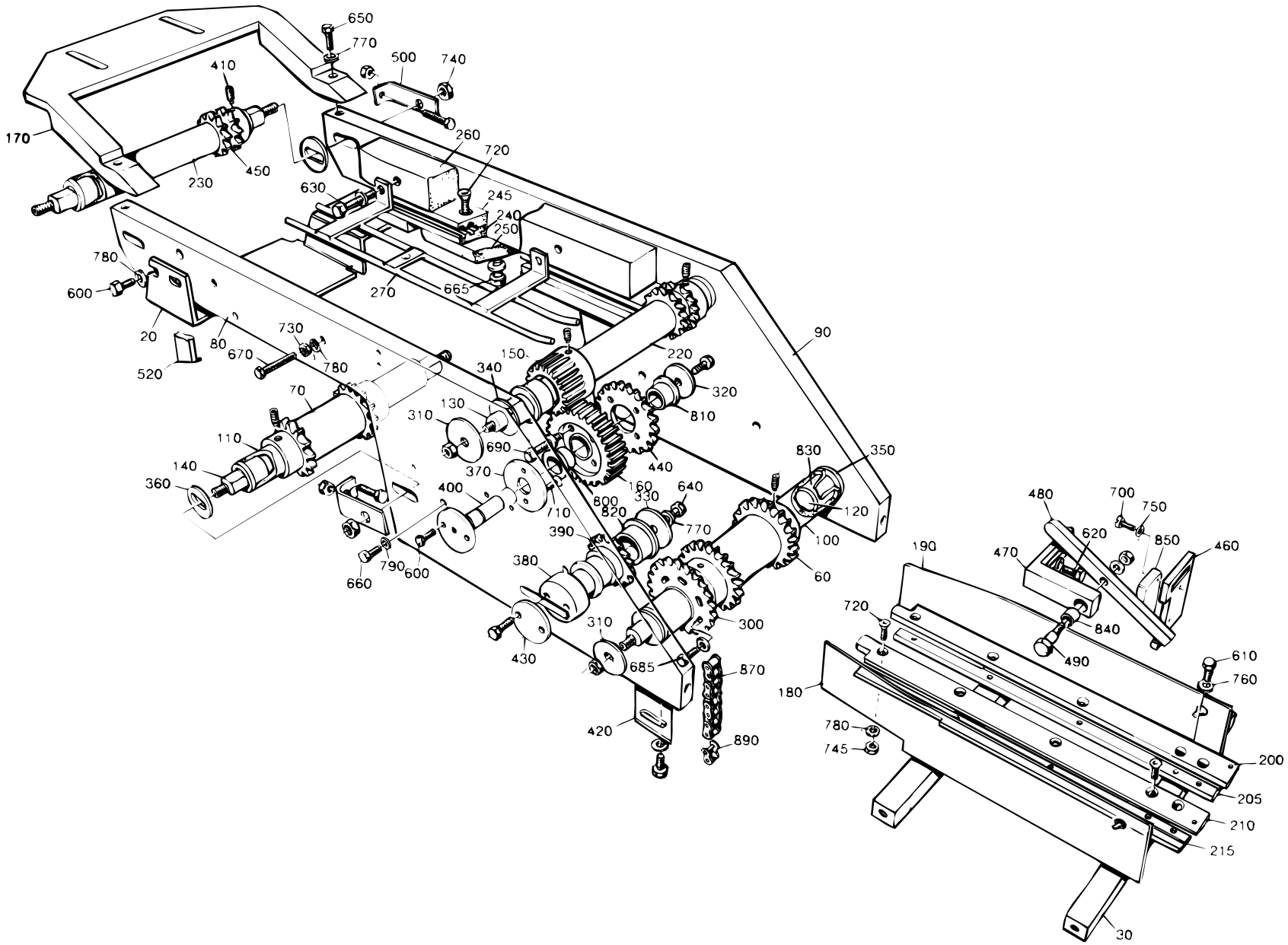

S-525086-1
ECN 16757

Pos	Part No	SP	UN	Qty	Description	Page No
0300B						
200	525425-0000	-		1	PROFILE	
205	525426-0000	-		1	PROFILE	
210	525427-0000	-		1	PROFILE	
215	525428-0000	-		1	PROFILE	
0355B or 0400B						
020	443388-0001	-		1	HEAD PLATE	
030	443480-0000	-		2	BRACKET	
060	443478-0002	K		1	SPROCKET	
070	443479-0002	K		1	SPROCKET	
200	525425-0000	-		1	PROFILE	
205	525426-0000	-		1	PROFILE	
210	525427-0000	-		1	PROFILE	
215	525428-0000	-		1	PROFILE	
0375S						
020	443388-0002	-		1	HEAD PLATE	
030	443481-0000	-		2	BRACKET	
060	443478-0003	K		1	SPROCKET	
070	443479-0003	K		1	SPROCKET	
200	525245-0000	K		1	PROFILE	
205	525246-0000	K		1	PROFILE	
210	525247-0000	K		1	PROFILE	
215	525248-0000	K		1	PROFILE	
0500B or 0568B						
020	443387-0000	-		1	HEAD PLATE	
030	443454-0000	-		2	BRACKET	
060	443478-0001	K		1	SPROCKET	
070	443479-0001	K		1	SPROCKET	
200	525425-0000	-		1	PROFILE	
205	525426-0000	-		1	PROFILE	
210	525427-0000	-		1	PROFILE	
215	525428-0000	-		1	PROFILE	
0500S						
020	443388-0001	-		1	HEAD PLATE	
030	443480-0000	-		2	BRACKET	
060	443478-0002	K		1	SPROCKET	
070	443479-0002	K		1	SPROCKET	
200	525245-0000	K		1	PROFILE	
205	525246-0000	K		1	PROFILE	
210	525247-0000	K		1	PROFILE	
215	525248-0000	K		1	PROFILE	
0750B or 1000B or 1055B						
020	443387-0000	-		1	HEAD PLATE	
030	443454-0000	-		2	BRACKET	
060	443478-0001	K		1	SPROCKET	
070	443479-0001	K		1	SPROCKET	
200	525245-0000	K		1	PROFILE	
205	525246-0000	K		1	PROFILE	
210	525247-0000	K		1	PROFILE	
215	525248-0000	K		1	PROFILE	
0750S						
020	544321-0000	-		1	HEAD PLATE	
030	544322-0000	-		2	BRACKET	
060	443478-0004	K		1	SPROCKET	
070	443479-0004	K		1	SPROCKET	
200	525245-0000	K		1	PROFILE	
205	525246-0000	K		1	PROFILE	
210	525247-0000	K		1	PROFILE	
215	525248-0000	K		1	PROFILE	
1000S						
020	569132-0000	-		1	HEAD PLATE	
030	569133-0000	-		2	BRACKET	
060	443478-0004	K		1	SPROCKET	
070	443479-0004	K		1	SPROCKET	
200	525403-0000	K		1	PROFILE	
205	525404-0000	K		1	PROFILE	
210	525405-0000	K		1	PROFILE	
215	525406-0000	K		1	PROFILE	
1136B						
020	443387-0000	-		1	HEAD PLATE	
030	443454-0000	-		2	BRACKET	
060	443478-0001	K		1	SPROCKET	
070	443479-0001	K		1	SPROCKET	
200	525403-0000	K		1	PROFILE	
205	525404-0000	K		1	PROFILE	
210	525405-0000	K		1	PROFILE	
215	525406-0000	K		1	PROFILE	

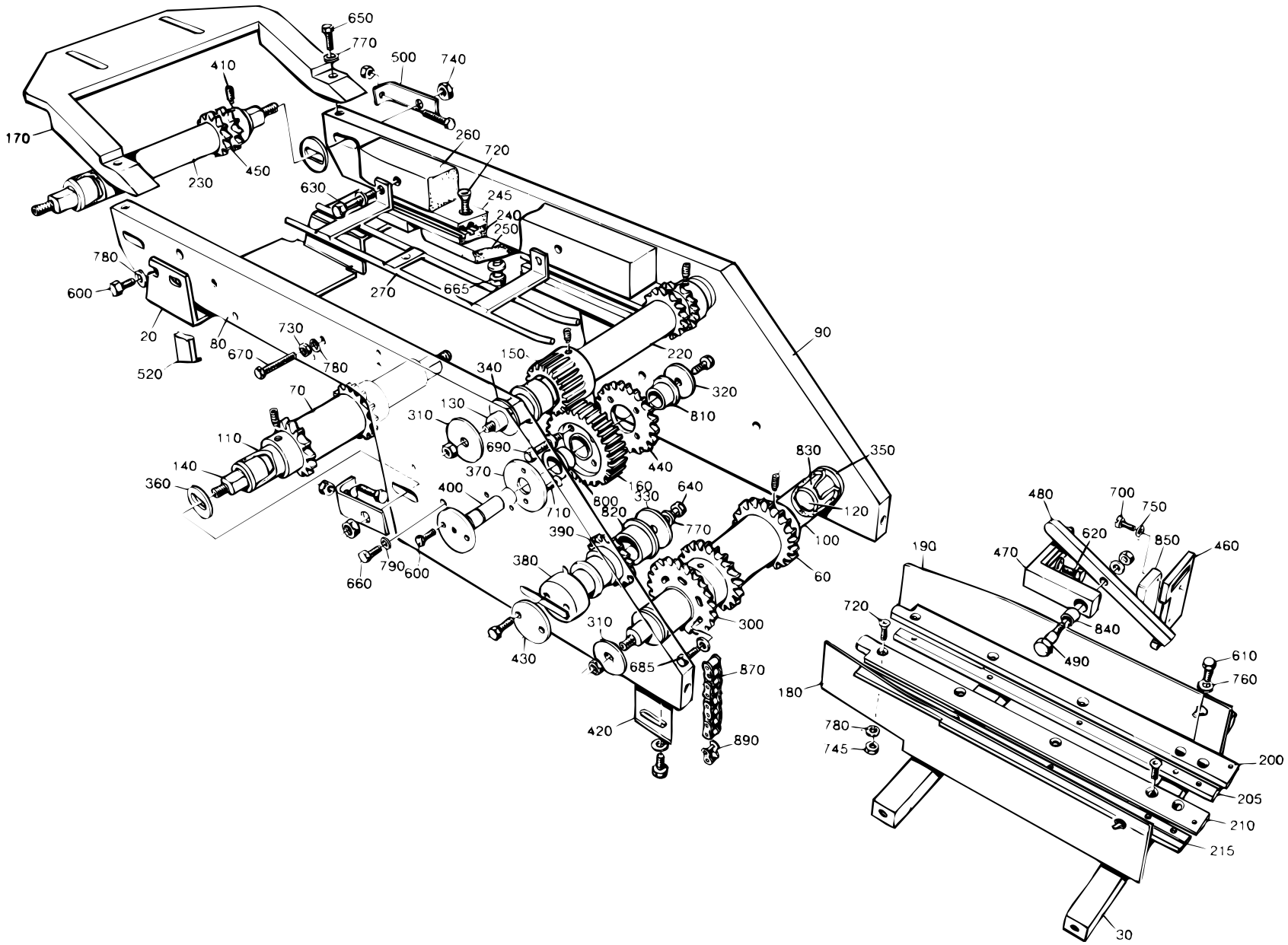

S-525086-1
ECN 16757

Pos	Part No	SP	UN	Qty	Description	Page No
Common parts						
080	443445-0000	-		1	SIDE PLATE	
090	443446-0000	-		1	SIDE PLATE	
100	443455-0000	D		1	SHAFT	
110	443456-0000	D		1	SHAFT	
120	525400-0000	D		1	SHAFT	
130	525401-0000	D		1	SHAFT	
140	525402-0000	D		2	SHAFT	
150	443290-0000	K		1	GEAR WHEEL	
160	443291-0000	K		1	GEAR WHEEL	
170	443293-0000	-		1	BRACKET	
180	443450-0000	-		1	HEAD PLATE	
190	443451-0000	-		1	HEAD PLATE	
220	443457-0000	D		1	SHAFT	
230	443458-0000	D		1	SHAFT	
240	525243-0000	D		1	PROFILE	
245	525244-0000	D		1	PROFILE	
250	525242-0000	-		1	BRACKET	
260	443486-0000	D		1	GUIDE	
270	525419-0000	-		1	LEAD RAIL	
300	297899-0000	K		1	SPROCKET	
310	443295-0000	-		4	WASHER	
320	443296-0000	D		1	WASHER	
330	443297-0000	D		1	WASHER	
340	443298-0000	D		2	WASHER	
350	443299-0000	D		2	WASHER	
360	443300-0000	D		4	WASHER	
370	443301-0000	D		1	WASHER	
380	443305-0000	D		1	SHAFT	
390	443306-0000	K		1	SPROCKET	
400	443307-0000	D		1	SHAFT	
410	90287-0161	K		10	STOP SCREW	
420	443350-0000	-		1	BRACKET	
430	443414-0000	-		1	WASHER	
440	443464-0000	K		1	SPROCKET	
450	443467-0000	K		2	SPROCKET	
460	443482-0000	-		1	BRACKET	
470	443483-0000	-		1	BRACKET	
480	443484-0000	-		1	ARM	
490	443485-0000	K		1	SCREW	
500	443489-0000	-		2	BRACKET	
520	525334-0000	-		1	BRACKET	
530	556886-0000	-		2	BRACKET	
600	312105-0366	-		6	SCREW M6S ISO 4017 M6X12 A280	
610	312105-0368	-		7	SCREW M6S ISO 4017 M6X16 A280	
620	312105-0370	-		4	SCREW M6S ISO 4017 M6X20 A280	
625	312105-0372	-		2	SCREW M6S ISO 4017 M6X25 A280	
630	312105-0384	-		2	SCREW M6S ISO 4014 M6X70 A280	
640	312105-0449	-		1	SCREW M6S ISO 4017 M8X16 A280	
650	312105-0453	-		2	SCREW M6S ISO 4017 M8X25 A280	
660	312105-0455	-		6	SCREW M6S ISO 4017 M8X30 A280	
665	312105-0457	-		3	SCREW O4017 M8X35A280	
670	312109-0376	-		4	SCREW M6S ISO 4017 M6X35 A280	
685	312115-0370	-		6	SCREW MC6S ISO 4762 M6X20 A280	
690	312115-0374	-		4	SCREW MC6S ISO O4762 M6X30 A280	
700	312125-0230	-		2	SLOTTED CHEESE HEAD ISO 1207 M3X20	
RFR						
710	312155-0366	-		2	SCREW MF6S DIN 7991 M6X12 A280	
720	312155-0376	-		16	SCREW MF6S DIN 7991 M6X35 A280	
730	312605-0316	-		7	NUT M6M6RFR	
740	312605-0322	-		8	NUT M6M12RFR	
745	312812-0316	-		6	LOCK NUT A2-M6RFR	
750	315105-0124	-		2	WASHER BRB3,2X6RFR	
760	315105-0153	-		7	WASHER BRB6,4X12RFR	
770	315105-0165	-		6	WASHER BRB8,4X16RFR	
780	315115-0153	-		28	WASHER TBRB6,4X12RFR	
790	315115-0165	-		4	WASHER TBRB8,4X16RFR	
800	321101-0252	K		1	FLANGE BUS 25F7X16	
810	321101-0253	K		7	FLANGE BUS 25F7X25	
820	321101-0272	K		2	FLANGE BUS 30F7X20	
830	321101-0283	K		2	FLANGE BUS 35F7X35	
840	321116-0128	K		1	BUSHING 10E7/14X16	
850	90044-0104	F		1	PROX.SWITCHIFM IN 3002	
870	318212-0150	K		1	ROLLER CHAIN	
890	318219-0187	F		1	CONNECTION LINK	

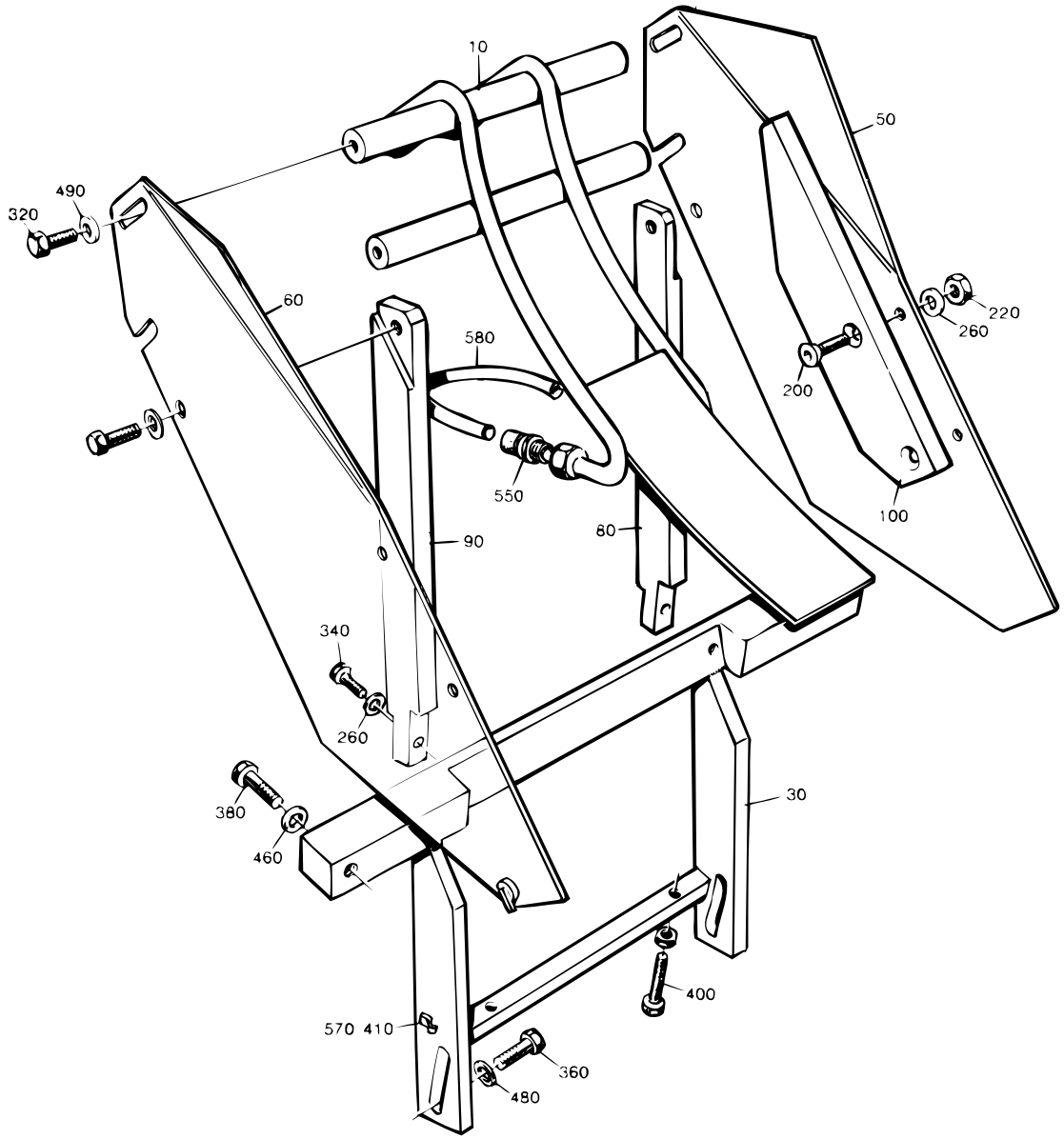
10
50
490
320
60
580
220
260
200
550
100
90
80
340
260
380
460
30
400
570
410
360
480

Pos	Part No	SP	UN	Qty	Description	Page No
TB/8 0300B or TBA/8 0375S						
010	B 544229-0003	-		1	DROP WING	
030	443492-0000	-		1	BRACKET	
050	443273-0000	-		1	HEAD PLATE	
060	443274-0000	-		1	HEAD PLATE	
080	443497-0000	-		1	SUPPORT	
090	443498-0000	-		1	SUPPORT	
220	312605-0316	-		2	NUT M6M6RFR	
260	315105-0153	-		4	WASHER BRB6,4X12RFR	
TB/8 0500B or TB/8 0568B						
010	B 544229-0001	-		1	DROP WING	
030	525147-0000	-		1	BRACKET	
050	443273-0000	-		1	HEAD PLATE	
060	443274-0000	-		1	HEAD PLATE	
080	443497-0000	-		1	SUPPORT	
090	443498-0000	-		1	SUPPORT	
100	525164-0000	-		2	STEERING	
200	312155-0372	-		4	SCREW MF6S DIN 7991 M6X25 A280	
220	312605-0316	-		6	NUT M6M6RFR	
260	315105-0153	-		8	WASHER BRB6,4X12RFR	
TB/8 0500S or TBA/8 0500S						
010	B 544229-0002	-		1	DROP WING	
030	443491-0000	-		1	BRACKET	
050	443271-0000	-		1	HEAD PLATE	
060	443272-0000	-		1	HEAD PLATE	
080	443497-0000	-		1	SUPPORT	
090	443498-0000	-		1	SUPPORT	
220	312605-0316	-		2	NUT M6M6RFR	
260	315105-0153	-		4	WASHER BRB6,4X12RFR	
TB/8 0500SQ						
010	B 574166-0000	-		1	DROP WING	
030	574080-0000	-		1	BRACKET	
050	583459-0000	-		1	HEAD PLATE	
060	583460-0000	-		1	HEAD PLATE	
080	443462-0000	-		1	SUPPORT	
090	443463-0000	-		1	SUPPORT	
220	312605-0316	-		2	NUT M6M6RFR	
260	315105-0153	-		4	WASHER BRB6,4X12RFR	
TB/8 1000B or TB/8 1136B or TBA/8 1000B or TBA/8 1055B or TBO/8 1000B						
010	B 544229-0001	-		1	DROP WING	
030	443447-0000	-		1	BRACKET	
050	525255-0000	-		1	HEAD PLATE	
060	525256-0000	-		1	HEAD PLATE	
080	443462-0000	-		1	SUPPORT	
090	443463-0000	-		1	SUPPORT	
220	312605-0316	-		2	NUT M6M6RFR	
260	315105-0153	-		4	WASHER BRB6,4X12RFR	
TB/8 1000S or TBA/8 1000S						
010	B 544229-0005	-		1	DROP WING	
030	569131-0000	-		1	BRACKET	
050	525255-0000	-		1	HEAD PLATE	
060	525256-0000	-		1	HEAD PLATE	
080	443462-0000	-		1	SUPPORT	
090	443463-0000	-		1	SUPPORT	
220	312605-0316	-		2	NUT M6M6RFR	
260	315105-0153	-		4	WASHER BRB6,4X12RFR	
TB/8 1000SQ or TBA/8 1000SQ or TBO/8 1000SQ						
010	B 574166-0000	-		1	DROP WING	
030	574080-0000	-		1	BRACKET	
050	525255-0000	-		1	HEAD PLATE	
060	525256-0000	-		1	HEAD PLATE	
080	443462-0000	-		1	SUPPORT	
090	443463-0000	-		1	SUPPORT	
220	312605-0316	-		2	NUT M6M6RFR	
260	315105-0153	-		4	WASHER BRB6,4X12RFR	
TBA/8 0355B or TBA/8 0400B						
010	B 544229-0002	-		1	DROP WING	
030	525259-0000	-		1	BRACKET	
050	443271-0000	-		1	HEAD PLATE	
060	443272-0000	-		1	HEAD PLATE	
080	443497-0000	-		1	SUPPORT	
090	443498-0000	-		1	SUPPORT	
220	312605-0316	-		2	NUT M6M6RFR	
260	315105-0153	-		4	WASHER BRB6,4X12RFR	
TBA/8 0500B						
010	B 544229-0001	-		1	DROP WING	
030	525148-0000	-		1	BRACKET	
050	443273-0000	-		1	HEAD PLATE	
060	443274-0000	-		1	HEAD PLATE	
080	443497-0000	-		1	SUPPORT	
090	443498-0000	-		1	SUPPORT	
100	525164-0000	-		2	STEERING	
200	312155-0372	-		4	SCREW MF6S DIN 7991 M6X25 A280	
220	312605-0316	-		6	NUT M6M6RFR	

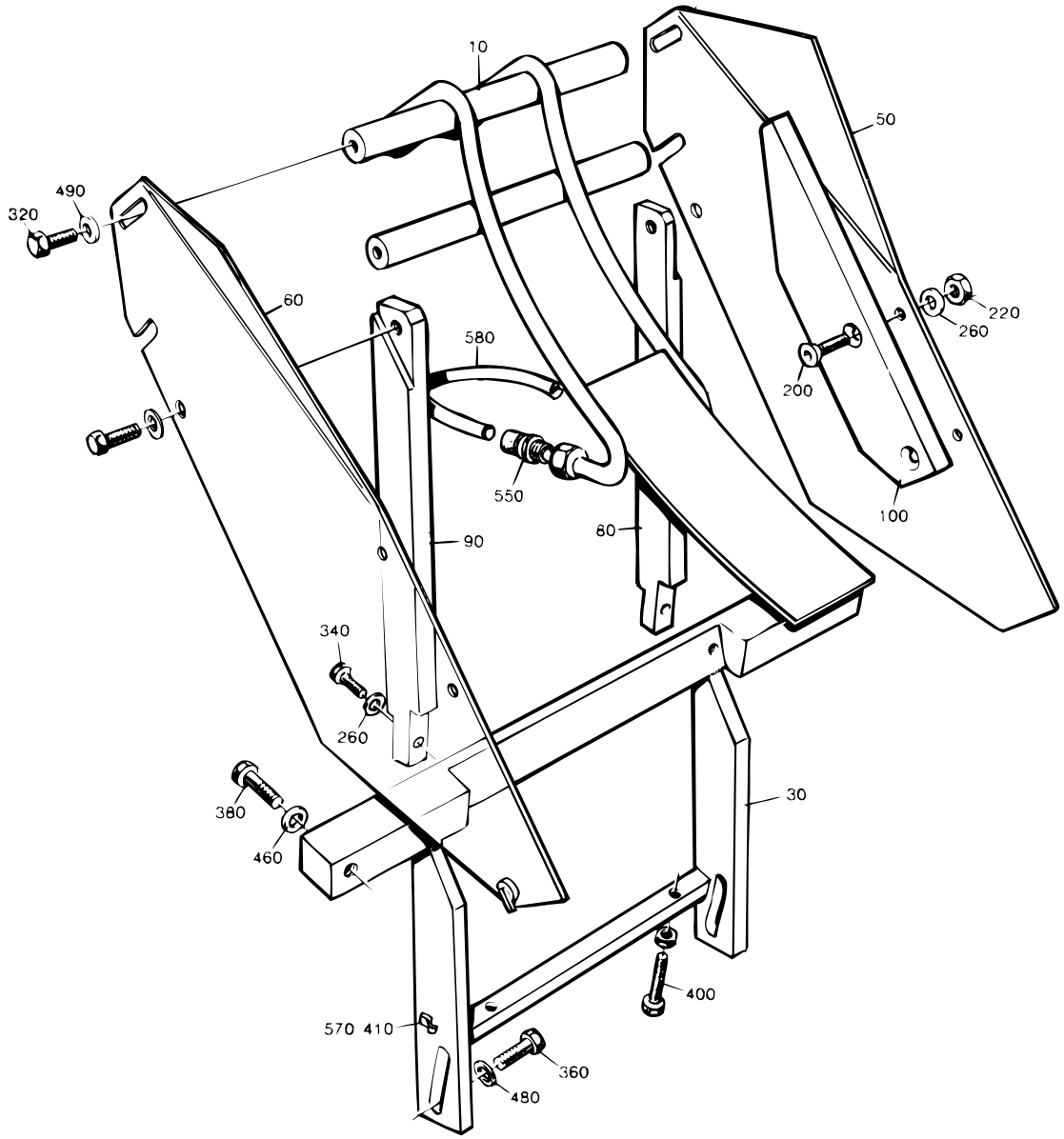
10
50
490
320
60
580
220
260
200
550
100
90
80
340
260
380
460
30
400
570
410
360
480

Pos	Part No	SP	UN	Qty	Description	Page No
260	315105-0153	-		8	WASHER BRB6,4X12RFR	
TBA/8 0750B						
010	B 544229-0001	-		1	DROP WING	
030	525146-0000	-		1	BRACKET	
050	443273-0000	-		1	HEAD PLATE	
060	443274-0000	-		1	HEAD PLATE	
080	443497-0000	-		1	SUPPORT	
090	443498-0000	-		1	SUPPORT	
220	312605-0316	-		2	NUT M6M6RFR	
260	315105-0153	-		4	WASHER BRB6,4X12RFR	
Common parts						
320	312105-0366	-		6	SCREW M6S ISO 4017 M6X12 A280	
340	312105-0368	-		2	SCREW M6S ISO 4017 M6X16 A280	
360	312105-0449	-		4	SCREW M6S ISO 4017 M8X16 A280	
380	312105-0459	-		2	SCREW O4017 M8X40A280	
400	312109-0381	-		2	SCREW M6S6X55HA480	
410	312125-0287	-		1	SLOTTED CHEESE HEAD ISO 1207 M4X8 RFR	
460	315105-0165	-		2	WASHER BRB8,4X16RFR	
480	315115-0165	-		4	WASHER TBRB8,4X16RFR	
490	315125-0153	-		4	WASHER SB 6,4X22X4 RFR	
550	342920-0121	K		2	STRAIGHT COUPLING,EXT.THREADED 8/6-R1/8"	
570	90165-0056	-		1	CLIP	
580	90166-0122	F	MM	1500	HOSE	
TBA/8 0750S						
010	B 544229-0004	-		1	DROP WING	
030	443447-0000	-		1	BRACKET	
050	525255-0000	-		1	HEAD PLATE	
060	525256-0000	-		1	HEAD PLATE	
080	443462-0000	-		1	SUPPORT	
090	443463-0000	-		1	SUPPORT	
220	312605-0316	-		2	NUT M6M6RFR	
260	315105-0153	-		6	WASHER BRB6,4X12RFR	

Pos	Part No	SP	UN	Qty	Description	Page No

DISCHARGE CHUTE

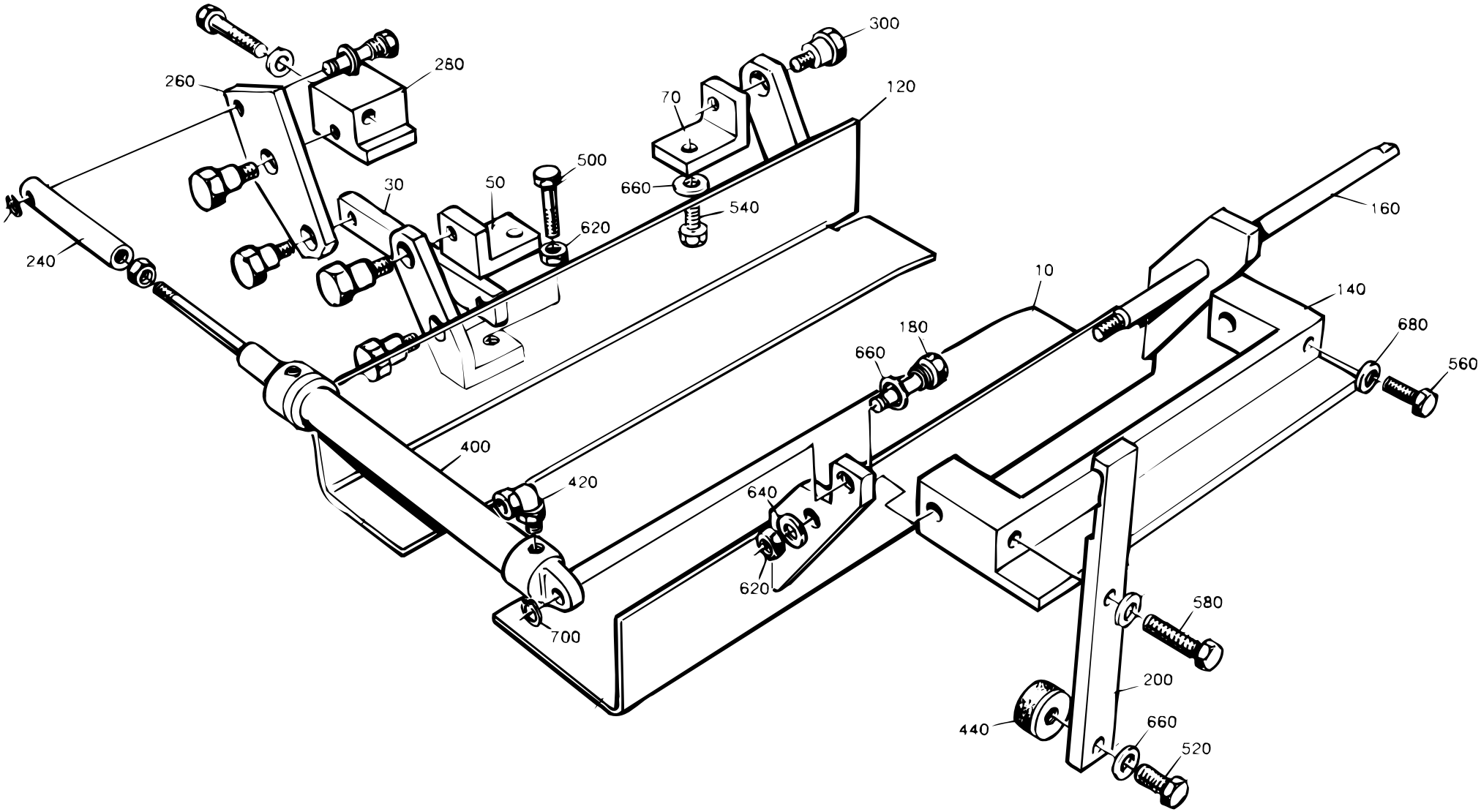

S-525088-2
ECN 15029

Pos	Part No	SP	UN	Qty	Description	Page No
0300B or 0375S						
010	443495-0000	-		1	HEAD PLATE	
030	525075-0003	-		1	LINK	
050	525082-0000	-		1	BRACKET	
070	525083-0000	-		1	BRACKET	
120	525084-0000	-		1	HEAD PLATE	
200	525416-0000	-		1	STOP	
0355B or 0400B or 0500S						
010	443493-0000	-		1	HEAD PLATE	
030	525075-0002	-		1	LINK	
050	525080-0000	-		1	BRACKET	
070	525081-0000	-		1	BRACKET	
120	525084-0000	-		1	HEAD PLATE	
200	525416-0000	-		1	STOP	
0500B or 0568B or 0750B or 1000B or 1055B or 1136B						
010	443448-0000	-		1	HEAD PLATE	
030	525075-0001	-		1	LINK	
050	525078-0000	-		1	BRACKET	
070	525079-0000	-		1	BRACKET	
120	525084-0000	-		1	HEAD PLATE	
200	525416-0000	-		1	STOP	
0500SQ or 1000SQ NORMFIN						
010	574077-0000	-		1	HEAD PLATE	
030	525075-0006	-		1	LINK	
050	574078-0000	-		1	BRACKET	
070	574079-0000	-		1	BRACKET	
120	574126-0000	-		1	HEAD PLATE	
200	525416-0000	-		1	STOP	
0750S						
010	544307-0000	-		1	HEAD PLATE	
030	525075-0004	-		1	LINK	
050	544331-0000	-		1	BRACKET	
070	544332-0000	-		1	BRACKET	
120	525084-0000	-		1	HEAD PLATE	
200	525416-0000	-		1	STOP	
1000S						
010	569134-0000	-		1	HEAD PLATE	
030	525075-0005	-		1	LINK	
050	569135-0000	-		1	BRACKET	
070	569136-0000	-		1	BRACKET	
120	525084-0000	-		1	HEAD PLATE	
200	525416-0000	-		1	STOP	

Pos	Part No	SP	UN	Qty	Description	Page No
1000SQ REVFIN						
010	574077-0000	-		1	HEAD PLATE	
030	525075-0006	-		1	LINK	
050	574078-0000	-		1	BRACKET	
070	574079-0000	-		1	BRACKET	
120	574126-0000	-		1	HEAD PLATE	
200	1195333-0000	-		1	STOP	
Common parts						
140	443365-0000	-		1	BRACKET	
160	443309-0000	D		1	SHAFT	
180	443310-0000	K		2	AXLE PIN	
240	443474-0000	-		1	BRACKET	
260	525074-0000	-		1	ARM	
280	525465-0000	-		1	BRACKET	
300	525077-0000	K		5	AXLE PIN	
400	90239-0818	K		1	DOUBLE ACTING,MINI-ISO,CYL.16-80	
420	342732-0099	K		2	V-COUPL,ADJUST,FOR PLASTIC TUBE 4-M5	
440	90347-0007	K		1	VIBRATION DAMPER	
500	312105-0374	-		1	SCREW M6S ISO 4017 M6X30 A280	
540	312105-0451	-		2	SCREW M6S ISO 4017 8X20 A280	
560	312105-0455	-		1	SCREW M6S ISO 4017 M8X30 A280	
580	312105-0460	-		1	SCREW O4017 M8X45A280	
600	312105-0462	-		1	SCREW M6S ISO 4014 M8X55 A280	
620	312605-0316	-		4	NUT M6M6RFR	
640	315105-0153	-		2	WASHER BRB6,4X12RFR	
660	315105-0165	-		6	WASHER BRB8,4X16RFR	
680	315115-0165	-		1	WASHER TBRB8,4X16RFR	
700	315755-0107	-		2	LOCKING WAE 5RFR	

CHAIN RIGHT

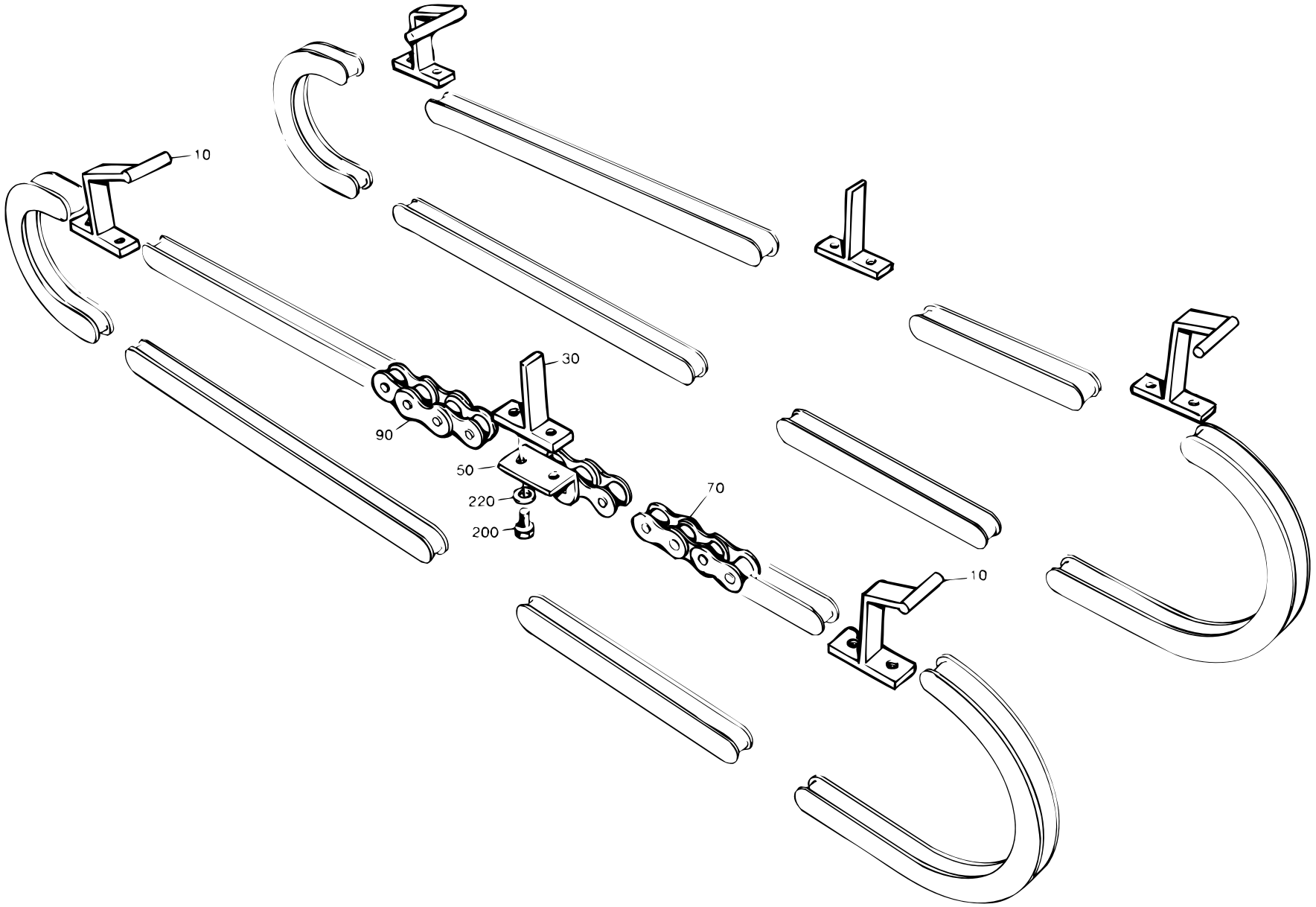

S-525089-1
ECN 10866

Pos	Part No	SP	UN	Qty	Description	Page No
0300B or 0355B or 0375S or 0400B or 0500S or 0750S						
010	443469-0000	F		3	CARRIER	
070	318212-0008	K		3	ROLLER CHA1/2 RFR	
090	90288-0053	K		3	ROLLER CHAIN	
0500B or 0568B or 0750B or 1000B or 1055B						
010	525431-0000	-		3	CARRIER	
070	318212-0008	K		3	ROLLER CHA1/2 RFR	
090	90288-0053	K		3	ROLLER CHAIN	
1000S or 1136B						
010	525431-0000	-		3	CARRIER	
070	318212-0006	K		3	ROLLER CHA1/2" RFR	
090	90288-0057	K		3	ROLLER CHAIN	
Common parts						
030	443468-0000	F		3	CARRIER	
050	90288-0311	F		6	LINK	
200	312105-0287	F		12	SCREW M6S ISO 4017 M4X8 A280	
220	315105-0136	F		12	WASHER BRB4,3X8RFR	

Pos	Part No	SP	UN	Qty	Description	Page No

CHAIN LEFT

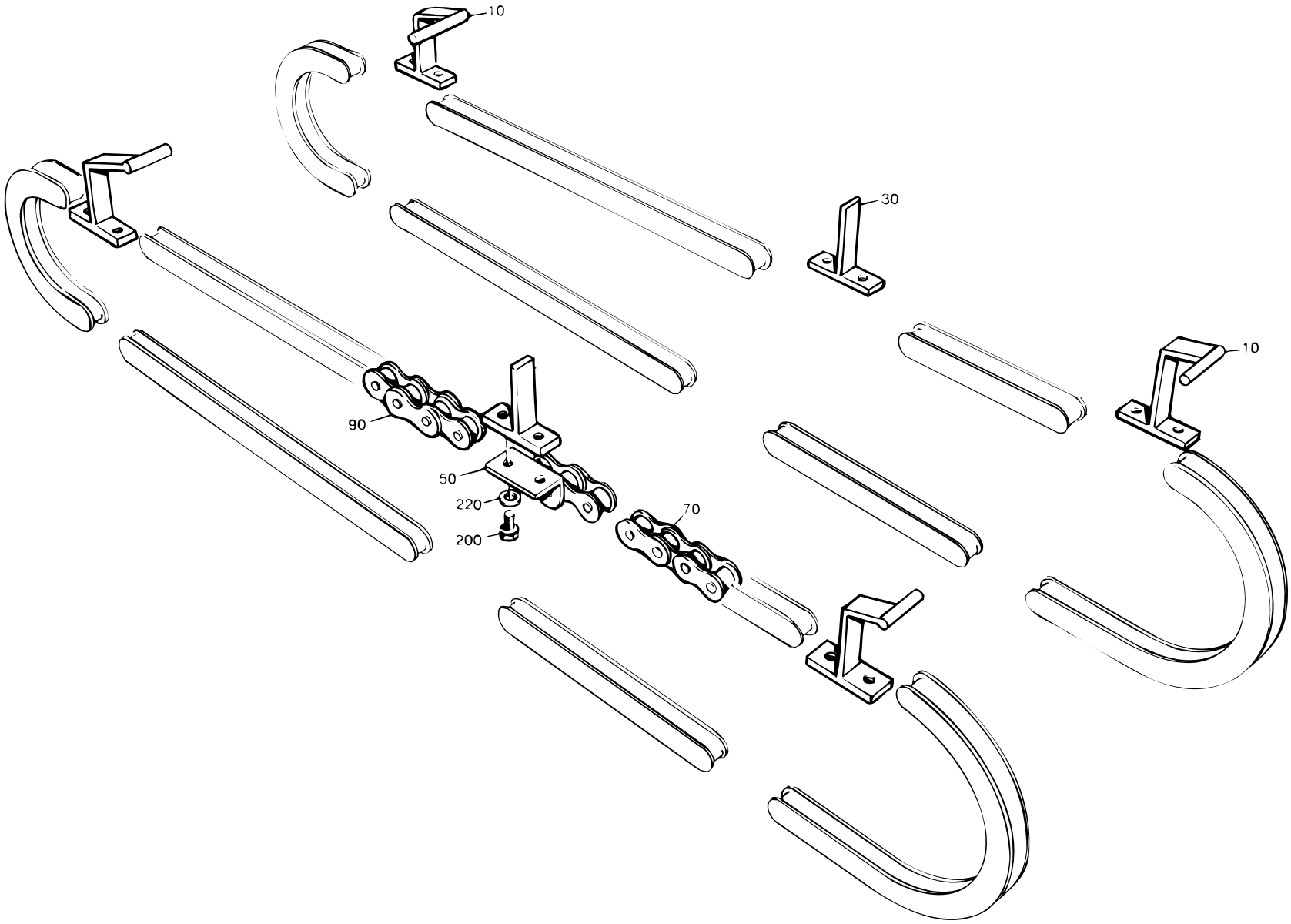

S-525090-1
ECN 10866

Pos	Part No	SP	UN	Qty	Description	Page No
0300B or 0355B or 0375S or 0400B or 0500S or 0750S						
010	443470-0000	F		3	CARRIER	
070	318212-0008	K		3	ROLLER CHA1/2 RFR	
090	90288-0053	K		3	ROLLER CHAIN	
0500B or 0568B or 0750B or 1000B or 1055B						
010	525432-0000	-		3	CARRIER	
070	318212-0008	K		3	ROLLER CHA1/2 RFR	
090	90288-0053	K		3	ROLLER CHAIN	
1000S or 1136B						
010	525432-0000	-		3	CARRIER	
070	318212-0006	K		3	ROLLER CHA1/2" RFR	
090	90288-0057	K		3	ROLLER CHAIN	
Common parts						
030	443468-0000	F		3	CARRIER	
050	90288-0311	F		6	LINK	
200	312105-0287	F		12	SCREW M6S ISO 4017 M4X8 A280	
220	315105-0136	F		12	WASHER BRB4,3X8RFR	

Pos	Part No	SP	UN	Qty	Description	Page No

CHAIN

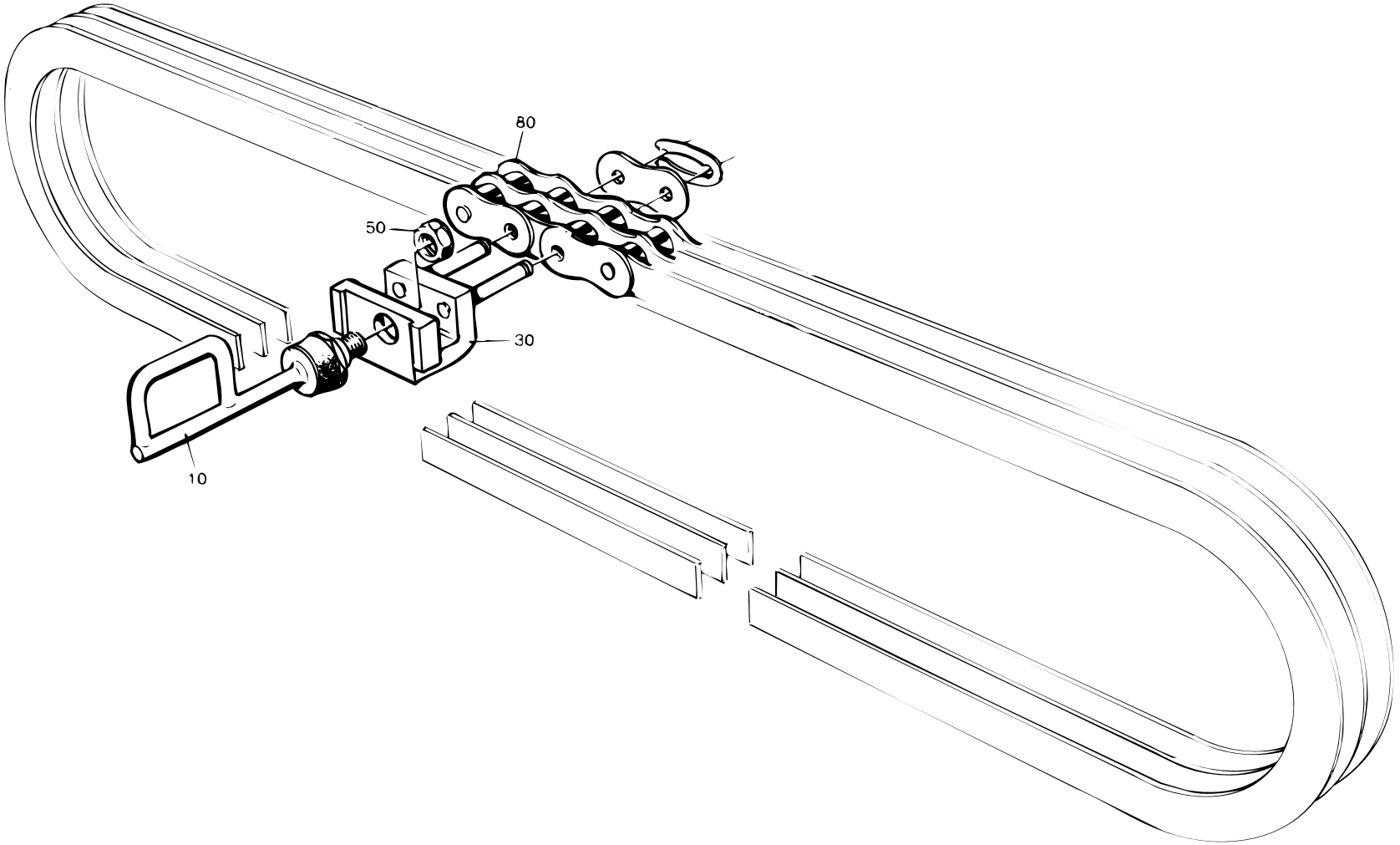

S-525091-1
ECN 10866

Pos	Part No	SP	UN	Qty	Description	Page No
0300B or 0355B or 0375S or 0400B or 0500S						
010	525208-0002	F		3	CARRIER	
0500B or 0568B or 0750B or 1000B or 1055B or 1136B						
010	525208-0001	F		3	CARRIER	
0750S or 1000S						
010	525208-0003	F		3	CARRIER	
Common parts						
030	B 525254-0000	F		3	LINK	
050	312605-0318	-		3	NUT M6M8RFR	
080	318242-0036	K		3	ROLLER CHAIN	

Pos	Part No	SP	UN	Qty	Description	Page No

CHAIN GUARD

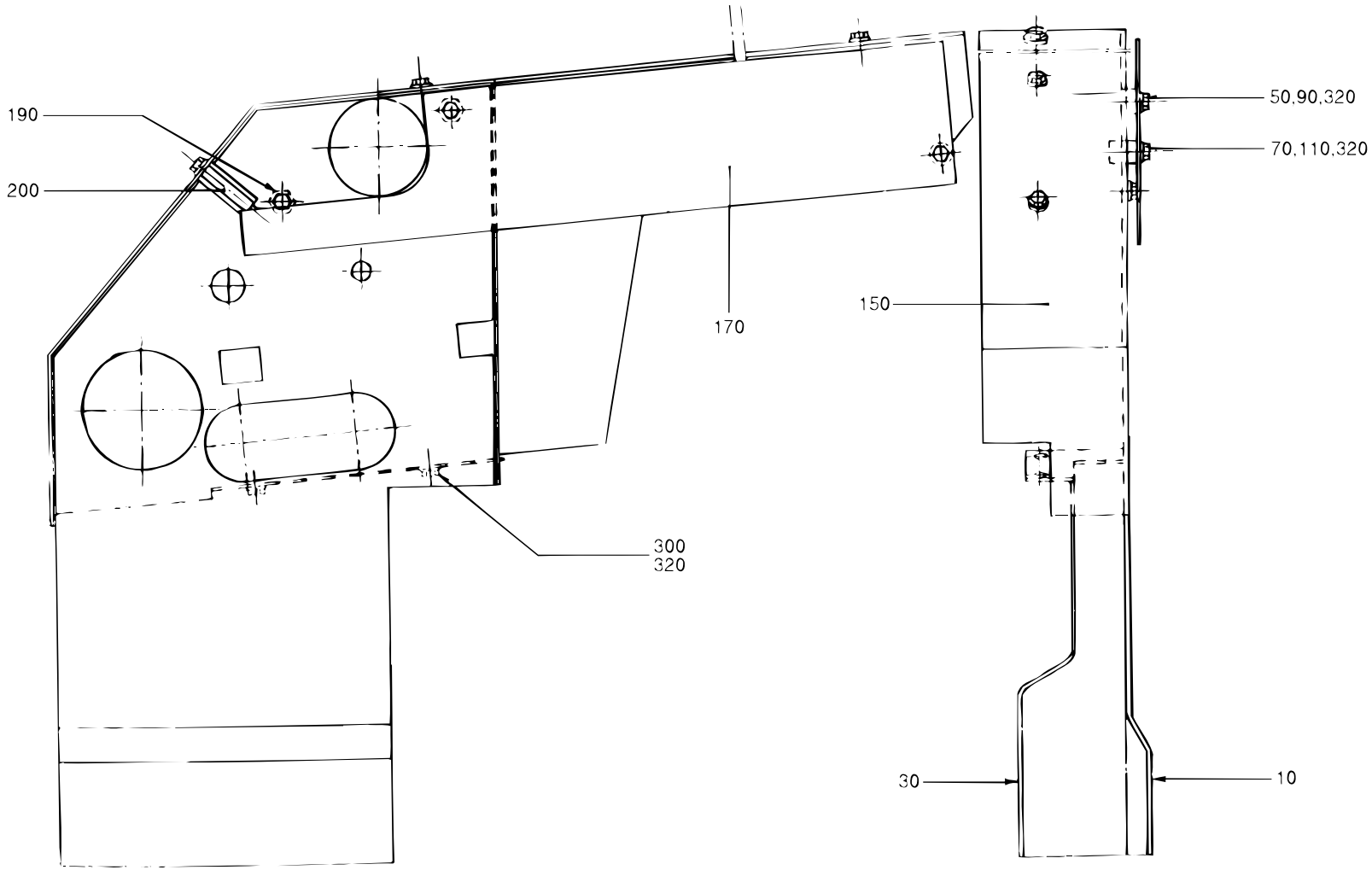

S-525092-1
ECN 12055

Pos	Part No	SP	UN	Qty	Description	Page No
0300B or 0375S						
010	525038-0000	-		1	GABLE PLATE	
030	525039-0000	-		1	GABLE PLATE	
050	525052-0005	-		1	SPACER	
070	525052-0006	-		1	SPACER	
090	312105-0378	-		1	SCREW O4017 M6X40A280	
110	312105-0381	-		1	SCREW M6S ISO 4014 M6X55 A280	
150	928901-0000	-		1	COVERING PLATE	
0355B or 0400B						
010	525260-0000	-		1	GABLE PLATE	
030	525261-0000	-		1	GABLE PLATE	
050	525052-0003	-		1	SPACER	
070	525052-0004	-		1	SPACER	
090	312105-0376	-		1	SCREW M6S ISO 4017 M6X35 A280	
110	312105-0380	-		1	SCREW M6S ISO 4014 M6X50 A280	
150	566416-0000	-		1	COVERING PLATE	
200	525338-0000	-		1	SPACER	
0500B or 0568B or 0750B						
010	525150-0000	-		1	GABLE PLATE	
030	525151-0000	-		1	GABLE PLATE	
050	525052-0001	-		1	SPACER	
070	525052-0002	-		1	SPACER	
090	312105-0370	-		1	SCREW M6S ISO 4017 M6X20 A280	
110	312105-0374	-		1	SCREW M6S ISO 4017 M6X30 A280	
150	525339-0000	-		1	COVERING PLATE	
200	525338-0000	-		1	SPACER	
0500S						
010	525038-0000	-		1	GABLE PLATE	
030	525039-0000	-		1	GABLE PLATE	
050	525052-0003	-		1	SPACER	
070	525052-0004	-		1	SPACER	
090	312105-0376	-		1	SCREW M6S ISO 4017 M6X35 A280	
110	312105-0380	-		1	SCREW M6S ISO 4014 M6X50 A280	
150	566416-0000	-		1	COVERING PLATE	
200	525338-0000	-		1	SPACER	
0750S or 1000B or 1000S or 1055B or 1136B						
010	443476-0000	-		1	GABLE PLATE	
030	443477-0000	-		1	GABLE PLATE	
050	525052-0001	-		1	SPACER	
070	525052-0002	-		1	SPACER	
090	312105-0370	-		1	SCREW M6S ISO 4017 M6X20 A280	
110	312105-0374	-		1	SCREW M6S ISO 4017 M6X30 A280	
150	525339-0000	-		1	COVERING PLATE	
200	525338-0000	-		1	SPACER	
Common parts						
170	525051-0000	-		1	HEAD PLATE	
190	443419-0000	-		2	SPACER	
300	312105-0364	-		6	SCREW M6S6X10RFR	
320	315105-0153	-		8	WASHER BRB6,4X12RFR	

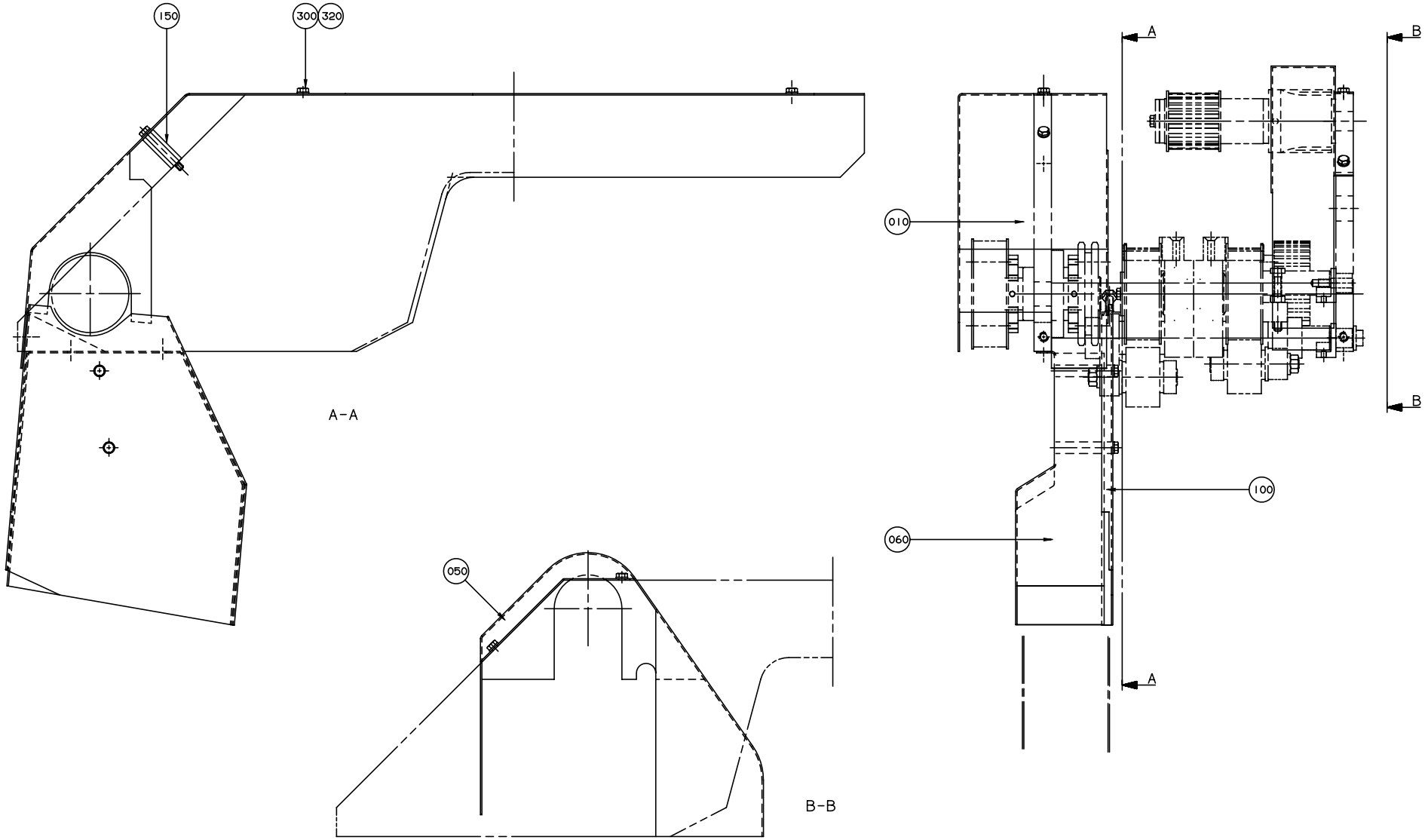

S-576247-2
ECN 19329

Pos	Part No	SP	UN	Qty	Description	Page No
TB/8 or TBO/8						
010	574096-0000	-		1	PROTECTION PLATE	
050	574095-0000	-		1	PROTECTIVE COVER	
060	574112-0000	-		1	PROTECTION PLATE	
100	574113-0000	-		1	PROTECTION PLATE	
TBA/8 REVFIN						
010	1195332-0000	-		1	PROTECTION PLATE	
050	574165-0000	-		1	PROTECTIVE COVER	
060	580006-0000	-		1	PROTECTION PLATE	
100	580007-0000	-		1	PROTECTION PLATE	
TBA/8 NORMFIN						
010	574164-0000	-		1	PROTECTION PLATE	
050	574165-0000	-		1	PROTECTIVE COVER	
060	580006-0000	-		1	PROTECTION PLATE	
100	580007-0000	-		1	PROTECTION PLATE	
Common parts						
150	525338-0000	-		1	SPACER	
300	312105-0364	-		9	SCREW M6S6X10RFR	
320	315105-0153	-		9	WASHER BRB6,4X12RFR	

Pos	Part No	SP	UN	Qty	Description	Page No

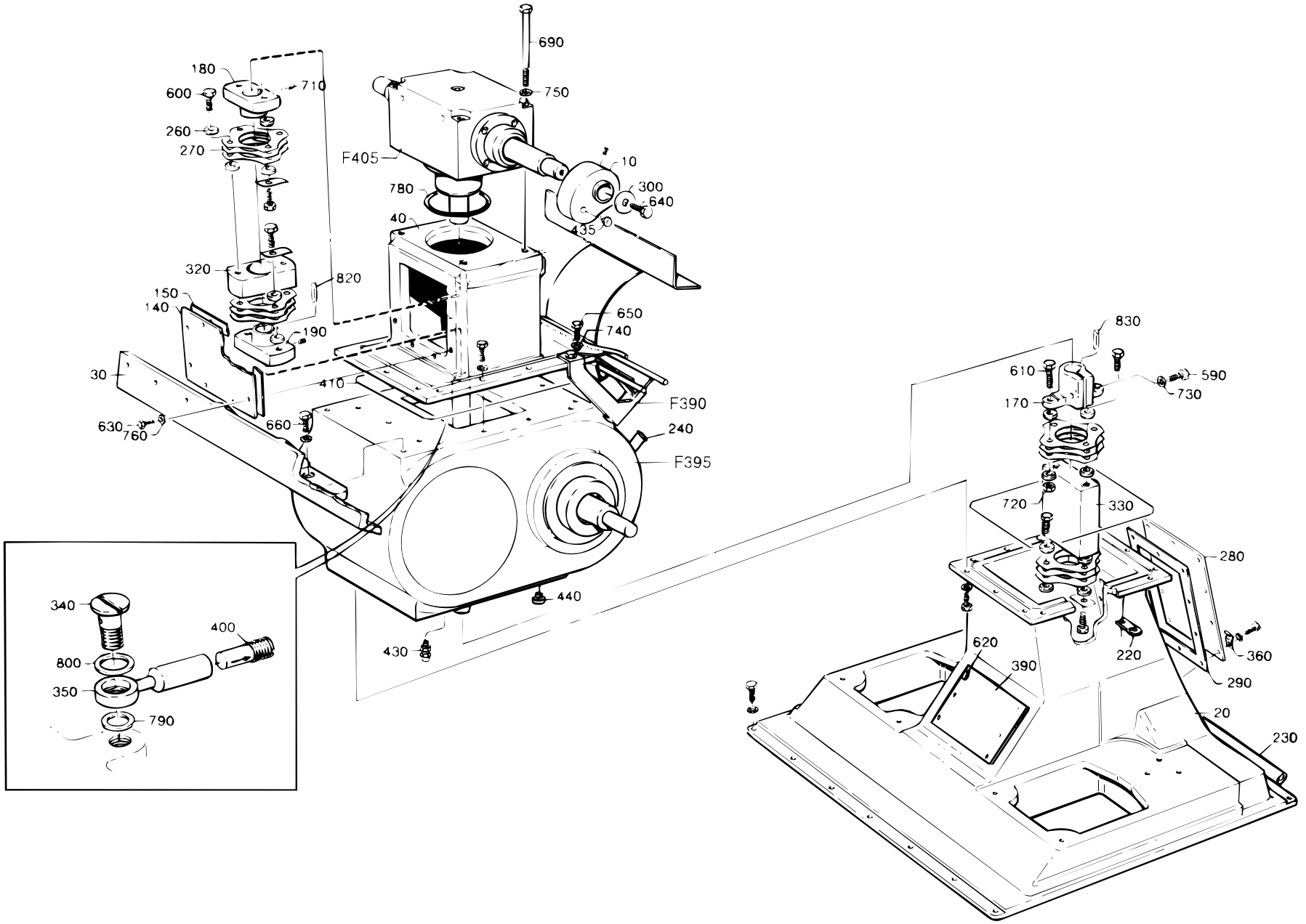

S-285479-4
ECN 12204

Pos	Part No	SP	UN	Qty	Description	Page No
0300B or 0355B or 0375S or 0400B or 0500S						
010	525235-0000	D		2	CURVE	
0500B or 0500SQ or 0568B or 0750B or 0750S or 1000B or 1000S or 1000SQ or 1055B or 1136B						
010	443362-0000	D		2	CURVE	
Common parts						
F390	A 285853-0200	-		1	STEERING RAIL	**499**
F395	A 525117-0300	-		1	INDEXING GEAR	**503**
F405	A 442646-0200	D		1	TOP GEAR	**505**
020	443218-0000	-		1	INTERMEDIARY SECTION	
030	262264-0000	-		1	CANTILEVER	
040	262922-0000	-		1	HOUSE	
140	262932-0000	-		1	HATCH	
150	262933-0000	K		1	GASKET	
170	285141-0003	K		1	CLAMPING SLEEVE	
180	285142-0002	-		1	SLEEVE	
190	285142-0003	-		1	SLEEVE	
220	525292-0000	-		3	BRACKET	
230	525293-0000	-		1	PIPE	
240	525294-0000	-		1	PIPE	
260	31553-0002	K		32	WASHER	
270	33261-0000	K		32	SPRING PLATE	
280	262252-0000	-		1	HATCH	
290	262253-0000	-		1	GASKET	
300	276659-0000	-		2	WASHER	
320	285145-0002	-		1	INTERMEDIARY SECTION	
330	285147-0000	-		1	INTERMEDIARY SECTION	
340	285891-0000	K		1	SCREW	
350	285892-0000	K		1	CONNECTION	
390	525279-0000	-		1	HATCH	
400	90092-0077	K		1	METERING VALVE	
410	90143-0052	K	MM	2450	STRAP	
420	90153-0043	K	KG	x	ADHESIVE	
425	90296-0009	-	KG	x	GREASE	
430	90224-0066	F		1	CONNECTION	
435	90261-0032	K		4	PLUG	
440	342720-0102	K		1	STRAIGHT CONNECTION GA-6-G1/8"	
570	311103-0399	-		10	CYLINDRICACP M6 8X16 RFR	
590	312101-0455	-		1	SCREW M6S8X30FZB	
600	90287-0155	-		14	SCREW	
610	312101-0497	-		2	SCREW M6S10X35FZB	
620	312105-0367	-		6	SCREW M6S6X14RFR	
630	312105-0368	-		12	SCREW M6S ISO 4017 M6X16 A280	
635	312105-0370	-		4	SCREW M6S ISO 4017 M6X20 A280	
638	312105-0372	-		2	SCREW M6S ISO 4017 M6X25 A280	
640	312105-0451	-		2	SCREW M6S ISO 4017 8X20 A280	
650	312105-0453	-		50	SCREW M6S ISO 4017 M8X25 A280	
660	312105-0455	-		2	SCREW M6S ISO 4017 M8X30 A280	
690	312105-0517	-		4	SCREW M6S ISO 4014 M10X130 A280	
710	312316-0362	-		2	STOP SCREW SK6SS6X8FZB	
720	312810-0320	-		2	LOCK NUT 10FZB	
730	315101-0165	-		1	WASHER BRB8,4X16FZB	
735	315105-0153	-		2	WASHER BRB6,4X12RFR	
740	315105-0165	-		10	WASHER BRB8,4X16RFR	
750	315115-0173	-		4	WASHER B 10,5X22 RFR	
760	315115-0153	-		22	WASHER TBRB6,4X12RFR	
770	315115-0165	-		42	WASHER TBRB8,4X16RFR	
780	315202-0311	K		1	O-RING 99,5X3	
790	315233-0109	K		1	SEAL RING R1/8"	
800	315233-0110	K		1	SEAL RING R1/4"	
820	315701-0270	-		1	FLAT WEDGE8X7X40	
830	315701-0274	-		1	FLAT WEDGE8X7X60	

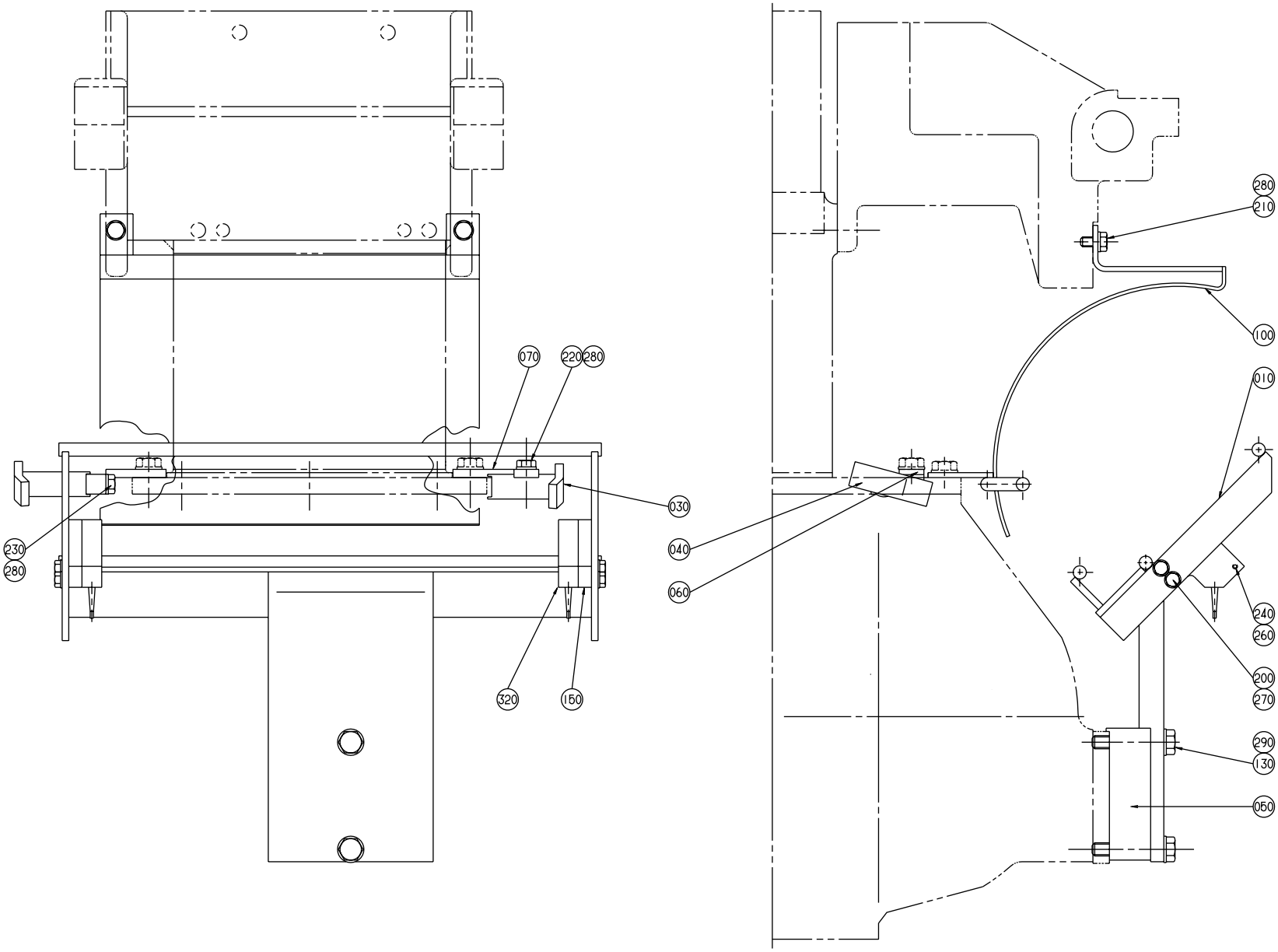

S-285853-3
ECN 19449

Pos	Part No	SP	UN	Qty	Description	Page No
0300B						
010	525356-0000	-		1	SLIDE RAIL	
100	529478-0000	-		1	HEAD PLATE	
130	312105-0451	-		2	SCREW M6S ISO 4017 8X20 A280	
280	315105-0153	-		2	WASHER BRB6,4X12RFR	
0355B						
010	525354-0000	-		1	SLIDE RAIL	
100	527861-0000	-		1	HEAD PLATE	
130	312105-0451	-		2	SCREW M6S ISO 4017 8X20 A280	
280	315105-0153	-		2	WASHER BRB6,4X12RFR	
0375S						
010	525355-0000	-		1	SLIDE RAIL	
100	531313-0000	-		1	HEAD PLATE	
130	312105-0451	-		2	SCREW M6S ISO 4017 8X20 A280	
280	315105-0153	-		2	WASHER BRB6,4X12RFR	
0400B						
010	574678-0000	-		1	SLIDE RAIL	
100	574679-0000	-		1	HEAD PLATE	
130	312105-0451	-		2	SCREW M6S ISO 4017 8X20 A280	
280	315105-0153	-		2	WASHER BRB6,4X12RFR	
0500B						
010	525352-0000	-		1	SLIDE RAIL	
050	525357-0000	-		1	SPACER	
100	525424-0000	-		1	HEAD PLATE	
130	312105-0460	-		2	SCREW O4017 M8X45A280	
280	315105-0153	-		2	WASHER BRB6,4X12RFR	
0500S						
010	525353-0000	-		1	SLIDE RAIL	
100	531312-0000	-		1	HEAD PLATE	
130	312105-0451	-		2	SCREW M6S ISO 4017 8X20 A280	
280	315105-0153	-		2	WASHER BRB6,4X12RFR	
0500SQ						
010	583446-0000	-		1	SLIDE RAIL	
050	525357-0000	-		1	SPACER	
100	583450-0000	-		1	HEAD PLATE	
130	312105-0460	-		2	SCREW O4017 M8X45A280	
280	315105-0153	-		2	WASHER BRB6,4X12RFR	
0568B						
010	525351-0000	-		1	SLIDE RAIL	
050	525357-0000	-		1	SPACER	
100	531310-0000	-		1	HEAD PLATE	
130	312105-0460	-		2	SCREW O4017 M8X45A280	
280	315105-0153	-		2	WASHER BRB6,4X12RFR	
0750B						
010	525350-0000	-		1	SLIDE RAIL	
100	531314-0000	-		1	HEAD PLATE	
130	312105-0451	-		2	SCREW M6S ISO 4017 8X20 A280	
280	315105-0153	-		2	WASHER BRB6,4X12RFR	
0750S						
010	543694-0000	-		1	SLIDE RAIL	
100	525378-0000	-		1	HEAD PLATE	
130	312105-0451	-		2	SCREW M6S ISO 4017 8X20 A280	
280	315105-0153	-		2	WASHER BRB6,4X12RFR	
Common parts						
150	525172-0000	-		2	SPACER	
200	312105-0328	-		4	SCREW M6S5X14 A2 80	
210	312105-0366	-		2	SCREW M6S ISO 4017 M6X12 A280	
240	312125-0230	-		4	SLOTTED CHEESE HEAD ISO 1207 M3X20	
RFR						
260	315105-0124	-		4	WASHER BRB3,2X6RFR	
270	315105-0146	-		4	WASHER BRB5,3X10RFR	
290	315105-0165	-		2	WASHER BRB8,4X16RFR	
320	90044-0104	-		2	PROX.SWITCHIFM IN 3002	
1000B HIFIN						
010	525349-0000	-		1	SLIDE RAIL	
100	529312-0000	-		1	HEAD PLATE	
130	312105-0451	-		2	SCREW M6S ISO 4017 8X20 A280	
280	315105-0153	-		2	WASHER BRB6,4X12RFR	
1000S						
010	569127-0000	-		1	SLIDE RAIL	
030	573486-0000	-		1	STEERING	
040	573487-0000	-		1	STEERING	
060	573488-0000	-		1	BRACKET	
070	573489-0000	-		1	BRACKET	
100	569128-0000	-		1	HEAD PLATE	
130	312105-0451	-		2	SCREW M6S ISO 4017 8X20 A280	
220	312105-0368	-		1	SCREW M6S ISO 4017 M6X16 A280	
230	312105-0371	-		1	SCREW M6S6X22RFR	
280	315105-0153	-		4	WASHER BRB6,4X12RFR	

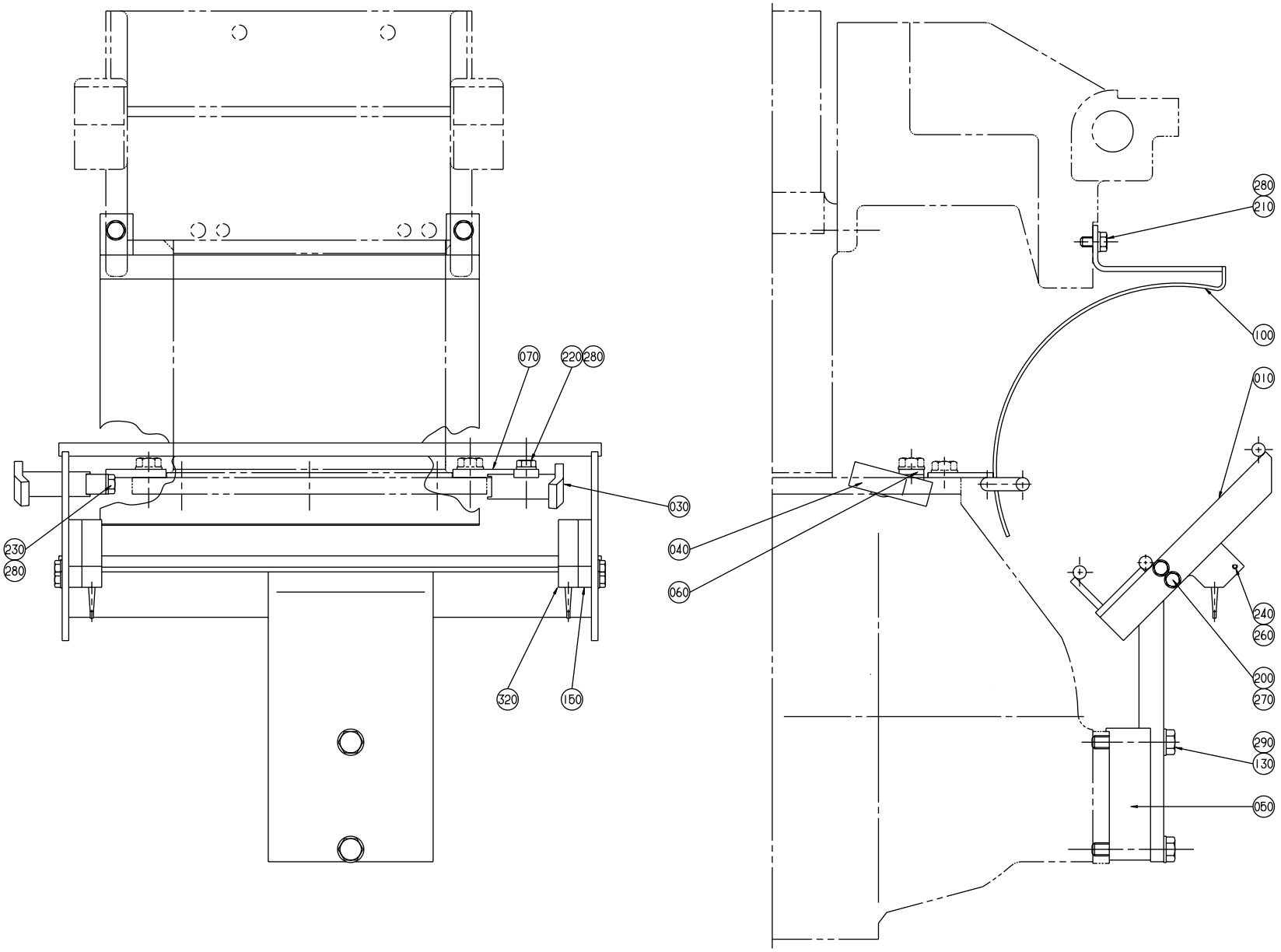

S-285853-3
ECN 19449

Pos	Part No	SP	UN	Qty	Description	Page No
1055B						
010	525347-0000	-		1	SLIDE RAIL	
100	531328-0000	-		1	HEAD PLATE	
130	312105-0451	-		2	SCREW M6S ISO 4017 8X20 A280	
280	315105-0153	-		2	WASHER BRB6,4X12RFR	
1136B						
010	525347-0000	-		1	SLIDE RAIL	
100	525408-0000	-		1	HEAD PLATE	
130	312105-0451	-		2	SCREW M6S ISO 4017 8X20 A280	
280	315105-0153	-		2	WASHER BRB6,4X12RFR	
1000B LOFIN						
010	525348-0000	-		1	SLIDE RAIL	
100	529312-0000	-		1	HEAD PLATE	
130	312105-0451	-		2	SCREW M6S ISO 4017 8X20 A280	
280	315105-0153	-		2	WASHER BRB6,4X12RFR	
1000SQ REVFIN						
010	574053-0000	-		1	SLIDE RAIL	
030	1143007-0000	X		1	STEERING	
040	1143006-0000	X		1	STEERING	
060	1143008-0000	X		1	BRACKET	
070	1143009-0000	X		1	BRACKET	
100	574054-0000	-		1	HEAD PLATE	
130	312105-0451	-		2	SCREW M6S ISO 4017 8X20 A280	
220	312105-0368	-		1	SCREW M6S ISO 4017 M6X16 A280	
230	312105-0371	-		1	SCREW M6S6X22RFR	
280	315105-0153	-		4	WASHER BRB6,4X12RFR	
1000SQ NORMFIN						
010	574053-0000	-		1	SLIDE RAIL	
030	574097-0000	-		1	STEERING	
040	574098-0000	-		1	STEERING	
060	573488-0000	-		1	BRACKET	
070	573489-0000	-		1	BRACKET	
100	574054-0000	-		1	HEAD PLATE	
130	312105-0451	-		2	SCREW M6S ISO 4017 8X20 A280	
220	312105-0368	-		1	SCREW M6S ISO 4017 M6X16 A280	
230	312105-0371	-		1	SCREW M6S6X22RFR	
280	315105-0153	-		4	WASHER BRB6,4X12RFR	

Pos	Part No	SP	UN	Qty	Description	Page No

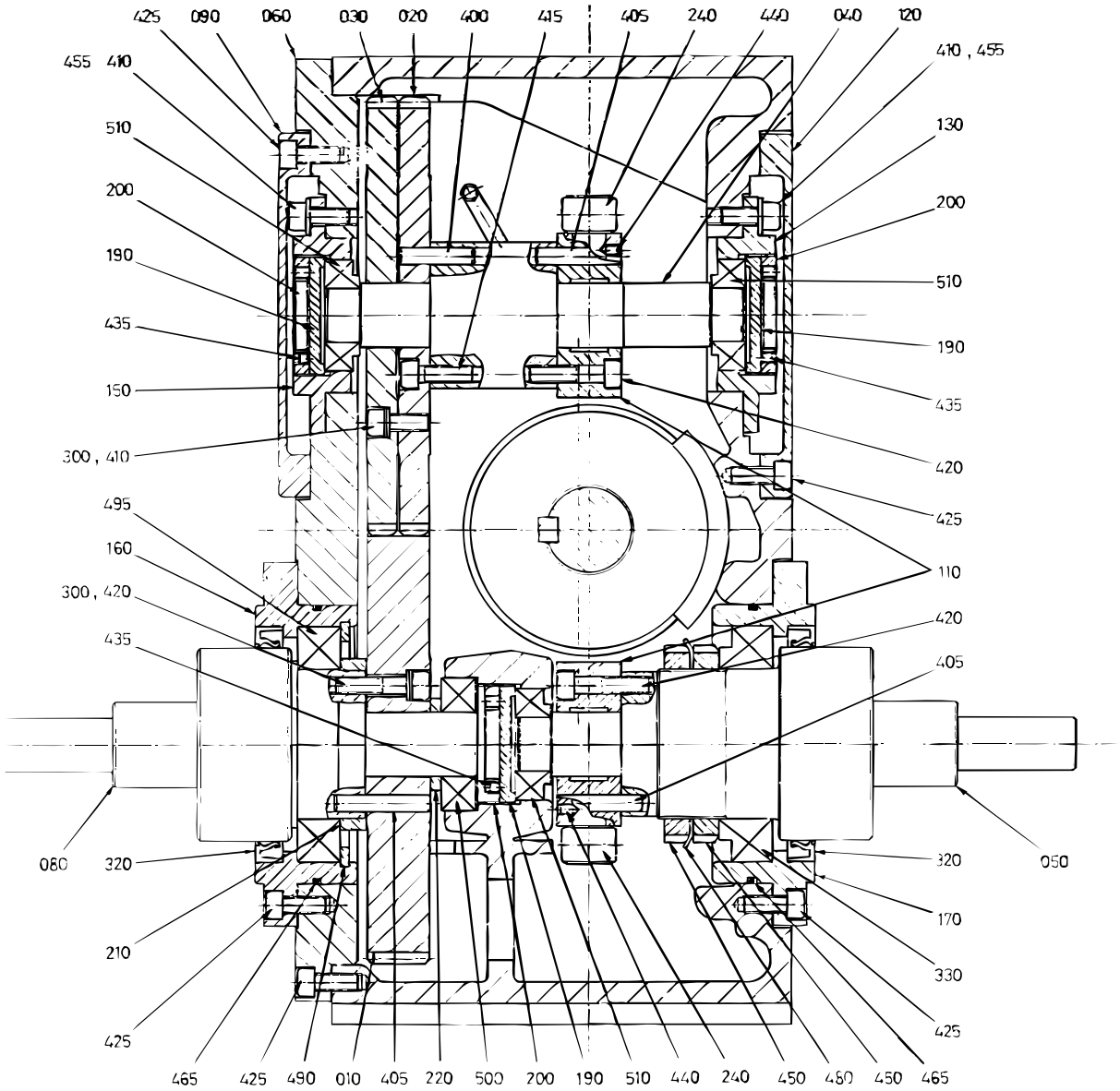
425
090
060
030
020
400
415
405
240
440
040
120
455
410
410 , 455
510
130
200
200
190
510
435
190
150
435
300 , 410
420
495
425
160
110
300 , 420
420
435
405
080
320
320
050
170
210
330
425
425
465
425
490
010
405
220
500
200
190
510
440
240
450
480
450
465

Pos	Part No	SP	UN	Qty	Description	Page No
-						
	543709-0003	-		x	INSTALLATION DIAGRAM	
010	543705-0000	K		1	GEAR WHEEL WIDE	
020	543706-0000	K		1	GEAR WHEEL SLIM , INNER	
030	543707-0000	K		1	GEAR WHEEL SLIM , OUTER	
040	565322-0000	K		1	INTERMEDIARY SHAFT	
050	565323-0000	K		1	OUTPUT SHAFT, LONG	
060	565324-0000	D		1	LID	
070	565325-0000	K		1	INPUT SHAFT	
080	565336-0000	K		1	OUTPUT SHAFT SHORT	
090	565338-0000	D		1	GEAR HOUSING	
100	927314-0000	K		1	CAM	
110	927315-0000	K		2	TURRET	
120	565326-0000	D		2	LID	
130	565331-0000	D		1	BEARING HOLDER	
140	565332-0000	D		2	BEARING HOLDER	
150	565333-0000	D		1	BEARING HOLDER	
160	565334-0000	D		1	BEARING HOLDER	
170	565335-0000	D		1	BEARING HOLDER	
180	565339-0000	D		1	OIL PIPE	
190	565327-0000	D		3	RING NUT	
200	565328-0000	D		3	SCREW RING	
210	565329-0000	D		1	SPACER	
220	565330-0000	D		1	SPACER	
230	565340-0000	D		1	OIL LEVEL TUBE	
240	927318-0000	K		12	ROLLER	
300	90062-0049	-		18	LOCK WASHER	
310	90087-0015	-		1	PIPE PLUG	
320	90091-0130	K		2	SEAL RING	
330	90214-0087	K		1	TAPER ROLLER BEARING	
400	311103-0407	-		3	CYLINDRICACP M6 8X35 RFR	
405	311103-0411	-		9	CYLINDRICACP M6 8X45 RFR	
410	312111-0451	-		12	SCREW MC6S8X20FZB	
415	312111-0453	-		3	SCREW MC6S8X25FZB	
420	312111-0457	-		9	SCREW MC6S8X35FZB	
425	312115-0451	-		40	SCREW MC6S ISO 4762 M8X20 A280	
430	312115-0453	-		12	SCREW MC6S ISO 4762 M8X25 A280	
435	312316-0320	-		3	STOP SCREW SK6SS5X5FZB	
440	312316-0323	-		12	STOP SCREW SK6SS5X8FZB	
445	312805-0108	-		4	ROUND NUT KM8	
450	312805-0114	-		2	ROUND NUT KM14	
455	315101-0165	-		8	WASHER BRB8,4X16FZB	
460	315105-0165	-		12	WASHER BRB8,4X16RFR	
465	315202-0316	K		2	O-RING 124,5X3	
470	315221-0171	K		1	SEAL RING CB30X62X7	
475	315410-0108	K		2	LOCK WASHESKFMB8	
480	315410-0114	K		1	LOCK WASHESKFMB14	
485	315701-0338	K		1	FLAT WEDGE12X8X70	
490	315752-0149	K		1	CIRCLIP SGH110	
495	321306-0114	K		1	BALL BEARISKF6014	
500	321309-0106	K		1	BALL BEARISKF6206	
505	321364-0106	K		2	ROLLER BEASKF31306	
510	321361-0105	K		3	ROLLER BEASKF30205	
515	342720-0104	-		1	STRAIGHT CONNECTION GA-8-G1/4"	
520	342730-0104	-		2	ELBOW CONNECTION WA-8-1/4"	

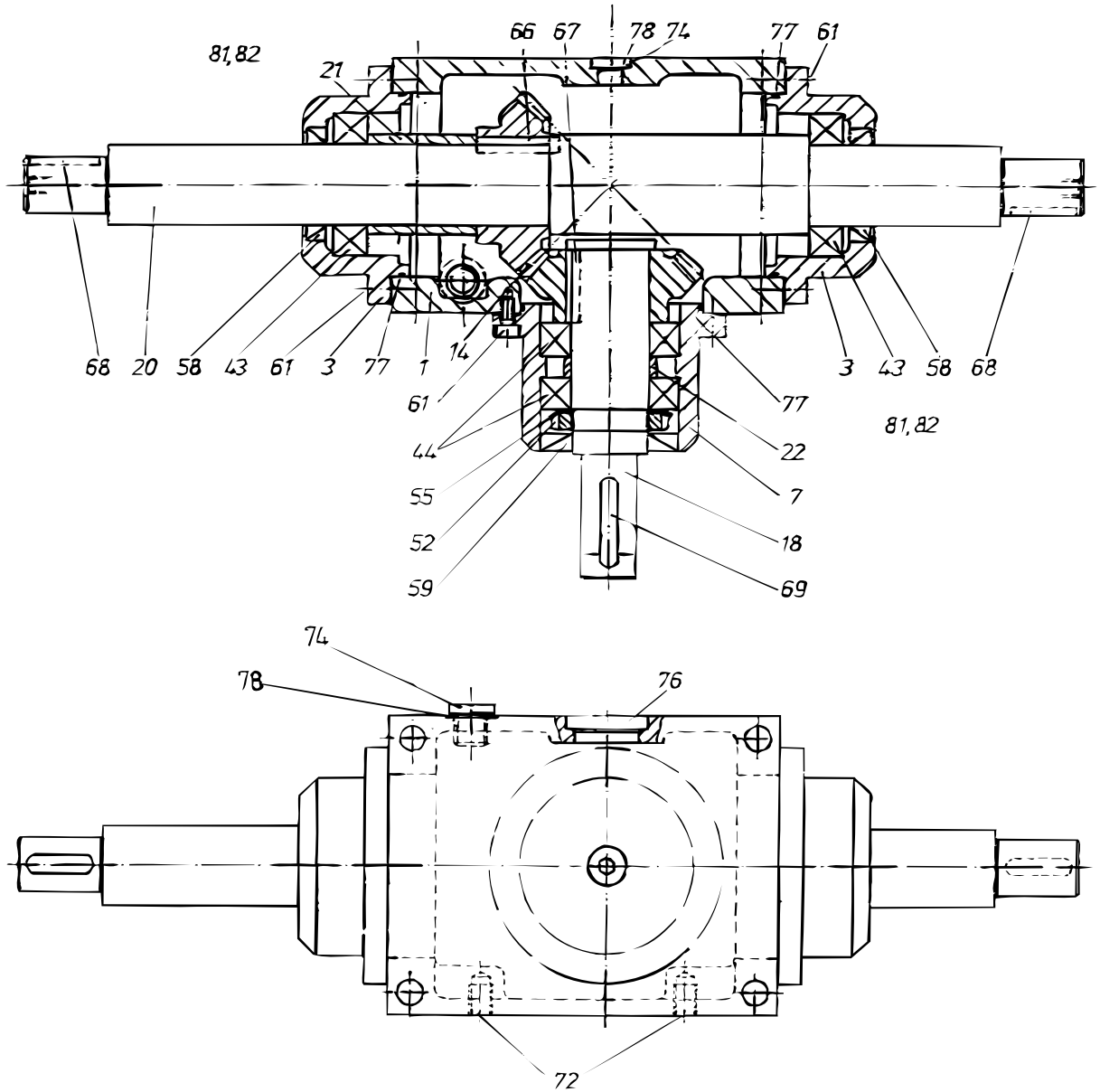

S-442646-2
ECN 8718

Pos	Part No	SP	UN	Qty	Description	Page No
-						
	442844-0001	-		x	MEASURE DRAWING	
001	568070-0000	-		1	GEAR HOUSING	
003	568071-0000	-		2	BEARING SEAT	
007	568072-0000	-		1	BEARING SEAT	
014	443188-0000	K		1	GEAR WHEEL	
018	568073-0000	K		1	SHAFT	
020	568074-0000	K		1	SHAFT	
021	442621-0000	K		1	SPACER	
022	442622-0000	K		1	SPACER	
043	321306-0107	K		2	BALL BEARISKF6007	
044	321306-0107	K		2	BALL BEARISKF6007	
052	312805-0107	K		1	ROUND NUT KM7	
055	315410-0107	K		1	LOCK WASHESKFMB7	
058	90091-0142	K		2	SEAL RING	
059	315221-0171	K		1	SEAL RING CB30X62X7	
061	312111-0368	K		12	SCREW MC6S6X16FZB	
066	315701-0802	K		1	FLAT WEDGE10X8X36	
067	315701-0299	K		1	FLAT WEDGE10X8X32	
068	315701-0268	K		2	FLAT WEDGE8X7X32	
069	315701-0270	K		1	FLAT WEDGE8X7X40	
072	312910-0126	K		2	THREADED I M8X1,5D	
077	90242-0117	K		3	O-RING*	
078	90242-0121	K		2	O-RING	
081	443193-0000	K		3	SHIM	
082	443194-0000	K		3	SHIM	

Pos	Part No	SP	UN	Qty	Description	Page No

PRESSURE DEVICE

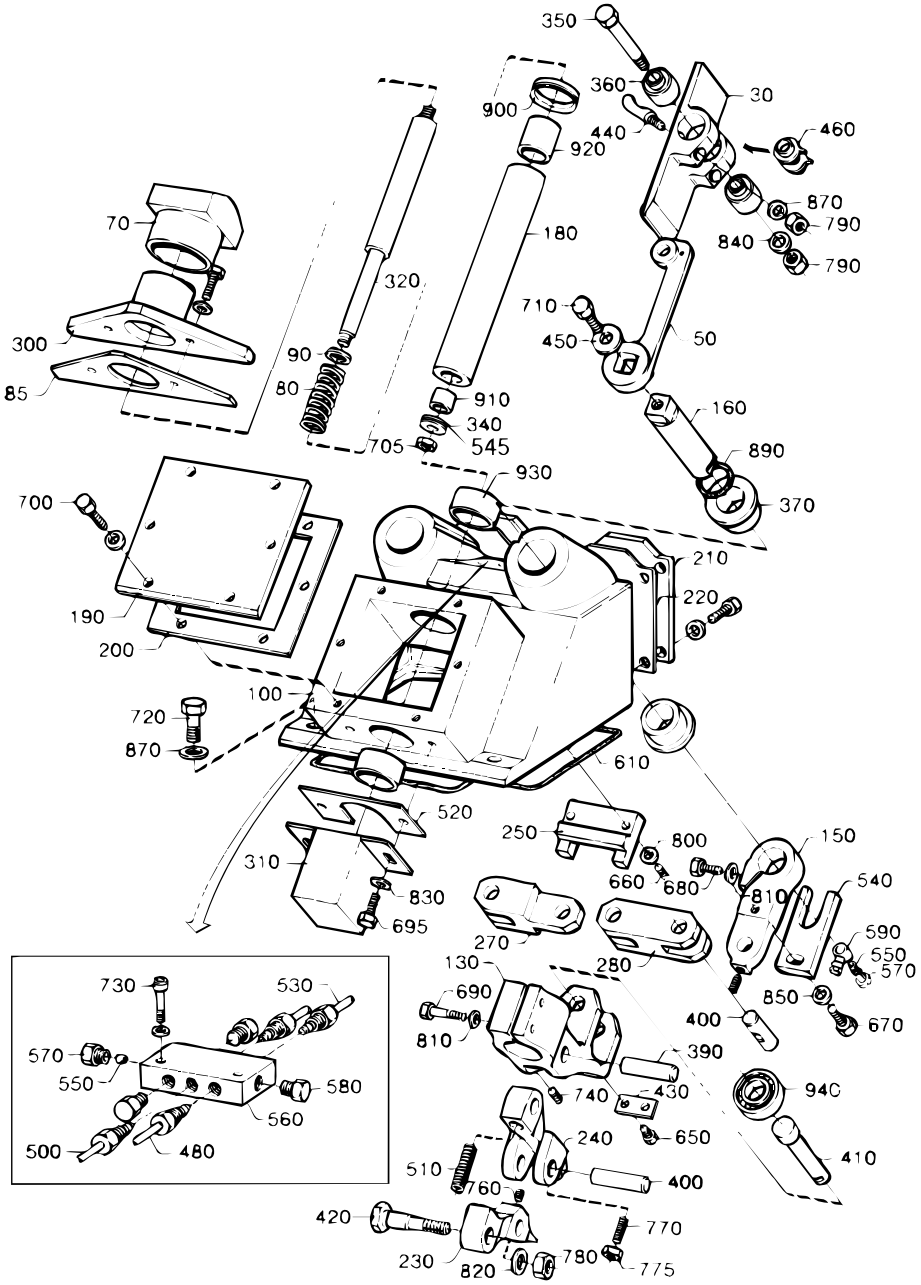

Pos	Part No	SP	UN	Qty	Description	Page No
0300B						
030	443351-0000	K		2	FLAP	
050	285449-0000	K		2	ARM	
070	525101-0002	D		1	BLOCKING PIECE	
080	268830-0000	F		1	COMPRESSION SPRING	
095	312105-0370	-		2	SCREW M6S ISO 4017 M6X20 A280	
440	262350-0001	-		4	PIN	
0355B						
030	531628-0000	K		2	PRESSURE DEVICE FLAP	
050	285449-0000	K		2	ARM	
070	525101-0001	D		1	BLOCKING PIECE	
080	268830-0000	F		1	COMPRESSION SPRING	
095	312105-0370	-		2	SCREW M6S ISO 4017 M6X20 A280	
440	525125-0000	F		4	PIN	
0375S						
030	443249-0000	K		2	FLAP	
050	442589-0000	K		2	ARM	
070	525101-0002	D		1	BLOCKING PIECE	
080	268830-0000	F		1	COMPRESSION SPRING	
095	312105-0370	-		2	SCREW M6S ISO 4017 M6X20 A280	
440	262350-0001	-		4	PIN	
0400B						
030	574680-0000	K		2	FLAP	
050	442589-0000	K		2	ARM	
070	525101-0001	D		1	BLOCKING PIECE	
080	268830-0000	F		1	COMPRESSION SPRING	
095	312105-0370	-		2	SCREW M6S ISO 4017 M6X20 A280	
440	525125-0000	F		4	PIN	
0500B						
030	442886-0000	K		2	FLAP	
050	262907-0000	K		2	ARM	
070	525100-0000	D		1	BLOCKING PIECE	
080	525379-0000	F		1	COMPRESSION SPRING	
085	297496-0000	-		1	LACE	
095	312105-0372	-		2	SCREW M6S ISO 4017 M6X25 A280	
440	262350-0001	-		4	PIN	
0500S						
030	443038-0000	K		2	FLAP	
050	262906-0000	K		2	ARM	
070	525101-0001	D		1	BLOCKING PIECE	
080	268830-0000	F		1	COMPRESSION SPRING	
095	312105-0370	-		2	SCREW M6S ISO 4017 M6X20 A280	
440	525125-0000	F		4	PIN	
0500SQ						
030	583451-0000	K		2	FLAP	
050	285449-0000	K		2	ARM	
070	574036-0000	D		1	BLOCKING PIECE	
080	268830-0000	F		1	COMPRESSION SPRING	
085	297496-0000	-		1	LACE	
095	312105-0372	-		2	SCREW M6S ISO 4017 M6X25 A280	
440	262350-0001	-		4	PIN	
0568B						
030	442885-0000	K		2	FLAP	
050	262907-0000	K		2	ARM	
070	525100-0000	D		1	BLOCKING PIECE	
080	525379-0000	F		1	COMPRESSION SPRING	
085	297496-0000	-		1	LACE	
095	312105-0372	-		2	SCREW M6S ISO 4017 M6X25 A280	
440	262350-0001	-		4	PIN	
0750B						
030	442984-0000	K		2	FLAP	
050	262906-0000	K		2	ARM	
070	525100-0000	D		1	BLOCKING PIECE	
080	525379-0000	F		1	COMPRESSION SPRING	
085	297496-0000	-		1	LACE	
095	312105-0372	-		2	SCREW M6S ISO 4017 M6X25 A280	
440	262350-0001	-		4	PIN	
0750S						
030	544289-0000	-		2	FLAP	
050	262906-0000	K		2	ARM	
070	544255-0000	-		1	BLOCKING PIECE	
080	268830-0000	F		1	COMPRESSION SPRING	
085	297496-0000	-		1	LACE	
095	312105-0372	-		2	SCREW M6S ISO 4017 M6X25 A280	
440	525125-0000	F		4	PIN	

PRESSURE DEVICE

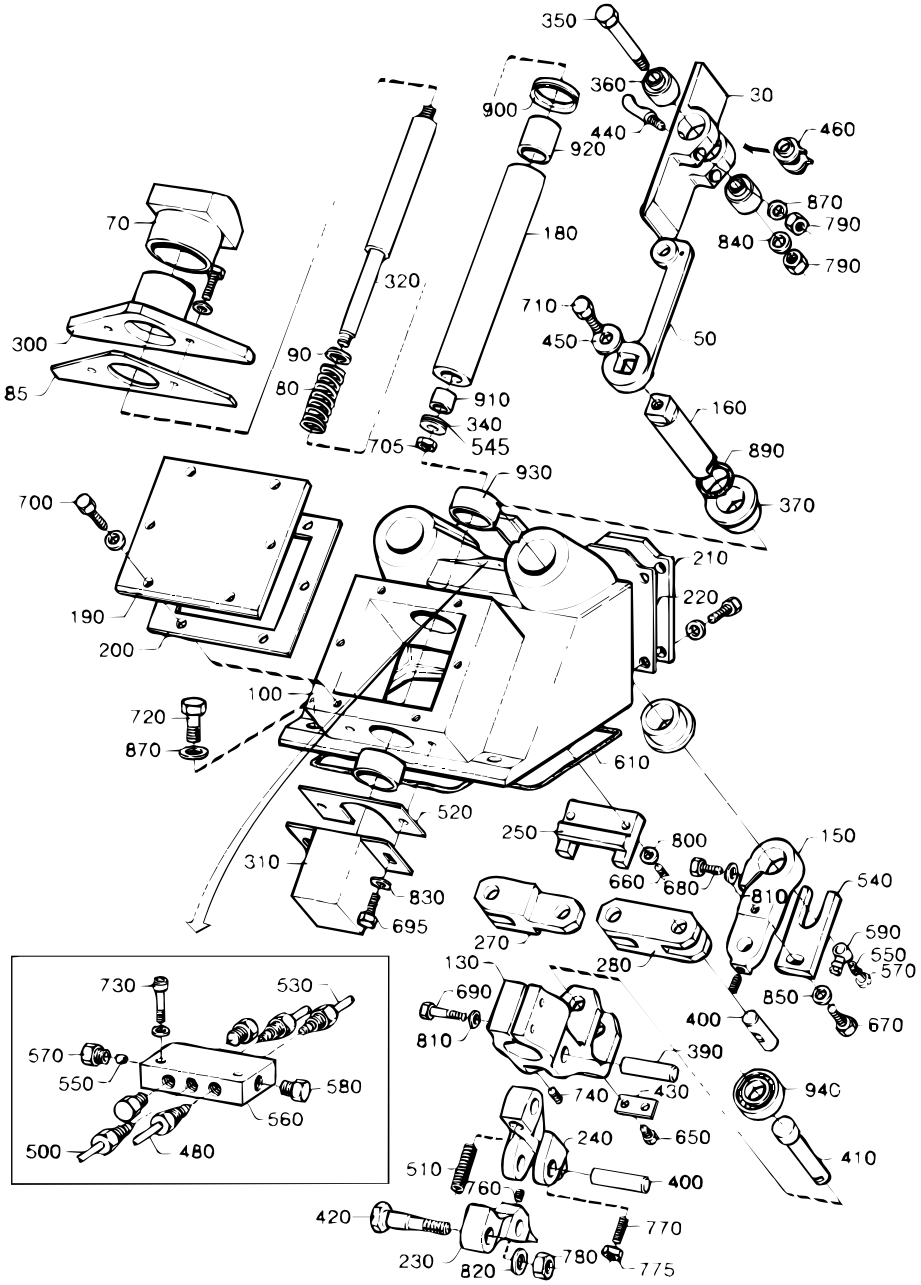

Pos	Part No	SP	UN	Qty	Description	Page No
Common parts						
090	442883-0000	-		2	SPACING WASHER	
100	525335-0000	-		1	HOUSE	
130	262234-0000	K		1	BRACKET	
150	262235-0000	K		2	ARM	
160	262266-0000	K		2	SHAFT	
180	262309-0000	K		1	SLEEVE	
190	262313-0000	-		1	LID	
200	262314-0000	K		1	RUBBER GASKET	
210	262315-0000	-		1	LID	
220	262316-0000	K		1	RUBBER GASKET	
230	262415-0000	K		1	LINK	
240	262610-0000	K		1	LINK	
250	262720-0000	-		1	STEERING	
270	285157-0000	K		1	LINK	
280	285158-0000	K		1	LINK	
300	285448-0000	-		1	PROTECTIVE CASING	
310	442532-0000	-		1	COVER	
320	B 442882-0000	K		1	SPINDLE	
340	28037-0000	-		1	WASHER	
350	262028-0011	K		2	FITTING BOLT	
360	525367-0000	K		4	SLEEVE	
370	262267-0000	K		4	BUSHING	
390	262322-0000	K		1	SHAFT	
400	262323-0000	K		3	SHAFT	
410	262324-0000	K		1	SHAFT	
420	262325-0000	K		1	SHAFT	
430	262343-0000	K		1	SECURING PLATE	
450	276659-0000	-		2	WASHER	
460	311103-0306	-		4	CYLINDRICACP M6 5X12 RFR	
480	B 285162-0000	K		1	LUBRICATING PIPE	
500	B 285164-0000	K		2	LUBRICATING PIPE	
510	285970-0000	F		1	COMPRESSION SPRING	
520	442533-0000	K		1	RUBBER GASKET	
530	B 442560-0000	K		1	LUBR.OIL PIPE	
540	442884-0000	K		2	LOCK PLATE	
545	566016-0000	-		1	WASHER	
550	90028-0001	F		3	CONE	
560	90032-0034	F		1	JUNCTION BLOCK	
570	90134-0003	F		3	BUSHING	
580	90136-0002	F		3	PLUG	
590	90137-0005	F		2	PIPE JOINT	
600	90153-0043	-	KG	x	ADHESIVE	
605	90157-0022	K	G	x	SEALING COMPOUND	
610	90161-0001	-	MM	900	STRIP	
620	90296-0009	K	KG	x	GREASE	
650	312101-0362	-		2	SCREW M6S6X8FZB	
660	312101-0372	-		2	SCREW M6S6X25FZB	
670	312101-0453	-		2	SCREW M6S8X25FZB	
680	312101-0457	-		2	SCREW M6S8X35FZB	
690	312101-0459	-		2	SCREW M6S8X40FZB	
695	312105-0368	-		2	SCREW M6S ISO 4017 M6X16 A280	
700	312105-0368	-		14	SCREW M6S ISO 4017 M6X16 A280	
705	312105-0447	-		1	SCREW M6S ISO 4017 M8X12 A280	
710	312105-0449	-		2	SCREW M6S ISO 4017 M8X16 A280	
720	312105-0453	-		3	SCREW M6S ISO 4017 M8X25 A280	
730	312111-0293	-		2	SCREW MC6S4X16FZB	
740	312316-0287	-		1	STOP SCREW SK6SS4X8FZB	
760	312316-0362	-		3	STOP SCREW SK6SS6X8FZB	
770	312316-0372	K		1	STOP SCREW SK6SS6X25FZB	
775	312601-0316	-		1	NUT M6M6FZB	
780	312601-0322	-		1	NUT M6M12FZB	
790	312605-0318	-		6	NUT M6M8RFR	
800	315101-0153	-		2	WASHER BRB6,4X12FZB	
810	315101-0165	-		4	WASHER BRB8,4X16FZB	
820	315101-0178	-		1	WASHER BRB13X24FZB	
830	315105-0153	-		20	WASHER BRB6,4X12RFR	
840	315105-0165	-		2	WASHER BRB8,4X16RFR	
850	315111-0165	-		2	WASHER TBRB8,4X16FZB	
870	315115-0165	-		7	WASHER TBRB8,4X16RFR	
890	315202-0217	K		2	O-RING 24,2X3	
900	315220-0175	K		1	SEAL RING V-35S	
910	321120-0122	K		1	BUSHING 15/17X15	
920	321120-0160	K		1	BUSHING 25/28X30	
930	321120-0183	K		2	BUSHING 35/39X20	
940	321306-0104	K		1	BALL BEARISKF6004	
1000B						
030	443182-0000	K		2	FLAP	
050	262906-0000	K		2	ARM	
070	525100-0000	D		1	BLOCKING PIECE	
080	525379-0000	F		1	COMPRESSION SPRING	
085	297496-0000	-		1	LACE	
095	312105-0372	-		2	SCREW M6S ISO 4017 M6X25 A280	
440	262350-0001	-		4	PIN	

PRESSURE DEVICE

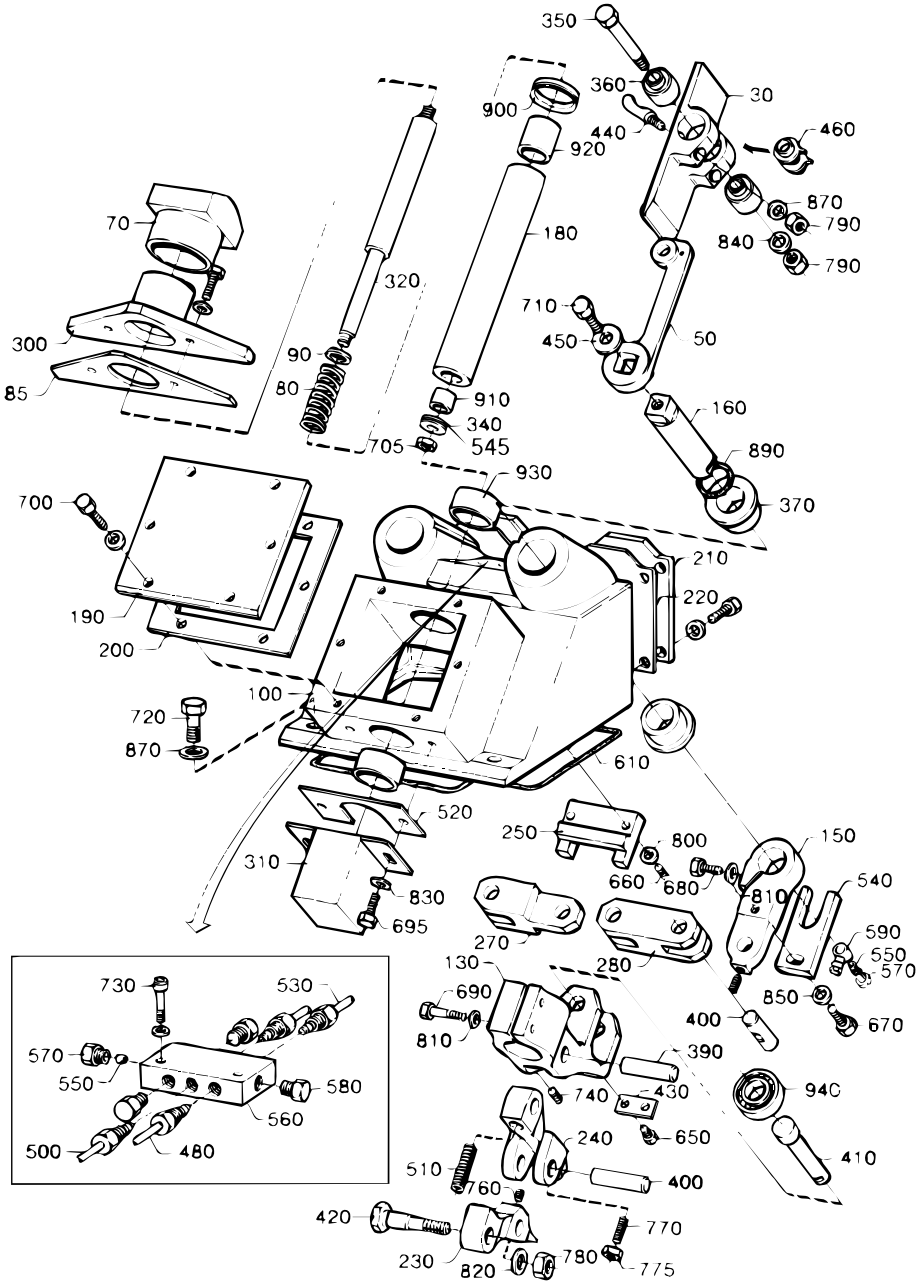

Pos	Part No	SP	UN	Qty	Description	Page No
1000S						
030	569111-0000	K		2	FLAP	
050	262906-0000	K		2	ARM	
070	569112-0000	D		1	BLOCKING PIECE	
080	268830-0000	F		1	COMPRESSION SPRING	
085	297496-0000	-		1	LACE	
095	312105-0372	-		2	SCREW M6S ISO 4017 M6X25 A280	
440	262350-0001	-		4	PIN	
1000SQ						
030	574035-0000	K		2	FLAP	
050	262906-0000	K		2	ARM	
070	574036-0000	D		1	BLOCKING PIECE	
080	268830-0000	F		1	COMPRESSION SPRING	
085	297496-0000	-		1	LACE	
095	312105-0372	-		2	SCREW M6S ISO 4017 M6X25 A280	
440	262350-0001	-		4	PIN	
1055B						
030	443114-0000	K		2	FLAP	
050	262906-0000	K		2	ARM	
070	525100-0000	D		1	BLOCKING PIECE	
080	525379-0000	F		1	COMPRESSION SPRING	
085	297496-0000	-		1	LACE	
095	312105-0372	-		2	SCREW M6S ISO 4017 M6X25 A280	
440	262350-0001	-		4	PIN	
1136B						
030	548406-0000	K		2	FLAP	
050	262906-0000	K		2	ARM	
070	525100-0000	D		1	BLOCKING PIECE	
080	525379-0000	F		1	COMPRESSION SPRING	
085	297496-0000	-		1	LACE	
095	312105-0372	-		2	SCREW M6S ISO 4017 M6X25 A280	
440	262350-0001	-		4	PIN	

Pos	Part No	SP	UN	Qty	Description	Page No

PULL-DOWN DEVICE

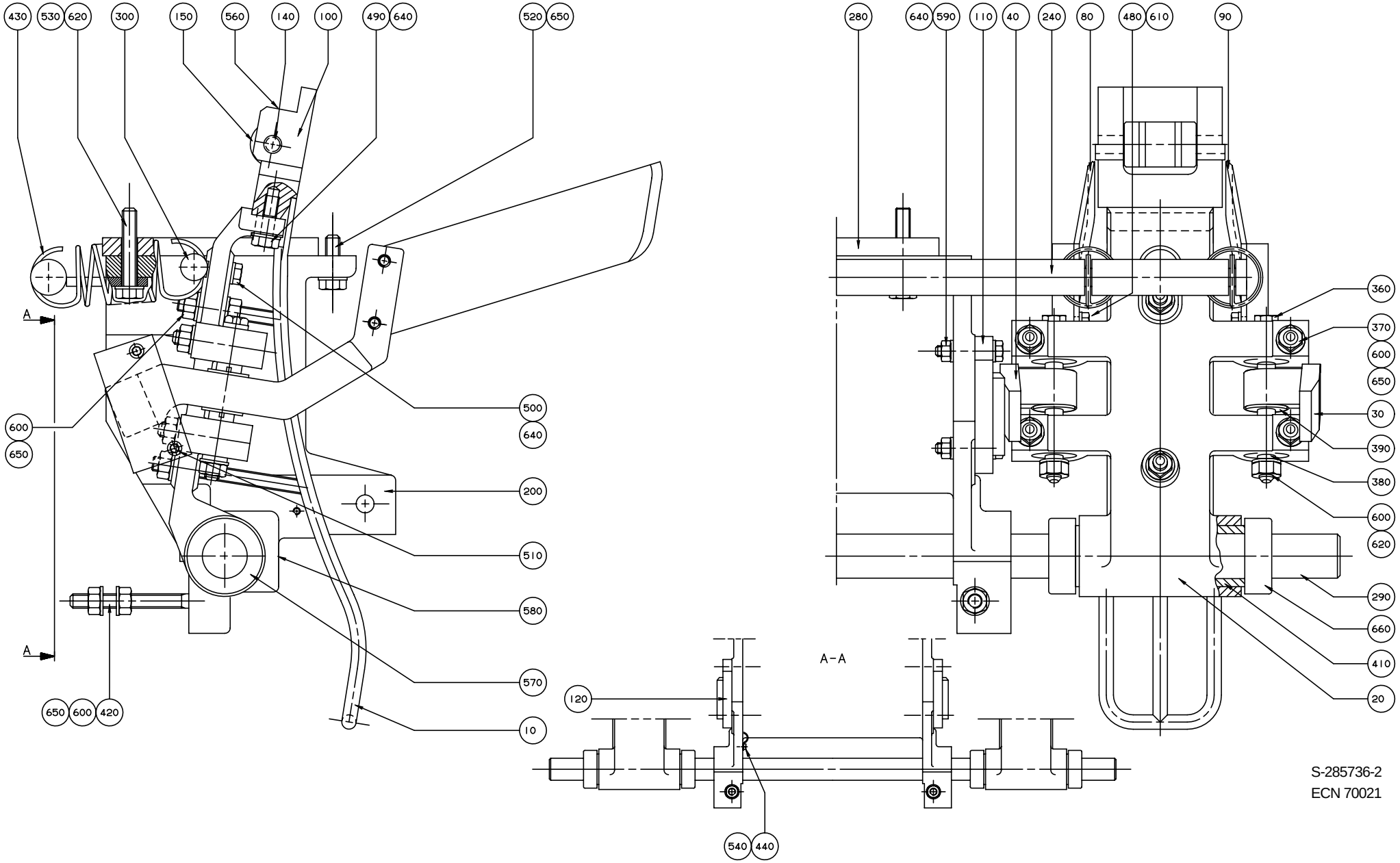

S-285736-2
ECN 70021

Pos	Part No	SP	UN	Qty	Description	Page No
0300B						
010	285724-0002	D		2	RAIL	
020	285723-0000	D		2	ARM	
030	285660-0000	D		2	ARM	
040	285661-0000	D		2	ARM	
080	525068-0000	D		2	SHEET	
090	525069-0000	D		2	SHEET	
100	525234-0002	D		2	PLATE	
140	262427-0002	K		2	SHAFT	
150	B 443488-0000	K		2	ROLL	
300	297644-0000	-		2	SHAFT	
600	312605-0318	-		24	NUT M6M8RFR	
610	315105-0153	-		8	WASHER BRB6,4X12RFR	
0355B						
010	285712-0000	D		2	RAIL	
020	285723-0000	D		2	ARM	
030	285656-0000	D		2	ARM	
040	285657-0000	D		2	ARM	
080	527854-0000	D		2	PLATE RIGHT	
090	527856-0000	D		2	PLATE LEFT	
100	525212-0000	D		2	PLATE	
140	262427-0005	K		2	SHAFT	
150	B 443487-0000	K		2	ROLL	
300	297644-0000	-		2	SHAFT	
600	312605-0318	-		24	NUT M6M8RFR	
610	315105-0153	-		8	WASHER BRB6,4X12RFR	
0375S						
010	285724-0002	D		2	RAIL	
020	285723-0000	D		2	ARM	
030	285660-0000	D		2	ARM	
040	285661-0000	D		2	ARM	
080	443027-0000	D		2	SHEET	
090	443028-0000	D		2	SHEET	
100	525234-0002	D		2	PLATE	
140	262427-0002	K		2	SHAFT	
150	B 443488-0000	K		2	ROLL	
300	297644-0000	-		2	SHAFT	
600	312605-0318	-		24	NUT M6M8RFR	
610	315105-0153	-		8	WASHER BRB6,4X12RFR	
0400B						
010	285712-0000	D		2	RAIL	
020	285723-0000	D		2	ARM	
030	285656-0000	D		2	ARM	
040	285657-0000	D		2	ARM	
080	574681-0000	D		2	SHEET	
090	574682-0000	D		2	SHEET	
100	525212-0000	D		2	PLATE	
140	262427-0005	K		2	SHAFT	
150	B 443487-0000	K		2	ROLL	
300	297644-0000	-		2	SHAFT	
600	312605-0318	-		24	NUT M6M8RFR	
610	315105-0153	-		8	WASHER BRB6,4X12RFR	
0500B						
010	262970-0000	D		2	RAIL	
020	285655-0000	D		2	ARM	
030	285656-0000	D		2	ARM	
040	285657-0000	D		2	ARM	
080	525066-0000	D		2	SHEET	
090	525067-0000	D		2	SHEET	
100	B 525429-0000	-		2	PLATE	
140	262427-0001	K		2	SHAFT	
150	B 443487-0000	K		2	ROLL	
300	297644-0000	-		2	SHAFT	
600	312605-0318	-		24	NUT M6M8RFR	
610	315105-0153	-		8	WASHER BRB6,4X12RFR	
0500S						
010	285712-0000	D		2	RAIL	
020	285723-0000	D		2	ARM	
030	285656-0000	D		2	ARM	
040	285657-0000	D		2	ARM	
080	443023-0000	D		2	SHEET	
090	443024-0000	D		2	SHEET	
100	525212-0000	D		2	PLATE	
140	262427-0005	K		2	SHAFT	
150	B 443487-0000	K		2	ROLL	
300	297644-0000	-		2	SHAFT	
600	312605-0318	-		24	NUT M6M8RFR	
610	315105-0153	-		8	WASHER BRB6,4X12RFR	

PULL-DOWN DEVICE

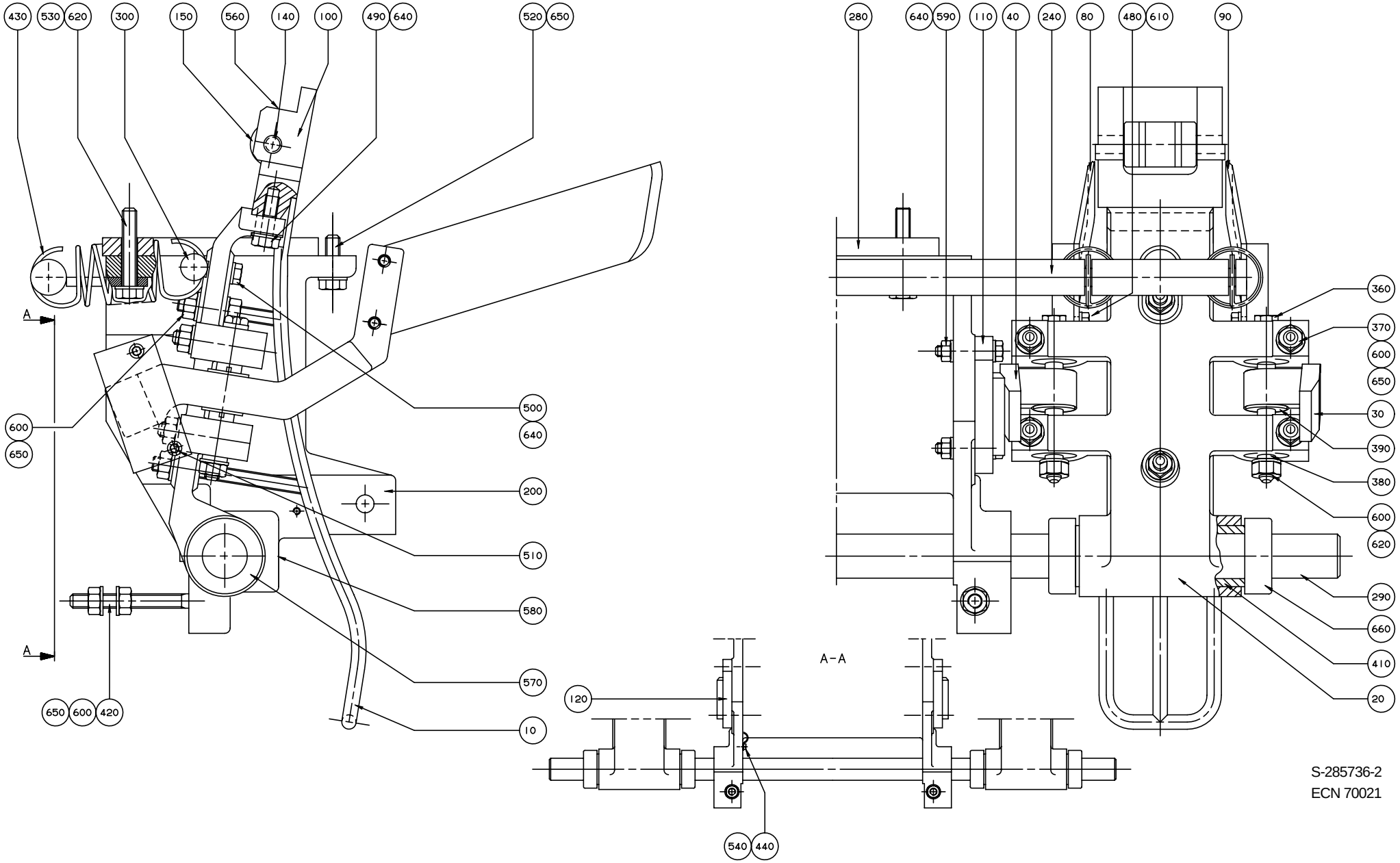

Pos	Part No	SP	UN	Qty	Description	Page No
0500SQ						
010	574039-0000	D		2	RAIL	
020	285723-0000	D		2	ARM	
030	285660-0000	D		2	ARM	
040	285661-0000	D		2	ARM	
080	583447-0000	D		2	SHEET	
090	583455-0000	D		2	SHEET	
100	574042-0000	D		2	PLATE	
140	262427-0008	K		2	SHAFT	
150	B 443487-0000	K		2	ROLL	
300	297644-0000	-		2	SHAFT	
600	312605-0318	-		24	NUT M6M8RFR	
610	315105-0153	-		8	WASHER BRB6,4X12RFR	
0568B						
010	262970-0000	D		2	RAIL	
020	285655-0000	D		2	ARM	
030	285656-0000	D		2	ARM	
040	285657-0000	D		2	ARM	
080	442909-0001	D		2	SHEET	
090	442910-0001	D		2	SHEET	
100	B 525429-0000	-		2	PLATE	
140	262427-0001	K		2	SHAFT	
150	B 443487-0000	K		2	ROLL	
300	297644-0000	-		2	SHAFT	
600	312605-0318	-		24	NUT M6M8RFR	
610	315105-0153	-		8	WASHER BRB6,4X12RFR	
0750B						
010	262970-0000	D		2	RAIL	
020	285655-0000	D		2	ARM	
030	285656-0000	D		2	ARM	
040	285657-0000	D		2	ARM	
080	442979-0000	D		2	SHEET	
090	442980-0000	D		2	SHEET	
100	B 525429-0000	-		2	PLATE	
140	262427-0001	K		2	SHAFT	
150	B 443487-0000	K		2	ROLL	
300	297644-0000	-		2	SHAFT	
600	312605-0318	-		24	NUT M6M8RFR	
610	315105-0153	-		8	WASHER BRB6,4X12RFR	
0750S						
010	544290-0000	D		2	RAIL	
020	285723-0000	D		2	ARM	
030	285656-0000	D		2	ARM	
040	285657-0000	D		2	ARM	
080	544288-0000	-		2	SHEET	
090	544280-0000	-		2	SHEET	
100	544291-0000	-		2	PLATE	
140	262427-0006	-		2	SHAFT	
150	B 443487-0000	K		2	ROLL	
300	297644-0000	-		2	SHAFT	
600	312605-0318	-		24	NUT M6M8RFR	
610	315105-0153	-		8	WASHER BRB6,4X12RFR	
Common parts						
110	442564-0000	K		1	CURVE	
120	442565-0000	K		1	CURVE	
200	262924-0000	-		1	CANTILEVER	
240	297643-0000	-		1	BRACKET	
280	285444-0000	-		1	SPACER	
290	285664-0000	-		1	SHAFT	
360	262028-0002	K		4	FITTING BOLT	
370	262179-0001	-		8	PIN	
380	262183-0000	K		8	BUSHING	
390	276664-0000	-		8	WASHER	
410	285729-0000	K		2	BUSHING	
420	443313-0000	-		2	STUD SCREW	
430	297567-0000	K		4	TENSION SPRING	
440	90165-0057	-		1	CLIP	
480	312105-0366	-		8	SCREW M6S ISO 4017 M6X12 A280	
490	312105-0372	-		4	SCREW M6S ISO 4017 M6X25 A280	
500	312105-0374	-		2	SCREW M6S ISO 4017 M6X30 A280	
510	312105-0376	-		4	SCREW M6S ISO 4017 M6X35 A280	
520	312105-0453	-		2	SCREW M6S ISO 4017 M8X25 A280	
530	312105-0460	-		2	SCREW O4017 M8X45A280	
540	312125-0291	-		1	SLOTTED CHEESE HEAD ISO 1207 M4X12 RFR	
560	312318-0370	-		2	SET SCREW CUP POINT ISO 4029 M6X20 RFR	
570	312318-0443	-		4	SET SCREW CUP POINT ISO 4029 M8X8 RFR	
580	312318-0449	-		2	SET SCREW COP POINT ISO 4029 M8X16 RFR	
590	312605-0316	-		4	NUT M6M6RFR	
620	315105-0165	-		6	WASHER BRB8,4X16RFR	
640	315115-0153	-		14	WASHER TBRB6,4X12RFR	
650	315115-0165	-		22	WASHER TBRB8,4X16RFR	
660	315742-0119	-		4	RETAINING 25SMS199RFR	

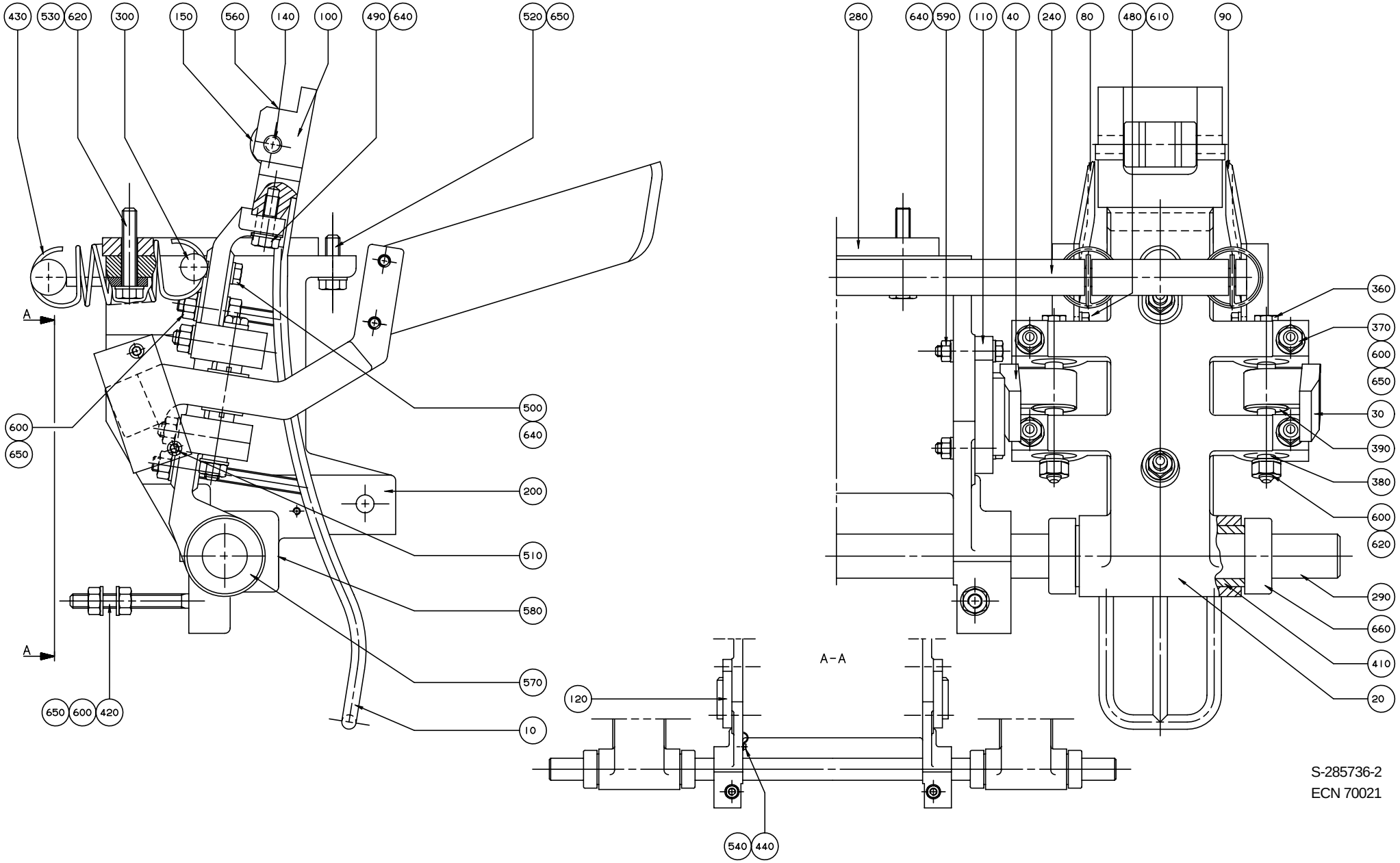
430
530
620
300
150
560
140
100
490
640
520
650
280
640
590
110
40
240
80
480
610
90
360
370
600
650
30
390
380
600
620
290
660
410
20
500
640
200
510
580
570
10
600
650
650
600
420
A
A
A-A
120
540
440
S-285736-2
ECN 70021

Pos	Part No	SP	UN	Qty	Description	Page No
1000B HIFIN						
010	262970-0000	D		2	RAIL	
020	285655-0000	D		2	ARM	
030	285656-0000	D		2	ARM	
040	285657-0000	D		2	ARM	
080	443021-0000	D		2	SHEET	
090	443022-0000	D		2	SHEET	
100	B 443348-0000	D		2	PLATE	
140	262427-0001	K		2	SHAFT	
150	B 443487-0000	K		2	ROLL	
300	297644-0000	-		2	SHAFT	
600	312605-0318	-		24	NUT M6M8RFR	
610	315105-0153	-		8	WASHER BRB6,4X12RFR	
1000S						
010	544290-0000	D		2	RAIL	
020	285723-0000	D		2	ARM	
030	285656-0000	D		2	ARM	
040	285657-0000	D		2	ARM	
080	569115-0000	D		2	SHEET	
090	569116-0000	D		2	SHEET	
100	569114-0000	D		2	PLATE	
140	262427-0007	K		2	SHAFT	
150	B 443487-0000	K		2	ROLL	
300	297644-0000	-		2	SHAFT	
600	312605-0318	-		24	NUT M6M8RFR	
610	315105-0153	-		8	WASHER BRB6,4X12RFR	
1055B						
010	262970-0000	D		2	RAIL	
020	285655-0000	D		2	ARM	
030	285656-0000	D		2	ARM	
040	285657-0000	D		2	ARM	
080	443137-0000	D		2	SHEET	
090	443138-0000	D		2	SHEET	
100	525211-0000	D		2	PLATE	
140	262427-0001	K		2	SHAFT	
150	B 443487-0000	K		2	ROLL	
300	297644-0000	-		2	SHAFT	
600	312605-0318	-		24	NUT M6M8RFR	
610	315105-0153	-		8	WASHER BRB6,4X12RFR	
1136B						
010	262970-0000	D		2	RAIL	
020	285655-0000	D		2	ARM	
030	285656-0000	D		2	ARM	
040	285657-0000	D		2	ARM	
080	543701-0000	-		2	SHEET	
090	543702-0000	-		2	SHEET	
100	525211-0000	D		2	PLATE	
140	262427-0001	K		2	SHAFT	
150	B 443487-0000	K		2	ROLL	
300	297644-0000	-		2	SHAFT	
600	312605-0318	-		24	NUT M6M8RFR	
610	315105-0153	-		8	WASHER BRB6,4X12RFR	
1000B LOFIN						
010	262970-0000	D		2	RAIL	
020	285655-0000	D		2	ARM	
030	285656-0000	D		2	ARM	
040	285657-0000	D		2	ARM	
080	443021-0000	D		2	SHEET	
090	443022-0000	D		2	SHEET	
100	525211-0000	D		2	PLATE	
140	262427-0001	K		2	SHAFT	
150	B 443487-0000	K		2	ROLL	
300	297644-0000	-		2	SHAFT	
600	312605-0318	-		24	NUT M6M8RFR	
610	315105-0153	-		8	WASHER BRB6,4X12RFR	

PULL-DOWN DEVICE

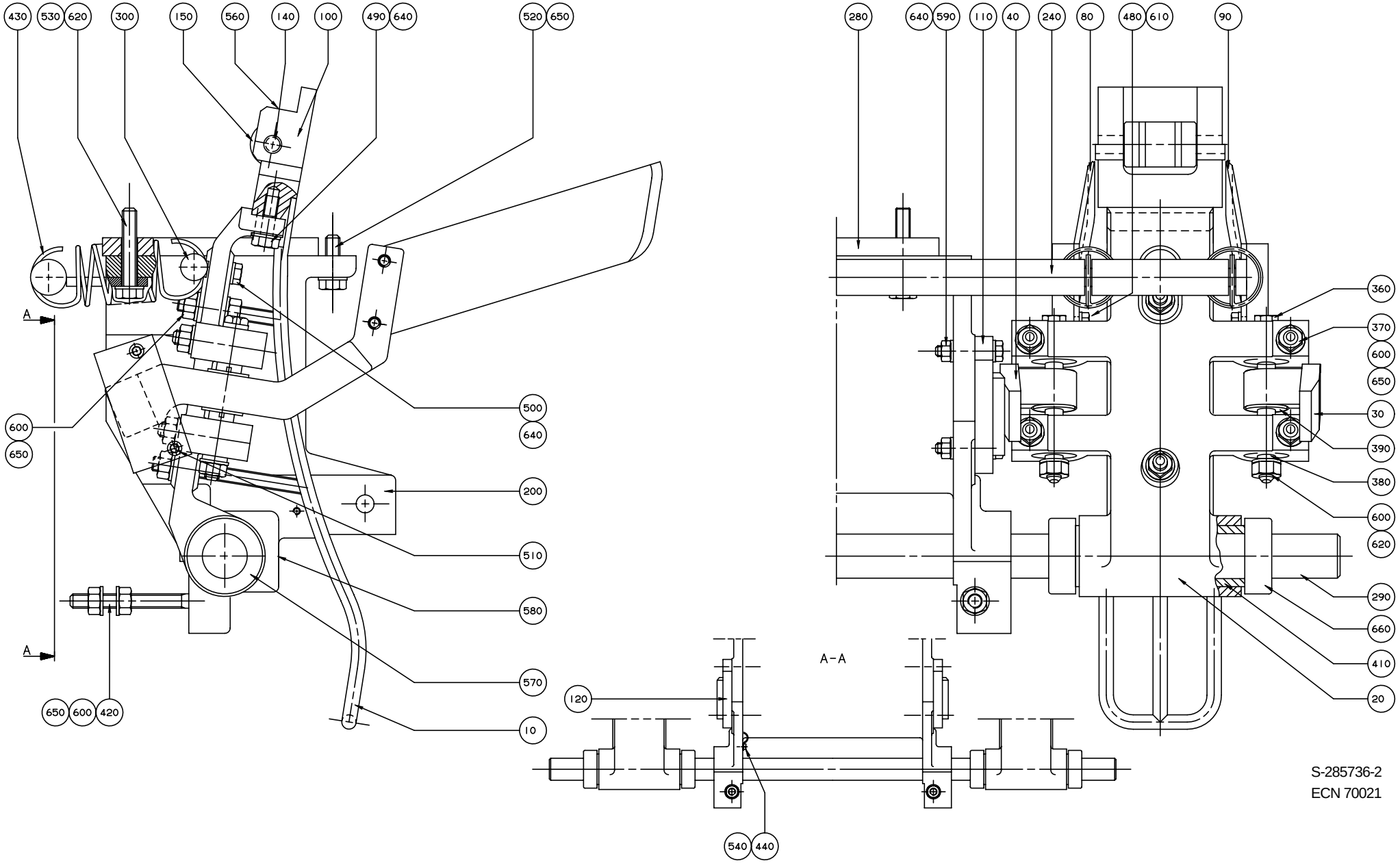

S-285736-2
ECN 70021

Pos	Part No	SP	UN	Qty	Description	Page No
1000SQ REVFIN						
010	574039-0000	D		2	RAIL	
020	285723-0000	D		2	ARM	
030	285660-0000	D		2	ARM	
040	285661-0000	D		2	ARM	
080	574040-0000	D		2	SHEET	
090	574041-0000	D		2	SHEET	
100	574042-0000	D		2	PLATE	
140	262427-0008	K		2	SHAFT	
150	B 443487-0000	K		2	ROLL	
160	1255161-0000	D		4	ARM	
170	1255162-0000	D		2	ROCKER ARM	
180	1255163-0000	D		2	ROCKER ARM	
185	1255160-0000	D		4	THREADED INSERT	
190	1143015-0000	K		4	BUSHING	
300	1143016-0000	K		2	AXLE PIN	
600	312605-0318	-		32	NUT M6M8RFR	
605	312902-0318	-		4	NUT M6M8VRFR	
610	315105-0153	-		12	WASHER BRB6,4X12RFR	
615	1143223-0000	D		4	WASHER	
616	315105-0146	-		4	WASHER BRB5,3X10RFR	
617	312105-0323	-		4	SCREW M6S ISO 4017 M5X8 A280	
670	312105-0370	-		4	SCREW M6S ISO 4017 M6X20 A280	
680	312105-0362	-		4	SCREW M6S ISO 4017 M6X8 A280	
690	90115-0139	K		8	LINK HEAD	
1000SQ NORMFIN						
010	574039-0000	D		2	RAIL	
020	285723-0000	D		2	ARM	
030	285660-0000	D		2	ARM	
040	285661-0000	D		2	ARM	
080	574040-0000	D		2	SHEET	
090	574041-0000	D		2	SHEET	
100	574042-0000	D		2	PLATE	
140	262427-0008	K		2	SHAFT	
300	297644-0000	-		2	SHAFT	
600	312605-0318	-		24	NUT M6M8RFR	
610	315105-0153	-		8	WASHER BRB6,4X12RFR	

Pos	Part No	SP	UN	Qty	Description	Page No

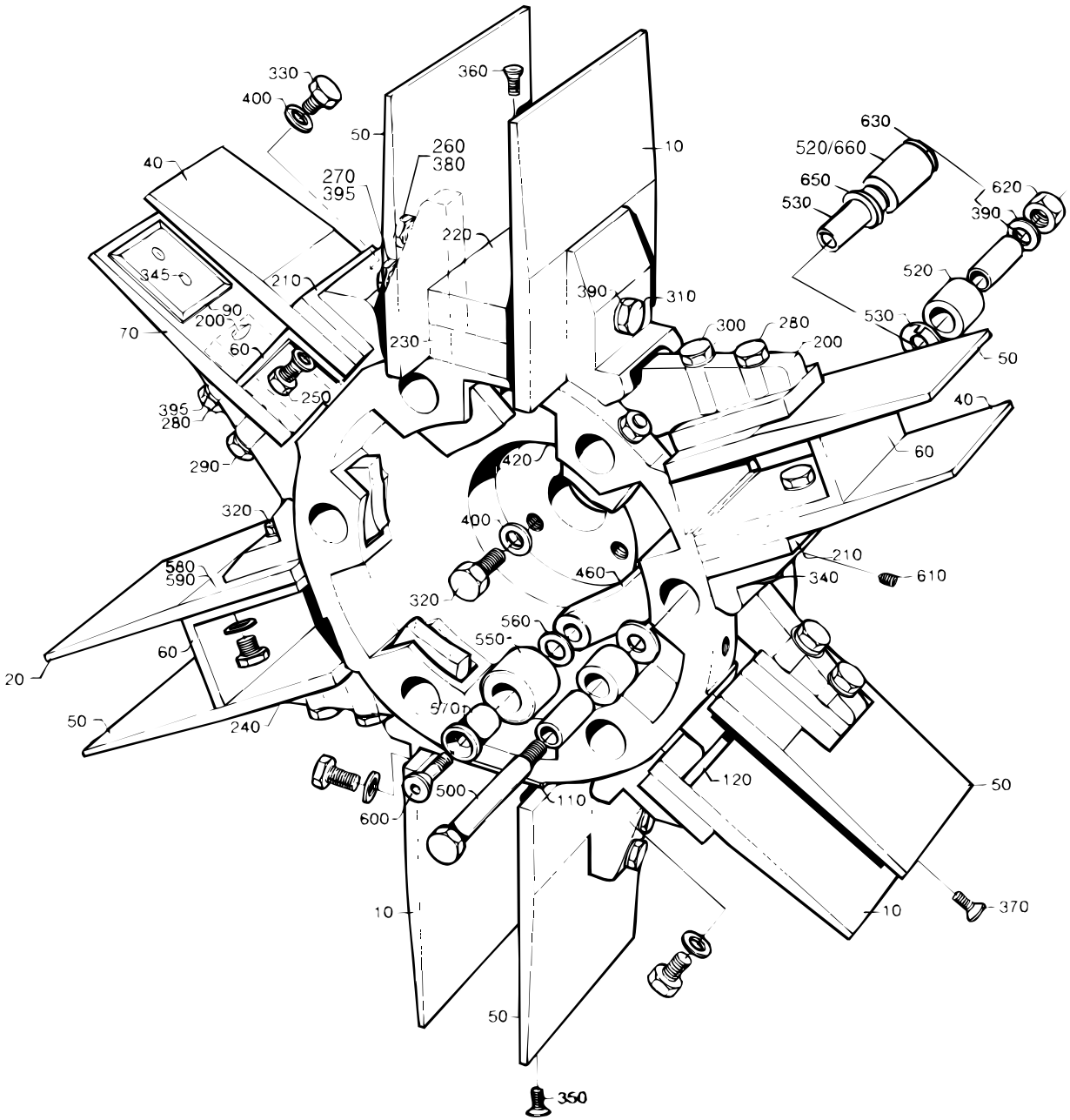

S-297681-2-3
ECN 19244

Pos	Part No	SP	UN	Qty	Description	Page No
0300B						
040	525459-0000	-		6	FLAP	
060	525373-0000	D		6	BOTTOM	
070	297646-0000	K		6	FLAP	
200	285316-0002	K		6	SPACER PIECE	
210	525461-0000	K		6	SPACER PIECE	
250	312105-0368	F		6	SCREW M6S ISO 4017 M6X16 A280	
280	312105-0378	F		6	SCREW O4017 M6X40A280	
290	312105-0379	F		6	SCREW M6S ISO 4014 M6X45 A280	
320	312105-0457	F		3	SCREW O4017 M8X35A280	
330	312105-0459	F		6	SCREW O4017 M8X40A280	
380	315105-0153	F		12	WASHER BRB6,4X12RFR	
390	315105-0165	F		24	WASHER BRB8,4X16RFR	
395	315115-0153	F		6	WASHER TBRB6,4X12RFR	
400	315115-0165	F		9	WASHER TBRB8,4X16RFR	
420	525450-0000	D		1	HUB	
460	565967-0000	K		6	ARM	
510	262179-0001	K		12	PIN	
520	525329-0000	K		12	SLEEVE	
610	312109-0459	K		2	SCREW M6S ISO 4017 M8X40 A280	
620	312605-0318	-		18	NUT M6M8RFR	
650	321111-0185	K		24	FLANGE BUS 14E7X14	
0355B						
010	525458-0000	K		6	FLAP	
050	B 285310-0002	K		6	FLAP	
120	525371-0000	D		6	BOTTOM	
200	285316-0002	K		6	SPACER PIECE	
210	525461-0000	K		6	SPACER PIECE	
250	312105-0368	F		6	SCREW M6S ISO 4017 M6X16 A280	
280	312105-0378	F		6	SCREW O4017 M6X40A280	
290	312105-0379	F		6	SCREW M6S ISO 4014 M6X45 A280	
320	312105-0457	F		9	SCREW O4017 M8X35A280	
380	315105-0153	F		12	WASHER BRB6,4X12RFR	
390	315105-0165	F		24	WASHER BRB8,4X16RFR	
395	315115-0153	F		6	WASHER TBRB6,4X12RFR	
400	315115-0165	F		9	WASHER TBRB8,4X16RFR	
420	525450-0000	D		1	HUB	
460	565967-0000	K		6	ARM	
510	262179-0001	K		12	PIN	
520	525329-0000	K		12	SLEEVE	
610	312109-0459	K		2	SCREW M6S ISO 4017 M8X40 A280	
620	312605-0318	-		18	NUT M6M8RFR	
650	321111-0185	K		24	FLANGE BUS 14E7X14	

Pos	Part No	SP	UN	Qty	Description	Page No
0375S						
040	525430-0000	-		6	FLAP	
060	525372-0000	-		6	BOTTOM	
070	297646-0000	K		6	FLAP	
200	285316-0002	K		6	SPACER PIECE	
210	525461-0000	K		6	SPACER PIECE	
250	312105-0368	F		12	SCREW M6S ISO 4017 M6X16 A280	
280	312105-0378	F		6	SCREW O4017 M6X40A280	
290	312105-0379	F		6	SCREW M6S ISO 4014 M6X45 A280	
320	312105-0457	F		3	SCREW O4017 M8X35A280	
330	312105-0459	F		6	SCREW O4017 M8X40A280	
380	315105-0153	F		18	WASHER BRB6,4X12RFR	
390	315105-0165	F		24	WASHER BRB8,4X16RFR	
395	315115-0153	F		6	WASHER TBRB6,4X12RFR	
400	315115-0165	F		9	WASHER TBRB8,4X16RFR	
420	525450-0000	D		1	HUB	
460	565967-0000	K		6	ARM	
510	262179-0001	K		12	PIN	
520	525329-0000	K		12	SLEEVE	
610	312109-0459	K		2	SCREW M6S ISO 4017 M8X40 A280	
620	312605-0318	-		18	NUT M6M8RFR	
650	321111-0185	K		24	FLANGE BUS 14E7X14	
0400B						
010	574684-0000	K		6	FLAP	
050	B 285310-0002	K		6	FLAP	
120	574683-0000	D		6	BOTTOM	
200	285316-0002	K		6	SPACER PIECE	
210	525461-0000	K		6	SPACER PIECE	
250	312105-0368	F		12	SCREW M6S ISO 4017 M6X16 A280	
280	312105-0378	F		6	SCREW O4017 M6X40A280	
290	312105-0379	F		6	SCREW M6S ISO 4014 M6X45 A280	
320	312105-0457	F		9	SCREW O4017 M8X35A280	
380	315105-0153	F		18	WASHER BRB6,4X12RFR	
390	315105-0165	F		24	WASHER BRB8,4X16RFR	
395	315115-0153	F		6	WASHER TBRB6,4X12RFR	
400	315115-0165	F		9	WASHER TBRB8,4X16RFR	
420	525450-0000	D		1	HUB	
460	565967-0000	K		6	ARM	
510	262179-0001	K		12	PIN	
520	525329-0000	K		12	SLEEVE	
610	312109-0459	K		2	SCREW M6S ISO 4017 M8X40 A280	
620	312605-0318	-		18	NUT M6M8RFR	
650	321111-0185	K		24	FLANGE BUS 14E7X14	

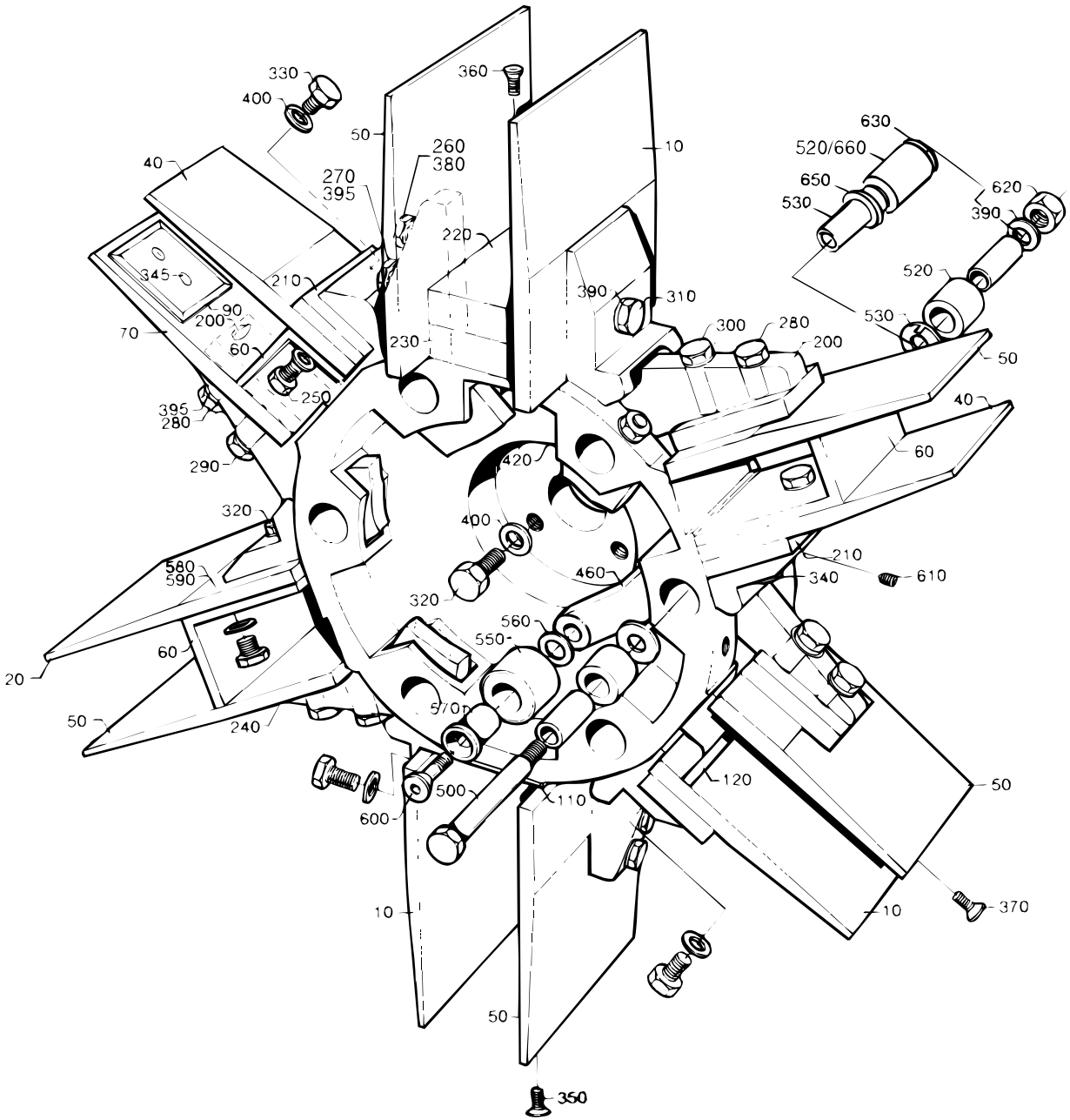

S-297681-2-3
ECN 19244

Pos	Part No	SP	UN	Qty	Description	Page No
0500B						
020	525455-0000	K		6	FLAP	
050	B 285310-0001	K		6	FLAP	
060	525369-0000	D		6	BOTTOM	
240	442981-0000	-		6	SHIM	
250	312105-0368	F		6	SCREW M6S ISO 4017 M6X16 A280	
260	312105-0374	F		6	SCREW M6S ISO 4017 M6X30 A280	
280	312105-0378	F		6	SCREW O4017 M6X40A280	
320	312105-0457	F		9	SCREW O4017 M8X35A280	
380	315105-0153	F		18	WASHER BRB6,4X12RFR	
390	315105-0165	F		24	WASHER BRB8,4X16RFR	
400	315115-0165	F		9	WASHER TBRB8,4X16RFR	
420	525450-0000	D		1	HUB	
460	565967-0000	K		6	ARM	
510	262179-0001	K		12	PIN	
520	525329-0000	K		12	SLEEVE	
610	312109-0459	K		2	SCREW M6S ISO 4017 M8X40 A280	
620	312605-0318	-		18	NUT M6M8RFR	
650	321111-0185	K		24	FLANGE BUS 14E7X14	
0500S						
010	525456-0000	K		6	FLAP	
050	B 285310-0002	K		6	FLAP	
120	525370-0000	D		6	BOTTOM	
200	285316-0002	K		6	SPACER PIECE	
210	525461-0000	K		6	SPACER PIECE	
280	312105-0378	F		6	SCREW O4017 M6X40A280	
290	312105-0379	F		6	SCREW M6S ISO 4014 M6X45 A280	
320	312105-0457	F		9	SCREW O4017 M8X35A280	
370	312155-0378	F		6	SCREW MF6S DIN 7991 M6X40 A280	
380	315105-0153	F		12	WASHER BRB6,4X12RFR	
390	315105-0165	F		24	WASHER BRB8,4X16RFR	
395	315115-0153	F		6	WASHER TBRB6,4X12RFR	
400	315115-0165	F		9	WASHER TBRB8,4X16RFR	
420	525450-0000	D		1	HUB	
460	565967-0000	K		6	ARM	
510	262179-0001	K		12	PIN	
520	525329-0000	K		12	SLEEVE	
610	312109-0459	K		2	SCREW M6S ISO 4017 M8X40 A280	
620	312605-0318	-		18	NUT M6M8RFR	
650	321111-0185	K		24	FLANGE BUS 14E7X14	
0500SQ						
010	574029-0000	K		6	FLAP	
050	574030-0000	-		6	FLAP	
060	583449-0000	D		6	BOTTOM	
130	583454-0000	-		6	SUPPORT	
140	583631-0000	-		6	BOTTOM PANEL	
260	312105-0372	F		6	SCREW M6S ISO 4017 M6X25 A280	
350	312155-0368	F		6	SCREW MF6S DIN7991 M6X16 A280	
380	315105-0153	F		6	WASHER BRB6,4X12RFR	
390	315105-0165	F		18	WASHER BRB8,4X16RFR	
395	315115-0153	F		6	WASHER TBRB6,4X12RFR	
400	315115-0165	F		3	WASHER TBRB8,4X16RFR	
420	574026-0000	D		1	HUB	
460	574028-0000	K		6	ARM	
610	312109-0459	K		8	SCREW M6S ISO 4017 M8X40 A280	
620	312605-0318	-		12	NUT M6M8RFR	
650	321111-0185	K		12	FLANGE BUS 14E7X14	
660	90240-0233	K		12	BUSHING	
0568B						
020	525455-0000	K		6	FLAP	
050	B 285310-0001	K		6	FLAP	
060	525368-0000	D		6	BOTTOM	
240	442981-0000	-		6	SHIM	
250	312105-0368	F		6	SCREW M6S ISO 4017 M6X16 A280	
260	312105-0374	F		6	SCREW M6S ISO 4017 M6X30 A280	
280	312105-0378	F		6	SCREW O4017 M6X40A280	
320	312105-0457	F		9	SCREW O4017 M8X35A280	
380	315105-0153	F		18	WASHER BRB6,4X12RFR	
390	315105-0165	F		24	WASHER BRB8,4X16RFR	
400	315115-0165	F		9	WASHER TBRB8,4X16RFR	
420	525450-0000	D		1	HUB	
460	565967-0000	K		6	ARM	
510	262179-0001	K		12	PIN	
520	525329-0000	K		12	SLEEVE	
610	312109-0459	K		2	SCREW M6S ISO 4017 M8X40 A280	
620	312605-0318	-		18	NUT M6M8RFR	
650	321111-0185	K		24	FLANGE BUS 14E7X14	

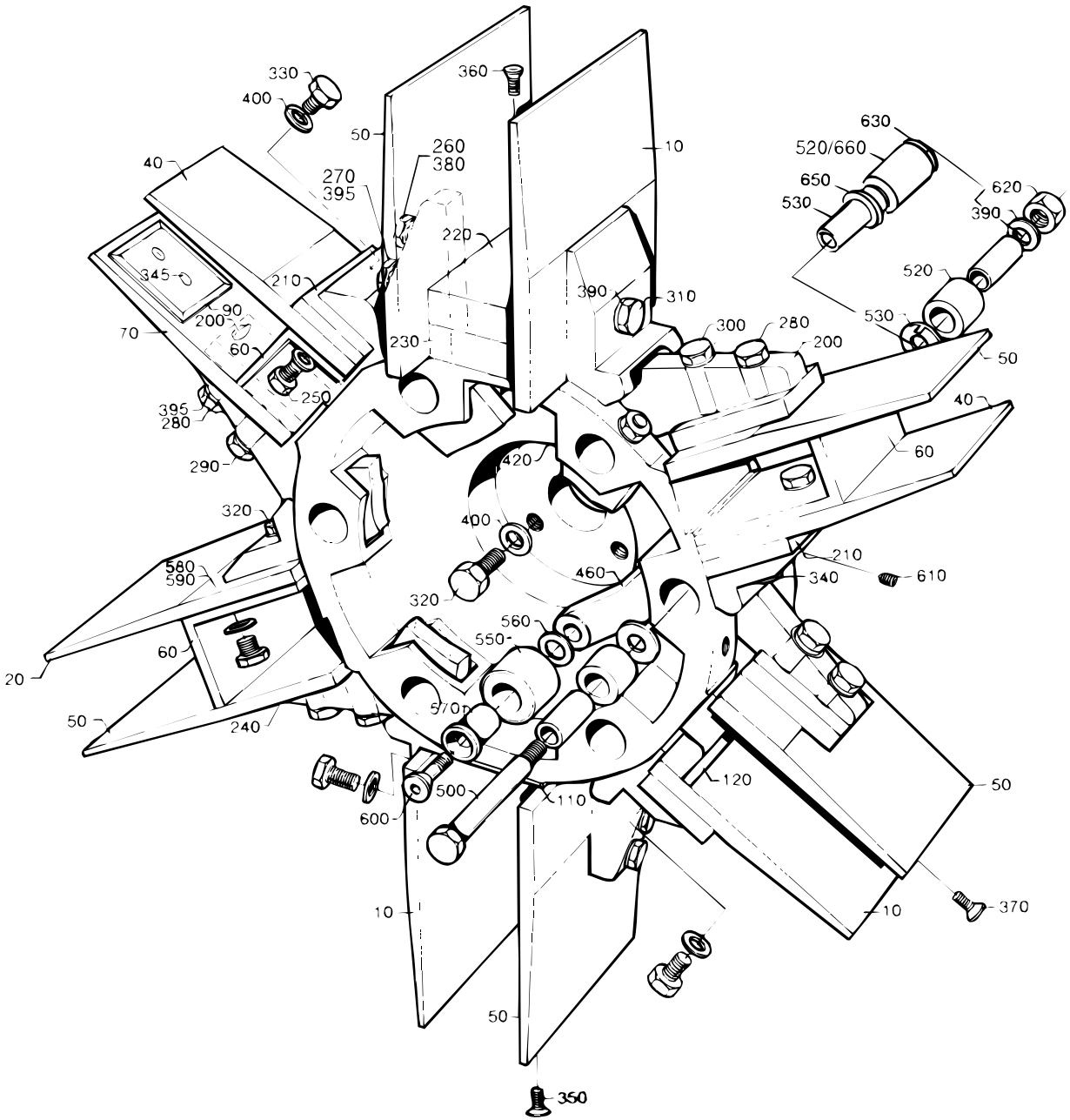

S-297681-2-3
ECN 19244

Pos	Part No	SP	UN	Qty	Description	Page No
0750B						
010	525453-0000	K		6	FLAP	
050	B 285310-0001	K		6	FLAP	
220	525264-0000	D		6	BOTTOM	
230	297650-0000	D		6	BOTTOM	
240	442981-0000	-		6	SHIM	
260	312105-0374	F		6	SCREW M6S ISO 4017 M6X30 A280	
270	312105-0376	F		6	SCREW M6S ISO 4017 M6X35 A280	
310	312105-0453	F		6	SCREW M6S ISO 4017 M8X25 A280	
320	312105-0457	F		3	SCREW O4017 M8X35A280	
360	312155-0376	F		18	SCREW MF6S DIN 7991 M6X35 A280	
380	315105-0153	F		12	WASHER BRB6,4X12RFR	
390	315105-0165	F		30	WASHER BRB8,4X16RFR	
400	315115-0165	F		3	WASHER TBRB8,4X16RFR	
420	525450-0000	D		1	HUB	
460	565967-0000	K		6	ARM	
510	262179-0001	K		12	PIN	
520	525329-0000	K		12	SLEEVE	
610	312109-0459	K		2	SCREW M6S ISO 4017 M8X40 A280	
620	312605-0318	-		18	NUT M6M8RFR	
650	321111-0185	K		24	FLANGE BUS 14E7X14	
0750S						
010	525454-0000	-		6	FLAP	
050	544252-0000	K		6	FLAP	
110	544254-0000	D		6	PLATE	
200	543697-0000	-		6	SPACER PIECE	
210	525460-0000	-		6	SPACER PIECE	
270	312105-0376	F		6	SCREW M6S ISO 4017 M6X35 A280	
280	312105-0378	F		6	SCREW O4017 M6X40A280	
315	312105-0455	F		6	SCREW M6S ISO 4017 M8X30 A280	
320	312105-0457	F		3	SCREW O4017 M8X35A280	
350	312155-0368	F		6	SCREW MF6S DIN7991 M6X16 A280	
380	315105-0153	F		12	WASHER BRB6,4X12RFR	
390	315105-0165	F		30	WASHER BRB8,4X16RFR	
400	315115-0165	F		3	WASHER TBRB8,4X16RFR	
420	525448-0000	D		1	HUB	
460	565967-0000	K		6	ARM	
510	262179-0001	K		12	PIN	
520	525329-0000	K		12	SLEEVE	
610	312109-0459	K		2	SCREW M6S ISO 4017 M8X40 A280	
620	312605-0318	-		18	NUT M6M8RFR	
650	321111-0185	K		24	FLANGE BUS 14E7X14	
Common parts						
500	262028-0001	K		6	FITTING BOLT	
530	525330-0000	K		12	SHAFT	
550	285321-0000	K		6	ROLL	
560	285322-0000	K		6	WASHER	
570	442563-0000	K		6	AXLE PIN	
580	442894-0000	-		x	SHIM	
590	442939-0000	-		x	SHIM	
600	312155-0499	-		6	SCREW MF6S DIN 7991 M10X40 A280	
630	315105-0173	-		12	WASHER BRB10,5X22RFR	
1000B HIFIN						
010	525453-0000	K		6	FLAP	
050	B 285310-0001	K		6	FLAP	
110	525063-0000	D		6	BOTTOM	
260	312105-0374	F		6	SCREW M6S ISO 4017 M6X30 A280	
270	312105-0376	F		6	SCREW M6S ISO 4017 M6X35 A280	
310	312105-0453	F		6	SCREW M6S ISO 4017 M8X25 A280	
320	312105-0457	F		3	SCREW O4017 M8X35A280	
350	312155-0368	F		6	SCREW MF6S DIN7991 M6X16 A280	
380	315105-0153	F		12	WASHER BRB6,4X12RFR	
390	315105-0165	F		30	WASHER BRB8,4X16RFR	
400	315115-0165	F		3	WASHER TBRB8,4X16RFR	
420	525450-0000	D		1	HUB	
460	565967-0000	K		6	ARM	
510	262179-0001	K		12	PIN	
520	525329-0000	K		12	SLEEVE	
610	312109-0459	K		2	SCREW M6S ISO 4017 M8X40 A280	
620	312605-0318	-		18	NUT M6M8RFR	
650	321111-0185	K		24	FLANGE BUS 14E7X14	
1000S						
010	569117-0000	K		6	FLAP	
050	569118-0000	K		6	FLAP	
110	569119-0000	D		6	BOTTOM	
270	312105-0376	F		6	SCREW M6S ISO 4017 M6X35 A280	
280	312105-0378	F		6	SCREW O4017 M6X40A280	
310	312105-0453	F		6	SCREW M6S ISO 4017 M8X25 A280	
350	312155-0368	F		6	SCREW MF6S DIN7991 M6X16 A280	
390	315105-0165	F		30	WASHER BRB8,4X16RFR	
395	315115-0153	F		12	WASHER TBRB6,4X12RFR	
420	525446-0000	D		1	HUB	
460	565967-0000	K		6	ARM	
510	262179-0001	K		12	PIN	
520	525329-0000	K		12	SLEEVE	
610	312109-0459	K		2	SCREW M6S ISO 4017 M8X40 A280	

WHEEL

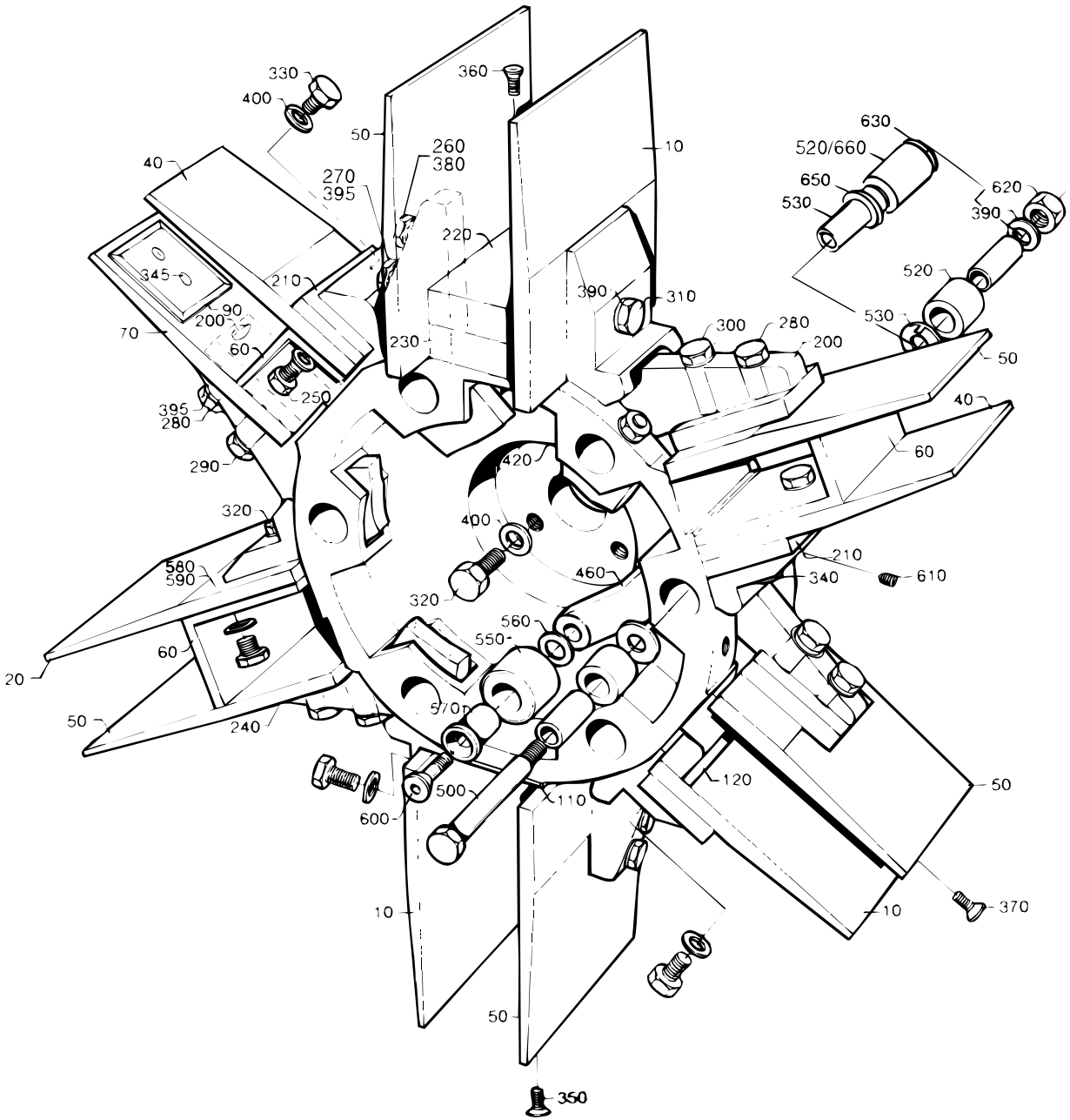

S-297681-2-3
ECN 19244

Pos	Part No	SP	UN	Qty	Description	Page No
620	312605-0318	-		18	NUT M6M8RFR	
650	321111-0185	K		24	FLANGE BUS 14E7X14	
1055B						
010	525452-0000	K		6	FLAP	
050	B 443116-0000	K		6	FLAP	
110	443076-0000	D		6	BOTTOM	
260	312105-0374	F		6	SCREW M6S ISO 4017 M6X30 A280	
270	312105-0376	F		6	SCREW M6S ISO 4017 M6X35 A280	
310	312105-0453	F		6	SCREW M6S ISO 4017 M8X25 A280	
320	312105-0457	F		3	SCREW O4017 M8X35A280	
350	312155-0368	F		6	SCREW MF6S DIN7991 M6X16 A280	
380	315105-0153	F		12	WASHER BRB6,4X12RFR	
390	315105-0165	F		30	WASHER BRB8,4X16RFR	
400	315115-0165	F		3	WASHER TBRB8,4X16RFR	
420	525448-0000	D		1	HUB	
460	565967-0000	K		6	ARM	
510	262179-0001	K		12	PIN	
520	525329-0000	K		12	SLEEVE	
610	312109-0459	K		2	SCREW M6S ISO 4017 M8X40 A280	
620	312605-0318	-		18	NUT M6M8RFR	
650	321111-0185	K		24	FLANGE BUS 14E7X14	
1136B						
010	525451-0000	K		6	FLAP	
050	550149-0000	K		6	FLAP	
110	550235-0000	D		6	BOTTOM	
260	312105-0374	F		6	SCREW M6S ISO 4017 M6X30 A280	
270	312105-0376	F		6	SCREW M6S ISO 4017 M6X35 A280	
310	312105-0453	F		6	SCREW M6S ISO 4017 M8X25 A280	
320	312105-0457	F		3	SCREW O4017 M8X35A280	
350	312155-0368	F		6	SCREW MF6S DIN7991 M6X16 A280	
380	315105-0153	F		12	WASHER BRB6,4X12RFR	
390	315105-0165	F		30	WASHER BRB8,4X16RFR	
400	315115-0165	F		3	WASHER TBRB8,4X16RFR	
420	525446-0000	D		1	HUB	
460	565967-0000	K		6	ARM	
510	262179-0001	K		12	PIN	
520	525329-0000	K		12	SLEEVE	
610	312109-0459	K		2	SCREW M6S ISO 4017 M8X40 A280	
620	312605-0318	-		18	NUT M6M8RFR	
650	321111-0185	K		24	FLANGE BUS 14E7X14	
1000B LOFIN						
010	525453-0000	K		6	FLAP	
050	B 285310-0001	K		6	FLAP	
110	443076-0000	D		6	BOTTOM	
260	312105-0374	F		6	SCREW M6S ISO 4017 M6X30 A280	
270	312105-0376	F		6	SCREW M6S ISO 4017 M6X35 A280	
310	312105-0453	F		6	SCREW M6S ISO 4017 M8X25 A280	
320	312105-0457	F		3	SCREW O4017 M8X35A280	
350	312155-0368	F		6	SCREW MF6S DIN7991 M6X16 A280	
380	315105-0153	F		12	WASHER BRB6,4X12RFR	
390	315105-0165	F		30	WASHER BRB8,4X16RFR	
400	315115-0165	F		3	WASHER TBRB8,4X16RFR	
420	525450-0000	D		1	HUB	
460	565967-0000	K		6	ARM	
510	262179-0001	K		12	PIN	
520	525329-0000	K		12	SLEEVE	
610	312109-0459	K		2	SCREW M6S ISO 4017 M8X40 A280	
620	312605-0318	-		18	NUT M6M8RFR	
650	321111-0185	K		24	FLANGE BUS 14E7X14	
1000SQ REVFIN						
010	574029-0000	K		6	FLAP	
050	574030-0000	-		6	FLAP	
110	574031-0000	D		6	BOTTOM	
260	312105-0372	F		6	SCREW M6S ISO 4017 M6X25 A280	
270	312105-0376	F		6	SCREW M6S ISO 4017 M6X35 A280	
310	312105-0451	F		6	SCREW M6S ISO 4017 8X20 A280	
320	312105-0457	F		3	SCREW O4017 M8X35A280	
350	312155-0364	F		6	SCREW MF6S6X10RFR	
380	315105-0153	F		6	WASHER BRB6,4X12RFR	
390	315105-0165	F		12	WASHER BRB8,4X16RFR	
395	315115-0153	F		6	WASHER TBRB6,4X12RFR	
400	315115-0165	F		3	WASHER TBRB8,4X16RFR	
420	574026-0000	D		1	HUB	
460	574028-0000	K		6	ARM	
610	312318-0455	-		2	STOP SCREW SK6SS8X30RFR	
620	312605-0318	-		6	NUT M6M8RFR	
650	321111-0185	K		12	FLANGE BUS 14E7X14	
660	90240-0233	K		12	BUSHING	

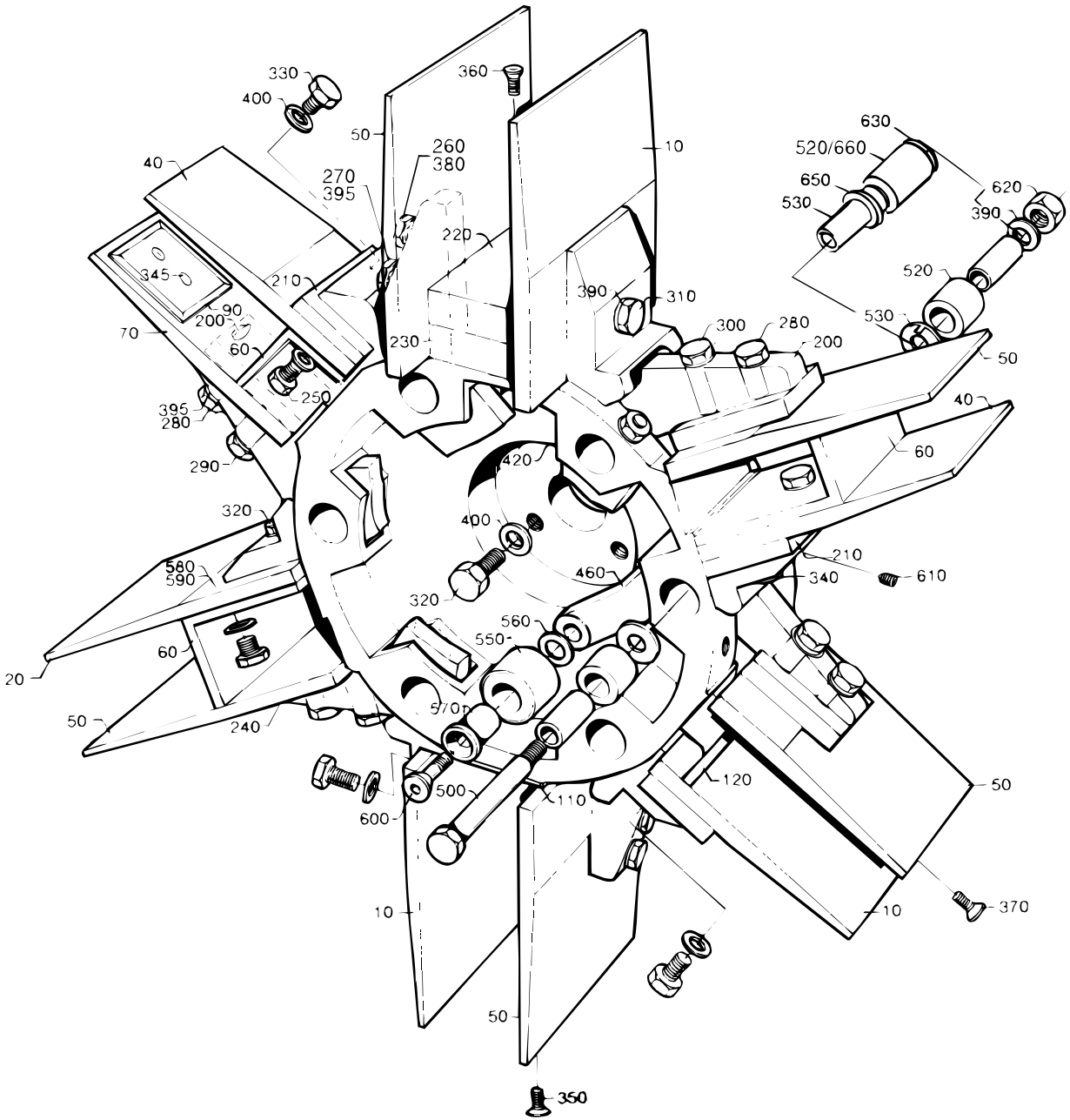

S-297681-2-3
ECN 19244

Pos	Part No	SP	UN	Qty	Description	Page No
1000SQ NORMFIN						
010	574029-0000	K		6	FLAP	
050	574030-0000	-		6	FLAP	
110	574031-0000	D		6	BOTTOM	
260	312105-0372	F		6	SCREW M6S ISO 4017 M6X25 A280	
270	312105-0376	F		6	SCREW M6S ISO 4017 M6X35 A280	
310	312105-0451	F		6	SCREW M6S ISO 4017 8X20 A280	
320	312105-0457	F		3	SCREW O4017 M8X35A280	
350	312155-0364	F		6	SCREW MF6S6X10RFR	
380	315105-0153	F		6	WASHER BRB6,4X12RFR	
390	315105-0165	F		12	WASHER BRB8,4X16RFR	
395	315115-0153	F		6	WASHER TBRB6,4X12RFR	
400	315115-0165	F		3	WASHER TBRB8,4X16RFR	
420	574026-0000	D		1	HUB	
460	574028-0000	K		6	ARM	
610	312109-0459	K		2	SCREW M6S ISO 4017 M8X40 A280	
620	312605-0318	-		6	NUT M6M8RFR	
650	321111-0185	K		12	FLANGE BUS 14E7X14	
660	90240-0233	K		12	BUSHING	

Pos	Part No	SP	UN	Qty	Description	Page No

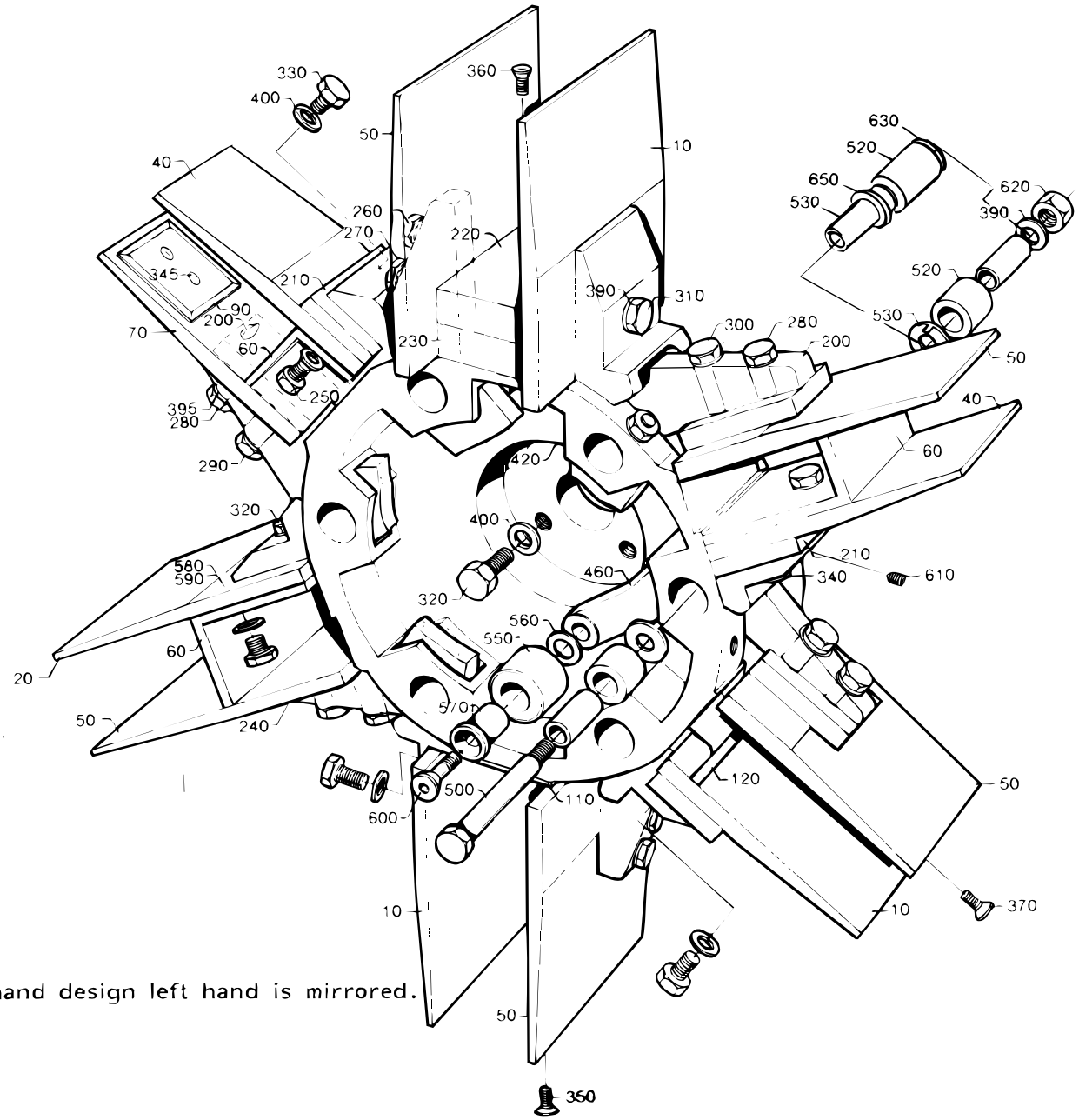

The Illustration shows right hand design left hand is mirrored.

S-297682-2
ECN 14031

Pos	Part No	SP	UN	Qty	Description	Page No
0300B						
040	525459-0000	K		6	FLAP	
060	525373-0000	D		6	BOTTOM	
070	297646-0000	K		6	FLAP	
200	285316-0002	K		6	SPACER PIECE	
210	525461-0000	K		6	SPACER PIECE	
250	312105-0368	F		6	SCREW M6S ISO 4017 M6X16 A280	
280	312105-0378	F		6	SCREW O4017 M6X40A280	
290	312105-0379	F		6	SCREW M6S ISO 4014 M6X45 A280	
320	312105-0457	F		3	SCREW O4017 M8X35A280	
330	312105-0459	F		6	SCREW O4017 M8X40A280	
380	315105-0153	F		12	WASHER BRB6,4X12RFR	
390	315105-0165	F		24	WASHER BRB8,4X16RFR	
395	315115-0153	F		6	WASHER TBRB6,4X12RFR	
400	315115-0165	F		9	WASHER TBRB8,4X16RFR	
420	525449-0000	D		1	HUB	
460	565967-0000	K		6	ARM	
510	262179-0001	K		12	PIN	
520	525329-0000	K		12	SLEEVE	
610	312109-0459	K		2	SCREW M6S ISO 4017 M8X40 A280	
620	312605-0318	-		18	NUT M6M8RFR	
650	321111-0185	K		24	FLANGE BUS 14E7X14	
0355B						
010	525458-0000	K		6	FLAP	
050	B 285310-0002	K		6	FLAP	
120	525371-0000	D		6	BOTTOM	
200	285316-0002	K		6	SPACER PIECE	
210	525461-0000	K		6	SPACER PIECE	
250	312105-0368	F		6	SCREW M6S ISO 4017 M6X16 A280	
280	312105-0378	F		6	SCREW O4017 M6X40A280	
290	312105-0379	F		6	SCREW M6S ISO 4014 M6X45 A280	
320	312105-0457	F		9	SCREW O4017 M8X35A280	
380	315105-0153	F		12	WASHER BRB6,4X12RFR	
390	315105-0165	F		24	WASHER BRB8,4X16RFR	
395	315115-0153	F		6	WASHER TBRB6,4X12RFR	
400	315115-0165	F		9	WASHER TBRB8,4X16RFR	
420	525449-0000	D		1	HUB	
460	565967-0000	K		6	ARM	
510	262179-0001	K		12	PIN	
520	525329-0000	K		12	SLEEVE	
610	312109-0459	K		2	SCREW M6S ISO 4017 M8X40 A280	
620	312605-0318	-		18	NUT M6M8RFR	
650	321111-0185	K		24	FLANGE BUS 14E7X14	

Pos	Part No	SP	UN	Qty	Description	Page No
0375S						
040	525430-0000	-		6	FLAP	
060	525372-0000	-		6	BOTTOM	
070	297646-0000	K		6	FLAP	
200	285316-0002	K		6	SPACER PIECE	
210	525461-0000	K		6	SPACER PIECE	
250	312105-0368	F		12	SCREW M6S ISO 4017 M6X16 A280	
280	312105-0378	F		6	SCREW O4017 M6X40A280	
290	312105-0379	F		6	SCREW M6S ISO 4014 M6X45 A280	
320	312105-0457	F		3	SCREW O4017 M8X35A280	
330	312105-0459	F		6	SCREW O4017 M8X40A280	
380	315105-0153	F		18	WASHER BRB6,4X12RFR	
390	315105-0165	F		24	WASHER BRB8,4X16RFR	
395	315115-0153	F		6	WASHER TBRB6,4X12RFR	
400	315115-0165	F		9	WASHER TBRB8,4X16RFR	
420	525449-0000	D		1	HUB	
460	565967-0000	K		6	ARM	
510	262179-0001	K		12	PIN	
520	525329-0000	K		12	SLEEVE	
610	312109-0459	K		2	SCREW M6S ISO 4017 M8X40 A280	
620	312605-0318	-		18	NUT M6M8RFR	
650	321111-0185	K		24	FLANGE BUS 14E7X14	
0400B						
010	574684-0000	K		6	FLAP	
050	B 285310-0002	K		6	FLAP	
120	574683-0000	D		6	BOTTOM	
200	285316-0002	K		6	SPACER PIECE	
210	525461-0000	K		6	SPACER PIECE	
250	312105-0368	F		12	SCREW M6S ISO 4017 M6X16 A280	
280	312105-0378	F		6	SCREW O4017 M6X40A280	
290	312105-0379	F		6	SCREW M6S ISO 4014 M6X45 A280	
320	312105-0457	F		9	SCREW O4017 M8X35A280	
380	315105-0153	F		18	WASHER BRB6,4X12RFR	
390	315105-0165	F		24	WASHER BRB8,4X16RFR	
395	315115-0153	F		6	WASHER TBRB6,4X12RFR	
400	315115-0165	F		9	WASHER TBRB8,4X16RFR	
420	525449-0000	D		1	HUB	
460	565967-0000	K		6	ARM	
510	262179-0001	K		12	PIN	
520	525329-0000	K		12	SLEEVE	
610	312109-0459	K		2	SCREW M6S ISO 4017 M8X40 A280	
620	312605-0318	-		18	NUT M6M8RFR	
650	321111-0185	K		24	FLANGE BUS 14E7X14	

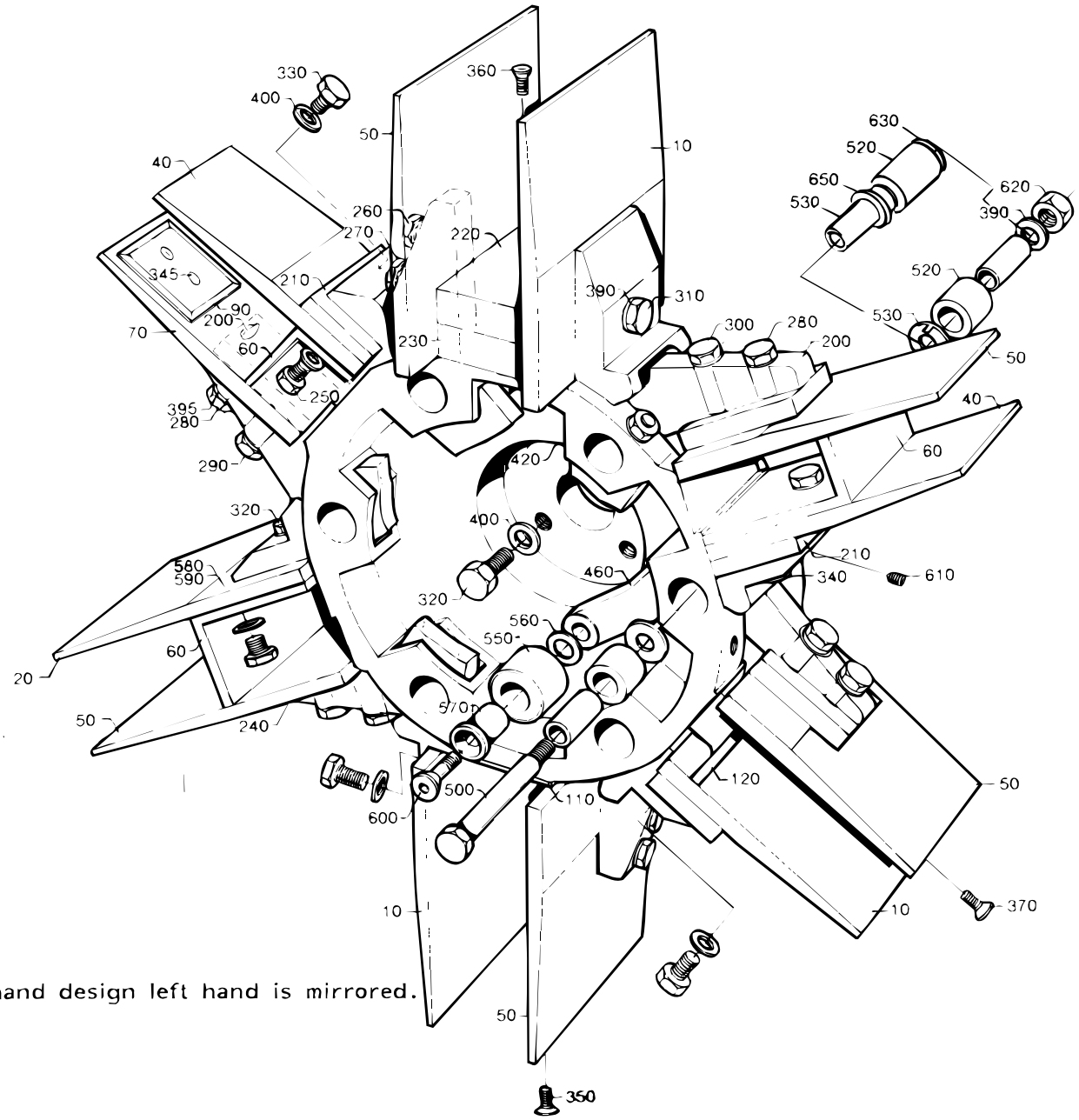

The Illustration shows right hand design left hand is mirrored.

S-297682-2
ECN 14031

Pos	Part No	SP	UN	Qty	Description	Page No
0500B						
020	525455-0000	K		6	FLAP	
050	B 285310-0001	K		6	FLAP	
060	525369-0000	D		6	BOTTOM	
240	442981-0000	-		6	SHIM	
250	312105-0368	F		6	SCREW M6S ISO 4017 M6X16 A280	
260	312105-0374	-		6	SCREW M6S ISO 4017 M6X30 A280	
280	312105-0378	F		6	SCREW O4017 M6X40A280	
320	312105-0457	F		9	SCREW O4017 M8X35A280	
380	315105-0153	F		18	WASHER BRB6,4X12RFR	
390	315105-0165	F		24	WASHER BRB8,4X16RFR	
400	315115-0165	F		9	WASHER TBRB8,4X16RFR	
420	525449-0000	D		1	HUB	
460	565967-0000	K		6	ARM	
510	262179-0001	K		12	PIN	
520	525329-0000	K		12	SLEEVE	
610	312109-0459	K		2	SCREW M6S ISO 4017 M8X40 A280	
620	312605-0318	-		18	NUT M6M8RFR	
650	321111-0185	K		24	FLANGE BUS 14E7X14	
0500S						
010	525456-0000	K		6	FLAP	
050	B 285310-0002	K		6	FLAP	
120	525370-0000	D		6	BOTTOM	
200	285316-0002	K		6	SPACER PIECE	
210	525461-0000	K		6	SPACER PIECE	
280	312105-0378	F		6	SCREW O4017 M6X40A280	
290	312105-0379	F		6	SCREW M6S ISO 4014 M6X45 A280	
320	312105-0457	F		9	SCREW O4017 M8X35A280	
370	312155-0378	F		6	SCREW MF6S DIN 7991 M6X40 A280	
380	315105-0153	F		12	WASHER BRB6,4X12RFR	
390	315105-0165	F		24	WASHER BRB8,4X16RFR	
395	315115-0153	F		6	WASHER TBRB6,4X12RFR	
400	315115-0165	F		9	WASHER TBRB8,4X16RFR	
420	525449-0000	D		1	HUB	
460	565967-0000	K		6	ARM	
510	262179-0001	K		12	PIN	
520	525329-0000	K		12	SLEEVE	
610	312109-0459	K		2	SCREW M6S ISO 4017 M8X40 A280	
620	312605-0318	-		18	NUT M6M8RFR	
650	321111-0185	K		24	FLANGE BUS 14E7X14	
0500SQ						
010	574029-0000	K		6	FLAP	
050	574030-0000	K		6	FLAP	
060	583449-0000	D		6	BOTTOM	
130	583454-0000	-		6	SUPPORT	
140	583631-0000	-		6	BOTTOM PANEL	
260	312105-0372	F		6	SCREW M6S ISO 4017 M6X25 A280	
350	312155-0368	F		6	SCREW MF6S DIN7991 M6X16 A280	
380	315105-0153	F		6	WASHER BRB6,4X12RFR	
390	315105-0165	F		18	WASHER BRB8,4X16RFR	
395	315115-0153	F		6	WASHER TBRB6,4X12RFR	
400	315115-0165	F		3	WASHER TBRB8,4X16RFR	
420	574027-0000	D		1	HUB	
460	574028-0000	K		6	ARM	
610	312109-0459	K		8	SCREW M6S ISO 4017 M8X40 A280	
620	312605-0318	-		12	NUT M6M8RFR	
650	321111-0185	K		12	FLANGE BUS 14E7X14	
660	90240-0233	K		12	BUSHING	
0568B						
020	525455-0000	K		6	FLAP	
050	B 285310-0001	K		6	FLAP	
060	525368-0000	D		6	BOTTOM	
240	442981-0000	-		6	SHIM	
250	312105-0368	F		6	SCREW M6S ISO 4017 M6X16 A280	
260	312105-0374	-		6	SCREW M6S ISO 4017 M6X30 A280	
280	312105-0378	F		6	SCREW O4017 M6X40A280	
320	312105-0457	F		9	SCREW O4017 M8X35A280	
380	315105-0153	F		18	WASHER BRB6,4X12RFR	
390	315105-0165	F		24	WASHER BRB8,4X16RFR	
400	315115-0165	F		9	WASHER TBRB8,4X16RFR	
420	525449-0000	D		1	HUB	
460	565967-0000	K		6	ARM	
510	262179-0001	K		12	PIN	
520	525329-0000	K		12	SLEEVE	
610	312109-0459	K		2	SCREW M6S ISO 4017 M8X40 A280	
620	312605-0318	-		18	NUT M6M8RFR	
650	321111-0185	K		24	FLANGE BUS 14E7X14	

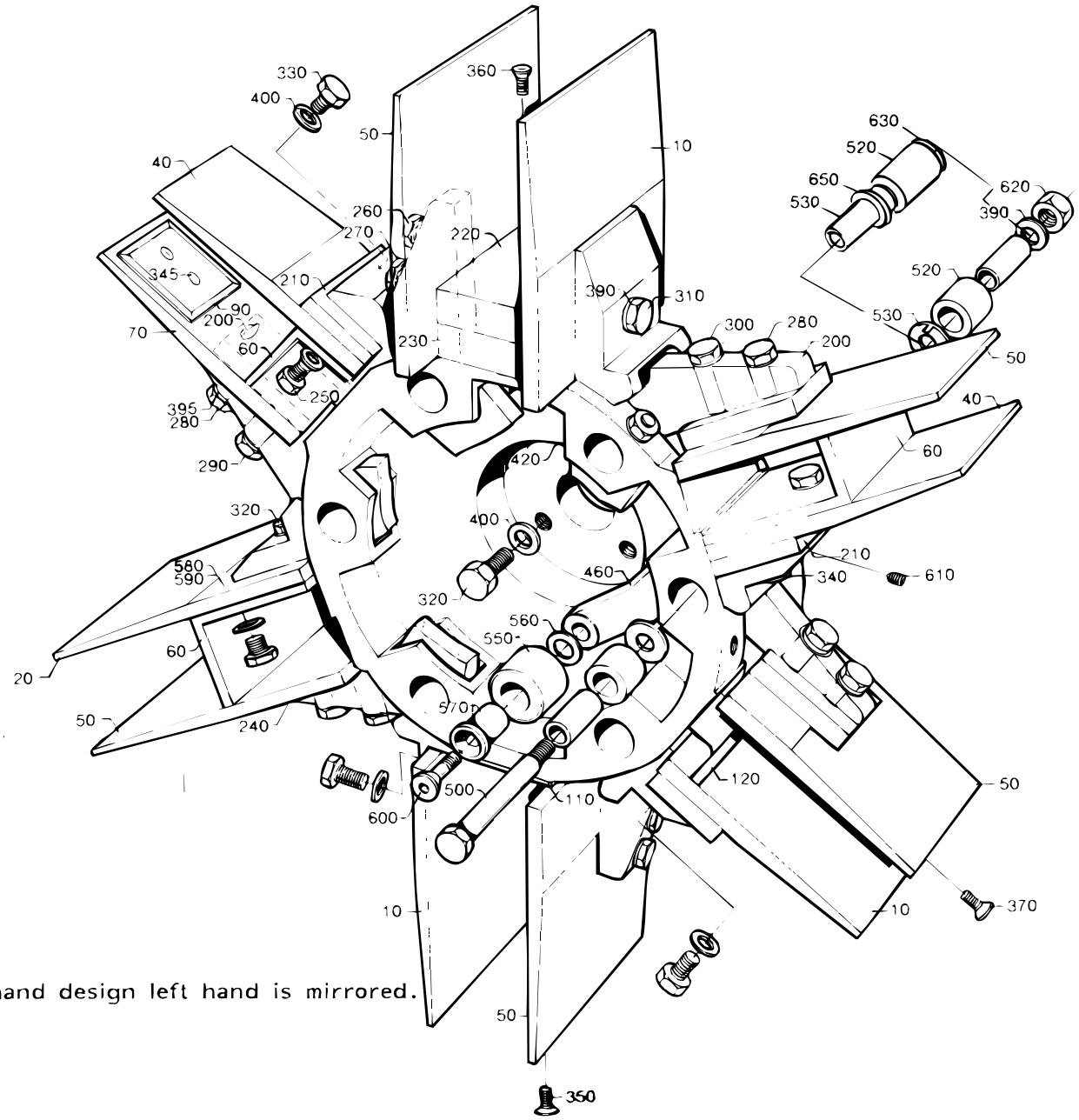

The Illustration shows right hand design left hand is mirrored.

S-297682-2
ECN 14031

Pos	Part No	SP	UN	Qty	Description	Page No
0750B						
010	525453-0000	K		6	FLAP	
050	B 285310-0001	K		6	FLAP	
220	525264-0000	D		6	BOTTOM	
230	297650-0000	D		6	BOTTOM	
240	442981-0000	-		6	SHIM	
260	312105-0374	-		6	SCREW M6S ISO 4017 M6X30 A280	
270	312105-0376	F		6	SCREW M6S ISO 4017 M6X35 A280	
310	312105-0453	F		6	SCREW M6S ISO 4017 M8X25 A280	
320	312105-0457	F		3	SCREW O4017 M8X35A280	
360	312155-0376	F		18	SCREW MF6S DIN 7991 M6X35 A280	
380	315105-0153	F		12	WASHER BRB6,4X12RFR	
390	315105-0165	F		30	WASHER BRB8,4X16RFR	
400	315115-0165	F		3	WASHER TBRB8,4X16RFR	
420	525449-0000	D		1	HUB	
460	565967-0000	K		6	ARM	
510	262179-0001	K		12	PIN	
520	525329-0000	K		12	SLEEVE	
610	312109-0459	K		2	SCREW M6S ISO 4017 M8X40 A280	
620	312605-0318	-		18	NUT M6M8RFR	
650	321111-0185	K		24	FLANGE BUS 14E7X14	
0750S						
010	525454-0000	-		6	FLAP	
050	544252-0000	-		6	FLAP	
110	544254-0000	D		6	PLATE	
200	543697-0000	-		6	SPACER PIECE	
210	525460-0000	-		6	SPACER PIECE	
270	312105-0376	F		6	SCREW M6S ISO 4017 M6X35 A280	
280	312105-0378	F		6	SCREW O4017 M6X40A280	
315	312105-0455	F		6	SCREW M6S ISO 4017 M8X30 A280	
320	312105-0457	F		3	SCREW O4017 M8X35A280	
350	312155-0368	F		6	SCREW MF6S DIN7991 M6X16 A280	
380	315105-0153	F		12	WASHER BRB6,4X12RFR	
390	315105-0165	F		30	WASHER BRB8,4X16RFR	
400	315115-0165	F		3	WASHER TBRB8,4X16RFR	
420	525447-0000	D		1	HUB	
460	565967-0000	K		6	ARM	
510	262179-0001	K		12	PIN	
520	525329-0000	K		12	SLEEVE	
610	312109-0459	K		2	SCREW M6S ISO 4017 M8X40 A280	
620	312605-0318	-		18	NUT M6M8RFR	
650	321111-0185	K		24	FLANGE BUS 14E7X14	
Common parts						
500	262028-0001	K		6	FITTING BOLT	
530	525330-0000	K		12	SHAFT	
550	285321-0000	K		6	ROLL	
560	285322-0000	K		6	WASHER	
570	442563-0000	K		6	AXLE PIN	
580	442894-0000	-		x	SHIM	
590	442939-0000	-		x	SHIM	
600	312155-0499	-		6	SCREW MF6S DIN 7991 M10X40 A280	
630	315105-0173	-		12	WASHER BRB10,5X22RFR	
1000B HIFIN						
010	525453-0000	K		6	FLAP	
050	B 285310-0001	K		6	FLAP	
110	525063-0000	D		6	BOTTOM	
260	312105-0374	-		6	SCREW M6S ISO 4017 M6X30 A280	
270	312105-0376	F		6	SCREW M6S ISO 4017 M6X35 A280	
310	312105-0453	F		6	SCREW M6S ISO 4017 M8X25 A280	
320	312105-0457	F		3	SCREW O4017 M8X35A280	
350	312155-0368	F		6	SCREW MF6S DIN7991 M6X16 A280	
380	315105-0153	F		12	WASHER BRB6,4X12RFR	
390	315105-0165	F		30	WASHER BRB8,4X16RFR	
400	315115-0165	F		3	WASHER TBRB8,4X16RFR	
420	525449-0000	D		1	HUB	
460	565967-0000	K		6	ARM	
510	262179-0001	K		12	PIN	
520	525329-0000	K		12	SLEEVE	
610	312109-0459	K		2	SCREW M6S ISO 4017 M8X40 A280	
620	312605-0318	-		18	NUT M6M8RFR	
650	321111-0185	K		24	FLANGE BUS 14E7X14	
1000S						
010	569117-0000	K		6	FLAP	
050	569118-0000	K		6	FLAP	
110	569119-0000	D		6	BOTTOM	
270	312105-0376	F		6	SCREW M6S ISO 4017 M6X35 A280	
280	312105-0378	F		6	SCREW O4017 M6X40A280	
310	312105-0453	F		6	SCREW M6S ISO 4017 M8X25 A280	
390	315105-0165	F		30	WASHER BRB8,4X16RFR	
395	315115-0153	F		12	WASHER TBRB6,4X12RFR	
420	525445-0000	D		1	HUB	
460	565967-0000	K		6	ARM	
510	262179-0001	K		12	PIN	
520	525329-0000	K		12	SLEEVE	
610	312109-0459	K		2	SCREW M6S ISO 4017 M8X40 A280	
620	312605-0318	-		18	NUT M6M8RFR	

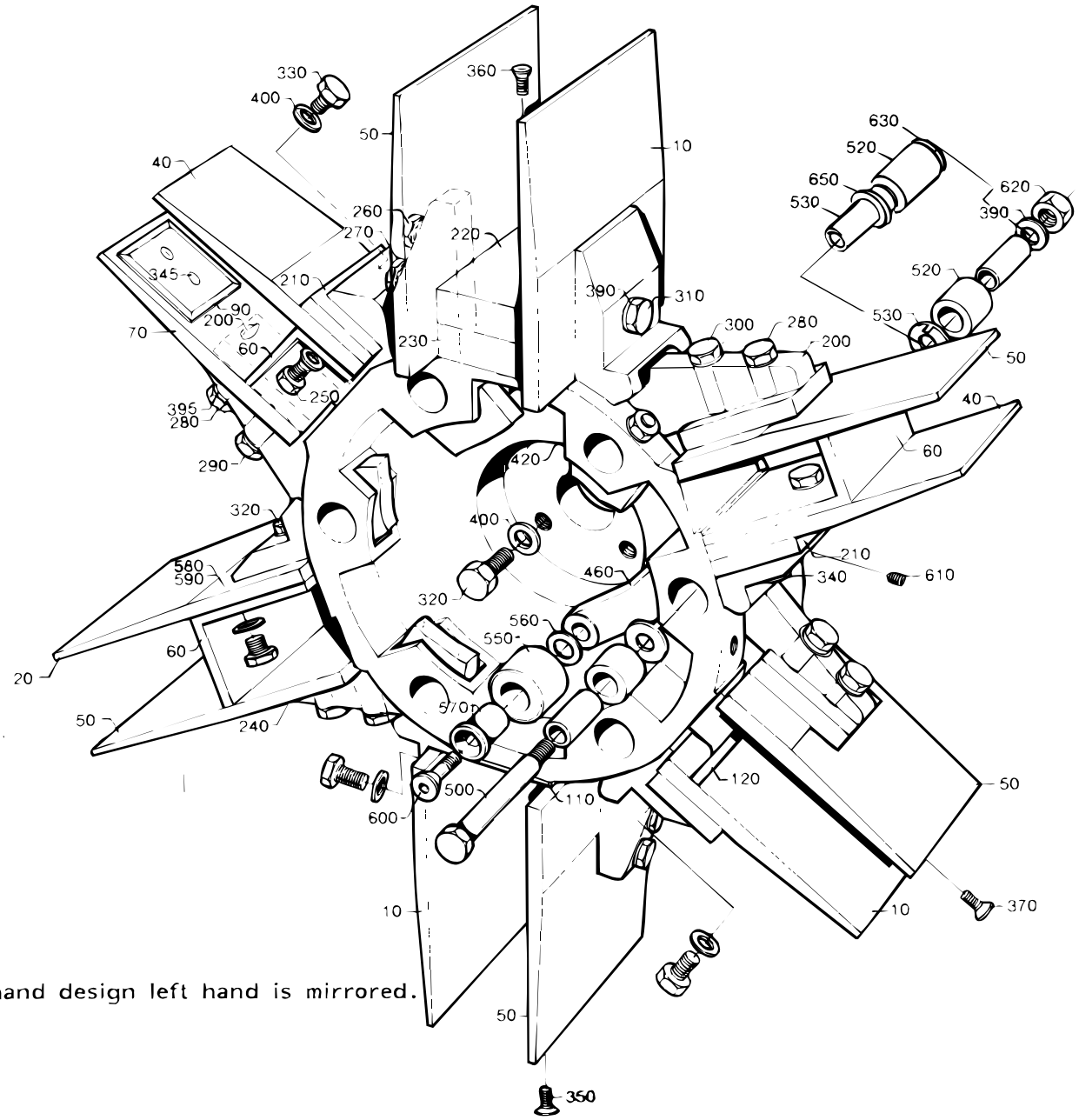

The Illustration shows right hand design left hand is mirrored.

S-297682-2
ECN 14031

Pos	Part No	SP	UN	Qty	Description	Page No
650	321111-0185	K		24	FLANGE BUS 14E7X14	
1055B						
010	525452-0000	K		6	FLAP	
050	B 443116-0000	K		6	FLAP	
110	443076-0000	D		6	BOTTOM	
260	312105-0374	-		6	SCREW M6S ISO 4017 M6X30 A280	
270	312105-0376	F		6	SCREW M6S ISO 4017 M6X35 A280	
310	312105-0453	F		6	SCREW M6S ISO 4017 M8X25 A280	
320	312105-0457	F		3	SCREW O4017 M8X35A280	
350	312155-0368	F		6	SCREW MF6S DIN7991 M6X16 A280	
380	315105-0153	F		12	WASHER BRB6,4X12RFR	
390	315105-0165	F		30	WASHER BRB8,4X16RFR	
400	315115-0165	F		3	WASHER TBRB8,4X16RFR	
420	525447-0000	D		1	HUB	
460	565967-0000	K		6	ARM	
510	262179-0001	K		12	PIN	
520	525329-0000	K		12	SLEEVE	
610	312109-0459	K		2	SCREW M6S ISO 4017 M8X40 A280	
620	312605-0318	-		18	NUT M6M8RFR	
650	321111-0185	K		24	FLANGE BUS 14E7X14	
1136B						
010	525451-0000	K		6	FLAP	
050	550149-0000	K		6	FLAP	
110	550235-0000	D		6	BOTTOM	
260	312105-0374	-		6	SCREW M6S ISO 4017 M6X30 A280	
270	312105-0376	F		6	SCREW M6S ISO 4017 M6X35 A280	
310	312105-0453	F		6	SCREW M6S ISO 4017 M8X25 A280	
320	312105-0457	F		3	SCREW O4017 M8X35A280	
350	312155-0368	F		6	SCREW MF6S DIN7991 M6X16 A280	
380	315105-0153	F		12	WASHER BRB6,4X12RFR	
390	315105-0165	F		30	WASHER BRB8,4X16RFR	
400	315115-0165	F		3	WASHER TBRB8,4X16RFR	
420	525445-0000	D		1	HUB	
460	565967-0000	K		6	ARM	
510	262179-0001	K		12	PIN	
520	525329-0000	K		12	SLEEVE	
610	312109-0459	K		2	SCREW M6S ISO 4017 M8X40 A280	
620	312605-0318	-		18	NUT M6M8RFR	
650	321111-0185	K		24	FLANGE BUS 14E7X14	
1000B LOFIN						
010	525453-0000	K		6	FLAP	
050	B 285310-0001	K		6	FLAP	
110	443076-0000	D		6	BOTTOM	
260	312105-0374	-		6	SCREW M6S ISO 4017 M6X30 A280	
270	312105-0376	F		6	SCREW M6S ISO 4017 M6X35 A280	
310	312105-0453	F		6	SCREW M6S ISO 4017 M8X25 A280	
320	312105-0457	F		3	SCREW O4017 M8X35A280	
350	312155-0368	F		6	SCREW MF6S DIN7991 M6X16 A280	
380	315105-0153	F		12	WASHER BRB6,4X12RFR	
390	315105-0165	F		30	WASHER BRB8,4X16RFR	
400	315115-0165	F		3	WASHER TBRB8,4X16RFR	
420	525449-0000	D		1	HUB	
460	565967-0000	K		6	ARM	
510	262179-0001	K		12	PIN	
520	525329-0000	K		12	SLEEVE	
610	312109-0459	K		2	SCREW M6S ISO 4017 M8X40 A280	
620	312605-0318	-		18	NUT M6M8RFR	
650	321111-0185	K		24	FLANGE BUS 14E7X14	
1000SQ REVFIN						
010	574029-0000	K		6	FLAP	
050	574030-0000	K		6	FLAP	
110	574031-0000	K		6	BOTTOM	
260	312105-0372	F		6	SCREW M6S ISO 4017 M6X25 A280	
270	312105-0376	F		6	SCREW M6S ISO 4017 M6X35 A280	
310	312105-0451	F		6	SCREW M6S ISO 4017 8X20 A280	
350	312155-0364	F		6	SCREW MF6S6X10RFR	
380	315105-0153	F		6	WASHER BRB6,4X12RFR	
390	315105-0165	F		12	WASHER BRB8,4X16RFR	
395	315115-0153	F		6	WASHER TBRB6,4X12RFR	
400	315115-0165	F		3	WASHER TBRB8,4X16RFR	
420	574027-0000	D		1	HUB	
460	574028-0000	K		6	ARM	
610	312318-0455	-		2	STOP SCREW SK6SS8X30RFR	
620	312605-0318	-		6	NUT M6M8RFR	
650	321111-0185	K		12	FLANGE BUS 14E7X14	
660	90240-0233	K		12	BUSHING	

WHEEL

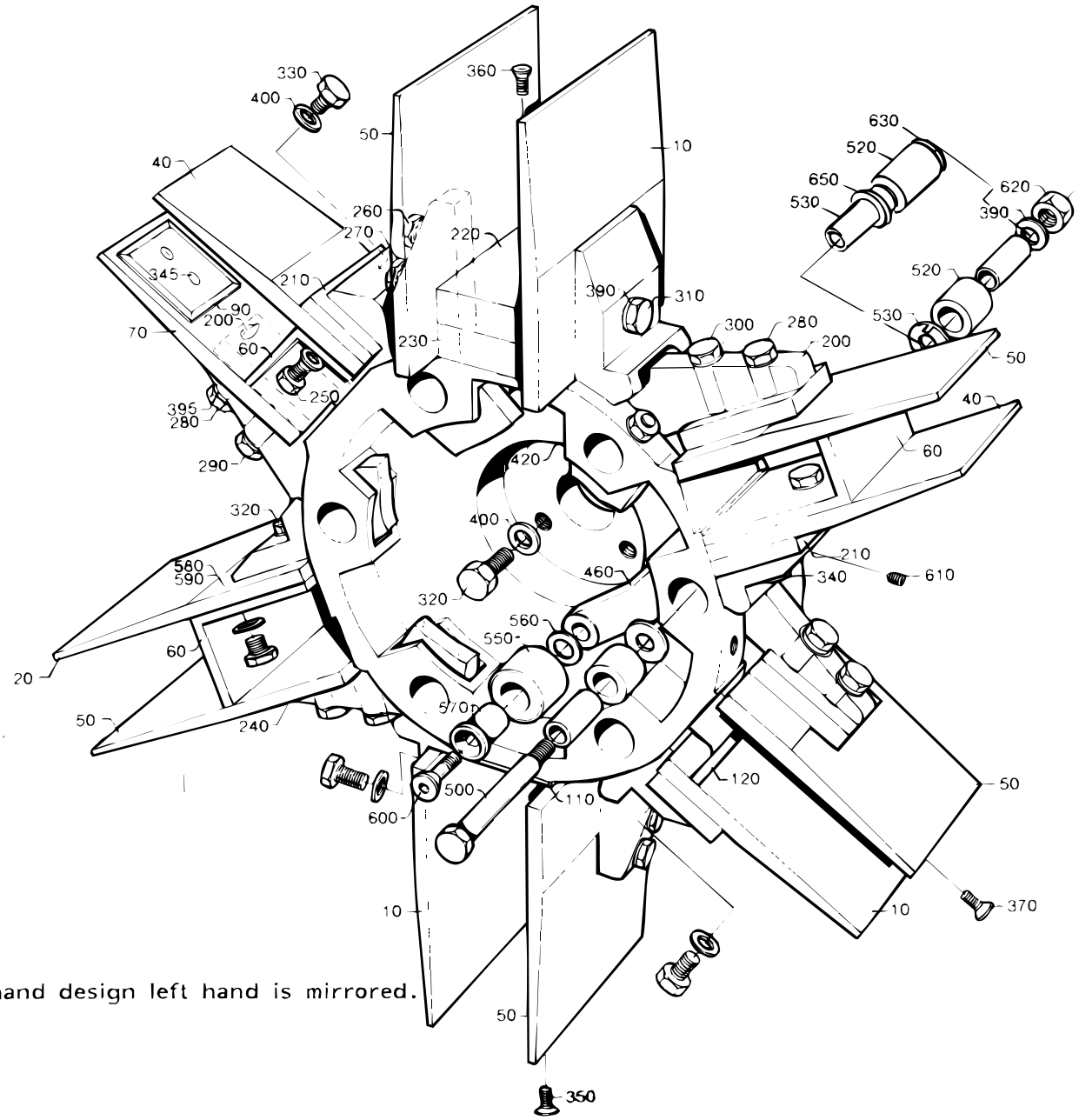

The Illustration shows right hand design left hand is mirrored.

S-297682-2
ECN 14031

Pos	Part No	SP	UN	Qty	Description	Page No
1000SQ NORMFIN						
010	574029-0000	K		6	FLAP	
050	574030-0000	K		6	FLAP	
110	574031-0000	K		6	BOTTOM	
260	312105-0372	F		6	SCREW M6S ISO 4017 M6X25 A280	
270	312105-0376	F		6	SCREW M6S ISO 4017 M6X35 A280	
310	312105-0451	F		6	SCREW M6S ISO 4017 8X20 A280	
350	312155-0364	F		6	SCREW MF6S6X10RFR	
380	315105-0153	F		6	WASHER BRB6,4X12RFR	
390	315105-0165	F		12	WASHER BRB8,4X16RFR	
395	315115-0153	F		6	WASHER TBRB6,4X12RFR	
400	315115-0165	F		3	WASHER TBRB8,4X16RFR	
420	574027-0000	D		1	HUB	
460	574028-0000	K		6	ARM	
610	312109-0459	K		2	SCREW M6S ISO 4017 M8X40 A280	
620	312605-0318	-		6	NUT M6M8RFR	
650	321111-0185	K		12	FLANGE BUS 14E7X14	
660	90240-0233	K		12	BUSHING	

Pos	Part No	SP	UN	Qty	Description	Page No

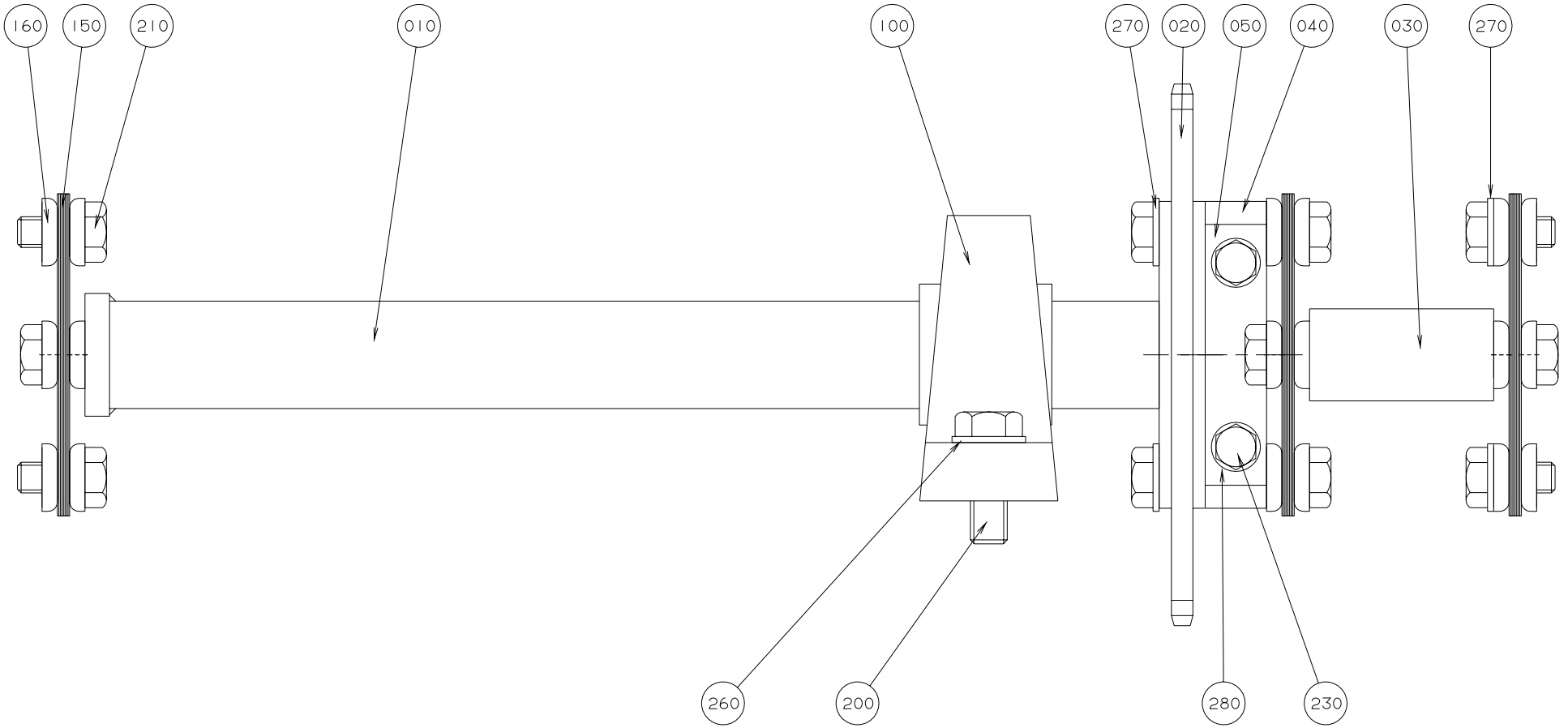
160
150
210
010
100
270
020
050
040
030
270
260
200
280
230

Pos	Part No	SP	UN	Qty	Description	Page No
-						
010	443175-0000	D		1	SHAFT	
020	443177-0000	D		1	SPROCKET	
030	443179-0000	-		1	SPACER	
040	443178-0000	D		1	BRACKET	
050	262275-0003	D		1	CAP	
100	90345-0038	-		1	BEARING HOUSING	
150	33261-0000	K		24	SPRING PLATE	
160	31553-0002	K		24	WASHER	
200	312105-0538	-		2	SCREW M6S ISO 4017 M12X35 A280	
210	90287-0164	-		14	SCREW	
230	90287-0165	-		2	SCREW	
260	315105-0178	-		2	WASHER BRB13X24RFR	
270	315105-0173	-		4	WASHER BRB10,5X22RFR	
280	315105-0165	-		2	WASHER BRB8,4X16RFR	

Pos	Part No	SP	UN	Qty	Description	Page No

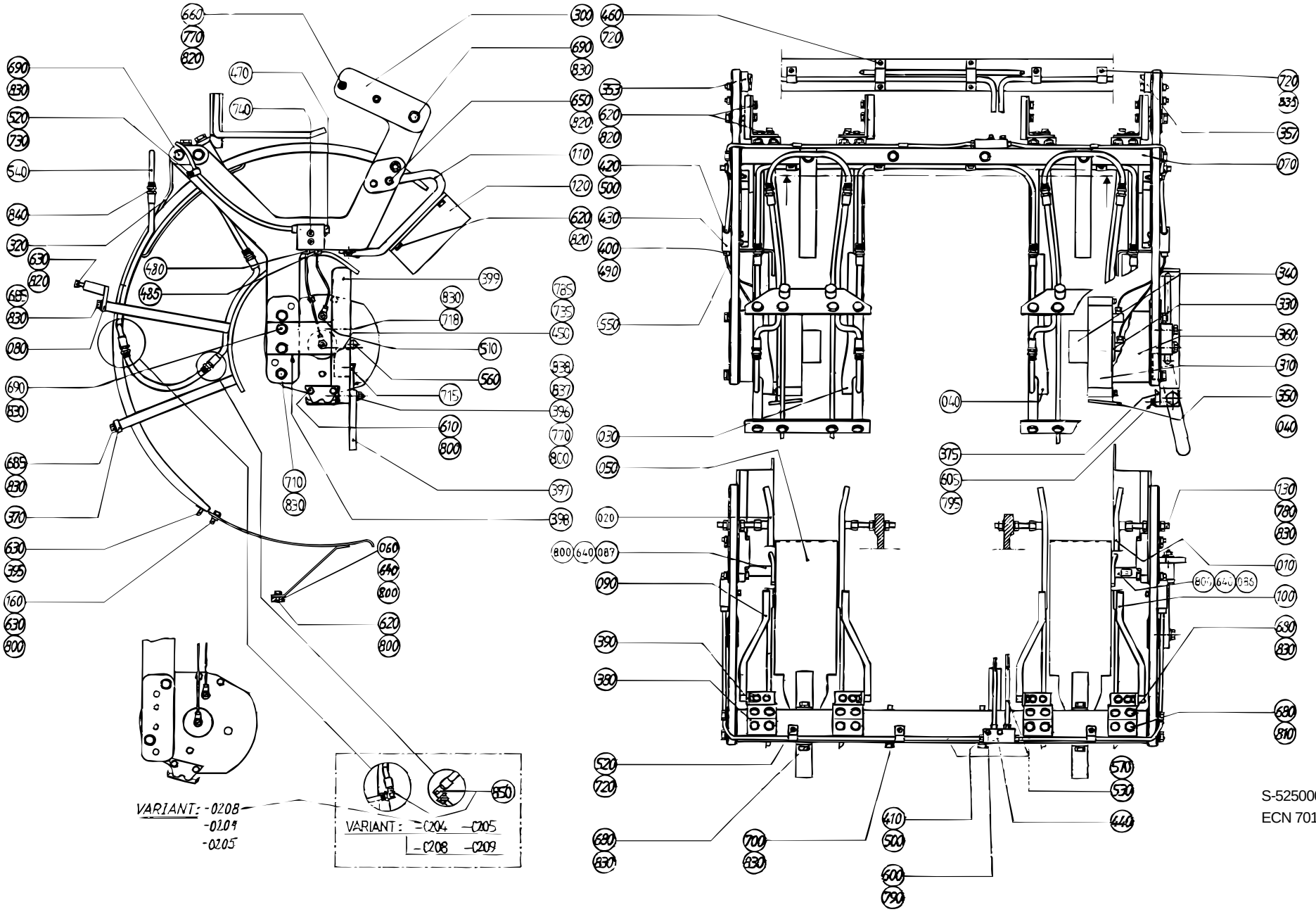
VARIANT: -0208
-0209
-0205
VARIANT: -0204 -0205
-0208 -0209
S-525000-2
ECN 70165

Pos	Part No	SP	UN	Qty	Description	Page No
0300B						
010	525002-0000	-		2	FOLDING BAR	
020	525004-0000	-		2	FOLDING BAR	
030	525005-0008	-		2	FOLDING BAR	
040	525006-0008	-		2	FOLDING BAR	
050	525341-0002	-		2	LEAD RAIL	
070	B 525007-0003	-		1	CANTILEVER	
080	525008-0002	-		2	BRACKET	
090	525180-0002	-		2	FOLDING ARM	
100	525179-0002	-		2	FOLDING ARM	
110	525011-0008	-		2	BRACKET	
120	525014-0002	-		2	COUNTER PLATE	
130	525015-0003	-		4	SCREW	
160	315115-0153	-		2	WASHER TBRB6,4X12RFR	
397	525295-0000	-		1	ARM	
399	B 525297-0000	-		1	BRACKET	
800	315105-0153	-		17	WASHER BRB6,4X12RFR	
840	342920-0121	-		8	STRAIGHT COUPLING,EXT.THREADED 8/6-R1/8"	
850	342930-0121	-		8	ELBOW 90 COUPL.,EXT.THREAD 8/6-R1/8"	
0355B						
010	525002-0000	-		2	FOLDING BAR	
020	525004-0000	-		2	FOLDING BAR	
030	525005-0009	-		2	FOLDING BAR	
040	525006-0009	-		2	FOLDING BAR	
050	525341-0002	-		2	LEAD RAIL	
070	B 525007-0002	-		1	CANTILEVER	
080	525008-0002	-		2	BRACKET	
090	525180-0002	-		2	FOLDING ARM	
100	525179-0002	-		2	FOLDING ARM	
110	525011-0009	-		2	BRACKET	
120	525182-0002	-		2	COUNTER PLATE	
130	525015-0002	-		4	SCREW	
160	315115-0153	-		2	WASHER TBRB6,4X12RFR	
397	525295-0000	-		1	ARM	
399	B 525297-0000	-		1	BRACKET	
800	315105-0153	-		17	WASHER BRB6,4X12RFR	
840	342920-0121	-		8	STRAIGHT COUPLING,EXT.THREADED 8/6-R1/8"	
850	342930-0121	-		8	ELBOW 90 COUPL.,EXT.THREAD 8/6-R1/8"	
0375S						
010	525002-0000	-		2	FOLDING BAR	
020	525004-0000	-		2	FOLDING BAR	
030	525005-0007	-		2	FOLDING BAR	
040	525006-0007	-		2	FOLDING BAR	
050	525341-0002	-		2	LEAD RAIL	
070	B 525007-0003	-		1	CANTILEVER	
080	525008-0002	-		2	BRACKET	
090	525180-0002	-		2	FOLDING ARM	
100	525179-0002	-		2	FOLDING ARM	
110	525011-0007	-		2	BRACKET	
120	525014-0001	-		2	COUNTER PLATE	
130	525015-0003	-		4	SCREW	
160	315115-0153	-		2	WASHER TBRB6,4X12RFR	
397	525295-0000	-		1	ARM	
399	B 525297-0000	-		1	BRACKET	
800	315105-0153	-		17	WASHER BRB6,4X12RFR	
840	342920-0121	-		16	STRAIGHT COUPLING,EXT.THREADED 8/6-R1/8"	
0400B						
010	525002-0000	-		2	FOLDING BAR	
020	525004-0000	-		2	FOLDING BAR	
030	525005-0010	-		2	FOLDING BAR	
040	525006-0010	-		2	FOLDING BAR	
050	525341-0002	-		2	LEAD RAIL	
070	B 525007-0002	-		1	CANTILEVER	
080	525008-0002	-		2	BRACKET	
090	525180-0002	-		2	FOLDING ARM	
100	525179-0002	-		2	FOLDING ARM	
110	525011-0010	-		2	BRACKET	
120	525182-0003	-		2	COUNTER PLATE	
130	525015-0002	-		4	SCREW	
397	525295-0000	-		1	ARM	
399	B 525297-0000	-		1	BRACKET	
800	315105-0153	-		17	WASHER BRB6,4X12RFR	
840	342920-0121	-		8	STRAIGHT COUPLING,EXT.THREADED 8/6-R1/8"	
850	342930-0121	-		8	ELBOW 90 COUPL.,EXT.THREAD 8/6-R1/8"	

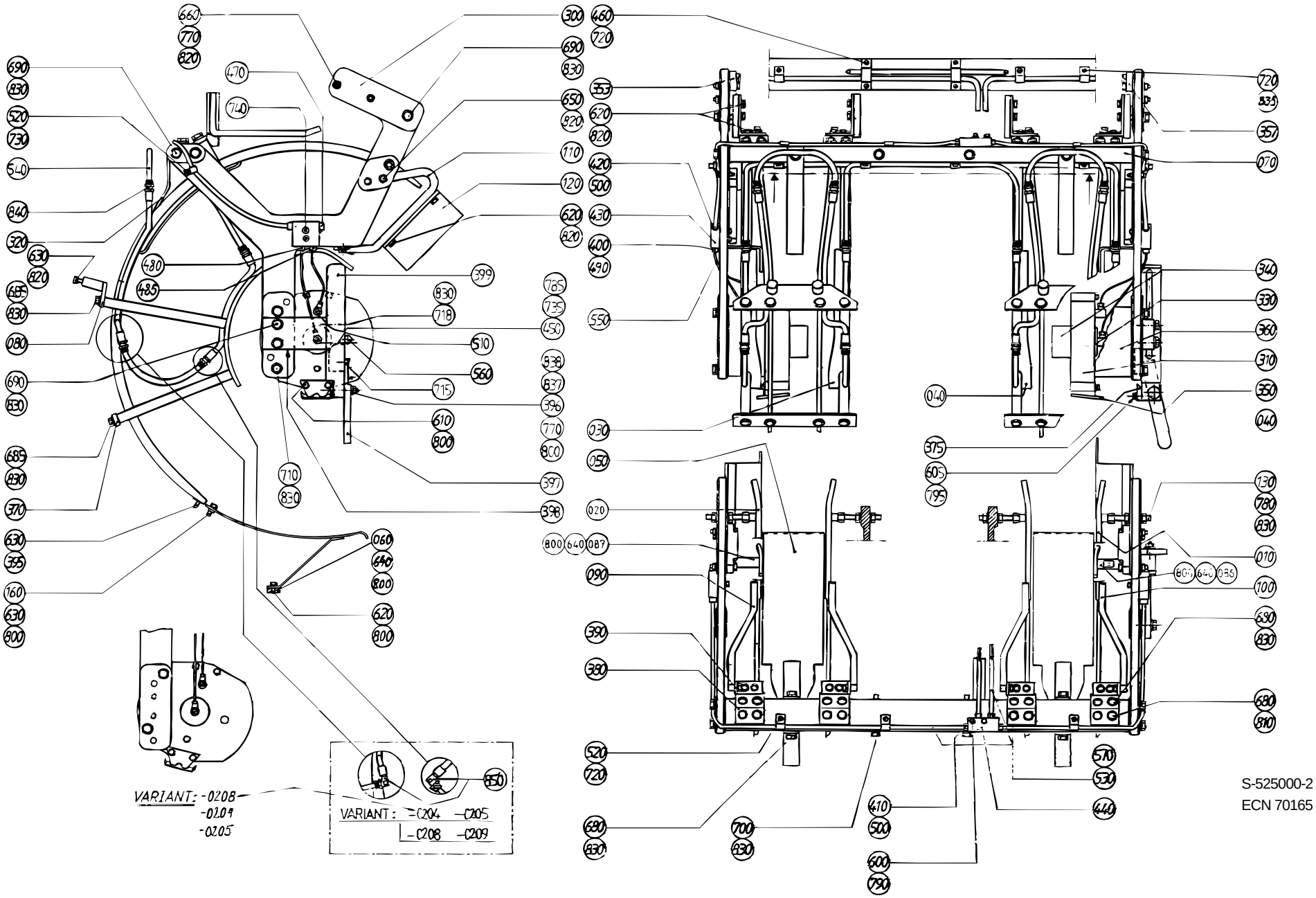
VARIANT: -0208
-0209
-0205
VARIANT: -0204 -0205
-0208 -0209
S-525000-2
ECN 70165

Pos	Part No	SP	UN	Qty	Description	Page No
0500B						
010	525001-0000	-		2	FOLDING BAR	
020	525003-0000	-		2	FOLDING BAR	
030	525005-0005	-		2	FOLDING BAR	
040	525006-0005	-		2	FOLDING BAR	
050	525341-0001	-		2	LEAD RAIL	
070	B 525007-0001	-		1	CANTILEVER	
080	525008-0003	-		2	BRACKET	
090	525180-0001	-		2	FOLDING ARM	
100	525179-0001	-		2	FOLDING ARM	
110	525011-0005	-		2	BRACKET	
120	525012-0005	-		2	COUNTER PLATE	
130	525015-0001	-		4	SCREW	
397	525295-0000	-		1	ARM	
399	B 525297-0000	-		1	BRACKET	
800	315105-0153	-		17	WASHER BRB6,4X12RFR	
840	342920-0121	-		8	STRAIGHT COUPLING,EXT.THREADED 8/6-R1/8"	
850	342930-0121	-		8	ELBOW 90 COUPL.,EXT.THREAD 8/6-R1/8"	
0500S						
010	525002-0000	-		2	FOLDING BAR	
020	525004-0000	-		2	FOLDING BAR	
030	525005-0006	-		2	FOLDING BAR	
040	525006-0006	-		2	FOLDING BAR	
050	525341-0002	-		2	LEAD RAIL	
070	B 525007-0002	-		1	CANTILEVER	
080	525008-0002	-		2	BRACKET	
090	525180-0002	-		2	FOLDING ARM	
100	525179-0002	-		2	FOLDING ARM	
110	525011-0006	-		2	BRACKET	
120	525182-0001	-		2	COUNTER PLATE	
130	525015-0002	-		4	SCREW	
160	315115-0153	-		2	WASHER TBRB6,4X12RFR	
397	525295-0000	-		1	ARM	
399	B 525297-0000	-		1	BRACKET	
800	315105-0153	-		17	WASHER BRB6,4X12RFR	
840	342920-0121	-		16	STRAIGHT COUPLING,EXT.THREADED 8/6-R1/8"	
0500SQ						
010	525001-0000	-		2	FOLDING BAR	
020	525003-0000	-		2	FOLDING BAR	
030	583453-0000	-		2	FOLDING BAR	
040	583458-0000	-		2	FOLDING BAR	
050	574047-0000	-		2	LEAD RAIL	
060	591085-0000	-		2	SPACER	
070	B 525007-0002	-		1	CANTILEVER	
080	525008-0001	-		2	BRACKET	
090	569122-0000	-		2	FOLDING ARM	
100	569123-0000	-		2	FOLDING ARM	
110	583456-0000	-		2	BRACKET	
120	583457-0000	-		2	COUNTER PLATE	
130	525015-0002	-		4	SCREW	
397	525295-0000	-		1	ARM	
399	B 525297-0000	-		1	BRACKET	
640	312105-0370	-		4	SCREW M6S ISO 4017 M6X20 A280	
800	315105-0153	-		19	WASHER BRB6,4X12RFR	
840	342920-0121	-		8	STRAIGHT COUPLING,EXT.THREADED 8/6-R1/8"	
850	342930-0121	-		8	ELBOW 90 COUPL.,EXT.THREAD 8/6-R1/8"	
0568B						
010	525001-0000	-		2	FOLDING BAR	
020	525003-0000	-		2	FOLDING BAR	
030	525005-0004	-		2	FOLDING BAR	
040	525006-0004	-		2	FOLDING BAR	
050	525341-0001	-		2	LEAD RAIL	
070	B 525007-0001	-		1	CANTILEVER	
080	525008-0002	-		2	BRACKET	
090	525180-0001	-		2	FOLDING ARM	
100	525179-0001	-		2	FOLDING ARM	
110	525011-0004	-		2	BRACKET	
120	525012-0004	-		2	COUNTER PLATE	
130	525015-0001	-		4	SCREW	
397	525295-0000	-		1	ARM	
399	B 525297-0000	-		1	BRACKET	
800	315105-0153	-		17	WASHER BRB6,4X12RFR	
840	342920-0121	-		8	STRAIGHT COUPLING,EXT.THREADED 8/6-R1/8"	
850	342930-0121	-		8	ELBOW 90 COUPL.,EXT.THREAD 8/6-R1/8"	

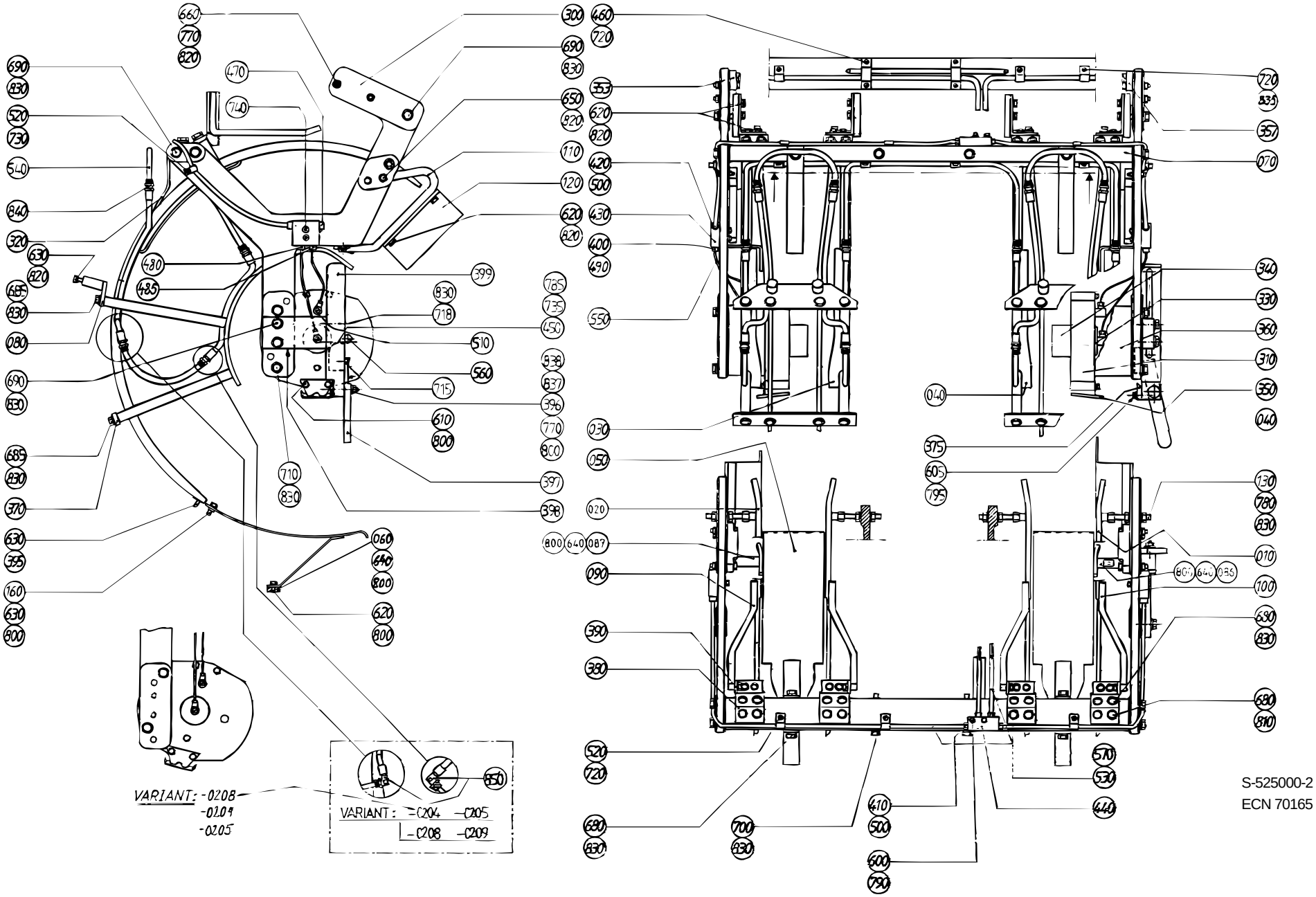
VARIANT: -0208
-0209
-0205
VARIANT: -0204 -0205
-0208 -0209
S-525000-2
ECN 70165

Pos	Part No	SP	UN	Qty	Description	Page No
0750B						
010	525001-0000	-		2	FOLDING BAR	
020	525003-0000	-		2	FOLDING BAR	
030	525005-0003	-		2	FOLDING BAR	
040	525006-0003	-		2	FOLDING BAR	
050	525341-0001	-		2	LEAD RAIL	
070	B 525007-0001	-		1	CANTILEVER	
080	525008-0002	-		2	BRACKET	
090	525180-0001	-		2	FOLDING ARM	
100	525179-0001	-		2	FOLDING ARM	
110	525011-0003	-		2	BRACKET	
120	525012-0003	-		2	COUNTER PLATE	
130	525015-0001	-		4	SCREW	
397	525295-0000	-		1	ARM	
399	B 525297-0000	-		1	BRACKET	
800	315105-0153	-		17	WASHER BRB6,4X12RFR	
840	342920-0121	-		16	STRAIGHT COUPLING,EXT.THREADED 8/6-	
R1/8"						
0750S						
010	525001-0000	-		2	FOLDING BAR	
020	525003-0000	-		2	FOLDING BAR	
030	525005-0001	-		2	FOLDING BAR	
040	525006-0001	-		2	FOLDING BAR	
050	525341-0001	-		2	LEAD RAIL	
070	525007-0004	-		1	CANTILEVER	
080	525008-0001	-		2	BRACKET	
090	525180-0002	-		2	FOLDING ARM	
100	525179-0002	-		2	FOLDING ARM	
110	525011-0002	-		2	BRACKET	
120	525438-0000	-		2	COUNTER PLATE	
130	525015-0002	-		4	SCREW	
397	525295-0000	-		1	ARM	
399	B 525297-0000	-		1	BRACKET	
800	315105-0153	-		17	WASHER BRB6,4X12RFR	
840	342920-0121	-		16	STRAIGHT COUPLING,EXT.THREADED 8/6-	
R1/8"						
Common parts						
300	B 525016-0000	-		2	FASTENING PLATE	
310	574050-0000	-		2	CURVE	
320	525017-0000	-		2	STEERING GUIDE	
330	285168-0000	-		2	BUSHING	
340	285851-0000	-		2	BEARING	
350	443240-0000	-		2	DRIP PLATE	
353	442564-0000	K		1	CURVE	
357	442565-0000	K		1	CURVE	
360	525018-0000	-		2	SPACER	
370	525019-0000	-		2	BRACKET	
375	525360-0000	-		1	BRACKET	
380	525340-0000	-		4	BRACKET	
390	525178-0000	-		4	BRACKET	
395	525181-0000	-		2	WASHER	
396	525321-0000	K		1	SCREW	
398	525296-0000	-		1	BRACKET	
400	90028-0020	-		4	CONE	
410	90028-0022	-		4	CONE	
420	90028-0025	-		2	CONE	
430	90032-0038	-		2	BLOCK	
440	90032-0044	-		1	JUNCTION BLOCK	
450	90044-0104	F		1	PROX.SWITCHIFM IN 3002	
460	90074-0018	-		2	CLIP	
470	90087-0019	-		2	PLUG	
480	90092-0052	-		2	VALVE	
485	90092-0053	-		2	VALVE	
490	90134-0039	-		4	BUSHING	
500	90134-0055	-		6	BUSHING	
510	90134-0058	-		4	BANJO CONNECTION	
520	90165-0057	-		5	CLIP	
530	90166-0108	-	MM	5200	HOSE	
540	90166-0122	-	MM	6000	HOSE	
550	90166-0143	-	MM	2000	HOSE	
560	90261-0032	-		4	PLUG	
570	90134-0030	-		6	SLEEVE	
600	312105-0295	-		2	SCREW M6S ISO 4017 M4X20 A280	
605	312105-0327	-		2	SCREW M6S ISO 4017 M5X12 A280	
610	312105-0364	-		10	SCREW M6S6X10RFR	
620	312105-0366	-		24	SCREW M6S ISO 4017 M6X12 A280	
630	312105-0368	-		10	SCREW M6S ISO 4017 M6X16 A280	
650	312105-0374	-		4	SCREW M6S ISO 4017 M6X30 A280	
660	312105-0378	-		4	SCREW O4017 M6X40A280	
680	312105-0449	-		20	SCREW M6S ISO 4017 M8X16 A280	
685	312105-0451	-		16	SCREW M6S ISO 4017 8X20 A280	
690	312105-0455	-		8	SCREW M6S ISO 4017 M8X30 A280	
700	312105-0464	-		2	SCREW M6S ISO 4014 M8X65 A280	
710	312105-0469	-		4	SCREW M6S ISO 4014 M8X90 A280	
715	312115-0323	-		1	SCREW MC6S ISO 4762 M5X8 A280	
718	312115-0455	-		2	SCREW MC6S ISO 4762 M8X30 A280	

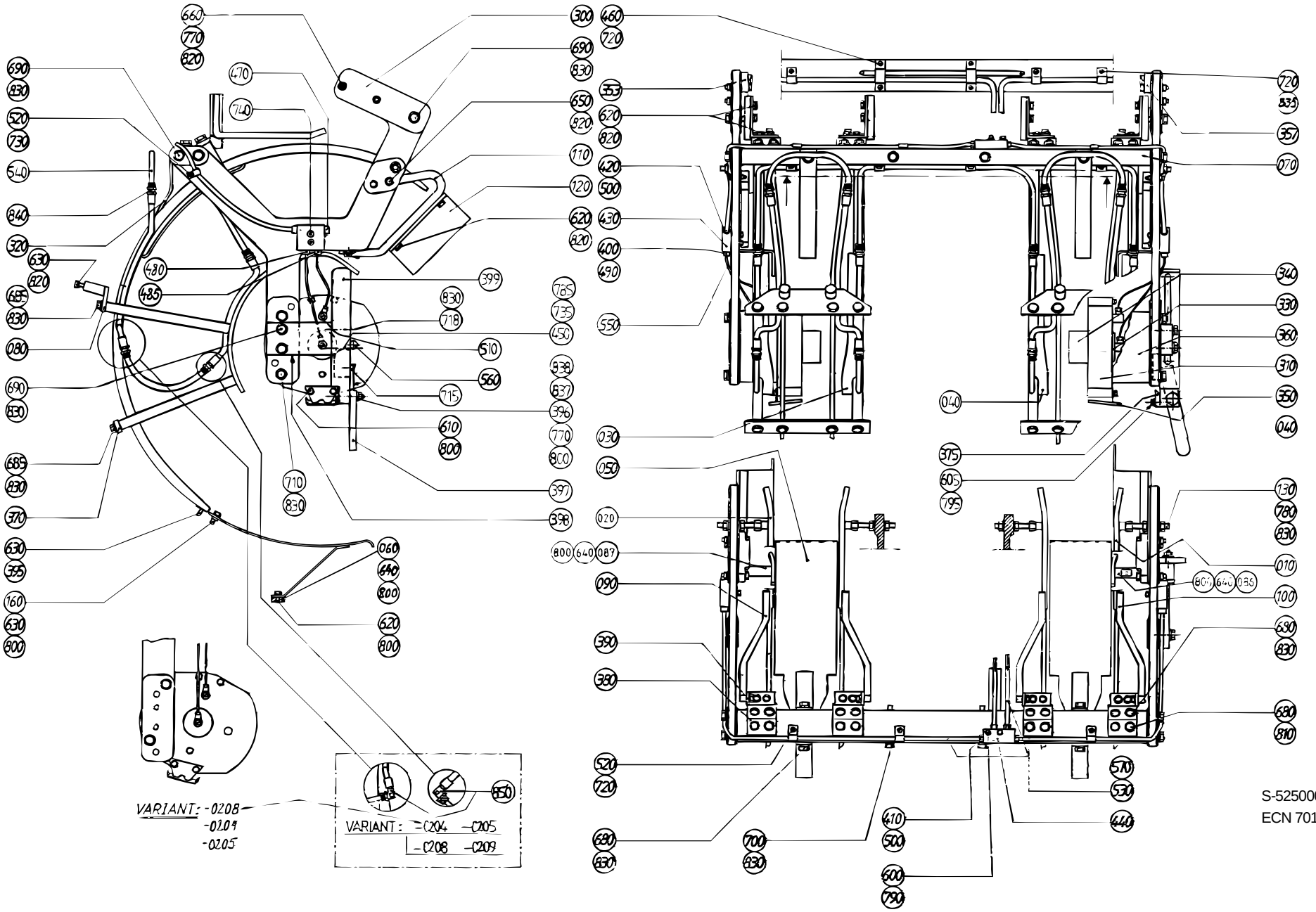
VARIANT: -0208
-0209
-0205
VARIANT: -0204 -0205
-0208 -0209
S-525000-2
ECN 70165

Pos	Part No	SP	UN	Qty	Description	Page No
720	312125-0287	-		10	SLOTTED CHEESE HEAD ISO 1207 M4X8	
RFR						
730	312125-0291	-		2	SLOTTED CHEESE HEAD ISO 1207 M4X12	
RFR						
735	312125-0230	-		2	SLOTTED CHEESE HEAD ISO 1207 M3X20	
RFR						
740	312155-0297	-		4	SCREW MF6S DIN 7991 M4X25 A280	
770	312605-0316	-		5	NUT M6M6RFR	
780	312605-0318	-		8	NUT M6M8RFR	
785	315105-0124	-		2	WASHER BRB3,2X6RFR	
790	315105-0136	-		2	WASHER BRB4,3X8RFR	
795	315105-0146	-		2	WASHER BRB5,3X10RFR	
810	315105-0165	-		8	WASHER BRB8,4X16RFR	
820	315115-0153	-		40	WASHER TBRB6,4X12RFR	
830	315115-0165	-		52	WASHER TBRB8,4X16RFR	
835	316810-0106	-		3	PIPE CLAMP 8MM RFR	
837	321116-0127	K		1	BUSHING 10E7/14X10	
838	321116-0128	K		1	BUSHING 10E7/14X16	
1000B						
010	525001-0000	-		2	FOLDING BAR	
020	525003-0000	-		2	FOLDING BAR	
030	525005-0002	-		2	FOLDING BAR	
040	525006-0002	-		2	FOLDING BAR	
050	525341-0001	-		2	LEAD RAIL	
070	B 525007-0001	-		1	CANTILEVER	
080	525008-0001	-		2	BRACKET	
090	525180-0001	-		2	FOLDING ARM	
100	525179-0001	-		2	FOLDING ARM	
110	525011-0002	-		2	BRACKET	
120	525012-0002	-		2	COUNTER PLATE	
130	525015-0001	-		4	SCREW	
397	525295-0000	-		1	ARM	
399	B 525297-0000	-		1	BRACKET	
800	315105-0153	-		17	WASHER BRB6,4X12RFR	
840	342920-0121	-		16	STRAIGHT COUPLING,EXT.THREADED 8/6-	
R1/8"						
1000S						
010	525001-0000	-		2	FOLDING BAR	
020	525003-0000	-		2	FOLDING BAR	
030	569120-0000	-		2	FOLDING BAR	
040	569121-0000	-		2	FOLDING BAR	
050	525410-0000	-		2	LEAD RAIL	
070	B 525007-0001	-		1	CANTILEVER	
080	525008-0001	-		2	BRACKET	
086	573486-0000	-		1	STEERING	
087	573487-0000	-		1	STEERING	
090	569122-0000	-		2	FOLDING ARM	
100	569123-0000	-		2	FOLDING ARM	
110	573485-0000	-		2	BRACKET	
120	525012-0001	-		2	COUNTER PLATE	
130	525015-0001	-		4	SCREW	
397	550359-0000	-		1	ARM	
399	B 525297-0000	-		1	BRACKET	
640	312105-0370	-		2	SCREW M6S ISO 4017 M6X20 A280	
800	315105-0153	-		19	WASHER BRB6,4X12RFR	
840	342920-0121	-		16	STRAIGHT COUPLING,EXT.THREADED 8/6-	
R1/8"						
1055B						
010	525001-0000	-		2	FOLDING BAR	
020	525003-0000	-		2	FOLDING BAR	
030	525005-0001	-		2	FOLDING BAR	
040	525006-0001	-		2	FOLDING BAR	
050	525341-0001	-		2	LEAD RAIL	
070	B 525007-0001	-		1	CANTILEVER	
080	525008-0001	-		2	BRACKET	
090	525180-0001	-		2	FOLDING ARM	
100	525179-0001	-		2	FOLDING ARM	
110	525011-0001	-		2	BRACKET	
120	525012-0001	-		2	COUNTER PLATE	
130	525015-0001	-		4	SCREW	
397	525295-0000	-		1	ARM	
399	B 525297-0000	-		1	BRACKET	
800	315105-0153	-		17	WASHER BRB6,4X12RFR	
840	342920-0121	-		16	STRAIGHT COUPLING,EXT.THREADED 8/6-	
R1/8"						
1136B						
010	525001-0000	-		2	FOLDING BAR	
020	525003-0000	-		2	FOLDING BAR	
030	548397-0000	-		2	FOLDING BAR	
040	548398-0000	-		2	FOLDING BAR	
050	525410-0000	-		2	LEAD RAIL	
070	B 525007-0001	-		1	CANTILEVER	
080	525008-0001	-		2	BRACKET	
090	525180-0001	-		2	FOLDING ARM	
100	525179-0001	-		2	FOLDING ARM	
110	525011-0001	-		2	BRACKET	

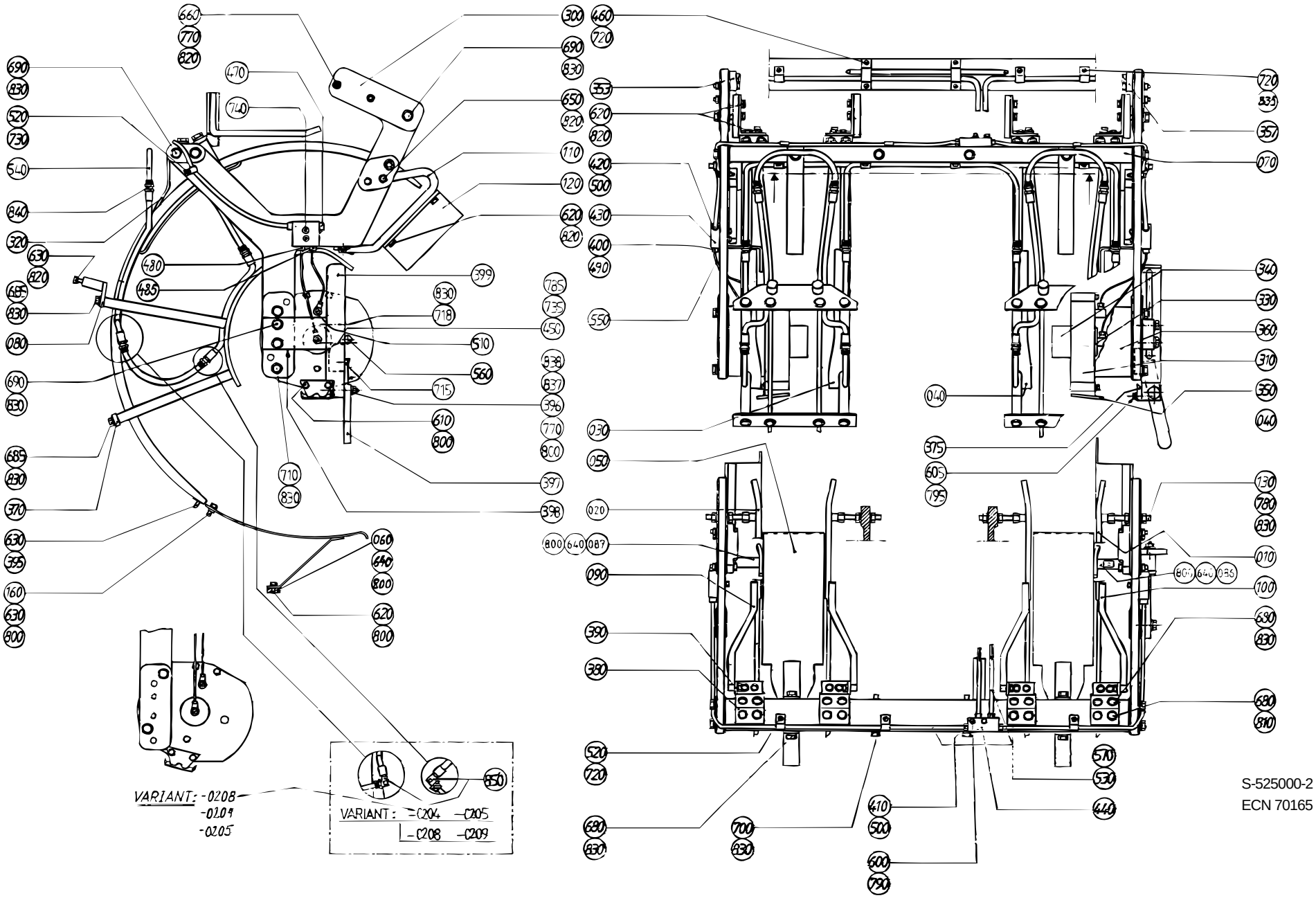
VARIANT: -0208
-0209
-0205
VARIANT: -0204 -0205
-0208 -0209
S-525000-2
ECN 70165

Pos	Part No	SP	UN	Qty	Description	Page No
120	525012-0001	-		2	COUNTER PLATE	
130	525015-0001	-		4	SCREW	
397	550359-0000	-		1	ARM	
399	B 525297-0000	-		1	BRACKET	
800	315105-0153	-		17	WASHER BRB6,4X12RFR	
840	342920-0121	-		16	STRAIGHT COUPLING,EXT.THREADED 8/6-R1/8"	
1000SQ REVFIN						
010	525001-0000	-		2	FOLDING BAR	
020	525003-0000	-		2	FOLDING BAR	
030	1143020-0000	X		2	FOLDING BAR	
040	1143021-0000	X		2	FOLDING BAR	
050	574047-0000	-		2	LEAD RAIL	
070	B 525007-0002	-		1	CANTILEVER	
080	525008-0001	-		2	BRACKET	
086	574097-0000	X		1	STEERING	
087	574098-0000	X		1	STEERING	
090	569122-0000	-		2	FOLDING ARM	
100	569123-0000	-		2	FOLDING ARM	
110	574048-0000	-		2	BRACKET	
120	574049-0000	-		2	COUNTER PLATE	
130	525015-0002	-		4	SCREW	
397	550359-0000	-		1	ARM	
399	574125-0000	-		1	BRACKET	
640	312105-0370	-		2	SCREW M6S ISO 4017 M6X20 A280	
800	315105-0153	-		19	WASHER BRB6,4X12RFR	
840	342920-0121	-		16	STRAIGHT COUPLING,EXT.THREADED 8/6-R1/8"	
1000SQ NORMFIN						
010	525001-0000	-		2	FOLDING BAR	
020	525003-0000	-		2	FOLDING BAR	
030	574045-0000	-		2	FOLDING BAR	
040	574046-0000	-		2	FOLDING BAR	
050	574047-0000	-		2	LEAD RAIL	
070	B 525007-0002	-		1	CANTILEVER	
080	525008-0001	-		2	BRACKET	
086	574097-0000	X		1	STEERING	
087	574098-0000	X		1	STEERING	
090	569122-0000	-		2	FOLDING ARM	
100	569123-0000	-		2	FOLDING ARM	
110	574048-0000	-		2	BRACKET	
120	574049-0000	-		2	COUNTER PLATE	
130	525015-0002	-		4	SCREW	
397	550359-0000	-		1	ARM	
399	574125-0000	-		1	BRACKET	
640	312105-0370	-		2	SCREW M6S ISO 4017 M6X20 A280	
800	315105-0153	-		19	WASHER BRB6,4X12RFR	
840	342920-0121	-		16	STRAIGHT COUPLING,EXT.THREADED 8/6-R1/8"	

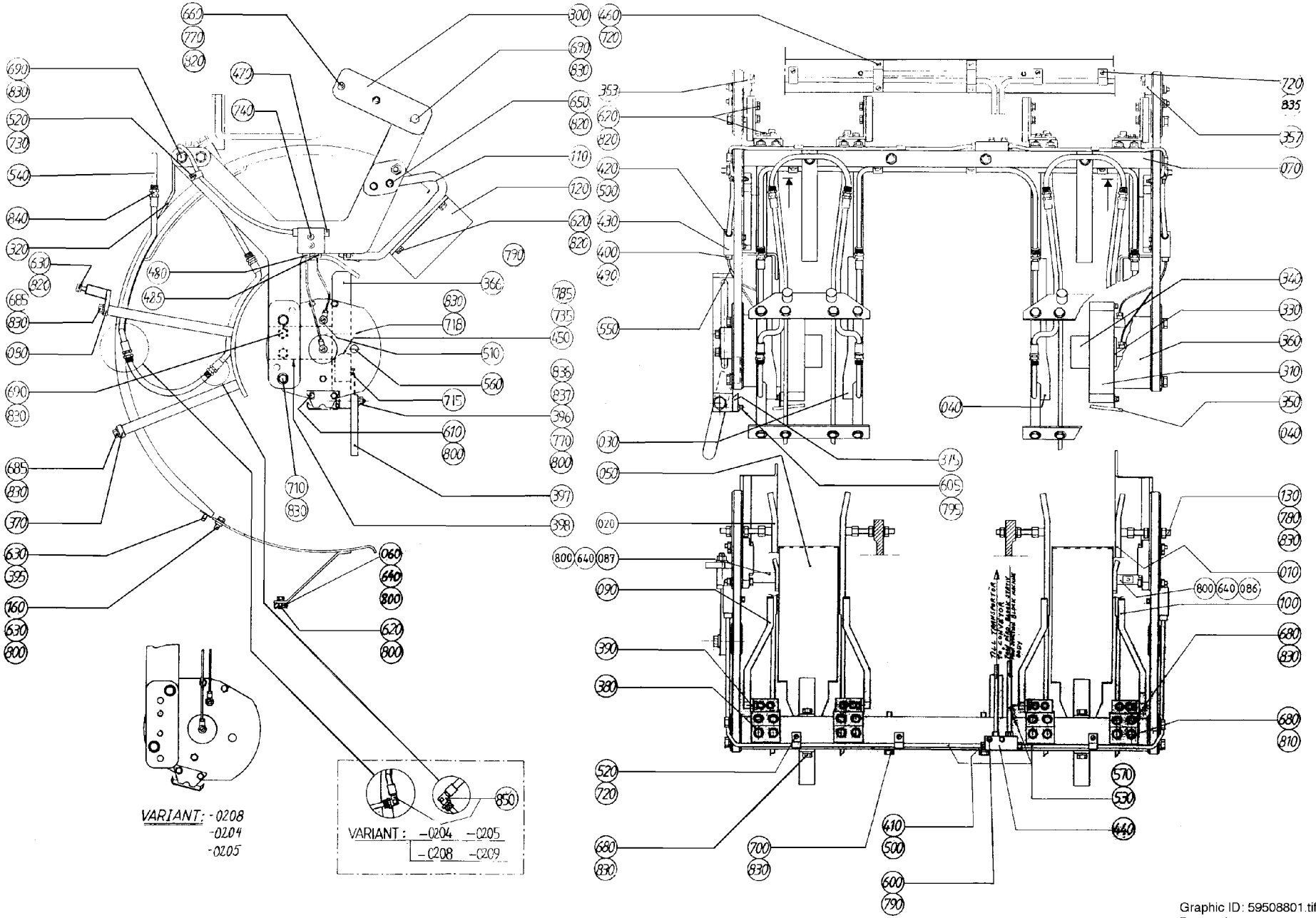

Graphic ID: 59508801.tif
Parent drw.: 595088-1
ECN: 70799

Pos	Part No	SP	UN	Qty	Description	Page No
REVFIN						
030	1143020-0000	-		2	FOLDING BAR	
040	1143021-0000	-		2	FOLDING BAR	
NORMFIN						
030	574045-0000	-		2	FOLDING BAR	
040	574046-0000	-		2	FOLDING BAR	
Common parts						
010	525001-0000	-		2	FOLDING BAR	
020	525003-0000	-		2	FOLDING BAR	
050	574047-0000	-		2	LEAD RAIL	
070	B 525007-0002	-		1	CANTILEVER	
080	525008-0001	-		2	BRACKET	
086	574097-0000	-		1	STEERING	
087	574098-0000	-		1	STEERING	
090	569122-0000	-		2	FOLDING ARM	
100	569123-0000	-		2	FOLDING ARM	
110	574048-0000	-		2	BRACKET	
120	574049-0000	-		2	COUNTER PLATE	
130	525015-0002	-		4	SCREW	
300	B 525016-0000	-		2	FASTENING PLATE	
310	574050-0000	-		2	CURVE	
320	525017-0000	-		2	STEERING GUIDE	
330	285168-0000	-		2	BUSHING	
340	285851-0000	-		2	BEARING	
350	443240-0000	-		2	DRIP PLATE	
353	442564-0000	K		1	CURVE	
357	442565-0000	K		1	CURVE	
360	525018-0000	-		2	SPACER	
370	525019-0000	-		2	BRACKET	
375	595057-0000	-		1	BRACKET	
380	525340-0000	-		4	BRACKET	
390	525178-0000	-		4	BRACKET	
395	525181-0000	-		2	WASHER	
396	525321-0000	K		1	SCREW	
397	550359-0000	-		1	ARM	
398	525296-0000	-		1	BRACKET	
399	595055-0000	-		1	BRACKET	
400	90028-0020	-		4	CONE	
410	90028-0022	-		4	CONE	
420	90028-0025	-		2	CONE	
430	90032-0038	-		2	BLOCK	
440	90032-0044	-		1	JUNCTION BLOCK	
450	90044-0104	F		1	PROX.SWITCHIFM IN 3002	
460	90074-0018	-		2	CLIP	
470	90087-0019	-		2	PLUG	
480	90092-0052	-		2	VALVE	
485	90092-0053	-		2	VALVE	
490	90134-0039	-		4	BUSHING	
500	90134-0055	-		6	BUSHING	
510	90134-0058	-		4	BANJO CONNECTION	
520	90165-0057	-		5	CLIP	
530	90166-0108	-	MM	5200	HOSE	
540	90166-0122	-	MM	6000	HOSE	
550	90166-0143	-	MM	2000	HOSE	
560	90261-0032	-		4	PLUG	
570	90134-0030	-		6	SLEEVE	
600	312105-0295	-		2	SCREW M6S ISO 4017 M4X20 A280	
605	312105-0327	-		2	SCREW M6S ISO 4017 M5X12 A280	
610	312105-0364	-		10	SCREW M6S6X10RFR	
620	312105-0366	-		24	SCREW M6S ISO 4017 M6X12 A280	
630	312105-0368	-		10	SCREW M6S ISO 4017 M6X16 A280	
640	312105-0370	-		2	SCREW M6S ISO 4017 M6X20 A280	
650	312105-0374	-		4	SCREW M6S ISO 4017 M6X30 A280	
660	312105-0378	-		4	SCREW O4017 M6X40A280	
680	312105-0449	-		20	SCREW M6S ISO 4017 M8X16 A280	
685	312105-0451	-		16	SCREW M6S ISO 4017 8X20 A280	
690	312105-0455	-		8	SCREW M6S ISO 4017 M8X30 A280	
700	312105-0464	-		2	SCREW M6S ISO 4014 M8X65 A280	
710	312105-0469	-		4	SCREW M6S ISO 4014 M8X90 A280	
715	312115-0323	-		1	SCREW MC6S ISO 4762 M5X8 A280	
718	312115-0455	-		2	SCREW MC6S ISO 4762 M8X30 A280	
720	312125-0287	-		10	SLOTTED CHEESE HEAD ISO 1207 M4X8	
RFR						
730	312125-0291	-		2	SLOTTED CHEESE HEAD ISO 1207 M4X12	
RFR						
735	312125-0230	-		2	SLOTTED CHEESE HEAD ISO 1207 M3X20	
RFR						
740	312155-0297	-		4	SCREW MF6S DIN 7991 M4X25 A280	
770	312605-0316	-		5	NUT M6M6RFR	
780	312605-0318	-		8	NUT M6M8RFR	
785	315105-0124	-		2	WASHER BRB3,2X6RFR	
790	315105-0136	-		2	WASHER BRB4,3X8RFR	
795	315105-0146	-		2	WASHER BRB5,3X10RFR	
800	315105-0153	-		19	WASHER BRB6,4X12RFR	
810	315105-0165	-		8	WASHER BRB8,4X16RFR	
820	315115-0153	-		40	WASHER TBRB6,4X12RFR	

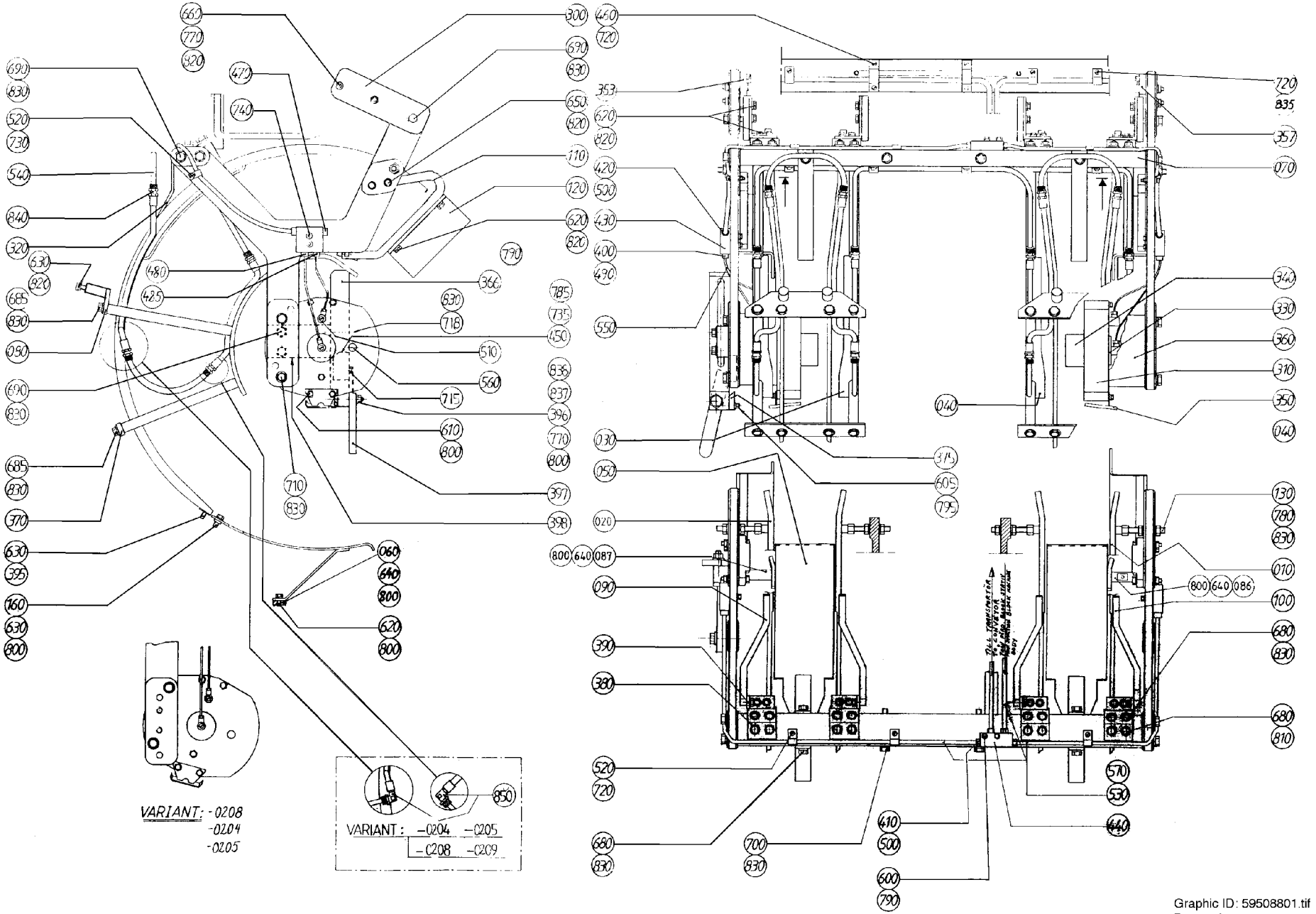

Graphic ID: 59508801.tif
Parent drw.: 595088-1
ECN: 70799

Pos	Part No	SP	UN	Qty	Description	Page No
830	315115-0165	-		52	WASHER TBRB8,4X16RFR	
835	316810-0106	-		3	PIPE CLAMP 8MM RFR	
837	321116-0127	K		1	BUSHING 10E7/14X10	
838	321116-0128	K		1	BUSHING 10E7/14X16	
840	342920-0121	-		16	STRAIGHT COUPLING,EXT.THREADED 8/6-R1/8"	

Pos	Part No	SP	UN	Qty	Description	Page No

WASTE CHUTE

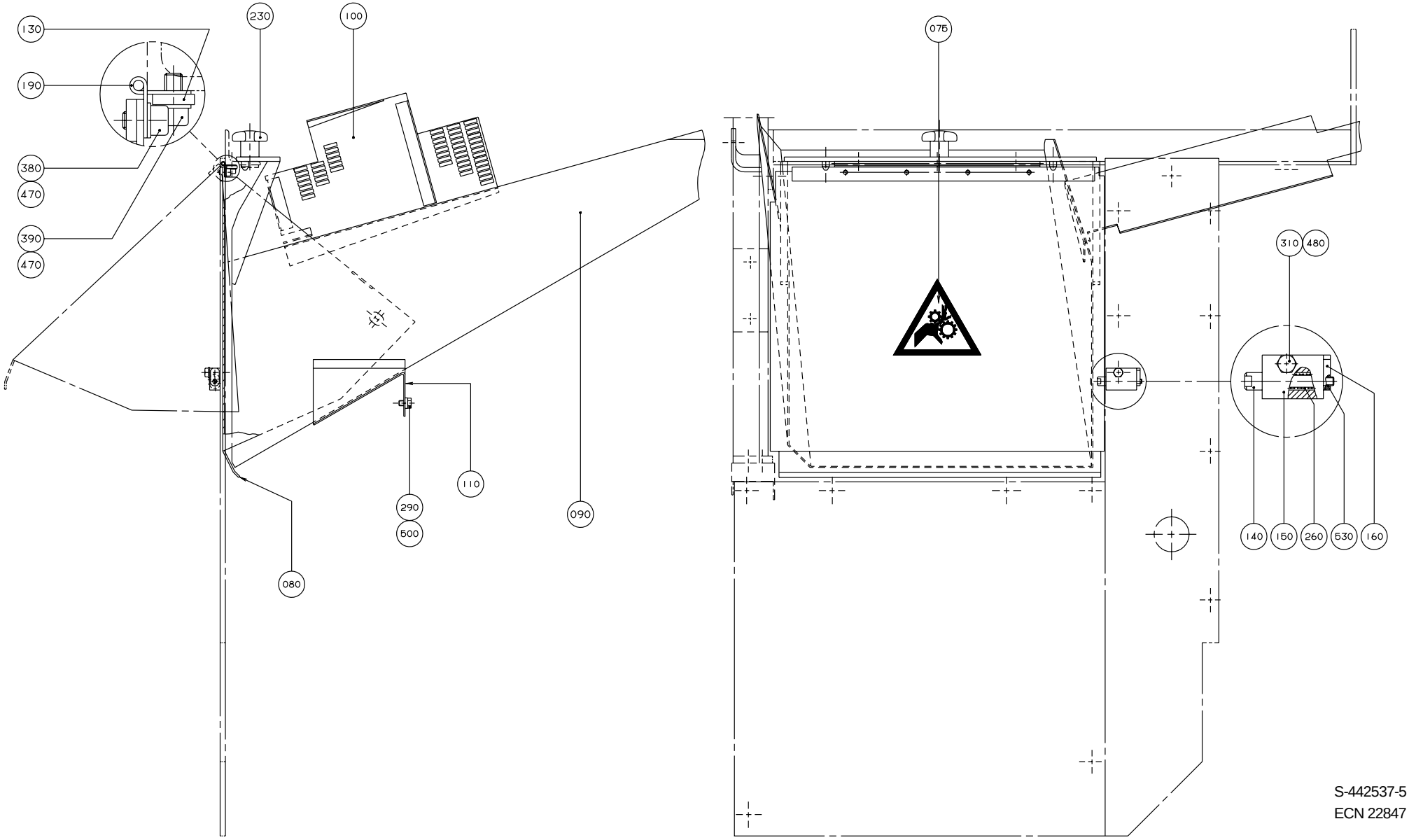

S-442537-5
ECN 22847

Pos	Part No	SP	UN	Qty	Description	Page No
0300B or 0355B or 0375S or 0400B or 0500B or 0500S or 0568B or 0750B or 0750S or 1000B or 1000S or 1055B or 1136B						
090	525409-0000	-		1	WASTE CHUTE	
0500SQ or 1000SQ						
090	574124-0000	-		1	WASTE CHUTE	
Common parts						
075	359705-0002	-		1	WARNING SIGN"ENTANGLEMENT	
080	525380-0000	-		1	HATCH	
100	525423-0000	-		1	COVERING PLATE	
110	525439-0000	-		1	DRIP PLATE	
130	525381-0000	-		1	BRACKET	
140	525382-0000	-		1	SHAFT	
150	525383-0000	-		1	BRACKET	
160	525384-0000	-		1	DOWEL	
190	525394-0000	-		1	HINGE	
230	90051-0025	-		1	HANDLE	
260	90335-0005	-		1	SPRING	
290	312105-0364	-		1	SCREW M6S6X10RFR	
310	312105-0372	-		1	SCREW M6S ISO 4017 M6X25 A280	
380	312115-0323	-		4	SCREW MC6S ISO 4762 M5X8 A280	
390	312115-0325	-		3	SCREW 5X10 A4 80	
470	315105-0146	-		7	WASHER BRB5,3X10RFR	
480	315105-0153	-		1	WASHER BRB6,4X12RFR	
500	315115-0153	-		1	WASHER TBRB6,4X12RFR	
530	90157-0002	-		x	SEALING COMPOUND	

Pos	Part No	SP	UN	Qty	Description	Page No

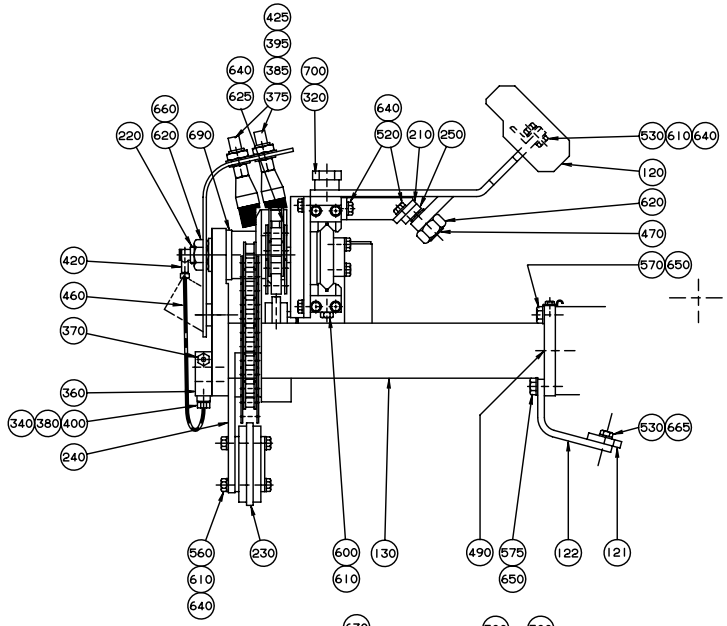

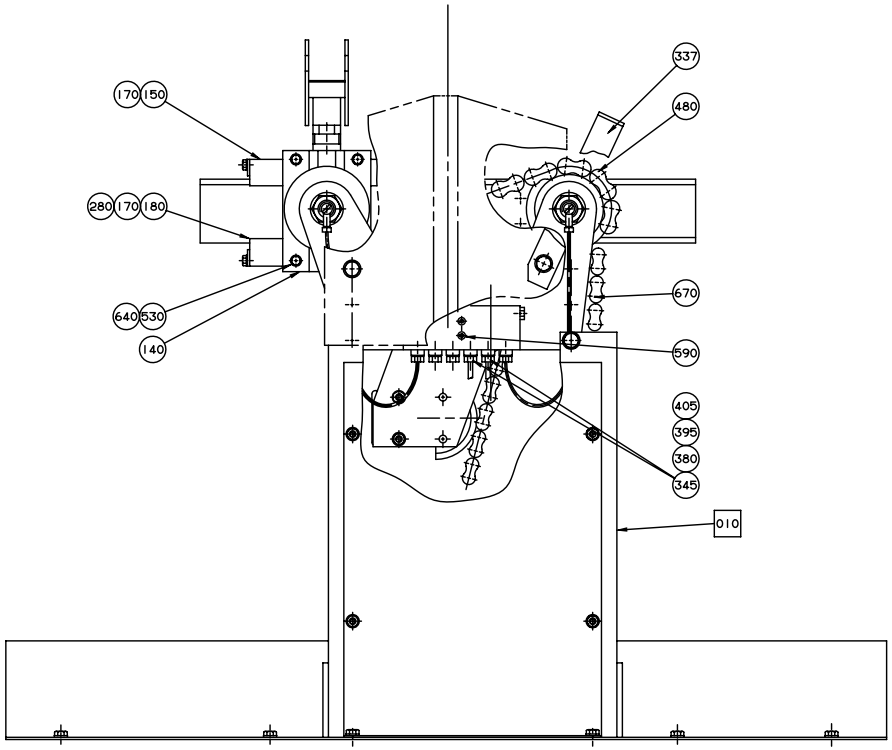

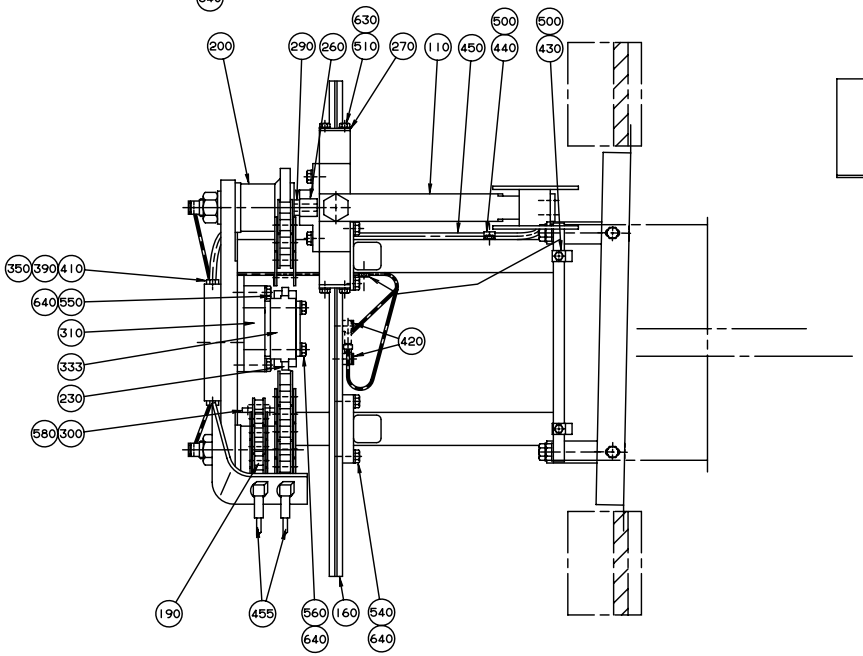

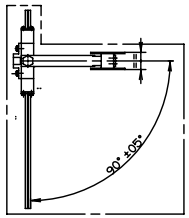

S-525213-2
ECN 14321

Pos	Part No	SP	UN	Qty	Description	Page No
0300B						
110	525304-0000	-		1	ARM	
120	525309-0000	-		1	DISTRIBUTOR	
530	312105-0368	-		6	SCREW M6S ISO 4017 M6X16 A280	
570-02	312105-0453	-		4	SCREW M6S ISO 4017 M8X25 A280	
0355B or 0400B						
110	525304-0000	-		1	ARM	
120	525308-0000	-		1	DISTRIBUTOR	
530	312105-0368	-		6	SCREW M6S ISO 4017 M6X16 A280	
570-02	312105-0453	-		4	SCREW M6S ISO 4017 M8X25 A280	
0375S						
110	525302-0000	-		1	ARM	
120	525309-0000	-		1	DISTRIBUTOR	
530	312105-0368	-		6	SCREW M6S ISO 4017 M6X16 A280	
570-02	312105-0453	-		4	SCREW M6S ISO 4017 M8X25 A280	
0500B or 0568B						
110	525303-0000	-		1	ARM	
120	525307-0000	-		1	DISTRIBUTOR	
530	312105-0368	-		6	SCREW M6S ISO 4017 M6X16 A280	
570-02	312105-0453	-		4	SCREW M6S ISO 4017 M8X25 A280	
0500S						
110	525302-0000	-		1	ARM	
110	525304-0000	-		1	ARM	
120	525308-0000	-		1	DISTRIBUTOR	
530	312105-0368	-		6	SCREW M6S ISO 4017 M6X16 A280	
570-02	312105-0453	-		4	SCREW M6S ISO 4017 M8X25 A280	
0500SQ						
110	525304-0000	-		1	ARM	
120	583630-0000	-		1	DISTRIBUTOR	
530	312105-0368	-		6	SCREW M6S ISO 4017 M6X16 A280	
570-02	312105-0453	-		4	SCREW M6S ISO 4017 M8X25 A280	
0750B						
110	525302-0000	-		1	ARM	
120	525306-0000	-		1	DISTRIBUTOR	
530	312105-0368	-		6	SCREW M6S ISO 4017 M6X16 A280	
570-02	312105-0453	-		4	SCREW M6S ISO 4017 M8X25 A280	
0750S						
110	525301-0000	-		1	ARM	
120	544318-0000	-		1	DISTRIBUTOR	
530	312105-0368	-		6	SCREW M6S ISO 4017 M6X16 A280	
570-02	312105-0453	-		4	SCREW M6S ISO 4017 M8X25 A280	
1000B or 1055B						
110	525301-0000	-		1	ARM	
120	525305-0000	-		1	DISTRIBUTOR	
530	312105-0368	-		6	SCREW M6S ISO 4017 M6X16 A280	
570-02	312105-0453	-		4	SCREW M6S ISO 4017 M8X25 A280	
1000S						
110	525301-0000	-		1	ARM	
120	569129-0000	-		1	DISTRIBUTOR	
121	525417-0000	-		1	STEERING	
122	525418-0000	-		2	HOLDER	
530-02	312105-0368	-		8	SCREW M6S ISO 4017 M6X16 A280	
570	312105-0453	-		2	SCREW M6S ISO 4017 M8X25 A280	
575	312105-0455	-		2	SCREW M6S ISO 4017 M8X30 A280	
665	315115-0153	-		2	WASHER TBRB6,4X12RFR	
Common parts						
F010	A 525320-0100	-		1	CHAIN GUARD	
130	525310-0000	-		1	BRACKET	
140	443229-0000	D		1	BRACKET	
150	525140-0000	-		1	HOLDER	
160	525311-0000	D		1	GUIDE	
170	442931-0000	K		2	SLIDE RAIL	
180	443232-0000	-		1	HOLDER	
190	443235-0000	K		1	SPROCKET	
200	525194-0000	K		1	SPROCKET	
210	525200-0000	D		1	BRACKET	
220	525312-0000	D		2	SHAFT	
230	90344-0049	K		2	CHAIN TENSIONER	
240	566533-0000	-		1	BRACKET	
250	285074-0000	K		1	PLATE	
260	443237-0000	K		1	SLIDER	
270	443239-0000	-		4	WASHER	
280	525138-0000	-		1	SHEET	
290	525195-0000	-		1	WASHER	
300	525315-0000	K		1	SLIDER	
310	566312-0000	-		1	BRACKET	
320	525317-0000	K		1	FITTING BOLT	
333	566311-0000	-		1	PROFILE	
337	566315-0000	-		1	HOLDER	
340	90028-0020	F		4	CONE	
345	90028-0021	-		2	CONE	
350	90028-0025	F		1	CONE	
360	90032-0040	K		1	BLOCK	
370	90087-0019	K		1	PLUG	
375	90092-0048	F		2	OIL BRUSH	

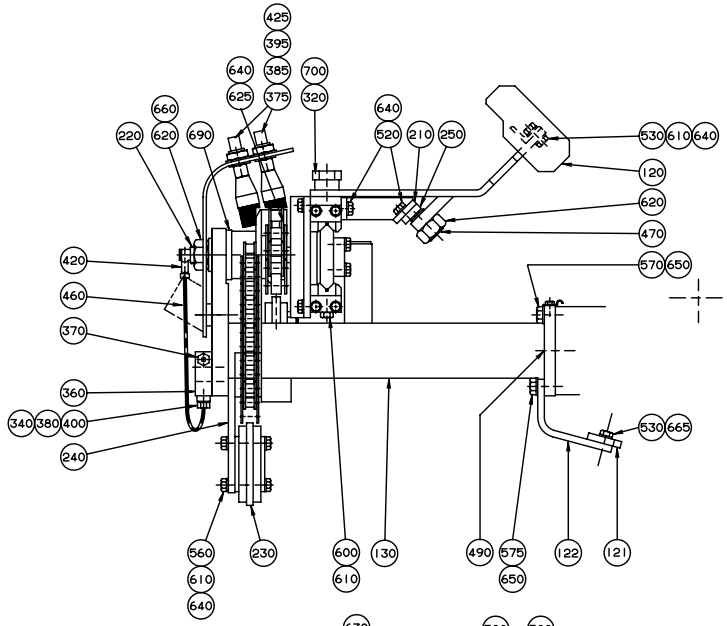

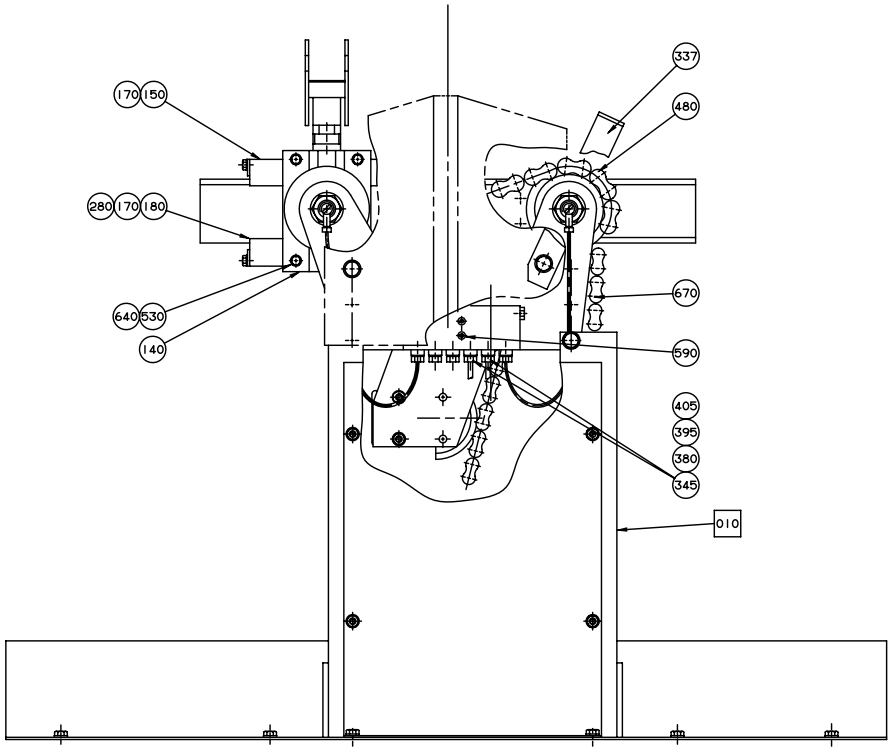

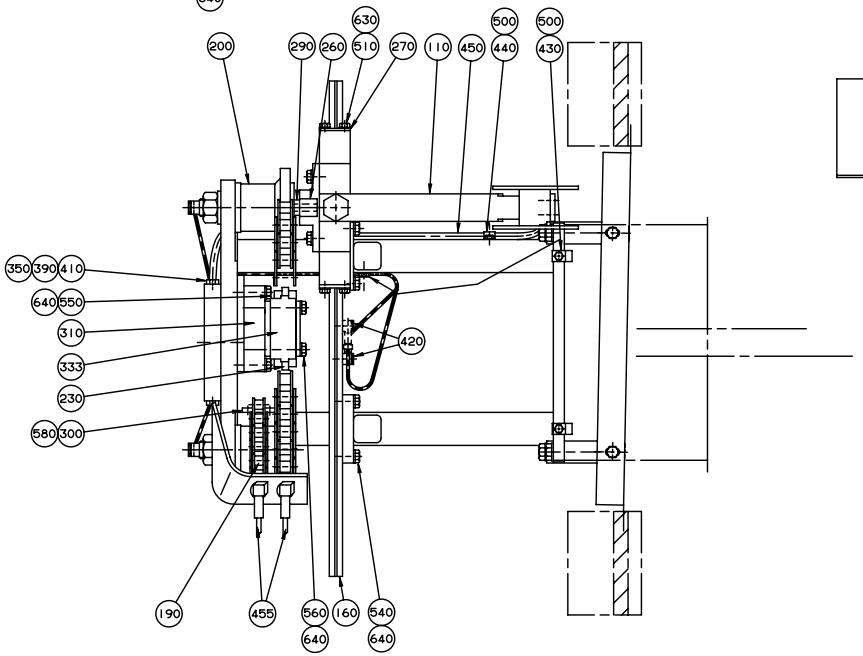

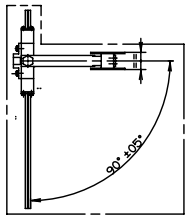

S-525213-2
ECN 14321

Pos	Part No	SP	UN	Qty	Description	Page No
380	90092-0052	F		6	VALVE	
385	90134-0002	F		2	PIPE CONNECTION	
390	90134-0030	F		2	SLEEVE	
395	342706-0114	F		4	ACCESSORIES,INSERT SLEEVE 4	
400	90134-0039	F		4	BUSHING	
405	90134-0040	F		2	BUSHING	
410	90134-0055	F		1	BUSHING	
420	90134-0058	K		4	BANJO CONNECTION	
425	90137-0002	F		2	ELBOW PIPE	
430	90165-0056	K		3	CLIP	
440	90165-0057	K		2	CLIP	
450	90166-0108	F	MM	1400	HOSE	
455	90166-0051	F	MM	600	HOSE	
460	90166-0143	F	MM	1200	HOSE	
470	90287-0109	F		1	SPRINGLOADED SCREW	
480	B 90288-0055	K		1	ROLLER CHAIN	
490	311103-0399	-		2	CYLINDRICACP M6 8X16 RFR	
500	312105-0287	-		5	SCREW M6S ISO 4017 M4X8 A280	
510	312105-0325	-		8	SCREW M6S5X10 A2 80	
520	312105-0366	-		4	SCREW M6S ISO 4017 M6X12 A280	
540	312105-0370	-		8	SCREW M6S ISO 4017 M6X20 A280	
550	312105-0376	-		2	SCREW M6S ISO 4017 M6X35 A280	
560	312105-0379	-		4	SCREW M6S ISO 4014 M6X45 A280	
580	312155-0291	-		4	SCREW MF6S DIN 7991 M4X12 A280	
590	312155-0297	-		2	SCREW MF6S DIN 7991 M4X25 A280	
600	312318-0368	-		2	SET SCREW CUP POINT ISO 4029 M6X16	
RFR						
610	312605-0316	-		4	NUT M6M6RFR	
620	312605-0324	-		3	NUT M6M16RFR	
625	312812-0316	-		2	LOCK NUT A2-M6RFR	
630	315105-0146	-		8	WASHER BRB5,3X10RFR	
640	315105-0153	-		28	WASHER BRB6,4X12RFR	
650	315105-0165	-		4	WASHER BRB8,4X16RFR	
660	315105-0186	-		2	WASHER BRB17X30RFR	
670	318212-0119	K		1	ROLLER CHA1/2"	
690	321101-0252	K		4	FLANGE BUS 25F7X16	
700	321120-0122	K		1	BUSHING 15/17X15	
1000SQ						
110	525301-0000	-		1	ARM	
120	574056-0000	-		1	DISTRIBUTOR	
121	574099-0000	-		1	STEERING	
122	574058-0000	-		2	HOLDER	
530-02	312105-0368	-		8	SCREW M6S ISO 4017 M6X16 A280	
570	312105-0453	-		2	SCREW M6S ISO 4017 M8X25 A280	
575	312105-0455	-		2	SCREW M6S ISO 4017 M8X30 A280	
665	315115-0153	-		2	WASHER TBRB6,4X12RFR	
1136B						
110	525301-0000	-		1	ARM	
120	525305-0000	-		1	DISTRIBUTOR	
121	525417-0000	-		1	STEERING	
122	525418-0000	-		2	HOLDER	
530-02	312105-0368	-		8	SCREW M6S ISO 4017 M6X16 A280	
570	312105-0453	-		2	SCREW M6S ISO 4017 M8X25 A280	
575	312105-0455	-		2	SCREW M6S ISO 4017 M8X30 A280	
665	315115-0153	-		2	WASHER TBRB6,4X12RFR	

CHAIN GUARD

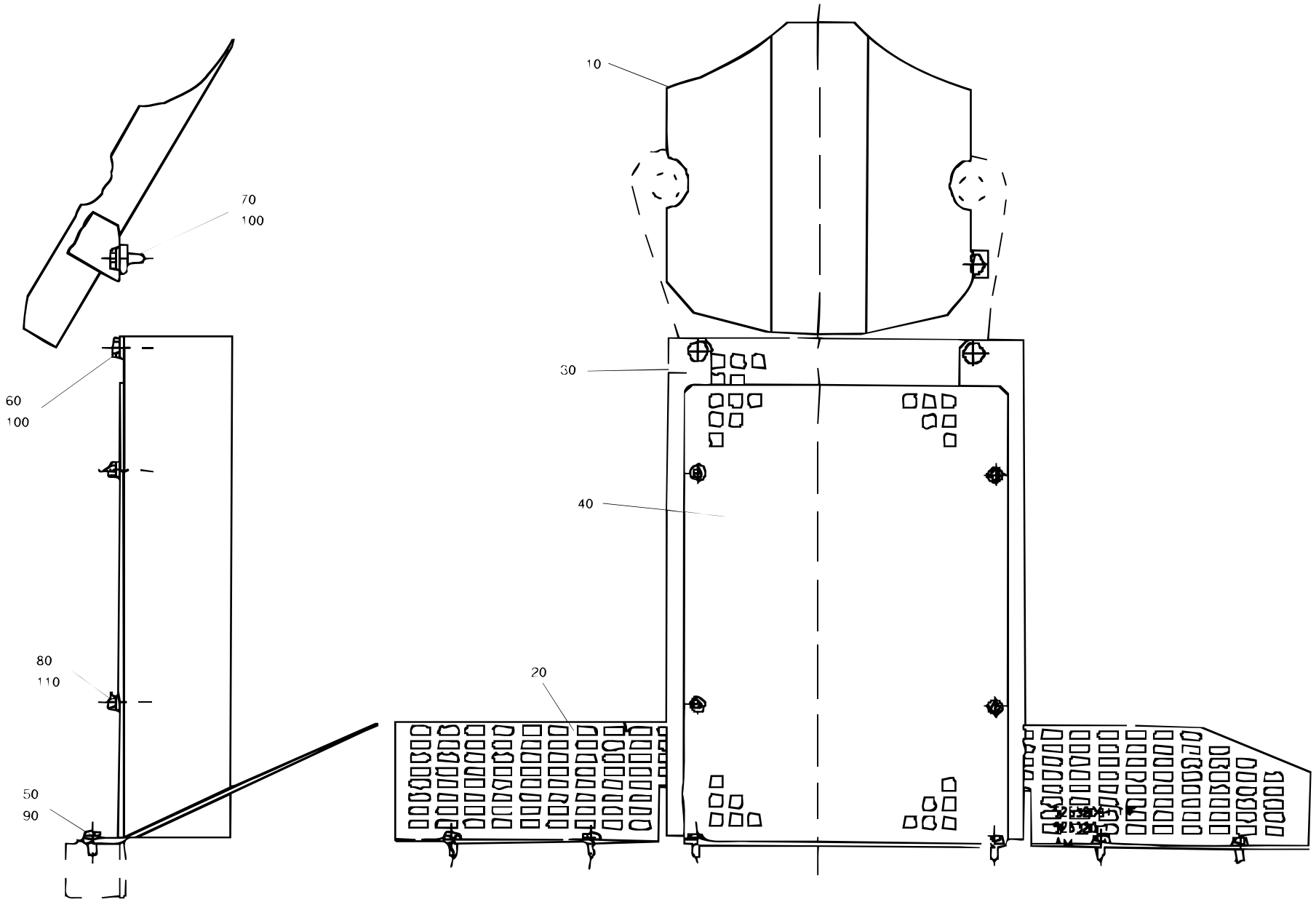

Pos	Part No	SP	UN	Qty	Description	Page No
0300B or 0375S						
010	525265-0003	-		1	LEAD PLATE	
0355B or 0400B or 0500B or 0568B						
010	525265-0004	-		1	LEAD PLATE	
0500S or 0750B						
010	525265-0002	-		1	LEAD PLATE	
0500SQ or 1000SQ						
010	574131-0000	-		1	LEAD PLATE	
0750S or 1000B or 1000S or 1055B or 1136B						
010	525265-0001	-		1	LEAD PLATE	
Common parts						
020	525326-0000	-		1	CHAIN GUARD	
030	525327-0000	-		1	CHAIN GUARD	
040	525328-0000	-		1	CHAIN GUARD	
050	312105-0368	-		6	SCREW M6S ISO 4017 M6X16 A280	
060	312105-0449	-		2	SCREW M6S ISO 4017 M8X16 A280	
070	312105-0451	-		2	SCREW M6S ISO 4017 8X20 A280	
080	312605-0316	-		4	NUT M6M6RFR	
090	315105-0153	-		6	WASHER BRB6,4X12RFR	
100	315105-0165	-		4	WASHER BRB8,4X16RFR	
110	315115-0153	-		4	WASHER TBRB6,4X12RFR	

Pos	Part No	SP	UN	Qty	Description	Page No

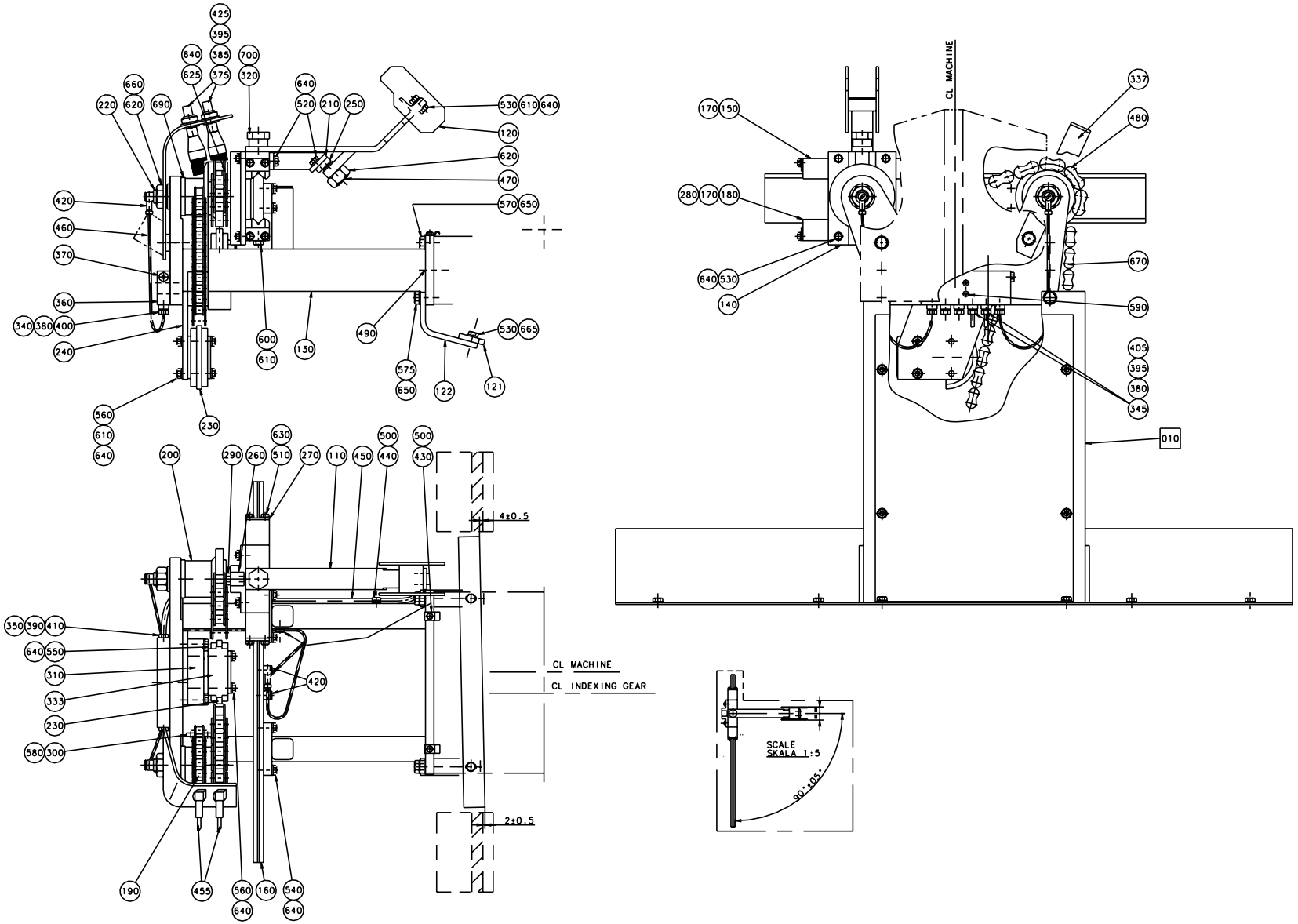

Graphic ID: 59508901.eps
Parent drw.: 595089-1
ECN: 70779

Pos	Part No	SP	UN	Qty	Description	Page No
-						
F010	A 525320-0100	-		1	CHAIN GUARD	
110	525301-0000	-		1	ARM	
120	574056-0000	-		1	DISTRIBUTOR	
121	595068-0000	-		1	STEERING	
122	574058-0000	-		2	HOLDER	
130	525310-0000	-		1	BRACKET	
140	443229-0000	D		1	BRACKET	
150	525140-0000	-		1	HOLDER	
160	525311-0000	D		1	GUIDE	
170	442931-0000	K		2	SLIDE RAIL	
180	443232-0000	-		1	HOLDER	
190	443235-0000	K		1	SPROCKET	
200	525194-0000	K		1	SPROCKET	
210	525200-0000	D		1	BRACKET	
220	525312-0000	D		2	SHAFT	
230	90344-0049	K		2	CHAIN TENSIONER	
240	566533-0000	-		1	BRACKET	
250	285074-0000	K		1	PLATE	
260	443237-0000	K		1	SLIDER	
270	443239-0000	-		4	WASHER	
280	525138-0000	-		1	SHEET	
290	525195-0000	-		1	WASHER	
300	525315-0000	K		1	SLIDER	
310	566312-0000	-		1	BRACKET	
320	525317-0000	K		1	FITTING BOLT	
333	566311-0000	-		1	PROFILE	
337	566315-0000	-		1	HOLDER	
340	90028-0020	F		4	CONE	
345	90028-0021	-		2	CONE	
350	90028-0025	F		1	CONE	
360	90032-0040	K		1	BLOCK	
370	90087-0019	K		1	PLUG	
375	90092-0048	F		2	OIL BRUSH	
380	90092-0052	F		6	VALVE	
385	90134-0002	F		2	PIPE CONNECTION	
390	90134-0030	F		2	SLEEVE	
395	342706-0114	F		4	ACCESSORIES,INSERT SLEEVE 4	
400	90134-0039	F		4	BUSHING	
405	90134-0040	F		2	BUSHING	
410	90134-0055	F		1	BUSHING	
420	90134-0058	K		4	BANJO CONNECTION	
425	90137-0002	F		2	ELBOW PIPE	
430	90165-0056	K		3	CLIP	
440	90165-0057	K		2	CLIP	
450	90166-0108	F	MM	1400	HOSE	
455	90166-0051	F	MM	600	HOSE	
460	90166-0143	F	MM	1200	HOSE	
470	90287-0109	F		1	SPRINGLOADED SCREW	
480	B 90288-0055	K		1	ROLLER CHAIN	
490	311103-0399	-		2	CYLINDRICACP M6 8X16 RFR	
500	312105-0287	-		5	SCREW M6S ISO 4017 M4X8 A280	
510	312105-0325	-		8	SCREW M6S5X10 A2 80	
520	312105-0366	-		4	SCREW M6S ISO 4017 M6X12 A280	
530-02	312105-0368	-		8	SCREW M6S ISO 4017 M6X16 A280	
540	312105-0370	-		8	SCREW M6S ISO 4017 M6X20 A280	
550	312105-0376	-		2	SCREW M6S ISO 4017 M6X35 A280	
560	312105-0379	-		4	SCREW M6S ISO 4014 M6X45 A280	
570	312105-0453	-		2	SCREW M6S ISO 4017 M8X25 A280	
575	312105-0455	-		2	SCREW M6S ISO 4017 M8X30 A280	
580	312155-0291	-		4	SCREW MF6S DIN 7991 M4X12 A280	
590	312155-0297	-		2	SCREW MF6S DIN 7991 M4X25 A280	
600	312318-0368	-		2	SET SCREW CUP POINT ISO 4029 M6X16 RFR	
610	312605-0316	-		4	NUT M6M6RFR	
620	312605-0324	-		3	NUT M6M16RFR	
625	312812-0316	-		2	LOCK NUT A2-M6RFR	
630	315105-0146	-		8	WASHER BRB5,3X10RFR	
640	315105-0153	-		28	WASHER BRB6,4X12RFR	
650	315105-0165	-		4	WASHER BRB8,4X16RFR	
660	315105-0186	-		2	WASHER BRB17X30RFR	
665	315115-0153	-		2	WASHER TBRB6,4X12RFR	
670	318212-0119	K		1	ROLLER CHA1/2"	
690	321101-0252	K		4	FLANGE BUS 25F7X16	
700	321120-0122	K		1	BUSHING 15/17X15	

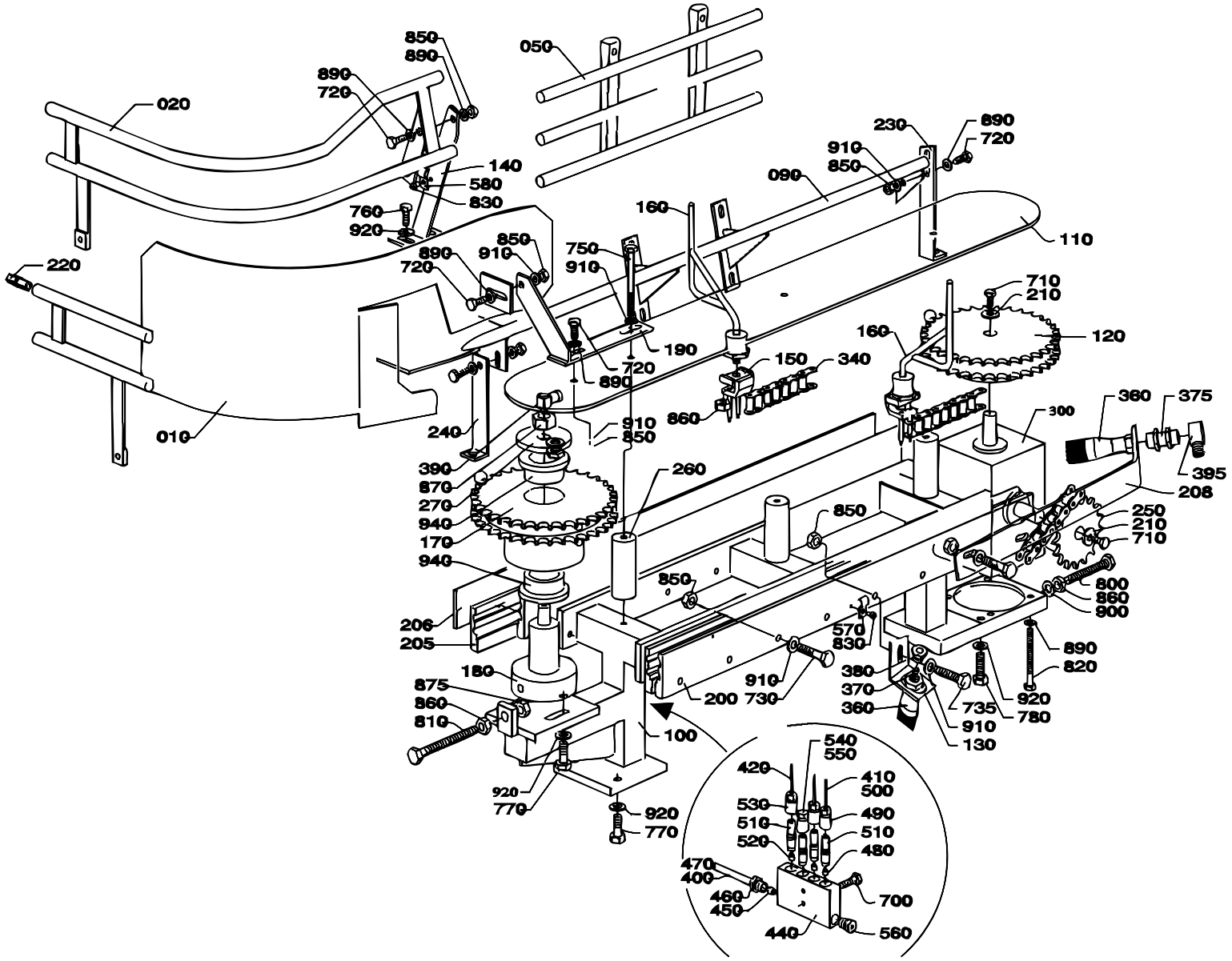

S-525325-2
ECN 17168

Pos	Part No	SP	UN	Qty	Description	Page No
0300B						
010	442811-0002	-		1	ARCH	
020	443207-0003	-		1	ARCH	
050	525322-0003	-		1	LEAD RAIL	
140	443217-0000	-		1	BRACKET	
160	525374-0000	F		4	CARRIER	
0355B or 0400B						
010	442811-0002	-		1	ARCH	
020	443207-0002	-		1	ARCH	
050	525322-0002	-		1	LEAD RAIL	
140	443217-0000	-		1	BRACKET	
160	525374-0000	F		4	CARRIER	
0375S						
010	442811-0002	-		1	ARCH	
020	443206-0003	-		1	ARCH	
050	525322-0003	-		1	LEAD RAIL	
140	443217-0000	-		1	BRACKET	
160	525374-0000	F		4	CARRIER	
0500B or 0568B						
010	442811-0001	-		1	ARCH	
020	443207-0001	-		1	ARCH	
050	525322-0001	-		1	LEAD RAIL	
140	443217-0000	-		1	BRACKET	
160	525374-0000	F		4	CARRIER	
0500S						
010	525466-0000	-		1	ARCH	
020	443206-0002	-		1	ARCH	
050	525322-0002	-		1	LEAD RAIL	
140	443217-0000	-		1	BRACKET	
160	525414-0000	F		4	CARRIER	
0500SQ						
010	525437-0000	-		1	ARCH	
020	583628-0000	-		1	ARCH	
050	583452-0000	-		1	LEAD RAIL	
140	583629-0000	-		1	BRACKET	
160	525374-0000	F		4	CARRIER	
0750B						
010	442811-0001	-		1	ARCH	
020	443206-0001	-		1	ARCH	
050	525322-0001	-		1	LEAD RAIL	
140	443217-0000	-		1	BRACKET	
160	525374-0000	F		4	CARRIER	

Pos	Part No	SP	UN	Qty	Description	Page No
0750S						
010	525437-0000	-		1	ARCH	
020	443206-0004	-		1	ARCH	
050	525322-0004	-		1	LEAD RAIL	
140	443217-0000	-		1	BRACKET	
160	525414-0000	F		4	CARRIER	
1000B or 1055B						
010	525437-0000	-		1	ARCH	
020	443206-0001	-		1	ARCH	
050	525322-0001	-		1	LEAD RAIL	
140	443217-0000	-		1	BRACKET	
160	525414-0000	F		4	CARRIER	
1000S						
010	525437-0000	-		1	ARCH	
020	443206-0001	-		1	ARCH	
050	569130-0000	-		1	LEAD RAIL	
140	443217-0000	-		1	BRACKET	
160	525414-0000	F		4	CARRIER	
Common parts						
090	442809-0000	-		1	LEAD RAIL	
100	525300-0000	-		1	MACHINE BODY	
110	443210-0000	-		1	PLATE STAINLESS	
120	443081-0000	K		1	SPROCKET	
130	443213-0000	-		1	BRACKET	
150	B 525254-0000	F		4	LINK	
170	525298-0000	K		1	SPROCKET	
180	525299-0000	D		1	SHAFT	
190	525323-0000	-		1	BRACKET	
200	525324-0000	K		3	PROFILE	
205	525411-0000	K		1	PROFILE	
206	525412-0000	-		1	RULER	
208	566314-0000	-		1	HOLDER	
210	6278-0000	-		2	WASHER	
220	229516-0000	-		4	PIN	
230	442829-0000	-		1	BRACKET	
240	442830-0000	-		1	BRACKET	
250	442836-0000	K		1	SPROCKET	
260	443215-0000	-		3	SPACER	
270	443295-0000	-		1	WASHER	
300	90056-0099	D		1	BEVEL GEAR	
320	318212-0066	K		1	ROLLER CHAIN	
340	318242-0034	K		4	ROLLER CHAIN	

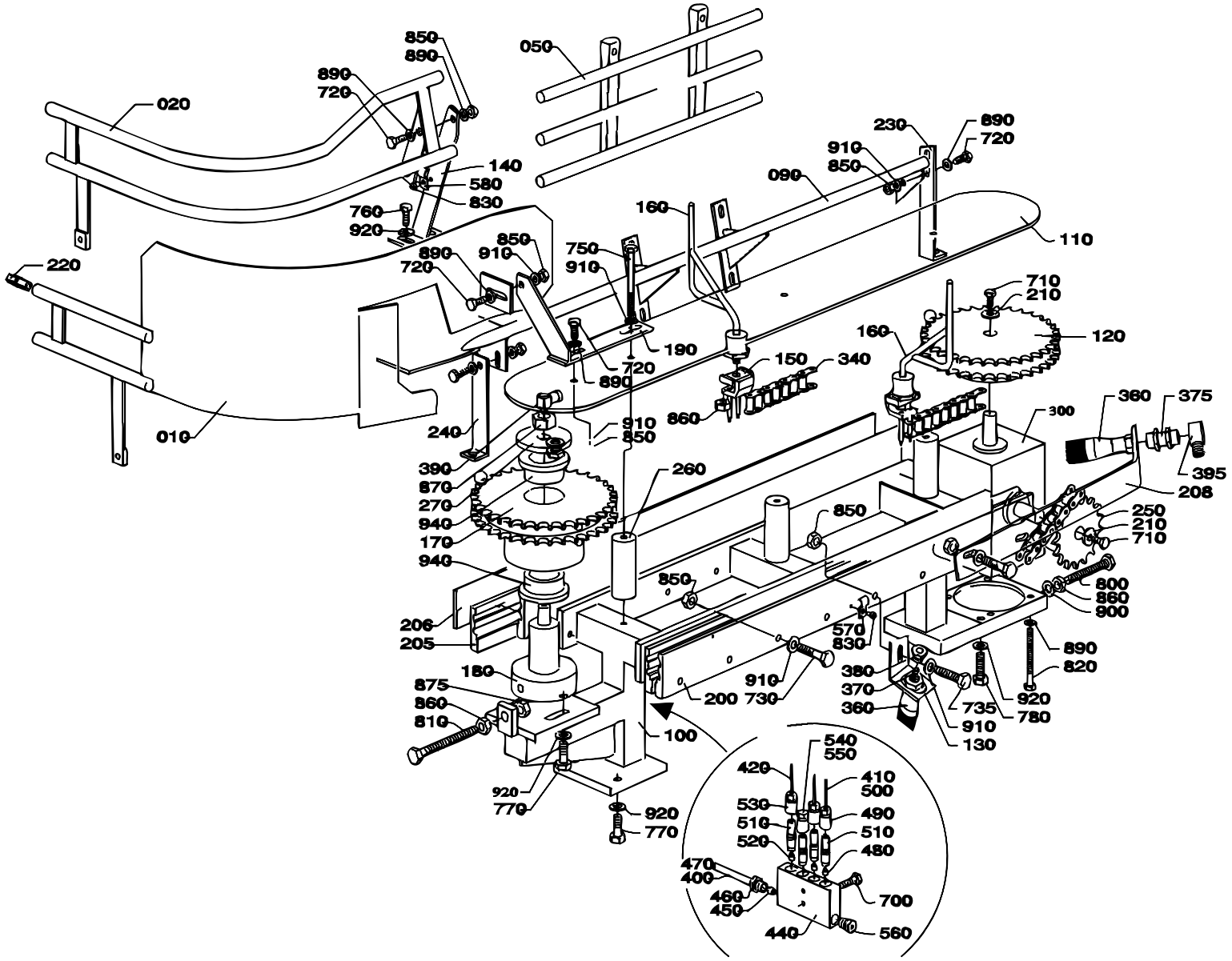

S-525325-2
ECN 17168

Pos	Part No	SP	UN	Qty	Description	Page No
360	90092-0048	F		2	OIL BRUSH	
370	90028-0001	F		1	CONE	
375	90134-0002	F		1	PIPE CONNECTION	
380	90134-0003	F		1	BUSHING	
390	90134-0058	K		1	BANJO CONNECTION	
395	90137-0002	F		1	ELBOW PIPE	
400	90166-0108	F	MM	1300	HOSE	
410	90166-0051	F	MM	1100	HOSE	
420	90166-0143	F	MM	200	HOSE	
440	90032-0039	K		1	BLOCK	
450	90028-0025	F		1	CONE	
460	90134-0055	F		1	BUSHING	
470	90134-0030	F		2	SLEEVE	
480	90028-0021	F		2	CONE	
490	90134-0040	F		2	BUSHING	
500	342706-0114	F		4	ACCESSORIES,INSERT SLEEVE 4	
510	90092-0052	F		3	VALVE	
520	90028-0020	F		1	CONE	
530	90134-0039	F		1	BUSHING	
540	90134-0045	K		1	PLUG	
550	90134-0052	K		1	PLUG	
560	90087-0019	K		1	PLUG	
570	90165-0056	K		1	CLIP	
580	90165-0060	K		1	CLAMP	
700	312155-0295	-		2	SCREW MF6S DIN 7991 M4X20 A280	
710	312105-0366	-		2	SCREW M6S ISO 4017 M6X12 A280	
720	312105-0368	-		6	SCREW M6S ISO 4017 M6X16 A280	
730	312105-0376	-		7	SCREW M6S ISO 4017 M6X35 A280	
735	312105-0378	-		9	SCREW O4017 M6X40A280	
750	312105-0386	-		3	SCREW M6S ISO 4014 M6X80 A280	
760	312105-0449	-		2	SCREW M6S ISO 4017 M8X16 A280	
770	312105-0451	-		4	SCREW M6S ISO 4017 8X20 A280	
780	312105-0453	-		2	SCREW M6S ISO 4017 M8X25 A280	
800	312109-0457	-		1	SCREW M6S ISO 4017 M8X35 A280	
810	312109-0461	-		1	SCREW M6S ISO 4017 M8X50 A280	
820	312115-0368	-		4	SCREW MC6S ISO 4762 M6X16 A280	
830	312125-0285	-		2	SLOTTED HEMCS4X6RFR	
840	312125-0289	-		1	SLOTTED HEMCS4X10RFR	
850	312605-0316	-		22	NUT M6M6RFR	
860	312605-0318	-		6	NUT M6M8RFR	
870	312605-0322	-		1	NUT M6M12RFR	
875	312625-0318	-		1	NUT M 8	
890	315105-0153	-		14	WASHER BRB6,4X12RFR	
900	315105-0165	-		1	WASHER BRB8,4X16RFR	
910	315115-0153	-		21	WASHER TBRB6,4X12RFR	
920	315115-0165	-		8	WASHER TBRB8,4X16RFR	
940	321101-0272	K		2	FLANGE BUS 30F7X20	
1000SQ						
010	525437-0000	-		1	ARCH	
020	574055-0000	-		1	ARCH	
050	574057-0000	-		1	LEAD RAIL	
140	443217-0000	-		1	BRACKET	
160	525414-0000	F		4	CARRIER	
1136B						
010	525437-0000	-		1	ARCH	
020	443206-0001	-		1	ARCH	
050	525413-0000	-		1	LEAD RAIL	
140	443217-0000	-		1	BRACKET	
160	525414-0000	F		4	CARRIER	

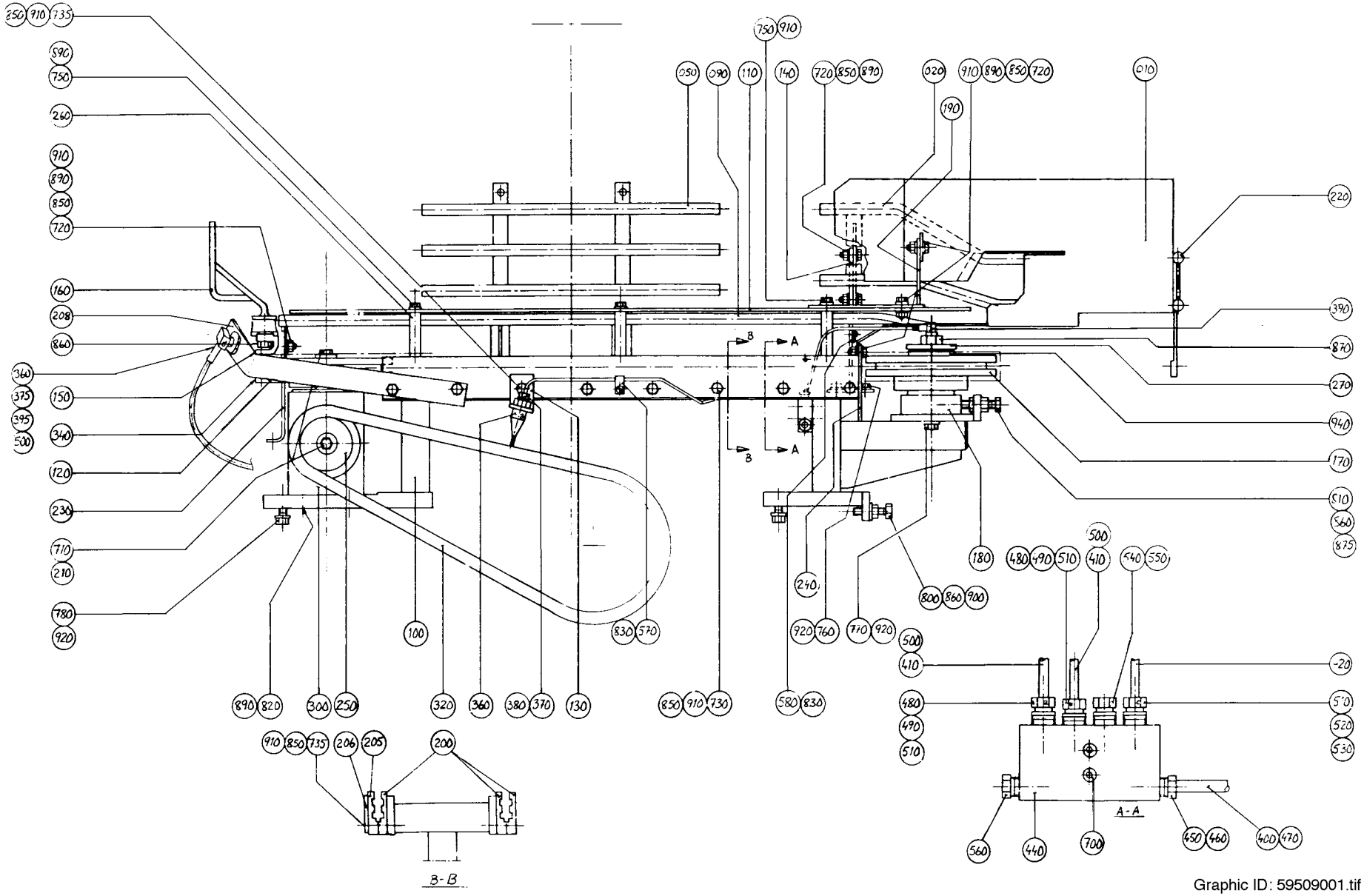

Graphic ID: 59509001.tif
Parent drw.: 595090-1
ECN: 70799

Pos	Part No	SP	UN	Qty	Description	Page No
-						
010	595052-0000	-		1	ARCH	
020	595048-0000	-		1	ARCH	
050	595060-0000	-		1	LEAD RAIL	
090	594644-0000	-		1	LEAD RAIL	
100	595044-0000	-		1	MACHINE BODY	
110	443210-0000	-		1	PLATE STAINLESS	
120	443081-0000	K		1	SPROCKET	
130	443213-0000	-		1	BRACKET	
140	443217-0000	-		1	BRACKET	
150	B 525254-0000	F		4	LINK	
160	595046-0000	F		4	CARRIER	
170	525298-0000	K		1	SPROCKET	
180	525299-0000	D		1	SHAFT	
190	595053-0000	-		1	BRACKET	
200	525324-0000	K		3	PROFILE	
205	525411-0000	K		1	PROFILE	
206	525412-0000	-		1	RULER	
208	595061-0000	-		1	HOLDER	
210	6278-0000	-		2	WASHER	
220	229516-0000	-		4	PIN	
230	595056-0000	-		1	BRACKET	
240	442830-0000	-		1	BRACKET	
250	442836-0000	K		1	SPROCKET	
260	443215-0000	-		3	SPACER	
270	443295-0000	-		1	WASHER	
300	90056-0147	D		1	Bevel Gear	
320	318212-0074	K		1	Roller Chain	
340	318242-0034	K		4	ROLLER CHAIN	
360	90092-0048	F		2	OIL BRUSH	
370	90028-0001	F		1	CONE	
375	90134-0002	F		1	PIPE CONNECTION	
380	90134-0003	F		1	BUSHING	
390	90134-0058	K		1	BANJO CONNECTION	
395	90137-0002	F		1	ELBOW PIPE	
400	90166-0108	F	MM	1300	HOSE	
410	90166-0051	F	MM	700	HOSE	
420	90166-0143	F	MM	500	HOSE	
440	90032-0039	K		1	BLOCK	
450	90028-0025	F		1	CONE	
460	90134-0055	F		1	BUSHING	
470	90134-0030	F		2	SLEEVE	
480	90028-0021	F		2	CONE	
490	90134-0040	F		2	BUSHING	
500	342706-0114	F		4	ACCESSORIES,INSERT SLEEVE 4	
510	90092-0052	F		3	VALVE	
520	90028-0020	F		1	CONE	
530	90134-0039	F		1	BUSHING	
540	90134-0045	K		1	PLUG	
550	90134-0052	K		1	PLUG	
560	90087-0019	K		1	PLUG	
570	90165-0056	K		1	CLIP	
580	90165-0060	K		1	CLAMP	
700	312155-0295	-		2	SCREW MF6S DIN 7991 M4X20 A280	
710	312105-0366	-		2	SCREW M6S ISO 4017 M6X12 A280	
720	312105-0368	-		6	SCREW M6S ISO 4017 M6X16 A280	
730	312105-0376	-		7	SCREW M6S ISO 4017 M6X35 A280	
735	312105-0378	-		9	SCREW O4017 M6X40A280	
750	312105-0386	-		3	SCREW M6S ISO 4014 M6X80 A280	
760	312105-0449	-		2	SCREW M6S ISO 4017 M8X16 A280	
770	312105-0451	-		2	SCREW M6S ISO 4017 8X20 A280	
780	312105-0453	-		4	SCREW M6S ISO 4017 M8X25 A280	
800	312109-0457	-		1	SCREW M6S ISO 4017 M8X35 A280	
810	312109-0461	-		1	SCREW M6S ISO 4017 M8X50 A280	
820	312115-0368	-		4	SCREW MC6S ISO 4762 M6X16 A280	
830	312125-0285	-		2	SLOTTED HEMCS4X6RFR	
840	312125-0289	-		1	SLOTTED HEMCS4X10RFR	
850	312605-0316	-		22	NUT M6M6RFR	
860	312605-0318	-		6	NUT M6M8RFR	
870	312605-0322	-		1	NUT M6M12RFR	
875	312625-0318	-		1	NUT M 8	
890	315105-0153	-		14	WASHER BRB6,4X12RFR	
900	315105-0165	-		1	WASHER BRB8,4X16RFR	
910	315115-0153	-		21	WASHER TBRB6,4X12RFR	
920	315115-0165	-		8	WASHER TBRB8,4X16RFR	
940	321101-0272	K		2	FLANGE BUS 30F7X20	

This page is intentionally left blank

Pos	Part No	SP	UN	Qty	Description	Page No
90134-0034	90030-0101	-		1	TAPER	
90274-0002	90274-0300	-		1	CONTACT HOUSING	
90288-0055	90288-0317	K		1	CONNECTION LINK	
90288-0055	90288-0324	K		1	CARRIER	
90321-0015	90321-0466	K		1	SPARE PART KIT	
90321-0015	90321-0481	K		1	GASKET	
90321-0034	90321-0466	K		1	SPARE PART KIT	
90321-0034	90321-0481	K		1	GASKET	
90415-0033	90415-0330	K		1	FILTER INSERT	
285162-0000	90028-0002	-		1	CONE	
285162-0000	90134-0022	-		1	BUSHING	
285162-0000	90151-0004	-	M	1	PIPE	
285164-0000	90028-0002	-		1	CONE	
285164-0000	90134-0022	-		1	BUSHING	
285164-0000	90151-0004	-	M	1	PIPE	
285676-0000	20704-0000	-		1	NUT	
285677-0000	20704-0000	-		1	NUT	
297664-0000	312923-0131	-		1	NUT FO M6X15,0RFR	
442560-0000	90028-0002	-		1	CONE	
442560-0000	90134-0022	-		1	BUSHING	
442560-0000	90151-0004	-	M	1	PIPE	
442867-0000	20704-0000	-		1	NUT	
442882-0000	90157-0021	-	L	1	LOCKING FLUID	
442882-0000	312318-0451	-		1	SET SCREW CUP POINT ISO 4029 M8X20 RFR	
443116-0000	312910-0118	-		2	THREADED I M6X1,5D	
443348-0000	312910-0119	-		3	THREADED I M6X2,0D	
443487-0000	90242-0054	-		2	O-RING	
443488-0000	90242-0054	-		2	O-RING	
525016-0000	312910-0112	-		3	THREADED I M4X2,5D	
525016-0000	312910-0127	-		2	THREADED I M8X2,0D	
525070-0000	351121-0109	K	M	1	CABLE RHH 16	
525070-0000	353102-0168	K		1	CABLE SHOEYAEV16-M6	
525197-0000	525196-0000	-		1	NUT	
525198-0000	525196-0000	-		1	NUT	
525254-0000	318219-0687	-		1	CONNECTION LINK	
525271-0000	90266-0022	-	M	1	DAIRY PIPE	
525271-0000	342808-0103	-		2	ELBOW PIPE38	
525271-0000	342810-0103	-		2	ELBOW PIPE38	

This page is intentionally left blank

Pos	Part No	SP	UN	Qty	Description	Page No
525271-0000						
	342811-0103	-		1	NIPPLE ANSL.38	
525297-0000						
	312910-0113	-		2	THREADED I M5X1,0D	
525429-0000						
	312910-0119	-		3	THREADED I M6X2,0D	
544269-0000						
	525196-0000	-		1	NUT	
544293-0000						
	525196-0000	-		1	NUT	
544298-0000						
	20704-0000	-		1	NUT	
574166-0000						
	90266-0167	-	M	1	PIPE	
574166-0000						
	285993-0000	-		1	CONNECTION	
574676-0000						
	20704-0000	-		1	NUT	
574677-0000						
	20704-0000	-		1	NUT	

Pos	Part No	SP	UN	Qty	Description	Page No

Tetra Pak

SPC

Spare Parts Catalogue

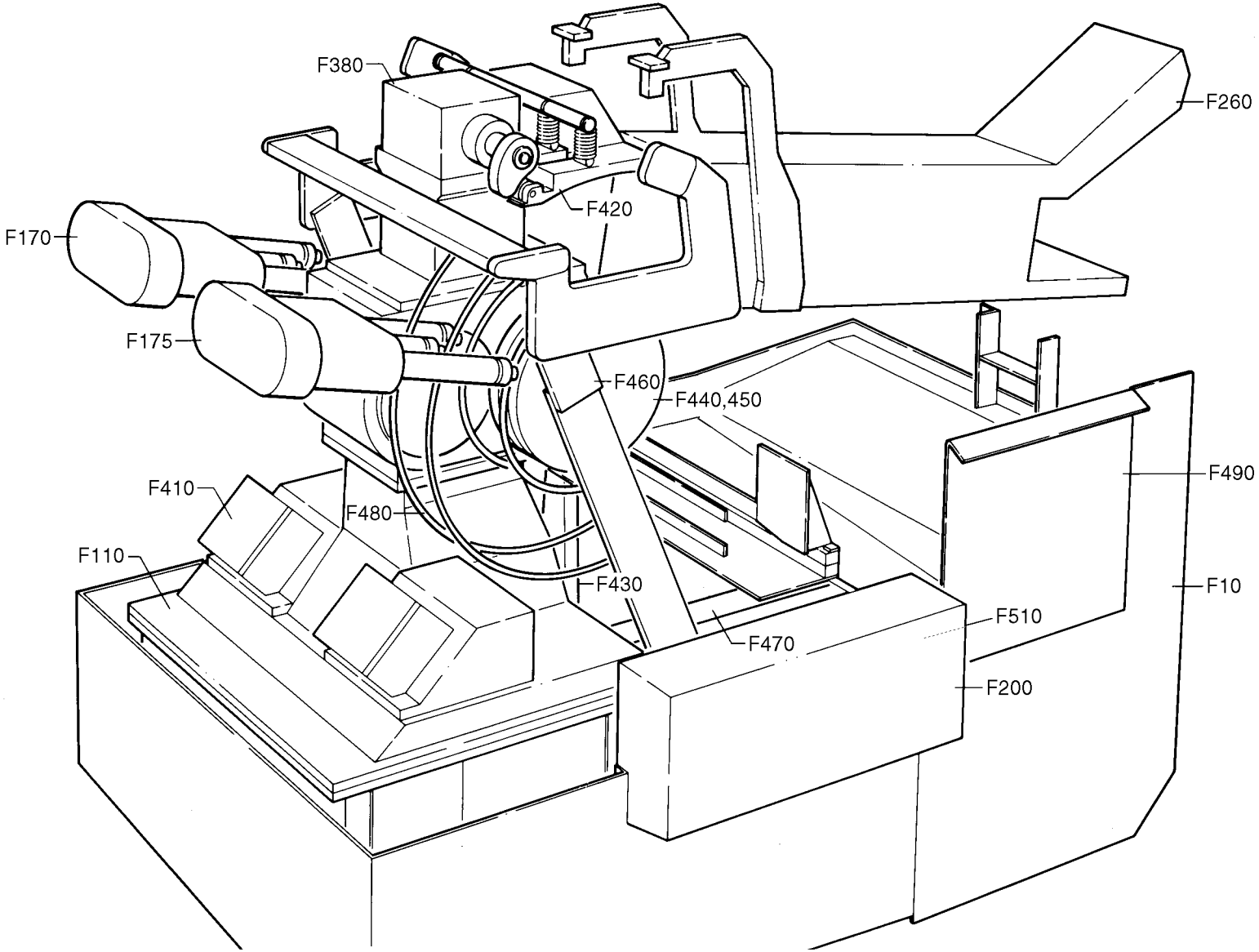
F380
F260
F420
F170
F175
F460
F440,450
F490
F410
F480
F110
F430
F10
F510
F470
F200

Pos	Part No	SP	UN	Qty	Description	Page No
SOURCE,TBA/8-040V						
F490	A 442537-0200	-		1	WASTE CHUTE	**705**
SOURCE,TBA/8-030V						
F490	A 442537-0100	-		1	WASTE CHUTE	**707**
Common parts						
F010	A 598443-0100	-		1	MACHINE BODY	**581**
F110	A 598447-0100	-		1	LOWER SECTION	**601**
F170	A 525129-0100	-		1	ELEMENT	**617**
F175	A 525128-0100	-		1	FF-ELEMENT R	**623**
F200	A 285674-6000	-		1	DISCHARGER	**629**
F260	A 297641-6000	-		1	CONVEYING EQUIPMENT	**639**
F380	A 285479-0300	-		1	SUPERSTRUCTURE	**669**
F410	A 285456-6000	-		2	PRESSURE DEVICE	**677**
F420	A 285736-0300	-		1	PULL-DOWN DEVICE	**679**
F430	A 285478-0200	-		1	DISTRIBUTOR	**687**
F440	A 598445-0100	-		1	WHEEL LEFT	**691**
F450	A 598446-0100	-		1	WHEEL RIGHT	**693**
F460	A 525049-0100	-		1	DROP CHUTE	**695**
F470	A 285324-0100	-		1	SHAFT	**697**
F480	A 525000-0100	-		1	FOLDING PART	**699**

Pos	Part No	SP	UN	Qty	Description	Page No

598443-1

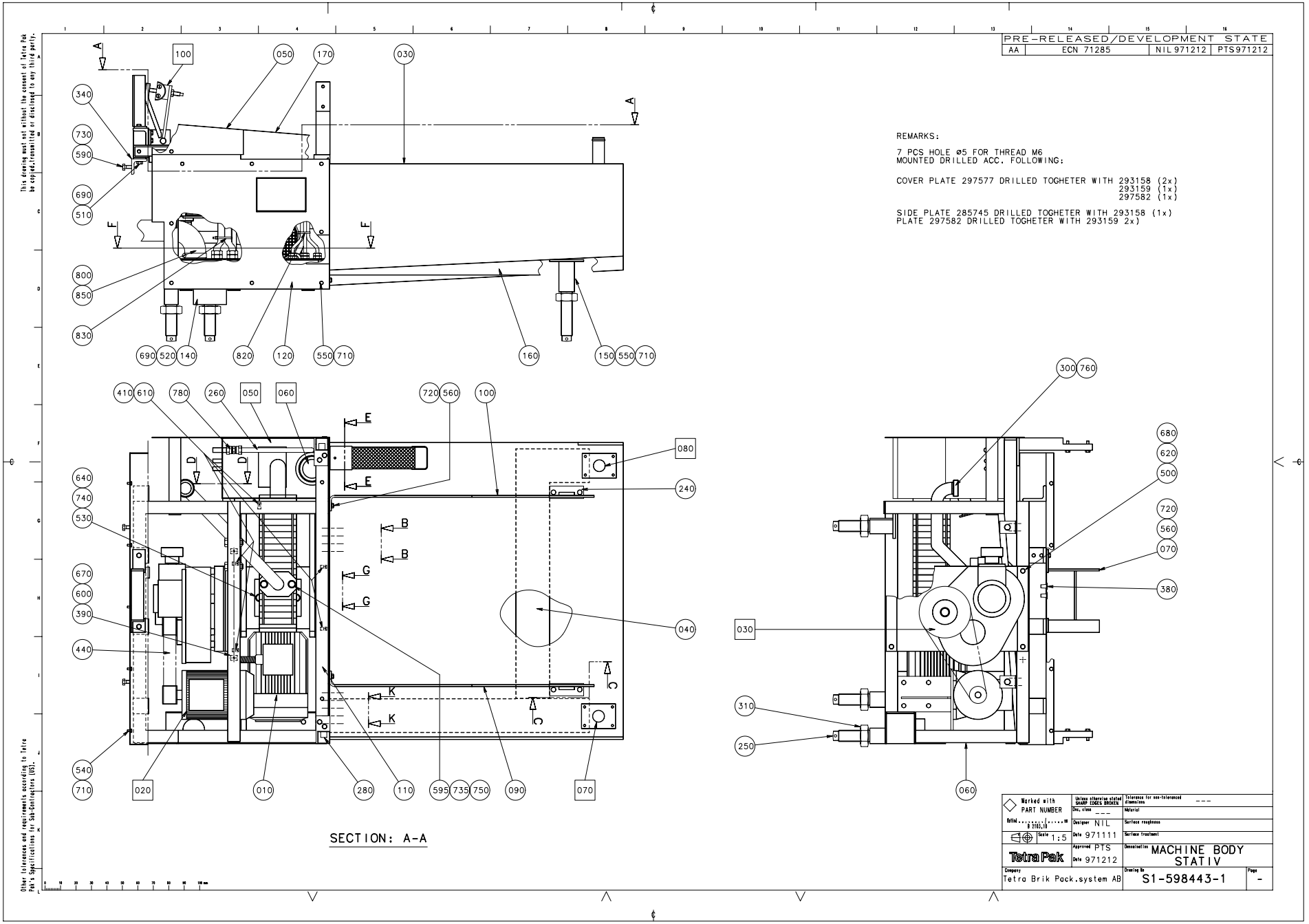
PRE-RELEASED/DEVELOPMENT STATE
AA ECN 71285 NIL971212 PTS971212
REMARKS:
7 PCS HOLE ø5 FOR THREAD M6
MOUNTED DRILLED ACC. FOLLOWING:
COVER PLATE 297577 DRILLED TOGHETER WITH 293158 (2x)
293159 (1x)
297582 (1x)
SIDE PLATE 285745 DRILLED TOGHETER WITH 293158 (1x)
PLATE 297582 DRILLED TOGHETER WITH 293159 2x)
SECTION: A-A
Tetra Pak
Tetra Brik Pack.system AB
MACHINE BODY
STATIV
S1-598443-1

Pos	Part No	SP	UN	Qty	Description	Page No
50HZ						
010	B 90321-0015	D		1	PUMP	
60HZ						
010	B 90321-0034	D		1	PUMP	
Common parts						
F020	A 598861-0100	-		1	DRIVE UNIT	**585**
F030	A 285861-6000	-		1	GEAR REDUCTION	**587**
F050	A 285552-0100	-		1	TUB	**591**
F060	A 243506-0300	-		1	BOTTOM VALVE	
F070	A 598449-0100	-		1	CABLE CONDUIT LEFT	
F080	A 598448-0100	-		1	CABLE CONDUIT RIGHT	
F100	A 297638-0100	-		1	CHAIN TENSIONER	
030	598490-0000	-		1	CLEANING TROUGH	
040	297539-0000	-		1	CABLE TRACK	
050	297577-0000	-		1	COVERING PLATE	
060	598491-0000	-		1	MACHINE BODY	
070	285330-0000	-		1	HOLDER	
090	285684-0000	-		1	SIDE FRAME	
100	285685-0000	-		1	SIDE FRAME	
110	285744-0000	-		1	COVERING PLATE	
120	285745-0000	-		1	SIDE PLATE	
140	285924-0000	-		1	LEG	
150	B 285925-0000	-		1	LEG	
160	442562-0000	-		1	CABLE TRACK	
170	442946-0000	-		1	COVERING PLATE	
230	285855-0000	-		1	LEG	
240	285857-0000	-		1	LEG	
250	285923-0000	-		4	SCREW	
260	285967-0000	-		1	PIPE	
280	297663-0000	-		1	POST HOLDER	
290	B 297664-0000	-		1	POST HOLDER	
300	297801-0000	-		1	ELBOW PIPE	
305	6278-0000	-		2	WASHER	
310	285994-0000	-		4	NUT	
320	295435-0000	-		2	WASHER	
340	297814-0000	-		2	BRACKET	
350	297860-0000	-		2	BUSHING	
360	525280-0000	-		1	SHEET	
370	525281-0000	-		1	GASKET	
380	90015-0020	F		9	BUSHING	
390	90074-0014	-		2	CLIP	
400	90152-0050	-	MM	2500	FLEXIBLE CONDUIT	
410	316810-0106	-		7	PIPE CLAMP 8MM RFR	
440	90417-0180	F		1	TIMING BELT	
500	312101-0368	-		2	SCREW M6S6X16FZB	
510	312101-0449	-		4	SCREW M6S8X16FZB	
520	312101-0451	-		4	SCREW M6S8X20FZB	
530	312101-0542	-		2	SCREW M6S12X50FZB	
540	312105-0364	-		5	SCREW M6S6X10RFR	
550	312105-0367	-		19	SCREW M6S6X14RFR	
555	312105-0376	-		2	SCREW M6S ISO 4017 M6X35 A280	
560	312105-0451	-		22	SCREW M6S ISO 4017 8X20 A280	
580	312105-0455	-		8	SCREW M6S ISO 4017 M8X30 A280	
590	312105-0495	-		2	SCREW M6S ISO 4017 M10X30 A280	
595	312105-0542	-		2	SCREW M6S ISO 4014 M12X50 A280	
600	312121-0287	-		2	SLOTTED HEMCS4X8FZB	
610	312125-0287	-		8	SLOTTED CHEESE HEAD ISO 1207 M4X8	
RFR						
615	312125-0291	-		4	SLOTTED CHEESE HEAD ISO 1207 M4X12	
RFR						
620	312601-0316	-		2	NUT M6M6FZB	
640	312601-0322	-		2	NUT M6M12FZB	
645	312605-0312	-		5	NUTS,HEXAGON,M4	
650	312605-0316	-		4	NUTS,HEXAGON,M6	
670	315101-0136	-		2	WASHER BRB4,3X8FZB	
680	315101-0153	-		2	WASHER BRB6,4X12FZB	
690	315101-0165	-		12	WASHER BRB8,4X16FZB	
700	315105-0136	-		5	WASHERS,PLAIN ROUND 4,3X8	
710	315105-0153	-		24	WASHERS,PLAIN ROUND 6,4X12	
720	315105-0165	-		30	WASHERS,PLAIN ROUND 8,4X16	
730	315105-0173	-		2	WASHERS,PLAIN ROUND 10,5X22	
735	315105-0178	-		2	WASHERS,PLAIN ROUND 13X24	
740	315111-0178	-		4	WASHER TBRB13X24FZB	
750	315202-0229	F		1	O-RINGS 59,2X5,7	
760	315250-0103	F		1	GASKET 48/38	
780	342726-0114	-		1	PIPE CONNECTION G-15	
800	342991-0112	-		2	HOSE CLIP,WORM DRIVE TYPE (73)-83	
805	352103-0100	-		3	CABLE GLAND STR 9	
810	352103-0101	-		1	CABLE GLAND ST 9	
820	352113-0101	-		6	RIBBON CLAMP	
830	352113-0102	-		2	RIBBON CLAMP	
840	90152-0051	-	MM	1000	FLEXIBLE CONDUIT	
850	90152-0044	-	MM	350	FLEXIBLE CONDUIT	
860	90012-0072	F		2	GLAND FITTING **	
880	90012-0071	-		2	GLAND FITTING	

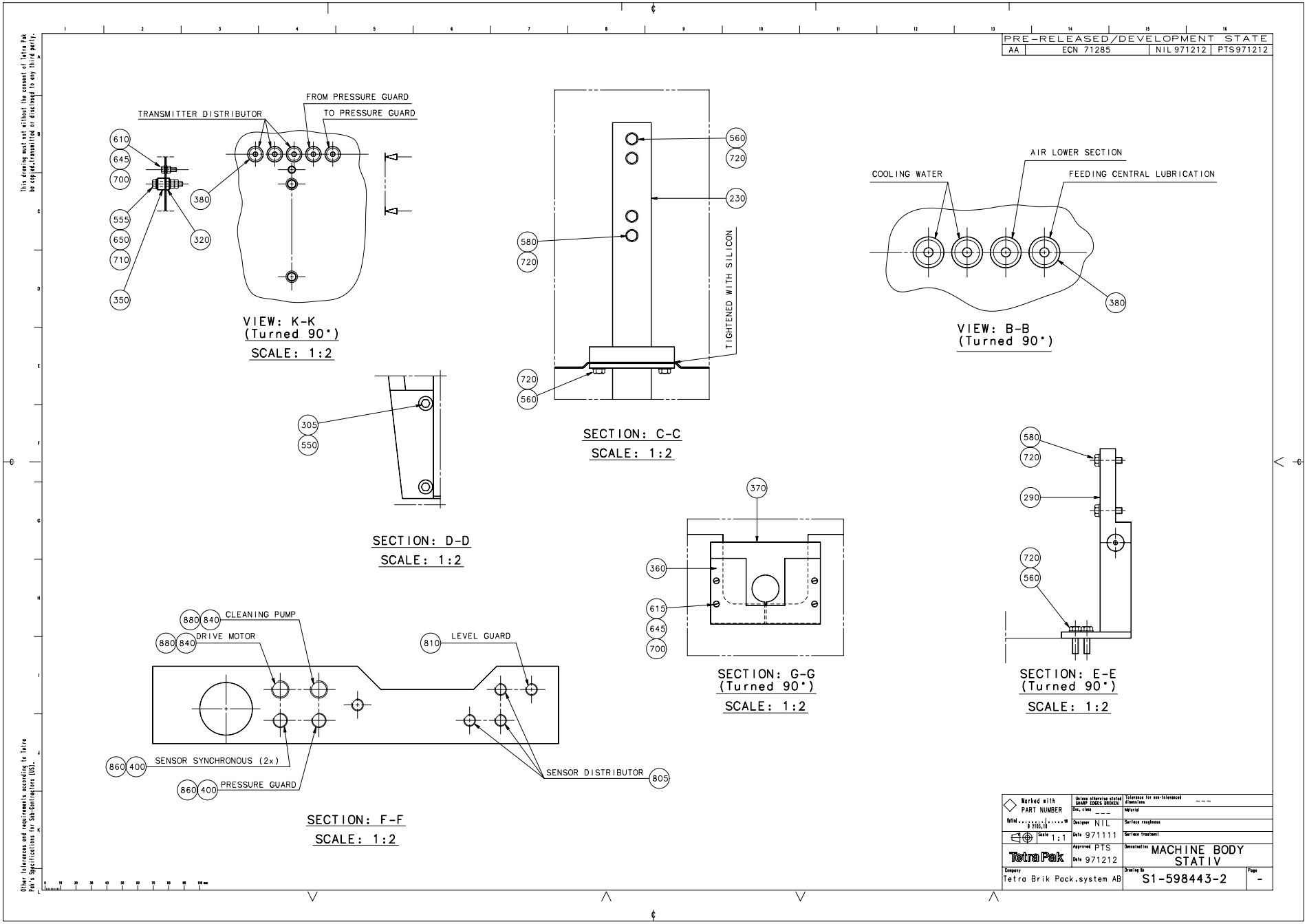
PRE-RELEASED/DEVELOPMENT STATE
AA | ECN 71285 | NIL 971212 | PTS971212
This drawing must not without the consent of Tetra Pak be copied, transmitted or disclosed to any third party.
TRANSMITTER DISTRIBUTOR
FROM PRESSURE GUARD
TO PRESSURE GUARD
610
645
700
555
650
710
350
380
320
VIEW: K-K
(Turned 90°)
SCALE: 1:2
560
720
230
580
720
720
560
TIGHTENED WITH SILICON
SECTION: C-C
SCALE: 1:2
AIR LOWER SECTION
COOLING WATER
FEEDING CENTRAL LUBRICATION
380
VIEW: B-B
(Turned 90°)
305
550
SECTION: D-D
SCALE: 1:2
370
360
615
645
700
SECTION: G-G
(Turned 90°)
SCALE: 1:2
580
720
290
720
560
SECTION: E-E
(Turned 90°)
SCALE: 1:2
880
840
CLEANING PUMP
880
840
DRIVE MOTOR
810
LEVEL GUARD
860
400
SENSOR SYNCHRONOUS (2x)
860
400
PRESSURE GUARD
SENSOR DISTRIBUTOR
805
SECTION: F-F
SCALE: 1:2
Other tolerances and requirements according to Tetra Pak's specifications to sub-contractors (DS).
Marked with PART NUMBER
Unless otherwise stated SHARP EDGES BROKEN
Tolerance for non-toleranced dimensions ---
Dec. class ---
Material
Designer NIL
Surface roughness
Date 971111
Surface treatment
Scale 1:1
Approved PTS
Date 971212
Denomination MACHINE BODY STATIV
Tetra Pak
Company Tetra Brik Pack.system AB
Drawing No S1-598443-2
Page -

Pos	Part No	SP	UN	Qty	Description	Page No
50HZ						
010	B 90321-0015	D		1	PUMP	
60HZ						
010	B 90321-0034	D		1	PUMP	
Common parts						
F020	A 598861-0100	-		1	DRIVE UNIT	
F030	A 285861-6000	-		1	GEAR REDUCTION	
F050	A 285552-0100	-		1	TUB	
F060	A 243506-0300	-		1	BOTTOM VALVE	
F070	A 598449-0100	-		1	CABLE CONDUIT LEFT	
F080	A 598448-0100	-		1	CABLE CONDUIT RIGHT	
F100	A 297638-0100	-		1	CHAIN TENSIONER	
030	598490-0000	-		1	CLEANING TROUGH	
040	297539-0000	-		1	CABLE TRACK	
050	297577-0000	-		1	COVERING PLATE	
060	598491-0000	-		1	MACHINE BODY	
070	285330-0000	-		1	HOLDER	
090	285684-0000	-		1	SIDE FRAME	
100	285685-0000	-		1	SIDE FRAME	
110	285744-0000	-		1	COVERING PLATE	
120	285745-0000	-		1	SIDE PLATE	
140	285924-0000	-		1	LEG	
150	B 285925-0000	-		1	LEG	
160	442562-0000	-		1	CABLE TRACK	
170	442946-0000	-		1	COVERING PLATE	
230	285855-0000	-		1	LEG	
240	285857-0000	-		1	LEG	
250	285923-0000	-		4	SCREW	
260	285967-0000	-		1	PIPE	
280	297663-0000	-		1	POST HOLDER	
290	B 297664-0000	-		1	POST HOLDER	
300	297801-0000	-		1	ELBOW PIPE	
305	6278-0000	-		2	WASHER	
310	285994-0000	-		4	NUT	
320	295435-0000	-		2	WASHER	
340	297814-0000	-		2	BRACKET	
350	297860-0000	-		2	BUSHING	
360	525280-0000	-		1	SHEET	
370	525281-0000	-		1	GASKET	
380	90015-0020	F		9	BUSHING	
390	90074-0014	-		2	CLIP	
400	90152-0050	-	MM	2500	FLEXIBLE CONDUIT	
410	316810-0106	-		7	PIPE CLAMP 8MM RFR	
440	90417-0180	F		1	TIMING BELT	
500	312101-0368	-		2	SCREW M6S6X16FZB	
510	312101-0449	-		4	SCREW M6S8X16FZB	
520	312101-0451	-		4	SCREW M6S8X20FZB	
530	312101-0542	-		2	SCREW M6S12X50FZB	
540	312105-0364	-		5	SCREW M6S6X10RFR	
550	312105-0367	-		19	SCREW M6S6X14RFR	
555	312105-0376	-		2	SCREW M6S ISO 4017 M6X35 A280	
560	312105-0451	-		22	SCREW M6S ISO 4017 8X20 A280	
580	312105-0455	-		8	SCREW M6S ISO 4017 M8X30 A280	
590	312105-0495	-		2	SCREW M6S ISO 4017 M10X30 A280	
595	312105-0542	-		2	SCREW M6S ISO 4014 M12X50 A280	
600	312121-0287	-		2	SLOTTED HEMCS4X8FZB	
610	312125-0287	-		8	SLOTTED CHEESE HEAD ISO 1207 M4X8	
RFR						
615	312125-0291	-		4	SLOTTED CHEESE HEAD ISO 1207 M4X12	
RFR						
620	312601-0316	-		2	NUT M6M6FZB	
640	312601-0322	-		2	NUT M6M12FZB	
645	312605-0312	-		5	NUTS,HEXAGON,M4	
650	312605-0316	-		4	NUTS,HEXAGON,M6	
670	315101-0136	-		2	WASHER BRB4,3X8FZB	
680	315101-0153	-		2	WASHER BRB6,4X12FZB	
690	315101-0165	-		12	WASHER BRB8,4X16FZB	
700	315105-0136	-		5	WASHERS,PLAIN ROUND 4,3X8	
710	315105-0153	-		24	WASHERS,PLAIN ROUND 6,4X12	
720	315105-0165	-		30	WASHERS,PLAIN ROUND 8,4X16	
730	315105-0173	-		2	WASHERS,PLAIN ROUND 10,5X22	
735	315105-0178	-		2	WASHERS,PLAIN ROUND 13X24	
740	315111-0178	-		4	WASHER TBRB13X24FZB	
750	315202-0229	F		1	O-RINGS 59,2X5,7	
760	315250-0103	F		1	GASKET 48/38	
780	342726-0114	-		1	PIPE CONNECTION G-15	
800	342991-0112	-		2	HOSE CLIP,WORM DRIVE TYPE (73)-83	
805	352103-0100	-		3	CABLE GLAND STR 9	
810	352103-0101	-		1	CABLE GLAND ST 9	
820	352113-0101	-		6	RIBBON CLAMP	
830	352113-0102	-		2	RIBBON CLAMP	
840	90152-0051	-	MM	1000	FLEXIBLE CONDUIT	
850	90152-0044	-	MM	350	FLEXIBLE CONDUIT	
860	90012-0072	F		2	GLAND FITTING **	
880	90012-0071	-		2	GLAND FITTING	

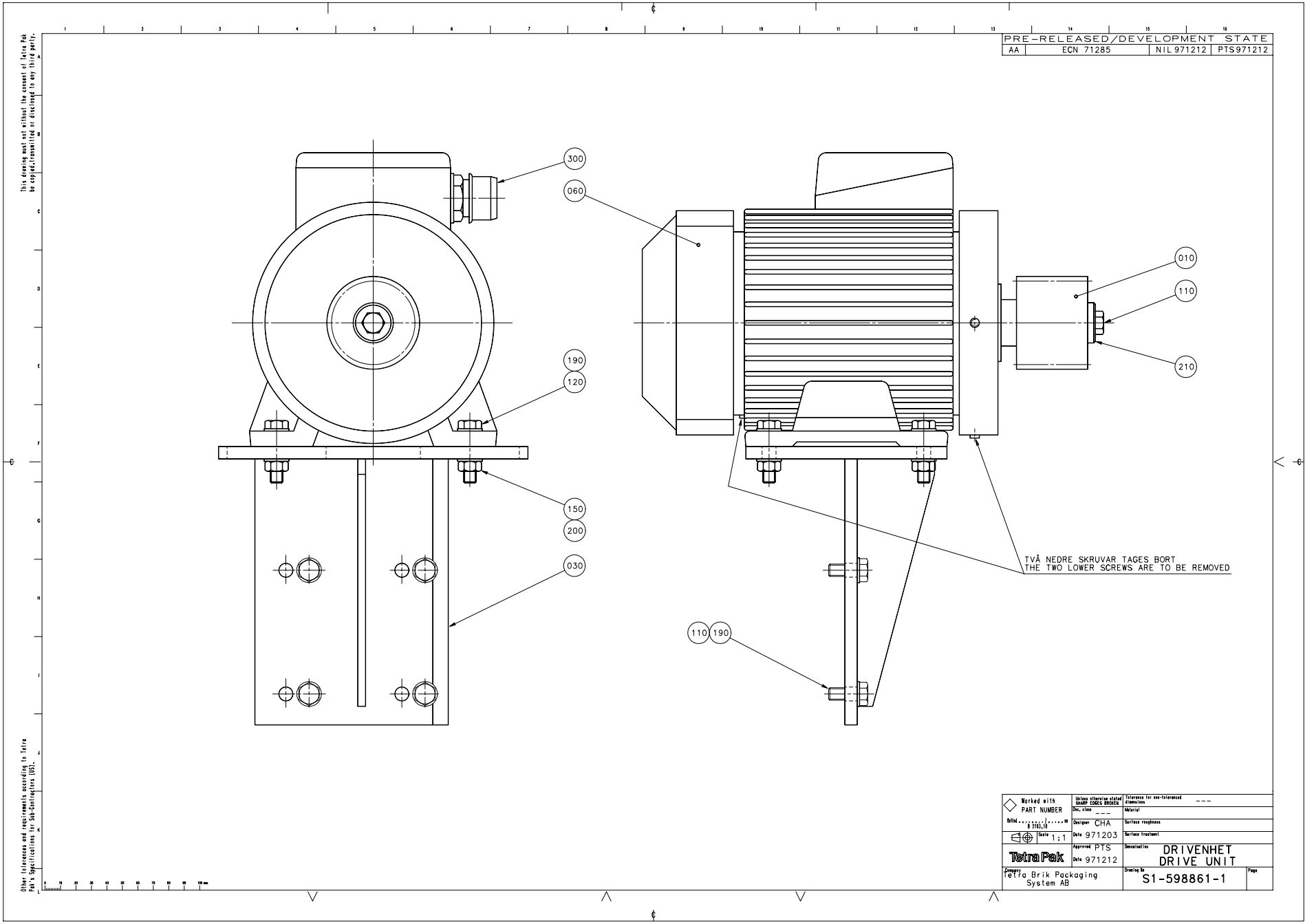
PRE-RELEASED/DEVELOPMENT STATE
AA
ECN 71285
NIL 971212
PTS971212
This drawing must not without the consent of Tetra Pak be copied, transmitted or disclosed to any third party.
300
060
190
120
150
200
030
010
110
210
TVÅ NEDRE SKRUVAR TAGES BORT
THE TWO LOWER SCREWS ARE TO BE REMOVED
110
190
Other tolerances and requirements according to Tetra Pak's specifications for sub-contractors (DS).
Marked with PART NUMBER
Unless otherwise stated SHARP EDGES BROKEN
Tolerance for non-toleranced dimensions ---
Dec. class ---
Material
Designer CHA
Surface roughness
Date 971203
Surface treatment
Scale 1:1
Approved PTS
Date 971212
Denomination
DRIVENHET
DRIVE UNIT
Tetra Pak
Company
Tetra Brik Packaging System AB
Drawing No
S1-598861-1
Page

Pos	Part No	SP	UN	Qty	Description	Page No
-						
010	443336-0008	K		1	TIMING BELT PULLEY	
030	598860-0000	-		1	SHELF	
060	90045-0049	K		1	MOTOR	
110	312101-0451	-		5	SCREW M6S8X20FZB	
120	312101-0457	-		3	SCREW M6S8X35FZB	
150	312601-0318	-		3	NUT M6M8FZB	
190	315101-0165	-		7	WASHER BRB8,4X16FZB	
200	315111-0165	-		3	WASHER TBRB8,4X16FZB	
210	315121-0165	-		1	WASHER TBRSB8,4X26FZB	
300	352136-0129	-		1	GLAND FITTING	

Pos	Part No	SP	UN	Qty	Description	Page No

GEAR REDUCTION

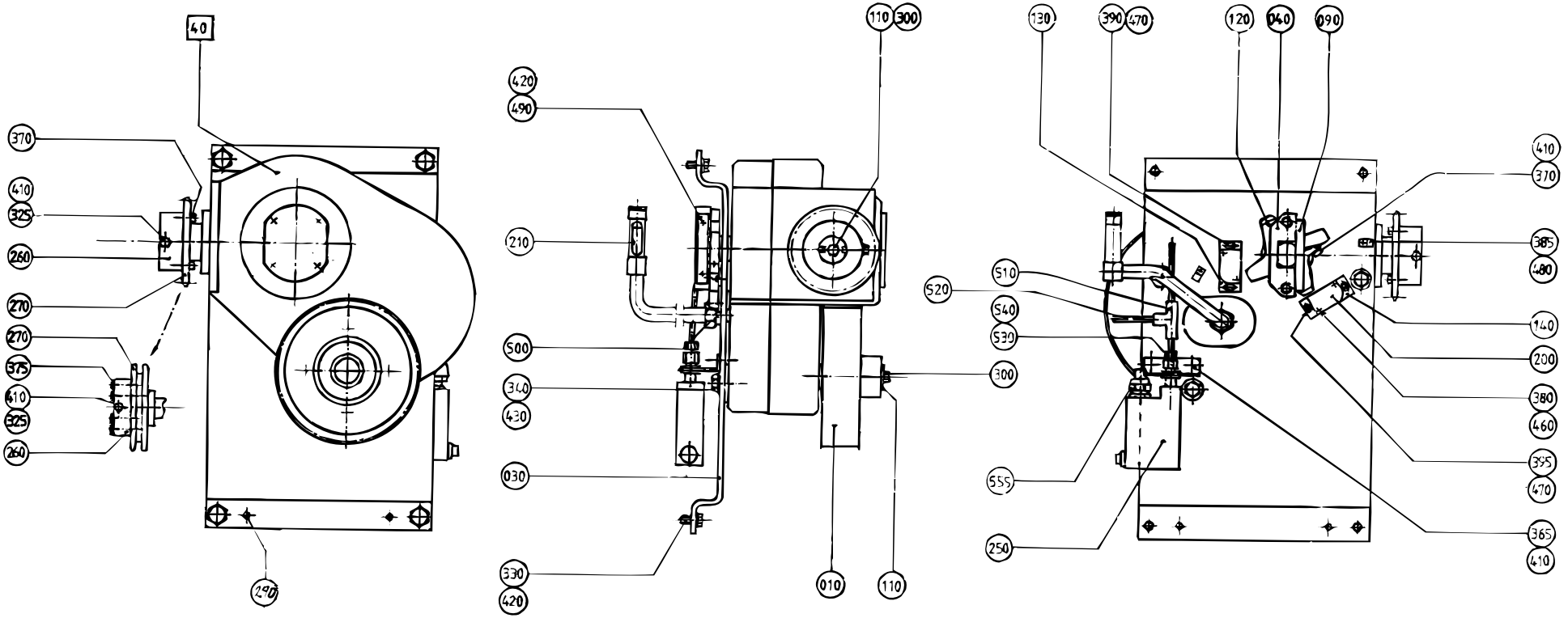

S-285861-5
ECN 70373

Pos	Part No	SP	UN	Qty	Description	Page No
-						
F040	A 442582-0100	D		1	DRIVE GEAR	589
010	525215-0006	-		1	TIMING BELT PULLEY	
030	525109-0000	-		1	BRACKET	
040	927332-0000	-		1	BRACKET	
090	927333-0000	-		1	BAR CLAMP	
110	285403-0000	-		2	WASHER	
120	566775-0000	-		1	CARRIER	
130	525337-0000	-		1	BRACKET	
140	525232-0000	-		1	BRACKET	
200	90044-0104	F		2	PROX.SWITCHIFM IN 3002	
210	443248-0000	K		1	OIL PIPE	
250	B 90274-0002	K		1	PRESSURE SWITCH	
260	525216-0000	-		1	SLEEVE	
270	297661-0000	K		1	SPROCKET	
290	311112-0341	-		2	PINS,SLOTTED TUBULAR SPRING PIN 6X24	
300	312101-0370	-		2	SCREW M6S6X20FZB	
325	312101-0384	-		1	SCREW M6S6X70FZB	
330	312101-0451	-		4	SCREW M6S8X20FZB	
340	312101-0493	-		3	SCREW M6S10X25FZB	
365	312101-0364	-		2	SCREW M6S6X10FZB	
370	312111-0370	-		7	SCREW MC6S6X20FZB	
380	312125-0228	-		2	SLOTTED CHEESE HEAD ISO 1207 M3X16	
RFR						
385	312125-0287	-		2	SLOTTED CHEESE HEAD ISO 1207 M4X8	
RFR						
390	312115-0295	-		2	SCREW MC6S ISO 4762 M4X20 A280	
395	312115-0291	-		2	SCREW MC6S ISO 4762 M4X12 A280	
410	315101-0153	-		4	WASHER BRB6,4X12FZB	
420	315101-0165	-		6	WASHER BRB8,4X16FZB	
430	315101-0173	-		3	WASHER BRB10,5X22FZB	
460	315105-0124	-		2	WASHERS,PLAIN ROUND 3,2X6	
470	315105-0136	-		4	WASHERS,PLAIN ROUND 4,3X8	
480	90165-0056	-		2	CLIP	
490	312105-0455	-		2	SCREW M6S ISO 4017 M8X30 A280	
500	342720-0115	-		1	STRAIGHT CONNECTION GA-16-G1/2"	
510	342946-0112	-		1	T-COUPLING,UNION 6/4	
520	90166-0011	-	MM	3000	HOSE	
530	342706-0130	-		1	ACCESSORIES,INSERT SLEEVE 6	
540	342790-0202	-		1	PRESSURE GAUGE CONNECTION MAV6-S/	
R3/8FZB						
555	90012-0073	-		1	GLAND FITTING	

Pos	Part No	SP	UN	Qty	Description	Page No

DRIVE GEAR

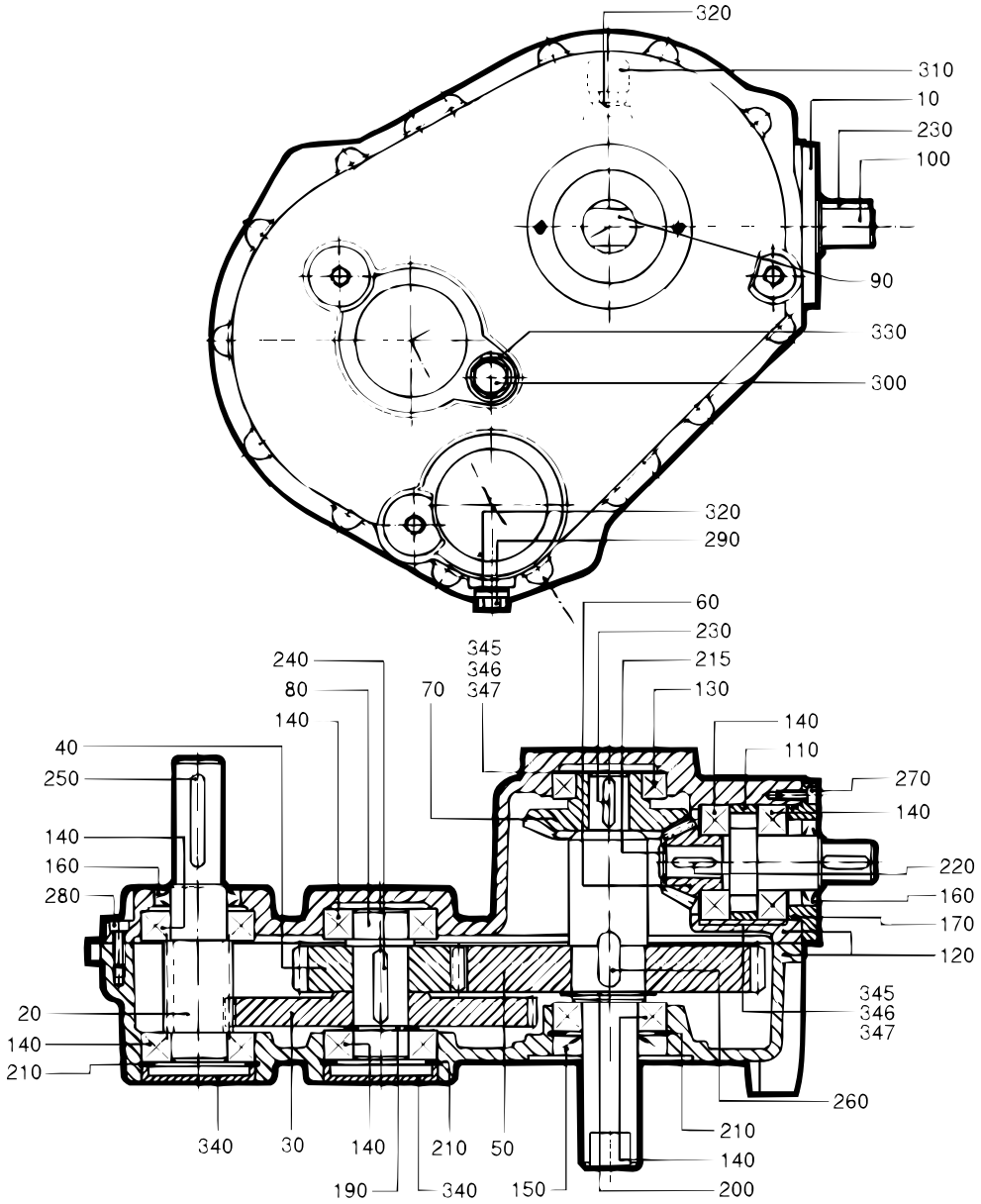

S-442582-1
ECN 5999

Pos	Part No	SP	UN	Qty	Description	Page No
-						
	442581-0001	-		x	MEASURE DRAWING	
010	567345-0000	-		1	BEARING COVER	
020	442554-0000	K		1	GEARING	
030	442555-0000	K		1	GEAR WHEEL	
040	442556-0000	K		1	GEAR WHEEL	
050	442557-0000	K		1	GEAR WHEEL	
060	442558-0000	K		1	GEAR WHEEL	
070	442559-0000	K		1	GEAR WHEEL	
080	567347-0000	K		1	SHAFT	
090	567348-0000	K		1	SHAFT	
100	525136-0000	K		1	SHAFT	
110	567349-0000	K		1	SPACER	
120	567373-0000	-		1	GEAR HOUSING	
130	321306-0107	K		1	BALL BEARISKF6007	
140	321309-0106	K		7	BALL BEARISKF6206	
150	90091-0145	K		1	SEAL RING	
160	90091-0054	K		2	SEAL RING	
170	90242-0116	K		1	O-RING	
190	315750-0122	K		1	CIRCLIP SGA30	
200	315750-0127	K		1	CIRCLIP SGA40	
210	315752-0136	K		3	CIRCLIP SGH62	
215	90141-0012	K		1	LOCK RING	
220	315701-0202	K		1	FLAT WEDGE5X5X22	
230	315701-0234	K		3	FLAT WEDGE6X6X25	
240	315701-0270	K		2	FLAT WEDGE8X7X40	
250	315701-0272	K		1	FLAT WEDGE8X7X50	
260	567350-0000	K		2	WEDGE	
270	312111-0329	-		4	SCREW MC6S5X16FZB	
280	312111-0370	-		12	SCREW MC6S6X20FZB	
290	90330-0026	K		1	PLUG,EXTERNAL G-THREAD G1/4"	
300	90330-0037	K		1	PLUG,EXTERNAL G-THREAD G1/2"	
310	442841-0000	K		1	AIR SCREW	
320	315234-0110	K		2	PLAIN ROUND,COPPER R1/4"	
330	315234-0113	K		1	PLAIN ROUND,COPPER R1/2",M20	
340	90214-0310	K		2	LID	
345	442903-0000	K		x	SHIM	
346	442904-0000	K		x	SHIM	
347	442905-0000	K		x	SHIM	
390	90296-0075	K	ML	2400	OIL	

Pos	Part No	SP	UN	Qty	Description	Page No

285552-1

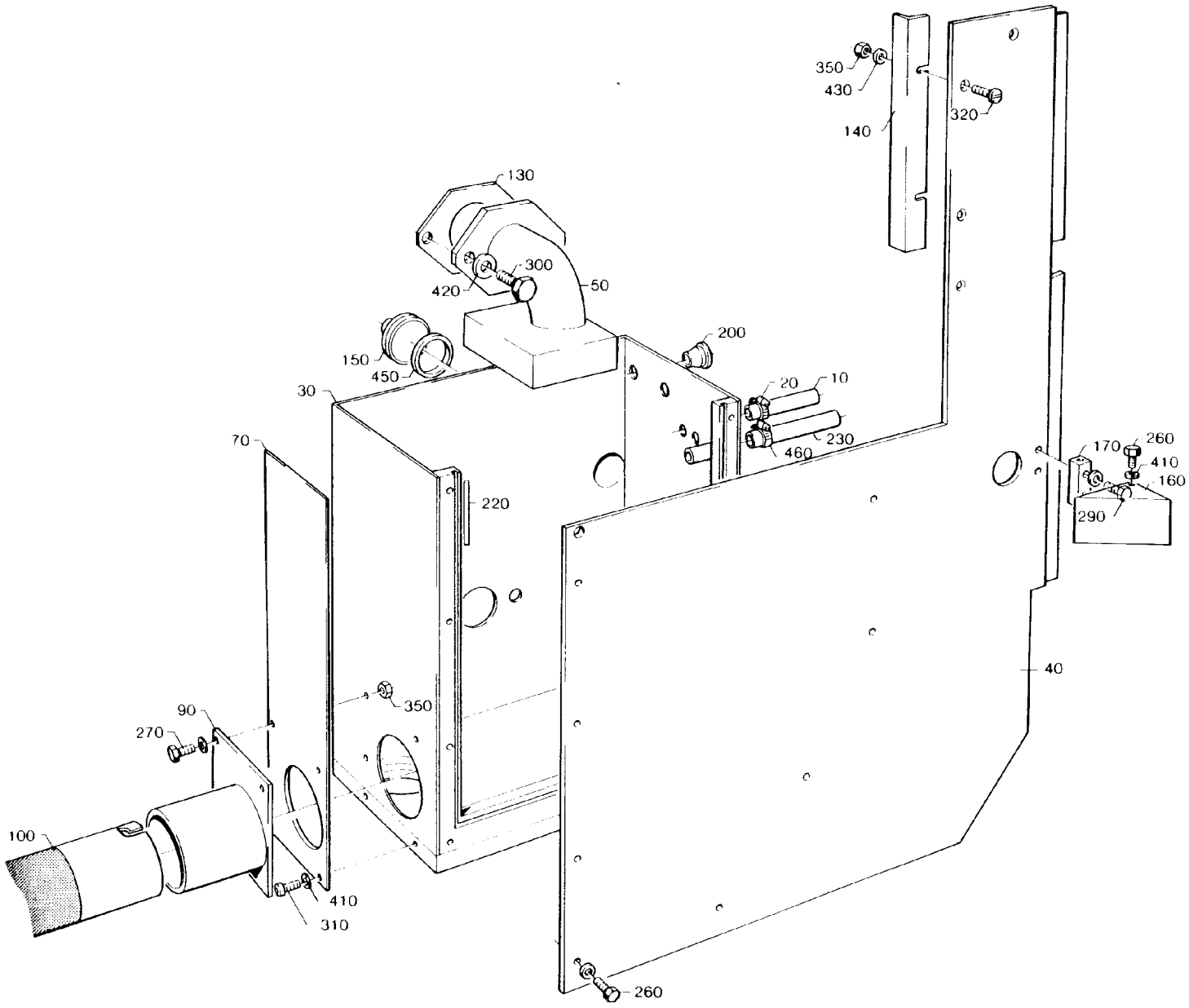

285552-1
285552-1.TIF

Pos	Part No	SP	UN	Qty	Description	Page No
TB/8						
010	90166-0059	K	MM	100	HOSE	
020	342991-0101	K		2	HOSE CLIP,WORM DRIVE TYPE (13)-16	
TBA/8						
010	90166-0059	K	MM	560	HOSE	
020	342991-0101	K		4	HOSE CLIP,WORM DRIVE TYPE (13)-16	
Common parts						
030	285539-0000	-		1	TUB	
040	297582-0000	-		1	SHEET	
050	442947-0000	-		1	STRAINER	
070	285540-0000	-		1	GASKET	
090	297821-0000	-		1	BRACKET	
100	297822-0000	-		1	STRAINER	
130	262328-0000	-		2	GASKET	
140	297551-0000	-		1	SHEET	
150	297596-0000	-		1	PLUG	
160	297666-0000	-		1	PROTECTION	
170	297667-0000	-		1	BRACKET	
200	90015-0020	F		2	BUSHING	
220	90161-0001	K	MM	865	STRIP	
230	90166-0087	K	MM	280	HOSE	
260	312105-0366	-		12	SCREW M6S ISO 4017 M6X12 A280	
270	312105-0367	-		1	SCREW M6S6X14RFR	
280	312105-0370	-		2	SCREW M6S ISO 4017 M6X20 A280	
290	312105-0372	-		2	SCREW M6S ISO 4017 M6X25 A280	
300	312105-0536	-		2	SCREW M6S ISO 4017 M12X30 A280	
310	312115-0368	-		2	SCREW MC6S ISO 4762 M6X16 A280	
320	312155-0368	-		4	SCREW MF6S DIN7991 M6X16 A280	
350	312605-0316	-		3	NUTS,HEXAGON,M6	
410	315105-0153	-		19	WASHERS,PLAIN ROUND 6,4X12	
420	315105-0178	-		2	WASHERS,PLAIN ROUND 13X24	
430	315115-0153	-		2	WASHER TBRB6,4X12RFR	
450	315250-0103	F		1	GASKET 48/38	
460	342991-0103	K		2	HOSE CLIP,WORM DRIVE TYPE (19)-23	

Pos	Part No	SP	UN	Qty	Description	Page No

BOTTOM VALVE

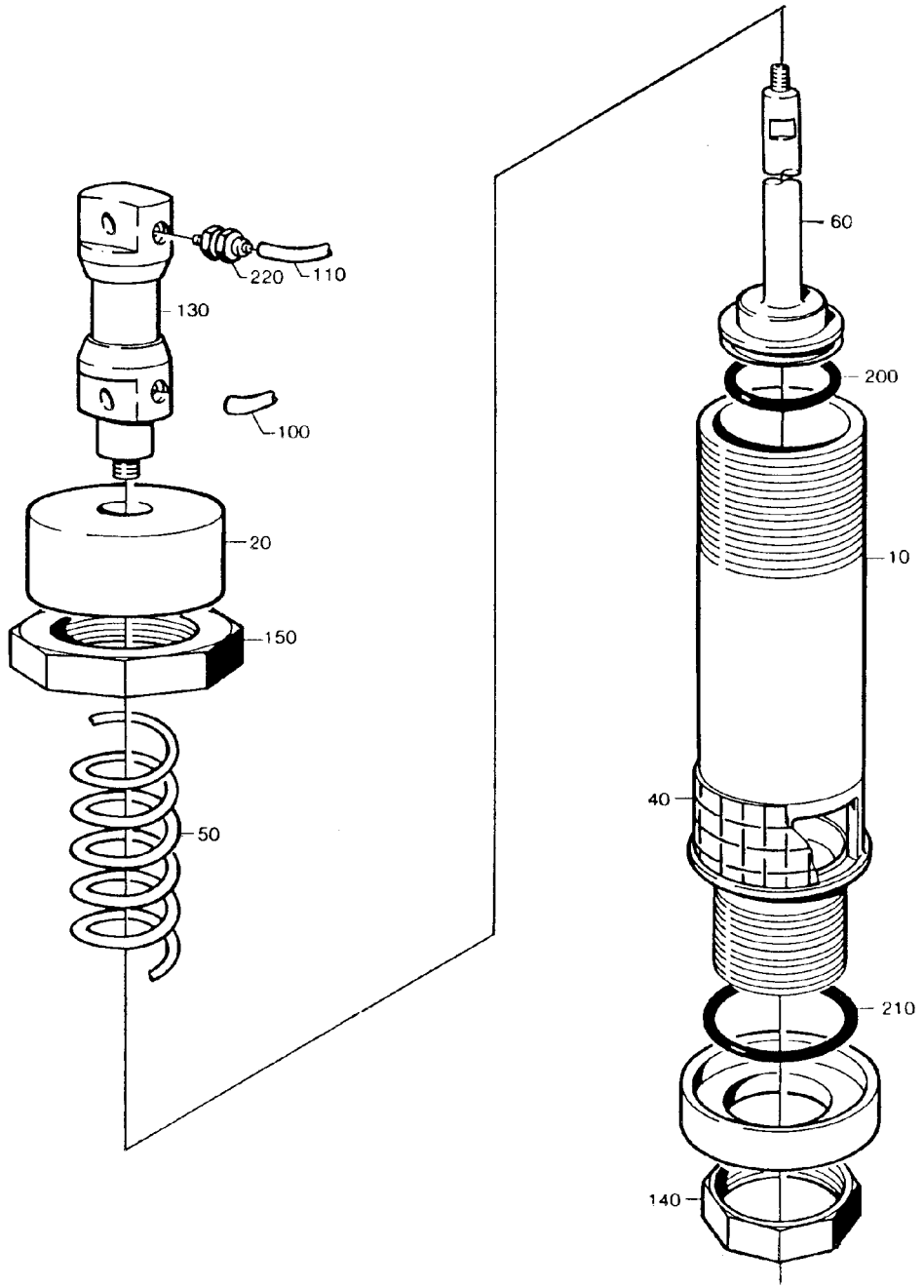

243506-3
243506-3.TIF

Pos	Part No	SP	UN	Qty	Description	Page No
-						
010	229424-0000	D		1	VALVE HOUSING	
020	229443-0000	D		1	CYLINDER BRACKET	
040	229445-0000	K		1	STRAINER	
050	279139-0000	F		1	COMPRESSION SPRING	
060	279754-0000	D		1	BOTTOM VALVE	
100	90166-0124	K	MM	1500	HOSE	
110	90166-0124	-	MM	500	HOSE	
130	B 90239-0189	K		1	CYLINDER	
140	90330-0052	D		1	NUT	
150	90330-0053	D		1	NUT	
200	315202-0226	F		1	O-RINGS 44,2X5,7	
210	315202-0230	F		1	O-RINGS 64,2X5,7	
220	342920-0114	-		2	STRAIGHT COUPLING,EXT.THREADED 6/4-R1/4"	

Pos	Part No	SP	UN	Qty	Description	Page No

This drawing must not without the consent of Tetra Pak be copied, transmitted or disclosed to any third party.

PRE-RELEASED/DEVELOPMENT STATE			
AA	ECN 71285	NIL 971212	PTS971212

Hose assembly scale 1:10

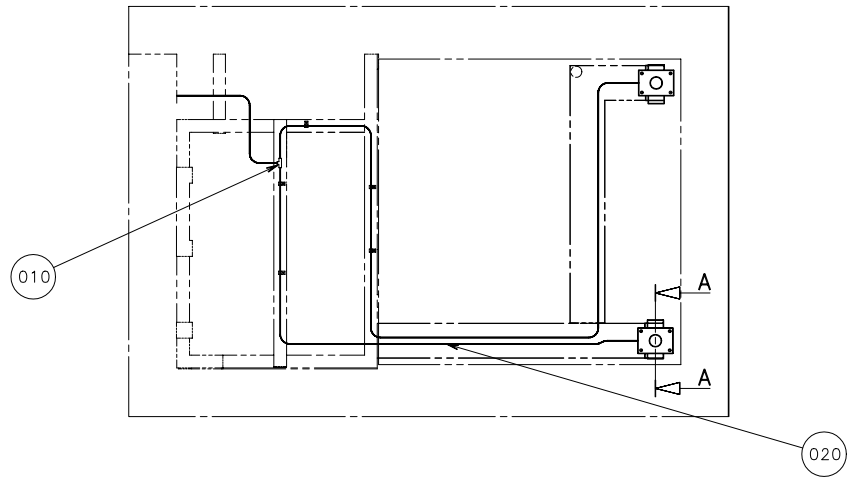

090 O-ringar smorda med silikonfett före montering.
O-rings silicon greased before mounting

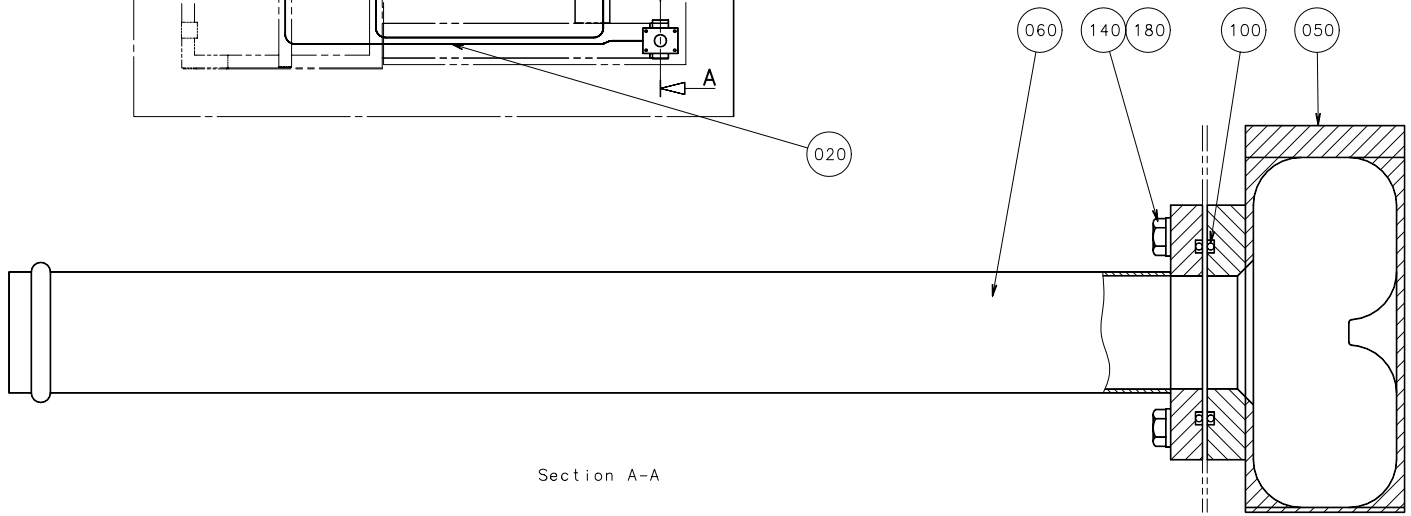

Section A-A

Marked with PART NUMBER	Unless otherwise stated SHARP EDGES BROKEN	Tolerance for non-tolerenced dimensions	---
Method ...../..... 01 B 2103.10	Dwg. class ---	Material	
	Designer NIL	Surface roughness	
Scale 1:1	Date 971031	Surface treatment	
Tetra Pak	Approved PTS Date 971212	Denomination	KABELRÖR VÄNSTER CABLE CONDUIT LEFT
Company Tetra Brik Pack.system AB		Drawing No S2-598449-1	Page

Other tolerances and requirements according to Tetra Pak's Specifications for Sub-Contractors (US).

0 10 20 30 40 50 60 70 80 90 100 mm

Pos	Part No	SP	UN	Qty	Description	Page No
-						
010	342946-0122	-		1	T-COUPLING,UNION 8/6	
020	90166-0122	-	MM	3150	HOSE	
050	598451-0000	-		1	HOUSE LEFT	
060	297413-0000	-		1	PIPE	
090	90296-0009	K		x	GREASE	
100	315202-0301	-		2	O-RINGS 49,5X3	
140	312105-0370	-		4	SCREW M6S ISO 4017 M6X20 A280	
180	315105-0153	-		4	WASHERS,PLAIN ROUND 6,4X12	

Pos	Part No	SP	UN	Qty	Description	Page No

This drawing must not without the consent of Tetra Pak be copied, transmitted or disclosed to any third party.

PRE-RELEASED/DEVELOPMENT STATE			
AA	ECN 71285	NIL 971212	PTS971212

Hose assembly scale 1:10

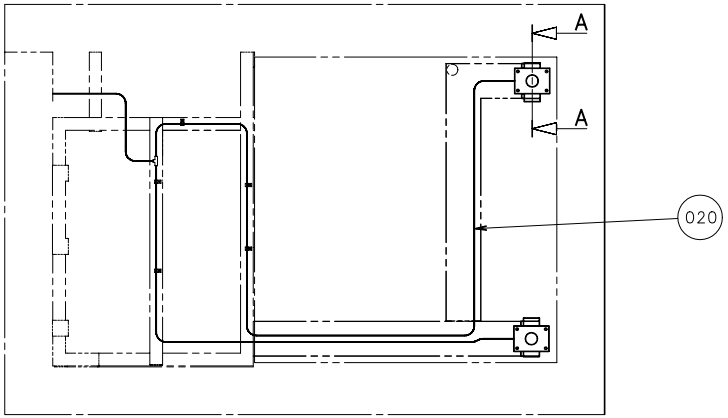

090 O-ringar smorda med silikonfett före montering.
O-rings silicon greased before mounting

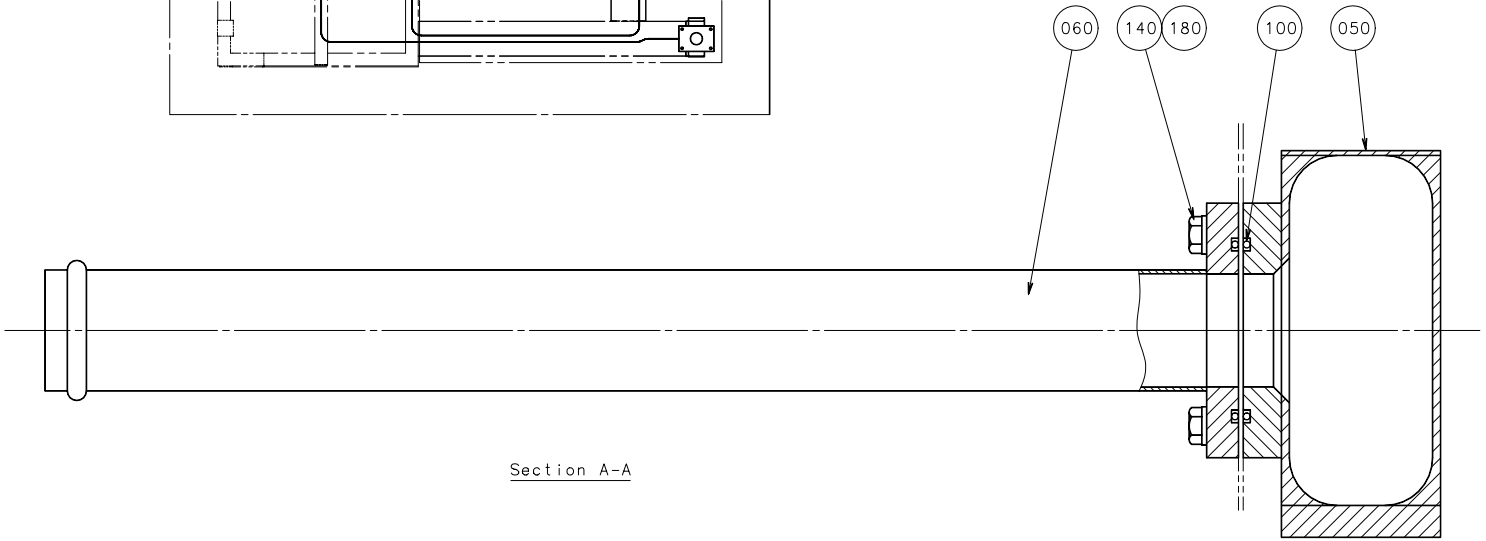

Section A-A

Other tolerances and requirements according to Tetra Pak's Specifications for Sub-Contractors (US).

Marked with PART NUMBER	Unless otherwise stated SHARP EDGES BROKEN	Tolerance for non-toleranced dimensions	---
Ritkod ...../..... 01 B 2103.10	Dwg. class ---	Material	
	Designer NIL	Surface roughness	
Scale 1:1	Date 971031	Surface treatment	
Tetra Pak	Approved PTS Date 971212	Denomination	KABELRÖR HÖGER CABLE CONDUIT RIGHT
Company Tetra Brik Pack.system AB		Drawing No S2-598448-1	Page

Pos	Part No	SP	UN	Qty	Description	Page No
-						
020	90166-0122	-	MM	3600	HOSE	
050	598450-0000	-		1	HOUSE RIGHT	
060	297413-0000	-		1	PIPE	
090	90296-0009	K		x	GREASE	
100	315202-0301	-		2	O-RINGS 49,5X3	
140	312105-0370	-		4	SCREW M6S ISO 4017 M6X20 A280	
180	315105-0153	-		4	WASHERS,PLAIN ROUND 6,4X12	

Pos	Part No	SP	UN	Qty	Description	Page No

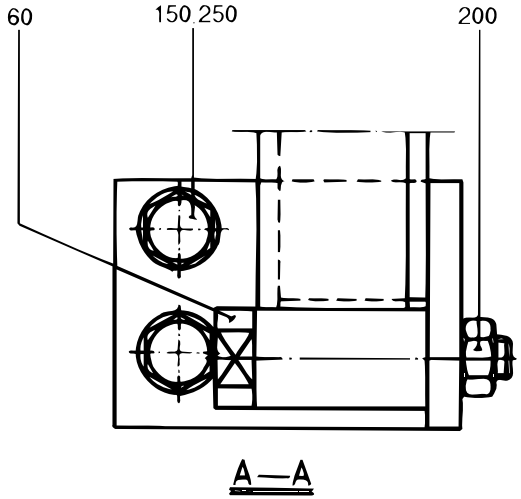

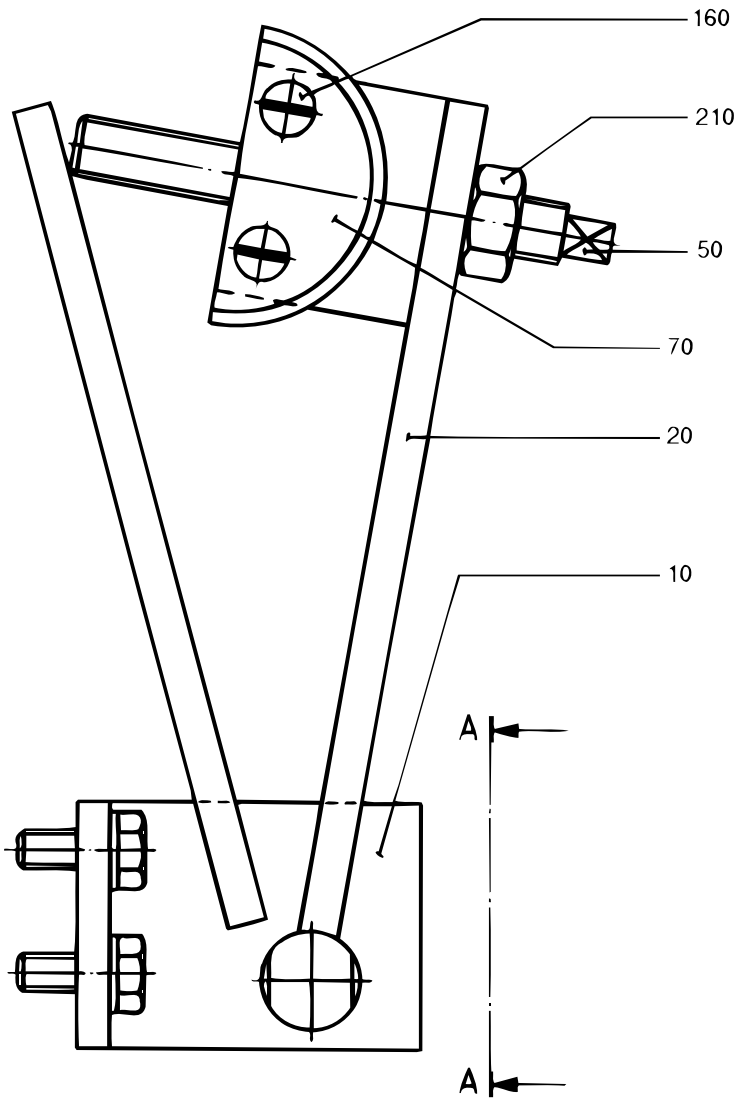

S-297638-1
ECN 16142

Pos	Part No	SP	UN	Qty	Description	Page No
-						
010	297608-0000	-		1	BRACKET	
020	297609-0000	-		1	ARM	
050	297610-0000	-		1	SCREW	
060	297611-0000	-		1	SHAFT	
070	297612-0000	F		1	PROFILE	
150	312105-0451	-		2	SCREW M6S ISO 4017 8X20 A280	
160	312145-0378	-		2	SLOTTED HEMFS6X40RFR	
200	312605-0318	-		1	NUTS,HEXAGON,M8	
210	312605-0322	-		1	NUTS,HEXAGON,M12	
250	315105-0165	-		2	WASHERS,PLAIN ROUND 8,4X16	

Pos	Part No	SP	UN	Qty	Description	Page No

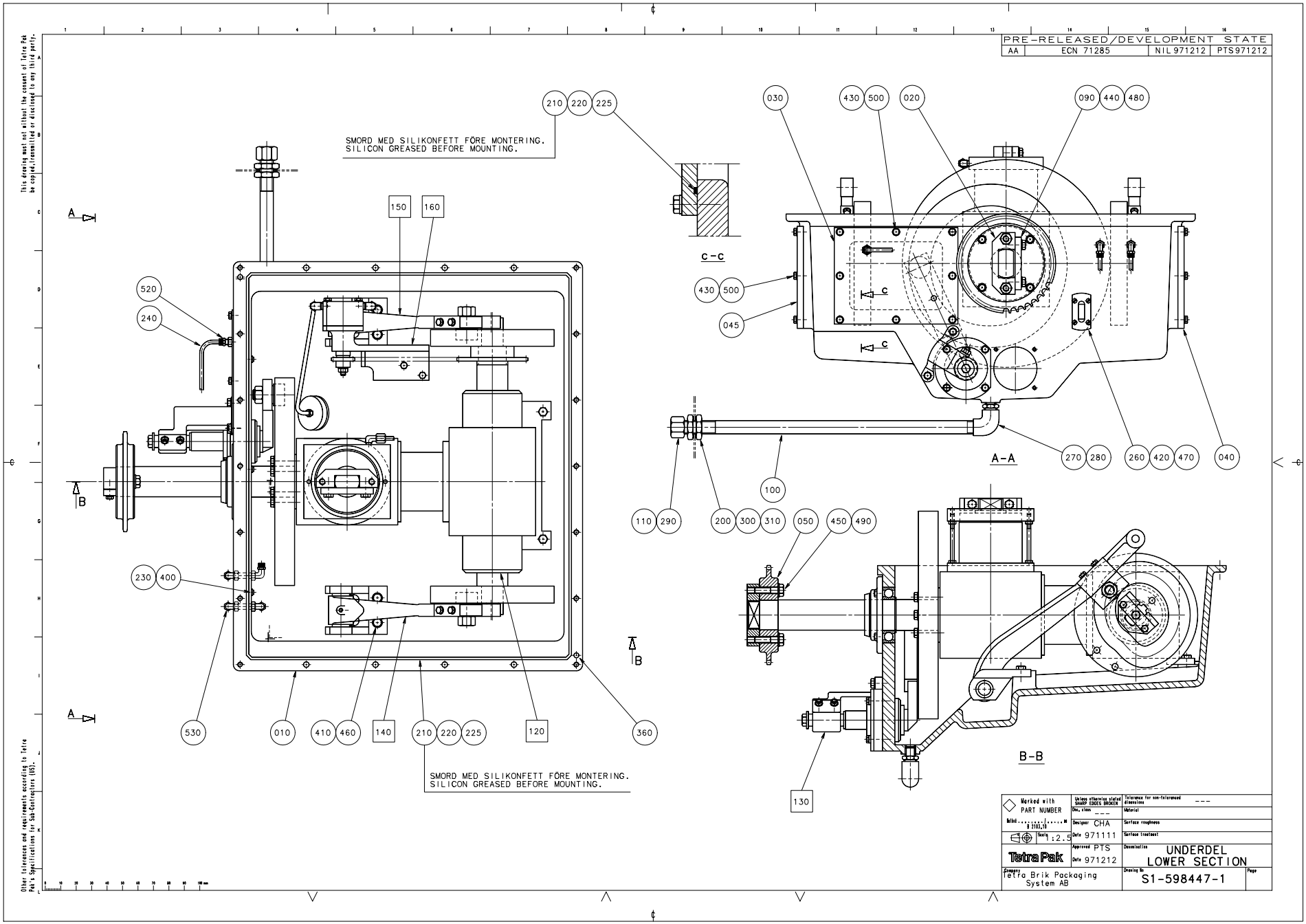
PRE-RELEASED/DEVELOPMENT STATE
AA ECN 71285 NIL 971212 PTS 971212
SMORD MED SILIKONFETT FÖRE MONTERING.
SILICON GREASED BEFORE MOUNTING.
SMORD MED SILIKONFETT FÖRE MONTERING.
SILICON GREASED BEFORE MOUNTING.
c-c
A-A
B-B
UNDERDEL
LOWER SECTION
Tetra Brik Packaging System AB
S1-598447-1
Designer CHA
Date 971111
Approved PTS
Date 971212
Scale :2.5

Pos	Part No	SP	UN	Qty	Description	Page No
-						
F120	A 598452-0100	-		1	BEVEL GEAR	
F130	A 442782-0100	-		1	DISTRIBUTOR ARM	
F140	A 285299-0100	-		1	PRESSURE ARM	
F150	A 594621-0100	-		1	PRESSURE ARM	
F160	A 525102-0200	-		1	LUBRICATING SYSTEM	
010	598493-0000	-		1	HOUSE	
020	262274-0005	K		1	BRACKET	
030	285039-0000	-		1	HATCH	
040	B 525167-0000	-		1	HATCH	
045	598488-0000	-		1	HATCH	
050	285051-0000	K		1	SPROCKET	
090	262275-0003	K		1	CAP	
100	443126-0000	-		1	CONNECTION PIPE	
110	525047-0000	-		1	GASKET	
200	525046-0000	-		2	GASKET	
210	90296-0009	-		1	GREASE	
220	90161-0001	K	MM	4500	STRIP	
225	90153-0043	K		x	ADHESIVE	
230	90165-0005	-		5	CLIP	
240	90166-0124	F	MM	3000	HOSE	
260	90199-0004	K		1	LEVEL INDICATOR	
270	90330-0020	-		1	ELBOW 90,INTERNAL THREAD Rp1/2"	
280	90330-0021	-		1	NIPPLES,HEXAGON,EXT.R-THREAD R1/2"-R1/2"	
290	90330-0086	-		1	COVER	
300	90330-0093	-		2	NUT,HEXAGON G1/2"	
310	90157-0034	-		1	SEALING COMPOUND	
360	311103-0399	-		2	CYLINDRICACP M6 8X16 RFR	
400	312101-0287	-		3	SCREW M6S4X8FZB	
410	312101-0453	-		4	SCREW M6S8X25FZB	
420	312105-0293	-		4	SCREW M6S ISO 4017 M4X16 A280	
430	312105-0370	-		24	SCREW M6S ISO 4017 M6X20 A280	
440	90287-0165	-		2	SCREW	
450	312105-0499	-		2	SCREW 4017 M10X40A280	
460	315101-0165	-		4	WASHER BRB8,4X16FZB	
470	315105-0136	-		4	WASHERS,PLAIN ROUND 4,3X8	
480	315105-0165	-		2	WASHERS,PLAIN ROUND 8,4X16	
490	315105-0173	-		2	WASHERS,PLAIN ROUND 10,5X22	
500	315115-0153	-		24	WASHER TBRB6,4X12RFR	
520	342920-0113	-		1	STRAIGHT COUPLING,EXT.THREADED 6/4-R1/8"	
530	342930-0113	-		4	ELBOW 90 COUPL.,EXT.THREAD 6/4-R1/8"	

Pos	Part No	SP	UN	Qty	Description	Page No

BEVEL GEAR

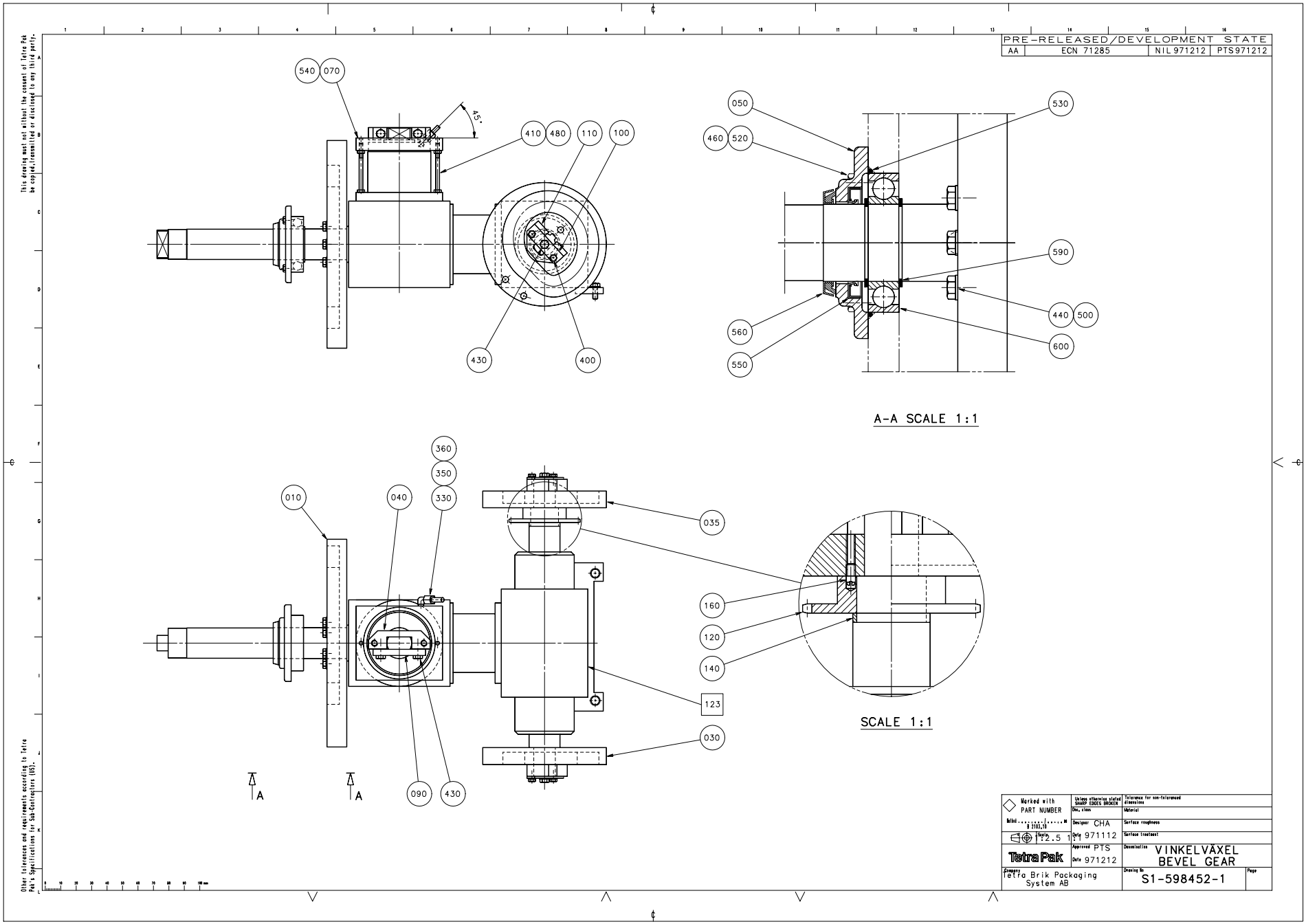
PRE-RELEASED/DEVELOPMENT STATE
AA ECN 71285 NIL 971212 PTS971212
540
070
45°
410
480
110
100
430
400
050
460
520
530
590
560
550
440
500
600
A-A SCALE 1:1
360
350
330
010
040
035
160
120
140
123
030
090
430
A
A
SCALE 1:1
Marked with PART NUMBER
Unless otherwise stated SHARP EDGES BROKEN
Tolerance for non-toleranced dimensions
Material
Surface roughness
Surface treatment
Designer CHA
Date 971112
Approved PTS
Date 971212
Tetra Pak
VINKELVÄXEL
BEVEL GEAR
Company Tetra Brik Packaging System AB
Drawing No S1-598452-1
Page
This drawing must not without the consent of Tetra Pak be copied, transmitted or disclosed to any third party.
Other tolerances and requirements according to Tetra Pak's Specifications for Sub-Contractors (SS).

Pos	Part No	SP	UN	Qty	Description	Page No
-						
F123	A 442678-0200	-		1	GEAR	
010	442606-0000	K		1	CURVE	
030	285054-0000	K		1	CURVE	
035	285055-0000	K		1	CURVE	
040	262274-0002	K		1	BRACKET	
050	276613-0000	-		1	LID	
070	598453-0000	-		1	OIL TROUGH	
090	262275-0002	K		1	CAP	
100	276636-0000	K		2	WASHER	
110	285027-0000	K		2	CARRIER	
120	443047-0000	K		1	SPROCKET	
140	443052-0000	-		1	SPACER RING	
160	443149-0000	K		1	STUD SCREW	
330	90030-0222	K		1	ELBOW PIPE JOINT	
350	90166-0108	K	MM	400	HOSE	
360	90134-0030	K		2	SLEEVE	
400	312101-0374	-		4	SCREW M6S6X30FZB	
410	312101-0385	-		2	SCREW M6S6X75FZB	
430	312101-0451	-		4	SCREW M6S8X20FZB	
440	312111-0460	-		6	SCREW MC6S8X45FZB	
460	312105-0371	-		4	SCREW M6S6X22RFR	
480	312601-0316	-		2	NUT M6M6FZB	
500	315101-0165	-		6	WASHER BRB8,4X16FZB	
520	315115-0153	-		4	WASHER TBRB6,4X12RFR	
530	315202-0309	K		1	O-RINGS 89,5X3	
540	315202-0311	K		1	O-RINGS 99,5X3	
550	315221-0200	K		1	SEALING RINGS,TYPE A 50X72X8	
560	315226-0200	K		1	SEALING RINGS,TYPE RB"GAMMA	
RI"50X70X4,5						
590	315750-0131	K		2	CIRCLIP SGA50	
600	321309-0110	K		1	BALL BEARISKF6210	

Pos	Part No	SP	UN	Qty	Description	Page No

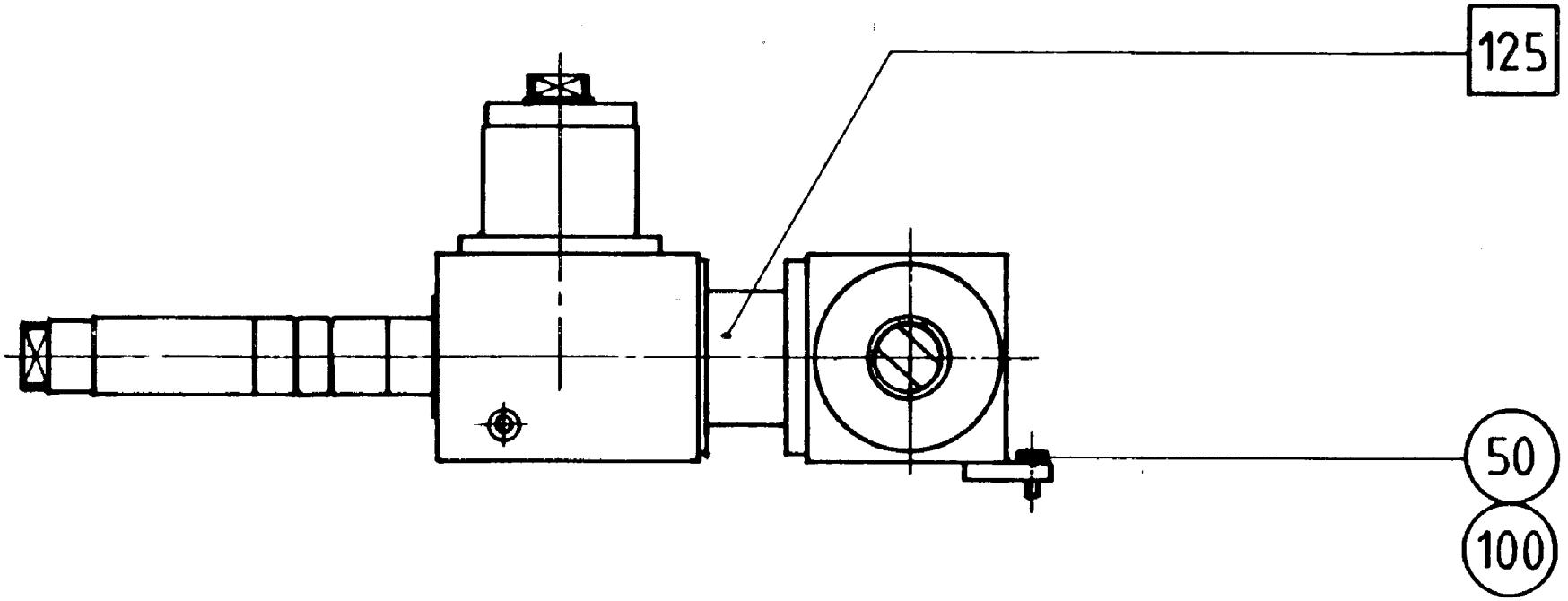

442678-1
442678-1.TIF

Pos	Part No	SP	UN	Qty	Description	Page No
-						
F125	A 442644-0200	-		1	GEAR	
050	312101-0453	-		2	SCREW M6S8X25FZB	
100	315101-0165	-		2	WASHER BRB8,4X16FZB	

Pos	Part No	SP	UN	Qty	Description	Page No

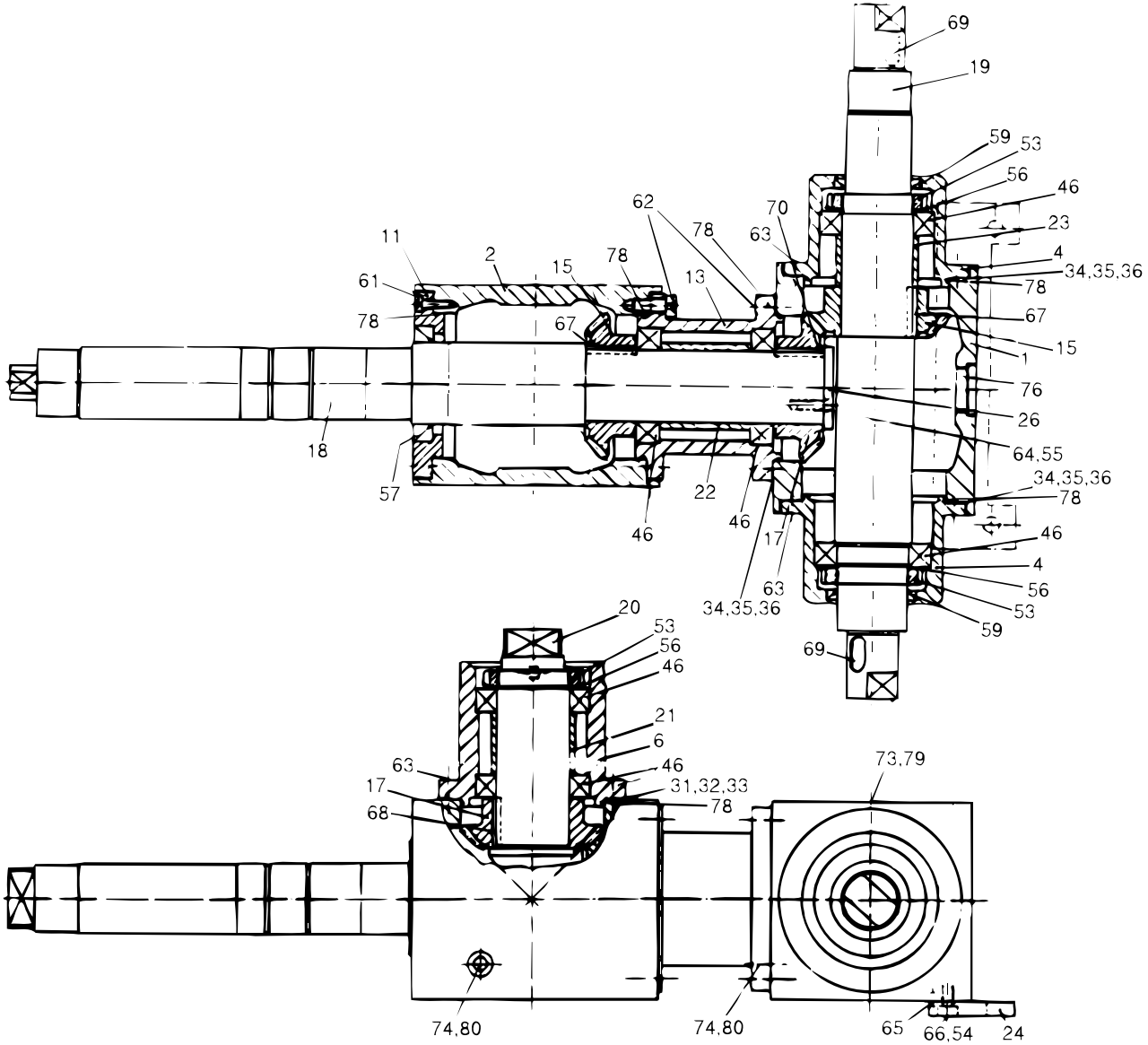
69
19
59
53
56
46
23
4
34,35,36
78
67
15
1
76
26
64,55
34,35,36
78
46
4
56
53
59
69
62
78
70
63
11
2
15
78
13
61
78
67
18
57
22
46
46
17
63
34,35,36
20
53
56
46
21
6
63
17
68
46
31,32,33
78
73,79
74,80
74,80
65
66,54
24

Pos	Part No	SP	UN	Qty	Description	Page No
-						
	442643-0002	-	ML	x	MEASURE DRAWING	
001	568151-0000	-		1	GEAR HOUSING	
002	568152-0000	-		1	GEAR HOUSING	
004	568153-0000	-		2	BEARING SEAT	
006	568154-0000	-		1	BEARING SEAT	
013	568156-0000	-		1	FLANGE	
015	442613-0000	K		2	GEAR WHEEL	
017	442614-0000	K		2	GEAR WHEEL	
019	568158-0000	K		1	SHAFT	
020	568159-0000	K		1	SHAFT	
021	442615-0000	K		1	SPACER	
022	442616-0000	K		1	SPACER	
023	442617-0000	K		1	SPACER	
024	568160-0000	K		1	FASTENING PLATE	
026	568161-0000	K		1	WASHER	
046	321306-0110	K		6	BALL BEARISKF6010*	
053	312805-0110	K		3	NUTS,ROUND,WITH SLOTS,M50X1,5	
054	315402-0173	K		2	WASHER FBB10,2RFR	
056	315410-0110	K		3	WASHERS.LOCK 50X74	
057	90091-0144	K		1	SEAL RING	
059	90091-0143	K		2	SEAL RING	
061	312111-0370	K		4	SCREW MC6S6X20FZB	
062	312111-0453	K		8	SCREW MC6S8X25FZB	
063	312111-0451	K		12	SCREW MC6S8X20FZB	
064	312151-0451	K		2	SCREW MF6S8X20FZB	
065	311111-0305	K		2	SLOTTED TUFRP5X14	
066	312111-0491	K		2	SCREW MC6S10X20FZB	
067	315701-0363	K		2	FLAT WEDGE14X9X40	
068	568162-0000	K		1	WEDGE	
069	315701-0296	K		2	FLAT WEDGE10X8X25	
070	315701-0363	K		1	FLAT WEDGE14X9X40	
078	90242-0118	K		6	O-RING	
079	90242-0120	K		1	O-RING	
080	90242-0121	K		2	O-RING	
081	443055-0000	K		1	SHIM	
082	443056-0000	K		1	SHIM	
083	443057-0000	K		4	SHIM	
084	443058-0000	K		4	SHIM	

Pos	Part No	SP	UN	Qty	Description	Page No

DISTRIBUTOR ARM

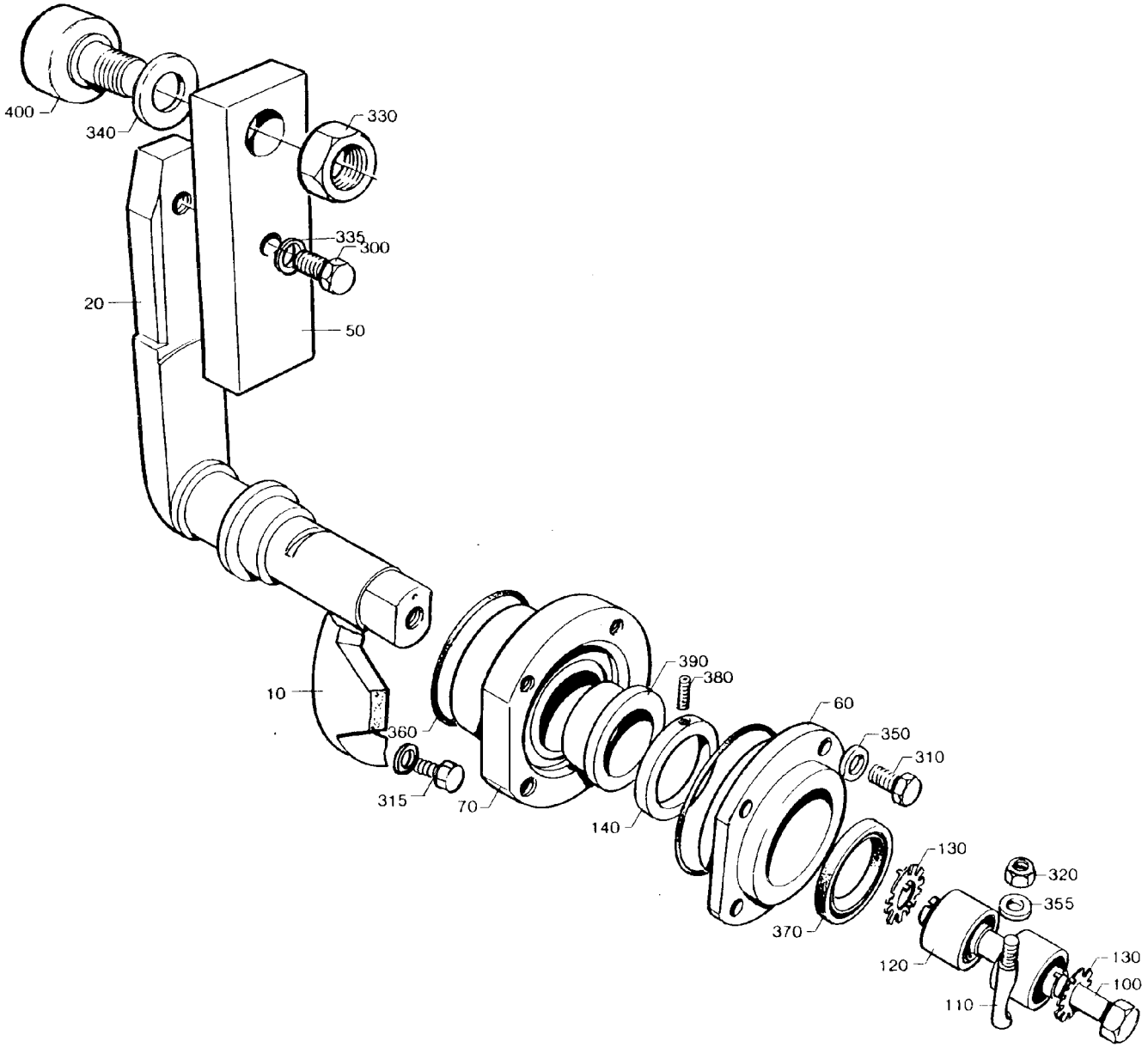

442782-1
442782-1.TIF

Pos	Part No	SP	UN	Qty	Description	Page No
-						
010	276617-0000	-		1	BRACKET	
020	B 442783-0000	D		1	SHAFT	
050	297761-0000	-		1	HOLDER	
060	442784-0000	-		1	LID	
070	442785-0000	-		1	BEARING HOUSING	
100	262028-0011	K		1	FITTING BOLT	
110	262179-0001	-		2	PIN	
120	262183-0000	K		2	BUSHING	
130	276664-0000	-		2	WASHER	
140	442786-0000	K		1	WASHER	
200	90296-0009	K	KG	x	GREASE	
300	312101-0451	-		1	SCREW M6S8X20FZB	
310	312105-0374	-		4	SCREW M6S ISO 4017 M6X30 A280	
315	312105-0453	-		2	SCREW M6S ISO 4017 M8X25 A280	
320	312605-0318	-		2	NUTS,HEXAGON,M8	
330	312631-0324	-		1	NUTS,HEXAGON,M16X1,5	
335	315101-0165	-		1	WASHER BRB8,4X16FZB	
340	315101-0186	-		1	WASHER BRB17X30FZB	
350	315115-0153	-		4	WASHER TBRB6,4X12RFR	
355	315115-0165	-		4	WASHER TBRB8,4X16RFR	
360	315202-0305	K		2	O-RINGS 69,5X3	
370	315221-0170	K		1	SEALING RINGS,TYPE A 30X52X7	
380	312316-0284	-		1	STOP SCREW SK6SS4X5FZB	
390	321101-0272	K		2	FLANGE BUS 30F7X20	
400	321582-0212	K		1	CURVE ROLLNUKR35	
442783-0000						
	312911-0126	-		1	THREADED I M8X1,5D	

Pos	Part No	SP	UN	Qty	Description	Page No

PRESSURE ARM

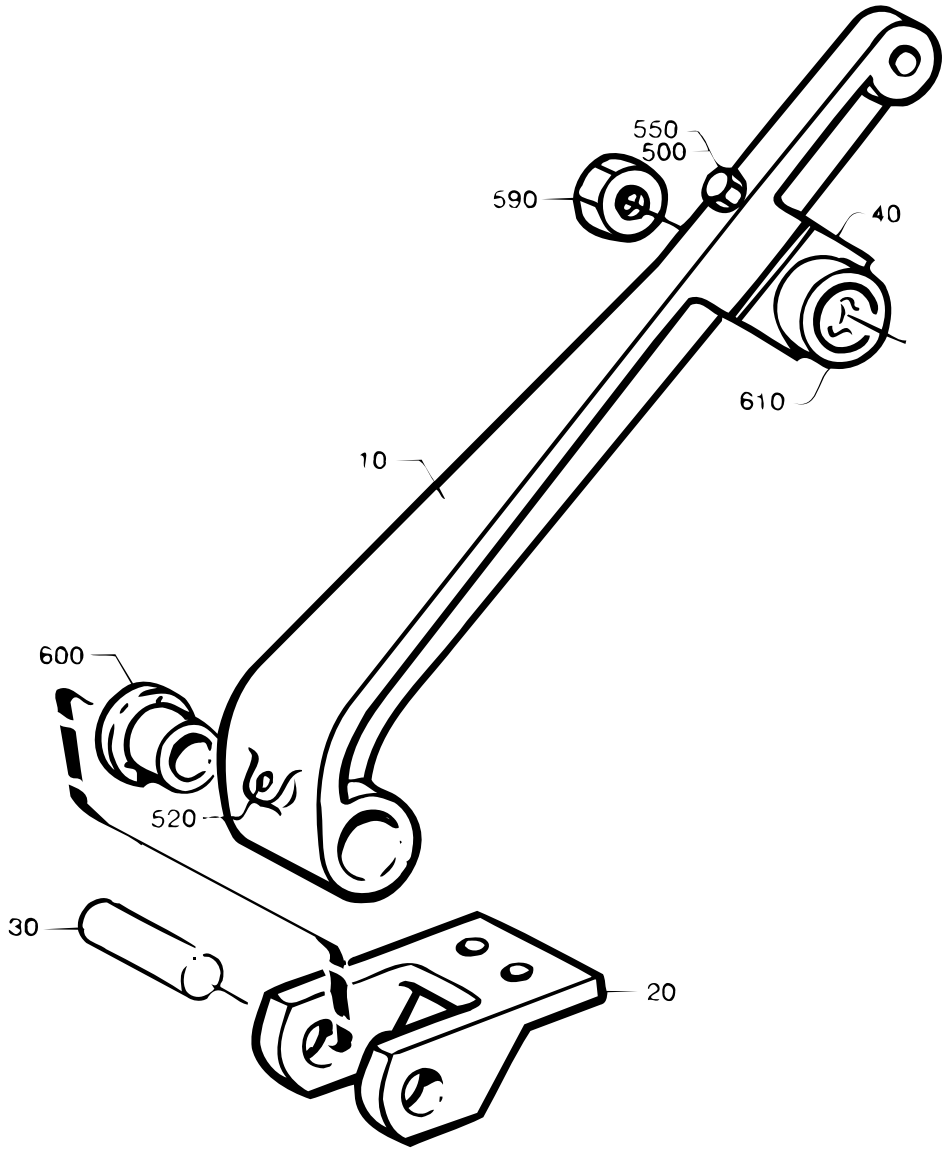

Pos	Part No	SP	UN	Qty	Description	Page No
-						
010	442524-0000	D		1	ARM	
020	285300-0000	D		1	BRACKET	
030	262261-0000	K		1	SHAFT	
040	442523-0000	-		1	HOLDER	
500	312101-0379	-		2	SCREW M6S6X45FZB	
520	312311-0370	K		1	SET SCREW FULL DOGPOINT ISO 4028	
M6X20						
550	315101-0153	-		2	WASHER BRB6,4X12FZB	
590	312631-0324	-		1	NUTS,HEXAGON,M16X1,5	
600	321101-0232	K		2	FLANGE BUS 20F7X16	
610	321582-0212	K		1	CURVE ROLLNUKR35	

Pos	Part No	SP	UN	Qty	Description	Page No

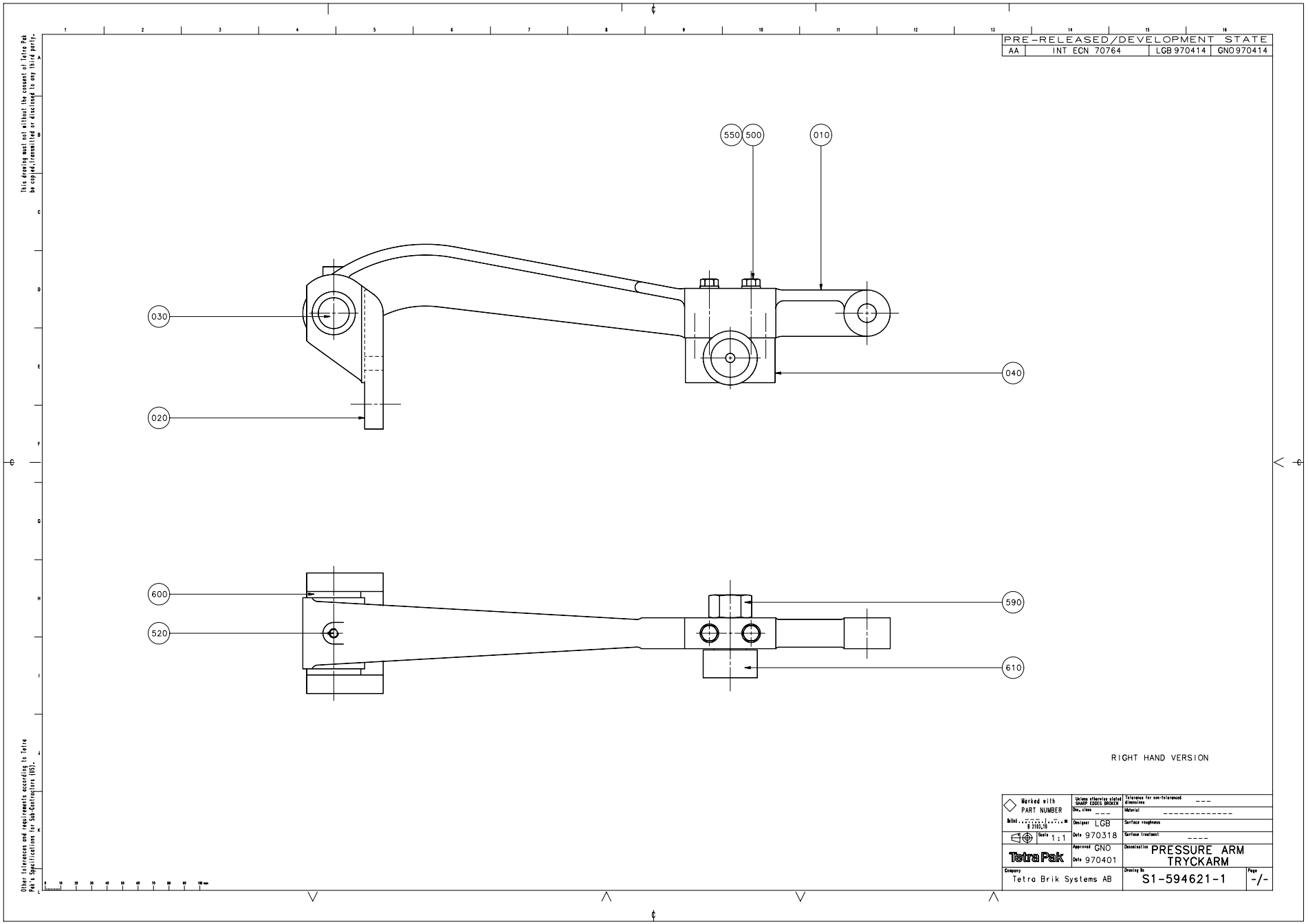
This drawing must not without the consent of Tetra Pak be copied, transmitted or disclosed to any third party.
PRE-RELEASED/DEVELOPMENT STATE
AA
INT ECN 70764
LGB 970414
GNO 970414
550
500
010
030
040
020
600
590
520
610
RIGHT HAND VERSION
Marked with PART NUMBER
Unless otherwise stated SHARP EDGES BROKEN
Tolerance for non-toleranced dimensions ---
Dec. class ---
Material ----------
Designer LGB
Surface roughness
Date 970318
Surface treatment ----
Scale 1:1
Approved GNO
Date 970401
Tetra Pak
Denomination PRESSURE ARM TRYCKARM
Company Tetra Brik Systems AB
Drawing No S1-594621-1
Page -/-
Other tolerances and requirements according to Tetra Pak's Specifications for Sub-Contractors (SS).

Pos	Part No	SP	UN	Qty	Description	Page No
-						
010	442524-0000	D		1	ARM	
020	285300-0000	D		1	BRACKET	
030	262261-0000	K		1	SHAFT	
040	442523-0000	-		1	HOLDER	
500	312101-0379	-		2	SCREW M6S6X45FZB	
520	312311-0370	K		1	SET SCREW FULL DOGPOINT ISO 4028	
M6X20						
550	315101-0153	-		2	WASHER BRB6,4X12FZB	
590	312631-0324	-		1	NUTS,HEXAGON,M16X1,5	
600	321101-0232	K		2	FLANGE BUS 20F7X16	
610	321582-0212	K		1	CURVE ROLLNUKR35	

Pos	Part No	SP	UN	Qty	Description	Page No

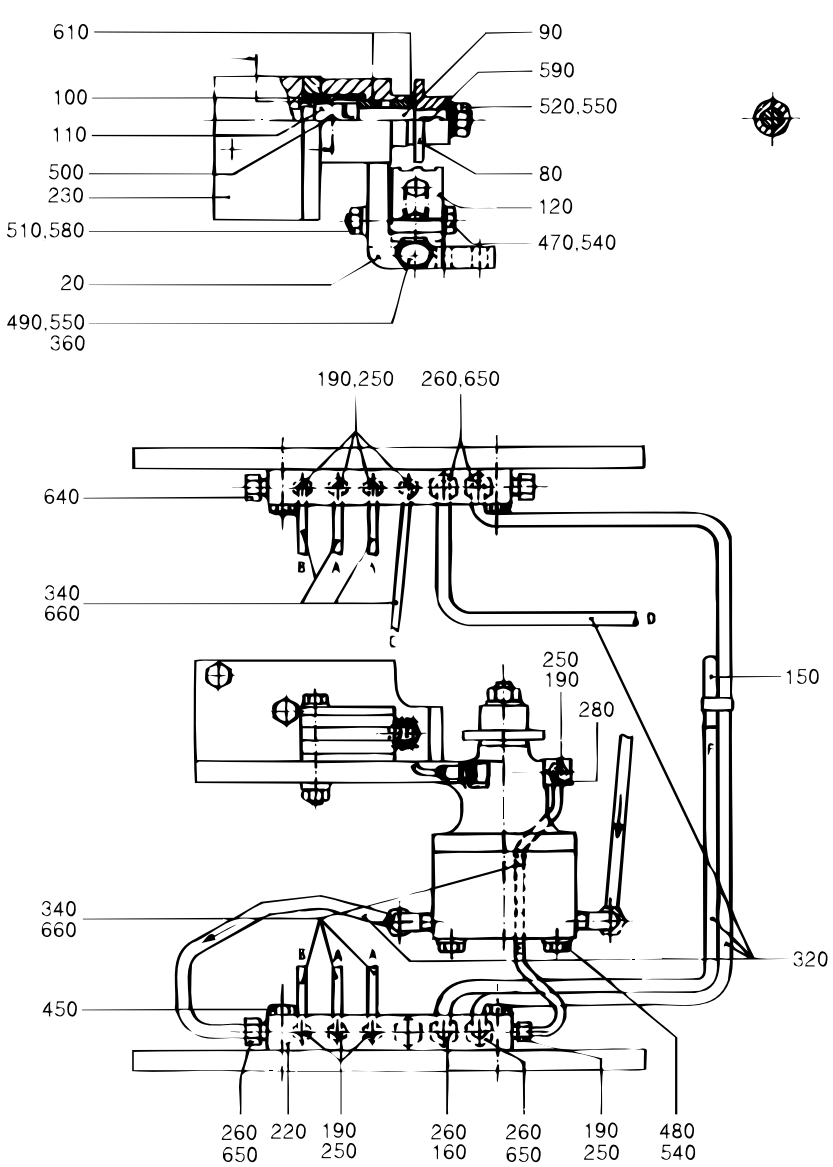

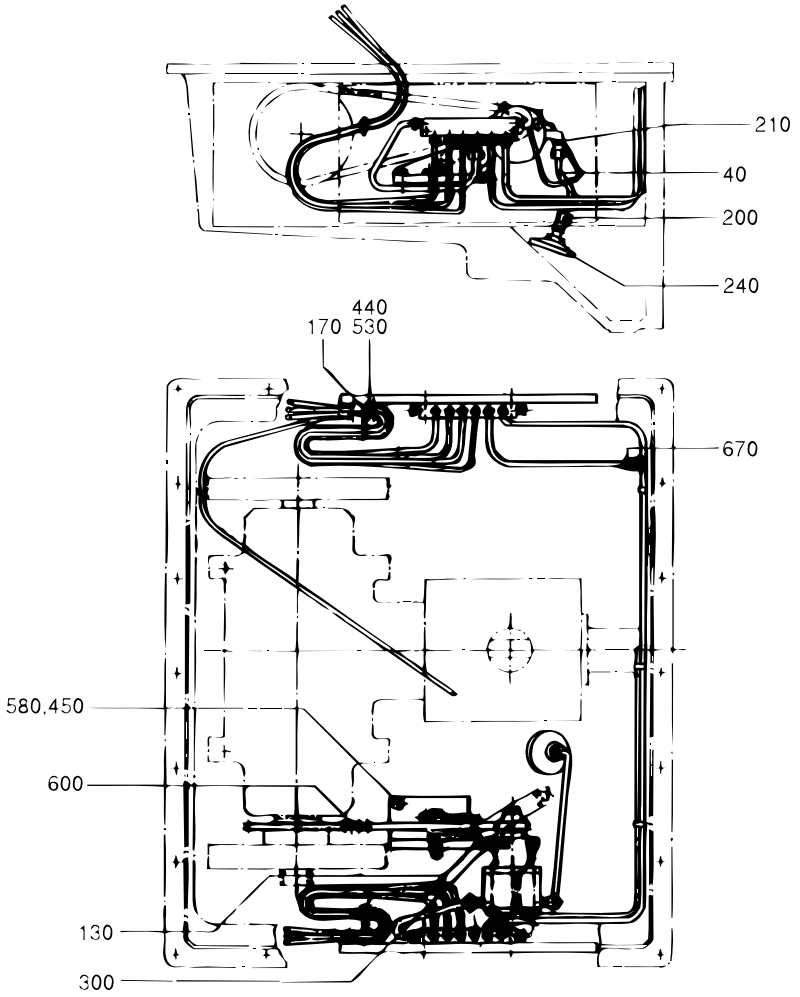

S-525102-2
ECN 12903

Pos	Part No	SP	UN	Qty	Description	Page No
-						
020	525173-0000	-		1	CANTILEVER	
040	443150-0000	-		1	SUCTION TUBE	
080	443048-0000	K		1	SPROCKET	
090	443049-0000	K		1	SHAFT	
100	443050-0000	-		1	GUIDE SLEEVE	
110	443051-0000	K		1	CONNECTION	
120	443053-0000	K		1	CHAIN GUIDE	
130	443151-0000	K		1	PIPE	
150	525375-0000	-		1	OIL PIPE	
170	525358-0000	-		2	BRACKET	
180	525376-0000	-		2	BOW CLAMP	
190	90028-0001	-		1	CONE	
200	90030-0107	-		1	PIPE CONNECTION	
210	90030-0222	-		2	ELBOW PIPE JOINT	
220	90032-0035	-		2	JUNCTION BLOCK	
230	90048-0033	-		1	GEAR PUMP	
240	90048-0420	-		1	FILTER	
250	90134-0003	-		1	BUSHING	
260	B 90134-0034	-		3	NIPPLE	
270	90092-0038	-		4	METERING VALVE	
275	90092-0081	-		5	METERING VALVE	
280	90137-0005	-		1	PIPE JOINT	
300	90137-0010	-		1	PIPE JOINT	
320	90166-0011	-	MM	1500	HOSE	
340	90166-0051	-	MM	4500	HOSE	
350	90230-0031	-		1	NON-RETURN VALVE	
360	90335-0012	-		1	SPRING	
370	B 90415-0033	-		1	OIL FILTER	
440	312101-0327	-		2	SCREW M6S5X12FZB	
450	312101-0370	-		6	SCREW M6S6X20FZB	
470	312101-0379	-		1	SCREW M6S6X45FZB	
480	312101-0380	-		2	SCREW M6S6X50FZB	
490	312101-0451	-		1	SCREW M6S8X20FZB	
495	312105-0388	-		2	SCREW M6S ISO 4014 M6X90 A280	
500	312316-0283	-		1	STOP SCREW SK6SS4X4FZB	
510	312601-0316	-		1	NUT M6M6FZB	
520	312601-0318	-		1	NUT M6M8FZB	
530	315101-0146	-		2	WASHER BRB5,3X10FZB	
540	315101-0153	-		3	WASHER BRB6,4X12FZB	
550	315101-0165	-		2	WASHER BRB8,4X16FZB	
580	315111-0153	-		5	WASHER TBRB6,4X12FZB	
583	315233-0109	-		2	PLAIN ROUND,NYLON R1/8"	
585	315233-0110	-		2	PLAIN ROUND,NYLON R1/4"	
590	315701-0134	-		1	FLAT WEDGE3X3X10	
600	318201-0076	-		1	ROLLER CHA3/8"	
610	321101-0172	-		2	FLANGE BUS 12F7X10	
640	90136-0002	-		3	PLUG	
650	342706-0130	-		3	ACCESSORIES,INSERT SLEEVE 6	
660	342706-0114	-		16	ACCESSORIES,INSERT SLEEVE 4	
680	342921-0114	-		2	STRAIGHT COUPLING,EXT.THREADED 6/4-G1/4"	
690	342960-0112	-		2	BULKHEAD COUPLING 6/4	
	90030-0101	-		1	TAPER	
	90415-0330	K		1	FILTER INSERT	

ELEMENT

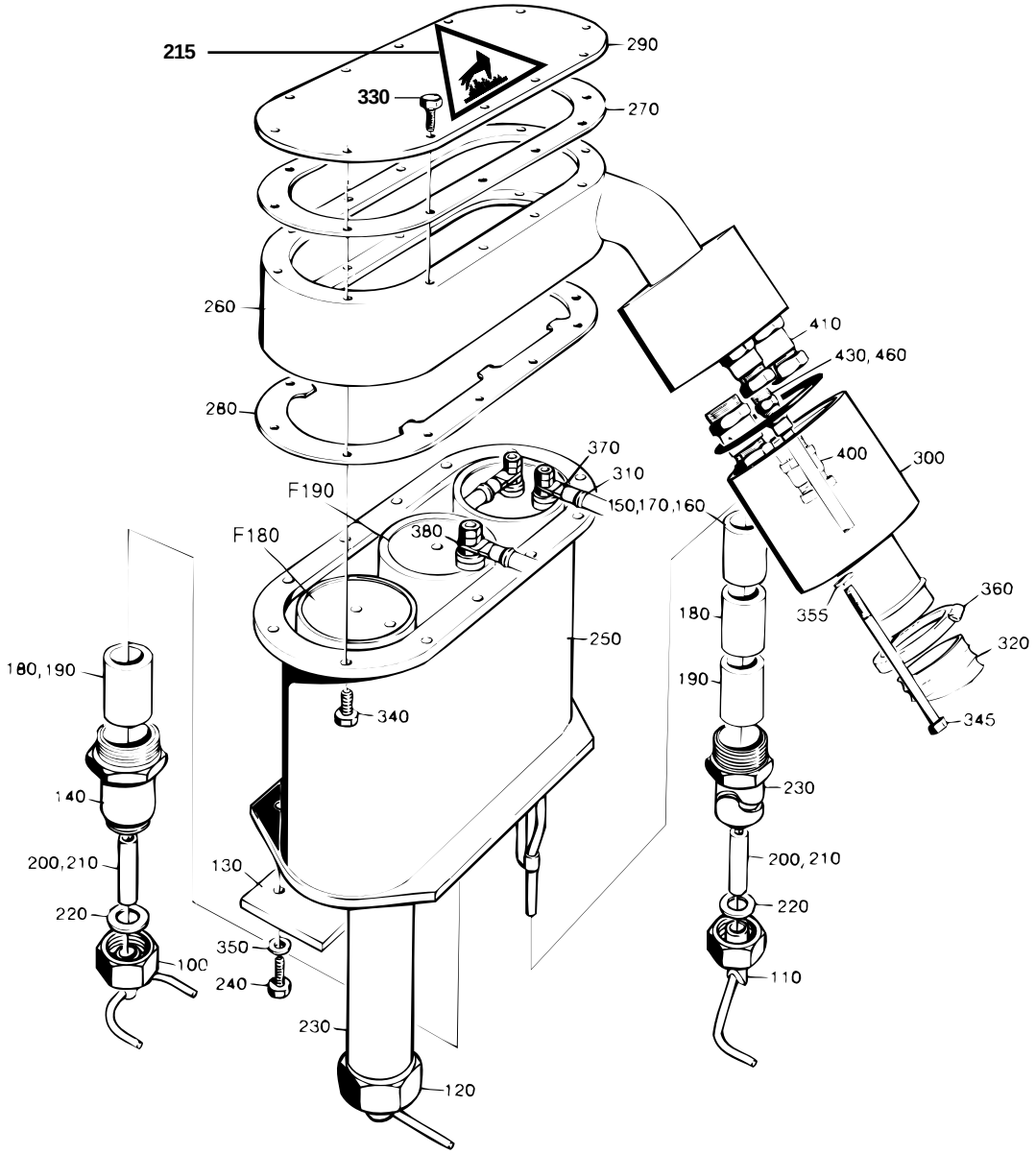

S-525129-1
ECN 22847

Pos	Part No	SP	UN	Qty	Description	Page No
0300B						
100	B 247227-0002	K		1	AIR NOZZLE	
110	B 285507-0002	K		1	AIR NOZZLE	
120	B 285508-0002	K		1	AIR NOZZLE	
140	23763-0010	-		1	SPACER PIPE	
160	23765-0002	K		2	INSULATING PIPE	
190	23765-0005	K		1	INSULATING PIPE	
200	252766-0001	K		2	INSULATING PIPE	
210	252766-0002	K		1	INSULATING PIPE	
230	297499-0002	-		2	SIDE PIPE	
240	312105-0372	-		3	SCREW M6S ISO 4017 M6X25 A280	
0355B						
100	B 442867-0000	K		1	AIR NOZZLE	
110	B 285676-0000	K		1	AIR NOZZLE	
120	B 285677-0000	K		1	AIR NOZZLE	
140	23763-0006	-		1	SPACER PIPE	
180	23765-0004	K		4	INSULATING PIPE	
190	23765-0005	K		1	INSULATING PIPE	
200	252766-0001	K		4	INSULATING PIPE	
210	252766-0002	K		1	INSULATING PIPE	
230	297499-0007	-		2	SIDE PIPE	
240	312105-0372	-		3	SCREW M6S ISO 4017 M6X25 A280	
0375S						
100	B 247227-0002	K		1	AIR NOZZLE	
110	B 285507-0002	K		1	AIR NOZZLE	
120	B 285508-0002	K		1	AIR NOZZLE	
140	23763-0010	-		1	SPACER PIPE	
170	23765-0003	K		2	INSULATING PIPE	
180	23765-0004	K		4	INSULATING PIPE	
190	23765-0005	K		1	INSULATING PIPE	
210	252766-0002	K		3	INSULATING PIPE	
230	297499-0009	-		2	SIDE PIPE	
240	312105-0372	-		3	SCREW M6S ISO 4017 M6X25 A280	
0400B						
100	B 442867-0000	K		1	AIR NOZZLE	
110	B 574676-0000	K		1	AIR NOZZLE	
120	B 574677-0000	K		1	AIR NOZZLE	
140	23763-0006	-		1	SPACER PIPE	
170	23765-0003	K		2	INSULATING PIPE	
180	23765-0004	K		2	INSULATING PIPE	
190	23765-0005	K		3	INSULATING PIPE	
210	252766-0002	K		3	INSULATING PIPE	
230	297499-0003	-		2	SIDE PIPE	
240	312105-0372	-		3	SCREW M6S ISO 4017 M6X25 A280	
0500B						
100	247227-0003	K		1	AIR NOZZLE	
110	B 525197-0000	K		1	BLOW-OFF NOZZLE TR	
120	B 525198-0000	K		1	BLOW-OFF NOZZLE TL	
130	262290-0002	-		1	LACE	
140	23763-0003	-		1	SPACER PIPE	
160	23765-0002	K		2	INSULATING PIPE	
180	23765-0004	K		1	INSULATING PIPE	
200	252766-0001	K		3	INSULATING PIPE	
230	297499-0002	-		2	SIDE PIPE	
240	312105-0376	-		3	SCREW M6S ISO 4017 M6X35 A280	
0500S						
100	B 442867-0000	K		1	AIR NOZZLE	
110	B 285676-0000	K		1	AIR NOZZLE	
120	B 285677-0000	K		1	AIR NOZZLE	
140	23763-0006	-		1	SPACER PIPE	
170	23765-0003	K		2	INSULATING PIPE	
180	23765-0004	K		2	INSULATING PIPE	
190	23765-0005	K		3	INSULATING PIPE	
200	252766-0001	K		4	INSULATING PIPE	
210	252766-0002	K		1	INSULATING PIPE	
230	297499-0003	-		2	SIDE PIPE	
240	312105-0372	-		3	SCREW M6S ISO 4017 M6X25 A280	
0500SQ						
100	574032-0000	K		1	BLOWING NOZZLE B	
110	574033-0000	K		1	BLOWING NOZZLE TH	
120	574034-0000	K		1	BLOWING NOZZLE TV	
130	262290-0001	-		1	LACE	
140	23763-0006	-		1	SPACER PIPE	
170	23765-0003	K		2	INSULATING PIPE	
180	23765-0004	K		2	INSULATING PIPE	
190	23765-0005	K		1	INSULATING PIPE	
200	252766-0001	K		1	INSULATING PIPE	
210	252766-0002	K		2	INSULATING PIPE	
230	583448-0000	-		2	SIDE PIPE	
240	312105-0374	-		3	SCREW M6S ISO 4017 M6X30 A280	

ELEMENT

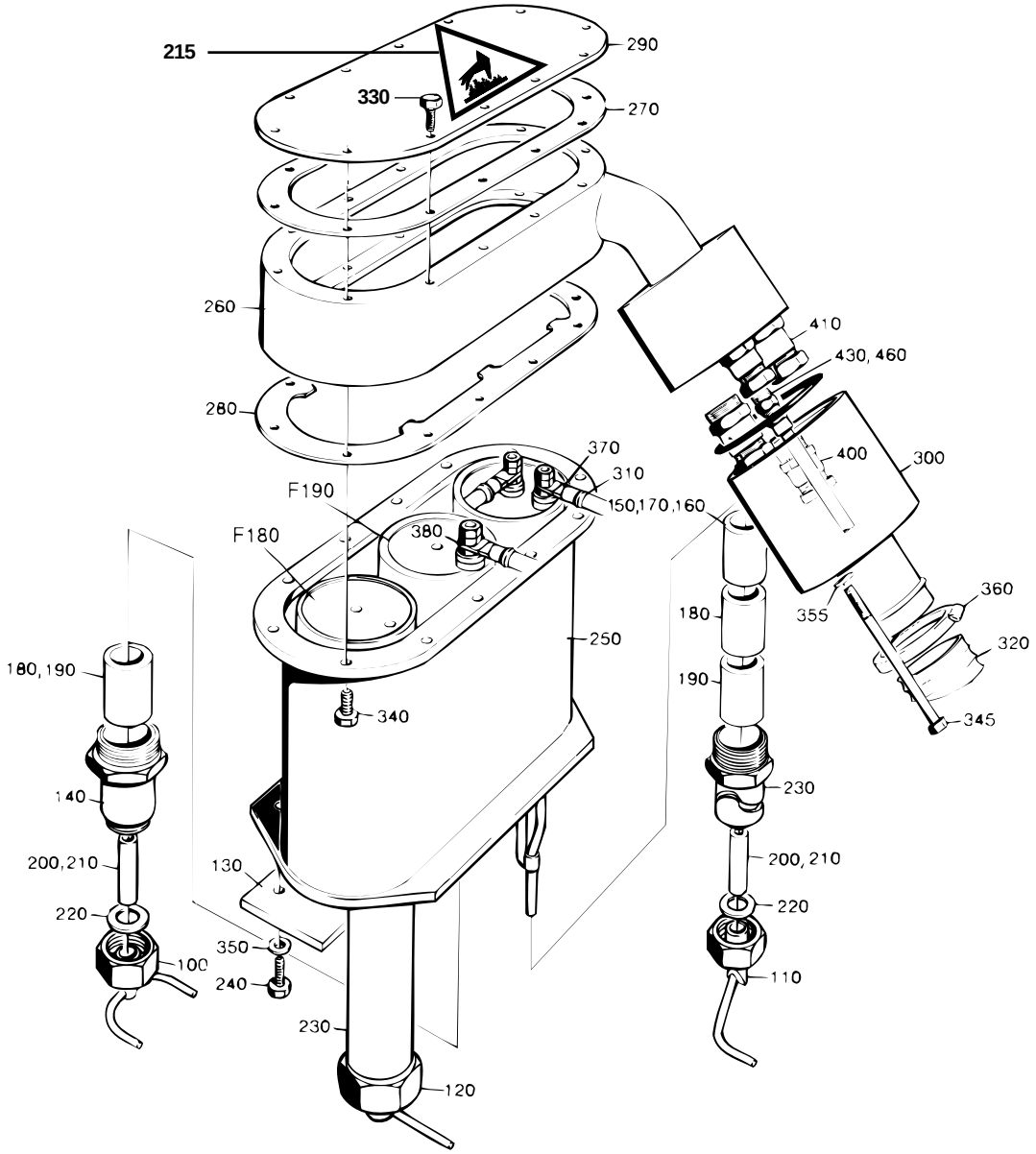

S-525129-1
ECN 22847

Pos	Part No	SP	UN	Qty	Description	Page No
0568B						
100	247227-0003	K		1	AIR NOZZLE	
110	B 525197-0000	K		1	BLOW-OFF NOZZLE TR	
120	B 525198-0000	K		1	BLOW-OFF NOZZLE TL	
140	23763-0005	-		1	SPACER PIPE	
160	23765-0002	K		2	INSULATING PIPE	
190	23765-0005	K		1	INSULATING PIPE	
200	252766-0001	K		2	INSULATING PIPE	
210	252766-0002	K		1	INSULATING PIPE	
230	297499-0002	-		2	SIDE PIPE	
240	312105-0372	-		3	SCREW M6S ISO 4017 M6X25 A280	
0750B						
100	247227-0003	K		1	AIR NOZZLE	
110	B 525197-0000	K		1	BLOW-OFF NOZZLE TR	
120	B 525198-0000	K		1	BLOW-OFF NOZZLE TL	
140	23763-0005	-		1	SPACER PIPE	
160	23765-0002	K		2	INSULATING PIPE	
180	23765-0004	K		1	INSULATING PIPE	
190	23765-0005	K		2	INSULATING PIPE	
210	252766-0002	K		3	INSULATING PIPE	
230	297499-0008	-		2	SIDE PIPE	
240	312105-0372	-		3	SCREW M6S ISO 4017 M6X25 A280	
0750S						
100	B 544298-0000	K		1	BLOWING NOZZLE B	
110	B 544293-0000	K		1	BLOW-OFF NOZZLE TH	
120	B 544269-0000	K		1	BLOW-OFF NOZZLE TV	
130	262290-0001	-		1	LACE	
140	23763-0004	-		1	SPACER PIPE	
160	23765-0002	K		2	INSULATING PIPE	
180	23765-0004	K		5	INSULATING PIPE	
200	252766-0001	K		3	INSULATING PIPE	
230	443158-0000	-		2	SIDE PIPE	
240	312105-0374	-		3	SCREW M6S ISO 4017 M6X30 A280	
Common parts						
F180	A 31390-0100	-		2	ELEMENT	**443**
F190	A 31390-0110	-		1	ELEMENT	**445**
215	359710-0002	-		1	WARNING SIGN"HOT SURFACE"	
220	263673-0000	F		6	GASKET	
250	262272-0000	-		1	HEATING CHAMBER	
260	525071-0000	-		1	SPACER PIECE	
270	531730-0000	K		3	FLANGE SEAL	
280	23769-0000	-		1	STOP PLATE	
290	262288-0000	-		1	LID	

Pos	Part No	SP	UN	Qty	Description	Page No
300	525073-0000	-		1	COVER	
310	B 525070-0000	-		1	ELECTRICAL CONNECTION	
320	352135-0116	K	MM	500	FLEXIBLE CG DIA 40	
330	312105-0325	-		12	SCREW M6S5X10 A2 80	
340	312105-0328	-		12	SCREW M6S5X14 A2 80	
345	312105-0388	-		2	SCREW M6S ISO 4014 M6X90 A280	
350	315115-0153	-		3	WASHER TBRB6,4X12RFR	
355	315105-0153	-		2	WASHERS,PLAIN ROUND 6,4X12	
360	342991-0109	K		2	HOSE CLIP,WORM DRIVE TYPE (48)-50	
370	353104-0168	F		2	CABLE SHOEYAV 16 M6*	
380	353104-0182	F		2	CABLE SHOEYAV 35 M6*	
400	352103-0106	-		2	CABLE GLAND ST 11	
410	352103-0111	-		2	CABLE GLAND ST 16	
430	342921-0121	-		1	STRAIGHT COUPLING,EXT.THREADED 8/6-	
G1/8"						
460	315234-0109	-		1	PLAIN ROUND,COPPER R1/8",M10	
1000B						
100	247227-0003	K		1	AIR NOZZLE	
110	B 525197-0000	K		1	BLOW-OFF NOZZLE TR	
120	B 525198-0000	K		1	BLOW-OFF NOZZLE TL	
130	262290-0001	-		1	LACE	
140	23763-0004	-		1	SPACER PIPE	
150	23765-0001	K		2	INSULATING PIPE	
180	23765-0004	K		1	INSULATING PIPE	
200	252766-0001	K		3	INSULATING PIPE	
230	297499-0001	-		2	SIDE PIPE	
240	312105-0374	-		3	SCREW M6S ISO 4017 M6X30 A280	
1000S						
100	569124-0000	K		1	AIR NOZZLE	
110	569125-0000	K		1	AIR NOZZLE	
120	569126-0000	K		1	AIR NOZZLE	
130	262290-0001	-		1	LACE	
140	23763-0004	-		1	SPACER PIPE	
160	23765-0002	K		2	INSULATING PIPE	
170	23765-0003	K		2	INSULATING PIPE	
180	23765-0004	K		3	INSULATING PIPE	
200	252766-0001	K		1	INSULATING PIPE	
210	252766-0002	K		2	INSULATING PIPE	
230	548402-0000	-		2	SIDE PIPE	
240	312105-0374	-		3	SCREW M6S ISO 4017 M6X30 A280	

ELEMENT

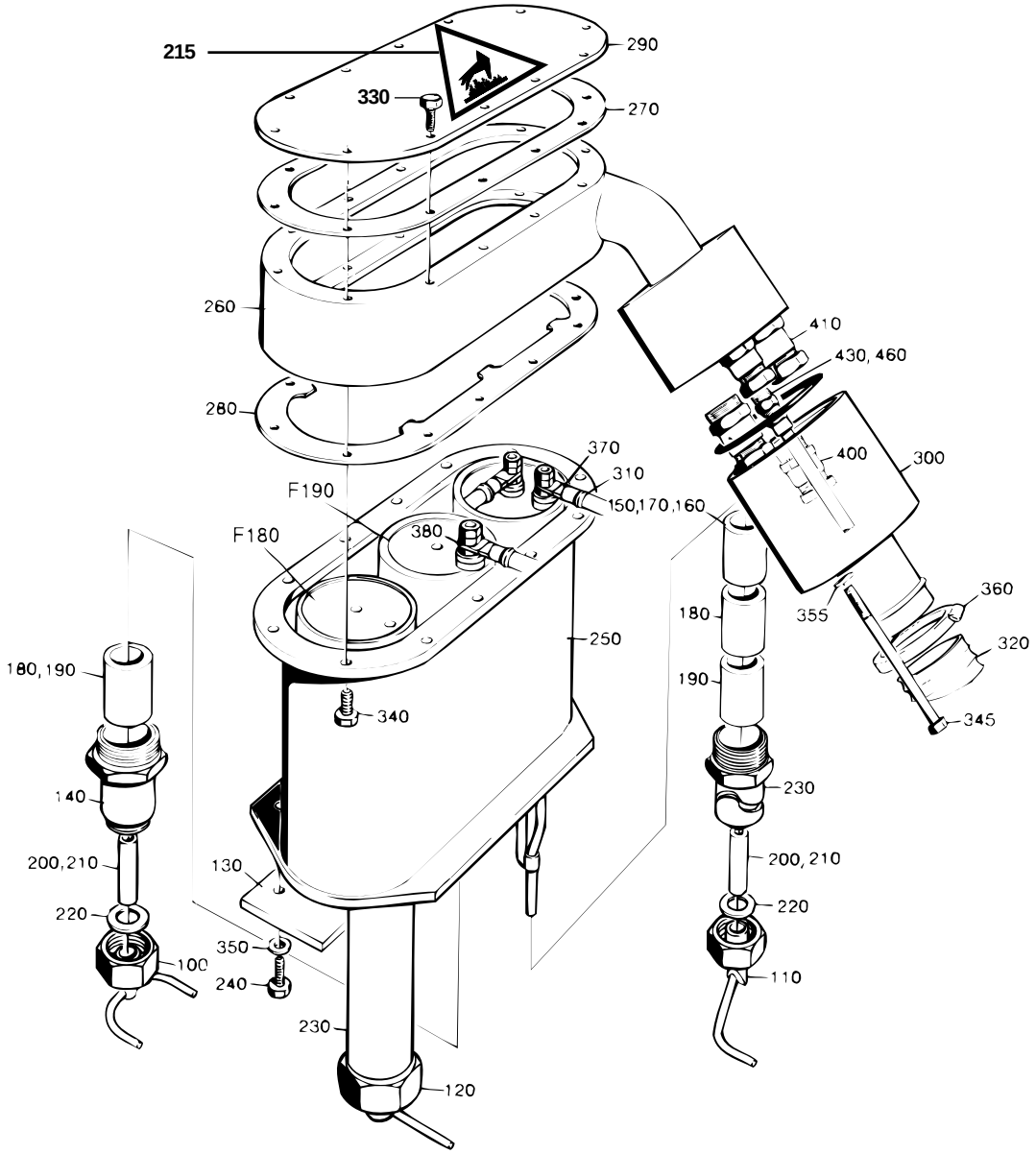

S-525129-1
ECN 22847

Pos	Part No	SP	UN	Qty	Description	Page No
1000SQ						
100	574032-0000	K		1	BLOWING NOZZLE B	
110	574033-0000	K		1	BLOWING NOZZLE TH	
120	574034-0000	K		1	BLOWING NOZZLE TV	
130	262290-0001	-		1	LACE	
140	23763-0006	-		1	SPACER PIPE	
160	23765-0002	K		2	INSULATING PIPE	
180	23765-0004	K		4	INSULATING PIPE	
190	23765-0005	K		1	INSULATING PIPE	
200	252766-0001	K		3	INSULATING PIPE	
230	443158-0000	-		2	SIDE PIPE	
240	312105-0374	-		3	SCREW M6S ISO 4017 M6X30 A280	
1055B						
100	247227-0003	K		1	AIR NOZZLE	
110	B 525197-0000	K		1	BLOW-OFF NOZZLE TR	
120	B 525198-0000	K		1	BLOW-OFF NOZZLE TL	
130	262290-0001	-		1	LACE	
140	23763-0004	-		1	SPACER PIPE	
160	23765-0002	K		2	INSULATING PIPE	
180	23765-0004	K		5	INSULATING PIPE	
200	252766-0001	K		3	INSULATING PIPE	
230	443158-0000	-		2	SIDE PIPE	
240	312105-0374	-		3	SCREW M6S ISO 4017 M6X30 A280	
1136B						
100	247227-0003	K		1	AIR NOZZLE	
110	B 525197-0000	K		1	BLOW-OFF NOZZLE TR	
120	B 525198-0000	K		1	BLOW-OFF NOZZLE TL	
130	262290-0001	-		1	LACE	
140	23763-0004	-		1	SPACER PIPE	
160	23765-0002	K		2	INSULATING PIPE	
170	23765-0003	K		2	INSULATING PIPE	
180	23765-0004	K		3	INSULATING PIPE	
200	252766-0001	K		1	INSULATING PIPE	
210	252766-0002	K		2	INSULATING PIPE	
230	548402-0000	-		2	SIDE PIPE	
240	312105-0374	-		3	SCREW M6S ISO 4017 M6X30 A280	

Pos	Part No	SP	UN	Qty	Description	Page No

FF-ELEMENT R

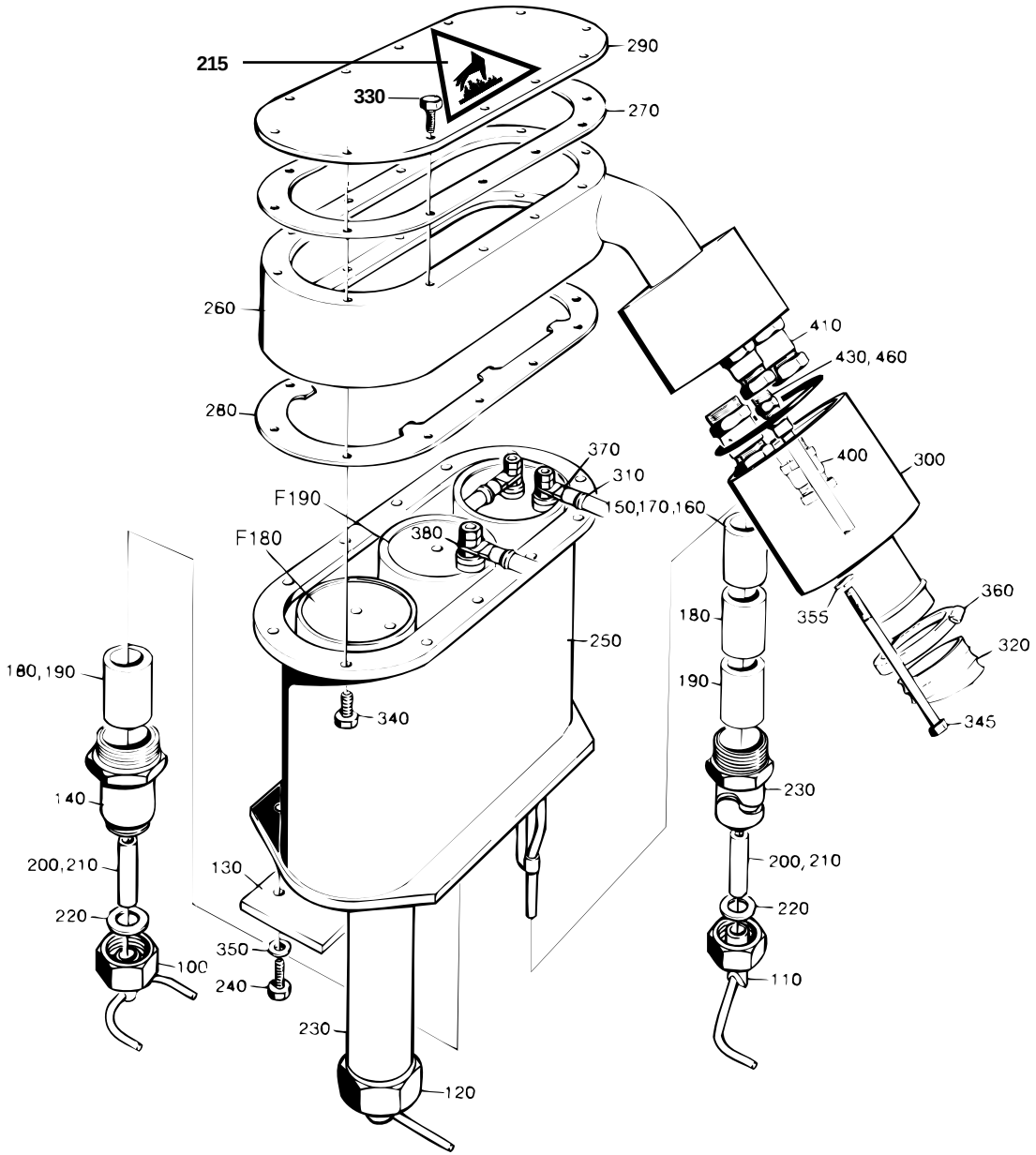

S-525128-1
ECN 22847

Pos	Part No	SP	UN	Qty	Description	Page No
0300B						
100	B 247227-0002	K		1	AIR NOZZLE	
110	B 285507-0002	K		1	AIR NOZZLE	
120	B 285508-0002	K		1	AIR NOZZLE	
140	23763-0010	-		1	SPACER PIPE	
160	23765-0002	K		2	INSULATING PIPE	
190	23765-0005	K		1	INSULATING PIPE	
200	252766-0001	K		2	INSULATING PIPE	
210	252766-0002	K		1	INSULATING PIPE	
230	297499-0002	-		2	SIDE PIPE	
240	312105-0372	-		3	SCREW M6S ISO 4017 M6X25 A280	
0355B						
100	B 442867-0000	K		1	AIR NOZZLE	
110	B 285676-0000	K		1	AIR NOZZLE	
120	B 285677-0000	K		1	AIR NOZZLE	
140	23763-0006	-		1	SPACER PIPE	
180	23765-0004	K		4	INSULATING PIPE	
190	23765-0005	K		1	INSULATING PIPE	
200	252766-0001	K		4	INSULATING PIPE	
210	252766-0002	K		1	INSULATING PIPE	
230	297499-0007	-		2	SIDE PIPE	
240	312105-0372	-		3	SCREW M6S ISO 4017 M6X25 A280	
0375S						
100	B 247227-0002	K		1	AIR NOZZLE	
110	B 285507-0002	K		1	AIR NOZZLE	
120	B 285508-0002	K		1	AIR NOZZLE	
140	23763-0010	-		1	SPACER PIPE	
170	23765-0003	K		2	INSULATING PIPE	
180	23765-0004	K		4	INSULATING PIPE	
190	23765-0005	K		1	INSULATING PIPE	
210	252766-0002	K		3	INSULATING PIPE	
230	297499-0009	-		2	SIDE PIPE	
240	312105-0372	-		3	SCREW M6S ISO 4017 M6X25 A280	
0400B						
100	B 442867-0000	K		1	AIR NOZZLE	
110	B 574676-0000	K		1	AIR NOZZLE	
120	B 574677-0000	K		1	AIR NOZZLE	
140	23763-0006	-		1	SPACER PIPE	
170	23765-0003	K		2	INSULATING PIPE	
180	23765-0004	K		2	INSULATING PIPE	
190	23765-0005	K		3	INSULATING PIPE	
210	252766-0002	K		3	INSULATING PIPE	
230	297499-0003	-		2	SIDE PIPE	
240	312105-0372	-		3	SCREW M6S ISO 4017 M6X25 A280	
0500B						
100	247227-0003	K		1	AIR NOZZLE	
110	B 525197-0000	K		1	BLOW-OFF NOZZLE TR	
120	B 525198-0000	K		1	BLOW-OFF NOZZLE TL	
130	262290-0002	-		1	LACE	
140	23763-0003	-		1	SPACER PIPE	
160	23765-0002	K		2	INSULATING PIPE	
180	23765-0004	K		1	INSULATING PIPE	
200	252766-0001	K		3	INSULATING PIPE	
230	297499-0002	-		2	SIDE PIPE	
240	312105-0376	-		3	SCREW M6S ISO 4017 M6X35 A280	
0500S						
100	B 442867-0000	K		1	AIR NOZZLE	
110	B 285676-0000	K		1	AIR NOZZLE	
120	B 285677-0000	K		1	AIR NOZZLE	
140	23763-0006	-		1	SPACER PIPE	
170	23765-0003	K		2	INSULATING PIPE	
180	23765-0004	K		2	INSULATING PIPE	
190	23765-0005	K		3	INSULATING PIPE	
200	252766-0001	K		4	INSULATING PIPE	
210	252766-0002	K		1	INSULATING PIPE	
230	297499-0003	-		2	SIDE PIPE	
240	312105-0372	-		3	SCREW M6S ISO 4017 M6X25 A280	
0500SQ						
100	574032-0000	K		1	BLOWING NOZZLE B	
110	574033-0000	K		1	BLOWING NOZZLE TH	
120	574034-0000	K		1	BLOWING NOZZLE TV	
130	262290-0001	-		1	LACE	
140	23763-0006	-		1	SPACER PIPE	
170	23765-0003	K		2	INSULATING PIPE	
180	23765-0004	K		2	INSULATING PIPE	
190	23765-0005	K		1	INSULATING PIPE	
200	252766-0001	K		1	INSULATING PIPE	
210	252766-0002	K		2	INSULATING PIPE	
230	583448-0000	-		2	SIDE PIPE	
240	312105-0374	-		3	SCREW M6S ISO 4017 M6X30 A280	

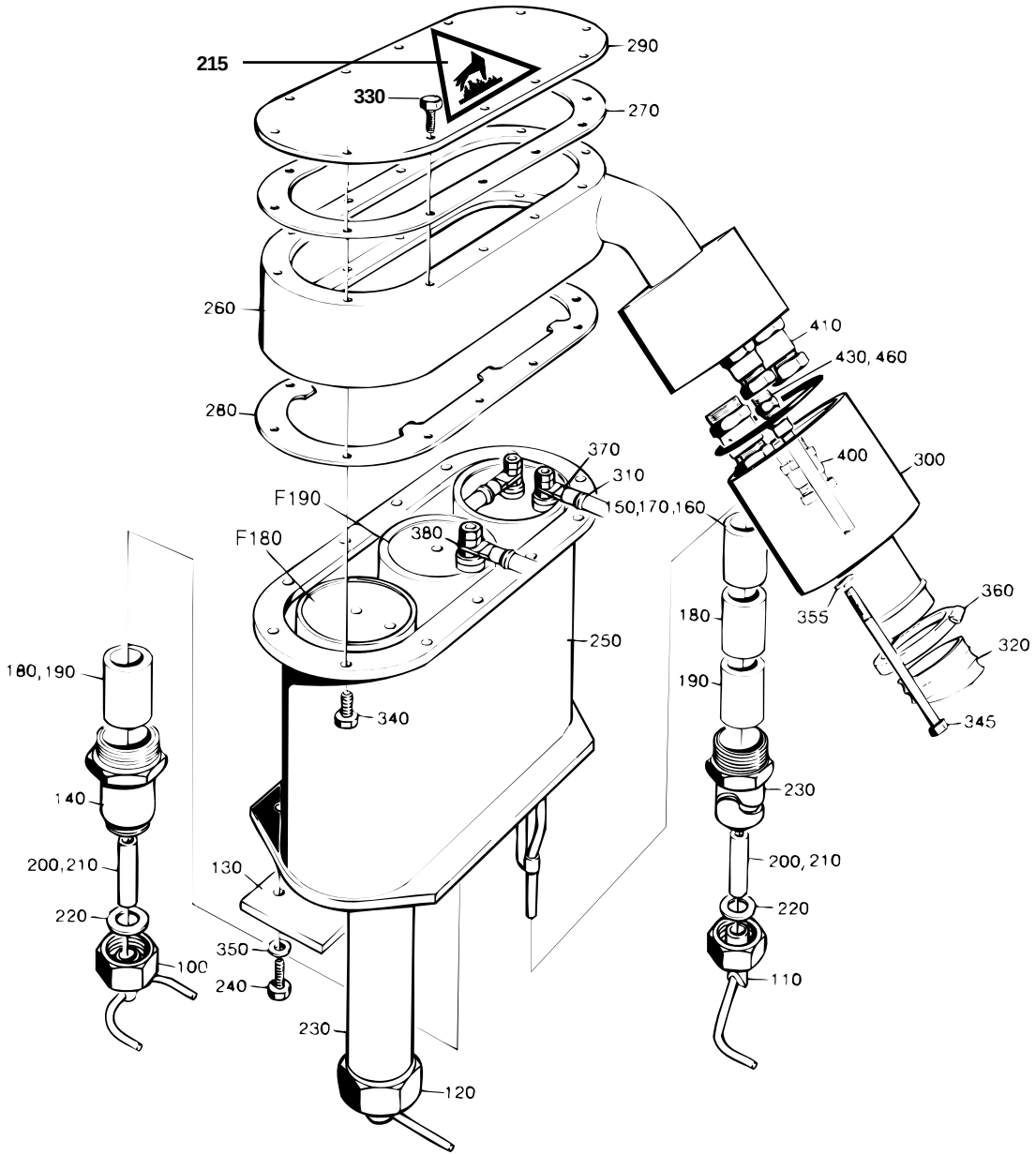
215
290
330
270
260
410
430, 460
280
400
300
370
310
F190
150,170,160
F180
380
360
355
180
320
250
180, 190
340
345
190
230
140
200, 210
200, 210
130
220
220
350
100
240
110
230
120

Pos	Part No	SP	UN	Qty	Description	Page No
0568B						
100	247227-0003	K		1	AIR NOZZLE	
110	B 525197-0000	K		1	BLOW-OFF NOZZLE TR	
120	B 525198-0000	K		1	BLOW-OFF NOZZLE TL	
140	23763-0005	-		1	SPACER PIPE	
160	23765-0002	K		2	INSULATING PIPE	
190	23765-0005	K		1	INSULATING PIPE	
200	252766-0001	K		2	INSULATING PIPE	
210	252766-0002	K		1	INSULATING PIPE	
230	297499-0002	-		2	SIDE PIPE	
240	312105-0372	-		3	SCREW M6S ISO 4017 M6X25 A280	
0750B						
100	247227-0003	K		1	AIR NOZZLE	
110	B 525197-0000	K		1	BLOW-OFF NOZZLE TR	
120	B 525198-0000	K		1	BLOW-OFF NOZZLE TL	
140	23763-0005	-		1	SPACER PIPE	
160	23765-0002	K		2	INSULATING PIPE	
190	23765-0005	K		3	INSULATING PIPE	
210	252766-0002	K		3	INSULATING PIPE	
230	297499-0008	-		2	SIDE PIPE	
240	312105-0372	-		3	SCREW M6S ISO 4017 M6X25 A280	
0750S						
100	B 544298-0000	K		1	BLOWING NOZZLE B	
110	B 544293-0000	K		1	BLOW-OFF NOZZLE TH	
120	B 544269-0000	K		1	BLOW-OFF NOZZLE TV	
130	262290-0001	-		1	LACE	
140	23763-0004	-		1	SPACER PIPE	
160	23765-0002	K		2	INSULATING PIPE	
180	23765-0004	K		5	INSULATING PIPE	
200	252766-0001	K		3	INSULATING PIPE	
230	443158-0000	-		2	SIDE PIPE	
240	312105-0374	-		3	SCREW M6S ISO 4017 M6X30 A280	
Common parts						
F180	A 31390-0100	-		2	ELEMENT	**443**
F190	A 31390-0110	-		1	ELEMENT	**445**
215	359710-0002	-		1	WARNING SIGN"HOT SURFACE"	
220	263673-0000	F		6	GASKET	
250	262272-0000	-		1	HEATING CHAMBER	
260	525134-0000	-		1	SPACER PIECE	
270	531730-0000	K		3	FLANGE SEAL	
280	23769-0000	-		1	STOP PLATE	
290	262288-0000	-		1	LID	
300	525073-0000	-		1	COVER	
310	B 525070-0000	-		1	ELECTRICAL CONNECTION	
320	352135-0116	K	MM	500	FLEXIBLE CG DIA 40	
330	312105-0325	-		12	SCREW M6S5X10 A2 80	
340	312105-0328	-		12	SCREW M6S5X14 A2 80	
345	312105-0388	-		2	SCREW M6S ISO 4014 M6X90 A280	
350	315115-0153	-		3	WASHER TBRB6,4X12RFR	
355	315105-0153	-		2	WASHERS,PLAIN ROUND 6,4X12	
360	342991-0109	K		2	HOSE CLIP,WORM DRIVE TYPE (48)-50	
370	353104-0168	F		2	CABLE SHOEYAV 16 M6*	
380	353104-0182	F		2	CABLE SHOEYAV 35 M6*	
400	352103-0106	-		2	CABLE GLAND ST 11	
410	352103-0111	-		2	CABLE GLAND ST 16	
430	342921-0121	-		1	STRAIGHT COUPLING,EXT.THREADED 8/6-G1/8"	
460	315234-0109	-		1	PLAIN ROUND,COPPER R1/8",M10	
1000B						
100	247227-0003	K		1	AIR NOZZLE	
110	B 525197-0000	K		1	BLOW-OFF NOZZLE TR	
120	B 525198-0000	K		1	BLOW-OFF NOZZLE TL	
130	262290-0001	-		1	LACE	
140	23763-0004	-		1	SPACER PIPE	
150	23765-0001	K		2	INSULATING PIPE	
180	23765-0004	K		1	INSULATING PIPE	
200	252766-0001	K		3	INSULATING PIPE	
230	297499-0001	-		2	SIDE PIPE	
240	312105-0374	-		3	SCREW M6S ISO 4017 M6X30 A280	
1000S						
100	569124-0000	K		1	AIR NOZZLE	
110	569125-0000	K		1	AIR NOZZLE	
120	569126-0000	K		1	AIR NOZZLE	
130	262290-0001	-		1	LACE	
140	23763-0004	-		1	SPACER PIPE	
160	23765-0002	K		2	INSULATING PIPE	
170	23765-0003	K		2	INSULATING PIPE	
180	23765-0004	K		3	INSULATING PIPE	
200	252766-0001	K		1	INSULATING PIPE	
210	252766-0002	K		2	INSULATING PIPE	
230	548402-0000	-		2	SIDE PIPE	
240	312105-0374	-		3	SCREW M6S ISO 4017 M6X30 A280	

FF-ELEMENT R

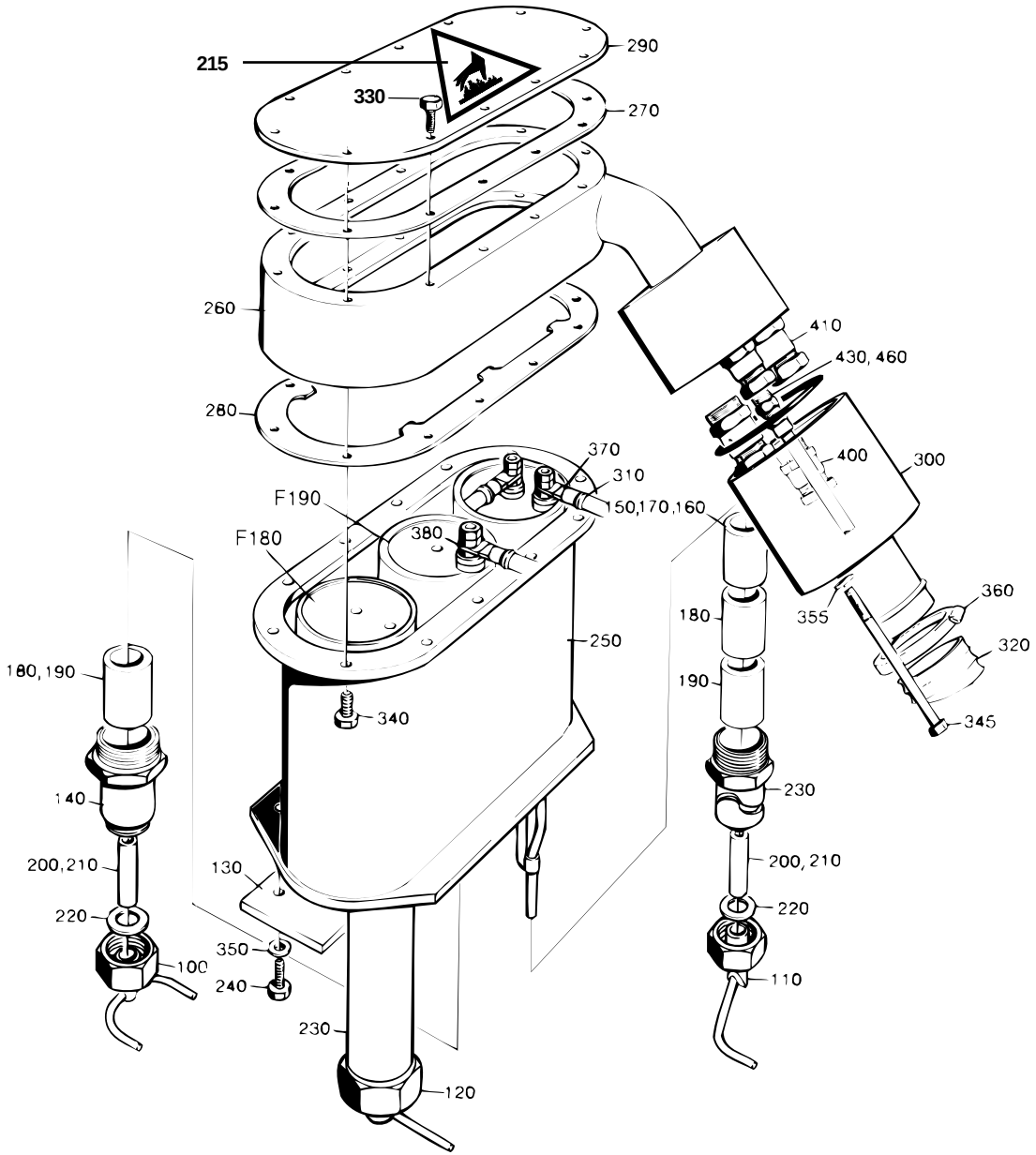

S-525128-1
ECN 22847

Pos	Part No	SP	UN	Qty	Description	Page No
1000SQ						
100	574032-0000	K		1	BLOWING NOZZLE B	
110	574033-0000	K		1	BLOWING NOZZLE TH	
120	574034-0000	K		1	BLOWING NOZZLE TV	
130	262290-0001	-		1	LACE	
140	23763-0006	-		1	SPACER PIPE	
160	23765-0002	K		2	INSULATING PIPE	
180	23765-0004	K		4	INSULATING PIPE	
190	23765-0005	K		1	INSULATING PIPE	
200	252766-0001	K		3	INSULATING PIPE	
230	443158-0000	-		2	SIDE PIPE	
240	312105-0374	-		3	SCREW M6S ISO 4017 M6X30 A280	
1055B						
100	247227-0003	K		1	AIR NOZZLE	
110	B 525197-0000	K		1	BLOW-OFF NOZZLE TR	
120	B 525198-0000	K		1	BLOW-OFF NOZZLE TL	
130	262290-0001	-		1	LACE	
140	23763-0004	-		1	SPACER PIPE	
160	23765-0002	K		2	INSULATING PIPE	
180	23765-0004	K		5	INSULATING PIPE	
200	252766-0001	K		3	INSULATING PIPE	
230	443158-0000	-		2	SIDE PIPE	
240	312105-0374	-		3	SCREW M6S ISO 4017 M6X30 A280	
1136B						
100	247227-0003	K		1	AIR NOZZLE	
110	B 525197-0000	K		1	BLOW-OFF NOZZLE TR	
120	B 525198-0000	K		1	BLOW-OFF NOZZLE TL	
130	262290-0001	-		1	LACE	
140	23763-0004	-		1	SPACER PIPE	
160	23765-0002	K		2	INSULATING PIPE	
170	23765-0003	K		2	INSULATING PIPE	
180	23765-0004	K		3	INSULATING PIPE	
200	252766-0001	K		1	INSULATING PIPE	
210	252766-0002	K		2	INSULATING PIPE	
230	548402-0000	-		2	SIDE PIPE	
240	312105-0374	-		3	SCREW M6S ISO 4017 M6X30 A280	

Pos	Part No	SP	UN	Qty	Description	Page No

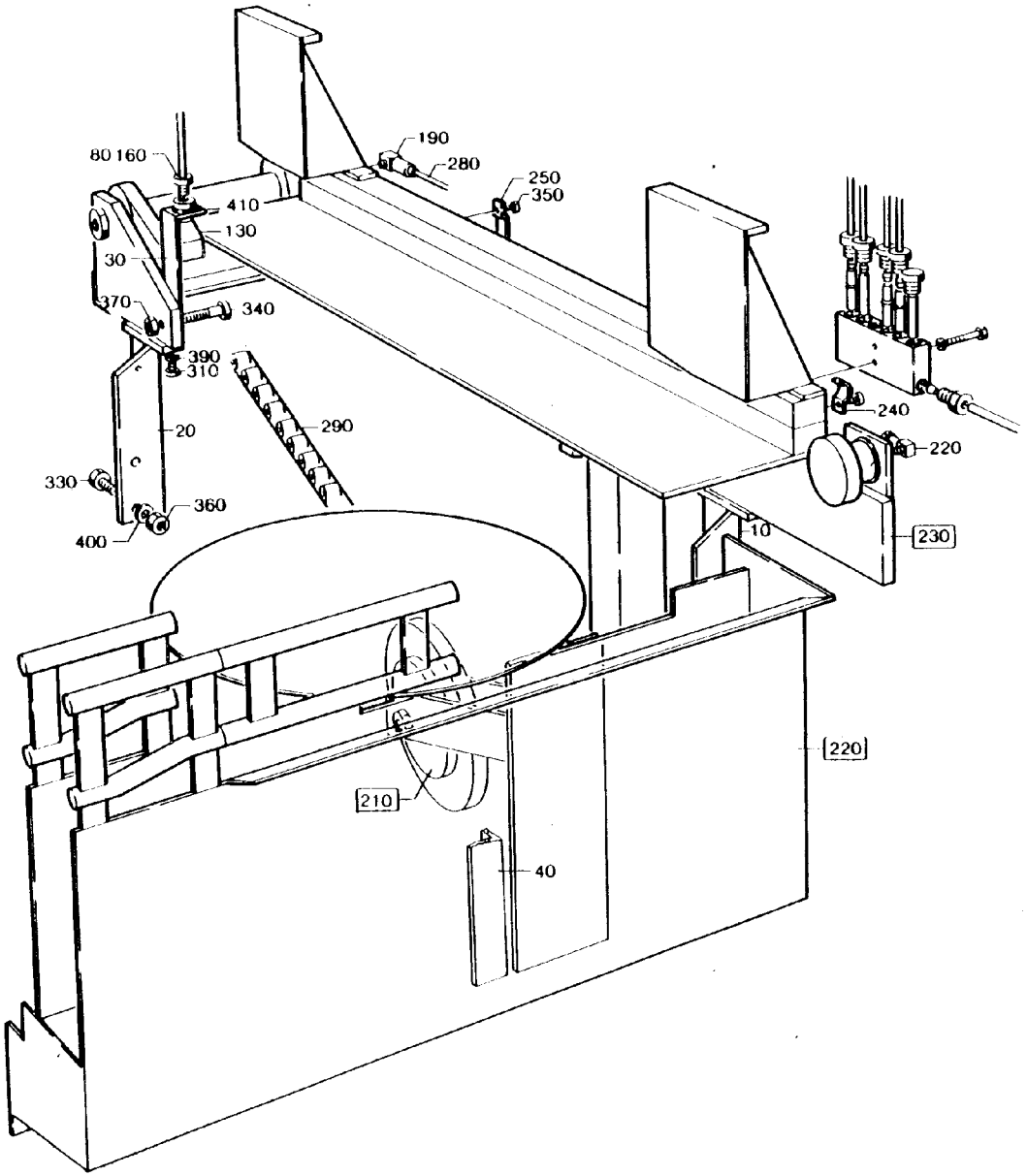

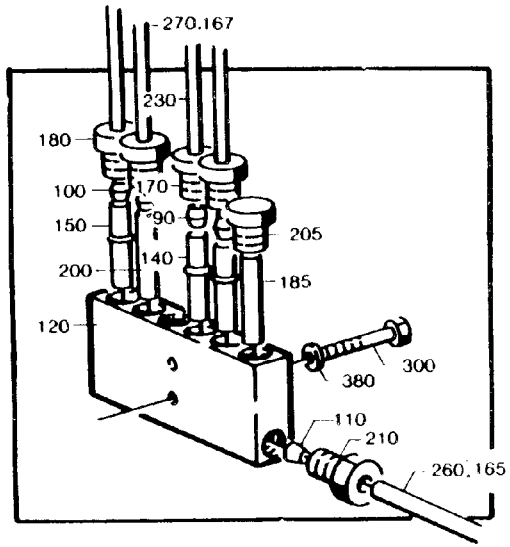

285674-2
285674-2.TIF

Pos	Part No	SP	UN	Qty	Description	Page No
0300B or 0355B or 0375S or 0500B or 0500S or 0568B or 0750B or 1000B						
010	285575-0000	-		2	FASTENING BRACKET	
020	285576-0000	-		1	FASTENING BRACKET	
040	442988-0000	-		1	FASTENING BRACKET	
1055B						
010	443156-0000	-		2	FASTENING BRACKET	
020	443157-0000	-		1	FASTENING BRACKET	
040	443423-0000	-		1	FASTENING BRACKET	
Common parts						
F210	A 285673-0200	-		1	CHAIN TENSIONER	**631**
F220	A 285591-6000	-		1	STATION	**633**
F230	A 285654-0300	-		1	CONVEYING EQUIPMENT	**635**
030	297834-0000	-		1	HOLDER	
080	90028-0001	F		1	CONE	
090	90028-0020	F		1	CONE	
100	90028-0021	F		4	CONE	
110	90028-0025	F		2	CONE	
120	90032-0040	-		1	BLOCK	
130	90092-0048	F		1	OIL BRUSH	
140	90092-0052	K		3	VALVE	
150	90092-0053	K		2	VALVE	
160	90134-0003	F		1	BUSHING	
165	90134-0030	F		4	SLEEVE	
167	90134-0031	F		6	SLEEVE	
170	90134-0039	F		1	BUSHING	
180	90134-0040	F		4	BUSHING	
185	90134-0045	F		1	PLUG	
190	90134-0048	F		2	CONNECTION	
200	90134-0051	K		2	SPACER COLLAR	
205	90134-0052	K		1	PLUG	
210	90134-0055	F		2	BUSHING	
220	90134-0058	F		1	BANJO CONNECTION	
230	90151-0001	-	MM	550	BRASS PIPE	
240	90165-0056	K		4	CLIP	
245	90165-0058	K		1	CLAMP	
250	316810-0106	-		3	PIPE CLAMP 8MM RFR	
260	90166-0108	F	MM	2500	HOSE	
270	90166-0109	F	MM	2500	HOSE	
280	90166-0143	F	MM	500	HOSE	
290	90288-0038	K		1	ROLLER CHAIN	
300	312155-0295	-		2	SCREW MF6S DIN 7991 M4X20 A280	
310	312105-0368	-		7	SCREW M6S ISO 4017 M6X16 A280	
330	312105-0451	-		8	SCREW M6S ISO 4017 8X20 A280	
335	312105-0453	-		1	SCREW M6S ISO 4017 M8X25 A280	
340	312105-0455	-		1	SCREW M6S ISO 4017 M8X30 A280	
350	312125-0285	-		8	SLOTTED HEMCS4X6RFR	
360	312605-0318	-		8	NUTS,HEXAGON,M8	
370	312811-0318	-		1	LOCK NUT M8RFR	
390	315105-0153	-		7	WASHERS,PLAIN ROUND 6,4X12	
400	315105-0165	-		10	WASHERS,PLAIN ROUND 8,4X16	
410	315105-0173	-		1	WASHERS,PLAIN ROUND 10,5X22	
420	315115-0165	-		1	WASHER TBRB8,4X16RFR	

CHAIN TENSIONER

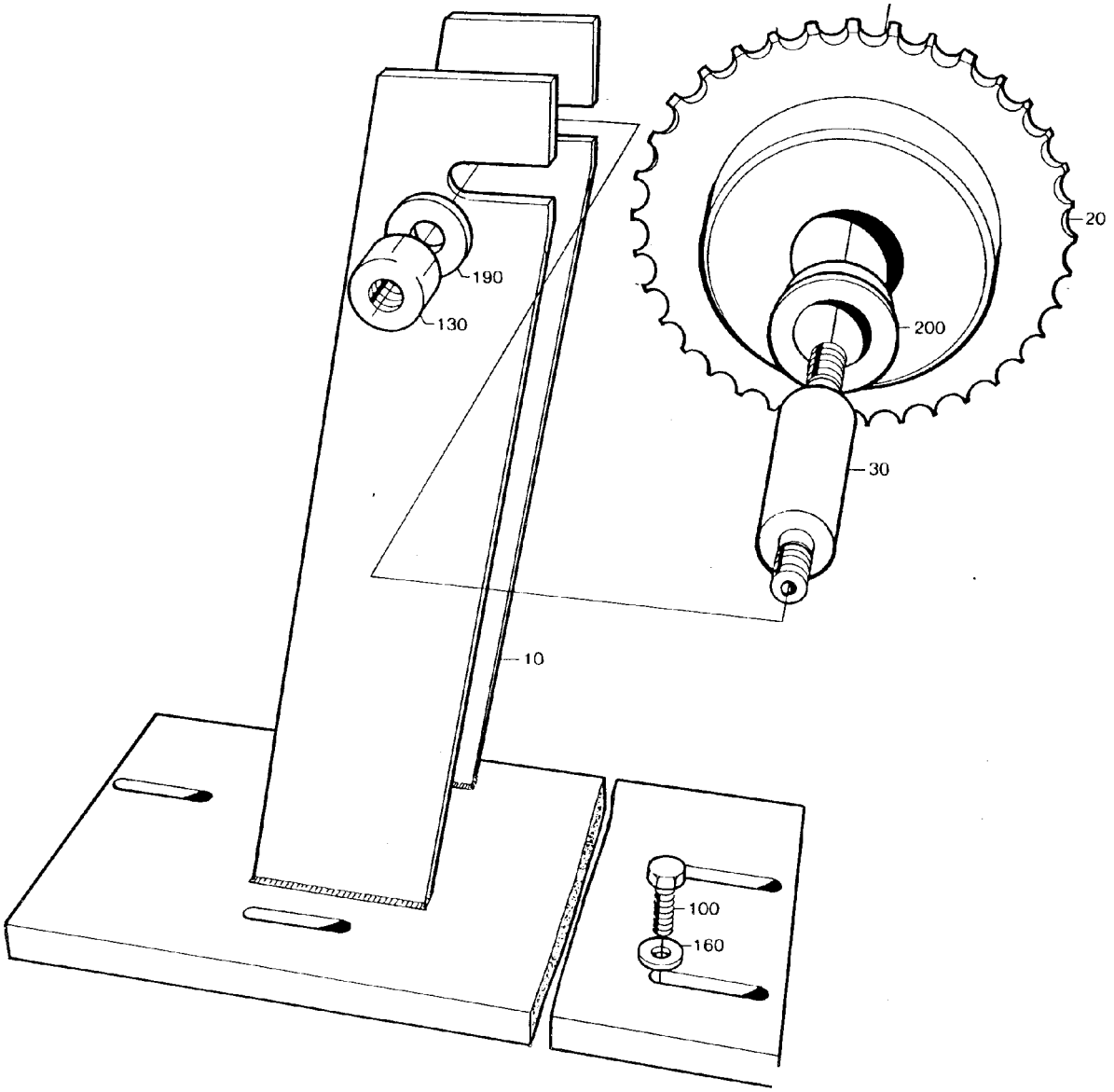

285673-2
285673-2.TIF

Pos	Part No	SP	UN	Qty	Description	Page No
-						
010	442989-0000	-		1	CANTILEVER	
020	285585-0000	K		1	SPROCKET	
030	276880-0000	K		1	SHAFT	
100	312105-0368	-		4	SCREW M6S ISO 4017 M6X16 A280	
130	312605-0322	-		2	NUTS,HEXAGON,M12	
160	315115-0153	-		4	WASHER TBRB6,4X12RFR	
190	315115-0178	-		2	WASHER TBRB13X24RFR	
200	321101-0223	K		2	FLANGE BUS 18F7X16	

Pos	Part No	SP	UN	Qty	Description	Page No

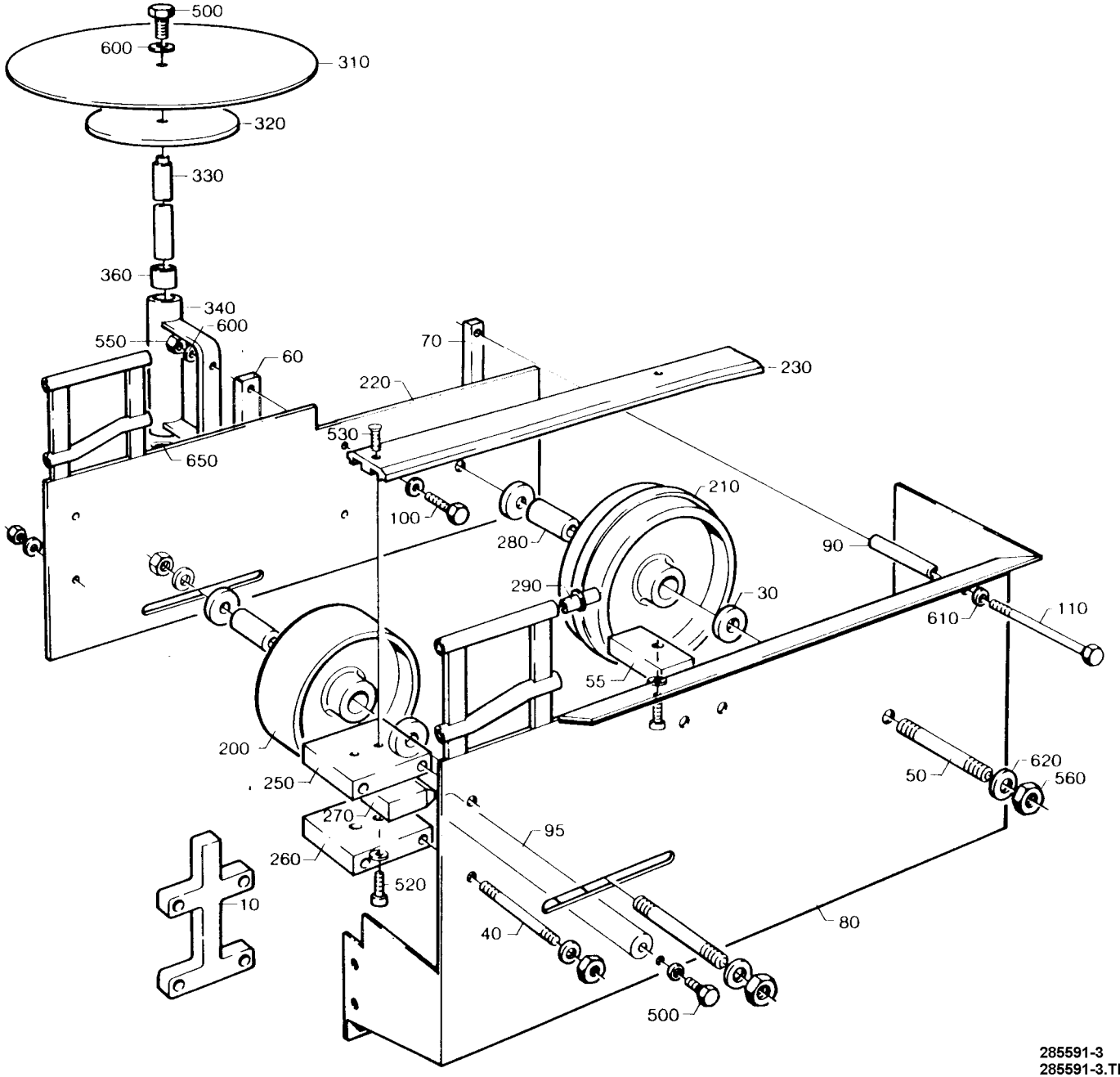

285591-3
285591-3.TIF

Pos	Part No	SP	UN	Qty	Description	Page No
0180B or 0189B or 0200B or 0236B or 0250B or 0284B or 0300B or 0355B or 0375S or 0500S						
030	229201-0001	-		4	SPACER	
040	229508-0031	-		5	STUD SCREW	
050	229760-0012	-		2	STUD SCREW	
055	237082-0001	-		1	MOUNTING BLOCK	
080	297505-0000	-		1	SIDE PLATE	
090	297574-0001	-		1	SPACER	
095	297597-0002	-		1	BRACKET	
110	312105-0469	-		1	SCREW M6S ISO 4014 M8X90 A280	
220	525054-0000	-		1	SIDE PLATE	
550	312605-0316	-		10	NUTS,HEXAGON,M6	
600	315105-0153	-		15	WASHERS,PLAIN ROUND 6,4X12	
0500B or 0568B or 0750B or 1000B or 1055B						
010	228843-0001	-		2	SPACER	
030	229201-0002	-		4	SPACER	
040	229508-0029	-		5	STUD SCREW	
050	229760-0013	-		2	STUD SCREW	
055	237082-0002	-		1	MOUNTING BLOCK	
080	297484-0000	-		1	SIDE PLATE	
090	297574-0002	-		1	SPACER	
095	297597-0001	-		1	BRACKET	
110	312105-0471	-		1	SCREW M6S ISO 4014 M8X100 A280	
220	297569-0000	-		1	SIDE PLATE	
550	312605-0316	-		12	NUTS,HEXAGON,M6	
600	315105-0153	-		17	WASHERS,PLAIN ROUND 6,4X12	
Common parts						
100	312105-0368	-		2	SCREW M6S ISO 4017 M6X16 A280	
200	476975-0000	K		1	WHEEL	
210	245039-0000	K		1	GUIDE WHEEL	
230	442776-0000	-		1	SLIDE RAIL	
250	228845-0000	-		1	MOUNTING BLOCK	
260	229202-0000	-		1	MOUNTING BLOCK	
270	229206-0000	-		1	LOCATING PIECE	
280	229207-0000	-		2	BEARING SLEEVE	
290	229516-0000	-		8	PIN	
310	525053-0000	-		1	PLATE (CIRCULAR)	
330	285132-0000	-		1	SHAFT	
340	285133-0000	-		1	CANTILEVER	
360	525252-0000	K		2	BEARING	
500	312105-0367	-		2	SCREW M6S6X14RFR	
520	312115-0368	-		1	SCREW MC6S ISO 4762 M6X16 A280	
530	312155-0370	-		3	SCREW MF6S DIN 7991 M6X20 A280	
560	312605-0320	-		4	NUTS,HEXAGON,M10	
610	315105-0165	-		2	WASHERS,PLAIN ROUND 8,4X16	
620	315105-0173	-		4	WASHERS,PLAIN ROUND 10,5X22	
650	315755-0113	K		1	LOCKING WAE 15 RFR	

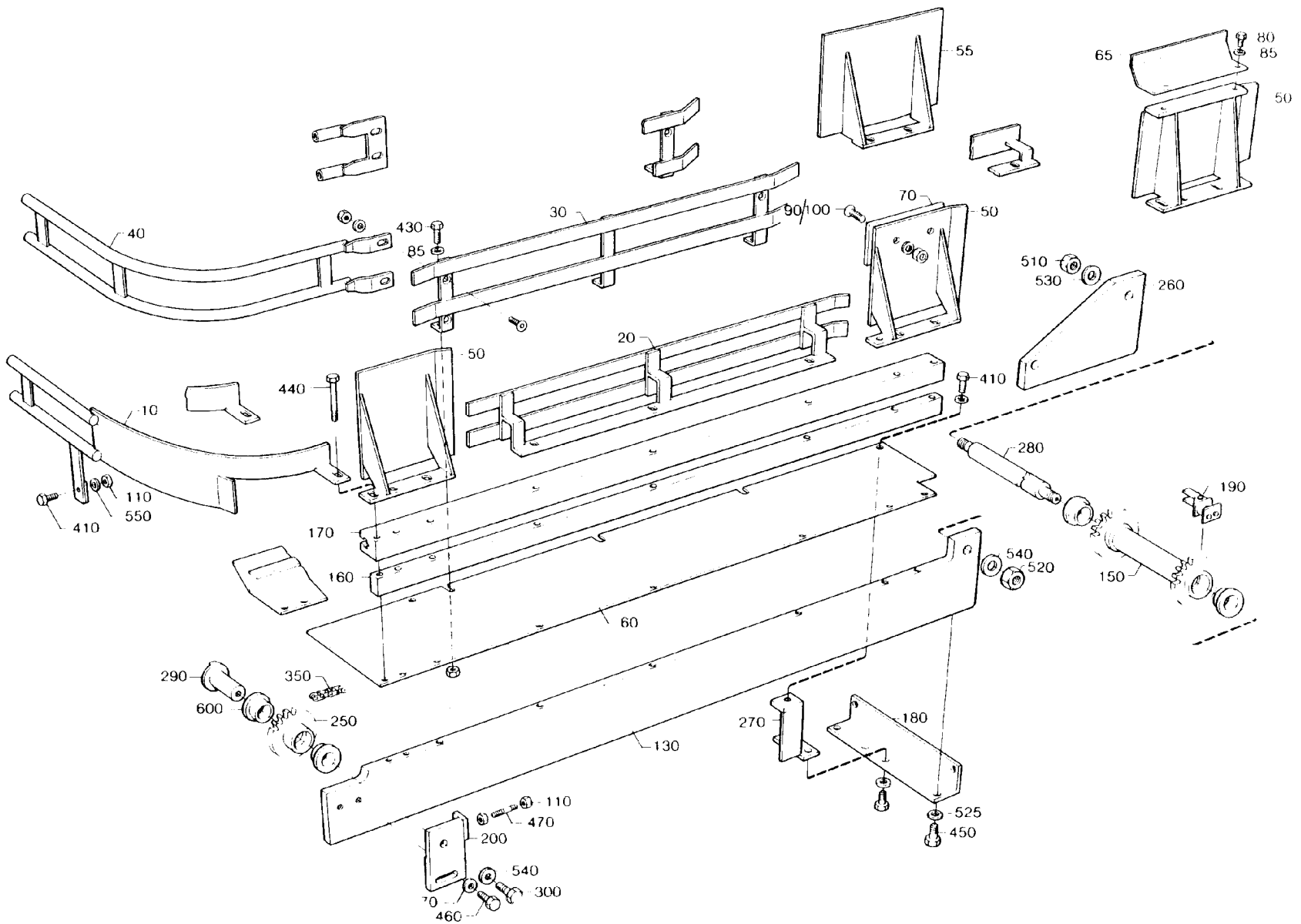

285654-3
285654-3.TIF

Pos	Part No	SP	UN	Qty	Description	Page No
0200B						
010	442569-0000	-		1	ARCH	
020	285580-0000	-		1	LEAD RAIL	
030	285581-0000	-		1	LEAD RAIL	
040	297625-0000	-		1	ARCH	
050	297778-0000	-		2	LEAD PLATE	
060	442752-0000	-		1	SLIDE SHEET	
070	443030-0000	-		2	PLATE	
085	315115-0153	-		20	WASHER TBRB6,4X12RFR	
090	312155-0368	-		5	SCREW MF6S DIN7991 M6X16 A280	
110	312605-0316	-		9	NUTS,HEXAGON,M6	
0250B or 0300B						
010	442569-0000	-		1	ARCH	
020	285580-0000	-		1	LEAD RAIL	
030	285581-0000	-		1	LEAD RAIL	
040	297625-0000	-		1	ARCH	
050	297778-0000	-		2	LEAD PLATE	
060	442752-0000	-		1	SLIDE SHEET	
070	443029-0000	-		2	PLATE	
085	315115-0153	-		20	WASHER TBRB6,4X12RFR	
090	312155-0368	-		5	SCREW MF6S DIN7991 M6X16 A280	
110	312605-0316	-		9	NUTS,HEXAGON,M6	
0355B						
010	442569-0000	-		1	ARCH	
020	285580-0000	-		1	LEAD RAIL	
030	285581-0000	-		1	LEAD RAIL	
040	297625-0000	-		1	ARCH	
050	442868-0000	-		2	LEAD PLATE	
060	442752-0000	-		1	SLIDE SHEET	
065	525176-0000	-		2	PLATE	
080	312105-0364	-		4	SCREW M6S6X10RFR	
085	315115-0153	-		20	WASHER TBRB6,4X12RFR	
090	312155-0368	-		1	SCREW MF6S DIN7991 M6X16 A280	
110	312605-0316	-		5	NUTS,HEXAGON,M6	
0375S						
010	442569-0000	-		1	ARCH	
020	285580-0000	-		1	LEAD RAIL	
030	285581-0000	-		1	LEAD RAIL	
040	297625-0000	-		1	ARCH	
050	297778-0000	-		2	LEAD PLATE	
060	442752-0000	-		1	SLIDE SHEET	
070	443026-0000	-		2	PLATE	
085	315115-0153	-		20	WASHER TBRB6,4X12RFR	
090	312155-0368	-		1	SCREW MF6S DIN7991 M6X16 A280	
100	312155-0370	-		4	SCREW MF6S DIN 7991 M6X20 A280	
110	312605-0316	-		9	NUTS,HEXAGON,M6	
0500B or 0568B or 0750B						
010	442568-0000	-		1	ARCH	
020	285704-0000	-		1	LEAD RAIL	
030	285708-0000	-		1	LEAD RAIL	
040	297626-0000	-		1	ARCH	
050	285942-0001	-		1	LEAD PLATE	
055	442535-0000	-		1	LEAD PLATE	
060	285577-0000	-		1	SLIDE SHEET	
085	315115-0153	-		16	WASHER TBRB6,4X12RFR	
090	312155-0368	-		1	SCREW MF6S DIN7991 M6X16 A280	
110	312605-0316	-		5	NUTS,HEXAGON,M6	
0500S						
010	442569-0000	-		1	ARCH	
020	285580-0000	-		1	LEAD RAIL	
030	285581-0000	-		1	LEAD RAIL	
040	297625-0000	-		1	ARCH	
050	442868-0000	-		2	LEAD PLATE	
060	442752-0000	-		1	SLIDE SHEET	
065	442870-0000	-		2	TOP SECTION	
080	312105-0364	-		4	SCREW M6S6X10RFR	
085	315115-0153	-		20	WASHER TBRB6,4X12RFR	
090	312155-0368	-		1	SCREW MF6S DIN7991 M6X16 A280	
110	312605-0316	-		5	NUTS,HEXAGON,M6	
1000B						
010	442568-0000	-		1	ARCH	
020	285704-0000	-		1	LEAD RAIL	
030	285708-0000	-		1	LEAD RAIL	
040	297626-0000	-		1	ARCH	
050	442603-0000	-		2	LEAD PLATE	
060	285577-0000	-		1	SLIDE SHEET	
065	442604-0000	-		2	TOP SECTION	
080	312105-0364	-		4	SCREW M6S6X10RFR	
085	315115-0153	-		20	WASHER TBRB6,4X12RFR	
090	312155-0368	-		1	SCREW MF6S DIN7991 M6X16 A280	
110	312605-0316	-		5	NUTS,HEXAGON,M6	

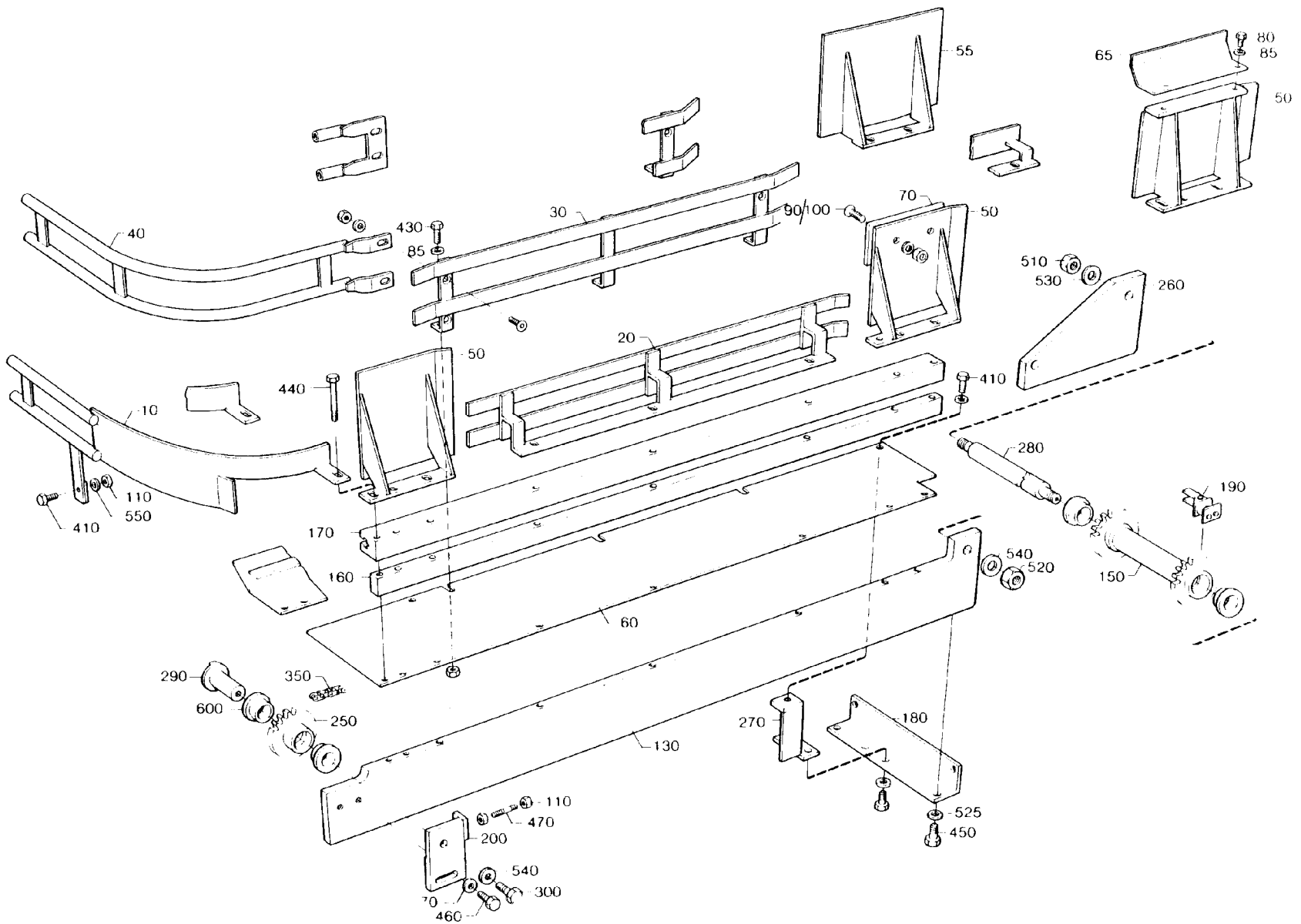

285654-3
285654-3.TIF

Pos	Part No	SP	UN	Qty	Description	Page No
1055B						
010	442568-0000	-		1	ARCH	
020	285704-0000	-		1	LEAD RAIL	
030	285708-0000	-		1	LEAD RAIL	
040	297626-0000	-		1	ARCH	
050	443152-0000	-		2	LEAD PLATE	
060	285577-0000	-		1	SLIDE SHEET	
065	442604-0000	-		2	TOP SECTION	
080	312105-0364	-		4	SCREW M6S6X10RFR	
085	315115-0153	-		20	WASHER TBRB6,4X12RFR	
090	312155-0368	-		1	SCREW MF6S DIN7991 M6X16 A280	
110	312605-0316	-		5	NUTS,HEXAGON,M6	
Common parts						
130	285109-0000	-		1	BEAM	
150	276742-0004	K		1	BEARING SLEEVE	
160	285115-0000	-		1	MOUNTING BAR	
170	443020-0000	K		1	PROFILE	
180	285669-0000	-		1	ANGLE IRON	
190	B 297750-0000	F		4	CARRIER	
200	297831-0000	-		1	PLATE	
250	276743-0000	K		1	SPROCKET	
260	285126-0000	-		1	BRACKET	
270	285682-0000	-		1	FASTENING BRACKET	
280	525365-0000	K		1	SHAFT	
290	525366-0000	K		1	SHAFT	
300	297833-0000	K		1	SCREW	
350	90288-0039	K		4	ROLLER CHAIN	
410	312105-0366	-		4	SCREW M6S ISO 4017 M6X12 A280	
430	312105-0368	-		3	SCREW M6S ISO 4017 M6X16 A280	
440	312105-0383	-		8	SCREW M6S ISO 4014 M6X65 A280	
450	312105-0449	-		4	SCREW M6S ISO 4017 M8X16 A280	
460	312105-0452	-		2	SCREW M6S8X22RFR	
470	312109-0374	-		1	SCREW M6S ISO 4017 M6X30 A280	
510	312605-0320	-		1	NUTS,HEXAGON,M10	
520	312605-0322	-		1	NUTS,HEXAGON,M12	
525	315105-0165	-		4	WASHERS,PLAIN ROUND 8,4X16	
530	315105-0173	-		1	WASHERS,PLAIN ROUND 10,5X22	
540	315105-0178	-		2	WASHERS,PLAIN ROUND 13X24	
550	315105-0153	-		3	WASHERS,PLAIN ROUND 6,4X12	
570	315115-0165	-		2	WASHER TBRB8,4X16RFR	
600	321101-0223	K		4	FLANGE BUS 18F7X16	

Pos	Part No	SP	UN	Qty	Description	Page No

297641-2

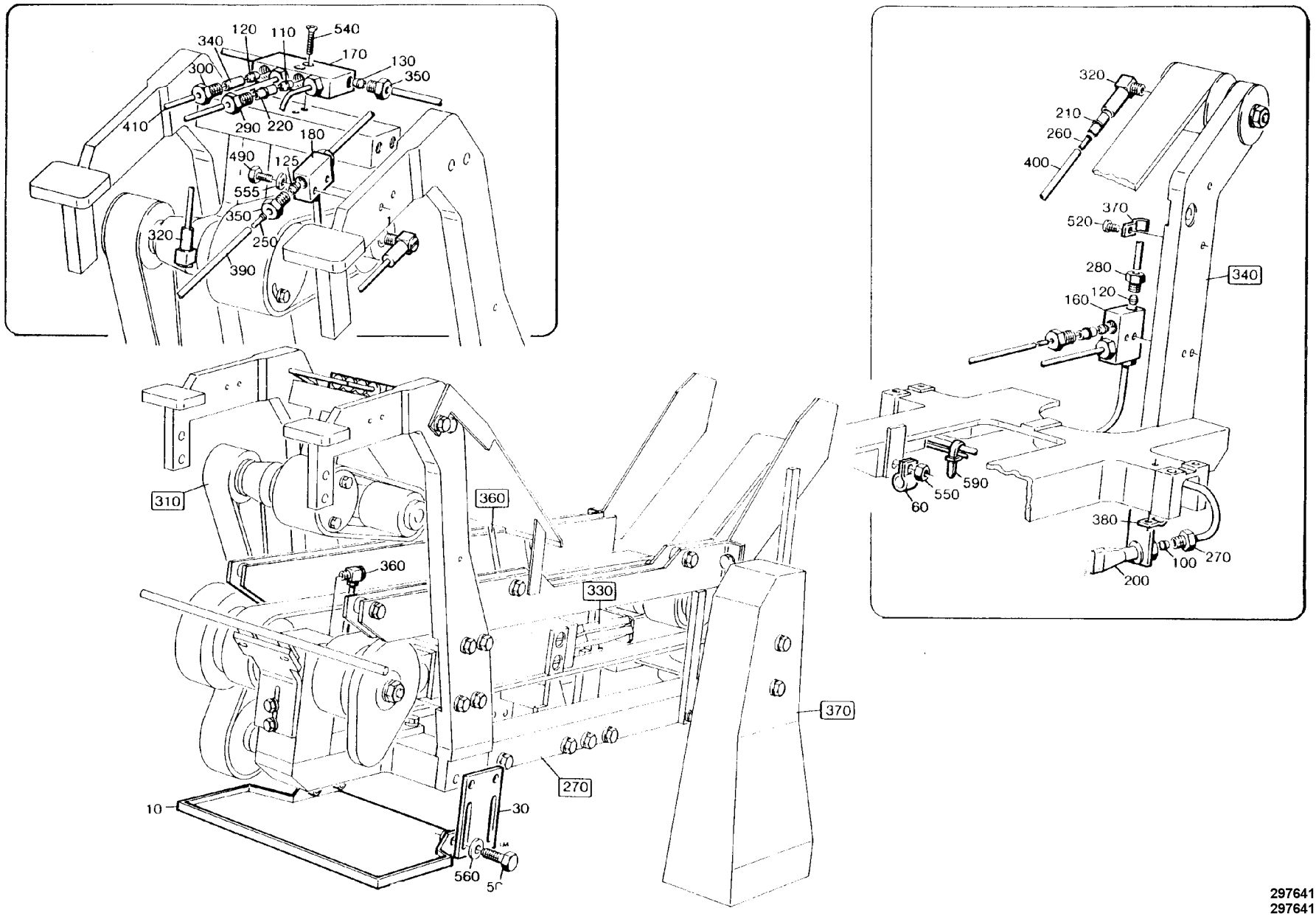

297641-2
297641-2.TIF

Pos	Part No	SP	UN	Qty	Description	Page No
SOURCE,TBA/8-030V						
F340	A 285409-0100	-		1	TENSION SPROCKET	661
F360	A 285483-0100	-		1	STOP	665
SOURCE,TBA/8-040V						
F340	A 285409-0100	-		1	TENSION SPROCKET	661
F360	A 285483-0200	-		1	STOP	663
SOURCE,TBA/8-050V						
F340	A 285409-0200	-		1	TENSION SPROCKET	659
F360	A 285483-0200	-		1	STOP	663
Common parts						
F270	A 297622-0200	-		1	MACHINE BODY	641
F310	A 285407-0200	-		1	INFEEDER	653
F330	A 285408-6000	-		1	LIFTING DEVICE	655
F370	A 297721-0100	-		1	CHAIN GUARD	667
010	297635-0000	-		1	TROUGH	
030	297637-0000	-		2	PLATE	
060	442756-0000	-		3	CRAMP	
100	90028-0001	F		1	CONE	
110	90028-0020	F		1	CONE	
120	90028-0021	F		6	CONE	
125	90028-0022	F		3	CONE	
130	90028-0025	F		3	CONE	
160	90032-0038	K		1	BLOCK	
170	90032-0039	K		1	BLOCK	
180	90032-0043	K		1	JUNKTION BLOCK	
200	90092-0048	F		1	OIL BRUSH	
210	90092-0052	F		5	VALVE	
220	90092-0053	F		2	VALVE	
250	90134-0030	F		8	SLEEVE	
260	90134-0031	F		12	SLEEVE	
270	90134-0003	F		1	BUSHING	
280	90134-0038	F		1	BUSHING	
290	90134-0039	F		1	BUSHING	
300	90134-0040	F		5	BUSHING	
320	90134-0048	K		5	CONNECTION	
340	90134-0051	K		4	SPACER COLLAR	
350	90134-0055	F		6	BUSHING	
360	90134-0058	K		1	BANJO CONNECTION	
370	90165-0056	K		4	CLIP	
375	90165-0057	K		4	CLIP	
390	90166-0108	F	MM	3500	HOSE	
400	90166-0109	F	MM	3000	HOSE	
410	90166-0143	F	MM	1000	HOSE	

Pos	Part No	SP	UN	Qty	Description	Page No
490	312105-0295	-		2	SCREW M6S ISO 4017 M4X20 A280	
500	312105-0366	-		4	SCREW M6S ISO 4017 M6X12 A280	
520	312125-0285	-		16	SLOTTED HEMCS4X6RFR	
540	312155-0295	-		4	SCREW MF6S DIN 7991 M4X20 A280	
550	312605-0318	-		3	NUTS,HEXAGON,M8	
555	315105-0136	-		2	WASHERS,PLAIN ROUND 4,3X8	
560	315115-0153	-		4	WASHER TBRB6,4X12RFR	
590	352113-0101	F		10	RIBBON CLAMP	

297622-2

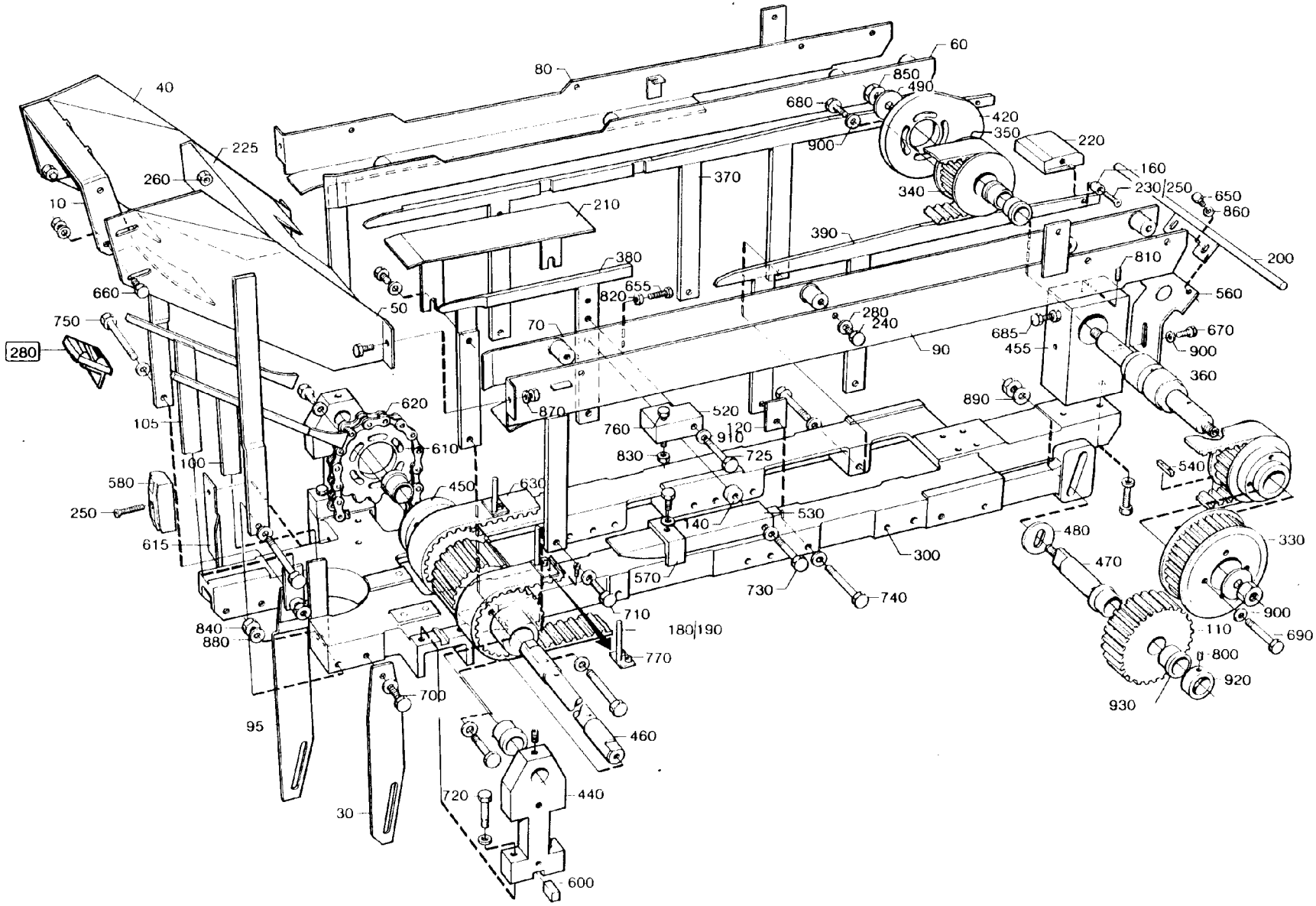

297622-2
297622-2.TIF

Pos	Part No	SP	UN	Qty	Description	Page No
TB/8 0180B or TB/8 0189B or TB/8 0200B						
010	297759-0000	-		1	DROP WING	
030	285570-0000	-		1	BRACKET	
040	297627-0002	-		1	HEAD PLATE	
050	297628-0002	-		1	HEAD PLATE	
060	297521-0003	-		1	HEAD PLATE	
070	297522-0003	-		1	HEAD PLATE	
080	442750-0000	-		1	HEAD PLATE	
090	297541-0002	-		1	HEAD PLATE	
095	297591-0000	-		1	BRACKET	
100	285370-0000	-		1	RAIL	
105	285416-0000	-		1	RAIL	
110	297665-0000	-		1	TIMING BELT PULLEY	
120	285605-0001	-		7	SPACER	
140	285944-0002	-		2	SPACER	
180	525061-0000	F		7	CARRIER	
190	525062-0000	F		7	CARRIER	
200	297542-0003	-		1	SLIDE RAIL	
210	297555-0002	-		1	SLIDE SHEET	
220	297693-0002	-		1	BLOCKING PIECE	
230	312115-0329	-		2	SCREW MC6S ISO 4762 M5X16 A280	
240	312105-0364	-		8	SCREW M6S6X10RFR	
250	312155-0335	-		2	SCREW MF6S DIN 7991 M5X30 A280	
450	B 297662-0000	K		1	TIMING BELT PULLEY	
560	285424-0000	-		1	HOLDER	
650	312105-0325	-		2	SCREW M6S5X10 A2 80	
830	312605-0316	-		5	NUTS,HEXAGON,M6	
870	315105-0153	-		13	WASHERS,PLAIN ROUND 6,4X12	
900	315115-0153	-		22	WASHER TBRB6,4X12RFR	
TB/8 0236B or TB/8 0250B or TB/8 0284B						
010	297759-0000	-		1	DROP WING	
030	285568-0000	-		1	BRACKET	
040	297627-0002	-		1	HEAD PLATE	
050	297628-0002	-		1	HEAD PLATE	
060	297521-0003	-		1	HEAD PLATE	
070	297522-0003	-		1	HEAD PLATE	
080	442750-0000	-		1	HEAD PLATE	
090	297541-0002	-		1	HEAD PLATE	
095	297590-0000	-		1	BRACKET	
100	285370-0000	-		1	RAIL	
105	285416-0000	-		1	RAIL	
110	297665-0000	-		1	TIMING BELT PULLEY	
120	285605-0001	-		7	SPACER	
140	285944-0002	-		2	SPACER	
180	525061-0000	F		7	CARRIER	
190	525062-0000	F		7	CARRIER	
200	297542-0003	-		1	SLIDE RAIL	
210	297555-0002	-		1	SLIDE SHEET	
220	297693-0002	-		1	BLOCKING PIECE	
230	312115-0329	-		2	SCREW MC6S ISO 4762 M5X16 A280	
240	312105-0364	-		8	SCREW M6S6X10RFR	
250	312155-0335	-		2	SCREW MF6S DIN 7991 M5X30 A280	
450	B 297662-0000	K		1	TIMING BELT PULLEY	
560	285424-0000	-		1	HOLDER	
650	312105-0325	-		2	SCREW M6S5X10 A2 80	
830	312605-0316	-		5	NUTS,HEXAGON,M6	
870	315105-0153	-		13	WASHERS,PLAIN ROUND 6,4X12	
900	315115-0153	-		22	WASHER TBRB6,4X12RFR	
TB/8 0300B or TBA/8 0375S						
010	297766-0000	-		1	DROP WING	
030	285568-0000	-		1	BRACKET	
040	297627-0001	-		1	HEAD PLATE	
050	297628-0001	-		1	HEAD PLATE	
060	297521-0002	-		1	HEAD PLATE	
070	297522-0002	-		1	HEAD PLATE	
080	442750-0000	-		1	HEAD PLATE	
090	297541-0002	-		1	HEAD PLATE	
095	297590-0000	-		1	BRACKET	
100	285370-0000	-		1	RAIL	
105	285416-0000	-		1	RAIL	
110	285572-0000	-		1	TIMING BELT PULLEY	
120	285605-0001	-		7	SPACER	
140	285944-0002	-		2	SPACER	
180	525061-0000	F		7	CARRIER	
190	525062-0000	F		7	CARRIER	
200	297542-0003	-		1	SLIDE RAIL	
210	297555-0002	-		1	SLIDE SHEET	
220	297693-0002	-		1	BLOCKING PIECE	
230	312115-0329	-		2	SCREW MC6S ISO 4762 M5X16 A280	
240	312105-0364	-		8	SCREW M6S6X10RFR	
250	312155-0335	-		2	SCREW MF6S DIN 7991 M5X30 A280	
450	B 297662-0000	K		1	TIMING BELT PULLEY	
560	285424-0000	-		1	HOLDER	
650	312105-0325	-		2	SCREW M6S5X10 A2 80	
830	312605-0316	-		5	NUTS,HEXAGON,M6	
870	315105-0153	-		13	WASHERS,PLAIN ROUND 6,4X12	

297622-2

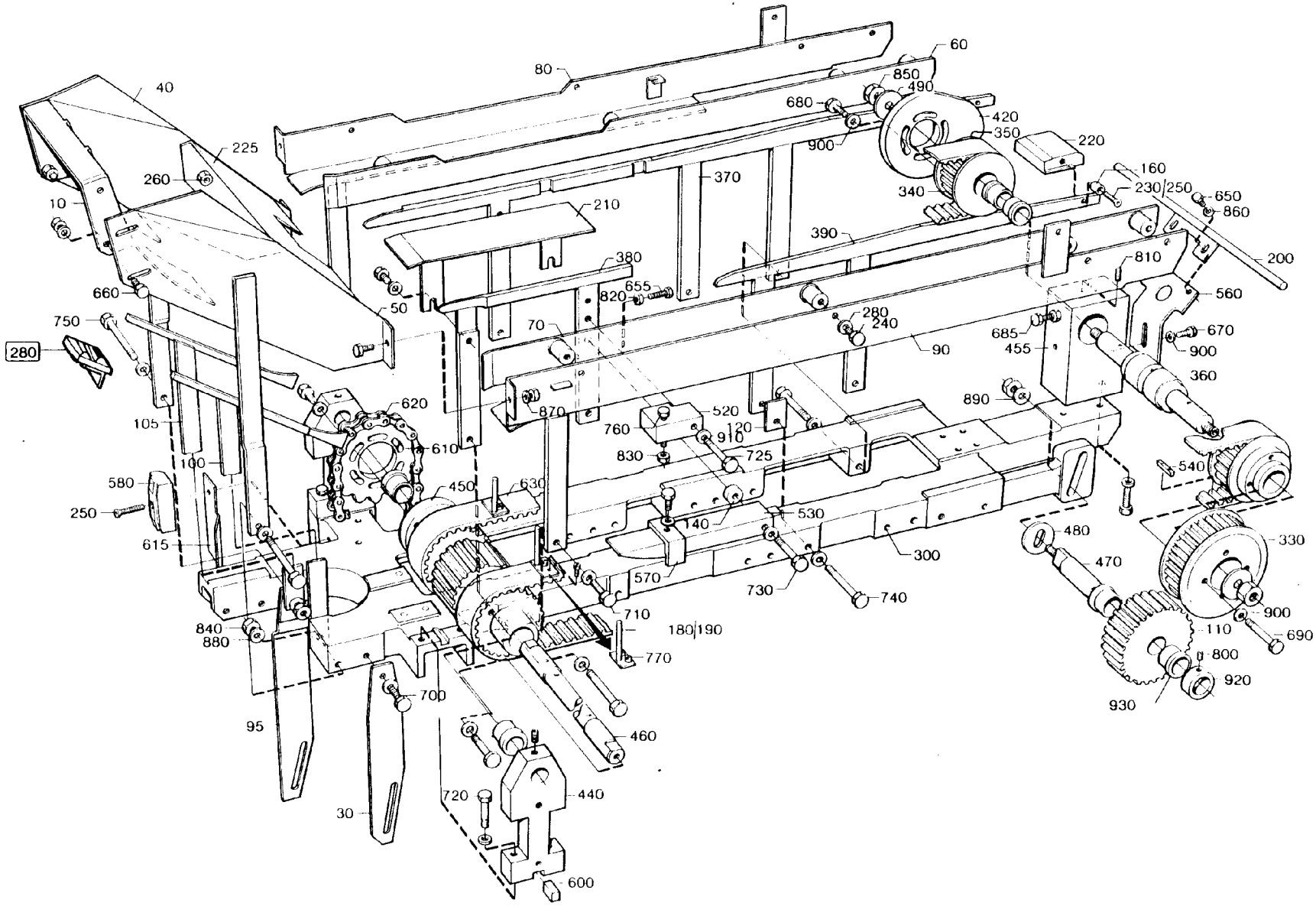

297622-2
297622-2.TIF

Pos	Part No	SP	UN	Qty	Description	Page No
900	315115-0153	-		22	WASHER TBRB6,4X12RFR	
TB/8 0500B or TB/8 0568B or TBA/8 0750B						
010	442896-0000	-		1	DROP WING	
030	285564-0000	-		1	BRACKET	
040	442857-0000	-		1	HEAD PLATE	
050	442856-0000	-		1	HEAD PLATE	
080	297540-0002	-		1	HEAD PLATE	
090	297541-0002	-		1	HEAD PLATE	
095	297588-0000	-		1	BRACKET	
100	442863-0000	-		1	RAIL	
105	442864-0000	-		1	RAIL	
110	285356-0000	-		1	TIMING BELT PULLEY	
140	285944-0001	-		2	SPACER	
160	442571-0000	-		2	SHAFT	
180	525057-0000	F		7	CARRIER	
190	525058-0000	F		7	CARRIER	
200	297542-0001	-		1	SLIDE RAIL	
210	297555-0001	-		1	SLIDE SHEET	
220	297693-0003	-		1	BLOCKING PIECE	
225	442895-0000	-		2	STEERING	
250	312155-0335	-		4	SCREW MF6S DIN 7991 M5X30 A280	
260	312155-0372	-		4	SCREW MF6S DIN 7991 M6X25 A280	
450	B 297662-0000	K		1	TIMING BELT PULLEY	
560	285424-0000	-		1	HOLDER	
650	312105-0325	-		2	SCREW M6S5X10 A2 80	
830	312605-0316	-		9	NUTS,HEXAGON,M6	
870	315105-0153	-		9	WASHERS,PLAIN ROUND 6,4X12	
900	315115-0153	-		22	WASHER TBRB6,4X12RFR	
TB/8 1000B						
010	297816-0000	-		1	DROP WING	
030	285372-0000	-		1	BRACKET	
040	297818-0000	-		1	HEAD PLATE	
050	297817-0000	-		1	HEAD PLATE	
080	297540-0001	-		1	HEAD PLATE	
090	297541-0001	-		1	HEAD PLATE	
095	297586-0000	-		1	BRACKET	
100	285370-0000	-		1	RAIL	
105	285416-0000	-		1	RAIL	
110	285356-0000	-		1	TIMING BELT PULLEY	
140	285944-0001	-		2	SPACER	
160	442571-0000	-		2	SHAFT	
180	525057-0000	F		7	CARRIER	
190	525058-0000	F		7	CARRIER	
200	297542-0001	-		1	SLIDE RAIL	
210	297555-0001	-		1	SLIDE SHEET	
220	297693-0003	-		1	BLOCKING PIECE	
250	312155-0335	-		4	SCREW MF6S DIN 7991 M5X30 A280	
450	B 297662-0000	K		1	TIMING BELT PULLEY	
560	285424-0000	-		1	HOLDER	
650	312105-0325	-		2	SCREW M6S5X10 A2 80	
830	312605-0316	-		5	NUTS,HEXAGON,M6	
870	315105-0153	-		5	WASHERS,PLAIN ROUND 6,4X12	
900	315115-0153	-		22	WASHER TBRB6,4X12RFR	
TB/8 1055B						
010	297816-0000	-		1	DROP WING	
030	285372-0000	-		1	BRACKET	
040	297818-0000	-		1	HEAD PLATE	
050	297817-0000	-		1	HEAD PLATE	
080	297540-0001	-		1	HEAD PLATE	
090	297541-0001	-		1	HEAD PLATE	
095	297586-0000	-		1	BRACKET	
100	285370-0000	-		1	RAIL	
105	285416-0000	-		1	RAIL	
110	285356-0000	-		1	TIMING BELT PULLEY	
140	285944-0001	-		2	SPACER	
160	442571-0000	-		2	SHAFT	
180	525057-0000	F		7	CARRIER	
190	525058-0000	F		7	CARRIER	
200	297542-0001	-		1	SLIDE RAIL	
210	297555-0001	-		1	SLIDE SHEET	
220	297693-0003	-		1	BLOCKING PIECE	
250	312155-0335	-		4	SCREW MF6S DIN 7991 M5X30 A280	
450	B 443166-0000	K		1	TIMING BELT PULLEY	
560	285424-0000	-		1	HOLDER	
650	312105-0325	-		2	SCREW M6S5X10 A2 80	
830	312605-0316	-		5	NUTS,HEXAGON,M6	
870	315105-0153	-		5	WASHERS,PLAIN ROUND 6,4X12	
900	315115-0153	-		22	WASHER TBRB6,4X12RFR	
TBA/8 0355B						
010	443039-0000	-		1	DROP WING	
030	525162-0000	-		1	BRACKET	
040	297870-0002	-		1	HEAD PLATE	
050	297869-0002	-		1	HEAD PLATE	
060	297521-0001	-		1	HEAD PLATE	
070	297522-0001	-		1	HEAD PLATE	
080	442750-0000	-		1	HEAD PLATE	

297622-2

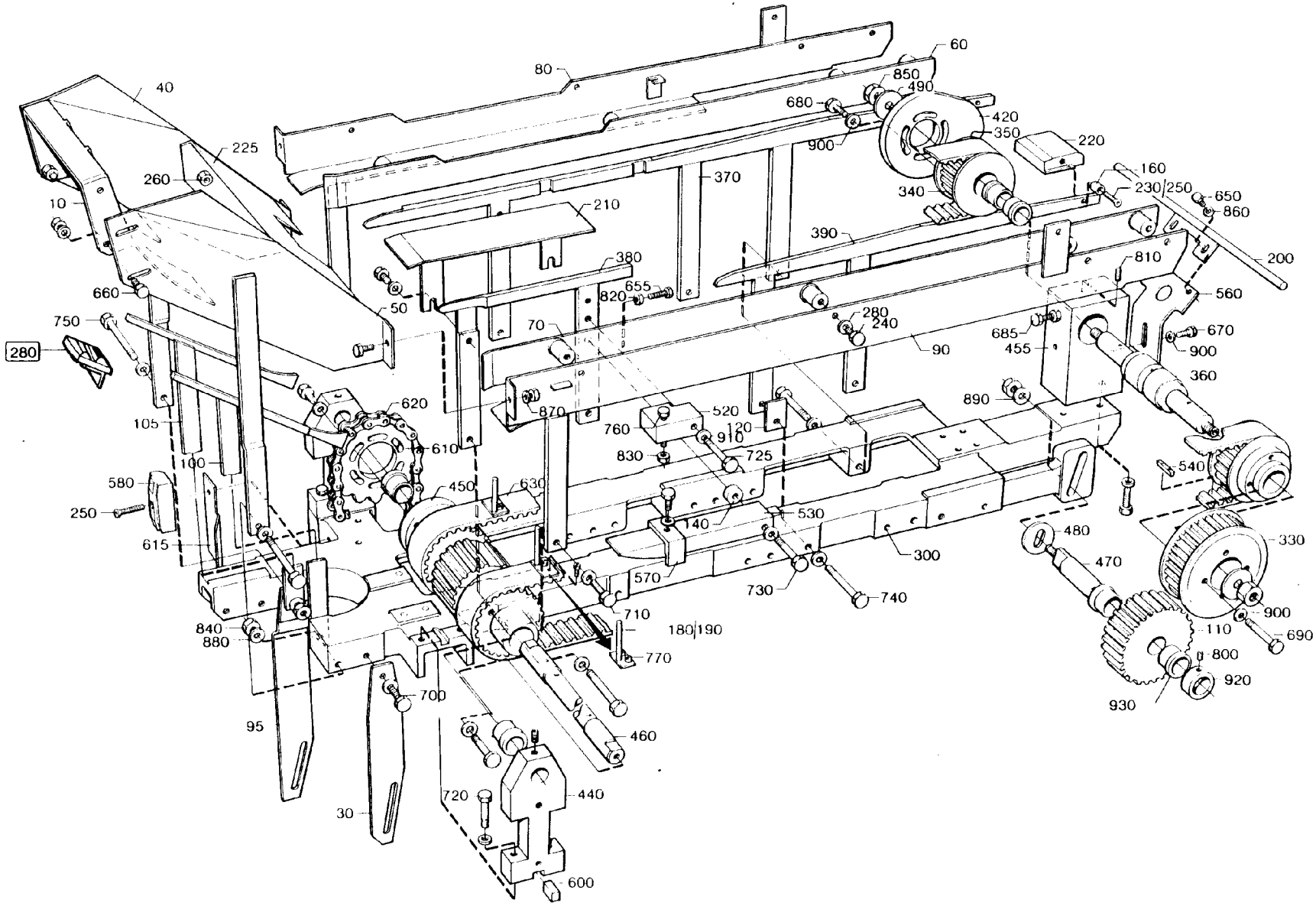

297622-2
297622-2.TIF

Pos	Part No	SP	UN	Qty	Description	Page No
090	297541-0002	-		1	HEAD PLATE	
095	525163-0000	-		1	BRACKET	
100	285370-0000	-		1	RAIL	
105	285416-0000	-		1	RAIL	
110	285572-0000	-		1	TIMING BELT PULLEY	
140	285944-0001	-		2	SPACER	
180	525059-0000	F		7	CARRIER	
190	525060-0000	F		7	CARRIER	
210	297555-0001	-		1	SLIDE SHEET	
220	297693-0003	-		1	BLOCKING PIECE	
230	312115-0329	-		2	SCREW MC6S ISO 4762 M5X16 A280	
240	312105-0364	-		8	SCREW M6S6X10RFR	
250	312155-0335	-		2	SCREW MF6S DIN 7991 M5X30 A280	
450	B 297662-0000	K		1	TIMING BELT PULLEY	
830	312605-0316	-		5	NUTS,HEXAGON,M6	
870	315105-0153	-		13	WASHERS,PLAIN ROUND 6,4X12	
900	315115-0153	-		20	WASHER TBRB6,4X12RFR	
TBA/8 0500B or TBA/8 0568B						
010	442896-0000	-		1	DROP WING	
030	285566-0000	-		1	BRACKET	
040	442857-0000	-		1	HEAD PLATE	
050	442856-0000	-		1	HEAD PLATE	
080	297540-0002	-		1	HEAD PLATE	
090	297541-0002	-		1	HEAD PLATE	
095	297589-0000	-		1	BRACKET	
100	442863-0000	-		1	RAIL	
105	442864-0000	-		1	RAIL	
110	285356-0000	-		1	TIMING BELT PULLEY	
140	285944-0001	-		2	SPACER	
160	442571-0000	-		2	SHAFT	
180	525057-0000	F		7	CARRIER	
190	525058-0000	F		7	CARRIER	
200	297542-0001	-		1	SLIDE RAIL	
210	297555-0001	-		1	SLIDE SHEET	
220	297693-0003	-		1	BLOCKING PIECE	
225	442895-0000	-		2	STEERING	
250	312155-0335	-		4	SCREW MF6S DIN 7991 M5X30 A280	
260	312155-0372	-		4	SCREW MF6S DIN 7991 M6X25 A280	
450	B 297662-0000	K		1	TIMING BELT PULLEY	
560	285424-0000	-		1	HOLDER	
650	312105-0325	-		2	SCREW M6S5X10 A2 80	
830	312605-0316	-		9	NUTS,HEXAGON,M6	
870	315105-0153	-		9	WASHERS,PLAIN ROUND 6,4X12	
900	315115-0153	-		22	WASHER TBRB6,4X12RFR	
TBA/8 0500S						
010	443039-0000	-		1	DROP WING	
030	285568-0000	-		1	BRACKET	
040	297870-0002	-		1	HEAD PLATE	
050	297869-0002	-		1	HEAD PLATE	
060	297521-0001	-		1	HEAD PLATE	
070	297522-0001	-		1	HEAD PLATE	
080	442750-0000	-		1	HEAD PLATE	
090	297541-0002	-		1	HEAD PLATE	
095	297590-0000	-		1	BRACKET	
100	285370-0000	-		1	RAIL	
105	285416-0000	-		1	RAIL	
110	285572-0000	-		1	TIMING BELT PULLEY	
140	285944-0001	-		2	SPACER	
180	525059-0000	F		7	CARRIER	
190	525060-0000	F		7	CARRIER	
200	297542-0002	-		1	SLIDE RAIL	
210	297555-0001	-		1	SLIDE SHEET	
220	297693-0003	-		1	BLOCKING PIECE	
230	312115-0329	-		2	SCREW MC6S ISO 4762 M5X16 A280	
240	312105-0364	-		8	SCREW M6S6X10RFR	
250	312155-0335	-		2	SCREW MF6S DIN 7991 M5X30 A280	
450	B 297662-0000	K		1	TIMING BELT PULLEY	
560	285424-0000	-		1	HOLDER	
650	312105-0325	-		2	SCREW M6S5X10 A2 80	
830	312605-0316	-		5	NUTS,HEXAGON,M6	
870	315105-0153	-		13	WASHERS,PLAIN ROUND 6,4X12	
900	315115-0153	-		22	WASHER TBRB6,4X12RFR	
TBA/8 1000B						
010	297816-0000	-		1	DROP WING	
030	285562-0000	-		1	BRACKET	
040	297818-0000	-		1	HEAD PLATE	
050	297817-0000	-		1	HEAD PLATE	
080	297540-0001	-		1	HEAD PLATE	
090	297541-0001	-		1	HEAD PLATE	
095	297587-0000	-		1	BRACKET	
100	285370-0000	-		1	RAIL	
105	285416-0000	-		1	RAIL	
110	285356-0000	-		1	TIMING BELT PULLEY	
140	285944-0001	-		2	SPACER	
160	442571-0000	-		2	SHAFT	
180	525057-0000	F		7	CARRIER	

297622-2

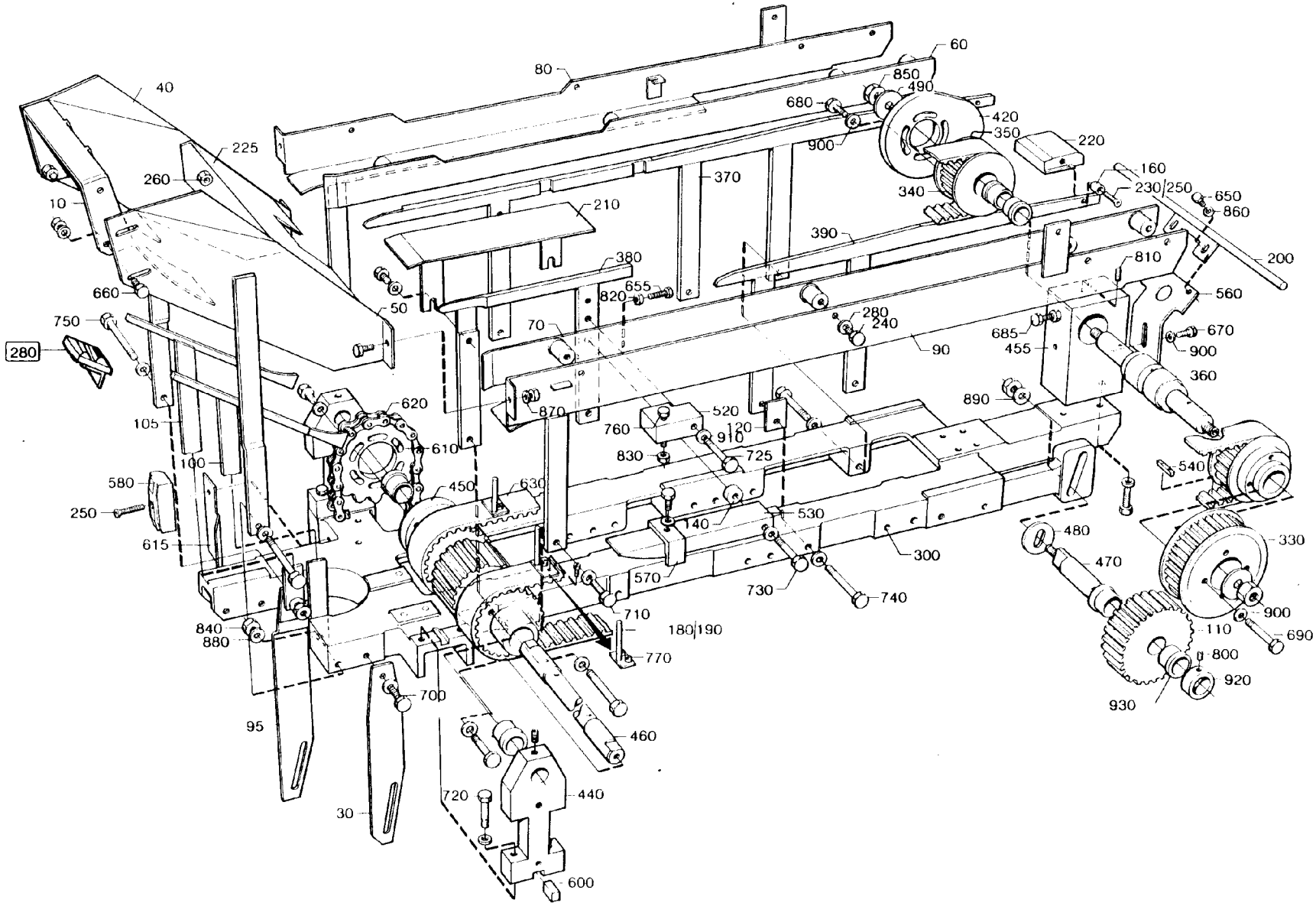

297622-2
297622-2.TIF

Pos	Part No	SP	UN	Qty	Description	Page No
190	525058-0000	F		7	CARRIER	
200	297542-0001	-		1	SLIDE RAIL	
210	297555-0001	-		1	SLIDE SHEET	
220	297693-0003	-		1	BLOCKING PIECE	
250	312155-0335	-		4	SCREW MF6S DIN 7991 M5X30 A280	
450	B 297662-0000	K		1	TIMING BELT PULLEY	
560	285424-0000	-		1	HOLDER	
650	312105-0325	-		2	SCREW M6S5X10 A2 80	
830	312605-0316	-		5	NUTS,HEXAGON,M6	
870	315105-0153	-		5	WASHERS,PLAIN ROUND 6,4X12	
900	315115-0153	-		22	WASHER TBRB6,4X12RFR	
Common parts						
F280	A 285378-0200	-		1	CONVEYOR BELT	**651**
300	285327-0000	-		1	MACHINE BODY	
330	285332-0000	K		1	TIMING BELT PULLEY	
340	B 525191-0000	K		2	TIMING BELT PULLEY	
350	B 525190-0000	-		2	SPACER RING	
360	525361-0000	K		1	SHAFT	
370	285345-0000	-		1	RAIL	
380	285346-0000	-		1	RAIL	
390	285347-0000	-		1	RAIL	
420	285419-0000	K		1	CURVE	
440	297632-0000	-		2	BEARING CONSOLE	
455	297867-0000	-		1	HOLDER	
460	525362-0000	K		1	SHAFT	
470	525363-0002	K		1	SHAFT	
480	285363-0000	K		1	WASHER	
490	285365-0000	K		2	WASHER	
520	285373-0000	-		2	BRACKET	
530	285374-0000	-		2	ARM	
540	285380-0002	F		14	WEDGE	
570	285945-0000	K		2	STEERING	
580	297581-0000	K		2	PROFILE	
600	297659-0000	-		3	WEDGE	
610	297820-0000	K		1	SPROCKET	
615	442605-0000	-		1	BRACKET	
620	B 90288-0037	K		1	ROLLER CHAIN	
630	90417-0212	F		2	TIMING BELT	
655	312105-0331	-		1	SCREW M6S ISO 4017 M5X20 A280	
660	312105-0366	-		7	SCREW M6S ISO 4017 M6X12 A280	
670	312105-0368	-		6	SCREW M6S ISO 4017 M6X16 A280	
680	312105-0372	-		10	SCREW M6S ISO 4017 M6X25 A280	
685	312105-0376	-		1	SCREW M6S ISO 4017 M6X35 A280	
690	312105-0380	-		4	SCREW M6S ISO 4014 M6X50 A280	
700	312105-0449	-		3	SCREW M6S ISO 4017 M8X16 A280	
710	312105-0453	-		4	SCREW M6S ISO 4017 M8X25 A280	
720	312105-0457	-		4	SCREW O4017 M8X35A280	
725	312105-0460	-		2	SCREW O4017 M8X45A280	
730	312105-0461	-		2	SCREW O4017 M8X50A280	
740	312105-0464	-		7	SCREW M6S ISO 4014 M8X65 A280	
750	312105-0467	-		2	SCREW M6S ISO 4014 M8X80 A280	
760	312109-0374	-		2	SCREW M6S ISO 4017 M6X30 A280	
770	312125-0222	F		28	SLOTTED CHEESE HEAD ISO 1207 M3X8	
RFR						
800	312318-0362	F		3	SET SCREW CUP POINT ISO 4029 M6X8 RFR	
810	312318-0445	-		3	STOP SCREW SK6SS8X10RFR	
820	312605-0314	-		1	NUTS,HEXAGON,M5	
840	312605-0318	-		2	NUTS,HEXAGON,M8	
850	312605-0320	-		3	NUTS,HEXAGON,M10	
860	315105-0146	-		2	WASHERS,PLAIN ROUND 5,3X10	
880	315105-0165	-		24	WASHERS,PLAIN ROUND 8,4X16	
890	315105-0173	-		1	WASHERS,PLAIN ROUND 10,5X22	
910	315115-0165	-		6	WASHER TBRB8,4X16RFR	
920	315742-0114	-		1	RETAINING 18SMS199RFR	
930	321101-0223	K		8	FLANGE BUS 18F7X16	
TBA/8 1055B						
010	297816-0000	-		1	DROP WING	
030	285562-0000	-		1	BRACKET	
040	297818-0000	-		1	HEAD PLATE	
050	297817-0000	-		1	HEAD PLATE	
080	297540-0001	-		1	HEAD PLATE	
090	297541-0001	-		1	HEAD PLATE	
095	297587-0000	-		1	BRACKET	
100	285370-0000	-		1	RAIL	
105	285416-0000	-		1	RAIL	
110	285356-0000	-		1	TIMING BELT PULLEY	
140	285944-0001	-		2	SPACER	
160	442571-0000	-		2	SHAFT	
180	525057-0000	F		7	CARRIER	
190	525058-0000	F		7	CARRIER	
200	297542-0001	-		1	SLIDE RAIL	
210	297555-0001	-		1	SLIDE SHEET	
220	297693-0003	-		1	BLOCKING PIECE	
250	312155-0335	-		4	SCREW MF6S DIN 7991 M5X30 A280	
450	B 443166-0000	K		1	TIMING BELT PULLEY	
560	285424-0000	-		1	HOLDER	

297622-2

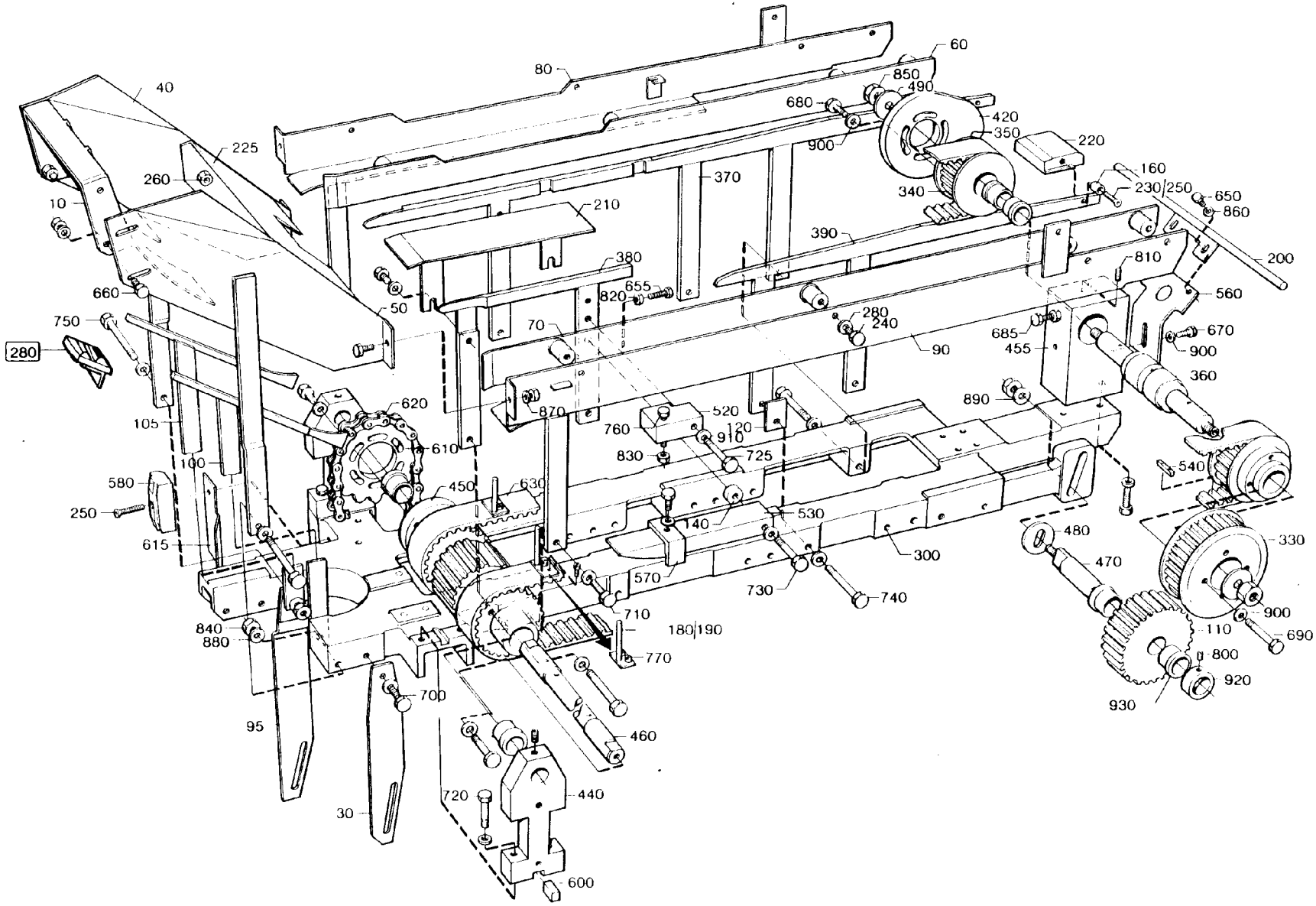

297622-2
297622-2.TIF

Pos	Part No	SP	UN	Qty	Description	Page No
650	312105-0325	-		2	SCREW M6S5X10 A2 80	
830	312605-0316	-		5	NUTS,HEXAGON,M6	
870	315105-0153	-		5	WASHERS,PLAIN ROUND 6,4X12	
900	315115-0153	-		22	WASHER TBRB6,4X12RFR	

Pos	Part No	SP	UN	Qty	Description	Page No

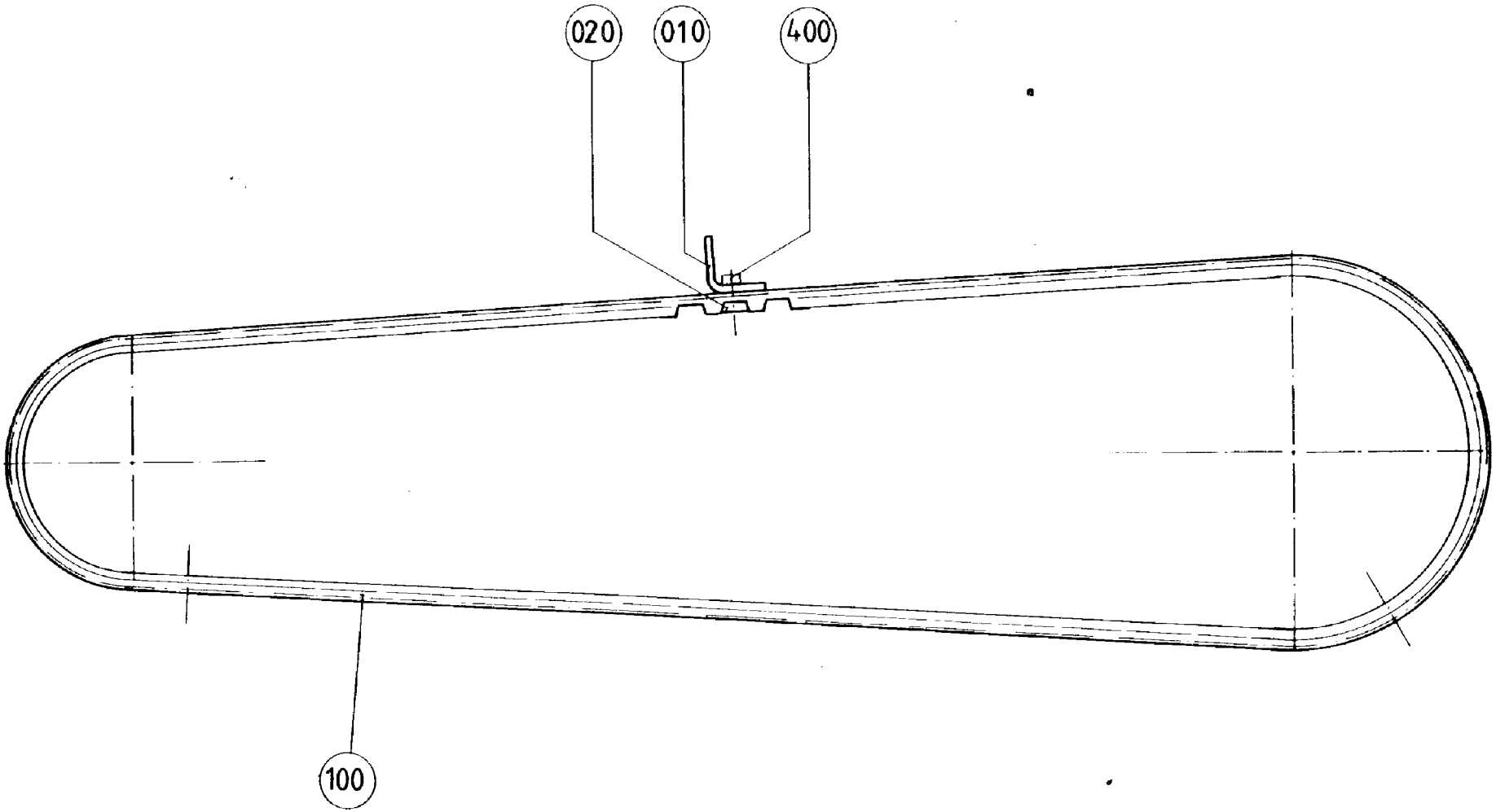

285378-1
285378-1.TIF

Pos	Part No	SP	UN	Qty	Description	Page No
-						
010	525056-0000	-		3	CARRIER	
020	297495-0001	-		3	WEDGE	
100	90417-0214	-		1	TIMING BELT	
400	312125-0220	-		12	SLOTTED HEMCS3X6RFR	

Pos	Part No	SP	UN	Qty	Description	Page No

285407-1

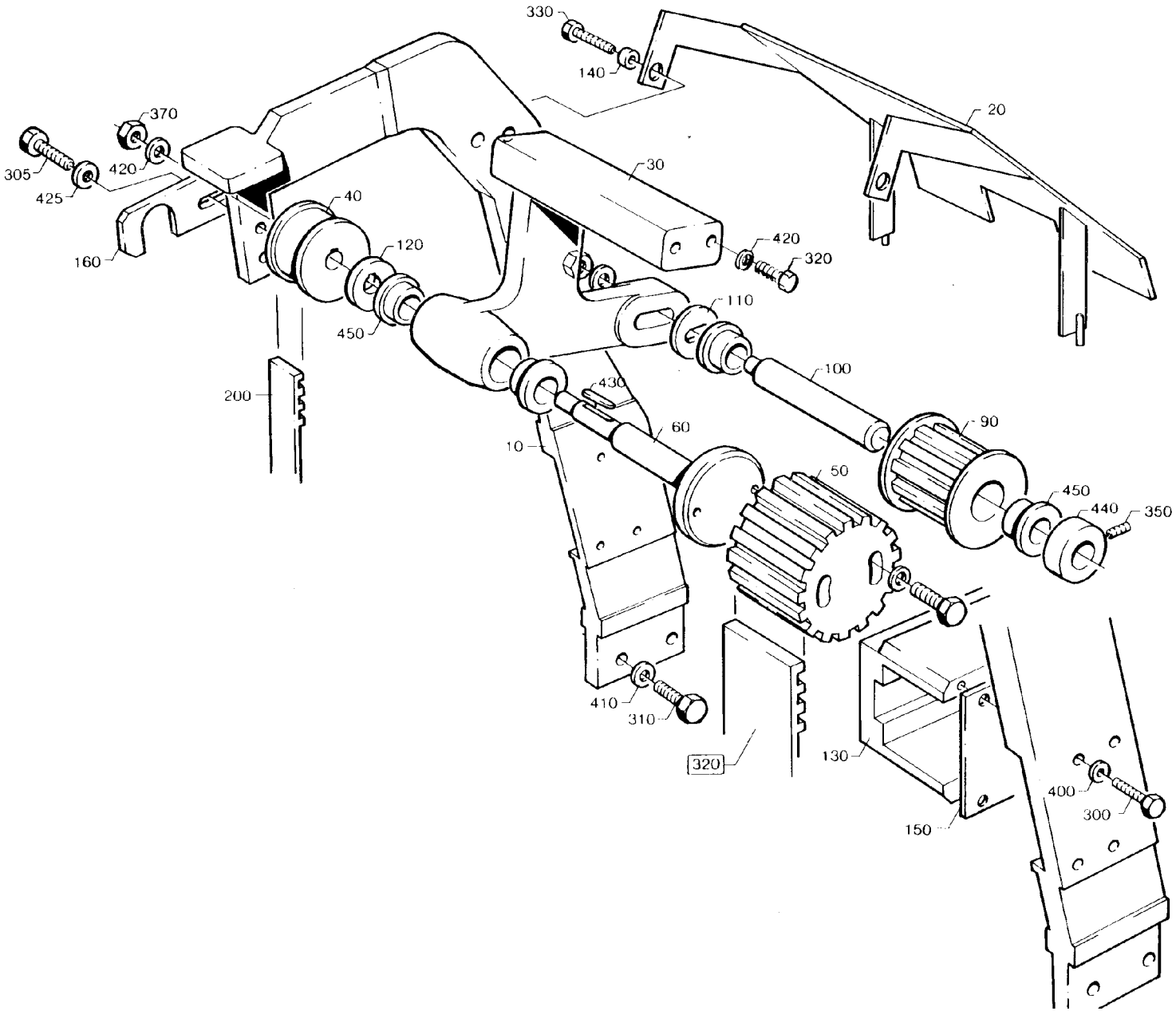

285407-1
285407-1.TIF

Pos	Part No	SP	UN	Qty	Description	Page No
0180B or 0189B or 0200B or 0236B or 0250B or 0284B						
010	297414-0004	-		2	MOUNTING BEAM	
020	442961-0005	-		1	PROTECTION	
0300B or 0375S						
010	297414-0003	-		2	MOUNTING BEAM	
020	442961-0004	-		1	PROTECTION	
0355B or 0500S						
010	297414-0003	-		2	MOUNTING BEAM	
020	442961-0003	-		1	PROTECTION	
0500B or 0568B						
010	297414-0002	-		2	MOUNTING BEAM	
020	442961-0002	-		1	PROTECTION	
0750B or 1000B or 1055B						
010	297414-0001	-		2	MOUNTING BEAM	
020	442961-0001	-		1	PROTECTION	
Common parts						
F320	A 297792-0200	-		1	CONVEYOR BELT	**657**
030	285329-0000	D		1	BEARING HEAD	
040	285333-0000	K		1	TIMING BELT PULLEY	
050	285334-0000	K		1	TIMING BELT PULLEY	
060	525364-0000	K		1	PIVOT PIN	
090	285361-0000	K		1	ROLL	
100	525363-0001	K		1	SHAFT	
110	285363-0000	K		1	WASHER	
120	285364-0000	K		1	WASHER	
130	285375-0000	K		1	STEERING	
140	285498-0000	-		2	SPACER RING	
150	297514-0000	K		1	PLATE	
160	442787-0000	-		1	BRACKET	
200	90417-0213	F		1	TIMING BELT	
300	312105-0371	-		4	SCREW M6S6X22RFR	
305	312105-0451	-		1	SCREW M6S ISO 4017 8X20 A280	
310	312105-0453	-		4	SCREW M6S ISO 4017 M8X25 A280	
320	312105-0457	-		2	SCREW O4017 M8X35A280	
330	312105-0459	-		4	SCREW O4017 M8X40A280	
350	312318-0362	K		1	SET SCREW CUP POINT ISO 4029 M6X8 RFR	
370	312605-0320	-		2	NUTS,HEXAGON,M10	
400	315105-0153	-		4	WASHERS,PLAIN ROUND 6,4X12	
410	315105-0165	-		8	WASHERS,PLAIN ROUND 8,4X16	
420	315105-0173	-		2	WASHERS,PLAIN ROUND 10,5X22	
425	315115-0165	-		3	WASHER TBRB8,4X16R63FR	
430	315701-0171	-		1	FLAT WEDGE4X4X22	
440	315742-0114	-		1	RETAINING 18SMS199RFR	
450	321101-0223	K		4	FLANGE BUS 18F7X16	

LIFTING DEVICE

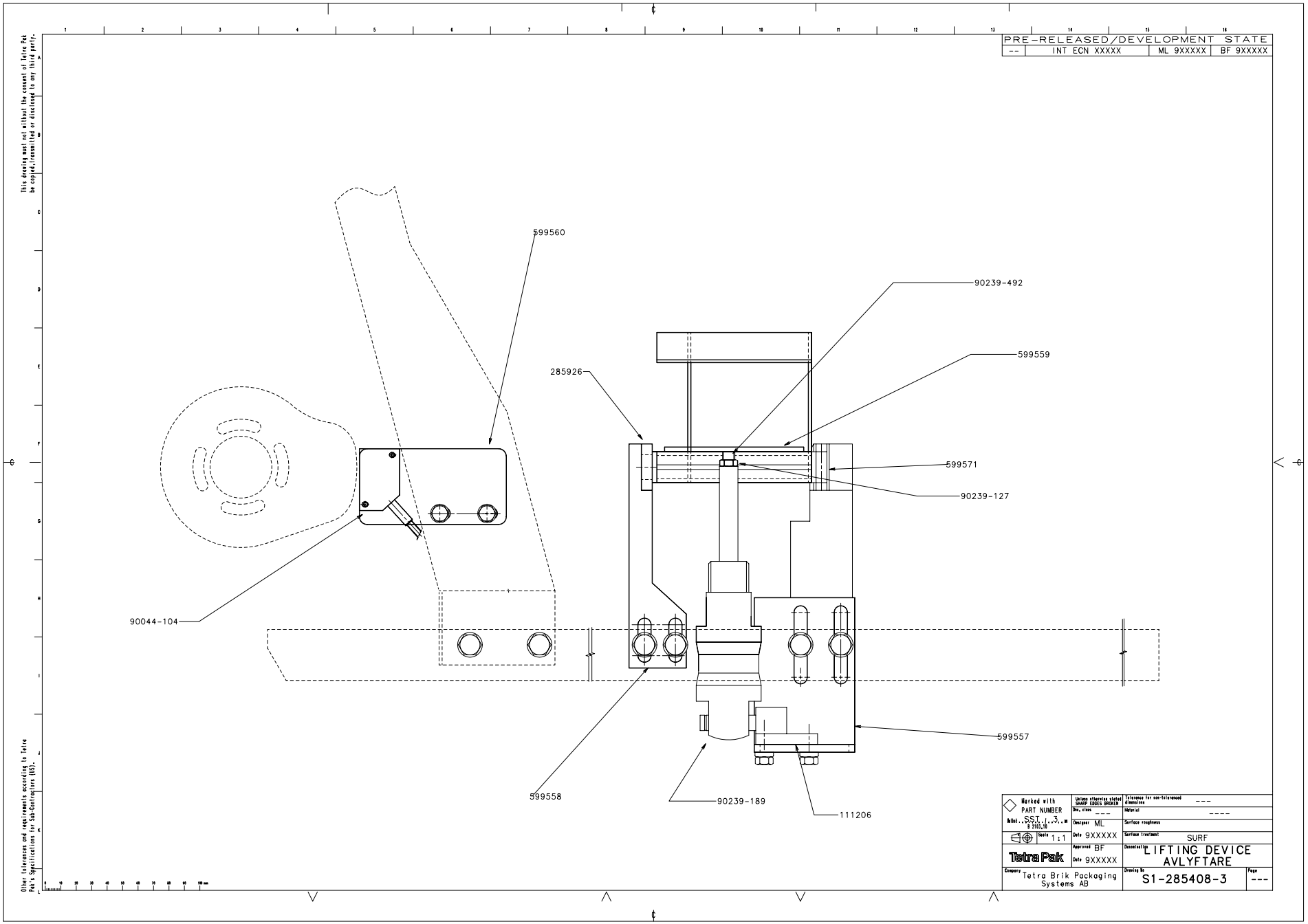

Pos	Part No	SP	UN	Qty	Description	Page No
-						
020	599557-0000	K		1	BRACKET	
030	599558-0000	-		1	BRACKET	
040	111206-0000	-		1	BEARING	
050	599559-0000	-		1	BRACKET	
060	285352-0000	-		1	FLAP	
110	599560-0000	-		1	BRACKET	
130	599571-0000	K		1	AXLE	
160	285926-0000	K		2	BEARING	
180	90166-0124	F	MM	2600	HOSE	
200	B 90239-0189	K		1	CYLINDER	
210	90239-0127	-		1	BRACKET	
220	90239-0492	-		1	ROD END,BALL JOINT EYE,MINI-ISO,M8	
230	90044-0104	-		1	PROX.SWITCHIFM IN 3002	
310	312105-0371	-		2	SCREW M6S6X22RFR	
320	312105-0466	-		2	SCREW M6S ISO 4014 M8X75 A280	
370	315105-0153	-		4	WASHERS,PLAIN ROUND 6,4X12	
380	315105-0165	-		4	WASHERS,PLAIN ROUND 8,4X16	
460	90224-0329	F		2	ELBOW 90 COUPL.,EXT.THREAD 6/4-G1/4"	
470	315750-0107	-		1	CIRCLIP SGA10	
500	352103-0096	-		1	CABLE GLAND ST 7	
510	352103-0100	-		1	CABLE GLAND STR 9	
520	312105-0368	-		4	SCREW M6S ISO 4017 M6X16 A280	
530	312105-0370	-		2	SCREW M6S ISO 4017 M6X20 A280	
540	312105-0449	-		1	SCREW M6S ISO 4017 M8X16 A280	
550	312125-0228	-		2	SLOTTED CHEESE HEAD ISO 1207 M3X16	
RFR						
560	312812-0316	-		2	NUTS,HEXAGON,LOCK,WITH NYLON,M6	
570	315115-0171	-		3	WASHER TBRB10X18RFR	

Pos	Part No	SP	UN	Qty	Description	Page No

CONVEYOR BELT

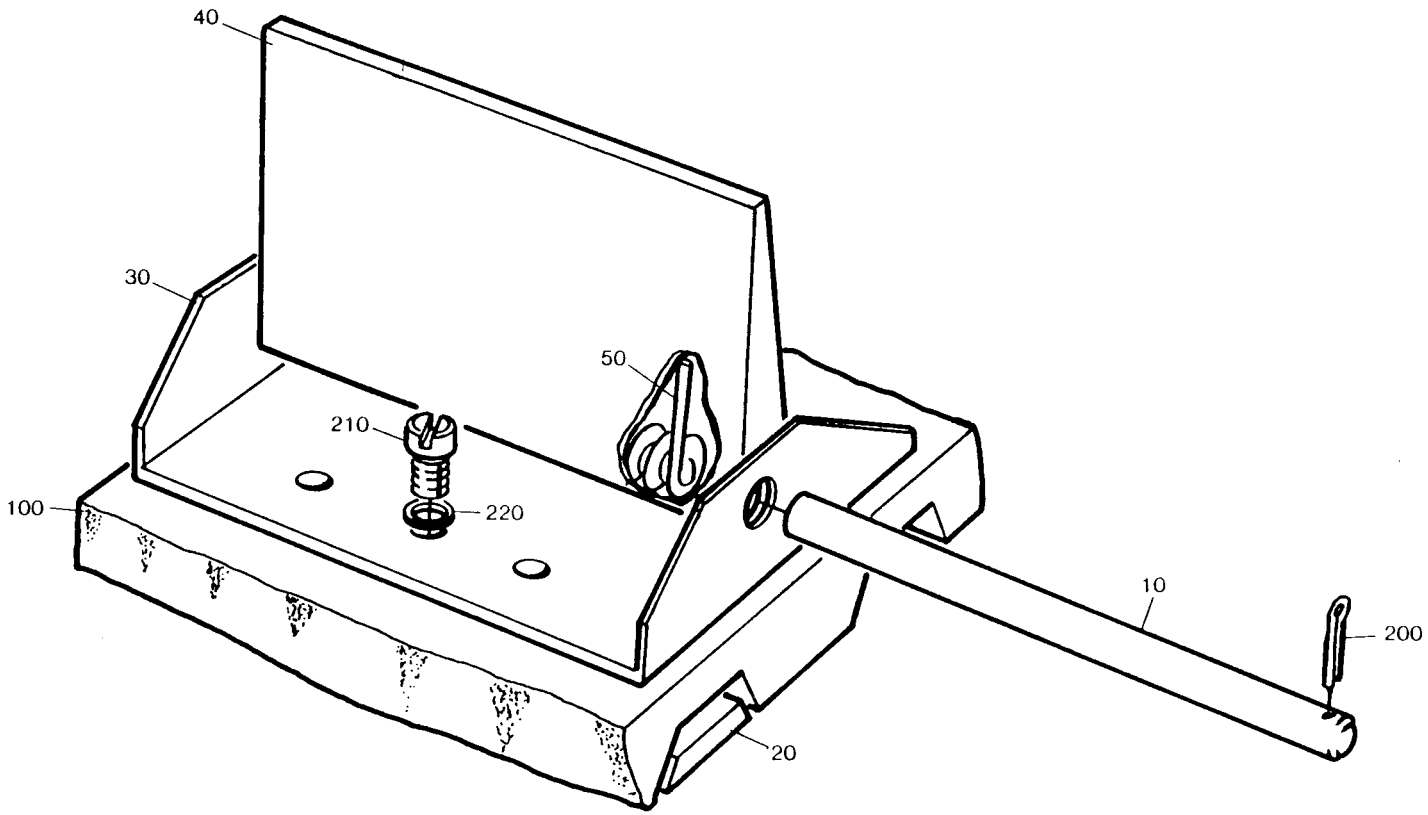

297792-1
297792-1.TIF

Pos	Part No	SP	UN	Qty	Description	Page No
-						
010	297751-0000	-		1	SHAFT	
020	297755-0000	-		1	WEDGE	
030	525055-0000	-		1	BRACKET	
040	297794-0000	-		1	SHEET	
050	297795-0000	-		1	SPRING	
100	90417-0215	-		1	TIMING BELT	
200	311411-0127	-		2	SPLIT PIN SP1,2X12RFR	
210	312125-0220	-		3	SLOTTED HEMCS3X6RFR	
220	315105-0124	-		3	WASHERS,PLAIN ROUND 3,2X6	
020	599557-0000	K		1	BRACKET	
030	599558-0000	-		1	BRACKET	
040	111206-0000	-		1	BEARING	
050	599559-0000	-		1	BRACKET	
060	285352-0000	-		1	FLAP	
110	599560-0000	-		1	BRACKET	
130	599571-0000	K		1	AXLE	
160	285926-0000	K		2	BEARING	
180	90166-0124	F	MM	2600	HOSE	
200	B 90239-0189	K		1	CYLINDER	
210	90239-0127	-		1	BRACKET	
220	90239-0492	-		1	ROD END,BALL JOINT EYE,MINI-ISO,M8	
230	90044-0104	-		1	PROX.SWITCHIFM IN 3002	
310	312105-0371	-		2	SCREW M6S6X22RFR	
320	312105-0466	-		2	SCREW M6S ISO 4014 M8X75 A280	
370	315105-0153	-		4	WASHERS,PLAIN ROUND 6,4X12	
380	315105-0165	-		4	WASHERS,PLAIN ROUND 8,4X16	
460	90224-0329	F		2	ELBOW 90 COUPL.,EXT.THREAD 6/4-G1/4"	
470	315750-0107	-		1	CIRCLIP SGA10	
500	352103-0096	-		1	CABLE GLAND ST 7	
510	352103-0100	-		1	CABLE GLAND STR 9	
520	312105-0368	-		4	SCREW M6S ISO 4017 M6X16 A280	
530	312105-0370	-		2	SCREW M6S ISO 4017 M6X20 A280	
540	312105-0449	-		1	SCREW M6S ISO 4017 M8X16 A280	
550	312125-0228	-		2	SLOTTED CHEESE HEAD ISO 1207 M3X16	
RFR						
560	312812-0316	-		2	NUTS,HEXAGON,LOCK,WITH NYLON,M6	
570	315115-0171	-		3	WASHER TBRB10X18RFR	

Pos	Part No	SP	UN	Qty	Description	Page No

285409-2

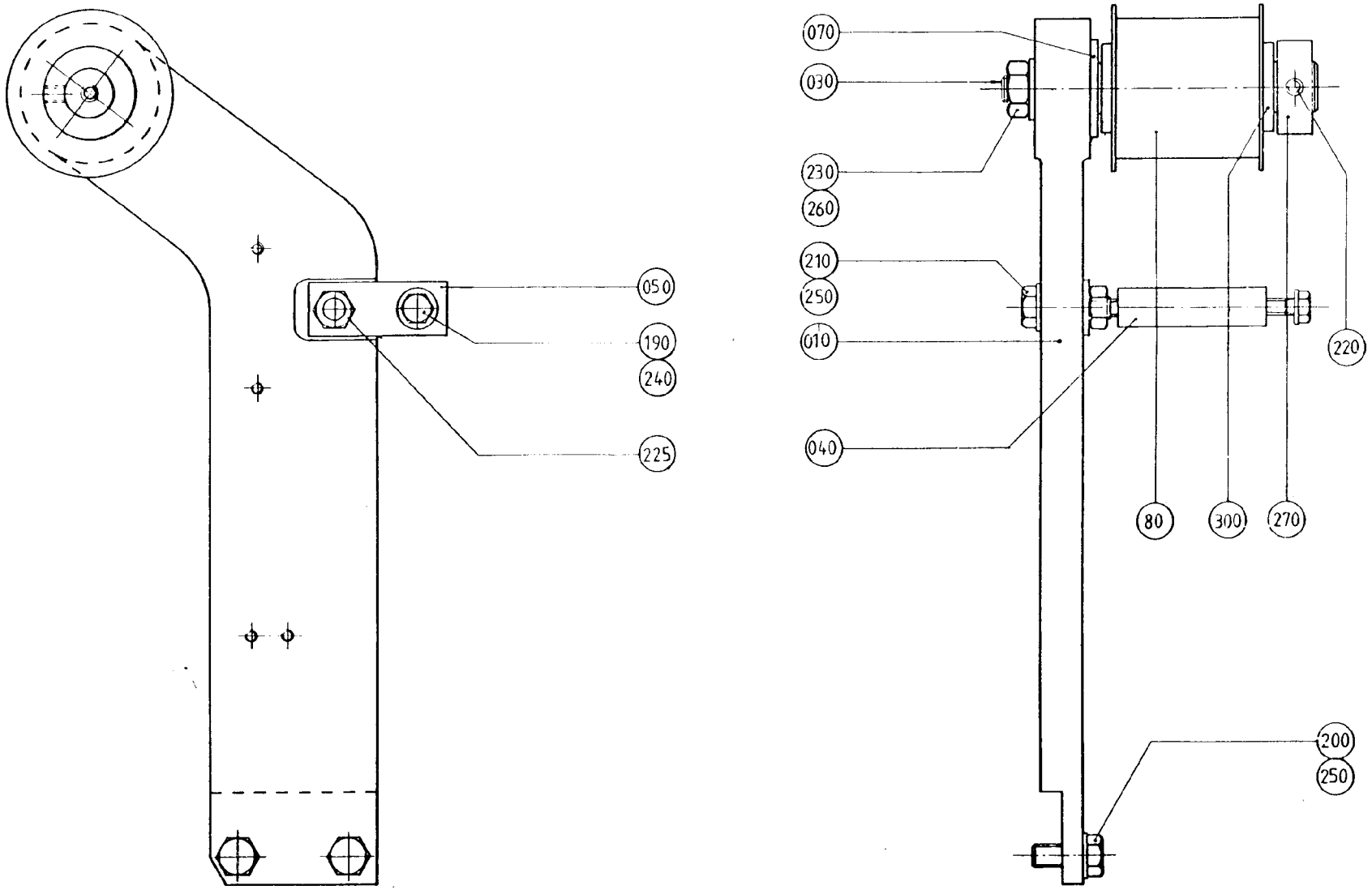

285409-2
285409-2.TIF

Pos	Part No	SP	UN	Qty	Description	Page No
0200B or 0250B or 0300B or 0355B or 0375S or 0500S or 1000B or 1055B						
010	285337-0000	D		1	ARM	
050	443435-0000	-		1	SPACER	
210	312105-0452	-		1	SCREW M6S8X22RFR	
0500B or 0568B or 0750B						
010	442858-0000	D		1	ARM	
050	527885-0000	-		1	SPACER	
210	312105-0455	-		1	SCREW M6S ISO 4017 M8X30 A280	
Common parts						
030	525363-0001	K		1	SHAFT	
040	443436-0000	-		1	SPACER	
070	297518-0000	F		1	WASHER	
080	297668-0000	K		1	ROLL	
190	312105-0370	-		2	SCREW M6S ISO 4017 M6X20 A280	
200	312105-0451	-		2	SCREW M6S ISO 4017 8X20 A280	
220	312318-0362	F		1	SET SCREW CUP POINT ISO 4029 M6X8 RFR	
225	312605-0318	-		1	NUTS,HEXAGON,M8	
230	312605-0320	-		1	NUTS,HEXAGON,M10	
240	315105-0153	-		2	WASHERS,PLAIN ROUND 6,4X12	
250	315105-0165	-		3	WASHERS,PLAIN ROUND 8,4X16	
260	315105-0173	-		1	WASHERS,PLAIN ROUND 10,5X22	
270	315742-0114	-		1	RETAINING 18SMS199RFR	
300	321101-0223	K		2	FLANGE BUS 18F7X16	

Pos	Part No	SP	UN	Qty	Description	Page No

285409-1

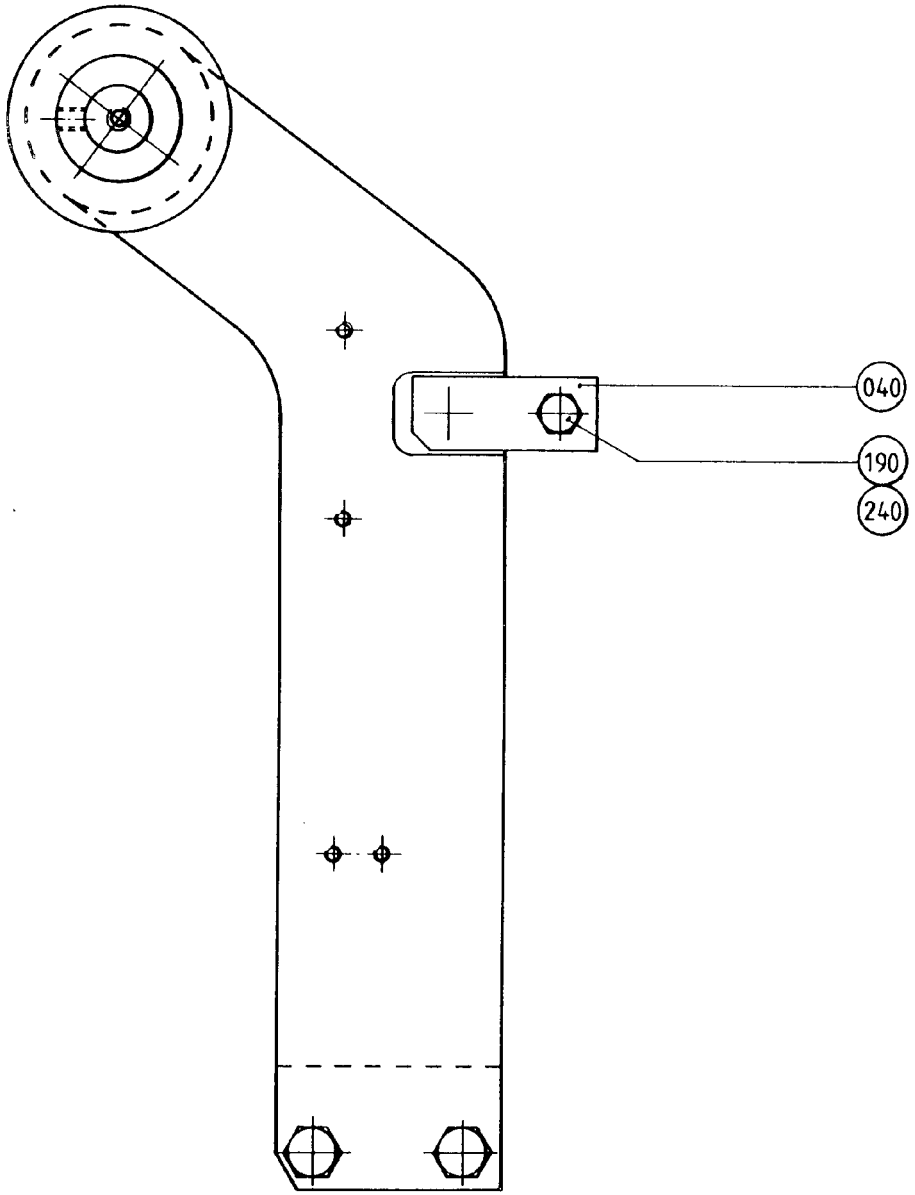
040
190
240

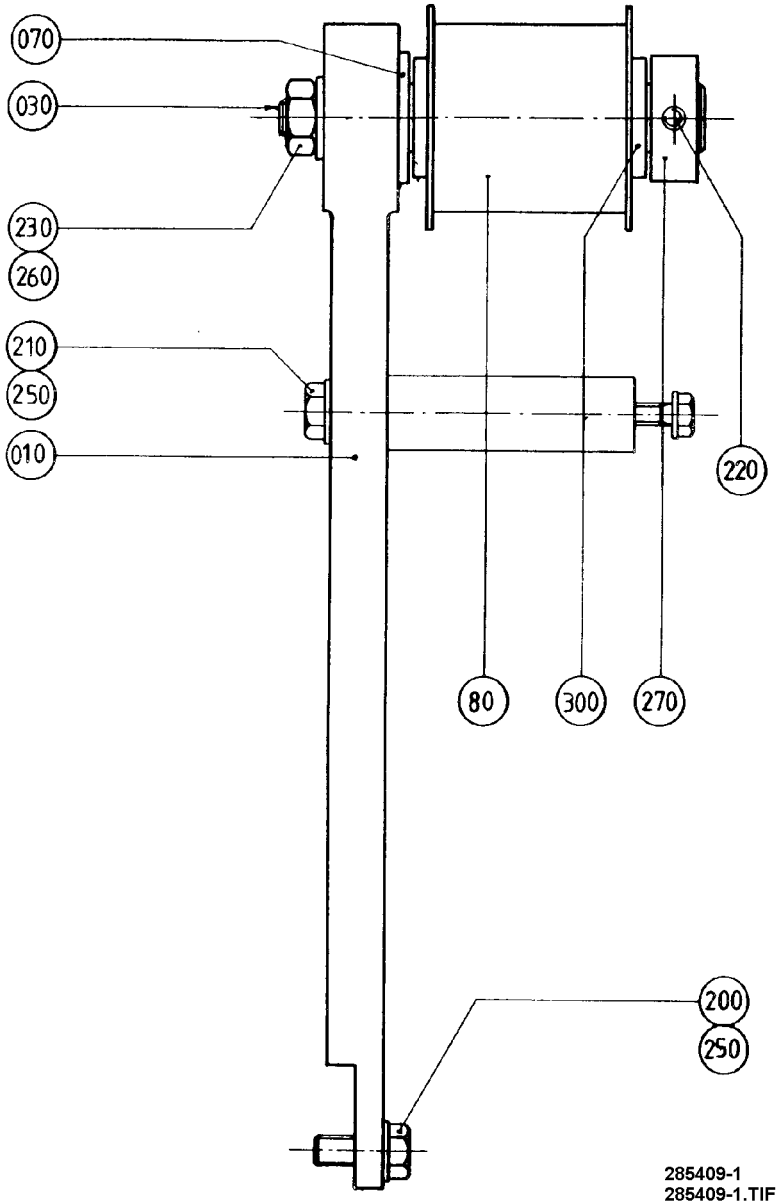
070
030
230
260
210
250
010
220
80
300
270
200
250
285409-1
285409-1.TIF

Pos	Part No	SP	UN	Qty	Description	Page No
0200B or 0250B or 0300B or 0355B or 0375S or 0500S or 1000B or 1055B						
010	285337-0000	D		1	ARM	
040	285943-0002	-		1	SPACER	
210	312105-0452	-		1	SCREW M6S8X22RFR	
0500B or 0568B or 0750B						
010	442858-0000	D		1	ARM	
040	442865-0000	-		1	SPACER	
210	312105-0455	-		1	SCREW M6S ISO 4017 M8X30 A280	
Common parts						
030	285362-0001	K		1	SHAFT REPBY 0525363-0001	
070	297518-0000	F		1	WASHER	
080	297668-0000	K		1	ROLL	
190	312105-0370	-		2	SCREW M6S ISO 4017 M6X20 A280	
200	312105-0451	-		2	SCREW M6S ISO 4017 8X20 A280	
220	312318-0362	F		1	SET SCREW CUP POINT ISO 4029 M6X8 RFR	
230	312605-0320	-		1	NUTS,HEXAGON,M10	
240	315105-0153	-		2	WASHERS,PLAIN ROUND 6,4X12	
250	315105-0165	-		3	WASHERS,PLAIN ROUND 8,4X16	
260	315105-0173	-		1	WASHERS,PLAIN ROUND 10,5X22	
270	315742-0114	-		1	RETAINING 18SMS199RFR	
300	321101-0223	K		2	FLANGE BUS 18F7X16	

Pos	Part No	SP	UN	Qty	Description	Page No

285483-0200

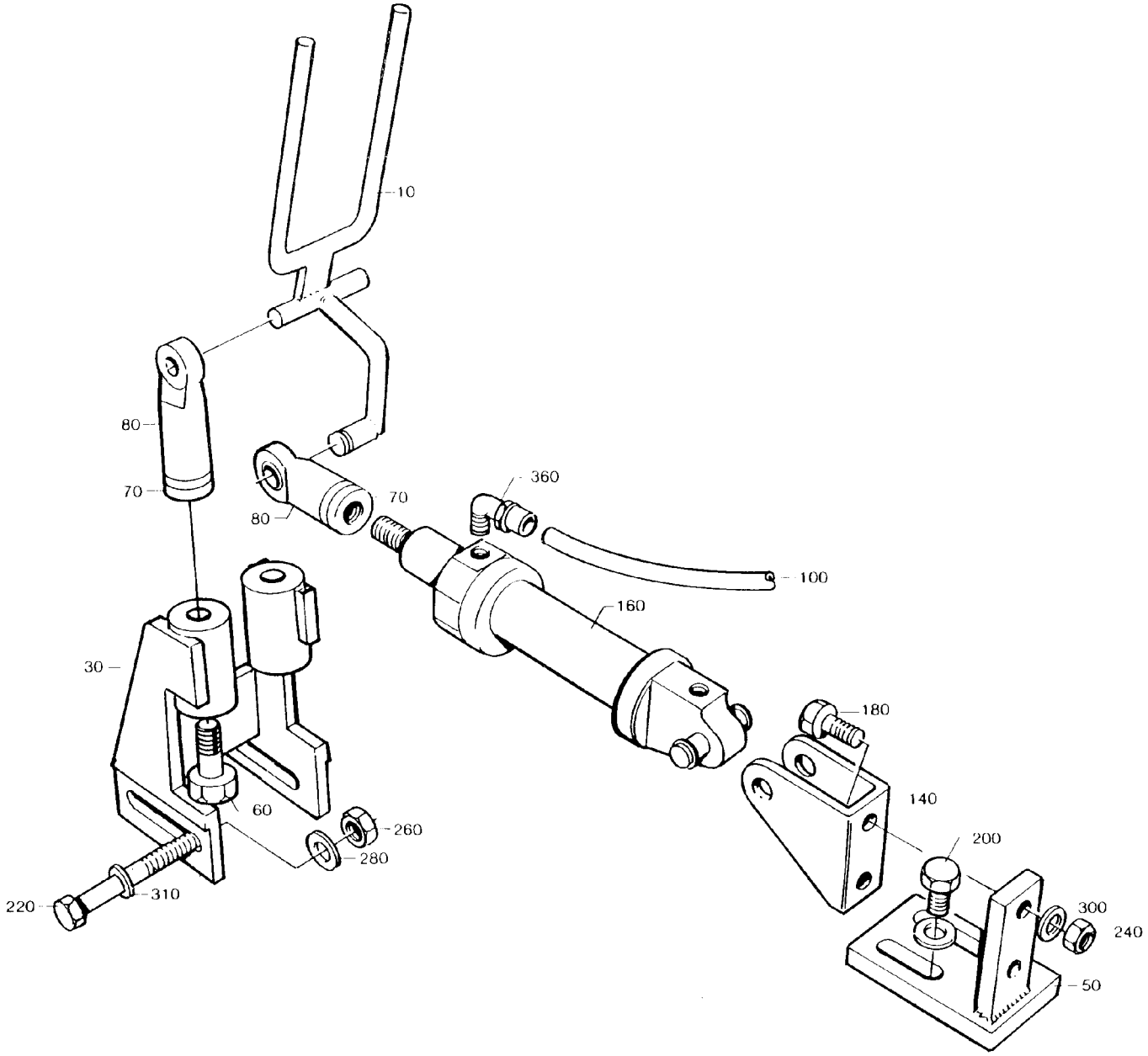

285483-2
285483-2.TIF

Pos	Part No	SP	UN	Qty	Description	Page No
0180B or 0189B or 0200B or 0236B or 0250B or 0300B or 0375S						
010	443165-0000	K		1	FORK	
0355B or 0500B or 0500S or 0568B or 0750B or 1000B or 1055B						
010	443002-0000	K		1	FORK	
Common parts						
030	443195-0000	-		1	HOLDER	
050	443167-0000	-		1	CYLINDER BRACKET	
060	443197-0000	K		2	SCREW	
070	90099-0102	K		1	NUT	
080	90115-0134	K		3	JOINT	
100	90166-0124	-	MM	2400	HOSE	
140	90239-0487	K		1	BRACKET,REAR,CLEVIS FLANG,MINI-ISO,20-25	
160	90239-0829	K		1	CYLINDER 25-50	
180	312105-0370	-		2	SCREW M6S ISO 4017 M6X20 A280	
200	312105-0451	-		3	SCREW M6S ISO 4017 8X20 A280	
220	312105-0464	-		4	SCREW M6S ISO 4014 M8X65 A280	
240	312605-0316	-		2	NUTS,HEXAGON,M6	
260	312605-0318	-		4	NUTS,HEXAGON,M8	
280	315115-0165	-		7	WASHER TBRB8,4X16RFR	
300	315105-0153	-		2	WASHERS,PLAIN ROUND 6,4X12	
310	315105-0165	-		4	WASHERS,PLAIN ROUND 8,4X16	
360	342930-0113	F		2	ELBOW 90 COUPL.,EXT.THREAD 6/4-R1/8"	

Pos	Part No	SP	UN	Qty	Description	Page No

285483-1

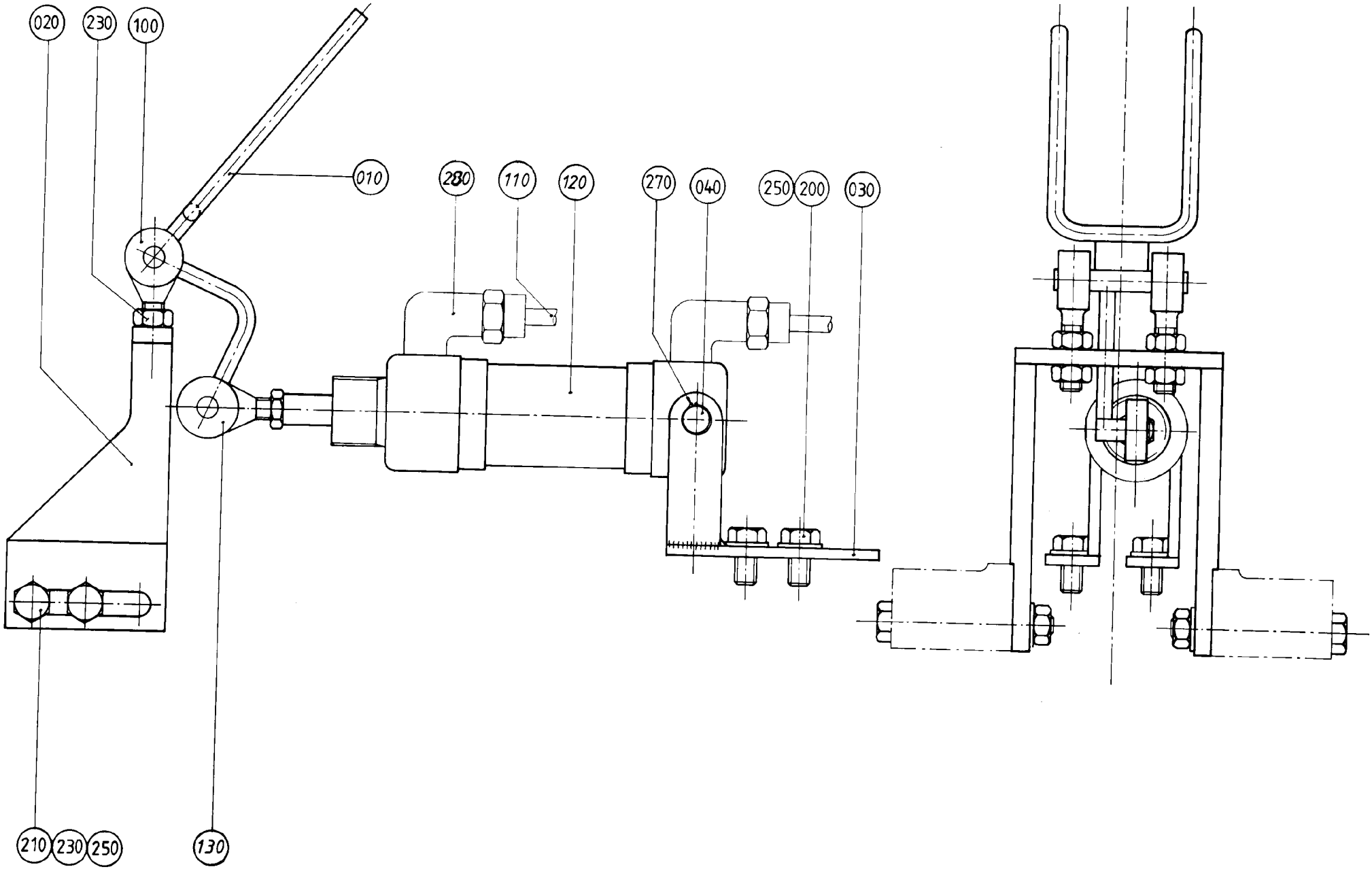

285483-1.tif
285483-1

Pos	Part No	SP	UN	Qty	Description	Page No
0180B or 0189B or 0200B or 0236B or 0250B or 0300B or 0375S						
010	297779-0000	K		1	FORK	
0500B or 0500S or 0568B or 0750B or 1000B HIFIN or 1000B LF						
010	285604-0001	K		1	FORK	
Common parts						
020	285354-0000	-		1	HOLDER	
030	285376-0000	-		2	PENDULUM SUSPENSION	
040	285377-0000	K		1	SHAFT	
100	90115-0054	K		2	JOINT	
110	90166-0124	-	MM	2400	HOSE	
120	B 90239-0166	K		1	CYLINDER	
130	90239-0320	K		1	BRACKET	
200	312105-0449	-		4	SCREW M6S ISO 4017 M8X16 A280	
210	312105-0463	-		4	SCREW M6S ISO 4014 M8X60 A280	
230	312605-0318	-		8	NUTS,HEXAGON,M8	
250	315105-0165	-		8	WASHERS,PLAIN ROUND 8,4X16	
270	315750-0107	K		2	CIRCLIP SGA10	
280	342930-0114	F		2	ELBOW 90 COUPL.,EXT.THREAD 6/4-R1/4"	

Pos	Part No	SP	UN	Qty	Description	Page No

297721-1

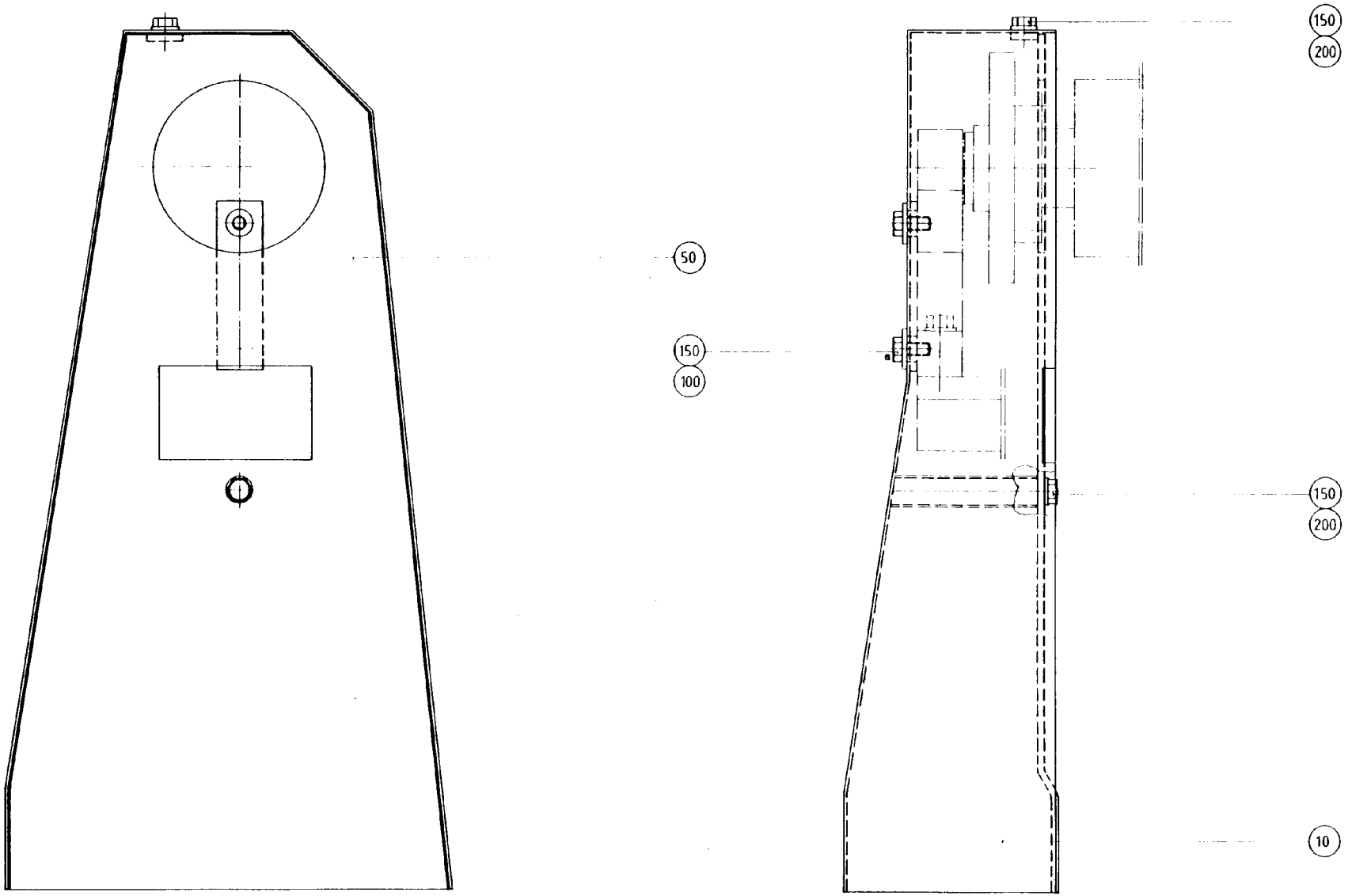

297721-1
297721-1.TIF

Pos	Part No	SP	UN	Qty	Description	Page No
0180B or 0200B or 0236B or 0250B or 0284B or 0300B or 0355B or 0375S or 0500B or 0500S or 0568B or 0750B						
010	297713-0000	-		1	COVER	
050	297715-0000	-		1	GABLE PLATE	
1000B or 1055B						
010	297712-0000	-		1	COVER	
050	297714-0000	-		1	GABLE PLATE	
Common parts						
100	6278-0000	-		2	WASHER	
150	312105-0366	-		4	SCREW M6S ISO 4017 M6X12 A280	
200	315105-0153	-		2	WASHERS,PLAIN ROUND 6,4X12	

Pos	Part No	SP	UN	Qty	Description	Page No

285479-30

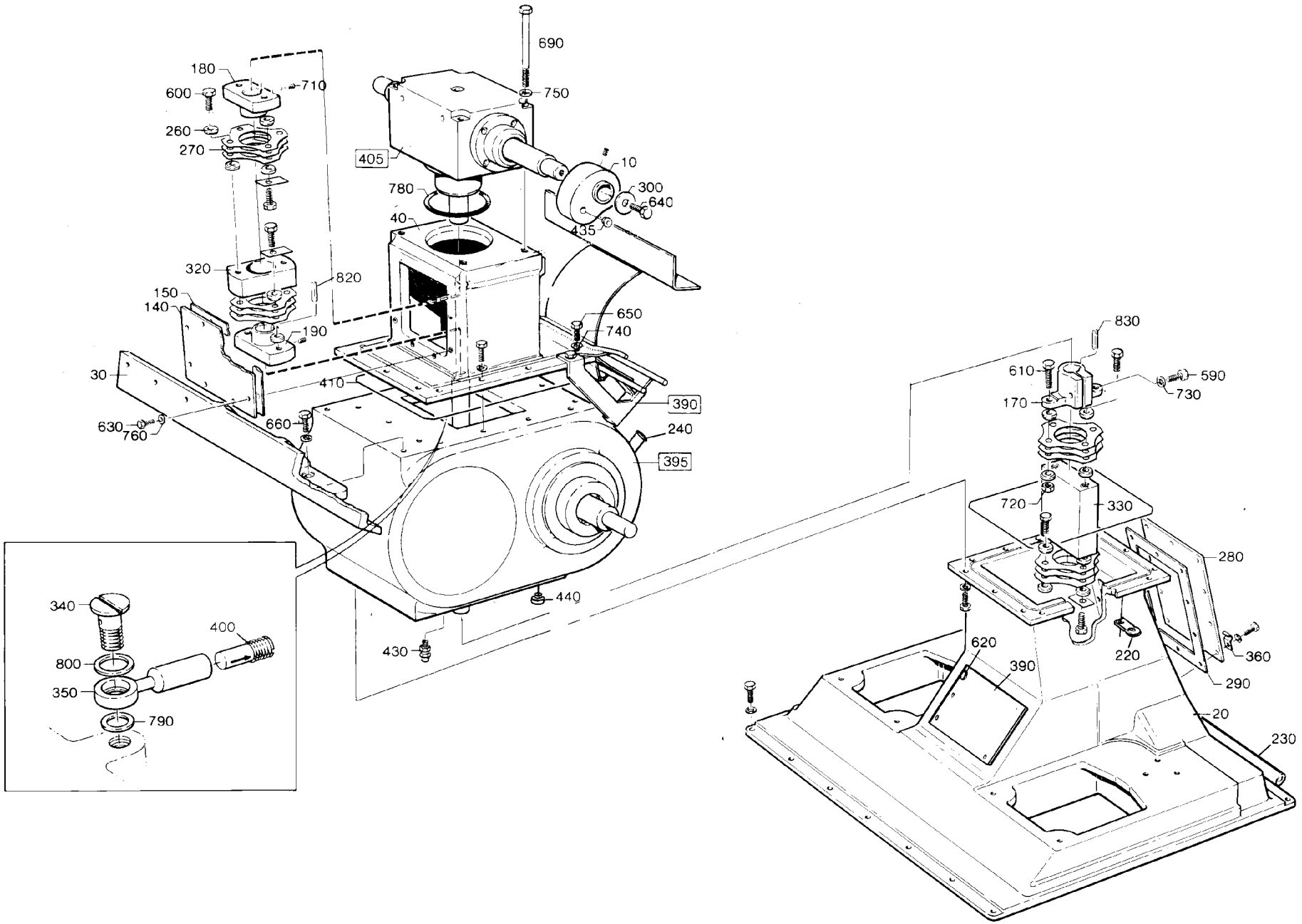

285479-3.tif

Pos	Part No	SP	UN	Qty	Description	Page No
0200B or 0250B or 0300B or 0355B or 0375S or 0500S						
010	525235-0000	D		2	CURVE	
0500B or 0568B or 0750B or 1000B or 1055B						
010	443362-0000	D		2	CURVE	
Common parts						
F390	A 285853-0100	-		1	STEERING RAIL	**671**
F395	A 442580-0200	-		1	INDEXING GEAR	**673**
F405	A 442646-0200	-		1	TOP GEAR	**675**
020	262191-0000	-		1	INTERMEDIARY SECTION	
030	262264-0000	-		1	CANTILEVER	
040	262922-0000	-		1	HOUSE	
140	262932-0000	-		1	HATCH	
150	262933-0000	K		1	GASKET	
170	285141-0003	K		1	CLAMPING SLEEVE	
180	285142-0002	-		1	SLEEVE	
190	285142-0003	-		1	SLEEVE	
260	31553-0002	K		32	WASHER	
270	33261-0000	K		32	SPRING PLATE	
280	262252-0000	-		1	HATCH	
290	262253-0000	-		1	GASKET	
300	276659-0000	-		2	WASHER	
320	285145-0002	-		1	INTERMEDIARY SECTION	
330	285147-0000	-		1	INTERMEDIARY SECTION	
340	285891-0000	K		1	SCREW	
350	285892-0000	K		1	CONNECTION	
360	297809-0000	-		2	CRAMP	
380	442756-0000	-		2	CRAMP	
400	90092-0077	K		1	METERING VALVE	
410	90143-0052	K	MM	1800	STRAP	
420	90153-0043	K	KG	x	ADHESIVE	
425	90296-0009	-	KG	x	GREASE	
430	90224-0066	F		1	CONNECTION	
435	90261-0032	K		4	PLUG	
440	342720-0102	K		1	STRAIGHT CONNECTION GA-6-G1/8"	
590	312101-0455	-		1	SCREW M6S8X30FZB	
600	90287-0155	-		14	SCREW	
610	312101-0497	-		2	SCREW M6S10X35FZB	
630	312105-0368	-		18	SCREW M6S ISO 4017 M6X16 A280	
640	312105-0451	-		2	SCREW M6S ISO 4017 8X20 A280	
650	312105-0453	-		50	SCREW M6S ISO 4017 M8X25 A280	
660	312105-0455	-		2	SCREW M6S ISO 4017 M8X30 A280	
690	312105-0517	-		4	SCREW M6S ISO 4014 M10X130 A280	
710	312316-0362	-		2	STOP SCREW SK6SS6X8FZB	
720	312810-0320	-		2	LOCK NUT 10FZB	
730	315101-0165	-		1	WASHER BRB8,4X16FZB	
740	315105-0165	-		9	WASHERS,PLAIN ROUND 8,4X16	
750	315125-0173	-		4	WASHERS,PLAIN ROUND,CHAMFERED 10,5X28X6	
760	315115-0153	-		18	WASHER TBRB6,4X12RFR	
770	315115-0165	-		42	WASHER TBRB8,4X16RFR	
780	315202-0311	K		1	O-RINGS 99,5X3	
790	315233-0109	K		1	PLAIN ROUND,NYLON R1/8"	
800	315233-0110	K		1	PLAIN ROUND,NYLON R1/4"	
820	315701-0270	-		1	FLAT WEDGE8X7X40	
830	315701-0274	-		1	FLAT WEDGE8X7X60	

285853-0100

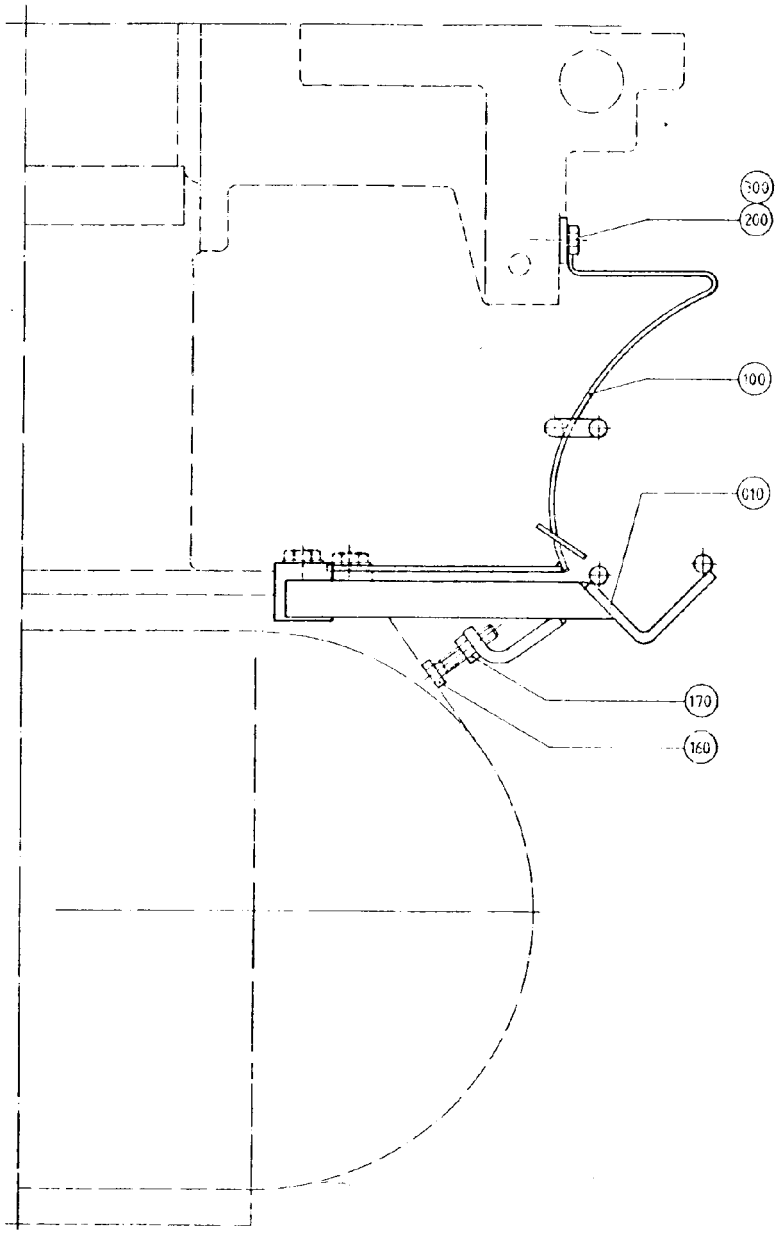

285853-2
285853-2.TIF

Pos	Part No	SP	UN	Qty	Description	Page No
0180B						
010	285635-0003	-		1	SLIDE RAIL	
100	285641-0000	-		1	HEAD PLATE	
0189B						
010	285635-0002	-		1	SLIDE RAIL	
100	285641-0000	-		1	HEAD PLATE	
0200B						
010	285635-0001	-		1	SLIDE RAIL	
100	285640-0000	-		1	HEAD PLATE	
0236B						
010	285634-0003	-		1	SLIDE RAIL	
100	285639-0000	-		1	HEAD PLATE	
0250B						
010	285634-0002	-		1	SLIDE RAIL	
100	525236-0000	-		1	HEAD PLATE	
0284B						
010	285634-0001	-		1	SLIDE RAIL	
100	285637-0000	-		1	HEAD PLATE	
0300B						
010	285633-0000	-		1	SLIDE RAIL	
100	529478-0000	-		1	HEAD PLATE	
0355B						
010	527859-0000	-		1	SLIDE RAIL	
100	527861-0000	-		1	HEAD PLATE	
0375S						
010	442584-0000	-		1	SLIDE RAIL	
100	531313-0000	-		1	HEAD PLATE	
0500B						
010	442801-0000	-		1	SLIDE RAIL	
100	525424-0000	-		1	HEAD PLATE	
160	312109-0374	-		2	SCREW M6S ISO 4017 M6X30 A280	
170	312605-0316	-		2	NUTS,HEXAGON,M6	
Common parts						
200	312105-0366	-		2	SCREW M6S ISO 4017 M6X12 A280	
300	315105-0153	-		2	WASHERS,PLAIN ROUND 6,4X12	
0500S						
010	285671-0000	-		1	SLIDE RAIL	
100	531312-0000	-		1	HEAD PLATE	
0568B						
010	285524-0000	-		1	SLIDE RAIL	
100	531310-0000	-		1	HEAD PLATE	
0750B						
010	525253-0000	-		1	SLIDE RAIL	
100	531314-0000	-		1	HEAD PLATE	
1000B HIFIN						
010	443345-0000	-		1	SLIDE RAIL	
100	529312-0000	-		1	HEAD PLATE	
1000B LF						
010	297852-0000	-		1	SLIDE RAIL	
100	529312-0000	-		1	HEAD PLATE	
1055B						
010	443136-0000	-		1	SLIDE RAIL	
100	531328-0000	-		1	HEAD PLATE	

INDEXING GEAR

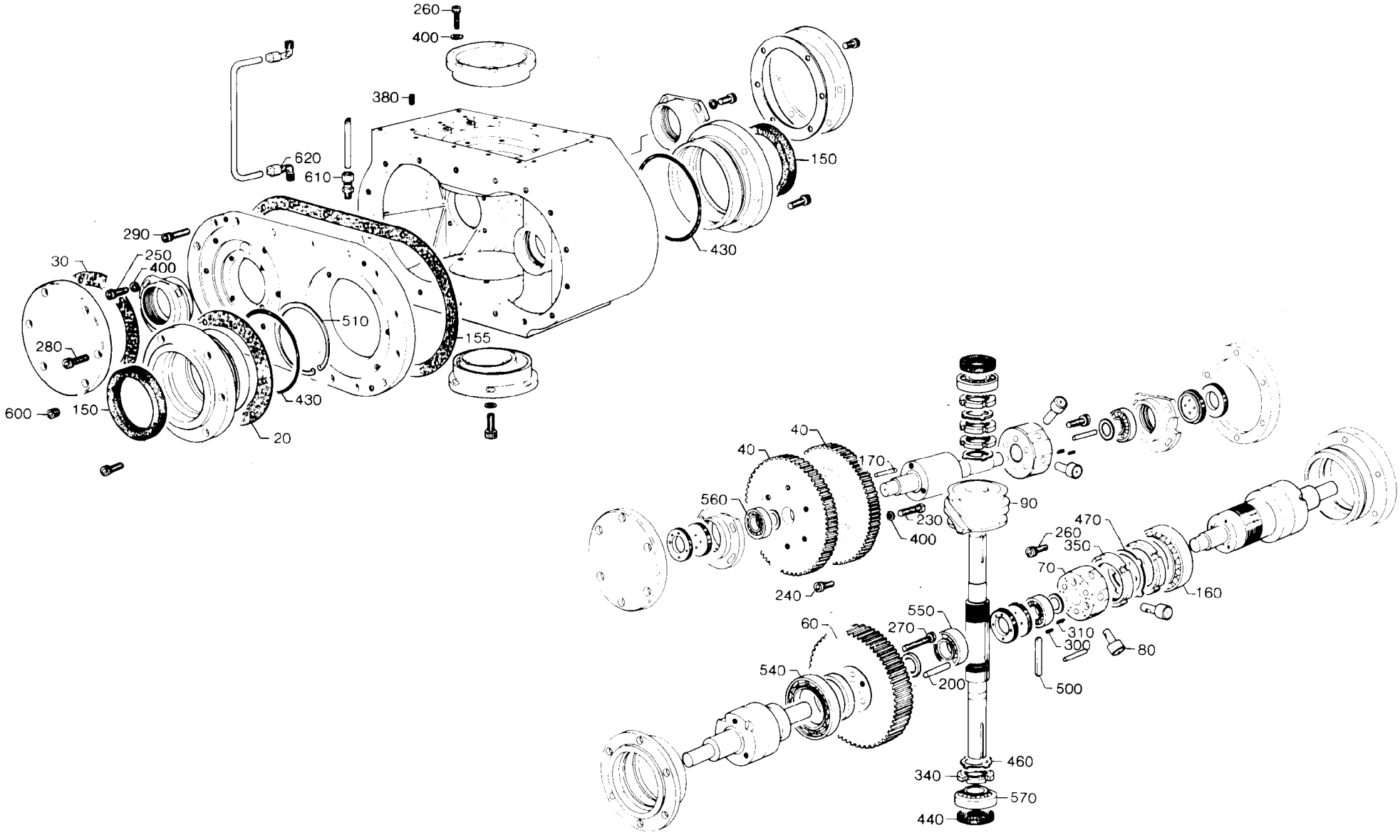

442580-1.tif

Pos	Part No	SP	UN	Qty	Description	Page No
-						
	442579-0002	-	M	x	MEASURE DRAWING	
020	285464-0000	K		2	GASKET	
030	285465-0000	K		2	GASKET	
040	443191-0000	K		1	GEAR WHEEL	
060	285468-0000	K		1	GEAR WHEEL	
070	B 285469-0000	K		2	HUB	
080	285470-0000	K		x	ROLL	
090	285471-0000	K		1	CURVE	
150	90091-0130	K		2	SEAL RING	
155	90157-0033	K	L	1	FLANGE SEALING COMPOUND	
160	90214-0087	K		1	TAPER ROLLER BEARING	
170	90258-0032	K		3	PIN	
200	311103-0413	-		9	PINS,STRAIGHT 8X50	
230	312101-0455	-		3	SCREW M6S8X30FZB	
240	312111-0451	-		3	SCREW MC6S8X20FZB	
250	312111-0453	-		8	SCREW MC6S8X25FZB	
260	312111-0455	-		18	SCREW MC6S8X30FZB	
270	312111-0457	-		3	SCREW MC6S8X35FZB	
280	312115-0451	-		12	SCREW MC6S ISO 4762 M8X20 A280	
290	312115-0453	-		28	SCREW MC6S ISO 4762 M8X25 A280	
300	312306-0443	-		x	STOP SCREW P6SS8X8FZB	
310	312316-0443	-		x	STOP SCREW SK6SS8X8FZB	
340	312805-0108	K		3	NUTS,ROUND,WITH SLOTS,M40X1,5	
350	312805-0114	K		2	NUTS,ROUND,WITH SLOTS,M70X20	
380	312910-0126	-		30	THREADED I M8X1,5D	
400	315101-0165	-		26	WASHER BRB8,4X16FZB	
430	315202-0316	K		2	O-RINGS 124,5X3	
440	315221-0171	K		1	SEALING RINGS,TYPE A 30X62X7	
460	315410-0108	K		3	WASHERS,LOCK 40X50	
470	315410-0114	K		1	WASHERS,LOCK 70X85	
500	315701-0338	K		1	FLAT WEDGE12X8X70	
510	315752-0149	K		1	CIRCLIP SGH110	
540	321306-0114	K		1	BALL BEARISKF6014	
550	321309-0106	K		1	BALL BEARISKF6206	
560	321361-0105	K		3	ROLLER BEASKF30205	
570	321364-0106	K		2	ROLLER BEASKF31306	
600	342713-0210	K		1	PLUG,EXT.G-THREAD,HEXAGON SOCKET G1/4"	
610	342720-0104	K		1	STRAIGHT CONNECTION GA-8-G1/4"	
620	342730-0104	K		2	ELBOW CONNECTION WA-8-1/4"	

Pos	Part No	SP	UN	Qty	Description	Page No

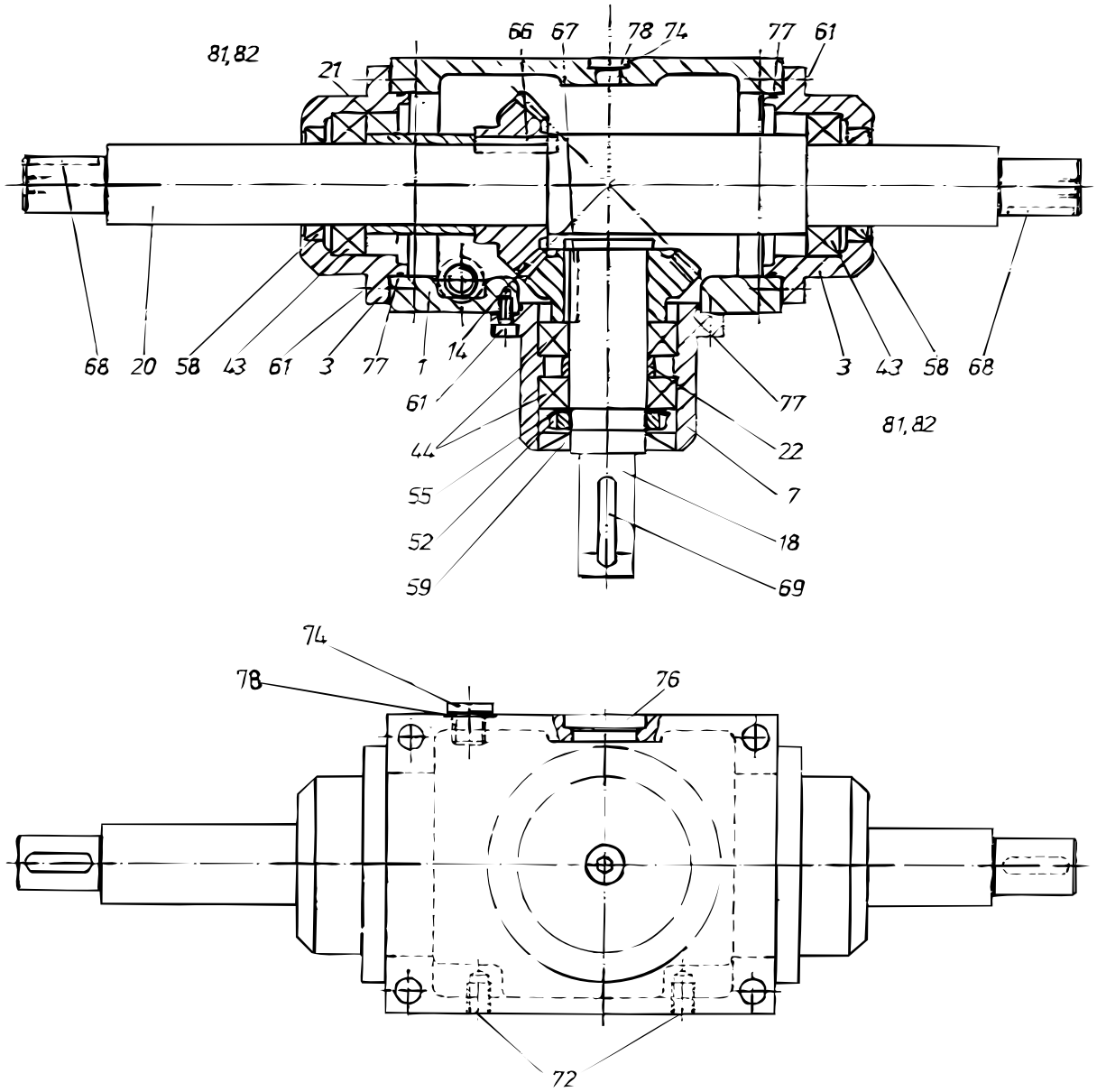

S-442646-2
ECN 8718

Pos	Part No	SP	UN	Qty	Description	Page No
-						
	442844-0001	-		x	MEASURE DRAWING	
001	568070-0000	-		1	GEAR HOUSING	
003	568071-0000	-		2	BEARING SEAT	
007	568072-0000	-		1	BEARING SEAT	
014	443188-0000	K		1	GEAR WHEEL	
018	568073-0000	K		1	SHAFT	
020	568074-0000	K		1	SHAFT	
021	442621-0000	K		1	SPACER	
022	442622-0000	K		1	SPACER	
043	321306-0107	K		2	BALL BEARISKF6007	
044	321306-0107	K		2	BALL BEARISKF6007	
052	312805-0107	K		1	NUTS,ROUND,WITH SLOTS,M35X1,5	
055	315410-0107	K		1	WASHERS,LOCK 34X44	
058	90091-0142	K		2	SEAL RING	
059	315221-0171	K		1	SEALING RINGS,TYPE A 30X62X7	
061	312111-0368	K		12	SCREW MC6S6X16FZB	
066	315701-0802	K		1	FLAT WEDGE10X8X36	
067	315701-0299	K		1	FLAT WEDGE10X8X32	
068	315701-0268	K		2	FLAT WEDGE8X7X32	
069	315701-0270	K		1	FLAT WEDGE8X7X40	
072	312910-0126	K		2	THREADED I M8X1,5D	
077	90242-0117	K		3	O-RING*	
078	90242-0121	K		2	O-RING	
081	443193-0000	K		3	SHIM	
082	443194-0000	K		3	SHIM	

Pos	Part No	SP	UN	Qty	Description	Page No

285456-2

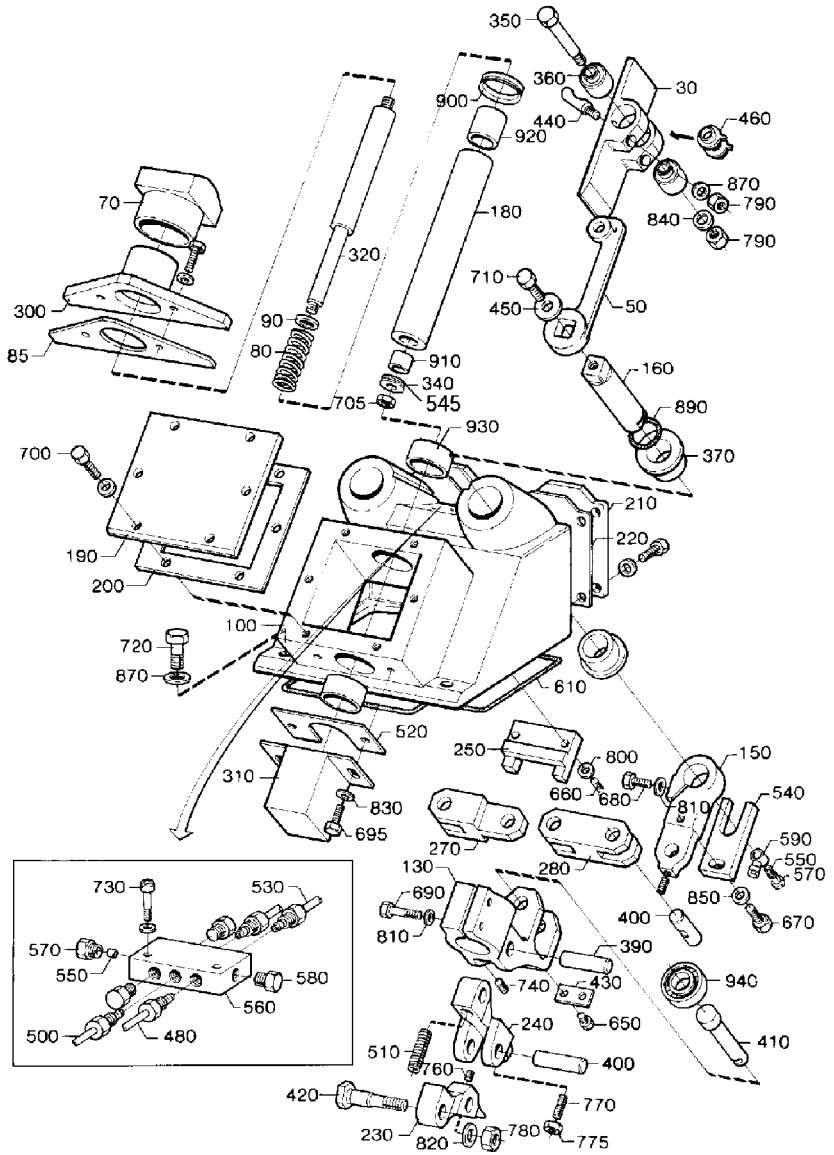

28545602.TIF
285456-2
AM

Pos	Part No	SP	UN	Qty	Description	Page No
SOURCE,TBA/8-030V or SOURCE,TBA/8-040V						
100	262233-0000	-		1	HOUSE	
SOURCE,TBA/8-050V or SOURCE,TBA/8-060V or SOURCE,TBA/8-090V or SOURCE,TBA/8-100V						
100	525335-0000	-		1	HOUSE	
Common parts						
030	443182-0000	K		2	FLAP	
050	262906-0000	K		2	ARM	
070	525100-0000	D		1	BLOCKING PIECE	
080	525379-0000	F		1	COMPRESSION SPRING	
085	297496-0000	-		1	LACE	
090	442883-0000	-		2	SPACING WASHER	
095	312105-0372	-		2	SCREW M6S ISO 4017 M6X25 A280	
130	262234-0000	K		1	BRACKET	
150	262235-0000	K		2	ARM	
160	262266-0000	K		2	SHAFT	
180	262309-0000	K		1	SLEEVE	
190	262313-0000	-		1	LID	
200	262314-0000	K		1	RUBBER GASKET	
210	262315-0000	-		1	LID	
220	262316-0000	K		1	RUBBER GASKET	
230	262415-0000	K		1	LINK	
240	262610-0000	K		1	LINK	
250	262720-0000	-		1	STEERING	
270	285157-0000	K		1	LINK	
280	285158-0000	K		1	LINK	
300	285448-0000	-		1	PROTECTIVE CASING	
310	442532-0000	-		1	COVER	
320	B 442882-0000	K		1	SPINDLE	
340	28037-0000	-		1	WASHER	
350	262028-0011	K		2	FITTING BOLT	
360	525367-0000	K		4	SLEEVE	
370	262267-0000	K		4	BUSHING	
390	262322-0000	K		1	SHAFT	
410	262324-0000	K		1	SHAFT	
420	262325-0000	K		1	SHAFT	
430	262343-0000	K		1	SECURING PLATE	
440	262350-0001	-		4	PIN	
450	276659-0000	-		2	WASHER	
460	311103-0306	-		4	PINS,STRAIGHT 5X12	
480	B 285162-0000	K		1	LUBRICATING PIPE	
500	B 285164-0000	K		2	LUBRICATING PIPE	
510	285970-0000	F		1	COMPRESSION SPRING	
520	442533-0000	K		1	RUBBER GASKET	
530	B 442560-0000	K		1	LUBR.OIL PIPE	
540	442884-0000	K		2	LOCK PLATE	
545	566016-0000	-		1	WASHER	
550	90028-0001	F		3	CONE	
560	90032-0034	F		1	JUNCTION BLOCK	
570	90134-0003	F		3	BUSHING	
580	90136-0002	F		3	PLUG	
590	90137-0005	F		2	PIPE JOINT	
600	90153-0043	-		x	ADHESIVE	
605	90157-0022	K		x	SEALING COMPOUND	
610	90161-0001	-	MM	900	STRIP	
620	90296-0009	K		x	GREASE	
650	312101-0362	-		2	SCREW M6S6X8FZB	
660	312101-0372	-		2	SCREW M6S6X25FZB	
670	312101-0453	-		2	SCREW M6S8X25FZB	
680	312101-0457	-		2	SCREW M6S8X35FZB	
690	312101-0459	-		2	SCREW M6S8X40FZB	
695	312105-0368	-		2	SCREW M6S ISO 4017 M6X16 A280	
700	312105-0368	-		14	SCREW M6S ISO 4017 M6X16 A280	
705	312105-0447	-		1	SCREW M6S ISO 4017 M8X12 A280	
710	312105-0449	-		2	SCREW M6S ISO 4017 M8X16 A280	
720	312105-0453	-		3	SCREW M6S ISO 4017 M8X25 A280	
730	312111-0293	-		2	SCREW MC6S4X16FZB	
740	312316-0287	-		1	STOP SCREW SK6SS4X8FZB	
760	312316-0362	-		3	STOP SCREW SK6SS6X8FZB	
770	312316-0372	K		1	STOP SCREW SK6SS6X25FZB	
775	312601-0316	-		1	NUT M6M6FZB	
780	312601-0322	-		1	NUT M6M12FZB	
790	312605-0318	-		6	NUTS,HEXAGON,M8	
800	315101-0153	-		2	WASHER BRB6,4X12FZB	
810	315101-0165	-		4	WASHER BRB8,4X16FZB	
820	315101-0178	-		1	WASHER BRB13X24FZB	
830	315105-0153	-		20	WASHERS,PLAIN ROUND 6,4X12	
840	315105-0165	-		2	WASHERS,PLAIN ROUND 8,4X16	
850	315111-0165	-		2	WASHER TBRB8,4X16FZB	
870	315115-0165	-		7	WASHER TBRB8,4X16RFR	
890	315202-0217	K		2	O-RINGS 24,2X3	
900	315220-0175	K		1	SEAL RING V-35S	
910	321120-0122	K		1	BUSHING 15/17X15	
920	321120-0160	K		1	BUSHING 25/28X30	
930	321120-0183	K		2	BUSHING 35/39X20	
940	321306-0104	K		1	BALL BEARISKF6004	

PULL-DOWN DEVICE

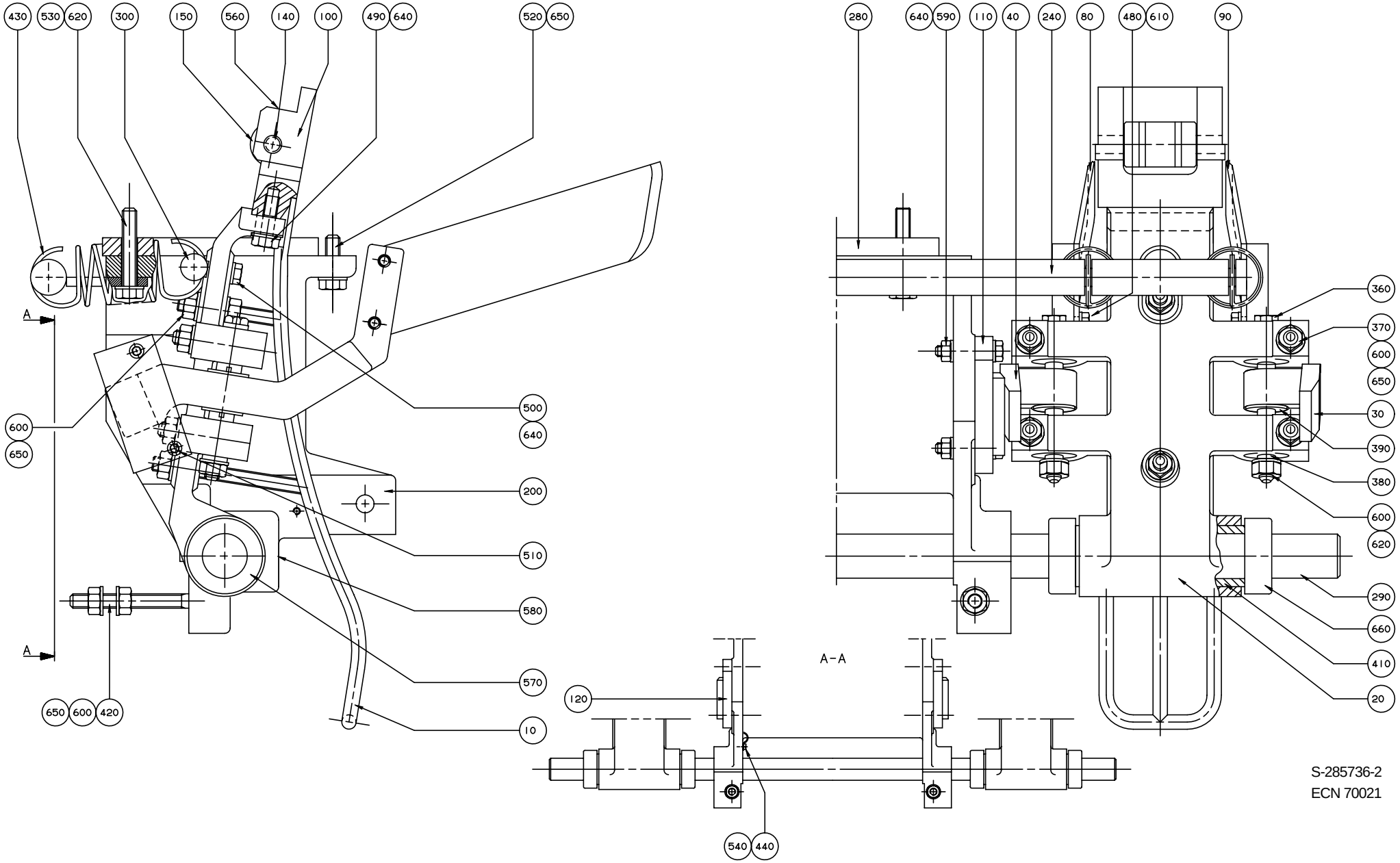

S-285736-2
ECN 70021

Pos	Part No	SP	UN	Qty	Description	Page No
0300B						
010	285724-0002	D		2	RAIL	
020	285723-0000	D		2	ARM	
030	285660-0000	D		2	ARM	
040	285661-0000	D		2	ARM	
080	525068-0000	D		2	SHEET	
090	525069-0000	D		2	SHEET	
100	525234-0002	D		2	PLATE	
140	262427-0002	K		2	SHAFT	
150	B 443488-0000	K		2	ROLL	
300	297644-0000	-		2	SHAFT	
600	312605-0318	-		24	NUTS,HEXAGON,M8	
610	315105-0153	-		8	WASHERS,PLAIN ROUND 6,4X12	
0355B						
010	285712-0000	D		2	RAIL	
020	285723-0000	D		2	ARM	
030	285656-0000	D		2	ARM	
040	285657-0000	D		2	ARM	
080	527854-0000	D		2	PLATE RIGHT	
090	527856-0000	D		2	PLATE LEFT	
100	525212-0000	D		2	PLATE	
140	262427-0005	K		2	SHAFT	
150	B 443487-0000	K		2	ROLL	
300	297644-0000	-		2	SHAFT	
600	312605-0318	-		24	NUTS,HEXAGON,M8	
610	315105-0153	-		8	WASHERS,PLAIN ROUND 6,4X12	
0375S						
010	285724-0002	D		2	RAIL	
020	285723-0000	D		2	ARM	
030	285660-0000	D		2	ARM	
040	285661-0000	D		2	ARM	
080	443027-0000	D		2	SHEET	
090	443028-0000	D		2	SHEET	
100	525234-0002	D		2	PLATE	
140	262427-0002	K		2	SHAFT	
150	B 443488-0000	K		2	ROLL	
300	297644-0000	-		2	SHAFT	
600	312605-0318	-		24	NUTS,HEXAGON,M8	
610	315105-0153	-		8	WASHERS,PLAIN ROUND 6,4X12	
0400B						
010	285712-0000	D		2	RAIL	
020	285723-0000	D		2	ARM	
030	285656-0000	D		2	ARM	
040	285657-0000	D		2	ARM	
080	574681-0000	D		2	SHEET	
090	574682-0000	D		2	SHEET	
100	525212-0000	D		2	PLATE	
140	262427-0005	K		2	SHAFT	
150	B 443487-0000	K		2	ROLL	
300	297644-0000	-		2	SHAFT	
600	312605-0318	-		24	NUTS,HEXAGON,M8	
610	315105-0153	-		8	WASHERS,PLAIN ROUND 6,4X12	
0500B						
010	262970-0000	D		2	RAIL	
020	285655-0000	D		2	ARM	
030	285656-0000	D		2	ARM	
040	285657-0000	D		2	ARM	
080	525066-0000	D		2	SHEET	
090	525067-0000	D		2	SHEET	
100	B 525429-0000	-		2	PLATE	
140	262427-0001	K		2	SHAFT	
150	B 443487-0000	K		2	ROLL	
300	297644-0000	-		2	SHAFT	
600	312605-0318	-		24	NUTS,HEXAGON,M8	
610	315105-0153	-		8	WASHERS,PLAIN ROUND 6,4X12	
0500S						
010	285712-0000	D		2	RAIL	
020	285723-0000	D		2	ARM	
030	285656-0000	D		2	ARM	
040	285657-0000	D		2	ARM	
080	443023-0000	D		2	SHEET	
090	443024-0000	D		2	SHEET	
100	525212-0000	D		2	PLATE	
140	262427-0005	K		2	SHAFT	
150	B 443487-0000	K		2	ROLL	
300	297644-0000	-		2	SHAFT	
600	312605-0318	-		24	NUTS,HEXAGON,M8	
610	315105-0153	-		8	WASHERS,PLAIN ROUND 6,4X12	
0500SQ						
010	574039-0000	D		2	RAIL	
020	285723-0000	D		2	ARM	
030	285660-0000	D		2	ARM	
040	285661-0000	D		2	ARM	
080	583447-0000	D		2	SHEET	
090	583455-0000	D		2	SHEET	

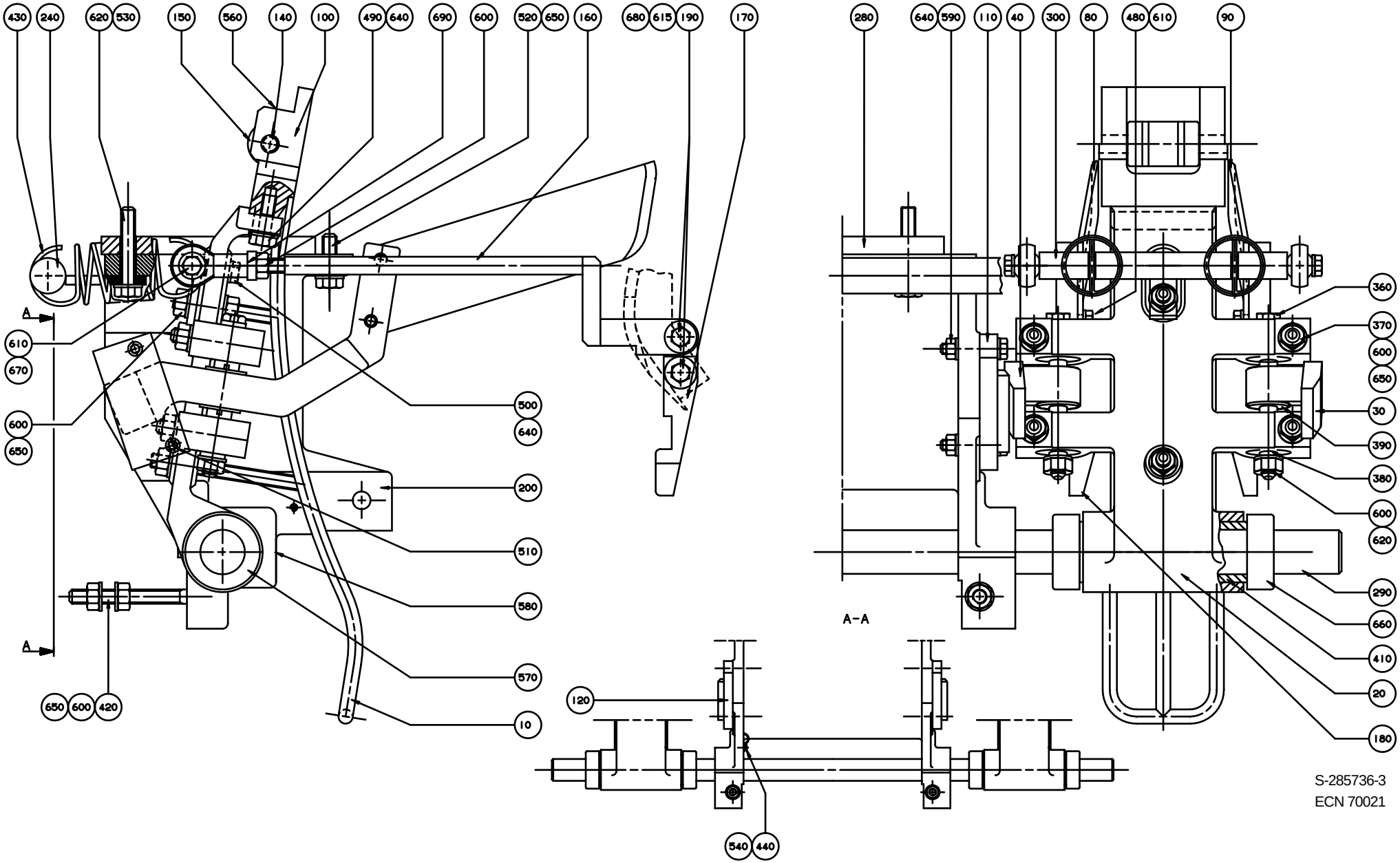
430
240
620
530
150
560
140
100
490
640
690
600
520
650
160
680
615
190
170
280
640
590
110
40
300
80
480
610
90
360
370
600
650
30
390
380
600
620
290
660
410
20
180
A
610
670
600
650
500
640
200
510
580
570
10
650
600
420
A-A
120
540
440
S-285736-3
ECN 70021

Pos	Part No	SP	UN	Qty	Description	Page No
100	574042-0000	D		2	PLATE	
140	262427-0008	K		2	SHAFT	
150	B 443487-0000	K		2	ROLL	
300	297644-0000	-		2	SHAFT	
600	312605-0318	-		24	NUTS,HEXAGON,M8	
610	315105-0153	-		8	WASHERS,PLAIN ROUND 6,4X12	
0568B						
010	262970-0000	D		2	RAIL	
020	285655-0000	D		2	ARM	
030	285656-0000	D		2	ARM	
040	285657-0000	D		2	ARM	
080	442909-0001	D		2	SHEET	
090	442910-0001	D		2	SHEET	
100	B 525429-0000	-		2	PLATE	
140	262427-0001	K		2	SHAFT	
150	B 443487-0000	K		2	ROLL	
300	297644-0000	-		2	SHAFT	
600	312605-0318	-		24	NUTS,HEXAGON,M8	
610	315105-0153	-		8	WASHERS,PLAIN ROUND 6,4X12	
0750B						
010	262970-0000	D		2	RAIL	
020	285655-0000	D		2	ARM	
030	285656-0000	D		2	ARM	
040	285657-0000	D		2	ARM	
080	442979-0000	D		2	SHEET	
090	442980-0000	D		2	SHEET	
100	B 525429-0000	-		2	PLATE	
140	262427-0001	K		2	SHAFT	
150	B 443487-0000	K		2	ROLL	
300	297644-0000	-		2	SHAFT	
600	312605-0318	-		24	NUTS,HEXAGON,M8	
610	315105-0153	-		8	WASHERS,PLAIN ROUND 6,4X12	
0750S						
010	544290-0000	D		2	RAIL	
020	285723-0000	D		2	ARM	
030	285656-0000	D		2	ARM	
040	285657-0000	D		2	ARM	
080	544288-0000	-		2	SHEET	
090	544280-0000	-		2	SHEET	
100	544291-0000	-		2	PLATE	
140	262427-0006	-		2	SHAFT	
150	B 443487-0000	K		2	ROLL	
300	297644-0000	-		2	SHAFT	
600	312605-0318	-		24	NUTS,HEXAGON,M8	
610	315105-0153	-		8	WASHERS,PLAIN ROUND 6,4X12	
Common parts						
110	442564-0000	K		1	CURVE	
120	442565-0000	K		1	CURVE	
200	262924-0000	-		1	CANTILEVER	
240	297643-0000	-		1	BRACKET	
280	285444-0000	-		1	SPACER	
290	285664-0000	-		1	SHAFT	
360	262028-0002	K		4	FITTING BOLT	
370	262179-0001	-		8	PIN	
380	262183-0000	K		8	BUSHING	
390	276664-0000	-		8	WASHER	
410	285729-0000	K		2	BUSHING	
420	443313-0000	-		2	STUD SCREW	
430	297567-0000	K		4	TENSION SPRING	
440	90165-0057	-		1	CLIP	
480	312105-0366	-		8	SCREW M6S ISO 4017 M6X12 A280	
490	312105-0372	-		4	SCREW M6S ISO 4017 M6X25 A280	
500	312105-0374	-		2	SCREW M6S ISO 4017 M6X30 A280	
510	312105-0376	-		4	SCREW M6S ISO 4017 M6X35 A280	
520	312105-0453	-		2	SCREW M6S ISO 4017 M8X25 A280	
530	312105-0460	-		2	SCREW O4017 M8X45A280	
540	312125-0291	-		1	SLOTTED CHEESE HEAD ISO 1207 M4X12	
RFR						
560	312318-0370	-		2	SET SCREW CUP POINT ISO 4029 M6X20	
RFR						
570	312318-0443	-		4	SET SCREW CUP POINT ISO 4029 M8X8 RFR	
580	312318-0449	-		2	SET SCREW COP POINT ISO 4029 M8X16	
RFR						
590	312605-0316	-		4	NUTS,HEXAGON,M6	
620	315105-0165	-		6	WASHERS,PLAIN ROUND 8,4X16	
640	315115-0153	-		14	WASHER TBRB6,4X12RFR	
650	315115-0165	-		22	WASHER TBRB8,4X16RFR	
660	315742-0119	-		4	RETAINING 25SMS199RFR	
1000B HIFIN						
010	262970-0000	D		2	RAIL	
020	285655-0000	D		2	ARM	
030	285656-0000	D		2	ARM	
040	285657-0000	D		2	ARM	
080	443021-0000	D		2	SHEET	
090	443022-0000	D		2	SHEET	
100	B 443348-0000	D		2	PLATE	

PULL-DOWN DEVICE

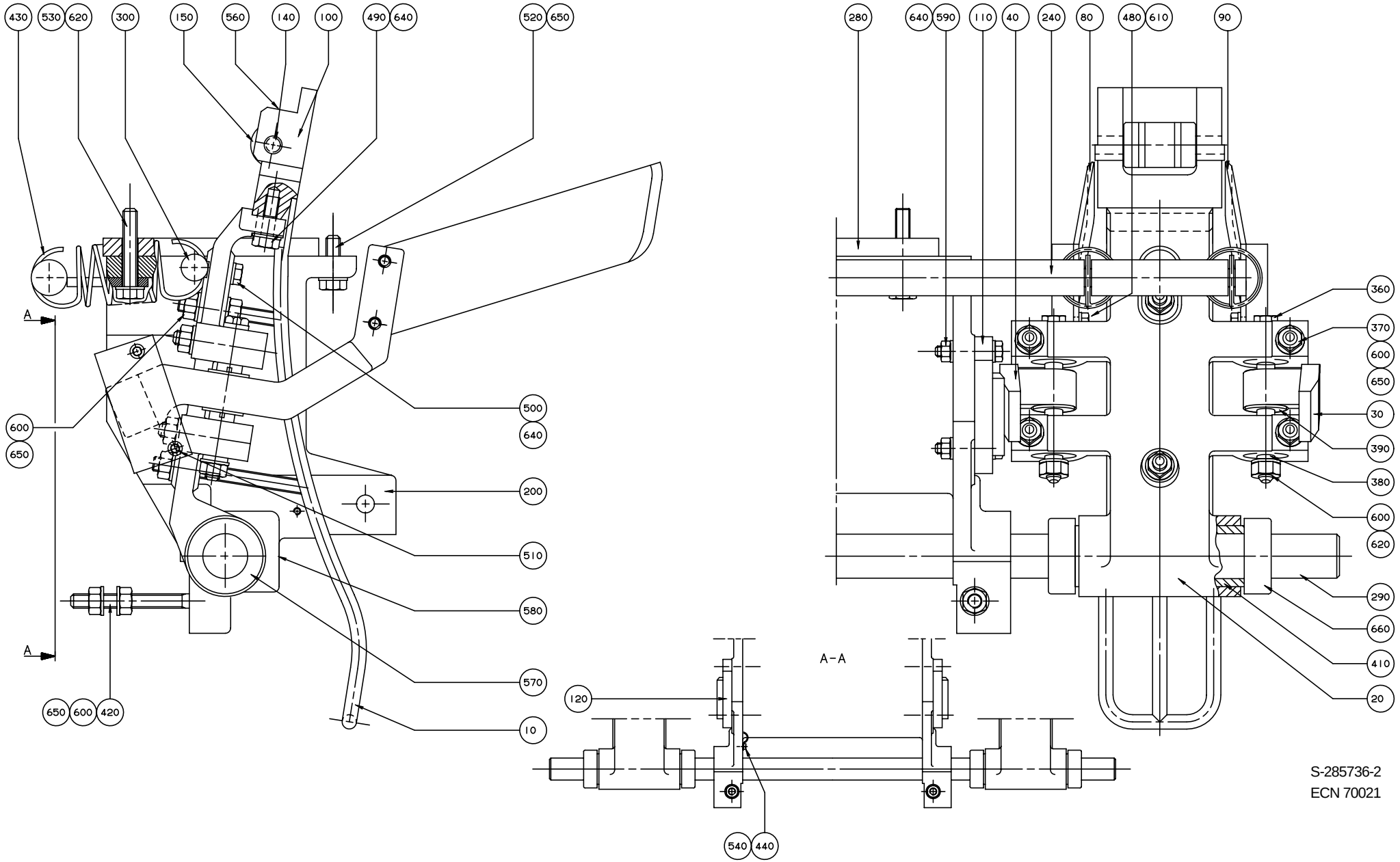

S-285736-2
ECN 70021

Pos	Part No	SP	UN	Qty	Description	Page No
140	262427-0001	K		2	SHAFT	
150	B 443487-0000	K		2	ROLL	
300	297644-0000	-		2	SHAFT	
600	312605-0318	-		24	NUTS,HEXAGON,M8	
610	315105-0153	-		8	WASHERS,PLAIN ROUND 6,4X12	
1000S						
010	544290-0000	D		2	RAIL	
020	285723-0000	D		2	ARM	
030	285656-0000	D		2	ARM	
040	285657-0000	D		2	ARM	
080	569115-0000	D		2	SHEET	
090	569116-0000	D		2	SHEET	
100	569114-0000	D		2	PLATE	
140	262427-0007	K		2	SHAFT	
150	B 443487-0000	K		2	ROLL	
300	297644-0000	-		2	SHAFT	
600	312605-0318	-		24	NUTS,HEXAGON,M8	
610	315105-0153	-		8	WASHERS,PLAIN ROUND 6,4X12	
1055B						
010	262970-0000	D		2	RAIL	
020	285655-0000	D		2	ARM	
030	285656-0000	D		2	ARM	
040	285657-0000	D		2	ARM	
080	443137-0000	D		2	SHEET	
090	443138-0000	D		2	SHEET	
100	525211-0000	D		2	PLATE	
140	262427-0001	K		2	SHAFT	
150	B 443487-0000	K		2	ROLL	
300	297644-0000	-		2	SHAFT	
600	312605-0318	-		24	NUTS,HEXAGON,M8	
610	315105-0153	-		8	WASHERS,PLAIN ROUND 6,4X12	
1136B						
010	262970-0000	D		2	RAIL	
020	285655-0000	D		2	ARM	
030	285656-0000	D		2	ARM	
040	285657-0000	D		2	ARM	
080	543701-0000	-		2	SHEET	
090	543702-0000	-		2	SHEET	
100	525211-0000	D		2	PLATE	
140	262427-0001	K		2	SHAFT	
150	B 443487-0000	K		2	ROLL	
300	297644-0000	-		2	SHAFT	
600	312605-0318	-		24	NUTS,HEXAGON,M8	
610	315105-0153	-		8	WASHERS,PLAIN ROUND 6,4X12	
1000B LOFIN						
010	262970-0000	D		2	RAIL	
020	285655-0000	D		2	ARM	
030	285656-0000	D		2	ARM	
040	285657-0000	D		2	ARM	
080	443021-0000	D		2	SHEET	
090	443022-0000	D		2	SHEET	
100	525211-0000	D		2	PLATE	
140	262427-0001	K		2	SHAFT	
150	B 443487-0000	K		2	ROLL	
300	297644-0000	-		2	SHAFT	
600	312605-0318	-		24	NUTS,HEXAGON,M8	
610	315105-0153	-		8	WASHERS,PLAIN ROUND 6,4X12	
1000SQ REVFIN						
010	574039-0000	D		2	RAIL	
020	285723-0000	D		2	ARM	
030	285660-0000	D		2	ARM	
040	285661-0000	D		2	ARM	
080	574040-0000	D		2	SHEET	
090	574041-0000	D		2	SHEET	
100	574042-0000	D		2	PLATE	
140	262427-0008	K		2	SHAFT	
150	B 443487-0000	K		2	ROLL	
160	1255161-0000	D		4	ARM	
170	1255162-0000	D		2	ROCKER ARM	
180	1255163-0000	D		2	ROCKER ARM	
185	1255160-0000	D		4	THREADED INSERT	
190	1143015-0000	K		4	BUSHING	
300	1143016-0000	K		2	AXLE PIN	
600	312605-0318	-		32	NUTS,HEXAGON,M8	
605	312902-0318	-		4	NUTS,HEXAGON,LEFT HAND THREAD,M8	
610	315105-0153	-		12	WASHERS,PLAIN ROUND 6,4X12	
615	1143223-0000	D		4	WASHER	
616	315105-0146	-		4	WASHERS,PLAIN ROUND 5,3X10	
617	312105-0323	-		4	SCREW M6S ISO 4017 M5X8 A280	
670	312105-0370	-		4	SCREW M6S ISO 4017 M6X20 A280	
680	312105-0362	-		4	SCREW M6S ISO 4017 M6X8 A280	
690	90115-0139	K		8	LINK HEAD	
1000SQ NORMFIN						
010	574039-0000	D		2	RAIL	
020	285723-0000	D		2	ARM	

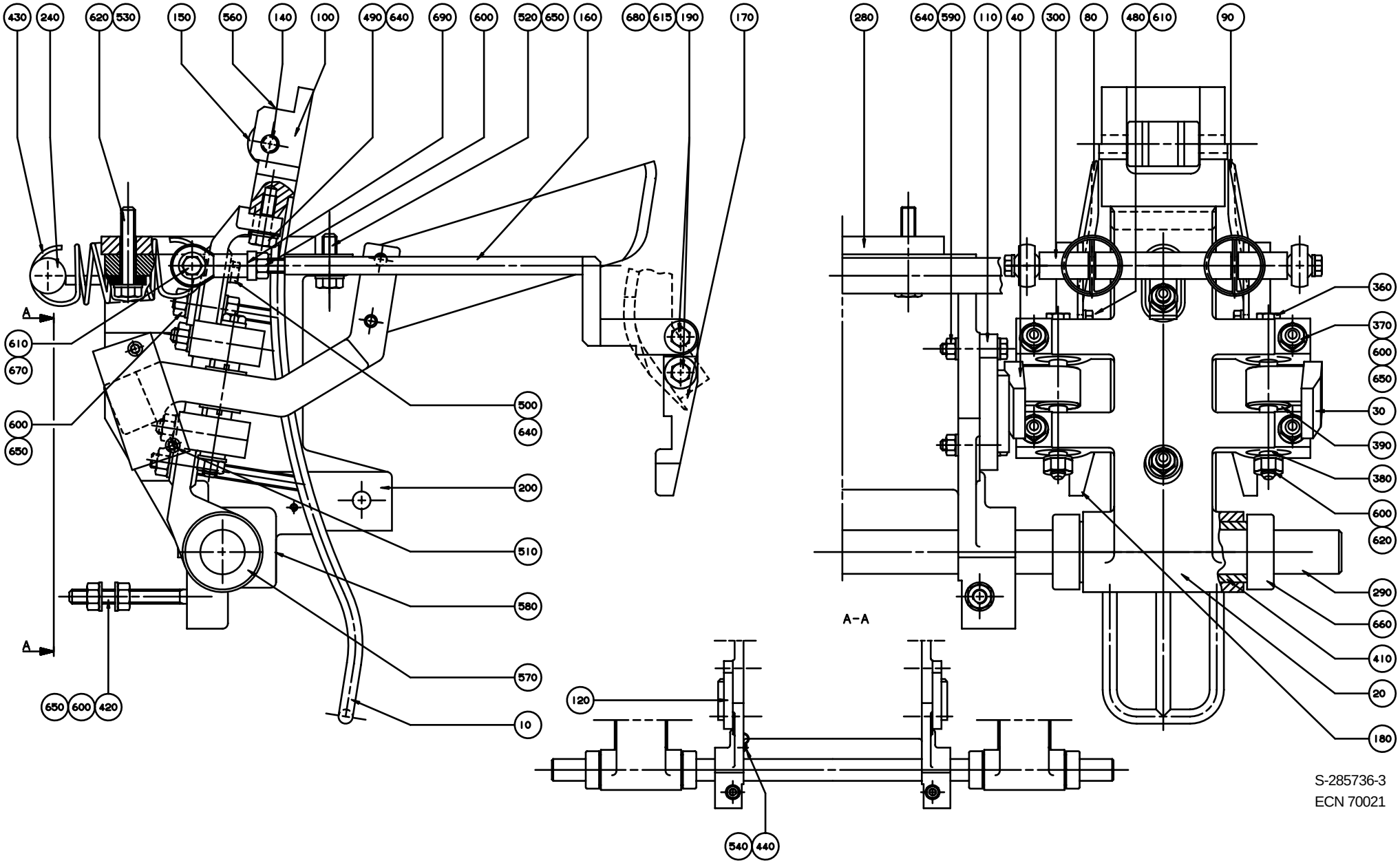
430
240
620
530
150
560
140
100
490
640
690
600
520
650
160
680
615
190
170
280
640
590
110
40
300
80
480
610
90
360
370
600
650
30
390
380
600
620
290
660
410
20
180
A
610
670
600
650
500
640
200
510
580
570
10
650
600
420
A-A
120
540
440
S-285736-3
ECN 70021

Pos	Part No	SP	UN	Qty	Description	Page No
030	285660-0000	D		2	ARM	
040	285661-0000	D		2	ARM	
080	574040-0000	D		2	SHEET	
090	574041-0000	D		2	SHEET	
100	574042-0000	D		2	PLATE	
140	262427-0008	K		2	SHAFT	
300	297644-0000	-		2	SHAFT	
600	312605-0318	-		24	NUTS,HEXAGON,M8	
610	315105-0153	-		8	WASHERS,PLAIN ROUND 6,4X12	

Pos	Part No	SP	UN	Qty	Description	Page No

285478-2

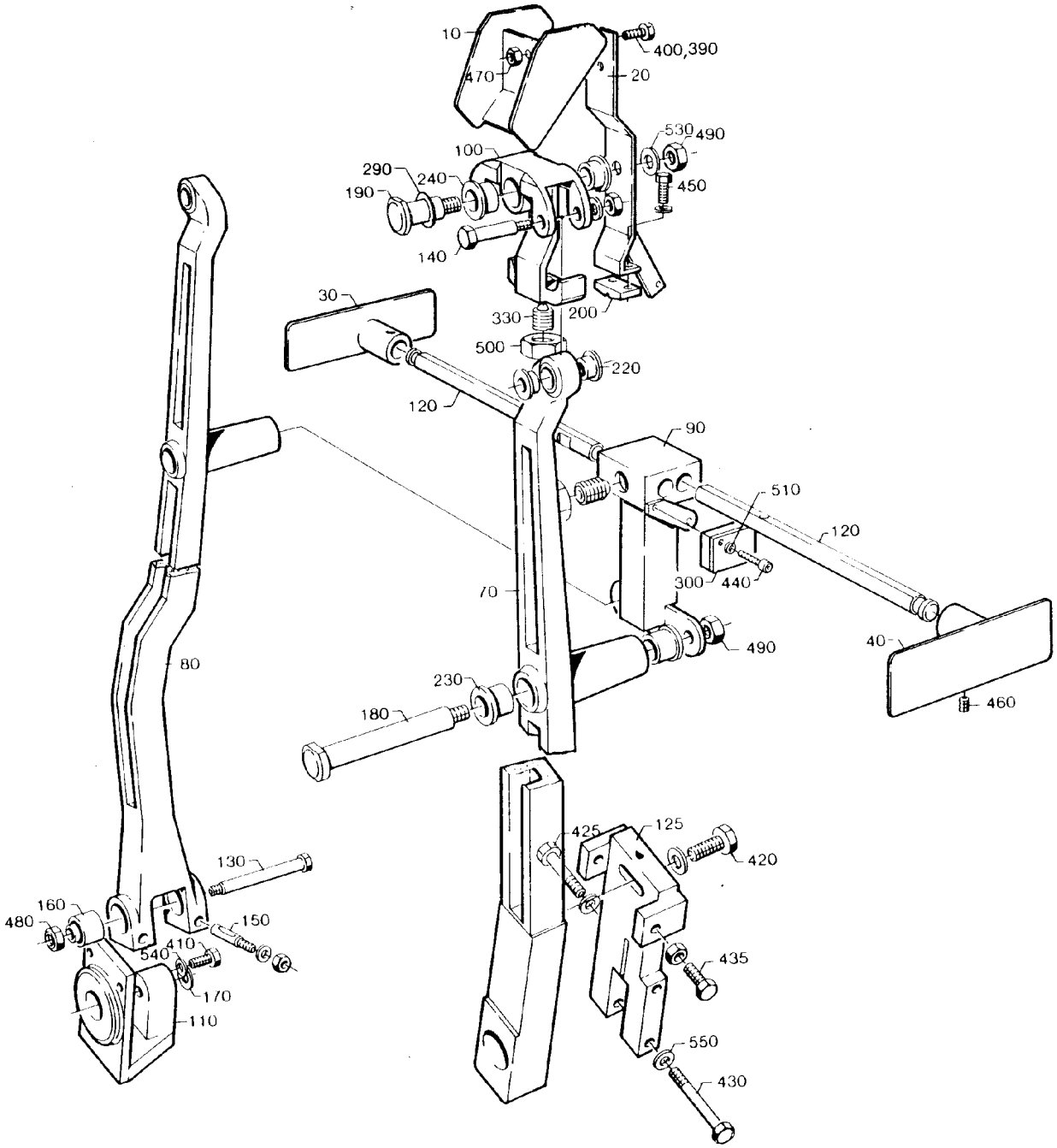

285478-2
285478-2.TIF

Pos	Part No	SP	UN	Qty	Description	Page No
0300B						
010	442682-0001	D		1	PACKAGE GUIDE	
020	442680-0002	D		1	HOLDER	
030	285489-0000	D		1	PLATE	
040	285490-0000	D		1	PLATE	
390	312105-0364	-		2	SCREW M6S6X10RFR	
0355B						
010	527851-0000	D		1	PACKAGE GUIDE	
020	527850-0000	D		1	HOLDER	
030	527853-0000	D		1	PLATE	
040	527852-0000	D		1	PLATE	
390	312105-0364	-		2	SCREW M6S6X10RFR	
0375S						
010	442941-0000	D		1	PACKAGE GUIDE	
020	442942-0000	D		1	HOLDER	
030	442593-0000	D		1	PLATE	
040	442592-0000	D		1	PLATE	
390	312105-0364	-		2	SCREW M6S6X10RFR	
0500B or 0568B						
010	442681-0000	D		1	PACKAGE GUIDE	
020	442680-0001	D		1	HOLDER	
030	297774-0000	-		1	PLATE	
040	297775-0000	-		1	PLATE	
390	312105-0364	-		2	SCREW M6S6X10RFR	
0500S						
010	442596-0000	D		1	PACKAGE GUIDE	
020	442869-0000	D		1	HOLDER	
030	285494-0000	D		1	PLATE	
040	285493-0000	D		1	PLATE	
390	312105-0364	-		2	SCREW M6S6X10RFR	
0750B						
010	442696-0000	D		1	PACKAGE GUIDE	
020	442680-0001	D		1	HOLDER	
030	442608-0000	D		1	PLATE	
040	442609-0000	D		1	PLATE	
390	312105-0364	-		2	SCREW M6S6X10RFR	
1000B						
010	262293-0000	D		1	PACKAGE GUIDE	
020	285064-0000	D		1	HOLDER	
030	297772-0000	-		1	PLATE	
040	297773-0000	-		1	PLATE	
400	312105-0366	-		2	SCREW M6S ISO 4017 M6X12 A280	
470	312605-0316	-		2	NUTS,HEXAGON,M6	
1055B						
010	262293-0000	D		1	PACKAGE GUIDE	
020	285064-0000	D		1	HOLDER	
030	534456-0000	-		1	PLATE	
040	297773-0000	-		1	PLATE	
400	312105-0366	-		2	SCREW M6S ISO 4017 M6X12 A280	
470	312605-0316	-		2	NUTS,HEXAGON,M6	

285478-2

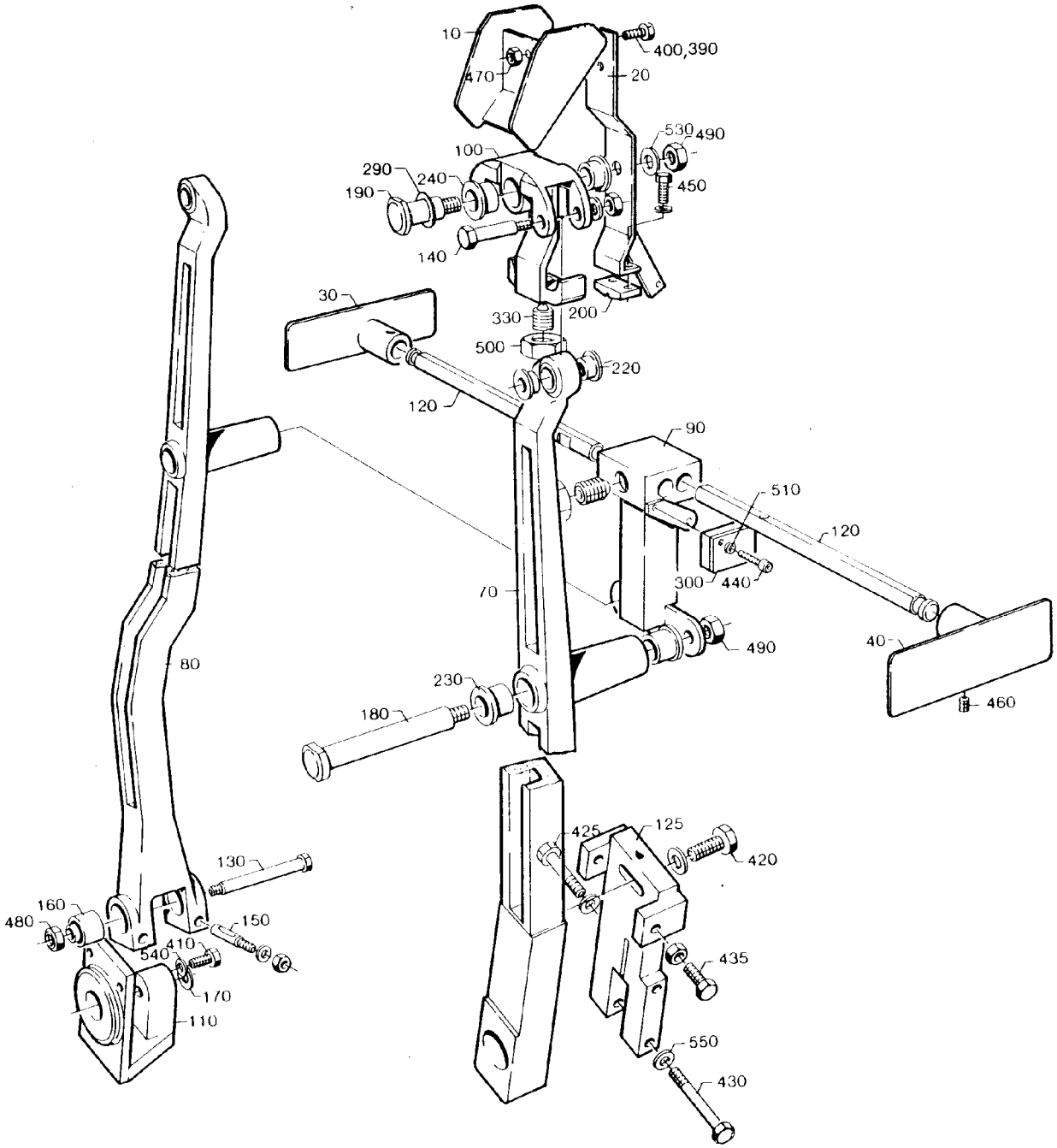

285478-2
285478-2.TIF

Pos	Part No	SP	UN	Qty	Description	Page No
Common parts						
070	285059-0000	D		1	ARM	
080	285060-0000	D		1	ARM	
090	285061-0000	D		1	BRACKET	
100	525127-0000	D		1	BRACKET	
110	276616-0000	D		1	BRACKET	
120	525126-0000	-		2	SHAFT	
125	442751-0000	D		1	CARRIER	
130	262028-0013	K		1	FITTING BOLT	
140	262028-0016	K		2	FITTING BOLT	
150	262179-0001	K		2	PIN	
160	262183-0000	K		2	BUSHING	
170	276664-0000	K		2	WASHER	
180	285072-0001	K		2	SHAFT	
190	285072-0002	K		1	SHAFT	
200	285074-0000	K		1	PLATE	
220	285926-0000	K		4	BEARING	
230	285927-0001	K		4	BEARING	
240	285927-0002	K		2	BEARING	
290	90005-0092	K		1	SPACER DISC	
300	90044-0104	F		3	PROX.SWITCHIFM IN 3002	
330	90287-0109	F		3	SPRINGLOADED SCREW	
410	312105-0370	-		3	SCREW M6S ISO 4017 M6X20 A280	
420	312105-0455	-		1	SCREW M6S ISO 4017 M8X30 A280	
425	312105-0461	-		1	SCREW O4017 M8X50A280	
430	312105-0463	-		1	SCREW M6S ISO 4014 M8X60 A280	
435	312109-0459	-		2	SCREW M6S ISO 4017 M8X40 A280	
440	312125-0228	-		4	SLOTTED CHEESE HEAD ISO 1207 M3X16 RFR	
445	312125-0232	-		1	SLOTTED CHEESE HEAD ISO 1207 M3X25 RFR	
450	312105-0364	-		2	SCREW M6S6X10RFR	
460	312318-0362	F		2	SET SCREW CUP POINT ISO 4029 M6X8 RFR	
465	312605-0310	-		2	NUTS,HEXAGON,M3	
480	312605-0318	-		7	NUTS,HEXAGON,M8	
490	312605-0320	-		3	NUTS,HEXAGON,M10	
500	312605-0324	-		3	NUTS,HEXAGON,M16	
510	315105-0124	-		8	WASHERS,PLAIN ROUND 3,2X6	
530	315105-0173	-		3	WASHERS,PLAIN ROUND 10,5X22	
540	315115-0153	-		6	WASHER TBRB6,4X12RFR	
550	315115-0165	-		7	WASHER TBRB8,4X16RFR	
600	352110-0100	-		1	CRAMP TK 5-7	

Pos	Part No	SP	UN	Qty	Description	Page No

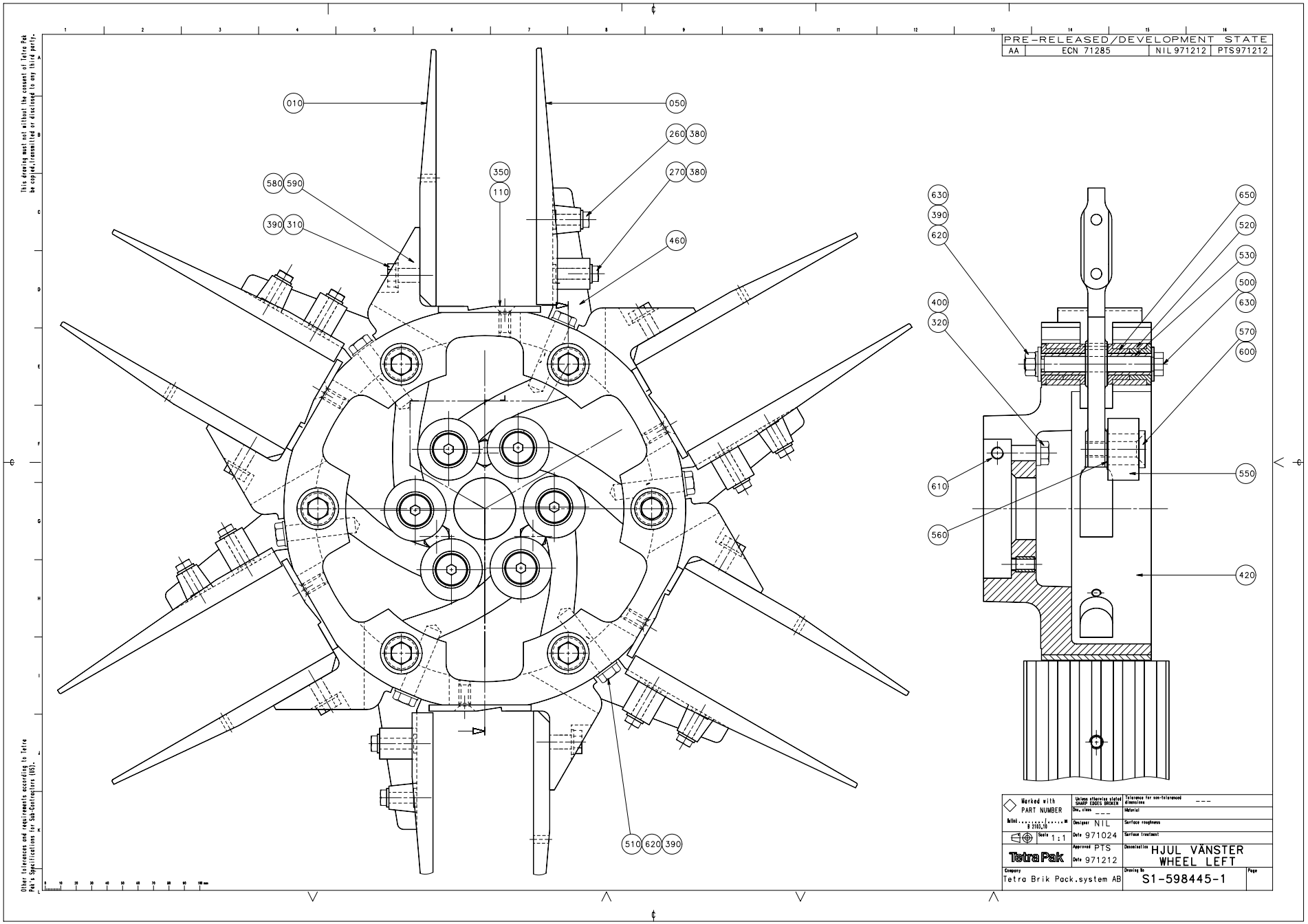
PRE-RELEASED/DEVELOPMENT STATE
AA ECN 71285 NIL 971212 PTS971212
010
050
260 380
270 380
350
110
580 590
390 310
460
630
390
620
650
520
530
500
630
570
600
400
320
610
560
550
420
510 620 390
Marked with PART NUMBER
Designer NIL
Date 971024
Approved PTS
Date 971212
Scale 1:1
Tetra Pak
Company
Tetra Brik Pack.system AB
Denomination
HJUL VÄNSTER
WHEEL LEFT
Drawing No
S1-598445-1
This drawing must not without the consent of Tetra Pak be copied, transmitted or disclosed to any third party.
Other tolerances and requirements according to Tetra Pak's Specification for Sub-Contractors (SS).

Pos	Part No	SP	UN	Qty	Description	Page No
-						
010	525453-0000	K		6	FLAP	
050	B 285310-0001	K		6	FLAP	
110	443076-0000	D		6	BOTTOM	
260	312105-0374	F		6	SCREW M6S ISO 4017 M6X30 A280	
270	312105-0376	F		6	SCREW M6S ISO 4017 M6X35 A280	
310	312105-0453	F		6	SCREW M6S ISO 4017 M8X25 A280	
320	312105-0457	F		3	SCREW O4017 M8X35A280	
350	312155-0368	F		6	SCREW MF6S DIN7991 M6X16 A280	
380	315105-0153	F		12	WASHERS,PLAIN ROUND 6,4X12	
390	315105-0165	F		30	WASHERS,PLAIN ROUND 8,4X16	
400	315115-0165	F		3	WASHER TBRB8,4X16RFR	
420	525450-0000	D		1	HUB	
460	565967-0000	K		6	ARM	
500	262028-0001	K		6	FITTING BOLT	
510	262179-0001	K		12	PIN	
520	525329-0000	K		12	SLEEVE	
530	525330-0000	K		12	SHAFT	
550	285321-0000	K		6	ROLL	
560	285322-0000	K		6	WASHER	
570	442563-0000	K		6	AXLE PIN	
580	442894-0000	-		x	SHIM	
590	442939-0000	-		x	SHIM	
600	312155-0499	-		6	SCREW MF6S DIN 7991 M10X40 A280	
610	312109-0459	K		2	SCREW M6S ISO 4017 M8X40 A280	
620	312605-0318	-		18	NUTS,HEXAGON,M8	
630	315105-0173	-		12	WASHERS,PLAIN ROUND 10,5X22	
650	321111-0185	K		24	FLANGE BUS 14E7X14	

Pos	Part No	SP	UN	Qty	Description	Page No

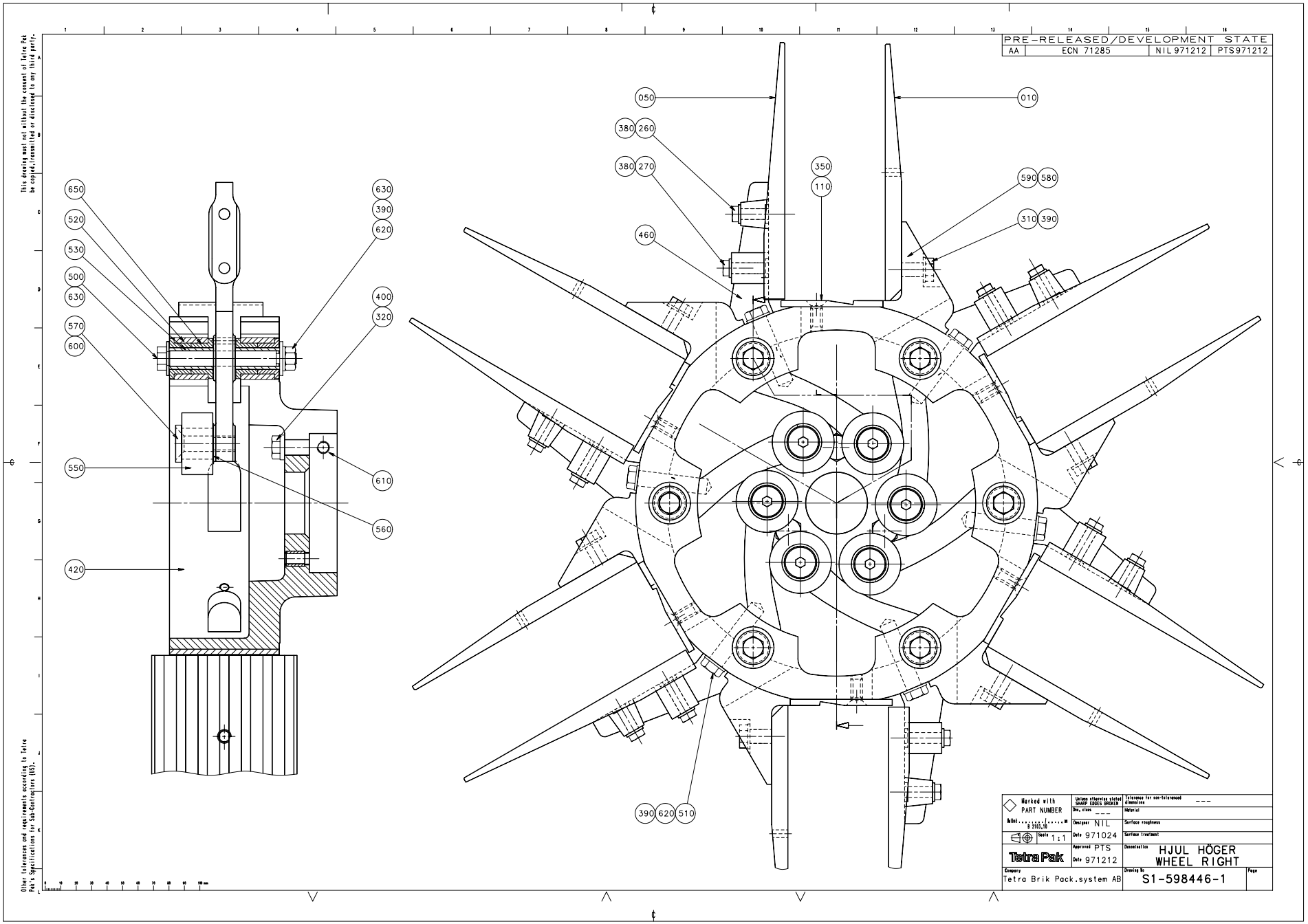
PRE-RELEASED/DEVELOPMENT STATE
AA ECN 71285 NIL 971212 PTS 971212
050
010
380 260
380 270
350
110
590 580
310 390
460
650
520
530
500
630
570
600
630
390
620
400
320
550
610
560
420
390 620 510
Marked with PART NUMBER
Scale 1:1
Designer NIL
Date 971024
Approved PTS
Date 971212
Tetra Pak
Company
Tetra Brik Pack.system AB
HJUL HÖGER
WHEEL RIGHT
Drawing No
S1-598446-1

Pos	Part No	SP	UN	Qty	Description	Page No
-						
010	525453-0000	K		6	FLAP	
050	B 285310-0001	K		6	FLAP	
110	443076-0000	D		6	BOTTOM	
260	312105-0374	F		6	SCREW M6S ISO 4017 M6X30 A280	
270	312105-0376	F		6	SCREW M6S ISO 4017 M6X35 A280	
310	312105-0453	F		6	SCREW M6S ISO 4017 M8X25 A280	
320	312105-0457	F		3	SCREW O4017 M8X35A280	
350	312155-0368	F		6	SCREW MF6S DIN7991 M6X16 A280	
380	315105-0153	F		12	WASHERS,PLAIN ROUND 6,4X12	
390	315105-0165	F		30	WASHERS,PLAIN ROUND 8,4X16	
400	315115-0165	F		3	WASHER TBRB8,4X16RFR	
420	525449-0000	D		1	HUB	
460	565967-0000	K		6	ARM	
500	262028-0001	K		6	FITTING BOLT	
510	262179-0001	K		12	PIN	
520	525329-0000	K		12	SLEEVE	
530	525330-0000	K		12	SHAFT	
550	285321-0000	K		6	ROLL	
560	285322-0000	K		6	WASHER	
570	442563-0000	K		6	AXLE PIN	
580	442894-0000	-		x	SHIM	
590	442939-0000	-		x	SHIM	
600	312155-0499	-		6	SCREW MF6S DIN 7991 M10X40 A280	
610	312109-0459	K		2	SCREW M6S ISO 4017 M8X40 A280	
620	312605-0318	-		18	NUTS,HEXAGON,M8	
630	315105-0173	-		12	WASHERS,PLAIN ROUND 10,5X22	
650	321111-0185	K		24	FLANGE BUS 14E7X14	

Pos	Part No	SP	UN	Qty	Description	Page No

525049-1

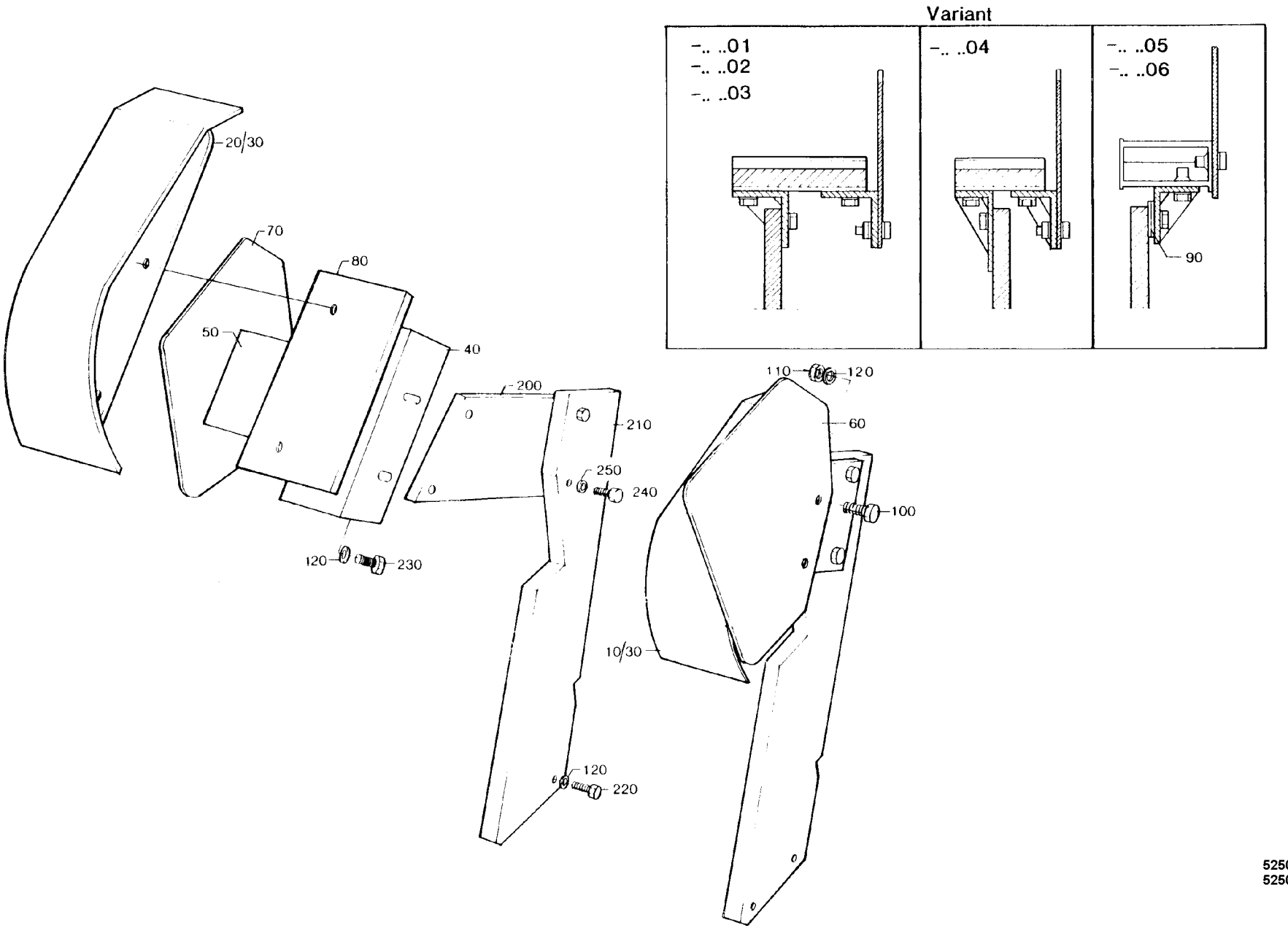

525049-1
525049-1.TIF

Pos	Part No	SP	UN	Qty	Description	Page No
0300B						
010	297786-0000	-		1	EJECTOR CHUTE	
020	297787-0000	-		1	EJECTOR CHUTE	
050	297790-0000	-		2	BRACKET	
060	297788-0000	-		1	HEAD PLATE	
070	297789-0000	-		1	HEAD PLATE	
090	297791-0000	-		4	LACE	
120	315105-0165	-		16	WASHERS,PLAIN ROUND 8,4X16	
0355B						
030	442872-0000	-		2	EJECTOR CHUTE	
040	442873-0000	-		2	BRACKET	
050	442874-0000	-		2	BRACKET	
060	525183-0000	-		1	SHEET	
070	442871-0000	-		1	HEAD PLATE	
080	442875-0000	-		2	PLATE	
100	312105-0449	-		4	SCREW M6S ISO 4017 M8X16 A280	
110	312605-0318	-		4	NUTS,HEXAGON,M8	
120	315105-0165	-		24	WASHERS,PLAIN ROUND 8,4X16	
0375S						
010	443044-0000	-		1	EJECTOR CHUTE	
020	443045-0000	-		1	EJECTOR CHUTE	
050	297790-0000	-		2	BRACKET	
060	297788-0000	-		1	HEAD PLATE	
070	443025-0000	-		1	HEAD PLATE	
090	297791-0000	-		4	LACE	
120	315105-0165	-		16	WASHERS,PLAIN ROUND 8,4X16	
0500B or 0568B						
010	442876-0000	-		1	EJECTOR CHUTE	
020	442877-0000	-		1	EJECTOR CHUTE	
040	442805-0000	-		2	BRACKET	
050	442806-0000	-		2	BRACKET	
060	285813-0000	-		1	HEAD PLATE	
070	442807-0000	-		1	HEAD PLATE	
100	312105-0449	-		4	SCREW M6S ISO 4017 M8X16 A280	
110	312605-0318	-		4	NUTS,HEXAGON,M8	
120	315105-0165	-		24	WASHERS,PLAIN ROUND 8,4X16	
0500S						
030	442872-0000	-		2	EJECTOR CHUTE	
040	442873-0000	-		2	BRACKET	
050	442874-0000	-		2	BRACKET	
060	442964-0000	-		1	HEAD PLATE	
070	442871-0000	-		1	HEAD PLATE	
080	442875-0000	-		2	PLATE	
100	312105-0449	-		4	SCREW M6S ISO 4017 M8X16 A280	
110	312605-0318	-		4	NUTS,HEXAGON,M8	
120	315105-0165	-		24	WASHERS,PLAIN ROUND 8,4X16	
0750B or 1000B						
030	442639-0000	-		2	EJECTOR CHUTE	
040	442641-0000	-		2	BRACKET	
050	442642-0000	-		2	BRACKET	
060	285813-0000	-		1	HEAD PLATE	
070	285814-0000	-		1	HEAD PLATE	
080	285815-0003	-		2	PLATE	
100	312105-0449	-		4	SCREW M6S ISO 4017 M8X16 A280	
110	312605-0318	-		4	NUTS,HEXAGON,M8	
120	315105-0165	-		24	WASHERS,PLAIN ROUND 8,4X16	
1055B						
030	443154-0000	-		2	EJECTOR CHUTE	
040	442641-0000	-		2	BRACKET	
050	442642-0000	-		2	BRACKET	
060	285813-0000	-		1	HEAD PLATE	
070	534455-0000	-		1	HEAD PLATE	
080	285815-0003	-		2	PLATE	
100	312105-0449	-		4	SCREW M6S ISO 4017 M8X16 A280	
110	312605-0318	-		4	NUTS,HEXAGON,M8	
120	315105-0165	-		24	WASHERS,PLAIN ROUND 8,4X16	
Common parts						
200	285809-0000	-		2	BRACKET	
210	525022-0000	-		2	STRUT	
220	312105-0451	-		4	SCREW M6S ISO 4017 8X20 A280	
230	312105-0453	-		12	SCREW M6S ISO 4017 M8X25 A280	
240	312105-0455	-		4	SCREW M6S ISO 4017 M8X30 A280	
250	315115-0165	-		4	WASHER TBRB8,4X16RFR	

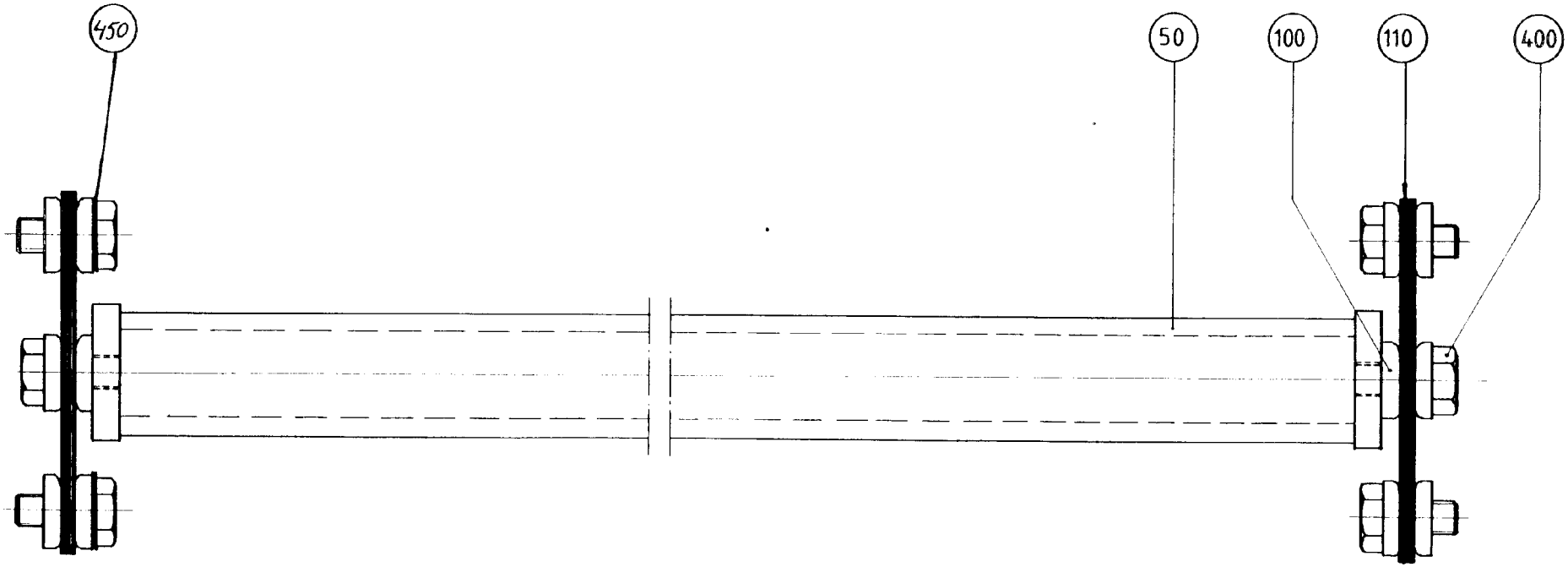

285324-1
285324-1.TIF

Pos	Part No	SP	UN	Qty	Description	Page No
-						
050	285325-0000	-		1	SHAFT	
100	31553-0002	F		16	WASHER	
110	33261-0000	F		16	SPRING PLATE	
400	90287-0164	-		8	SCREW	
450	315105-0173	-		2	WASHERS,PLAIN ROUND 10,5X22	

Pos	Part No	SP	UN	Qty	Description	Page No

525000-10

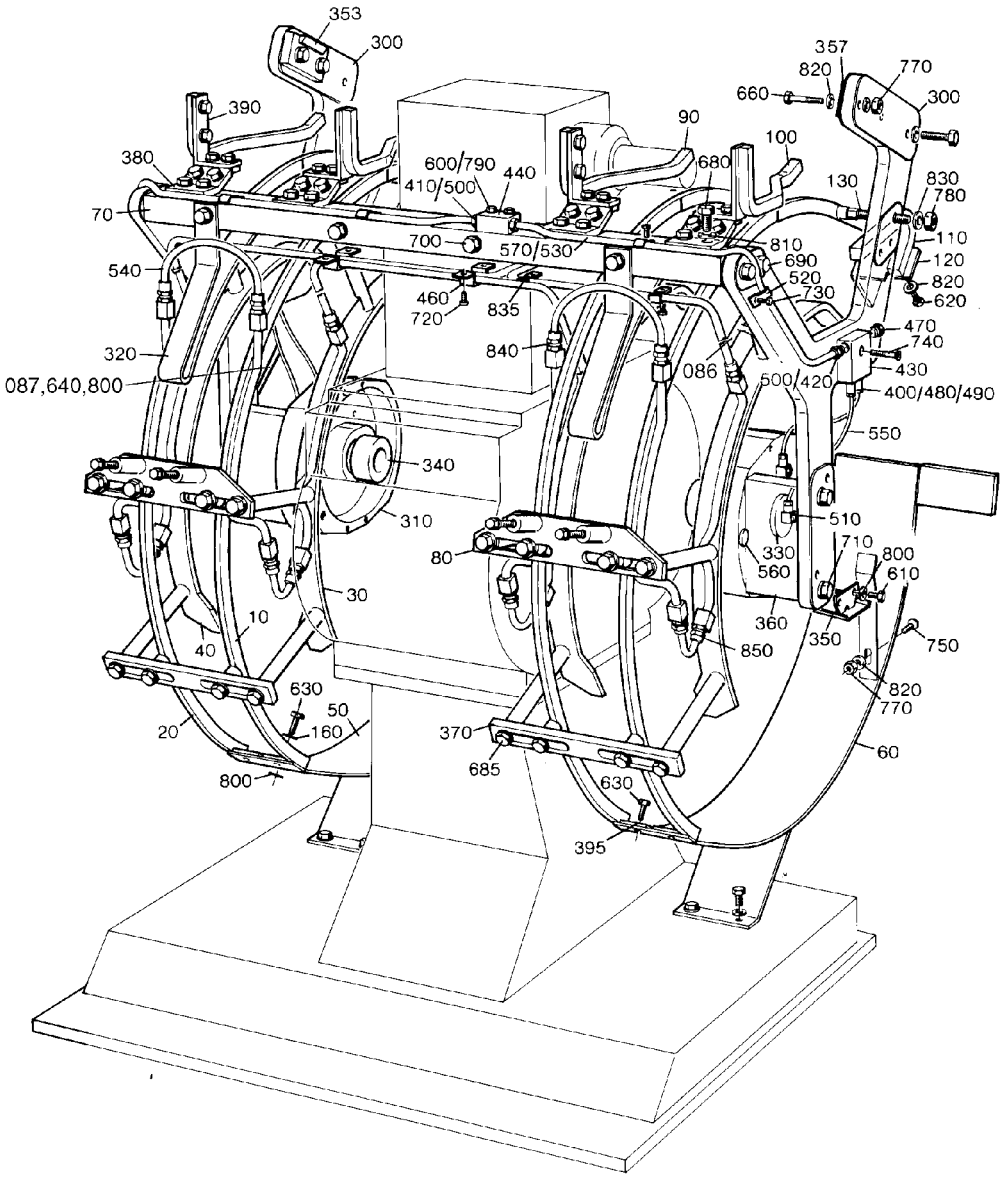

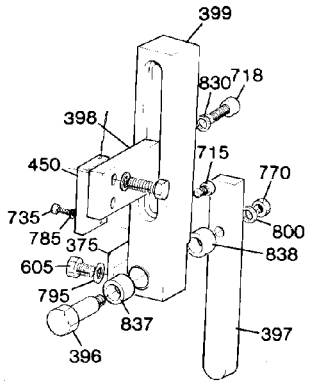

52500001.TIF
525000-1/2
AM 19402

Pos	Part No	SP	UN	Qty	Description	Page No
0300B						
010	525002-0000	-		2	FOLDING BAR	
020	525004-0000	-		2	FOLDING BAR	
030	525005-0008	-		2	FOLDING BAR	
040	525006-0008	-		2	FOLDING BAR	
050	297796-0000	-		1	LEAD RAIL	
060	297694-0000	-		1	LEAD RAIL	
070	B 525007-0003	-		1	CANTILEVER	
080	525008-0002	-		2	BRACKET	
090	525180-0002	-		2	FOLDING ARM	
100	525179-0002	-		2	FOLDING ARM	
110	525011-0008	-		2	BRACKET	
120	525014-0002	-		2	COUNTER PLATE	
130	525015-0003	-		4	SCREW	
160	315115-0153	-		2	WASHER TBRB6,4X12RFR	
840	342920-0121	-		12	STRAIGHT COUPLING,EXT.THREADED 8/6-R1/8"	
850	342930-0121	-		4	ELBOW 90 COUPL.,EXT.THREAD 8/6-R1/8"	
0355B						
010	525002-0000	-		2	FOLDING BAR	
020	525004-0000	-		2	FOLDING BAR	
030	525005-0009	-		2	FOLDING BAR	
040	525006-0009	-		2	FOLDING BAR	
050	297825-0000	-		1	LEAD RAIL	
060	297826-0000	-		1	LEAD RAIL	
070	B 525007-0002	-		1	CANTILEVER	
080	525008-0002	-		2	BRACKET	
090	525180-0002	-		2	FOLDING ARM	
100	525179-0002	-		2	FOLDING ARM	
110	525011-0009	-		2	BRACKET	
120	525182-0002	-		2	COUNTER PLATE	
130	525015-0002	-		4	SCREW	
160	315115-0153	-		2	WASHER TBRB6,4X12RFR	
840	342920-0121	-		12	STRAIGHT COUPLING,EXT.THREADED 8/6-R1/8"	
850	342930-0121	-		4	ELBOW 90 COUPL.,EXT.THREAD 8/6-R1/8"	
0375S						
010	525002-0000	-		2	FOLDING BAR	
020	525004-0000	-		2	FOLDING BAR	
030	525005-0007	-		2	FOLDING BAR	
040	525006-0007	-		2	FOLDING BAR	
050	297796-0000	-		1	LEAD RAIL	
060	297694-0000	-		1	LEAD RAIL	
070	B 525007-0003	-		1	CANTILEVER	
080	525008-0002	-		2	BRACKET	
090	525180-0002	-		2	FOLDING ARM	
100	525179-0002	-		2	FOLDING ARM	
110	525011-0007	-		2	BRACKET	
120	525014-0001	-		2	COUNTER PLATE	
130	525015-0003	-		4	SCREW	
160	315115-0153	-		2	WASHER TBRB6,4X12RFR	
840	342920-0121	-		16	STRAIGHT COUPLING,EXT.THREADED 8/6-R1/8"	
0500B						
010	525001-0000	-		2	FOLDING BAR	
020	525003-0000	-		2	FOLDING BAR	
030	525005-0005	-		2	FOLDING BAR	
040	525006-0005	-		2	FOLDING BAR	
050	442907-0000	-		1	LEAD RAIL	
060	442908-0000	-		1	LEAD RAIL	
070	B 525007-0001	-		1	CANTILEVER	
080	525008-0003	-		2	BRACKET	
090	525180-0001	-		2	FOLDING ARM	
100	525179-0001	-		2	FOLDING ARM	
110	525011-0005	-		2	BRACKET	
120	525012-0005	-		2	COUNTER PLATE	
130	525015-0001	-		4	SCREW	
840	342920-0121	-		12	STRAIGHT COUPLING,EXT.THREADED 8/6-R1/8"	
850	342930-0121	-		4	ELBOW 90 COUPL.,EXT.THREAD 8/6-R1/8"	

525000-10

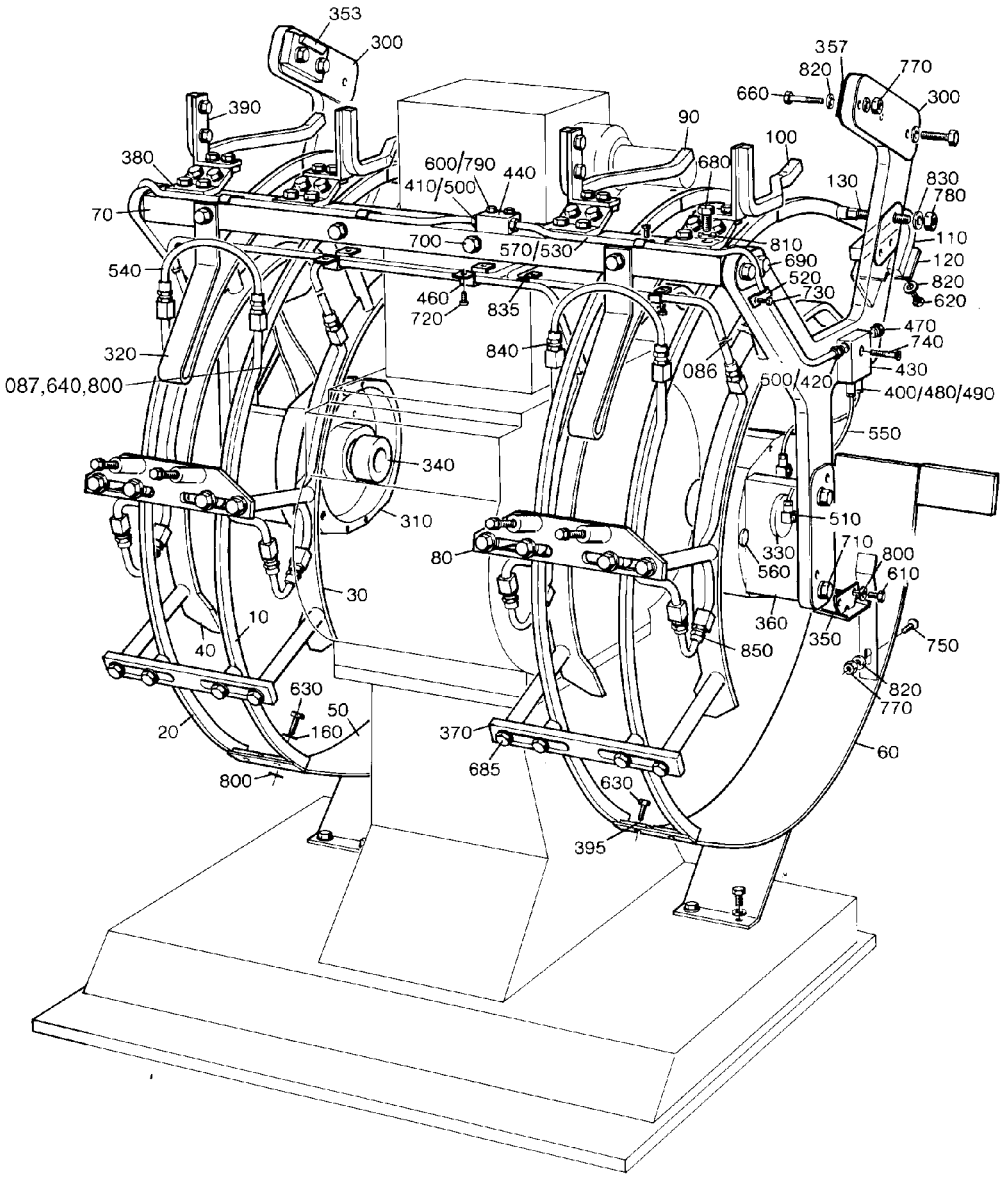

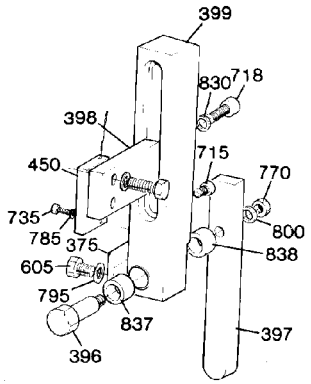

52500001.TIF
525000-1/2
AM 19402

Pos	Part No	SP	UN	Qty	Description	Page No
0500S						
010	525002-0000	-		2	FOLDING BAR	
020	525004-0000	-		2	FOLDING BAR	
030	525005-0006	-		2	FOLDING BAR	
040	525006-0006	-		2	FOLDING BAR	
050	297825-0000	-		1	LEAD RAIL	
060	297826-0000	-		1	LEAD RAIL	
070	B 525007-0002	-		1	CANTILEVER	
080	525008-0002	-		2	BRACKET	
090	525180-0002	-		2	FOLDING ARM	
100	525179-0002	-		2	FOLDING ARM	
110	525011-0006	-		2	BRACKET	
120	525182-0001	-		2	COUNTER PLATE	
130	525015-0002	-		4	SCREW	
160	315115-0153	-		2	WASHER TBRB6,4X12RFR	
840	342920-0121	-		16	STRAIGHT COUPLING,EXT.THREADED 8/6-R1/8"	
0568B						
010	525001-0000	-		2	FOLDING BAR	
020	525003-0000	-		2	FOLDING BAR	
030	525005-0004	-		2	FOLDING BAR	
040	525006-0004	-		2	FOLDING BAR	
050	442907-0000	-		1	LEAD RAIL	
060	442908-0000	-		1	LEAD RAIL	
070	B 525007-0001	-		1	CANTILEVER	
080	525008-0002	-		2	BRACKET	
090	525180-0001	-		2	FOLDING ARM	
100	525179-0001	-		2	FOLDING ARM	
110	525011-0004	-		2	BRACKET	
120	525012-0004	-		2	COUNTER PLATE	
130	525015-0001	-		4	SCREW	
840	342920-0121	-		12	STRAIGHT COUPLING,EXT.THREADED 8/6-R1/8"	
850	342930-0121	-		4	ELBOW 90 COUPL.,EXT.THREAD 8/6-R1/8"	
0750B						
010	525001-0000	-		2	FOLDING BAR	
020	525003-0000	-		2	FOLDING BAR	
030	525005-0003	-		2	FOLDING BAR	
040	525006-0003	-		2	FOLDING BAR	
050	442907-0000	-		1	LEAD RAIL	
060	442908-0000	-		1	LEAD RAIL	
070	B 525007-0001	-		1	CANTILEVER	
080	525008-0002	-		2	BRACKET	
090	525180-0001	-		2	FOLDING ARM	
100	525179-0001	-		2	FOLDING ARM	
110	525011-0003	-		2	BRACKET	
120	525012-0003	-		2	COUNTER PLATE	
130	525015-0001	-		4	SCREW	
840	342920-0121	-		16	STRAIGHT COUPLING,EXT.THREADED 8/6-R1/8"	
1000B						
010	525001-0000	-		2	FOLDING BAR	
020	525003-0000	-		2	FOLDING BAR	
030	525005-0002	-		2	FOLDING BAR	
040	525006-0002	-		2	FOLDING BAR	
050	297827-0000	-		1	LEAD RAIL	
060	297828-0000	-		1	LEAD RAIL	
070	B 525007-0001	-		1	CANTILEVER	
080	525008-0001	-		2	BRACKET	
090	525180-0001	-		2	FOLDING ARM	
100	525179-0001	-		2	FOLDING ARM	
110	525011-0002	-		2	BRACKET	
120	525012-0002	-		2	COUNTER PLATE	
130	525015-0001	-		4	SCREW	
840	342920-0121	-		16	STRAIGHT COUPLING,EXT.THREADED 8/6-R1/8"	
1055B						
010	525001-0000	-		2	FOLDING BAR	
020	525003-0000	-		2	FOLDING BAR	
030	525005-0001	-		2	FOLDING BAR	
040	525006-0001	-		2	FOLDING BAR	
050	525141-0000	-		1	LEAD RAIL	
060	525142-0000	-		1	LEAD RAIL	
070	B 525007-0001	-		1	CANTILEVER	
080	525008-0001	-		2	BRACKET	
090	525180-0001	-		2	FOLDING ARM	
100	525179-0001	-		2	FOLDING ARM	
110	525011-0001	-		2	BRACKET	
120	525012-0001	-		2	COUNTER PLATE	
130	525015-0001	-		4	SCREW	
840	342920-0121	-		16	STRAIGHT COUPLING,EXT.THREADED 8/6-R1/8"	

525000-10

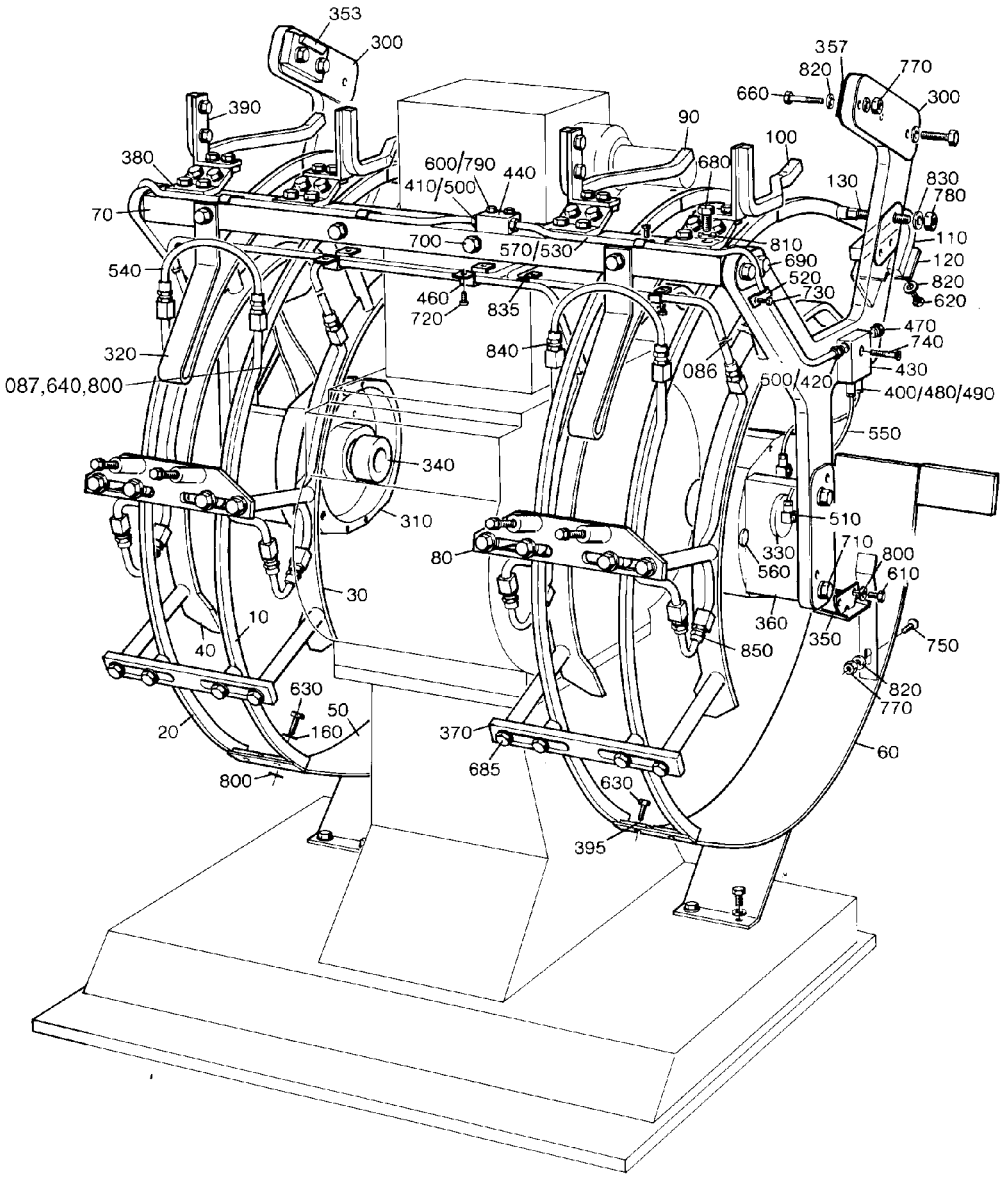

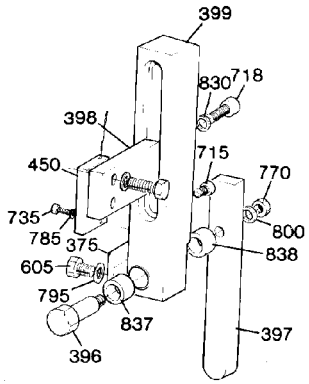

52500001.TIF
525000-1/2
AM 19402

Pos	Part No	SP	UN	Qty	Description	Page No
Common parts						
300	B 525016-0000	-		2	FASTENING PLATE	
310	285849-0000	-		2	CURVE	
320	525017-0000	-		2	STEERING GUIDE	
330	285168-0000	-		2	BUSHING	
340	285851-0000	-		2	BEARING	
350	285852-0000	-		2	DRIP PLATE	
353	442564-0000	K		1	CURVE	
357	442565-0000	K		1	CURVE	
360	525018-0000	-		2	SPACER	
370	525019-0000	-		2	BRACKET	
380	525340-0000	-		4	BRACKET	
390	525178-0000	-		4	BRACKET	
395	525181-0000	-		2	WASHER	
400	90028-0020	-		4	CONE	
410	90028-0022	-		3	CONE	
420	90028-0025	-		2	CONE	
430	90032-0038	-		2	BLOCK	
440	90032-0043	-		1	JUNKTION BLOCK	
460	90074-0018	-		2	CLIP	
470	90087-0019	-		2	PLUG	
480	90092-0052	-		4	VALVE	
490	90134-0039	-		4	BUSHING	
500	90134-0055	-		5	BUSHING	
510	90134-0058	-		4	BANJO CONNECTION	
520	90165-0057	-		5	CLIP	
530	90166-0108	-	MM	4000	HOSE	
540	90166-0122	-	MM	6000	HOSE	
550	90166-0143	-	MM	2000	HOSE	
560	90261-0032	-		4	PLUG	
570	90134-0030	-		4	SLEEVE	
600	312105-0295	-		2	SCREW M6S ISO 4017 M4X20 A280	
610	312105-0364	-		10	SCREW M6S6X10RFR	
620	312105-0366	-		24	SCREW M6S ISO 4017 M6X12 A280	
630	312105-0368	-		10	SCREW M6S ISO 4017 M6X16 A280	
650	312105-0374	-		4	SCREW M6S ISO 4017 M6X30 A280	
660	312105-0378	-		4	SCREW O4017 M6X40A280	
680	312105-0449	-		20	SCREW M6S ISO 4017 M8X16 A280	
685	312105-0451	-		16	SCREW M6S ISO 4017 8X20 A280	
690	312105-0455	-		6	SCREW M6S ISO 4017 M8X30 A280	
700	312105-0464	-		2	SCREW M6S ISO 4014 M8X65 A280	
710	312105-0469	-		4	SCREW M6S ISO 4014 M8X90 A280	
720	312125-0287	-		10	SLOTTED CHEESE HEAD ISO 1207 M4X8	
RFR						
730	312125-0291	-		2	SLOTTED CHEESE HEAD ISO 1207 M4X12	
RFR						
740	312155-0297	-		4	SCREW MF6S DIN 7991 M4X25 A280	
750	312155-0370	-		2	SCREW MF6S DIN 7991 M6X20 A280	
770	312605-0316	-		6	NUTS,HEXAGON,M6	
780	312605-0318	-		8	NUTS,HEXAGON,M8	
790	315105-0136	-		2	WASHERS,PLAIN ROUND 4,3X8	
800	315105-0153	-		16	WASHERS,PLAIN ROUND 6,4X12	
810	315105-0165	-		8	WASHERS,PLAIN ROUND 8,4X16	
820	315115-0153	-		42	WASHER TBRB6,4X12RFR	
830	315115-0165	-		48	WASHER TBRB8,4X16RFR	
835	316810-0106	-		3	PIPE CLAMP 8MM RFR	

WASTE CHUTE

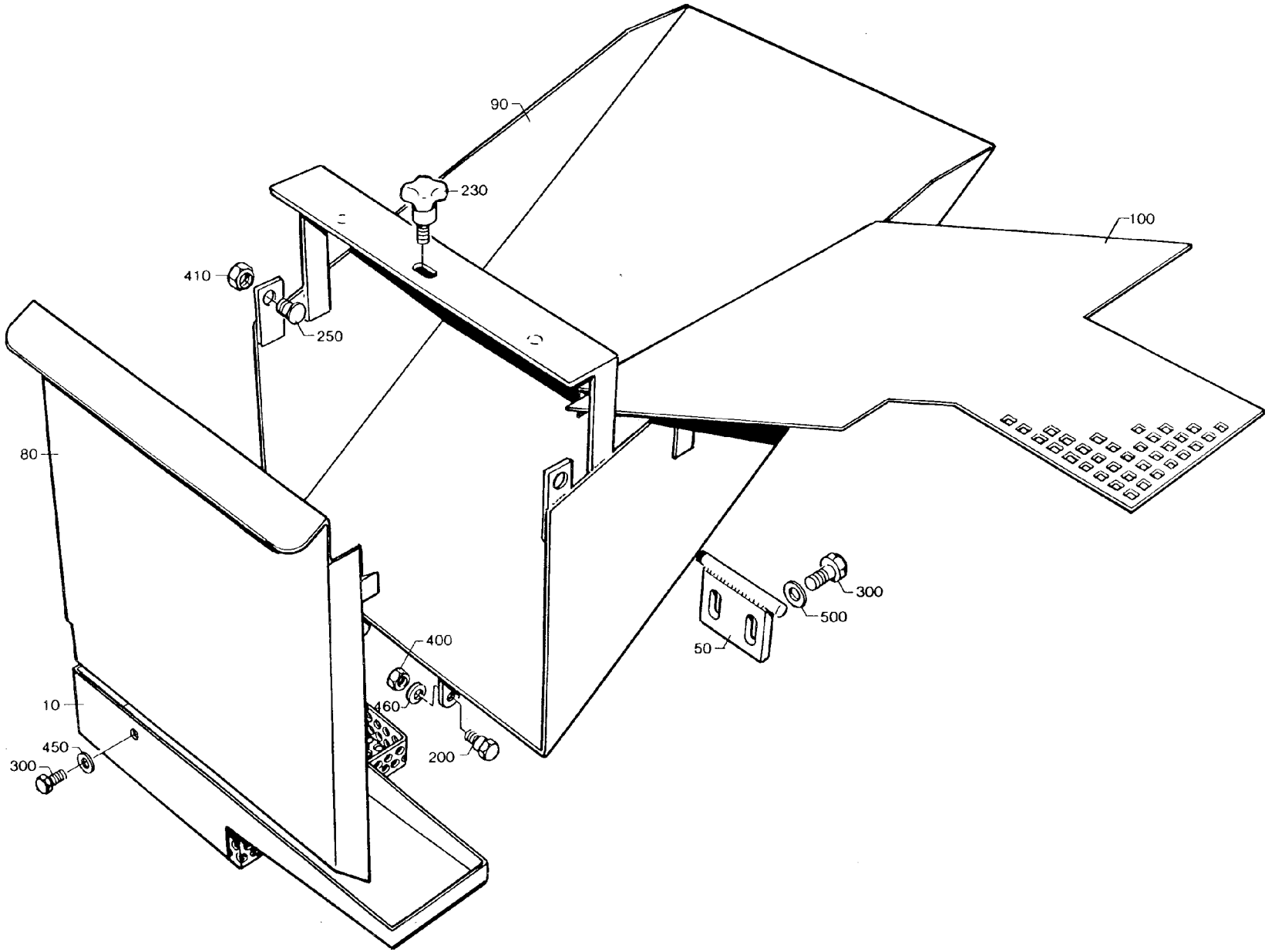

442537-2.tif
442537-2
ECN 6979

Pos	Part No	SP	UN	Qty	Description	Page No
-						
010	442944-0000	-		1	WASTE CHUTE	
050	443131-0000	-		1	BRACKET	
080	297524-0000	-		1	HATCH	
090	443169-0000	-		1	CHUTE	
100	297678-0001	-		1	COVERING PLATE	
200	297527-0000	K		2	SCREW	
230	90051-0025	-		1	HANDLE	
250	90287-0109	K		2	SPRINGLOADED SCREW	
300	312105-0368	-		3	SCREW M6S ISO 4017 M6X16 A280	
400	312605-0318	-		2	NUTS,HEXAGON,M8	
410	312605-0324	-		2	NUTS,HEXAGON,M16	
450	315105-0153	-		1	WASHERS,PLAIN ROUND 6,4X12	
460	315105-0165	-		2	WASHERS,PLAIN ROUND 8,4X16	
500	315115-0153	-		2	WASHER TBRB6,4X12RFR	

Pos	Part No	SP	UN	Qty	Description	Page No

WASTE CHUTE

442537-1

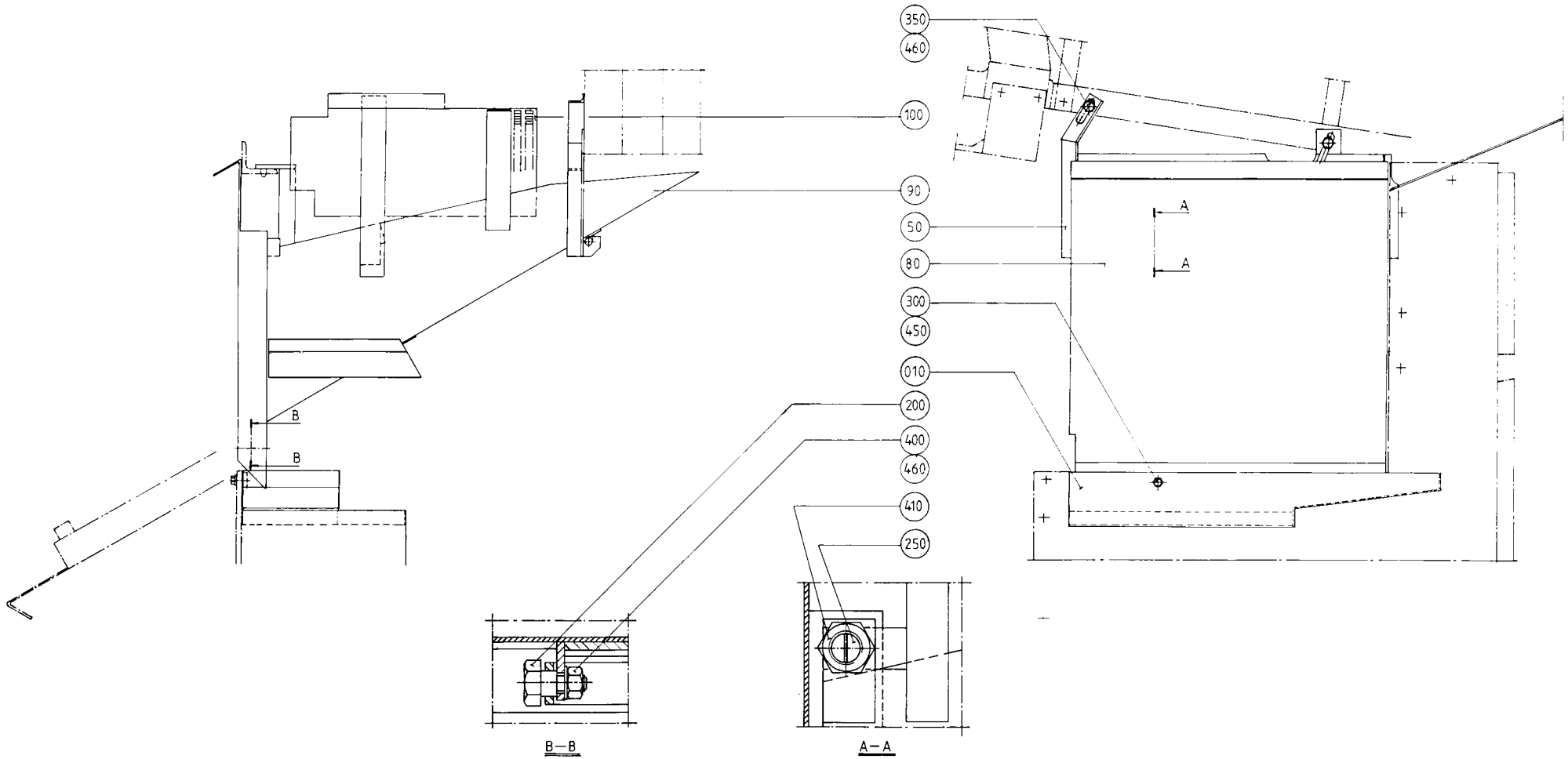

442537-1.ti

Pos	Part No	SP	UN	Qty	Description	Page No
0180B or 0189B or 0200B						
050	442541-0000	-		1	BRACKET	
0236B or 0250B or 0284B or 0300B or 0375S or 0500S						
050	442540-0000	-		1	BRACKET	
0500B or 0568B						
050	442539-0000	-		1	BRACKET	
0750B						
050	442538-0000	-		1	BRACKET	
1000B						
050	297856-0000	-		1	BRACKET	
Common parts						
010	442944-0000	-		1	WASTE CHUTE	
080	297524-0000	-		1	HATCH	
090	297855-0000	-		1	CHUTE	
100	297678-0001	-		1	COVERING PLATE	
200	297527-0000	K		2	SCREW	
250	90287-0109	K		2	SPRINGLOADED SCREW	
300	312105-0368	-		1	SCREW M6S ISO 4017 M6X16 A280	
350	312105-0447	-		1	SCREW M6S ISO 4017 M8X12 A280	
400	312605-0318	-		2	NUTS,HEXAGON,M8	
410	312605-0324	-		2	NUTS,HEXAGON,M16	
450	315105-0153	-		1	WASHERS,PLAIN ROUND 6,4X12	
460	315105-0165	-		3	WASHERS,PLAIN ROUND 8,4X16	

Pos	Part No	SP	UN	Qty	Description	Page No

This page is intentionally left blank

Pos	Part No	SP	UN	Qty	Description	Page No
90134-0034						
	90030-0101	-		1	TAPER	
90239-0166						
	90285-0094	K		1	SEAL KIT	
90239-0189						
	90285-0094	K		1	SEAL KIT	
90274-0002						
	90274-0300	-		1	CONTACT HOUSING	
90288-0037						
	90288-0305	K		1	CONNECTION LINK	
	90288-0316	K		1	CONNECTION LINK	
90321-0015						
	90321-0466	K		1	SPARE PART KIT	
	90321-0481	K		1	GASKET	
90321-0034						
	90321-0466	K		1	SPARE PART KIT	
	90321-0481	K		1	GASKET	
90415-0033						
	90415-0330	K		1	FILTER INSERT	
285162-0000						
	90028-0002	-		1	CONE	
	90134-0022	-		1	BUSHING	
	90151-0004	-	M	1	PIPE	
285164-0000						
	90028-0002	-		1	CONE	
	90134-0022	-		1	BUSHING	
	90151-0004	-	M	1	PIPE	
285469-0000						
	285470-0000	K		6	ROLL	
	312306-0443	-		6	STOP SCREW P6SS8X8FZB	
	312316-0443	-		6	STOP SCREW SK6SS8X8FZB	
285676-0000						
	20704-0000	-		1	NUT	
285677-0000						
	20704-0000	-		1	NUT	
285925-0000						
	312923-0131	-		1	NUTS,BLIND RIVET M6X15	
297662-0000						
	312910-0118	-		1	THREADED I M6X1,5D	
297664-0000						
	312923-0131	-		1	NUTS,BLIND RIVET M6X15	
297750-0000						
	297745-0000	-		1	BRACKET	
	297746-0000	F		1	LINK	
	297748-0000	F		1	SHAFT	
	297749-0000	F		1	RIVET	
	297815-0000	F		1	SPRING	
442560-0000						
	90028-0002	-		1	CONE	
	90134-0022	-		1	BUSHING	
	90151-0004	-	M	1	PIPE	
442783-0000						
	312911-0126	-		1	THREADED I M8X1,5D	
442867-0000						
	20704-0000	-		1	NUT	
442882-0000						
	90157-0021	-	L	1	LOCKING FLUID	
	312318-0451	-		1	SET SCREW CUP POINT ISO 4029 M8X20 RFR	
443166-0000						
	312910-0118	-		6	THREADED I M6X1,5D	
443348-0000						
	312910-0119	-		3	THREADED INSERTS M6X2,0D	
443487-0000						
	90242-0054	-		2	O-RING	
443488-0000						
	90242-0054	-		2	O-RING	
525016-0000						
	312910-0112	-		3	THREADED I M4X2,5D	
	312910-0127	-		2	THREADED INSERTS M8X2,0D	
525070-0000						
	351121-0109	K	M	1	CABLE RHH 16	
	353102-0168	K		1	CABLE SHOEYAEV16-M6	
525167-0000						
	312910-0117	-		2	THREADED INSERTS M6X1,0D	
525190-0000						
	312910-0117	-		1	THREADED INSERTS M6X1,0D	
525191-0000						
	312910-0119	-		4	THREADED INSERTS M6X2,0D	

This page is intentionally left blank

Pos	Part No	SP	UN	Qty	Description	Page No
525197-0000						
	525196-0000	-		1	NUT	
525198-0000						
	525196-0000	-		1	NUT	
525429-0000						
	312910-0119	-		3	THREADED INSERTS M6X2,0D	
544269-0000						
	525196-0000	-		1	NUT	
544293-0000						
	525196-0000	-		1	NUT	
544298-0000						
	20704-0000	-		1	NUT	
574676-0000						
	20704-0000	-		1	NUT	
574677-0000						
	20704-0000	-		1	NUT	

Pos	Part No	SP	UN	Qty	Description	Page No

Tetra Pak

SPC

Spare Parts Catalogue

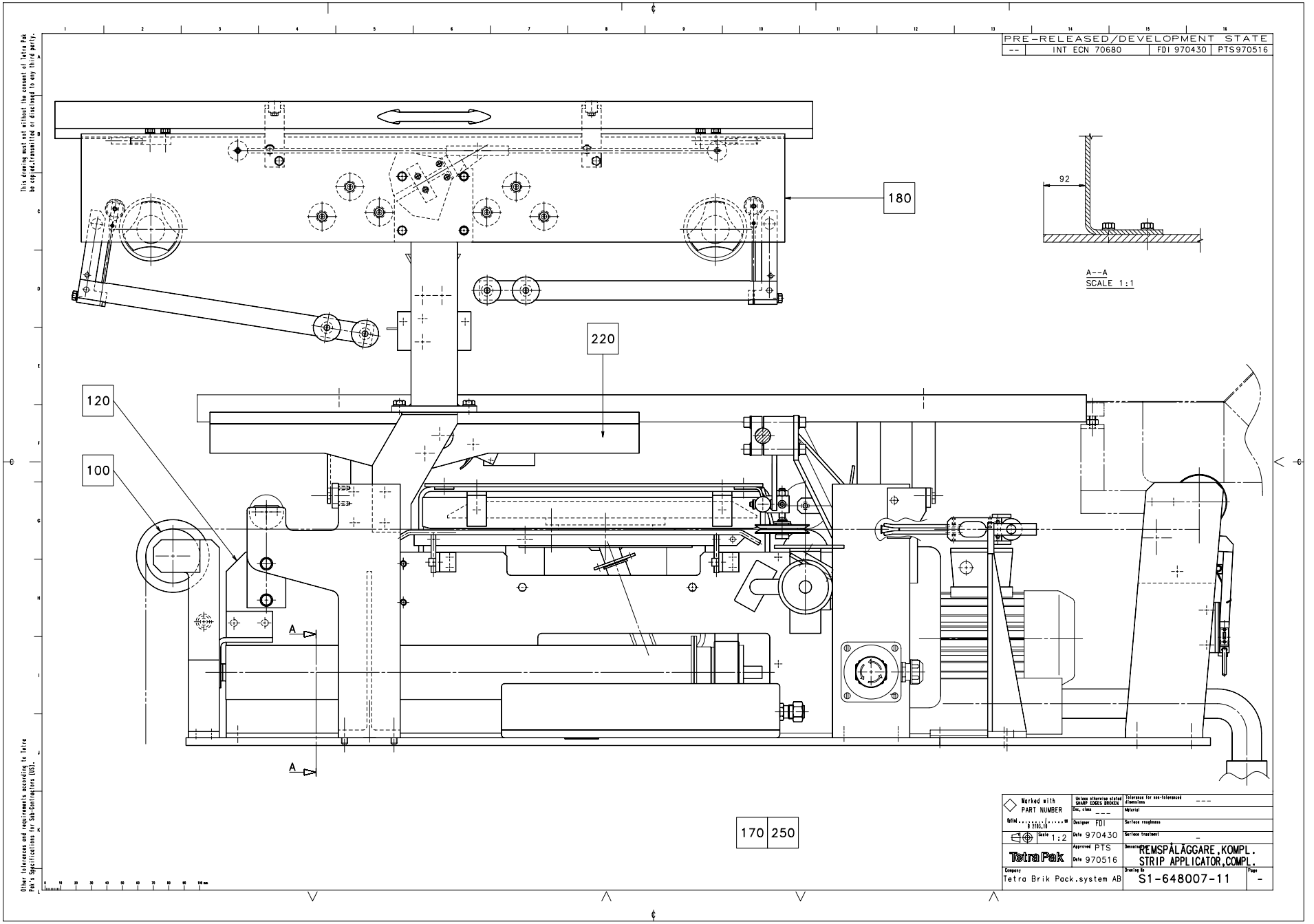
PRE-RELEASED/DEVELOPMENT STATE
-- | INT ECN 70680 | FDI 970430 | PTS970516
180
220
120
100
170
250
92
A--A
SCALE 1:1
A
A
This drawing must not without the consent of Tetra Pak be copied, transmitted or disclosed to any third party.
Other tolerances and requirements according to Tetra Pak's specifications for Sub-Contractors (SS).
Marked with PART NUMBER
Unless otherwise stated SHARP EDGES BROKEN
Tolerance for non-toleranced dimensions ---
Material
Surface roughness
Surface treatment -
Designer FDI
Date 970430
Approved PTS
Date 970516
Scale 1:2
Tetra Pak
Company Tetra Brik Pack.system AB
Denomination REMSPÅLÄGGARE,KOMPL. STRIP APPLICATOR,COMPL.
Drawing No S1-648007-11
Page -

Pos	Part No	SP	UN	Qty	Description	Page No
F040	A 282509-0300	-		1	BENDING ROLLER	719
F065	A 445759-0100	-		1	SUPPORT ROLLER	729
F070	A 450862-0300	-		1	CONNECTION BOX	731
F080	A 526931-0300	-		1	BOTTOM PLATE	733
F090	A 526932-0300	-		1	PIPE WORK	735
F095	A 279210-0100	-		1	PAPER GUIDE	737
F100	A 265565-0200	-		1	BENDING ROLLER BRACKET	739
F110	A 266726-0300	-		1	PRESSURE ROLLER	741
F120	A 269112-0600	-		1	STRIP APPLICATOR	743
F130	A 282528-0200	-		1	PRESSURE ROLLER	747
F135	A 282634-0300	-		1	STRIP GUIDE	749
F160	A 546180-0100	-		1	SPLICE DETECTOR	753
F170	A 526954-0100	-		1	START-UP KIT	755
F180	A 543823-0100	-		1	STRIP MAGAZINE	757
F220	A 544973-0100	-		1	PILLAR	759

Pos	Part No	SP	UN	Qty	Description	Page No

STRIP APPLICATOR

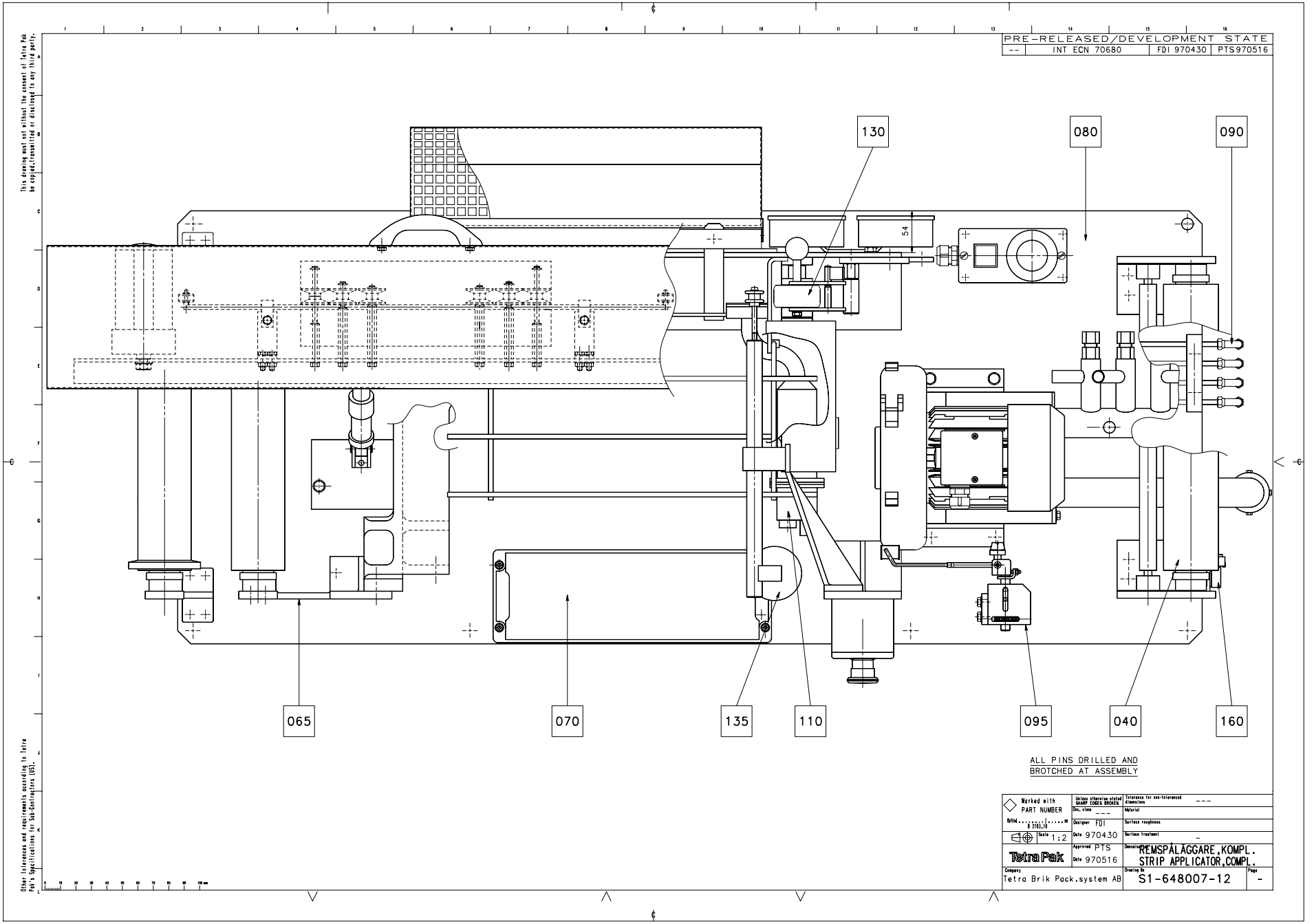

Pos	Part No	SP	UN	Qty	Description	Page No
F040	A 282509-0300	-		1	BENDING ROLLER	719
F065	A 445759-0100	-		1	SUPPORT ROLLER	729
F070	A 450862-0300	-		1	CONNECTION BOX	731
F080	A 526931-0300	-		1	BOTTOM PLATE	733
F090	A 526932-0300	-		1	PIPE WORK	735
F095	A 279210-0100	-		1	PAPER GUIDE	737
F100	A 265565-0200	-		1	BENDING ROLLER BRACKET	739
F110	A 266726-0300	-		1	PRESSURE ROLLER	741
F120	A 269112-0600	-		1	STRIP APPLICATOR	743
F130	A 282528-0200	-		1	PRESSURE ROLLER	747
F135	A 282634-0300	-		1	STRIP GUIDE	749
F160	A 546180-0100	-		1	SPLICE DETECTOR	753
F170	A 526954-0100	-		1	START-UP KIT	755
F180	A 543823-0100	-		1	STRIP MAGAZINE	757
F220	A 544973-0100	-		1	PILLAR	759

Pos	Part No	SP	UN	Qty	Description	Page No

BENDING ROLLER

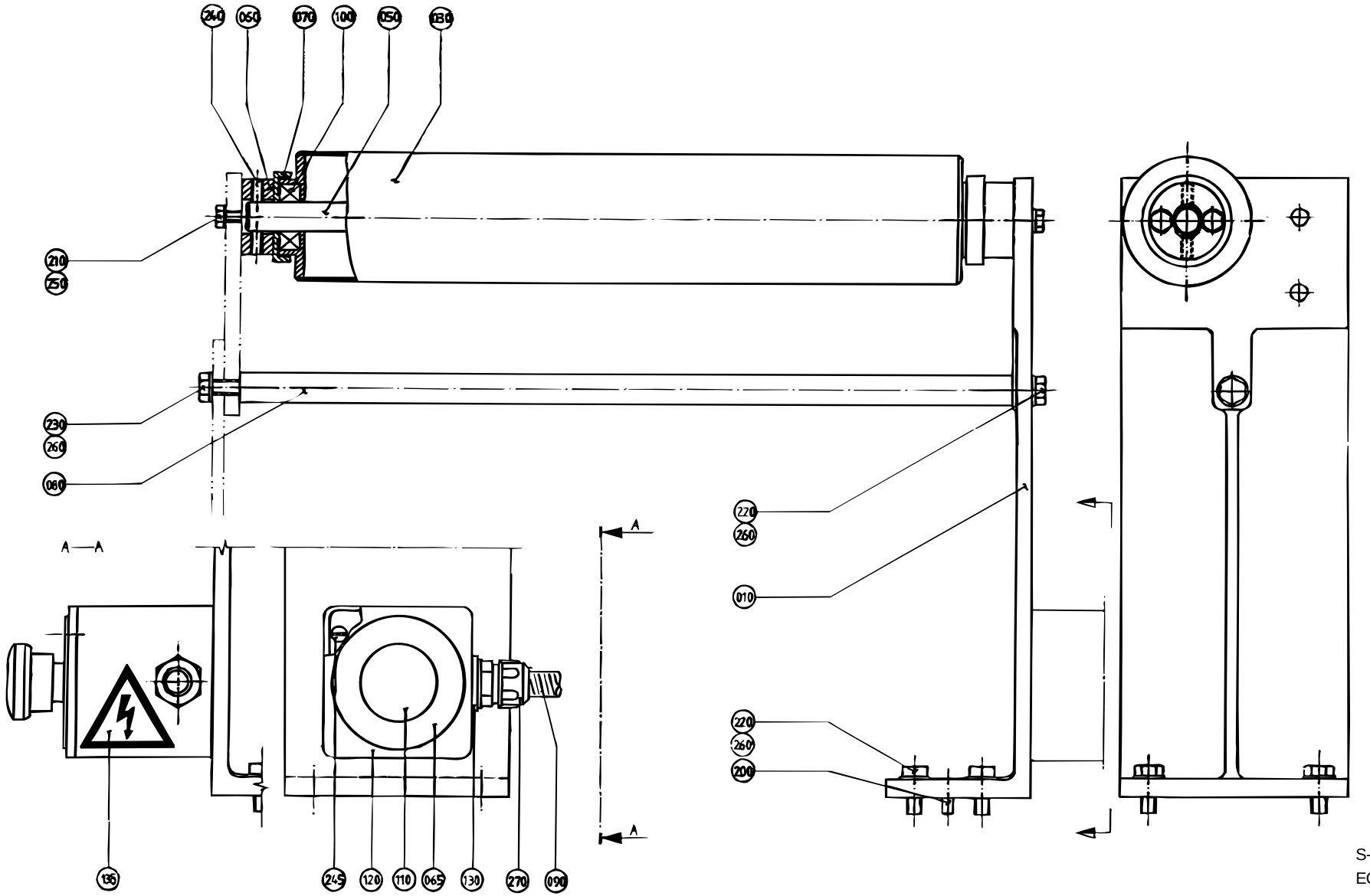

S-282509-2
ECN 22872

Pos	Part No	SP	UN	Qty	Description	Page No
TB 0500B or TB 1000B or TB 1000S or TBA 0500B or TBA 0750B or TBA 1000B or TBA 1000S or TBA 1055B or TBA 1500S or TBO 1000B						
030	449843-0001	D		1	BENDING ROLLER	
050	265566-0001	K		1	SHAFT	
080	265569-0001	-		1	STRUT	
TBA 0750S or TPA 1000S						
030	449843-0003	D		1	BENDING ROLLER	
050	265566-0004	K		1	SHAFT	
080	265569-0005	-		1	STRUT	
TB 1000SQ or TBA 1000SQ or TBO 1000SQ						
030	449843-0004	-		1	BENDING ROLLER	
050	265566-0005	-		1	SHAFT	
080	265569-0006	-		1	STRUT	
TB 0500S or TBA 0355B or TBA 0375S or TBA 0400B or TBA 0500S						
030	449843-0002	D		1	BENDING ROLLER	
050	265566-0003	K		1	SHAFT	
080	265569-0003	-		1	STRUT	
Common parts						
010	265756-0000	-		1	CANTILEVER	
060	265567-0000	D		2	BEARING UNIT	
065	486826-0001	-		1	SIGN "EMERGENCY STOP"	
070	265568-0000	-		2	DUST COVER	
090	90152-0033	-	M	1	HOSE	
100	90214-0098	F		2	BALL BEARING	
110	90064-0105	-		1	EMERGENCY STOP REPBY 0090064-0124	
120	90066-0021	-		1	PUSH BUTTON BOX	
130	90089-0003	-		1	SLEEVE	
135	90194-0016	-		1	SIGN "FLASH SIGN" 50X50MM	
200	311305-0308	-		2	SLOTTED PIRPC5X16FZB	
210	312105-0370	-		4	SCREW M6S ISO 4017 M6X20 A280	
220	312105-0451	-		5	SCREW M6S ISO 4017 8X20 A280	
230	312105-0453	-		1	SCREW M6S ISO 4017 M8X25 A280	
240	312318-0364	-		4	STOP SCREW SK6SS6X10RFR	
245	312125-0333	-		2	SLOTTED CHEESE HEAD ISO 1207 M5X25 RFR	
250	315105-0153	-		4	WASHER BRB6,4X12RFR	
260	315105-0165	-		6	WASHER BRB8,4X16RFR	
270	352136-0113	-		1	GLAND FITTING	
544730-0000						
	321120-0101	-		2	BUSHING 6/8X6	

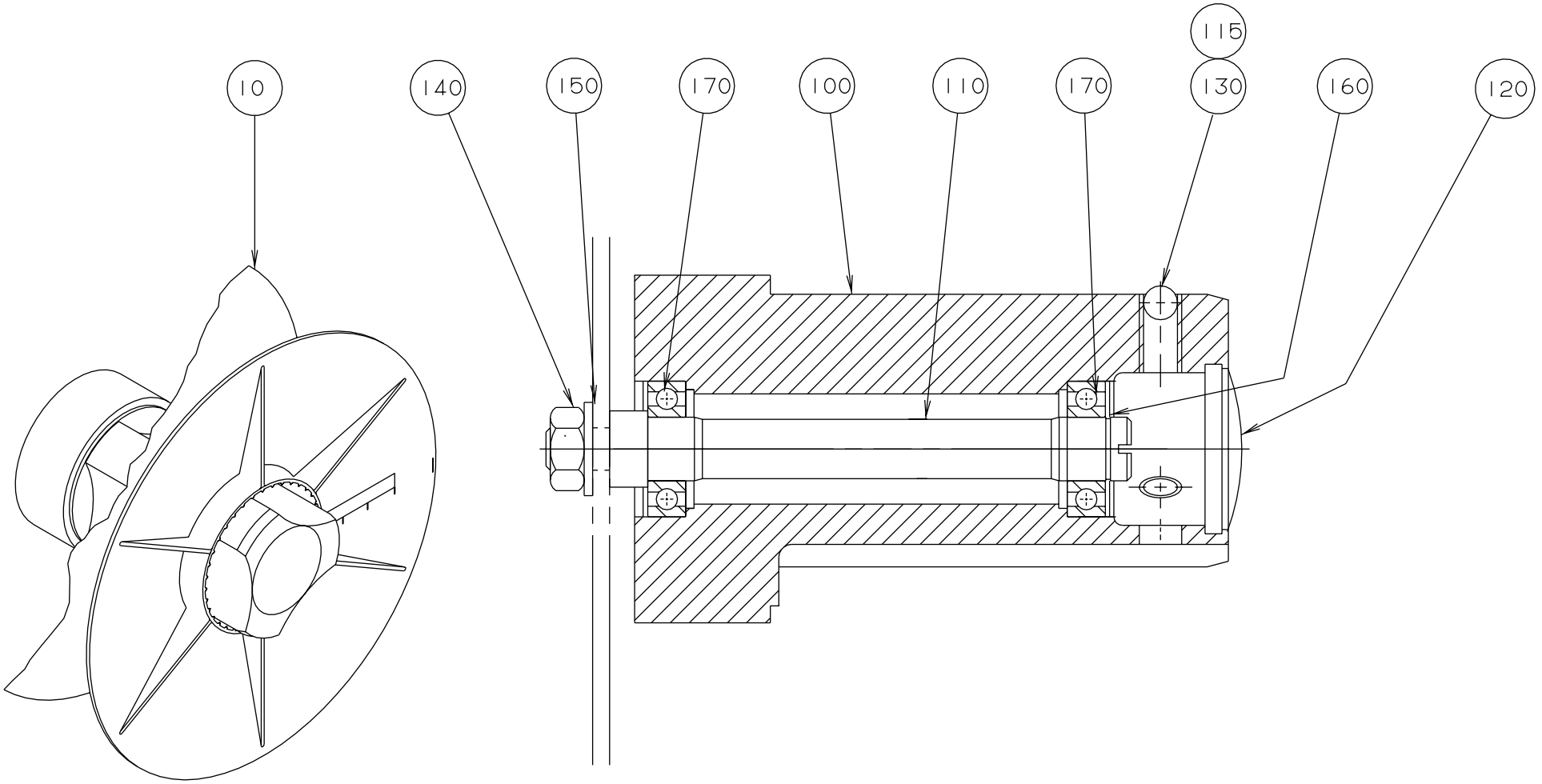

S-537329-1
ECN 12660

Pos	Part No	SP	UN	Qty	Description	Page No
-						
010	541751-0000	-		x	CONICAL BOBBIN	
100	536913-0000	-		1	HUB	
110	537327-0000	-		1	SHAFT	
115	90157-0016	-		x	LOCKING FLUID	
120	90261-0049	-		1	PLASTIC PLUG	
130	90287-0106	K		3	SPRINGLOADED SCREW	
140	312605-0320	-		1	NUT M6M10RFR	
150	315105-0173	-		1	WASHER BRB10,5X22RFR	
160	315751-0112	K		1	CIRCLIP SGA15 RFR	
170	321308-0202	K		2	BALL BEARISKF6002-2RS	

Pos	Part No	SP	UN	Qty	Description	Page No

BRAKE ARM

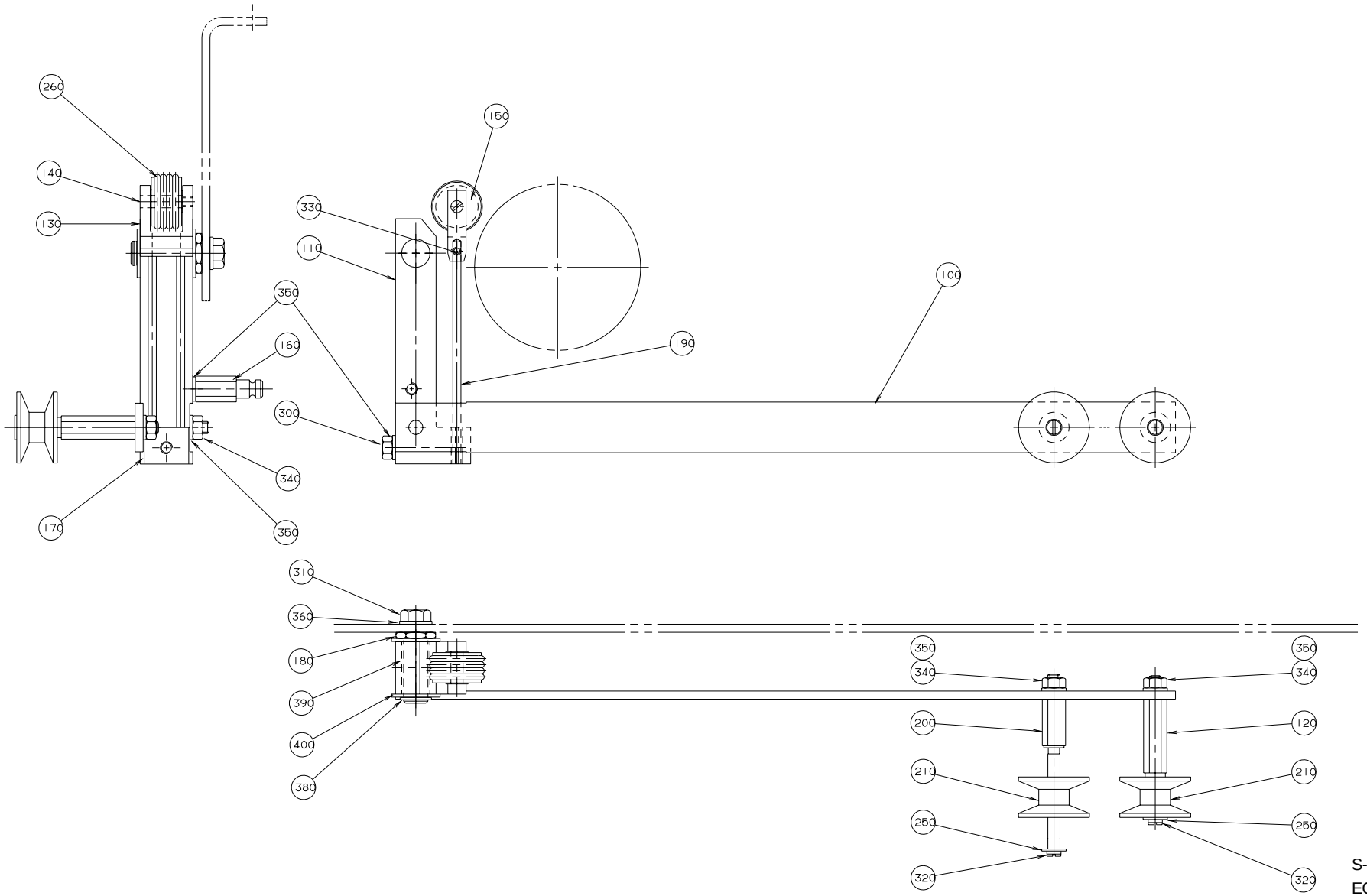

S-543822-1
ECN 11854

Pos	Part No	SP	UN	Qty	Description	Page No
-						
100	540870-0000	D		1	ARM	
110	541057-0000	D		1	ARM	
120	536917-0000	K		1	AXLE PIN	
130	541064-0000	D		1	FORK	
140	541065-0000	D		1	SHAFT	
150	541066-0000	K		1	ROLL	
160	541067-0000	D		1	SPRING BRACKET	
170	541069-0000	D		1	SPRING BRACKET	
180	541070-0000	K		1	SHAFT	
190	543820-0000	K		2	SPRING	
200	544726-0000	K		1	AXLE PIN	
210	B 544730-0000	K		2	ROLL	
250	90005-0082	-		2	WASHER	
260	90242-0148	K		4	O-RING	
300	312105-0378	-		1	SCREW O4017 M6X40A280	
310	312105-0449	-		1	SCREW M6S ISO 4017 M8X16 A280	
320	312125-0287	-		2	SLOTTED CHEESE HEAD ISO 1207 M4X8 RFR	
330	312318-0283	-		2	SET SCREW CUP POINT ISO 4029 M4X4 RFR	
340	312605-0316	-		3	NUT M6M6RFR	
350	315105-0153	-		5	WASHER BRB6,4X12RFR	
360	315105-0165	-		1	WASHER BRB8,4X16RFR	
380	315751-0109	K		1	CIRCLIP SGA12 RFR	
390	321120-0113	K		1	BUSHING 12/14X25	
400	321129-0104	K		1	THRUST WAS12/24X1,5	

Pos	Part No	SP	UN	Qty	Description	Page No

BRAKE ARM

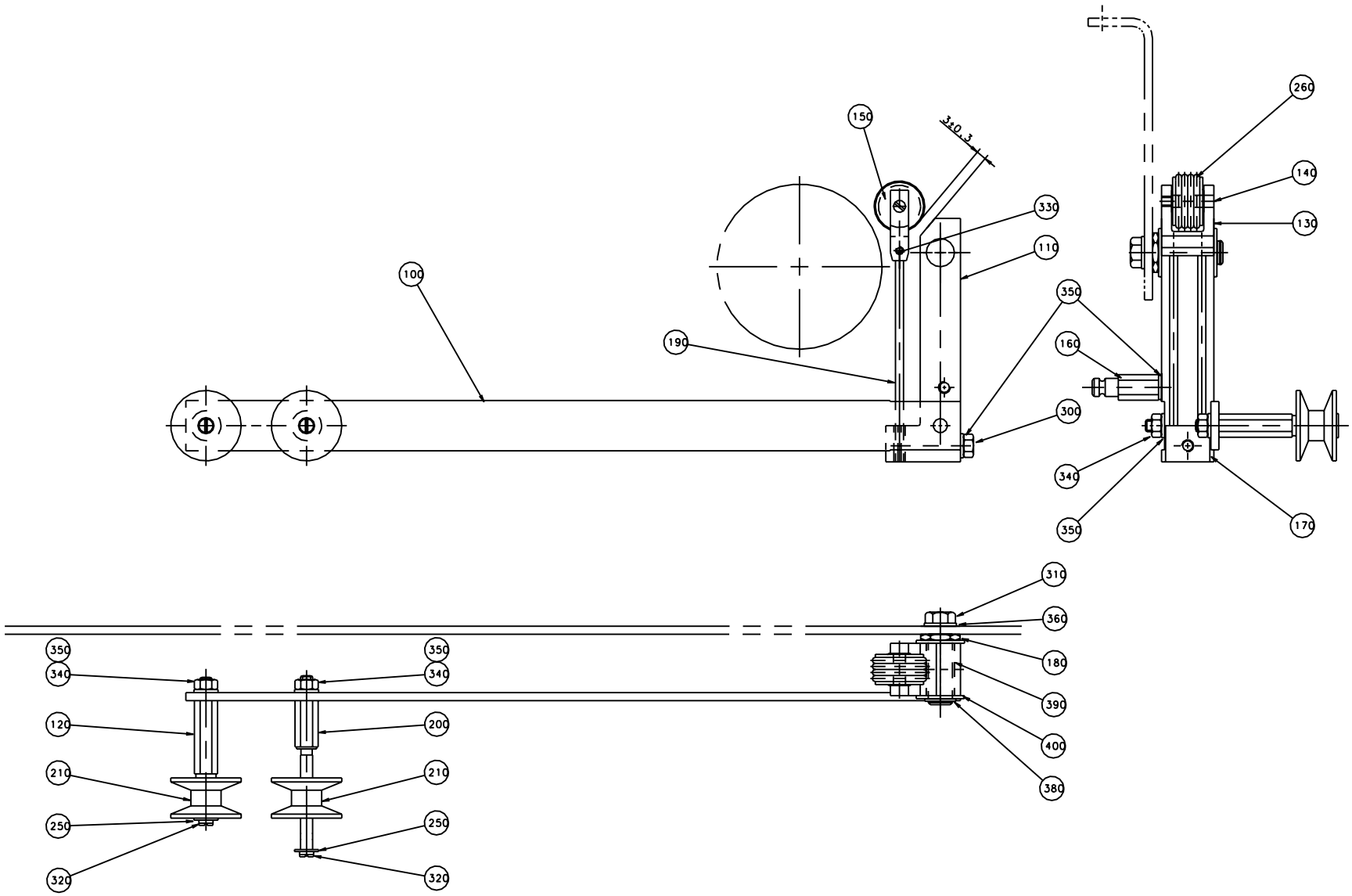

Graphic ID: 59462001.eps
Parent drw.: 594620-1
ECN: 70720

Pos	Part No	SP	UN	Qty	Description	Page No
-						
100	540870-0000	D		1	ARM	
110	541057-0000	D		1	ARM	
120	536917-0000	K		1	AXLE PIN	
130	541064-0000	D		1	FORK	
140	541065-0000	D		1	SHAFT	
150	541066-0000	K		1	ROLL	
160	541067-0000	D		1	SPRING BRACKET	
170	541069-0000	D		1	SPRING BRACKET	
180	541070-0000	K		1	SHAFT	
190	543820-0000	K		2	SPRING	
200	544726-0000	K		1	AXLE PIN	
210	B 544730-0000	K		2	ROLL	
250	90005-0082	-		2	WASHER	
260	90242-0148	K		4	O-RING	
300	312105-0378	-		1	SCREW O4017 M6X40A280	
310	312105-0449	-		1	SCREW M6S ISO 4017 M8X16 A280	
320	312125-0287	-		2	SLOTTED CHEESE HEAD ISO 1207 M4X8 RFR	
330	312318-0283	-		2	SET SCREW CUP POINT ISO 4029 M4X4 RFR	
340	312605-0316	-		3	NUT M6M6RFR	
350	315105-0153	-		5	WASHER BRB6,4X12RFR	
360	315105-0165	-		1	WASHER BRB8,4X16RFR	
380	315751-0109	K		1	CIRCLIP SGA12 RFR	
390	321120-0113	K		1	BUSHING 12/14X25	
400	321129-0104	K		1	THRUST WAS12/24X1,5	

Pos	Part No	SP	UN	Qty	Description	Page No

LEVEL PROBE

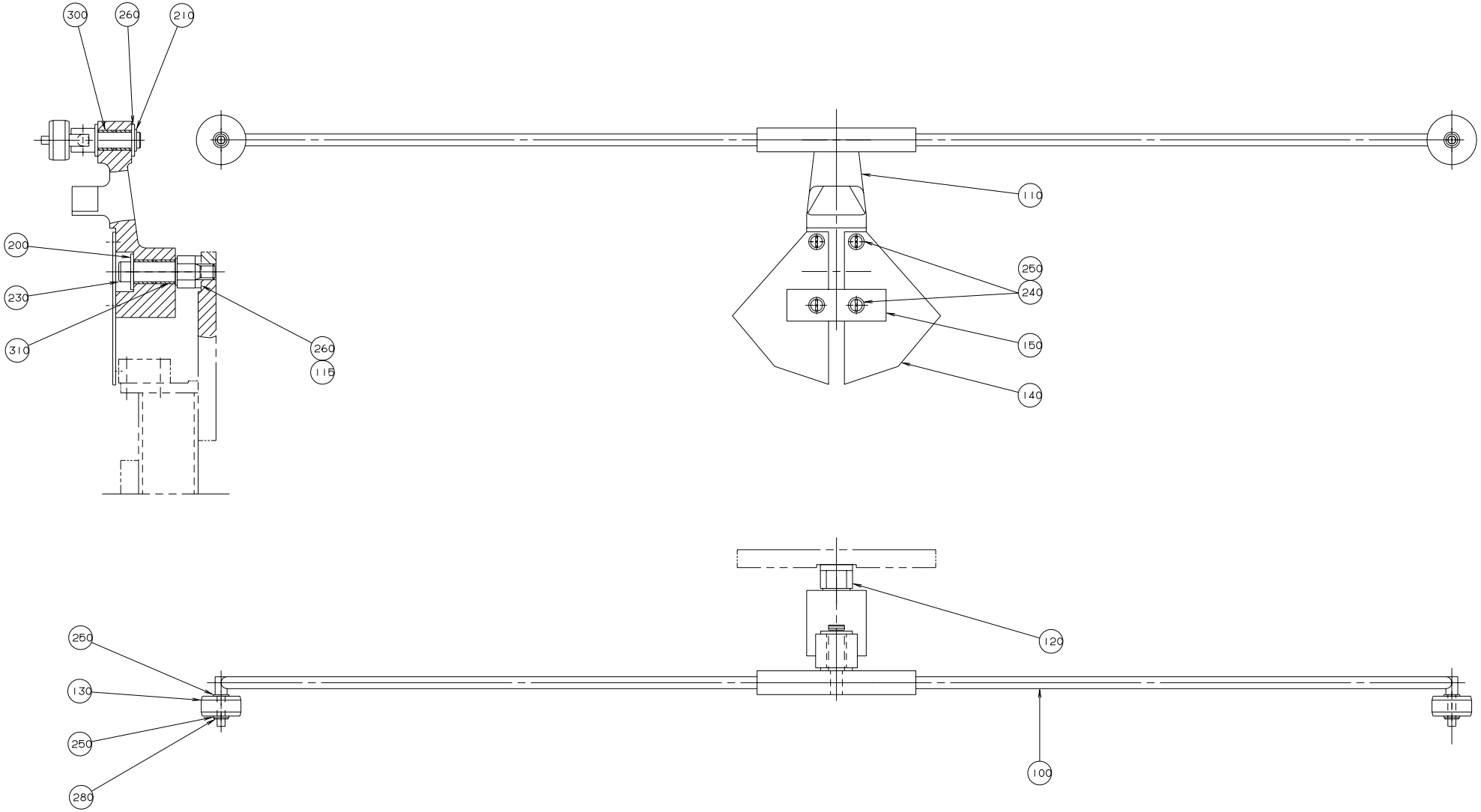

S-543821-1
ECN 11854

Pos	Part No	SP	UN	Qty	Description	Page No
-						
100	542781-0000	D		1	ARM	
110	542784-0000	D		1	LINK ARM	
115	2033-0008	D		3	WASHER	
120	542782-0000	D		1	AXLE PIN	
130	542785-0000	K		2	ROLL	
140	542786-0000	D		2	FLAG	
150	543575-0000	D		1	LOCK SHEET	
200	90005-0060	-		1	WASHER	
210	90141-0015	K		1	LOCK RING	
230	312115-0366	-		1	SCREW MC6S ISO 4762 M6X12 A280	
240	312125-0287	-		4	SLOTTED CHEESE HEAD ISO 1207 M4X8 RFR	
250	315105-0136	-		8	WASHER BRB4,3X8RFR	
260	315105-0165	-		3	WASHER BRB8,4X16RFR	
280	315755-0105	K		2	LOCKING WAE 3,2 RFR	
300	321120-0103	K		2	BUSHING 8/10X8	
310	321120-0104	K		2	BUSHING 10/12X10	

Pos	Part No	SP	UN	Qty	Description	Page No

SUPPORT ROLLER

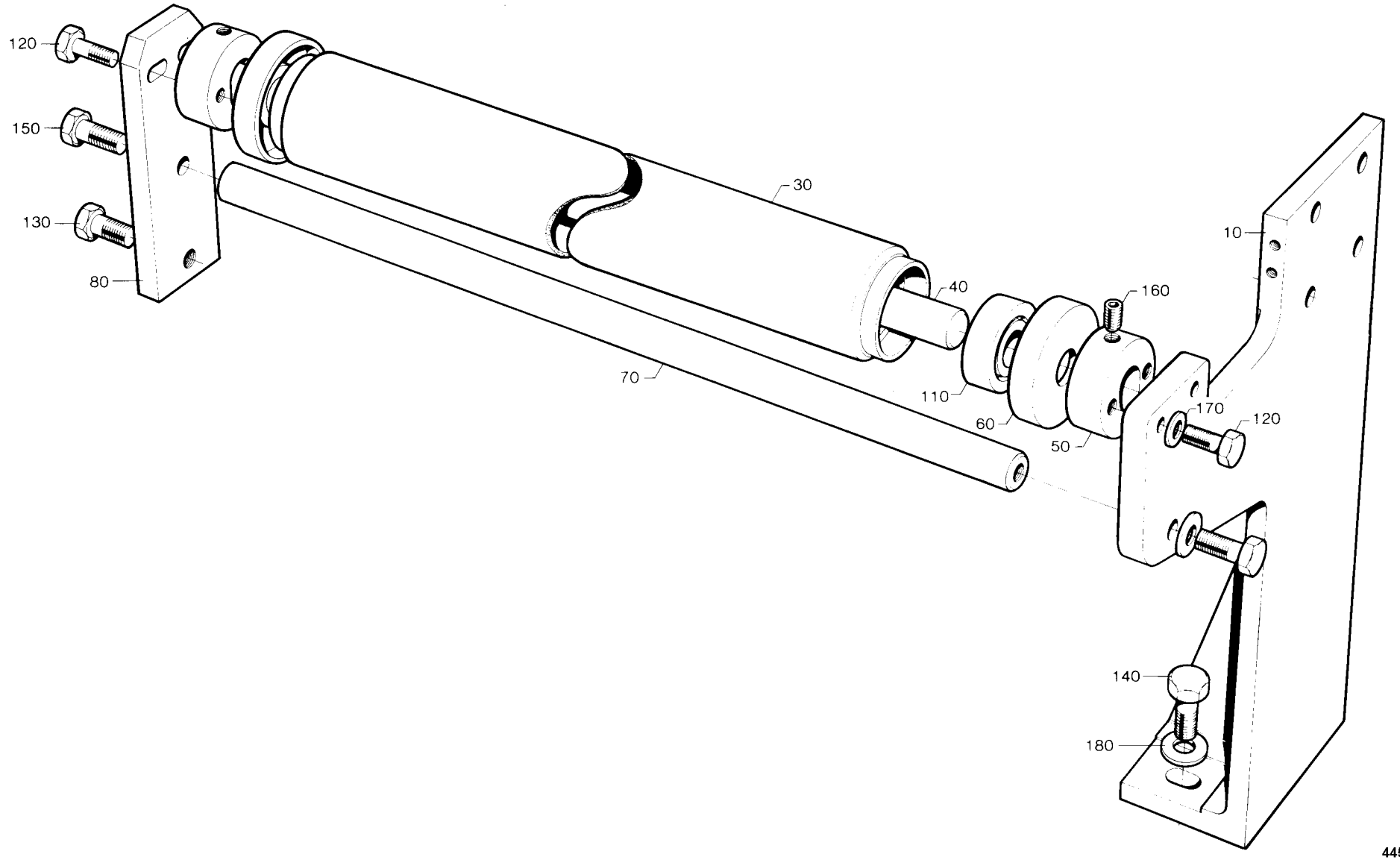

445759-1.tif

Pos	Part No	SP	UN	Qty	Description	Page No
0300B or 0355B or 0375S or 0400B or 0500S						
030	450463-0002	D		1	SUPPORT ROLLER	
040	265566-0003	K		1	SHAFT	
070	265569-0003	-		1	STRUT	
0500B or 0568B or 0750B or 1000B or 1000S or 1055B						
030	450463-0001	D		1	SUPPORT ROLLER	
040	265566-0001	K		1	SHAFT	
070	265569-0001	-		1	STRUT	
0750S						
030	450463-0003	D		1	SUPPORT ROLLER	
040	265566-0004	K		1	SHAFT	
070	265569-0005	-		1	STRUT	
Common parts						
010	B 445691-0000	-		1	CANTILEVER	
050	265567-0000	D		2	BEARING UNIT	
060	265568-0000	-		2	DUST COVER	
080	445690-0000	-		1	FASTENING PLATE	
110	90214-0098	-		2	BALL BEARING	
120	312105-0370	-		4	SCREW M6S ISO 4017 M6X20 A280	
130	312105-0449	-		1	SCREW M6S ISO 4017 M8X16 A280	
140	312105-0451	-		4	SCREW M6S ISO 4017 8X20 A280	
150	312105-0453	-		1	SCREW M6S ISO 4017 M8X25 A280	
160	312318-0364	F		4	STOP SCREW SK6SS6X10RFR	
170	315105-0153	-		2	WASHER BRB6,4X12RFR	
180	315105-0165	-		3	WASHER BRB8,4X16RFR	

Pos	Part No	SP	UN	Qty	Description	Page No

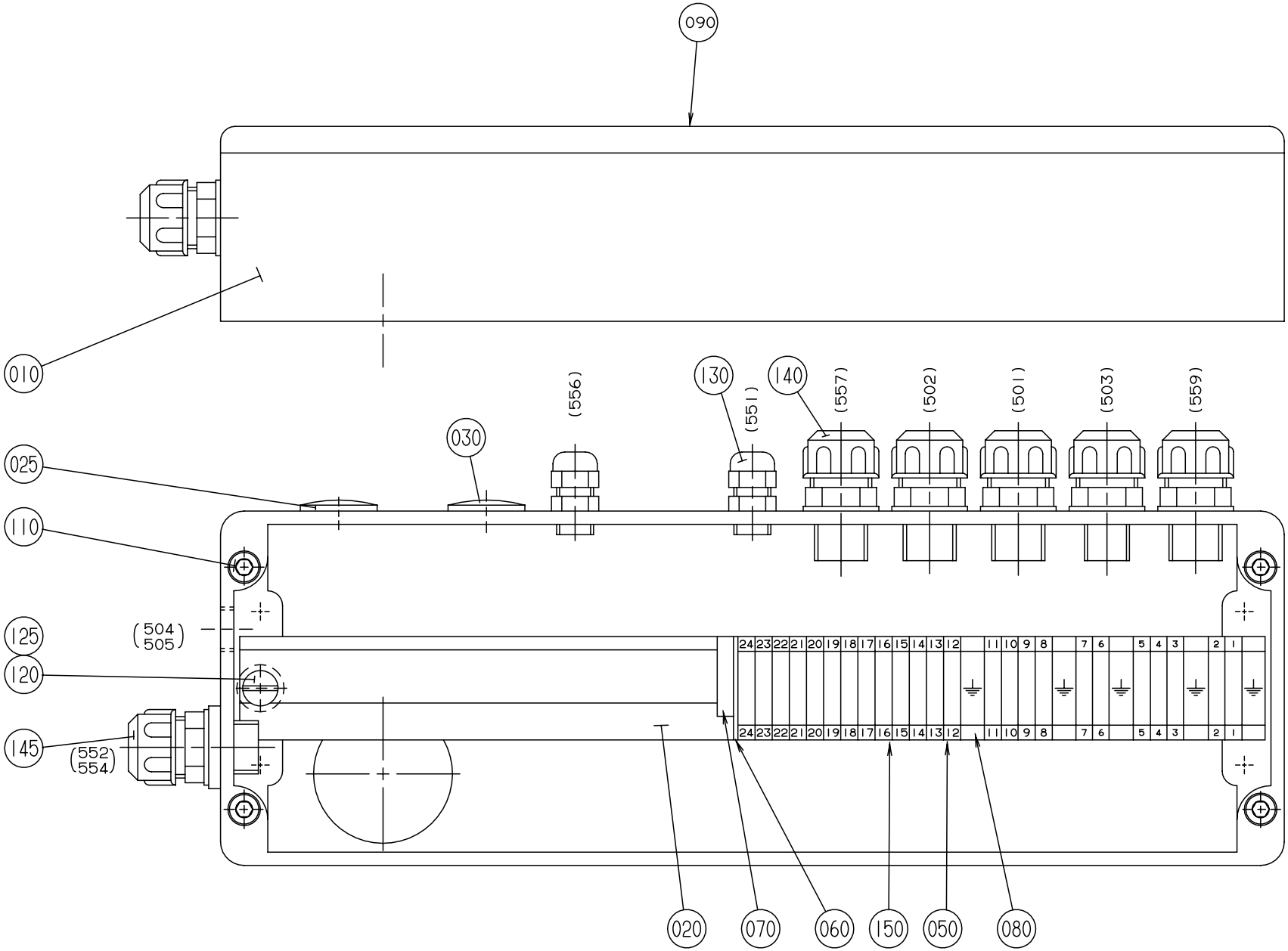

S-450862-3
ECN 17189

Pos	Part No	SP	UN	Qty	Description	Page No
-						
010	553156-0000	-		1	CONNECTION BOX	
020	282549-0000	-		1	MOUNTING RAIL	
025	90002-0009	-		2	BLANK-OFF PLUG 18.6	
030	90002-0013	-		1	BLANK-OFF PLUG 15,2	
050	90077-0064	-		24	FEED THROUGH TERMINAL	
060	90077-0300	-		1	END PLATE	
070	90094-0004	-		1	END SUPPORT EWK 2061.6 WM	
080	90135-0022	-		4	EARTHING CLAMP	
090	90194-0016	-		1	SIGN "FLASH SIGN" 50X50MM	
110	312115-0372	-		4	SCREW MC6S ISO 4762 M6X25 A280	
120	312145-0364	-		2	SLOTTED HEMFS6X10RFR	
125	315115-0165	-		2	WASHER TBRB8,4X16RFR	
130	352103-0100	-		2	CABLE GLAND STR 9	
140	352136-0113	-		5	GLAND FITTING	
145	352136-0129	-		1	GLAND FITTING	
150	359011-0821	-		2	SET OF SIG6-FW 1-50	

Pos	Part No	SP	UN	Qty	Description	Page No

BOTTOM PLATE

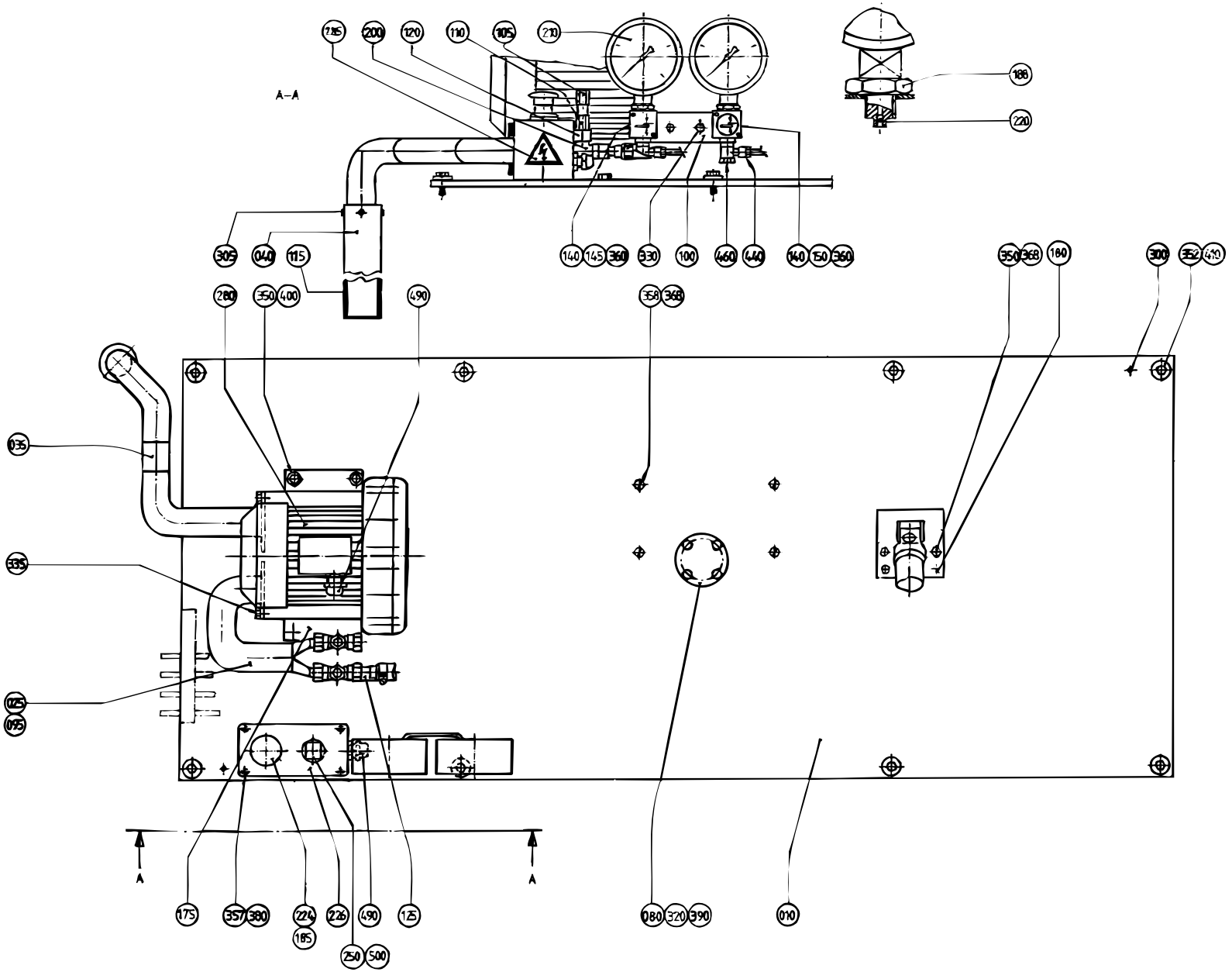

S-526931-3
ECN 22872

Pos	Part No	SP	UN	Qty	Description	Page No
TB 1000S or TBA 1000S						
010	450850-0005	-		1	SHEET	
TB 0500B or TB 1000B or TBA 0500B or TBA 0750B or TBA 1000B or TBA 1055B or TBA 1500S or TBO 1000B						
010	450850-0001	-		1	SHEET	
TBA 0750S or TPA 1000S						
010	450850-0004	-		1	SHEET	
TB 1000SQ or TBA 1000SQ or TBO 1000SQ						
010	450850-0006	-		1	SHEET	
TBA 0375S						
010	450850-0003	-		1	SHEET	
TB 0500S or TBA 0355B or TBA 0400B or TBA 0500S						
010	450850-0002	-		1	SHEET	
Common parts						
025	B 535613-0000	-		1	BRANCH	
035	B 535614-0000	-		1	INNER PIPE	
040	450882-0000	-		1	OUTER PIPE	
080	247171-0000	-		1	BEARING COVER	
095	535608-0000	-		1	GASKET	
100	33577-0000	-		1	CANTILEVER	
105	209145-0000	K		2	THROTTLE SCREW	
110	209146-0000	K		2	BARRIER NUT	
115	526582-0000	K		1	NET	
120	279589-0000	-		2	NUT	
125	279590-0000	-		1	REDUCTION	
140	464173-0000	-		2	LABEL HOLDER	
145	464176-0000	-		1	SIGN	
150	464177-0000	-		1	SIGN	
175	450812-0000	-		2	SPACER	
180	556549-0000	-		1	FASTENING PLATE	
185	486826-0001	-		1	SIGN "EMERGENCY STOP"	
188	90330-0105	-		2	NUT	
200	90030-0058	-		2	T-PIPE CONNECTION T-12	
210	90043-0034	-		2	PRESSURE GAUGE	
220	90043-0302	-		2	SCREW	
224	90064-0105	-		1	EMERGENCY STOP REPBY 0090064-0124	
226	90066-0029	-		1	PUSH BUTTON BOX	
250	90064-0084	D		1	PUSH BUTTON YELLOW	
280	B 90264-0042	D		1	FAN SIEMENS 2BH1 300-1AH	
285	90194-0016	-		1	SIGN "FLASH SIGN" 50X50MM	
300	311305-0308	-		2	SLOTTED PIRPC5X16FZB	
305	312105-0287	-		4	SCREW M6S ISO 4017 M4X8 A280	
320	312105-0325	-		4	SCREW M6S5X10 A2 80	
330	312105-0364	-		2	SCREW M6S6X10RFR	
335	312105-0368	-		4	SCREW M6S ISO 4017 M6X16 A280	
350	312105-0451	-		8	SCREW M6S ISO 4017 8X20 A280	
352	312105-0455	-		8	SCREW M6S ISO 4017 M8X30 A280	
357	312125-0289	-		5	SLOTTED HEMCS4X10RFR	
358	312125-0447	-		4	SLOTTED CHEESE HEAD ISO 1207 M8X12 RFR	
360	312502-0120	-		4	DRIVE SCREW ROUND HEAD SMS 1549 KDS 0X5	
368	315111-0165	-		8	WASHER TBRB8,4X16FZB	
380	315105-0136	-		4	WASHER BRB4,3X8RFR	
390	315105-0146	-		4	WASHER BRB5,3X10RFR	
400	315105-0165	-		4	WASHER BRB8,4X16RFR	
410	315121-0165	-		8	WASHER TBRSB8,4X26FZB	
440	342797-0122	-		2	BANJO CONNECTION,RINGPIECE 6-1/4"	
460	342980-0304	-		2	BANJO-HOLLOW BOLT COUPL,EXT.THR.01-G1/4"	
490	352136-0113	-		3	GLAND FITTING	
500	359301-0051	-		1	SIGN"STRIP SPLICE"	

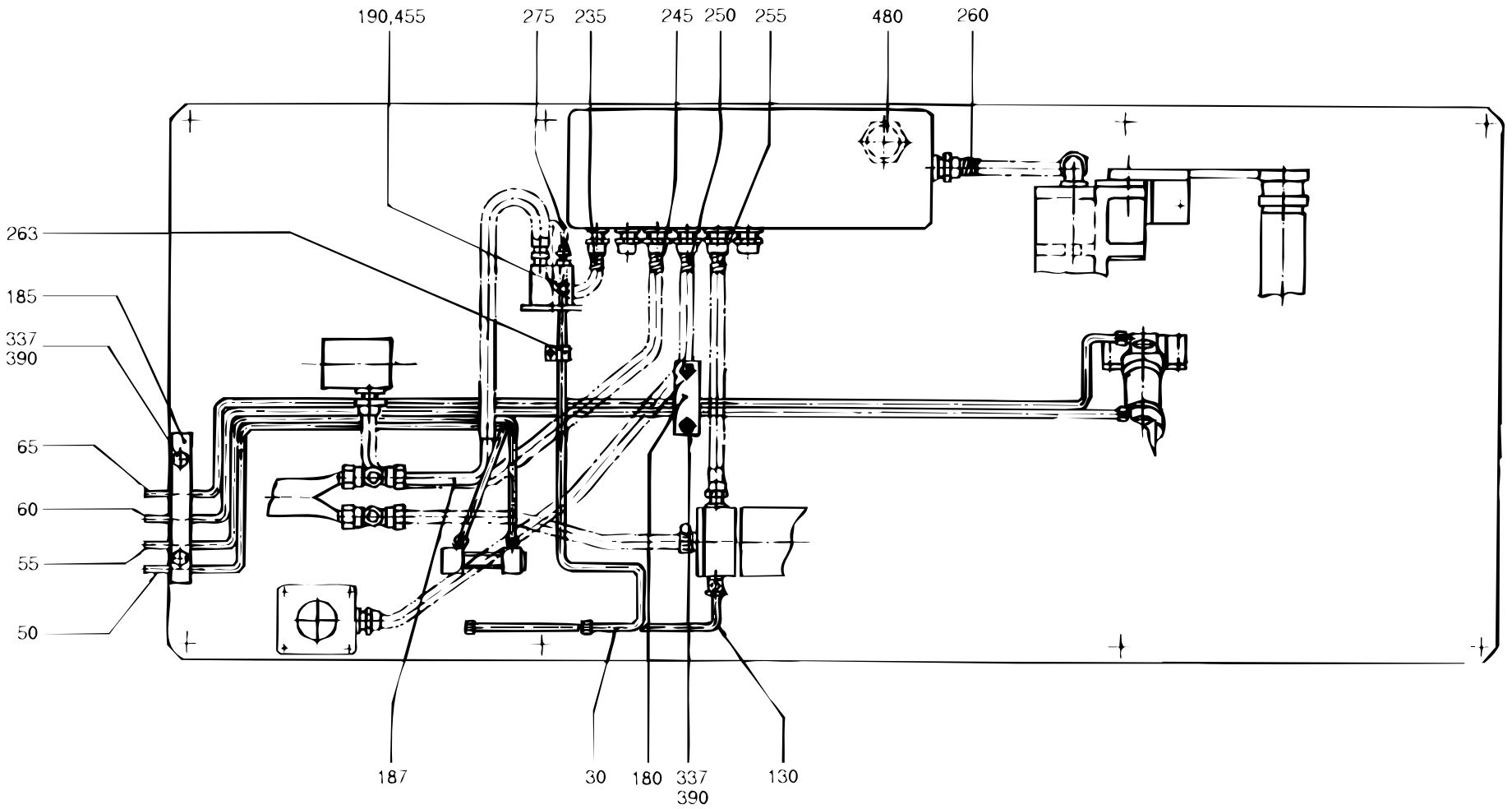

S-526932-2
ECN 11854

Pos	Part No	SP	UN	Qty	Description	Page No
TB 1000S or TBA 1000S						
030	458199-0001	-		1	PIPE	
050	556557-0005	-		1	PIPE	
055	556558-0005	-		1	PIPE	
060	556559-0005	-		1	PIPE	
065	556560-0005	-		1	PIPE	
TB 0500B or TB 1000B or TBA 0500B or TBA 0750B or TBA 1000B or TBA 1055B or TBA 1500S or TBO 1000B or TPA 2000S						
030	458199-0001	-		1	PIPE	
050	556557-0001	-		1	PIPE	
055	556558-0001	-		1	PIPE	
060	556559-0001	-		1	PIPE	
065	556560-0001	-		1	PIPE	
TBA 0750S or TPA 1000S						
030	458199-0001	-		1	PIPE	
050	556557-0004	-		1	PIPE	
055	556558-0004	-		1	PIPE	
060	556559-0004	-		1	PIPE	
065	556560-0004	-		1	PIPE	
TB 1000SQ or TBA 1000SQ or TBO 1000SQ						
050	556557-0006	-		1	PIPE	
055	556558-0006	-		1	PIPE	
060	556559-0006	-		1	PIPE	
065	556560-0006	-		1	PIPE	
TBA 0375S						
030	458199-0003	-		1	PIPE	
050	556557-0003	-		1	PIPE	
055	556558-0003	-		1	PIPE	
060	556559-0003	-		1	PIPE	
065	556560-0003	-		1	PIPE	
TB 0500S or TBA 0355B or TBA 0400B or TBA 0500S						
030	458199-0002	-		1	PIPE	
050	556557-0002	-		1	PIPE	
055	556558-0002	-		1	PIPE	
060	556559-0002	-		1	PIPE	
065	556560-0002	-		1	PIPE	
Common parts						
130	282802-0000	-		1	PIPE	
180	450813-0000	-		1	HOLDER	
185	450814-0000	-		1	HOLDER	
187	535612-0000	-		1	PIPE	
190	90224-0304	-		1	CONNECTION	
235	90152-0033	-	MM	450	HOSE	
245	90152-0033	-	MM	800	HOSE	
250	90152-0033	-	MM	500	HOSE	
255	90152-0033	-	MM	250	HOSE	
260	90152-0033	-	MM	265	HOSE	
263	90165-0005	-		1	CLIP	
275	90166-0124	-	MM	200	HOSE	
337	312105-0370	-		6	SCREW M6S ISO 4017 M6X20 A280	
390	315105-0153	-		8	WASHER BRB6,4X12RFR	
455	342706-0130	-		1	ACCESSORIES,INSERT SLEEVE 6	
480	352101-0107	-		1	LEAD-IN G 37	

PAPER GUIDE

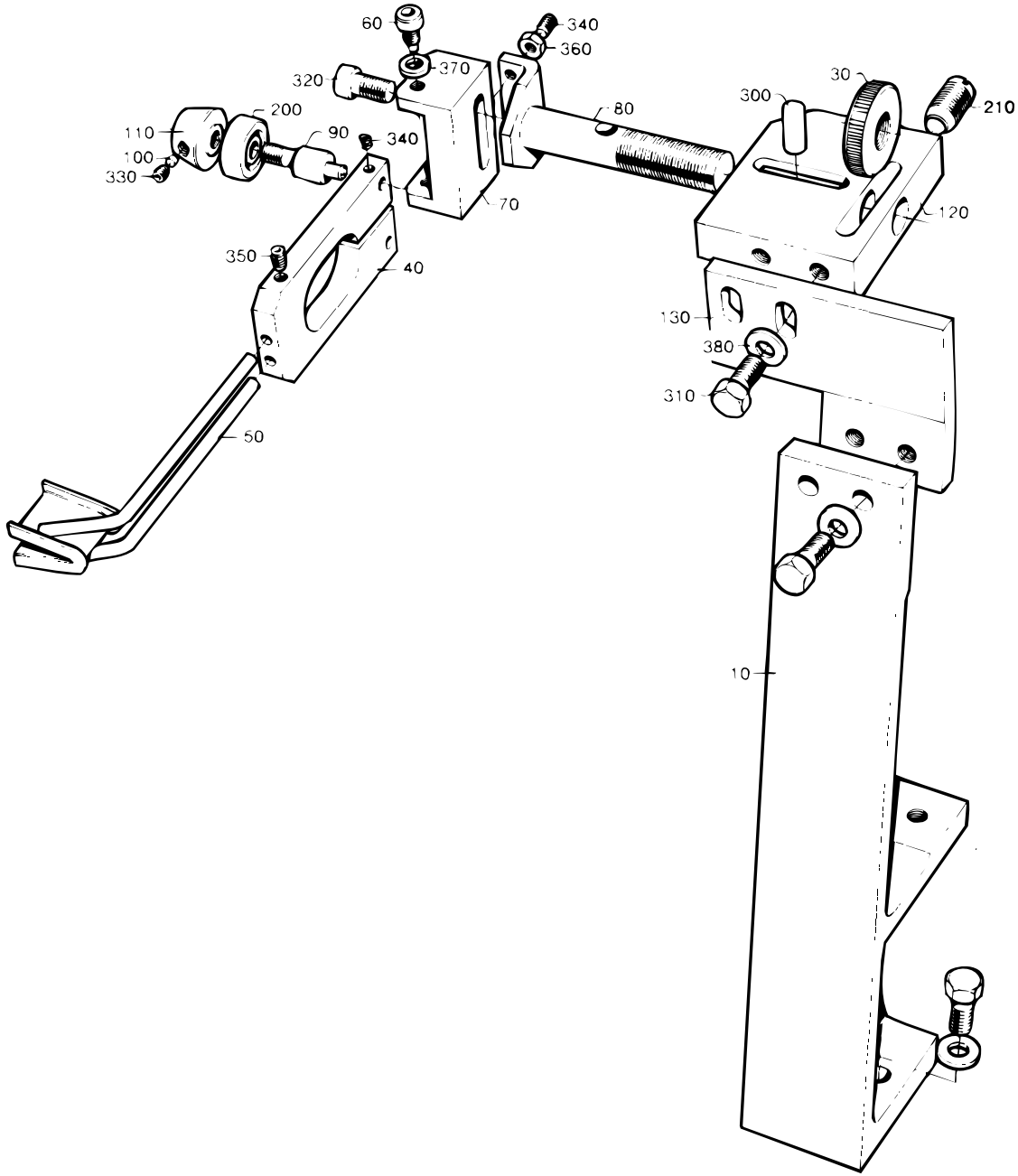

S-279210-1
ECN 13150

Pos	Part No	SP	UN	Qty	Description	Page No
TB/8						
010	267316-0000	-		1	CANTILEVER	
310	312105-0368	-		4	SCREW M6S ISO 4017 M6X16 A280	
TBA/8 0355B or TBA/8 0400B or TBA/8 0500S						
010	279211-0000	-		1	CANTILEVER	
130	450127-0002	-		1	BRACKET	
310	312105-0368	-		6	SCREW M6S ISO 4017 M6X16 A280	
TBA/8 0375S						
010	279211-0000	-		1	CANTILEVER	
130	450127-0003	-		1	BRACKET	
310	312105-0368	-		6	SCREW M6S ISO 4017 M6X16 A280	
TBA/8 0500B or TBA/8 0750B or TBA/8 1000B or TBA/8 1055B or TBA/8LSC 1500S or TBO/8 1000B						
010	279211-0000	-		1	CANTILEVER	
130	450127-0001	-		1	BRACKET	
310	312105-0368	-		6	SCREW M6S ISO 4017 M6X16 A280	
TBA/8 0750S or TBA/8 1000SQ or TBA/8PRISMA TPA 1000S or TBO/8 1000SQ						
010	279211-0000	-		1	CANTILEVER	
130	450127-0004	-		1	BRACKET	
310	312105-0368	-		6	SCREW M6S ISO 4017 M6X16 A280	
TBA/8 1000S						
010	279211-0000	-		1	CANTILEVER	
130	450127-0005	-		1	BRACKET	
310	312105-0368	-		6	SCREW M6S ISO 4017 M6X16 A280	
Common parts						
030	23580-0000	D		1	SHIFTER HANDLE	
040	23582-0000	-		1	HOLDER	
050	23583-0000	K		1	GUIDE FINGER	
060	23584-0000	K		2	SCREW	
070	24351-0000	-		1	BOW CLAMP	
080	24352-0000	-		1	SHAFT	
090	24355-0000	K		2	DOWEL	
100	24356-0000	K		4	PIECE	
110	111543-0000	-		2	GUIDE CONE	
120	245210-0000	-		1	BODY	
200	90214-0138	F		2	BALL BEARING	
210	90287-0009	F		1	SPRINGLOADED SCREW	
300	311103-0350	-		1	CYLINDRICACP M6 6X14 RFR	
320	312115-0366	-		1	SCREW MC6S ISO 4762 M6X12 A280	
330	312316-0283	F		4	STOP SCREW SK6SS4X4FZB	
340	312316-0291	F		3	STOP SCREW SK6SS4X12FZB	
350	312318-0285	F		2	SET SCREW CUP POINT ISO 4029 M4X6 RFR	
360	312605-0312	F		3	NUT M6M4RFR	
370	315105-0146	-		2	WASHER BRB5,3X10RFR	
380	315105-0153	-		4	WASHER BRB6,4X12RFR	

BENDING ROLLER BRACKET

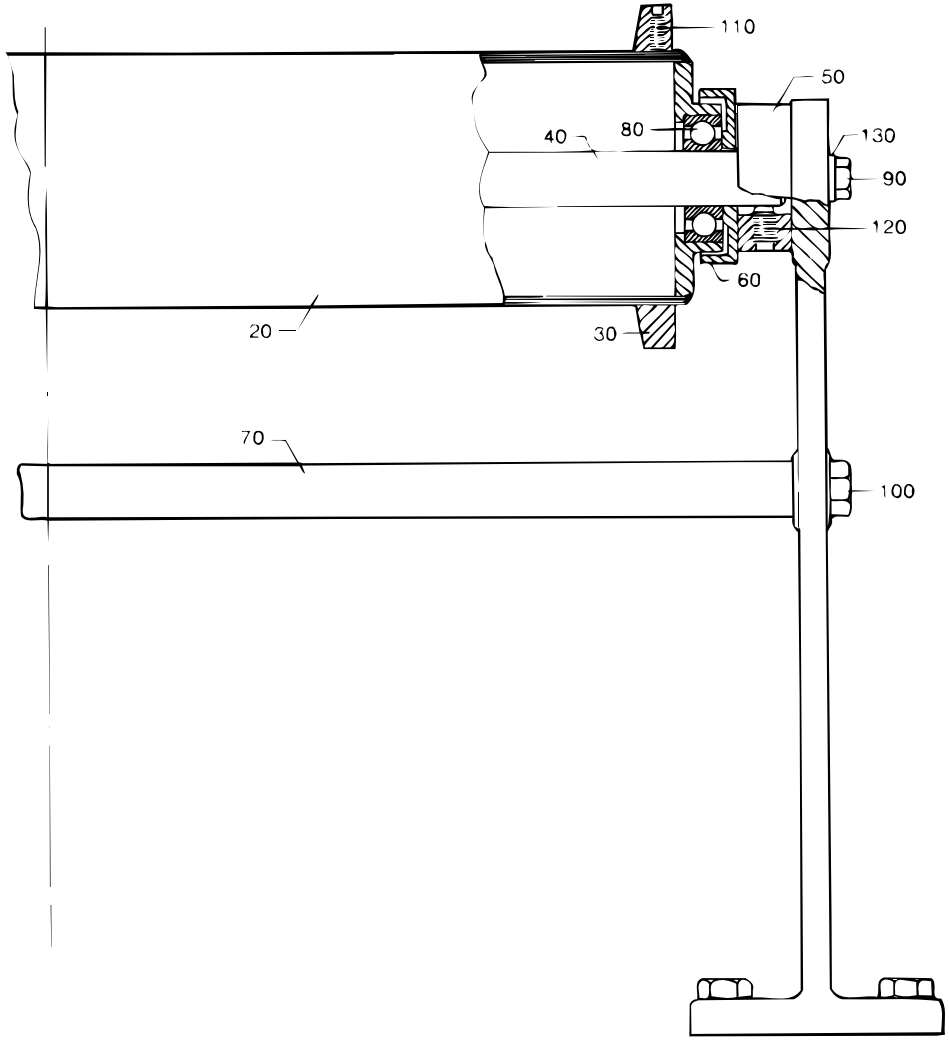

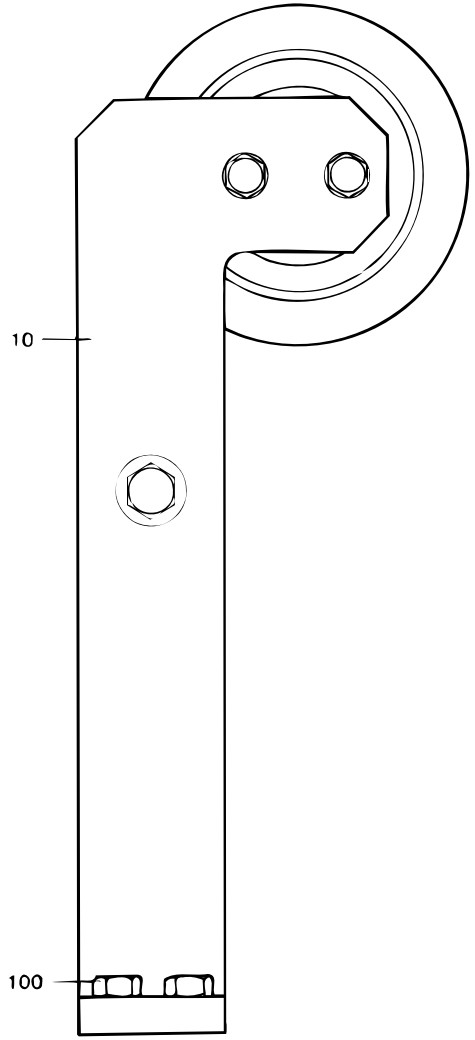

S-265565-1
ECN 4745

Pos	Part No	SP	UN	Qty	Description	Page No
TB/8 0300B or TB/8 0500B or TB/8 0500S or TB/8 0500SQ or TB/8 0568B or TB/8 1000B or TB/8 1000S or TB/8 1000SQ or TB/8 1136B or TBA/8 0355B or TBA/8 0375S or TBA/8 0400B or TBA/8 0500B or TBA/8 0500S or TBA/8 0750B or TBA/8 0750S or TBA/8 1000B or TBA/8 1000S or TBA/8 1000SQ or TBA/8 1055B or TBO/8 1000B or TBO/8 1000SQ						
020	265564-0000	D		1	BENDING ROLLER	
040	265566-0001	K		1	SHAFT	
070	265569-0001	-		1	STRUT	
TB/8 1500B						
020	592594-0000	D		1	BENDING ROLLER	
040	265566-0006	K		1	SHAFT	
070	265569-0007	-		1	STRUT	
Common parts						
010	546116-0000	-		2	CANTILEVER	
030	250588-0000	D		2	FLANGE	
050	265567-0000	D		2	BEARING UNIT	
060	265568-0000	-		2	DUST COVER	
080	90214-0098	K		2	BALL BEARING	
085	311305-0308	-		4	SLOTTED PIRPC5X16FZB	
090	312105-0370	-		4	SCREW M6S ISO 4017 M6X20 A280	
100	312105-0451	-		10	SCREW M6S ISO 4017 8X20 A280	
110	312318-0289	F		4	SET SCREW CUP POINT ISO 4029 M4X10 RFR	
120	312318-0364	F		4	STOP SCREW SK6SS6X10RFR	
130	315105-0153	-		4	WASHER BRB6,4X12RFR	

Pos	Part No	SP	UN	Qty	Description	Page No

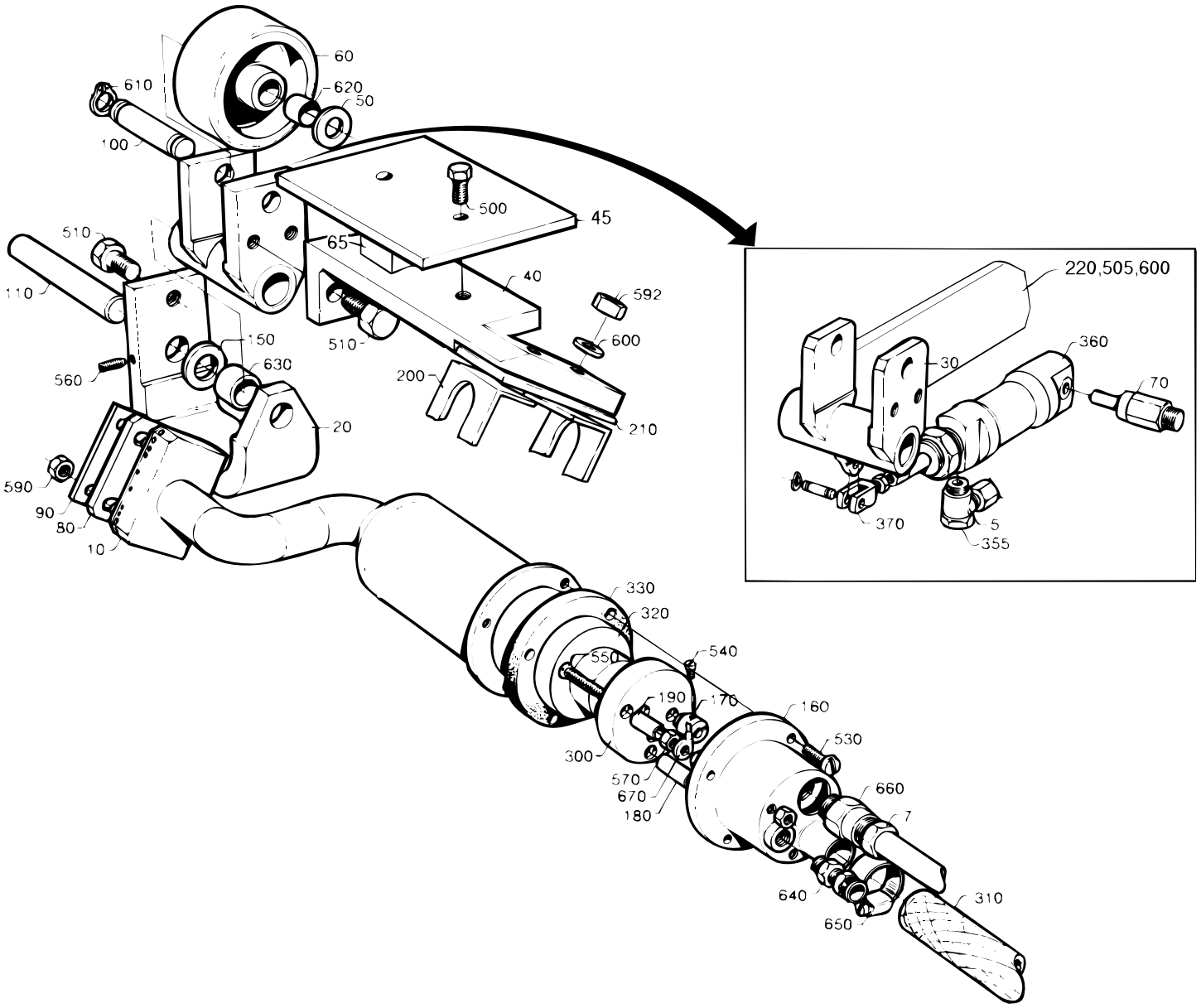

S-266726-3
ECN 14724

Pos	Part No	SP	UN	Qty	Description	Page No
-						
005	342797-0121	-		2	BANJO CONNECTION,RINGPIECE 6-1/8"	
007	352136-0113	-		1	GLAND FITTING	
010	464197-0000	D		1	AIR NOZZLE	
020	266728-0000	-		1	CANTILEVER	
030	556565-0000	-		1	ROCKER ARM	
040	266730-0000	-		1	HOLDER	
045	542090-0000	-		1	HEAT GUARD	
050	2033-0009	F		2	WASHER	
060	21903-0000	F		1	ROLL	
065	242954-0000	-		2	WASHER	
070	556551-0000	D		1	CYLINDER BRACKET	
080	466412-0000	K		1	PLATE	
090	255417-0000	K		1	WASHER	
100	266731-0000	D		1	SHAFT	
110	266732-0000	D		1	SHAFT	
150	266737-0000	K		2	WASHER	
160	266738-0000	-		1	COVER	
170	266739-0000	-		3	CABLE GLAND	
180	266740-0001	-		2	SPACER	
190	266740-0002	-		1	SPACER	
200	450887-0000	-		1	CRAMP	
210	450888-0000	-		1	INSULATING PLATE	
220	556552-0000	-		1	BRACKET	
300	B 90125-0020	K		1	PLATE	
310	90166-0087	F	MM	600	HOSE	
320	90206-0085	F		1	HEATING CARTRIDGE	
330	90206-0322	F		1	GASKET	
355	90235-0274	K		2	THROTTLE CHECK VALVES,G1/8"	
360	90239-0821	K		1	DOUBLE ACTING,MINI-ISO,CYL.20-25	
370	90239-0532	D		1	PISTON ROD HEAD	
500	312105-0370	-		2	SCREW M6S ISO 4017 M6X20 A280	
505	312105-0447	-		2	SCREW M6S ISO 4017 M8X12 A280	
510	312105-0451	-		4	SCREW M6S ISO 4017 8X20 A280	
530	312125-0291	-		4	SLOTTED CHEESE HEAD ISO 1207 M4X12 RFR	
540	312125-0220	-		3	SLOTTED HEMCS3X6RFR	
550	312145-0238	-		3	SLOTTED HEMFS3X40RFR	
560	312311-0292	-		1	STOP SCREW T6SS4X14FZB	
570	312605-0310	-		7	NUT M6M3RFR	
590	312605-0314	-		2	NUT M6M5RFR	
592	312605-0318	-		2	NUT M6M8RFR	
595	315105-0153	-		2	WASHER BRB6,4X12RFR	
600	315105-0165	-		4	WASHER BRB8,4X16RFR	
610	315750-0107	F		2	CIRCLIP SGA10	
620	321120-0104	K		2	BUSHING 10/12X10	
630	321120-0110	K		2	BUSHING 12/14X12	
640	342921-0113	-		1	STRAIGHT COUPLING,EXT.THREADED 6/4-G1/8"	
650	342991-0103	F		2	HOSE CLIP,WORM DRIVE TYPE (19)-23	
660	352100-0106	-		1	CABLE GLANR.18,6-10,5	
670	353101-0130	-		1	CABLE SHOE	

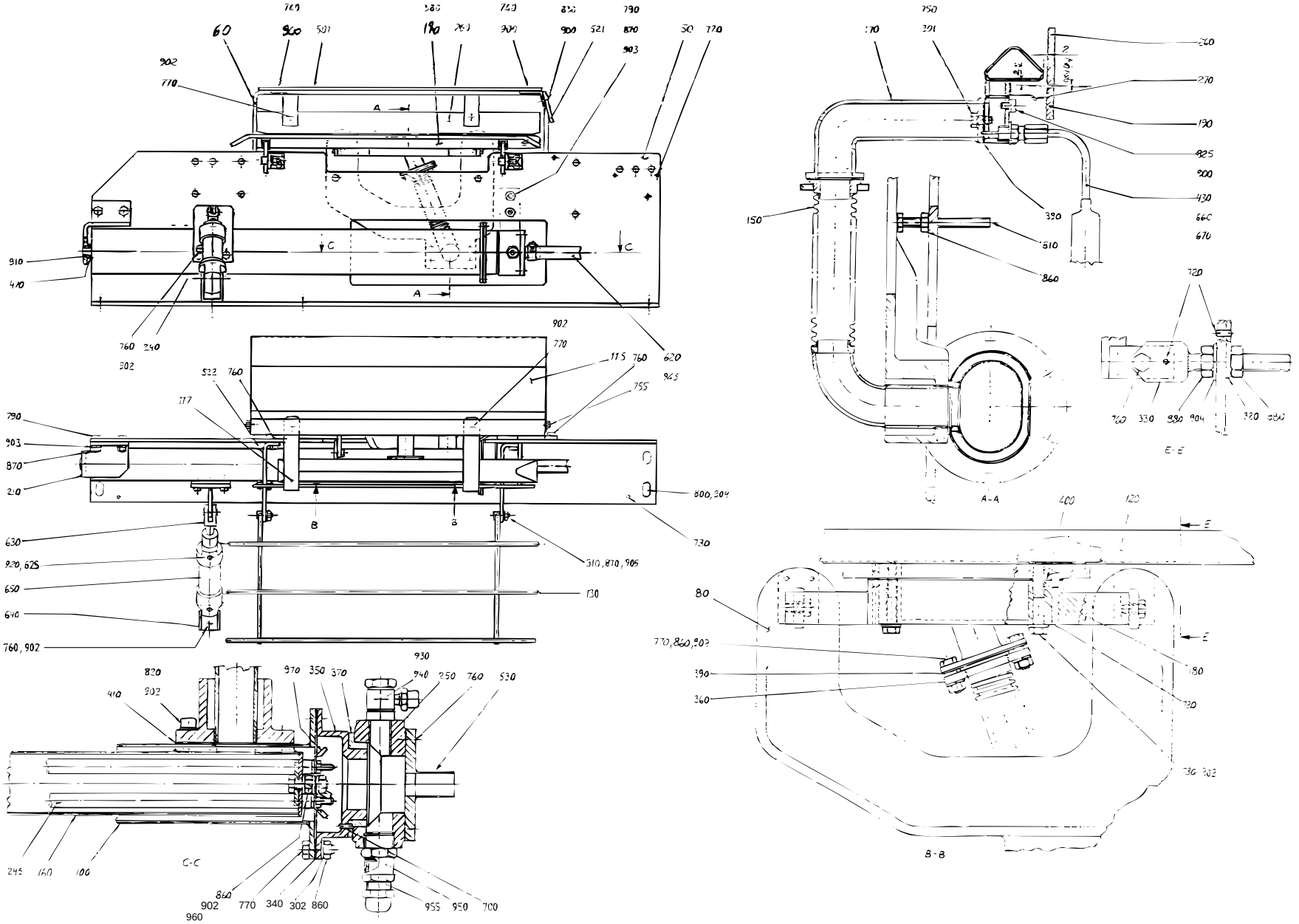

S-269112-5
ECN 19587

Pos	Part No	SP	UN	Qty	Description	Page No
TBA 0355B IH or TBA 0400B IH or TBA 0500S IH						
130	1296003-0000	-		1	PAPER SUPPORT	
245	267494-0000	F		1	COIL HEATER	
TBA 0375S IH						
130	1143677-0000	-		1	PAPER SUPPORT	
245	267494-0000	F		1	COIL HEATER	
TB 0500SQ US or TB 1000SQ US or TB 1500B US or TBA 0500B IH or TBA 0750B IH or TBA 0750S IH or TBA 1000B IH or TBA 1000S IH or TBA 1000SQ IH or TBA 1055B IH or TBA 1500S IH or TBO 1000B IH or TBO 1000SQ IH or TPA 1000S IH						
130	22560-0000	-		1	PAPER SUPPORT	
245	267494-0000	F		1	COIL HEATER	
TB 0300B TPC						
130	1143677-0000	-		1	PAPER SUPPORT	
245	251279-0000	F		1	COIL HEATER	
TB 0500B TPC or TB 0500SQ TPC or TB 1000S TPC or TB 1000SQ TPC or TB 1136B TPC						
130	22560-0000	-		1	PAPER SUPPORT	
245	251279-0000	F		1	COIL HEATER	
TB 0500S TPC						
130	1296003-0000	-		1	PAPER SUPPORT	
245	251279-0000	F		1	COIL HEATER	
Common parts						
050	526948-0000	-		1	MOUNTING SHEET	
060	442480-0000	-		1	BOW CLAMP	
080	32668-0000	-		1	ARM	
100	36749-0000	-		1	MANTLE	
115	571428-0000	-		1	TOUCH GUARD	
117	445669-0000	-		1	HOLDER	
120	283361-0000	K		1	AIR NOZZLE	
150	32451-0000	D		1	AIR DUCT	
160	32453-0000	-		1	MANTLE	
170	32474-0000	-		1	ATTACHMENT	
180	245189-0001	-		1	ATTACHMENT	
190	246342-0000	-		1	PAPER SUPPORT	
210	251490-0000	D		1	FASTENING BRACKET	
240	556550-0000	D		1	BRACKET	
250	283172-0000	-		1	BEARING HOUSING	
260	445670-0000	-		1	PAPER SUPPORT	
270	445688-0000	-		1	AIR GUIDE	
310	22559-0000	F		4	GRUB SCREW	
320	32213-0000	-		2	WASHER	
330	32215-0000	D		2	HOLDER	
340	531733-0000	F		1	GASKET	
350	32217-0000	-		1	BOTTOM SECTION	
360	32219-0000	-		1	WASHER	
370	32223-0000	K		1	BEARING	
380	32400-0000	-		2	HOLDER	
390	531734-0000	F		2	GASKET	
400	531735-0000	F		1	GASKET	
410	531736-0000	F		1	GASKET	
430	37768-0000	F		1	THERMOCOUPLE CR-AL	
470	230107-0000	F		1	WASHER	
501	246344-0000	-		1	HEAT GUARD	
521	251502-0000	-		1	HEAT GUARD	
522	592586-0000	-		2	HOLDER	
530	279672-0000	-		1	ATTACHMENT	
620	90166-0087	-	MM	600	HOSE	
625	90235-0274	F		2	THROTTLE CHECK VALVES,G1/8"	
630	90239-0516	D		1	PISTON ROD HEAD	
640	90239-0487	D		1	BRACKET	
650	90239-0829	K		1	CYLINDER 25-50	
660	90326-0012	F		1	PROTECTIVE COVER	
670	90326-0020	F		1	PLUG,FEMALE YELLOW CR-AL	
700	311103-0232	-		1	CYLINDRICACP M6 3X8 RFR	
720	311103-0267	-		10	CYLINDRICACP M6 4X10 RFR	
730	311305-0308	-		2	SLOTTED PIRPC5X16FZB	
740	312105-0291	-		4	SCREW M6S ISO 4017 M4X12 A280	
750	312105-0325	-		2	SCREW M6S5X10 A2 80	
755	312105-0364	-		4	SCREW M6S6X10RFR	
760	312105-0366	-		18	SCREW M6S ISO 4017 M6X12 A280	
770	312105-0368	-		16	SCREW M6S ISO 4017 M6X16 A280	
780	312105-0378	-		2	SCREW O4017 M6X40A280	
790	312105-0451	-		4	SCREW M6S ISO 4017 8X20 A280	
800	312105-0489	-		6	SCREW M6S ISO 4017 M10X16 A280	
810	312109-0381	-		2	SCREW M6S6X55HA480	
820	312115-0368	-		4	SCREW MC6S ISO 4762 M6X16 A280	
825	312125-0285	-		1	SLOTTED HEMCS4X6RFR	
830	312125-0287	-		2	SLOTTED CHEESE HEAD ISO 1207 M4X8 RFR	
860	312605-0316	-		12	NUT M6M6RFR	
870	312605-0318	-		8	NUT M6M8RFR	
880	312605-0320	-		4	NUT M6M10RFR	
900	315105-0136	-		7	WASHER BRB4,3X8RFR	
901	315105-0146	-		2	WASHER BRB5,3X10RFR	
902	315105-0153	-		27	WASHER BRB6,4X12RFR	
903	315105-0165	-		4	WASHER BRB8,4X16RFR	

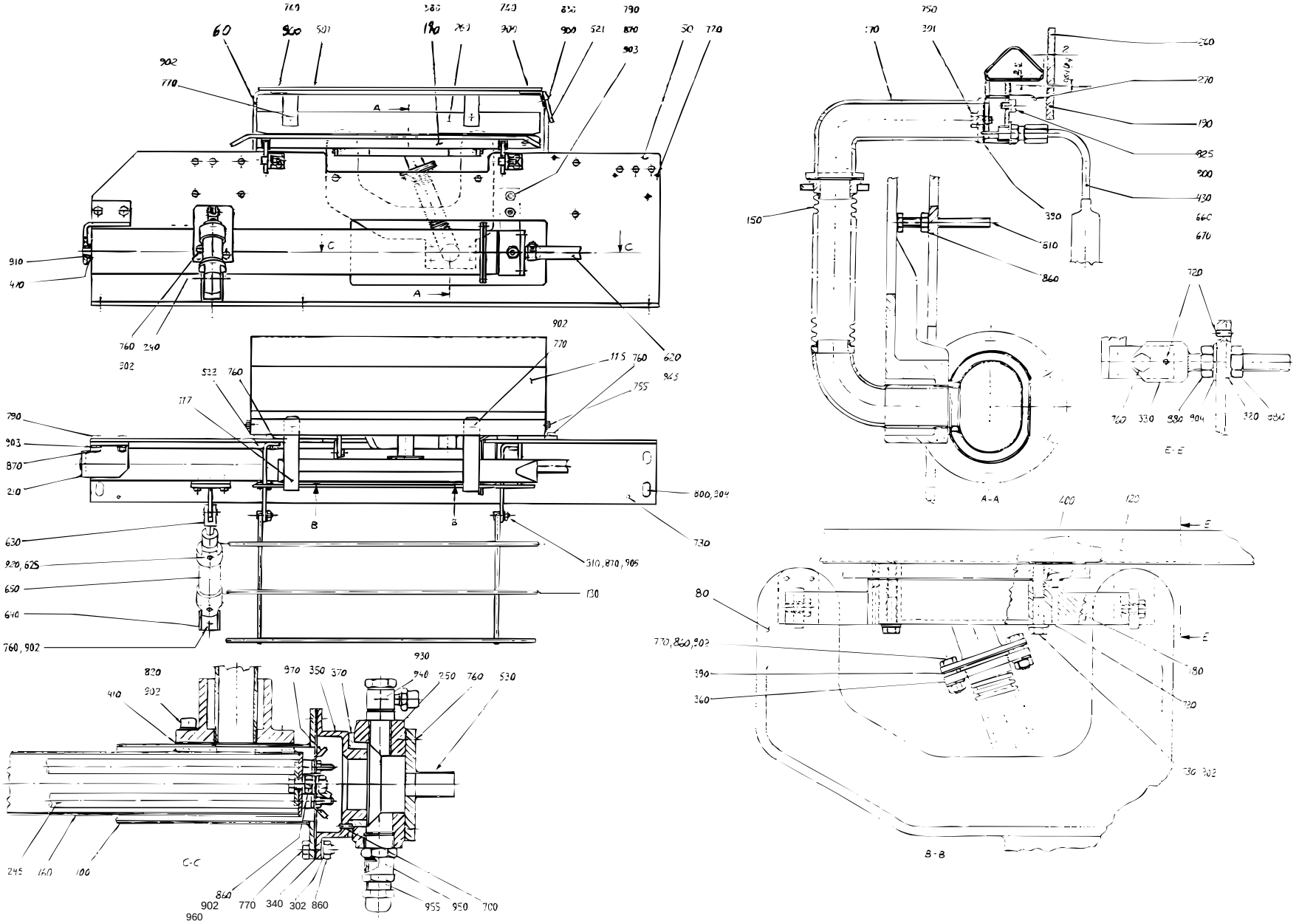

S-269112-5
ECN 19587

Pos	Part No	SP	UN	Qty	Description	Page No
904	315105-0173	-		6	WASHER BRB10,5X22RFR	
905	315121-0165	-		4	WASHER TBRSB8,4X26FZB	
910	321101-0173	F		1	FLANGE BUS 12F7X12	
920	342797-0121	-		2	BANJO CONNECTION,RINGPIECE 6-1/8"	
930	342797-0122	-		2	BANJO CONNECTION,RINGPIECE 6-1/4"	
940	342980-0304	-		1	BANJO-HOLLOW BOLT COUPL,EXT.THR.01-G1/4"	
945	342991-0103	-		2	HOSE CLIP,WORM DRIVE TYPE (19)-23	
950	352100-0106	-		1	CABLE GLANR.18,6-10,5	
955	352136-0113	-		1	GLAND FITTING	
960	353101-0134	-		1	CABLE SHOE	
970	353104-0130	-		2	CABLE SHOEYAV 025 M 4*	

Pos	Part No	SP	UN	Qty	Description	Page No

PRESSURE ROLLER

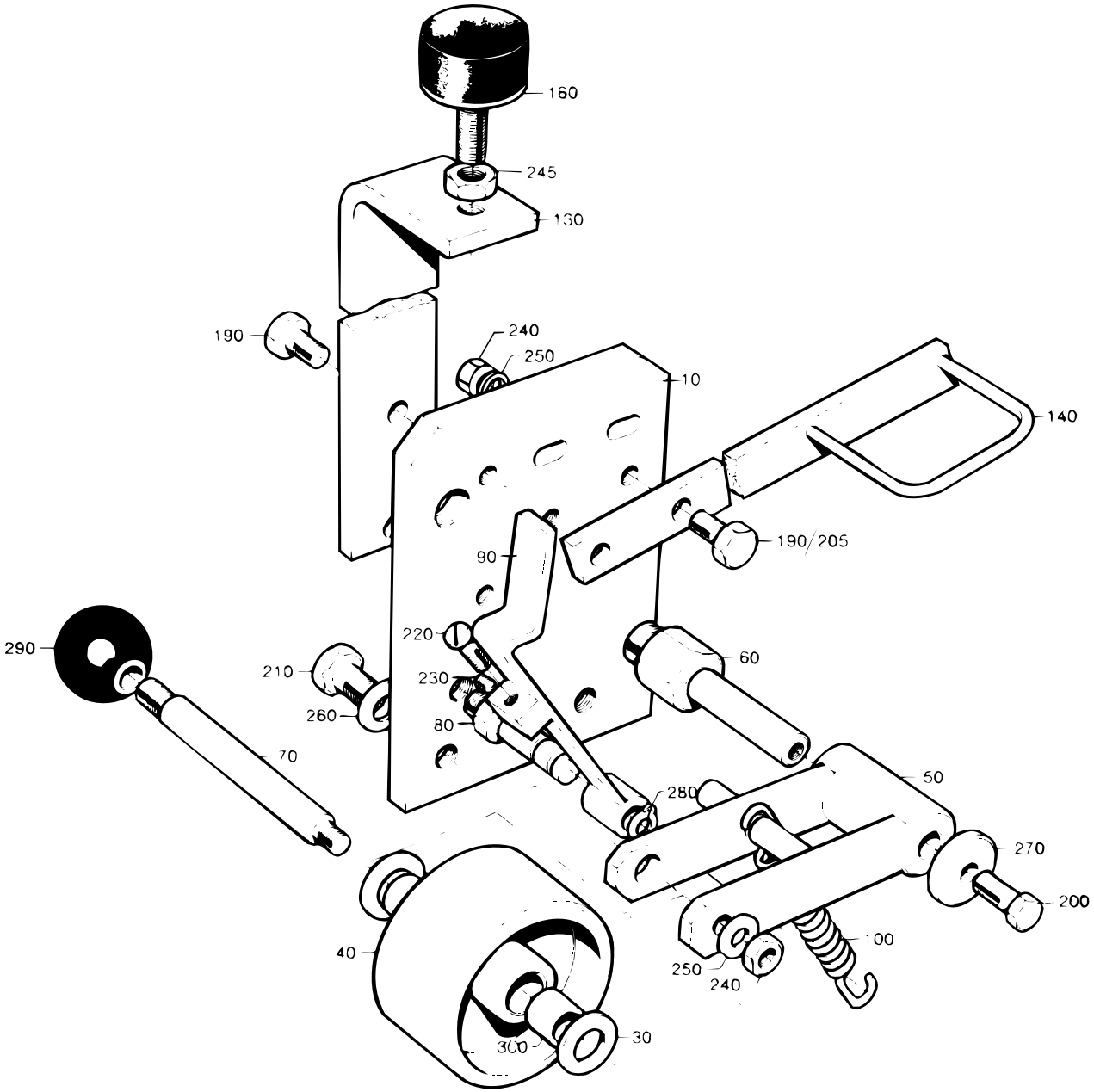

S-282529-1
ECN 8264

Pos	Part No	SP	UN	Qty	Description	Page No
TB/8						
190	312105-0366	-		2	SCREW M6S ISO 4017 M6X12 A280	
240	312605-0316	-		1	NUT M6M6RFR	
250	315105-0153	-		1	WASHER BRB6,4X12RFR	
TBA/8 or TBA/8LSC or TBA/8PRISMA or TBO/8						
140	282625-0000	D		1	EYELET	
190	312105-0366	-		3	SCREW M6S ISO 4017 M6X12 A280	
205	312105-0370	-		1	SCREW M6S ISO 4017 M6X20 A280	
240	312605-0316	-		2	NUT M6M6RFR	
250	315105-0153	-		3	WASHER BRB6,4X12RFR	
Common parts						
010	526947-0000	-		1	MOUNTING SHEET	
030	2033-0009	-		2	WASHER	
040	21903-0000	K		1	ROLL	
050	251493-0000	-		1	FORK	
060	251494-0000	-		1	SHAFT	
070	251495-0000	-		1	SHAFT	
080	251496-0000	-		1	SHAFT	
090	251498-0000	-		1	BARRIER	
100	279074-0000	K		1	TENSION SPRING	
130	282596-0000	D		1	SUPPORT	
160	90347-0004	K		1	VIBRATION DAMPER	
200	312105-0368	-		1	SCREW M6S ISO 4017 M6X16 A280	
210	312105-0449	-		2	SCREW M6S ISO 4017 M8X16 A280	
220	312125-0329	-		1	SLOTTED CHEESE HEAD ISO 1207 M5X16 RFR	
230	312318-0285	-		1	SET SCREW CUP POINT ISO 4029 M4X6 RFR	
245	312605-0318	-		1	NUT M6M8RFR	
260	315105-0165	-		2	WASHER BRB8,4X16RFR	
270	315121-0153	-		1	WASHER TBRSB6,4X22FZB	
280	315750-0105	-		1	CIRCLIP SGA8	
290	318800-0104	-		1	HANDLE BALLA D.30-M8	
300	321120-0104	K		2	BUSHING 10/12X10	

Pos	Part No	SP	UN	Qty	Description	Page No

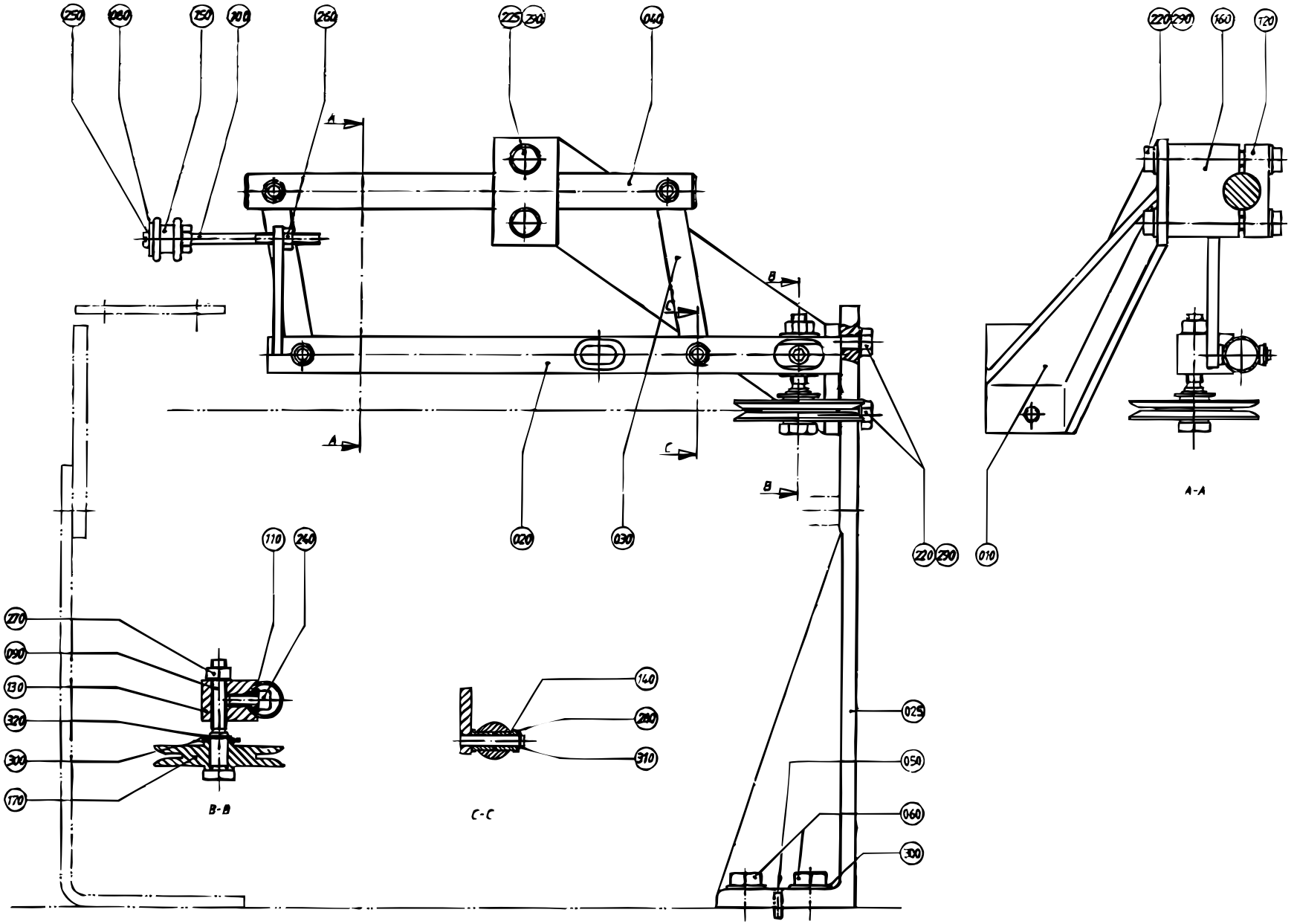

S-282634-2
ECN 8264

Pos	Part No	SP	UN	Qty	Description	Page No
TB/8 0300B						
020	450460-0002	-		1	GUIDE SHAFT	
025	266758-0000	-		1	CANTILEVER	
040	450461-0000	D		1	SHAFT	
045	486826-0001	-		1	SIGN "EMERGENCY STOP"	
050	311305-0308	-		2	SLOTTED PIRPC5X16FZB	
060	312105-0491	-		4	SCREW M6S ISO 4017 M10X20 A280	
180	90064-0124	-		1	EMERGENCY STOP BUTTON	
190	90066-0021	-		1	PUSH BUTTON BOX	
200	90089-0003	-		1	SLEEVE	
210	90152-0033	-	M	1	HOSE	
230	312125-0333	-		2	SLOTTED CHEESE HEAD ISO 1207 M5X25 RFR	
300	315105-0173	-		5	WASHER BRB10,5X22RFR	
330	352136-0113	-		1	GLAND FITTING	
TB/8 0500B or TB/8 0568B or TB/8 1000B or TB/8 1000S or TB/8 1136B						
020	239665-0000	D		1	GUIDE SHAFT	
025	266758-0000	-		1	CANTILEVER	
040	243151-0000	D		1	SHAFT	
045	486826-0001	-		1	SIGN "EMERGENCY STOP"	
050	311305-0308	-		2	SLOTTED PIRPC5X16FZB	
060	312105-0491	-		4	SCREW M6S ISO 4017 M10X20 A280	
180	90064-0124	-		1	EMERGENCY STOP BUTTON	
190	90066-0021	-		1	PUSH BUTTON BOX	
200	90089-0003	-		1	SLEEVE	
210	90152-0033	-	M	1	HOSE	
230	312125-0333	-		2	SLOTTED CHEESE HEAD ISO 1207 M5X25 RFR	
300	315105-0173	-		5	WASHER BRB10,5X22RFR	
330	352136-0113	-		1	GLAND FITTING	
TB/8 0500S						
020	450460-0001	D		1	GUIDE SHAFT	
025	266758-0000	-		1	CANTILEVER	
040	450461-0000	D		1	SHAFT	
045	486826-0001	-		1	SIGN "EMERGENCY STOP"	
050	311305-0308	-		2	SLOTTED PIRPC5X16FZB	
060	312105-0491	-		4	SCREW M6S ISO 4017 M10X20 A280	
180	90064-0124	-		1	EMERGENCY STOP BUTTON	
190	90066-0021	-		1	PUSH BUTTON BOX	
200	90089-0003	-		1	SLEEVE	
210	90152-0033	-	M	1	HOSE	
230	312125-0333	-		2	SLOTTED CHEESE HEAD ISO 1207 M5X25 RFR	
300	315105-0173	-		5	WASHER BRB10,5X22RFR	
330	352136-0113	-		1	GLAND FITTING	
TB/8 0500SQ or TB/8 1000SQ						
020	450460-0003	D		1	GUIDE SHAFT	
025	266758-0000	-		1	CANTILEVER	
040	450461-0000	D		1	SHAFT	
045	486826-0001	-		1	SIGN "EMERGENCY STOP"	
050	311305-0308	-		2	SLOTTED PIRPC5X16FZB	
060	312105-0491	-		4	SCREW M6S ISO 4017 M10X20 A280	
180	90064-0124	-		1	EMERGENCY STOP BUTTON	
190	90066-0021	-		1	PUSH BUTTON BOX	
200	90089-0003	-		1	SLEEVE	
210	90152-0033	-	M	1	HOSE	
230	312125-0333	-		2	SLOTTED CHEESE HEAD ISO 1207 M5X25 RFR	
300	315105-0173	-		5	WASHER BRB10,5X22RFR	
330	352136-0113	-		1	GLAND FITTING	
TBA/8 0355B or TBA/8 0400B or TBA/8 0500S						
020	450460-0001	D		1	GUIDE SHAFT	
040	450461-0000	D		1	SHAFT	
300	315105-0173	-		1	WASHER BRB10,5X22RFR	
TBA/8 0375S						
020	450460-0002	-		1	GUIDE SHAFT	
040	450461-0000	D		1	SHAFT	
300	315105-0173	-		1	WASHER BRB10,5X22RFR	
TBA/8 0500B or TBA/8 0750B or TBA/8 1000B or TBA/8 1000S or TBA/8 1055B or TBA/8LSC 1500S or TBO/8 1000B						
020	239665-0000	D		1	GUIDE SHAFT	
040	243151-0000	D		1	SHAFT	
300	315105-0173	-		1	WASHER BRB10,5X22RFR	
TBA/8 0750S or TBA/8 1000SQ or TBA/8PRISMA TPA 1000S or TBO/8 1000SQ						
020	450460-0003	D		1	GUIDE SHAFT	
040	450461-0000	D		1	SHAFT	
300	315105-0173	-		1	WASHER BRB10,5X22RFR	
TB/8 1500B						
020	592593-0000	-		1	GUIDE SHAFT	
040	243151-0000	D		1	SHAFT	
040	592592-0000	-		1	SHAFT	
045	486826-0001	-		1	SIGN "EMERGENCY STOP"	
050	311305-0308	-		2	SLOTTED PIRPC5X16FZB	
060	312105-0491	-		4	SCREW M6S ISO 4017 M10X20 A280	
180	90064-0124	-		1	EMERGENCY STOP BUTTON	

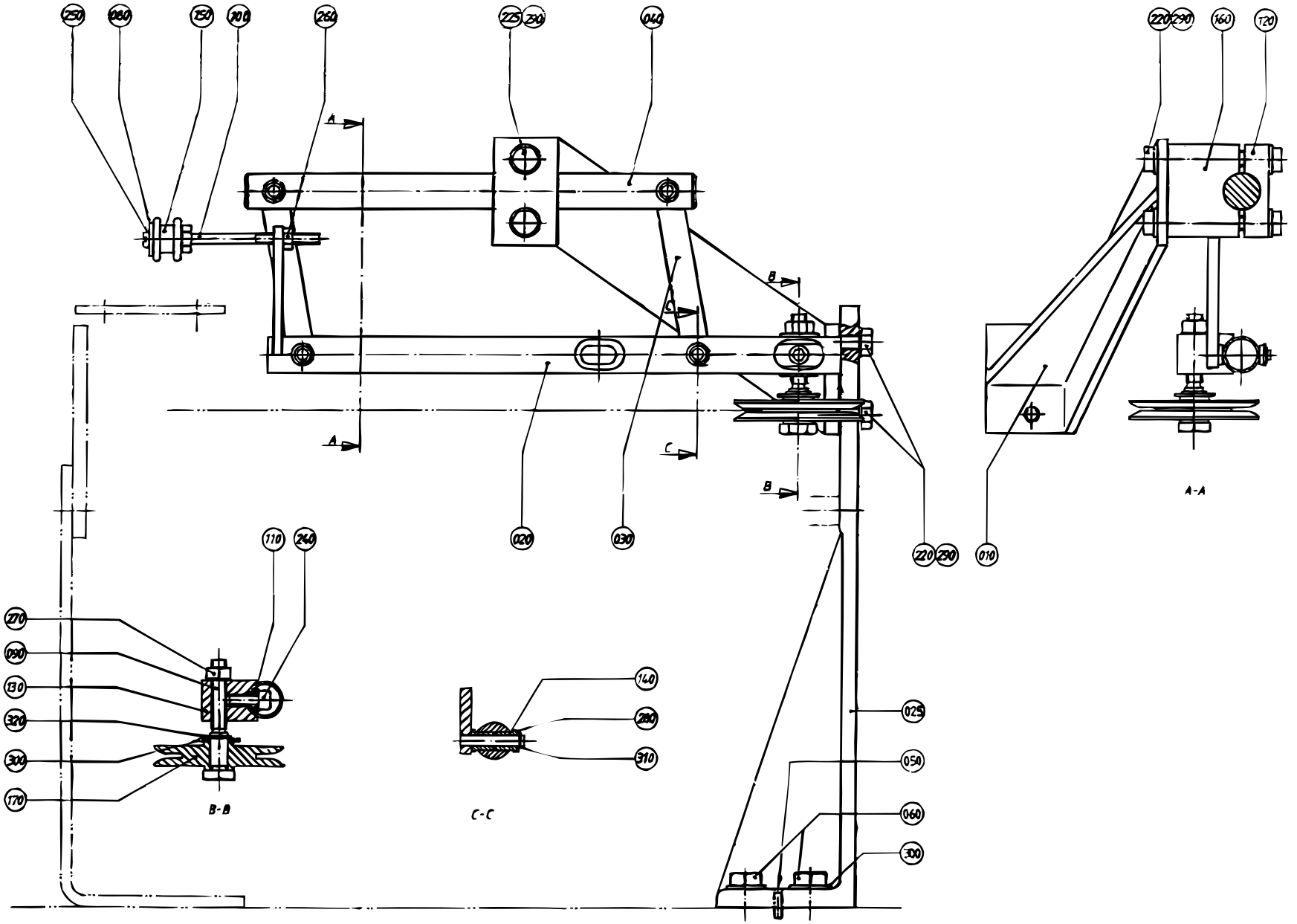

S-282634-2
ECN 8264

Pos	Part No	SP	UN	Qty	Description	Page No
190	90066-0021	-		1	PUSH BUTTON BOX	
200	90089-0003	-		1	SLEEVE	
210	90152-0033	-	M	1	HOSE	
230	312125-0333	-		2	SLOTTED CHEESE HEAD ISO 1207 M5X25 RFR	
300	315105-0173	-		5	WASHER BRB10,5X22RFR	
330	352136-0113	-		1	GLAND FITTING	
Common parts						
010	243218-0000	-		1	CANTILEVER	
030	31417-0000	K		2	LINK	
080	19262-0000	K		1	WASHER	
090	31418-0000	F		1	SHAFT	
100	31419-0000	K		1	SHAFT	
110	31420-0000	F		1	WASHER	
120	31423-0000	-		1	MOUNTING LUG	
130	31424-0000	D		1	ROLLER BRACKET	
140	255064-0000	F		8	BUSHING	
150	257923-0000	F		1	GUIDE WHEEL	
160	266761-0000	-		1	MOUNTING LUG	
170	282635-0000	-		1	GUIDE WHEEL	
215	90194-0016	-		1	SIGN "FLASH SIGN" 50X50MM	
220	312105-0451	-		4	SCREW M6S ISO 4017 8X20 A280	
225	312105-0455	-		2	SCREW M6S ISO 4017 M8X30 A280	
240	312115-0368	-		1	SCREW MC6S ISO 4762 M6X16 A280	
250	312125-0323	-		1	SLOTTED CHEESE HEAD ISO 1207 M5X8 RFR	
260	312605-0316	F		1	NUT M6M6RFR	
270	312605-0318	F		1	NUT M6M8RFR	
280	315105-0153	F		4	WASHER BRB6,4X12RFR	
290	315105-0165	-		6	WASHER BRB8,4X16RFR	
310	315754-0107	F		4	LOCKING WAE 5	
320	315754-0110	F		1	LOCKING WAE 9	

Pos	Part No	SP	UN	Qty	Description	Page No

SPLICE DETECTOR

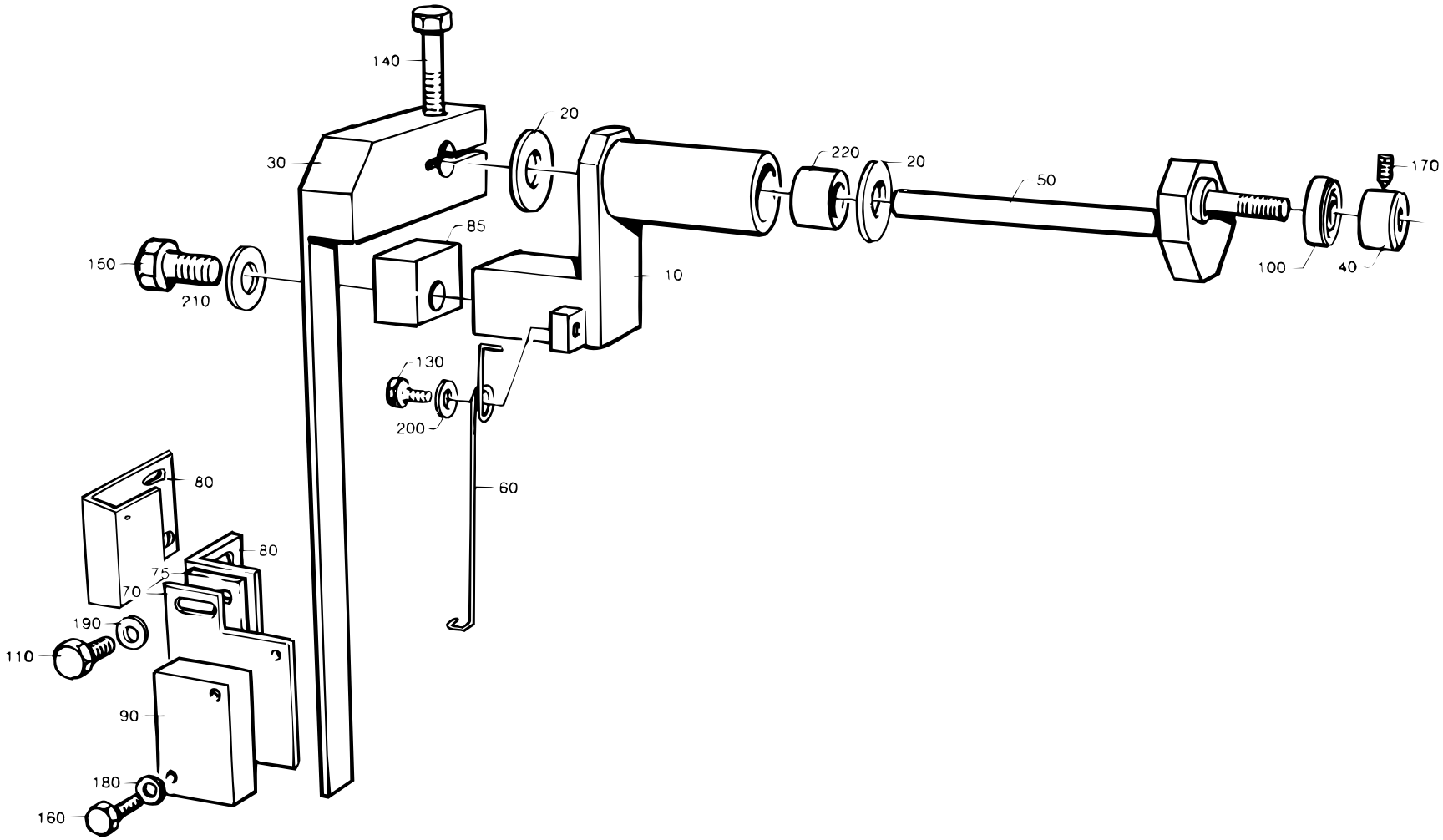

S-546180-1
ECN 12133

Pos	Part No	SP	UN	Qty	Description	Page No
TB/8						
060	529401-0000	-		1	SPRING	
075	479714-0000	-		1	FASTENING PLATE	
080	479715-0000	-		1	ANGLE BRACKET	
085	542269-0000	-		1	SPACER	
135	312105-0368	-		2	SCREW M6S ISO 4017 M6X16 A280	
210	315105-0153	-		4	WASHER BRB6,4X12RFR	
TBA/8 or TBA/8LSC or TBA/8PRISMA or TBO/8						
060	272466-0000	-		1	SPRING	
070	450117-0000	-		1	HOLDER	
210	315105-0153	-		2	WASHER BRB6,4X12RFR	
Common parts						
010	450116-0000	-		1	CANTILEVER	
020	271211-0000	-		2	WASHER	
030	271653-0000	-		1	ARM	
040	271654-0000	-		1	RETAINING RING	
050	271655-0000	-		1	HOLDER	
090	90044-0104	-		1	PROX.SWITCHIFM IN 3002	
100	90214-0138	-		1	BALL BEARING	
110	312105-0287	-		2	SCREW M6S ISO 4017 M4X8 A280	
130	312105-0327	-		1	SCREW M6S ISO 4017 M5X12 A280	
140	312105-0370	-		1	SCREW M6S ISO 4017 M6X20 A280	
150	312105-0372	-		2	SCREW M6S ISO 4017 M6X25 A280	
160	312115-0228	-		2	SCREW MC6S ISO 4762 M3X16 A280	
170	312318-0283	-		1	SET SCREW CUP POINT ISO 4029 M4X4 RFR	
180	315105-0124	-		2	WASHER BRB3,2X6RFR	
190	315105-0136	-		2	WASHER BRB4,3X8RFR	
200	315105-0146	-		1	WASHER BRB5,3X10RFR	
220	321127-0100	-		2	BUSHING 10/13X10	

Pos	Part No	SP	UN	Qty	Description	Page No

This page is intentionally left blank

Pos	Part No	SP	UN	Qty	Description	Page No
TB/8 TPC						
010	251279-0000	-		1	COIL HEATER	
TB/8 US or TBA/8 or TBA/8LSC or TBA/8PRISMA or TBO/8						
010	267494-0000	-		1	COIL HEATER	
Common parts						
020	21903-0000	-		1	ROLL	
030	531733-0000	-		1	GASKET	
040	531734-0000	-		2	GASKET	
050	531735-0000	-		1	GASKET	
060	531736-0000	-		1	GASKET	

Pos	Part No	SP	UN	Qty	Description	Page No

STRIP MAGAZINE

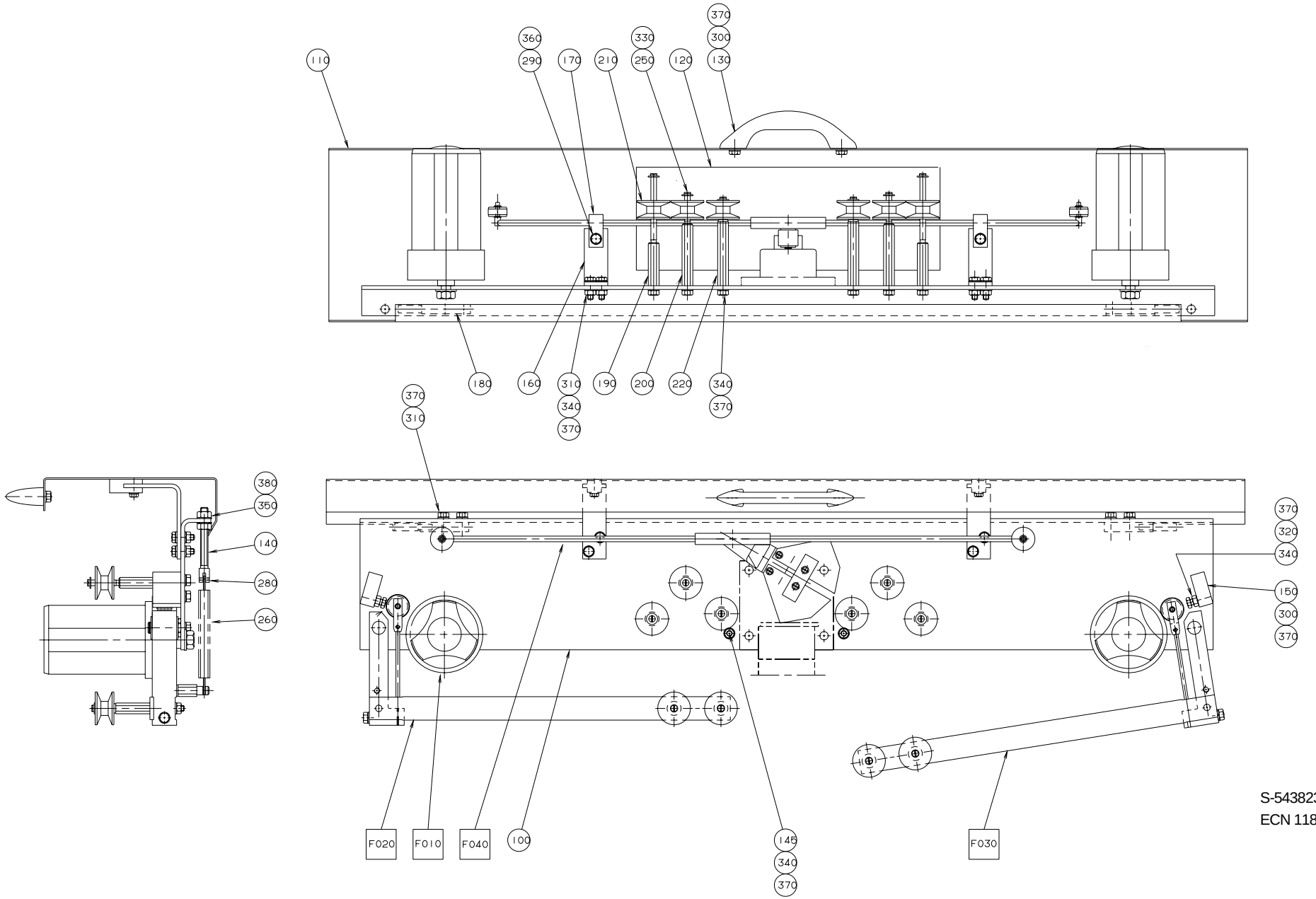

S-543823-1
ECN 11854

Pos	Part No	SP	UN	Qty	Description	Page No
-						
F010	A 537329-0100	-		2	HUB JUMBO	721
F020	A 543822-0100	-		1	BRAKE ARM	723
F030	A 594620-0100	-		1	BRAKE ARM	725
F040	A 543821-0100	-		1	LEVEL PROBE	727
100	540869-0000	-		1	SHEET	
110	543818-0000	-		1	PROTECTION PLATE	
120	545113-0000	-		1	SIGN	
130	7309-0000	-		1	HANDLE	
140	541068-0000	D		2	SPRING HOLDER	
145	541172-0000	-		2	SET SCREW	
150	541173-0000	-		2	STOP	
160	543125-0000	-		2	ANGLE	
170	543126-0000	-		2	STOP LUG	
180	543819-0000	-		2	HINGE	
190	544725-0000	K		2	AXLE PIN	
200	544727-0000	K		2	AXLE PIN	
210	B 544730-0000	F		6	ROLL	
220	536916-0000	K		2	AXLE PIN	
250	90005-0082	-		6	WASHER	
260	90335-0015	K		2	SPRING	
280	311112-0205	-		2	SLOTTED TURP 3X10 RFR	
290	312105-0327	-		2	SCREW M6S ISO 4017 M5X12 A280	
300	312105-0366	-		6	SCREW M6S ISO 4017 M6X12 A280	
310	312105-0368	-		8	SCREW M6S ISO 4017 M6X16 A280	
320	312109-0374	-		2	SCREW M6S ISO 4017 M6X30 A280	
330	312125-0287	-		6	SLOTTED CHEESE HEAD ISO 1207 M4X8 RFR	
340	312605-0316	-		14	NUT M6M6RFR	
350	312605-0318	-		4	NUT M6M8RFR	
360	315105-0146	-		2	WASHER BRB5,3X10RFR	
370	315105-0153	-		24	WASHER BRB6,4X12RFR	
380	315105-0165	-		4	WASHER BRB8,4X16RFR	

Pos	Part No	SP	UN	Qty	Description	Page No

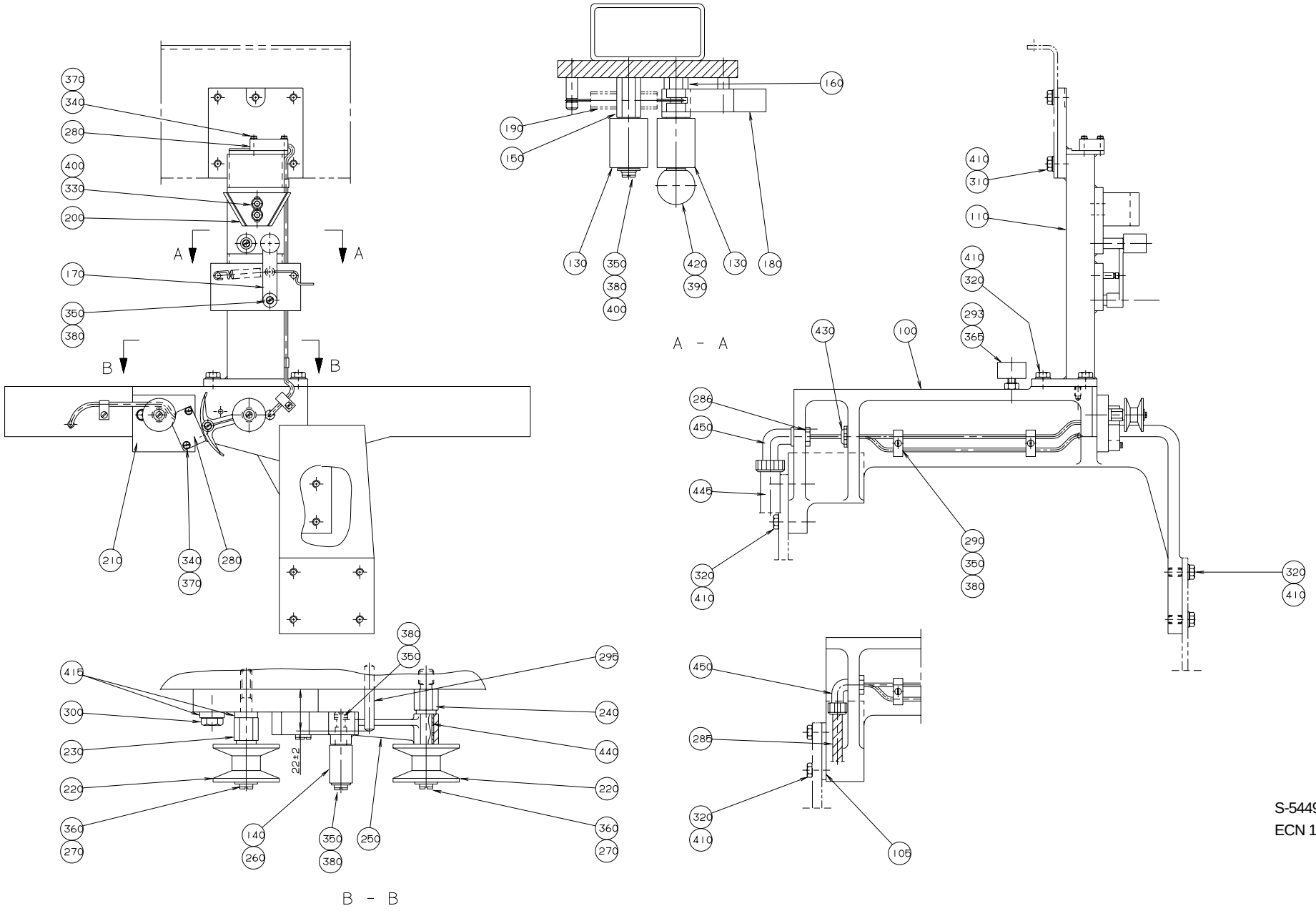

S-544973-1
ECN 17189

Pos	Part No	SP	UN	Qty	Description	Page No
TB/8 0300B						
100	546030-0002	D		1	CANTILEVER	
TB/8 0500B or TB/8 0568B or TB/8 0750B or TB/8 1000B or TB/8 1000S or TB/8 1136B or TBA/8 0500B or TBA/8 0750B or TBA/8 1000B or TBA/8 1000S or TBA/8 1055B or TBA/8LSC 1500S or TBO/8 1000B						
100	545138-0000	D		1	CANTILEVER	
430	352101-0103	-		1	LEAD IN G 18,6	
TB/8 0500S or TBA/8 0355B or TBA/8 0375S or TBA/8 0400B or TBA/8 0500S						
100	546030-0001	D		1	CANTILEVER	
TB/8 0500SQ or TB/8 1000SQ or TBA/8 1000SQ or TBO/8 1000SQ						
100	546030-0002	D		1	CANTILEVER	
105	574037-0000	-		1	SPACER	
TBA/8 0750S or TBA/8PRISMA TPA 1000S						
100	546030-0002	D		1	CANTILEVER	
105	546031-0000	D		1	SPACER	
TB/8 1500B						
100	545138-0000	D		1	CANTILEVER	
105	592588-0000	D		1	SPACER	
430	352101-0103	-		1	LEAD IN G 18,6	
Common parts						
110	544974-0000	D		1	PILLAR	
130	232979-0000	F		2	PRESSURE ROLLER	
140	249298-0000	F		1	ROLL	
150	269053-0001	K		1	SHAFT	
160	269053-0003	K		1	SHAFT	
170	269054-0000	K		1	ARM	
180	269056-0000	K		1	CATCH	
190	269057-0000	K		1	TENSION SPRING	
200	279480-0000	D		1	STEERING RAIL	
210	547571-0000	-		1	PLATE	
220	B 544730-0000	F		2	ROLL	
230	547924-0000	K		1	AXLE PIN	
240	547925-0000	K		1	AXLE PIN	
250	545111-0000	K		1	ARM	
260	545112-0000	K		1	SHAFT	
270	90005-0082	-		2	WASHER	
280	90044-0104	F		2	PROX.SWITCHIFM IN 3002	
286	90099-0002	-		1	NUT	
290	90165-0060	-		11	CLAMP	
293	90347-0004	-		1	VIBRATION DAMPER	
295	311103-0316	-		1	CYLINDRICACP M6 5X35 RFR	
300	312105-0372	-		1	SCREW M6S ISO 4017 M6X25 A280	
310	312105-0449	-		4	SCREW M6S ISO 4017 M8X16 A280	
320	312105-0452	-		10	SCREW M6S8X22RFR	
330	312115-0366	-		2	SCREW MC6S ISO 4762 M6X12 A280	
340	312125-0228	-		4	SLOTTED CHEESE HEAD ISO 1207 M3X16 RFR	
350	312125-0285	-		12	SLOTTED HEMCS4X6RFR	
360	312125-0287	-		2	SLOTTED CHEESE HEAD ISO 1207 M4X8 RFR	
365	312605-0318	-		1	NUT M6M8RFR	
370	315105-0124	-		4	WASHER BRB3,2X6RFR	
380	315105-0136	-		12	WASHER BRB4,3X8RFR	
390	315105-0146	-		1	WASHER BRB5,3X10RFR	
400	315105-0153	-		3	WASHER BRB6,4X12RFR	
410	315105-0165	-		14	WASHER BRB8,4X16RFR	
415	315115-0153	-		2	WASHER TBRB6,4X12RFR	
420	318800-0102	-		1	HANDLE BALLA D.20-M5	
440	321120-0101	-		2	BUSHING 6/8X6	
445	352135-0106	-	MM	430	HOSE .016	
450	352137-0127	-		1	GLAND FITTING	

This page is intentionally left blank

Pos	Part No	SP	UN	Qty	Description	Page No
90125-0020						
	270926-0000	K		6	NUT	
90125-0020						
	270927-0000	K		3	SCREW	
90125-0020						
	294464-0000	K		1	BASE PLATE	
90264-0042						
	90264-0306	-		1	SILENCER	
445691-0000						
	573664-0000	-		1	CANTILEVER	
535613-0000						
	90266-0174	-	M	2	PIPE	
535613-0000						
	342808-0103	-		2	ELBOW PIPE38	
535614-0000						
	90266-0022	-	M	1	DAIRY PIPE	
535614-0000						
	342808-0103	-		2	ELBOW PIPE38	
535614-0000						
	342810-0103	-		1	ELBOW PIPE38	
544730-0000						
	321120-0101	-		2	BUSHING 6/8X6	

Pos	Part No	SP	UN	Qty	Description	Page No

Tetra Pak

SPC

Spare Parts Catalogue

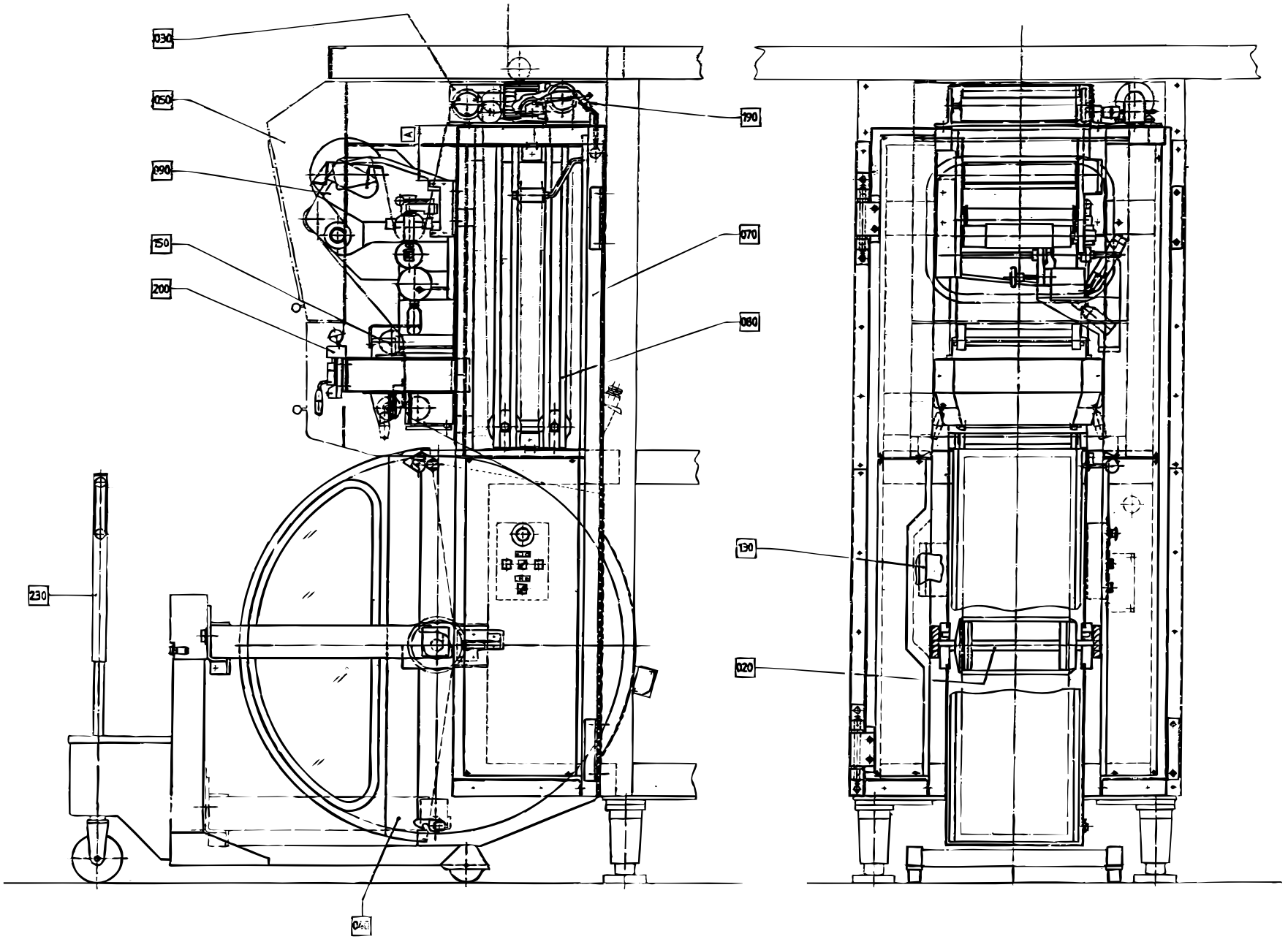

S-648013-6
ECN 20106

Pos	Part No	SP	UN	Qty	Description	Page No
F020	A 440285-0100	-		2	PAPER REEL HOLDER	767
F030	A 445840-0100	-		1	DRIVE UNIT	769
F040	A 556875-0100	-		1	COVER	771
F050	A 530745-0400	-		1	SIDE GUARD	773
F070	A 440133-0400	-		1	MACHINE BODY	775
F080	A 440210-0200	-		1	ROLL	777
F090	A 486958-0200	-		1	DATING UNIT	779
F130	A 445920-0600	-		1	EL-PNEUMATIC EQUIPMENT	805
F150	A 445880-0600	-		1	SPLICING DEVICE	807
F190	A 445930-0100	-		1	BENDING UNIT	823
F200	A 522121-0200	-		1	CUTTING TABLE	825
F220	A 440132-0200	-		1	START-UP KIT	827
F230	A 576739-0200	-		1	(PAPER)REEL TROLLEY	829

Pos	Part No	SP	UN	Qty	Description	Page No

PAPER REEL HOLDER

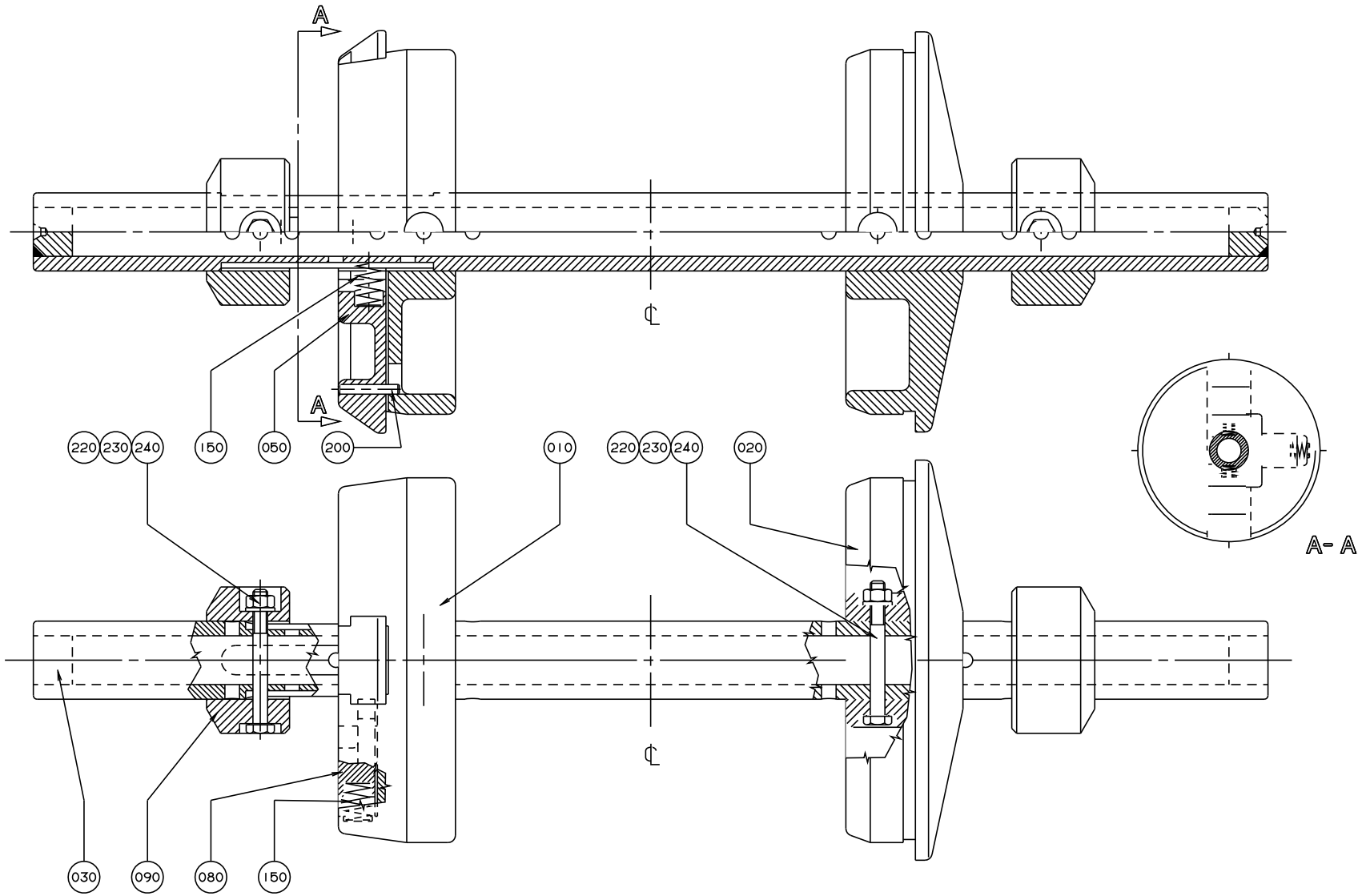

S-440285-1
ECN 19398

Pos	Part No	SP	UN	Qty	Description	Page No
TB 0180B or TB 0200B or TB 0200S or TB 0236B or TB 0250B or TB 0300B or TB 0500S or TBA 0180B or TBA 0189B or TBA 0200B or TBA 0200S or TBA 0236B or TBA 0250B or TBA 0284B or TBA 0355B or TBA 0375S or TBA 0400B or TBA 0500S						
010	272814-0000	D		1	SLEEVE	
020	272815-0001	D		1	SLEEVE	
050	575002-0000	K		2	PLUNGER	
090	440259-0000	D		2	RETAINING RING	
220	312101-0381	-		4	SCREW M6S6X55FZB	
230	312812-0316	-		4	LOCK NUT A2-M6RFR	
240	315101-0153	-		4	WASHER BRB6,4X12FZB	
TB 1000S or TBA 1000S						
010	569944-0000	D		1	SLEEVE	
020	569945-0000	D		1	SLEEVE	
050	575003-0000	K		2	PLUNGER	
220	312101-0381	-		2	SCREW M6S6X55FZB	
230	312812-0316	-		2	LOCK NUT A2-M6RFR	
240	315101-0153	-		2	WASHER BRB6,4X12FZB	
TB 0500B or TB 0568B or TB 1000B or TB 1136B or TBA 0500B or TBA 0750B or TBA 1000B or TBA 1055B or TBA 1500S or TBO 1000B						
010	272814-0000	D		1	SLEEVE	
020	272815-0001	D		1	SLEEVE	
050	575002-0000	K		2	PLUNGER	
220	312101-0381	-		2	SCREW M6S6X55FZB	
230	312812-0316	-		2	LOCK NUT A2-M6RFR	
240	315101-0153	-		2	WASHER BRB6,4X12FZB	
TBA 0750S or TPA 1000S						
010	272814-0000	D		1	SLEEVE	
020	272815-0001	D		1	SLEEVE	
050	575002-0000	K		2	PLUNGER	
090	544277-0000	D		2	RETAINING RING	
210	311112-0350	-		2	SLOTTED TURP 6X55 RFR	
220	312101-0381	-		2	SCREW M6S6X55FZB	
230	312812-0316	-		2	LOCK NUT A2-M6RFR	
240	315101-0153	-		2	WASHER BRB6,4X12FZB	
TB 0500SQ or TB 1000SQ or TBA 1000SQ or TBO 1000SQ						
010	272814-0000	D		1	SLEEVE	
020	272815-0001	D		1	SLEEVE	
050	575002-0000	K		2	PLUNGER	
090	574051-0000	-		2	RETAINING RING	
TB 1500B						
010	272814-0000	D		1	SLEEVE	
020	593560-0000	D		1	SLEEVE	
050	593561-0000	K		2	PLUNGER	
220	312101-0381	-		2	SCREW M6S6X55FZB	
230	312812-0316	-		2	LOCK NUT A2-M6RFR	
240	315101-0153	-		2	WASHER BRB6,4X12FZB	
Common parts						
030	440260-0000	D		1	SHAFT	
080	272728-0000	K		1	BARRIER	
150	90335-0025	F		3	SPRING	
200	311103-0274	-		2	CYLINDRICACP 4X25 RFR	

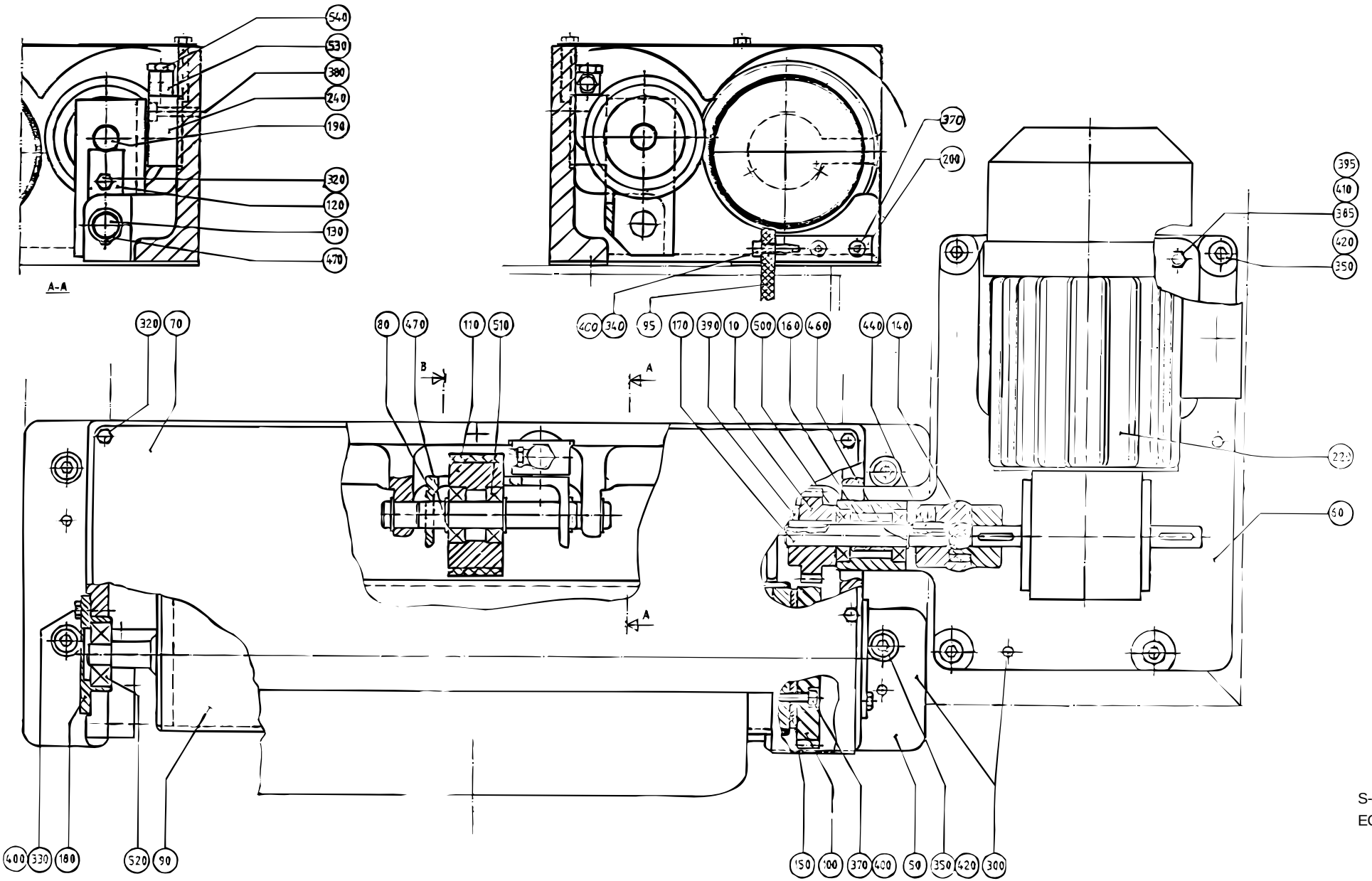

S-445840-1
ECN 9113

Pos	Part No	SP	UN	Qty	Description	Page No
TB/1 or TB/5 or TB/8 0300B or TB/8 0500B or TB/8 0568B or TBA/3 or TBA/5						
010	445854-0001	D		1	GEAR WHEEL	
050	445841-0000	D		1	CANTILEVER	
070	450363-0000	-		1	LID	
TB/8 1000B or TB/8 1136B or TBA/8 or TBA/8LSC or TBA/8PRISMA						
010	445854-0002	D		1	GEAR WHEEL	
050	445841-0000	D		1	CANTILEVER	
070	450363-0000	-		1	LID	
TB/8 1500B						
010	445854-0002	D		1	GEAR WHEEL	
050	593641-0000	D		1	CANTILEVER	
070	595214-0000	-		1	LID	
Common parts						
060	445842-0000	D		1	MOTOR PLATE	
080	445837-0000	D		1	CANTILEVER	
090	445845-0000	D		1	DRIVE ROLLER	
095	526680-0000	-		1	FENDER WALING	
100	207019-0003	D		1	GEAR WHEEL	
110	266710-0000	D		1	WHEEL	
120	445839-0000	-		1	SECURING PLATE	
130	445847-0000	-		1	SHAFT	
140	445848-0000	D		1	ELASTIC COUPLING	
150	445849-0000	-		1	SPACER DISC	
160	445850-0000	D		1	SPACER SLEEVE	
170	445851-0000	D		1	SHAFT	
180	445852-0000	D		2	LID	
190	445838-0000	-		1	SHAFT	
200	476503-0000	-		2	BRACKET	
220	B 90069-0116	K		1	WORM GEAR MOTOR REPBY 90069-281	
240	90239-0259	K		1	CYLINDER	
300	311102-0353	-		4	CYLINDRICACP M6 6X20	
320	312101-0323	-		6	SCREW M6S5X8FZB	
330	312101-0329	-		6	SCREW M6S5X16FZB	
340	312105-0331	-		2	SCREW M6S ISO 4017 M5X20 A280	
350	312111-0449	-		8	SCREW MC6S8X16FZB	
370	312111-0331	-		7	SCREW MC6S5X20FZB	
380	312111-0333	-		2	SCREW MC6S5X25FZB	
385	312111-0371	-		4	SCREW MC6S6X22FZB	
390	312316-0285	-		1	STOP SCREW SK6SS4X6FZB	
395	312601-0316	-		4	NUT M6M6FZB	
400	315101-0146	-		11	WASHER BRB5,3X10FZB	
410	315101-0153	-		4	WASHER BRB6,4X12FZB	
420	315101-0165	-		8	WASHER BRB8,4X16FZB	
440	315701-0169	-		2	FLAT WEDGE4X4X18	
460	315750-0109	-		1	CIRCLIP SGA12	
470	315750-0112	-		4	CIRCLIP SGA15	
500	321308-0201	-		2	BALL BEARISKF6001-2RS	
510	321308-0202	-		2	BALL BEARISKF6002-2RS	
520	321316-0201	-		2	BALL BEARISKF6301-2RS	
530	342980-0113	-		1	BANJO-CONNECTION,RING 6/4-G1/8"	
540	342980-0303	-		1	BANJO-HOLLOW BOLT COUPL,EXT.THR.01-G1/8"	

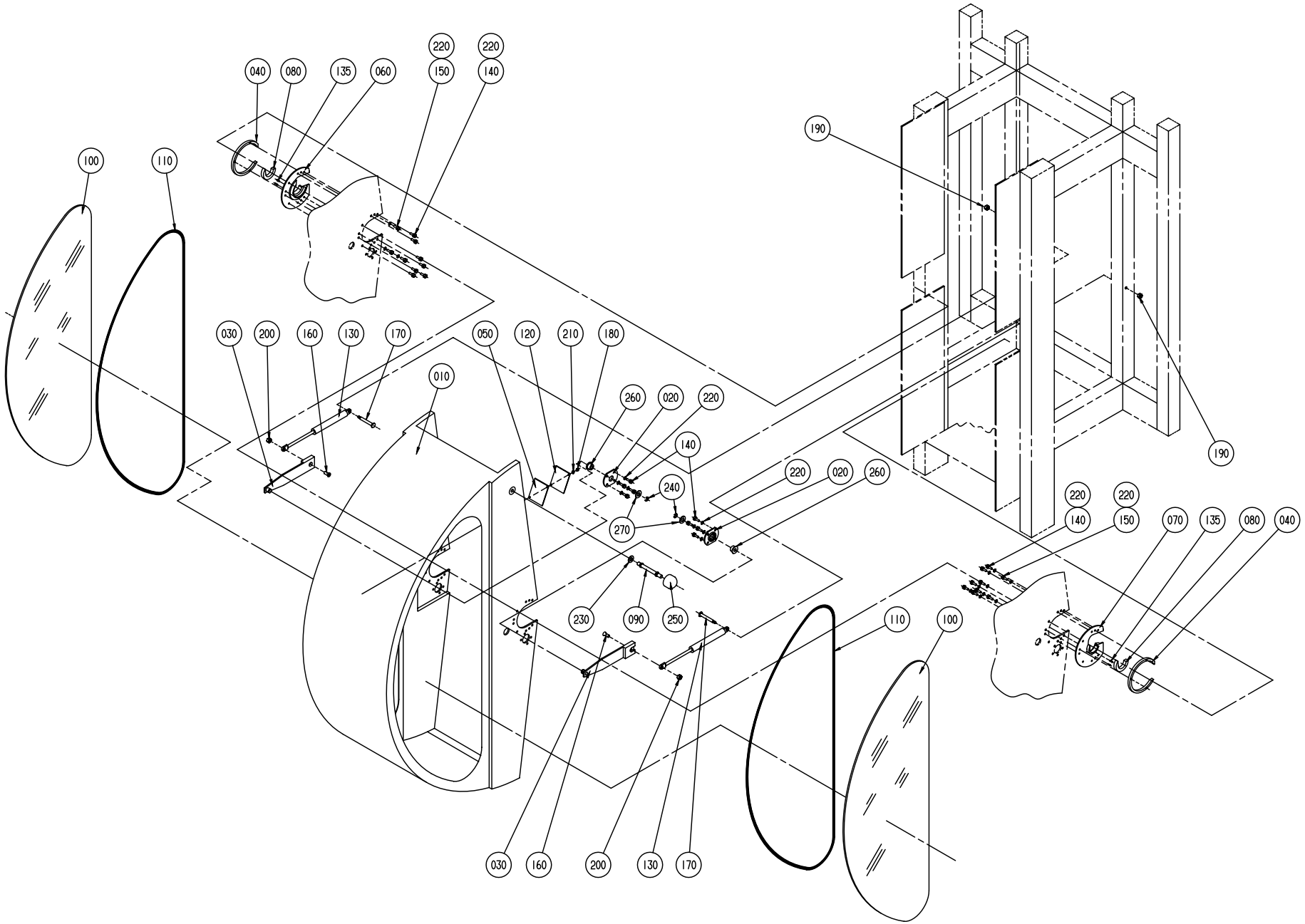

S-556875-1
ECN 70071

Pos	Part No	SP	UN	Qty	Description	Page No
TB 0300B or TB 0500B or TB 0500S or TB 0500SQ or TB 0568B or TB 1000B or TB 1000S or TB 1000SQ or TB 1136B or TBA 0355B or TBA 0375S or TBA 0400B or TBA 0500B or TBA 0500S or TBA 0750B or TBA 0750S or TBA 1000B or TBA 1000S or TBA 1000SQ or TBA 1055B or TBA 1500S or TBO 1000B or TBO 1000SQ or TPA 1000S						
010	556879-0000	-		1	COVER	
100	440251-0000	D		2	GLASS PANE	
110	90143-0039	D	MM	5200	STRIP	
TB 1500B						
010	593564-0000	-		1	COVER	
100	593565-0000	D		2	GLASS PANE	
115	90157-0041	D		x	SEALING COMPOUND	
Common parts						
020	556872-0000	-		2	BEARING UNIT	
030	556873-0000	-		2	EXTENSION PIECE	
040	556874-0000	-		2	BLOCKING RING	
050	1143605-0000	-		1	SPACER	
060	440247-0000	-		1	HOLDER	
070	440248-0000	-		1	HOLDER	
080	440249-0000	F		2	SLIDE BELT	
090	440250-0000	-		1	AXLE PIN	
120	90232-0333	D		1	REFLECTOR	
130	90347-0108	-		2	DAMPER	
135	311103-0233	-		4	CYLINDRICACP M6 3X10 RFR	
140	312105-0323	-		22	SCREW M6S ISO 4017 M5X8 A280	
150	312105-0331	-		6	SCREW M6S ISO 4017 M5X20 A280	
160	312155-0453	-		2	SCREW MF6S DIN 7991 M8X25 A280	
170	568166-0000	-		2	REAMED BOLT	
180	312605-0310	-		2	NUT M6M3RFR	
190	312605-0316	-		2	NUT M6M6RFR	
200	312811-0318	-		2	LOCK NUT M8RFR	
210	315105-0124	-		2	WASHER BRB3,2X6RFR	
220	315105-0146	-		28	WASHER BRB5,3X10RFR	
230	315105-0173	-		1	WASHER BRB10,5X22RFR	
240	315755-0111	-		2	LOCKING WAE 10 RFR	
250	318800-0106	-		1	HANDLE BALLA D.40-M10	
260	321111-0157	-		2	FLANGE BUS 12E7X8	
270	321129-0104	-		2	THRUST WAS12/24X1,5	

Pos	Part No	SP	UN	Qty	Description	Page No

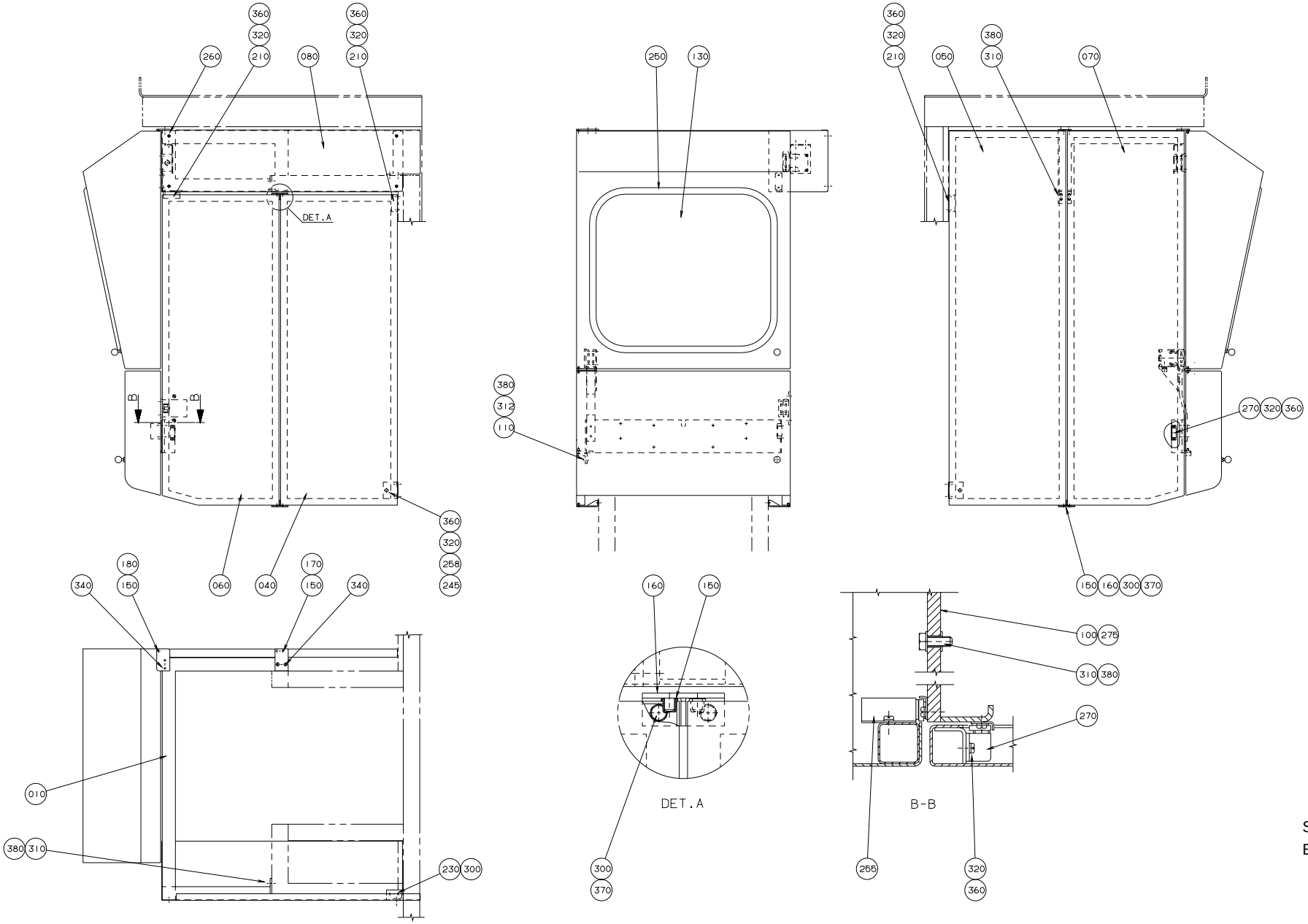

S-530745-4
ECN 20082

Pos	Part No	SP	UN	Qty	Description	Page No
-						
010	445861-0000	-		1	FRAME	
020	571418-0000	-		1	HOOD	
030	571419-0000	-		1	HOOD	
040	445863-0000	-		1	PROTECTION	
050	529498-0000	-		1	SIDE GUARD RIGHT	
060	573507-0000	-		1	SIDE GUARD	
070	529476-0000	-		1	SIDE GUARD	
080	571421-0000	-		1	COVER	
100	573508-0000	-		1	MOUNTING BAR	
110	556868-0000	-		1	ANGLE	
115	571424-0000	-		1	HINGE	
120	571425-0000	-		1	BRACKET	
125	572246-0000	-		1	BRACKET	
130	571423-0000	-		1	GLASS PANE	
135	576410-0000	-		1	BRACKET	
150	436991-0000	K		10	BEARING	
160	445872-0000	-		3	HINGE	
170	445873-0000	-		1	HINGE	
180	445874-0000	-		1	HINGE	
210	445877-0000	-		3	SUPPORT	
230	445879-0000	-		1	SUPPORT	
245	525385-0000	-		2	BRACKET	
247	B 90044-0103	-		2	KEY SAFETY SWITCH	
248	90044-0139	-		1	KEY SAFETY SWITCH	
250	90143-0039	-	MM	2000	STRIP	
255	90237-0046	-		2	LOCK PART	
258	90237-0075	-		2	SNAP LOCK	
260	90287-0075	-		6	SCREW	
265	90287-0076	-		2	SCREW	
270	90339-0011	-		2	LOCK	
275	311102-0350	-		2	CYLINDRICACP M6 6X14	
278	311103-0270	-		2	CYLINDRICACP M6 4X16 RFR	
300	312105-0327	-		12	SCREW M6S ISO 4017 M5X12 A280	
310	312105-0368	-		10	SCREW M6S ISO 4017 M6X16 A280	
312	312105-0370	-		1	SCREW M6S ISO 4017 M6X20 A280	
315	312105-0455	-		2	SCREW M6S ISO 4017 M8X30 A280	
320	312125-0222	-		28	SLOTTED CHEESE HEAD ISO 1207 M3X8 RFR	
330	312125-0329	-		6	SLOTTED CHEESE HEAD ISO 1207 M5X16 RFR	
335	312145-0323	-		6	SLOTTED HEMFS5X8RFR	
340	312155-0327	-		4	SCREW MF6S DIN 7991 M5X12 A280	
345	312605-0314	-		4	NUT M6M5RFR	
355	312605-0318	-		2	NUT M6M8RFR	
358	312812-0316	-		2	LOCK NUT A2-M6RFR	
360	315105-0124	-		28	WASHER BRB3,2X6RFR	
370	315105-0146	-		18	WASHER BRB5,3X10RFR	
380	315105-0153	-		17	WASHER BRB6,4X12RFR	
390	318800-0104	-		2	HANDLE BALLA D.30-M8	

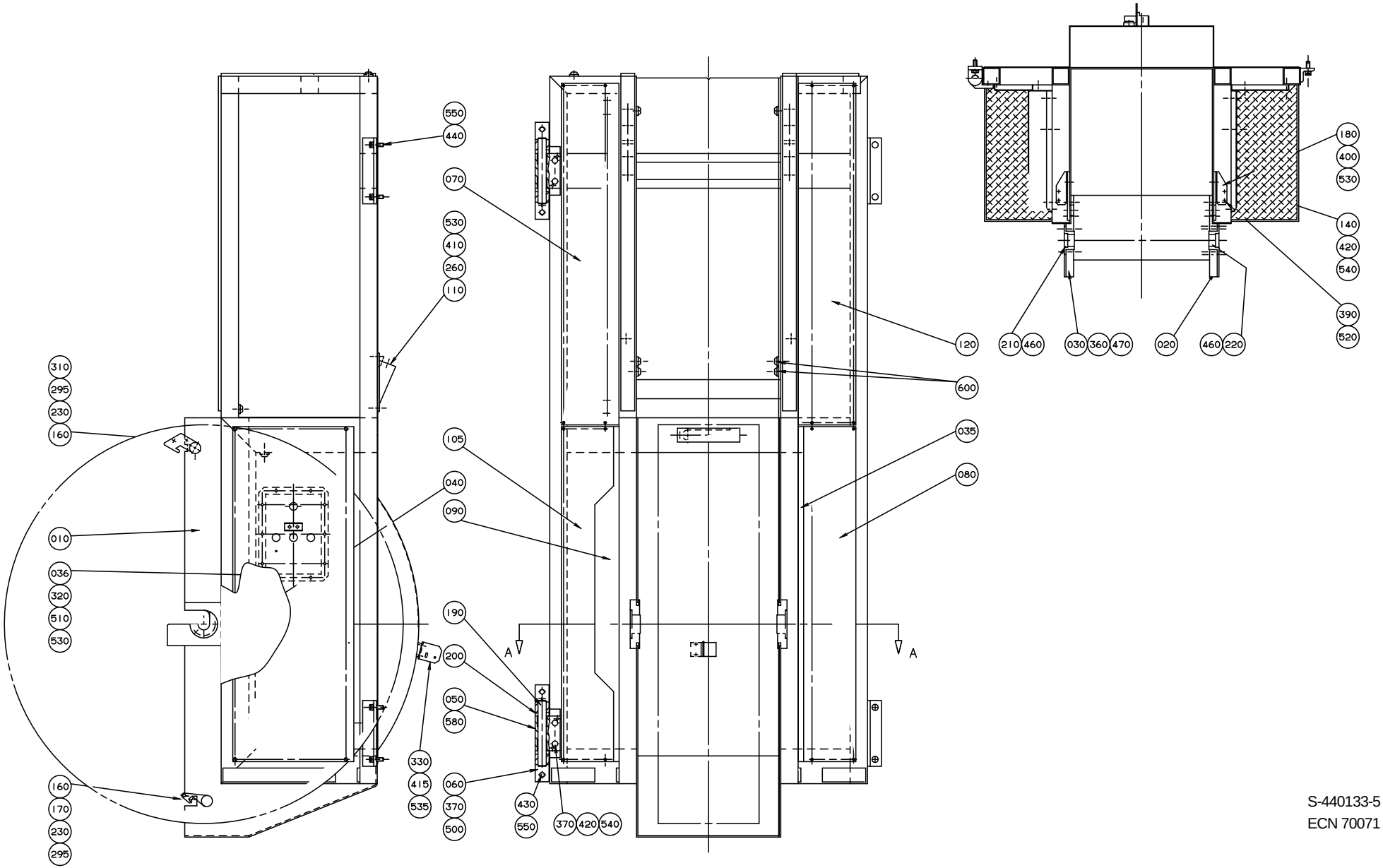

S-440133-5
ECN 70071

Pos	Part No	SP	UN	Qty	Description	Page No
-						
010	531337-0000	-		1	MACHINE BODY	
020	440185-0000	-		1	HOLDER	
030	440186-0000	-		1	HOLDER	
035	549830-0000	-		1	PROTECTION PLATE	
036	532026-0000	-		1	SEAL COVER	
040	440192-0000	-		2	BRACKET	
050	440195-0000	-		2	JOINT	
060	440196-0000	-		2	HANGER	
070	B 440199-0000	-		1	PROTECTION PLATE	
080	440200-0000	-		1	PROTECTION PLATE	
090	440202-0000	-		1	PROTECTION PLATE	
105	445857-0000	-		1	PROTECTION PLATE	
110	464141-0000	-		1	LEAD-IN PLATE	
120	B 445935-0000	-		1	PROTECTION PLATE	
160	1013-0000	-		2	SHAFT	
170	476117-0000	-		1	CATCH	
180	440193-0000	-		2	HOLDER	
190	440197-0000	-		2	SHAFT	
200	440198-0000	K		4	WASHER	
210	440252-0000	F		1	SLEEVE	
220	440253-0000	F		1	SLEEVE	
230	440271-0000	-		2	SCREW	
240	445934-0000	-		1	LID	
260	445929-0000	D		1	GASKET	
295	457358-0000	-		2	SLEEVE	
310	568167-0000	-		1	CATCH	
320	532024-0000	-		1	GASKET	
330	1195094-0000	-		1	BRACKET	
360	311103-0353	-		4	CYLINDRICACP M6 6X20 RFR	
370	311103-0355	-		6	CYLINDRICACP M6 6X25 RFR	
390	312105-0293	-		4	SCREW M6S ISO 4017 M4X16 A280	
400	312105-0325	-		6	SCREW M6S5X10 A2 80	
410	312105-0329	-		4	SCREW M6S ISO 4017 M5X16 A280	
415	312105-0368	-		2	SCREW M6S ISO 4017 M6X16 A280	
420	312105-0451	-		6	SCREW M6S ISO 4017 8X20 A280	
430	312105-0495	-		4	SCREW M6S ISO 4017 M10X30 A280	
440	312115-0495	-		4	SCREW MC6S ISO 4762 M10X30 A280	
450	312125-0323	-		2	SLOTTED CHEESE HEAD ISO 1207 M5X8 RFR	
460	312155-0327	-		4	SCREW MF6S DIN 7991 M5X12 A280	
470	312155-0451	-		8	SCREW MF6S8X20RFR	
500	312318-0362	-		4	SET SCREW CUP POINT ISO 4029 M6X8 RFR	
510	312605-0314	-		10	NUT M6M5RFR	
520	315105-0136	-		4	WASHER BRB4,3X8RFR	
530	315105-0146	-		18	WASHER BRB5,3X10RFR	
535	315105-0153	-		2	WASHER BRB6,4X12RFR	
540	315105-0165	-		6	WASHER BRB8,4X16RFR	
550	315105-0173	-		8	WASHER BRB10,5X22RFR	
580	321105-0234	-		4	BUSHING 20F7X28X30	
600	352101-0103	-		18	LEAD IN G 18,6	

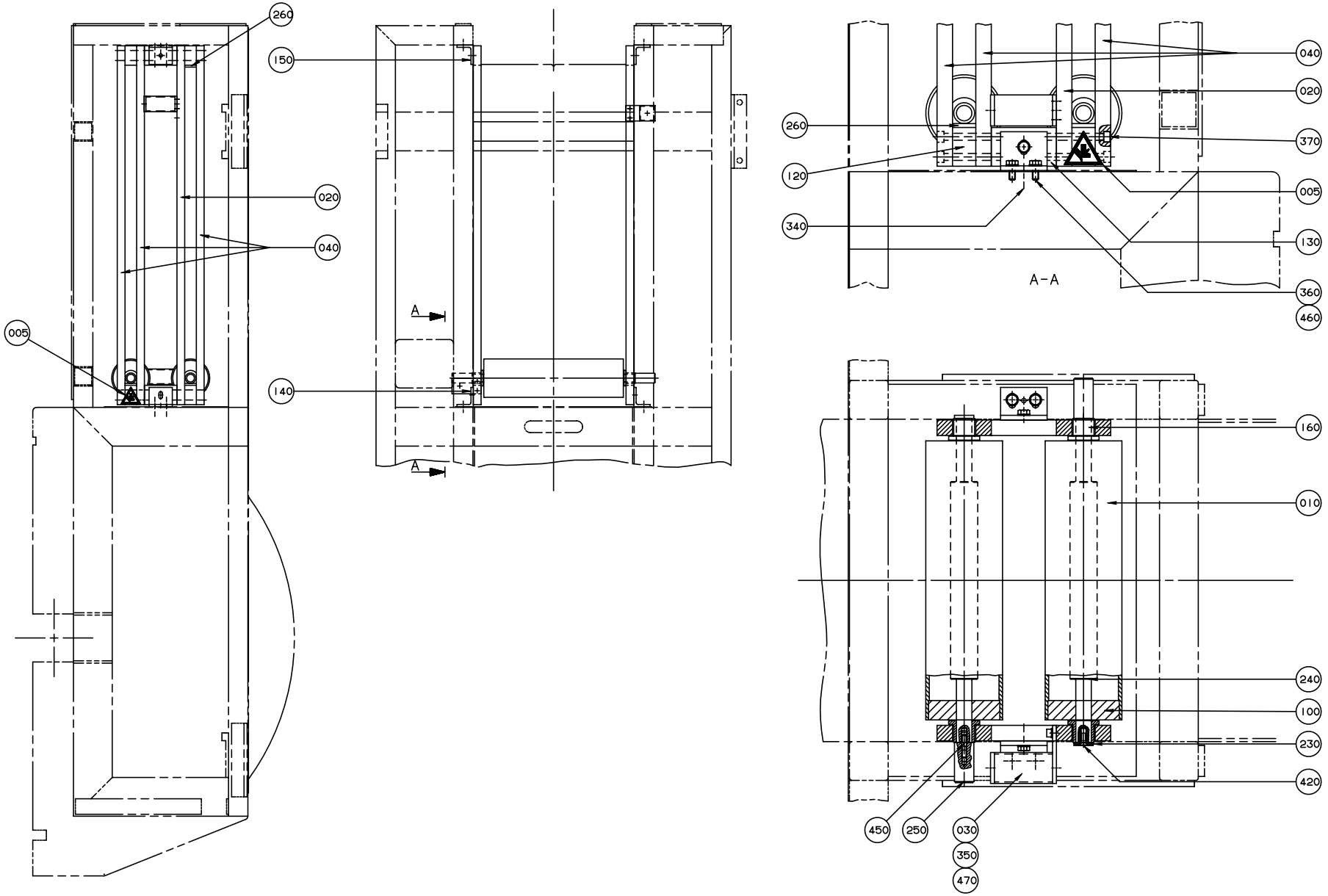

S-440210-1
ECN 70286

Pos	Part No	SP	UN	Qty	Description	Page No
TB/8 0300B or TB/8 0500B or TB/8 0500S or TB/8 0500SQ or TB/8 0568B or TB/8 1000B or TB/8 1000S or TB/8 1000SQ or TB/8 1136B or TBO/8 1000B or TBO/8 1000SQ						
015	265564-0000	-		1	BENDING ROLLER	
050	548696-0000	-		2	SHAFT	
060	549827-0000	-		2	LUG	
130	440213-0000	-		2	LUG	
270	548699-0000	-		1	SHAFT	
280	549826-0000	-		2	WASHER	
290	549828-0000	-		2	CAP	
365	312105-0466	-		4	SCREW M6S ISO 4014 M8X75 A280	
460	315105-0165	-		16	WASHER BRB8,4X16RFR	
480	321313-0102	-		2	BALL BEARISKF6202-2RS	
TBA/8 0300B or TBA/8 0355B or TBA/8 0375S or TBA/8 0400B or TBA/8 0500S						
130	440213-0000	-		4	LUG	
240	466086-0000	D		2	SHAFT	
460	315105-0165	-		12	WASHER BRB8,4X16RFR	
TB/8 1500B or TBA/8 0500B or TBA/8 0568B or TBA/8 0750B or TBA/8 0750S or TBA/8 1000B or TBA/8 1000S or TBA/8 1000SQ or TBA/8 1055B or TBA/8LSC 1500S or TBA/8PRISMA TPA 1000S						
130	440213-0000	-		4	LUG	
240	476401-0000	D		2	SHAFT	
460	315105-0165	-		12	WASHER BRB8,4X16RFR	
Common parts						
005	359705-0005	-		2	WARNING SIGN"MOVING PART"	
010	226097-0002	-		2	BENDING ROLLER	
020	440211-0000	-		2	GUIDE	
030	445927-0000	-		2	HOLDER	
040	476556-0000	-		6	GUIDE	
100	226098-0000	K		4	BEARING	
120	440212-0000	-		8	LUG	
140	440214-0000	-		2	HOLDER	
150	440215-0000	-		2	HOLDER	
160	440217-0000	K		4	BUSHING	
230	445926-0000	-		2	WASHER	
250	476015-0000	-		2	DOWEL	
260	476016-0000	-		6	RUBBER	
340	311103-0350	-		4	CYLINDRICACP M6 6X14 RFR	
350	312115-0370	-		4	SCREW MC6S ISO 4762 M6X20 A280	
360	312105-0451	-		12	SCREW M6S ISO 4017 8X20 A280	
370	312111-0467	-		16	SCREW MC6S8X80FZB	
420	312155-0368	-		2	SCREW MF6S DIN7991 M6X16 A280	
450	312303-0374	-		2	STUD SCREWMPS 6X25 RFR	
470	315105-0153	-		4	WASHER BRB6,4X12RFR	

Pos	Part No	SP	UN	Qty	Description	Page No

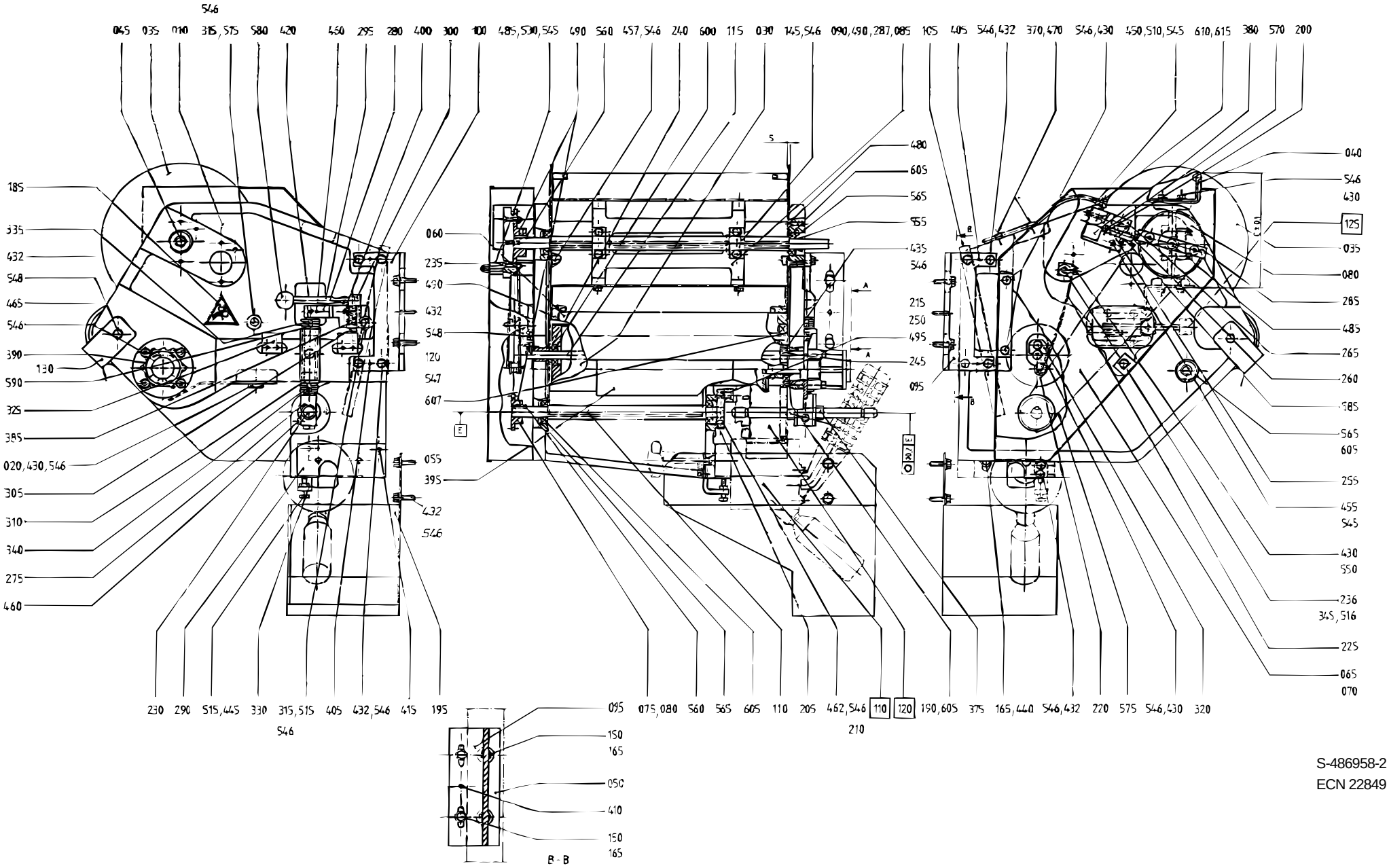
546
045 035 010 315,575 580 420 430 295 280 400 300 100 485,530,545 490 560 457,546 240 600 115 030 145,546 090,490,287,085 105 405 546,432 370,470 546,430 450,510,545 610,615 380 570 200
185
335
432
548
465
546
390
130
590
325
385
020,430,546
305
310
340
275
460
060
235
490
432
548
120
547
607
055
395
432
546
480
605
565
555
435
546
215
250
495
245
095
040
546
430
125
035
080
285
485
265
260
585
565
605
255
455
545
430
550
236
345,516
225
065
070
230 290 515,445 330 315,515 405 432,546 415 195
546
095 075,080 560 565 605 110 205 462,546 110 120 190,605 375 165,440 546,432 220 575 546,430 320
210
095
150
165
050
410
150
165
B - B
S-486958-2
ECN 22849

Pos	Part No	SP	UN	Qty	Description	Page No
0355B						
010	484848-0002	-		1	MACHINE BODY	
020	573827-0002	-		1	PROTECTION	
030	293621-0001	D		1	BENDING ROLLER	
035	293624-0001	-		2	PROTECTION PLATE	
040	529139-0000	K		2	CREASE FORMER	
045	486960-0001	D		1	SHAFT	
050	486961-0000	-		1	PLATE	
055	532719-0001	D		1	FEEDING ROLLER	
060	533449-0001	D		1	BENDING ROLLER	
065	533453-0000	-		1	LID	
070	533454-0000	-		1	FRAME	
075	32629-0000	K		1	SPROCKET	
080	32630-0000	K		1	SPROCKET	
085	543137-0002	-		1	SPACER	
090	539338-0000	-		2	CAP	
095	486962-0002	-		1	FASTENING BRACKET	
100	486962-0004	-		1	FASTENING BRACKET	
105	486964-0000	-		1	HEAD PLATE	
110	486966-0001	-		1	SHAFT	
115	486968-0001	-		1	SHAFT FOR BENDINGROLLER	
120	533457-0001	-		1	SHAFT	
130	575786-0000	-		1	PAPER SUPPORT	
150	312105-0451	-		6	SCREW M6S ISO 4017 8X20 A280	
165	315105-0165	-		7	WASHER BRB8,4X16RFR	
200	10258-0000	F		1	COMPRESSION SPRING	
215	32926-0000	F		1	ROLL	
230	228653-0000	K		1	SHAFT	
235	544706-0000	-		2	FLANGE	
240	293646-0001	K		1	WASHER	
245	293646-0002	K		1	WASHER	
250	293674-0000	K		1	DOWEL	
255	436939-0000	D		1	CYLINDER BRACKET	
260	436940-0000	D		1	SHAFT	
265	440277-0000	D		1	LACE	
290	458489-0000	-		1	CANTILEVER	
380	90239-0259	K		1	CYLINDER	
435	312105-0370	-		4	SCREW M6S ISO 4017 M6X20 A280	
450	312111-0333	-		2	SCREW MC6S5X25FZB	
490	312318-0323	-		8	SET SCREW CUP POINT ISO 4029 M5X8 RFR	
546	315105-0153	-		42	WASHER BRB6,4X12RFR	
0375S						
010	533448-0000	-		1	MACHINE BODY	
030	293621-0002	D		1	BENDING ROLLER	
035	293624-0002	-		2	PROTECTION PLATE	
040	458109-0000	K		2	CREASE FORMER	
045	486960-0002	D		1	SHAFT	
055	532719-0002	D		1	FEEDING ROLLER	
060	533449-0002	D		1	BENDING ROLLER	
065	533455-0000	-		1	LID	
070	533456-0000	-		1	FRAME	
075	32629-0000	K		1	SPROCKET	
080	32630-0000	K		1	SPROCKET	
085	543138-0000	-		1	SPACER	
090	539338-0000	-		2	CAP	
095	486962-0003	-		2	FASTENING BRACKET	
105	486965-0000	-		1	HEAD PLATE	
110	486966-0002	-		1	SHAFT FOR CARRIER	
115	486968-0002	-		1	SHAFT FOR BENDINGROLLER	
120	533457-0002	-		1	SHAFT	
130	576218-0000	-		1	PAPER SUPPORT	
150	312105-0451	-		4	SCREW M6S ISO 4017 8X20 A280	
165	315105-0165	-		5	WASHER BRB8,4X16RFR	
200	10258-0000	F		1	COMPRESSION SPRING	
215	32926-0000	F		1	ROLL	
230	228653-0000	K		1	SHAFT	
235	544706-0000	-		2	FLANGE	
240	293646-0001	K		1	WASHER	
245	293646-0002	K		1	WASHER	
250	293674-0000	K		1	DOWEL	
255	436939-0000	D		1	CYLINDER BRACKET	
260	436940-0000	D		1	SHAFT	
265	440277-0000	D		1	LACE	
290	458489-0000	-		1	CANTILEVER	
380	90239-0259	K		1	CYLINDER	
435	312105-0370	-		4	SCREW M6S ISO 4017 M6X20 A280	
450	312111-0333	-		2	SCREW MC6S5X25FZB	
490	312318-0323	-		8	SET SCREW CUP POINT ISO 4029 M5X8 RFR	
546	315105-0153	-		40	WASHER BRB6,4X12RFR	

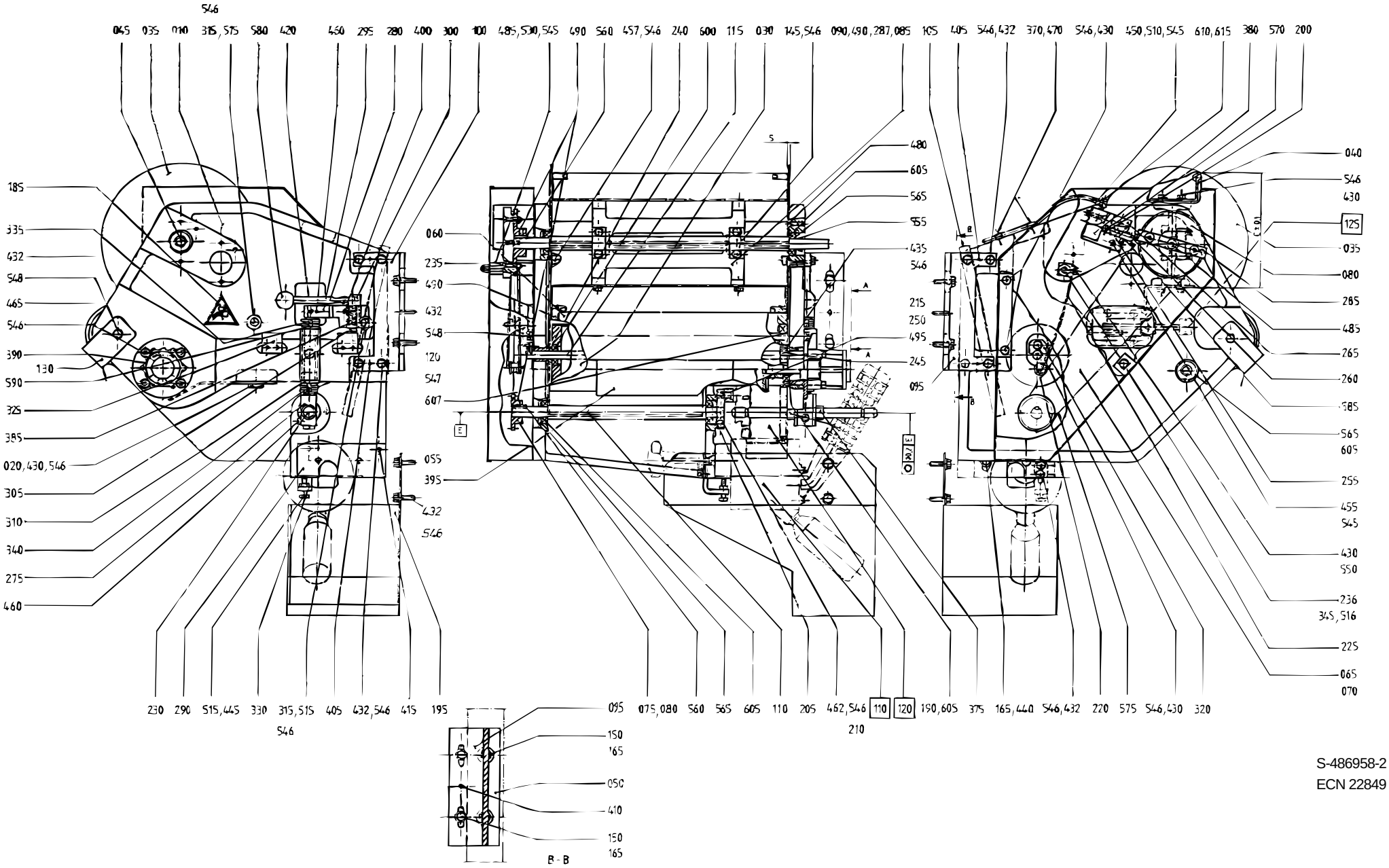
546
045 035 010 315,575 580 420 430 295 280 400 300 100 485,530,545 490 560 457,546 240 600 115 030 145,546 090,490,287,085 105 405 546,432 370,470 546,430 450,510,545 610,615 380 570 200
185
335
432
548
465
546
390
130
590
325
385
020,430,546
305
310
340
275
460
060
235
490
432
548
120
547
607
055
395
432
546
480
605
565
555
435
546
215
250
495
245
095
040
546
430
125
035
080
285
485
265
260
585
565
605
255
455
545
430
550
236
345,516
225
065
070
230 290 515,445 330 315,515 405 432,546 415 195
546
095 075,080 560 565 605 110 205 462,546 110 120 190,605 375 165,440 546,432 220 575 546,430 320
210
150
165
050
410
150
165
B - B
S-486958-2
ECN 22849

Pos	Part No	SP	UN	Qty	Description	Page No
0400B						
010	484848-0002	-		1	MACHINE BODY	
020	573827-0002	-		1	PROTECTION	
030	293621-0001	D		1	BENDING ROLLER	
035	293624-0001	-		2	PROTECTION PLATE	
040	458108-0000	K		2	CREASE FORMER	
045	486960-0001	D		1	SHAFT	
050	486961-0000	-		1	PLATE	
055	532719-0001	D		1	FEEDING ROLLER	
060	533449-0001	D		1	BENDING ROLLER	
065	533453-0000	-		1	LID	
070	533454-0000	-		1	FRAME	
075	32629-0000	K		1	SPROCKET	
080	32630-0000	K		1	SPROCKET	
085	543137-0003	-		1	SPACER	
090	539338-0000	-		2	CAP	
095	486962-0002	-		1	FASTENING BRACKET	
100	486962-0004	-		1	FASTENING BRACKET	
105	486964-0000	-		1	HEAD PLATE	
110	486966-0001	-		1	SHAFT	
115	486968-0001	-		1	SHAFT FOR BENDINGROLLER	
120	533457-0001	-		1	SHAFT	
130	575786-0000	-		1	PAPER SUPPORT	
150	312105-0451	-		6	SCREW M6S ISO 4017 8X20 A280	
165	315105-0165	-		7	WASHER BRB8,4X16RFR	
200	10258-0000	F		1	COMPRESSION SPRING	
215	32926-0000	F		1	ROLL	
230	228653-0000	K		1	SHAFT	
235	544706-0000	-		2	FLANGE	
240	293646-0001	K		1	WASHER	
245	293646-0002	K		1	WASHER	
250	293674-0000	K		1	DOWEL	
255	436939-0000	D		1	CYLINDER BRACKET	
260	436940-0000	D		1	SHAFT	
265	440277-0000	D		1	LACE	
290	458489-0000	-		1	CANTILEVER	
380	90239-0259	K		1	CYLINDER	
435	312105-0370	-		4	SCREW M6S ISO 4017 M6X20 A280	
450	312111-0333	-		2	SCREW MC6S5X25FZB	
490	312318-0323	-		8	SET SCREW CUP POINT ISO 4029 M5X8 RFR	
546	315105-0153	-		40	WASHER BRB6,4X12RFR	
0500B						
010	484848-0003	-		1	MACHINE BODY	
020	573827-0003	-		1	PROTECTION	
030	293621-0001	D		1	BENDING ROLLER	
035	293624-0002	-		2	PROTECTION PLATE	
040	458106-0000	K		2	CREASE FORMER	
045	544367-0000	D		1	SHAFT	
055	532719-0001	D		1	FEEDING ROLLER	
060	533449-0001	D		1	BENDING ROLLER	
065	533453-0000	-		1	LID	
070	533454-0000	-		1	FRAME	
080-02	32630-0000	K		2	SPROCKET	
085	440282-0004	-		2	SPACER	
095	486962-0001	-		2	FASTENING BRACKET	
105	486964-0000	-		1	HEAD PLATE	
110	486966-0001	-		1	SHAFT	
115	486968-0001	-		1	SHAFT FOR BENDINGROLLER	
120	533457-0001	-		1	SHAFT	
130	576217-0000	-		1	PAPER SUPPORT	
150	312105-0451	-		4	SCREW M6S ISO 4017 8X20 A280	
165	315105-0165	-		5	WASHER BRB8,4X16RFR	
200	10258-0000	F		1	COMPRESSION SPRING	
215	32926-0000	F		1	ROLL	
230	228653-0000	K		1	SHAFT	
235	544706-0000	-		2	FLANGE	
240	293646-0001	K		1	WASHER	
245	293646-0002	K		1	WASHER	
250	293674-0000	K		1	DOWEL	
255	436939-0000	D		1	CYLINDER BRACKET	
260	436940-0000	D		1	SHAFT	
265	440277-0000	D		1	LACE	
290	458489-0000	-		1	CANTILEVER	
380	90239-0259	K		1	CYLINDER	
435	312105-0370	-		4	SCREW M6S ISO 4017 M6X20 A280	
450	312111-0333	-		2	SCREW MC6S5X25FZB	
490	312318-0323	-		6	SET SCREW CUP POINT ISO 4029 M5X8 RFR	
546	315105-0153	-		42	WASHER BRB6,4X12RFR	

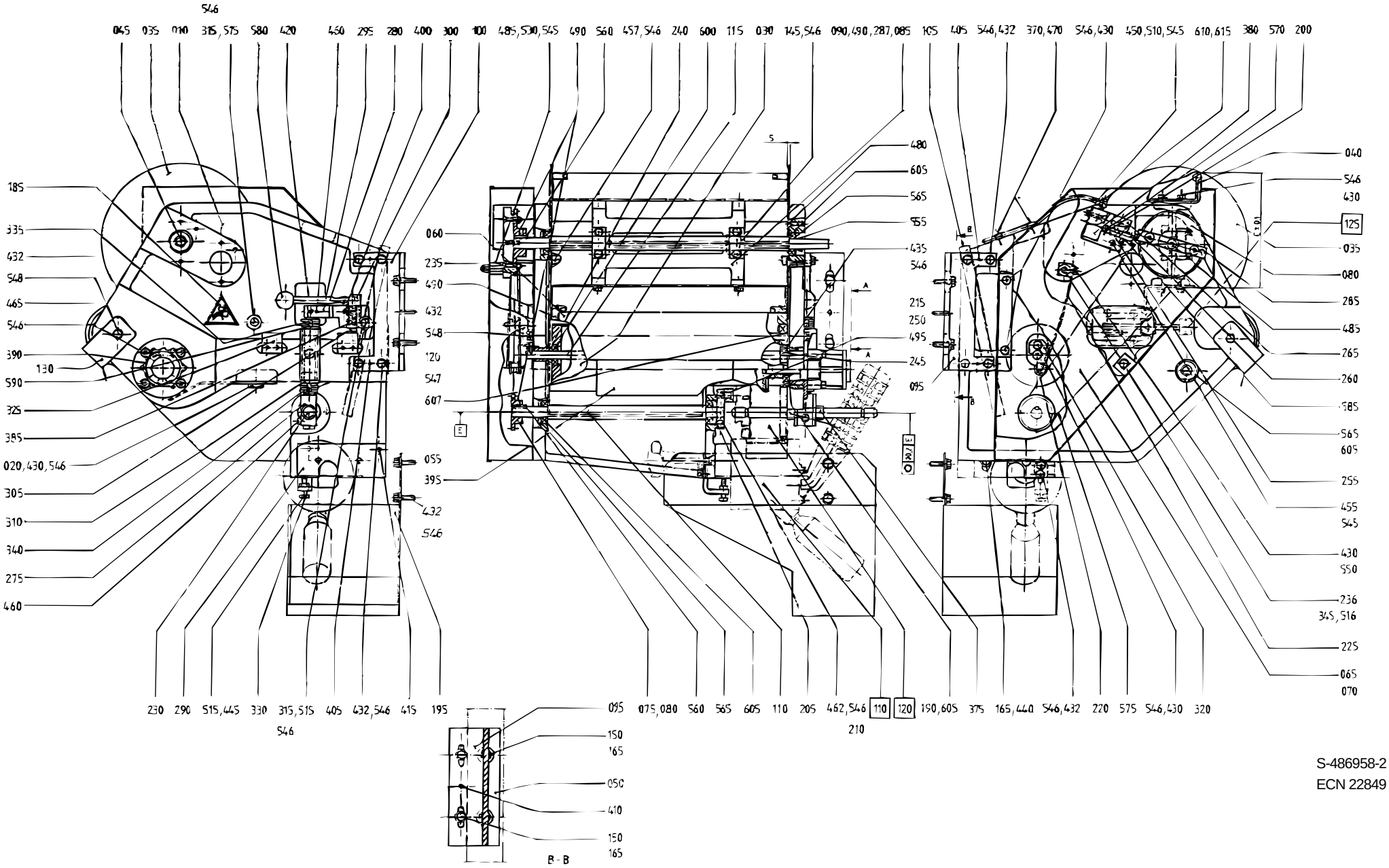

S-486958-2
ECN 22849

Pos	Part No	SP	UN	Qty	Description	Page No
0500S						
010	484848-0002	-		1	MACHINE BODY	
020	573827-0002	-		1	PROTECTION	
030	293621-0001	D		1	BENDING ROLLER	
035	293624-0001	-		2	PROTECTION PLATE	
040	458108-0000	K		2	CREASE FORMER	
045	486960-0001	D		1	SHAFT	
050	486961-0000	-		1	PLATE	
055	532719-0001	D		1	FEEDING ROLLER	
060	533449-0001	D		1	BENDING ROLLER	
065	533453-0000	-		1	LID	
070	533454-0000	-		1	FRAME	
075	32629-0000	K		1	SPROCKET	
080	32630-0000	K		1	SPROCKET	
085	538241-0004	-		1	SPACER	
090	539338-0000	-		2	CAP	
095	486962-0002	-		1	FASTENING BRACKET	
100	486962-0004	-		1	FASTENING BRACKET	
105	486964-0000	-		1	HEAD PLATE	
110	486966-0001	-		1	SHAFT	
115	486968-0001	-		1	SHAFT FOR BENDINGROLLER	
120	533457-0001	-		1	SHAFT	
130	575786-0000	-		1	PAPER SUPPORT	
150	312105-0451	-		6	SCREW M6S ISO 4017 8X20 A280	
165	315105-0165	-		7	WASHER BRB8,4X16RFR	
200	10258-0000	F		1	COMPRESSION SPRING	
215	32926-0000	F		1	ROLL	
230	228653-0000	K		1	SHAFT	
235	544706-0000	-		2	FLANGE	
240	293646-0001	K		1	WASHER	
245	293646-0002	K		1	WASHER	
250	293674-0000	K		1	DOWEL	
255	436939-0000	D		1	CYLINDER BRACKET	
260	436940-0000	D		1	SHAFT	
265	440277-0000	D		1	LACE	
290	458489-0000	-		1	CANTILEVER	
380	90239-0259	K		1	CYLINDER	
435	312105-0370	-		4	SCREW M6S ISO 4017 M6X20 A280	
450	312111-0333	-		2	SCREW MC6S5X25FZB	
490	312318-0323	-		8	SET SCREW CUP POINT ISO 4029 M5X8 RFR	
546	315105-0153	-		42	WASHER BRB6,4X12RFR	
0500SQ						
010	484848-0001	-		1	MACHINE BODY	
020	573827-0001	-		1	PROTECTION	
030	293621-0001	D		1	BENDING ROLLER	
035	293624-0001	-		2	PROTECTION PLATE	
040	574043-0000	-		2	CREASE FORMER	
045	486960-0001	D		1	SHAFT	
055	532719-0001	D		1	FEEDING ROLLER	
060	533449-0001	D		1	BENDING ROLLER	
065	533453-0000	-		1	LID	
070	533454-0000	-		1	FRAME	
075	32629-0000	K		1	SPROCKET	
080	32630-0000	K		1	SPROCKET	
085	543137-0002	-		1	SPACER	
090	539338-0000	-		2	CAP	
095	486962-0011	-		1	FASTENING BRACKET	
100	574044-0000	-		1	FASTENING BRACKET	
105	486964-0000	-		1	HEAD PLATE	
110	486966-0001	-		1	SHAFT	
115	486968-0001	-		1	SHAFT FOR BENDINGROLLER	
120	533457-0001	-		1	SHAFT	
130	575786-0000	-		1	PAPER SUPPORT	
150	312105-0451	-		4	SCREW M6S ISO 4017 8X20 A280	
165	315105-0165	-		5	WASHER BRB8,4X16RFR	
200	10258-0000	F		1	COMPRESSION SPRING	
215	32926-0000	F		1	ROLL	
230	228653-0000	K		1	SHAFT	
235	544706-0000	-		2	FLANGE	
240	293646-0001	K		1	WASHER	
245	293646-0002	K		1	WASHER	
250	293674-0000	K		1	DOWEL	
255	436939-0000	D		1	CYLINDER BRACKET	
260	436940-0000	D		1	SHAFT	
265	440277-0000	D		1	LACE	
290	458489-0000	-		1	CANTILEVER	
380	90239-0259	K		1	CYLINDER	
435	312105-0370	-		4	SCREW M6S ISO 4017 M6X20 A280	
450	312111-0333	-		2	SCREW MC6S5X25FZB	
490	312318-0323	-		8	SET SCREW CUP POINT ISO 4029 M5X8 RFR	
546	315105-0153	-		42	WASHER BRB6,4X12RFR	

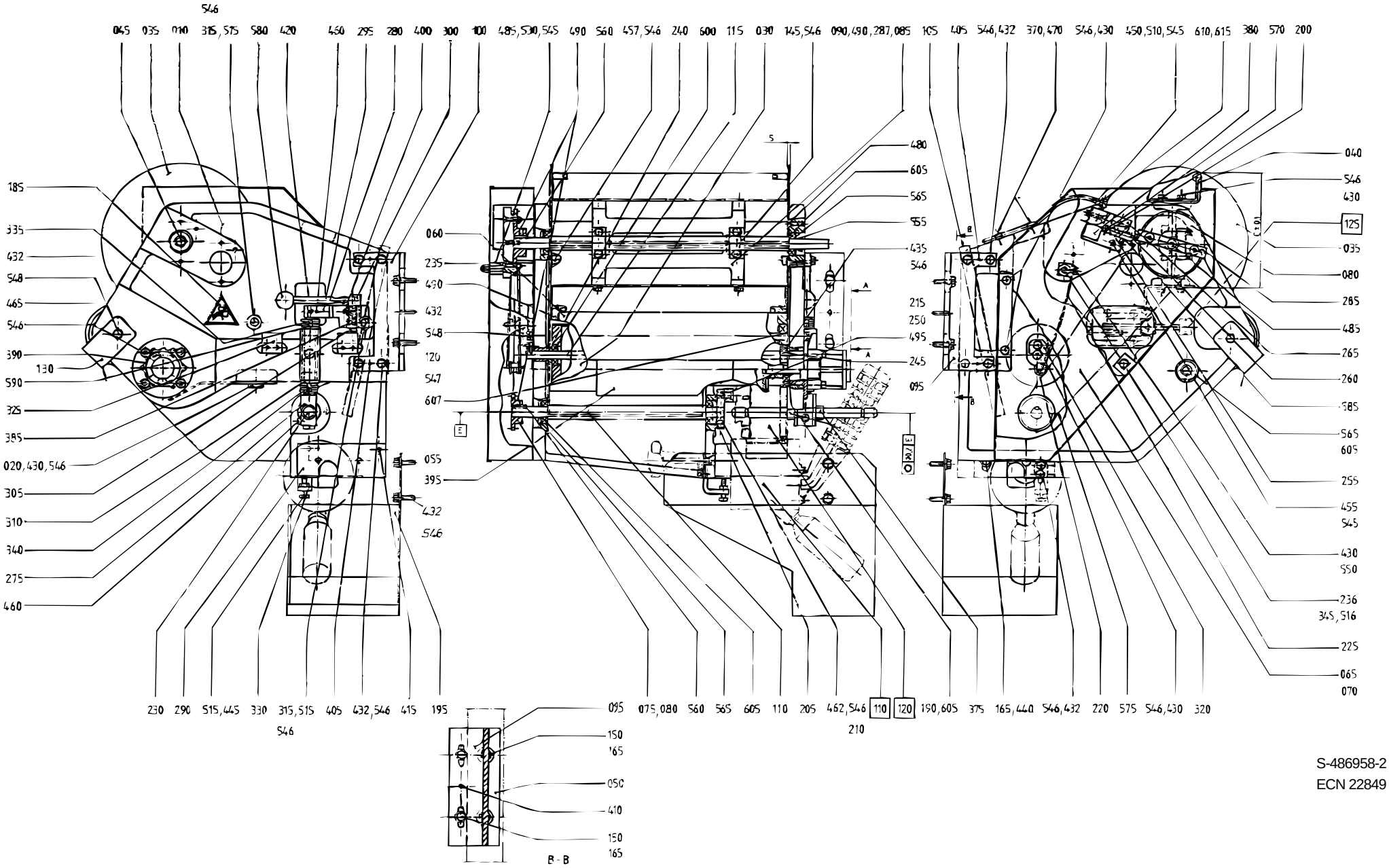

S-486958-2
ECN 22849

Pos	Part No	SP	UN	Qty	Description	Page No
0568B						
010	484848-0003	-		1	MACHINE BODY	
020	573827-0003	-		1	PROTECTION	
030	293621-0001	D		1	BENDING ROLLER	
035	293624-0002	-		2	PROTECTION PLATE	
040	458106-0000	K		2	CREASE FORMER	
045	544367-0000	D		1	SHAFT	
055	532719-0001	D		1	FEEDING ROLLER	
060	533449-0001	D		1	BENDING ROLLER	
065	533453-0000	-		1	LID	
070	533454-0000	-		1	FRAME	
080-02	32630-0000	K		2	SPROCKET	
085	440282-0003	-		2	SPACER	
095	486962-0001	-		2	FASTENING BRACKET	
105	486964-0000	-		1	HEAD PLATE	
110	486966-0001	-		1	SHAFT	
115	486968-0001	-		1	SHAFT FOR BENDINGROLLER	
120	533457-0001	-		1	SHAFT	
130	576217-0000	-		1	PAPER SUPPORT	
150	312105-0451	-		4	SCREW M6S ISO 4017 8X20 A280	
165	315105-0165	-		5	WASHER BRB8,4X16RFR	
200	10258-0000	F		1	COMPRESSION SPRING	
215	32926-0000	F		1	ROLL	
230	228653-0000	K		1	SHAFT	
235	544706-0000	-		2	FLANGE	
240	293646-0001	K		1	WASHER	
245	293646-0002	K		1	WASHER	
250	293674-0000	K		1	DOWEL	
255	436939-0000	D		1	CYLINDER BRACKET	
260	436940-0000	D		1	SHAFT	
265	440277-0000	D		1	LACE	
290	458489-0000	-		1	CANTILEVER	
380	90239-0259	K		1	CYLINDER	
435	312105-0370	-		4	SCREW M6S ISO 4017 M6X20 A280	
450	312111-0333	-		2	SCREW MC6S5X25FZB	
490	312318-0323	-		6	SET SCREW CUP POINT ISO 4029 M5X8 RFR	
546	315105-0153	-		42	WASHER BRB6,4X12RFR	
0750B						
010	484848-0002	-		1	MACHINE BODY	
020	573827-0002	-		1	PROTECTION	
030	293621-0001	D		1	BENDING ROLLER	
035	293624-0001	-		2	PROTECTION PLATE	
040	458105-0000	K		2	CREASE FORMER	
045	486960-0001	D		1	SHAFT	
055	532719-0001	D		1	FEEDING ROLLER	
060	533449-0001	D		1	BENDING ROLLER	
065	533453-0000	-		1	LID	
070	533454-0000	-		1	FRAME	
075	32629-0000	K		1	SPROCKET	
080	32630-0000	K		1	SPROCKET	
085	543137-0001	-		1	SPACER	
090	539338-0000	-		2	CAP	
095	486962-0001	-		2	FASTENING BRACKET	
105	486964-0000	-		1	HEAD PLATE	
110	486966-0001	-		1	SHAFT	
115	486968-0001	-		1	SHAFT FOR BENDINGROLLER	
120	533457-0001	-		1	SHAFT	
130	575786-0000	-		1	PAPER SUPPORT	
150	312105-0451	-		4	SCREW M6S ISO 4017 8X20 A280	
165	315105-0165	-		5	WASHER BRB8,4X16RFR	
200	10258-0000	F		1	COMPRESSION SPRING	
215	32926-0000	F		1	ROLL	
230	228653-0000	K		1	SHAFT	
235	544706-0000	-		2	FLANGE	
240	293646-0001	K		1	WASHER	
245	293646-0002	K		1	WASHER	
250	293674-0000	K		1	DOWEL	
255	436939-0000	D		1	CYLINDER BRACKET	
260	436940-0000	D		1	SHAFT	
265	440277-0000	D		1	LACE	
290	458489-0000	-		1	CANTILEVER	
380	90239-0259	K		1	CYLINDER	
435	312105-0370	-		4	SCREW M6S ISO 4017 M6X20 A280	
450	312111-0333	-		2	SCREW MC6S5X25FZB	
490	312318-0323	-		8	SET SCREW CUP POINT ISO 4029 M5X8 RFR	
546	315105-0153	-		42	WASHER BRB6,4X12RFR	

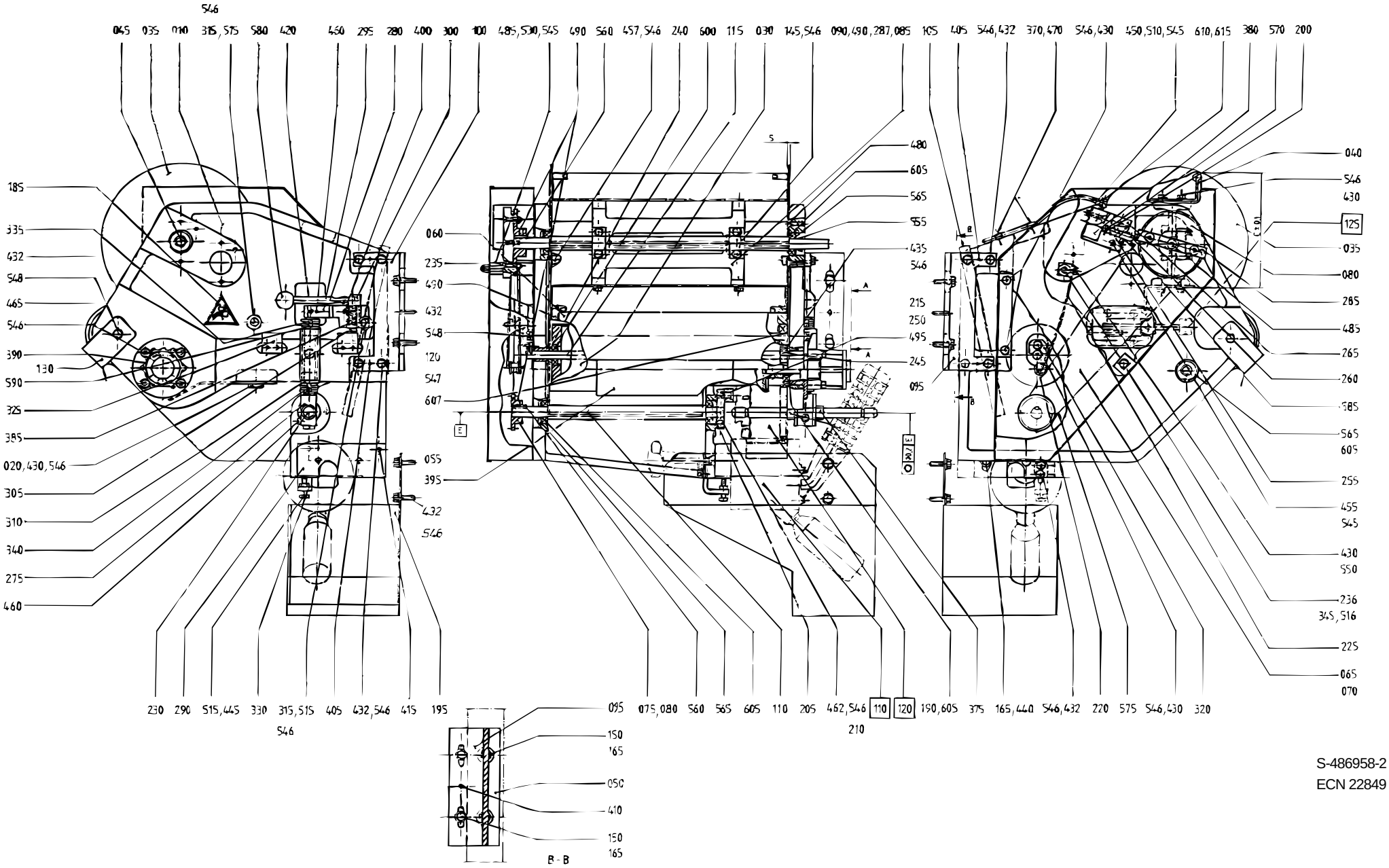
546
045 035 010 315,575 580 420 430 295 280 400 300 100 485,530,545 490 560 457,546 240 600 115 030 145,546 090,490,287,085 105 405 546,432 370,470 546,430 450,510,545 610,615 380 570 200
185
335
432
548
465
546
390
130
590
325
385
020,430,546
305
310
340
275
460
060
235
490
432
548
120
547
607
055
395
432
546
480
605
565
555
435
546
215
250
495
245
095
040
546
430
125
035
080
285
485
265
260
585
565
605
255
455
545
430
550
236
345,516
225
065
070
230 290 515,445 330 315,515 405 432,546 415 195
546
095 075,080 560 565 605 110 205 462,546 110 120 190,605 375 165,440 546,432 220 575 546,430 320
210
150
165
050
410
150
165
B - B
S-486958-2
ECN 22849

Pos	Part No	SP	UN	Qty	Description	Page No
0750S						
010	484848-0001	-		1	MACHINE BODY	
020	573827-0001	-		1	PROTECTION	
030	293621-0001	D		1	BENDING ROLLER	
035	293624-0001	-		2	PROTECTION PLATE	
040	544279-0000	K		2	CREASE FORMER	
045	486960-0001	D		1	SHAFT	
050	486961-0000	-		1	PLATE	
055	532719-0001	D		1	FEEDING ROLLER	
060	533449-0001	D		1	BENDING ROLLER	
065	533453-0000	-		1	LID	
070	533454-0000	-		1	FRAME	
075	32629-0000	K		1	SPROCKET	
080	32630-0000	K		1	SPROCKET	
085	538241-0005	-		1	SPACER	
090	539338-0000	-		2	CAP	
095	486962-0007	-		1	FASTENING BRACKET	
100	486962-0008	-		1	FASTENING BRACKET	
105	486964-0000	-		1	HEAD PLATE	
110	486966-0001	-		1	SHAFT	
115	486968-0001	-		1	SHAFT FOR BENDINGROLLER	
120	533457-0001	-		1	SHAFT	
130	575786-0000	-		1	PAPER SUPPORT	
150	312105-0451	-		6	SCREW M6S ISO 4017 8X20 A280	
165	315105-0165	-		7	WASHER BRB8,4X16RFR	
200	10258-0000	F		1	COMPRESSION SPRING	
215	32926-0000	F		1	ROLL	
230	228653-0000	K		1	SHAFT	
235	544706-0000	-		2	FLANGE	
240	293646-0001	K		1	WASHER	
245	293646-0002	K		1	WASHER	
250	293674-0000	K		1	DOWEL	
255	436939-0000	D		1	CYLINDER BRACKET	
260	436940-0000	D		1	SHAFT	
265	440277-0000	D		1	LACE	
290	458489-0000	-		1	CANTILEVER	
380	90239-0259	K		1	CYLINDER	
435	312105-0370	-		4	SCREW M6S ISO 4017 M6X20 A280	
450	312111-0333	-		2	SCREW MC6S5X25FZB	
490	312318-0323	-		8	SET SCREW CUP POINT ISO 4029 M5X8 RFR	
546	315105-0153	-		42	WASHER BRB6,4X12RFR	
1000B HIFIN						
010	484848-0001	-		1	MACHINE BODY	
020	573827-0001	-		1	PROTECTION	
030	293621-0001	D		1	BENDING ROLLER	
035	293624-0001	-		2	PROTECTION PLATE	
040	458104-0000	K		2	CREASE FORMER	
045	486960-0001	D		1	SHAFT	
055	532719-0001	D		1	FEEDING ROLLER	
060	533449-0001	D		1	BENDING ROLLER	
065	533453-0000	-		1	LID	
070	533454-0000	-		1	FRAME	
075	32629-0000	K		1	SPROCKET	
080	32630-0000	K		1	SPROCKET	
085	538241-0003	-		1	SPACER	
090	539338-0000	-		2	CAP	
095	486962-0001	-		2	FASTENING BRACKET	
105	486964-0000	-		1	HEAD PLATE	
110	486966-0001	-		1	SHAFT	
115	486968-0001	-		1	SHAFT FOR BENDINGROLLER	
120	533457-0001	-		1	SHAFT	
130	575786-0000	-		1	PAPER SUPPORT	
150	312105-0451	-		4	SCREW M6S ISO 4017 8X20 A280	
165	315105-0165	-		5	WASHER BRB8,4X16RFR	
200	10258-0000	F		1	COMPRESSION SPRING	
215	32926-0000	F		1	ROLL	
230	228653-0000	K		1	SHAFT	
235	544706-0000	-		2	FLANGE	
240	293646-0001	K		1	WASHER	
245	293646-0002	K		1	WASHER	
250	293674-0000	K		1	DOWEL	
255	436939-0000	D		1	CYLINDER BRACKET	
260	436940-0000	D		1	SHAFT	
265	440277-0000	D		1	LACE	
290	458489-0000	-		1	CANTILEVER	
380	90239-0259	K		1	CYLINDER	
435	312105-0370	-		4	SCREW M6S ISO 4017 M6X20 A280	
450	312111-0333	-		2	SCREW MC6S5X25FZB	
490	312318-0323	-		8	SET SCREW CUP POINT ISO 4029 M5X8 RFR	
546	315105-0153	-		42	WASHER BRB6,4X12RFR	

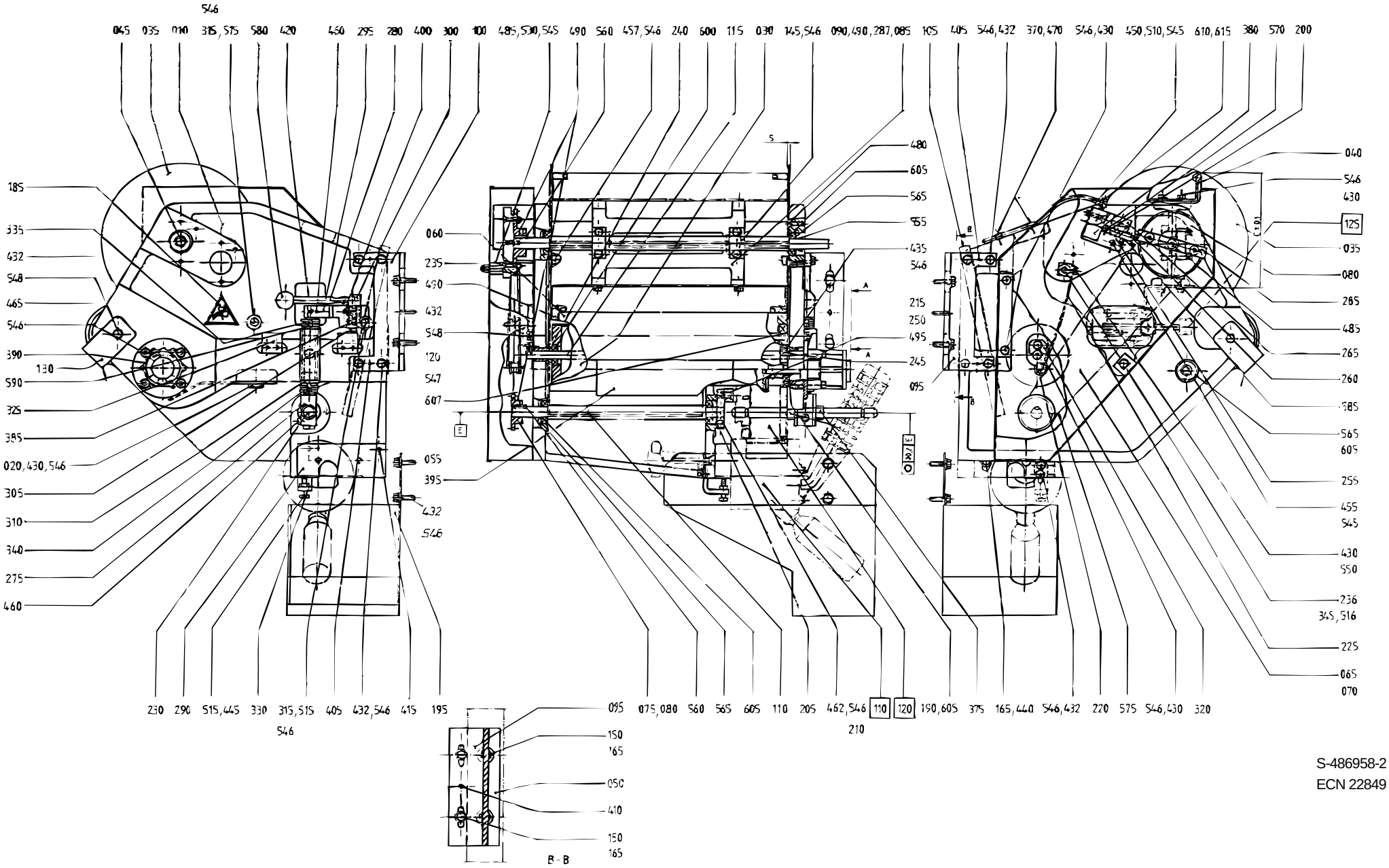

S-486958-2
ECN 22849

Pos	Part No	SP	UN	Qty	Description	Page No
Common parts						
F110	A 440286-0300	-		1	INK UNIT NSS	797
F120	A 293684-0200	-		2	PRINTING WHEEL NSS	799
F125	A 543143-0100	-		1	ADJUSTMENT DEVICE	803
145	312105-0372	-		4	SCREW M6S ISO 4017 M6X25 A280	
185	359705-0001	-		1	WARNING SIGN"ENTANGLEMENT	
190	522408-0000	-		1	BEARING HOUSING	
195	549832-0000	-		1	WASTE CHUTE	
205	533458-0000	-		1	WASHER	
210	32925-0000	K		1	CARRIER	
220	33182-0000	F		1	ROLL	
225	33183-0000	K		1	SPRING	
236	293645-0000	D		1	BRACKET	
275	450497-0000	K		1	SHAFT	
280	450500-0000	-		1	DOWEL	
285	457430-0000	-		1	BEATER	
287	458193-0001	F		4	WASHER	
287	458193-0002	F		4	WASHER	
287	458193-0003	F		4	WASHER	
295	464010-0000	-		1	ARM	
300	464012-0000	D		1	CURVE	
305	464011-0000	F		1	LOCK STUD	
310	B 466430-0000	-		1	BUSHING	
315	B 476377-0000	-		2	SCREW	
320	486967-0000	-		1	SHEET	
325	486969-0000	-		2	GUIDE LUG	
330	486971-0000	-		1	ANGLE	
335	B 532082-0000	-		2	ROUND NUT	
340	B 532083-0000	-		2	ROUND NUT	
345	533459-0000	-		1	SCREW	
370	90165-0057	-		2	CLIP	
375	90166-0059	K	MM	18	HOSE	
385	90335-0064	-		1	SPRING	
390	90347-0054	D		1	DAMPER	
395	311103-0273	-		1	CYLINDRICAM6 4X22 RFR	
400	311103-0274	-		1	CYLINDRICACP 4X25 RFR	
405	311103-0310	-		4	CYLINDRICACP M6 5X20 RFR	
410	311103-0353	-		2	CYLINDRICACP M6 6X20 RFR	
415	311103-0357	-		1	CYLINDRICACP M6 6X30 RFR	
420	311202-0241	-		1	TAPER PIN KP4X25RFR	
430	312105-0366	-		15	SCREW M6S ISO 4017 M6X12 A280	
432	312105-0368	-		14	SCREW M6S ISO 4017 M6X16 A280	
440	312105-0457	-		1	SCREW O4017 M8X35A280	
445	312109-0374	-		1	SCREW M6S ISO 4017 M6X30 A280	
455	312111-0335	-		2	SCREW MC6S5X30FZB	
457	312111-0364	-		3	SCREW MC6S6X10FZB	
460	312115-0370	-		2	SCREW MC6S ISO 4762 M6X20 A280	
462	312115-0372	-		1	SCREW MC6S ISO 4762 M6X25 A280	
465	312115-0376	-		4	SCREW MC6S ISO 4762 M6X35 A280	
470	312125-0285	-		2	SLOTTED HEMCS4X6RFR	
480	312155-0329	-		4	SCREW MF6S DIN 7991 M5X16 A280	
485	312155-0333	-		3	SCREW MF6S DIN 7991 M5X25 A280	
495	312318-0362	-		1	SET SCREW CUP POINT ISO 4029 M6X8 RFR	
510	312605-0314	-		2	NUT M6M5RFR	
515	312605-0316	-		3	NUT M6M6RFR	
516	312705-0316	-		1	CAP NUT MHM 6 A2	
530	312812-0314	-		2	LOCK NUT A2-M5RFR	
545	315105-0146	-		10	WASHER BRB5,3X10RFR	
547	315105-0173	-		2	WASHER BRB10,5X22RFR	
548	315115-0153	-		4	WASHER TBRB6,4X12RFR	
550	315121-0153	-		1	WASHER TBRSB6,4X22FZB	
555	315220-0121	F		1	SEAL RING V-14S	
560	315701-0201	K		2	FLAT WEDGE5X5X20	
565	315752-0123	F		5	CIRCLIP SGH32	
570	315755-0801	F		1	LOCKING WAE 8RFR	
575	318207-0168	K		1	ROLLER CHA6MM	
580	318800-0103	-		1	HANDLE BALLA D.25-M6	
585	321111-0135	K		1	FLANGE BUS 10E7X10	
590	321111-0212	K		1	FLANGE BUS 15E7X15	
600	321308-0101	K		2	BALL BEARISKF6001RS	
605	321308-0202	K		6	BALL BEARISKF6002-2RS	
607	321316-0200	K		2	BALL BEARISKF6300-2RS	
610	342980-0113	-		1	BANJO-CONNECTION,RING 6/4-G1/8"	
615	342980-0303	-		1	BANJO-HOLLOW BOLT COUPL,EXT.THR.01-G1/8"	

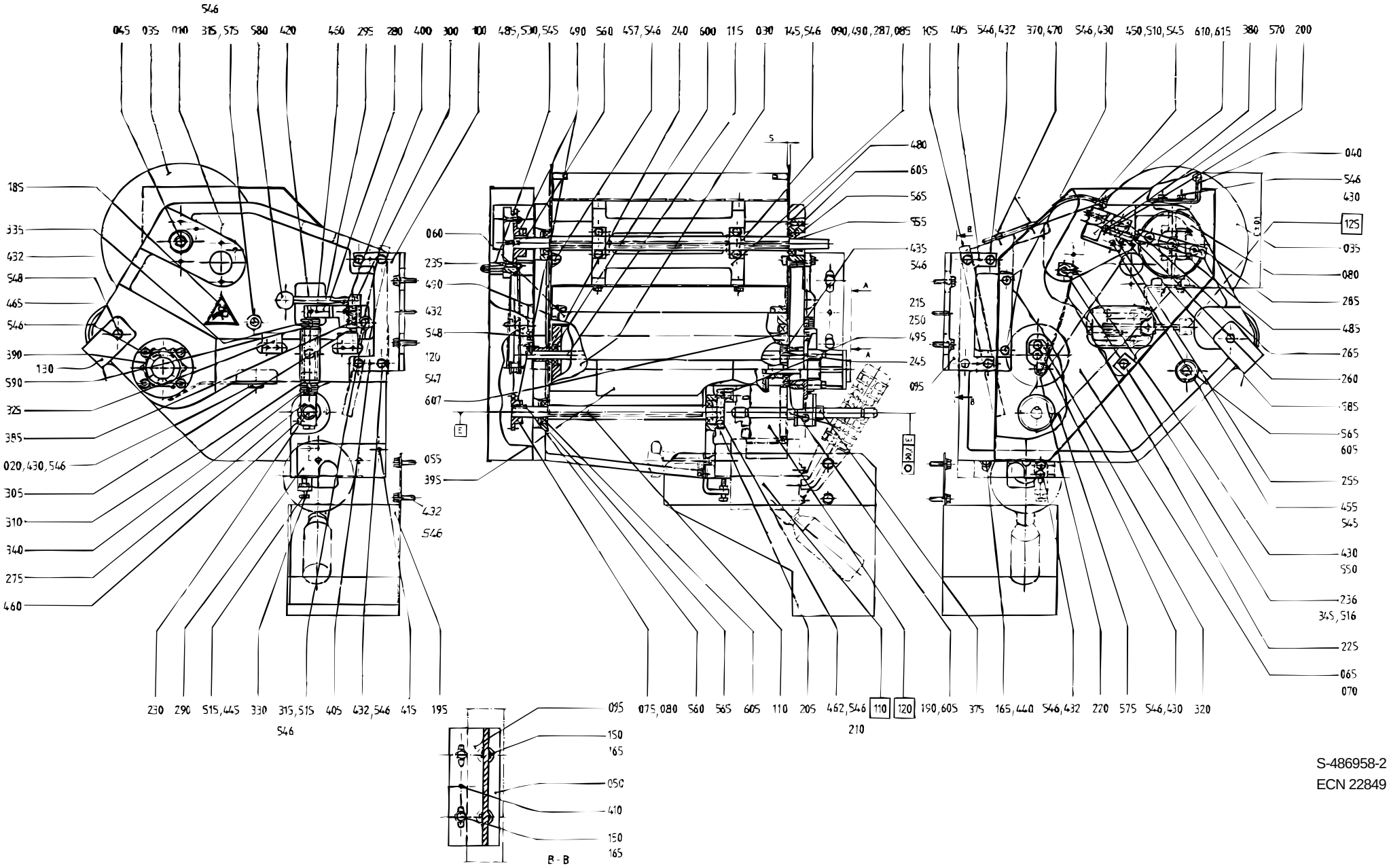
546
045 035 010 315,575 580 420 430 295 280 400 300 100 485,530,545 490 560 457,546 240 600 115 030 145,546 090,490,287,085 105 405 546,432 370,470 546,430 450,510,545 610,615 380 570 200
185
335
432
548
465
546
390
130
590
325
385
020,430,546
305
310
340
275
460
060
235
490
432
548
120
547
607
055
395
432
546
480
605
565
555
435
546
215
250
495
245
095
040
546
430
125
035
080
285
485
265
260
585
565
605
255
455
545
430
550
236
345,516
225
065
070
230 290 515,445 330 315,515 405 432,546 415 195
546
095 075,080 560 565 605 110 205 462,546 110 120 190,605 375 165,440 546,432 220 575 546,430 320
210
095
150
165
050
410
150
165
B - B
S-486958-2
ECN 22849

Pos	Part No	SP	UN	Qty	Description	Page No
1000S						
010	484848-0001	-		1	MACHINE BODY	
020	573827-0001	-		1	PROTECTION	
030	293621-0001	D		1	BENDING ROLLER	
035	293624-0001	-		2	PROTECTION PLATE	
040	569651-0000	K		2	CREASE FORMER	
045	486960-0001	D		1	SHAFT	
055	532719-0001	D		1	FEEDING ROLLER	
060	533449-0001	D		1	BENDING ROLLER	
065	533453-0000	-		1	LID	
070	533454-0000	-		1	FRAME	
075	32629-0000	K		1	SPROCKET	
080	32630-0000	K		1	SPROCKET	
085	569652-0002	-		1	SPACER	
090	539338-0000	-		2	CAP	
095	486962-0009	-		1	FASTENING BRACKET	
100	486962-0010	-		1	FASTENING BRACKET	
105	486964-0000	-		1	HEAD PLATE	
110	486966-0001	-		1	SHAFT	
115	486968-0001	-		1	SHAFT FOR BENDINGROLLER	
120	533457-0001	-		1	SHAFT	
130	575786-0000	-		1	PAPER SUPPORT	
150	312105-0451	-		4	SCREW M6S ISO 4017 8X20 A280	
165	315105-0165	-		5	WASHER BRB8,4X16RFR	
200	10258-0000	F		1	COMPRESSION SPRING	
215	32926-0000	F		1	ROLL	
230	228653-0000	K		1	SHAFT	
235	544706-0000	-		2	FLANGE	
240	293646-0001	K		1	WASHER	
245	293646-0002	K		1	WASHER	
250	293674-0000	K		1	DOWEL	
255	436939-0000	D		1	CYLINDER BRACKET	
260	436940-0000	D		1	SHAFT	
265	440277-0000	D		1	LACE	
290	458489-0000	-		1	CANTILEVER	
380	90239-0259	K		1	CYLINDER	
435	312105-0370	-		4	SCREW M6S ISO 4017 M6X20 A280	
450	312111-0333	-		2	SCREW MC6S5X25FZB	
490	312318-0323	-		8	SET SCREW CUP POINT ISO 4029 M5X8 RFR	
546	315105-0153	-		42	WASHER BRB6,4X12RFR	
1000SQ						
010	484848-0001	-		1	MACHINE BODY	
020	573827-0001	-		1	PROTECTION	
030	293621-0001	D		1	BENDING ROLLER	
035	293624-0001	-		2	PROTECTION PLATE	
040	574043-0000	-		2	CREASE FORMER	
045	486960-0001	D		1	SHAFT	
055	532719-0001	D		1	FEEDING ROLLER	
060	533449-0001	D		1	BENDING ROLLER	
065	533453-0000	-		1	LID	
070	533454-0000	-		1	FRAME	
075	32629-0000	K		1	SPROCKET	
080	32630-0000	K		1	SPROCKET	
085	569652-0003	-		1	SPACER	
090	539338-0000	-		2	CAP	
095	486962-0011	-		1	FASTENING BRACKET	
100	574044-0000	-		1	FASTENING BRACKET	
105	486964-0000	-		1	HEAD PLATE	
110	486966-0001	-		1	SHAFT	
115	486968-0001	-		1	SHAFT FOR BENDINGROLLER	
120	533457-0001	-		1	SHAFT	
130	575786-0000	-		1	PAPER SUPPORT	
150	312105-0451	-		4	SCREW M6S ISO 4017 8X20 A280	
165	315105-0165	-		5	WASHER BRB8,4X16RFR	
200	10258-0000	F		1	COMPRESSION SPRING	
215	32926-0000	F		1	ROLL	
230	228653-0000	K		1	SHAFT	
235	544706-0000	-		2	FLANGE	
240	293646-0001	K		1	WASHER	
245	293646-0002	K		1	WASHER	
250	293674-0000	K		1	DOWEL	
255	436939-0000	D		1	CYLINDER BRACKET	
260	436940-0000	D		1	SHAFT	
265	440277-0000	D		1	LACE	
290	458489-0000	-		1	CANTILEVER	
380	90239-0259	K		1	CYLINDER	
435	312105-0370	-		4	SCREW M6S ISO 4017 M6X20 A280	
450	312111-0333	-		2	SCREW MC6S5X25FZB	
490	312318-0323	-		8	SET SCREW CUP POINT ISO 4029 M5X8 RFR	
546	315105-0153	-		42	WASHER BRB6,4X12RFR	

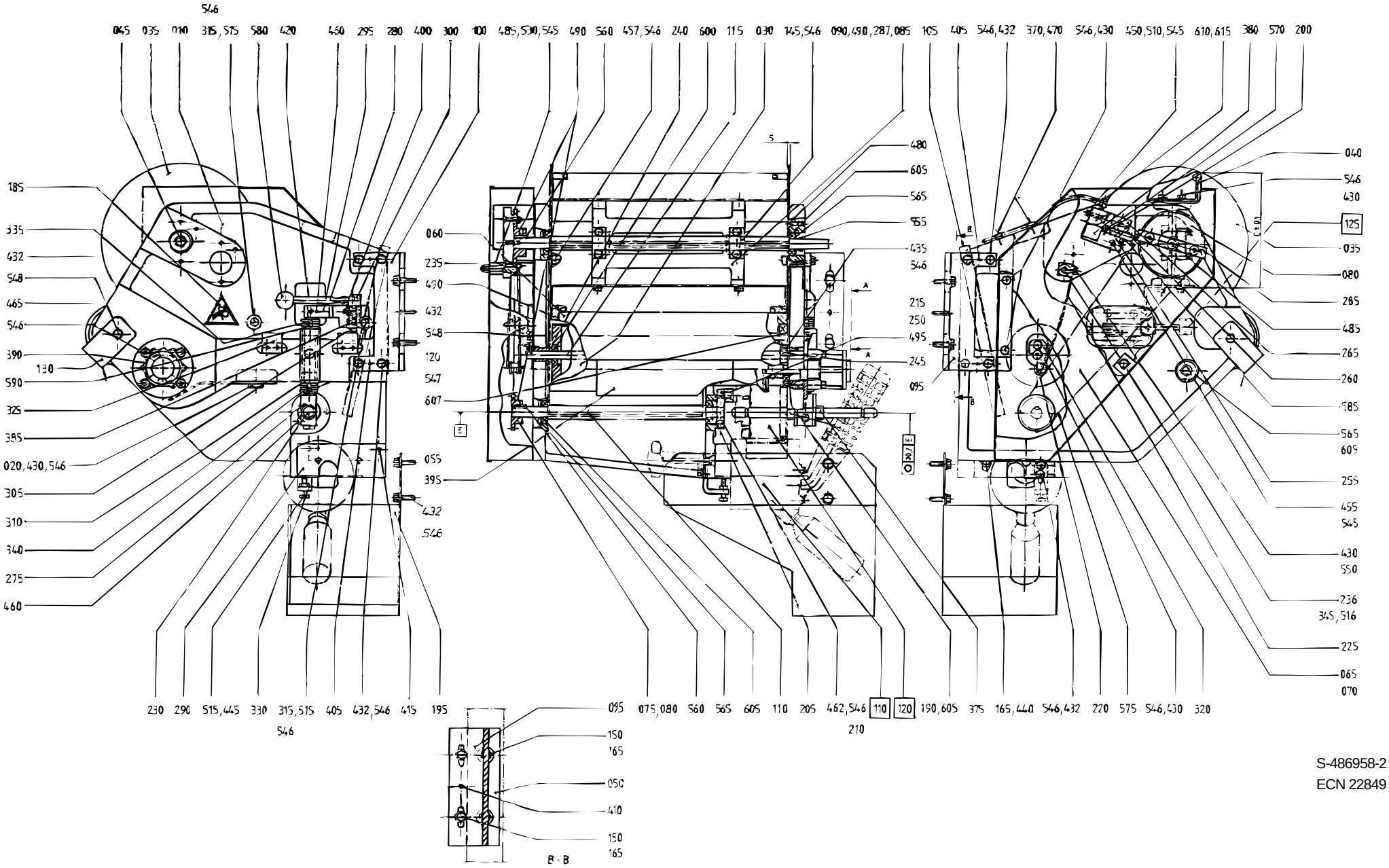

S-486958-2
ECN 22849

Pos	Part No	SP	UN	Qty	Description	Page No
1055B						
010	484848-0001	-		1	MACHINE BODY	
020	573827-0001	-		1	PROTECTION	
030	293621-0001	D		1	BENDING ROLLER	
035	293624-0001	-		2	PROTECTION PLATE	
040	458105-0000	K		2	CREASE FORMER	
045	486960-0001	D		1	SHAFT	
055	532719-0001	D		1	FEEDING ROLLER	
060	533449-0001	D		1	BENDING ROLLER	
065	533453-0000	-		1	LID	
070	533454-0000	-		1	FRAME	
075	32629-0000	K		1	SPROCKET	
080	32630-0000	K		1	SPROCKET	
085	538241-0001	-		1	SPACER	
090	539338-0000	-		2	CAP	
095	486962-0001	-		2	FASTENING BRACKET	
105	486964-0000	-		1	HEAD PLATE	
110	486966-0001	-		1	SHAFT	
115	486968-0001	-		1	SHAFT FOR BENDINGROLLER	
120	533457-0001	-		1	SHAFT	
130	575786-0000	-		1	PAPER SUPPORT	
150	312105-0451	-		4	SCREW M6S ISO 4017 8X20 A280	
165	315105-0165	-		5	WASHER BRB8,4X16RFR	
200	10258-0000	F		1	COMPRESSION SPRING	
215	32926-0000	F		1	ROLL	
230	228653-0000	K		1	SHAFT	
235	544706-0000	-		2	FLANGE	
240	293646-0001	K		1	WASHER	
245	293646-0002	K		1	WASHER	
250	293674-0000	K		1	DOWEL	
255	436939-0000	D		1	CYLINDER BRACKET	
260	436940-0000	D		1	SHAFT	
265	440277-0000	D		1	LACE	
290	458489-0000	-		1	CANTILEVER	
380	90239-0259	K		1	CYLINDER	
435	312105-0370	-		4	SCREW M6S ISO 4017 M6X20 A280	
450	312111-0333	-		2	SCREW MC6S5X25FZB	
490	312318-0323	-		8	SET SCREW CUP POINT ISO 4029 M5X8 RFR	
546	315105-0153	-		42	WASHER BRB6,4X12RFR	
1136B						
010	484848-0001	-		1	MACHINE BODY	
020	573827-0001	-		1	PROTECTION	
030	293621-0001	D		1	BENDING ROLLER	
035	293624-0001	-		2	PROTECTION PLATE	
040	458105-0000	K		2	CREASE FORMER	
045	486960-0001	D		1	SHAFT	
055	532719-0001	D		1	FEEDING ROLLER	
060	533449-0001	D		1	BENDING ROLLER	
065	533453-0000	-		1	LID	
070	533454-0000	-		1	FRAME	
075	32629-0000	K		1	SPROCKET	
080	32630-0000	K		1	SPROCKET	
085	569652-0001	-		1	SPACER	
090	539338-0000	-		2	CAP	
095	486962-0001	-		2	FASTENING BRACKET	
105	486964-0000	-		1	HEAD PLATE	
110	486966-0001	-		1	SHAFT	
115	486968-0001	-		1	SHAFT FOR BENDINGROLLER	
120	533457-0001	-		1	SHAFT	
130	575786-0000	-		1	PAPER SUPPORT	
150	312105-0451	-		4	SCREW M6S ISO 4017 8X20 A280	
165	315105-0165	-		5	WASHER BRB8,4X16RFR	
200	10258-0000	F		1	COMPRESSION SPRING	
215	32926-0000	F		1	ROLL	
230	228653-0000	K		1	SHAFT	
235	544706-0000	-		2	FLANGE	
240	293646-0001	K		1	WASHER	
245	293646-0002	K		1	WASHER	
250	293674-0000	K		1	DOWEL	
255	436939-0000	D		1	CYLINDER BRACKET	
260	436940-0000	D		1	SHAFT	
265	440277-0000	D		1	LACE	
290	458489-0000	-		1	CANTILEVER	
380	90239-0259	K		1	CYLINDER	
435	312105-0370	-		4	SCREW M6S ISO 4017 M6X20 A280	
450	312111-0333	-		2	SCREW MC6S5X25FZB	
490	312318-0323	-		8	SET SCREW CUP POINT ISO 4029 M5X8 RFR	
546	315105-0153	-		42	WASHER BRB6,4X12RFR	

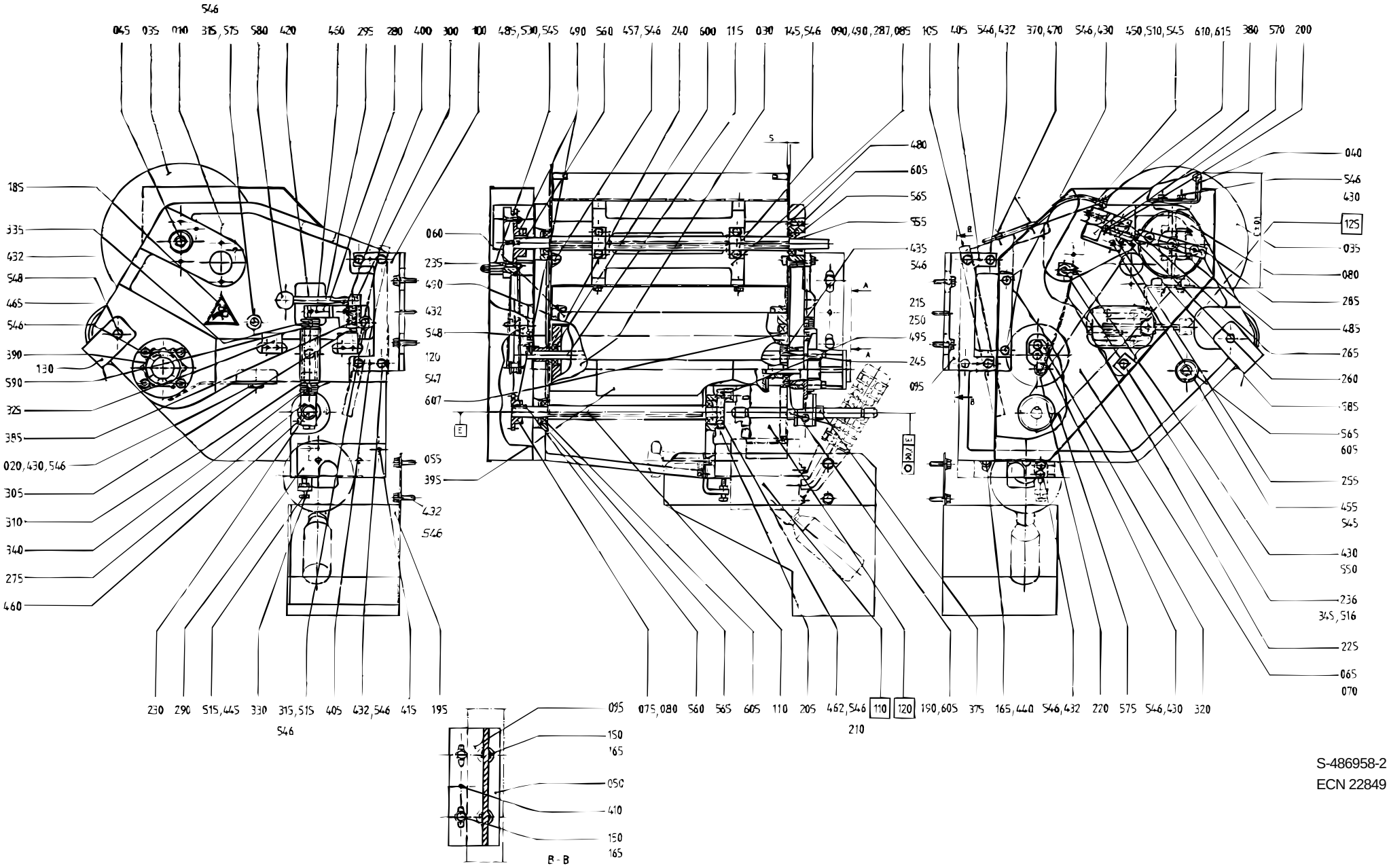
546
045 035 010 315,575 580 420 430 295 280 400 300 100 485,530,545 490 560 457,546 240 600 115 030 145,546 090,490,287,085 105 405 546,432 370,470 546,430 450,510,545 610,615 380 570 200
185
335
432
548
465
546
390
130
590
325
385
020,430,546
305
310
340
275
460
060
235
490
432
548
120
547
607
055
395
432
546
480
605
565
555
435
546
215
250
495
245
095
040
546
430
125
035
080
285
485
265
260
585
565
605
255
455
545
430
550
236
345,516
225
065
070
230 290 515,445 330 315,515 405 432,546 415 195
546
095 075,080 560 565 605 110 205 462,546 110 120 190,605 375 165,440 546,432 220 575 546,430 320
210
095
150
165
050
410
150
165
B - B
S-486958-2
ECN 22849

Pos	Part No	SP	UN	Qty	Description	Page No
1500B						
010	593590-0000	-		1	FRAME	
020	927830-0000	-		1	PROTECTION	
030	293621-0005	D		1	BENDING ROLLER	
035	927745-0000	-		2	PROTECTION PLATE	
040	593556-0000	-		2	CREASE FORMER	
045	486960-0001	D		1	SHAFT	
055	532719-0001	D		1	FEEDING ROLLER	
060	927743-0000	-		1	BENDING ROLLER	
065	533453-0000	-		1	LID	
070	533454-0000	-		1	FRAME	
075	32629-0000	K		1	SPROCKET	
080	32630-0000	K		1	SPROCKET	
085	593586-0000	-		1	SPACER	
090	539338-0000	-		2	CAP	
095	486962-0001	-		2	FASTENING BRACKET	
105	486964-0000	-		1	HEAD PLATE	
110	486966-0001	-		1	SHAFT	
115	486968-0001	-		1	SHAFT FOR BENDINGROLLER	
120	533457-0001	-		1	SHAFT	
130	575786-0000	-		1	PAPER SUPPORT	
150	312105-0451	-		4	SCREW M6S ISO 4017 8X20 A280	
165	315105-0165	-		5	WASHER BRB8,4X16RFR	
200	90335-0037	F		1	SPRING	
215	593589-0000	F		1	ROLL	
230	593587-0000	K		1	SHAFT	
248	293646-0003	K		2	WASHER	
250	593588-0000	K		1	DOWEL	
255	595204-0000	D		1	CYLINDER BRACKET	
260	595202-0000	D		1	SHAFT	
265	595203-0000	D		1	LACE	
290	593746-0000	-		1	CANTILEVER	
380	90450-0454	K		1	Cylinder	
435	312155-0370	-		4	SCREW MF6S DIN 7991 M6X20 A280	
450	312111-0337	-		2	SCREW MC6S5X35FZB	
490	312318-0323	-		6	SET SCREW CUP POINT ISO 4029 M5X8 RFR	
546	315105-0153	-		42	WASHER BRB6,4X12RFR	
552	315125-0153	-		4	WASHER SB 6,4X22X4 RFR	
1000B LOFIN						
010	484848-0001	-		1	MACHINE BODY	
020	573827-0001	-		1	PROTECTION	
030	293621-0001	D		1	BENDING ROLLER	
035	293624-0001	-		2	PROTECTION PLATE	
040	458105-0000	K		2	CREASE FORMER	
045	486960-0001	D		1	SHAFT	
055	532719-0001	D		1	FEEDING ROLLER	
060	533449-0001	D		1	BENDING ROLLER	
065	533453-0000	-		1	LID	
070	533454-0000	-		1	FRAME	
075	32629-0000	K		1	SPROCKET	
080	32630-0000	K		1	SPROCKET	
085	538241-0002	-		1	SPACER	
090	539338-0000	-		2	CAP	
095	486962-0001	-		2	FASTENING BRACKET	
105	486964-0000	-		1	HEAD PLATE	
110	486966-0001	-		1	SHAFT	
115	486968-0001	-		1	SHAFT FOR BENDINGROLLER	
120	533457-0001	-		1	SHAFT	
130	575786-0000	-		1	PAPER SUPPORT	
150	312105-0451	-		4	SCREW M6S ISO 4017 8X20 A280	
165	315105-0165	-		5	WASHER BRB8,4X16RFR	
200	10258-0000	F		1	COMPRESSION SPRING	
215	32926-0000	F		1	ROLL	
230	228653-0000	K		1	SHAFT	
235	544706-0000	-		2	FLANGE	
240	293646-0001	K		1	WASHER	
245	293646-0002	K		1	WASHER	
250	293674-0000	K		1	DOWEL	
255	436939-0000	D		1	CYLINDER BRACKET	
260	436940-0000	D		1	SHAFT	
265	440277-0000	D		1	LACE	
290	458489-0000	-		1	CANTILEVER	
380	90239-0259	K		1	CYLINDER	
435	312105-0370	-		4	SCREW M6S ISO 4017 M6X20 A280	
450	312111-0333	-		2	SCREW MC6S5X25FZB	
490	312318-0323	-		8	SET SCREW CUP POINT ISO 4029 M5X8 RFR	
546	315105-0153	-		42	WASHER BRB6,4X12RFR	

INK UNIT NSS

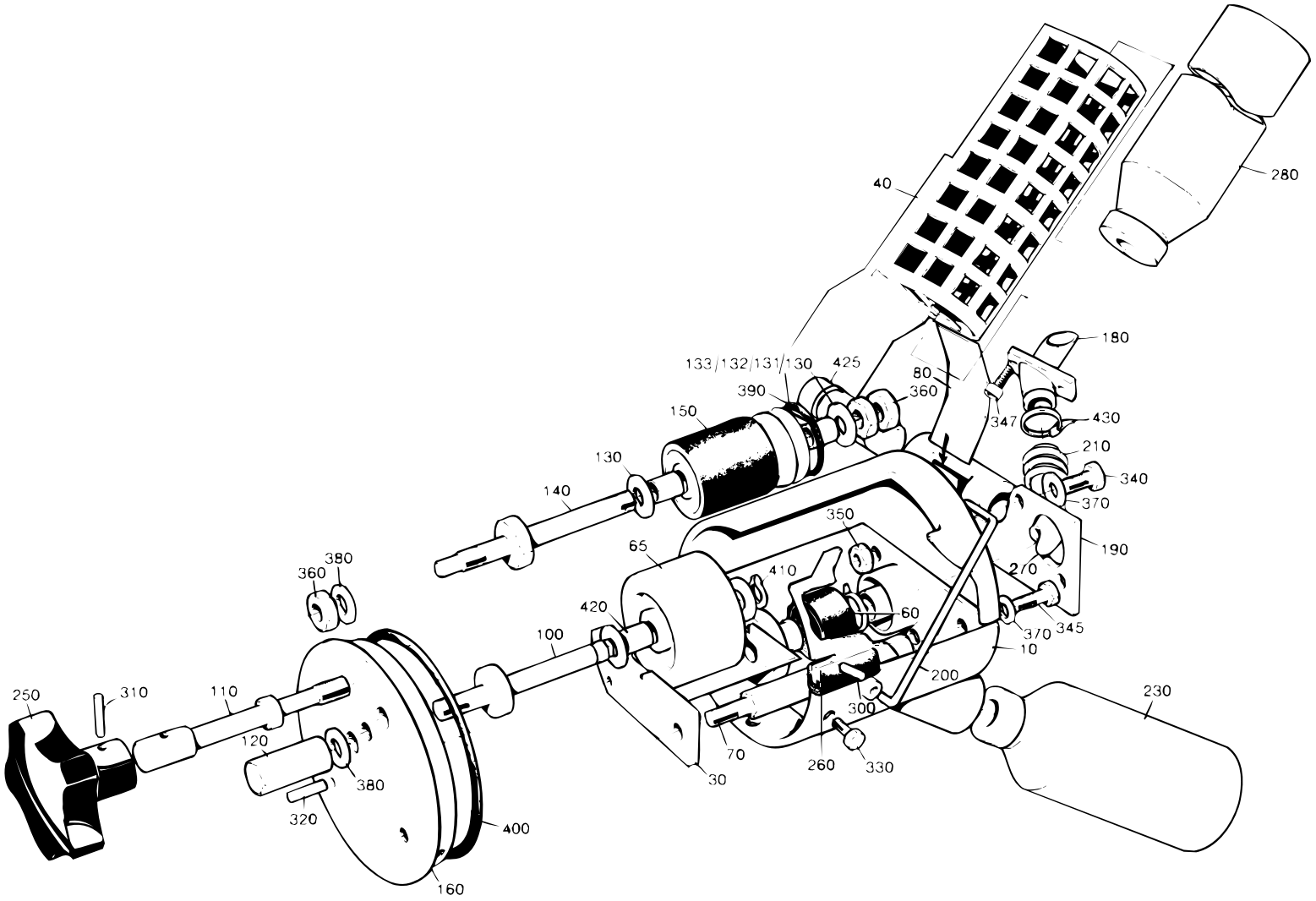

S-440286-3
ECN 10575

Pos	Part No	SP	UN	Qty	Description	Page No
TB/8 or TBA/21 or TBA/8 or TBA/8LSC or TBA/8PRISMA or TBO/8						
230	90050-0008	F		1	BOTTLE	
TB/19 or TBA/19						
230	90050-0012	F		1	BOTTLE	
Common parts						
010	440287-0000	-		1	COVER	
030	297211-0000	-		1	INK WELL	
040	476356-0000	D		1	HOLDER FOR INK BOTTLE	
060	445542-0000	F		1	MANTEL RUBBER	
065	450355-0000	K		1	INK ROLLER	
070	33010-0000	-		1	SCREW	
080	35547-0000	K		1	SPRING	
100	292044-0000	F		1	SHAFT	
110	293667-0000	K		1	DOWEL	
120	436927-0000	D		1	NUT	
130	293669-0001	F		4	WASHER	
131	293669-0002	F		2	WASHER	
132	293669-0003	F		2	WASHER	
133	293669-0004	F		2	WASHER	
140	293670-0000	F		1	SHAFT	
150	B 543135-0000	F		1	INK TRANSFER ROLLER	
160	293697-0000	K		1	END SECTION	
180	476354-0000	K		1	CANNULAR TUBE	
190	456773-0000	D		1	PIVOT BRACKET	
200	434747-0000	K		1	BOW CLAMP	
210	537308-0000	-		1	SPRING	
250	90051-0077	K		1	HANDLE	
260	90143-0029	K	MM	295	STRIP	
270	90166-0138	F	MM	100	HOSE	
280	B 90299-0013	F		x	INK	
300	311103-0236	-		2	CYLINDRICACP M6 3X16 RFR	
310	311103-0238	-		1	CYLINDRICACP M6 3X20 RFR	
320	311103-0270	-		1	CYLINDRICACP M6 4X16 RFR	
330	312105-0291	-		3	SCREW M6S ISO 4017 M4X12 A280	
340	312105-0327	-		2	SCREW M6S ISO 4017 M5X12 A280	
345	312105-0329	-		1	SCREW M6S ISO 4017 M5X16 A280	
347	312115-0287	-		2	SCREW MC6S ISO 4762 M4X8 A280	
350	312605-0314	-		2	NUT M6M5RFR	
360	312605-0318	-		3	NUT M6M8RFR	
370	315105-0146	-		3	WASHER BRB5,3X10RFR	
380	315105-0165	-		2	WASHER BRB8,4X16RFR	
390	315202-0218	F		1	O-RING 26,2X3	
400	315202-0309	F		1	O-RING 89,5X3	
410	315750-0105	F		1	CIRCLIP SGA8	
420	321120-0100	K		2	BUSHING 8/10X12	
425	321120-0109	K		2	BUSHING 12/14X10	
430	352113-0101	-		1	RIBBON CLAMP	

PRINTING WHEEL NSS

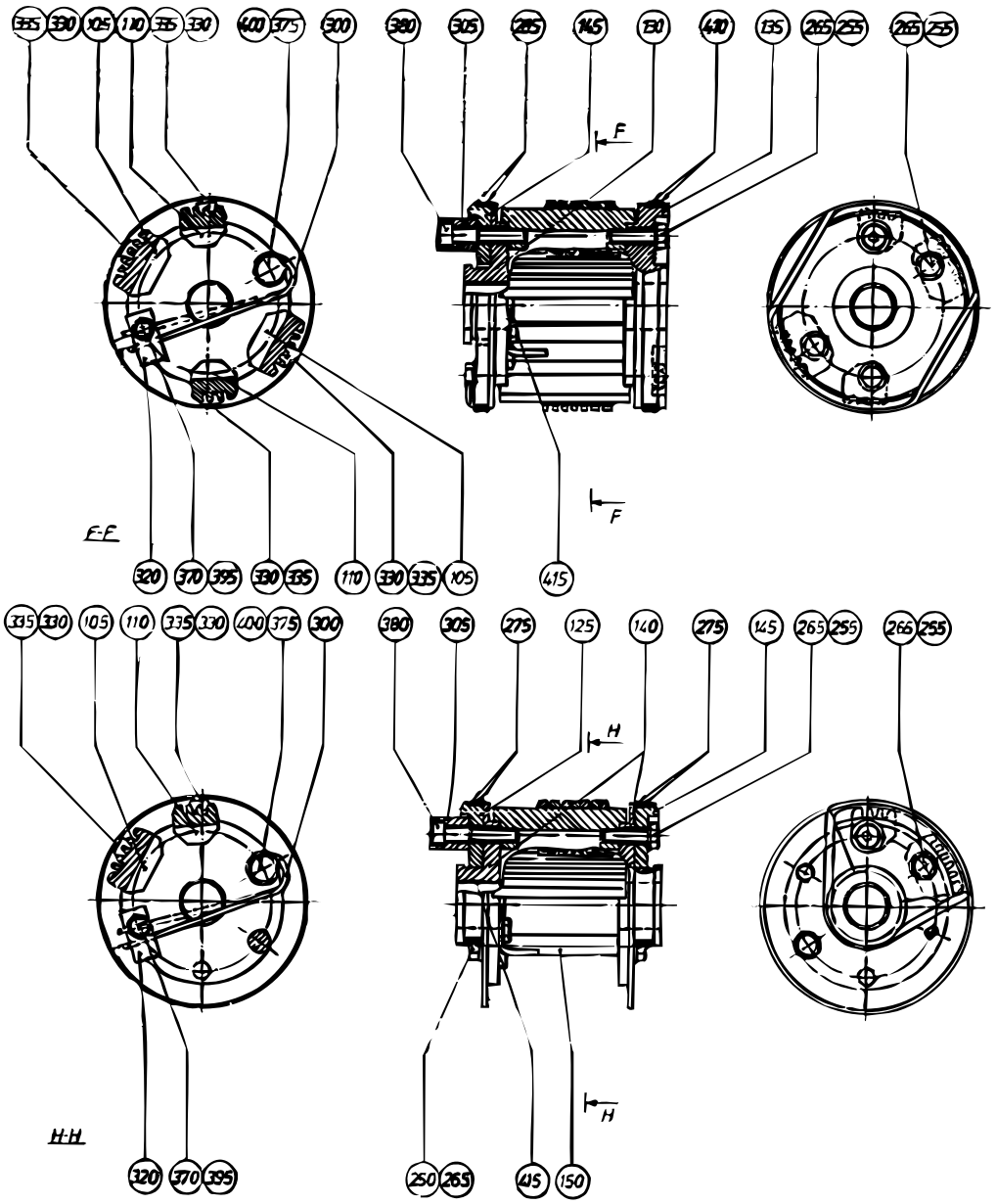

S-293684-4
ECN 20648

Pos	Part No	SP	UN	Qty	Description	Page No
TB 0180B or TB 0200B or TB 0200M or TB 0200S or TB 0236B or TB 0250B or TB 0300B or TBA 0100B or TBA 0125S or TBA 0160S or TBA 0180B or TBA 0189B or TBA 0200B or TBA 0200M or TBA 0200S or TBA 0236B or TBA 0250B or TBA 0250S or TBA 0284B or TBA 0300S or TBA 0330S						
105	293395-0002	F		2	TYPE HOLDER	
110	293395-0001	F		2	TYPE HOLDER	
130	292412-0000	D		1	END SECTION	
135	292413-0000	D		1	END SECTION	
145	293659-0000	D		1	CARRIER	
255	312101-0331	-		7	SCREW M6S5X20FZB	
265	315101-0146	-		7	WASHER BRB5,3X10FZB	
285	315202-0304	F		2	O-RING 64,5X3	
410	315202-0305	F		2	O-RING 69,5X3	
TPA 0250SQ or TPA 0330SQ						
105	293395-0002	F		2	TYPE HOLDER	
110	293395-0001	F		1	TYPE HOLDER	
130	292412-0000	D		1	END SECTION	
135	292413-0000	D		1	END SECTION	
145	293659-0000	D		1	CARRIER	
255	312101-0331	-		7	SCREW M6S5X20FZB	
265	315101-0146	-		5	WASHER BRB5,3X10FZB	
285	315202-0304	F		2	O-RING 64,5X3	
410	315202-0305	F		2	O-RING 69,5X3	
TB 0500SQ or TB 1000B LOFIN or TB 1000S or TB 1000SQ or TB 1136B or TB 1500B or TBA 0750B or TBA 1000B LOFIN or TBA 1000S or TBA 1000SQ or TBA 1055B or TBA 1500S or TBO 1000B LOFIN or TBO 1000SQ or TPA 1000S						
100	293395-0003	F		1	TYPE HOLDER	
110	293395-0001	F		1	TYPE HOLDER	
115	292409-0000	D		2	END SECTION	
120	442072-0000	D		1	CARRIER	
125	292411-0000	D		1	CARRIER	
150	293671-0000	D		1	SPACER	
200	90413-0048	F		1	CODE INSERT SET	
205	90413-0049	F		1	CODE INSERT SET	
250	312101-0329	-		2	SCREW M6S5X16FZB	
255	312101-0331	-		3	SCREW M6S5X20FZB	
265	315101-0146	-		5	WASHER BRB5,3X10FZB	
280	315202-0301	F		4	O-RING 49,5X3	
TB 0500B or TB 0568B or TBA 0500B						
100	293395-0003	F		2	TYPE HOLDER	
110	293395-0001	F		2	TYPE HOLDER	
115	434787-0000	D		1	END SECTION	
120	292410-0000	D		1	END SECTION	
155	293676-0000	D		1	CARRIER	
200	90413-0048	F		1	CODE INSERT SET	
205	90413-0049	F		1	CODE INSERT SET	
255	312101-0331	-		7	SCREW M6S5X20FZB	
265	315101-0146	-		7	WASHER BRB5,3X10FZB	
285	315202-0304	F		2	O-RING 64,5X3	
410	315202-0305	F		2	O-RING 69,5X3	
TB 0500S or TBA 0355B or TBA 0375S or TBA 0400B or TBA 0500S or TBA 0750S						
105	293395-0002	F		1	TYPE HOLDER	
110	293395-0001	F		1	TYPE HOLDER	
125	479237-0000	D		1	CARRIER	
140	479236-0000	D		2	END SECTION	
145	479238-0000	D		1	CARRIER	
150	293671-0000	D		1	SPACER	
250	312101-0329	-		2	SCREW M6S5X16FZB	
255	312101-0331	-		3	SCREW M6S5X20FZB	
265	315101-0146	-		5	WASHER BRB5,3X10FZB	
275	315202-0224	F		4	O-RING 42,2X3	
TB 1000B HIFIN or TBA 1000B HIFIN						
100	293395-0003	F		1	TYPE HOLDER	
110	293395-0001	F		1	TYPE HOLDER	
115	293690-0000	D		2	END SECTION	
120	442431-0000	D		1	CARRIER	
125	293688-0000	D		1	CARRIER	
150	293671-0000	D		1	SPACER	
200	90413-0048	F		1	CODE INSERT SET	
205	90413-0049	F		1	CODE INSERT SET	
250	312101-0329	-		2	SCREW M6S5X16FZB	
255	312101-0331	-		3	SCREW M6S5X20FZB	
265	315101-0146	-		5	WASHER BRB5,3X10FZB	
280	315202-0301	F		4	O-RING 49,5X3	

PRINTING WHEEL NSS

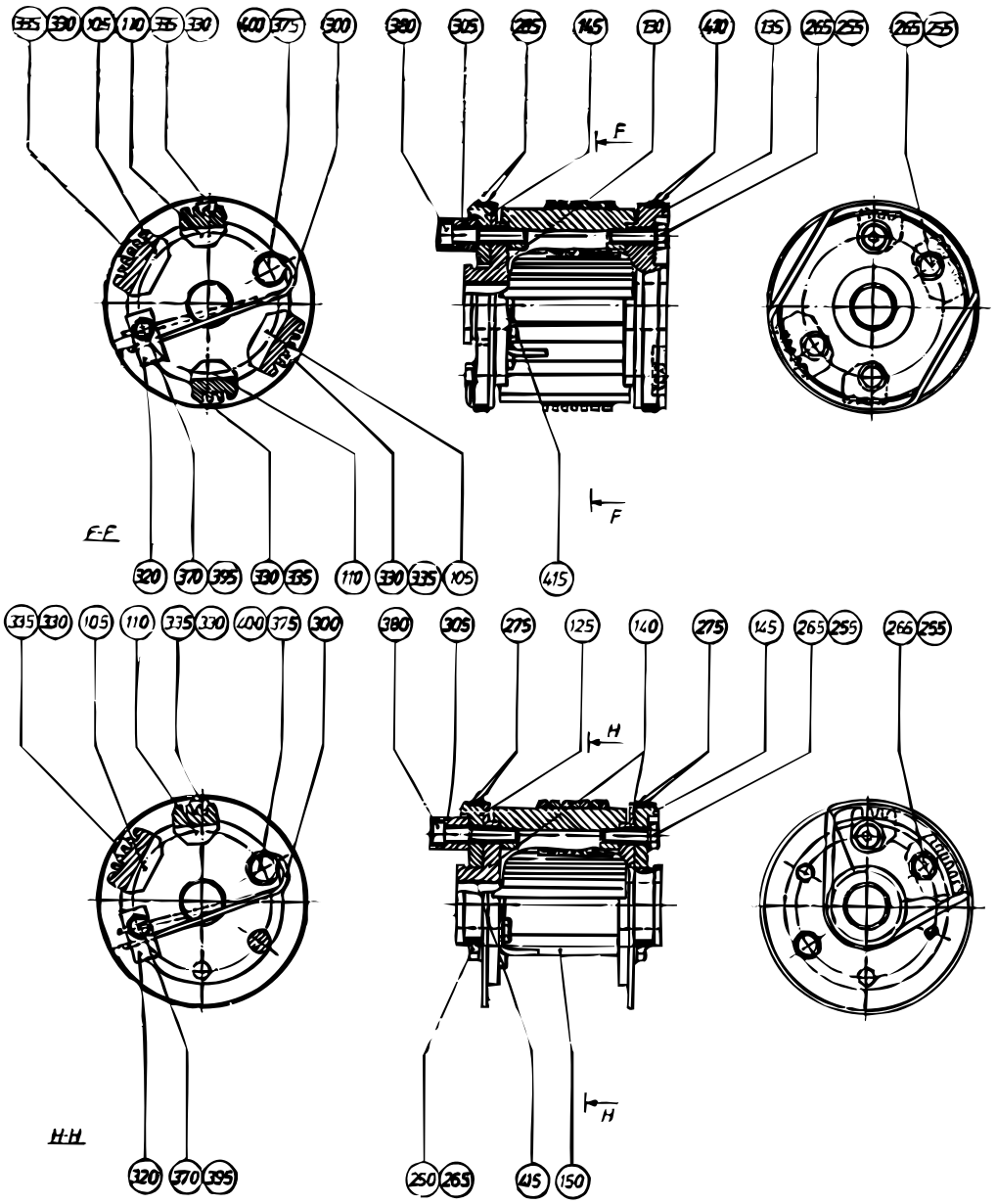

S-293684-4
ECN 20648

Pos	Part No	SP	UN	Qty	Description	Page No
Common parts						
	539347-0001	-		x	STAMPING SUMMARY	
300	32691-0000	F		1	LOCKING SPRING	
305	33011-0000	K		1	SLEEVE	
320	90165-0010	-		1	CLIP	
330	90413-0033	F		1	CODE INSERT SET 0-9	
330	90413-0043	F		1	CODE INSERT SET	
335	90413-0044	F		1	CODE INSERT SET	
335	90413-0047	F		1	CODE INSERT SET	
370	312101-0287	-		1	SCREW M6S4X8FZB	
375	312101-0364	-		1	SCREW M6S6X10FZB	
380	312111-0335	-		1	SCREW MC6S5X30FZB	
395	315101-0136	-		2	WASHER BRB4,3X8FZB	
400	315111-0153	-		1	WASHER TBRB6,4X12FZB	
415	321120-0122	K		2	BUSHING 15/17X15	

Pos	Part No	SP	UN	Qty	Description	Page No

ADJUSTMENT DEVICE

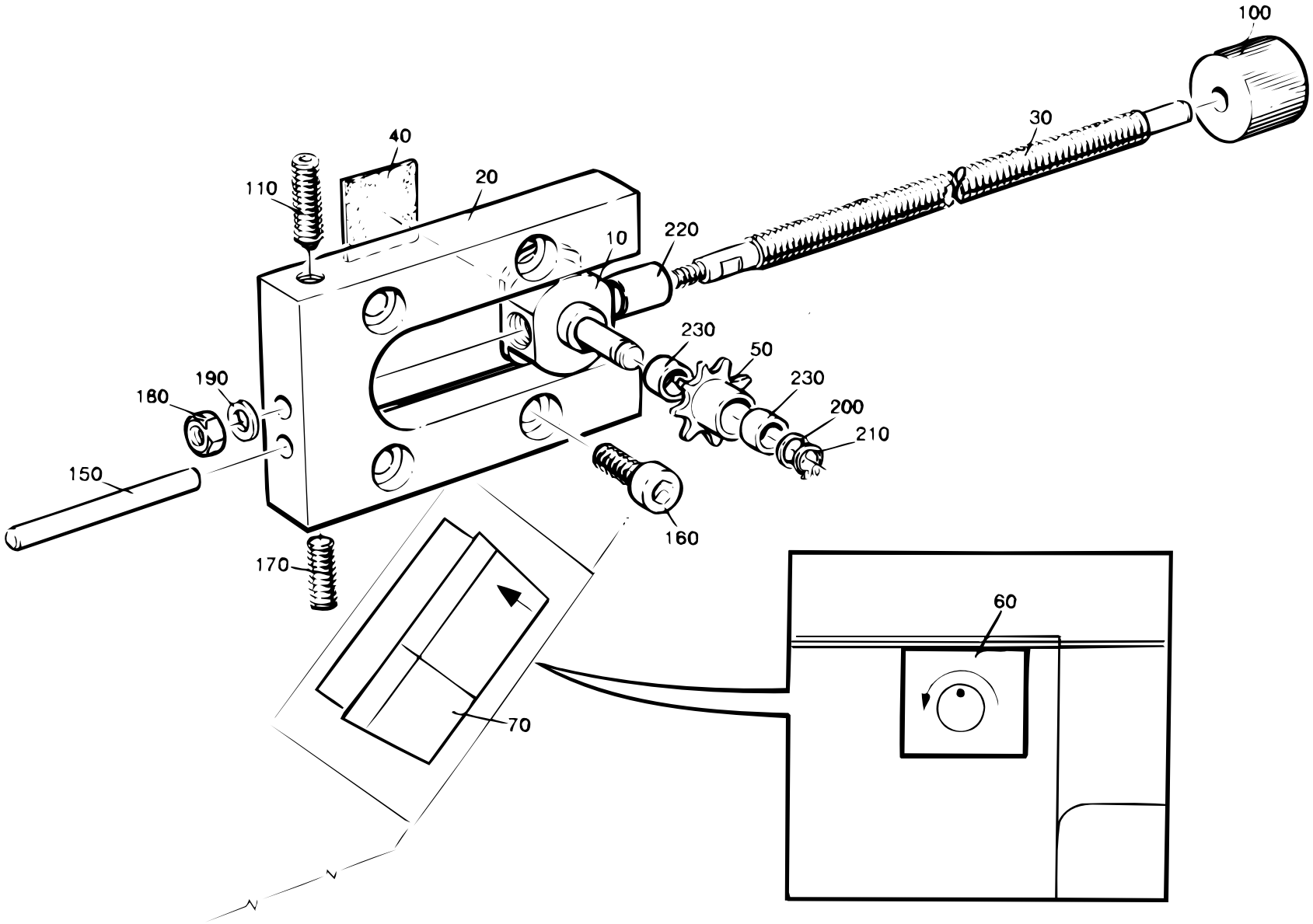

S-543143-1
ECN 10835

Pos	Part No	SP	UN	Qty	Description	Page No
-						
	543144-0001	-		x	ASSEMBLY DESCRIPTION	
010	526984-0000	-		1	SADDLE	
020	526985-0000	-		1	PLATE	
030	526986-0001	-		1	SHAFT	
040	527649-0000	-		1	DISTANCE RUBBER	
050	529362-0000	-		1	SPROCKET	
060	543141-0000	-		1	SIGN	
070	543142-0000	-		1	SIGN	
100	90051-0089	-		1	SHIFTER HANDLE	
110	90287-0167	-		1	SPRINGLOADED SCREW	
150	311103-0365	-		1	CYLINDRICACP M6 6X50 RFR	
160	312115-0368	-		2	SCREW MC6S ISO 4762 M6X16 A280	
170	312318-0368	-		1	SET SCREW CUP POINT ISO 4029 M6X16	
RFR						
180	312605-0312	-		1	NUT M6M4RFR	
190	315105-0136	-		1	WASHER BRB4,3X8RFR	
200	315105-0153	-		1	WASHER BRB6,4X12RFR	
210	315751-0103	-		1	CIRCLIP SGA 6 RFR	
220	321120-0100	-		1	BUSHING 8/10X12	
230	321120-0101	-		2	BUSHING 6/8X6	

Pos	Part No	SP	UN	Qty	Description	Page No

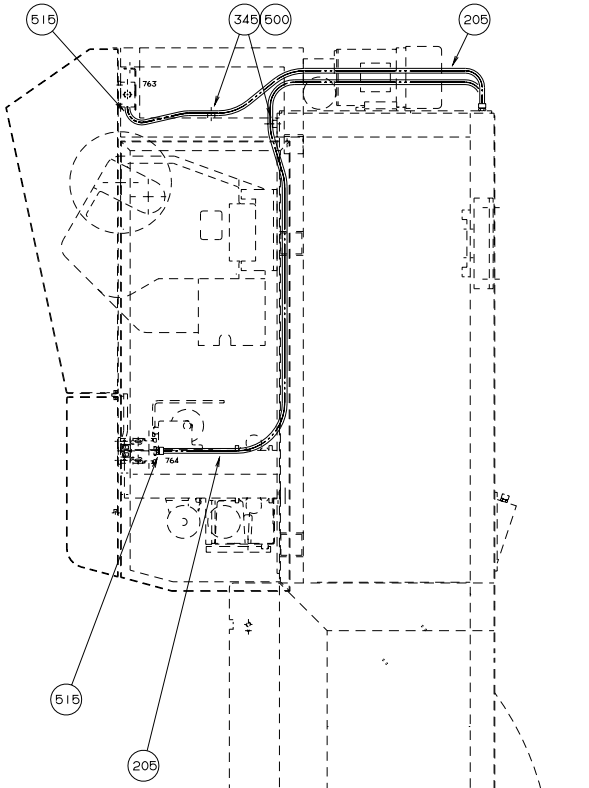

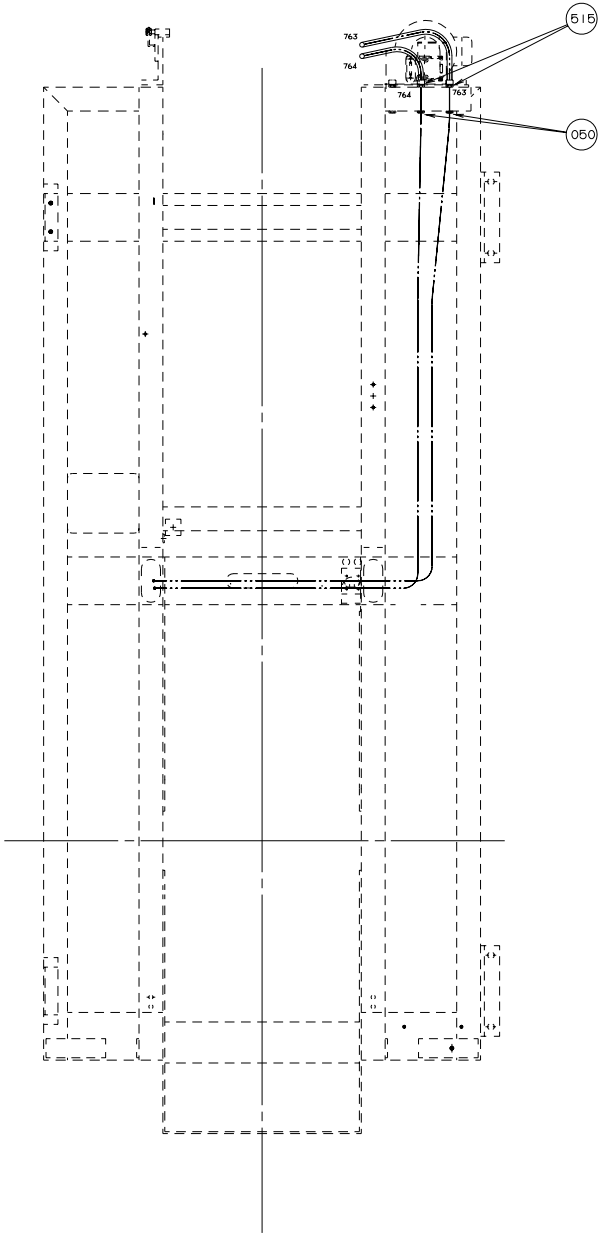

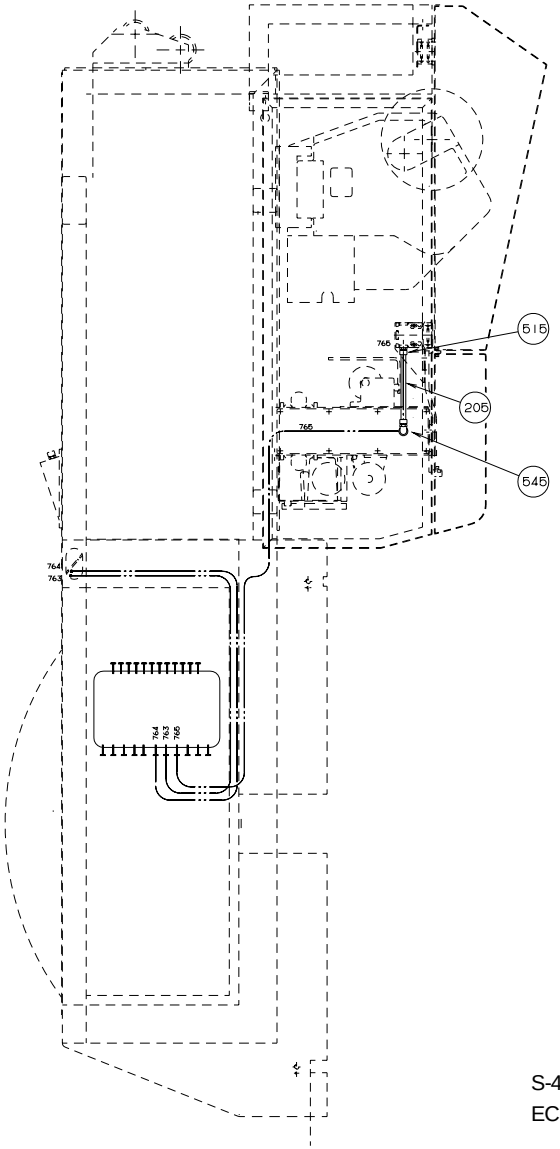

S-445920-16
ECN 20082

Pos	Part No	SP	UN	Qty	Description	Page No
TB/8 0300B or TB/8 0500B or TB/8 0500S or TB/8 0500SQ or TB/8 0568B or TB/8 1000B or TB/8 1000S or TB/8 1000SQ or TB/8 1136B or TBO/8						
010	445844-0000	-		3	SLEEVE	
050	352101-0103	-		8	LEAD IN G 18,6	
TB/8 1500B or TBA/8 or TBA/8LSC or TBA/8PRISMA						
010	445844-0000	-		2	SLEEVE	
020	458362-0000	-		1	PLUG	
050	352101-0103	-		4	LEAD IN G 18,6	
Common parts						
140	A 532151-0300	-		1	CONNECTION BOX	
030	90166-0081	-	MM	7800	HOSE	
040	352135-0106	D	MM	4100	HOSE .016	
060	B 466337-0000	-		1	CONNECTION BOX	
070	486826-0001	D		1	SIGN "EMERGENCY STOP"	
075	B 529456-0000	-		1	PLATE	
080	B 529455-0000	-		1	PLATE	
100	440256-0000	-		1	ARM	
110	445846-0000	-		1	SLEEVE	
120	90002-0004	-		1	BLANK-OFF PLUG 22,5	
125	90002-0009	-		1	BLANK-OFF PLUG 18.6	
130	90044-0122	K		2	INDUCTIVE SWITCH	
140	90044-0104	K		5	PROX.SWITCHIFM IN 3002	
150	90064-0084	D		2	PUSH BUTTON YELLOW	
160	90064-0085	D		1	PUSH BUTTON RED	
170	90064-0124	D		1	EMERGENCY STOP BUTTON	
180	90099-0003	-		1	NUT	
190	90110-0128	K		1	PLUG 24-POL	
200	90111-0150	D		1	SWITCH GEAR	
205	90152-0033	-	DM	30	HOSE	
210	90166-0013	K	DM	25	HOSE	
220	90194-0016	-		2	SIGN "FLASH SIGN" 50X50MM	
230	90232-0103	K		1	PH.CELL OMRON E3SCT61-L-5M	
235	90232-0104	K		1	RECEIVER OMRON E3S-CT61-D-5M	
240	90232-0106	-		1	PH.CELL OMRON E3S-CR11-5M	
310	312111-0323	-		2	SCREW MC6S5X8FZB	
320	312121-0228	-		2	SLOTTED HEMCS3X16FZB	
330	312125-0228	-		2	SLOTTED CHEESE HEAD ISO 1207 M3X16 RFR	
340	312125-0234	-		2	SLOTTED CHEESE HEAD ISO 1207 M3X30 RFR	
345	312125-0323	-		2	SLOTTED CHEESE HEAD ISO 1207 M5X8 RFR	
350	312155-0329	-		3	SCREW MF6S DIN 7991 M5X16 A280	
360	312316-0360	-		1	STOP SCREW SK6SS6X6FZB	
365	312605-0310	-		2	NUT M6M3RFR	
370	312605-0312	-		3	NUT M6M4RFR	
380	315105-0124	-		6	WASHER BRB3,2X6RFR	
390	315101-0136	-		2	WASHER BRB4,3X8FZB	
400	315105-0146	-		2	WASHER BRB5,3X10RFR	
430	342946-0112	-		1	T-COUPLING,UNION 6/4	
460	352101-0105	-		1	LEAD-IN G 22,5	
470	352103-0100	D		1	CABLE GLAND STR 9	
480	352103-0111	D		2	CABLE GLAND ST 16	
490	352110-0099	D		3	CRAMP TK 3-5	
500	352113-0204	-		2	ANCHOR TM3S25-M	
510	352135-0109	D	DM	10	HOSE .022	
515	352136-0113	-		5	GLAND FITTING	
520	352136-0127	K		7	GLAND FITTING	
530	352136-0129	K		4	GLAND FITTING	
540	352136-0143	K		2	GLAND FITTING	
545	352137-0113	-		1	GLAND FITTING	
550	352137-0127	K		3	GLAND FITTING	
560	359241-0269	D		1	SIGN	
570	359301-0100	D		1	SIGN T	
580	359301-0110	D		1	SIGN "SHORT	
590	359301-0335	D		1	SIGN T	
595	90012-0137	-		1	CABLE GLAND SCREENED	

SPLICING DEVICE

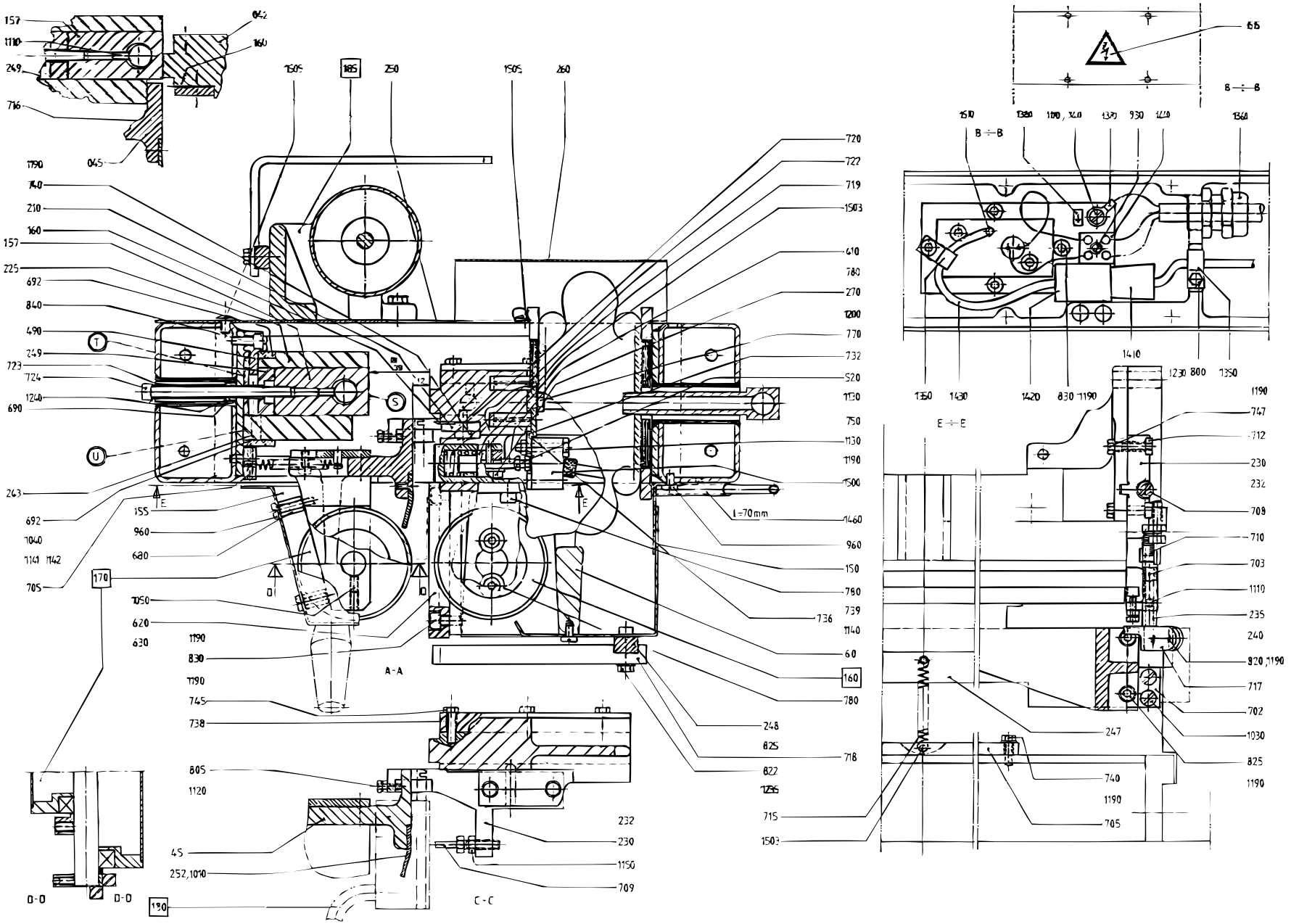

S-445880-8
ECN 22849

Pos	Part No	SP	UN	Qty	Description	Page No
0300B or 0375S						
010	445881-0000	D		1	BRACKET LEFT	
020	445882-0000	D		1	BRACKET RIGHT	
042	B 553770-0002	D		1	PRESSURE JAW	
230	458908-0000	D		1	BRACKET	
232	458909-0000	D		1	BRACKET	
252	484895-0003	-		1	SHEET	
0355B or 0400B or 0500S						
010	445881-0000	D		1	BRACKET LEFT	
020	445882-0000	D		1	BRACKET RIGHT	
042	B 553770-0002	D		1	PRESSURE JAW	
230	458908-0000	D		1	BRACKET	
232	458909-0000	D		1	BRACKET	
252	484895-0002	-		1	SHEET	
0500B or 0568B or 0750B or 1000B or 1055B or 1136B						
010	445881-0000	D		1	BRACKET LEFT	
020	445882-0000	D		1	BRACKET RIGHT	
042	B 553770-0001	D		1	PRESSURE JAW	
230	458908-0000	D		1	BRACKET	
232	458909-0000	D		1	BRACKET	
252	484895-0001	-		1	SHEET	
0500SQ or 1000SQ						
010	445881-0000	D		1	BRACKET LEFT	
020	445882-0000	D		1	BRACKET RIGHT	
042	B 553770-0001	D		1	PRESSURE JAW	
230	458908-0000	D		1	BRACKET	
232	458909-0000	D		1	BRACKET	
252	484895-0007	-		1	SHEET	
0750S						
010	445881-0000	D		1	BRACKET LEFT	
020	445882-0000	D		1	BRACKET RIGHT	
042	B 553770-0001	D		1	PRESSURE JAW	
230	458908-0000	D		1	BRACKET	
232	458909-0000	D		1	BRACKET	
252	484895-0005	-		1	SHEET	
1000S						
010	445881-0000	D		1	BRACKET LEFT	
020	445882-0000	D		1	BRACKET RIGHT	
042	B 553770-0001	D		1	PRESSURE JAW	
230	458908-0000	D		1	BRACKET	
232	458909-0000	D		1	BRACKET	
252	484895-0006	-		1	SHEET	

Pos	Part No	SP	UN	Qty	Description	Page No
1500B						
010	593656-0000	D		1	BRACKET LEFT	
020	593657-0000	D		1	BRACKET RIGHT	
042	B 553770-0001	D		1	PRESSURE JAW	
230	593652-0000	D		1	BRACKET	
232	593651-0000	D		1	BRACKET	
252	484895-0001	-		1	SHEET	
Common parts						
F160	A 440135-0100	-		1	BENDING ROLLER	**813**
F170	A 440184-0100	-		1	BENDING ROLLER	**815**
F180	A 449630-0300	D		1	PAPER HOLDER	**817**
F185	A 522410-0200	-		1	BENDING ROLLER	**821**
045	457627-0000	D		1	DOLLY	
060	445911-0000	-		1	CANTILEVER	
080	445885-0000	-		1	BEAM	
090	445886-0000	-		1	BEAM	
150	449751-0000	-		1	PROTECTION	
155	450853-0000	-		1	PROTECTION	
157	548794-0000	D		1	HEATING JAW	
160	294009-0000	F		2	KNIFE	
210	539052-0000	D		1	KNIFE HOLDER	
225	449770-0000	D		1	INSULATION	
235	466618-0000	K		1	CATCH	
240	466619-0000	K		1	CATCH	
243	457658-0000	D		1	INSULATION	
247	458912-0000	-		1	BRACKET	
248	479223-0000	-		1	RAIL	
249	484844-0000	D		1	INSULATION	
250	531886-0000	-		1	PROTECTION PLATE	
260	531887-0000	-		1	PROTECTION PLATE	
265	573828-0000	-		1	COVERING PLATE	
270	32079-0000	-		1	WASHER	
330	445894-0000	D		1	SEAL	
340	556316-0000	-		1	INSULATION	
350	556317-0000	D		1	INSULATION	
370	445898-0000	-		2	NUT	
390	556318-0000	D		1	INSULATION	
400	445901-0000	-		1	FRAME	
410	445902-0000	-		1	ARM	
420	445903-0000	D		2	ECCENTRIC SHAFT	
430	445904-0000	D		2	SHAFT	
450	445907-0000	-		2	SCREW	
460	458062-0000	K		2	TENSION SPRING	

SPLICING DEVICE

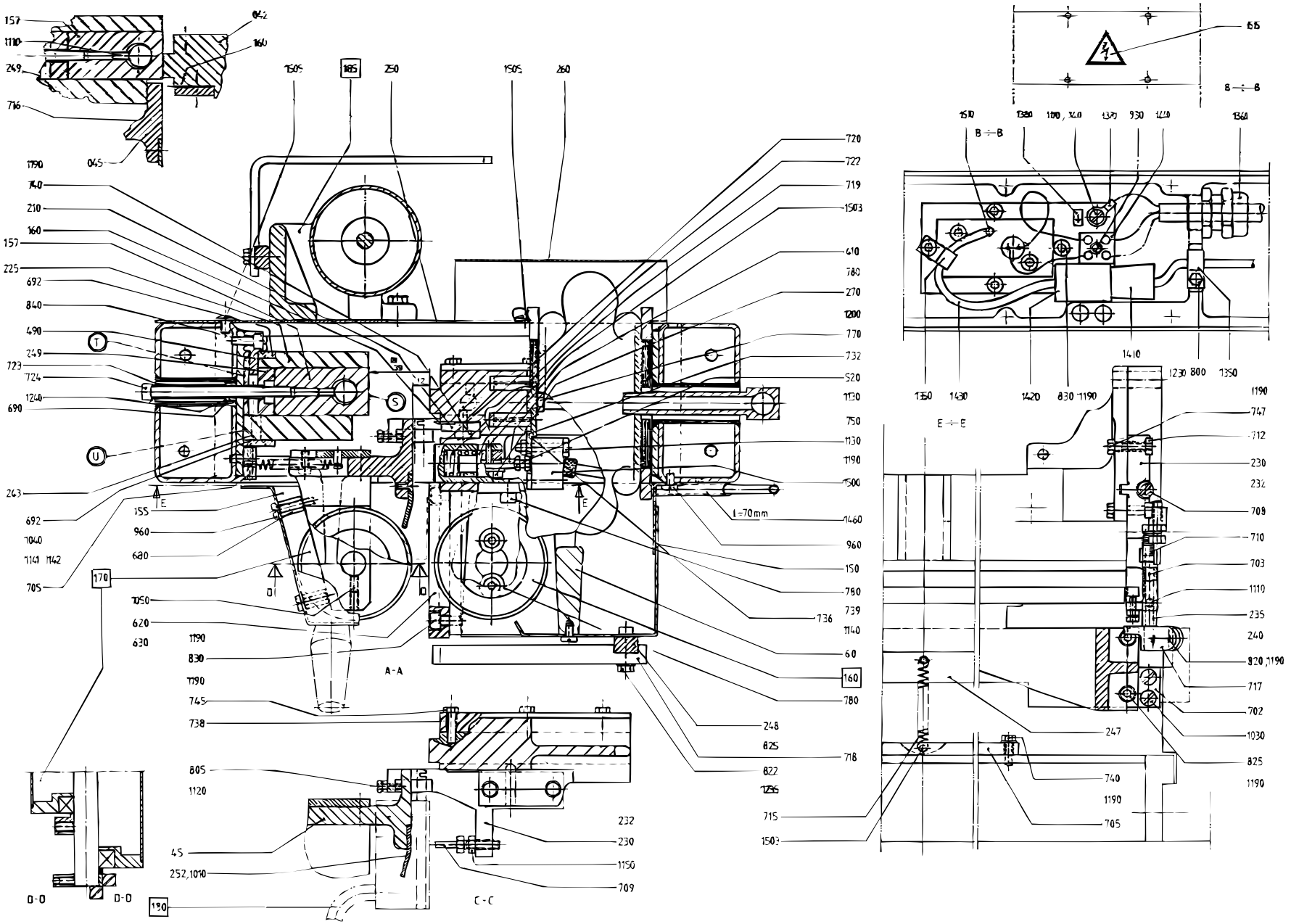

S-445880-8
ECN 22849

Pos	Part No	SP	UN	Qty	Description	Page No
470	445909-0000	-		1	NIPPLE	
490	445915-0000	-		1	STEERING	
520	445918-0000	-		1	SCREW	
620	449623-0000	D		1	STEERING	
630	449624-0000	D		1	STEERING	
640	927428-0000	-		1	COVERING PLATE	
650	449626-0000	D		2	SEAL	
660	449629-0000	-		1	BRACKET	
680	449753-0000	-		4	SCREW	
690	449761-0000	D		1	WASHER	
692	450017-0000	D		2	PLATE	
698	451412-0000	-		2	WASHER	
699	451413-0000	-		2	WASHER	
702	458915-0000	K		2	HEAD RAIL	
703	458916-0000	D		2	SHAFT	
705	458917-0000	-		1	SUPPORT	
708	553763-0000	D		2	ADJUSTING SCREW	
709	464983-0000	D		2	SCREW	
710	458929-0000	K		2	TURN SPRING	
712	464547-0000	D		4	NUT	
713	464548-0000	-		1	BRACKET	
715	464854-0000	K		1	TENSION SPRING	
716	561426-0000	K		1	LACE	
717	466446-0000	-		2	HANDLE	
718	479224-0000	D		2	STEERING	
719	466620-0000	D		1	PISTON	
720	466621-0000	D		1	PISTON	
722	466623-0000	D		1	COMPRESSION SPRING	
723	476288-0000	-		1	PIPE	
724	B 476289-0000	-		1	SCREW	
728	479188-0000	D		1	INSULATION	
732	484529-0000	D		1	CYLINDER BRACKET	
734	484682-0000	K		2	COMPRESSION SPRING	
736	484783-0000	D		2	RAIL	
737	484877-0000	K		2	STEERING	
738	B 484878-0000	-		2	HOLDER	
739	311211-0292	K		6	TAPER PIN GKP6X6X30	
740	312101-0329	-		8	SCREW M6S5X16FZB	
745	312101-0331	-		6	SCREW M6S5X20FZB	
747	312101-0333	-		4	SCREW M6S5X25FZB	
750	312101-0335	-		2	SCREW M6S5X30FZB	
770	312101-0366	-		4	SCREW M6S6X12FZB	
780	312101-0368	-		9	SCREW M6S6X16FZB	
790	312101-0493	-		2	SCREW M6S10X25FZB	
800	312105-0287	-		2	SCREW M6S ISO 4017 M4X8 A280	
802	312101-0289	-		2	SCREW M6S4X10FZB	
805	312101-0291	-		2	SCREW M6S4X12FZB	
820	312101-0323	-		4	SCREW M6S5X8FZB	
822	312105-0329	-		10	SCREW M6S ISO 4017 M5X16 A280	
825	312111-0325	-		6	SCREW MC6S5X10FZB	
830	312111-0327	-		10	SCREW MC6S5X12FZB	
840	312111-0329	-		2	SCREW MC6S5X16FZB	
870	312111-0372	-		8	SCREW MC6S6X25FZB	
890	312115-0340	-		2	SCREW MC6S ISO 4762 M5X45 A280	
920	312121-0228	-		4	SLOTTED HEMCS3X16FZB	
930	312121-0230	-		1	SLOTTED HEMCS3X20FZB	
940	312121-0321	-		1	SLOTTED HEMCS5X6FZB	
960	312132-0323	K		8	SLOTTED PAN HEAD ISO 1580 M5X8 MSGFN	
1010	312145-0289	-		7	SLOTTED HEMFS4X10RFR	
1020	312145-0327	-		8	SLOTTED HEMFS5X12RFR	
1021	312145-0335	-		2	SLOTTED HEMFS5X30RFR	
1030	312145-0329	-		4	SLOTTED HEMFS5X16RFR	
1035	312151-0368	-		4	SCREW MF6S6X16FZB	
1040	312151-0384	-		6	SCREW MF6S6X70FZB	
1050	312306-0287	-		2	STOP SCREW P6SS4X8FZB	
1110	312318-0321	K		7	STOP SCREW SK6SS5X6RFR	
1120	312601-0312	-		2	NUT M6M4FZB	
1130	312601-0314	-		3	NUT M6M5FZB	
1140	312601-0316	-		6	NUT M6M6FZB	
1141	312811-0316	-		6	LOCK NUT M6RFR	
1142	319030-0125	-		40	DISC SPRING	
1150	312605-0316	-		2	NUT M6M6RFR	
1180	315101-0136	-		2	WASHER BRB4,3X8FZB	
1190	315101-0146	-		43	WASHER BRB5,3X10FZB	
1200	315101-0153	-		16	WASHER BRB6,4X12FZB	
1210	315101-0173	-		2	WASHER BRB10,5X22FZB	
1230	315105-0136	-		2	WASHER BRB4,3X8RFR	
1235	315105-0146	-		10	WASHER BRB5,3X10RFR	
1240	315105-0153	-		2	WASHER BRB6,4X12RFR	
1250	316810-0106	-		1	PIPE CLAMP 8MM RFR	
1270	321116-0179	K		4	BUSHING 14E7/18X14	
1295	342713-0210	D		2	PLUG,EXT.G-THREAD,HEXAGON SOCKET G1/4"	
1300	342722-0205	-		1	STRAIGHT COUPL,FOR PLASTIC TUBE 8-G1/4"	
1310	342980-0113	-		1	BANJO-CONNECTION,RING 6/4-G1/8"	

SPLICING DEVICE

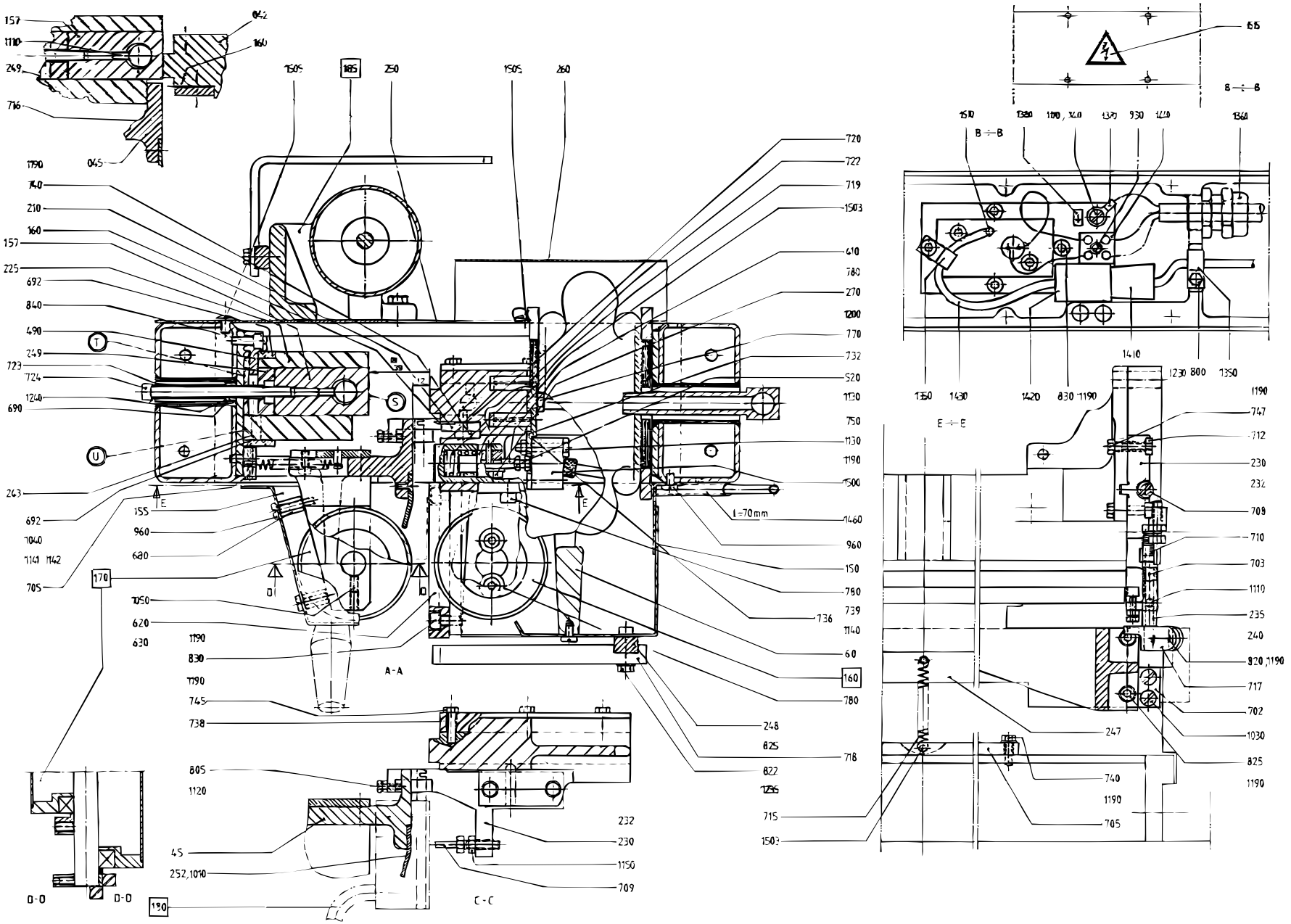

S-445880-8
ECN 22849

Pos	Part No	SP	UN	Qty	Description	Page No
1320	342980-0303	-		1	BANJO-HOLLOW BOLT COUPL,EXT.THR.01-G1/8"	
1350	352110-0099	-		2	CRAMP TK 3-5	
1360	352103-0108	-		1	CABLE GLAND ST 13	
1370	353101-0132	-		1	CABLE SHOE	
1380	359020-0012	-		1	SIGN "EARTHSYMBOL" 4X6MM	
1410	90326-0020	-		1	PLUG,FEMALE YELLOW CR-AL	
1420	90326-0022	-		1	PLUG,MALE YELLOW CR-AL	
1430	90326-0060	-		1	THERMOCOUPLE CR-AL	
1440	90195-0020	D		1	TERMINAL BK2 KRG 2-POLE	
1460	90166-0122	K	MM	100	HOSE	
1480	90206-0097	K		1	HEATING CARTRIDGE	
1490	90239-0231	D		1	BELLOWS	
1500	90239-0259	D		1	CYLINDER	
1503	90258-0031	-		2	HOLLOW PIN	
1505	90287-0075	-		3	SCREW	
1508	312155-0449	-		4	SCREW MF6S DIN 7991 M8X16 A280	
1510	90296-0051	-	KG	x	PASTE	
1515	90194-0016	-		1	SIGN "FLASH SIGN" 50X50MM	

Pos	Part No	SP	UN	Qty	Description	Page No

BENDING ROLLER

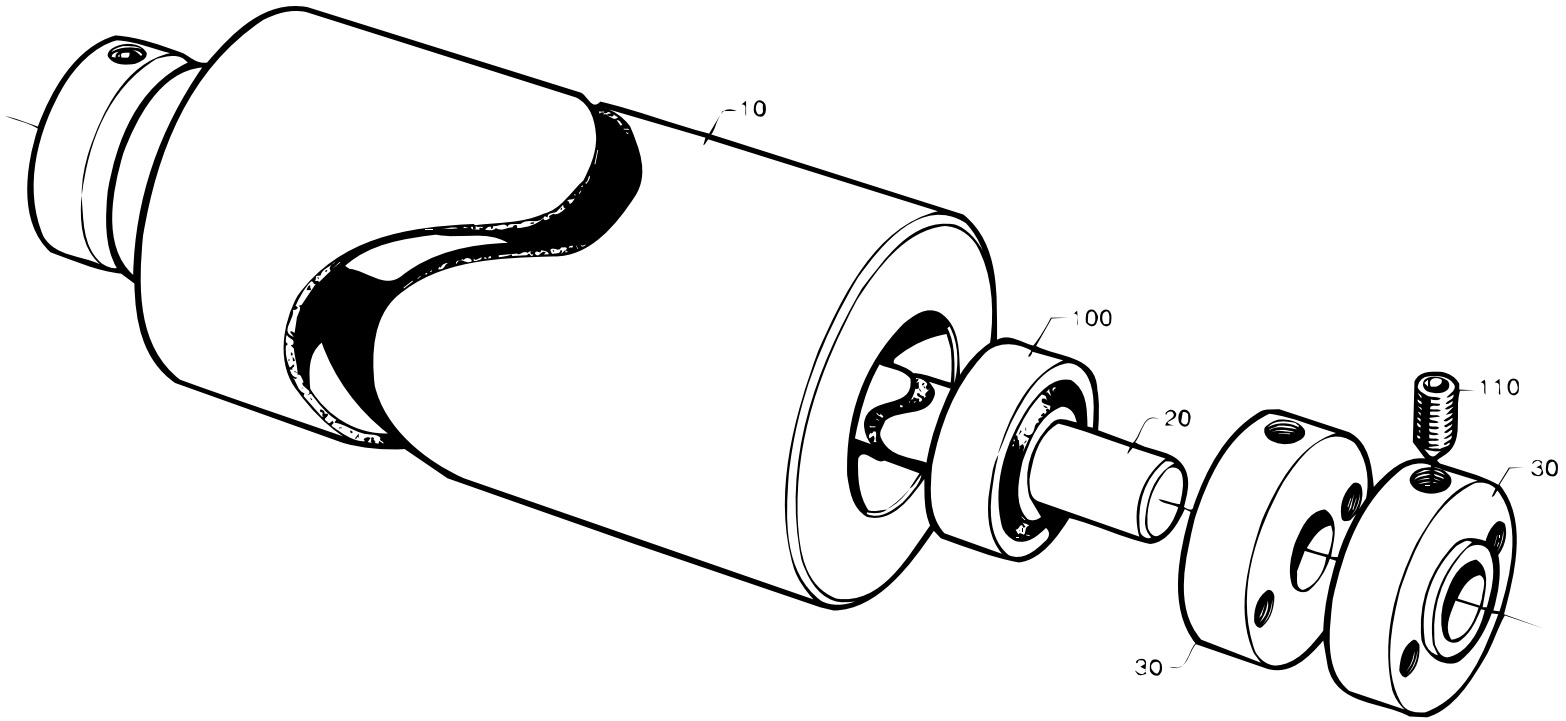

S-440135-1
ECN 5832

Pos	Part No	SP	UN	Qty	Description	Page No
-						
010	440136-0001	D		1	ROLL	
020	440137-0001	-		1	SHAFT	
030	440138-0000	-		4	LOCKING CIRCLIP	
100	321313-0102	K		2	BALL BEARISKF6202-2RS	
110	312306-0366	-		4	STOP SCREW P6SS6X12FZB	

Pos	Part No	SP	UN	Qty	Description	Page No

BENDING ROLLER

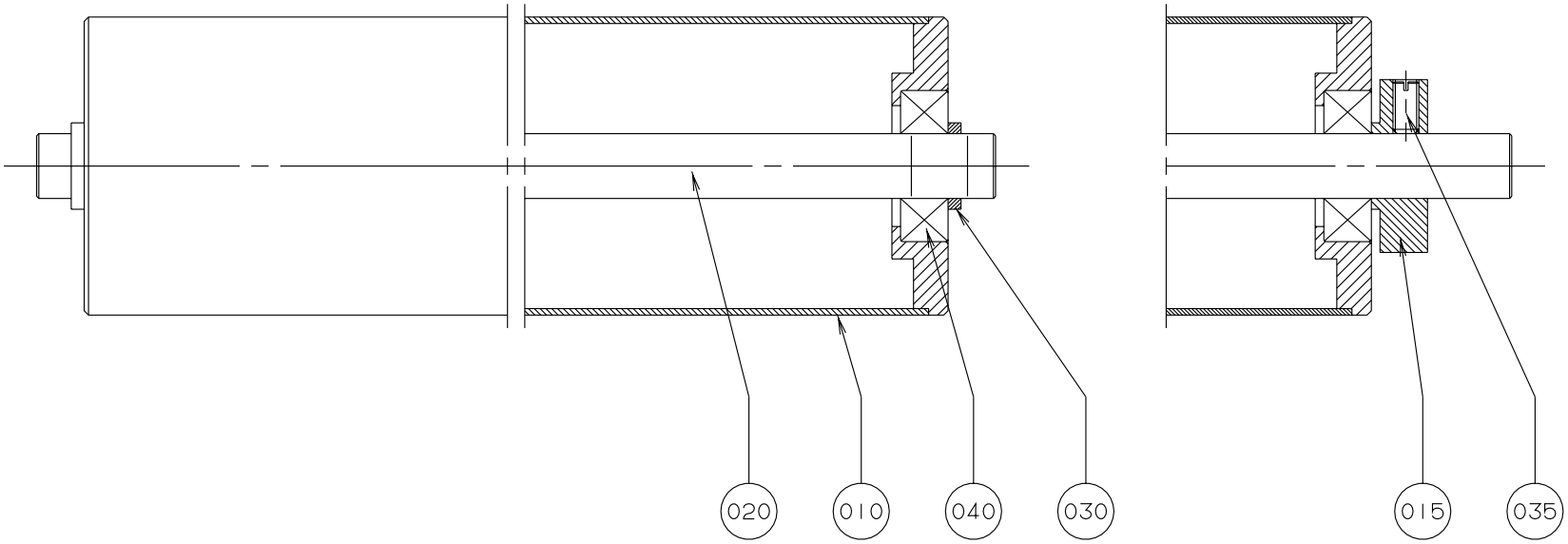

Pos	Part No	SP	UN	Qty	Description	Page No
TB 0200B or TB 0250B or TBA 0200B or TBA 0250B						
010	440136-0005	D		1	ROLL	
015	440138-0000	-		2	LOCKING CIRCLIP	
035	312306-0366	-		2	STOP SCREW P6SS6X12FZB	
TB 1000S or TBA 1000S						
010	440136-0007	D		1	ROLL	
015	569917-0000	-		2	LOCKING CIRCLIP	
035	312306-0366	-		2	STOP SCREW P6SS6X12FZB	
TB 0500B or TB 0568B or TB 1000B or TB 1136B or TB 1500B or TBA 0500B or TBA 0750B or TBA 1000B or TBA 1055B or TBA 1500S or TBO 1000B						
010	440136-0002	D		1	ROLL	
030	440194-0000	F		2	WASHER	
TBA 0750S or TPA 1000S						
010	440136-0006	D		1	ROLL	
015	440138-0000	-		2	LOCKING CIRCLIP	
035	312306-0366	-		2	STOP SCREW P6SS6X12FZB	
TB 0500SQ or TB 1000SQ or TBA 1000SQ or TBO 1000SQ						
010	440136-0008	-		1	ROLL	
015	440138-0000	-		2	LOCKING CIRCLIP	
035	312306-0366	-		2	STOP SCREW P6SS6X12FZB	
TB 0300B or TBA 0375S						
010	440136-0004	D		1	ROLL	
015	440138-0000	-		2	LOCKING CIRCLIP	
035	312306-0366	-		2	STOP SCREW P6SS6X12FZB	
TB 0500S or TBA 0355B or TBA 0400B or TBA 0500S						
010	440136-0003	D		1	ROLL	
015	440138-0000	-		2	LOCKING CIRCLIP	
035	312306-0366	-		2	STOP SCREW P6SS6X12FZB	
Common parts						
020	440137-0002	-		1	SHAFT	
040	321313-0102	K		2	BALL BEARISKF6202-2RS	

Pos	Part No	SP	UN	Qty	Description	Page No

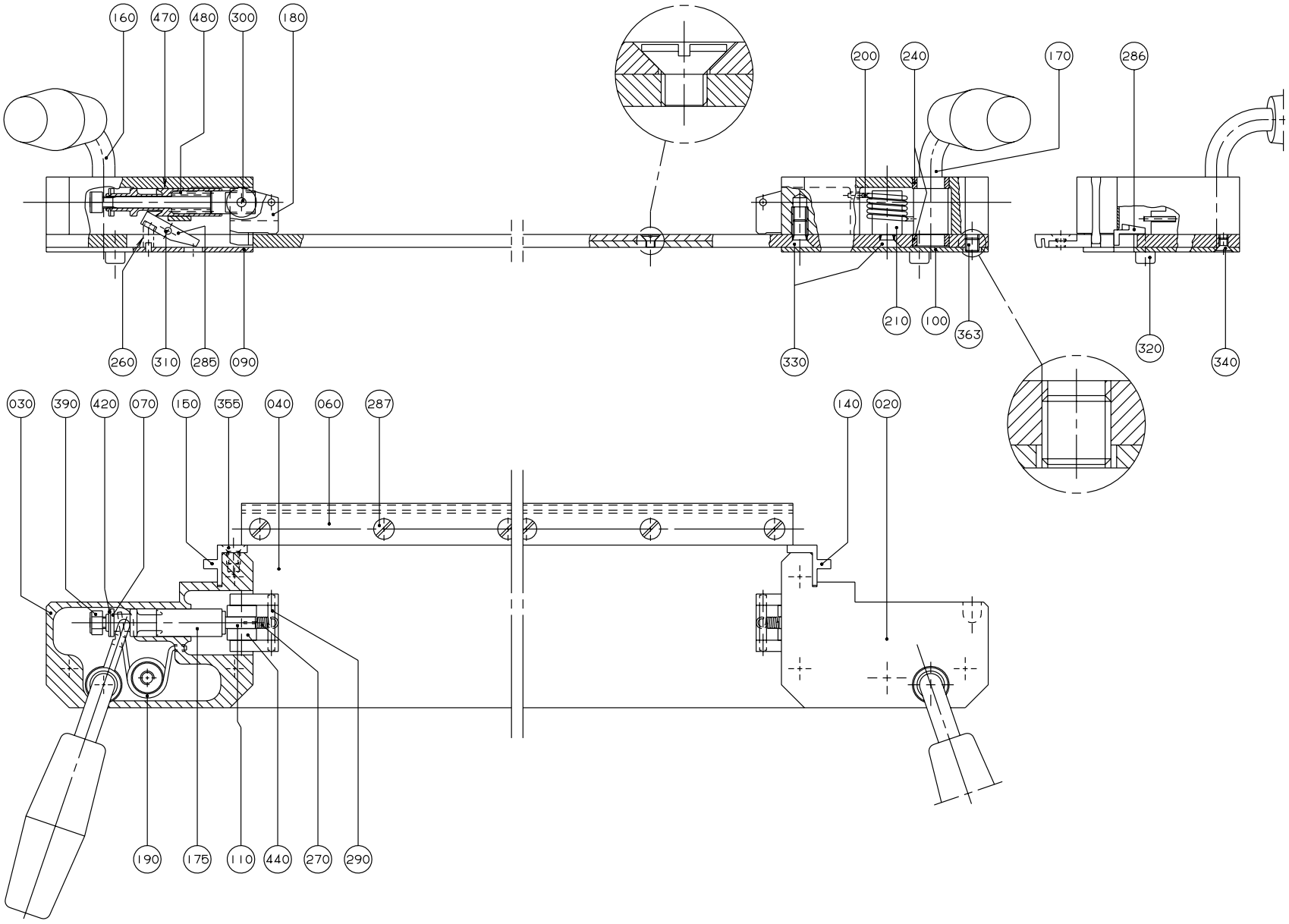

S-449630-3
ECN 19242

Pos	Part No	SP	UN	Qty	Description	Page No
TB 1000S or TBA 1000S						
020	569921-0000	D		1	BEARING HOUSE L.	
030	569922-0000	D		1	BEARING HOUSE R.	
040	569923-0000	D		1	CUTTING RAIL	
090	569919-0000	D		1	COVER PLATE R.	
100	569918-0000	D		1	COVER PLATE L.	
110	569920-0000	-		2	SHAFT	
140	522474-0000	K		1	BLOCK L	
150	522475-0000	K		1	BLOCK R	
330	312141-0366	-		8	SLOTTED HEMFS6X12FZB	
355	312145-0323	-		4	SLOTTED HEMFS5X8RFR	
TB 0500B or TB 0568B or TB 1000B or TB 1136B or TBA 0500B or TBA 0750B or TBA 1000B or TBA 1055B or TBA 1500S or TBO 1000B						
020	449631-0000	D		1	BEARING HOUSING	
030	449632-0000	D		1	BEARING HOUSING	
040	549834-0000	D		1	CUTTING RAIL	
090	449634-0000	D		1	COVERING PLATE	
100	449635-0000	D		1	COVERING PLATE	
110	556322-0000	-		2	SHAFT	
140	522474-0000	K		1	BLOCK L	
150	522475-0000	K		1	BLOCK R	
330	312141-0366	-		8	SLOTTED HEMFS6X12FZB	
355	312145-0323	-		4	SLOTTED HEMFS5X8RFR	
TBA 0750S or TPA 1000S						
020	544272-0000	D		1	BEARING HOUSING	
030	544273-0000	D		1	BEARING HOUSING	
040	556393-0000	D		1	CUTTING RAIL	
090	544274-0000	D		1	COVERING PLATE	
100	544275-0000	D		1	COVERING PLATE	
110	556323-0000	-		2	SHAFT	
140	522474-0000	K		1	BLOCK L	
150	522475-0000	K		1	BLOCK R	
330	312141-0366	-		8	SLOTTED HEMFS6X12FZB	
355	312145-0323	-		4	SLOTTED HEMFS5X8RFR	
TB 0500SQ or TB 1000SQ or TBA 1000SQ or TBO 1000SQ						
020	574059-0000	D		1	BEARING HOUSING	
030	574060-0000	D		1	BEARING HOUSING	
040	574061-0000	D		1	CUTTING RAIL	
090	574062-0000	D		1	COVERING PLATE	
100	574063-0000	D		1	COVERING PLATE	
110	574064-0000	-		2	SHAFT	
140	522474-0000	K		1	BLOCK L	
150	522475-0000	K		1	BLOCK R	
330	312141-0366	-		8	SLOTTED HEMFS6X12FZB	
355	312145-0323	-		4	SLOTTED HEMFS5X8RFR	
TB 1500B						
020	593566-0000	D		1	BEARING HOUSING	
030	593567-0000	D		1	BEARING HOUSING	
040	593568-0000	D		1	CUTTING RAIL	
090	593569-0000	D		1	COVERING PLATE	
100	593648-0000	D		1	COVERING PLATE	
110	556322-0000	-		2	SHAFT	
140	593649-0000	D		1	BLOCK LEFT	
150	593650-0000	D		1	BLOCK RIGHT	
330	312141-0366	-		6	SLOTTED HEMFS6X12FZB	
345	312145-0291	-		2	SLOTTED HEMFS4X12RFR	
355	312145-0287	-		4	SLOTTED HEMFS4X8RFR	
TB 0300B or TBA 0375S						
020	457487-0000	D		1	BEARING HOUSING	
030	457489-0000	D		1	BEARING HOUSING	
040	556395-0000	D		1	CUTTING RAIL	
090	457493-0000	D		1	COVERING PLATE	
100	457495-0000	D		1	COVERING PLATE	
110	556325-0000	-		2	SHAFT	
140	522474-0000	K		1	BLOCK L	
150	522475-0000	K		1	BLOCK R	
330	312141-0366	-		8	SLOTTED HEMFS6X12FZB	
355	312145-0323	-		4	SLOTTED HEMFS5X8RFR	
TB 0500S or TBA 0355B or TBA 0400B or TBA 0500S						
020	457486-0000	D		1	BEARING HOUSING	
030	457488-0000	D		1	BEARING HOUSING	
040	556394-0000	D		1	CUTTING RAIL	
090	457492-0000	D		1	COVERING PLATE	
100	457494-0000	D		1	COVERING PLATE	
110	556324-0000	-		2	SHAFT	
140	522474-0000	K		1	BLOCK L	
150	522475-0000	K		1	BLOCK R	
330	312141-0366	-		8	SLOTTED HEMFS6X12FZB	
355	312145-0323	-		4	SLOTTED HEMFS5X8RFR	

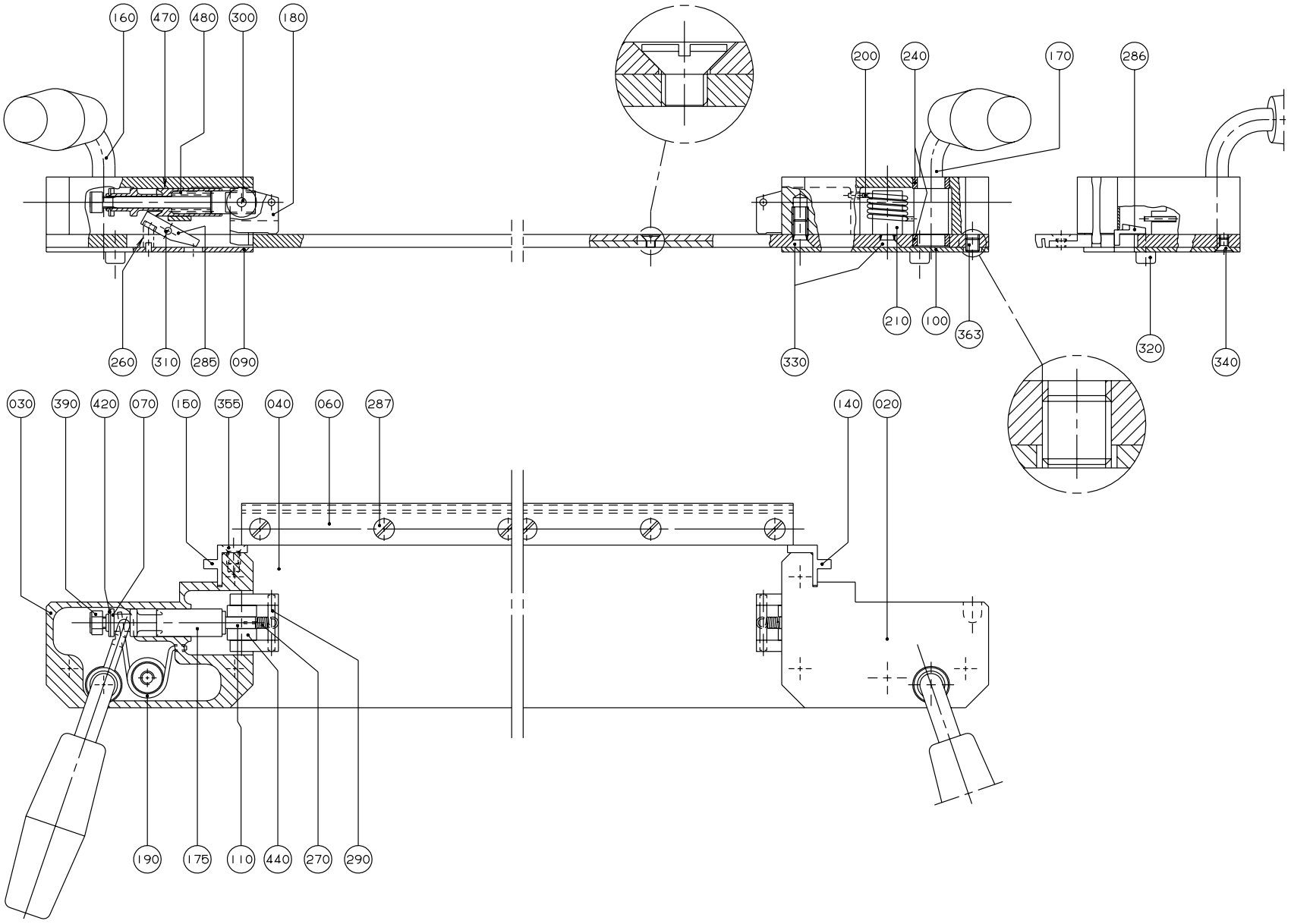

S-449630-3
ECN 19242

Pos	Part No	SP	UN	Qty	Description	Page No
Common parts						
060	549835-0000	D		1	CUTTING RAIL	
070	556319-0000	D		2	WASHER	
160	556391-0000	D		1	HANDLE	
170	556392-0000	D		1	HANDLE	
175	556320-0000	D		2	SLEEVE	
180	556321-0000	-		2	CLAMPING PIECE	
190	449744-0000	D		1	TURN SPRING	
200	449745-0000	D		1	TURN SPRING	
210	449746-0000	-		2	STEERING	
240	449748-0000	K		4	BEARING	
260	458041-0000	D		2	COMPRESSION SPRING	
270	458042-0000	D		2	SPRING	
285	457370-0000	D		2	CATCH	
286	457586-0000	D		1	SLIDE	
287	90287-0206	-		7	SLOTTED SCREW	
290	90258-0030	-		2	HOLLOW PIN	
300	311101-0274	K		2	CYLINDRICACP4H6X25	
310	311102-0236	K		2	CYLINDRICACP M6 3X16	
320	312115-0323	-		2	SCREW MC6S ISO 4762 M5X8 A280	
340	312145-0285	-		6	SLOTTED HEMFS4X6RFR	
363	312306-0360	-		1	STOP SCREW P6SS6X6FZB	
390	312812-0314	-		2	LOCK NUT A2-M5RFR	
420	315755-0108	K		2	LOCKING WAE 6RFR	
440	321300-0094	K		4	BALL BEARISKF624	
470	90296-0009	-	ML	2	GREASE	
480	90335-0027	D		2	SPRING	

Pos	Part No	SP	UN	Qty	Description	Page No

BENDING ROLLER

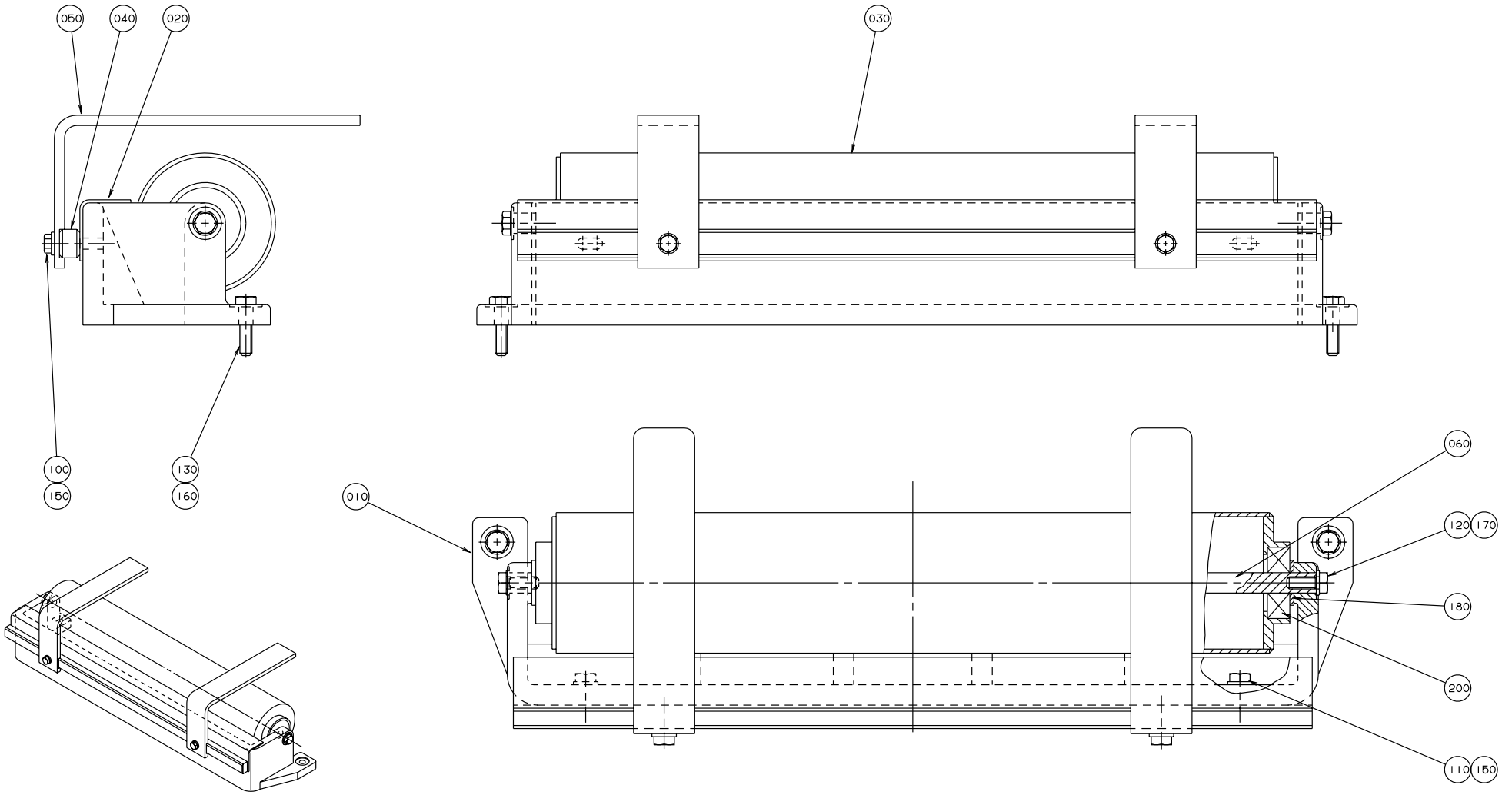

S-522410-2
ECN 19252

Pos	Part No	SP	UN	Qty	Description	Page No
-						
010	522173-0000	-		1	CANTILEVER	
020	574651-0000	-		1	SHEET	
030	265564-0000	D		1	BENDING ROLLER	
040	479223-0000	-		1	RAIL	
050	531885-0000	-		2	STEERING	
060	499132-0002	-		1	SHAFT	
100	312105-0327	-		2	SCREW M6S ISO 4017 M5X12 A280	
110	312105-0331	-		2	SCREW M6S ISO 4017 M5X20 A280	
120	312105-0368	-		2	SCREW M6S ISO 4017 M6X16 A280	
130	312105-0372	-		2	SCREW M6S ISO 4017 M6X25 A280	
150	315105-0146	-		4	WASHER BRB5,3X10RFR	
160	315105-0153	-		2	WASHER BRB6,4X12RFR	
170	315115-0153	-		2	WASHER TBRB6,4X12RFR	
180	315105-0173	-		2	WASHER BRB10,5X22RFR	
200	321316-0200	K		2	BALL BEARISKF6300-2RS	

Pos	Part No	SP	UN	Qty	Description	Page No

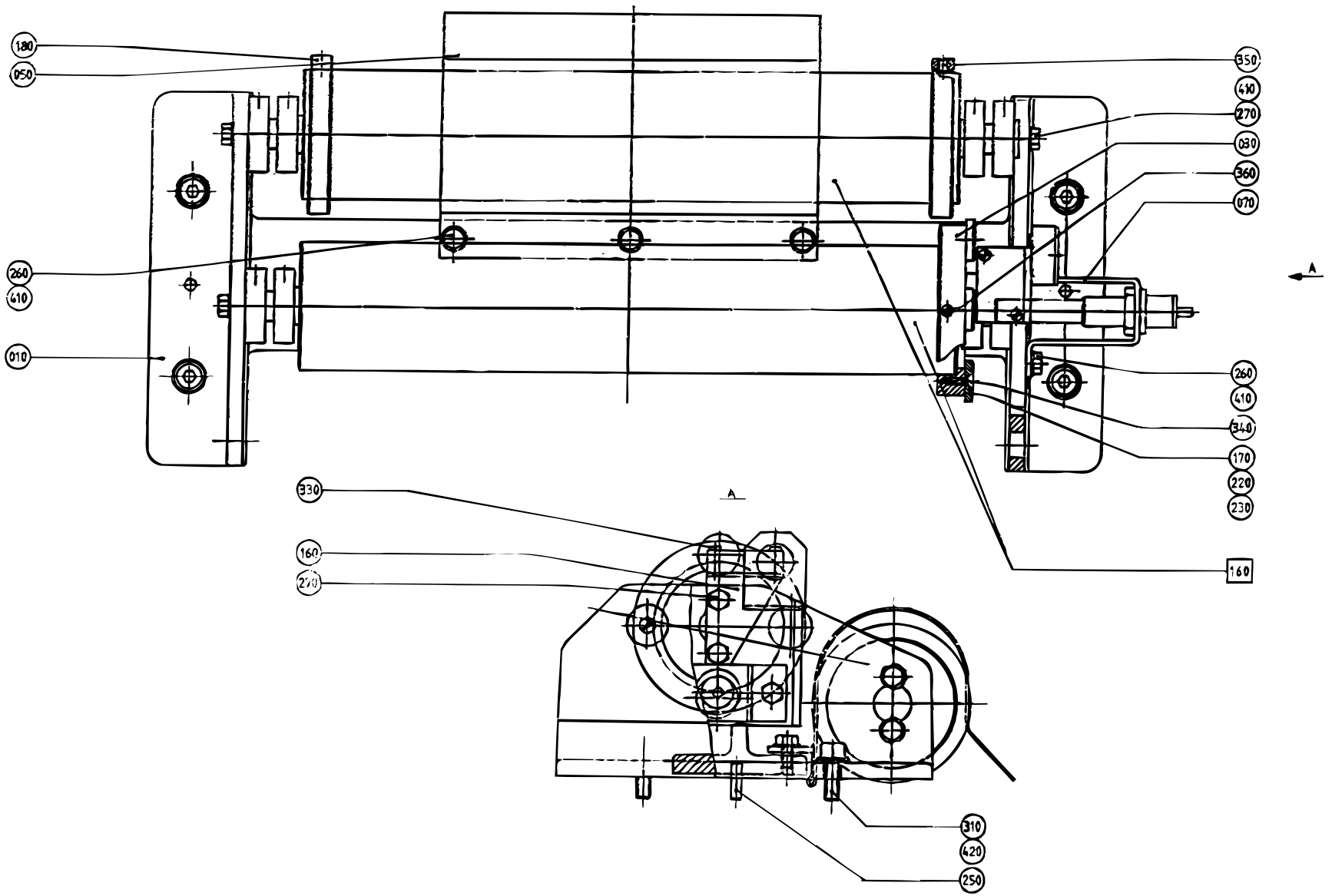

S-445930-1
ECN 11015

Pos	Part No	SP	UN	Qty	Description	Page No
TB/1 TB/5 TBA/3 TBA/5						
070	252868-0000	D		1	BRACKET	
220	90339-0006	K		2	MAGNET	
230	90339-0007	K		2	MAGNET	
260-02	312105-0366	-		5	SCREW M6S ISO 4017 M6X12 A280	
340	312145-0292	-		4	SLOTTED HEMFS4X14RFR	
410-02	315105-0153	-		13	WASHER BRB6,4X12RFR	
TB/8 TBA/8 TBO/8						
160	466469-0000	D		1	HOLDER	
170	440180-0000	D		4	WASHER	
260	312105-0366	-		3	SCREW M6S ISO 4017 M6X12 A280	
330	312125-0228	-		2	SLOTTED CHEESE HEAD ISO 1207 M3X16 RFR	
340	312145-0287	-		4	SLOTTED HEMFS4X8RFR	
410	315105-0153	-		9	WASHER BRB6,4X12RFR	
Common parts						
F160	A 440135-0100	-		2	BENDING ROLLER **813**	
010	445931-0000	D		1	CANTILEVER	
030	440157-0000	D		1	MAGNET BRACKET	
050	476403-0000	-		1	HEAD PLATE	
180	250588-0000	-		2	FLANGE	
250	311102-0353	-		2	CYLINDRICACP M6 6X20	
270	312105-0368	-		8	SCREW M6S ISO 4017 M6X16 A280	
310	312115-0451	-		4	SCREW MC6S ISO 4762 M8X20 A280	
350	312316-0323	-		4	STOP SCREW SK6SS5X8FZB	
360	312316-0362	-		3	STOP SCREW SK6SS6X8FZB	
420	315105-0165	-		4	WASHER BRB8,4X16RFR	

Pos	Part No	SP	UN	Qty	Description	Page No

CUTTING TABLE

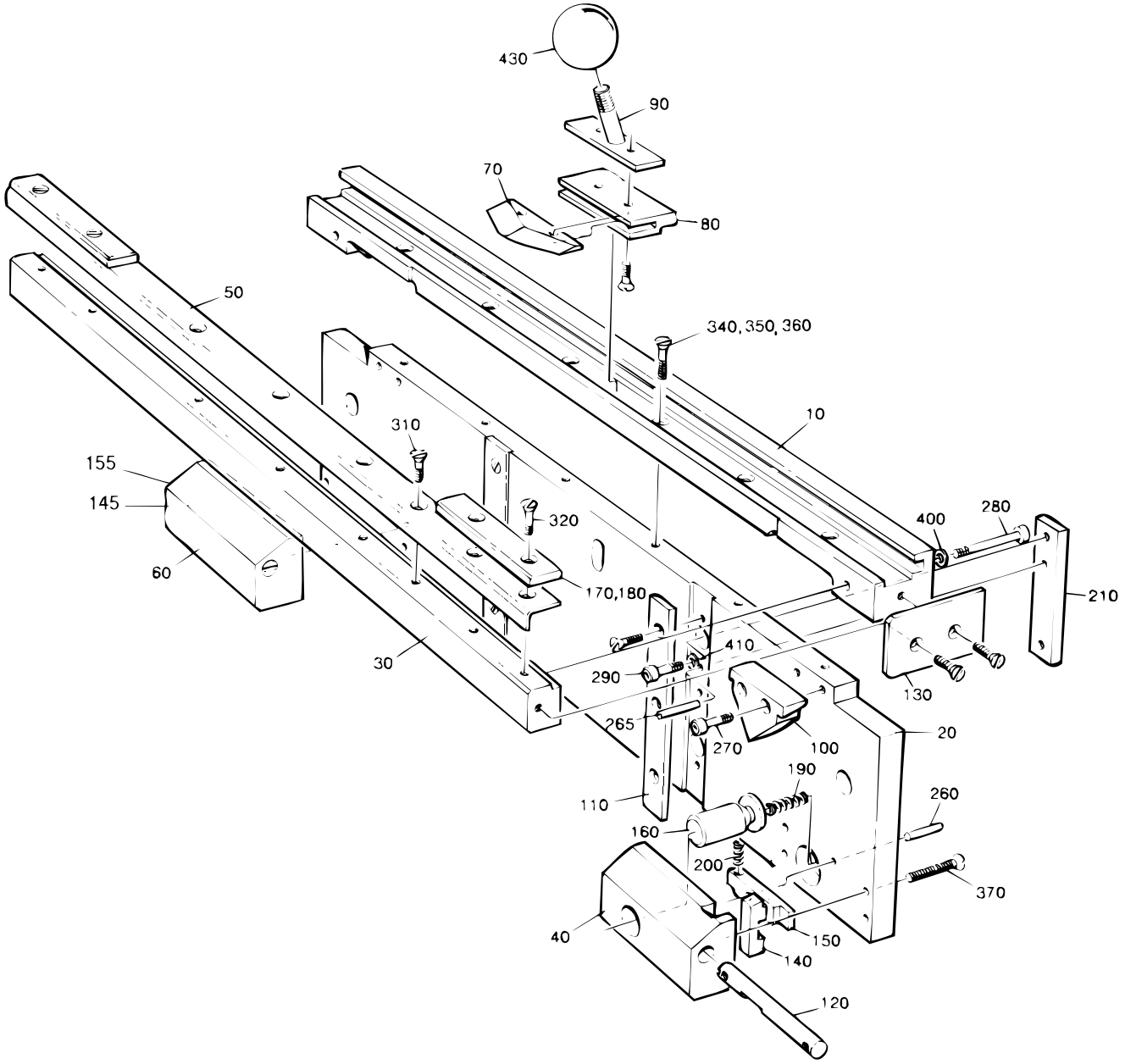

S-522121-2
ECN 14575

Pos	Part No	SP	UN	Qty	Description	Page No
TB 1000S or TBA 1000S						
010	B 522122-0001	-		1	RAIL	
020	B 522123-0000	-		1	PLATE	
030	B 522124-0000	-		1	RULER	
100	522131-0000	D		2	STEERING	
170	569924-0000	D		1	STOPPER	
360	312145-0331	-		6	SLOTTED HEMFS5X20RFR	
TB 0500B or TB 0568B or TB 1000B or TB 1136B or TBA 0500B or TBA 0750B or TBA 1000B or TBA 1055B or TBA 1500S or TBO 1000B						
010	B 522122-0001	-		1	RAIL	
020	B 522123-0000	-		1	PLATE	
030	B 522124-0000	-		1	RULER	
100	522131-0000	D		2	STEERING	
170	522138-0000	D		1	STOPPER	
360	312145-0331	-		6	SLOTTED HEMFS5X20RFR	
TBA 0750S or TPA 1000S						
010	B 522122-0001	-		1	RAIL	
020	B 522123-0000	-		1	PLATE	
030	B 522124-0000	-		1	RULER	
100	522131-0000	D		2	STEERING	
170	544270-0000	D		1	STOPPER	
360	312145-0331	-		6	SLOTTED HEMFS5X20RFR	
TB 0500SQ or TB 1000SQ or TBA 1000SQ or TBO 1000SQ						
010	B 522122-0001	-		1	RAIL	
020	B 522123-0000	-		1	PLATE	
030	B 522124-0000	-		1	RULER	
100	522131-0000	D		2	STEERING	
170	574052-0000	-		1	STOPPER	
360	312145-0331	-		6	SLOTTED HEMFS5X20RFR	
TB 1500B						
010	593642-0000	-		1	RAIL	
020	593643-0000	-		1	PLATE	
030	593644-0000	-		1	RULER	
100	593645-0000	D		2	STEERING	
180	593653-0000	D		1	STOPPER	
185	593654-0000	D		2	SCREW SET	
330	312605-0316	-		2	NUT M6M6RFR	
360	312145-0331	-		6	SLOTTED HEMFS5X20RFR	
TB 0300B or TBA 0375S						
010	B 522122-0002	-		1	RAIL	
020	B 522123-0000	-		1	PLATE	
030	B 522124-0000	-		1	RULER	
100	522131-0000	D		2	STEERING	
180	522139-0002	D		1	STOPPER	
350	312145-0329	-		6	SLOTTED HEMFS5X16RFR	
TB 0500S or TBA 0355B or TBA 0400B or TBA 0500S						
010	B 522122-0002	-		1	RAIL	
020	B 522123-0000	-		1	PLATE	
030	B 522124-0000	-		1	RULER	
100	522131-0000	D		2	STEERING	
180	522139-0001	D		1	STOPPER	
350	312145-0329	-		6	SLOTTED HEMFS5X16RFR	
Common parts						
040	522125-0000	D		1	BEARING HOUSING	
050	522126-0000	-		1	SHEET	
060	556443-0000	D		1	BEARING HOUSING	
070	522128-0000	K		1	KNIFE	
080	522129-0000	D		1	KNIFE HOLDER	
090	522130-0000	-		1	HANDLE	
110	522132-0000	D		2	SLIDE BELT	
120	522133-0000	-		2	SHAFT	
130	522134-0000	-		2	END PLATE	
140	556439-0000	D		1	BARRIER	
145	556440-0000	D		1	BARRIER	
150	556441-0000	-		1	ARM	
155	556442-0000	-		1	ARM	
160	522137-0000	D		2	PUSH BUTTON	
190	522158-0000	D		2	COMPRESSION SPRING	
200	458041-0000	D		2	COMPRESSION SPRING	
210	530778-0000	-		2	LACE	
250	311103-0272	-		2	CYLINDRICACP M6 4X20 RFR	
260	311112-0256	-		4	SLOTTED TURP 4X20 RFR	
265	311112-0258	-		2	SLOTTED TURP 4X24 RFR	
270	312115-0329	-		4	SCREW MC6S ISO 4762 M5X16 A280	
280	312115-0339	-		2	SCREW MC6S ISO 4762 M5X40 A280	
290	312115-0370	-		4	SCREW MC6S ISO 4762 M6X20 A280	
310	312145-0289	-		8	SLOTTED HEMFS4X10RFR	
320	312145-0291	-		6	SLOTTED HEMFS4X12RFR	
340	312145-0327	-		6	SLOTTED HEMFS5X12RFR	
370	312105-0337	-		4	SCREW M6S ISO 4014 M5X35 A280	
400	315105-0146	-		6	WASHER BRB5,3X10RFR	
410	315105-0153	-		4	WASHER BRB6,4X12RFR	
430	318800-0107	-		1	HANDLE BALLA D45-M10	

This page is intentionally left blank

Pos	Part No	SP	UN	Qty	Description	Page No
-						
030	294009-0000	-		2	KNIFE	

Pos	Part No	SP	UN	Qty	Description	Page No

(PAPER)REEL TROLLEY

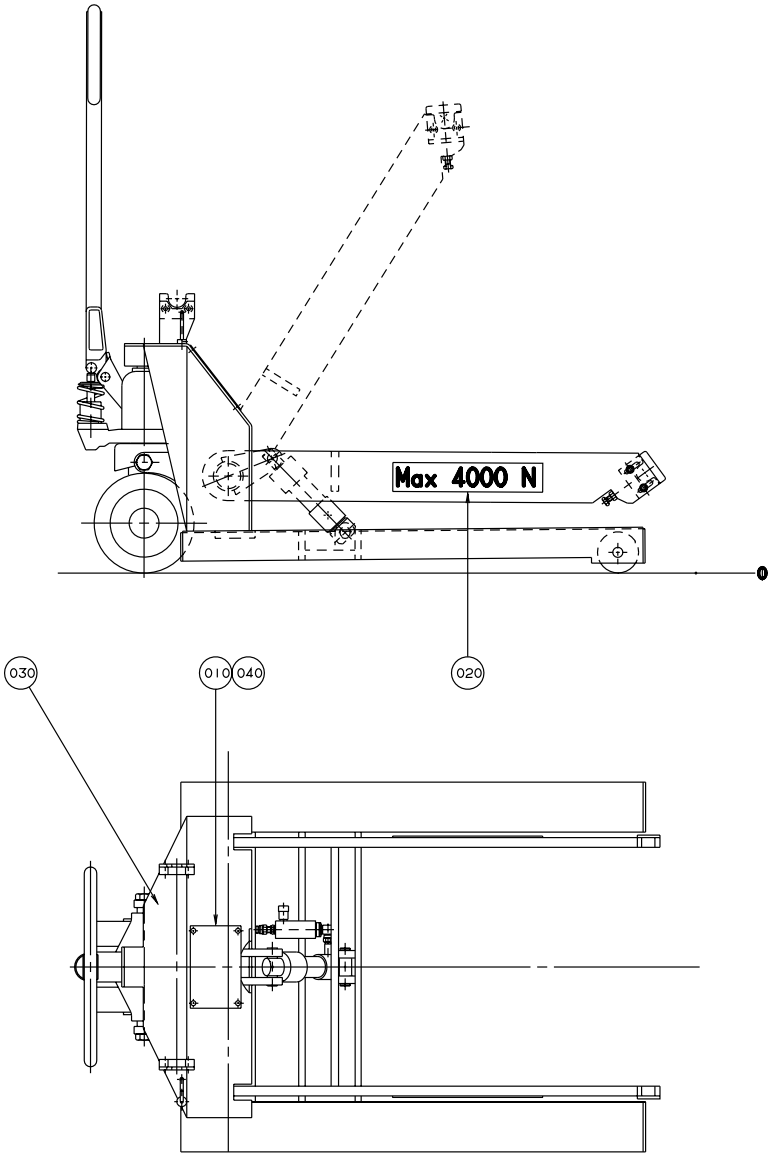

SPAREPARTS FOR (030) SEE SHEET 3 AND 5

Pos	Part No	SP	UN	Qty	Description	Page No
-						
010	574658-0000	-		1	LOGOTYPE TP	
020	522308-0000	-		2	SIGN	
030	90067-0021	-		1	CARRIAGE	
040	311521-0143	-		4	BLANK RIVE2X8,0 RFR	

Pos	Part No	SP	UN	Qty	Description	Page No

This page is intentionally left blank

Pos	Part No	SP	UN	Qty	Description	Page No
90044-0103	90044-0310	-		1	KEY FOR KEY SAFETY SWITCH	
90069-0116	90056-0096	K		1	WORM GEAR	
90069-0116	90069-0364	K		1	CARBON BRUSH	
90069-0116	90069-0365	K		1	CARBON BRUSH	
90299-0013	90299-0300	-		1	COVER	
440199-0000	90166-0116	-		4	HOSE	
440199-0000	312125-0372	-		4	SLOTTED CHEESE HEAD ISO 1207 M6X25 RFR	
445935-0000	90166-0116	-		4	HOSE	
445935-0000	312125-0372	-		4	SLOTTED CHEESE HEAD ISO 1207 M6X25 RFR	
466337-0000	90265-0028	-		1	APPLIANCE BOX	
466430-0000	321111-0212	-		1	FLANGE BUS 15E7X15	
476289-0000	312111-0390	-		1	SCREW MC6S6X100FZB	
476377-0000	312105-0371	-		1	SCREW M6S6X22RFR	
484878-0000	311103-0268	-		2	CYLINDRICACP M6 4X12 RFR	
522123-0000	312910-0114	-		12	THREADED I M5X1,5D	
522123-0000	312910-0115	-		4	THREADED I M5X2,0D	
522124-0000	312910-0111	-		10	THREADED I M4X2,0D	
522124-0000	312911-0115	-		2	THREADED I M5X2,0D	
529455-0000	312911-0101	-		5	THREADED I M3X1,0D	
529456-0000	312911-0113	-		2	THREADED I M5X1,0D	
532082-0000	312805-0102	-		1	ROUND NUT KM2	
532083-0000	312805-0103	-		1	ROUND NUT KM3	
543135-0000	90153-0050	-	L	1	ADHESIVE	
543135-0000	321120-0100	-		1	BUSHING 8/10X12	

Tetra Pak

SPC

Spare Parts Catalogue

This page is intentionally left blank

Pos	Part No	SP	UN	Qty	Description	Page No
1000B						
	B 597845-0001	-		x	INSTALLATION DRAW. TBA/8	
1000S						
	B 449880-0006	-		x	INSTALLATION DRAW. TBA/8	
Common parts						
	B 263617-0001	-		x	PLATFORM VERSIONS	
F240	A 250610-0200	-		1	TOOL KIT	**839**
F300	A 554171-0300	-		1	PLATFORM ADDITION	**855**
F330	A 284953-0100	-		1	HOSE	**847**
F340	A 292445-0100	-		1	LIFTING UNIT	**849**
F360	A 531345-0100	-		1	PERSONAL PROTECT. EQ H2O2	**851**
F370	A 551997-0100	-		1	LIFTING UNIT	**853**
F480	A 597839-0100	-		1	DIAGRAM	**857**
490	90243-0133	-		1	CONTAINER	
500	90347-0111	-		4	MACHINE SHOE	
502	90347-0110	-		4	MACHINE SHOE	
510	436407-0000	-		2	BEAM	
540	436512-0000	-		2	PIPE	
600	579765-0000	-		1	MACHINE SIGN CE	
F560	499082-0404	-		1	ADAPTER, TYPE 1	

Pos	Part No	SP	UN	Qty	Description	Page No

LADDER

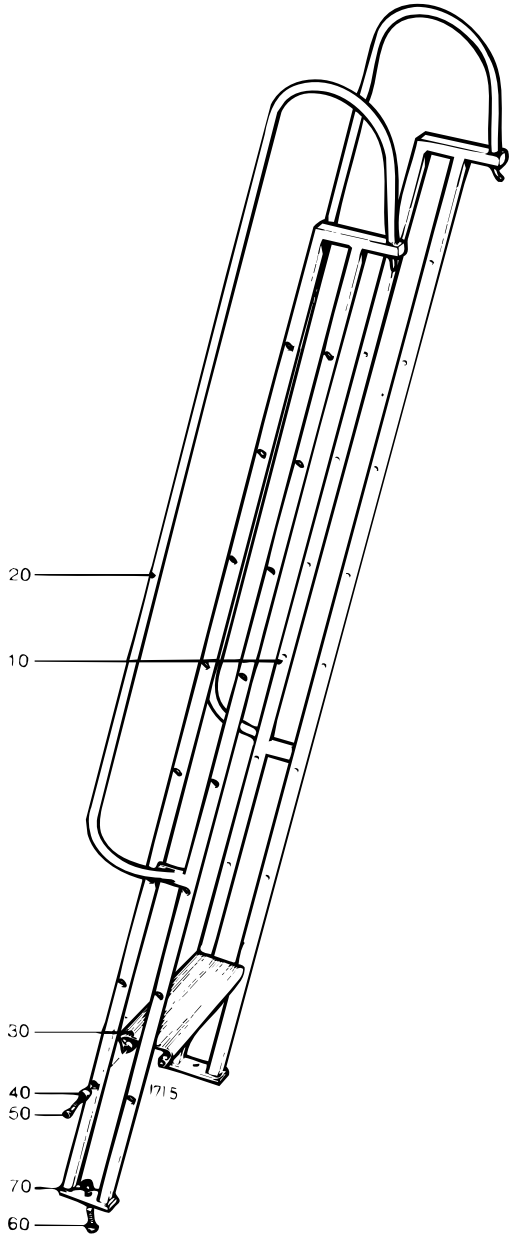

S-243171-2
ECN 7470

Pos	Part No	SP	UN	Qty	Description	Page No
-						
010	243172-0001	-		1	SIDE PIECE	
020	243172-0002	-		1	SIDE PIECE	
030	208361-0001	-		8	STAIR	
040	208658-0001	-		32	SPACER	
050	90287-0056	-		32	SCREW	
060	312101-0495	-		2	SCREW M6S10X30FZB	
070	312601-0320	-		2	NUT M6M10FZB	

Pos	Part No	SP	UN	Qty	Description	Page No

This page is intentionally left blank

Pos	Part No	SP	UN	Qty	Description	Page No
-						
015	283084-0000	-		1	GUIDE SHAFT	
020	283085-0000	-		1	SLEEVE	
040	72947-0000	-		1	HOOK SPANNER	
045	74387-0000	-		1	HOOK SPANNER	
050	245165-0000	-		1	ASSEMBLY TOOL	
055	442173-0000	-		2	GAUGE BLOCK	
070	76138-0000	-		1	LOCKING LOOP	
075	434841-0000	-		1	GAUGE	
100	90278-0001	-		1	PUMP	
110	90279-0001	-		1	OIL CAN	
125	315202-0224	-		1	O-RINGS 42,2X3	
130	318301-0130	-		4	LIFTING EYLTM30FZB	
150	776422-0101	-		2	BRASS WIRESTE	
160	777100-0113	-		1	SCREWDRIVER	
170	777100-0184	-		1	SCREWDRIVER	
180	777120-0215	-		2	SPANNER 6x7	
190	777120-0220	-		2	C-SPANNER	
200	777120-0232	-		2	SPANNER 12x13	
204	777121-0137	-		1	OPEN SPANNKEL	
210	777150-0100	-		2	HEXAGON SPKEL N=2,5	
220	777150-0101	-		2	HEXAGON SPKEL N=3	
230	777150-0104	-		2	HEXAGON SPKEL N=4	
240	777150-0106	-		2	HEXAGON SPKEL N=5	
250	777150-0108	-		2	HEXAGON SPKEL N=6	
260	777150-0110	-		2	HEXAGON SPKEL N=8	
270	777150-0112	-		2	HEXAGON SPKEL N=10	
280	777150-0114	-		2	HEXAGON SPKEL N=12	
290	777150-0199	-		2	HEXAGON SPKEL N=2	
300	777150-0491	-		2	HEXAGON SPKEL N=1,3	
310	777155-0492	-		2	ALLEN KEY KEL N=1/16"	
320	777200-0101	-		1	PIPE WRENCEL	
330	777510-0101	-		1	SCISSORS	

Pos	Part No	SP	UN	Qty	Description	Page No

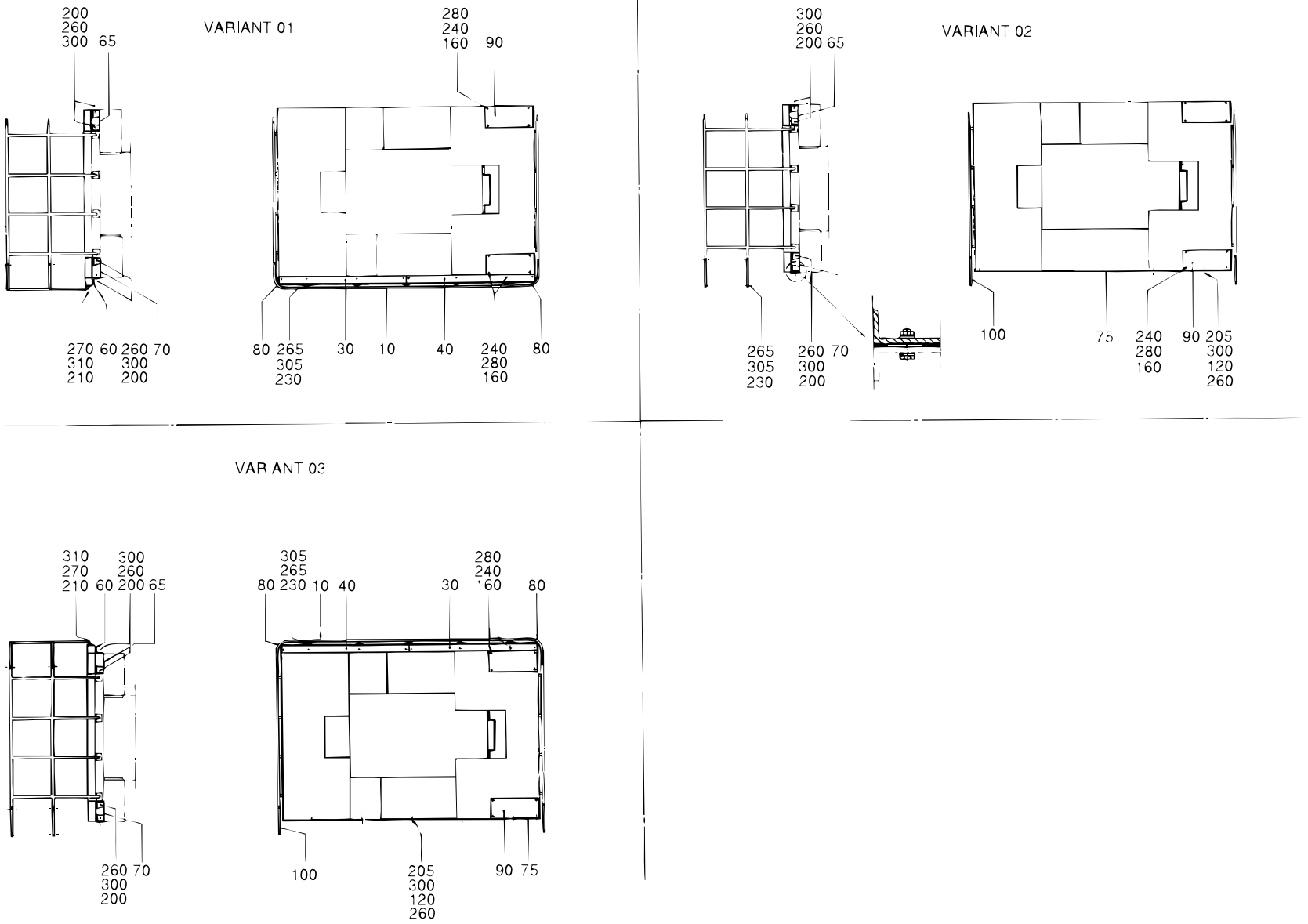

S-266755-2
ECN 6045

Pos	Part No	SP	UN	Qty	Description	Page No
PFV1						
010	257845-0000	-		1	RAILING	
030	247146-0000	-		1	PLATFORM	
040	257852-0000	-		1	PLATFORM	
060	257854-0000	-		1	CANTILEVER	
080	257859-0000	-		4	RAILING	
160-02	90287-0076	-		16	SCREW	
200	312101-0495	-		13	SCREW M6S10X30FZB	
210	312105-0493	-		20	SCREW M6S ISO 4017 M10X25 A280	
230	312115-0453	-		8	SCREW MC6S ISO 4762 M8X25 A280	
240-02	312601-0316	-		16	NUT M6M6FZB	
260	312601-0320	-		10	NUT M6M10FZB	
265	312605-0318	-		8	NUTS,HEXAGON,M8	
270	312605-0320	-		20	NUTS,HEXAGON,M10	
280-02	315101-0153	-		16	WASHER BRB6,4X12FZB	
300	315101-0173	-		23	WASHER BRB10,5X22FZB	
305	315105-0165	-		8	WASHERS,PLAIN ROUND 8,4X16	
310	315105-0173	-		20	WASHERS,PLAIN ROUND 10,5X22	
PFV2						
075	451406-0000	-		1	VIBRATION DAMPER	
100	451407-0000	-		4	RAILING	
120	451408-0000	-		14	BUFFER RING	
160	90287-0076	-		8	SCREW	
205	312101-0500	-		7	SCREW M6S10X45FZB	
230	312115-0453	-		8	SCREW MC6S ISO 4762 M8X25 A280	
240	312601-0316	-		8	NUT M6M6FZB	
260-02	312601-0320	-		13	NUT M6M10FZB	
265	312605-0318	-		8	NUTS,HEXAGON,M8	
280	315101-0153	-		8	WASHER BRB6,4X12FZB	
300-02	315101-0173	-		26	WASHER BRB10,5X22FZB	
305	315105-0165	-		8	WASHERS,PLAIN ROUND 8,4X16	
PFV3						
010	257845-0000	-		1	RAILING	
030	247146-0000	-		1	PLATFORM	
040	257852-0000	-		1	PLATFORM	
060	257854-0000	-		1	CANTILEVER	
075	451406-0000	-		1	VIBRATION DAMPER	
080	257859-0000	-		4	RAILING	
100	451407-0000	-		4	RAILING	
120	451408-0000	-		14	BUFFER RING	
160-02	90287-0076	-		16	SCREW	
200	312101-0495	-		13	SCREW M6S10X30FZB	
205	312101-0500	-		7	SCREW M6S10X45FZB	
210	312105-0493	-		20	SCREW M6S ISO 4017 M10X25 A280	
230-02	312115-0453	-		16	SCREW MC6S ISO 4762 M8X25 A280	
240-02	312601-0316	-		16	NUT M6M6FZB	
260-03	312601-0320	-		17	NUT M6M10FZB	
265-02	312605-0318	-		16	NUTS,HEXAGON,M8	
270	312605-0320	-		20	NUTS,HEXAGON,M10	
280-02	315101-0153	-		16	WASHER BRB6,4X12FZB	
300-03	315101-0173	-		37	WASHER BRB10,5X22FZB	
305-02	315105-0165	-		16	WASHERS,PLAIN ROUND 8,4X16	
310	315105-0173	-		20	WASHERS,PLAIN ROUND 10,5X22	
	266755-0002	-		x		
Common parts						
065	269339-0000	-		1	CANTILEVER	
070	269340-0000	-		1	CANTILEVER	
090	257862-0000	-		2	PLATFORM	

VARIANT 11

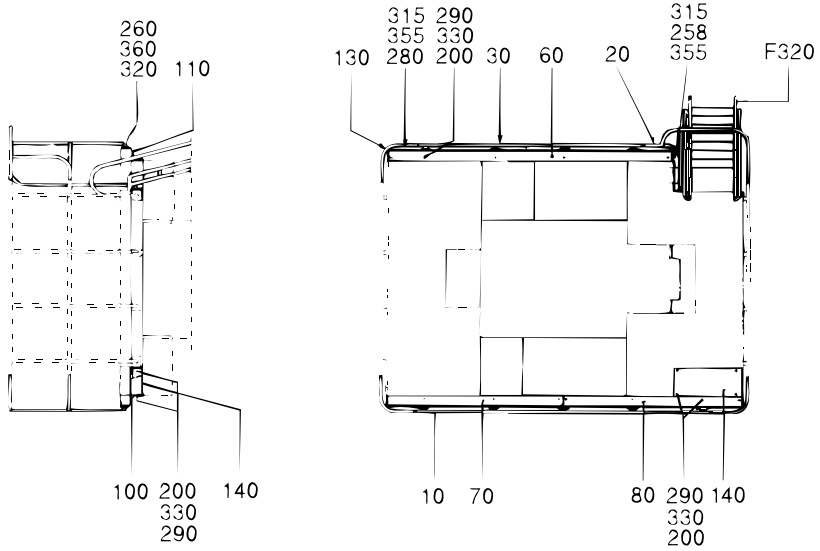

VARIANT 12

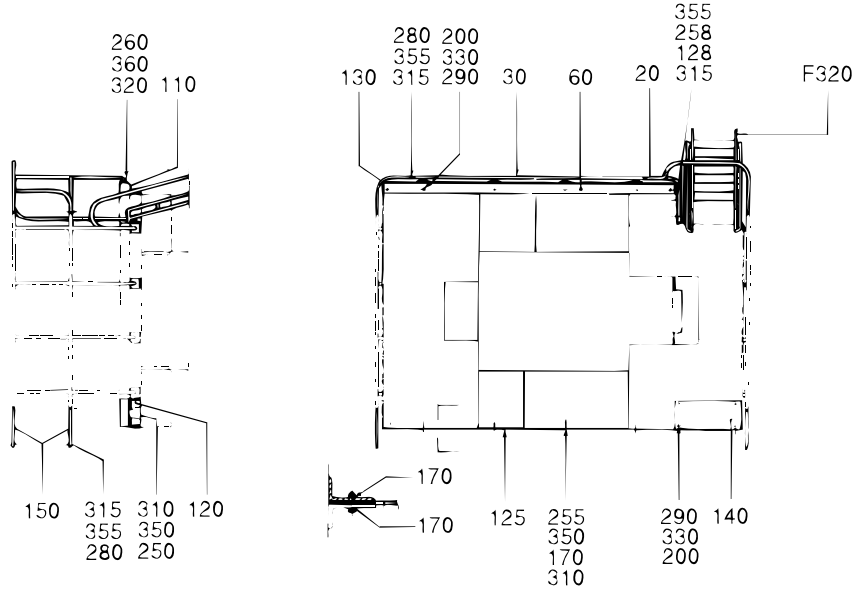

VARIANT 13

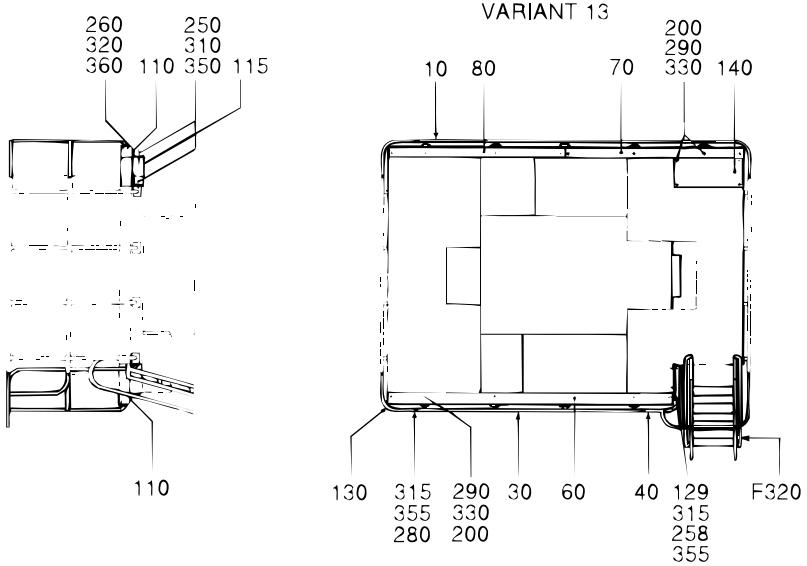

VARIANT 14



S-256756-4
ECN 19452

Pos	Part No	SP	UN	Qty	Description	Page No
PFV11						
010	257845-0000	-		1	RAILING	
020	257846-0000	-		1	RAILING	
070	247146-0000	-		1	PLATFORM	
080	257852-0000	-		1	PLATFORM	
100	257854-0000	-		1	CANTILEVER	
120	269340-0000	-		1	CANTILEVER	
128	551903-0000	-		1	KICKPLATE,LEFT	
130-02	257859-0000	-		6	RAILING	
200-02	90287-0076	-		18	SCREW	
250-02	312101-0495	-		16	SCREW M6S10X30FZB	
260-02	312105-0493	-		40	SCREW M6S ISO 4017 M10X25 A280	
280-02	312115-0453	-		16	SCREW MC6S ISO 4762 M8X25 A280	
290-02	312601-0316	-		18	NUT M6M6FZB	
310-02	312601-0320	-		10	NUT M6M10FZB	
315-02	312605-0318	-		18	NUTS,HEXAGON,M8	
320-02	312605-0320	-		40	NUTS,HEXAGON,M10	
330-02	315101-0153	-		18	WASHER BRB6,4X12FZB	
350-02	315101-0173	-		26	WASHER BRB10,5X22FZB	
355-02	315105-0165	-		20	WASHERS,PLAIN ROUND 8,4X16	
360-02	315105-0173	-		40	WASHERS,PLAIN ROUND 10,5X22	
PFV12						
020	257846-0000	-		1	RAILING	
120	269340-0000	-		1	CANTILEVER	
125	451406-0000	-		1	VIBRATION DAMPER	
128	551903-0000	-		1	KICKPLATE,LEFT	
130	257859-0000	-		2	RAILING	
150	451407-0000	-		4	RAILING	
170	451408-0000	-		8	BUFFER RING	
200	90287-0076	-		10	SCREW	
250	312101-0495	-		9	SCREW M6S10X30FZB	
255	312101-0500	-		7	SCREW M6S10X45FZB	
260	312105-0493	-		20	SCREW M6S ISO 4017 M10X25 A280	
280-02	312115-0453	-		16	SCREW MC6S ISO 4762 M8X25 A280	
290	312601-0316	-		10	NUT M6M6FZB	
310-03	312601-0320	-		13	NUT M6M10FZB	
315-02	312605-0318	-		18	NUTS,HEXAGON,M8	
320	312605-0320	-		20	NUTS,HEXAGON,M10	
330	315101-0153	-		10	WASHER BRB6,4X12FZB	
350-03	315101-0173	-		29	WASHER BRB10,5X22FZB	
355-02	315105-0165	-		20	WASHERS,PLAIN ROUND 8,4X16	
360	315105-0173	-		20	WASHERS,PLAIN ROUND 10,5X22	
PFV13						
010	257845-0000	-		1	RAILING	
040	263619-0000	-		1	RAILING	
070	247146-0000	-		1	PLATFORM	
080	257852-0000	-		1	PLATFORM	
100	257854-0000	-		1	CANTILEVER	
115	269339-0000	-		1	CANTILEVER	
129	565961-0000	-		1	KICKPLATE,RIGHT	
130-02	257859-0000	-		6	RAILING	
200-02	90287-0076	-		18	SCREW	
250-02	312101-0495	-		16	SCREW M6S10X30FZB	
260-02	312105-0493	-		40	SCREW M6S ISO 4017 M10X25 A280	
280-02	312115-0453	-		16	SCREW MC6S ISO 4762 M8X25 A280	
290-02	312601-0316	-		18	NUT M6M6FZB	
310-02	312601-0320	-		10	NUT M6M10FZB	
315-02	312605-0318	-		18	NUTS,HEXAGON,M8	
320-02	312605-0320	-		40	NUTS,HEXAGON,M10	
330-02	315101-0153	-		18	WASHER BRB6,4X12FZB	
350-02	315101-0173	-		26	WASHER BRB10,5X22FZB	
355-02	315105-0165	-		20	WASHERS,PLAIN ROUND 8,4X16	
360-02	315105-0173	-		40	WASHERS,PLAIN ROUND 10,5X22	
PFV14						
040	263619-0000	-		1	RAILING	
115	269339-0000	-		1	CANTILEVER	
129	565961-0000	-		1	KICKPLATE,RIGHT	
130	257859-0000	-		2	RAILING	
200	90287-0076	-		10	SCREW	
250	312101-0495	-		9	SCREW M6S10X30FZB	
260	312105-0493	-		20	SCREW M6S ISO 4017 M10X25 A280	
280	312115-0453	-		8	SCREW MC6S ISO 4762 M8X25 A280	
290	312601-0316	-		10	NUT M6M6FZB	
310	312601-0320	-		6	NUT M6M10FZB	
315	312605-0318	-		10	NUTS,HEXAGON,M8	
320	312605-0320	-		20	NUTS,HEXAGON,M10	
330	315101-0153	-		10	WASHER BRB6,4X12FZB	
350	315101-0173	-		15	WASHER BRB10,5X22FZB	
355	315105-0165	-		12	WASHERS,PLAIN ROUND 8,4X16	
360	315105-0173	-		20	WASHERS,PLAIN ROUND 10,5X22	
	266756-0004	-		x		

VARIANT 11

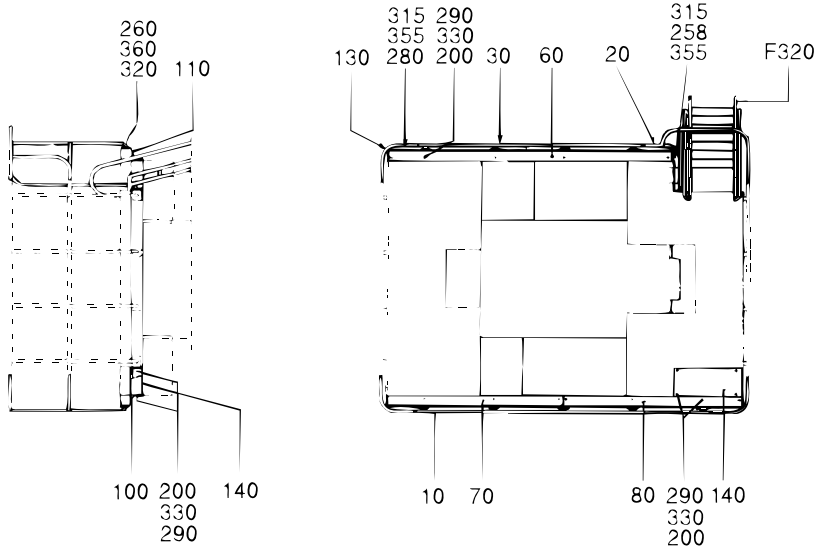

VARIANT 12

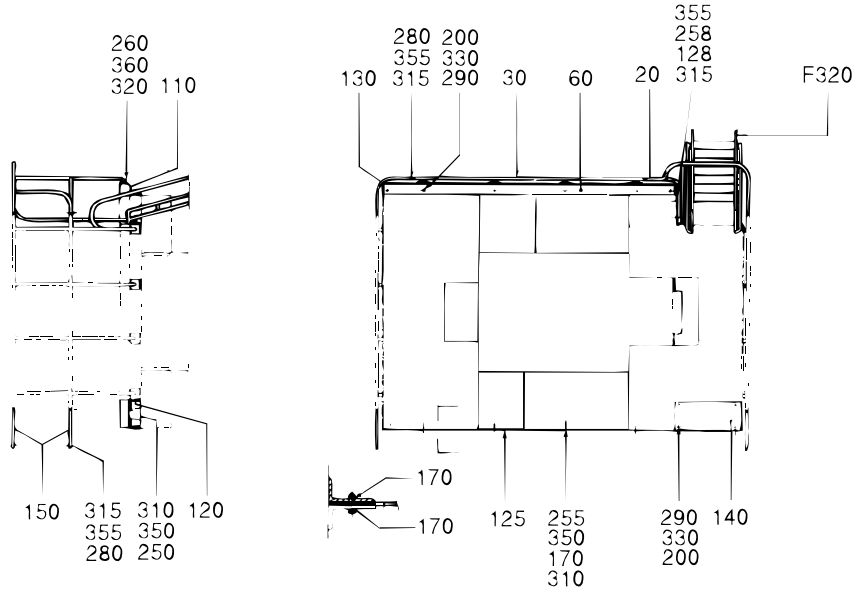

VARIANT 13

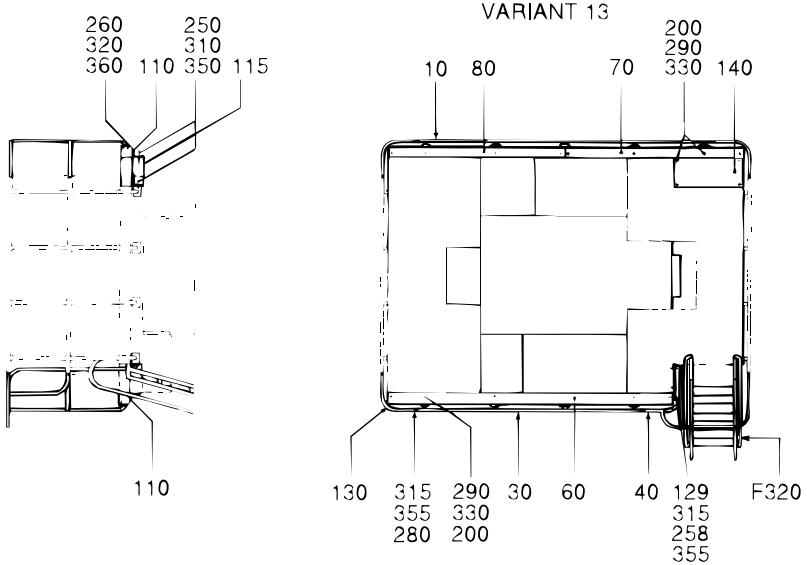

VARIANT 14



S-256756-4
ECN 19452

Pos	Part No	SP	UN	Qty	Description	Page No
Common parts						
F320	A 243171-0200	-		1	LADDER	**837**
030	263322-0000	-		1	RAILING	
060	247145-0000	-		1	PLATFORM	
110	257855-0000	-		1	CANTILEVER	
140	257862-0000	-		1	PLATFORM	
258	312105-0453	-		2	SCREW M6S ISO 4017 M8X25 A280	
	284953-0001	-		x		

Pos	Part No	SP	UN	Qty	Description	Page No

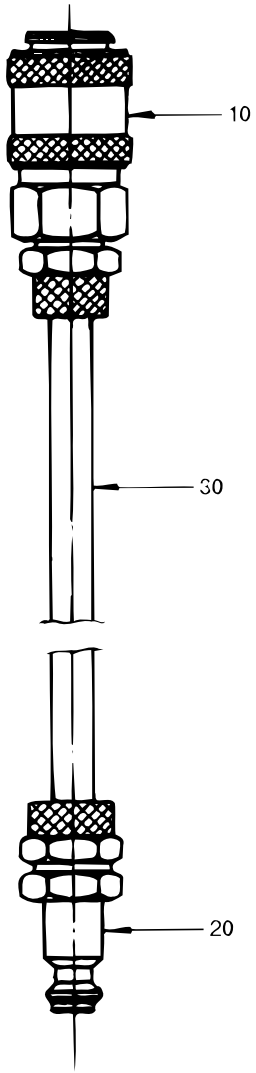
10
30
20

Pos	Part No	SP	UN	Qty	Description	Page No
-						
010	90163-0056	-		1	SLEEVE	
020	90163-0063	-		1	NIPPLE	
030	90166-0124	-	MM	1500	HOSE	
	292445-0001	-	MM	x		

Pos	Part No	SP	UN	Qty	Description	Page No

LIFTING UNIT

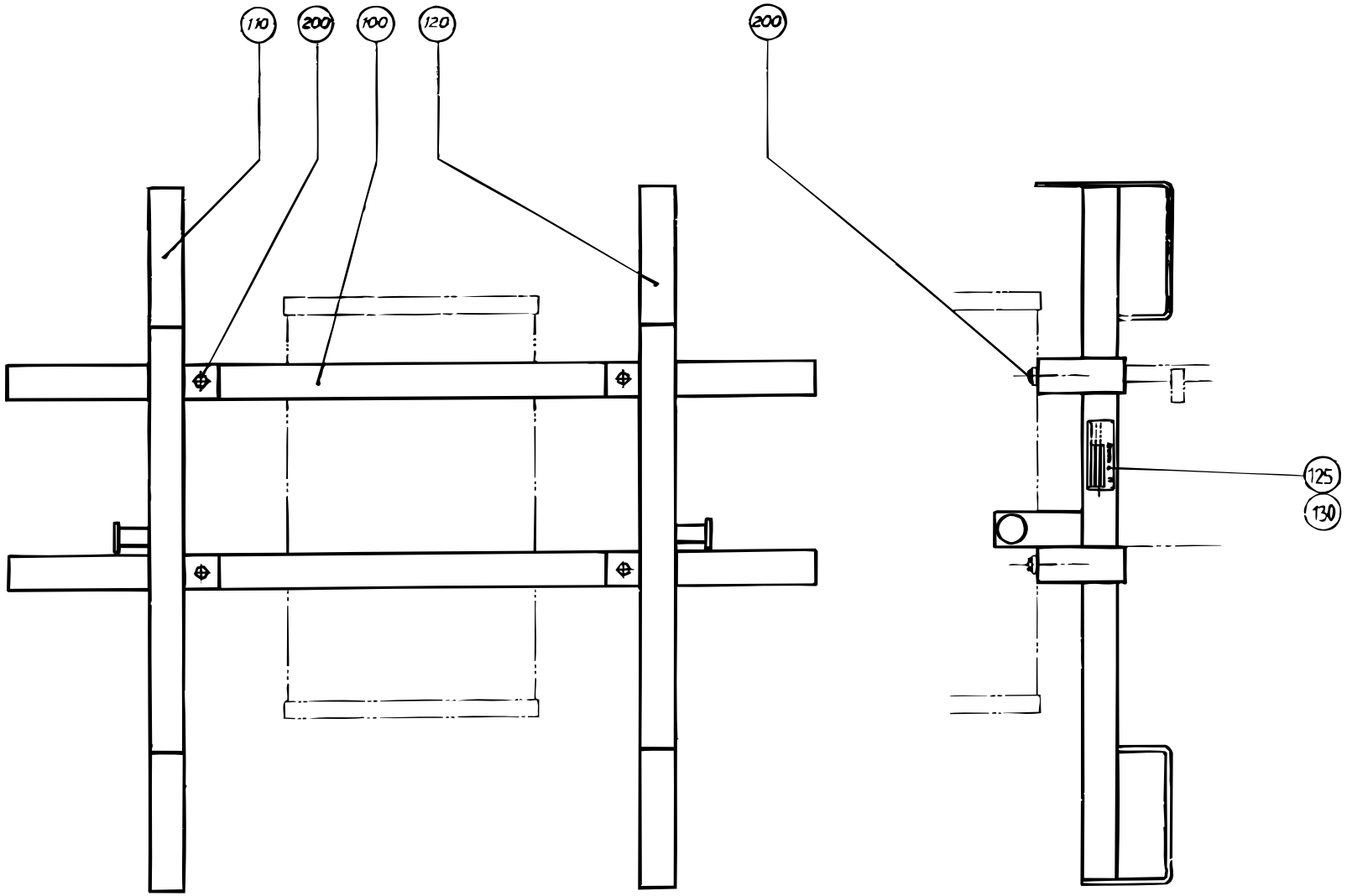

S-292445-1
ECN 22850

Pos	Part No	SP	UN	Qty	Description	Page No
-						
100	292313-0000	-		2	BEAM	
110	292314-0000	-		1	BEAM	
120	292315-0000	-		1	BEAM	
125	1143455-0000	-		1	MACHINE SIGN CE	
130	311521-0144	-		4	COLD SQUEEZE TYPE "POP RIVET" 3,2X10	
200	312101-0491	-		8	SCREW M6S10X20FZB	

Pos	Part No	SP	UN	Qty	Description	Page No

This page is intentionally left blank

Pos	Part No	SP	UN	Qty	Description	Page No
-						
010	90303-0004	-		1	GLOVES	
020	90303-0005	-		1	PROTECTIVE EQUIPMENT	
030	779130-0102	-		1	PROTECTIVE GOGGLES	

Pos	Part No	SP	UN	Qty	Description	Page No

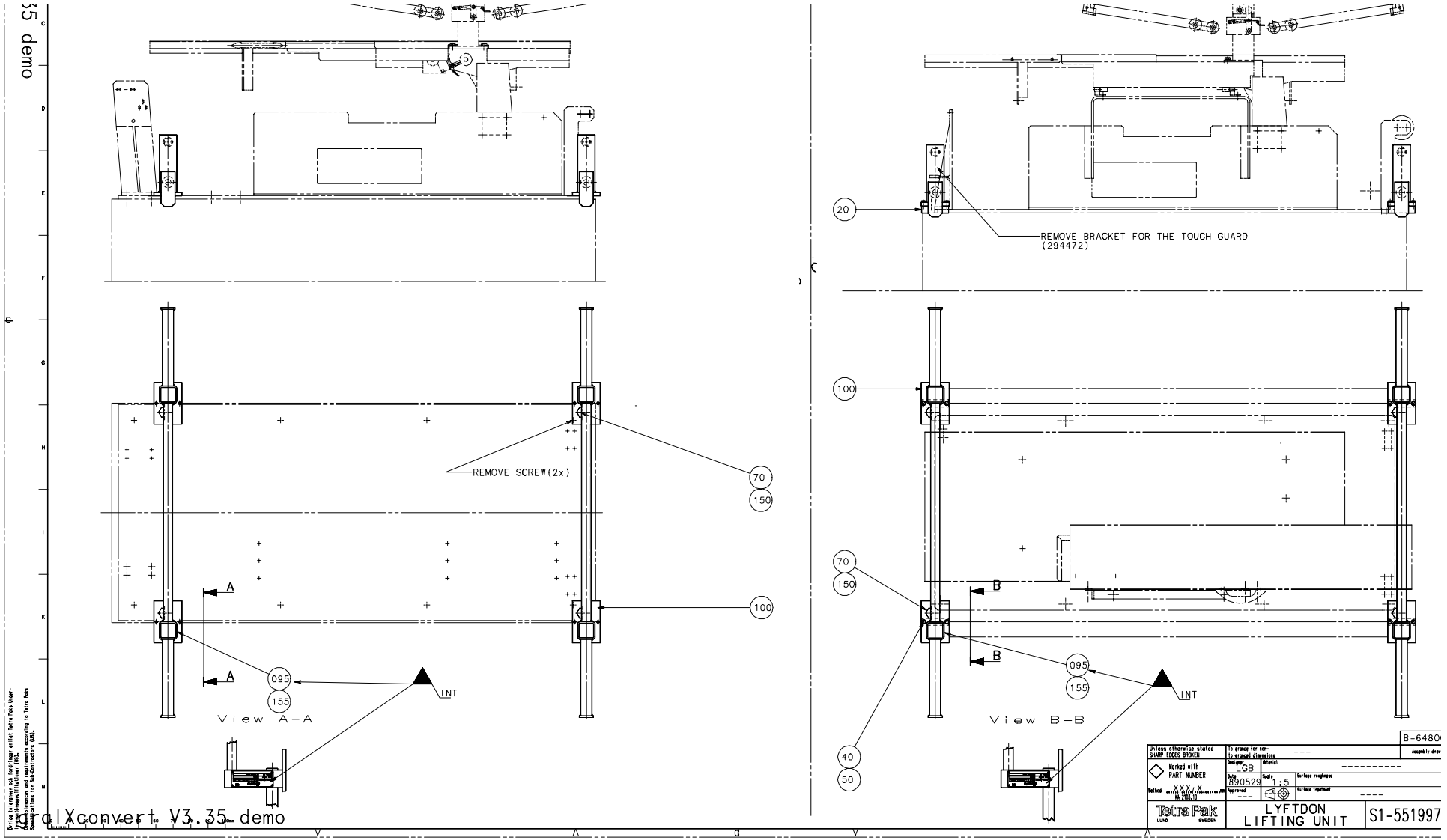

Trial Xconvert V3.35 demo

Pos	Part No	SP	UN	Qty	Description	Page No
TB/8						
070	312101-0674	-		4	SCREW M6S20X50 8.8FZB	
TBA/8 or TBA/8PRISMA or TBO/8						
020	551998-0000	-		4	SUPPORT LUG	
040	312101-0370	-		8	SCREW M6S6X20FZB	
050	315101-0153	-		8	WASHER BRB6,4X12FZB	
070	90287-0127	-		4	SCREW	
	551997-0001	-		x		
Common parts						
095	1143456-0000	-		1	MACHINE SIGN CE	
100	548778-0000	-		2	LIFTING UNIT	
150	315102-0192	-		4	WASHER BRFB21X36FZB	
155	311521-0144	-		4	COLD SQUEEZE TYPE "POP RIVET" 3,2X10	

Pos	Part No	SP	UN	Qty	Description	Page No

This page is intentionally left blank

Pos	Part No	SP	UN	Qty	Description	Page No
PFV11 or PFV12 or PFV13 or PFV14						
F020	A 266756-0500	-		1	PLATFORM	843
PFV1 or PFV2 or PFV3						
F010	A 266755-0200	-		1	PLATFORM	845

Pos	Part No	SP	UN	Qty	Description	Page No

This page is intentionally left blank

Pos	Part No	SP	UN	Qty	Description	Page No
1000B						
	A 597838-0000	-		x	CENTRAL LUBRIC. DIAGRAM	
	A 597846-0000	-		x	PNEUMATIC DIAGRAM	
1000S						
	A 574600-0000	-		x	PNEUMATIC DIAGRAM	
	A 597844-0000	-		x	CENTRAL LUBRIC. DIAGRAM	
Common parts						
	A 479858-0000	-		x	HYDRAULIC DIAGRAM	
	A 575448-0000	-		x	VALVE PANEL	
	A 576730-0000	-		x	WATER DIAGRAM	

Pos	Part No	SP	UN	Qty	Description	Page No

This page is intentionally left blank

Pos	Part No	SP	UN	Qty	Description	Page No
90046-0015						
	90046-0304	K		1	STATOR	
	90046-0312	K		1	RECTIFIER	
	90046-0313	K		1	COIL	
	90046-0314	K		1	BRAKE DISC	
90046-0016						
	90046-0308	K		1	STATOR	
	90046-0312	K		1	RECTIFIER	
	90046-0313	K		1	COIL	
	90046-0314	K		1	BRAKE DISC	
90201-0010						
	90201-0300	-		1	PLATE	
	90201-0301	-		1	SPRING	
	90201-0302	-		1	WASHER	
	90201-0303	-		1	SPARE PARTS KIT	

Pos	Part No	SP	UN	Qty	Description	Page No

Tetra Pak

SPC

Spare Parts Catalogue

Part No	Description	Page No
1,4A		155
1013-0000	SHAFT	775
10258-0000	COMPRESSION SPRING	779, 781, 783, 785, 787, 791, 793, 795
1038128-0001	DOLLY	359, 361, 363, 365, 393
1038517-0002	CUTTING RAIL	359, 363
1038517-0003	CUTTING RAIL	361, 365
107000-0000	SPRING	315, 319
107062-0000	LID	289
107095-0000	LID	285
107334-0000	SPACER SLEEVE	325, 329
107335-0000	SPACER RING	325, 329
107339-0000	DOWEL	325, 329
10793-0036	MOUNTINGRAIL TS32 L=400MM	115
111017-0000	SPACER RING	285
111206-0000	BEARING	655, 657
111433-0000	BRACKET REPBY 0531365-0000	207
111543-0000	GUIDE CONE	7, 737
113653-0000	BEARING PLATE	315, 319
113654-0000	RING	315, 319
1143000-0000	PUSHER	457, 459
1143001-0000	ATTACHMENT PLATE	457, 459
1143002-0000	BRACKET	457, 459
1143003-0000	BRACKET	463, 473
1143004-0000	CYLINDER BRACKET	457, 459
1143006-0000	STEERING	501
1143007-0000	STEERING	501
1143008-0000	BRACKET	501
1143009-0000	BRACKET	501
1143015-0000	BUSHING	519, 683
1143016-0000	AXLE PIN	519, 683
1143020-0000	FOLDING BAR	551, 553
1143021-0000	FOLDING BAR	551, 553
1143049-0000	VOLUME BULGE	345
1143050-0000	VOLUME SHIM	345, 349, 393
1143215-0000	SPRING	351, 353
1143216-0000	SPRING	351, 353
1143223-0000	WASHER	519, 683
1143455-0000	MACHINE SIGN CE	849
1143456-0000	MACHINE SIGN CE	853
1143605-0000	SPACER	771
1143628-0000	COVERING PLATE	167
1143661-0000	CABLE DUCT	237
1143677-0000	PAPER SUPPORT	743
1143839-0000	NUT PLATE	237
1195070-0000	VOLUME FLAP	345
1195094-0000	BRACKET	775
1195332-0000	PROTECTION PLATE	495
1195333-0000	STOP	485
12242-0001	GASKET	27, 81, 95
12242-0003	GASKET	53, 59, 61, 63, 71, 73, 81, 89, 117
12242-0005	GASKET	53, 59, 61, 63, 71, 99, 101, 117
1255160-0000	THREADED INSERT	519, 683
1255161-0000	ARM	519, 683
1255162-0000	ROCKER ARM	519, 683
1255163-0000	ROCKER ARM	519, 683
1255207-0000	STOPPER	351, 353
1255208-0000	STOPPER	351, 353
1260781-0000	VOLUME FLAP	343
1279457-0000	BRACKET	49
1282023-0001	CAST WORKPIECE	121
1282592-0000	STOPPER	351, 353
1282593-0000	STOPPER	351, 353
1282595-0000	CATCH	351, 353
1282596-0000	CATCH	351, 353
1285367-0000	HOLDER	351, 353
12922-0000	WASHER	359, 361, 363, 365
1296003-0000	PAPER SUPPORT	743
1296884-0000	SCREW	361, 365, 383, 387
1296885-0000	SCREW	359, 363, 383, 387
1296886-0000	SCREW	359, 363, 383, 387
1296981-0000	SCREW	361, 365, 383, 387
1296982-0000	SCREW	359, 361, 363, 365, 383, 387
1317808-0000	FOLDING FLAP	315, 319
1317809-0000	FOLDING FLAP	315, 319
1317955-0000	SPRING BRACKET	351, 353
1360383-0100	SHOCK ABSORBER	311, 313
14600-0000	HOOD	29
14729-0000	NUT	333, 335, 337
1881-0001	COMPRESSION SPRING	7
19262-0000	WASHER	751
19972-0000	WASHER	343, 345, 347, 349
2033-0008	WASHER	7, 15, 17, 19, 727
2033-0009	WASHER	741, 747
20494-0000	COMPRESSION SPRING	321, 323
207019-0003	GEAR WHEEL	769
20704-0000	NUT	573, 575, 709, 711

Part No	Description	Page No
20705-0001	INSULATING PIPE	443, 445
20718-0000	BEARING	325, 329
20770-0000	WASHER	189
20772-0000	INSULATOR BODY	443, 445
208361-0001	STAIR	69, 837
208658-0001	SPACER	69, 837
208709-0000	VOLUME SHIM	343, 347, 391, 393
208843-0000	ANGLE BRACKET	21
209145-0000	THROTTLE SCREW	97, 733
209146-0000	BARRIER NUT	97, 733
209331-0012	GEAR WHEEL	93
209331-0013	GEAR WHEEL	93
21,6NF		339, 341
21521-0000	COMPRESSION SPRING	47, 77, 79
21903-0000	ROLL	741, 747, 755
22462-0000	SHAFT	315, 319
22463-0000	ROLL	315, 319
22473-0000	ROLLER BRACKET	315
22483-0000	FORK	325, 329
22485-0000	DOWEL	325, 329
22486-0000	DOWEL	325, 329
22488-0000	ELBOW PIPE	369
22489-0000	ELBOW PIPE	369
22504-0000	STOP LUG	325, 329
22559-0000	GRUB SCREW	743
22560-0000	PAPER SUPPORT	743
226097-0002	BENDING ROLLER	777
226098-0000	BEARING	777
228653-0000	SHAFT	779, 781, 783, 785, 787, 791, 793, 795
228843-0001	SPACER	453, 455, 633
228845-0000	MOUNTING BLOCK	453, 455, 633
228943-0000	THROTTLE	37
229201-0001	SPACER	453, 633
229201-0002	SPACER	453, 455, 633
229202-0000	MOUNTING BLOCK	453, 455, 633
229206-0000	LOCATING PIECE	453, 455, 633
229207-0000	BEARING SLEEVE	453, 455, 633
229424-0000	VALVE HOUSING	593
229443-0000	CYLINDER BRACKET	593
229445-0000	STRAINER	593
229508-0029	STUD SCREW	453, 455, 633
229508-0031	STUD SCREW	453, 633
229516-0000	PIN	453, 455, 567, 571, 633
229760-0012	STUD SCREW	453, 633
229760-0013	STUD SCREW	453, 455, 633
230107-0000	WASHER	743
230226-0000	BLOCKING PIECE	255
230462-0000	BUSHING	303
230551-0000	GASKET	45, 117
230922-0100	AIR JET GUN	125, 127
23127-0101	TRANSFORMER	193
232236-0000	TOOTH PART	339, 341
232237-0000	SCREW	339, 341
232238-0000	TOOTH PART	333, 335, 337
23229-0000	BRACKET	315, 319
23270-0000	BUSHING	293
23291-0000	BEARING COVER	325, 329
23292-0000	BEARING HOUSING	325, 329
232979-0000	PRESSURE ROLLER	29, 117, 759
23312-0000	BUSHING	325, 329
23361-0000	ROLLER BRACKET	319
23458-0000	SHAFT	289
23462-0000	SPACER RING	289
23580-0000	SHIFTER HANDLE	737
23582-0000	HOLDER	7, 737
23583-0000	GUIDE FINGER	7, 737
23584-0000	SCREW	7, 737
237082-0001	MOUNTING BLOCK	453, 633
237082-0002	MOUNTING BLOCK	453, 455, 633
23763-0003	SPACER PIPE	437, 447, 617, 623
23763-0004	SPACER PIPE	439, 441, 449, 451, 619, 621, 625, 627
23763-0005	SPACER PIPE	439, 449, 619, 625
23763-0006	SPACER PIPE	437, 441, 447, 451, 617, 621, 623, 627
23763-0010	SPACER PIPE	437, 447, 617, 623
23765-0001	INSULATING PIPE	439, 449, 619, 625
23765-0002	INSULATING PIPE	437, 439, 441, 447, 449, 451, 617, 619, 621, 623, 625, 627
23765-0003	INSULATING PIPE	437, 439, 441, 447, 449, 451, 617, 619, 621, 623, 625, 627
23765-0004	INSULATING PIPE	437, 439, 441, 447, 449, 451, 617, 619, 621, 623, 625, 627
23765-0005	INSULATING PIPE	437, 439, 441, 447, 449, 451, 617, 619, 621, 623, 625, 627
23769-0000	STOP PLATE	439, 449, 619, 625
23771-0000	SPACER RING	443, 445
237725-0000	BEARING HOUSING	285
239383-0000	SLEEVE	295
239440-0000	SHAFT	23
239441-0000	BRACKET	23
239476-0000	ROD	333, 335, 337

Part No	Description	Page No
239533-0000	DRUM	289
239534-0000	FLANGE	289
239535-0000	FLANGE	289
239536-0000	GEAR WHEEL	289
239538-0000	WASHER	303
239665-0000	GUIDE SHAFT	749
239847-0000	HINGE	191
239870-0000	SPACER SLEEVE	285
239874-0000	WASHER	321, 323
239890-0300	INTERMEDIARY SHAFT	279, 281
242954-0000	WASHER	741
243016-0000	GEARING	289
243017-0000	GEAR WHEEL	297
243143-0000	SCREW	359, 361, 363, 365
243144-0000	BUSHING	361, 365
243151-0000	SHAFT	749
243171-0200	LADDER	845
243172-0001	SIDE PIECE	837
243172-0002	SIDE PIECE	837
243218-0000	CANTILEVER	751
243506-0300	BOTTOM VALVE	581, 583
24351-0000	BOW CLAMP	7, 737
24352-0000	SHAFT	737
24355-0000	DOWEL	7, 737
24356-0000	PIECE	7, 737
243573-0000	LACE	207
243846-0000	ATTACHMENT	43
243851-0000	GASKET	117
243927-0700	ARM	279, 281
243928-0000	BRACKET	293
243930-0000	SHAFT	293
243931-0000	SECURING PLATE	293
243942-0400	YOKE	311, 313
243943-0000	BUSHING	321, 323
243951-0000	YOKE	323
243952-0000	YOKE	321
243971-0000	SPRING	295
245039-0000	GUIDE WHEEL	453, 455, 633
245165-0000	ASSEMBLY TOOL	839
245189-0001	ATTACHMENT	743
245190-0000	FLOAT	37, 39
245210-0000	BODY	737
245271-0000	GASKET	359, 361, 363, 365
245272-0000	GASKET	359, 363
246342-0000	PAPER SUPPORT	743
246344-0000	HEAT GUARD	743
246374-0000	BRACKET	237
246468-0800	VOLUME FLAP	311, 313
246494-0000	ATTACHMENT	385
246495-0000	ATTACHMENT	389
246499-0600	ARM	311, 313
246513-0000	BEARING	321, 323
246739-0000	BRACKET	255
246787-0000	SCREW	293
246790-0000	LINK	293
246885-0000	WASHER	229
246948-0000	BRACKET	295
246964-0000	CYLINDER BRACKET	95
246965-0000	STOP	95
246966-0000	SCREW	91, 95
246982-0000	PROTRACTOR	289
247080-0000	BRACKET	205
247082-0000	LEG	207
247112-0000	SHAFT	321, 323
247119-0000	ROD	303
247145-0000	PLATFORM	845
247146-0000	PLATFORM	841, 843
247159-0000	AXLE SUPPORT	91
247160-0000	AXLE SUPPORT	53, 91
247161-0000	AXLE SUPPORT	91
247162-0000	BRACKET	91
247168-0000	CYLINDER BRACKET	91
247170-0000	BEARING COVER	91
247171-0000	BEARING COVER	89, 93, 733
247172-0000	SPACER RING	89, 93
247173-0000	BEARING SEAT	89, 93
247227-0002	AIR NOZZLE	437, 447, 617, 623
247227-0003	AIR NOZZLE	437, 439, 441, 447, 449, 451, 617, 619, 621, 623, 625, 627
247236-0000	CARRIER	53
247240-0000	WHEEL	91
247241-0000	AXLE SUPPORT	53
247248-0000	PIN	53
247252-0000	GASKET	53
247296-0001	SIDE PIECE	69
247296-0002	SIDE PIECE	69
247297-0000	CANTILEVER	67

Part No	Description	Page No
247349-0000	STEERING	89
247355-0000	LOCK WASHER	89
247357-0000	SPROCKET	57, 89
247358-0000	SHIFTER HANDLE	89
247385-0000	SIGN	183, 185
247386-0000	SIGN	183, 185
247422-0000	DRIP PLATE	89
24928-0000	LOCKING RUBBER	29
249298-0000	ROLL	759
250586-0000	BEARING PANEL	93
250588-0000	FLANGE	89, 739, 823
250590-0000	BEARING COVER	93
250591-0000	SHAFT	93
250592-0000	WASHER	93
250594-0000	FORMING RING	19
250610-0200	TOOL KIT	835
250633-0000	CABLE CLAMP	393
250654-0000	PIVOT ARM	41
250656-0000	ATTACHMENT PIPE	41
250660-0000	BEARING CONSOLE	41
250662-0000	LEVER	41
250663-0000	BEARING	23, 41
250664-0000	TIE ROD	41
250668-0000	SPACER	41
251279-0000	COIL HEATER	743, 755
251454-0000	LID	73
251455-0000	SEAL	73
251490-0000	FASTENING BRACKET	743
251493-0000	FORK	747
251494-0000	SHAFT	747
251495-0000	SHAFT	747
251496-0000	SHAFT	747
251498-0000	BARRIER	747
251502-0000	HEAT GUARD	743
251544-0000	SHEET	89
251561-0000	LINK	293
251562-0000	SHAFT	293
252653-0001	COUNTER CAM	325
252654-0001	COUNTER CAM	329
252707-0000	SPRING	303
252732-0000	GLASS PANE	31
252733-0000	GLASS PANE	33, 35
252734-0000	HINGE	31, 33, 35
252735-0000	HINGE	35
252766-0001	INSULATING PIPE	437, 439, 441, 447, 449, 451, 617, 619, 621, 623, 625, 627
252766-0002	INSULATING PIPE	437, 439, 441, 447, 449, 451, 617, 619, 621, 623, 625, 627
252768-0000	CANTILEVER	371, 373, 375, 377, 379
252770-0000	RAIL BRACKET	371, 373
252773-0000	FASTENING PLATE	375, 377
252774-0000	FASTENING PLATE	371, 373
252775-0000	CURVE	371, 373
252776-0000	VOLUME CAM	371, 373
252780-0000	RULER	371, 373, 375
252785-0000	SCREW	375
252786-0000	WASHER	375
252787-0000	BUSHING	375
252788-0000	BUSHING	375
252789-0000	NUT	375
252791-0000	NUT	375
252792-0000	NUT	375
252793-0000	SUPPORT	371, 373, 375, 377, 379
252794-0000	LACE	375
252797-0000	RUBBER STRIP	31
252798-0000	RUBBER STRIP	33, 35
252868-0000	BRACKET	823
252930-0000	SPACER SCREW	375
252953-0000	TANK	181
252972-0000	SHOULDER SCREW	11
255017-0000	BRACKET	215
255064-0000	BUSHING	751
255227-0001	VOLUME BULGE	345
255228-0001	VOLUME SHIM	345, 391
255278-0000	PLUG FINISHER	361, 365
255335-0000	SHAFT	303
255368-0000	PRESSURE GAUGE TUBE	59, 61, 63
255398-0000	SLEEVE	303
255417-0000	WASHER	741
255874-0000	BEARING COVER	47, 77, 79
255875-0000	BUSHING	47, 77, 79
25640-0000	CARRIER	317
25641-0000	REAMED BOLT	317
257090-0000	SHIFTER HANDLE	7
257783-0000	CUTTING JAW	359, 363
257835-0300	CUTTING JAW	311, 313
257835-0350	CUTTING JAW	311, 313
257845-0000	RAILING	841, 843

Part No	Description	Page No
257846-0000	RAILING	843
257852-0000	PLATFORM	841, 843
257854-0000	CANTILEVER	841, 843
257855-0000	CANTILEVER	845
257859-0000	RAILING	841, 843
257862-0000	PLATFORM	841, 845
257903-0000	AIR NOZZLE	23
257904-0000	HEAT GUARD	23
257923-0000	GUIDE WHEEL	751
257987-0000	AXLE SUPPORT	7, 19
257988-0000	AXLE SUPPORT	7
259414-0400	CARRIER PRESSURE L IH	311, 313
259415-0400	CARRIER	311, 313
259534-0700	PRESSURE JAW	311, 313
259534-0750	PRESSURE JAW	311, 313
259760-0000	BENDING ROLLER BRACKET	135
259835-0000	FLANGE SEAL	153
259867-0000	HOSE CLAMP	253
259902-0000	FLOAT	37
26075-0000	VOLUME BULGE	343, 347
262028-0001	FITTING BOLT	525, 535, 691, 693
262028-0002	FITTING BOLT	515, 681
262028-0011	FITTING BOLT	509, 609, 677
262028-0013	FITTING BOLT	689
262028-0016	FITTING BOLT	475, 689
262179-0001	PIN	515, 521, 523, 525, 527, 531, 533, 535, 537, 609, 681, 689, 691, 693
262183-0000	BUSHING	515, 609, 681, 689
262191-0000	INTERMEDIARY SECTION	669
262233-0000	HOUSE	677
262234-0000	BRACKET	509, 677
262235-0000	ARM	509, 677
262252-0000	HATCH	497, 669
262253-0000	GASKET	497, 669
262261-0000	SHAFT	431, 433, 611, 613
262264-0000	CANTILEVER	497, 669
262266-0000	SHAFT	509, 677
262267-0000	BUSHING	509, 677
262272-0000	HEATING CHAMBER	439, 449, 619, 625
262274-0002	BRACKET	427, 603
262274-0005	BRACKET	425, 601
262275-0002	CAP	427, 603
262275-0003	CAP	425, 541, 601
262288-0000	LID	439, 449, 619, 625
262290-0001	LACE	437, 439, 441, 447, 449, 451, 617, 619, 621, 623, 625, 627
262290-0002	LACE	437, 447, 617, 623
262293-0000	PACKAGE GUIDE	687
262309-0000	SLEEVE	509, 677
262313-0000	LID	509, 677
262314-0000	RUBBER GASKET	509, 677
262315-0000	LID	509, 677
262316-0000	RUBBER GASKET	509, 677
262322-0000	SHAFT	509, 677
262323-0000	SHAFT	509
262324-0000	SHAFT	509, 677
262325-0000	SHAFT	509, 677
262328-0000	GASKET	591
262343-0000	SECURING PLATE	509, 677
262350-0001	PIN	507, 509, 511, 677
262415-0000	LINK	509, 677
262427-0001	SHAFT	513, 515, 517, 679, 681, 683
262427-0002	SHAFT	513, 679
262427-0005	SHAFT	513, 679
262427-0006	SHAFT	515, 681
262427-0007	SHAFT	517, 683
262427-0008	SHAFT	515, 519, 681, 683, 685
262610-0000	LINK	509, 677
262720-0000	STEERING	509, 677
262774-0009	GLASS PANE	175
262906-0000	ARM	507, 509, 511, 677
262907-0000	ARM	507
262922-0000	HOUSE	497, 669
262924-0000	CANTILEVER	515, 681
262932-0000	HATCH	497, 669
262933-0000	GASKET	497, 669
262970-0000	RAIL	513, 515, 517, 679, 681, 683
263249-0000	PIVOT ARM	23
263250-0000	TOOTH PART	23
263251-0000	GEAR WHEEL	23
263252-0000	SHAFT	23
263254-0000	BRACKET	23
263256-0000	ROCKER ARM	23
263257-0000	CYLINDER BRACKET	15, 17, 23
263262-0000	BUSHING	15, 17
263313-0000	LINK HEAD	303
263314-0000	LINK HEAD	303
263322-0000	RAILING	845

Part No	Description	Page No
263323-0000	RAILING	191
263328-0000	SPACER	303
263329-0000	NUT	303
263391-0400	CALENDER ROLLER	89
263509-0000	LID	321, 323
263572-0000	CANTILEVER	57
263574-0000	BEARING CONSOLE	57
263575-0000	GASKET	57
263576-0000	GUIDE STUD	57
263579-0000	WASHER	57
263585-0000	BUSHING	57
263586-0000	BUSHING	57
263587-0000	CRANK	57
263588-0000	JOINT	57
263589-0000	RATCHET	57
263590-0000	BARRIER	57
263592-0000	WHEEL	57
263593-0000	SHAFT	57
263612-0000	RAIL	191
263617-0001	PLATFORM VERSIONS	835
263619-0000	RAILING	843
263655-0002	SHAFT	5
263655-0003	SHAFT	5
263655-0004	SHAFT	5
263655-0007	SHAFT	103
263655-0008	SHAFT	5, 19, 103
263655-0009	SHAFT	13, 19, 103
263655-0010	SHAFT	19
263655-0012	SHAFT	5
263655-0021	SHAFT	5
263655-0022	SHAFT	13
263655-0023	SHAFT	5
263655-0024	SHAFT	5
263656-0002	SHAFT	5
263673-0000	GASKET	439, 449, 619, 625
263684-0000	SPACER	351, 353
263805-0200	FORM CLAMP	3
263828-0000	JUNCTION RAIL	207
263948-0300	CUP	3
26423-0000	LACE	315, 319
26425-0000	LACE	333, 335, 337
26426-0000	LACE	325, 329
26490-0000	WASHER	475
265564-0000	BENDING ROLLER	135, 739, 777, 821
265565-0200	BENDING ROLLER BRACKET	715, 717
265566-0001	SHAFT	135, 719, 729, 739
265566-0003	SHAFT	719, 729
265566-0004	SHAFT	719, 729
265566-0005	SHAFT	719
265566-0006	SHAFT	739
265567-0000	BEARING UNIT	135, 719, 729, 739
265568-0000	DUST COVER	135, 719, 729, 739
265569-0001	STRUT	719, 729, 739
265569-0003	STRUT	719, 729
265569-0005	STRUT	719, 729
265569-0006	STRUT	719
265569-0007	STRUT	739
265756-0000	CANTILEVER	719
265809-0300	PAPER GUARD	3
265872-0001	GEAR WHEEL	93
265889-0300	SWITCH (MONITOR)	125, 127
265957-0000	SHAFT	43
266182-0000	BUSHING	73
266389-0000	PISTON ROD	83, 85
266390-0000	NUT	83, 85
266391-0000	RING	83, 85
266394-0000	BRACKET	83
26642-0200	CARRIER	315, 319
266446-0500	DESIGN CORRECTION DEVICE	311, 313
266447-0500	DESIGN CORRECTION DEVICE	311, 313
266550-0400	FILTER HOUSING	147
266557-0000	GASKET	151
266710-0000	WHEEL	769
266726-0300	PRESSURE ROLLER	715, 717
266728-0000	CANTILEVER	741
266730-0000	HOLDER	741
266731-0000	SHAFT	741
266732-0000	SHAFT	741
266737-0000	WASHER	47, 77, 79, 741
266738-0000	COVER	741
266739-0000	CABLE GLAND	23, 741
266740-0001	SPACER	741
266740-0002	SPACER	741
266755-0002		841
266755-0200	PLATFORM	855
266756-0004		843

Part No	Description	Page No
266756-0500	PLATFORM	855
266758-0000	CANTILEVER	749
266761-0000	MOUNTING LUG	751
266797-0002	PAPER GUARD	11
266986-0500	CURVE SHAFT	279, 281
267033-0000	WASHER	89
267056-0000	BEARING CONSOLE	53
267316-0000	CANTILEVER	737
267327-0000	HOLDER	373, 375
267462-0000	LOCK SHEET	207
267463-0000	LOCK SHEET	207
267494-0000	COIL HEATER	743, 755
267564-0000	BRACKET	99, 101
26760-0000	LOCATING PIECE	321, 323
267646-0000	BLOCKING PIECE	105
267665-0000	BRACKET	105
267676-0000	HOLDER	377
267727-0000	FORK	29
267728-0000	SHAFT	29
267754-0000	BOW CLAMP	333, 335, 337
267835-0000	CANTILEVER	205
267842-0000	COVER SLIP	137, 199
268015-0100	BENDING ROLLER BRACKET	125, 127
268195-0000	SCREW	375
268614-0500	START-UP KIT	311, 313
268746-0000	SCREW	133
268830-0000	COMPRESSION SPRING	507, 511
268954-0000	FOLDING FLAP CAM L	325
268955-0000	FOLDING FLAP CAM R	329
269053-0001	SHAFT	759
269053-0003	SHAFT	759
269054-0000	ARM	759
269056-0000	CATCH	759
269057-0000	TENSION SPRING	759
269059-0000	COUNTER CAM	325
269060-0000	COUNTER CAM	329
269108-0000	FOLDING FLAP CAM L	325
269109-0000	FOLDING FLAP CAM R	329
269110-0000	COUNTER CAM	325
269111-0000	COUNTER CAM	329
269112-0600	STRIP APPLICATOR	715, 717
269113-0600	LOWER FORMING RING	3
269115-0500	UPPER FORMING RING	3
269136-0200	EDGE ROLLER	3
269146-0000	FORK	13
269147-0000	SHAFT	13
269152-0000	ROCKER ARM	15, 17
269153-0000	STOP	15, 17
269154-0000	BUSHING	15, 17, 23
269158-0400	HOT AIR ELEMENT	3
269242-0000	BEARING HOUSING	23
269274-0000	PLATFORM COVER	191
269275-0000	PLATFORM COVER	191
269285-0000	PROTECTION PLATE	205
269291-0000	RULER	205
269294-0000	RULER	205
269295-0000	PROTECTION PLATE	205
269296-0000	PROTECTION PLATE	207
269297-0000	PROTECTION PLATE	207
269304-0000	SIDE PLATE	199
269305-0000	SIDE PLATE	137
269313-0000	FASTENING PLATE	23
269314-0000	CANTILEVER	23
269315-0000	WASHER	23
269316-0000	BEARING HOUSING	23
269320-0000	RAIL	255
269321-0000	RAIL	255
269322-0200	HATCH	125, 127
269323-0000	HATCH	139
269339-0000	CANTILEVER	841, 843
269340-0000	CANTILEVER	841, 843
269366-0000	DOWEL	315, 319
269405-0000	PIPE	81
269522-0000	PIPE	71
269575-0000	HOLDER	87
269576-0000	CAP	87
269577-0000	DISCHARGE TRAY	87
269578-0000	DISCHARGE TRAY	87
269715-0100	PIPE HOLDER	3
269716-0000	FASTENING PLATE	27
269717-0000	GASKET HOLDER	27
269718-0000	GASKET	27
269719-0000	SCREW	27
269720-0300	FILLER TUBE	3
269792-0000	DAMPER	375, 377, 379
269827-0001	FILLER TUBE	39

Part No	Description	Page No
269827-0002	FILLER TUBE	37
269828-0500	FILLER TUBE	3
269859-0000	BRACKET	45
269903-0000	FILTER INSERT	151
269904-0000	FILTER MESH	151
269905-0000	WASHER	151
269913-0000	STOPPER	41
269914-0000	SHOULDER SCREW	41
269915-0700	HOT AIR ELEMENT	3
269929-0000	COVER	57
269930-0000	SCREW	57
269932-0500	BOTTOM COVER	53
269941-0600	BATH	3
269971-0100	LADDER	67
269988-0600	VENTILATION SYSTEM	3
269989-0300	VALVE	81
270926-0000	NUT	121, 761
270927-0000	SCREW	121, 761
271211-0000	WASHER	753
271653-0000	ARM	753
271654-0000	RETAINING RING	753
271655-0000	HOLDER	753
271823-0000	FILTER	217
272466-0000	SPRING	753
272728-0000	BARRIER	767
272814-0000	SLEEVE	767
272815-0001	SLEEVE	767
273400-0700	STERILE AIR SYSTEM	3
273401-0300	CHANGE-OVER VALVE	71
273402-0400	AIR SUPER-HEATER	81
273429-0000	WASHER	41, 53
273449-0000	SIGN	223
273450-0000	SIGN	223
273452-0000	SIGN	223
273455-0000	LABEL (COLD WATER)	219
273456-0000	SIGN	217, 219
273458-0000	LABEL (AIR)	219
273508-0000	COVERING PLATE	205
273514-0000	TOUCH GUARD	81
273515-0000	TOUCH GUARD	81
273547-0001	TOUCH GUARD	59, 61, 63
273547-0002	TOUCH GUARD	81
273548-0001	TOUCH GUARD	59, 61, 63
273548-0002	TOUCH GUARD	81
273728-0300	VALVE GROUP	297
273751-0000	FRONT PLATE	205
273753-0000	PROTECTION PLATE	205
273934-0000	LID	53
273937-0000	DIAPHRAGM	53
273938-0000	WASHER	53
273944-0000	DIAPHRAGM	75
273950-0000	FILTER	71
273951-0000	VALVE HOUSING	75
273961-0000	SEAL	53
273977-0000	NUT	161
273978-0000	LEVEL GLASS	161
273980-0000	SPRING	161
273981-0000	GASKET	163
273982-0000	WEIGHT	163
273996-0000	NUT	161
276164-0000	VALVE HOUSING	83, 85
276165-0000	HOUSE	83, 85
276166-0000	PIPE	81
276167-0000	PIPE	81
276172-0000	AXLE PIN	315, 319
276173-0000	CURVE ROLLER	315, 319
276189-0000	DAMPER	371, 373, 375
276304-0000	PIPE	81
276305-0000	PIPE	81
276343-0300	LID	181
276345-0300	AIR KNIFE	89
276346-0000	AIR GUIDE	95
276347-0000	AIR DISTRIBUTOR	95
276348-0000	AIR DISTRIBUTOR	95
276350-0000	GEAR WHEEL	95
276351-0000	GEAR WHEEL	95
276354-0000	ATTACHMENT	95
276355-0000	SLEEVE	95
276356-0000	BEARING HOUSING	95
276357-0000	BUSHING	95
276358-0000	BUSHING	95
276359-0000	LEVER	95
276360-0000	SPRING	95
276361-0000	BRACKET	95
276394-0000	BENDING ROLLER	93
276398-0000	HEXAGON NIPPLE	233

Part No	Description	Page No
276480-0500	PIPE WORK	3
276490-0000	PIPE	97
276613-0000	LID	427, 603
276616-0000	BRACKET	689
276617-0000	BRACKET	609
276636-0000	WASHER	427, 603
276659-0000	WASHER	497, 509, 669, 677
276664-0000	WASHER	515, 609, 681, 689
276742-0004	BEARING SLEEVE	637
276743-0000	SPROCKET	637
276880-0000	SHAFT	631
278954-0000	NET	81
278955-0000	NET	81
279006-0000	BENDING ROLLER	89
279007-0000	BENDING ROLLER	89
279009-0000	BEARING PLATE	89
279010-0000	BEARING PLATE	89
279011-0000	COVERING PLATE	89
279074-0000	TENSION SPRING	747
279103-0000	CONNECTION CLAMP	369
279105-0000	WASHER	233
279134-0500	TRANSMISSION	311, 313
279139-0000	COMPRESSION SPRING	593
279208-0000	BEARING HOUSING	41
279209-0000	ROCKER ARM	41
279210-0100	PAPER GUIDE	715, 717
279211-0000	CANTILEVER	737
279213-0000	DOWEL	41
279370-0000	STEERING	205
279466-0000	BRACKET	293
279471-0000	CANTILEVER	53
279472-0000	FASTENING BRACKET	53
279478-0000	BEARING PLATE	53
279480-0000	STEERING RAIL	759
279526-0000	BRACKET	233
279564-0300	FOLDING DEVICE	311, 313
279565-0300	FOLDING DEVICE	311, 313
279589-0000	NUT	97, 733
279590-0000	REDUCTION	733
279619-0000	BRACKET	105
279621-0000	FASTENING PLATE	377, 379, 381
279651-0600	TOUCH GUARD	3
279672-0000	ATTACHMENT	743
279754-0000	BOTTOM VALVE	593
279804-0000	BUSHING	195, 197
279807-0000	COVER	191
279860-0000	ADJUSTMENT PLATE	99, 101
279885-0000	COVER	191
279979-0500	CENTRAL LUBRICATION	125, 127
279983-0000	SPLASH PROTECTION	301
279984-0000	SPLASH PROTECTION	301
279985-0000	BRACKET	301
279987-0000	BRACKET	301
279989-0000	SPACER	301
279991-0000	BRACKET	301
279992-0000	BRACKET	301
279993-0000	BRACKET	301
279997-0000	BRACKET	301
279998-0000	SHAFT	301
279999-0000	COVERING PLATE	301
28036-0000	WASHER	19, 297
28037-0000	WASHER	7, 41, 509, 677
282507-0000	BRACKET LEFT	139, 141
282509-0300	BENDING ROLLER	715, 717
282511-0000	COVERING PLATE	301
282512-0000	BRACKET	301
282513-0000	BRACKET	301
282528-0200	PRESSURE ROLLER	715, 717
282549-0000	MOUNTING RAIL	731
282596-0000	SUPPORT	747
282604-0200	START-UP KIT MACHINE BODY	125, 127
282608-0000	ANGLE	99, 101
282625-0000	EYELET	747
282634-0300	STRIP GUIDE	715, 717
282635-0000	GUIDE WHEEL	751
282682-0000	BRACKET	45
282683-0000	BRACKET	45
282766-0000	LINK	91
282767-0000	BRACKET	91
282802-0000	PIPE	735
282805-0800	PIPE WORK-PNEUMATIC	3
282893-0000	SAFETY GUARD	67
283084-0000	GUIDE SHAFT	839
283085-0000	SLEEVE	839
283157-0000	MAIN CAM	289
283160-0000	COUNTER CAM	289

Part No	Description	Page No
283172-0000	BEARING HOUSING	743
283271-0000	BRACKET	11
28334-0000	CURVE ROLLER	303
283361-0000	AIR NOZZLE	743
283475-0000	COVER DISC	89
283774-0000	BEARING	301
283775-0000	SLIDE	301
283884-0000	OIL TROUGH	205
283926-0300	AIR NOZZLE	41
283992-0000	RULER	205
284124-0000	HOLDER	377, 379, 381
284163-0500	START-UP KIT	3
284232-0000	FOLDING FLAP CAM L	325
284233-0000	FOLDING FLAP CAM R	329
284234-0000	COUNTER CAM	325
284235-0000	COUNTER CAM	329
284578-0000	CUTTING JAW	361, 365
284581-0000	RAIL	383
284582-0000	RAIL	387
284833-0000	LID	385, 389
284840-0000	NUT	151
284953-0001		845
284953-0100	HOSE	835
284973-0000	SHAFT	13
284974-0000	HUB	93
285027-0000	CARRIER	427, 603
285039-0000	HATCH	601
285051-0000	SPROCKET	601
285054-0000	CURVE	427, 603
285055-0000	CURVE	427, 603
285059-0000	ARM	689
285060-0000	ARM	689
285061-0000	BRACKET	689
285064-0000	HOLDER	687
285072-0001	SHAFT	689
285072-0002	SHAFT	689
285074-0000	PLATE	559, 565, 689
28509-0000	WASHER	355, 357
285109-0000	BEAM	637
285115-0000	MOUNTING BAR	637
285126-0000	BRACKET	637
285132-0000	SHAFT	453, 455, 633
285133-0000	CANTILEVER	453, 455, 633
285141-0003	CLAMPING SLEEVE	497, 669
285142-0002	SLEEVE	497, 669
285142-0003	SLEEVE	497, 669
285145-0002	INTERMEDIARY SECTION	497, 669
285147-0000	INTERMEDIARY SECTION	497, 669
285157-0000	LINK	509, 677
285158-0000	LINK	509, 677
285162-0000	LUBRICATING PIPE	509, 677
285164-0000	LUBRICATING PIPE	509, 677
285168-0000	BUSHING	547, 553, 703
285287-0500	DRIVE UNIT	405, 421
285291-0400	BEVEL GEAR	425
285299-0100	PRESSURE ARM	425, 601
285300-0000	BRACKET	431, 433, 611, 613
285303-0400	LOWER SECTION	401, 403
285310-0001	FLAP	523, 525, 527, 533, 535, 537, 691, 693
285310-0002	FLAP	521, 523, 531, 533
285316-0002	SPACER PIECE	521, 523, 531, 533
285321-0000	ROLL	525, 535, 691, 693
285322-0000	WASHER	525, 535, 691, 693
285324-0100	SHAFT	579
285325-0000	SHAFT	697
285327-0000	MACHINE BODY	647
285329-0000	BEARING HEAD	653
285330-0000	HOLDER	405, 421, 581, 583
285332-0000	TIMING BELT PULLEY	647
285333-0000	TIMING BELT PULLEY	653
285334-0000	TIMING BELT PULLEY	653
285337-0000	ARM	659, 661
285345-0000	RAIL	647
285346-0000	RAIL	647
285347-0000	RAIL	647
285352-0000	FLAP	655, 657
285354-0000	HOLDER	665
285356-0000	TIMING BELT PULLEY	643, 645, 647
285361-0000	ROLL	653
285362-0001	SHAFT REPBY 0525363-0001	661
285363-0000	WASHER	463, 475, 647, 653
285364-0000	WASHER	653
285365-0000	WASHER	647
285370-0000	RAIL	641, 643, 645, 647
285372-0000	BRACKET	643
285373-0000	BRACKET	647

Part No	Description	Page No
285374-0000	ARM	647
285375-0000	STEERING	653
285376-0000	PENDULUM SUSPENSION	665
285377-0000	SHAFT	665
285378-0200	CONVEYOR BELT	647
285380-0002	WEDGE	469, 471, 647
285403-0000	WASHER	411, 587
285407-0200	INFEEDER	639
285408-6000	LIFTING DEVICE	639
285409-0100	TENSION SPROCKET	639
285409-0200	TENSION SPROCKET	639
285416-0000	RAIL	641, 643, 645, 647
285419-0000	CURVE	647
285424-0000	HOLDER	641, 643, 645, 647
285444-0000	SPACER	515, 681
285448-0000	PROTECTIVE CASING	509, 677
285449-0000	ARM	507
285456-0300	PRESSURE DEVICE	401, 403
285456-6000	PRESSURE DEVICE	579
285464-0000	GASKET	673
285465-0000	GASKET	673
285468-0000	GEAR WHEEL	673
285469-0000	HUB	673
285470-0000	ROLL	673, 709
285471-0000	CURVE	673
285478-0200	DISTRIBUTOR	579
285479-0300	SUPERSTRUCTURE	579
285479-0500	SUPERSTRUCTURE	401, 403
285483-0100	STOP	639
285483-0200	STOP	639
285489-0000	PLATE	687
285490-0000	PLATE	687
285493-0000	PLATE	687
285494-0000	PLATE	687
285498-0000	SPACER RING	653
285507-0002	AIR NOZZLE	437, 447, 617, 623
285508-0002	AIR NOZZLE	437, 447, 617, 623
285524-0000	SLIDE RAIL	671
285539-0000	TUB	591
285540-0000	GASKET	591
285552-0100	TUB	581, 583
285562-0000	BRACKET	645, 647
285564-0000	BRACKET	643
285566-0000	BRACKET	645
285568-0000	BRACKET	641, 645
285570-0000	BRACKET	641
285572-0000	TIMING BELT PULLEY	641, 645
285575-0000	FASTENING BRACKET	629
285576-0000	FASTENING BRACKET	629
285577-0000	SLIDE SHEET	635, 637
285580-0000	LEAD RAIL	635
285581-0000	LEAD RAIL	635
285585-0000	SPROCKET	631
285591-0400	STATION	401, 403
285591-6000	STATION	629
285592-0600	MACHINE BODY	401, 403
285604-0001	FORK	665
285605-0001	SPACER	641
285633-0000	SLIDE RAIL	671
285634-0001	SLIDE RAIL	671
285634-0002	SLIDE RAIL	671
285634-0003	SLIDE RAIL	671
285635-0001	SLIDE RAIL	671
285635-0002	SLIDE RAIL	671
285635-0003	SLIDE RAIL	671
285637-0000	HEAD PLATE	671
285639-0000	HEAD PLATE	671
285640-0000	HEAD PLATE	671
285641-0000	HEAD PLATE	671
285654-0300	CONVEYING EQUIPMENT	629
285655-0000	ARM	513, 515, 517, 679, 681, 683
285656-0000	ARM	513, 515, 517, 679, 681, 683
285657-0000	ARM	513, 515, 517, 679, 681, 683
285660-0000	ARM	513, 515, 519, 679, 683, 685
285661-0000	ARM	513, 515, 519, 679, 683, 685
285664-0000	SHAFT	515, 681
285669-0000	ANGLE IRON	637
285671-0000	SLIDE RAIL	671
285673-0200	CHAIN TENSIONER	629
285674-6000	DISCHARGER	579
285676-0000	AIR NOZZLE	437, 447, 617, 623
285677-0000	AIR NOZZLE	437, 447, 617, 623
285682-0000	FASTENING BRACKET	637
285684-0000	SIDE FRAME	581, 583
285685-0000	SIDE FRAME	581, 583
285704-0000	LEAD RAIL	635, 637

Part No	Description	Page No
285708-0000	LEAD RAIL	635, 637
285712-0000	RAIL	513, 679
285723-0000	ARM	513, 515, 517, 519, 679, 681, 683
285724-0002	RAIL	513, 679
285729-0000	BUSHING	515, 681
285736-0300	PULL-DOWN DEVICE	401, 403, 579
285744-0000	COVERING PLATE	581, 583
285745-0000	SIDE PLATE	581, 583
285801-0000	BEAM	205
285809-0000	BRACKET	695
285813-0000	HEAD PLATE	695
285814-0000	HEAD PLATE	695
285815-0003	PLATE	695
285825-0000	SHAFT	257
285849-0000	CURVE	703
285851-0000	BEARING	547, 553, 703
285852-0000	DRIP PLATE	703
285853-0100	STEERING RAIL	669
285853-0200	STEERING RAIL	497
285855-0000	LEG	581, 583
285857-0000	LEG	581, 583
285861-0500	GEAR REDUCTION	405, 421
285861-6000	GEAR REDUCTION	581, 583
285891-0000	SCREW	497, 669
285892-0000	CONNECTION	497, 669
285923-0000	SCREW	405, 421, 581, 583
285924-0000	LEG	581, 583
285925-0000	LEG	581, 583
285926-0000	BEARING	655, 657, 689
285927-0001	BEARING	689
285927-0002	BEARING	689
285942-0001	LEAD PLATE	635
285943-0002	SPACER	661
285944-0001	SPACER	643, 645, 647
285944-0002	SPACER	641
285945-0000	STEERING	647
285956-0000	HANDLE	175
285967-0000	PIPE	581, 583
285970-0000	COMPRESSION SPRING	509, 677
285979-0000	PIPE	257
285993-0000	CONNECTION	575
285994-0000	NUT	405, 421, 581, 583
28880-0000	PLUNGER	361, 365

Part No	Description	Page No
292037-0000	SCREW	383, 387
292044-0000	SHAFT	797
292071-0200	SPLASH PROTECTION	279, 281
292313-0000	BEAM	849
292314-0000	BEAM	849
292315-0000	BEAM	849
292367-0000	PISTON	385, 389
292409-0000	END SECTION	799
292410-0000	END SECTION	799
292411-0000	CARRIER	799
292412-0000	END SECTION	799
292413-0000	END SECTION	799
292445-0001		847
292445-0100	LIFTING UNIT	835
292449-0000	PUMP HOUSING	155, 275
292451-0500	PEROXIDE PUMP	153
292452-0000	EXTENSION PIPE	155
292456-0000	BEARING COVER	155
292464-0000	FLANGE	155
292472-0000	HOLDER	297
292473-0000	CANTILEVER	297
292477-0000	SHAFT	297
292482-0000	WASHER	297
292565-0000	PROTECTION	95
293158-0000	HATCH	205
293159-0000	HATCH	205
293160-0000	COVERING PLATE	207
293161-0000	COVERING PLATE	207
293198-0002	BRACKET	143
293201-0000	PIPE	217
293351-0000	CRAMP	233
293352-0000	CRAMP	233
293395-0001	TYPE HOLDER	799
293395-0002	TYPE HOLDER	799
293395-0003	TYPE HOLDER	799
293405-0000	GASKET	53
293478-0000	BEARING	165
293562-0000	BOTTOM PANEL	199
293563-0000	BOTTOM PANEL	137
293564-0000	SIDE PLATE	199
293565-0000	SIDE PLATE	137
293566-0000	MOUNTINGS	165, 167
293598-0000	GLASS PANE	165, 167

Part No	Description	Page No
293605-0500	VOLUM CURVE PIECE	311, 313
293606-0000	SHIFTER HANDLE	371, 373, 375, 377, 379, 381
293608-0000	BEARING CONSOLE	375
293609-0000	BEARING CONSOLE	375
293610-0000	GEAR WHEEL	375
293611-0000	SHAFT	371, 373, 375, 377, 379
293612-0000	SCREW	375
293621-0001	BENDING ROLLER	779, 781, 783, 785, 787, 791, 793, 795
293621-0002	BENDING ROLLER	779
293621-0005	BENDING ROLLER	795
293624-0001	PROTECTION PLATE	779, 781, 783, 785, 787, 791, 793, 795
293624-0002	PROTECTION PLATE	779, 781, 785
293645-0000	BRACKET	789
293646-0001	WASHER	779, 781, 783, 785, 787, 791, 793, 795
293646-0002	WASHER	779, 781, 783, 785, 787, 791, 793, 795
293646-0003	WASHER	795
293659-0000	CARRIER	799
293667-0000	DOWEL	797
293669-0001	WASHER	797
293669-0002	WASHER	797
293669-0003	WASHER	797
293669-0004	WASHER	797
293670-0000	SHAFT	797
293671-0000	SPACER	799
293674-0000	DOWEL	779, 781, 783, 785, 787, 791, 793, 795
293676-0000	CARRIER	799
293684-0200	PRINTING WHEEL NSS	789
293688-0000	CARRIER	799
293690-0000	END SECTION	799
293697-0000	END SECTION	797
294009-0000	KNIFE	807, 827
294042-0000	SEALING WASHER	375
294053-0000	BEARING	167
294054-0000	BRACKET	167
29411-0000	SPACER PIPE	443
294113-0000	HOLDER	167
294114-0000	HOLDER	165
29413-0000	LACE	443, 445
294172-0000	CURVE	165, 167
294464-0000	BASE PLATE	121, 761
294472-0000	CANTILEVER	105
294474-0000	ROLL	5
294475-0000	ROLL	5
294476-0000	ROLL	5
294477-0000	ROLL	5
294480-0000	ROLL	5
294493-0000	HYDRAULIC PIPE	215
294494-0000	HYDRAULIC PIPE	215
294495-0000	HYDRAULIC PIPE	215
294496-0000	HYDRAULIC PIPE	215
295391-0003	THROTTLE SCREW	299
295435-0000	WASHER	405, 421, 581, 583
295878-0000	THROTTLE SCREW	45
295879-0000	NUT	45
297054-0000	WASHER	41
297091-0000	ARM	297
297092-0000	ARM	297
297142-0000	BUSHING	91
297163-0000	CARRIER	57
297195-0000	SPACER	59, 61, 63
297211-0000	INK WELL	797
297309-0000	PIPE-LINE	23
297310-0000	FLANGE	23
297311-0000	COVER	23
297347-0000	PIPE	97
297366-0000	BRACKET	165
297413-0000	PIPE	417, 595, 597
297414-0001	MOUNTING BEAM	653
297414-0002	MOUNTING BEAM	653
297414-0003	MOUNTING BEAM	653
297414-0004	MOUNTING BEAM	653
297484-0000	SIDE PLATE	633
297488-0000	GLASS PANE	175
297495-0001	WEDGE	651
297496-0000	LACE	507, 509, 511, 677
297499-0001	SIDE PIPE	439, 449, 619, 625
297499-0002	SIDE PIPE	437, 439, 447, 449, 617, 619, 623, 625
297499-0003	SIDE PIPE	437, 447, 617, 623
297499-0007	SIDE PIPE	437, 447, 617, 623
297499-0008	SIDE PIPE	439, 449, 619, 625
297499-0009	SIDE PIPE	437, 447, 617, 623
297505-0000	SIDE PLATE	633
297514-0000	PLATE	653
297518-0000	WASHER	659, 661
297521-0001	HEAD PLATE	643, 645
297521-0002	HEAD PLATE	641

Part No	Description	Page No
297521-0003	HEAD PLATE	641
297522-0001	HEAD PLATE	643, 645
297522-0002	HEAD PLATE	641
297522-0003	HEAD PLATE	641
297524-0000	HATCH	705, 707
297527-0000	SCREW	705, 707
297539-0000	CABLE TRACK	581, 583
297540-0001	HEAD PLATE	643, 645, 647
297540-0002	HEAD PLATE	643, 645
297541-0001	HEAD PLATE	643, 645, 647
297541-0002	HEAD PLATE	641, 643, 645
297542-0001	SLIDE RAIL	643, 645, 647
297542-0002	SLIDE RAIL	645
297542-0003	SLIDE RAIL	641
297551-0000	SHEET	405, 421, 591
297555-0001	SLIDE SHEET	643, 645, 647
297555-0002	SLIDE SHEET	641
297567-0000	TENSION SPRING	515, 681
297569-0000	SIDE PLATE	453, 455, 633
297574-0001	SPACER	453, 633
297574-0002	SPACER	453, 455, 633
297576-0000	BEAM	205
297577-0000	COVERING PLATE	581, 583
297581-0000	PROFILE	647
297582-0000	SHEET	591
297586-0000	BRACKET	643
297587-0000	BRACKET	645, 647
297588-0000	BRACKET	643
297589-0000	BRACKET	645
297590-0000	BRACKET	641, 645
297591-0000	BRACKET	641
297596-0000	PLUG	591
297597-0001	BRACKET	633
297597-0002	BRACKET	633
297604-6000	HOOD	125, 127
297608-0000	BRACKET	419, 599
297609-0000	ARM	419, 599
297610-0000	SCREW	419, 599
297611-0000	SHAFT	419, 599
297612-0000	PROFILE	599
297622-0200	MACHINE BODY	639
297625-0000	ARCH	635
297626-0000	ARCH	635, 637
297627-0001	HEAD PLATE	641
297627-0002	HEAD PLATE	641
297628-0001	HEAD PLATE	641
297628-0002	HEAD PLATE	641
297632-0000	BEARING CONSOLE	647
297635-0000	TROUGH	639
297637-0000	PLATE	639
297638-0100	CHAIN TENSIONER	581, 583
297638-0200	CHAIN TENSIONER	405, 421
297641-6000	CONVEYING EQUIPMENT	579
297643-0000	BRACKET	515, 681
297644-0000	SHAFT	513, 515, 517, 519, 679, 681, 683, 685
297646-0000	FLAP	521, 531
297650-0000	BOTTOM	525, 535
297659-0000	WEDGE	647
297661-0000	SPROCKET	587
297662-0000	TIMING BELT PULLEY	641, 643, 645, 647
297663-0000	POST HOLDER	405, 421, 581, 583
297664-0000	POST HOLDER	405, 421, 581, 583
297665-0000	TIMING BELT PULLEY	641
297666-0000	PROTECTION	591
297667-0000	BRACKET	591
297668-0000	ROLL	659, 661
297669-0000	POST	205
297670-0000	POST	205
297678-0001	COVERING PLATE	705, 707
297679-0000	PIPE	175
297681-0300	WHEEL	401, 403
297682-0300	WHEEL	401, 403
297693-0002	BLOCKING PIECE	641
297693-0003	BLOCKING PIECE	643, 645, 647
297694-0000	LEAD RAIL	699
297712-0000	COVER	667
297713-0000	COVER	667
297714-0000	GABLE PLATE	667
297715-0000	GABLE PLATE	667
297721-0100	CHAIN GUARD	639
297745-0000	BRACKET	709
297746-0000	LINK	709
297748-0000	SHAFT	709
297749-0000	RIVET	709
297750-0000	CARRIER	637
297751-0000	SHAFT	467, 657

Part No	Description	Page No
297755-0000	WEDGE	467, 657
297759-0000	DROP WING	641
297761-0000	HOLDER	609
297766-0000	DROP WING	641
297769-0000	HOOD	175
297770-0000	SCREW	257
297772-0000	PLATE	687
297773-0000	PLATE	687
297774-0000	PLATE	687
297775-0000	PLATE	687
297778-0000	LEAD PLATE	635
297779-0000	FORK	665
297786-0000	EJECTOR CHUTE	695
297787-0000	EJECTOR CHUTE	695
297788-0000	HEAD PLATE	695
297789-0000	HEAD PLATE	695
297790-0000	BRACKET	695
297791-0000	LACE	695
297792-0200	CONVEYOR BELT	653
297794-0000	SHEET	467, 657
297795-0000	SPRING	467, 657
297796-0000	LEAD RAIL	699
297800-0000	PIPE	169
297801-0000	ELBOW PIPE	581, 583
297802-0000	BRACKET	169
297805-0000	PIPE	169
297808-0500	CLEANING EQUIPMENT	125, 127
297809-0000	CRAMP	669
297814-0000	BRACKET	405, 421, 581, 583
297815-0000	SPRING	709
297816-0000	DROP WING	643, 645, 647
297817-0000	HEAD PLATE	643, 645, 647
297818-0000	HEAD PLATE	643, 645, 647
297820-0000	SPROCKET	647
297821-0000	BRACKET	591
297822-0000	STRAINER	591
297825-0000	LEAD RAIL	699, 701
297826-0000	LEAD RAIL	699, 701
297827-0000	LEAD RAIL	701
297828-0000	LEAD RAIL	701
297831-0000	PLATE	637
297833-0000	SCREW	637
297834-0000	HOLDER	629
297852-0000	SLIDE RAIL	671
297855-0000	CHUTE	707
297856-0000	BRACKET	707
297860-0000	BUSHING	405, 421, 581, 583
297867-0000	HOLDER	647
297869-0002	HEAD PLATE	643, 645
297870-0002	HEAD PLATE	643, 645
297899-0000	SPROCKET	479
297969-0000	FASTENING PLATE	95
297970-0000	CATCH LEVER	95
297998-0000	ADJUSTMENT PLATE	371, 373, 375, 377, 379, 381
297999-0000	ADJUSTMENT PLATE	371
29876-0000	COVER	87
29886-0000	LACE	321, 323
30,9NF		339, 341
30298-0000	INSULATION	87
30310-0001	HEATING ELEMENT	443
30310-0002	HEATING ELEMENT	443
30310-0003	HEATING ELEMENT	443
30311-0001	HEATING ELEMENT	445
30311-0002	HEATING ELEMENT	445
311101-0274	CYLINDRICACP4H6X25	819
311102-0236	CYLINDRICACP M6 3X16	819
311102-0350	CYLINDRICACP M6 6X14	773
311102-0353	CYLINDRICACP M6 6X20	769, 823
311103-0209	CYLINDRICACP M6 2,5X14RFR	23
311103-0212	CYLINDRICACP M6 2,5X20RFR	15, 17
311103-0232	CYLINDRICACP M6 3X8 RFR	743
311103-0233	CYLINDRICACP M6 3X10 RFR	15, 17, 41, 771
311103-0234	CYLINDRICACP M6 3X12 RFR	163
311103-0235	CYLINDRICACP M6 3X14 RFR	19
311103-0236	CYLINDRICACP M6 3X16 RFR	7, 73, 797
311103-0238	CYLINDRICACP M6 3X20 RFR	99, 101, 797
311103-0239	CYLINDRICACP M6 3X22 RFR	99, 101
311103-0267	CYLINDRICACP M6 4X10 RFR	743
311103-0268	CYLINDRICACP M6 4X12 RFR	831
311103-0270	CYLINDRICACP M6 4X16 RFR	93, 773, 797
311103-0272	CYLINDRICACP M6 4X20 RFR	15, 17, 375, 825
311103-0273	CYLINDRICAM6 4X22 RFR	163, 789
311103-0274	CYLINDRICACP 4X25 RFR	23, 767, 789
311103-0275	CYLINDRICACP M6 4X28 RFR	89
311103-0276	CYLINDRICACP M6 4X30 RFR	15, 17, 57, 375
311103-0278	CYLINDRICACP M6 4X35 RFR	89

Part No	Description	Page No
311103-0306	CYLINDRICACP M6 5X12 RFR	509
311103-0306	PINS,STRAIGHT 5X12	677
311103-0310	CYLINDRICACP M6 5X20 RFR	53, 57, 89, 315, 319, 325, 329, 375, 789
311103-0314	CYLINDRICACP M6 5X30 RFR	207
311103-0316	CYLINDRICACP M6 5X35 RFR	759
311103-0350	CYLINDRICACP M6 6X14 RFR	737, 777
311103-0353	CYLINDRICACP M6 6X20 RFR	775, 789
311103-0355	CYLINDRICACP M6 6X25 RFR	775
311103-0357	CYLINDRICACP M6 6X30 RFR	57, 325, 329, 375, 789
311103-0361	CYLINDRICACP M6 6X40 RFR	107, 109
311103-0365	CYLINDRICACP M6 6X50 RFR	803
311103-0367	CYLINDRICACP M6 6X55 RFR	95
311103-0399	CYLINDRICACP M6 8X16 RFR	405, 421, 425, 497, 561, 565, 601
311103-0401	CYLINDRICACP M6 8X20 RFR	57, 397
311103-0403	CYLINDRICACP M6 8X25 RFR	255
311103-0405	CYLINDRICACP M6 8X30 RFR	31, 33, 35
311103-0407	CYLINDRICACP M6 8X35 RFR	503
311103-0411	CYLINDRICACP M6 8X45 RFR	35, 503
311103-0413	CYLINDRICACP M6 8X50 RFR	207, 269
311103-0413	PINS,STRAIGHT 8X50	673
311111-0305	SLOTTED TUFRP5X14	429, 607
311112-0192	SLOTTED TURP 2,5X24	325, 329
311112-0204	SLOTTED TURP 3X8 RFR	379, 381
311112-0205	SLOTTED TURP 3X10 RFR	757
311112-0256	SLOTTED TURP 4X20 RFR	155, 825
311112-0258	SLOTTED TURP 4X24 RFR	825
311112-0341	PINS,SLOTTED TUBULAR SPRING PIN 6X24	587
311112-0341	SLOTTED TURP 6X24 RFR	411
311112-0350	SLOTTED TURP 6X55 RFR	767
311202-0241	TAPER PIN KP4X25RFR	789
311202-0320	TAPER PIN KP8X35RFR	207
311211-0267	TAPER PIN GKP5X5X30	207
311211-0292	TAPER PIN GKP6X6X30	261, 809
311211-0299	TAPER PIN GKP6X6X55	99, 101
311303-0310	SLOTTED PIRPB5X20FZB	135
311303-0356	SLOTTED PIRPB6X30FZB	295
311305-0308	SLOTTED PIRPC5X16FZB	719, 733, 739, 743, 749
311411-0127	SPLIT PIN SP1,2X12RFR	467, 657
311411-0140	SPLIT PIN SP1,6X16RFR	23
311411-0169	SPLIT PIN SP2,5X25RFR	155
311508-0416	RIVET KN4X10ALUM.	359, 363
311520-0329	BLANK RIVE2,4X8	227, 255
311520-0420	BLANK RIVE3,2X4	139
311521-0143	BLANK RIVE2X8,0 RFR	829
311521-0144	COLD SQUEEZE TYPE "POP RIVET" 3,2X10	849, 853
312101-0287	SCREW M6S4X8FZB	425, 601, 801
312101-0289	SCREW M6S4X10FZB	189, 809
312101-0291	SCREW M6S4X12FZB	809
312101-0295	SCREW M6S4X20FZB	143, 293, 295
312101-0323	SCREW M6S5X8FZB	303, 769, 809
312101-0325	SCREW M6S5X10FZB	237, 297
312101-0327	SCREW M6S5X12FZB	233, 435, 615
312101-0329	SCREW M6S5X16FZB	769, 799, 809
312101-0331	SCREW M6S5X20FZB	215, 799, 809
312101-0333	SCREW M6S5X25FZB	809
312101-0335	SCREW M6S5X30FZB	809
312101-0362	SCREW M6S6X8FZB	201, 293, 509, 677
312101-0364	SCREW M6S6X10FZB	201, 233, 237, 287, 411, 587, 801
312101-0366	SCREW M6S6X12FZB	143, 261, 297, 303, 809
312101-0368	SCREW M6S6X16FZB	181, 189, 293, 581, 583, 809
312101-0370	SCREW M6S6X20FZB	135, 411, 435, 587, 615, 853
312101-0372	SCREW M6S6X25FZB	233, 295, 297, 509, 677
312101-0374	SCREW M6S6X30FZB	427, 603
312101-0378	SCREW M6S6X40FZB	195, 197
312101-0379	SCREW M6S6X45FZB	431, 433, 435, 611, 613, 615
312101-0380	SCREW M6S6X50FZB	237, 435, 615
312101-0381	SCREW M6S6X55FZB	767
312101-0383	SCREW M6S6X65FZB	301
312101-0384	SCREW M6S6X70FZB	411, 587
312101-0385	SCREW M6S6X75FZB	603
312101-0447	SCREW M6S8X12FZB	237
312101-0449	SCREW M6S8X16FZB	201, 285, 581, 583
312101-0451	SCREW M6S8X20FZB	189, 193, 409, 411, 427, 435, 581, 583, 585, 587, 603, 609, 615
312101-0453	SCREW M6S8X25FZB	135, 181, 191, 295, 297, 409, 425, 427, 509, 601, 605, 677
312101-0455	SCREW M6S8X30FZB	287, 497, 669, 673
312101-0457	SCREW M6S8X35FZB	409, 509, 585, 677
312101-0459	SCREW M6S8X40FZB	295, 509, 677
312101-0461	SCREW M6S8X50FZB	193
312101-0463	SCREW M6S8X60FZB	181
312101-0465	SCREW M6S8X70FZB	293, 303
312101-0467	SCREW M6S8X80FZB	143
312101-0491	SCREW M6S10X20FZB	849
312101-0493	SCREW M6S10X25FZB	67, 411, 587, 809
312101-0495	SCREW M6S10X30FZB	181, 837, 841, 843

Part No	Description	Page No
312101-0497	SCREW M6S10X35FZB	497, 669
312101-0499	SCREW M6S10X40FZB	285
312101-0500	SCREW M6S10X45FZB	841, 843
312101-0501	SCREW M6S10X50FZB	287
312101-0518	SCREW M6S10X140FZB	207
312101-0536	SCREW M6S12X30FZB	287
312101-0540	SCREW M6S12X40FZB	137, 191, 199, 287
312101-0542	SCREW M6S12X50FZB	581, 583
312101-0546	SCREW M6S12X70FZB	295
312101-0674	SCREW M6S20X50 8.8FZB	853
312104-0374	SCREW M6S6X30H8.8 FZB	411
312104-0460	SCREW M6S8X45H8.8FZB	297
312104-0465	SCREW M6S8X70H8.8 FZB	287, 303
312105-0287	SCREW M6S ISO 4017 M4X8 A280	87, 113, 321, 323, 333, 335, 337, 339, 341, 487, 489, 561, 565, 733, 753, 809
312105-0289	SCREW M6S4X10 A2 80	41
312105-0291	SCREW M6S ISO 4017 M4X12 A280	23, 255, 375, 743, 797
312105-0293	SCREW M6S ISO 4017 M4X16 A280	425, 601, 775
312105-0295	SCREW M6S ISO 4017 M4X20 A280	321, 323, 325, 329, 355, 357, 375, 405, 421, 547, 553, 639, 703
312105-0323	SCREW M6S ISO 4017 M5X8 A280	205, 223, 253, 519, 683, 771
312105-0325	SCREW M6S5X10 A2 80	41, 53, 73, 89, 95, 203, 351, 353, 439, 449, 561, 565, 619, 625, 641, 643, 645, 647, 649, 733, 743, 775
312105-0327	SCREW M6S ISO 4017 M5X12 A280	41, 97, 107, 109, 165, 167, 207, 233, 255, 339, 341, 547, 553, 753, 757, 773, 797, 821
312105-0328	SCREW M6S5X14 A2 80	439, 449, 499, 619, 625
312105-0329	SCREW M6S ISO 4017 M5X16 A280	57, 325, 329, 395, 405, 421, 775, 797, 809
312105-0331	SCREW M6S ISO 4017 M5X20 A280	31, 33, 35, 59, 61, 63, 351, 353, 375, 647, 769, 771, 821
312105-0332	SCREW M6S5X22RFR	53
312105-0333	SCREW M6S ISO 4017 M5X25 A280	351, 353
312105-0335	SCREW M6S ISO 4017 M5X30 A280	321, 323, 339, 341, 351, 353
312105-0337	SCREW M6S ISO 4014 M5X35 A280	825
312105-0339	SCREW M6S ISO 4014 M5X40 A280	223
312105-0343	SCREW M6S5X60 A2 80	339, 341
312105-0362	SCREW M6S ISO 4017 M6X8 A280	11, 71, 163, 217, 219, 227, 405, 421, 453, 455, 459, 519, 683
312105-0364	SCREW M6S6X10RFR	15, 17, 23, 41, 47, 53, 59, 61, 63, 71, 73, 77, 79, 89, 91, 95, 99, 101, 111, 113, 149, 165, 167, 205, 223, 301, 395, 405, 417, 421, 493, 495, 547, 553, 557, 581, 583, 635, 637, 641, 645, 687, 689, 703, 733, 743
312105-0366	SCREW M6S ISO 4017 M6X12 A280	11, 21, 23, 45, 53, 57, 83, 85, 87, 91, 93, 97, 99, 101, 105, 139, 141, 193, 207, 213, 255, 301, 375, 457, 463, 473, 475, 479, 483, 499, 515, 547, 553, 561, 565, 569, 571, 591, 637, 639, 647, 667, 671, 681, 687, 703, 743, 747, 757, 789, 823
312105-0367	SCREW M6S6X14RFR	53, 89, 153, 405, 421, 453, 455, 497, 581, 583, 591, 633
312105-0368	SCREW M6S ISO 4017 M6X16 A280	7, 25, 27, 41, 45, 47, 53, 57, 77, 79, 89, 95, 107, 109, 151, 165, 167, 169, 175, 207, 213, 239, 253, 255, 257, 405, 415, 421, 453, 455, 457, 463, 473, 475, 479, 483, 497, 499, 501, 509, 521, 523, 531, 533, 547, 553, 559, 561, 563, 565, 569, 571, 629, 631, 633, 637, 647, 655, 657, 669, 677, 703, 705, 707, 733, 737, 743, 747, 753, 757, 773, 775, 789, 821, 823
312105-0370	SCREW M6S ISO 4017 M6X20 A280	15, 17, 21, 41, 45, 47, 53, 73, 77, 79, 81, 87, 91, 95, 151, 153, 163, 165, 167, 169, 213, 301, 325, 329, 355, 357, 371, 373, 375, 377, 379, 381, 395, 405, 415, 417, 421, 425, 463, 475, 479, 493, 497, 507, 519, 545, 549, 551, 553, 561, 565, 591, 595, 597, 601, 655, 657, 659, 661, 663, 683, 689, 719, 729, 735, 739, 741, 747, 753, 773, 779, 781, 783, 785, 787, 791, 793, 795
312105-0371	SCREW M6S6X22RFR	53, 427, 499, 501, 603, 653, 655, 657, 831
312105-0372	SCREW M6S ISO 4017 M6X25 A280	41, 45, 49, 57, 89, 105, 111, 155, 213, 229, 325, 329, 375, 385, 389, 437, 439, 447, 449, 459, 463, 479, 497, 507, 509, 511, 515, 523, 527, 529, 533, 537, 539, 557, 591, 617, 619, 623, 625, 647, 677, 681, 753, 759, 789, 821
312105-0374	SCREW M6S ISO 4017 M6X30 A280	23, 45, 93, 155, 159, 293, 301, 415, 437, 439, 441, 447, 449, 451, 463, 473, 485, 493, 515, 523, 525, 527, 533, 535, 537, 547, 553, 609, 617, 619, 621, 623, 625, 627, 681, 691, 693, 703
312105-0376	SCREW M6S ISO 4017 M6X35 A280	15, 17, 43, 53, 95, 223, 301, 375, 405, 421, 437, 447, 493, 515, 525, 527, 529, 535, 537, 539, 561, 565, 569, 571, 581, 583, 617, 623, 647, 681, 691, 693
312105-0378	SCREW O4017 M6X40A280	149, 163, 369, 493, 521, 523, 525, 531, 533, 535, 547, 553, 569, 571, 703, 723, 725, 743
312105-0379	SCREW M6S ISO 4014 M6X45 A280	103, 301, 521, 523, 531, 533, 561, 565
312105-0380	SCREW M6S ISO 4014 M6X50 A280	15, 17, 23, 473, 475, 493, 647
312105-0381	SCREW M6S ISO 4014 M6X55 A280	239, 493
312105-0382	SCREW M6S ISO 4014 M6X60 A280	71, 81, 155, 287
312105-0383	SCREW M6S ISO 4014 M6X65 A280	637
312105-0384	SCREW M6S ISO 4014 M6X70 A280	67, 479
312105-0386	SCREW M6S ISO 4014 M6X80 A280	569, 571
312105-0388	SCREW M6S ISO 4014 M6X90 A280	435, 439, 449, 615, 619, 625
312105-0447	SCREW M6S ISO 4017 M8X12 A280	45, 81, 87, 95, 99, 101, 105, 111, 355, 357, 463, 473, 509, 677, 707, 741
312105-0449	SCREW M6S ISO 4017 M8X16 A280	15, 17, 41, 67, 83, 99, 101, 111, 139, 141, 207, 223, 293, 303, 377, 379, 381, 453, 455, 479, 483, 509, 547, 553, 563, 569, 571, 637, 647, 655, 657, 665, 677, 695, 703, 723, 725, 729, 747, 759
312105-0451	SCREW M6S ISO 4017 8X20 A280	7, 15, 17, 23, 53, 59, 61, 63, 89, 93, 159,

Part No	Description	Page No
		165, 167, 175, 405, 419, 421, 485, 497, 499, 501, 527, 529, 537, 539, 547, 553, 563, 569, 571, 581, 583, 599, 629, 653, 659, 661, 663, 669, 695, 703, 719, 729, 733, 739, 741, 743, 751, 775, 777, 779, 781, 783, 785, 787, 791, 793, 795
312105-0452	SCREW M6S8X22RFR	53, 87, 151, 375, 637, 659, 661, 759
312105-0453	SCREW M6S ISO 4017 M8X25 A280	19, 23, 41, 67, 207, 219, 301, 303, 333, 335, 337, 375, 405, 421, 463, 473, 479, 497, 509, 515, 525, 527, 535, 537, 559, 561, 565, 569, 571, 609, 629, 647, 653, 669, 677, 681, 691, 693, 695, 719, 729, 845
312105-0455	SCREW M6S ISO 4017 M8X30 A280	23, 41, 395, 405, 411, 421, 463, 473, 479, 485, 497, 525, 535, 547, 553, 559, 561, 565, 581, 583, 587, 629, 659, 661, 669, 689, 695, 703, 733, 751, 773
312105-0457	SCREW O4017 M8X35A280	87, 333, 335, 337, 355, 357, 463, 479, 521, 523, 525, 527, 529, 531, 533, 535, 537, 647, 653, 691, 693, 789
312105-0459	SCREW O4017 M8X40A280	483, 521, 531, 653
312105-0460	SCREW O4017 M8X45A280	485, 499, 515, 647, 681
312105-0461	SCREW O4017 M8X50A280	647, 689
312105-0462	SCREW M6S ISO 4014 M8X55 A280	7, 19, 485
312105-0463	SCREW M6S ISO 4014 M8X60 A280	7, 463, 473, 665, 689
312105-0464	SCREW M6S ISO 4014 M8X65 A280	19, 547, 553, 647, 663, 703
312105-0466	SCREW M6S ISO 4014 M8X75 A280	157, 333, 335, 337, 655, 657, 777
312105-0467	SCREW M6S ISO 4014 M8X80 A280	95, 647
312105-0469	SCREW M6S ISO 4014 M8X90 A280	453, 547, 553, 633, 703
312105-0471	SCREW M6S ISO 4014 M8X100 A280	453, 455, 633
312105-0473	SCREW M6S8X110RFR	139, 141
312105-0489	SCREW M6S ISO 4017 M10X16 A280	81, 743
312105-0491	SCREW M6S ISO 4017 M10X20 A280	45, 67, 95, 113, 191, 749
312105-0493	SCREW M6S ISO 4017 M10X25 A280	23, 89, 191, 207, 257, 371, 373, 375, 377, 379, 381, 425, 841, 843
312105-0495	SCREW M6S ISO 4017 M10X30 A280	257, 371, 373, 375, 377, 379, 381, 405, 421, 581, 583, 775
312105-0497	SCREW M6S ISO 4017 M10X35 A280	15, 17, 45, 257, 339, 341
312105-0499	SCREW 4017 M10X40A280	371, 373, 375, 377, 379, 381, 601
312105-0509	SCREW M6S ISO 4014 M10X90 A280	373
312105-0517	SCREW M6S ISO 4014 M10X130 A280	497, 669
312105-0532	SCREW M6S ISO 4017 M12X20 A280	99, 101
312105-0534	SCREW M6S ISO 4017 M12X25 A280	415
312105-0536	SCREW M6S ISO 4017 M12X30 A280	23, 591
312105-0538	SCREW M6S ISO 4017 M12X35 A280	207, 541
312105-0540	SCREW M6S ISO 4017 M12X40 A280	7, 19, 99, 101, 207
312105-0542	SCREW M6S ISO 4014 M12X50 A280	207, 405, 421, 581, 583
312109-0374	SCREW M6S ISO 4017 M6X30 A280	25, 637, 647, 671, 757, 789
312109-0376	SCREW M6S ISO 4017 M6X35 A280	463, 473, 479
312109-0381	SCREW M6S6X55HA480	483, 743
312109-0457	SCREW M6S ISO 4017 M8X35 A280	339, 341, 569, 571
312109-0459	SCREW M6S ISO 4017 M8X40 A280	333, 335, 337, 521, 523, 525, 527, 529, 531, 533, 535, 537, 539, 689, 691, 693
312109-0461	SCREW M6S ISO 4017 M8X50 A280	569, 571
312109-0463	SCREW M6S8X60H A4 80	293, 295, 325, 329, 355, 357, 475
312109-0499	SCREW M6S ISO 4017 M10X40 A280	207
312111-0293	SCREW MC6S4X16FZB	509, 677
312111-0297	SCREW MC6S4X25FZB	143
312111-0323	SCREW MC6S5X8FZB	805
312111-0325	SCREW MC6S5X10FZB	809
312111-0327	SCREW MC6S5X12FZB	809
312111-0329	SCREW MC6S5X16FZB	189, 413, 589, 809
312111-0331	SCREW MC6S5X20FZB	769
312111-0333	SCREW MC6S5X25FZB	183, 185, 769, 779, 781, 783, 785, 787, 791, 793, 795
312111-0335	SCREW MC6S5X30FZB	295, 789, 801
312111-0337	SCREW MC6S5X35FZB	795
312111-0343	SCREW MC6S5X60FZB	183
312111-0345	SCREW MC6S5X70FZB	187
312111-0364	SCREW MC6S6X10FZB	789
312111-0368	SCREW MC6S6X16FZB	183, 185, 295, 505, 675
312111-0370	SCREW MC6S6X20FZB	411, 413, 429, 587, 589, 607
312111-0371	SCREW MC6S6X22FZB	769
312111-0372	SCREW MC6S6X25FZB	809
312111-0374	SCREW MC6S6X30FZB	289
312111-0390	SCREW MC6S6X100FZB	831
312111-0449	SCREW MC6S8X16FZB	769
312111-0451	SCREW MC6S8X20FZB	287, 429, 503, 607, 673
312111-0453	SCREW MC6S8X25FZB	429, 503, 607, 673
312111-0455	SCREW MC6S8X30FZB	303, 673
312111-0457	SCREW MC6S8X35FZB	503, 673
312111-0459	SCREW MC6S8X40FZB	133
312111-0460	SCREW MC6S8X45FZB	603
312111-0467	SCREW MC6S8X80FZB	777
312111-0491	SCREW MC6S10X20FZB	429, 607
312111-0492	SCREW MC6S10X22FZB	289
312111-0497	SCREW MC6S10X35FZB	289
312111-0499	SCREW MC6S10X40FZB	289
312111-0501	SCREW MC6S10X50FZB	289
312111-0504	SCREW MMC6S10X65FZB	289
312111-0506	SCREW MC6S10X75FZB	289
312115-0224	SCREW S 3X10 A4 80	47, 77
312115-0228	SCREW MC6S ISO 4762 M3X16 A280	59, 61, 63, 753

Part No	Description	Page No
312115-0232	SCREW 3X25 A4 80	93
312115-0287	SCREW MC6S ISO 4762 M4X8 A280	227, 797
312115-0289	SCREW S4X10 A4 80	333, 335, 337
312115-0291	SCREW MC6S ISO 4762 M4X12 A280	411, 587
312115-0295	SCREW MC6S ISO 4762 M4X20 A280	93, 385, 389, 411, 587
312115-0297	SCREW MC6S ISO 4762 M4X25 A280	385, 389, 393
312115-0303	SCREW MC6S ISO 4762 M4X40 A280	339, 341
312115-0305	SCREW MC6S ISO 4762 M4X50 A280	59, 61, 63
312115-0323	SCREW MC6S ISO 4762 M5X8 A280	547, 553, 557, 819
312115-0325	SCREW 5X10 A4 80	95, 165, 167, 255, 263, 557
312115-0327	SCREW MC6S ISO 4762 M5X12 A280	165, 167
312115-0328	SCREW 5X14 A4 80	89, 93, 99, 101
312115-0329	SCREW MC6S ISO 4762 M5X16 A280	53, 59, 61, 63, 73, 89, 165, 321, 323, 351, 353, 641, 645, 825
312115-0331	SCREW MC6S ISO 4762 M5X20 A280	81, 85, 165, 167, 355, 357, 359, 361, 363, 365
312115-0332	SCREW 5X22 A4 80	95
312115-0333	SCREW MC6S ISO 4762 M5X25 A280	217, 219
312115-0339	SCREW MC6S ISO 4762 M5X40 A280	825
312115-0340	SCREW MC6S ISO 4762 M5X45 A280	351, 353, 809
312115-0364	SCREW 6X10 A4 80	47, 77, 115, 155, 207
312115-0366	SCREW MC6S ISO 4762 M6X12 A280	7, 165, 167, 219, 315, 319, 355, 357, 473, 727, 737, 759
312115-0368	SCREW MC6S ISO 4762 M6X16 A280	31, 33, 35, 205, 315, 319, 453, 455, 569, 571, 591, 633, 743, 751, 803
312115-0370	SCREW MC6S ISO 4762 M6X20 A280	155, 383, 387, 393, 479, 777, 789, 825
312115-0372	SCREW MC6S ISO 4762 M6X25 A280	211, 385, 389, 475, 731, 789
312115-0374	SCREW MC6S ISO O4762 M6X30 A280	361, 365, 383, 387, 391, 463, 473, 475, 479
312115-0376	SCREW MC6S ISO 4762 M6X35 A280	301, 789
312115-0378	SCREW MC6S ISO 4762 M6X40 A280	207
312115-0380	SCREW MC6S ISO 4762 M6X50 A280	463
312115-0382	SCREW MC6S ISO 4762 M6X60 A280	103
312115-0449	SCREW MC6S ISO 4762 M8X16 A280	315, 319
312115-0451	SCREW MC6S ISO 4762 M8X20 A280	113, 207, 503, 673, 823
312115-0453	SCREW MC6S ISO 4762 M8X25 A280	293, 503, 673, 841, 843
312115-0455	SCREW MC6S ISO 4762 M8X30 A280	27, 165, 333, 335, 337, 339, 341, 547, 553
312115-0461	SCREW MC6S ISO 4762 M8X50 A280	325, 329, 361, 365
312115-0467	SCREW MC6S ISO 4762 M8X80 A280	95
312115-0495	SCREW MC6S ISO 4762 M10X30 A280	775
312115-0501	SCREW MC6S ISO 4762 M10X50 A280	207
312115-0503	SCREW MC6S ISO 4762 M10X60 A280	207
312121-0228	SLOTTED HEMCS3X16FZB	805, 809
312121-0230	SLOTTED HEMCS3X20FZB	201, 809
312121-0285	SLOTTED HEMCS4X6FZB	143, 289, 293
312121-0287	SLOTTED HEMCS4X8FZB	233, 237, 303, 581, 583
312121-0291	SLOTTED HEMCS4X12FZB	193
312121-0293	SLOTTED HEMCS4X16FZB	201
312121-0321	SLOTTED HEMCS5X6FZB	195, 197, 809
312121-0323	SLOTTED HEMCS5X8FZB	227
312125-0220	SLOTTED HEMCS3X6RFR	23, 53, 193, 224, 233, 253, 265, 467, 469, 471, 651, 657, 741
312125-0222	SLOTTED CHEESE HEAD ISO 1207 M3X8 RFR	165, 647, 773
312125-0224	SLOTTED HEMCS3X10RFR	219
312125-0228	SLOTTED CHEESE HEAD ISO 1207 M3X16 RFR	411, 475, 587, 655, 657, 689, 759, 805, 823
312125-0230	SLOTTED CHEESE HEAD ISO 1207 M3X20 RFR	91, 95, 463, 479, 499, 549, 553
312125-0232	SLOTTED CHEESE HEAD ISO 1207 M3X25 RFR	321, 323, 689
312125-0234	SLOTTED CHEESE HEAD ISO 1207 M3X30 RFR	805
312125-0285	SLOTTED HEMCS4X6RFR	25, 49, 53, 81, 153, 257, 321, 323, 325, 329, 385, 389, 395, 569, 571, 629, 639, 743, 759, 789
312125-0287	SLOTTED CHEESE HEAD ISO 1207 M4X8 RFR	205, 315, 319, 361, 365, 375, 405, 411, 421, 457, 459, 463, 473, 483, 549, 553, 581, 583, 587, 703, 723, 725, 727, 743, 757, 759
312125-0289	SLOTTED HEMCS4X10RFR	569, 571, 733
312125-0291	SLOTTED CHEESE HEAD ISO 1207 M4X12 RFR	93, 265, 405, 421, 515, 549, 553, 581, 583, 681, 703, 741
312125-0295	SLOTTED CHEESE HEAD ISO 1207 M4X20 RFR	23
312125-0323	SLOTTED CHEESE HEAD ISO 1207 M5X8 RFR	87, 215, 233, 405, 421, 751, 775, 805
312125-0327	SLOTTED CHEESE HEAD ISO 1207 M5X12 RFR	41, 51
312125-0329	SLOTTED CHEESE HEAD ISO 1207 M5X16 RFR	747, 773
312125-0331	SLOTTED CHEESE HEAD ISO 1207 M5X20 RFR	87
312125-0333	SLOTTED CHEESE HEAD ISO 1207 M5X25 RFR	719, 749, 751
312125-0364	SLOTTED HEMCS6X10RFR	87
312125-0370	SLOTTED CHEESE HEAD ISO 1207 M6X20 RFR	163
312125-0372	SLOTTED CHEESE HEAD ISO 1207 M6X25 RFR	831
312125-0376	SLOTTED CHEESE HEAD ISO 1207 M6X35 RFR	211
312125-0378	SLOTTED CHEESE HEAD ISO 1207 M6X40 RFR	75
312125-0447	SLOTTED CHEESE HEAD ISO 1207 M8X12 RFR	733
312132-0323	SLOTTED PAN HEAD ISO 1580 M5X8 MSGFN	809
312141-0295	SLOTTED HEMFS4X20FZB	303
312141-0325	SLOTTED HEMFS5X10FZB	237
312141-0366	SLOTTED HEMFS6X12FZB	817
312145-0222	SLOTTED HEMFS3X8RFR	343, 345, 347
312145-0228	SLOTTED HEMFS3X16RFR	23

Part No	Description	Page No
312145-0238	SLOTTED HEMFS3X40RFR	361, 365, 393, 741
312145-0285	SLOTTED HEMFS4X6RFR	255, 333, 335, 337, 339, 341, 819
312145-0287	SLOTTED HEMFS4X8RFR	817, 823
312145-0289	SLOTTED HEMFS4X10RFR	343, 345, 347, 349, 809, 825
312145-0291	SLOTTED HEMFS4X12RFR	817, 825
312145-0292	SLOTTED HEMFS4X14RFR	823
312145-0297	SLOTTED HEMFS4X25RFR	333, 335, 337
312145-0305	SLOTTED HEMFS4X50RFR	321, 323
312145-0323	SLOTTED HEMFS5X8RFR	773, 817
312145-0325	SLOTTED HEMFS5X10RFR	255
312145-0327	SLOTTED HEMFS5X12RFR	255, 809, 825
312145-0329	SLOTTED HEMFS5X16RFR	809, 825
312145-0331	SLOTTED HEMFS5X20RFR	825
312145-0335	SLOTTED HEMFS5X30RFR	809
312145-0364	SLOTTED HEMFS6X10RFR	731
312145-0366	SLOTTED HEMFS6X12RFR	193, 371, 373, 375
312145-0368	SLOTTED HEMFS6X16RFR	99, 101
312145-0378	SLOTTED HEMFS6X40RFR	419, 599
312145-0449	SLOTTED HEMFS8X16RFR	151
312151-0368	SCREW MF6S6X16FZB	809
312151-0384	SCREW MF6S6X70FZB	809
312151-0451	SCREW MF6S8X20FZB	429, 607
312155-0289	SCREW MF6S4X10RFR	297
312155-0291	SCREW MF6S DIN 7991 M4X12 A280	561, 565
312155-0295	SCREW MF6S DIN 7991 M4X20 A280	461, 569, 571, 629, 639
312155-0297	SCREW MF6S DIN 7991 M4X25 A280	549, 553, 561, 565, 703
312155-0301	SCREW MF6S4X35RFR	339, 341
312155-0327	SCREW MF6S DIN 7991 M5X12 A280	207, 773, 775
312155-0329	SCREW MF6S DIN 7991 M5X16 A280	11, 89, 99, 101, 789, 805
312155-0333	SCREW MF6S DIN 7991 M5X25 A280	789
312155-0335	SCREW MF6S DIN 7991 M5X30 A280	641, 643, 645, 647
312155-0364	SCREW MF6S6X10RFR	47, 77, 79, 527, 529, 537, 539
312155-0366	SCREW MF6S DIN 7991 M6X12 A280	163, 207, 405, 421, 463, 473, 479
312155-0368	SCREW MF6S DIN7991 M6X16 A280	207, 523, 525, 527, 533, 535, 537, 591, 635, 637, 691, 693, 777
312155-0370	SCREW MF6S DIN 7991 M6X20 A280	47, 77, 79, 191, 207, 453, 455, 633, 635, 703, 795
312155-0372	SCREW MF6S DIN 7991 M6X25 A280	193, 351, 353, 481, 643, 645
312155-0374	SCREW MF6S6X30RFR	315, 319
312155-0376	SCREW MF6S DIN 7991 M6X35 A280	463, 475, 479, 525, 535
312155-0378	SCREW MF6S DIN 7991 M6X40 A280	523, 533
312155-0382	SCREW MF6S6X60 A2 70	325, 329
312155-0449	SCREW MF6S DIN 7991 M8X16 A280	85, 811
312155-0451	SCREW MF6S8X20RFR	207, 775
312155-0453	SCREW MF6S DIN 7991 M8X25 A280	771
312155-0499	SCREW MF6S DIN 7991 M10X40 A280	525, 535, 691, 693
312155-0532	SCREW MF6S12X20RFR	59, 61, 63
312180-0447	HEX. SOCKET HEAD SHOULD. ISO 7379 M6X12	189
312180-0489	HEX. SOCKET HEAD SHOULD. ISO 7379 M8X16	295, 303
312180-0493	HEX. SOCKET HEAD SHOULD. ISO 7379 M8X25	57
312180-0499	HEX. SOCKET HEAD SHOULD. ISO 7379 M8X40	321, 323
312180-0530	HEX. S0CKET HEAD SHOULD. ISO 7379 M10X16	95, 409
312303-0374	STUD SCREWMPS 6X25 RFR	777
312303-0497	STUD SCREWMPS 10X25 RFR	45
312306-0287	STOP SCREW P6SS4X8FZB	809
312306-0360	STOP SCREW P6SS6X6FZB	819
312306-0366	STOP SCREW P6SS6X12FZB	813, 815
312306-0443	STOP SCREW P6SS8X8FZB	673, 709
312311-0292	STOP SCREW T6SS4X14FZB	741
312311-0370	SET SCREW FULL DOGPOINT ISO 4028 M6X20	431, 433, 611, 613
312316-0283	STOP SCREW SK6SS4X4FZB	303, 435, 615, 737
312316-0284	STOP SCREW SK6SS4X5FZB	609
312316-0285	STOP SCREW SK6SS4X6FZB	769
312316-0287	STOP SCREW SK6SS4X8FZB	509, 677
312316-0291	STOP SCREW SK6SS4X12FZB	737
312316-0320	STOP SCREW SK6SS5X5FZB	95, 503
312316-0323	STOP SCREW SK6SS5X8FZB	503, 823
312316-0360	STOP SCREW SK6SS6X6FZB	805
312316-0362	STOP SCREW SK6SS6X8FZB	497, 509, 669, 677, 823
312316-0372	STOP SCREW SK6SS6X25FZB	509, 677
312316-0443	STOP SCREW SK6SS8X8FZB	673, 709
312318-0283	SET SCREW CUP POINT ISO 4029 M4X4 RFR	7, 723, 725, 753
312318-0285	SET SCREW CUP POINT ISO 4029 M4X6 RFR	7, 343, 345, 347, 349, 737, 747
312318-0289	SET SCREW CUP POINT ISO 4029 M4X10 RFR	377, 739
312318-0291	SET SCREW CUP POINT ISO 4029 M4X12 RFR	7
312318-0321	STOP SCREW SK6SS5X6RFR	361, 365, 809
312318-0323	SET SCREW CUP POINT ISO 4029 M5X8 RFR	395, 779, 781, 783, 785, 787, 791, 793, 795
312318-0325	STOP SCREW SK6SS5X10RFR	57
312318-0327	SET SCREW CUP POINT ISO 4029 M5X12 RFR	89
312318-0360	STOP SCREW SK6SS6X6RFR	31, 33, 35, 297
312318-0362	SET SCREW CUP POINT ISO 4029 M6X8 RFR	41, 93, 257, 475, 647, 653, 659, 661, 689, 775, 789
312318-0364	STOP SCREW SK6SS6X10RFR	135, 719, 729, 739
312318-0366	SET SCREW CUP POINT ISO 4029 M6X12 RFR	473
312318-0368	SET SCREW CUP POINT ISO 4029 M6X16 RFR	93, 561, 565, 803

Part No	Description	Page No
312318-0370	SET SCREW CUP POINT ISO 4029 M6X20 RFR	315, 319, 515, 681
312318-0443	SET SCREW CUP POINT ISO 4029 M8X8 RFR	475, 515, 681
312318-0445	STOP SCREW SK6SS8X10RFR	647
312318-0447	SET SCREW CUP POINT ISO 4029 M8X12 RFR	207
312318-0449	SET SCREW COP POINT ISO 4029 M8X16 RFR	515, 681
312318-0451	SET SCREW CUP POINT ISO 4029 M8X20 RFR	573, 709
312318-0455	STOP SCREW SK6SS8X30RFR	527, 537
312318-0459	SET SCREW CUP POINT ISO 4029 M8X40 RFR	325, 329
312318-0499	SET SCREW CUP POINT ISO 4029 M10X40 RFR	325, 329
312502-0120	DRIVE SCREW ROUND HEAD SMS 1549 KDS 0X5	99, 101, 219, 225, 733
312502-0171	DRIVE SCREW ROUND HEAD SMS 1549 KDS 2X6	183, 185
312601-0312	NUT M6M4FZB	191, 201, 809
312601-0314	NUT M6M5FZB	187, 227, 809
312601-0316	NUT M6M6FZB	181, 191, 201, 295, 297, 435, 509, 581, 583, 603, 615, 677, 769, 809, 841, 843
312601-0318	NUT M6M8FZB	135, 143, 181, 191, 297, 409, 435, 585, 615
312601-0320	NUT M6M10FZB	287, 837, 841, 843
312601-0322	NUT M6M12FZB	191, 283, 287, 295, 509, 581, 583, 677
312601-0324	NUT M6M16FZB	305
312605-0310	NUT M6M3RFR	23, 91, 95, 165, 167, 253, 741, 771, 805
312605-0310	NUTS,HEXAGON,M3	689
312605-0312	NUT M6M4RFR	7, 15, 17, 25, 49, 55, 121, 153, 165, 167, 255, 321, 323, 355, 357, 407, 423, 737, 803, 805
312605-0312	NUTS,HEXAGON,M4	581, 583
312605-0314	NUT M6M5RFR	25, 31, 33, 35, 41, 57, 85, 165, 167, 207, 217, 219, 263, 317, 407, 423, 741, 773, 775, 789, 797
312605-0314	NUTS,HEXAGON,M5	647
312605-0316	NUT M6M6RFR	7, 15, 17, 21, 41, 45, 49, 55, 67, 73, 75, 81, 87, 93, 95, 149, 155, 159, 163, 165, 167, 169, 175, 193, 207, 213, 225, 229, 239, 257, 407, 423, 443, 445, 453, 455, 463, 473, 479, 481, 483, 485, 515, 549, 553, 561, 563, 565, 569, 571, 723, 725, 743, 747, 751, 757, 771, 789, 809, 825
312605-0316	NUTS,HEXAGON,M6	581, 583, 591, 633, 635, 637, 641, 643, 645, 647, 649, 663, 671, 681, 687, 703
312605-0318	NUT M6M8RFR	27, 41, 57, 91, 99, 101, 133, 139, 141, 151, 157, 163, 293, 301, 303, 315, 319, 325, 329, 333, 335, 337, 339, 341, 355, 357, 377, 419, 453, 455, 475, 491, 509, 513, 515, 517, 519, 521, 523, 525, 527, 529, 531, 533, 535, 537, 539, 549, 553, 569, 571, 741, 743, 747, 751, 757, 759, 773, 797
312605-0318	NUTS,HEXAGON,M8	599, 609, 629, 639, 647, 659, 663, 665, 677, 679, 681, 683, 685, 689, 691, 693, 695, 703, 705, 707, 841, 843
312605-0320	NUT M6M10RFR	23, 41, 45, 91, 95, 155, 191, 207, 339, 341, 453, 455, 463, 475, 721, 743
312605-0320	NUTS,HEXAGON,M10	633, 637, 647, 653, 659, 661, 689, 841, 843
312605-0322	NUT M6M12RFR	27, 257, 407, 419, 423, 463, 473, 479, 569, 571
312605-0322	NUTS,HEXAGON,M12	599, 631, 637
312605-0324	NUT M6M16RFR	561, 565
312605-0324	NUTS,HEXAGON,M16	689, 705, 707
312621-0318	NUT ML6M8FZB	303
312621-0324	NUT ML6M16FZB	305
312625-0316	NUT M 6	475
312625-0318	NUT M 8	569, 571
312631-0321	NUT TER M6M 10X1,25	459
312631-0324	NUT M6M16X1,5FZB	431, 433
312631-0324	NUTS,HEXAGON,M16X1,5	609, 611, 613
312635-0320	NUT 10X1 RFR	325, 329, 333, 335, 337
312705-0316	CAP NUT MHM 6 A2	113, 789
312715-0114	WING NUT MVM-K 5 A2	193
312805-0100	ROUND NUT KM0	325, 329
312805-0101	ROUND NUT KM1	325, 329
312805-0102	ROUND NUT KM2	831
312805-0103	ROUND NUT KM3	831
312805-0107	NUTS,ROUND,WITH SLOTS,M35X1,5	675
312805-0107	ROUND NUT KM7	505
312805-0108	NUTS,ROUND,WITH SLOTS,M40X1,5	673
312805-0108	ROUND NUT KM8	503
312805-0110	NUTS,ROUND,WITH SLOTS,M50X1,5	607
312805-0110	ROUND NUT KM10	429
312805-0114	NUTS,ROUND,WITH SLOTS,M70X20	673
312805-0114	ROUND NUT KM14	503
312810-0310	LOCK NUT 3FZB	165
312810-0320	LOCK NUT 10FZB	497, 669
312810-0322	LOCK NUT 12FZB	295
312810-0324	LOCK NUT 16FZB	295
312811-0316	LOCK NUT M6RFR	73, 301, 809
312811-0318	LOCK NUT M8RFR	321, 323, 327, 331, 629, 771
312811-0322	LOCK NUT M12RFR	305
312811-0324	LOCK NUT M16RFR	293
312812-0314	LOCK NUT A2-M5RFR	89, 99, 101, 789, 819
312812-0316	LOCK NUT A2-M6RFR	71, 73, 81, 163, 191, 395, 479, 561, 565, 767, 773
312812-0316	NUTS,HEXAGON,LOCK,WITH NYLON,M6	655, 657
312812-0318	LOCK NUT A2-M8RFR	395, 475
312812-0320	LOCK NUT A2-M10RFR	287
312902-0318	NUT M6M8VRFR	301, 303, 519
312902-0318	NUTS,HEXAGON,LEFT HAND THREAD,M8	683
312910-0111	THREADED I M4X2,0D	831
312910-0112	THREADED I M4X2,5D	573, 709

Part No	Description	Page No
312910-0113	THREADED I M5X1,0D	575
312910-0114	THREADED I M5X1,5D	831
312910-0115	THREADED I M5X2,0D	831
312910-0117	THREADED INSERTS M6X1,0D	709
312910-0118	THREADED I M6X1,5D	573, 709
312910-0119	THREADED I M6X2,0D	573, 575
312910-0119	THREADED INSERTS M6X2,0D	709, 711
312910-0126	THREADED I M8X1,5D	505, 673, 675
312910-0127	THREADED I M8X2,0D	573
312910-0127	THREADED INSERTS M8X2,0D	709
312911-0101	THREADED I M3X1,0D	831
312911-0103	THREADED I M3X2,0D	397
312911-0109	THREADED I M4X1,0D	397
312911-0111	THREADED I M4X2,0D	397
312911-0113	THREADED I M5X1,0D	397, 831
312911-0114	THREADED I M5X1,5D	397
312911-0115	THREADED I M5X2,0D	831
312911-0117	THREADED I M6X1,0D	397
312911-0118	THREADED I M6X1,5D	273, 397
312911-0119	THREADED I M6X2,0D	269
312911-0125	THREADED I M8X1,0D	269
312911-0126	THREADED I M8X1,5D	609, 709
312923-0131	NUT FO M6X15,0RFR	573
312923-0131	NUTS,BLIND RIVET M6X15	709
31390-0100	ELEMENT	439, 449, 619, 625
31390-0110	ELEMENT	439, 449, 619, 625
31417-0000	LINK	751
31418-0000	SHAFT	751
31419-0000	SHAFT	751
31420-0000	WASHER	751
31423-0000	MOUNTING LUG	751
31424-0000	ROLLER BRACKET	751
315101-0124	WASHER BRB3,2X6FZB	201
315101-0136	WASHER BRB4,3X8FZB	189, 193, 201, 237, 581, 583, 801, 805, 809
315101-0146	WASHER BRB5,3X10FZB	189, 237, 435, 615, 769, 799, 809
315101-0153	WASHER BRB6,4X12FZB	135, 143, 189, 191, 195, 197, 201, 233, 237, 261, 295, 303, 411, 431, 433, 435, 459, 509, 581, 583, 587, 611, 613, 615, 677, 767, 769, 809, 841, 843, 853
315101-0165	WASHER BRB8,4X16FZB	135, 143, 191, 193, 201, 287, 293, 297, 409, 411, 425, 427, 435, 497, 503, 509, 581, 583, 585, 587, 601, 603, 605, 609, 615, 669, 673, 677, 769
315101-0173	WASHER BRB10,5X22FZB	191, 285, 287, 411, 587, 809, 841, 843
315101-0178	WASHER BRB13X24FZB	137, 191, 199, 287, 295, 509, 677
315101-0186	WASHER BRB17X30FZB	295, 609
315102-0192	WASHER BRFB21X36FZB	853
315103-0195	WASHER BRB23X40MSGFN	257
315105-0124	WASHER BRB3,2X6RFR	59, 61, 63, 91, 95, 165, 167, 193, 233, 411, 463, 467, 475, 479, 499, 549, 553, 753, 759, 771, 773, 805
315105-0124	WASHERS,PLAIN ROUND 3,2X6	587, 657, 689
315105-0136	WASHER BRB4,3X8RFR	25, 43, 49, 55, 59, 61, 63, 93, 113, 153, 165, 167, 321, 323, 333, 335, 337, 339, 341, 355, 357, 377, 407, 411, 423, 425, 487, 489, 549, 553, 727, 733, 743, 753, 759, 775, 803, 809
315105-0136	WASHERS,PLAIN ROUND 4,3X8	581, 583, 587, 601, 639, 703
315105-0146	WASHER BRB5,3X10RFR	7, 25, 41, 55, 59, 61, 63, 87, 89, 93, 95, 97, 99, 101, 107, 109, 165, 167, 193, 225, 255, 339, 341, 351, 353, 395, 407, 423, 499, 519, 549, 553, 557, 561, 565, 733, 737, 743, 753, 757, 759, 771, 773, 775, 789, 797, 805, 809, 821, 825
315105-0146	WASHERS,PLAIN ROUND 5,3X10	647, 683
315105-0153	WASHER BRB6,4X12RFR	11, 15, 17, 21, 23, 25, 41, 45, 47, 49, 55, 71, 77, 79, 81, 89, 93, 95, 97, 105, 111, 113, 139, 141, 151, 153, 155, 163, 165, 167, 169, 175, 193, 208, 211, 213, 217, 219, 225, 227, 239, 253, 255, 257, 293, 297, 301, 327, 331, 355, 357, 369, 377, 395, 407, 415, 417, 423, 439, 443, 445, 449, 453, 455, 463, 473, 479, 481, 483, 485, 493, 495, 497, 499, 501, 509, 513, 515, 517, 519, 521, 523, 525, 527, 529, 531, 533, 535, 537, 539, 543, 545, 547, 549, 551, 553, 557, 561, 563, 565, 569, 571, 719, 723, 725, 729, 735, 737, 739, 741, 743, 747, 751, 753, 757, 759, 773, 775, 777, 779, 781, 783, 785, 787, 791, 793, 795, 803, 809, 821, 823, 825
315105-0153	WASHERS,PLAIN ROUND 6,4X12	581, 583, 591, 595, 597, 619, 625, 629, 633, 637, 641, 643, 645, 647, 649, 653, 655, 657, 659, 661, 663, 667, 671, 677, 679, 681, 683, 685, 691, 693, 703, 705, 707
315105-0156	WASHER BRB6,7X14RFR	67, 297
315105-0165	WASHER BRB8,4X16RFR	7, 15, 17, 23, 41, 45, 55, 57, 67, 89, 93, 99, 101, 105, 111, 113, 139, 141, 151, 165, 167, 175, 209, 219, 301, 303, 315, 319, 327, 331, 333, 335, 337, 339, 341, 355, 357, 377, 395, 407, 419, 423, 425, 453, 455, 465, 473, 475, 479, 483, 485, 497, 499, 503, 509, 515, 521, 523, 525, 527, 529, 531, 533, 535, 537, 539, 541, 549, 553, 561, 563, 565, 569, 571, 719, 723, 725, 727, 729, 733, 741, 743, 747, 751, 757, 759, 775, 777, 779, 781, 783, 785, 787, 791, 793, 795, 797, 823
315105-0165	WASHERS,PLAIN ROUND 8,4X16	581, 583, 599, 601, 629, 633, 637, 647, 653, 655, 657, 659, 661, 663, 665, 669, 677, 681, 691, 693, 695, 703, 705, 707, 841, 843
315105-0173	WASHER BRB10,5X22RFR	15, 17, 23, 41, 45, 57, 91, 113, 155, 207, 257, 339, 341, 377, 407, 423, 425, 453, 455, 465, 475, 525, 535, 541, 721, 745, 749, 751, 771, 775, 789, 821
315105-0173	WASHERS,PLAIN ROUND 10,5X22	581, 583, 601, 629, 633, 637, 647, 653, 659, 661, 689, 691, 693, 697, 841, 843

Part No	Description	Page No
315105-0176	WASHER BRB12X22RFR	377
315105-0178	WASHER BRB13X24RFR	7, 19, 23, 407, 415, 423, 541
315105-0178	WASHERS,PLAIN ROUND 13X24	581, 583, 591, 637
315105-0186	WASHER BRB17X30RFR	561, 565
315105-0192	WASHER BRB21X36RFR	27
315111-0153	WASHER TBRB6,4X12FZB	435, 615, 801
315111-0165	WASHER TBRB8,4X16FZB	181, 189, 409, 509, 585, 677, 733
315111-0178	WASHER TBRB13X24FZB	581, 583
315111-0179	WASHER	187
315115-0153	WASHER TBRB6,4X12RFR	89, 407, 415, 423, 425, 427, 439, 443, 445, 449, 457, 465, 473, 475, 479, 497, 515, 521, 523, 525, 527, 529, 531, 533, 535, 537, 539, 543, 545, 549, 553, 557, 559, 561, 563, 565, 569, 571, 591, 601, 603, 609, 619, 625, 631, 635, 637, 639, 641, 643, 645, 647, 649, 669, 681, 689, 699, 701, 703, 705, 759, 789, 821
315115-0165	WASHER TBRB8,4X16RFR	7, 19, 159, 165, 333, 335, 337, 407, 423, 465, 473, 479, 483, 485, 497, 509, 515, 521, 523, 525, 527, 529, 531, 533, 535, 537, 539, 549, 555, 569, 571, 609, 629, 637, 647, 653, 663, 669, 677, 681, 689, 691, 693, 695, 703, 731
315115-0171	WASHER TBRB10X18RFR	315, 319, 655, 657
315115-0173	WASHER B 10,5X22 RFR	321, 323, 475, 497
315115-0178	WASHER TBRB13X24RFR	99, 101, 209, 407, 423, 631
315121-0153	WASHER TBRSB6,4X22FZB	91, 193, 747, 789
315121-0165	WASHER TBRSB8,4X26FZB	95, 293, 303, 409, 585, 733, 745
315125-0153	WASHER SB 6,4X22X4 RFR	153, 209, 483, 795
315125-0165	WASHER SB 8,4X26X5 RFR	225
315125-0173	WASHERS,PLAIN ROUND,CHAMFERED 10,5X28X6	669
315202-0101	O-RING 3,1X1,6	385, 389, 393, 397
315202-0102	O-RING 4,1X1,6	393
315202-0104	O-RING 6,1X1,6	385, 389, 393
315202-0106	O-RING 8,1X1,6	415
315202-0111	O-RING 13,1X1,6	359, 361, 363, 365, 391, 393
315202-0114	O-RING 16,1X1,6	315, 319, 393
315202-0119	O-RING 25,1X1,6	45
315202-0203	O-RING 4,3X2,4	385, 389
315202-0206	O-RING 7,3X2,4	139, 141, 391
315202-0207	O-RING 8,3X2,4	359, 361, 363, 365, 391, 393
315202-0208	O-RING 9,3X2,4	315, 319, 393
315202-0211	O-RING 13,3X2,4	171, 173, 177, 179, 231, 259
315202-0212	O-RING 14,3X2,4	361, 365, 391, 393
315202-0214	O-RING 17,3X2,4	415
315202-0216	O-RING 22,2X3	175, 257
315202-0217	O-RING 24,2X3	509
315202-0217	O-RINGS 24,2X3	677
315202-0218	O-RING 26,2X3	797
315202-0220	O-RING 32,2X3	415
315202-0224	O-RING 42,2X3	799
315202-0224	O-RINGS 42,2X3	839
315202-0226	O-RING 44,2X5,7	415
315202-0226	O-RINGS 44,2X5,7	593
315202-0229	O-RING 59,2X5,7	407, 423
315202-0229	O-RINGS 59,2X5,7	581, 583
315202-0230	O-RINGS 64,2X5,7	593
315202-0244	O-RING 134,3X5,7	49
315202-0265	O-RING 12,3X2,4	369
315202-0301	O-RING 49,5X3	119, 417, 799
315202-0301	O-RINGS 49,5X3	595, 597
315202-0302	O-RING 54,5X3	415
315202-0303	O-RING 59,5X3	415
315202-0304	O-RING 64,5X3	799
315202-0305	O-RING 69,5X3	799
315202-0305	O-RINGS 69,5X3	609
315202-0309	O-RING 89,5X3	427, 797
315202-0309	O-RINGS 89,5X3	603
315202-0311	O-RING 99,5X3	497
315202-0311	O-RINGS 99,5X3	603, 669
315202-0316	O-RING 124,5X3	503
315202-0316	O-RINGS 124,5X3	673
315202-0317	O-RING 129,5X3	51
315202-0500	O-RING ,42X1,53	269
315202-0501	O-RING 2,90X1,78	269
315202-0612	O-RING 75,80X3,53	269
315202-0702	O-RING 12,42X1,78	393
315204-0109	O-RING 11,1X1,6VITON	89
315204-0110	O-RING 1X1,6 VITON	47, 77, 79
315204-0111	O-RING 1X1,6 VITON	73
315204-0116	O-RING 18,1X1,6VITON	395
315204-0208	O-RING 9,3X2,4VITON	107, 109
315204-0209	O-RING 3X2,4 VITON	99, 101
315204-0213	O-RING 15,3X2,4VITON	49
315204-0215	O-RING 19,2X3VITON	119
315204-0217	O-RING 24,2X3VITON	29, 117
315204-0221	O-RING 34,2X3VITON	89
315204-0222	O-RING 36,2X3VITON	45, 47, 71, 77
315204-0223	O-RING 39,39,2X3VITON	45
315204-0302	O-RING 54,5X3VITON	45, 47, 77, 79
315204-0304	O-RING 64,5X3 VITON	45

Part No	Description	Page No
315204-0310	O-RING 5X3 VITON	89
315204-0324	O-RING164,3X5,7 VITON	103
315211-0103	SEALING WASHER	159
315220-0121	SEAL RING V-14S	789
315220-0175	SEAL RING V-35S	475, 509, 677
315220-0198	SEAL RING V-50S	285
315221-0170	SEALING RINGS,TYPE A 30X52X7	609
315221-0171	SEAL RING CB30X62X7	503, 505
315221-0171	SEALING RINGS,TYPE A 30X62X7	673, 675
315221-0197	SEAL RING CB48X72X8	285
315221-0200	SEAL RING CB50X72X8	427
315221-0200	SEALING RINGS,TYPE A 50X72X8	603
315221-0221	SEAL RING CB70X90X10	289
315226-0196	SEAL RING RB48X65X4,5	377
315226-0200	SEAL RING RB50X70X5,5	427
315226-0200	SEALING RINGS,TYPE RB"GAMMA RI"50X70X4,5	603
315230-0157	SEAL RING G12X16X3	315, 319
315233-0109	PLAIN ROUND,NYLON R1/8"	615, 669
315233-0109	SEAL RING R1/8"	107, 109, 195, 197, 435, 497
315233-0110	PLAIN ROUND,NYLON R1/4"	615, 669
315233-0110	SEAL RING R1/4"	71, 131, 195, 197, 219, 233, 241, 243, 245, 247, 249, 251, 369, 435, 461, 497
315233-0111	SEAL RING R3/8"	143, 219
315233-0113	SEAL RING R1/2"	9, 45, 131, 217, 219, 225, 234, 239, 241, 243, 245, 247, 249, 251
315234-0109	PLAIN ROUND,COPPER R1/8",M10	619, 625
315234-0109	SEAL RING R1/8"	439, 449
315234-0110	PLAIN ROUND,COPPER R1/4"	589
315234-0110	SEAL RING R1/4"	81, 361, 365, 413
315234-0113	PLAIN ROUND,COPPER R1/2",M20	589
315234-0113	SEAL RING R1/2"	229, 233, 413
315237-0109	SEAL RING 1/8"	23
315250-0101	GASKET 32/25	45, 111
315250-0103	GASKET 48/38	71, 111, 169, 407, 423, 581, 583, 591
315259-0103	FELT SEAL SKFFI260	321, 323
315401-0153	WASHER FBH6,1FZB	289
315401-0173	WASHER FBH10,2FZB	289
315401-0178	WASHER FBH12,2FZB	283
315402-0173	WASHER FBB10,2RFR	209, 429, 607
315410-0100	LOCK WASHESKFMB0	327, 331
315410-0101	LOCK WASHESKFMB1	327, 331
315410-0107	LOCK WASHESKFMB7	505
315410-0107	WASHERS,LOCK 34X44	675
315410-0108	LOCK WASHESKFMB8	503
315410-0108	WASHERS,LOCK 40X50	673
315410-0110	LOCK WASHESKFMB10	429
315410-0110	WASHERS.LOCK 50X74	607
315410-0114	LOCK WASHESKFMB14	503
315410-0114	WASHERS,LOCK 70X85	673
31553-0002	WASHER	497, 541, 669, 697
315701-0134	FLAT WEDGE3X3X10	435, 615
315701-0169	FLAT WEDGE4X4X18	769
315701-0171	FLAT WEDGE4X4X22	653
315701-0201	FLAT WEDGE5X5X20	789
315701-0202	FLAT WEDGE5X5X22	413, 589
315701-0234	FLAT WEDGE6X6X25	413, 589
315701-0262	FLAT WEDGE8X7X18	297
315701-0263	FLAT WEDGE8X7X20	297
315701-0268	FLAT WEDGE8X7X32	505, 675
315701-0270	FLAT WEDGE8X7X40	293, 413, 497, 505, 589, 669, 675
315701-0272	FLAT WEDGE8X7X50	413, 589
315701-0274	FLAT WEDGE8X7X60	497, 669
315701-0296	FLAT WEDGE10X8X25	429, 607
315701-0299	FLAT WEDGE10X8X32	505, 675
315701-0307	FLAT WEDGE10X8X70	287
315701-0330	FLAT WEDGE12X8X32	209
315701-0336	FLAT WEDGE12X8X63	209
315701-0338	FLAT WEDGE12X8X70	503, 673
315701-0363	FLAT WEDGE14X9X40	429, 607
315701-0802	FLAT WEDGE10X8X36	505, 675
315705-0196	FLAT WEDGE	155
315705-0266	FLAT WEDGE	475
315705-0298	FLAT WEDGE	473
315742-0114	RETAINING 18SMS199RFR	465, 475, 647, 653, 659, 661
315742-0119	RETAINING 25SMS199RFR	475, 515, 681
315750-0105	CIRCLIP SGA8	747, 797
315750-0107	CIRCLIP SGA10	327, 331, 655, 657, 665, 741
315750-0109	CIRCLIP SGA12	769
315750-0112	CIRCLIP SGA15	769
315750-0119	CIRCLIP SGA25	297
315750-0122	CIRCLIP SGA30	413, 589
315750-0127	CIRCLIP SGA40	413, 589
315750-0131	CIRCLIP SGA50	427, 603
315751-0103	CIRCLIP SGA 6 RFR	803
315751-0109	CIRCLIP SGA12 RFR	723, 725
315751-0112	CIRCLIP SGA15 RFR	721

Part No	Description	Page No
315752-0123	CIRCLIP SGH32	789
315752-0136	CIRCLIP SGH62	321, 323, 413, 589
315752-0149	CIRCLIP SGH110	503, 673
315754-0107	LOCKING WAE 5	751
315754-0110	LOCKING WAE 9	751
315755-0105	LOCKING WAE 3,2 RFR	727
315755-0107	LOCKING WAE 5RFR	485
315755-0108	LOCKING WAE 6RFR	819
315755-0109	LOCKING WAE 7RFR	301
315755-0111	LOCKING WAE 10 RFR	771
315755-0113	LOCKING WAE 15 RFR	453, 455, 633
315755-0801	LOCKING WAE 8RFR	789
31653-0001	SHEET	443
31653-0002	SHEET	445
316810-0106	PIPE CLAMP 8MM RFR	385, 389, 405, 421, 457, 459, 549, 555, 581, 583, 629, 703, 809
318201-0076	ROLLER CHA3/8"	435, 615
318207-0168	ROLLER CHA6MM	789
318212-0006	ROLLER CHA1/2" RFR	487, 489
318212-0008	ROLLER CHA1/2 RFR	487, 489
318212-0066	ROLLER CHAIN	567
318212-0074	Roller Chain	571
318212-0119	ROLLER CHA1/2"	561, 565
318212-0150	ROLLER CHAIN	479
318219-0187	CONNECTION LINK	479
318219-0487	CONNECTION LINK	465, 473
318219-0687	CONNECTION LINK	573
318242-0034	ROLLER CHAIN	567, 571
318242-0036	ROLLER CHAIN	491
318242-0108	ROLLER CHAIN	465, 473
318301-0130	LIFTING EYLTM30FZB	839
31837-0000	SPRING HOUSING	321, 323
31838-0000	PLUNGER	321, 323
318800-0102	HANDLE BALLA D.20-M5	759
318800-0103	HANDLE BALLA D.25-M6	789
318800-0104	HANDLE BALLA D.30-M8	99, 101, 747, 773
318800-0105	HANDLE BALLA D.35-M10	95
318800-0106	HANDLE BALLA D.40-M10	771
318800-0107	HANDLE BALLA D45-M10	825
319030-0125	DISC SPRING	809
32079-0000	WASHER	807
321101-0143	FLANGE BUS 8F7X8	395
321101-0163	FLANGE BUS 10F7X10	315, 319
321101-0172	FLANGE BUS 12F7X10	435, 615
321101-0173	FLANGE BUS 12F7X12	257, 745
321101-0223	FLANGE BUS 18F7X16	465, 475, 631, 637, 647, 653, 659, 661
321101-0232	FLANGE BUS 20F7X16	431, 433, 611, 613
321101-0233	FLANGE BUS 20F7X20	257
321101-0252	FLANGE BUS 25F7X16	465, 473, 479, 561, 565
321101-0253	FLANGE BUS 25F7X25	465, 473, 479
321101-0272	FLANGE BUS 30F7X20	479, 569, 571, 609
321101-0282	FLANGE BUS 35F7X20	473
321101-0283	FLANGE BUS 35F7X35	465, 479
321105-0234	BUSHING 20F7X28X30	321, 323, 775
321111-0095	FLANGE BUS 8E7X6	301
321111-0097	FLANGE BUS 8E7X12	475
321111-0135	FLANGE BUS 10E7X10	789
321111-0157	FLANGE BUS 12E7X8	771
321111-0159	FLANGE BUS 12E7X12	41
321111-0163	FLANGE BUS 12E7X20	377
321111-0185	FLANGE BUS 14E7X14	521, 523, 525, 527, 529, 531, 533, 535, 537, 539, 691, 693
321111-0212	FLANGE BUS 15E7X15	789, 831
321111-0240	FLANGE BUS 16E7X12	297
321116-0095	BUSHING 8E7/12X6	475
321116-0127	BUSHING 10E7/14X10	549, 555
321116-0128	BUSHING 10E7/14X16	465, 479, 549, 555
321116-0163	BUSHING 12E7/18X20	377
321116-0179	BUSHING 14E7/18X14	809
321120-0100	BUSHING 8/10X12	797, 803, 831
321120-0101	BUSHING 6/8X6	719, 759, 761, 803
321120-0103	BUSHING 8/10X8	727
321120-0104	BUSHING 10/12X10	727, 741, 747
321120-0109	BUSHING 12/14X10	797
321120-0110	BUSHING 12/14X12	741
321120-0113	BUSHING 12/14X25	723, 725
321120-0122	BUSHING 15/17X15	509, 561, 565, 677, 801
321120-0160	BUSHING 25/28X30	509, 677
321120-0183	BUSHING 35/39X20	509, 677
321127-0100	BUSHING 10/13X10	753
321129-0104	THRUST WAS12/24X1,5	723, 725, 771
32116-0000	END PIECE	359, 361, 363, 365, 391, 393
321300-0094	BALL BEARISKF624	819
321306-0104	BALL BEARISKF6004	509, 677
321306-0107	BALL BEARISKF6007	413, 505, 589, 675
321306-0110	BALL BEARISKF6010*	285, 429, 607

Part No	Description	Page No
321306-0114	BALL BEARISKF6014	503, 673
321308-0101	BALL BEARISKF6001RS	789
321308-0106	BALL BEARISKF6006RS	475
321308-0201	BALL BEARISKF6001-2RS	769
321308-0202	BALL BEARISKF6002-2RS	721, 769, 789
321308-0205	BALL BEARISKF6005-2RS	297
321309-0100	BALL BEARISKF6200	327, 331
321309-0106	BALL BEARISKF6206	413, 503, 589, 673
321309-0108	BALL BEARISKF6208	285
321309-0110	BALL BEARISKF6210	427, 603
321309-0114	BALL BEARISKF6214	289
321312-0100	BALL BEARISKF6200RS	327, 331
321312-0101	BALL BEARISKF6201RS	327, 331
321313-0102	BALL BEARISKF6202-2RS	777, 813, 815
321316-0108	BALL BEARISKF6308RS	287
321316-0200	BALL BEARISKF6300-2RS	789, 821
321316-0201	BALL BEARISKF6301-2RS	769
321361-0105	ROLLER BEASKF30205	503, 673
321364-0106	ROLLER BEASKF31306	503, 673
321576-0360	SUPPORT RONUTR30	293, 295
321580-0165	CURVE ROLLKR30	297
321582-0212	CURVE ROLLNUKR35	431, 433, 609, 611, 613
32213-0000	WASHER	743
32215-0000	HOLDER	41, 743
32217-0000	BOTTOM SECTION	743
32219-0000	WASHER	743
32223-0000	BEARING	743
32400-0000	HOLDER	743
32451-0000	AIR DUCT	743
32453-0000	MANTLE	743
32462-0000	SHAFT	317
32463-0000	BEARING	315, 319
32464-0000	SHAFT	361, 365
32468-0000	OPERATING ROD	315, 319
32474-0000	ATTACHMENT	743
32494-0000	OPERATING ROD	315, 319
32544-0000	INSULATION NUT	355, 357, 393
32629-0000	SPROCKET	779, 781, 783, 785, 787, 791, 793, 795
32630-0000	SPROCKET	779, 781, 783, 785, 787, 791, 793, 795
32644-0000	WASHER	355, 357
32668-0000	ARM	743
32691-0000	LOCKING SPRING	801
32925-0000	CARRIER	789
32926-0000	ROLL	779, 781, 783, 785, 787, 791, 793, 795
32957-0000	SCREW	333, 335, 337
32966-0400	KNIFE HOLDER	311, 313
33010-0000	SCREW	797
33011-0000	SLEEVE	801
33182-0000	ROLL	789
33183-0000	SPRING	789
33261-0000	SPRING PLATE	497, 541, 669, 697
33408-0000	BEARING	315, 319
33409-0000	SCREW	325, 329
33442-0000	ROLL	23
33577-0000	CANTILEVER	99, 101, 733
33648-0000	HOLDER	7
341001-0148	COPPER TUBE	219, 271, 273
341001-0192	COPPER TUBE	219
341001-0228	COPPER TUBE	209, 219, 233, 235, 269, 271, 273, 275
342701-0205	BUSHING,INT./EXT.G-THREAD G1/2"-G1/4"	131, 219, 229
342701-0206	BUSHING,INT./EXT.G-THREAD G1/2"-G3/8"	225, 229
342701-0208	BUSHING RNI3/4"-1/4"	181
342703-0103	ACCESSORIES,NUT M-8 LFZB	215
342705-0103	ACCESSORIES,FERRULE 8-LFZB	215
342706-0114	ACCESSORIES,INSERT SLEEVE 4 .	435, 457, 459, 561, 565, 569, 571, 615
342706-0130	ACCESSORIES,INSERT SLEEVE 6	107, 109, 411, 435, 587, 615, 735
342710-0115	REDUCTION RBM 16/8	217, 219
342711-0115	ACCESSORIES,PLUG PL-15 AND 16	217
342712-0205	REDUCER RI1/2"-1/4"	181, 187
342713-0209	PLUG,EXT.G-THREAD,HEXAGON SOCKET G1/8"	195, 197, 361, 365, 385, 389
342713-0210	PLUG,EXT.G-THREAD,HEXAGON SOCKET G1/4"	223, 235, 241, 243, 245, 247, 249, 251, 673, 809
342713-0211	PLUG,EXT.G-THREAD,HEXAGON SOCKET G3/8"	225
342713-0213	PLUG,EXT.G-THREAD,HEXAGON SOCKET G1/2"	45, 219
342713-0311	BLIND PLUG BPS38	183, 185, 187
342714-0202	REDUCTION KOR 10/6-LFZB	183, 185
342714-0209	REDUCTION KOR 15/10-LFZB	215
342715-0102	BLIND PLUG,FOR QUICK COUPLING D=6	223
342715-0103	BLIND PLUG,FOR QUICK COUPLING D=8	223
342716-0203	REDUCER,FOR PLASTIC TUBE 6-8	223
342716-0209	REDUCER,FOR PLASTIC TUBE 8-12	223
342716-0210	REDUCER,FOR PLASTIC TUBE 6-12	223
342716-0211	REDUCER,FOR PLASTIC TUBE 12-14	223
342720-0102	STRAIGHT CONNECTION GA-6-G1/8"	497, 669
342720-0103	STRAIGHT CONNECTION GA-8-G1/8"	219
342720-0104	STRAIGHT CONNECTION GA-8-G1/4"	503, 673

Part No	Description	Page No
342720-0114	STRAIGHT CONNECTION GA-15-G1/2"	217, 219, 229, 235, 239, 241, 243, 245, 247, 249, 251
342720-0115	STRAIGHT CONNECTION GA-16-G1/2"	411, 587
342721-0108	PIPE COUPLGA10-LRFZB REPBY 0342752-0104	181, 183, 187
342721-0114	PIPE COUPLGA15-LRFZB REPBY 0342752-0114	181
342722-0202	STRAIGHT COUPL,FOR PLASTIC TUBE 6-G1/8"	195, 197, 223
342722-0203	STRAIGHT COUPL,FOR PLASTIC TUBE 6-G1/4"	223
342722-0204	STRAIGHT COUPL,FOR PLASTIC TUBE 8-G1/8"	195, 197
342722-0205	STRAIGHT COUPL,FOR PLASTIC TUBE 8-G1/4"	809
342722-0206	STRAIGHT COUPL,FOR PLASTIC TUBE 8-G3/8"	223
342723-0109	STRAIGHT PIPE CONNECTION GAI-12-G3/8"	219
342726-0114	PIPE CONNECTION G-15	581, 583
342727-0208	PIPE CONNECTION G-10-L/SY	59, 61, 63
342730-0104	ELBOW CONNECTION WA-8-1/4"	503, 673
342730-0114	ELBOW CONNECTION WA-15-1/2"	217, 219
342731-0102	ELBOW CONNECTION WE 6-LRFZB	185, 427
342731-0108	ELBOW CONNECTION WE 10-LRFZB	183, 185
342731-0114	ELBOW CONNECTION WE 15-LRFZB	181, 215
342732-0099	V-COUPL,ADJUST,FOR PLASTIC TUBE 4-M5	485
342732-0102	V-COUPL,ADJUST,FOR PLASTIC TUBE 6-G1/8"	459
342732-0103	V-COUPL,ADJUST,FOR PLASTIC TUBE 6-G1/4"	223
342732-0104	V-COUPL,ADJUST,FOR PLASTIC TUBE 8-G1/4"	223
342732-0109	V-COUPL,ADJUST,FOR PLASTIC TUBE 12-G1/4"	223
342733-0114	ELBOW CONNECTION WI-15-G1/2"	201, 219, 225
342735-0103	V-JUNCTION COUPLING,FOR PLASTIC TUBE 8	223
342736-0114	ELBOW CONNECTION W-15	219, 235
342737-0212	ELBOW CONNECTION W-10 LRFR	59, 61, 63
342739-0108	ELBOW BULKHEAD CONNECTOR WSV 10	59, 61, 63
342740-0114	T-PIPE CONNECTION TA-15-G1/2"	217
342741-0108	T-PIPE CONNECTION TA-10-R1/4"	181
342747-0114	T-PIPE CONNECTION T-15	215
342748-0102	T-JUNCTION COUPLING,FOR PLASTIC TUBE 6	223
342748-0103	T-JUNCTION COUPLING,FOR PLASTIC TUBE 8	225
342748-0110	T-JUNCTION COUPLING,FOR PLASTIC TUBE 14	223
342750-0114	L-PIPE CONNECTION LA-15-G1/2"	217, 219
342752-0104	STRAIGHT CONNECTION GA-10-G1/4"	185
342764-0108	BULKHEAD LWSV10-LFZB	183, 185
342764-0114	BULKHEAD LWSV15-LFZB	183, 185
342767-0114	BULKHEAD CONNECTOR G1/2"	229
342768-0103	BULKHEAD COUPLING,FOR PLASTIC TUBE 8	225
342770-0105	STRAIGHT COUPL,FOR PLASTIC TUBE 6-G1/8"	223
342790-0102	PRESSURE GAUGE CONNECTION MAV6-LRFZB	183, 185
342790-0202	PRESSURE GAUGE CONNECTION MAV6-S/R3/8FZB	411, 587
342797-0121	BANJO CONNECTION,RINGPIECE 6-1/8"	45, 47, 77, 79, 741, 745
342797-0122	BANJO CONNECTION,RINGPIECE 6-1/4"	15, 17, 23, 41, 55, 83, 85, 91, 95, 99, 101, 733, 745
342803-0103	NUT 38	111, 121
342803-0104	NUT 51	59, 61, 63
342803-0106	NUT 76	59, 61, 63
342808-0101	ELBOW PIPE25	273
342808-0103	ELBOW PIPE38	121, 573, 761
342810-0101	ELBOW PIPE25	273
342810-0103	ELBOW PIPE38	573, 761
342811-0103	NIPPLE ANSL.38	121, 575
342812-0103	SLEEVE ANSL.38	121
342812-0203	SLEEVE	111
342903-0111	NUT WITH SPRING 6/4-M10X1	149
342920-0113	STRAIGHT COUPLING,EXT.THREADED 6/4-R1/8"	205, 327, 331, 415, 425, 601
342920-0114	STRAIGHT COUPLING,EXT.THREADED 6/4-R1/4"	213, 593
342920-0121	STRAIGHT COUPLING,EXT.THREADED 8/6-R1/8"	205, 483, 543, 545, 547, 549, 551, 555, 699, 701
342921-0113	STRAIGHT COUPLING,EXT.THREADED 6/4-G1/8"	149, 741
342921-0114	STRAIGHT COUPLING,EXT.THREADED 6/4-G1/4"	435, 615
342921-0121	STRAIGHT COUPLING,EXT.THREADED 8/6-G1/8"	439, 449, 619, 625
342923-0114	STRAIGHT COUPL.,INT.THREADED 6/4-G1/4"	149, 233, 241, 243, 245, 247, 249, 251
342923-0122	STRAIGHT COUPL.,INT.THREADED 8/6-G1/4"	235
342929-0121	STRAIGHT COUPLING,SOLDER 8/6-8	209, 219, 241, 243, 245, 247, 249, 251
342930-0113	ELBOW 90 COUPL.,EXT.THREAD 6/4-R1/8"	219, 425, 601, 663
342930-0114	ELBOW 90 COUPL.,EXT.THREAD 6/4-R1/4"	665
342930-0121	ELBOW 90 COUPL.,EXT.THREAD 8/6-R1/8"	543, 545, 699, 701
342930-0122	ELBOW 90 COUPL.,EXT.THREAD 8/6-R1/4"	181
342931-0113	ELBOW 90 COUPL.,EXT.THREAD 6/4-G1/8"	143
342933-0122	ELBOW 90 COUPL.,INT.THREAD 8/6-G1/4"	461
342946-0112	T-COUPLING,UNION 6/4	327, 331, 411, 587, 805
342946-0122	T-COUPLING,UNION 8/6	417, 595
342950-0114	L-COUPLING,EXT.THREAD 6/4-R1/4"	149
342960-0112	BULKHEAD COUPLING 6/4	209, 241, 243, 245, 247, 249, 251, 435, 615
342960-0122	BULKHEAD COUPLING 8/6	209
342980-0113	BANJO-CONNECTION,RING 6/4-G1/8"	73, 327, 331, 769, 789, 809
342980-0114	BANJO-CONNECTION,RING 6/4-G1/4"	395
342980-0122	BANJO-CONNECTION,RING 8/6-G1/4"	235, 369
342980-0303	BANJO-HOLLOW BOLT COUPL,EXT.THR.01-G1/8"	45, 47, 59, 61, 63, 77, 79, 327, 331, 769, 789, 811
342980-0304	BANJO-HOLLOW BOLT COUPL,EXT.THR.01-G1/4"	15, 17, 23, 55, 85, 91, 99, 101, 369, 733, 745

Part No	Description	Page No
342980-0314	BANJO-HOLLOW BOLT COUPL,EXT.THR.02-G1/4"	83, 91
342991-0100	HOSE CLIP,WORM DRIVE TYPE 10-13	143
342991-0101	HOSE CLIP,WORM DRIVE TYPE (13)-16 ..	163, 199, 215, 297, 405, 421, 591
342991-0102	HOSE CLIP,WORM DRIVE TYPE (16)-19	233
342991-0103	HOSE CLIP,WORM DRIVE TYPE (19)-23	209, 407, 423, 591, 741, 745
342991-0104	HOSE CLIP,WORM DRIVE TYPE (23)-27	9, 159, 241, 243, 245, 247, 249, 251
342991-0106	HOSE CLIP,WORM DRIVE TYPE (30)-36	169, 175
342991-0108	HOSE CLIP 38-50MMRFR	237
342991-0109	HOSE CLIP,WORM DRIVE TYPE (48)-50	439, 449, 619, 625
342991-0111	HOSE CLIP,WORM DRIVE TYPE (63)-73	415
342991-0112	HOSE CLIP,WORM DRIVE TYPE (73)-83	407, 423, 581, 583
342991-0115	HOSE CLIP,WORM DRIVE TYPE (110)-136	199
344502-0026	NIPPLE L AHKR1/8"	289
344502-0046	NIPPLE L BHKR1/8"	287
344502-0066	NIPPLE L CHKR1/8"	285, 289
346800-0109	SILENCER FILTER R1/8"	59, 61, 63
351121-0109	CABLE RHH 16	573, 709
352100-0106	CABLE GLANR.18,6-10,5	23, 41, 741, 745
352100-0111	CABLE GLANR.22,5-13,5	181
352100-0115	CABLE GLANR.28,3-15,5	287
352100-0126	CABLE GLANR.47-32,5	137
352100-0127	CABLE GLANR.47-34,5	195, 197
352100-0227	CABLE GLANR.31-34,5	137
352101-0103	LEAD IN G 18,6	143, 193, 205, 759, 775, 805
352101-0105	LEAD-IN G 22,5	805
352101-0107	LEAD-IN G 37	735
352103-0096	CABLE GLAND ST 7	655, 657
352103-0100	CABLE GLAND STR 9	113, 217, 219, 407, 423, 581, 583, 655, 657, 731, 805
352103-0101	CABLE GLAND ST 9	113, 201, 237, 265, 407, 423, 581, 583
352103-0105	CABLE GLAND STR 11	205
352103-0106	CABLE GLAND ST 11	211, 237, 265, 439, 449, 619, 625
352103-0108	CABLE GLAND ST 13	811
352103-0110	CABLE GLAND STR 16	237, 265
352103-0111	CABLE GLAND ST 16	45, 113, 439, 449, 619, 625, 805
352103-0115	CABLE GLAND STR 21	265
352103-0116	CABLE GLAND ST 21	209, 211
352103-0120	CABLE GLAND STR 29	211
352103-0121	CABLE GLAND ST 29	209
352110-0099	CRAMP TK 3-5	805, 811
352110-0100	CRAMP TK 5-7	689
352110-0101	CRAMP TK 7-10	209
352113-0101	RIBBON CLAMP	293, 369, 407, 423, 459, 581, 583, 639, 797
352113-0102	RIBBON CLAMP	407, 423, 581, 583
352113-0202	ANCHOR TM2S8-M "REPBY 352113-205"	237
352113-0204	ANCHOR TM3S25-M	407, 423, 805
352135-0106	HOSE .016	113, 201, 219, 225, 227, 237, 265, 759, 805
352135-0109	HOSE .022	237, 805
352135-0116	FLEXIBLE CG DIA 40	237, 439, 449, 619, 625
352135-0201	CRAMP 12	209, 257
352135-0202	CRAMP 16	205
352136-0113	GLAND FITTING	25, 41, 51, 113, 183, 185, 191, 211, 221, 227, 237, 719, 731, 733, 741, 745, 749, 751, 805
352136-0127	GLAND FITTING	23, 45, 113, 201, 221, 225, 227, 237, 253, 257, 265, 805
352136-0129	GLAND FITTING	155, 181, 585, 731, 805
352136-0142	GLAND FITTING	211, 237
352136-0143	GLAND FITTING	237, 287, 805
352136-0152	GLAND FITTING	165, 167
352137-0113	GLAND FITTING	113, 227, 805
352137-0127	GLAND FITTING	227, 759, 805
352137-0129	CABLE GLAND	227
353021-0212	FEED THROUGH TERMINAL WDU 2,5	211
353021-0213	FEED THROUGH TERMINAL WDU 4	227
353021-0217	FEED TRHOUGH TERMINAL WDU 4	227
353021-0302	FEED THROUGH TERMINAL DLD 2,5/	211
353024-0205	EARTH TERMINAL WPE 4	211, 227
353031-0201	END BRACKE 35	211, 227
353032-0004	END PLATE WAP	211
353032-0005	END PLATE WAP	227
353032-0302	END PLATE WAP	211
353034-0031	BRIDGE CONLECK WQV 4/10	227
353034-0401	BRIDGE CONLECK Q2	211
353034-0404	BRIDGE CONLECK Q10	211
353042-0004	RAIL TS 35/7,5	211
353101-0130	CABLE SHOE	741
353101-0132	CABLE SHOE	811
353101-0134	CABLE SHOE	745
353102-0168	CABLE SHOEYAEV16-M6	573, 709
353104-0129	CABLE SHOEYAV 025 M 35*	23
353104-0130	CABLE SHOEYAV 025 M 4*	41, 745
353104-0168	CABLE SHOEYAV 16 M6*	439, 449, 619, 625
353104-0182	CABLE SHOEYAV 35 M6*	439, 449, 619, 625
353245-0005	GLAND FITTING	409
353246-0001	Gland fitting	237
353249-0058	INSERT	237
35547-0000	SPRING	797
35827-0000	BRACKET	293

Part No	Description	Page No
359011-0202	SIGN BOARD(GROUND)	115
359011-0800	MARKING PLBSFW 51-100	115
359011-0807	MARKING PL5-FW 1-50	211, 227
359011-0808	MARKING PL5-FW 51-100	211
359011-0809	FIGURES 105-FW 101-150	211
359011-0821	SET OF SIG6-FW 1-50	731
359020-0012	SIGN "EARTHSYMBOL" 4X6MM	811
359240-0100	SIGN HOLDER	227
359241-0127	SIGN "LIGH BACKSY & STAT"	227
359241-0158	SIGN"LEVEL HYD OLJETANK"	227
359241-0269	SIGN	805
359301-0051	SIGN"STRIP SPLICE"	733
359301-0100	SIGN T	805
359301-0110	SIGN "SHORT	805
359301-0125	SIGN "LUBRJNING"	227
359301-0335	SIGN T	805
35962-0000	LID	253
359705-0001	WARNING SIGN"ENTANGLEMENT	789
359705-0002	WARNING SIGN"ENTANGLEMENT	557
359705-0003	WARNING SIGN"CORROSION"	9, 25, 53, 151
359705-0005	WARNING SIGN"MOVING PART"	777
359710-0002	WARNING SIGN"HOT SURFACE"	439, 449, 619, 625
36133-0000	BUSHING	343, 345, 347, 349
36301-0000	FOLDING FLAP	315, 319
36302-0000	FOLDING FLAP	315, 319
36749-0000	MANTLE	743
3675-0000	TETRA PAK NAME PLATE	255
36753-0000	RING	321, 323
36804-0000	ARM	37, 39
36805-0000	LINK	37, 39
36806-0000	CLAMPING ELEMENT	37, 39
36816-0000	LINK	37
36817-0000	CLAMPING ELEMENT	37, 39
36821-0001	SHEAR PIN	37, 39
36821-0002	SHEAR PIN	37, 39
36885-0000	CRANK ARM	283
36953-0001	ROLL	13
36953-0010	ROLL	21
37070-0000	SPRING	375
37071-0000	WASHER	375
37097-0000	CARRIER	287
37258-0000	BUSHING	315, 319
37296-0000	ARM	37
37535-0000	SUPPORTING PART	443, 445
37536-0000	INSULATOR BODY	443, 445
37537-0000	SPACER RING	443, 445
37638-0000	PENDULUM SUSPENSION	83
37768-0000	THERMOCOUPLE CR-AL	59, 61, 63, 743
37782-0000	THROTTLE	37, 39
38087-0000	WASHER	57, 263
38490-0000	END PIECE	359, 363
38603-0002	SPACER	371, 373, 375
38630-0001	COUNTER ROLLER	13
434020-0000	BEARING CONSOLE	375
434021-0000	SCREW	375
434062-0000	SHAFT	295
434073-0000	NUT	375
434098-0000	STRUT	295
434101-0000	WASHER	15, 17
434142-0000	PISTON	303
434143-0000	END SECTION	303
434168-0000	PIPE	233
434171-0000	PIPE	233
434222-0000	FILLER TUBE	29
434270-0000	RAILING	67
434273-0000	STRUT	67
434274-0000	PIPE	81
434309-0000	FASTENING PLATE	371
434320-0000	AXLE PIN	343, 345, 347, 349
434321-0000	CURVE ROLLER	343, 345, 347, 349
434338-0000	KNIFE	367
434379-0000	TIE ROD	287
434380-0000	SHAFT	287
434387-0000	BRACKET	325, 329
434388-0000	SHAFT	325, 329
434469-0000	HEATING PIPE	87
434493-0000	FORMING RING	19
434499-0000	FORK	13
434500-0000	SHAFT	13
434504-0000	SHAFT	13
434507-0000	SHAFT	13
434659-0000	CRANK BRACKET	189
434661-0000	BUSHING	189
434664-0000	BRACKET	189
434665-0000	HOOD	29
434668-0400	DRIVE UNIT	279, 281

Part No	Description	Page No
434669-0400	IMPULSE TRANSMITTER	279, 281
434670-0600	LINK SYSTEM	279, 281
434707-0300	HYDRAULIC SYSTEM	125, 127
434708-0000	PIPE	183, 185
434709-0000	PIPE	183, 185
434710-0000	PIPE	181
434711-0000	PIPE	183, 185
434712-0001	PIPE	183, 185
434712-0002	PIPE	183, 185
434713-0000	PIPE	183, 185
434714-0000	PIPE	181
434715-0000	PIPE	183, 185
434716-0000	PIPE	183, 185
434717-0000	PIPE	181
434718-0000	PIPE	181
434719-0000	PIPE	181
434747-0000	BOW CLAMP	797
434749-0000	FLOAT	37
434750-0000	PRESSURE FLANGE	37
434751-0000	ARM	37, 39
434752-0000	LINK	37, 39
434787-0000	END SECTION	799
434829-0000	LEAD	41
434841-0000	GAUGE	839
434858-0000	CUSHION	165, 167
434919-0000	COLUMN LEFT	205
434920-0000	COLUMN RIGHT	205
434972-0000	AIR GUIDE	95
434973-0000	AIR DISTRIBUTOR	95
434974-0000	AIR DISTRIBUTOR	95
434976-0000	STOP	95
436302-0000	ROLL	7
436342-0000	SPACER	15, 17
436355-0000	REAMED BOLT	7
436356-0000	BUSHING	7
436357-0000	NUT	7
436361-0000	MOTOR PLATE	93
436377-0000	JOINT	7
436378-0000	SHAFT	7
436395-0000	CANTILEVER	7
436403-0000	WASHER	7
436404-0000	BOW CLAMP	5
436405-0000	FORK	7
436407-0000	BEAM	835
436471-0000	PIPE	217
436482-0000	BEARING BRACKET	287
436483-0000	SHAFT	287
436484-0000	BRACKET	287
436485-0000	LACE	287
436486-0000	LID	287
436487-0000	SPACER	287
436488-0000	WASHER	287
436502-0000	CURVE	371
436512-0000	PIPE	219, 835
436556-0000	CURVE ROLLER	343, 345, 347, 349
436580-0000	COVERING PLATE	301
436648-0000	CANTILEVER	19
436671-0000	ECCENTRIC SHAFT	325, 329
436672-0000	LINK	301
436740-0000	LINK	325, 329
436776-0000	MACHINE BODY	205
436778-0000	PIPE	59, 61, 63
436779-0000	PRESSURE GAUGE TUBE	59, 61, 63
436781-0000	GASKET	59, 61, 63
436927-0000	NUT	797
436930-0000	KNIFE	367
436939-0000	CYLINDER BRACKET	779, 781, 783, 785, 787, 791, 793, 795
436940-0000	SHAFT	779, 781, 783, 785, 787, 791, 793, 795
436951-0000	CANTILEVER	201
436952-0000	CANTILEVER	201
436953-0000	AIR DISTRIBUTOR	201
436955-0000	WATER/AIR COOLER	201
436956-0000	CONDENSATE TRAY	201
436957-0100	AIR COOLER	199
436991-0000	BEARING	773
440023-0000	PROTECTION PLATE	205
440024-0000	PROTECTION PLATE	205
440025-0000	PROTECTION PLATE	206
440026-0000	CANTILEVER	207
440027-0000	RIM	207
440028-0000	RIM	207
440043-0000	END PIECE	359, 363, 391
440068-0000	ROLL	19
440077-0000	COVERING PLATE	207
440098-0300	CRANK BRACKET	125, 127
440132-0200	START-UP KIT	765

Part No	Description	Page No
440133-0400	MACHINE BODY	765
440135-0100	BENDING ROLLER	807, 823
440136-0001	ROLL	813
440136-0002	ROLL	815
440136-0003	ROLL	815
440136-0004	ROLL	815
440136-0005	ROLL	815
440136-0006	ROLL	815
440136-0007	ROLL	815
440136-0008	ROLL	815
440137-0001	SHAFT	813
440137-0002	SHAFT	815
440138-0000	LOCKING CIRCLIP	813, 815
440157-0000	MAGNET BRACKET	823
440180-0000	WASHER	823
440184-0100	BENDING ROLLER	807
440185-0000	HOLDER	775
440186-0000	HOLDER	775
440192-0000	BRACKET	775
440193-0000	HOLDER	775
440194-0000	WASHER	815
440195-0000	JOINT	775
440196-0000	HANGER	775
440197-0000	SHAFT	775
440198-0000	WASHER	775
440199-0000	PROTECTION PLATE	775
440200-0000	PROTECTION PLATE	775
440202-0000	PROTECTION PLATE	775
440203-0000	RULER	207
440204-0000	RULER	207
440205-0000	RULER	207
440206-0000	RULER	207
440210-0200	ROLL	765
440211-0000	GUIDE	777
440212-0000	LUG	777
440213-0000	LUG	777
440214-0000	HOLDER	777
440215-0000	HOLDER	777
440217-0000	BUSHING	777
440247-0000	HOLDER	771
440248-0000	HOLDER	771
440249-0000	SLIDE BELT	771
440250-0000	AXLE PIN	771
440251-0000	GLASS PANE	771
440252-0000	SLEEVE	775
440253-0000	SLEEVE	775
440256-0000	ARM	805
440259-0000	RETAINING RING	767
440260-0000	SHAFT	767
440271-0000	SCREW	775
440277-0000	LACE	779, 781, 783, 785, 787, 791, 793, 795
440282-0003	SPACER	785
440282-0004	SPACER	781
440285-0100	PAPER REEL HOLDER	765
440286-0300	INK UNIT NSS	789
440287-0000	COVER	797
440349-0000	FASTENING IRON	201
440385-0000	CANTILEVER	191
440386-0000	PLATFORM REAR	191
440389-0000	HATCH	191
440415-0200	TRANSFORMER	125, 127
440424-0000	DRUM	195, 197
440470-0000	PROTECTION	205
440471-0000	PROTECTION	205
440474-0100	TUBE FLUSHING DEVICE	125, 127
440482-0000	PROTECTION	261
440491-0000	NIPPLE	385, 389
440507-0000	FASTENING PLATE	371, 375
440510-0000	COUNTER CAM	325
440511-0000	COUNTER CAM	329
440565-0000	CYLINDER	385, 389
440588-0200	CRANK	279, 281
440600-0000	ROTOR	171, 173, 177, 179, 231, 259
440604-0001	PIPE	171, 173, 179, 259
440605-0001	PIPE	171, 177, 179, 231
440630-0200	AP-VALVE	59, 61, 63
440631-0000	VALVE BODY 51	65
440634-0000	HOUSE	65
440647-0000	SLEEVE	59, 61, 63
440702-0000	BEAM	205
440731-0000	PLATE	59, 61, 63
440925-0000	CUTTING RAIL	359, 363
440930-0000	COUNTER CAM	325
440931-0000	COUNTER CAM	329
440977-0000	ATTACHMENT PIPE	59, 61, 63
440978-0000	PIPE BEND	59, 61, 63

Part No	Description	Page No
441483-0000	CYLINDER BRACKET	47, 77, 79
441718-0000	SPACER	31, 33, 35
441957-0000	BEARING COVER	47, 77, 79
442072-0000	CARRIER	799
442076-0000	LID	183, 185
442077-0200	DECREASE OF PRESSURE	181
442078-0000	CANTILEVER	187
442079-0000	PIPE	215
442173-0000	GAUGE BLOCK	839
442193-0000	PROTECTIVE CASING	165
442194-0000	PROTECTIVE CASING	167
442195-0000	LID	165
442236-0000	THROTTLE SCREW	45
442237-0000	NUT	45
442401-0000	COVER PLATE	165
442431-0000	CARRIER	799
442463-0400	PIPE WORK	125, 127
442466-0000	PIPE CONNECTION	213
442480-0000	BOW CLAMP	743
442500-0000	SPROCKET	411
442523-0000	HOLDER	431, 433, 611, 613
442524-0000	ARM	431, 433, 611, 613
442532-0000	COVER	509, 677
442533-0000	RUBBER GASKET	509, 677
442535-0000	LEAD PLATE	635
442537-0100	WASTE CHUTE	579
442537-0200	WASTE CHUTE	579
442537-0500	WASTE CHUTE	401, 403
442538-0000	BRACKET	707
442539-0000	BRACKET	707
442540-0000	BRACKET	707
442541-0000	BRACKET	707
442545-0000	SHEET	405, 421
442554-0000	GEARING	413, 589
442555-0000	GEAR WHEEL	413, 589
442556-0000	GEAR WHEEL	413, 589
442557-0000	GEAR WHEEL	413, 589
442558-0000	GEAR WHEEL	413, 589
442559-0000	GEAR WHEEL	413, 589
442560-0000	LUBR.OIL PIPE	509, 677
442562-0000	CABLE TRACK	581, 583
442563-0000	AXLE PIN	525, 535, 691, 693
442564-0000	CURVE	515, 547, 553, 681, 703
442565-0000	CURVE	515, 547, 553, 681, 703
442566-0000	BRACKET	257
442568-0000	ARCH	635, 637
442569-0000	ARCH	635
442571-0000	SHAFT	643, 645, 647
442579-0002	MEASURE DRAWING	673
442580-0200	INDEXING GEAR	669
442581-0001	MEASURE DRAWING	413, 589
442582-0100	DRIVE GEAR	411, 587
442584-0000	SLIDE RAIL	671
442589-0000	ARM	507
442592-0000	PLATE	687
442593-0000	PLATE	687
442596-0000	PACKAGE GUIDE	687
442603-0000	LEAD PLATE	635
442604-0000	TOP SECTION	635, 637
442605-0000	BRACKET	647
442606-0000	CURVE	603
442608-0000	PLATE	687
442609-0000	PLATE	687
442613-0000	GEAR WHEEL	429, 607
442614-0000	GEAR WHEEL	429, 607
442615-0000	SPACER	429, 607
442616-0000	SPACER	429, 607
442617-0000	SPACER	429, 607
442621-0000	SPACER	505, 675
442622-0000	SPACER	505, 675
442639-0000	EJECTOR CHUTE	695
442641-0000	BRACKET	695
442642-0000	BRACKET	695
442643-0002	MEASURE DRAWING	607
442644-0200	GEAR	605
442644-0300	DOUBLE GEAR	427
442646-0200	TOP GEAR	497, 669
442678-0200	GEAR	603
442680-0001	HOLDER	687
442680-0002	HOLDER	687
442681-0000	PACKAGE GUIDE	687
442682-0001	PACKAGE GUIDE	687
442696-0000	PACKAGE GUIDE	687
442750-0000	HEAD PLATE	641, 643, 645
442751-0000	CARRIER	689
442752-0000	SLIDE SHEET	635

Part No	Description	Page No
442756-0000	CRAMP	639, 669
442776-0000	SLIDE RAIL	453, 455, 633
442782-0100	DISTRIBUTOR ARM	601
442783-0000	SHAFT	609
442784-0000	LID	609
442785-0000	BEARING HOUSING	609
442786-0000	WASHER	609
442787-0000	BRACKET	653
442801-0000	SLIDE RAIL	671
442805-0000	BRACKET	695
442806-0000	BRACKET	695
442807-0000	HEAD PLATE	695
442809-0000	LEAD RAIL	567
442811-0001	ARCH	567
442811-0002	ARCH	567
442829-0000	BRACKET	567
442830-0000	BRACKET	567, 571
442836-0000	SPROCKET	567, 571
442841-0000	AIR SCREW	413, 589
442844-0001	MEASURE DRAWING	505, 675
442851-0000	SHAFT	415
442852-0000	VALVE	415
442853-0000	ATTACHMENT PIPE	415
442856-0000	HEAD PLATE	643, 645
442857-0000	HEAD PLATE	643, 645
442858-0000	ARM	659, 661
442863-0000	RAIL	643, 645
442864-0000	RAIL	643, 645
442865-0000	SPACER	661
442867-0000	AIR NOZZLE	437, 447, 617, 623
442868-0000	LEAD PLATE	635
442869-0000	HOLDER	687
442870-0000	TOP SECTION	635
442871-0000	HEAD PLATE	695
442872-0000	EJECTOR CHUTE	695
442873-0000	BRACKET	695
442874-0000	BRACKET	695
442875-0000	PLATE	695
442876-0000	EJECTOR CHUTE	695
442877-0000	EJECTOR CHUTE	695
442882-0000	SPINDLE	509, 677
442883-0000	SPACING WASHER	509, 677
442884-0000	LOCK PLATE	509, 677
442885-0000	FLAP	507
442886-0000	FLAP	507
442894-0000	SHIM	525, 535, 691, 693
442895-0000	STEERING	643, 645
442896-0000	DROP WING	643, 645
442903-0000	SHIM	413, 589
442904-0000	SHIM	413, 589
442905-0000	SHIM	413, 589
442907-0000	LEAD RAIL	699, 701
442908-0000	LEAD RAIL	699, 701
442909-0001	SHEET	515, 681
442910-0001	SHEET	515, 681
442931-0000	SLIDE RAIL	559, 565
442939-0000	SHIM	525, 535, 691, 693
442941-0000	PACKAGE GUIDE	687
442942-0000	HOLDER	687
442944-0000	WASTE CHUTE	705, 707
442946-0000	COVERING PLATE	581, 583
442947-0000	STRAINER	591
442961-0001	PROTECTION	653
442961-0002	PROTECTION	653
442961-0003	PROTECTION	653
442961-0004	PROTECTION	653
442961-0005	PROTECTION	653
442964-0000	HEAD PLATE	695
442979-0000	SHEET	515, 681
442980-0000	SHEET	515, 681
442981-0000	SHIM	523, 525, 533, 535
442984-0000	FLAP	507
442988-0000	FASTENING BRACKET	629
442989-0000	CANTILEVER	631
443002-0000	FORK	663
443020-0000	PROFILE	637
443021-0000	SHEET	517, 681, 683
443022-0000	SHEET	517, 681, 683
443023-0000	SHEET	513, 679
443024-0000	SHEET	513, 679
443025-0000	HEAD PLATE	695
443026-0000	PLATE	635
443027-0000	SHEET	513, 679
443028-0000	SHEET	513, 679
443029-0000	PLATE	635
443030-0000	PLATE	635

Part No	Description	Page No
443038-0000	FLAP	507
443039-0000	DROP WING	643, 645
443044-0000	EJECTOR CHUTE	695
443045-0000	EJECTOR CHUTE	695
443047-0000	SPROCKET	427, 603
443048-0000	SPROCKET	435, 615
443049-0000	SHAFT	435, 615
443050-0000	GUIDE SLEEVE	435, 615
443051-0000	CONNECTION	435, 615
443052-0000	SPACER RING	427, 603
443053-0000	CHAIN GUIDE	435, 615
443055-0000	SHIM	429, 607
443056-0000	SHIM	429, 607
443057-0000	SHIM	429, 607
443058-0000	SHIM	429, 607
443076-0000	BOTTOM	527, 537, 691, 693
443081-0000	SPROCKET	567, 571
443114-0000	FLAP	511
443116-0000	FLAP	527, 537
443122-0000	HOUSE	415
443123-0000	HOUSE	415
443126-0000	CONNECTION PIPE	425, 601
443131-0000	BRACKET	705
443136-0000	SLIDE RAIL	671
443137-0000	SHEET	517, 683
443138-0000	SHEET	517, 683
443149-0000	STUD SCREW	427, 603
443150-0000	SUCTION TUBE	435, 615
443151-0000	PIPE	435, 615
443152-0000	LEAD PLATE	637
443154-0000	EJECTOR CHUTE	695
443156-0000	FASTENING BRACKET	629
443157-0000	FASTENING BRACKET	629
443158-0000	SIDE PIPE	439, 441, 449, 451, 619, 621, 625, 627
443165-0000	FORK	663
443166-0000	TIMING BELT PULLEY	643, 647
443167-0000	CYLINDER BRACKET	663
443169-0000	CHUTE	705
443173-0100	DRIVE SHAFT	401, 403
443174-0001	MEASURE DRAWING	429
443175-0000	SHAFT	541
443176-0000	SPROCKET	425
443177-0000	SPROCKET	541
443178-0000	BRACKET	541
443179-0000	SPACER	541
443182-0000	FLAP	509, 677
443186-0000	CHUTE	405, 421
443187-0000	SHEET	405, 421
443188-0000	GEAR WHEEL	505, 675
443191-0000	GEAR WHEEL	673
443193-0000	SHIM	505, 675
443194-0000	SHIM	505, 675
443195-0000	HOLDER	663
443197-0000	SCREW	663
443206-0001	ARCH	567, 569
443206-0002	ARCH	567
443206-0003	ARCH	567
443206-0004	ARCH	567
443207-0001	ARCH	567
443207-0002	ARCH	567
443207-0003	ARCH	567
443210-0000	PLATE STAINLESS	567, 571
443213-0000	BRACKET	567, 571
443215-0000	SPACER	567, 571
443217-0000	BRACKET	567, 569, 571
443218-0000	INTERMEDIARY SECTION	497
443229-0000	BRACKET	559, 565
443232-0000	HOLDER	559, 565
443235-0000	SPROCKET	559, 565
443237-0000	SLIDER	559, 565
443239-0000	WASHER	559, 565
443240-0000	DRIP PLATE	547, 553
443248-0000	OIL PIPE	411, 587
443249-0000	FLAP	507
443271-0000	HEAD PLATE	481
443272-0000	HEAD PLATE	481
443273-0000	HEAD PLATE	481, 483
443274-0000	HEAD PLATE	481, 483
443289-0000	TOOTHED PULLY	463, 473
443290-0000	GEAR WHEEL	463, 473, 479
443291-0000	GEAR WHEEL	479
443292-0000	STEERING	463, 473
443293-0000	BRACKET	463, 473, 479
443295-0000	WASHER	463, 473, 479, 567, 571
443296-0000	WASHER	463, 473, 475, 479
443297-0000	WASHER	479

Part No	Description	Page No
443298-0000	WASHER	479
443299-0000	WASHER	463, 479
443300-0000	WASHER	463, 473, 479
443301-0000	WASHER	463, 473, 479
443305-0000	SHAFT	479
443306-0000	SPROCKET	479
443307-0000	SHAFT	463, 473, 479
443309-0000	SHAFT	485
443310-0000	AXLE PIN	485
443312-0000	SPACER	463, 473
443313-0000	STUD SCREW	515, 681
443336-0008	TIMING BELT PULLEY	409, 585
443345-0000	SLIDE RAIL	671
443348-0000	PLATE	517, 681
443350-0000	BRACKET	479
443351-0000	FLAP	507
443362-0000	CURVE	497, 669
443365-0000	BRACKET	485
443367-0000	PROFILE	419
443387-0000	HEAD PLATE	477
443388-0001	HEAD PLATE	477
443388-0002	HEAD PLATE	477
443414-0000	WASHER	479
443419-0000	SPACER	493
443423-0000	FASTENING BRACKET	629
443435-0000	SPACER	659
443436-0000	SPACER	659
443445-0000	SIDE PLATE	479
443446-0000	SIDE PLATE	479
443447-0000	BRACKET	481, 483
443448-0000	HEAD PLATE	485
443450-0000	HEAD PLATE	479
443451-0000	HEAD PLATE	479
443454-0000	BRACKET	477
443455-0000	SHAFT	479
443456-0000	SHAFT	479
443457-0000	SHAFT	479
443458-0000	SHAFT	479
443462-0000	SUPPORT	481, 483
443463-0000	SUPPORT	481, 483
443464-0000	SPROCKET	479
443467-0000	SPROCKET	479
443468-0000	CARRIER	487, 489
443469-0000	CARRIER	487
443470-0000	CARRIER	489
443474-0000	BRACKET	485
443476-0000	GABLE PLATE	493
443477-0000	GABLE PLATE	493
443478-0001	SPROCKET	477
443478-0002	SPROCKET	477
443478-0003	SPROCKET	477
443478-0004	SPROCKET	477
443479-0001	SPROCKET	477
443479-0002	SPROCKET	477
443479-0003	SPROCKET	477
443479-0004	SPROCKET	477
443480-0000	BRACKET	477
443481-0000	BRACKET	477
443482-0000	BRACKET	463, 479
443483-0000	BRACKET	463, 479
443484-0000	ARM	463, 475, 479
443485-0000	SCREW	463, 479
443486-0000	GUIDE	479
443487-0000	ROLL	513, 515, 517, 519, 679, 681, 683
443488-0000	ROLL	513, 679
443489-0000	BRACKET	463, 473, 479
443491-0000	BRACKET	481
443492-0000	BRACKET	481
443493-0000	HEAD PLATE	485
443495-0000	HEAD PLATE	485
443497-0000	SUPPORT	481, 483
443498-0000	SUPPORT	481, 483
445502-0000	LOCKING PIN LOWER	37, 39
445503-0000	LOCKING PIN LOWER	37
445504-0000	LOCKING PIN UPPER	37, 39
445515-0000	PIPE BEND	59, 61, 63
445537-0200	PIPE WORK-HYDRAULIC	125, 127
445538-0000	HYDRAULIC PIPE	215
445539-0000	HYDRAULIC PIPE	215
445540-0000	HYDRAULIC PIPE	215
445541-0000	HYDRAULIC PIPE	215
445542-0000	MANTEL RUBBER	797
445583-0000	VALVE	203
445669-0000	HOLDER	743
445670-0000	PAPER SUPPORT	743
445688-0000	AIR GUIDE	743

Part No	Description	Page No
445690-0000	FASTENING PLATE	729
445691-0000	CANTILEVER	729
445736-0000	HINGE	223
445759-0100	SUPPORT ROLLER	715, 717
445837-0000	CANTILEVER	769
445838-0000	SHAFT	769
445839-0000	SECURING PLATE	769
445840-0100	DRIVE UNIT	765
445841-0000	CANTILEVER	769
445842-0000	MOTOR PLATE	769
445844-0000	SLEEVE	805
445845-0000	DRIVE ROLLER	769
445846-0000	SLEEVE	805
445847-0000	SHAFT	769
445848-0000	ELASTIC COUPLING	769
445849-0000	SPACER DISC	769
445850-0000	SPACER SLEEVE	769
445851-0000	SHAFT	769
445852-0000	LID	769
445854-0001	GEAR WHEEL	769
445854-0002	GEAR WHEEL	769
445857-0000	PROTECTION PLATE	775
445858-0000	WASHER	191
445861-0000	FRAME	773
445863-0000	PROTECTION	773
445872-0000	HINGE	773
445873-0000	HINGE	773
445874-0000	HINGE	773
445877-0000	SUPPORT	773
445879-0000	SUPPORT	773
445880-0600	SPLICING DEVICE	765
445881-0000	BRACKET LEFT	807
445882-0000	BRACKET RIGHT	807
445885-0000	BEAM	807
445886-0000	BEAM	807
445894-0000	SEAL	807
445898-0000	NUT	807
445901-0000	FRAME	807
445902-0000	ARM	807
445903-0000	ECCENTRIC SHAFT	807
445904-0000	SHAFT	807
445907-0000	SCREW	807
445909-0000	NIPPLE	809
445911-0000	CANTILEVER	807
445915-0000	STEERING	809
445918-0000	SCREW	809
445920-0600	EL-PNEUMATIC EQUIPMENT	765
445926-0000	WASHER	777
445927-0000	HOLDER	777
445929-0000	GASKET	775
445930-0100	BENDING UNIT	765
445931-0000	CANTILEVER	823
445934-0000	LID	775
445935-0000	PROTECTION PLATE	775
445950-0000	RAIL	383, 387
449000-0000	BRACKET	11
449130-0000	CONNECTING PIPE	45
449168-0300	CLEANING SYSTEM	125, 127
449170-0000	CLEANING PIPE	229
449190-0000	SHAFT	9
449414-0000	BRACKET	85
449415-0000	PENDULUM SUSPENSION	85
449584-0000	VOLUME BULGE	343
449586-0000	ROLL	19
449589-0001	ROLLER, (STD.SIZE)	13
449613-0000	NOZZLE UNIT	201
449623-0000	STEERING	809
449624-0000	STEERING	809
449626-0000	SEAL	809
449629-0000	BRACKET	809
449630-0300	PAPER HOLDER	807
449631-0000	BEARING HOUSING	817
449632-0000	BEARING HOUSING	817
449634-0000	COVERING PLATE	817
449635-0000	COVERING PLATE	817
449678-0000	VALVE BODY 76	65
449716-0000	MAIN CAM	289
449719-0000	COUNTER CAM	289
449727-0000	CUTTING JAW	359, 363
449728-0000	FOLDING FLAP CAM L	325
449729-0000	FOLDING FLAP CAM R	329
449730-0000	COUNTER CAM	325
449731-0000	COUNTER CAM	329
449734-0000	HOLDER	371
449744-0000	TURN SPRING	819
449745-0000	TURN SPRING	819

Part No	Description	Page No
449746-0000	STEERING	819
449748-0000	BEARING	819
449751-0000	PROTECTION	807
449753-0000	SCREW	809
449761-0000	WASHER	809
449770-0000	INSULATION	807
449817-0000	U-TUBE	81
449818-0000	PIPE	81
449840-0001	ROLLER, (STD.SIZE)	13
449843-0001	BENDING ROLLER	719
449843-0002	BENDING ROLLER	719
449843-0003	BENDING ROLLER	719
449843-0004	BENDING ROLLER	719
449853-0000	BOW CLAMP	9
449854-0000	CUP	9
449855-0000	CUP	9
449880-0006	INSTALLATION DRAW. TBA/8	835
449908-0000	BUSHING	343, 345, 347
449926-0000	HOLDER	373
449930-0500	CONNECTION BOX	125, 127
449932-6000	PIPE WORK-WATER	125, 127
449939-0001	HEATING ELEMENT 15KW	87
449960-0000	BRACKET	81, 111
449963-0000	U-TUBE	81
449964-0000	PIPE	111
449966-0000	PIPE	111
449967-0000	PIPE	111
449991-0000	BRACKET	9
449992-0000	GASKET	9
449993-0000	GASKET	9
450010-0000	FILLER TUBE	29
450017-0000	PLATE	809
450022-0000	WASHER	81
450023-0000	BRACKET	81
450116-0000	CANTILEVER	753
450117-0000	HOLDER	753
450127-0001	BRACKET	737
450127-0002	BRACKET	737
450127-0003	BRACKET	737
450127-0004	BRACKET	737
450127-0005	BRACKET	737
450145-0000	STRUT	287
450146-0000	STRUT	287

Part No	Description	Page No
450284-0000	CABLE DUCT	237
450285-0000	CABLE DUCT	237
450286-0000	LID	237
450287-0000	LID	237
450290-0000	LID	237
450291-0000	ATTACHMENT PIPE	237
450292-0000	ATTACHMENT PIPE	237
450293-0500	CABLE DUCT	125, 127
450298-0000	COVERING PLATE	207
450299-0000	SWIVEL PLATE	193
450300-0000	BEAM	193
450301-0000	FASTENING PLATE	193
450302-0000	VOLUME SHIM	343, 391
450315-0000	HOLDER	371
450335-0000	PIPE	111
450340-0000	PIPE	203
450342-0000	COVERING PLATE	207
450355-0000	INK ROLLER	797
450363-0000	LID	769
450457-0000	FLANGE	205
450459-0001	FORMING RING	13
450459-0002	FORMING RING	13
450460-0001	GUIDE SHAFT	749
450460-0002	GUIDE SHAFT	749
450460-0003	GUIDE SHAFT	749
450461-0000	SHAFT	749
450463-0001	SUPPORT ROLLER	729
450463-0002	SUPPORT ROLLER	729
450463-0003	SUPPORT ROLLER	729
450495-0000	CONNECTION BOX	201
450497-0000	SHAFT	789
450500-0000	DOWEL	789
450503-0000	BEARING HOUSING	359, 363
450505-0000	CARRIER RULER LEFT	315
450506-0000	CARRIER RULER	319
450509-0000	PIPE	53
450512-0000	COVER	53
450667-0000	SPLASH GUARD	193
450668-0000	SPLASH GUARD	193
450669-0000	TOUCH GUARD	193
450716-0000	PIPE	233
450717-0000	PIPE	233
450719-0000	PIPE	233

Part No	Description	Page No
450722-0000	PIPE	233
450723-0000	PIPE	233
450724-0000	PIPE	233
450725-0000	ATTACHMENT PLATE	233
450730-0000	PIPE	233
450731-0000	PIPE	233
450733-0000	PIPE	233
450735-0000	PIPE	233
450736-0000	PIPE	233
450737-0000	PIPE	233
450738-0000	PIPE	233
450739-0000	PIPE	233
450740-0000	PIPE	233
450741-0000	PIPE	233
450742-0000	PIPE	233
450743-0000	PIPE	233
450744-0000	CRAMP	233
450745-0000	SPACER	233
450746-0000	HOLDER	233
450747-0000	PIPE	233
450748-0000	PIPE	233
450781-0000	VOLUME BULGE	347
450782-0000	VOLUME SHIM	347, 391
450791-0000	PIPE	241, 243, 245, 247, 249, 251
450792-0100	DETERGENT PUMP	125, 127
450793-0000	PIPE	253
450794-0000	PIPE	253
450795-0000	PIPE	253
450796-0000	BRACKET	253
450812-0000	SPACER	733
450813-0000	HOLDER	735
450814-0000	HOLDER	107, 109, 735
450824-0100	DOOR	125, 127
450825-0000	DOOR	255
450826-0000	BRACKET	255
450840-0400	LIFTING UNIT	125, 127
450841-0000	CANTILEVER	257
450846-0000	CANTILEVER	57
450850-0001	SHEET	733
450850-0002	SHEET	733
450850-0003	SHEET	733
450850-0004	SHEET	733
450850-0005	SHEET	733
450850-0006	SHEET	733
450853-0000	PROTECTION	807
450862-0300	CONNECTION BOX	715, 717
450869-0000	BRACKET RIGHT	139, 141
450882-0000	OUTER PIPE	733
450884-0000	PROTECTION	261
450887-0000	CRAMP	741
450888-0000	INSULATING PLATE	741
450899-0001	SPACER	211
450973-0000	BRACKET	255
451053-0000	PIPE	97
451085-0002	SPACER SCREW	113
451085-0003	SPACER SCREW	113
451085-0004	SPACER SCREW	113
451085-0005	SPACER SCREW	113
451088-0000	PROTECTION	193
451089-0000	BRACKET	193
451099-0000	CABLE TRENCH	113
451101-0000	CABLE TRENCH	113
451102-0000	COVER STAINLESS	113
451103-0000	LID	113
451104-0000	LID	113
451125-0000	SIDE GUARD	165
451126-0000	SIDE GUARD	167
451127-0000	CHUTE, LEFT FRONT	165
451128-0000	CHUTE, RIGHT FRONT	167
451131-0100	CLEANING PIPE	3
451277-0000	PIPE	107, 109
451280-0000	PIPE	107, 109
451281-0000	PIPE	107, 109
451284-0000	PIPE	107, 109
451285-0000	PIPE	107, 109
451286-0000	PIPE	107, 109
451287-0000	PIPE	107, 109
451288-0000	PIPE	107, 109
451289-0000	PIPE	107, 109
451290-0000	PIPE	107, 109
451291-0000	PIPE	107, 109
451292-0000	PIPE	107, 109
451296-0000	PIPE	107, 109
451297-0000	PIPE	107, 109
451298-0000	PIPE	107, 109
451299-0000	PIPE	107, 109

Part No	Description	Page No
451300-0000	PIPE	107, 109
451301-0000	PIPE	107, 109
451302-0000	PIPE	107, 109
451303-0001	PIPE	107, 109
451303-0002	PIPE	107, 109
451303-0003	PIPE	107, 109
451303-0004	PIPE	107, 109
451304-0000	PIPE	107, 109
451305-0000	PIPE	107, 109
451306-0000	PIPE	107, 109
451307-0000	PIPE	107, 109
451316-0000	STOP PLATE	165
451317-0000	STOP LUG	165
451321-0000	COVER	45
451323-0000	SHEET	45
451324-0000	PIPE	45
451326-0000	CLAMPING PLATE	107, 109
451338-0000	PIPE	113
451339-0000	BOXSTAINLESS	113
451340-0000	CHANNELSTAINLESS	113
451341-0001	LID	113
451341-0002	LID	113
451342-0500	CABLE DUCT	3
451348-0200	CONNECTION BOX	125, 127
451365-0200	TERMINAL PLINTH	113
451389-0000	PLATFORM	67
451390-0000	PLATFORM	67
451391-0000	PLATFORM	67
451406-0000	VIBRATION DAMPER	841, 843
451407-0000	RAILING	841, 843
451408-0000	BUFFER RING	841, 843
451409-0000	CONNECTION BOX	265
451412-0000	WASHER	809
451413-0000	WASHER	809
451423-0000	CIRCUIT BOARD	265
451430-0000	CONNECTION HOUS.(MINOR)	87
456011-0000	PIN	367, 393
456773-0000	PIVOT BRACKET	797
457354-0000	SCREW	257
457355-0000	NUT	257
457357-0000	BRACKET	207
457358-0000	SLEEVE	775
457359-0000	BRACKET	395
457361-0000	CANTILEVER	395
457364-0000	PLATE RIGHT	395
457365-0000	PLATE LEFT	395
457367-0000	SHAFT	395
457368-0000	SPRING	395
457370-0000	CATCH	819
457430-0000	BEATER	789
457486-0000	BEARING HOUSING	817
457487-0000	BEARING HOUSING	817
457488-0000	BEARING HOUSING	817
457489-0000	BEARING HOUSING	817
457492-0000	COVERING PLATE	817
457493-0000	COVERING PLATE	817
457494-0000	COVERING PLATE	817
457495-0000	COVERING PLATE	817
457586-0000	SLIDE	819
457614-0001	CLAMPING PIECE	111
457614-0002	CLAMPING PIECE	111
457627-0000	DOLLY	807
457658-0000	INSULATION	807
457752-0000	CANTILEVER	105
457753-0000	BRACKET	105
458019-0000	BEARING HOUSING	383, 387
458030-0000	CARRIER RULER	315
458031-0000	CARRIER RULER	319
458032-0000	CARRIER RULER	315
458033-0000	CARRIER RULER	319
458038-0000	CARRIER RULER	315
458039-0000	CARRIER RULER	319
458041-0000	COMPRESSION SPRING	819, 825
458042-0000	SPRING	819
458046-0000	PIPE	23
458062-0000	TENSION SPRING	807
458104-0000	CREASE FORMER	787
458105-0000	CREASE FORMER	785, 793, 795
458106-0000	CREASE FORMER	781, 785
458108-0000	CREASE FORMER	781, 783
458109-0000	CREASE FORMER	779
458164-0000	SHAFT	343, 345, 347, 349
458165-0000	SHAFT	343, 345, 347
458193-0001	WASHER	789
458193-0002	WASHER	789
458193-0003	WASHER	789

Part No	Description	Page No
458199-0001	PIPE	735
458199-0002	PIPE	735
458199-0003	PIPE	735
458362-0000	PLUG	805
458467-0000	VOLUME BULGE	343, 347
458481-0001	SHIM	99, 101
458481-0002	SHIM	99, 101
458481-0003	SHIM	99, 101
458489-0000	CANTILEVER	779, 781, 783, 785, 787, 791, 793, 795
458783-0000	BOW CLAMP	9
458784-0000	CUP	9
458785-0000	BRACKET	9
458786-0000	GASKET	9
458787-0000	BUSHING	9
458788-0000	NUT	9
458791-0000	SHAFT	21
458908-0000	BRACKET	807
458909-0000	BRACKET	807
458912-0000	BRACKET	807
458915-0000	HEAD RAIL	809
458916-0000	SHAFT	809
458917-0000	SUPPORT	809
458929-0000	TURN SPRING	809
464000-0000	FRONT GUARD	191
464001-0000	FRONT GUARD	191
464010-0000	ARM	789
464011-0000	LOCK STUD	789
464012-0000	CURVE	789
464018-0000	JUNCTION BLOCK	97
464141-0000	LEAD-IN PLATE	775
464162-0000	CUTTING JAW	359, 363
464164-0000	CARRIER CUT LEFT	361
464171-0000	CARRIER CUT RIGHT	365
464173-0000	LABEL HOLDER	99, 101, 733
464174-0000	SIGN	99, 101
464175-0000	SIGN	99, 101
464176-0000	SIGN	733
464177-0000	SIGN	733
464193-0000	ATTACHMENT PLATE	237
464197-0000	AIR NOZZLE	741
464297-0000	CONNECTION BOX	265
464307-0000	PIPE BEND	97
464308-0000	PIPE	97
464309-0000	PIPE	97
464310-0000	FOLDING FLAP	315, 319
464311-0000	FOLDING FLAP	315, 319
464314-0000	VOLUME BULGE	343, 347
464315-0000	VOLUME SHIM	343, 347, 391
464363-0000	HOLDER	303
464366-0000	LID	339, 341
464367-0000	CRAMP	339, 341
464368-0000	CRAMP	339, 341
464370-0000	SPACER	369
464431-0000	PIPE	233
464432-0000	PIPE	233
464520-0000	PIPE	233
464547-0000	NUT	809
464548-0000	BRACKET	809
464719-0000	SIGN	233
464854-0000	TENSION SPRING	809
464983-0000	SCREW	809
466040-0000	AXLE SUPPORT	103
466041-0000	WASHER	103
466042-0000	SEAL	103, 117
466046-0000	ROLL	103
466086-0000	SHAFT	777
466089-0000	SEAL	103, 117
466092-0000	ROLL	103
466099-0000	SEAL	103, 117
466102-0000	ROLL	103
466337-0000	CONNECTION BOX	805
466395-0000	BEARING HOUSING	383, 387
466399-0100	SEAL	99, 101
466400-0000	RING	103
466401-0000	RING	103
466402-0000	RING	103
466403-0000	RING	103
466404-0000	RING	103
466405-0000	RING	103
466412-0000	PLATE	741
466430-0000	BUSHING	789
466431-0000	BEARING HOUSING	359, 363
466432-0000	BEARING HOUSING	359, 363
466446-0000	HANDLE	809
466463-0000	PRESSURE FLANGE	37, 39
466469-0000	HOLDER	823

Part No	Description	Page No
466471-0000	PIPE	71
466474-0000	VALVE HOUSING	47, 77, 79
466477-0000	INNER PIPE	47, 77
466478-0000	OUTER PIPE	47, 77
466479-0000	PIECE	47, 77, 79
466483-0000	CLAMPING PIECE	47, 77
466484-0000	NET	47, 77
466618-0000	CATCH	807
466619-0000	CATCH	807
466620-0000	PISTON	809
466621-0000	PISTON	809
466623-0000	COMPRESSION SPRING	809
469463-0000	SHAFT	15, 17
469464-0000	ROLL	15, 17
469795-0000	HOLDER	165
476015-0000	DOWEL	777
476016-0000	RUBBER	777
476087-0000	LID	53
476115-0000	VOLUME FLAP	347
476117-0000	CATCH	775
476288-0000	PIPE	809
476289-0000	SCREW	809
476354-0000	CANNULAR TUBE	797
476356-0000	HOLDER FOR INK BOTTLE	797
476358-0000	COIL HEATER	117
476360-0000	LID	41
476377-0000	SCREW	789
476398-0000	LID	53
476400-0000	PIPE	53
476401-0000	SHAFT	777
476403-0000	HEAD PLATE	823
476449-0000	PIPE	71
476498-0000	PLATE	99, 101
476500-0000	SEAL	99, 101
476503-0000	BRACKET	769
476556-0000	GUIDE	777
476599-0000	PLATFORM	67
476600-0000	PIPE HOLDER	67, 71, 81
476794-0001	PIPE	107, 109
476794-0002	PIPE	107, 109
476796-0000	PIPE	107, 109
476849-0100	VALVE	71
476859-0200	CHANGE-OVER VALVE	71
476865-0000	HOOD	175
476877-0000	SPACER	373
476878-0000	FILLER TUBE	37
476879-0000	PRESSURE FLANGE	37
476884-0200	CLEANING HEAD	169
476885-0200	CLEANING HEAD	175
476886-0200	CLEANING HEAD	175
476887-0200	CLEANING HEAD	169
476894-0000	PIPE HOLDER	257
476975-0000	WHEEL	453, 455, 633
479025-0000	WASHER	53
479032-0000	HATCH	153
479033-0000	PIPE CONNECTION	213
479034-0000	PIPE CONNECTION	213
479036-0000	PIPE CONNECTION	213
479040-0000	PIPE CONNECTION	213
479061-0000	PIPE	107, 109
479072-0000	PIPE	107, 109
479073-0000	PIPE	107, 109
479074-0000	PIPE	107, 109
479176-0000	PIPE	41
479188-0000	INSULATION	809
479223-0000	RAIL	807, 821
479224-0000	STEERING	809
479230-0000	PIPE	97
479231-0000	PIPE	97
479232-0000	PIPE	97
479234-0000	WASHER	45
479236-0000	END SECTION	799
479237-0000	CARRIER	799
479238-0000	CARRIER	799
479245-0000	VOLUME SHIM	343, 347, 391
479246-0000	VOLUME SHIM	343, 391
479260-0000	TOUCH GUARD	201
479261-0000	NIPPLE	217
479275-0000	COVERING PLATE	205
479311-0000	COVERING PLATE	195, 197
479354-0000	SCREW	297
479374-0000	DRIP PLATE	207
479714-0000	FASTENING PLATE	753
479715-0000	ANGLE BRACKET	753
479743-0000	COMPRESSION SPRING	385, 389
479744-0000	COMPRESSION SPRING	385, 389

Part No	Description	Page No
479753-0000	STRIPPER	297
479858-0000	HYDRAULIC DIAGRAM	263, 857
479964-0000	SIGN	223
484047-0000	PIPE	59, 61, 63
484189-0000	HIGH PRESSURE HOSE	57
484212-0000	BRACKET	207
484213-0000	BRACKET	207
484219-0000	SHAFT	257
484220-0000	BRACKET	257
484221-0000	BRACKET	257
484222-0000	SHAFT	257
484223-0000	NUT	257
484529-0000	CYLINDER BRACKET	809
484536-0000	VALVE	151, 159
484538-0000	VALVE	213
484682-0000	COMPRESSION SPRING	809
484783-0000	RAIL	809
484791-0000	GASKET	155
484834-0000	HOLDER	355, 357
484843-0000	GASKET	339, 341
484844-0000	INSULATION	807
484848-0001	MACHINE BODY	783, 787, 791, 793, 795
484848-0002	MACHINE BODY	779, 781, 783, 785
484848-0003	MACHINE BODY	781, 785
484877-0000	STEERING	809
484878-0000	HOLDER	809
484895-0001	SHEET	807
484895-0002	SHEET	807
484895-0003	SHEET	807
484895-0005	SHEET	807
484895-0006	SHEET	807
484895-0007	SHEET	807
484997-0000	VALVE BODY 51	65
486790-0000	BRACKET	395
486794-0000	HOLDER	395
486803-0000	BEARING HOUSING	13
486826-0001	SIGN "EMERGENCY STOP"	719, 733, 749, 805
486958-0200	DATING UNIT	765
486960-0001	SHAFT	779, 781, 783, 785, 787, 791, 793, 795
486960-0002	SHAFT	779
486961-0000	PLATE	779, 781, 783, 787
486962-0001	FASTENING BRACKET	781, 785, 787, 793, 795
486962-0002	FASTENING BRACKET	779, 781, 783
486962-0003	FASTENING BRACKET	779
486962-0004	FASTENING BRACKET	779, 781, 783
486962-0007	FASTENING BRACKET	787
486962-0008	FASTENING BRACKET	787
486962-0009	FASTENING BRACKET	791
486962-0010	FASTENING BRACKET	791
486962-0011	FASTENING BRACKET	783, 791
486964-0000	HEAD PLATE	779, 781, 783, 785, 787, 791, 793, 795
486965-0000	HEAD PLATE	779
486966-0001	SHAFT	779, 781, 783, 785, 787, 791, 793, 795
486966-0002	SHAFT FOR CARRIER	779
486967-0000	SHEET	789
486968-0001	SHAFT FOR BENDINGROLLER	779, 781, 783, 785, 787, 791, 793, 795
486968-0002	SHAFT FOR BENDINGROLLER	779
486969-0000	GUIDE LUG	789
486971-0000	ANGLE	789
491126-0000	SCREW	53
491128-0000	GASKET	89
491602-0000	GASKET HOLDER	89
491770-0000	BUSHING	155
491929-0000	IMPELLER WHEEL	155
493021-0000	ARM	257
493022-0000	ARM	257
493091-0000	CLAMP RAIL	99, 101
493614-0100	SPRAY GUN	125, 127
493615-0000	SEAL	99, 101
493653-0000	GASKET	71
493658-0000	AXLE SUPPORT	103
493710-0000	FOLDING FLAP	315, 319
493711-0000	FOLDING FLAP	315, 319
493733-0000	LOCKING PIN UPPER	37, 39
493734-0000	LOCKING PIN LOWER	37, 39
493875-0000	FILLING TUBE LOWER	37
493948-0000	CANTILEVER	19
497040-0000	STEERING	385, 389
497121-0000	SPLASH GUARD	153
497131-0000	FILLER TUBE	29
497172-0000	PIPE	215
497173-0000	PIPE	215
497174-0000	PIPE	215
497175-0000	PIPE	215
497176-0000	PIPE	215
497572-0000	BEARING HOUSING	361, 365

Part No	Description	Page No
497579-0000	CLAMP HALF	23
497580-0000	CLAMP HALF	23
497583-0000	HOUSING	383, 387
497716-0000	GASKET	359, 363
497719-0000	WASHER	89
497720-0000	WASHER	7
497921-0000	CUTTING RAIL	359, 363
499011-0000	SHAFT	29
499016-0000	FORK	29
499082-0404	ADAPTER, TYPE 1	835
499132-0002	SHAFT	821
49915-0000	CIRCUIT DIAGRAM	267
49916-0000	COMPONENT LAYOUT	267
499181-0000	WASHER	71
499255-0200	SEAL KIT	117
499387-0000	PRESSURE ROLLER	29, 117
499473-0000	GEAR WHEEL	285
499474-0000	SHAFT	285
499825-0000	GASKET	71
499826-0000	PIPE	71
499833-0000	PIPE RIGHT	175
499834-0000	PIPE LEFT	175
522090-0000	HEAT EXCHANGER	81
522121-0200	CUTTING TABLE	765
522122-0001	RAIL	825
522122-0002	RAIL	825
522123-0000	PLATE	825
522124-0000	RULER	825
522125-0000	BEARING HOUSING	825
522126-0000	SHEET	825
522128-0000	KNIFE	825
522129-0000	KNIFE HOLDER	825
522130-0000	HANDLE	825
522131-0000	STEERING	825
522132-0000	SLIDE BELT	825
522133-0000	SHAFT	825
522134-0000	END PLATE	825
522137-0000	PUSH BUTTON	825
522138-0000	STOPPER	825
522139-0001	STOPPER	825
522139-0002	STOPPER	825
522152-0000	RAIL BRACKET	371, 375
522153-0000	VOLUME CAM	371, 375

Part No	Description	Page No
522158-0000	COMPRESSION SPRING	825
522173-0000	CANTILEVER	821
522308-0000	SIGN	829
522408-0000	BEARING HOUSING	789
522410-0200	BENDING ROLLER	807
522474-0000	BLOCK L	817
522475-0000	BLOCK R	817
525000-0100	FOLDING PART	579
525000-0200	FOLDING PART	401, 403
525001-0000	FOLDING BAR	545, 547, 549, 551, 553, 699, 701
525002-0000	FOLDING BAR	543, 545, 699, 701
525003-0000	FOLDING BAR	545, 547, 549, 551, 553, 699, 701
525004-0000	FOLDING BAR	543, 545, 699, 701
525005-0001	FOLDING BAR	547, 549, 701
525005-0002	FOLDING BAR	549, 701
525005-0003	FOLDING BAR	547, 701
525005-0004	FOLDING BAR	545, 701
525005-0005	FOLDING BAR	545, 699
525005-0006	FOLDING BAR	545, 701
525005-0007	FOLDING BAR	543, 699
525005-0008	FOLDING BAR	543, 699
525005-0009	FOLDING BAR	543, 699
525005-0010	FOLDING BAR	543
525006-0001	FOLDING BAR	547, 549, 701
525006-0002	FOLDING BAR	549, 701
525006-0003	FOLDING BAR	547, 701
525006-0004	FOLDING BAR	545, 701
525006-0005	FOLDING BAR	545, 699
525006-0006	FOLDING BAR	545, 701
525006-0007	FOLDING BAR	543, 699
525006-0008	FOLDING BAR	543, 699
525006-0009	FOLDING BAR	543, 699
525006-0010	FOLDING BAR	543
525007-0001	CANTILEVER	545, 547, 549, 699, 701
525007-0002	CANTILEVER	543, 545, 551, 553, 699, 701
525007-0003	CANTILEVER	543, 699
525007-0004	CANTILEVER	547
525008-0001	BRACKET	545, 547, 549, 551, 553, 701
525008-0002	BRACKET	543, 545, 547, 699, 701
525008-0003	BRACKET	545, 699
525011-0001	BRACKET	549, 701
525011-0002	BRACKET	547, 549, 701
525011-0003	BRACKET	547, 701

Part No	Description	Page No
525011-0004	BRACKET	545, 701
525011-0005	BRACKET	545, 699
525011-0006	BRACKET	545, 701
525011-0007	BRACKET	543, 699
525011-0008	BRACKET	543, 699
525011-0009	BRACKET	543, 699
525011-0010	BRACKET	543
525012-0001	COUNTER PLATE	549, 551, 701
525012-0002	COUNTER PLATE	549, 701
525012-0003	COUNTER PLATE	547, 701
525012-0004	COUNTER PLATE	545, 701
525012-0005	COUNTER PLATE	545, 699
525014-0001	COUNTER PLATE	543, 699
525014-0002	COUNTER PLATE	543, 699
525015-0001	SCREW	545, 547, 549, 551, 699, 701
525015-0002	SCREW	543, 545, 547, 551, 553, 699, 701
525015-0003	SCREW	543, 699
525016-0000	FASTENING PLATE	547, 553, 703
525017-0000	STEERING GUIDE	547, 553, 703
525018-0000	SPACER	547, 553, 703
525019-0000	BRACKET	547, 553, 703
525022-0000	STRUT	695
525038-0000	GABLE PLATE	493
525039-0000	GABLE PLATE	493
525046-0000	GASKET	425, 601
525047-0000	GASKET	425, 601
525049-0100	DROP CHUTE	579
525051-0000	HEAD PLATE	493
525052-0001	SPACER	493
525052-0002	SPACER	493
525052-0003	SPACER	493
525052-0004	SPACER	493
525052-0005	SPACER	493
525052-0006	SPACER	493
525053-0000	PLATE (CIRCULAR)	453, 455, 633
525054-0000	SIDE PLATE	453, 633
525055-0000	BRACKET	467, 657
525056-0000	CARRIER	651
525057-0000	CARRIER	643, 645, 647
525058-0000	CARRIER	643, 645, 647
525059-0000	CARRIER	645
525060-0000	CARRIER	645
525061-0000	CARRIER	641
525062-0000	CARRIER	641
525063-0000	BOTTOM	525, 535
525066-0000	SHEET	513, 679
525067-0000	SHEET	513, 679
525068-0000	SHEET	513, 679
525069-0000	SHEET	513, 679
525070-0000	ELECTRICAL CONNECTION	439, 449, 619, 625
525071-0000	SPACER PIECE	439, 619
525073-0000	COVER	439, 449, 619, 625
525074-0000	ARM	485
525075-0001	LINK	485
525075-0002	LINK	485
525075-0003	LINK	485
525075-0004	LINK	485
525075-0005	LINK	485
525075-0006	LINK	485
525077-0000	AXLE PIN	485
525078-0000	BRACKET	485
525079-0000	BRACKET	485
525080-0000	BRACKET	485
525081-0000	BRACKET	485
525082-0000	BRACKET	485
525083-0000	BRACKET	485
525084-0000	HEAD PLATE	485
525085-0200	LUBRICATING SYSTEM	401, 403
525086-0200	CONVEYING EQUIPMENT	457
525087-0100	DROP	461
525088-0200	DISCHARGE CHUTE	461
525089-0100	CHAIN RIGHT	457
525090-0100	CHAIN LEFT	457
525091-0100	CHAIN	457
525092-0100	CHAIN GUARD	457
525100-0000	BLOCKING PIECE	507, 509, 511, 677
525101-0001	BLOCKING PIECE	507
525101-0002	BLOCKING PIECE	507
525102-0200	LUBRICATING SYSTEM	425, 601
525109-0000	BRACKET	411, 587
525110-0100	CABLE CONDUIT	405, 421
525117-0300	INDEXING GEAR	497
525125-0000	PIN	507
525126-0000	SHAFT	689
525127-0000	BRACKET	689
525128-0100	FF-ELEMENT R	401, 403, 579

Part No	Description	Page No
525129-0100	ELEMENT	401, 403, 579
525130-0000	LEG	405, 421
525132-0000	CABLE TRENCH	405, 421
525134-0000	SPACER PIECE	449, 625
525135-0000	PLATE	417
525136-0000	SHAFT	413, 589
525138-0000	SHEET	559, 565
525140-0000	HOLDER	559, 565
525141-0000	LEAD RAIL	701
525142-0000	LEAD RAIL	701
525143-0200	BOTTOM VALVE	405, 421
525146-0000	BRACKET	483
525147-0000	BRACKET	481
525148-0000	BRACKET	481
525150-0000	GABLE PLATE	493
525151-0000	GABLE PLATE	493
525162-0000	BRACKET	643
525163-0000	BRACKET	645
525164-0000	STEERING	481
525166-0000	MOTOR CRADLE	409
525167-0000	HATCH	601
525169-0000	SIDE PLATE	453
525170-0000	SIDE PLATE	453
525171-0001	BRACKET	453, 455
525171-0002	BRACKET	453
525172-0000	SPACER	499
525173-0000	CANTILEVER	435, 615
525174-0000	BRACKET	405, 421
525175-0000	BRACKET	405, 421
525176-0000	PLATE	635
525178-0000	BRACKET	547, 553, 703
525179-0001	FOLDING ARM	545, 547, 549, 699, 701
525179-0002	FOLDING ARM	543, 545, 547, 699, 701
525180-0001	FOLDING ARM	545, 547, 549, 699, 701
525180-0002	FOLDING ARM	543, 545, 547, 699, 701
525181-0000	WASHER	547, 553, 703
525182-0001	COUNTER PLATE	545, 701
525182-0002	COUNTER PLATE	543, 699
525182-0003	COUNTER PLATE	543
525183-0000	SHEET	695
525185-0000	HATCH	425
525190-0000	SPACER RING	647
525191-0000	TIMING BELT PULLEY	647
525194-0000	SPROCKET	559, 565
525195-0000	WASHER	559, 565
525196-0000	NUT	573, 575, 711
525197-0000	BLOW-OFF NOZZLE TR	437, 439, 441, 447, 449, 451, 617, 619, 621, 623, 625, 627
525198-0000	BLOW-OFF NOZZLE TL	437, 439, 441, 447, 449, 451, 617, 619, 621, 623, 625, 627
525200-0000	BRACKET	559, 565
525208-0001	CARRIER	491
525208-0002	CARRIER	491
525208-0003	CARRIER	491
525211-0000	PLATE	517, 683
525212-0000	PLATE	513, 679
525213-0200	INFEEDER	401, 403
525215-0006	TIMING BELT PULLEY	411, 587
525216-0000	SLEEVE	411, 587
525232-0000	BRACKET	411, 587
525233-0000	GASKET	443, 445
525234-0002	PLATE	513, 679
525235-0000	CURVE	497, 669
525236-0000	HEAD PLATE	671
525242-0000	BRACKET	479
525243-0000	PROFILE	479
525244-0000	PROFILE	479
525245-0000	PROFILE	477
525246-0000	PROFILE	477
525247-0000	PROFILE	477
525248-0000	PROFILE	477
525252-0000	BEARING	453, 455, 633
525253-0000	SLIDE RAIL	671
525254-0000	LINK	491, 567, 571
525255-0000	HEAD PLATE	481, 483
525256-0000	HEAD PLATE	481, 483
525259-0000	BRACKET	481
525260-0000	GABLE PLATE	493
525261-0000	GABLE PLATE	493
525262-0000	COVERING PLATE	405, 421
525264-0000	BOTTOM	525, 535
525265-0001	LEAD PLATE	563
525265-0002	LEAD PLATE	563
525265-0003	LEAD PLATE	563
525265-0004	LEAD PLATE	563
525266-0000	LEG	405, 421

Part No	Description	Page No
525267-0000	LEG	405, 421
525268-0000	LEG	405, 421
525269-0000	PIPE	415
525270-0000	PIPE	415
525271-0000	ELBOW PIPE	405, 421
525272-0000	STRUT	405, 421
525273-0000	STRUT	405, 421
525274-0000	FINISH FRAME 525274	405, 421
525275-0000	COVERING PLATE	405, 421
525276-0000	HOUSE	425
525277-0000	CABLE TRENCH	405, 421
525278-0000	CLEANING TROUGH	405
525279-0000	HATCH	497
525280-0000	SHEET	405, 421, 581, 583
525281-0000	GASKET	405, 421, 581, 583
525292-0000	BRACKET	497
525293-0000	PIPE	497
525294-0000	PIPE	497
525295-0000	ARM	543, 545, 547, 549
525296-0000	BRACKET	547, 553
525297-0000	BRACKET	543, 545, 547, 549, 551
525298-0000	SPROCKET	567, 571
525299-0000	SHAFT	567, 571
525300-0000	MACHINE BODY	567
525301-0000	ARM	559, 561, 565
525302-0000	ARM	559
525303-0000	ARM	559
525304-0000	ARM	559
525305-0000	DISTRIBUTOR	559, 561
525306-0000	DISTRIBUTOR	559
525307-0000	DISTRIBUTOR	559
525308-0000	DISTRIBUTOR	559
525309-0000	DISTRIBUTOR	559
525310-0000	BRACKET	559, 565
525311-0000	GUIDE	559, 565
525312-0000	SHAFT	559, 565
525315-0000	SLIDER	559, 565
525317-0000	FITTING BOLT	559, 565
525320-0100	CHAIN GUARD	559, 565
525321-0000	SCREW	547, 553
525322-0001	LEAD RAIL	567
525322-0002	LEAD RAIL	567
525322-0003	LEAD RAIL	567
525322-0004	LEAD RAIL	567
525323-0000	BRACKET	567
525324-0000	PROFILE	567, 571
525325-0200	DISCHARGER	401, 403
525326-0000	CHAIN GUARD	563
525327-0000	CHAIN GUARD	563
525328-0000	CHAIN GUARD	563
525329-0000	SLEEVE	521, 523, 525, 527, 531, 533, 535, 537, 691, 693
525330-0000	SHAFT	525, 535, 691, 693
525331-0000	SHIM	429
525332-0000	SHIM	429
525334-0000	BRACKET	463, 473, 479
525335-0000	HOUSE	509, 677
525337-0000	BRACKET	411, 587
525338-0000	SPACER	493, 495
525339-0000	COVERING PLATE	493
525340-0000	BRACKET	547, 553, 703
525341-0001	LEAD RAIL	545, 547, 549
525341-0002	LEAD RAIL	543, 545
525346-0000	SIDE PLATE	405, 421
525347-0000	SLIDE RAIL	501
525348-0000	SLIDE RAIL	501
525349-0000	SLIDE RAIL	499
525350-0000	SLIDE RAIL	499
525351-0000	SLIDE RAIL	499
525352-0000	SLIDE RAIL	499
525353-0000	SLIDE RAIL	499
525354-0000	SLIDE RAIL	499
525355-0000	SLIDE RAIL	499
525356-0000	SLIDE RAIL	499
525357-0000	SPACER	499
525358-0000	BRACKET	435, 615
525360-0000	BRACKET	547
525361-0000	SHAFT	647
525362-0000	SHAFT	647
525363-0001	SHAFT	653, 659
525363-0002	SHAFT	463, 475, 647
525364-0000	PIVOT PIN	653
525365-0000	SHAFT	637
525366-0000	SHAFT	637
525367-0000	SLEEVE	509, 677
525368-0000	BOTTOM	523, 533
525369-0000	BOTTOM	523, 533

Part No	Description	Page No
525370-0000	BOTTOM	523, 533
525371-0000	BOTTOM	521, 531
525372-0000	BOTTOM	521, 531
525373-0000	BOTTOM	521, 531
525374-0000	CARRIER	567
525375-0000	OIL PIPE	435, 615
525376-0000	BOW CLAMP	435, 615
525377-0000	HATCH	425
525378-0000	HEAD PLATE	499
525379-0000	COMPRESSION SPRING	507, 509, 511, 677
525380-0000	HATCH	557
525381-0000	BRACKET	557
525382-0000	SHAFT	557
525383-0000	BRACKET	557
525384-0000	DOWEL	557
525385-0000	BRACKET	773
525394-0000	HINGE	557
525400-0000	SHAFT	463, 479
525401-0000	SHAFT	479
525402-0000	SHAFT	463, 473, 479
525403-0000	PROFILE	477
525404-0000	PROFILE	477
525405-0000	PROFILE	477
525406-0000	PROFILE	477
525408-0000	HEAD PLATE	501
525409-0000	WASTE CHUTE	557
525410-0000	LEAD RAIL	549
525411-0000	PROFILE	567, 571
525412-0000	RULER	567, 571
525413-0000	LEAD RAIL	569
525414-0000	CARRIER	567, 569
525416-0000	STOP	485
525417-0000	STEERING	559, 561
525418-0000	HOLDER	559, 561
525419-0000	LEAD RAIL	479
525423-0000	COVERING PLATE	557
525424-0000	HEAD PLATE	499, 671
525425-0000	PROFILE	477
525426-0000	PROFILE	477
525427-0000	PROFILE	477
525428-0000	PROFILE	477
525429-0000	PLATE	513, 515, 679, 681
525430-0000	FLAP	521, 531
525431-0000	CARRIER	487
525432-0000	CARRIER	489
525437-0000	ARCH	567, 569
525438-0000	COUNTER PLATE	547
525439-0000	DRIP PLATE	557
525445-0000	HUB	535, 537
525446-0000	HUB	525, 527
525447-0000	HUB	535, 537
525448-0000	HUB	525, 527
525449-0000	HUB	531, 533, 535, 537, 693
525450-0000	HUB	521, 523, 525, 527, 691
525451-0000	FLAP	527, 537
525452-0000	FLAP	527, 537
525453-0000	FLAP	525, 527, 535, 537, 691, 693
525454-0000	FLAP	525, 535
525455-0000	FLAP	523, 533
525456-0000	FLAP	523, 533
525458-0000	FLAP	521, 531
525459-0000	FLAP	521, 531
525460-0000	SPACER PIECE	525, 535
525461-0000	SPACER PIECE	521, 523, 531, 533
525465-0000	BRACKET	485
525466-0000	ARCH	567
526502-0000	STEERING RAIL	95
526582-0000	NET	733
526587-0000	AIR NOZZLE	43
526677-0000	CANTILEVER	395
526680-0000	FENDER WALING	769
526682-0000	HOOD	29
526687-0000	ATTACHMENT	43
526688-0000	HEAD PLATE	43
526689-0000	DISTRIBUTOR WING	43, 117
526690-0000	SHAFT	43
526691-0000	ROLL	43
526692-0000	ROLL	43
526696-0000	AIR NOZZLE	23
526697-0000	HEAT GUARD	23
526782-0000	COVERING PLATE	45
526904-0000	LINK HEAD	303
526931-0300	BOTTOM PLATE	715, 717
526932-0300	PIPE WORK	715, 717
526947-0000	MOUNTING SHEET	747
526948-0000	MOUNTING SHEET	743

Part No	Description	Page No
526949-0000	CANTILEVER	395
526954-0100	START-UP KIT	715, 717
526958-0000	AXLE SUPPORT	19
526960-0000	PRESSURE FLANGE	37
526984-0000	SADDLE	803
526985-0000	PLATE	803
526986-0001	SHAFT	803
527120-0000	STEERING	163
527121-0001	BOW CLAMP	163
527121-0002	BOW CLAMP	163
527122-0000	ATTACHMENT	163
527124-0000	BEARING	163
527125-0000	STEERING	163
527126-0000	LEAF SPRING	163
527127-0000	DOWEL	163
527128-0000	GUIDE PIN	163
527129-0000	BRACKET	163
527130-0000	SCREW	163
527647-0001	STEERING RAIL	95
527647-0002	STEERING RAIL	95
527648-0000	WASHER	295
527649-0000	DISTANCE RUBBER	803
527750-0000	CALENDER ROLLER	91
527850-0000	HOLDER	687
527851-0000	PACKAGE GUIDE	687
527852-0000	PLATE	687
527853-0000	PLATE	687
527854-0000	PLATE RIGHT	513, 679
527856-0000	PLATE LEFT	513, 679
527859-0000	SLIDE RAIL	671
527861-0000	HEAD PLATE	499, 671
527885-0000	SPACER	659
527898-0100	CONTAINER H2O2	147
527902-0000	SHEET	149
527905-0000	GASKET	159
527906-0000	GASKET	159
527907-0000	PIPE	241, 243, 245, 247, 249, 251
527910-0000	PIPE	153
527912-0000	NON-RETURN VALVE	163
529000-0000	VOLUME FLAP	345
529002-0000	VOLUME FLAP	347
529033-0000	FILLING TUBE LOWER	37
529039-0000	EDGE ROLLER	19
529040-0000	GUIDE ROLLER	19
529041-0000	GUIDE ROLLER	19
529137-0000	CURVE LEFT	325
529138-0000	CURVE RIGHT	329
529139-0000	CREASE FORMER	779
529141-0000	VOLUME SHIM	391
529180-0000	FORK	29
529181-0000	COUNTER ROLLER	13
529184-0000	HOLDER	13
529196-0000	HOLDER	371
529312-0000	HEAD PLATE	499, 501, 671
529331-0000	COVERING PLATE	405
529362-0000	SPROCKET	803
529376-0000	ARM	39
529377-0000	CLAMP	39
529378-0000	LINK	39
529401-0000	SPRING	753
529455-0000	PLATE	805
529456-0000	PLATE	805
529476-0000	SIDE GUARD	773
529478-0000	HEAD PLATE	499, 671
529498-0000	SIDE GUARD RIGHT	773
530469-0000	FRONT PLATE	205
530529-0000	MAIN CAM	291
530532-0000	COUNTER CAM	291
530550-0000	PIPE	149
530551-0000	WASHER	163
530556-0000	JUNCTION PIPE UPPER	229
530566-0000	EDGE ROLLER	19
530567-0000	GUIDE ROLLER	19
530568-0000	GUIDE ROLLER	19
530588-0000	SEAL RING	83, 85, 119
530589-0000	SEAL RING	119
530622-0000	BUSHING	41
530708-0000	ARM	293
530745-0400	SIDE GUARD	765
530754-0000	FASTENING BRACKET	287
530755-0000	SCREW	287
530778-0000	LACE	825
530808-0000	CLAMP RAIL	99, 101
530826-0000	FILLING TUBE LOWER	37
531002-0000	CURVE	371
531034-0000	VALVE HOUSING	73

Part No	Description	Page No
531035-0000	ARM	73
531036-0000	SHAFT	73
531037-0000	FLAP	73
531038-0000	GASKET	73
531039-0000	WASHER	73
531040-0000	BRACKET	73
531041-0000	WEDGE	73
531109-0000	VOLUME CAM	377
531110-0000	RAIL BRACKET	377, 379
531116-0000	GASKET	415
531119-0000	STRAINER	405, 421
531167-0000	SHAFT	53
531168-0000	WHEEL	53
531169-0000	WASHER	53
531189-0000	GASKET	415
531190-0000	SHAFT	89
531191-0000	BUSHING	89
531309-0000	GASKET	99, 101
531310-0000	HEAD PLATE	499, 671
531312-0000	HEAD PLATE	499, 671
531313-0000	HEAD PLATE	499, 671
531314-0000	HEAD PLATE	499, 671
531320-0000	VOLUME SHIM	347, 393
531328-0000	HEAD PLATE	501, 671
531337-0000	MACHINE BODY	775
531345-0100	PERSONAL PROTECT. EQ H2O2	835
531592-0000	PIPE	213
531595-0000	STRAIGHT PIPE UNION	213
531597-0000	PIPE	213
531616-0000	HOLDER	165, 167
531628-0000	PRESSURE DEVICE FLAP	507
531730-0000	FLANGE SEAL	439, 449, 619, 625
531731-0000	GASKET	87
531733-0000	GASKET	743, 755
531734-0000	GASKET	41, 117, 743, 755
531735-0000	GASKET	743, 755
531736-0000	GASKET	743, 755
531737-0000	GASKET	81, 87
531738-0000	GASKET	41, 117
531739-0000	GASKET	41, 117
531740-0000	GASKET	41, 117
531741-0000	GASKET	23
531742-0000	GASKET	45, 81, 117

Part No	Description	Page No
531744-0000	GASKET	41, 117
531745-0000	GASKET	41, 117
531761-0000	HOLDER	167
531764-0000	GASKET	41, 117
531765-0000	GASKET	83, 85
531885-0000	STEERING	821
531886-0000	PROTECTION PLATE	807
531887-0000	PROTECTION PLATE	807
532024-0000	GASKET	775
532026-0000	SEAL COVER	775
532032-0000	MAIN CAM	289
532033-0000	COUNTER CAM	289
532082-0000	ROUND NUT	789
532083-0000	ROUND NUT	789
532097-0000	COUNTER CAM	289
532129-0000	VOLUME BULGE	347
532143-0000	ARM	91
532144-0000	SHAFT	91
532145-0000	SHAFT	91
532146-0000	SHAFT	91
532147-0000	WASHER	91
532148-0000	SCREW	91
532151-0300	CONNECTION BOX	805
532205-0000	LID	159
532206-0000	GASKET	159
532261-0000	SLEEVE	91
532318-0000	CATCH GUARD RIGHT	133
532319-0000	CATCH GUARD LEFT	133
532348-0000	SPINDLE GUIDE	83, 85
532349-0000	PLAIN BEARING	83, 85
532352-0000	PIPE	107, 109
532354-0000	PIPE	107, 109
532355-0000	PIPE	107, 109
532356-0000	PIPE	107, 109
532366-0000	PIPE	107, 109
532371-0000	STOP LUG	257
532655-0000	CAUTION SIGN	161
532718-0000	VOLUME FLAP	343
532719-0001	FEEDING ROLLER	779, 781, 783, 785, 787, 791, 793, 795
532719-0002	FEEDING ROLLER	779
533012-0001	END PIECE	359, 361, 363, 365, 393
533112-0000	FOLDING FLAP CAM L	325
533113-0000	FOLDING FLAP CAM R	329

Part No	Description	Page No
533169-0000	DIAPHRAGM	119
533195-0000	MANTLE	41
533196-0000	FASTENING PLATE	41
533441-0000	VOLUME FLAP	343
533442-0000	COUNTER ROLLER	13
533448-0000	MACHINE BODY	779
533449-0001	BENDING ROLLER	779, 781, 783, 785, 787, 791, 793, 795
533449-0002	BENDING ROLLER	779
533453-0000	LID	779, 781, 783, 785, 787, 791, 793, 795
533454-0000	FRAME	779, 781, 783, 785, 787, 791, 793, 795
533455-0000	LID	779
533456-0000	FRAME	779
533457-0001	SHAFT	779, 781, 783, 785, 787, 791, 793, 795
533457-0002	SHAFT	779
533458-0000	WASHER	789
533459-0000	SCREW	789
533818-0000	HOLDER	333, 335, 337, 339, 341
533955-0000	CURVE	375, 377, 379
533956-0000	CURVE RIGHT	329
533957-0000	CURVE LEFT	325
533958-0000	FOLDING FLAP CAM R	329
533959-0000	FOLDING FLAP CAM L	325
533961-0000	MAIN CAM	289
533962-0000	COUNTER CAM	289
534176-0000	AIR NOZZLE	23
534177-0000	HOLDER	13
534237-0000	SEAL	339, 341
534426-0000	PIPE	81
534455-0000	HEAD PLATE	695
534456-0000	PLATE	687
534486-0000	PIPE HOLDER	257
534878-0000	SHAFT	171, 173, 177, 179, 231, 259
534879-0000	BEARING HOUSING	171, 173, 177, 179, 231, 259
534880-0000	END SECTION	171, 173, 177, 179, 231, 259
535016-0000	FORCE SPRING	229
535017-0000	BRACKET	229
535200-0000	HOLDER	395
535608-0000	GASKET	733
535612-0000	PIPE	735
535613-0000	BRANCH	733
535614-0000	INNER PIPE	733
536686-0000	VOLUME BULGE	345
536687-0000	VOLUME SHIM	345
536703-0000	SHAFT	303
536704-0000	WASHER	333, 335, 337, 339, 341
536705-0000	BRACKET	339, 341
536913-0000	HUB	721
536916-0000	AXLE PIN	757
536917-0000	AXLE PIN	723, 725
537308-0000	SPRING	797
537327-0000	SHAFT	721
537329-0100	HUB JUMBO	757
537901-0000	FOLDING FLAP CAM L	325
537902-0000	FOLDING FLAP CAM R	329
537918-0000	PIPE	229
537919-0000	PIPE HOLDER	229
538241-0001	SPACER	793
538241-0002	SPACER	795
538241-0003	SPACER	787
538241-0004	SPACER	783
538241-0005	SPACER	787
538245-0000	SHIM	207
538399-0000	SHAFT	333, 335, 337, 339, 341
538400-0000	ARM LEFT	333
538401-0000	ARM RIGHT	335, 337
539052-0000	KNIFE HOLDER	807
539209-0100	A-CYLINDER	65
539210-0100	C-CYLINDER	65
539211-0100	B-CYLINDER	65
539212-0000	GASKET	65, 119
539338-0000	CAP	779, 781, 783, 785, 787, 791, 793, 795
539347-0001	STAMPING SUMMARY	801
539612-0000	SPREADER	203
539613-0000	SPREADER	203
539761-0000	CUTTING RAIL	361, 365
540270-0000	MAIN CAM	289
540306-0001	COMPONENTS WITHOUT TP-NO	267
540307-0000	PRINTED CIRCUIT BOARD	267
540335-0000	LINK	303
540367-0000	CARRIER	357
540368-0000	CARRIER	355
540718-0000	ELBOW PIPE JOINT	215
540721-0000	CABLE DUCT	237
540722-0000	LID	237
540723-0100	CONNECTION BOX	205
540724-0000	CONNECTION BOX	211

Part No	Description	Page No
540726-0000	HOOK HOLDER	207
540727-0000	FASTENING BRACKET	207
540743-0000	BUSBAR	357
540744-0000	BUSBAR	355
540869-0000	SHEET	757
540870-0000	ARM	723, 725
540886-0000	TANK	153
540949-0000	SHAFT	297
541009-0000	CRANK HOLDER	189
541052-0100	ARM WITH AXLE PRESSURE L	311, 313
541053-0100	ARM WITH AXLE PRESSURE R	311, 313
541057-0000	ARM	723, 725
541064-0000	FORK	723, 725
541065-0000	SHAFT	723, 725
541066-0000	ROLL	723, 725
541067-0000	SPRING BRACKET	723, 725
541068-0000	SPRING HOLDER	757
541069-0000	SPRING BRACKET	723, 725
541070-0000	SHAFT	723, 725
541163-0100	CLAMP RING	65
541164-0100	CLAMP RING	65
541172-0000	SET SCREW	757
541173-0000	STOP	757
541177-0000	BENDING ROLLER	53
541188-0200	BAR CODE	311, 313
541204-0000	VOLUME BULGE	343
541697-0000	CATCH	385, 389
541751-0000	CONICAL BOBBIN	721
542063-0000	FLANGE	297
542074-0000	PIPE	213
542075-0000	PIPE	53
542090-0000	HEAT GUARD	741
542262-0000	CRANK	283
542269-0000	SPACER	753
542398-0000	HOLDER	205
542399-0000	HOLDER	205
542695-0000	COVERPLATE R	137
542697-0000	COVER PLATE L	199
542700-0000	VALVEPANEL LOWER	219
542702-0000	COVER PLATE L	205
542703-0000	COVER PLATE R	205
542706-0000	PIPE	169
542781-0000	ARM	727
542782-0000	AXLE PIN	727
542784-0000	LINK ARM	727
542785-0000	ROLL	727
542786-0000	FLAG	727
542847-0000	PAPER GUARD	11
542848-0000	HATCH	11
542849-0000	CANTILEVER	11
542850-0000	COVERING PLATE	11
542851-0000	HINGE	11
543125-0000	ANGLE	757
543126-0000	STOP LUG	757
543127-0000	BRACKET	217
543128-0000	VALVE BRACKET	219
543130-0000	BRACKET	217, 219
543131-0000	BRACKET	219
543134-0000	PLATE	219
543135-0000	INK TRANSFER ROLLER	797
543137-0001	SPACER	785
543137-0002	SPACER	779, 783
543137-0003	SPACER	781
543138-0000	SPACER	779
543141-0000	SIGN	803
543142-0000	SIGN	803
543143-0100	ADJUSTMENT DEVICE	789
543144-0001	ASSEMBLY DESCRIPTION	803
543148-0000	HOOD	175
543151-0000	CANTILEVER	205
543152-0000	HOSE ATTACHMENT	207
543470-0000	LEVEL GLASS	53
543471-0000	ROLL	19
543476-0000	TROUGH	297
543575-0000	LOCK SHEET	727
543694-0000	SLIDE RAIL	499
543697-0000	SPACER PIECE	525, 535
543701-0000	SHEET	517, 683
543702-0000	SHEET	517, 683
543705-0000	GEAR WHEEL WIDE	503
543706-0000	GEAR WHEEL SLIM , INNER	503
543707-0000	GEAR WHEEL SLIM , OUTER	503
543709-0003	INSTALLATION DIAGRAM	503
543818-0000	PROTECTION PLATE	757
543819-0000	HINGE	757
543820-0000	SPRING	723, 725

Part No	Description	Page No
543821-0100	LEVEL PROBE	757
543822-0100	BRAKE ARM	757
543823-0100	STRIP MAGAZINE	715, 717
543950-0000	BENDING ROLLER	89
544012-0000	ROLL	103
544013-0000	RING	103
544014-0000	RING	103
544015-0000	SEAL	103, 117
544229-0001	DROP WING	481, 483
544229-0002	DROP WING	481
544229-0003	DROP WING	481
544229-0004	DROP WING	483
544229-0005	DROP WING	481
544252-0000	FLAP	525, 535
544254-0000	PLATE	525, 535
544255-0000	BLOCKING PIECE	507
544263-0000	FORMING RING	19
544269-0000	BLOW-OFF NOZZLE TV	439, 449, 619, 625
544270-0000	STOPPER	825
544272-0000	BEARING HOUSING	817
544273-0000	BEARING HOUSING	817
544274-0000	COVERING PLATE	817
544275-0000	COVERING PLATE	817
544277-0000	RETAINING RING	767
544278-0000	BEARING HOUSING	383, 387
544279-0000	CREASE FORMER	787
544280-0000	SHEET	515, 681
544286-0000	BOW CLAMP	5
544287-0000	FILLER TUBE	29
544288-0000	SHEET	515, 681
544289-0000	FLAP	507
544290-0000	RAIL	515, 517, 681, 683
544291-0000	PLATE	515, 681
544292-0000	SHAFT	343, 345, 347, 349
544293-0000	BLOW-OFF NOZZLE TH	439, 449, 619, 625
544294-0000	FILLER TUBE	37, 39
544295-0000	FLOAT	37, 39
544298-0000	BLOWING NOZZLE B	439, 449, 619, 625
544299-0000	CUP	9
544300-0000	GASKET	9
544301-0000	STEERING RAIL	95
544303-0000	HOLDER	375
544305-0000	VOLUME SHIM	391
544306-0000	BEARING HOUSING	13
544307-0000	HEAD PLATE	485
544314-0000	FOLDING FLAP	315, 319
544315-0000	FOLDING FLAP	315, 319
544317-0000	BEARING HOUSING	359, 363
544318-0000	DISTRIBUTOR	559
544319-0000	CARRIER RULER	315
544320-0000	CARRIER RULER	319
544321-0000	HEAD PLATE	477
544322-0000	BRACKET	477
544323-0000	CUTTING JAW	359, 363
544327-0000	KNIFE	367
544331-0000	BRACKET	485
544332-0000	BRACKET	485
544333-0000	FORMING RING	13
544334-0000	CUTTING RAIL	359, 361, 363, 365
544335-0000	FORK	13
544336-0000	SHAFT	13
544337-0000	END PIECE	359, 363, 391
544342-0000	RAIL BRACKET	375, 377, 379
544343-0000	CANTILEVER	395
544344-0000	VOLUME FLAP	345
544345-0000	VOLUME BULGE	345
544346-0000	VOLUME SHIM	345
544367-0000	SHAFT	781, 785
544435-0000	PIPE	71
544436-0000	FILTER PIPE	71
544437-0000	BRANCH PIPE	81
544439-0000	INTERMEDIATE PIPE	71
544445-0000	SPACER	15, 17
544480-0000	NUT	165, 167
544481-0000	PLATE	165, 167
544482-0000	BRACKET	167
544483-0000	BRACKET	165
544484-0000	HOLDER	165, 167
544486-0000	BEARING UNIT	165, 167
544504-0000	VOLUME FLAP	347
544506-0000	PIPE	71
544516-0000	CUTTING RAIL	359, 363
544527-0000	MACHINE PLATE TBA	191
544533-0000	PLASTIC PEHD 21172-10	191
544680-0000	SIDE GUARD R	167
544681-0000	SIDEGUARD L	165

Part No	Description	Page No
544688-0000	PIPE	233
544689-0000	PIPE	233
544690-0000	PIPE	233
544691-0000	PIPE	233
544692-0000	PIPE	241, 243, 245, 247, 249, 251
544693-0000	PIPE	233
544694-0000	PIPE	233
544695-0000	PIPE	233
544696-0000	PIPE	233
544697-0000	PIPE	241, 243, 245, 247, 249, 251
544703-0000	MOUNTING SHEET	205
544706-0000	FLANGE	779, 781, 783, 785, 787, 791, 793, 795
544725-0000	AXLE PIN	757
544726-0000	AXLE PIN	723, 725
544727-0000	AXLE PIN	757
544730-0000	ROLL	723, 725, 757, 759
544892-0000	SPRING	29
544893-0000	SPRING	29
544896-0000	VALVE	53
544913-0000	PIPE	107, 109
544973-0100	PILLAR	715, 717
544974-0000	PILLAR	759
545101-0000	MAIN CAM	289
545107-0000	CHUTE LEFT	165
545108-0000	CHUTE	167
545111-0000	ARM	759
545112-0000	SHAFT	759
545113-0000	SIGN	757
545138-0000	CANTILEVER	759
545409-0000	ARM RIGHT	341
545410-0000	ARM LEFT	339
545651-0000	GUIDE STUD	351, 353
545789-0000	HOLDER	395
545995-0000	WIRING DIAGRAM	87
546030-0001	CANTILEVER	759
546030-0002	CANTILEVER	759
546031-0000	SPACER	759
546116-0000	CANTILEVER	739
546180-0100	SPLICE DETECTOR	715, 717
546929-0000	FILTER	49, 51
547220-0000	CABLE DUCT	237
547567-0000	SHAFT	57
547568-0000	SPACER	57
547571-0000	PLATE	759
547793-0000	SHAFT	155
547902-0000	BRACKET	143
547904-0000	TUBE	143
547906-0000	SHELF	253
547924-0000	AXLE PIN	759
547925-0000	AXLE PIN	759
548336-0000	WASHER	395
548337-0000	BUSHING	395
548397-0000	FOLDING BAR	549
548398-0000	FOLDING BAR	549
548402-0000	SIDE PIPE	439, 441, 449, 451, 619, 621, 625, 627
548406-0000	FLAP	511
548601-0000	VOLUME FLAP	347
548696-0000	SHAFT	777
548699-0000	SHAFT	777
548778-0000	LIFTING UNIT	853
548794-0000	HEATING JAW	807
549093-0000	PIPE	107, 109
549263-0000	BLOCK	25
549264-0000	CONTAINER	25
549267-0000	LID	25
549826-0000	WASHER	777
549827-0000	LUG	777
549828-0000	CAP	777
549830-0000	PROTECTION PLATE	775
549832-0000	WASTE CHUTE	789
549834-0000	CUTTING RAIL	817
549835-0000	CUTTING RAIL	819
549928-0000	COUNTER CAM	289
550149-0000	FLAP	527, 537
550235-0000	BOTTOM	527, 537
550301-0000	CURVE	375
550337-0000	FOLDING FLAP CAM L	325
550338-0000	FOLDING FLAP CAM R	329
550359-0000	ARM	549, 551, 553
550503-0000	PROTECTION	175
551281-0000	RAIL BRACKET	373
551282-0000	FASTENING PLATE	373
551283-0000	CURVE	373
551284-0000	VOLUME CAM	373
551285-0000	FOLDING FLAP CAM	325
551286-0000	FOLDING FLAP CAM	329

Part No	Description	Page No
551340-0000	FILLER TUBE	53
551626-0000	VOLUME CAM	377, 379
551784-0000	FITTING BOLT	99, 101
551786-0000	LEVER	99, 101
551825-0000	COUNTER CAM	289
551903-0000	KICKPLATE,LEFT	843
551907-0000	MAIN CAM	289
551910-0000	COUNTER CAM	289
551997-0001		853
551997-0100	LIFTING UNIT	835
551998-0000	SUPPORT LUG	853
552158-0000	RAIL BRACKET	371
552159-0000	VOLUME CAM	371
553156-0000	CONNECTION BOX	731
553164-0000	LOW IMPEDANCELITZ L=150MM	165, 167
553763-0000	ADJUSTING SCREW	809
553770-0001	PRESSURE JAW	807
553770-0002	PRESSURE JAW	807
553841-0000	LEAD-IN PLATE	195, 197
553851-0000	SCREW	385, 389
554139-0000	PIPE	107, 109
554141-0000	FILTER	25
554142-0000	FILTER HOUSING	25
554171-0300	PLATFORM ADDITION	835
554448-0000	PIPE	97
554449-0000	PIPE	97
554582-0000	CANTILEVER	59, 61, 63
554583-0000	PIPE	97
554585-0000	STUD SCREW	25
554850-0000	PIPE	107, 109
555540-0000	SPACER	47, 77, 79
555541-0000	BRACKET	47, 77, 79
555542-0000	BRACKET	47, 77, 79
555544-0000	PIPE	45
555545-0000	COIL HEATER	41
555546-0000	INSULATING PLATE	41
555547-0000	PIPE	107, 109
555548-0000	PIPE	107, 109
555551-0000	PIPE	107, 109
555552-0000	PIPE	107, 109
555553-0000	PIPE	107, 109
555554-0000	PIPE	107, 109
555888-0000	BRACKET	301

Part No	Description	Page No
555892-0000	VOLUME BULGE	347
555926-0000	VOLUME FLAP	347
555928-0000	VOLUME SHIM	347
556139-0000	ROLL	13
556316-0000	INSULATION	807
556317-0000	INSULATION	807
556318-0000	INSULATION	807
556319-0000	WASHER	819
556320-0000	SLEEVE	819
556321-0000	CLAMPING PIECE	819
556322-0000	SHAFT	817
556323-0000	SHAFT	817
556324-0000	SHAFT	817
556325-0000	SHAFT	817
556391-0000	HANDLE	819
556392-0000	HANDLE	819
556393-0000	CUTTING RAIL	817
556394-0000	CUTTING RAIL	817
556395-0000	CUTTING RAIL	817
556439-0000	BARRIER	825
556440-0000	BARRIER	825
556441-0000	ARM	825
556442-0000	ARM	825
556443-0000	BEARING HOUSING	825
556471-0000	KNIFE HOLDER	367
556472-0000	KNIFE HOLDER	367
556473-0000	KNIFE HOLDER	367
556549-0000	FASTENING PLATE	733
556550-0000	BRACKET	743
556551-0000	CYLINDER BRACKET	741
556552-0000	BRACKET	741
556557-0001	PIPE	735
556557-0002	PIPE	735
556557-0003	PIPE	735
556557-0004	PIPE	735
556557-0005	PIPE	735
556557-0006	PIPE	735
556558-0001	PIPE	735
556558-0002	PIPE	735
556558-0003	PIPE	735
556558-0004	PIPE	735
556558-0005	PIPE	735
556558-0006	PIPE	735

Part No	Description	Page No
556559-0001	PIPE	735
556559-0002	PIPE	735
556559-0003	PIPE	735
556559-0004	PIPE	735
556559-0005	PIPE	735
556559-0006	PIPE	735
556560-0001	PIPE	735
556560-0002	PIPE	735
556560-0003	PIPE	735
556560-0004	PIPE	735
556560-0005	PIPE	735
556560-0006	PIPE	735
556565-0000	ROCKER ARM	741
556579-0000	CURVE	297
556682-0000	PLATE	113
556683-0000	GASKET	113
556868-0000	ANGLE	773
556872-0000	BEARING UNIT	771
556873-0000	EXTENSION PIECE	771
556874-0000	BLOCKING RING	771
556875-0100	COVER	765
556879-0000	COVER	771
556886-0000	BRACKET	463, 479
560122-0000	SUPPORT ROLLER	373, 375, 377, 379
560391-0000	CAM LEFT	291
560392-0000	CAM RIGHT	291
560417-0000	ROCKER ARM	295
560418-0000	SHAFT	295
560472-0000	PIPE	53
560614-0000	BATH	53
560615-0000	PIPE	53
560616-0000	PILLAR	57
560617-0000	ROLLER CHAIN	53
560873-0000	PLATE	165, 167
560881-0000	PIPE	241, 243, 245, 247, 249, 251
560922-0100	VALVE PANEL	147
560923-0000	PIPE	155
560927-0000	PIPE	59, 61, 63
560928-0000	PIPE	107, 109
560929-0000	TOUCH GUARD	59, 61, 63
560930-0100	CONTAINER	3
560931-0000	BRACKET	25, 53, 153
560932-0000	INTERMEDIATE PART	25
560933-0000	ELECTRODE	25
560934-0000	ELECTRODE	25
561256-0300	PEROXIDE PIPE	125, 127
561257-0200	PEROXIDE TANK	147
561258-0200	DRAINING PEROXIDE	147
561259-0100	CONNECTION HOUSING	147
561268-0200	CONNECTION ASSEMBLY	3
561416-0000	BRACKET	325, 329
561420-0000	OVERFLOW TUBE	53
561421-0000	OVERFLOW TUBE	53
561422-0000	OVERFLOW TUBE	53
561424-0000	PIPE	233
561426-0000	LACE	809
561427-0000	CONTAINER	161
561542-0000	SUPPORT ROLLER	371
561543-0000	SUPPORT ROLLER	371, 373
561544-0000	SUPPORT ROLLER	375
561545-0000	SHAFT	371
561547-0000	SHAFT	371, 373, 375, 377, 379, 381
561549-0000	TANK	159
561571-0000	CABLE TRENCH	113
561583-0000	U-TUBE	81
561591-0000	PIPE	233
561592-0000	PIPE	233
561595-0000	SIGN	223
562140-0000	CAP	303
562746-0000	ARM	303
562747-0000	ARM	303
562748-0000	BRACKET	303
562749-0000	BRACKET	303
562971-0000	CANTILEVER	395
563061-0000	REAMED BOLT	303
563205-0000	RAIL BRACKET	373
563285-0000	BLIND PLUG	149
563609-0000	VOLUME FLAP	343
563728-0000	CAM LEFT	289
563729-0000	CAM RIGHT	289
564524-0000	CAM LEFT	289
564525-0000	CAM RIGHT	289
564526-0000	CAM LEFT	289
564527-0000	CAM RIGHT	289
564528-0000	CAM LEFT	289
564529-0000	CAM RIGHT	289

Part No	Description	Page No
564533-0001	DOLLY	359, 361, 363, 365, 391, 393
564533-0002	DOLLY	359, 363
564533-0005	DOLLY	359, 363, 391
564533-0007	DOLLY	359, 363, 391
564600-0000	PIPE	107, 109
564621-0000	CAM LEFT	289
564622-0000	CAM RIGHT	289
564623-0000	CAM LEFT	289
564624-0000	CAM RIGHT	289
564625-0000	CAM LEFT	289
564626-0000	CAM RIGHT	289
564933-0000	CAM LEFT	289
564934-0000	CAM RIGHT	289
565104-0000	SWEEP	163
565188-0000	FOLDING FLAP CAM	325
565189-0000	FOLDING FLAP CAM	329
565250-0000	WASHER	161
565251-0000	VALVE	161
565259-0000	VOLUME CAM	375
565322-0000	INTERMEDIARY SHAFT	503
565323-0000	OUTPUT SHAFT, LONG	503
565324-0000	LID	503
565325-0000	INPUT SHAFT	503
565326-0000	LID	503
565327-0000	RING NUT	503
565328-0000	SCREW RING	503
565329-0000	SPACER	503
565330-0000	SPACER	503
565331-0000	BEARING HOLDER	503
565332-0000	BEARING HOLDER	503
565333-0000	BEARING HOLDER	503
565334-0000	BEARING HOLDER	503
565335-0000	BEARING HOLDER	503
565336-0000	OUTPUT SHAFT SHORT	503
565338-0000	GEAR HOUSING	503
565339-0000	OIL PIPE	503
565340-0000	OIL LEVEL TUBE	503
565668-0000	MAIN CAM	289
565961-0000	KICKPLATE,RIGHT	843
565967-0000	ARM	521, 523, 525, 527, 531, 533, 535, 537, 691, 693
566016-0000	WASHER	509, 677
566171-0000	CUP SPRING	157
566192-0000	METERING DEVICE	159
566194-0000	WEIGHT	157
566195-0000	LID	157
566196-0100	LID WITH WEIGHT	153, 159
566228-0000	BRACKET	71
566229-0000	BRACKET	81
566311-0000	PROFILE	559, 565
566312-0000	BRACKET	559, 565
566313-0000	HOLDER	457
566314-0000	HOLDER	567
566315-0000	HOLDER	559, 565
566316-0000	HOLDER	457
566317-0000	HOLDER	457
566416-0000	COVERING PLATE	493
566526-0000	CLUTCH PIECE	383, 387
566527-0000	CLUTCH PIECE	383, 387
566533-0000	BRACKET	559, 565
566775-0000	CARRIER	411, 587
567023-0000	TOUCH GUARD	105
567033-0000	ARM	295
567070-0002	ELECTRODE	153
567070-0006	ELECTRODE	153
567070-0007	ELECTRODE	153
567070-0011	ELECTRODE	153
567070-0012	ELECTRODE	53
567070-0013	ELECTRODE	49
567070-0018	ELECTRODE	153
567345-0000	BEARING COVER	413, 589
567347-0000	SHAFT	413, 589
567348-0000	SHAFT	413, 589
567349-0000	SPACER	413, 589
567350-0000	WEDGE	413, 589
567373-0000	GEAR HOUSING	413, 589
567702-0000	CURVE	295
567703-0000	LINK	295
567734-0000	AIR NOZZLE	43
567735-0000	HEAD PLATE	43
567736-0000	EDGE ROLLER	19
567737-0000	GUIDE ROLLER	19
567738-0000	GUIDE ROLLER	19
567743-0000	SEAL	103, 117
567744-0000	FORMING RING	13
567746-0001	ROLLER, (STD.SIZE)	13
567747-0000	ROLL	13

Part No	Description	Page No
567748-0000	FORK	13
568070-0000	GEAR HOUSING	505, 675
568071-0000	BEARING SEAT	505, 675
568072-0000	BEARING SEAT	505, 675
568073-0000	SHAFT	505, 675
568074-0000	SHAFT	505, 675
568151-0000	GEAR HOUSING	429, 607
568152-0000	GEAR HOUSING	429, 607
568153-0000	BEARING SEAT	429, 607
568154-0000	BEARING SEAT	429, 607
568155-0000	BEARING COVER	429
568156-0000	FLANGE	429, 607
568157-0000	SHAFT	429
568158-0000	SHAFT	429, 607
568159-0000	SHAFT	429, 607
568160-0000	FASTENING PLATE	429, 607
568161-0000	WASHER	429, 607
568162-0000	WEDGE	429, 607
568166-0000	REAMED BOLT	771
568167-0000	CATCH	775
568286-0000	SLEEVE	295
568287-0000	RING	295
568530-0000	COIL	397
568531-0000	CORE	397
568532-0000	NIPPLE	397
568802-0000	CONTAINER	49
568803-0000	CONTAINER	51
568804-0000	PIPE	45
568805-0000	PIPE	45
568806-0000	LID	51
568807-0000	PIPE	45
568808-0000	PIPE	45
568809-0000	PIPE	45
568810-0000	PIPE	45
568827-0000	LID	49
568828-0000	FLOAT GUARD	49
568983-0000	INDUCTOR	383, 387, 391, 393
569003-0100	SEPARATION INSERT	45
569016-0000	GASKET	53
569049-0000	MAIN CAM	289
569050-0000	COUNTER CAM	289
569051-0000	CAM LEFT	289
569052-0000	CAM RIGHT	289
569053-0000	BEARING HOUSING	383, 387
569055-0000	VOLUME BULGE	343
569056-0000	VOLUME SHIM	345, 393
569057-0000	BEARING HOUSING	361, 365
569058-0000	SUPPORT ROLLER	377
569059-0000	CUTTING JAW	361, 365
569060-0000	FOLDING FLAP	315, 319
569061-0000	FOLDING FLAP	315, 319
569062-0000	CARRIER RULER	315
569063-0000	CARRIER RULER	319
569085-0000	SHAFT	13
569086-0000	ROLL	19
569087-0000	ROLL	19
569088-0000	ROLL	19
569089-0000	ROLL	19
569090-0000	FORMING RING	19
569091-0000	SHAFT	5
569092-0000	ROLL	5
569093-0000	ROLL	5
569094-0000	ROLL	5
569095-0000	ROLL	5
569096-0000	BOW CLAMP	5
569097-0000	FILLER TUBE	29
569098-0000	PRESSURE FLANGE	39
569099-0000	HOLDER	13
569100-0000	SHAFT	13
569104-0000	DISTRIBUTOR WING	43, 117
569105-0000	CUP	9
569106-0000	GASKET	9
569111-0000	FLAP	511
569112-0000	BLOCKING PIECE	511
569114-0000	PLATE	517, 683
569115-0000	SHEET	517, 683
569116-0000	SHEET	517, 683
569117-0000	FLAP	525, 535
569118-0000	FLAP	525, 535
569119-0000	BOTTOM	525, 535
569120-0000	FOLDING BAR	549
569121-0000	FOLDING BAR	549
569122-0000	FOLDING ARM	545, 549, 551, 553
569123-0000	FOLDING ARM	545, 549, 551, 553
569124-0000	AIR NOZZLE	439, 449, 619, 625
569125-0000	AIR NOZZLE	439, 449, 619, 625

Part No	Description	Page No
569126-0000	AIR NOZZLE	439, 449, 619, 625
569127-0000	SLIDE RAIL	499
569128-0000	HEAD PLATE	499
569129-0000	DISTRIBUTOR	559
569130-0000	LEAD RAIL	567
569131-0000	BRACKET	481
569132-0000	HEAD PLATE	477
569133-0000	BRACKET	477
569134-0000	HEAD PLATE	485
569135-0000	BRACKET	485
569136-0000	BRACKET	485
569163-0000	ARM	189
569651-0000	CREASE FORMER	791
569652-0001	SPACER	793
569652-0002	SPACER	791
569652-0003	SPACER	791
569917-0000	LOCKING CIRCLIP	815
569918-0000	COVER PLATE L.	817
569919-0000	COVER PLATE R.	817
569920-0000	SHAFT	817
569921-0000	BEARING HOUSE L.	817
569922-0000	BEARING HOUSE R.	817
569923-0000	CUTTING RAIL	817
569924-0000	STOPPER	825
569944-0000	SLEEVE	767
569945-0000	SLEEVE	767
570066-0000	SHAFT	293, 303
570067-0000	RING	293, 303
57008-0000	BACKPLANE	267
570125-0000	SLEEVE	293, 303
570126-0000	SLEEVE	293, 303
570545-0001	FERROTRONEINSERT	397
571086-0000	BRACKET	45
571087-0000	RETAINING RING	51
571088-0000	DRAINING	49
571277-0000	PUMP HOUSING	155
571297-0000	LACE	351, 353
571298-0000	LACE	351, 353
571418-0000	HOOD	773
571419-0000	HOOD	773
571421-0000	COVER	773
571423-0000	GLASS PANE	773
571424-0000	HINGE	773
571425-0000	BRACKET	773
571428-0000	TOUCH GUARD	743
571486-0000	VOLUME FLAP	345
571654-0000	NOZZLE	229
571942-0000	SUPPORT ROLLER	371
571945-0000	FASTENING BRACKET	15, 17
572246-0000	BRACKET	773
573058-0000	AIR NOZZLE	43
573277-0000	PIPE	219
573278-0000	PIPE	219
573353-0000	SPROCKET	463, 473
573445-0000	FILTER HOUSING	151
573446-0000	STRAIGHT CONNECTION	151
573485-0000	BRACKET	549
573486-0000	STEERING	499, 549
573487-0000	STEERING	499, 549
573488-0000	BRACKET	499, 501
573489-0000	BRACKET	499, 501
573504-0000	ROLL	103
573507-0000	SIDE GUARD	773
573508-0000	MOUNTING BAR	773
573583-0000	SCREW	361, 365
573615-0000	COVER SLIP	31, 33, 35
573616-0000	COVER SLIP	31
573617-0000	COVER SLIP	33, 35
573619-0000	PILLAR	99, 101
573624-0000	CORE	397
573625-0000	INDUCTOR	383, 387, 391, 393
573664-0000	CANTILEVER	761
573827-0001	PROTECTION	783, 787, 791, 793, 795
573827-0002	PROTECTION	779, 781, 783, 785
573827-0003	PROTECTION	781, 785
573828-0000	COVERING PLATE	807
573841-0000	STEERING RAIL	95
573976-0000	SUPPORT ROLLER	373, 379
573979-0000	CARRIER RULER	315
573980-0000	CARRIER RULER	319
573985-0000	BEARING HOUSING	361, 365
573988-0000	GASKET	361, 365
573994-0000	CURVE	297
574006-0000	PRESSURE FLANGE	39
574013-0000	FILLING PIPE LOWER	37
574026-0000	HUB	523, 527, 529

Part No	Description	Page No
574027-0000	HUB	533, 537, 539
574028-0000	ARM	523, 527, 529, 533, 537, 539
574029-0000	FLAP	523, 527, 529, 533, 537, 539
574030-0000	FLAP	523, 527, 529, 533, 537, 539
574031-0000	BOTTOM	527, 529, 537, 539
574032-0000	BLOWING NOZZLE B	437, 441, 447, 451, 617, 621, 623, 627
574033-0000	BLOWING NOZZLE TH	437, 441, 447, 451, 617, 621, 623, 627
574034-0000	BLOWING NOZZLE TV	437, 441, 447, 451, 617, 621, 623, 627
574035-0000	FLAP	511
574036-0000	BLOCKING PIECE	507, 511
574037-0000	SPACER	759
574039-0000	RAIL	515, 519, 679, 683
574040-0000	SHEET	519, 683, 685
574041-0000	SHEET	519, 683, 685
574042-0000	PLATE	515, 519, 681, 683, 685
574043-0000	CREASE FORMER	783, 791
574044-0000	FASTENING BRACKET	783, 791
574045-0000	FOLDING BAR	551, 553
574046-0000	FOLDING BAR	551, 553
574047-0000	LEAD RAIL	545, 551, 553
574048-0000	BRACKET	551, 553
574049-0000	COUNTER PLATE	551, 553
574050-0000	CURVE	547, 553
574051-0000	RETAINING RING	767
574052-0000	STOPPER	825
574053-0000	SLIDE RAIL	501
574054-0000	HEAD PLATE	501
574055-0000	ARCH	569
574056-0000	DISTRIBUTOR	561, 565
574057-0000	LEAD RAIL	569
574058-0000	HOLDER	561, 565
574059-0000	BEARING HOUSING	817
574060-0000	BEARING HOUSING	817
574061-0000	CUTTING RAIL	817
574062-0000	COVERING PLATE	817
574063-0000	COVERING PLATE	817
574064-0000	SHAFT	817
574065-0000	SIDE PLATE	463
574066-0000	SIDE PLATE	463
574067-0000	TIMING BELT SHAFT	463
574068-0000	TIMING BELT SHAFT	463
574069-0000	AXLE PIN	463, 473
574070-0000	TIMING BELT SHAFT	463, 473
574071-0000	PROFILE	463
574072-0000	PROFILE	463
574073-0000	BRACKET	463
574074-0000	ROLLER BRACKET	463
574075-0000	ROLL	463, 475
574076-0000	BRACKET	463
574077-0000	HEAD PLATE	485
574078-0000	BRACKET	485
574079-0000	BRACKET	485
574080-0000	BRACKET	481
574081-0000	SLEEVE	411
574082-0000	GEAR WHEEL	463, 473
574083-0000	WASHER	463, 473
574084-0000	SCREW	463, 473
574085-0000	TIMING BELT PULLEY	463, 473
574086-0000	TIMING BELT PULLEY	463, 473, 475
574087-0000	WASHER	463, 473, 475
574088-0000	SPROCKET	411
574089-0000	CARRIER	469
574090-0000	CARRIER	471
574091-0000	CARRIER	471
574092-0000	CARRIER	469
574093-0000	PROFILE	419
574094-0000	HEAD PLATE	463, 473
574095-0000	PROTECTIVE COVER	495
574096-0000	PROTECTION PLATE	495
574097-0000	STEERING	501, 551, 553
574098-0000	STEERING	501, 551, 553
574099-0000	STEERING	561
574112-0000	PROTECTION PLATE	495
574113-0000	PROTECTION PLATE	495
574119-0000	HEAD PLATE	463
574120-0000	HEAD PLATE	463
574121-0000	BRACKET	463, 473
574122-0000	BRACKET	463, 473
574123-0000	BRACKET	463, 473
574124-0000	WASTE CHUTE	557
574125-0000	BRACKET	551
574126-0000	HEAD PLATE	485
574129-0000	CURVE	379
574130-0000	DAMPER	379
574131-0000	LEAD PLATE	563
574132-0000	SIDE PLATE	473

Part No	Description	Page No
574133-0000	SIDE PLATE	473
574134-0000	BEARING CONSOLE	475
574135-0000	BEARING CONSOLE	475
574136-0000	TIMING BELT PULLEY	475
574137-0000	TIMING BELT PULLEY	475
574138-0000	TIMING BELT PULLEY	475
574139-0000	BEARING HOUSING	473
574140-0000	SHAFT	473
574141-0000	SHAFT	475
574142-0000	SHAFT	475
574143-0000	AXLE SUPPORT	475
574144-0000	SHAFT	475
574145-0000	HEAD PLATE	473
574146-0000	HEAD PLATE	473
574147-0000	HOLDER	473
574148-0000	SHAFT	473
574149-0000	ARM	475
574150-0000	SLEEVE	473
574151-0000	BRACKET	475
574152-0000	BRACKET	475
574153-0000	PLATE	475
574154-0000	SPACER	475
574155-0000	PLATE	473
574156-0000	SUPPORT RAIL	475
574157-0000	PROFILE	475
574158-0000	PROFILE	475
574159-0000	TIMING BELT PULLEY	473
574160-0000	SPACER	475
574161-0000	SHAFT	475
574164-0000	PROTECTION PLATE	495
574165-0000	PROTECTIVE COVER	495
574166-0000	DROP WING	481
574167-0000	LIMIT PLATE	301
574214-0000	SPRING	29
574323-0100	CONVEYING EQUIPMENT	457
574332-0100	BELT	463, 473
574600-0000	PNEUMATIC DIAGRAM	263, 857
574602-0000	VALVE PANEL UPPER	223
574603-0000	BRACKET	223
574604-0000	BRACKET	223
574605-0000	CONNECTION BOX	227
574606-0000	SHEET	227
574651-0000	SHEET	821
574652-0000	PROTECTION	189
574653-0000	PROTECTION	85
574654-0000	PIPE	71
574658-0000	LOGOTYPE TP	139, 829
574676-0000	AIR NOZZLE	437, 447, 617, 623
574677-0000	AIR NOZZLE	437, 447, 617, 623
574678-0000	SLIDE RAIL	499
574679-0000	HEAD PLATE	499
574680-0000	FLAP	507
574681-0000	SHEET	513, 679
574682-0000	SHEET	513, 679
574683-0000	BOTTOM	521, 531
574684-0000	FLAP	521, 531
575002-0000	PLUNGER	767
575003-0000	PLUNGER	767
575392-0100	VALVE PANEL LOWER	125, 127
575448-0000	VALVE PANEL	263, 857
575464-0000	CABLE DUCT	237
575474-0100	COMPRESSOR	3
575475-0100	SCRUBBER	45
575639-0000	VOLUME FLAP	345
575640-0000	VOLUME BULGE	345
575641-0000	VOLUME SHIM	345, 391
575782-0000	MAIN CAM	289
575783-0000	COUNTER CAM	289
575786-0000	PAPER SUPPORT	779, 781, 783, 785, 787, 791, 793, 795
575791-0000	JUNCTION BLOCK	239
575792-0000	ANGLE STRUT	239
575795-0000	WATER PIPE	233
575797-0100	FLOWMETER GROUP	125, 127
576111-0000	JUNCTION BLOCK	239
576217-0000	PAPER SUPPORT	781, 785
576218-0000	PAPER SUPPORT	779
576245-0100	BELT RIGHT	463, 475
576246-0100	BELT LEFT	463, 475
576247-0100	PROTECTION	457, 459
576251-0100	CONVEYOR	459
576252-0100	INFEED SECTION	473
576410-0000	BRACKET	773
576730-0000	WATER DIAGRAM	263, 857
576738-0000	TOUCH GUARD	105
576739-0200	(PAPER)REEL TROLLEY	765
576742-0000	OIL TROUGH	295

Part No	Description	Page No
576833-0000	PLATFORM	191
576835-0000	PLATFORM COVER	191
576836-0000	CAM LEFT	289
576837-0000	CAM RIGHT	289
579306-0000	ROLL	5
579307-0000	ROLL	5
579308-0000	ROLL	5
579309-0000	ROLL	5
579310-0001	ROLLER, (STD.SIZE)	13
579311-0000	COUNTER ROLLER	13
579316-0000	FILLER TUBE	29
579318-0000	SEAL	103, 117
579319-0000	ROLL	103
579641-0000	MAIN CAM	289
579642-0000	COUNTER CAM	289
579643-0000	CAM LEFT	289
579644-0000	CAM RIGHT	289
579645-0000	CURVE	379
579765-0000	MACHINE SIGN CE	835
579772-0000	CUTTING JAW	361, 365
579773-0000	BEARING HOUSING	383, 387
579898-0000	RAIL	383, 387
579951-0000	BOW CLAMP	9
580006-0000	PROTECTION PLATE	495
580007-0000	PROTECTION PLATE	495
580366-0000	ROLL	475
580828-0001	CORE	397
580828-0002	CORE	397
580829-0000	CURRENT RAIL	397
580833-0001	FERROTRONE INSERT	397
580833-0002	FERROTRONE INSERT	397
580958-0000	AXLE SUPPORT	103
580959-0000	AXLE SUPPORT	103
580996-0000	ROLLER BRACKET	475
581807-0000	CANTILEVER	381
581814-0000	SPACER	381
581823-0000	RAIL BRACKET	381
581826-0000	DAMPER	381
581889-0000	KNIFE HOLDER	367
581890-0000	KNIFE HOLDER	367
582352-0000	VOLUME FLAP	347
582911-0000	VOLUME FLAP	343
583446-0000	SLIDE RAIL	499
583447-0000	SHEET	515, 679
583448-0000	SIDE PIPE	437, 447, 617, 623
583449-0000	BOTTOM	523, 533
583450-0000	HEAD PLATE	499
583451-0000	FLAP	507
583452-0000	LEAD RAIL	567
583453-0000	FOLDING BAR	545
583454-0000	SUPPORT	523, 533
583455-0000	SHEET	515, 679
583456-0000	BRACKET	545
583457-0000	COUNTER PLATE	545
583458-0000	FOLDING BAR	545
583459-0000	HEAD PLATE	481
583460-0000	HEAD PLATE	481
583628-0000	ARCH	567
583629-0000	BRACKET	567
583630-0000	DISTRIBUTOR	559
583631-0000	BOTTOM PANEL	523, 533
583827-0000	VOLUME SHIM	343
589924-0000	VOLUME FLAP	349
589925-0000	VOLUME BULGE	349
589926-0000	VOLUME SHIM	349
591084-0000	GUIDE LUG	463
591085-0000	SPACER	545
591086-0000	SUPPORT	379, 381
591245-0000	ARM	295
591246-0000	SHAFT	295
591247-0000	SLEEVE	295
591981-0000	CATCH	361, 365
591982-0000	CATCH	361, 365
592558-0000	TUBE	185
592564-0100	LID	181
592581-0000	VOLUME FLAP	343
592586-0000	HOLDER	743
592588-0000	SPACER	759
592592-0000	SHAFT	749
592593-0000	GUIDE SHAFT	749
592594-0000	BENDING ROLLER	739
592923-0000	VOLUME FLAP	343
593270-0000	CATCH	351, 353
593271-0000	CATCH	351, 353
593279-0000	VOLUME CAM	381
593280-0000	VOLUME FLAP	349

Part No	Description	Page No
593556-0000	CREASE FORMER	795
593560-0000	SLEEVE	767
593561-0000	PLUNGER	767
593564-0000	COVER	771
593565-0000	GLASS PANE	771
593566-0000	BEARING HOUSING	817
593567-0000	BEARING HOUSING	817
593568-0000	CUTTING RAIL	817
593569-0000	COVERING PLATE	817
593580-0000	CARRIER RULER	315
593581-0000	CARRIER RULER	319
593585-0000	SUPPORT ROLLER	381
593586-0000	SPACER	795
593587-0000	SHAFT	795
593588-0000	DOWEL	795
593589-0000	ROLL	795
593590-0000	FRAME	795
593641-0000	CANTILEVER	769
593642-0000	RAIL	825
593643-0000	PLATE	825
593644-0000	RULER	825
593645-0000	STEERING	825
593648-0000	COVERING PLATE	817
593649-0000	BLOCK LEFT	817
593650-0000	BLOCK RIGHT	817
593651-0000	BRACKET	807
593652-0000	BRACKET	807
593653-0000	STOPPER	825
593654-0000	SCREW SET	825
593655-0000	VOLUME BULGE	343
593656-0000	BRACKET LEFT	807
593657-0000	BRACKET RIGHT	807
593746-0000	CANTILEVER	795
593749-0100	YOKE	311, 313
593750-0100	ARM	311, 313
593756-0100	PLATFORM	125, 127
593760-0100	COVER, LOWER	125, 127
593761-0000	COVER LOWER	141
593763-0100	HOLD-DOWN DEVICE	279, 281
593765-0000	COVER	137, 199
593766-0100	SIDE PIECE, RIGHT	125, 127
593767-0000	BOX	137
593768-0000	BOX	199
593769-0000	BOTTOM PANEL	137
593770-0000	BOTTOM PANEL	199
593771-0100	SIDE PIECE, Left	125, 127
593772-0100	SIDE GUARD, RIGHT	125, 127
593773-0100	SIDE GUARD, LEFT	125, 127
593786-0100	MACHINE BODY	125, 127
594589-0000	CLEANING TROUGH	421
594613-0100	CLEANING HEAD	257
594614-0100	CLEANING HEAD	229
594616-0100	VALVE	81
594618-0100	CHANGE-OVER VALVE	71
594619-0100	CHANGE-OVER VALVE	45
594620-0100	BRAKE ARM	757
594621-0100	PRESSURE ARM	425, 601
594632-0000	SIDE PLATE	455
594644-0000	LEAD RAIL	571
595044-0000	MACHINE BODY	571
595046-0000	CARRIER	571
595048-0000	ARCH	571
595052-0000	ARCH	571
595053-0000	BRACKET	571
595055-0000	BRACKET	553
595056-0000	BRACKET	571
595057-0000	BRACKET	553
595060-0000	LEAD RAIL	571
595061-0000	HOLDER	571
595066-0000	COVERING PLATE	421
595068-0000	STEERING	565
595086-0100	MACHINE BODY	401, 403
595087-0100	STATION	401, 403
595088-0100	FOLDING PART	401, 403
595089-0100	INFEEDER	401, 403
595090-0100	DISCHARGER	401, 403
595202-0000	SHAFT	795
595203-0000	LACE	795
595204-0000	CYLINDER BRACKET	795
595208-0000	SPREADER	203
595209-0000	CURVE	381
595214-0000	LID	769
596085-0000	VOLUME BULGE	349
596723-0000	PILLAR	99, 101
596725-0100	DOOR	3
596726-0000	DOOR	33, 35

Part No	Description	Page No
596727-0100	DOOR	3
596728-0100	DOOR	3
596729-0000	DOOR	31
596731-0100	PLATFORM	3
597837-0000	HOUSE	89
597838-0000	CENTRAL LUBRIC. DIAGRAM	263, 857
597839-0100	DIAGRAM	835
597840-0100	BENDING ROLLER	89
597841-0100	DRIER	3
597842-0100	HOLDER	261
597843-0100	PROTECTION	125, 127
597844-0000	CENTRAL LUBRIC. DIAGRAM	263, 857
597845-0001	INSTALLATION DRAW. TBA/8	835
597846-0000	PNEUMATIC DIAGRAM	263, 857
598441-0000	BOTTOM PLATE	195, 197
598442-0100	BOTTOM PLATE	125, 127
598443-0100	MACHINE BODY	579
598445-0100	WHEEL LEFT	579
598446-0100	WHEEL RIGHT	579
598447-0100	LOWER SECTION	579
598448-0100	CABLE CONDUIT RIGHT	581, 583
598449-0100	CABLE CONDUIT LEFT	581, 583
598450-0000	HOUSE RIGHT	597
598451-0000	HOUSE LEFT	595
598452-0100	BEVEL GEAR	601
598453-0000	OIL TROUGH	603
598488-0000	HATCH	601
598490-0000	CLEANING TROUGH	581, 583
598491-0000	MACHINE BODY	581, 583
598493-0000	HOUSE	601
598494-0100	VALVE PANEL	125, 127
598495-0100	PIPE WORK-PNEUMATIC	125, 127
598855-0000	CANTILEVER	205
598860-0000	SHELF	585
598861-0100	DRIVE UNIT	581, 583
598864-0000	FRONT PLATE LOWER	205
598975-0000	SHIFTER HANDLE	381
598976-0000	SHAFT	381
599182-0100	PILLAR	3
599183-0000	PILLAR	99, 101
599185-0000	BRACKET	207
599557-0000	BRACKET	655, 657
599558-0000	BRACKET	655, 657
599559-0000	BRACKET	655, 657
599560-0000	BRACKET	655, 657
599561-0000	BOTTOM PLATE	195, 197
599571-0000	AXLE	655, 657
6161-0000	ROLL	43
6278-0000	WASHER	23, 103, 407, 423, 567, 571, 581, 583, 667
67379-0101	IH TRANSF.1.PRIM	
	5 339, 341	
67379-0102	IH TRANSF.1.PRIM	
	4 339, 341	
68917-0100	ANGLE INDICATOR	265
72947-0000	HOOK SPANNER	839
7309-0000	HANDLE	11, 139, 141, 255, 757
74387-0000	HOOK SPANNER	839
751009-0000	INSULATION	87
751316-0000	ELBOW PIPE	155
751631-0000	CONNECTION BOX	265
752156-0000	FLANGE BUSHING	5
752176-0000	PROTECTIVE CASING	59, 61, 63
752578-0001	ROLLER, (STD.SIZE)	13
752583-0000	ROLL	5
752584-0000	ROLL	5
752585-0000	ROLL	5
752586-0000	ROLL	5
752587-0000	LINK	37
752590-0000	THROTTLE	37, 39
752711-0000	PIPE	59, 61, 63
752718-0000	ROLL	19
752719-0000	ROLL	19
752720-0000	ROLL	19
752721-0000	ROLL	19
752740-0000	ROLL	21
752771-0000	TOUCH GUARD	105
752860-0000	PRESSURE FLANGE	37
76138-0000	LOCKING LOOP	839
776422-0101	BRASS WIRESTE	839
777100-0113	SCREWDRIVER	839
777100-0184	SCREWDRIVER	839
777120-0215	SPANNER 6x7	839
777120-0220	C-SPANNER	839
777120-0232	SPANNER 12x13	839
777121-0137	OPEN SPANNKEL	839

Part No	Description	Page No
777150-0100	HEXAGON SPKEL N=2,5	839
777150-0101	HEXAGON SPKEL N=3	839
777150-0104	HEXAGON SPKEL N=4	839
777150-0106	HEXAGON SPKEL N=5	839
777150-0108	HEXAGON SPKEL N=6	839
777150-0110	HEXAGON SPKEL N=8	839
777150-0112	HEXAGON SPKEL N=10	839
777150-0114	HEXAGON SPKEL N=12	839
777150-0199	HEXAGON SPKEL N=2	839
777150-0491	HEXAGON SPKEL N=1,3	839
777155-0492	ALLEN KEY KEL N=1/16"	839
777200-0101	PIPE WRENCEL	839
777510-0101	SCISSORS	839
779130-0102	PROTECTIVE GOGGLES	851
795581-0000	PLATE	93
90002-0004	BLANK-OFF PLUG 22,5	211, 237, 805
90002-0009	BLANK-OFF PLUG 18.6	113, 211, 227, 237, 731, 805
90002-0010	BLANK-OFF PLUG 37	137, 237
90002-0012	BLANK-OFF PLUG 28,3	137
90002-0013	BLANK-OFF PLUG 15,2	201, 211, 237, 731
90005-0005	WASHER	149
90005-0007	WASHER	355, 357
90005-0009	WASHER	149
90005-0060	WASHER	727
90005-0082	WASHER	723, 725, 757, 759
90005-0092	SPACER DISC	689
90007-0100	FUSE H.MANN 2P 60A 2	193
90007-0101	FUSE H.MANN 2P 100A 2	193
90012-0059	GLAND	113
90012-0061	GLAND	87, 211, 237
90012-0062	GLAND	87
90012-0063	GLAND	45, 113, 137, 143, 149, 185, 199, 211, 219, 237
90012-0064	GLAND	113
90012-0071	GLAND FITTING	407, 423, 581, 583
90012-0072	GLAND FITTING **	405, 421, 581, 583
90012-0073	GLAND FITTING	411, 587
90012-0137	CABLE GLAND SCREENED	93, 805
90015-0010	BUSHING	207
90015-0011	BUSHING	207
90015-0020	BUSHING	405, 421, 581, 583, 591
90015-0021	BUSHING	207
90017-0009	HANDLE	283
90028-0001	CONE	435, 457, 459, 509, 569, 571, 615, 629, 639, 677
90028-0002	CONE	573, 709
90028-0020	CONE 143, 293, 295, 303, 321, 323, 325, 329, 333, 335, 337, 339, 341, 343, 345, 347, 349, 375, 457, 459, 547, 553, 559, 565, 569, 571, 629, 639, 703	
90028-0021	CONE 143, 321, 323, 325, 329, 333, 335, 337, 339, 341, 375, 457, 459, 559, 565, 569, 571, 629, 639	
90028-0022	CONE	143, 293, 405, 421, 547, 553, 639, 703
90028-0024	CONE	143, 293
90028-0025	CONE	143, 293, 461, 547, 553, 559, 565, 569, 571, 629, 639, 703
90030-0030	BULKHEAD CONNECTOR SV 12-L/SY 195, 197, 205, 241, 243, 245, 247, 249, 251	
90030-0051	PIPE CONNECTION	81, 99, 101
90030-0058	T-PIPE CONNECTION T-12	97, 733
90030-0066	BULKHEAD CONNECTOR SV 6-L/SY	207
90030-0067	BULKHEAD CONNECTOR SV 8-L/SY	207
90030-0070	ELBOW CONNECTION WA 10-R1/4"	59, 61, 63
90030-0076	T-PIPE CONNECTION T-6	203
90030-0083	STRAIGHT CONNECTION GE 10-1/4-18 NPTF	59, 61, 63
90030-0088	PIPE CONNECTION	59, 61, 63
90030-0091	PIPE CONNECTION G-8	233
90030-0092	PIPE CONNECTION	41
90030-0096	ELBOW CONNECTION W-12	59, 61, 63, 107, 109
90030-0098	ACCESSORIES,FERRULE 8	369
90030-0101	TAPER	573, 615, 709
90030-0106	PIPE CONNECTION G-12	233
90030-0107	PIPE CONNECTION	435, 615
90030-0109	PIPE CONNECTION	53, 59, 61, 63
90030-0115	ELBOW CONNECTION WA 12-R3/8	45, 53, 229
90030-0120	L-PIPE CONNECTION,EVL,INT.T-8	183, 185
90030-0121	ELBOW CONNECTION EVW,INT 10	181, 183, 185
90030-0137	ELBOW CONNECTION WA 6-R1/8"	97
90030-0146	ELBOW CONNECTION EVW,EXT 6-G1/8"	183, 185
90030-0155	CONNECTION	215
90030-0157	CONNECTION	181, 183, 185, 187, 215
90030-0159	BULKHEAD CONNECTOR SV 15-L/SY	207, 233
90030-0162	CONNECTION	303
90030-0172	NUT "REPBY 342703-208"	369
90030-0178	CONNECTION	181
90030-0179	BULKHEAD CONNECTOR SV 22-L/SY	207
90030-0180	STRAIGHT CONNECTION GE 12-1/2-14 NPTF	59, 61, 63
90030-0183	NIPPLE	187
90030-0184	STRAIGHT CONNECTION GA-6-G1/8"	97, 149
90030-0187	STRAIGHT CONNECTION GA-12-G3/8"	41, 45, 59, 61, 63, 81, 229
90030-0201	PIPE CONNECTION	361, 365

Part No	Description	Page No
90030-0207	NIPPLE	71
90030-0221	ELBOW BULKHEAD CONNECTOR WSV 12	195, 197
90030-0222	ELBOW PIPE JOINT	435, 603, 615
90030-0253	PIPE COUPLING	233
90030-0265	HOLLOW SCREW	395
90030-0266	HOLLOW SCREW	395
90030-0594	Reducing adapter	185
90032-0034	JUNCTION BLOCK	509, 677
90032-0035	JUNCTION BLOCK	435, 615
90032-0038	BLOCK	143, 295, 325, 329, 375, 547, 553, 639, 703
90032-0039	BLOCK	293, 303, 321, 323, 333, 335, 337, 339, 341, 457, 459, 569, 571, 639
90032-0040	BLOCK	333, 335, 337, 457, 459, 559, 565, 629
90032-0043	JUNKTION BLOCK	143, 293, 639, 703
90032-0044	JUNCTION BLOCK	143, 405, 421, 547, 553
90032-0046	JUNCTION BLOCK	143
90036-0009	BULB 24V 5W BA15D	145
90036-0038	BULB 24V 25W E27	145, 191, 269
90042-0172	SOLENOID VALVE 24VDC	217
90042-0187	SOLENOID VALVE	51
90042-0203	SOLENOID VALVE	25
90042-0206	SOLENOID VALVE	149
90042-0215	SOL.VALVE PACKAGE	223
90042-0398	CONTACT	185
90042-0467	COIL	269
90042-0481	CONNECTION TABLE	219
90042-0487	COIL	149
90042-0519	COVER PLATE	223
90042-0520	CONNECTION TABLE	223
90042-0522	END PIECE	223
90042-0527	SEALING DISC	223
90042-0528	SEALING DISC	223
90042-0532	CONNECTION TABLE	223
90042-0535	TERMINAL FOR SOL.VALVE	219, 223
90042-0536	CONTACT FOR SOL.VALVE	217, 218
90042-0538	EL.COIL	223
90042-0539	EL.COIL	223
90042-0550	PROTECTIVE COVER	219, 223
90043-0004	PRESSURE GAUGE	149
90043-0006	PRESSURE GAUGE	219
90043-0021	PRESSURE GAUGE	223
90043-0034	PRESSURE GAUGE	99, 101, 733
90043-0043	PRESSURE GAUGE	219, 223
90043-0062	MANOMETER	183, 185
90043-0075	PRESSURE GAUGE	187
90043-0095	PRESSURE GAUGE	49
90043-0302	SCREW	99, 101, 733
90044-0084	LIMITSW.14CE1-4 HONEYWELL	53, 85
90044-0094	LIMIT SWITCH HONEYWELL	165, 167, 189, 295
90044-0095	PROX.SWITCH IFM 3010BPKG	205
90044-0099	PROXIMITY SWITCH IG REPBY 0090044-0126	71, 111
90044-0103	KEY SAFETY SWITCH	89, 99, 101, 773
90044-0104	PROX.SWITCHIFM IN 3002	59, 61, 63, 91, 93, 95, 411, 465, 475, 479, 499, 547, 553, 587, 655, 657, 689, 753, 759, 805
90044-0122	INDUCTIVE SWITCH	805
90044-0126	INDUCTIVE SWITCH	81
90044-0139	KEY SAFETY SWITCH	773
90044-0310	KEY FOR KEY SAFETY SWITCH	121, 831
90045-0049	MOTOR	409, 585
90045-0079	MOTOR	181
90045-0087	PUMPMOTOR ABB 0,55KW	155
90046-0015	DRIVE BRAKE MOTOR 50HZ	287
90046-0016	BRAKE MOTOR	287
90046-0304	STATOR	307, 859
90046-0308	STATOR	307, 859
90046-0312	RECTIFIER	307, 859
90046-0313	COIL	307, 859
90046-0314	BRAKE DISC	307, 859
90048-0033	GEAR PUMP	435, 615
90048-0034	OIL PUMP	143
90048-0420	FILTER	435, 615
90048-0450	SPARE PARTS KIT	269
90050-0008	BOTTLE	797
90050-0011	BOTTLE	253
90050-0012	BOTTLE	797
90051-0025	HANDLE	557, 705
90051-0053	HANDLE	71
90051-0065	HANDLE	57
90051-0077	HANDLE	797
90051-0089	SHIFTER HANDLE	803
90055-0033	HOSE NIPPLE,EXT. THREADED G1/2"-13	207
90055-0067	HOSE CLAMP	199
90055-0071	HOSE NIPPLE	9
90055-0096	STRAIGHT COUPL,FOR PLASTIC TUBE 14-G3/8"	223
90055-0100	Y-CONNECTION,PARALLEL 6-6	241, 243, 245, 247, 249, 251
90055-0101	Y-CONNECTION,PARALLEL 8-8	217
90055-0117	ELBOW PIPE JOINT "REPBY 90055-217"	223

Part No	Description	Page No
90055-0118	ELBOW PIPE JOINT	223
90056-0096	WORM GEAR	121, 831
90056-0099	BEVEL GEAR	567
90056-0147	Bevel Gear	571
90061-0018	ANGLE ENCODER 8BIT GRAY	297
90062-0049	LOCK WASHER	503
90064-0084	PUSH BUTTON YELLOW	227, 733, 805
90064-0085	PUSH BUTTON RED	805
90064-0094	PUSH BUTTON	227
90064-0095	PUSH BUTTON	227
90064-0096	PUSH BUTTON	227
90064-0105	EMERGENCY STOP REPBY 0090064-0124	719, 733
90064-0124	EMERGENCY STOP BUTTON	749, 805
90064-0317	TOUCH GUARD REPBY 90064-335	227
90064-0318	SIGNAL LAMP	269
90064-0319	SIGNAL LAMP	269
90064-0320	SIGNAL LAMP	269
90066-0021	PUSH BUTTON BOX	719, 749, 751
90066-0029	PUSH BUTTON BOX	733
90067-0021	CARRIAGE	829
90069-0116	WORM GEAR MOTOR REPBY 90069-281	93, 769
90069-0364	CARBON BRUSH	121, 831
90069-0365	CARBON BRUSH	121, 831
90074-0001	CABLE CLIP JR10 STAINLESS	207
90074-0002	CABLE CLIP JR11 STAINLESS	253, 457, 459
90074-0006	CABLE CLIP JR212STAINLESS	205, 215
90074-0014	CLIP	581, 583
90074-0018	CLIP	547, 553, 703
90074-0026	CLIP	223
90077-0064	FEED THROUGH TERMINAL	731
90077-0090	FEED THROUGH TERMINAL	115
90077-0102	TERMINAL BK4 KRG 4-POLE	201
90077-0115	FEED THROUGH TERMINAL REPBY 0353021-0122	227
90077-0300	END PLATE	731
90077-0302	RAIL REPBY 0353042-0005	227
90077-0309	END PLATE	115
90087-0002	PIPE PLUG	137, 233
90087-0003	PIPE PLUG	287
90087-0015	PIPE PLUG	503
90087-0019	PLUG 143, 293, 295, 303, 325, 329, 333, 335, 337, 339, 341, 375, 461, 547, 553, 559, 565, 569, 571, 703	
90089-0003	SLEEVE	719, 749, 751
90089-0018	TRANSITIONAL NIPPLE	233
90090-0013	STEEL BALL	385, 389, 393
90090-0014	STEEL BALL	207
90090-0016	BALL	395
90090-0020	BALL	171, 173, 177, 179, 231, 259
90091-0029	SEAL RING	289
90091-0054	SEAL RING	413, 589
90091-0078	SEAL	385, 389, 393
90091-0079	SEAL	385, 389, 393
90091-0080	SCRAPER	321, 323
90091-0130	SEAL RING	503, 673
90091-0137	SEAL RING	155
90091-0142	SEAL RING	505, 675
90091-0143	SEAL RING	429, 607
90091-0144	SEAL RING	607
90091-0145	SEAL RING	413, 589
90091-0159	GASKET	181
90091-0182	GASKET	83, 85
90091-0202	SEAL RING	429
90092-0038	METERING VALVE	435, 615
90092-0048	OIL BRUSH	457, 459, 559, 565, 569, 571, 629, 639
90092-0052	VALVE 143, 303, 321, 323, 325, 329, 333, 335, 337, 339, 341, 457, 459, 547, 553, 561, 565, 569, 571, 629, 639, 703	
90092-0053	VALVE 143, 293, 295, 303, 321, 323, 333, 335, 337, 339, 341, 375, 457, 459, 547, 553, 629, 639	
90092-0054	VALVE	293, 325, 329, 333, 335, 337
90092-0077	METERING VALVE	497, 669
90092-0081	METERING VALVE	435, 615
90094-0004	END SUPPORT EWK 2061.6 WM	731
90097-0017	FLAT PIN PLUG	41
90099-0001	NUT PR 15,2 BRASS	113, 137, 199, 237
90099-0002	NUT	113, 227, 237, 759
90099-0003	NUT	113, 237, 253, 805
90099-0004	NUT	207
90099-0011	NUT PR 37 BRASS	207, 237
90099-0012	NUT	303
90099-0015	NUT	297
90099-0085	NUT	195, 197
90099-0102	NUT	663
90099-0178	LOOKING NUT PG 16	409
90110-0095	CONTACT 3 POLE+EARTH	149, 219
90110-0128	PLUG 24-POL	113, 211, 219, 223, 265, 805
90111-0121	SWITCH 3 POS. EA OLTEN	227
90111-0150	SWITCH GEAR	805

Part No	Description	Page No
90113-0044	PRESSURE REGULATOR	183, 185, 187
90113-0056	REGULATOR	149
90113-0069	PRESSURE REGULATOR	223
90113-0076	PRESSURE REGULATOR	223
90113-0114	REGULATOR	219
90113-0379	NUT	223
90113-0407	Single Yoke 1/2"	219
90115-0054	JOINT	665
90115-0067	JOINT	303
90115-0105	JOINT	287
90115-0106	JOINT	301
90115-0107	JOINT	301
90115-0111	JOINT	257
90115-0122	JOINT	303
90115-0133	JOINT	295
90115-0134	JOINT	663
90115-0139	LINK HEAD	519, 683
90117-0008	HANDLE	51
90125-0020	PLATE	23, 741
90131-0004	HOSE COUPLING	253
90132-0021	HOSE CLIP	163, 223
90134-0002	PIPE CONNECTION	457, 459, 561, 565, 569, 571
90134-0003	BUSHING	435, 457, 459, 509, 569, 571, 615, 629, 639, 677
90134-0004	PIPE CONNECTION	205
90134-0022	BUSHING	573, 709
90134-0030	SLEEVE	143, 293, 303, 407, 423, 427, 457, 459, 547, 553, 561, 565, 569, 571, 603, 629, 639, 703
90134-0031	SLEEVE	143, 293, 295, 321, 323, 325, 329, 333, 335, 337, 339, 341, 375, 629, 639
90134-0034	NIPPLE	435, 615
90134-0038	BUSHING	143, 293, 295, 321, 323, 325, 329, 333, 335, 337, 339, 341, 375, 639
90134-0039	BUSHING	143, 293, 295, 303, 321, 323, 325, 329, 333, 335, 337, 339, 341, 375, 457, 459, 547, 553, 561, 565, 569, 571, 629, 639, 703
90134-0040	BUSHING	321, 323, 457, 459, 561, 565, 569, 571, 629, 639
90134-0045	PLUG	569, 571, 629
90134-0048	CONNECTION	629, 639
90134-0051	SPACER COLLAR	321, 323, 629, 639
90134-0052	PLUG	143, 293, 295, 303, 333, 335, 337, 569, 571, 629
90134-0054	CONNECTION	143
90134-0055	BUSHING	143, 293, 405, 421, 461, 547, 553, 561, 565, 569, 571, 629, 639, 703
90134-0058	BANJO CONNECTION	293, 295, 303, 315, 319, 321, 323, 325, 329, 339, 341, 361, 365, 385, 389, 457, 459, 547, 553, 561, 565, 569, 571, 629, 639, 703
90134-0063	BUSHING	343, 345, 347, 349
90135-0021	EARTHING CLAMP	115
90135-0022	EARTHING CLAMP	731
90136-0002	PLUG	435, 509, 615, 677
90137-0002	ELBOW PIPE	457, 459, 561, 565, 569, 571
90137-0005	PIPE JOINT	435, 509, 615, 677
90137-0010	PIPE JOINT	435, 615
90140-0010	T-PIPE,INTERNAL THREAD Rp1/2"	219
90140-0011	T-PIECE	219
90140-0012	ELBOW 90,INT./EXT.THREAD R1/2"	219
90140-0021	ELBOW 90,INT./EXT.THREAD R1/8"	107, 109
90141-0012	LOCK RING	413, 589
90141-0015	LOCK RING	727
90141-0022	RING	83, 85
90143-0011	STRIP	121
90143-0014	STRIP	121
90143-0017	FOAMRUBBERSTRIP B68205	139, 141, 255
90143-0018	STRIP	99, 101
90143-0020	STRIP	53, 157
90143-0029	STRIP	797
90143-0035	STRIP	165, 167, 175
90143-0039	STRIP	165, 167, 175, 771, 773
90143-0049	RUBBERSTRIP 11X21MM	207
90143-0052	STRAP	497, 669
90143-0054	STRIP	207
90143-0068	RUBBERSTRIP EMKA 1011-06	175
90144-0004	TAPE	53
90145-0005	WIRE	443
90148-0021	HOSE	9
90148-0032	HOSE	121
90148-0036	HOSE	183, 185
90148-0040	HOSE	369
90151-0001	BRASS PIPE	321, 323, 325, 329, 629
90151-0004	PIPE	573, 709
90152-0016	HOSE	129
90152-0017	HOSE	131
90152-0029	HOSE	113
90152-0031	HOSE	87, 237
90152-0032	HOSE	199
90152-0033	HOSE	41, 113, 219, 227, 237, 719, 735, 749, 751, 805
90152-0044	FLEXIBLE CONDUIT	407, 423, 581, 583
90152-0050	FLEXIBLE CONDUIT	405, 421, 581, 583

Part No	Description	Page No
90152-0051	FLEXIBLE CONDUIT	407, 423, 581, 583
90153-0016	ADHESIVE	53
90153-0017	ADHESIVE	121, 139, 141, 255
90153-0020	ADHESIVE	87
90153-0023	ADHESIVE	157
90153-0043	ADHESIVE	425, 497, 509, 601, 669, 677
90153-0050	ADHESIVE	831
90157-0002	SEALING COMPOUND	557
90157-0016	LOCKING FLUID	75, 169, 303, 321, 323, 385, 389, 395, 721
90157-0021	LOCKING FLUID	383, 387, 573, 709
90157-0022	SEALING COMPOUND	207, 509, 677
90157-0033	FLANGE SEALING COMPOUND	673
90157-0034	SEALING COMPOUND	425, 601
90157-0041	SEALING COMPOUND	771
90161-0001	STRIP	425, 509, 591, 601, 677
90163-0041	HOSE NIPPLE,EXT. THREADED G3/8"-12	215
90163-0050	NIPPLE	143
90163-0056	SLEEVE	847
90163-0057	NIPPLE	59, 61, 63, 195, 197
90163-0062	SLEEVE	59, 61, 63
90163-0063	NIPPLE	847
90163-0064	NIPPLE	143
90163-0076	SLEEVE	215
90163-0133	QUICK-RELEASE COUPLING	239
90163-0134	COUPLING NIPPLE	239
90164-0003	LIGHT FIXTURE 1X20W IP67	237, 257
90165-0003	CLIP	143, 293, 425
90165-0005	CLIP	143, 293, 425, 601, 735
90165-0007	CLIP	233
90165-0010	CLIP	801
90165-0022	CLIP	143, 303
90165-0056	CLIP	315, 319, 333, 335, 337, 339, 341, 375, 411, 457, 459, 465, 473, 483, 561, 565, 569, 571, 587, 629, 639
90165-0057	CLIP	395, 405, 421, 457, 459, 515, 547, 553, 561, 565, 639, 681, 703, 789
90165-0058	CLAMP	325, 329, 361, 365, 375, 385, 389, 629
90165-0060	CLAMP	321, 323, 361, 365, 405, 421, 569, 571, 759
90165-0086	CRAMP	191
90166-0007	HOSE	199, 215
90166-0011	HOSE	411, 435, 587, 615
90166-0013	HOSE	219, 223, 241, 243, 245, 247, 249, 251, 805
90166-0051	HOSE	435, 461, 561, 565, 569, 571, 615
90166-0059	HOSE	405, 421, 591, 789
90166-0060	HOSE	159, 243, 245, 249, 251
90166-0068	HOSE	223
90166-0081	HOSE	219, 223, 241, 243, 245, 247, 249, 251, 805
90166-0087	HOSE	407, 423, 591, 741, 743
90166-0095	HOSE	461
90166-0101	HOSE	163
90166-0108	HOSE	143, 293, 407, 423, 427, 461, 547, 553, 561, 565, 569, 571, 603, 629, 639, 703
90166-0109	HOSE	143, 293, 321, 323, 333, 335, 337, 339, 341, 375, 629, 639
90166-0113	HOSE	143, 297
90166-0116	HOSE	831
90166-0121	HOSE	207, 233
90166-0122	HOSE	215, 233, 417, 461, 483, 547, 553, 595, 597, 703, 811
90166-0123	HOSE	369
90166-0124	HOSE	107, 109, 149, 233, 325, 329, 395, 415, 425, 459, 593, 601, 655, 657, 663, 665, 735, 847
90166-0133	HOSE	239
90166-0138	HOSE	163, 797
90166-0142	HOSE	169, 175
90166-0143	HOSE	293, 295, 303, 315, 319, 321, 323, 325, 329, 333, 335, 337, 339, 341, 461, 547, 553, 561, 565, 569, 571, 629, 639, 703
90166-0157	HOSE	269
90166-0194	PLASTIC HOSE	223
90166-0199	RUBBER HOSE	415
90166-0206	PLASTIC HOSE	223
90187-0029	VALVE	207, 219
90187-0054	VALVE	215
90187-0059	VALVE	273
90187-0062	VALVE	217, 219
90187-0081	BALL VALVE	53
90187-0082	BALL VALVE	9, 59, 61, 63
90194-0016	SIGN "FLASH SIGN" 50X50MM	53, 87, 113, 207, 211, 227, 265, 719, 731, 733, 751, 805, 811
90194-0039	FLASH SIGN 18X37MM	297
90195-0020	TERMINAL BK2 KRG 2-POLE	253, 811
90195-0028	TERM.BLOCK 6-POLE STEATIT	87
90195-0029	CONN. LINK NO324 FOR -28	87
90196-0055	PULLEY	287
90196-0061	PULLEY	287
90196-0062	PULLEY	287
90196-0063	PULLEY	287
90196-0064	PULLEY	287
90196-0065	PULLEY	287
90196-0066	PULLEY	287

Part No	Description	Page No
90196-0067	PULLEY	285
90196-0079	TIMING BELT PULLEY	287
90196-0086	TIMING BELT PULLEY	287
90196-0090	TIMING BELT PULLEY	287
90199-0004	LEVEL INDICATOR	425, 601
90199-0010	LEVEL GLASS	53
90201-0010	VALVE	187, 299
90201-0014	VALVE	183, 185
90201-0057	VALVE	299
90201-0058	SOLENOID VALVE	185, 187
90201-0300	PLATE	269, 299, 307, 859
90201-0301	SPRING	269, 307, 859
90201-0302	WASHER	187, 269, 307, 859
90201-0303	SPARE PARTS KIT	187, 269, 299, 307, 859
90201-0307	PLATE	183
90201-0308	PLATE	183, 185
90201-0309	BLOCK	187
90201-0310	BLOCK	299
90201-0311	PLATE	299
90201-0334	COIL	269
90201-0407	BOLT KIT	185
90206-0070	HEATING ELEMENT	53
90206-0085	HEATING CARTRIDGE	23, 741
90206-0097	HEATING CARTRIDGE	811
90206-0322	GASKET	23, 741
90206-0326	CONNECTION BOX	121
90207-0363	GASKET	65, 119
90207-0365	GASKET	65, 119
90208-0067	CLAMPING ELEMENT	285
90214-0028	BALL BEARING REPBY 0090214-0098	91
90214-0087	TAPER ROLLER BEARING	503, 673
90214-0098	BALL BEARING	89, 93, 135, 719, 729, 739
90214-0138	BALL BEARING	7, 117, 737, 753
90214-0163	BALL BEARING	295
90214-0169	BALL BEARING	293, 303
90214-0303	RING	89, 91, 93
90214-0310	LID	413, 589
90217-0026	NUT	45
90217-0047	NUT	53
90217-0053	NIPPLE	169
90217-0312	CRAMP	49
90217-0313	SEAL	49
90224-0066	CONNECTION	497, 669
90224-0078	CONNECTION	53
90224-0284	SWIVEL	15, 17, 23
90224-0301	CONNECTION	23
90224-0304	CONNECTION	735
90224-0307	CONNECTION	23, 59, 61, 63, 107, 109, 195, 197
90224-0308	BANJO CONNECTION	59, 61, 63
90224-0309	CONNECTION	107, 109
90224-0310	CONNECTION	107, 109
90224-0316	CONNECTION	241, 243, 245, 247, 249, 251
90224-0317	CONNECTION	233
90224-0318	CONNECTION	233
90224-0319	CONNECTION	195, 197, 219, 233, 241, 243, 245, 247, 249, 251
90224-0320	CONNECTION	233
90224-0321	CONNECTION	233
90224-0322	CONNECTION	233
90224-0323	CONNECTION	233, 241, 243, 245, 247, 249, 251
90224-0329	ELBOW 90 COUPL.,EXT.THREAD 6/4-G1/4"	149, 655, 657
90224-0331	CONNECTION	195, 197
90230-0011	NON RETURN VALVE	215
90230-0017	NON RETURN VALVE	181
90230-0021	NON-RETURN VALVE	253
90230-0023	NON RETURN VALVE	233
90230-0031	NON-RETURN VALVE	435, 615
90232-0075	PH.CELL SICK NT6-14900S12	395
90232-0103	PH.CELL OMRON E3SCT61-L-5M	805
90232-0104	RECEIVER OMRON E3S-CT61-D-5M	805
90232-0106	PH.CELL OMRON E3S-CR11-5M	805
90232-0333	REFLECTOR	771
90235-0048	VALVE	107, 109
90235-0259	VALVE	59, 61, 63
90235-0270	VALVE	273
90235-0274	THROTTLE CHECK VALVES,G1/8"	59, 61, 63, 73, 741, 743
90235-0275	THROTTLE CHECK VALVES,G1/4"	15, 17, 23, 41, 95
90235-0295	THROTTLE CHECK VALVES,G1/4"	233
90235-0450	PLATE	223
90235-0460	WEAR & TEAR PARTS KIT	273
90235-0708	VALVE	223
90235-0767	VALVE	219
90236-0041	BRACKET	219
90237-0011	BAR CLAMP	165, 167
90237-0046	LOCK PART	193, 253, 773
90237-0061	HANDLE	165, 167
90237-0066	LOCKING DEVICE	165

Part No	Description	Page No
90237-0067	LOCKING DEVICE	167
90237-0070	LOCK	255
90237-0075	SNAP LOCK	773
90237-0319	LOCK HOUSING	227
90237-0320	LOCK COMPONENT	227
90237-0335	LOCKING CATCH	227
90239-0127	BRACKET	15, 17, 23, 91, 655, 657
90239-0166	CYLINDER	15, 17, 23, 83, 85, 665
90239-0189	CYLINDER	91, 593, 655, 657
90239-0196	CYLINDER	95
90239-0231	BELLOWS	811
90239-0259	CYLINDER	769, 779, 781, 783, 785, 787, 791, 793, 795, 811
90239-0320	BRACKET	665
90239-0321	BRACKET	95
90239-0346	BRACKET	41
90239-0442	SEAL KIT	121
90239-0443	SEAL KIT	121
90239-0453	BRACKET	47, 77, 79
90239-0487	BRACKET	743
90239-0487	BRACKET,REAR,CLEVIS FLANG,MINI-ISO,20-25	663
90239-0490	BRACKET	73
90239-0492	ROD END,BALL JOINT EYE,MINI-ISO,M8	655, 657
90239-0516	PISTON ROD HEAD	47, 77, 79, 743
90239-0532	PISTON ROD HEAD	741
90239-0779	CYLINDER	47, 77, 79
90239-0818	DOUBLE ACTING,MINI-ISO,CYL.16-80	485
90239-0821	DOUBLE ACTING,MINI-ISO,CYL.20-25	741
90239-0822	DOUBLE ACTING,MINI-ISO,CYL.20-50	73
90239-0829	CYLINDER 25-50	663, 743
90239-0951	CYLINDER	41
90239-0960	CYLINDER	415
90240-0097	RICTION BEARING	303
90240-0146	FLANGE BUSHING	53
90240-0172	FLANGE BUSHING	5, 13, 19, 21
90240-0180	FLANGE BUSHING	375
90240-0233	BUSHING	523, 527, 529, 533, 537, 539
90242-0054	O-RING	573, 709
90242-0084	O-RING	117
90242-0115	O-RING	207
90242-0116	O-RING	413, 589
90242-0117	O-RING*	505, 675
90242-0118	O-RING	429, 607
90242-0120	O-RING	429, 607
90242-0121	O-RING	429, 505, 607, 675
90242-0148	O-RING	723, 725
90242-0163	O-RING REPBY 0315204-0103	163
90243-0061	FAN NOZZLE	129
90243-0133	CONTAINER	835
90243-0169	PAPER HOLDER	263
90248-0013	HINGE 3562E STUV	255
90258-0001	HOLLOW PIN	315, 319
90258-0030	HOLLOW PIN	819
90258-0031	HOLLOW PIN	811
90258-0032	PIN	673
90261-0003	PLUG,BLIND PLASTIC	207
90261-0004	PIPE PLUG	405, 421
90261-0008	PLUG,BLIND PLASTIC M35X1,5/M36X3	223
90261-0011	PLUG,BLIND PLASTIC FOR M30/M28X1,5	207
90261-0013	PLUG	223
90261-0018	PLUG,BLIND PLASTIC	205
90261-0019	PIPE PLUG	237
90261-0032	PLUG	497, 547, 553, 669, 703
90261-0033	PLUG,BLIND PLASTIC FOR M24X2	223
90261-0035	PIPE PLUG	207
90261-0036	PIPE PLUG "REPBY 90261-71"	325, 329
90261-0049	PLASTIC PLUG	721
90264-0037	FAN	201
90264-0042	FAN SIEMENS 2BH1 300-1AH	733
90264-0306	SILENCER	761
90264-0310	CAPACITOR 2MF 460V	269
90264-0316	TOUCH GUARD	269
90264-0325	SPARE MOTOR ZIEHL	269
90264-0328	CONE	269
90265-0028	APPLIANCE BOX	831
90266-0006	TUBE	293
90266-0007	TUBE	233, 241, 243, 245, 247, 249, 251
90266-0010	TUBE	205
90266-0019	PIPE ..	143, 293, 315, 319, 321, 323, 333, 335, 337, 339, 341, 375, 461
90266-0021	DAIRY PIPE	273
90266-0022	DAIRY PIPE	573, 761
90266-0165	BRASS PIPE	333, 335, 337, 339, 341
90266-0167	PIPE	575
90266-0174	PIPE	761
90270-0011	COMPRESSOR ELMO RA112"REPBY 90270-17"	45
90270-0338	SPARE PARTS KIT	121
90270-0345	SHIMS	121

Part No	Description	Page No
90270-0346	GASKET	121
90270-0347	VALVE	45
90270-0348	MOTOR ELMO RA112/MB42083	121
90274-0002	PRESSURE SWITCH	411, 587
90274-0042	PRESSURE SWITCH 2BAR	217
90274-0043	PRESSURE SWITCH 3BAR	217, 219
90274-0044	PRESSURE SWITCH 4BAR	219
90274-0045	GUARD	45
90274-0052	SWITCH (MONITOR)	269
90274-0053	LEVEL PROBE	183, 185
90274-0065	PRESSURE SWITCH	233
90274-0084	PRESSURE SWITCH	143
90274-0300	CONTACT HOUSING	573, 709
90277-0041	FILTER	183, 185
90277-0045	FILTER	223
90277-0046	FILTER	223
90277-0055	FILTER	59, 61, 63
90277-0339	O-RING	121
90278-0001	PUMP	839
90279-0001	OIL CAN	839
90285-0094	SEAL KIT	121, 709
90285-0119	SEAL AND WEAR-AND-TEAR PA	121
90287-0009	SPRINGLOADED SCREW	737
90287-0056	SCREW	69, 837
90287-0062	SCREW	191
90287-0070	SCREW	359, 361, 363, 365
90287-0073	SCREW	297, 299
90287-0074	SCREW	191
90287-0075	SCREW	67, 137, 191, 195, 197, 199, 207, 773, 811
90287-0076	SCREW	191, 773, 841, 843
90287-0106	SPRINGLOADED SCREW	721
90287-0109	SPRINGLOADED SCREW	561, 565, 689, 705, 707
90287-0127	SCREW	853
90287-0136	SCREW	295
90287-0155	SCREW	497, 669
90287-0159	GRUB SCREW	155
90287-0161	STOP SCREW	463, 473, 479
90287-0164	SCREW	541, 697
90287-0165	SCREW	425, 541, 601
90287-0167	SPRINGLOADED SCREW	803
90287-0206	SLOTTED SCREW	819
90288-0037	ROLLER CHAIN	647
90288-0038	ROLLER CHAIN	629
90288-0039	ROLLER CHAIN	637
90288-0053	ROLLER CHAIN	487, 489
90288-0055	ROLLER CHAIN	561, 565
90288-0057	ROLLER CHAIN	487, 489
90288-0062	ROLLER CHAIN	57
90288-0305	CONNECTION LINK	315, 319, 709
90288-0311	LINK	487, 489
90288-0316	CONNECTION LINK	709
90288-0317	CONNECTION LINK	573
90288-0324	CARRIER	573
90296-0009	GREASE	417, 425, 497, 509, 595, 597, 601, 609, 669, 677, 819
90296-0028	OIL (QTY OF STOCK REFLECTS LITERS)	145
90296-0051	PASTE	811
90296-0053	OIL	145
90296-0068	GREASE	145
90296-0075	OIL	145, 413, 589
90297-0002	FLUORESCENT TUBE 18W	269
90297-0300	BALLAST COIL 50HZ	227
90298-0019	DETERGENT	145
90298-0022	ZERUST CAPSULE	211
90299-0013	INK	797
90299-0300	COVER	831
90303-0004	GLOVES	851
90303-0005	PROTECTIVE EQUIPMENT	851
90321-0015	PUMP	405, 421, 581, 583
90321-0018	PUMP	181
90321-0034	PUMP	405, 421, 581, 583
90321-0037	PUMP	253
90321-0380	DIAPHRAGM	269
90321-0381	ACCUMULATOR	181
90321-0382	FLANGE	181
90321-0383	FLANGE	181
90321-0384	DISTANCE PIECE	181
90321-0385	COUPLING	181
90321-0396	FILTER	269
90321-0411	GASKET	155
90321-0466	SPARE PART KIT	573, 709
90321-0481	GASKET	573, 709
90326-0012	PROTECTIVE COVER	41, 53, 59, 61, 63, 81, 87, 743
90326-0017	GLAND "REPBY 90326-306"	41, 53, 87
90326-0019	THERMOELEMENT	53
90326-0020	PLUG,FEMALE YELLOW CR-AL	41, 53, 59, 61, 63, 81, 87, 743, 811
90326-0022	PLUG,MALE YELLOW CR-AL	811

Part No	Description	Page No
90326-0043	THERMOCOUPLE CR-ALPREM.G	53, 87
90326-0048	THERMOELEMENT	41
90326-0052	THERMO ELEMENT	81
90326-0053	THERMO ELEMENT	81
90326-0060	THERMOCOUPLE CR-AL	811
90326-0304	LEAD IN	41, 121
90328-0001	SILENCER	219
90328-0003	SILENCER	59, 61, 63
90328-0024	SILENCERS,THREADED CONNECTION G3/8"	223
90330-0012	SLEEVE,REDUCTION Rp1/8"-Rp1/4"	45
90330-0020	ELBOW 90,INTERNAL THREAD Rp1/2"	425, 601
90330-0021	NIPPLES,HEXAGON,EXT.R-THREAD R1/2"-R1/2"	59, 61, 63, 425, 601
90330-0024	T-PIPE,INTERNAL THREAD Rp1/4"	175
90330-0026	PLUG,EXTERNAL G-THREAD G1/4"	71, 169, 413, 589
90330-0032	NIPPLE	59, 61, 63
90330-0034	NUT,HEXAGON G1/4"	171, 173, 177, 179, 231, 259
90330-0037	PLUG,EXTERNAL G-THREAD G1/2"	413, 589
90330-0042	BUSHING,INT./EXT.R-THREAD R3/8"-Rp1/4"	49, 95
90330-0048	BUSHING,INT./EXT.R-THREAD R1/2"-Rp3/8"	53
90330-0052	NUT	593
90330-0053	NUT	593
90330-0059	NIPPLE	159
90330-0065	ELBOW PIPE	273
90330-0066	PLUG,EXTERNAL G-THREAD G1/8"	53, 99, 101
90330-0078	BUSHING,INT./EXT.R-THREAD R3/4"-Rp3/8"	45
90330-0083	NIPPLES,HEXAGON,EXT.R-THREAD R3/8"-R1/4"	175
90330-0086	COVER	425, 601
90330-0093	NUT,HEXAGON G1/2"	215, 425, 601
90330-0105	NUT	99, 101, 733
90330-0106	PIPE COUPLING	59, 61, 63
90335-0005	SPRING	557
90335-0012	SPRING	435, 615
90335-0015	SPRING	757
90335-0025	SPRING	767
90335-0027	SPRING	819
90335-0034	SPRING	51
90335-0037	SPRING	795
90335-0064	SPRING	789
90337-0315	FILTER	59, 61, 63
90339-0006	MAGNET	823
90339-0007	MAGNET	823
90339-0011	LOCK	773
90344-0049	CHAIN TENSIONER	559, 565
90345-0038	BEARING HOUSING	541
90347-0004	VIBRATION DAMPER	139, 141, 747, 759
90347-0007	VIBRATION DAMPER	485
90347-0026	DAMPER	45
90347-0036	DAMPER	257
90347-0038	DAMPER	257
90347-0054	DAMPER	789
90347-0108	DAMPER	771
90347-0110	MACHINE SHOE	835
90347-0111	MACHINE SHOE	835
90347-0300	BRACKET	257
90348-0007	FREE WHEEL COUPLING	93
90355-0031	FLEXIBLE COUPLING	297
90360-0009	STEAM TRAP	59, 61, 63
90360-0011	STEAM TRAP "REPBY 90360-25	59, 61, 63
90360-0304	SPARE PART KIT	121
90360-0305	FLOAT	49
90411-0005	INSULATOR	87
90413-0033	CODE INSERT SET 0-9	801
90413-0043	CODE INSERT SET	801
90413-0044	CODE INSERT SET	801
90413-0047	CODE INSERT SET	801
90413-0048	CODE INSERT SET	799
90413-0049	CODE INSERT SET	799
90415-0018	FILTER	219
90415-0019	FILTER	219
90415-0029	FILTER	181
90415-0032	FILTER	169
90415-0033	OIL FILTER	435, 615
90415-0314	FILTERINSERT 5594-36	269
90415-0323	FILTERINSERT FOR -29	269
90415-0325	GASKET	269
90415-0328	FILTER INSERT	269
90415-0330	FILTER INSERT	573, 615, 709
90417-0133	TOOTHED BELT	287
90417-0134	TOOTHED BELT	287
90417-0180	TIMING BELT	405, 421, 581, 583
90417-0212	TIMING BELT	647
90417-0213	TIMING BELT	653
90417-0214	TIMING BELT	651
90417-0215	TIMING BELT	657
90417-0329	TIMING BELT	469, 471, 473
90417-0330	TIMING BELT	467

Part No	Description	Page No
90417-0345	TIMING BELT	465, 473
90418-0003	SLEEVE,REDUCTION 12-8	271
90418-0014	ELBOW PIPE	219
90418-0016	ADAPTER	271
90418-0018	ELBOW 45,INTERNAL CONNECTION 8	271
90418-0035	ADAPTER,INTERNAL CONNECTION 8-G1/4"	271
90418-0039	ELBOW PIPE	219
90418-0048	T-PIPE,INTERNAL CONNECTION 15	217, 219
90418-0049	T-PIPE,REDUCTION INTERNAL CONNE.15X12X12	271
90418-0050	T-PIPE,REDUCTION INTERNAL CONNE.15X12X15	219, 272
90418-0053	ELBOW 90,INTERNAL CONNECTION 15	217, 219, 269, 271, 273, 275
90418-0054	ELBOW 45,INTERNAL CONNECTION 15	217, 219, 271, 273
90418-0055	ELBOW 45,INTERNAL AND EXTERNAL CONN.15	219, 271, 273
90418-0056	T-PIPE,REDUCTION INTERNAL CONNE.15X15X12	219
90418-0058	ELBOW 90,INTERNAL AND EXTERNAL CONNEC.15	219, 269, 271
90418-0063	ADAPTER,INTERNAL CONNECTION 15-G1/2"	217, 219, 269
90418-0068	T-PIPE,REDUCTION INTERNAL CONNEC.15X8X15	219, 271
90419-0005	ALARM BEACON,RED24V	191
90419-0302	LENS RED FOR -304	269
90422-0008	COOLER	181
90424-0025	NOZZLE	175
90424-0026	NOZZLE	171, 173, 177, 179, 231, 259
90424-0031	NOZZLE	81, 99, 101
90424-0035	NOZZLE	229, 257, 461
90424-0054	NOZZLE	51
90425-0009	EJECTOR	71
90426-0003	HAND SHOWER	131
90450-0105	CYLINDER	325, 329
90450-0377	CYLINDER	459
90450-0454	Cylinder	795
90450-0634	OVERHAUL KIT	397
927085-0000	OVERFLOW TUBE	53
927195-0000	PIPE	59, 61, 63
927196-0000	PIPE	59, 61, 63
927197-0000	PIPE	59, 61, 63
927198-0000	PIPE	59, 61, 63
927199-0000	CLAMP BRACKET	59, 61, 63
927200-0000	PIPE	59, 61, 63
927226-0000	PIPE	59, 61, 63
927252-0000	COMPRESSION SPRING	367
927258-0000	BRACKET	93
927311-0000	PIPE	59, 61, 63
927314-0000	CAM	503
927315-0000	TURRET	503
927318-0000	ROLLER	503
927319-0000	PLATFORM	191
927323-0000	SPACER	367
927332-0000	BRACKET	411, 587
927333-0000	BAR CLAMP	411, 587
927420-0001	O-RING 5.1X1.6 SILICON	25
927421-0001	O-RING 9.3X2.4 SILICON	55, 97
927421-0002	O-RING 12.3X2.4 SILICON	25
927421-0003	O-RING 13.3X2.4 SILICON	55, 97, 213
927421-0004	O-RING 15.3X2.4 SILICON	25, 153
927422-0001	O-RING 19.2X3 SILICON	25, 55
927422-0003	O.RING 24.2X3 SILICON	161
927422-0004	O-RING 29.2X3 SILICON	55, 97, 155
927422-0006	O-RING 42.2X3 SILICON	55, 151, 155, 213
927422-0007	O-RING 44.2X3 SILICON	25
927422-0009	O-RING 54.5X3 SILICON	25, 55
927422-0011	O-RING 69.5X3 SILICON	151
927428-0000	COVERING PLATE	809
927440-0000	LINK	367, 393
927441-0000	NUT	367, 393
927448-0000	LINK	315, 319
927449-0000	SECURITY PLATE LEFT	315
927450-0000	SECURITY PLATE RIGHT	319
927493-0000	INDUCTOR	383, 387
927495-0000	INDUCTOR	383, 387, 393
927743-0000	BENDING ROLLER	795
927745-0000	PROTECTION PLATE	795
927830-0000	PROTECTION	795
927891-0000	SCREW	475
928720-0000	HOLDER	371
928901-0000	COVERING PLATE	493
928948-0000	BEARING	301
929541-0000	VOLUME FLAP	345
929669-0000	CURVE	297
929753-0000	HOLDER	395
978603-0000	SIGN	223

P

PR22,5(PG16)	227

Tetra Pak

SPC binder labels. 40 mm Full width *Note! This page is generated **automatically** using the **variable definitions** made in the **front page** file!!*

Tetra Brik Aseptic
648022-6000

Issue: 9808 Doc No: SPC-80278-0101

Tetra Brik Aseptic
648022-6000

Issue: 9808 Doc No: SPC-80278-0101

Tetra Brik Aseptic
648022-6000

Issue: 9808 Doc No: SPC-80278-0101

Tetra Brik Aseptic
648022-6000

Issue: 9808 Doc No: SPC-80278-0101

Tetra Brik Aseptic
648022-6000

Issue: 9808 Doc No: SPC-80278-0101

Tetra Brik Aseptic
648022-6000

Issue: 9808 Doc No: SPC-80278-0101

Tetra Brik Aseptic
648022-6000

Issue: 9808 Doc No: SPC-80278-0101

Tetra Brik Aseptic
648022-6000

Issue: 9808 Doc No: SPC-80278-0101

Tetra Brik Aseptic
648022-6000

Issue: 9808 Doc No: SPC-80278-0101

Tetra Brik Aseptic
648022-6000

Issue: 9808 Doc No: SPC-80278-0101

Tetra Brik Aseptic
648022-6000

Issue: 9808 Doc No: SPC-80278-0101

*SPC binder labels. 30 mm Half width Note! This page is generated **automaticall** using the **variable definitions** made in the **front page** file!!*

Tetra Brik Aseptic
648022-6000

Issue: 9808 Doc No: SPC-80278-0101

Tetra Brik Aseptic
648022-6000

Issue: 9808 Doc No: SPC-80278-0101