SPC

Spare Parts Catalogue

TBA/8 090V

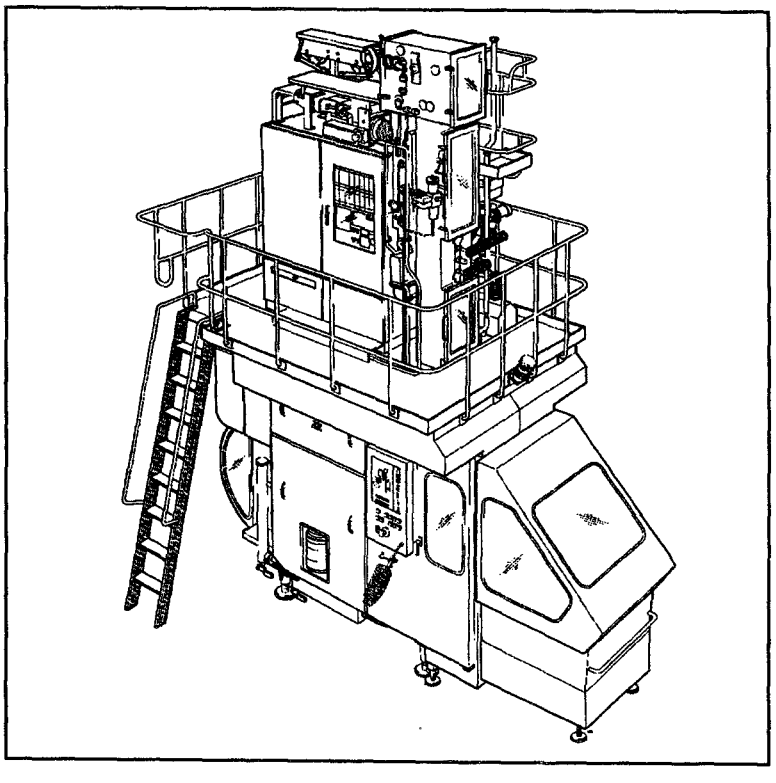

Tetra Pak

Doc No SPC-80162-1

This document is valid for:

Series No/Machine No Sign.

SPC

Spare Part Catalogue

Tetra Brik Aseptic
TBA/8
648022-090V

Contents Page No

Superstructure
648011-070V 3

Machine Body
648012-070V 117

Drive
648003-090V 271

Jaw System
648004-090V 301

Final Folder
648035-070V 401

Strip Applicator
648007-030V 521

Automatic Splicing Unit
648013-050V 581

Accessories
648009-080V 669

Installed Extra Equipments
To check your actual machine data and eventual installed extra equipments, check the machine specification, supplied on machine delivery!

Order/add necessary documents.

Issue 9306

Tetra Pak

Tetra Brik Packaging Systems AB

Service

When ordering spare parts for your machine, contact the nearest Tetra Pak service station. You will find a list of all service stations at the end of this publication.

Manufacturer

This machine is produced by:

Tetra Brik Packaging Systems AB
Ruben Rausings gata
S-221 86 LUND
Sweden

Machine Identification

The machine plate on the right is an example of the type of machine plate attached to the machine frame. The plate carries data needed when contacting Tetra Pak concerning this particular machine.

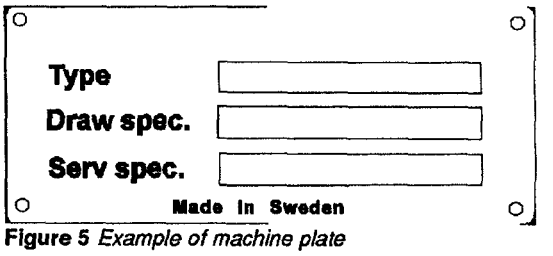

Figure 5 *Example of machine plate*

The location of the different machine plates is shown on the page "Location of machine number plates", page I-7.

Document Information

Purpose of the Spare Parts Catalogue

The purpose of the Spare Parts Catalogue (SPC) is to provide the service technicians and contact personnel with information on how to find and order spare parts for repairing and servicing the machine.

For instructions on how to replace parts and adjust machine setup, see the Maintenance manual.

Design Modifications

The content of this document is in accordance with the design and construction of the machine at the time it was delivered from the Tetra Pak machine production facility.

Document producer

This document has been produced by:

Tetra Brik Packaging Systems AB
Teknisk Documentation
Ruben Rausings gata
S-221 86 LUND
Sweden

Further copies

Additional copies can be ordered from nearest Tetra Pak service station. You will find a list of all the service stations at the end of this publication. Copies are also available directly from:

Tetra Laval Marketing Services AB
Central Technical Publications
Ruben Rausings gata
S-221 86 LUND
Sweden

When ordering technical publications, always quote the **document No** printed on the front cover of the document concerned.

Number of pages

This document contains a total number of ***25 introduction and 284 catalogue pages.***

Copyright

This document is protected under the Copyright Act and **must not be copied** without the express permission by Tetra Pak.

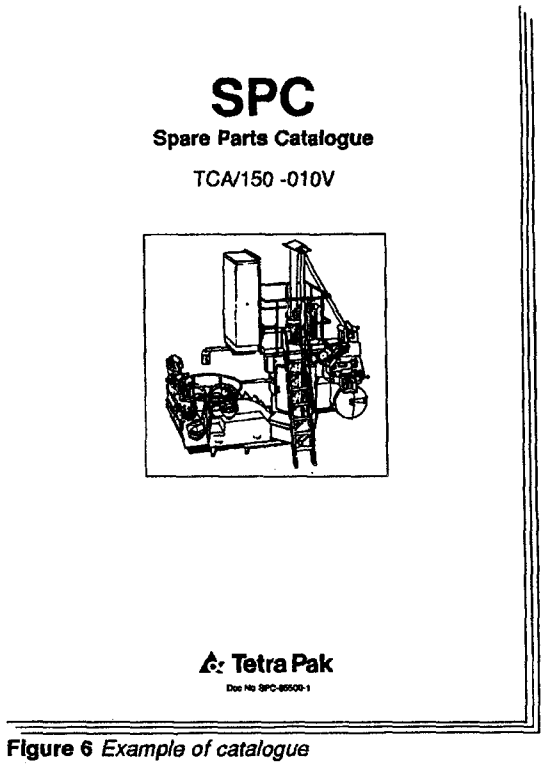

Figure 6 *Example of catalogue*

Tetra Pak Part Numbering System

Example of part/group number

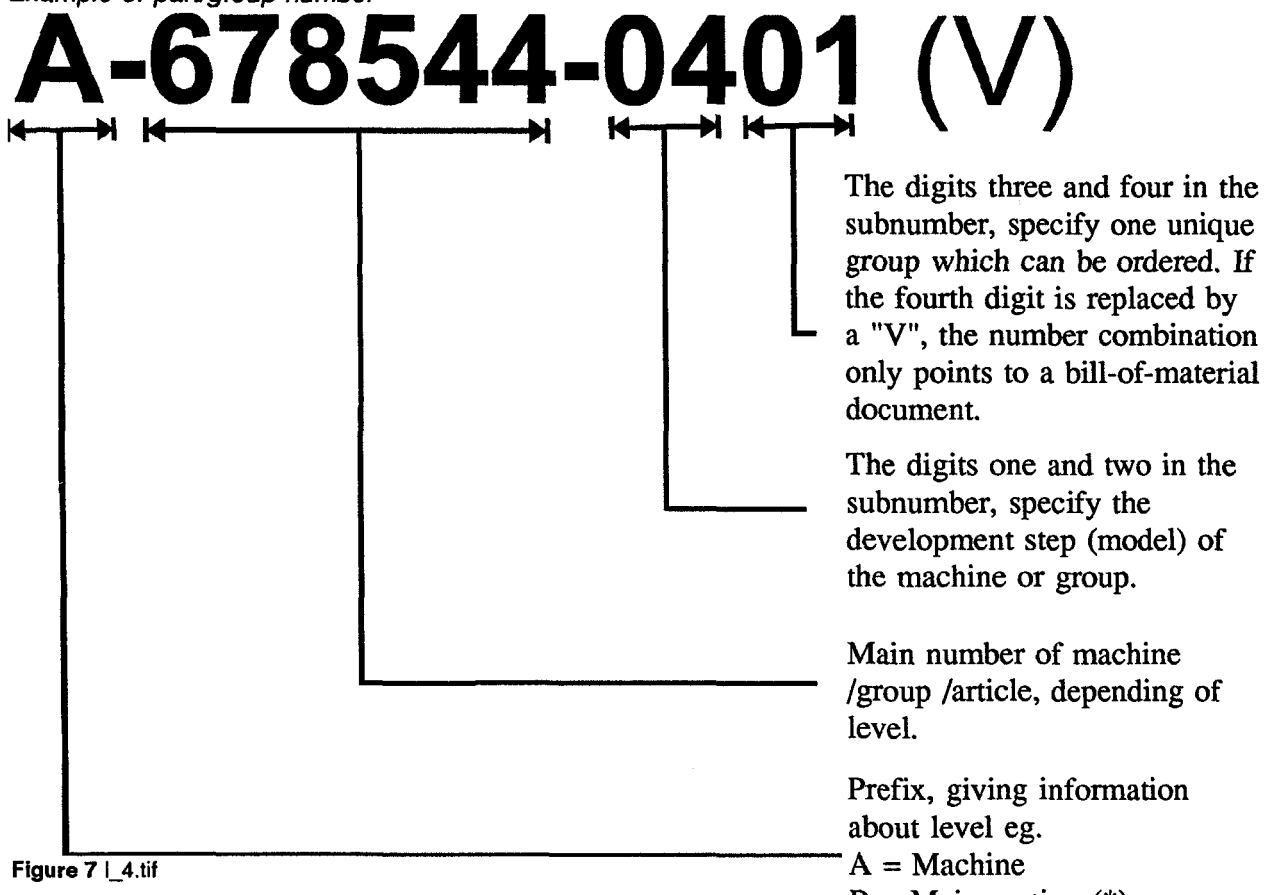

Figure 7 I_4.tif

Location of Machine Number Plates

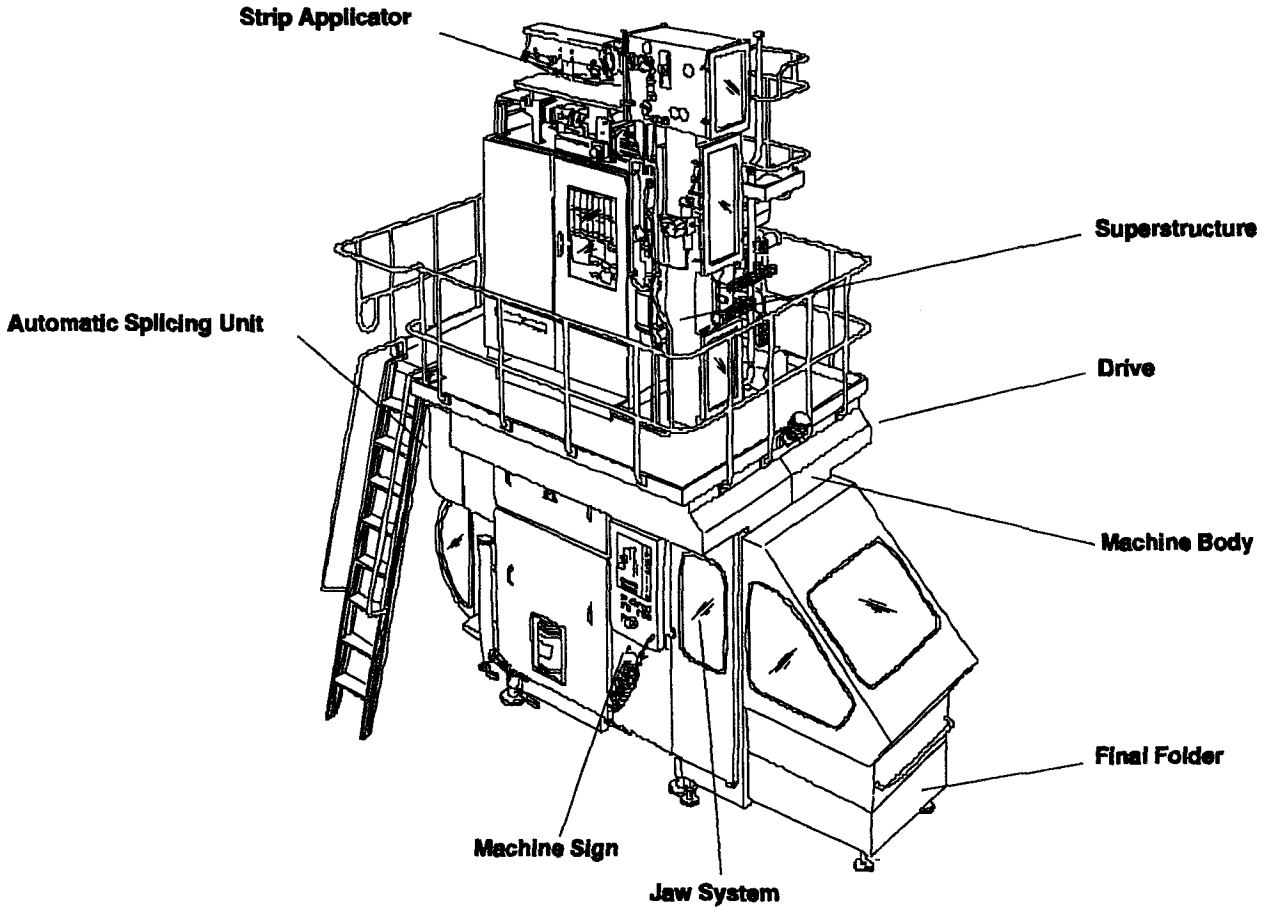

Machine Sign

Type
Draw spec.
Serv spec.
Made In Sweden

Group Number Plate

TETRA PAK
No.

For the correct machine data, check your machine specification, supplied on machine delivery!

How to find the correct Spare Part Number

A. Check that the data on your machine type sign, and/or machine specification corresponds with the catalogue, in which you are looking at right now. If not change/order an actual catalogue.

1. Main groups of the machine

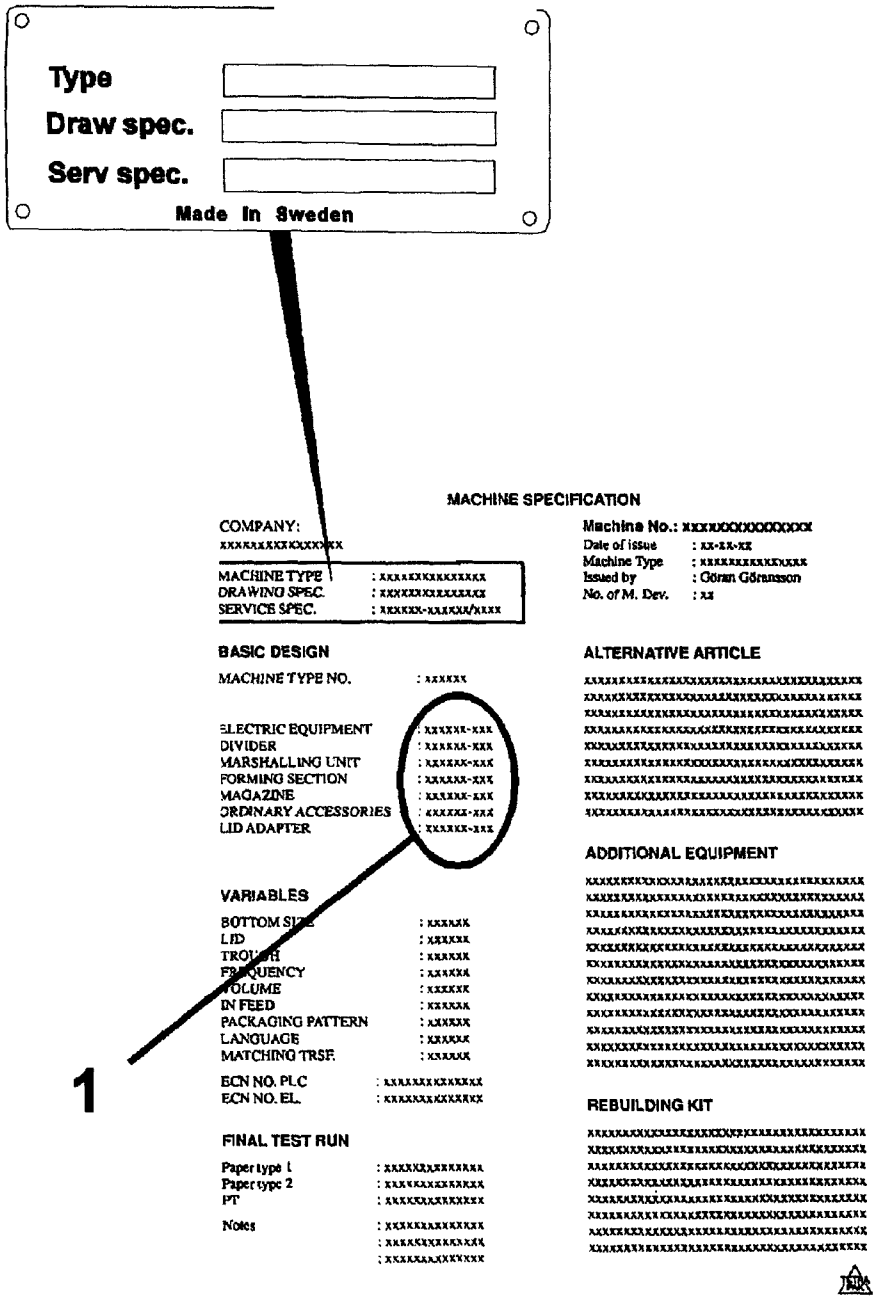

Figure 11 *Example of machine specification*

Tetra Pak

B. The second catalogue sheet contains a table of content for the main groups, included in the catalogue.
The information regarding machine and main group status MUST correspond with your machine specification.
Locate and choose the main groups page number, in which you want to search for spare parts.

1. Main group of the machine
2. Machine Type

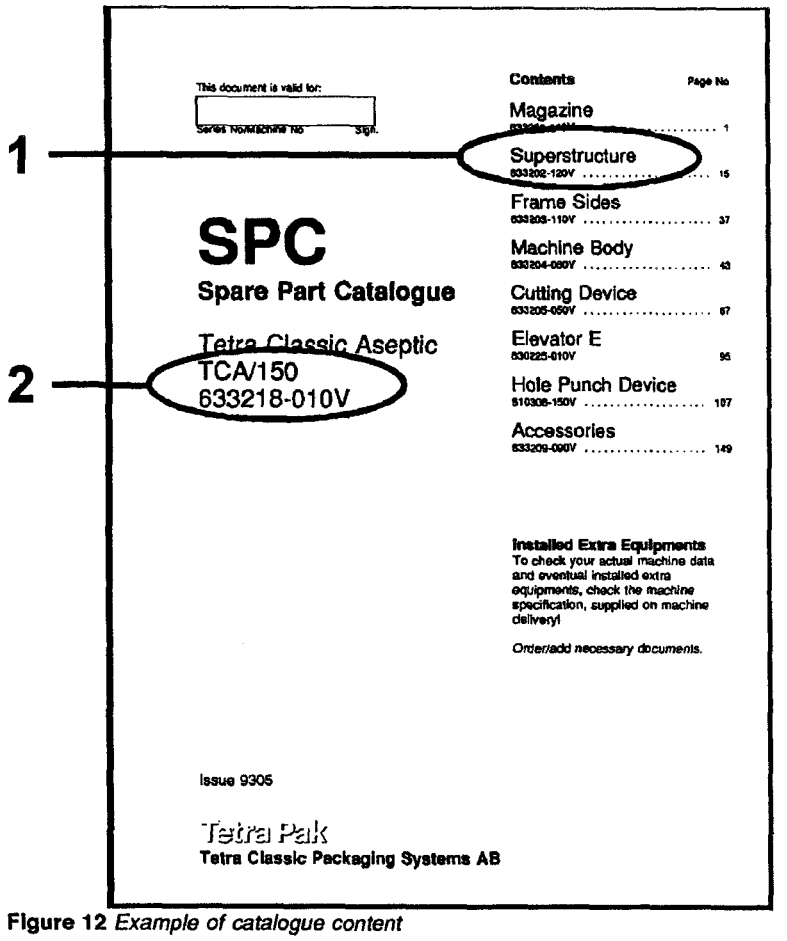

Figure 12 *Example of catalogue content*

Continued overleaf

How to find the correct Spare Part Number

C. Search in the main group illustration, the item number, which may hold your wanted spare part. Go to the text page below and read page number for the actual group.

4. Internal information, such as latest Alteration Message, bill-of-materials included in catalogue page.
5. Pos number on main group illustration
6. Pos numbering on illustration.
7. Illustration number in the SPC database.
8. Continuous page numbering through the document.
9. Pos number corresponding to illustration.
10. Group or article number, to spare parts store.
11. Group or article description.
12. Machine type including development status.
13. Group description.
14. Group number (bill-of-material) including development status.
15. Document number.

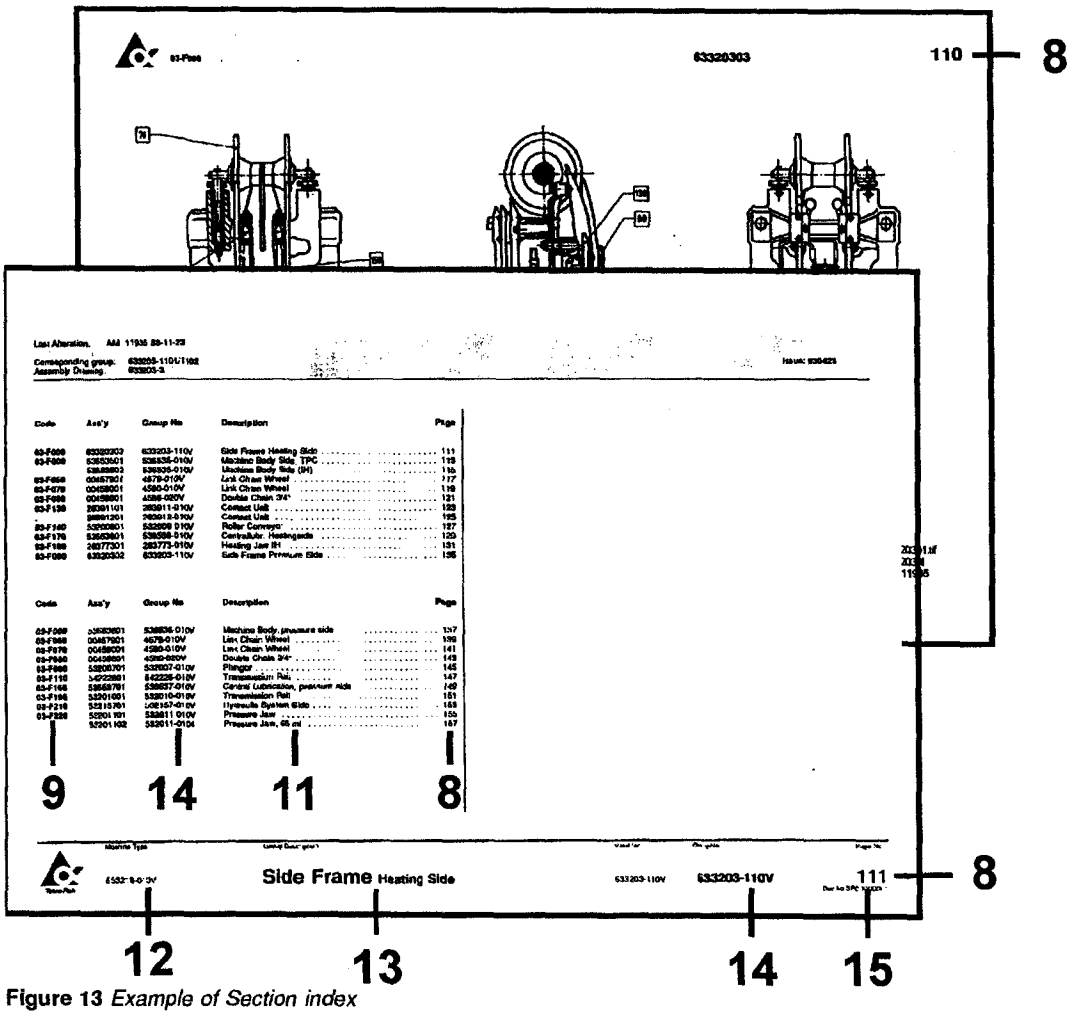

Figure 13 *Example of Section index*

D. Continue to the found page number, and search in the illustration, for your spare part. Go to the text row for the found item number, and read the part number. Take eventual variant headings in consideration; if you are unsure, read your machine specification.

16. Variant heading, eg volume, left/right etc.
17. Heading for common parts.
18. SP = Code for articles, which are included into various spare part kits.
    U = Kit 101, start up parts supplied on machine delivery.
    P = Kit 102, production parts to be held at production site workshop.
    S = Kit 103, overhaul parts to be held at service stations store.
    C = Kit 104, security parts to be avaiable at the central store.
19. UN = Short code for measure units eg mm, kg etc.
20. Qty = Number of item needed in the complete assembly.

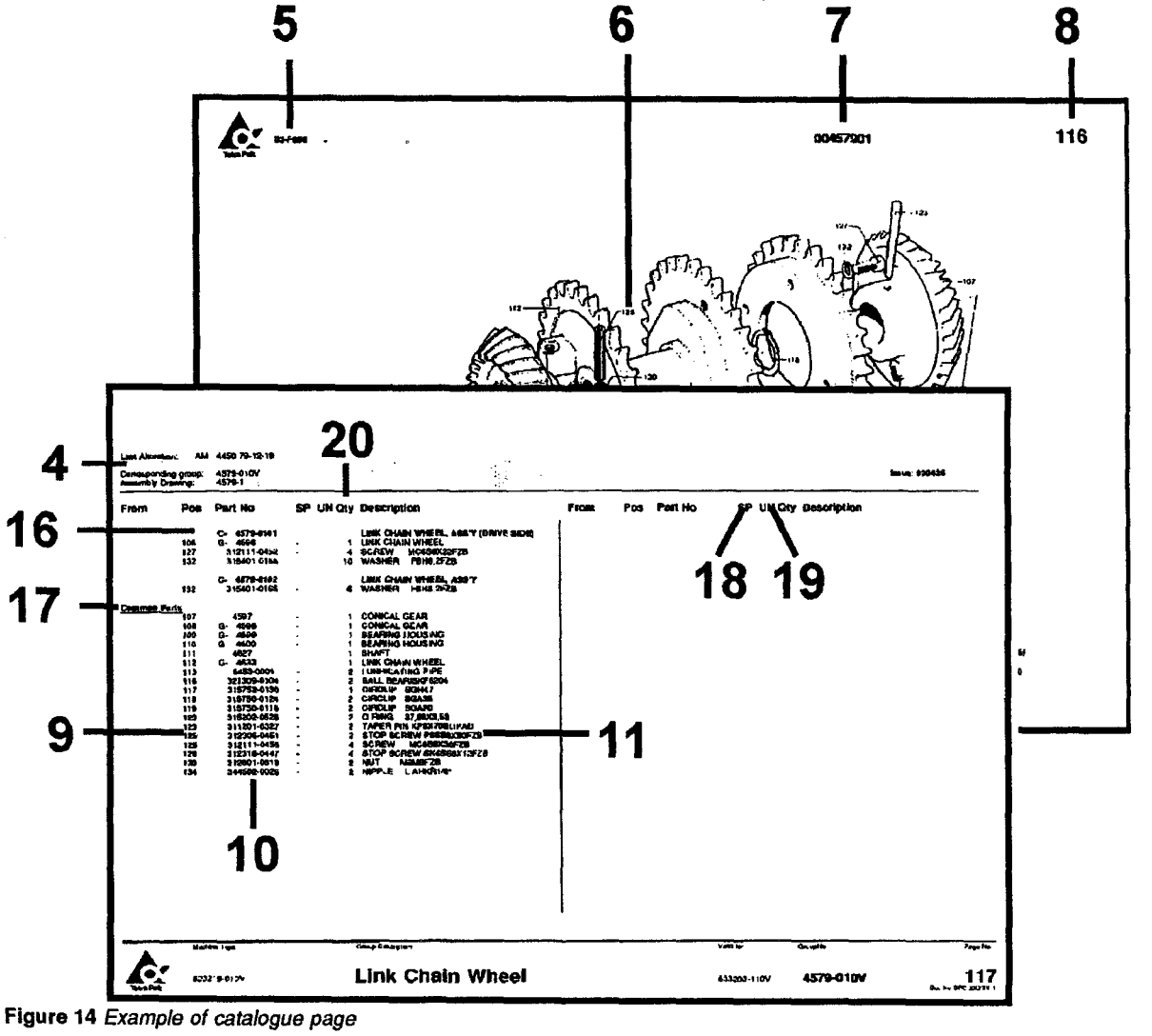

Figure 14 *Example of catalogue page*

On the page overleaf you will find a complete page number index, for the catalogue, sorted in both alfabetical and numerical group number order. A similar index will be found at the beginning of each main section, containing the sections pages in geographical structure/page number order.

Alfabetical group number index

Pos	Group No	Description	Page
	539209-010V	A-Cylinder	57
09-F560	499082-010V	Adapter, Type 1	683
	543143-010V	Adjustmentment Device	621
	543143-010V	Adjustmentment Device	611
	566683-010V	Air Cooler	197
12-F020	230922-010V	Air Jet Gun	119
	276345-030V	Air Knife	91
	283926-020V	Air Nozzle	37
	283926-0204	Air Nozzle 1000ml Slim	39
	526973-010V	Air Nozzle	41
	273402-040V	Air Super-heater	83
	68917-010V	Angle indicator	267
	440630-020V	Ap-Valve	55
12-F130	279631-040V	Appliance Box	135
03-F080	243927-060V	Arm	285
04-F080	246499-060V	Arm	329
04-F090	246499-060V	Arm	329
04-F100	246498-060V	Arm w. Shaft Pressure TPC	331
04-F110	246498-060V	Arm w. Shaft Pressure TPC	331
04-F100	541052-010V	Arm With Axle Pressure L	333
04-F110	541053-010V	Arm With Axle Pressure R	335
13-F000	648013-050V	Automatic Splicing Unit	581
	539211-010V	B-Cylinder	61
04-F280	541188-020V	Bar Code	397
	546117-010V	Bar Code	573
	269941-060V	Bath	49
11-F450	269941-060V	Bath	47
	263394-020V	Bending Roller	89
07-F100	265565-020V	Bending Roller Bracket	543
12-F065	268015-010V	Bending Roller Bracket	127
07-F040	282509-030V	Bending Roller	523
	440135-010V	Bending Roller	641
	440135-010V	Bending Roller	631
	440184-010V	Bending Roller	633
	522410-010V	Bending Roller	637
07-F040	546179-010V	Bending Roller	525
13-F190	445930-010V	Bending Unit	639
	285291-040V	Bevel Gear	421
	269932-050V	Bottom Cover	51
12-F340	440422-0501	Bottom Plate TBA/8	191
	440422-0502	Bottom Plate TB/8	193
07-F080	526931-020V	Bottom Plate	533
07-F080	526933-030V	Bottom Plate	535
	525143-020V	Bottom Valve	413
12-F350	440437-030V	Box	195
	543822-010V	Brake Arm	561
	539210-010V	C-Cylinder	59
	525110-010V	Cable Conduit	415
	450293-0402	Cable Duct TB/8	241
12-F470	450293-0401	Cable Duct TBA/8	239
11-F640	451342-040V	Cable Duct	107
	263391-040V	Calender Roller	87
09-F210	243372-010V	Carriage	671
	464100-020V	Carriage	649
13-F240	464100-020V	Carriage	647
04-F150	247187-055V	Carrier	349
04-F140	247187-050V	Carrier	347
	26642-020V	Carrier	305
	26642-020V	Carrier	309
04-F140	259414-040V	Carrier Pressure L IH	351
04-F150	259415-040V	Carrier Pressure R IH	353
12-F140	279979-040V	Central Lubrication	137
	525091-010V	Chain	463
	525092-010V	Chain Guard	465
	525320-010V	Chain Guard	513

Tetra Pak

Alfabetical group number index

Pos	Group No	Description	Page
	525090-010V	Chain Left	461
	525089-010V	Chain Right	459
	297638-020V	Chain Tensioner	417
	273401-030V	Change-over Valve	73
	476859-020V	Change-Over Valve	77
	476859-020V	Change-Over Valve	45
	541163-010V	Clamp Ring	63
	541164-010V	Clamp Ring	65
12-F230	297808-050V	Cleaning Equipment	165
	476884-020V	Cleaning Head	259
	476884-020V	Cleaning Head	169
	476885-020V	Cleaning Head	225
	476885-020V	Cleaning Head	173
	476886-020V	Cleaning Head	175
	476887-020V	Cleaning Head	167
11-F635	451131-010V	Cleaning Pipe	105
12-F455	449168-030V	Cleaning System	223
	68474-010V	Coil	577
11-F440	269938-050V	Compressor	43
11-F470	561268-010V	Connection Assembly	53
07-F070	283026-030V	Connection Box	529
12-F450	449930-040V	Connection Box	221
07-F070	450862-030V	Connection Box	531
12-F570	451348-020V	Connection Box	265
	532151-020V	Connection Box	625
	540723-010V	Connection Box	205
	561259-010V	Connection Housing	159
	527898-010V	Container	157
11-F350	560930-010V	Container	23
	525086-020V	Conveying Equipment	449
	525086-020V	Conveying Equipment	451
13-F040	556875-010V	Cover	589
12-F100	269322-030V	Cover Upper	131
03-F010	440588-020V	Crank	273
12-F310	440098-020V	Crank Bracket	183
11-F175	263948-030V	Cup	9
03-F070	243776-030V	Curve Shaft	279
03-F070	266986-050V	Curve Shaft	281
	266986-050V	Curve Shaft	283
04-F170	246337-050V	Cutting Jaw Left TPC	357
04-F180	246338-050V	Cutting Jaw Right TPC	359
	257835-035V	Cutting Jaw	367
	257835-030V	Cutting Jaw	363
04-F180	257835-035V	Cutting Jaw	365
04-F170	257835-030V	Cutting Jaw	361
13-F200	522121-020V	Cutting Table	643
	486958-010V	Dating Unit	601
	486958-010V	Dating Unit	603
	486958-010V	Dating Unit	605
13-F090	486958-010V	Dating Unit	597
	486958-010V	Dating Unit	599
	538248-010V	Dating Unit	615
13-F090	538248-010V	Dating Unit	613
	442077-020V	Decrease of Pressure	181
	243434-050V	Design Correction Device	315
04-F060	243434-050V	Design Correction Device	313
	243435-050V	Design Correction Device	319
04-F070	243435-050V	Design Correction Device	317
	266446-050V	Design Correction Device Left Hand	323
04-F060	266446-050V	Design Correction Device Left Hand	321
	266447-050V	Design Correction Device Right Hand	327
04-F070	266447-050V	Design Correction Device Right Hand	325
12-F520	450792-010V	Detergent Pump	253
	525088-020V	Discharge Chute	457
	525325-020V	Discharger	517

Alfabetical group number index

Pos	Group No	Description	Page
35-F510	525325-020V	Discharger	515
11-F390	269761-020V	Door	29
11-F400	269761-020V	Door	29
11-F380	269761-020V	Door	29
12-F530	450824-020V	Door	255
	442644-030V	Double Gear	423
	561258-010V	Draining Peroxide	153
11-F550	276373-060V	Drier	85
03-F000	648003-090V	Drive	271
13-F250	542902-010V	Drive Brake Unit	663
	442582-010V	Drive Gear	411
35-F470	443173-010V	Drive Shaft	499
	285287-050V	Drive Unit	407
03-F050	434668-040V	Drive Unit	277
13-F030	445840-010V	Drive Unit	587
	525087-010V	Drop	455
	525087-010V	Drop	453
11-F330	269136-020V	Edge Roller	19
13-F130	445920-050V	El- Pneumatic Equipment	623
	31390-010V	Element	441
	31390-010V	Element	433
	31390-011V	Element	443
	31390-011V	Element	435
	525128-010V	FF-Element Right	439
35-F175	525128-010V	FF-Element Right	437
35-F170	525129-010V	FF-Element Left	429
	525129-010V	FF-Element Left	431
11-F370	269720-030V	Filler Tube	27
	269828-050V	Filler Tube	33
11-F410	269828-050V	Filler Tube	31
	266550-030V	Filter Housing	145
35-F000	648035-070V	Final Folder	401
12-F490	450303-020V	Flow Meter Group	243
04-F010	279564-030V	Folding Device Left	303
04-F030	279565-030V	Folding Device Right	307
35-F480	525000-020V	Folding Part	501
	525000-020V	Folding Part	505
	525000-020V	Folding Part	503
11-F170	263805-020V	Form Clamp	5
11-F170	450490-010V	Form Clamp	7
	285861-050V	Gear Reduction	409
	450125-010V	Heating Device	569
03-F090	476177-020V	Hold-Down Device	287
	543157-020V	Holder	263
12-F260	297604-040V	Hood	171
07-F090	526934-020V	Hose and Pipe Assembly	539
11-F340	269158-040V	Hot Air Element	21
11-F420	269915-060V	Hot Air Element	35
	537329-010V	Hub Jumbo	559
12-F280	434707-030V	Hydraulic System	177
	464108-010V	Hydraulic Valve	651
	67379-010V	IH Transformator I	575
03-F100	434669-030V	Impulse Transmitter	289
	525117-020V	Indexing Gear	473
	450873-020V	Inductor Unit	571
35-F500	525213-020V	Infeeder	509
	525213-020V	Infeeder	511
	440286-030V	Ink Unit	607
	458192-030V	Ink Unit	617
03-F020	239890-030V	Intermediary Shaft	275
04-F000	648004-090V	Jaw System	301
04-F190	25096-070V	Knife Holder	369
04-F190	32966-040V	Knife Holder	371
	269971-020V	Ladder	69
.	556989-010V	Ladder	681

Tetra Pak

Alfabetical group number index

Pos	Group No	Description	Page
	543821-010V	Level Probe	563
	276343-030V	Lid	179
	493652-010V	Lid	155
	493652-010V	Lid	151
	464124-010V	Lifting Cylinder	653
12-F540	450840-040V	Lifting Unit	257
03-F130	434670-050V	Link System	297
	269113-050V	Lower Forming Ring	15
11-F190	269113-050V	Lower Forming Ring	13
35-F110	285303-040V	Lower Section	419
35-F260	525085-020V	Lubricating System	447
	525102-020V	Lubricating System	427
12-F000	648012-070V	Machine body	117
35-F010	285592-060V	Machine Body	403
	285592-060V	Machine Body	405
13-F070	440133-040V	Machine Body	593
	440537-050V	Machine Body	203
12-F400	440537-050V	Machine Body	201
12-F110	269324-040V	Opening	133
11-F180	265809-030V	Paper Guard	11
07-F095	279210-010V	Paper Guide	541
	449630-030V	Paper Holder	635
13-F010	440258-010V	Paper Reel Holder	583
13-F020	440285-010V	Paper Reel Holder	585
12-F170	561256-010V	Peroxide Pipe	141
	292451-050V	Peroxide Pump	149
	561257-010V	Peroxide Tank	147
11-F610	278956-060V	Pillar	95
07-F220	544973-010V	Pillar	565
11-F360	269715-010V	Pipe Holder	25
11-F600	276480-050V	Pipe Work	93
	282805-070V	Pipe Work-Pneumatic	103
11-F630	282805-070V	Pipe Work-Pneumatic	101
12-F410	442463-040V	Pipe Work	207
12-F420	445537-020V	Pipe Work-Hydraulic	209
	449932-0402	Pipe Work-Water TB/8	233
12-F460	449932-0401	Pipe Work-Water TBA/8	227
	449932-0401	Pipe Work-Water TBA/8	231
	449932-0401	Pipe Work-Water TBA/8	229
	449932-0402	Pipe Work-Water TB/8	237
	449932-0402	Pipe Work-Water TB/8	235
	450788-0502	Pipe Work-Pneumatic TB/8	251
12-F510	450788-0501	Pipe Work-Pneumatic TBA/8	245
	450788-0502	Pipe Work-Pneumatic TB/8	249
	450788-0501	Pipe Work-Pneumatic TBA/8	247
07-F090	526932-030V	Pipe Work	537
.	266755-020V	Platform	677
.	266756-040V	Platform	679
11-F480	269970-050V	Platform	67
09-F300	554171-020V	Platform Addition	675
	440384-0402	Platform TB/8	187
12-F320	440384-0401	Platform TBA/8	185
	285299-010V	Pressure Arm	425
	285456-030V	Pressure Device	479
35-F410	285456-030V	Pressure Device	477
	543147-010V	Pressure Feed	219
04-F250	246497-095V	Pressure Jaw Compl.Right TPC	385
04-F240	246497-090V	Pressure Jaw Compl. Left TPC	383
04-F240	259534-070V	Pressure Jaw	387
04-F250	259534-075V	Pressure Jaw	389
07-F110	266726-030V	Pressure Roller	545
07-F130	282528-020V	Pressure Roller	549
	293684-020V	Printing Wheel	609
	293685-020V	Printing Wheel	619
12-F560	450883-030V	Protection	261

Alfabetical group number index

Pos	Group No	Description	Page
	285736-030V	Pull-Down Device	483
35-F420	285736-030V	Pull-Down Device	481
	285736-030V	Pull-Down Device	485
	493729-010V	Pump	659
09-F000	648009-080V	Regular Accessories	669
13-F080	440210-020V	Roll	595
	466399-010V	Seal	97
	499255-020V	Seal Kit	113
	529278-010V	Seal Kit	655
	529279-010V	Seal Kit	661
04-F130	246327-040V	Shock Absorber	341
	246327-040V	Shock Absorber	345
	246327-040V	Shock Absorber	343
12-F070	269301-050V	Side Box Right	129
13-F050	530745-030V	Side Guard	591
12-F190	545099-020V	Side Guard	161
12-F210	545100-020V	Side Guard	163
04-F270	247123-060V	Spare Part Kit	391
03-F120	292071-020V	Splash Protection	295
07-F160	546180-010V	Splice Detector	553
	445880-050V	Splicing Device	629
13-F150	445880-050V	Splicing Device	627
12-F030	493614-010V	Spray Gun	121
04-F270	268614-050V	Start-Up Kit	393
	268614-050V	Start-Up Kit	395
12-F160	282604-020V	Start-Up Kit Machine Body	139
11-F650	284163-050V	Start-Up Kit	111
13-F220	440132-020V	Start-Up Kit	645
07-F170	526954-010V	Start-Up Kit	555
35-F200	285591-040V	Station	445
	285853-020V	Steering Rail	469
	285853-020V	Steering Rail	471
11-F520	273400-060V	Sterile Air System	79
07-F120	269112-050V	Strip Applicator	547
07-F000	648007-030V	Strip Applicator	521
07-F135	282634-030V	Strip Guide	551
07-F180	543823-010V	Strip Magazine	557
35-F380	285479-040V	Superstructure	467
11-F000	648011-070V	Superstructure	3
07-F065	445759-010V	Support Roller	527
12-F050	265889-030V	Switch (monitor)	125
	493700-010V	Tank	657
	451365-020V	Terminal Plinth	109
09-F240	250610-020V	Tool Kit	673
	442646-020V	Top Gear	475
11-F620	279651-050V	Touch Guard	99
04-F160	273565-030V	TPC Bar	355
12-F330	440415-020V	Transformer	189
04-F200	279134-050V	Transmission	375
04-F200	294056-020V	Transmission	373
12-F390	440474-010V	Tube Flushing Device	199
12-F040	243843-040V	Upper Cleaning Pipe	123
11-F200	269115-040V	Upper Forming Ring	17
	269989-020V	Valve	81
	442402-010V	Valve	293
	476849-010V	Valve	75
	273728-020V	Valve Group	291
	445656-030V	Valve Panel Lower	213
12-F430	445656-030V	Valve Panel Lower	211
	542011-0202	Valve Panel Upper TB/8	217
12-F440	542011-0201	Valve Panel Upper TBA/8	215
	560922-010V	Valve Panel	143
11-F500	269988-050V	Ventilation System	71
	293605-050V	Volume Curve Piece	381
04-F230	293605-050V	Volume Curve Piece	377

Tetra Pak

Alfabetical group number index

Pos	Group No	Description	Page
	293605-050V	Volume Curve Piece	379
04-F120	246468-080V	Volume Flap	337
	246468-080V	Volume Flap	339
35-F490	442537-050V	Waste Chute	507
35-F440	297681-030V	Wheel Left	487
	297681-030V	Wheel Left	489
	297681-030V	Wheel Left	491
35-F450	297682-030V	Wheel Right	493
	297682-030V	Wheel Right	495
	297682-030V	Wheel Right	497
	542904-010V	Worm Gear Motor	665
04-F040	243942-040V	Yoke	311
04-F050	243942-040V	Yoke	311
07-F230	282642-040V	Zone Heater	567

Numerical group number index

Pos	Group No	Description	Page
12-F020	230922-010V	Air Jet Gun	119
03-F020	239890-030V	Intermediary Shaft	275
09-F210	243372-010V	Carriage	671
	243434-050V	Design Correction Device	315
04-F060	243434-050V	Design Correction Device	313
04-F070	243435-050V	Design Correction Device	317
	243435-050V	Design Correction Device	319
03-F070	243776-030V	Curve Shaft	279
12-F040	243843-040V	Upper Cleaning Pipe	123
03-F080	243927-060V	Arm	285
04-F040	243942-040V	Yoke	311
04-F050	243942-040V	Yoke	311
	246327-040V	Shock Absorber	345
04-F130	246327-040V	Shock Absorber	341
	246327-040V	Shock Absorber	343
04-F170	246337-050V	Cutting Jaw Left TPC	357
04-F180	246338-050V	Cutting Jaw Right TPC	359
04-F120	246468-080V	Volume Flap	337
	246468-080V	Volume Flap	339
04-F240	246497-090V	Pressure Jaw Compl. Left TPC	383
04-F250	246497-095V	Pressure Jaw Compl.Right TPC	385
04-F100	246498-060V	Arm w. Shaft Pressure TPC	331
04-F110	246498-060V	Arm w. Shaft Pressure TPC	331
04-F090	246499-060V	Arm	329
04-F080	246499-060V	Arm	329
04-F270	247123-060V	Spare Part Kit	391
04-F140	247187-050V	Carrier	347
04-F150	247187-055V	Carrier	349
09-F240	250610-020V	Tool Kit	673
04-F190	25096-070V	Knife Holder	369
04-F170	257835-030V	Cutting Jaw	361
	257835-030V	Cutting Jaw	363
04-F180	257835-035V	Cutting Jaw	365
	257835-035V	Cutting Jaw	367
04-F140	259414-040V	Carrier Pressure L IH	351
04-F150	259415-040V	Carrier Pressure R IH	353
04-F240	259534-070V	Pressure Jaw	387
04-F250	259534-075V	Pressure Jaw	389
	263391-040V	Calender Roller	87
	263394-020V	Bending Roller	89
11-F170	263805-020V	Form Clamp	5
11-F175	263948-030V	Cup	9
07-F100	265565-020V	Bending Roller Bracket	543
11-F180	265809-030V	Paper Guard	11
12-F050	265889-030V	Switch (monitor)	125
	26642-020V	Carrier	305
	26642-020V	Carrier	309
04-F060	266446-050V	Design Correction Device Left Hand	321
	266446-050V	Design Correction Device Left Hand	323
	266447-050V	Design Correction Device Right Hand	327
04-F070	266447-050V	Design Correction Device Right Hand	325
	266550-030V	Filter Housing	145
07-F110	266726-030V	Pressure Roller	545
.	266755-020V	Platform	677
.	266756-040V	Platform	679
03-F070	266986-050V	Curve Shaft	281
	266986-050V	Curve Shaft	283
12-F065	268015-010V	Bending Roller Bracket	127
	268614-050V	Start-Up Kit	395
04-F270	268614-050V	Start-Up Kit	393
07-F120	269112-050V	Strip Applicator	547
	269113-050V	Lower Forming Ring	15
11-F190	269113-050V	Lower Forming Ring	13
11-F200	269115-040V	Upper Forming Ring	17
11-F330	269136-020V	Edge Roller	19

Tetra Pak

Numerical group number index

Pos	Group No	Description	Page
11-F340	269158-040V	Hot Air Element	21
12-F070	269301-050V	Side Box Right	129
12-F100	269322-030V	Cover Upper	131
12-F110	269324-040V	Opening	133
11-F360	269715-010V	Pipe Holder	25
11-F370	269720-030V	Filler Tube	27
11-F400	269761-020V	Door	29
11-F390	269761-020V	Door	29
11-F380	269761-020V	Door	29
11-F410	269828-050V	Filler Tube	31
	269828-050V	Filler Tube	33
11-F420	269915-060V	Hot Air Element	35
	269932-050V	Bottom Cover	51
11-F440	269938-050V	Compressor	43
11-F450	269941-060V	Bath	47
	269941-060V	Bath	49
11-F480	269970-050V	Platform	67
	269971-020V	Ladder	69
11-F500	269988-050V	Ventilation System	71
	269989-020V	Valve	81
11-F520	273400-060V	Sterile Air System	79
	273401-030V	Change-over Valve	73
	273402-040V	Air Super-heater	83
04-F160	273565-030V	TPC Bar	355
	273728-020V	Valve Group	291
	276343-030V	Lid	179
	276345-030V	Air Knife	91
11-F550	276373-060V	Drier	85
11-F600	276480-050V	Pipe Work	93
11-F610	278956-060V	Pillar	95
04-F200	279134-050V	Transmission	375
07-F095	279210-010V	Paper Guide	541
04-F010	279564-030V	Folding Device Left	303
04-F030	279565-030V	Folding Device Right	307
12-F130	279631-040V	Appliance Box	135
11-F620	279651-050V	Touch Guard	99
12-F140	279979-040V	Central Lubrication	137
07-F040	282509-030V	Bending Roller	523
07-F130	282528-020V	Pressure Roller	549
12-F160	282604-020V	Start-Up Kit Machine Body	139
07-F135	282634-030V	Strip Guide	551
07-F230	282642-040V	Zone Heater	567
11-F630	282805-070V	Pipe Work-Pneumatic	101
	282805-070V	Pipe Work-Pneumatic	103
07-F070	283026-030V	Connection Box	529
	283926-0204	Air Nozzle 1000ml Slim	39
	283926-020V	Air Nozzle	37
11-F650	284163-050V	Start-Up Kit	111
	285287-050V	Drive Unit	407
	285291-040V	Bevel Gear	421
	285299-010V	Pressure Arm	425
35-F110	285303-040V	Lower Section	419
35-F410	285456-030V	Pressure Device	477
	285456-030V	Pressure Device	479
35-F380	285479-040V	Superstructure	467
35-F200	285591-040V	Station	445
	285592-060V	Machine Body	405
35-F010	285592-060V	Machine Body	403
35-F420	285736-030V	Pull-Down Device	481
	285736-030V	Pull-Down Device	485
	285736-030V	Pull-Down Device	483
	285853-020V	Steering Rail	471
	285853-020V	Steering Rail	469
	285861-050V	Gear Reduction	409
03-F120	292071-020V	Splash Protection	295

Numerical group number index

Pos	Group No	Description	Page
	292451-050V	Peroxide Pump	149
	293605-050V	Volume Curve Piece	381
	293605-050V	Volume Curve Piece	379
04-F230	293605-050V	Volume Curve Piece	377
	293684-020V	Printing Wheel	609
	293685-020V	Printing Wheel	619
04-F200	294056-020V	Transmission	373
12-F260	297604-040V	Hood	171
	297638-020V	Chain Tensioner	417
35-F440	297681-030V	Wheel Left	487
	297681-030V	Wheel Left	489
	297681-030V	Wheel Left	491
	297682-030V	Wheel Right	495
	297682-030V	Wheel Right	497
35-F450	297682-030V	Wheel Right	493
12-F230	297808-050V	Cleaning Equipment	165
	31390-010V	Element	433
	31390-010V	Element	441
	31390-011V	Element	443
	31390-011V	Element	435
04-F190	32966-040V	Knife Holder	371
03-F050	434668-040V	Drive Unit	277
03-F100	434669-030V	Impulse Transmitter	289
03-F130	434670-050V	Link System	297
12-F280	434707-030V	Hydraulic System	177
12-F310	440098-020V	Crank Bracket	183
13-F220	440132-020V	Start-Up Kit	645
13-F070	440133-040V	Machine Body	593
	440135-010V	Bending Roller	641
	440135-010V	Bending Roller	631
	440184-010V	Bending Roller	633
13-F080	440210-020V	Roll	595
13-F010	440258-010V	Paper Reel Holder	583
13-F020	440285-010V	Paper Reel Holder	585
	440286-030V	Ink Unit	607
12-F320	440384-0401	Platform TBA/8	185
	440384-0402	Platform TB/8	187
12-F330	440415-020V	Transformer	189
12-F340	440422-0501	Bottom Plate TBA/8	191
	440422-0502	Bottom Plate TB/8	193
12-F350	440437-030V	Box	195
12-F390	440474-010V	Tube Flushing Device	199
	440537-050V	Machine Body	203
12-F400	440537-050V	Machine Body	201
03-F010	440588-020V	Crank	273
	440630-020V	Ap-Valve	55
	442077-020V	Decrease of Pressure	181
	442402-010V	Valve	293
12-F410	442463-040V	Pipe Work	207
35-F490	442537-050V	Waste Chute	507
	442582-010V	Drive Gear	411
	442644-030V	Double Gear	423
	442646-020V	Top Gear	475
35-F470	443173-010V	Drive Shaft	499
12-F420	445537-020V	Pipe Work-Hydraulic	209
12-F430	445656-030V	Valve Panel Lower	211
	445656-030V	Valve Panel Lower	213
07-F065	445759-010V	Support Roller	527
13-F030	445840-010V	Drive Unit	587
13-F150	445880-050V	Splicing Device	627
	445880-050V	Splicing Device	629
13-F130	445920-050V	El- Pneumatic Equipment	623
13-F190	445930-010V	Bending Unit	639
12-F455	449168-030V	Cleaning System	223

Tetra Pak

Numerical group number index

Pos	Group No	Description	Page
	449630-030V	Paper Holder	635
12-F450	449930-040V	Connection Box	221
	449932-0401	Pipe Work-Water TBA/8	231
	449932-0401	Pipe Work-Water TBA/8	229
12-F460	449932-0401	Pipe Work-Water TBA/8	227
	449932-0402	Pipe Work-Water TB/8	233
	449932-0402	Pipe Work-Water TB/8	235
	449932-0402	Pipe Work-Water TB/8	237
	450125-010V	Heating Device	569
12-F470	450293-0401	Cable Duct TBA/8	239
	450293-0402	Cable Duct TB/8	241
12-F490	450303-020V	Flow Meter Group	243
11-F170	450490-010V	Form Clamp	7
	450788-0501	Pipe Work-Pneumatic TBA/8	247
12-F510	450788-0501	Pipe Work-Pneumatic TBA/8	245
	450788-0502	Pipe Work-Pneumatic TB/8	249
	450788-0502	Pipe Work-Pneumatic TB/8	251
12-F520	450792-010V	Detergent Pump	253
12-F530	450824-020V	Door	255
12-F540	450840-040V	Lifting Unit	257
07-F070	450862-030V	Connection Box	531
	450873-020V	Inductor Unit	571
12-F560	450883-030V	Protection	261
11-F635	451131-010V	Cleaning Pipe	105
11-F640	451342-040V	Cable Duct	107
12-F570	451348-020V	Connection Box	265
	451365-020V	Terminal Plinth	109
	458192-030V	Ink Unit	617
	464100-020V	Carriage	649
13-F240	464100-020V	Carriage	647
	464108-010V	Hydraulic Valve	651
	464124-010V	Lifting Cylinder	653
	466399-010V	Seal	97
03-F090	476177-020V	Hold-Down Device	287
	476849-010V	Valve	75
	476859-020V	Change-Over Valve	45
	476859-020V	Change-Over Valve	77
	476884-020V	Cleaning Head	259
	476884-020V	Cleaning Head	169
	476885-020V	Cleaning Head	225
	476885-020V	Cleaning Head	173
	476886-020V	Cleaning Head	175
	476887-020V	Cleaning Head	167
	486958-010V	Dating Unit	603
	486958-010V	Dating Unit	605
13-F090	486958-010V	Dating Unit	597
	486958-010V	Dating Unit	599
	486958-010V	Dating Unit	601
12-F030	493614-010V	Spray Gun	121
	493652-010V	Lid	155
	493652-010V	Lid	151
	493700-010V	Tank	657
	493729-010V	Pump	659
09-F560	499082-010V	Adapter, Type 1	683
	499255-020V	Seal Kit	113
13-F200	522121-020V	Cutting Table	643
	522410-010V	Bending Roller	637
	525000-020V	Folding Part	505
	525000-020V	Folding Part	503
35-F480	525000-020V	Folding Part	501
35-F260	525085-020V	Lubricating System	447
	525086-020V	Conveying Equipment	449
	525086-020V	Conveying Equipment	451
	525087-010V	Drop	453

Numerical group number index

Pos	Group No	Description	Page
	525087-010V	Drop	455
	525088-020V	Discharge Chute	457
	525089-010V	Chain Right	459
	525090-010V	Chain Left	461
	525091-010V	Chain	463
	525092-010V	Chain Guard	465
	525102-020V	Lubricating System	427
	525110-010V	Cable Conduit	415
	525117-020V	Indexing Gear	473
35-F175	525128-010V	FF-Element Right	437
	525128-010V	FF-Element Right	439
35-F170	525129-010V	FF-Element Left	429
	525129-010V	FF-Element Left	431
	525143-020V	Bottom Valve	413
	525213-020V	Infeeder	511
35-F500	525213-020V	Infeeder	509
	525320-010V	Chain Guard	513
	525325-020V	Discharger	517
35-F510	525325-020V	Discharger	515
07-F080	526931-020V	Bottom Plate	533
07-F090	526932-030V	Pipe Work	537
07-F080	526933-030V	Bottom Plate	535
07-F090	526934-020V	Hose and Pipe Assembly	539
07-F170	526954-010V	Start-Up Kit	555
	526973-010V	Air Nozzle	41
	527898-010V	Container	157
	529278-010V	Seal Kit	655
	529279-010V	Seal Kit	661
13-F050	530745-030V	Side Guard	591
	532151-020V	Connection Box	625
	537329-010V	Hub Jumbo	559
	538248-010V	Dating Unit	615
13-F090	538248-010V	Dating Unit	613
	539209-010V	A-Cylinder	57
	539210-010V	C-Cylinder	59
	539211-010V	B-Cylinder	61
	540723-010V	Connection Box	205
04-F100	541052-010V	Arm With Axle Pressure L	333
04-F110	541053-010V	Arm With Axle Pressure R	335
	541163-010V	Clamp Ring	63
	541164-010V	Clamp Ring	65
04-F280	541188-020V	Bar Code	397
12-F440	542011-0201	Valve Panel Upper TBA/8	215
	542011-0202	Valve Panel Upper TB/8	217
13-F250	542902-010V	Drive Brake Unit	663
	542904-010V	Worm Gear Motor	665
	543143-010V	Adjustmentment Device	621
	543143-010V	Adjustmentment Device	611
	543147-010V	Pressure Feed	219
	543157-020V	Holder	263
	543821-010V	Level Probe	563
	543822-010V	Brake Arm	561
07-F180	543823-010V	Strip Magazine	557
07-F220	544973-010V	Pillar	565
12-F190	545099-020V	Side Guard	161
12-F210	545100-020V	Side Guard	163
	546117-010V	Bar Code	573
07-F040	546179-010V	Bending Roller	525
07-F160	546180-010V	Splice Detector	553
09-F300	554171-020V	Platform Addition	675
13-F040	556875-010V	Cover	589
.	556989-010V	Ladder	681
	560922-010V	Valve Panel	143
11-F350	560930-010V	Container	23

Tetra Pak

Numerical group number index

Pos	Group No	Description	Page
12-F170	561256-010V	Peroxide Pipe	141
	561257-010V	Peroxide Tank	147
	561258-010V	Draining Peroxide	153
	561259-010V	Connection Housing	159
11-F470	561268-010V	Connection Assembly	53
	566683-010V	Air Cooler	197
03-F000	648003-090V	Drive	271
04-F000	648004-090V	Jaw System	301
07-F000	648007-030V	Strip Applicator	521
09-F000	648009-080V	Regular Accessories	669
11-F000	648011-070V	Superstructure	3
12-F000	648012-070V	Machine body	117
13-F000	648013-050V	Automatic Splicing Unit	581
35-F000	648035-070V	Final Folder	401
	67379-010V	IH Transformator I	575
	68474-010V	Coil	577
	68917-010V	Angle indicator	267

This page is intentionally left blank

Special terminology and abbreviations

This page is intentionally left blank

SPC section 648011

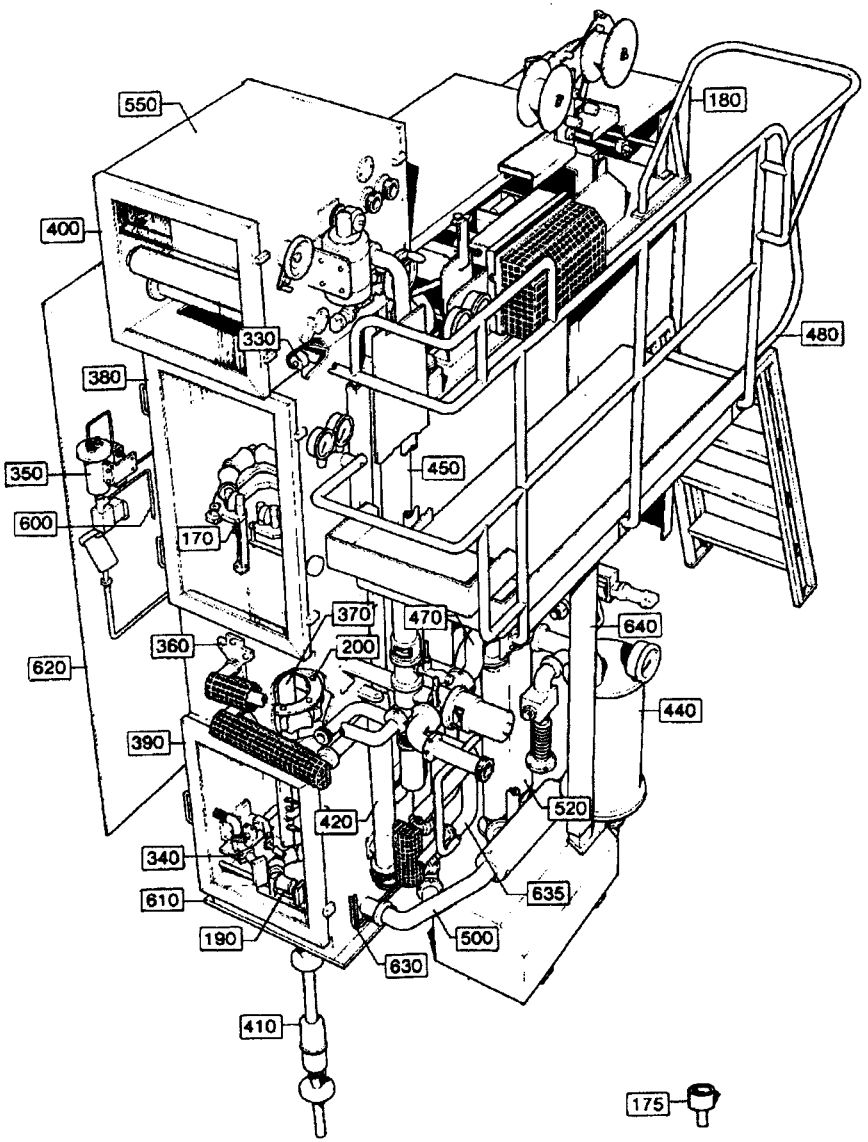

64801111.TIF
648011-11/13/14/15
AM 16052 91-01-29

Last Alteration: AM 18332 93-03-29

Corresponding group: 648011-070V
Assembly Drawing: 648011-11/14/15

Issue: 930607

Code	Ass'y	Group No	Description	Page
11-F000	64801111	648011-070V	Superstructure	3
11-F170	26380502	263805-020V	Form Clamp	5
11-F170	45049001	450490-010V	Form Clamp	7
11-F175	26394803	263948-030V	Cup	9
11-F180	26580903	265809-030V	Paper Guard	11
11-F190	26911303	269113-050V	Lower Forming Ring	13
	26911303	269113-050V	Lower Forming Ring	15
11-F200	26911502	269115-040V	Upper Forming Ring	17
11-F330	26913601	269136-020V	Edge Roller	19
11-F340	26915802	269158-040V	Hot Air Element	21
11-F350	56093001	560930-010V	Container	23
11-F360	26971501	269715-010V	Pipe Holder	25
11-F370	26972002	269720-030V	Filler Tube	27
11-F380	26976104	269761-020V	Door	29
11-F390	26976104	269761-020V	Door	29
11-F400	26976104	269761-020V	Door	29
11-F410	26982802	269828-050V	Filler Tube	31
	26982802	269828-050V	Filler Tube	33
11-F420	26991505	269915-060V	Hot Air Element	35
	28392601	283926-020V	Air Nozzle	37
	28392603	283926-0204	Air Nozzle 1000ml Slim	39
	52697301	526973-010V	Air Nozzle	41
11-F440	26993805	269938-050V	Compressor	43
	47685903	476859-020V	Change-Over Valve	45
11-F450	26994106	269941-060V	Bath	47
	26994106	269941-060V	Bath	49
	26993204	269932-050V	Bottom Cover	51
11-F470	56126801	561268-010V	Connection Assembly	53
	44063003	440630-020V	Ap-Valve	55
	53920901	539209-010V	A-Cylinder	57
	53921001	539210-010V	C-Cylinder	59
	53921101	539211-010V	B-Cylinder	61
	54116301	541163-010V	Clamp Ring	63
	54116401	541164-010V	Clamp Ring	65
11-F480	26997004	269970-050V	Platform	67
	26997102	269971-020V	Ladder	69
11-F500	26998804	269988-050V	Ventilation System	71
	27340103	273401-030V	Change-over Valve	73
	47684901	476849-010V	Valve	75
	47685903	476859-020V	Change-Over Valve	77

Code	Ass'y	Group No	Description	Page
11-F520	27340005	273400-060V	Sterile Air System	79
	26998902	269989-020V	Valve	81
	27340204	273402-040V	Air Super-heater	83
11-F550	27637306	276373-060V	Drier	85
	26339104	263391-040V	Calender Roller	87
	26339402	263394-020V	Bending Roller	89
	27634502	276345-030V	Air Knife	91
11-F600	27648005	276480-050V	Pipe Work	93
11-F610	27895607	278956-060V	Pillar	95
	46639901	466399-010V	Seal	97
11-F620	27965104	279651-050V	Touch Guard	99
11-F630	28280512	282805-070V	Pipe Work-Pneumatic	101
	28280513	282805-070V	Pipe Work-Pneumatic	103
11-F635	45113101	451131-010V	Cleaning Pipe	105
11-F640	45134203	451342-040V	Cable Duct	107
	45136502	451365-020V	Terminal Plinth	109
11-F650	284163	284163-050V	Start-Up Kit	111
	499255	499255-020V	Seal Kit	113

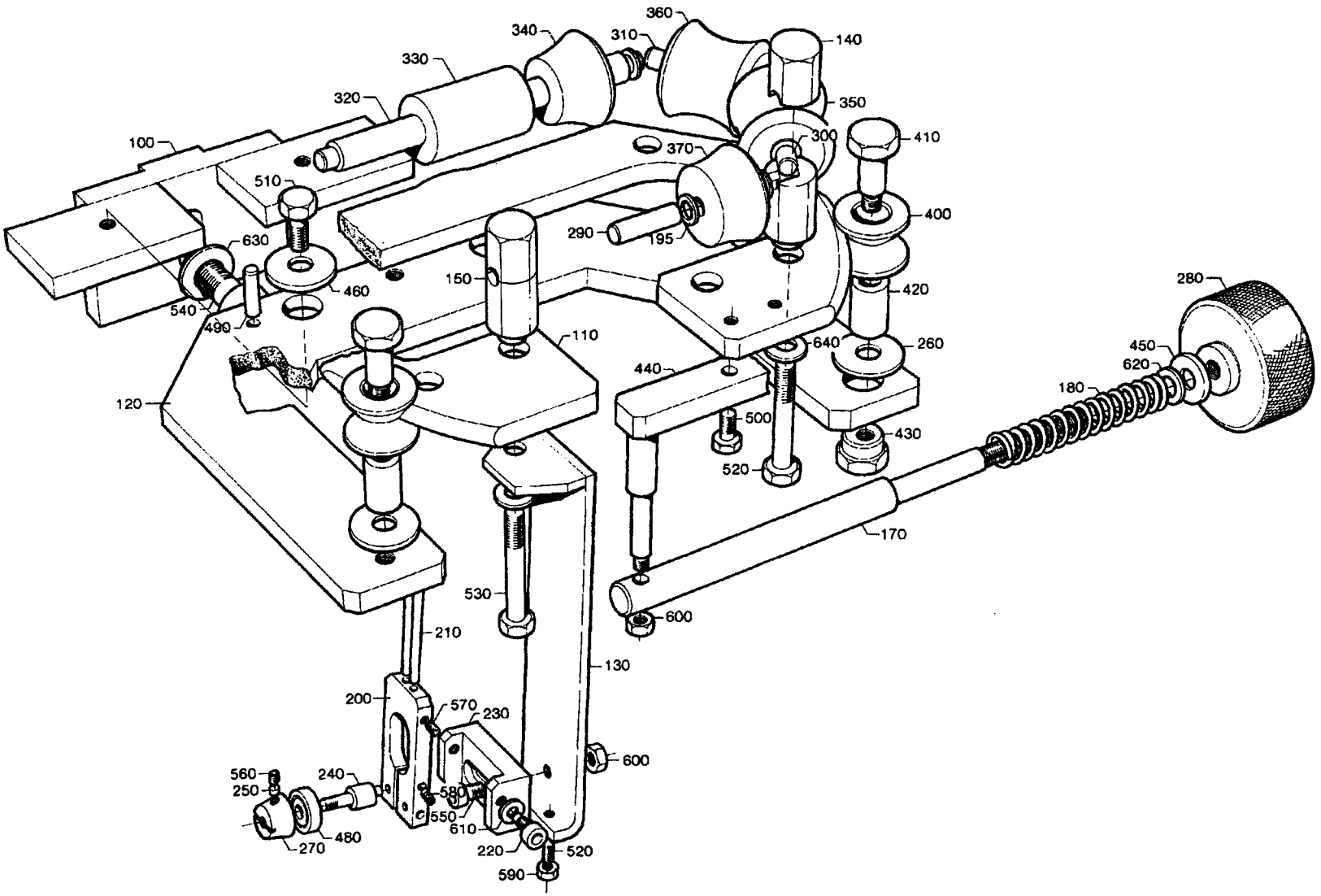

26380502.TIF
263805-2
AM

From	Pos	Part No	SP	UN	Qty	Description
1055ml-500ml						
	F000	**C- 263805-0201**				**Form Clamp, Ass'y**
	110	436404	-		1	BOW CLAMP
	290	263655-0003	S		2	SHAFT
	300	263655-0004	S		2	SHAFT
	310	263655-0008	S		2	SHAFT
	320	263656-0002	S		1	SHAFT
	330	294474	P		2	ROLL
	340	294475	P		2	ROLL
	350	294476	P		2	ROLL
	360	294477	P		2	ROLL
	370	294480	P		2	ROLL
750ml Slim						
	F000	**C- 263805-0202**				**Form Clamp, Ass'y**
	110	544286	-		1	BOW CLAMP
	290	263655-0021	S		2	SHAFT
	300	263655-0023	S		2	SHAFT
	310	263655-0012	S		2	SHAFT
	320	263655-0024	S		1	SHAFT
	340	752583	P		1	ROLL
	350	752585	P		2	ROLL
	360	752584	P		2	ROLL
	370	752586	P		2	ROLL
	380	90240-0172	-		10	FLANGE BUSHING
	390	752156	-		4	FLANGE BUSHING
1000ml Slim						
	F000	**C- 263805-0203**				**Form Clamp, Ass'y**
	110	569096	-		1	BOW CLAMP
	290	263655-0002	-		2	SHAFT
	300	569091	-		2	SHAFT
	310	263655-0012	-		2	SHAFT
	320	263655-0024	S		1	SHAFT
	340	569095	-		1	ROLL
	350	569093	-		2	ROLL
	360	569094	-		2	ROLL
	370	569092	-		2	ROLL
	380	90240-0172	-		10	FLANGE BUSHING
	390	752156	-		4	FLANGE BUSHING
Common Parts						
	100	436395	-		1	CANTILEVER
	120	436405	-		1	FORK
	130	33648	-		1	HOLDER
	140	257987	-		6	AXLE SUPPORT
	150	257988	-		2	AXLE SUPPORT
	170	436378	C		1	SHAFT
	180	1881-0001	P		1	COMPRESSION SPRING
	190	2033-0008	P		14	WASHER
	200	23582	-		1	HOLDER
	210	23583	-		1	GUIDE FINGER
	220	23584	-		2	SCREW
	230	24351	-		1	BOW CLAMP
	240	24355	-		2	DOWEL
	250	24356	-		4	PIECE
	260	28037	-		3	WASHER
	270	111543	P		2	GUIDE CONE
	280	257090	-		1	SHIFTER HANDLE
	400	436302	C		3	ROLL
	410	436355	S		3	REAMED BOLT
	420	436356	S		3	BUSHING
	430	436357	C		1	NUT
	440	436377	C		1	JOINT
	450	436403	P		1	WASHER
	460	497720	-		2	WASHER
	480	90214-0138	SU		2	BALL BEARING
	490	311103-0236	-		2	CYLINDRICACP M6 3X16 RFR
	500	312105-0366	-		2	SCREW M6S6X12RFR
	510	312105-0451	-		2	SCREW M6S8X20RFR
	520	312105-0462	-		7	SCREW M6S8X55RFR
	530	312105-0463	-		1	SCREW M6S8X60RFR
	540	312105-0540	-		1	SCREW M6S12X40 A4 80
	550	312115-0366	-		1	SCREW 6X12 A4 80
	560	312318-0283	-		4	STOP SCREW SK6SS4X4RFR
	570	312318-0285	-		2	STOP SCREW SK6SS4X6RFR
	580	312318-0291	-		3	STOP SCREW SK6SS4X12RFR
	590	312605-0312	-		3	NUT M6M4RFR
	600	312605-0316	-		2	NUT M6M6RFR
	610	315105-0146	-		2	WASHER BRB5,3X10RFR
	620	315105-0165	-		1	WASHER BRB8,4X16RFR
	630	315105-0178	-		1	WASHER BRB13X24RFR
	640	315115-0165	-		8	WASHER TBRB8,4X16RFR

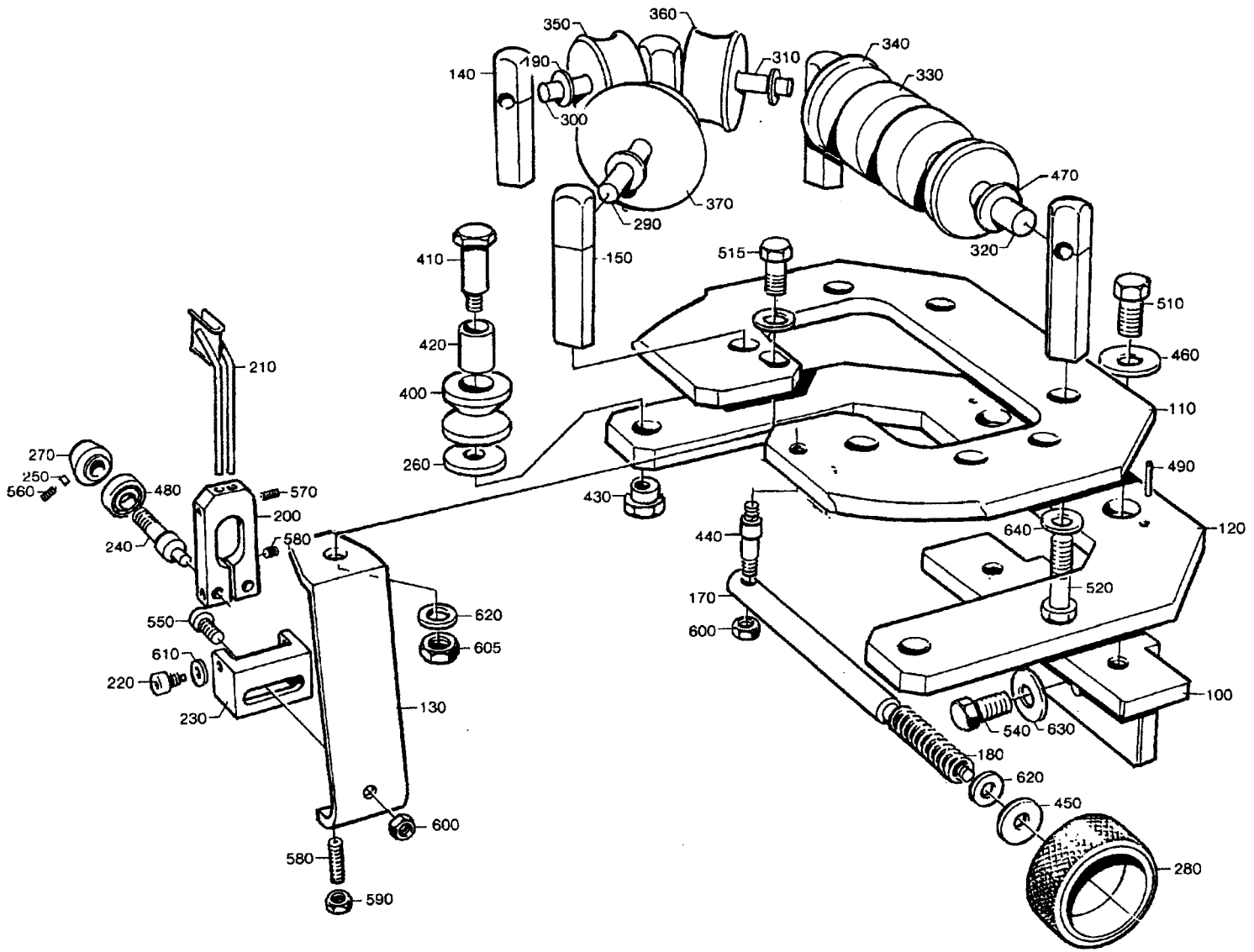

45049001.TIF
450490-1
AM

From	Pos	Part No	SP	UN	Qty	Description
1055ml-500ml						
		C- 450490-0101				**Form Clamp, Ass'y**
	110	450491	-		1	BOW CLAMP
	290	445788-0002	S		2	SHAFT
	300	445788-0003	S		2	SHAFT
	310	263655-0006	S		2	SHAFT
	320	434490-0001	S		1	SHAFT
	330	445776	P		2	ROLL
	340	445778	P		2	ROLL
	350	445782	P		2	ROLL
	360	445781	P		2	ROLL
	370	445785	P		2	ROLL
500ml Slim 400ml 355ml						
		C- 450490-0102				**Form Clamp, Ass'y**
	110	450492	-		1	BOW CLAMP
	290	263655-0018	S		2	SHAFT
	300	445788-0005	S		2	SHAFT
	310	445788-0003	S		2	SHAFT
	320	434490-0002	S		1	SHAFT
	330	445777	P		2	ROLL
	340	445779	P		2	ROLL
	350	445783	P		2	ROLL
	360	445782	P		2	ROLL
	370	445786	P		2	ROLL
375ml 300ml						
		C- 450490-0103				**Form Clamp, Ass'y**
	110	450493	-		1	BOW CLAMP
	290	445788-0005	S		2	SHAFT
	300	445788-0006	S		2	SHAFT
	310	445788-0005	S		2	SHAFT
	320	434490-0003	S		1	SHAFT
	330	445777	P		2	ROLL
	340	445780	P		2	ROLL
	350	445784	P		2	ROLL
	360	445783	P		2	ROLL
	370	445787	P		2	ROLL
Common Parts						
	100	436395	-		1	CANTILEVER
	120	436405	-		1	FORK
	130	33648	-		1	HOLDER
	140	445790	-		6	AXLE SUPPORT
	150	445791	-		2	AXLE SUPPORT
	170	493886	C		1	SHAFT
	180	1881-0001	P		1	COMPRESSION SPRING
	190	2033-0008	P		14	WASHER
	200	23582	-		1	HOLDER
	210	23583	-		1	GUIDE FINGER
	220	23584	-		2	SCREW
	230	24351	-		1	BOW CLAMP
	240	24355	-		2	DOWEL
	250	24356	-		4	PIECE
	260	28037	-		3	WASHER
	270	111543	P		2	GUIDE CONE
	280	257090	-		1	SHIFTER HANDLE
	400	436302	C		3	ROLL
	410	436355	S		3	REAMED BOLT
	420	436356	S		3	BUSHING
	430	436357	C		1	NUT
	440	493747	C		1	GUIDE STUD
	450	436403	P		1	WASHER
	460	497720	-		2	WASHER
	470	536987	-		X	WASHER
	480	90214-0138	SU		2	BALL BEARING
	490	311103-0236	-		2	CYLINDRICACP M6 3X16 RFR
	510	312105-0451	-		2	SCREW M6S8X20RFR
	515	312105-0453	-		1	SCREW M6S8X25RFR
	520	312105-0464	-		8	SCREW M6S8X65RFR
	540	312105-0540	-		1	SCREW M6S12X40 A4 80
	550	312115-0366	-		1	SCREW 6X12 A4 80
	560	312318-0283	-		4	STOP SCREW SK6SS4X4RFR
	570	312318-0285	-		2	STOP SCREW SK6SS4X6RFR
	580	312318-0291	-		3	STOP SCREW SK6SS4X12RFR
	590	312605-0312	-		3	NUT M6M4RFR
	600	312605-0316	-		2	NUT M6M6RFR
	605	312605-0318	-		1	NUT M6M8RFR
	610	315105-0146	-		2	WASHER BRB5,3X10RFR
	620	315105-0165	-		3	WASHER BRB8,4X16RFR
	630	315105-0178	-		1	WASHER BRB13X24RFR
	640	315115-0165	-		8	WASHER TBRB8,4X16RFR

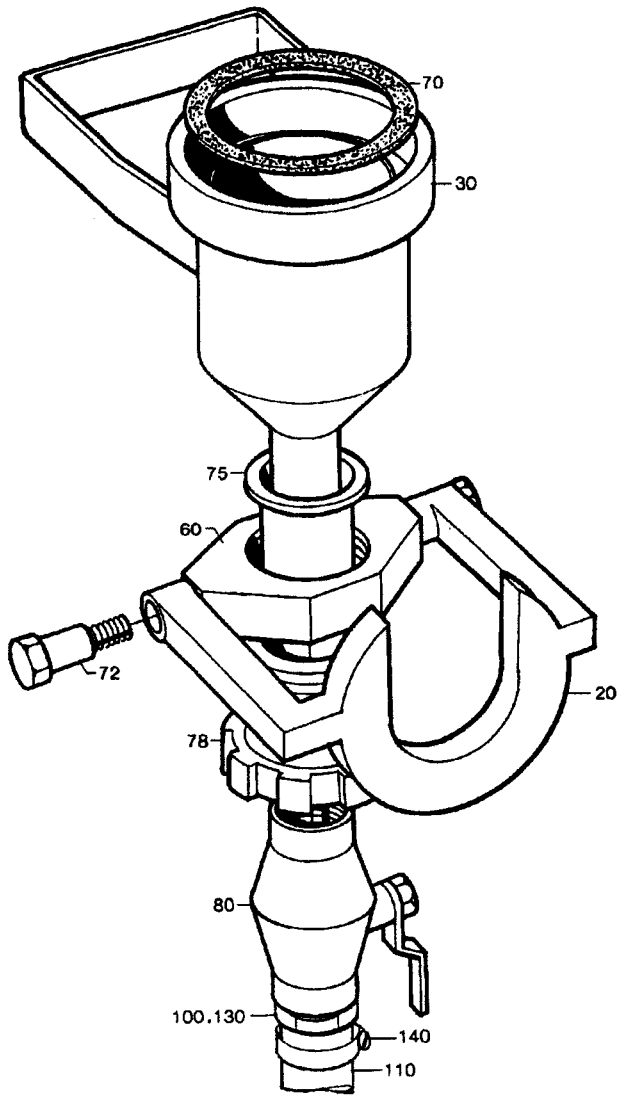

26394803.TIF
263948-3
AM

From	Pos	Part No	SP	UN	Qty	Description
1055ml-500ml						
	F000	**C- 263948-0301**				**Cup, Ass'y**
	020	458783	-		1	BOW CLAMP
	030	458784	-		1	CUP
	060	458785	-		1	BRACKET
	070	458786	-		1	GASKET
500ml Slim 400ml 355ml						
	F000	**C- 263948-0302**				**Cup, Ass'y**
	020	449853	-		1	BOW CLAMP
	030	449854	-		1	CUP
	060	449991	-		1	BRACKET
	070	449992	-		1	GASKET
375ml 300ml						
	F000	**C- 263948-0303**				**Cup, Ass'y**
	020	449853	-		1	BOW CLAMP
	030	449855	-		1	CUP
	060	449991	-		1	BRACKET
	070	449993	-		1	GASKET
750ml Slim						
	F000	**C- 263948-0304**				**Cup, Ass'y**
	020	449853	-		1	BOW CLAMP
	030	544299	-		1	CUP
	060	449991	-		1	BRACKET
	070	544300	-		1	GASKET
1000ml Slim						
	F000	**C- 263948-0305**				**Cup, Ass'y**
	020	449853	-		1	BOW CLAMP
	030	569105	-		1	CUP
	060	458785	-		1	BRACKET
	070	569106	-		1	GASKET
Common Parts						
	072	449190	-		2	SHAFT
	075	458787	-		1	BUSHING
	078	458788	-		1	NUT
	080	90187-0082	-		1	BALL VALVE
	100	90055-0071	-		1	HOSE NIPPLE
	110	90148-0021	-	MM	2500	HOSE
	130	315233-0113	-		1	SEAL RING R1/2"
	140	342991-0104	-		1	HOSE CLIP 19-28MMRFR

From	Pos	Part No	SP	UN	Qty	Description

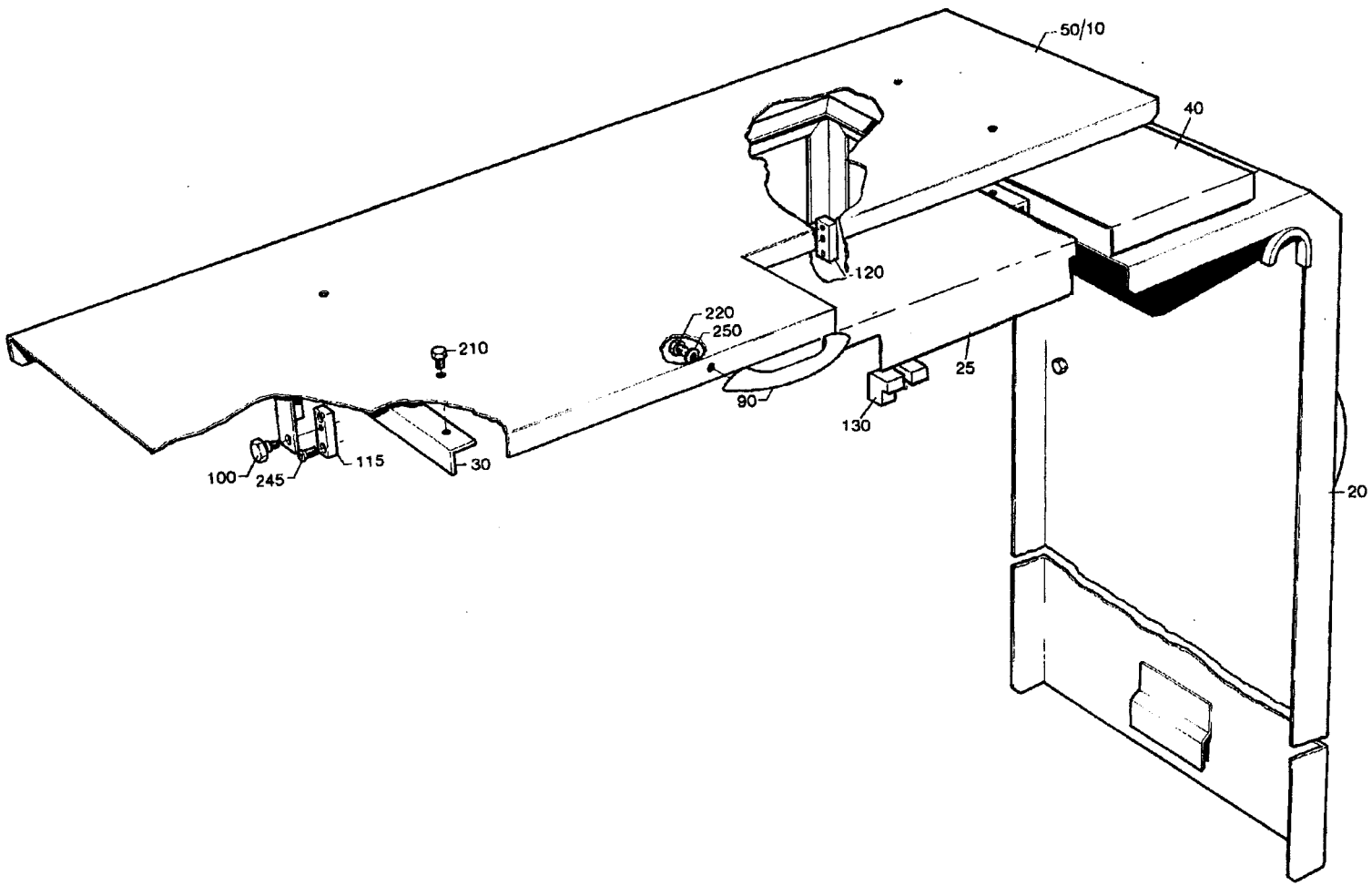

26580903.TIF
265809-3
AM

From	Pos	Part No	SP	UN	Qty	Description
	F000	**C- 265809-0301**				**Paper Guard, Ass'y**
	010	542847	-		1	PAPER GUARD
	020	266797-0002	-		1	PAPER GUARD
	025	542848	-		1	OPENING
	030	542849	-		1	CANTILEVER
	040	542850	-		1	COVERING PLATE
	090	7309	-		4	HANDLE
	100	252972	-		2	SHOULDER SCREW
	115	283271	-		1	BRACKET
	120	449000	-		1	BRACKET
	130	542851	-		2	HINGE
	210	312105-0362	-		4	SCREW M6S6X8RFR
	220	312105-0366	-		10	SCREW M6S6X12RFR
	245	312155-0329	-		4	SCREW MF6S5X16RFR
	250	315105-0153	-		12	WASHER BRB6,4X12RFR

From	Pos	Part No	SP	UN	Qty	Description

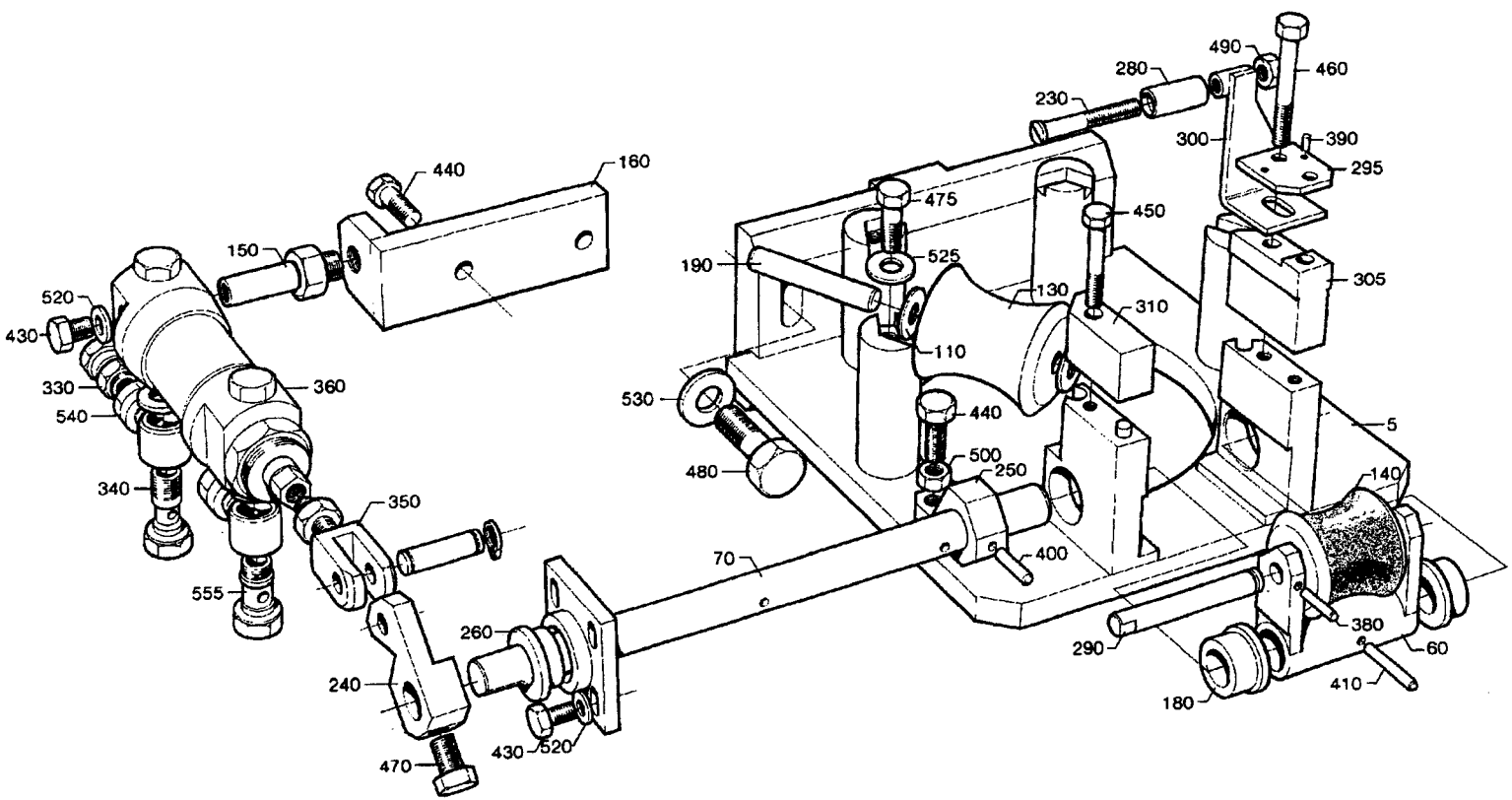

26911303.TIF
269113-3
AM

From	Pos	Part No	SP	UN	Qty	Description
1055ml- 500ml						
		C- 269113-0501				**Lower Forming Ring, Ass'y**
	005	450459-0001	-		1	FORMING RING
	060	269146	-		1	FORK
	070	269147	S		1	SHAFT
	130	36953-0001	P		5	ROLL
	140	38630-0001	P		1	COUNTER ROLLER
	190	263655-0009	P		5	SHAFT
	230	269151	-		1	SHAFT
	265	486803	S		1	BEARING HOUSING
	280	279374	P		1	ROLL
	290	284973	P		1	SHAFT
	300	544440	-		1	HOLDER
	490	312605-0314	-		1	NUT M6M5RFR
355ml 400ml 500ml Slim						
		C- 269113-0502				**Lower Forming Ring, Ass'y**
	005	450459-0002	-		1	FORMING RING
	060	434499	-		1	FORK
	070	434500	S		1	SHAFT
	130	449840-0001	P		5	ROLLER, (STD.SIZE)
	140	533442	P		1	COUNTER ROLLER
	190	434504	P		5	SHAFT
	230	469463	-		1	SHAFT
	265	486803	S		1	BEARING HOUSING
	280	469464	P		1	ROLL
	290	434507	P		1	SHAFT
	300	534177	-		1	HOLDER
	490	312605-0312	-		1	NUT M6M4RFR
375ml 300ml						
		C- 269113-0503				**Lower Forming Ring, Ass'y**
	005	450459-0002	-		1	FORMING RING
	060	434499	-		1	FORK
	070	434500	S		1	SHAFT
	130	449589-0001	P		5	ROLLER, (STD.SIZE)
	140	529181	P		1	COUNTER ROLLER
	190	434504	P		5	SHAFT
	230	469463	-		1	SHAFT
	265	486803	S		1	BEARING HOUSING
	280	469464	P		1	ROLL
	290	434507	P		1	SHAFT
	300	529184	-		1	HOLDER
	490	312605-0312	-		1	NUT M6M4RFR
750ml Slim						
		C- 269113-0504				**Lower Forming Ring, Ass'y**
	005	544333	-		1	FORMING RING
	060	544335	-		1	FORK
	070	269147	S		1	SHAFT
	130	752578-0001	P		5	ROLLER, (STD.SIZE)
	140	556139	P		1	ROLL
	190	263655-0022	P		5	SHAFT
	200	90240-0172	-		12	FLANGE BUSHING
	230	469463	-		1	SHAFT
	265	544306	S		1	BEARING HOUSING
	280	469464	P		1	ROLL
	290	544336	P		1	SHAFT
	300	534177	-		1	HOLDER
	490	312605-0312	-		1	NUT M6M4RFR
1000ml Slim						
		C- 269113-0505				**Lower Forming Ring, Ass'y**
	005	567744	-		1	FORMING RING
	060	567748	-		1	FORK
	070	269147	S		1	SHAFT
	130	567746-0001	P		5	ROLLER, (STD.SIZE)
	140	567747	P		1	ROLL
	190	569100	-		5	SHAFT
	200	90240-0172	-		12	FLANGE BUSHING
	230	469463	-		1	SHAFT
	265	544306	S		1	BEARING HOUSING
	280	526691	-		1	ROLL
	290	569085	-		1	SHAFT
	300	569099	-		1	HOLDER
	490	312605-0312	-		1	NUT M6M4RFR
Common Parts						
	110	2033-0008	P		10	WASHER
	150	263257	C		1	CYLINDER BRACKET
	160	571945	-		1	FASTENING BRACKET
	180	263262	S		2	BUSHING
	240	269152	C		1	ROCKER ARM
	250	269153	-		1	STOP
	260	269154	S		1	BUSHING
	295	434101	-		1	WASHER
	305	544445	-		1	SPACER
	310	436342	-		1	SPACER
	330	90224-0284	S		1	SWIVEL
	340	90235-0275	S		1	VALVE
	350	90239-0127	S		1	BRACKET
	360	90239-0166	P		1	CYLINDER
		90285-0094	S		0	* SEAL
	380	311103-0212	-		1	CYLINDRICACP M6 2,5X20RFR
	390	311103-0233	-		2	CYLINDRICACP M6 3X10 RFR

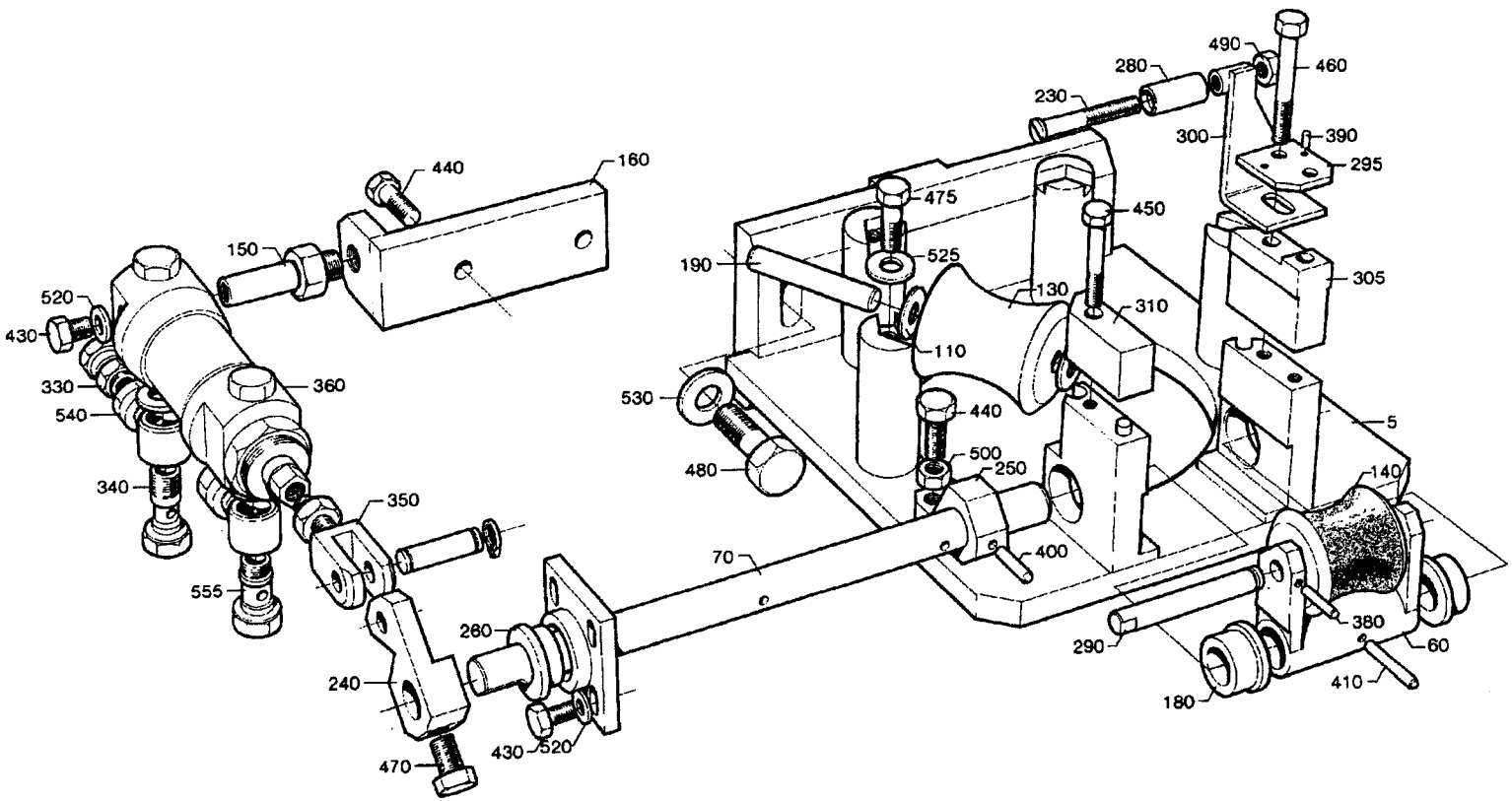

26911303.TIF
269113-3
AM

From	Pos	Part No	SP	UN Qty	Description
	400	311103-0272	-	1	CYLINDRICACP M6 4X20 RFR
	410	311103-0276	-	1	CYLINDRICACP M6 4X30 RFR
	430	312105-0364	-	5	SCREW M6S6X10RFR
	440	312105-0370	-	3	SCREW M6S6X20RFR
	450	312105-0376	-	1	SCREW M6S6X35RFR
	460	312105-0380	-	2	SCREW M6S6X50RFR
	470	312105-0449	-	1	SCREW M6S8X16RFR
	475	312105-0451	-	4	SCREW M6S8X20RFR
	480	312105-0497	-	2	SCREW M6S10X35RFR
	500	312605-0316	-	1	NUT M6M6RFR
	520	315105-0153	-	5	WASHER BRB6,4X12RFR
	525	315105-0165	-	4	WASHER BRB8,4X16RFR
	530	315105-0173	-	2	WASHER BRB10,5X22RFR
	540	342797-0122	S	2	BANJO CONNSINGEL 6-1/4
	555	342980-0304	S	1	BANJO CONN SINGEL 1/4

From	Pos	Part No	SP	UN Qty	Description

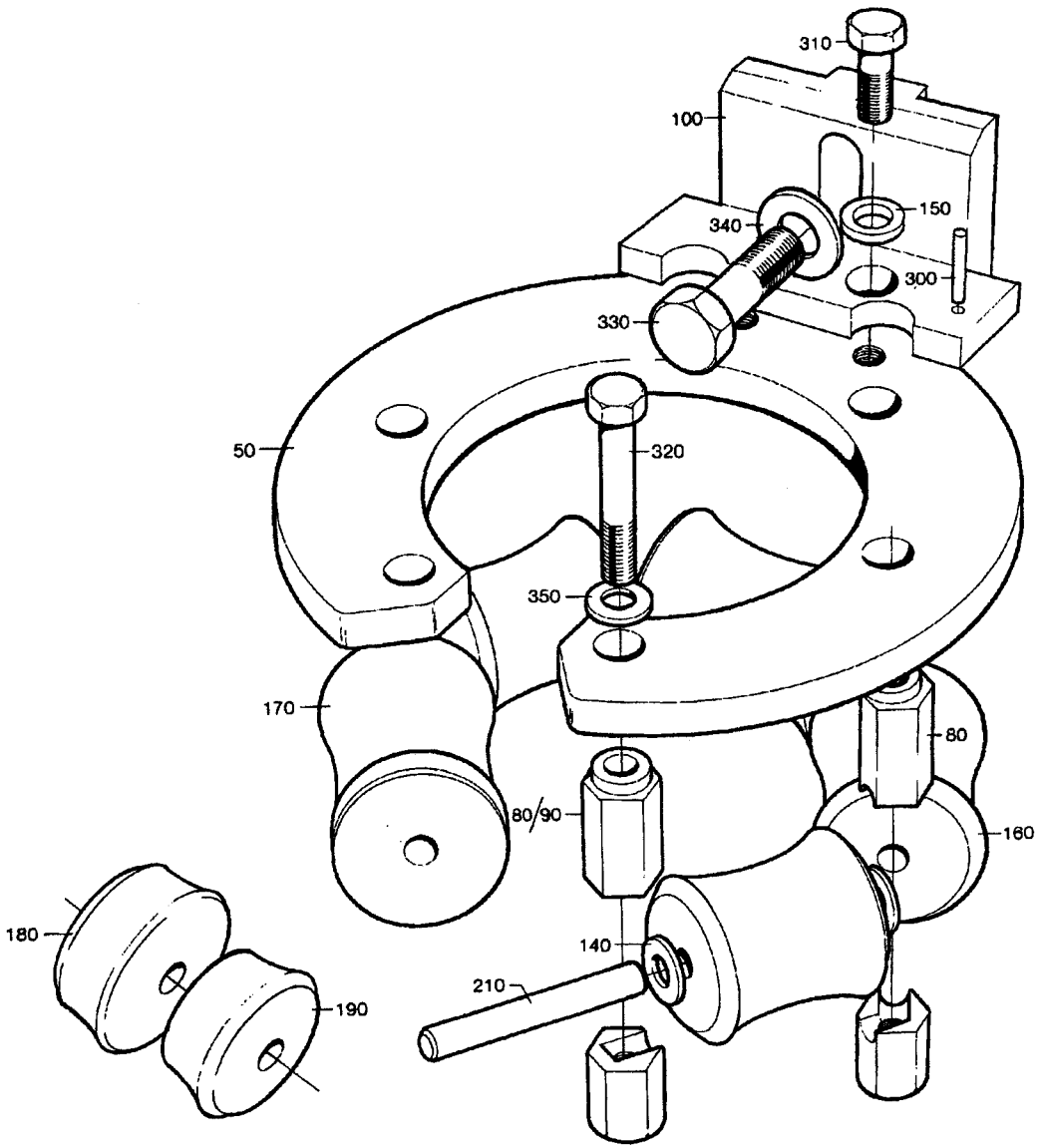

26911502.TIF
269115-2
AM

From	Pos	Part No	SP	UN	Qty	Description
1055ml-500ml						
	F000	**C- 269115-0401**				**Upper Forming Ring, Ass'y**
	050	250594	-		1	FORMING RING
	080	257987	-		4	AXLE SUPPORT
	090	257988	-		2	AXLE SUPPORT
	100	436648	-		1	CANTILEVER
	140	2033-0008	P		10	WASHER
	160	543471	-		4	ROLL
	170	543472	-		1	ROLL
	210	263655-0010	S		5	SHAFT
	320	312105-0462	-		6	SCREW M6S8X55RFR
500ml Slim 400ml 355ml						
	F000	**C- 269115-0402**				**Upper Forming Ring, Ass'y**
	050	434493	-		1	FORMING RING
	080	257987	-		6	AXLE SUPPORT
	100	493948	-		1	CANTILEVER
	140	2033-0008	P		13	WASHER
	160	440068	-		4	ROLL
	170	530566	-		1	EDGE ROLLER
	180	530567	-		1	GUIDE ROLLER
	190	530568	-		1	GUIDE ROLLER
	210	263655-0008	S		6	SHAFT
	320	312105-0462	-		6	SCREW M6S8X55RFR
375ml 300ml						
	F000	**C- 269115-0403**				**Upper Forming Ring, Ass'y**
	050	434493	-		1	FORMING RING
	080	526958	-		6	AXLE SUPPORT
	100	493948	-		1	CANTILEVER
	140	2033-0008	P		13	WASHER
	160	449586	-		4	ROLL
	170	529039	-		1	EDGE ROLLER
	180	529040	-		1	GUIDE ROLLER
	190	529041	-		1	GUIDE ROLLER
	210	263655-0008	S		6	SHAFT
	320	312105-0464	-		6	SCREW M6S8X65RFR
750ml Slim						
	F000	**C- 269115-0404**				**Upper Forming Ring, Ass'y**
	050	544263	-		1	FORMING RING
	080	257987	-		6	AXLE SUPPORT
	100	493948	-		1	CANTILEVER
	130	90240-0172	-		14	FLANGE BUSHING
	140	2033-0008	P		12	WASHER
	160	752719	-		4	ROLL
	170	752721	-		1	ROLL
	180	752720	-		1	ROLL
	190	752718	-		1	ROLL
	210	263655-0009	S		6	SHAFT
	320	312105-0462	-		6	SCREW M6S8X55RFR
1000ml Slim						
	F000	**C- 269115-0405**				**Upper Forming Ring, Ass'y**
	050	569090	-		1	FORMING RING
	080	257987	-		6	AXLE SUPPORT
	100	493948	-		1	CANTILEVER
	130	90240-0172	-		14	FLANGE BUSHING
	140	2033-0008	P		13	WASHER
	160	569087	-		4	ROLL
	170	569086	-		1	ROLL
	180	569089	-		1	ROLL
	190	569088	-		1	ROLL
	210	263655-0009	S		6	SHAFT
	320	312105-0462	-		6	SCREW M6S8X55RFR
Common Parts						
	150	28036	-		2	WASHER
	300	311103-0235	-		2	CYLINDRICACP M6 3X14 RFR
	310	312105-0453	-		2	SCREW M6S8X25RFR
	330	312105-0540	-		1	SCREW M6S12X40 A4 80
	340	315105-0178	-		1	WASHER BRB13X24RFR
	350	315115-0165	-		6	WASHER TBRB8,4X16RFR

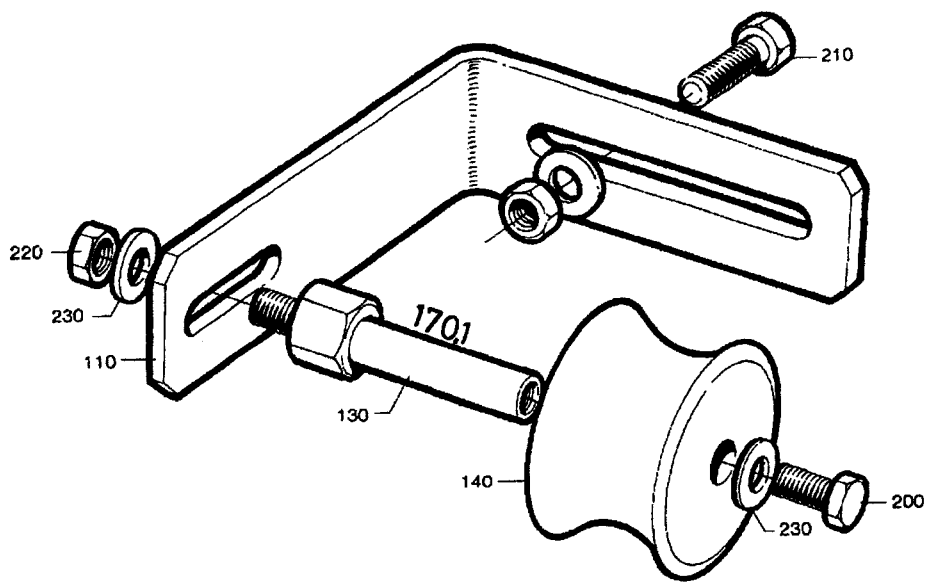

26913601.TIF
269136-1
AM

Last Alteration: AM 18332 93-03-29

Corresponding group: 269136-020V
Assembly Drawing: 269136-1

Issue: **930607**

From	Pos	Part No	SP	UN	Qty	Description
1055ml-300ml 500ml Slim						
	F000	**C- 269136-0201**				**Edge Roller, Ass'y**
	140	36953-0010	C		1	ROLL
750ml Slim 1000ml Slim						
	F000	**C- 269136-0201**				**Edge Roller, Ass'y**
	140	752740	-		1	ROLL
	150	90240-0172	-		2	FLANGE BUSHING
Common Parts						
	110	208843	-		1	ANGLE BRACKET
	130	458791	-		1	SHAFT
	200	312105-0366	-		1	SCREW M6S6X12RFR
	210	312105-0370	-		2	SCREW M6S6X20RFR
	220	312605-0316	-		3	NUT M6M6RFR
	230	315105-0153	-		4	WASHER BRB6,4X12RFR

From	Pos	Part No	SP	UN	Qty	Description

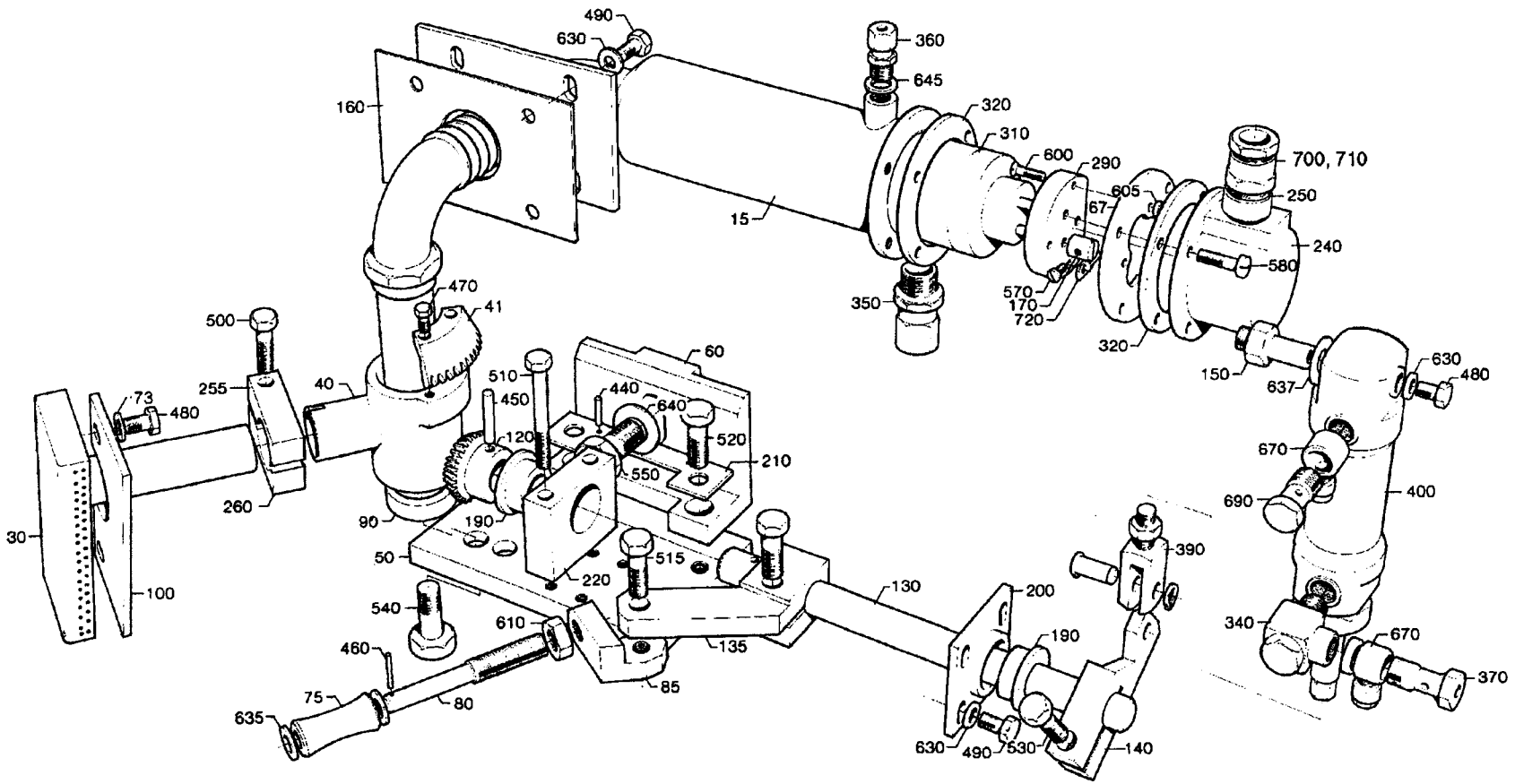

26915802.TIF
269158-2
AM 17647

From	Pos	Part No	SP	UN	Qty	Description
1055ml-500ml 1000ml Slim						
	F000	**C- 269158-0401**				**Hot Air Element, Ass'y**
	030	257903	S		1	AIR NOZZLE
	100	257904	S		1	HEAT GUARD
500ml Slim 750ml Slim 400ml 355ml						
	F000	**C- 269158-0402**				**Hot Air Element, Ass'y**
	030	534176	S		1	AIR NOZZLE
	100	526697	S		1	HEAT GUARD
375ml 300ml						
	F000	**C- 269158-0403**				**Hot Air Element, Ass'y**
	030	526696	S		1	AIR NOZZLE
	100	526697	S		1	HEAT GUARD
Common Parts						
	015	297309	C		1	PIPE-LINE
	040	263249	C		1	PIVOT ARM
	041	263250	C		1	TOOTH PART
	050	269313	C		1	FASTENING PLATE
	060	269314	C		1	CANTILEVER
	067	297310	-		1	FLANGE
	073	6278	-		2	WASHER
	075	33442	S		1	ROLL
	080	239440	S		1	SHAFT
	085	239441	S		1	BRACKET
	090	250663	S		2	BEARING
	120	263251	C		1	GEAR WHEEL
	130	263252	-		1	SHAFT
	135	263254	S		1	BRACKET
	140	263256	C		1	ROCKER ARM
	150	263257	S		1	CYLINDER BRACKET
	160	531741	S		1	GASKET
	170	266739	S		3	CABLE GLAND
	190	269154	S		2	BUSHING
	200	269242	S		1	BEARING HOUSING
	210	269315	S		1	WASHER
	220	269316	S		1	BEARING HOUSING
	240	297311	-		1	COVER
	250	458046	-		1	PIPE
	255	497579	S		1	CLAMP HALF
	260	497580	S		1	CLAMP HALF
	290	90125-0020	S		1	PLATE
		270926	S		6	* NUT
		270927	S		3	* SCREW
		294464	S		1	* BASE PLATE
	310	90206-0085	P		1	HEATING CARTRIDGE
	320	90206-0322	P		2	GASKET
	340	90224-0284	S		1	SWIVEL
	350	90224-0301	S		1	CONNECTION
	360	90224-0307	S		1	CONNECTION
	370	90235-0275	S		1	VALVE
	390	90239-0127	S		1	BRACKET
	400	90239-0166	P		1	CYLINDER
		90285-0094	S		0	* SEAL
	440	311103-0209	-		2	CYLINDRICACP M6 2,5X14RFR
	450	311103-0274	-		1	CYLINDRICACP 4X25 RFR
	460	311411-0140	-		1	SPLIT PIN SP1,6X16RFR
	470	312105-0291	-		2	SCREW M6S4X12RFR
	480	312105-0364	-		3	SCREW M6S6X10RFR
	490	312105-0366	-		8	SCREW M6S6X12RFR
	500	312105-0374	-		2	SCREW M6S6X30RFR
	510	312105-0380	-		2	SCREW M6S6X50RFR
	515	312105-0451	-		1	SCREW M6S8X20RFR
	520	312105-0453	-		3	SCREW M6S8X25RFR
	530	312105-0455	-		1	SCREW M6S8X30RFR
	540	312105-0493	-		1	SCREW M6S10X25RFR
	550	312105-0536	-		1	SCREW M6S12X30RFR
	570	312125-0220	-		3	SLOTTED HEMCS3X6RFR
	580	312125-0295	-		4	SLOTTED HEMCS4X20RFR
	600	312145-0228	-		3	SLOTTED HEMFS3X16RFR
	605	312605-0310	-		3	NUT M6M3RFR
	610	312605-0320	-		1	NUT M6M10RFR
	630	315105-0153	-		9	WASHER BRB6,4X12RFR
	635	315105-0165	-		2	WASHER BRB8,4X16RFR
	637	315105-0173	-		1	WASHER BRB10,5X22RFR
	640	315105-0178	-		1	WASHER BRB13X24RFR
	645	315237-0109	-		1	SEAL RING 1/8"
	670	342797-0122	-		2	BANJO CONNSINGEL 6-1/4
	690	342980-0304	-		1	BANJO CONN SINGEL 1/4
	700	352136-0127	C		1	GLAND FITT
	710	352100-0106	C		1	CABLE GLANR.18,6-10,5
	720	353104-0129	-		1	CABLE SHOEYAV 14 M 37

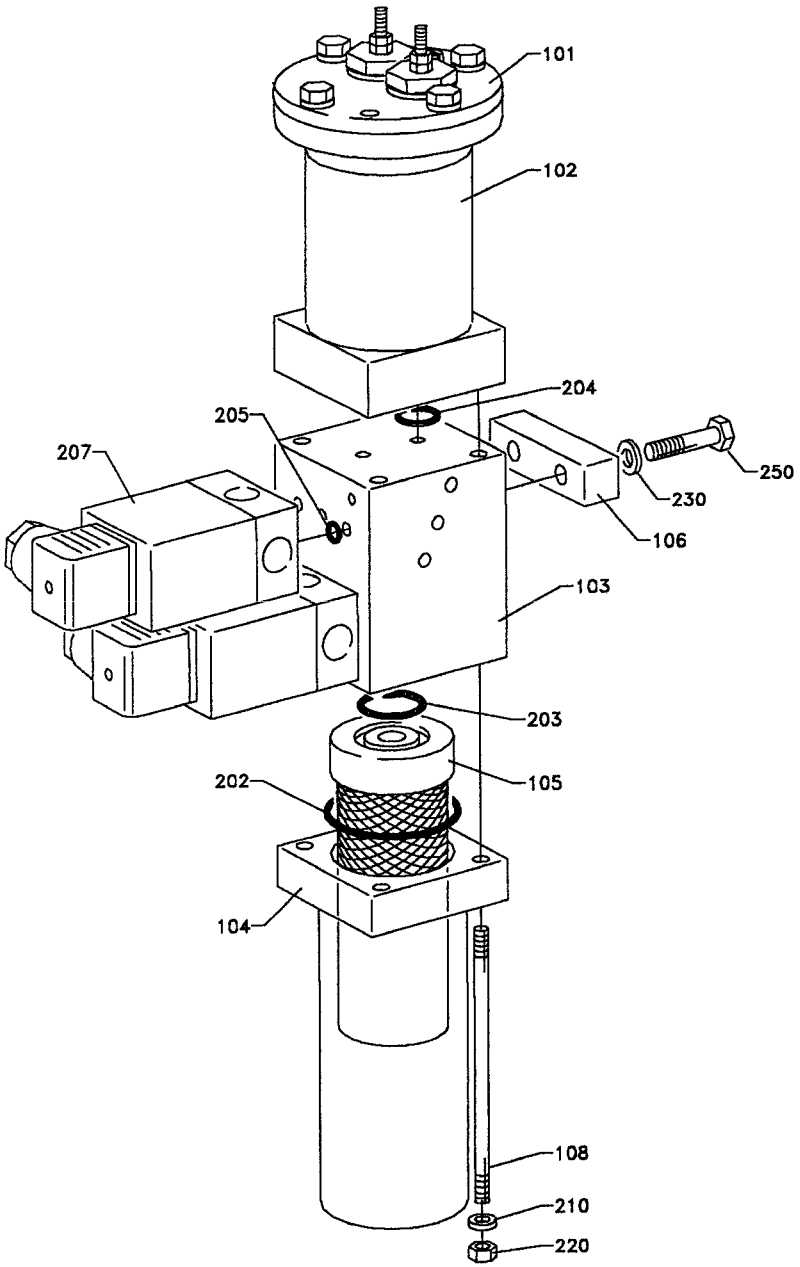

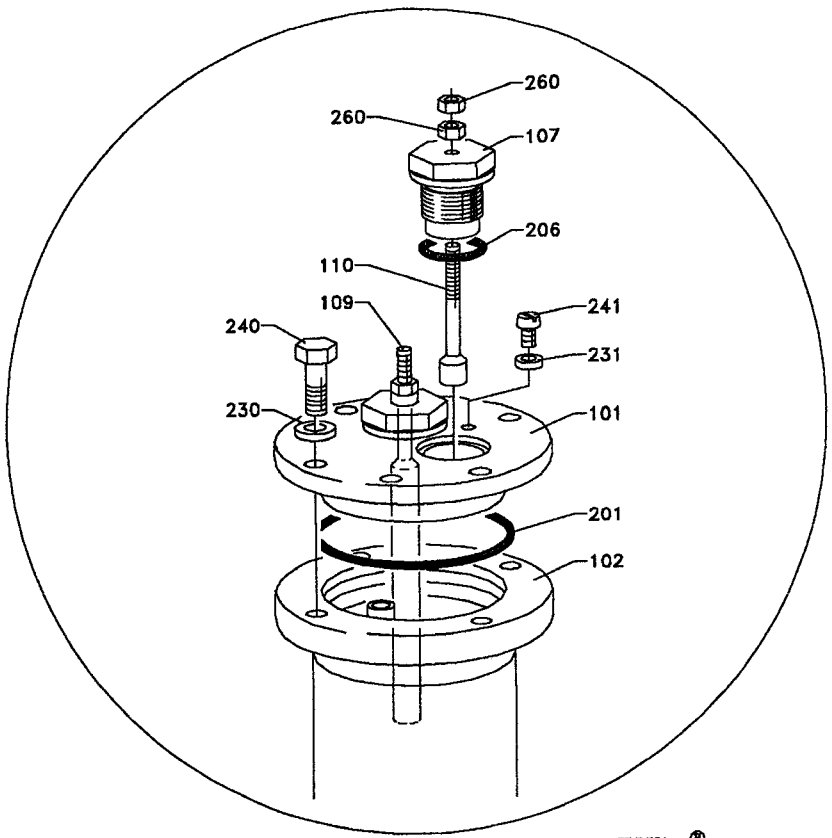

ILLUtec®
56093001.dwg

From	Pos	Part No	SP	UN	Qty	Description
		C- 560930-0101				**Container, Ass'y**
	101	549267	-		1	LID
	102	549264	-		1	CONTAINER
	103	549263	-		1	BLOCK
	104	554142	-		1	FILTER HOUSING
	105	554141	-		1	FILTER
	106	560932	-		1	INTERMEDIATE PART
	107	560931	-		2	BRACKET
	108	554585	-		4	STUD SCREW
	109	560934	-		1	ELECTRODE
	110	560933	-		1	ELECTRODE
	201	315204-0302	P		1	O-RING 54,5X3VITON
	202	315204-0225	P		1	O-RING 44,2X3VITON
	203	315204-0215	P		1	O-RING 19,2X3VITON
	204	315204-0265	P		2	O-RING 12,3X2,4VITON
	205	315204-0103	P		6	O-RING 5,1X1,6VITON
	206	315204-0213	P		2	O-RING 15,3X2,4VITON
	207	90042-0203	P		2	SOLENOID VALVE
	210	315105-0146	-		4	WASHER BRB5,3X10RFR
	220	312605-0314	-		4	NUT M6M5RFR
	230	315105-0153	-		6	WASHER BRB6,4X12RFR
	231	315105-0136	-		1	WASHER BRB4,3X8RFR
	240	312105-0368	-		4	SCREW M6S6X16RFR
	241	312125-0285	-		1	SLOTTED HEMCS4X6RFR
	250	312109-0374	-		2	SCREW M6S6X30HRFR
	260	312605-0312	-		4	NUT M6M4RFR

From	Pos	Part No	SP	UN	Qty	Description

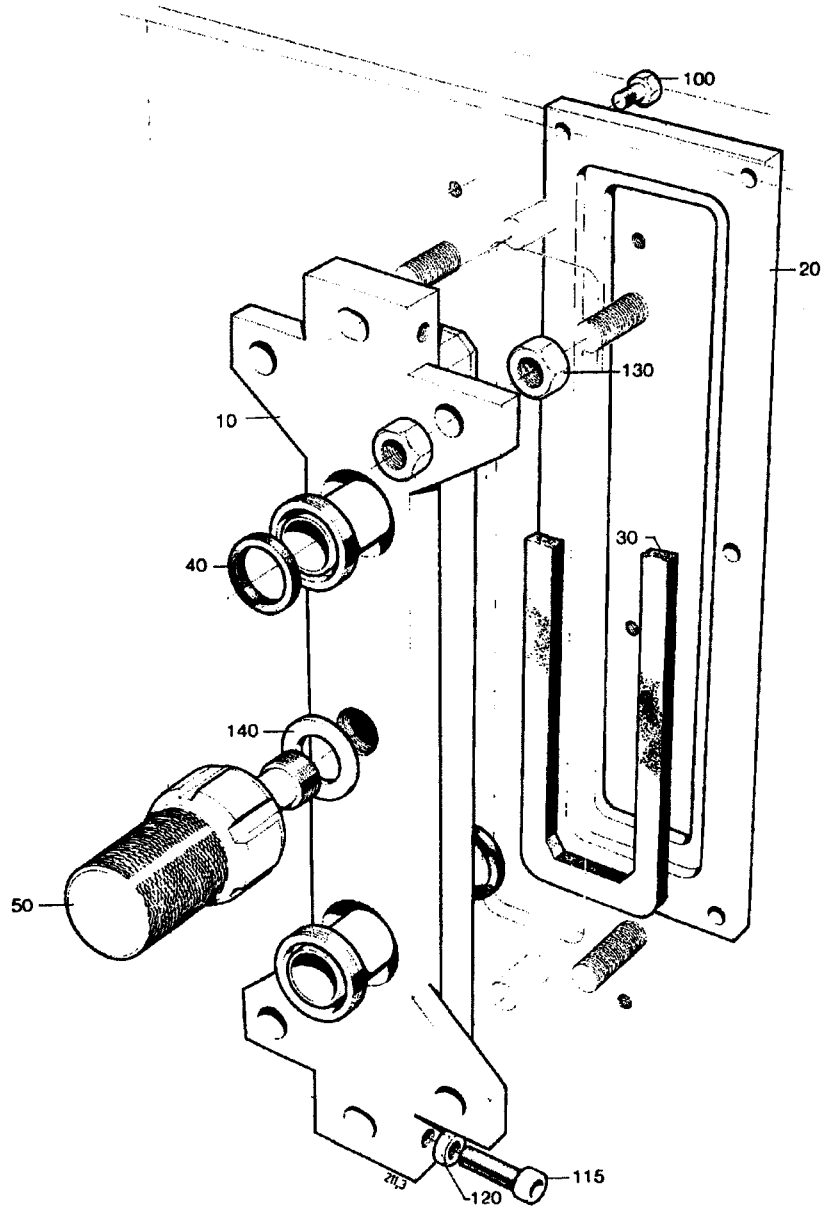

26971501.TIF
269715-1
AM

From	Pos	Part No	SP	UN	Qty	Description
		C- 269715-0101				**Pipe Holder, Ass'y**
	010	269716	C		1	FASTENING PLATE
	020	269717	C		1	GASKET HOLDER
	030	269718	P		1	GASKET
	040	12242-0001	P		4	GASKET
	050	269719	S		1	SCREW
	100	312105-0368	-		6	SCREW M6S6X16RFR
	115	312115-0455	-		4	SCREW 8X30 A4 80
	120	312605-0318	-		4	NUT M6M8RFR
	130	312605-0322	-		8	NUT M6M12RFR
	140	315105-0192	-		1	WASHER BRB21X36RFR

From	Pos	Part No	SP	UN	Qty	Description

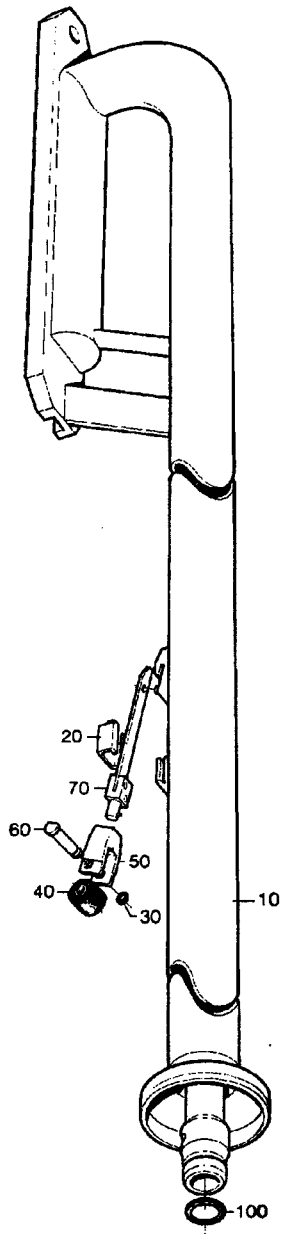

26972002.TIF
269720-2
AM

From	Pos	Part No	SP	UN	Qty	Description
1055ml-500ml						
		C- 269720-0301				**Filler Tube, Ass'y**
	010	434222	C		1	FILLER TUBE
	020	14600	-		1	HOOD
	040	232979	PU		1	PRESSURE ROLLER
	050	267727	P		1	FORK
	060	267728	P		1	SHAFT
	070	544892	P		1	SPRING
500ml Slim 400ml 355ml						
		C- 269720-0302				**Filler Tube, Ass'y**
	010	450010	C		1	FILLER TUBE
	020	434665	-		1	HOOD
	040	499387	PU		1	PRESSURE ROLLER
	050	499016	P		1	FORK
	060	499011	P		1	SHAFT
	070	544892	P		1	SPRING
375ml 300ml						
		C- 269720-0303				**Filler Tube, Ass'y**
	010	497131	C		1	FILLER TUBE
	020	526682	-		1	HOOD
	040	499387	PU		1	PRESSURE ROLLER
	050	529180	P		1	FORK
	060	499011	P		1	SHAFT
	070	544893	P		1	SPRING
750ml Slim						
		C- 269720-0304				**Filler Tube, Ass'y**
	010	544287	C		1	FILLER TUBE
	020	434665	-		1	HOOD
	040	499387	PU		1	PRESSURE ROLLER
	050	499016	P		1	FORK
	060	499011	P		1	SHAFT
	070	544892	P		1	SPRING
1000ml Slim						
		C- 269720-0305				**Filler Tube, Ass'y**
	010	569097	-		1	FILLER TUBE
	020	434665	-		1	HOOD
	040	499387	PU		1	PRESSURE ROLLER
	050	499016	P		1	FORK
	060	499011	P		1	SHAFT
	070	544892	P		1	SPRING
Common Parts						
	030	24928	P		1	LOCKING RUBBER
	100	315204-0217	PU		1	O-RING 24,2X3VITON

From	Pos	Part No	SP	UN	Qty	Description

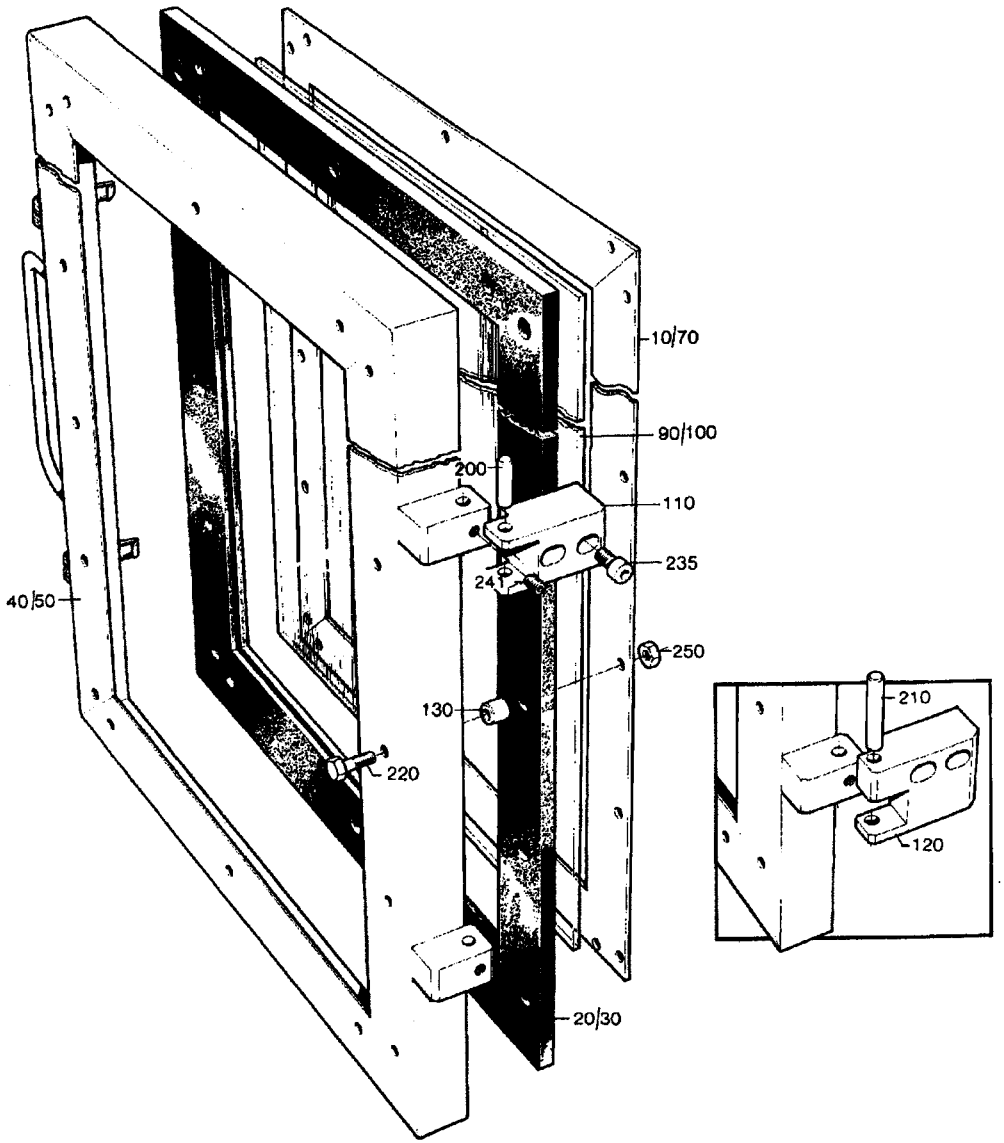

26976104.TIF
269761-4
AM

From	Pos	Part No	SP	UN	Qty	Description
Big Door						
		C- 269761-0201				**Door, Ass'y**
	010	252730	-		1	SEALING FRAME
	020	252797	S		1	RUBBER STRIP
	040	436598	-		1	DOOR
	090	252732	S		1	GLASS PANE
	110	252734	-		3	HINGE
	130	252738	-		20	SPACER
	200	311103-0405	-		3	CYLINDRICACP M6 8X30 RFR
	220	312105-0331	-		20	SCREW M6S5X20 A4 80
	235	312115-0368	-		6	SCREW 6X16 A4 80
	241	312318-0360	-		3	STOP SCREW SK6SS6X6RFR
	250	312605-0314	-		20	NUT M6M5RFR
Small Door						
		C- 269761-0202				**Door, Ass'y**
	030	252798	S		1	RUBBER STRIP
	050	436599	-		1	DOOR
	070	252731	-		1	SEALING FRAME
	100	252733	S		1	GLASS PANE
	110	252734	-		2	HINGE
	130	252738	-		16	SPACER
	200	311103-0405	-		2	CYLINDRICACP M6 8X30 RFR
	220	312105-0331	-		16	SCREW M6S5X20 A4 80
	235	312115-0368	-		4	SCREW 6X16 A4 80
	241	312318-0360	-		2	STOP SCREW SK6SS6X6RFR
	250	312605-0314	-		16	NUT M6M5RFR
Door on the Back of Drying Section						
		C- 269761-0203				**Door, Ass'y**
	030	252798	S		1	RUBBER STRIP
	050	436599	-		1	DOOR
	070	252731	-		1	SEALING FRAME
	100	252733	S		1	GLASS PANE
	110	252734	-		1	HINGE
	120	252735	-		1	HINGE
	130	252738	-		16	SPACER
	200	311103-0405	-		1	CYLINDRICACP M6 8X30 RFR
	210	311103-0411	-		1	CYLINDRICACP M6 8X45 RFR
	220	312105-0331	-		16	SCREW M6S5X20 A4 80
	235	312115-0368	-		4	SCREW 6X16 A4 80
	241	312318-0360	-		2	STOP SCREW SK6SS6X6RFR
	250	312605-0314	-		16	NUT M6M5RFR

From	Pos	Part No	SP	UN	Qty	Description

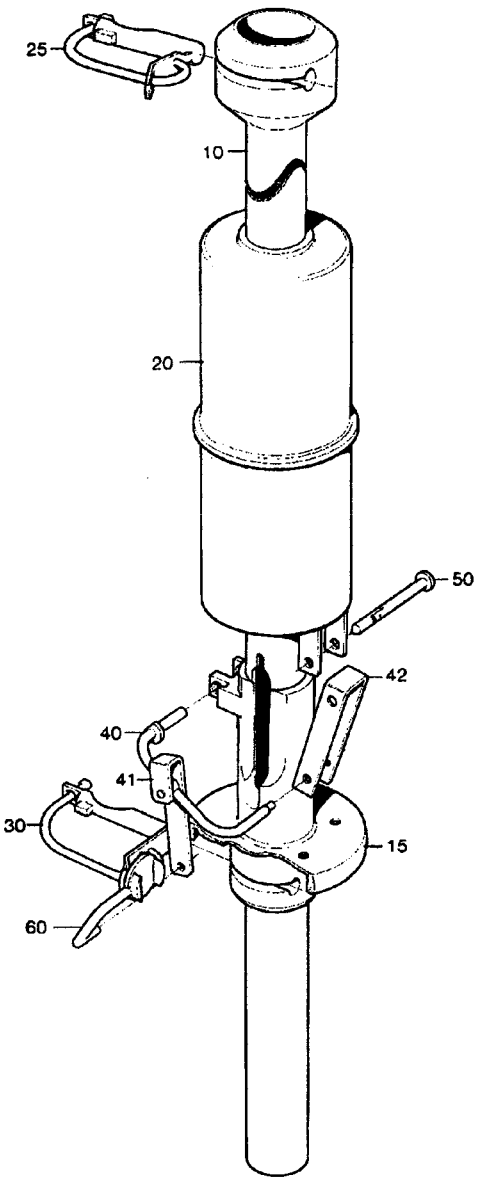

26982802.TIF
269828-2
AM

From	Pos	Part No	SP	UN	Qty	Description
1000ml LoFin						
		C- 269828-0501				**Filler Tube, Ass'y**
	010	269827-0001	-		1	FILLER TUBE
	015	466463	-		1	PRESSURE FLANGE
	020	245190	S		1	FLOAT
	025	445504	P		1	LOCKING FINGER
	030	445502	P		1	LOCKING FINGER
	040	36804	S		1	ARM
	041	36805	S		1	LINK
	042	36806	S		1	CLAMPING ELEMENT
	050	36821-0001	P		1	SHEAR PIN
	060	37782	S		1	THROTTLE
568ml 500ml LoFin						
		C- 269828-0502				**Filler Tube, Ass'y**
	010	476878	-		1	FILLER TUBE
	015	476879	-		1	PRESSURE FLANGE
	020	245190	S		1	FLOAT
	025	445504	P		1	LOCKING FINGER
	030	445502	P		1	LOCKING FINGER
	040	36804	S		1	ARM
	041	36805	S		1	LINK
	042	36806	S		1	CLAMPING ELEMENT
	050	36821-0001	P		1	SHEAR PIN
	060	37782	S		1	THROTTLE
500ml Slim LoFin						
		C- 269828-0503				**Filler Tube, Ass'y**
	010	493875	-		1	FILLING TUBE LOWER
	015	434750	-		1	PRESSURE FLANGE
	020	434749	S		1	FLOAT
	025	493733	P		1	UPPER LOCKING PIN
	030	493734	P		1	LOWER LOCKING PIN
	040	434751	S		1	ARM
	041	434752	S		1	LINK
	042	36817	S		1	CLAMPING ELEMENT
	050	36821-0002	P		1	SHEAR PIN
	060	37782	S		1	THROTTLE
375ml 300ml LoFin						
		C- 269828-0504				**Filler Tube, Ass'y**
	010	529033	-		1	FILLING TUBE LOWER
	015	526960	-		1	PRESSURE FLANGE
	020	259902	S		1	FLOAT
	025	493733	P		1	UPPER LOCKING PIN
	030	445503	P		1	LOCKING PIN LOWER
	040	37296	S		1	ARM
	041	36816	S		1	LINK
	042	36817	S		1	CLAMPING ELEMENT
	050	36821-0002	P		1	SHEAR PIN
	060	228943	S		1	THROTTLE
355ml LoFin						
		C- 269828-0505				**Filler Tube, Ass'y**
	010	530826	-		1	FILLING TUBE LOWER
	015	434750	-		1	PRESSURE FLANGE
	020	434749	S		1	FLOAT
	025	493733	P		1	UPPER LOCKING PIN
	030	493734	P		1	LOWER LOCKING PIN
	040	434751	S		1	ARM
	041	752587	S		1	LINK
	042	36817	S		1	CLAMPING ELEMENT
	050	36821-0002	P		1	SHEAR PIN
	060	37782	S		1	THROTTLE
1055ml LoFin 1000ml HiFin						
		C- 269828-0506				**Filler Tube, Ass'y**
	010	544294	-		1	FILLER TUBE
	015	466463	-		1	PRESSURE FLANGE
	020	245190	S		1	FLOAT
	025	445504	P		1	LOCKING FINGER
	030	445502	P		1	LOCKING FINGER
	040	529376	-		1	ARM
	041	529378	-		1	LINK
	042	529377	-		1	CLAMP
	050	36821-0001	P		1	SHEAR PIN
	060	37782	S		1	THROTTLE
750ml Slim LoFin						
		C- 269828-0507				**Filler Tube, Ass'y**
	010	544294	-		1	FILLER TUBE
	015	752860	-		1	PRESSURE FLANGE
	020	544295	S		1	FLOAT
	025	493733	P		1	UPPER LOCKING PIN
	030	493734	P		1	LOWER LOCKING PIN
	040	434751	S		1	ARM
	041	434752	S		1	LINK
	042	36817	S		1	CLAMPING ELEMENT
	050	36821-0002	P		1	SHEAR PIN
	060	752590	S		1	THROTTLE
750ml LoFin						
		C- 269828-0508				**Filler Tube, Ass'y**
	010	269827-0002	-		1	FILLER TUBE
	015	466463	-		1	PRESSURE FLANGE
	020	245190	S		1	FLOAT
	025	445504	P		1	LOCKING FINGER

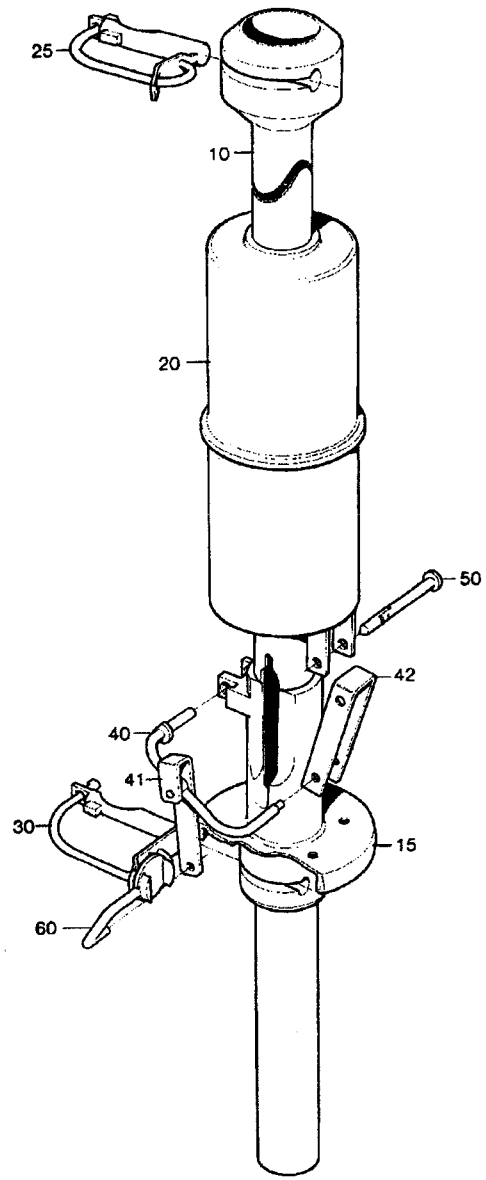

26982802.TIF
269828-2
AM

From	Pos	Part No	SP	UN	Qty	Description
	030	445502	P		1	LOCKING FINGER
	040	36804	S		1	ARM
	041	36805	S		1	LINK
	042	36806	S		1	CLAMPING ELEMENT
	050	36821-0001	P		1	SHEAR PIN
	060	37782	S		1	THROTTLE
1000ml Slim		**C- 269828-0509**				**Filler Tube, Ass'y**
	010	544294	-		1	FILLER TUBE
	015	569098	-		1	PRESSURE FLANGE
	020	544295	S		1	FLOAT
	025	493733	P		1	UPPER LOCKING PIN
	030	493734	P		1	LOWER LOCKING PIN
	040	434751	S		1	ARM
	041	434752	S		1	LINK
	042	36817	S		1	CLAMPING ELEMENT
	050	36821-0002	P		1	SHEAR PIN
	060	752590	S		1	THROTTLE
400ml						
		C- 269828-0510				**Filler Tube, Ass'y**
	010	574013	-		1	FILLING TUBE LOWER
	015	434750	-		1	PRESSURE FLANGE
	020	434749	S		1	FLOAT
	025	493733	P		1	UPPER LOCKING PIN
	030	493734	P		1	LOWER LOCKING PIN
	040	434751	S		1	ARM
	041	434752	S		1	LINK
	042	36817	S		1	CLAMPING ELEMENT
	050	36821-0002	P		1	SHEAR PIN
	060	37782	S		1	THROTTLE

From	Pos	Part No	SP	UN	Qty	Description

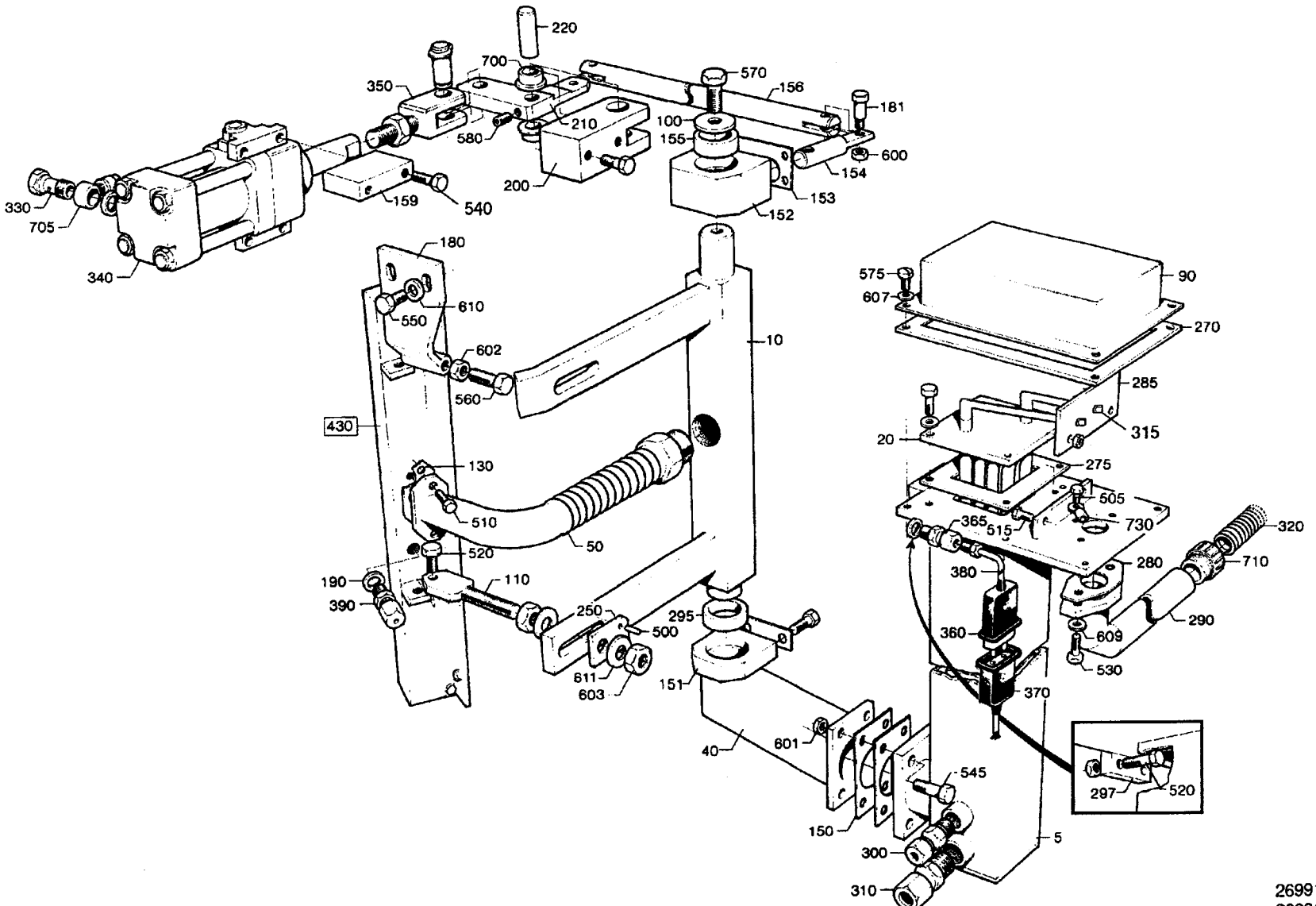

26991505.TIF
269915-5
AM 17647

From	Pos	Part No	SP	UN	Qty	Description
1055ml-500ml 1000ml Slim						
		C- 269915-0601				**Hot Air Element, Ass'y**
	F430	**C- 283926-020V**	**-**		**1**	**AIR NOZZLE**
400ml-300ml 750ml Slim						
		C- 269915-0601				**Hot Air Element, Ass'y**
	F430	**C- 526973-0101**	**-**		**1**	**AIR NOZZLE**
Common Parts						
	005	533195	C		1	MANTLE
	010	250654	C		1	PIVOT ARM
	020	555545	-		1	COIL HEATER
	040	250656	C		1	ATTACHMENT PIPE
	050	434829	C		1	LEAD
	090	476360	-		1	LID
	100	28037	-		1	WASHER
	110	32215	-		2	HOLDER
	130	531734	PU		1	GASKET
	150	531738	PU		2	GASKET
	151	531739	PU		1	GASKET
	152	250660	S		1	BEARING CONSOLE
	153	531740	PU		1	GASKET
	154	250662	-		1	LEVER
	155	250663	S		1	BEARING
	156	250664	C		1	TIE ROD
	159	250668	-		2	SPACER
	180	269913	S		1	STOPPER
	181	269914	S		2	SHOULDER SCREW
	190	273429	S		2	WASHER
	200	279208	S		1	BEARING HOUSING
	210	279209	C		1	ROCKER ARM
	220	279213	S		1	DOWEL
	250	297054	-		2	WASHER
	270	531744	PU		1	GASKET
	275	531745	PU		1	GASKET
	280	531764	PU		1	GASKET
	285	555546	-		1	INSULATING PLATE
	290	479176	-		1	PIPE
	295	530622	S		1	BUSHING
	297	533196	C		1	FASTENING PLATE
	300	90030-0092	S		1	PIPE CONNECTION
	310	90030-0187	S		1	PIPE CONNECTION
	315	90097-0017	-		2	FLAT PIN PLUG
	320	90152-0033	C	MM	500	HOSE
	330	90235-0275	S		2	VALVE
	340	90239-0951	P		1	CYLINDER
		90239-0443	S		1	* SEAL KIT
	350	90239-0346	S		1	BRACKET
	360	90326-0012	P		1	PROTECTIVE COVER
	365	90326-0017	P		1	GLAND
	370	90326-0020	P		1	SOCKET
	380	90326-0048	P		1	THERMOELEMENT
	390	90326-0304	S		1	LEAD IN
	500	311103-0233	-		2	CYLINDRICACP M6 3X10 RFR
	505	312105-0289	-		1	SCREW M6S4X10 A4 80
	510	312105-0325	-		2	SCREW M6S5X10 A4 80
	515	312105-0327	-		2	SCREW M6S5X12 A4 80
	520	312105-0364	-		4	SCREW M6S6X10RFR
	530	312105-0368	-		6	SCREW M6S6X16RFR
	540	312105-0370	-		16	SCREW M6S6X20RFR
	545	312105-0372	-		4	SCREW M6S6X25RFR
	550	312105-0449	-		2	SCREW M6S8X16RFR
	560	312105-0453	-		1	SCREW M6S8X25RFR
	570	312105-0455	-		1	SCREW M6S8X30RFR
	575	312125-0327	-		6	SLOTTED HEMCS5X12RFR
	580	312318-0362	-		1	STOP SCREW SK6SS6X8RFR
	600	312605-0314	-		4	NUT M6M5RFR
	601	312605-0316	-		4	NUT M6M6RFR
	602	312605-0318	-		1	NUT M6M8RFR
	603	312605-0320	-		4	NUT M6M10RFR
	607	315105-0146	-		6	WASHER BRB5,3X10RFR
	609	315105-0153	-		6	WASHER BRB6,4X12RFR
	610	315105-0165	-		2	WASHER BRB8,4X16RFR
	611	315105-0173	-		4	WASHER BRB10,5X22RFR
	700	321111-0159	-		2	FLANGE BUS 12E7X12
	705	342797-0122	-		2	BANJO CONNSINGEL 6-1/4
	707	352100-0106	C		1	CABLE GLANR.18,6-10,5
	710	352136-0113	C		1	GLAND FITT
	730	353104-0130	-		1	CABLE SHOEYAV 14 M 43!

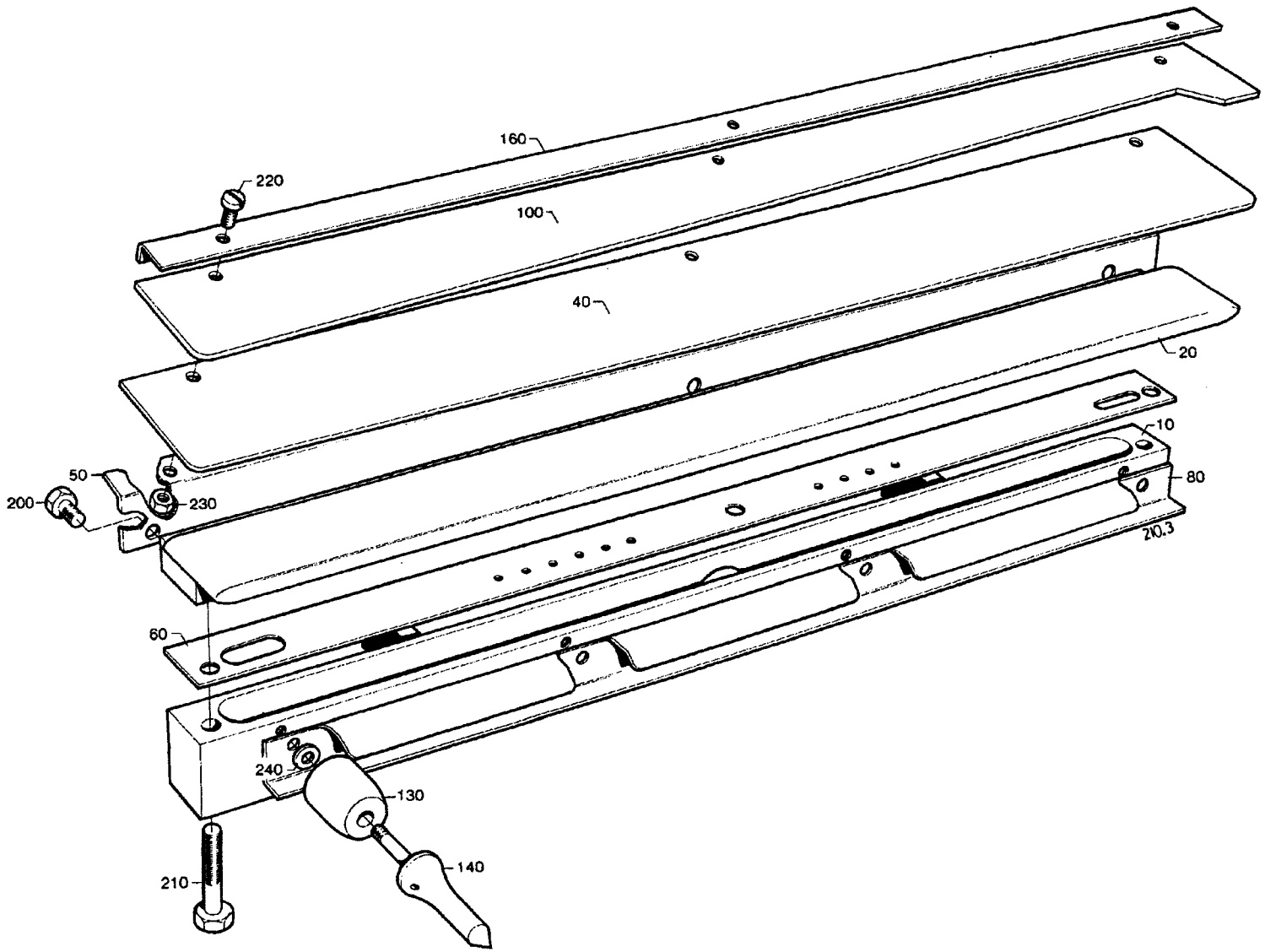

28392601.TIF
283926-1/2
AM

From	Pos	Part No	SP	UN	Qty	Description
1055ml-500ml						
		C- 283926-0201				**Air Nozzle, Ass'y**
	020	268568	C		1	AIR NOZZLE
	040	259549-0001	S		1	SUPPORT PLATE
	050	259550	-		1	MOUNTING SHEET
	060	243851	PU		1	GASKET
	080	265956-0001	C		1	HEAD PLATE
	100	294110-0001	S		1	SLIDE PLATE
	160	282647-0001	-		1	RAIL
	200	312105-0323	-		1	SCREW M6S5X8 A4 80
	220	312125-0289	-		1	SLOTTED HEMCS4X10RFR
	230	312605-0312	-		1	NUT M6M4RFR
500ml Slim 400ml						
		C- 283926-0202				**Air Nozzle, Ass'y**
	020	268568	C		1	AIR NOZZLE
	040	259549-0001	S		1	SUPPORT PLATE
	050	259550	-		1	MOUNTING SHEET
	060	464686	PU		1	GASKET
	080	265956-0001	C		1	HEAD PLATE
	100	464687	S		1	SLIDE PLATE
	160	282647-0001	-		1	RAIL
	200	312105-0323	-		1	SCREW M6S5X8 A4 80
	220	312125-0289	-		1	SLOTTED HEMCS4X10RFR
	230	312605-0312	-		1	NUT M6M4RFR
375ml 300ml						
		C- 283926-0203				**Air Nozzle, Ass'y**
	020	499017	C		1	AIR NOZZLE
	040	499027	S		1	SUPPORT PLATE
	050	259550	-		1	MOUNTING SHEET
	080	499207	C		1	HEAD PLATE
	100	499026	S		1	SLIDE PLATE
	160	282647-0001	-		1	RAIL
	200	312105-0323	-		1	SCREW M6S5X8 A4 80
	220	312125-0289	-		1	SLOTTED HEMCS4X10RFR
	230	312605-0312	-		1	NUT M6M4RFR

From	Pos	Part No	SP	UN	Qty	Description
Common Parts						
	010	243846	-		1	ATTACHMENT
	130	6161	P		2	ROLL
	140	265957	S		2	SHAFT
	210	312105-0376	-		3	SCREW M6S6X35RFR
	240	315105-0136	-		2	WASHER BRB4,3X8RFR

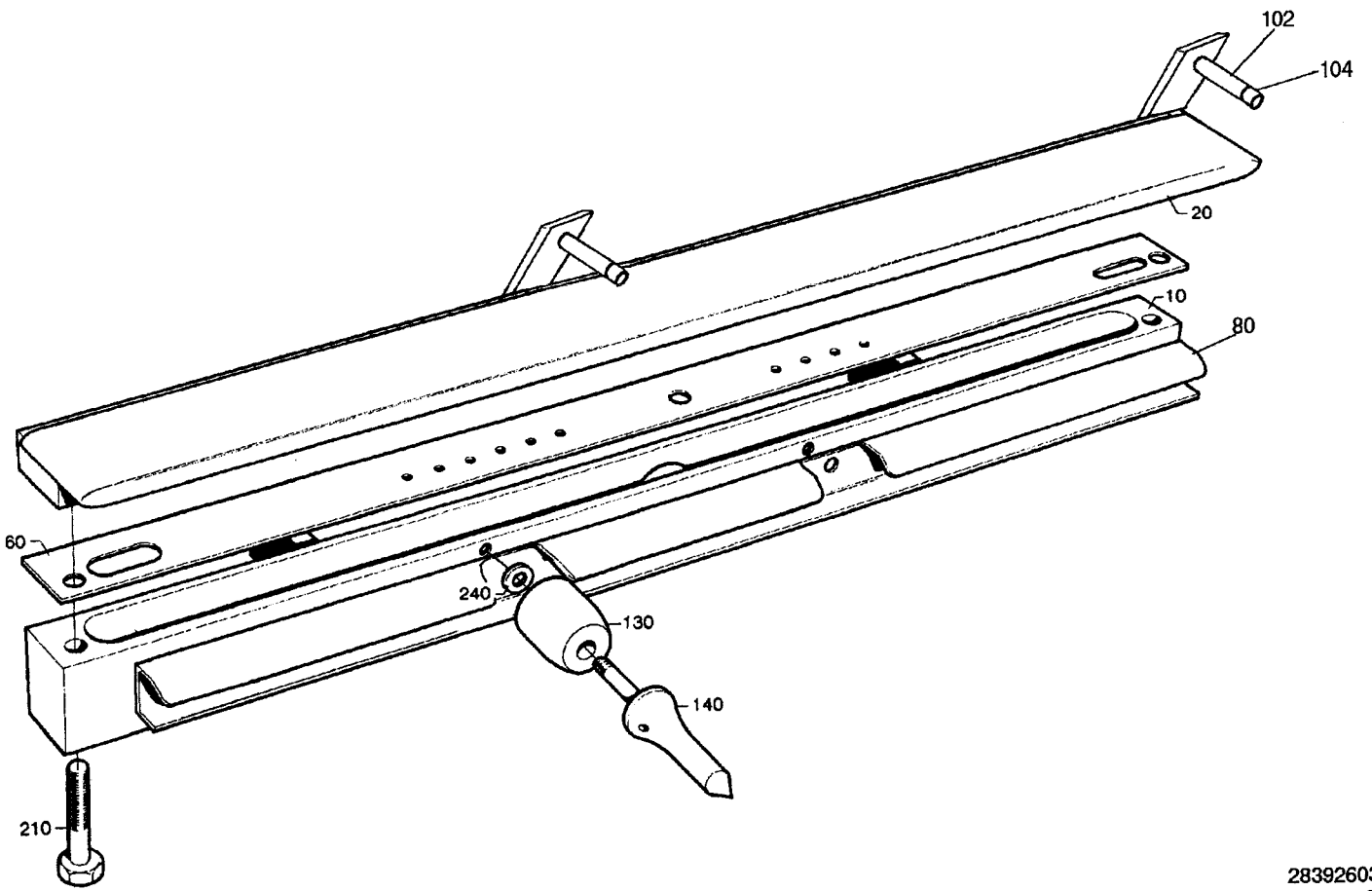

28392603.TIF
283926-3
AM 16976 91-12-10

From	Pos	Part No	SP	UN	Qty	Description
1000ml Slim						
		C- 283926-0204				**Air Nozzle, Ass'y**
	020	573058	-		1	AIR NOZZLE
	060	569104	-		1	DISTRIBUTOR WING
	080	567735	-		1	HEAD PLATE
	102	526691	-		2	ROLL
	104	526690	-		2	SHAFT
Common Parts						
	010	243846	-		1	ATTACHMENT
	130	6161	P		2	ROLL
	140	265957	S		2	SHAFT
	210	312105-0376	-		3	SCREW M6S6X35RFR
	240	315105-0136	-		2	WASHER BRB4,3X8RFR

From	Pos	Part No	SP	UN	Qty	Description

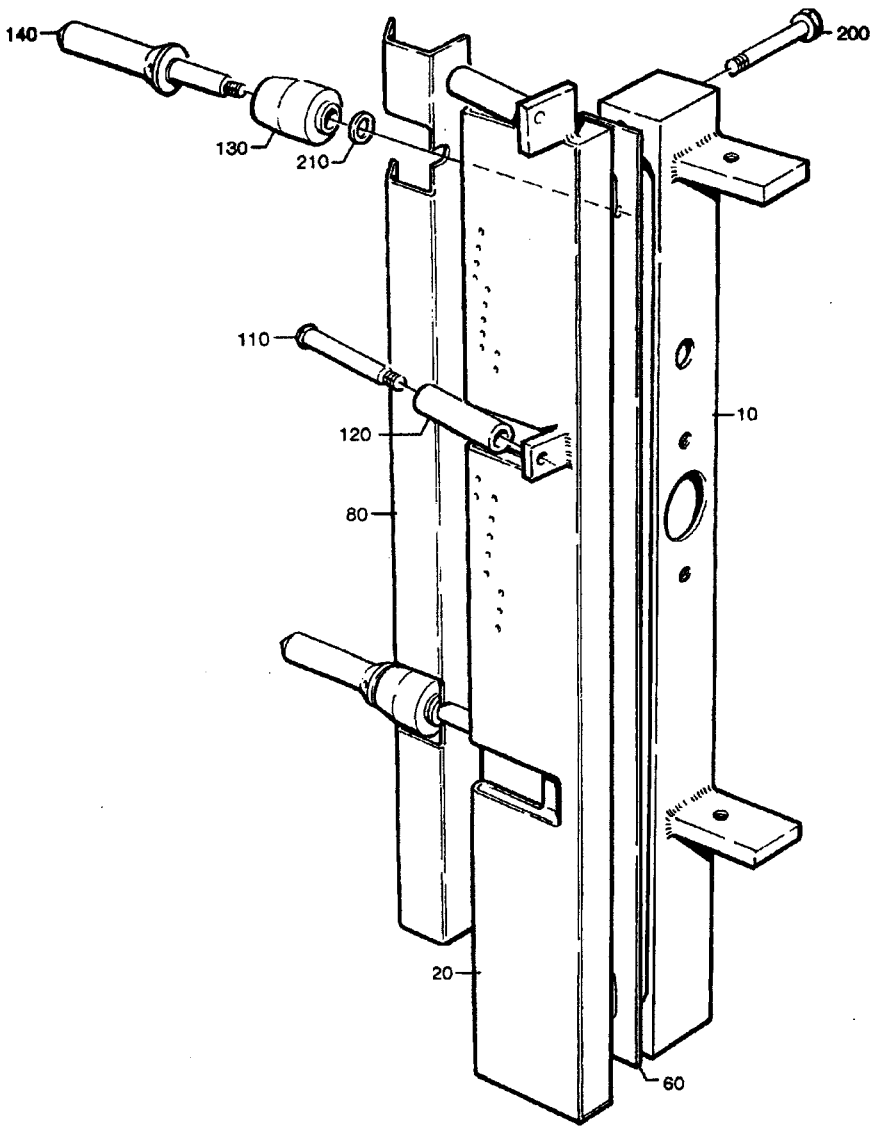

52697301.TIF
526973-1
AM

From	Pos	Part No	SP	UN	Qty	Description
		C- 526973-0101				**Air Nozzle, Ass'y**
	010	526687	-		1	ATTACHMENT
	020	526587	C		1	AIR NOZZLE
	060	526689	C		1	DISTRIBUTOR WING
	080	526688	C		1	HEAD PLATE
	110	526690	S		2	SHAFT
	120	526691	P		2	ROLL
	130	526692	P		2	ROLL
	140	265957	S		2	SHAFT
	200	312105-0376	-		3	SCREW M6S6X35RFR
	210	315105-0136	-		2	WASHER BRB4,3X8RFR

From	Pos	Part No	SP	UN	Qty	Description

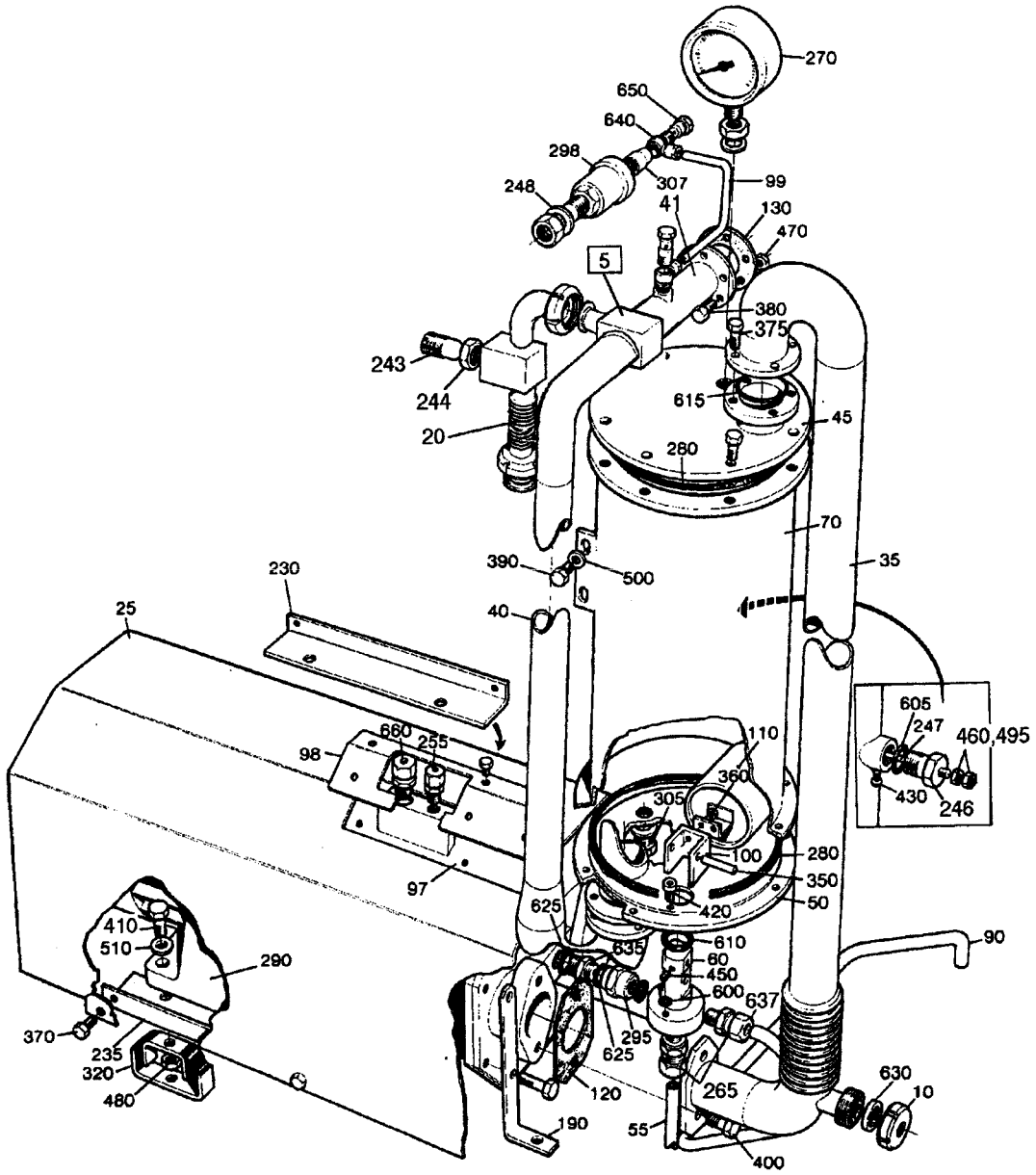

26993805.TIF
269938-5
AM 17647

From	Pos	Part No	SP	UN	Qty	Description
50Hz						
		C- 269938-0501				**Compressor, Ass'y**
	010	90217-0026	-		1	NUT
60Hz						
		C- 269938-0502				**Compressor, Ass'y**
Common Parts						
	F005	**C- 476859-0203**	**-**		**1**	**CHANGE-OVER VALVE**
	020	449130	C		1	CONNECTING PIPE
	025	451321	-		1	COVER
	035	484684	C		1	PIPE
	040	555543	-		1	PIPE
	041	555544	-		1	PIPE
	045	555555	-		1	LID
	050	484687	C		1	BOTTOM
	055	484688	C		1	PIPE
	060	269443	C		1	BRACKET
	070	269461	C		1	CONTAINER
	090	283886	-		1	PIPE
	097	526782	-		1	COVERING PLATE
	098	451323	-		1	SHEET
	099	451324	C		1	PIPE
	100	179595	C		1	CLOSING DEVICE
	110	179596	C		1	FLOAT
	120	230551	PU		1	GASKET
	130	531742	PU		1	GASKET
	190	269859	C		2	BRACKET
	230	282682	C		1	BRACKET
	235	282683	C		1	BRACKET
	243	295878	C		1	THROTTLE SCREW
	244	295879	C		1	NUT
	246	560931	-		1	BRACKET
	247	567070-0012	S		1	ELECTRODE
	248	479234	-		1	WASHER
	255	90012-0063	C		1	GLAND
	260	90030-0187	S		1	PIPE CONNECTION
	265	90030-0109	-		1	PIPE CONNECTION
	270	90043-0095	-		1	PRESSURE GAUGE
	280	90242-0084	PU		2	O-RING
	290	90270-0011	C		1	COMPRESSOR
		90270-0338	S		1	* SPARE PARTS KIT
		90270-0345	S		1	* SHIMS
		90270-0346	S		1	* GASKET
		90270-0348	R		1	* MOTOR
	295	90270-0349	-		1	VALVE
	298	90274-0045	S		1	GUARD

From	Pos	Part No	SP	UN	Qty	Description
	305	90330-0029	-		1	PLUG
	307	90330-0012	S		1	REDUCTION SLEEVE
	320	90347-0026	S		4	DAMPER
	350	311103-0361	-		1	CYLINDRICACP M6 6X40 RFR
	360	312105-0287	-		2	SCREW M6S4X8 A4 80
	370	312105-0366	-		32	SCREW M6S6X12RFR
	375	312105-0368	-		8	SCREW M6S6X16RFR
	380	312105-0370	-		6	SCREW M6S6X20RFR
	390	312105-0447	-		4	SCREW M6S8X12RFR
	400	312105-0491	-		8	SCREW M6S10X20RFR
	410	312105-0497	-		8	SCREW M6S10X35RFR
	420	312115-0368	-		2	SCREW 6X16 A4 80
	430	312125-0285	-		1	SLOTTED HEMCS4X6RFR
	450	312318-0323	-		1	STOP SCREW SK6SS5X8RFR
	460	312605-0312	-		2	NUT M6M4RFR
	470	312605-0316	-		6	NUT M6M6RFR
	480	312605-0320	-		6	NUT M6M10RFR
	495	315105-0136	-		3	WASHER BRB4,3X8RFR
	500	315105-0165	-		4	WASHER BRB8,4X16RFR
	510	315105-0173	-		12	WASHER BRB10,5X22RFR
	600	315204-0105	-		2	O-RING 1X1,6 VITON
	605	315204-0213	P		1	O-RING 15,3X2,4VITON
	610	315204-0217	-		1	O-RING 24,2X3VITON
	615	315204-0302	P		2	O-RING 54,5X3VITON
	617	315204-0223	-		2	O-RING 39,2X3VITON
	625	315233-0113	-		3	SEAL RING R1/2"
	630	315250-0101	-		3	GASKET 32/25
	635	342700-0113	-		1	NIPPLE RNA1/2"-1/2"
	640	342797-0121	-		2	BANJO CONNSINGEL 6-1/8
	650	342980-0303	-		2	BANJO CONN SINGEL 1/8"
	655	352103-0111	-		1	CABLE GLANR.ST 16
	660	352136-0127	C		1	GLAND FITT

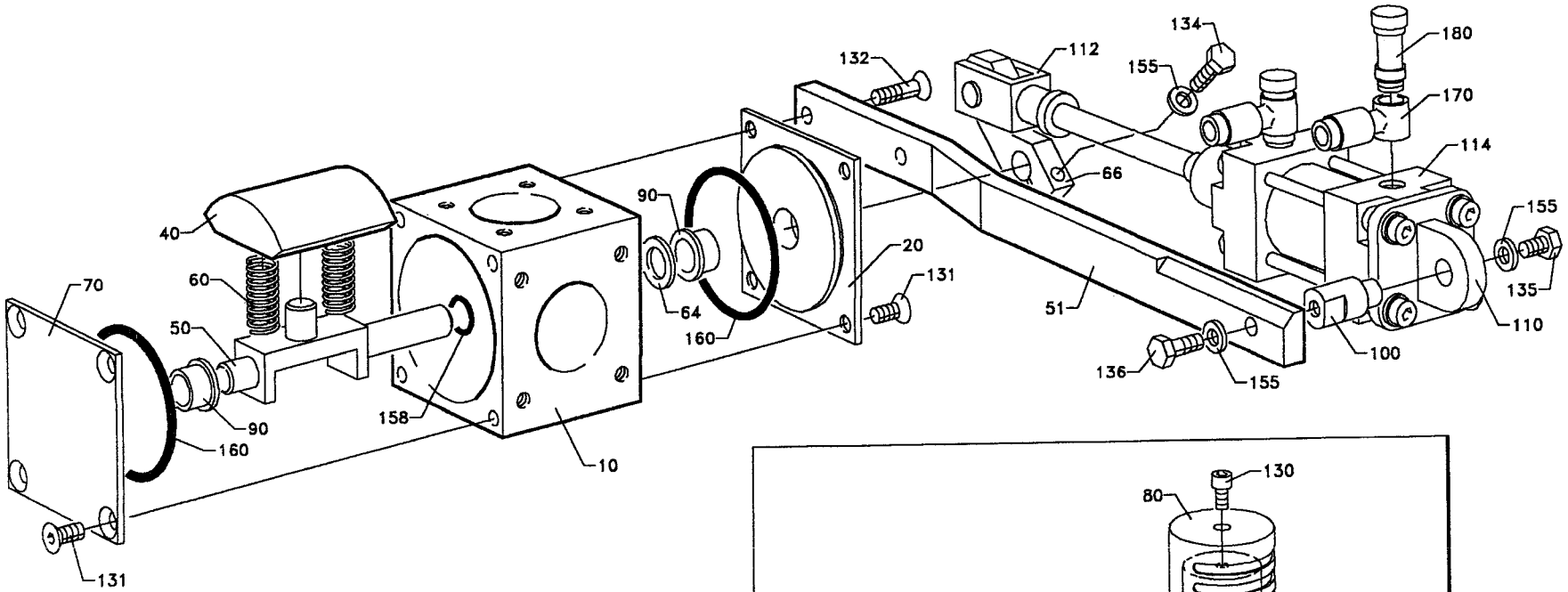

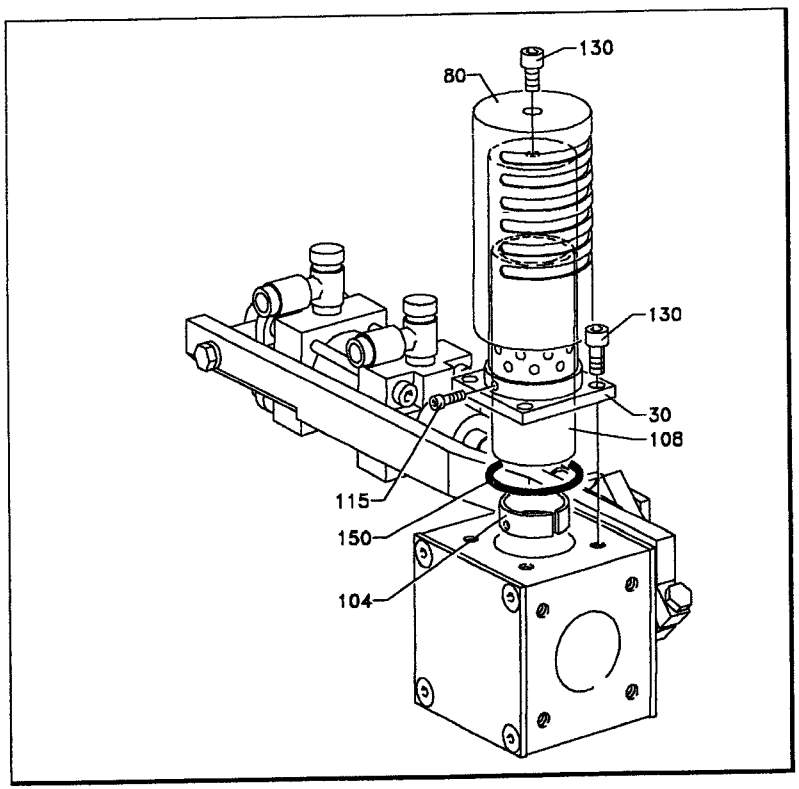

ILLUtec®
47685903.dwg
AM 17647

From	Pos	Part No	SP	UN	Qty	Description
		C- 476859-0201				**Change-Over Valve, Ass'y**
	030	466477	-		1	INNER PIPE
	080	466478	-		1	OUTER PIPE
	104	466483	-		1	CLAMPING PIECE
	108	466484	-		1	NET
	115	312115-0224	-		2	SCREW S 3X10 A4 80
	130	312115-0364	-		5	SCREW 6X10 A4 80
	150	315204-0222	-		1	O-RING 36,2X3VITON
		C- 476859-0203				**Change-Over Valve, Ass'y**
	030	466477	-		1	INNER PIPE
	080	466478	-		1	OUTER PIPE
	104	466483	-		1	CLAMPING PIECE
	108	466484	-		1	NET
	115	312115-0224	-		2	SCREW S 3X10 A4 80
	130	312115-0364	-		5	SCREW 6X10 A4 80
	150	315204-0222	-		1	O-RING 36,2X3VITON
Common Parts						
	010	466474	-		1	VALVE HOUSING
	020	255874	-		1	BEARING COVER
	040	466479	S		1	PIECE
	050	555541	-		1	BRACKET
	051	555542	-		1	BRACKET
	060	21521	S		2	COMPRESSION SPRING
	064	266737	-		1	WASHER
	066	441483	-		1	CYLINDER BRACKET
	070	255874	-		1	BEARING COVER
	090	255875	S		2	BUSHING
	100	555540	-		1	SPACER
	110	90239-0453	-		1	BRACKET
	112	90239-0516	-		1	PISTON ROD HEAD
	114	90239-0779	-		1	CYLINDER
		90239-0442	S		1	* SEAL KIT
	131	312155-0364	-		6	SCREW MF6S6X10RFR
	132	312155-0370	-		2	SCREW MF6S6X20RFR
	134	312105-0370	-		1	SCREW M6S6X20RFR
	135	312105-0364	-		2	SCREW M6S6X10RFR
	136	312105-0368	-		1	SCREW M6S6X16RFR
	155	315105-0153	-		3	WASHER BRB6,4X12RFR
	158	315204-0110	-		1	O-RING 1X1,6 VITON
	160	315204-0302	S		2	O-RING 54,5X3VITON
	170	342797-0121	-		2	BANJO CONNSINGEL 6-1/8
	180	342980-0303	-		2	BANJO CONN SINGEL 1/8"

From	Pos	Part No	SP	UN	Qty	Description

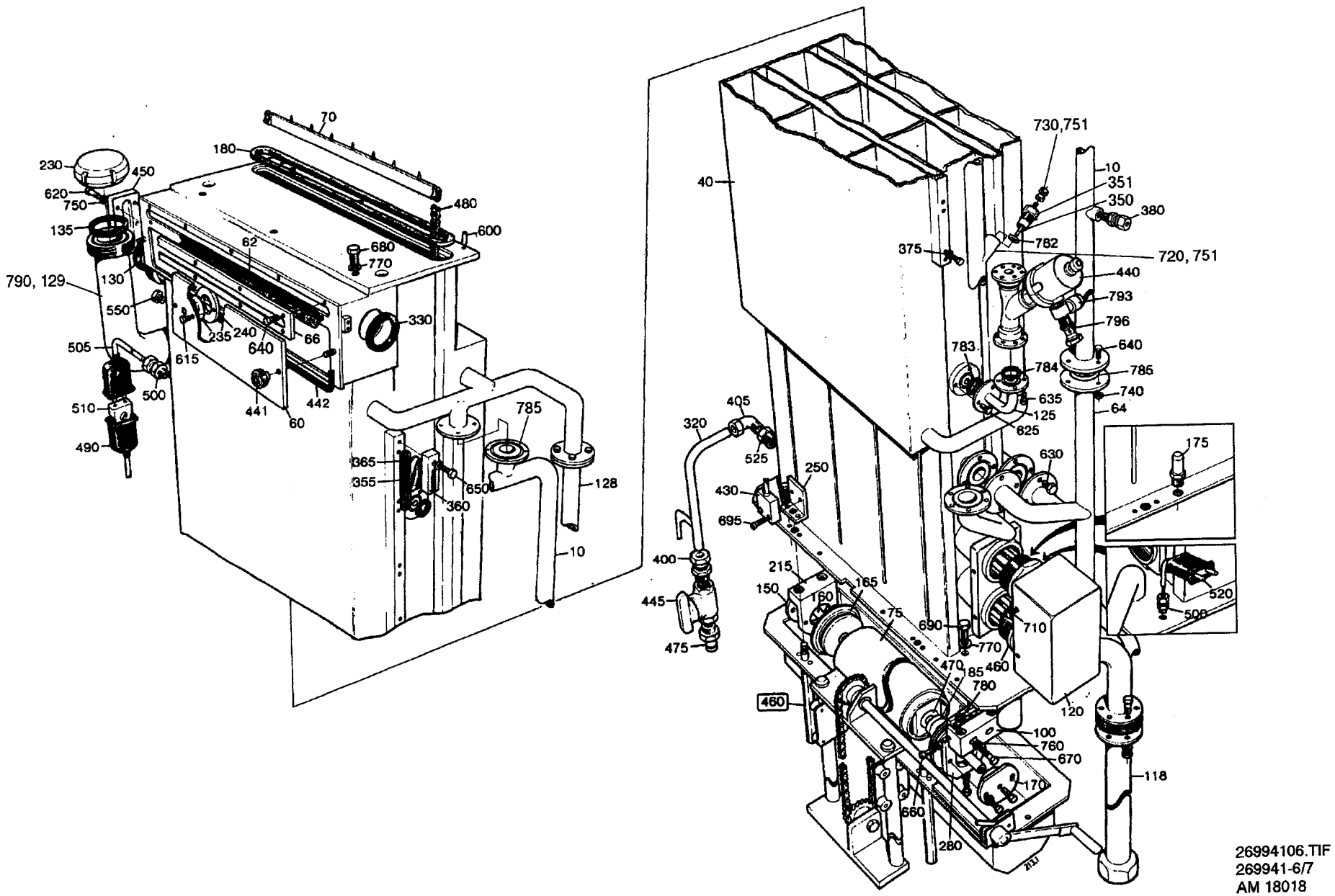

26994106.TIF
269941-6/7
AM 18018

From	Pos	Part No	SP	UN	Qty	Description
1055ml 1000ml 1000ml Slim 750ml Slim						
		C- 269941-0601				**Bath, Ass'y**
	010	561420	C		1	OVERFLOW TUBE
568ml 500ml 400ml 355ml 300ml						
		C- 269941-0602				**Bath, Ass'y**
	010	561421	C		1	OVERFLOW TUBE
750ml 500ml Slim 375ml						
		C- 269941-0603				**Bath, Ass'y**
	010	561422	C		1	OVERFLOW TUBE
1000ml Slim						
		C- 269941-0604				**Bath, Ass'y**
	010	573840	C		1	OVERFLOW TUBE
Common Parts						
	F460	**C- 269932-0501**	-		1	**COVER**
	040	560614	C		1	BATH
	060	273934	C		1	LID
	062	273961	P		1	SEAL
	064	450509	-		1	PIPE
	066	476087	C		1	LID
	070	247236	S		1	CARRIER
	075	541177	C		1	BENDING ROLLER
	100	279471	-		1	CANTILEVER
	118	560615	-		1	PIPE
	120	450512	-		1	COVER
	125	476400	-		1	PIPE
	128	542075	-		1	PIPE
	129	551340	-		1	FILLER TUBE
	130	12242-0003	PU		1	GASKET
	135	12242-0005	PU		1	GASKET
	150	247160	-		1	AXLE SUPPORT
	160	531167	C		1	SHAFT
	165	531168	S		2	WHEEL
	170	247241	-		1	AXLE SUPPORT
	175	247248	-		2	PEG
	180	247252	S		1	GASKET
	185	531169	S		2	WASHER
	215	267056	C		1	BEARING CONSOLE
	230	269931	C		1	NUT
	235	273937	P		1	DIAPHRAGM
	240	273938	C		1	WASHER
	250	279472	-		4	FASTENING BRACKET
	280	279478	-		1	BEARING PLATE
	320	560472	-		1	PIPE
	330	293405	C		2	GASKET
	350	567070-0012	S		1	ELECTRODE

From	Pos	Part No	SP	UN	Qty	Description
	351	560931	-		1	BRACKET
	355	543470	S		2	LEVEL GLASS
	360	476398	S		2	LID
	365	569016	S		4	GASKET
	375	479025	S		10	WASHER
	390	273429	S		2	WASHER
	400	90030-0109	S		1	PIPE CONNECTION
	405	90030-0115	-		1	PIPE CONNECTION
	430	90044-0084	P		4	MICRO SWITCH
	440	544896	S		1	VALVE
	441	491126	-		2	SCREW
	442	90143-0020	P	MM	772	STRIP
	443	90144-0004	-	MM	X	TAPE
	444	90153-0016	-	ML	X	ADHESIVE
	445	90187-0081	-		1	BALL VALVE
	450	90199-0010	S		1	LEVEL GLASS
	460	90206-0070	P		2	HEATING ELEMENT
	470	90240-0146	S		2	FLANGE BUSHING
	475	90224-0078	-		1	CONNECTION
	480	560617	S		2	ROLLER CHAIN
	490	90326-0012	P		2	PROTECTIVE COVER
	500	90326-0017	S		2	GLAND
	505	90326-0019	P		1	THERMOELEMENT
	510	90326-0020	P		2	SOCKET
	520	90326-0043	P		1	THERMOELEMENT
	525	90330-0048	-		1	BUSHING
	550	90330-0066	-		1	PLUG
	600	311103-0310	-		2	CYLINDRICACP M6 5X20 RFR
	615	312105-0325	-		2	SCREW M6S5X10 A4 80
	620	312105-0332	-		6	SCREW M6S5X22RFR
	625	312105-0364	-		6	SCREW M6S6X10RFR
	630	312105-0366	-		20	SCREW M6S6X12RFR
	635	312105-0367	-		10	SCREW M6S6X14RFR
	640	312105-0368	-		40	SCREW M6S6X16RFR
	650	312105-0370	-		10	SCREW M6S6X20RFR
	660	312105-0371	-		2	SCREW M6S6X22RFR
	670	312105-0376	-		2	SCREW M6S6X35RFR
	680	312105-0451	-		6	SCREW M6S8X20RFR
	690	312105-0452	-		4	SCREW M6S8X22RFR
	695	312115-0327	-		8	SCREW MC6S5X12 A4 80
	710	312125-0220	-		4	SLOTTED HEMCS3X6RFR
	720	312125-0285	-		1	SLOTTED HEMCS4X6RFR
	730	312605-0312	-		2	NUT M6M4RFR
	740	312605-0316	-		23	NUT M6M6RFR

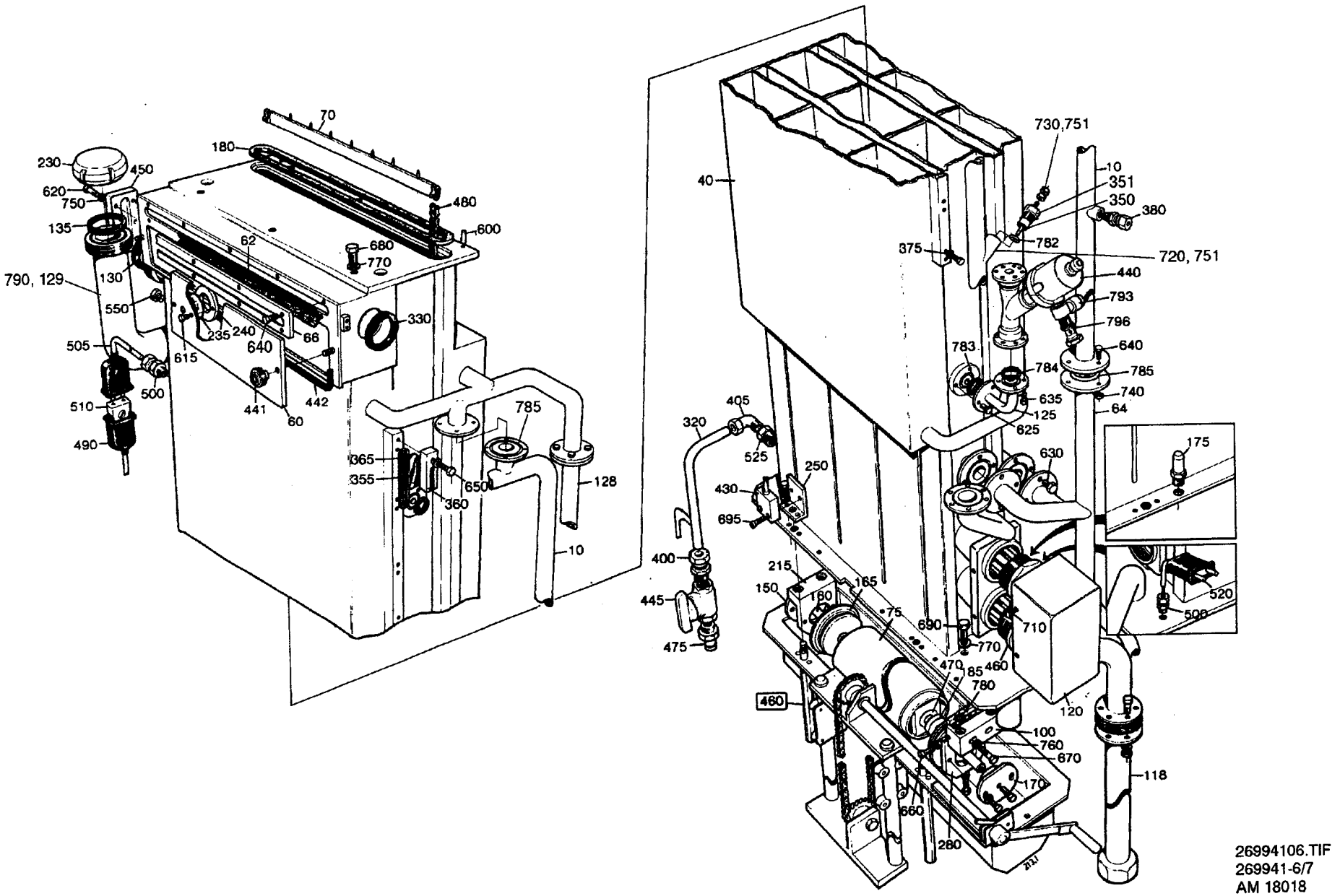

26994106.TIF
269941-6/7
AM 18018

From	Pos	Part No	SP	UN Qty	Description
	750	315105-0146	-	6	WASHER BRB5,3X10RFR
	751	315105-0136	-	5	WASHER BRB4,3X8RFR
	760	315105-0153	-	22	WASHER BRB6,4X12RFR
	770	315105-0165	-	10	WASHER BRB8,4X16RFR
	780	315204-0208	S	5	O-RING 9,3X2,4VITON
	782	315204-0213	S	1	O-RING 15,3X2,4VITON
	783	315204-0215	S	2	O-RING 19,2X3VITON
	784	315204-0219	S	1	O-RING 29,2X3VITON
	785	315204-0224	S	7	O-RING 2X3 VITON
	790	315204-0302	-	1	O-RING 54,5X3VITON
	793	342797-0122	-	1	BANJO CONNSINGEL 6-1/4
	796	342980-0304	-	1	BANJO CONN SINGEL 1/4

From	Pos	Part No	SP	UN Qty	Description

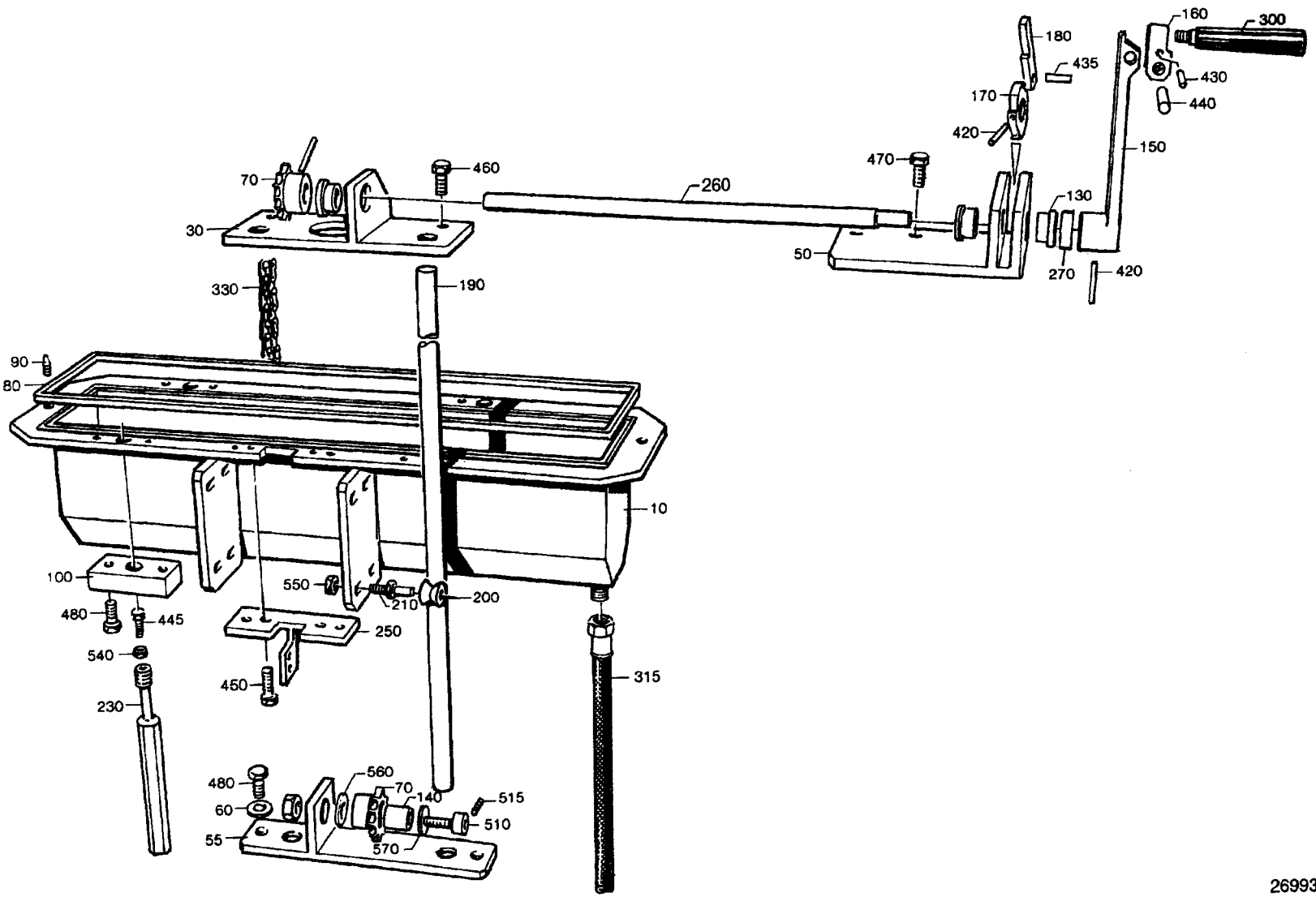

26993203.TIF
269932-3
AM

From	Pos	Part No	SP	UN	Qty	Description
		C- 269932-0501				**Bottom Cover, Ass'y**
	010	269929	C		1	COVER
	030	263572	C		1	CANTILEVER
	050	263574	C		1	BEARING CONSOLE
	055	450846	-		1	CANTILEVER
	060	38087	-		2	WASHER
	070	247357	S		2	SPROCKET
	080	263575	P		1	GASKET
	090	263576	S		2	GUIDE STUD
	100	263579	S		4	WASHER
	130	263585	P		3	BUSHING
	140	263586	P		1	BUSHING
	150	263587	C		1	CRANK
	160	263588	S		1	JOINT
	170	263589	S		1	RATCHET
	180	263590	S		1	BARRIER
	190	560616	C		2	PILLAR
	200	263592	P		8	WHEEL
	210	263593	P		8	SHAFT
	230	269930	S		4	SCREW
	250	297163	C		1	CARRIER
	260	547567	C		1	SHAFT
	270	547568	-		1	SPACER
	300	90051-0065	C		1	HANDLE
	315	484189	-		1	HIGH PRESSURE HOSE
	330	90288-0062	S		1	ROLLER CHAIN
	420	311103-0276	-		3	CYLINDRICACP M6 4X30 RFR
	430	311103-0310	-		1	CYLINDRICACP M6 5X20 RFR
	435	311103-0357	-		1	CYLINDRICACP M6 6X30 RFR
	440	311103-0401	-		1	CYLINDRICACP M6 8X20 RFR
	445	312105-0329	-		4	SCREW M6S5X16 A4 80
	450	312105-0366	-		4	SCREW M6S6X12RFR
	460	312105-0368	-		2	SCREW M6S6X16RFR
	470	312105-0370	-		2	SCREW M6S6X20RFR
	480	312105-0372	-		10	SCREW M6S6X25RFR
	510	312180-0493	-		1	REAMED BOL
	515	312318-0325	-		2	STOP SCREW SK6SS5X10RFR
	540	312605-0314	-		4	NUT M6M5RFR
	550	312605-0318	-		9	NUT M6M8RFR
	560	315105-0165	-		1	WASHER BRB8,4X16RFR
	570	315105-0173	-		1	WASHER BRB10,5X22RFR

From	Pos	Part No	SP	UN	Qty	Description

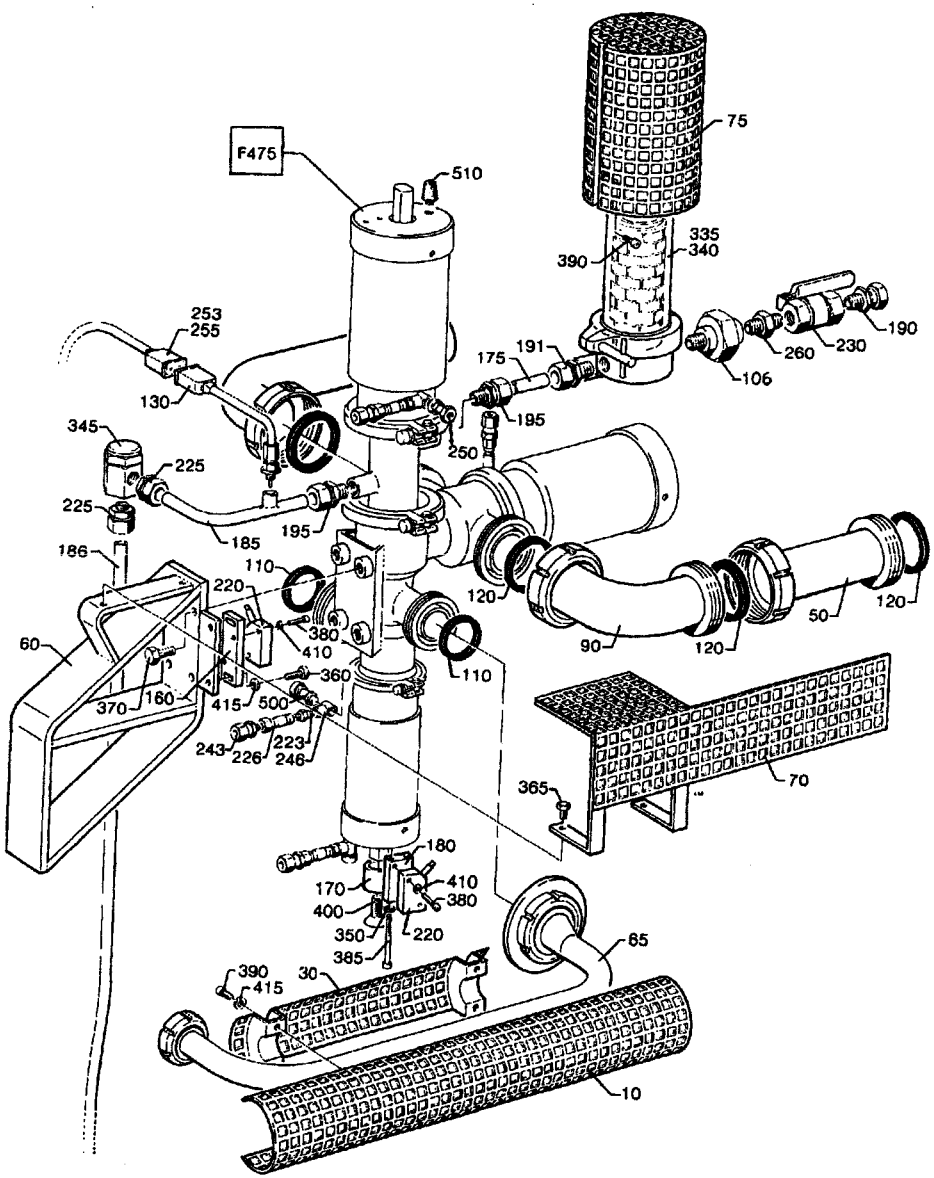

56126801.TIF
561268-1/2
AM 14904

From	Pos	Part No	SP	UN	Qty	Description
2" Valve						
		C- 561268-0101				**Connection Assembly, Ass'y**
	050	255368	C		1	PRESSURE GAUGE TUBE
	080	440977	C		1	ATTACHMENT PIPE
	090	440978	C		1	PIPE BEND
	120	12242-0005	P		4	GASKET
	470	342803-0104	-		1	NUT 51
3" Valve						
		C- 561268-0102				**Connection Assembly, Ass'y**
	050	436779	C		1	PRESSURE GAUGE TUBE
	080	436778	C		1	PIPE
	090	445515	C		1	PIPE BEND
	120	436781	P		4	GASKET
	470	342803-0106	-		1	NUT 76
Common Parts						
	F475	**C- 440630-020V**	-		1	**AP-VALVE**
		SP- 499255-0201	PU		1	* SEAL KIT
		SP- 499255-0202	P		1	* SEAL KIT
		SP- 499255-0203	P		1	* SEAL KIT
	010	273547-0001	C		1	TOUCH GUARD
	030	273548-0001	C		1	TOUCH GUARD
	060	554582	-		1	CANTILEVER
	065	484047	C		1	PIPE
	070	560929	-		1	TOUCH GUARD
	075	752176	-		1	PROTECTIVE CASING
	106	90330-0106	-		1	PIPE COUPLING
	110	12242-0003	P		2	GASKET
	130	37768	P		1	THERMOCOUPLE
	160	297195	-		1	SPACER
	170	440647	-		1	SLEEVE
	175	752711	-		1	PIPE
	180	440731	-		1	PLATE
	185	560927	-		1	PIPE
	190	90030-0109	S		1	PIPE CONNECTION
	191	90030-0180	-		1	PIPE CONNECTION
	195	90030-0187	C		2	PIPE CONNECTION
	220	90044-0104	P		2	INDUCTIVE SWITCH
	223	90163-0057	C		4	NIPPLE
	225	90030-0088	-		2	PIPE CONNECTION
	226	90163-0062	C		4	SLEEVE
	230	90187-0082	S		1	BALL VALVE
	243	90224-0307	C		4	CONNECTION
	246	90224-0308	C		4	BANJO CONNECTION
	250	90235-0274	S		1	VALVE
	253	90326-0012	P		1	PROTECTIVE COVER
	255	90326-0020	P		1	SOCKET
	260	90330-0021	-		1	NIPPLE
	335	90277-0055	-		1	FILTER
	340	90337-0315	-		1	FILTER
	345	90360-0009	-		1	STEAM TRAP
	350	315105-0136	-		2	WASHER BRB4,3X8RFR
	360	312105-0331	-		2	SCREW M6S5X20 A4 80
	365	312105-0364	-		2	SCREW M6S6X10RFR
	370	312105-0451	-		8	SCREW M6S8X20RFR
	380	312115-0228	-		4	SCREW 3X16 A4 80
	385	312115-0305	-		2	SCREW 4X50 A4 80
	390	312115-0329	-		4	SCREW 5X16 A4 80
	400	312155-0532	-		1	SCREW MF6S12X20RFR
	410	315105-0124	-		4	WASHER BRB3,2X6RFR
	415	315105-0146	-		6	WASHER BRB5,3X10RFR
	500	342980-0303	-		3	BANJO CONN SINGEL 1/8"
	510	346800-0109	C		2	SILENCER FILTER R1/8"

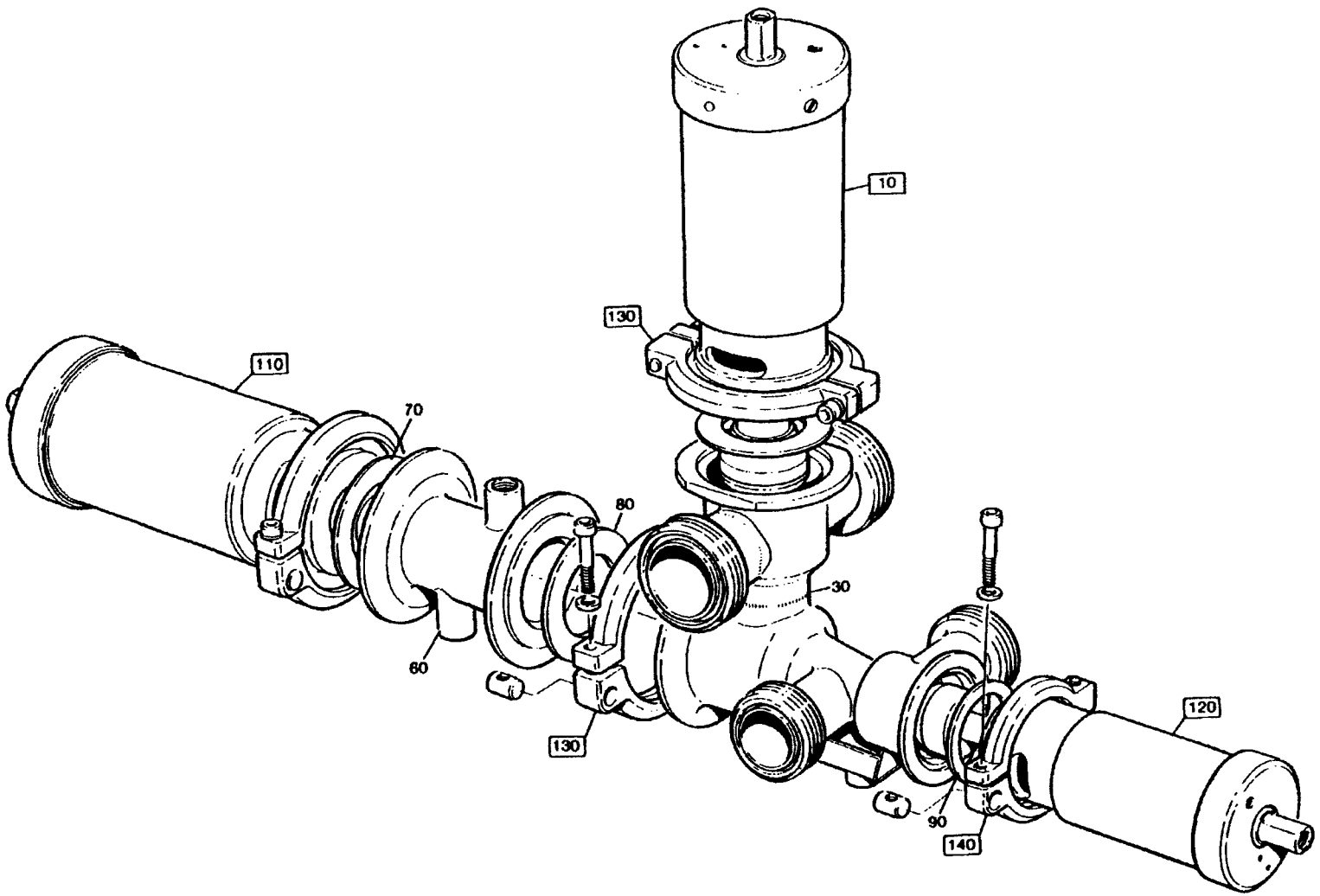

44063003.TIF
440630-3
AM

From	Pos	Part No	SP	UN	Qty	Description
2" Valve TBA/8 TBA/9						
		C- 440630-0201				**Ap-Valve, Ass'y**
	F010	**C- 539209-0101**	**-**		**1**	**A-CYLINDER**
	030	440631	-		1	VALVE BODY 51
3" Valve TBA/8						
		C- 440630-0202				**Ap-Valve, Ass'y**
	F020	**C- 539209-0102**	**-**		**1**	**A-CYLINDER**
	050	449678	-		1	VALVE BODY 76
2" Valve TBA/3 TBA/3R TCA/500 TCA/300 TCA/150						
		C- 440630-0203				**Ap-Valve, Ass'y**
	F010	**C- 539209-0101**	**-**		**1**	**A-CYLINDER**
	040	484997	-		1	VALVE BODY 51
Common Parts						
	F110	**C- 539210-0101**	**-**		**1**	**C-CYLINDER**
	F120	**C- 539211-0101**	**-**		**1**	**B-CYLINDER**
	F130	**C- 541163-0101**	**-**		**3**	**CLAMP RING**
	F140	**C- 541164-0101**	**-**		**1**	**CLAMP RING**
	060	440634	-		1	HOUSE
	070	539212	-		1	GASKET
	080	90207-0363	-		1	GASKET
	090	90207-0365	-		1	GASKET

From	Pos	Part No	SP	UN	Qty	Description

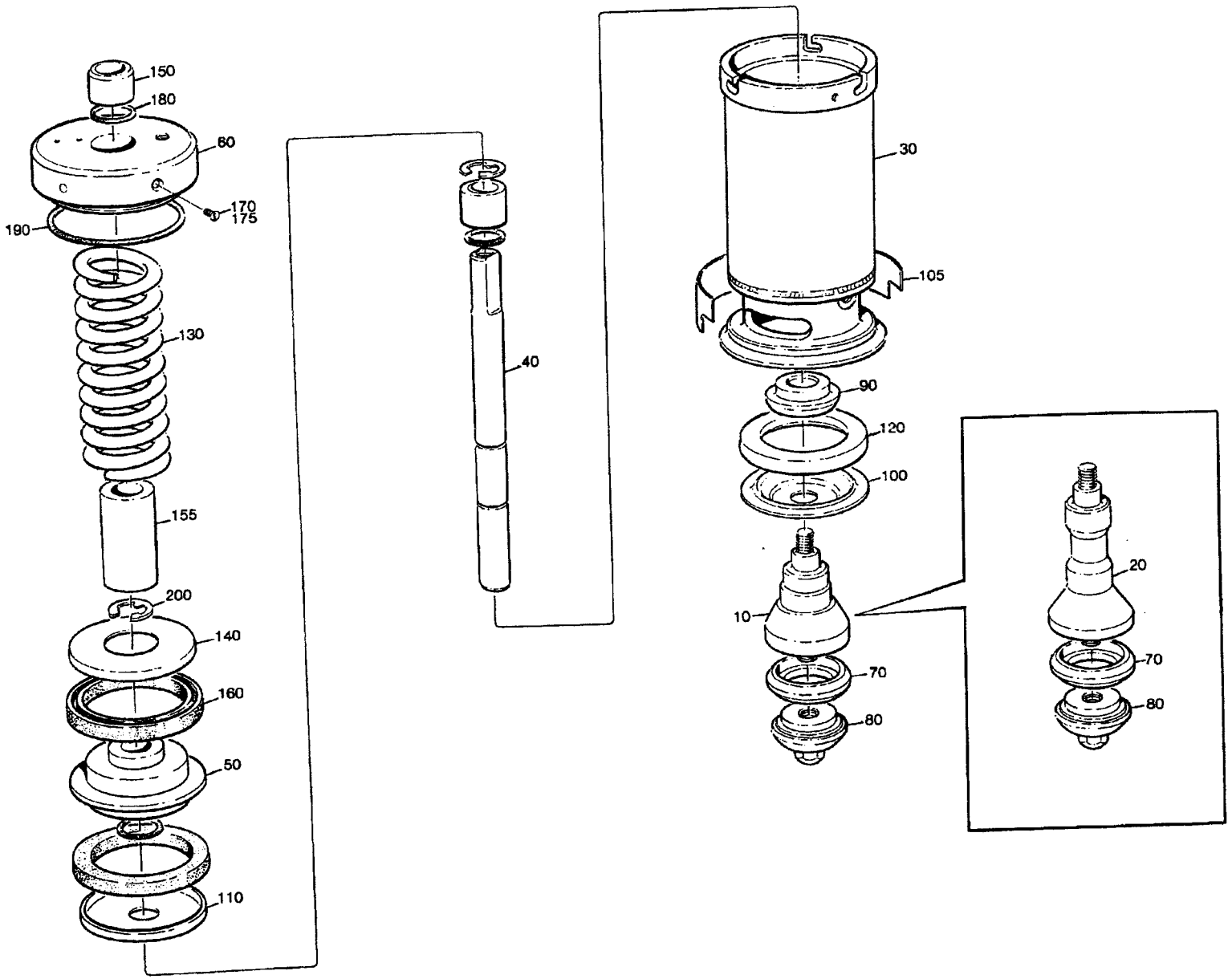

53920901.TIF
539209-1
AM

Last Alteration: AM 15504 90-10-31

Corresponding group: 539209-010V
Assembly Drawing: 539209-1

Issue: **930607**

From	Pos	Part No	SP	UN Qty	Description
	F000	**C- 539209-0101**			**A- Cylinder 2", Ass'y**
	F000	**C- 539209-0102**			**A- Cylinder 3", Ass'y**
	010	530592	-	1	SEAL RING HOLDER 2"
	020	530595	-	1	SEAL RING HOLDER 3"
	030	440632	-	1	CYLINDER HOUSING
	040	440637	-	1	PISTON ROD
	050	440638	-	1	PISTON
	060	484998	-	1	END SECTION
	070	530589	PU	1	SEAL RING
	080	530590	-	1	VALVE CONE
	090	541166	-	1	WASHER
	100	533169	PU	1	DIAPHRAGM
	105	476203	-	1	PROTECTION
	110	440651	-	1	WASHER
	120	440655	-	1	RING
	130	440663	-	1	COMPRESSION SPRING
	140	484975	-	1	WASHER
	150	497933	-	2	BUSHING
	155	541167	-	1	SPACER SLEEVE
	160	90020-0028	P	2	SLEEVE
	170	312125-0323	-	1	SLOTTED HEMCS5X8RFR
	175	315233-0101	-	1	SEAL RING M5
	180	315202-0308	P	1	O-RING 84,5X3
	190	315204-0215	P	3	O-RING 19,2X3VITON
	200	315754-0113	P	2	LOCKING WAE 15

From	Pos	Part No	SP	UN Qty	Description

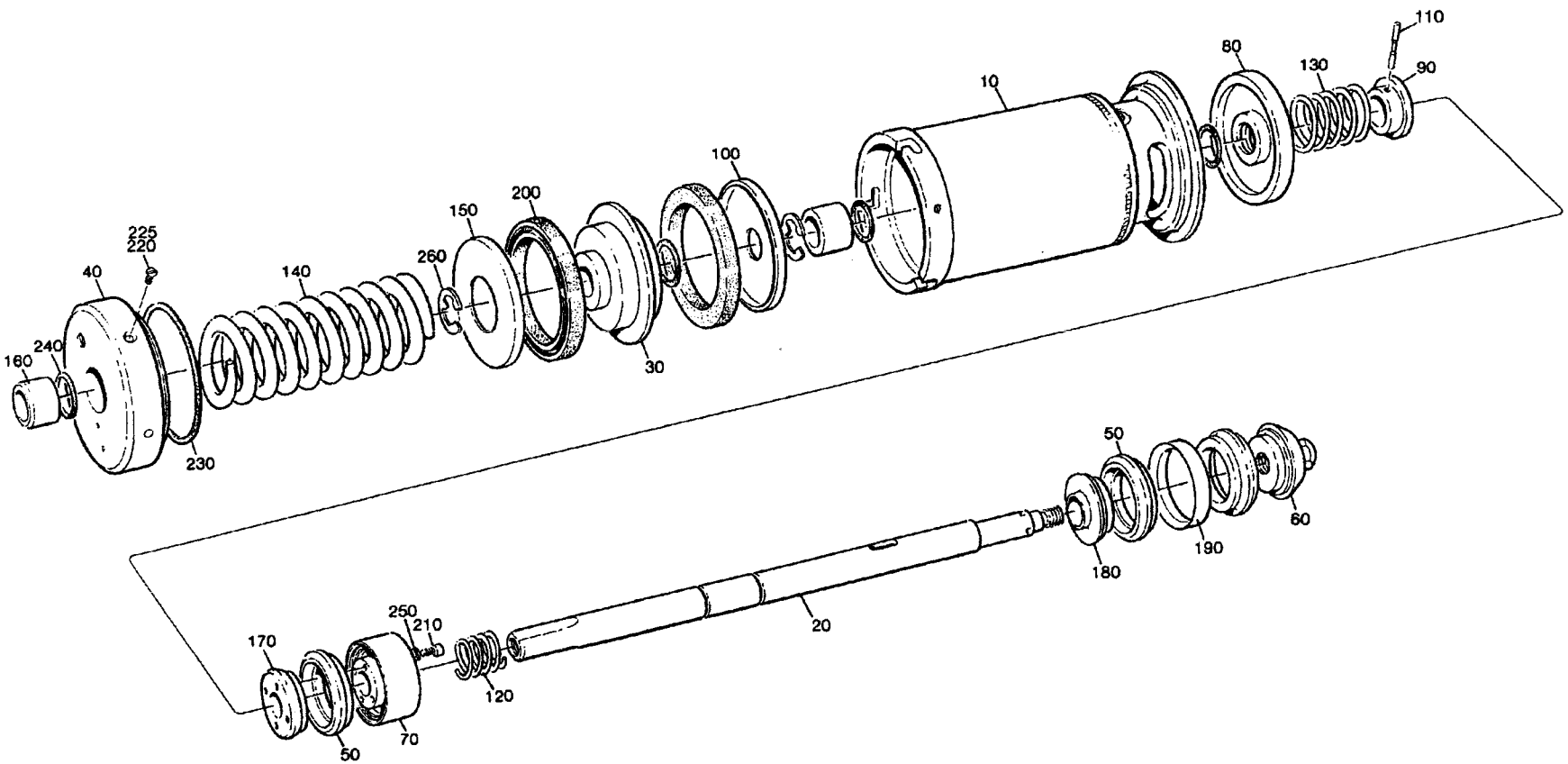

53921001.TIF
539210-1
AM

From	Pos	Part No	SP	UN	Qty	Description
		C- 539210-0101				**C-CYLINDER, ASS'Y**
	010	440632	-		1	CYLINDER HOUSING
	020	440635	-		1	PISTON ROD
	030	440638	-		1	PISTON
	040	484998	-		1	END SECTION
	050	530589	PU		3	SEAL RING
	060	530590	-		1	VALVE CONE
	070	530591	-		1	HOLDER
	080	440648	-		1	SEALING WASHER
	090	440650	-		1	WASHER
	100	440651	-		1	WASHER
	110	440659	-		1	CYLINDRICAL PIN
	120	440660	-		1	COMPRESSION SPRING
	130	440661	-		1	COMPRESSION SPRING
	140	440663	-		1	COMPRESSION SPRING
	150	484975	-		1	WASHER
	160	497933	-		2	BUSHING
	170	530597	-		1	WASHER
	180	530598	-		1	WASHER
	190	530599	-		1	RING
	200	90020-0028	P		2	SLEEVE
	210	312115-0291	-		4	SCREW MC6S4X12 A4 80
	220	312125-0323	-		1	SLOTTED HEMCS5X8RFR
	225	315233-0101	-		1	SEAL RING M5
	230	315202-0308	P		1	O-RING 84,5X3
	240	315204-0215	P		4	O-RING 19,2X3VITON
	250	315402-0136	-		4	WASHER FBB4,1RFR
	260	315754-0113	P		2	LOCKING WAE 15

From	Pos	Part No	SP	UN	Qty	Description

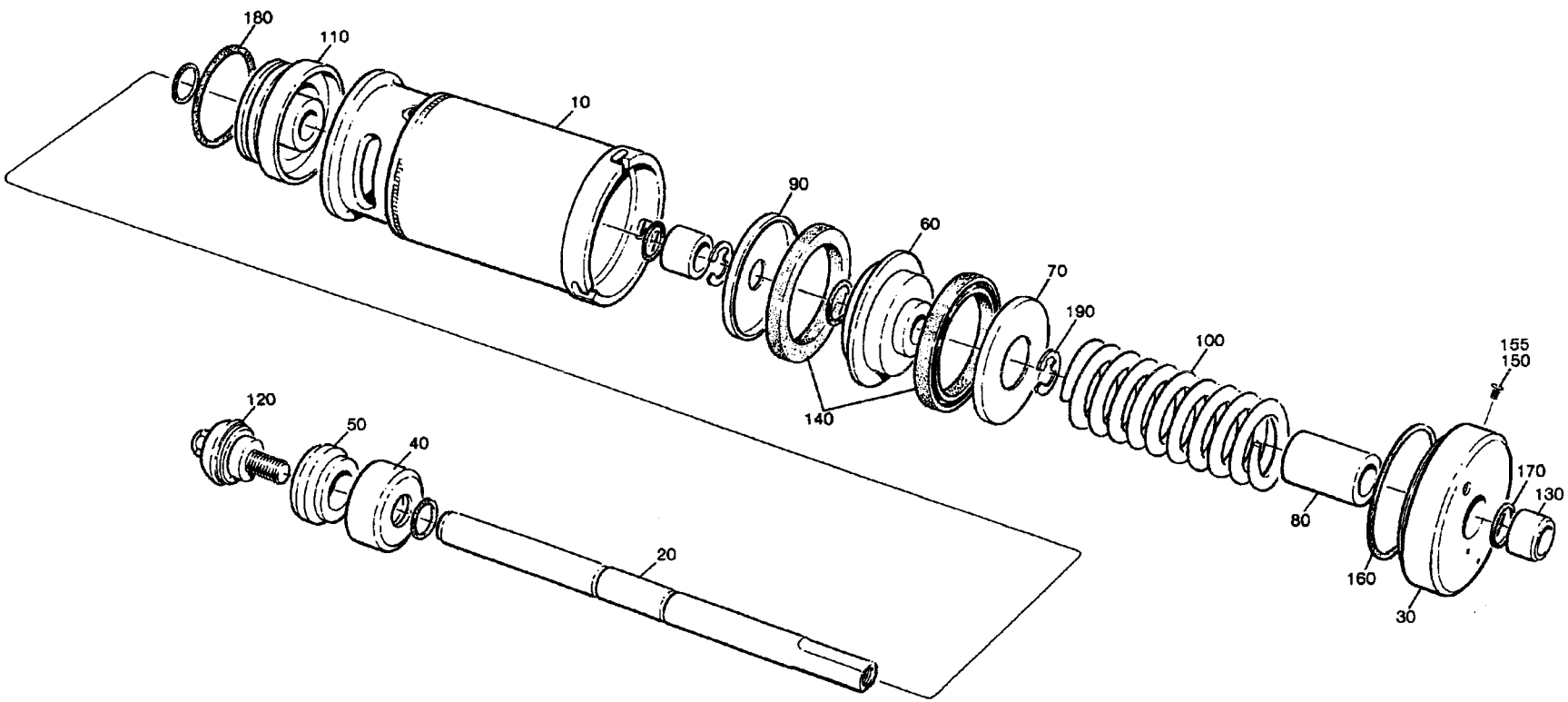

53921101.TIF
539211-1
AM

From	Pos	Part No	SP	UN	Qty	Description
		C- 539211-0101				**B-CYLINDER, ASS'Y**
	010	440633	-		1	CYLINDER HOUSING
	020	440636	-		1	PISTON ROD
	030	440695	-		1	END SECTION
	040	530587	-		1	WASHER
	050	530588	PU		1	SEAL RING
	060	440646	-		1	PISTON
	070	440652	-		1	WASHER
	080	440654	-		1	SPACER SLEEVE
	090	440656	-		1	WASHER
	100	440662	-		1	COMPRESSION SPRING
	110	440664	-		1	SEALING WASHER
	120	476185	-		1	VALVE CONE
	130	497933	-		2	BUSHING
	140	90020-0027	P		2	SLEEVE
	150	312125-0323	-		1	SLOTTED HEMCS5X8RFR
	155	315233-0101	-		1	SEAL RING M5
	160	315202-0304	P		1	O-RING 64,5X3
	170	315204-0215	PU		5	O-RING 19,2X3VITON
	180	315204-0301	PU		1	O-RING 49,5X3VITON
	190	315754-0113	P		2	LOCKING WAE 15

From	Pos	Part No	SP	UN	Qty	Description

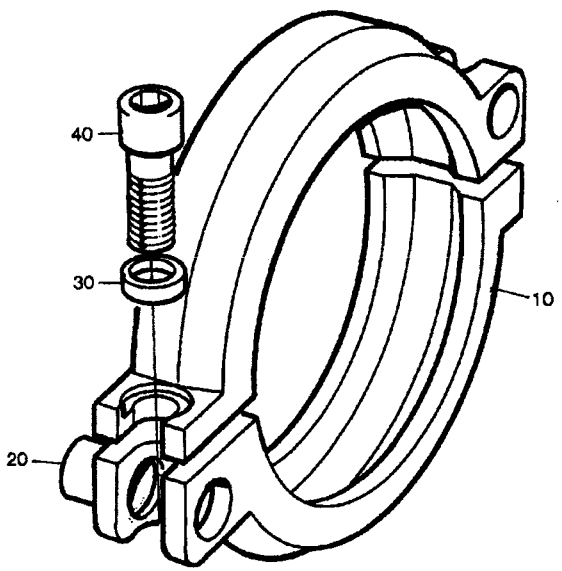

54116301.TIF
541163-1
AM

From	Pos	Part No	SP	UN	Qty	Description
	F000	**C- 541163-0101**				**Clamp Ring, Ass'y**
	010	G- 532117	-		2	CLAMP RING
	020	497748	-		2	PEG
	030	541165	-		2	WASHER
	040	312115-0459	-		2	SCREW 8X40 A4 80

From	Pos	Part No	SP	UN	Qty	Description

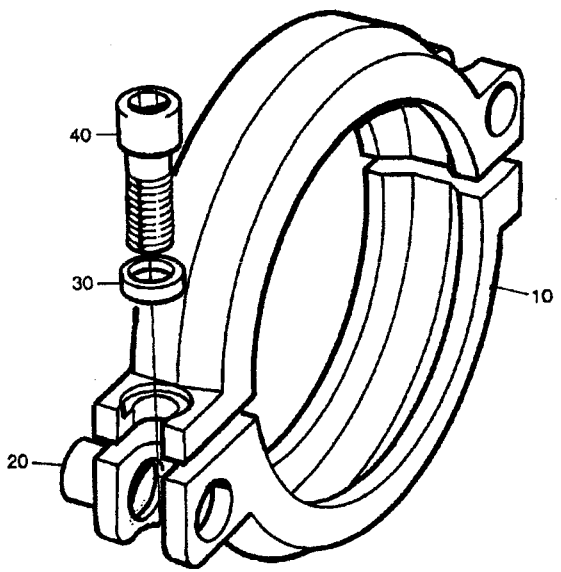

54116401.TIF
541164-1
AM

From	Pos	Part No	SP	UN	Qty	Description
		C- 541164-0101				**CLAMP RING, ASS'Y**
	010	G- 532118	-		2	CLAMP RING
	020	497748	-		2	PEG
	030	541165	-		2	WASHER
	040	312115-0459	-		2	SCREW 8X40 A4 80

From	Pos	Part No	SP	UN	Qty	Description

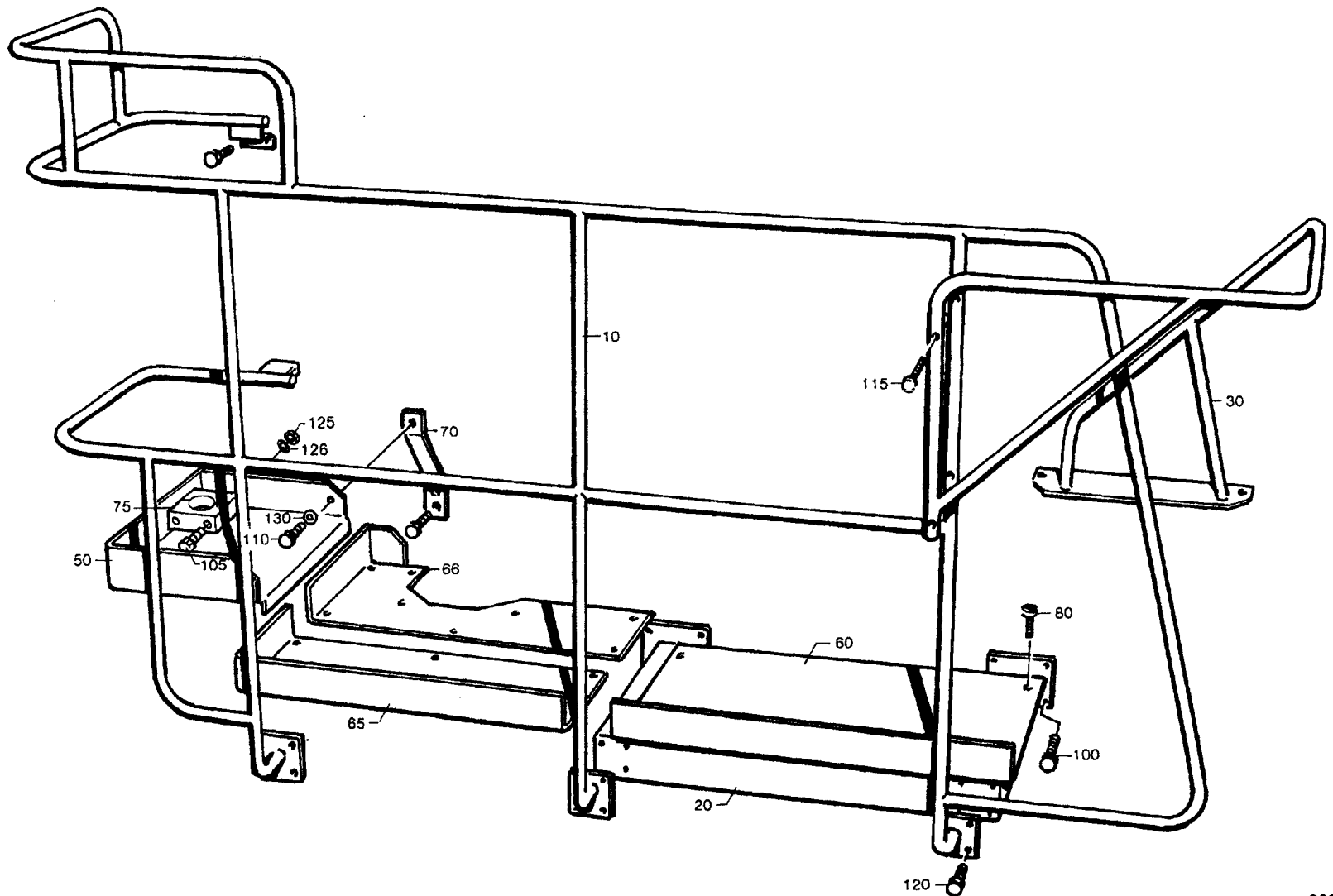

26997004.TIF
269970-4
AM

From	Pos	Part No	SP	UN	Qty	Description
		C- 269970-0501				**Platform, Ass'y**
	F490	**C- 269971-0201**	-		**1**	**LADDER**
	010	434270	-		1	RAILING
	020	542852	-		1	CANTILEVER
	030	282893	-		1	SAFETY GUARD
	050	476599	-		1	PLATFORM
	060	451389	-		1	PLATFORM
	065	451390	-		1	PLATFORM
	066	451391	-		1	PLATFORM
	070	434273	-		2	STRUT
	075	476600	-		2	PIPE HOLDER
	080	90287-0075	-		20	SCREW
	100	312101-0493	-		8	SCREW M6S10X25FZB
	105	312105-0384	-		2	SCREW M6S6X70RFR
	110	312105-0449	-		12	SCREW M6S8X16RFR
	115	312105-0453	-		2	SCREW M6S8X25RFR
	120	312105-0491	-		12	SCREW M6S10X20RFR
	125	312605-0316	-		2	NUT M6M6RFR
	126	315105-0156	-		4	WASHER BRB6,7X14RFR
	130	315105-0165	-		4	WASHER BRB8,4X16RFR

From	Pos	Part No	SP	UN	Qty	Description

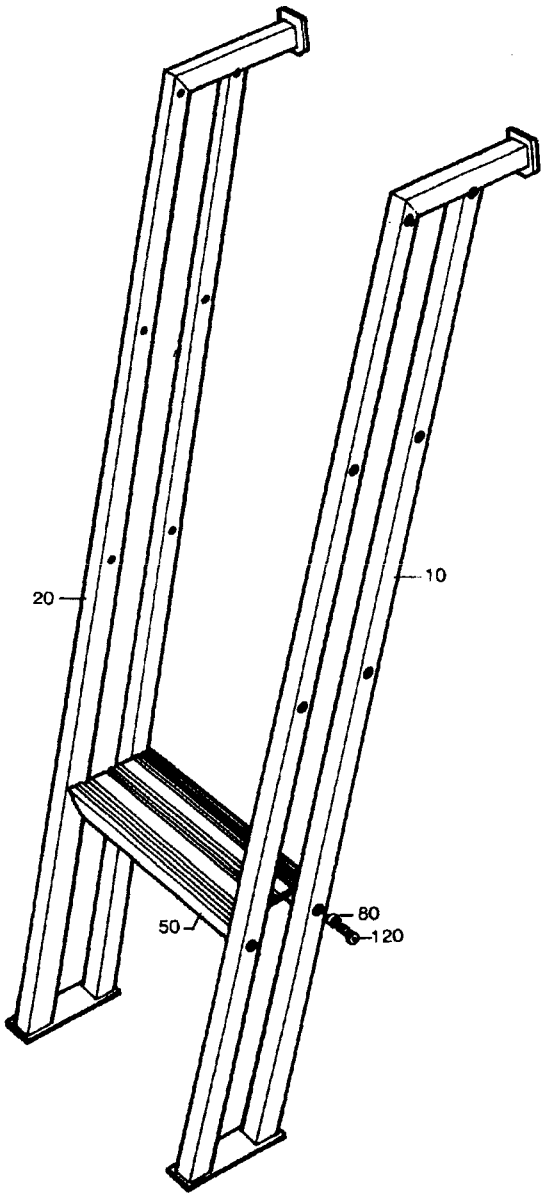

26997101.TIF
269971-1
AM

From	Pos	Part No	SP	UN	Qty	Description
		C- 269971-0201				**Ladder, Ass'y**
	010	247296-0001	-		1	SIDE PIECE
	020	247296-0002	-		1	SIDE PIECE
	050	208361-0002	-		5	STAIR
	080	208658-0001	-		20	SPACER
	120	90287-0056	-		20	SCREW

From	Pos	Part No	SP	UN	Qty	Description

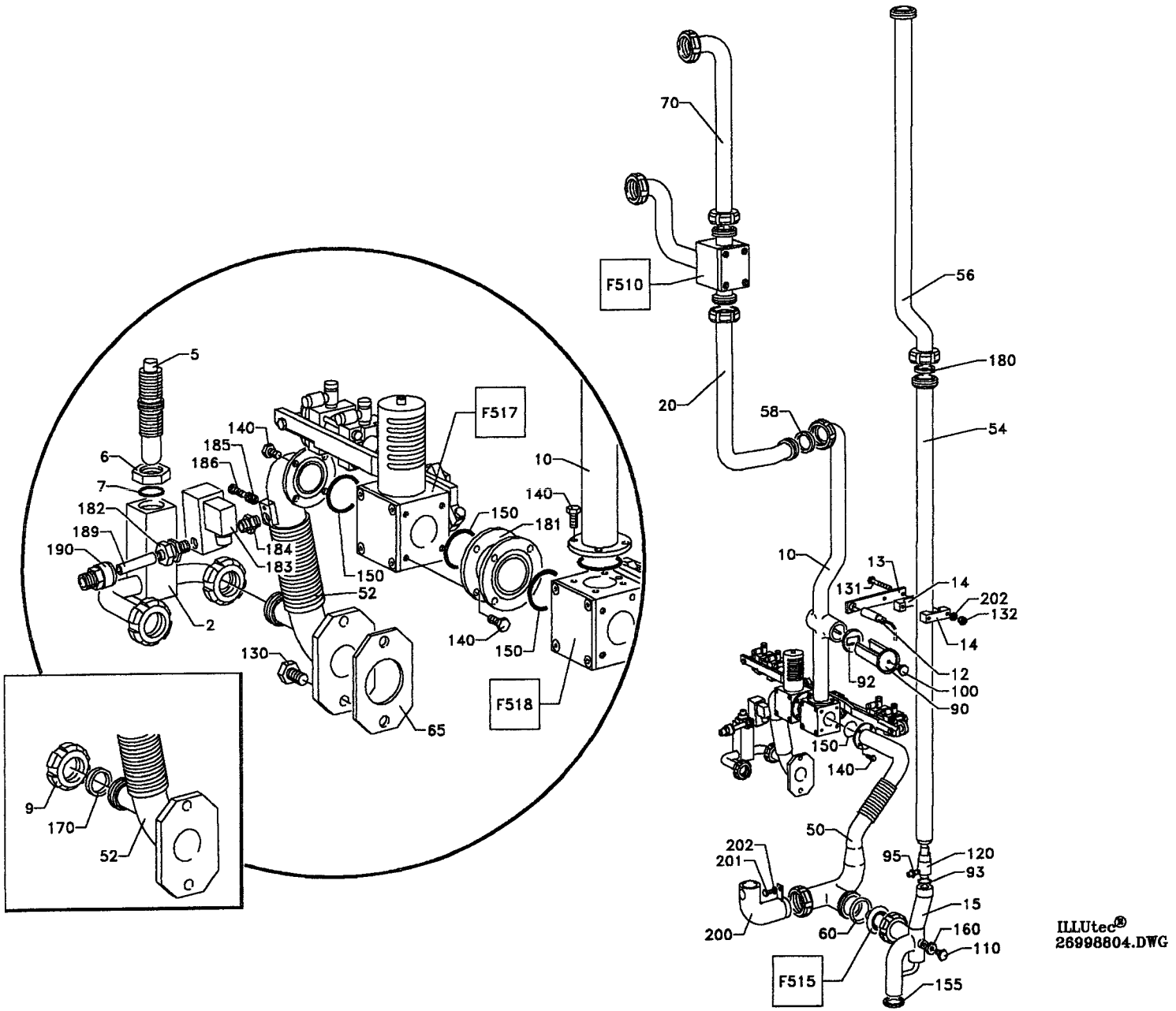

ILLUtec®
26998804.DWG

From	Pos	Part No	SP	UN	Qty	Description
50Hz						
		C- 269988-0501				**Ventilation System, Ass'y**
	009	90217-0026	-		1	NUT
60Hz						
		C- 269988-0502				**Ventilation System, Ass'y**
	002	479199	-		1	PIPE-LINE
	005	442236	C		1	THROTTLE SCREW
	006	442237	C		1	NUT
	007	315202-0119	P		1	O-RING 25,1X1,6
Common Parts						
	F510	**C- 273401-0301**	**-**		**1**	**CHANGE-OVER VALVE**
	F515	**C- 476849-0101**	**-**		**1**	**VALVE**
	F517	**C- 476859-0201**	**-**		**1**	**CHANGE-OVER VALVE**
	F518	**C- 476859-0202**	**-**		**1**	**CHANGE-OVER VALVE**
	010	544436	-		1	FILTER PIPE
	012	90044-0126	-		1	INDUCTIVE SWITCH
	013	566228	-		1	BRACKET
	014	476600	-		2	PIPE HOLDER
	015	476449	-		1	PIPE
	020	466471	-		1	PIPE
	050	544435	-		1	PIPE
	052	555556	-		1	PIPE
	054	499826	-		1	PIPE
	056	499827	-		1	PIPE
	058	12242-0003	PU		1	GASKET
	060	12242-0005	PU		1	GASKET
	065	230551	P		1	GASKET
	070	269522	-		1	PIPE
	090	273950	C		1	FILTER
	092	493653	P		1	GASKET
	093	499181	-		4	WASHER
	095	90030-0207	-		1	NIPPLE
	100	90051-0053	P		1	HANDLE
	110	90330-0026	-		1	PLUG
	120	90425-0009	C		1	EJECTOR
	130	312105-0491	-		2	SCREW M6S10X20RFR
	131	312105-0382	-		2	SCREW M6S6X60RFR
	132	312812-0316	-		2	LOCK NUT A4-M6RFR
	140	312105-0366	-		20	SCREW M6S6X12RFR
	150	315204-0222	P		5	O-RING 36,2X3VITON
	155	499825	-		1	GASKET
	160	315233-0110	-		1	SEAL RING R1/4"
	170	315250-0101	-		1	GASKET 32/25
	180	315250-0103	-		1	GASKET 48/38
	181	544439	-		1	INTERMEDIATE PIPE
	182	90012-0063	-		1	GLAND
	183	90042-0187	-		1	SOLENOID VALVE
	184	90330-0032	-		1	NIPPLE
	185	90335-0034	-		1	SPRING
	186	312125-0329	-		1	SLOTTED HEMCS5X16RFR
	189	351150-0403	-	M	2	CABLE OILFLEX 3G0,75
	190	352136-0113	-		1	GLAND FITT
	200	544506	-		1	PIPE
	201	312105-0362	-		1	SCREW M6S6X8RFR
	202	315105-0153	-		5	WASHER BRB6,4X12RFR

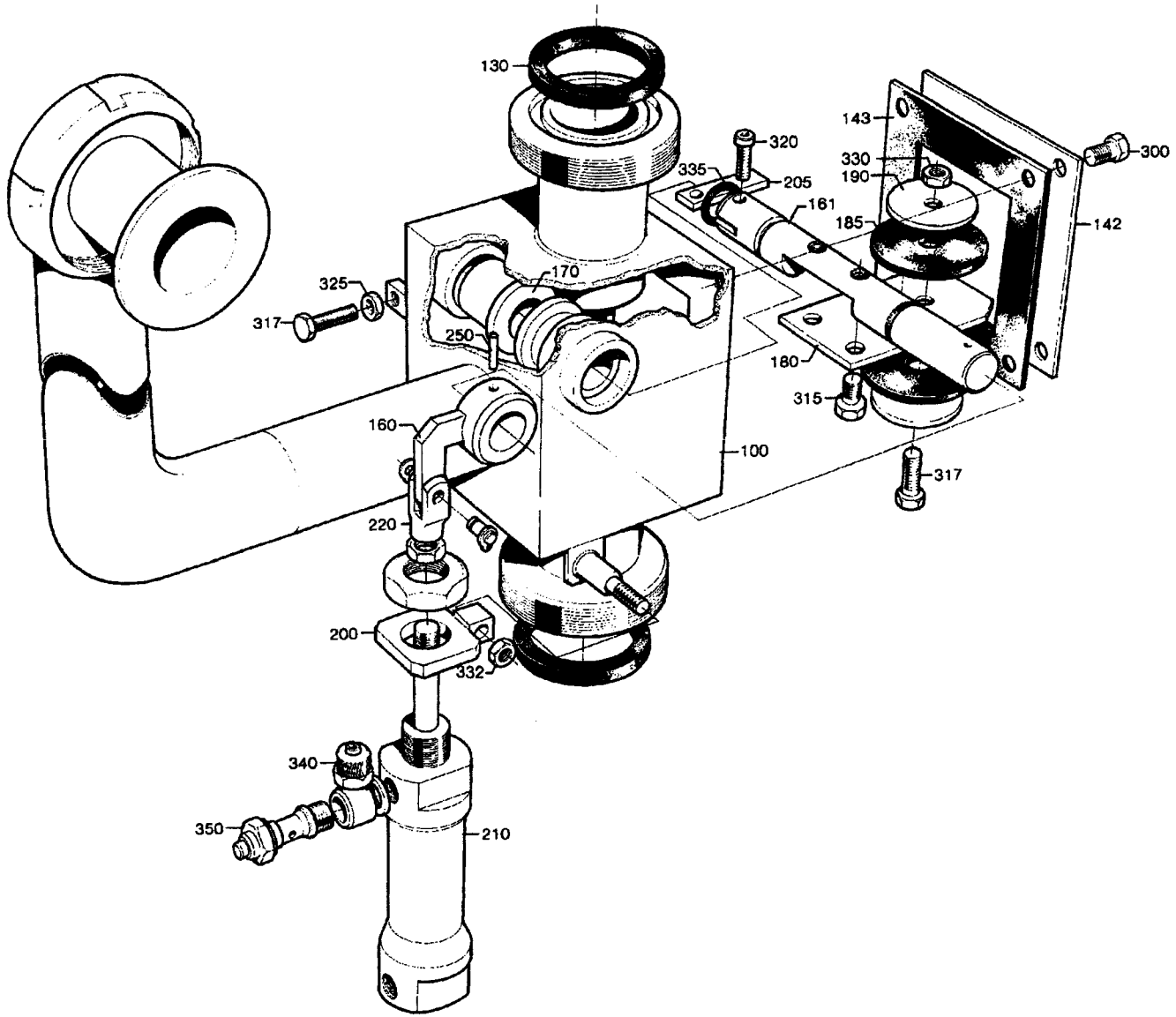

27340103.TIF
273401-3
AM

From	Pos	Part No	SP	UN	Qty	Description
		C- 273401-0301				**Change-over Valve, Ass'y**
	100	531034	C		1	VALVE HOUSING
	130	12242-0003	P		2	GASKET
	142	251454	-		1	LID
	143	251455	P		1	SEAL
	160	531035	-		1	ARM
	161	531036	-		1	SHAFT
	170	266182	P		2	BUSHING
	180	531037	-		1	FLAP
	185	531038	P		2	GASKET
	190	531039	S		2	WASHER
	200	531040	-		1	BRACKET
	205	531041	-		1	WEDGE
	210	90239-0822	P		1	CYLINDER
	220	90239-0490	S		1	BRACKET
	250	311103-0236	-		1	CYLINDRICACP M6 3X16 RFR
	300	312105-0325	-		4	SCREW M6S5X10 A4 80
	315	312105-0364	-		2	SCREW M6S6X10RFR
	317	312105-0370	-		2	SCREW M6S6X20RFR
	320	312115-0329	-		1	SCREW 5X16 A4 80
	325	312605-0316	-		1	NUT M6M6RFR
	330	312811-0316	-		1	LOCK NUT M6RFR
	332	312812-0316	-		1	LOCK NUT A4-M6RFR
	335	315204-0111	-		2	O-RING 1X1,6 VITON
	340	342980-0113	-		2	BANJO CONNSINGEL 6/4-1/8
	350	90235-0274	-		2	VALVE

From	Pos	Part No	SP	UN	Qty	Description

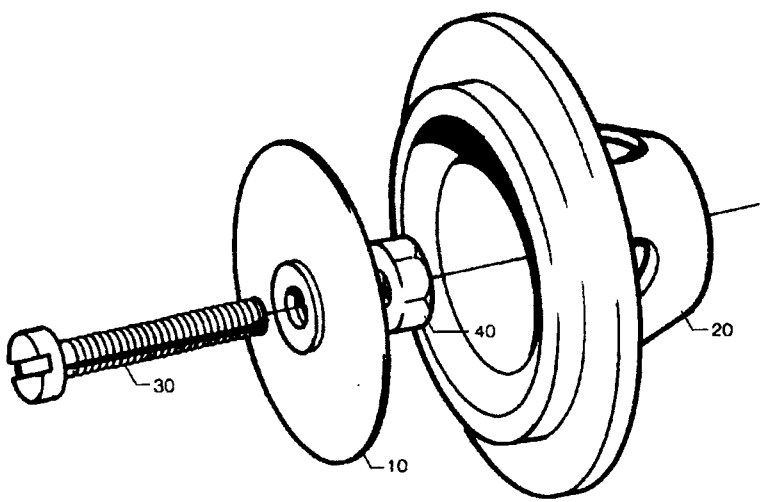

47684901.TIF
476849-1
AM

Last Alteration: AM 7023 85-03-28

Corresponding group: 476849-010V
Assembly Drawing: 476849-1

Issue: **930607**

From	Pos	Part No	SP	UN	Qty	Description
		C- 476849-0101				**Valve, Ass'y**
	010	273944	P		1	DIAPHRAGM
	020	273951	-		1	VALVE HOUSING
	025	90157-0016	-	ML	1	LOCKING FLUID
	030	312125-0378	-		1	SLOTTED HEMCS6X40RFR
	040	312605-0316	-		1	NUT M6M6RFR

From	Pos	Part No	SP	UN	Qty	Description

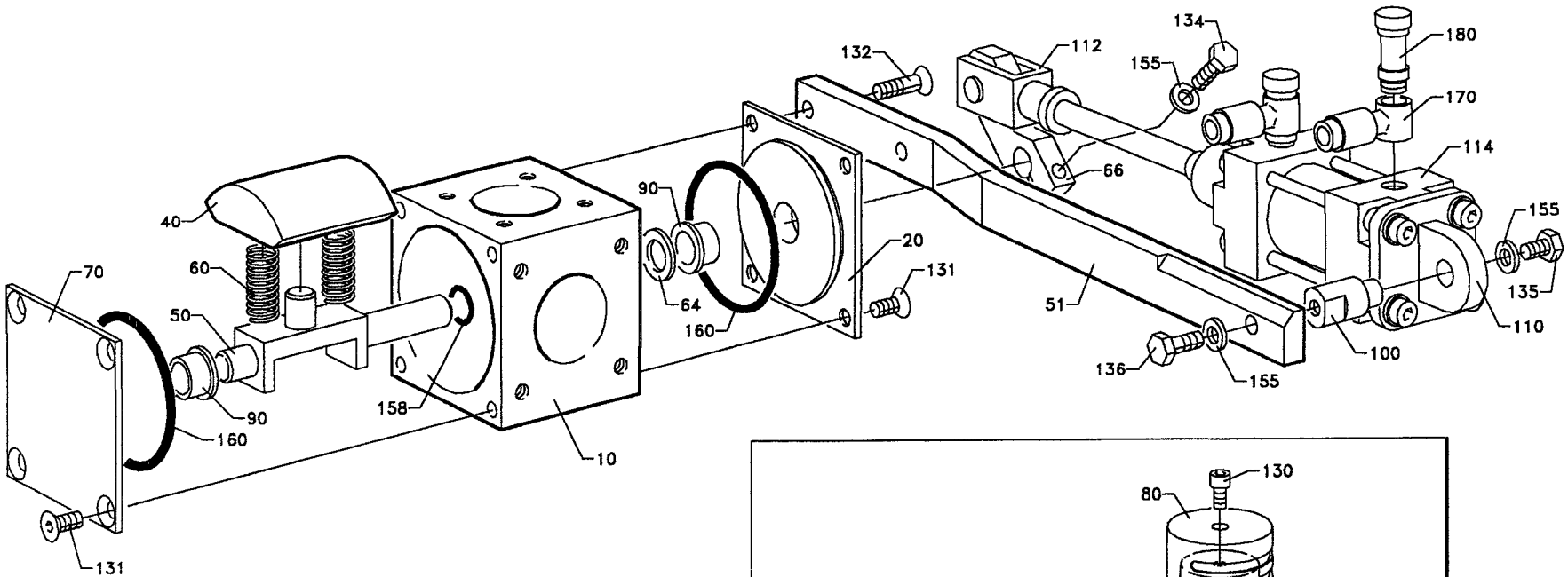

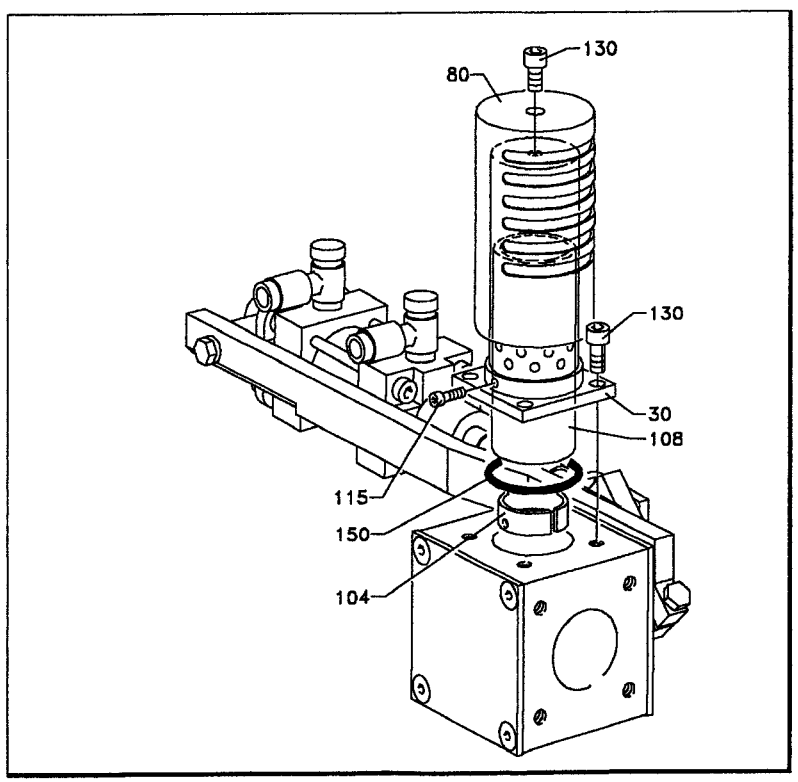

ILLUtec®
47685903.dwg
AM 17647

Last Alteration: AM 17647 92-05-25

Corresponding group: 476859-020V
Assembly Drawing: 476859-3/4/5

Issue: **930607**

From	Pos	Part No	SP	UN	Qty	Description
		C- 476859-0201				**Change-Over Valve, Ass'y**
	030	466477	-		1	INNER PIPE
	080	466478	-		1	OUTER PIPE
	104	466483	-		1	CLAMPING PIECE
	108	466484	-		1	NET
	115	312115-0224	-		2	SCREW S 3X10 A4 80
	130	312115-0364	-		5	SCREW 6X10 A4 80
	150	315204-0222	-		1	O-RING 36,2X3VITON
		C- 476859-0203				**Change-Over Valve, Ass'y**
	030	466477	-		1	INNER PIPE
	080	466478	-		1	OUTER PIPE
	104	466483	-		1	CLAMPING PIECE
	108	466484	-		1	NET
	115	312115-0224	-		2	SCREW S 3X10 A4 80
	130	312115-0364	-		5	SCREW 6X10 A4 80
	150	315204-0222	-		1	O-RING 36,2X3VITON
Common Parts						
	010	466474	-		1	VALVE HOUSING
	020	255874	-		1	BEARING COVER
	040	466479	S		1	PIECE
	050	555541	-		1	BRACKET
	051	555542	-		1	BRACKET
	060	21521	S		2	COMPRESSION SPRING
	064	266737	-		1	WASHER
	066	441483	-		1	CYLINDER BRACKET
	070	255874	-		1	BEARING COVER
	090	255875	S		2	BUSHING
	100	555540	-		1	SPACER
	110	90239-0453	-		1	BRACKET
	112	90239-0516	-		1	PISTON ROD HEAD
	114	90239-0779	-		1	CYLINDER
		90239-0442	S		1	* SEAL KIT
	131	312155-0364	-		6	SCREW MF6S6X10RFR
	132	312155-0370	-		2	SCREW MF6S6X20RFR
	134	312105-0370	-		1	SCREW M6S6X20RFR
	135	312105-0364	-		2	SCREW M6S6X10RFR
	136	312105-0368	-		1	SCREW M6S6X16RFR
	155	315105-0153	-		3	WASHER BRB6,4X12RFR
	158	315204-0110	-		1	O-RING 1X1,6 VITON
	160	315204-0302	S		2	O-RING 54,5X3VITON
	170	342797-0121	-		2	BANJO CONNSINGEL 6-1/8
	180	342980-0303	-		2	BANJO CONN SINGEL 1/8"

From	Pos	Part No	SP	UN	Qty	Description

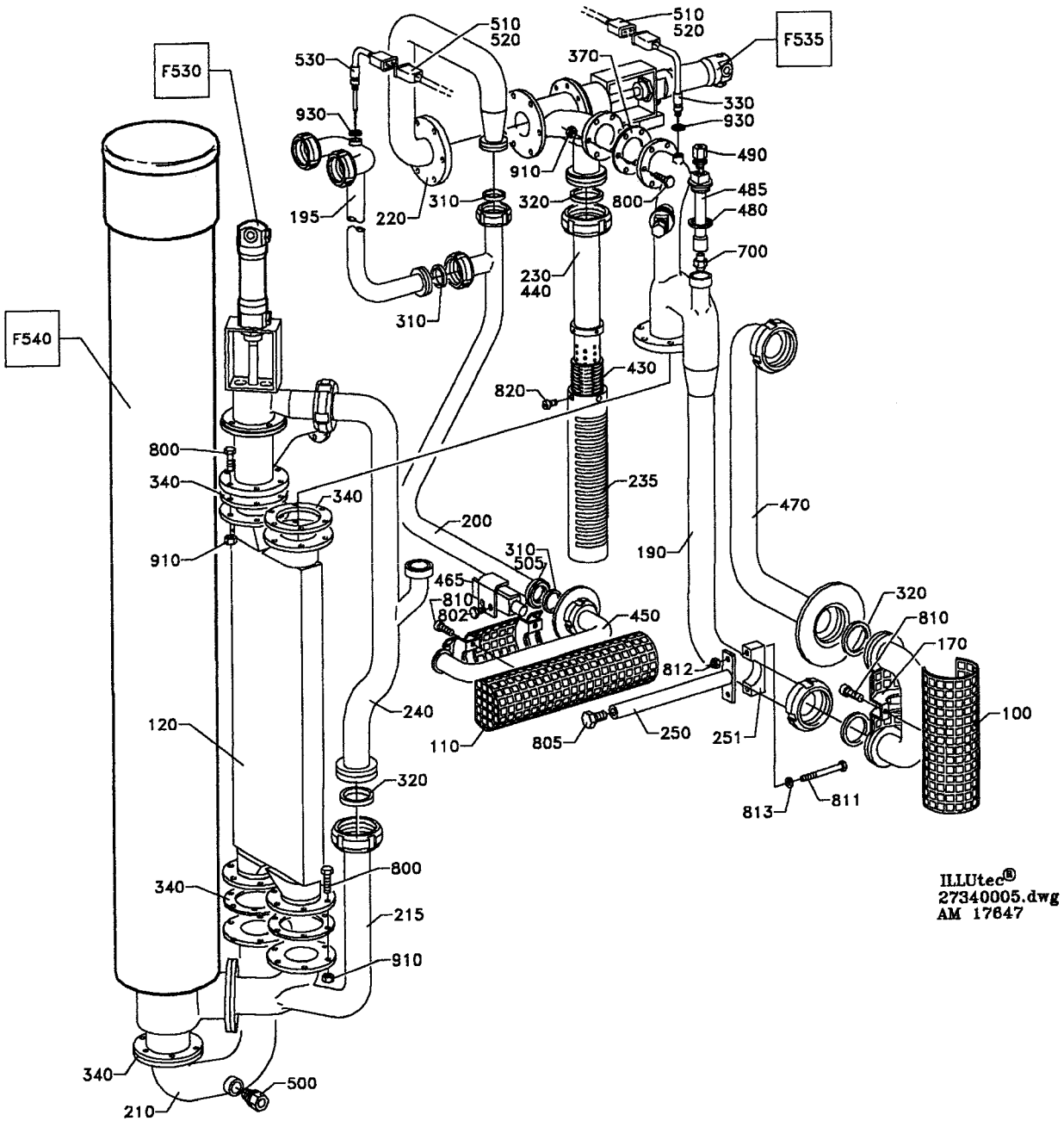
F530
F535
F540
510
520
530
370
330
930
490
910
485
480
700
195
220
310
320
800
230
440
430
820
235
200
190
470
340
465
810
802
450
320
170
812
240
120
110
805
250
251
100
813
811
215
500
210
ILLUtec®
27340005.dwg
AM 17647

From	Pos	Part No	SP	UN	Qty	Description
		C- 273400-0601				**Sterile Air System, Ass'y**
	F530	**C- 269989-0201**	**-**		**1**	**VALVE**
	F535	**C- 269989-0202**	**-**		**1**	**VALVE**
	F540	**C- 273402-0401**	**-**		**1**	**AIR SUPER-HEATER**
	100	273514	C		1	TOUCH GUARD
	110	273547-0002	C		1	TOUCH GUARD
	120	522090	C		1	HEAT EXCHANGER
	170	273515	C		1	TOUCH GUARD
	180	273548-0002	C		1	TOUCH GUARD
	190	434274	C		1	PIPE
	195	534426	C		1	PIPE
	200	449818	-		1	PIPE
	210	269405	C		1	PIPE
	215	276166	C		1	PIPE
	220	276167	C		1	PIPE
	230	276304	C		1	PIPE
	235	276305	C		1	PIPE
	240	544437	C		1	BRANCH PIPE
	250	566229	-		1	BRACKET
	251	476600	-		2	PIPE HOLDER
	310	12242-0001	P		3	GASKET
	320	12242-0003	P		5	GASKET
	330	90326-0052	P		1	THERMO ELEMENT
	340	531737	P		5	GASKET
	370	531742	P		1	GASKET
	430	278954	S		1	NET
	440	278955	S		1	NET
	450	449817	C		1	U-TUBE
	460	561583	-		1	U-TUBE
	465	449960	-		1	BRACKET
	470	449963	C		1	U-TUBE
	480	450022	P		2	WASHER
	485	450023	C		2	BRACKET
	490	90030-0051	S		2	PIPE CONNECTION
	500	90030-0187	S		1	PIPE CONNECTION
	505	90044-0126	-		1	INDUCTIVE SWITCH
	510	90326-0012	P		2	PROTECTIVE COVER
	520	90326-0020	P		2	SOCKET
	530	90326-0053	-		1	THERMO ELEMENT
	700	90424-0031	S		2	NOZZLE
	800	312105-0370	-		30	SCREW M6S6X20RFR
	802	312105-0447	-		2	SCREW M6S8X12RFR
	805	312105-0489	-		1	SCREW M6S10X16RFR
	810	312115-0331	-		6	SCREW 5X20 A4 80
	811	312105-0382	-		2	SCREW M6S6X60RFR
	812	312812-0316	-		2	LOCK NUT A4-M6RFR
	813	315105-0153	-		4	WASHER BRB6,4X12RFR
	820	312125-0285	-		4	SLOTTED HEMCS4X6RFR
	910	312605-0316	-		30	NUT M6M6RFR
	930	315234-0110	-		1	SEAL RING R1/4"

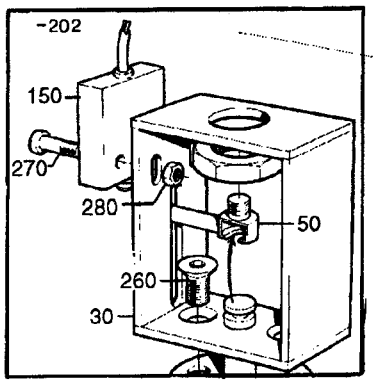

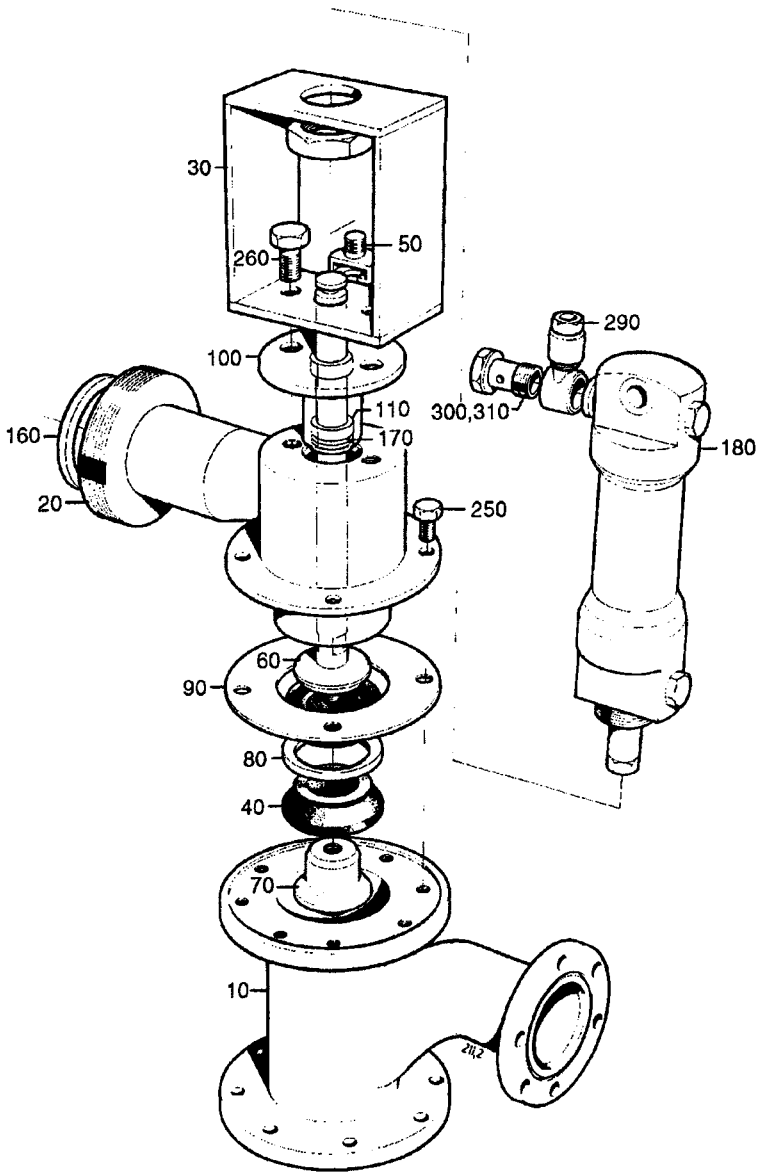

26998902.TIF
269989-2
AM 19294

From	Pos	Part No	SP	UN	Qty	Description
Without Micro Switch						
		C- 269989-0201				**Valve, Ass'y**
	030	266394	-		1	BRACKET
	050	37638	C		1	PENDULUM SUSPENSION
	260	312105-0449	-		2	SCREW M6S8X16RFR
	290	342797-0122	-		4	BANJO CONNSINGEL 6-1/4
	310	342980-0314	-		2	BANJO CONN DUBBEL 1/4
With Micro Switch						
		C- 269989-0202				**Valve, Ass'y**
	030	449414	-		1	BRACKET
	050	449415	C		1	PENDULUM SUSPENSION
	150	90044-0084	P		1	MICRO SWITCH
	260	312155-0449	-		2	SCREW MF6S8X16RFR
	270	312115-0331	-		2	SCREW 5X20 A4 80
	280	312605-0314	-		2	NUT M6M5RFR
	290	342797-0122	-		2	BANJO CONNSINGEL 6-1/4
	300	342980-0304	-		2	BANJO CONN SINGEL 1/4
Common parts						
	010	276164	C		1	VALVE HOUSING
	020	276165	C		1	HOUSE
	040	530588	P		2	SEAL RING
	060	266389	C		1	PISTON ROD
	070	266390	C		1	NUT
	080	266391	C		1	RING
	090	531765	P		1	GASKET
	100	532348	S		1	SPINDLE GUIDE
	110	532349	S		2	PLAIN BEARING
	160	90091-0182	P		1	GASKET
	170	90141-0022	S		1	RING
	180	90239-0166	P		1	CYLINDER
		90285-0094	S		0	* SEAL
	250	312105-0366	-		6	SCREW M6S6X12RFR

From	Pos	Part No	SP	UN	Qty	Description

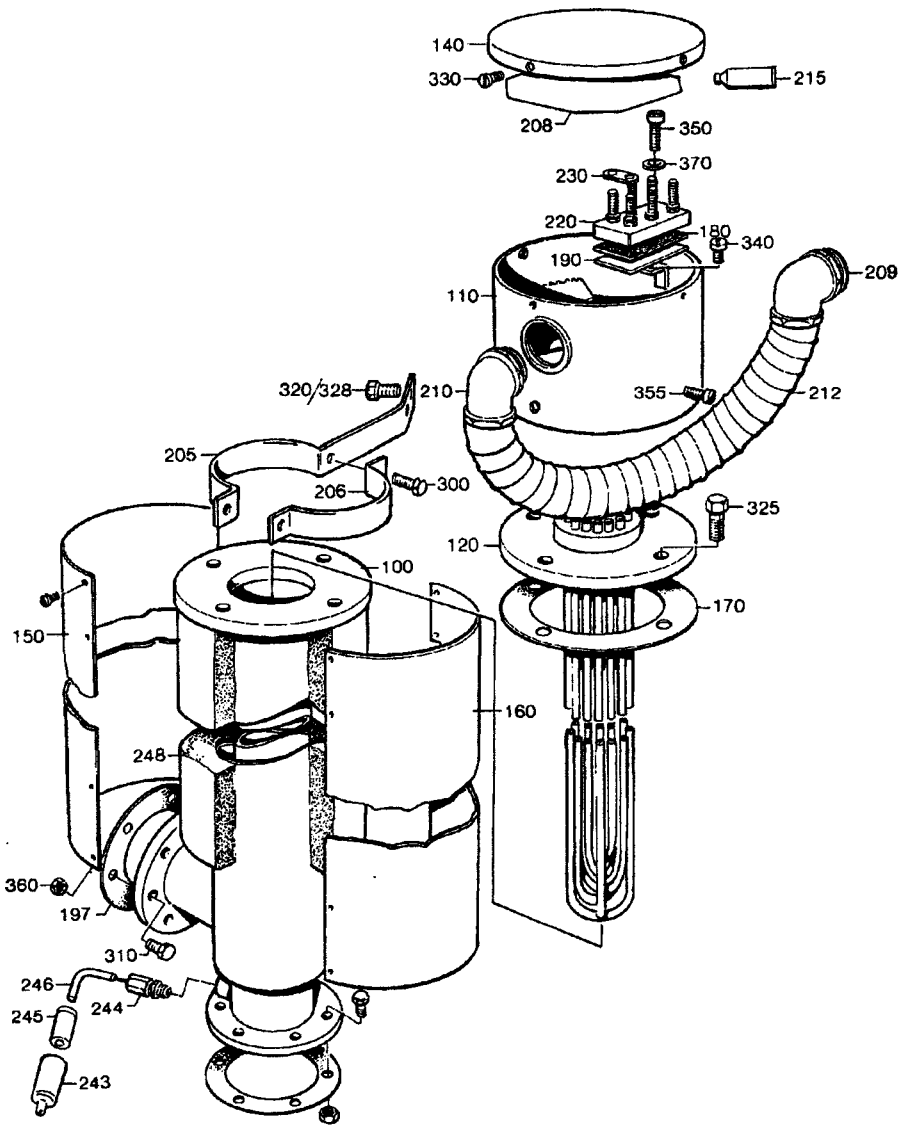

27340203.TIF
273402-2
AM

From	Pos	Part No	SP	UN	Qty	Description
		C- 273402-0401				**Air Super-heater, Ass'y**
	100	434469	C		1	HEATING PIPE
	110	451430	C		1	CONNECTION HOUS.(MINOR)
	120	449939-0001	C		1	HEATING ELEMENT 15KW
		449938-0001	S		2	* HEATING PIPE
		449938-0002	S		2	* HEATING PIPE
		449938-0003	S		2	* HEATING PIPE
	140	29876	-		1	LID
	150	269577	-		1	DISCHARGE TRAY
	160	269578	-		1	DISCHARGE TRAY
	170	531731	P		1	GASKET
	180	751009	P		2	INSULATION
	190	30298	P		2	INSULATION
	197	531737	P		2	GASKET
	205	269575	-		2	HOLDER
	206	269576	-		2	CAP
	208	545995	-		1	WIRING DIAGRAM
	209	90012-0061	S		1	GLAND
	210	90012-0062	S		1	GLAND
	212	90152-0031	C	MM	500	HOSE
	215	90153-0020	P	ML	X	ADHESIVE
	220	90195-0028	P		2	TERMINAL BLOCK
	230	90195-0029	P		4	COUPLING STRIP
	243	90326-0012	P		1	PROTECTIVE COVER
	244	90326-0017	P		1	GLAND
	245	90326-0020	P		1	SOCKET
	246	90326-0043	P		1	THERMOELEMENT
	248	90411-0005	S	MM	1232	INSULATOR
	300	312105-0366	-		4	SCREW M6S6X12RFR
	310	312105-0368	-		12	SCREW M6S6X16RFR
	320	312105-0447	-		2	SCREW M6S8X12RFR
	325	312105-0452	-		4	SCREW M6S8X22RFR
	328	312105-0457	-		2	SCREW M6S8X35RFR
	330	312105-0287	-		4	SCREW M6S4X8 A4 80
	340	312125-0323	-		17	SLOTTED HEMCS5X8RFR
	350	312125-0331	-		4	SLOTTED HEMCS5X20RFR
	355	312125-0364	-		4	SLOTTED HEMCS6X10RFR
	360	312605-0316	-		12	NUT M6M6RFR
	370	315105-0146	-		4	WASHER BRB5,3X10RFR

From	Pos	Part No	SP	UN	Qty	Description

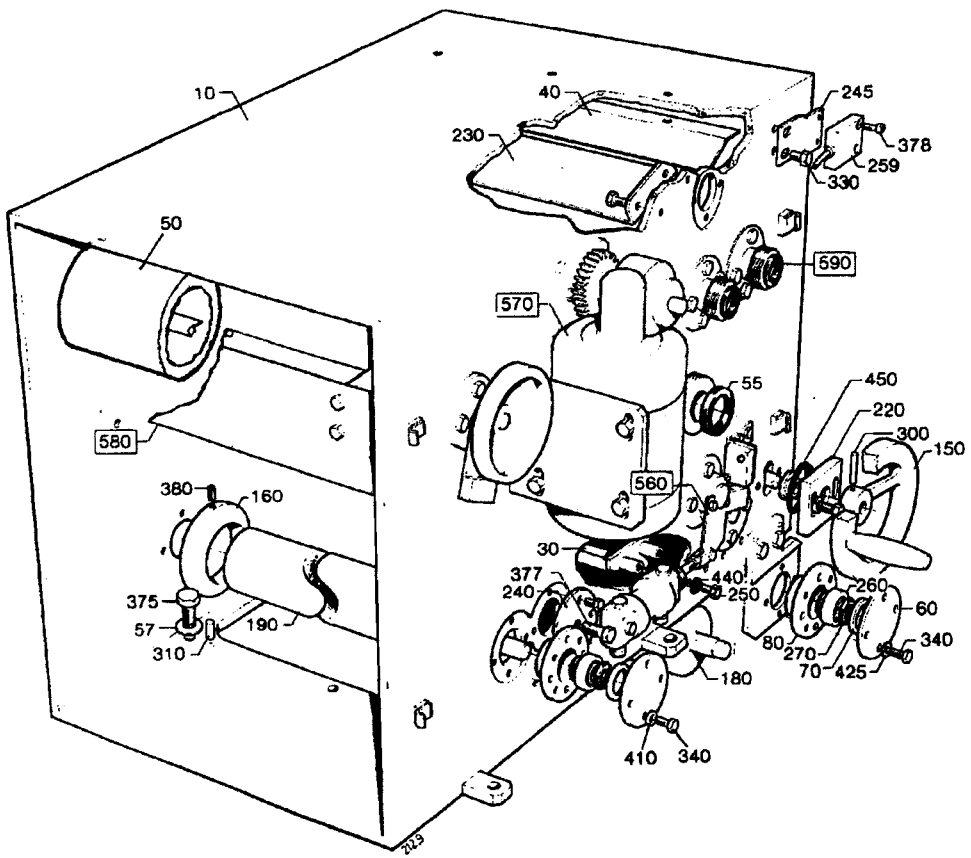

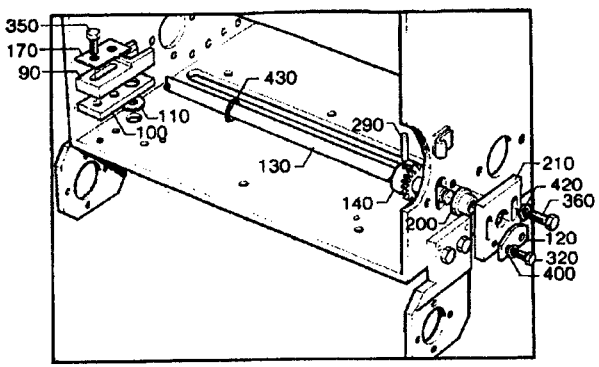

27637305.TIF
276373-5
AM

From	Pos	Part No	SP	UN Qty	Description
		C- 276373-0601			**Drier, Ass'y**
	F560	**C- 263391-0401**	**-**	**1**	**CALENDER ROLLER**
	F570	**C- 263394-020V**	**-**	**1**	**BENDING ROLLER**
	F590	**C- 276345-030V**	**-**	**1**	**AIR KNIFE**
	010	436572	-	1	HOUSE
	030	247422	-	2	DRIP PLATE
	040	251544	-	1	SHEET
	050	543950	-	1	BENDING ROLLER
	055	12242-0003	-	1	GASKET
	057	497719	-	6	WASHER
	060	247171	-	8	BEARING COVER
	070	247172	S	8	SPACER RING
	080	247173	C	8	BEARING SEAT
	090	247349	P	2	STEERING
	100	491602	-	2	GASKET HOLDER
	110	491128	P	2	GASKET
	120	247355	-	1	LOCK WASHER
	130	531190	S	1	SHAFT
	140	247357	C	2	SPROCKET
	150	247358	C	1	SHIFTER HANDLE
	160	250588	-	2	FLANGE
	170	267033	S	2	WASHER
	180	279006	C	1	BENDING ROLLER
	190	279007	C	2	BENDING ROLLER
	200	531191	P	2	BUSHING
	210	279009	-	1	BEARING PLATE
	220	279010	-	1	BEARING PLATE
	230	279011	-	1	COVERING PLATE
	240	283475	-	2	COVER DISC
	245	436597	-	2	CANTILEVER
	250	531192	-	8	SCREW
	259	90044-0084	-	2	MICRO SWITCH
	260	90214-0098	P	8	BALL BEARING
	270	90214-0303	P	16	RING
	290	311103-0275	-	2	CYLINDRICACP M6 4X28 RFR
	300	311103-0278	-	1	CYLINDRICACP M6 4X35 RFR
	310	311103-0310	-	2	CYLINDRICACP M6 5X20 RFR
	320	312105-0325	-	2	SCREW M6S5X10 A4 80
	330	312105-0364	-	19	SCREW M6S6X10RFR
	340	312105-0368	-	32	SCREW M6S6X16RFR
	350	312105-0372	-	4	SCREW M6S6X25RFR
	360	312105-0451	-	4	SCREW M6S8X20RFR
	375	312105-0493	-	6	SCREW M6S10X25RFR
	377	312105-0495	-	2	SCREW M6S10X30RFR
	378	312115-0329	-	4	SCREW 5X16 A4 80
	380	312318-0327	-	4	STOP SCREW SK6SS5X12RFR
	400	315105-0146	-	2	WASHER BRB5,3X10RFR
	410	315105-0153	-	24	WASHER BRB6,4X12RFR
	420	315105-0165	-	6	WASHER BRB8,4X16RFR
	425	315115-0153	-	8	WASHER TBRB6,4X12RFR
	430	315204-0109	-	2	O-RING 11,1X1,6VITON
	440	315204-0208	-	8	O-RING 9,3X2,4VITON
	450	315204-0221	-	2	O-RING 34,2X3VITON
	460	315204-0310	-	2	O-RING 5X3 VITON

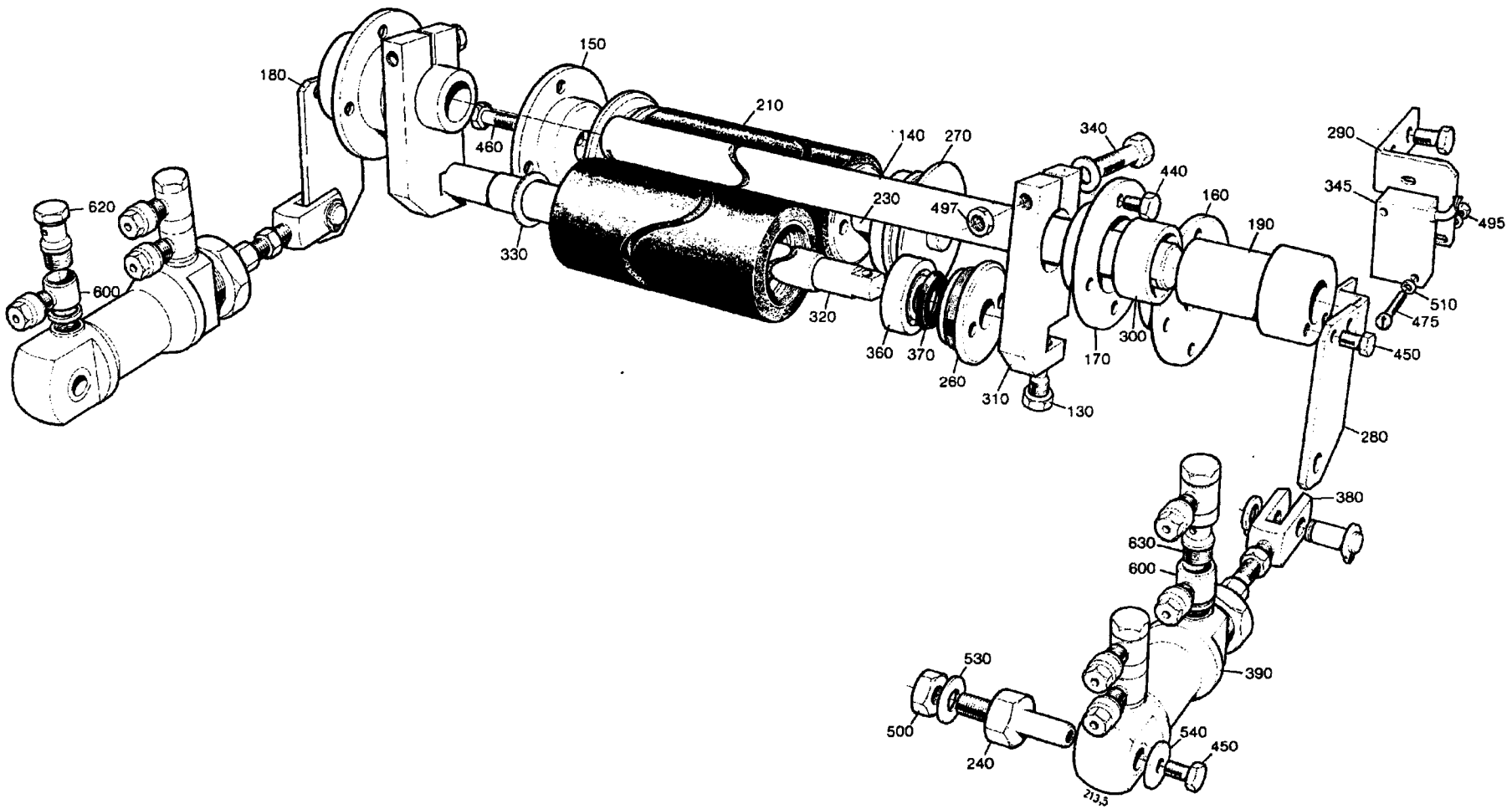

26339104.TIF
263391-4
AM

From	Pos	Part No	SP	UN	Qty	Description
	F000	**C- 263391-0401**				**Calender Roller, Ass'y**
	130	246966	-		2	SCREW
	140	532145	S		1	SHAFT
	150	247159	C		1	AXLE SUPPORT
	160	247160	C		1	AXLE SUPPORT
	170	247161	C		2	AXLE SUPPORT
	180	247162	-		1	BRACKET
	190	532261	C		2	SLEEVE
	210	527750	P		2	CALENDER ROLLER
	230	532144	S		1	SHAFT
	240	247168	C		2	CYLINDER BRACKET
	260	247170	C		4	BEARING COVER
	270	247240	S		2	WHEEL
	280	282766	S		1	LINK
	290	282767	C		1	BRACKET
	300	297142	P		2	BUSHING
	310	532143	C		2	ARM
	320	532146	S		1	SHAFT
	330	532147	-		2	WASHER
	340	532148	-		2	SCREW
	345	90044-0104	P		1	INDUCTIVE SWITCH
	360	90214-0098	S		4	BALL BEARING
	370	90214-0303	S		8	RING
	380	90239-0127	S		2	BRACKET
	390	90239-0189	S		2	CYLINDER
		90285-0094	S		0	* SEAL
	440	312105-0364	-		16	SCREW M6S6X10RFR
	450	312105-0366	-		6	SCREW M6S6X12RFR
	460	312105-0370	-		1	SCREW M6S6X20RFR
	475	312125-0230	-		2	SLOTTED HEMCS3X20RFR
	495	312605-0310	-		2	NUT M6M3RFR
	497	312605-0318	-		2	NUT M6M8RFR
	500	312605-0320	-		2	NUT M6M10RFR
	510	315105-0124	-		4	WASHER BRB3,2X6RFR
	530	315105-0173	-		2	WASHER BRB10,5X22RFR
	540	315121-0153	-		2	WASHER TBRSB6,4X22FZB
	600	342797-0122	-		7	BANJO CONNSINGEL 6-1/4
	620	342980-0304	-		1	BANJO CONN SINGEL 1/4
	630	342980-0314	-		3	BANJO CONN DUBBEL 1/4

From	Pos	Part No	SP	UN	Qty	Description

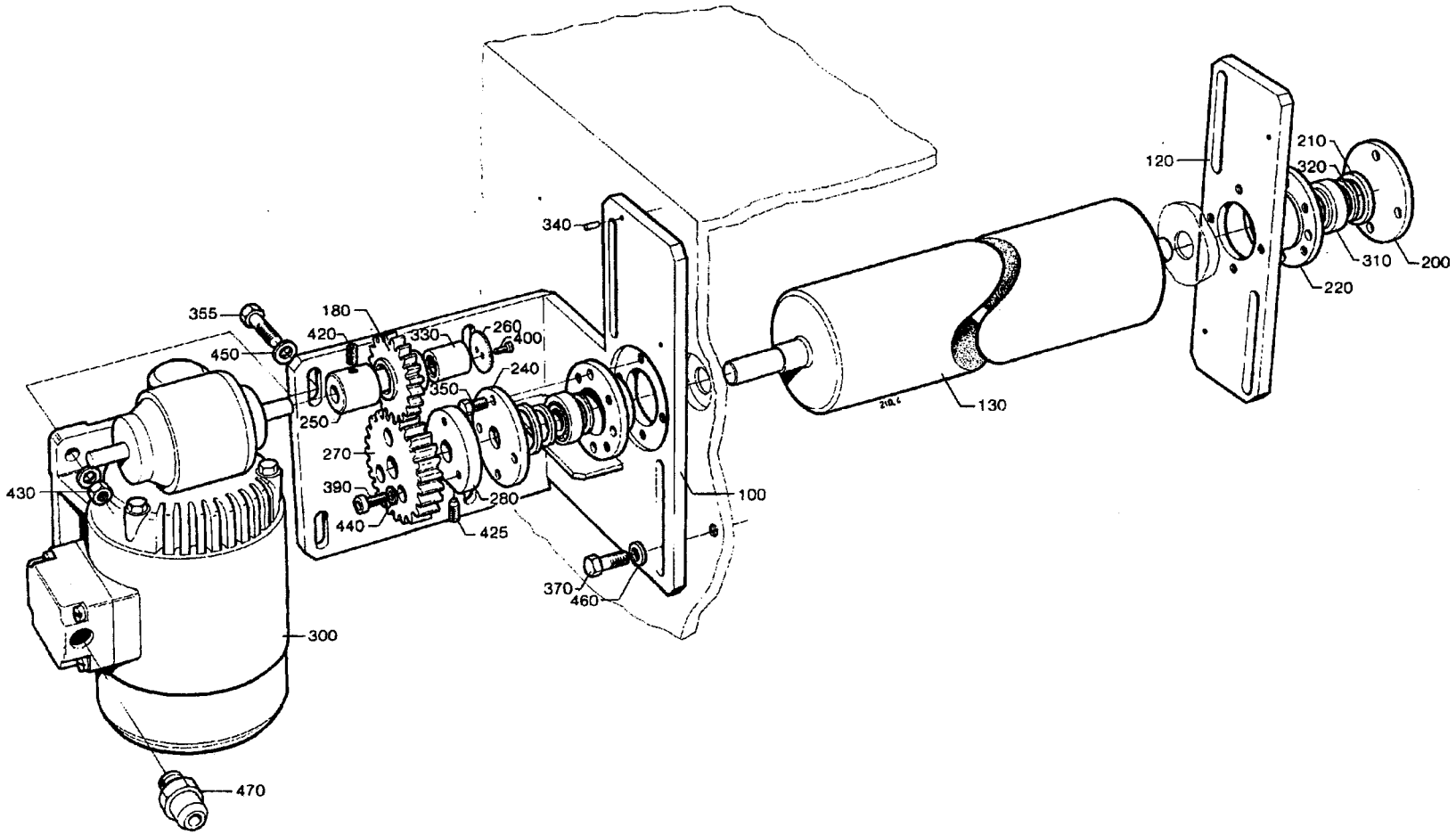

26339402.TIF
263394-2
AM

From	Pos	Part No	SP	UN	Qty	Description
1000ml 5000p/h 375ml 6000p/h						
	F000	C- 263394-0201				**Bending Roller, Ass'y**
	180	209331-0007	S		1	GEAR WHEEL
5000ml 5000p/h						
	F000	C- 263394-0202				**Bending Roller, Ass'y**
	180	209331-0006	S		1	GEAR WHEEL
750ml 500ml Slim 5000p/h 568ml 300ml 6000p/h 400ml						
	F000	C- 263394-0203				**Bending Roller, Ass'y**
	180	209331-0005	S		1	GEAR WHEEL
1055ml 1000ml 750ml slim 6000p/h						
	F000	C- 263394-0204				**Bending Roller, Ass'y**
	180	209331-0012	S		1	GEAR WHEEL
500ml 355ml 6000p/h						
	F000	C- 263394-0205				**Bending Roller, Ass'y**
	180	209331-0009	S		1	GEAR WHEEL
750ml 500ml Slim 6000p/h						
	F000	C- 263394-0206				**Bending Roller, Ass'y**
	180	209331-0007	S		1	GEAR WHEEL
1000ml Slim 6000p/h						
	F000	C- 263394-0207				**Bending Roller, Ass'y**
	180	209331-0013	S		1	GEAR WHEEL
Common Parts						
	100	436361	-		1	MOTOR PLATE
	120	250586	-		1	BEARING PANEL
	130	276394	S		1	BENDING ROLLER
	200	247171	-		1	BEARING COVER
	210	247172	S		2	SPACER RING
	220	247173	C		2	BEARING SEAT
	240	250590	-		1	BEARING COVER
	250	250591	S		1	SHAFT
	260	250592	-		1	WASHER
	270	265872-0001	S		1	GEAR WHEEL
	280	284974	-		1	HUB
	300	90069-0116	C		1	WORM GEAR MOTOR
		90056-0096	S		1	* WORM GEAR
		90069-0364	S		1	* CARBON BRUSH
		90069-0365	S		1	* CARBON BRUSH
	310	90214-0098	P		2	BALL BEARING
	320	90214-0303	P		4	RING
	330	90348-0007	S		1	FREE WHEEL COUPLING
	340	311103-0270	-		2	CYLINDRICACP M6 4X16 RFR
	350	312105-0366	-		8	SCREW M6S6X12RFR
	355	312105-0374	-		4	SCREW M6S6X30RFR
	370	312105-0451	-		4	SCREW M6S8X20RFR
	390	312115-0328	-		3	SCREW 5X14 A4 80

From	Pos	Part No	SP	UN	Qty	Description
	400	312125-0291	-		2	SLOTTED HEMCS4X12RFR
	420	312318-0362	-		1	STOP SCREW SK6SS6X8RFR
	425	312318-0368	-		1	STOP SCREW SK6SS6X16RFR
	430	312605-0316	-		4	NUT M6M6RFR
	440	315105-0146	-		3	WASHER BRB5,3X10RFR
	450	315105-0153	-		8	WASHER BRB6,4X12RFR
	460	315105-0165	-		4	WASHER BRB8,4X16RFR
	470	352136-0127	C		1	GLAND FITT

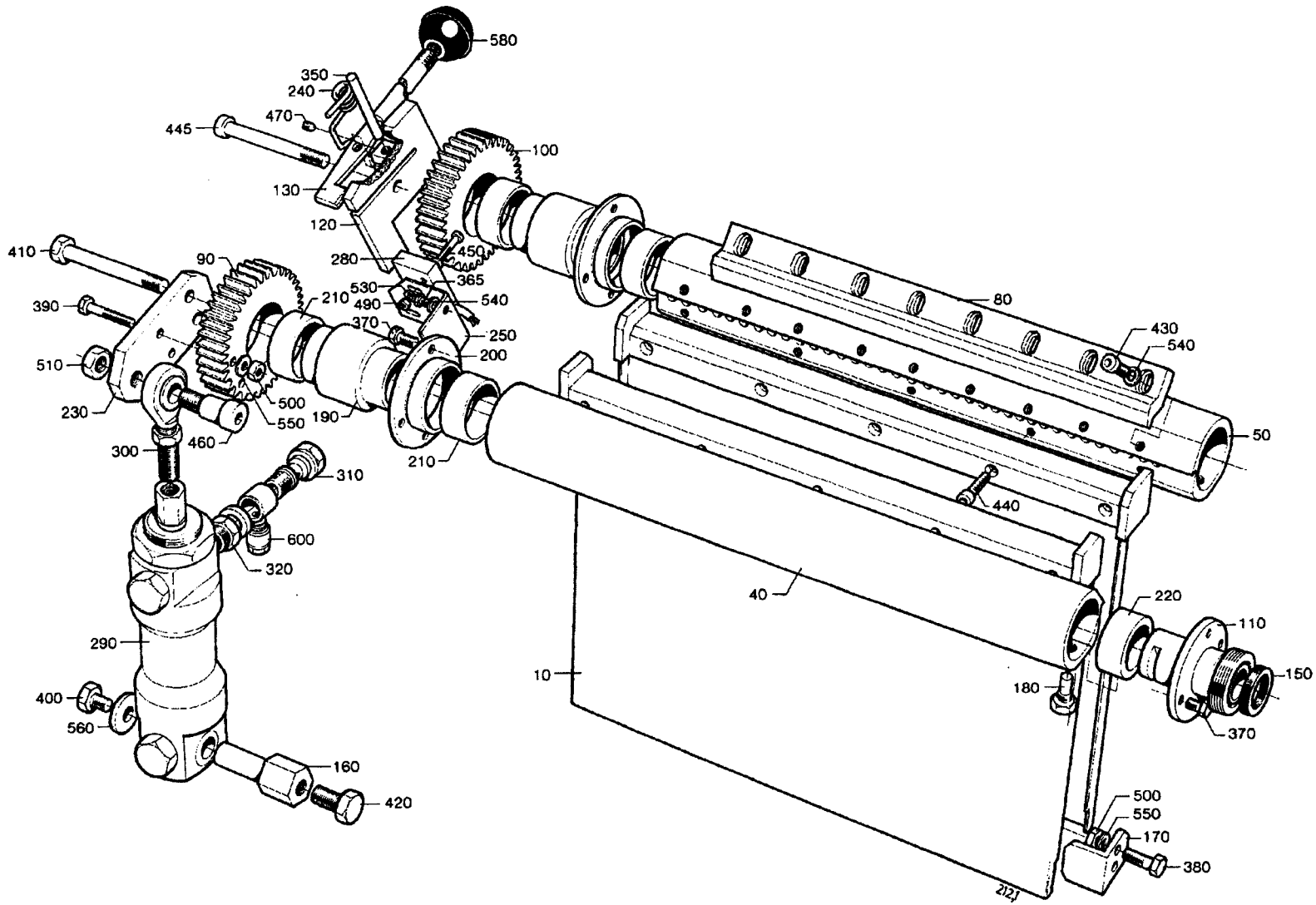

27634502.TIF
276345-2
AM

From	Pos	Part No	SP	UN	Qty	Description
1055ml-500ml 1000ml Slim						
		C- 276345-0301				**Air Knife, Ass'y**
	010	276346	C		2	AIR GUIDE
	040	276347	C		1	AIR DISTRIBUTOR
	050	276348	C		1	AIR DISTRIBUTOR
	080	526502	S		2	STEERING RAIL
	170	246965	-		2	STOP
375ml 300ml						
		C- 276345-0302				**Air Knife, Ass'y**
	010	434972	-		2	AIR GUIDE
	040	434973	-		1	AIR DISTRIBUTOR
	050	434974	-		1	AIR DISTRIBUTOR
	080	527647-0001	-		2	STEERING RAIL
	170	434976	-		2	STOP
355ml 500ml Slim						
		C- 276345-0303				**Air Knife, Ass'y**
	010	434972	-		2	AIR GUIDE
	040	434973	-		1	AIR DISTRIBUTOR
	050	434974	-		1	AIR DISTRIBUTOR
	080	527647-0002	-		2	STEERING RAIL
	170	434976	-		2	STOP
750ml Slim						
		C- 276345-0304				**Air Knife, Ass'y**
	010	276346	C		2	AIR GUIDE
	040	276347	C		1	AIR DISTRIBUTOR
	050	276348	C		1	AIR DISTRIBUTOR
	080	544301	-		2	STEERING RAIL
	170	246965	-		2	STOP
1000ml Slim						
		C- 276345-0305				**Air Knife, Ass'y**
	010	276346	C		2	AIR GUIDE
	040	276347	C		1	AIR DISTRIBUTOR
	050	276348	C		1	AIR DISTRIBUTOR
	080	573841	-		2	STEERING RAIL
	170	246965	-		2	STOP
Common Parts						
	060	292565	-		1	PROTECTION
	090	276350	C		1	GEAR WHEEL
	100	276351	C		1	GEAR WHEEL
	110	276354	C		2	ATTACHMENT
	120	297969	-		1	FASTENING PLATE
	130	297970	-		1	CATCH LEVER
	150	12242-0001	-		2	GASKET
	160	246964	-		1	CYLINDER BRACKET

From	Pos	Part No	SP	UN	Qty	Description
	180	246966	C		2	SCREW
	190	276355	C		2	SLEEVE
	200	276356	C		2	BEARING HOUSING
	210	276357	S		4	BUSHING
	220	276358	S		2	BUSHING
	230	276359	-		1	LEVER
	240	276360	S		1	SPRING
	250	276361	-		1	BRACKET
	280	90044-0104	S		1	INDUCTIVE SWITCH
	290	90239-0196	C		1	CYLINDER
		90285-0119	S		0	* SEAL AND WEAR-AND-TEAR
	300	90239-0321	-		1	BRACKET
	310	90235-0275	-		2	VALVE
	320	90330-0042	-		2	BUSHING
	350	311103-0367	-		1	CYLINDRICACP M6 6X55 RFR
	365	312105-0325	-		2	SCREW M6S5X10 A4 80
	370	312105-0364	-		14	SCREW M6S6X10RFR
	375	312105-0368	-		2	SCREW M6S6X16RFR
	380	312105-0370	-		4	SCREW M6S6X20RFR
	390	312105-0376	-		2	SCREW M6S6X35RFR
	400	312105-0447	-		1	SCREW M6S8X12RFR
	410	312105-0467	-		2	SCREW M6S8X80RFR
	420	312105-0491	-		1	SCREW M6S10X20RFR
	430	312115-0325	-		18	SCREW 5X10 A4 80
	440	312115-0332	-		10	SCREW 5X22 A4 80
	445	312115-0467	-		2	SCREW MC6S8X80RFR
	450	312125-0230	-		2	SLOTTED HEMCS3X20RFR
	460	312180-0530	-		1	REAMED BOL
	470	312316-0320	-		1	STOP SCREW SK6SS5X5FZB
	490	312605-0310	-		2	NUT M6M3RFR
	500	312605-0316	-		6	NUT M6M6RFR
	510	312605-0320	-		1	NUT M6M10RFR
	530	315105-0124	-		4	WASHER BRB3,2X6RFR
	540	315105-0146	-		20	WASHER BRB5,3X10RFR
	550	315105-0153	-		8	WASHER BRB6,4X12RFR
	560	315121-0165	-		1	WASHER TBRSB8,4X26FZB
	580	318800-0105	-		1	HANDLE BALLA D.35-M10
	600	342797-0122	-		2	BANJO CONNSINGEL 6-1/4

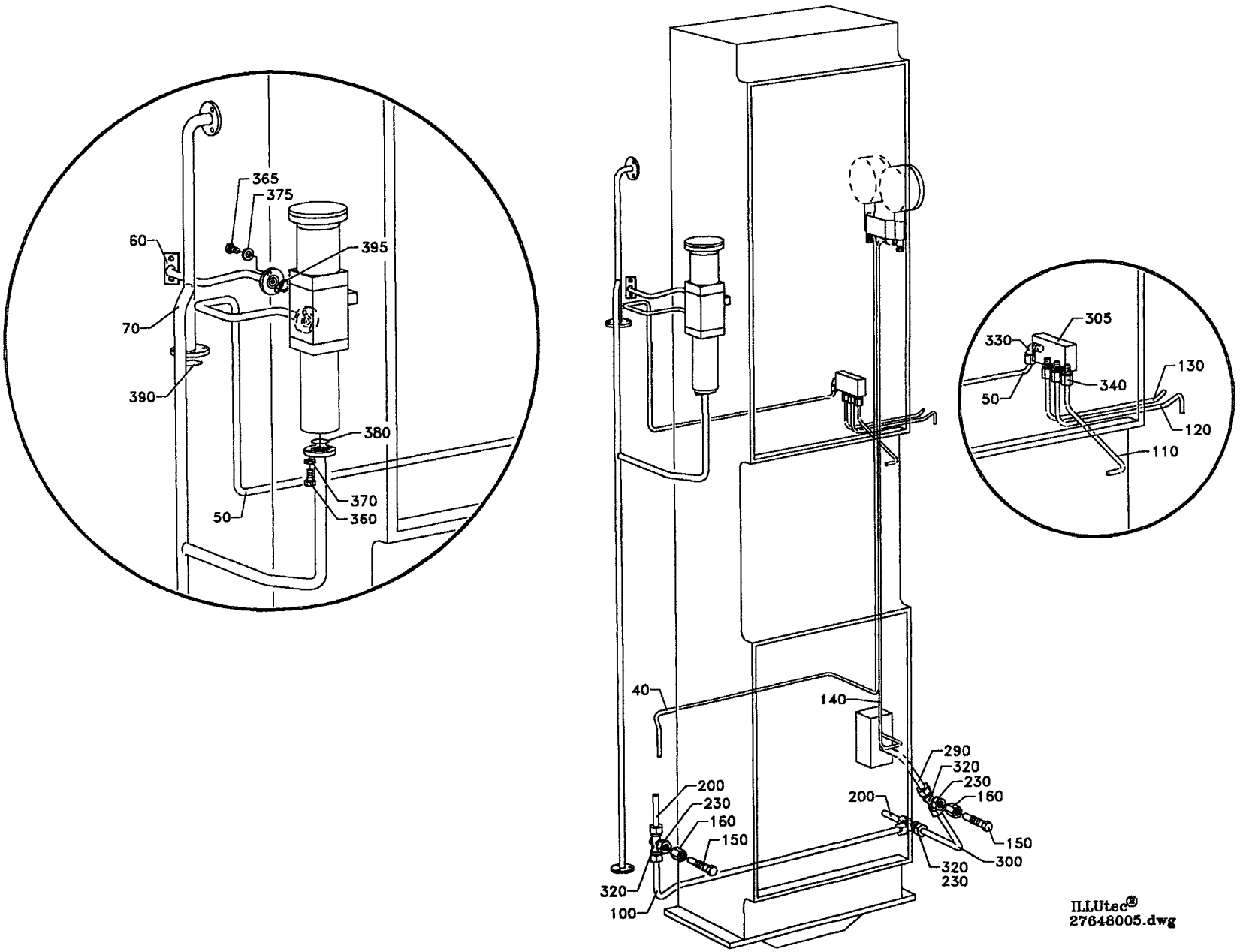
365
375
60
395
70
390
380
370
360
50
305
330
340
130
50
120
110
40
140
290
320
230
160
200
200
230
160
150
150
300
320
230
320
100
ILLUtec®
27648005.dwg

From	Pos	Part No	SP	UN	Qty	Description
		C- 276480-0501				**Pipe Work, Ass'y**
	040	451053	-		1	PIPE
	050	554448	-		1	PIPE
	060	554449	-		1	PIPE
	070	554583	-		1	PIPE
	100	297347	-		1	PIPE
	110	464307	-		1	PIPE BEND
	120	464308	-		1	PIPE
	130	464309	-		1	PIPE
	140	479230	-		1	PIPE
	150	209145	S		2	THROTTLE SCREW
	160	209146	S		2	BARRIER NUT
	200	276490	-		2	PIPE
	230	279589	S		2	NUT
	290	479231	-		1	PIPE
	300	479232	-		1	PIPE
	305	464018	-		1	JUNCTION BLOCK
	320	90030-0058	S		3	CONNECTION
	330	90030-0137	-		1	CONNECTION
	340	90030-0184	-		3	PIPE CONNECTION
	360	312105-0366	-		2	SCREW M6S6X12RFR
	365	312105-0327	-		4	SCREW M6S5X12 A4 80
	370	315105-0153	-		2	WASHER BRB6,4X12RFR
	375	315105-0146	-		4	WASHER BRB5,3X10RFR
	380	315204-0211	P		1	O-RING 13,3X2,4VITON
	390	315204-0219	P		1	O-RING 29,2X3VITON
	395	315204-0208	P		2	O-RING 9,3X2,4VITON

From	Pos	Part No	SP	UN	Qty	Description

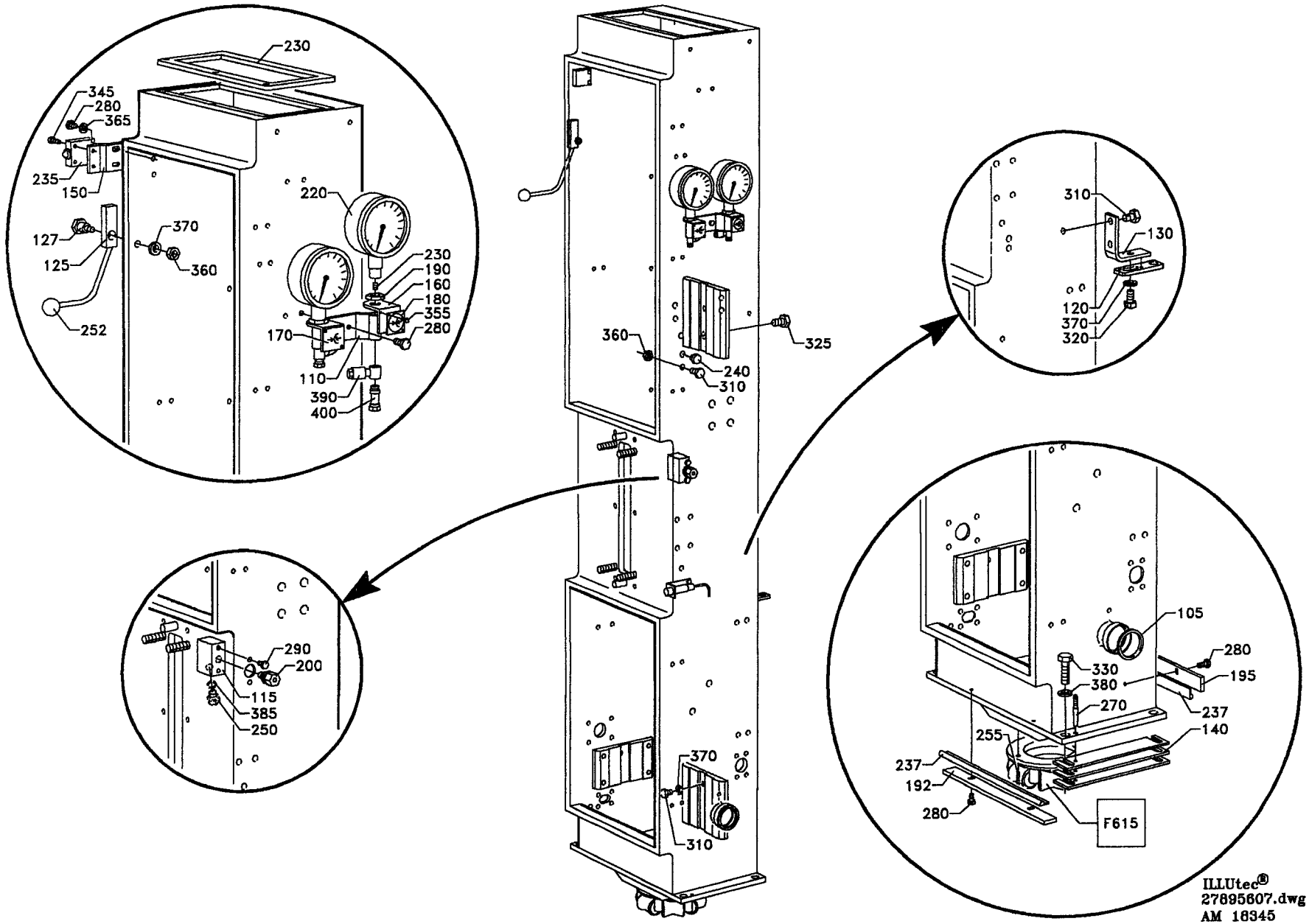
230
345
280
365
235
150
127
125
252
370
360
220
230
190
160
180
355
280
170
110
390
400
360
325
240
310
310
130
120
370
320
290
200
115
385
250
370
310
105
280
330
380
195
270
237
255
140
237
192
280
F615
ILLUtec®
27895607.dwg
AM 18345

From	Pos	Part No	SP	UN	Qty	Description
		C- 278956-0601				**Pillar, Ass'y**
	F615	**C- 466399-010V**	-		**1**	**SEAL**
	100	476020	-		1	PILLAR
	102	531309	-		1	GASKET
	105	12242-0005	P		1	GASKET
	110	33577	-		1	CANTILEVER
	115	267564	C		1	BRACKET
	120	279860	C		2	ADJUSTMENT PLATE
	125	551786	-		1	LEVER
	127	551784	-		1	FITTING BOLT
	130	282608	-		2	ANGLE
	140	458481-0002	-		1	SHIM
	140	458481-0003	-		1	SHIM
	140	458481-0001	-		1	SHIM
	150	436597	-		2	CANTILEVER
	160	464173	-		2	LABEL HOLDER
	170	464174	-		1	SIGN
	180	464175	-		1	SIGN
	190	90330-0105	S		2	NUT
	192	493091	-		1	CLAMP RAIL
	195	530808	-		1	CLAMP RAIL
	200	90030-0051	S		1	PIPE CONNECTION
	220	90043-0034	S		2	PRESSURE GAUGE
	230	90043-0302	S		2	SCREW
	235	90044-0084	-		2	MICRO SWITCH
	237	90143-0018	-	MM	950	STRIP
	240	90330-0066	-		1	PLUG
	250	90424-0031	S		1	NOZZLE
	252	318800-0104	-		1	HANDLE BALLA D.30-M8
	255	311103-0238	-		2	CYLINDRICACP M6 3X20 RFR
	270	311211-0299	-		2	TAPER PIN GKP6X6X55
	280	312105-0364	-		10	SCREW M6S6X10RFR
	290	312105-0366	-		2	SCREW M6S6X12RFR
	310	312105-0447	-		6	SCREW M6S8X12RFR
	320	312105-0449	-		2	SCREW M6S8X16RFR
	325	312105-0532	-		1	SCREW M6S12X20RFR
	330	312105-0540	-		4	SCREW M6S12X40 A4 80
	345	312115-0329	-		4	SCREW 5X16 A4 80
	355	312502-0120	-		4	DRIVE SCREKDS0X5FNB
	360	312605-0318	-		2	NUT M6M8RFR
	365	315105-0153	-		4	WASHER BRB6,4X12RFR
	370	315105-0165	-		4	WASHER BRB8,4X16RFR
	380	315115-0178	-		4	WASHER TBRB13X24RFR
	385	315204-0209	S		1	O-RING 3X2,4 VITON
	390	342797-0122	-		2	BANJO CONNSINGEL 6-1/4
	400	342980-0304	-		2	BANJO CONN SINGEL 1/4

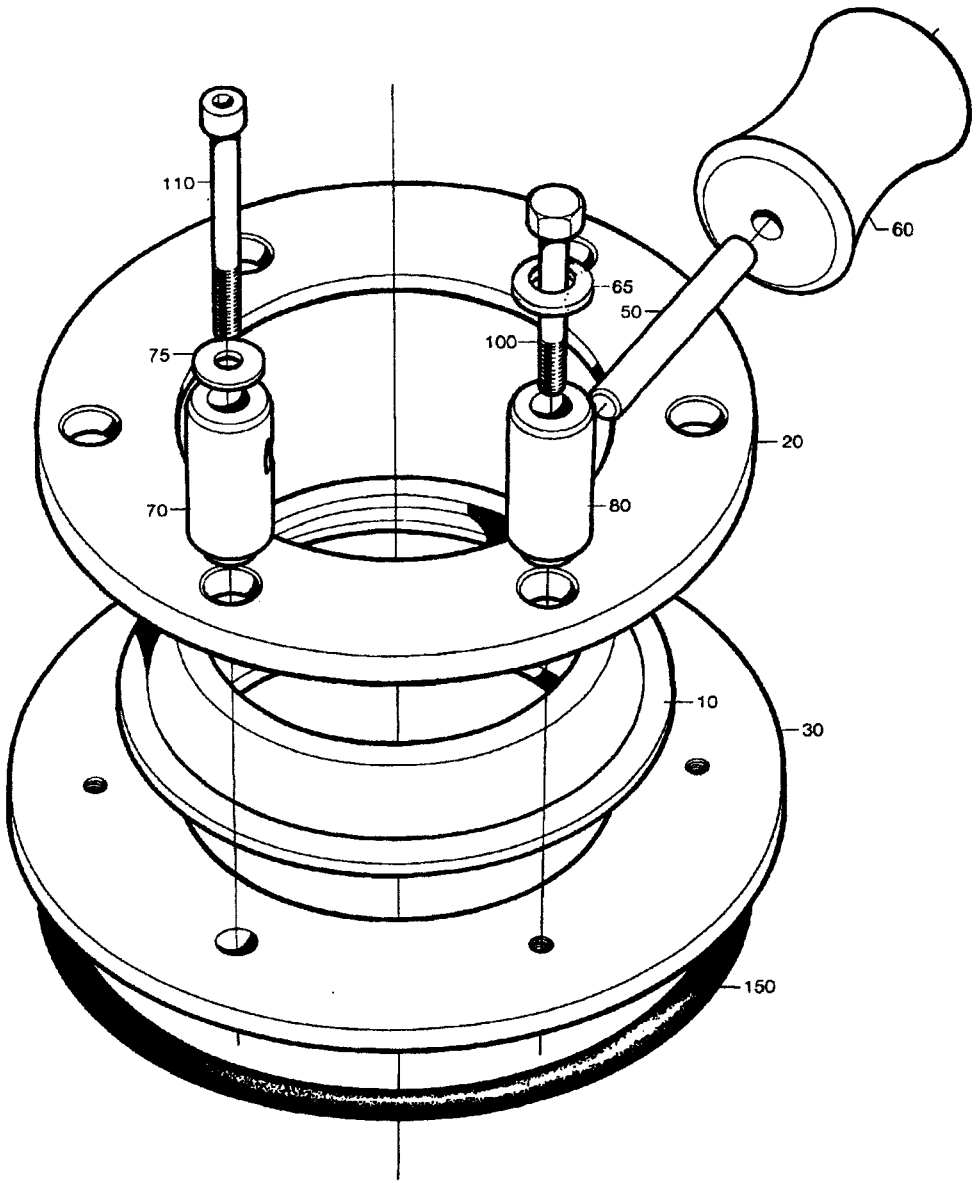

46639901.TIF
466399-1
AM

From	Pos	Part No	SP	UN	Qty	Description
1055ml-500ml						
		C- 466399-0101				**Seal, Ass'y**
	010	466042	PU		1	SEAL
	020	466400	-		1	RING
	030	466403	-		1	RING
	050	263655-0009	-		6	SHAFT
	060	466046	P		6	ROLL
355ml 400ml 500ml Slim						
		C- 466399-0102				**Seal, Ass'y**
	010	466089	PU		1	SEAL
	020	466401	-		1	RING
	030	466404	-		1	RING
	050	263655-0007	-		6	SHAFT
	060	466092	P		6	ROLL
375ml 300ml						
		C- 466399-0103				**Seal, Ass'y**
	010	466099	PU		1	SEAL
	020	466402	-		1	RING
	030	466405	-		1	RING
	050	263655-0007	-		6	SHAFT
	060	466102	P		6	ROLL
750ml Slim						
		C- 466399-0104				**Seal, Ass'y**
	010	544015	PU		1	SEAL
	020	544013	-		1	RING
	030	544014	-		1	RING
	050	263655-0008	-		6	SHAFT
	060	544012	P		6	ROLL
1000ml Slim						
		C- 466399-0105				**Seal, Ass'y**
	010	567743	-		1	SEAL
	020	466400	-		1	RING
	030	466403	-		1	RING
	050	263655-0009	-		6	SHAFT
	060	573504	P		6	ROLL
Common Parts						
	065	6278	-		4	WASHER
	070	466040	-		2	AXLE SUPPORT
	075	466041	-		2	WASHER
	080	493658	-		4	AXLE SUPPORT
	100	312105-0379	-		4	SCREW M6S6X45RFR
	110	312115-0382	-		2	SCREW 6X60 A4 80
	150	315204-0324	S		1	O-RING ,3X5,7 VITON

From	Pos	Part No	SP	UN	Qty	Description

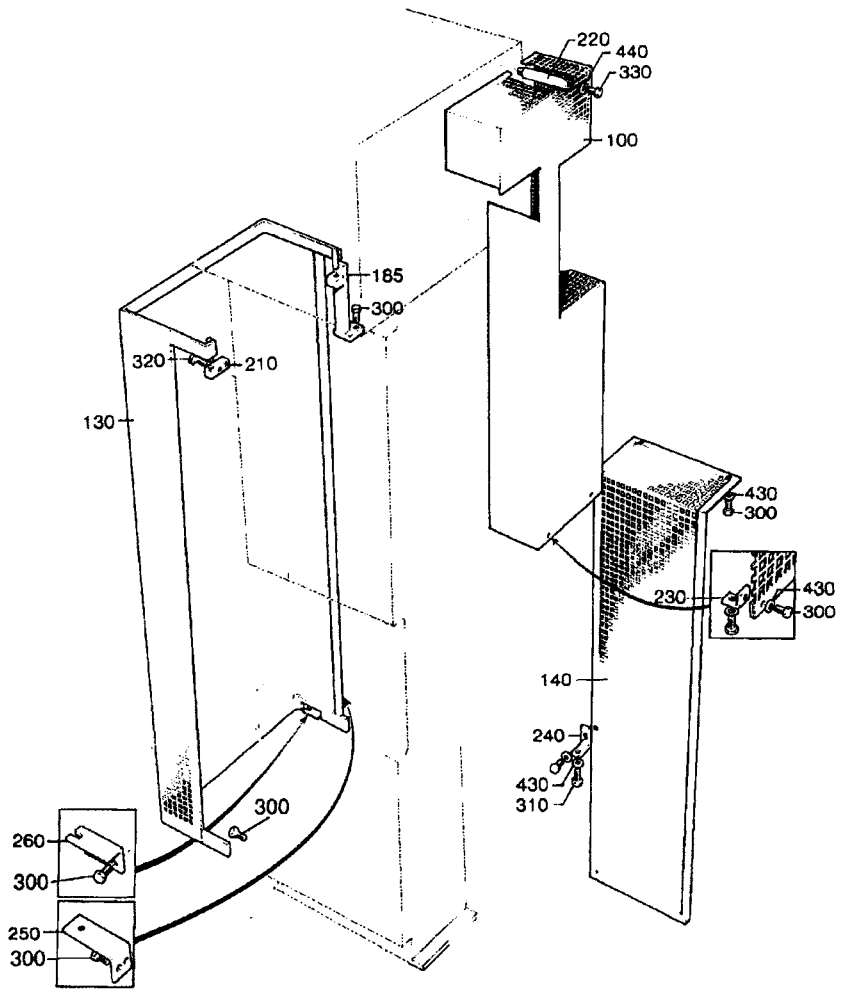

27965104.TIF
279651-4
AM 16627

From	Pos	Part No	SP	UN	Qty	Description
		C- 279651-0501				**Touch Guard, Ass'y**
	100	752771	-		1	TOUCH GUARD
	130	567023	-		1	TOUCH GUARD
	140	555549	-		1	TOUCH GUARD
	185	294472	-		1	CANTILEVER
	210	267646	-		1	BLOCKING PIECE
	220	267665	-		2	BRACKET
	230	279619	-		2	BRACKET
	240	555550	-		1	BRACKET
	250	457752	-		1	CANTILEVER
	260	457753	-		1	BRACKET
	300	312105-0366	-		15	SCREW M6S6X12RFR
	310	312105-0370	-		1	SCREW M6S6X20RFR
	320	312105-0372	-		2	SCREW M6S6X25RFR
	330	312105-0447	-		2	SCREW M6S8X12RFR
	430	315105-0153	-		11	WASHER BRB6,4X12RFR
	440	315105-0165	-		2	WASHER BRB8,4X16RFR

From	Pos	Part No	SP	UN	Qty	Description

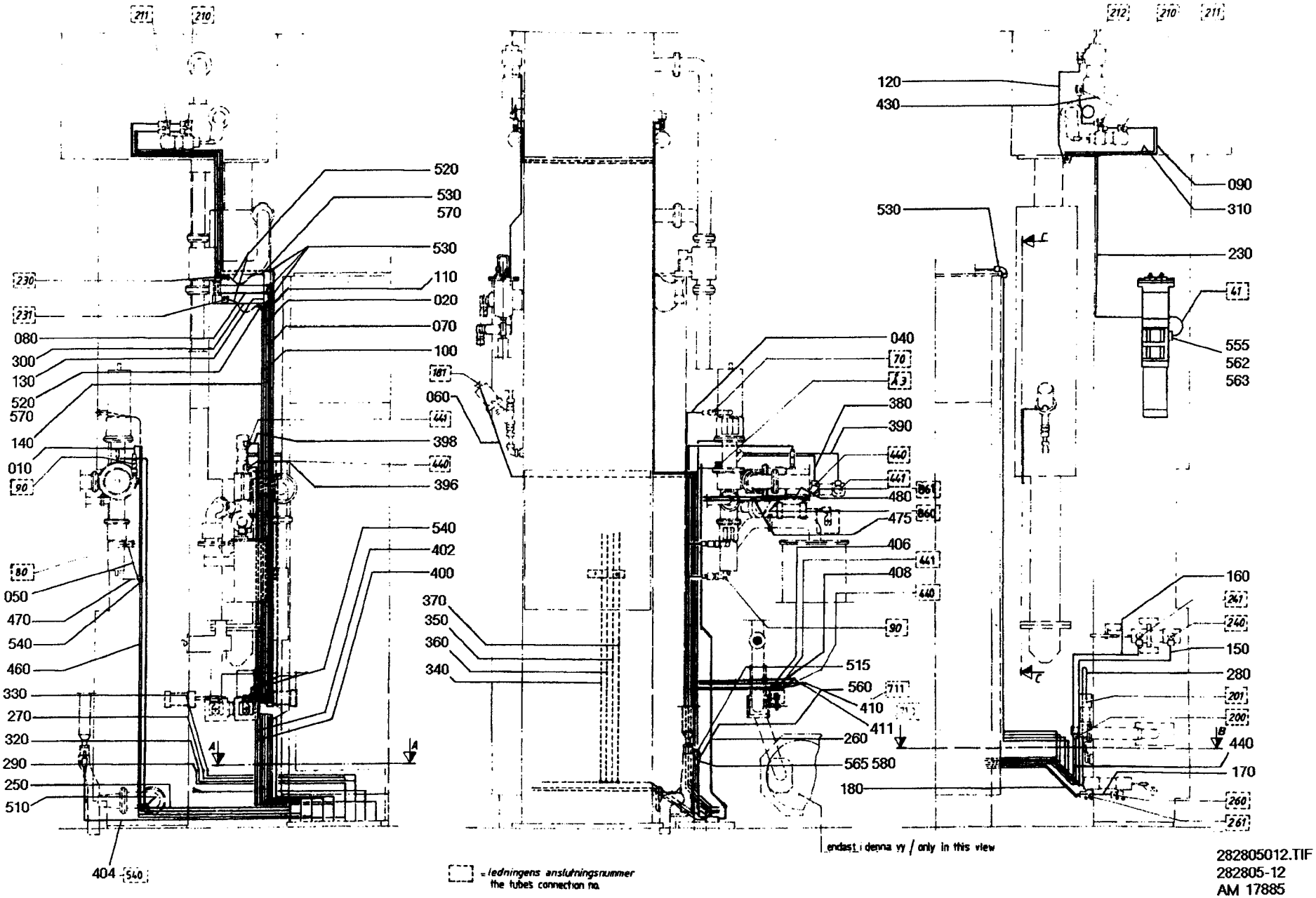

282805012.TIF
282805-12
AM 17885

From	Pos	Part No	SP	UN	Qty	Description
		C- 282805-0701				**Pipe Work-Pneumatic 2" Valve, Ass'y**
		C- 282805-0702				**Pipe Work-Pneumatic 3" Valve, Ass'y**
	010	476794-0001	-		1	PIPE 2" Valve
	010	476794-0002	-		1	PIPE 3" Valve
	020	532352	-		1	PIPE
	040	554850	-		1	PIPE
	050	451277	-		1	PIPE
	060	544913	-		1	PIPE
	070	532354	-		1	PIPE
	080	451280	-		1	PIPE
	090	451281	-		1	PIPE
	100	532355	-		1	PIPE
	110	532356	-		1	PIPE
	120	451284	-		1	PIPE
	130	451285	-		1	PIPE
	140	451286	-		1	PIPE
	150	451287	-		1	PIPE
	160	451288	-		1	PIPE
	170	451289	-		1	PIPE
	180	451290	-		1	PIPE
	190	451291	-		1	PIPE
	200	451292	-		1	PIPE
	230	564600	-		1	PIPE
	250	549093	-		1	PIPE
	260	560928	-		1	PIPE
	270	451296	-		1	PIPE
	280	451297	-		1	PIPE
	290	451298	-		1	PIPE
	300	451299	-		1	PIPE
	310	451300	-		1	PIPE
	320	451301	-		1	PIPE
	330	451302	-		1	PIPE
	340	451303-0001	-		1	PIPE
	350	451303-0002	-		1	PIPE
	360	451303-0003	-		1	PIPE
	370	451303-0004	-		1	PIPE
	380	451304	-		1	PIPE
	390	451305	-		1	PIPE
	396	479061	-		1	PIPE
	398	479072	-		1	PIPE
	400	479073	-		1	PIPE
	402	479074	-		1	PIPE
	404	532366	-		1	PIPE
	406	555553	-		1	PIPE
	408	555554	-		1	PIPE
	410	555547	-		1	PIPE
	411	555548	-		1	PIPE
	420	450814	-		1	HOLDER
	430	451306	-		1	PIPE
	440	451307	-		1	PIPE
	450	451326	-		1	CLAMPING PLATE
	460	554139	-		1	PIPE
	470	476796	-		1	PIPE
	475	555551	-		1	PIPE
	480	555552	-		1	PIPE
	510	90030-0096	-		1	PIPE CONNECTION
	515	90140-0021	-		1	ELBOW PIPE
	520	90166-0124	-	MM	400	HOSE
	530	90224-0309	-		12	CONNECTION
	540	90224-0310	-		7	CONNECTION
	550	90235-0048	-		1	VALVE
	555	312105-0327	-		2	SCREW M6S5X12 A4 80
	560	312105-0368	-		2	SCREW M6S6X16RFR
	562	315105-0146	-		2	WASHER BRB5,3X10RFR
	563	315204-0208	-		1	O-RING 9,3X2,4VITON
	565	315233-0109	-		1	SEAL RING R1/8"
	570	342706-0130	-		2	INSERT SLESH06
	580	90224-0307	-		1	CONNECTION

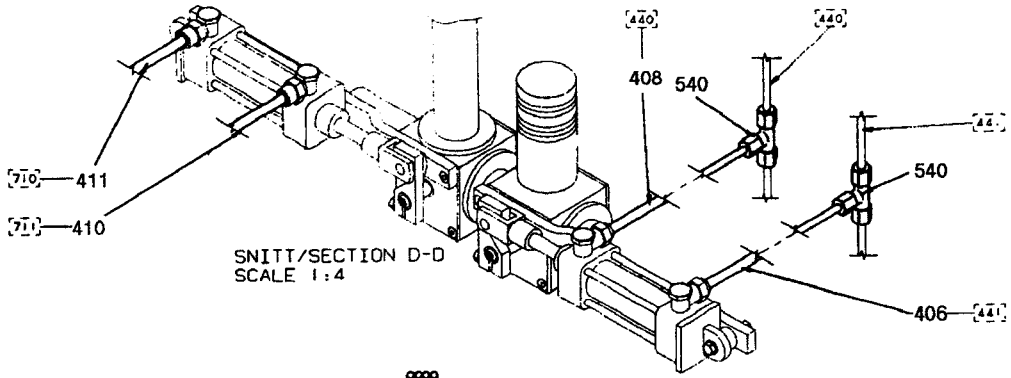

SNITT/SECTION D-D
SCALE 1:4

SNITT/SECTION A-A
VRIDET/TURNED 90°

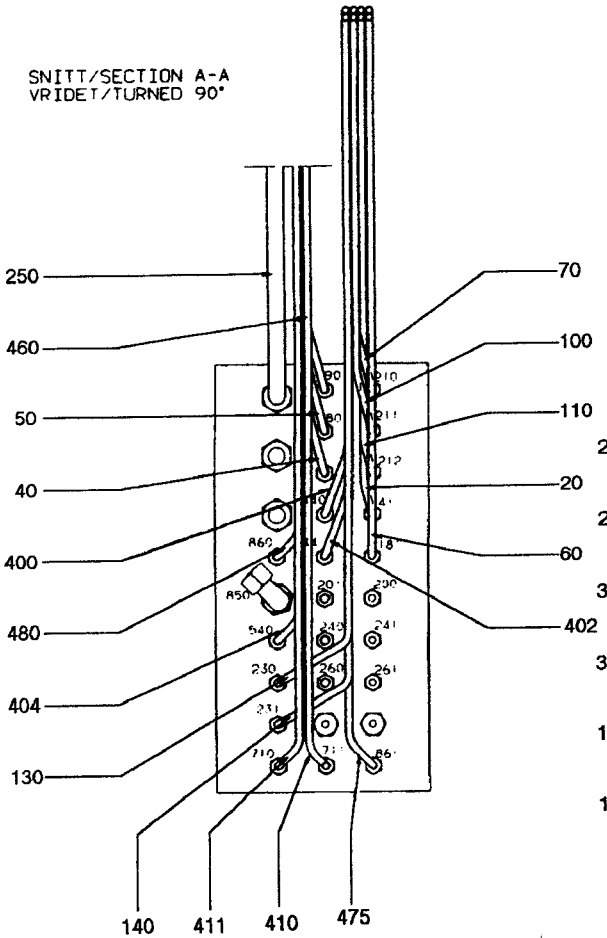

SNITT/SECTION B-B
VRIDET/TURNED 90°

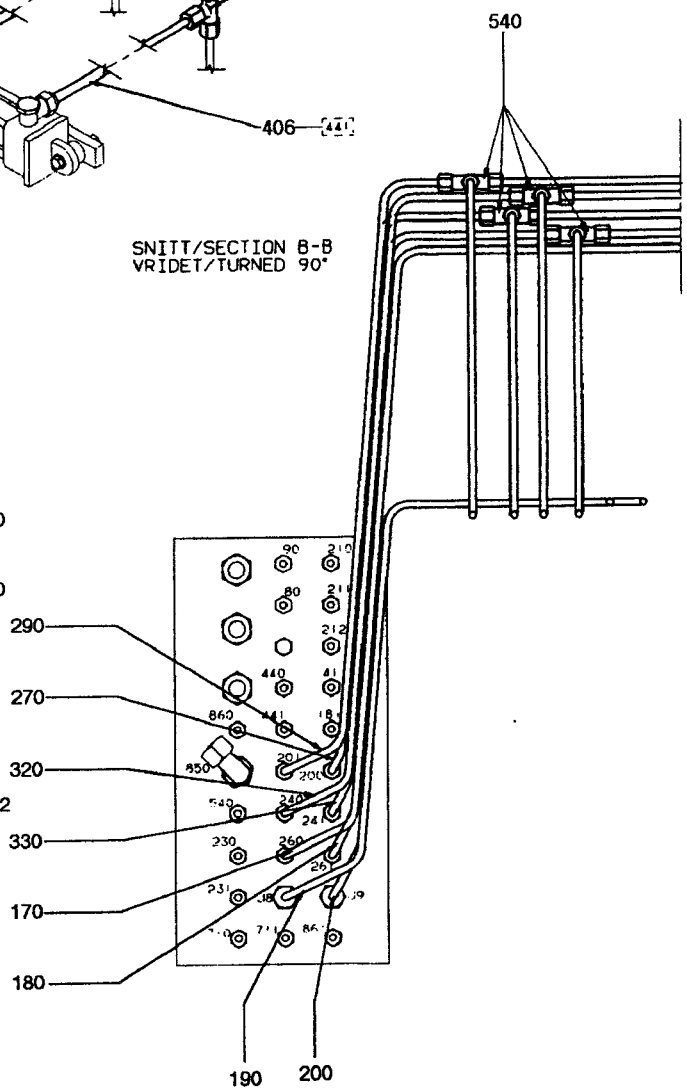

SNITT/SECTION C-C
VRIDET/TURNED 90°

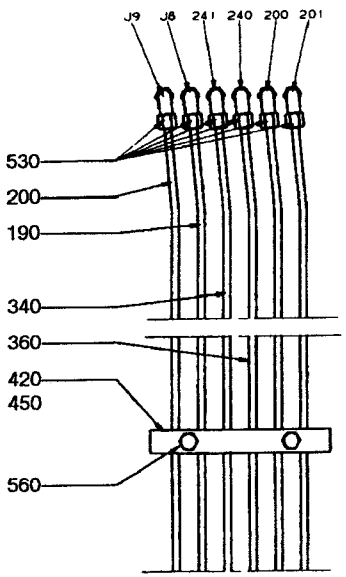

XXX = LEDNINGENS ANSLUTNINGSNUMMER/
THE TUBES CONNECTION NO.

28280513.TIF
282805-13
AM 17885

From	Pos	Part No	SP	UN	Qty	Description
		C- 282805-0701				**Pipe Work-Pneumatic 2" Valve, Ass'y**
		C- 282805-0702				**Pipe Work-Pneumatic 3" Valve, Ass'y**
	010	476794-0001	-		1	PIPE 2" Valve
	010	476794-0002	-		1	PIPE 3" Valve
	020	532352	-		1	PIPE
	040	554850	-		1	PIPE
	050	451277	-		1	PIPE
	060	544913	-		1	PIPE
	070	532354	-		1	PIPE
	080	451280	-		1	PIPE
	090	451281	-		1	PIPE
	100	532355	-		1	PIPE
	110	532356	-		1	PIPE
	120	451284	-		1	PIPE
	130	451285	-		1	PIPE
	140	451286	-		1	PIPE
	150	451287	-		1	PIPE
	160	451288	-		1	PIPE
	170	451289	-		1	PIPE
	180	451290	-		1	PIPE
	190	451291	-		1	PIPE
	200	451292	-		1	PIPE
	230	564600	-		1	PIPE
	250	549093	-		1	PIPE
	260	560928	-		1	PIPE
	270	451296	-		1	PIPE
	280	451297	-		1	PIPE
	290	451298	-		1	PIPE
	300	451299	-		1	PIPE
	310	451300	-		1	PIPE
	320	451301	-		1	PIPE
	330	451302	-		1	PIPE
	340	451303-0001	-		1	PIPE
	350	451303-0002	-		1	PIPE
	360	451303-0003	-		1	PIPE
	370	451303-0004	-		1	PIPE
	380	451304	-		1	PIPE
	390	451305	-		1	PIPE
	396	479061	-		1	PIPE
	398	479072	-		1	PIPE
	400	479073	-		1	PIPE
	402	479074	-		1	PIPE
	404	532366	-		1	PIPE
	406	555553	-		1	PIPE
	408	555554	-		1	PIPE
	410	555547	-		1	PIPE
	411	555548	-		1	PIPE
	420	450814	-		1	HOLDER
	430	451306	-		1	PIPE
	440	451307	-		1	PIPE
	450	451326	-		1	CLAMPING PLATE
	460	554139	-		1	PIPE
	470	476796	-		1	PIPE
	475	555551	-		1	PIPE
	480	555552	-		1	PIPE
	510	90030-0096	-		1	PIPE CONNECTION
	515	90140-0021	-		1	ELBOW PIPE
	520	90166-0124	-	MM	400	HOSE
	530	90224-0309	-		12	CONNECTION
	540	90224-0310	-		7	CONNECTION
	550	90235-0048	-		1	VALVE
	555	312105-0327	-		2	SCREW M6S5X12 A4 80
	560	312105-0368	-		2	SCREW M6S6X16RFR
	562	315105-0146	-		2	WASHER BRB5,3X10RFR
	563	315204-0208	-		1	O-RING 9,3X2,4VITON
	565	315233-0109	-		1	SEAL RING R1/8"
	570	342706-0130	-		2	INSERT SLESH06
	580	90224-0307	-		1	CONNECTION

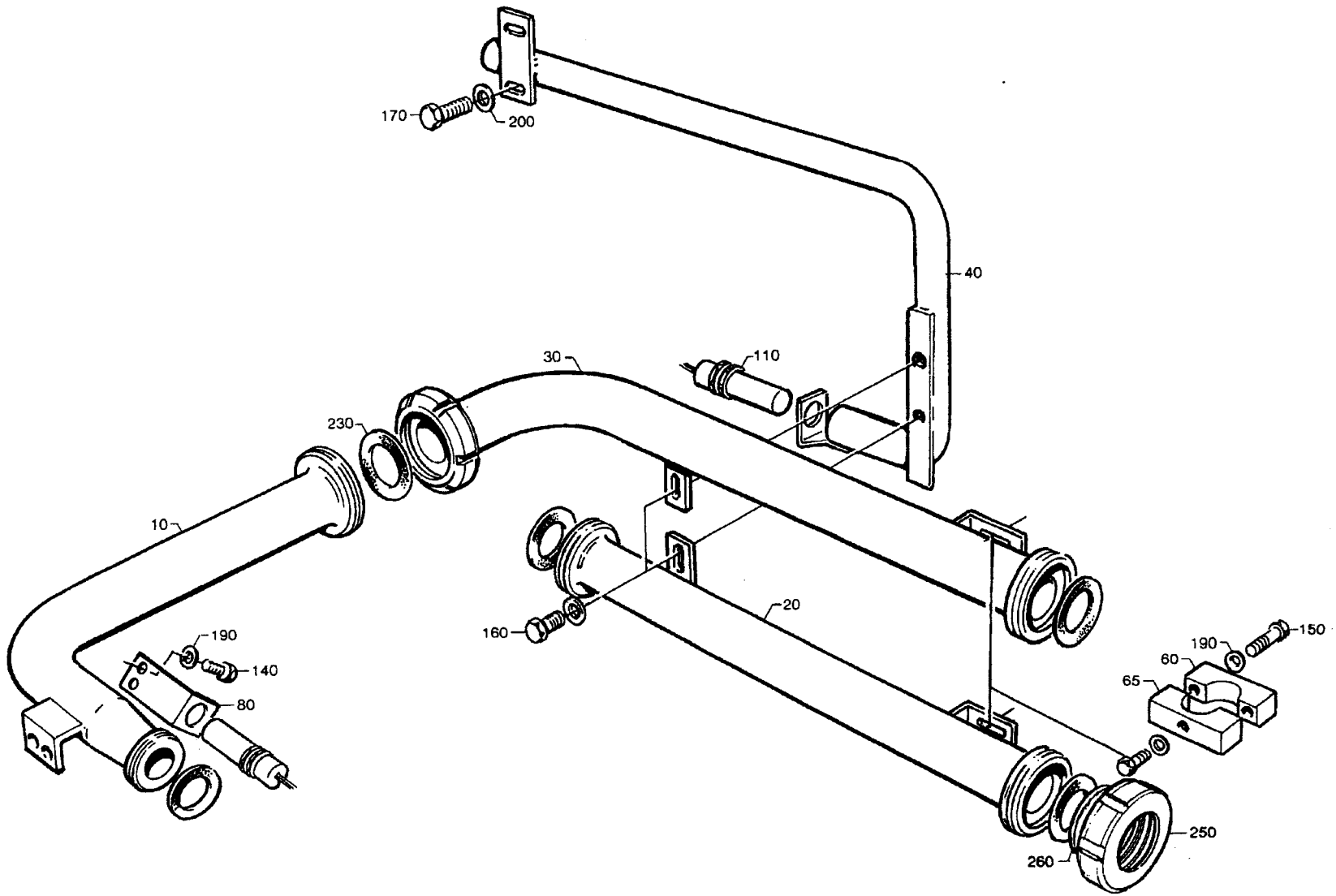

45113101.TIF
451131-1
AM

Last Alteration: AM 8104 85-09-13

Corresponding group: 451131-010V
Assembly Drawing: 451131-1

Issue: **930607**

From	Pos	Part No	SP	UN	Qty	Description
		C- 451131-0101				**Cleaning Pipe, Ass'y**
	010	449964	-		1	PIPE
	020	449966	-		1	PIPE
	030	449967	-		1	PIPE
	040	450335	-		1	PIPE
	060	457614-0001	-		2	CLAMPING PIECE
	065	457614-0002	-		2	CLAMPING PIECE
	080	449960	-		1	BRACKET
	110	90044-0126	P		2	INDUCTIVE SWITCH
	140	312105-0364	-		4	SCREW M6S6X10RFR
	150	312105-0372	-		4	SCREW M6S6X25RFR
	160	312105-0447	-		2	SCREW M6S8X12RFR
	170	312105-0449	-		2	SCREW M6S8X16RFR
	190	315105-0153	-		6	WASHER BRB6,4X12RFR
	200	315105-0165	-		4	WASHER BRB8,4X16RFR
	220	315250-0101	P		1	GASKET 32/25
	230	315250-0103	P		3	GASKET 48/38
	250	342803-0103	-		2	NUT 38
	260	342812-0203	-		2	SLEEVE

From	Pos	Part No	SP	UN	Qty	Description

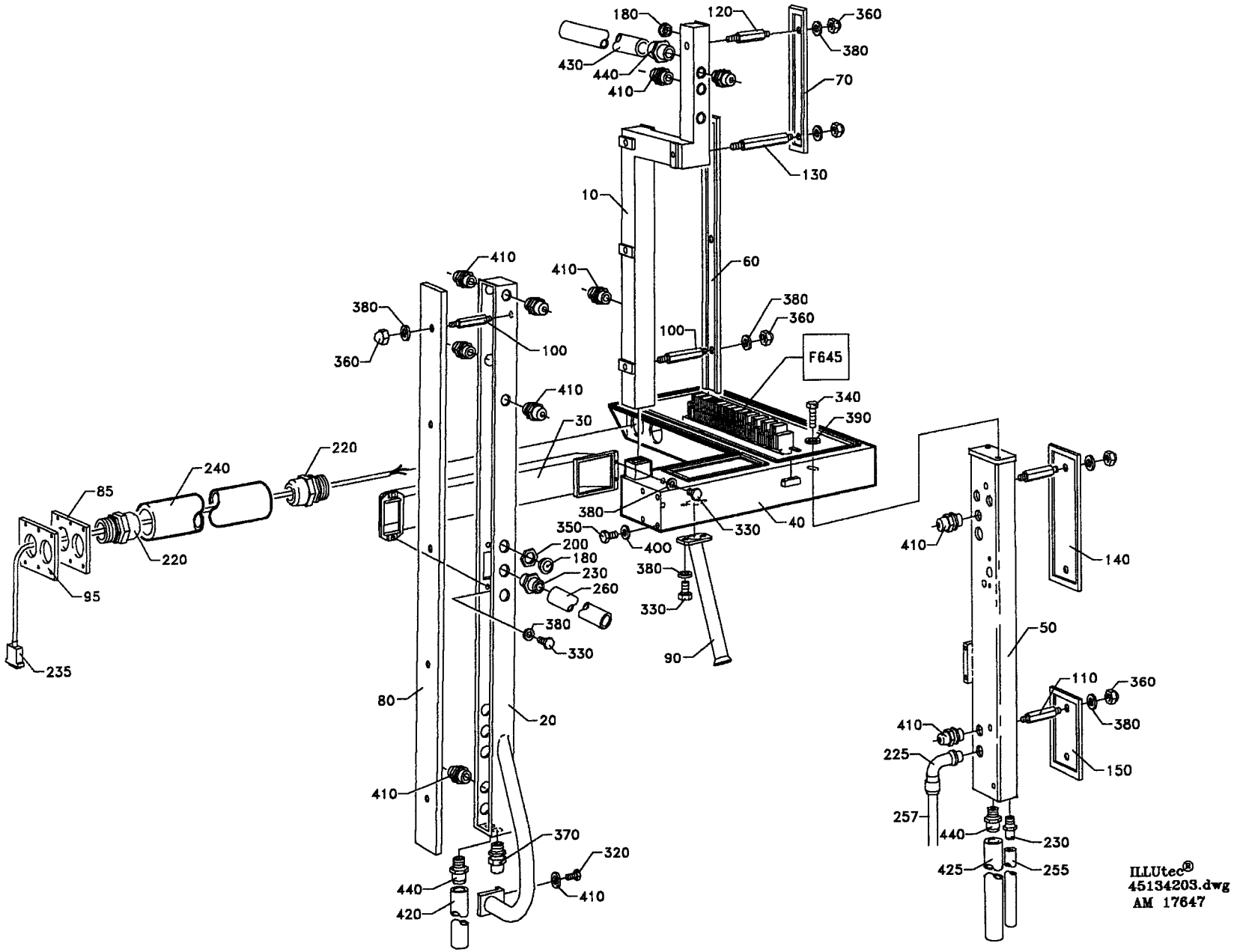
180
120
360
380
430
440
410
70
130
10
410
60
410
380
360
100
380
360
100
F645
410
340
390
30
220
240
85
380
350
400
330
40
410
140
220
95
200
180
230
260
380
330
380
330
90
50
235
80
20
110
360
380
410
225
150
410
257
440
230
425
255
370
320
440
410
420
ILLUtec®
45134203.dwg
AM 17647

From	Pos	Part No	SP	UN	Qty	Description
		C- 451342-0401				**Cable Duct, Ass'y**
	F645	**C- 451365-0201**	**-**		**1**	**TERMINAL PLINTH**
	010	451099	-		1	CABLE TRENCH
	020	561571	-		1	CABLE TRENCH
	030	451101	-		1	CABLE TRENCH
		90143-0014	C		0	* STRIP
		90153-0017	C		0	* ADHESIVE
	040	451339	-		1	BOX
		90143-0011	C		0	* STRIP
		90153-0017	C		0	* ADHESIVE
	050	451340	-		1	CHANNEL
	060	451102	-		1	LID
		90143-0011	C		0	* STRIP
		90153-0017	C		0	* ADHESIVE
	070	451103	C		1	LID
		90143-0011	C		0	* STRIP
		90153-0017	C		0	* ADHESIVE
	080	451104	C		1	LID
		90143-0011	C		0	* STRIP
		90153-0017	C		0	* ADHESIVE
	085	556682	-		1	PLATE
	090	451338	-		1	PIPE
	095	556683	-		1	GASKET
	100	451085-0002	C		8	SPACER SCREW
	110	451085-0003	C		4	SPACER SCREW
	120	451085-0004	C		1	SPACER SCREW
	130	451085-0005	C		1	SPACER SCREW
	140	451341-0001	C		1	LID
		90143-0011	C		0	* STRIP
		90153-0017	C		0	* ADHESIVE
	150	451341-0002	C		1	LID
		90143-0011	C		0	* STRIP
		90153-0017	C		0	* ADHESIVE
	180	90002-0013	-		3	BLANK-OFF PLUG
	200	90099-0001	-		22	NUT
	220	90012-0059	C		4	GLAND
	225	90012-0064	-		1	GLAND
	230	90012-0063	C		4	GLAND
	235	90110-0128	-		2	PLUG 24-POL
	240	90152-0029	C	MM	500	HOSE
	255	90152-0033	C	MM	180	HOSE
	257	90152-0033	-	MM	500	HOSE
	260	90152-0033	C	MM	480	HOSE
	270	90194-0016	-		1	SIGN"FLASH SIGN"
	320	312105-0287	-		2	SCREW M6S4X8 A4 80
	330	312105-0364	-		6	SCREW M6S6X10RFR
	340	312115-0451	-		2	SCREW 8X20 A4 80
	350	312105-0491	-		4	SCREW M6S10X20RFR
	360	312705-0316	-		14	CAP NUT MHM 6 A2
	370	315105-0136	-		2	WASHER BRB4,3X8RFR
	380	315105-0153	-		20	WASHER BRB6,4X12RFR
	390	315105-0165	-		2	WASHER BRB8,4X16RFR
	400	315105-0173	-		4	WASHER BRB10,5X22RFR
	410	352103-0101	C		19	CABLE GLANR.ST 9
	420	352135-0106	C	MM	240	HOSE .016
	425	352135-0106	C	MM	180	HOSE .016
	430	352135-0106	C	MM	450	HOSE .016
	440	352136-0127	C		3	GLAND FITT

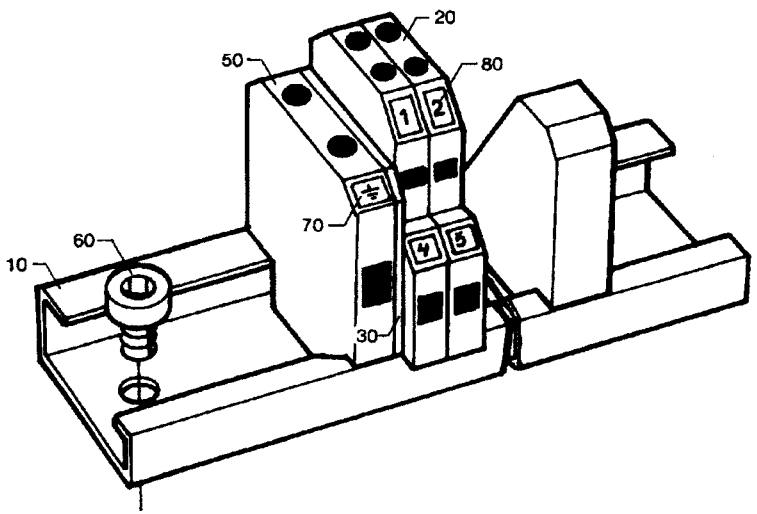

45136501.TIF
451365-2
AM 14875

From	Pos	Part No	SP	UN	Qty	Description
		C- 451365-0201				**Terminal Plinth, Ass'y**
	010	10793-0036	-		1	MOUNTING RAIL
	020	90077-0090	-		37	FEED THROUGH TERMINAL
	030	90077-0309	-		9	END PLATE
	050	90135-0021	-		14	EARTHING CLAMP
	060	312115-0364	-		2	SCREW 6X10 A4 80
	070	359011-0202	-		18	SIGN BOARD(GROUND)
	080	359011-0800	-		2	MARKING PLATE KITS

From	Pos	Part No	SP	UN	Qty	Description

From	Pos	Part No	SP	UN	Qty	Description
1055ml-500ml						
		C- 284163-0501				**Start-Up Kit, Ass'y**
	030	243851	-		1	GASKET
	110	232979	-		1	PRESSURE ROLLER
	115	466042	-		1	SEAL
355ml 400ml 500ml Slim						
		C- 284163-0502				**Start-Up Kit, Ass'y**
	030	526689	-		1	DISTRIBUTOR WING
	110	499387	-		1	PRESSURE ROLLER
	115	466089	-		1	SEAL
375ml 300ml						
		C- 284163-0503				**Start-Up Kit, Ass'y**
	030	526689	-		1	DISTRIBUTOR WING
	110	499387	-		1	PRESSURE ROLLER
	115	466099	-		1	SEAL
750ml Slim						
		C- 284163-0504				**Start-Up Kit, Ass'y**
	030	526689	-		1	DISTRIBUTOR WING
	110	499387	-		1	PRESSURE ROLLER
	115	544015	-		1	SEAL
1000ml Slim						
		C- 284163-0505				**Start-Up Kit, Ass'y**
	030	569104	-		1	DISTRIBUTOR WING
	110	499387	-		1	PRESSURE ROLLER
	115	567743	-		1	SEAL
Common Parts						
	F010	**SP- 499255-0201**	-		**1**	**SEAL KIT**
	033	476358	-		1	COIL HEATER
	040	12242-0003	-		1	GASKET
	050	12242-0005	-		1	GASKET
	100	230551	-		1	GASKET
	120	531738	-		2	GASKET
	130	531739	-		1	GASKET
	140	531740	-		1	GASKET
	160	531742	-		1	GASKET
	190	531744	-		1	GASKET
	195	531745	-		1	GASKET
	200	531764	-		1	GASKET
	205	531734	-		1	GASKET
	210	90214-0138	-		2	BALL BEARING
	220	90242-0084	-		2	O-RING
	230	315204-0217	-		2	O-RING 24,2X3VITON

From	Pos	Part No	SP	UN	Qty	Description

From	Pos	Part No	SP	UN	Qty	Description
Seal Kit , Valve Change every 1000-1200h Service						
		C- 499255-0201				**Seal Kit, Ass'y**
	010	530589	-		4	SEAL RING
	020	530588	-		1	SEAL RING
	030	533169	-		1	DIAPHRAGM
	060	90207-0363	-		1	GASKET
	070	90207-0365	-		1	GASKET
	080	539212	-		1	GASKET
	100	315204-0215	-		4	O-RING 19,2X3VITON
	110	315202-0301	-		1	O-RING 49,5X3
Sealing Kit , Air cylinder "A" and "C"						
		C- 499255-0202				**Seal Kit, Ass'y**
	050	90020-0028	-		2	SLEEVE
	100	315204-0215	-		4	O-RING 19,2X3VITON
	120	315202-0308	-		1	O-RING 84,5X3
Sealing Kit , Air cylinder "B"						
		C- 499255-0203				**Seal Kit, Ass'y**
	040	90020-0027	-		2	SLEEVE
	090	315202-0304	-		1	O-RING 64,5X3
	100	315204-0215	-		5	O-RING 19,2X3VITON

From	Pos	Part No	SP	UN	Qty	Description

Tetra Pak

SPC section 648012

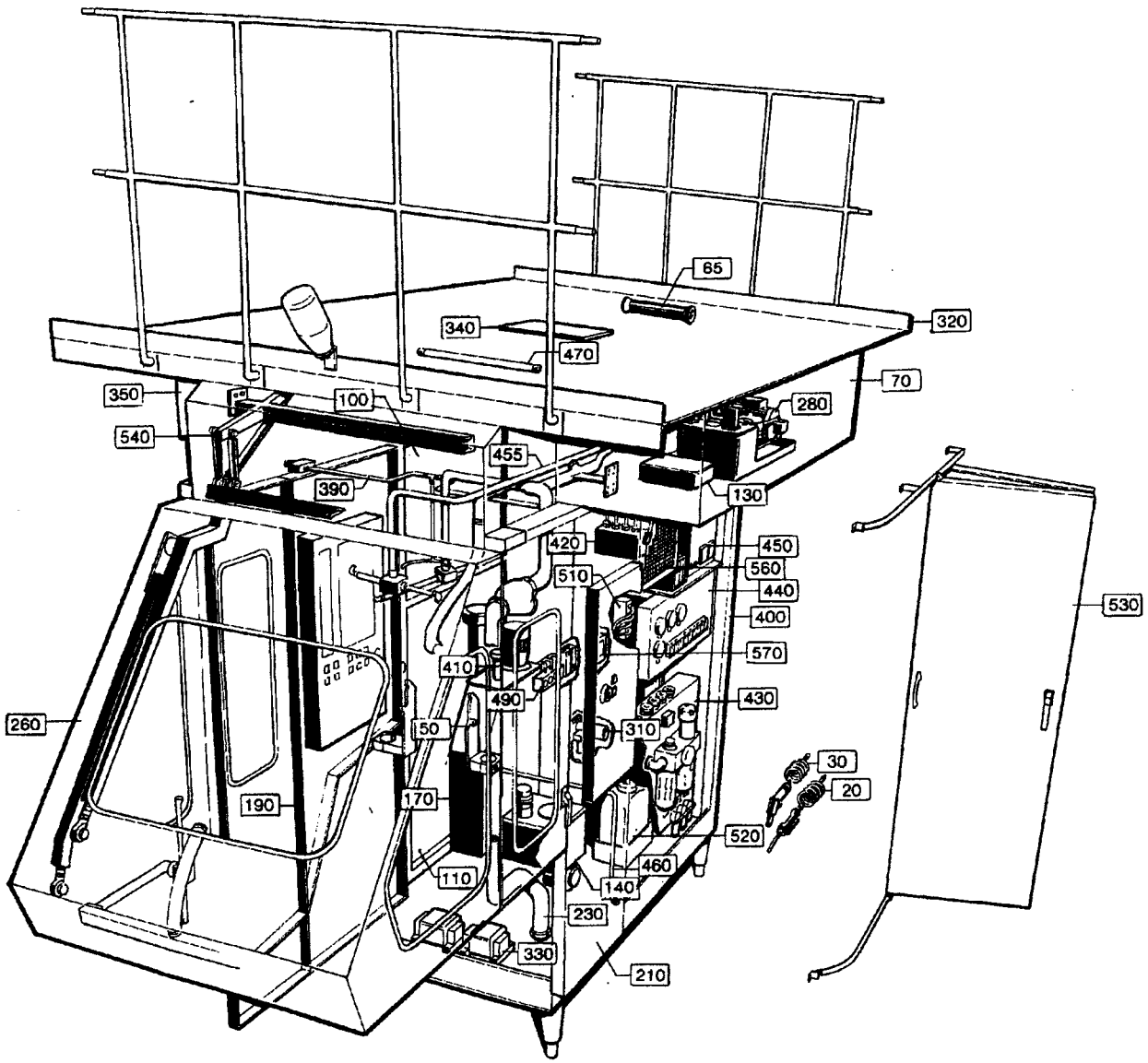

64801209.TIF
648012-9
AM 11880

Code	Ass'y	Group No	Description	Page
12-F000	64801209	648012-070V	Machine body	117
12-F020	23092201	230922-010V	Air Jet Gun	119
12-F030	49361401	493614-010V	Spray Gun	121
12-F040	24384303	243843-040V	Upper Cleaning Pipe	123
12-F050	26588903	265889-030V	Switch (monitor)	125
12-F065	26801501	268015-010V	Bending Roller Bracket	127
12-F070	26930105	269301-050V	Side Box Right	129
12-F100	26932203	269322-030V	Cover Upper	131
12-F110	26932403	269324-040V	Opening	133
12-F130	27963104	279631-040V	Appliance Box	135
12-F140	27997904	279979-040V	Central Lubrication	137
12-F160	282604	282604-020V	Start-Up Kit Machine Body	139
12-F170	56125601	561256-010V	Peroxide Pipe	141
	56092201	560922-010V	Valve Panel	143
	26655003	266550-030V	Filter Housing	145
	56125701	561257-010V	Peroxide Tank	147
	29245105	292451-050V	Peroxide Pump	149
	49365201	493652-010V	Lid	151
	56125801	561258-010V	Draining Peroxide	153
	49365201	493652-010V	Lid	155
	52789801	527898-010V	Container	157
	56125901	561259-010V	Connection Housing	159
12-F190	54509902	545099-020V	Side Guard	161
12-F210	54510002	545100-020V	Side Guard	163
12-F230	29780803	297808-050V	Cleaning Equipment	165
	47688701	476887-020V	Cleaning Head	167
	47688401	476884-020V	Cleaning Head	169
12-F260	29760403	297604-040V	Hood	171
	47688501	476885-020V	Cleaning Head	173
	47688601	476886-020V	Cleaning Head	175
12-F280	43470701	434707-030V	Hydraulic System	177
	27634302	276343-030V	Lid	179
	44207701	442077-020V	Decrease of Pressure	181
12-F310	44009802	440098-020V	Crank Bracket	183
12-F320	44038406	440384-0401	Platform TBA/8	185
	44038407	440384-0402	Platform TB/8	187
12-F330	44041503	440415-020V	Transformer	189
12-F340	44042209	440422-0501	Bottom Plate TBA/8	191
	44042208	440422-0502	Bottom Plate TB/8	193
12-F350	44043705	440437-030V	Box	195
	56668301	566683-010V	Air Cooler	197
12-F390	44047401	440474-010V	Tube Flushing Device	199
12-F400	44053703	440537-050V	Machine Body	201
	44053703	440537-050V	Machine Body	203
	54072301	540723-010V	Connection Box	205
12-F410	44246303	442463-040V	Pipe Work	207
12-F420	44553703	445537-020V	Pipe Work-Hydraulic	209
12-F430	44565604	445656-030V	Valve Panel Lower	211
	44565604	445656-030V	Valve Panel Lower	213
12-F440	54201103	542011-0201	Valve Panel Upper TBA/8	215
	54201104	542011-0202	Valve Panel Upper TB/8	217
	54314701	543147-010V	Pressure Feed	219
12-F450	44993004	449930-040V	Connection Box	221
12-F455	44916803	449168-030V	Cleaning System	223
	47688501	476885-020V	Cleaning Head	225
12-F460	44993203	449932-0401	Pipe Work-Water TBA/8	227
	44993208	449932-0401	Pipe Work-Water TBA/8	229
	44993209	449932-0401	Pipe Work-Water TBA/8	231
	44993204	449932-0402	Pipe Work-Water TB/8	233
	44993205	449932-0402	Pipe Work-Water TB/8	235
	44993206	449932-0402	Pipe Work-Water TB/8	237
12-F470	45029303	450293-0401	Cable Duct TBA/8	239
	45029304	450293-0402	Cable Duct TB/8	241
12-F490	45030303	450303-020V	Flow Meter Group	243
12-F510	45078813	450788-0501	Pipe Work-Pneumatic TBA/8	245
	45078814	450788-0501	Pipe Work-Pneumatic TBA/8	247
	45078815	450788-0502	Pipe Work-Pneumatic TB/8	249
	45078816	450788-0502	Pipe Work-Pneumatic TB/8	251
12-F520	45079201	450792-010V	Detergent Pump	253
12-F530	45082402	450824-020V	Door	255
12-F540	45084004	450840-040V	Lifting Unit	257
	47688401	476884-020V	Cleaning Head	259
12-F560	45088302	450883-030V	Protection	261
	54315702	543157-020V	Holder	263
12-F570	45134801	451348-020V	Connection Box	265
	68917	68917-010V	Angle indicator	267

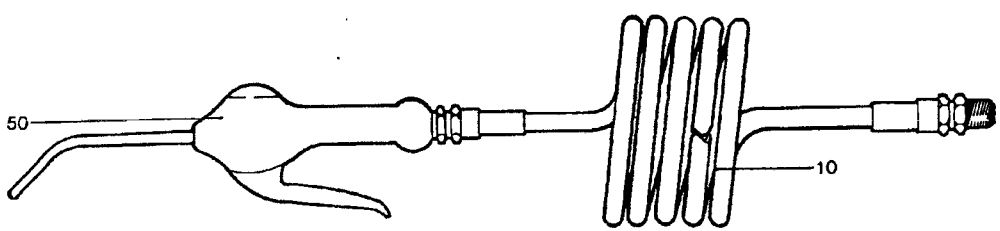

23092201.TIF
230922-1
AM

Last Alteration: AM 5061 81-11-06

Corresponding group: 230922-010V
Assembly Drawing: 230922-1

Issue: **930607**

From	Pos	Part No	SP	UN	Qty	Description
		C- 230922-0101				**Air Jet Gun, Ass'y**
	010	90152-0016	S		1	HOSE
	050	90243-0061	S		1	FAN NOZZLE

From	Pos	Part No	SP	UN	Qty	Description

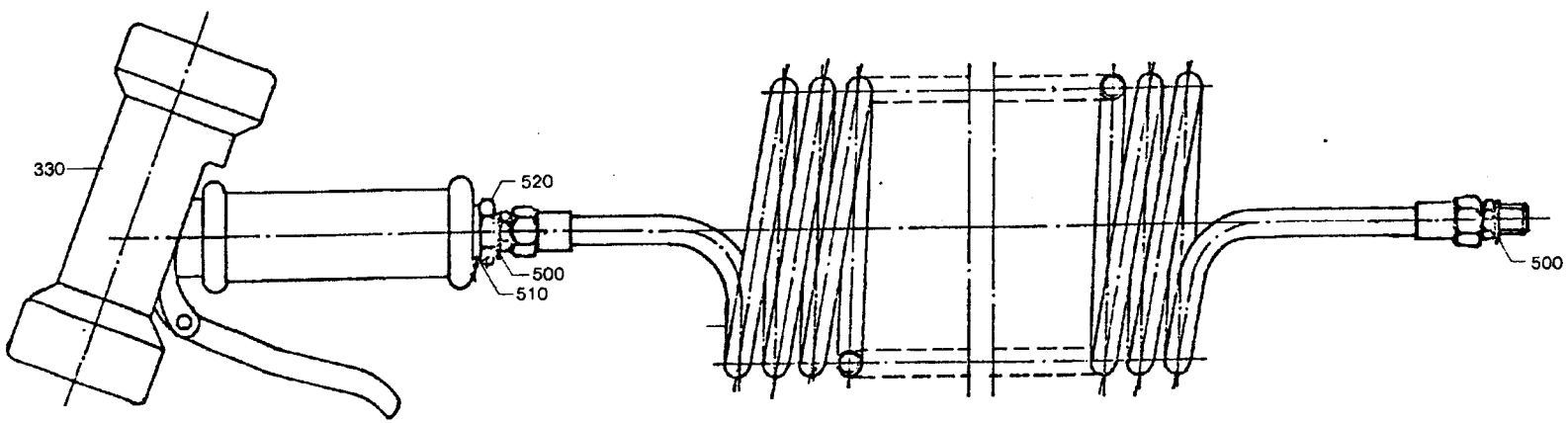

49361401.TIF
493614-1
AM

From	Pos	Part No	SP	UN	Qty	Description
		C- 493614-0101				**Spray Gun , Ass'y**
	300	90152-0017	S		1	HOSE
	330	90426-0003	S		1	HAND SHOWER
	500	315233-0110	-		2	SEAL RING R1/4"
	510	315233-0113	-		1	SEAL RING R1/2"
	520	342701-0205	-		1	BUSHING RNI1/2"-1/4"

From	Pos	Part No	SP	UN	Qty	Description

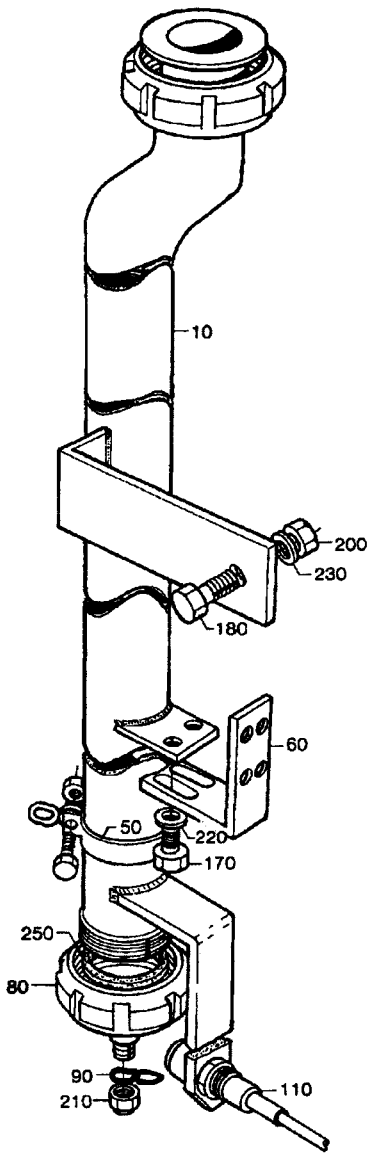

24384303.TIF
243843-3
AM

Last Alteration: AM 8048 85-06-13

Corresponding group: 243843-040V
Assembly Drawing: 243843-3

Issue: 930607

From	Pos	Part No	SP	UN	Qty	Description
		C- 243843-0401				**Upper Cleaning Pipe, Ass'y**
	010	484871	-		1	CLEANING PIPE
	050	209182	-		1	BRACKET
	060	209184	-		1	BRACKET
	080	293455	-		1	LID
	090	293456	-		1	LINK CHAIN
	110	90044-0095	C		1	PROXIMITY SWITCH
	170	312105-0366	-		3	SCREW M6S6X12RFR
	180	312105-0368	-		3	SCREW M6S6X16RFR
	200	312605-0316	-		2	NUT M6M6RFR
	210	312812-0318	-		1	LOCK NUT A4-M8RFR
	220	315105-0153	-		4	WASHER BRB6,4X12RFR
	230	315105-0165	-		2	WASHER BRB8,4X16RFR
	250	315250-0103	-		1	GASKET 48/38

From	Pos	Part No	SP	UN	Qty	Description

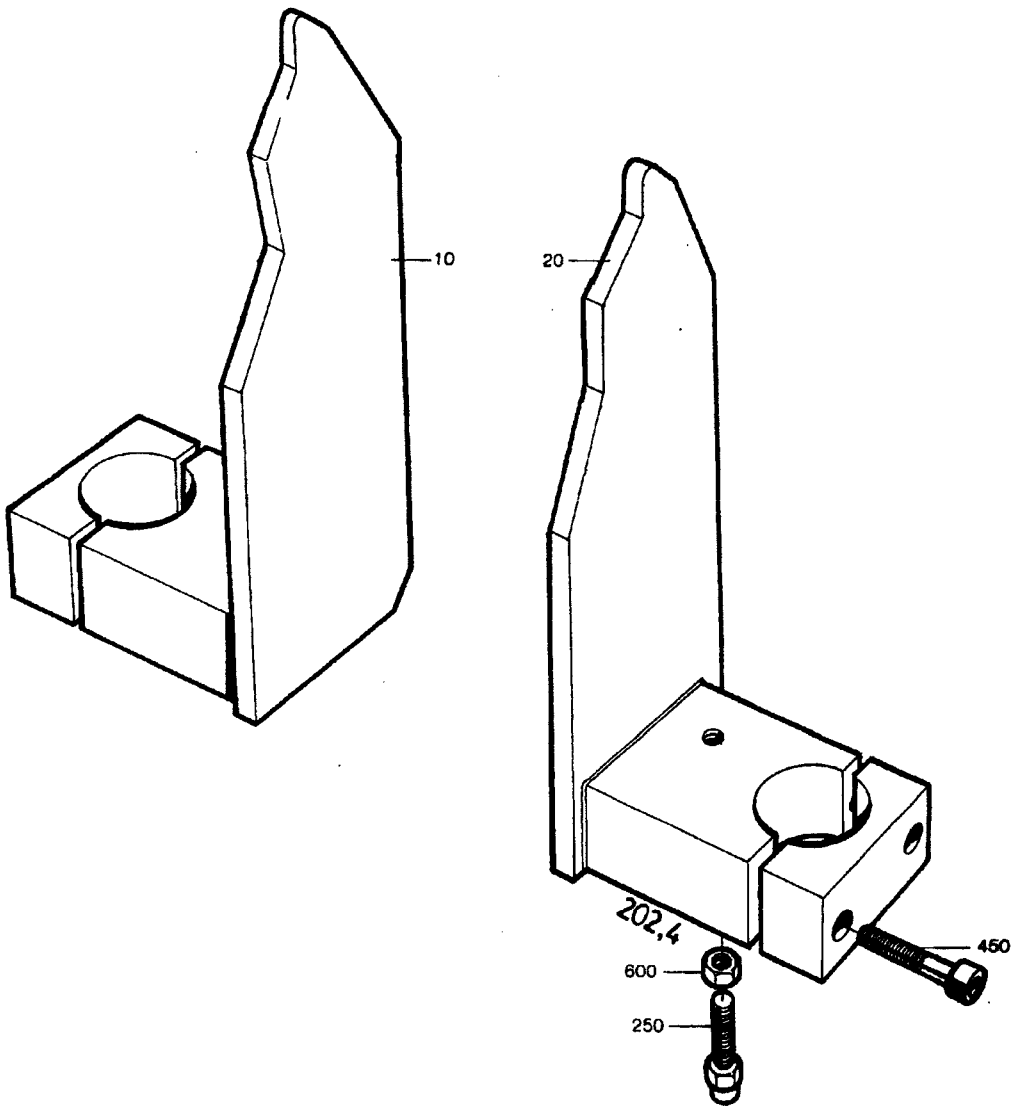

26588903.TIF
265889-3
AM

From	Pos	Part No	SP	UN	Qty	Description
		C- 265889-0301				**Switch (monitor), Ass'y**
	010	532319	-		1	CATCH GUARD LEFT
	020	532318	-		1	CATCH GUARD RIGHT
	250	268746	-		2	SCREW
	450	312111-0459	-		4	SCREW MC6S8X40FZB
	600	312605-0318	-		2	NUT M6M8RFR

From	Pos	Part No	SP	UN	Qty	Description

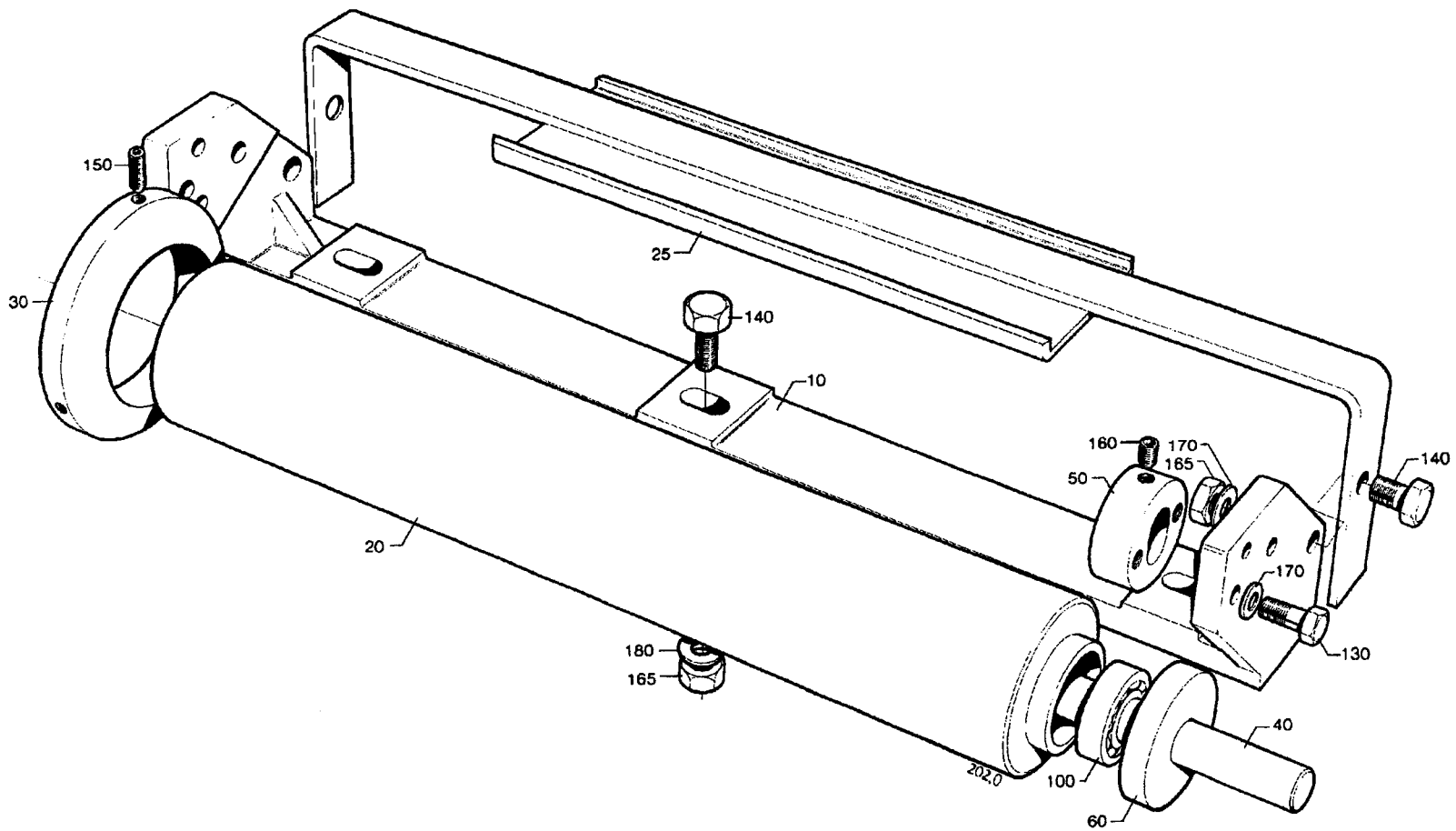

26801501.TIF
268015-1
AM

Last Alteration: AM 5046 81-12-04

Corresponding group: 268015-010V
Assembly Drawing: 268015-1

Issue: **930607**

From	Pos	Part No	SP	UN	Qty	Description
		C- 268015-0101				**Bending Roller Bracket**
	010	259760	-		1	BENDING ROLLER BRACKET
	020	265564	-		1	BENDING ROLLER
	025	268750	S		1	PAPER GUIDE PLATE
	030	250588	S		2	FLANGE
	040	265566-0001	-		1	SHAFT
	050	265567	-		2	BEARING UNIT
	060	265568	-		2	DUST COVER
	100	90214-0098	S		2	BALL BEARING
	120	311303-0310	-		2	SLOTTED PIRPB5X20FZB
	130	312101-0370	-		4	SCREW M6S6X20FZB
	140	312101-0453	-		5	SCREW M6S8X25FZB
	150	312318-0325	-		4	STOP SCREW SK6SS5X10RFR
	160	312318-0364	-		4	STOP SCREW SK6SS6X10RFR
	165	312601-0318	-		5	NUT M6M8FZB
	170	315101-0153	-		4	WASHER BRB6,4X12FZB
	180	315101-0165	-		8	WASHER BRB8,4X16FZB

From	Pos	Part No	SP	UN	Qty	Description

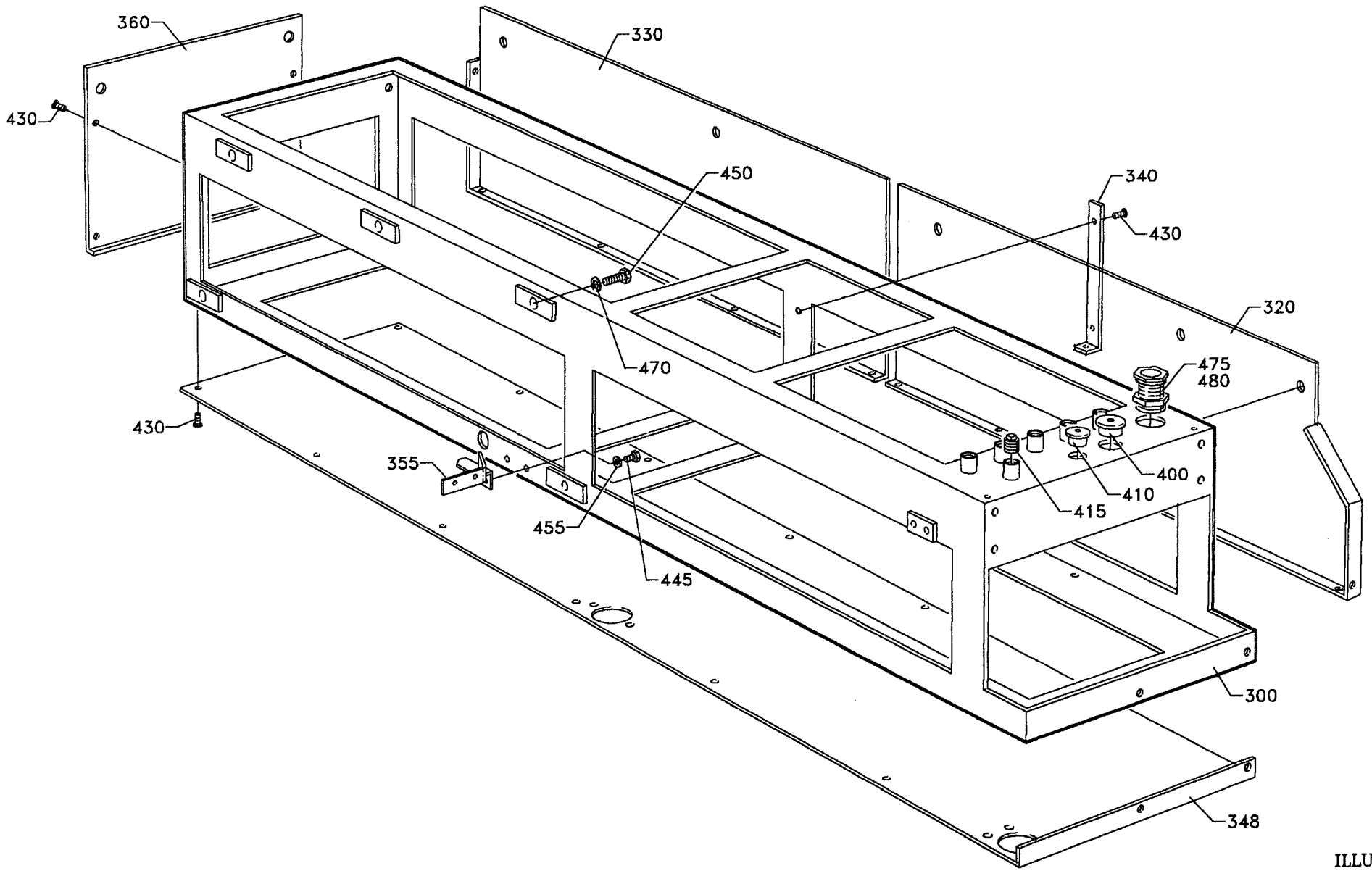

ILLUtec®
26930105.dwg

From	Pos	Part No	SP	UN Qty	Description
		C- 269301-0501			**Side Box Right, Ass'y**
	300	560797	-	1	SIDE PIECE
	320	564521	-	1	SIDE PLATE
	330	564522	-	1	SIDE PLATE
	340	564523	-	1	RIM
	348	548343	-	1	BOTTOM PANEL
	355	561423	-	1	BRACKET
	360	542695	-	1	COVERPLATE R
	400	90002-0010	-	1	PLUG
	410	90002-0012	-	1	BLANK-OFF PLUG
	415	90087-0002	-	1	PIPE PLUG
	430	90287-0075	-	33	SCREW
	445	312105-0366	-	2	SCREW M6S6X12RFR
	450	312101-0540	-	5	SCREW M6S12X40FZB
	455	315101-0153	-	2	WASHER BRB6,4X12FZB
	470	315101-0178	-	5	WASHER BRB13X24FZB
	475	352100-0126	-	1	CABLE GLANR.47-32,5
	480	352100-0227	-	1	CABLE GLANR.31-34,5

From	Pos	Part No	SP	UN Qty	Description

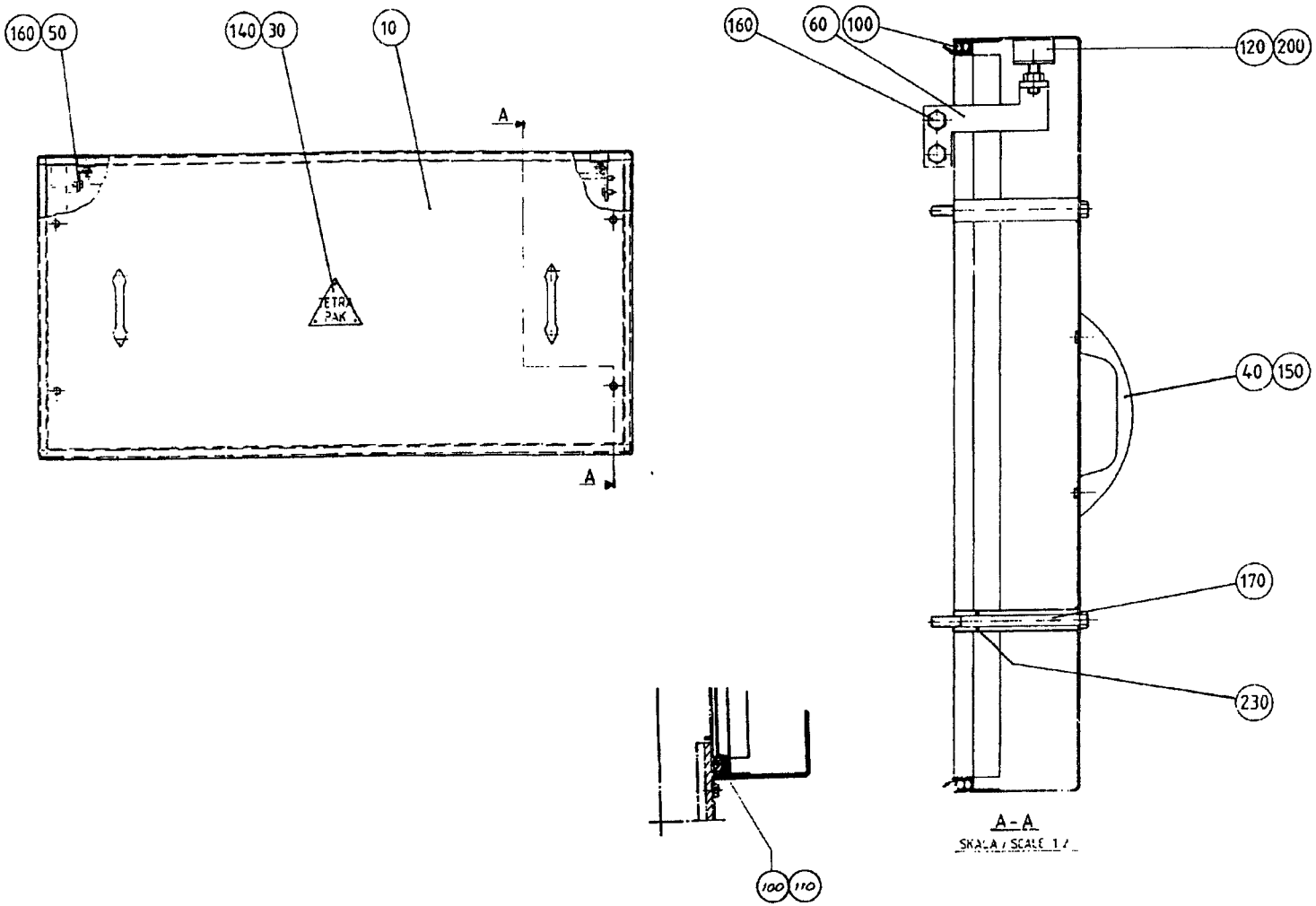

26932203.TIF
269322-3
AM

From	Pos	Part No	SP	UN Qty	Description
		C- 269322-0301			**Cover Upper, Ass'y**
	010	549045	-	1	OPENING
	030	544539	-	1	HOUSEMARK
	040	7309	-	2	HANDLE
	050	282507	-	1	BRACKET LEFT
	060	450869	-	1	BRACKET RIGHT
	100	90143-0049	S	MM4000	STRIP
	120	90347-0004	-	2	VIBRATION DAMPER
	140	311520-0420	-	4	BLANK RIVE3,2X4
	150	312101-0364	-	4	SCREW M6S6X10FZB
	160	312101-0449	-	4	SCREW M6S8X16FZB
	170	312101-0473	-	4	SCREW M6S8X110FZB
	200	312601-0318	-	2	NUT M6M8FZB
	230	315202-0206	-	4	O-RING 7,3X2,4

From	Pos	Part No	SP	UN Qty	Description

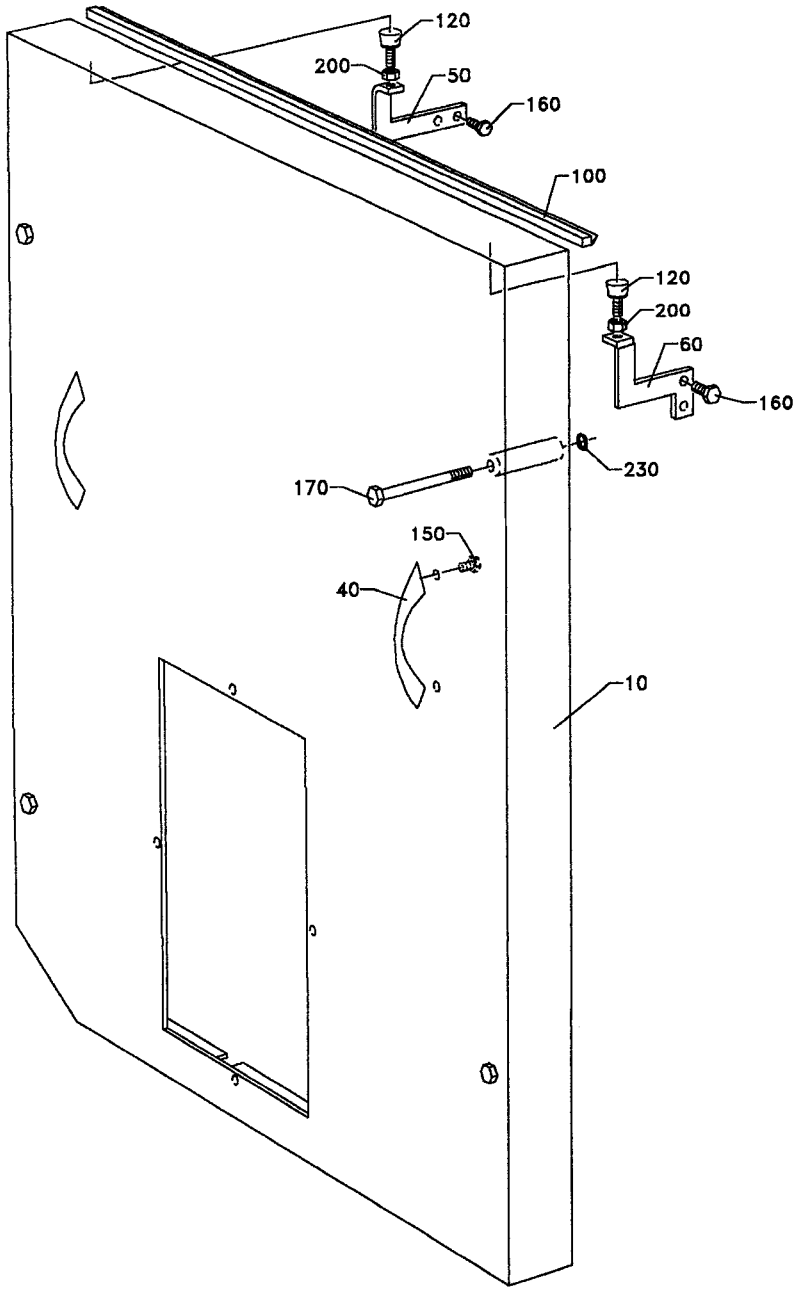

ILLUtec®
26932404.dwg

From	Pos	Part No	SP	UN Qty	Description
		C- 269324-0401			**Opening TBA/8, Ass'y**
		C- 269324-0402			**Opening TB/8, Ass'y**
	010	560880	-	1	OPENING TBA/8
	010	533428	-	1	OPENING TB/8
	040	7309	-	2	HANDLE
	050	282507	-	1	BRACKET LEFT
	060	450869	-	1	BRACKET RIGHT
	100	90143-0049	S	MM5000	STRIP
	120	90347-0004	-	2	VIBRATION DAMPER
	150	312101-0364	-	4	SCREW M6S6X10FZB
	160	312101-0449	-	4	SCREW M6S8X16FZB
	170	312101-0473	-	4	SCREW M6S8X110FZB
	200	312601-0318	-	2	NUT M6M8FZB
	230	315202-0206	-	4	O-RING 7,3X2,4

From	Pos	Part No	SP	UN Qty	Description

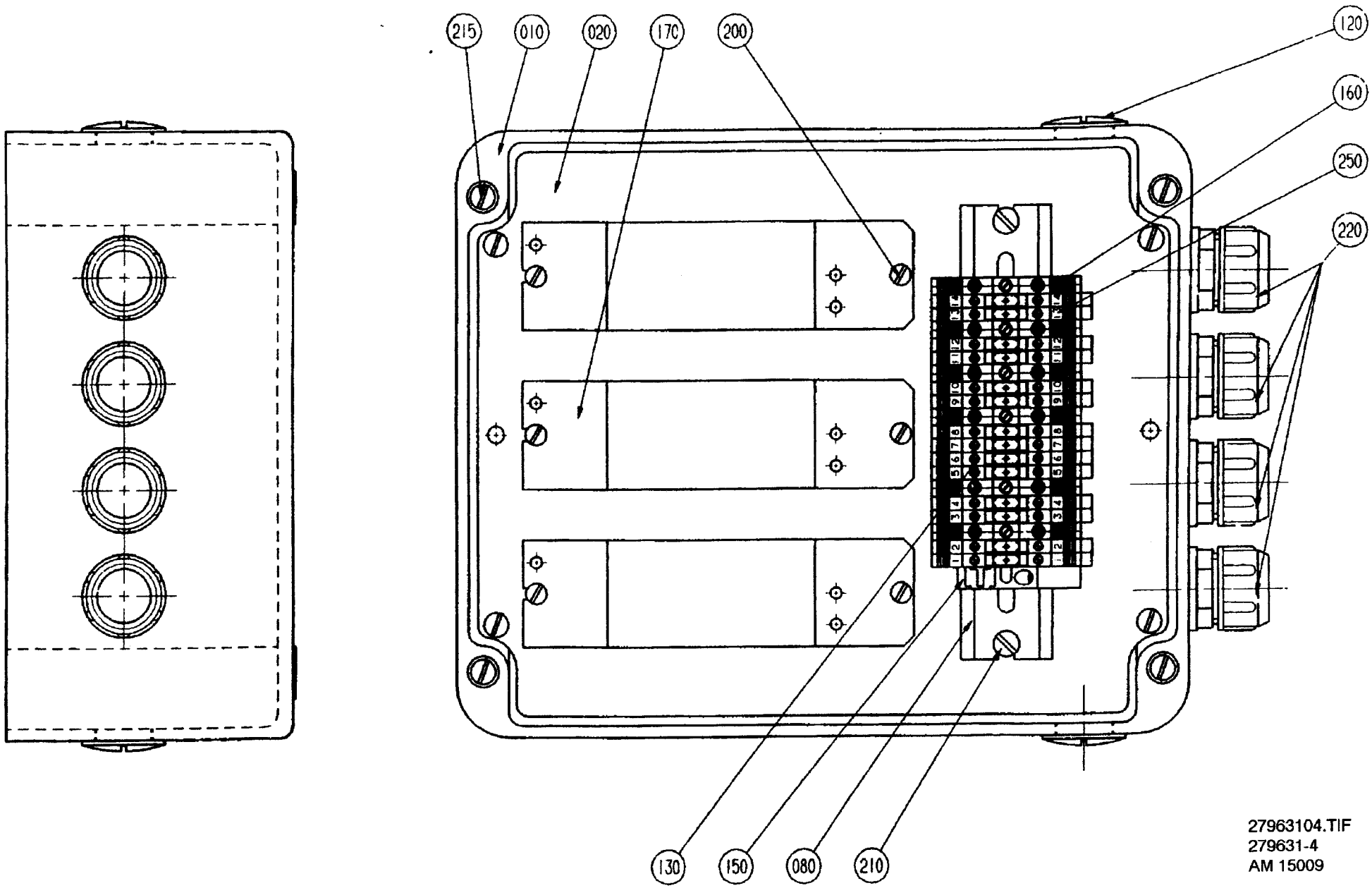

27963104.TIF
279631-4
AM 15009

From	Pos	Part No	SP	UN	Qty	Description
		C- 279631-0401				**Appliance Box 50Hz, Ass'y**
		C- 279631-0402				**Appliance Box 60Hz, Ass'y**
	170	90297-0300	S		3	BALLAST COIL FOR 50 HZ
	170	90297-0301	S		3	BALLAST COIL FOR 60Hz
	010	458351	-		1	APPLIANCE BOX
	020	561414	-		1	ASSEMBLY PLATE
	080	353042-0004	-	MM	175	RAIL
	120	90002-0004	-		2	PLUG
	130	353021-0212	-		14	TERMINAL
	150	353031-0201	-		1	END PLATE 35
	160	353024-0205	-		6	EARTH TERML#MMA WPE 4
	200	312121-0289	-		6	SLOTTED HEMCS4X10FZB
	210	312121-0325	-		2	SLOTTED HEMCS5X10FZB
	215	312121-0374	-		4	SLOTTED HEMCS6X30FZB
	220	352136-0129	-		4	GLAND FITT
	250	359011-0805	-		2	SIGN BOARDATS 1-15

From	Pos	Part No	SP	UN	Qty	Description

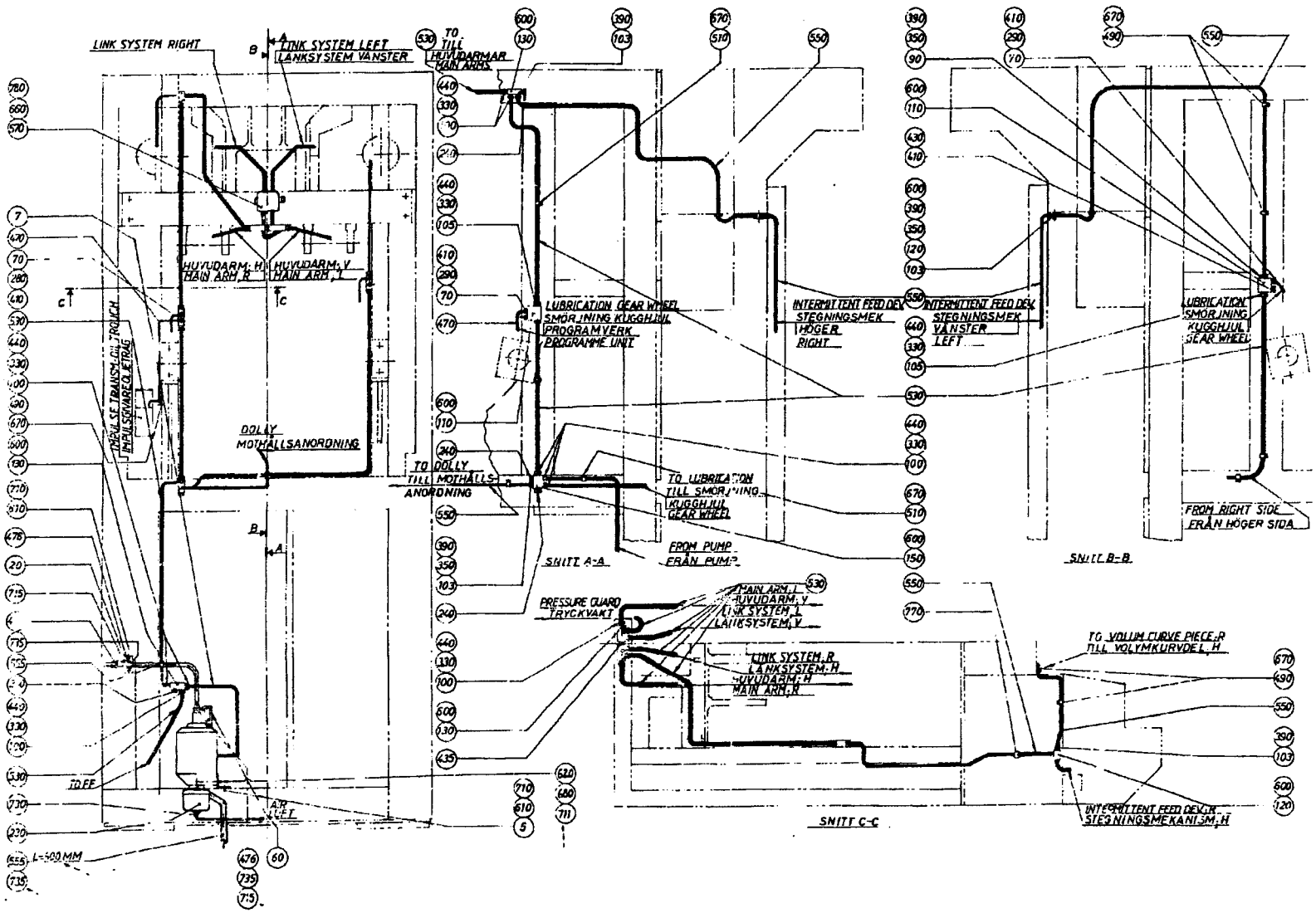

27997904.TIF
279979-4
AM

From	Pos	Part No	SP	UN	Qty	Description
		C- 279979-0401				**Central Lubrication, Ass'y**
	005	547902	-		1	BRACKET
	007	547904	-		1	TUBE
	020	293198-0002	-		1	BRACKET
	060	90012-0063	-		1	GLAND
	070	90028-0020	P		3	CONE
	090	90028-0021	P		1	CONE
	100	90028-0022	-		14	CONE
	103	90028-0024	-		8	CONE
	105	90028-0025	-		3	CONE
	110	90032-0038	-		2	BLOCK
	120	90032-0043	-		2	JUNKTION BLOCK
	130	90032-0044	-		4	JUNKTION BLOCK
	150	90032-0046	-		1	JUNKTION BLOCK
	230	90048-0034	-		1	OIL PUMP
	240	90087-0019	-		4	PLUG
	280	90092-0052	S		1	VALVE
	290	90092-0053	S		2	VALVE
	330	90134-0030	P		16	SLEEVE
	350	90134-0031	P		9	SLEEVE
	390	90134-0038	P		9	BUSHING
	410	90134-0039	P		4	BUSHING
	430	90134-0052	-		1	PLUG
	435	90134-0054	-		1	CONNECTION
	440	90134-0055	-		14	BUSHING
	470	90266-0019	-	MM	800	PIPE
	475	90163-0064	-		1	NIPPLE
	476	90163-0050	-		2	NIPPLE
	490	90165-0003	-		12	CLIP
	510	90165-0005	-		8	CLIP
	530	90166-0108	P	M	6	HOSE
	550	90166-0109	P	M	7	HOSE
	555	90166-0113	P	MM	900	HOSE
	570	90274-0027	-		1	GUARD
	600	312101-0295	-		18	SCREW M6S4X20FZB
	610	312101-0366	-		6	SCREW M6S6X12FZB
	620	312101-0467	-		2	SCREW M6S8X80FZB
	660	312111-0293	-		2	SCREW MC6S4X16FZB
	670	312121-0285	-		20	SLOTTED HEMCS4X6FZB
	680	312601-0318	-		2	NUT M6M8FZB
	710	315101-0153	-		6	WASHER BRB6,4X12FZB
	711	315101-0165	-		2	WASHER BRB8,4X16FZB
	715	315233-0111	-		2	SEAL RING R3/8"
	730	342930-0113	-		1	ELBOW PIPE6/4-1/8
	735	342991-0100	-		3	HOSE CLIP 8-14MMRFR
	770	352101-0103	-		2	LEAD-IN G 18,6
	780	352136-0113	-		1	GLAND FITT

From	Pos	Part No	SP	UN Qty	Description
		C- 282604-0201			**Start-Up Kit Machine Body, Ass'y**
	010	90036-0009	-	1	BULB
	020	90036-0038	-	1	BULB
	030	90296-0028	-	ML 2500	OIL
	035	90296-0053	-	L 10	OIL
	040	90296-0068	-	1	GREASE
	045	90296-0075	-	ML 2500	OIL
	060	90298-0019	-	1	DETERGENT

From	Pos	Part No	SP	UN Qty	Description

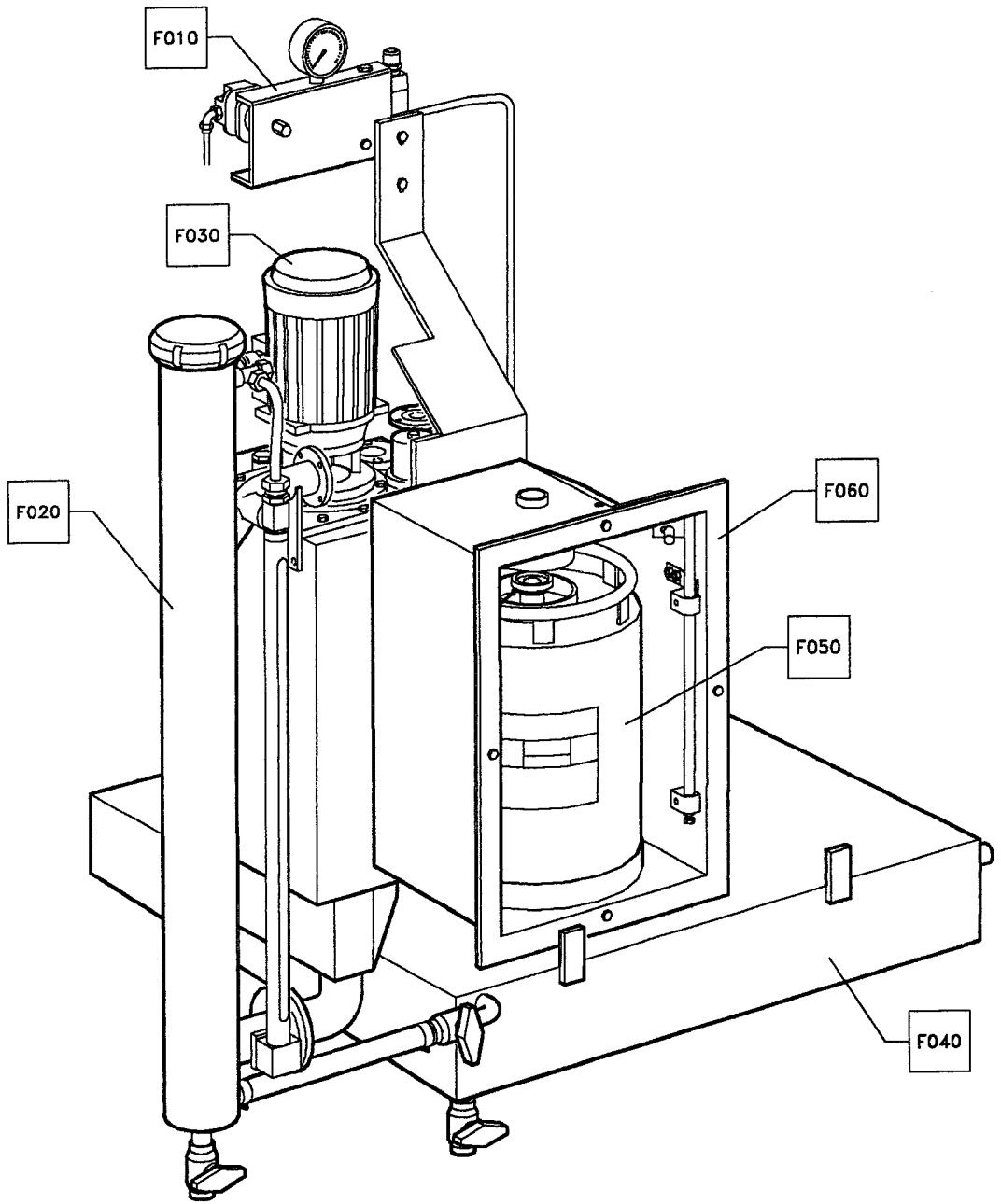

561256-1.WPG
SMST S2-561256-1
AM 15566 901031

From	Pos	Part No	SP	UN	Qty	Description
		C- 561256-0101				**Peroxide Pipe, Ass'y**
	F010	C- 560922-0101	-		1	VALVE PANEL
	F020	C- 266550-0301	-		1	FILTER HOUSING
	F030	C- 561257-0101	-		1	PEROXIDE TANK
		C- 292451-0501				. PEROXIDE PUMP
		C- 493652-0102				. LID
	F040	C- 561258-0101	-		1	DRAINING PEROXIDE
		C- 493652-0102				. LID
	F050	C- 527898-0101	-		2	CONTAINER
	F060	C- 561259-0101	-		1	CONNECTION HOUSING

From	Pos	Part No	SP	UN	Qty	Description

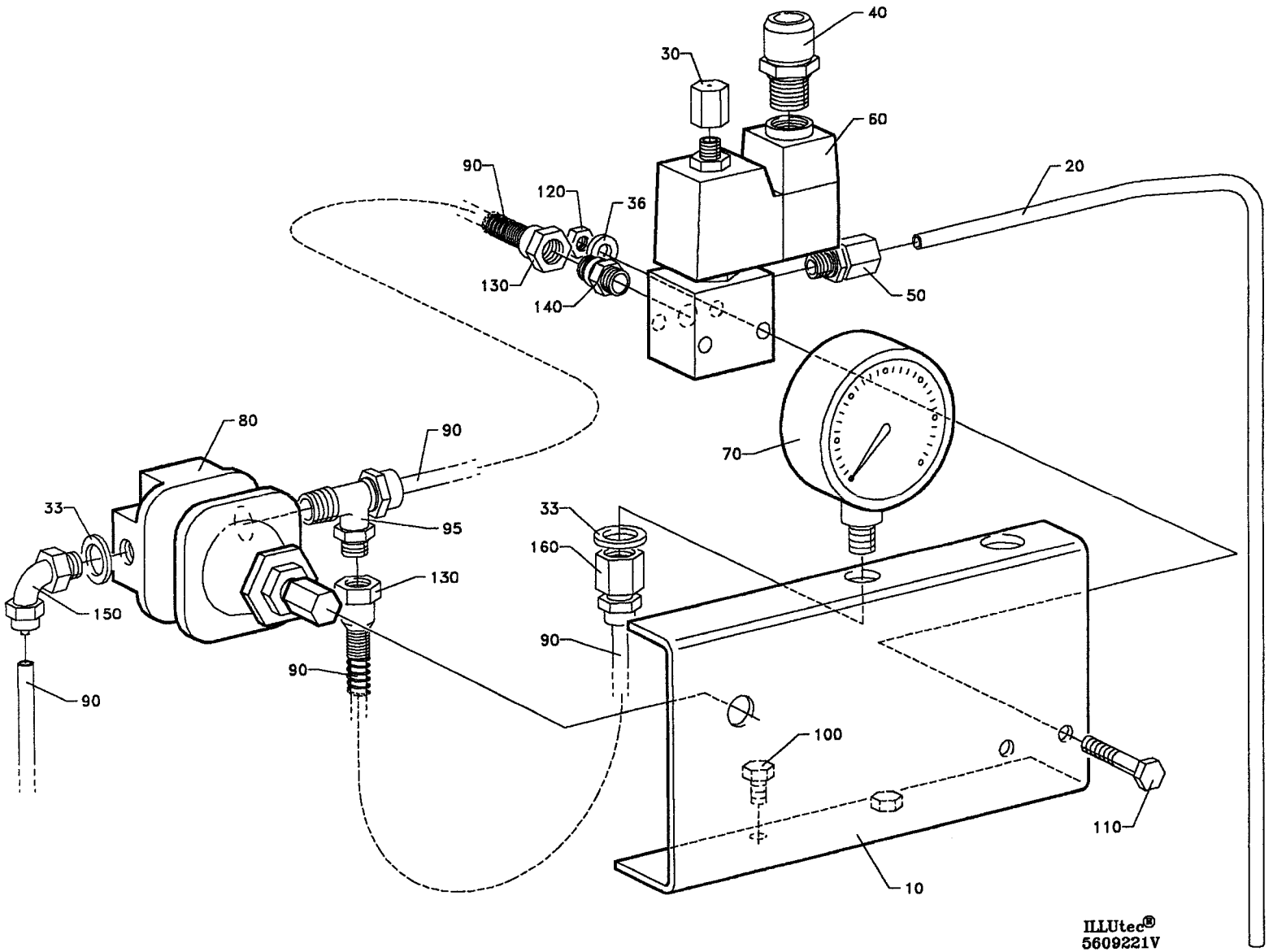

560922.WPG
SMST S2-560922-1
AM 15566 901108

From	Pos	Part No	SP	UN	Qty	Description
		C- 560922-0101				**Valve Panel,Ass'y**
	010	527902	-		1	SHEET
	020	530550	-		1	PIPE
	030	563285	-		1	BLIND PLUG
	033	90005-0005	S		2	WASHER
	036	90005-0009	S		1	WASHER
	040	90012-0063	-		2	GLAND
	050	90030-0184	-		1	PIPE CONNECTION
	060	90042-0206	-		1	SOLENOID VALVE
	065	90042-0487	-		1	COIL
	070	90043-0004	-		1	PRESSURE GAUGE
	075	90110-0095	-		1	CONTAKT
	080	90113-0056	-		1	REGULATOR
	090	90166-0124	-	MM	3000	HOSE
	095	342950-0114	-		1	ELBOW FITT6/4-1/4
	100	312105-0364	-		2	SCREW M6S6X10RFR
	110	312105-0378	-		2	SCREW M6S6X40RFR
	120	312605-0316	-		2	NUT M6M6RFR
	130	342903-0111	-		2	NUT J#DER 1723-6/4
	140	342921-0113	-		1	PIPE COUPL6/4-1/8"
	150	90224-0329	-		1	ELBOW PIPE JOINT
	160	342923-0114	-		1	PIPE COUPL6/4-1/4

From	Pos	Part No	SP	UN	Qty	Description

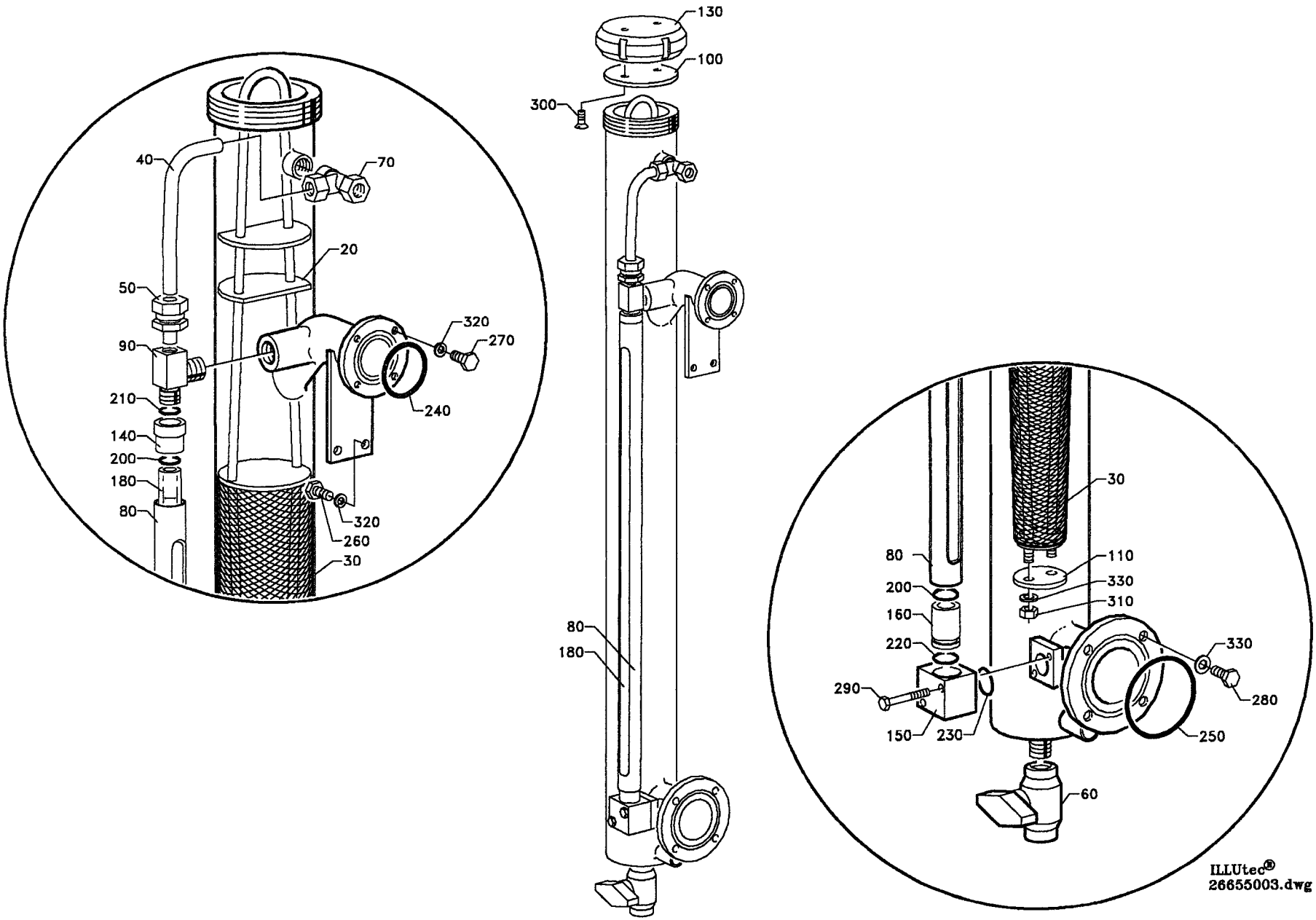
130
100
300
40
70
20
50
320
270
90
240
210
140
200
180
80
320
260
30
80
180
30
80
110
200
330
160
310
220
330
290
280
150
230
250
60
ILLUtec®
26655003.dwg

Last Alteration: AM 17024 92-03-09

Corresponding group: 266550-030V
Assembly Drawing: 266550-3

Issue: **930607**

From	Pos	Part No	SP	UN Qty	Description
		C- 266550-0301			**Filter Housing, Ass'y**
	010	560859	-	1	FILTER HOUSING
	020	269903	-	1	FILTER INSERT
	030	269904	P	1	FILTER MESH
	040	479038	-	1	PIPE
	050	484534	-	1	NIPPLE
	060	484536	S	2	VALVE
	070	484543	-	1	ELBOW FITTING
	080	527917	-	1	PROTECTION PIPE
	090	27216	S	1	T-CONNECTION
	100	266557	P	1	GASKET
	110	269905	-	1	WASHER
	130	284840	-	1	NUT
	140	527919	-	1	CONNECTION
	150	529335	-	1	JUNCTION BLOCK
	160	529336	-	1	PIPE CONNECTION
	180	532202	S	1	GLASS TUBE
	200	315204-0117	-	2	O-RING 1X1,6 VITON
	210	315204-0213	-	1	O-RING 15,3X2,4VITON
	220	315204-0215	-	2	O-RING 19,2X3VITON
	230	315204-0216	-	1	O-RING 22,2X3VITON
	240	315204-0224	-	1	O-RING 2X3 VITON
	250	315204-0305	-	1	O-RING 69,5X3
	260	312105-0368	-	2	SCREW M6S6X16RFR
	270	312105-0370	-	4	SCREW M6S6X20RFR
	280	312105-0452	-	4	SCREW M6S8X22RFR
	290	312115-0379	-	2	SCREW 6X45 A4 80
	300	312145-0449	-	2	SLOTTED HEMFS8X16RFR
	310	312605-0318	-	2	NUT M6M8RFR
	320	315105-0153	-	6	WASHER BRB6,4X12RFR
	330	315105-0165	-	6	WASHER BRB8,4X16RFR

From	Pos	Part No	SP	UN Qty	Description

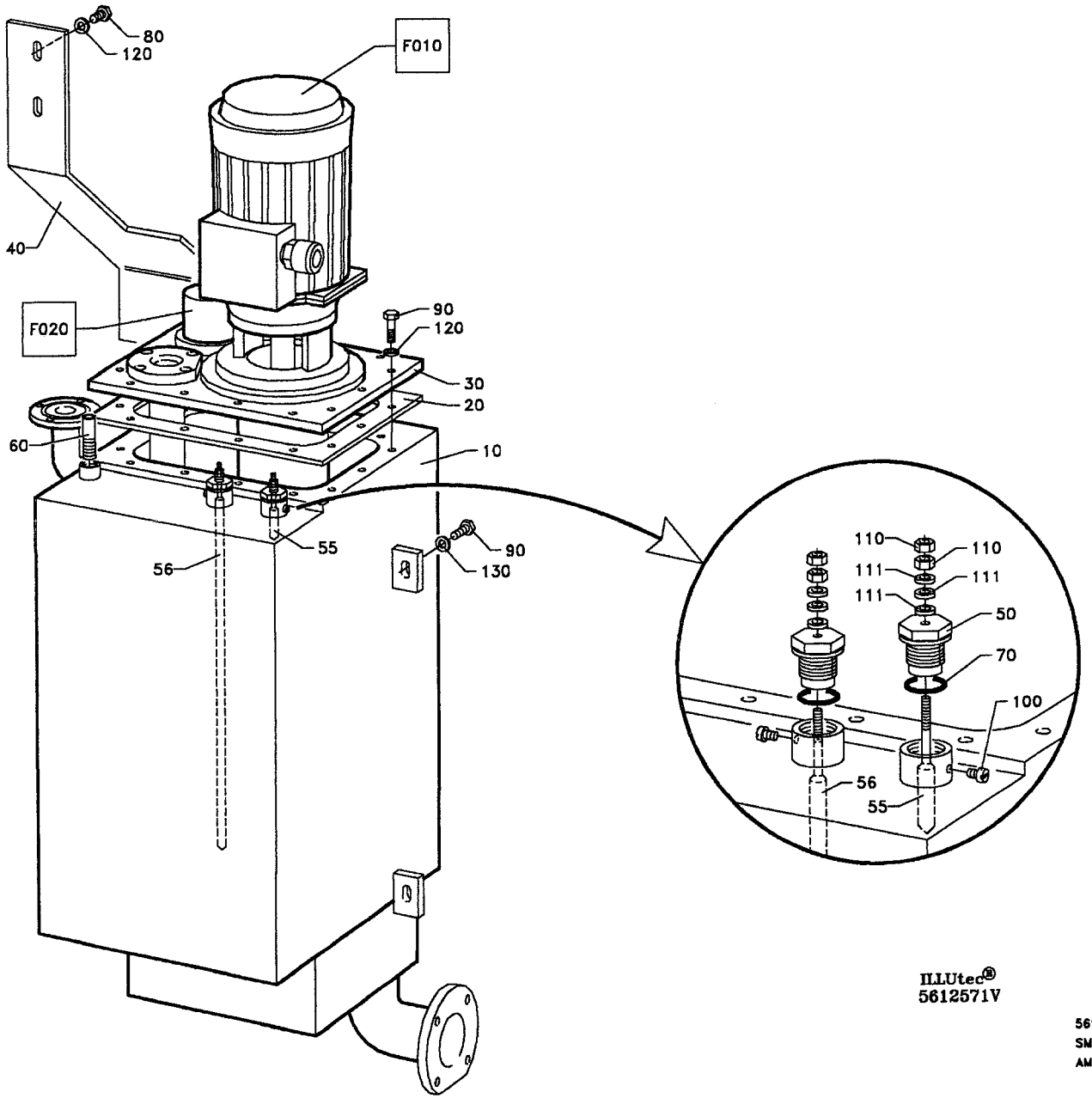

ILLUtec®
5612571V

561257.WPG
SMST S1-561257-1
AM 16337 900418

From	Pos	Part No	SP	UN	Qty	Description
		C- 561257-0101				**Peroxide Tank 1055ml-1000ml 750ml Slim,**
Ass'y						
		C- 561257-0102				**Peroxide Tank 568ml-300ml, Ass'y**
		C- 561257-0103				**Peroxide Tank 750ml 375ml 500ml Slim, Ass'y**
	F010	**C- 292451-0501**	**-**		**1**	**PEROXIDE PUMP**
	F020	**C- 493652-0102**	**-**		**1**	**LID**
	055	567070-0011	C		1	ELECTRODE 1055ml-1000ml 750ml Slim
	055	567070-0006	C		1	ELECTRODE 568ml-300ml
	055	567070-0007	C		1	ELECTRODE 750ml 375ml 500ml Slim
	010	540886	-		1	TANK
	020	259835	P		1	FLANGE SEAL
	030	479032	-		1	OPENING
	040	497121	-		1	SPLASH GUARD
	050	560931	C		2	BRACKET
	056	567070-0002	-		1	ELECTRODE
	060	527910	-		1	PIPE
	070	315204-0213	-		2	O-RING 15,3X2,4VITON
	080	312105-0367	-		2	SCREW M6S6X14RFR
	090	312105-0370	-		17	SCREW M6S6X20RFR
	100	312125-0285	-		2	SLOTTED HEMCS4X6RFR
	110	312605-0312	-		4	NUT M6M4RFR
	111	315105-0136	-		6	WASHER BRB4,3X8RFR
	120	315105-0153	-		16	WASHER BRB6,4X12RFR
	130	315125-0153	-		3	WASHER SB 6,4X22X4 RFR

From	Pos	Part No	SP	UN	Qty	Description

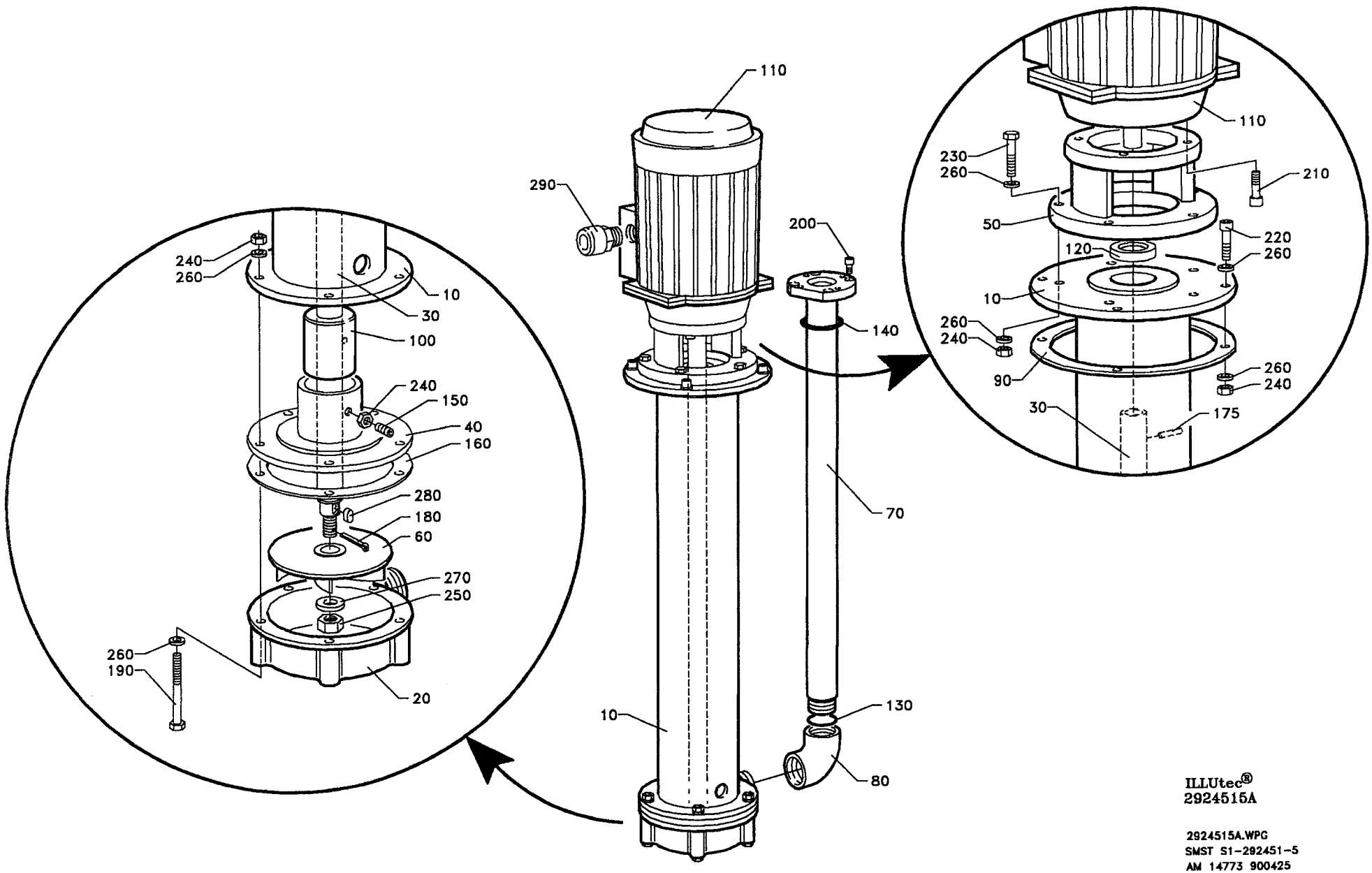

ILLUtec®
2924515A

2924515A.WPG
SMST S1-292451-5
AM 14773 900425

From	Pos	Part No	SP	UN	Qty	Description
50Hz						
		C- 292451-0501				**Peroxide Pump, Ass'y**
	020	G- 571277	-		1	PUMP HOUSING
60Hz						
		C- 292451-0502				**Peroxide Pump, Ass'y**
	020	G- 292499	-		1	PUMP HOUSING
Common parts						
	010	292452	-		1	EXTENSION PIPE
	030	547793	S		1	SHAFT
	040	292456	-		1	BEARING COVER
	050	292464	-		1	FLANGE
	060	G- 491929	-		1	IMPELLER WHEEL
	070	560923	-		1	PIPE
	080	751316	-		1	ELBOW PIPE
	090	484791	P		1	GASKET
	100	491770	S		1	BUSHING
	110	90045-0087	S		1	MOTOR
	120	90091-0137	P		1	SEAL RING
	130	315204-0219	-		1	O-RING 29,2X3VITON
	140	315204-0224	-		1	O-RING 2X3 VITON
	150	90287-0159	-		2	GRUB SCREW
	160	90321-0411	P		1	GASKET
	175	311112-0256	-		1	SLOTTED TURP 4X20 RFR
	180	311411-0169	P		1	SPLIT PIN SP2,5X25RFR
	190	312105-0382	-		5	SCREW M6S6X60RFR
	200	312115-0364	-		4	SCREW 6X10 A4 80
	210	312115-0370	-		4	SCREW 6X20 A4 80
	220	312105-0372	-		4	SCREW M6S6X25RFR
	230	312105-0374	-		5	SCREW M6S6X30RFR
	240	312605-0316	-		16	NUT M6M6RFR
	250	312605-0320	-		1	NUT M6M10RFR
	260	315105-0153	-		28	WASHER BRB6,4X12RFR
	270	315105-0173	-		1	WASHER BRB10,5X22RFR
	280	315705-0196	S		1	FLAT WEDGE
	290	352136-0129	-		1	GLAND FITT

From	Pos	Part No	SP	UN	Qty	Description

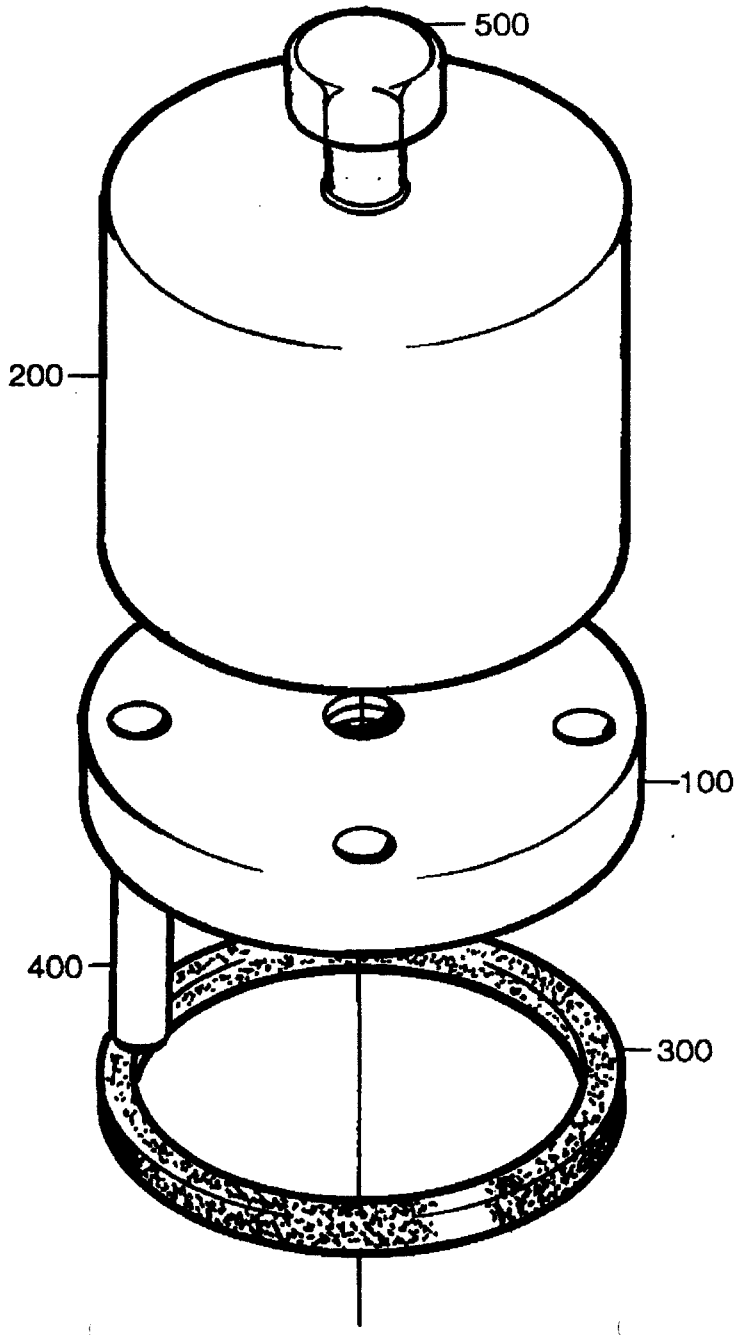
500
200
100
400
300

From	Pos	Part No	SP	UN	Qty	Description
Weight Down						
		C- 493652-0101				**Lid, Ass'y**
	500	312105-0467	-		1	SCREW M6S8X80RFR
	600	312605-0318	-		1	NUT M6M8RFR
	700	312705-0318	-		1	CAP NUT MHM 8 A2
Weight Up						
		C- 493652-0102				**Lid, Ass'y**
	500	312105-0461	-		1	SCREW M6S8X50RFR
Common Parts						
	100	273964	-		1	LID
	200	273965-0001	-		1	WEIGHT
	300	90143-0020	-	MM	190	STRIP
	400	311103-0357	-		4	CYLINDRICACP M6 6X30 RFR

From	Pos	Part No	SP	UN	Qty	Description

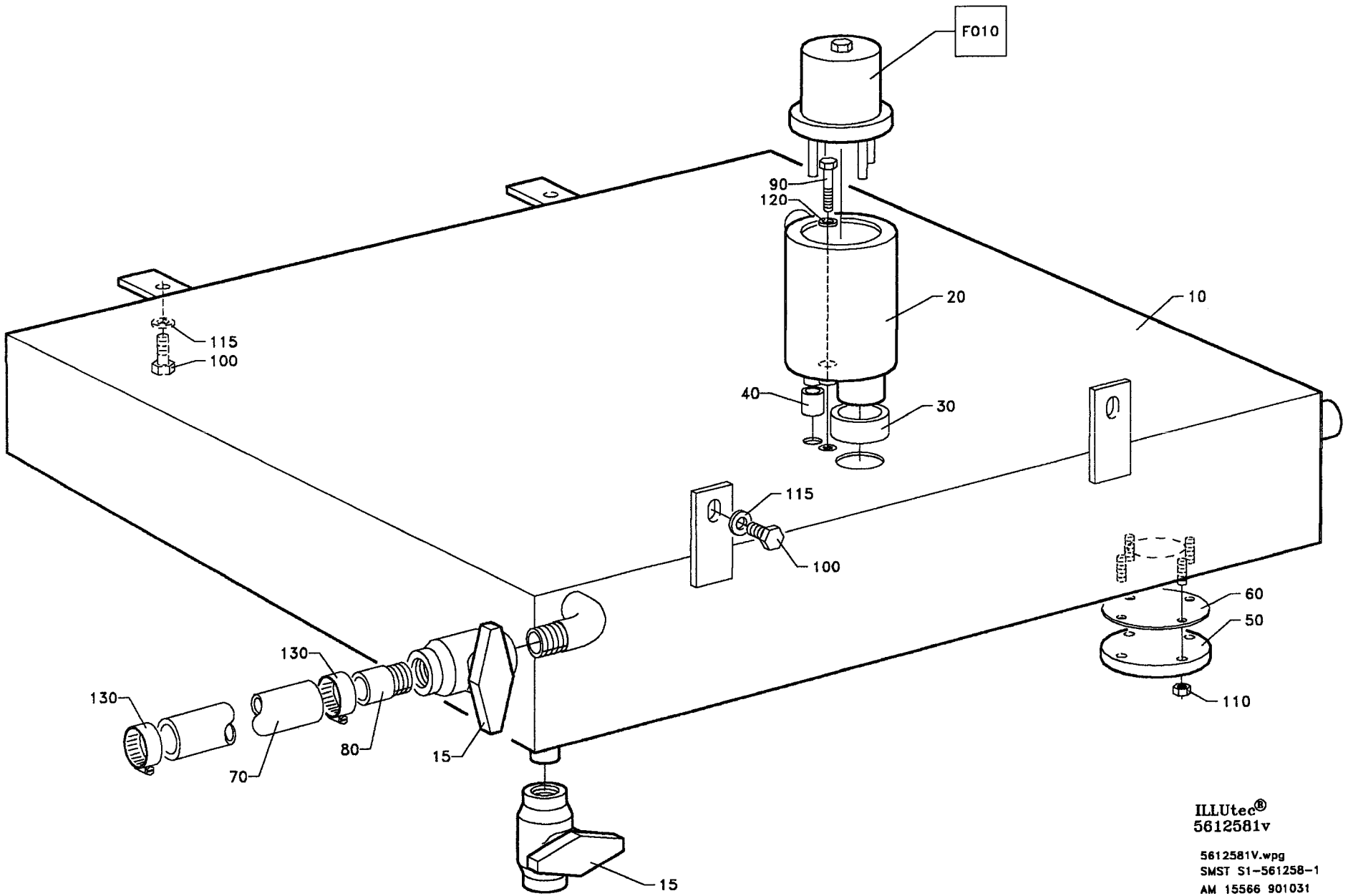

ILLUtec®
5612581v

5612581V.wpg
SMST S1-561258-1
AM 15566 901031

From	Pos	Part No	SP	UN	Qty	Description
		C- 561258-0101				**Draining Peroxide, Ass'y**
	F010	**C- 493652-0102**	**-**		**1**	**LID**
	010	561549	-		1	TANK
	015	484536	S		1	VALVE
	020	532207	-		1	METERING DEVICE
	030	527905	C		1	GASKET
	040	527906	C		1	GASKET
	050	532205	-		1	LID
	060	532206	S		1	GASKET
	070	90166-0060	-	MM	200	HOSE
	080	90330-0059	-		1	NIPPLE
	090	312105-0374	-		1	SCREW M6S6X30RFR
	100	312105-0451	-		4	SCREW M6S8X20RFR
	110	312605-0316	-		4	NUT M6M6RFR
	115	315115-0165	-		4	WASHER TBRB8,4X16RFR
	120	315211-0103	-		1	SEALING WA
	130	342991-0104	-		2	HOSE CLIP 19-28MMRFR

From	Pos	Part No	SP	UN	Qty	Description

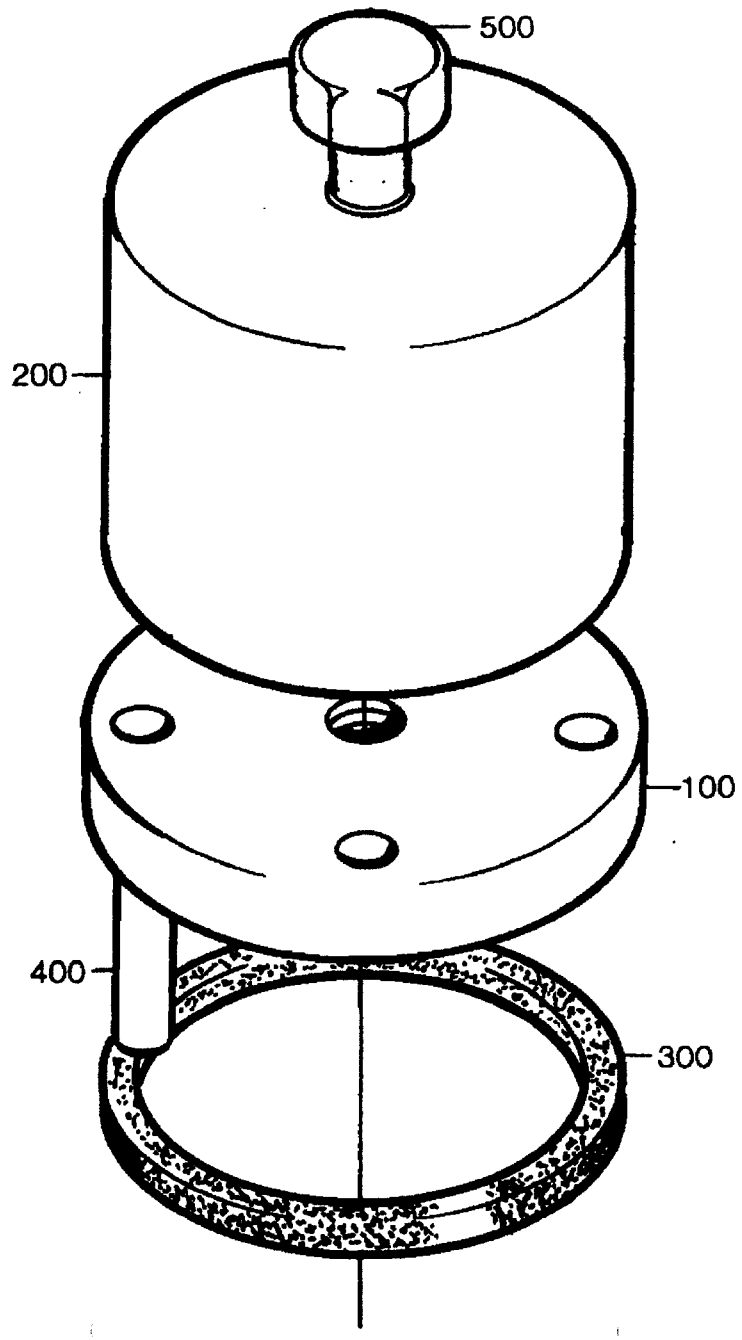
500
200
100
400
300

From	Pos	Part No	SP	UN	Qty	Description
Weight Down						
		C- 493652-0101				**Lid, Ass'y**
	500	312105-0467	-		1	SCREW M6S8X80RFR
	600	312605-0318	-		1	NUT M6M8RFR
	700	312705-0318	-		1	CAP NUT MHM 8 A2
Weight Up						
		C- 493652-0102				**Lid, Ass'y**
	500	312105-0461	-		1	SCREW M6S8X50RFR
Common Parts						
	100	273964	-		1	LID
	200	273965-0001	-		1	WEIGHT
	300	90143-0020	-	MM	190	STRIP
	400	311103-0357	-		4	CYLINDRICACP M6 6X30 RFR

From	Pos	Part No	SP	UN	Qty	Description

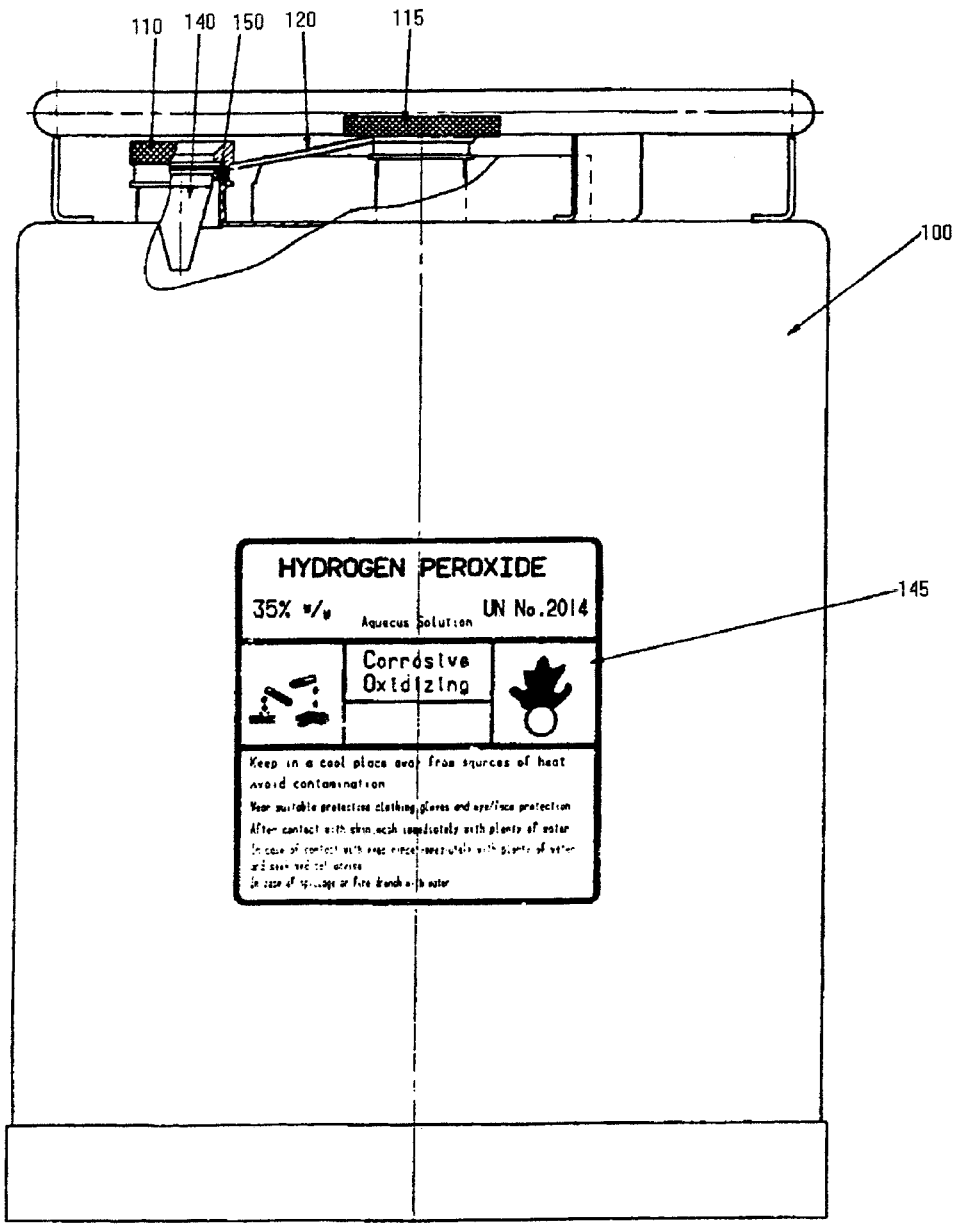

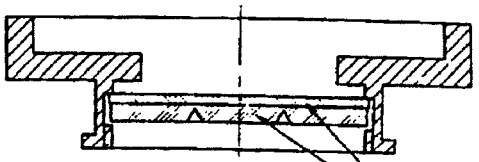

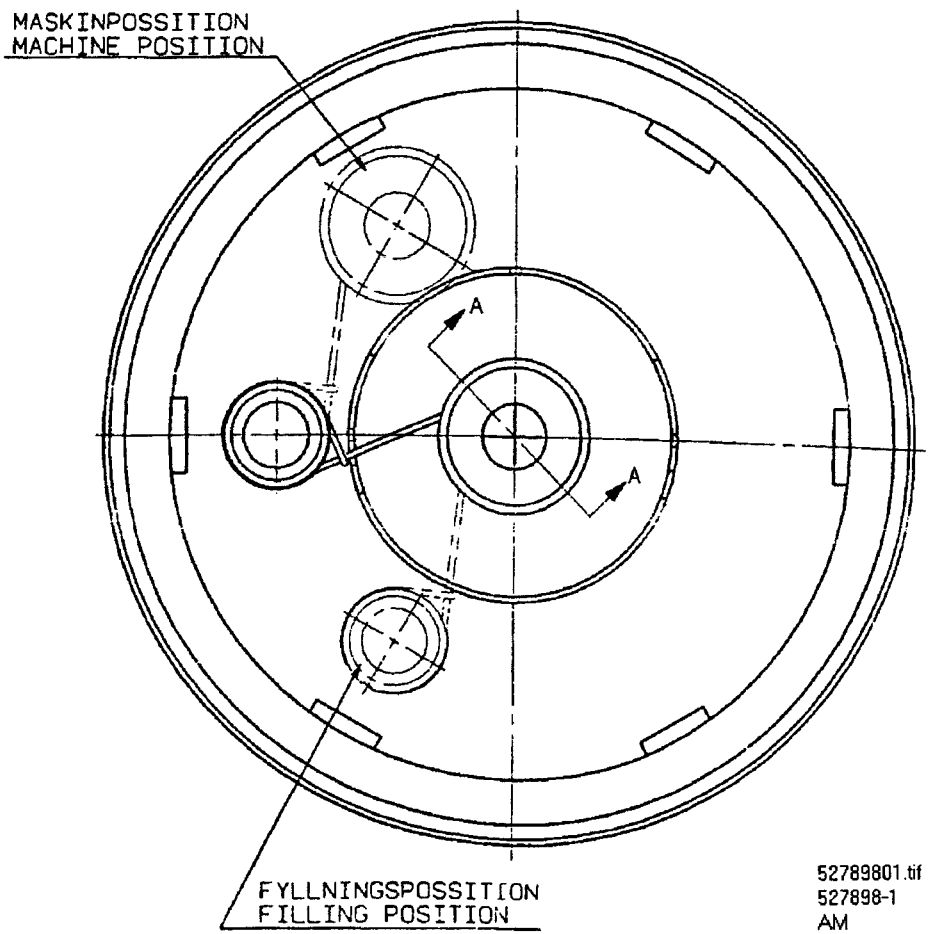

52789801.tif
527898-1
AM

From	Pos	Part No	SP	UN	Qty	Description
		C- 527898-0101				**Container, Ass'y**
	100	561427	C		1	CONTAINER
	110	273977	C		1	NUT
	115	273996	C		1	NUT
	120	273980	C		1	SPRING
	130	565250	S		1	WASHER
	135	565251	S		1	VALVE
	140	273978	C		1	LEVEL GLASS
	145	532655	C		1	CAUTION SIGN
	150	315204-0217	-		1	O-RING 24,2X3VITON

From	Pos	Part No	SP	UN	Qty	Description

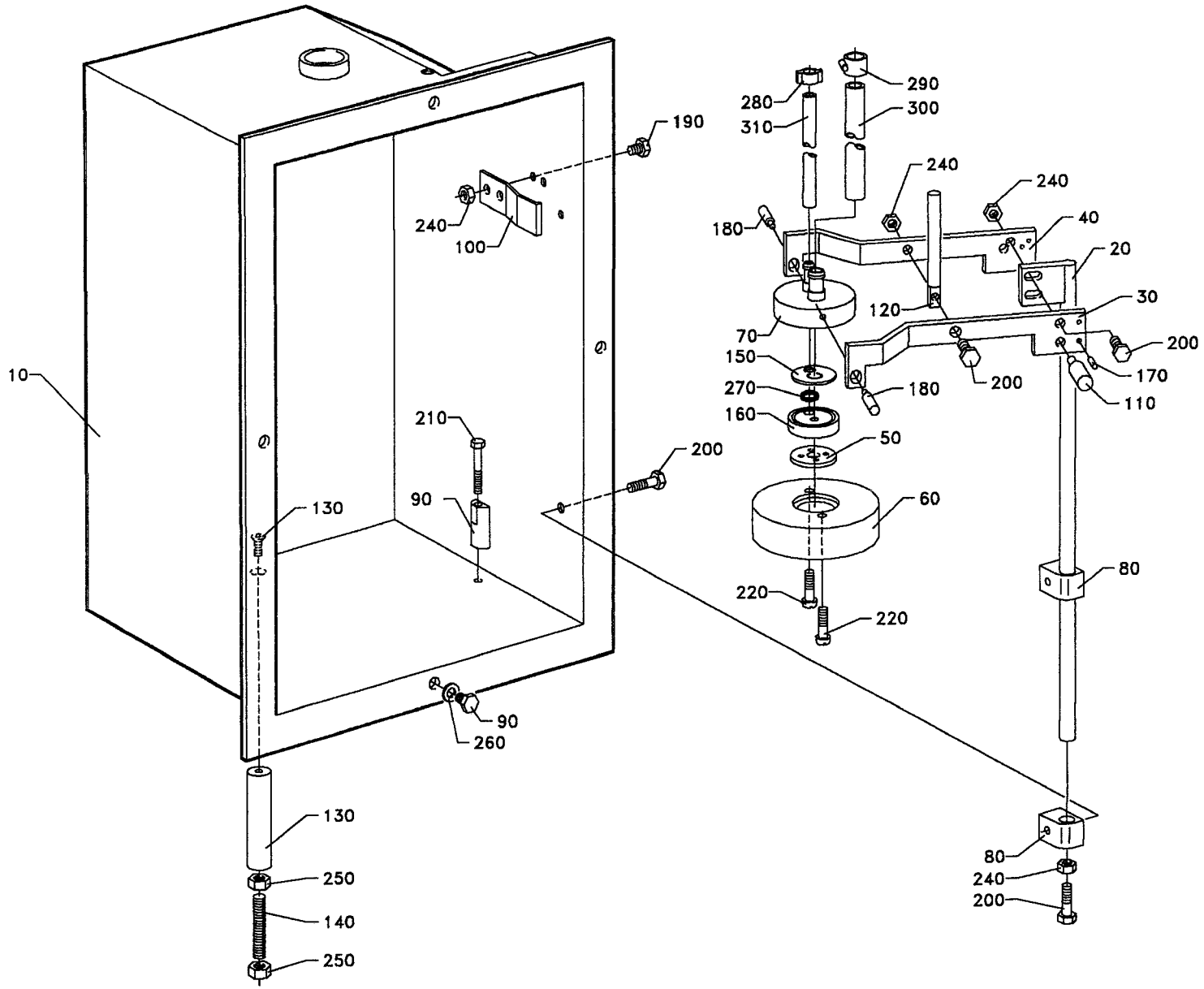

5612591V.WPG
SMST S1-561259-1
AM 14773 900521

From	Pos	Part No	SP	UN	Qty	Description
		C- 561259-0101				**Connection Housing, Ass'y**
	010	565104	-		1	SWEEP
	020	527120	-		1	STEERING
	030	527121-0001	-		1	BOW CLAMP
	040	527121-0002	-		1	BOW CLAMP
	050	273981	S		1	GASKET
	060	273982	-		1	WEIGHT
	070	527122	-		1	ATTACHMENT
	080	527124	-		2	BEARING
	090	527125	-		2	STEERING
	100	527126	C		1	LEAF SPRING
	110	527127	-		1	DOWEL
	120	527128	-		1	GUIDE PIN
	130	527129	-		1	BRACKET
	140	527130	-		1	SCREW
	150	527912	S		1	NON-RETURN VALVE
	160	530551	-		1	WASHER
	170	311103-0234	-		2	CYLINDRICACP M6 3X12 RFR
	180	311103-0273	-		2	CYLINDRICAM6 4X22 RFR
	190	312105-0362	-		6	SCREW M6S6X8RFR
	200	312105-0370	-		5	SCREW M6S6X20RFR
	210	312105-0378	-		2	SCREW M6S6X40RFR
	220	312125-0370	-		2	SLOTTED HEMCS6X20RFR
	230	312155-0366	-		1	SCREW MF6S6X12RFR
	240	312605-0316	-		5	NUT M6M6RFR
	250	312605-0318	-		2	NUT M6M8RFR
	255	312812-0316	-		1	LOCK NUT A4-M6RFR
	260	315105-0153	-		4	WASHER BRB6,4X12RFR
	270	315204-0103	-		1	O-RING 5,1X1,6VITON
	280	342991-0101	-		2	HOSE CLIP 11-17MMRFR
	290	90132-0021	-		2	HOSE CLIP
	300	90166-0101	-	MM	350	HOSE
	310	90166-0138	-	MM	500	HOSE

From	Pos	Part No	SP	UN	Qty	Description

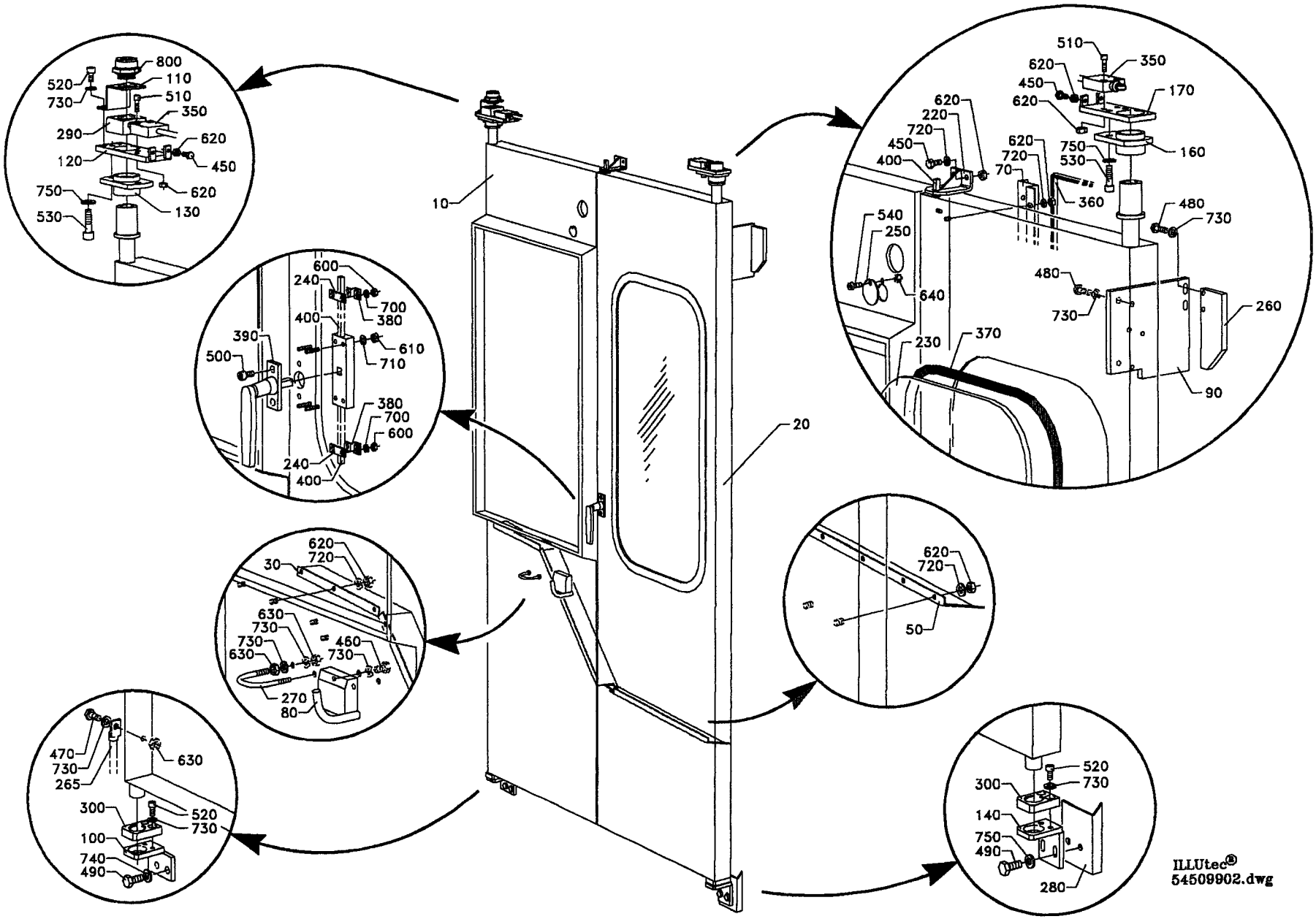

ILLUtec®
54509902.dwg

From	Pos	Part No	SP	UN	Qty	Description
		C- 545099-0201				**Side Guard TBA/8, Ass'y**
		C- 545099-0202				**Side Guard TB/8, Ass'y**
	010	544681	-		1	SIDEGUARD L
	020	544899	-		1	SIDECOVER LEFT FRONT
	030	545107	-		1	CHUTE LEFT
	050	451127	-		1	CHUTE, LEFT FRONT
	070	442193	-		1	PROTECTIVE CASING
	080	469795	-		1	HOLDER
	090	533426	-		1	STOP PLATE
	100	544483	-		1	BRACKET
	110	544484	-		1	HOLDER
	120	560873	-		1	PLATE
	130	544486	S		1	BEARING UNIT
	140	544510	-		1	BRACKET
	160	560800	S		1	BEARING UNIT
	170	560872	-		1	PLATE
	220	293566	-		1	MOUNTINGS
	230	293598	S		1	GLASS PANE
	240	434858	-		2	CUSHION
	250	442195	-		1	LID
	260	553162	-		1	STOP PLATE
	265	553164	-		1	EARTH BAR
	270	531616	-		1	HOLDER
	280	542860	-		1	COVER PLATE
	290	544480	S		1	NUT
	300	544481	S		2	PLATE
	350	90044-0094	S		2	LIMIT SWITCH
	360	90143-0035	-	MM	2300	STRIP
	370	90143-0039	-	MM	2400	STRIP
	380	90237-0011	-		2	BAR CLAMP
	390	90237-0061	-		1	HANDLE
	400	90237-0066	-		1	LOCKING DEVICE
	450	312105-0327	-		6	SCREW M6S5X12 A4 80
	460	312105-0364	-		2	SCREW M6S6X10RFR
	470	312105-0368	-		1	SCREW M6S6X16RFR
	480	312105-0370	-		3	SCREW M6S6X20RFR
	490	312105-0451	-		4	SCREW M6S8X20RFR
	500	312115-0325	-		2	SCREW 5X10 A4 80
	510	312115-0329	-		4	SCREW 5X16 A4 80
	520	312115-0366	-		6	SCREW 6X12 A4 80
	530	312115-0455	-		4	SCREW 8X30 A4 80
	540	312125-0222	-		1	SLOTTED HEMCS3X8RFR
	600	312605-0310	-		4	NUT M6M3RFR
	610	312605-0312	-		4	NUT M6M4RFR
	620	312605-0314	-		38	NUT M6M5RFR
	630	312605-0316	-		3	NUT M6M6RFR
	640	312810-0310	-		1	LOCK NUT 3FZB
	700	315105-0124	-		4	WASHER BRB3,2X6RFR
	710	315105-0136	-		4	WASHER BRB4,3X8RFR
	720	315105-0146	-		33	WASHER BRB5,3X10RFR
	730	315105-0153	-		18	WASHER BRB6,4X12RFR
	740	315105-0165	-		2	WASHER BRB8,4X16RFR
	750	315115-0165	-		6	WASHER TBRB8,4X16RFR
	800	352136-0152	S		1	GLAND FITT

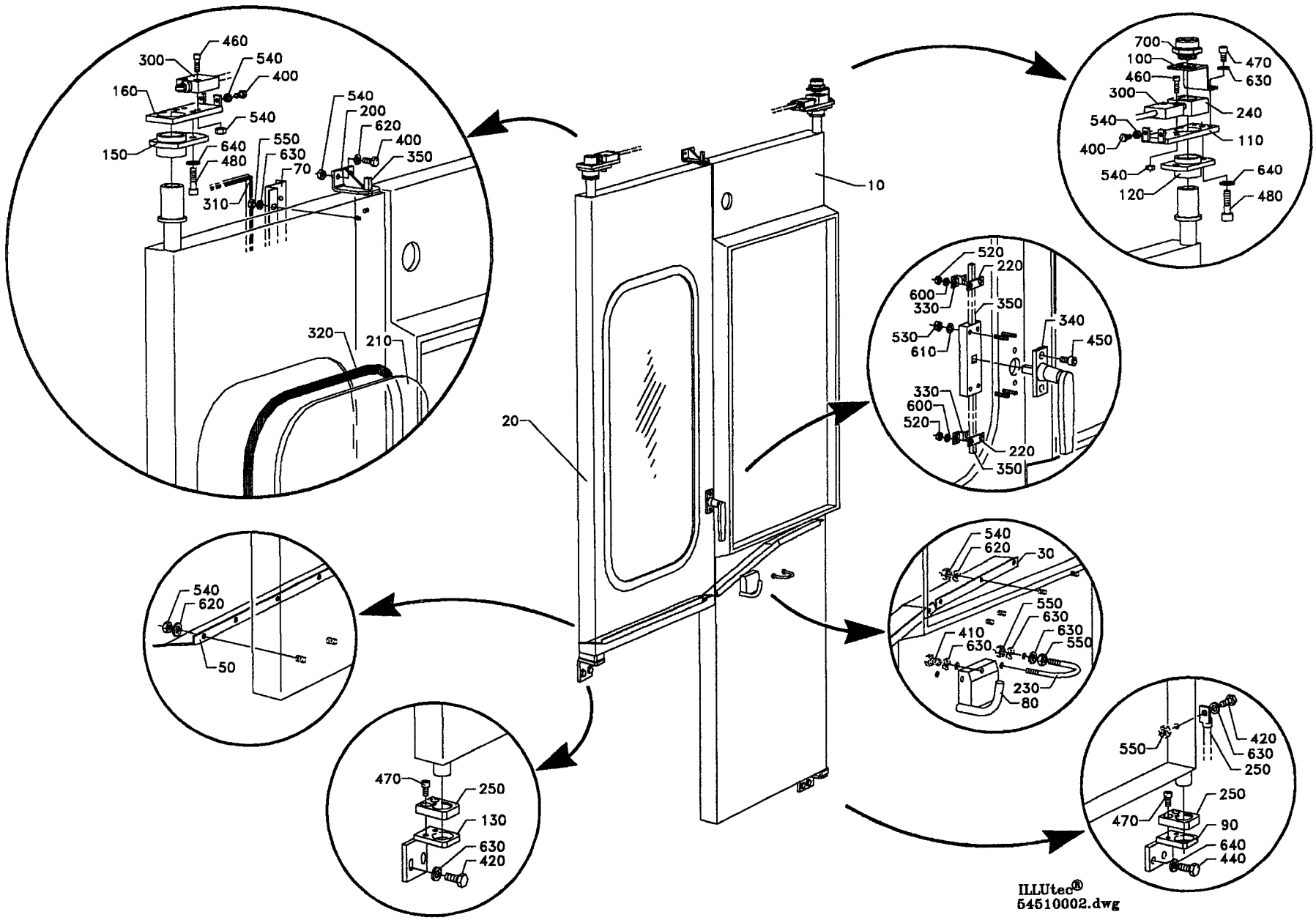
460
300
540
400
160
540
540
200
620
150
640
550
400
480
630
350
70
310
320
210
10
20
700
100
470
460
630
300
240
540
110
400
540
640
120
480
520
220
600
330
350
340
530
450
610
330
600
520
220
350
540
620
30
550
630
410
630
630
550
230
80
540
620
50
470
250
130
630
420
550
420
630
250
250
470
90
640
440
ILLUtec®
54510002.dwg

From	Pos	Part No	SP	UN Qty	Description
		C- 545100-0201			**Side Guard, Ass'y**
	010	544680	-	1	SIDE GUARD R
	020	544900	-	1	SIDECOVER RIGHT FRONT
	030	545108	-	1	CHUTE
	050	451128	-	1	CHUTE, RIGHT FRONT
	070	442194	-	1	PROTECTIVE CASING
	080	531761	-	1	HOLDER
	090	544482	-	1	BRACKET
	100	544484	-	1	HOLDER
	110	560873	-	1	PLATE
	120	544486	S	1	BEARING UNIT
	130	544508	-	1	BRACKET
	150	560800	S	1	BEARING UNIT
	160	560872	-	1	PLATE
	200	293566	-	1	MOUNTINGS
	210	293598	S	1	GLASS PANE
	220	434858	-	2	CUSHION
	230	531616	-	1	HOLDER
	240	544480	S	1	NUT
	250	544481	S	2	PLATE
	265	553164	-	1	EARTH BAR
	300	90044-0094	S	2	LIMIT SWITCH
	310	90143-0035	-	MM2300	STRIP
	320	90143-0039	-	MM2400	STRIP
	330	90237-0011	-	2	BAR CLAMP
	340	90237-0061	-	1	HANDLE
	350	90237-0067	-	1	LOCKING DEVICE
	400	312105-0327	-	6	SCREW M6S5X12 A4 80
	410	312105-0364	-	2	SCREW M6S6X10RFR
	420	312105-0368	-	3	SCREW M6S6X16RFR
	440	312105-0451	-	2	SCREW M6S8X20RFR
	450	312115-0325	-	2	SCREW 5X10 A4 80
	460	312115-0329	-	4	SCREW 5X16 A4 80
	470	312115-0366	-	6	SCREW 6X12 A4 80
	480	312115-0455	-	4	SCREW 8X30 A4 80
	520	312605-0310	-	4	NUT M6M3RFR
	530	312605-0312	-	4	NUT M6M4RFR
	540	312605-0314	-	35	NUT M6M5RFR
	550	312605-0316	-	7	NUT M6M6RFR
	600	315105-0124	-	4	WASHER BRB3,2X6RFR
	610	315105-0136	-	4	WASHER BRB4,3X8RFR
	620	315105-0146	-	27	WASHER BRB5,3X10RFR
	630	315105-0153	-	9	WASHER BRB6,4X12RFR
	640	315105-0165	-	6	WASHER BRB8,4X16RFR
	700	352136-0152	S	1	GLAND FITT

From	Pos	Part No	SP	UN Qty	Description

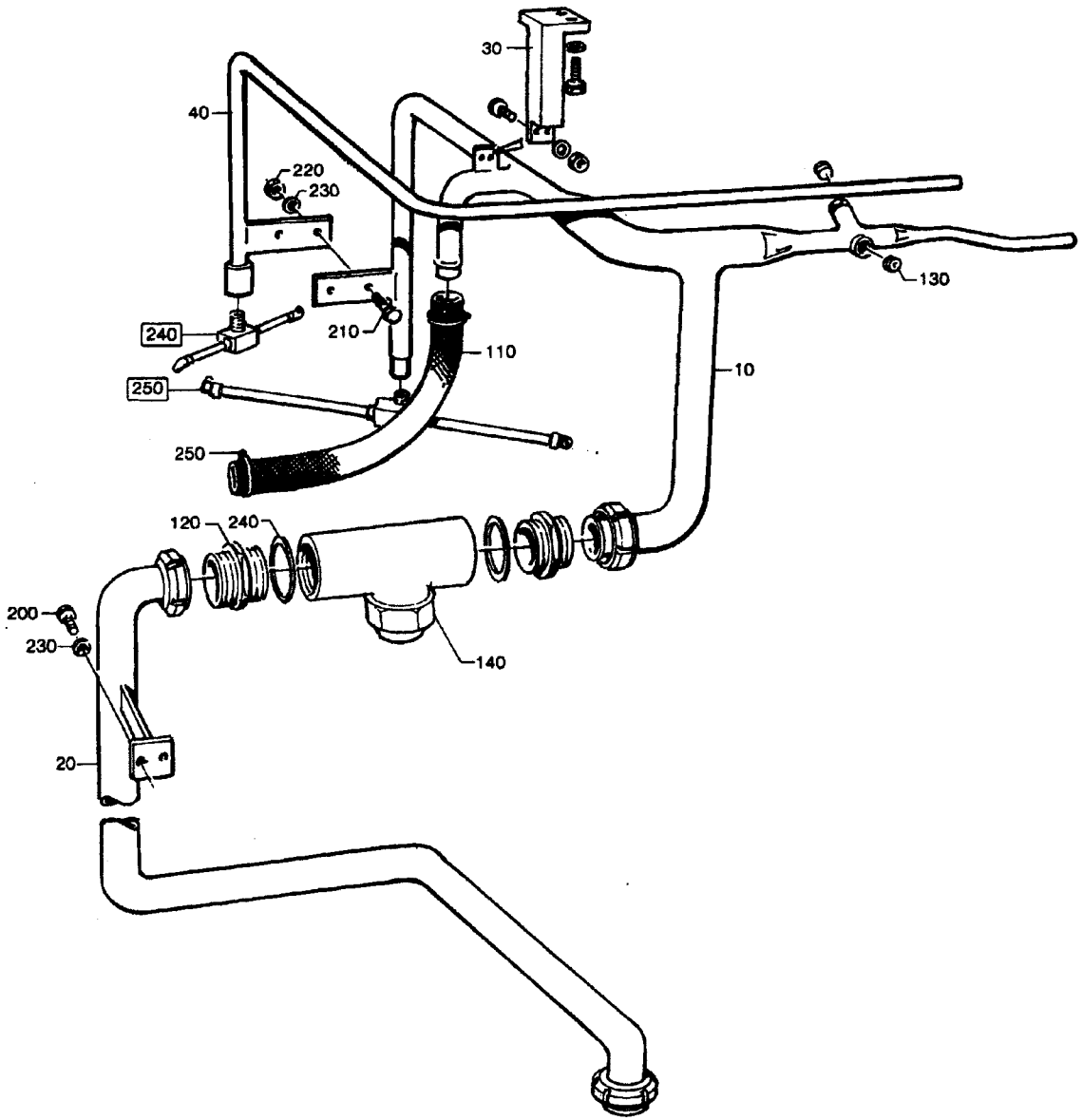

29780803.TIF
297808-3
AM

From	Pos	Part No	SP	UN	Qty	Description
		C- 297808-0501				**Cleaning Equipment, Ass'y**
	F240	**C- 476887-0201**	**-**		**1**	**CLEANING HEAD**
	F250	**C- 476884-0201**	**-**		**1**	**CLEANING HEAD**
	010	542706	-		1	PIPE
	020	297800	-		1	PIPE
	030	297802	-		1	BRACKET
	040	297805	-		1	PIPE
	100	90157-0016	S	ML	X	LOCKING FLUID
	110	90166-0142	S	MM	750	HOSE
	120	90217-0053	-		2	NIPPLE
	130	90330-0026	S		2	PLUG
	140	90415-0032	S		1	FILTER
		90415-0328	S		1	* FILTER INSERT
	200	312105-0368	-		2	SCREW M6S6X16RFR
	210	312105-0370	-		6	SCREW M6S6X20RFR
	220	312605-0316	-		4	NUT M6M6RFR
	230	315105-0153	-		10	WASHER BRB6,4X12RFR
	240	315250-0103	S		2	GASKET 48/38
	250	342991-0106	S		2	HOSE CLIP 26-38MMRFR

From	Pos	Part No	SP	UN	Qty	Description

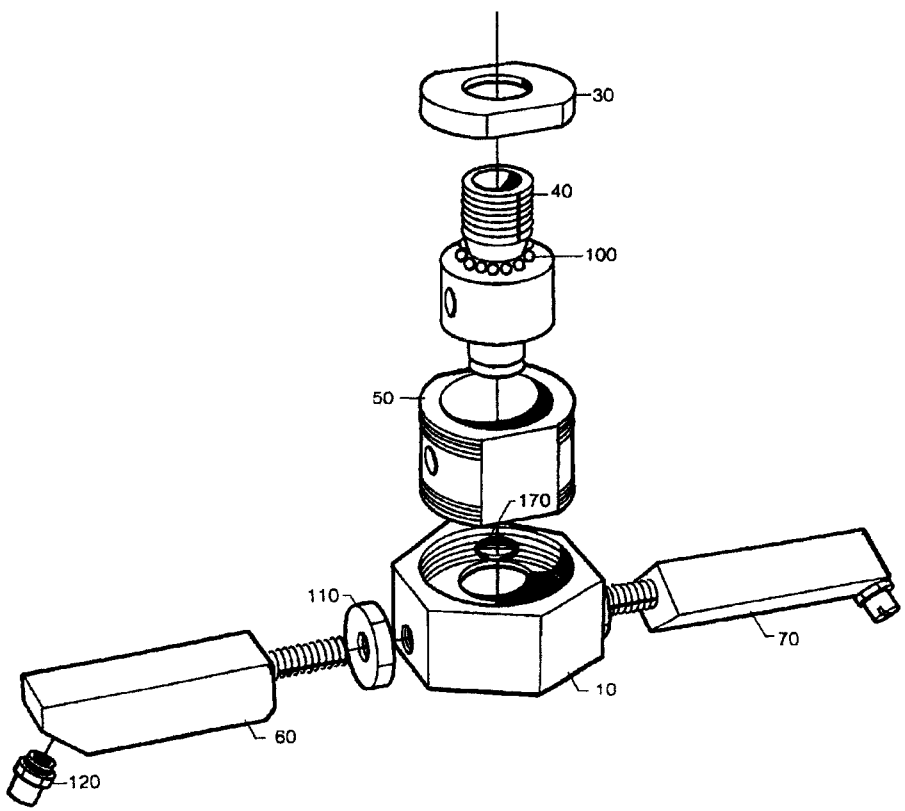

47688701.TIF
476887-1
AM

Last Alteration: AM 14358 90-01-18

Corresponding group: 476887-020V
Assembly Drawing: 476887-1

Issue: 930607

From	Pos	Part No	SP	UN	Qty	Description
		C- 476887-0201				**Cleaning Head, Ass'y**
	010	440600	C		1	ROTOR
	030	534880	S		1	END SECTION
	040	534878	S		1	SHAFT
	050	534879	S		1	BEARING HOUSING
	060	440604-0001	C		1	PIPE
	070	440605-0001	C		1	PIPE
	100	90090-0020	S		24	BALL
	110	90330-0034	-		2	NUT
	120	90424-0026	S		2	NOZZLE
	170	315202-0211	S		1	O-RING 13,3X2,4

From	Pos	Part No	SP	UN	Qty	Description

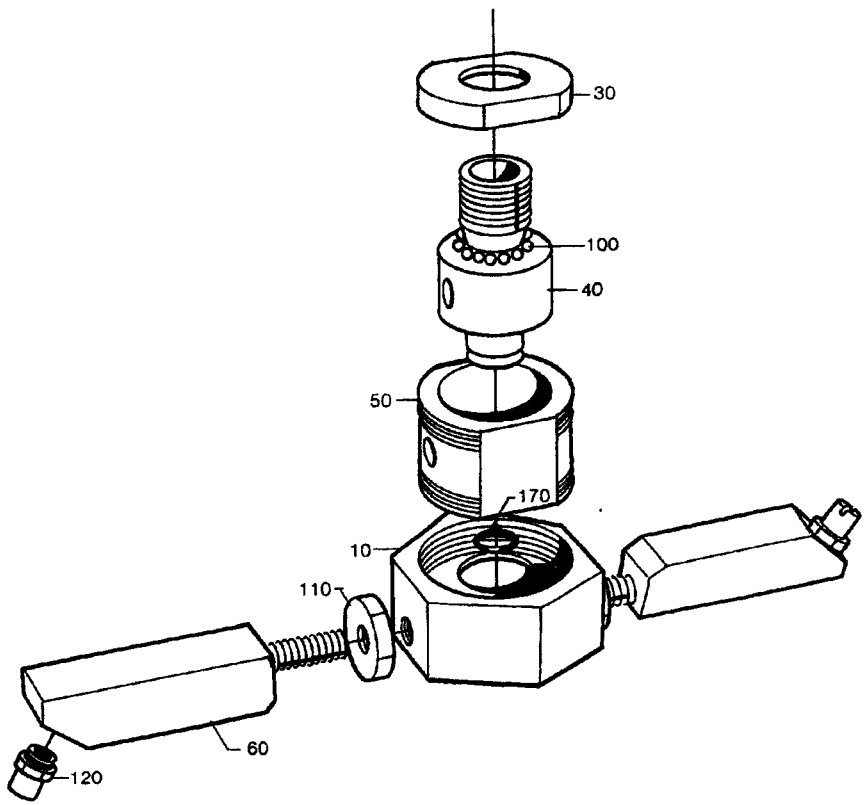

47688401.TIF
476884-1
AM

From	Pos	Part No	SP	UN	Qty	Description
		C- 476884-0201				**Cleaning Head 45° Up, Ass'y**
		C- 476884-0202				**Cleaning Head 45° Down, Ass'y**
	010	440600	C		1	ROTOR
	030	534880	S		1	END SECTION
	040	534878	S		1	SHAFT
	050	534879	S		1	BEARING HOUSING
	060	440604-0001	C		2	PIPE
	100	90090-0020	S		24	BALL
	110	90330-0034	-		2	NUT
	120	90424-0026	S		2	NOZZLE
	170	315202-0211	S		1	O-RING 13,3X2,4

From	Pos	Part No	SP	UN	Qty	Description

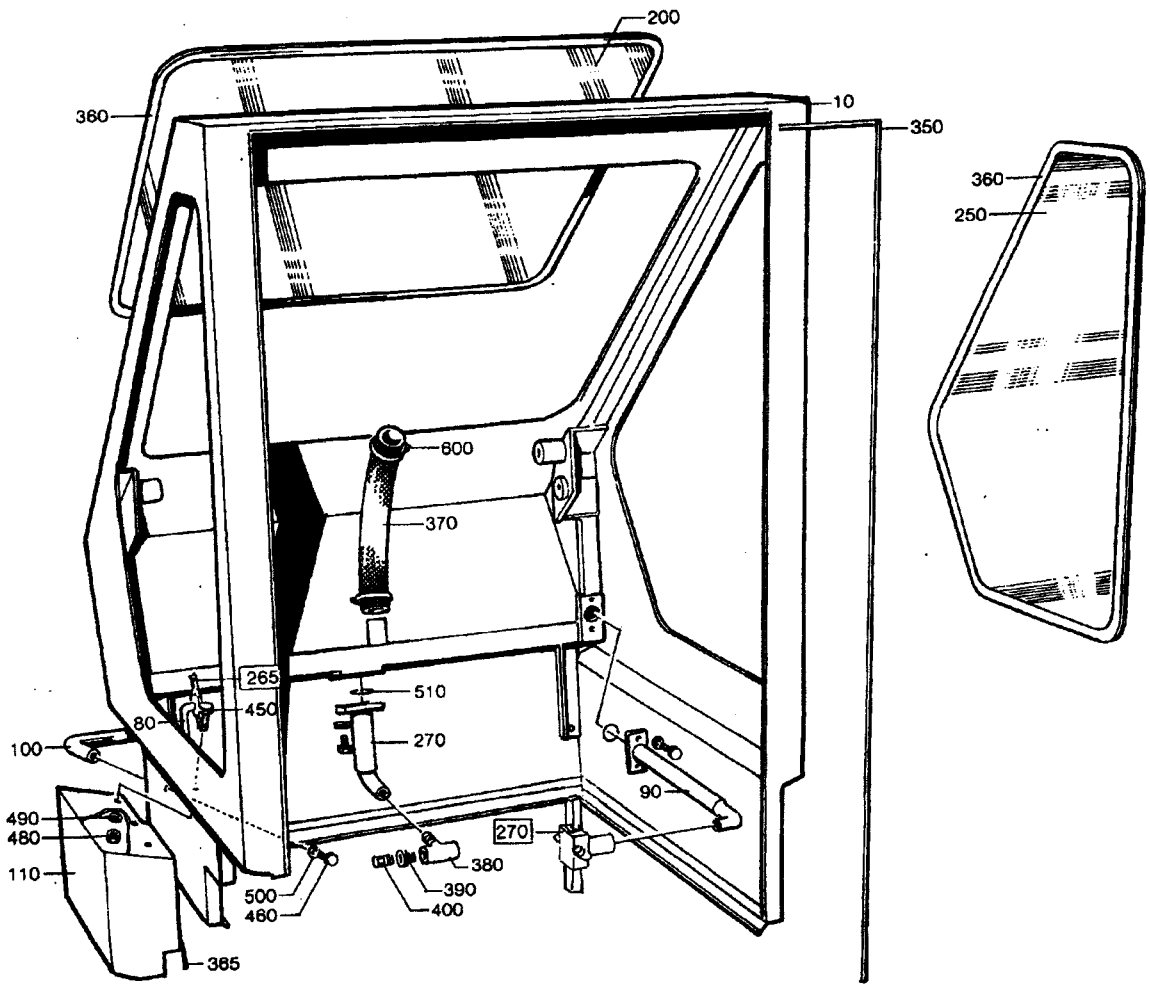

29760402.TIF
297604-2
AM

Last Alteration: AM 15046 90-08-09

Corresponding group: 297604-040V
Assembly Drawing: 297604-3

Issue: 930607

From	Pos	Part No	SP	UN	Qty	Description
		C- 297604-0401				**Hood, Ass'y**
	F265	**C- 476885-0201**	**-**		**2**	**CLEANING HEAD**
	F270	**C- 476886-0201**	**-**		**2**	**CLEANING HEAD**
	010	543148	-		1	HOOD
	080	499833	-		1	PIPE RIGHT
	090	499834	-		1	PIPE LEFT
	100	285956	-		1	HANDLE
	110	550503	-		1	PROTECTION
	200	262774-0009	C		1	GLASS PANE
	250	297488	C		2	GLASS PANE
	270	297679	-		1	PIPE
	350	90143-0035	S	MM	4500	STRIP
	360	90143-0039	-	MM	9500	STRIP
	365	90143-0068	S	MM	200	RUBBER STRIP
	370	90166-0142	S	MM	600	HOSE
	380	90330-0024	-		1	T-PIECE
	390	90330-0083	-		1	NIPPLE
	400	90424-0025	S		2	NOZZLE
	450	312105-0368	-		11	SCREW M6S6X16RFR
	460	312105-0451	-		2	SCREW M6S8X20RFR
	480	312605-0316	-		4	NUT M6M6RFR
	490	315105-0153	-		10	WASHER BRB6,4X12RFR
	500	315105-0165	-		2	WASHER BRB8,4X16RFR
	510	315202-0216	P		3	O-RING 22,2X3
	600	342991-0106	S		2	HOSE CLIP 26-38MMRFR

From	Pos	Part No	SP	UN	Qty	Description

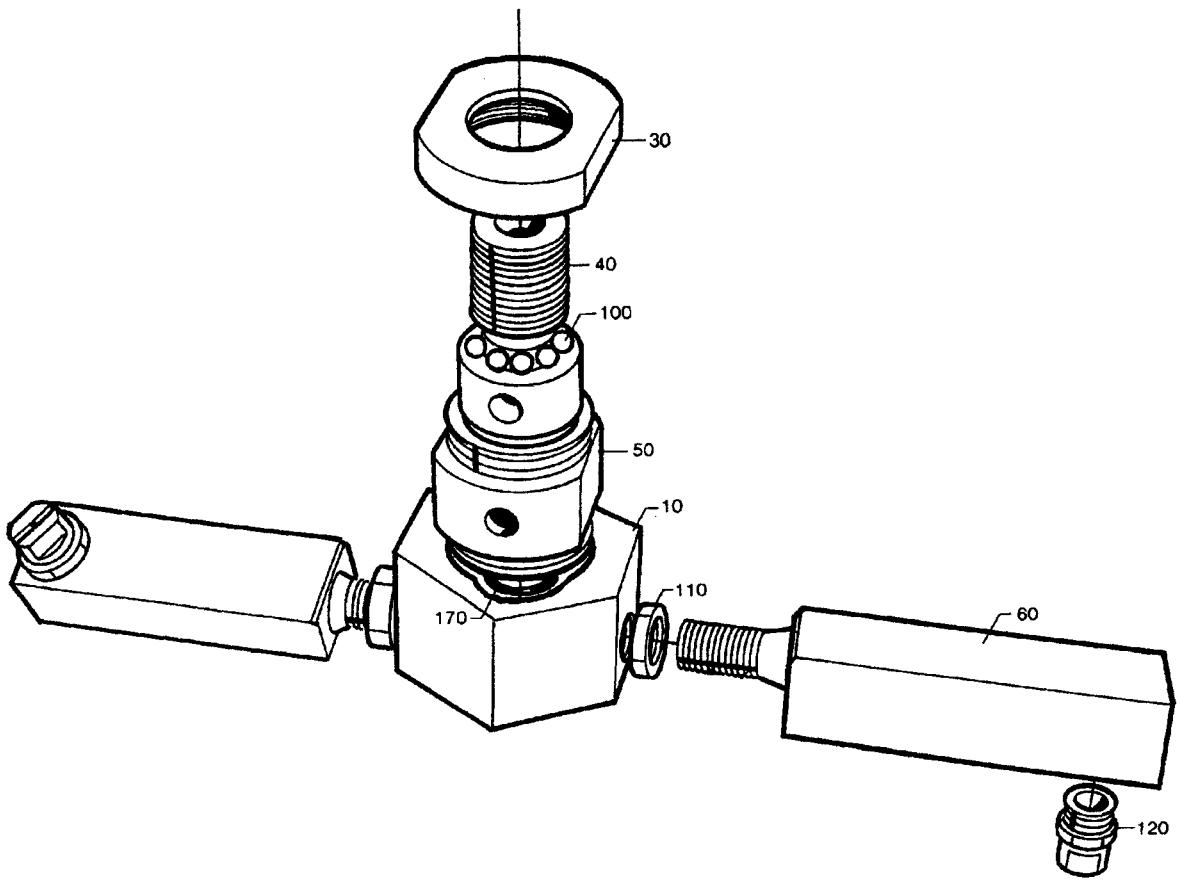

47688501.TIF
476885-1/2
AM

From	Pos	Part No	SP	UN Qty	Description
		C- 476885-0201			**Cleaning Head Cover, Ass'y**
		C- 476885-0202			**Cleaning Head Cleaning System Body, Ass'y**
	010	440600	C	1	ROTOR
	030	534880	S	1	END SECTION
	040	534878	S	1	SHAFT
	050	534879	S	1	BEARING HOUSING
	060	440605-0001	C	2	PIPE
	100	90090-0020	S	24	BALL
	110	90330-0034	-	2	NUT
	120	90424-0026	S	2	NOZZLE
	170	315202-0211	S	1	O-RING 13,3X2,4

From	Pos	Part No	SP	UN Qty	Description

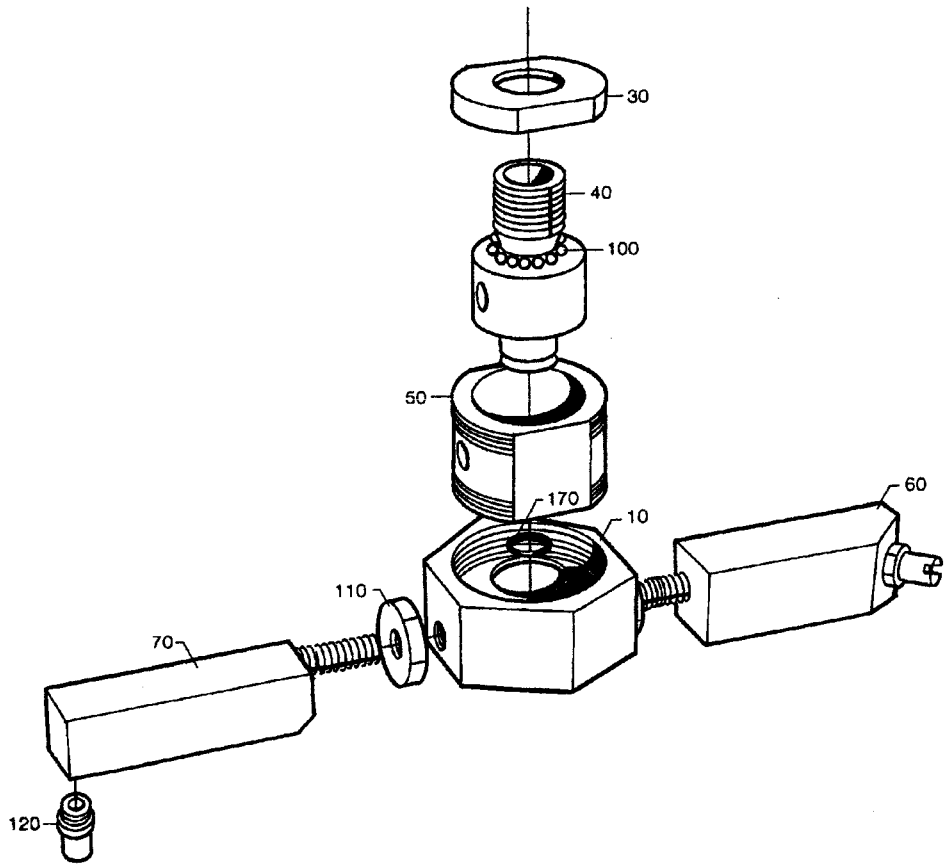

47688601.TIF
476886-1
AM

From	Pos	Part No	SP	UN Qty	Description
		C- 476886-0201			**Cleaning Head, Ass'y**
	010	440600	C	1	ROTOR
	030	534880	S	1	END SECTION
	040	534878	S	1	SHAFT
	050	534879	S	1	BEARING HOUSING
	060	440604-0001	C	1	PIPE
	070	440605-0001	C	1	PIPE
	100	90090-0020	S	24	BALL
	110	90330-0034	-	2	NUT
	120	90424-0026	S	2	NOZZLE
	170	315202-0211	S	1	O-RING 13,3X2,4

From	Pos	Part No	SP	UN Qty	Description

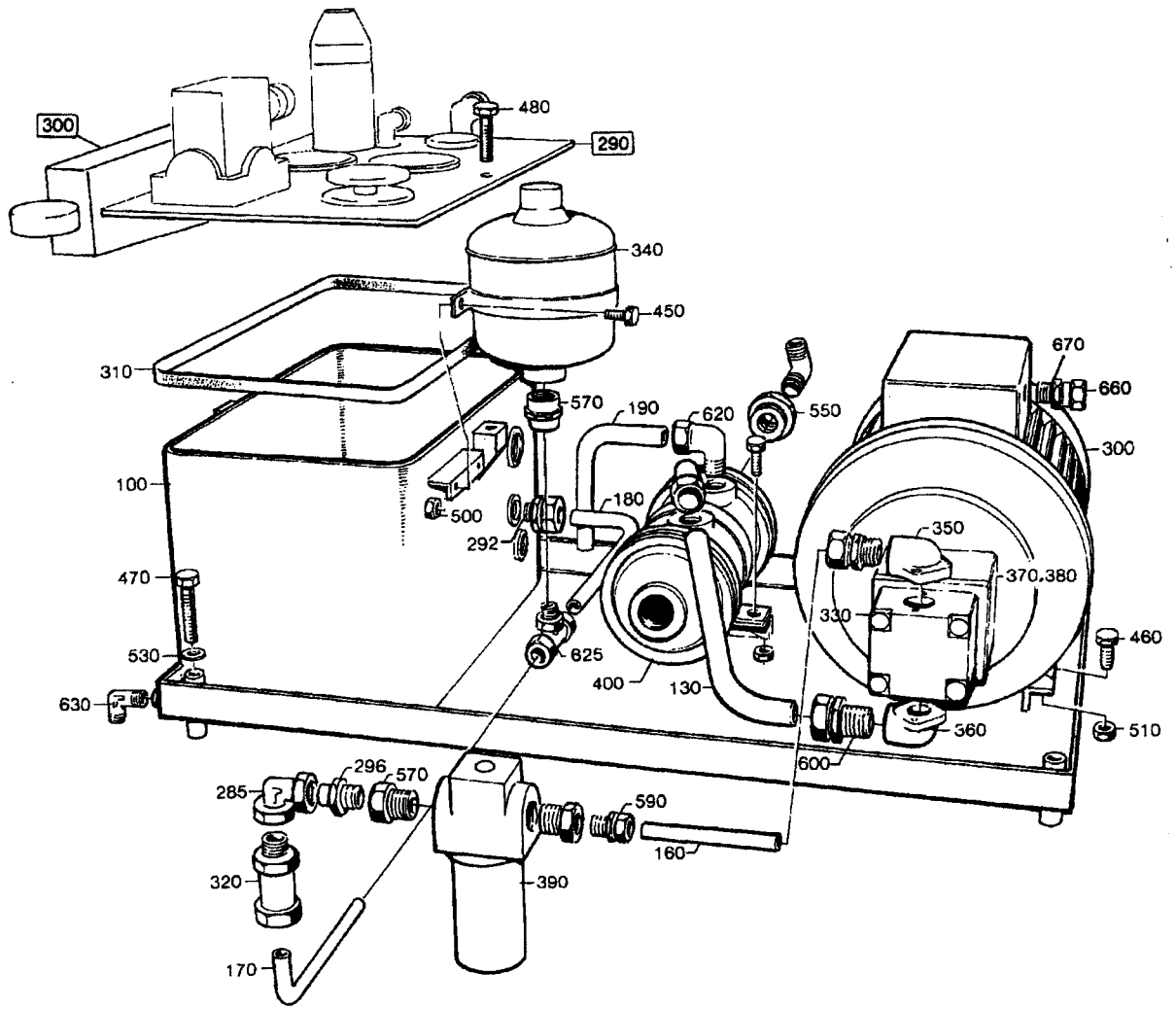

43470701.TIF
434707-1
AM

From	Pos	Part No	SP	UN	Qty	Description
TBA/8 TB/8 1136ml-500ml						
		C- 434707-0301				**Hydraulic System, Ass'y**
TB/8 300ml-200ml						
		C- 434707-0302				**Hydraulic System, Ass'y**
	F300	C- 442077-0201	-		1	**DECREASE OF PRESSURE**
Common Parts						
	F290	C- 276343-0301	-		1	**LID**
	100	252953	-		1	TANK
	130	434710	-		1	PIPE
	160	434714	-		1	PIPE
	170	434717	-		1	PIPE
	180	434718	-		1	PIPE
	190	434719	-		1	PIPE
	285	90030-0121	-		2	PIPE CONNECTION
	292	90030-0157	-		3	CONNECTION
	296	90030-0178	-		1	CONNECTION
	300	90045-0079	-		1	MOTOR
	310	90091-0159	-		1	GASKET
	320	90230-0017	-		1	NON RETURN VALVE
	330	90321-0018	-		1	PUMP
	340	90321-0381	-		1	ACCUMULATOR
	350	90321-0382	-		1	FLANGE
	360	90321-0383	-		1	FLANGE
	370	90321-0384	-		1	DISTANCE PIECE
	380	90321-0385	-		1	COUPLING
	390	90415-0029	-		1	FILTER
		90415-0323	R		0	* FILTER
	400	90422-0008	-		1	COOLER
		315202-0612	P		1	* O-RING 75,80X3,53
	450	312101-0368	-		2	SCREW M6S6X16FZB
	460	312101-0453	-		4	SCREW M6S8X25FZB
	470	312101-0463	-		4	SCREW M6S8X60FZB
	480	312101-0495	-		2	SCREW M6S10X30FZB
	500	312601-0316	-		2	NUT M6M6FZB
	510	312601-0318	-		4	NUT M6M8FZB
	530	315111-0165	-		4	WASHER TBRB8,4X16FZB
	550	342701-0208	-		2	BUSHING RNI3/4"-1/4"
	570	342712-0205	-		3	REDUCER RI1/2"-1/4"
	590	342752-0104	-		1	STRAIGHT C
	600	342752-0114	-		1	STRAIGHT C
	620	342731-0114	-		3	ELBOW PIPE WE15-LRFZB
	625	342741-0108	-		1	T-CONNECTI TA10-LKFZB
	630	342930-0122	-		3	ELBOW PIPE8/6-1/4
	660	352136-0129	-		1	GLAND FITT
	670	352100-0111	-		1	CABLE GLANR.22,5-13,5

From	Pos	Part No	SP	UN	Qty	Description

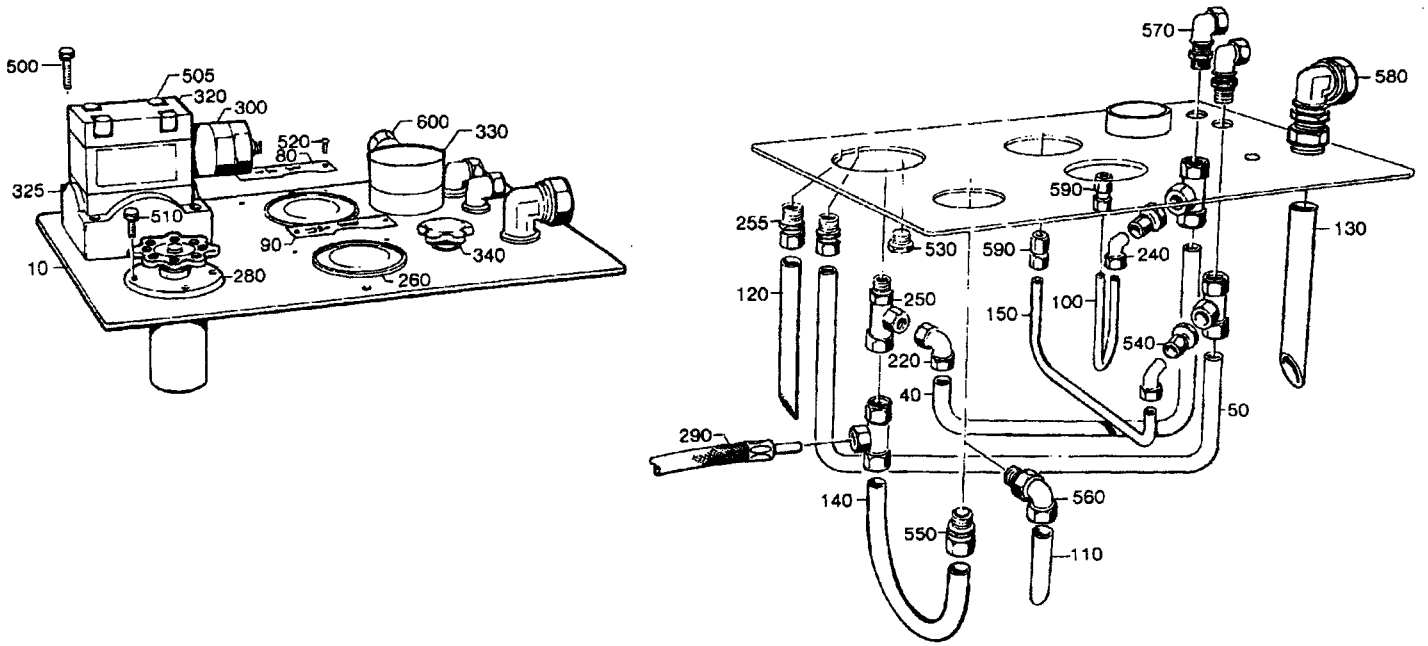

27634302.TIF
276343-2
AM

From	Pos	Part No	SP	UN	Qty	Description
		C- 276343-0301				**Lid, Ass'y**
	010	442076	-		1	LID
	040	434708	-		1	PIPE
	050	434709	-		1	PIPE
	080	247385	-		1	SIGN
	090	247386	-		1	SIGN
	100	434711	-		1	PIPE
	110	434712-0001	-		1	PIPE
	120	434712-0002	-		1	PIPE
	130	434713	-		1	PIPE
	140	434715	-		1	PIPE
	150	434716	-		1	PIPE
	220	90030-0121	-		1	PIPE CONNECTION
	240	90030-0146	-		2	CONNECTION
	250	90030-0120	-		4	PIPE CONNECTION
	255	90030-0157	-		3	CONNECTION
	260	90043-0062	S		2	MANOMETER
	280	90113-0044	S		1	PRESSURE REGULATOR
	290	90148-0036	-		1	HOSE
	300	90201-0014	S		1	VALVE
	320	90201-0307	-		1	PLATE
	325	90201-0308	-		1	PLATE
	330	90274-0053	-		1	LEVEL PROBE
	340	90277-0041	-		1	FILTER
	500	312111-0333	-		4	SCREW MC6S5X25FZB
	505	312111-0343	-		4	SCREW MC6S5X60FZB
	510	312111-0368	-		4	SCREW MC6S6X16FZB
	520	312502-0171	-		4	DRIVE SCREKDS2X6FNB
	530	342713-0311	-		1	BLIND PLUG BPS38
	540	342714-0202	-		2	REDUCER KOR10/6-LFZB
	550	342752-0104	-		1	STRAIGHT C
	560	342731-0108	-		1	ELBOW PIPE WE10-LRFZB
	570	342764-0108	-		2	BULKHEAD LWSV10-LFZB
	580	342764-0114	-		1	BULKHEAD LWSV15-LFZB
	590	342790-0102	-		2	GAUGE CONN MAV6-LRFZB
	600	352136-0113	-		1	GLAND FITT

From	Pos	Part No	SP	UN	Qty	Description

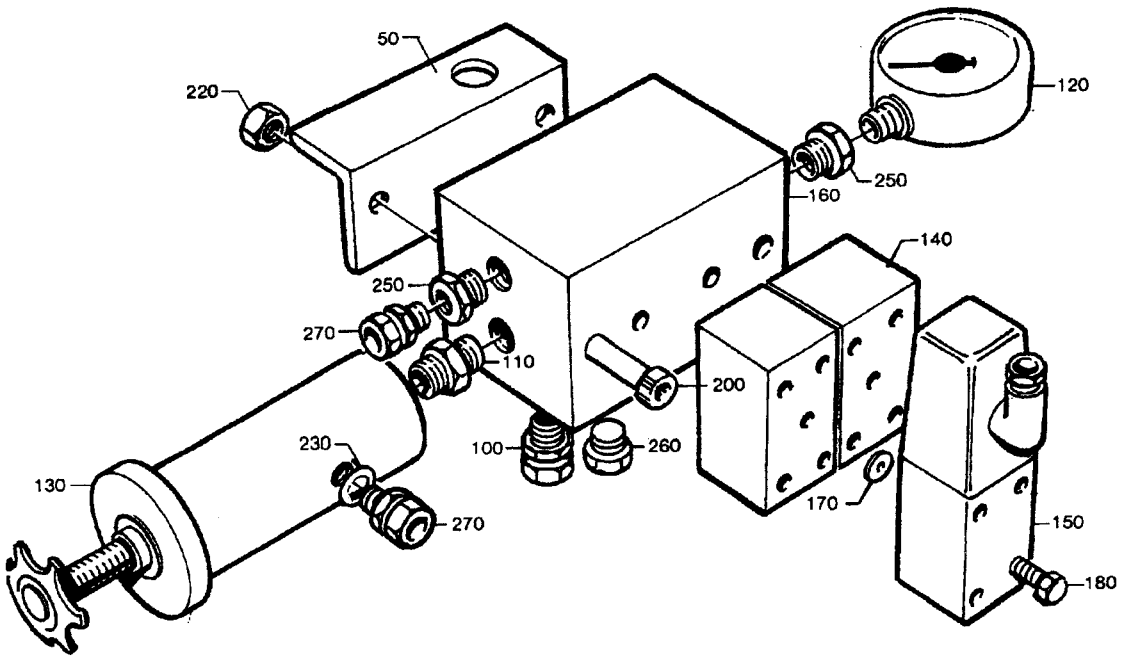

44207701.TIF
442077-1
AM

From	Pos	Part No	SP	UN	Qty	Description
		C- 442077-0201				**Decrease of Pressure, Ass'y**
	050	442078	-		1	CANTILEVER
	100	90030-0157	-		2	CONNECTION
	110	90030-0183	-		1	NIPPLE
	120	90043-0075	-		1	PRESSURE GAUGE
	130	90113-0044	-		1	PRESSURE REGULATOR
	140	90201-0010	-		2	VALVE
		90201-0300	R		0	* PLATE
		90201-0301	R		0	* SPRING
		90201-0302	R		0	* WASHER
		90201-0303	R		0	* SPARE PARTS KIT
	150	90201-0058	-		2	SOLENOID VALVE
		90201-0334	S		1	* COIL
	160	90201-0309	-		1	BLOCK
	170	90201-0302	-		2	WASHER
	180	90201-0303	-		2	SPARE PARTS KIT
	200	312111-0345	-		2	SCREW MC6S5X70FZB
	220	312601-0314	-		2	NUT M6M5FZB
	230	315111-0179	-		1	WASHER
	250	342712-0205	-		2	REDUCER RI1/2"-1/4"
	260	342713-0311	-		2	BLIND PLUG BPS38
	270	342752-0104	-		2	STRAIGHT C

From	Pos	Part No	SP	UN	Qty	Description

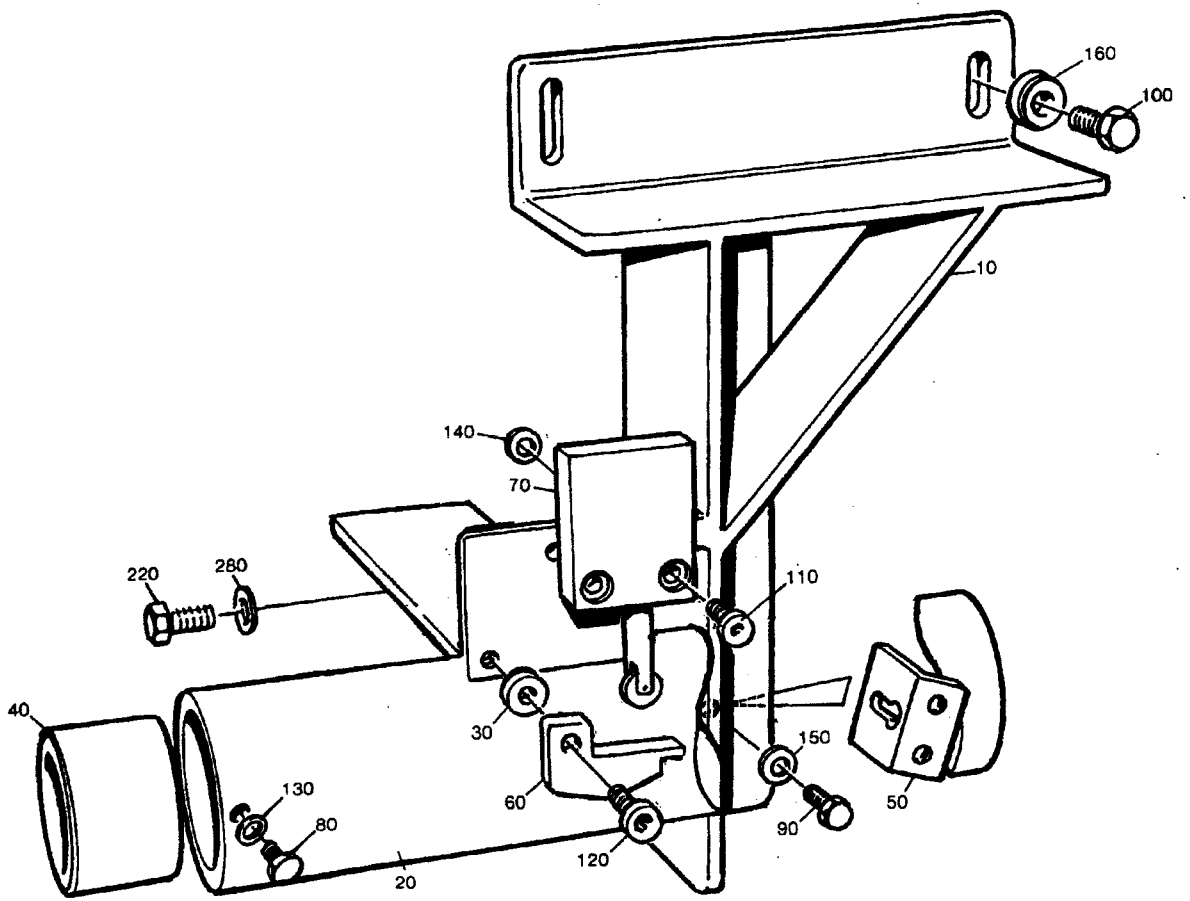

44009802
440098-2
AM

From	Pos	Part No	SP	UN	Qty	Description
		C- 440098-0201				**Crank Bracket, Ass'y**
	010	434659	-		1	CRANK BRACKET
	020	541009	-		1	CRANK HOLDER
	030	20770	-		1	WASHER
	040	434661	-		2	BUSHING
	050	434664	-		1	BRACKET
	060	569163	-		1	ARM
	070	90044-0094	-		1	LIMIT SWITCH
	080	312101-0289	-		2	SCREW M6S4X10FZB
	090	312101-0368	-		2	SCREW M6S6X16FZB
	100	312101-0451	-		4	SCREW M6S8X20FZB
	110	312111-0329	-		2	SCREW MC6S5X16FZB
	120	312180-0447	-		1	REAMED BOL
	130	315101-0136	-		2	WASHER BRB4,3X8FZB
	140	315101-0146	-		2	WASHER BRB5,3X10FZB
	150	315101-0153	-		2	WASHER BRB6,4X12FZB
	160	315111-0165	-		4	WASHER TBRB8,4X16FZB

From	Pos	Part No	SP	UN	Qty	Description

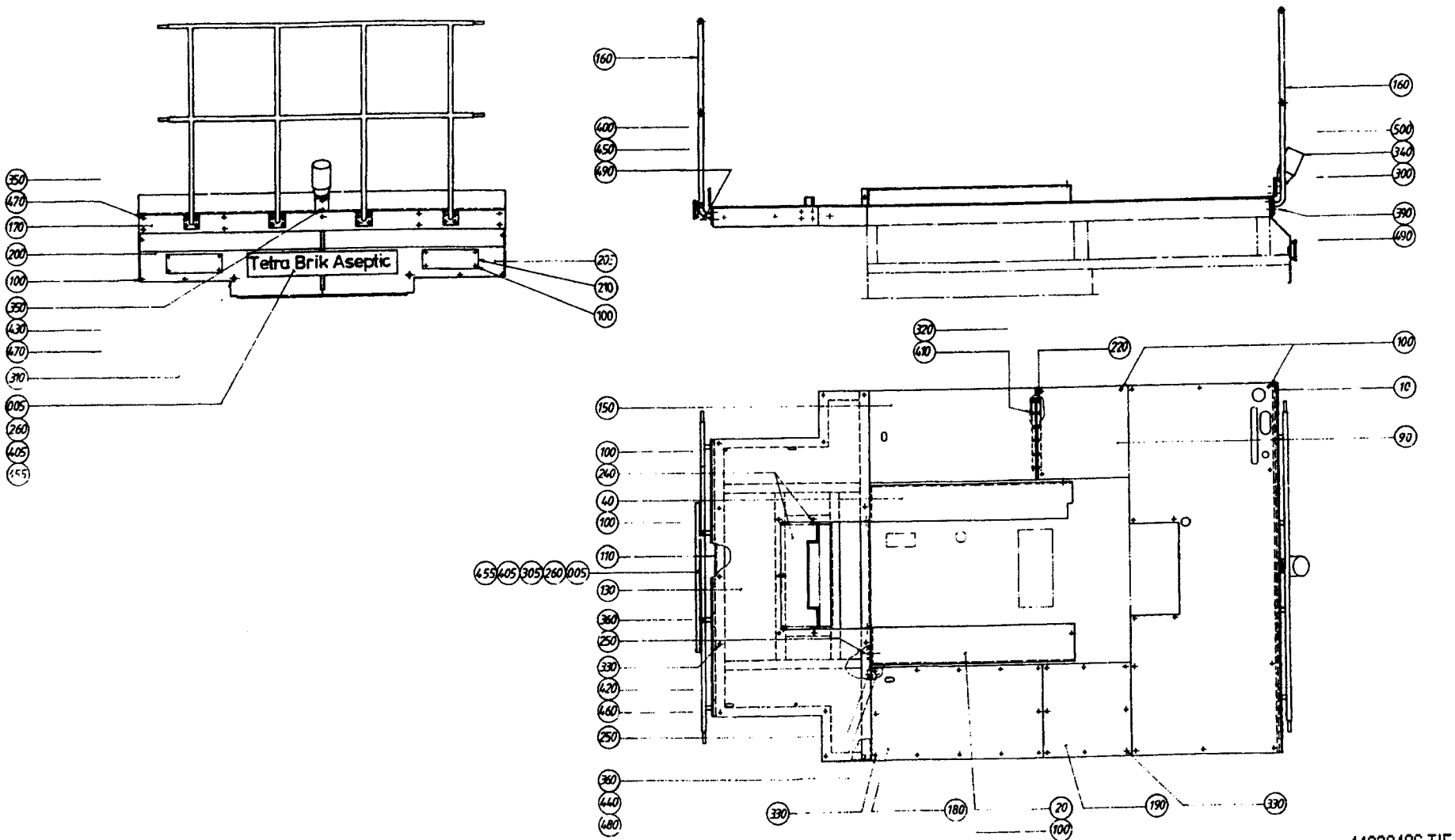

44038406.TIF
440384-6
AM 14990

From	Pos	Part No	SP	UN Qty	Description
		C- 440384-0401			**Platform, Ass'y**
	005	544527	-	2	MACHINE PLATE TBA
	010	522091	-	1	PLATFORM FRONT
	020	279807	-	1	COVER
	040	279885	-	1	COVER
	090	451095	-	1	PLATFORM
	100	90287-0075	-	40	SCREW
	110	440385	-	1	CANTILEVER
	130	440386	-	1	PLATFORM
	150	239832	-	1	PLATFORM
	160	263323	-	2	RAILING
	170	263612	-	1	RAIL
	180	269274	-	1	PLATFORM
	190	269275	-	1	PLATFORM
	200	548346	-	1	FRONT GUARD
	205	560799	-	1	FRONT GUARD
	210	548348	-	2	OPENING
	220	239847	-	1	HINGE
	240	440389	-	1	OPENING
	250	445858	-	4	WASHER
	260	544533	-	4	PLASTIC PEHD 21172-10
	300	90036-0038	-	1	BULB
	305	90165-0086	-	2	CRAMP
	310	90287-0062	-	2	SCREW
	320	90287-0074	-	12	SCREW
	330	90287-0076	-	38	SCREW
	340	90419-0005	-	1	ALARM LAMP
		90419-0302	S	1	* LENS
	350	312101-0453	-	10	SCREW M6S8X25FZB
	360	312101-0540	-	6	SCREW M6S12X40FZB
	390	312105-0491	-	16	SCREW M6S10X20RFR
	400	312105-0493	-	16	SCREW M6S10X25RFR
	405	312155-0370	-	4	SCREW MF6S6X20RFR
	410	312601-0312	-	12	NUT M6M4FZB
	420	312601-0316	-	19	NUT M6M6FZB
	430	312601-0318	-	2	NUT M6M8FZB
	440	312601-0322	-	4	NUT M6M12FZB

From	Pos	Part No	SP	UN Qty	Description
	450	312605-0320	-	32	NUT M6M10RFR
	455	312812-0316	-	4	LOCK NUT A4-M6RFR
	460	315101-0153	-	19	WASHER BRB6,4X12FZB
	470	315101-0165	-	10	WASHER BRB8,4X16FZB
	480	315101-0178	-	6	WASHER BRB13X24FZB
	490	315105-0173	-	48	WASHER BRB10,5X22RFR
	500	352136-0113	-	1	GLAND FITT

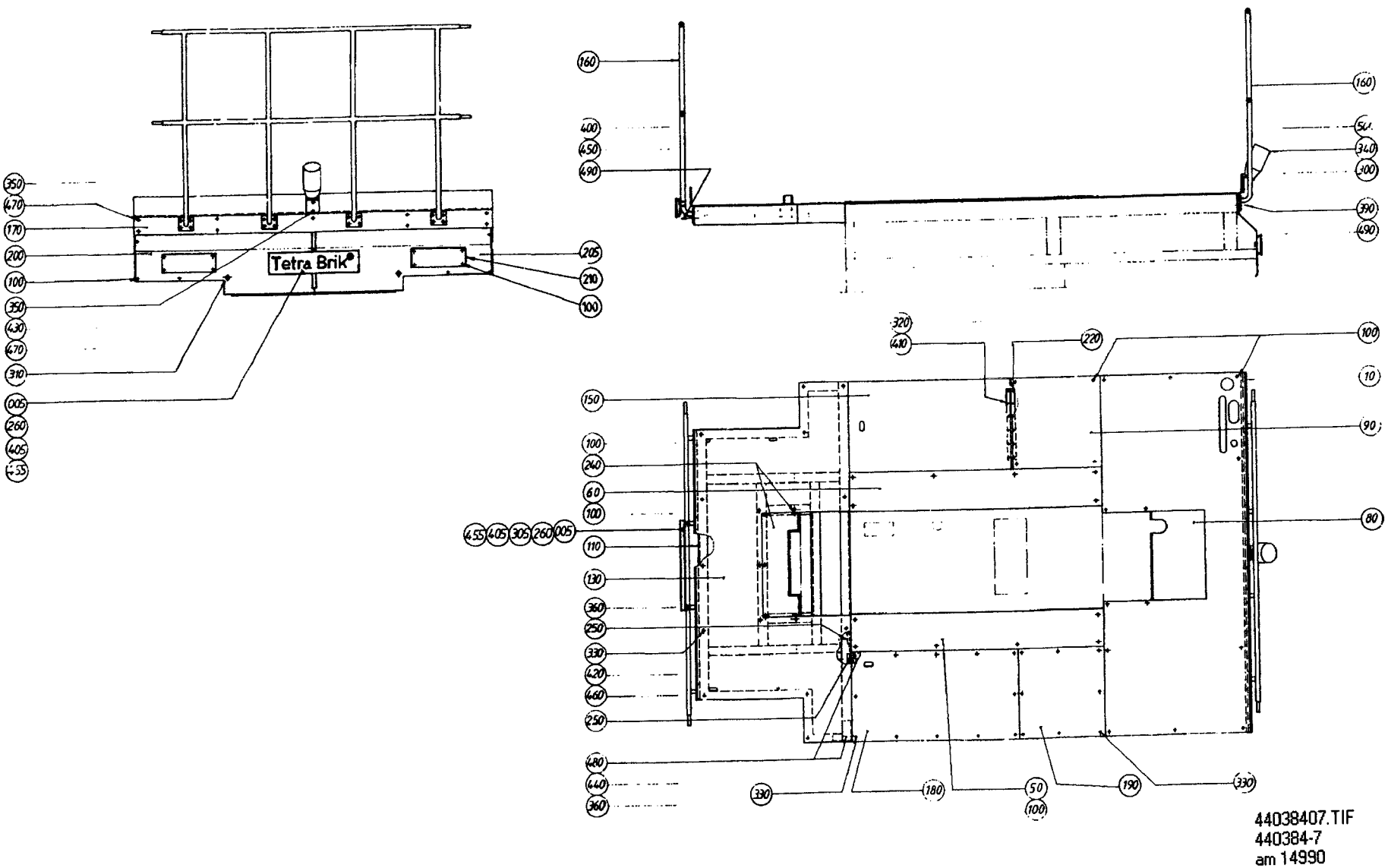
Tetra Brik®
44038407.TIF
440384-7
am 14990

From	Pos	Part No	SP	UN	Qty	Description
		C- 440384-0402				**Platform, Ass'y**
	005	544526	-		2	MACHINE PLATE TB
	010	440541	-		1	PLATFORM
	050	293375	-		1	PLATE
	060	293376	-		1	PLATE RIGHT
	080	440542	-		1	OPENING
	090	451096	-		1	PLATFORM
	100	90287-0075	-		50	SCREW
	110	440385	-		1	CANTILEVER
	130	440386	-		1	PLATFORM
	150	239832	-		1	PLATFORM
	160	263323	-		2	RAILING
	170	263612	-		1	RAIL
	180	269274	-		1	PLATFORM
	190	269275	-		1	PLATFORM
	200	548346	-		1	FRONT GUARD
	205	560799	-		1	FRONT GUARD
	210	548348	-		2	OPENING
	220	239847	-		1	HINGE
	240	440389	-		1	OPENING
	250	445858	-		4	WASHER
	260	544533	-		4	PLASTIC PEHD 21172-10
	300	90036-0038	-		1	BULB
	305	90165-0086	-		2	CRAMP
	310	90287-0062	-		2	SCREW
	320	90287-0074	-		12	SCREW
	330	90287-0076	-		38	SCREW
	340	90419-0005	-		1	ALARM LAMP
		90419-0302	S		1	* LENS
	350	312101-0453	-		10	SCREW M6S8X25FZB
	360	312101-0540	-		6	SCREW M6S12X40FZB
	390	312105-0491	-		16	SCREW M6S10X20RFR
	400	312105-0493	-		16	SCREW M6S10X25RFR
	405	312155-0370	-		4	SCREW MF6S6X20RFR
	410	312601-0312	-		12	NUT M6M4FZB
	420	312601-0316	-		19	NUT M6M6FZB
	430	312601-0318	-		2	NUT M6M8FZB
	440	312601-0322	-		4	NUT M6M12FZB
	450	312605-0320	-		32	NUT M6M10RFR
	455	312812-0316	-		4	LOCK NUT A4-M6RFR
	460	315101-0153	-		19	WASHER BRB6,4X12FZB
	470	315101-0165	-		10	WASHER BRB8,4X16FZB
	480	315101-0178	-		6	WASHER BRB13X24FZB
	490	315105-0173	-		48	WASHER BRB10,5X22RFR
	500	352136-0113	-		1	GLAND FITT

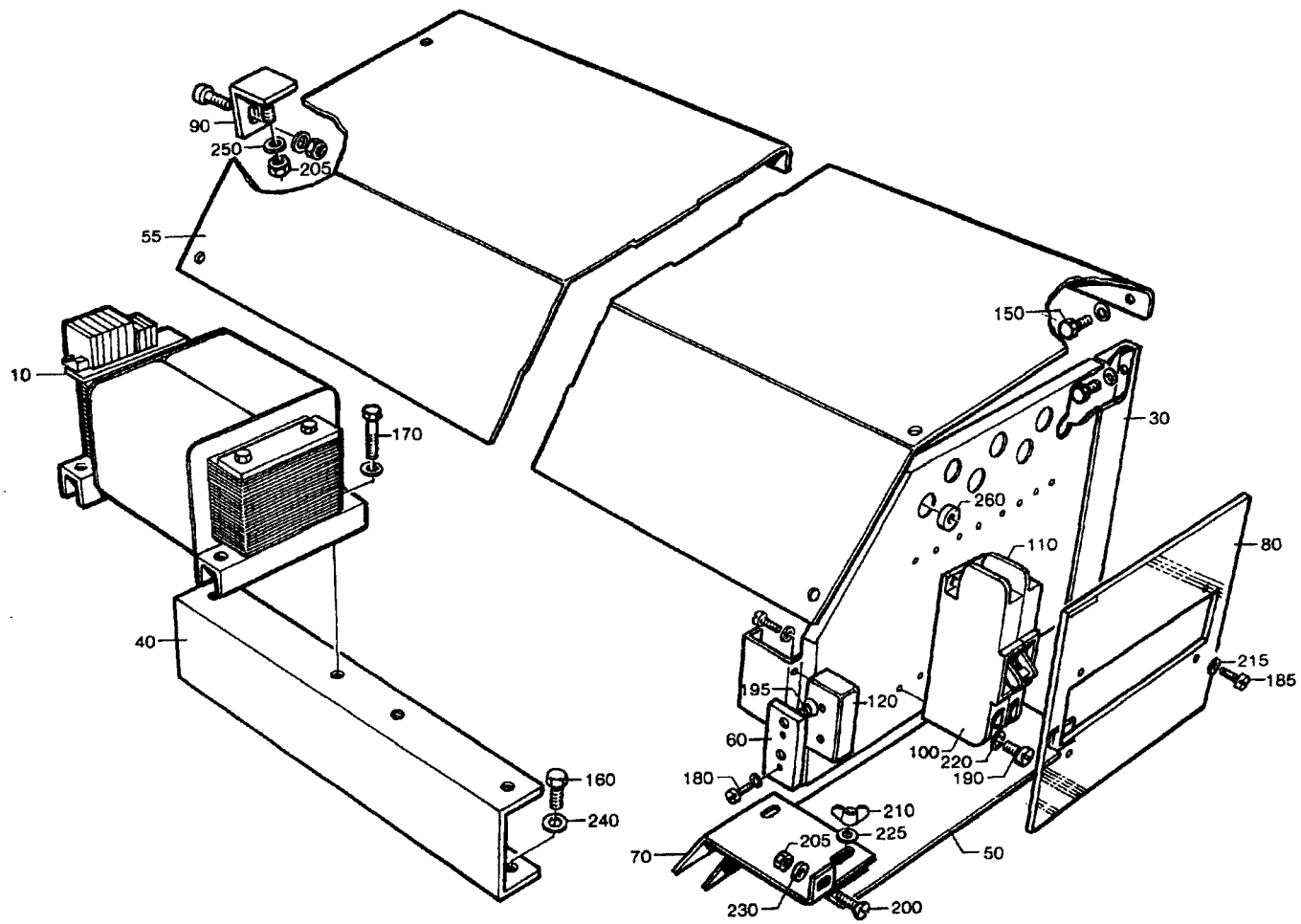

44041501.TIF
440415-1
AM

From	Pos	Part No	SP	UN	Qty	Description
		C- 440415-0201				**Transformer, Ass'y**
	010	23127-0101	-		2	TRANSFORMER
	030	450299	-		1	SWIVEL PLATE
	040	450300	-		1	BEAM
	050	450667	-		1	SPLASH GUARD
	055	451088	-		1	PROTECTION
	060	450301	-		1	FASTENING PLATE
	070	450668	-		1	SPLASH GUARD
	080	450669	-		1	TOUCH GUARD
	090	451089	-		6	BRACKET
	100	90007-0100	-		2	FUSE H.MANN 2P 60A 2
	110	90007-0101	-		2	FUSE H.MANN 2P 100A 2
	120	90237-0046	-		1	LOCK PART
	150	312105-0366	-		4	SCREW M6S6X12RFR
	160	312101-0451	-		4	SCREW M6S8X20FZB
	170	312101-0461	-		8	SCREW M6S8X50FZB
	180	312125-0220	-		4	SLOTTED HEMCS3X6RFR
	185	312125-0226	-		4	SLOTTED HEMCS3X12RFR
	190	312121-0291	-		16	SLOTTED HEMCS4X12FZB
	195	312145-0366	-		2	SLOTTED HEMFS6X12RFR
	200	312155-0372	-		8	SCREW MF6S6X25RFR
	205	312605-0316	-		14	NUT M6M6RFR
	210	312715-0114	-		2	WING NUT MVM-K 5 A4
	215	315105-0124	-		8	WASHER BRB3,2X6RFR
	220	315101-0136	-		8	WASHER BRB4,3X8FZB
	225	315105-0146	-		2	WASHER BRB5,3X10RFR
	230	315105-0153	-		12	WASHER BRB6,4X12RFR
	240	315101-0165	-		12	WASHER BRB8,4X16FZB
	250	315121-0153	-		6	WASHER TBRSB6,4X22FZB
	260	352101-0103	-		8	LEAD-IN G 18,6

From	Pos	Part No	SP	UN	Qty	Description

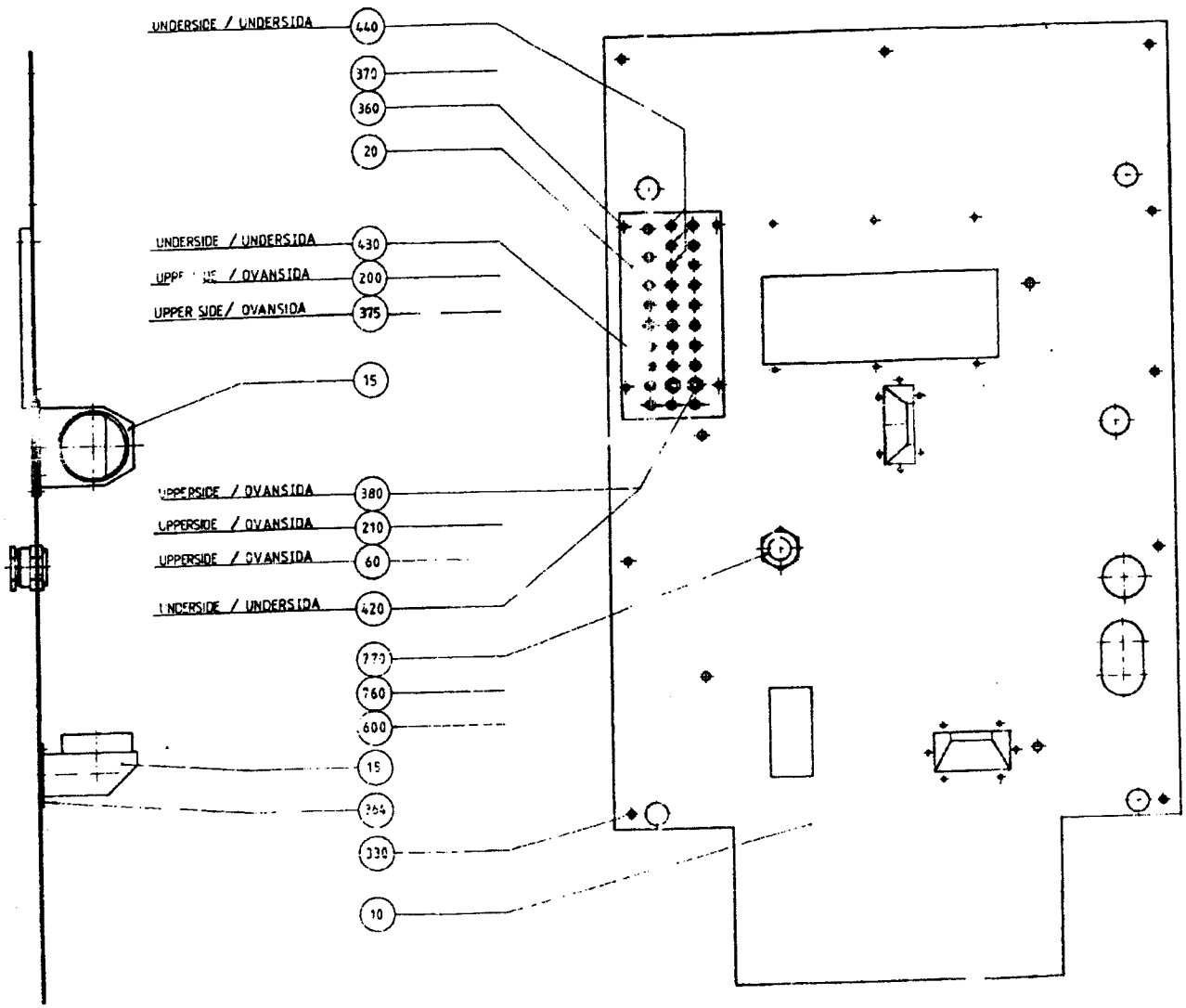

44042209.TIF
440442-9
AM 15046

Last Alteration: AM 16852 92-04-21

Corresponding group: 440422-0501
Assembly Drawing: 440422-9

Issue: 930607

From	Pos	Part No	SP	UN	Qty	Description
		C- 440422-0501				**Bottom Plate, Ass'y**
	010	553842	-		1	BOTTOM PLATE
	020	553841	-		1	LEAD-IN PLATE
	060	279804	-		2	BUSHING
	200	90224-0307	-		23	CONNECTION
	210	90224-0331	-		2	CONNECTION
	330	90287-0075	-		8	SCREW
	360	312101-0378	-		4	SCREW M6S6X40FZB
	370	315101-0153	-		4	WASHER BRB6,4X12FZB
	375	315233-0109	-		21	SEAL RING R1/8"
	380	315233-0110	-		2	SEAL RING R1/4"
	410	342713-0209	-		2	BLIND PLUG
	420	90224-0319	-		2	CONNECTION
	430	342920-0113	-		20	PIPE COUPL6/4-1/8
	440	342920-0121	-		3	PIPE COUPL8/6-1/8
	450	90163-0057	-		2	NIPPLE
	015	440424	-		2	DRUM
	364	312121-0321	-		12	SLOTTED HEMCS5X6FZB
	600	90099-0085	-		1	NUT
	760	352100-0126	-		1	CABLE GLANR.47-32,5
	770	352100-0227	-		1	CABLE GLANR.31-34,5

From	Pos	Part No	SP	UN	Qty	Description

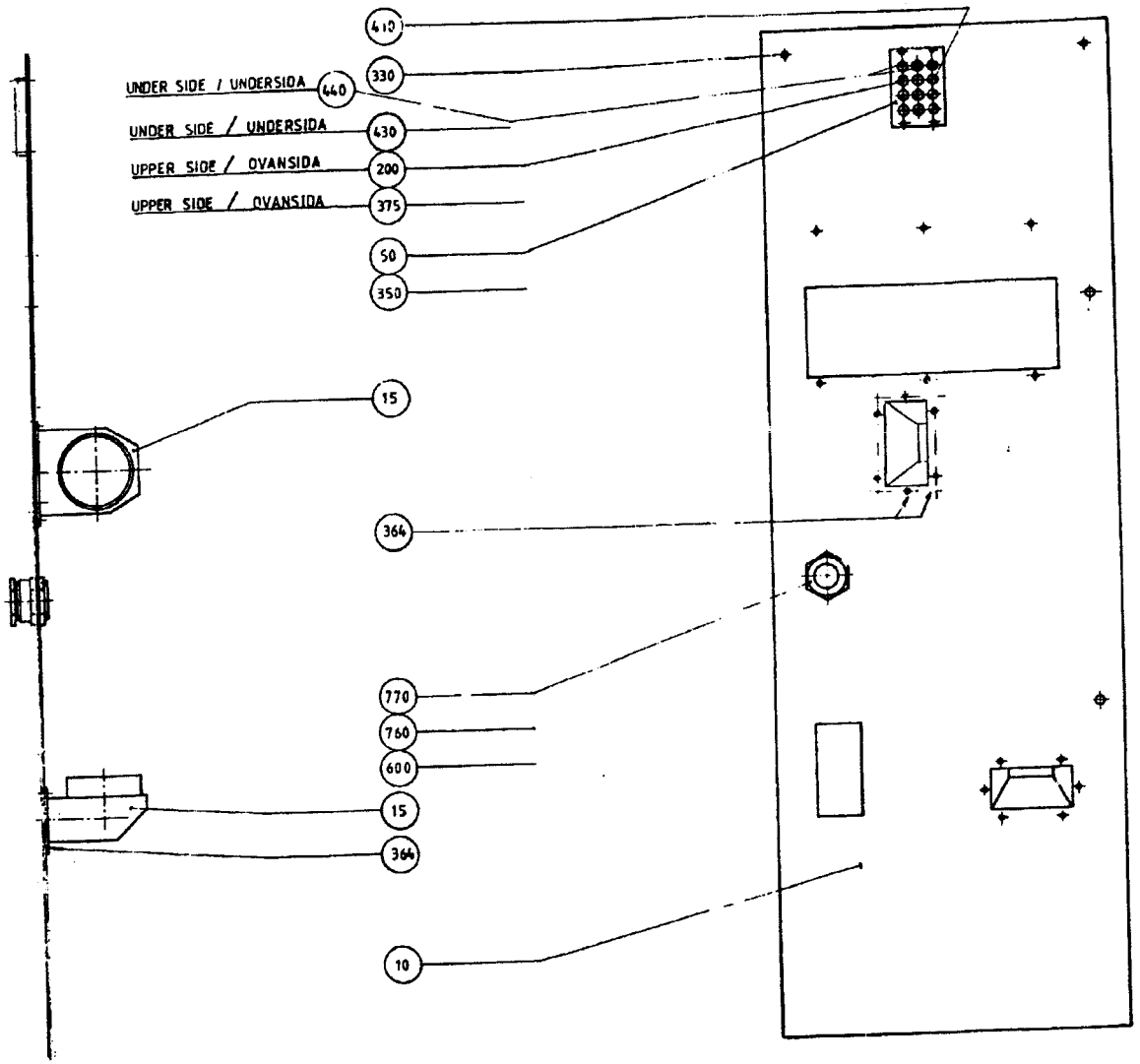

44042208.TIF
440422-8
AM 13635

Last Alteration: AM 16852 92-04-21

Corresponding group: 440422-0502
Assembly Drawing: 440422-8

Issue: **930607**

From	Pos	Part No	SP	UN	Qty	Description
		C- 440422-0502				**Bottom Plate, Ass'y**
	010	442027	-		1	BOTTOM PLATE
	050	476165	-		1	LEAD-IN PLATE
	200	90224-0307	-		9	CONNECTION
	330	90287-0075	-		2	SCREW
	350	312101-0333	-		4	SCREW M6S5X25FZB
	375	315233-0109	-		9	SEAL RING R1/8"
	410	342713-0209	-		3	BLIND PLUG
	430	342920-0113	-		7	PIPE COUPL6/4-1/8
	440	342920-0121	-		2	PIPE COUPL8/6-1/8
	015	440424	-		2	DRUM
	364	312121-0321	-		12	SLOTTED HEMCS5X6FZB
	600	90099-0085	-		1	NUT
	760	352100-0126	-		1	CABLE GLANR.47-32,5
	770	352100-0227	-		1	CABLE GLANR.31-34,5

From	Pos	Part No	SP	UN	Qty	Description

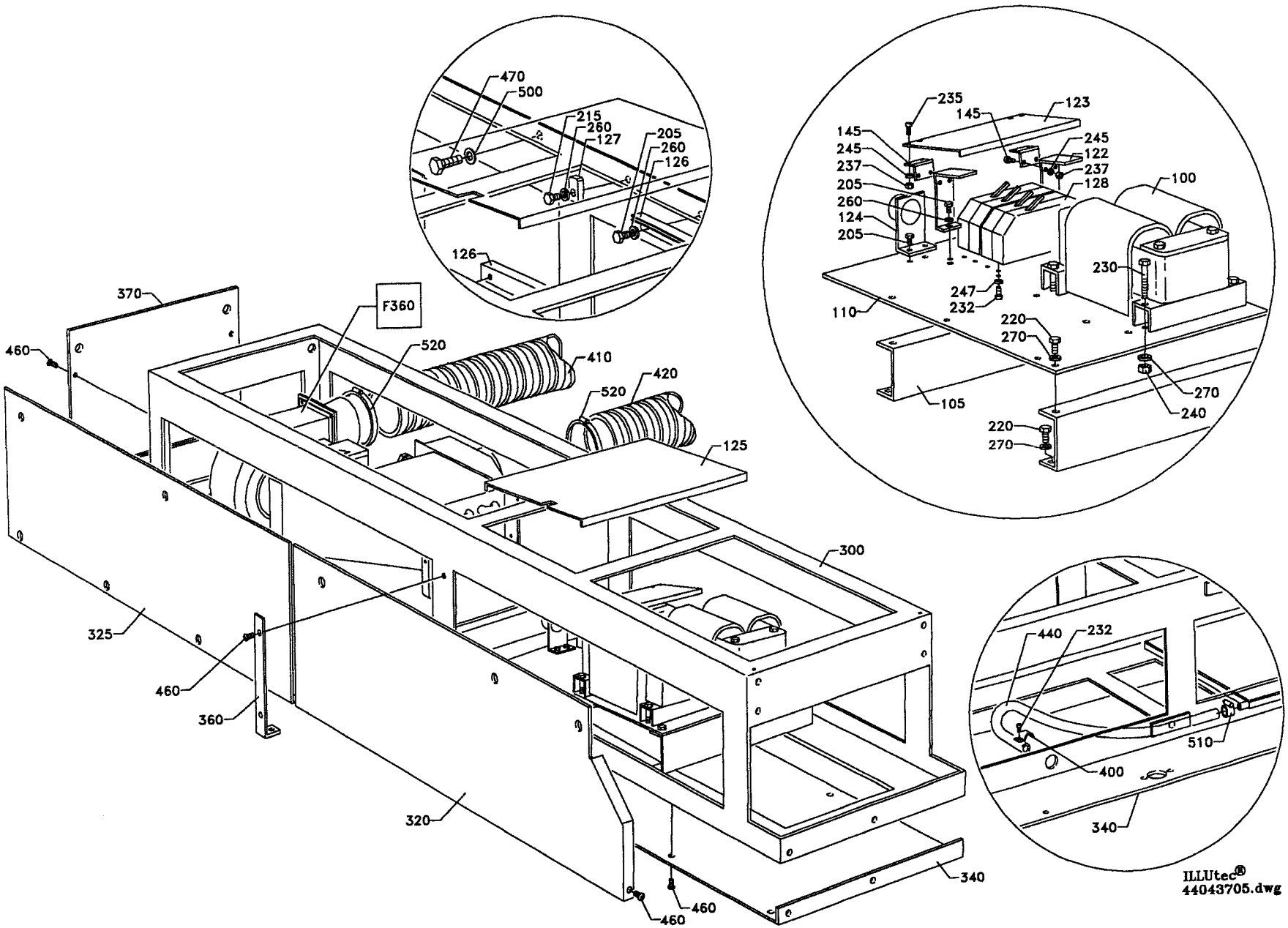
470
500
215
260
127
205
260
126
126
235
145
123
145
245
122
245
237
237
205
128
260
124
205
100
230
247
232
110
220
270
270
240
105
220
270
370
F360
460
520
410
420
520
125
300
325
460
360
320
340
460
460
440
232
510
400
340
ILLUtec®
44043705.dwg

From	Pos	Part No	SP	UN Qty	Description
TBA/8					
	232	312121-0287	-	1	SLOTTED HEMCS4X8FZB
TB/8					
		C- 440437-0302			**Box, Ass'y**
	100	23117	-	2	TRANSFORMER
	105	442217	-	2	BEAM
	110	464289	-	1	MOUNTING PLATE
	122	458188	-	2	HOLDER
	123	458189	-	1	DRIP GUARD
	124	464004	-	1	HOLDER
	125	464195	-	1	DRIP GUARD
	126	464196	-	2	SLIDE RAIL
	127	464200	-	1	LOCKING BLOCK
	128	90007-0101	-	2	FUSE H.MANN 2P 100A 2
	145	90248-0007	-	2	HINGE
	205	312101-0364	-	6	SCREW M6S6X10FZB
	215	312101-0368	-	1	SCREW M6S6X16FZB
	220	312101-0449	-	8	SCREW M6S8X16FZB
	230	312101-0461	-	8	SCREW M6S8X50FZB
	232	312121-0287	-	8	SLOTTED HEMCS4X8FZB
	235	312141-0222	-	8	SLOTTED HEMFS3X8FZB
	237	312601-0310	-	4	NUT M6M3FZB
	240	312601-0318	-	4	NUT M6M8FZB
	245	315101-0124	-	4	WASHER BRB3,2X6FZB
	247	315101-0136	-	8	WASHER BRB4,3X8FZB
	260	315101-0153	-	7	WASHER BRB6,4X12FZB
	270	315101-0165	-	16	WASHER BRB8,4X16FZB
Common Parts					
	F360	**C- 566683-0101**	-	1	**AIR COOLER**
	300	560798	-	1	SIDE PIECE
	320	564519	-	1	SIDE PLATE
	325	564520	-	1	SIDE PLATE
	340	548344	-	1	BOTTOM PANEL
	360	564523	-	1	RIM
	370	542697	-	1	COVER PLATE L
	400	90074-0004	-	1	CLIP
	410	90152-0032	-	MM 1000	HOSE
	420	90152-0032	-	MM 1300	HOSE
	440	90166-0007	-	MM 1200	HOSE
	460	90287-0075	-	33	SCREW
	470	312101-0540	-	5	SCREW M6S12X40FZB
	500	315101-0178	-	5	WASHER BRB13X24FZB
	510	342991-0101	-	1	HOSE CLIP 11-17MMRFR
	520	342991-0115	-	4	HOSE CLIP 104-138MMRFR

From	Pos	Part No	SP	UN Qty	Description

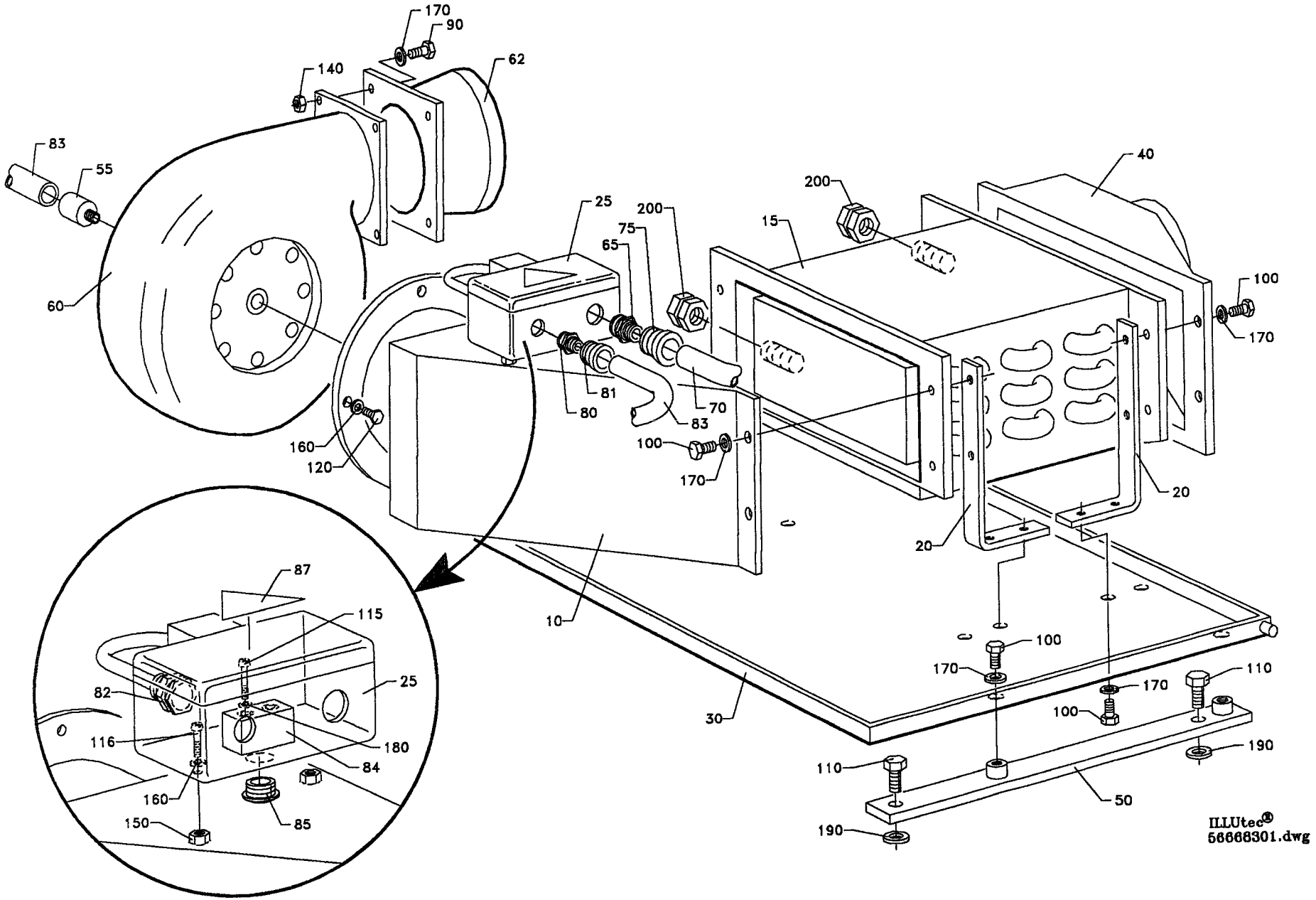
170
90
140
62
83
55
60
25
200
75
65
200
15
200
40
100
170
81
80
70
83
160
120
100
170
20
20
10
30
87
115
82
25
116
180
84
160
150
85
100
170
110
170
100
190
110
50
190
ILLUtec®
56668301.dwg

Last Alteration: AM 17183 92-02-10

Corresponding group: 566683-010V
Assembly Drawing: 566683-1

Issue: 930607

From	Pos	Part No	SP	UN	Qty	Description
		C- 566683-0101				**Air Cooler, Ass'y**
	010	566684	C		1	AIR DISTRIBUTOR
	015	495201	-		1	COOLING ELEMENT
	020	566685	C		4	BRACKET
	025	450495	C		1	CONNECTION BOX
	030	566686	C		1	CONDENSATE TRAY
	040	566687	C		1	NOZZLE
	050	440349	C		2	FASTENING IRON
	055	456256	C		1	PROTECTIVE COVER
	060	90264-0019	C		1	FAN
	062	90264-0344	-		1	FAN CASING
	065	352136-0127	-		1	GLAND FITT
	070	352135-0106	-	MM	800	HOSE .016
	075	352100-0106	-		1	CABLE GLANR.18,6-10,5
	080	90012-0063	-		1	GLAND
	081	352100-0100	-		1	CABLE GLANR.15,2-7,5
	082	352103-0101	-		1	CABLE GLANR.ST 9
	083	90152-0033	-	MM	1000	HOSE
	084	90077-0102	-		1	TERMINAL BLOCK
	085	90002-0013	-		1	BLANK-OFF PLUG
	087	90194-0016	-		1	SIGN"FLASH SIGN"
	090	312101-0366	C		4	SCREW M6S6X12FZB
	100	312101-0364	C		20	SCREW M6S6X10FZB
	110	312101-0449	C		2	SCREW M6S8X16FZB
	115	312121-0230	-		2	SLOTTED HEMCS3X20FZB
	116	312121-0293	-		2	SLOTTED HEMCS4X16FZB
	120	312101-0287	C		4	SCREW M6S4X8FZB
	140	312601-0316	C		4	NUT M6M6FZB
	150	312821-0102	C		2	HEXAGON WETSMUTTER M4 RFR
	160	315101-0136	-		6	WASHER BRB4,3X8FZB
	170	315101-0153	C		24	WASHER BRB6,4X12FZB
	180	315101-0124	-		2	WASHER BRB3,2X6FZB
	190	315101-0165	C		4	WASHER BRB8,4X16FZB
	200	342723-0114	C		2	PIPE COUPLGI-15-1/2"

From	Pos	Part No	SP	UN	Qty	Description

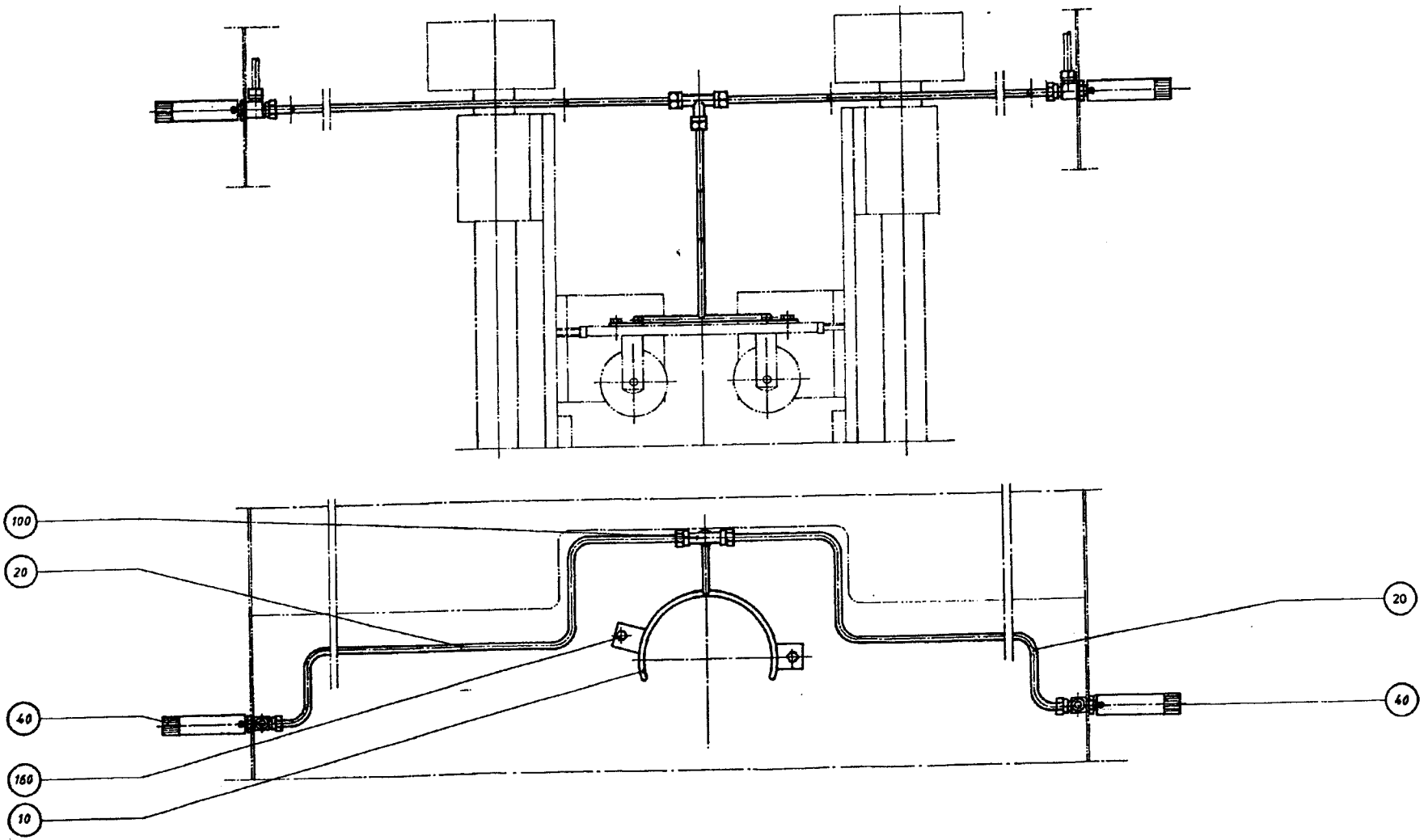

44047401.TIF
440474-1
AM

From	Pos	Part No	SP	UN	Qty	Description
TBA/8 1055ml-500ml 355ml TB/8 1136ml-500ml						
		C- 440474-0101				**Tube Flushing Device, Ass'y**
	010	539612	-		1	SPREADER
TBA/8 375ml 300ml TB/8 300ml-200ml						
		C- 440474-0102				**Tube Flushing Device, Ass'y**
	010	539613	-		1	SPREADER
Common Parts						
	020	450340	-		2	PIPE
	040	445583	-		2	VALVE
		315202-0500	P		1	* O-RING ,42X1,53
		315202-0501	P		1	* O-RING 2,90X1,78
	100	90030-0076	-		1	CONNECTION
	160	312105-0325	-		2	SCREW M6S5X10 A4 80

From	Pos	Part No	SP	UN	Qty	Description

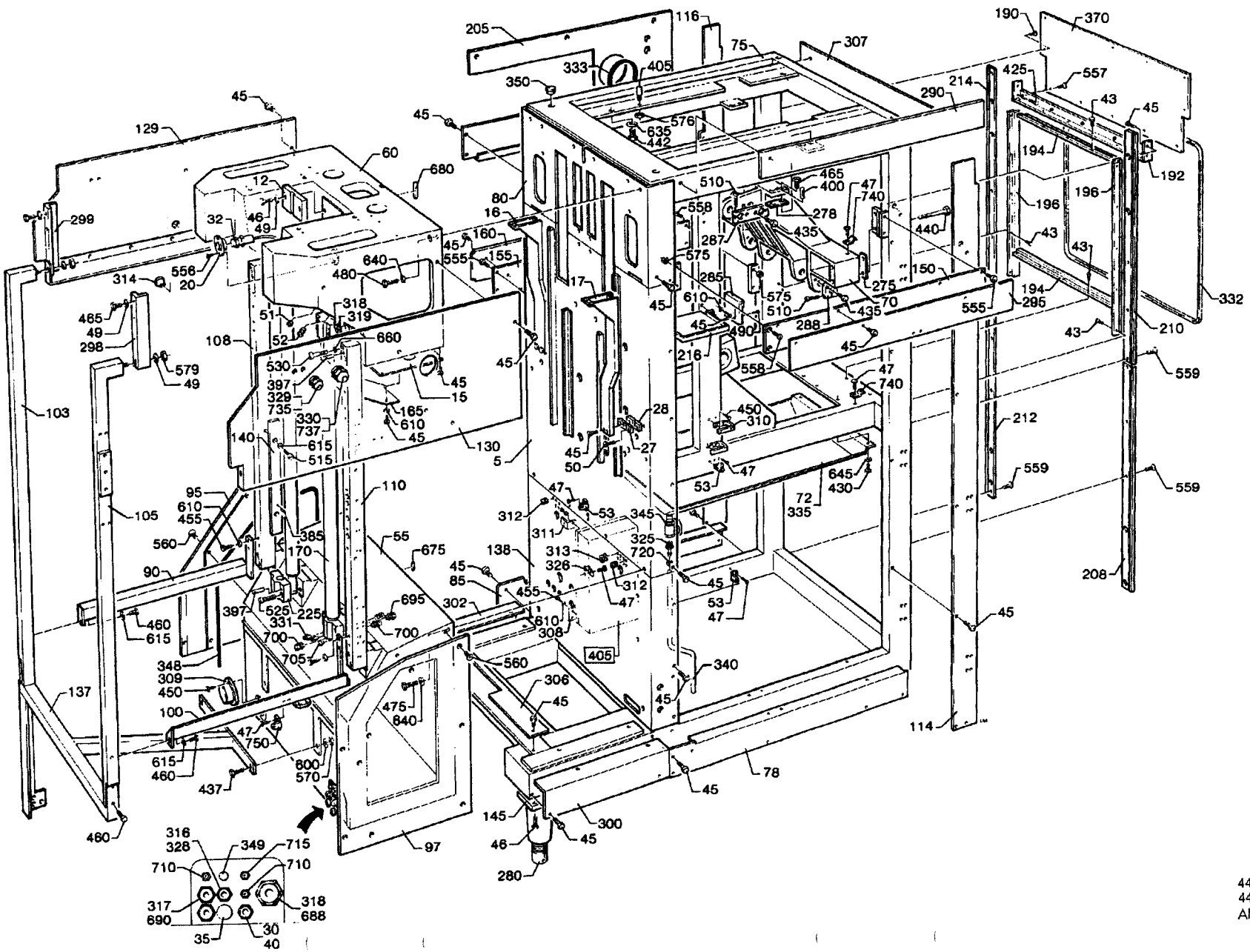

44053706.TIF
440537-3/6/7
AM 16850

From	Pos	Part No	SP	UN	Qty	Description
TBA/8						
		C- 440537-0501				**Machine Body, Ass'y**
	005	530469	-		1	FRONT PLATE
	015	544703	-		2	MOUNTING SHEET
	016	542702	-		1	COVER PLATE L
	017	542703	-		1	COVER PLATE R
	020	450457	-		1	FLANGE
	027	542398	-		2	HOLDER
	028	542399	-		2	HOLDER
	030	90030-0030	-		1	PIPE CONNECTION
	032	90044-0095	-		1	PROXIMITY SWITCH
	035	90261-0018	-		1	PIPE PLUG
	040	90266-0010	-	MM	35	TUBE
	043	312101-0323	-		22	SCREW M6S5X8FZB
	045	312105-0364	-		110	SCREW M6S6X10RFR
	046	312105-0497	-		16	SCREW M6S10X35RFR
	047	312125-0287	-		13	SLOTTED HEMCS4X8RFR
	049	315105-0173	-		12	WASHER BRB10,5X22RFR
	050	312115-0368	-		4	SCREW 6X16 A4 80
	051	352101-0103	-		5	LEAD-IN G 18,6
	052	352103-0105	-		2	CABLE GLANR.STR 11
	053	352135-0202	-		4	CRAMP 16
TB/8						
		C- 440537-0502				**Machine Body, Ass'y**
	005	530555	-		1	FRONT PLATE
	012	228332	-		1	FASTENING PLATE
	013	229074	-		1	LACE
	014	229075	-		2	LACE
	015	544702	-		2	COVERING PLATE
	025	464194	-		1	COVER DISC
	035	90261-0018	-		2	PIPE PLUG
	037	90074-0006	-		5	CLIP
	042	311103-0357	-		2	CYLINDRICACP M6 6X30 RFR
	043	312101-0323	-		32	SCREW M6S5X8FZB
	045	312105-0364	-		104	SCREW M6S6X10RFR
	046	312105-0497	-		18	SCREW M6S10X35RFR
	047	312125-0287	-		9	SLOTTED HEMCS4X8RFR
	049	315105-0173	-		14	WASHER BRB10,5X22RFR
	051	352101-0103	-		4	LEAD-IN G 18,6
	052	352103-0105	-		3	CABLE GLANR.STR 11
	053	352135-0202	-		2	CRAMP 16
Common Parts						
	055	G- 543151	-		1	CANTILEVER
	060	G- 531182	-		1	CANTILEVER
	070	G- 267835	-		1	CANTILEVER

From	Pos	Part No	SP	UN	Qty	Description
	072	283884	-		1	OIL TROUGH
	075	436776	-		1	MACHINE BODY
	078	269285	-		1	PROTECTION PLATE
	080	273751	-		1	FRONT PLATE
	085	273753	-		1	PROTECTION PLATE
	090	285801	-		1	BEAM
	095	293158	-		1	OPENING
	097	293159	-		1	OPENING
	100	297576	-		1	BEAM
	103	297669	-		1	POST
	105	297670	-		1	POST
	108	434919	-		1	SQUARE COLUMN
	110	434920	-		1	SQUARE COLUMN
	114	440023	-		1	PROTECTION PLATE
	116	440024	-		1	PROTECTION PLATE
	129	566646	-		1	SIDE GUARD
	130	566645	-		1	SIDE GUARD
	137	440702	-		1	BEAM
	138	540725	-		1	FRONT PLATE, LOWER
	140	283992	-		2	RULER
	145	247080	-		4	BRACKET
	150	269291	-		1	RULER
	155	269294	-		1	RULER
	160	269295	-		1	PROTECTION PLATE
	165	476824	-		1	COVERING PLATE
	170	279370	C		2	STEERING
	190	440025	-		1	PROTECTION PLATE
	192	440026	-		1	CANTILEVER
	194	440027	-		2	RIM
	196	440028	-		2	RIM
	205	440077	-		1	COVERING PLATE
	208	440203	-		1	RULER
	210	440204	-		1	RULER
	212	440205	-		1	RULER
	214	440206	-		1	RULER
	216	479374	-		1	DRIP PLATE
	225	531365	-		4	BRACKET
	275	243573	-		2	LACE
	278	538245	-		2	SHIM
	280	247082	-		4	LEG
	285	263828	-		1	JUNCTION RAIL
	287	267462	-		2	LOCK SHEET
	288	267463	-		2	LOCK SHEET
	290	269296	-		1	PROTECTION PLATE
	295	269297	-		1	PROTECTION PLATE

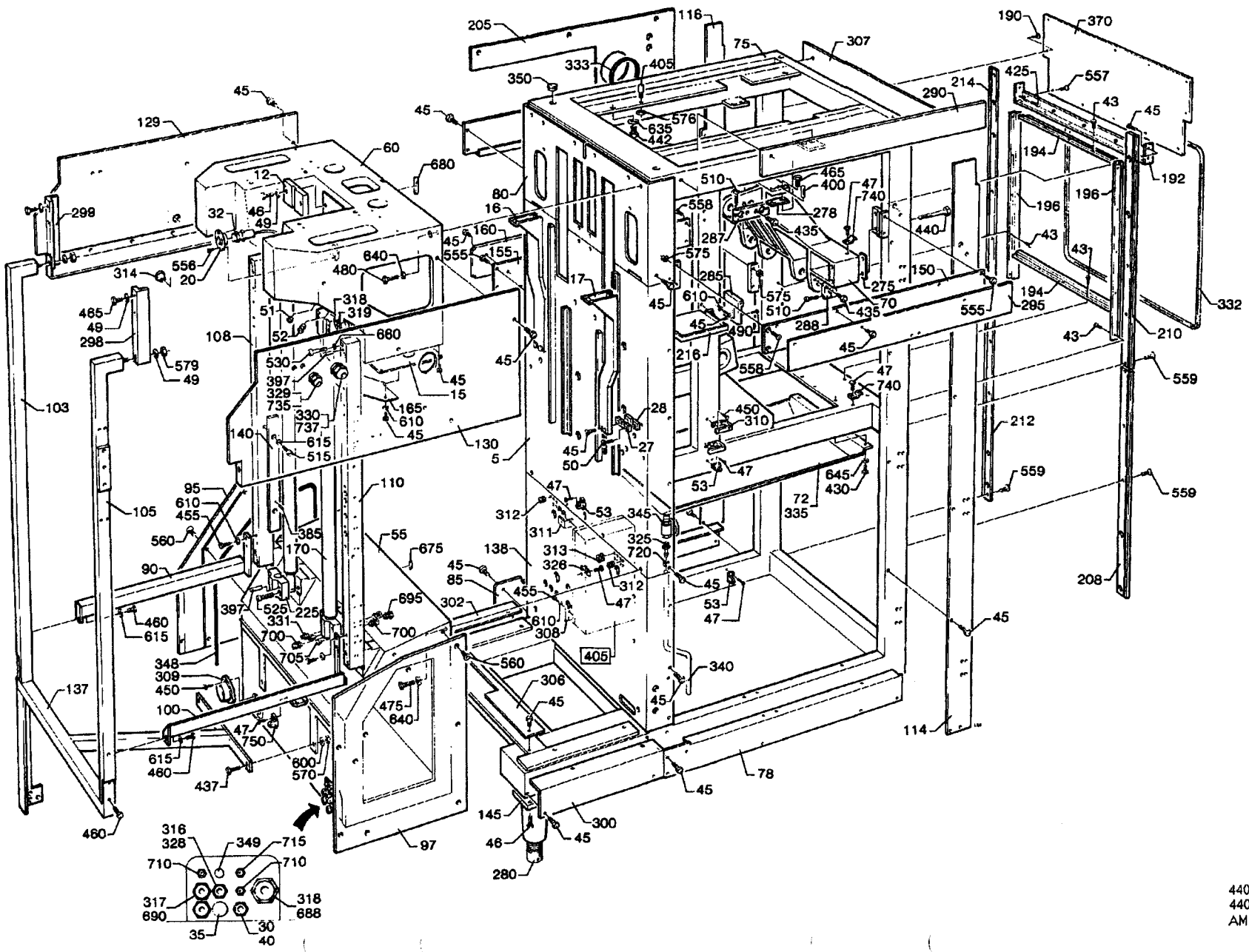

44053706.TIF
440537-3/6/7
AM 16850

From	Pos	Part No	SP	UN	Qty	Description
	298	484212	-		1	BRACKET
	299	484213	-		1	BRACKET
	300	293160	-		1	COVERING PLATE
	302	293161	-		1	COVERING PLATE
	306	450298	-		1	COVERING PLATE
	307	450342	-		1	COVERING PLATE
	308	540726	-		2	HOOK HOLDER
	309	543152	-		1	HOSE ATTACHMENT
	310	457357	-		2	BRACKET
	311	540727	-		1	FASTENING BRACKET
	312	90015-0010	-		12	BUSHING
	313	90015-0011	-		1	BUSHING
	314	90015-0021	-		1	BUSHING
	316	90030-0066	-		1	GROMMET
	317	90030-0067	-		2	GROMMET
	318	90030-0159	-		2	GROMMET
	319	90030-0179	-		1	GROMMET
	325	90055-0033	-		1	HOSE CLAMP
	326	90074-0001	-		1	CLIP
	328	90090-0014	-		1	STEEL BALL
	329	90099-0004	-		1	NUT
	330	90099-0011	-		1	NUT
	331	90134-0004	-		2	PIPE CONNECTION
	332	90143-0049	-	MM	3400	STRIP
	333	90143-0054	-	MM	500	STRIP
	335	90157-0022	-	G	X	SEALING COMPOUND
	338	90194-0016	-		2	SIGN"FLASH SIGN"
	340	90166-0121	-	MM	1500	HOSE
	345	90187-0029	-		1	VALVE
	348	90242-0115	-	MM	3200	O-RING
	349	90261-0003	-		1	PIPE PLUG
	350	90261-0011	-		4	PIPE PLUG
	370	90287-0075	-		6	SCREW
	385	311103-0314	-		4	CYLINDRICACP M6 5X30 RFR
	397	311103-0413	-		16	CYLINDRICACP M6 8X50 RFR
	400	311202-0320	-		2	TAPER PIN KP8X35RFR
	405	311211-0267	-		2	TAPER PIN GKP5X5X30
	425	312101-0366	-		8	SCREW M6S6X12FZB
	430	312101-0368	-		8	SCREW M6S6X16FZB
	435	312101-0453	-		20	SCREW M6S8X25FZB
	437	312101-0499	-		2	SCREW M6S10X40FZB
	440	312101-0518	-		4	SCREW M6S10X140FZB
	442	312101-0538	-		4	SCREW M6S12X35FZB
	450	312105-0327	-		8	SCREW M6S5X12 A4 80
	455	312105-0368	-		7	SCREW M6S6X16RFR

From	Pos	Part No	SP	UN	Qty	Description
	460	312105-0449	-		6	SCREW M6S8X16RFR
	465	312105-0493	-		8	SCREW M6S10X25RFR
	475	312105-0540	-		10	SCREW M6S12X40 A4 80
	480	312105-0542	-		12	SCREW M6S12X50RFR
	490	312111-0364	-		2	SCREW MC6S6X10FZB
	510	312115-0378	-		6	SCREW 6X40 A4 80
	515	312115-0451	-		8	SCREW 8X20 A4 80
	525	312115-0501	-		7	SCREW 10X50 A4 80
	530	312115-0503	-		8	SCREW 10X60 A4 80
	555	312151-0366	-		4	SCREW MF6S6X12FZB
	556	312155-0327	-		4	SCREW MF6S5X12RFR
	557	312155-0366	-		5	SCREW MF6S6X12RFR
	558	312155-0370	-		4	SCREW MF6S6X20RFR
	559	312155-0368	-		15	SCREW MF6S6X16RFR
	560	312155-0451	-		12	SCREW MF6S8X20RFR
	570	312601-0320	-		2	NUT M6M10FZB
	575	312605-0316	-		4	NUT M6M6RFR
	576	312605-0314	-		2	NUT M6M5RFR
	579	312605-0320	-		2	NUT M6M10RFR
	600	315101-0173	-		2	WASHER BRB10,5X22FZB
	610	315105-0153	-		29	WASHER BRB6,4X12RFR
	615	315105-0165	-		14	WASHER BRB8,4X16RFR
	635	315111-0178	-		4	WASHER TBRB13X24FZB
	640	315115-0178	-		22	WASHER TBRB13X24RFR
	645	315121-0153	-		8	WASHER TBRSB6,4X22FZB
	660	315402-0173	-		15	WASHER FBB10,2RFR
	675	315701-0330	-		2	FLAT WEDGE12X8X32
	680	315701-0336	-		3	FLAT WEDGE12X8X63
	688	341001-0228	-	MM	35	COPPER TUB
	690	342929-0121	-		2	PIPE COUPL8/6-8
	695	342920-0113	-		2	PIPE COUPL6/4-1/8
	700	342920-0121	-		2	PIPE COUPL8/6-1/8
	705	90330-0066	-		1	PLUG
	710	342960-0112	-		2	BULKHEAD L6/4
	715	342960-0122	-		1	BULKHEAD L8/6
	720	342991-0103	-		1	HOSE CLIP 15-24MMRFR
	735	352103-0116	-		1	CABLE GLANR.ST 21
	737	352103-0121	-		1	CABLE GLANR.ST 29
	740	352110-0101	-		2	CRAMP TK 7-10
	750	352135-0201	-		1	CRAMP 12

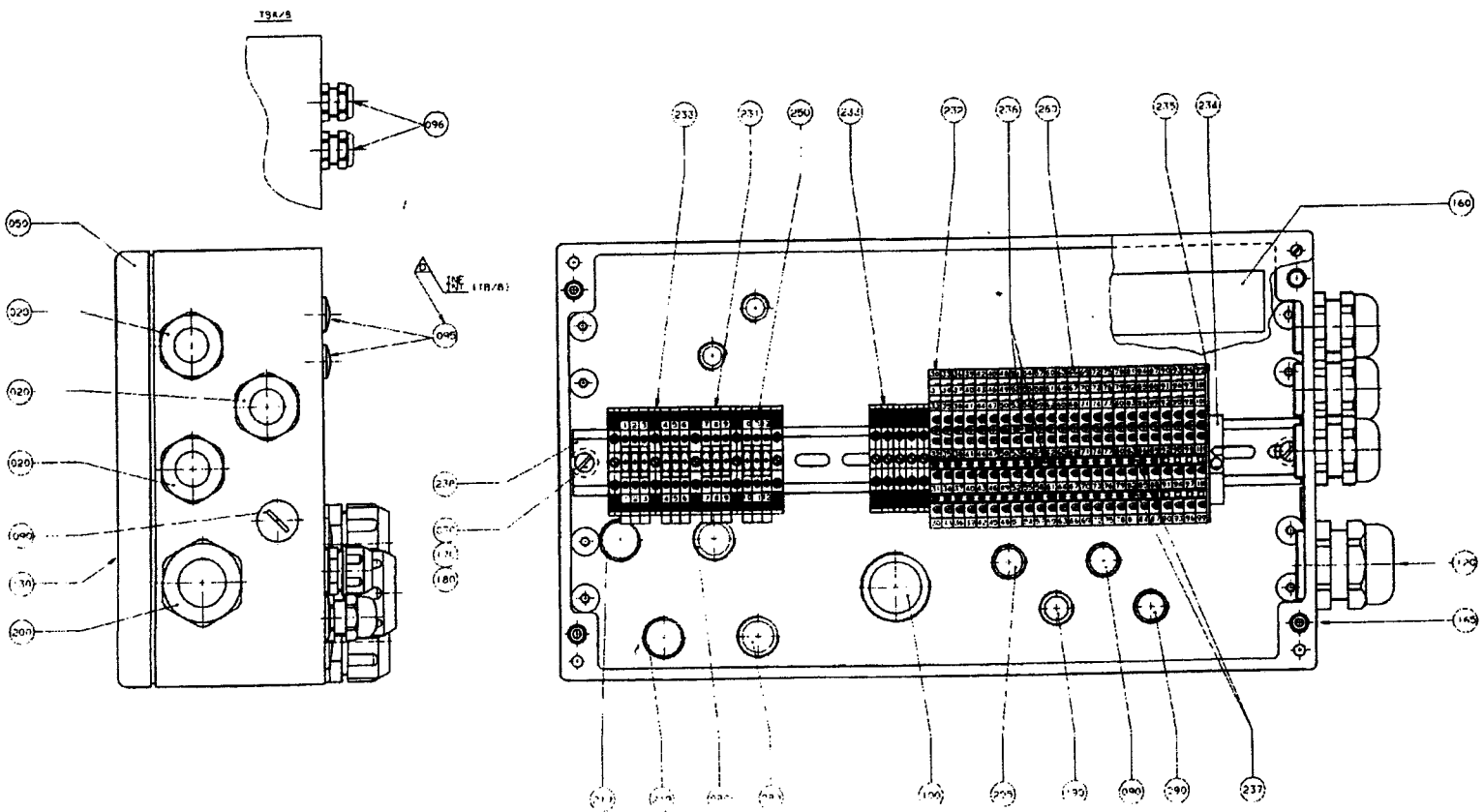

54072301.TIF
540723-1
AM

From	Pos	Part No	SP	UN	Qty	Description
		C- 540723-0101				**Connection Box TBA/8, Ass'y**
		C- 540723-0102				**Connection Box TB/8, Ass'y**
	096	90012-0063	-		2	GLAND TBA/8
	095	90002-0013	-		2	BLANK-OFF PLUG TB/8
	020	352103-0116	-		3	CABLE GLANR.ST 21
	050	540724	-		1	CONNECTION BOX
	070	450899-0001	-		2	SPACER
	080	90002-0004	-		2	PLUG
	090	90002-0009	-		3	BLANK-OFF PLUG
	100	90012-0061	-		1	GLAND
	120	90110-0128	-		2	PLUG 24-POL
	130	90194-0016	-		1	SIGN"FLASH SIGN"
	160	90298-0022	-		1	ZERUST CAPSULE
	165	312115-0372	-		3	SCREW MC6S6X25 A4 80
	170	312125-0376	-		2	SLOTTED HEMCS6X35RFR
	180	315105-0153	-		2	WASHER BRB6,4X12RFR
	190	352103-0106	-		1	CABLE GLANR.ST 11
	200	352103-0120	-		1	CABLE GLANR.STR 29
	205	352136-0113	-		1	GLAND FITT
	219	352136-0142	-		2	GLAND FITT
	231	353021-0212	-		12	TERMINAL
	232	353021-0302	-		24	CONNECTIONL#MMA DLD 2,5/
	233	353024-0205	-		10	EARTH TERML#MMA WPE 4
	234	353031-0201	-		1	END PLATE 35
	235	353032-0302	-		1	END PLATE AP
	236	353034-0401	-		3	BRIDGE CONLECK Q2
	237	353034-0404	-		4	BRIDGE CONLECK Q10
	238	353042-0004	-	MM	385	RAIL
	250	359011-0807	-		2	SET OF SIG5-FW 1-50
	260	359011-0808	-		2	SET OF SIG5-FW 51-100
	270	359011-0809	-		2	SET OF SIG5-FW 101-150

From	Pos	Part No	SP	UN	Qty	Description

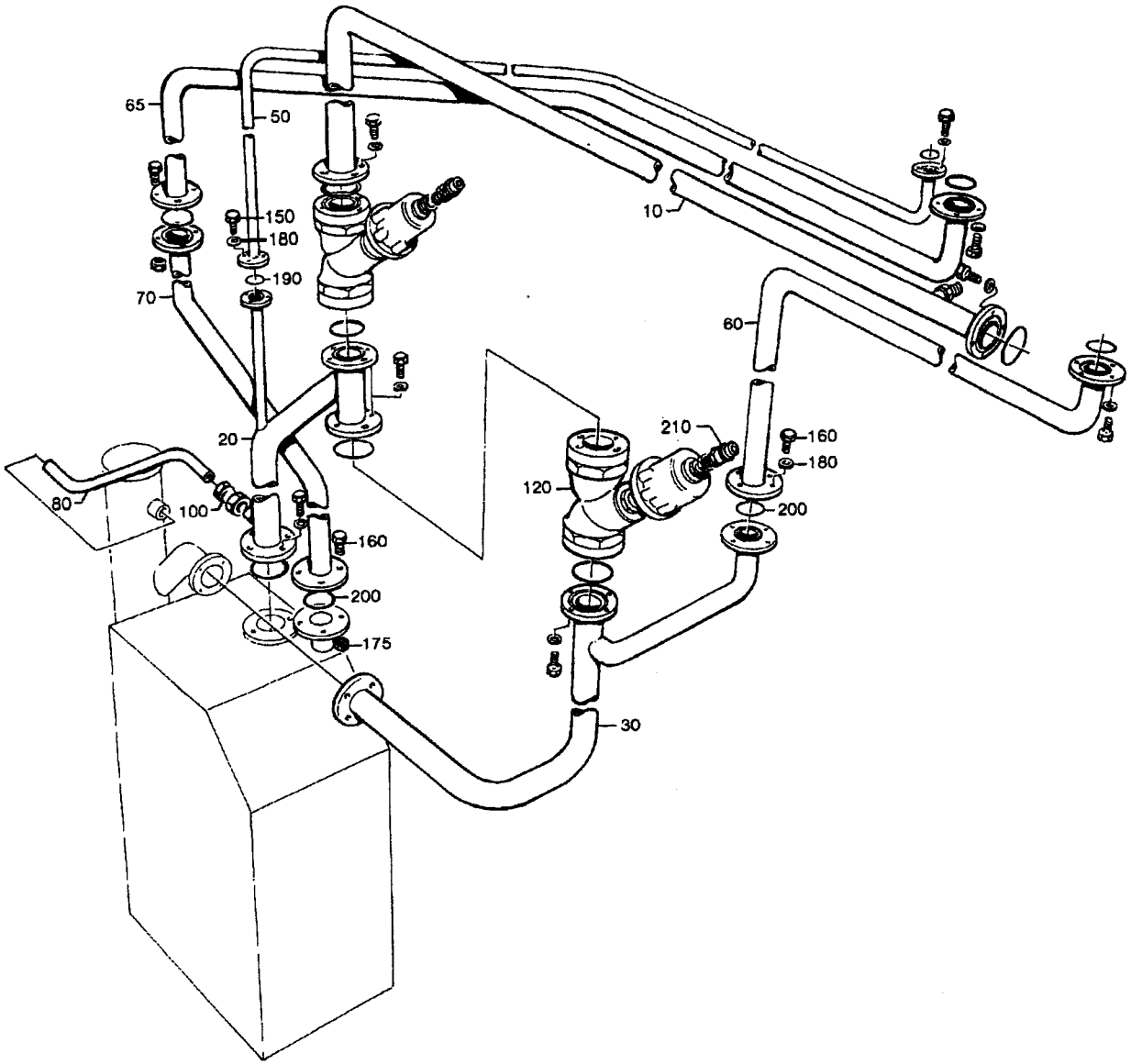

44246303.TIF
442463-3
AM

From	Pos	Part No	SP	UN	Qty	Description
		C- 442463-0401				**Pipe Work, Ass'y**
	010	442466	-		1	PIPE CONNECTION
	020	479033	-		1	PIPE CONNECTION
	030	479034	-		1	PIPE CONNECTION
	050	479036	-		1	PIPE CONNECTION
	060	479040	-		1	PIPE CONNECTION
	065	542074	-		1	PIPE
	070	531592	-		1	PIPE
	080	531597	-		1	PIPE
	100	531595	-		1	STRAIGHT PIPE UNION
	120	484538	S		2	VALVE
		90235-0460	S		1	* WEAR & TEAR PARTS KIT
	150	312105-0366	-		8	SCREW M6S6X12RFR
	160	312105-0368	-		48	SCREW M6S6X16RFR
	175	312605-0316	-		8	NUT M6M6RFR
	180	315105-0153	-		56	WASHER BRB6,4X12RFR
	190	315204-0215	-		2	O-RING 19,2X3VITON
	200	315204-0224	-		10	O-RING 2X3 VITON
	210	342920-0114	-		2	PIPE COUPL6/4-1/4

From	Pos	Part No	SP	UN	Qty	Description

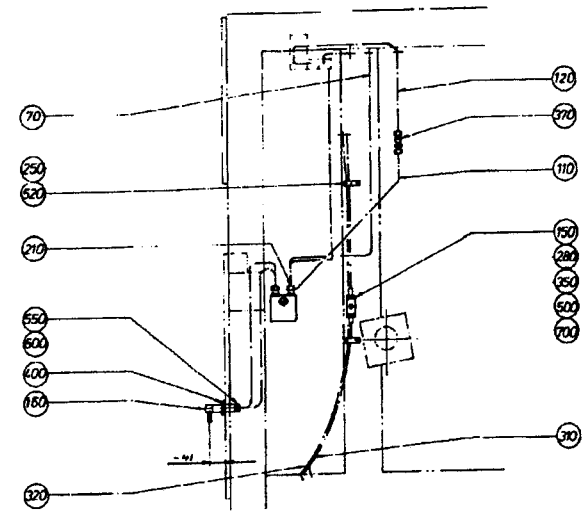

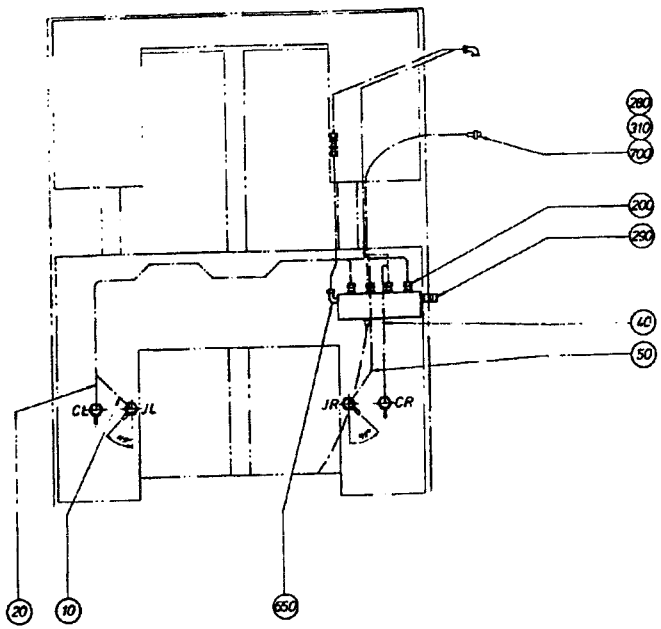

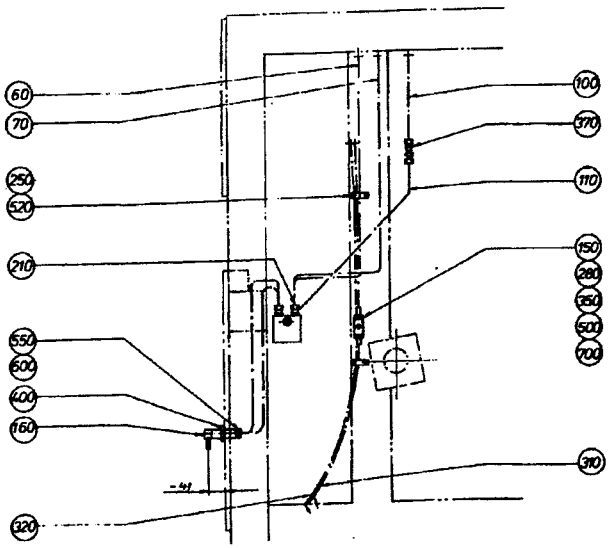

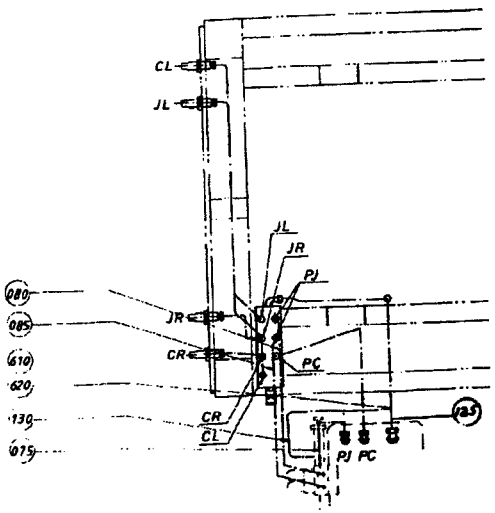

44553701.TIF
445537-1/2/3/4
AM

From	Pos	Part No	SP	UN	Qty	Description
TB/8 1136ml-500ml TBA/8 ALL						
		C- 445537-0201				**Pipe Work-Hydraulic, Ass'y**
	060	445538	-		1	HYDRAULIC PIPE
	100	445540	-		1	HYDRAULIC PIPE
	210	90030-0157	-		2	CONNECTION
TB/8 300ml						
		C- 445537-0202				**Pipe Work-Hydraulic, Ass'y**
	075	442079	-		1	PIPE
	080	497172	-		1	PIPE
	085	497173	-		1	PIPE
	120	497175	-		1	PIPE
	125	497176	-		1	PIPE
	130	497174	-		1	PIPE
	210	90030-0157	-		3	CONNECTION
	610	342714-0209	-		1	REDUCER KOR15/10-LFZB
	620	342747-0114	-		1	T-CONNECTI
Common Parts						
	010	294493	-		1	HYDRAULIC PIPE
	020	294494	-		1	HYDRAULIC PIPE
	040	294495	-		1	HYDRAULIC PIPE
	050	294496	-		1	HYDRAULIC PIPE
	070	445539	-		1	HYDRAULIC PIPE
	110	445541	-		1	HYDRAULIC PIPE
	150	255017	-		1	BRACKET
	160	540718	-		4	ELBOW PIPE JOINT
	200	90030-0155	-		4	CONNECTION
	250	90074-0006	-		2	CLIP
	280	90163-0041	-		3	NIPPLE
	290	90163-0076	-		1	SLEEVE
	310	90166-0007	S	MM	2000	HOSE
	320	90166-0122	S	MM	2000	HOSE
	350	90187-0054	S		1	VALVE
	370	90230-0011	S		1	NON RETURN VALVE
	400	90330-0093	-		4	NUT
	500	312101-0331	-		2	SCREW M6S5X20FZB
	520	312125-0323	-		4	SLOTTED HEMCS5X8RFR
	550	342703-0103	-		4	NUT M8-LFZB
	600	342705-0103	-		4	CUTTING RIR8-LFZB
	650	342731-0114	-		1	ELBOW PIPE WE15-LRFZB
	700	342991-0101	P		3	HOSE CLIP 11-17MMRFR

From	Pos	Part No	SP	UN	Qty	Description

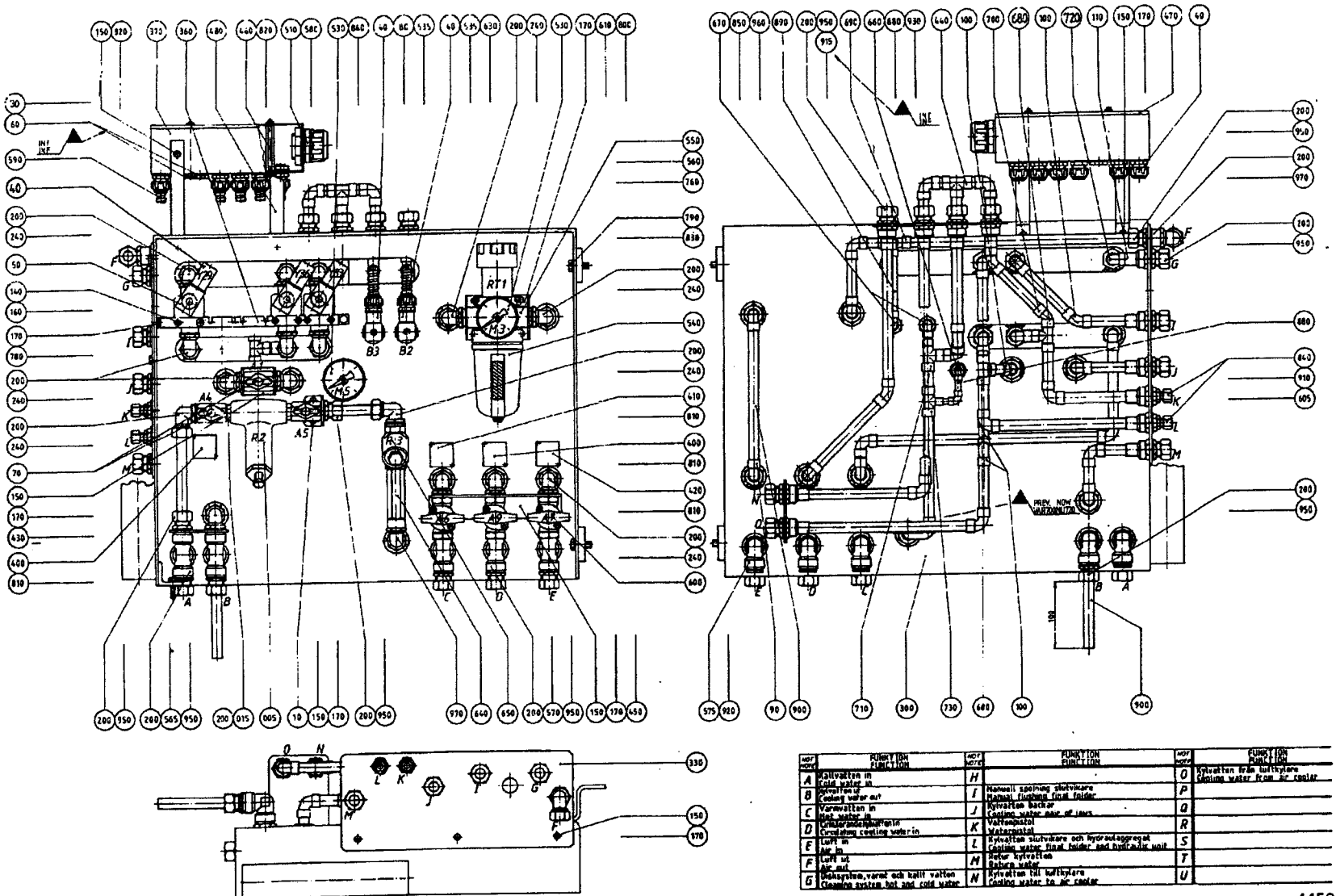

HÄNV. NOT	FUNKTION	HÄNV. NOT	FUNKTION	HÄNV. NOT	FUNKTION
A	Kallvatten in	H		O	Kylvatten från luftkylare
	Cold water in				Cooling water from air cooler
B	Kylvatten ut	I	Manuell spolning slutväxare	P	
	Cooling water out		Manual flushing final holder		
C	Varmvatten in	J	Kylvatten back-or	Q	
	Hot water in		Cooling water pair of jaws		
D	Cirkulerande kylvatten	K	Vattenpastol	R	
	Circulating cooling water in		Waterpastol		
E	Luft in	L	Kylvatten slutväxare och hydroaggregat	S	
	Air in		Cooling water final holder and hydraulic unit		
F	Luft ut	M	Retur kylvatten	T	
	Air out		Return water		
G	Blåsgrabar, varmt och kallt vatten	N	Kylvatten till luftkylare	U	
	Cleaning system hot and cold water		Cooling water to air cooler		

44565604.TIF
445656-4
AM

From	Pos	Part No	SP	UN Qty	Description
TBA/8					
		C- 445656-0301			**Valve Panel Lower, Ass'y**
	005	271823	-	2	FILTER
		90415-0314	P	0	* FILTERINSERT
		90415-0325	P	0	* GASKET
	010	543127	-	2	BRACKET
	015	479261	-	4	NIPPLE
	030	90002-0013	-	1	BLANK-OFF PLUG
	040	90012-0063	-	13	GLAND
	050	90042-0172	-	4	SOLENOID VALVE
		90042-0467	P	0	* COIL
	060	90099-0001	-	1	NUT
	070	90187-0062	S	5	VALVE
	075	90274-0042	-	1	GUARD
	090	90418-0053	-	25	ELBOW PIPE
	100	90418-0054	-	7	PIPE FITTING
	110	90418-0063	-	13	ADAPTER
	140	312115-0333	-	8	SCREW A4 80
	150	312105-0362	-	13	SCREW M6S6X8RFR
	160	312605-0314	-	16	NUT M6M5RFR
	170	315105-0153	-	31	WASHER BRB6,4X12RFR
	200	315233-0113	-	50	SEAL RING R1/2"
	240	342730-0114	-	19	ELBOW PIPE WA-15-1/2"
	250	342740-0114	-	1	T-CONNECTI TA-15-1/2"
	260	342750-0114	-	1	ELBOW FITT LA-15-1/2"
TB/8					
		C- 445656-0302			**Valve Panel Lower, Ass'y**
	005	271823	-	1	FILTER
		90415-0314	P	0	* FILTERINSERT
		90415-0325	P	0	* GASKET
	010	543127	-	1	BRACKET
	015	479261	-	2	NIPPLE
	030	90002-0013	-	2	BLANK-OFF PLUG
	040	90012-0063	-	11	GLAND
	050	90042-0172	-	3	SOLENOID VALVE
		90042-0467	P	0	* COIL
	060	90099-0001	-	2	NUT
	070	90187-0062	S	2	VALVE
	080	90274-0043	-	1	GUARD
	090	90418-0053	-	24	ELBOW PIPE
	100	90418-0054	-	6	PIPE FITTING
	110	90418-0063	-	12	ADAPTER
	140	312115-0333	-	6	SCREW A4 80
	150	312105-0362	-	11	SCREW M6S6X8RFR
	160	312605-0314	-	12	NUT M6M5RFR
	170	315105-0153	-	29	WASHER BRB6,4X12RFR
	200	315233-0113	-	41	SEAL RING R1/2"
	240	342730-0114	-	16	ELBOW PIPE WA-15-1/2"
Common Parts					
	300	542700	-	1	VALVEPANEL LOWER
	330	543134	-	1	PLATE
	360	543128	-	1	VALVE BRACKET
	370	543129	-	1	CABLE DUCT
	400	273455	-	2	LABEL (COLD WATER)
	410	273456	-	1	SIGN
	420	273458	-	1	LABEL (AIR)
	430	543130	-	1	BRACKET
	440	293201	-	1	PIPE
	450	543131	-	1	BRACKET
	460	445739	-	2	SPACER
	470	543132	-	1	LID
	480	543133	-	2	BRACKET
	510	90012-0061	-	1	GLAND
	530	90043-0006	S	2	PRESSURE GAUGE
	535	90110-0095	-	2	CONTAKT
	540	90113-0047	-	1	REGULATOR
		90113-0349	P	0	* GASKET
		90277-0314	P	0	* FILTER
	550	90113-0336	-	1	INSERT
	560	90113-0338	-	1	YOKE
	565	90140-0010	-	2	T-PIECE
	570	90140-0011	-	3	T-PIECE
	575	90140-0012	-	5	ELBOW PIPE
	580	90152-0031	-	MM1000	HOSE
	590	90152-0033	-	MM2500	HOSE
	600	90187-0029	S	3	VALVE
	605	90224-0319	-	2	CONNECTION
	610	90236-0012	-	2	BRACKET
	630	90274-0044	-	1	GUARD
	640	90415-0018	-	1	FILTER
	650	90415-0019	-	1	FILTER
	660	90418-0014	-	2	ELBOW PIPE
	670	90418-0039	-	3	ELBOW PIPE
	680	90418-0048	-	3	T-PIECE
	690	90418-0050	-	1	T-PIECE
	700	90418-0055	-	2	PIPE FITTING
	710	90418-0056	-	1	T-PIECE
	720	90418-0058	-	3	ELBOW PIPE
	730	90418-0068	-	1	T-PIECE
	760	311111-0212	-	2	SLOTTED TUFRP3X24

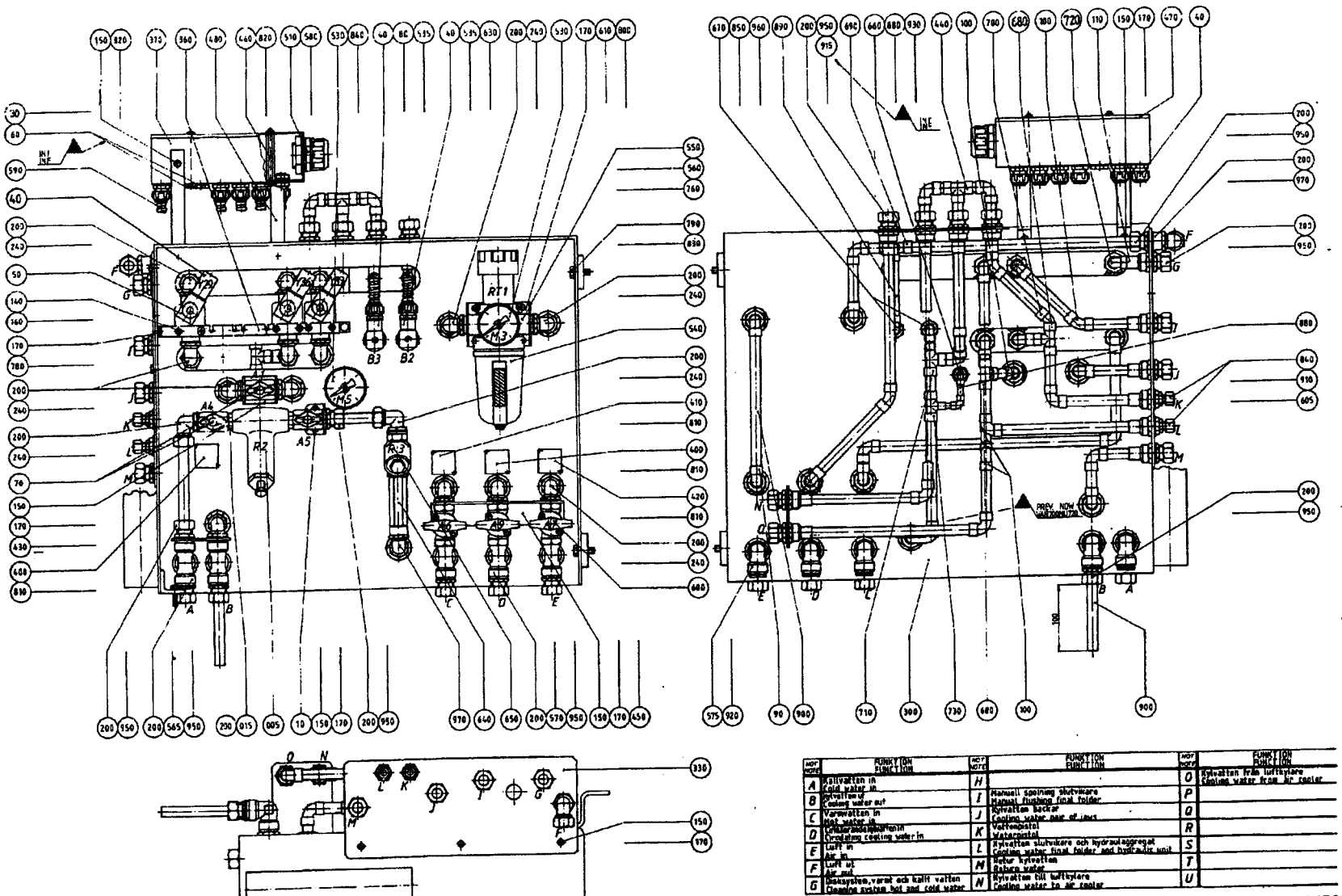

REF NOTE	FUNKTION FUNCTION	REF NOTE	FUNKTION FUNCTION	REF NOTE	FUNKTION FUNCTION
A	Kallvatten in Cold water in	H		O	Kylvatten från luftkylare Cooling water from air cooler
B	Kylvatten ut Cooling water out	I	Manuell spolning slutventare Manual flushing final holder	P	
C	Varmvatten in Hot water in	J	Kylvatten backar Cooling water pass of inlet	Q	
D	Cirkulerande kylvatten in Circulating cooling water in	K	Vattenpistol Waterpistol	R	
E	Luft in Air in	L	Kylvatten slutventare och hydraulaggregat Cooling water final holder and hydraulic unit	S	
F	Luft ut Air out	M	Retur kylvatten Return water	T	
G	Slangsystem, varmt och kallt vatten Cooling system hot and cold water	N	Kylvatten till luftkylare Cooling water to air cooler	U	

44565604.TIF
445656-4
AM

From	Pos	Part No	SP	UN	Qty	Description
	780	312105-0366	-		4	SCREW M6S6X12RFR
	790	312105-0453	-		3	SCREW M6S8X25RFR
	800	312115-0362	-		4	SCREW 6X8 A4 80
	810	312502-0120	-		8	DRIVE SCREKDS0X5FNB
	820	312605-0316	-		6	NUT M6M6RFR
	830	315105-0165	-		3	WASHER BRB8,4X16RFR
	840	315233-0110	-		1	SEAL RING R1/4"
	850	315233-0111	-		2	SEAL RING R3/8"
	880	341001-0148	-	MM	100	COPPER TUB
	890	341001-0192	-	MM	300	COPPER TUB
	900	341001-0228	-	MM	5000	COPPER TUB
	910	342701-0205	-		2	BUSHING RNI1/2"-1/4"
	915	342711-0115	-		1	PLUG PL-16
	920	342713-0213	-		4	BLIND PLUG
	930	342720-0103	-		1	PIPE COUPLGA-8-1/8"
	950	342720-0114	-		19	PIPE COUPLGA-15-1/2"
	960	342723-0109	-		2	PIPE COUPLGI-12-3/8"
	970	342733-0114	-		2	ELBOW PIPE WI-15-1/2"

From	Pos	Part No	SP	UN	Qty	Description

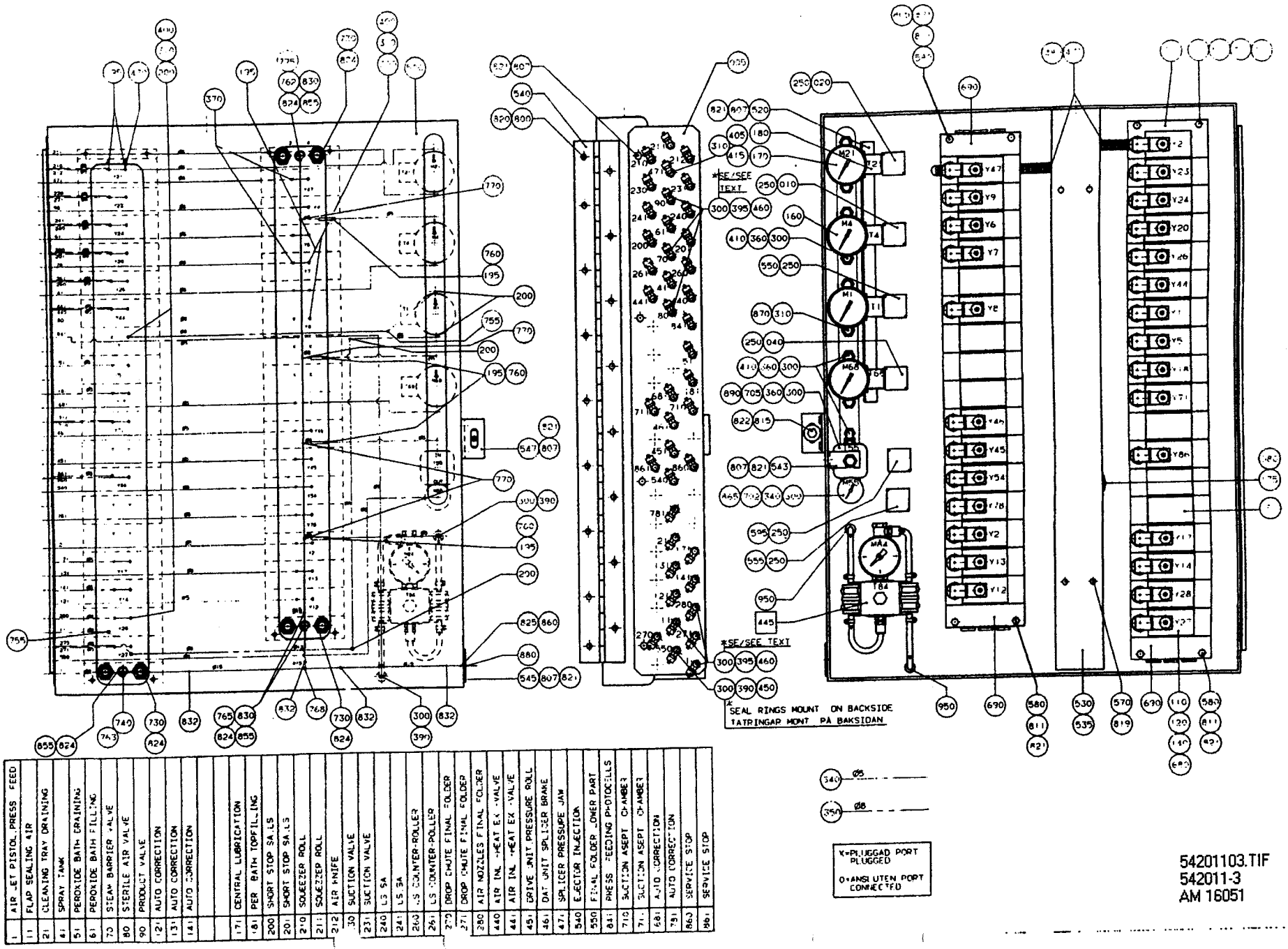
1 AIR JET PISTOL PRESS FEED
11 FLAP SEALING AIR
21 CLEANING TRAY DRAINING
41 SPRAY TANK
51 PEROXIDE BATH DRAINING
61 PEROXIDE BATH FILLING
70 STEAM BARRIER VALVE
80 STERILE AIR VALVE
90 PRODUCT VALVE
121 AUTO CORRECTION
131 AUTO CORRECTION
141 AUTO CORRECTION
171 CENTRAL LUBRICATION
181 PER BATH TOPFILLING
200 SHORT STOP SA.LS
201 SHORT STOP SA.LS
210 SQUEEZER ROLL
211 SQUEEZER ROLL
212 AIR KNIFE
30 SUCTION VALVE
231 SUCTION VALVE
240 LS SA
241 LS SA
260 LS COUNTER-ROLLER
261 LS COUNTER-ROLLER
270 DROP CHUTE FINAL FOLDER
271 DROP CHUTE FINAL FOLDER
280 AIR NOZZLES FINAL FOLDER
440 AIR IN. HEAT EX.-VALVE
441 AIR IN. HEAT EX.-VALVE
451 DRIVE UNIT PRESSURE ROLL
461 DRIVE UNIT SPLICER BRAKE
471 SPLICER PRESSURE JAW
540 EJECTOR INJECTION
550 FINAL FOLDER LOWER PART
841 PRESS FEEDING PHOTOCELLS
710 SUCTION ASEPT CHAMBER
711 SUCTION ASEPT CHAMBER
681 AUTO CORRECTION
791 AUTO CORRECTION
861 SERVICE STOP
861 SERVICE STOP
*SE/SEE TEXT
*SE/SEE TEXT
*SEAL RINGS MOUNT ON BACKSIDE
TATRINGAR MONT PÅ BAKSIDAN
K=PLUGGAD PORT
PLUGGED
O=ANSLUTEN PORT
CONNECTED
54201103.TIF
542011-3
AM 16051

From	Pos	Part No	SP	UN	Qty	Description
		C- 542011-0201				**Valve Panel, Ass'y**
	005	560876	-		1	BRACKET TBA/8
	010	273450	-		1	SIGN
	020	273452	-		1	SIGN
	080	90002-0018	-		7	BLIND PLUG
	110	90042-0108	-		27	SOLENOID VALVE
		90042-0451	SP		1	* WEAR & TEAR PARTS KIT
	120	90042-0345	P		27	COIL
	140	90042-0476	-		27	CONTACT
	150	90042-0404	-		7	PLATE
	170	90043-0033	S		1	PRESSURE GAUGE
	175	90099-0116	-		7	NUT
	180	90113-0048	-		4	REGULATOR
	195	90224-0019	-		34	NIPPLE
	200	90418-0014	-		10	ELBOW PIPE
	250	312502-0120	-		12	DRIVE SCREKDS0X5FNB
	300	315233-0109	-		52	SEAL RING R1/8"
	310	315233-0110	-		8	SEAL RING R1/4"
	340	341001-0122	-	M	14	COPPER TUB
	350	341001-0148	-	MM	4000	COPPER TUB
	360	342701-0201	-		8	BUSHING RNI1/4"-1/8"
	370	342713-0210	-		32	BLIND PLUG
	390	342720-0101	-		37	PIPE COUPLGA-5-1/8"
	395	342720-0103	-		7	PIPE COUPLGA-8-1/8"
	400	342720-0104	-		6	PIPE COUPLGA-8-1/4"
	410	342730-0101	-		7	ELBOW PIPE WA-5-1/8"
	430	342746-0101	-		1	T-CONNECTI T-5
	450	342933-0113	-		35	ELBOW PIPE6/4-1/8
	460	342933-0121	-		7	ELBOW PIPE8/6-1/8
	470	352135-0102	-	MM	6500	HOSE .010
	480	352136-0107	-		54	GLAND FITT
	755	90418-0018	-		3	PIPE FITTING
	760	90418-0035	-		4	ADAPTER
	770	90418-0068	-		4	T-PIECE
Common Parts						
	F445	C- 543147-0101	-		1	PRESSURE FEED
	040	561595	-		1	SIGN
	160	90043-0006	S		3	PRESSURE GAUGE
	405	342723-0104	-		1	PIPE COUPLGI-8-1/4"
	415	342732-0104	-		1	ELBOW PIPE D8-R1/4"
	500	560878	-		1	VALVE PANEL UPPE
	520	560879	-		1	BRACKET
	530	543944	-		1	CABLE DUCT
	535	543945	-		1	LID
	540	445736	-		1	HINGE
	543	543164	-		1	HOLDER
	545	543165	-		1	BRACKET
	547	543166	-		1	BRACKET
	550	273449	-		1	SIGN
	555	273458	-		1	LABEL (AIR)
	570	543946	-		4	SPACER
	580	544525	-		8	SPACER
	595	479964	-		1	SIGN
	680	90042-0431	-		34	PLATE
	690	90042-0368	-		3	CONNECTION
	700	90042-0369	-		1	END PIECE
	702	90043-0021	-		1	PRESSURE GAUGE
	705	90113-0056	-		1	REGULATOR
	730	90328-0007	-		6	SILENCER
	740	90418-0003	-		1	REDUCTION SLEEVE
	762	90418-0053	-		1	ELBOW PIPE
	763	90418-0049	-		1	T-PIECE
	765	90418-0050	-		1	T-PIECE
	768	90418-0048	-		1	T-PIECE
	775	90418-0052	-		1	REDUCTION SLEEVE
	800	312105-0323	-		17	SCREW M6S5X8 A4 80
	805	312605-0316	-		2	NUT M6M6RFR
	807	312105-0364	-		10	SCREW M6S6X10RFR
	811	312105-0382	-		8	SCREW M6S6X60RFR
	815	312105-0449	-		1	SCREW M6S8X16RFR
	819	312705-0314	-		4	CAP NUT MHM 5 A2
	820	315105-0146	-		17	WASHER BRB5,3X10RFR
	821	315105-0153	-		26	WASHER BRB6,4X12RFR
	822	315125-0165	-		1	WASHER SB 8,4X26X5 RFR
	824	315233-0111	-		9	SEAL RING R3/8"
	825	315233-0113	-		1	SEAL RING R1/2"
	830	341001-0192	-	MM	200	COPPER TUB
	832	341001-0228	-	MM	1300	COPPER TUB
	855	342720-0109	-		3	PIPE COUPLGA-12-3/8"
	860	342720-0114	-		1	PIPE COUPLGA-15-1/2"
	865	342723-0101	-		1	PIPE COUPLGI-5-1/8"
	870	342730-0104	-		2	ELBOW PIPE WA-8-1/4"
	880	342733-0114	-		1	ELBOW PIPE WI-15-1/2"
	890	342740-0101	-		1	T-CONNECTI TA-5-1/8"
	950	342923-0121	-		2	PIPE COUPL8/6-1/8

54201104

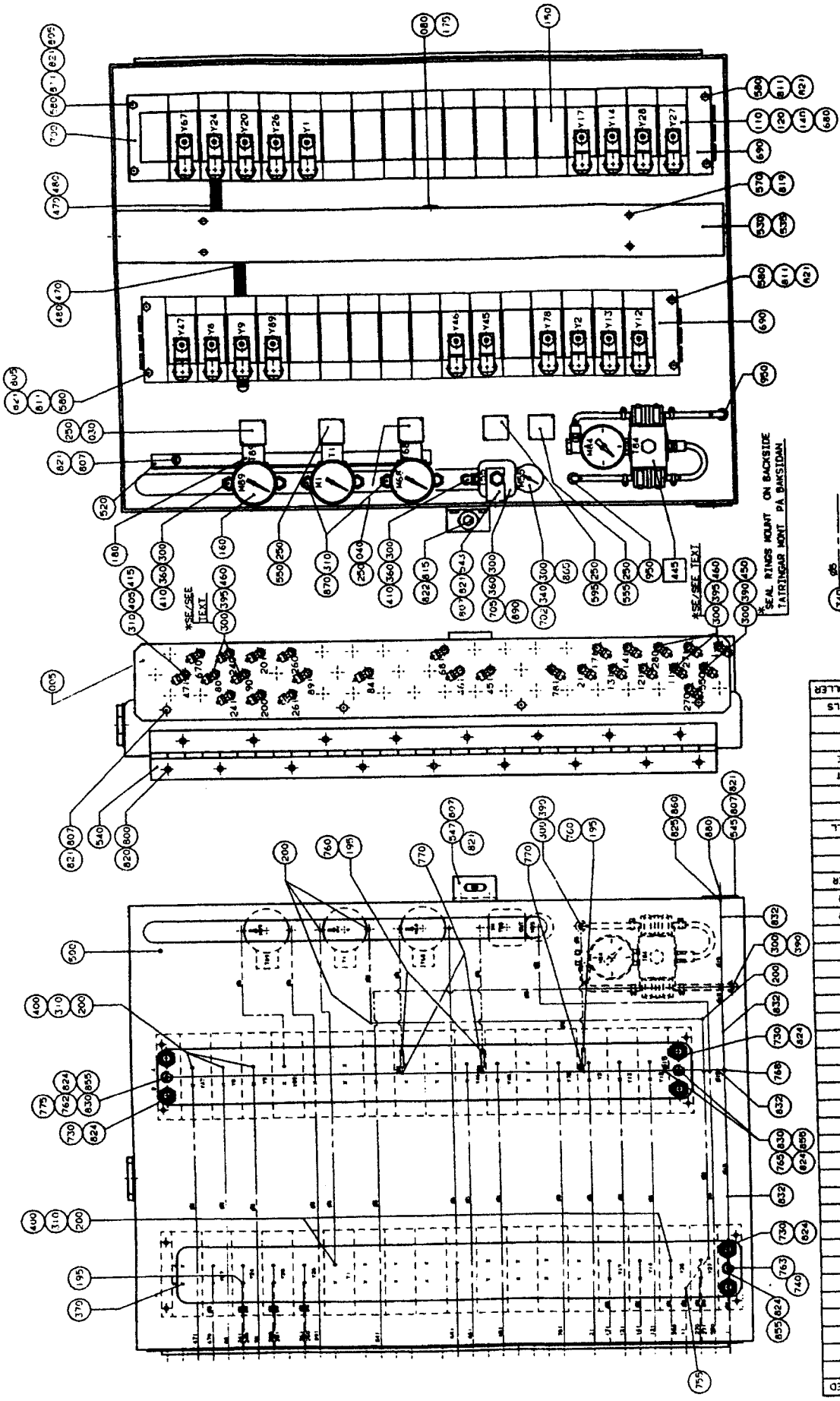

1	AIR JET PISTOL PRESS FEED
11	FLAP SEALING AIR
21	CLEANING TRAY DRAINING
80	STERILE AIR VALVE
90	PRODUCT VALVE
121	AUTO CORRECTION
131	AUTO CORRECTION
141	AUTO CORRECTION
171	CENTRAL LUBRICATION
200	SHORT STOP SA LS
201	SHORT STOP SA LS
240	LS SA
241	LS SA
260	LS COUNTER-ROLLER
261	LS COUNTER-ROLLER
270	DROP CHUTE FINAL FOLDER
271	DROP CHUTE FINAL FOLDER
280	AIR NOZZLES FINAL FOLDER
451	DRIVE UNIT PRESSURE ROLL
461	OAT UNIT SPLICER BRAKE
471	SPLICER PRESSURE JAW
550	FINAL FOLDER LOWER PART
670	CLEANING-VENTING VALVE
681	AUTO CORRECTION
781	AUTO CORRECTION
841	PRESS FEEDING PHOTOCELLS
891	BRAKE UNIT PRESSURE ROLLER

Last Alteration: AM 16792 91-09-11

Corresponding group: 542011-0202
Assembly Drawing: 542011-4

Issue: 930607

From	Pos	Part No	SP	UN	Qty	Description
		C- 542011-0202				**Valve Panel, Ass'y**
	005	560877	-		1	BRACKET TB/8
	030	293333	-		1	SIGN
	080	90002-0018	-		15	BLIND PLUG
	110	90042-0108	-		19	SOLENOID VALVE
		90042-0451	SP		1	* WEAR & TEAR PARTS KIT
	120	90042-0345	P		19	COIL
	140	90042-0476	-		19	CONTACT
	150	90042-0404	-		15	PLATE
	175	90099-0116	-		15	NUT
	180	90113-0048	-		3	REGULATOR
	195	90224-0019	-		21	NIPPLE
	200	90418-0014	-		9	ELBOW PIPE
	250	312502-0120	-		10	DRIVE SCREKDS0X5FNB
	300	315233-0109	-		35	SEAL RING R1/8"
	310	315233-0110	-		7	SEAL RING R1/4"
	340	341001-0122	-	M	10	COPPER TUB
	350	341001-0148	-	MM	3500	COPPER TUB
	360	342701-0201	-		5	BUSHING RNI1/4"-1/8"
	370	342713-0210	-		45	BLIND PLUG
	390	342720-0101	-		23	PIPE COUPLGA-5-1/8"
	395	342720-0103	-		6	PIPE COUPLGA-8-1/8"
	400	342720-0104	-		5	PIPE COUPLGA-8-1/4"
	410	342730-0101	-		5	ELBOW PIPE WA-5-1/8"
	450	342933-0113	-		23	ELBOW PIPE6/4-1/8
	460	342933-0121	-		6	ELBOW PIPE8/6-1/8
	470	352135-0102	-	MM	5300	HOSE .010
	480	352136-0107	-		38	GLAND FITT
	755	90418-0018	-		2	PIPE FITTING
	760	90418-0035	-		3	ADAPTER
	770	90418-0068	-		3	T-PIECE
Common Parts						
	F445	C- 543147-0101	-		1	PRESSURE FEED
	040	561595	-		1	SIGN
	160	90043-0006	S		3	PRESSURE GAUGE
	405	342723-0104	-		1	PIPE COUPLGI-8-1/4"
	415	342732-0104	-		1	ELBOW PIPE D8-R1/4"
	500	560878	-		1	VALVE PANEL UPPE
	520	560879	-		1	BRACKET
	530	543944	-		1	CABLE DUCT
	535	543945	-		1	LID
	540	445736	-		1	HINGE
	543	543164	-		1	HOLDER
	545	543165	-		1	BRACKET
	547	543166	-		1	BRACKET

From	Pos	Part No	SP	UN	Qty	Description
	550	273449	-		1	SIGN
	555	273458	-		1	LABEL (AIR)
	570	543946	-		4	SPACER
	580	544525	-		8	SPACER
	595	479964	-		1	SIGN
	680	90042-0431	-		34	PLATE
	690	90042-0368	-		3	CONNECTION
	700	90042-0369	-		1	END PIECE
	702	90043-0021	-		1	PRESSURE GAUGE
	705	90113-0056	-		1	REGULATOR
	730	90328-0007	-		6	SILENCER
	740	90418-0003	-		1	REDUCTION SLEEVE
	762	90418-0053	-		1	ELBOW PIPE
	763	90418-0049	-		1	T-PIECE
	765	90418-0050	-		1	T-PIECE
	768	90418-0048	-		1	T-PIECE
	775	90418-0052	-		1	REDUCTION SLEEVE
	800	312105-0323	-		17	SCREW M6S5X8 A4 80
	805	312605-0316	-		2	NUT M6M6RFR
	807	312105-0364	-		10	SCREW M6S6X10RFR
	811	312105-0382	-		8	SCREW M6S6X60RFR
	815	312105-0449	-		1	SCREW M6S8X16RFR
	819	312705-0314	-		4	CAP NUT MHM 5 A2
	820	315105-0146	-		17	WASHER BRB5,3X10RFR
	821	315105-0153	-		26	WASHER BRB6,4X12RFR
	822	315125-0165	-		1	WASHER SB 8,4X26X5 RFR
	824	315233-0111	-		9	SEAL RING R3/8"
	825	315233-0113	-		1	SEAL RING R1/2"
	830	341001-0192	-	MM	200	COPPER TUB
	832	341001-0228	-	MM	1300	COPPER TUB
	855	342720-0109	-		3	PIPE COUPLGA-12-3/8"
	860	342720-0114	-		1	PIPE COUPLGA-15-1/2"
	865	342723-0101	-		1	PIPE COUPLGI-5-1/8"
	870	342730-0104	-		2	ELBOW PIPE WA-8-1/4"
	880	342733-0114	-		1	ELBOW PIPE WI-15-1/2"
	890	342740-0101	-		1	T-CONNECTI TA-5-1/8"
	950	342923-0121	-		2	PIPE COUPL8/6-1/8

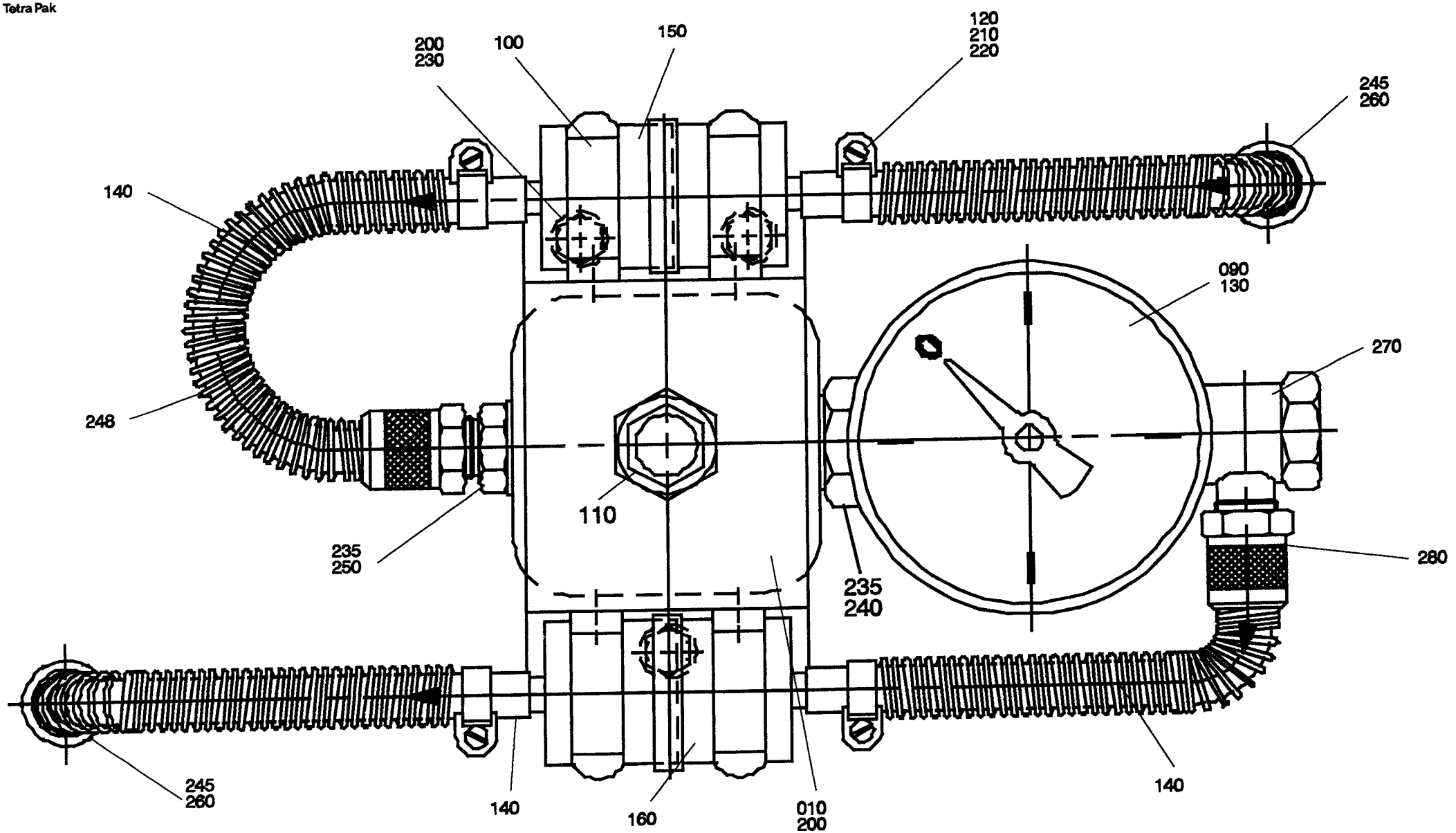

54314701.wpg
543170-1
AM 11471

From	Pos	Part No	SP	UN	Qty	Description
		C- 543147-0101				**Pressure Feed, Ass'y**
	010	458053	-		1	BOW CLAMP
	090	90043-0078	-		1	PRESSURE GAUGE
	100	90074-0026	-		4	CLIP
	110	90113-0056	-		1	REGULATOR
	120	90132-0021	-		4	HOSE CLIP
	130	90140-0018	-		1	T-PIECE
	140	90166-0122	-	MM	500	HOSE
	150	90277-0045	S		1	FILTER
	160	90277-0046	S		1	FILTER
	200	312105-0323	-		3	SCREW M6S5X8 A4 80
	210	312125-0220	-		4	SLOTTED HEMCS3X6RFR
	220	312605-0310	-		4	NUT M6M3RFR
	230	315105-0146	-		3	WASHER BRB5,3X10RFR
	235	315233-0110	-		2	SEAL RING R1/4"
	240	342700-0110	-		1	NIPPLE RNA1/4"-1/4"
	245	342720-0101	-		2	PIPE COUPLGA-5-1/8"
	248	342903-0121	-		4	NUT J#DER 1723-8/6
	250	342920-0122	-		1	PIPE COUPL8/6-1/4
	260	342923-0121	-		2	PIPE COUPL8/6-1/8
	270	342980-0122	-		1	BANJO CONNSINGEL 8/6-1/4
	280	342980-0304	-		1	BANJO CONN SINGEL 1/4

From	Pos	Part No	SP	UN	Qty	Description

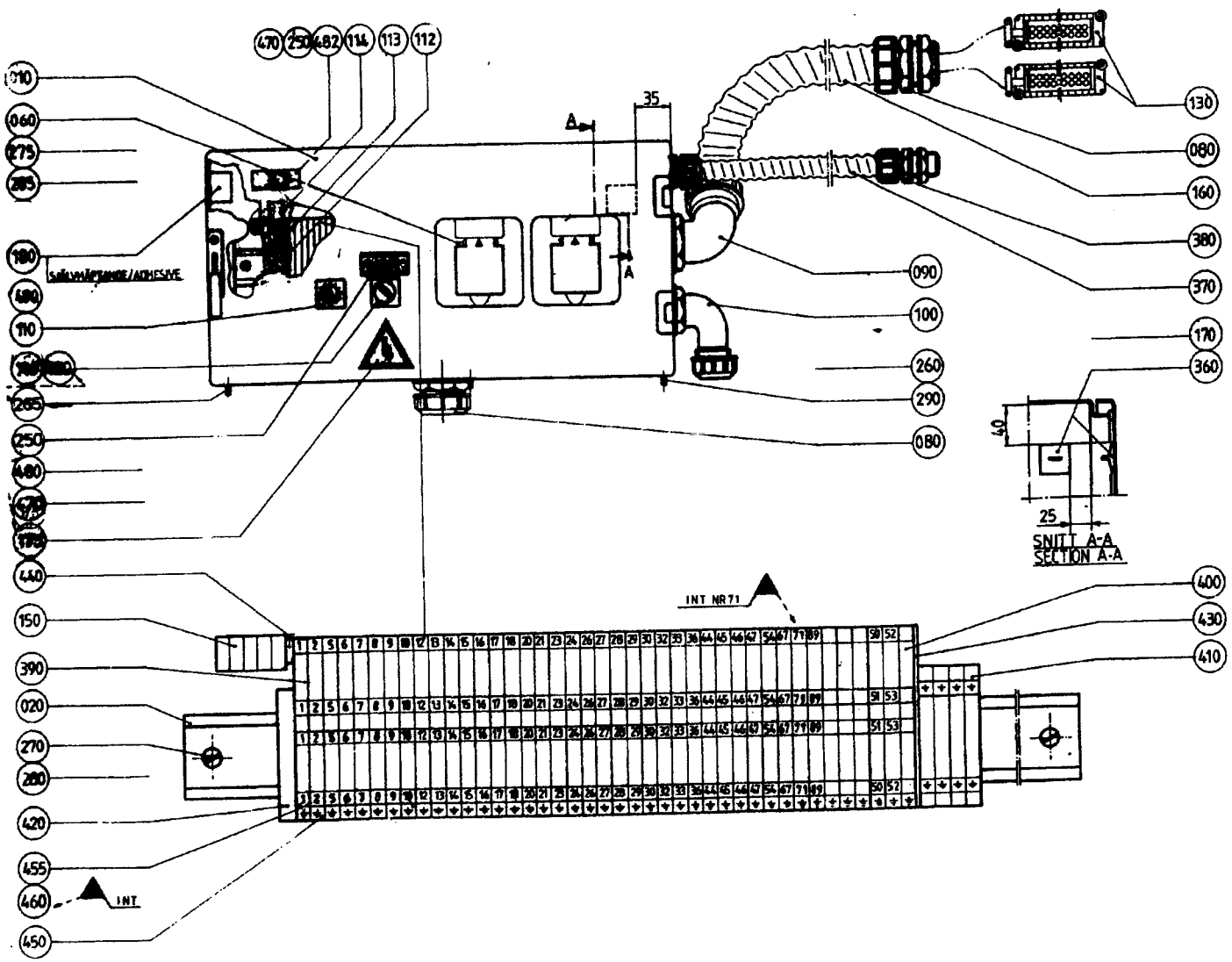

44993003.TIF
449930-3/4
AM

From	Pos	Part No	SP	UN	Qty	Description
		C- 449930-0401				**Connection Box, Ass'y**
	010	542710	-		1	CONNECTION BOX
	020	450858-0001	-		1	MOUNTING RAIL
	060	90001-0025	-		2	WALL SOCKET
	080	90012-0059	-		2	GLAND
	090	90012-0060	-		1	GLAND
	100	90012-0062	-		1	GLAND
	110	90064-0084	-		1	PUSH BUTTON YELLOW
	112	90064-0094	-		1	PUSH BUTTON
		90064-0318	S		0	* SIGNAL LAMP
	113	90064-0095	-		1	PUSH BUTTON
		90064-0319	S		0	* SIGNAL LAMP
	114	90064-0096	-		1	PUSH BUTTON
		90064-0320	S		0	* SIGNAL LAMP
	120	90064-0317	-		1	TOUCH GUARD
	130	90110-0128	-		2	PLUG 24-POL
	140	90111-0121	-		1	SWITCH
	150	90135-0017	-		5	CLAMP
	160	90152-0029	-	MM	550	HOSE
	170	90182-0007	-		3	PLATE
	175	90194-0016	-		1	SIGN"FLASH SIGN"
	180	90298-0022	-		1	ZERUST CAPSULE
	250	311520-0329	-		4	BLANK RIVE2,4X8
	260	312105-0362	-		6	SCREW M6S6X8RFR
	265	312105-0366	-		1	SCREW M6S6X12RFR
	270	312121-0323	-		2	SLOTTED HEMCS5X8FZB
	275	312125-0226	-		4	SLOTTED HEMCS3X12RFR
	280	312601-0314	-		2	NUT M6M5FZB
	285	312605-0310	-		4	NUT M6M3RFR
	290	315105-0153	-		6	WASHER BRB6,4X12RFR
	360	352113-0102	-		2	RIBBON CLA
	370	352135-0106	-	MM	550	HOSE .016
	380	352136-0127	-		2	GLAND FITT
	390	353021-0201	-		38	CONNECTIONMMA DKIT 4 PA
	400	353021-0203	-		3	CONNECTIONMMA DKI 4 PA
	410	353024-0201	-		4	EARTH TERML#MMA EK4/35 PA
	420	353031-0201	-		1	END PLATE 35
	430	353032-0201	-		1	END PLATE AP PA
	440	353041-0001	-	MM	275	RAIL 10X3MS
	450	359011-0202	-		45	SIGN BOARD(GROUND)
	455	359011-0800	-		4	MARKING PLATE KITS
	460	359011-0801	-		4	SIGN BOARDBSFW 0-49
	470	359240-0100	-		2	SIGN HOLDER
	480	359241-0127	-		1	SIGN"LIGHT JAWSY & MACH"
	482	359241-0158	-		1	SIGN"LEVEL HYD OIL TANK"
	490	359301-0125	-		1	SIGN
	500	359301-0265	-		1	SIGN T

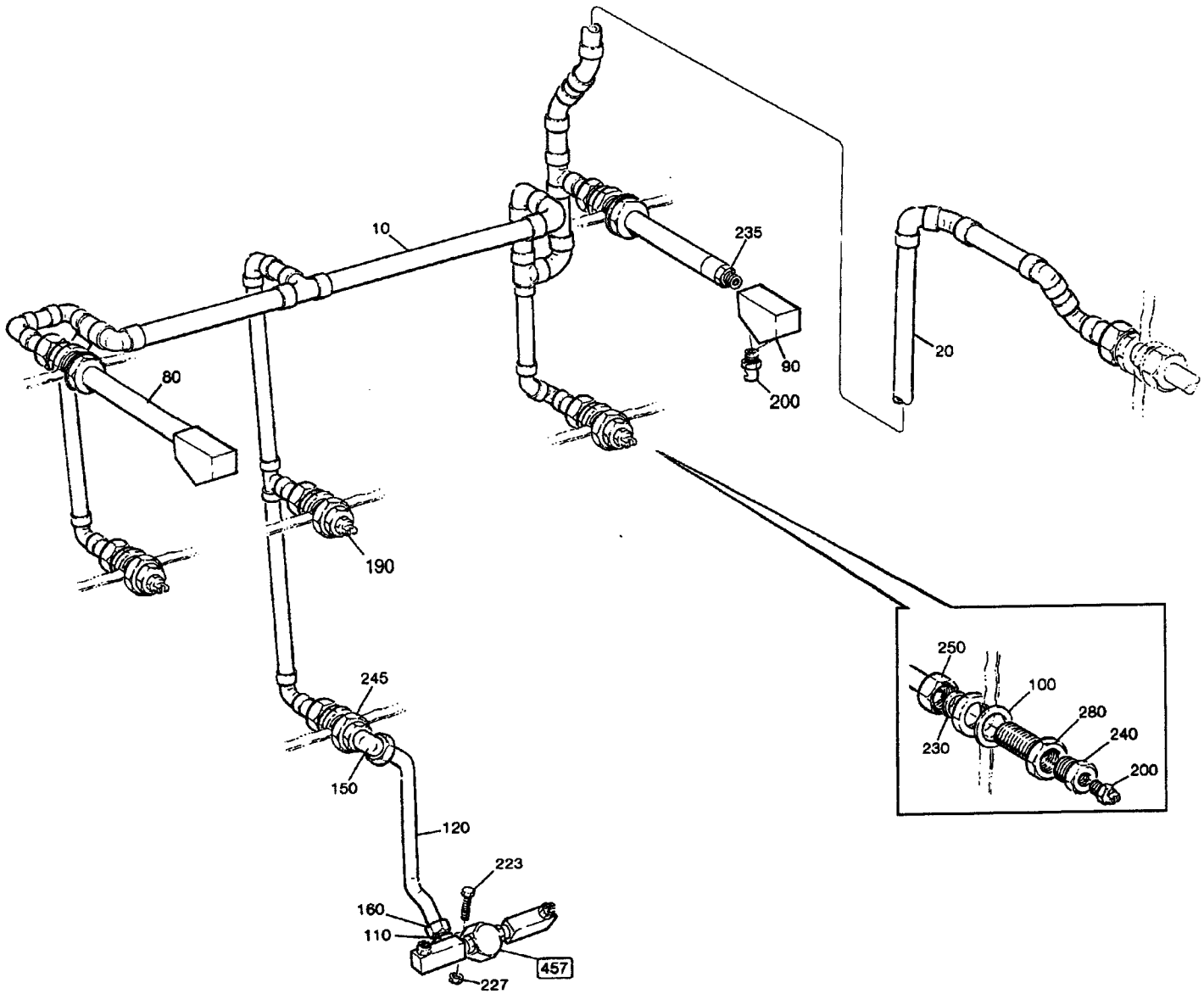

44916803.TIF
449168-3
AM 17879

From	Pos	Part No	SP	UN	Qty	Description
TB/8 TBA/8						
		C- 449168-0301				**Cleaning system, ass'y**
	200	90424-0035	S		7	NOZZLE
TBA/8 100ml Slim TB/8 1136ml						
		C- 449168-0302				**Cleaning system, ass'y**
	190	571654			1	NOZZLE
	200	90424-0035	S		6	NOZZLE
	F457	**C- 476885-0202**	**-**		**1**	**CLEANING HEAD**
	010	530556	-		1	JUNCTION PIPE UPPER
	020	449170	-		1	CLEANING PIPE
	080	535016	-		2	FORCE SPRING
	090	535017	-		2	BRACKET
	100	246885	-		6	WASHER
	110	537919	-		1	PIPE HOLDER
	120	537918	-		1	PIPE
	150	90030-0115	-		1	PIPE CONNECTION
	160	90030-0187	-		1	PIPE CONNECTION
	223	312105-0372	-		1	SCREW M6S6X25RFR
	227	312605-0316	-		2	NUT M6M6RFR
	230	315234-0113	-		6	SEAL RING R1/2"
	240	342701-0205	-		3	BUSHING RNI1/2"-1/4"
	245	342701-0206	-		1	BUSHING RNI1/2"-3/8"
	250	342720-0114	-		6	PIPE COUPLGA-15-1/2"
	280	342767-0114	-		6	BULKHEAD LR1/2

From	Pos	Part No	SP	UN	Qty	Description

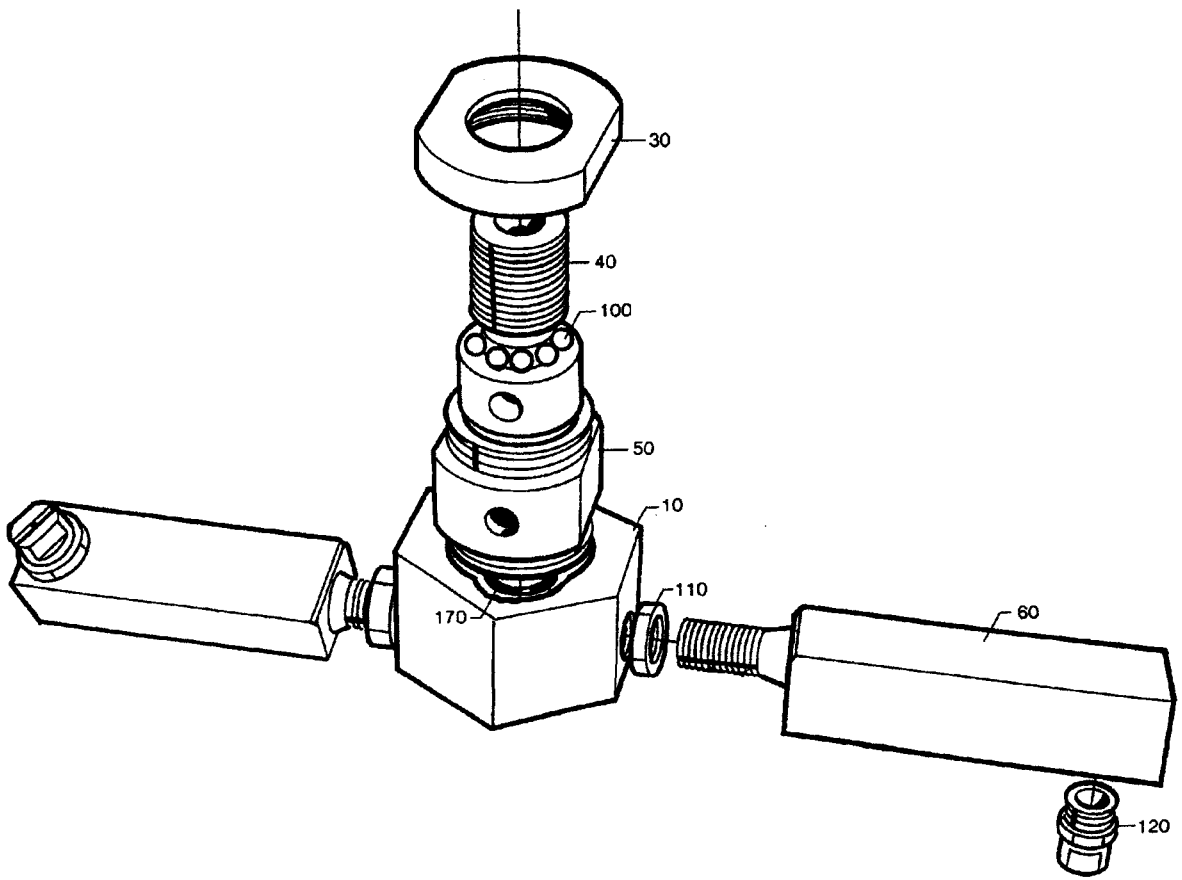

47688501.TIF
476885-1/2
AM

From	Pos	Part No	SP	UN	Qty	Description
		C- 476885-0201				**Cleaning Head Cover, Ass'y**
		C- 476885-0202				**Cleaning Head Cleaning System Body, Ass'y**
	010	440600	C		1	ROTOR
	030	534880	S		1	END SECTION
	040	534878	S		1	SHAFT
	050	534879	S		1	BEARING HOUSING
	060	440605-0001	C		2	PIPE
	100	90090-0020	S		24	BALL
	110	90330-0034	-		2	NUT
	120	90424-0026	S		2	NOZZLE
	170	315202-0211	S		1	O-RING 13,3X2,4

From	Pos	Part No	SP	UN	Qty	Description

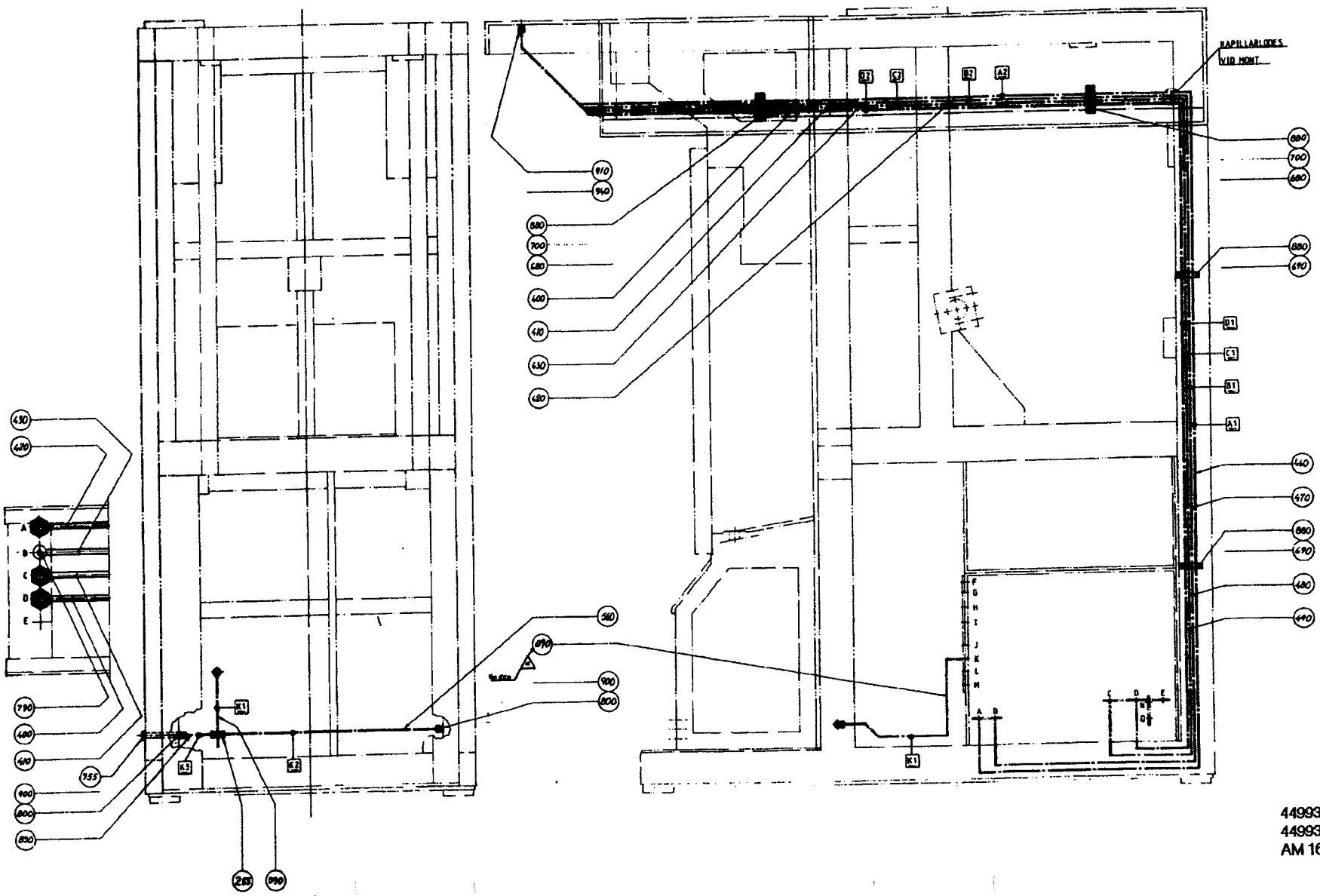

44993203.TIF
449932-3
AM 16787

Last Alteration: AM 16787 91-08-27

Corresponding group: 449932-0401
Assembly Drawing: 449932-3/8/9

Issue: 930607

From	Pos	Part No	SP	UN	Qty	Description
TBA/8						
		C- 449932-0401				Pipe Work-Water, Ass'y
	010	434168	-		1	PIPE
	030	450716	-		1	PIPE
	040	450717	-		1	PIPE
	050	464520	-		1	PIPE
	060	450719	-		1	PIPE
	070	561591	-		1	PIPE
	080	561592	-		1	PIPE
	090	450735	-		1	PIPE
	105	561424	-		1	PIPE
	110	450722	-		1	PIPE
	120	450723	-		1	PIPE
	125	90166-0121	-	MM	1200	HOSE
	140	464719	-		1	SIGN
	165	90030-0106	-		1	PIPE CONNECTION
	170	90030-0030	-		3	PIPE CONNECTION
	175	342991-0102	-		2	HOSE CLIP 13-20MMRFR
	185	90030-0221	-		1	BULKHEAD LEAD-IN
	190	90030-0253	-		1	PIPE COUPLING
	195	90089-0018	-		1	TRANSITIONAL NIPPLE
	200	90163-0081	-		4	NIPPLE
	210	90224-0317	-		1	CONNECTION
	230	90224-0320	-		2	CONNECTION
	240	90224-0321	-		1	CONNECTION
	250	90224-0322	-		1	CONNECTION
	255	90224-0323	-		1	CONNECTION
	258	90274-0065	-		1	PRESSURE GUARD
	290	312105-0327	-		2	SCREW M6S5X12 A4 80
	300	315105-0124	-		2	WASHER BRB3,2X6RFR
	310	315234-0113	-		1	SEAL RING R1/2"
	335	342923-0114	-		2	PIPE COUPL6/4-1/4
	350	352136-0129	-		1	GLAND FITT
	825	90235-0295	-		4	THROTTLE VALVE
Common Parts						
	220	90224-0318	-		1	CONNECTION
	400	544688	-		1	PIPE
	410	544689	-		1	PIPE
	420	544690	-		1	PIPE
	430	544691	-		1	PIPE
	440	434171	-		1	PIPE
	450	450725	-		1	ATTACHMENT PLATE
	460	544693	-		1	PIPE
	470	544694	-		1	PIPE
	480	544695	-		1	PIPE
	490	544696	-		1	PIPE
	500	450730	-		1	PIPE
	510	450731	-		1	PIPE
	520	464431	-		1	PIPE
	530	450733	-		1	PIPE
	540	464432	-		1	PIPE
	560	450736	-		1	PIPE
	570	450737	-		1	PIPE
	580	450738	-		1	PIPE
	590	450739	-		1	PIPE
	600	450740	-		1	PIPE
	610	567266	-		1	TUBE
	620	450742	-		1	PIPE
	630	567267	-		1	TUBE
	660	276398	-		4	HEXAGON NIPPLE
	670	279105	-		2	WASHER
	680	279526	-		2	BRACKET
	690	293351	-		2	CRAMP
	700	293352	-		2	CRAMP
	705	450724	-		1	PIPE
	710	450744	-		2	CRAMP
	720	450745	-		2	SPACER
	730	450746	-		1	HOLDER
	740	450747	-		1	PIPE
	750	450748	-		1	PIPE
	760	466637	-		1	PIPE
	770	341001-0228	-	MM	57	COPPER TUB
	780	90030-0091	-		1	PIPE CONNECTION
	785	90030-0159	-		2	GROMMET
	790	90087-0002	-		1	PIPE PLUG
	792	90165-0007	-		3	CLIP
	794	90166-0122	P	M	2	HOSE
	796	90166-0124	-	M	2	HOSE
	800	90224-0319	-		11	CONNECTION
	820	90230-0023	-		1	NON RETURN VALVE
	830	90266-0007	-	MM	63	TUBE
	850	312101-0327	-		4	SCREW M6S5X12FZB
	860	312101-0364	-		2	SCREW M6S6X10FZB
	870	312101-0372	-		1	SCREW M6S6X25FZB
	872	312121-0287	-		3	SLOTTED HEMCS4X8FZB
	875	312125-0220	-		4	SLOTTED HEMCS3X6RFR
	880	312125-0323	-		8	SLOTTED HEMCS5X8RFR
	890	315101-0153	-		2	WASHER BRB6,4X12FZB
	900	315233-0110	-		6	SEAL RING R1/4"
	910	315233-0113	-		4	SEAL RING R1/2"

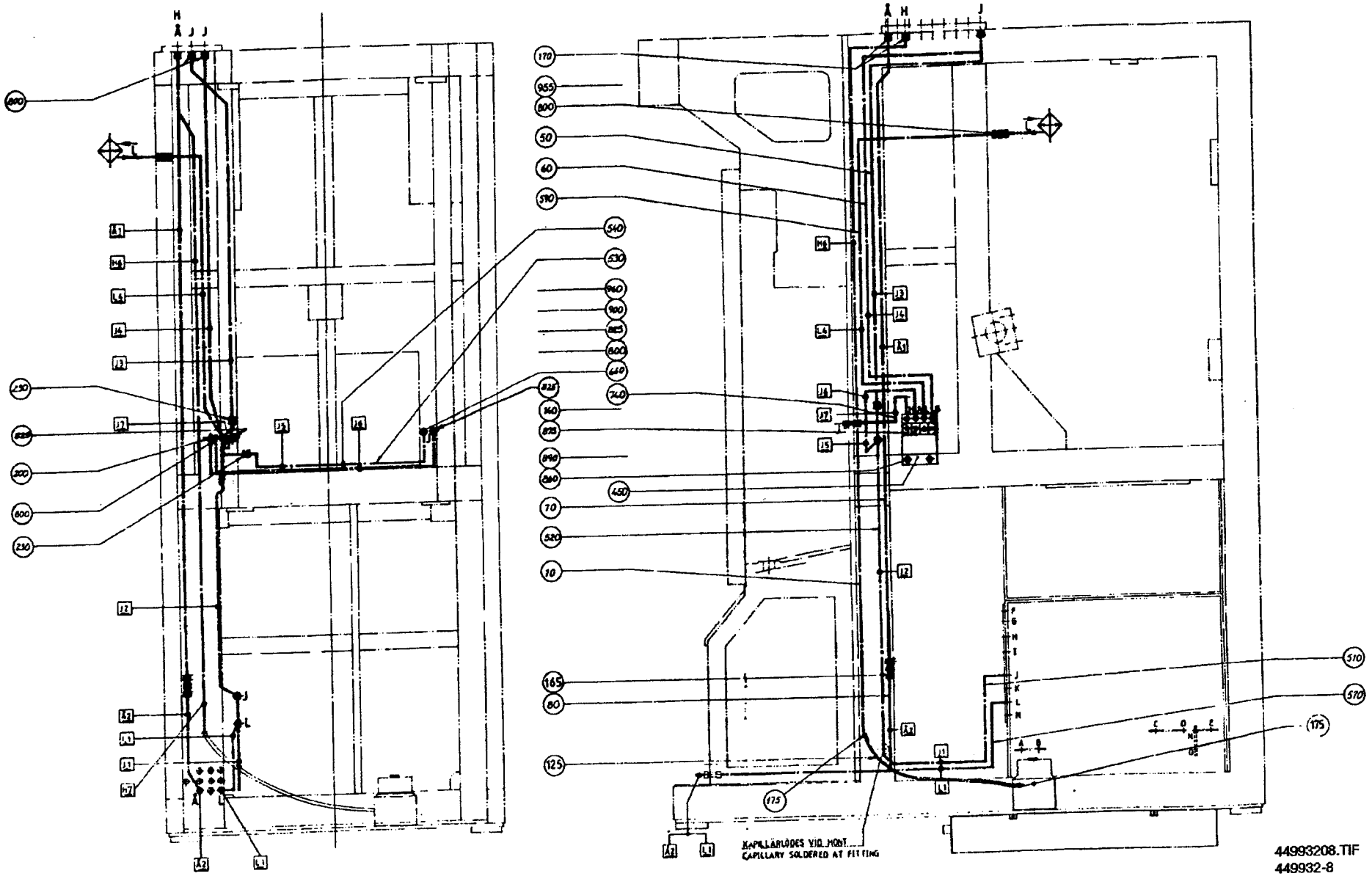

44993208.TIF
449932-8
AM 15046

From	Pos	Part No	SP	UN	Qty	Description
	920	341001-0228	-	MM	300	COPPER TUB
	930	341001-0228	-	MM	1792	COPPER TUB
	935	342713-0210	-		1	BLIND PLUG
	940	342720-0114	-		4	PIPE COUPLGA-15-1/2"
	950	342736-0114	-		1	ELBOW PIPE W-15
	955	342923-0122	-		2	PIPE COUPL8/6-1/4
	960	342980-0122	-		4	BANJO CONNSINGEL 8/6-1/4

From	Pos	Part No	SP	UN	Qty	Description

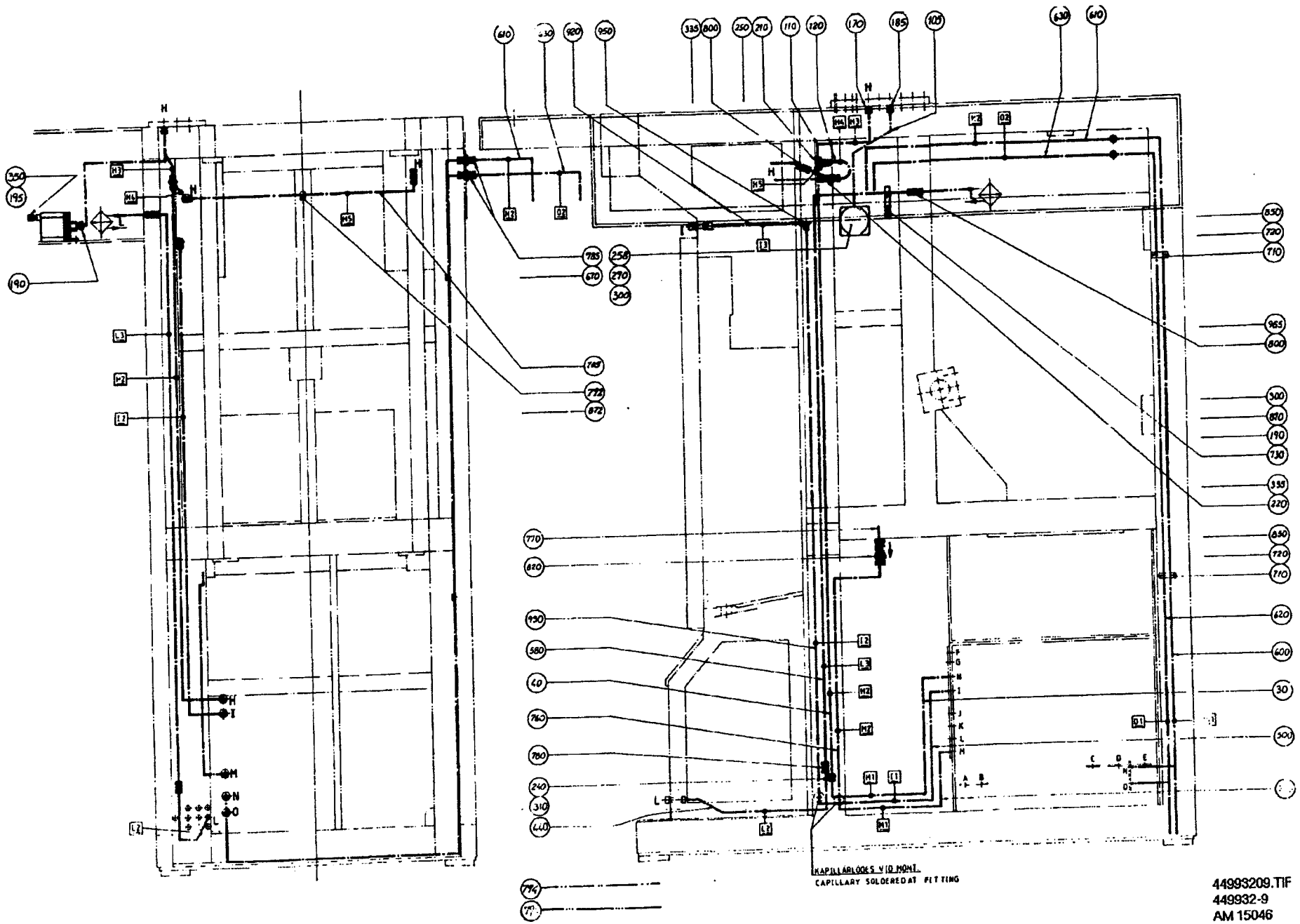

44993209.TIF
449932-9
AM 15046

From	Pos	Part No	SP	UN	Qty	Description
TBA/8						
		C- 449932-0401				**Pipe Work-Water, Ass'y**
	010	434168	-		1	PIPE
	030	450716	-		1	PIPE
	040	450717	-		1	PIPE
	050	464520	-		1	PIPE
	060	450719	-		1	PIPE
	070	561591	-		1	PIPE
	080	561592	-		1	PIPE
	090	450735	-		1	PIPE
	105	561424	-		1	PIPE
	110	450722	-		1	PIPE
	120	450723	-		1	PIPE
	125	90166-0121	-	MM	1200	HOSE
	140	464719	-		1	SIGN
	165	90030-0106	-		1	PIPE CONNECTION
	170	90030-0030	-		3	PIPE CONNECTION
	175	342991-0102	-		2	HOSE CLIP 13-20MMRFR
	185	90030-0221	-		1	BULKHEAD LEAD-IN
	190	90030-0253	-		1	PIPE COUPLING
	195	90089-0018	-		1	TRANSITIONAL NIPPLE
	200	90163-0081	-		4	NIPPLE
	210	90224-0317	-		1	CONNECTION
	230	90224-0320	-		2	CONNECTION
	240	90224-0321	-		1	CONNECTION
	250	90224-0322	-		1	CONNECTION
	255	90224-0323	-		1	CONNECTION
	258	90274-0065	-		1	PRESSURE GUARD
	290	312105-0327	-		2	SCREW M6S5X12 A4 80
	300	315105-0124	-		2	WASHER BRB3,2X6RFR
	310	315234-0113	-		1	SEAL RING R1/2"
	335	342923-0114	-		2	PIPE COUPL6/4-1/4
	350	352136-0129	-		1	GLAND FITT
	825	90235-0295	-		4	THROTTLE VALVE
Common Parts						
	220	90224-0318	-		1	CONNECTION
	400	544688	-		1	PIPE
	410	544689	-		1	PIPE
	420	544690	-		1	PIPE
	430	544691	-		1	PIPE
	440	434171	-		1	PIPE
	450	450725	-		1	ATTACHMENT PLATE
	460	544693	-		1	PIPE
	470	544694	-		1	PIPE
	480	544695	-		1	PIPE
	490	544696	-		1	PIPE
	500	450730	-		1	PIPE
	510	450731	-		1	PIPE
	520	464431	-		1	PIPE
	530	450733	-		1	PIPE
	540	464432	-		1	PIPE
	560	450736	-		1	PIPE
	570	450737	-		1	PIPE
	580	450738	-		1	PIPE
	590	450739	-		1	PIPE
	600	450740	-		1	PIPE
	610	567266	-		1	TUBE
	620	450742	-		1	PIPE
	630	567267	-		1	TUBE
	660	276398	-		4	HEXAGON NIPPLE
	670	279105	-		2	WASHER
	680	279526	-		2	BRACKET
	690	293351	-		2	CRAMP
	700	293352	-		2	CRAMP
	705	450724	-		1	PIPE
	710	450744	-		2	CRAMP
	720	450745	-		2	SPACER
	730	450746	-		1	HOLDER
	740	450747	-		1	PIPE
	750	450748	-		1	PIPE
	760	466637	-		1	PIPE
	770	341001-0228	-	MM	57	COPPER TUB
	780	90030-0091	-		1	PIPE CONNECTION
	785	90030-0159	-		2	GROMMET
	790	90087-0002	-		1	PIPE PLUG
	792	90165-0007	-		3	CLIP
	794	90166-0122	P	M	2	HOSE
	796	90166-0124	-	M	2	HOSE
	800	90224-0319	-		11	CONNECTION
	820	90230-0023	-		1	NON RETURN VALVE
	830	90266-0007	-	MM	63	TUBE
	850	312101-0327	-		4	SCREW M6S5X12FZB
	860	312101-0364	-		2	SCREW M6S6X10FZB
	870	312101-0372	-		1	SCREW M6S6X25FZB
	872	312121-0287	-		3	SLOTTED HEMCS4X8FZB
	875	312125-0220	-		4	SLOTTED HEMCS3X6RFR
	880	312125-0323	-		8	SLOTTED HEMCS5X8RFR
	890	315101-0153	-		2	WASHER BRB6,4X12FZB
	900	315233-0110	-		6	SEAL RING R1/4"
	910	315233-0113	-		4	SEAL RING R1/2"

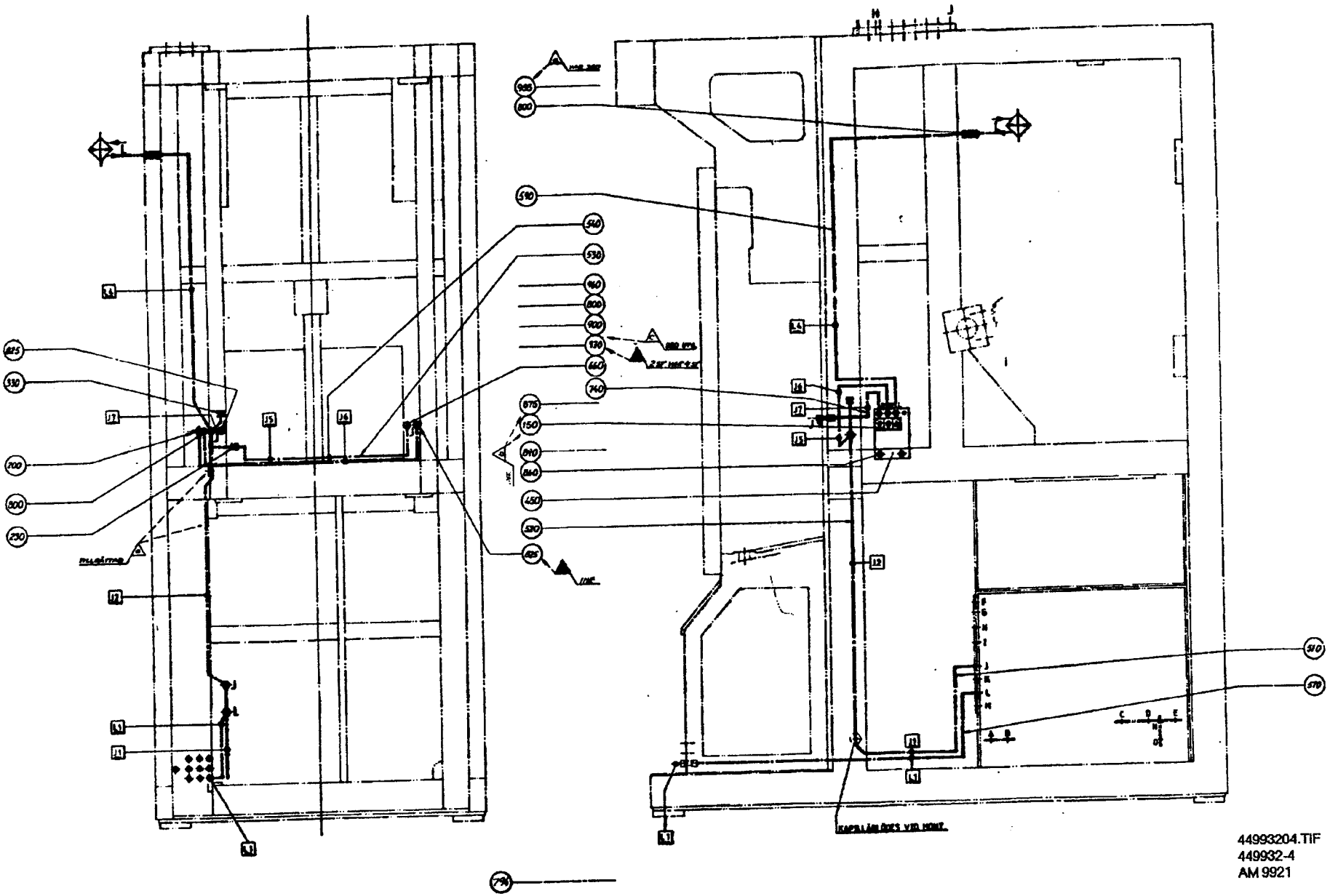

44993204.TIF
449932-4
AM 9921

From	Pos	Part No	SP	UN	Qty	Description
TB/8						
		C- 449932-0402				Pipe Work-Water, Ass'y
	100	484104	-		1	PIPE
	150	464720	-		1	SIGN
	160	484103	-		1	PIPE
	200	90163-0081	-		3	NIPPLE
	205	90224-0316	-		1	CONNECTION
	230	90224-0320	-		1	CONNECTION
	325	342707-0110	-		2	MUFF
	330	342713-0211	-		1	BLIND PLUG
	335	342923-0114	-		1	PIPE COUPL6/4-1/4
	340	342930-0114	-		1	ELBOW PIPE6/4-1/4
	825	90235-0295	-		2	THROTTLE VALVE
	970	342980-0304	-		2	BANJO CONN SINGEL 1/4
Common Parts						
	220	90224-0318	-		1	CONNECTION
	400	544688	-		1	PIPE
	410	544689	-		1	PIPE
	420	544690	-		1	PIPE
	430	544691	-		1	PIPE
	440	434171	-		1	PIPE
	450	450725	-		1	ATTACHMENT PLATE
	460	544693	-		1	PIPE
	470	544694	-		1	PIPE
	480	544695	-		1	PIPE
	490	544696	-		1	PIPE
	500	450730	-		1	PIPE
	510	450731	-		1	PIPE
	520	464431	-		1	PIPE
	530	450733	-		1	PIPE
	540	464432	-		1	PIPE
	560	450736	-		1	PIPE
	570	450737	-		1	PIPE
	580	450738	-		1	PIPE
	590	450739	-		1	PIPE
	600	450740	-		1	PIPE
	610	567266	-		1	TUBE
	620	450742	-		1	PIPE
	630	567267	-		1	TUBE
	660	276398	-		4	HEXAGON NIPPLE
	670	279105	-		2	WASHER
	680	279526	-		2	BRACKET
	690	293351	-		2	CRAMP
	700	293352	-		2	CRAMP
	705	450724	-		1	PIPE
	710	450744	-		2	CRAMP
	720	450745	-		2	SPACER
	730	450746	-		1	HOLDER
	740	450747	-		1	PIPE
	750	450748	-		1	PIPE
	760	466637	-		1	PIPE
	770	341001-0228	-	MM	57	COPPER TUB
	780	90030-0091	-		1	PIPE CONNECTION
	785	90030-0159	-		2	GROMMET
	790	90087-0002	-		1	PIPE PLUG
	792	90165-0007	-		3	CLIP
	794	90166-0122	P	M	2	HOSE
	796	90166-0124	-	M	2	HOSE
	800	90224-0319	-		11	CONNECTION
	820	90230-0023	-		1	NON RETURN VALVE
	830	90266-0007	-	MM	63	TUBE
	850	312101-0327	-		4	SCREW M6S5X12FZB
	860	312101-0364	-		2	SCREW M6S6X10FZB
	870	312101-0372	-		1	SCREW M6S6X25FZB
	872	312121-0287	-		3	SLOTTED HEMCS4X8FZB
	875	312125-0220	-		4	SLOTTED HEMCS3X6RFR
	880	312125-0323	-		8	SLOTTED HEMCS5X8RFR
	890	315101-0153	-		2	WASHER BRB6,4X12FZB
	900	315233-0110	-		6	SEAL RING R1/4"
	910	315233-0113	-		4	SEAL RING R1/2"
	920	341001-0228	-	MM	300	COPPER TUB
	930	341001-0228	-	MM	1792	COPPER TUB
	935	342713-0210	-		1	BLIND PLUG
	940	342720-0114	-		4	PIPE COUPLGA-15-1/2"
	950	342736-0114	-		1	ELBOW PIPE W-15
	955	342923-0122	-		2	PIPE COUPL8/6-1/4
	960	342980-0122	-		4	BANJO CONNSINGEL 8/6-1/4

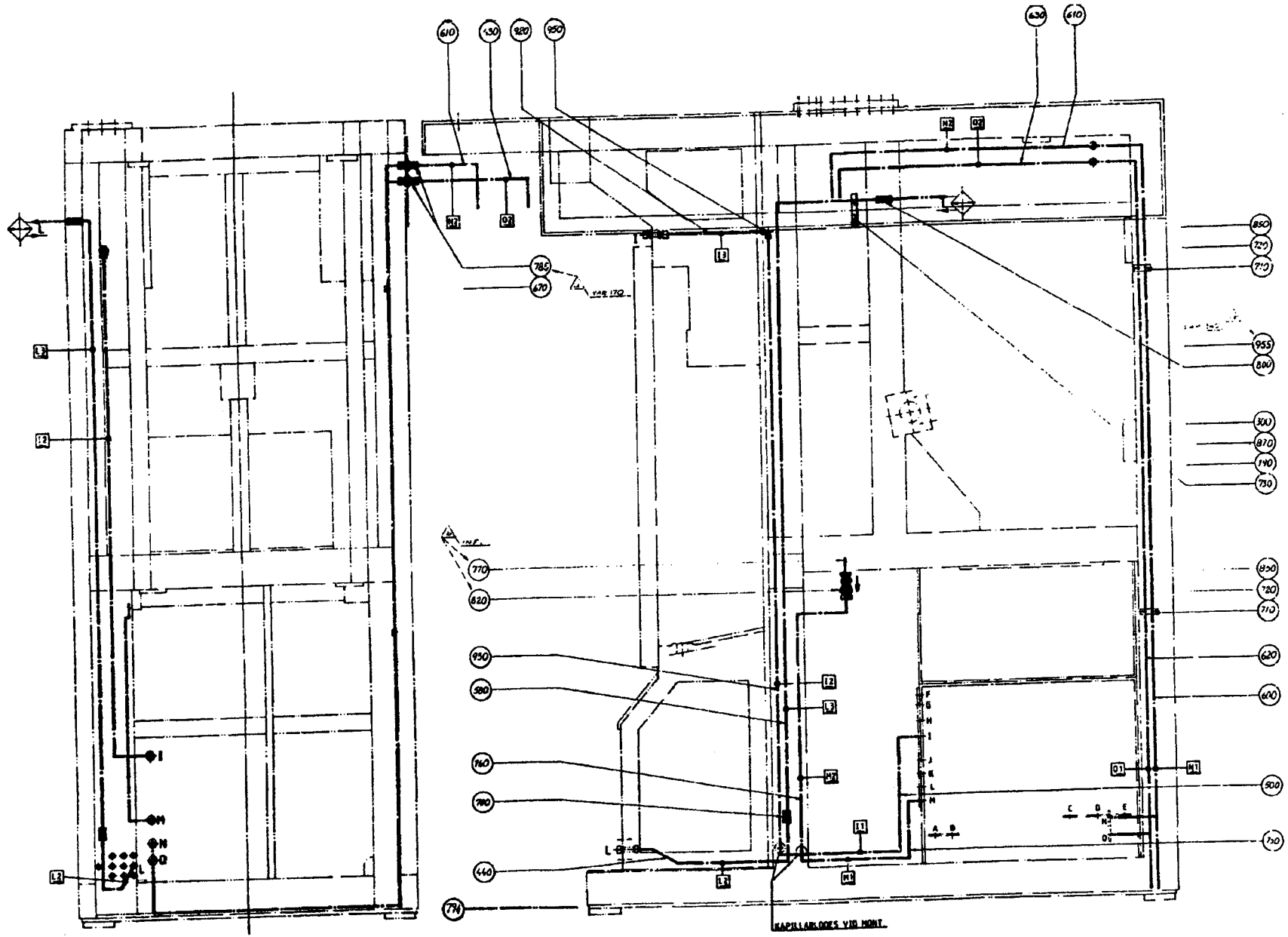

44993205.TIF
449932-5
AM 7252

From	Pos	Part No	SP	UN	Qty	Description
TB/8						
		C- 449932-0402				Pipe Work-Water, Ass'y
	100	484104	-		1	PIPE
	150	464720	-		1	SIGN
	160	484103	-		1	PIPE
	200	90163-0081	-		3	NIPPLE
	205	90224-0316	-		1	CONNECTION
	230	90224-0320	-		1	CONNECTION
	325	342707-0110	-		2	MUFF
	330	342713-0211	-		1	BLIND PLUG
	335	342923-0114	-		1	PIPE COUPL6/4-1/4
	340	342930-0114	-		1	ELBOW PIPE6/4-1/4
	825	90235-0295	-		2	THROTTLE VALVE
	970	342980-0304	-		2	BANJO CONN SINGEL 1/4
Common Parts						
	220	90224-0318	-		1	CONNECTION
	400	544688	-		1	PIPE
	410	544689	-		1	PIPE
	420	544690	-		1	PIPE
	430	544691	-		1	PIPE
	440	434171	-		1	PIPE
	450	450725	-		1	ATTACHMENT PLATE
	460	544693	-		1	PIPE
	470	544694	-		1	PIPE
	480	544695	-		1	PIPE
	490	544696	-		1	PIPE
	500	450730	-		1	PIPE
	510	450731	-		1	PIPE
	520	464431	-		1	PIPE
	530	450733	-		1	PIPE
	540	464432	-		1	PIPE
	560	450736	-		1	PIPE
	570	450737	-		1	PIPE
	580	450738	-		1	PIPE
	590	450739	-		1	PIPE
	600	450740	-		1	PIPE
	610	567266	-		1	TUBE
	620	450742	-		1	PIPE
	630	567267	-		1	TUBE
	660	276398	-		4	HEXAGON NIPPLE
	670	279105	-		2	WASHER
	680	279526	-		2	BRACKET
	690	293351	-		2	CRAMP
	700	293352	-		2	CRAMP
	705	450724	-		1	PIPE

From	Pos	Part No	SP	UN	Qty	Description
	710	450744	-		2	CRAMP
	720	450745	-		2	SPACER
	730	450746	-		1	HOLDER
	740	450747	-		1	PIPE
	750	450748	-		1	PIPE
	760	466637	-		1	PIPE
	770	341001-0228	-	MM	57	COPPER TUB
	780	90030-0091	-		1	PIPE CONNECTION
	785	90030-0159	-		2	GROMMET
	790	90087-0002	-		1	PIPE PLUG
	792	90165-0007	-		3	CLIP
	794	90166-0122	P	M	2	HOSE
	796	90166-0124	-	M	2	HOSE
	800	90224-0319	-		11	CONNECTION
	820	90230-0023	-		1	NON RETURN VALVE
	830	90266-0007	-	MM	63	TUBE
	850	312101-0327	-		4	SCREW M6S5X12FZB
	860	312101-0364	-		2	SCREW M6S6X10FZB
	870	312101-0372	-		1	SCREW M6S6X25FZB
	872	312121-0287	-		3	SLOTTED HEMCS4X8FZB
	875	312125-0220	-		4	SLOTTED HEMCS3X6RFR
	880	312125-0323	-		8	SLOTTED HEMCS5X8RFR
	890	315101-0153	-		2	WASHER BRB6,4X12FZB
	900	315233-0110	-		6	SEAL RING R1/4"
	910	315233-0113	-		4	SEAL RING R1/2"
	920	341001-0228	-	MM	300	COPPER TUB
	930	341001-0228	-	MM	1792	COPPER TUB
	935	342713-0210	-		1	BLIND PLUG
	940	342720-0114	-		4	PIPE COUPLGA-15-1/2"
	950	342736-0114	-		1	ELBOW PIPE W-15
	955	342923-0122	-		2	PIPE COUPL8/6-1/4
	960	342980-0122	-		4	BANJO CONNSINGEL 8/6-1/4

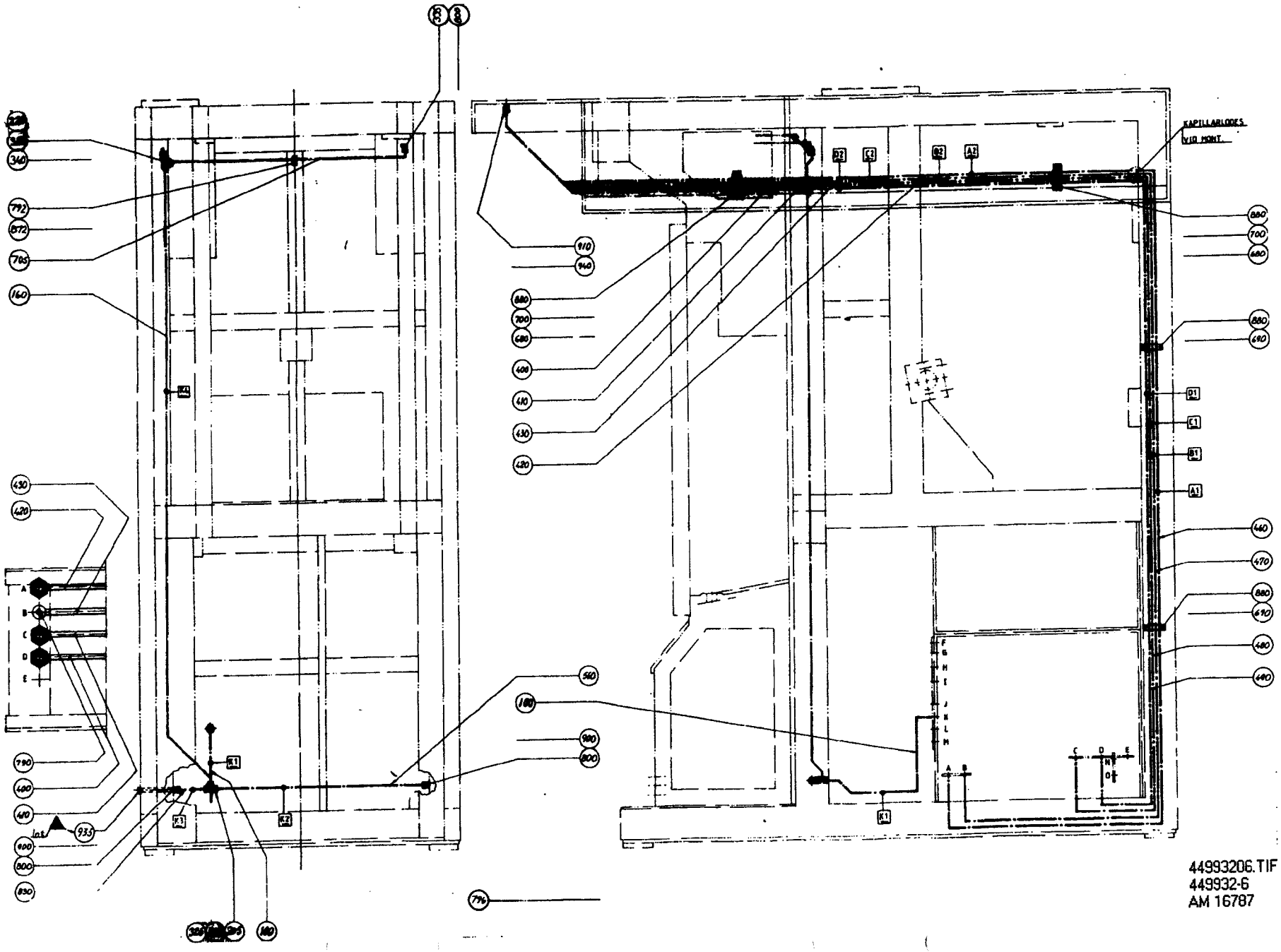
KAPILLARLODDES
VID MONT.
44993206.TIF
449932-6
AM 16787

From	Pos	Part No	SP	UN	Qty	Description
TB/8						
		C- 449932-0402				**Pipe Work-Water, Ass'y**
	100	484104	-		1	PIPE
	150	464720	-		1	SIGN
	160	484103	-		1	PIPE
	200	90163-0081	-		3	NIPPLE
	205	90224-0316	-		1	CONNECTION
	230	90224-0320	-		1	CONNECTION
	325	342707-0110	-		2	MUFF
	330	342713-0211	-		1	BLIND PLUG
	335	342923-0114	-		1	PIPE COUPL6/4-1/4
	340	342930-0114	-		1	ELBOW PIPE6/4-1/4
	825	90235-0295	-		2	THROTTLE VALVE
	970	342980-0304	-		2	BANJO CONN SINGEL 1/4
Common Parts						
	220	90224-0318	-		1	CONNECTION
	400	544688	-		1	PIPE
	410	544689	-		1	PIPE
	420	544690	-		1	PIPE
	430	544691	-		1	PIPE
	440	434171	-		1	PIPE
	450	450725	-		1	ATTACHMENT PLATE
	460	544693	-		1	PIPE
	470	544694	-		1	PIPE
	480	544695	-		1	PIPE
	490	544696	-		1	PIPE
	500	450730	-		1	PIPE
	510	450731	-		1	PIPE
	520	464431	-		1	PIPE
	530	450733	-		1	PIPE
	540	464432	-		1	PIPE
	560	450736	-		1	PIPE
	570	450737	-		1	PIPE
	580	450738	-		1	PIPE
	590	450739	-		1	PIPE
	600	450740	-		1	PIPE
	610	567266	-		1	TUBE
	620	450742	-		1	PIPE
	630	567267	-		1	TUBE
	660	276398	-		4	HEXAGON NIPPLE
	670	279105	-		2	WASHER
	680	279526	-		2	BRACKET
	690	293351	-		2	CRAMP
	700	293352	-		2	CRAMP
	705	450724	-		1	PIPE
	710	450744	-		2	CRAMP
	720	450745	-		2	SPACER
	730	450746	-		1	HOLDER
	740	450747	-		1	PIPE
	750	450748	-		1	PIPE
	760	466637	-		1	PIPE
	770	341001-0228	-	MM	57	COPPER TUB
	780	90030-0091	-		1	PIPE CONNECTION
	785	90030-0159	-		2	GROMMET
	790	90087-0002	-		1	PIPE PLUG
	792	90165-0007	-		3	CLIP
	794	90166-0122	P	M	2	HOSE
	796	90166-0124	-	M	2	HOSE
	800	90224-0319	-		11	CONNECTION
	820	90230-0023	-		1	NON RETURN VALVE
	830	90266-0007	-	MM	63	TUBE
	850	312101-0327	-		4	SCREW M6S5X12FZB
	860	312101-0364	-		2	SCREW M6S6X10FZB
	870	312101-0372	-		1	SCREW M6S6X25FZB
	872	312121-0287	-		3	SLOTTED HEMCS4X8FZB
	875	312125-0220	-		4	SLOTTED HEMCS3X6RFR
	880	312125-0323	-		8	SLOTTED HEMCS5X8RFR
	890	315101-0153	-		2	WASHER BRB6,4X12FZB
	900	315233-0110	-		6	SEAL RING R1/4"
	910	315233-0113	-		4	SEAL RING R1/2"
	920	341001-0228	-	MM	300	COPPER TUB
	930	341001-0228	-	MM	1792	COPPER TUB
	935	342713-0210	-		1	BLIND PLUG
	940	342720-0114	-		4	PIPE COUPLGA-15-1/2"
	950	342736-0114	-		1	ELBOW PIPE W-15
	955	342923-0122	-		2	PIPE COUPL8/6-1/4
	960	342980-0122	-		4	BANJO CONNSINGEL 8/6-1/4

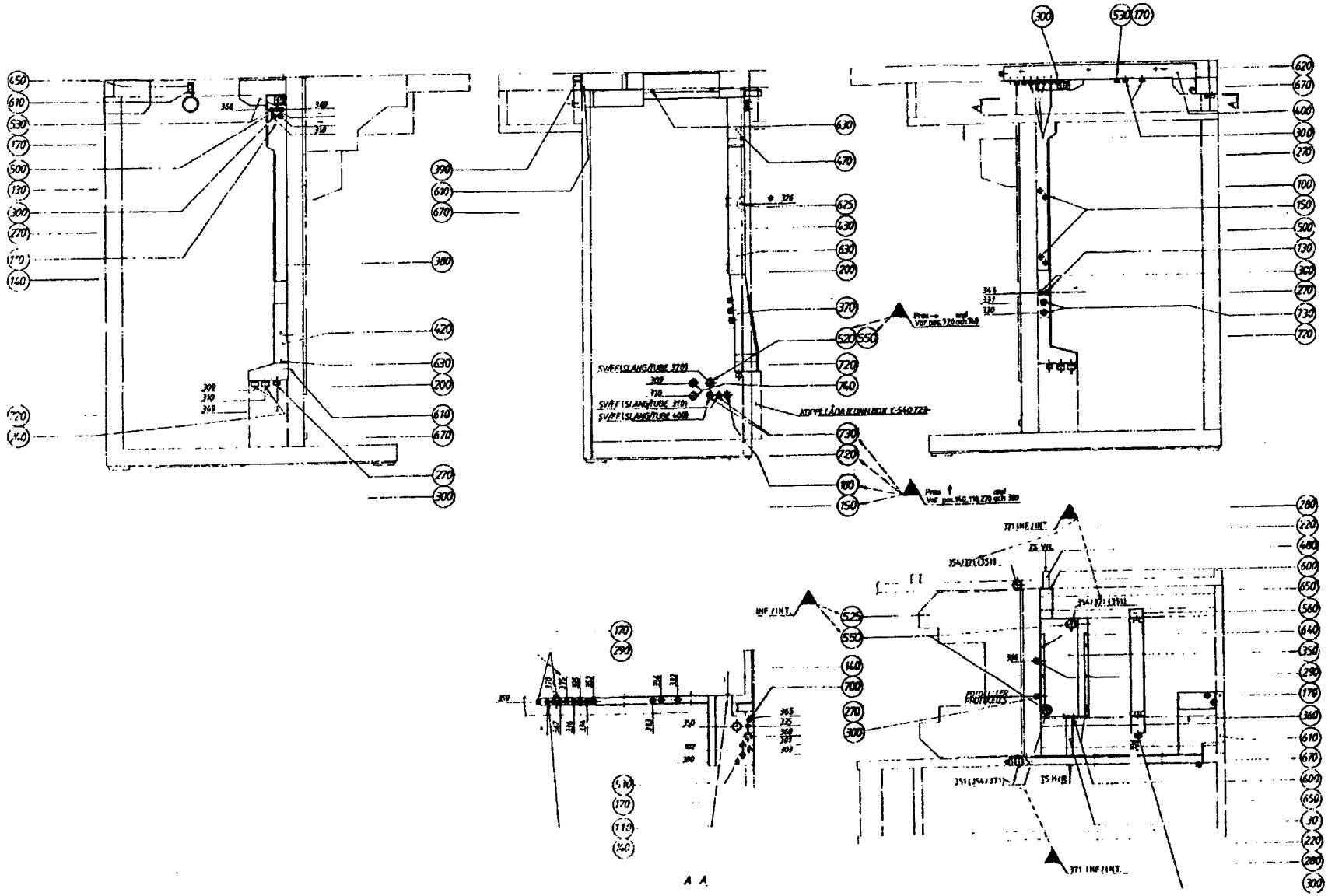

45029301.TIF
450293-1/3
AM

From	Pos	Part No	SP	UN Qty	Description
TBA/8		C- 450293-0401			**Cable Duct, Ass'y**
	030	450292	-	1	ATTACHMENT PIPE
	100	90002-0004	-	5	PLUG
	110	90002-0009	-	4	BLANK-OFF PLUG
	130	90099-0001	-	2	NUT
	140	90099-0002	-	5	NUT
	170	90152-0033	-	MM6800	HOSE
	200	315101-0136	-	5	WASHER BRB4,3X8FZB
	220	342991-0108	-	2	HOSE CLIP 38-50MMRFR
	270	352135-0106	-	MM6400	HOSE .016
	280	352135-0116	-	MM3800	FLEXIBLE CG DIA 40
	290	352136-0113	-	4	GLAND FITT
	300	352136-0127	-	12	GLAND FITT
	520	90012-0061	-	1	GLAND
	525	90012-0062	-	2	GLAND
Common parts					
	115	90002-0010	-	1	PLUG
	150	90099-0003	-	5	NUT
	155	90099-0011	-	1	NUT
	350	547220	-	1	CABLE DUCT
	360	552000	-	1	CABLE DUCT
	370	540721	-	1	CABLE DUCT
	380	450284	-	1	CABLE DUCT
	390	450285	-	1	CABLE DUCT
	400	450286	-	1	LID
	420	540722	-	1	LID
	430	450287	-	1	LID
	450	246374	-	2	BRACKET
	470	450290	-	1	LID
	480	450291	-	1	ATTACHMENT PIPE
	500	90002-0013	-	2	BLANK-OFF PLUG
	530	90012-0063	-	4	GLAND
	550	90152-0031	-	MM2270	HOSE
	560	90164-0003	-	1	LIGHT FIXTURE
		90297-0002	P	0	* FLUORESCENT TUBE
	600	312101-0325	-	11	SCREW M6S5X10FZB
	610	312101-0364	-	18	SCREW M6S6X10FZB
	620	312101-0380	-	3	SCREW M6S6X50FZB
	625	312101-0447	-	1	SCREW M6S8X12FZB
	630	312121-0287	-	7	SLOTTED HEMCS4X8FZB
	640	312141-0325	-	3	SLOTTED HEMFS5X10FZB
	650	315101-0146	-	11	WASHER BRB5,3X10FZB
	670	315101-0153	-	15	WASHER BRB6,4X12FZB
	700	352103-0106	-	1	CABLE GLANR.ST 11
	720	352135-0109	-	MM3700	HOSE .022
	730	352136-0142	-	4	GLAND FITT
	740	352136-0143	-	4	GLAND FITT

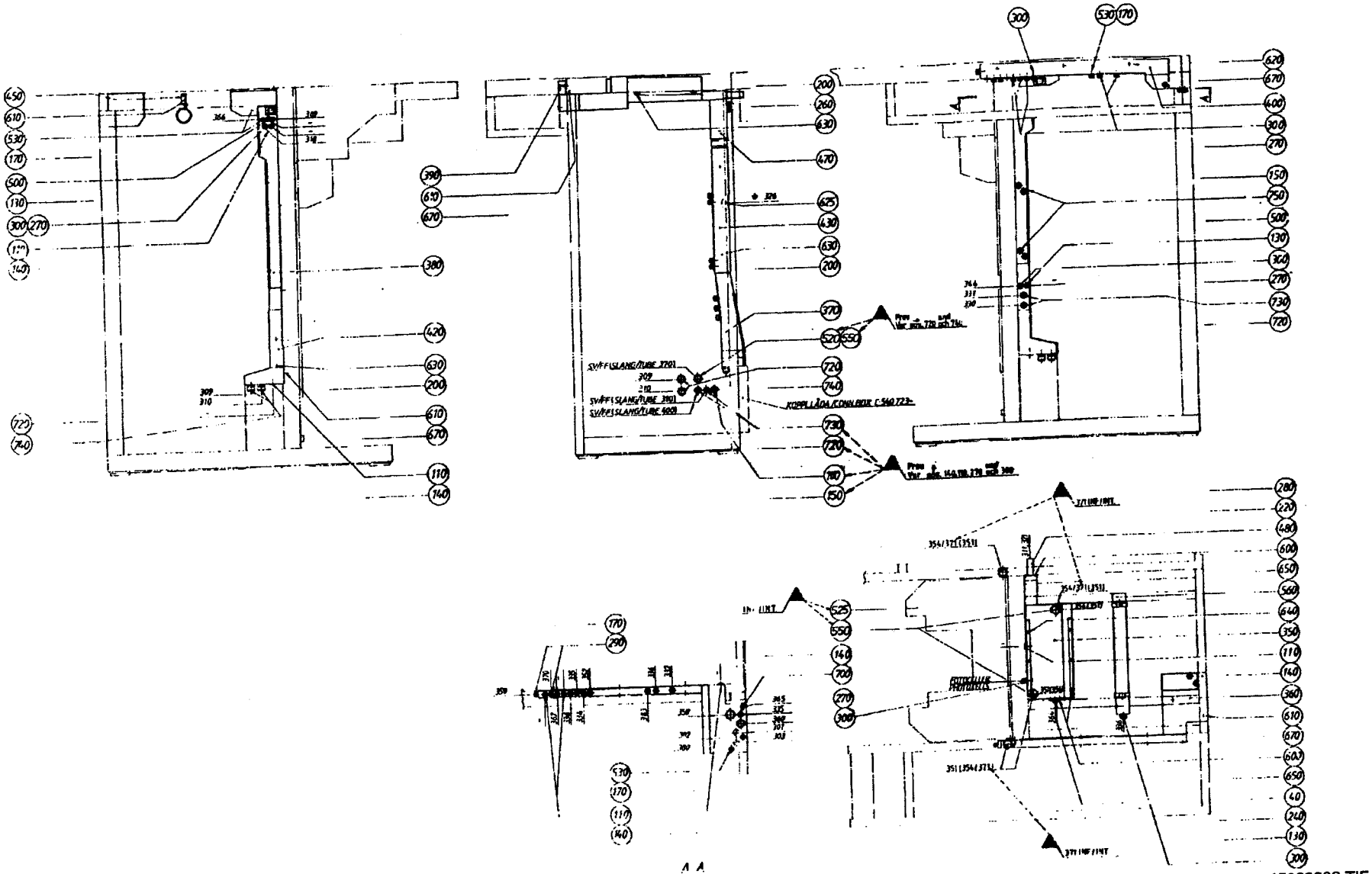

45029302.TIF
450293-2/4
AM

From	Pos	Part No	SP	UN Qty	Description
TB/8					
	C- 450293-0402				**Cable Duct, Ass'y**
	040	464193	-	1	ATTACHMENT PLATE
	110	90002-0009	-	6	BLANK-OFF PLUG
	130	90099-0001	-	3	NUT
	140	90099-0002	-	7	NUT
	170	90152-0033	-	MM 6300	HOSE
	200	315101-0136	-	7	WASHER BRB4,3X8FZB
	220	342991-0108	-	1	HOSE CLIP 38-50MMRFR
	240	352103-0101	-	1	CABLE GLANR.ST 9
	250	352103-0110	-	4	CABLE GLANR.STR 16
	260	352113-0202	-	2	ARMATURE -TM2-S8
	270	352135-0106	-	MM 3200	HOSE .016
	280	352135-0116	-	MM 500	FLEXIBLE CG DIA 40
	290	352136-0113	-	3	GLAND FITT
	300	352136-0127	-	10	GLAND FITT
	520	90012-0061	-	3	GLAND
Common parts					
	115	90002-0010	-	1	PLUG
	150	90099-0003	-	5	NUT
	155	90099-0011	-	1	NUT
	350	547220	-	1	CABLE DUCT
	360	552000	-	1	CABLE DUCT
	370	540721	-	1	CABLE DUCT
	380	450284	-	1	CABLE DUCT
	390	450285	-	1	CABLE DUCT
	400	450286	-	1	LID
	420	540722	-	1	LID
	430	450287	-	1	LID
	450	246374	-	2	BRACKET
	470	450290	-	1	LID
	480	450291	-	1	ATTACHMENT PIPE
	500	90002-0013	-	2	BLANK-OFF PLUG
	530	90012-0063	-	4	GLAND
	550	90152-0031	-	MM 2270	HOSE
	560	90164-0003	-	1	LIGHT FIXTURE
		90297-0002	P	0	* FLUORESCENT TUBE
	600	312101-0325	-	11	SCREW M6S5X10FZB
	610	312101-0364	-	18	SCREW M6S6X10FZB
	620	312101-0380	-	3	SCREW M6S6X50FZB
	625	312101-0447	-	1	SCREW M6S8X12FZB
	630	312121-0287	-	7	SLOTTED HEMCS4X8FZB
	640	312141-0325	-	3	SLOTTED HEMFS5X10FZB
	650	315101-0146	-	11	WASHER BRB5,3X10FZB
	670	315101-0153	-	15	WASHER BRB6,4X12FZB

From	Pos	Part No	SP	UN Qty	Description
	700	352103-0106	-	1	CABLE GLANR.ST 11
	720	352135-0109	-	MM 3700	HOSE .022
	730	352136-0142	-	4	GLAND FITT
	740	352136-0143	-	4	GLAND FITT

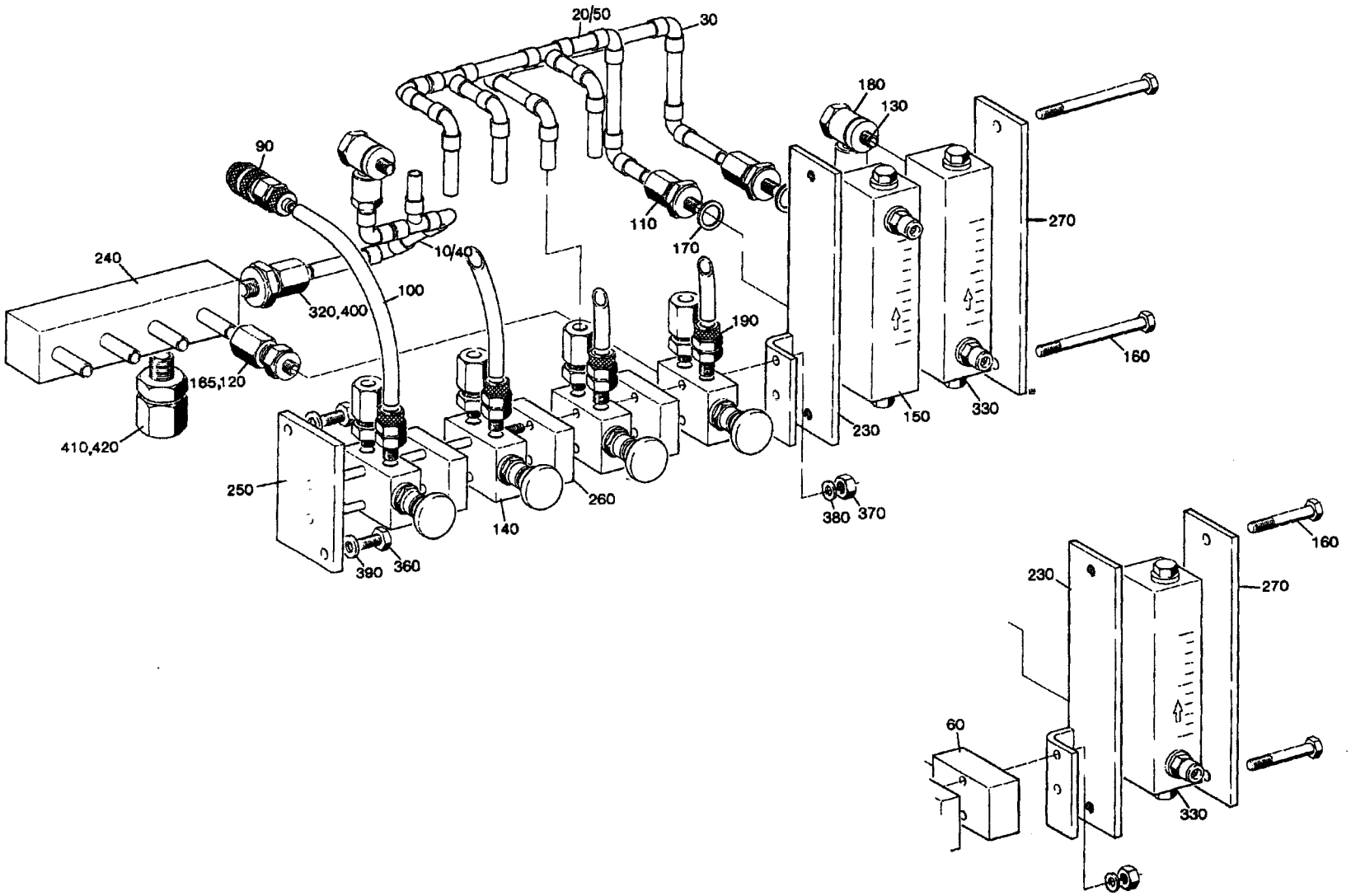

45030303.TIF
450303-3/4
AM

From	Pos	Part No	SP	UN	Qty	Description
TBA/8						
		C- 450303-0201				**Flow Meter Group, Ass'y**
	010	450304	-		1	PIPE
	020	450305	-		1	PIPE
	030	450306	-		1	PIPE
	090	90163-0079	-		4	SLEEVE
	100	90166-0133	-	MM	800	HOSE
	110	90224-0319	-		2	CONNECTION
	120	90224-0324	-		8	CONNECTION
	130	90230-0018	-		2	NON RETURN VALVE
	140	90235-0064	-		4	VALVE
		90235-0311	S		1	* WEAR & TEAR PARTS KIT
	150	90243-0112	-		1	FLOW METER
	160	312105-0384	-		2	SCREW M6S6X70RFR
	165	315233-0109	-		12	SEAL RING R1/8"
	170	315233-0110	-		2	SEAL RING R1/4"
	180	342797-0132	-		2	BANJO CONNSINGEL 8-1/4
	190	342921-0121	-		4	PIPE COUPL8/6-1/8"
TB/8						
		C- 450303-0202				**Flow Meter Group, Ass'y**
	040	450307	-		1	PIPE
	050	450308	-		1	PIPE
	060	450309	-		1	BLOCK
	090	90163-0079	-		3	SLEEVE
	100	90166-0133	-	MM	600	HOSE
	110	90224-0319	-		1	CONNECTION
	120	90224-0324	-		7	CONNECTION
	130	90230-0018	-		1	NON RETURN VALVE
	140	90235-0064	-		3	VALVE
		90235-0311	S		1	* WEAR & TEAR PARTS KIT
	160	312105-0378	-		2	SCREW M6S6X40RFR
	165	315233-0109	-		10	SEAL RING R1/8"
	170	315233-0110	-		1	SEAL RING R1/4"
	180	342797-0132	-		1	BANJO CONNSINGEL 8-1/4
	190	342921-0121	-		3	PIPE COUPL8/6-1/8"

From	Pos	Part No	SP	UN	Qty	Description
Common Parts						
	230	542708	-		1	HOLDER
	240	450311	-		1	JUNCTION BLOCK
	250	450312	-		1	VALVE BRACKET
	260	450313	-		3	SPACER
	270	542707	-		1	CLAMPING PLATE
	320	90224-0320	-		1	CONNECTION
	330	90243-0113	-		1	FLOW METER
	360	312105-0368	-		2	SCREW M6S6X16RFR
	370	312605-0314	-		2	NUT M6M5RFR
	380	315105-0146	-		2	WASHER BRB5,3X10RFR
	390	315105-0153	-		2	WASHER BRB6,4X12RFR
	400	315233-0111	-		1	SEAL RING R3/8"
	410	315233-0113	-		1	SEAL RING R1/2"
	420	342720-0114	-		1	PIPE COUPLGA-15-1/2"

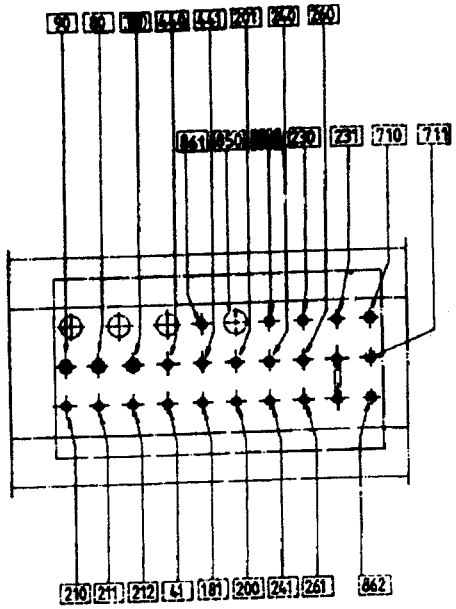

Snitt B-B (1:2,5)

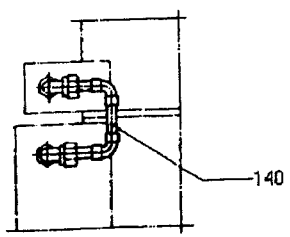

Vy C-C (1:2,5)

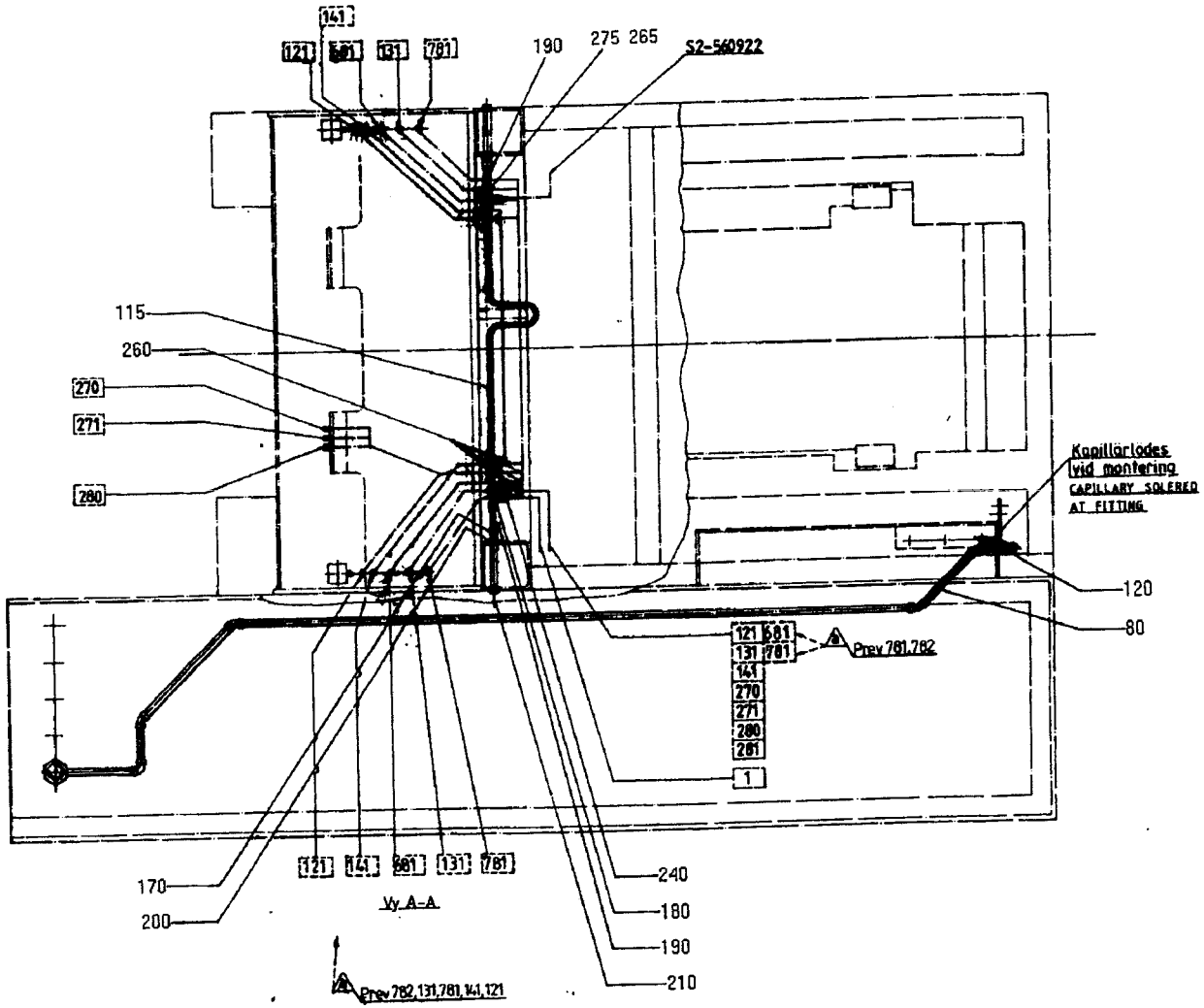

45078813.TIF
450788-13
AM 16787

From	Pos	Part No	SP	UN	Qty	Description
TBA/8						
		C- 450788-0501				**Pipe Work-Pneumatic, Ass'y**
	005	90166-0122	-	M	16	HOSE
	010	90166-0124	-	M	87	HOSE
	115	560881	-		1	PIPE
	190	90266-0007	-	MM	58	TUBE
	190	90266-0007	-	MM	58	TUBE
	265	342923-0114	-		1	PIPE COUPL6/4-1/4
	275	90224-0316	-		1	CONNECTION
	290	90030-0030	-		1	PIPE CONNECTION
	300	527907	-		1	PIPE
	310	342991-0104	-		2	HOSE CLIP 19-28MMRFR
	320	90166-0060	-	MM	3000	HOSE
Common parts						
	080	544692	-		1	PIPE
	120	544697	-		1	PIPE
	140	450791	-		1	PIPE
	170	90224-0319	-		2	CONNECTION
	180	90224-0323	-		1	CONNECTION
	200	315233-0110	-		2	SEAL RING R1/4"
	210	342713-0210	-		1	BLIND PLUG
	220	342720-0114	-		1	PIPE COUPLGA-15-1/2"
	240	342929-0121	-		1	PIPE COUPL8/6-8
	260	342946-0112	-		10	T-CONNECTI6/4
	280	342960-0112	-		10	BULKHEAD L6/4

From	Pos	Part No	SP	UN	Qty	Description

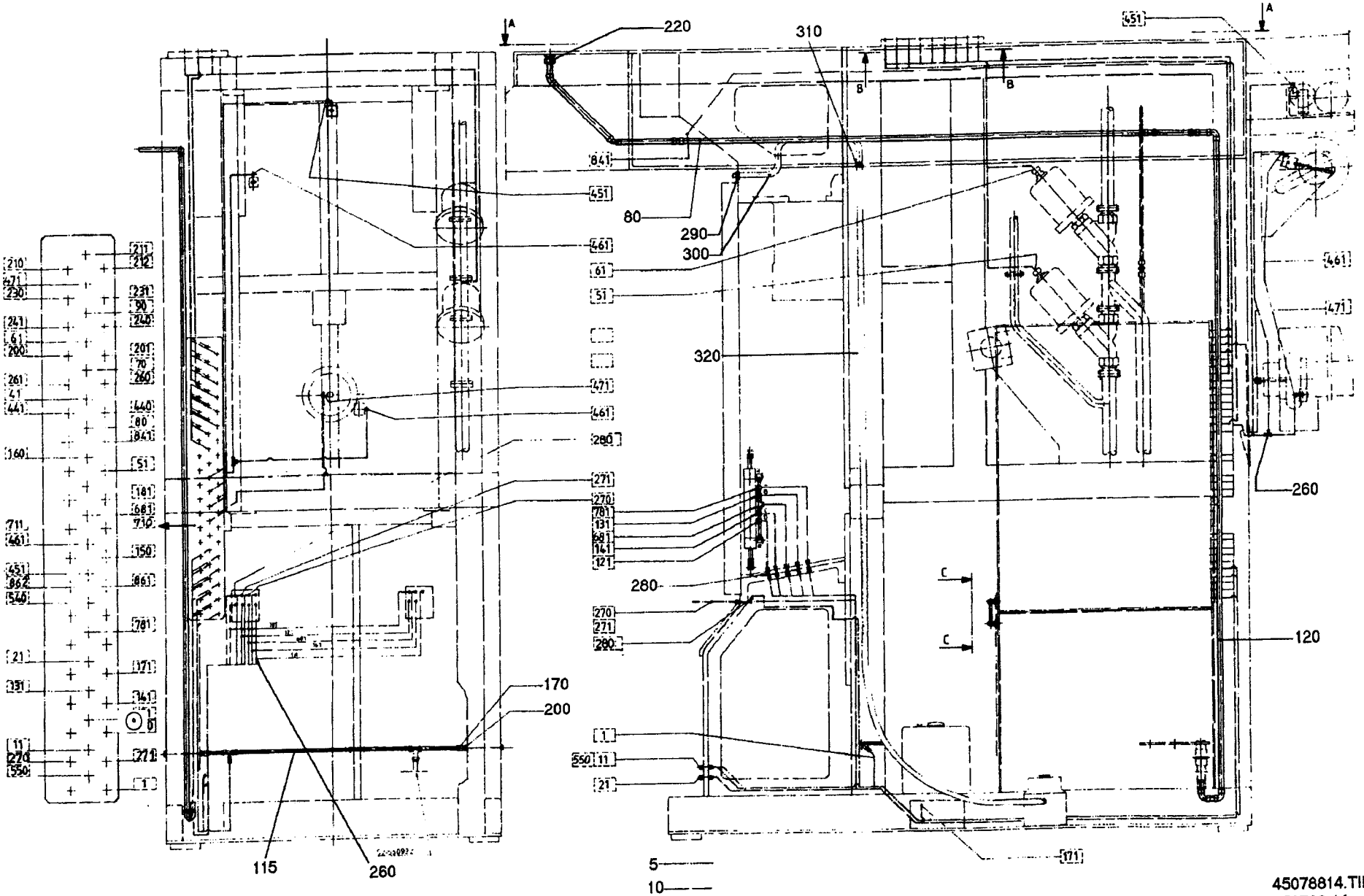
220
310
451
80
290
300
461
61
51
320
471
461
280
271
270
781
131
68
141
121
280
270
271
280
260
120
170
200
115
260
5
10
171
45078814.TIF
450788-14
AM 16051

Last Alteration: AM 17183 92-02-10

Corresponding group: 450788-050V
Assembly Drawing: 450788-13/14

Issue: 930607

From	Pos	Part No	SP	UN	Qty	Description
TBA/8						
		C- 450788-0501				***Pipe Work-Pneumatic, Ass'y***
	005	90166-0122	-	M	16	HOSE
	010	90166-0124	-	M	87	HOSE
	115	560881	-		1	PIPE
	190	90266-0007	-	MM	58	TUBE
	190	90266-0007	-	MM	58	TUBE
	265	342923-0114	-		1	PIPE COUPL6/4-1/4
	275	90224-0316	-		1	CONNECTION
	290	90030-0030	-		1	PIPE CONNECTION
	300	527907	-		1	PIPE
	310	342991-0104	-		2	HOSE CLIP 19-28MMRFR
	320	90166-0060	-	MM	3000	HOSE
Common parts						
	080	544692	-		1	PIPE
	120	544697	-		1	PIPE
	140	450791	-		1	PIPE
	170	90224-0319	-		2	CONNECTION
	180	90224-0323	-		1	CONNECTION
	200	315233-0110	-		2	SEAL RING R1/4"
	210	342713-0210	-		1	BLIND PLUG
	220	342720-0114	-		1	PIPE COUPLGA-15-1/2"
	240	342929-0121	-		1	PIPE COUPL8/6-8
	260	342946-0112	-		10	T-CONNECTI6/4
	280	342960-0112	-		10	BULKHEAD L6/4

From	Pos	Part No	SP	UN	Qty	Description

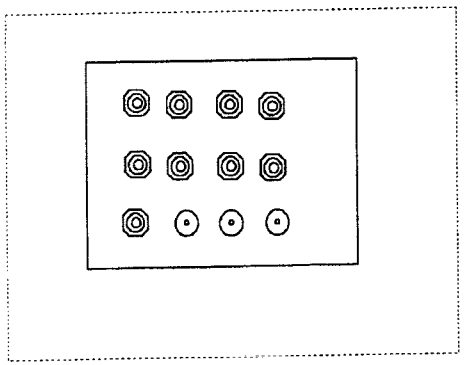

Snitt B-B (1:2,5)

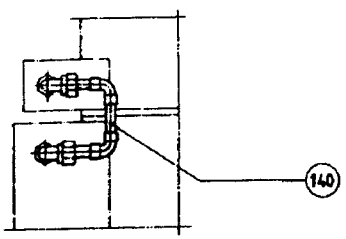

Vy C-C (1:2,5)

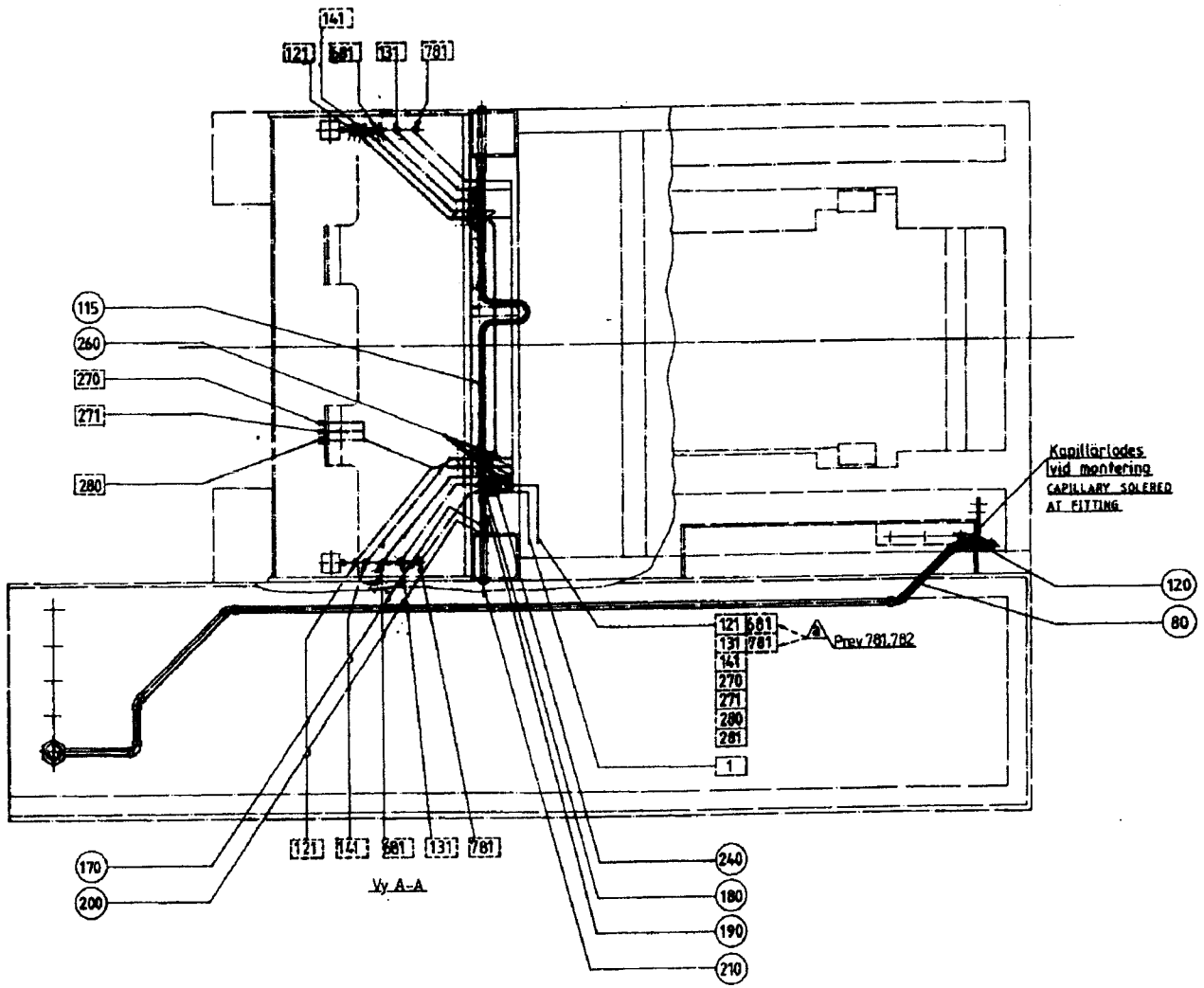

Vy A-A

45078815.TIF
450788-15
AM 16787

From	Pos	Part No	SP	UN	Qty	Description
TB/8						
		C- 450788-0502				**Pipe Work-Pneumatic, Ass'y**
	005	90166-0122	-	M	14	HOSE
	010	90166-0124	-	M	54	HOSE
	110	450736	-		1	PIPE
Common parts						
	080	544692	-		1	PIPE
	120	544697	-		1	PIPE
	140	450791	-		1	PIPE
	170	90224-0319	-		2	CONNECTION
	180	90224-0323	-		1	CONNECTION
	200	315233-0110	-		2	SEAL RING R1/4"
	210	342713-0210	-		1	BLIND PLUG
	220	342720-0114	-		1	PIPE COUPLGA-15-1/2"
	240	342929-0121	-		1	PIPE COUPL8/6-8
	260	342946-0112	-		10	T-CONNECTI6/4
	280	342960-0112	-		10	BULKHEAD L6/4

From	Pos	Part No	SP	UN	Qty	Description

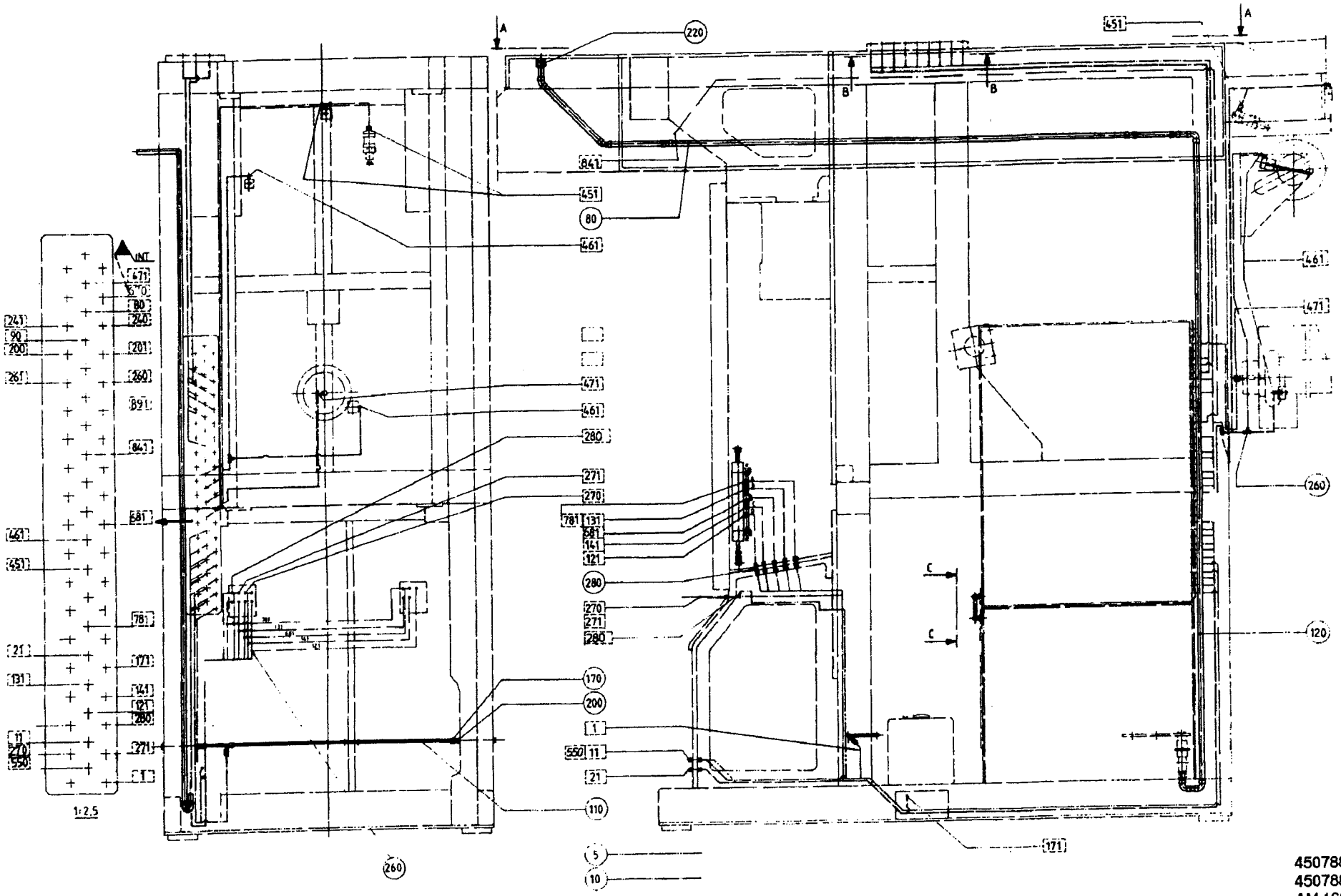

45078816.TIF
450788-16
AM 16051

From	Pos	Part No	SP	UN	Qty	Description
TB/8						
		C- 450788-0502				**Pipe Work-Pneumatic, Ass'y**
	005	90166-0122	-	M	14	HOSE
	010	90166-0124	-	M	54	HOSE
	110	450736	-		1	PIPE
Common parts						
	080	544692	-		1	PIPE
	120	544697	-		1	PIPE
	140	450791	-		1	PIPE
	170	90224-0319	-		2	CONNECTION
	180	90224-0323	-		1	CONNECTION
	200	315233-0110	-		2	SEAL RING R1/4"
	210	342713-0210	-		1	BLIND PLUG
	220	342720-0114	-		1	PIPE COUPLGA-15-1/2"
	240	342929-0121	-		1	PIPE COUPL8/6-8
	260	342946-0112	-		10	T-CONNECTI6/4
	280	342960-0112	-		10	BULKHEAD L6/4

From	Pos	Part No	SP	UN	Qty	Description

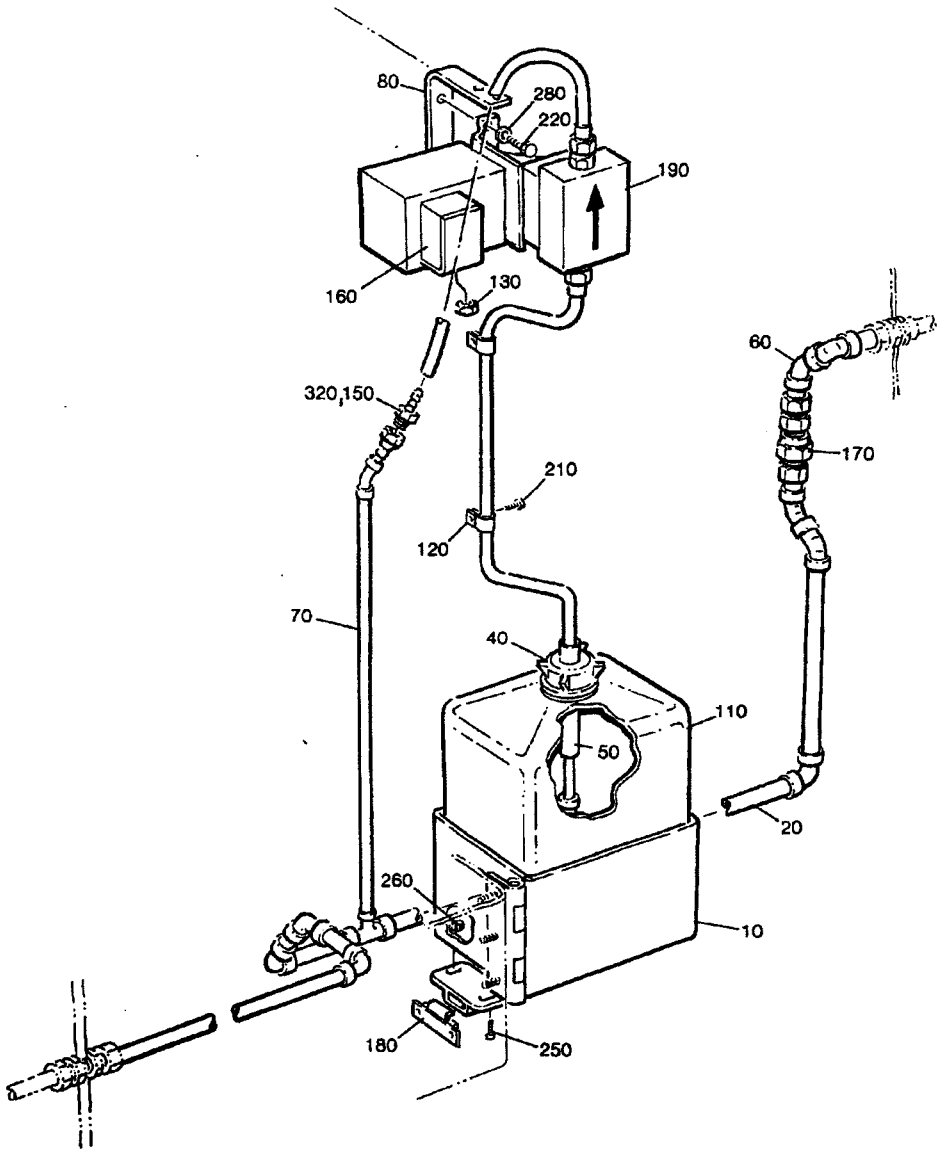

45079201.TIF
450792-1
AM

From	Pos	Part No	SP	UN	Qty	Description
		C- 450792-0101				**Detergent Pump, Ass'y**
	010	547906	-		1	SHELF
	020	450793	-		1	PIPE
	040	35962	S		1	LID
	050	259867	-		1	HOSE CLAMP
	060	450794	-		1	PIPE
	070	450795	-		1	PIPE
	080	450796	-		1	BRACKET
	110	90050-0011	-		1	BOTTLE
	120	90074-0002	-		2	CLIP
	130	90099-0003	-		1	NUT
	150	90131-0004	-		1	HOSE COUPLING
	160	90195-0020	-		1	TERMINAL BLOCK
	170	90230-0021	-		1	NON-RETURN VALVE
	180	90237-0046	-		1	LOCK PART
	190	90321-0037	P		1	UMP
		90166-0157	S	MM	1500	* HOSE
		90321-0380	S		0	* DIAPHRAGM
		90321-0396	S		0	* FILTER
	210	312105-0323	-		5	SCREW M6S5X8 A4 80
	220	312105-0368	-		4	SCREW M6S6X16RFR
	250	312125-0220	-		2	SLOTTED HEMCS3X6RFR
	260	312605-0310	-		2	NUT M6M3RFR
	280	315105-0153	-		3	WASHER BRB6,4X12RFR
	320	352136-0127	-		1	GLAND FITT

From	Pos	Part No	SP	UN	Qty	Description

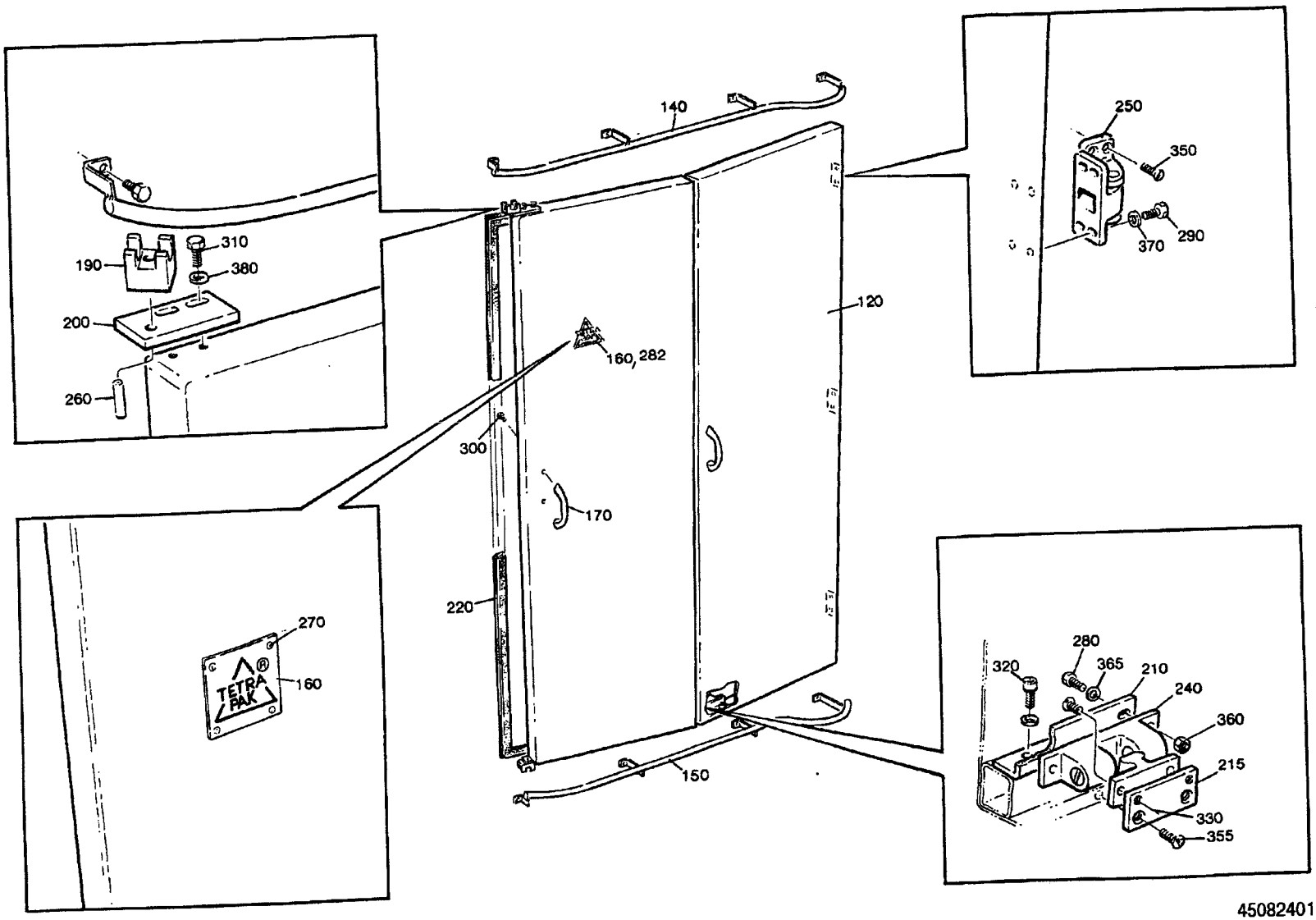

45082401.TIF
450824-1/2
AM

From	Pos	Part No	SP	UN	Qty	Description
		C- 450824-0201				**Door, Ass'y**
	120	549044	-		1	DOOR
	140	269320	-		1	RAIL
	150	269321	-		1	RAIL
	160	544539	-		1	HOUSEMARK
	170	7309	-		2	HANDLE
	190	230226	-		2	BLOCKING PIECE
	200	246739	-		2	BRACKET
	210	450826	-		2	BRACKET
	215	450973	-		2	BRACKET
	220	90143-0049	S	MM	6000	STRIP
	240	90237-0070	-		2	LOCK
	250	90248-0013	-		3	HINGE
	260	311103-0403	-		2	CYLINDRICACP M6 8X25 RFR
	270	311520-0420	-		4	BLANK RIVE3,2X4
	280	312105-0291	-		4	SCREW M6S4X12RFR
	290	312105-0327	-		12	SCREW M6S5X12 A4 80
	300	312105-0366	-		12	SCREW M6S6X12RFR
	310	312105-0368	-		4	SCREW M6S6X16RFR
	320	312115-0325	-		4	SCREW 5X10 A4 80
	330	312145-0285	-		4	SLOTTED HEMFS4X6RFR
	350	312145-0325	-		12	SLOTTED HEMFS5X10RFR
	355	312145-0327	-		4	SLOTTED HEMFS5X12RFR
	360	312605-0312	-		4	NUT M6M4RFR
	365	315105-0136	-		4	WASHER BRB4,3X8RFR
	370	315105-0146	-		16	WASHER BRB5,3X10RFR
	380	315105-0153	-		4	WASHER BRB6,4X12RFR

From	Pos	Part No	SP	UN	Qty	Description

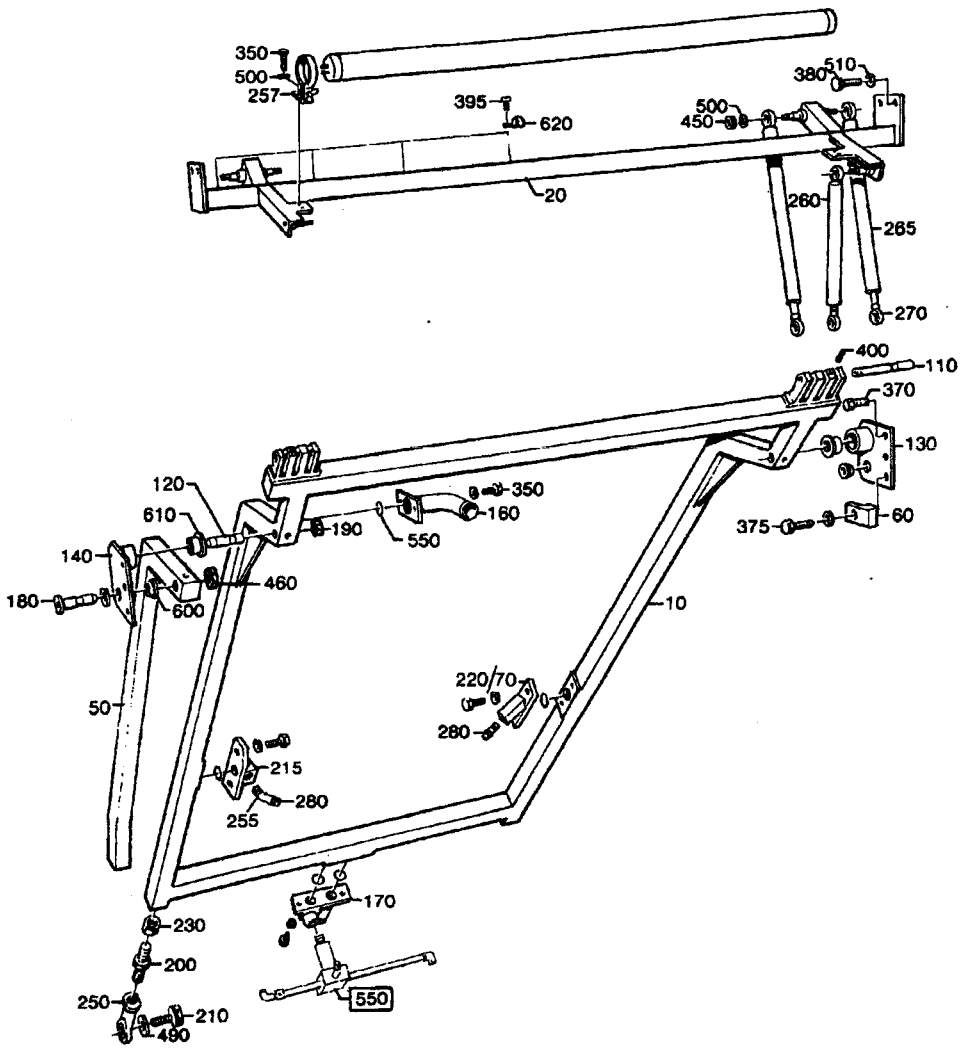

45084004.TIF
450840-4
AM

From	Pos	Part No	SP	UN	Qty	Description
		C- 450840-0401				**Lifting Unit, Ass'y**
	F550	**C- 476884-0202**	**-**		**1**	**CLEANING HEAD**
	010	493021	-		1	ARM
	020	450841	-		1	CANTILEVER
	050	493022	-		2	ARM
	060	532371	-		1	STOP LUG
	070	534486	-		1	PIPE HOLDER
	110	285825	S		2	SHAFT
	120	484219	S		2	SHAFT
	130	484220	C		1	BRACKET
	140	484221	C		1	BRACKET
	160	285979	-		1	PIPE
	170	476894	-		1	PIPE HOLDER
	180	484222	S		2	SHAFT
	190	484223	S		2	NUT
	200	457354	S		4	SCREW
	210	297770	-		4	SCREW
	215	442566	-		1	BRACKET
	230	457355	-		4	NUT
	250	90115-0111	-		4	JOINT
	257	90164-0003	C		1	LIGHT FIXTURE
		90297-0002	P		0	* FLUORESCENT TUBE
	260	90347-0036	-		2	DAMPER
	265	90347-0038	-		4	DAMPER
	270	90347-0300	-		6	BRACKET
	280	90424-0035	-		2	NOZZLE
	350	312105-0368	-		12	SCREW M6S6X16RFR
	370	312105-0493	-		5	SCREW M6S10X25RFR
	375	312105-0495	-		1	SCREW M6S10X30RFR
	380	312105-0497	-		2	SCREW M6S10X35RFR
	395	312125-0285	-		4	SLOTTED HEMCS4X6RFR
	400	312318-0362	S		2	STOP SCREW SK6SS6X8RFR
	450	312605-0316	-		6	NUT M6M6RFR
	460	312605-0322	-		2	NUT M6M12RFR
	490	315103-0195	-		4	WASHER BRB23X40MSGFN
	500	315105-0153	-		18	WASHER BRB6,4X12RFR
	510	315105-0173	-		10	WASHER BRB10,5X22RFR
	550	315202-0216	P		5	O-RING 22,2X3
	600	321101-0173	-		4	FLANGE BUS 12F7X12
	610	321101-0233	S		4	FLANGE BUS 20F7X20
	620	352135-0201	-		4	CRAMP 12
	630	352136-0127	-		1	GLAND FITT

From	Pos	Part No	SP	UN	Qty	Description

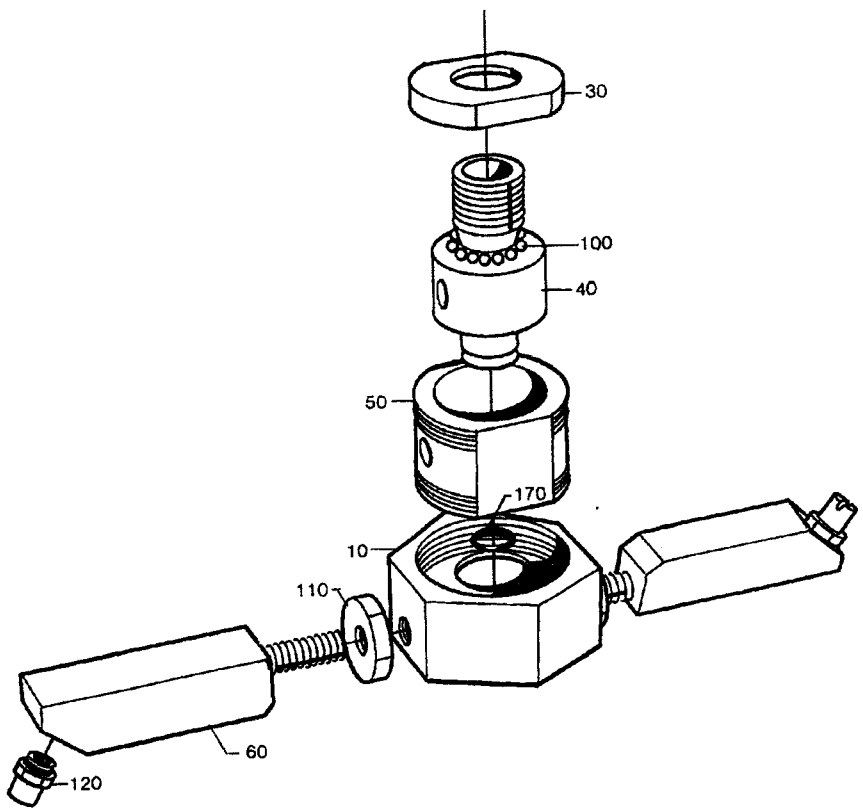

47688401.TIF
476884-1
AM

From	Pos	Part No	SP	UN	Qty	Description
		C- 476884-0201				**Cleaning Head 45° Up, Ass'y**
		C- 476884-0202				**Cleaning Head 45° Down, Ass'y**
	010	440600	C		1	ROTOR
	030	534880	S		1	END SECTION
	040	534878	S		1	SHAFT
	050	534879	S		1	BEARING HOUSING
	060	440604-0001	C		2	PIPE
	100	90090-0020	S		24	BALL
	110	90330-0034	-		2	NUT
	120	90424-0026	S		2	NOZZLE
	170	315202-0211	S		1	O-RING 13,3X2,4

From	Pos	Part No	SP	UN	Qty	Description

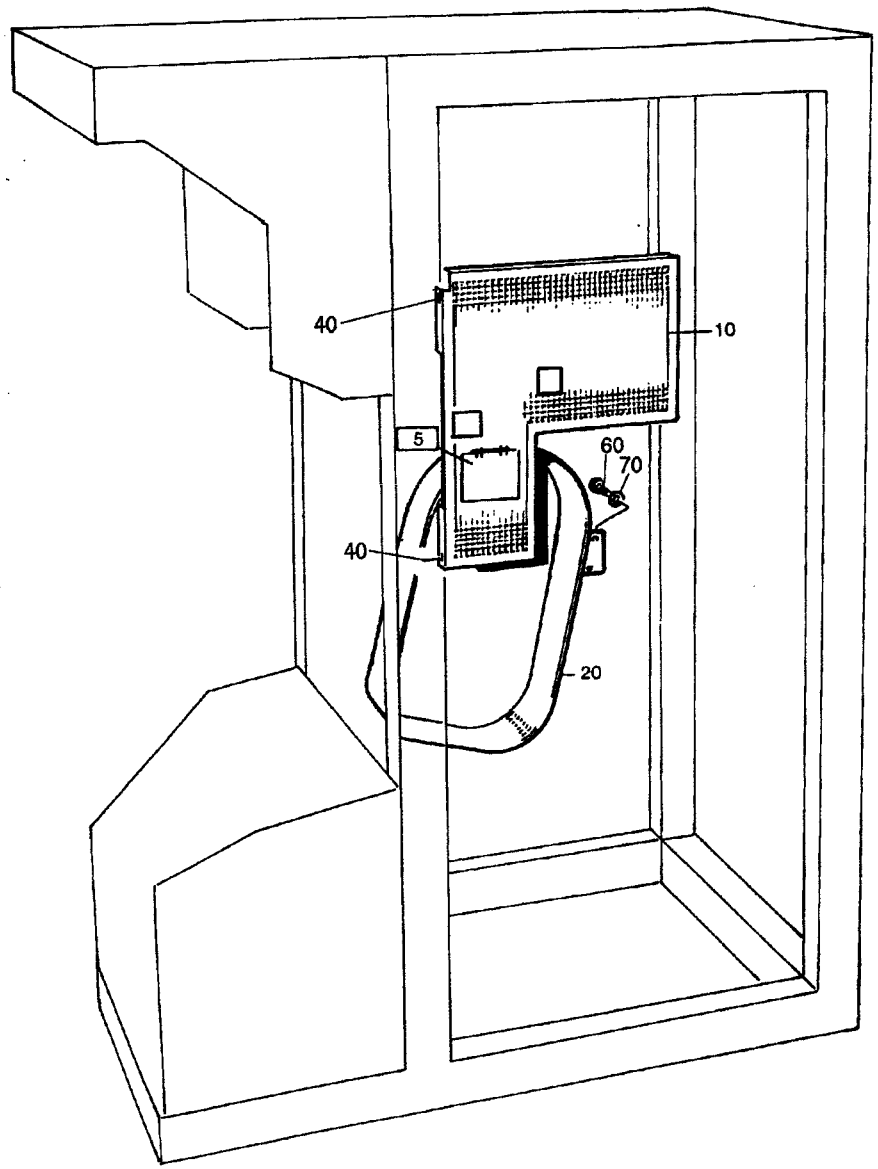

45088302.TIF
450883-2
AM 14358

From	Pos	Part No	SP	UN	Qty	Description
		C- 450883-0301				**Protection, Ass'y**
	F005	**C- 543157-020V**	-		1	**HOLDER**
	010	440482	-		1	PROTECTION
	020	450884	-		1	PROTECTION
	040	311211-0292	-		2	TAPER PIN GKP6X6X30
	060	312101-0366	-		5	SCREW M6S6X12FZB
	070	315101-0153	-		5	WASHER BRB6,4X12FZB

From	Pos	Part No	SP	UN	Qty	Description

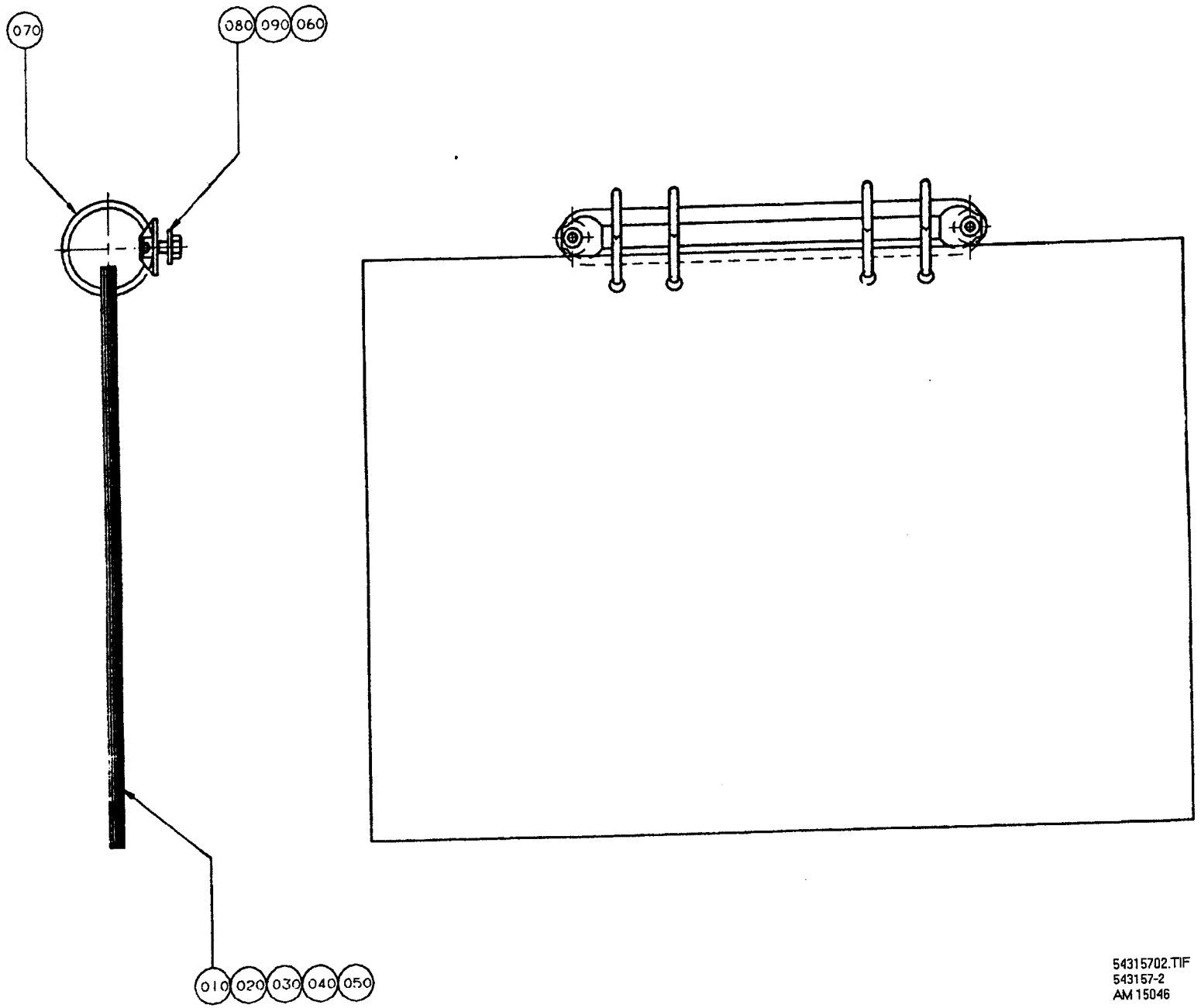

54315702.TIF
543157-2
AM 15046

From	Pos	Part No	SP	UN	Qty	Description
TBA/8						
		C- 543157-0201				**Holder**
	010	560883	-		1	VALVE PANEL
	020	560875	-		1	PNEUMATIK DIAGRAM
	030	479858	-		1	HYDRAULIC DIAGRAM
	040	560882	-		1	WATER DIAGRAM
TB/8 1136ml-500ml						
		C- 543157-0202				**Holder**
	010	560884	-		1	VALVE PANEL
	020	560874	-		1	PNEUMATIK DIAGRAM
	030	479858	-		1	HYDRAULIC DIAGRAM
	040	530759	-		1	WATER DIAGRAM
TB/8 300ml						
		C- 543157-0203				**Holder**
	010	560884	-		1	VALVE PANEL
	020	560874	-		1	PNEUMATIK DIAGRAM
	030	479859	-		1	HYDRAULIC DIAGRAM
	040	530759	-		1	WATER DIAGRAM
Common Parts						
	050	561590	-		1	CENTRAL LUBRIC. DIAGRAM
	060	38087	-		2	WASHER
	070	90243-0169	-		1	PAPER HOLDER
	080	312115-0325	-		2	SCREW 5X10 A4 80
	090	312605-0314	-		2	NUT M6M5RFR

From	Pos	Part No	SP	UN	Qty	Description

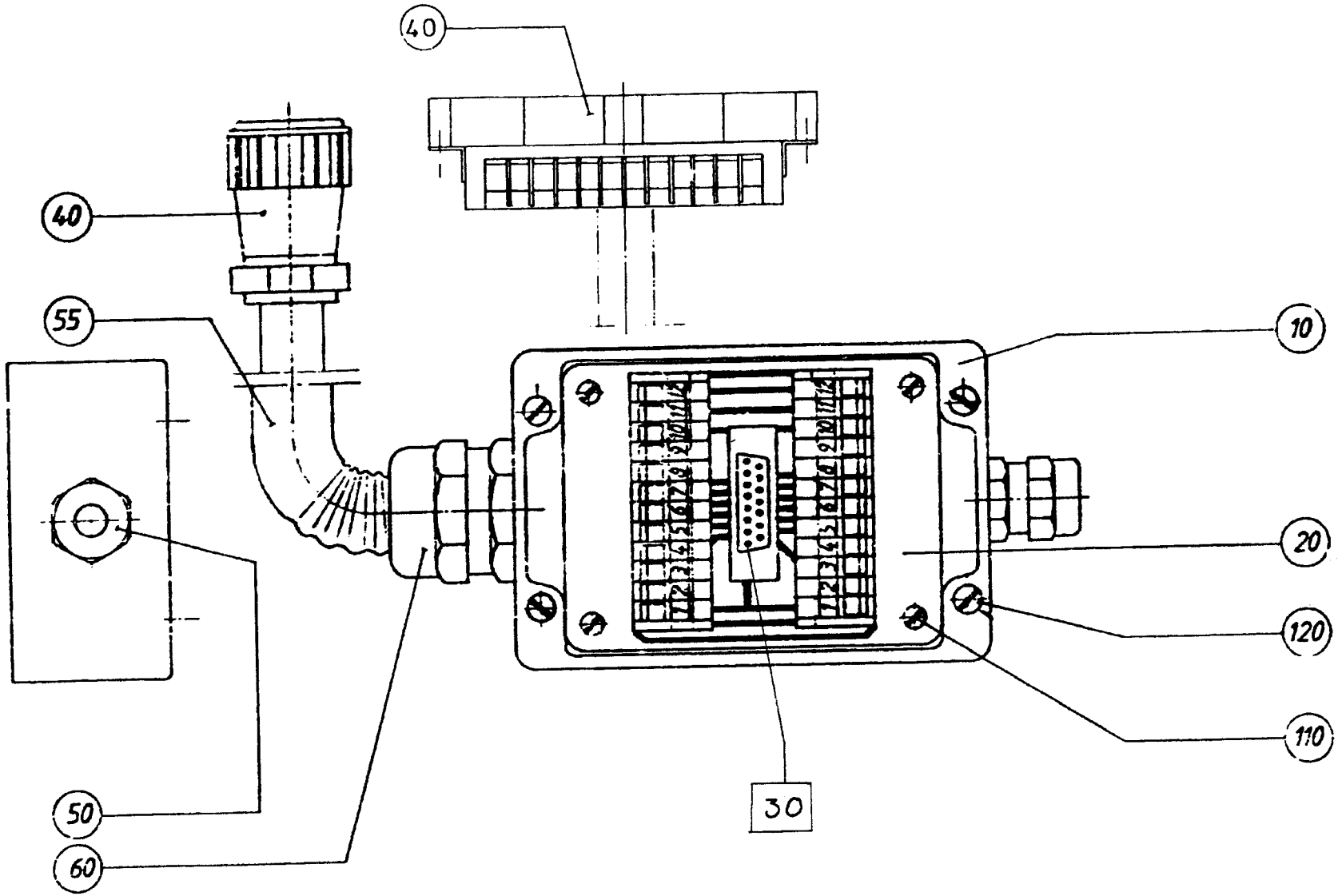

45134801.TIF
451348-1/2
AM

From	Pos	Part No	SP	UN	Qty	Description
TBA/9 TB/9						
		C- 451348-0201				**Connection Box.**
	F030	**C- 68917-0101**	**C**		**1**	***ANGLE INDICATOR***
	010	751631	C		1	CONNECTION BOX
	050	352103-0106	S		1	CABLE GLANR.ST 11
	060	352103-0110	S		1	CABLE GLANR.STR 16
TBA/8 TB/8						
		C- 451348-0202				**Connection Box.**
	F030	**C- 68917-0101**	**C**		**1**	**ANGLE INDICATOR**
	010	464297	C		1	CONNECTION BOX
	040	90110-0128	S		1	PLUG 24-POL
	050	352103-0106	S		1	CABLE GLANR.ST 11
	055	352135-0106	C	MM	1400	*HOSE .016*
	060	352136-0127	S		1	GLAND FITT
Tetra King TT/1 TTA/5						
		C- 451348-0203				**Connection Box.**
	010	451409	C		1	CONNECTION BOX
	050	352103-0101	S		1	CABLE GLANR.ST 9
	060	352103-0115	S		1	CABLE GLANR.STR 21
TT/2						
		C- 451348-0204				**Connection Box.**
	F030	**C- 68917-0101**	**C**		**1**	**ANGLE INDICATOR**
	010	451409	C		1	CONNECTION BOX
	050	352103-0101	S		1	CABLE GLANR.ST 9
	060	352103-0115	S		1	CABLE GLANR.STR 21
Common Parts						
	020	451423	S		1	CIRCUIT BOARD
	110	312125-0220	S		4	SLOTTED HEMCS3X6RFR
	120	312125-0291	S		4	SLOTTED HEMCS4X12RFR

From	Pos	Part No	SP	UN	Qty	Description

From	Pos	Part No	SP	UN	Qty	Description
		C- 68917-0101				**Angle indicator, ass'y**
	D001	49915-01:0	-		X	CIRCUIT DIAGRAM
	D002	49916-01:0	-		X	COMPONENT LAYOUT
	D003	57008-01:0	-		X	BACKPLANE
	010	540306-0001	-		1	COMPONENTS WITHOUT TP-NO
	020	540307	-		1	PRINTED CIRCUIT BOARD

From	Pos	Part No	SP	UN	Qty	Description


Tetra Pak

SPC section 648003

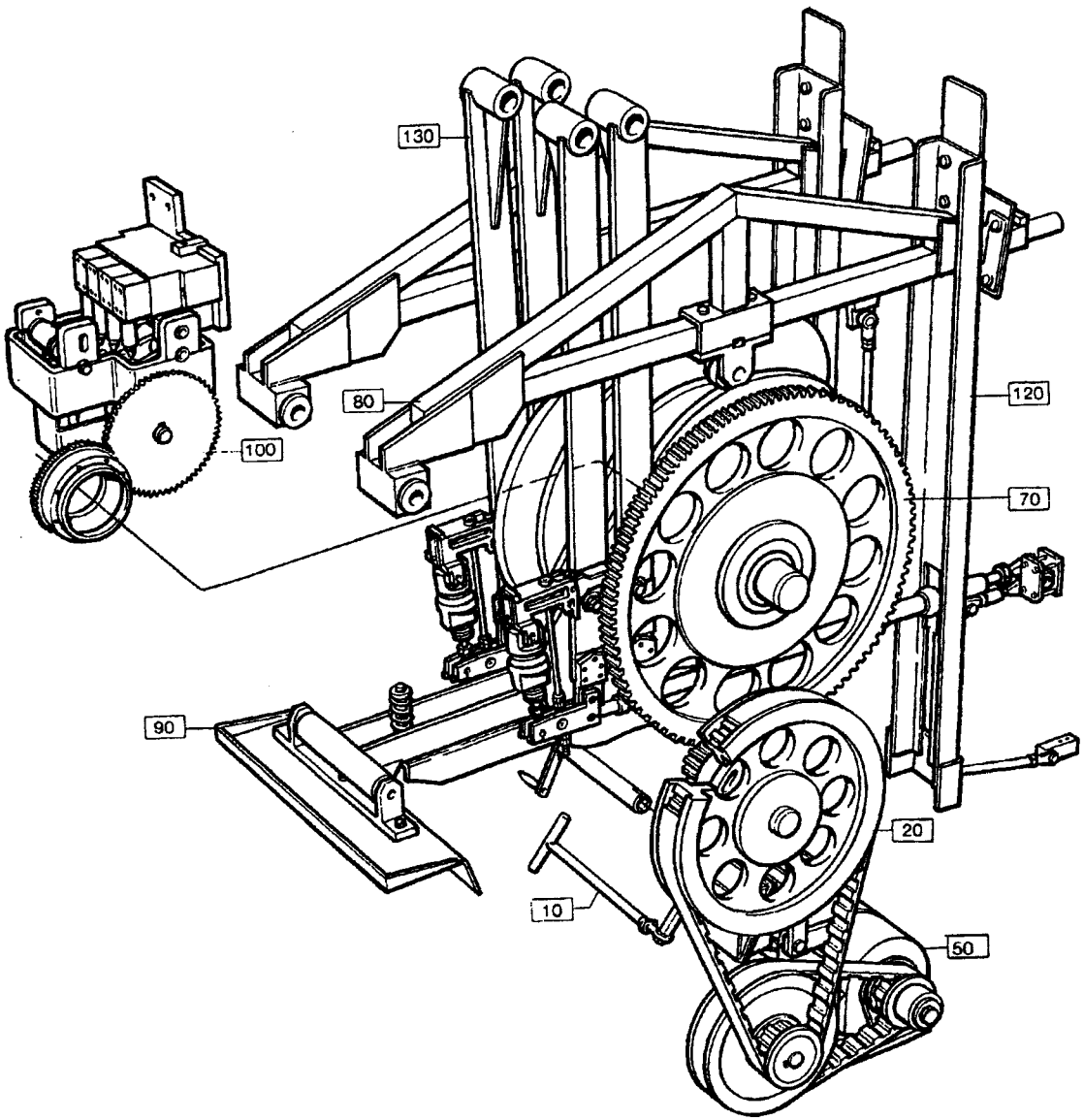

64800301.TIF
648003-1
AM

Code	Ass'y	Group No	Description	Page
03-F000	64800301	648003-090V	Drive	271
03-F010	44058801	440588-020V	Crank	273
03-F020	23989002	239890-030V	Intermediary Shaft	275
03-F050	43466802	434668-040V	Drive Unit	277
03-F070	24377601	243776-030V	Curve Shaft	279
03-F070	26698601	266986-050V	Curve Shaft	281
	26698601	266986-050V	Curve Shaft	283
03-F080	24392706	243927-060V	Arm	285
03-F090	47617702	476177-020V	Hold-Down Device	287
03-F100	43466902	434669-030V	Impulse Transmitter	289
	27372801	273728-020V	Valve Group	291
	44240201	442402-010V	Valve	293
03-F120	29207102	292071-020V	Splash Protection	295
03-F130	43467005	434670-050V	Link System	297

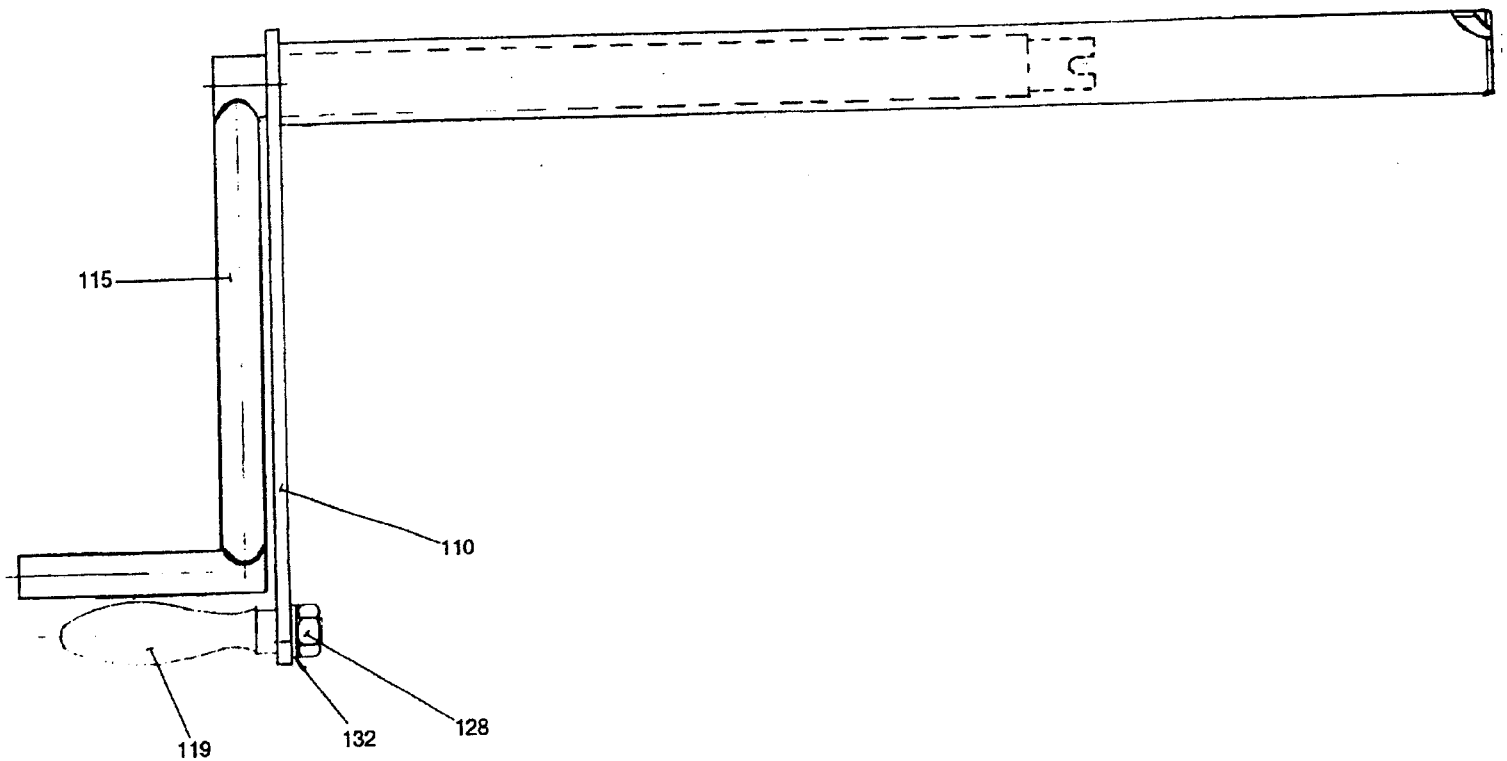

44058801.TIF
440588-1
AM

Last Alteration: AM 11082 87-12-08

Corresponding group: 440588-020V
Assembly Drawing: 440588-1

Issue: 930607

From	Pos	Part No	SP	UN	Qty	Description
	F000	**C- 440588-0201**				**Crank, Ass'y**
	110	36885	-		1	CRANK ARM
	115	542262	-		1	CRANK
	119	90017-0009	-		1	HANDLE
	128	312601-0322	-		1	NUT M6M12FZB
	132	315401-0178	-		1	WASHER FBH12,2FZB

From	Pos	Part No	SP	UN	Qty	Description

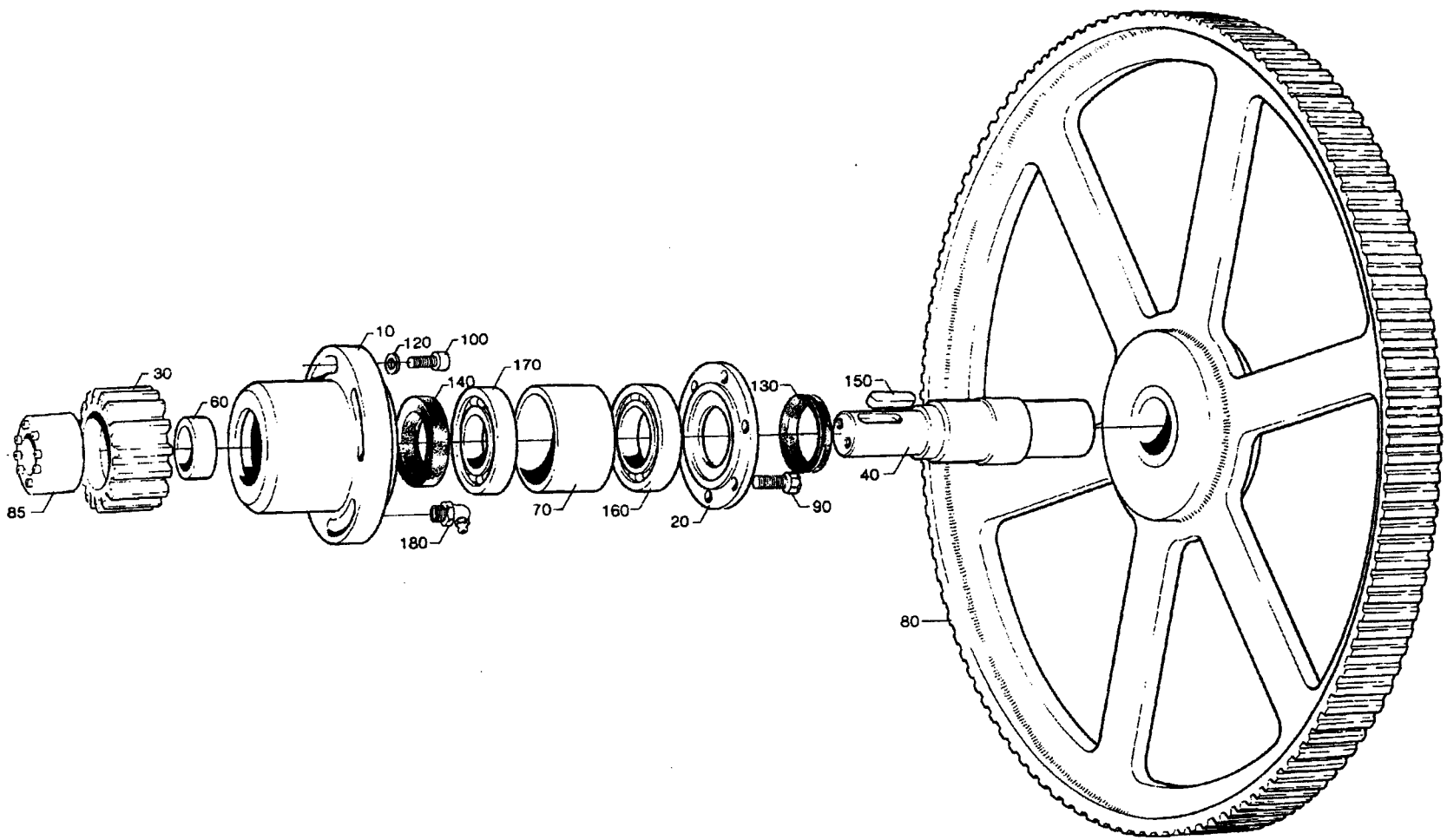

23989002.TIF
239890-2
AM

From	Pos	Part No	SP	UN	Qty	Description
	F000	**C- 239890-0301**				**Intermediary Shaft, Ass'y**
	010	237725	-		1	BEARING HOUSING
	020	107095	-		1	LID
	030	499473	C		1	GEAR WHEEL
	040	499474	C		1	SHAFT
	060	111017	-		1	SPACER RING
	070	239870	-		1	SPACER SLEEVE
	080	90196-0067	-		1	PULLEY
	085	90208-0067	-		1	CLAMPING ELEMENT
	090	312101-0449	-		6	SCREW M6S8X16FZB
	100	312101-0499	-		4	SCREW M6S10X40FZB
	120	315101-0173	-		4	WASHER BRB10,5X22FZB
	130	315220-0198	S		1	SEAL RING V-50S
	140	315221-0197	S		1	SEAL RING CB48X72X8
	160	321306-0110	S		1	BALL BEARISKF6010
	170	321309-0108	S		1	BALL BEARISKF6208
	180	344502-0066	-		1	NIPPLE L CHKR1/8"

From	Pos	Part No	SP	UN	Qty	Description

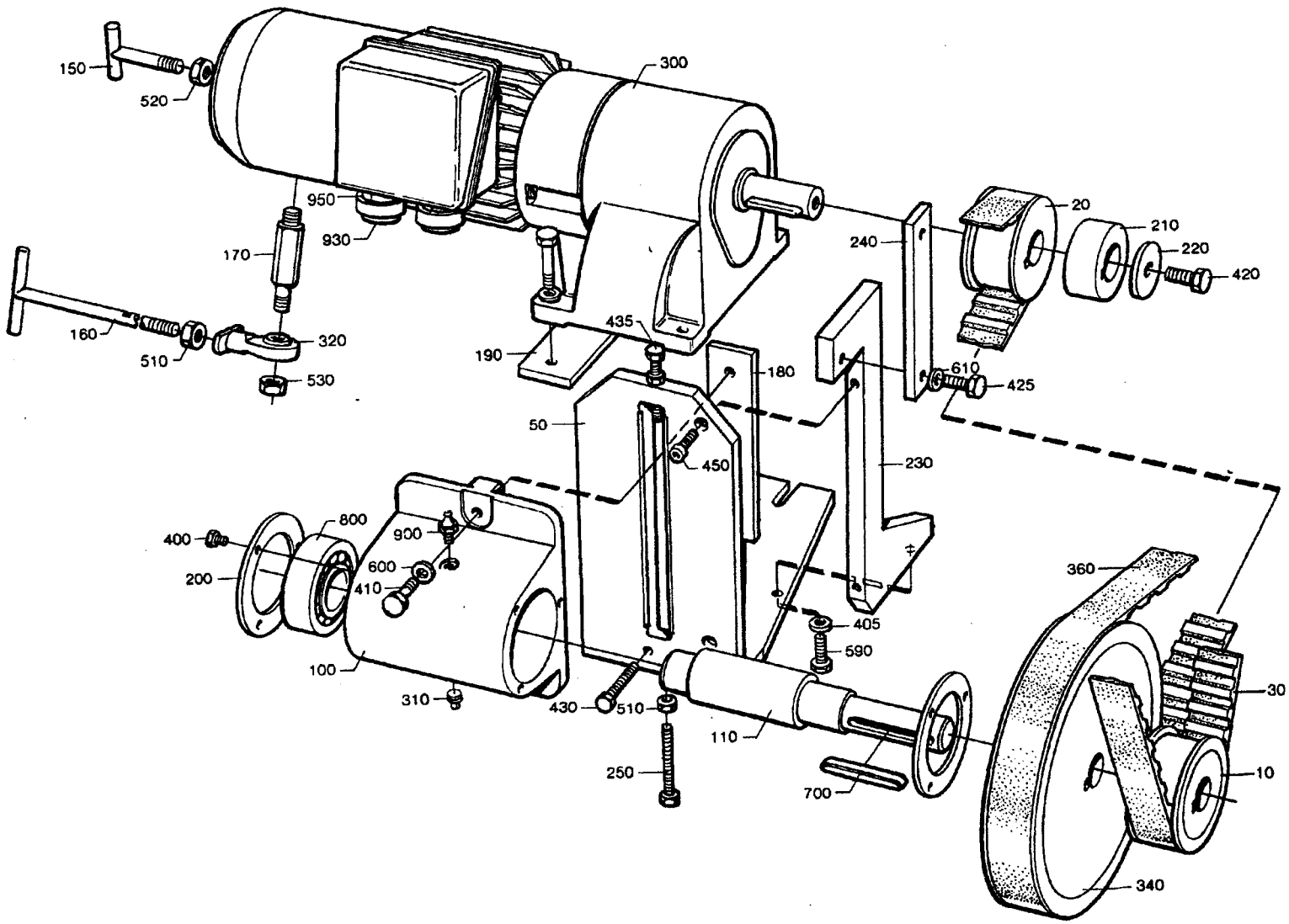

43466802.TIF
434668-1
AM

From	Pos	Part No	SP	UN	Qty	Description
IH 50Hz						
	F000	C- 434668-0401				**Drive Unit, Ass'y**
	010	90196-0055	-		1	PULLEY
	020	90196-0062	-		1	PULLEY
	300	90046-0015	C		1	BRAKE MOTOR
		90046-0304	S		1	* STATOR
		90046-0312	S		1	* RECTIFIER
		90046-0313	S		1	* COIL
		90046-0314	S		1	* BRAKE DISC
IH 60Hz						
	F000	C- 434668-0402				**Drive Unit, Ass'y**
	010	90196-0065	-		1	PULLEY
	020	90196-0062	-		1	PULLEY
	300	90046-0016	C		1	BRAKE MOTOR
		90046-0308	S		1	* STATOR
		90046-0312	S		1	* RECTIFIER
		90046-0313	S		1	* COIL
		90046-0314	S		1	* BRAKE DISC
TPC 50Hz						
	F000	C- 434668-0403				**Drive Unit, Ass'y**
	010	90196-0064	-		1	PULLEY
	020	90196-0062	-		1	PULLEY
	300	90046-0015	C		1	BRAKE MOTOR
		90046-0304	S		1	* STATOR
		90046-0312	S		1	* RECTIFIER
		90046-0313	S		1	* COIL
		90046-0314	S		1	* BRAKE DISC
TPC 60Hz						
	F000	C- 434668-0404				**Drive Unit, Ass'y**
	010	90196-0063	-		1	PULLEY
	020	90196-0061	-		1	PULLEY
	300	90046-0016	C		1	BRAKE MOTOR
		90046-0308	S		1	* STATOR
		90046-0312	S		1	* RECTIFIER
		90046-0313	S		1	* COIL
		90046-0314	S		1	* BRAKE DISC
Common Parts						
	030	90417-0134	S		1	TOOTHED BELT
	050	530754	-		1	FASTENING BRACKET
	100	G- 436482	-		1	BEARING BRACKET
	110	436483	-		1	SHAFT
	150	37097	-		1	CARRIER
	160	434379	-		1	TIE ROD
	170	434380	-		1	SHAFT
	180	436484	-		1	BRACKET
	190	436485	-		1	LACE
	200	436486	-		2	LID
	210	436487	-		1	SPACER
	220	436488	-		1	WASHER
	230	450145	-		1	STRUT
	240	450146	-		1	STRUT
	250	530755	-		1	SCREW
	310	90087-0003	-		1	PIPE PLUG
	320	90115-0105	S		1	JOINT
	340	90196-0066	-		1	PULLEY
	360	90417-0133	S		1	TOOTHED BELT
	400	312101-0364	-		6	SCREW M6S6X10FZB
	405	312101-0455	-		2	SCREW M6S8X30FZB
	410	312101-0501	-		6	SCREW M6S10X50FZB
	420	312101-0534	-		1	SCREW M6S12X25FZB
	425	312101-0536	-		2	SCREW M6S12X30FZB
	430	312104-0465	-		1	SCREW M6S8X70H8.8 FZB
	435	312104-0507	-		1	SCREW M6S10X80H8.8FZB
	450	312111-0451	-		2	SCREW MC6S8X20FZB
	500	312601-0318	-		1	NUT M6M8FZB
	510	312601-0320	-		3	NUT M6M10FZB
	520	312601-0322	-		1	NUT M6M12FZB
	530	312812-0320	-		1	LOCK NUT A4-M10RFR
	590	315101-0165	-		2	WASHER BRB8,4X16FZB
	600	315101-0173	-		6	WASHER BRB10,5X22FZB
	610	315101-0178	-		2	WASHER BRB13X24FZB
	700	315701-0307	-		1	FLAT WEDGE10X8X70
	800	321316-0108	S		2	BALL BEARISKF6308RS
	900	344502-0046	-		1	NIPPLE L BHKR1/8"
	930	352136-0143	-		2	GLAND FITT
	950	352100-0115	-		2	CABLE GLANR.28,3-15,5

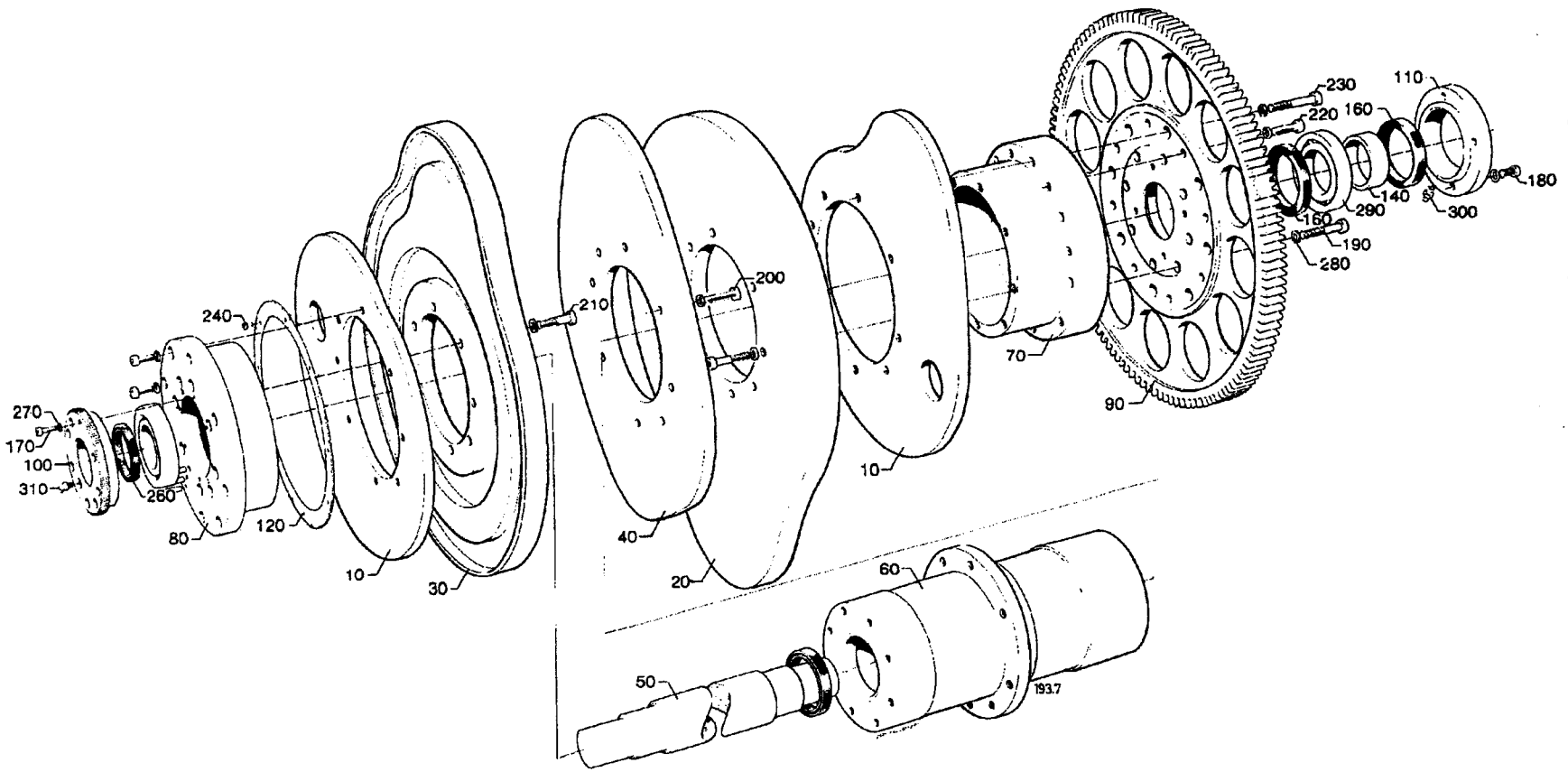

24377601.TIF
243776-1
AM

From	Pos	Part No	SP	UN	Qty	Description
1000ml LoFin						
	F000	**C- 243776-0301**				**Curve Shaft, Ass'y**
	010	562974	C		2	MAIN CAM
	020	562976	C		1	CAM LEFT
	030	562977	C		1	CAM RIGHT
	040	562975	C		1	COUNTER CAM
568ml						
	F000	**C- 243776-0302**				**Curve Shaft, Ass'y**
	010	565043	C		2	MAIN CAM
	020	565045	C		1	CAM LEFT
	030	565046	C		1	CAM RIGHT
	040	565044	C		1	COUNTER CAM
500ml						
	F000	**C- 243776-0303**				**Curve Shaft, Ass'y**
	010	563201	C		2	MAIN CAM
	020	563203	C		1	CAM LEFT
	030	563204	C		1	CAM RIGHT
	040	563202	C		1	COUNTER CAM
300ml						
	F000	**C- 243776-0304**				**Curve Shaft, Ass'y**
	010	565190	C		2	MAIN CAM
	020	565192	C		1	CAM LEFT
	030	565193	C		1	CAM RIGHT
	040	565191	C		1	COUNTER CAM
1000ml HiFin						
	F000	**C- 243776-0305**				**Curve Shaft, Ass'y**
	010	565130	C		2	MAIN CAM
	020	565132	C		1	CAM LEFT
	030	565133	C		1	CAM RIGHT
	040	565131	C		1	COUNTER CAM
1055ml not to be Ordered						
	F000	**C- 243776-0306**				**Curve Shaft, Ass'y**
	010	476284	C		2	MAIN CAM
	020	476286	C		1	CAM LEFT
	030	476287	C		1	CAM RIGHT
	040	476285	C		1	COUNTER CAM
1136ml						
	F000	**C- 243776-0307**				**Curve Shaft, Ass'y**
	010	547560	C		2	MAIN CAM
	020	561575	C		1	CAM LEFT
	030	561576	C		1	CAM RIGHT
	040	551826	C		1	COUNTER CAM

From	Pos	Part No	SP	UN	Qty	Description
Common Parts						
	050	23458	-		1	SHAFT
	060	239533	-		1	DRUM
	070	239534	-		1	FLANGE
	080	239535	-		1	FLANGE
	090	239536	-		1	GEAR WHEEL
	100	243016	-		1	GEARING
	110	107062	-		1	LID
	120	246982	-		1	PROTRACTOR
	140	23462	-		1	SPACER RING
	160	90091-0029	-		3	SEAL RING
	170	312111-0374	-		8	SCREW MC6S6X30FZB
	180	312111-0492	-		4	SCREW MC6S10X22FZB
	190	312111-0497	-		24	SCREW MC6S10X35FZB
	200	312111-0499	-		8	SCREW MC6S10X40FZB
	210	312111-0501	-		16	SCREW MC6S10X50FZB
	220	312111-0504	-		8	SCREW MC6S10X65 8.8FZB
	230	312111-0506	-		8	SCREW MC6S10X75FZB
	240	312121-0285	-		10	SLOTTED HEMCS4X6FZB
	260	315221-0221	-		1	SEAL RING CB70X90X10
	270	315401-0153	-		8	WASHER FBH6,1FZB
	280	315401-0173	-		68	WASHER FBH10,2FZB
	290	321309-0114	-		2	BALL BEARISKF6214
	300	344502-0026	-		1	NIPPLE L AHKR1/8"
	310	344502-0066	-		1	NIPPLE L CHKR1/8"

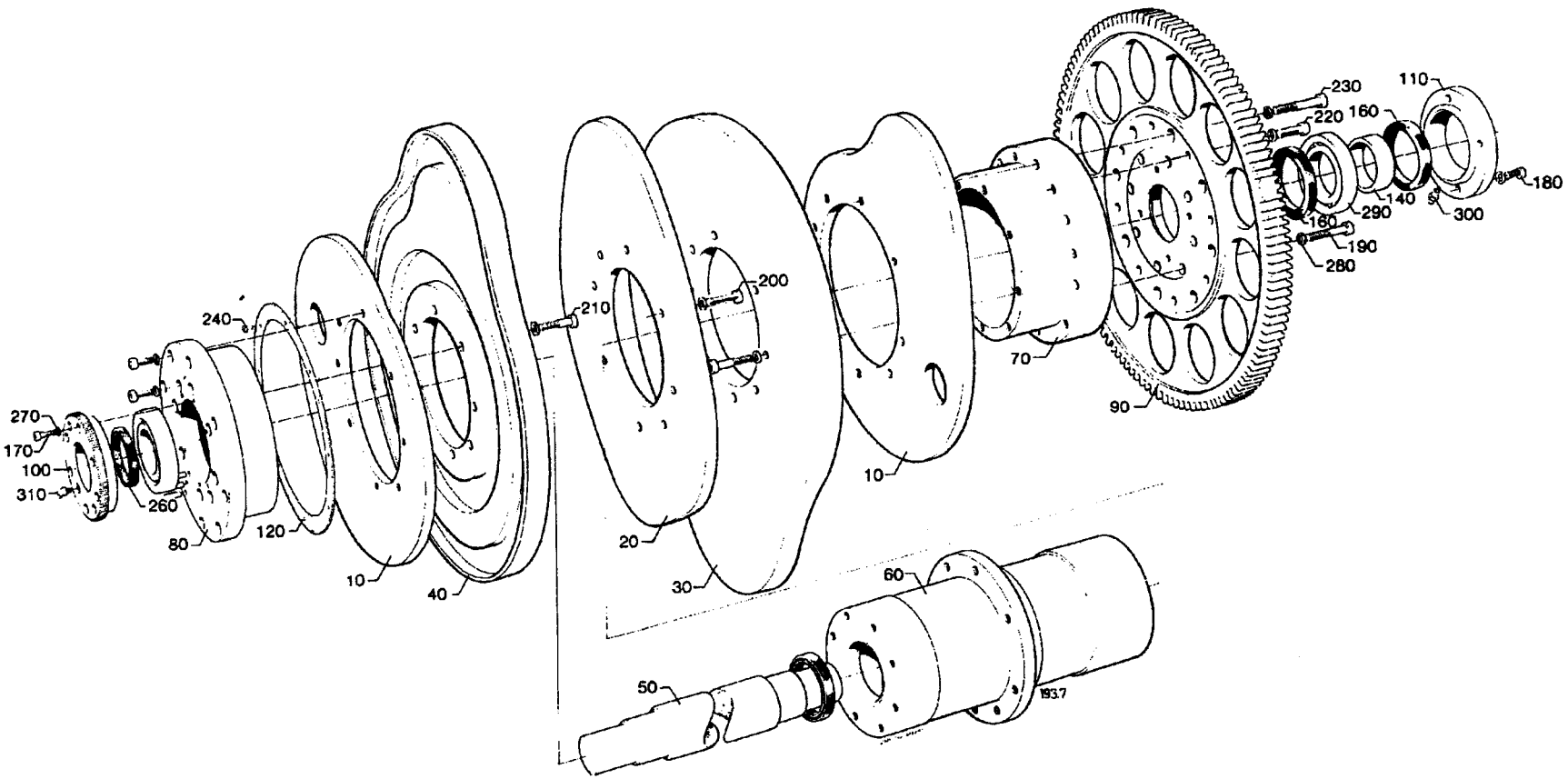

26698601.TIF
266986-1
AM

From	Pos	Part No	SP	UN	Qty	Description
1000ml LoFin						
	F000	**C- 266986-0501**				**Curve Shaft, Ass'y**
	010	530529	C		2	MAIN CAM
	020	530532	C		1	COUNTER CAM
	030	560391	C		1	CAM LEFT
	040	560392	C		1	CAM RIGHT
568ml						
	F000	**C- 266986-0502**				**Curve Shaft, Ass'y**
	010	539307	C		2	MAIN CAM
	020	484559	C		1	COUNTER CAM
	030	563645	C		1	CAM LEFT
	040	563646	C		1	CAM RIGHT
500ml						
	F000	**C- 266986-0503**				**Curve Shaft, Ass'y**
	010	283157	C		2	MAIN CAM
	020	283160	C		1	COUNTER CAM
	030	563728	C		1	CAM LEFT
	040	563729	C		1	CAM RIGHT
1000ml HiFin						
	F000	**C- 266986-0504**				**Curve Shaft, Ass'y**
	010	540270	C		2	MAIN CAM
	020	549928	C		1	COUNTER CAM
	030	564524	C		1	CAM LEFT
	040	564525	C		1	CAM RIGHT
750ml						
	F000	**C- 266986-0505**				**Curve Shaft, Ass'y**
	010	565668	C		2	MAIN CAM
	020	532097	C		1	COUNTER CAM
	030	564526	C		1	CAM LEFT
	040	564527	C		1	CAM RIGHT
500ml Slim						
	F000	**C- 266986-0506**				**Curve Shaft, Ass'y**
	010	532032	C		2	MAIN CAM
	020	532033	C		1	COUNTER CAM
	030	564621	C		1	CAM LEFT
	040	564622	C		1	CAM RIGHT
375ml						
	F000	**C- 266986-0507**				**Curve Shaft, Ass'y**
	010	449716	C		2	MAIN CAM
	020	449719	C		1	COUNTER CAM
	030	564528	C		1	CAM LEFT
	040	564529	C		1	CAM RIGHT
300ml						
	F000	**C- 266986-0508**				**Curve Shaft, Ass'y**
	010	449720	C		2	MAIN CAM
	020	449723	C		1	COUNTER CAM
	030	564517	C		1	CAM LEFT
	040	564518	C		1	CAM RIGHT
355ml						
	F000	**C- 266986-0509**				**Curve Shaft, Ass'y**
	010	551907	C		2	MAIN CAM
	020	551910	C		1	COUNTER CAM
	030	564623	C		1	CAM LEFT
	040	564624	C		1	CAM RIGHT
1055ml						
	F000	**C- 266986-0510**				**Curve Shaft, Ass'y**
	010	533961	C		2	MAIN CAM
	020	533962	C		1	COUNTER CAM
	030	564625	C		1	CAM LEFT
	040	564626	C		1	CAM RIGHT
7500ml Slim						
	F000	**C- 266986-0511**				**Curve Shaft, Ass'y**
	010	545101	C		2	MAIN CAM
	020	551825	C		1	COUNTER CAM
	030	564933	C		1	CAM LEFT
	040	564934	C		1	CAM RIGHT
1000ml Slim						
	F000	**C- 266986-0512**				**Curve Shaft, Ass'y**
	010	569049	C		2	MAIN CAM
	020	569050	C		1	COUNTER CAM
	030	569051	C		1	CURVE
	040	569052	C		1	CURVE
Common Parts						
	050	23458	-		1	SHAFT
	060	239533	-		1	DRUM
	070	239534	-		1	FLANGE
	080	239535	-		1	FLANGE
	090	239536	C		1	GEAR WHEEL
	100	243016	C		1	GEARING
	110	107062	-		1	LID
	120	246982	-		1	PROTRACTOR
	140	23462	-		1	SPACER RING
	160	90091-0029	S		3	SEAL RING
	170	312111-0374	-		8	SCREW MC6S6X30FZB
	180	312111-0492	-		4	SCREW MC6S10X22FZB
	190	312111-0497	-		24	SCREW MC6S10X35FZB
	200	312111-0499	-		8	SCREW MC6S10X40FZB
	210	312111-0501	-		16	SCREW MC6S10X50FZB
	220	312111-0504	-		8	SCREW MC6S10X65 8.8FZB
	230	312111-0506	-		8	SCREW MC6S10X75FZB

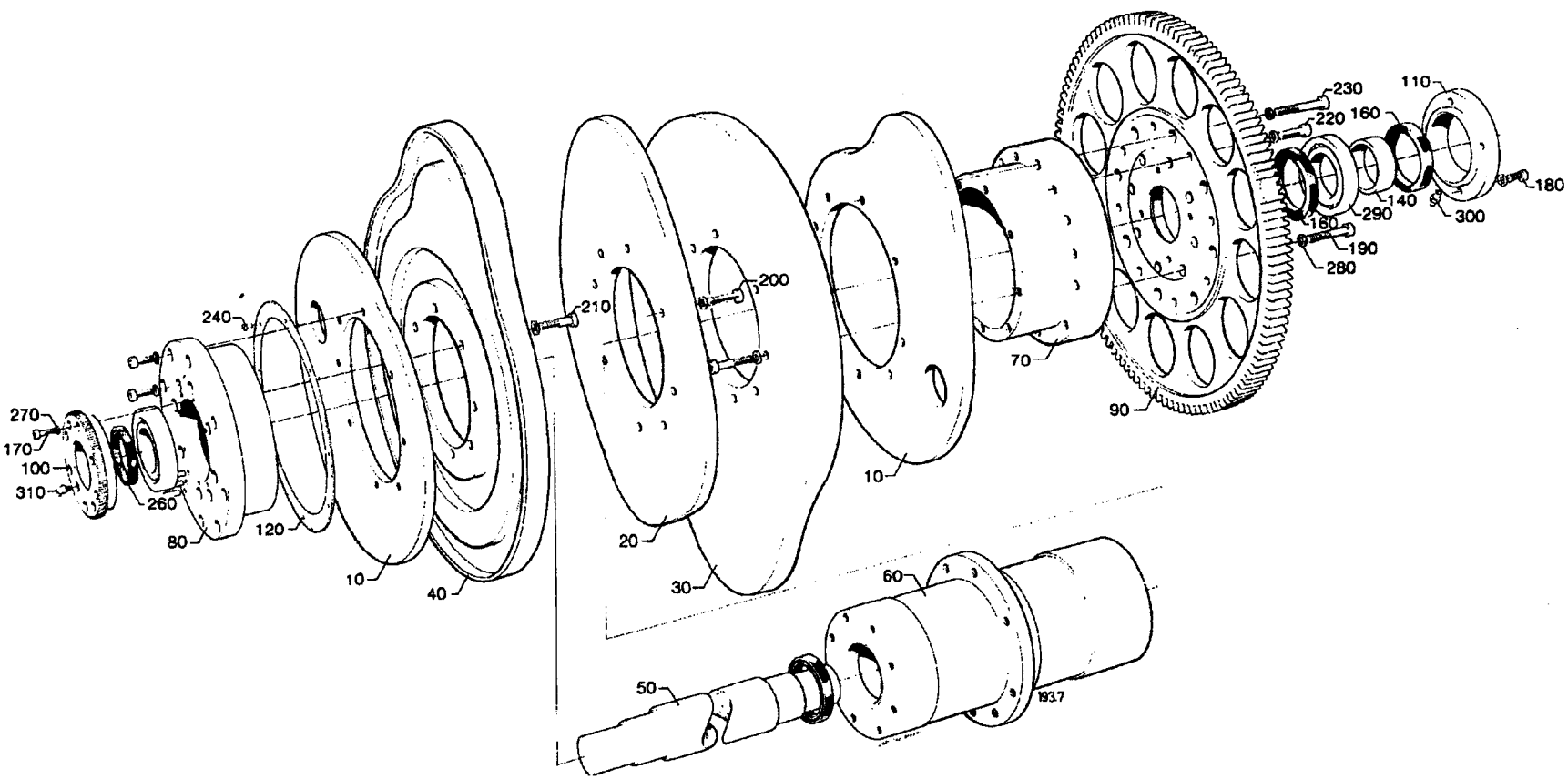

26698601.TIF
266986-1
AM

From	Pos	Part No	SP	UN	Qty	Description
	240	312121-0285	-		10	SLOTTED HEMCS4X6FZB
	260	315221-0221	S		1	SEAL RING CB70X90X10
	270	315401-0153	-		8	WASHER FBH6,1FZB
	280	315401-0173	-		68	WASHER FBH10,2FZB
	290	321309-0114	S		2	BALL BEARISKF6214
	300	344502-0026	-		1	NIPPLE L AHKR1/8"
	310	344502-0066	-		1	NIPPLE L CHKR1/8"

From	Pos	Part No	SP	UN	Qty	Description

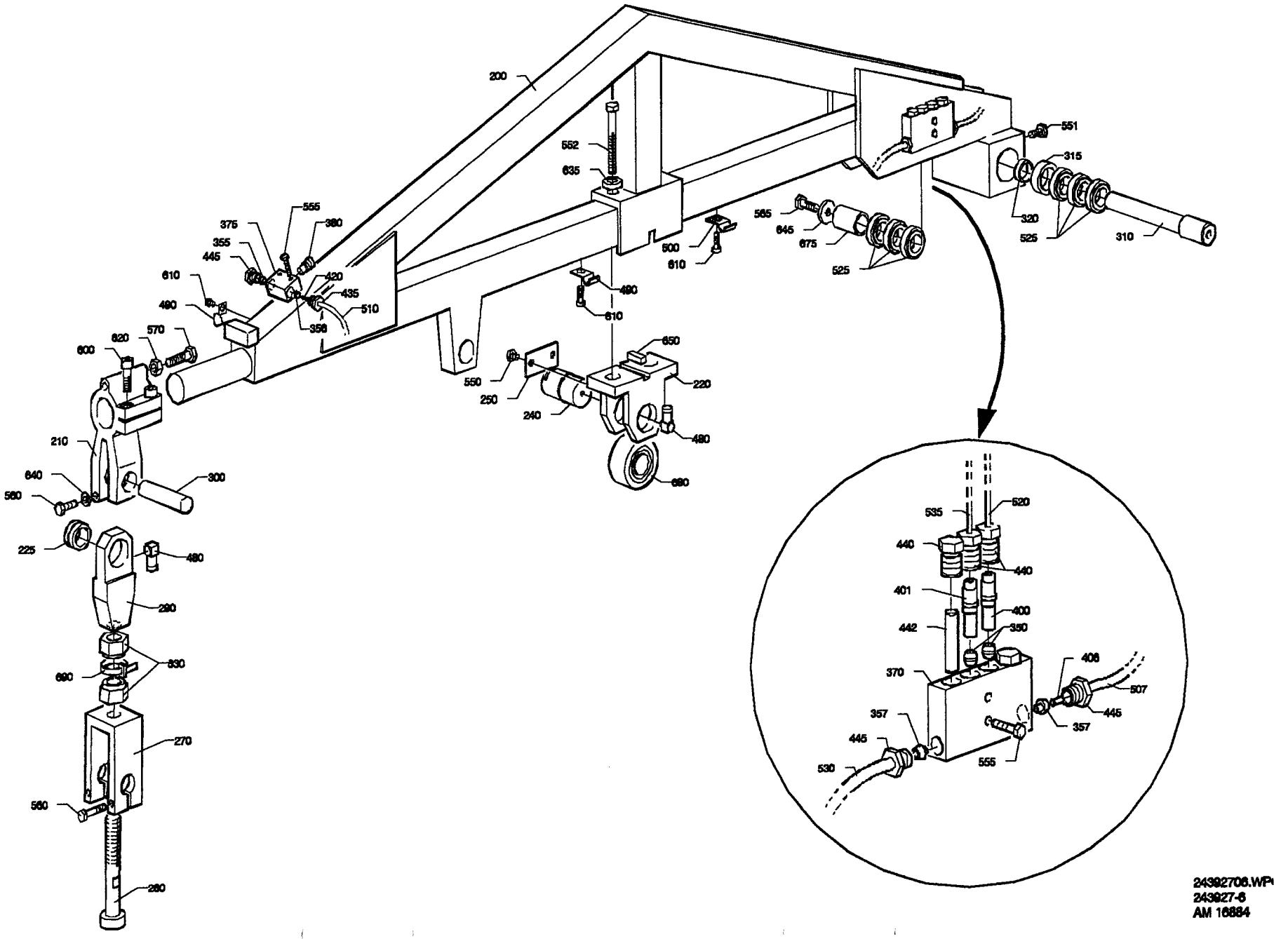

24392706.WP
243927-6
AM 16884

From	Pos	Part No	SP	UN	Qty	Description
1000ml LoFin, 568ml, 500ml, 300ml, 750ml, IH 750ml Slim IH, 375ml IH, 355ml IH						
	F000	**C- 243927-0601**				**Arm, Ass'y**
	220	243928	C		1	BRACKET
1000ml HIFin, 1055ml, 1136ml TPC, 1000ml Slim IH						
	F000	**C- 243927-0602**				**Arm, Ass'y**
	220	279466	C		1	BRACKET
Common Parts						
	200	530708	-		1	ARM
	210	G- 35827	C		1	BRACKET
	225	23270	S		1	BUSHING
	240	243930	S		1	SHAFT
	250	243931	-		1	SECURING PLATE
	260	246787	S		1	SCREW
	270	246790	C		1	LINK
	290	251561	C		1	LINK
	300	251562	S		1	SHAFT
	310	560618	-		1	SHAFT
	315	560619	-		1	RING
	320	560620	-		1	SLEEVE
	350	90028-0020	-		3	CONE
	355	90028-0022	-		1	CONE
	356	90028-0024	-		1	CONE
	357	90028-0025	-		2	CONE
	370	90032-0039	-		1	BLOCK
	375	90032-0043	-		1	JUNKTION BLOCK
	380	90087-0019	-		1	PLUG
	400	90092-0053	S		2	VALVE
	401	90092-0054	S		1	VALVE
	406	90134-0030	-		1	SLEEVE
	420	90134-0031	-		1	SLEEVE
	435	90134-0038	-		1	BUSHING
	440	90134-0039	-		4	BUSHING
	442	90134-0052	-		1	PLUG
	445	90134-0055	-		3	BUSHING
	480	90134-0058	-		2	BANJO CONNECTION
	490	90165-0003	-		4	CLIP
	500	90165-0005	-		6	CLIP
	507	90166-0108	P	MM	2700	HOSE
	510	90166-0109	P	MM	2700	HOSE
	520	90166-0143	P	MM	2000	HOSE
	525	90240-0078	S		6	RICTION BEARING
	530	90266-0006	-	MM	1500	TUBE
	535	90266-0019	P	MM	1000	PIPE
	550	312101-0362	-		2	SCREW M6S6X8FZB
	551	312101-0368	-		1	SCREW M6S6X16FZB
	552	312101-0465	-		2	SCREW M6S8X70FZB
	555	312101-0295	-		4	SCREW M6S4X20FZB
	560	312105-0374	-		3	SCREW M6S6X30RFR
	565	312105-0453	-		1	SCREW M6S8X25RFR
	570	312109-0463	-		1	SCREW
	600	312115-0453	-		2	SCREW 8X25 A4 80
	610	312121-0285	-		10	SLOTTED HEMCS4X6FZB
	620	312605-0318	-		1	NUT M6M8RFR
	630	312811-0324	-		2	LOCK NUT M16RFR
	635	315101-0165	-		2	WASHER BRB8,4X16FZB
	640	315105-0153	-		1	WASHER BRB6,4X12RFR
	645	315121-0165	-		1	WASHER TBRSB8,4X26FZB
	650	315701-0270	-		1	FLAT WEDGE8X7X40
	675	321530-0303	-		1	INNER RINGIR20X25X38,5
	680	321576-0360	P		1	SUPPORT RONUTR30
	690	352113-0101	-		1	RIBBON CLA

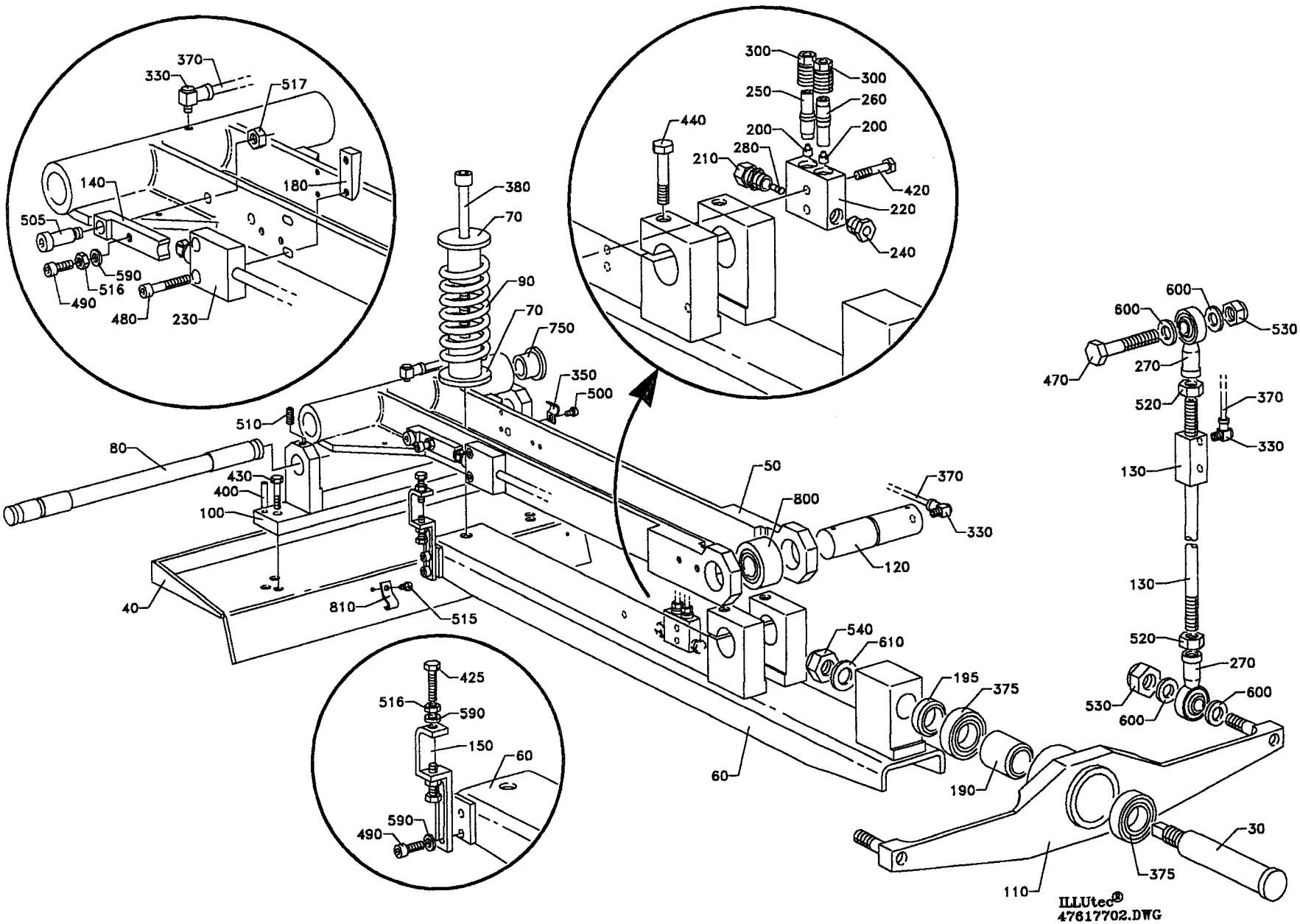
370
330
517
140
180
505
590
516
490
480
230
300
300
250
260
200
200
280
210
440
420
220
240
380
70
90
70
750
350
500
510
80
430
400
100
50
800
370
330
120
40
810
515
540
610
195
375
60
190
425
516
590
150
60
590
490
600
600
530
470
270
520
370
330
130
130
520
270
530
600
600
30
375
110
ILLUtec®
47617702.DWG

From	Pos	Part No	SP	UN	Qty	Description
	F000	**C- 476177-0201**				**Hold-Down Device, Ass'y**
	030	560418	S		1	SHAFT
	040	279969	-		1	DRIP PLATE
	050	450670	C		1	ARM
	060	567033	C		1	ARM
	070	239383	S		2	SLEEVE
	080	563212	-		1	SHAFT
	090	243971	S		1	SPRING
	100	246948	-		1	BRACKET
	110	560417	C		1	ROCKER ARM
	120	434062	S		1	SHAFT
	130	434098	C		2	STRUT
	140	567702	-		1	CURVE
	150	567703	-		1	LINK
	180	527648	-		2	WASHER
	190	568286	-		1	SLEEVE
	195	568287	-		1	RING
	200	90028-0020	P		2	CONE
	210	90030-0162	P		1	CONNECTION
	220	90032-0038	-		1	BLOCK
	230	90044-0094	-		1	LIMIT SWITCH
	240	90087-0019	-		1	PLUG
	250	90092-0052	S		1	VALVE
	260	90092-0053	S		1	VALVE
	270	90115-0133	S		4	JOINT
	280	90134-0030	-		1	SLEEVE
	300	90134-0039	-		2	BUSHING
	330	90134-0058	-		6	BANJO CONNECTION
	350	90165-0022	-		1	CLIP
	370	90166-0143	P	MM	1000	HOSE
	375	90214-0163	S		2	BALL BEARING
	380	90287-0136	S		1	SCREW
	400	311303-0356	-		2	SLOTTED PIRPB6X30FZB
	420	312101-0295	-		2	SCREW M6S4X20FZB
	425	312101-0372	-		2	SCREW M6S6X25FZB
	430	312101-0453	-		3	SCREW M6S8X25FZB
	440	312101-0459	-		2	SCREW M6S8X40FZB
	470	312101-0546	-		2	SCREW M6S12X70FZB
	480	312111-0335	-		2	SCREW MC6S5X30FZB
	490	312111-0368	-		3	SCREW MC6S6X16FZB
	500	312121-0285	-		1	SLOTTED HEMCS4X6FZB
	505	312180-0489	-		1	REAMED BOL
	510	312316-0327	-		1	STOP SCREW SK6SS5X12FZB
	515	312503-0275	-		2	DRIVE SCRERXKB6X6,5FZB
	516	312601-0316	-		3	NUT M6M6FZB
	520	312601-0322	-		4	NUT M6M12FZB
	530	312810-0322	-		4	LOCK NUT 12FZB
	540	312810-0324	-		1	LOCK NUT 16FZB
	590	315101-0153	-		5	WASHER BRB6,4X12FZB
	600	315101-0178	-		8	WASHER BRB13X24FZB
	610	315101-0186	-		1	WASHER BRB17X30FZB
	750	321101-0233	S		2	FLANGE BUS 20F7X20
	800	321576-0360	P		1	SUPPORT RONUTR30
	810	352110-0101	-		2	CRAMP TK 7-10

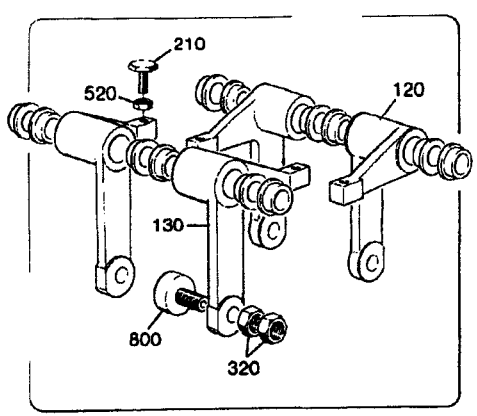

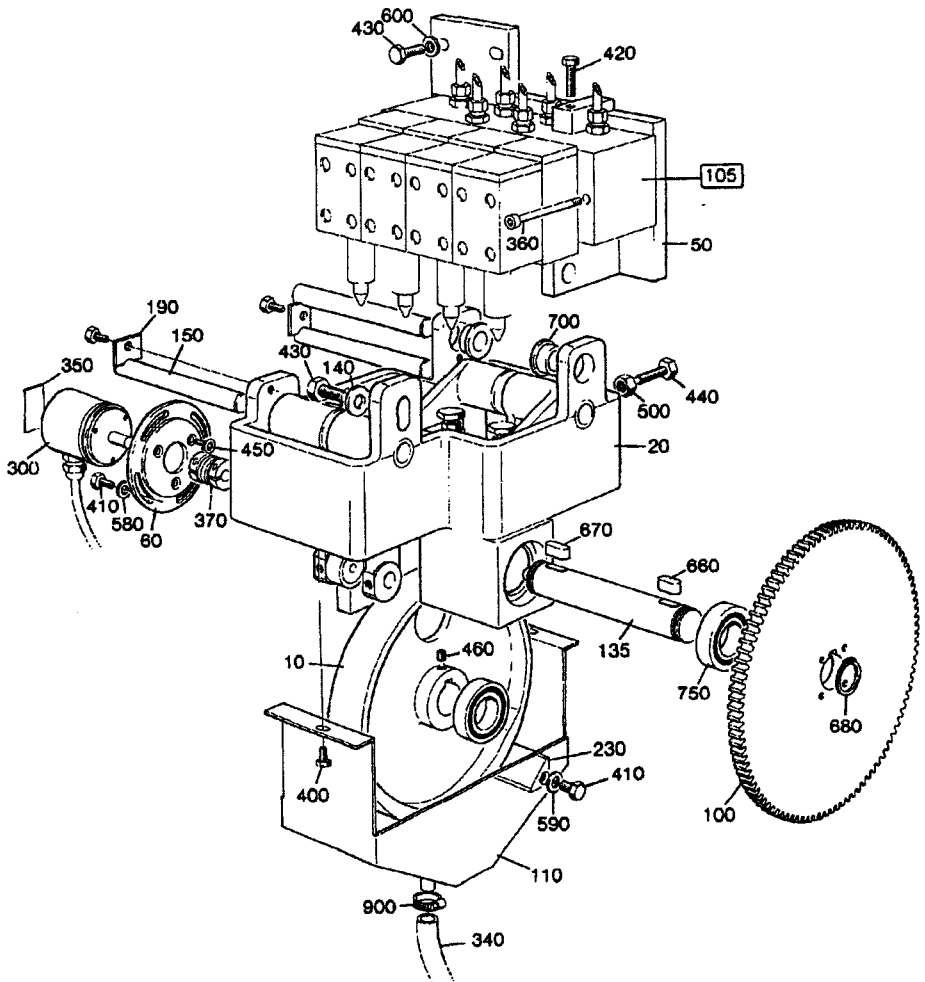

43466902.TIF
434669-2
AM

From	Pos	Part No	SP	UN	Qty	Description
	F000	**C- 434669-0301**				**Impulse Transmitter TB/8, Ass'y**
	F000	**C- 434669-0302**				**Impulse Transmitter TBA/8, Ass'y**
	F105	**C- 273728-020V**	-		1	**VALVE GROUP**
	010	556579	C		1	CURVE TBA/8
	010	551336	C		1	CURVE TB/8
	020	G- 292473	-		1	CANTILEVER
	050	292472	-		1	HOLDER
	060	542063	C		1	FLANGE
	100	243017	C		1	GEAR WHEEL
	110	543476	-		1	TROUGH
	120	G- 297091	-		2	ARM
	130	G- 297092	-		2	ARM
	135	540949	C		1	SHAFT
	140	28036	-		1	WASHER
	150	292477	C		3	SHAFT
	190	292482	-		2	WASHER
	210	479354	C		4	SCREW
	230	479753	C		1	STRIPPER
	300	90061-0018	C		1	ANGLE ENCODER
	320	90099-0015	-		8	NUT
	340	90166-0113	-	MM	700	HOSE
	350	90194-0039	-		1	LABEL
	360	90287-0073	-		2	SCREW
	370	90355-0031	C		1	FLEXIBLE COUPLING
	400	312101-0325	-		2	SCREW M6S5X10FZB
	410	312101-0366	-		6	SCREW M6S6X12FZB
	420	312101-0372	-		1	SCREW M6S6X25FZB
	430	312101-0453	-		5	SCREW M6S8X25FZB
	440	312104-0460	-		1	SCREW M6S8X45H8.8FZB
	450	312155-0289	-		3	SCREW MF6S4X10RFR
	460	312318-0360	-		2	STOP SCREW SK6SS6X6RFR
	500	312601-0318	-		1	NUT M6M8FZB
	520	312601-0316	-		4	NUT M6M6FZB
	580	315105-0153	-		2	WASHER BRB6,4X12RFR
	590	315105-0156	-		2	WASHER BRB6,7X14RFR
	600	315101-0165	-		4	WASHER BRB8,4X16FZB
	660	315701-0262	-		1	FLAT WEDGE8X7X18
	670	315701-0263	-		1	FLAT WEDGE8X7X20
	680	315750-0119	S		2	CIRCLIP SGA25
	700	321111-0240	S		14	FLANGE BUS 16E7X12
	750	321308-0205	S		2	BALL BEARISKF6005-2RS
	800	321580-0165	P		4	CURVE ROLLKR30
	900	342991-0101	-		1	HOSE CLIP 11-17MMRFR

From	Pos	Part No	SP	UN	Qty	Description

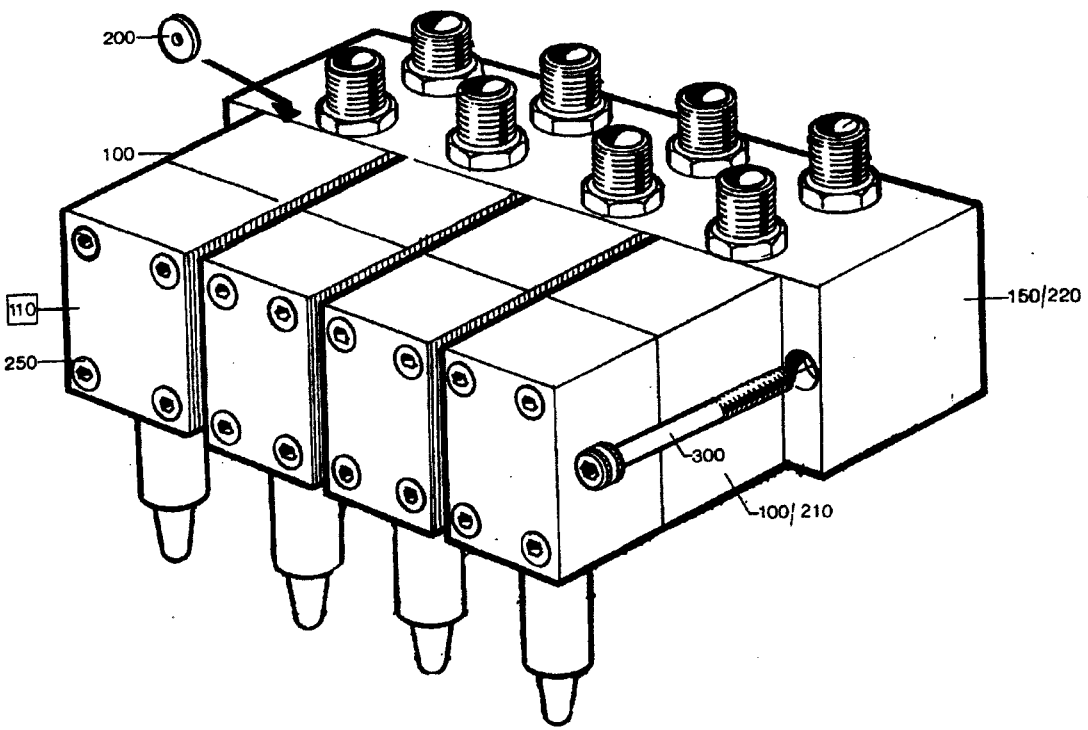

27372802.TIF
273728-2
AM 16995

From	Pos	Part No	SP	UN	Qty	Description
IH, 1136ml-500ml TPC						
	F000	**C- 273728-0201**				**Valve Group, Ass'y**
	100	90201-0010	C		4	VALVE
	150	90201-0300	C		1	PLATE
	200	90201-0302	C		2	WASHER
300ml-200ml TPC						
	F000	**C- 273728-0202**				**Valve Group, Ass'y**
	100	90201-0010	C		2	VALVE
		90201-0300	R		0	* PLATE
		90201-0301	R		0	* SPRING
		90201-0302	R		0	* WASHER
		90201-0303	R		0	* SPARE PARTS KIT
	210	90201-0311	C		2	PLATE
	220	90201-0310	C		1	BLOCK
Common Parts						
	F110	**C- 442402-010V**	**-**		**4**	**VALVE**
	250	90201-0303	C		4	SPARE PARTS KIT
	300	90287-0073	-		2	SCREW

From	Pos	Part No	SP	UN	Qty	Description

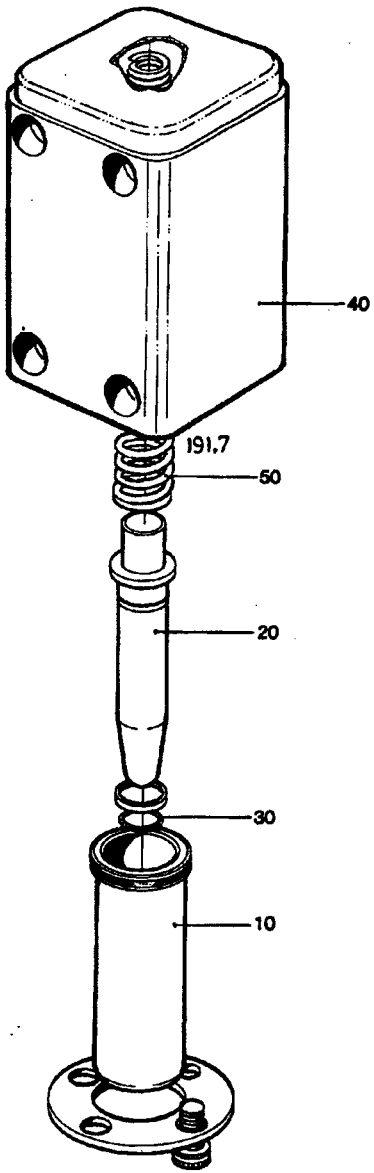

44240201.TIF
442402-1
AM

From	Pos	Part No	SP	UN	Qty	Description
	F000	**C- 442402-0101**				**Valve, Ass'y**
	010	276235	C		1	CYLINDER
	020	276204	C		1	PLUNGER
	030	90020-0026	S		1	SLEEVER
	040	90201-0016	C		1	VALVE
		90020-0031	S		1	* SLEEVE
		90201-0312	R		0	* COIL
		90201-0314	S		1	* CYLINDER
		90201-0315	S		1	* PLUNGER
		90201-0316	S		1	* SPRING
	050	90201-0301	S		1	SPRING

From	Pos	Part No	SP	UN	Qty	Description

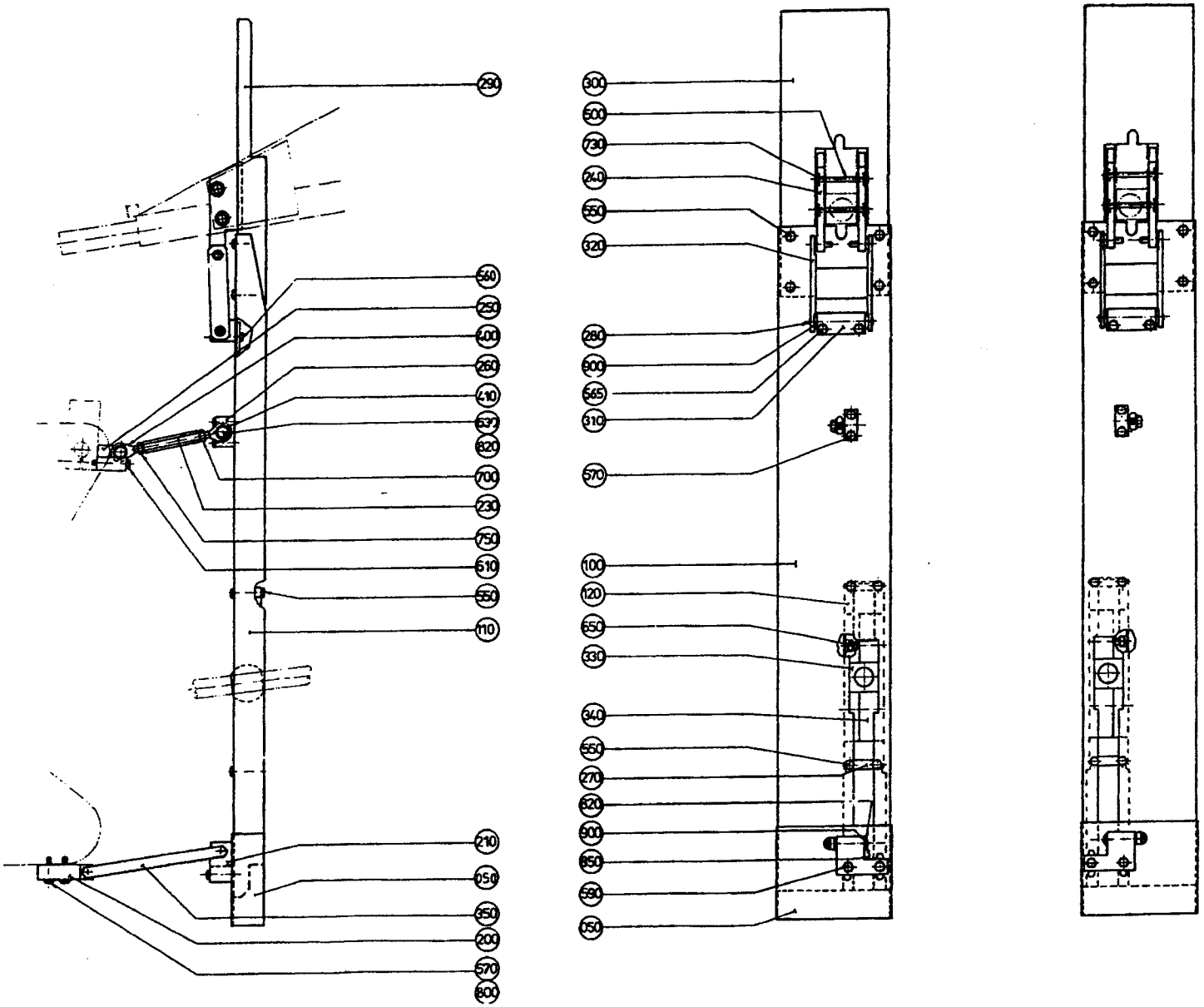

29207102.TIF
292071-2
AM 19158

From	Pos	Part No	SP	UN Qty	Description
	F000	**C- 292071-0201**			**Splash Protection, Ass'y**
	F000	**C- 292071-0201**			**Splash Protection, Ass'y**
	050	436580	C	1	COVERING PLATE
	100	279983	C	1	SPLASH PROTECTION LEFT HAND
	110	279984	C	1	SPLASH PROTECTION RIGHT HAND
	120	279985	C	2	BRACKET
	200	555888	-	2	BRACKET
	210	279987	-	2	BRACKET
	230	279989	C	2	SPACER
	240	279991	C	4	BRACKET
	250	279992	-	2	BRACKET
	260	279993	-	2	BRACKET
	270	279997	-	4	BRACKET
	280	279998	S	2	SHAFT
	290	279999	C	1	COVERING PLATE
	300	282511	C	1	COVERING PLATE
	310	282512	-	2	BRACKET
	320	282513	C	2	BRACKET
	330	283774	S	4	BEARING
	340	283775	S	4	SLIDE
	350	436672	C	2	LINK
	400	90115-0107	-	2	JOINT
	410	90115-0106	-	2	JOINT
	500	312101-0383	-	4	SCREW M6S6X65FZB
	550	312105-0364	-	24	SCREW M6S6X10RFR
	560	312105-0366	-	8	SCREW M6S6X12RFR
	565	312105-0370	-	4	SCREW M6S6X20RFR
	570	312105-0374	-	4	SCREW M6S6X30RFR
	590	312105-0376	-	4	SCREW M6S6X35RFR
	610	312105-0379	-	4	SCREW M6S6X45RFR
	630	312105-0453	-	4	SCREW M6S8X25RFR
	650	312115-0376	-	4	SCREW 6X35 A4 80
	700	312605-0318	-	2	NUT M6M8RFR
	730	312811-0316	-	4	LOCK NUT M6RFR
	750	312902-0318	-	2	NUT M6M8VRFR
	800	315105-0153	-	4	WASHER BRB6,4X12RFR
	820	315105-0165	-	8	WASHER BRB8,4X16RFR
	850	315755-0109	S	4	LOCKING WAE 7RFR
	900	321111-0095	S	16	FLANGE BUS 8E7X6

From	Pos	Part No	SP	UN Qty	Description

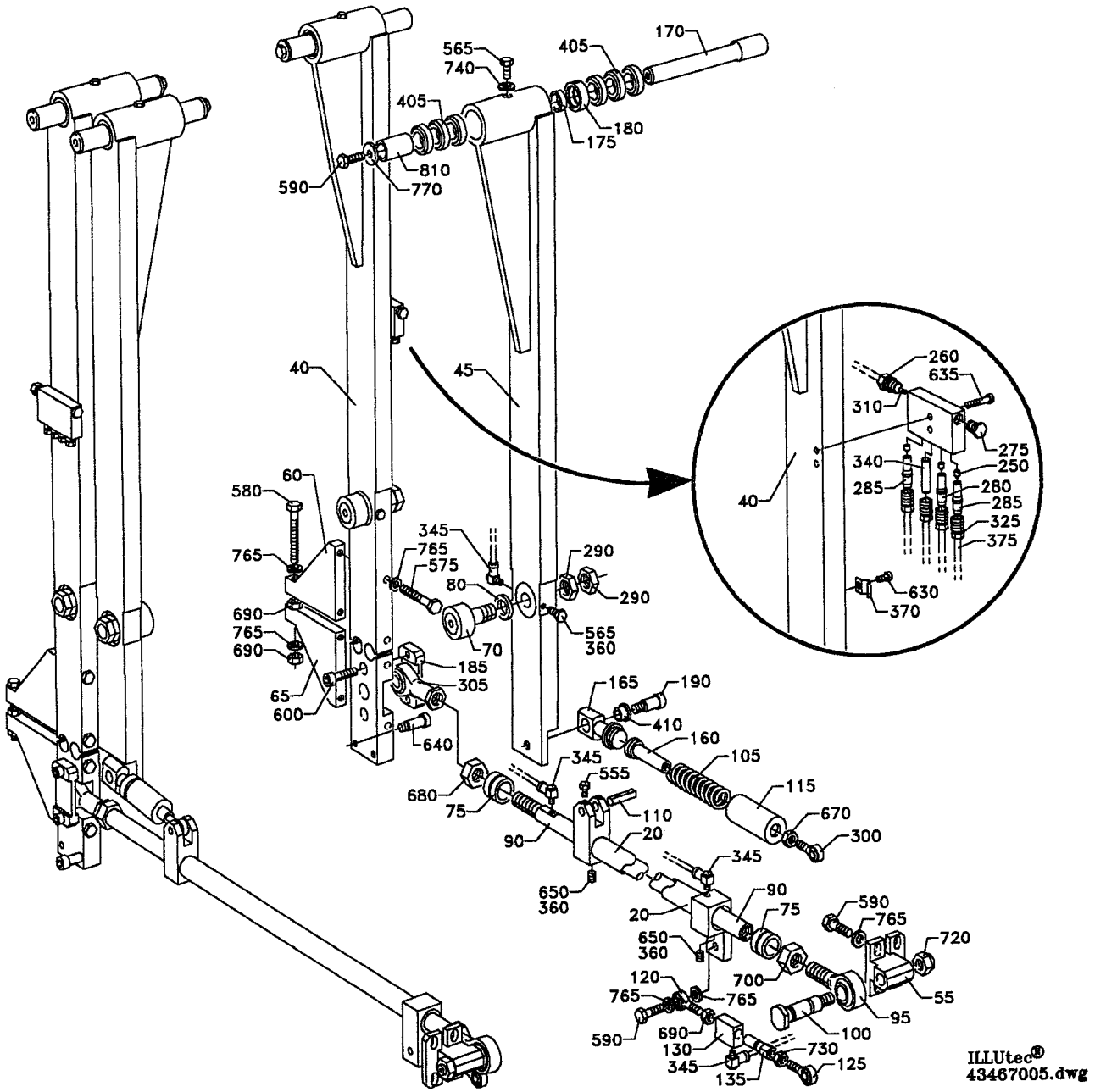
565
740
405
170
405
180
175
590
810
770
40
45
60
580
765
345
765
575
80
290
290
690
765
690
565
360
70
185
305
65
600
640
165
190
410
160
105
115
670
300
680
75
345
555
110
90
20
345
650
360
90
75
590
765
720
650
360
700
120
765
765
55
95
590
690
130
345
100
730
125
135
260
635
310
275
340
250
285
280
285
325
375
40
630
370
ILLUtec®
43467005.dwg

From	Pos	Part No	SP	UN	Qty	Description
	F000	**C- 434670-0501**				**Link System, Ass'y**
	020	540335	C		2	LINK
	040	562746	-		2	ARM
	045	562747	-		2	ARM
	055	464363	C		2	HOLDER
	060	562748	-		2	BRACKET
	065	562749	-		2	BRACKET
	070	28334	P		4	CURVE ROLLER
	075	230462	S		4	BUSHING
	080	239538	-		4	WASHER
	090	247119	C		2	ROD
	095	526904	S		2	LINK HEAD
	100	536703	S		2	SHAFT
	105	252707	C		2	SPRING
	110	255335	S		2	SHAFT
	115	255398	-		2	SLEEVE
	120	263313	S		2	LINK HEAD
	125	263314	S		2	LINK HEAD
	130	263328	-		2	SPACER
	135	263329	-		2	NUT
	160	434142	C		2	PISTON
	165	434143	-		2	END SECTION
	170	560618	-		4	SHAFT
	175	560619	-		4	RING
	180	560620	-		4	SLEEVE
	185	562140	-		2	CAP
	190	563061	-		2	REAMED BOLT
	250	90028-0020	-		6	CONE
	260	90030-0162	-		2	CONNECTION
	270	90032-0039	-		2	BLOCK
	275	90087-0019	-		2	PLUG
	280	90092-0052	S		2	VALVE
	285	90092-0053	S		4	VALVE
	290	90099-0012	-		8	NUT
	300	90115-0122	S		2	JOINT
	305	90115-0067	S		2	JOINT
	310	90134-0030	-		2	SLEEVE
	325	90134-0039	-		8	BUSHING
	340	90134-0052	-		2	PLUG
	345	90134-0058	-		10	BANJO CONNECTION
	360	90157-0016	-	ML	X	LOCKING FLUID
	370	90165-0022	-		8	CLIP
	375	90166-0143	P	MM	2500	HOSE
	405	90240-0078	-		24	RICTION BEARING
	410	90240-0097	S		4	RICTION BEARING
	555	312101-0323	-		4	SCREW M6S5X8FZB
	565	312101-0366	-		8	SCREW M6S6X12FZB
	575	312101-0465	-		8	SCREW M6S8X70FZB
	580	312104-0465	-		2	SCREW M6S8X70H8.8 FZB
	590	312105-0453	-		16	SCREW M6S8X25RFR
	600	312111-0455	-		4	SCREW MC6S8X30FZB
	630	312121-0287	-		8	SLOTTED HEMCS4X8FZB
	635	312141-0295	-		4	SLOTTED HEMFS4X20FZB
	640	312180-0489	-		2	REAMED BOL
	650	312316-0283	-		4	STOP SCREW SK6SS4X4FZB
	670	312621-0318	-		2	NUT ML6M8FZB
	680	312601-0324	-		2	NUT M6M16FZB
	690	312605-0318	-		6	NUT M6M8RFR
	700	312621-0324	-		2	NUT ML6M16FZB
	720	312811-0322	-		2	LOCK NUT M12RFR
	730	312902-0318	-		2	NUT M6M8VRFR
	740	315101-0153	-		4	WASHER BRB6,4X12FZB
	765	315105-0165	-		30	WASHER BRB8,4X16RFR
	770	315121-0165	-		4	WASHER TBRSB8,4X26FZB
	810	321530-0303	-		4	INNER RINGIR20X25X38,5

Tetra Pak

SPC section 648004

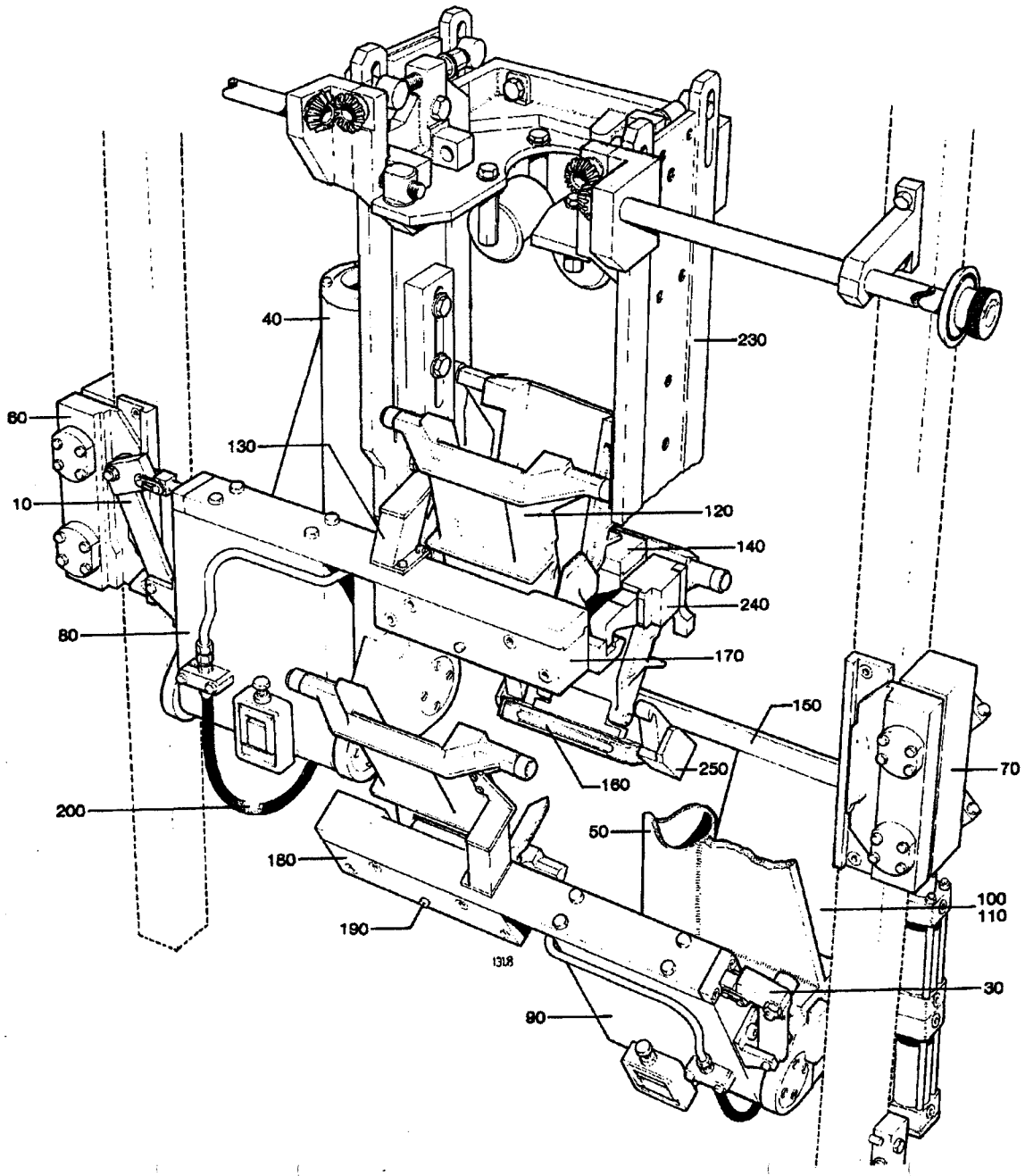

64800401.TIF
648004-1/2/3
AM

Code	Ass'y	Group No	Description	Page
04-F000	64800401	648004-090V	Jaw System	301
04-F010	27956402	279564-030V	Folding Device Left	303
	2664202	26642-020V	Carrier	305
04-F030	27956502	279565-030V	Folding Device Right	307
	2664202	26642-020V	Carrier	309
04-F040	24394202	243942-040V	Yoke	311
04-F050	24394202	243942-040V	Yoke	311
04-F060	24343404	243434-050V	Design Correction Device	313
	24343404	243434-050V	Design Correction Device	315
04-F070	24343504	243435-050V	Design Correction Device	317
	24343504	243435-050V	Design Correction Device	319
04-F060	26644604	266446-050V	Design Correction Device Left Hand	321
	26644604	266446-050V	Design Correction Device Left Hand	323
04-F070	26644704	266447-050V	Design Correction Device Right Hand	325
	26644704	266447-050V	Design Correction Device Right Hand	327
04-F080	24649905	246499-060V	Arm	329
04-F090	24649905	246499-060V	Arm	329
04-F100	24649804	246498-060V	Arm w. Shaft Pressure TPC	331
04-F110	24649804	246498-060V	Arm w. Shaft Pressure TPC	331
04-F100	54105201	541052-010V	Arm With Axle Pressure L	333
04-F110	54105301	541053-010V	Arm With Axle Pressure R	335
04-F120	24646810	246468-080V	Volume Flap	337
	24646810	246468-080V	Volume Flap	339
04-F130	24632701	246327-040V	Shock Absorber	341
	24632701	246327-040V	Shock Absorber	343
	24632701	246327-040V	Shock Absorber	345
04-F140	24718703	247187-050V	Carrier	347
04-F150	24718703	247187-055V	Carrier	349
04-F140	25941402	259414-040V	Carrier Pressure L IH	351
04-F150	25941502	259415-040V	Carrier Pressure R IH	353
04-F160	27356502	273565-030V	TPC Bar	355
04-F170	24633705	246337-050V	Cutting Jaw Left TPC	357
04-F180	24633805	246338-050V	Cutting Jaw Right TPC	359
04-F170	25783506	257835-030V	Cutting Jaw	361
	25783506	257835-030V	Cutting Jaw	363
04-F180	25783506	257835-035V	Cutting Jaw	365
	25783506	257835-035V	Cutting Jaw	367
04-F190	2509609	25096-070V	Knife Holder	369
04-F190	3296604	32966-040V	Knife Holder	371
04-F200	29405602	294056-020V	Transmission	373
04-F200	27913405	279134-050V	Transmission	375
04-F230	29360503	293605-050V	Volume Curve Piece	377
	29360503	293605-050V	Volume Curve Piece	379
	29360503	293605-050V	Volume Curve Piece	381
04-F240	24649708	246497-090V	Pressure Jaw Compl. Left TPC	383
04-F250	24649708	246497-095V	Pressure Jaw Compl.Right TPC	385
04-F240	25953412	259534-070V	Pressure Jaw	387
04-F250	25953412	259534-075V	Pressure Jaw	389
04-F270	247123	247123-060V	Spare Part Kit	391
04-F270	268614	268614-050V	Start-Up Kit	393
	268614	268614-050V	Start-Up Kit	395
04-F280	54118803	541188-020V	Bar Code	397

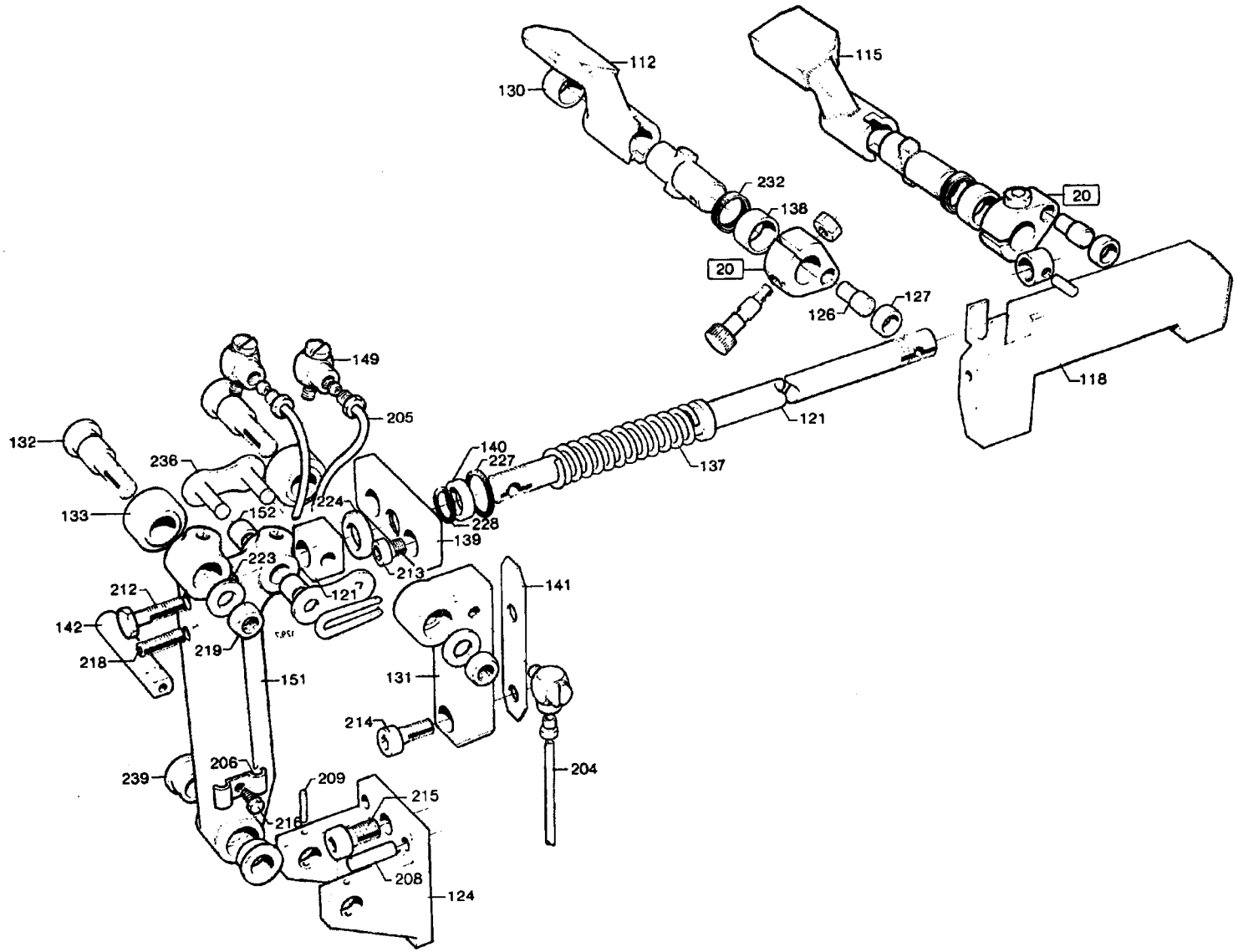

27956402.TIF
279564-2
AM

Last Alteration: AM 16885 91-11-16

Corresponding group: 279564-030V
Assembly Drawing: 279564-2

Issue: 930607

From	Pos	Part No	SP	UN	Qty	Description
1136ml 1055ml 1000ml 750ml 568ml 500ml						
	F000	**C- 279564-0301**				**Folding Device, Ass'y**
	112	G- 464311	S		1	FOLDING FLAP
	115	G- 464310	S		1	FOLDING FLAP
	118	G- 450505	S		1	CARRIER RULER LEFT
	121	32468	S		1	OPERATING ROD
284ml 250ml 236ml 200ml 189ml 180ml						
	F000	**C- 279564-0302**				**Folding Device, Ass'y**
	112	G- 36302	S		1	FOLDING FLAP
	115	G- 36301	S		1	FOLDING FLAP
	118	G- 458032	S		1	CARRIER RULER
	121	32494	S		1	OPERATING ROD
375ml 300ml						
	F000	**C- 279564-0303**				**Folding Device, Ass'y**
	112	G- 493711	S		1	FOLDING FLAP
	115	G- 493710	S		1	FOLDING FLAP
	118	G- 458038	S		1	CARRIER RULER
	121	32494	S		1	OPERATING ROD
500ml Slim 355ml						
	F000	**C- 279564-0304**				**Folding Device, Ass'y**
	112	G- 493711	S		1	FOLDING FLAP
	115	G- 493710	S		1	FOLDING FLAP
	118	G- 458030	S		1	CARRIER RULER
	121	32494	S		1	OPERATING ROD
750ml Slim						
	F000	**C- 279564-0305**				**Folding Device, Ass'y**
	112	G- 544315	S		1	FOLDING FLAP
	115	G- 544314	S		1	FOLDING FLAP
	118	G- 544319	S		1	CARRIER RULER
	121	32494	S		1	OPERATING ROD
1000ml Slim						
	F000	**C- 279564-0306**				**Folding Device, Ass'y**
	112	G- 569061	S		1	FOLDING FLAP
	115	G- 569060	S		1	FOLDING FLAP
	118	569062	S		1	CARRIER RULER
	121	32468	S		1	OPERATING ROD
Common Parts						
	F020	**CR- 26642-0201**	**-**		**2**	**CARRIER**
	124	23229	C		1	BRACKET
	126	22462	S		2	SHAFT
	127	22463	S		2	ROLL
	130	32463	S		2	BEARING
	131	G- 22473	S		1	ROLLER BRACKET
	132	276172	S		2	AXLE PIN
	133	276173	S		2	CURVE ROLLER

From	Pos	Part No	SP	UN	Qty	Description
	137	107000	S		1	SPRING
	138	33408	S		2	BEARING
	139	113653	S		1	BEARING PLATE
	140	113654	S		1	RING
	141	26423	S		2	LACE
	142	269366	S		1	DOWEL
	149	90134-0058	-		4	BANJO CONNECTION
	151	37175	S		1	LINK
	152	37258	S		2	BUSHING
	204	90266-0019	P	MM	400	PIPE
	205	90166-0143	P	MM	800	HOSE
	206	90165-0056	-		1	CLIP
	208	311103-0310	-		2	CYLINDRICACP M6 5X20 RFR
	209	90258-0001	-		1	HOLLOW PIN
	212	312105-0374	-		1	SCREW M6S6X30RFR
	213	312115-0366	-		2	SCREW 6X12 A4 80
	214	312115-0368	-		2	SCREW 6X16 A4 80
	215	312115-0449	-		2	SCREW 8X16 A4 80
	216	312125-0287	-		1	SLOTTED HEMCS4X8RFR
	218	312318-0370	-		1	STOP SCREW SK6SS6X20RFR
	219	312605-0318	-		2	NUT M6M8RFR
	223	315105-0165	-		2	WASHER BRB8,4X16RFR
	224	315115-0171	-		1	WASHER TBRB10X18RFR
	227	315202-0114	PU		1	O-RING 16,1X1,6
	228	315202-0208	PU		1	O-RING 9,3X2,4
	232	315230-0157	-		2	SEAL RING G12X16X3
	236	90288-0305	P		1	CONNECTION LINK
	239	321101-0163	S		2	FLANGE BUS 10F7X10

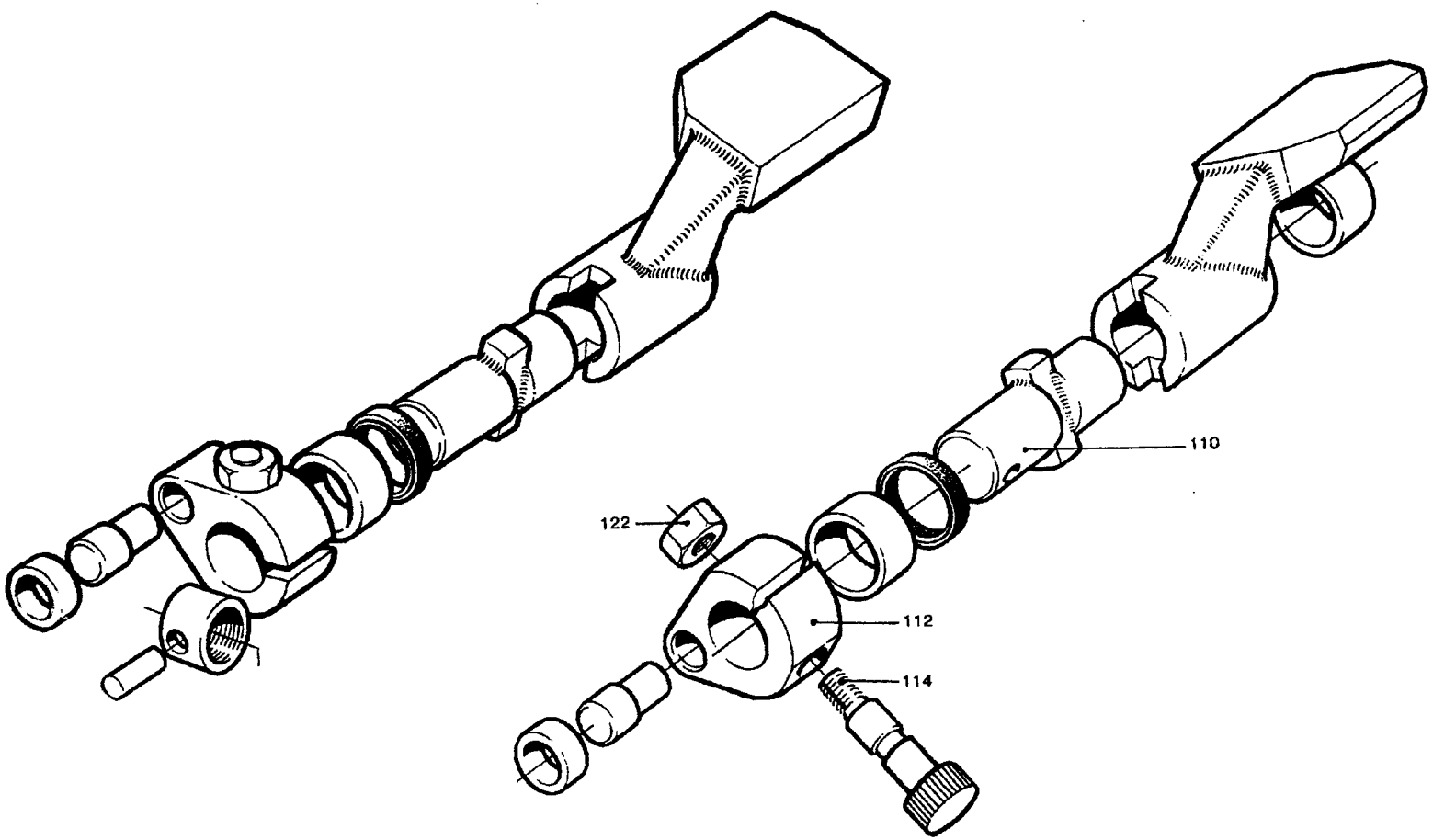

02664202.TIF
26642-2
AM

From	Pos	Part No	SP	UN	Qty	Description
	F000	**C- 26642-0201**				**Carrier, Ass'y**
	110	32462	S		1	SHAFT
	112	G- 25640	S		1	CARRIER
	114	25641	S		1	REAMED BOLT
	122	312605-0314	S		1	NUT M6M5RFR

From	Pos	Part No	SP	UN	Qty	Description

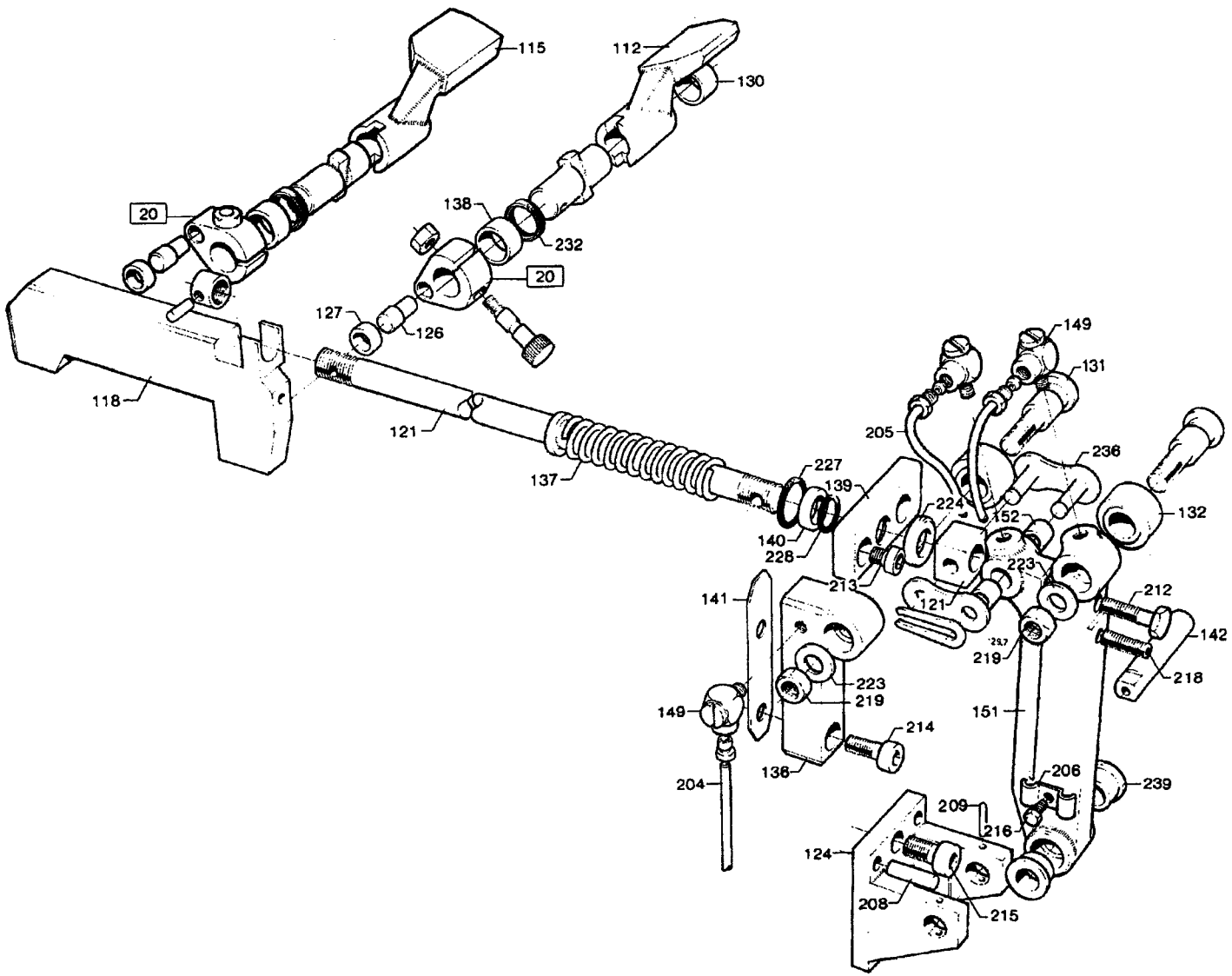

27956502.TIF
279565-2
AM

From	Pos	Part No	SP	UN	Qty	Description
1136ml 1055ml 1000ml 750ml 568ml 500ml						
	F000	**C- 279565-0301**				**Folding Device, Ass'y**
	112	G- 464311	S		1	FOLDING FLAP
	115	G- 464310	S		1	FOLDING FLAP
	118	G- 450506	S		1	CARRIER RULER
	121	32468	S		1	OPERATING ROD
284ml 250ml 236ml 200ml 1892 180ml						
	F000	**C- 279565-0302**				**Folding Device, Ass'y**
	112	G- 36302	S		1	FOLDING FLAP
	115	G- 36301	S		1	FOLDING FLAP
	118	G- 458033	S		1	CARRIER RULER
	121	32494	S		1	OPERATING ROD
375ml 300ml						
	F000	**C- 279565-0303**				**Folding Device, Ass'y**
	112	G- 493711	S		1	FOLDING FLAP
	115	G- 493710	S		1	FOLDING FLAP
	118	G- 458039	S		1	CARRIER RULER
	121	32494	S		1	OPERATING ROD
500ml Slim 0355ml						
	F000	**C- 279565-0304**				**Folding Device, Ass'y**
	112	G- 493711	S		1	FOLDING FLAP
	115	G- 493710	S		1	FOLDING FLAP
	118	G- 458031	S		1	CARRIER RULER
	121	32494	S		1	OPERATING ROD
750ml Slim						
	F000	**C- 279565-0305**				**Folding Device, Ass'y**
	112	G- 544315	S		1	FOLDING FLAP
	115	G- 544314	S		1	FOLDING FLAP
	118	G- 544320	S		1	CARRIER RULER
	121	32494	S		1	OPERATING ROD
1000ml Slim						
	F000	**C- 279565-0306**				**Folding Device, Ass'y**
	112	G- 569061	S		1	FOLDING FLAP
	115	G- 569060	S		1	FOLDING FLAP
	118	569063	S		1	CARRIER RULER
	121	32468	S		1	OPERATING ROD
Common Parts						
	F020	**CR- 26642-0201**	-		**2**	**CARRIER**
	124	23229	C		1	BRACKET
	126	22462	S		2	SHAFT
	127	22463	S		2	ROLL
	130	32463	S		2	BEARING
	131	276172	S		2	AXLE PIN
	132	276173	S		2	CURVE ROLLER
	136	23361	S		1	ROLLER BRACKET

From	Pos	Part No	SP	UN	Qty	Description
	137	107000	S		1	SPRING
	138	33408	S		2	BEARING
	139	113653	S		1	BEARING PLATE
	140	113654	S		1	RING
	141	26423	S		2	LACE
	142	269366	S		1	DOWEL
	149	90134-0058	-		4	BANJO CONNECTION
	151	37175	S		1	LINK
	152	37258	S		2	BUSHING
	204	90266-0019	P	MM	400	PIPE
	205	90166-0143	P	MM	800	HOSE
	206	90165-0056	-		1	CLIP
	208	311103-0310	-		2	CYLINDRICACP M6 5X20 RFR
	209	90258-0001	-		1	HOLLOW PIN
	212	312105-0374	-		1	SCREW M6S6X30RFR
	213	312115-0366	-		2	SCREW 6X12 A4 80
	214	312115-0368	-		2	SCREW 6X16 A4 80
	215	312115-0449	-		2	SCREW 8X16 A4 80
	216	312125-0287	-		1	SLOTTED HEMCS4X8RFR
	218	312318-0370	-		1	STOP SCREW SK6SS6X20RFR
	219	312605-0318	-		2	NUT M6M8RFR
	223	315105-0165	-		2	WASHER BRB8,4X16RFR
	224	315115-0171	-		1	WASHER TBRB10X18RFR
	227	315202-0114	PU		1	O-RING 16,1X1,6
	228	315202-0208	PU		1	O-RING 9,3X2,4
	232	315230-0157	-		2	SEAL RING G12X16X3
	236	90288-0305	P		1	CONNECTION LINK
	239	321101-0163	S		2	FLANGE BUS 10F7X10

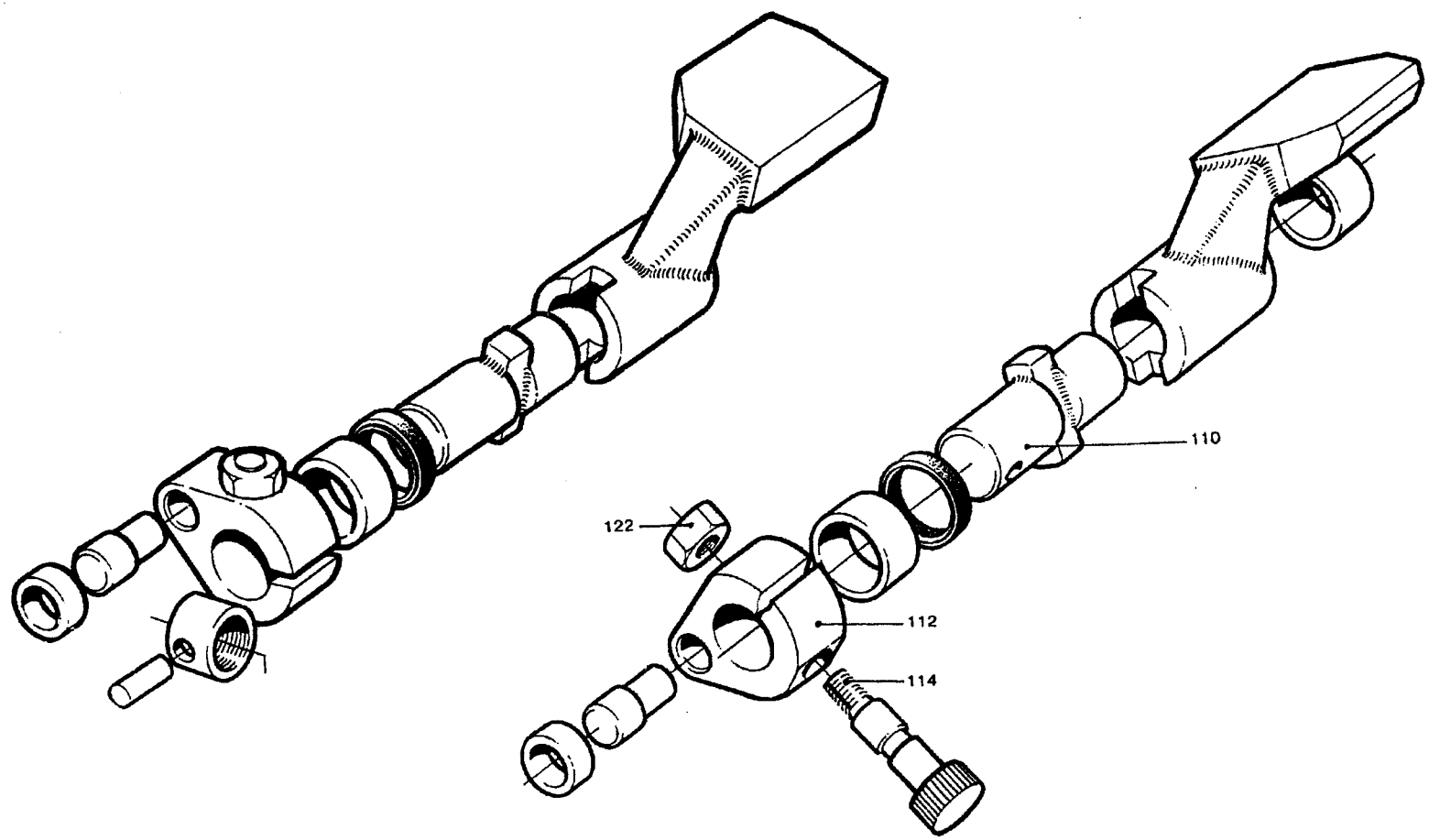

02664202.TIF
26642-2
AM

From	Pos	Part No	SP	UN	Qty	Description
	F000	**C- 26642-0201**				**Carrier, Ass'y**
	110	32462	S		1	SHAFT
	112	G- 25640	S		1	CARRIER
	114	25641	S		1	REAMED BOLT
	122	312605-0314	S		1	NUT M6M5RFR

From	Pos	Part No	SP	UN	Qty	Description

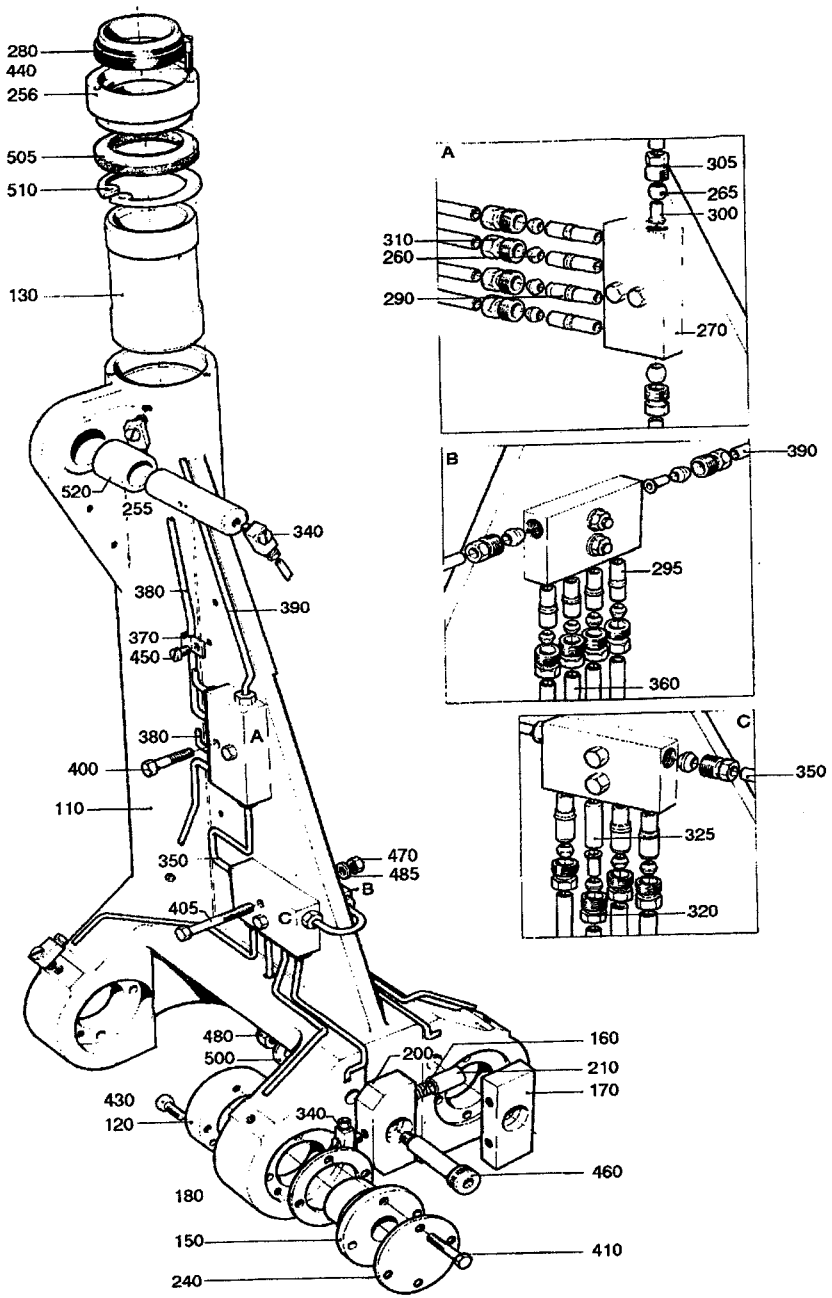

24394202.TIF
243942-2
AM 16717

From	Pos	Part No	SP	UN	Qty	Description
	F000	**C- 243942-0401**				**Yoke Right Performance, Ass'y**
	F000	**C- 243942-0402**				**Yoke Left Performance, Ass'y**
	110	G- 243951	C		1	YOKE **Right Performance**
	110	G- 243952	C		1	YOKE **Left Performance**
	120	36753	C		4	RING
	130	243943	S		2	BUSHING
	150	246513	S		4	BEARING
	160	20494	S		2	COMPRESSION SPRING
	170	26760	S		1	LOCATING PIECE
	180	29886	S		4	LACE
	200	31837	S		1	SPRING HOUSING
	210	31838	S		2	PLUNGER
	240	239874	C		4	WASHER
	255	247112	S		1	SHAFT
	256	263509	S		1	LID
	260	90028-0020	-		11	CONE
	265	90028-0021	-		7	CONE
	270	90032-0039	-		3	BLOCK
	280	90091-0080	S		1	SCRAPER
	290	90092-0052	-		4	VALVE
	295	90092-0053	-		7	VALVE
	300	90134-0031	-		3	SLEEVE
	305	90134-0038	-		6	BUSHING
	310	90134-0039	-		11	BUSHING
	320	90134-0040	-		1	BUSHING
	325	90134-0051	-		1	SPACER COLLOR
	340	90134-0058	-		9	BANJO CONNECTION
	350	90151-0001	-	MM	200	BRASS PIPE
	360	90266-0019	-	MM	1400	PIPE
	365	90157-0016	-	ML	X	LOCKING FLUID
	370	90165-0060	-		4	CLAMP
	380	90166-0143	-	MM	900	HOSE
	390	90166-0109	-	MM	500	HOSE
	395	312105-0287	-		2	SCREW M6S4X8 A4 80
	400	312105-0295	-		2	SCREW M6S4X20 A4 80
	405	312145-0305	-		2	SLOTTED HEMFS4X50RFR
	410	312105-0335	-		16	SCREW M6S5X30 A4 80
	430	312115-0329	-		4	SCREW 5X16 A4 80
	440	312125-0232	-		3	SLOTTED HEMCS3X25RFR
	450	312125-0285	-		2	SLOTTED HEMCS4X6RFR
	460	312180-0499	-		2	REAMED BOL
	470	312605-0312	-		2	NUT M6M4RFR
	480	312811-0318	-		2	LOCK NUT M8RFR
	485	315105-0136	-		4	WASHER BRB4,3X8RFR
	500	315115-0173	-		2	WASHER B 10,5X22 RFR
	505	315259-0103	S		1	FELT SEAL SKFFI260
	510	315752-0136	S		4	CIRCLIP SGH62
	520	321105-0234	S		1	BUSHING 20F7X28X30

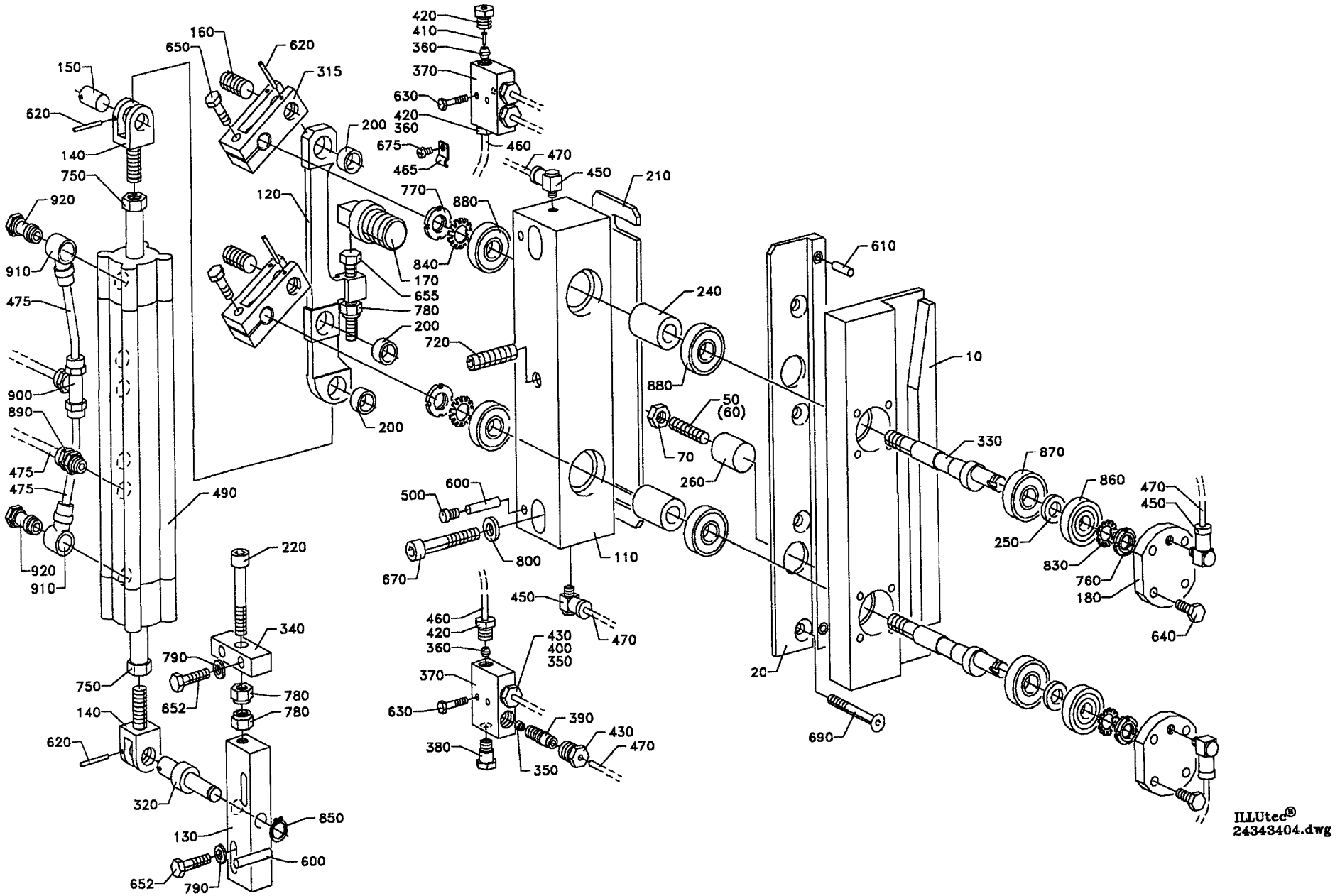

ILLUtec®
24343404.dwg

Last Alteration: AM 16244 91-04-10

Corresponding group: 243434-050V
Assembly Drawing: 243434-4/5

Issue: 930607

From	Pos	Part No	SP	UN	Qty	Description
1000ml LoFin						
	F000	**C- 243434-0501**				**Design Correction Device, Ass'y**
	010	563064	S		1	FOLDING FLAP CAM
	020	269059	C		1	COUNTER CAM
	050	312306-0459	-		2	STOP SCREW P6SS8X40FZB
	070	312605-0318	-		2	NUT M6M8RFR
568ml 300ml						
	F000	**C- 243434-0502**				**Design Correction Device, Ass'y**
	010	564628	S		1	FOLDING FLAP CAM
	020	252653-0002	C		1	COUNTER CAM
	050	312306-0459	-		2	STOP SCREW P6SS8X40FZB
	070	312605-0318	-		2	NUT M6M8RFR
500ml						
	F000	**C- 243434-0503**				**Design Correction Device, Ass'y**
	010	563206	S		1	FOLDING FLAP CAM
	020	26372	C		1	COUNTER CAM
	050	312306-0459	-		2	STOP SCREW P6SS8X40FZB
	070	312605-0318	-		2	NUT M6M8RFR
250ml						
	F000	**C- 243434-0506**				**Design Correction Device, Ass'y**
	010	279750	S		1	FOLDING FLAP CAM
	020	252653-0001	C		1	COUNTER CAM
	050	312306-0459	-		2	STOP SCREW P6SS8X40FZB
	070	312605-0318	-		2	NUT M6M8RFR
200ml 180ml						
	F000	**C- 243434-0508**				**Design Correction Device, Ass'y**
	010	259797	S		1	FOLDING FLAP CAM
	020	252653-0002	C		1	COUNTER CAM
	050	312306-0459	-		2	STOP SCREW P6SS8X40FZB
	070	312605-0318	-		2	NUT M6M8RFR
1000ml HiFin						
	F000	**C- 243434-0509**				**Design Correction Device, Ass'y**
	010	565188	S		1	FOLDING FLAP CAM
	020	269059	C		1	COUNTER CAM
	050	312306-0459	-		2	STOP SCREW P6SS8X40FZB
	070	312605-0318	-		2	NUT M6M8RFR
1055ml						
	F000	**C- 243434-0510**				**Design Correction Device, Ass'y**
	010	476666	S		1	FOLDING FLAP CAM
	020	476668	C		1	COUNTER CAM
	060	312311-0455	-		2	STOP SCREW T6SS8X30FZB

From	Pos	Part No	SP	UN	Qty	Description
1136ml						
	F000	**C- 243434-0511**				**Design Correction Device, Ass'y**
	010	549107	S		1	FOLDING FLAP CAM
	020	549109	C		1	COUNTER CAM
	050	312306-0459	-		2	STOP SCREW P6SS8X40FZB
	070	312605-0318	-		2	NUT M6M8RFR
Common Parts						
	110	23292	C		1	BEARING HOUSING
	120	G- 436740	C		1	LINK
	130	20718	-		1	BEARING
	140	22483	S		2	FORK
	150	22485	S		1	DOWEL
	160	22486	S		2	DOWEL
	170	22504	S		1	STOP LUG
	180	23291	C		2	BEARING COVER
	200	23312	S		3	BUSHING
	210	26426	P		5	LACE
	220	33409	S		1	SCREW
	240	107334	-		2	SPACER SLEEVE
	250	107335	-		2	SPACER RING
	260	107339	-		2	DOWEL
	315	434387	S		2	BRACKET
	320	434388	C		1	SHAFT
	330	436671	S		2	ECCENTRIC SHAFT
	340	561416	-		1	BRACKET
	350	90028-0020	-		4	CONE
	360	90028-0021	-		3	CONE
	370	90032-0038	-		2	BLOCK
	380	90087-0019	-		1	PLUG
	390	90092-0052	S		2	VALVE
	400	90092-0054	S		2	VALVE
	410	90134-0031	-		1	SLEEVE
	420	90134-0038	-		3	BUSHING
	430	90134-0039	-		4	BUSHING
	450	90134-0058	-		4	BANJO CONNECTION
	460	90151-0001	S	MM	400	BRASS PIPE
	465	90165-0058	-		1	CLAMP
	470	90166-0143	S	MM	700	HOSE
	475	90166-0124	-	MM	1600	HOSE
	490	90450-0105	-		1	CYLINDER
		90450-0634	S		1	* OVERHAUL KIT

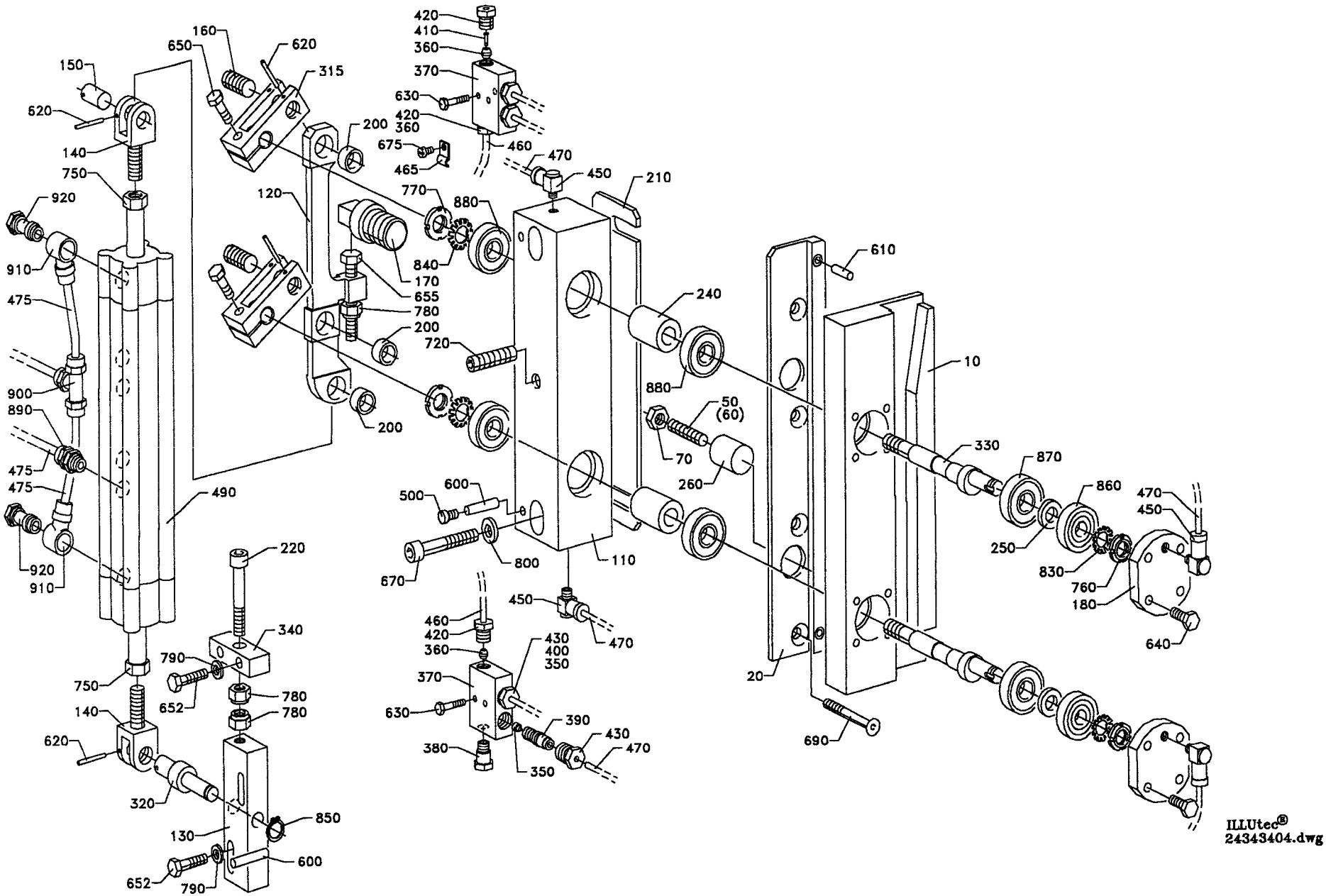

ILLUtec®
24343404.dwg

From	Pos	Part No	SP	UN	Qty	Description
	500	90261-0036	-		2	PIPE PLUG
	600	311103-0357	-		4	CYLINDRICACP M6 6X30 RFR
	610	311103-0310	-		2	CYLINDRICACP M6 5X20 RFR
	620	311112-0192	S		4	SLOTTED TURP 2,5X24
	630	312105-0295	-		4	SCREW M6S4X20 A4 80
	640	312105-0329	-		8	SCREW M6S5X16 A4 80
	650	312105-0370	-		2	SCREW M6S6X20RFR
	652	312105-0372	-		4	SCREW M6S6X25RFR
	655	312109-0463	-		1	SCREW
	670	312115-0461	-		2	SCREW 8X50 A4 80
	675	312125-0285	-		1	SLOTTED HEMCS4X6RFR
	690	312155-0382	-		4	SCREW MF6S6X60 A2 70
	720	312318-0499	-		1	STOP SCREW SK6SS10X40RFR
	750	312635-0320	-		2	NUT 10X1 RFR
	760	312805-0100	S		2	ROUND NUT KM0
	770	312805-0101	S		2	ROUND NUT KM1
	780	312811-0318	-		3	LOCK NUT M8RFR
	790	315105-0153	-		4	WASHER BRB6,4X12RFR
	800	315105-0165	-		2	WASHER BRB8,4X16RFR
	830	315410-0100	S		2	LOCK WASHESKFMB0
	840	315410-0101	S		2	LOCK WASHESKFMB1
	850	315750-0107	-		1	CIRCLIP SGA10
	860	321309-0100	S		2	BALL BEARISKF6200
	870	321312-0100	S		2	BALL BEARISKF6200RS
	880	321312-0101	S		4	BALL BEARISKF6201RS
	890	342920-0113	-		4	PIPE COUPL6/4-1/8
	900	342946-0112	-		1	T-CONNECTI6/4
	910	342980-0113	-		2	BANJO CONNSINGEL 6/4-1/8
	920	342980-0303	-		2	BANJO CONN SINGEL 1/8"

From	Pos	Part No	SP	UN	Qty	Description

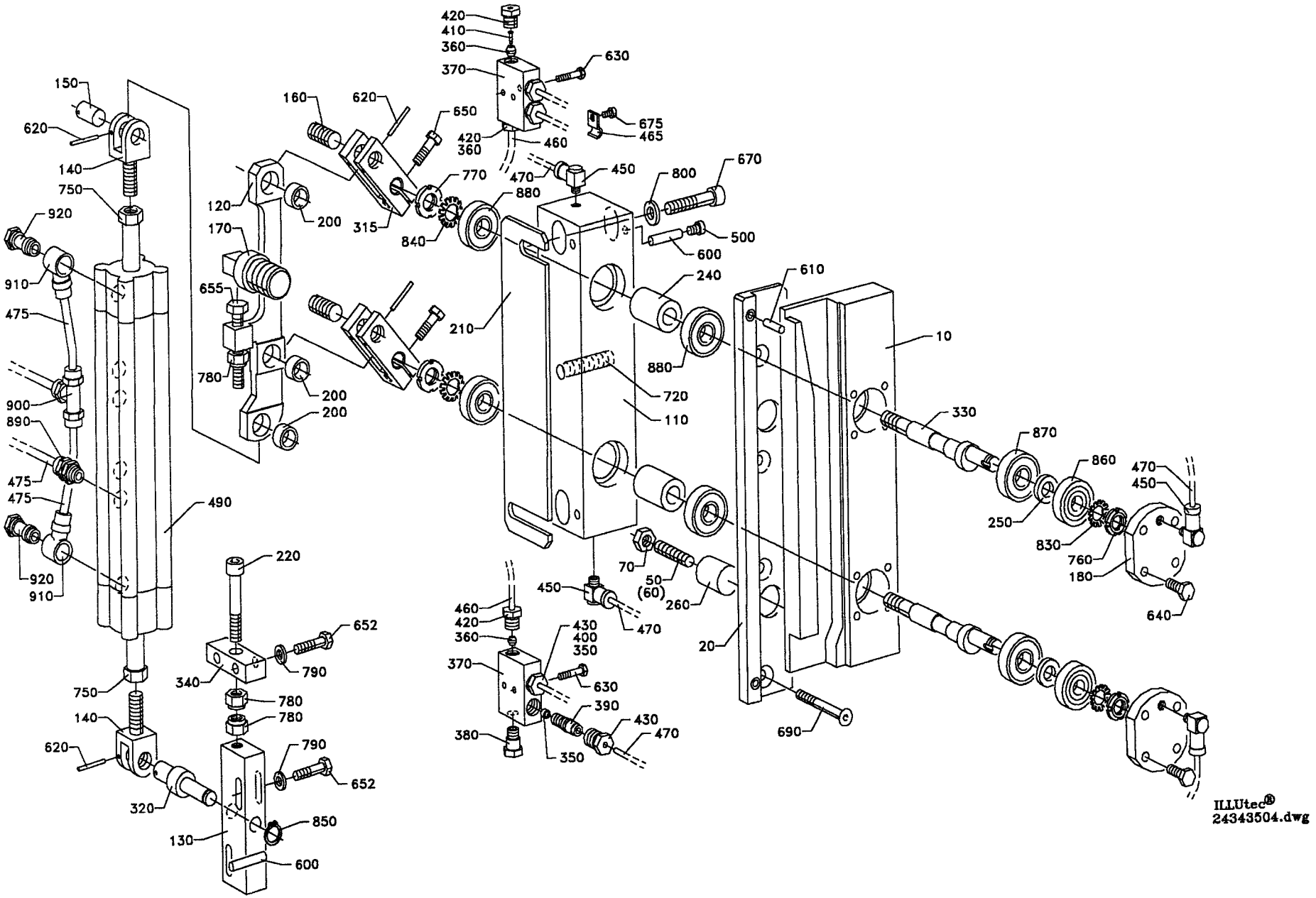
420
410
360
370
630
675
465
460
450
470
800
670
500
600
880
770
840
315
160
620
650
120
200
170
655
780
200
200
210
240
610
10
880
720
110
330
870
860
470
450
250
830
760
180
640
70
50
(60)
260
450
470
20
690
460
420
360
370
430
400
350
630
390
430
470
380
350
150
620
140
750
920
910
475
900
890
475
475
490
920
910
220
652
790
340
780
780
790
652
750
140
620
320
850
130
600
ILLUtec®
24343504.dwg

From	Pos	Part No	SP	UN	Qty	Description
1000ml LoFin						
	F000	**C- 243435-0501**				**Design Correction Device, Ass'y**
	010	563065	S		1	FOLDING FLAP CAM
	020	269060	C		1	COUNTER CAM
	050	312306-0459	-		2	STOP SCREW P6SS8X40FZB
	070	312605-0318	-		2	NUT M6M8RFR
568ml 300ml						
	F000	**C- 243435-0502**				**Design Correction Device, Ass'y**
	010	564629	S		1	FOLDING FLAP CAM
	020	252654-0002	C		1	COUNTER CAM
	050	312306-0459	-		2	STOP SCREW P6SS8X40FZB
	070	312605-0318	-		2	NUT M6M8RFR
500ml						
	F000	**C- 243435-0503**				**Design Correction Device, Ass'y**
	010	563207	S		1	FOLDING FLAP CAM
	020	26373	C		1	COUNTER CAM
	050	312306-0459	-		2	STOP SCREW P6SS8X40FZB
	070	312605-0318	-		2	NUT M6M8RFR
250ml						
	F000	**C- 243435-0506**				**Design Correction Device, Ass'y**
	010	279751	S		11	FOLDING FLAP CAM
	020	252654-0001	C		1	COUNTER CAM
	050	312306-0459	-		2	STOP SCREW P6SS8X40FZB
	070	312605-0318	-		2	NUT M6M8RFR
200ml 180ml						
	F000	**C- 243435-0508**				**Design Correction Device, Ass'y**
	010	259798	S		1	FOLDING FLAP CAM
	020	252654-0002	C		1	COUNTER CAM
	050	312306-0459	-		2	STOP SCREW P6SS8X40FZB
	070	312605-0318	-		2	NUT M6M8RFR
1000ml HiFin						
	F000	**C- 243435-0509**				**Design Correction Device, Ass'y**
	010	565189	S		1	FOLDING FLAP CAM
	020	269060	C		1	COUNTER CAM
	050	312306-0459	-		2	STOP SCREW P6SS8X40FZB
	070	312605-0318	-		2	NUT M6M8RFR
1055ml						
	F000	**C- 243435-0510**				**Design Correction Device, Ass'y**
	010	476665	S		1	FOLDING FLAP CAM
	020	476667	C		1	COUNTER CAM
	060	312311-0455	-		2	STOP SCREW T6SS8X30FZB

From	Pos	Part No	SP	UN	Qty	Description
1136ml						
	F000	**C- 243435-0511**				**Design Correction Device, Ass'y**
	010	549108	S		1	FOLDING FLAP CAM
	020	549110	C		1	COUNTER CAM
	050	312306-0459	-		2	STOP SCREW P6SS8X40FZB
	070	312605-0318	-		2	NUT M6M8RFR
Common Parts						
	110	23292	C		1	BEARING HOUSING
	120	G- 436740	C		1	LINK
	130	20718	-		1	BEARING
	140	22483	S		2	FORK
	150	22485	S		1	DOWEL
	160	22486	S		2	DOWEL
	170	22504	S		1	STOP LUG
	180	23291	C		2	BEARING COVER
	200	23312	S		3	BUSHING
	210	26426	P		5	LACE
	220	33409	S		1	SCREW
	240	107334	-		2	SPACER SLEEVE
	250	107335	-		2	SPACER RING
	260	107339	-		2	DOWEL
	315	434387	S		2	BRACKET
	320	434388	C		1	SHAFT
	330	436671	S		2	ECCENTRIC SHAFT
	340	561416	-		1	BRACKET
	350	90028-0020	-		4	CONE
	360	90028-0021	-		3	CONE
	370	90032-0038	-		2	BLOCK
	380	90087-0019	-		1	PLUG
	390	90092-0052	S		2	VALVE
	400	90092-0054	S		2	VALVE
	410	90134-0031	-		1	SLEEVE
	420	90134-0038	-		3	BUSHING
	430	90134-0039	-		4	BUSHING
	450	90134-0058	-		4	BANJO CONNECTION
	460	90151-0001	-	MM	400	BRASS PIPE
	465	90165-0058	-		1	CLAMP
	470	90166-0143	-	MM	700	HOSE
	475	90166-0124	-	MM	1600	HOSE
	490	90450-0105	-		1	CYLINDER
		90450-0634	S		1	* OVERHAUL KIT

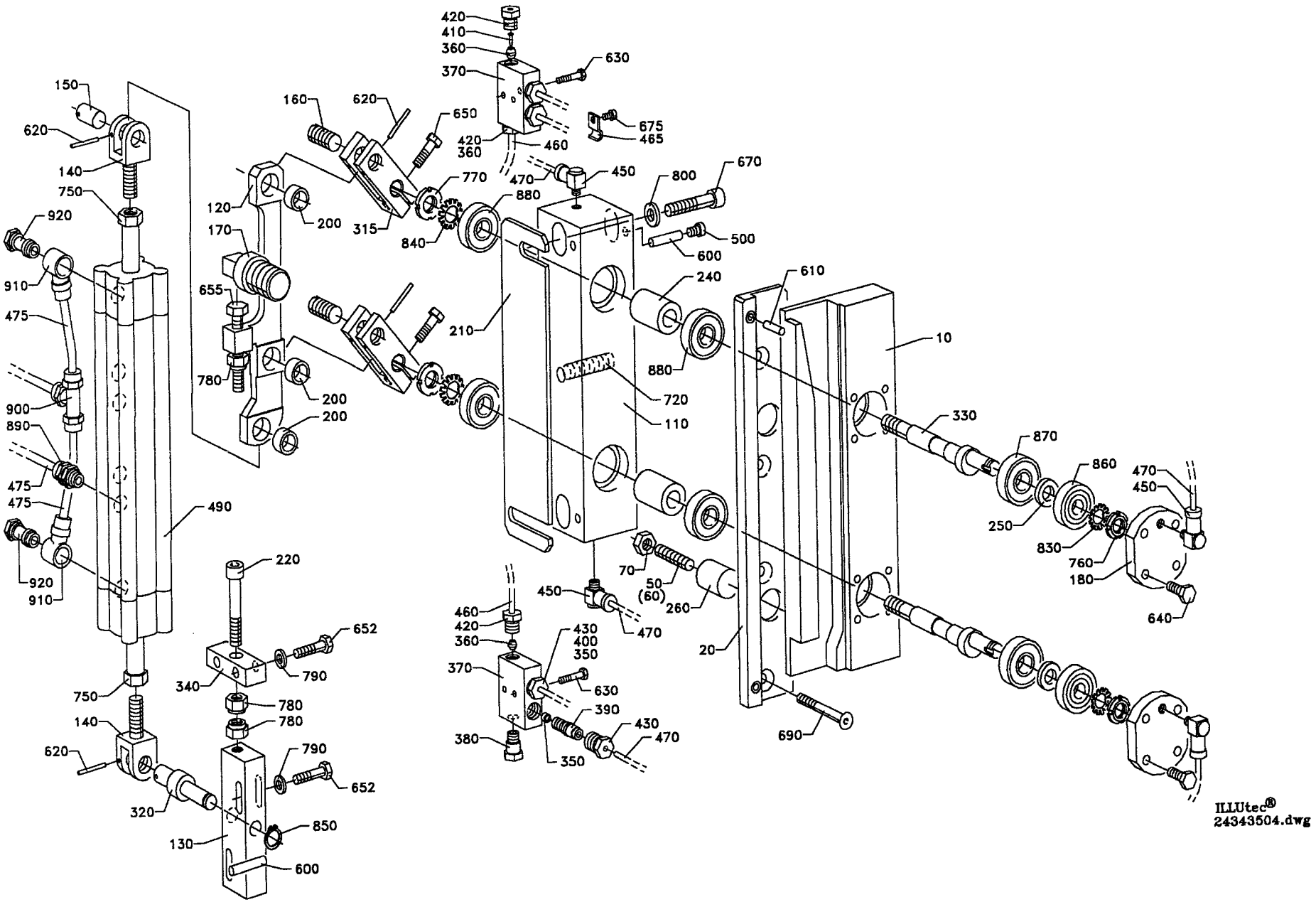

ILLUtec®
24343504.dwg

From	Pos	Part No	SP	UN	Qty	Description
	500	90261-0036	-		2	PIPE PLUG
	600	311103-0357	-		4	CYLINDRICACP M6 6X30 RFR
	610	311103-0310	-		2	CYLINDRICACP M6 5X20 RFR
	620	311112-0192	-		4	SLOTTED TURP 2,5X24
	630	312105-0295	-		4	SCREW M6S4X20 A4 80
	640	312105-0329	-		8	SCREW M6S5X16 A4 80
	650	312105-0370	-		2	SCREW M6S6X20RFR
	652	312105-0372	-		4	SCREW M6S6X25RFR
	655	312109-0463	-		1	SCREW
	670	312115-0461	-		2	SCREW 8X50 A4 80
	675	312125-0285	-		1	SLOTTED HEMCS4X6RFR
	690	312155-0382	-		4	SCREW MF6S6X60 A2 70
	720	312318-0499	-		1	STOP SCREW SK6SS10X40RFR
	750	312635-0320	-		2	NUT 10X1 RFR
	760	312805-0100	S		2	ROUND NUT KM0
	770	312805-0101	S		2	ROUND NUT KM1
	780	312811-0318	-		3	LOCK NUT M8RFR
	790	315105-0153	-		4	WASHER BRB6,4X12RFR
	800	315105-0165	-		2	WASHER BRB8,4X16RFR
	830	315410-0100	S		2	LOCK WASHESKFMB0
	840	315410-0101	S		2	LOCK WASHESKFMB1
	850	315750-0107	-		1	CIRCLIP SGA10
	860	321309-0100	S		2	BALL BEARISKF6200
	870	321312-0100	S		2	BALL BEARISKF6200RS
	880	321312-0101	S		4	BALL BEARISKF6201RS
	890	342920-0113	-		4	PIPE COUPL6/4-1/8
	900	342946-0112	-		1	T-CONNECTI6/4
	910	342980-0113	-		2	BANJO CONNSINGEL 6/4-1/8
	920	342980-0303	-		2	BANJO CONN SINGEL 1/8"

From	Pos	Part No	SP	UN	Qty	Description

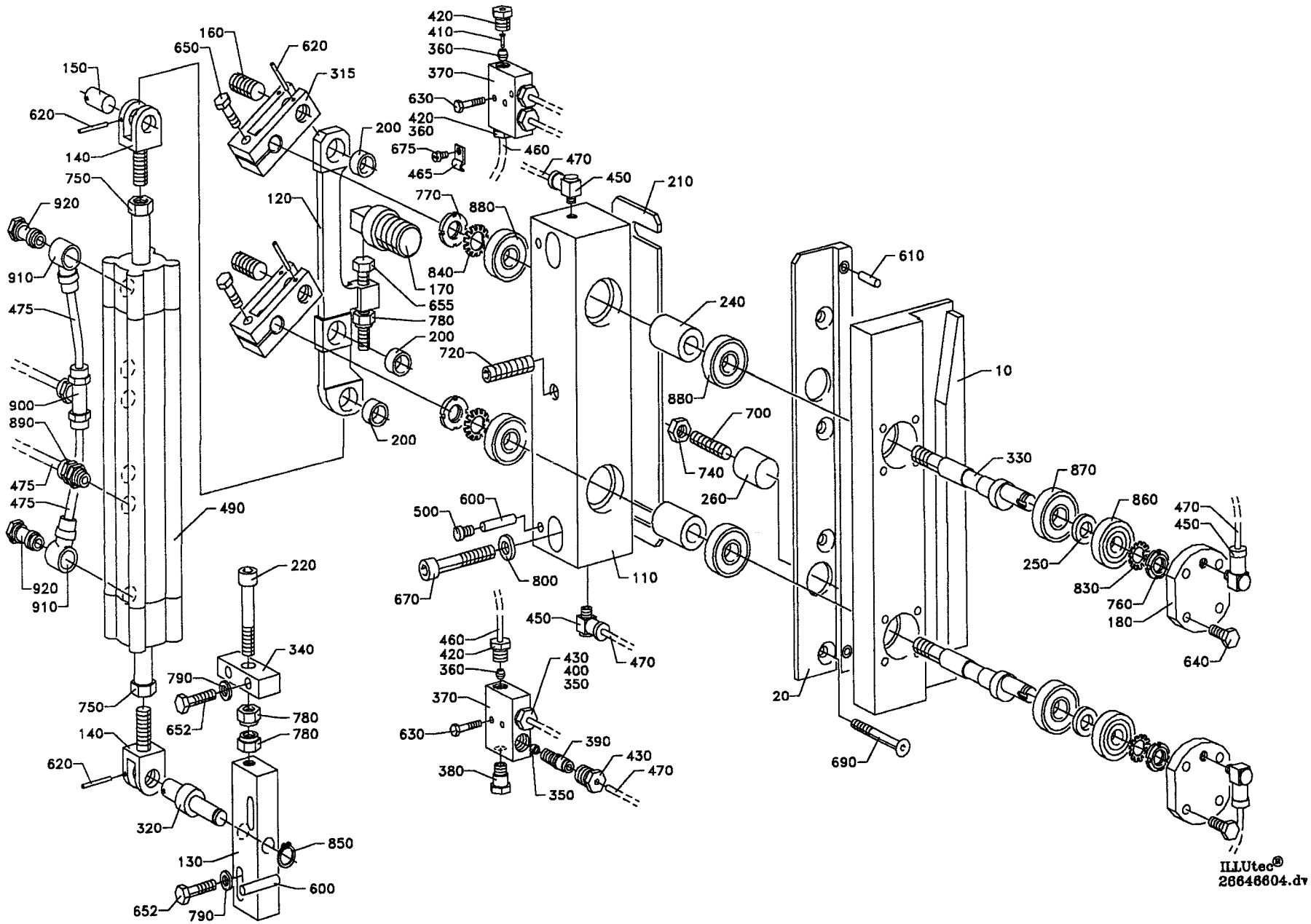

ILLUtec®
26646604.dv

Last Alteration: AM 16885 91-11-16

Corresponding group: 266446-050V
Assembly Drawing: 266446-4/5

Issue: 930607

From	Pos	Part No	SP	UN	Qty	Description
1000ml LoFin 750ml Slim						
	F000	**C- 266446-0501**				**Design Correction Device, Ass'y**
	010	268954	S		1	FOLDING FLAP CAM L
	020	269059	C		1	COUNTER CAM
1000ml HiFin						
	F000	**C- 266446-0502**				**Design Correction Device, Ass'y**
	010	284232	S		1	FOLDING FLAP CAM L
	020	284234	C		1	COUNTER CAM
500ml						
	F000	**C- 266446-0503**				**Design Correction Device, Ass'y**
	010	269108	S		1	FOLDING FLAP CAM L
	020	269110	C		1	COUNTER CAM
750ml 375ml						
	F000	**C- 266446-0504**				**Design Correction Device, Ass'y**
	010	550337	S		1	FOLDING FLAP CAM L
	020	440510	C		1	COUNTER CAM
500ml Slim						
	F000	**C- 266446-0505**				**Design Correction Device, Ass'y**
	010	551285	S		1	FOLDING FLAP CAM L
	020	440930	C		1	COUNTER CAM
300ml						
	F000	**C- 266446-0506**				**Design Correction Device, Ass'y**
	010	449728	S		1	FOLDING FLAP CAM L
	020	449730	C		1	COUNTER CAM
355ml						
	F000	**C- 266446-0507**				**Design Correction Device, Ass'y**
	010	537901	S		1	FOLDING FLAP CAM L
	020	529137	C		1	CURVE LEFT
1055ml						
	F000	**C- 266446-0508**				**Design Correction Device, Ass'y**
	010	533959	S		1	FOLDING FLAP CAM L
	020	533957	C		1	CURVE LEFT
568ml						
	F000	**C- 266446-0509**				**Design Correction Device, Ass'y**
	010	533112	S		1	FOLDING FLAP CAM L
	020	252653-0001	C		1	COUNTER CAM
1000ml Slim						
	F000	**C- 266446-0510**				**Design Correction Device, Ass'y**
	010	565188	S		1	FOLDING FLAP CAM
	020	269059	C		1	COUNTER CAM
Common Parts						
	110	23292	C		1	BEARING HOUSING
	120	G- 436740	C		1	LINK
	130	20718	-		1	BEARING
	140	22483	S		2	FORK
	150	22485	S		1	DOWEL
	160	22486	S		2	DOWEL
	170	22504	S		1	STOP LUG
	180	23291	C		2	BEARING COVER
	200	23312	S		3	BUSHING
	210	26426	P		5	LACE
	220	33409	S		1	SCREW
	240	107334	-		2	SPACER SLEEVE
	250	107335	-		2	SPACER RING
	260	107339	-		2	DOWEL
	315	434387	S		2	BRACKET
	320	434388	C		1	SHAFT
	330	436671	S		2	ECCENTRIC SHAFT
	340	561416	-		1	BRACKET
	350	90028-0020	-		4	CONE
	360	90028-0021	-		3	CONE
	370	90032-0038	-		2	BLOCK
	380	90087-0019	-		1	PLUG
	390	90092-0052	S		2	VALVE
	400	90092-0054	S		2	VALVE
	410	90134-0031	-		1	SLEEVE
	420	90134-0038	-		3	BUSHING
	430	90134-0039	-		4	BUSHING
	450	90134-0058	-		4	BANJO CONNECTION
	460	90151-0001	-	MM	400	BRASS PIPE
	465	90165-0058	-		1	CLAMP
	470	90166-0143	-	MM	700	HOSE
	475	90166-0124	-	MM	1600	HOSE
	490	90450-0105	-		1	CYLINDER
		90450-0634	S		1	* OVERHAUL KIT
	500	90261-0036	-		2	PIPE PLUG
	600	311103-0357	-		4	CYLINDRICACP M6 6X30 RFR
	610	311103-0310	-		2	CYLINDRICACP M6 5X20 RFR
	620	311112-0192	S		4	SLOTTED TURP 2,5X24
	630	312105-0295	-		4	SCREW M6S4X20 A4 80
	640	312105-0329	-		8	SCREW M6S5X16 A4 80
	650	312105-0370	-		2	SCREW M6S6X20RFR
	652	312105-0372	-		4	SCREW M6S6X25RFR
	655	312109-0463	-		1	SCREW
	670	312115-0461	-		2	SCREW 8X50 A4 80
	675	312125-0285	-		1	SLOTTED HEMCS4X6RFR
	690	312155-0382	-		4	SCREW MF6S6X60 A2 70
	700	312318-0459	-		2	STOP SCREW SK6SS 8X40RFR
	720	312318-0499	-		1	STOP SCREW SK6SS10X40RFR
	740	312605-0318	-		2	NUT M6M8RFR

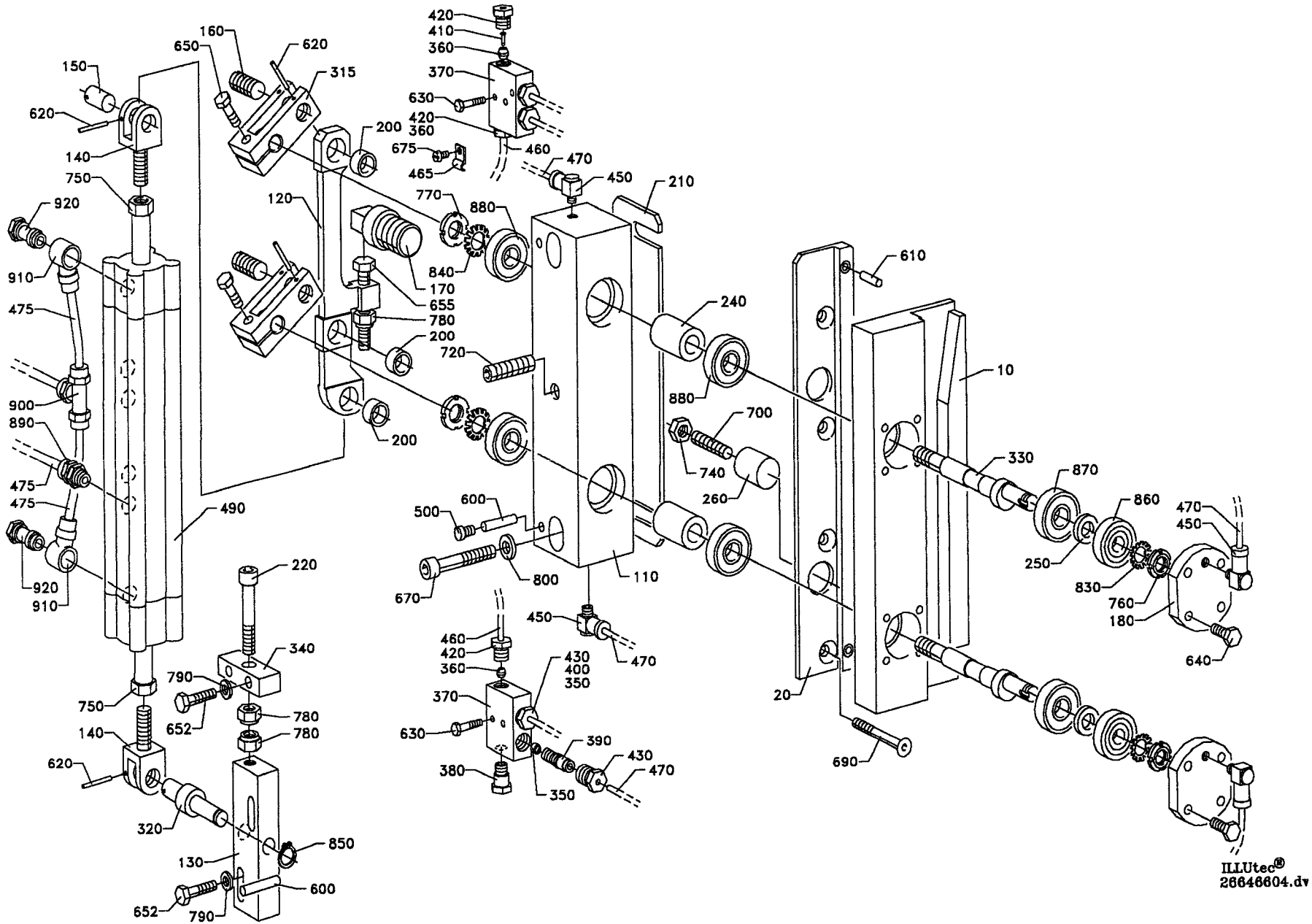

ILLUtec®
26646604.dv

From	Pos	Part No	SP	UN Qty	Description
	750	312635-0320	-	2	NUT 10X1 RFR
	760	312805-0100	S	2	ROUND NUT KM0
	770	312805-0101	S	2	ROUND NUT KM1
	780	312811-0318	-	3	LOCK NUT M8RFR
	790	315105-0153	-	4	WASHER BRB6,4X12RFR
	800	315105-0165	-	2	WASHER BRB8,4X16RFR
	830	315410-0100	S	2	LOCK WASHESKFMB0
	840	315410-0101	S	2	LOCK WASHESKFMB1
	850	315750-0107	-	1	CIRCLIP SGA10
	860	321309-0100	S	2	BALL BEARISKF6200
	870	321312-0100	S	2	BALL BEARISKF6200RS
	880	321312-0101	S	4	BALL BEARISKF6201RS
	890	342920-0113	-	4	PIPE COUPL6/4-1/8
	900	342946-0112	-	1	T-CONNECTI6/4
	910	342980-0113	-	2	BANJO CONNSINGEL 6/4-1/8
	920	342980-0303	-	2	BANJO CONN SINGEL 1/8"

From	Pos	Part No	SP	UN Qty	Description

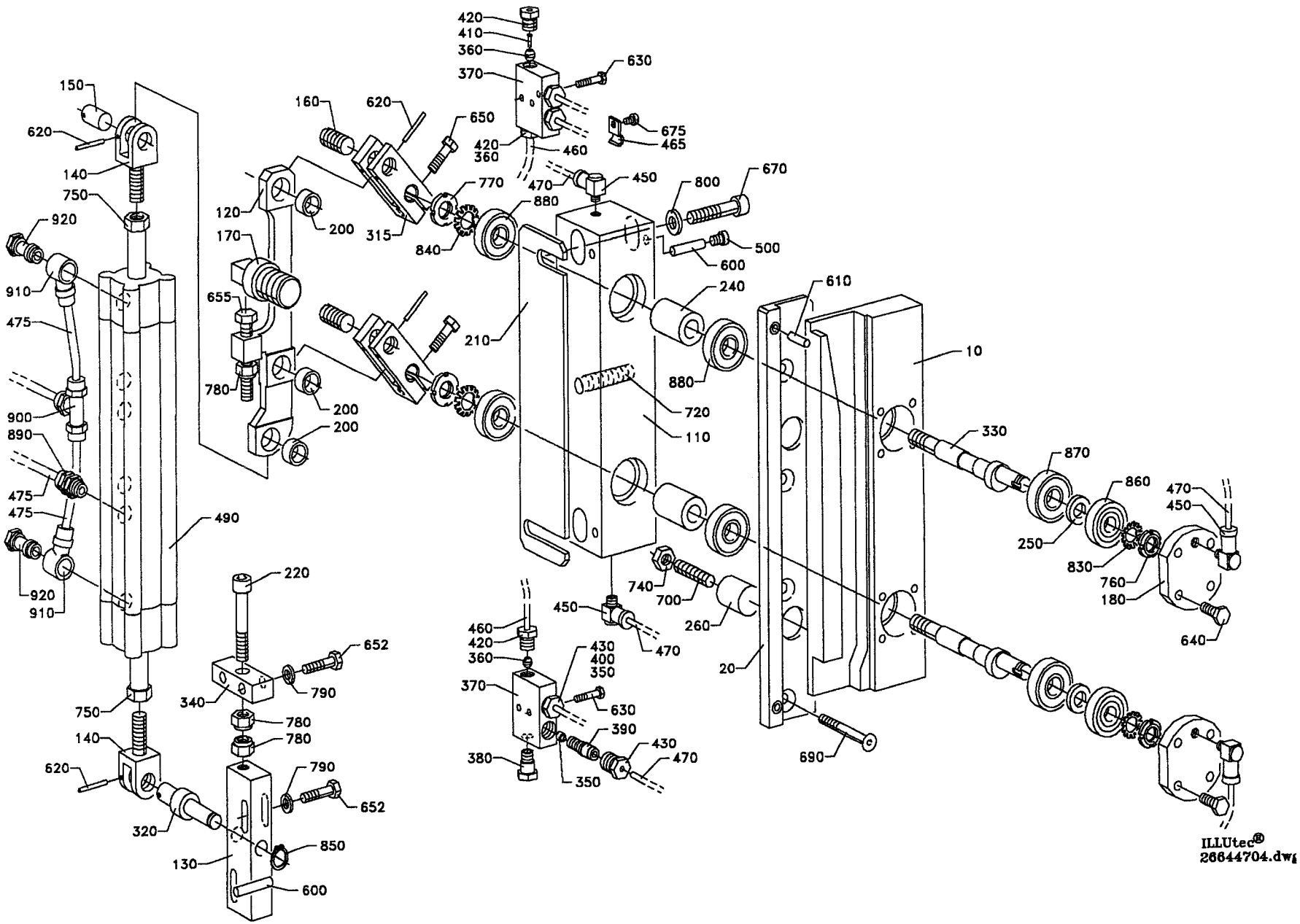
420
410
360
370
630
150
620
160
620
650
675
465
420
360
460
140
750
770
470
450
800
670
120
880
920
200
315
840
500
600
170
655
910
475
210
240
610
10
780
200
200
720
110
880
900
890
475
475
490
330
870
860
470
450
250
830
760
180
640
740
700
260
20
920
910
450
470
460
420
360
370
430
400
350
630
390
430
470
380
350
690
220
652
790
340
780
780
750
140
620
790
652
320
850
130
600
ILLUtec®
26644704.dwg

Last Alteration: AM 16885 91-11-16

Corresponding group: 266447-050V
Assembly Drawing: 266447-4/5

Issue: 930607

From	Pos	Part No	SP	UN	Qty	Description
1000 LoFin 750ml Slim						
	F000	**C- 266447-0501**				**Design Correction Devic, Ass'y**
	010	268955	S		1	FOLDING FLAP CAM R
	020	269060	C		1	COUNTER CAM
1000ml HiFin						
	F000	**C- 266447-0502**				**Design Correction Devic, Ass'y**
	010	284233	S		1	FOLDING FLAP CAM R
	020	284235	C		1	COUNTER CAM
500ml						
	F000	**C- 266447-0503**				**Design Correction Devic, Ass'y**
	010	269109	S		1	FOLDING FLAP CAM R
	020	269111	C		1	COUNTER CAM
750ml 375ml						
	F000	**C- 266447-0504**				**Design Correction Devic, Ass'y**
	010	550338	S		1	FOLDING FLAP CAM R
	020	440511	C		1	COUNTER CAM
500ml Slim						
	F000	**C- 266447-0505**				**Design Correction Devic, Ass'y**
	010	551286	S		1	FOLDING FLAP CAM R
	020	440931	C		1	COUNTER CAM
300ml						
	F000	**C- 266447-0506**				**Design Correction Devic, Ass'y**
	010	449729	S		1	FOLDING FLAP CAM R
	020	449731	C		1	COUNTER CAM
355ml						
	F000	**C- 266447-0507**				**Design Correction Devic, Ass'y**
	010	537902	S		1	FOLDING FLAP CAM R
	020	529138	C		1	CURVE RIGHT
1055ml						
	F000	**C- 266447-0508**				**Design Correction Devic, Ass'y**
	010	533958	S		1	FOLDING FLAP CAM R
	020	533956	C		1	CURVE RIGHT
568ml						
	F000	**C- 266447-0509**				**Design Correction Devic, Ass'y**
	010	533113	S		1	FOLDING FLAP CAM R
	020	252654-0001	C		1	COUNTER CAM
1000ml Slim						
	F000	**C- 266447-0510**				***Design Correction Devic, Ass'y***
	010	565189	S		1	FOLDING FLAP CAM
	020	269060	C		1	COUNTER CAM
Common Parts						
	110	23292	C		1	BEARING HOUSING
	120	G- 436740	C		1	LINK
	130	20718	-		1	BEARING
	140	22483	S		2	FORK
	150	22485	S		1	DOWEL
	160	22486	S		2	DOWEL
	170	22504	S		1	STOP LUG
	180	23291	C		2	BEARING COVER
	200	23312	S		3	BUSHING
	210	26426	P		5	LACE
	220	33409	S		1	SCREW
	240	107334	-		2	SPACER SLEEVE
	250	107335	-		2	SPACER RING
	260	107339	-		2	DOWEL
	315	434387	S		2	BRACKET
	320	434388	C		1	SHAFT
	330	436671	S		2	ECCENTRIC SHAFT
	340	561416	-		1	BRACKET
	350	90028-0020	-		4	CONE
	360	90028-0021	-		3	CONE
	370	90032-0038	-		2	BLOCK
	380	90087-0019	-		1	PLUG
	390	90092-0052	S		2	VALVE
	400	90092-0054	S		2	VALVE
	410	90134-0031	-		1	SLEEVE
	420	90134-0038	-		3	BUSHING
	430	90134-0039	-		4	BUSHING
	450	90134-0058	-		4	BANJO CONNECTION
	460	90151-0001	-	MM	400	BRASS PIPE
	465	90165-0058	-		1	CLAMP
	470	90166-0143	-	MM	700	HOSE
	475	90166-0124	-	MM	1600	HOSE
	490	90450-0105	-		1	CYLINDER
		90450-0634	S		1	* OVERHAUL KIT
	500	90261-0036	-		2	PIPE PLUG
	600	311103-0357	-		4	CYLINDRICACP M6 6X30 RFR
	610	311103-0310	-		2	CYLINDRICACP M6 5X20 RFR
	620	311112-0192	S		4	SLOTTED TURP 2,5X24
	630	312105-0295	-		4	SCREW M6S4X20 A4 80
	640	312105-0329	-		8	SCREW M6S5X16 A4 80
	650	312105-0370	-		2	SCREW M6S6X20RFR
	652	312105-0372	-		4	SCREW M6S6X25RFR
	655	312109-0463	-		1	SCREW
	670	312115-0461	-		2	SCREW 8X50 A4 80
	675	312125-0285	-		1	SLOTTED HEMCS4X6RFR
	690	312155-0382	-		4	SCREW MF6S6X60 A2 70
	700	312318-0459	-		2	STOP SCREW SK6SS 8X40RFR
	720	312318-0499	-		1	STOP SCREW SK6SS10X40RFR
	740	312605-0318	-		2	NUT M6M8RFR

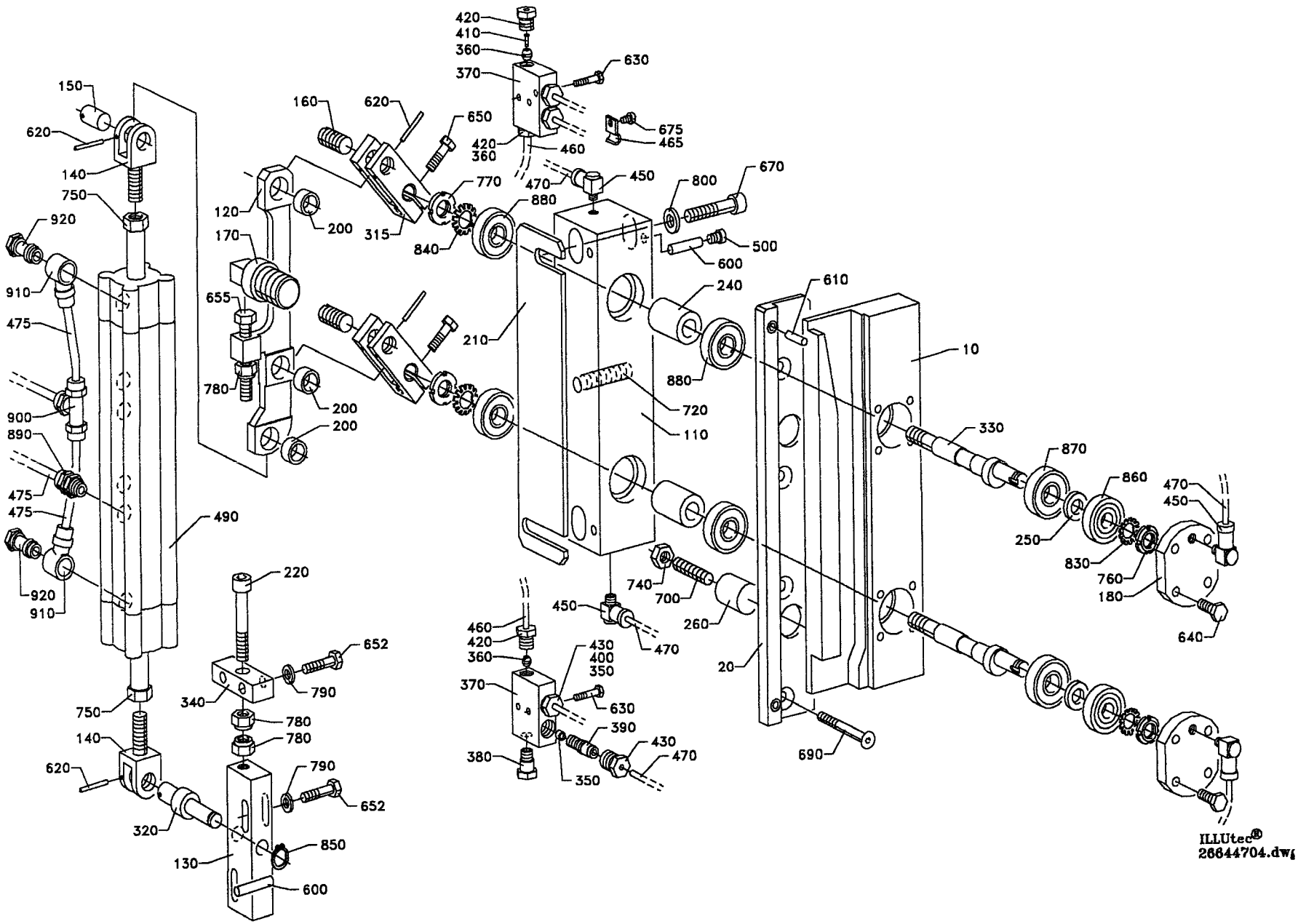
150
620
140
750
920
910
475
900
890
475
475
920
910
490
220
652
790
340
780
780
750
140
620
790
652
320
850
130
600
420
410
360
370
630
160
620
650
675
465
420
360
460
770
470
450
800
670
120
200
315
880
840
500
600
170
655
780
200
200
210
240
610
880
720
110
10
330
870
860
470
450
250
830
760
180
640
740
700
260
20
690
460
420
360
370
430
400
350
630
390
430
470
380
350
450
470
ILLUtec®
26644704.dwg

From	Pos	Part No	SP	UN	Qty	Description
	750	312635-0320	-		2	NUT 10X1 RFR
	760	312805-0100	S		2	ROUND NUT KM0
	770	312805-0101	S		2	ROUND NUT KM1
	780	312811-0318	-		3	LOCK NUT M8RFR
	790	315105-0153	-		4	WASHER BRB6,4X12RFR
	800	315105-0165	-		2	WASHER BRB8,4X16RFR
	830	315410-0100	S		2	LOCK WASHESKFMB0
	840	315410-0101	S		2	LOCK WASHESKFMB1
	850	315750-0107	-		1	CIRCLIP SGA10
	860	321309-0100	S		2	BALL BEARISKF6200
	870	321312-0100	S		2	BALL BEARISKF6200RS
	880	321312-0101	S		4	BALL BEARISKF6201RS
	890	342920-0113	-		4	PIPE COUPL6/4-1/8
	900	342946-0112	-		1	T-CONNECTI6/4
	910	342980-0113	-		2	BANJO CONNSINGEL 6/4-1/8
	920	342980-0303	-		2	BANJO CONN SINGEL 1/8"

From	Pos	Part No	SP	UN	Qty	Description

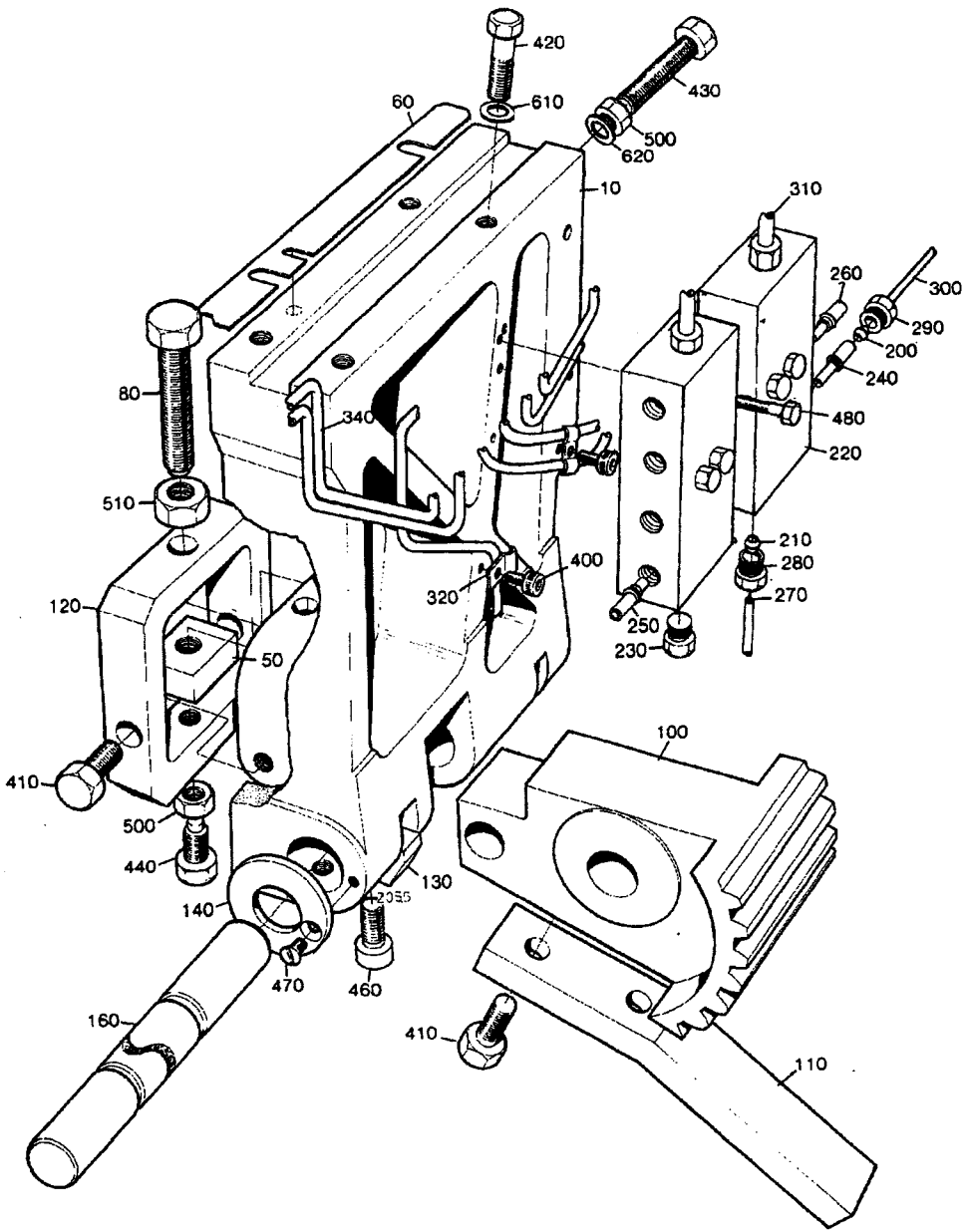

24649905.TIF
246499-5
AM

Last Alteration: AM 16778 91-09-24

Corresponding group: 246499-060V
Assembly Drawing: 246499-5

Issue: **930607**

From	Pos	Part No	SP	UN	Qty	Description
	F000	**C- 246499-0601**				**Arm Left,Ass'y**
	F000	**C- 246499-0602**				**Arm Right, Ass'y**
	010	G- 538400	C		1	ARM LEFT
	010	G- 538401	C		1	ARM RIGHT
	050	14729	S		1	NUT
	060	26425	P		6	LACE
	080	32957	S		1	SCREW
	100	232238	C		1	TOOTH PART
	110	239476	-		1	ROD
	120	267754	S		1	BOW CLAMP
	130	533818	-		2	HOLDER
	140	536704	S		2	WASHER
	160	538399	S		1	SHAFT
	200	90028-0020	-		8	CONE
	210	90028-0021	-		3	CONE
	220	90032-0039	-		2	BLOCK
	230	90087-0019	-		1	PLUG
	240	90092-0052	S		5	VALVE
	250	90092-0053	S		1	VALVE
	260	90092-0054	S		2	VALVE
	270	90134-0031	-		1	SLEEVE
	280	90134-0038	-		3	BUSHING
	290	90134-0039	-		8	BUSHING
	300	90266-0019	-	MM	1800	PIPE
	310	90266-0165	-	MM	100	BRASS PIPE
	320	90165-0056	-		2	CLIP
	330	90166-0109	-	MM	400	HOSE
	340	90166-0143	-	MM	1100	HOSE
	400	312105-0287	-		2	SCREW M6S4X8 A4 80
	410	312105-0453	-		3	SCREW M6S8X25RFR
	420	312105-0457	-		1	SCREW M6S8X35RFR
	430	312105-0466	-		1	SCREW M6S8X75RFR
	440	312109-0459	-		1	SCREW M6S8X40H A4 80
	450	312115-0289	-		2	SCREW S4X10 A4 80
	460	312115-0455	-		2	SCREW 8X30 A4 80
	470	312145-0285	-		4	SLOTTED HEMFS4X6RFR
	480	312145-0297	-		4	SLOTTED HEMFS4X25RFR
	500	312605-0318	-		2	NUT M6M8RFR
	510	312635-0320	-		1	NUT 10X1 RFR
	600	315105-0136	-		2	WASHER BRB4,3X8RFR
	610	315105-0165	-		4	WASHER BRB8,4X16RFR
	620	315115-0165	-		1	WASHER TBRB8,4X16RFR

From	Pos	Part No	SP	UN	Qty	Description

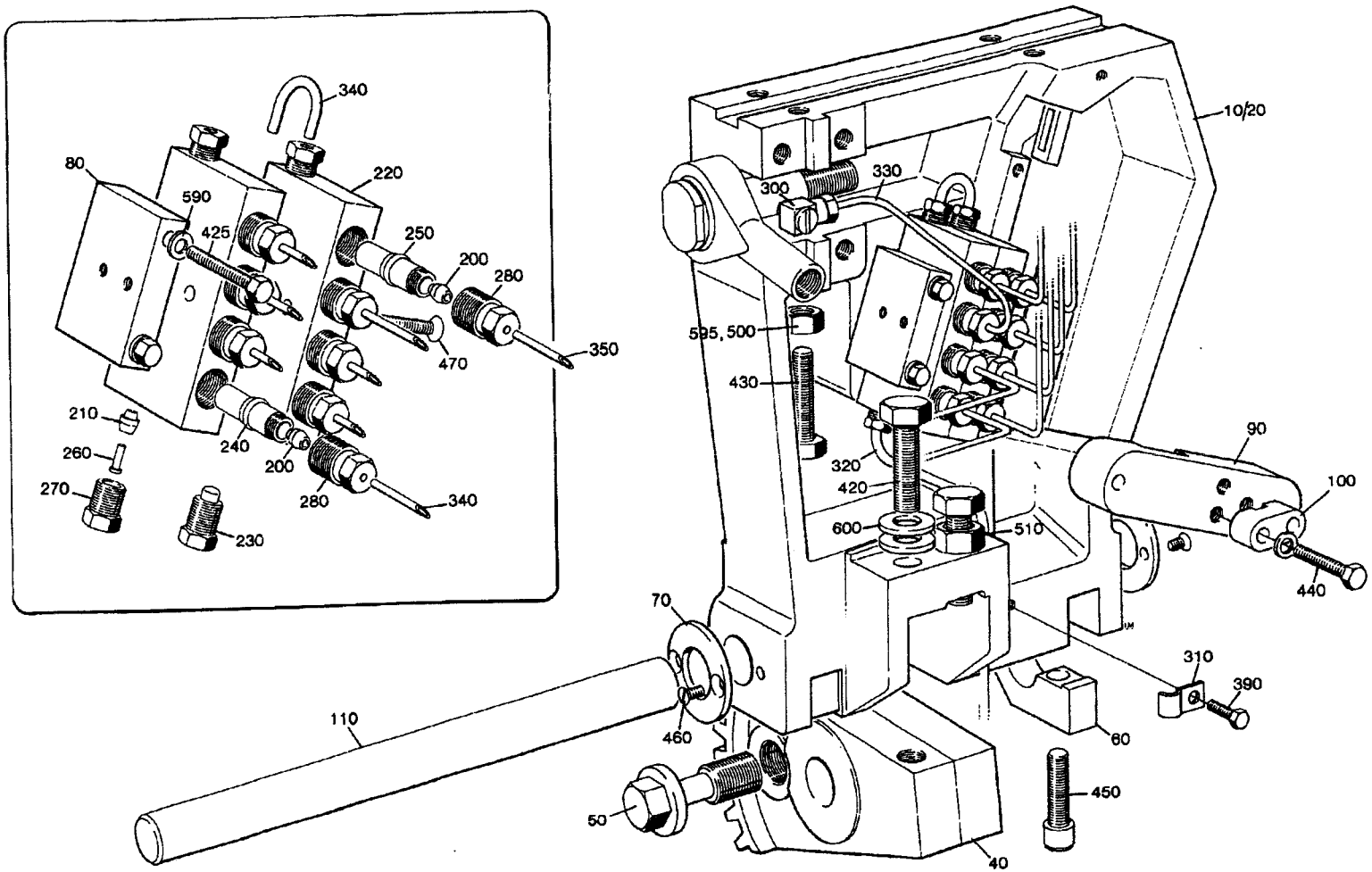

24649804.TIF
246498-4
AM

Last Alteration: AM 11922 88-09-08

Corresponding group: 246498-060V
Assembly Drawing: 246498-4

Issue: 930607

From	Pos	Part No	SP	UN	Qty	Description
	F000	**C- 246498-0601**				**Arm w Shaft Left Performance, ass'y**
	F000	**C- 246498-0602**				**Arm w Shaft Right Performance, ass'y**
	010	G- 5454091	C		1	ARM RIGHT
	020	G- 545410	C		1	ARM LEFT
	040	232236	C		2	TOOTH PART
	050	232237	S		1	SCREW
	060	533818	-		2	HOLDER
	070	536704	P		2	WASHER
	080	536705	-		1	BRACKET
	090	533886	S		1	CRAMP
	100	533888	P		1	CRAMP
	110	538399	S		1	SHAFT
	200	90028-0020	-		8	CONE
	210	90028-0021	-		3	CONE
	220	90032-0039	-		2	BLOCK
	230	90087-0019	-		1	PLUG
	240	90092-0052	S		4	VALVE
	250	90092-0053	S		4	VALVE
	260	90134-0031	-		1	SLEEVE
	270	90134-0038	-		3	BUSHING
	280	90134-0039	-		8	BUSHING
	300	90134-0058	-		1	BANJO CONNECTION
	310	90165-0056	-		1	CLIP
	320	90166-0109	-	MM	800	HOSE
	330	90166-0143	-	MM	1200	HOSE
	340	90266-0019	-	MM	2000	PIPE
	350	90266-0165	-	MM	100	BRASS PIPE
	390	312105-0287	-		1	SCREW M6S4X8 A4 80
	420	312105-0497	-		2	SCREW M6S10X35RFR
	425	312115-0303	-		2	SCREW 4X40 A4 80
	430	312109-0457	-		1	SCREW 8X35 H A4 80
	440	312115-0329	-		5	SCREW 5X16 A4 80
	450	312115-0455	-		2	SCREW 8X30 A4 80
	460	312145-0285	-		4	SLOTTED HEMFS4X6RFR
	470	312155-0301	-		2	SCREW MF6S4X35RFR
	500	312605-0318	-		1	NUT M6M8RFR
	510	312605-0320	-		1	NUT M6M10RFR
	590	315105-0136	-		2	WASHER BRB4,3X8RFR
	595	315105-0165	-		1	WASHER BRB8,4X16RFR
	600	315105-0173	-		3	WASHER BRB10,5X22RFR

From	Pos	Part No	SP	UN	Qty	Description

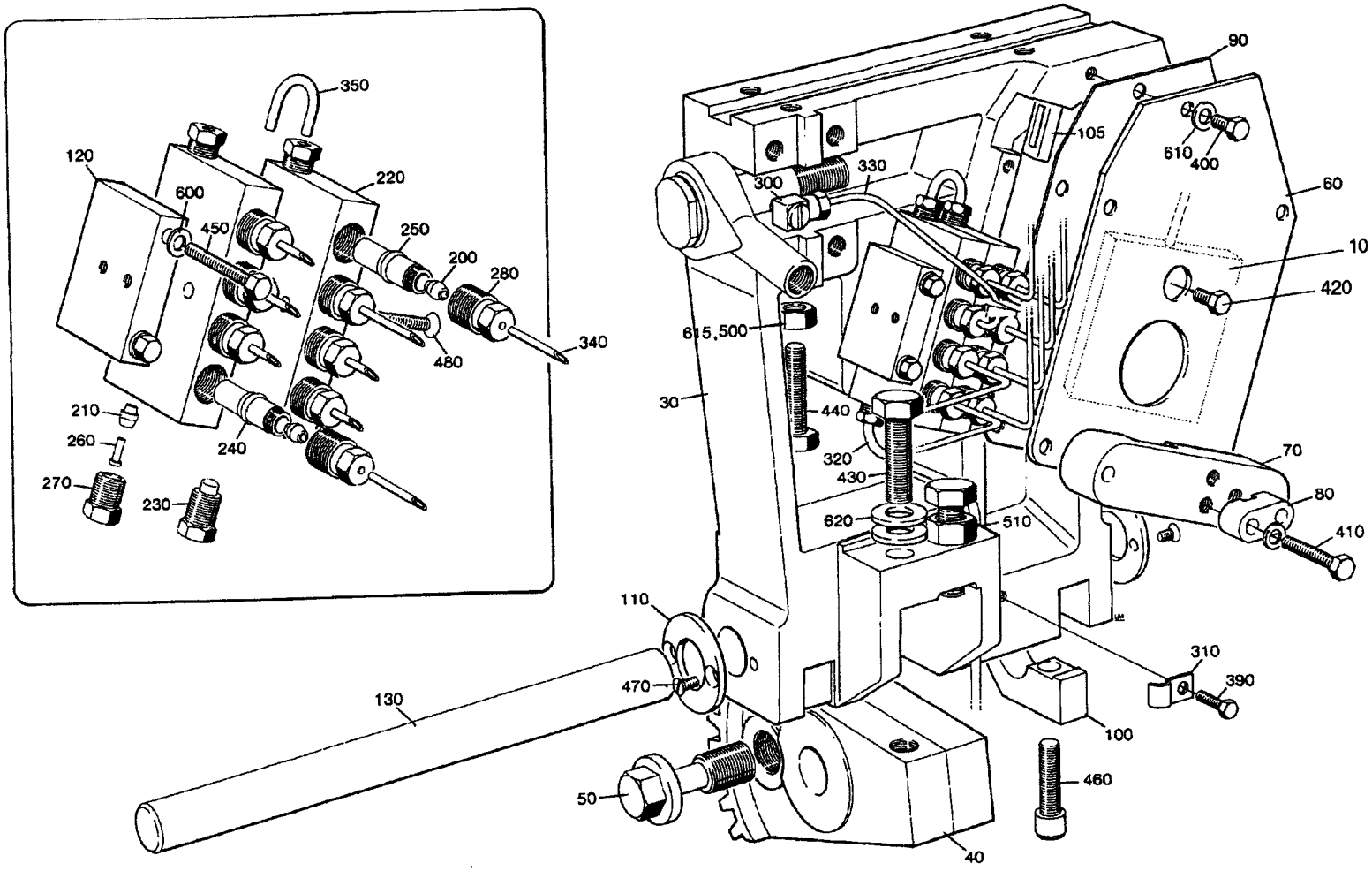

54105201.TIF
541052-1
AM 11922

From	Pos	Part No	SP	UN	Qty	Description
	F000	**C- 541052-0101**				**Arm W Axle 1055ml-500ml, Ass'y**
	F000	**C- 541052-0102**				**Arm W Axle 500ml Slim 375ml-300ml, Ass'y**
	030	G- 545410	C		1	ARM LEFT
	040	232236	C		2	TOOTH PART
	050	232237	S		1	SCREW
	060	464366	C		1	LID
	070	464367	C		1	CRAMP
	080	464368	C		2	CRAMP
	090	484843	S		1	GASKET
	100	533818	C		2	HOLDER
	105	534237	S		1	SEAL
	110	536704	P		2	WASHER
	120	536705	C		1	BRACKET
	130	538399	C		1	SHAFT
	200	90028-0020	-		8	CONE
	210	90028-0021	-		3	CONE
	220	90032-0039	-		2	BLOCK
	230	90087-0019	-		1	PLUG
	240	90092-0052	S		4	VALVE
	250	90092-0053	S		4	VALVE
	260	90134-0031	-		1	SLEEVE
	270	90134-0038	-		3	BUSHING
	280	90134-0039	-		8	BUSHING
	300	90134-0058	-		1	BANJO CONNECTION
	310	90165-0056	-		1	CLIP
	320	90166-0109	-	MM	800	HOSE
	330	90166-0143	-	MM	1200	HOSE
	340	90266-0019	-	MM	2000	PIPE
	350	90266-0165	-	MM	100	BRASS PIPE
	390	312105-0287	-		1	SCREW M6S4X8 A4 80
	400	312105-0327	-		3	SCREW M6S5X12 A4 80
	410	312105-0335	-		4	SCREW M6S5X30 A4 80
	420	312105-0343	-		1	SCREW M6S5X60 A4 80
	430	312105-0497	-		2	SCREW M6S10X35RFR
	440	312109-0457	-		1	SCREW 8X35 H A4 80
	450	312115-0303	-		2	SCREW 4X40 A4 80
	460	312115-0455	-		2	SCREW 8X30 A4 80
	470	312145-0285	-		4	SLOTTED HEMFS4X6RFR
	480	312155-0301	-		1	SCREW MF6S4X35RFR
	500	312605-0318	-		1	NUT M6M8RFR
	510	312605-0320	-		1	NUT M6M10RFR
	600	315105-0136	-		2	WASHER BRB4,3X8RFR
	610	315105-0146	-		7	WASHER BRB5,3X10RFR
	615	315105-0165	-		1	WASHER BRB8,4X16RFR
	620	315105-0173	-		3	WASHER BRB10,5X22RFR

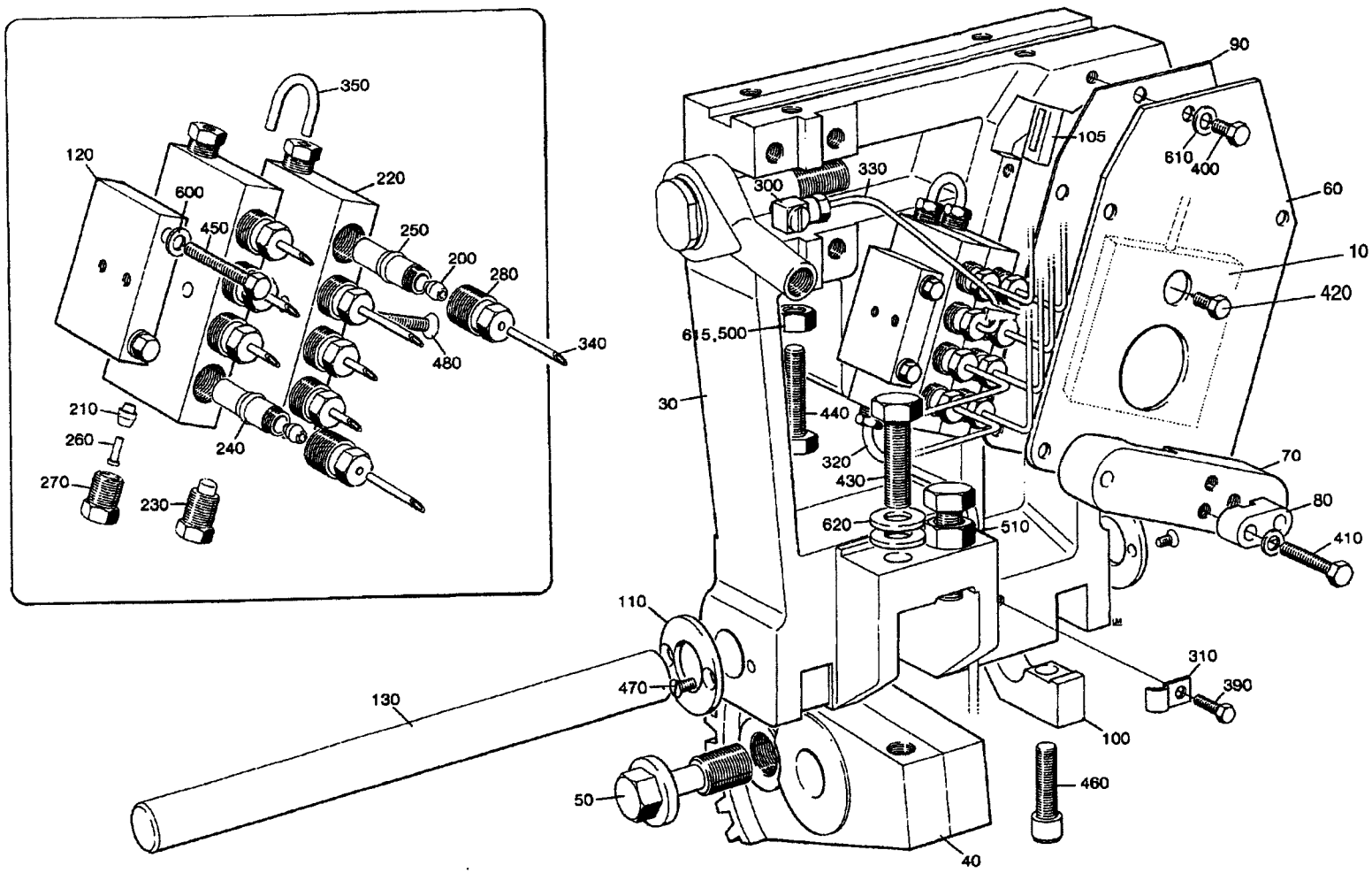

54105301.TIF
541053-1
AM 11922

From	Pos	Part No	SP	UN	Qty	Description
	F000	**C- 541053-0101**				**Arm w axle 1055ml-500ml, Ass'y**
	F000	**C- 541053-0102**				**Arm w axle 500ml Slim 375ml-300ml, Ass'y**
	030	G- 545409	C		1	ARM RIGHT
	040	232236	C		2	TOOTH PART
	050	232237	S		1	SCREW
	060	464366	C		1	LID
	070	464367	C		1	CRAMP
	080	464368	C		2	CRAMP
	090	484843	S		1	GASKET
	100	533818	C		2	HOLDER
	105	534237	S		1	SEAL
	110	536704	P		2	WASHER
	120	536705	C		1	BRACKET
	130	538399	C		1	SHAFT
	200	90028-0020	-		8	CONE
	210	90028-0021	-		3	CONE
	220	90032-0039	-		2	BLOCK
	230	90087-0019	-		1	PLUG
	240	90092-0052	S		4	VALVE
	250	90092-0053	S		4	VALVE
	260	90134-0031	-		1	SLEEVE
	270	90134-0038	-		3	BUSHING
	280	90134-0039	-		8	BUSHING
	300	90134-0058	-		1	BANJO CONNECTION
	310	90165-0056	-		1	CLIP
	320	90166-0109	-	MM	800	HOSE
	330	90166-0143	-	MM	1200	HOSE
	340	90266-0019	-	MM	2000	PIPE
	350	90266-0165	-	MM	100	BRASS PIPE
	390	312105-0287	-		1	SCREW M6S4X8 A4 80
	400	312105-0327	-		3	SCREW M6S5X12 A4 80
	410	312105-0335	-		4	SCREW M6S5X30 A4 80
	420	312105-0343	-		1	SCREW M6S5X60 A4 80
	430	312105-0497	-		2	SCREW M6S10X35RFR
	440	312109-0457	-		1	SCREW 8X35 H A4 80
	450	312115-0303	-		2	SCREW 4X40 A4 80
	460	312115-0455	-		2	SCREW 8X30 A4 80
	470	312145-0285	-		4	SLOTTED HEMFS4X6RFR
	480	312155-0301	-		1	SCREW MF6S4X35RFR
	500	312605-0318	-		1	NUT M6M8RFR
	510	312605-0320	-		1	NUT M6M10RFR
	600	315105-0136	-		2	WASHER BRB4,3X8RFR
	610	315105-0146	-		7	WASHER BRB5,3X10RFR
	615	315105-0165	-		1	WASHER BRB8,4X16RFR
	620	315105-0173	-		3	WASHER BRB10,5X22RFR

500ml
568ml

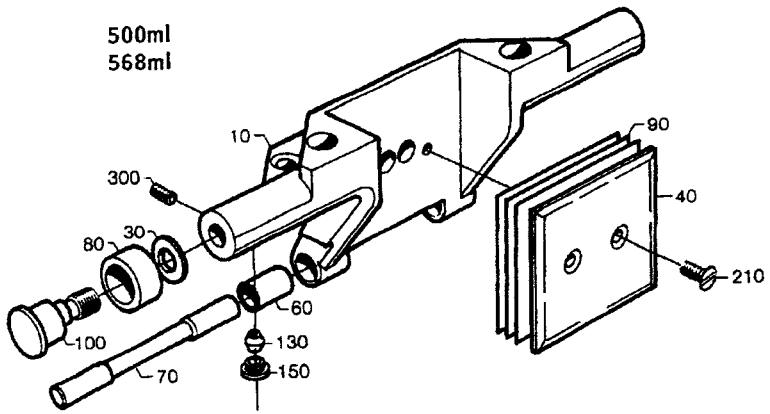

200ml
250ml
300ml
355ml
375ml
500ml slim

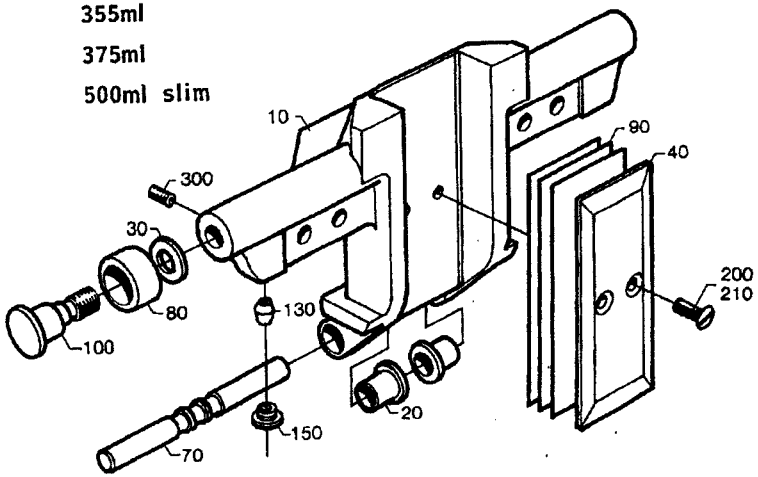

1055Hml
1000ml
750ml

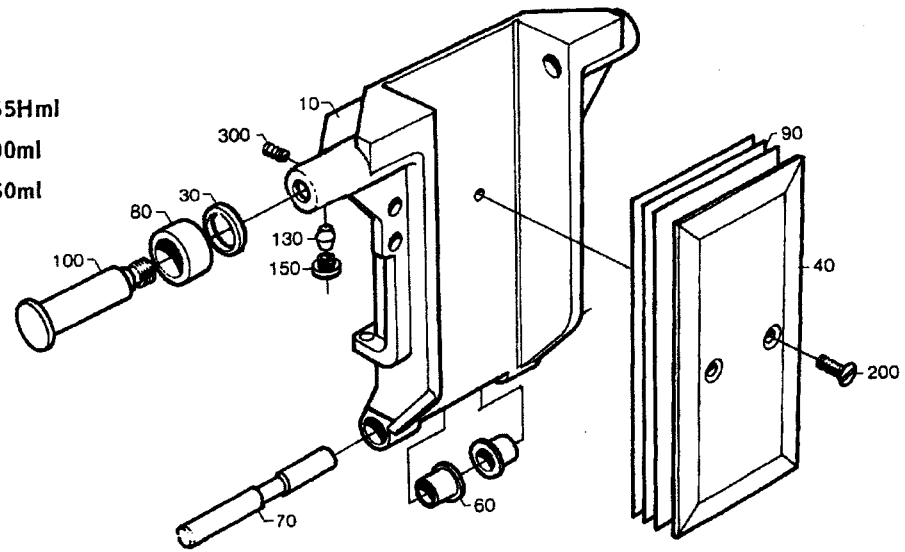

24646810.TIF
246468-10
AM

From	Pos	Part No	SP	UN	Qty	Description
1000ml						
	F000	**C- 246468-0801**				**Volume Flap, Ass'y**
	010	G- 532718	P		1	VOLUME FLAP
	040	26075	S		1	VOLUME BULGE
	060	36133	P		2	BUSHING
	070	458164	P		1	SHAFT
	080	434321	P		1	CURVE ROLLER
	090	208709	SU		3	VOLUME SHIM
	200	312145-0222	-		2	SLOTTED HEMFS3X8RFR
500ml IH						
	F000	**C- 246468-0802**				**Volume Flap, Ass'y**
	010	G- 476115	P		1	VOLUME FLAP
	040	458467	S		1	VOLUME BULGE
	060	36133	P		2	BUSHING
	070	458164	P		1	SHAFT
	080	436556	P		1	CURVE ROLLER
	090	479245	SU		3	VOLUME SHIM
	210	312145-0289	-		2	SLOTTED HEMFS4X10RFR
300ml TPC						
	F000	**C- 246468-0803**				**Volume Flap, Ass'y**
	010	G- 565253	P		1	VOLUME FLAP
	020	449908	P		2	BUSHING
	040	449584	S		1	VOLUME BULGE
	070	458165	P		1	SHAFT
	080	436556	P		1	CURVE ROLLER
	090	450302	SU		3	VOLUME SHIM
	210	312145-0289	-		2	SLOTTED HEMFS4X10RFR
300ml IH						
	F000	**C- 246468-0804**				**Volume Flap, Ass'y**
	010	G- 545137	P		1	VOLUME FLAP
	020	449908	P		2	BUSHING
	040	449584	S		1	VOLUME BULGE
	070	458165	P		1	SHAFT
	080	436556	P		1	CURVE ROLLER
	090	450302	SU		3	VOLUME SHIM
	210	312145-0289	-		2	SLOTTED HEMFS4X10RFR
568ml						
	F000	**C- 246468-0807**				**Volume Flap, Ass'y**
	010	G- 533441	P		1	VOLUME FLAP
	040	541204	S		1	VOLUME BULGE
	060	36133	P		2	BUSHING
	070	458164	P		1	SHAFT
	080	436556	P		1	CURVE ROLLER
	090	479246	SU		3	VOLUME SHIM
	210	312145-0289	-		2	SLOTTED HEMFS4X10RFR

From	Pos	Part No	SP	UN	Qty	Description
750ml IH						
	F000	**C- 246468-0811**				**Volume Flap, Ass'y**
	010	G- 544504	P		1	VOLUME FLAP
	040	450781	S		1	VOLUME BULGE
	060	36133	P		2	BUSHING
	070	458164	P		1	SHAFT
	080	436556	P		1	CURVE ROLLER
	090	450782	SU		3	VOLUME SHIM
	200	312145-0222	-		2	SLOTTED HEMFS3X8RFR
500ml Slim IH						
	F000	**C- 246468-0812**				**Volume Flap, Ass'y**
	010	G- 548601	P		1	VOLUME FLAP
	020	449908	P		2	BUSHING
	040	464314	S		1	VOLUME BULGE
	070	458165	P		1	SHAFT
	080	434321	P		1	CURVE ROLLER
	090	464315	SU		3	VOLUME SHIM
	200	312145-0222	-		2	SLOTTED HEMFS3X8RFR
375ml IH						
	F000	**C- 246468-0813**				**Volume Flap, Ass'y**
	010	G- 449724	P		1	VOLUME FLAP
	020	449908	P		2	BUSHING
	040	255227-0001	S		1	VOLUME BULGE
	070	458165	P		1	SHAFT
	080	436556	P		1	CURVE ROLLER
	090	255228-0001	SU		3	VOLUME SHIM
	200	312145-0222	-		2	SLOTTED HEMFS3X8RFR
1055ml TPC						
	F000	**C- 246468-0814**				**Volume Flap, Ass'y**
	010	G- 476264	P		1	VOLUME FLAP
	040	526714	S		1	VOLUME BULGE
	060	36133	P		2	BUSHING
	070	458164	P		1	SHAFT
	080	434321	P		1	CURVE ROLLER
	090	526715	SU		3	VOLUME SHIM
	200	312145-0222	-		2	SLOTTED HEMFS3X8RFR
355ml IH						
	F000	**C- 246468-0816**				**Volume Flap, Ass'y**
	010	G- 529000	P		1	VOLUME FLAP
	020	449908	P		2	BUSHING
	040	536686	S		1	VOLUME BULGE
	070	458165	P		1	SHAFT
	080	436556	P		1	CURVE ROLLER
	090	536687	SU		3	VOLUME SHIM
	210	312145-0289	-		2	SLOTTED HEMFS4X10RFR

500ml
568ml

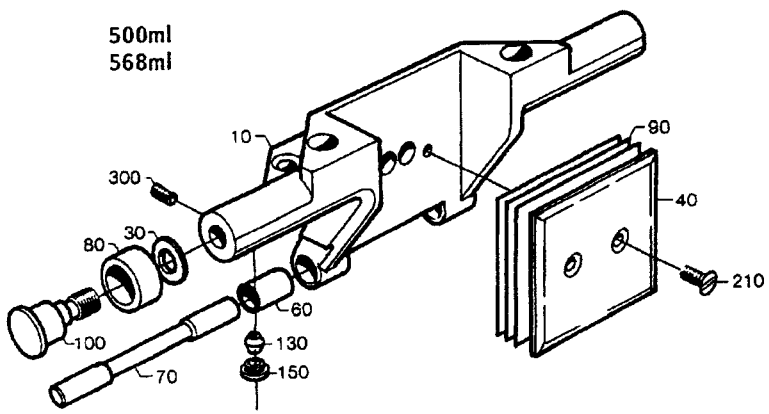

200ml
250ml
300ml
355ml
375ml
500ml slim

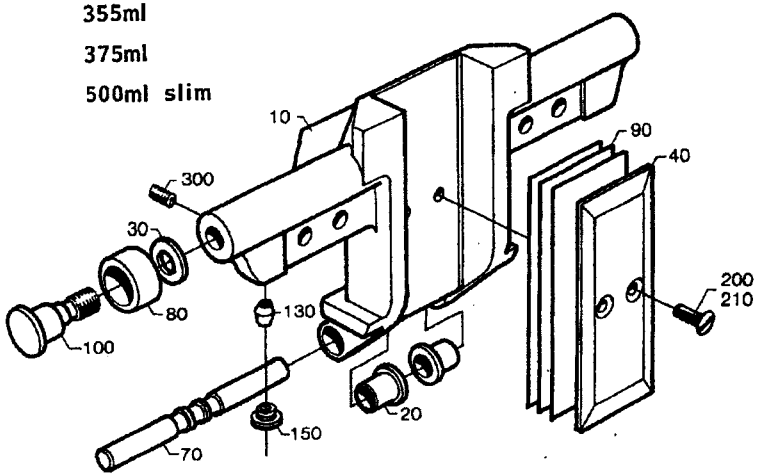

1055Hml
1000ml
750ml

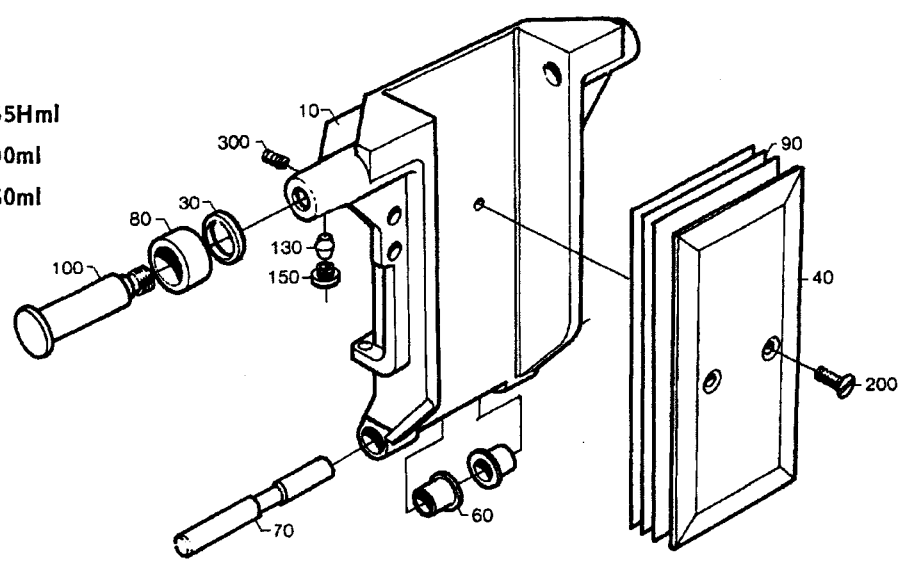

24646810.TIF
246468-10
AM

Last Alteration: AM 17939 92-06-22

Corresponding group: 246468-080V
Assembly Drawing: 246468-10/11/12

Issue: **930607**

From	Pos	Part No	SP	UN	Qty	Description
1055ml IH						
	F000	**C- 246468-0817**				**Volume Flap, Ass'y**
	010	G- 529002	P		1	VOLUME FLAP
	040	532129	S		1	VOLUME BULGE
	060	36133	P		2	BUSHING
	070	458164	P		1	SHAFT
	080	434321	P		1	CURVE ROLLER
	090	531320	SU		3	VOLUME SHIM
	200	312145-0222	-		2	SLOTTED HEMFS3X8RFR
750ml Slim IH						
	F000	**C- 246468-0818**				**Volume Flap, Ass'y**
	010	G- 555926	P		1	VOLUME FLAP
	040	555892	S		1	VOLUME BULGE
	070	544292	P		1	SHAFT
	080	434321	P		1	CURVE ROLLER
	090	555928	SU		3	VOLUME SHIM
	210	312145-0289	-		2	SLOTTED HEMFS4X10RFR
1136ml TPC						
	F000	**C- 246468-0819**				**Volume Flap, Ass'y**
	010	G- 544344	P		1	VOLUME FLAP
	040	544345	S		1	VOLUME BULGE
	060	36133	P		2	BUSHING
	070	458164	P		1	SHAFT
	080	434321	P		1	CURVE ROLLER
	090	544346	SU		3	VOLUME SHIM
	200	312145-0222	-		2	SLOTTED HEMFS3X8RFR
500ml TPC						
	F000	**C- 246468-0820**				**Volume Flap, Ass'y**
	010	G- 563609	P		1	VOLUME FLAP
	040	458467	S		1	VOLUME BULGE
	060	36133	P		2	BUSHING
	070	458164	P		1	SHAFT
	080	436556	P		1	CURVE ROLLER
	090	479245	SU		3	VOLUME SHIM
	210	312145-0289	-		2	SLOTTED HEMFS4X10RFR
1000ml Slim IH						
	F000	**C- 246468-0821**				**Volume Flap, Ass'y**
	010	569054	P		1	VOLUME FLAP
	040	569055	S		1	VOLUME BULGE
	060	36133	P		2	BUSHING
	070	458164	P		1	SHAFT
	080	434321	P		1	CURVE ROLLER
	090	569056	SU		3	VOLUME SHIM
	210	312145-0289	-		2	SLOTTED HEMFS4X10RFR

From	Pos	Part No	SP	UN	Qty	Description
Common Parts						
	030	19972	P		1	WASHER
	100	434320	P		1	AXLE PIN
	130	90028-0020	-		1	CONE
	150	90134-0063	-		1	BUSHING
	300	312318-0285	-		1	STOP SCREW SK6SS4X6RFR

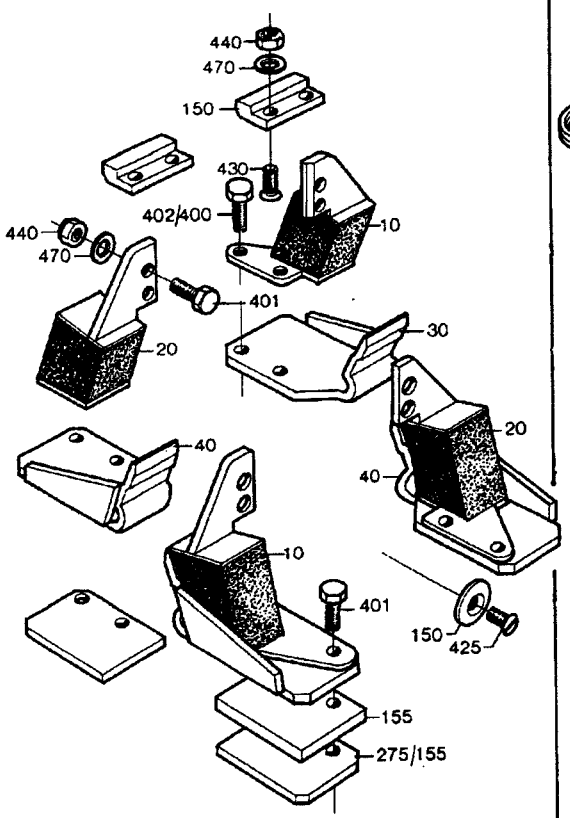

1000ml
1136ml - 1055ml TPC
1055ml IH
750ml - 500ml SLIM IH

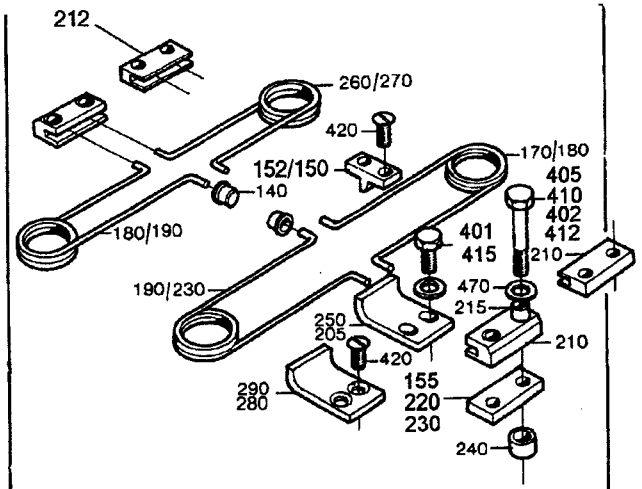

568ml - 300ml IH
1000ml Slim IH
568ml - 500ml TPC

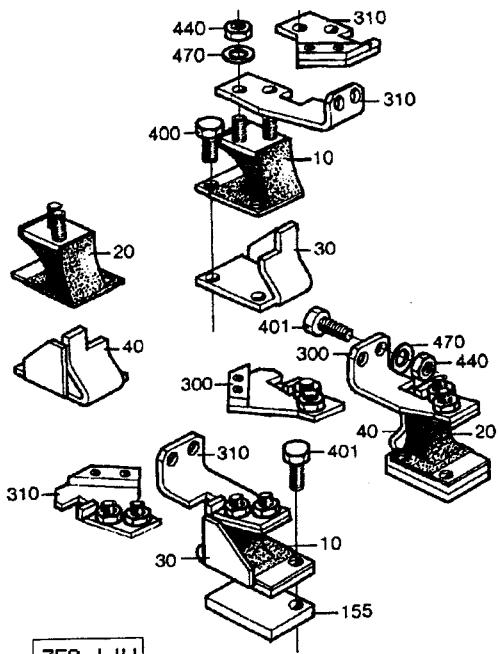

750ml IH

24632700.TIF
24632700-1/5-8/10-14/17
AM 18328

From	Pos	Part No	SP	UN	Qty	Description
TPC 1000ml LoFin 1136ml 1055ml						
	F000	**C- 246327-0401**				**Shock Absorber, Ass'y**
	010	252808	P		2	DAMPER
	020	252809	P		2	DAMPER
	030	255473	P		2	STOP
	040	255474	P		2	STOP
	150	251598	S		4	STOPPER
	155	251597	S		2	LACE
	400	312105-0329	-		4	SCREW M6S5X16 A4 80
	401	312105-0331	-		12	SCREW M6S5X20 A4 80
	430	312155-0329	-		8	SCREW MF6S5X16RFR
	440	312812-0314	S		16	LOCK NUT A4-M5RFR
	470	315105-0146	-		16	WASHER BRB5,3X10RFR
TPC 568ml 500ml						
	F000	**C- 246327-0402**				**Shock Absorber, Ass'y**
	140	33150	P		8	GUIDE STUD
	150	33152	S		4	STOPPER
	180	246328	P		4	SPRING
	190	246329	P		4	SPRING
	205	246332	S		2	CATCH
	210	247262	S		2	SPRING BRACKET
	212	545128	S		2	SPRING BRACKET
	215	247263	S		8	SPACER
	220	247271	S		2	LACE
	240	263684	S		4	SPACER
	250	263693	S		2	CATCH
	401	312105-0331	-		8	SCREW M6S5X20 A4 80
	410	312105-0340	-		8	SCREW M6S5X45 A4 80
	420	312145-0325	-		8	SLOTTED HEMFS5X10RFR
	470	315105-0146	-		16	WASHER BRB5,3X10RFR
TPC 300ml						
	F000	**C- 246327-0403**				**Shock Absorber, Ass'y**
	140	545651	P		8	GUIDE STUD
	150	545125	S		2	STOPPER
	152	545126	S		2	STOPPER
	180	38467	P		4	SPRING
	190	251530	P		4	SPRING
	205	545127	S		2	CATCH
	210	247262	S		2	SPRING BRACKET
	212	545128	S		2	SPRING BRACKET
	215	247263	S		8	SPACER
	220	247271	S		2	LACE
	240	263684	S		4	SPACER
	250	545136	S		2	CATCH
	401	312105-0331	-		8	SCREW M6S5X20 A4 80
	410	312105-0340	-		8	SCREW M6S5X45 A4 80
	420	312105-0325	-		8	SCREW M6S5X10 A4 80
	470	315105-0146	-		24	WASHER BRB5,3X10RFR
IH 1000ml LoFin 750ml Slim 1055ml 1000ml Slim						
	F000	**C- 246327-0407**				**Shock Absorber, Ass'y**
	010	252808	P		2	DAMPER
	020	252809	P		2	DAMPER
	030	255473	P		2	STOP
	040	255474	P		2	STOP
	150	251598	S		4	STOPPER
	155	251597	S		2	LACE
	400	312105-0329	-		4	SCREW M6S5X16 A4 80
	401	312105-0331	-		12	SCREW M6S5X20 A4 80
	430	312155-0329	-		8	SCREW MF6S5X16RFR
	440	312812-0314	S		16	LOCK NUT A4-M5RFR
	470	315105-0146	-		16	WASHER BRB5,3X10RFR
IH 568ml 500ml						
	F000	**C- 246327-0408**				**Shock Absorber, Ass'y**
	140	33150	P		8	GUIDE STUD
	150	33152	S		4	STOPPER
	180	246328	P		3	SPRING
	190	246329	P		3	SPRING
	210	247262	S		4	SPRING BRACKET
	215	247263	S		8	SPACER
	220	247271	S		2	LACE
	240	263684	S		4	SPACER
	260	554962	P		1	SPRING
	270	554963	P		1	SPRING
	280	284138	S		2	CATCH
	290	284139	S		2	CATCH
	410	312105-0340	-		8	SCREW M6S5X45 A4 80
	420	312145-0325	-		16	SLOTTED HEMFS5X10RFR
	470	315105-0146	-		8	WASHER BRB5,3X10RFR
IH 1000ml HiFin						
	F000	**C- 246327-0409**				**Shock Absorber, Ass'y**
	010	252808	P		2	DAMPER
	020	252809	P		2	DAMPER
	030	255473	P		2	STOP
	040	255474	P		2	STOP
	150	251598	S		4	STOPPER
	155	251597	S		2	LACE
	275	279623	S		4	LACE
	401	312105-0331	-		12	SCREW M6S5X20 A4 80
	402	312105-0333	-		4	SCREW M6S5X25 A4 80
	430	312155-0329	-		8	SCREW MF6S5X16RFR

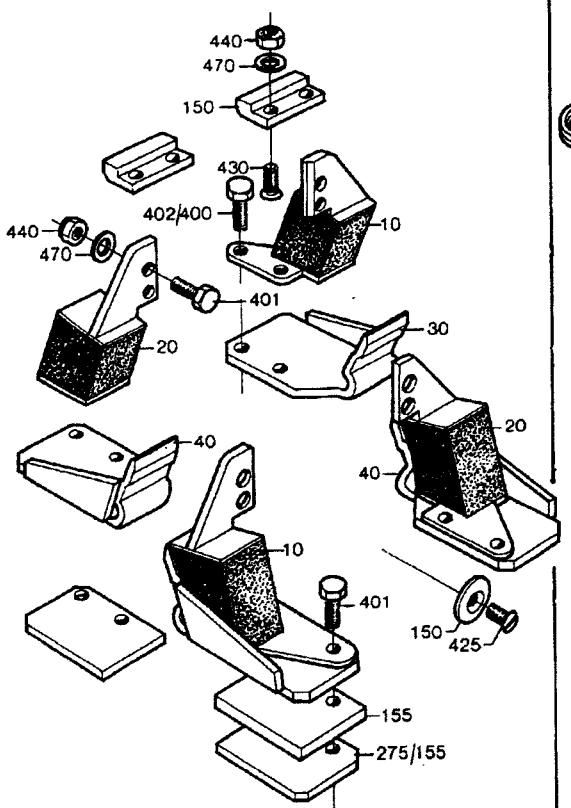

1000ml
1136ml - 1055ml TPC
1055ml IH
750ml - 500ml SLIM IH

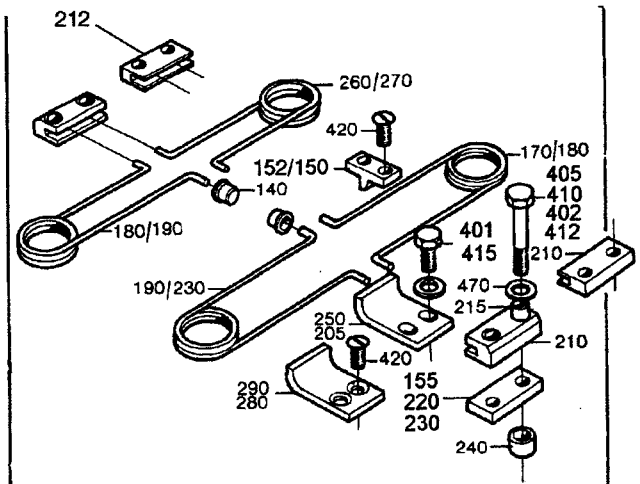

568ml - 300ml IH
1000ml Slim IH
568ml - 500ml TPC

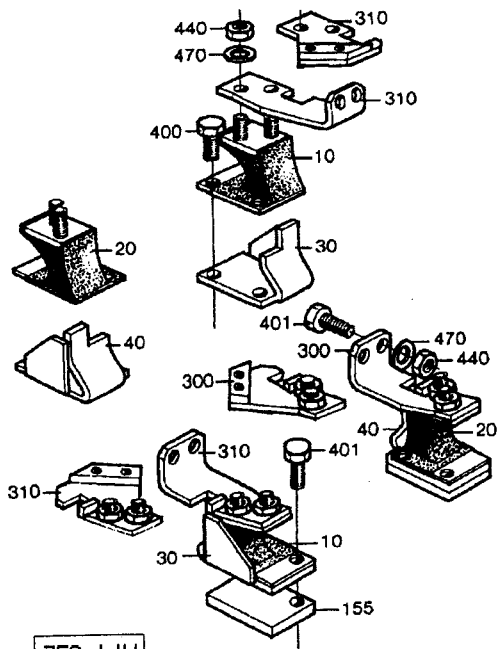

750ml IH

24632700.TIF
24632700-1/5-8/10-14/17
AM 18328

From	Pos	Part No	SP	UN Qty	Description
	440	312812-0314	S	16	LOCK NUT A4-M5RFR
	470	315105-0146	-	16	WASHER BRB5,3X10RFR
IH 750ml					
	F000	**C- 246327-0410**			**Shock Absorber, Ass'y**
	010	279505	P	2	DAMPER
	020	279506	P	2	DAMPER
	030	445560	P	2	STOP
	040	445559	P	2	STOP
	155	445561	S	2	LACE
	300	445557	S	2	CANTILEVER
	310	445558	S	2	CANTILEVER
	400	312105-0329	-	4	SCREW M6S5X16 A4 80
	401	312105-0331	-	12	SCREW M6S5X20 A4 80
	440	312812-0314	S	16	LOCK NUT A4-M5RFR
	470	315105-0146	-	16	WASHER BRB5,3X10RFR
IH 500ml Slim					
	F000	**C- 246327-0411**			**Shock Absorber, Ass'y**
	010	G- 499397	P	2	DAMPER L
	020	G- 499398	P	2	DAMPER R
	030	499125	-	2	STOP
	040	499124	-	2	STOP
	150	445770	S	4	STOPPER
	155	251597	S	2	LACE
	400	312105-0329	-	4	SCREW M6S5X16 A4 80
	401	312105-0331	-	12	SCREW M6S5X20 A4 80
	425	312145-0289	-	4	SLOTTED HEMFS4X10RFR
	440	312812-0314	S	8	LOCK NUT A4-M5RFR
	470	315105-0146	-	8	WASHER BRB5,3X10RFR
IH 300ml					
	F000	**C- 246327-0412**			**Shock Absorber, Ass'y**
	140	545651	P	8	GUIDE STUD
	150	545125	S	2	STOPPER
	152	545126	S	2	STOPPER
	180	38467	P	3	SPRING
	190	251530	P	3	SPRING
	205	545127	S	2	CATCH
	210	247262	S	4	SPRING BRACKET
	215	247263	S	8	SPACER
	220	247271	S	2	LACE
	240	263684	S	4	SPACER
	250	545136	S	2	CATCH
	260	554962	P	1	SPRING
	270	554963	P	1	SPRING
	401	312105-0331	-	8	SCREW M6S5X20 A4 80
	410	312105-0340	-	8	SCREW M6S5X45 A4 80
	420	312105-0325	-	8	SCREW M6S5X10 A4 80
	470	315105-0146	-	24	WASHER BRB5,3X10RFR
TPC 1000ml HiFin					
	F000	**C- 246327-0413**			**Shock Absorber, Ass'y**
	010	252808	P	2	DAMPER
	020	252809	P	2	DAMPER
	030	255473	P	2	STOP
	040	255474	P	2	STOP
	150	251598	S	4	STOPPER
	155	251597	S	6	LACE
	401	312105-0331	-	12	SCREW M6S5X20 A4 80
	402	312105-0333	-	4	SCREW M6S5X25 A4 80
	430	312155-0329	-	8	SCREW MF6S5X16RFR
	440	312812-0314	S	16	LOCK NUT A4-M5RFR
	470	315105-0146	-	16	WASHER BRB5,3X10RFR
IH 355ml					
	F000	**C- 246327-0414**			**Shock Absorber, Ass'y**
	140	545651	P	8	GUIDE STUD
	150	545125	S	2	STOPPER
	152	545126	S	2	STOPPER
	180	545801	P	3	SPRING
	190	545802	P	3	SPRING
	205	545127	S	2	CATCH
	210	247262	S	4	SPRING BRACKET
	215	247263	S	8	SPACER
	220	247271	S	2	LACE
	240	263684	S	4	SPACER
	250	545136	S	2	CATCH
	260	554962	P	1	SPRING
	270	554963	P	1	SPRING
	401	312105-0331	-	8	SCREW M6S5X20 A4 80
	410	312105-0340	-	8	SCREW M6S5X45 A4 80
	420	312105-0325	-	8	SCREW M6S5X10 A4 80
	470	315105-0146	-	24	WASHER BRB5,3X10RFR
IH 375ml					
	F000	**C- 246327-0415**			**Shock Absorber, Ass'y**
	140	545651	P	8	GUIDE STUD
	150	548493	S	4	STOPPER
	180	561393	P	3	SPRING
	190	561394	P	3	SPRING
	205	562137	S	2	CATCH
	210	247262	S	4	SPRING BRACKET
	215	247263	S	8	SPACER
	220	247271	S	2	LACE
	240	263684	S	4	SPACER

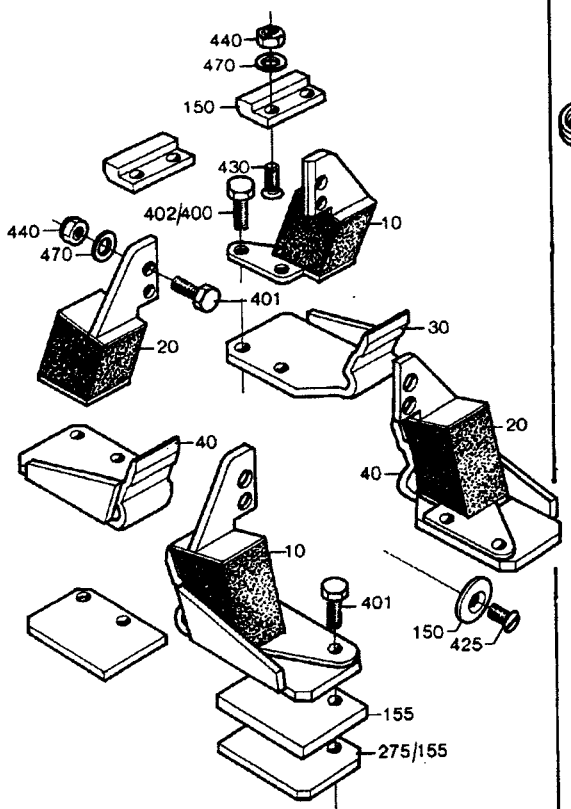

1000ml
1136ml - 1055ml TPC
1055ml IH
750ml - 500ml SLIM IH

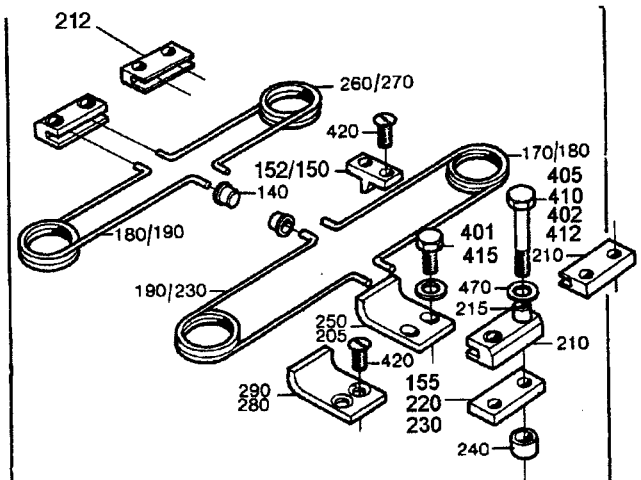

568ml - 300ml IH
1000ml Slim IH
568ml - 500ml TPC

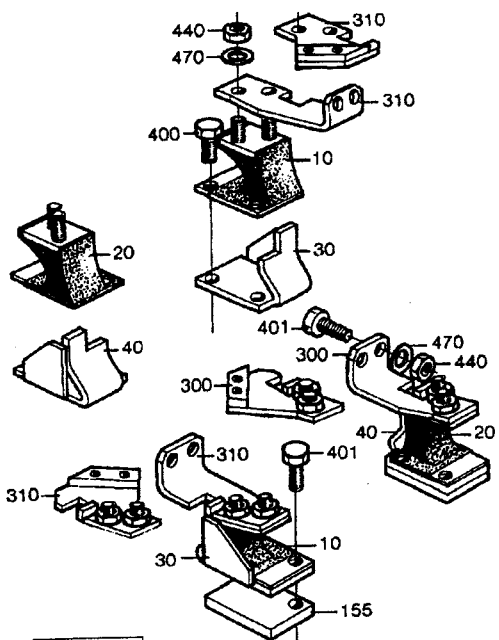

750ml IH

24632700.TIF
24632700-1/5-8/10-14/17
AM 18328

From	Pos	Part No	SP	UN	Qty	Description
	250	562136	S		2	CATCH
	260	561391	P		1	SPRING
	270	561392	P		1	SPRING
	400	312105-0329	-		8	SCREW M6S5X16 A4 80
	410	312105-0340	-		8	SCREW M6S5X45 A4 80
	415	312115-0331	-		8	SCREW MC6S 5X20 A4 80
	470	315105-0146	-		24	WASHER BRB5,3X10RFR
IH 1000ml Slim						
	F000	C- 246327-0416				**Shock Absorber, Ass'y**
	140	545651	P		8	GUIDE STUD
	150	571294	S		2	STOPPER
	152	571295	S		2	STOPPER
	180	571301	P		4	SPRING
	190	571302	P		4	SPRING
	205	571299	S		2	CATCH
	210	571296	S		4	SPRING BRACKET
	220	571298	S		2	LACE
	230	571297	S		2	LACE
	240	263684	S		4	SPACER
	250	571300	S		2	CATCH
	412	312115-0340	-		8	SCREW MC6S 5X45 A4 80
	415	312115-0331	-		8	SCREW MC6S 5X20 A4 80
	470	315105-0146	-		20	WASHER BRB5,3X10RFR

From	Pos	Part No	SP	UN	Qty	Description

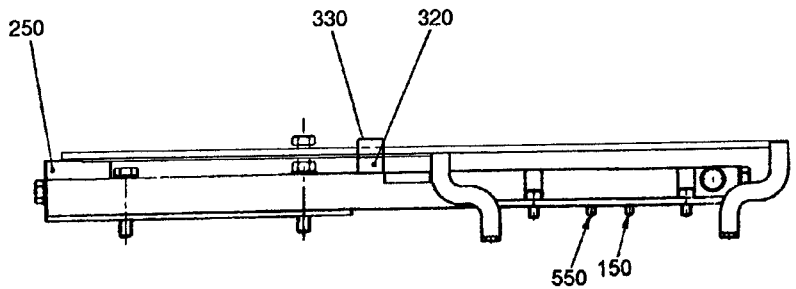

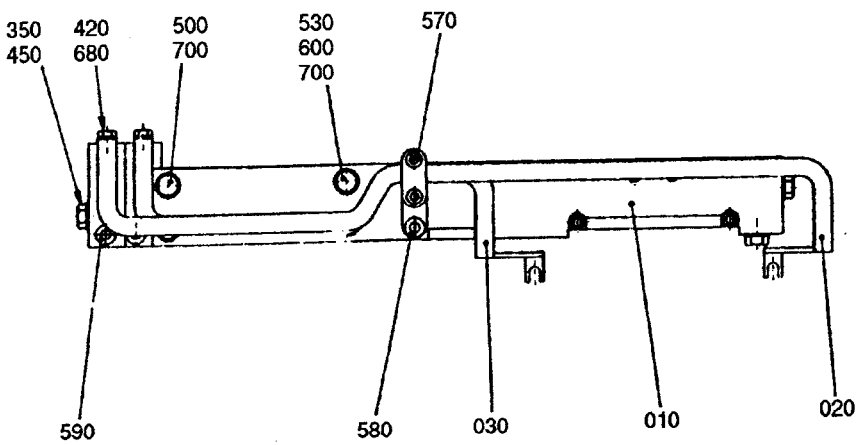

VÄNSTERUTFÖRANE VISAD
HÖGERUTFÖRANDE SPEGELVÄND

LEFT HAND VERSION SHOWN
RIGHT HAND VERSION REVERSED

24718703.TIF
247187-2
AM

From	Pos	Part No	SP	UN	Qty	Description
1000ml LoFin 1136ml 1055ml						
	F000	**C- 247187-0501**				**Carrier, Ass'y**
	010	527804	S		1	CARRIER
	020	542547	S		1	BUSBAR
	030	542549	S		1	BUSBAR
	150	312115-0331	-		2	SCREW 5X20 A4 80
568ml-200ml						
	F000	**C- 247187-0502**				**Carrier, Ass'y**
	010	527804	S		1	CARRIER
	020	542551	S		1	BUSBAR
	030	542553	S		1	BUSBAR
1000ml HiFin						
	F000	**C- 247187-0503**				**Carrier, Ass'y**
	010	533895	S		1	CARRIER
	020	542555	S		1	BUSBAR
	030	542557	S		1	BUSBAR
	150	312115-0331	-		2	SCREW 5X20 A4 80
Common Parts						
	250	542559	-		1	BRACKET
	320	542560	-		1	CRAMP
	330	542561	-		1	CRAMP
	350	90005-0007	-		3	WASHER
	420	312105-0366	-		2	SCREW M6S6X12RFR
	450	312105-0447	-		3	SCREW M6S8X12RFR
	500	312105-0457	-		3	SCREW M6S8X35RFR
	530	312109-0463	-		1	SCREW
	550	312115-0366	-		2	SCREW 6X12 A4 80
	570	312155-0329	-		2	SCREW MF6S5X16RFR
	580	312155-0370	-		3	SCREW MF6S6X20RFR
	590	312155-0372	-		1	SCREW MF6S6X25RFR
	600	312605-0318	-		1	NUT M6M8RFR
	680	315105-0153	-		2	WASHER BRB6,4X12RFR
	700	315105-0165	-		4	WASHER BRB8,4X16RFR

From	Pos	Part No	SP	UN	Qty	Description

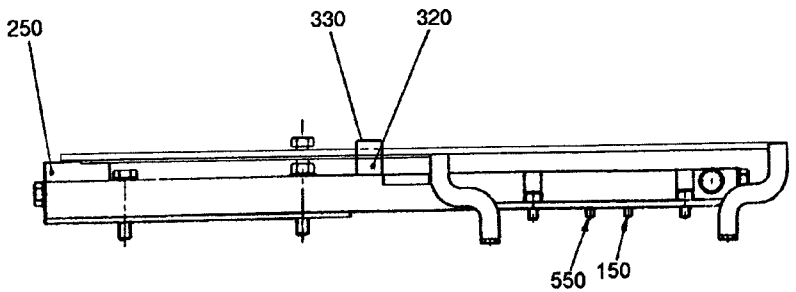

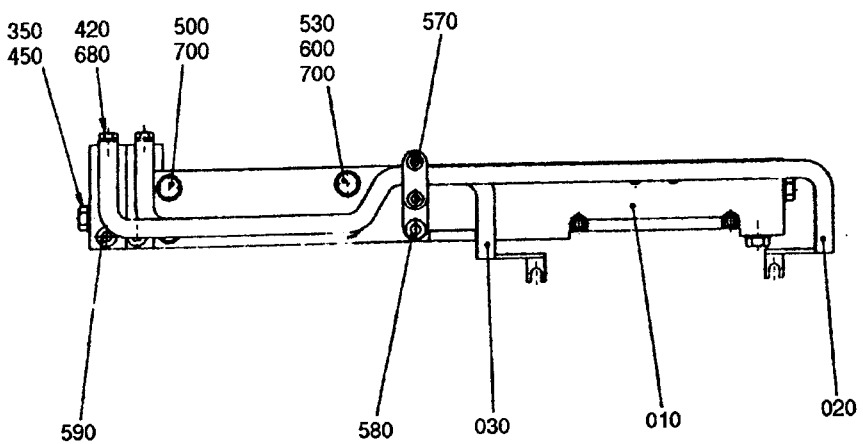

VÄNSTERUTFÖRANE VISAD
HÖGERUTFÖRANDE SPEGELVÄND

LEFT HAND VERSION SHOWN
RIGHT HAND VERSION REVERSED

24718703.TIF
247187-2
AM

From	Pos	Part No	SP	UN	Qty	Description
1000ml LoFin 1136ml 1055ml						
	F000	**C- 247187-0551**				**Carrier, Ass'y**
	010	527803	S		1	CARRIER
	020	542548	S		1	BUSBAR
	030	542546	S		1	BUSBAR
	150	312115-0331	-		2	SCREW 5X20 A4 80
568ml 500ml 300ml						
	F000	**C- 247187-0552**				**Carrier, Ass'y**
	010	527803	S		1	CARRIER
	020	542552	S		1	BUSBAR
	030	542550	S		1	BUSBAR
	010	533894	S		1	CARRIER
1000ml HiFin						
	F000	**C- 247187-0551**				**Carrier, Ass'y**
	020	542556	S		1	BUSBAR
	030	542554	S		1	BUSBAR
	150	312115-0331	-		2	SCREW 5X20 A4 80
Common Parts						
	250	542558	-		1	BRACKET
	320	542560	-		1	CRAMP
	330	542561	-		1	CRAMP
	350	90005-0007	-		3	WASHER
	420	312105-0366	-		2	SCREW M6S6X12RFR
	450	312105-0447	-		3	SCREW M6S8X12RFR
	500	312105-0457	-		3	SCREW M6S8X35RFR
	530	312109-0463	-		1	SCREW
	550	312115-0366	-		2	SCREW 6X12 A4 80
	570	312155-0329	-		2	SCREW MF6S5X16RFR
	580	312155-0370	-		3	SCREW MF6S6X20RFR
	590	312155-0372	-		1	SCREW MF6S6X25RFR
	600	312605-0318	-		1	NUT M6M8RFR
	680	315105-0153	-		2	WASHER BRB6,4X12RFR
	700	315105-0165	-		4	WASHER BRB8,4X16RFR

From	Pos	Part No	SP	UN	Qty	Description

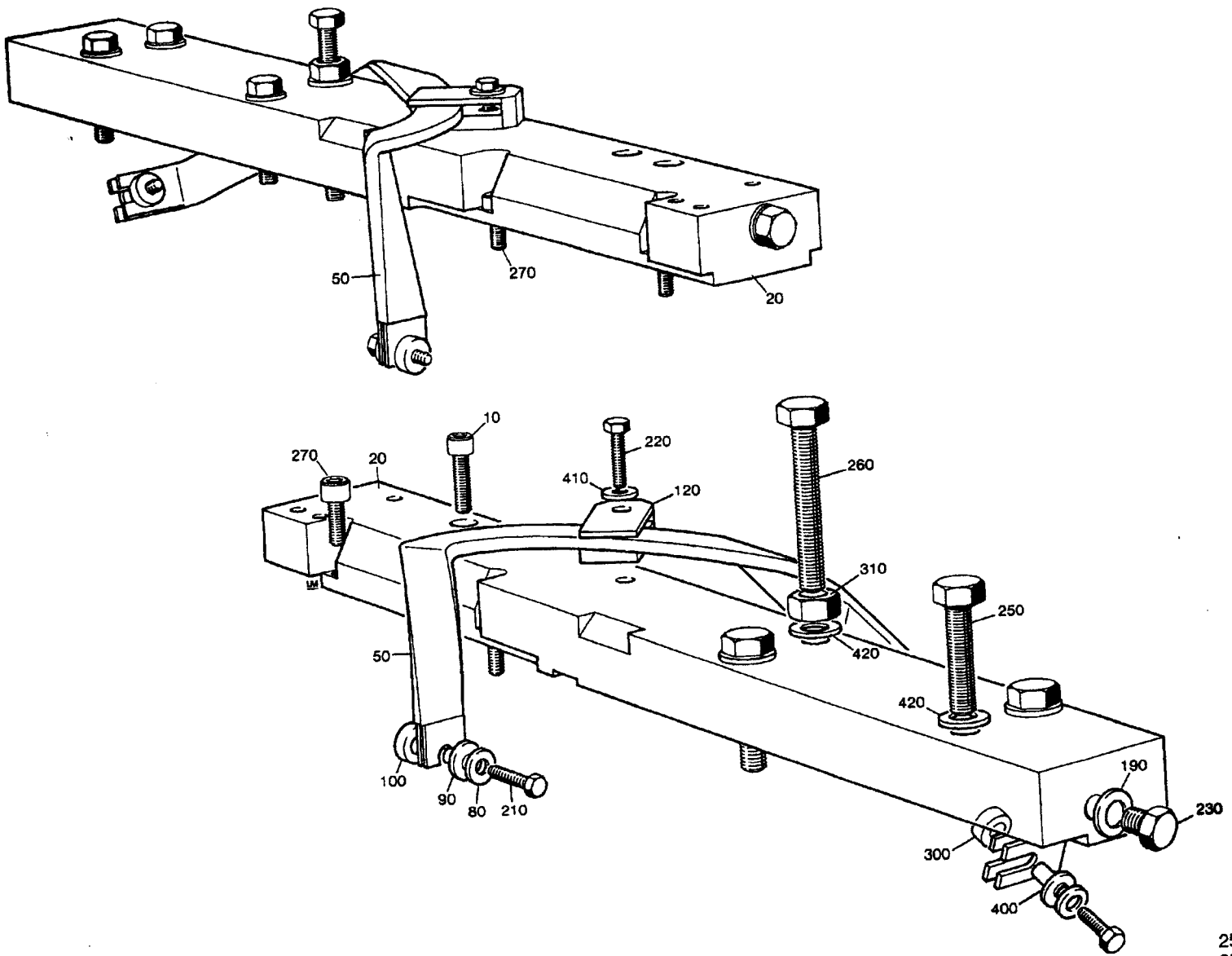

25941402.TIF
259414-2
AM

From	Pos	Part No	SP	UN	Qty	Description
1055ml 1000ml 1000ml Slim 750ml 750ml Slim 500ml 500ml Slim 375ml 355ml 300ml						
	F000	**C- 259414-0401**				**Carrier Pressure L IH, Ass'y**
	010	312115-0331	-		2	SCREW 5X20 A4 80
568ML 500ML						
	F000	**C- 259414-0402**				**Carrier Pressure L IH, Ass'y**
Common Parts						
	020	540368	S		1	CARRIER
	050	540744	S		1	BUSBAR
	080	28509	P		2	WASHER
	090	32544	SU		2	INSULATION NUT
	100	32644	P		2	WASHER
	120	484834	P		1	HOLDER
	190	90005-0007	-		2	WASHER
	210	312105-0295	-		2	SCREW M6S4X20 A4 80
	220	312105-0370	-		1	SCREW M6S6X20RFR
	230	312105-0447	-		2	SCREW M6S8X12RFR
	250	312105-0457	-		3	SCREW M6S8X35RFR
	260	312109-0463	-		1	SCREW
	270	312115-0366	-		2	SCREW 6X12 A4 80
	300	312605-0312	-		1	NUT M6M4RFR
	310	312605-0318	-		1	NUT M6M8RFR
	400	315105-0136	-		1	WASHER BRB4,3X8RFR
	410	315105-0153	-		1	WASHER BRB6,4X12RFR
	420	315105-0165	-		4	WASHER BRB8,4X16RFR

From	Pos	Part No	SP	UN	Qty	Description

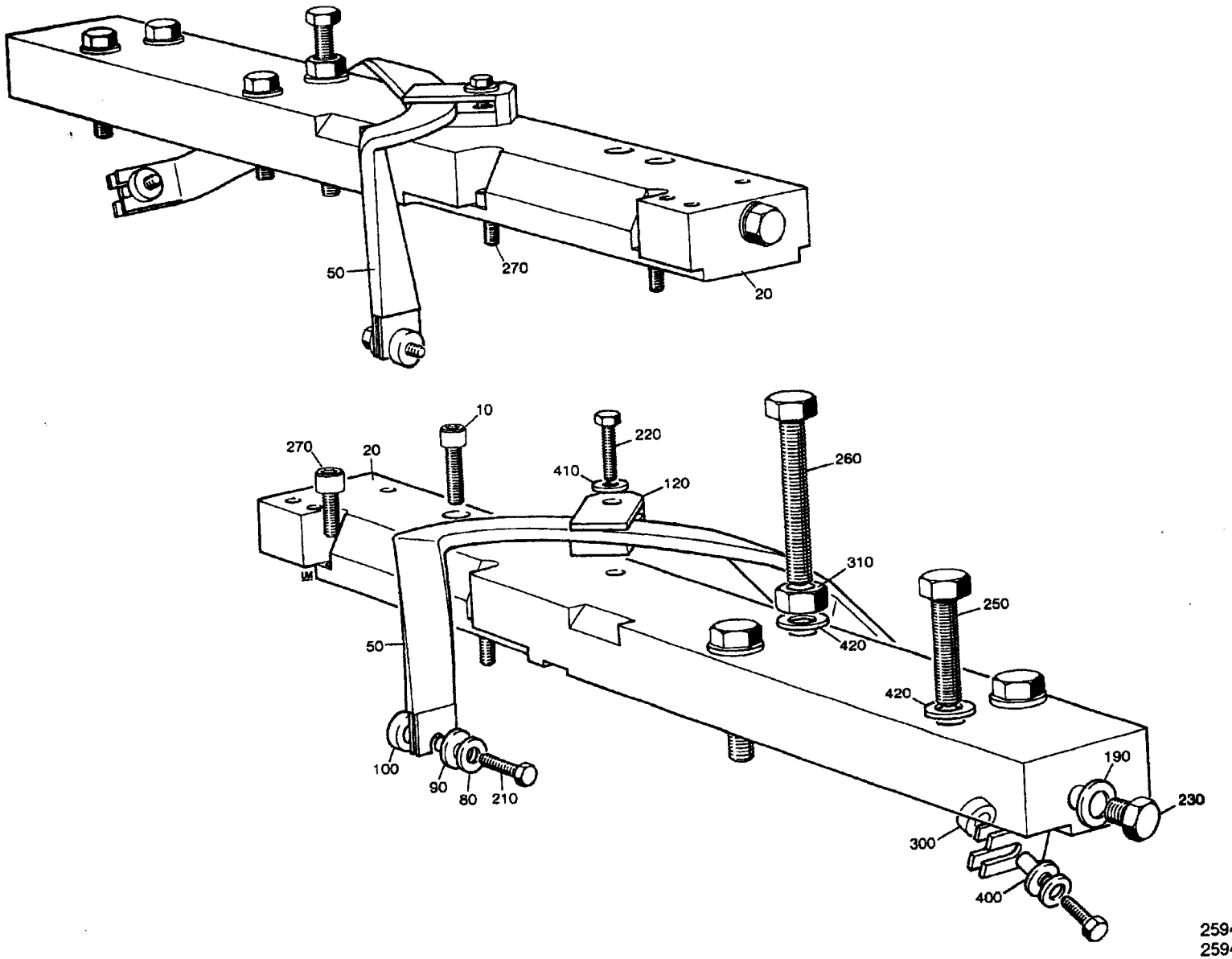

25941502.TIF
259415-2
AM

From	Pos	Part No	SP	UN	Qty	Description
1055ml 1000ml 1000ml Slim 750ml 750ml Slim 500ml Slim 375ml 355ml 300ml						
	F000	**C- 259415-0401**				**Carrier Pressure R IH, Ass'y**
	010	312115-0331	-		2	SCREW 5X20 A4 80
568ml 500ml						
	F000	**C- 259415-0402**				**Carrier Pressure R IH, Ass'y**
Common Parts						
	020	540367	S		1	CARRIER
	050	540743	S		1	BUSBAR
	080	28509	P		2	WASHER
	090	32544	SU		2	INSULATION NUT
	100	32644	P		2	WASHER
	120	484834	P		1	HOLDER
	190	90005-0007	-		2	WASHER
	210	312105-0295	-		2	SCREW M6S4X20 A4 80
	220	312105-0370	-		1	SCREW M6S6X20RFR
	230	312105-0447	-		2	SCREW M6S8X12RFR
	250	312105-0457	-		3	SCREW M6S8X35RFR
	260	312109-0463	-		1	SCREW
	270	312115-0366	-		2	SCREW 6X12 A4 80
	300	312605-0312	-		1	NUT M6M4RFR
	310	312605-0318	-		1	NUT M6M8RFR
	400	315105-0136	-		1	WASHER BRB4,3X8RFR
	410	315105-0153	-		1	WASHER BRB6,4X12RFR
	420	315105-0165	-		4	WASHER BRB8,4X16RFR

From	Pos	Part No	SP	UN	Qty	Description

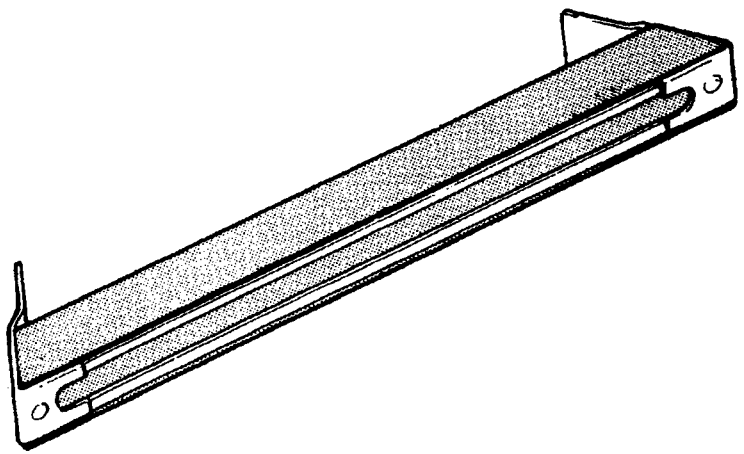

27356502.TIF
273565-2
AM

From	Pos	Part No	SP	UN	Qty	Description
	F000	C- 273565-0301				TPC Bar 1136ml-500ml, Ass'y
	F000	C- 273565-0302				TPC Bar 300ml, Ass'y

From	Pos	Part No	SP	UN	Qty	Description

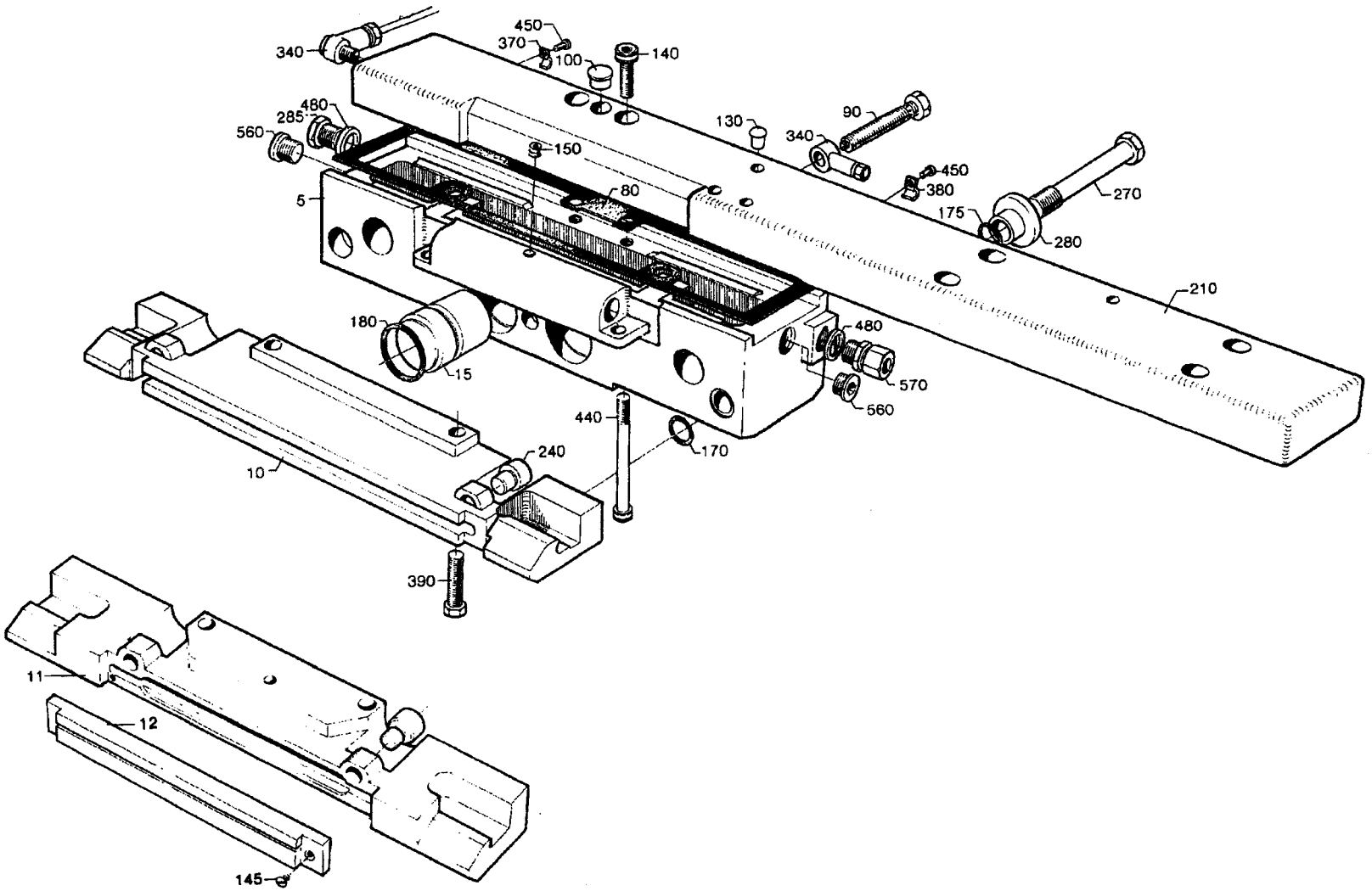

24633705.TIF
246337-5
AM

Last Alteration: AM 14129 89-11-03

Corresponding group: 246337-050V
Assembly Drawing: 246337-6/8/9

Issue: 930607

From	Pos	Part No	SP	UN	Qty	Description
1000ml LoFin 1136ml 1055ml						
	F000	**C- 246337-0501**				**Cutting Jaw Left TPC, Ass'y**
	005	450503	S		1	BEARING HOUSING
	010	536421	S		1	CUTTING JAW
	015	28880	S		2	PLUNGER
	080	245271	P		1	GASKET
	090	450507-0001	-		1	SCREW
	100	536980	-		2	SCREW
	130	311508-0416	-		1	RIVET KN4X10ALUM.
	140	312115-0331	-		2	SCREW 5X20 A4 80
	170	315202-0111	PU		2	O-RING 13,1X1,6
	175	315202-0207	PU		2	O-RING 8,3X2,4
	180	315202-0212	PU		2	O-RING 14,3X2,4
	240	32464	S		2	SHAFT
	390	90287-0070	-		2	SCREW
568ml 500ml						
	F000	**C- 246337-0502**				**Cutting Jaw Left TPC, Ass'y**
	005	450503	S		1	BEARING HOUSING
	010	536978	S		1	CUTTING JAW
	015	28880	S		2	PLUNGER
	080	245271	P		1	GASKET
	090	450507-0001	-		1	SCREW
	100	536980	-		2	SCREW
	130	311508-0416	-		1	RIVET KN4X10ALUM.
	170	315202-0111	PU		2	O-RING 13,1X1,6
	175	315202-0207	PU		2	O-RING 8,3X2,4
	180	315202-0212	PU		2	O-RING 14,3X2,4
	240	32464	S		2	SHAFT
	390	90287-0070	-		2	SCREW
300ml						
	F000	**C- 246337-0503**				**Cutting Jaw Left TPC, Ass'y**
	005	458021	S		1	BEARING HOUSING
	011	450105	S		1	CUTTING JAW
	012	464758	S		1	CUTTING JAW
	015	23972	S		2	PLUNGER
	080	245272	P		1	GASKET
	090	450507-0001	-		1	SCREW
	130	311508-0416	-		3	RIVET KN4X10ALUM.
	145	312145-0325	-		2	SLOTTED HEMFS5X10RFR
	180	315202-0213	PU		2	O-RING 15,3X2,4
	240	464697	S		2	SHAFT
	390	90287-0070	-		2	SCREW

From	Pos	Part No	SP	UN	Qty	Description
1000ml HiFin						
	F000	**C- 246337-0504**				**Cutting Jaw Left TPC, Ass'y**
	005	497572	S		1	HOUSING HIFIN TB/TBA8
	010	536979	S		1	CUTTING JAW
	015	28880	S		2	PLUNGER
	080	245271	P		1	GASKET
	090	450507-0001	-		1	SCREW
	100	536980	-		2	SCREW
	130	311508-0416	-		1	RIVET KN4X10ALUM.
	140	312115-0331	-		2	SCREW 5X20 A4 80
	150	312318-0321	-		1	STOP SCREW SK6SS5X6RFR
	170	315202-0111	PU		2	O-RING 13,1X1,6
	175	315202-0207	PU		2	O-RING 8,3X2,4
	180	315202-0212	PU		2	O-RING 14,3X2,4
	240	32464	S		2	SHAFT
	390	312115-0374	-		2	SCREW 6X30 A4 80
Common Parts						
	210	246333	S		1	CARRIER CUT LEFT
	270	243143	P		2	SCREW
	280	243144	P		2	BUSHING
	285	255278	S		1	PLUG FINISHER
	340	90134-0058	-		3	BANJO CONNECTION
	370	90165-0058	-		2	CLAMP
	380	90165-0060	-		1	CLAMP
	440	312115-0461	-		2	SCREW 8X50 A4 80
	450	312125-0287	-		3	SLOTTED HEMCS4X8RFR
	480	315234-0110	P		2	SEAL RING R1/4"
	560	342713-0209	-		4	BLIND PLUG
	570	90030-0201	P		1	PIPE CONNECTION

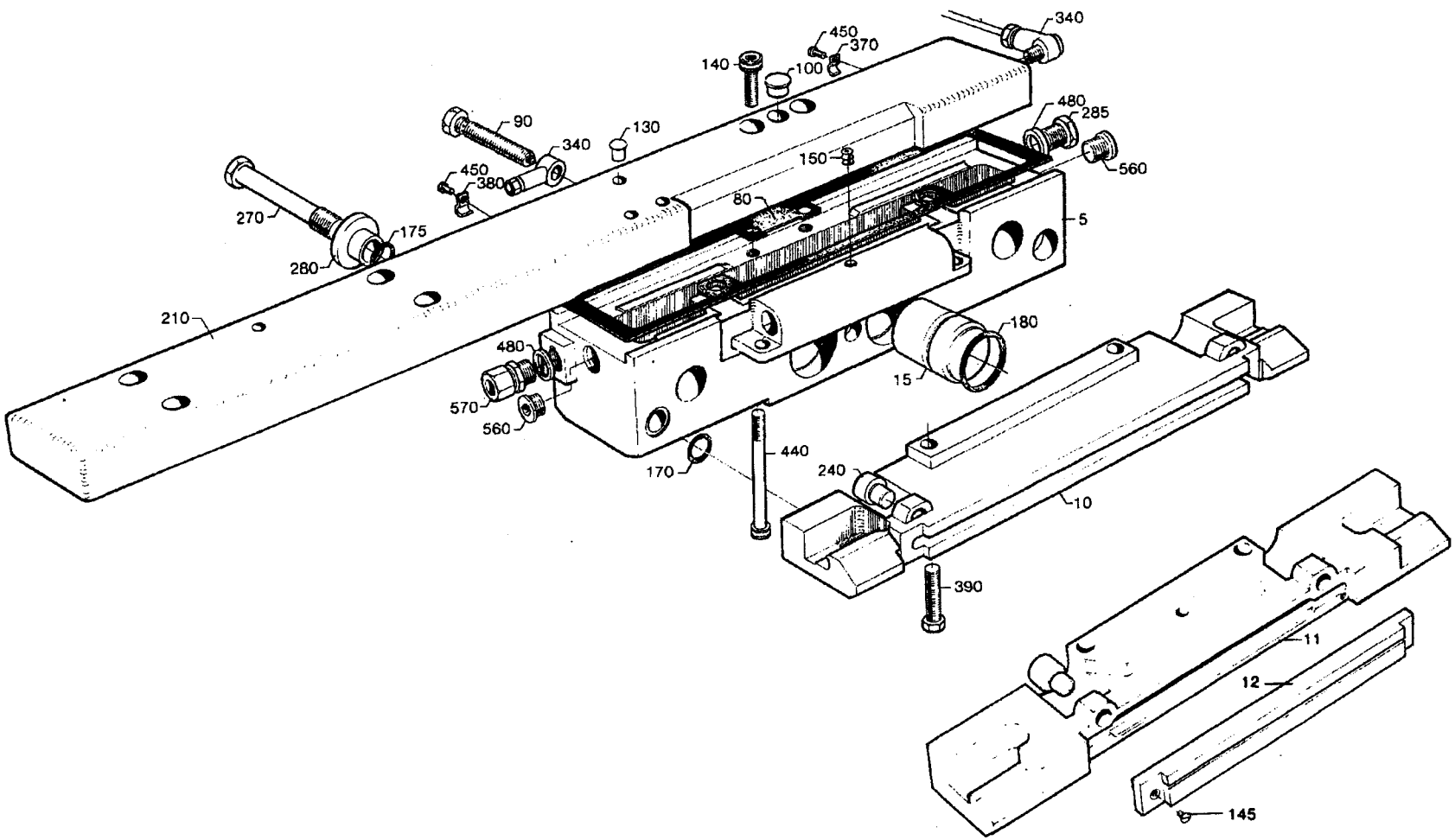

24633805.TIF
246338-5
AM

From	Pos	Part No	SP	UN	Qty	Description
1000ml LoFin 1136ml 1055ml						
	F000	**C- 246338-0501**				**Cutting Jaw Right TPC, Ass'y**
	005	450503	S		1	BEARING HOUSING
	010	536421	S		1	CUTTING JAW
	015	28880	S		2	PLUNGER
	080	245271	P		1	GASKET
	090	450507-0001	-		1	SCREW
	100	536980	-		2	SCREW
	130	311508-0416	-		1	RIVET KN4X10ALUM.
	140	312115-0331	-		2	SCREW 5X20 A4 80
	170	315202-0111	PU		2	O-RING 13,1X1,6
	175	315202-0207	PU		2	O-RING 8,3X2,4
	180	315202-0212	PU		2	O-RING 14,3X2,4
	240	32464	S		2	SHAFT
	390	90287-0070	-		2	SCREW
568ml 500ml						
	F000	**C- 246338-0502**				**Cutting Jaw Right TPC, Ass'y**
	005	450503	S		1	BEARING HOUSING
	010	536978	S		1	CUTTING JAW
	015	28880	S		2	PLUNGER
	080	245271	P		1	GASKET
	090	450507-0001	-		1	SCREW
	100	536980	-		2	SCREW
	130	311508-0416	-		1	RIVET KN4X10ALUM.
	170	315202-0111	PU		2	O-RING 13,1X1,6
	175	315202-0207	PU		2	O-RING 8,3X2,4
	180	315202-0212	PU		2	O-RING 14,3X2,4
	240	32464	S		2	SHAFT
	390	90287-0070	-		2	SCREW
300ml						
	F000	**C- 246338-0503**				**Cutting Jaw Right TPC, Ass'y**
	005	458021	S		1	BEARING HOUSING
	011	450105	S		1	CUTTING JAW
	012	464758	S		1	CUTTING JAW
	015	23972	S		2	PLUNGER
	080	245272	P		1	GASKET
	090	450507-0001	-		1	SCREW
	130	311508-0416	-		3	RIVET KN4X10ALUM.
	145	312145-0325	-		2	SLOTTED HEMFS5X10RFR
	180	315202-0213	PU		2	O-RING 15,3X2,4
	240	464697	S		2	SHAFT
	390	90287-0070	-		2	SCREW

From	Pos	Part No	SP	UN	Qty	Description
1000ml HiFin						
	F000	**C- 246338-0504**				**Cutting Jaw Right TPC, Ass'y**
	005	497572	S		1	HOUSING HIFIN TB/TBA8
	010	536979	S		1	CUTTING JAW
	015	28880	S		2	PLUNGER
	080	245271	P		1	GASKET
	090	450507-0001	-		1	SCREW
	100	536980	-		2	SCREW
	130	311508-0416	-		1	RIVET KN4X10ALUM.
	140	312115-0331	-		2	SCREW 5X20 A4 80
	150	312318-0321	-		1	STOP SCREW SK6SS5X6RFR
	170	315202-0111	PU		2	O-RING 13,1X1,6
	175	315202-0207	PU		2	O-RING 8,3X2,4
	180	315202-0212	PU		2	O-RING 14,3X2,4
	240	32464	S		2	SHAFT
	390	312115-0374	-		2	SCREW 6X30 A4 80
Common Parts						
	210	246334	S		1	CARRIER CUT RIGHT
	270	243143	P		2	SCREW
	280	243144	P		2	BUSHING
	285	255278	S		1	PLUG FINISHER
	340	90134-0058	-		3	BANJO CONNECTION
	370	90165-0058	-		2	CLAMP
	380	90165-0060	-		1	CLAMP
	440	312115-0461	-		2	SCREW 8X50 A4 80
	450	312125-0287	-		3	SLOTTED HEMCS4X8RFR
	480	315234-0110	P		2	SEAL RING R1/4"
	560	342713-0209	-		4	BLIND PLUG
	570	90030-0201	P		1	PIPE CONNECTION

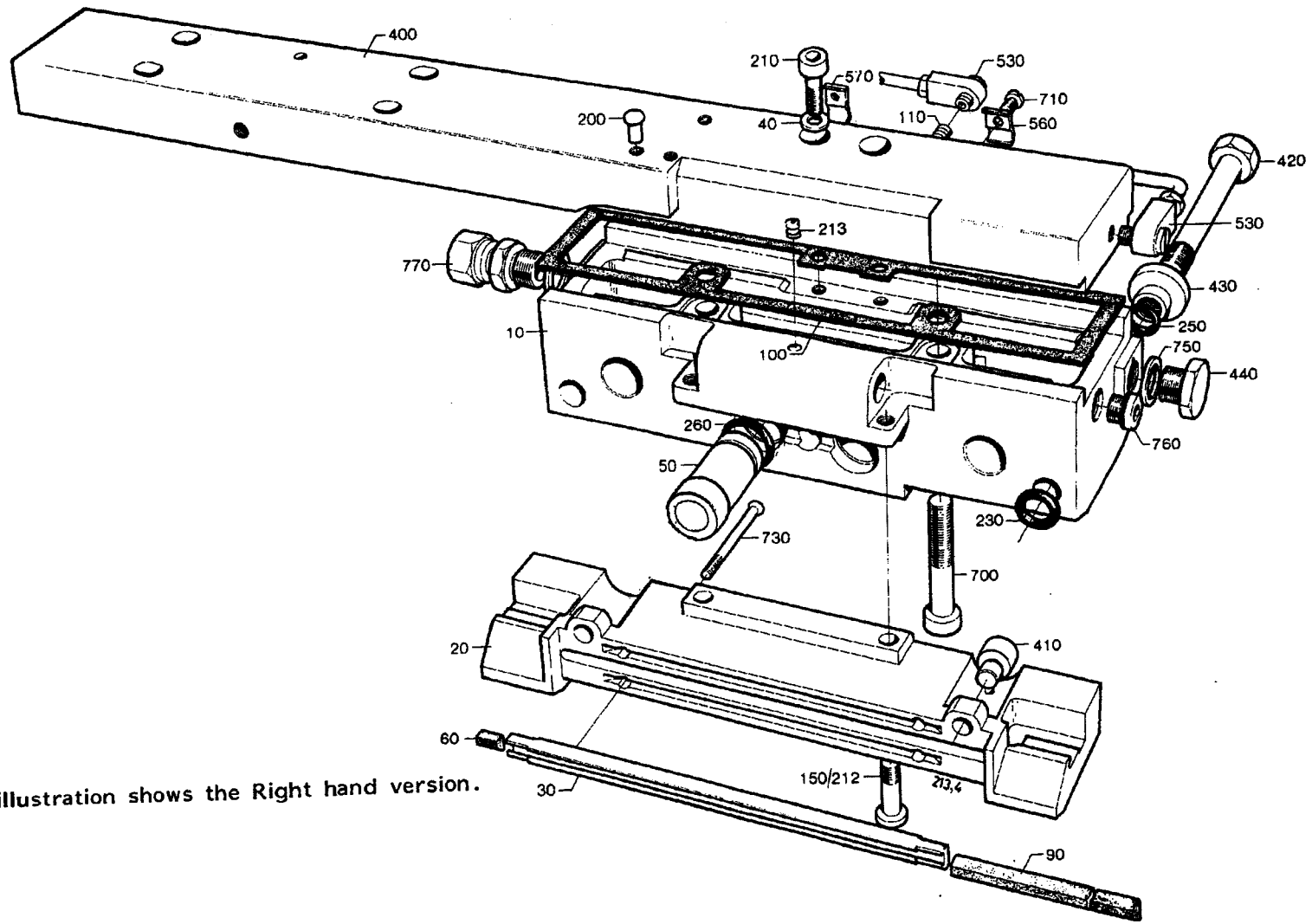

The illustration shows the Right hand version.

25783506.TIF
257835-6
AM

Last Alteration: AM 16885 91-11-16

Corresponding group: 257835-030V
Assembly Drawing: 257835-6/7

Issue: 930607

From	Pos	Part No	SP	UN	Qty	Description
1000ml LoFin 1055ml 750ml						
	F000	**C- 257835-0301**				**Cutting Jaw, Ass'y**
	010	450503	S		1	BEARING HOUSING
	020	257783	S		1	CUTTING JAW
	030	497921	P		2	CUTTING RAIL
	040	12922	S		2	WASHER
	060	32116	PU		4	END PIECE
	090	G- 564533-0001	PU		2	DOLLY
	100	245271	P		1	GASKET
	150	90287-0070	-		2	SCREW
	210	312115-0331	-		2	SCREW 5X20 A4 80
	230	315202-0111	PU		2	O-RING 13,1X1,6
	250	315202-0207	PU		2	O-RING 8,3X2,4
568ml 500ml						
	F000	**C- 257835-0302**				**Cutting Jaw, Ass'y**
	010	450503	S		1	BEARING HOUSING
	020	257783	S		1	CUTTING JAW
	030	497921	P		2	CUTTING RAIL
	060	32116	PU		4	END PIECE
	090	G- 564533-0001	PU		2	DOLLY
	100	245271	P		1	GASKET
	150	90287-0070	-		2	SCREW
	200	311508-0416	-		1	RIVET KN4X10ALUM.
	230	315202-0111	PU		2	O-RING 13,1X1,6
	250	315202-0207	PU		2	O-RING 8,3X2,4
1000ml HiFin						
	F000	**C- 257835-0305**				**Cutting Jaw, Ass'y**
	010	497572	S		1	HOUSING HIFIN B/AB8
	020	284578	S		1	CUTTING JAW
	030	539761	P		2	CUTTING RAIL
	040	12922	S		2	WASHER
	060	32116	PU		4	END PIECE
	090	G- 564533-0001	PU		2	DOLLY
	100	245271	P		1	GASKET
	210	312115-0331	-		2	SCREW 5X20 A4 80
	212	312115-0374	-		2	SCREW 6X30 A4 80
	213	312318-0321	-		1	STOP SCREW SK6SS5X6RFR
	230	315202-0111	PU		2	O-RING 13,1X1,6
	250	315202-0207	PU		2	O-RING 8,3X2,4
500ml Slim 355ml						
	F000	**C- 257835-0306**				**Cutting Jaw, Ass'y**
	010	466431	S		1	BEARING HOUSING
	020	464162	S		1	CUTTING JAW
	030	440925	P		2	CUTTING RAIL
	040	12922	S		2	WASHER
	060	440043	PU		4	END PIECE
	090	G- 564533-0005	PU		2	DOLLY
	100	497716	P		1	GASKET
	150	90287-0070	-		2	SCREW
	210	312115-0331	-		2	SCREW 5X20 A4 80
	230	315202-0111	PU		2	O-RING 13,1X1,6
	250	315202-0207	PU		2	O-RING 8,3X2,4
375ml 300ml						
	F000	**C- 257835-0307**				**Cutting Jaw, Ass'y**
	010	466432	S		1	BEARING HOUSING
	020	449727	S		1	CUTTING JAW
	030	544516	P		2	CUTTING RAIL
	040	12922	S		2	WASHER
	060	38490	PU		4	END PIECE
	090	G- 564533-0002	PU		2	DOLLY
	100	245272	P		1	GASKET
	150	90287-0070	-		2	SCREW
	210	312115-0331	-		2	SCREW 5X20 A4 80
750ml Slim						
	F000	**C- 257835-0308**				**Cutting Jaw, Ass'y**
	010	544317	S		1	BEARING HOUSING
	020	544323	S		1	CUTTING JAW
	030	544334	P		2	CUTTING RAIL
	040	12922	S		2	WASHER
	060	544337	PU		4	END PIECE
	090	G- 564533-0007	PU		2	DOLLY
	100	497716	P		1	GASKET
	150	90287-0070	-		2	SCREW
	210	312115-0331	-		2	SCREW 5X20 A4 80
	230	315202-0111	PU		2	O-RING 13,1X1,6
	250	315202-0207	PU		2	O-RING 8,3X2,4
1000ml Slim						
	F000	**C- 257835-0309**				**Cutting Jaw, Ass'y**
	010	569057	S		1	BEARING HOUSING
	020	569059	S		1	CUTTING JAW
	030	544334	P		2	CUTTING RAIL
	040	12922	S		2	WASHER
	060	32116	PU		4	END PIECE
	090	G- 564533-0001	PU		2	DOLLY
	100	245271	P		1	GASKET
	150	90287-0070	-		2	SCREW
	210	312115-0331	-		2	SCREW 5X20 A4 80
	230	315202-0111	PU		2	O-RING 13,1X1,6
	250	315202-0207	PU		2	O-RING 8,3X2,4

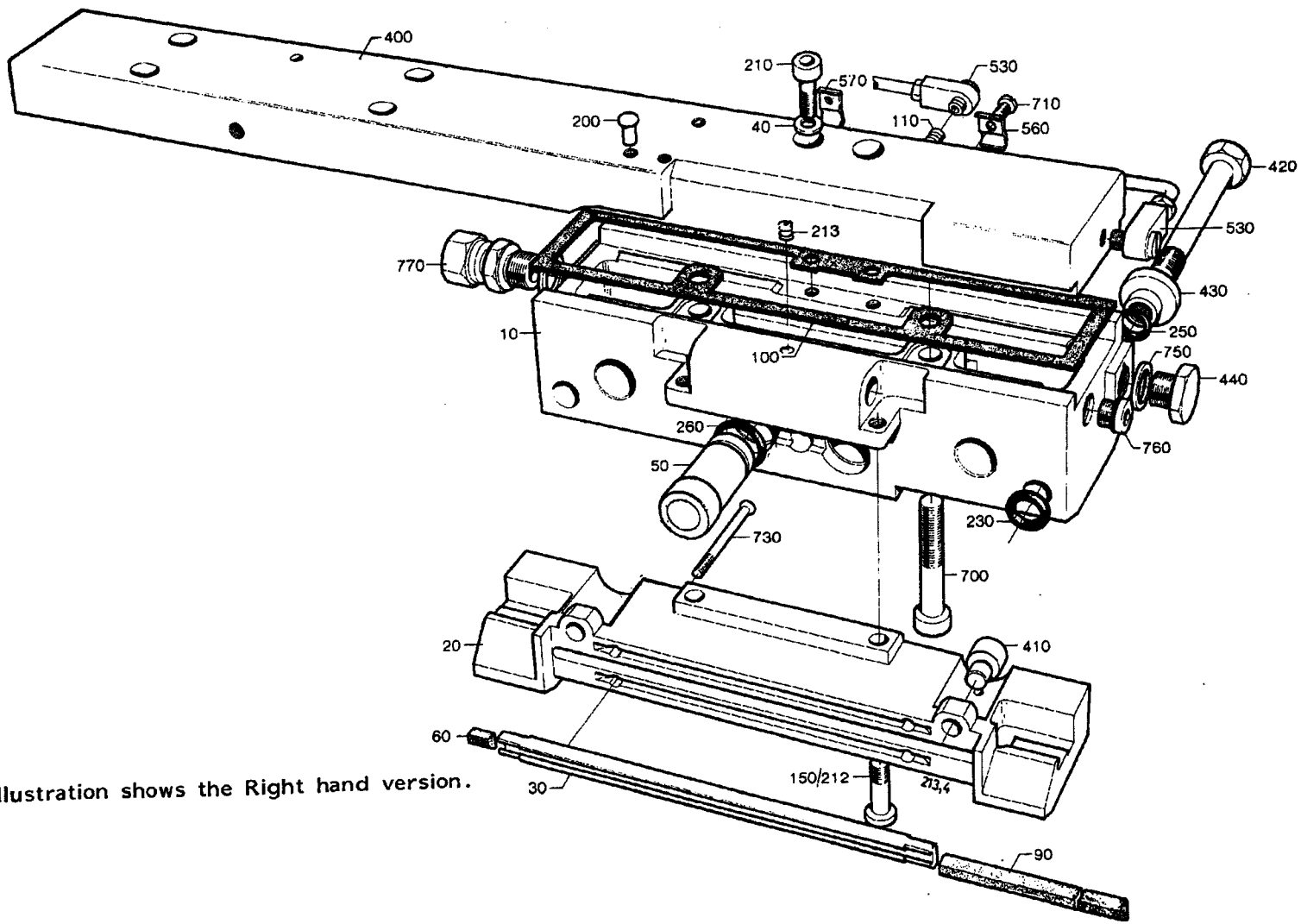

The illustration shows the Right hand version.

25783506.TIF
257835-6
AM

Last Alteration: AM 16885 91-11-16

Corresponding group: 257835-030V
Assembly Drawing: 257835-6/7

Issue: 930607

From	Pos	Part No	SP	UN	Qty	Description
Common Parts						
	050	28880	S		2	PLUNGER
	110	450507-0001	-		1	SCREW
	260	315202-0212	PU		2	O-RING 14,3X2,4
	400	464164	S		1	CARRIER CUT LEFT
	410	32464	S		2	SHAFT
	420	243143	P		2	SCREW
	430	243144	P		2	BUSHING
	440	255278	S		1	PLUG FINISHER
	530	90134-0058	-		3	BANJO CONNECTION
	560	90165-0058	-		2	CLAMP
	570	90165-0060	-		1	CLAMP
	700	312115-0461	-		2	SCREW 8X50 A4 80
	710	312125-0287	-		3	SLOTTED HEMCS4X8RFR
	730	312145-0238	PU		4	SLOTTED HEMFS3X40RFR
	750	315234-0110	P		2	SEAL RING R1/4"
	760	342713-0209	-		4	BLIND PLUG
	770	90030-0201	P		1	PIPE CONNECTION

From	Pos	Part No	SP	UN	Qty	Description

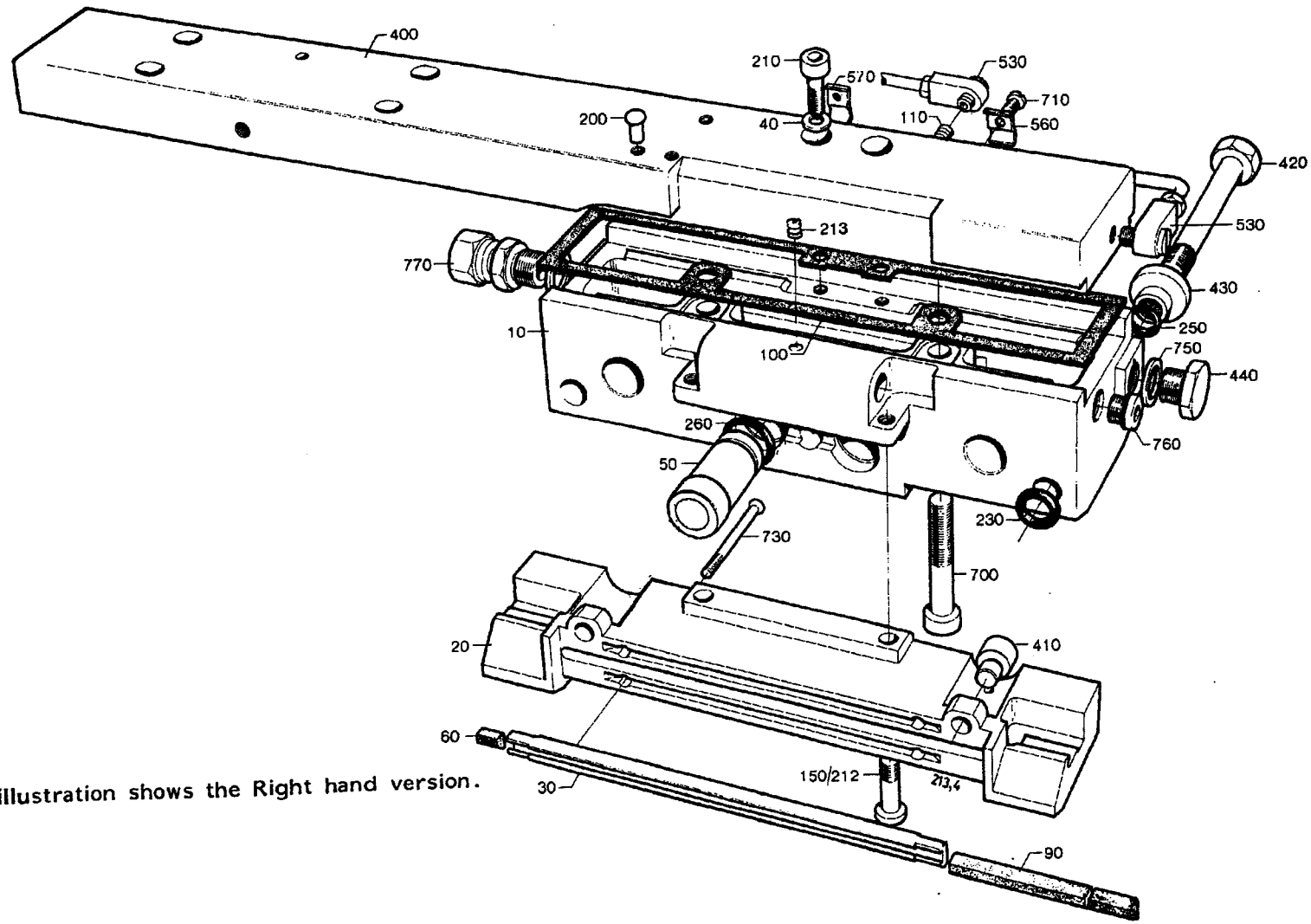

The illustration shows the Right hand version.

25783506.TIF
257835-6
AM

Last Alteration: AM 16885 91-11-16

Corresponding group: 257835-035V
Assembly Drawing: 257835-6/7

Issue: 930607

From	Pos	Part No	SP	UN	Qty	Description
1000ml LoFin 1055ml 750ml						
	F000	**C- 257835-0351**				**Cutting Jaw, Ass'y**
	010	450503	S		1	BEARING HOUSING
	020	257783	S		1	CUTTING JAW
	030	497921	P		2	CUTTING RAIL
	040	12922	S		2	WASHER
	060	32116	PU		4	END PIECE
	090	G- 564533-0001	PU		2	DOLLY
	100	245271	P		1	GASKET
	150	90287-0070	-		2	SCREW
	210	312115-0331	-		2	SCREW 5X20 A4 80
	230	315202-0111	PU		2	O-RING 13,1X1,6
	250	315202-0207	PU		2	O-RING 8,3X2,4
568ml 500ml						
	F000	**C- 257835-0352**				**Cutting Jaw, Ass'y**
	010	450503	S		1	BEARING HOUSING
	020	257783	S		1	CUTTING JAW
	030	497921	P		2	CUTTING RAIL
	060	32116	PU		4	END PIECE
	090	G- 564533-0001	PU		2	DOLLY
	100	245271	P		1	GASKET
	150	90287-0070	-		2	SCREW
	200	311508-0416	-		1	RIVET KN4X10ALUM.
	230	315202-0111	PU		2	O-RING 13,1X1,6
	250	315202-0207	PU		2	O-RING 8,3X2,4
1000ml HiFin						
	F000	**C- 257835-0355**				**Cutting Jaw, Ass'y**
	010	497572	S		1	HOUSING HIFIN B/AB8
	020	284578	S		1	CUTTING JAW
	030	539761	P		2	CUTTING RAIL
	040	12922	S		2	WASHER
	060	32116	PU		4	END PIECE
	090	G- 564533-0001	PU		2	DOLLY
	100	245271	P		1	GASKET
	210	312115-0331	-		2	SCREW 5X20 A4 80
	212	312115-0374	-		2	SCREW 6X30 A4 80
	213	312318-0321	-		1	STOP SCREW SK6SS5X6RFR
	230	315202-0111	PU		2	O-RING 13,1X1,6
	250	315202-0207	PU		2	O-RING 8,3X2,4
500ml Slim 355ml						
	F000	**C- 257835-0356**				**Cutting Jaw, Ass'y**
	010	466431	S		1	BEARING HOUSING
	020	464162	S		1	CUTTING JAW
	030	440925	P		2	CUTTING RAIL
	040	12922	S		2	WASHER
	060	440043	PU		4	END PIECE
	090	G- 564533-0005	PU		2	DOLLY
	100	497716	P		1	GASKET
	150	90287-0070	-		2	SCREW
	210	312115-0331	-		2	SCREW 5X20 A4 80
	230	315202-0111	PU		2	O-RING 13,1X1,6
	250	315202-0207	PU		2	O-RING 8,3X2,4
375ml 300ml						
	F000	**C- 257835-0357**				**Cutting Jaw, Ass'y**
	010	466432	S		1	BEARING HOUSING
	020	449727	S		1	CUTTING JAW
	030	544516	P		2	CUTTING RAIL
	040	12922	S		2	WASHER
	060	38490	PU		4	END PIECE
	090	G- 564533-0002	PU		2	DOLLY
	100	245272	P		1	GASKET
	150	90287-0070	-		2	SCREW
	210	312115-0331	-		2	SCREW 5X20 A4 80
750ml Slim						
	F000	**C- 257835-0358**				**Cutting Jaw, Ass'y**
	010	544317	S		1	BEARING HOUSING
	020	544323	S		1	CUTTING JAW
	030	544334	P		2	CUTTING RAIL
	040	12922	S		2	WASHER
	060	544337	PU		4	END PIECE
	090	G- 564533-0007	PU		2	DOLLY
	100	497716	P		1	GASKET
	150	90287-0070	-		2	SCREW
	210	312115-0331	-		2	SCREW 5X20 A4 80
	230	315202-0111	PU		2	O-RING 13,1X1,6
	250	315202-0207	PU		2	O-RING 8,3X2,4
1000ml Slim						
	F000	**C- 257835-0359**				**Cutting Jaw, Ass'y**
	010	569057	S		1	BEARING HOUSING
	020	569059	S		1	CUTTING JAW
	030	544334	P		2	CUTTING RAIL
	040	12922	S		2	WASHER
	060	32116	PU		4	END PIECE
	090	G- 564533-0001	PU		2	DOLLY
	100	245271	P		1	GASKET
	150	90287-0070	-		2	SCREW
	210	312115-0331	-		2	SCREW 5X20 A4 80
	230	315202-0111	PU		2	O-RING 13,1X1,6
	250	315202-0207	PU		2	O-RING 8,3X2,4

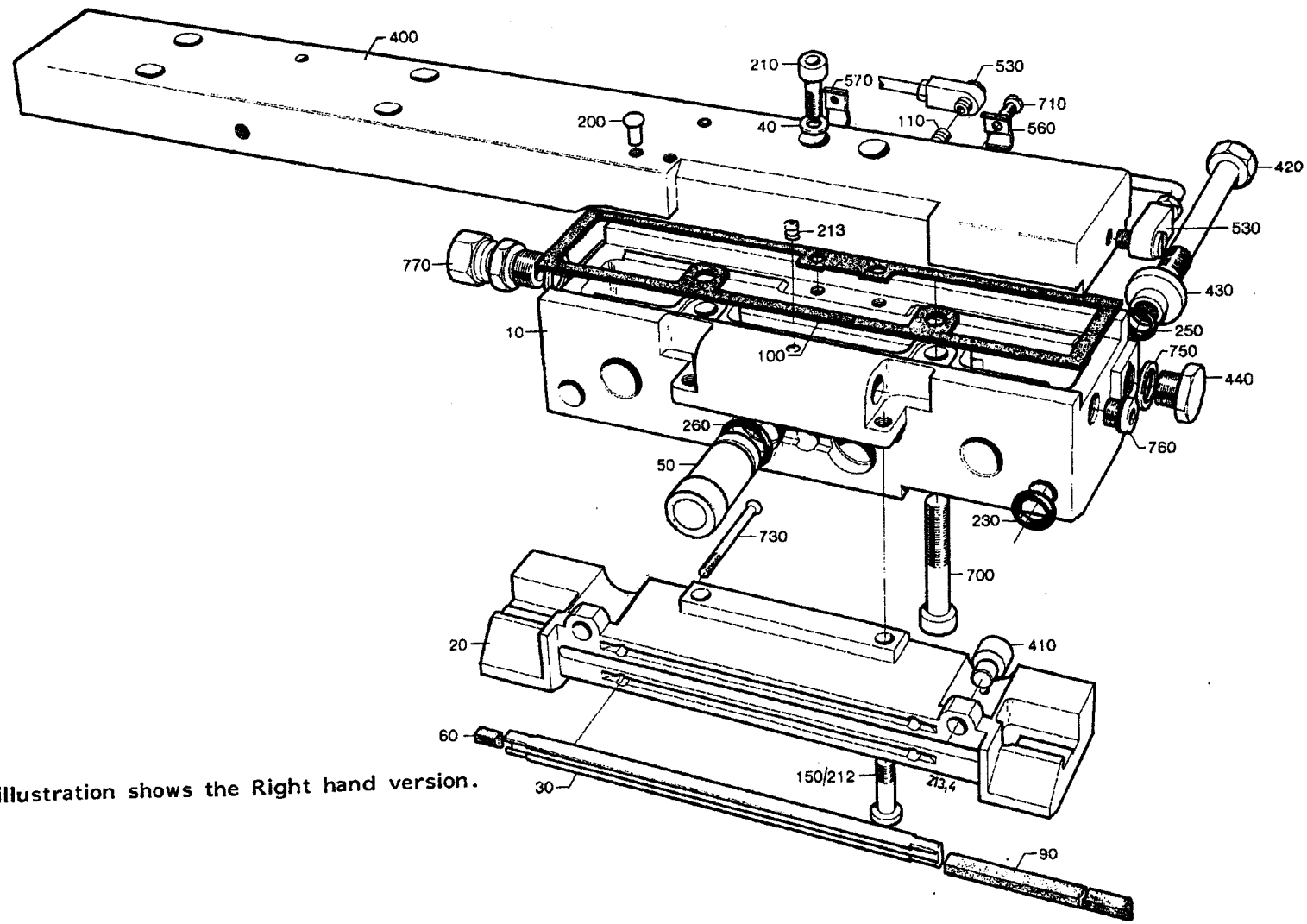

The illustration shows the Right hand version.

25783506.TIF
257835-6
AM

From	Pos	Part No	SP	UN	Qty	Description
Common Parts						
	050	28880	S		2	PLUNGER
	110	450507-0001	-		1	SCREW
	260	315202-0212	PU		2	O-RING 14,3X2,4
	400	464171	S		1	CARRIER CUT RIGHT
	410	32464	S		2	SHAFT
	420	243143	P		2	SCREW
	430	243144	P		2	BUSHING
	440	255278	S		1	PLUG FINISHER
	530	90134-0058	-		3	BANJO CONNECTION
	560	90165-0058	-		2	CLAMP
	570	90165-0060	-		1	CLAMP
	700	312115-0461	-		2	SCREW 8X50 A4 80
	710	312125-0287	-		3	SLOTTED HEMCS4X8RFR
	730	312145-0238	PU		4	SLOTTED HEMFS3X40RFR
	750	315234-0110	P		2	SEAL RING R1/4"
	760	342713-0209	-		4	BLIND PLUG
	770	90030-0201	P		1	PIPE CONNECTION

From	Pos	Part No	SP	UN	Qty	Description

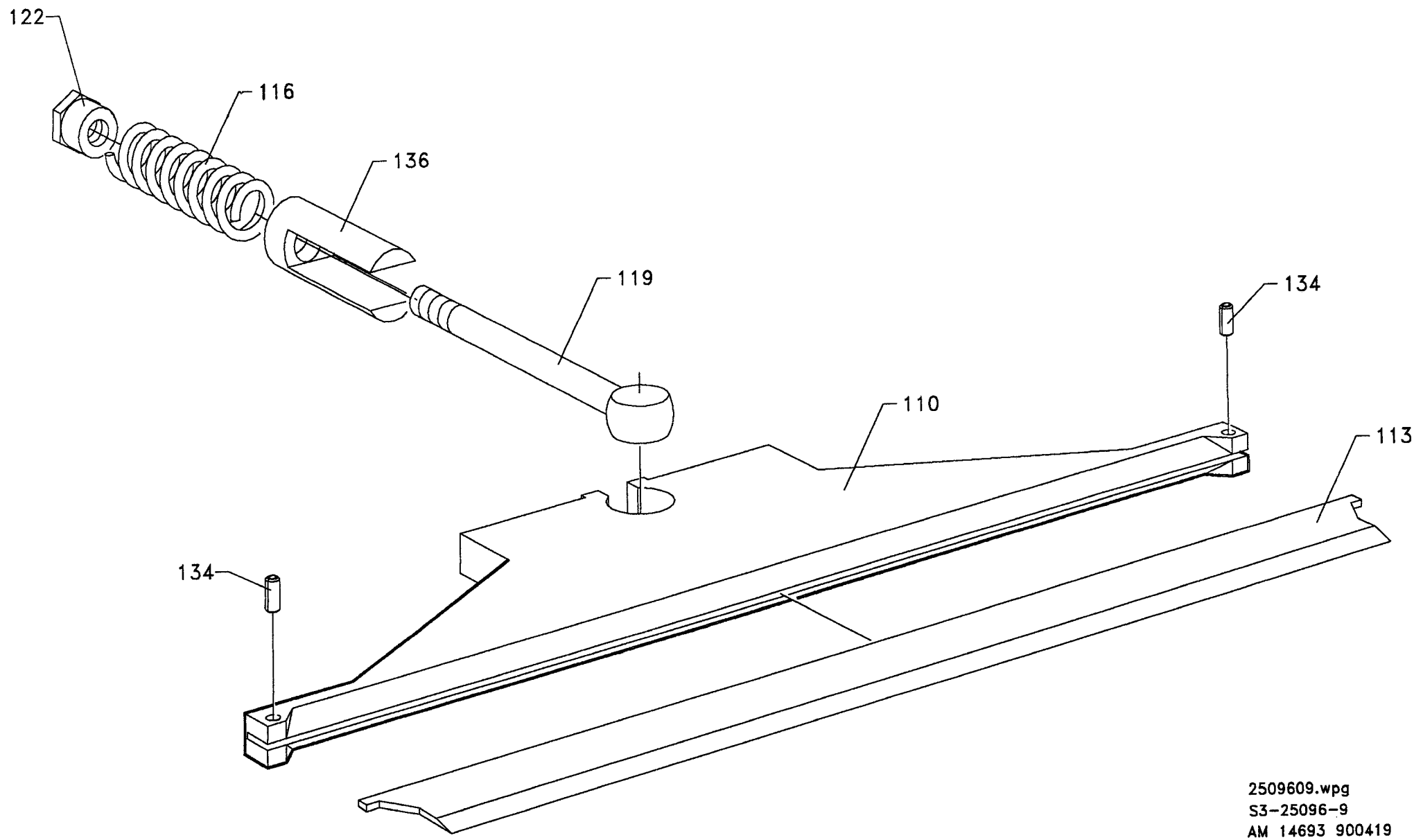

2509609.wpg
S3-25096-9
AM 14693 900419

From	Pos	Part No	SP	UN	Qty	Description
1136ml-500ml						
	F000	**C- 25096-0701**				**Knife Holder, Ass'y**
	110	560855	P		1	KNIFE HOLDER
	113	230143-0001	P		1	KNIFE
300ml						
	F000	**C- 25096-0705**				**Knife Holder, Ass'y**
	110	560856	P		1	KNIFE HOLDER
	113	230143-0004	P		1	KNIFE
Common Parts						
	116	19721	P		1	COMPRESSION SPRING
	119	542315	SU		1	LINK
	122	19887	SU		1	NUT
	134	456011	PU		2	PEG
	136	541194	P		1	SPACER

From	Pos	Part No	SP	UN	Qty	Description

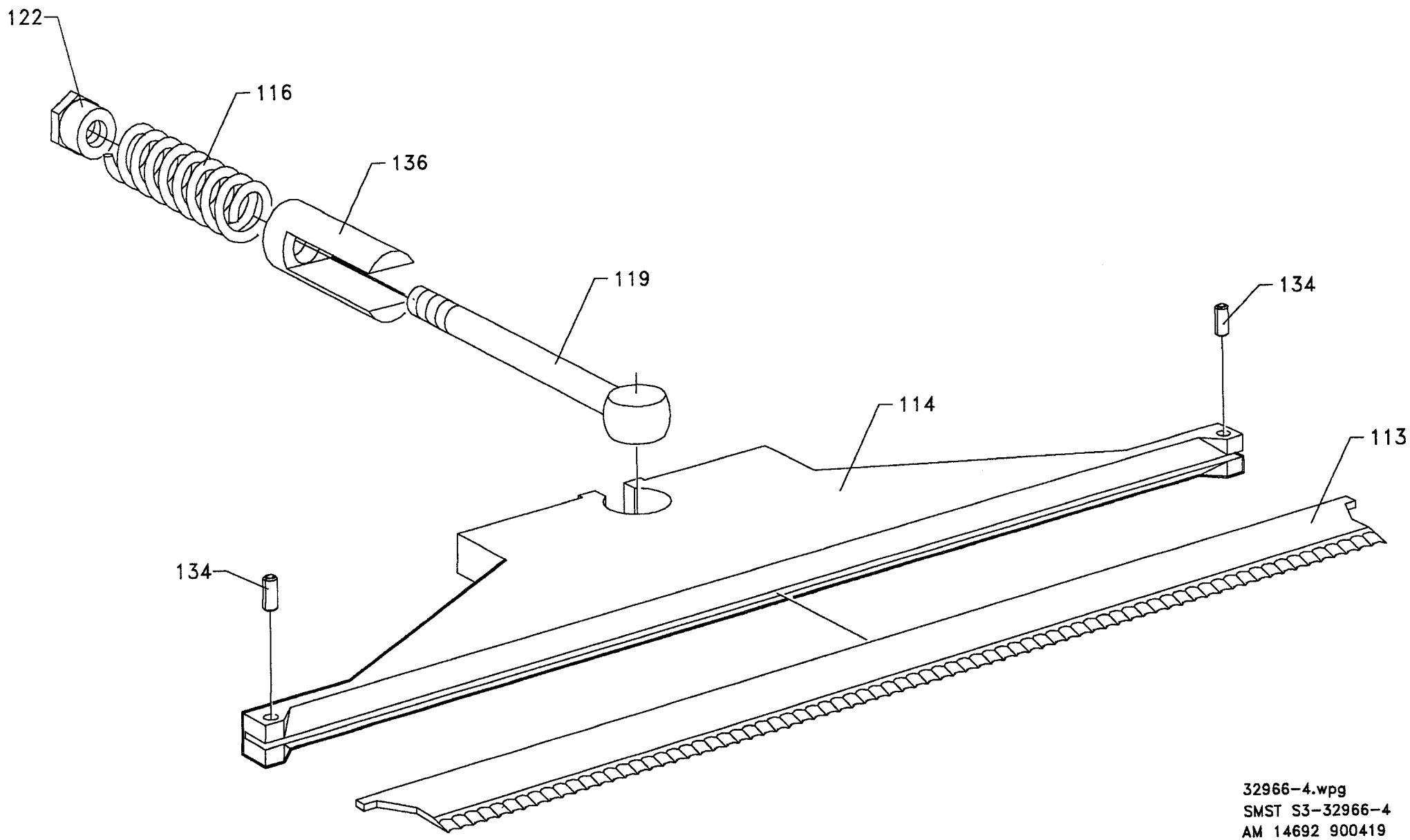
122
116
136
119
134
114
113
134
32966-4.wpg
SMST S3-32966-4
AM 14692 900419

From	Pos	Part No	SP	UN	Qty	Description
1136ml-500ml						
	F000	**C- 32966-0401**				**Knife Holder, Ass'y**
	113	436930	PU		1	KNIFE
	114	556471	P		1	KNIFE HOLDER
375ml-300ml 50oml Slim						
	F000	**C- 32966-0404**				**Knife Holder, Ass'y**
	113	434338	PU		1	KNIFE
	114	556473	P		1	KNIFE HOLDER
750ml Slim						
	F000	**C- 32966-0405**				**Knife Holder, Ass'y**
	113	544327	PU		1	KNIFE
	114	556472	P		1	KNIFE HOLDER
Common Parts						
	116	19721	P		1	COMPRESSION SPRING
	119	542315	SU		1	LINK
	122	19887	SU		1	NUT
	134	456011	PU		2	PEG
	136	541194	P		1	SPACER

From	Pos	Part No	SP	UN	Qty	Description

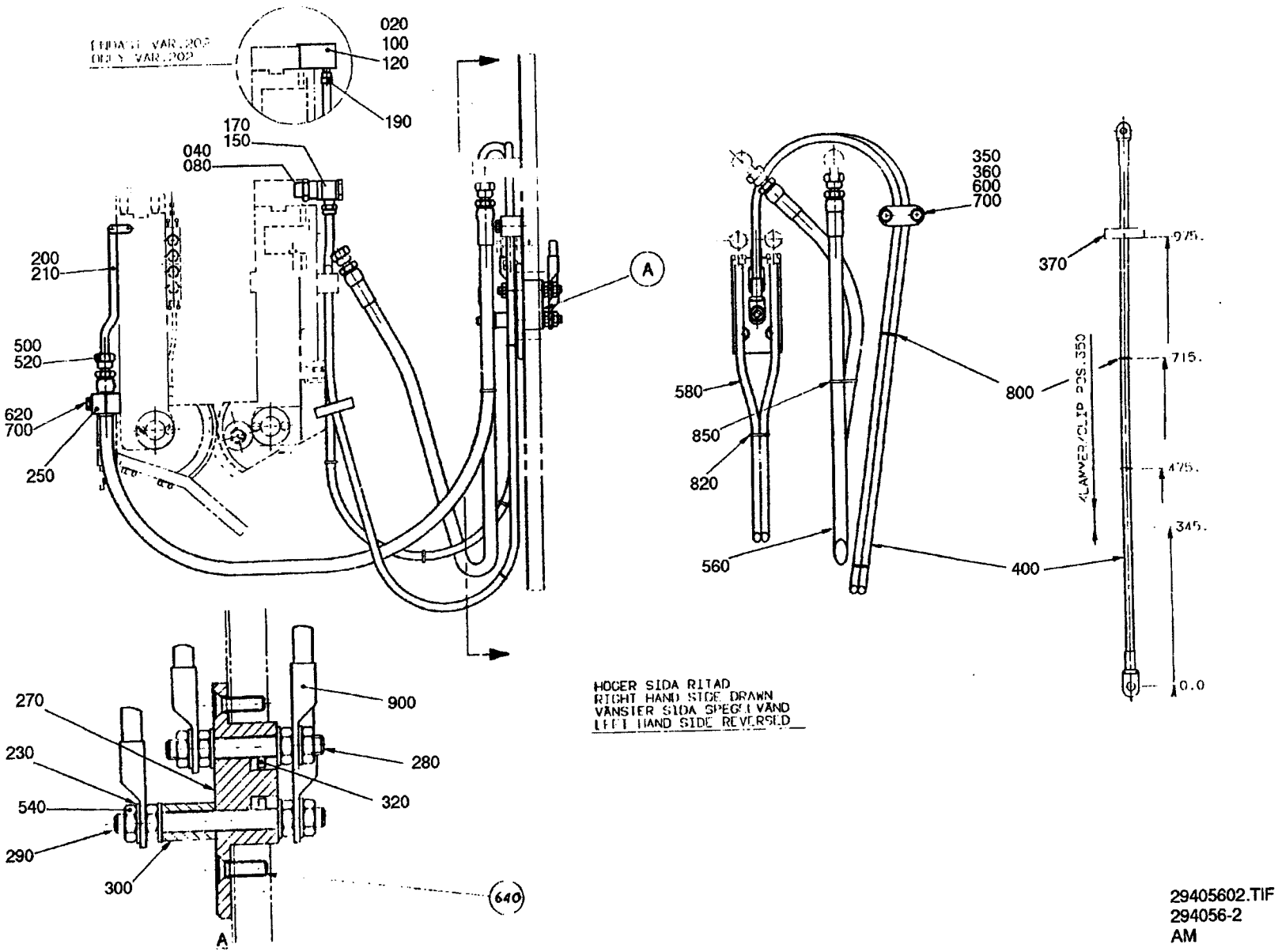

29405602.TIF
294056-2
AM

From	Pos	Part No	SP	UN Qty	Description
LoFin					
	F000	**C- 294056-0201**			**Transmission, Ass'y**
	040	464370	S	4	SPACER
	080	315233-0110	-	4	SEAL RING R1/4"
	150	342980-0122	-	4	BANJO CONNSINGEL 8/6-1/4
	170	342980-0304	-	4	BANJO CONN SINGEL 1/4
HiFin					
	F000	**C- 294056-0202**			**Transmission, Ass'y**
	020	533896	S	2	JUNCTION BLOCK
	100	312115-0453	-	2	SCREW 8X25 A4 80
	120	315202-0212	-	4	O-RING 14,3X2,4
	190	342995-0101	-	4	HOSE CLIP 7-9MMFZB
Common Parts					
	200	22488	-	1	ELBOW PIPE
	210	22489	-	1	ELBOW PIPE
	230	27171	P	16	WASHER
	250	279103	S	4	CONNECTION CLAMP
	270	294057	S	2	CONNECTION SOCKET
	280	294058-0001	P	2	STUD SCREW
	290	294058-0002	P	2	STUD SCREW
	300	294059	P	2	SPACER
	320	440352	P	4	PEG
	350	540331	C	1	CLAMP RIGHT
	350	545392	C	1	CLAMP LEFT
	360	540332	C	2	CRAMP
	370	540334	C	2	RUBBER RING
	400	541152	P	4	CABLE
	500	90030-0098	S	8	CONE
	520	90030-0172	S	8	NUT
	540	90099-0010	P	16	NUT
	560	90148-0033	S	4	HOSE
	580	90166-0123	P	MM2100	HOSE
	600	312105-0372	-	4	SCREW M6S6X25RFR
	620	312105-0378	-	4	SCREW M6S6X40RFR
	640	312145-0370	-	8	SLOTTED HEMFS6X20RFR
	700	315105-0153	-	8	WASHER BRB6,4X12RFR
	800	315202-0212	-	4	O-RING 14,3X2,4
	820	315202-0265	-	8	O-RING 12,3X2,4
	850	352113-0101	-	2	RIBBON CLA
	900	353104-0183	-	4	CABLE SHOEYAV 2 CLM 84!

From	Pos	Part No	SP	UN Qty	Description

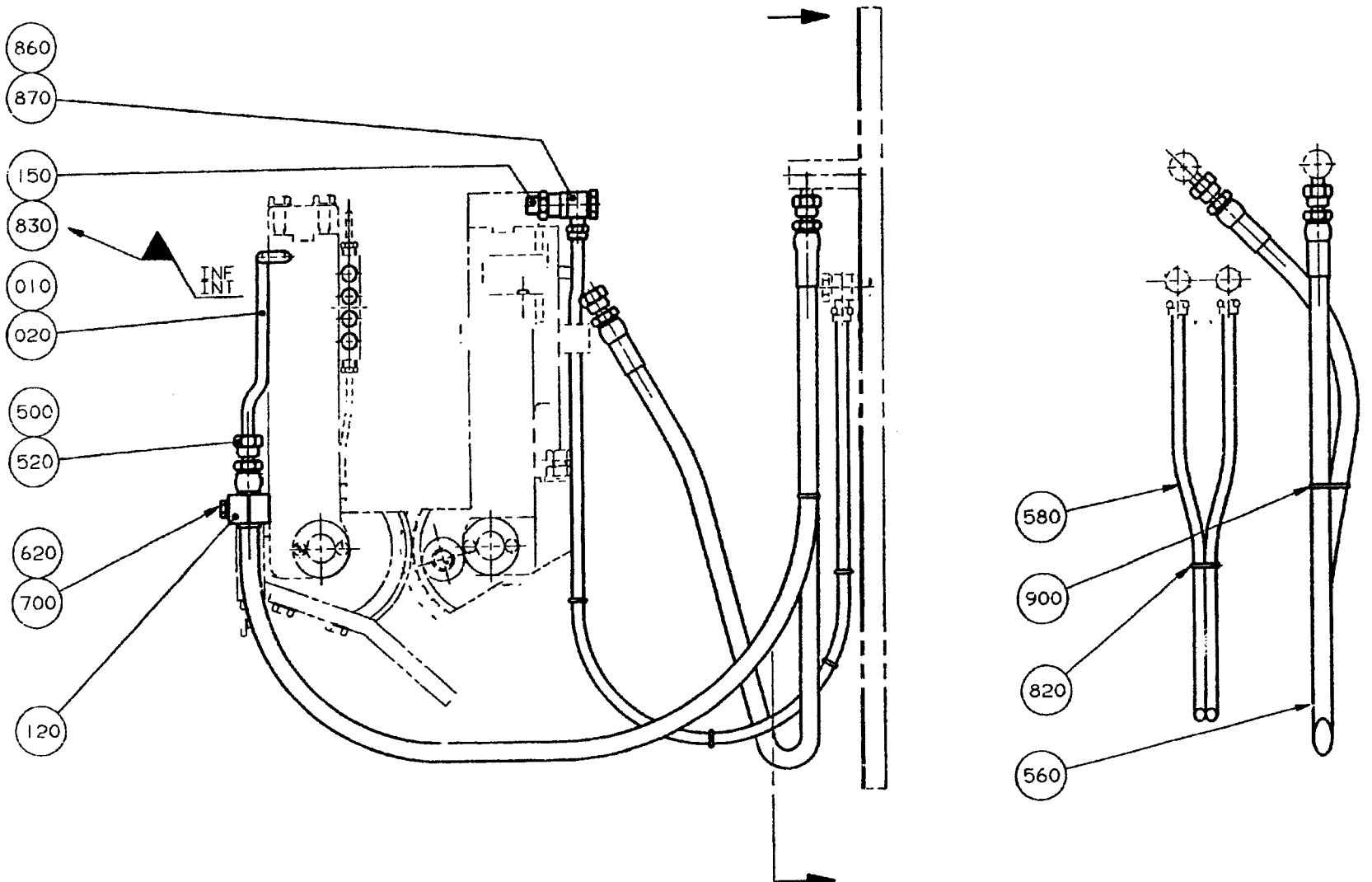

RIGHT HAND SIDE DRAWN
LEFT HAND SIDE REVERSED

27913405.TIF
279134-5
AM 11922

From	Pos	Part No	SP	UN Qty	Description
	F000	**C- 279134-0501**			**Transmission, Ass'y**
	010	22488	-	1	ELBOW PIPE
	020	22489	-	1	ELBOW PIPE
	120	279103	S	4	CONNECTION CLAMP
	150	464370	S	4	SPACER
	500	90030-0098	S	8	CONE
	520	90030-0172	S	8	NUT
	560	90148-0040	S	4	HOSE
	580	90166-0123	-	MM 2900	HOSE
	620	312105-0378	-	4	SCREW M6S6X40RFR
	700	315105-0153	-	8	WASHER BRB6,4X12RFR
	820	315202-0265	S	8	O-RING 12,3X2,4
	830	315233-0110	-	4	SEAL RING R1/4"
	860	342980-0122	-	4	BANJO CONNSINGEL 8/6-1/4
	870	342980-0304	-	4	BANJO CONN SINGEL 1/4
	900	352113-0101	P	2	RIBBON CLA

From	Pos	Part No	SP	UN Qty	Description

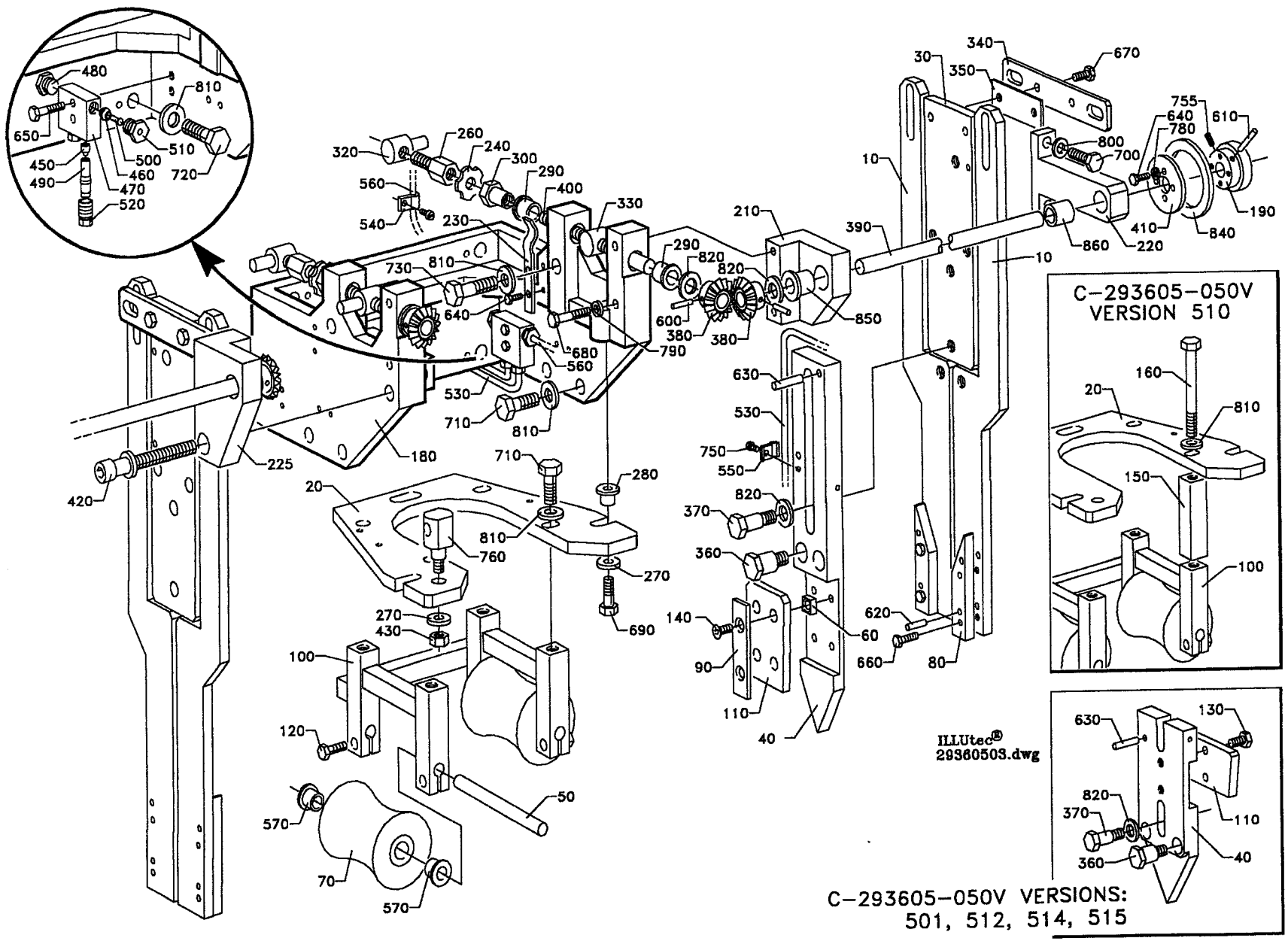
C-293605-050V
VERSION 510
ILLUtec®
29360503.dwg
C-293605-050V VERSIONS:
501, 512, 514, 515

From	Pos	Part No	SP	UN	Qty	Description
1000ml						
	F000	**C- 293605-0501**				**Volume Curve Piece, Ass'y**
	010	544342	C		4	RAIL BRACKET
	020	297998	C		1	ADJUSTMENT PLATE
	030	252773	C		2	FASTENING PLATE
	040	533955	C		2	CURVE
	050	561547	S		2	SHAFT
	070	560122	S		2	SUPPORT ROLLER
	080	531109	S		4	VOLUME CAM
	100	267676	-		1	HOLDER
	110	269792	P		2	DAMPER
	120	312105-0370	-		2	SCREW M6S6X20RFR
	130	312105-0449	-		4	SCREW M6S8X16RFR
	710	312105-0493	-		8	SCREW M6S10X25RFR
TPC 568ml 500ml						
	F000	**C- 293605-0502**				**Volume Curve Piece, Ass'y**
	010	563205	C		4	RAIL BRACKET
	020	297998	C		1	ADJUSTMENT PLATE
	030	252774	C		2	FASTENING PLATE
	040	252775	C		2	CURVE
	050	561547	S		2	SHAFT
	060	38603-0002	C		8	SPACER
	070	560122	S		2	SUPPORT ROLLER
	080	252776	S		4	VOLUME CAM
	090	252780	-		4	RULER
	100	267327	-		1	HOLDER
	110	276189	P		2	DAMPER
	120	312105-0370	-		2	SCREW M6S6X20RFR
	140	312145-0366	-		8	SLOTTED HEMFS6X12RFR
	710	312105-0493	-		8	SCREW M6S10X25RFR
300ml						
	F000	**C- 293605-0503**				**Volume Curve Piece, Ass'y**
	010	252770	C		4	RAIL BRACKET
	020	297999	C		1	ADJUSTMENT PLATE
	030	252774	C		2	FASTENING PLATE
	040	252775	C		2	CURVE
	050	561545	S		2	SHAFT
	060	38603-0002	C		8	SPACER
	070	561542	S		2	SUPPORT ROLLER
	080	252776	S		4	VOLUME CAM
	090	252780	-		4	RULER
	100	450315	-		1	HOLDER
	110	276189	P		2	DAMPER
	120	312105-0370	-		2	SCREW M6S6X20RFR
	140	312145-0366	-		8	SLOTTED HEMFS6X12RFR
	710	312105-0493	-		8	SCREW M6S10X25RFR

From	Pos	Part No	SP	UN	Qty	Description
IH 750ml						
	F000	**C- 293605-0507**				**Volume Curve Piece, Ass'y**
	010	522152	C		4	RAIL BRACKET
	020	297998	C		1	ADJUSTMENT PLATE
	030	440507	C		2	FASTENING PLATE
	040	550301	C		2	CURVE
	050	561547	S		2	SHAFT
	060	38603-0002	C		8	SPACER
	070	560122	S		2	SUPPORT ROLLER
	080	522153	S		4	VOLUME CAM
	090	252780	-		4	RULER
	100	267327	-		1	HOLDER
	110	276189	P		2	DAMPER
	120	312105-0370	-		2	SCREW M6S6X20RFR
	140	312145-0366	-		8	SLOTTED HEMFS6X12RFR
	710	312105-0493	-		8	SCREW M6S10X25RFR
IH 500ml Slim						
	F000	**C- 293605-0508**				**Volume Curve Piece, Ass'y**
	010	551281	C		4	RAIL BRACKET
	020	297998	C		1	ADJUSTMENT PLATE
	030	551282	C		2	FASTENING PLATE
	040	551283	C		2	CURVE
	050	561547	S		2	SHAFT
	060	38603-0002	C		8	SPACER
	070	561543	S		2	SUPPORT ROLLER
	080	551284	S		4	VOLUME CAM
	090	252780	-		4	RULER
	100	449926	-		1	HOLDER
	110	276189	P		2	DAMPER
	120	312105-0370	-		2	SCREW M6S6X20RFR
	140	312145-0366	-		8	SLOTTED HEMFS6X12RFR
	710	312105-0493	-		8	SCREW M6S10X25RFR
IH 375ml						
	F000	**C- 293605-0509**				**Volume Curve Piece, Ass'y**
	010	522152	C		4	RAIL BRACKET
	020	297999	C		1	ADJUSTMENT PLATE
	030	440507	C		2	FASTENING PLATE
	040	436502	C		2	CURVE
	050	561545	S		2	SHAFT
	060	38603-0002	C		8	SPACER
	070	561542	S		2	SUPPORT ROLLER
	080	522153	S		4	VOLUME CAM
	090	252780	-		4	RULER
	100	449734	-		1	HOLDER
	110	276189	P		2	DAMPER

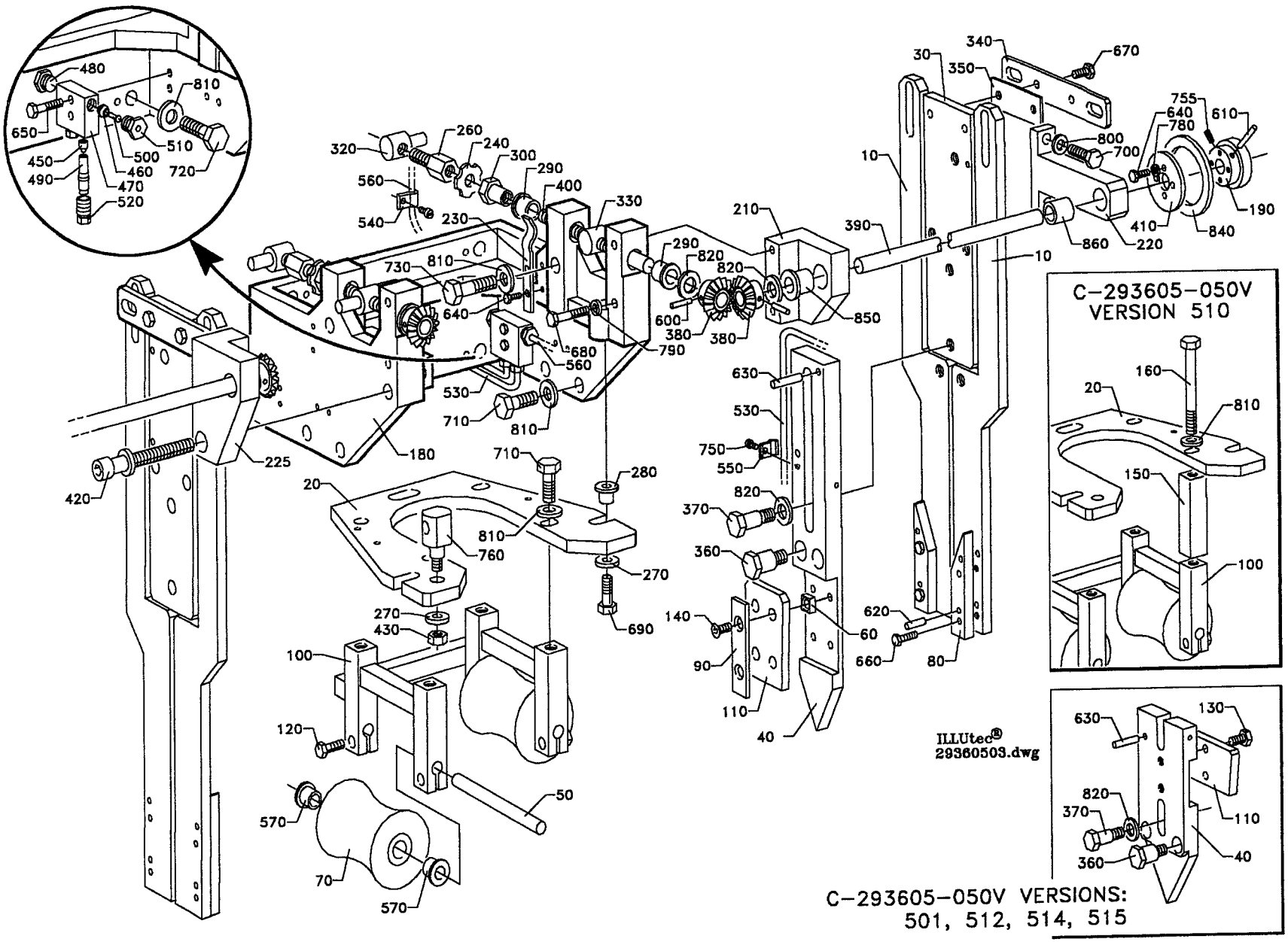
C-293605-050V
VERSION 510
C-293605-050V VERSIONS:
501, 512, 514, 515
ILLUtec®
29360503.dwg

From	Pos	Part No	SP	UN	Qty	Description
	120	312105-0370	-		2	SCREW M6S6X20RFR
	140	312145-0366	-		8	SLOTTED HEMFS6X12RFR
	710	312105-0493	-		8	SCREW M6S10X25RFR
IH 568ml 500ml						
	F000	**C- 293605-0510**				**Volume Curve Piece, Ass'y**
	010	252770	C		4	RAIL BRACKET
	020	297998	C		1	ADJUSTMENT PLATE
	030	252774	C		2	FASTENING PLATE
	040	252775	C		2	CURVE
	050	561547	S		2	SHAFT
	060	38603-0002	C		8	SPACER
	070	560122	S		2	SUPPORT ROLLER
	080	252776	S		4	VOLUME CAM
	090	252780	-		4	RULER
	100	267327	-		1	HOLDER
	110	276189	P		2	DAMPER
	120	312105-0370	-		2	SCREW M6S6X20RFR
	140	312145-0366	-		8	SLOTTED HEMFS6X12RFR
	150	476877	-		4	SPACER
	160	312105-0509	-		4	SCREW M6S10X90RFR
	710	312105-0493	-		4	SCREW M6S10X25RFR
TPC 1055ml						
	F000	**C- 293605-0512**				**Volume Curve Piece, Ass'y**
	010	279620	C		4	RAIL BRACKET
	020	297998	C		1	ADJUSTMENT PLATE
	030	279621	C		2	FASTENING PLATE
	040	279622	C		2	CURVE
	050	561547	S		2	SHAFT
	070	560122	S		2	SUPPORT ROLLER
	080	239642	S		4	VOLUME CAM
	100	284124	-		1	HOLDER
	110	269792	P		2	DAMPER
	120	312105-0370	-		2	SCREW M6S6X20RFR
	130	312105-0449	-		4	SCREW M6S8X16RFR
	710	312105-0493	-		8	SCREW M6S10X25RFR
IH 355ml						
	F000	**C- 293605-0513**				**Volume Curve Piece, Ass'y**
	010	552158	C		4	RAIL BRACKET
	020	297998	C		1	ADJUSTMENT PLATE
	030	434309	-		2	FASTENING PLATE
	040	531002	C		2	CURVE
	050	561547	S		2	SHAFT
	060	38603-0002	C		8	SPACER
	070	561543	S		2	SUPPORT ROLLER
	080	552159	S		4	VOLUME CAM
	090	252780	-		4	RULER
	100	529196	-		1	HOLDER
	110	276189	P		2	DAMPER
	120	312105-0370	-		2	SCREW M6S6X20RFR
	140	312145-0366	-		8	SLOTTED HEMFS6X12RFR
	710	312105-0493	-		8	SCREW M6S10X25RFR
IH 1055ml 1000ml HiFin						
	F000	**C- 293605-0514**				**Volume Curve Piece, Ass'y**
	010	531110	C		4	RAIL BRACKET
	020	297998	C		1	ADJUSTMENT PLATE
	030	279621	C		2	FASTENING PLATE
	040	533955	C		2	CURVE
	050	561547	S		2	SHAFT
	070	560122	S		2	SUPPORT ROLLER
	080	531109	S		4	VOLUME CAM
	100	284124	-		1	HOLDER
	110	269792	P		2	DAMPER
	120	312105-0370	-		2	SCREW M6S6X20RFR
	130	312105-0449	-		4	SCREW M6S8X16RFR
	710	312105-0493	-		8	SCREW M6S10X25RFR
TPC 1136ml						
	F000	**C- 293605-0515**				**Volume Curve Piece, Ass'y**
	010	531110	C		4	RAIL BRACKET
	020	297998	C		1	ADJUSTMENT PLATE
	030	279621	C		2	FASTENING PLATE
	040	533955	C		2	CURVE
	050	561547	S		2	SHAFT
	070	560122	S		2	SUPPORT ROLLER
	080	551626	S		4	VOLUME CAM
	100	284124	-		1	HOLDER
	110	269792	P		2	DAMPER
	120	312105-0370	-		2	SCREW M6S6X20RFR
	130	312105-0449	-		4	SCREW M6S8X16RFR
	710	312105-0493	-		8	SCREW M6S10X25RFR
IH 750ml Slim						
	F000	**C- 293605-0516**				**Volume Curve Piece, Ass'y**
	010	544342	C		4	RAIL BRACKET
	020	297998	C		1	ADJUSTMENT PLATE
	030	252773	C		2	FASTENING PLATE
	040	533955	C		2	CURVE
	050	561547	S		2	SHAFT
	070	561544	S		2	SUPPORT ROLLER
	080	565259	S		4	VOLUME CAM
	100	544303	-		1	HOLDER
	110	269792	P		2	DAMPER

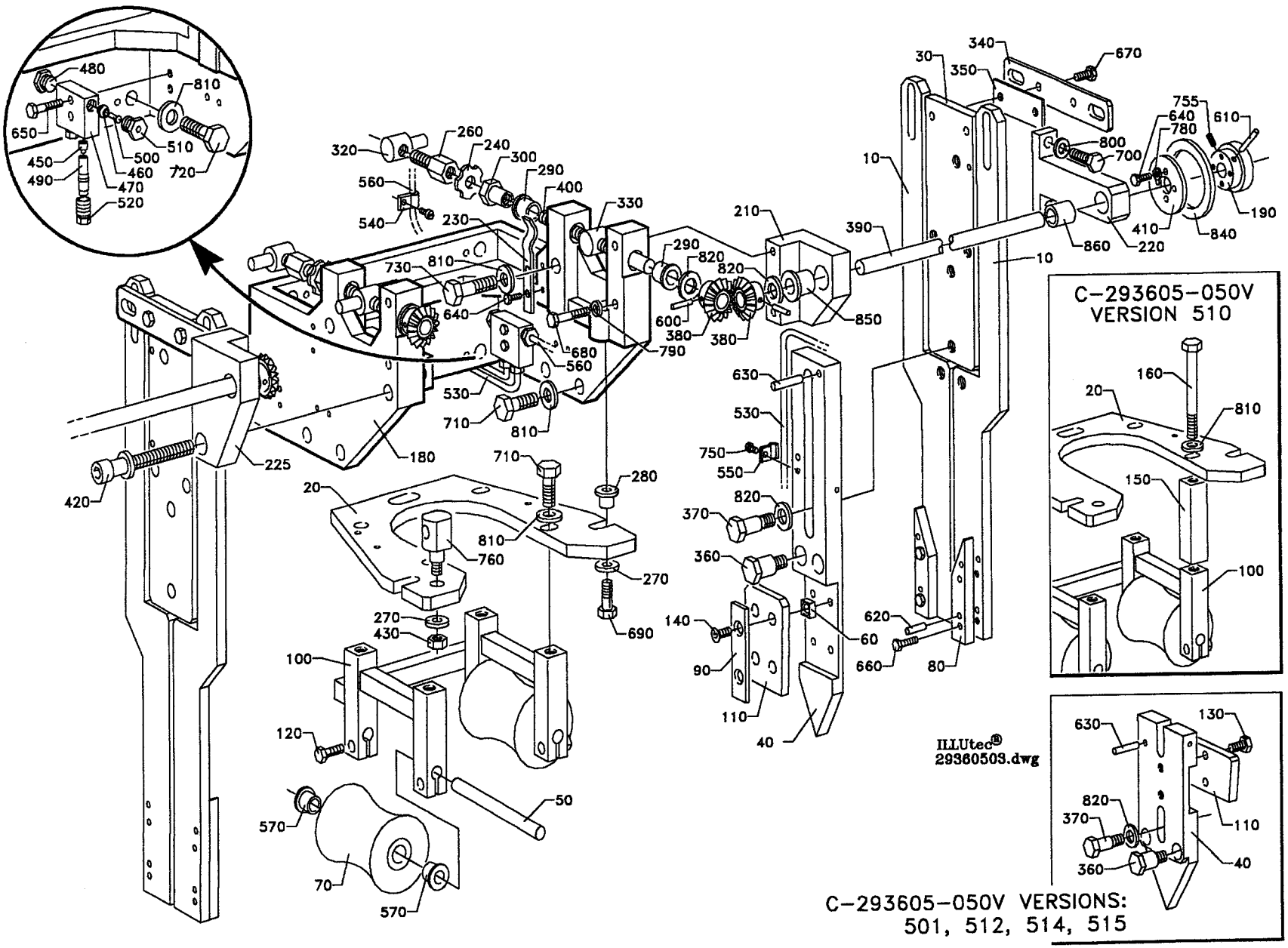
480
810
650
510
450
500
460
720
490
470
520
320
260
240
300
290
400
560
330
540
230
730
810
640
680
560
530
710
810
790
180
225
420
20
710
280
810
760
270
690
270
430
100
120
570
50
70
570
210
290
820
820
600
380
380
850
390
10
10
340
30
350
670
755
640
780
610
800
700
190
860
220
410
840
630
530
750
550
820
370
360
140
90
110
60
620
660
80
40
C-293605-050V
VERSION 510
160
20
810
150
100
ILLUtec®
29360503.dwg
630
130
820
370
360
110
40
C-293605-050V VERSIONS:
501, 512, 514, 515

From	Pos	Part No	SP	UN	Qty	Description
	120	312105-0372	-		2	SCREW M6S6X25RFR
	710	312105-0493	-		8	SCREW M6S10X25RFR
IH 1000ml Slim						
	F000	**C- 293605-0517**				**Volume Curve Piece, Ass'y**
	010	531110	C		4	RAIL BRACKET
	020	297998	C		1	ADJUSTMENT PLATE
	030	279621	C		2	FASTENING PLATE
	040	533955	C		2	CURVE
	050	561547	S		2	SHAFT
	070	569058	S		2	SUPPORT ROLLER
	080	551626	S		4	VOLUME CAM
	100	284124	-		1	HOLDER
	110	269792	P		2	DAMPER
	120	312105-0370	-		2	SCREW M6S6X20RFR
	130	312105-0449	-		4	SCREW M6S8X16RFR
	710	312105-0493	-		8	SCREW M6S10X25RFR
Common Parts						
	180	G- 252768	-		1	CANTILEVER
	190	293606	-		2	SHIFTER HANDLE
	210	293608	-		1	BEARING CONSOLE
	220	293609	-		2	BEARING CONSOLE
	225	434020	-		1	BEARING CONSOLE
	230	37070	-		2	SPRING
	240	37071	-		2	WASHER
	260	252785	-		2	SCREW
	270	252786	-		4	WASHER
	280	252787	-		3	BUSHING
	290	252788	-		4	BUSHING
	300	252789	-		2	NUT
	320	252791	-		2	NUT
	330	252792	-		2	NUT
	340	252793	-		2	SUPPORT
	350	252794	P		2	LACE
	360	252930	-		4	SPACER SCREW
	370	268195	-		4	SCREW
	380	293610	-		4	GEAR WHEEL
	390	293611	-		2	SHAFT
	400	293612	-		2	SCREW
	410	294042	-		2	SEALING WASHER
	420	434021	-		1	SCREW
	430	434073	-		1	NUT
	450	90028-0020	-		4	CONE
	460	90028-0021	-		2	CONE
	470	90032-0038	-		2	BLOCK
	480	90087-0019	-		2	PLUG

From	Pos	Part No	SP	UN	Qty	Description
	490	90092-0053	S		4	VALVE
	500	90134-0031	-		2	SLEEVE
	510	90134-0038	-		2	BUSHING
	520	90134-0039	-		4	BUSHING
	530	90266-0019	-	MM	800	PIPE
	540	90165-0056	-		2	CLIP
	550	90165-0058	-		4	CLAMP
	560	90166-0109	-	MM	700	HOSE
	570	90240-0180	-		4	FLANGE BUSHING
	600	311103-0272	-		4	CYLINDRICACP M6 4X20 RFR
	610	311103-0276	-		2	CYLINDRICACP M6 4X30 RFR
	620	311103-0310	-		8	CYLINDRICACP M6 5X20 RFR
	630	311103-0357	-		12	CYLINDRICACP M6 6X30 RFR
	640	312105-0291	-		12	SCREW M6S4X12RFR
	650	312105-0295	-		4	SCREW M6S4X20 A4 80
	660	312105-0331	-		8	SCREW M6S5X20 A4 80
	670	312105-0366	-		4	SCREW M6S6X12RFR
	680	312105-0376	-		4	SCREW M6S6X35RFR
	690	312105-0452	-		3	SCREW M6S8X22RFR
	700	312105-0453	-		4	SCREW M6S8X25RFR
	720	312105-0495	-		8	SCREW M6S10X30RFR
	730	312105-0499	-		2	SCREW M6S10X40RFR
	750	312125-0287	-		4	SLOTTED HEMCS4X8RFR
	755	312318-0289	-		2	STOP SCREW SK6SS4X10RFR
	760	312605-0318	-		1	NUT M6M8RFR
	780	315105-0136	-		8	WASHER BRB4,3X8RFR
	790	315105-0153	-		4	WASHER BRB6,4X12RFR
	800	315105-0165	-		4	WASHER BRB8,4X16RFR
	810	315105-0173	-		14	WASHER BRB10,5X22RFR
	820	315105-0176	-		8	WASHER BRB12X22RFR
	840	315226-0196	-		2	SEAL RING RB48X65X4,5
	850	321111-0163	-		2	FLANGE BUS 12E7X20
	860	321116-0163	-		2	BUSHING 12E7/18X20

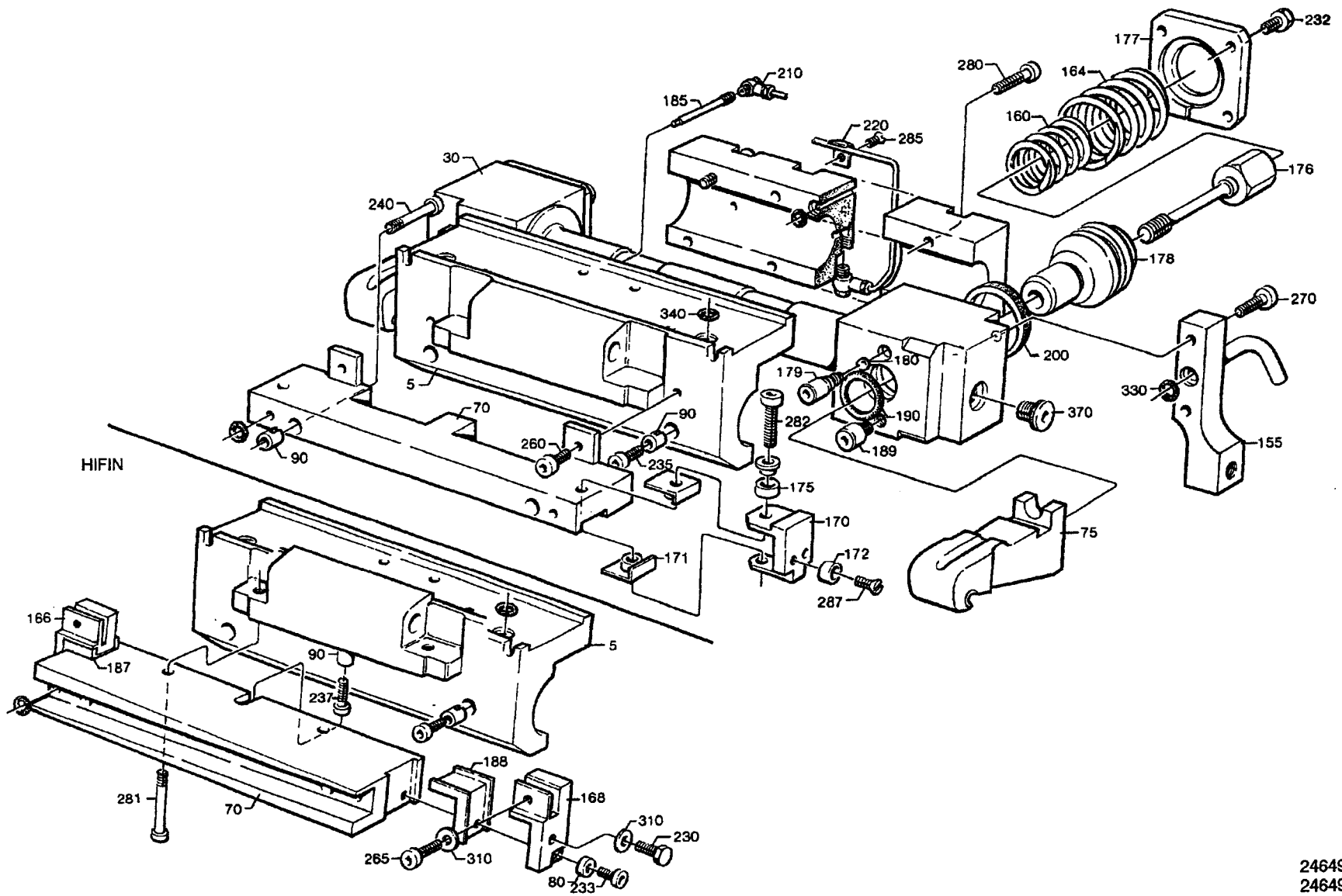

24649708.TIF
246497-8
AM

From	Pos	Part No	SP	UN	Qty	Description
1000ml LoFin 1136ml 1055ml						
	F000	**C- 246497-0901**				**Pressure Jaw, Ass'y**
	005	450504	S		1	BEARING HOUSING
	070	561411	C		1	RAIL
	071	561412	S		1	PUSHER PLATE
	090	107426	P		4	GUIDE SLEEVE
	170	268642	-		2	CONTACT PIECE
	171	268643	-		4	BUSHING
	172	268644	-		2	WASHER
	175	273428	-		2	WASHER
	191	561413	S		3	SCREW
	192	562134	S		3	COMPRESSION SPRING
	240	312115-0299	SU		2	SCREW 4X30 A4 80
	260	312115-0367	-		2	SCREW 6X14 A4 80
	282	312115-0333	-		2	SCREW A4 80
	287	312145-0323	-		2	SLOTTED HEMFS5X8RFR
	320	159720-0002	-		3	WASHER
568ml 500ml						
	F000	**C- 246497-0902**				**Pressure Jaw, Ass'y**
	005	450504	S		1	BEARING HOUSING
	070	561411	C		1	RAIL
	071	561412	S		1	PUSHER PLATE
	090	107426	P		4	GUIDE SLEEVE
	170	268642	-		2	CONTACT PIECE
	171	268643	-		4	BUSHING
	172	268644	-		2	WASHER
	175	273428	-		2	WASHER
	191	561413	S		3	SCREW
	192	562134	S		3	COMPRESSION SPRING
	240	312115-0299	SU		2	SCREW 4X30 A4 80
	260	312115-0367	-		2	SCREW 6X14 A4 80
	282	312115-0333	-		2	SCREW A4 80
	287	312145-0323	-		2	SLOTTED HEMFS5X8RFR
	320	159720-0002	-		3	WASHER
300ml						
	F000	**C- 246497-0903**				**Pressure Jaw, Ass'y**
	005	458020	S		1	BEARING HOUSING
	070	561411	C		1	RAIL
	090	107426	P		4	GUIDE SLEEVE
	170	268642	-		2	CONTACT PIECE
	171	268643	-		4	BUSHING
	172	268644	-		2	WASHER
	175	273428	-		2	WASHER
	238	312115-0295	-		2	SCREW S 4X20 A4 80
	260	312115-0367	-		2	SCREW 6X14 A4 80
	282	312115-0333	-		2	SCREW A4 80
	287	312145-0323	-		2	SLOTTED HEMFS5X8RFR
1000ml HiFin						
	F000	**C- 246497-0904**				**Pressure Jaw, Ass'y**
	005	279027	S		1	HOUSING
	070	279029	C		1	RAIL
	080	497916	-		2	WASHER
	090	107426	P		1	GUIDE SLEEVE
	166	497912	-		1	CONTACT PIECE
	168	497913	-		1	CONTACT PIECE
	187	497914	-		1	INSULATING PLATE
	188	497915	-		1	INSULATING PLATE
	230	312105-0362	-		2	SCREW M6S6X8RFR
	233	312115-0287	-		2	SCREW 4X8 A4 80
	237	312115-0293	-		1	SCREW 4 X 16 A4 80
	265	312115-0368	-		2	SCREW 6X16 A4 80
	281	312115-0374	-		2	SCREW 6X30 A4 80
	310	315105-0153	-		4	WASHER BRB6,4X12RFR
Common Parts						
	030	440565	S		1	CYLINDER
	075	541697	S		2	CATCH
	155	246494	P		1	ATTACHMENT
	160	479744	P		2	COMPRESSION SPRING
	164	479743	P		2	COMPRESSION SPRING
	176	553851	P		2	SCREW
	177	284833	C		2	LID
	178	292367	S		2	PISTON
	179	440491	P		2	NIPPLE
	180	90090-0013	PU		2	STEEL BALL
	185	476290	-		1	SCREW
	189	497040	P		2	STEERING
	190	90091-0078	SU		2	SEAL
	200	90091-0079	SU		2	SEAL
	210	90134-0058	-		4	BANJO CONNECTION
	215	90157-0016	-	ML	X	LOCKING FLUID
	220	90165-0058	-		1	CLAMP
	225	316810-0106	-		2	PIPE CLAMP 8MM RFR
	232	312105-0372	-		8	SCREW M6S6X25RFR
	235	312115-0291	-		2	SCREW MC6S4X12 A4 80
	270	312115-0370	-		6	SCREW 6X20 A4 80
	280	312115-0372	-		4	SCREW MC6S6X25 A4 80
	285	312125-0285	-		1	SLOTTED HEMCS4X6RFR
	330	315202-0104	PU		1	O-RING 6,1X1,6
	340	315202-0105	PU		6	O-RING 7,1X1,6
	370	342713-0209	-		1	BLIND PLUG

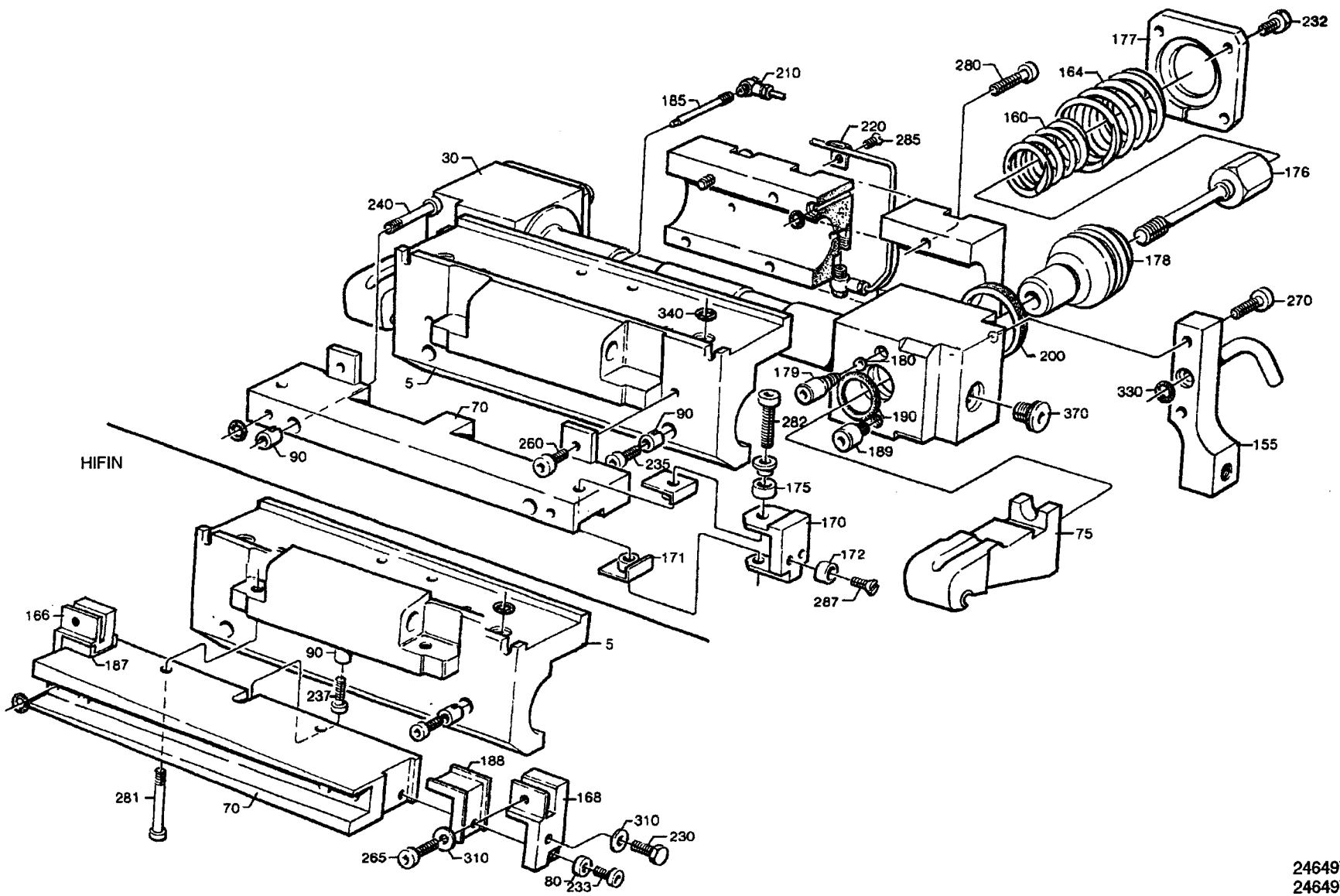

24649708.TIF
246497-8
AM

From	Pos	Part No	SP	UN	Qty	Description
1000 LoFin 1136ml 1055ml						
	F000	**C- 246497-0951**				**Pressure Jaw, Ass'y**
	005	450504	S		1	BEARING HOUSING
	070	561411	C		1	RAIL
	071	561412	C		1	PUSHER PLATE
	090	107426	P		4	GUIDE SLEEVE
	170	268642	-		2	CONTACT PIECE
	171	268643	-		4	BUSHING
	172	268644	-		2	WASHER
	175	273428	-		2	WASHER
	191	561413	C		3	SCREW
	192	562134	C		3	COMPRESSION SPRING
	240	312115-0299	SU		2	SCREW 4X30 A4 80
	260	312115-0367	-		2	SCREW 6X14 A4 80
	282	312115-0333	-		2	SCREW A4 80
	287	312145-0323	-		2	SLOTTED HEMFS5X8RFR
	320	159720-0002	-		3	WASHER
568ml 500ml						
	F000	**C- 246497-0952**				**Pressure Jaw, Ass'y**
	005	450504	S		1	BEARING HOUSING
	070	561411	C		1	RAIL
	071	561412	C		1	PUSHER PLATE
	090	107426	P		4	GUIDE SLEEVE
	170	268642	-		2	CONTACT PIECE
	171	268643	-		4	BUSHING
	172	268644	-		2	WASHER
	175	273428	-		2	WASHER
	191	561413	C		3	SCREW
	192	562134	C		3	COMPRESSION SPRING
	240	312115-0299	SU		2	SCREW 4X30 A4 80
	260	312115-0367	-		2	SCREW 6X14 A4 80
	282	312115-0333	-		2	SCREW A4 80
	287	312145-0323	-		2	SLOTTED HEMFS5X8RFR
	320	159720-0002	-		3	WASHER
300ml						
	F000	**C- 246497-0953**				**Pressure Jaw, Ass'y**
	005	458020	S		1	BEARING HOUSING
	070	561411	C		1	RAIL
	090	107426	P		4	GUIDE SLEEVE
	170	268642	-		2	CONTACT PIECE
	171	268643	-		4	BUSHING
	172	268644	-		2	WASHER
	175	273428	-		2	WASHER
	238	312115-0295	-		2	SCREW S 4X20 A4 80
	260	312115-0367	-		2	SCREW 6X14 A4 80
	282	312115-0333	-		2	SCREW A4 80
	287	312145-0323	-		2	SLOTTED HEMFS5X8RFR
1000ml HiFin						
	F000	**C- 246497-0954**				**Pressure Jaw, Ass'y**
	005	279027	S		1	HOUSING
	070	279029	C		1	RAIL
	080	497916	-		2	WASHER
	166	497912	-		1	CONTACT PIECE
	168	497913	-		1	CONTACT PIECE
	187	497914	-		1	INSULATING PLATE
	188	497915	-		1	INSULATING PLATE
	230	312105-0362	-		2	SCREW M6S6X8RFR
	233	312115-0287	-		2	SCREW 4X8 A4 80
	237	312115-0293	-		1	SCREW 4 X 16 A4 80
	265	312115-0368	-		2	SCREW 6X16 A4 80
	281	312115-0374	-		2	SCREW 6X30 A4 80
	310	315105-0153	-		4	WASHER BRB6,4X12RFR
Common Parts						
	030	440565	S		1	CYLINDER
	075	541697	S		2	CATCH
	155	246495	P		1	ATTACHMENT
	160	479744	P		2	COMPRESSION SPRING
	164	479743	P		2	COMPRESSION SPRING
	176	553851	P		2	SCREW
	177	284833	C		2	LID
	178	292367	S		2	PISTON
	179	440491	P		2	NIPPLE
	180	90090-0013	PU		2	STEEL BALL
	185	476290	-		1	SCREW
	189	497040	P		2	STEERING
	190	90091-0078	SU		2	SEAL
	200	90091-0079	SU		2	SEAL
	210	90134-0058	-		4	BANJO CONNECTION
	215	90157-0016	-	ML	X	LOCKING FLUID
	220	90165-0058	-		1	CLAMP
	225	316810-0106	-		2	PIPE CLAMP 8MM RFR
	232	312105-0372	-		8	SCREW M6S6X25RFR
	235	312115-0291	-		2	SCREW MC6S4X12 A4 80
	270	312115-0370	-		6	SCREW 6X20 A4 80
	280	312115-0372	-		4	SCREW MC6S6X25 A4 80
	285	312125-0285	-		1	SLOTTED HEMCS4X6RFR
	330	315202-0104	PU		1	O-RING 6,1X1,6
	340	315202-0105	PU		6	O-RING 7,1X1,6
	370	342713-0209	-		1	BLIND PLUG

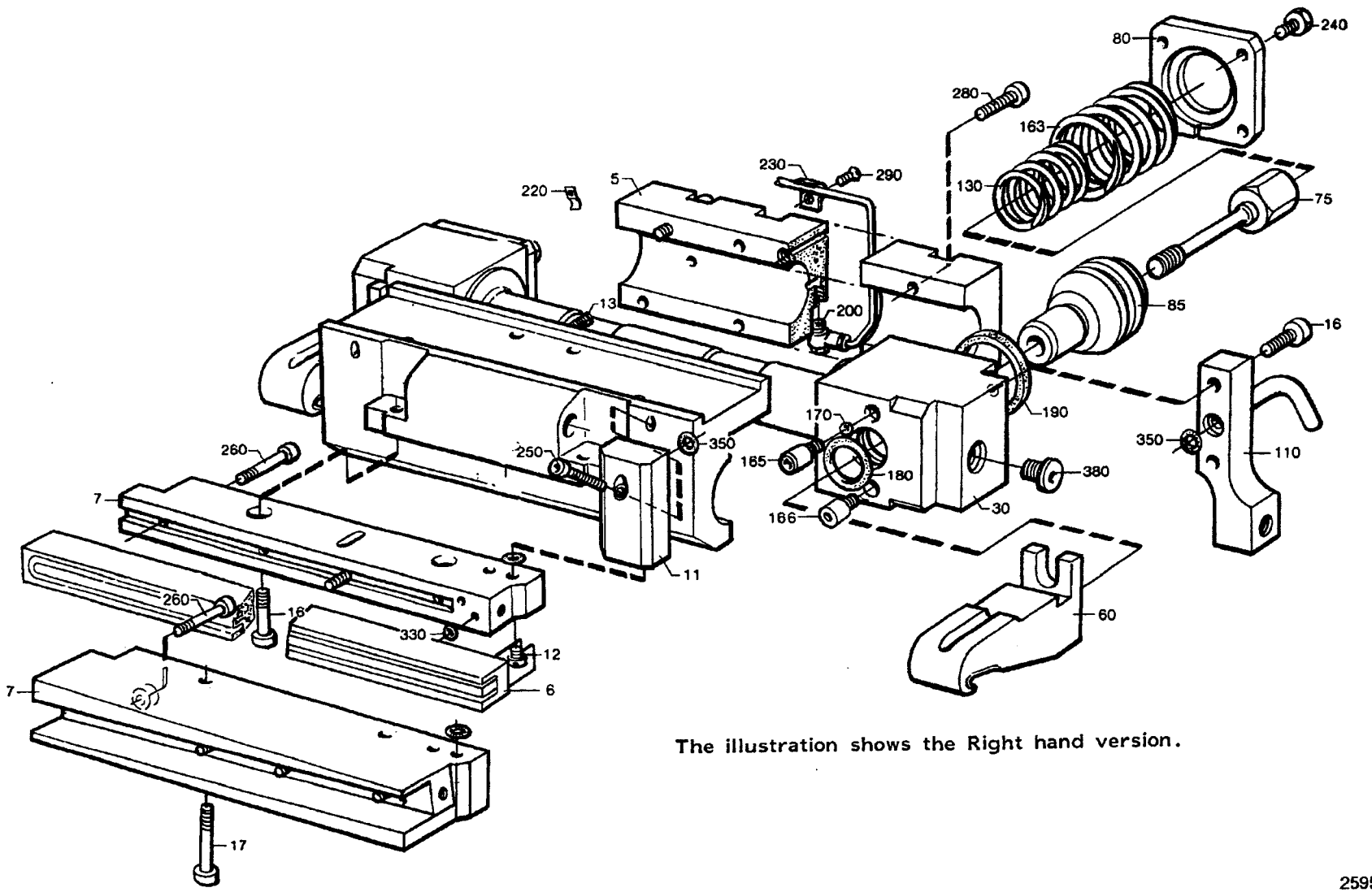

The illustration shows the Right hand version.

25953412.TIF
259534-12
AM

From	Pos	Part No	SP	UN	Qty	Description
1000ml LoFin 1055ml 750ml						
	F000	**C- 259534-0701**				**Pressure Jaw, Ass'y**
	005	458019	S		1	BEARING HOUSING
	007	445950	S		1	RAIL
	011	566526	C		1	CLUTCH PIECE
	012	292037	P		2	SCREW
	014	90157-0021	-		X	LOCKING FLUID
	016	312115-0370	PU		8	SCREW 6X20 A4 80
568ml 500ml						
	F000	**C- 259534-0702**				**Pressure Jaw, Ass'y**
	005	458019	S		1	BEARING HOUSING
	007	445950	S		1	RAIL
	011	566526	C		1	CLUTCH PIECE
	012	292037	P		2	SCREW
	014	90157-0021	-		X	LOCKING FLUID
	016	312115-0370	PU		8	SCREW 6X20 A4 80
1000ml HiFin						
	F000	**C- 259534-0705**				**Pressure Jaw, Ass'y**
	005	497583	S		1	HOUSING
	007	284581	S		1	RAIL
	011	566527	C		1	CLUTCH PIECE
	016	312115-0370	PU		6	SCREW 6X20 A4 80
	017	312115-0374	PU		2	SCREW 6X30 A4 80
500ml Slim 355ml						
	F000	**C- 259534-0706**				**Pressure Jaw, Ass'y**
	005	466395	S		1	BEARING HOUSING
	007	445950	S		1	RAIL
	011	566526	C		1	CLUTCH PIECE
	012	292037	P		2	SCREW
	014	90157-0021	-		X	LOCKING FLUID
	016	312115-0370	PU		8	SCREW 6X20 A4 80
375ml 300ml						
	F000	**C- 259534-0701**				**Pressure Jaw, Ass'y**
	005	466395	S		1	BEARING HOUSING
	007	445950	S		1	RAIL
	011	566526	C		1	CLUTCH PIECE
	012	292037	P		2	SCREW
	014	90157-0021	-		X	LOCKING FLUID
	016	312115-0370	PU		8	SCREW 6X20 A4 80
750ml Slim						
	F000	**C- 259534-0708**				**Pressure Jaw, Ass'y**
	005	544278	S		1	BEARING HOUSING
	007	445950	S		1	RAIL
	011	566526	C		1	CLUTCH PIECE
	012	292037	P		2	SCREW
	014	90157-0021	-		X	LOCKING FLUID
	016	312115-0370	PU		8	SCREW 6X20 A4 80
1000ml Slim						
	F000	**C- 259534-0709**				**Pressure Jaw, Ass'y**
	005	569053	S		1	BEARING HOUSING
	007	445950	S		1	RAIL
	011	566526	C		1	CLUTCH PIECE
	012	292037	P		2	SCREW
	014	90157-0021	-		X	LOCKING FLUID
	016	312115-0370	PU		8	SCREW 6X20 A4 80
Common Parts						
	006	539199	PU		1	INDUCTOR
	013	476290	-		1	SCREW
	030	440565	S		1	CYLINDER
	060	541697	S		2	CATCH
	075	553851	P		2	SCREW
	080	284833	C		2	LID
	085	292367	S		2	PISTON
	110	246494	P		1	ATTACHMENT
	130	479744	P		2	COMPRESSION SPRING
	163	479743	P		2	COMPRESSION SPRING
	165	440491	P		2	NIPPLE
	166	497040	P		2	STEERING
	170	90090-0013	SU		2	STEEL BALL
	180	90091-0078	PU		2	SEAL
	190	90091-0079	PU		2	SEAL
	200	90134-0058	-		4	BANJO CONNECTION
	205	90157-0016	-	ML	X	LOCKING FLUID
	220	90165-0058	-		1	CLAMP
	230	316810-0106	-		2	PIPE CLAMP 8MM RFR
	240	312105-0372	-		8	SCREW M6S6X25RFR
	250	312115-0295	-		1	SCREW S 4X20 A4 80
	260	312115-0297	PU		4	SCREW 4X25 A4 80
	280	312115-0372	P		4	SCREW MC6S6X25 A4 80
	290	312125-0285	-		3	SLOTTED HEMCS4X6RFR
	330	315202-0101	PU		2	O-RING 3,1X1,6
	350	315202-0104	PU		1	O-RING 6,1X1,6
	360	315202-0203	PU		4	O-RING 4,3X2,4
	380	342713-0209	-		1	BLIND PLUG

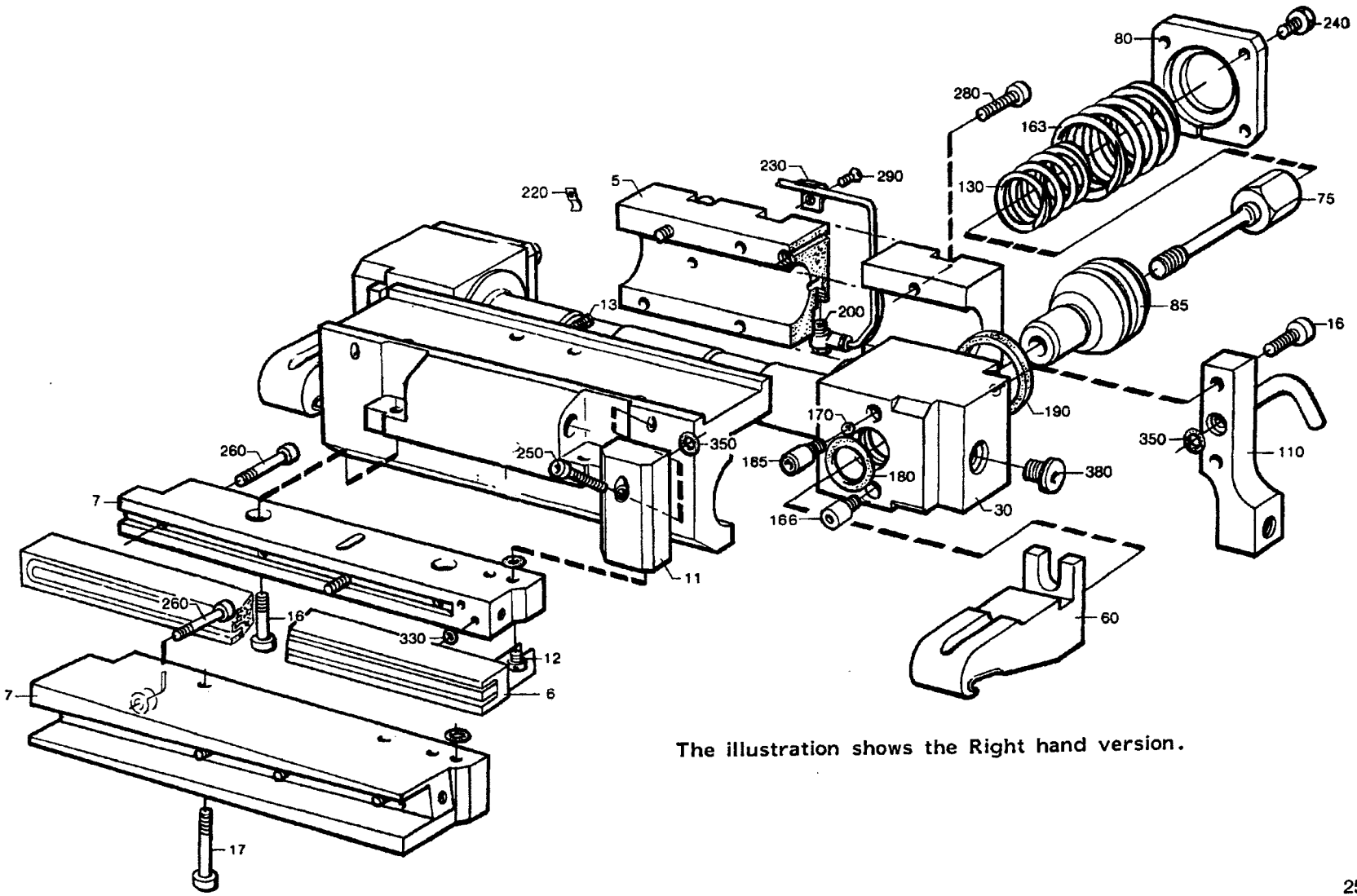

The illustration shows the Right hand version.

25953412.TIF
259534-12
AM

From	Pos	Part No	SP	UN	Qty	Description
1000ml LoFin 1055ml 750ml						
	F000	**C- 259534-0751**				**Pressure Jaw, Ass'y**
	005	458019	S		1	BEARING HOUSING
	007	445950	S		1	RAIL
	011	566526	C		1	CLUTCH PIECE
	012	292037	P		2	SCREW
	014	90157-0021	-		X	LOCKING FLUID
	016	312115-0370	PU		8	SCREW 6X20 A4 80
568ml 500ml						
	F000	**C- 259534-0752**				**Pressure Jaw, Ass'y**
	005	458019	S		1	BEARING HOUSING
	007	445950	S		1	RAIL
	011	566526	C		1	CLUTCH PIECE
	012	292037	P		2	SCREW
	014	90157-0021	-		X	LOCKING FLUID
	016	312115-0370	PU	1	8	SCREW 6X20 A4 80
1000ml HiFin						
	F000	**C- 259534-0755**				**Pressure Jaw, Ass'y**
	005	497583	S		1	HOUSING
	007	284582	S		1	RAIL
	011	566527	C		1	CLUTCH PIECE
	016	312115-0370	PU		6	SCREW 6X20 A4 80
	017	312115-0374	PU		2	SCREW 6X30 A4 80
500ml Slim 355ml						
	F000	**C- 259534-0756**				**Pressure Jaw, Ass'y**
	005	466395	S		1	BEARING HOUSING
	007	445950	S		1	RAIL
	011	566526	C		1	CLUTCH PIECE
	012	292037	P		2	SCREW
	014	90157-0021	-		X	LOCKING FLUID
	016	312115-0370	PU		8	SCREW 6X20 A4 80
375ml 300ml						
	F000	**C- 259534-0757**				**Pressure Jaw, Ass'y**
	005	466395	S		1	BEARING HOUSING
	007	445950	S		1	RAIL
	011	566526	C		1	CLUTCH PIECE
	012	292037	P		2	SCREW
	014	90157-0021	-		X	LOCKING FLUID
	016	312115-0370	PU		8	SCREW 6X20 A4 80
750ml Slim						
	F000	**C- 259534-0758**				**Pressure Jaw, Ass'y**
	005	544278	S		1	BEARING HOUSING
	007	445950	S		1	RAIL
	011	566526	C		1	CLUTCH PIECE
	012	292037	P		2	SCREW
	014	90157-0021	-		X	LOCKING FLUID
	016	312115-0370	PU		8	SCREW 6X20 A4 80
1000ml Slim						
	F000	**C- 259534-07591**				**Pressure Jaw, Ass'y**
	005	569053	S		1	BEARING HOUSING
	007	445950	S		1	RAIL
	011	566526	C		1	CLUTCH PIECE
	012	292037	P		2	SCREW
	014	90157-0021	-		X	LOCKING FLUID
	016	312115-0370	PU		8	SCREW 6X20 A4 80
Common Parts						
	006	539199	PU		1	INDUCTOR
	013	476290	-		1	SCREW
	030	440565	S		1	CYLINDER
	060	541697	S		2	CATCH
	075	553851	P		2	SCREW
	080	284833	C		2	LID
	085	292367	S		2	PISTON
	110	246495	P		1	ATTACHMENT
	130	479744	P		2	COMPRESSION SPRING
	163	479743	P		2	COMPRESSION SPRING
	165	440491	P		2	NIPPLE
	166	497040	P		2	STEERING
	170	90090-0013	SU		2	STEEL BALL
	180	90091-0078	SU		2	SEAL
	190	90091-0079	PU		2	SEAL
	200	90134-0058	-		4	BANJO CONNECTION
	205	90157-0016	-	ML	X	LOCKING FLUID
	220	90165-0058	-		1	CLAMP
	230	316810-0106	-		2	PIPE CLAMP 8MM RFR
	240	312105-0372	-		8	SCREW M6S6X25RFR
	250	312115-0295	-		1	SCREW S 4X20 A4 80
	260	312115-0297	PU		4	SCREW 4X25 A4 80
	280	312115-0372	P		4	SCREW MC6S6X25 A4 80
	290	312125-0285	-		3	SLOTTED HEMCS4X6RFR
	330	315202-0101	PU		2	O-RING 3,1X1,6
	350	315202-0104	PU		1	O-RING 6,1X1,6
	360	315202-0203	PU		4	O-RING 4,3X2,4
	380	342713-0209	-		1	BLIND PLUG

From	Pos	Part No	SP	UN Qty	Description
1000ml					
	F000	**C- 247123-0601**			**Spare Part Kit, Ass'y**
	F160	CR- 273565-0301	-	4	TPC BAR
	110	208709	-	8	VOLUME SHIM
	300	315202-0111	-	10	O-RING 13,1X1,6
	310	315202-0207	-	10	O-RING 8,3X2,4
	330	315202-0212	-	10	O-RING 14,3X2,4
568ml					
	F000	**C- 247123-0602**			**Spare Part Kit, Ass'y**
	F160	CR- 273565-0301	-	4	TPC BAR
	100	479246	-	8	VOLUME SHIM
	300	315202-0111	-	10	O-RING 13,1X1,6
	310	315202-0207	-	10	O-RING 8,3X2,4
	330	315202-0212	-	10	O-RING 14,3X2,4
300ml					
	F000	**C- 247123-0603**			**Spare Part Kit, Ass'y**
	F160	CR- 273565-0302	-	4	TPC BAR
	120	450302	-	8	VOLUME SHIM
	320	315202-0213	-	10	O-RING 15,3X2,4
500ml					
	F000	**C- 247123-0604**			**Spare Part Kit, Ass'y**
	F160	CR- 273565-0301	-	4	TPC BAR
	100	479245	-	8	VOLUME SHIM
	300	315202-0111	-	10	O-RING 13,1X1,6
	310	315202-0207	-	10	O-RING 8,3X2,4
	330	315202-0212	-	10	O-RING 14,3X2,4
1055ml					
	F000	**C- 247123-0605**			**Spare Part Kit, Ass'y**
	F160	CR- 273565-0301	-	4	TPC BAR
	125	526715	-	8	VOLUME SHIM
	300	315202-0111	-	10	O-RING 13,1X1,6
	310	315202-0207	-	10	O-RING 8,3X2,4
	330	315202-0212	-	10	O-RING 14,3X2,4
1136ml					
	F000	**C- 247123-0606**			**Spare Part Kit, Ass'y**
	F160	CR- 273565-0301	-	4	TPC BAR
	130	544346	-	8	VOLUME SHIM
	300	315202-0111	-	10	O-RING 13,1X1,6
	310	315202-0207	-	10	O-RING 8,3X2,4
	330	315202-0212	-	10	O-RING 14,3X2,4

From	Pos	Part No	SP	UN Qty	Description
Common Parts					
	400	542315	-	1	LINK
	410	19887	-	1	NUT
	500	90090-0013	-	10	STEEL BALL
	510	90091-0078	-	10	SEAL
	520	90091-0079	-	10	SEAL
	600	456011	-	10	PEG
	610	312111-0299	-	10	SCREW MC6S4X30FZB
	620	315202-0102	-	10	O-RING 4,1X1,6
	630	315202-0104	-	10	O-RING 6,1X1,6
	640	315202-0105	-	10	O-RING 7,1X1,6
	650	315202-0114	-	10	O-RING 16,1X1,6
	660	315202-0208	-	10	O-RING 9,3X2,4

From	Pos	Part No	SP	UN Qty	Description
1000ml LoFin					
		C- 268614-0501			**Start-Up Kit, Ass'y**
	200	32116	-	4	END PIECE
	240	208709	-	8	VOLUME SHIM
	260	G- 564533-0001	-	4	DOLLY
	400	315202-0111	-	10	O-RING 13,1X1,6
	420	315202-0207	-	10	O-RING 8,3X2,4
	430	315202-0212	-	5	O-RING 14,3X2,4
568ml					
		C- 268614-0502			**Start-Up Kit, Ass'y**
	200	32116	-	4	END PIECE
	210	479246	-	8	VOLUME SHIM
	260	G- 564533-0001	-	4	DOLLY
	400	315202-0111	-	10	O-RING 13,1X1,6
	420	315202-0207	-	10	O-RING 8,3X2,4
	430	315202-0212	-	5	O-RING 14,3X2,4
300ml					
		C- 268614-0503			**Start-Up Kit, Ass'y**
	250	450302	-	8	VOLUME SHIM
	285	G- 564533-0005	-	4	DOLLY
	350	440043	-	4	END PIECE
	410	315202-0206	-	5	O-RING 7,3X2,4
1000ml HiFin					
		C- 268614-0510			**Start-Up Kit, Ass'y**
	200	32116	-	4	END PIECE
	240	208709	-	8	VOLUME SHIM
	260	G- 564533-0001	-	4	DOLLY
	370	312115-0374	-	5	SCREW 6X30 A4 80
	410	315202-0206	-	5	O-RING 7,3X2,4
750ml					
		C- 268614-0511			**Start-Up Kit, Ass'y**
	200	32116	-	4	END PIECE
	260	G- 564533-0001	-	4	DOLLY
	345	450782	-	8	VOLUME SHIM
	400	315202-0111	-	10	O-RING 13,1X1,6
	420	315202-0207	-	10	O-RING 8,3X2,4
	430	315202-0212	-	5	O-RING 14,3X2,4
500ml Slim					
		C- 268614-0512			**Start-Up Kit, Ass'y**
	285	G- 564533-0005	-	4	DOLLY
	300	464315	-	8	VOLUME SHIM
	350	440043	-	4	END PIECE
	410	315202-0206	-	5	O-RING 7,3X2,4
375ml					
		C- 268614-0513			**Start-Up Kit, Ass'y**
	285	G- 564533-0005	-	4	DOLLY
	290	255228-0001	-	8	VOLUME SHIM
	350	440043	-	4	END PIECE
	410	315202-0206	-	5	O-RING 7,3X2,4
500ml					
		C- 268614-0514			**Start-Up Kit, Ass'y**
	200	32116	-	4	END PIECE
	210	479245	-	8	VOLUME SHIM
	260	G- 564533-0001	-	4	DOLLY
	400	315202-0111	-	10	O-RING 13,1X1,6
	420	315202-0207	-	10	O-RING 8,3X2,4
	430	315202-0212	-	5	O-RING 14,3X2,4
355ml					
		C- 268614-0515			**Start-Up Kit, Ass'y**
	255	529141	-	8	VOLUME SHIM
	285	G- 564533-0005	-	4	DOLLY
	350	440043	-	4	END PIECE
	410	315202-0206	-	5	O-RING 7,3X2,4
1055ml					
		C- 268614-0516			**Start-Up Kit, Ass'y**
	200	32116	-	4	END PIECE
	245	531320	-	8	VOLUME SHIM
	260	G- 564533-0001	-	4	DOLLY
	400	315202-0111	-	10	O-RING 13,1X1,6
	420	315202-0207	-	10	O-RING 8,3X2,4
	430	315202-0212	-	5	O-RING 14,3X2,4
750ml Slim					
		C- 268614-0517			**Start-Up Kit, Ass'y**
	200	544337	-	8	END PIECE
	210	544305	-	8	VOLUME SHIM
	260	G- 564533-0007	-	4	DOLLY
1000ml Slim					
		C- 268614-0518			**Start-Up Kit, Ass'y**
	200	32116	-	8	END PIECE
	240	559056	-	8	VOLUME SHIM
	260	G- 564533-0001	-	4	DOLLY
	400	315202-0111	-	10	O-RING 13,1X1,6
	420	315202-0207	-	10	O-RING 8,3X2,4
	430	315202-0212	-	5	O-RING 14,3X2,4

Last Alteration: AM 18328 91-11-26

Corresponding group: 268614-050V
Assembly Drawing:

Issue: 930607

From	Pos	Part No	SP	UN	Qty	Description
Common Parts						
	450	539199	-		2	INDUCTOR
	500	542315	-		1	LINK
	510	19887	-		1	NUT
	520	32544	-		2	INSULATION NUT
	530	250633	-		2	CABLE CLAMP
	600	90090-0013	-		10	STEEL BALL
	610	90091-0078	-		10	SEAL
	620	90091-0079	-		10	SEAL
	700	456011	-		10	PEG
	710	312115-0297	-		10	SCREW 4X25 A4 80
	720	312115-0370	-		10	SCREW 6X20 A4 80
	730	312145-0238	-		10	SLOTTED HEMFS3X40RFR
	740	315202-0101	-		20	O-RING 3,1X1,6
	750	315202-0102	-		20	O-RING 4,1X1,6
	760	315202-0104	-		20	O-RING 6,1X1,6
	770	315202-0114	-		10	O-RING 16,1X1,6
	780	315202-0208	-		10	O-RING 9,3X2,4
	790	315202-0702	-		10	O-RING 12,42X1,78

From	Pos	Part No	SP	UN	Qty	Description

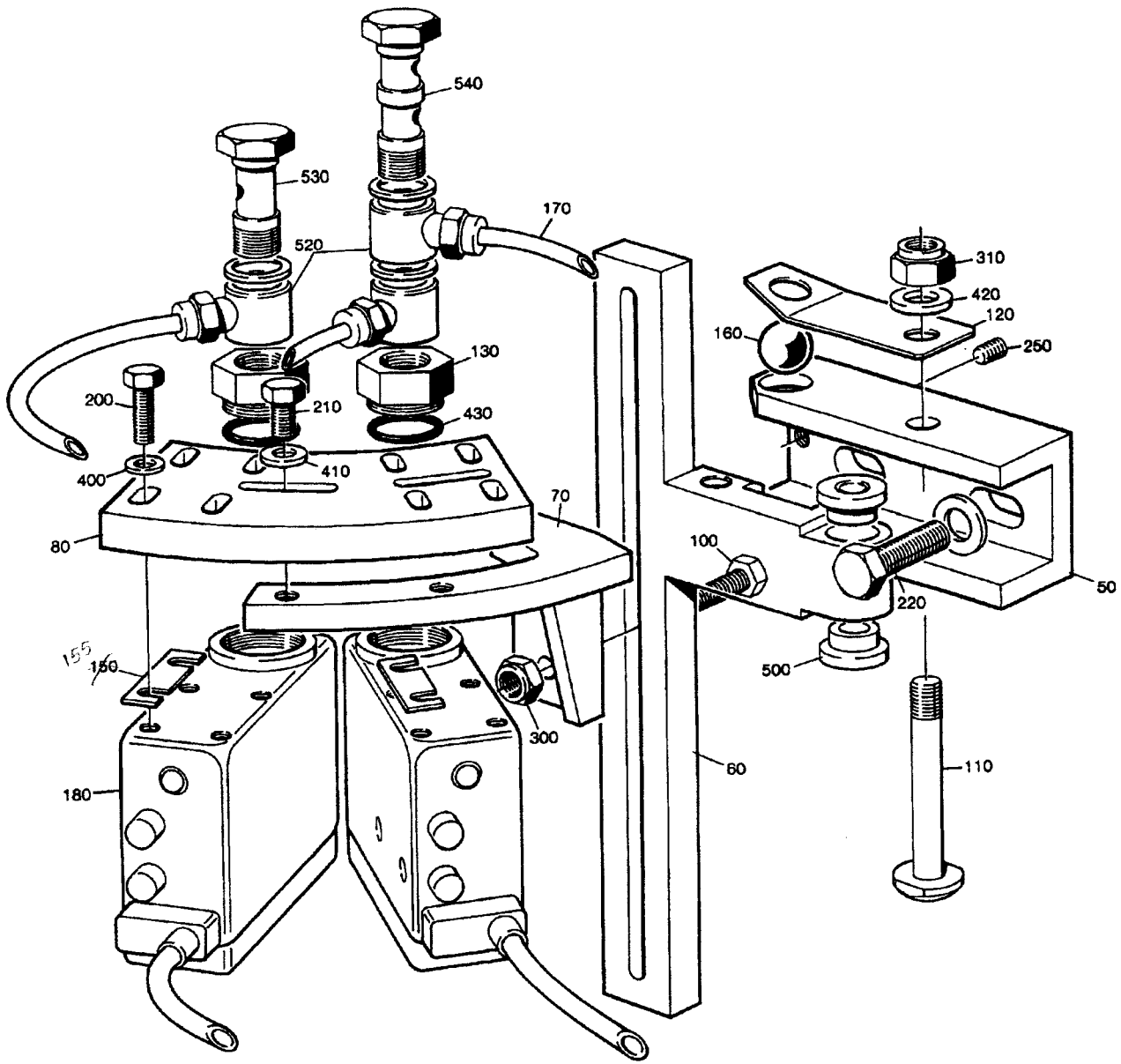

54118805.TIF
541188-5
AM

From	Pos	Part No	SP	UN	Qty	Description
NOSTRIP SIDE 1136ml-500ml						
	F000	**C- 541188-0201**				**Bar Code, Ass'y**
	050	457359	C		1	BRACKET
	060	545789	C		1	HOLDER
	070	457361	C		1	BRACKET 500-1136
	080	457364	C		1	PLATE RIGHT
NOSTRIP SIDE 500ml Slim 355ml						
	F000	**C- 541188-0202**				**Bar Code, Ass'y**
	050	457359	C		1	BRACKET
	060	545789	C		1	HOLDER
	070	526677	C		1	CANTILEVER
	080	457364	C		1	PLATE RIGHT
NOSTRIP SIDE 375ml						
	F000	**C- 541188-0203**				**Bar Code, Ass'y**
	050	457359	C		1	BRACKET
	060	545789	C		1	HOLDER
	070	562971	C		1	CANTILEVER
	080	457364	C		1	PLATE RIGHT
STRIP SIDE 300ml						
	F000	**C- 541188-0204**				**Bar Code, Ass'y**
	050	486790	C		1	BRACKET
	060	486794	C		1	HOLDER
	070	526949	C		1	CANTILEVER
	080	457365	C		1	PLATE LEFT
NOSTRIP SIDE 750ml Slim 1000ml Slim						
	F000	**C- 541188-0205**				**Bar Code, Ass'y**
	050	457359	C		1	BRACKET
	060	545789	C		1	HOLDER
	070	544343	C		1	BRACKET 750S
	080	457364	C		1	PLATE RIGHT
Common Parts						
	100	312105-0370	C		2	SCREW M6S6X20RFR
	110	457367	C		1	SHAFT
	120	457368	C		5	SPRING
	130	548337	C		2	BUSHING
	155	548336	C		2	WASHER
	160	90090-0016	-		1	BALL
	165	90157-0016	-		X	LOCKING FLUID
	166	90165-0057	-		1	CLIP
	170	90166-0124	-	MM	200	HOSE
	180	90232-0075	C		2	PHOTOCELL
	200	312105-0329	-		8	SCREW M6S5X16 A4 80
	210	312105-0364	-		2	SCREW M6S6X10RFR
	220	312105-0455	-		2	SCREW M6S8X30RFR
	230	312125-0285	-		1	SLOTTED HEMCS4X6RFR
	250	312318-0323	-		1	STOP SCREW SK6SS5X8RFR
	300	312812-0316	-		2	LOCK NUT A4-M6RFR
	310	312812-0318	-		1	LOCK NUT A4-M8RFR
	400	315105-0146	-		8	WASHER BRB5,3X10RFR
	410	315105-0153	-		2	WASHER BRB6,4X12RFR
	420	315105-0165	-		3	WASHER BRB8,4X16RFR
	430	315204-0116	-		2	O-RING 18,1X1,6VITON
	500	321101-0143	-		2	FLANGE BUS 8F7X8
	520	342980-0114	-		3	BANJO CONNSINGEL 6/4-1/4
	530	90030-0265	-		1	HOLLOW SCREW
	540	90030-0266	-		1	HOLLOW SCREW


Tetra Pak

SPC section 648035

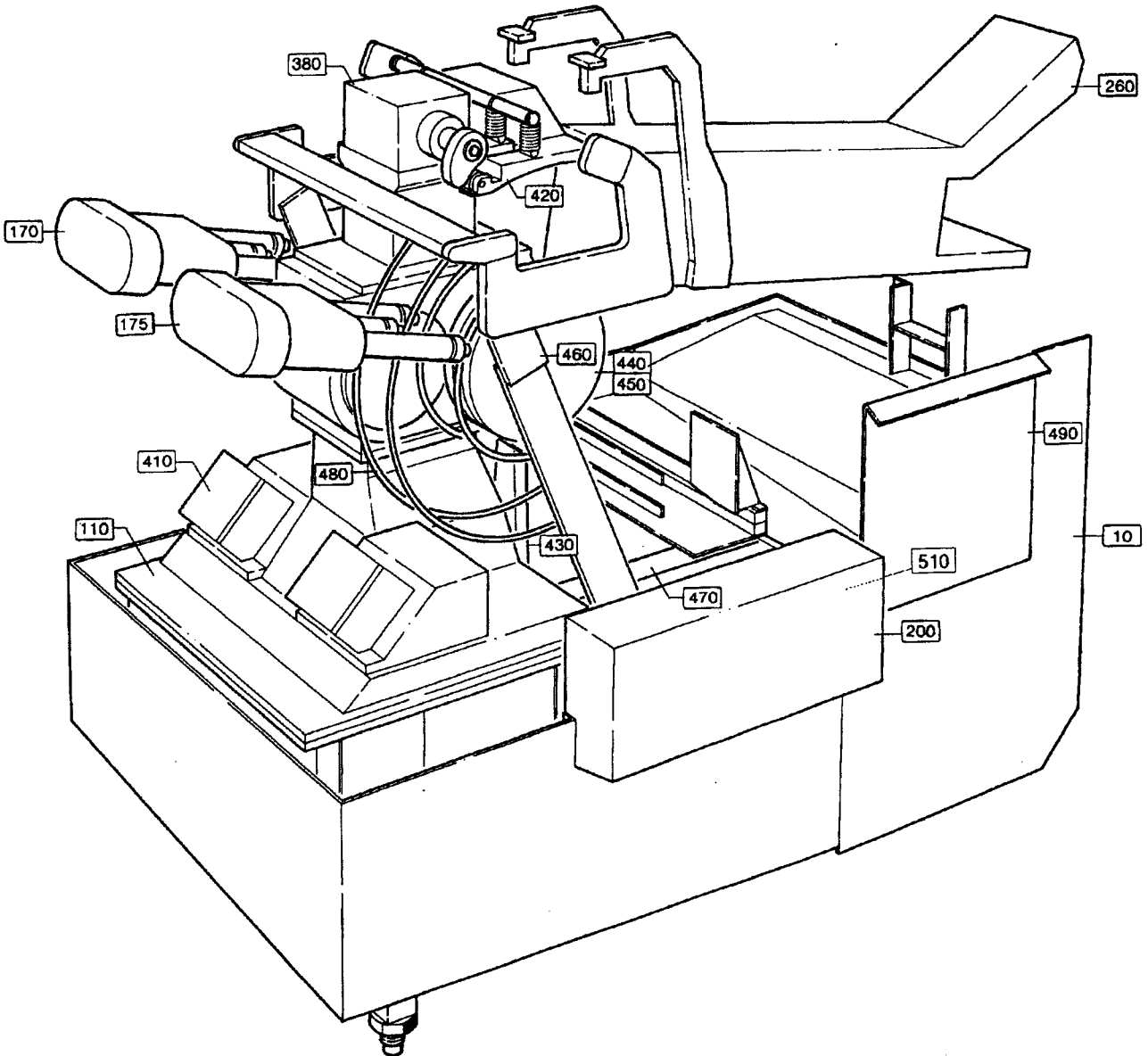

64803504.TIF
648035-4
AM

Code	Ass'y	Group No	Description	Page
35-F000	64803504	648035-070V	Final Folder	401
35-F010	28559206	285592-060V	Machine Body	403
	28559206	285592-060V	Machine Body	405
	28528703	285287-050V	Drive Unit	407
	28586105	285861-050V	Gear Reduction	409
	44258201	442582-010V	Drive Gear	411
	52514302	525143-020V	Bottom Valve	413
	52511001	525110-010V	Cable Conduit	415
	29763801	297638-020V	Chain Tensioner	417
35-F110	28530304	285303-040V	Lower Section	419
	28529104	285291-040V	Bevel Gear	421
	44264402	442644-030V	Double Gear	423
	28529901	285299-010V	Pressure Arm	425
	52510202	525102-020V	Lubricating System	427
35-F170	52512901	525129-010V	FF-Element Left	429
	52512901	525129-010V	FF-Element Left	431
	3139001	31390-010V	Element	433
	3139001	31390-011V	Element	435
35-F175	525128-010V	525128-010V	FF-Element Right	437
	525128-010V	525128-010V	FF-Element Right	439
	3139001	31390-010V	Element	441
	3139001	31390-011V	Element	443
35-F200	28559104	285591-040V	Station	445
35-F260	52508503	525085-020V	Lubricating System	447
	52508601	525086-020V	Conveying Equipment	449
	52508601	525086-020V	Conveying Equipment	451
	52508701	525087-010V	Drop	453
	52508701	525087-010V	Drop	455
	52508802	525088-020V	Discharge Chute	457
	52508901	525089-010V	Chain Right	459
	52509001	525090-010V	Chain Left	461
	52509101	525091-010V	Chain	463
	52509201	525092-010V	Chain Guard	465
35-F380	28547904	285479-040V	Superstructure	467
	28585303	285853-020V	Steering Rail	469
	28585303	285853-020V	Steering Rail	471
	52511702	525117-020V	Indexing Gear	473
	44264602	442646-020V	Top Gear	475
35-F410	28545602	285456-030V	Pressure Device	477
	28545602	285456-030V	Pressure Device	479
35-F420	28573602	285736-030V	Pull-Down Device	481
	28573602	285736-030V	Pull-Down Device	483
	28573602	285736-030V	Pull-Down Device	485
35-F440	29768102	297681-030V	Wheel Left	487
	29768102	297681-030V	Wheel Left	489
	29768102	297681-030V	Wheel Left	491
35-F450	29768202	297682-030V	Wheel Right	493
	29768202	297682-030V	Wheel Right	495
	29768202	297682-030V	Wheel Right	497
35-F470	44317301	443173-010V	Drive Shaft	499
35-F480	52500002	525000-020V	Folding Part	501
	52500002	525000-020V	Folding Part	503
	52500002	525000-020V	Folding Part	505
35-F490	44253705	442537-050V	Waste Chute	507
35-F500	52521302	525213-020V	Infeeder	509
	52521302	525213-020V	Infeeder	511
	52532001	525320-010V	Chain Guard	513
35-F510	52532502	525325-020V	Discharger	515
	52532502	525325-020V	Discharger	517

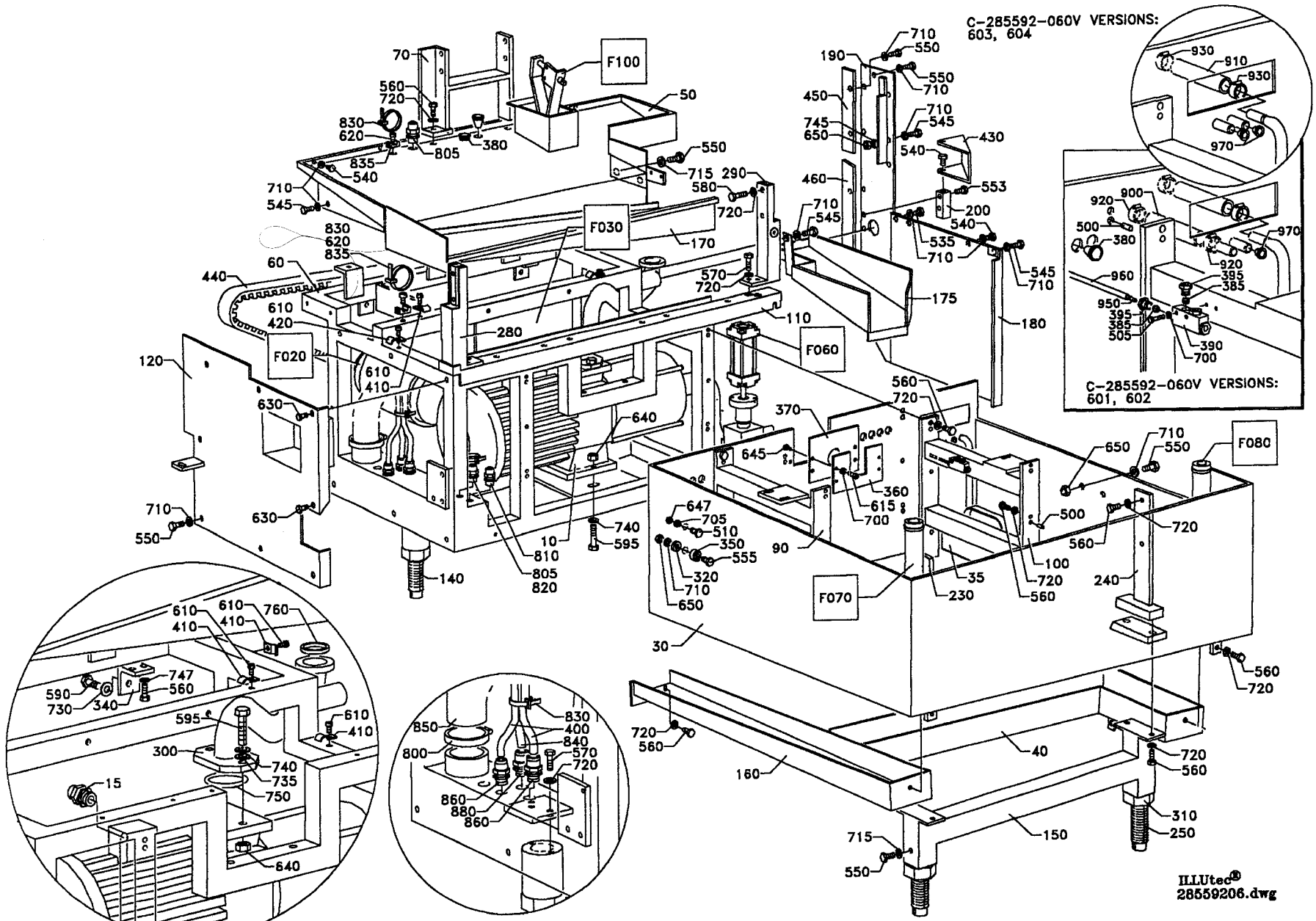
C-285592-060V VERSIONS:
603, 604
C-285592-060V VERSIONS:
601, 602
F100
F030
F020
F060
F080
F070
ILLUtec®
28559206.dwg

From	Pos	Part No	SP	UN	Qty	Description
TBA/8 50Hz						
		C- 285592-0601				**Machine Body, Ass'y**
	010	90321-0015	C		1	PUMP
		90321-0466	S		1	* SPARE PART KIT
		90321-0481	S		1	* GASKET
	900	90166-0059	-	MM	630	HOSE
	920	342991-0101	-		2	HOSE CLIP 11-17MMRFR
	970	90261-0004	-		1	PIPE PLUG
TBA/8 60Hz						
		C- 285592-0602				**Machine Body, Ass'y**
	010	90321-0034	C		1	PUMP
		90321-0466	S		1	* SPARE PART KIT
		90321-0481	S		1	* GASKET
	900	90166-0059	-	MM	630	HOSE
	920	342991-0101	-		2	HOSE CLIP 11-17MMRFR
	970	90261-0004	-		1	PIPE PLUG
TB/8 50Hz						
		C- 285592-0603				**Machine Body, Ass'y**
	010	90321-0015	C		1	PUMP
		90321-0466	S		1	* SPARE PART KIT
		90321-0481	S		1	* GASKET
	970	90261-0004	-		2	PIPE PLUG
TB/8 60Hz						
		C- 285592-0604				**Machine Body, Ass'y**
	010	90321-0034	C		1	PUMP
		90321-0466	S		1	* SPARE PART KIT
		90321-0481	S		1	* GASKET
	970	90261-0004	-		2	PIPE PLUG
Common parts						
	F020	**C- 285287-0501**	-		1	**DRIVE UNIT**
	F030	**C- 285861-0501**	-		1	**GEAR REDUCTION**
		CR- 442582-0101				**. DRIVE GEAR**
	F060	**C- 525143-0201**	-		1	**BOTTOM VALVE**
	F070	**C- 525110-0101**	-		1	**CABLE CONDUIT**
	F080	**C- 525110-0102**	-		1	**CABLE CONDUIT**
	F100	**C- 297638-0201**	-		1	**CHAIN TENSIONER**
	015	90012-0072	P		3	GLAND FITTING
	030	525278	-		1	CLEANING TROUGH
	035	531119	-		1	STRAINER
	040	525132	-		1	CABLE TRENCH
	050	525262	-		1	COVERING PLATE
	060	525274	-		1	MACHINE BODY
	070	285330	-		1	HOLDER
	090	525272	-		1	STRUT
	100	525273	-		1	STRUT

From	Pos	Part No	SP	UN	Qty	Description
	110	525275	-		1	COVERING PLATE
	120	525346	-		1	SIDE PLATE
	140	525268	-		2	LEG
	150	525130	-		1	LEG
	160	525277	-		1	CABLE TRENCH
	170	529331	-		1	COVERING PLATE
	175	443186	-		1	CHUTE
	180	443187	-		1	SHEET
	190	442545	-		1	SHEET
	200	297667	-		1	BRACKET
	230	525266	-		1	LEG
	240	525267	-		1	LEG
	250	285923	-		4	SCREW
	280	297663	-		1	POST HOLDER
	290	297664	-		1	POST HOLDER
	300	525271	-		1	ELBOW PIPE
	310	285994	-		4	NUT
	320	295435	-		2	WASHER
	340	297814	-		2	BRACKET
	350	297860	-		2	BUSHING
	360	525280	-		1	SHEET
	370	525281	-		1	GASKET
	380	90015-0020	P		11	BUSHING
	385	90028-0022	-		4	CONE
	390	90032-0044	-		1	JUNKTION BLOCK
	395	90134-0055	-		4	BUSHING
	400	90152-0050	-	MM	2500	FLEXIBLE CONDUIT
	405	90165-0060	-		1	CLAMP
	410	316810-0106	-		7	PIPE CLAMP 8MM RFR
	420	90165-0057	-		4	CLIP
	430	297666	-		1	PROTECTION
	440	90417-0180	P		1	TIMING BELT
	450	525174	-		1	BRACKET
	460	525175	-		1	BRACKET
	470	297551	-		1	SHEET
	500	311103-0399	-		8	CYLINDRICACP M6 8X16 RFR
	505	312105-0295	-		2	SCREW M6S4X20 A4 80
	510	312105-0329	-		1	SCREW M6S5X16 A4 80
	535	312105-0362	-		1	SCREW M6S6X8RFR
	540	312105-0364	-		10	SCREW M6S6X10RFR
	545	312105-0368	-		6	SCREW M6S6X16RFR
	550	312105-0367	-		15	SCREW M6S6X14RFR
	553	312105-0370	-		3	SCREW M6S6X20RFR
	555	312105-0376	-		2	SCREW M6S6X35RFR
	560	312105-0451	-		23	SCREW M6S8X20RFR

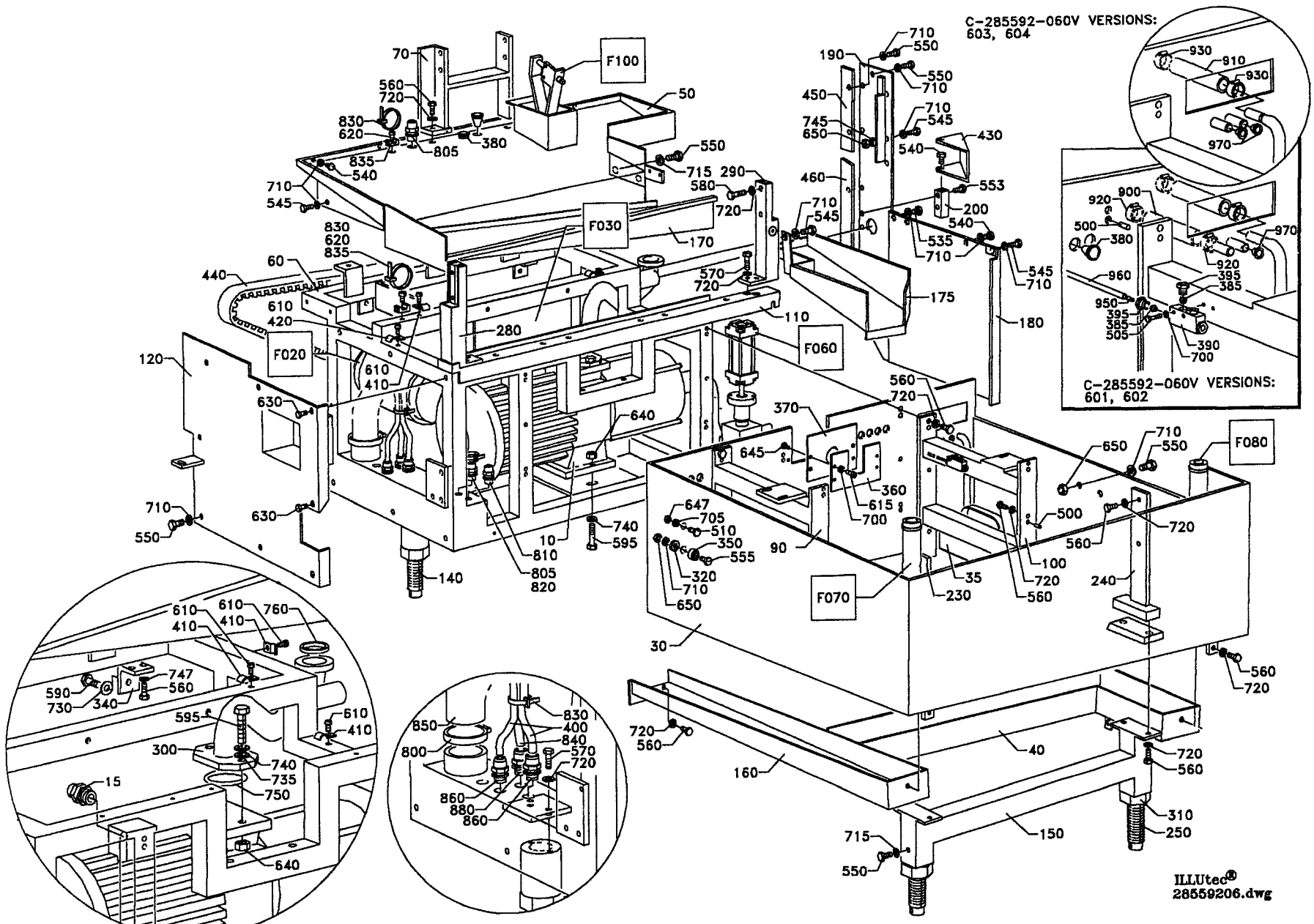
C-285592-060V VERSIONS:
603, 604
C-285592-060V VERSIONS:
601, 602
F100
F030
F020
F060
F080
F070
ILLUtec®
28559206.dwg

From	Pos	Part No	SP	UN	Qty	Description
	570	312105-0453	-		8	SCREW M6S8X25RFR
	580	312105-0455	-		4	SCREW M6S8X30RFR
	590	312105-0495	-		2	SCREW M6S10X30RFR
	595	312105-0542	-		4	SCREW M6S12X50RFR
	610	312125-0287	-		9	SLOTTED HEMCS4X8RFR
	615	312125-0291	-		4	SLOTTED HEMCS4X12RFR
	620	312125-0323	-		5	SLOTTED HEMCS5X8RFR
	630	312155-0366	-		2	SCREW MF6S6X12RFR
	640	312605-0322	-		4	NUT M6M12RFR
	645	312605-0312	-		4	NUT M6M4RFR
	647	312605-0314	-		2	NUT M6M5RFR
	650	312605-0316	-		7	NUT M6M6RFR
	700	315105-0136	-		11	WASHER BRB4,3X8RFR
	705	315105-0146	-		2	WASHER BRB5,3X10RFR
	710	315105-0153	-		31	WASHER BRB6,4X12RFR
	715	6278	-		3	WASHER
	720	315105-0165	-		31	WASHER BRB8,4X16RFR
	730	315105-0173	-		2	WASHER BRB10,5X22RFR
	735	315105-0178	-		2	WASHER BRB13X24RFR
	740	315115-0178	-		6	WASHER TBRB13X24RFR
	745	315115-0153	-		3	WASHER TBRB6,4X12RFR
	747	315115-0165	-		4	WASHER TBRB8,4X16RFR
	750	315202-0229	P		1	O-RING 59,2X5,7
	760	315250-0103	P		1	GASKET 48/38
	800	342991-0112	-		2	HOSE CLIP 68-85MMRFR
	805	352103-0100	-		4	CABLE GLANR.STR 9
	810	352103-0101	-		1	CABLE GLANR.ST 9
	820	352113-0101	-		3	RIBBON CLA
	830	352113-0102	-		6	RIBBON CLA
	835	352113-0204	-		5	ARMATURE M3-S25
	840	90152-0051	-	MM	1000	FLEXIBLE CONDUIT
	850	90152-0044	-	MM	350	FLEXIBLE CONDUIT
	880	90012-0071	-		3	GLAND FITTING
	910	90166-0087	-	MM	630	HOSE
	930	342991-0103	-		2	HOSE CLIP 15-24MMRFR
	950	90134-0030	-		1	SLEEVE
	960	90166-0108	-	MM	870	HOSE

From	Pos	Part No	SP	UN	Qty	Description

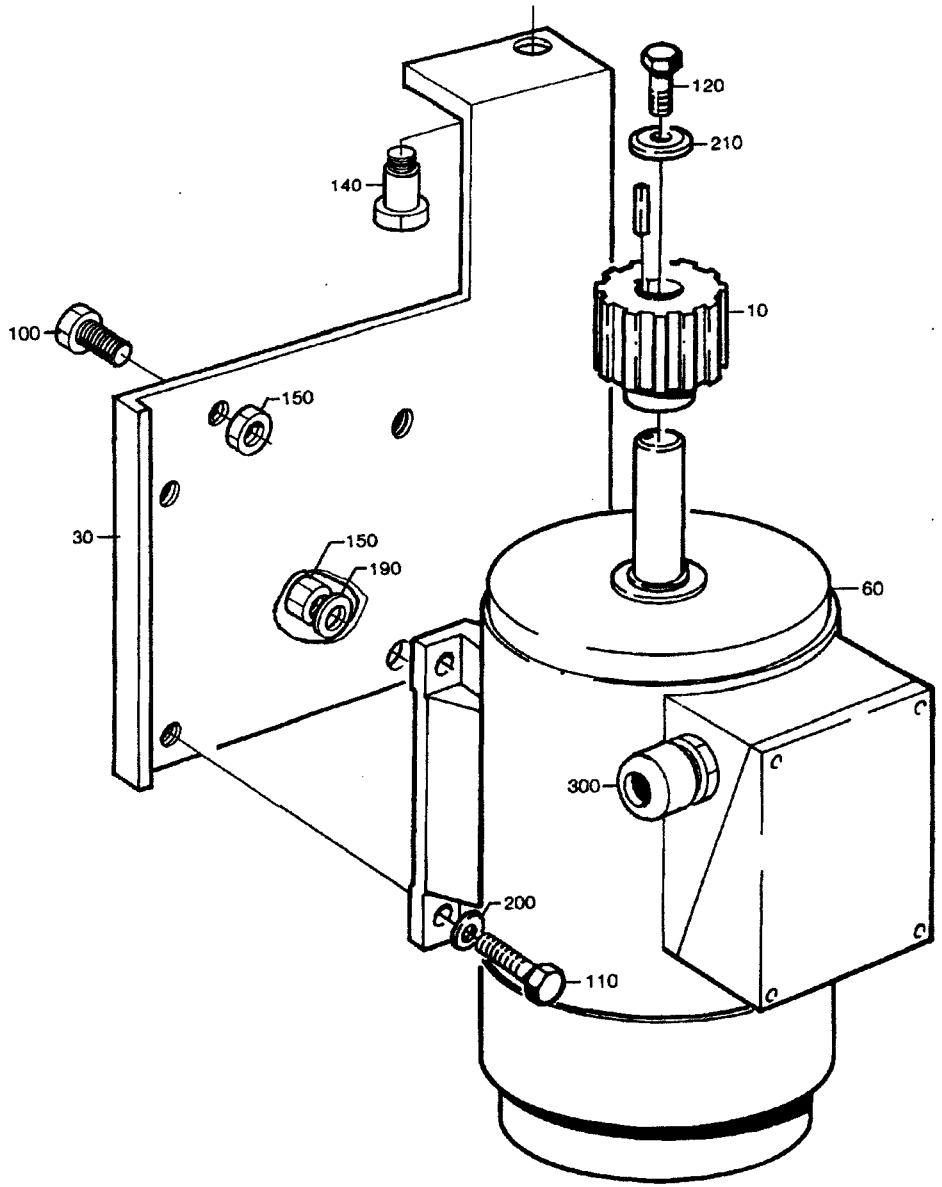

28528703.TIF
285287-3
AM

From	Pos	Part No	SP	UN	Qty	Description
		C- 285287-0501				**Drive Unit, Ass'y**
	010	443336-0008	S		1	TIMING BELT PULLEY
	030	525166	-		1	MOTOR CRADLE
	060	90045-0049	S		1	MOTOR
	100	312101-0451	-		1	SCREW M6S8X20FZB
	110	312101-0453	-		3	SCREW M6S8X25FZB
	120	312101-0457	-		2	SCREW M6S8X35FZB
	140	312180-0530	-		2	REAMED BOL
	150	312601-0318	-		2	NUT M6M8FZB
	190	315101-0165	-		1	WASHER BRB8,4X16FZB
	200	315111-0165	-		4	WASHER TBRB8,4X16FZB
	210	315121-0165	-		1	WASHER TBRSB8,4X26FZB
	300	90012-0072	-		1	GLAND FITTING

From	Pos	Part No	SP	UN	Qty	Description

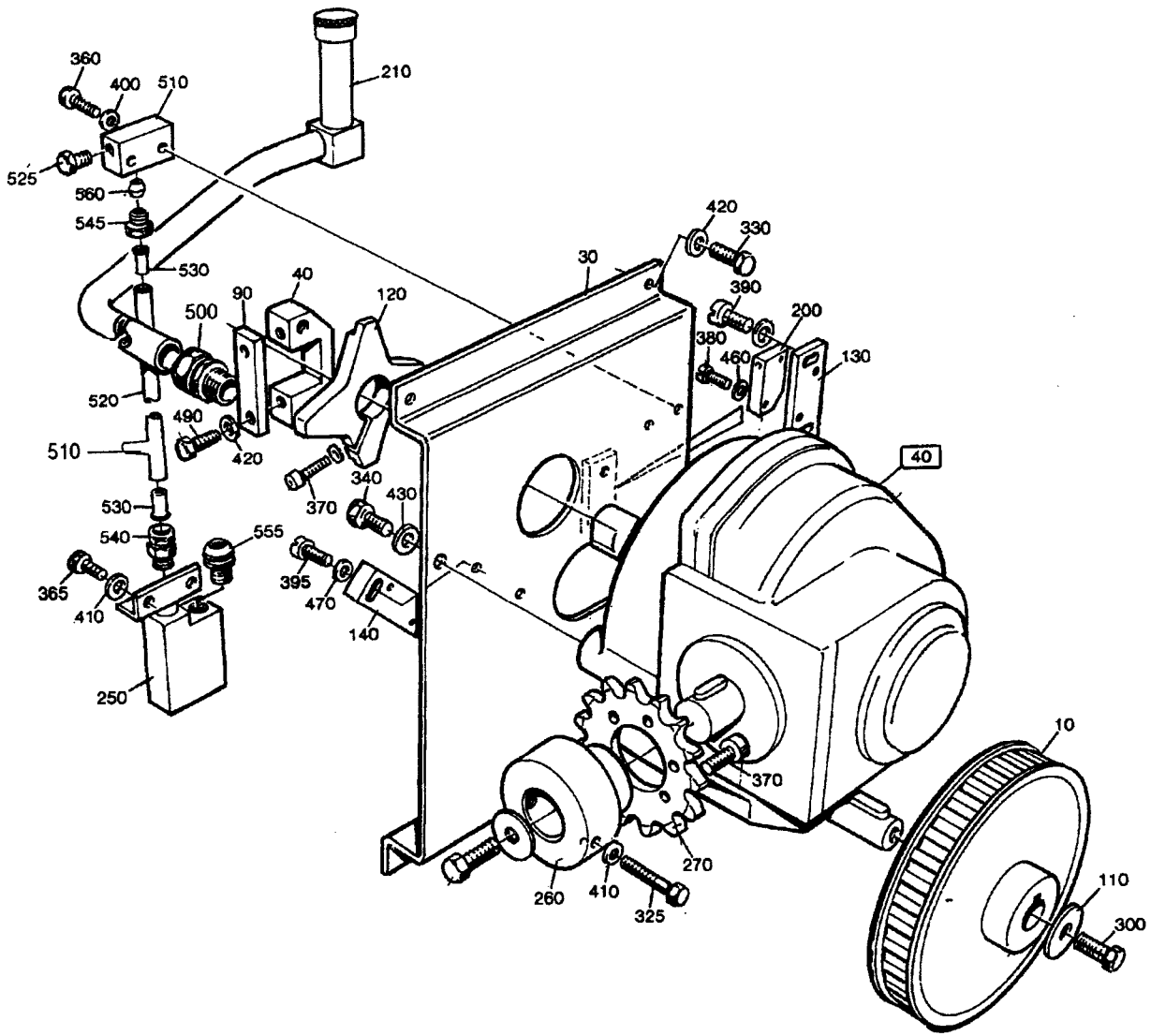

28586105.TIF
285861-5
AM 15032

From	Pos	Part No	SP	UN	Qty	Description
		C- 285861-0501				**Gear Reduction, Ass'y**
	F040	**CR- 442582-0101**	**C**		**1**	**DRIVE GEAR**
	010	525215-0006	-		1	TIMING BELT PULLEY
	030	525109	-		1	BRACKET
	040	262274-0004	S		1	BRACKET
	090	262275-0001	-		1	CAP
	110	285403	-		2	WASHER
	120	566775	-		1	CARRIER
	130	525337	-		1	BRACKET
	140	525232	-		1	BRACKET
	200	90044-0104	P		2	INDUCTIVE SWITCH
	210	443248	S		1	OIL PIPE
	250	90274-0002	S		1	PRESSURE GUARD
		90274-0300	R		0	* CONTACT HOUSING
	260	525216	-		1	SLEEVE
	270	442500	S		1	SPROCKET
	300	312101-0370	-		2	SCREW M6S6X20FZB
	325	312101-0384	-		1	SCREW M6S6X70FZB
	330	312101-0451	-		4	SCREW M6S8X20FZB
	340	312101-0493	-		3	SCREW M6S10X25FZB
	365	312101-0364	-		2	SCREW M6S6X10FZB
	370	312111-0370	-		7	SCREW MC6S6X20FZB
	380	312125-0228	-		2	SLOTTED HEMCS3X16RFR
	385	312125-0287	-		2	SLOTTED HEMCS4X8RFR
	390	312115-0295	-		2	SCREW S 4X20 A4 80
	395	312115-0291	-		2	SCREW MC6S4X12 A4 80
	410	315101-0153	-		4	WASHER BRB6,4X12FZB
	420	315101-0165	-		6	WASHER BRB8,4X16FZB
	430	315101-0173	-		3	WASHER BRB10,5X22FZB
	460	315105-0124	-		2	WASHER BRB3,2X6RFR
	470	315105-0136	-		4	WASHER BRB4,3X8RFR
	480	90165-0056	-		2	CLIP
	490	90287-0165	-		2	SCREW
	500	342720-0115	-		1	PIPE COUPLGA-16-1/2"
	510	342946-0112	-		1	T-CONNECTI6/4
	520	90166-0011	-	MM	3000	HOSE
	530	342706-0130	-		1	INSERT SLESH06
	540	342790-0202	-		1	GAUGE CONNMAV6-S/R3/8FZB
	555	90012-0073	-		1	GLAND FITTING

From	Pos	Part No	SP	UN	Qty	Description

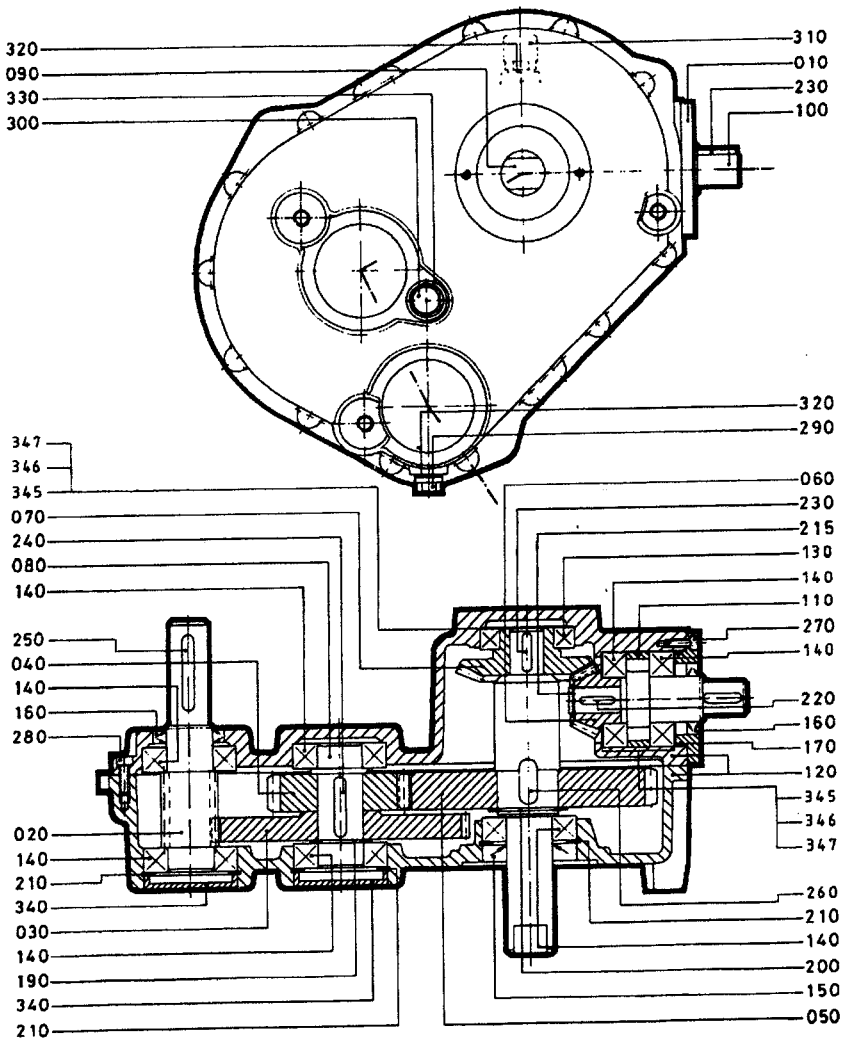
320
090
330
300
310
010
230
100
320
290
347
346
345
070
240
080
140
250
040
140
160
280
020
140
210
340
030
140
190
340
210
060
230
215
130
140
110
270
140
220
160
170
120
345
346
347
260
210
140
200
150
050

Last Alteration: AM 16197 91-11-11

Corresponding group: 442582-010V
Assembly Drawing: 442582-1

Issue: 930607

From	Pos	Part No	SP	UN Qty	Description
		C- 442582-0101			**Drive Gear, Ass'y**
	010	567345	-	1	BEARING COVER
	020	442554	S	1	GEARING
	030	442555	S	1	GEAR WHEEL
	040	442556	S	1	GEAR WHEEL
	050	442557	S	1	GEAR WHEEL
	060	442558	S	1	GEAR WHEEL
	070	442559	S	1	GEAR WHEEL
	080	567347	S	1	SHAFT
	090	567348	S	1	SHAFT
	100	525136	S	1	SHAFT
	110	567349	S	1	SPACER
	120	567373	-	1	GEAR HOUSING
	130	321306-0107	S	1	BALL BEARISKF6007
	140	321309-0106	S	7	BALL BEARISKF6206
	150	90091-0145	S	1	SEAL RING
	160	90091-0054	S	2	SEAL RING
	170	90242-0116	S	1	O-RING
	190	315750-0122	S	1	CIRCLIP SGA30
	200	315750-0127	S	1	CIRCLIP SGA40
	210	315752-0136	S	3	CIRCLIP SGH62
	215	90141-0012	S	1	LOCK RING
	220	315701-0202	S	1	FLAT WEDGE5X5X22
	230	315701-0234	S	3	FLAT WEDGE6X6X25
	240	315701-0270	S	2	FLAT WEDGE8X7X40
	250	315701-0272	S	1	FLAT WEDGE8X7X50
	260	567350	S	2	WEDGE
	270	312111-0329	-	4	SCREW MC6S5X16FZB
	280	312111-0370	-	12	SCREW MC6S6X20FZB
	290	90330-0026	S	1	PLUG
	300	90330-0037	S	1	PLUG
	310	442841	S	1	AIR SCREW
	320	315234-0110	S	2	SEAL RING R1/4"
	330	315234-0113	S	1	SEAL RING R1/2"
	340	90214-0310	S	2	LID
	345	442903	S	X	SHIM
	346	442904	S	X	SHIM
	347	442905	S	X	SHIM
	390	90296-0075	S	ML 2400	OIL

From	Pos	Part No	SP	UN Qty	Description

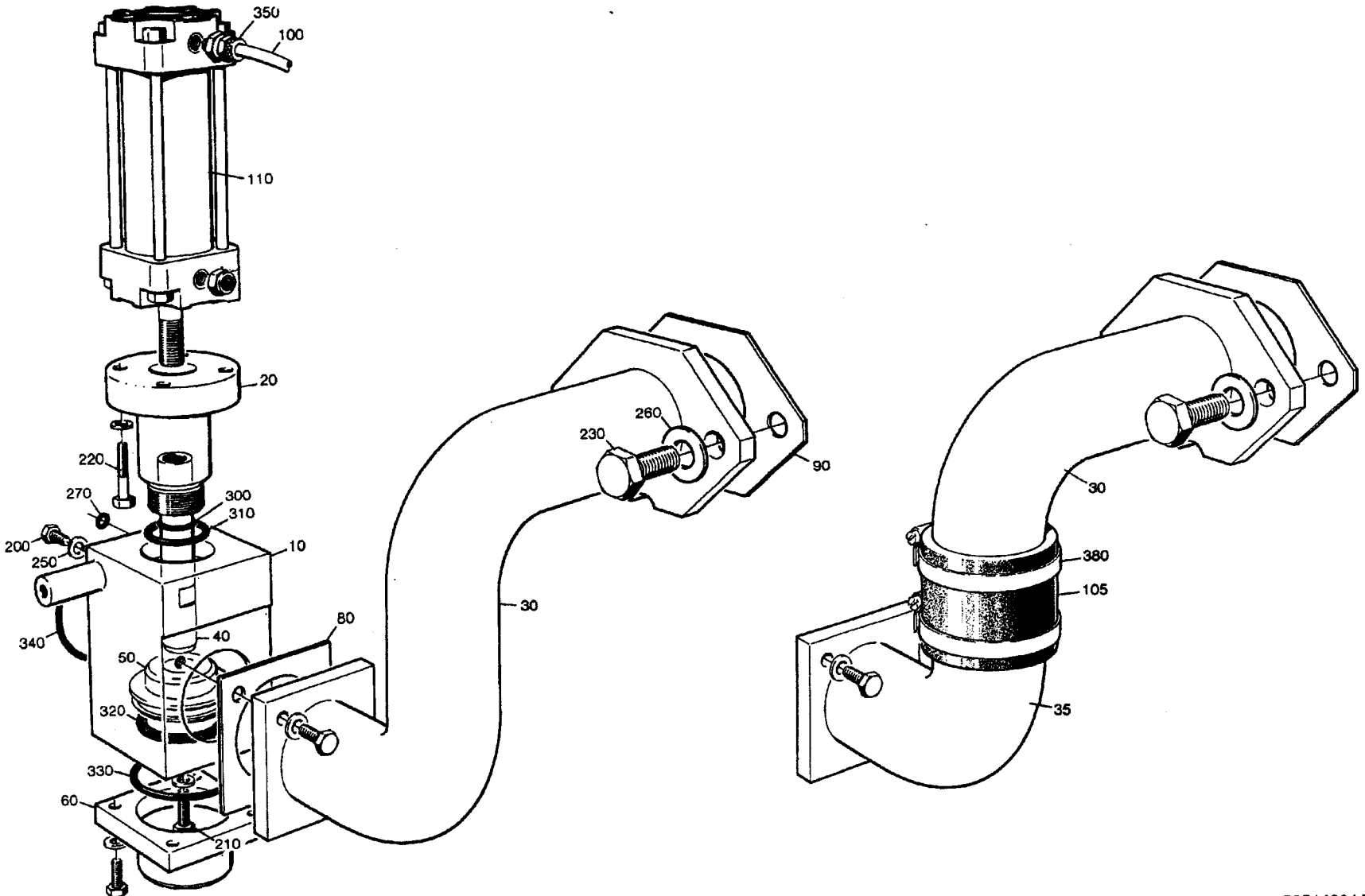

52514301.TIF
525143-1
AM

Last Alteration: AM 16630 91-08-21

Corresponding group: 525143-020V
Assembly Drawing: 525143-2

Issue: 930607

From	Pos	Part No	SP	UN	Qty	Description
		C- 525143-0201				**Bottom Valve, Ass'y**
	010	443122	C		1	HOUSE
	020	443123	C		1	HOUSE
	030	525269	C		1	PIPE
	035	525270	C		1	PIPE
	040	442851	C		1	SHAFT
	050	442852	C		1	VALVE
	060	442853	-		1	ATTACHMENT PIPE
	080	531116	-		1	GASKET
	090	531189	-		1	GASKET
	100	90166-0124	S	MM	650	HOSE
	105	90166-0199	S	MM	80	RUBBER HOSE
	110	90239-0960	S		1	CYLINDER
	200	312105-0368	P		8	SCREW M6S6X16RFR
	210	312105-0370	P		5	SCREW M6S6X20RFR
	220	312105-0374	P		4	SCREW M6S6X30RFR
	230	312105-0534	P		2	SCREW M6S12X25RFR
	250	315105-0153	-		13	WASHER BRB6,4X12RFR
	260	315105-0178	-		2	WASHER BRB13X24RFR
	265	315115-0153	-		4	WASHER TBRB6,4X12RFR
	270	315202-0106	P		2	O-RING 8,1X1,6
	300	315202-0214	P		1	O-RING 17,3X2,4
	310	315202-0220	P		1	O-RING 32,2X3
	320	315202-0226	P		1	O-RING 44,2X5,7
	330	315202-0302	P		1	O-RING 54,5X3
	340	315202-0303	P		1	O-RING 59,5X3
	350	342920-0113	P		1	PIPE COUPL6/4-1/8
	380	342991-0111	S		2	HOSE CLIP 58-75MMRFR

From	Pos	Part No	SP	UN	Qty	Description

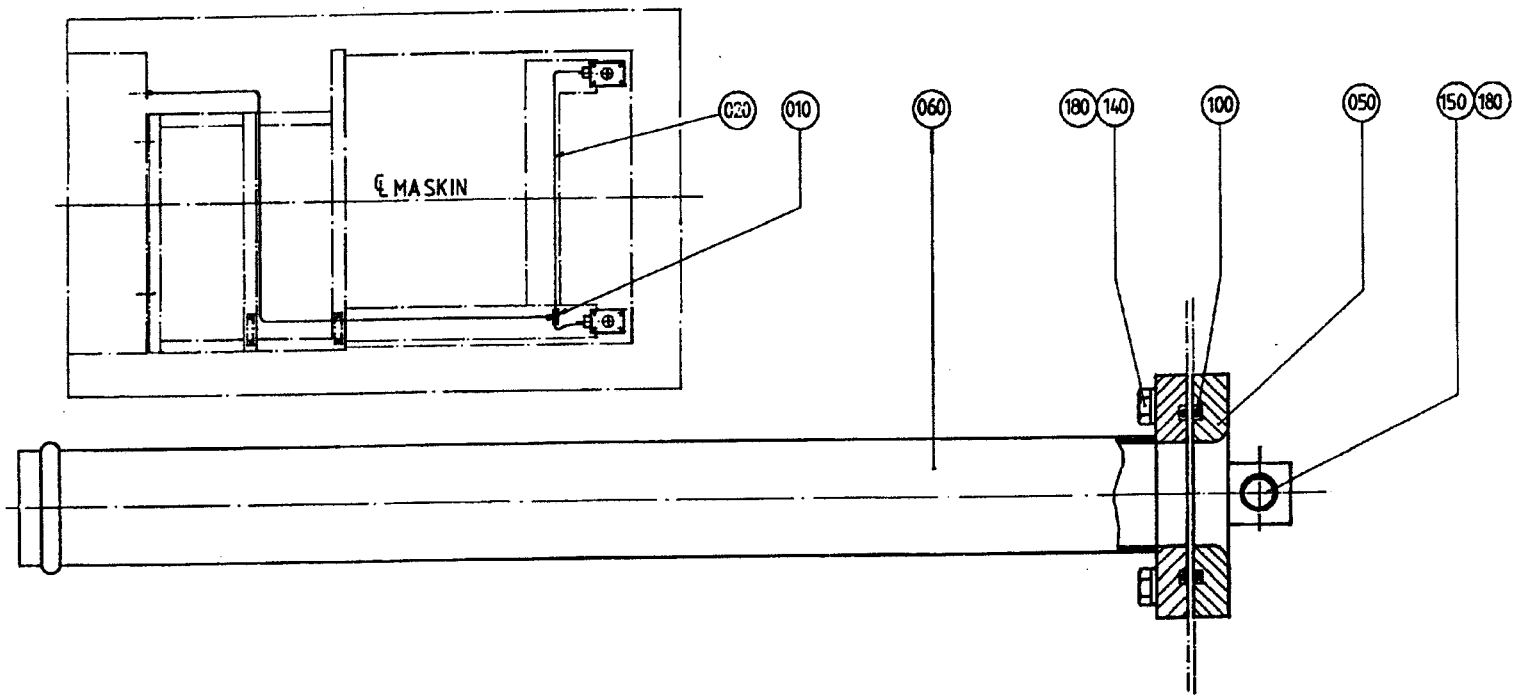

52511001.TIF
525110-1
AM

From	Pos	Part No	SP	UN Qty	Description
Left Hand					
		C- 525110-0101			**Cable Conduit, Ass'y**
	010	342946-0122	-	1	T-CONNECTI8/6
	020	90166-0122	-	MM3150	HOSE
Right Hand					
		C- 525110-0102			**Cable Conduit, Ass'y**
	020	90166-0122	-	MM3600	HOSE
Common parts					
	050	525135	-	1	PLATE
	060	297413	-	1	PIPE
	090	90296-0009	S	X	GREASE
	100	315202-0301	-	2	O-RING 49,5X3
	140	312105-0370	-	4	SCREW M6S6X20RFR
	150	312105-0364	-	1	SCREW M6S6X10RFR
	180	315105-0153	-	5	WASHER BRB6,4X12RFR

From	Pos	Part No	SP	UN Qty	Description

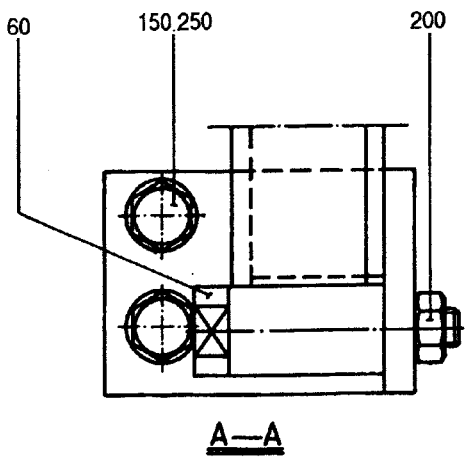

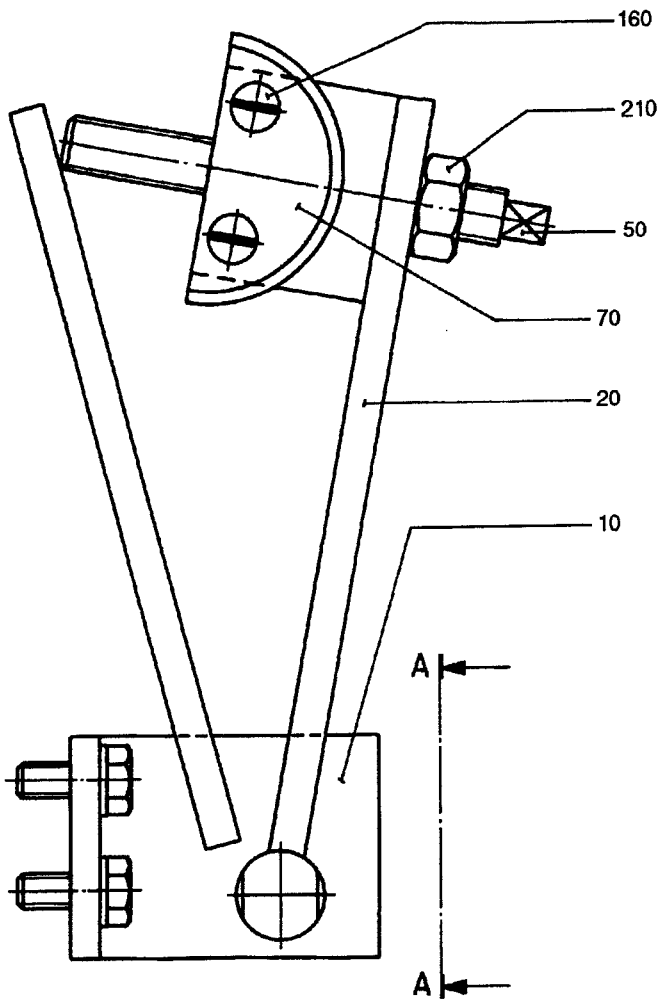

29763801.TIF
297638-1
AM

From	Pos	Part No	SP	UN	Qty	Description
		C- 297638-0201				**Chain Tensioner, Ass'y**
	010	297608	-		1	BRACKET
	020	297609	-		1	ARM
	050	297610	-		1	SCREW
	060	297611	-		1	SHAFT
	070	443367	P		1	PROFILE
	150	312105-0451	-		2	SCREW M6S8X20RFR
	160	312145-0378	-		2	SLOTTED HEMFS6X40RFR
	200	312605-0318	-		1	NUT M6M8RFR
	210	312605-0322	-		1	NUT M6M12RFR
	250	315105-0165	-		2	WASHER BRB8,4X16RFR

From	Pos	Part No	SP	UN	Qty	Description

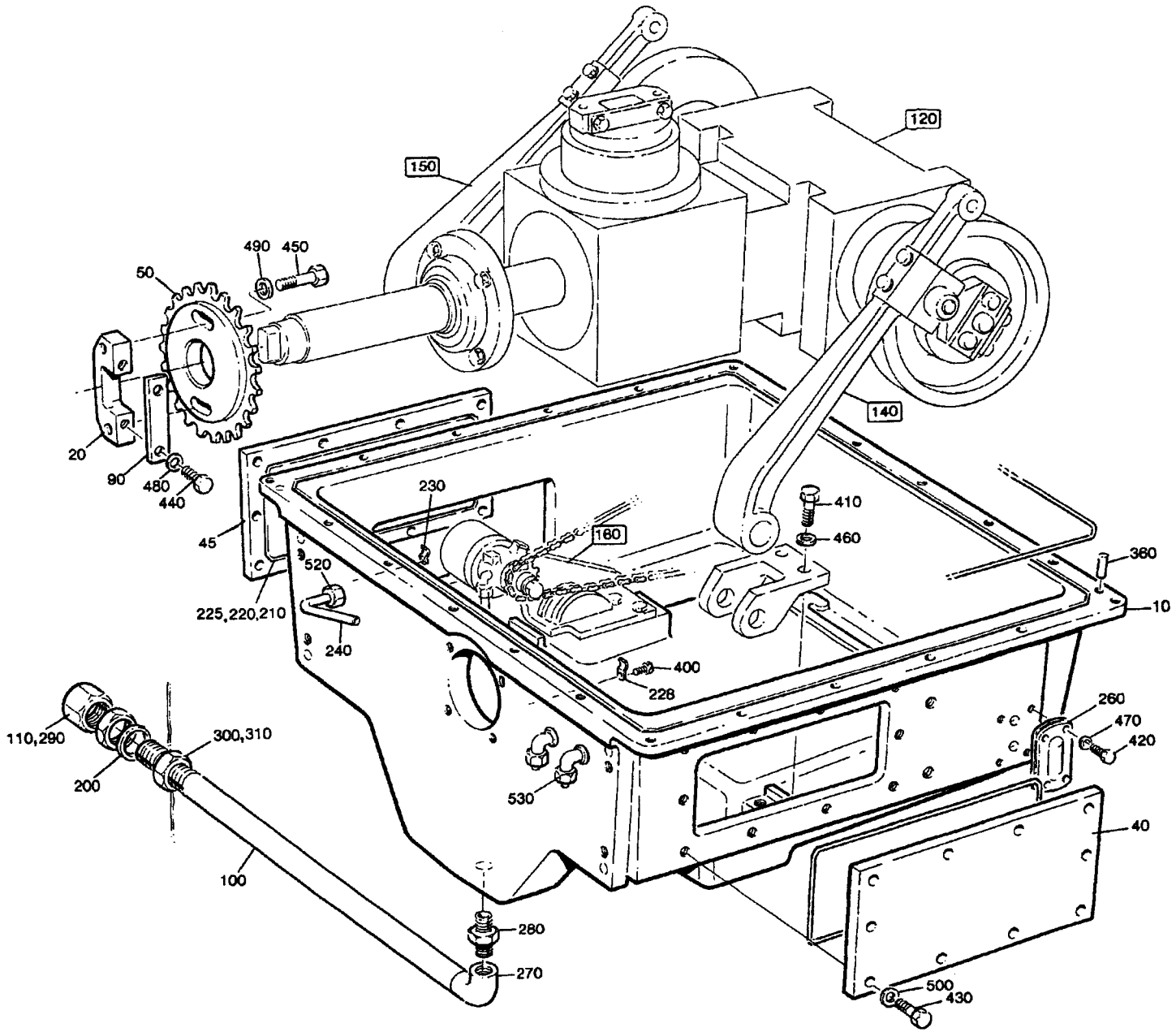

28530304.TIF
285303-4
AM

From	Pos	Part No	SP	UN	Qty	Description
		C- 285303-0401				**Lower Section, Ass'y**
	F120	**C- 285291-0401**	**-**		**1**	**BEVEL GEAR**
		CR- 442644-0301				**. DOUBLE GEAR**
	F140	**C- 285299-0101**	**-**		**1**	**PRESSURE ARM**
	F150	**C- 285299-0102**	**-**		**1**	**PRESSURE ARM**
	F160	**C- 525102-0201**	**-**		**1**	**LUBRICATING SYSTEM**
	010	G- 525276	-		1	HOUSE
	020	262274-0005	S		1	BRACKET
	040	525185	-		1	OPENING
	045	525377	-		1	OPENING
	050	443176	S		1	SPROCKET
	090	262275-0003	S		1	CAP
	100	443126	-		1	CONNECTION PIPE
	110	525047	-		2	GASKET
	200	525046	-		2	GASKET
	210	90296-0009	-		1	GREASE
	220	90161-0001	S	MM	3900	STRIP
	225	90153-0043	S		X	ADHESIVE
	228	90165-0003	-		2	CLIP
	230	90165-0005	-		3	CLIP
	240	90166-0124	P	MM	1500	HOSE
	260	90199-0004	S		1	LEVEL INDICATOR
	270	90330-0020	-		1	ELBOW PIPE
	280	90330-0021	-		1	NIPPLE
	290	90330-0086	-		1	COVER
	300	90330-0093	-		2	NUT
	310	90157-0034	-		1	SEALING COMPOUND
	360	311103-0399	-		2	CYLINDRICACP M6 8X16 RFR
	400	312101-0287	-		3	SCREW M6S4X8FZB
	410	312101-0453	-		4	SCREW M6S8X25FZB
	420	312105-0293	-		4	SCREW M6S4X16 A4 80
	430	312105-0370	-		20	SCREW M6S6X20RFR
	440	90287-0165	-		2	SCREW
	450	312105-0493	-		2	SCREW M6S10X25RFR
	460	315101-0165	-		4	WASHER BRB8,4X16FZB
	470	315105-0136	-		4	WASHER BRB4,3X8RFR
	480	315105-0165	-		2	WASHER BRB8,4X16RFR
	490	315105-0173	-		2	WASHER BRB10,5X22RFR
	500	315115-0153	-		20	WASHER TBRB6,4X12RFR
	520	342920-0113	-		1	PIPE COUPL6/4-1/8
	530	342930-0113	-		4	ELBOW PIPE6/4-1/8

From	Pos	Part No	SP	UN	Qty	Description

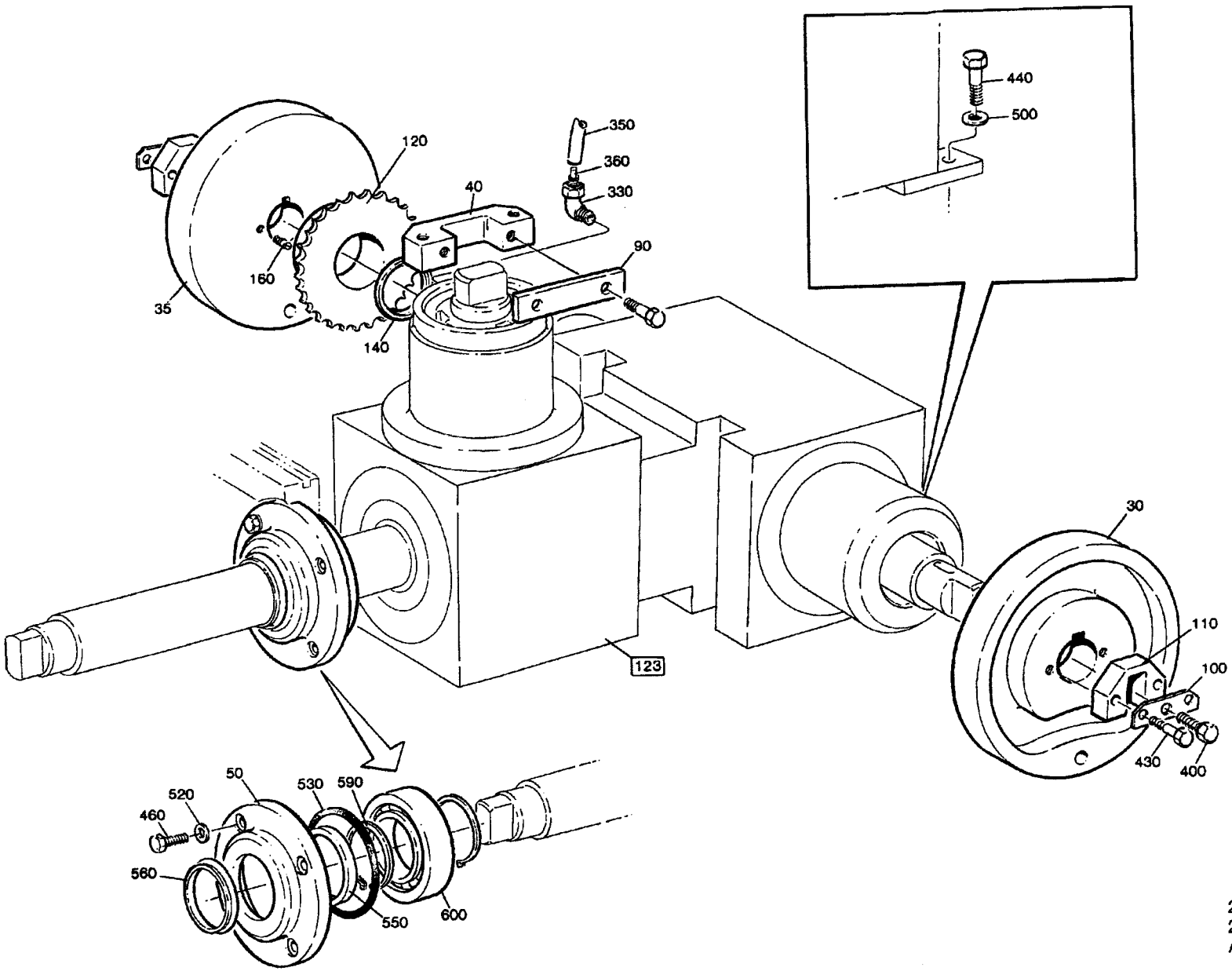

28529104.TIF
285291-4
AM

Last Alteration: AM 11736 88-08-15

Corresponding group: 285291-040V
Assembly Drawing: 285291-4

Issue: **930607**

From	Pos	Part No	SP	UN	Qty	Description
		C- 285291-0401				**Bevel Gear, Ass'y**
	F123	**CR- 442644-0301**	**C**		**1**	**DOUBLE GEAR**
	030	285054	S		1	CURVE
	035	285055	S		1	CURVE
	040	262274-0002	S		1	BRACKET
	050	276613	-		1	LID
	090	262275-0002	S		1	CAP
	100	276636	S		2	WASHER
	110	285027	S		2	CARRIER
	120	443047	S		1	SPROCKET
	140	443052	-		1	SPACER RING
	160	443149	S		1	STUD SCREW
	330	342731-0102	S		1	ELBOW PIPE WE6-LRFZB
	350	90166-0108	S	MM	400	HOSE
	360	90134-0030	S		2	SLEEVE
	400	312101-0374	-		4	SCREW M6S6X30FZB
	430	312101-0451	-		4	SCREW M6S8X20FZB
	440	312101-0453	-		2	SCREW M6S8X25FZB
	460	312105-0371	-		4	SCREW M6S6X22RFR
	500	315101-0165	-		2	WASHER BRB8,4X16FZB
	520	315115-0153	-		4	WASHER TBRB6,4X12RFR
	530	315202-0309	S		1	O-RING 89,5X3
	550	315221-0200	S		1	SEAL RING CB50X72X8
	560	315226-0200	S		1	SEAL RING RB50X70X5,5
	590	315750-0131	S		2	CIRCLIP SGA50
	600	321309-0110	S		1	BALL BEARISKF6210

From	Pos	Part No	SP	UN	Qty	Description

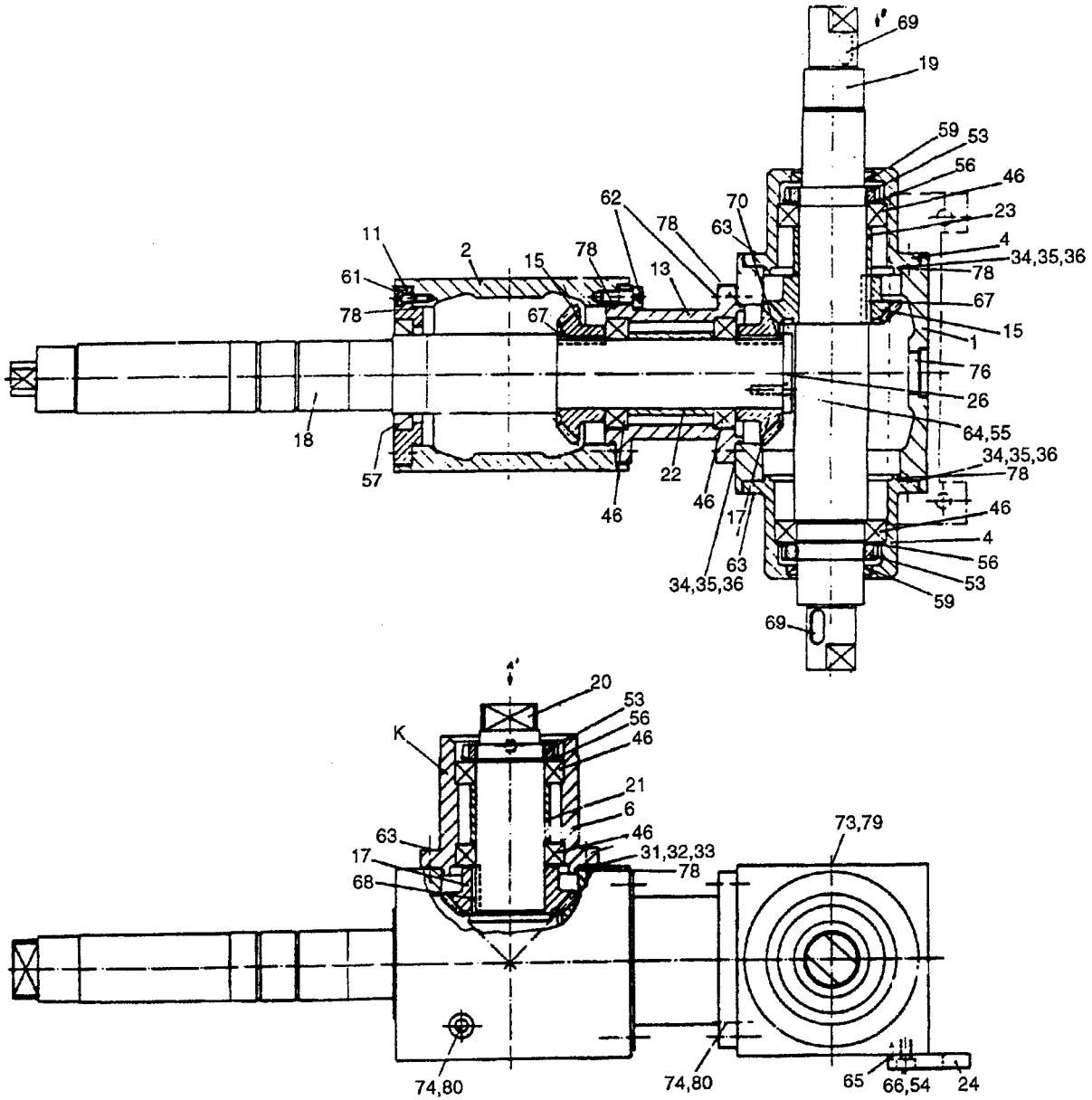

44264402.TIF
442644-2
AM

Last Alteration: AM 16195 91-11-11

Corresponding group: 442644-030V
Assembly Drawing: 442644-2

Issue: **930607**

From	Pos	Part No	SP	UN Qty	Description
		C- 442644-0301			**Double Gear, Ass'y**
	001	568151	-	1	GEAR HOUSING
	002	568152	-	1	GEAR HOUSING
	004	568153	-	2	BEARING SEAT
	006	568154	-	1	BEARING SEAT
	011	568155	-	1	BEARING COVER
	013	568156	-	1	FLANGE
	015	442613	S	2	GEAR WHEEL
	017	442614	S	2	GEAR WHEEL
	018	568157	S	1	SHAFT
	019	568158	S	1	SHAFT
	020	568159	S	1	SHAFT
	021	442615	S	1	SPACER
	022	442616	S	1	SPACER
	023	442617	S	1	SPACER
	024	568160	S	1	FASTENING PLATE
	026	568161	S	1	WASHER
	031	525331	S	1	SHIM
	032	443055	S	1	SHIM
	033	443056	S	1	SHIM
	034	525332	S	4	SHIM
	035	443057	S	4	SHIM
	036	443058	S	4	SHIM
	046	321306-0110	S	6	BALL BEARISKF6010
	053	312805-0110	S	3	ROUND NUT KM10
	054	315402-0173	S	2	WASHER FBB10,2RFR
	056	315410-0110	S	3	LOCK WASHESKFMB10
	057	90091-0202	S	1	SEAL RING
	059	90091-0143	S	2	SEAL RING
	061	312111-0370	S	4	SCREW MC6S6X20FZB
	062	312111-0453	S	8	SCREW MC6S8X25FZB
	063	312111-0451	S	12	SCREW MC6S8X20FZB
	064	312151-0451	S	2	SCREW MF6S8X20FZB
	065	311111-0305	S	2	SLOTTED TUFRP5X14
	066	312111-0491	S	2	SCREW MC6S10X20FZB
	067	315701-0363	S	2	FLAT WEDGE14X9X40
	068	568162	S	1	WEDGE
	069	315701-0296	S	2	FLAT WEDGE10X8X25
	070	315701-0363	S	1	FLAT WEDGE14X9X40
	078	90242-0118	S	6	O-RING
	079	90242-0120	S	1	O-RING
	080	90242-0121	S	2	O-RING

From	Pos	Part No	SP	UN Qty	Description

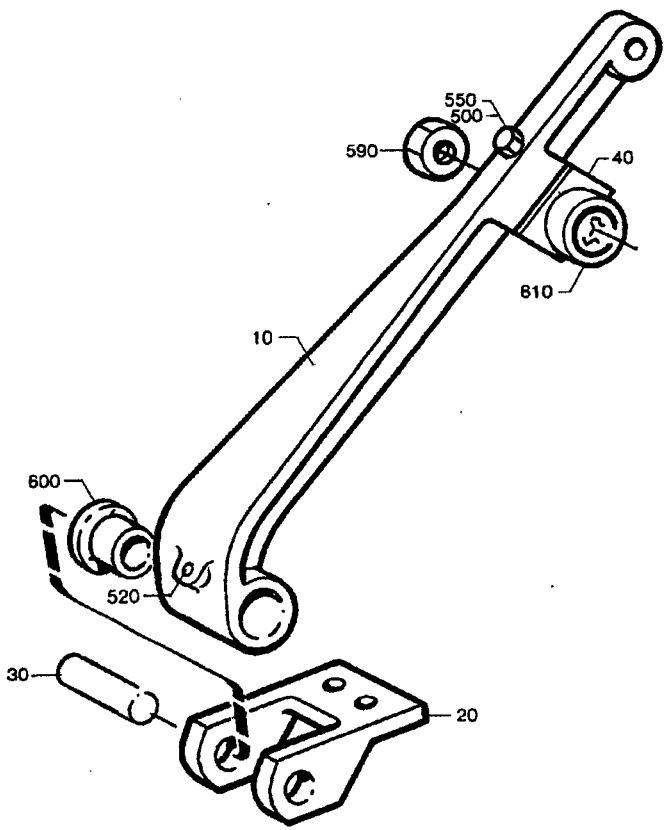

28529901.TIF
285299-1
AM

From	Pos	Part No	SP	UN	Qty	Description
		C- 285299-0101				**Pressure Arm Left Hand, Ass'y**
		C- 285299-0102				**Pressure Arm Right Hand, Ass'y**
	010	G- 442524	C		1	ARM
	020	285300	C		1	BRACKET
	030	262261	S		1	SHAFT
	040	442523	-		1	HOLDER
	500	312101-0379	-		2	SCREW M6S6X45FZB
	520	312311-0370	S		1	STOP SCREW T6SS6X20FZB
	550	315101-0153	-		2	WASHER BRB6,4X12FZB
	590	312631-0324	-		1	NUT M6M16X1,5FZB
	600	321101-0232	S		2	FLANGE BUS 20F7X16
	610	321582-0212	S		1	CURVE ROLLNUKR35

From	Pos	Part No	SP	UN	Qty	Description

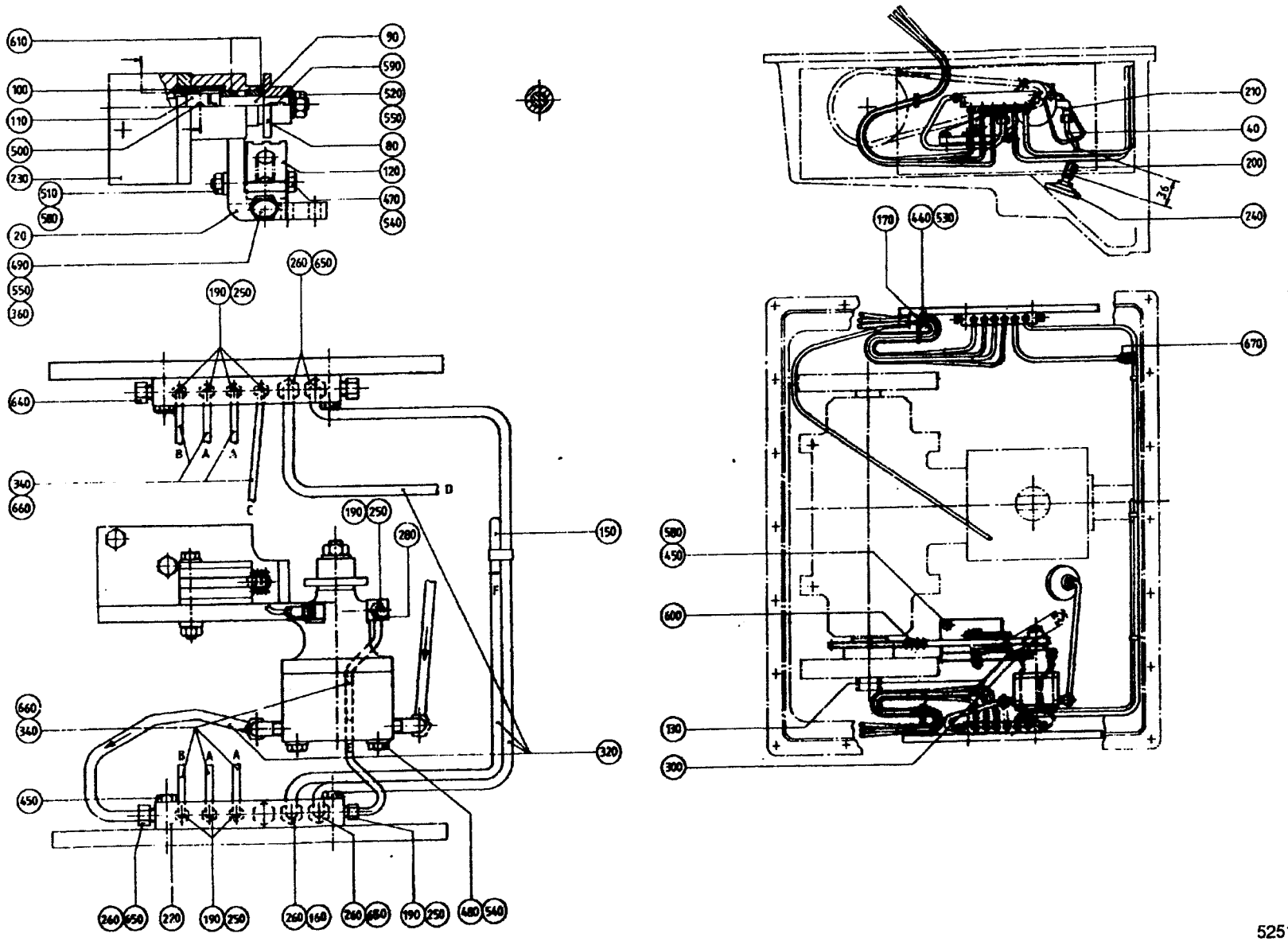

52510202.TIF
525102-2
AM

From	Pos	Part No	SP	UN Qty	Description
		C- 525102-0201			**Lubricating System, Ass'y**
	020	G- 525173	-	1	CANTILEVER
	040	443150	-	1	SUCTION TUBE
	080	443048	S	1	SPROCKET
	090	443049	S	1	SHAFT
	100	443050	-	1	GUIDE SLEEVE
	110	443051	S	1	CONNECTION
	120	443053	S	1	CHAIN GUIDE
	130	443151	S	1	PIPE
	150	525375	-	1	OIL PIPE
	170	525358	-	2	BRACKET
	180	525376	-	2	BOW CLAMP
	190	90028-0001	-	1	CONE
	200	90030-0107	-	1	PIPE CONNECTION
	210	90030-0222	-	2	ELBOW PIPE JOINT
	220	90032-0035	-	2	JUNCTION BLOCK
	230	90048-0033	-	1	GEAR PUMP
	240	90048-0420	-	1	FILTER
	250	90134-0003	-	1	BUSHING
	260	90134-0034	-	3	NIPPLE
	270	90092-0038	-	4	METERING VALVE
	275	90092-0081	-	5	METERING VALVE
	280	90137-0005	-	1	PIPE JOINT
	300	90137-0010	-	1	PIPE JOINT
	320	90166-0011	-	MM 1500	HOSE
	340	90166-0051	-	MM 4500	HOSE
	350	90230-0031	-	1	NON-RETURN VALVE
	360	90335-0012	-	1	SPRING
	370	90415-0033	-	1	OIL FILTER
		90415-0330	S	1	* FILTER INSERT
	440	312101-0327	-	2	SCREW M6S5X12FZB
	450	312101-0370	-	6	SCREW M6S6X20FZB
	470	312101-0379	-	1	SCREW M6S6X45FZB
	480	312101-0380	-	2	SCREW M6S6X50FZB
	490	312101-0451	-	1	SCREW M6S8X20FZB
	495	312105-0388	-	2	SCREW 6X90 RFR
	500	312316-0283	-	1	STOP SCREW SK6SS4X4FZB
	510	312601-0316	-	1	NUT M6M6FZB
	520	312601-0318	-	1	NUT M6M8FZB
	530	315101-0146	-	2	WASHER BRB5,3X10FZB
	540	315101-0153	-	3	WASHER BRB6,4X12FZB
	550	315101-0165	-	2	WASHER BRB8,4X16FZB
	580	315111-0153	-	5	WASHER TBRB6,4X12FZB
	583	315233-0109	-	2	SEAL RING R1/8"
	585	315233-0110	-	2	SEAL RING R1/4"
	590	315701-0134	-	1	FLAT WEDGE3X3X10
	600	318201-0076	-	1	ROLLER CHA3/8"
	610	321101-0172	-	2	FLANGE BUS 12F7X10
	640	90136-0002	-	3	PLUG
	650	342706-0130	-	3	INSERT SLESH06
	660	342706-0114	-	16	INSERT SLESH04
	680	342921-0114	-	2	PIPE COUPL6/4-1/4"
	690	342960-0112	-	2	BULKHEAD L6/4

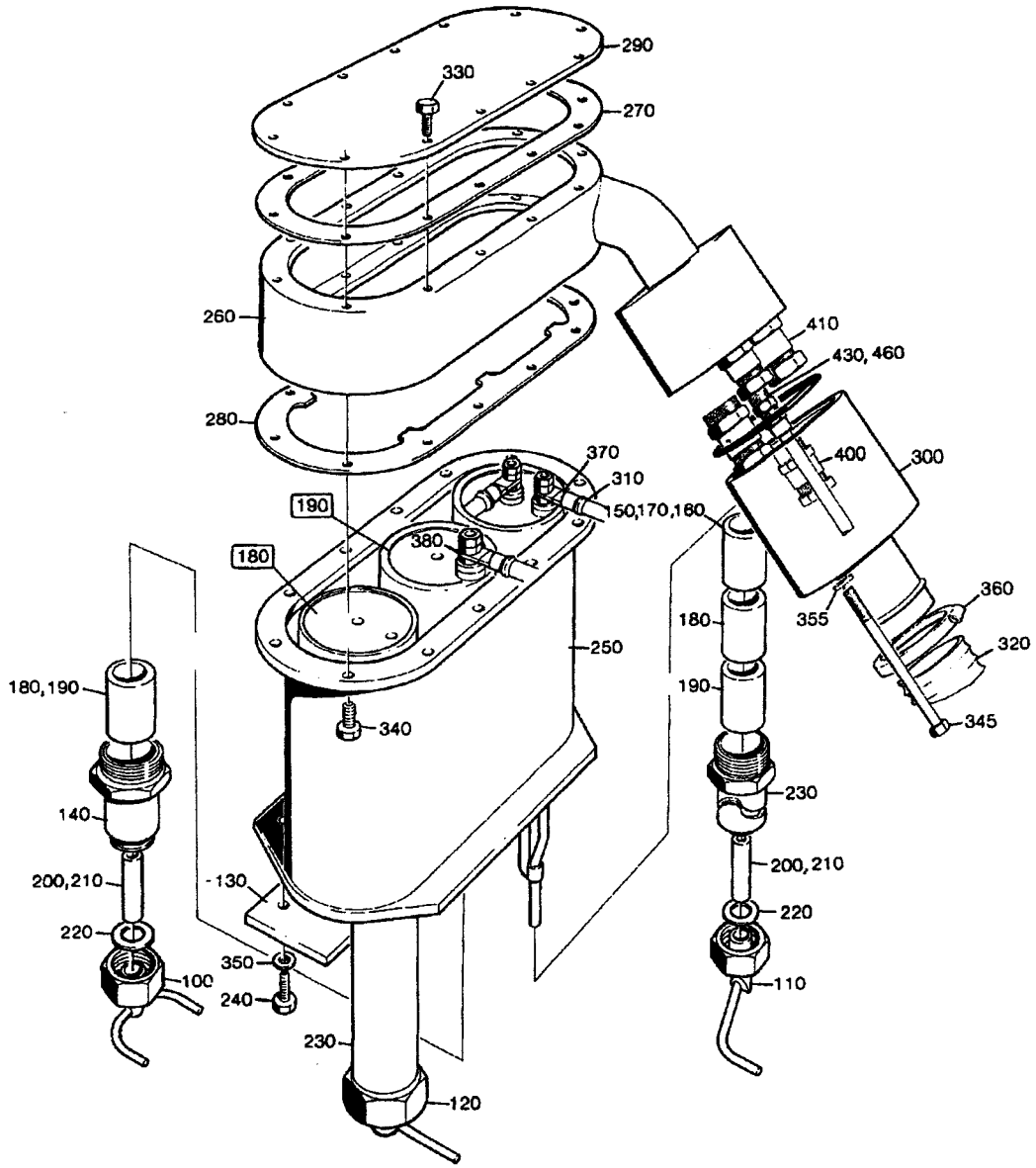

52512901.TIF
525129-1
AM

From	Pos	Part No	SP	UN	Qty	Description
1000ml						
		C- 525129-0101				**FF-Element Left, Ass'y**
	100	247227-0003	S		1	AIR NOZZLE
	110	525197	S		1	BLOW-OFF NOZZLE TR
	120	525198	S		1	BLOW-OFF NOZZLE TL
	130	262290-0001	-		1	LACE
	140	23763-0004	-		1	SPACER PIPE
	150	23765-0001	S		2	INSULATING PIPE
	180	23765-0004	S		1	INSULATING PIPE
	200	252766-0001	S		3	INSULATING PIPE
	230	297499-0001	-		2	SIDE PIPE
	240	312105-0374	-		3	SCREW M6S6X30RFR
568ml						
		C- 525129-0102				**FF-Element Left, Ass'y**
	100	247227-0003	S		1	AIR NOZZLE
	110	525197	S		1	BLOW-OFF NOZZLE TR
	120	525198	S		1	BLOW-OFF NOZZLE TL
	140	23763-0005	-		1	SPACER PIPE
	160	23765-0002	S		2	INSULATING PIPE
	190	23765-0005	S		1	INSULATING PIPE
	200	252766-0001	S		2	INSULATING PIPE
	210	252766-0002	S		1	INSULATING PIPE
	230	297499-0002	-		2	SIDE PIPE
	240	312105-0372	-		3	SCREW M6S6X25RFR
500ml						
		C- 525129-0103				**FF-Element Left, Ass'y**
	100	247227-0003	S		1	AIR NOZZLE
	110	525197	S		1	BLOW-OFF NOZZLE TR
	120	525198	S		1	BLOW-OFF NOZZLE TL
	130	262290-0002	-		1	LACE
	140	23763-0003	-		1	SPACER PIPE
	160	23765-0002	S		2	INSULATING PIPE
	180	23765-0004	S		1	INSULATING PIPE
	200	252766-0001	S		3	INSULATING PIPE
	230	297499-0002	-		2	SIDE PIPE
	240	312105-0376	-		3	SCREW M6S6X35RFR
300ml						
		C- 525129-0104				**FF-Element Left, Ass'y**
	100	247227-0002	S		1	AIR NOZZLE
	110	285507-0002	S		1	AIR NOZZLE
	120	285508-0002	S		1	AIR NOZZLE
	140	23763-0010	-		1	SPACER PIPE
	160	23765-0002	S		2	INSULATING PIPE
	190	23765-0005	S		1	INSULATING PIPE
	200	252766-0001	S		2	INSULATING PIPE
	210	252766-0002	S		1	INSULATING PIPE
	230	297499-0002	-		2	SIDE PIPE
	240	312105-0372	-		3	SCREW M6S6X25RFR
750ml						
		C- 525129-0111				**FF-Element Left, Ass'y**
	100	247227-0003	S		1	AIR NOZZLE
	110	525197	S		1	BLOW-OFF NOZZLE TR
	120	525198	S		1	BLOW-OFF NOZZLE TL
	140	23763-0005	-		1	SPACER PIPE
	160	23765-0002	S		2	INSULATING PIPE
	180	23765-0004	S		1	INSULATING PIPE
	190	23765-0005	S		2	INSULATING PIPE
	210	252766-0002	S		3	INSULATING PIPE
	230	297499-0008	-		2	SIDE PIPE
	240	312105-0372	-		3	SCREW M6S6X25RFR
500ml Slim						
		C- 525129-0112				**FF-Element Left, Ass'y**
	100	442867	S		1	AIR NOZZLE
	110	285676	S		1	AIR NOZZLE
	120	285677	S		1	AIR NOZZLE
	140	23763-0006	-		1	SPACER PIPE
	170	23765-0003	S		2	INSULATING PIPE
	180	23765-0004	S		2	INSULATING PIPE
	190	23765-0005	S		3	INSULATING PIPE
	200	252766-0001	S		4	INSULATING PIPE
	210	252766-0002	S		1	INSULATING PIPE
	230	297499-0003	-		2	SIDE PIPE
	240	312105-0372	-		3	SCREW M6S6X25RFR
375ml						
		C- 525129-0113				**FF-Element Left, Ass'y**
	100	247227-0002	S		1	AIR NOZZLE
	110	285507-0002	S		1	AIR NOZZLE
	120	285508-0002	S		1	AIR NOZZLE
	140	23763-0010	-		1	SPACER PIPE
	170	23765-0003	S		2	INSULATING PIPE
	180	23765-0004	S		4	INSULATING PIPE
	190	23765-0005	S		1	INSULATING PIPE
	210	252766-0002	S		3	INSULATING PIPE
	230	297499-0009	-		2	SIDE PIPE
	240	312105-0372	-		3	SCREW M6S6X25RFR
1055ml						
		C- 525129-0114				**FF-Element Left, Ass'y**
	100	247227-0003	S		1	AIR NOZZLE
	110	525197	S		1	BLOW-OFF NOZZLE TR
	120	525198	S		1	BLOW-OFF NOZZLE TL

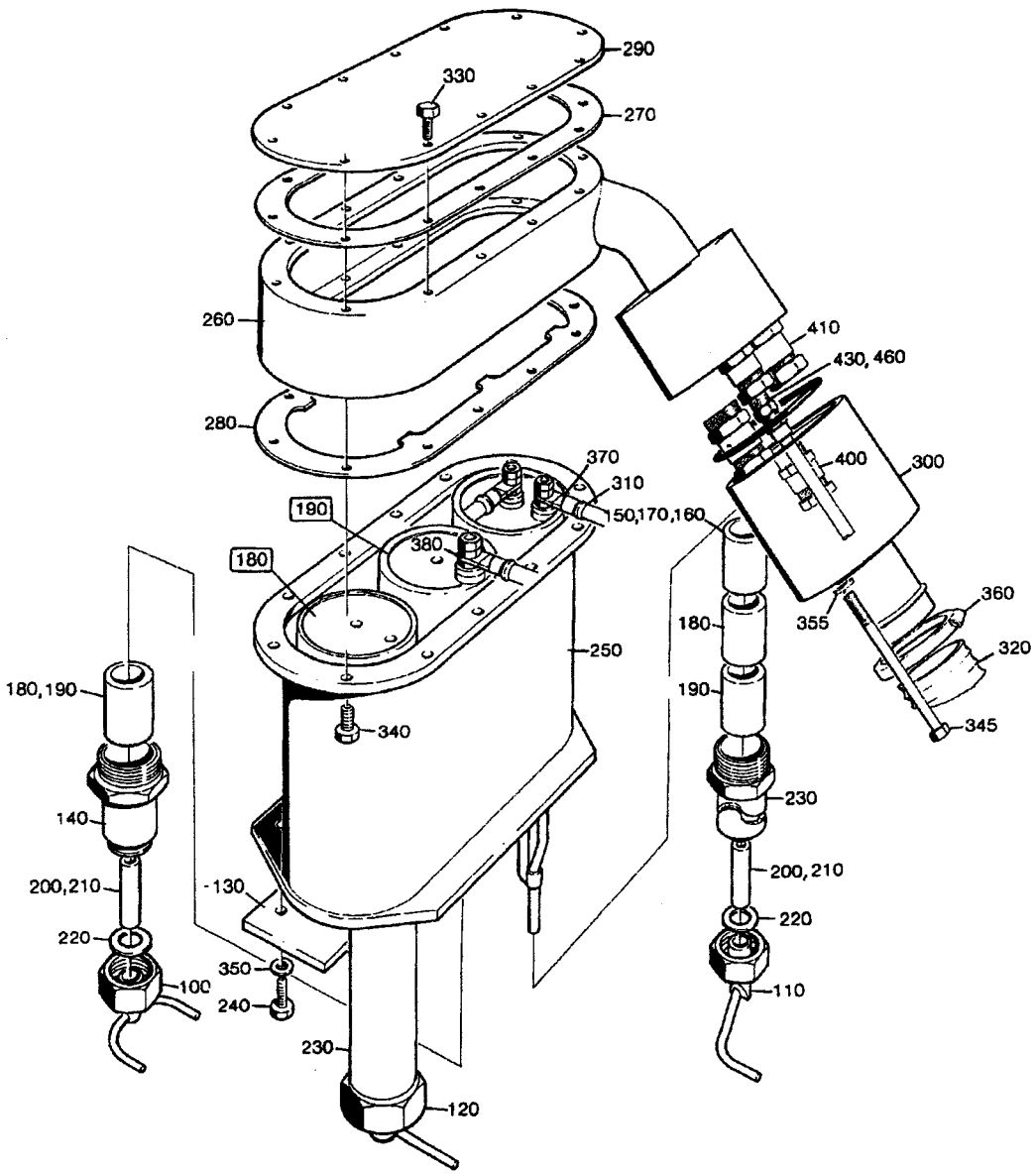

52512901.TIF
525129-1
AM

From	Pos	Part No	SP	UN	Qty	Description
	130	262290-0001	-		1	LACE
	140	23763-0004	-		1	SPACER PIPE
	160	23765-0002	S		2	INSULATING PIPE
	180	23765-0004	S		5	INSULATING PIPE
	200	252766-0001	S		3	INSULATING PIPE
	230	443158	-		2	SIDE PIPE
	240	312105-0374	-		3	SCREW M6S6X30RFR
355ml		**C- 525129-0115**				**FF-Element Left, Ass'y**
	100	442867	S		1	AIR NOZZLE
	110	285676	S		1	AIR NOZZLE
	120	285677	S		1	AIR NOZZLE
	140	23763-0006	-		1	SPACER PIPE
	180	23765-0004	S		4	INSULATING PIPE
	190	23765-0005	S		1	INSULATING PIPE
	200	252766-0001	S		4	INSULATING PIPE
	210	252766-0002	S		1	INSULATING PIPE
	230	297499-0007	-		2	SIDE PIPE
	240	312105-0372	-		3	SCREW M6S6X25RFR
750ml Slim		**C- 525129-0116**				**FF-Element Left, Ass'y**
	100	544298	S		1	BLOWING NOZZLE B
	110	544293	S		1	BLOW-OFF NOZZLE TH
	120	544269	S		1	BLOW-OFF NOZZLE TV
	130	262290-0001	-		1	LACE
	140	23763-0004	-		1	SPACER PIPE
	160	23765-0002	S		2	INSULATING PIPE
	180	23765-0004	S		5	INSULATING PIPE
	200	252766-0001	S		3	INSULATING PIPE
	230	443158	-		2	SIDE PIPE
	240	312105-0374	-		3	SCREW M6S6X30RFR
1136ml		**C- 525129-0117**				**FF-Element Left, Ass'y**
	100	247227-0003	S		1	AIR NOZZLE
	110	525197	S		1	BLOW-OFF NOZZLE TR
	120	525198	S		1	BLOW-OFF NOZZLE TL
	130	262290-0001	-		1	LACE
	140	23763-0004	-		1	SPACER PIPE
	160	23765-0002	S		2	INSULATING PIPE
	170	23765-0003	S		2	INSULATING PIPE
	180	23765-0004	S		3	INSULATING PIPE
	200	252766-0001	S		1	INSULATING PIPE
	210	252766-0002	S		2	INSULATING PIPE
	230	548402	-		2	SIDE PIPE
	240	312105-0374	-		3	SCREW M6S6X30RFR

From	Pos	Part No	SP	UN	Qty	Description
1000ml Slim		**C- 525129-0118**				**FF-Element Left, Ass'y**
	100	569124	S		1	AIR NOZZLE
	110	569125	S		1	AIR NOZZLE
	120	569126	S		1	AIR NOZZLE
	130	262290-0001	-		1	LACE
	140	23763-0004	-		1	SPACER PIPE
	160	23765-0002	S		2	INSULATING PIPE
	170	23765-0003	S		2	INSULATING PIPE
	180	23765-0004	S		3	INSULATING PIPE
	200	252766-0001	S		1	INSULATING PIPE
	210	252766-0002	S		2	INSULATING PIPE
	230	548402	-		2	SIDE PIPE
	240	312105-0374	-		3	SCREW M6S6X30RFR
Common parts						
	F180	**CR- 31390-010V**	**-**		**2**	**ELEMENT**
	F190	**CR- 31390-011V**	**-**		**1**	**ELEMENT**
	220	263673	P		6	GASKET
	250	262272	-		1	HEATING CHAMBER
	260	525071	-		1	SPACER PIECE
	270	531730	S		3	FLANGE SEAL
	280	23769	-		1	STOP PLATE
	290	262288	-		1	LID
	300	525073	-		1	COVER
	310	525070	-		1	ELECTRICAL CONNECTION
		351121-0109	S		0	* CABLE RHH 16
		353102-0168	S		0	* CABLE SHYAEV 6CL-M64
	320	352135-0116	S	MM	500	FLEXIBLE CG DIA 40
	330	312105-0325	-		12	SCREW M6S5X10 A4 80
	340	312105-0328	-		12	SCREW M6S5X14 A4 80
	345	312105-0388	-		2	SCREW 6X90 RFR
	350	315115-0153	-		3	WASHER TBRB6,4X12RFR
	355	315105-0153	-		2	WASHER BRB6,4X12RFR
	360	342991-0109	S		2	HOSE CLIP 44-56MMRFR
	370	353104-0168	P		2	CABLE SHOEYAV 6 CLM 64!
	380	353104-0182	P		2	CABLE SHOEYAV 2 CLM 64!
	400	352103-0106	-		2	CABLE GLANR.ST 11
	410	352103-0111	-		2	CABLE GLANR.ST 16
	430	342921-0121	-		1	PIPE COUPL8/6-1/8"
	460	315234-0109	-		1	SEAL RING R1/8"

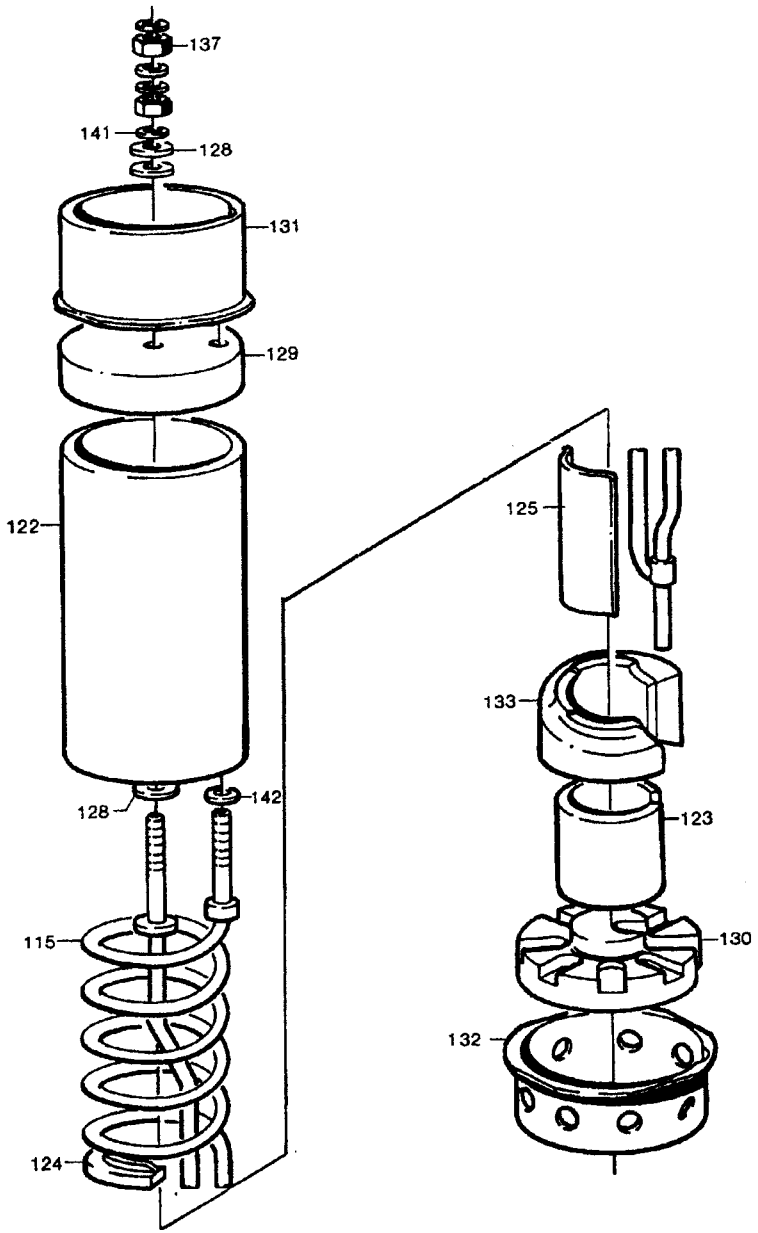

03139001.TIF
31390-1
AM

From	Pos	Part No	SP	UN	Qty	Description
640005/648005 1136ml 1000ml						
648025 1000ml						
648035 1136ml-1000ml 1000ml Slim 750ml Slim						
		C- 31390-0101				**Element, Ass'y**
	115	30310-0001	S		1	HEATING COIL
640005/648005 568ml-180ml						
648025 568ml 500ml						
648035 750ml-250ml 500ml Slim						
648105 284ml-100ml 200ml Slim						
		C- 31390-0102				**Element, Ass'y**
	115	30310-0002	P		1	HEATING COIL
648035 236ml-180ml 355ml						
		C- 31390-0103				**Element, Ass'y**
	115	30310-0003	-		1	HEATING COIL
Common parts						
	122	20705-0001	S		1	INSULATING PIPE
	123	29411	S		1	SPACER PIPE
	124	29413	S		12	LACE
	125	31653-0001	S		1	SHEET
	128	525233	S		5	GASKET
	129	20772	S		1	INSULATOR BODY
	130	37536	S		1	INSULATOR BODY
	131	23771	S		1	SPACER RING
	132	37537	S		1	SPACER RING
	133	37535	S		1	SUPPORTING PART
	135	90145-0005	-	M	1	WIRE
	137	312605-0316	-		6	NUT M6M6RFR
	141	315105-0153	-		4	WASHER BRB6,4X12RFR
	142	315115-0153	-		1	WASHER TBRB6,4X12RFR

From	Pos	Part No	SP	UN	Qty	Description

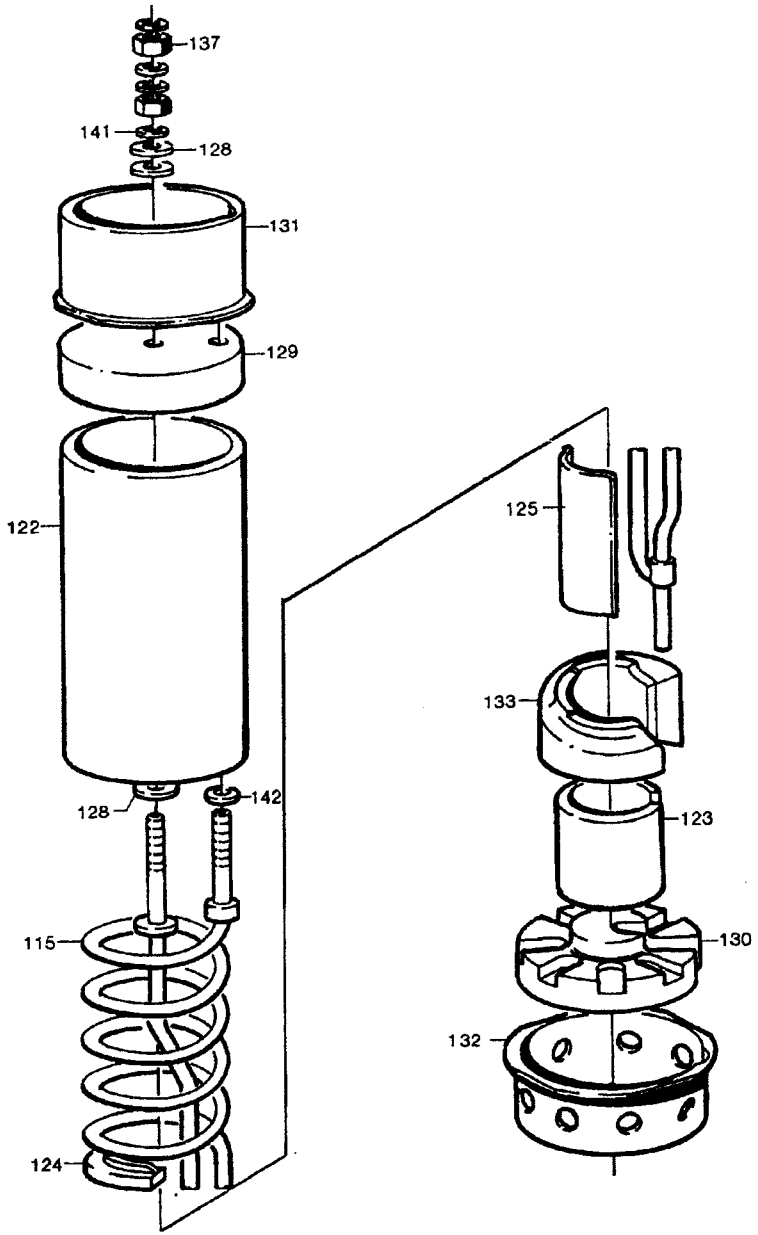

03139001.TIF
31390-1
AM

From	Pos	Part No	SP	UN	Qty	Description
640005/648005 1136ml-236ml						
648025 568ml250ml 236ml						
648035 750ml-236ml 500ml Slim						
648105 284ml-236ml 200ml Slim						
		C- 31390-0113				**Element, Ass'y**
	115	30311-0001	P		1	HEATING COIL
640005/648005 1000ml 500ml 200ml 180ml 189ml						
648025 1000ml 500ml						
648035 1136ml-500ml 1000ml Slim 750ml Slim						
648105 200ml-100ml						
		C- 31390-0114				**Element, Ass'y**
	115	30311-0002	P		1	HEATING COIL
Common parts						
	122	20705-0001	S		1	INSULATING PIPE
	124	29413	S		21	LACE
	125	31653-0002	S		1	SHEET
	128	525233	S		5	GASKET
	129	20772	S		1	INSULATOR BODY
	130	37536	S		1	INSULATOR BODY
	131	23771	S		1	SPACER RING
	132	37537	S		1	SPACER RING
	133	37535	S		1	SUPPORTING PART
	137	312605-0316	-		6	NUT M6M6RFR
	141	315105-0153	-		4	WASHER BRB6,4X12RFR
	142	315111-0153	-		1	WASHER TBRB6,4X12FZB

From	Pos	Part No	SP	UN	Qty	Description

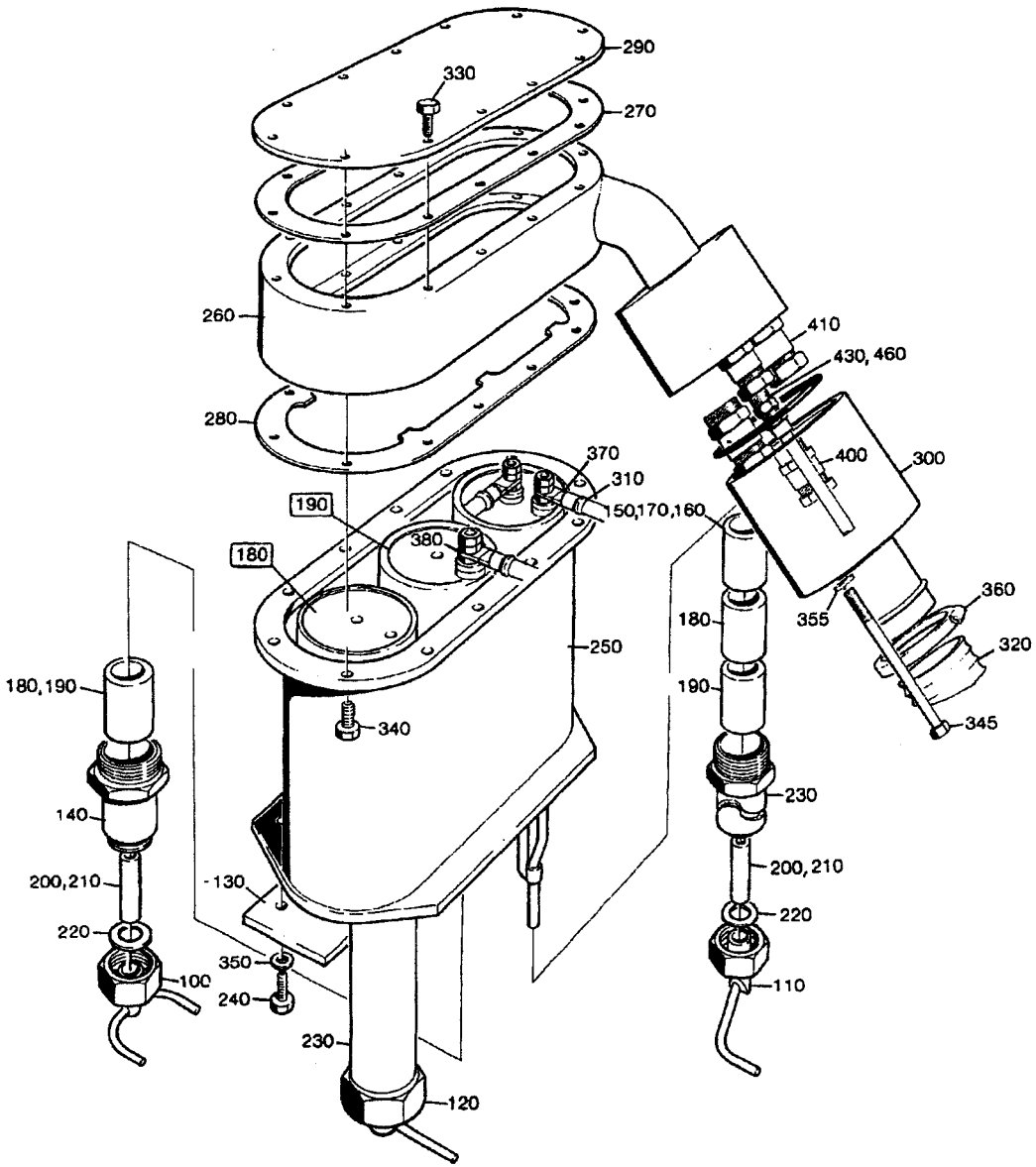

52512801.TIF
525128-1/525129-1
AM

From	Pos	Part No	SP	UN	Qty	Description
1000ml						
		C- 525128-0101				**FF-Element Right, Ass'y**
	100	247227-0003	S		1	AIR NOZZLE
	110	525197	S		1	BLOW-OFF NOZZLE TR
	120	525198	S		1	BLOW-OFF NOZZLE TL
	130	262290-0001	-		1	LACE
	140	23763-0004	-		1	SPACER PIPE
	150	23765-0001	S		2	INSULATING PIPE
	180	23765-0004	S		1	INSULATING PIPE
	200	252766-0001	S		3	INSULATING PIPE
	230	297499-0001	-		2	SIDE PIPE
	240	312105-0374	-		3	SCREW M6S6X30RFR
568ml						
		C- 525128-0102				**FF-Element Right, Ass'y**
	100	247227-0003	S		1	AIR NOZZLE
	110	525197	S		1	BLOW-OFF NOZZLE TR
	120	525198	S		1	BLOW-OFF NOZZLE TL
	140	23763-0005	-		1	SPACER PIPE
	160	23765-0002	S		2	INSULATING PIPE
	190	23765-0005	S		1	INSULATING PIPE
	200	252766-0001	S		2	INSULATING PIPE
	210	252766-0002	S		1	INSULATING PIPE
	230	297499-0002	-		2	SIDE PIPE
	240	312105-0372	-		3	SCREW M6S6X25RFR
500ml						
		C- 525128-0103				**FF-Element Right, Ass'y**
	100	247227-0003	S		1	AIR NOZZLE
	110	525197	S		1	BLOW-OFF NOZZLE TR
	120	525198	S		1	BLOW-OFF NOZZLE TL
	130	262290-0002	-		1	LACE
	140	23763-0003	-		1	SPACER PIPE
	160	23765-0002	S		2	INSULATING PIPE
	180	23765-0004	S		1	INSULATING PIPE
	200	252766-0001	S		3	INSULATING PIPE
	230	297499-0002	-		2	SIDE PIPE
	240	312105-0376	-		3	SCREW M6S6X35RFR
300ml						
		C- 525128-0104				**FF-Element Right, Ass'y**
	100	247227-0002	S		1	AIR NOZZLE
	110	285507-0002	S		1	AIR NOZZLE
	120	285508-0002	S		1	AIR NOZZLE
	140	23763-0010	-		1	SPACER PIPE
	160	23765-0002	S		2	INSULATING PIPE
	190	23765-0005	S		1	INSULATING PIPE
	200	252766-0001	S		2	INSULATING PIPE
	210	252766-0002	S		1	INSULATING PIPE
	230	297499-0002	-		2	SIDE PIPE
	240	312105-0372	-		3	SCREW M6S6X25RFR
750ml						
		C- 525128-0111				**FF-Element Right, Ass'y**
	100	247227-0003	S		1	AIR NOZZLE
	110	525197	S		1	BLOW-OFF NOZZLE TR
	120	525198	S		1	BLOW-OFF NOZZLE TL
	140	23763-0005	-		1	SPACER PIPE
	160	23765-0002	S		2	INSULATING PIPE
	190	23765-0005	S		3	INSULATING PIPE
	210	252766-0002	S		3	INSULATING PIPE
	230	297499-0008	-		2	SIDE PIPE
	240	312105-0372	-		3	SCREW M6S6X25RFR
500ml Slim						
		C- 525128-0112				**FF-Element Right, Ass'y**
	100	442867	S		1	AIR NOZZLE
	110	285676	S		1	AIR NOZZLE
	120	285677	S		1	AIR NOZZLE
	140	23763-0006	-		1	SPACER PIPE
	170	23765-0003	S		2	INSULATING PIPE
	180	23765-0004	S		2	INSULATING PIPE
	190	23765-0005	S		3	INSULATING PIPE
	200	252766-0001	S		4	INSULATING PIPE
	210	252766-0002	S		1	INSULATING PIPE
	230	297499-0003	-		2	SIDE PIPE
	240	312105-0372	-		3	SCREW M6S6X25RFR
375ml						
		C- 525128-0113				**FF-Element Right, Ass'y**
	100	247227-0002	S		1	AIR NOZZLE
	110	285507-0002	S		1	AIR NOZZLE
	120	285508-0002	S		1	AIR NOZZLE
	140	23763-0010	-		1	SPACER PIPE
	170	23765-0003	S		2	INSULATING PIPE
	180	23765-0004	S		4	INSULATING PIPE
	190	23765-0005	S		1	INSULATING PIPE
	210	252766-0002	S		3	INSULATING PIPE
	230	297499-0009	-		2	SIDE PIPE
	240	312105-0372	-		3	SCREW M6S6X25RFR
1055ml						
		C- 525128-0114				**FF-Element Right, Ass'y**
	100	247227-0003	S		1	AIR NOZZLE
	110	525197	S		1	BLOW-OFF NOZZLE TR
	120	525198	S		1	BLOW-OFF NOZZLE TL
	130	262290-0001	-		1	LACE

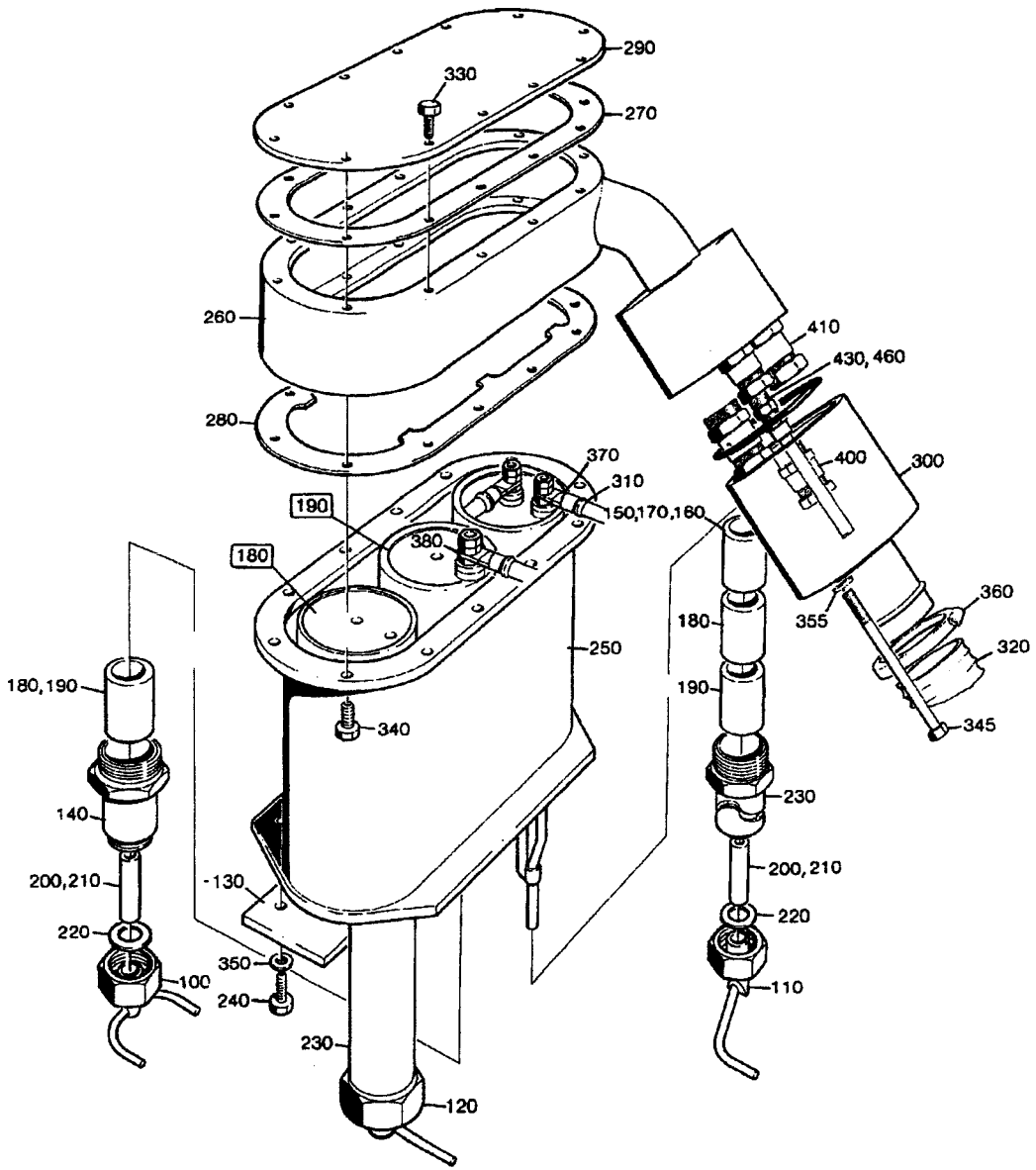

52512801.TIF
525128-1/525129-1
AM

From	Pos	Part No	SP	UN	Qty	Description
	140	23763-0004	-		1	SPACER PIPE
	160	23765-0002	S		2	INSULATING PIPE
	180	23765-0004	S		5	INSULATING PIPE
	200	252766-0001	S		3	INSULATING PIPE
	230	443158	-		2	SIDE PIPE
	240	312105-0374	-		3	SCREW M6S6X30RFR
355ml						
		C- 525128-0115				**FF-Element Right, Ass'y**
	100	442867	S		1	AIR NOZZLE
	110	285676	S		1	AIR NOZZLE
	120	285677	S		1	AIR NOZZLE
	140	23763-0006	-		1	SPACER PIPE
	180	23765-0004	S		4	INSULATING PIPE
	190	23765-0005	S		1	INSULATING PIPE
	200	252766-0001	S		4	INSULATING PIPE
	210	252766-0002	S		1	INSULATING PIPE
	230	297499-0007	-		2	SIDE PIPE
	240	312105-0372	-		3	SCREW M6S6X25RFR
750ml Slim						
		C- 525128-0116				**FF-Element Right, Ass'y**
	100	544298	S		1	BLOWING NOZZLE B
	110	544293	S		1	BLOW-OFF NOZZLE TH
	120	544269	S		1	BLOW-OFF NOZZLE TV
	130	262290-0001	-		1	LACE
	140	23763-0004	-		1	SPACER PIPE
	160	23765-0002	S		2	INSULATING PIPE
	180	23765-0004	S		5	INSULATING PIPE
	200	252766-0001	S		3	INSULATING PIPE
	230	443158	-		2	SIDE PIPE
	240	312105-0374	-		3	SCREW M6S6X30RFR
1136ml						
		C- 525128-0117				**FF-Element Right, Ass'y**
	100	247227-0003	S		1	AIR NOZZLE
	110	525197	S		1	BLOW-OFF NOZZLE TR
	120	525198	S		1	BLOW-OFF NOZZLE TL
	130	262290-0001	-		1	LACE
	140	23763-0004	-		1	SPACER PIPE
	160	23765-0002	S		2	INSULATING PIPE
	170	23765-0003	S		2	INSULATING PIPE
	180	23765-0004	S		3	INSULATING PIPE
	200	252766-0001	S		1	INSULATING PIPE
	210	252766-0002	S		2	INSULATING PIPE
	230	548402	-		2	SIDE PIPE
	240	312105-0374	-		3	SCREW M6S6X30RFR

From	Pos	Part No	SP	UN	Qty	Description
1000ml Slim						
		C- 525128-0118				**FF-Element Right, Ass'y**
	100	569124	S		1	AIR NOZZLE
	110	569125	S		1	AIR NOZZLE
	120	569126	S		1	AIR NOZZLE
	130	262290-0001	-		1	LACE
	140	23763-0004	-		1	SPACER PIPE
	160	23765-0002	S		2	INSULATING PIPE
	170	23765-0003	S		2	INSULATING PIPE
	180	23765-0004	S		3	INSULATING PIPE
	200	252766-0001	S		1	INSULATING PIPE
	210	252766-0002	S		2	INSULATING PIPE
	230	548402	-		2	SIDE PIPE
	240	312105-0374	-		3	SCREW M6S6X30RFR
Common parts						
	F180	**CR- 31390-010V**	**-**		**2**	**ELEMENT**
	F190	**CR- 31390-011V**	**-**		**1**	**ELEMENT**
	220	263673	P		6	GASKET
	250	262272	-		1	HEATING CHAMBER
	260	525134	-		1	SPACER PIECE
	270	531730	S		3	FLANGE SEAL
	280	23769	-		1	STOP PLATE
	290	262288	-		1	LID
	300	525073	-		1	COVER
	310	525070	-		1	ELECTRICAL CONNECTION
		351121-0109	S		0	* CABLE RHH 16
		353102-0168	S		0	* CABLE SHYAEV 6CL-M64
	320	352135-0116	S	MM	500	FLEXIBLE CG DIA 40
	330	312105-0325	-		12	SCREW M6S5X10 A4 80
	340	312105-0328	-		12	SCREW M6S5X14 A4 80
	345	312105-0388	-		2	SCREW 6X90 RFR
	350	315115-0153	-		3	WASHER TBRB6,4X12RFR
	355	315105-0153	-		2	WASHER BRB6,4X12RFR
	360	342991-0109	S		2	HOSE CLIP 44-56MMRFR
	370	353104-0168	P		2	CABLE SHOEYAV 6 CLM 64!
	380	353104-0182	P		2	CABLE SHOEYAV 2 CLM 64!
	400	352103-0106	-		2	CABLE GLANR.ST 11
	410	352103-0111	-		2	CABLE GLANR.ST 16
	430	342921-0121	-		1	PIPE COUPL8/6-1/8"
	460	315234-0109	-		1	SEAL RING R1/8"

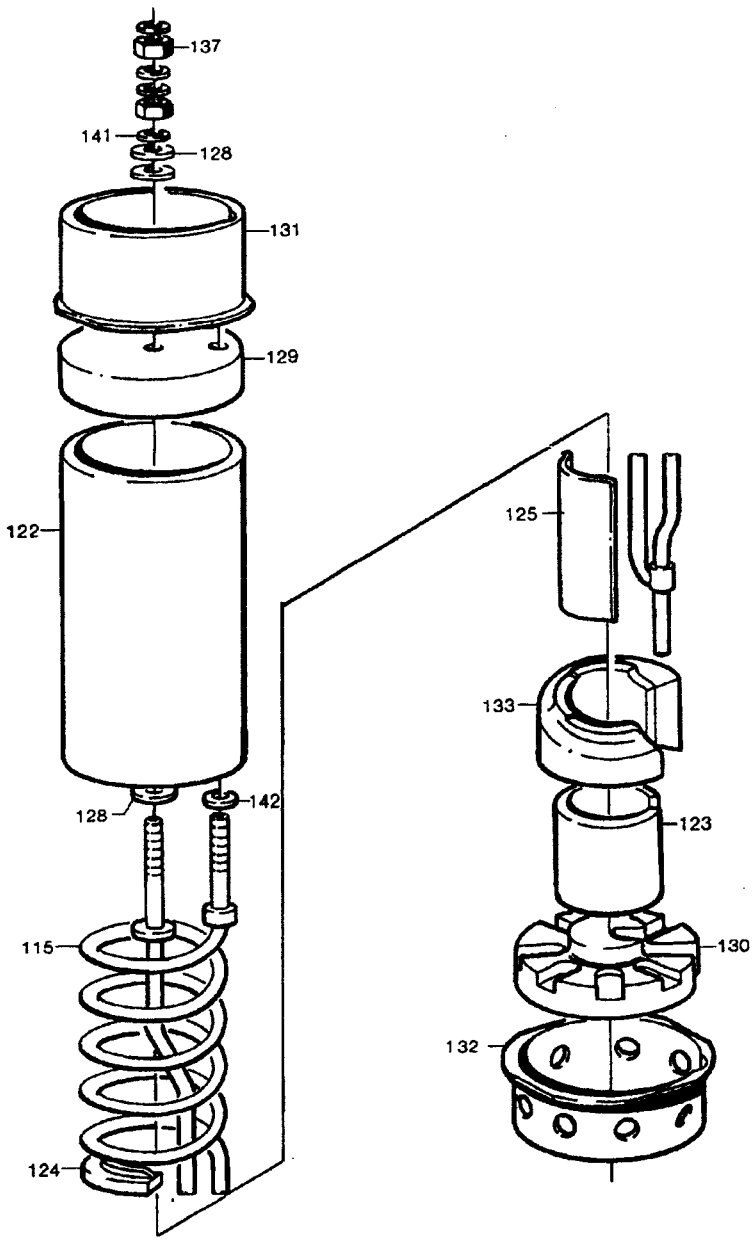

03139001.TIF
31390-1
AM

From	Pos	Part No	SP	UN	Qty	Description
640005/648005 1136ml 1000ml						
648025 1000ml						
648035 1136ml-1000ml 1000ml Slim 750ml Slim						
		C- 31390-0101				**Element, Ass'y**
	115	30310-0001	S		1	HEATING COIL
640005/648005 568ml-180ml						
648025 568ml 500ml						
648035 750ml-250ml 500ml Slim						
648105 284ml-100ml 200ml Slim						
		C- 31390-0102				**Element, Ass'y**
	115	30310-0002	P		1	HEATING COIL
648035 236ml-180ml 355ml						
		C- 31390-0103				**Element, Ass'y**
	115	30310-0003	-		1	HEATING COIL
Common parts						
	122	20705-0001	S		1	INSULATING PIPE
	123	29411	S		1	SPACER PIPE
	124	29413	S		12	LACE
	125	31653-0001	S		1	SHEET
	128	525233	S		5	GASKET
	129	20772	S		1	INSULATOR BODY
	130	37536	S		1	INSULATOR BODY
	131	23771	S		1	SPACER RING
	132	37537	S		1	SPACER RING
	133	37535	S		1	SUPPORTING PART
	135	90145-0005	-	M	1	WIRE
	137	312605-0316	-		6	NUT M6M6RFR
	141	315105-0153	-		4	WASHER BRB6,4X12RFR
	142	315115-0153	-		1	WASHER TBRB6,4X12RFR

From	Pos	Part No	SP	UN	Qty	Description

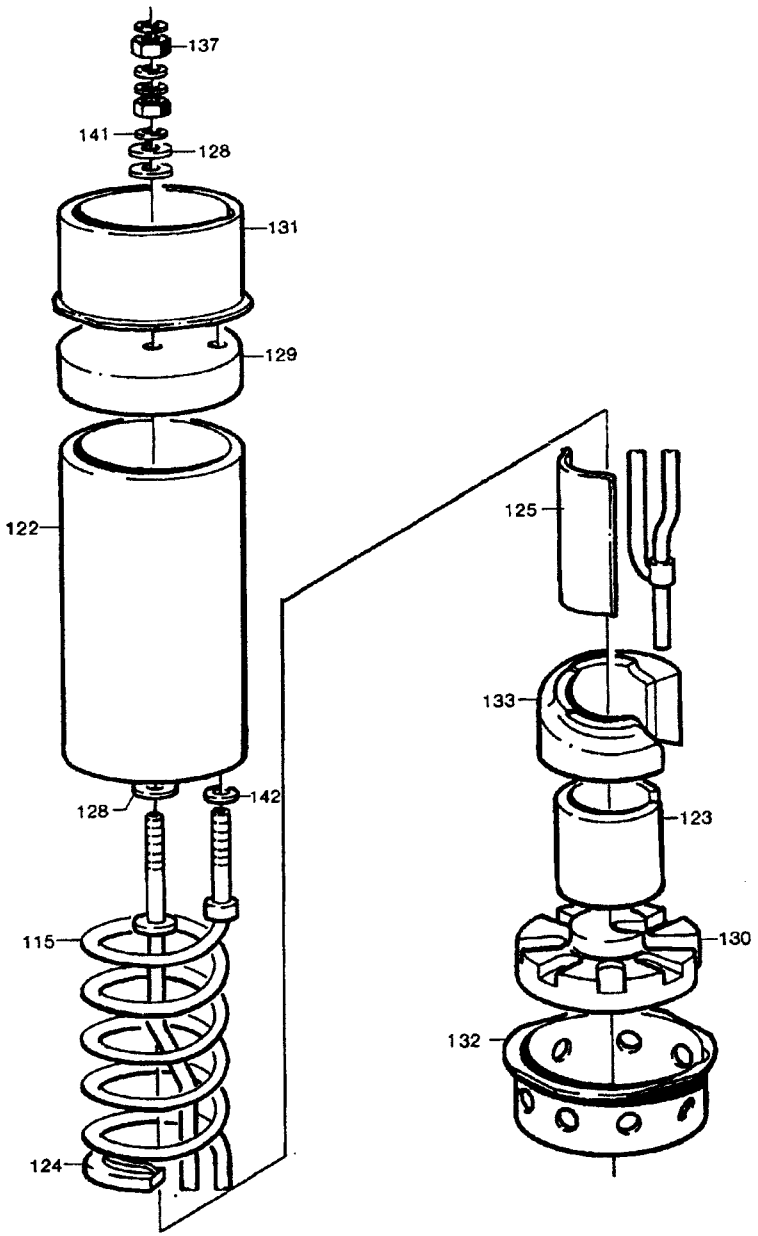

03139001.TIF
31390-1
AM

From	Pos	Part No	SP	UN	Qty	Description
640005/648005 1136ml-236ml						
648025 568ml250ml 236ml						
648035 750ml-236ml 500ml Slim						
648105 284ml-236ml 200ml Slim						
		C- 31390-0113				**Element, Ass'y**
	115	30311-0001	P		1	HEATING COIL
640005/648005 1000ml 500ml 200ml 180ml 189ml						
648025 1000ml 500ml						
648035 1136ml-500ml 1000ml Slim 750ml Slim						
648105 200ml-100ml						
		C- 31390-0114				**Element, Ass'y**
	115	30311-0002	P		1	HEATING COIL
Common parts						
	122	20705-0001	S		1	INSULATING PIPE
	124	29413	S		21	LACE
	125	31653-0002	S		1	SHEET
	128	525233	S		5	GASKET
	129	20772	S		1	INSULATOR BODY
	130	37536	S		1	INSULATOR BODY
	131	23771	S		1	SPACER RING
	132	37537	S		1	SPACER RING
	133	37535	S		1	SUPPORTING PART
	137	312605-0316	-		6	NUT M6M6RFR
	141	315105-0153	-		4	WASHER BRB6,4X12RFR
	142	315111-0153	-		1	WASHER TBRB6,4X12FZB

From	Pos	Part No	SP	UN	Qty	Description

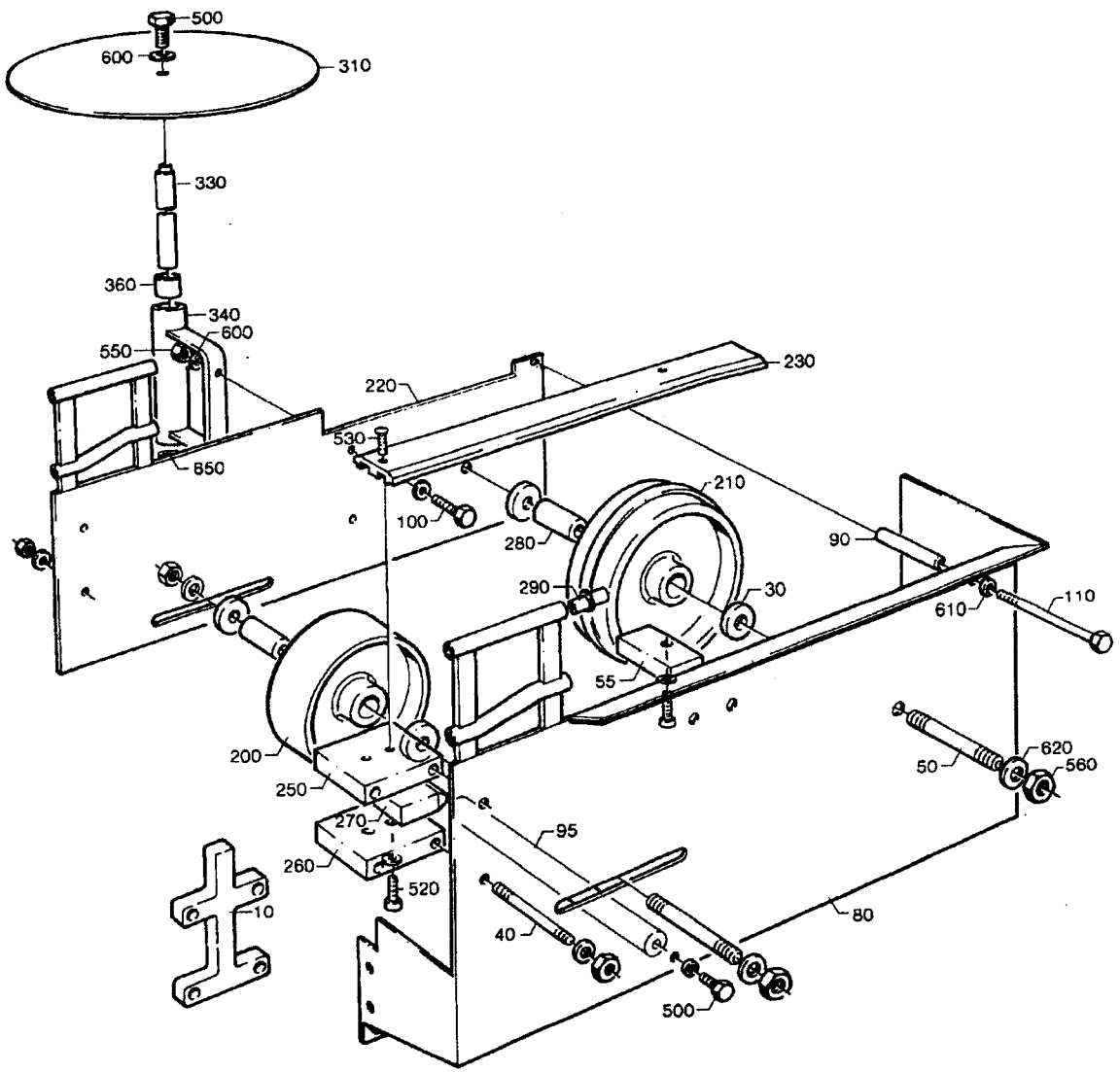

28559104.TIF
285591-4
AM 11752

From	Pos	Part No	SP	UN	Qty	Description
375ml-180ml 500ml Slim						
		C- 285591-0401				**Station, Ass'y**
	030	229201-0001	-		4	SPACER
	040	229508-0031	-		5	STUD SCREW
	050	229760-0012	-		2	STUD SCREW
	055	237082-0001	-		1	MOUNTING BLOCK
	080	525170	-		1	SIDE PLATE
	090	297574-0001	-		1	SPACER
	095	525171-0002	-		1	BRACKET
	110	312105-0469	-		1	SCREW M6S8X90RFR
	220	525054	-		1	SIDE PLATE
	550	312605-0316	-		12	NUT M6M6RFR
116ml- 500ml 750ml Slim 1000ml Slim						
		C- 285591-0402				**Station, Ass'y**
	010	228843-0001	-		2	SPACER
	030	229201-0002	-		4	SPACER
	040	229508-0029	-		5	STUD SCREW
	050	229760-0013	-		2	STUD SCREW
	055	237082-0002	-		1	MOUNTING BLOCK
	080	525169	-		1	SIDE PLATE
	090	297574-0002	-		1	SPACER
	095	525171-0001	-		1	BRACKET
	110	312105-0471	-		1	SCREW M6S8X100RFR
	220	297569	-		1	SIDE PLATE
	550	312605-0316	-		14	NUT M6M6RFR
Common parts						
	100	312105-0368	-		2	SCREW M6S6X16RFR
	200	476975	S		1	WHEEL
	210	245039	S		1	GUIDE WHEEL
	230	442776	-		1	SLIDE RAIL
	250	228845	-		1	MOUNTING BLOCK
	260	229202	-		1	MOUNTING BLOCK
	270	229206	-		1	LOCATING PIECE
	280	229207	-		2	BEARING SLEEVE
	290	229516	-		8	PEG
	310	525053	-		1	PLATE (CIRCULAR)
	330	285132	-		1	SHAFT
	340	285133	-		1	CANTILEVER
	360	525252	S		2	BEARING
	490	312105-0362	-		2	SCREW M6S6X8RFR
	500	312105-0367	-		5	SCREW M6S6X14RFR
	510	312105-0449	-		1	SCREW M6S8X16RFR
	520	312115-0368	-		1	SCREW 6X16 A4 80
	530	312155-0370	-		3	SCREW MF6S6X20RFR
	555	312605-0318	-		1	NUT M6M8RFR

From	Pos	Part No	SP	UN	Qty	Description
	560	312605-0320	-		4	NUT M6M10RFR
	600	315105-0153	-		19	WASHER BRB6,4X12RFR
	610	315105-0165	-		3	WASHER BRB8,4X16RFR
	620	315105-0173	-		4	WASHER BRB10,5X22RFR
	650	315755-0113	S		1	LOCKING WAE 15 RFR

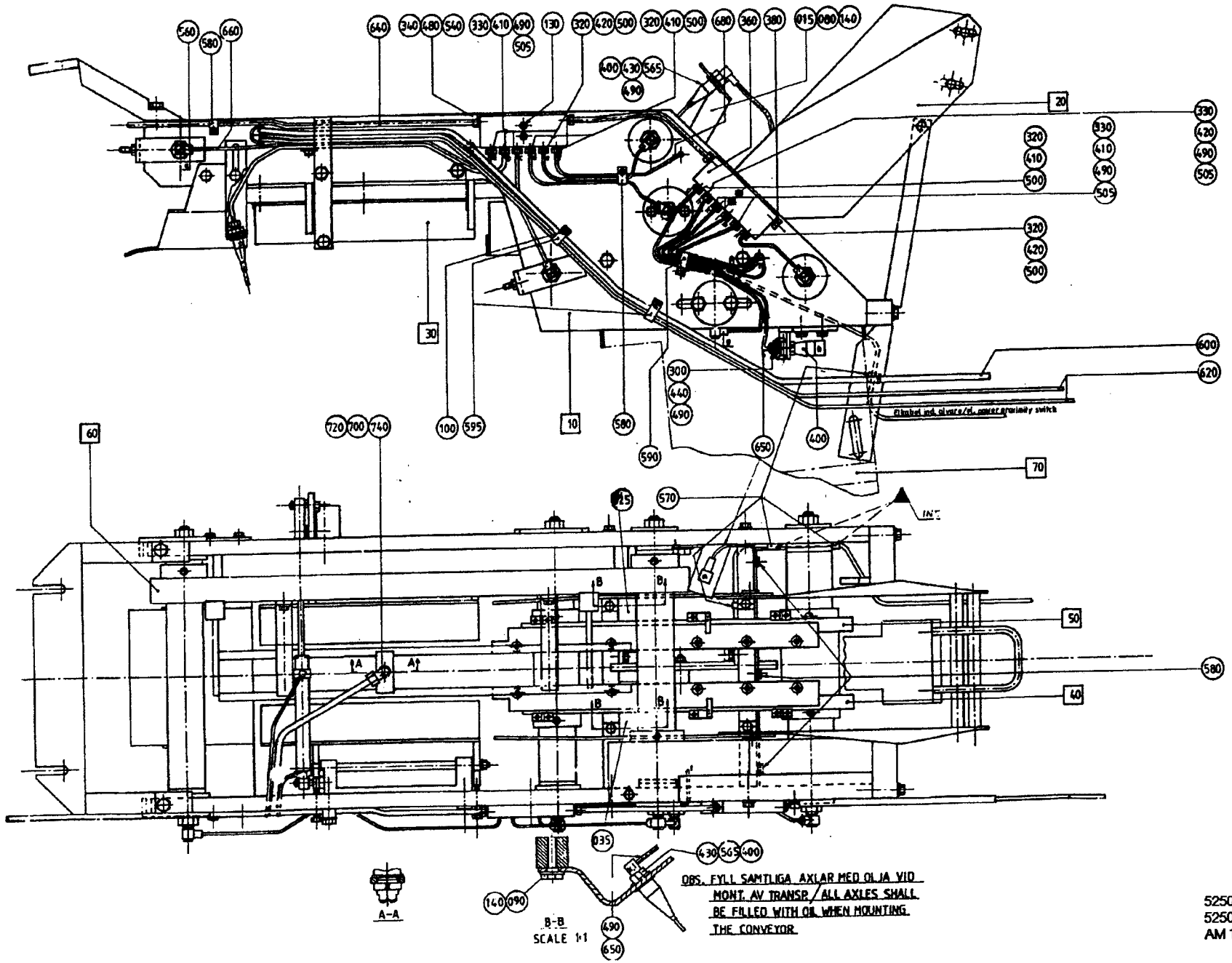

52508503.TIF
525085-3
AM 16630

From	Pos	Part No	SP	UN	Qty	Description
		C- 525085-0201				**Lubricating System, Ass'y**
	F010	**CR- 525086-020V**	**-**		**1**	**CONVEYING EQUIPMENT**
	F020	**CR- 525087-010V**	**-**		**1**	**DROP**
	F030	**CR- 525088-020V**	**-**		**1**	**DISCHARGE CHUTE**
	F040	**CR- 525089-010V**	**-**		**1**	**CHAIN RIGHT**
	F050	**CR- 525090-010V**	**-**		**1**	**CHAIN LEFT**
	F060	**CR- 525091-010V**	**-**		**1**	**CHAIN**
	F070	**CR- 525092-010V**	**-**		**1**	**CHAIN GUARD**
	015	566313	-		1	HOLDER
	025	566316	-		1	HOLDER
	035	566317	-		1	HOLDER
	080	312105-0368	-		2	SCREW M6S6X16RFR
	090	312105-0366	-		4	SCREW M6S6X12RFR
	100	312125-0287	-		11	SLOTTED HEMCS4X8RFR
	130	312155-0295	-		4	SCREW MF6S4X20RFR
	140	315115-0153	-		6	WASHER TBRB6,4X12RFR
	300	90028-0001	P		2	CONE
	320	90028-0020	P		7	CONE
	330	90028-0021	P		5	CONE
	340	90028-0025	P		3	CONE
	360	90032-0040	S		2	BLOCK
	380	90087-0019	S		1	PLUG
	400	90092-0048	P		5	OIL BRUSH
	410	90092-0052	P		7	VALVE
	420	90092-0053	P		5	VALVE
	430	90134-0002	P		3	PIPE CONNECTION
	440	90134-0003	P		2	BUSHING
	480	90134-0030	P		4	SLEEVE
	490	342706-0114	P		10	INSERT SLESH04
	500	90134-0039	P		7	BUSHING
	505	90134-0040	P		5	BUSHING
	540	90134-0055	P		3	BUSHING
	560	90134-0058	S		6	BANJO CONNECTION
	565	90137-0002	P		3	ELBOW PIPE
	570	90165-0056	S		4	CLIP
	580	90165-0057	S		5	CLIP
	590	316810-0106	S		1	PIPE CLAMP 8MM RFR
	595	90074-0002	S		2	CLIP
	600	90166-0122	P	MM	1300	HOSE
	620	90166-0095	P	MM	3000	HOSE
	640	90166-0108	P	MM	1300	HOSE
	650	90166-0051	P	MM	2600	HOSE
	660	90166-0143	P	MM	2500	HOSE
	680	90266-0019	P	MM	300	PIPE

From	Pos	Part No	SP	UN	Qty	Description
	700	90424-0035	P		1	NOZZLE
	720	315233-0110	P		1	SEAL RING R1/4"
	740	342933-0122	P		1	ELBOW PIPE8/6-1/4

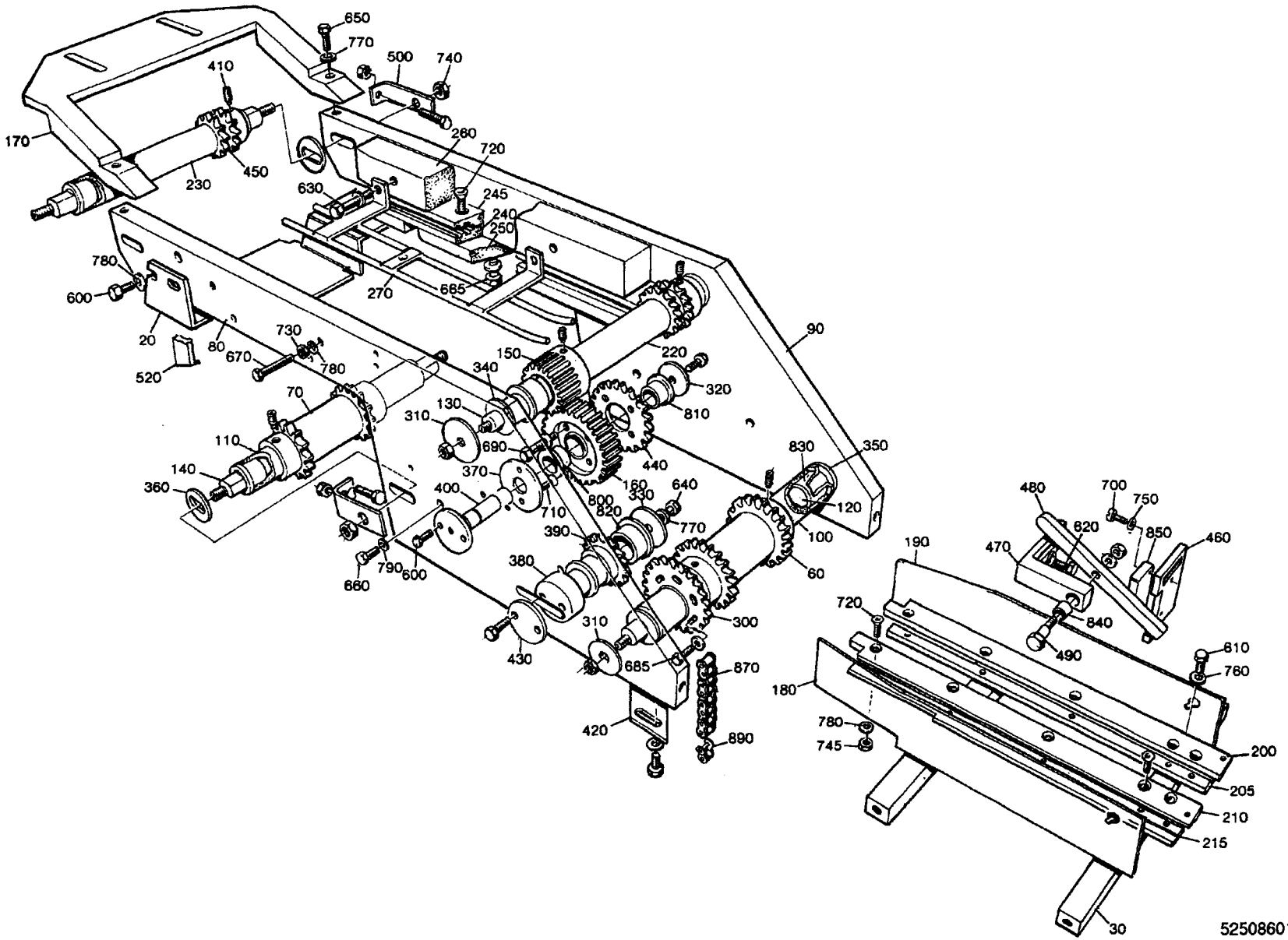

52508601.TIF
525086-1
AM

From	Pos	Part No	SP	UN	Qty	Description
1055ml 1000ml 750ml						
		C- 525086-0201				**Conveying Equipment, Ass'y**
	020	443387	-		1	HEAD PLATE
	030	443454	-		2	BRACKET
	060	443478-0001	S		1	SPROCKET
	070	443479-0001	S		1	SPROCKET
	200	525245	S		1	PROFILE
	205	525246	S		1	PROFILE
	210	525247	S		1	PROFILE
	215	525248	S		1	PROFILE
500ml Slim						
		C- 525086-0202				**Conveying Equipment, Ass'y**
	020	443388-0001	-		1	HEAD PLATE
	030	443480	-		2	BRACKET
	060	443478-0002	S		1	SPROCKET
	070	443479-0002	S		1	SPROCKET
	200	525245	S		1	PROFILE
	205	525246	S		1	PROFILE
	210	525247	S		1	PROFILE
	215	525248	S		1	PROFILE
375ml						
		C- 525086-0203				**Conveying Equipment, Ass'y**
	020	443388-0002	-		1	HEAD PLATE
	030	443481	-		2	BRACKET
	060	443478-0003	S		1	SPROCKET
	070	443479-0003	S		1	SPROCKET
	200	525245	S		1	PROFILE
	205	525246	S		1	PROFILE
	210	525247	S		1	PROFILE
	215	525248	S		1	PROFILE
750ml Slim						
		C- 525086-0204				**Conveying Equipment, Ass'y**
	020	544321	-		1	HEAD PLATE
	030	544322	-		2	BRACKET
	060	443478-0004	S		1	SPROCKET
	070	443479-0004	S		1	SPROCKET
	200	525245	S		1	PROFILE
	205	525246	S		1	PROFILE
	210	525247	S		1	PROFILE
	215	525248	S		1	PROFILE
1136ml						
		C- 525086-0205				**Conveying Equipment, Ass'y**
	020	443387	-		1	HEAD PLATE
	030	443454	-		2	BRACKET
	060	443478-0001	S		1	SPROCKET
	070	443479-0001	S		1	SPROCKET
	200	525403	S		1	PROFILE
	205	525404	S		1	PROFILE
	210	525405	S		1	PROFILE
	215	525406	S		1	PROFILE
568ml 500ml						
		C- 525086-0206				**Conveying Equipment, Ass'y**
	020	443387	-		1	HEAD PLATE
	030	443454	-		2	BRACKET
	060	443478-0001	S		1	SPROCKET
	070	443479-0001	S		1	SPROCKET
	200	525425	-		1	PROFILE
	205	525426	-		1	PROFILE
	210	525427	-		1	PROFILE
	215	525428	-		1	PROFILE
355ml						
		C- 525086-0207				**Conveying Equipment, Ass'y**
	020	443388-0001	-		1	HEAD PLATE
	030	443480	-		2	BRACKET
	060	443478-0002	S		1	SPROCKET
	070	443479-0002	S		1	SPROCKET
	200	525425	-		1	PROFILE
	205	525426	-		1	PROFILE
	210	525427	-		1	PROFILE
	215	525428	-		1	PROFILE
300ml						
		C- 525086-0208				**Conveying Equipment, Ass'y**
	200	525425	-		1	PROFILE
	205	525426	-		1	PROFILE
	210	525427	-		1	PROFILE
	215	525428	-		1	PROFILE
1000ml Slim						
		C- 525086-0209				**Conveying Equipment, Ass'y**
	020	569132	-		1	HEAD PLATE
	030	569133	-		2	BRACKET
	060	443478-0004	S		1	SPROCKET
	070	443479-0004	S		1	SPROCKET
	200	525403	S		1	PROFILE
	205	525404	S		1	PROFILE
	210	525405	S		1	PROFILE
	215	525406	S		1	PROFILE
Common parts						
	080	443445	-		1	SIDE PLATE
	090	443446	-		1	SIDE PLATE
	100	443455	C		1	SHAFT

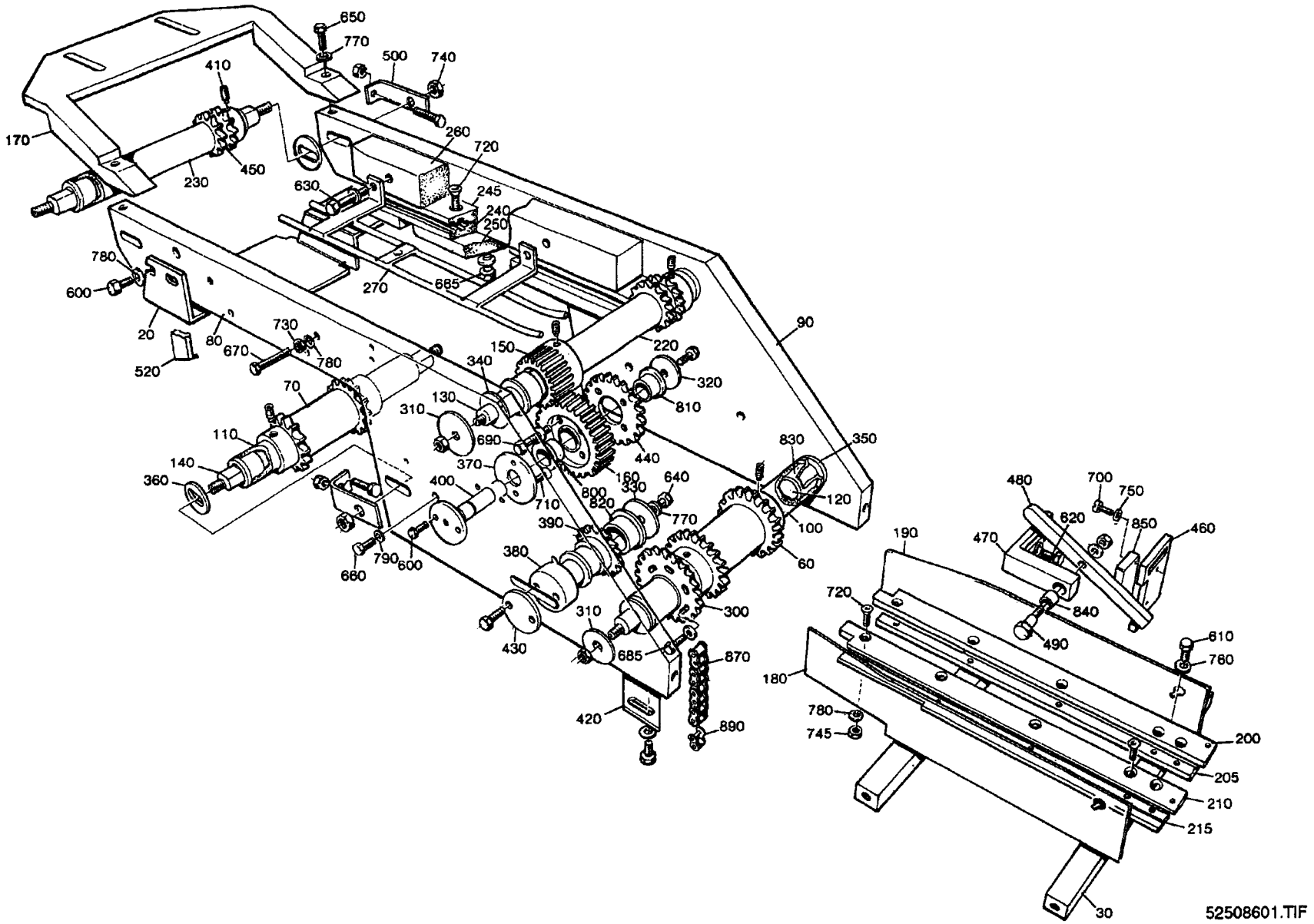

52508601.TIF
525086-1
AM

From	Pos	Part No	SP	UN	Qty	Description
	110	443456	C		1	SHAFT
	120	525400	C		1	SHAFT
	130	525401	C		1	SHAFT
	140	525402	C		2	SHAFT
	150	443290	S		1	GEAR WHEEL
	160	443291	S		1	GEAR WHEEL
	170	443293	-		1	BRACKET
	180	443450	-		1	HEAD PLATE
	190	443451	-		1	HEAD PLATE
	220	443457	C		1	SHAFT
	230	443458	C		1	SHAFT
	240	525243	C		1	PROFILE
	245	525244	C		1	PROFILE
	250	525242	-		1	BRACKET
	260	443486	C		1	WAY
	270	525419	-		1	LEAD RAIL
	300	297899	S		1	SPROCKET
	310	443295	-		4	WASHER
	320	443296	C		1	WASHER
	330	443297	C		1	WASHER
	340	443298	C		2	WASHER
	350	443299	C		2	WASHER
	360	443300	C		4	WASHER
	370	443301	C		1	WASHER
	380	443305	C		1	SHAFT
	390	443306	S		1	SPROCKET
	400	443307	C		1	SHAFT
	410	90287-0161	S		10	STOP SCREW
	420	443350	-		1	BRACKET
	430	443414	-		1	WASHER
	440	443464	S		1	SPROCKET
	450	443467	S		2	SPROCKET
	460	443482	-		1	BRACKET
	470	443483	-		1	BRACKET
	480	443484	-		1	ARM
	490	443485	S		1	SCREW
	500	443489	-		2	BRACKET
	520	525334	-		1	BRACKET
	530	556886	-		2	BRACKET
	600	312105-0366	-		6	SCREW M6S6X12RFR
	610	312105-0368	-		7	SCREW M6S6X16RFR
	620	312105-0370	-		4	SCREW M6S6X20RFR
	625	312105-0372	-		2	SCREW M6S6X25RFR
	630	312105-0384	-		2	SCREW M6S6X70RFR
	640	312105-0449	-		1	SCREW M6S8X16RFR
	650	312105-0453	-		2	SCREW M6S8X25RFR
	660	312105-0455	-		6	SCREW M6S8X30RFR
	665	312105-0457	-		3	SCREW M6S8X35RFR
	670	312109-0376	-		4	SCREW 6X35 H RFR
	685	312115-0370	-		6	SCREW 6X20 A4 80
	690	312115-0374	-		4	SCREW 6X30 A4 80
	700	312125-0230	-		2	SLOTTED HEMCS3X20RFR
	710	312155-0366	-		2	SCREW MF6S6X12RFR
	720	312155-0376	-		16	SCREW MF6X35RFR
	730	312605-0316	-		7	NUT M6M6RFR
	740	312605-0322	-		8	NUT M6M12RFR
	745	312812-0316	-		6	LOCK NUT A4-M6RFR
	750	315105-0124	-		2	WASHER BRB3,2X6RFR
	760	315105-0153	-		7	WASHER BRB6,4X12RFR
	770	315105-0165	-		6	WASHER BRB8,4X16RFR
	780	315115-0153	-		28	WASHER TBRB6,4X12RFR
	790	315115-0165	-		4	WASHER TBRB8,4X16RFR
	800	321101-0252	S		1	FLANGE BUS 25F7X16
	810	321101-0253	S		7	FLANGE BUS 25F7X25
	820	321101-0272	S		2	FLANGE BUS 30F7X20
	830	321101-0283	S		2	FLANGE BUS 35F7X35
	840	321116-0128	S		1	BUSHING 10E7/14X16
	850	90044-0104	P		1	INDUCTIVE SWITCH
	870	318212-0150	S		1	ROLLER CHA
	890	318219-0187	P		1	CONNECTION

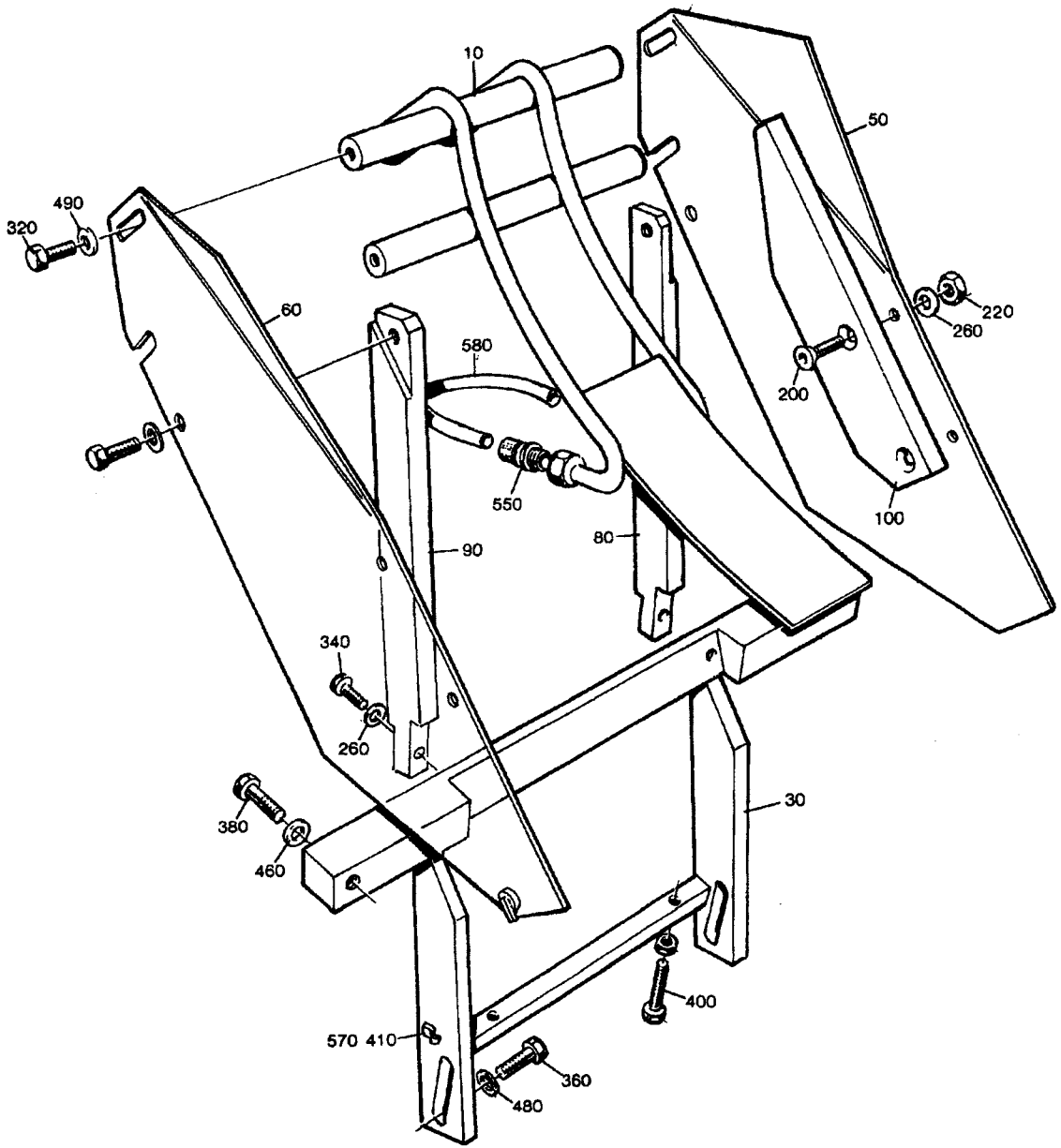

52508701.TIF
525087-1
AM 17749

From	Pos	Part No	SP	UN	Qty	Description
TB/8 TBA/8 1136ml 1055ml 1000ml						
		C- 525087-0101				**Drop, Ass'y**
	010	544229-0001	-		1	DROP WING
	030	443447	-		1	BRACKET
	050	525255	-		1	HEAD PLATE
	060	525256	-		1	HEAD PLATE
	080	443462	-		1	SUPPORT
	090	443463	-		1	SUPPORT
	220	312605-0316	-		2	NUT M6M6RFR
	260	315105-0153	-		4	WASHER BRB6,4X12RFR
TB/8500ml Slim						
		C- 525087-0102				**Drop, Ass'y**
	010	544229-0002	-		1	DROP WING
	030	443491	-		1	BRACKET
	050	443271	-		1	HEAD PLATE
	060	443272	-		1	HEAD PLATE
	080	443497	-		1	SUPPORT
	090	443498	-		1	SUPPORT
	220	312605-0316	-		2	NUT M6M6RFR
	260	315105-0153	-		4	WASHER BRB6,4X12RFR
TB/8 355ml						
		C- 525087-0103				**Drop, Ass'y**
	010	544229-0002	-		1	DROP WING
	030	525259	-		1	BRACKET
	050	443271	-		1	HEAD PLATE
	060	443272	-		1	HEAD PLATE
	080	443497	-		1	SUPPORT
	090	443498	-		1	SUPPORT
	220	312605-0316	-		2	NUT M6M6RFR
	260	315105-0153	-		4	WASHER BRB6,4X12RFR
TB/8 TBA/8 375ml 300ml						
		C- 525087-0104				**Drop, Ass'y**
	010	544229-0003	-		1	DROP WING
	030	443492	-		1	BRACKET
	050	443273	-		1	HEAD PLATE
	060	443274	-		1	HEAD PLATE
	080	443497	-		1	SUPPORT
	090	443498	-		1	SUPPORT
	220	312605-0316	-		2	NUT M6M6RFR
	260	315105-0153	-		4	WASHER BRB6,4X12RFR
TBA/8 750ml						
		C- 525087-0105				**Drop, Ass'y**
	010	544229-0001	-		1	DROP WING
	030	525146	-		1	BRACKET
	050	443273	-		1	HEAD PLATE
	060	443274	-		1	HEAD PLATE
	080	443497	-		1	SUPPORT
	090	443498	-		1	SUPPORT
	220	312605-0316	-		2	NUT M6M6RFR
	260	315105-0153	-		4	WASHER BRB6,4X12RFR
TB/8 568ml 500ml						
		C- 525087-0106				**Drop, Ass'y**
	010	544229-0001	-		1	DROP WING
	030	525147	-		1	BRACKET
	050	443273	-		1	HEAD PLATE
	060	443274	-		1	HEAD PLATE
	080	443497	-		1	SUPPORT
	090	443498	-		1	SUPPORT
	100	525164	-		2	STEERING
	200	312155-0372	-		4	SCREW MF6S6X25RFR
	220	312605-0316	-		6	NUT M6M6RFR
	260	315105-0153	-		8	WASHER BRB6,4X12RFR
TBA/8 568ml 500ml						
		C- 525087-0107				**Drop, Ass'y**
	010	544229-0001	-		1	DROP WING
	030	525148	-		1	BRACKET
	050	443273	-		1	HEAD PLATE
	060	443274	-		1	HEAD PLATE
	080	443497	-		1	SUPPORT
	090	443498	-		1	SUPPORT
	100	525164	-		2	STEERING
	200	312155-0372	-		4	SCREW MF6S6X25RFR
	220	312605-0316	-		6	NUT M6M6RFR
	260	315105-0153	-		8	WASHER BRB6,4X12RFR
TBA/8 750ml Slim						
		C- 525087-0108				**Drop, Ass'y**
	010	544229-0004	-		1	DROP WING
	030	443447	-		1	BRACKET
	050	525255	-		1	HEAD PLATE
	060	525256	-		1	HEAD PLATE
	080	443462	-		1	SUPPORT
	090	443463	-		1	SUPPORT
	220	312605-0316	-		2	NUT M6M6RFR
	260	315105-0153	-		6	WASHER BRB6,4X12RFR
TBA/8 1000ml Slim						
		C- 525087-0109				**Drop, Ass'y**
	010	544229-0005	-		1	DROP WING
	030	569131	-		1	BRACKET
	050	525255	-		1	HEAD PLATE
	060	525256	-		1	HEAD PLATE

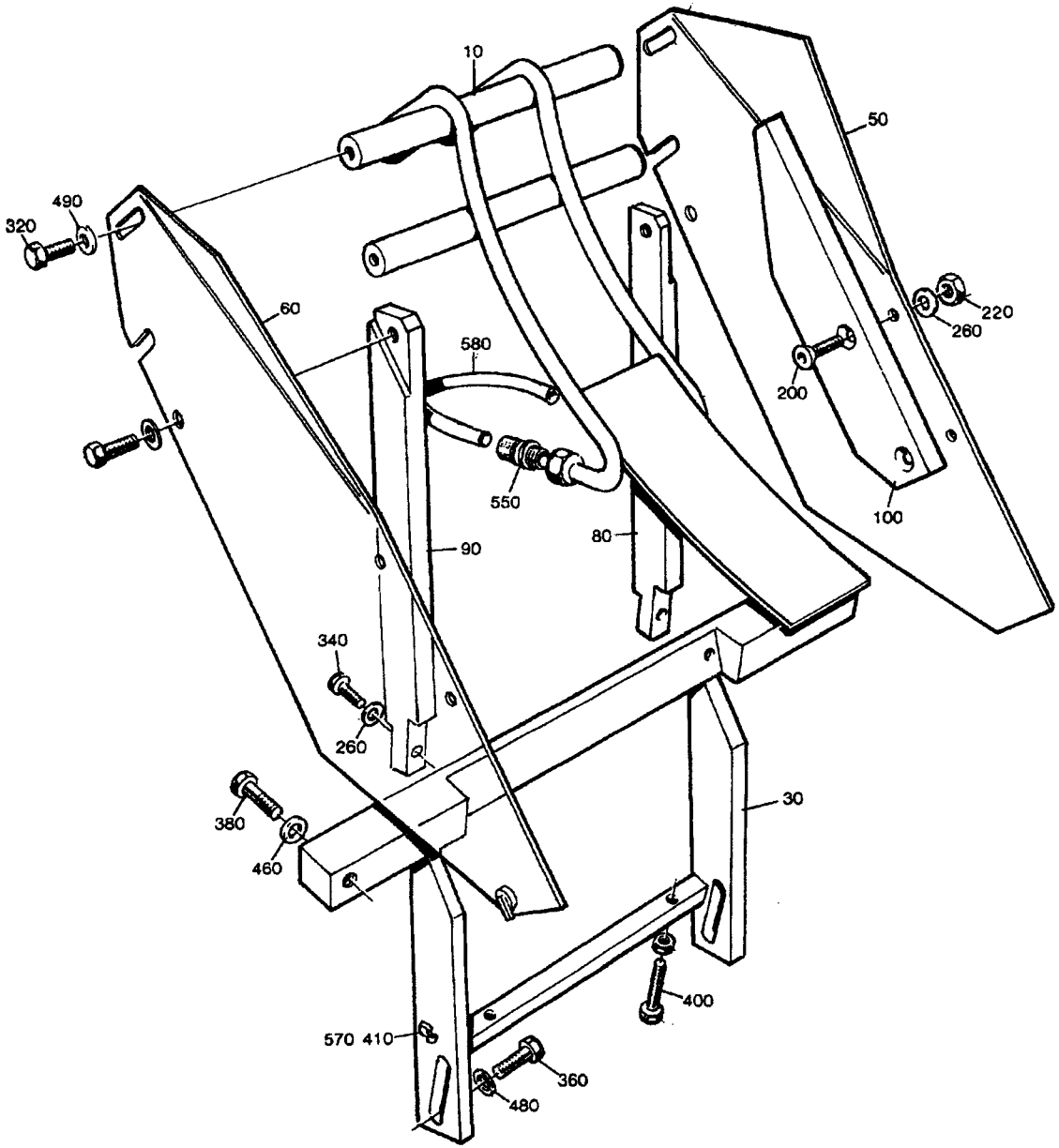

52508701.TIF
525087-1
AM 17749

From	Pos	Part No	SP	UN	Qty	Description
	080	443462	-		1	SUPPORT
	090	443463	-		1	SUPPORT
	220	312605-0316	-		2	NUT M6M6RFR
	260	315105-0153	-		4	WASHER BRB6,4X12RFR
Common parts						
	320	312105-0366	-		6	SCREW M6S6X12RFR
	340	312105-0368	-		2	SCREW M6S6X16RFR
	360	312105-0449	-		4	SCREW M6S8X16RFR
	380	312105-0459	-		2	SCREW M6S8X40RFR
	400	312109-0381	-		2	SCREW M6S6X55HA480
	410	312125-0287	-		1	SLOTTED HEMCS4X8RFR
	460	315105-0165	-		2	WASHER BRB8,4X16RFR
	480	315115-0165	-		4	WASHER TBRB8,4X16RFR
	490	315125-0153	-		4	WASHER SB 6,4X22X4 RFR
	550	342920-0121	S		2	PIPE COUPL8/6-1/8
	570	90165-0056	-		1	CLIP
	580	90166-0122	P	MM	1500	HOSE

From	Pos	Part No	SP	UN	Qty	Description

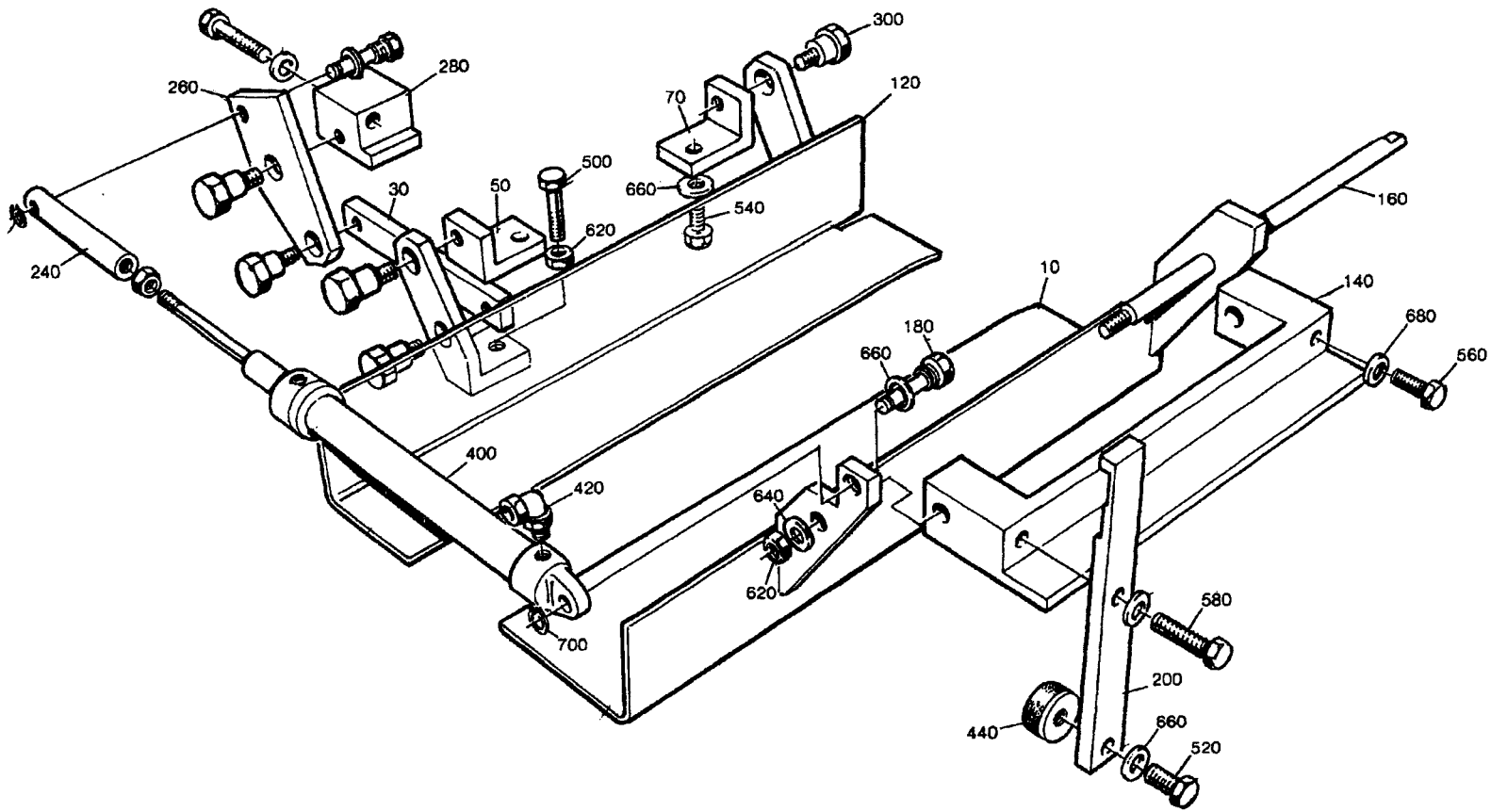

52508802.TIF
525088-2
AM

From	Pos	Part No	SP	UN	Qty	Description
1136ml-500ml						
		C- 525088-0201				**Discharge Chute, Ass'y**
	010	443448	-		1	HEAD PLATE
	030	525075-0001	-		1	LINK
	050	525078	-		1	BRACKET
	070	525079	-		1	BRACKET
355ml 500ml Slim						
		C- 525088-0202				**Discharge Chute, Ass'y**
	010	443493	-		1	HEAD PLATE
	030	525075-0002	-		1	LINK
	050	525080	-		1	BRACKET
	070	525081	-		1	BRACKET
375ml 300ml						
		C- 525088-0203				**Discharge Chute, Ass'y**
	010	443495	-		1	HEAD PLATE
	030	525075-0003	-		1	LINK
	050	525082	-		1	BRACKET
	070	525083	-		1	BRACKET
750ml Slim						
		C- 525088-0204				**Discharge Chute, Ass'y**
	010	544307	-		1	HEAD PLATE
	030	525075-0004	-		1	LINK
	050	544331	-		1	BRACKET
	070	544332	-		1	BRACKET
1000ml Slim						
		C- 525088-0205				**Discharge Chute, Ass'y**
	010	569134	-		1	HEAD PLATE
	030	525075-0005	-		1	LINK
	050	569135	-		1	BRACKET
	070	569136	-		1	BRACKET
Common parts						
	120	525084	-		1	HEAD PLATE
	140	443365	-		1	BRACKET
	160	443309	C		1	SHAFT
	180	443310	S		2	AXLE PIN
	200	525416	-		1	STOP
	240	443474	-		1	BRACKET
	260	525074	-		1	ARM
	280	525465	-		1	BRACKET
	300	525077	S		5	AXLE PIN
	400	90239-0818	S		1	CYLINDER
	420	342732-0099	S		2	ELBOW PIPE D4-M5
	440	90347-0007	S		1	VIBRATION DAMPER
	500	312105-0374	-		1	SCREW M6S6X30RFR
	540	312105-0451	-		2	SCREW M6S8X20RFR
	560	312105-0455	-		1	SCREW M6S8X30RFR
	580	312105-0460	-		1	SCREW M6S8X45RFR
	600	312105-0462	-		1	SCREW M6S8X55RFR
	620	312605-0316	-		4	NUT M6M6RFR
	640	315105-0153	-		2	WASHER BRB6,4X12RFR
	660	315105-0165	-		6	WASHER BRB8,4X16RFR
	680	315115-0165	-		1	WASHER TBRB8,4X16RFR
	700	315755-0107	-		2	LOCKING WAE 5RFR

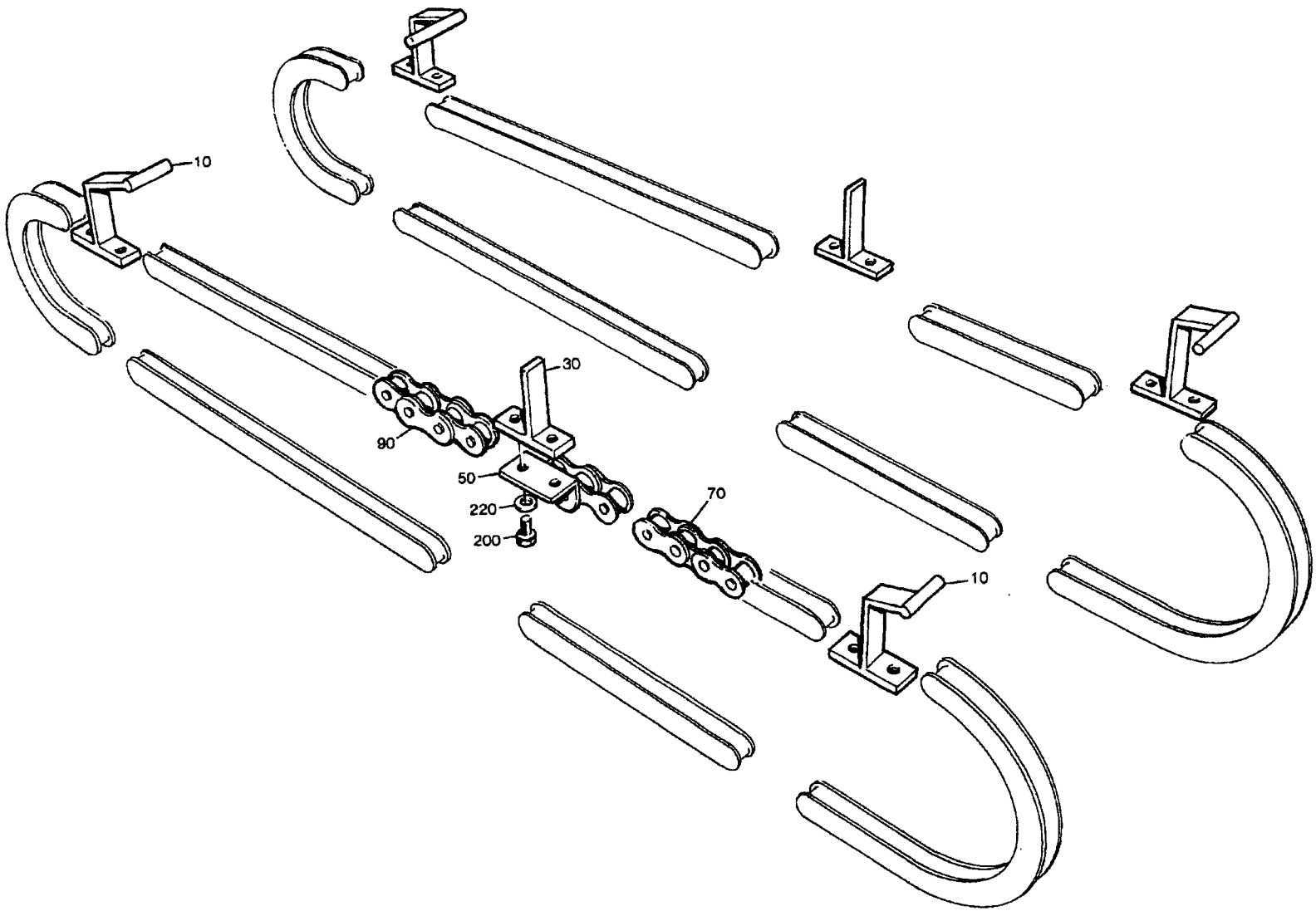

52508901.TIF
525089-1
AM

From	Pos	Part No	SP	UN Qty	Description
750ml Slim 500ml Slim 375ml 355ml 300ml					
		C- 525089-0101			**Chain Right, Ass'y**
	010	443469	P	3	CARRIER
	070	318212-0008	S	3	ROLLER CHA1/2 RFR
	090	90288-0053	S	3	ROLLER CHAIN
1136ml 1000ml Slim					
		C- 525089-0102			**Chain Right, Ass'y**
	010	525431	-	3	CARRIER
	070	318212-0006	S	3	ROLLER CHA1/2" RFR
	090	90288-0057	S	3	ROLLER CHAIN
1055ml 1000ml 750ml 568ml 500ml					
		C- 525089-0103			**Chain Right, Ass'y**
	010	525431	-	3	CARRIER
	070	318212-0008	S	3	ROLLER CHA1/2 RFR
	090	90288-0053	S	3	ROLLER CHAIN
Common parts					
	030	443468	P	3	CARRIER
	050	90288-0311	P	6	LINK
	200	312105-0287	P	12	SCREW M6S4X8 A4 80
	220	315105-0136	P	12	WASHER BRB4,3X8RFR

From	Pos	Part No	SP	UN Qty	Description

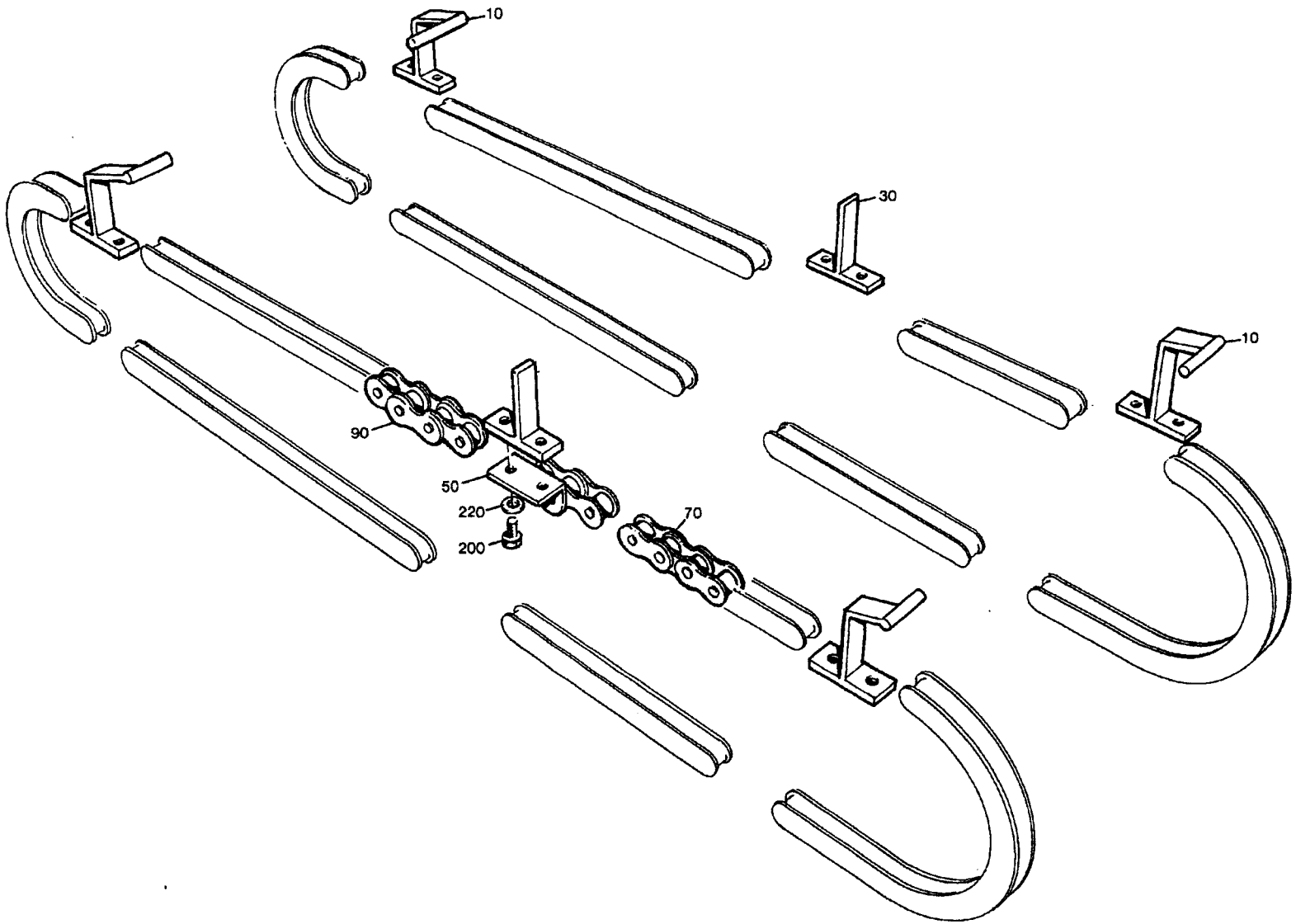

52509001.TIF
525090-1
AM

From	Pos	Part No	SP	UN	Qty	Description
750ml Slim 500ml Slim 375ml 355ml 300ml						
		C- 525090-0101				**Chain Left, Ass'y**
	010	443470	P		3	CARRIER
	070	318212-0008	S		3	ROLLER CHA1/2 RFR
	090	90288-0053	S		3	ROLLER CHAIN
1136ml 1000ml Slim						
		C- 525090-0102				**Chain Left, Ass'y**
	010	525432	-		3	CARRIER
	070	318212-0006	S		3	ROLLER CHA1/2" RFR
	090	90288-0057	S		3	ROLLER CHAIN
1055ml 1000ml 750ml 568ml 500ml						
		C- 525090-0103				**Chain Left, Ass'y**
	010	525432	-		3	CARRIER
	070	318212-0008	S		3	ROLLER CHA1/2 RFR
	090	90288-0053	S		3	ROLLER CHAIN
Common parts						
	030	443468	P		3	CARRIER
	050	90288-0311	P		6	LINK
	200	312105-0287	P		12	SCREW M6S4X8 A4 80
	220	315105-0136	P		12	WASHER BRB4,3X8RFR

From	Pos	Part No	SP	UN	Qty	Description

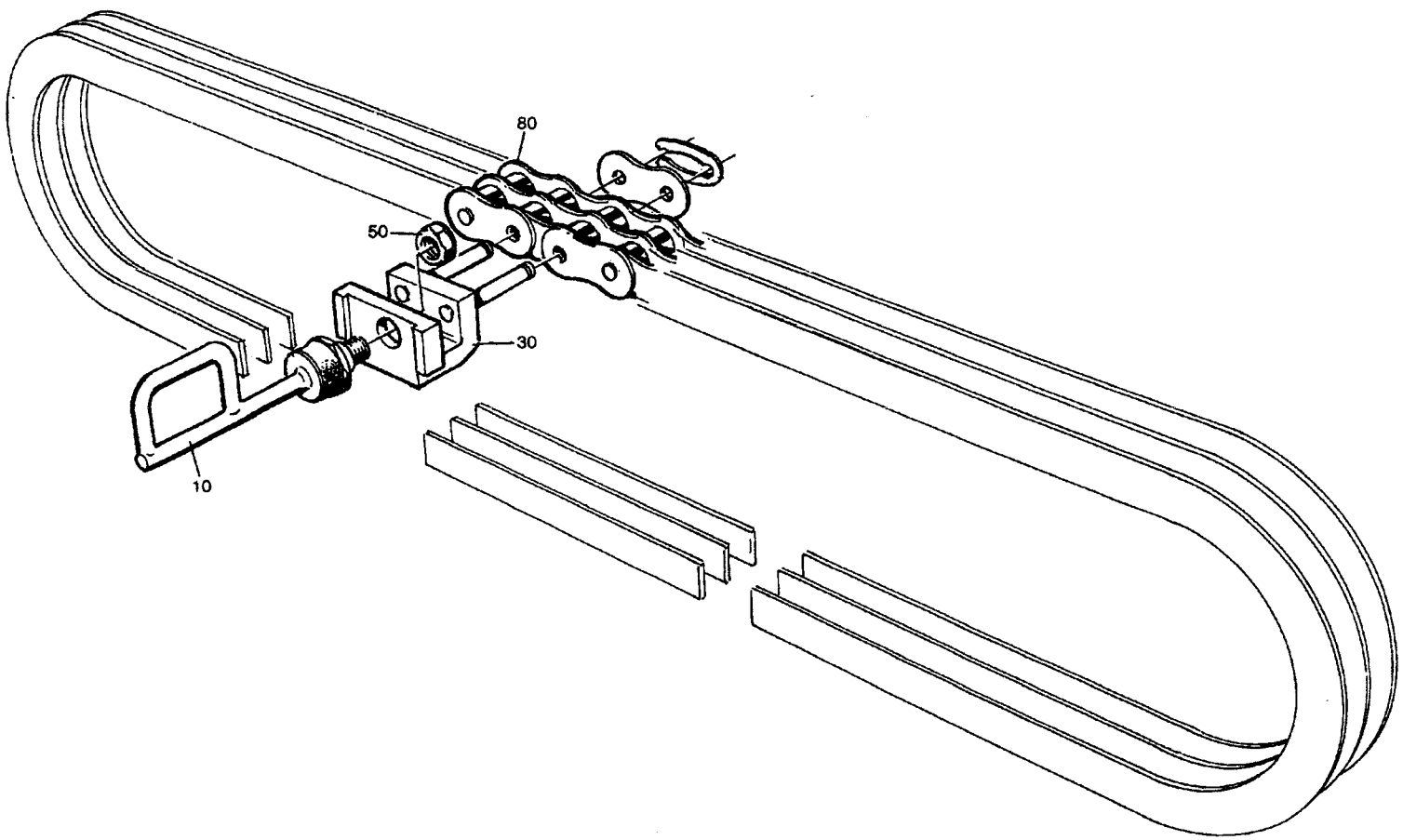

52509101.TIF
525091-1
AM

From	Pos	Part No	SP	UN	Qty	Description
1136ml-500ml						
		C- 525091-0101				**Chain, Ass'y**
	010	525208-0001	P		3	CARRIER
375ml-300ml 500ml Slim						
		C- 525091-0102				**Chain, Ass'y**
	010	525208-0002	P		3	CARRIER
1000ml Slim 750ml Slim						
		C- 525091-0103				**Chain, Ass'y**
	010	525208-0003	P		3	CARRIER
Common parts						
	030	525254	P		3	LINK
	050	312605-0318	-		3	NUT M6M8RFR
	080	318242-0036	S		3	ROLLER CHA

From	Pos	Part No	SP	UN	Qty	Description

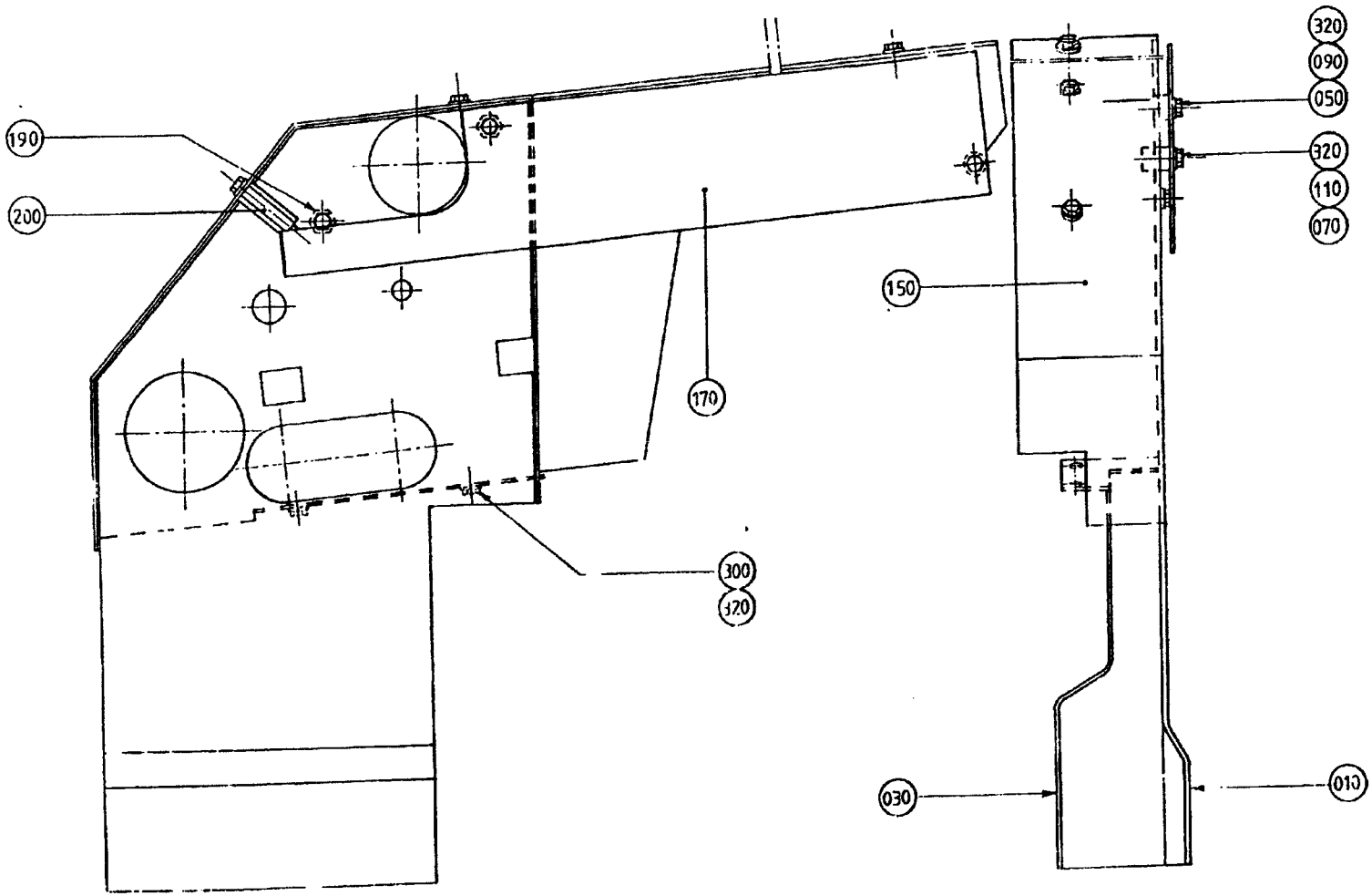

52509201.TIF
525092-1
AM

From	Pos	Part No	SP	UN	Qty	Description
1136ml 1055ml 1000ml 1000ml Slim 750ml Slim						
		C- 525092-0101				**Chain Guard, Ass'y**
	010	443476	-		1	GABLE PLATE
	030	443477	-		1	GABLE PLATE
	050	525052-0001	-		1	SPACER
	070	525052-0002	-		1	SPACER
	090	312105-0370	-		1	SCREW M6S6X20RFR
	110	312105-0374	-		1	SCREW M6S6X30RFR
	150	525339	-		1	COVERING PLATE
500ml Slim						
		C- 525092-0102				**Chain Guard, Ass'y**
	010	525038	-		1	GABLE PLATE
	030	525039	-		1	GABLE PLATE
	050	525052-0003	-		1	SPACER
	070	525052-0004	-		1	SPACER
	090	312105-0376	-		1	SCREW M6S6X35RFR
	110	312105-0380	-		1	SCREW M6S6X50RFR
	150	525339	-		1	COVERING PLATE
375ml 300ml						
		C- 525092-0103				**Chain Guard, Ass'y**
	010	525038	-		1	GABLE PLATE
	030	525039	-		1	GABLE PLATE
	050	525052-0005	-		1	SPACER
	070	525052-0006	-		1	SPACER
	090	312105-0378	-		1	SCREW M6S6X40RFR
	110	312105-0381	-		1	SCREW M6S6X55RFR
	150	525339	-		1	COVERING PLATE
750ml 568ml 500ml						
		C- 525092-0104				**Chain Guard, Ass'y**
	010	525150	-		1	GABLE PLATE
	030	525151	-		1	GABLE PLATE
	050	525052-0001	-		1	SPACER
	070	525052-0002	-		1	SPACER
	090	312105-0370	-		1	SCREW M6S6X20RFR
	110	312105-0374	-		1	SCREW M6S6X30RFR
	150	525339	-		1	COVERING PLATE
355ml						
		C- 525092-0105				**Chain Guard, Ass'y**
	010	525260	-		1	GABLE PLATE
	030	525261	-		1	GABLE PLATE
	050	525052-0003	-		1	SPACER
	070	525052-0004	-		1	SPACER
	090	312105-0376	-		1	SCREW M6S6X35RFR
	110	312105-0380	-		1	SCREW M6S6X50RFR
	150	566416	-		1	COVERING PLATE

From	Pos	Part No	SP	UN	Qty	Description
Common parts						
	170	525051	-		1	HEAD PLATE
	190	443419	-		2	SPACER
	200	525338	-		1	SPACER
	300	312105-0364	-		6	SCREW M6S6X10RFR
	320	315105-0153	-		8	WASHER BRB6,4X12RFR

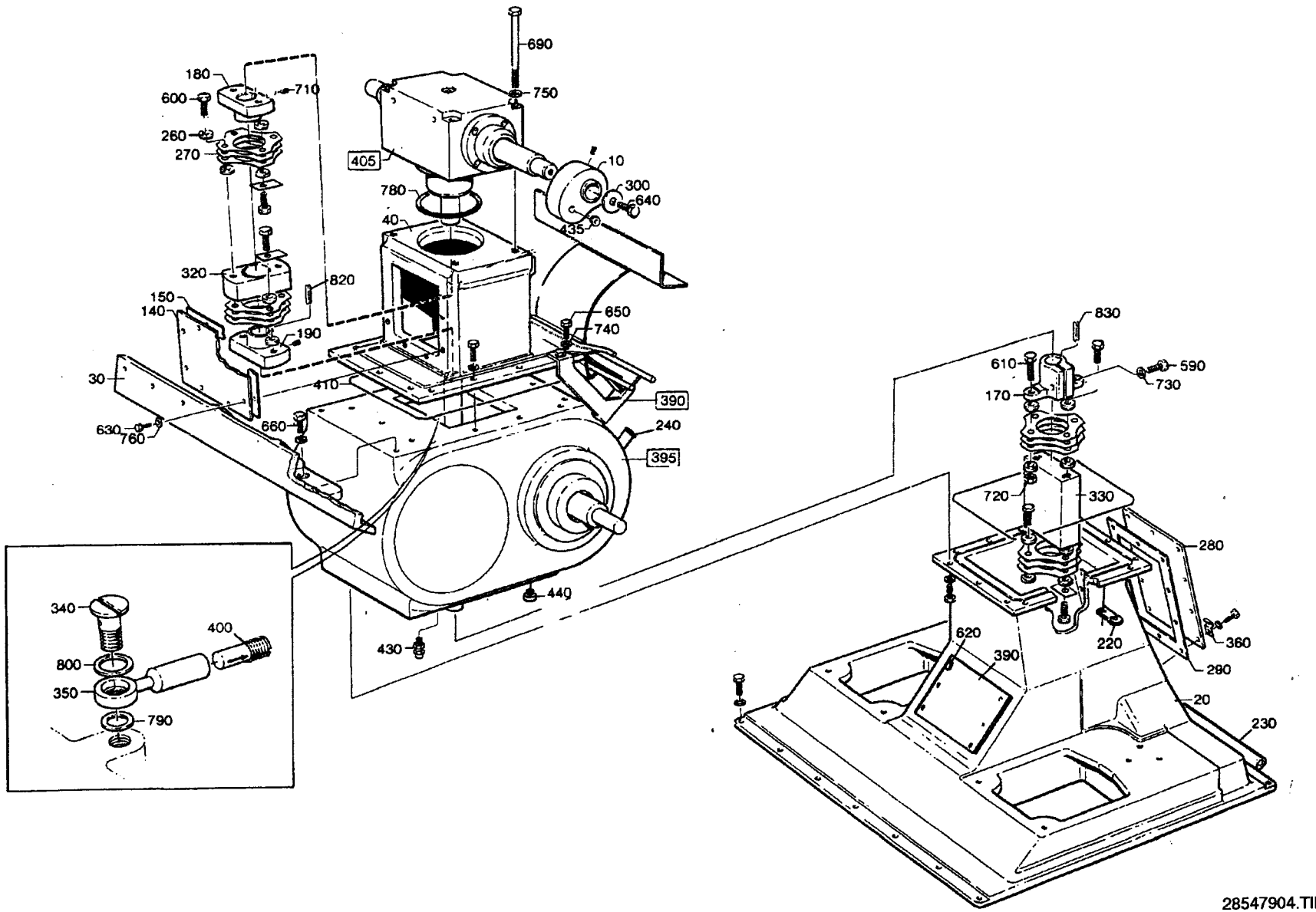

28547904.TIF
285479-4
AM

From	Pos	Part No	SP	UN	Qty	Description
1136ml-750ml 1000ml Slim 750ml Slim						
		C- 285479-0401				**Superstructure, Ass'y**
	010	443362	C		2	CURVE
568ml-300ml 500ml Slim						
		C- 285479-0402				**Superstructure, Ass'y**
	010	525235	C		2	CURVE
Common parts						
	F390	**C- 285853-020V**	-		1	**STEERING RAIL**
	F395	**CR- 525117-0201**	-		1	**INDEXING GEAR**
	F405	**C- 442646-0201**	**C**		1	**TOP GEAR**
	020	G- 443218	-		1	INTERMEDIARY SECTION
	030	G- 262264	-		1	CANTILEVER
	040	G- 262922	-		1	HOUSE
	140	262932	-		1	OPENING
	150	262933	S		1	GASKET
	170	285141-0003	S		1	CLAMPING SLEEVE
	180	285142-0002	-		1	SLEEVE
	190	285142-0003	-		1	SLEEVE
	220	525292	-		3	BRACKET
	230	525293	-		1	PIPE
	240	525294	-		1	PIPE
	260	31553-0002	S		32	WASHER
	270	33261	S		32	SPRING PLATE
	280	262252	-		1	OPENING
	290	262253	-		1	GASKET
	300	276659	-		2	WASHER
	320	285145-0002	-		1	INTERMEDIARY SECTION
	330	285147	-		1	INTERMEDIARY SECTION
	340	285891	S		1	SCREW
	350	285892	S		1	CONNECTION
	390	525279	-		1	OPENING
	400	90092-0077	S		1	METERING VALVE
	410	90143-0052	S	MM	2450	STRAP
	420	90153-0043	S		X	ADHESIVE
	425	90296-0009	-		X	GREASE
	430	90224-0066	P		1	CONNECTION
	435	90261-0032	S		4	PLUG
	440	342720-0102	S		1	PIPE COUPLGA-6-1/8"
	570	311103-0399	-		10	CYLINDRICACP M6 8X16 RFR
	590	312101-0455	-		1	SCREW M6S8X30FZB
	600	90287-0155	-		14	SCREW
	610	312101-0497	-		2	SCREW M6S10X35FZB
	620	312105-0367	-		6	SCREW M6S6X14RFR
	630	312105-0368	-		12	SCREW M6S6X16RFR
	635	312105-0370	-		4	SCREW M6S6X20RFR
	638	312105-0372	-		2	SCREW M6S6X25RFR
	640	312105-0451	-		2	SCREW M6S8X20RFR
	650	312105-0453	-		50	SCREW M6S8X25RFR
	660	312105-0455	-		2	SCREW M6S8X30RFR
	690	312105-0517	-		4	SCREW M6S-10X130RFR
	710	312316-0362	-		2	STOP SCREW SK6SS6X8FZB
	720	312810-0320	-		2	LOCK NUT 10FZB
	730	315101-0165	-		1	WASHER BRB8,4X16FZB
	735	315105-0153	-		2	WASHER BRB6,4X12RFR
	740	315105-0165	-		10	WASHER BRB8,4X16RFR
	750	315115-0173	-		4	WASHER B 10,5X22 RFR
	760	315115-0153	-		22	WASHER TBRB6,4X12RFR
	770	315115-0165	-		42	WASHER TBRB8,4X16RFR
	780	315202-0311	S		1	O-RING 99,5X3
	790	315233-0109	S		1	SEAL RING R1/8"
	800	315233-0110	S		1	SEAL RING R1/4"
	820	315701-0270	-		1	FLAT WEDGE8X7X40
	830	315701-0274	-		1	FLAT WEDGE8X7X60

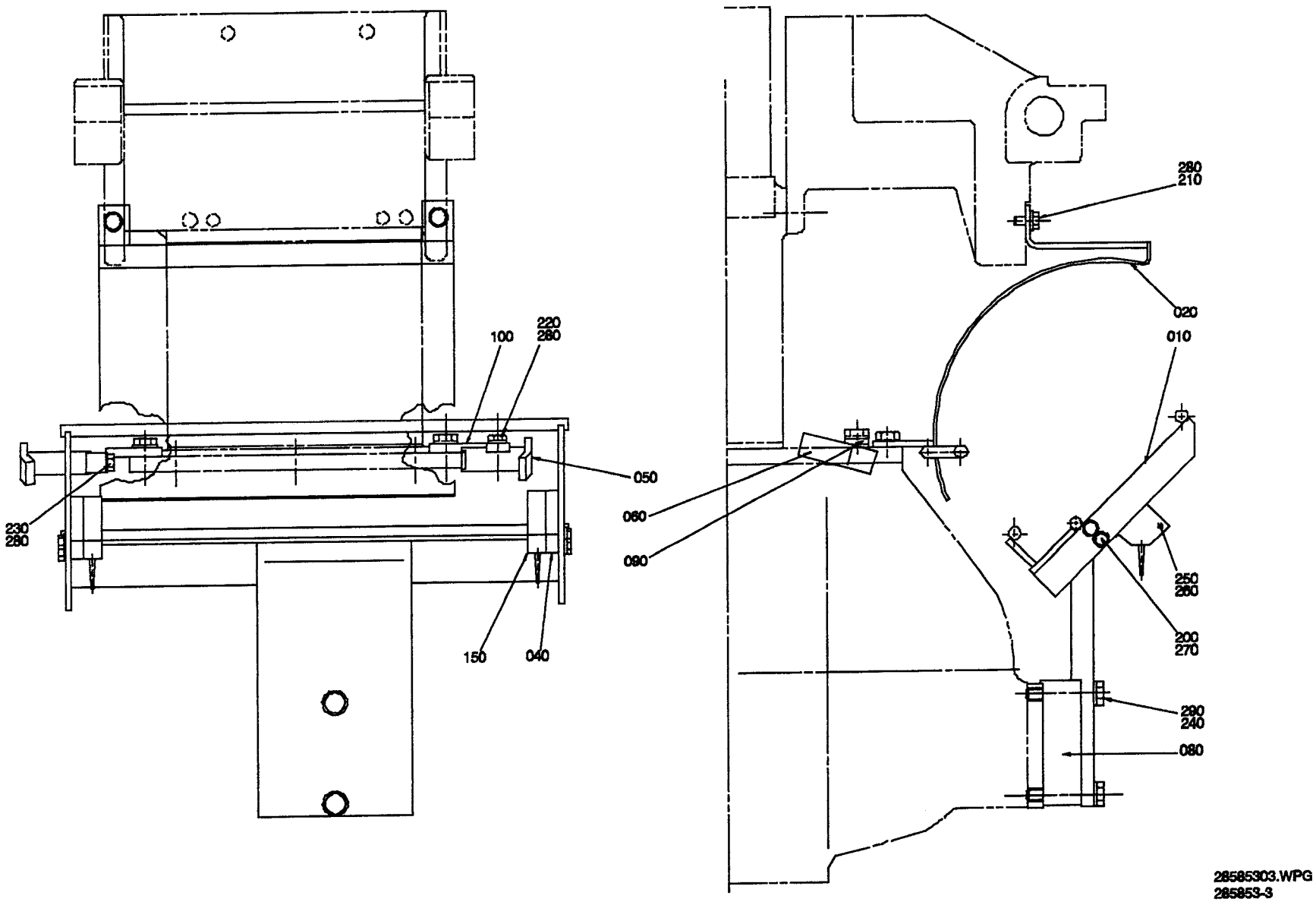

28585303.WPG
285853-3
AM 19402

From	Pos	Part No	SP	UN	Qty	Description
1055ml						
		C- 285853-0201				**Steering Rail, Ass'y**
	010	525347	-		1	SLIDE RAIL
	100	531328	-		1	HEAD PLATE
	130	312105-0451	-		2	SCREW M6S8X20RFR
	280	315105-0153	-		2	WASHER BRB6,4X12RFR
1000ml LoFin						
		C- 285853-0202				**Steering Rail, Ass'y**
	010	525348	-		1	SLIDE RAIL
	100	529312	-		1	HEAD PLATE
	130	312105-0451	-		2	SCREW M6S8X20RFR
	280	315105-0153	-		2	WASHER BRB6,4X12RFR
1000ml HiFin						
		C- 285853-0203				**Steering Rail, Ass'y**
	010	525349	-		1	SLIDE RAIL
	100	529312	-		1	HEAD PLATE
	130	312105-0451	-		2	SCREW M6S8X20RFR
	280	315105-0153	-		2	WASHER BRB6,4X12RFR
750ml						
		C- 285853-0204				**Steering Rail, Ass'y**
	010	525350	-		1	SLIDE RAIL
	100	531314	-		1	HEAD PLATE
	130	312105-0451	-		2	SCREW M6S8X20RFR
	280	315105-0153	-		2	WASHER BRB6,4X12RFR
568ml						
		C- 285853-0205				**Steering Rail, Ass'y**
	010	525351	-		1	SLIDE RAIL
	050	525357	-		1	SPACER
	100	531310	-		1	HEAD PLATE
	130	312105-0460	-		2	SCREW M6S8X45RFR
	280	315105-0153	-		2	WASHER BRB6,4X12RFR
500ml						
		C- 285853-0206				**Steering Rail, Ass'y**
	010	525352	-		1	SLIDE RAIL
	050	525357	-		1	SPACER
	100	525424	-		1	HEAD PLATE
	130	312105-0460	-		2	SCREW M6S8X45RFR
	280	315105-0153	-		2	WASHER BRB6,4X12RFR
500ml Slim						
		C- 285853-0207				**Steering Rail, Ass'y**
	010	525353	-		1	SLIDE RAIL
	100	531312	-		1	HEAD PLATE
	130	312105-0451	-		2	SCREW M6S8X20RFR
	280	315105-0153	-		2	WASHER BRB6,4X12RFR

From	Pos	Part No	SP	UN	Qty	Description
355ml						
		C- 285853-0208				**Steering Rail, Ass'y**
	010	525354	-		1	SLIDE RAIL
	100	527861	-		1	HEAD PLATE
	130	312105-0451	-		2	SCREW M6S8X20RFR
	280	315105-0153	-		2	WASHER BRB6,4X12RFR
375ml						
		C- 285853-0209				**Steering Rail, Ass'y**
	010	525355	-		1	SLIDE RAIL
	100	531313	-		1	HEAD PLATE
	130	312105-0451	-		2	SCREW M6S8X20RFR
	280	315105-0153	-		2	WASHER BRB6,4X12RFR
300ml						
		C- 285853-0210				**Steering Rail, Ass'y**
	010	525356	-		1	SLIDE RAIL
	100	529478	-		1	HEAD PLATE
	130	312105-0451	-		2	SCREW M6S8X20RFR
	280	315105-0153	-		2	WASHER BRB6,4X12RFR
750ml Slim						
		C- 285853-0211				**Steering Rail, Ass'y**
	010	543694	-		1	SLIDE RAIL
	100	525378	-		1	HEAD PLATE
	130	312105-0451	-		2	SCREW M6S8X20RFR
	280	315105-0153	-		2	WASHER BRB6,4X12RFR
1136ml						
		C- 285853-0212				**Steering Rail, Ass'y**
	010	525347	-		1	SLIDE RAIL
	100	525408	-		1	HEAD PLATE
	130	312105-0451	-		2	SCREW M6S8X20RFR
	280	315105-0153	-		2	WASHER BRB6,4X12RFR
1000ml Slim						
		C- 285853-0213				**Steering Rail, Ass'y**
	010	569127	-		1	SLIDE RAIL
	030	573486	-		1	STEERING
	040	573487	-		1	STEERING
	060	573488	-		1	BRACKET
	070	573489	-		1	BRACKET
	100	569128	-		1	HEAD PLATE
	130	312105-0451	-		2	SCREW M6S8X20RFR
	220	312105-0368	-		1	SCREW M6S6X16RFR
	230	312105-0371	-		1	SCREW M6S6X22RFR
	280	315105-0153	-		4	WASHER BRB6,4X12RFR

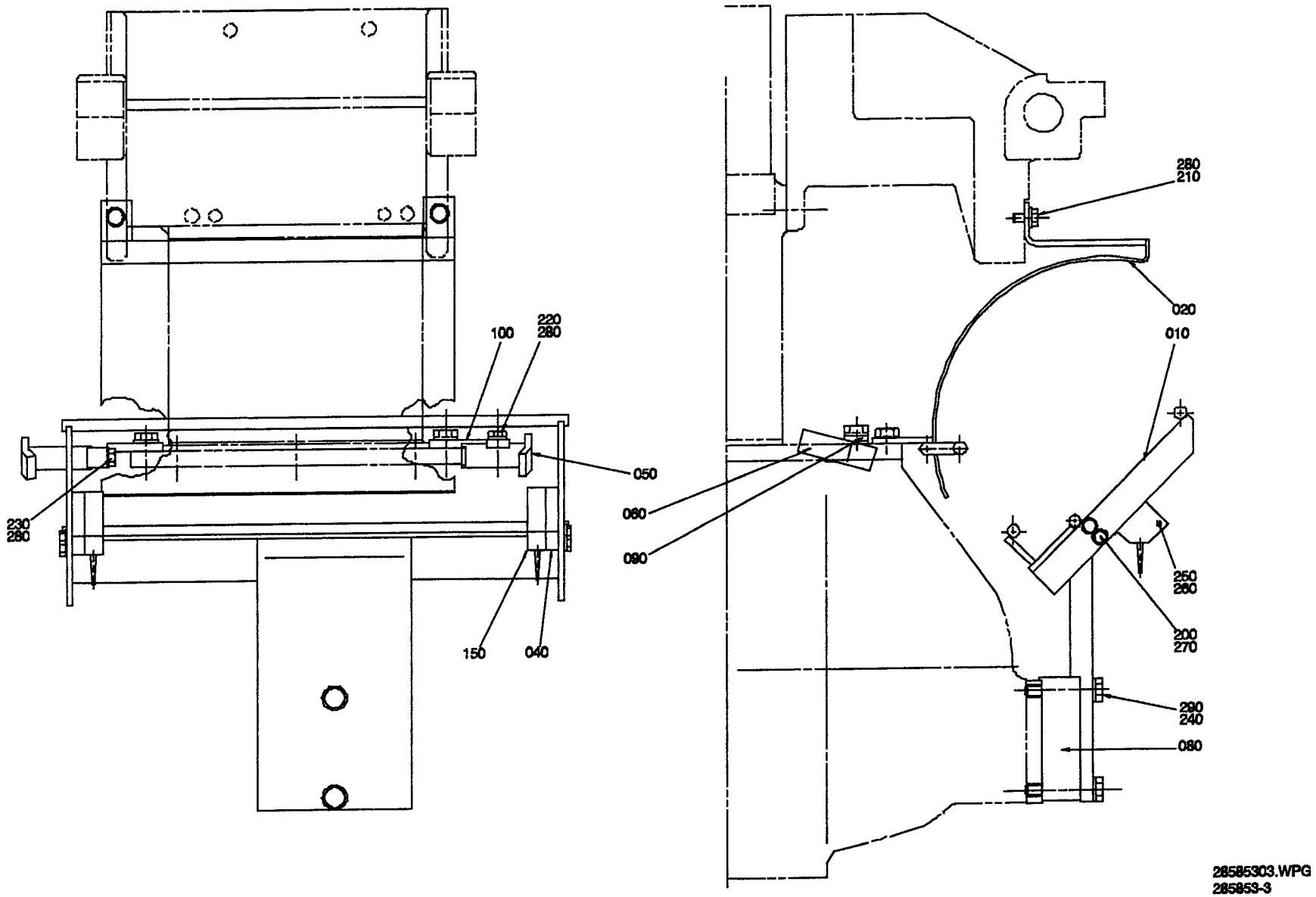

28585303.WPG
285853-3
AM 19402

From	Pos	Part No	SP	UN	Qty	Description
400ml						
		C- 285853-0214				**Steering Rail, Ass'y**
	010	574678	-		1	SLIDE RAIL
	100	574679	-		1	HEAD PLATE
	130	312105-0451	-		2	SCREW M6S8X20RFR
	280	315105-0153	-		2	WASHER BRB6,4X12RFR
Common parts						
	150	525172	-		2	SPACER
	200	312105-0328	-		4	SCREW M6S5X14 A2 80
	210	312105-0366	-		2	SCREW M6S6X12RFR
	240	312125-0230	-		4	SLOTTED HEMCS3X20RFR
	260	315105-0124	-		4	WASHER BRB3,2X6RFR
	270	315105-0146	-		4	WASHER BRB5,3X10RFR
	290	315105-0165	-		2	WASHER BRB8,4X16RFR
	320	90044-0104	-		2	INDUCTIVE SWITCH

From	Pos	Part No	SP	UN	Qty	Description

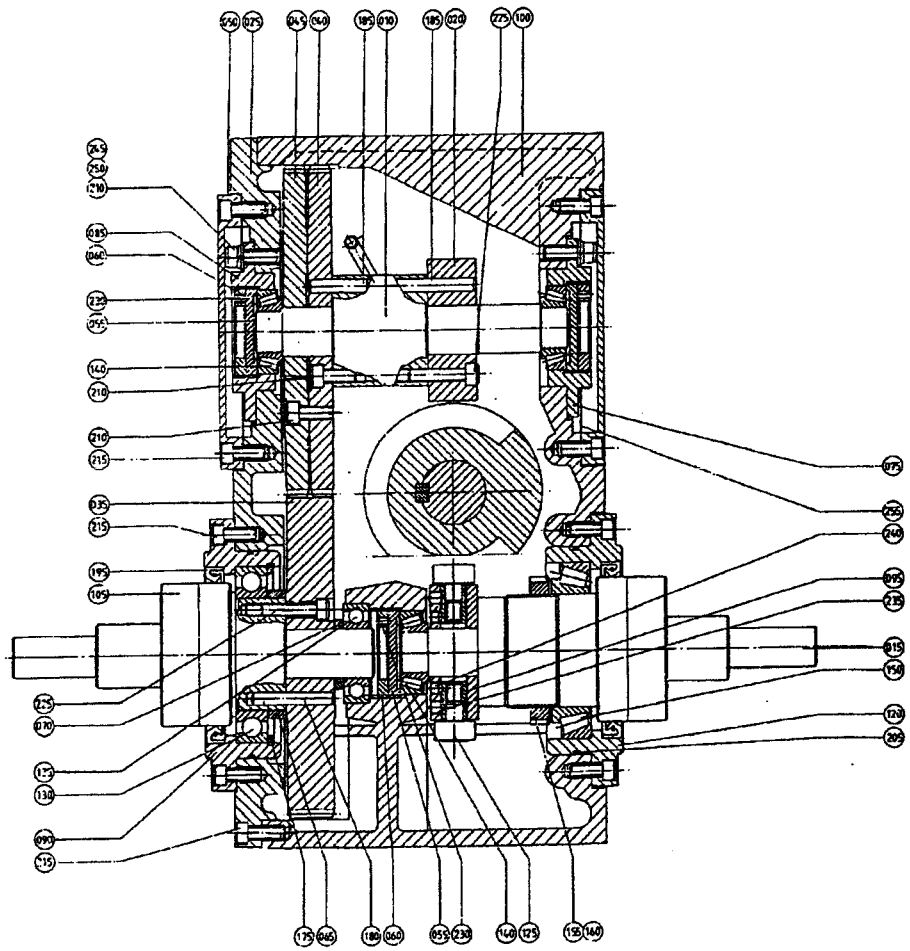

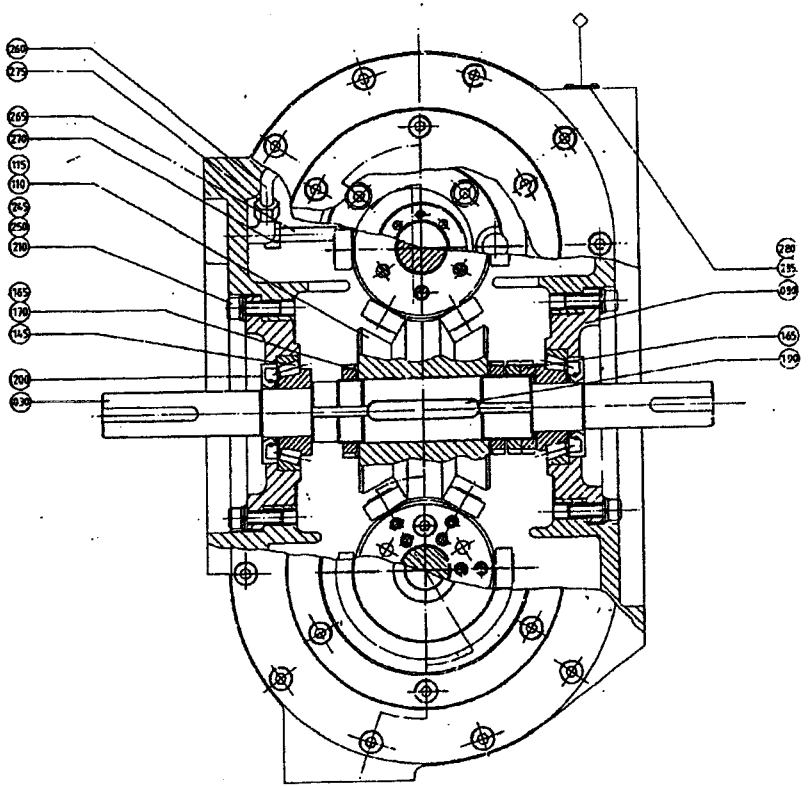

52511702.TIF
525117-2
AM

From	Pos	Part No	SP	UN Qty	Description
		C- 525117-0201			**Indexing Gear, Ass'y**
	010	565322	S	1	INTERMEDIARY SHAFT
	015	565323	S	1	OUTPUT SHAFT, LONG
	020	543704	S	2	INDEXING PLATE
	025	565324	C	1	LID
	030	565325	S	1	INPUT SHAFT
	035	543705	S	1	GEAR WHEEL WIDE
	040	543706	S	1	GEAR WHEEL SLIM , INNER
	045	543707	S	1	GEAR WHEEL SLIM , OUTER
	050	565326	C	2	LID
	055	565327	C	3	RING NUT
	060	565328	C	3	SCREW RING
	065	565329	C	1	SPACER
	070	565330	C	1	SPACER
	075	565331	C	1	BEARING HOLDER
	080	565332	C	2	BEARING HOLDER
	085	565333	C	1	BEARING HOLDER
	090	565334	C	1	BEARING HOLDER
	095	543708	S	12	SLEEVE
	100	565338	C	1	GEAR HOUSING
	105	565336	S	1	OUTPUT SHAFT SHORT
	115	543710	S	1	WORM
	120	565335	C	1	BEARING HOLDER
	125	321580-0150	S	12	CURVE ROLLKR26
	130	321306-0114	S	1	BALL BEARISKF6014
	135	321309-0106	S	1	BALL BEARISKF6206
	140	321361-0105	S	3	ROLLER BEASKF30205
	145	321364-0106	S	2	ROLLER BEASKF31306
	150	90214-0087	S	1	TAPER ROLLER BEARING
	155	312805-0114	S	2	ROUND NUT KM14
	160	315410-0114	S	1	LOCK WASHESKFMB14
	165	312805-0108	S	4	ROUND NUT KM8
	170	315410-0108	S	3	LOCK WASHESKFMB8
	175	315752-0149	S	1	CIRCLIP SGH110
	180	90258-0032	S	9	PIN
	185	311103-0403	S	3	CYLINDRICACP M6 8X25 RFR
	190	315701-0338	S	1	FLAT WEDGE12X8X70
	195	90091-0130	S	2	SEAL RING
	200	315221-0171	S	1	SEAL RING CB30X62X7
	205	315202-0316	S	2	O-RING 124,5X3
	210	312115-0453	-	23	SCREW 8X25 A4 80
	215	312115-0451	-	48	SCREW 8X20 A4 80
	225	312111-0457	-	9	SCREW MC6S8X35FZB
	230	312316-0321	-	3	STOP SCREW SK6SS5X6FZB
	235	312316-0443	-	12	STOP SCREW SK6SS8X8FZB

From	Pos	Part No	SP	UN Qty	Description
	240	90287-0207	-	12	STOP SCREW
	245	315105-0165	-	20	WASHER BRB8,4X16RFR
	250	90062-0049	-	9	LOCK WASHER
	255	90157-0033	S	1	FLANGE SEALING COMPOUND
	260	565339	C	1	OIL PIPE
	265	565340	C	1	OIL LEVEL TUBE
	270	342720-0104	-	1	PIPE COUPLGA-8-1/4"
	275	342730-0104	-	2	ELBOW PIPE WA-8-1/4"
	280	565341	-	1	SIGN BOARD
	285	312502-0122	-	4	DRIVE SCREKDS0X6FNB
	290	90087-0015	-	1	PIPE PLUG

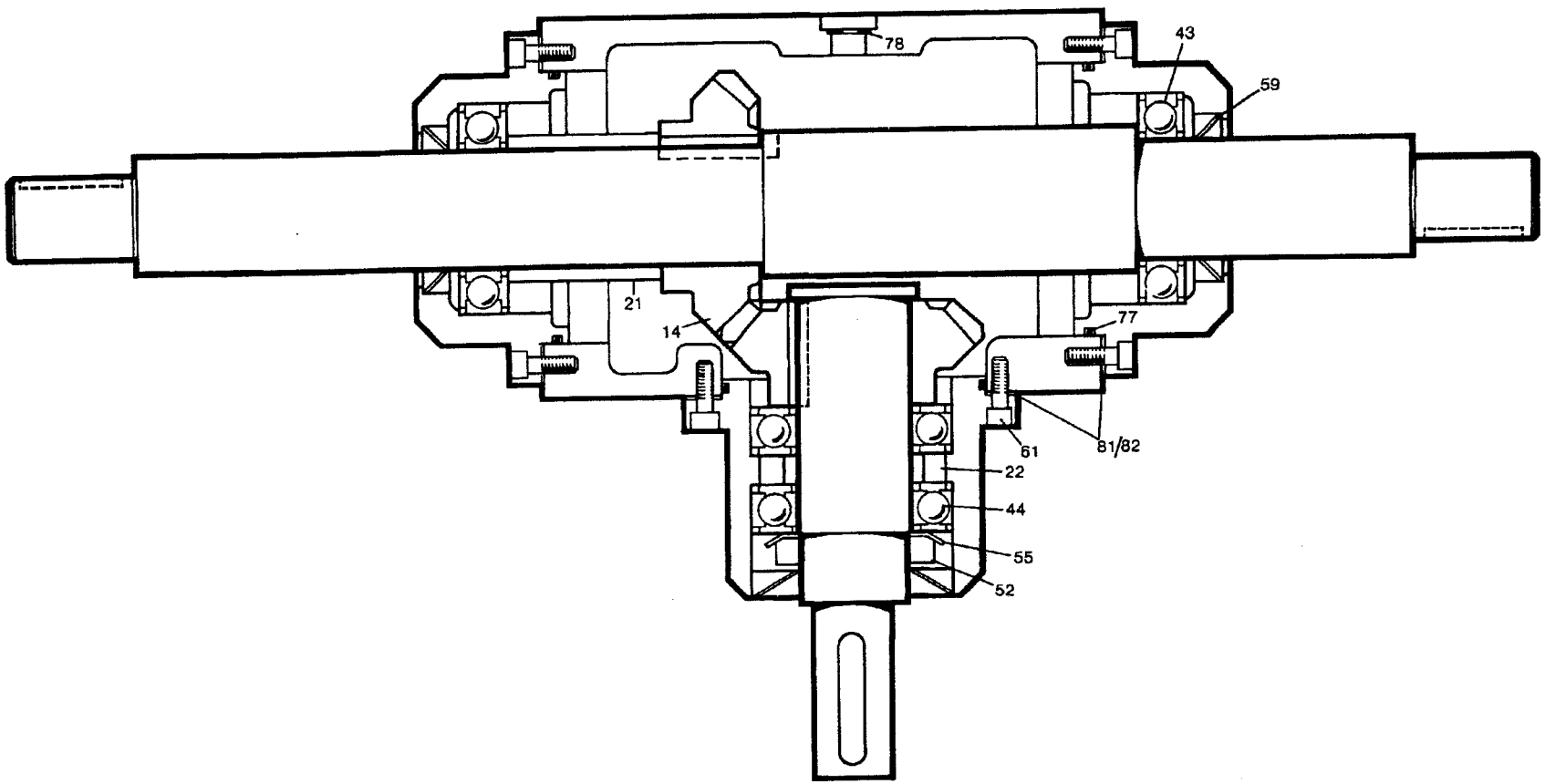

44264602.TIF
442646-2
AM

Last Alteration: AM 16196 91-11-10

Issue: 930607

Corresponding group: 442646-020V
Assembly Drawing: 442646-2

From	Pos	Part No	SP	UN Qty	Description
		C- 442646-0201			**Top Gear, Ass'y**
	001	568070	-	1	GEAR HOUSING
	003	568071	-	2	BEARING SEAT
	007	568072	-	1	BEARING SEAT
	014	443188	S	1	GEAR WHEEL
	018	568073	S	1	SHAFT
	020	568074	S	1	SHAFT
	021	442621	S	1	SPACER
	022	442622	S	1	SPACER
	043	321306-0107	S	2	BALL BEARISKF6007
	044	321306-0107	S	2	BALL BEARISKF6007
	052	312805-0107	S	1	ROUND NUT KM7
	055	315410-0107	S	1	LOCK WASHESKFMB7
	058	90091-0142	S	2	SEAL RING
	059	315221-0171	S	1	SEAL RING CB30X62X7
	061	312111-0368	S	12	SCREW MC6S6X16FZB
	066	315701-0802	S	1	FLAT WEDGE10X8X36
	067	315701-0299	S	1	FLAT WEDGE10X8X32
	068	315701-0268	S	2	FLAT WEDGE8X7X32
	069	315701-0270	S	1	FLAT WEDGE8X7X40
	072	312910-0126	S	2	THREADED I M8X1,5D
	077	90242-0117	S	3	O-RING
	078	90242-0121	S	2	O-RING
	081	443193	S	3	SHIM
	082	443194	S	3	SHIM

From	Pos	Part No	SP	UN Qty	Description

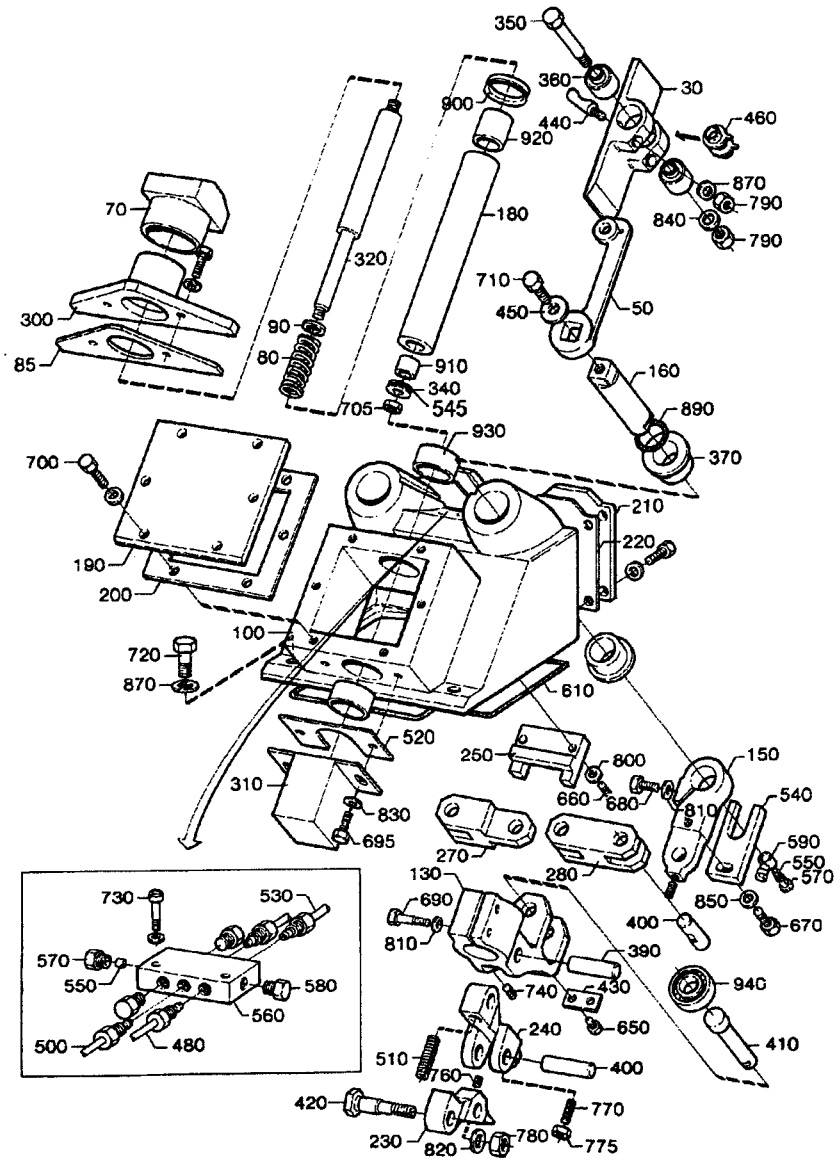

28545602.TIF
285456-2
AM

From	Pos	Part No	SP	UN	Qty	Description
1055ml						
		C- 285456-0301				**Pressure Device, Ass'y**
	030	443114	S		2	FLAP
	050	262906	S		2	ARM
	070	525100	C		1	BLOCKING PIECE
	080	525379	P		1	COMPRESSION SPRING
	085	297496	-		1	LACE
	095	312105-0372	-		2	SCREW M6S6X25RFR
	440	262350-0001	-		4	PEG
1000ml						
		C- 285456-0302				**Pressure Device, Ass'y**
	030	443182	S		2	FLAP
	050	262906	S		2	ARM
	070	525100	C		1	BLOCKING PIECE
	080	525379	P		1	COMPRESSION SPRING
	085	297496	-		1	LACE
	095	312105-0372	-		2	SCREW M6S6X25RFR
	440	262350-0001	-		4	PEG
750ml						
		C- 285456-0303				**Pressure Device, Ass'y**
	030	442984	S		2	FLAP
	050	262906	S		2	ARM
	070	525100	C		1	BLOCKING PIECE
	080	525379	P		1	COMPRESSION SPRING
	085	297496	-		1	LACE
	095	312105-0372	-		2	SCREW M6S6X25RFR
	440	262350-0001	-		4	PEG
568ml						
		C- 285456-0304				**Pressure Device, Ass'y**
	030	442885	S		2	FLAP
	050	262907	S		2	ARM
	070	525100	C		1	BLOCKING PIECE
	080	525379	P		1	COMPRESSION SPRING
	085	297496	-		1	LACE
	095	312105-0372	-		2	SCREW M6S6X25RFR
	440	262350-0001	-		4	PEG
500ml						
		C- 285456-0305				**Pressure Device, Ass'y**
	030	442886	S		2	FLAP
	050	262907	S		2	ARM
	070	525100	C		1	BLOCKING PIECE
	080	525379	P		1	COMPRESSION SPRING
	085	297496	-		1	LACE
	095	312105-0372	-		2	SCREW M6S6X25RFR
	440	262350-0001	-		4	PEG

From	Pos	Part No	SP	UN	Qty	Description
500ml Slim						
		C- 285456-0306				**Pressure Device, Ass'y**
	030	443038	S		2	FLAP
	050	262906	S		2	ARM
	070	525101-0001	C		1	BLOCKING PIECE
	080	268830	P		1	COMPRESSION SPRING
	095	312105-0370	-		2	SCREW M6S6X20RFR
	440	525125	P		4	PEG
375ml						
		C- 285456-0307				**Pressure Device, Ass'y**
	030	443249	S		2	FLAP
	050	G- 442589	S		2	ARM
	070	525101-0002	C		1	BLOCKING PIECE
	080	268830	P		1	COMPRESSION SPRING
	095	312105-0370	-		2	SCREW M6S6X20RFR
	440	262350-0001	-		4	PEG
300ml						
		C- 285456-0308				**Pressure Device, Ass'y**
	030	443351	S		2	FLAP
	050	285449	S		2	ARM
	070	525101-0002	C		1	BLOCKING PIECE
	080	268830	P		1	COMPRESSION SPRING
	095	312105-0370	-		2	SCREW M6S6X20RFR
	440	262350-0001	-		4	PEG
355ml						
		C- 285456-0309				**Pressure Device, Ass'y**
	030	531628	S		2	PRESSURE DEVICE FLAP
	050	285449	S		2	ARM
	070	525101-0001	C		1	BLOCKING PIECE
	080	268830	P		1	COMPRESSION SPRING
	095	312105-0370	-		2	SCREW M6S6X20RFR
	440	525125	P		4	PEG
750ml Slim						
		C- 285456-0310				**Pressure Device, Ass'y**
	030	544289	-		2	FLAP
	050	262906	S		2	ARM
	070	544255	-		1	BLOCKING PIECE
	080	268830	P		1	COMPRESSION SPRING
	085	297496	-		1	LACE
	095	312105-0372	-		2	SCREW M6S6X25RFR
	440	525125	P		4	PEG
1136ml						
		C- 285456-0311				**Pressure Device, Ass'y**
	030	548406	S		2	FLAP
	050	262906	S		2	ARM

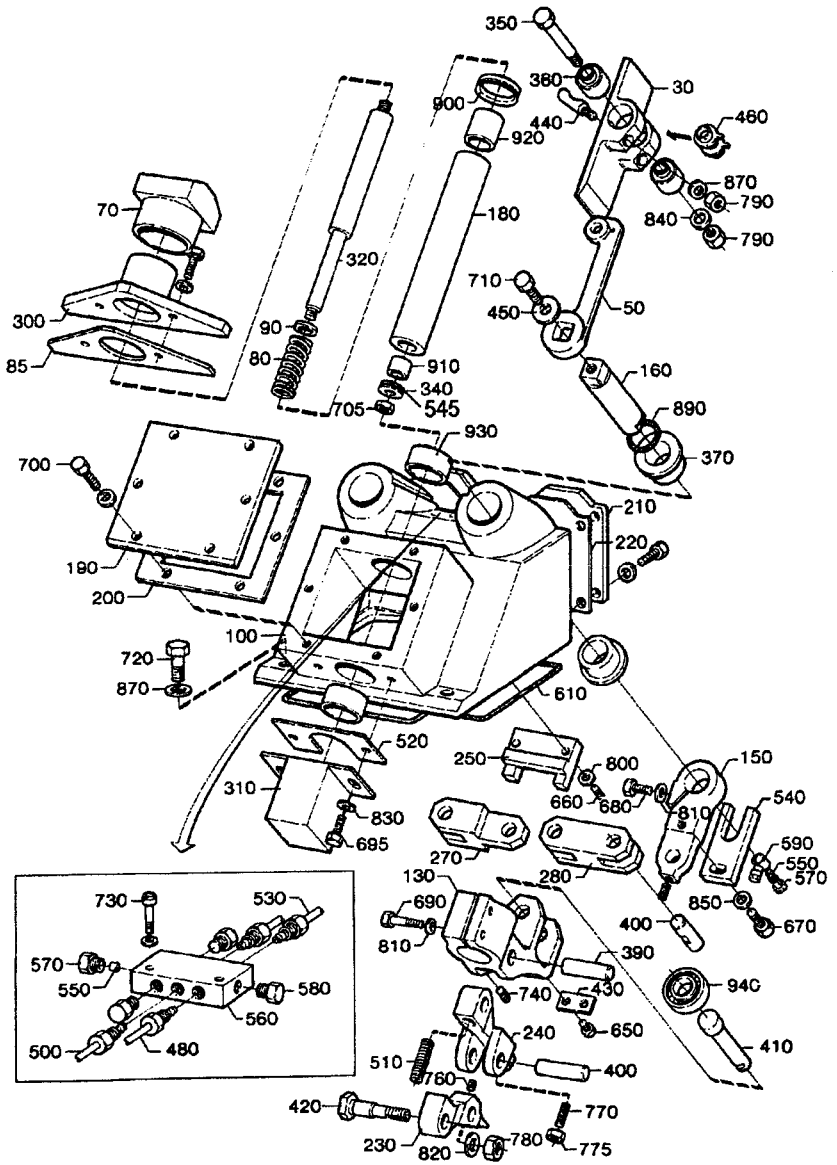

28545602.TIF
285456-2
AM

From	Pos	Part No	SP	UN	Qty	Description
	070	525100	C		1	BLOCKING PIECE
	080	525379	P		1	COMPRESSION SPRING
	085	297496	-		1	LACE
	095	312105-0372	-		2	SCREW M6S6X25RFR
	440	262350-0001	-		4	PEG
1000ml Slim		C- 285456-0312				**Pressure Device, Ass'y**
	030	569111	S		2	FLAP
	050	262906	S		2	ARM
	070	569112	C		1	BLOCKING PIECE
	080	268830	P		1	COMPRESSION SPRING
	085	297496	-		1	LACE
	095	312105-0372	-		2	SCREW M6S6X25RFR
	440	262350-0001	-		4	PEG
Common parts	090	442883	-		2	SPACING WASHER
	100	G- 525335	-		1	HOUSE
	130	262234	S		1	BRACKET
	150	262235	S		2	ARM
	160	262266	S		2	SHAFT
	180	262309	S		1	SLEEVE
	190	262313	-		1	LID
	200	262314	S		1	RUBBER GASKET
	210	262315	-		1	LID
	220	262316	S		1	RUBBER GASKET
	230	262415	S		1	LINK
	240	G- 262610	S		1	LINK
	250	262720	-		1	STEERING
	270	285157	S		1	LINK
	280	285158	S		1	LINK
	300	285448	-		1	PROTECTIVE CASING
	310	442532	-		1	COVER
	320	442882	S		1	SPINDLE
	340	28037	-		1	WASHER
	350	262028-0011	S		2	FITTING BOLT
	360	525367	S		4	SLEEVE
	370	262267	S		4	BUSHING
	390	262322	S		1	SHAFT
	400	262323	S		3	SHAFT
	410	262324	S		1	SHAFT
	420	262325	S		1	SHAFT
	430	262343	S		1	SECURING PLATE
	450	276659	-		2	WASHER
	460	311103-0306	-		4	CYLINDRICACP M6 5X12 RFR
	480	285162	S		1	LUBRICATING PIPE

From	Pos	Part No	SP	UN	Qty	Description
	500	285164	S		2	LUBRICATING PIPE
	510	285970	P		1	COMPRESSION SPRING
	520	442533	S		1	RUBBER GASKET
	530	442560	S		1	LUBRICATING PIPE
	540	442884	S		2	LOCK PLATE
	545	566016	-		1	WASHER
	550	90028-0001	P		3	CONE
	560	90032-0034	P		1	JUNCTION BLOCK
	570	90134-0003	P		3	BUSHING
	580	90136-0002	P		3	PLUG
	590	90137-0005	P		2	PIPE JOINT
	600	90153-0043	-		X	ADHESIVE
	605	90157-0022	S	G	X	SEALING COMPOUND
	610	90161-0001	-	MM	900	STRIP
	620	90296-0009	S		X	GREASE
	650	312101-0362	-		2	SCREW M6S6X8FZB
	660	312101-0372	-		2	SCREW M6S6X25FZB
	670	312101-0453	-		2	SCREW M6S8X25FZB
	680	312101-0457	-		2	SCREW M6S8X35FZB
	690	312101-0459	-		2	SCREW M6S8X40FZB
	695	312105-0368	-		2	SCREW M6S6X16RFR
	700	312105-0368	-		14	SCREW M6S6X16RFR
	705	312105-0447	-		1	SCREW M6S8X12RFR
	710	312105-0449	-		2	SCREW M6S8X16RFR
	720	312105-0453	-		3	SCREW M6S8X25RFR
	730	312111-0293	-		2	SCREW MC6S4X16FZB
	740	312316-0287	-		1	STOP SCREW SK6SS4X8FZB
	760	312316-0362	-		3	STOP SCREW SK6SS6X8FZB
	770	312316-0372	S		1	STOP SCREW SK6SS6X25FZB
	775	312601-0316	-		1	NUT M6M6FZB
	780	312601-0322	-		1	NUT M6M12FZB
	790	312605-0318	-		6	NUT M6M8RFR
	800	315101-0153	-		2	WASHER BRB6,4X12FZB
	810	315101-0165	-		4	WASHER BRB8,4X16FZB
	820	315101-0178	-		1	WASHER BRB13X24FZB
	830	315105-0153	-		20	WASHER BRB6,4X12RFR
	840	315105-0165	-		2	WASHER BRB8,4X16RFR
	850	315111-0165	-		2	WASHER TBRB8,4X16FZB
	870	315115-0165	-		7	WASHER TBRB8,4X16RFR
	890	315202-0217	S		2	O-RING 24,2X3
	900	315220-0175	S		1	SEAL RING V-35S
	910	321120-0122	S		1	BUSHING 15/17X15
	920	321120-0160	S		1	BUSHING 25/28X30
	930	321120-0183	S		2	BUSHING 35/39X20
	940	321306-0104	S		1	BALL BEARISKF6004

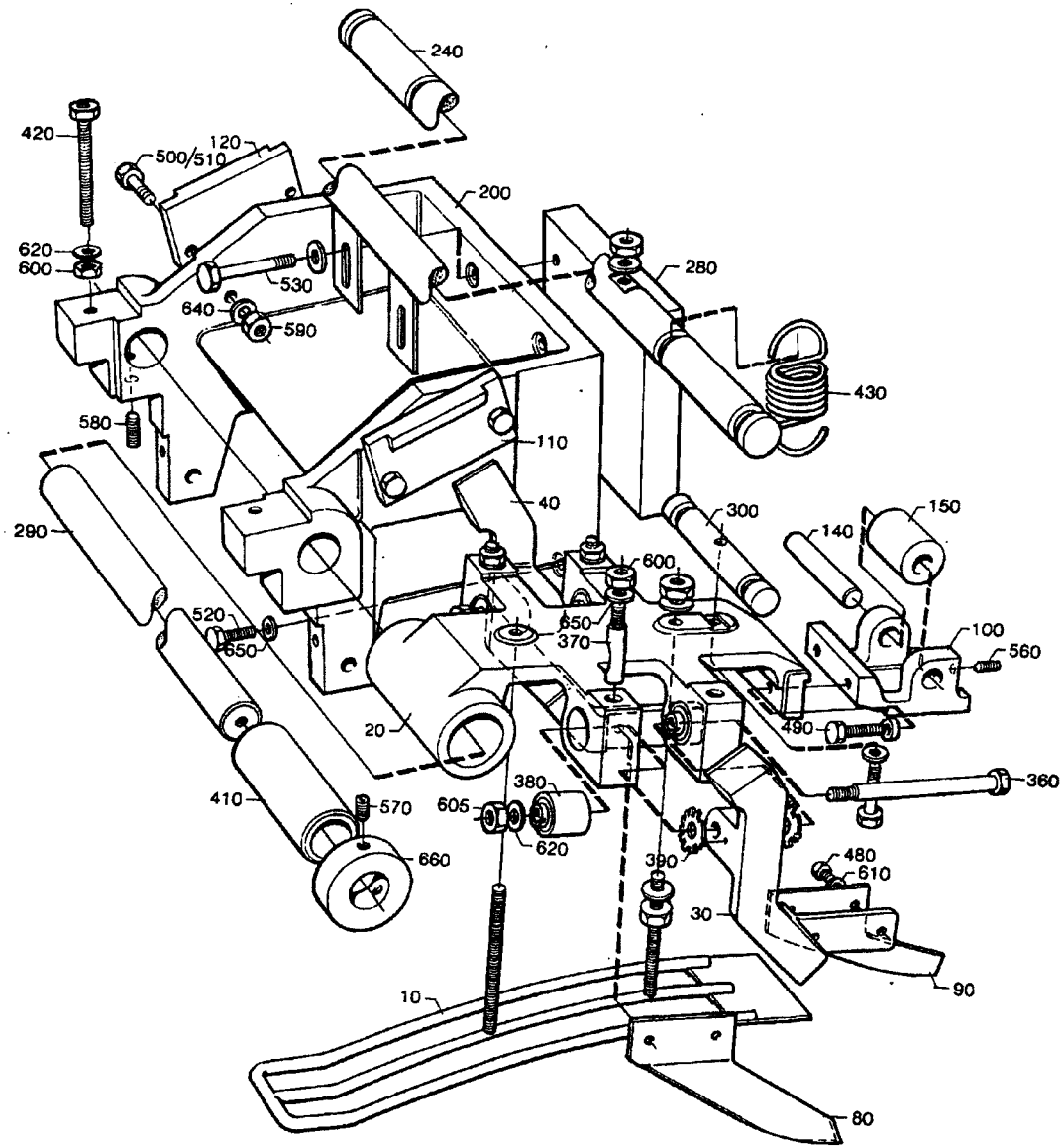

28573602.TIF
285736-2
AM

From	Pos	Part No	SP	UN	Qty	Description
1000ml LoFin						
		C- 285736-0301				**Pull-Down Device, Ass'y**
	010	262970	C		2	RAIL
	020	285655	C		2	ARM
	030	285656	C		2	ARM
	040	285657	C		2	ARM
	080	443021	C		2	SHEET
	090	443022	C		2	SHEET
	100	525211	C		2	PLATE
	140	262427-0001	S		2	SHAFT
	150	443487	S		2	ROLL
		90242-0054			2	* O-RING
568ml						
		C- 285736-0302				**Pull-Down Device, Ass'y**
	010	262970	C		2	RAIL
	020	285655	C		2	ARM
	030	285656	C		2	ARM
	040	285657	C		2	ARM
	080	442909-0001	C		2	SHEET
	090	442910-0001	C		2	SHEET
	100	525429	-		2	PLATE
	140	262427-0001	S		2	SHAFT
	150	443487	S		2	ROLL
		90242-0054			2	* O-RING
500ml						
		C- 285736-0303				**Pull-Down Device, Ass'y**
	010	262970	C		2	RAIL
	020	285655	C		2	ARM
	030	285656	C		2	ARM
	040	285657	C		2	ARM
	080	525066	C		2	SHEET
	090	525067	C		2	SHEET
	100	525429	-		2	PLATE
	140	262427-0001	S		2	SHAFT
	150	443487	S		2	ROLL
		90242-0054			2	* O-RING
300ml						
		C- 285736-0304				**Pull-Down Device, Ass'y**
	010	285724-0002	C		2	RAIL
	020	285723	C		2	ARM
	030	285660	C		2	ARM
	040	285661	C		2	ARM
	080	525068	C		2	SHEET
	090	525069	C		2	SHEET
	100	525234-0002	C		2	PLATE
	140	262427-0002	S		2	SHAFT
	150	443488	S		2	ROLL
		90242-0054			2	* O-RING
500ml Slim						
		C- 285736-0311				**Pull-Down Device, Ass'y**
	010	285712	C		2	RAIL
	020	285723	C		2	ARM
	030	285656	C		2	ARM
	040	285657	C		2	ARM
	080	443023	C		2	SHEET
	090	443024	C		2	SHEET
	100	525212	C		2	PLATE
	140	262427-0005	S		2	SHAFT
	150	443487	S		2	ROLL
		90242-0054			2	* O-RING
375ml						
		C- 285736-0312				**Pull-Down Device, Ass'y**
	010	285724-0002	C		2	RAIL
	020	285723	C		2	ARM
	030	285660	C		2	ARM
	040	285661	C		2	ARM
	080	443027	C		2	SHEET
	090	443028	C		2	SHEET
	100	525234-0002	C		2	PLATE
	140	262427-0002	S		2	SHAFT
	150	443488	S		2	ROLL
		90242-0054			2	* O-RING
750ml						
		C- 285736-0313				**Pull-Down Device, Ass'y**
	010	262970	C		2	RAIL
	020	285655	C		2	ARM
	030	285656	C		2	ARM
	040	285657	C		2	ARM
	080	442979	C		2	SHEET
	090	442980	C		2	SHEET
	100	525429	-		2	PLATE
	140	262427-0001	S		2	SHAFT
	150	443487	S		2	ROLL
		90242-0054			2	* O-RING
1055ml						
		C- 285736-0314				**Pull-Down Device, Ass'y**
	010	262970	C		2	RAIL
	020	285655	C		2	ARM
	030	285656	C		2	ARM
	040	285657	C		2	ARM

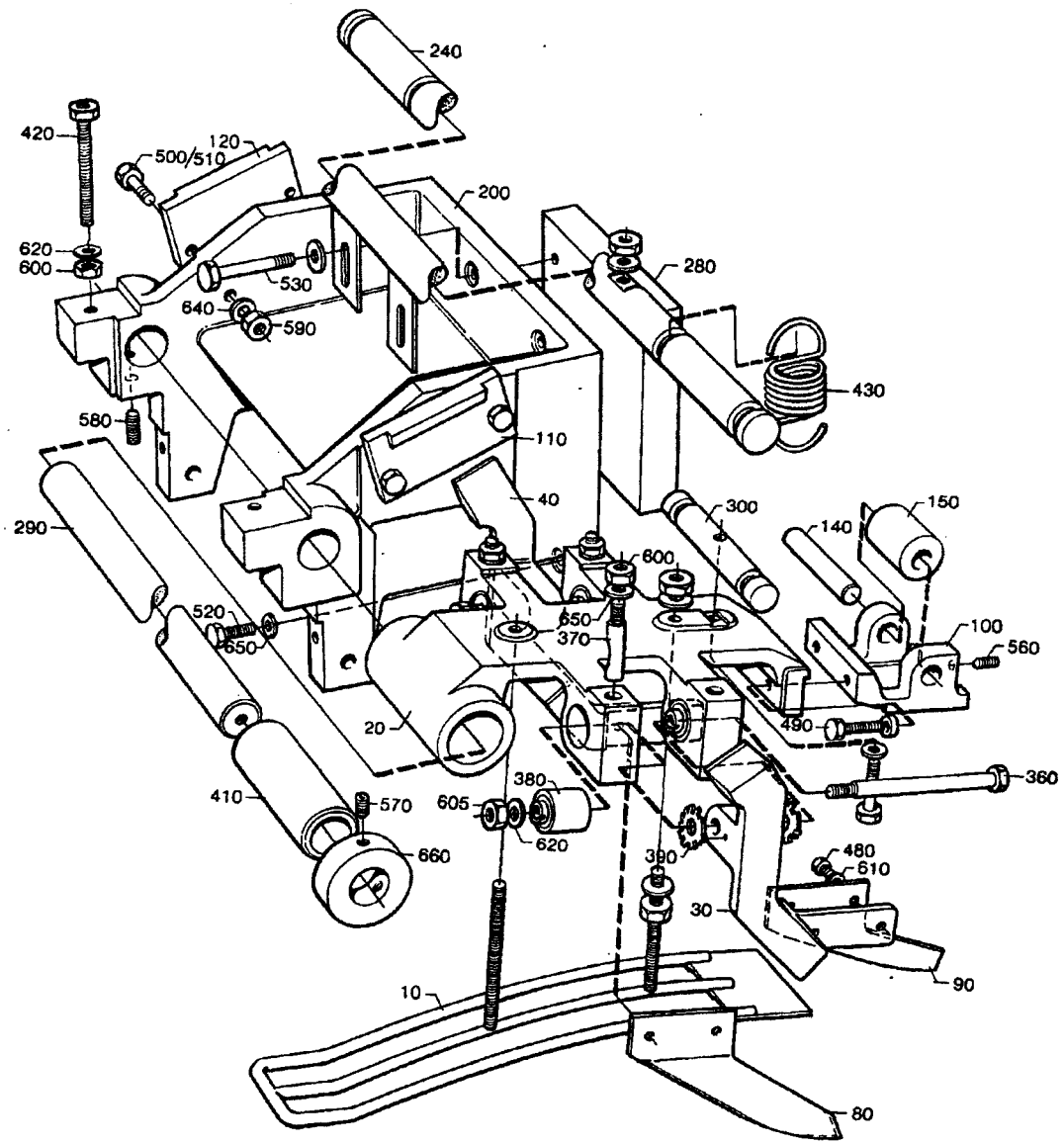

28573602.TIF
285736-2
AM

From	Pos	Part No	SP	UN	Qty	Description
	080	443137	C		2	SHEET
	090	443138	C		2	SHEET
	100	525211	C		2	PLATE
	140	262427-0001	S		2	SHAFT
	150	443487	S		2	ROLL
		90242-0054			2	* O-RING
1000ml HiFin						
		C- 285736-0315				**Pull-Down Device, Ass'y**
	010	262970	C		2	RAIL
	020	285655	C		2	ARM
	030	285656	C		2	ARM
	040	285657	C		2	ARM
	080	443021	C		2	SHEET
	090	443022	C		2	SHEET
	100	443348	C		2	PLATE
	140	262427-0001	S		2	SHAFT
	150	443487	S		2	ROLL
		90242-0054			2	* O-RING
355ml						
		C- 285736-0316				**Pull-Down Device, Ass'y**
	010	285712	C		2	RAIL
	020	285723	C		2	ARM
	030	285656	C		2	ARM
	040	285657	C		2	ARM
	080	527854	C		2	PLATE RIGHT
	090	527856	C		2	PLATE LEFT
	100	525212	C		2	PLATE
	140	262427-0005	S		2	SHAFT
	150	443487	S		2	ROLL
		90242-0054			2	* O-RING
750ml Slim						
		C- 285736-0317				**Pull-Down Device, Ass'y**
	010	544290	C		2	RAIL
	020	285723	C		2	ARM
	030	285656	C		2	ARM
	040	285657	C		2	ARM
	080	544288	-		2	SHEET
	090	544280	-		2	SHEET
	100	544291	-		2	PLATE
	140	262427-0006	-		2	SHAFT
	150	443487	S		2	ROLL
		90242-0054			2	* O-RING
1136ml						
		C- 285736-0318				**Pull-Down Device, Ass'y**
	010	262970	C		2	RAIL
	020	285655	C		2	ARM
	030	285656	C		2	ARM
	040	285657	C		2	ARM
	080	543701	-		2	SHEET
	090	543702	-		2	SHEET
	100	525211	C		2	PLATE
	140	262427-0001	S		2	SHAFT
	150	443487	S		2	ROLL
		90242-0054			2	* O-RING
1000ml Slim						
		C- 285736-0319				**Pull-Down Device, Ass'y**
	010	544290	C		2	RAIL
	020	285723	C		2	ARM
	030	285656	C		2	ARM
	040	285657	C		2	ARM
	080	569115	C		2	SHEET
	090	569116	C		2	SHEET
	100	569114	C		2	PLATE
	140	262427-0007	S		2	SHAFT
	150	443487	S		2	ROLL
		90242-0054			2	* O-RING
Common parts						
	110	442564	S		1	CURVE
	120	442565	S		1	CURVE
	200	262924	-		1	CANTILEVER
	240	297643	-		1	BRACKET
	280	285444	-		1	SPACER
	290	285664	-		1	SHAFT
	300	297644	-		2	SHAFT
	360	262028-0002	S		4	FITTING BOLT
	370	262179-0001	-		8	PEG
	380	262183	S		8	BUSHING
	390	276664	-		8	WASHER
	410	285729	S		2	BUSHING
	420	443313	-		2	STUD SCREW
	430	297567	S		4	TENSION SPRING
	440	90165-0057	-		1	CLIP
	480	312105-0366	-		8	SCREW M6S6X12RFR
	490	312105-0372	-		4	SCREW M6S6X25RFR
	500	312105-0374	-		2	SCREW M6S6X30RFR
	510	312105-0376	-		4	SCREW M6S6X35RFR
	520	312105-0453	-		2	SCREW M6S8X25RFR
	530	312105-0460	-		2	SCREW M6S8X45RFR
	540	312125-0291	-		1	SLOTTED HEMCS4X12RFR
	560	312318-0370	-		2	STOP SCREW SK6SS6X20RFR

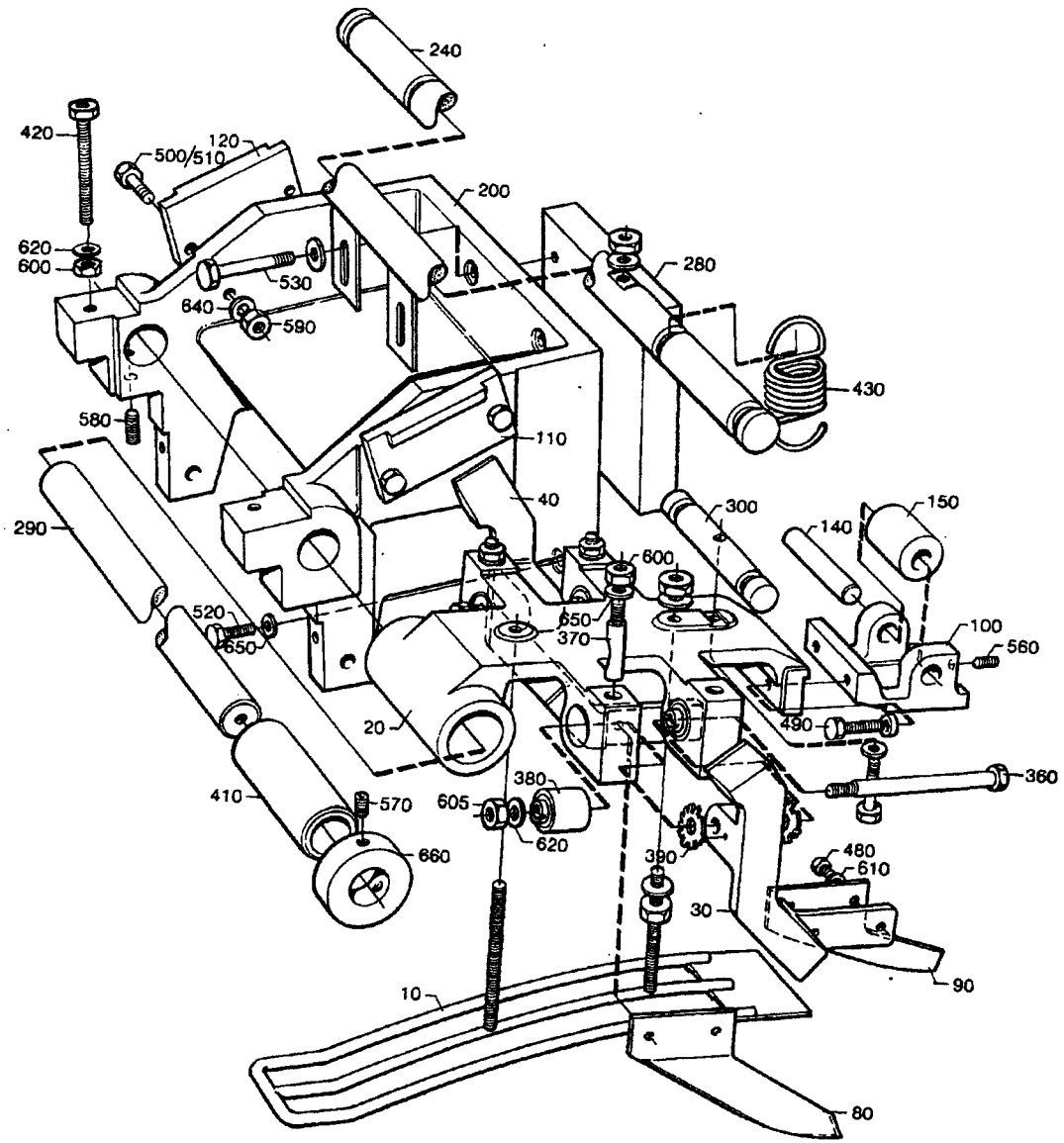

28573602.TIF
285736-2
AM

From	Pos	Part No	SP	UN	Qty	Description
	570	312318-0443	-		4	STOP SCREW SK6SS8X8RFR
	580	312318-0449	-		2	STOP SCREW SK6SS8X16RFR
	590	312605-0316	-		4	NUT M6M6RFR
	600	312605-0318	-		24	NUT M6M8RFR
	610	315105-0153	-		8	WASHER BRB6,4X12RFR
	620	315105-0165	-		6	WASHER BRB8,4X16RFR
	640	315115-0153	-		14	WASHER TBRB6,4X12RFR
	650	315115-0165	-		22	WASHER TBRB8,4X16RFR
	660	315742-0119	-		4	RETAINING 25SMS199RFR

From	Pos	Part No	SP	UN	Qty	Description

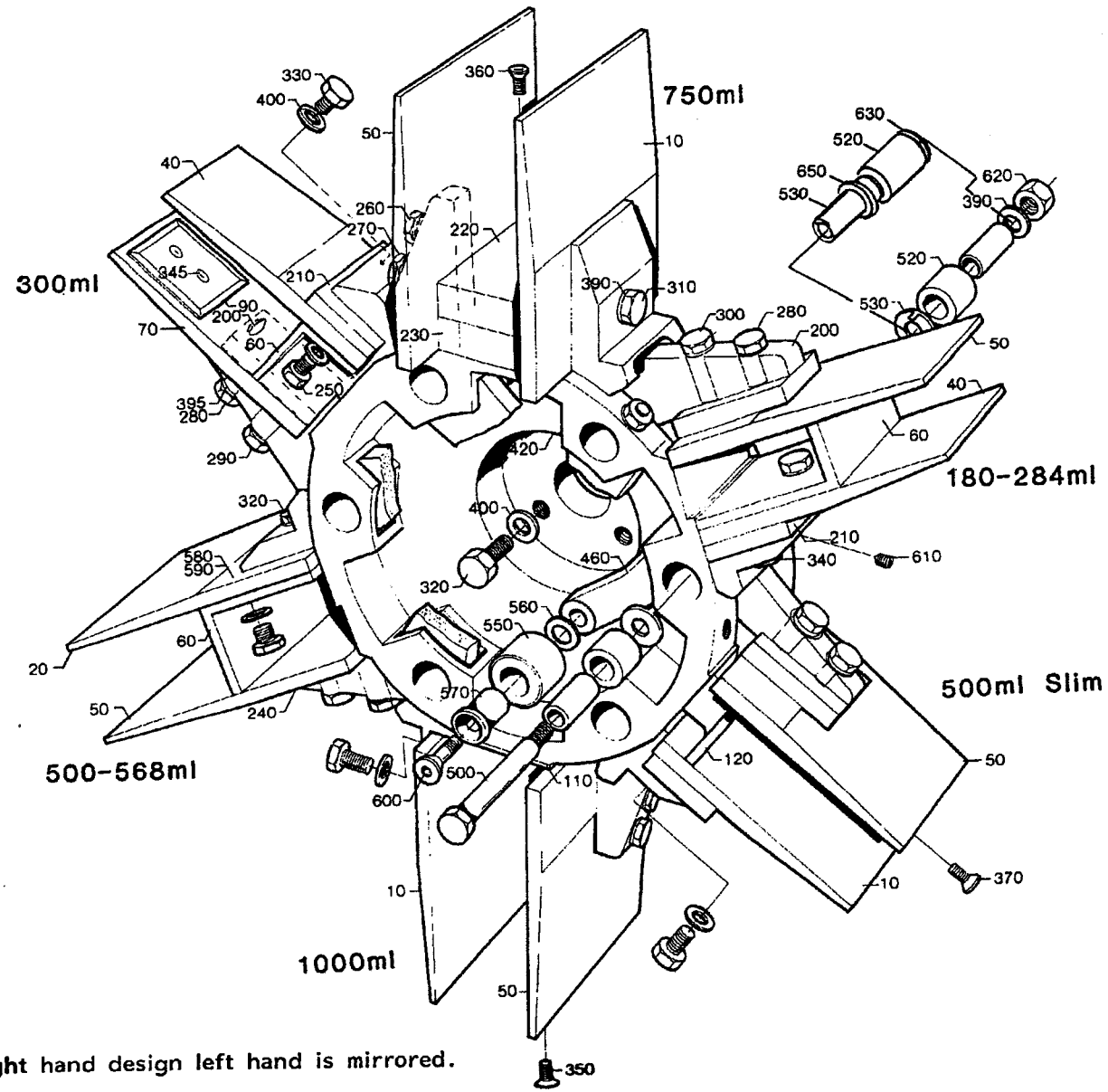

The Illustration shows right hand design left hand is mirrored.

29768101.TIF
297681-1
AM

From	Pos	Part No	SP	UN	Qty	Description
1000ml LoFin		**C- 297681-0301**				**Wheel Left, Ass'y**
	010	525453	S		6	FLAP
	050	285310-0001	S		6	FLAP
	110	443076	C		6	BOTTOM
	260	312105-0374	P		6	SCREW M6S6X30RFR
	270	312105-0376	P		6	SCREW M6S6X35RFR
	310	312105-0453	P		6	SCREW M6S8X25RFR
	320	312105-0457	P		3	SCREW M6S8X35RFR
	350	312155-0368	P		6	SCREW MF6S6X16RFR
	380	315105-0153	P		12	WASHER BRB6,4X12RFR
	390	315105-0165	P		30	WASHER BRB8,4X16RFR
	400	315115-0165	P		3	WASHER TBRB8,4X16RFR
	420	G- 525450	C		1	HUB
750ml		**C- 297681-0302**				**Wheel Left, Ass'y**
	010	525453	S		6	FLAP
	050	285310-0001	S		6	FLAP
	220	525264	C		6	BOTTOM
	230	297650	C		6	BOTTOM
	240	442981	-		6	SHIM
	260	312105-0374	P		6	SCREW M6S6X30RFR
	270	312105-0376	P		6	SCREW M6S6X35RFR
	310	312105-0453	P		6	SCREW M6S8X25RFR
	320	312105-0457	P		3	SCREW M6S8X35RFR
	360	312155-0376	P		18	SCREW MF6X35RFR
	380	315105-0153	P		12	WASHER BRB6,4X12RFR
	390	315105-0165	P		30	WASHER BRB8,4X16RFR
	400	315115-0165	P		3	WASHER TBRB8,4X16RFR
	420	G- 525450	C		1	HUB
568ml		**C- 297681-0303**				**Wheel Left, Ass'y**
	020	525455	S		6	FLAP
	050	285310-0001	S		6	FLAP
	060	525368	C		6	BOTTOM
	240	442981	-		6	SHIM
	250	312105-0368	P		6	SCREW M6S6X16RFR
	260	312105-0374	P		6	SCREW M6S6X30RFR
	280	312105-0378	P		6	SCREW M6S6X40RFR
	320	312105-0457	P		9	SCREW M6S8X35RFR
	380	315105-0153	P		18	WASHER BRB6,4X12RFR
	390	315105-0165	P		24	WASHER BRB8,4X16RFR
	400	315115-0165	P		9	WASHER TBRB8,4X16RFR
	420	G- 525450	C		1	HUB

From	Pos	Part No	SP	UN	Qty	Description
500ml		**C- 297681-0304**				**Wheel Left, Ass'y**
	020	525455	S		6	FLAP
	050	285310-0001	S		6	FLAP
	060	525369	C		6	BOTTOM
	240	442981	-		6	SHIM
	250	312105-0368	P		6	SCREW M6S6X16RFR
	260	312105-0374	P		6	SCREW M6S6X30RFR
	280	312105-0378	P		6	SCREW M6S6X40RFR
	320	312105-0457	P		9	SCREW M6S8X35RFR
	380	315105-0153	P		18	WASHER BRB6,4X12RFR
	390	315105-0165	P		24	WASHER BRB8,4X16RFR
	400	315115-0165	P		9	WASHER TBRB8,4X16RFR
	420	G- 525450	C		1	HUB
500ml Slim		**C- 297681-0305**				**Wheel Left, Ass'y**
	010	525456	S		6	FLAP
	050	285310-0002	S		6	FLAP
	120	525370	C		6	BOTTOM
	200	285316-0002	S		6	SPACER PIECE
	210	525461	S		6	SPACER PIECE
	280	312105-0378	P		6	SCREW M6S6X40RFR
	290	312105-0379	P		6	SCREW M6S6X45RFR
	320	312105-0457	P		9	SCREW M6S8X35RFR
	370	312155-0378	P		6	SCREW MF6S6X40RFR
	380	315105-0153	P		12	WASHER BRB6,4X12RFR
	390	315105-0165	P		24	WASHER BRB8,4X16RFR
	395	315115-0153	P		6	WASHER TBRB6,4X12RFR
	400	315115-0165	P		9	WASHER TBRB8,4X16RFR
	420	G- 525450	C		1	HUB
300ml		**C- 297681-0306**				**Wheel Left, Ass'y**
	040	525459	-		6	FLAP
	060	525373	C		6	BOTTOM
	070	297646	S		6	FLAP
	200	285316-0002	S		6	SPACER PIECE
	210	525461	S		6	SPACER PIECE
	250	312105-0368	P		6	SCREW M6S6X16RFR
	280	312105-0378	P		6	SCREW M6S6X40RFR
	290	312105-0379	P		6	SCREW M6S6X45RFR
	320	312105-0457	P		3	SCREW M6S8X35RFR
	330	312105-0459	P		6	SCREW M6S8X40RFR
	380	315105-0153	P		12	WASHER BRB6,4X12RFR
	390	315105-0165	P		24	WASHER BRB8,4X16RFR
	395	315115-0153	P		6	WASHER TBRB6,4X12RFR

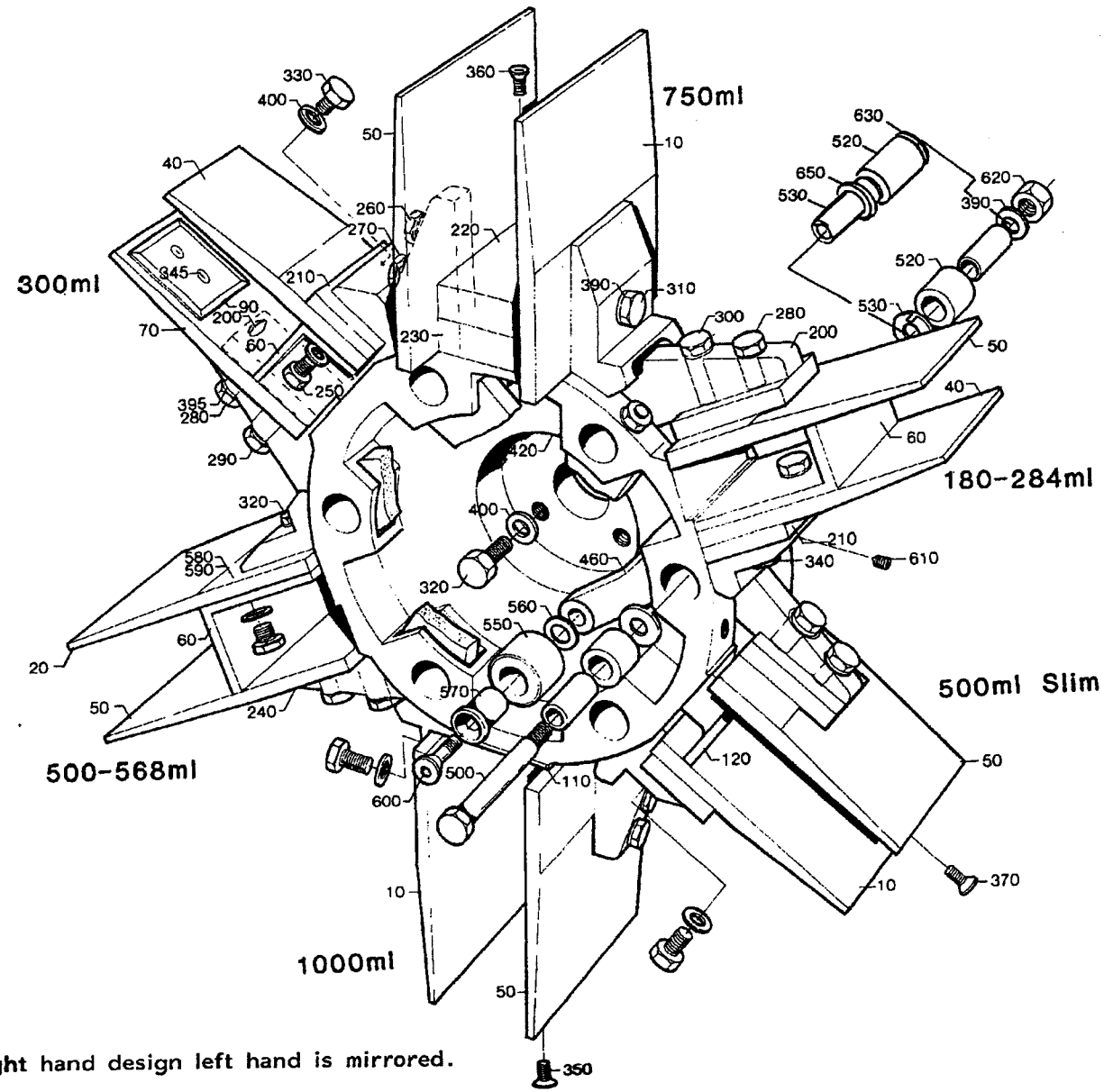

The Illustration shows right hand design left hand is mirrored.

29768101.TIF
297681-1
AM

From	Pos	Part No	SP	UN	Qty	Description
	400	315115-0165	P		9	WASHER TBRB8,4X16RFR
	420	G- 525450	C		1	HUB
375ml						
		C- 297681-0313				**Wheel Left, Ass'y**
	040	525430	-		6	FLAP
	060	525372	-		6	BOTTOM
	070	297646	S		6	FLAP
	200	285316-0002	S		6	SPACER PIECE
	210	525461	S		6	SPACER PIECE
	250	312105-0368	P		12	SCREW M6S6X16RFR
	280	312105-0378	P		6	SCREW M6S6X40RFR
	290	312105-0379	P		6	SCREW M6S6X45RFR
	320	312105-0457	P		3	SCREW M6S8X35RFR
	330	312105-0459	P		6	SCREW M6S8X40RFR
	380	315105-0153	P		18	WASHER BRB6,4X12RFR
	390	315105-0165	P		24	WASHER BRB8,4X16RFR
	395	315115-0153	P		6	WASHER TBRB6,4X12RFR
	400	315115-0165	P		9	WASHER TBRB8,4X16RFR
	420	G- 525450	C		1	HUB
1055ml						
		C- 297681-0314				**Wheel Left, Ass'y**
	010	525452	S		6	FLAP
	050	443116	S		6	FLAP
	110	443076	C		6	BOTTOM
	260	312105-0374	P		6	SCREW M6S6X30RFR
	270	312105-0376	P		6	SCREW M6S6X35RFR
	310	312105-0453	P		6	SCREW M6S8X25RFR
	320	312105-0457	P		3	SCREW M6S8X35RFR
	350	312155-0368	P		6	SCREW MF6S6X16RFR
	380	315105-0153	P		12	WASHER BRB6,4X12RFR
	390	315105-0165	P		30	WASHER BRB8,4X16RFR
	400	315115-0165	P		3	WASHER TBRB8,4X16RFR
	420	G- 525448	C		1	HUB
1000ml HiFin						
		C- 297681-0315				**Wheel Left, Ass'y**
	010	525453	S		6	FLAP
	050	285310-0001	S		6	FLAP
	110	525063	C		6	BOTTOM
	260	312105-0374	P		6	SCREW M6S6X30RFR
	270	312105-0376	P		6	SCREW M6S6X35RFR
	310	312105-0453	P		6	SCREW M6S8X25RFR
	320	312105-0457	P		3	SCREW M6S8X35RFR
	350	312155-0368	P		6	SCREW MF6S6X16RFR
	380	315105-0153	P		12	WASHER BRB6,4X12RFR
	390	315105-0165	P		30	WASHER BRB8,4X16RFR

From	Pos	Part No	SP	UN	Qty	Description
	400	315115-0165	P		3	WASHER TBRB8,4X16RFR
	420	G- 525450	C		1	HUB
355ml						
		C- 297681-0316				**Wheel Left, Ass'y**
	010	525458	S		6	FLAP
	050	285310-0002	S		6	FLAP
	120	525371	C		6	BOTTOM
	200	285316-0002	S		6	SPACER PIECE
	210	525461	S		6	SPACER PIECE
	250	312105-0368	P		6	SCREW M6S6X16RFR
	280	312105-0378	P		6	SCREW M6S6X40RFR
	290	312105-0379	P		6	SCREW M6S6X45RFR
	320	312105-0457	P		9	SCREW M6S8X35RFR
	380	315105-0153	P		12	WASHER BRB6,4X12RFR
	390	315105-0165	P		24	WASHER BRB8,4X16RFR
	395	315115-0153	P		6	WASHER TBRB6,4X12RFR
	400	315115-0165	P		9	WASHER TBRB8,4X16RFR
	420	G- 525450	C		1	HUB
750ml Slim						
		C- 297681-0317				**Wheel Left, Ass'y**
	010	525454	-		6	FLAP
	050	544252	S		6	FLAP
	110	544254	C		6	PLATE
	200	543697	-		6	SPACER PIECE
	210	525460	-		6	SPACER PIECE
	270	312105-0376	P		6	SCREW M6S6X35RFR
	280	312105-0378	P		6	SCREW M6S6X40RFR
	315	312105-0455	P		6	SCREW M6S8X30RFR
	320	312105-0457	P		3	SCREW M6S8X35RFR
	350	312155-0368	P		6	SCREW MF6S6X16RFR
	380	315105-0153	P		12	WASHER BRB6,4X12RFR
	390	315105-0165	P		30	WASHER BRB8,4X16RFR
	400	315115-0165	P		3	WASHER TBRB8,4X16RFR
	420	G- 525448	C		1	HUB
1136ml						
		C- 297681-0318				**Wheel Left, Ass'y**
	010	525451	S		6	FLAP
	050	550149	S		6	FLAP
	110	550235	C		6	BOTTOM
	260	312105-0374	P		6	SCREW M6S6X30RFR
	270	312105-0376	P		6	SCREW M6S6X35RFR
	310	312105-0453	P		6	SCREW M6S8X25RFR
	320	312105-0457	P		3	SCREW M6S8X35RFR
	350	312155-0368	P		6	SCREW MF6S6X16RFR
	380	315105-0153	P		12	WASHER BRB6,4X12RFR

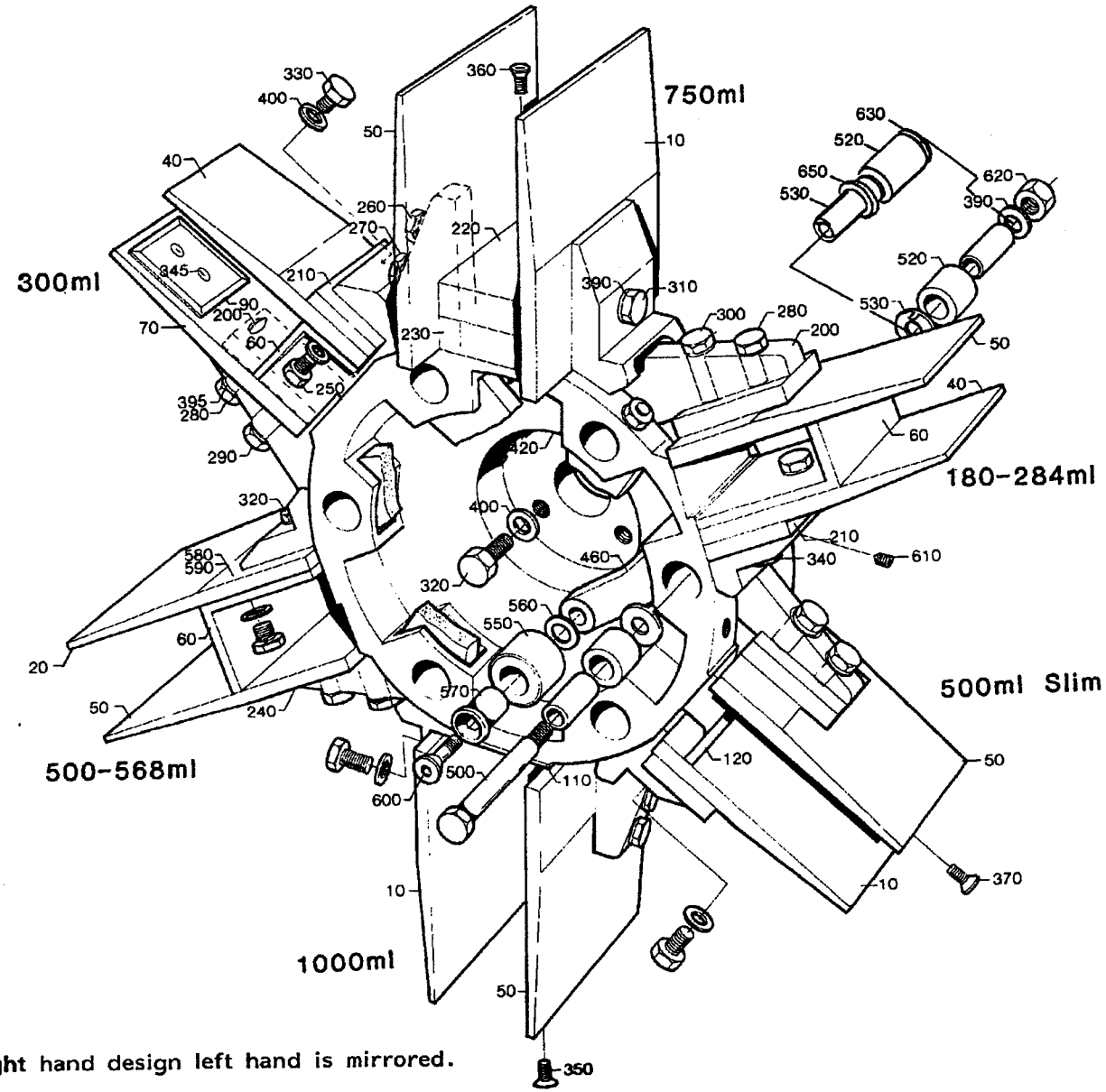

The Illustration shows right hand design left hand is mirrored.

29768101.TIF
297681-1
AM

From	Pos	Part No	SP	UN	Qty	Description
	390	315105-0165	P		30	WASHER BRB8,4X16RFR
	400	315115-0165	P		3	WASHER TBRB8,4X16RFR
	420	G- 525446	C		1	HUB
1000ml Slim						
		C- 297681-0319				**Wheel Left, Ass'y**
	010	569117	S		6	FLAP
	050	569118	S		6	FLAP
	110	569119	C		6	BOTTOM
	270	312105-0376	P		6	SCREW M6S6X35RFR
	280	312105-0378	P		6	SCREW M6S6X40RFR
	310	312105-0453	P		6	SCREW M6S8X25RFR
	350	312155-0368	P		6	SCREW MF6S6X16RFR
	390	315105-0165	P		30	WASHER BRB8,4X16RFR
	395	315115-0153	P		12	WASHER TBRB6,4X12RFR
	420	G- 525446	C		1	HUB
Common parts						
	460	G- 565967	S		6	ARM
	500	262028-0001	S		6	FITTING BOLT
	510	262179-0001	S		12	PEG
	520	525329	S		12	SLEEVE
	530	525330	S		12	SHAFT
	550	285321	S		6	ROLL
	560	285322	S		6	WASHER
	570	442563	S		6	AXLE PIN
	580	442894	-		X	SHIM
	590	442939	-		X	SHIM
	600	312155-0499	-		6	SCREW MF6S10X40RFR
	610	312109-0459	S		2	SCREW M6S8X40H A4 80
	620	312605-0318	-		18	NUT M6M8RFR
	630	315105-0173	-		12	WASHER BRB10,5X22RFR
	650	321111-0185	S		24	FLANGE BUS 14E7X14

From	Pos	Part No	SP	UN	Qty	Description

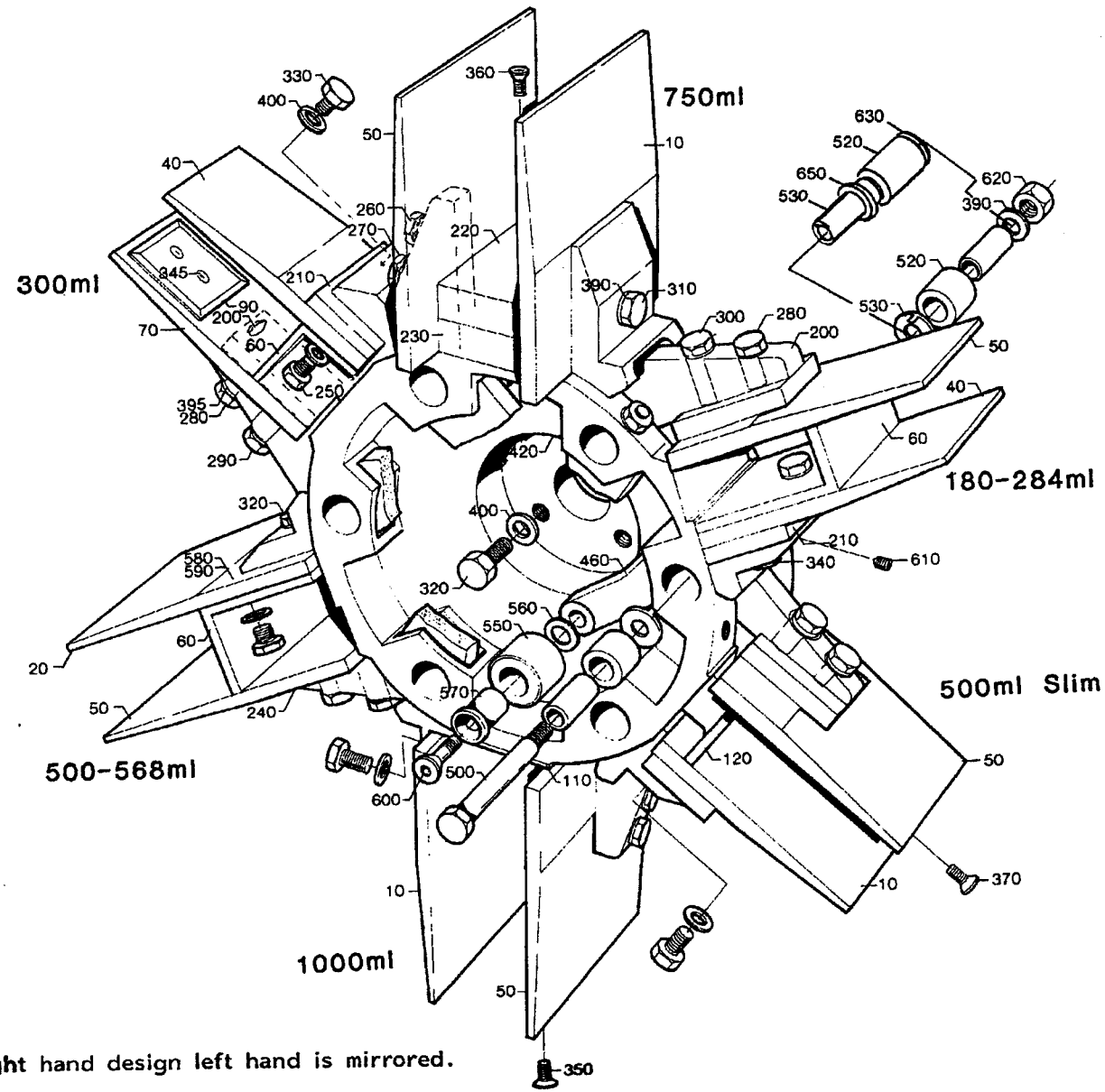

The illustration shows right hand design left hand is mirrored.

29768201.TIF
297682-1
AM

From	Pos	Part No	SP	UN	Qty	Description
1000ml LoFin						
		C- 297682-0301				Wheel Right, Ass'y
	010	525453	S		6	FLAP
	050	285310-0001	S		6	FLAP
	110	443076	C		6	BOTTOM
	260	312105-0374	-		6	SCREW M6S6X30RFR
	270	312105-0376	P		6	SCREW M6S6X35RFR
	310	312105-0453	P		6	SCREW M6S8X25RFR
	320	312105-0457	P		3	SCREW M6S8X35RFR
	350	312155-0368	P		6	SCREW MF6S6X16RFR
	380	315105-0153	P		12	WASHER BRB6,4X12RFR
	390	315105-0165	P		30	WASHER BRB8,4X16RFR
	400	315115-0165	P		3	WASHER TBRB8,4X16RFR
	420	G- 525449	C		1	HUB
750ml						
		C- 297682-0302				**Wheel Right, Ass'y**
	010	525453	S		6	FLAP
	050	285310-0001	S		6	FLAP
	220	525264	C		6	BOTTOM
	230	297650	C		6	BOTTOM
	240	442981	-		6	SHIM
	260	312105-0374	-		6	SCREW M6S6X30RFR
	270	312105-0376	P		6	SCREW M6S6X35RFR
	310	312105-0453	P		6	SCREW M6S8X25RFR
	320	312105-0457	P		3	SCREW M6S8X35RFR
	360	312155-0376	P		18	SCREW MF6X35RFR
	380	315105-0153	P		12	WASHER BRB6,4X12RFR
	390	315105-0165	P		30	WASHER BRB8,4X16RFR
	400	315115-0165	P		3	WASHER TBRB8,4X16RFR
	420	G- 525449	C		1	HUB
568ml						
		C- 297682-0303				**Wheel Right, Ass'y**
	020	525455	S		6	FLAP
	050	285310-0001	S		6	FLAP
	060	525368	C		6	BOTTOM
	240	442981	-		6	SHIM
	250	312105-0368	P		6	SCREW M6S6X16RFR
	260	312105-0374	-		6	SCREW M6S6X30RFR
	280	312105-0378	P		6	SCREW M6S6X40RFR
	320	312105-0457	P		9	SCREW M6S8X35RFR
	380	315105-0153	P		18	WASHER BRB6,4X12RFR
	390	315105-0165	P		24	WASHER BRB8,4X16RFR
	400	315115-0165	P		9	WASHER TBRB8,4X16RFR
	420	G- 525449	C		1	HUB

From	Pos	Part No	SP	UN	Qty	Description
500ml						
		C- 297682-0304				**Wheel Right, Ass'y**
	020	525455	S		6	FLAP
	050	285310-0001	S		6	FLAP
	060	525369	C		6	BOTTOM
	240	442981	-		6	SHIM
	250	312105-0368	P		6	SCREW M6S6X16RFR
	260	312105-0374	-		6	SCREW M6S6X30RFR
	280	312105-0378	P		6	SCREW M6S6X40RFR
	320	312105-0457	P		9	SCREW M6S8X35RFR
	380	315105-0153	P		18	WASHER BRB6,4X12RFR
	390	315105-0165	P		24	WASHER BRB8,4X16RFR
	400	315115-0165	P		9	WASHER TBRB8,4X16RFR
	420	G- 525449	C		1	HUB
500ml Slim						
		C- 297682-0305				**Wheel Right, Ass'y**
	010	525456	S		6	FLAP
	050	285310-0002	S		6	FLAP
	120	525370	C		6	BOTTOM
	200	285316-0002	S		6	SPACER PIECE
	210	525461	S		6	SPACER PIECE
	280	312105-0378	P		6	SCREW M6S6X40RFR
	290	312105-0379	P		6	SCREW M6S6X45RFR
	320	312105-0457	P		9	SCREW M6S8X35RFR
	370	312155-0378	P		6	SCREW MF6S6X40RFR
	380	315105-0153	P		12	WASHER BRB6,4X12RFR
	390	315105-0165	P		24	WASHER BRB8,4X16RFR
	395	315115-0153	P		6	WASHER TBRB6,4X12RFR
	400	315115-0165	P		9	WASHER TBRB8,4X16RFR
	420	G- 525449	C		1	HUB
300ml						
		C- 297682-0306				**Wheel Right, Ass'y**
	040	525459	S		6	FLAP
	060	525373	C		6	BOTTOM
	070	297646	S		6	FLAP
	200	285316-0002	S		6	SPACER PIECE
	210	525461	S		6	SPACER PIECE
	250	312105-0368	P		6	SCREW M6S6X16RFR
	280	312105-0378	P		6	SCREW M6S6X40RFR
	290	312105-0379	P		6	SCREW M6S6X45RFR
	320	312105-0457	P		3	SCREW M6S8X35RFR
	330	312105-0459	P		6	SCREW M6S8X40RFR
	380	315105-0153	P		12	WASHER BRB6,4X12RFR
	390	315105-0165	P		24	WASHER BRB8,4X16RFR
	395	315115-0153	P		6	WASHER TBRB6,4X12RFR

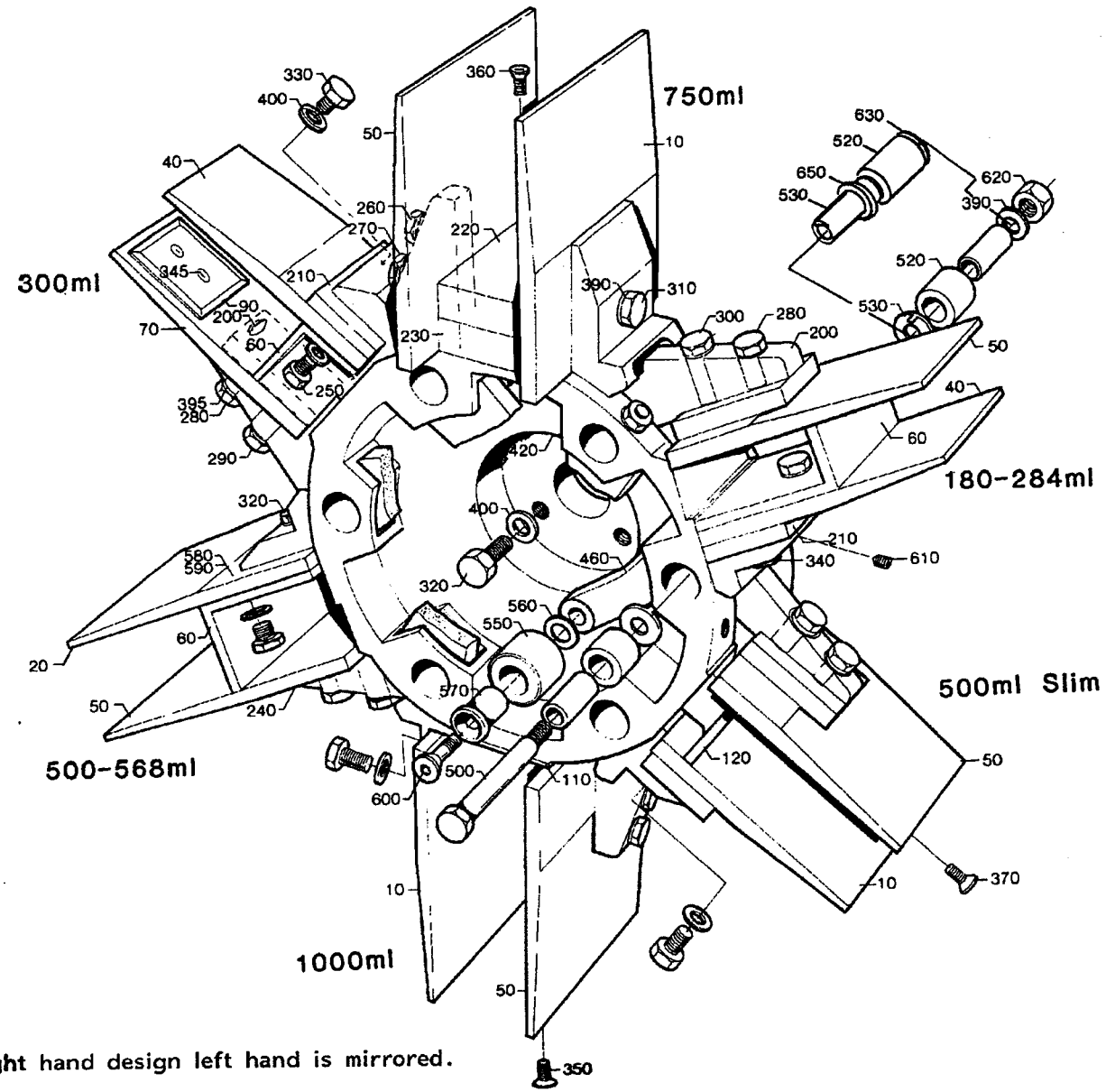

The Illustration shows right hand design left hand is mirrored.

29768201.TIF
297682-1
AM

From	Pos	Part No	SP	UN Qty	Description
	400	315115-0165	P	9	WASHER TBRB8,4X16RFR
	420	G- 525449	C	1	HUB
375ml					
		C- 297682-0313			**Wheel Right, Ass'y**
	040	525430	-	6	FLAP
	060	525372	-	6	BOTTOM
	070	297646	S	6	FLAP
	200	285316-0002	S	6	SPACER PIECE
	210	525461	S	6	SPACER PIECE
	250	312105-0368	P	12	SCREW M6S6X16RFR
	280	312105-0378	P	6	SCREW M6S6X40RFR
	290	312105-0379	P	6	SCREW M6S6X45RFR
	320	312105-0457	P	3	SCREW M6S8X35RFR
	330	312105-0459	P	6	SCREW M6S8X40RFR
	380	315105-0153	P	18	WASHER BRB6,4X12RFR
	390	315105-0165	P	24	WASHER BRB8,4X16RFR
	395	315115-0153	P	6	WASHER TBRB6,4X12RFR
	400	315115-0165	P	9	WASHER TBRB8,4X16RFR
	420	G- 525449	C	1	HUB
1055ml					
		C- 297682-0314			**Wheel Right, Ass'y**
	010	525452	S	6	FLAP
	050	443116	S	6	FLAP
	110	443076	C	6	BOTTOM
	260	312105-0374	-	6	SCREW M6S6X30RFR
	270	312105-0376	P	6	SCREW M6S6X35RFR
	310	312105-0453	P	6	SCREW M6S8X25RFR
	320	312105-0457	P	3	SCREW M6S8X35RFR
	350	312155-0368	P	6	SCREW MF6S6X16RFR
	380	315105-0153	P	12	WASHER BRB6,4X12RFR
	390	315105-0165	P	30	WASHER BRB8,4X16RFR
	400	315115-0165	P	3	WASHER TBRB8,4X16RFR
	420	G- 525447	C	1	HUB
1000ml Slim					
		C- 297682-0315			**Wheel Right, Ass'y**
	010	525453	S	6	FLAP
	050	285310-0001	S	6	FLAP
	110	525063	C	6	BOTTOM
	260	312105-0374	-	6	SCREW M6S6X30RFR
	270	312105-0376	P	6	SCREW M6S6X35RFR
	310	312105-0453	P	6	SCREW M6S8X25RFR
	320	312105-0457	P	3	SCREW M6S8X35RFR
	350	312155-0368	P	6	SCREW MF6S6X16RFR
	380	315105-0153	P	12	WASHER BRB6,4X12RFR
	390	315105-0165	P	30	WASHER BRB8,4X16RFR

From	Pos	Part No	SP	UN Qty	Description
	400	315115-0165	P	3	WASHER TBRB8,4X16RFR
	420	G- 525449	C	1	HUB
355ml					
		C- 297682-0316			**Wheel Right, Ass'y**
	010	525458	S	6	FLAP
	050	285310-0002	S	6	FLAP
	120	525371	C	6	BOTTOM
	200	285316-0002	S	6	SPACER PIECE
	210	525461	S	6	SPACER PIECE
	250	312105-0368	P	6	SCREW M6S6X16RFR
	280	312105-0378	P	6	SCREW M6S6X40RFR
	290	312105-0379	P	6	SCREW M6S6X45RFR
	320	312105-0457	P	9	SCREW M6S8X35RFR
	380	315105-0153	P	12	WASHER BRB6,4X12RFR
	390	315105-0165	P	24	WASHER BRB8,4X16RFR
	395	315115-0153	P	6	WASHER TBRB6,4X12RFR
	400	315115-0165	P	9	WASHER TBRB8,4X16RFR
	420	G- 525449	C	1	HUB
750ml Slim					
		C- 297682-0317			**Wheel Right, Ass'y**
	010	525454	-	6	FLAP
	050	544252	-	6	FLAP
	110	544254	C	6	PLATE
	200	543697	-	6	SPACER PIECE
	210	525460	-	6	SPACER PIECE
	270	312105-0376	P	6	SCREW M6S6X35RFR
	280	312105-0378	P	6	SCREW M6S6X40RFR
	315	312105-0455	P	6	SCREW M6S8X30RFR
	320	312105-0457	P	3	SCREW M6S8X35RFR
	350	312155-0368	P	6	SCREW MF6S6X16RFR
	380	315105-0153	P	12	WASHER BRB6,4X12RFR
	390	315105-0165	P	30	WASHER BRB8,4X16RFR
	400	315115-0165	P	3	WASHER TBRB8,4X16RFR
	420	G- 525447	C	1	HUB
1136ml					
		C- 297682-0318			**Wheel Right, Ass'y**
	010	525451	S	6	FLAP
	050	550149	S	6	FLAP
	110	550235	C	6	BOTTOM
	260	312105-0374	-	6	SCREW M6S6X30RFR
	270	312105-0376	P	6	SCREW M6S6X35RFR
	310	312105-0453	P	6	SCREW M6S8X25RFR
	320	312105-0457	P	3	SCREW M6S8X35RFR
	350	312155-0368	P	6	SCREW MF6S6X16RFR
	380	315105-0153	P	12	WASHER BRB6,4X12RFR

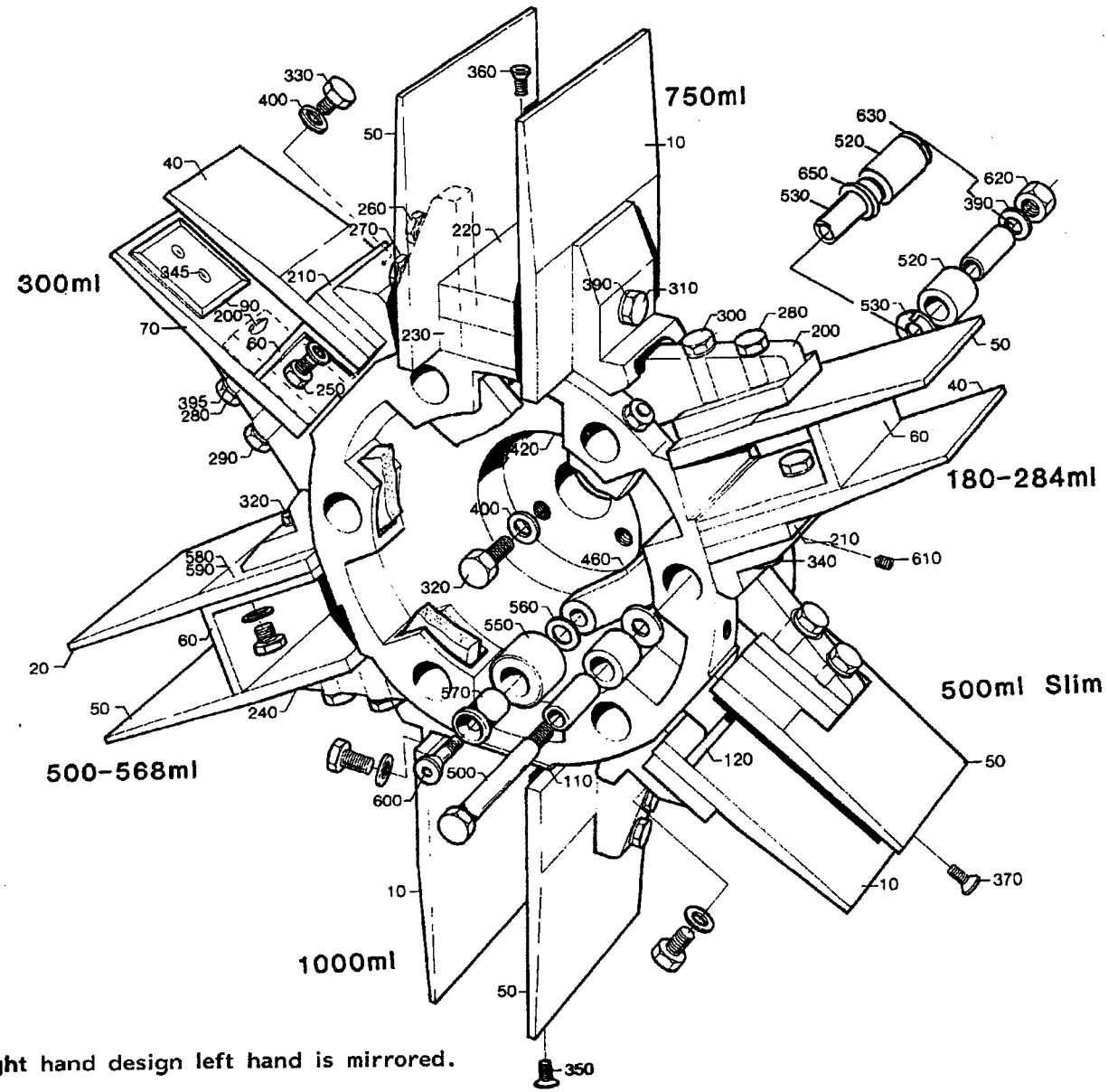

The illustration shows right hand design left hand is mirrored.

29768201.TIF
297682-1
AM

From	Pos	Part No	SP	UN	Qty	Description
	390	315105-0165	P		30	WASHER BRB8,4X16RFR
	400	315115-0165	P		3	WASHER TBRB8,4X16RFR
	420	G- 525445	C		1	HUB
1000ml Slim						
		C- 297682-0319				**Wheel Right, Ass'y**
	010	569117	S		6	FLAP
	050	569118	S		6	FLAP
	110	569119	C		6	BOTTOM
	270	312105-0376	P		6	SCREW M6S6X35RFR
	280	312105-0378	P		6	SCREW M6S6X40RFR
	310	312105-0453	P		6	SCREW M6S8X25RFR
	390	315105-0165	P		30	WASHER BRB8,4X16RFR
	395	315115-0153	P		12	WASHER TBRB6,4X12RFR
	420	G- 525445	C		1	HUB
Common parts						
	460	G- 565967	S		6	ARM
	500	262028-0001	S		6	FITTING BOLT
	510	262179-0001	S		12	PEG
	520	525329	S		12	SLEEVE
	530	525330	S		12	SHAFT
	550	285321	S		6	ROLL
	560	285322	S		6	WASHER
	570	442563	S		6	AXLE PIN
	580	442894	-		X	SHIM
	590	442939	-		X	SHIM
	600	312155-0499	-		6	SCREW MF6S10X40RFR
	610	312109-0459	S		2	SCREW M6S8X40H A4 80
	620	312605-0318	-		18	NUT M6M8RFR
	630	315105-0173	-		12	WASHER BRB10,5X22RFR
	650	321111-0185	S		24	FLANGE BUS 14E7X14

From	Pos	Part No	SP	UN	Qty	Description

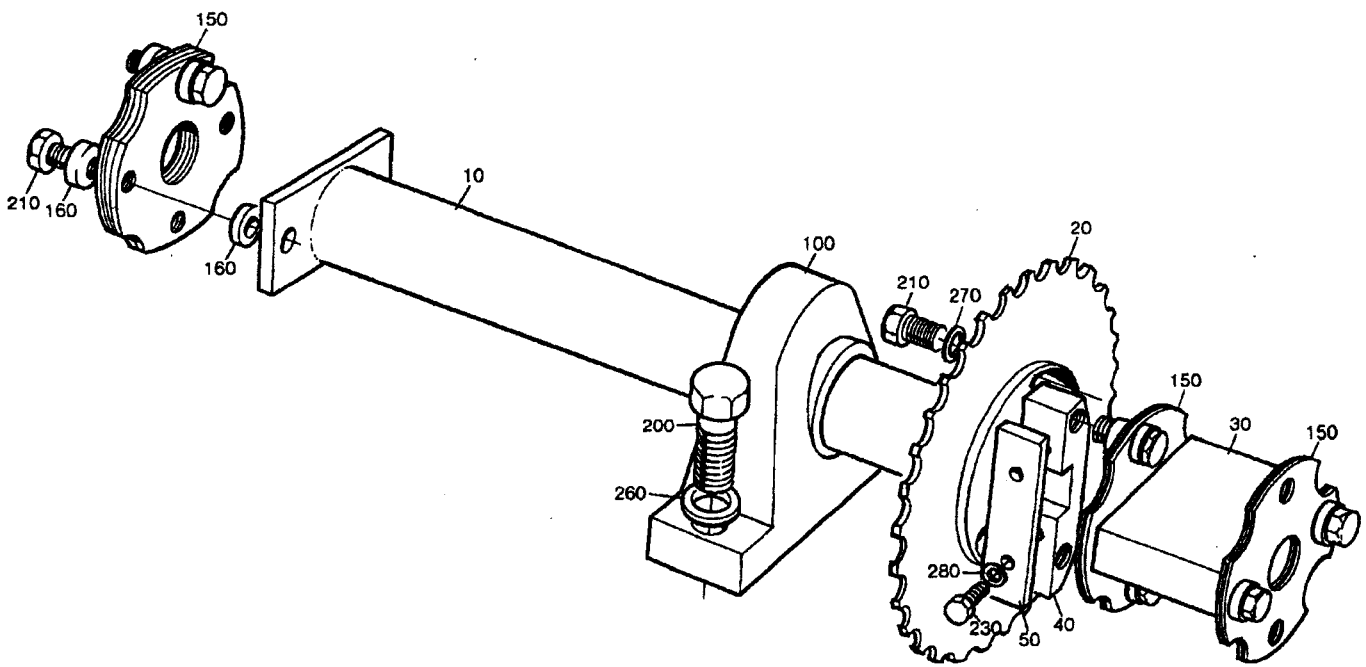

44317301.TIF
443173-1
AM

From	Pos	Part No	SP	UN	Qty	Description
		C- 443173-0101				**Drive Shaft, Ass'y**
	010	443175	C		1	SHAFT
	020	443177	C		1	SPROCKET
	030	443179	-		1	SPACER
	040	443178	C		1	BRACKET
	050	262275-0003	C		1	CAP
	100	90345-0038	-		1	BEARING HOUSING
	150	33261	S		24	SPRING PLATE
	160	31553-0002	S		24	WASHER
	200	312105-0538	-		2	SCREW M6S12X35RFR
	210	90287-0164	-		14	SCREW
	230	90287-0165	-		2	SCREW
	260	315105-0178	-		2	WASHER BRB13X24RFR
	270	315105-0173	-		4	WASHER BRB10,5X22RFR
	280	315105-0165	-		2	WASHER BRB8,4X16RFR

From	Pos	Part No	SP	UN	Qty	Description

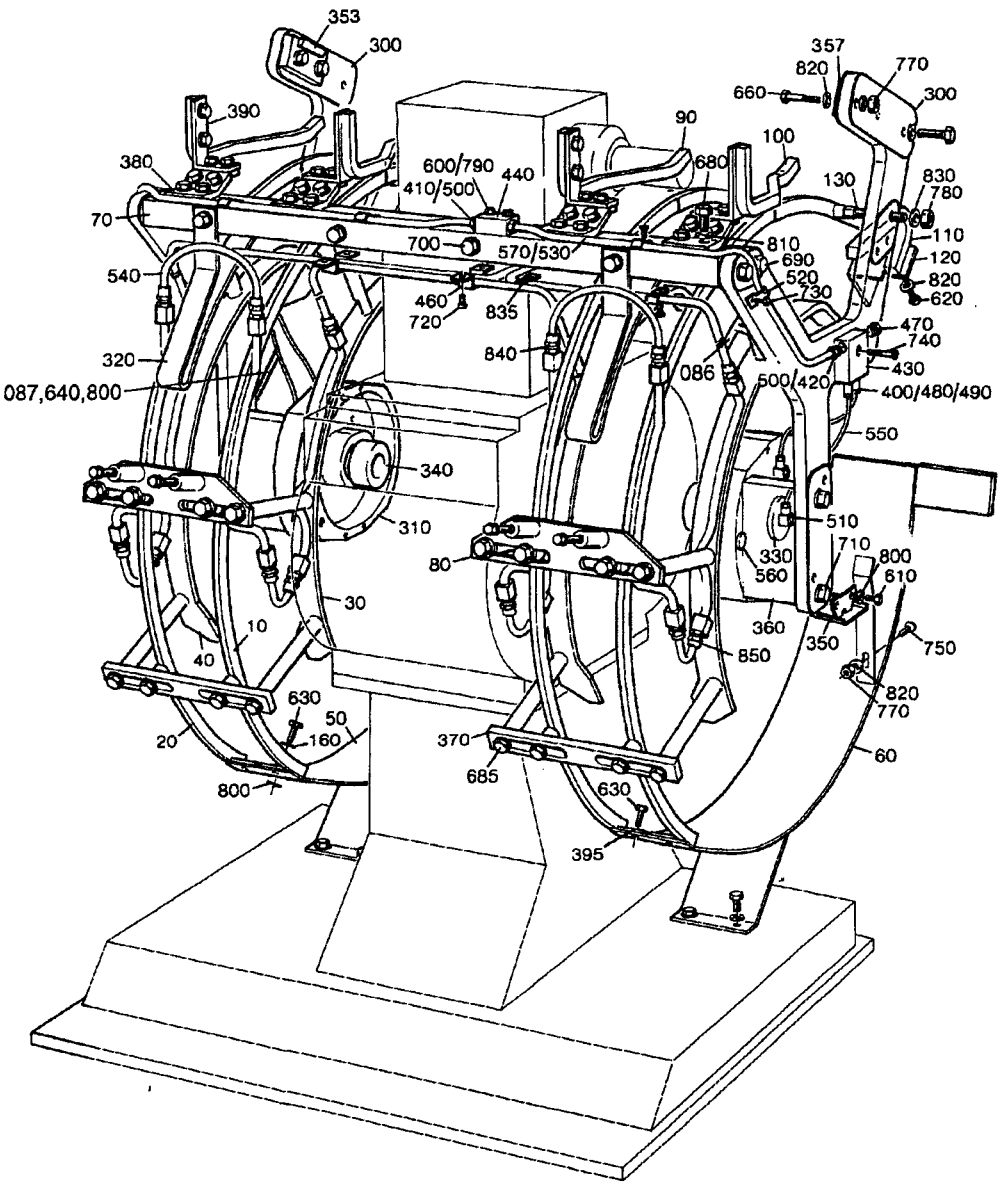

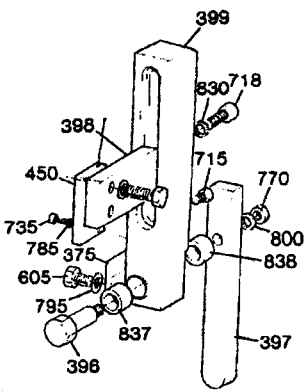

52500001.TIF
525000-1/2
AM 19402

From	Pos	Part No	SP	UN	Qty	Description
1055ml						
		C- 525000-0201				**Folding Part, Ass'y**
	010	525001	-		2	FOLDING BAR
	020	525003	-		2	FOLDING BAR
	030	525005-0001	-		2	FOLDING BAR
	040	525006-0001	-		2	FOLDING BAR
	050	525341-0001	-		2	LEAD RAIL
	070	525007-0001	-		1	CANTILEVER
	080	525008-0001	-		2	BRACKET
	090	525180-0001	-		2	FOLDING ARM
	100	525179-0001	-		2	FOLDING ARM
	110	525011-0001	-		2	BRACKET
	120	525012-0001	-		2	COUNTER PLATE
	130	525015-0001	-		4	SCREW
	397	525295	-		1	ARM
	840	342920-0121	-		16	PIPE COUPL8/6-1/8
1000ml						
		C- 525000-0202				**Folding Part, Ass'y**
	010	525001	-		2	FOLDING BAR
	020	525003	-		2	FOLDING BAR
	030	525005-0002	-		2	FOLDING BAR
	040	525006-0002	-		2	FOLDING BAR
	050	525341-0001	-		2	LEAD RAIL
	070	525007-0001	-		1	CANTILEVER
	080	525008-0001	-		2	BRACKET
	090	525180-0001	-		2	FOLDING ARM
	100	525179-0001	-		2	FOLDING ARM
	110	525011-0002	-		2	BRACKET
	120	525012-0002	-		2	COUNTER PLATE
	130	525015-0001	-		4	SCREW
	397	525295	-		1	ARM
	840	342920-0121	-		16	PIPE COUPL8/6-1/8
750ml						
		C- 525000-0203				**Folding Part, Ass'y**
	010	525001	-		2	FOLDING BAR
	020	525003	-		2	FOLDING BAR
	030	525005-0003	-		2	FOLDING BAR
	040	525006-0003	-		2	FOLDING BAR
	050	525341-0001	-		2	LEAD RAIL
	070	525007-0001	-		1	CANTILEVER
	080	525008-0002	-		2	BRACKET
	090	525180-0001	-		2	FOLDING ARM
	100	525179-0001	-		2	FOLDING ARM
	110	525011-0003	-		2	BRACKET
	120	525012-0003	-		2	COUNTER PLATE
	130	525015-0001	-		4	SCREW
	397	525295	-		1	ARM
	840	342920-0121	-		16	PIPE COUPL8/6-1/8
568ml						
		C- 525000-0204				**Folding Part, Ass'y**
	010	525001	-		2	FOLDING BAR
	020	525003	-		2	FOLDING BAR
	030	525005-0004	-		2	FOLDING BAR
	040	525006-0004	-		2	FOLDING BAR
	050	525341-0001	-		2	LEAD RAIL
	070	525007-0001	-		1	CANTILEVER
	080	525008-0002	-		2	BRACKET
	090	525180-0001	-		2	FOLDING ARM
	100	525179-0001	-		2	FOLDING ARM
	110	525011-0004	-		2	BRACKET
	120	525012-0004	-		2	COUNTER PLATE
	130	525015-0001	-		4	SCREW
	397	525295	-		1	ARM
	840	342920-0121	-		8	PIPE COUPL8/6-1/8
	850	342930-0121	-		8	ELBOW PIPE8/6-1/8
500ml						
		C- 525000-0205				**Folding Part, Ass'y**
	010	525001	-		2	FOLDING BAR
	020	525003	-		2	FOLDING BAR
	030	525005-0005	-		2	FOLDING BAR
	040	525006-0005	-		2	FOLDING BAR
	050	525341-0001	-		2	LEAD RAIL
	070	525007-0001	-		1	CANTILEVER
	080	525008-0003	-		2	BRACKET
	090	525180-0001	-		2	FOLDING ARM
	100	525179-0001	-		2	FOLDING ARM
	110	525011-0005	-		2	BRACKET
	120	525012-0005	-		2	COUNTER PLATE
	130	525015-0001	-		4	SCREW
	397	525295	-		1	ARM
	840	342920-0121	-		8	PIPE COUPL8/6-1/8
	850	342930-0121	-		8	ELBOW PIPE8/6-1/8
500ml Slim						
		C- 525000-0206				**Folding Part, Ass'y**
	010	525002	-		2	FOLDING BAR
	020	525004	-		2	FOLDING BAR
	030	525005-0006	-		2	FOLDING BAR
	040	525006-0006	-		2	FOLDING BAR
	050	525341-0002	-		2	LEAD RAIL
	070	525007-0002	-		1	CANTILEVER

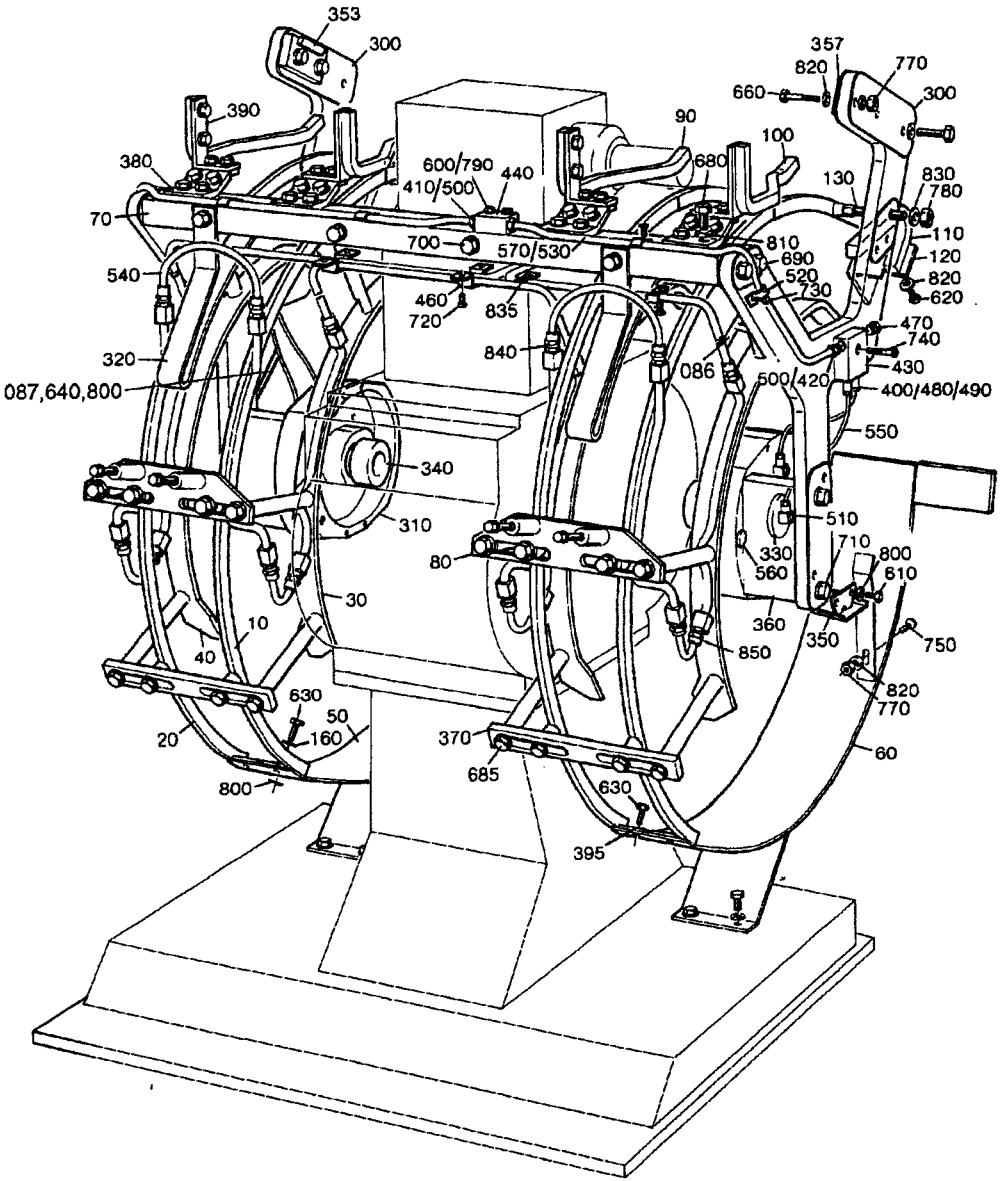

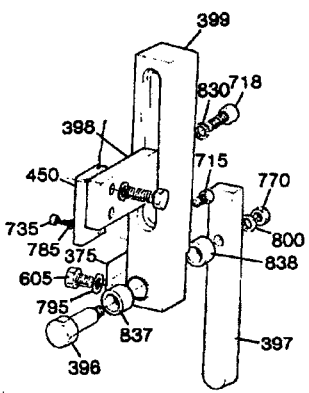

52500001.TIF
525000-1/2
AM 19402

From	Pos	Part No	SP	UN	Qty	Description
	080	525008-0002	-		2	BRACKET
	090	525180-0002	-		2	FOLDING ARM
	100	525179-0002	-		2	FOLDING ARM
	110	525011-0006	-		2	BRACKET
	120	525182-0001	-		2	COUNTER PLATE
	130	525015-0002	-		4	SCREW
	160	315115-0153	-		2	WASHER TBRB6,4X12RFR
	397	525295	-		1	ARM
	840	342920-0121	-		16	PIPE COUPL8/6-1/8
375ml						
		C- 525000-0207				**Folding Part, Ass'y**
	010	525002	-		2	FOLDING BAR
	020	525004	-		2	FOLDING BAR
	030	525005-0007	-		2	FOLDING BAR
	040	525006-0007	-		2	FOLDING BAR
	050	525341-0002	-		2	LEAD RAIL
	070	525007-0003	-		1	CANTILEVER
	080	525008-0002	-		2	BRACKET
	090	525180-0002	-		2	FOLDING ARM
	100	525179-0002	-		2	FOLDING ARM
	110	525011-0007	-		2	BRACKET
	120	525014-0001	-		2	COUNTER PLATE
	130	525015-0003	-		4	SCREW
	160	315115-0153	-		2	WASHER TBRB6,4X12RFR
	397	525295	-		1	ARM
	840	342920-0121	-		16	PIPE COUPL8/6-1/8
300ml						
		C- 525000-0208				**Folding Part, Ass'y**
	010	525002	-		2	FOLDING BAR
	020	525004	-		2	FOLDING BAR
	030	525005-0008	-		2	FOLDING BAR
	040	525006-0008	-		2	FOLDING BAR
	050	525341-0002	-		2	LEAD RAIL
	070	525007-0003	-		1	CANTILEVER
	080	525008-0002	-		2	BRACKET
	090	525180-0002	-		2	FOLDING ARM
	100	525179-0002	-		2	FOLDING ARM
	110	525011-0008	-		2	BRACKET
	120	525014-0002	-		2	COUNTER PLATE
	130	525015-0003	-		4	SCREW
	160	315115-0153	-		2	WASHER TBRB6,4X12RFR
	397	525295	-		1	ARM
	840	342920-0121	-		8	PIPE COUPL8/6-1/8
	850	342930-0121	-		8	ELBOW PIPE8/6-1/8

From	Pos	Part No	SP	UN	Qty	Description
355ml						
		C- 525000-0209				**Folding Part, Ass'y**
	010	525002	-		2	FOLDING BAR
	020	525004	-		2	FOLDING BAR
	030	525005-0009	-		2	FOLDING BAR
	040	525006-0009	-		2	FOLDING BAR
	050	525341-0002	-		2	LEAD RAIL
	070	525007-0002	-		1	CANTILEVER
	080	525008-0002	-		2	BRACKET
	090	525180-0002	-		2	FOLDING ARM
	100	525179-0002	-		2	FOLDING ARM
	110	525011-0009	-		2	BRACKET
	120	525182-0002	-		2	COUNTER PLATE
	130	525015-0002	-		4	SCREW
	160	315115-0153	-		2	WASHER TBRB6,4X12RFR
	397	525295	-		1	ARM
	840	342920-0121	-		8	PIPE COUPL8/6-1/8
	850	342930-0121	-		8	ELBOW PIPE8/6-1/8
750ml Slim						
		C- 525000-0210				**Folding Part, Ass'y**
	010	525001	-		2	FOLDING BAR
	020	525003	-		2	FOLDING BAR
	030	525005-0001	-		2	FOLDING BAR
	040	525006-0001	-		2	FOLDING BAR
	050	525341-0001	-		2	LEAD RAIL
	070	525007-0004	-		1	CANTILEVER
	080	525008-0001	-		2	BRACKET
	090	525180-0002	-		2	FOLDING ARM
	100	525179-0002	-		2	FOLDING ARM
	110	525011-0002	-		2	BRACKET
	120	525438	-		2	COUNTER PLATE
	130	525015-0002	-		4	SCREW
	397	525295	-		1	ARM
	840	342920-0121	-		16	PIPE COUPL8/6-1/8
1136ml						
		C- 525000-0211				**Folding Part, Ass'y**
	010	525001	-		2	FOLDING BAR
	020	525003	-		2	FOLDING BAR
	030	548397	-		2	FOLDING BAR
	040	548398	-		2	FOLDING BAR
	050	525410	-		2	LEAD RAIL
	070	525007-0001	-		1	CANTILEVER
	080	525008-0001	-		2	BRACKET
	090	525180-0001	-		2	FOLDING ARM
	100	525179-0001	-		2	FOLDING ARM

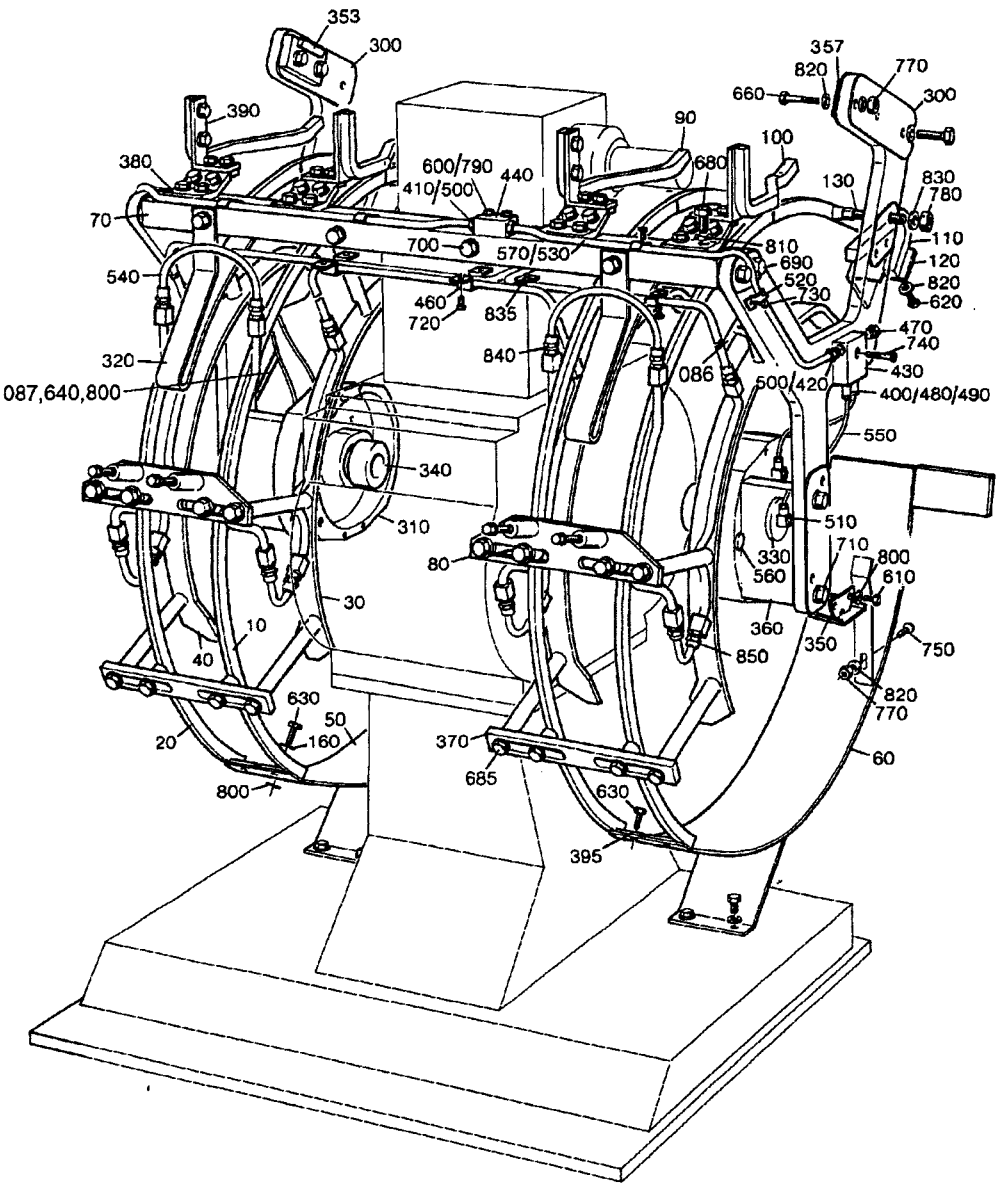

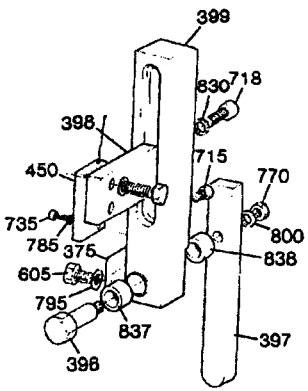

52500001.TIF
525000-1/2
AM 19402

From	Pos	Part No	SP	UN Qty	Description
	110	525011-0001	-	2	BRACKET
	120	525012-0001	-	2	COUNTER PLATE
	130	525015-0001	-	4	SCREW
	397	550359	-	1	ARM
	840	342920-0121	-	16	PIPE COUPL8/6-1/8
1000ml Slim		**C- 525000-0212**			**Folding Part, Ass'y**
	010	525001	-	2	FOLDING BAR
	020	525003	-	2	FOLDING BAR
	030	569120	-	2	FOLDING BAR
	040	569121	-	2	FOLDING BAR
	050	525410	-	2	LEAD RAIL
	070	525007-0001	-	1	CANTILEVER
	080	525008-0001	-	2	BRACKET
	086	573486	-	1	GUIDE
	087	573487	-	1	GUIDE
	090	569122	-	2	FOLDING ARM
	100	569123	-	2	FOLDING ARM
	110	573485	-	2	BRACKET
	120	525012-0001	-	2	COUNTER PLATE
	130	525015-0001	-	4	SCREW
	397	550359	-	1	ARM
	640	312105-0370	-	2	SCREW M6S6X20RFR
	840	342920-0121	-	16	PIPE COUPL8/6-1/8
Common parts	300	G- 525016	-	2	FASTENING PLATE
	310	443068	-	2	CURVE
	320	525017	-	2	STEERING GUIDE
	330	285168	-	2	BUSHING
	340	285851	-	2	BEARING
	350	443240	-	2	DRIP PLATE
	353	442564	S	1	CURVE
	357	442565	S	1	CURVE
	360	525018	-	2	SPACER
	370	525019	-	2	BRACKET
	375	525360	-	1	BRACKET
	380	525340	-	4	BRACKET
	390	525178	-	4	BRACKET
	395	525181	-	2	WASHER
	396	525321	S	1	SCREW
	398	525296	-	1	BRACKET
	399	525297	-	1	BRACKET
	400	90028-0020	-	4	CONE
	410	90028-0022	-	4	CONE
	420	90028-0025	-	2	CONE

From	Pos	Part No	SP	UN Qty	Description
	430	90032-0038	-	2	BLOCK
	440	90032-0044	-	1	JUNKTION BLOCK
	450	90044-0104	P	1	INDUCTIVE SWITCH
	460	90074-0018	-	2	CLIP
	470	90087-0019	-	2	PLUG
	480	90092-0052	-	2	VALVE
	485	90092-0053	-	2	VALVE
	490	90134-0039	-	4	BUSHING
	500	90134-0055	-	6	BUSHING
	510	90134-0058	-	4	BANJO CONNECTION
	520	90165-0057	-	5	CLIP
	530	90166-0108	-	MM5200	HOSE
	540	90166-0122	-	MM6000	HOSE
	550	90166-0143	-	MM2000	HOSE
	560	90261-0032	-	4	PLUG
	570	90134-0030	-	6	SLEEVE
	600	312105-0295	-	2	SCREW M6S4X20 A4 80
	605	312105-0327	-	2	SCREW M6S5X12 A4 80
	610	312105-0364	-	10	SCREW M6S6X10RFR
	620	312105-0366	-	24	SCREW M6S6X12RFR
	630	312105-0368	-	10	SCREW M6S6X16RFR
	650	312105-0374	-	4	SCREW M6S6X30RFR
	660	312105-0378	-	4	SCREW M6S6X40RFR
	680	312105-0449	-	20	SCREW M6S8X16RFR
	685	312105-0451	-	16	SCREW M6S8X20RFR
	690	312105-0455	-	8	SCREW M6S8X30RFR
	700	312105-0464	-	2	SCREW M6S8X65RFR
	710	312105-0469	-	4	SCREW M6S8X90RFR
	715	312115-0323	-	1	SCREW 5X8 A4 80
	718	312115-0455	-	2	SCREW 8X30 A4 80
	720	312125-0287	-	10	SLOTTED HEMCS4X8RFR
	730	312125-0291	-	2	SLOTTED HEMCS4X12RFR
	735	312125-0230	-	2	SLOTTED HEMCS3X20RFR
	740	312155-0297	-	4	SCREW MF6S4X25RFR
	770	312605-0316	-	5	NUT M6M6RFR
	780	312605-0318	-	8	NUT M6M8RFR
	785	315105-0124	-	2	WASHER BRB3,2X6RFR
	790	315105-0136	-	2	WASHER BRB4,3X8RFR
	795	315105-0146	-	2	WASHER BRB5,3X10RFR
	800	315105-0153	-	19	WASHER BRB6,4X12RFR
	810	315105-0165	-	8	WASHER BRB8,4X16RFR
	820	315115-0153	-	40	WASHER TBRB6,4X12RFR
	830	315115-0165	-	52	WASHER TBRB8,4X16RFR
	835	316810-0106	-	3	PIPE CLAMP 8MM RFR
	837	321116-0127	S	1	BUSHING 10E7/14X10
	838	321116-0128	S	1	BUSHING 10E7/14X16

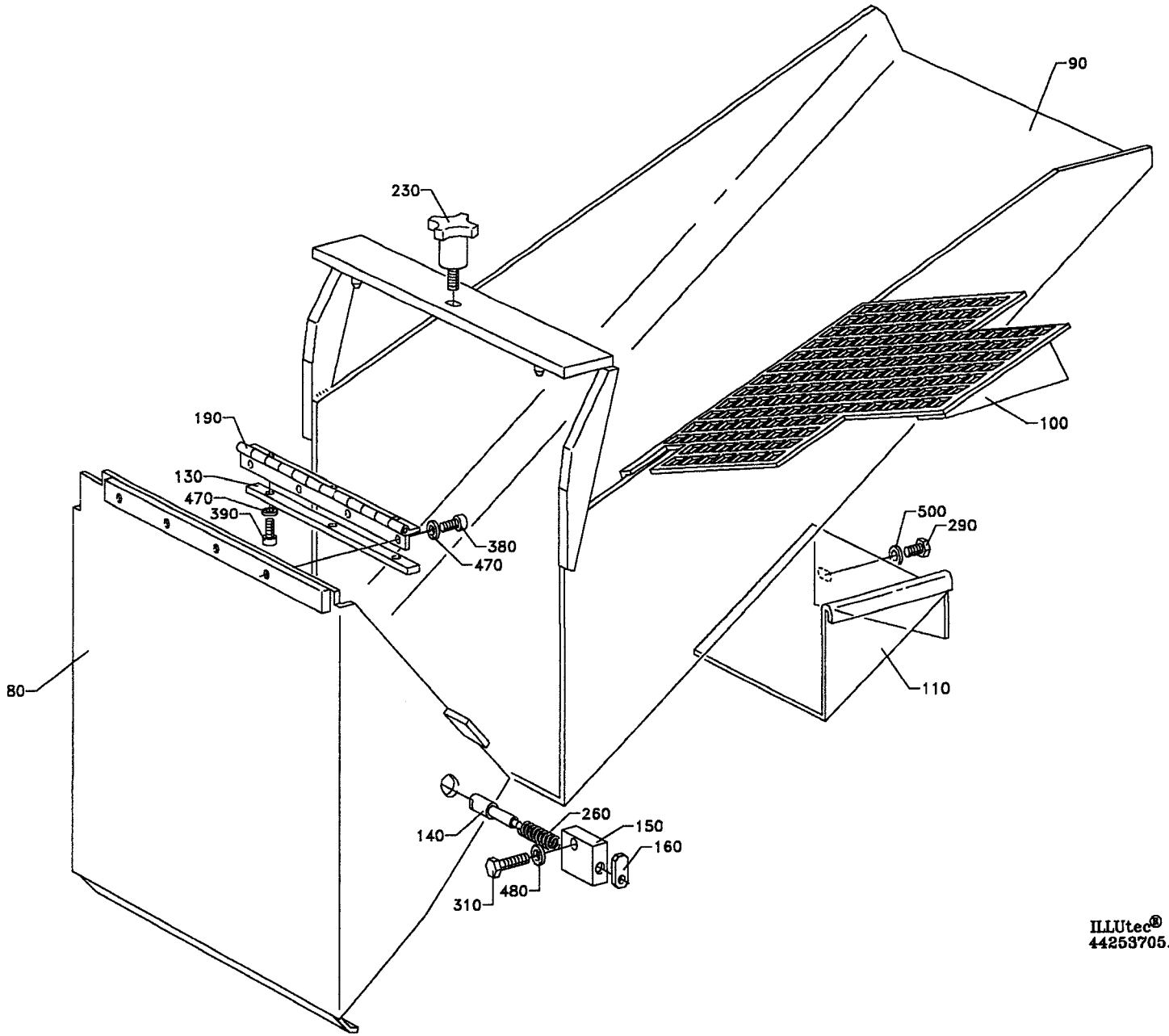
90
230
190
130
470
390
380
470
100
500
290
80
110
140
260
150
160
480
310
ILLUtec®
44253705.dwg

From	Pos	Part No	SP	UN	Qty	Description
		C- 442537-0501				**Waste Chute, Ass'y**
	080	525380	-		1	OPENING
	090	525409	-		1	WASTE CHUTE
	100	525423	-		1	COVERING PLATE
	110	525439	-		1	DRIP PLATE
	130	525381	-		1	BRACKET
	140	525382	-		1	SHAFT
	150	525383	-		1	BRACKET
	160	525384	-		1	DOWEL
	190	525394	-		1	HINGE
	230	90051-0025	-		1	HANDLE
	260	90335-0005	-		1	SPRING
	290	312105-0364	-		1	SCREW M6S6X10RFR
	310	312105-0372	-		1	SCREW M6S6X25RFR
	380	312115-0323	-		4	SCREW 5X8 A4 80
	390	312115-0325	-		3	SCREW 5X10 A4 80
	470	315105-0146	-		7	WASHER BRB5,3X10RFR
	480	315105-0153	-		1	WASHER BRB6,4X12RFR
	500	315115-0153	-		1	WASHER TBRB6,4X12RFR
	530	90157-0002	-		X	SEALING COMPOUND

From	Pos	Part No	SP	UN	Qty	Description

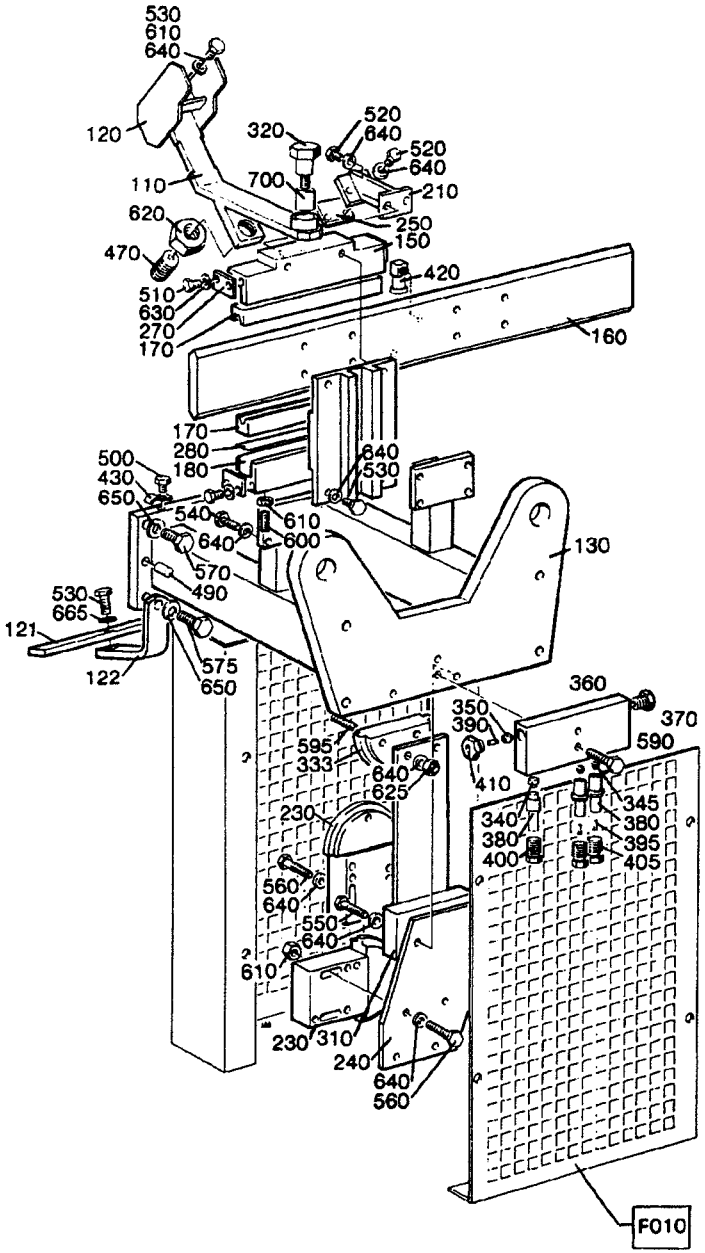

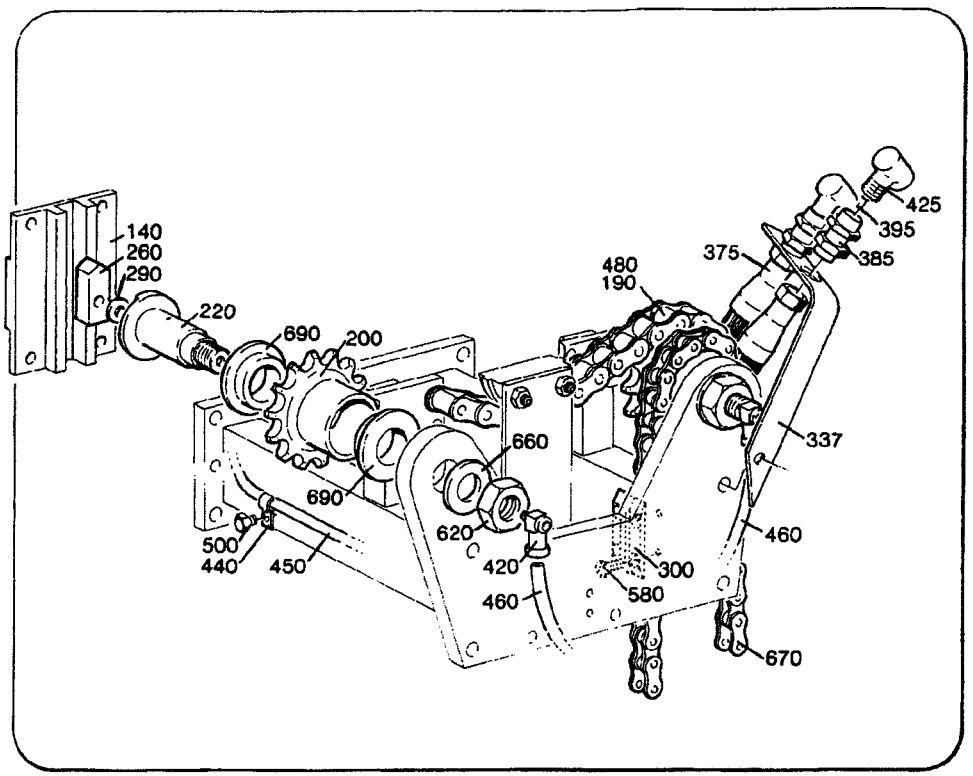

52521302.TIF
525213-2
AM 17749

From	Pos	Part No	SP	UN	Qty	Description
1055ml 1000ml						
		C- 525213-0201				**Infeeder, Ass'y**
	110	525301	-		1	ARM
	120	525305	-		1	DISTRIBUTOR
	530	312105-0368	-		6	SCREW M6S6X16RFR
	570	312105-0453	-		4	SCREW M6S8X25RFR
750ml						
		C- 525213-0202				**Infeeder, Ass'y**
	110	525302	-		1	ARM
	120	525306	-		1	DISTRIBUTOR
	530	312105-0368	-		6	SCREW M6S6X16RFR
	570	312105-0453	-		4	SCREW M6S8X25RFR
568ml 500ml						
		C- 525213-0203				**Infeeder, Ass'y**
	110	525303	-		1	ARM
	120	525307	-		1	DISTRIBUTOR
	530	312105-0368	-		6	SCREW M6S6X16RFR
	570	312105-0453	-		4	SCREW M6S8X25RFR
500ml Slim						
		C- 525213-0204				**Infeeder, Ass'y**
	110	525302	-		1	ARM
	120	525308	-		1	DISTRIBUTOR
	530	312105-0368	-		6	SCREW M6S6X16RFR
	570	312105-0453	-		4	SCREW M6S8X25RFR
375ml						
		C- 525213-0205				**Infeeder, Ass'y**
	110	525302	-		1	ARM
	120	525309	-		1	DISTRIBUTOR
	530	312105-0368	-		6	SCREW M6S6X16RFR
	570	312105-0453	-		4	SCREW M6S8X25RFR
355ml						
		C- 525213-0206				**Infeeder, Ass'y**
	110	525304	-		1	ARM
	120	525308	-		1	DISTRIBUTOR
	530	312105-0368	-		6	SCREW M6S6X16RFR
	570	312105-0453	-		4	SCREW M6S8X25RFR
300ml						
		C- 525213-0207				**Infeeder, Ass'y**
	110	525304	-		1	ARM
	120	525309	-		1	DISTRIBUTOR
	530	312105-0368	-		6	SCREW M6S6X16RFR
	570	312105-0453	-		4	SCREW M6S8X25RFR
750ml Slim						
		C- 525213-0208				**Infeeder, Ass'y**
	110	525301	-		1	ARM
	120	544318	-		1	DISTRIBUTOR
	530	312105-0368	-		6	SCREW M6S6X16RFR
	570	312105-0453	-		4	SCREW M6S8X25RFR
1136ml						
		C- 525213-0209				**Infeeder, Ass'y**
	110	525301	-		1	ARM
	120	525305	-		1	DISTRIBUTOR
	121	525417	-		1	STEERING
	122	525418	-		2	HOLDER
	530	312105-0368	-		8	SCREW M6S6X16RFR
	570	312105-0453	-		2	SCREW M6S8X25RFR
	575	312105-0455	-		2	SCREW M6S8X30RFR
	665	315115-0153	-		2	WASHER TBRB6,4X12RFR
1000ml Slim						
		C- 525213-0210				**Infeeder, Ass'y**
	110	525301	-		1	ARM
	120	569129	-		1	DISTRIBUTOR
	121	525417	-		1	STEERING
	122	525418	-		2	HOLDER
	530	312105-0368	-		8	SCREW M6S6X16RFR
	570	312105-0453	-		2	SCREW M6S8X25RFR
	575	312105-0455	-		2	SCREW M6S8X30RFR
	665	315115-0153	-		2	WASHER TBRB6,4X12RFR
Common parts						
	F010	**C- 525320-010V**	-		1	**CHAIN GUARD**
	130	525310	-		1	BRACKET
	140	443229	C		1	BRACKET
	150	525140	-		1	HOLDER
	160	525311	C		1	WAY
	170	442931	S		2	SLIDE RAIL
	180	443232	-		1	HOLDER
	190	443235	S		1	SPROCKET
	200	525194	S		1	SPROCKET
	210	525200	C		1	BRACKET
	220	525312	C		2	SHAFT
	230	525313	S		2	CHAIN TENSIONER
	240	566533	-		1	BRACKET
	250	285074	S		1	PLATE
	260	443237	S		1	SLIDER
	270	443239	-		4	WASHER
	280	525138	-		1	SHEET
	290	525195	-		1	WASHER
	300	525315	S		1	SLIDER
	310	566312	-		1	BRACKET
	320	525317	S		1	FITTING BOLT

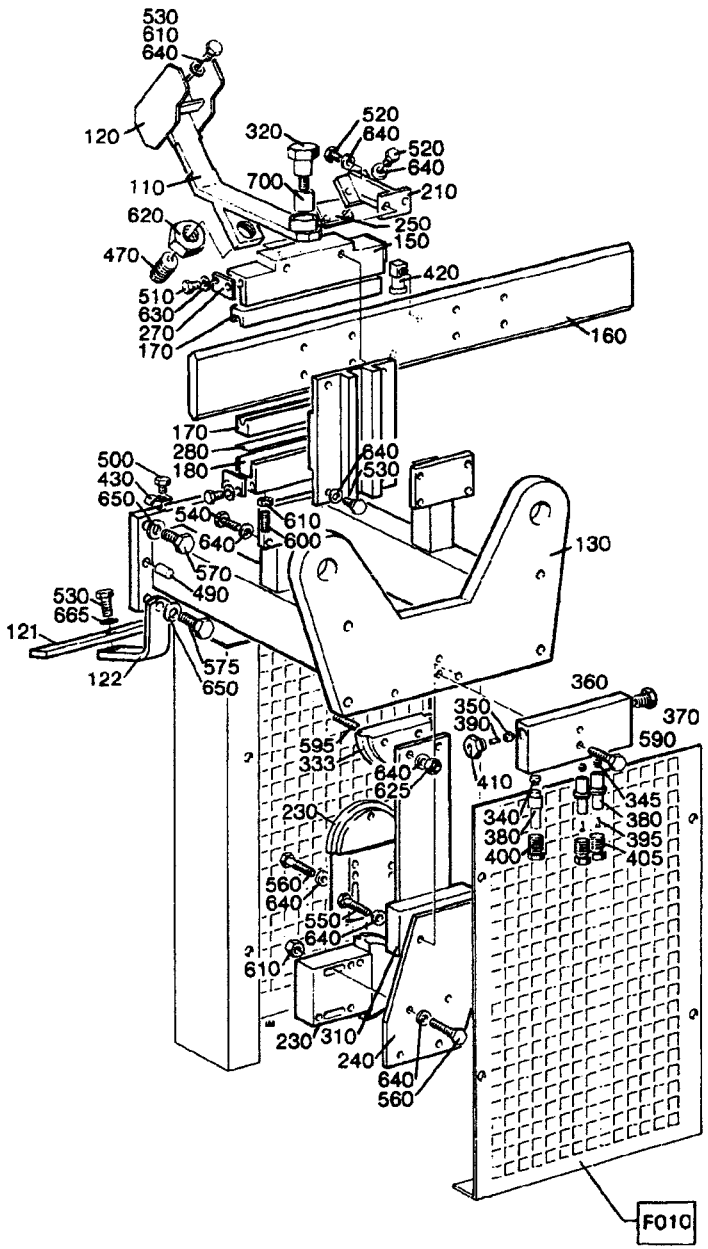

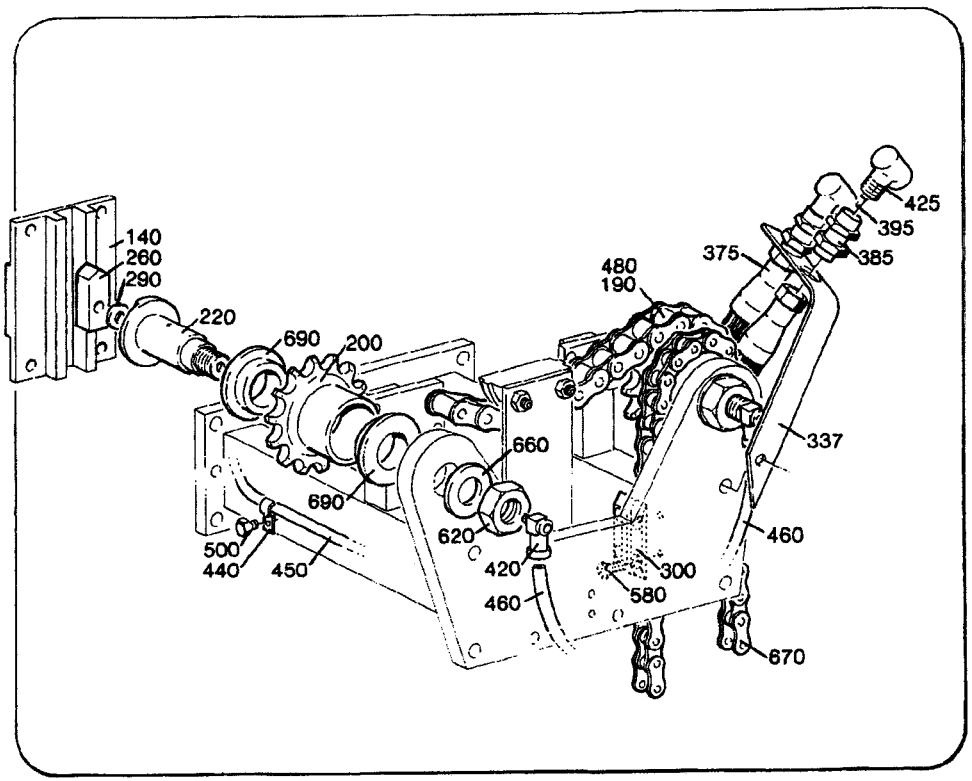

52521302.TIF
525213-2
AM 17749

From	Pos	Part No	SP	UN	Qty	Description
	333	566311	-		1	PROFILE
	337	566315	-		1	HOLDER
	340	90028-0020	P		4	CONE
	345	90028-0021	-		2	CONE
	350	90028-0025	P		1	CONE
	360	90032-0040	S		1	BLOCK
	370	90087-0019	S		1	PLUG
	375	90092-0048	P		2	OIL BRUSH
	380	90092-0052	P		6	VALVE
	385	90134-0002	P		2	PIPE CONNECTION
	390	90134-0030	P		2	SLEEVE
	395	342706-0114	P		4	INSERT SLESH04
	400	90134-0039	P		4	BUSHING
	405	90134-0040	P		2	BUSHING
	410	90134-0055	P		1	BUSHING
	420	90134-0058	S		4	BANJO CONNECTION
	425	90137-0002	P		2	ELBOW PIPE
	430	90165-0056	S		3	CLIP
	440	90165-0057	S		2	CLIP
	450	90166-0108	P	MM	1400	HOSE
	455	90166-0051	P	MM	600	HOSE
	460	90166-0143	P	MM	1200	HOSE
	470	90287-0109	P		1	SPRINGLOADED SCREW
	480	90288-0055	S		1	ROLLER CHAIN
		90288-0317	S		1	* CONNECTION LINK
		90288-0324	S		1	* CARRIER
	490	311103-0399	-		2	CYLINDRICACP M6 8X16 RFR
	500	312105-0287	-		5	SCREW M6S4X8 A4 80
	510	312105-0325	-		8	SCREW M6S5X10 A4 80
	520	312105-0366	-		4	SCREW M6S6X12RFR
	540	312105-0370	-		8	SCREW M6S6X20RFR
	550	312105-0376	-		2	SCREW M6S6X35RFR
	560	312105-0379	-		4	SCREW M6S6X45RFR
	580	312155-0291	-		4	SCREW MF6S4X12RFR
	590	312155-0297	-		2	SCREW MF6S4X25RFR
	600	312318-0368	-		2	STOP SCREW SK6SS6X16RFR
	610	312605-0316	-		4	NUT M6M6RFR
	620	312605-0324	-		3	NUT M6M16RFR
	625	312812-0316	-		2	LOCK NUT A4-M6RFR
	630	315105-0146	-		8	WASHER BRB5,3X10RFR
	640	315105-0153	-		28	WASHER BRB6,4X12RFR
	650	315105-0165	-		4	WASHER BRB8,4X16RFR
	660	315105-0186	-		2	WASHER BRB17X30RFR
	670	318212-0119	S		1	ROLLER CHA1/2"
	690	321101-0252	S		4	FLANGE BUS 25F7X16
	700	321120-0122	S		1	BUSHING 15/17X15

From	Pos	Part No	SP	UN	Qty	Description

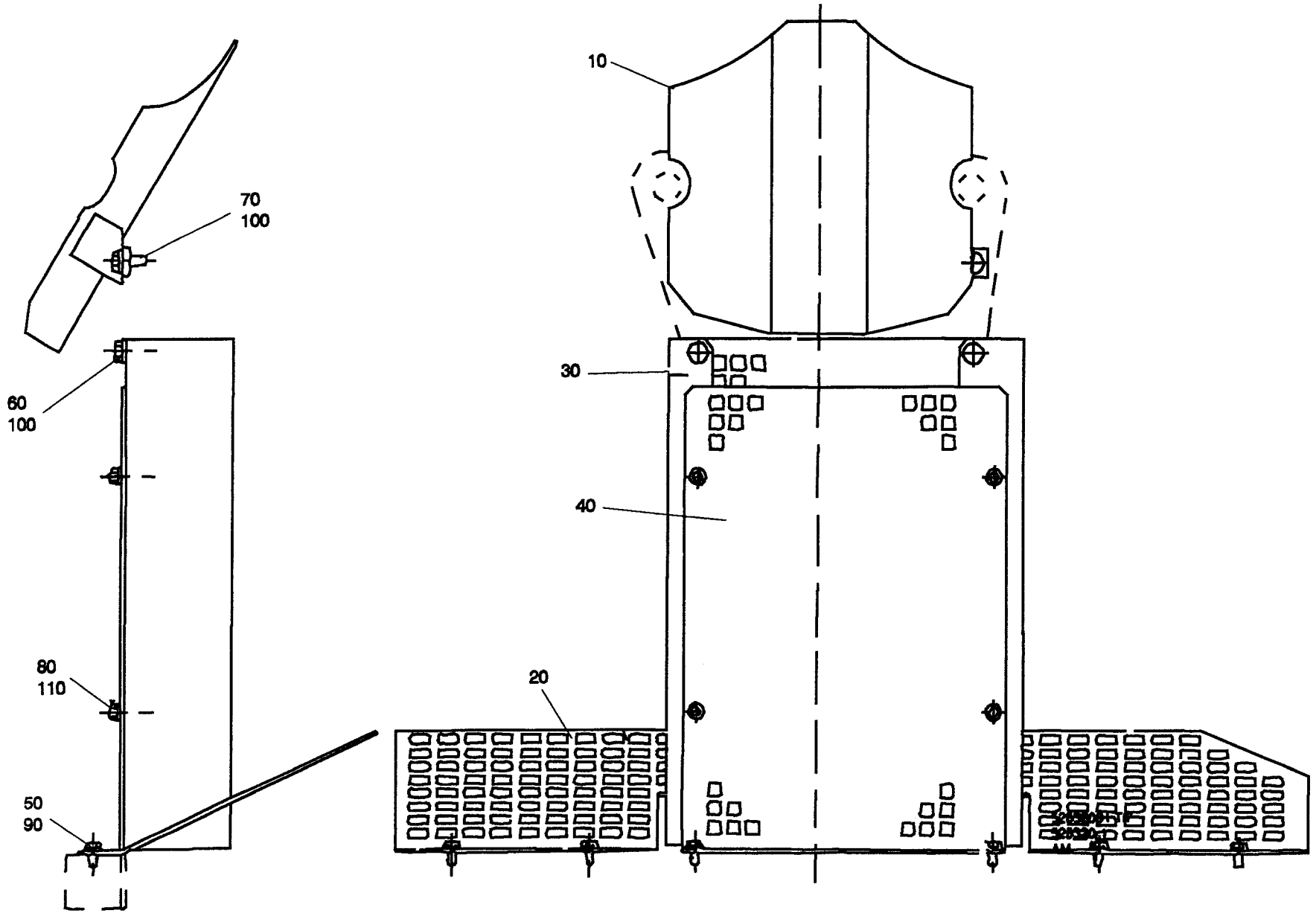

52532001.WPG
525320-1
AM 11872

From	Pos	Part No	SP	UN	Qty	Description
1136ml-1000ml 1000ml Slim 750ml Slim						
		C- 525320-0101				**Chain Guard, Ass'y**
	010	525265-0001	-		1	LEAD PLATE
750ml 500ml Slim						
		C- 525320-0102				**Chain Guard, Ass'y**
	010	525265-0002	-		1	LEAD PLATE
375ml 300ml						
		C- 525320-0103				**Chain Guard, Ass'y**
	010	525265-0003	-		1	LEAD PLATE
568ml 500ml 355ml						
		C- 525320-0104				**Chain Guard, Ass'y**
	010	525265-0004	-		1	LEAD PLATE
Common parts						
	020	525326	-		1	CHAIN GUARD
	030	525327	-		1	CHAIN GUARD
	040	525328	-		1	CHAIN GUARD
	050	312105-0368	-		6	SCREW M6S6X16RFR
	060	312105-0449	-		2	SCREW M6S8X16RFR
	070	312105-0451	-		2	SCREW M6S8X20RFR
	080	312605-0316	-		4	NUT M6M6RFR
	090	315105-0153	-		6	WASHER BRB6,4X12RFR
	100	315105-0165	-		4	WASHER BRB8,4X16RFR
	110	315115-0153	-		4	WASHER TBRB6,4X12RFR

From	Pos	Part No	SP	UN	Qty	Description

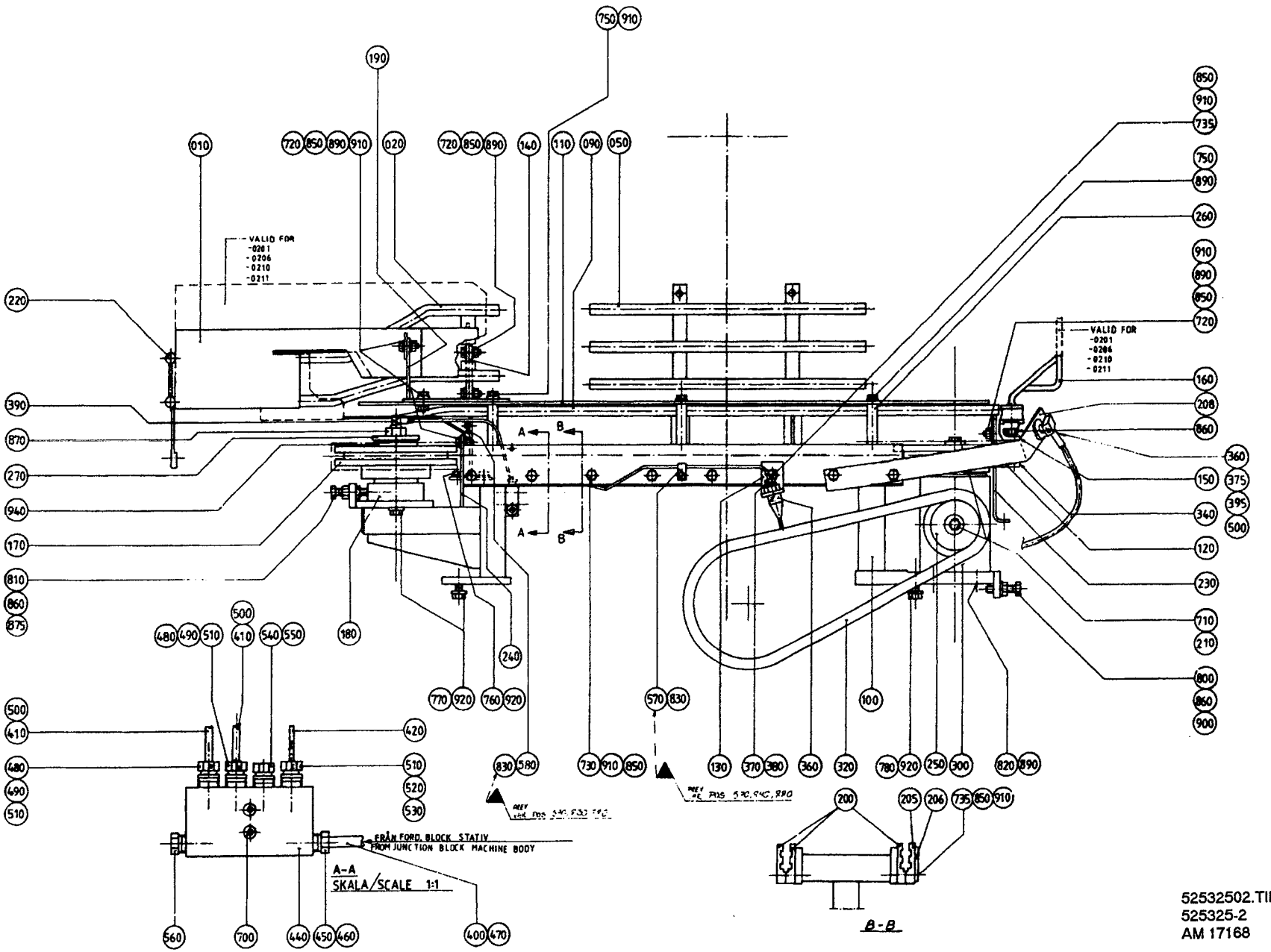

52532502.TIF
525325-2
AM 17168

From	Pos	Part No	SP	UN	Qty	Description
1055ml 1000ml						
		C- 525325-0201				**Discharger, Ass'y**
	010	525437	-		1	ARCH
	020	443206-0001	-		1	ARCH
	050	525322-0001	-		1	LEAD RAIL
	160	525414	P		4	CARRIER
750ml						
		C- 525325-0202				**Discharger, Ass'y**
	010	442811-0001	-		1	ARCH
	020	443206-0001	-		1	ARCH
	050	525322-0001	-		1	LEAD RAIL
	160	525374	P		4	CARRIER
568ml 500ml						
		C- 525325-0204				**Discharger, Ass'y**
	010	442811-0001	-		1	ARCH
	020	443207-0001	-		1	ARCH
	050	525322-0001	-		1	LEAD RAIL
	160	525374	P		4	CARRIER
500ml Slim						
		C- 525325-0206				**Discharger, Ass'y**
	010	525466	-		1	ARCH
	020	443206-0002	-		1	ARCH
	050	525322-0002	-		1	LEAD RAIL
	160	525414	P		4	CARRIER
355ml						
		C- 525325-0207				**Discharger, Ass'y**
	010	442811-0002	-		1	ARCH
	020	443207-0002	-		1	ARCH
	050	525322-0002	-		1	LEAD RAIL
	160	525374	P		4	CARRIER
300ml						
		C- 525325-0208				**Discharger, Ass'y**
	010	442811-0002	-		1	ARCH
	020	443206-0003	-		1	ARCH
	050	525322-0003	-		1	LEAD RAIL
	160	525374	P		4	CARRIER
300ml						
		C- 525325-0209				**Discharger, Ass'y**
	010	442811-0002	-		1	ARCH
	020	443207-0003	-		1	ARCH
	050	525322-0003	-		1	LEAD RAIL
	160	525374	P		4	CARRIER
750ml Slim						
		C- 525325-0210				**Discharger, Ass'y**
	010	525437	-		1	ARCH
	020	443206-0004	-		1	ARCH
	050	525322-0004	-		1	LEAD RAIL
	160	525414	P		4	CARRIER
1136ml						
		C- 525325-0211				**Discharger, Ass'y**
	010	525437	-		1	ARCH
	020	443206-0001	-		1	ARCH
	050	525413	-		1	LEAD RAIL
	160	525414	P		4	CARRIER
1000ml Slim						
		C- 525325-0212				**Discharger, Ass'y**
	010	525437	-		1	ARCH
	020	443206-0001	-		1	ARCH
	050	569130	-		1	LEAD RAIL
	160	525414	P		4	CARRIER
Common parts						
	090	442809	-		1	LEAD RAIL
	100	525300	-		1	MACHINE BODY
	110	443210	-		1	SHEET
	120	443081	S		1	SPROCKET
	130	443213	-		1	BRACKET
	140	443217	-		1	BRACKET
	150	525254	P		4	LINK
	170	525298	S		1	SPROCKET
	180	525299	C		1	SHAFT
	190	525323	-		1	BRACKET
	200	525324	S		3	PROFILE
	205	525411	S		1	PROFILE
	206	525412	-		1	RULER
	208	566314	-		1	HOLDER
	210	6278	-		2	WASHER
	220	229516	-		4	PEG
	230	442829	-		1	BRACKET
	240	442830	-		1	BRACKET
	250	442836	S		1	SPROCKET
	260	443215	-		3	SPACER
	270	443295	-		1	WASHER
	300	90056-0099	C		1	BEVEL GEAR
	320	318212-0066	S		1	ROLLER CHA
	340	318242-0034	S		4	ROLLER CHA
	360	90092-0048	P		2	OIL BRUSH
	370	90028-0001	P		1	CONE
	375	90134-0002	P		1	PIPE CONNECTION
	380	90134-0003	P		1	BUSHING

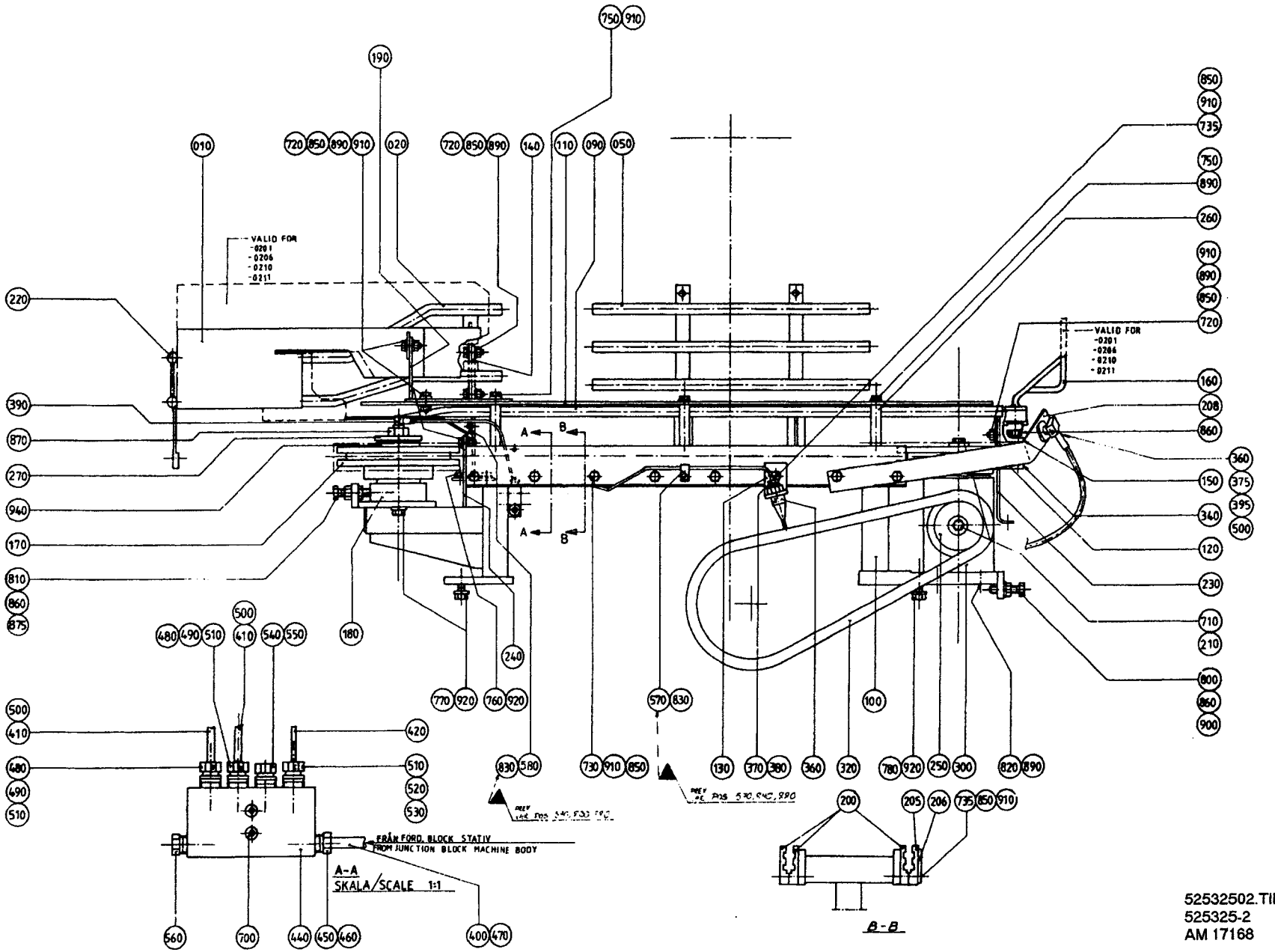

52532502.TIF
525325-2
AM 17168

From	Pos	Part No	SP	UN Qty	Description
	390	90134-0058	S	1	BANJO CONNECTION
	395	90137-0002	P	1	ELBOW PIPE
	400	90166-0108	P	MM 1300	HOSE
	410	90166-0051	P	MM 1100	HOSE
	420	90166-0143	P	MM 200	HOSE
	440	90032-0039	S	1	BLOCK
	450	90028-0025	P	1	CONE
	460	90134-0055	P	1	BUSHING
	470	90134-0030	P	2	SLEEVE
	480	90028-0021	P	2	CONE
	490	90134-0040	P	2	BUSHING
	500	342706-0114	P	4	INSERT SLESH04
	510	90092-0052	P	3	VALVE
	520	90028-0020	P	1	CONE
	530	90134-0039	P	1	BUSHING
	540	90134-0045	S	1	PLUG
	550	90134-0052	S	1	PLUG
	560	90087-0019	S	1	PLUG
	570	90165-0056	S	1	CLIP
	580	90165-0060	S	1	CLAMP
	700	312155-0295	-	2	SCREW MF6S4X20RFR
	710	312105-0366	-	2	SCREW M6S6X12RFR
	720	312105-0368	-	6	SCREW M6S6X16RFR
	730	312105-0376	-	7	SCREW M6S6X35RFR
	735	312105-0378	-	9	SCREW M6S6X40RFR
	750	312105-0386	-	3	SCREW M6S6X80RFR
	760	312105-0449	-	2	SCREW M6S8X16RFR
	770	312105-0451	-	4	SCREW M6S8X20RFR
	780	312105-0453	-	2	SCREW M6S8X25RFR
	800	312109-0457	-	1	SCREW 8X35 H A4 80
	810	312109-0461	-	1	SCREW M6S8X50H A4 80
	820	312115-0368	-	4	SCREW 6X16 A4 80
	830	312125-0285	-	2	SLOTTED HEMCS4X6RFR
	840	312125-0289	-	1	SLOTTED HEMCS4X10RFR
	850	312605-0316	-	22	NUT M6M6RFR
	860	312605-0318	-	6	NUT M6M8RFR
	870	312605-0322	-	1	NUT M6M12RFR
	875	312625-0318	-	1	NUT M 8
	890	315105-0153	-	14	WASHER BRB6,4X12RFR
	900	315105-0165	-	1	WASHER BRB8,4X16RFR
	910	315115-0153	-	21	WASHER TBRB6,4X12RFR
	920	315115-0165	-	8	WASHER TBRB8,4X16RFR
	940	321101-0272	S	2	FLANGE BUS 30F7X20

From	Pos	Part No	SP	UN Qty	Description

Tetra Pak

SPC section 648007

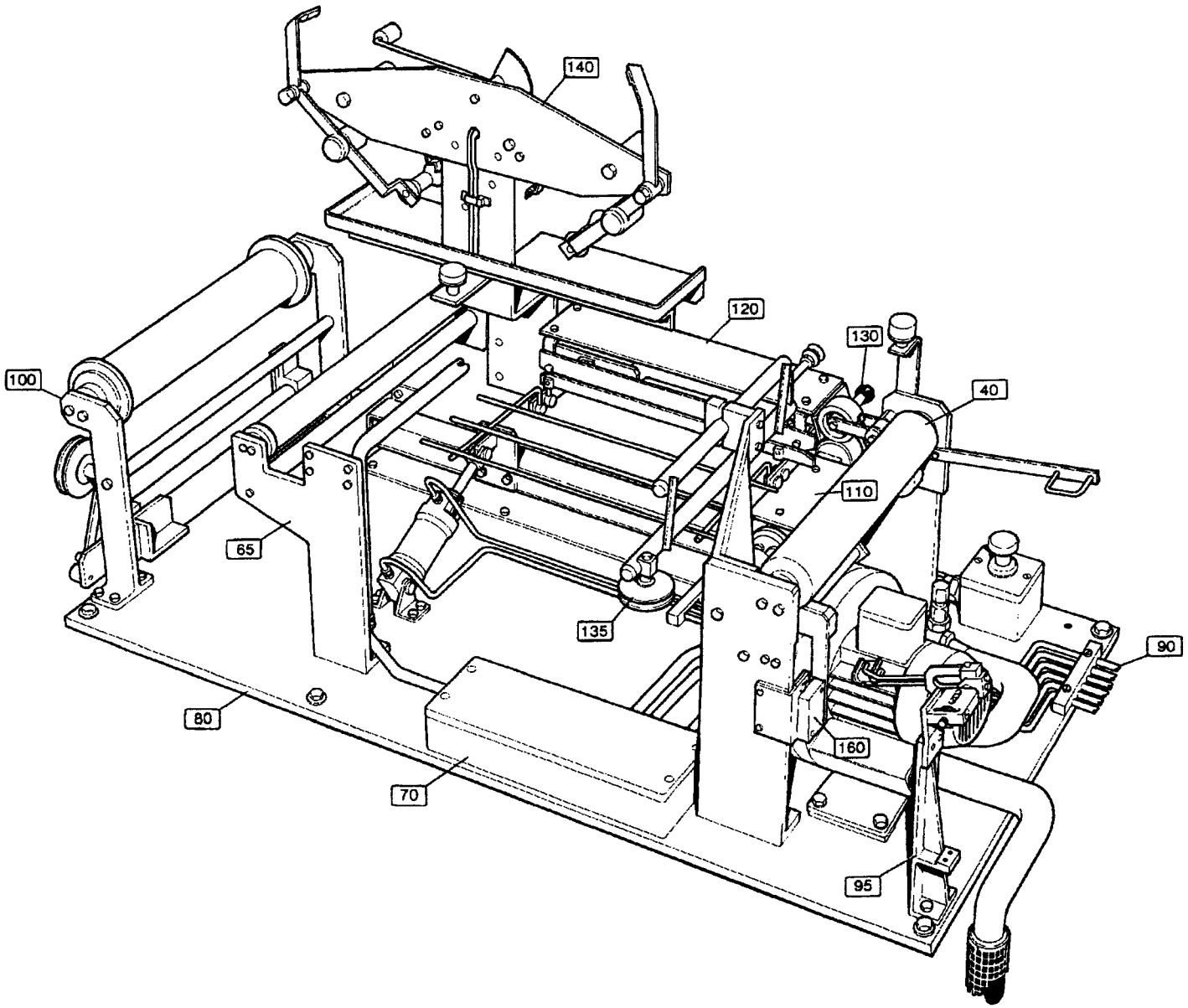

64800705.TIF
648007-5
AM

Code	Ass'y	Group No	Description	Page
07-F000	64800705	648007-030V	Strip Applicator	521
07-F040	28250902	282509-030V	Bending Roller TBA/8	523
07-F040	54617901	546179-010V	Bending Roller TB/8	525
07-F065	44575901	445759-010V	Support Roller	527
07-F070	28302603	283026-030V	Connection Box TB/8	529
07-F070	45086203	450862-030V	Connection Box TBA/8	531
07-F080	52693102	526931-020V	Bottom Plate TBA/8	533
07-F080	52693303	526933-030V	Bottom Plate TB/8	535
07-F090	52693202	526932-030V	Pipe Work TBA/8	537
07-F090	52693401	526934-020V	Hose and Pipe Assembly TB/8	539
07-F095	27921001	279210-010V	Paper Guide	541
07-F100	26556501	265565-020V	Bending Roller Bracket	543
07-F110	26672603	266726-030V	Pressure Roller	545
07-F120	26911204	269112-050V	Strip Applicator	547
07-F130	28252801	282528-020V	Pressure Roller	549
07-F135	28263402	282634-030V	Strip Guide	551
07-F160	54618001	546180-010V	Splice Detector	553
07-F170	526954	526954-010V	Start-Up Kit	555
07-F180	54382301	543823-010V	Strip Magazine	557
	53732901	537329-010V	Hub Jumbo	559
	54382201	543822-010V	Brake Arm	561
	54382101	543821-010V	Level Probe	563
07-F220	54497301	544973-010V	Pillar	565
07-F230	28264204	282642-040V	Zone Heater TBA/8	567
	45012501	450125-010V	Heating Device	569
	45087301	450873-020V	Inductor Unit	571
	54611701	546117-010V	Bar Code	573
	67379	67379-010V	IH Transformator I	575
	68474	68474-010V	Coil	577

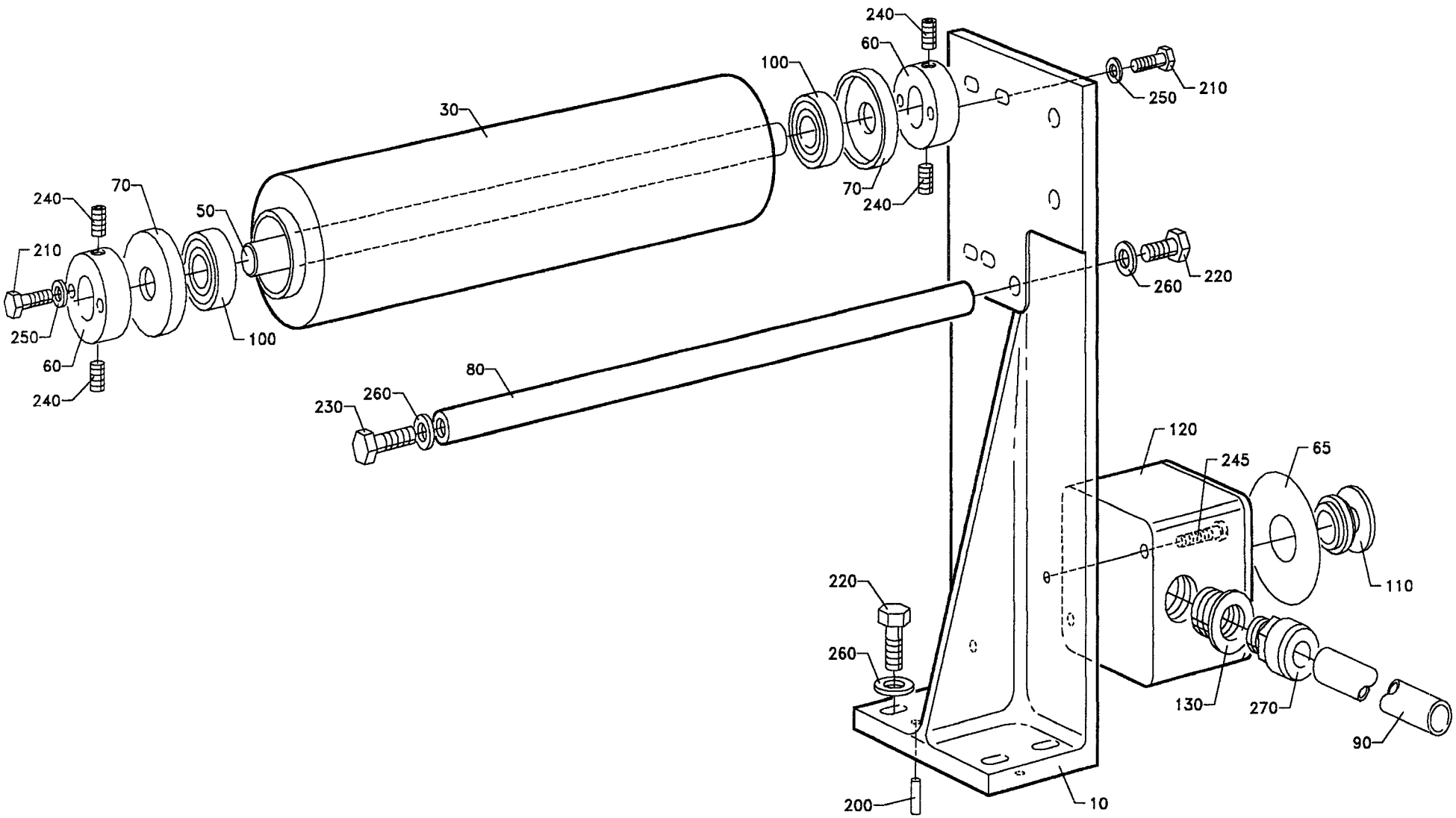

282509.wpg
SMST S1-282509-2
AM 16264 910416

From	Pos	Part No	SP	UN	Qty	Description
1055ml 1000ml 750ml 568ml 500ml 1000ml Slim						
	F000	**C- 282509-0301**				**Bending Roller, Ass'y**
	030	449843-0001	C		1	BENDING ROLLER
	050	265566-0001	S		1	SHAFT
	080	265569-0001	-		1	STRUT
375ml 300ml 500ml Slim 355ml						
	F000	**C- 282509-0302**				**Bending Roller, Ass'y**
	030	449843-0002	C		1	BENDING ROLLER
	050	265566-0003	S		1	SHAFT
	080	265569-0003	-		1	STRUT
750ML Slim						
	F000	**C- 282509-0303**				**Bending Roller, Ass'y**
	030	449843-0003	C		1	BENDING ROLLER
	050	265566-0004	S		1	SHAFT
	080	265569-0005	-		1	STRUT
Common Parts						
	010	265756	-		1	CANTILEVER
	060	265567	C		2	BEARING UNIT
	065	486826-0001	-		1	SIGN
	070	265568	-		2	DUST COVER
	090	90152-0033	-	M	1	HOSE
	100	90214-0098	P		2	BALL BEARING
	110	90064-0105	-		1	EMERGENCY STOP
	120	90066-0021	-		1	PUSH BOTTON BOX
	130	90089-0003	-		1	SLEEVE
	200	311305-0308	-		2	SLOTTED PIRPC5X16FZB
	210	312105-0370	-		4	SCREW M6S6X20RFR
	220	312105-0451	-		5	SCREW M6S8X20RFR
	230	312105-0453	-		1	SCREW M6S8X25RFR
	240	312318-0364	-		4	STOP SCREW SK6SS6X10RFR
	245	312125-0333	-		2	SLOTTED HEMCS5X25RFR
	250	315105-0153	-		4	WASHER BRB6,4X12RFR
	260	315105-0165	-		6	WASHER BRB8,4X16RFR
	270	352136-0113	-		1	GLAND FITT

From	Pos	Part No	SP	UN	Qty	Description

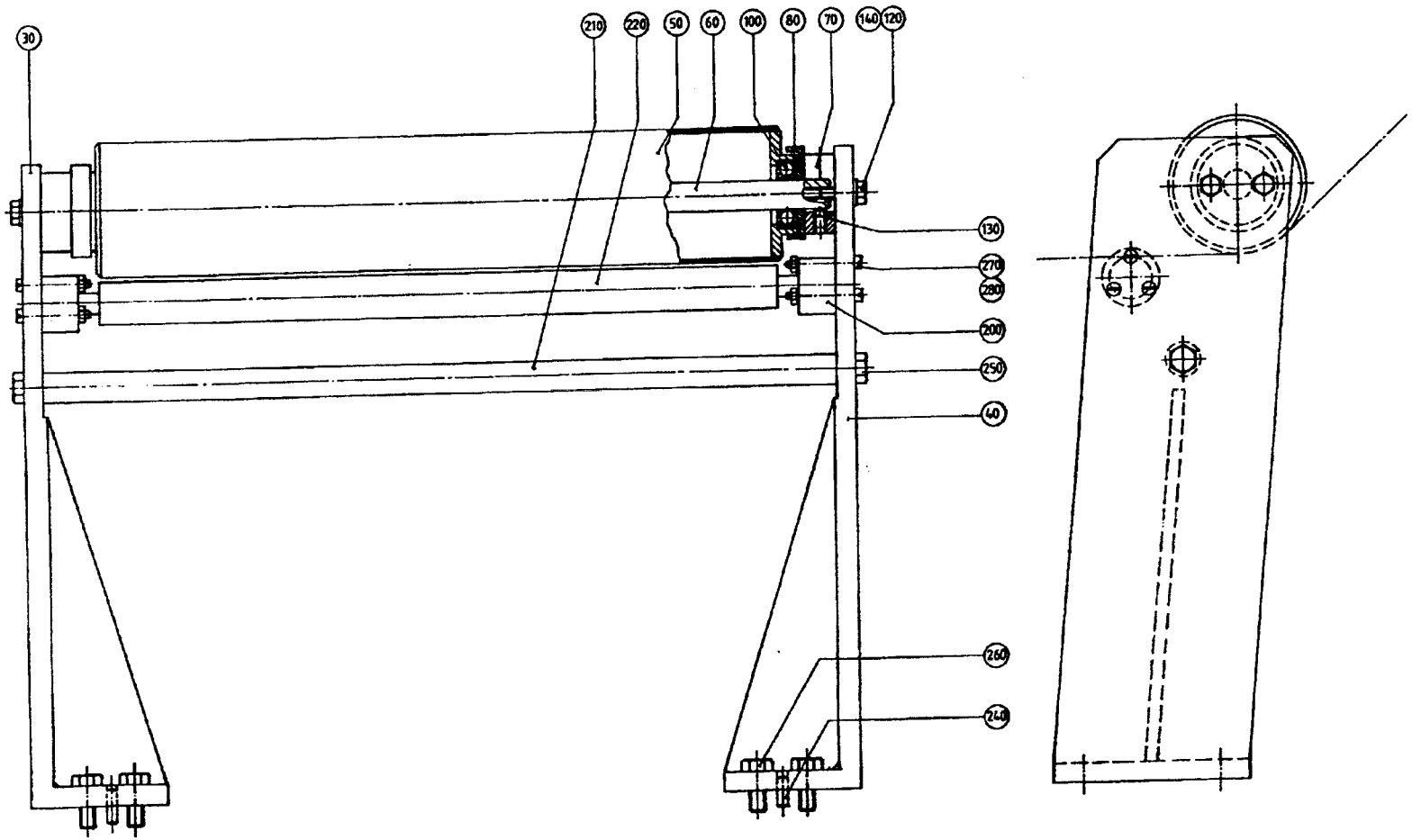

54617901.TIF
546179-1
AM

From	Pos	Part No	SP	UN	Qty	Description
	F000	**C- 546179-0101**				**Bending Roller, Ass'y**
	030	294108	-		1	CANTILEVER
	040	294109	-		1	CANTILEVER
	050	449843-0001	-		1	BENDING ROLLER
	060	265566-0001	-		1	SHAFT
	070	265567	-		2	BEARING UNIT
	080	265568	-		2	DUST COVER
	100	90214-0098	-		2	BALL BEARING
	120	312105-0370	-		4	SCREW M6S6X20RFR
	130	312318-0364	-		4	STOP SCREW SK6SS6X10RFR
	140	315105-0153	-		4	WASHER BRB6,4X12RFR
	200	24206	-		2	BEARING
	210	265569-0001	-		1	STRUT
	220	283462	-		1	ROLL
	240	311305-0308	-		2	SLOTTED PIRPC5X16FZB
	250	312105-0451	-		2	SCREW M6S8X20RFR
	260	312105-0491	-		4	SCREW M6S10X20RFR
	270	312125-0301	-		6	SLOTTED HEMCS4X35RFR
	280	312605-0312	-		6	NUT M6M4RFR

From	Pos	Part No	SP	UN	Qty	Description

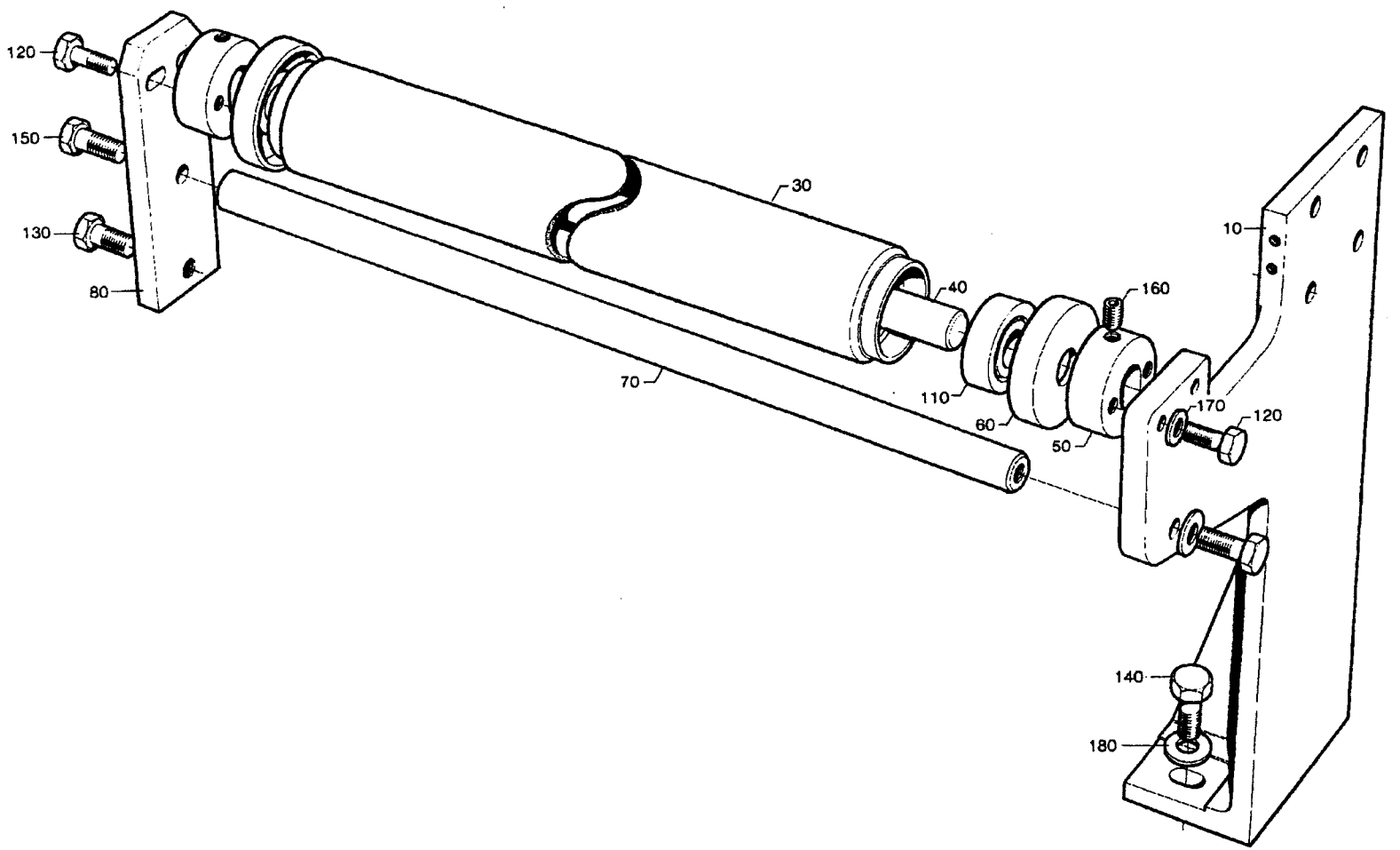

44575901.TIF
445759-1
AM

From	Pos	Part No	SP	UN	Qty	Description
1055ml 1000ml 750ml 568ml 500ml 1000ml Slim						
	F000	**C- 445759-0101**				**Support Roller, Ass'y**
	030	450463-0001	C		1	SUPPORT ROLLER
	040	265566-0001	S		1	SHAFT
	070	265569-0001	-		1	STRUT
375ml 300ml 500ml Slim 355ml						
	F000	**C- 445759-0102**				**Support Roller, Ass'y**
	030	450463-0002	C		1	SUPPORT ROLLER
	040	265566-0003	S		1	SHAFT
	070	265569-0003	-		1	STRUT
750ml Slim						
	F000	**C- 445759-0103**				**Support Roller, Ass'y**
	030	450463-0003	C		1	SUPPORT ROLLER
	040	265566-0004	S		1	SHAFT
	070	265569-0005	-		1	STRUT
Common Parts						
	010	G- 445691	-		1	CANTILEVER
	050	265567	C		2	BEARING UNIT
	060	265568	-		2	DUST COVER
	080	445690	-		1	FASTENING PLATE
	110	90214-0098	-		2	BALL BEARING
	120	312105-0370	-		4	SCREW M6S6X20RFR
	130	312105-0449	-		1	SCREW M6S8X16RFR
	140	312105-0451	-		4	SCREW M6S8X20RFR
	150	312105-0453	-		1	SCREW M6S8X25RFR
	160	312318-0364	P		4	STOP SCREW SK6SS6X10RFR
	170	315105-0153	-		2	WASHER BRB6,4X12RFR
	180	315105-0165	-		3	WASHER BRB8,4X16RFR

From	Pos	Part No	SP	UN	Qty	Description

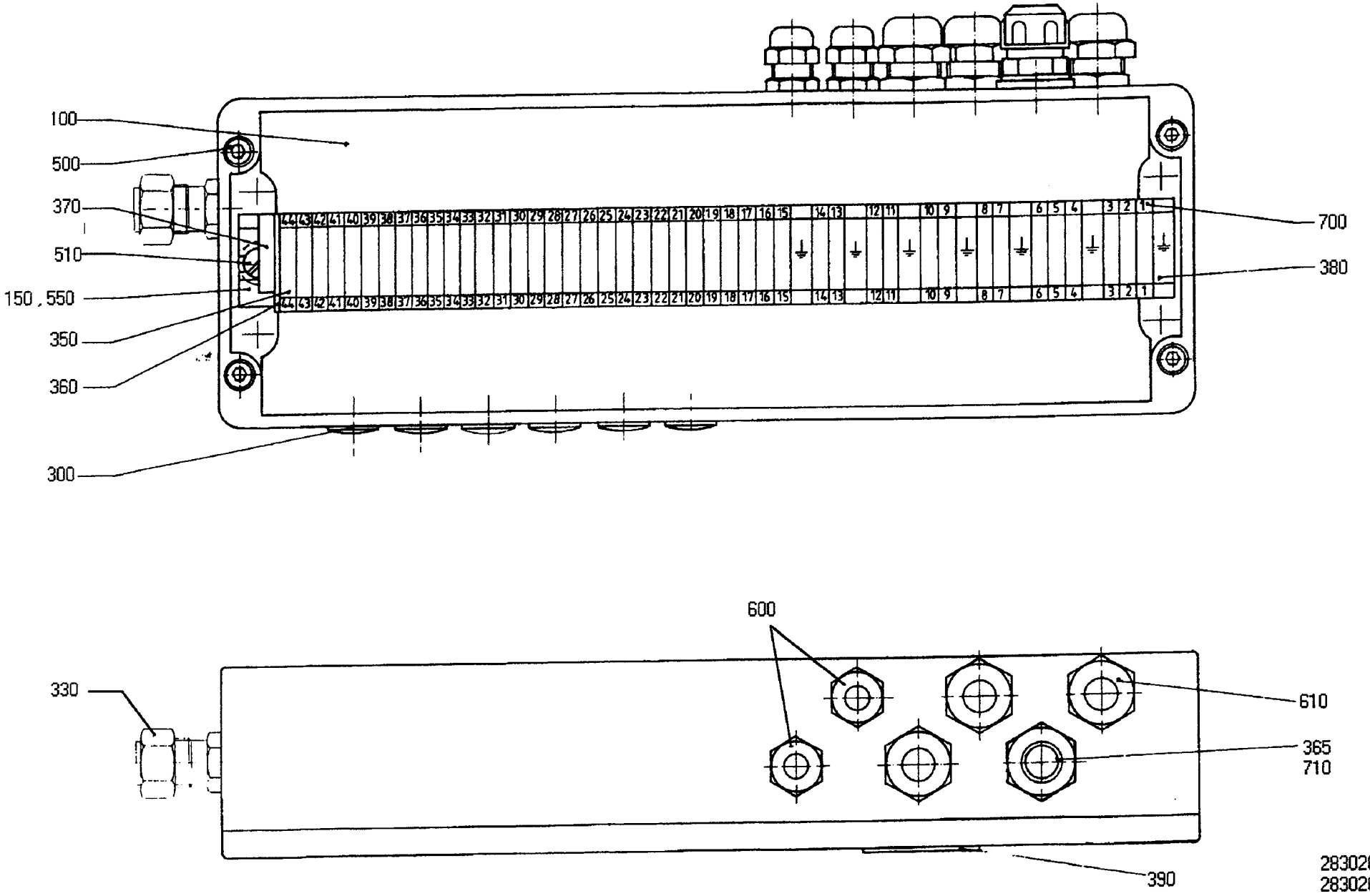

28302603.TIF
283026-3
AM 16264

From	Pos	Part No	SP	UN	Qty	Description
	F000	**C- 283026-0301**				**Connection Box, Ass'y**
	100	283027	C		1	APPLIANCE BOX
	150	282549	-		1	MOUNTING RAIL
	300	90002-0013	-		6	BLANK-OFF PLUG
	330	352136-0127	-		1	GLAND FITT
	350	90077-0064	-		44	FEED THROUGH TERMINAL
	360	90077-0300	-		1	END PLATE
	365	90089-0013	-		1	SLEEVE
	370	90094-0004	-		1	END SUPPORT
	380	90135-0022	-		7	EARTHING CLAMP
	390	90194-0016	-		1	SIGN"FLASH SIGN"
	500	312111-0372	-		4	SCREW MC6S6X25FZB
	510	312141-0364	-		2	SLOTTED HEMFS6X10FZB
	550	315115-0165	-		2	WASHER TBRB8,4X16RFR
	600	352103-0100	-		2	CABLE GLANR.STR 9
	610	352103-0108	-		3	CABLE GLANR.ST 13
	700	359011-0801	-		2	SIGN BOARDBSFW 0-49
	710	352136-0113	-		1	GLAND FITT

From	Pos	Part No	SP	UN	Qty	Description

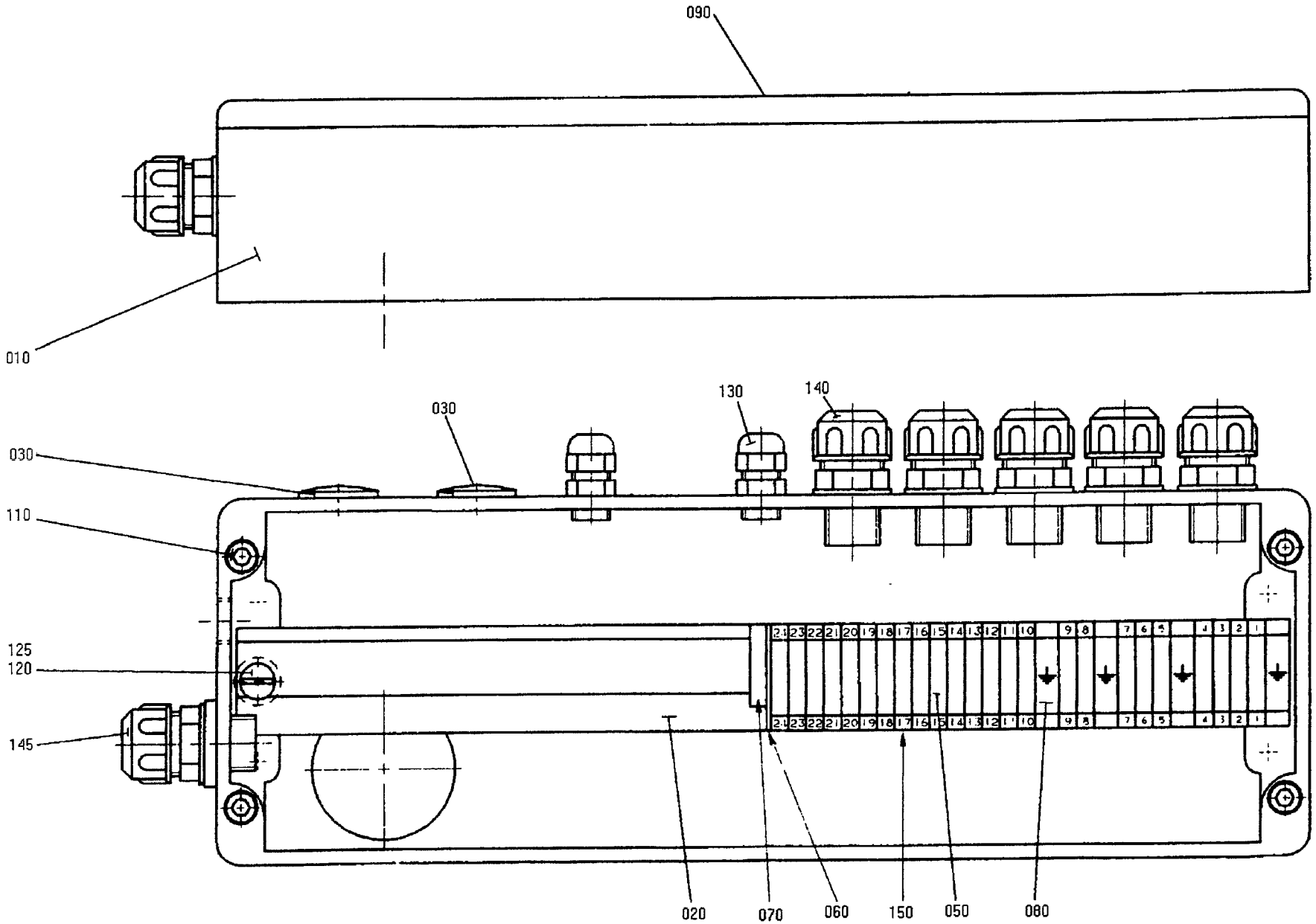

45086203.TIF
450862-3
AM 17189

From	Pos	Part No	SP	UN Qty	Description
	F000	**C- 450862-0301**			**Connection Box, Ass'y**
	010	553156	-	1	CONNECTION BOX
	020	282549	-	1	MOUNTING RAIL
	025	90002-0009	-	1	BLANK-OFF PLUG
	030	90002-0013	-	1	BLANK-OFF PLUG
	050	90077-0064	-	24	FEED THROUGH TERMINAL
	060	90077-0300	-	1	END PLATE
	070	90094-0004	-	1	END SUPPORT
	080	90135-0022	-	4	EARTHING CLAMP
	090	90194-0016	-	1	SIGN"FLASH SIGN"
	110	312115-0372	-	4	SCREW MC6S6X25 A4 80
	120	312145-0364	-	2	SLOTTED HEMFS6X10RFR
	125	315115-0165	-	2	WASHER TBRB8,4X16RFR
	130	352103-0100	-	2	CABLE GLANR.STR 9
	140	352136-0113	-	5	GLAND FITT
	145	352136-0129	-	1	GLAND FITT
	150	359011-0821	-	2	SET OF SIG6-FW 1-50

From	Pos	Part No	SP	UN Qty	Description

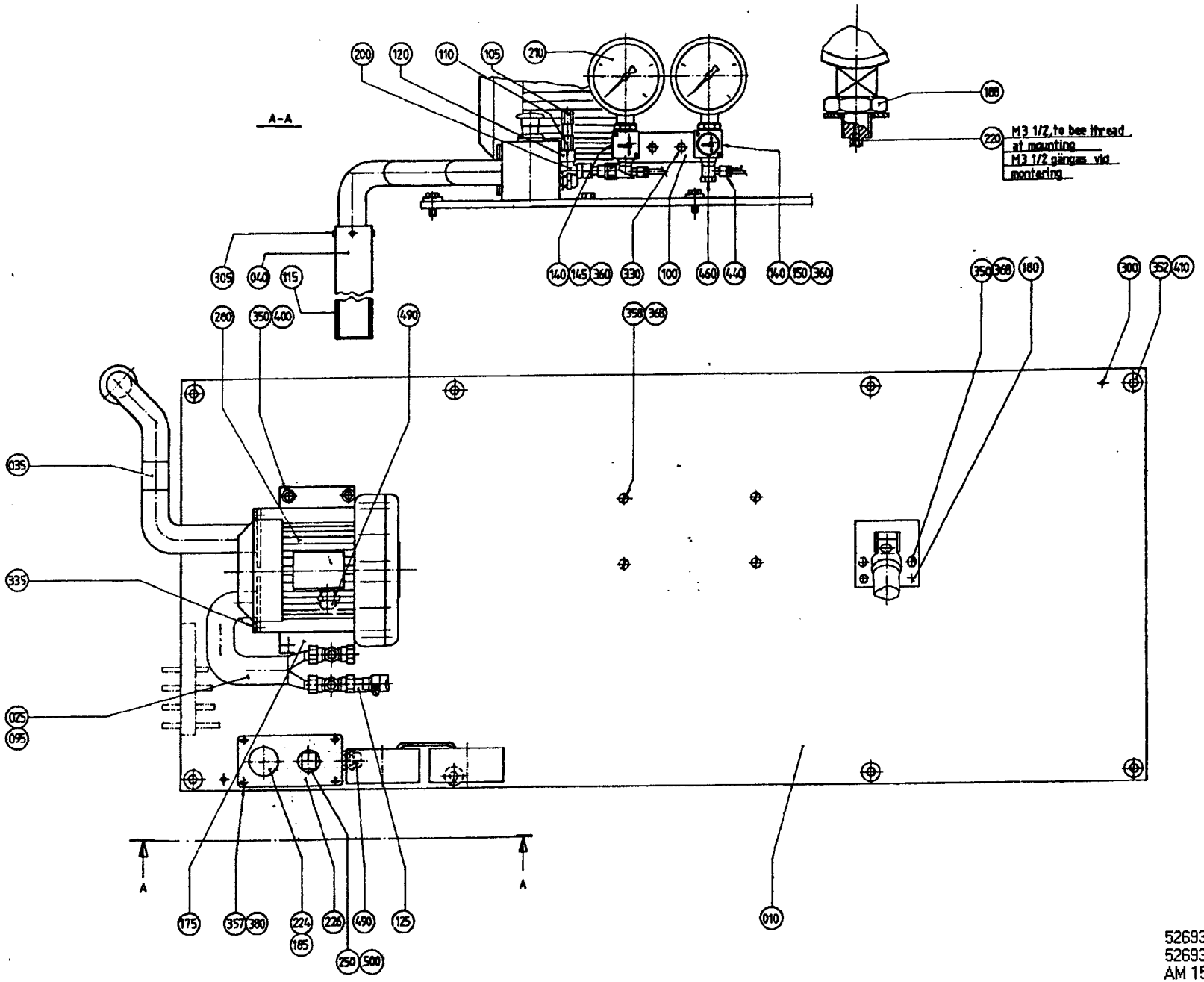

52693102.TIF
526931-2
AM 15600

From	Pos	Part No	SP	UN	Qty	Description
1055ml-500ml						
	F000	**C- 526931-0201**				**Bottom Plate, Ass'y**
	010	450850-0001	-		1	SHEET
500ml Slim 355ml						
	F000	**C- 526931-0202**				**Bottom Plate, Ass'y**
	010	450850-0002	-		1	SHEET
375ml 300ml						
	F000	**C- 526931-0203**				**Bottom Plate, Ass'y**
	010	450850-0003	-		1	SHEET
750ml Slim						
	F000	**C- 526931-0204**				**Bottom Plate, Ass'y**
	010	450850-0004	-		1	SHEET
1000ml Slim						
	F000	**C- 526931-0205**				**Bottom Plate, Ass'y**
	010	450850-0005	-		1	SHEET
Common Parts						
	025	535613	-		1	BRANCH
	035	535614	-		1	INNER PIPE
	040	450882	-		1	OUTER PIPE
	095	535608	-		1	GASKET
	100	33577	-		1	CANTILEVER
	105	209145	S		2	THROTTLE SCREW
	110	209146	S		2	BARRIER NUT
	115	526582	S		1	NET
	120	279589	-		2	NUT
	125	279590	-		1	REDUCTION
	140	464173	-		2	LABEL HOLDER
	145	464176	-		1	SIGN
	150	464177	-		1	SIGN
	175	450812	-		2	SPACER
	180	556549	-		1	FASTENING PLATE
	185	486826-0001	-		1	SIGN
	188	90330-0105	-		2	NUT
	200	90030-0058	-		2	CONNECTION
	210	90043-0034	-		2	PRESSURE GAUGE
	220	90043-0302	-		2	SCREW
	224	90064-0105	-		1	EMERGENCY STOP
	226	90066-0029	-		1	PUSH BUTTON BOX
	250	90064-0084	C		1	PUSH BUTTON YELLOW
	280	90264-0042	C		1	FAN
	300	311305-0308	-		2	SLOTTED PIRPC5X16FZB
	305	312105-0287	-		4	SCREW M6S4X8 A4 80
	330	312105-0364	-		2	SCREW M6S6X10RFR
	335	312105-0368	-		4	SCREW M6S6X16RFR
	350	312105-0451	-		8	SCREW M6S8X20RFR

From	Pos	Part No	SP	UN	Qty	Description
	352	312105-0455	-		8	SCREW M6S8X30RFR
	357	312125-0289	-		5	SLOTTED HEMCS4X10RFR
	358	312125-0447	-		4	SLOTTED HEMCS8X12RFR
	360	312502-0120	-		4	DRIVE SCREKDS0X5FNB
	368	315111-0165	-		8	WASHER TBRB8,4X16FZB
	380	315105-0136	-		4	WASHER BRB4,3X8RFR
	400	315105-0165	-		4	WASHER BRB8,4X16RFR
	410	315121-0165	-		8	WASHER TBRSB8,4X26FZB
	440	342797-0122	-		2	BANJO CONNSINGEL 6-1/4
	460	342980-0304	-		2	BANJO CONN SINGEL 1/4
	490	352136-0113	-		3	GLAND FITT
	500	359301-0051	-		1	SIGN"STRIP SPLICE"

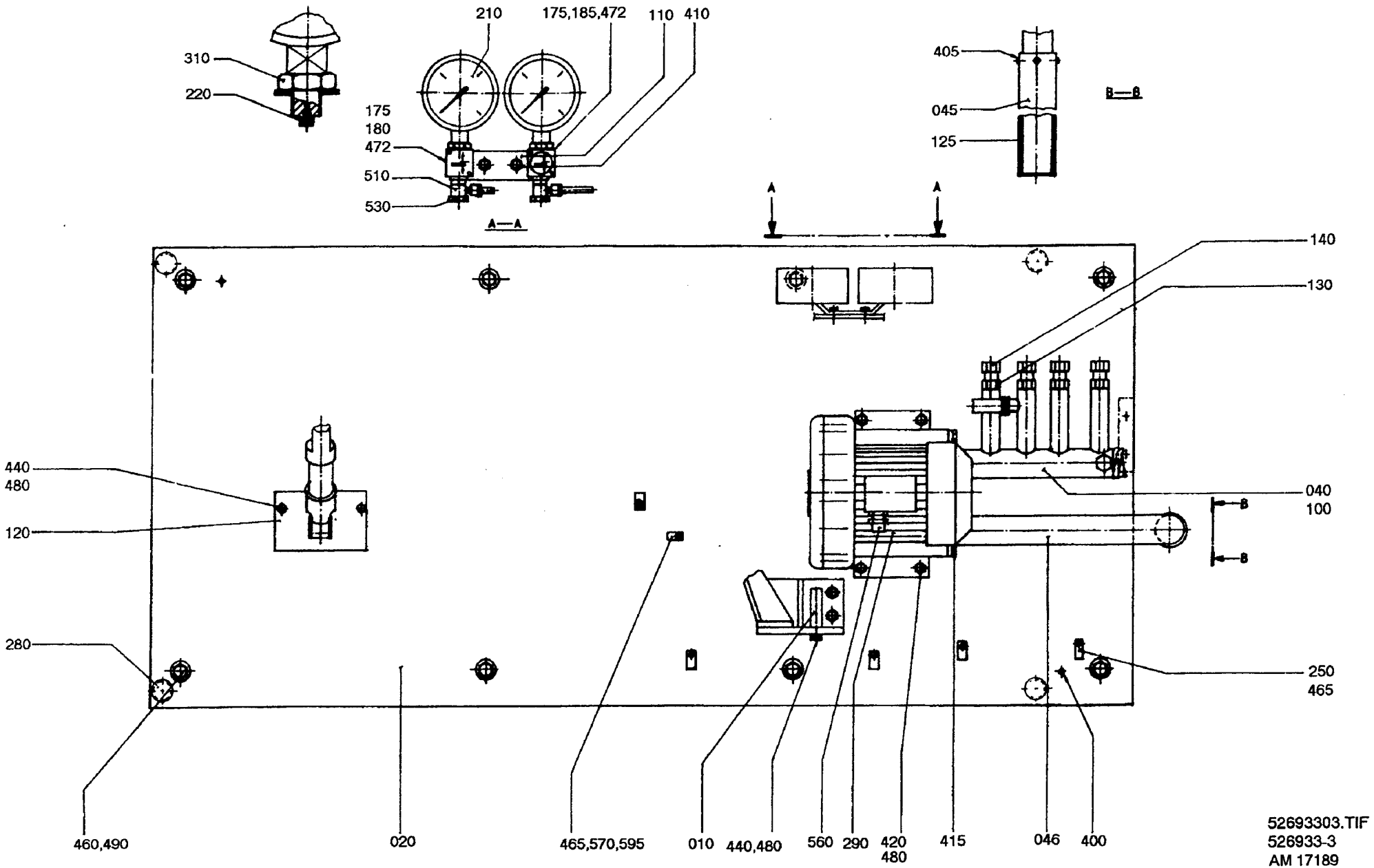
310
220
210
175,185,472
110
410
175
180
472
510
530
A—A
405
045
125
B—B
A
A
140
130
040
100
B
B
440
480
120
280
250
465
460,490
020
465,570,595
010
440,480
560
290
420
480
415
046
400
52693303.TIF
526933-3
AM 17189

From	Pos	Part No	SP	UN	Qty	Description
1136ml-500ml						
	F000	**C- 526933-0301**				**Bottom Plate, Ass'y**
	010	265569-0001	-		1	STRUT
300ml						
	F000	**C- 526933-0302**				**Bottom Plate, Ass'y**
	010	265569-0002	-		1	STRUT
Common Parts						
	020	294105	-		1	SHEET
	040	535623	-		1	BRANCH PIPE
	045	450882	-		1	OUTER PIPE
	046	535624	-		1	INNER PIPE
	100	535608	-		1	GASKET
	110	33577	-		1	CANTILEVER
	120	556548	-		1	FASTENING PLATE
	125	526582	S		1	NET
	130	293363	-		5	BARRIER NUT
	140	293364	-		5	THROTTLE SCREW
	175	464173	-		2	LABEL HOLDER
	180	464176	-		1	SIGN
	185	464177	-		1	SIGN
	210	90043-0034	-		2	PRESSURE GAUGE
	220	90043-0302	-		2	SCREW
	250	90165-0060	-		4	CLAMP
	280	90261-0011	-		4	PIPE PLUG
	290	90264-0042	-		1	FAN
	310	90330-0105	-		2	NUT
	400	311305-0308	-		2	SLOTTED PIRPC5X16FZB
	405	312105-0287	-		4	SCREW M6S4X8 A4 80
	410	312105-0366	-		2	SCREW M6S6X12RFR
	415	312105-0368	-		4	SCREW M6S6X16RFR
	420	312105-0447	-		4	SCREW M6S8X12RFR
	440	312105-0451	-		4	SCREW M6S8X20RFR
	460	312105-0493	-		8	SCREW M6S10X25RFR
	465	312125-0287	-		6	SLOTTED HEMCS4X8RFR
	472	312502-0120	-		4	DRIVE SCREKDS0X5FNB
	480	315115-0165	-		8	WASHER TBRB8,4X16RFR
	490	315121-0173	-		8	WASHER BRSB10,5X28FZB
	510	342797-0122	-		2	BANJO CONNSINGEL 6-1/4
	530	342980-0304	-		2	BANJO CONN SINGEL 1/4
	560	352103-0110	-		1	CABLE GLANR.STR 16
	570	352113-0102	-		2	RIBBON CLA
	595	352113-0203	-		2	ARMATURE M3-S8

From	Pos	Part No	SP	UN	Qty	Description

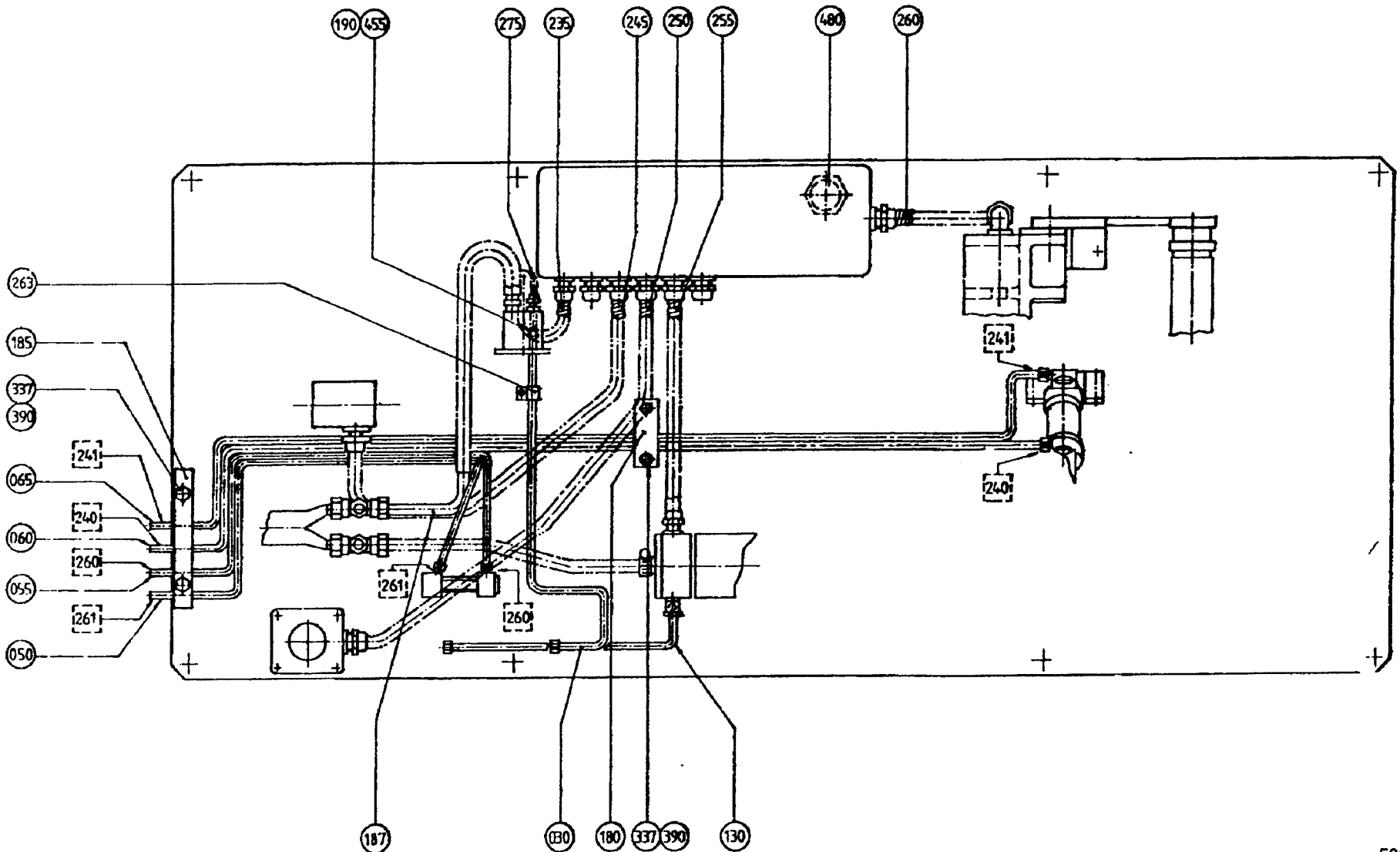

52693202.TIF
526932-2
AM 11854

From	Pos	Part No	SP	UN	Qty	Description
1055ml- 500ml						
	F000	**C- 526932-0301**				**Pipe Work, Ass'y**
	030	458199-0001	-		1	PIPE
	050	556557-0001	-		1	PIPE
	055	556558-0001	-		1	PIPE
	060	556559-0001	-		1	PIPE
	065	556560-0001	-		1	PIPE
500ml Slim 355ml						
	F000	**C- 526932-0302**				**Pipe Work, Ass'y**
	030	458199-0002	-		1	PIPE
	050	556557-0002	-		1	PIPE
	055	556558-0002	-		1	PIPE
	060	556559-0002	-		1	PIPE
	065	556560-0002	-		1	PIPE
375ml 300ml						
	F000	**C- 526932-0303**				**Pipe Work, Ass'y**
	030	458199-0003	-		1	PIPE
	050	556557-0003	-		1	PIPE
	055	556558-0003	-		1	PIPE
	060	556559-0003	-		1	PIPE
	065	556560-0003	-		1	PIPE
750ml Slim						
	F000	**C- 526932-0304**				**Pipe Work, Ass'y**
	030	458199-0001	-		1	PIPE
	050	556557-0004	-		1	PIPE
	055	556558-0004	-		1	PIPE
	060	556559-0004	-		1	PIPE
	065	556560-0004	-		1	PIPE
1000ml Slim						
	F000	**C- 526932-0305**				**Pipe Work, Ass'y**
	030	458199-0001	-		1	PIPE
	050	556557-0005	-		1	PIPE
	055	556558-0005	-		1	PIPE
	060	556559-0005	-		1	PIPE
	065	556560-0005	-		1	PIPE

From	Pos	Part No	SP	UN	Qty	Description
Coomon Parts						
	130	282802	-		1	PIPE
	180	450813	-		1	HOLDER
	185	450814	-		1	HOLDER
	187	535612	-		1	PIPE
	190	90224-0304	-		1	CONNECTION
	235	90152-0033	-	MM	450	HOSE
	245	90152-0033	-	MM	800	HOSE
	250	90152-0033	-	MM	500	HOSE
	255	90152-0033	-	MM	250	HOSE
	260	90152-0033	-	MM	265	HOSE
	263	90165-0005	-		1	CLIP
	275	90166-0124	-	MM	200	HOSE
	337	312105-0370	-		6	SCREW M6S6X20RFR
	390	315105-0153	-		8	WASHER BRB6,4X12RFR
	455	342706-0130	-		1	INSERT SLESH06
	480	352101-0107	-		1	LEAD-IN G 37

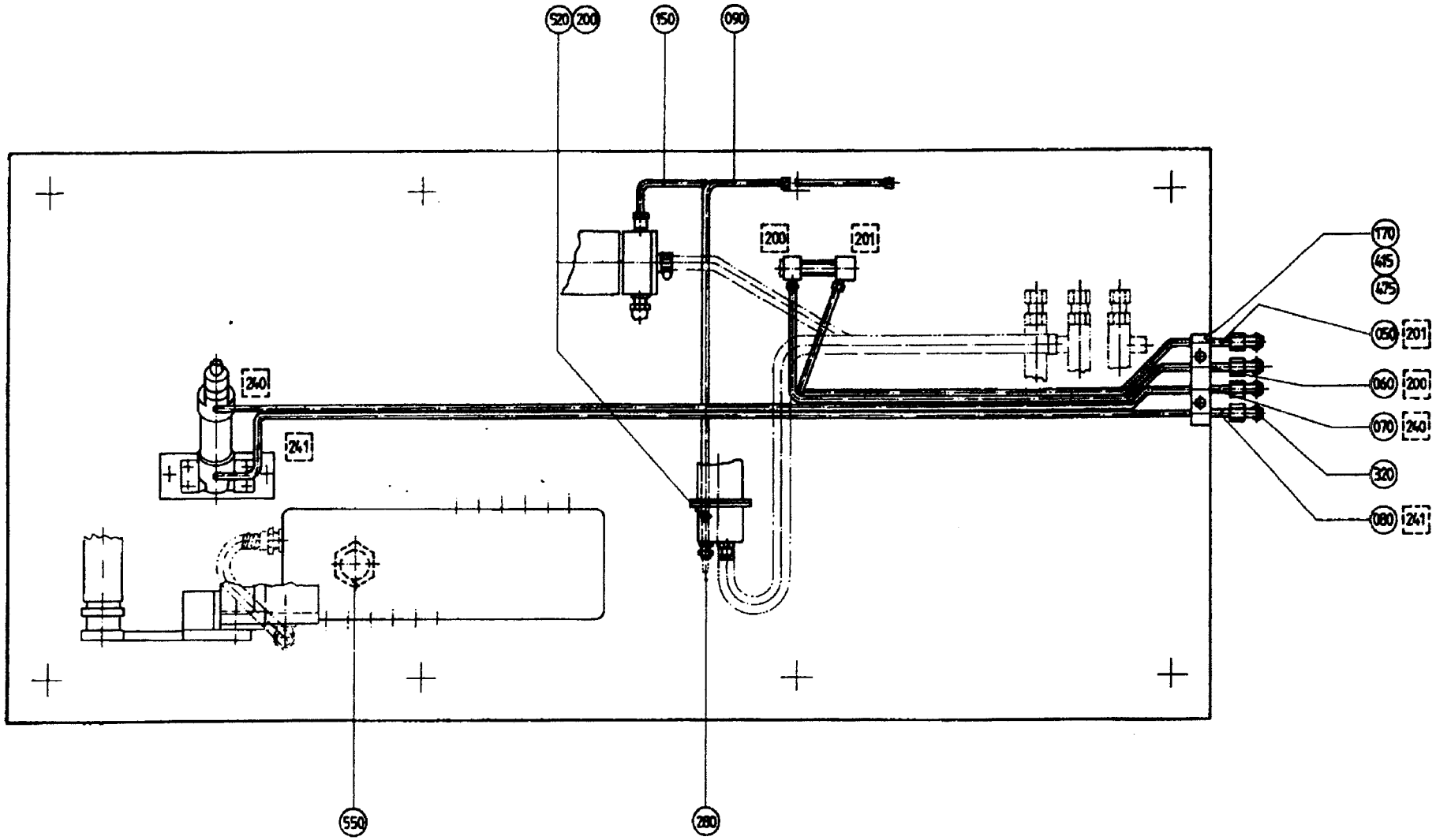

52693401.TIF
526934-1
AM 13150

From	Pos	Part No	SP	UN	Qty	Description
1136ml-500ml						
	F000	**C- 526934-0201**				**Hose & Pipe Assembly, Ass'y**
	050	556561-0001	-		1	PIPE
	060	556562-0001	-		1	PIPE
	070	556563-0001	-		1	PIPE
	080	556564-0001	-		1	PIPE
300ml						
	F000	**C- 526934-0202**				**Hose & Pipe Assembly, Ass'y**
	050	556561-0002	-		1	PIPE
	060	556562-0002	-		1	PIPE
	070	556563-0002	-		1	PIPE
	080	556564-0002	-		1	PIPE
Common Parts						
	090	526974	-		1	PIPE
	150	526975	-		1	PIPE
	170	434731	-		1	PIPE HOLDER
	200	90224-0304	-		1	CONNECTION
	280	90166-0124	-	MM	200	HOSE
	320	90224-0309	-		4	CONNECTION
	415	312105-0370	-		2	SCREW M6S6X20RFR
	475	315105-0153	-		2	WASHER BRB6,4X12RFR
	520	342706-0130	-		1	INSERT SLESH06
	550	352101-0107	-		1	LEAD-IN G 37

From	Pos	Part No	SP	UN	Qty	Description

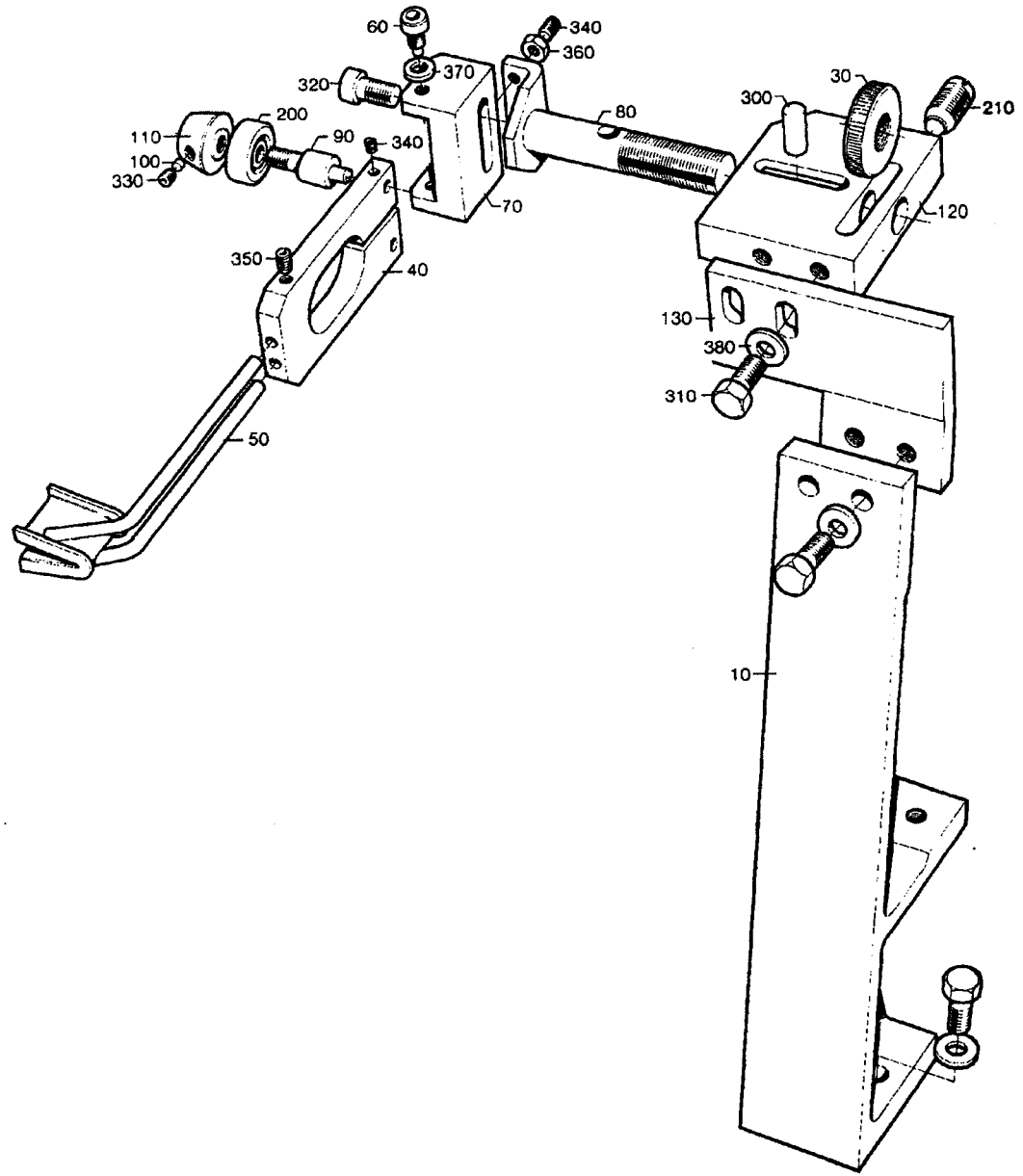

27921001-TIF
279210-1
AM

From	Pos	Part No	SP	UN	Qty	Description
TBA/8 1055ml-500ml						
	F000	**C- 279210-0101**				**Paper Guide, Ass'y**
	010	279211	-		1	CANTILEVER
	130	450127-0001	-		1	BRACKET
	310	312105-0368	-		6	SCREW M6S6X16RFR
TBA/8 500ml Slim 355ml						
	F000	**C- 279210-0102**				**Paper Guide, Ass'y**
	010	279211	-		1	CANTILEVER
	130	450127-0002	-		1	BRACKET
	310	312105-0368	-		6	SCREW M6S6X16RFR
TBA/8 375ml 300ml						
	F000	**C- 279210-0103**				**Paper Guide, Ass'y**
	010	279211	-		1	CANTILEVER
	130	450127-0003	-		1	BRACKET
	310	312105-0368	-		6	SCREW M6S6X16RFR
TB/8						
	F000	**C- 279210-0104**				**Paper Guide, Ass'y**
	010	267316	-		1	CANTILEVER
	310	312105-0368	-		4	SCREW M6S6X16RFR
TBA/8 750ml Slim						
	F000	**C- 279210-0105**				**Paper Guide, Ass'y**
	010	279211	-		1	CANTILEVER
	130	450127-0004	-		1	BRACKET
	310	312105-0368	-		6	SCREW M6S6X16RFR
TBA/8 1000ml Slim						
	F000	**C- 279210-0106**				**Paper Guide, Ass'y**
	010	279211	-		1	CANTILEVER
	130	450127-0005	-		1	BRACKET
	310	312105-0368	-		6	SCREW M6S6X16RFR
Common Parts						
	030	23580	C		1	SHIFTER HANDLE
	040	23582	-		1	HOLDER
	050	23583	S		1	GUIDE FINGER
	060	23584	S		2	SCREW
	070	24351	-		1	BOW CLAMP
	080	24352	-		1	SHAFT
	090	24355	S		2	DOWEL
	100	24356	S		4	PIECE
	110	111543	-		2	GUIDE CONE
	120	245210	-		1	BODY
	200	90214-0138	P		2	BALL BEARING
	210	90287-0009	P		1	SPRINGLOADED SCREW
	300	311103-0350	-		1	CYLINDRICACP M6 6X14 RFR
	320	312115-0366	-		1	SCREW 6X12 A4 80
	330	312316-0283	P		4	STOP SCREW SK6SS4X4FZB
	340	312316-0291	P		3	STOP SCREW SK6SS4X12FZB
	350	312318-0285	P		2	STOP SCREW SK6SS4X6RFR
	360	312605-0312	P		3	NUT M6M4RFR
	370	315105-0146	-		2	WASHER BRB5,3X10RFR
	380	315105-0153	-		4	WASHER BRB6,4X12RFR

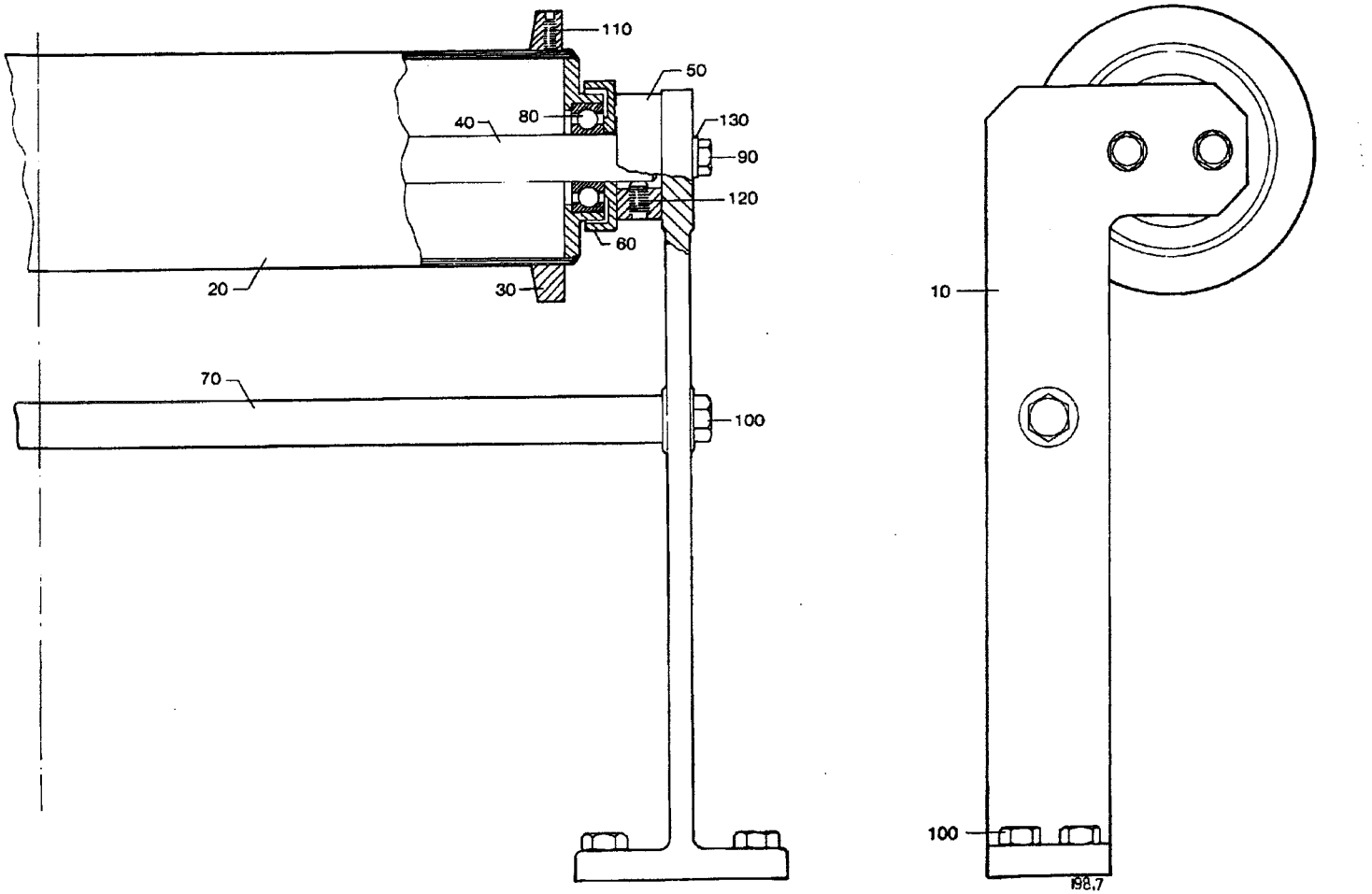

26556501.TIF
265565-1
AM

From	Pos	Part No	SP	UN Qty	Description
	F000	C- 265565-0201			**Bending Roller Bracket, Ass'y**
	010	546116	-	2	CANTILEVER
	020	265564	C	1	BENDING ROLLER
	030	250588	C	2	FLANGE
	040	265566-0001	S	1	SHAFT
	050	265567	C	2	BEARING UNIT
	060	265568	-	2	DUST COVER
	070	265569-0001	-	1	STRUT
	080	90214-0098	S	2	BALL BEARING
	085	311305-0308	-	4	SLOTTED PIRPC5X16FZB
	090	312105-0370	-	4	SCREW M6S6X20RFR
	100	312105-0451	-	10	SCREW M6S8X20RFR
	110	312318-0289	P	4	STOP SCREW SK6SS4X10RFR
	120	312318-0364	P	4	STOP SCREW SK6SS6X10RFR
	130	315105-0153	-	4	WASHER BRB6,4X12RFR

From	Pos	Part No	SP	UN Qty	Description

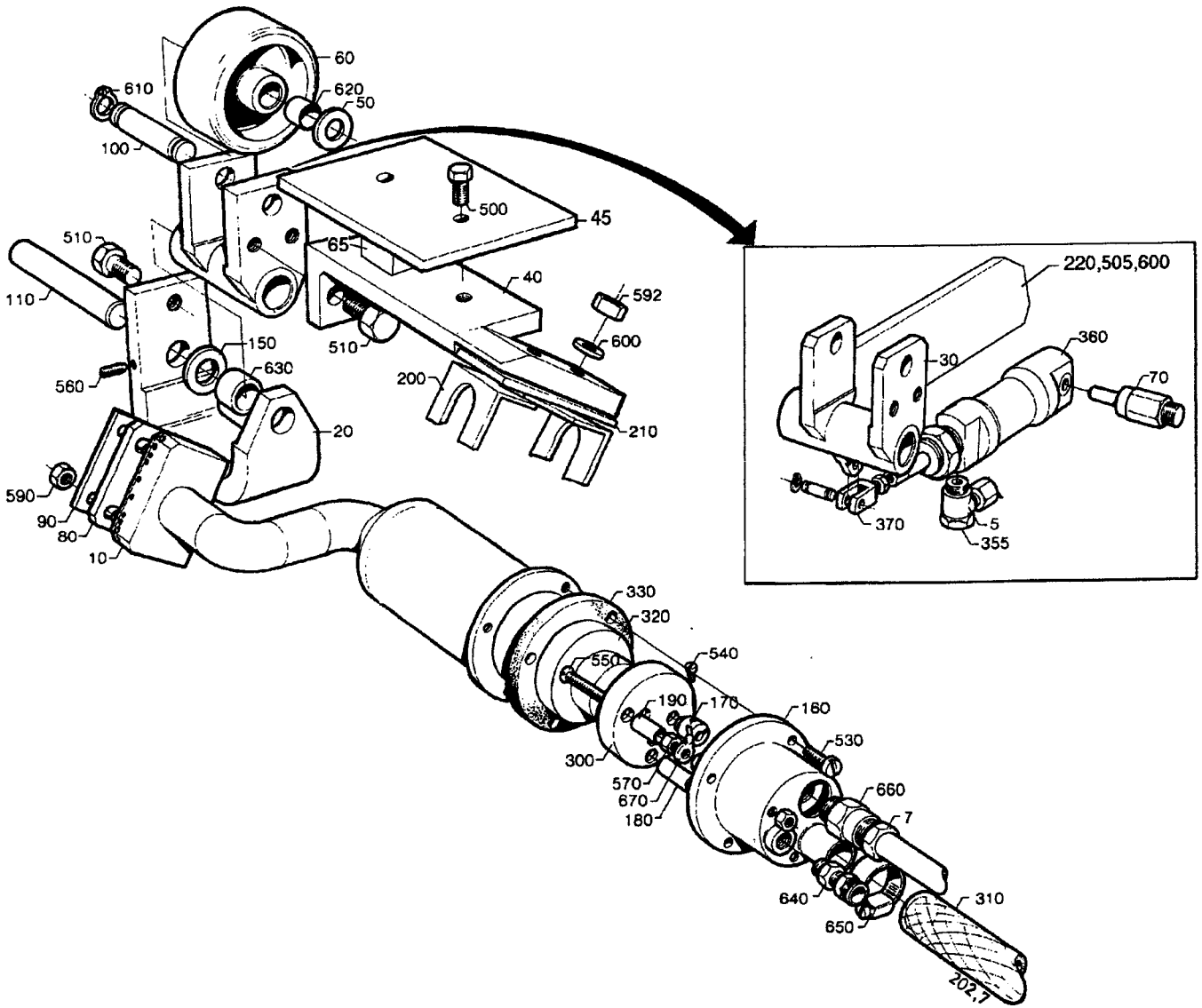

26672603.TIF
266726-3
AM 14724

From	Pos	Part No	SP	UN	Qty	Description
	F000	**C- 266726-0301**				**Pressure Roller, Ass'y**
	005	342797-0121	-		2	BANJO CONNSINGEL 6-1/8
	007	352136-0113	-		1	GLAND FITT
	010	464197	C		1	AIR NOZZLE
	020	266728	-		1	CANTILEVER
	030	556565	-		1	ROCKER ARM
	040	266730	-		1	HOLDER
	045	542090	-		1	HEAT GUARD
	050	2033-0009	P		2	WASHER
	060	21903	PU		1	ROLL
	065	242954	-		2	WASHER
	070	556551	C		1	CYLINDER BRACKET
	080	466412	S		1	PLATE
	090	255417	S		1	WASHER
	100	266731	C		1	SHAFT
	110	266732	C		1	SHAFT
	150	266737	S		2	WASHER
	160	266738	-		1	COVER
	170	266739	-		3	CABLE GLAND
	180	266740-0001	-		2	SPACER
	190	266740-0002	-		1	SPACER
	200	450887	-		1	CRAMP
	210	450888	-		1	INSULATING PLATE
	220	556552	-		1	BRACKET
	300	90125-0020	S		1	PLATE
		270926	S		6	* NUT
		270927	S		3	* SCREW
		294464	S		1	* BASE PLATE
	310	90166-0087	P	MM	600	HOSE
	320	90206-0085	P		1	HEATING CARTRIDGE
	330	90206-0322	P		1	GASKET
	355	90235-0274	S		2	VALVE
	360	90239-0821	S		1	CYLINDER
	370	90239-0532	C		1	PISTON ROD ADAPTOR
	500	312105-0370	-		2	SCREW M6S6X20RFR
	505	312105-0447	-		2	SCREW M6S8X12RFR
	510	312105-0451	-		4	SCREW M6S8X20RFR
	530	312125-0291	-		4	SLOTTED HEMCS4X12RFR
	540	312125-0220	-		3	SLOTTED HEMCS3X6RFR
	550	312145-0238	-		3	SLOTTED HEMFS3X40RFR
	560	312311-0292	-		1	STOP SCREW T6SS4X14FZB
	570	312605-0310	-		7	NUT M6M3RFR
	590	312605-0314	-		2	NUT M6M5RFR
	592	312605-0318	-		2	NUT M6M8RFR
	595	315105-0153	-		2	WASHER BRB6,4X12RFR
	600	315105-0165	-		4	WASHER BRB8,4X16RFR
	610	315750-0107	P		2	CIRCLIP SGA10
	620	321120-0104	S		2	BUSHING 10/12X10
	630	321120-0110	S		2	BUSHING 12/14X12
	640	342921-0113	-		1	PIPE COUPL6/4-1/8"
	650	342991-0103	P		2	HOSE CLIP 15-24MMRFR
	660	352100-0106	-		1	CABLE GLANR.18,6-10,5
	670	353101-0130	-		1	CABLE SHOE

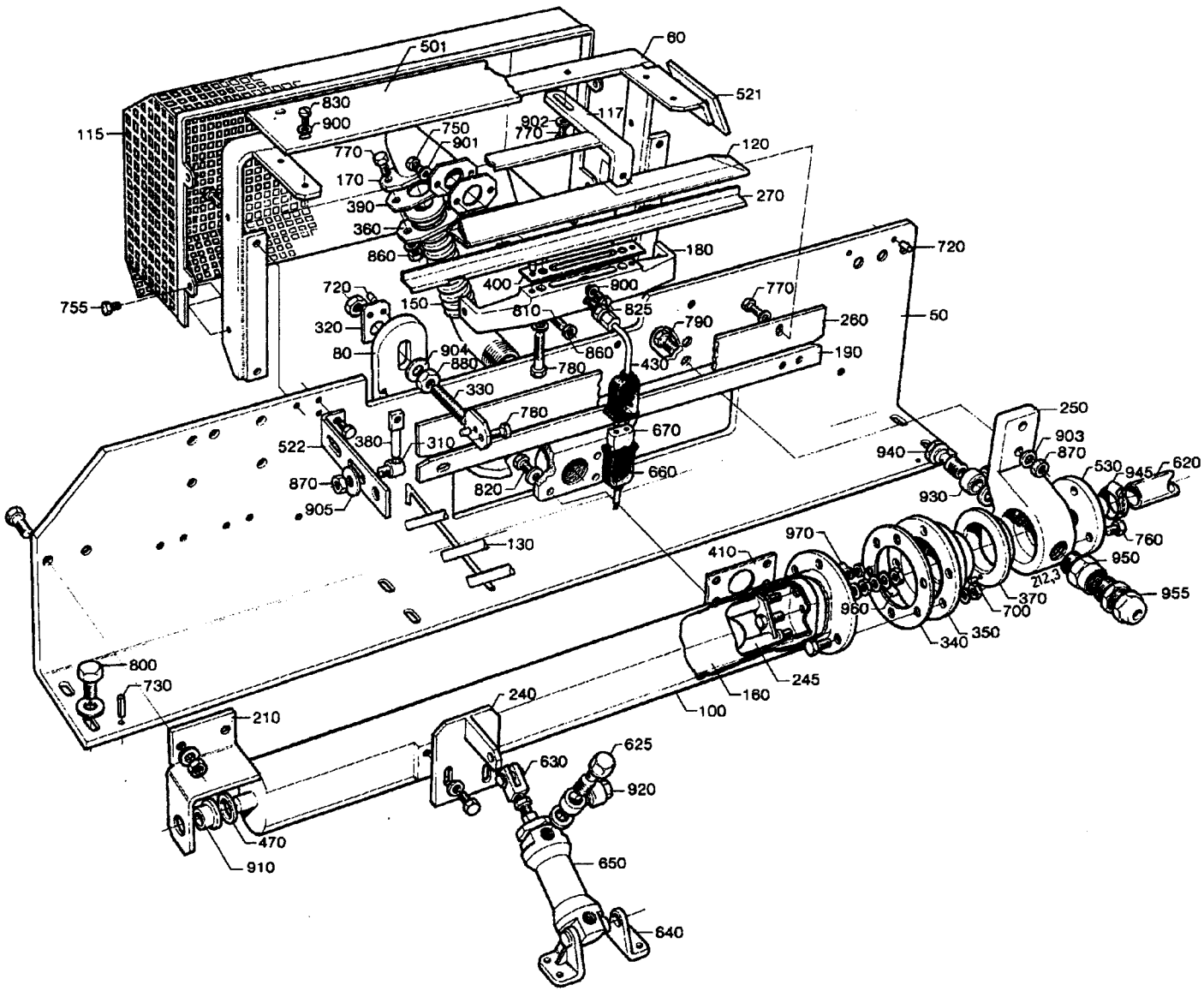

26911204.TIF
269112-4
AM

From	Pos	Part No	SP	UN	Qty	Description
TBA/8						
	F000	**C- 269112-0501**				**Strip Applicator, Ass'y**
	245	267494	PU		1	COIL HEATER
	310	22559	P		2	GRUB SCREW
TB/8						
	F000	**C- 269112-0502**				**Strip Applicator, Ass'y**
	130	22560	-		1	PAPER SUPPORT
	245	251279	PU		1	COIL HEATER
	310	22559	P		4	GRUB SCREW
Common Parts						
	050	526948	-		1	MOUNTING SHEET
	060	442480	-		1	BOW CLAMP
	080	32668	-		1	ARM
	100	36749	-		1	MANTLE
	115	445668	-		1	TOUCH GUARD
	117	445669	-		1	HOLDER
	120	283361	S		1	AIR NOZZLE
	150	32451	C		1	AIR DUCT
	160	32453	-		1	MANTLE
	170	32474	-		1	ATTACHMENT
	180	245189-0001	-		1	ATTACHMENT
	190	246342	-		1	PAPER SUPPORT
	210	251490	C		1	FASTENING BRACKET
	240	556550	C		1	BRACKET
	250	283172	-		1	BEARING HOUSING
	260	445670	-		1	PAPER SUPPORT
	270	445688	-		1	AIR GUIDE
	320	32213	-		2	WASHER
	330	32215	C		2	HOLDER
	340	531733	PU		1	GASKET
	350	32217	-		1	BOTTOM SECTION
	360	32219	-		1	WASHER
	370	32223	S		1	BEARING
	380	32400	-		2	HOLDER
	390	531734	PU		2	GASKET
	400	531735	PU		1	GASKET
	410	531736	PU		1	GASKET
	430	37768	P		1	THERMOCOUPLE
	470	230107	P		1	WASHER
	501	246344	-		1	HEAT GUARD
	521	251502	-		1	HEAT GUARD
	522	251503	-		2	HOLDER
	530	279672	-		1	ATTACHMENT
	620	90166-0087	-	MM	600	HOSE
	625	90235-0274	P		2	VALVE
	630	90239-0516	C		1	PISTON ROD HEAD
	640	90239-0487	C		1	BRACKET
	650	90239-0829	S		1	CYLINDER
	660	90326-0012	P		1	PROTECTIVE COVER
	670	90326-0020	P		1	SOCKET
	700	311103-0232	-		1	CYLINDRICACP M6 3X8 RFR
	720	311103-0267	-		10	CYLINDRICACP M6 4X10 RFR
	730	311305-0308	-		2	SLOTTED PIRPC5X16FZB
	740	312105-0291	-		4	SCREW M6S4X12RFR
	750	312105-0325	-		2	SCREW M6S5X10 A4 80
	755	312105-0364	-		4	SCREW M6S6X10RFR
	760	312105-0366	-		18	SCREW M6S6X12RFR
	770	312105-0368	-		16	SCREW M6S6X16RFR
	780	312105-0378	-		2	SCREW M6S6X40RFR
	790	312105-0451	-		4	SCREW M6S8X20RFR
	800	312105-0489	-		6	SCREW M6S10X16RFR
	810	312109-0381	-		2	SCREW M6S6X55HA480
	820	312115-0368	-		4	SCREW 6X16 A4 80
	825	312125-0285	-		1	SLOTTED HEMCS4X6RFR
	830	312125-0287	-		2	SLOTTED HEMCS4X8RFR
	860	312605-0316	-		12	NUT M6M6RFR
	870	312605-0318	-		8	NUT M6M8RFR
	880	312605-0320	-		4	NUT M6M10RFR
	900	315105-0136	-		7	WASHER BRB4,3X8RFR
	901	315105-0146	-		2	WASHER BRB5,3X10RFR
	902	315105-0153	-		27	WASHER BRB6,4X12RFR
	903	315105-0165	-		4	WASHER BRB8,4X16RFR
	904	315105-0173	-		6	WASHER BRB10,5X22RFR
	905	315121-0165	-		4	WASHER TBRSB8,4X26FZB
	910	321101-0173	P		1	FLANGE BUS 12F7X12
	920	342797-0121	-		2	BANJO CONNSINGEL 6-1/8
	930	342797-0122	-		2	BANJO CONNSINGEL 6-1/4
	940	342980-0304	-		1	BANJO CONN SINGEL 1/4
	945	342991-0103	-		2	HOSE CLIP 15-24MMRFR
	950	352100-0106	-		1	CABLE GLANR.18,6-10,5
	955	352136-0113	-		1	GLAND FITT
	960	353101-0134	-		1	CABLE SHOE
	970	353104-0130	-		2	CABLE SHOEYAV 14 M 43!

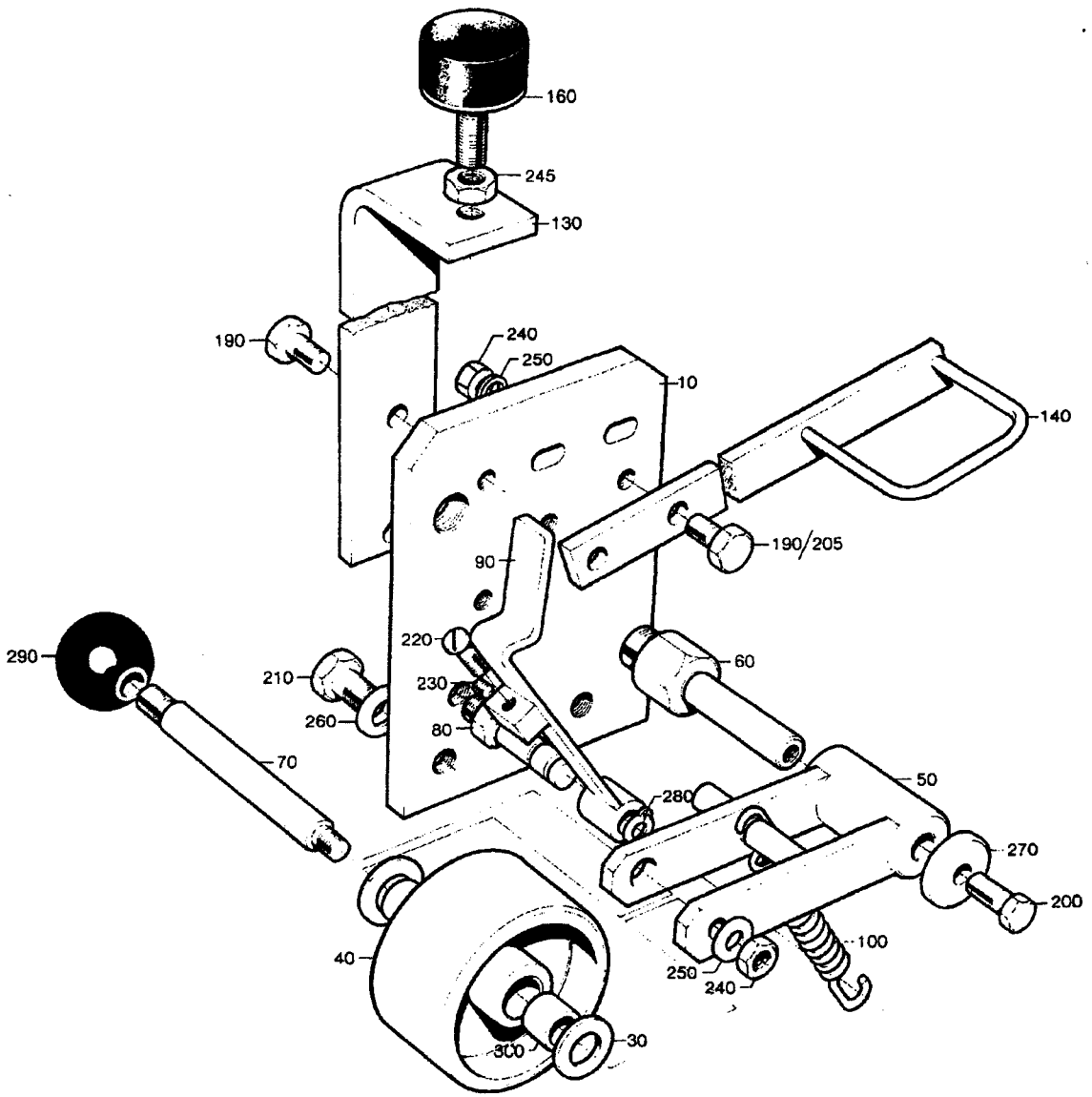

28252801.TIF
282528-1
AM

From	Pos	Part No	SP	UN	Qty	Description
TBA/8						
	F000	**C- 282528-0201**				**Pressure Roller, Ass'y**
	140	282625	C		1	EYELET
	190	312105-0366	-		3	SCREW M6S6X12RFR
	205	312105-0370	-		1	SCREW M6S6X20RFR
	240	312605-0316	-		2	NUT M6M6RFR
	250	315105-0153	-		3	WASHER BRB6,4X12RFR
TB/8						
	F000	**C- 282528-02021**				**Pressure Roller, Ass'y**
	190	312105-0366	-		2	SCREW M6S6X12RFR
	240	312605-0316	-		1	NUT M6M6RFR
	250	315105-0153	-		1	WASHER BRB6,4X12RFR
Common Parts						
	010	526947	-		1	MOUNTING SHEET
	030	2033-0009	-		2	WASHER
	040	21903	S		1	ROLL
	050	251493	-		1	FORK
	060	251494	-		1	SHAFT
	070	251495	-		1	SHAFT
	080	251496	-		1	SHAFT
	090	251498	-		1	BARRIER
	100	279074	S		1	TENSION SPRING
	130	282596	C		1	SUPPORT
	160	90347-0004	S		1	VIBRATION DAMPER
	200	312105-0368	-		1	SCREW M6S6X16RFR
	210	312105-0449	-		2	SCREW M6S8X16RFR
	220	312125-0329	-		1	SLOTTED HEMCS5X16RFR
	230	312318-0285	-		1	STOP SCREW SK6SS4X6RFR
	245	312605-0318	-		1	NUT M6M8RFR
	260	315105-0165	-		2	WASHER BRB8,4X16RFR
	270	315121-0153	-		1	WASHER TBRSB6,4X22FZB
	280	315750-0105	-		1	CIRCLIP SGA8
	290	318800-0104	-		1	HANDLE BALLA D.30-M8
	300	321120-0104	S		2	BUSHING 10/12X10

From	Pos	Part No	SP	UN	Qty	Description

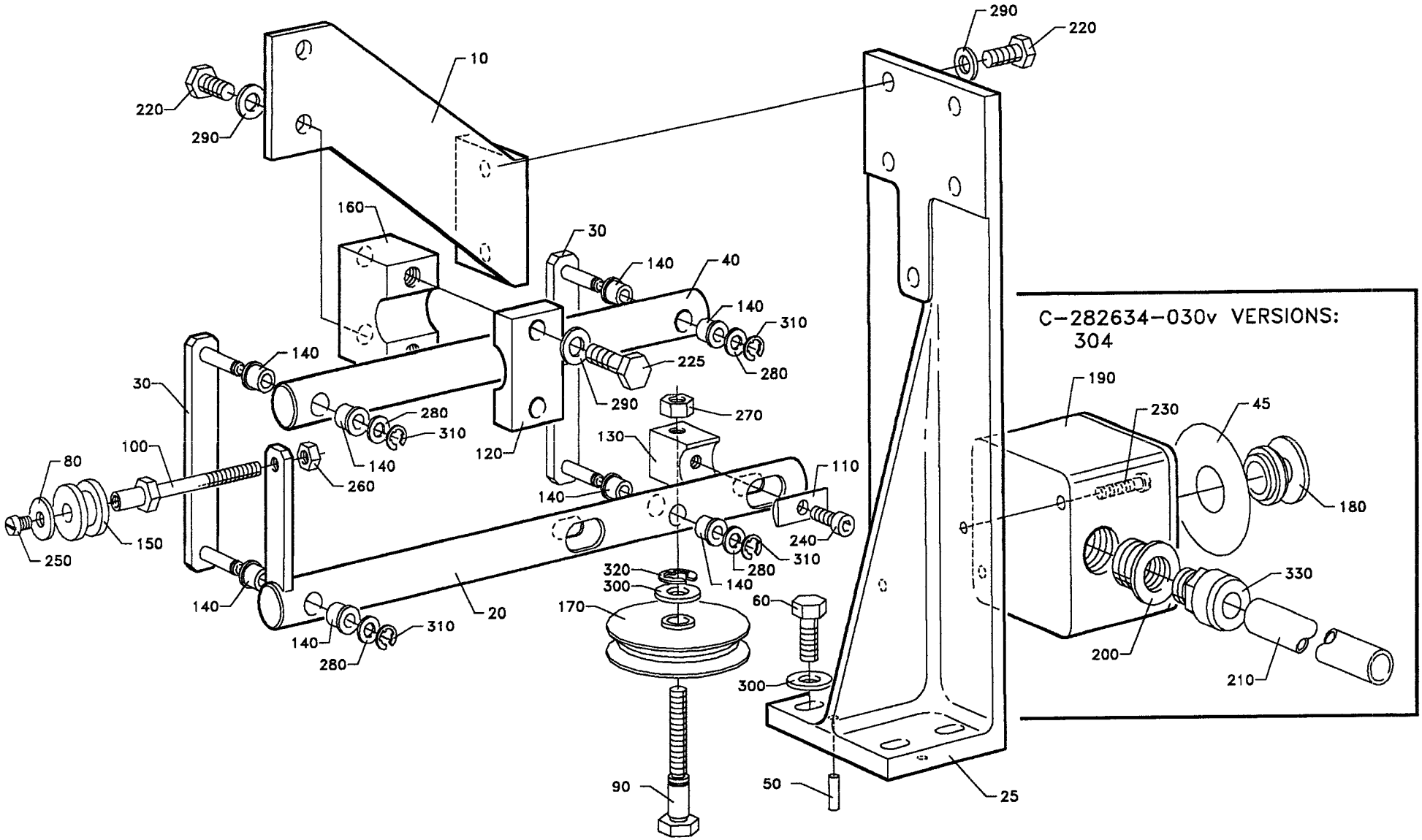

282634.dwg
SMST S1-282634-2/3
AM 16264 910416

From	Pos	Part No	SP	UN	Qty	Description
TBA/8 1055ml 1000ml 1000ml Slim 750ml 568ml 500ml						
	F000	**C- 282634-0301**				**Strip Guide, Ass'y**
	020	239665	C		1	GUIDE SHAFT
	040	243151	C		1	SHAFT
	300	315105-0173	-		1	WASHER BRB10,5X22RFR
TBA/8 500ml Slim 355ml						
	F000	**C- 282634-0302**				**Strip Guide, Ass'y**
	020	450460-0001	C		1	GUIDE SHAFT
	040	450461	C		1	SHAFT
	300	315105-0173	-		1	WASHER BRB10,5X22RFR
TBA/8 375ml 300ml						
	F000	**C- 282634-0303**				**Strip Guide, Ass'y**
	020	450460-0002	-		1	GUIDE SHAFT
	040	450461	C		1	SHAFT
	300	315105-0173	-		1	WASHER BRB10,5X22RFR
TB/8						
	F000	**C- 282634-0304**				**Strip Guide, Ass'y**
	020	239665	C		1	GUIDE SHAFT
	025	266758	-		1	CANTILEVER
	040	243151	C		1	SHAFT
	045	486826-0001	-		1	SIGN
	050	311305-0308	-		2	SLOTTED PIRPC5X16FZB
	060	312105-0491	-		4	SCREW M6S10X20RFR
	180	90064-0105	-		1	EMERGENCY STOP
	190	90066-0021	-		1	PUSH BOTTON BOX
	200	90089-0003	-		1	SLEEVE
	210	90152-0033	-	M	1	HOSE
	230	312125-0333	-		2	SLOTTED HEMCS5X25RFR
	300	315105-0173	-		5	WASHER BRB10,5X22RFR
	330	352136-0113	-		1	GLAND FITT
TBA/8 750ml Slim						
	F000	**C- 282634-0305**				**Strip Guide, Ass'y**
	020	450460-0003	C		1	GUIDE SHAFT
	040	450461	C		1	SHAFT
	300	315105-0173	-		1	WASHER BRB10,5X22RFR
Common Parts						
	010	243218	-		1	CANTILEVER
	030	31417	S		2	LINK
	080	19262	S		1	WASHER
	090	31418	P		1	SHAFT
	100	31419	S		1	SHAFT
	110	31420	P		1	WASHER
	120	31423	-		1	MOUNTING LUG
	130	31424	C		1	ROLLER BRACKET
	140	255064	P		8	BUSHING

From	Pos	Part No	SP	UN	Qty	Description
	150	257923	P		1	GUIDE WHEEL
	160	266761	-		1	MOUNTING LUG
	170	282635	-		1	GUIDE WHEEL
	215	90194-0016	-		1	LABEL
	220	312105-0451	-		4	SCREW M6S8X20RFR
	225	312105-0455	-		2	SCREW M6S8X30RFR
	240	312115-0368	-		1	SCREW 6X16 A4 80
	250	312125-0323	-		1	SLOTTED HEMCS5X8RFR
	260	312605-0316	P		1	NUT M6M6RFR
	270	312605-0318	P		1	NUT M6M8RFR
	280	315105-0153	P		4	WASHER BRB6,4X12RFR
	290	315105-0165	-		6	WASHER BRB8,4X16RFR
	310	315754-0107	P		4	LOCKING WAE 5
	320	315754-0110	P		1	LOCKING WAE 9

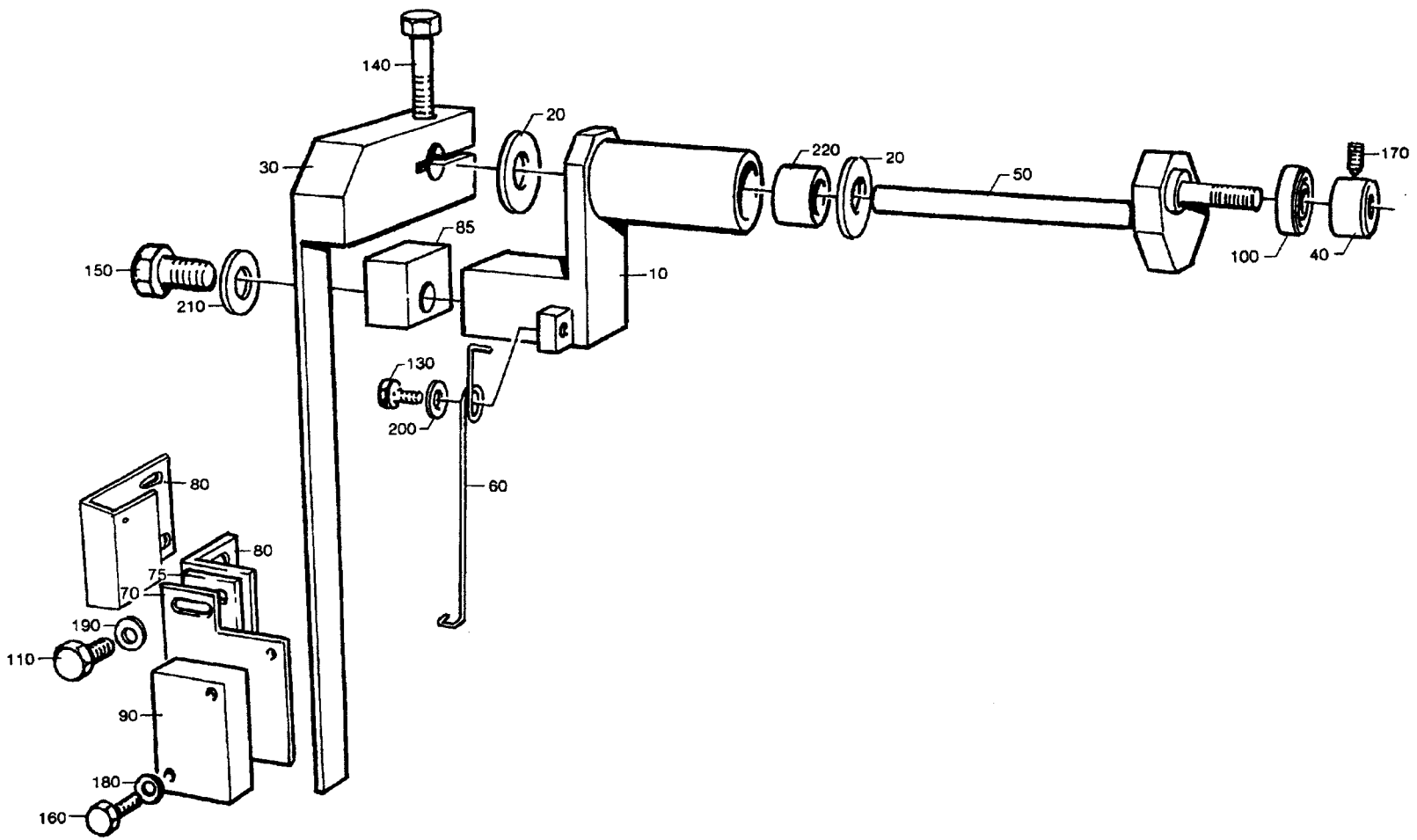

54618001.TIF
546180-1/2
AM 12133

From	Pos	Part No	SP	UN	Qty	Description
TBA/8						
	F000	**C- 546180-0101**				**Splice Detector, Ass'y**
	060	272466	-		1	SPRING
	070	450117	-		1	HOLDER
	210	315105-0153	-		2	WASHER BRB6,4X12RFR
TB/8						
	F000	**C- 546180-0102**				**Splice Detector, Ass'y**
	060	529401	-		1	SPRING
	075	479714	-		1	FASTENING PLATE
	080	479715	-		1	ANGLE BRACKET
	085	542269	-		1	SPACER
	135	312105-0368	-		2	SCREW M6S6X16RFR
	210	315105-0153	-		4	WASHER BRB6,4X12RFR
Common Parts						
	010	450116	-		1	CANTILEVER
	020	271211	-		2	WASHER
	030	271653	-		1	ARM
	040	271654	-		1	RETAINING RING
	050	271655	-		1	HOLDER
	090	90044-0104	-		1	INDUCTIVE SWITCH
	100	90214-0138	-		1	BALL BEARING
	110	312105-0287	-		2	SCREW M6S4X8 A4 80
	130	312105-0327	-		1	SCREW M6S5X12 A4 80
	140	312105-0370	-		1	SCREW M6S6X20RFR
	150	312105-0372	-		2	SCREW M6S6X25RFR
	160	312115-0228	-		2	SCREW 3X16 A4 80
	170	312318-0283	-		1	STOP SCREW SK6SS4X4RFR
	180	315105-0124	-		2	WASHER BRB3,2X6RFR
	190	315105-0136	-		2	WASHER BRB4,3X8RFR
	200	315105-0146	-		1	WASHER BRB5,3X10RFR
	220	321127-0100	-		2	BUSHING 10/13X10

From	Pos	Part No	SP	UN	Qty	Description

From	Pos	Part No	SP	UN	Qty	Description
TBA/8						
	F000	**C- 526954-0101**				**Start-Up Kit, Ass'y**
	010	267494	-		1	COIL HEATER
TB/8						
	F000	**C- 526954-0102**				**Start-Up Kit, Ass'y**
	010	251279	-		1	COIL HEATER
Common Parts						
	020	21903	-		1	ROLL
	030	531733	-		1	GASKET
	040	531734	-		2	GASKET
	050	531735	-		1	GASKET
	060	531736	-		1	GASKET

From	Pos	Part No	SP	UN	Qty	Description

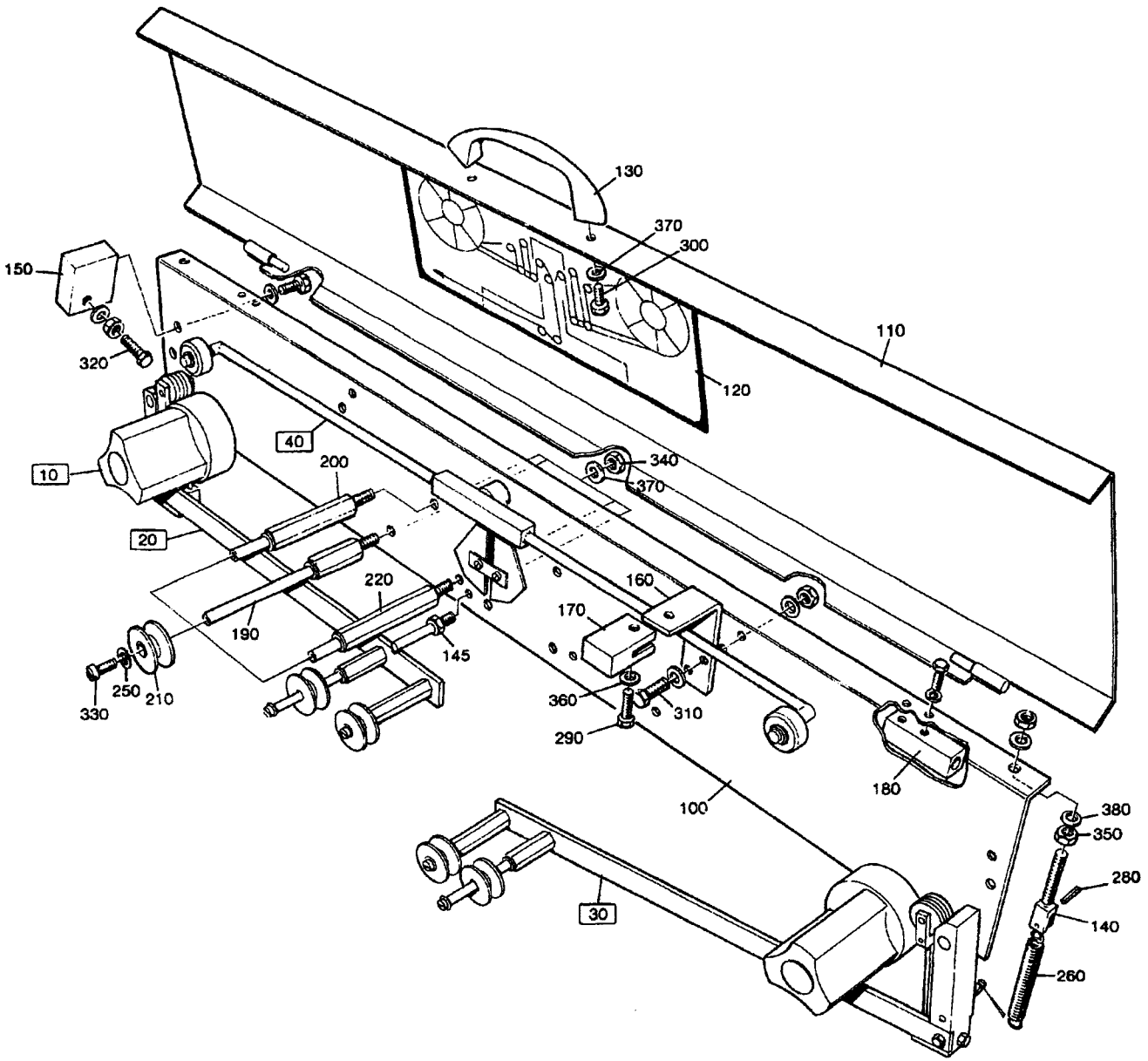

54382301.TIF
543823-1
AM

From	Pos	Part No	SP	UN Qty	Description
	F000	C- 543823-0101			**Strip Magazine, Ass'y**
	010	C- 537329-0101	-	2	**HUB JUMBO**
	020	C- 543822-0101	-	1	**BRAKE ARM Left**
	030	C- 543822-0102	-	1	**BRAKE ARM Right**
	040	C- 543821-0101	-	1	**LEVEL PROBE**
	100	540869	-	1	SHEET
	110	543818	-	1	PROTECTION PLATE
	120	545113	-	1	SIGN
	130	7309	-	1	HANDLE
	140	541068	C	2	SPRING HOLDER
	145	541172	-	2	SET SCREW
	150	541173	-	2	STOP
	160	543125	-	2	ANGLE
	170	543126	-	2	STOP LUG
	180	543819	-	2	HINGE
	190	544725	S	2	AXLE PIN
	200	544727	S	2	AXLE PIN
	210	544730	P	6	ROLL
	220	536916	S	2	AXLE PIN
	250	90005-0082	-	6	WASHER
	260	90335-0015	S	2	SPRING
	280	311112-0205	-	2	SLOTTED TURP 3X10 RFR
	290	312105-0327	-	2	SCREW M6S5X12 A4 80
	300	312105-0366	-	6	SCREW M6S6X12RFR
	310	312105-0368	-	8	SCREW M6S6X16RFR
	320	312109-0374	-	2	SCREW M6S6X30HRFR
	330	312125-0287	-	6	SLOTTED HEMCS4X8RFR
	340	312605-0316	-	14	NUT M6M6RFR
	350	312605-0318	-	4	NUT M6M8RFR
	360	315105-0146	-	2	WASHER BRB5,3X10RFR
	370	315105-0153	-	24	WASHER BRB6,4X12RFR
	380	315105-0165	-	4	WASHER BRB8,4X16RFR

From	Pos	Part No	SP	UN Qty	Description

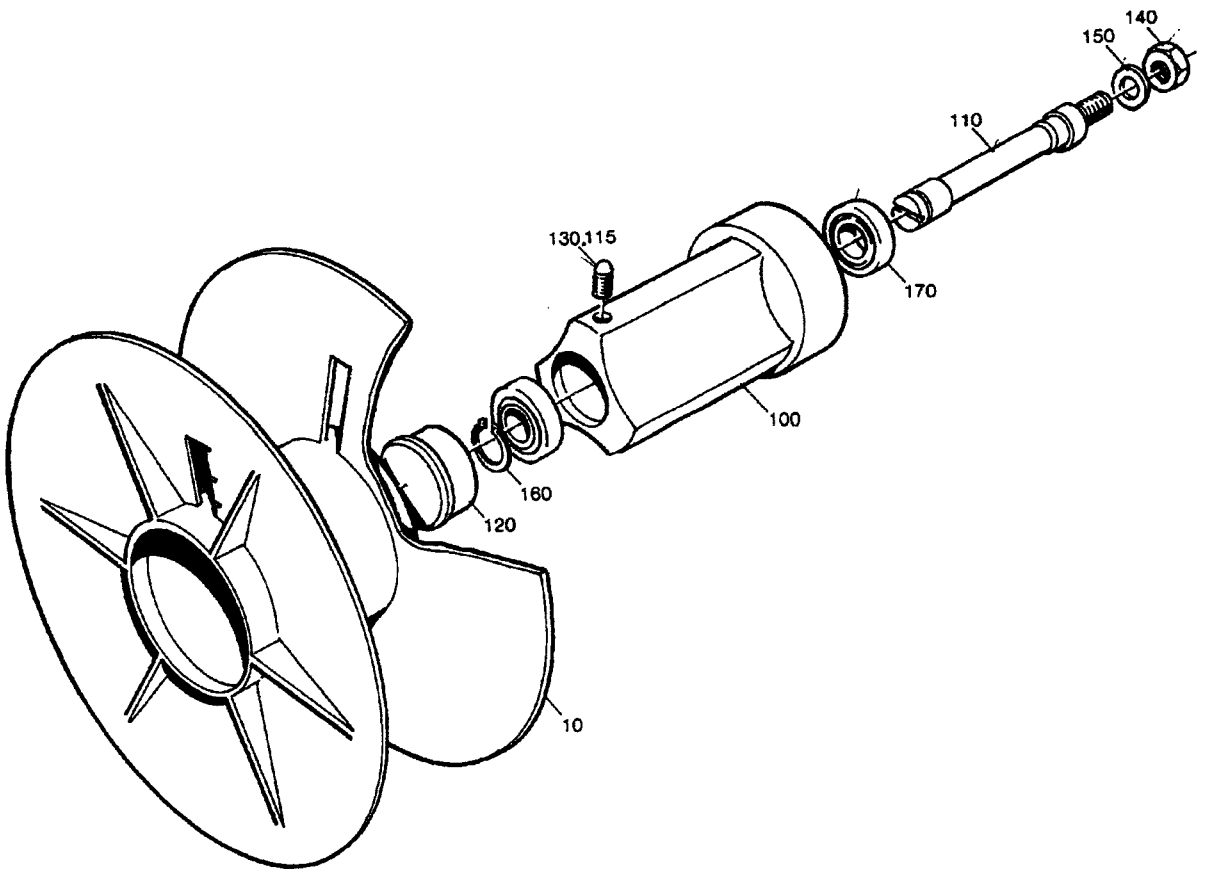

53732901.TIF
537329-1
AM

From	Pos	Part No	SP	UN	Qty	Description
	F000	**C- 537329-0101**				**Hub Jumbo**
	010	541751	-		X	CONICAL BOBBIN
	100	536913	-		1	HUB
	110	537327	-		1	SHAFT
	115	90157-0016	-		X	LOCKING FLUID
	120	90261-0049	-		1	PLASTIC PLUG
	130	90287-0106	S		3	SPRINGLOADED SCREW
	140	312605-0320	-		1	NUT M6M10RFR
	150	315105-0173	-		1	WASHER BRB10,5X22RFR
	160	315751-0112	S		1	CIRCLIP SGA15 RFR
	170	321308-0202	S		2	BALL BEARISKF6002-2RS

From	Pos	Part No	SP	UN	Qty	Description

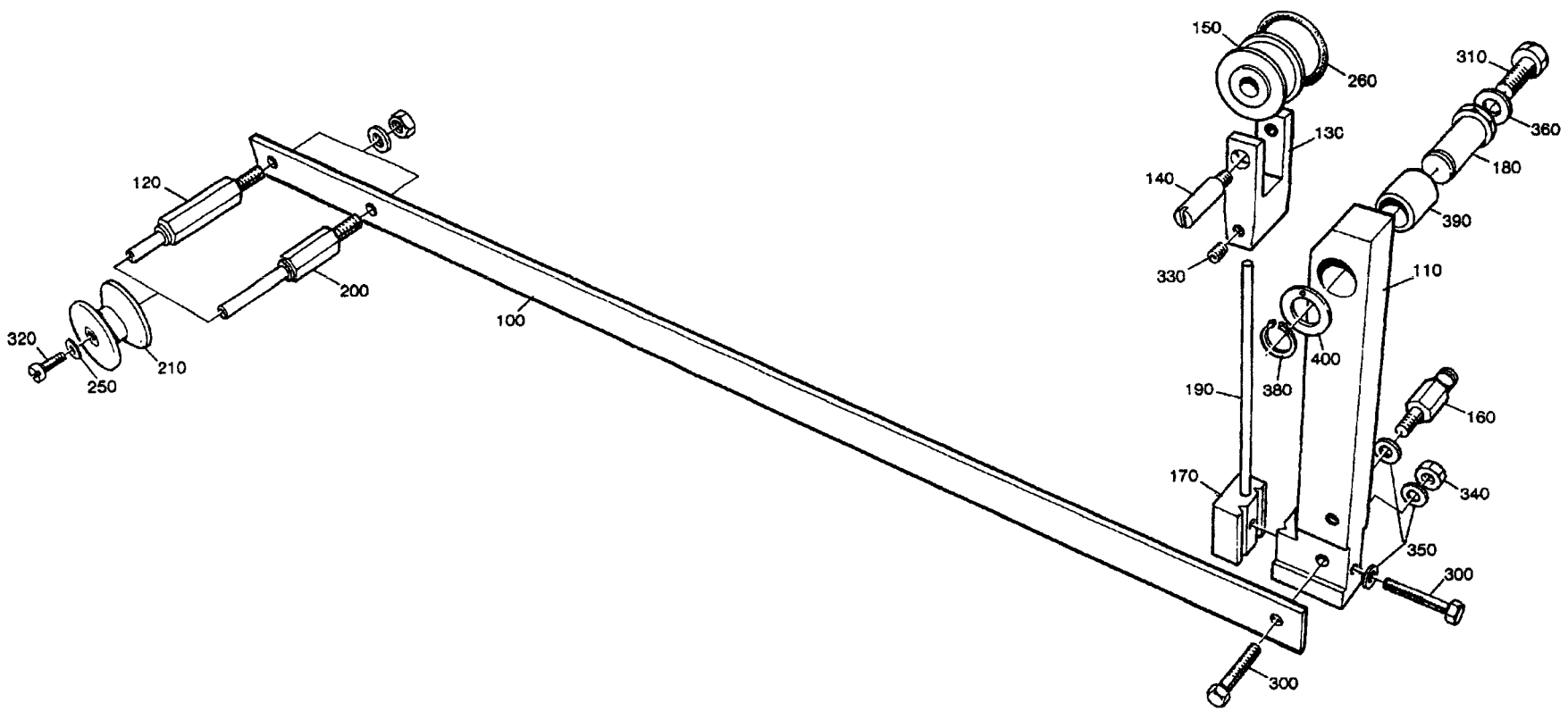

54382201.TIF
543822-1
AM

From	Pos	Part No	SP	UN	Qty	Description
	F000	**C- 543822-0101**				**Brake Arm Left, Ass'y**
	F000	**C- 543822-0102**				**Brake Arm Right, Ass'y**
	100	540870	C		1	ARM
	110	541057	C		1	ARM
	120	536917	S		1	AXLE PIN
	130	541064	C		1	FORK
	140	541065	C		1	SHAFT
	150	541066	S		1	ROLL
	160	541067	C		1	SPRING BRACKET
	170	541069	C		1	SPRING BRACKET
	180	541070	S		1	SHAFT
	190	543820	S		2	SPRING
	200	544726	S		1	AXLE PIN
	210	544730	S		2	ROLL
	250	90005-0082	-		2	WASHER
	260	90242-0148	S		4	O-RING
	300	312105-0378	-		1	SCREW M6S6X40RFR
	310	312105-0449	-		1	SCREW M6S8X16RFR
	320	312125-0287	-		2	SLOTTED HEMCS4X8RFR
	330	312318-0283	-		2	STOP SCREW SK6SS4X4RFR
	340	312605-0316	-		3	NUT M6M6RFR
	350	315105-0153	-		5	WASHER BRB6,4X12RFR
	360	315105-0165	-		1	WASHER BRB8,4X16RFR
	380	315751-0109	S		1	CIRCLIP SGA12 RFR
	390	321120-0113	S		1	BUSHING 12/14X25
	400	321129-0104	S		1	THRUST WAS12/24X1,5

From	Pos	Part No	SP	UN	Qty	Description

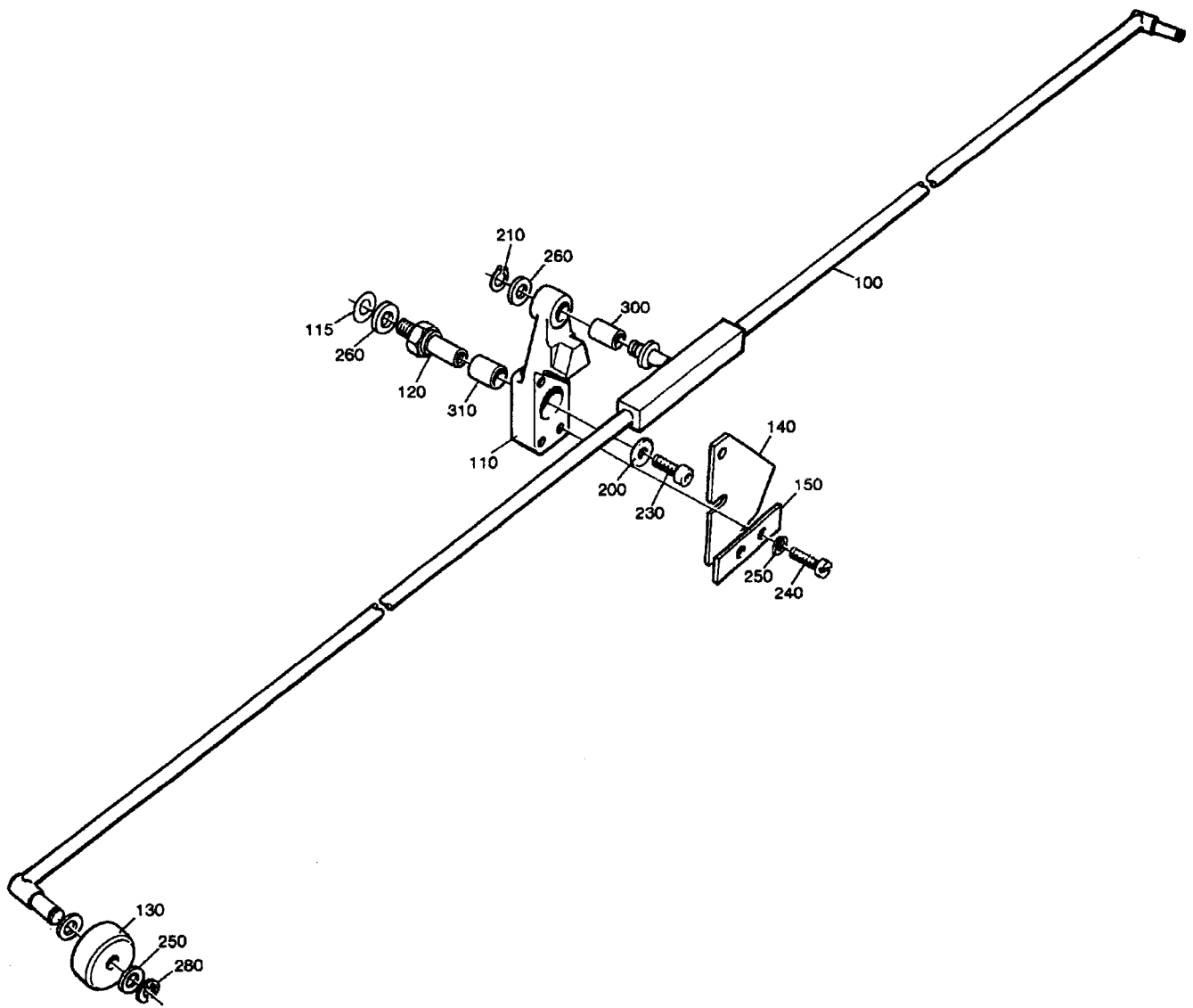

54382101.TIF
543821-1
AM

Last Alteration: AM 11854 88-09-23

Issue: 930607

Corresponding group: 543821-010V
Assembly Drawing: 543821-1

From	Pos	Part No	SP	UN	Qty	Description
	F000	**C- 543821-0101**				**Level Probe, Ass'y**
	100	542781	C		1	ARM
	110	G- 542784	C		1	LINK ARM
	115	2033-0008	C		3	WASHER
	120	542782	C		1	AXLE PIN
	130	542785	S		2	ROLL
	140	542786	C		2	FLAG
	150	543575	C		1	LOCK SHEET
	200	90005-0060	-		1	WASHER
	210	90141-0015	S		1	LOCK RING
	230	312115-0366	-		1	SCREW 6X12 A4 80
	240	312125-0287	-		4	SLOTTED HEMCS4X8RFR
	250	315105-0136	-		8	WASHER BRB4,3X8RFR
	260	315105-0165	-		3	WASHER BRB8,4X16RFR
	280	315755-0105	S		2	LOCKING WAE 3,2 RFR
	300	321120-0103	S		2	BUSHING 8/10X8
	310	321120-0104	S		2	BUSHING 10/12X10

From	Pos	Part No	SP	UN	Qty	Description

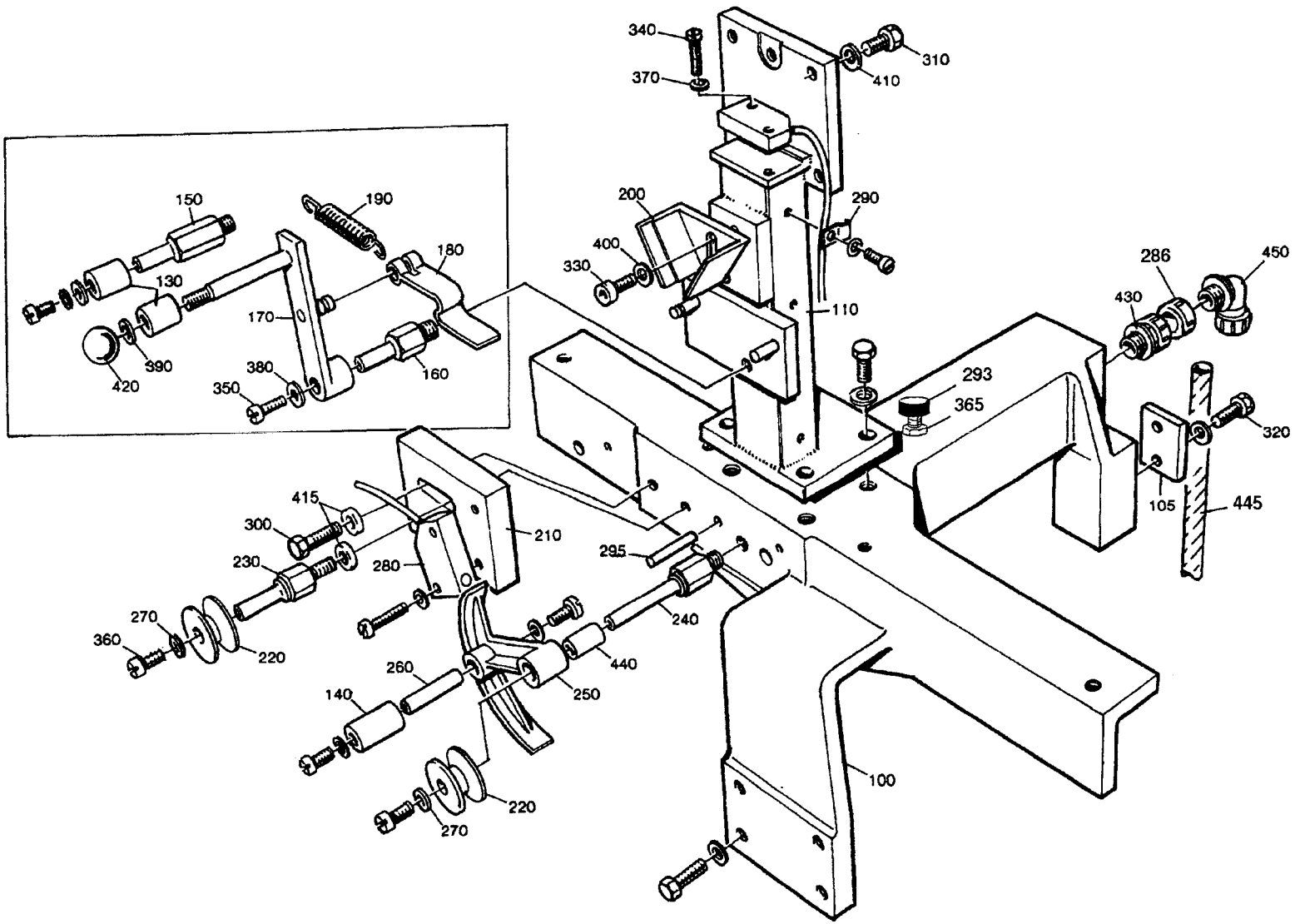

54497301.TIF
544973-1
AM 17189

From	Pos	Part No	SP	UN	Qty	Description
TB/8 1136ml-568ml TBA/8 1055ml-500ml 1000ml Slim						
	F000	**C- 544973-0101**				**Pillar, Ass'y**
	100	G- 545138	C		1	CANTILEVER
	430	352101-0103	-		1	LEAD-IN G 18,6
TB/8 300ml						
	F000	**C- 544973-0102**				**Pillar, Ass'y**
	100	G- 546030-0002	C		1	CANTILEVER
TB/8 284ml-180ml						
	F000	**C- 544973-0103**				**Pillar, Ass'y**
	100	G- 546030-0001	C		1	CANTILEVER
TBA/8 375ml-300ml						
	F000	**C- 544973-0104**				**Pillar, Ass'y**
	100	G- 546030-0001	C		1	CANTILEVER
TBA/8 355ml 500ml Slim						
	F000	**C- 544973-0105**				**Pillar, Ass'y**
	100	G- 546030-0001	C		1	CANTILEVER
TBA/8 750ml Slim						
	F000	**C- 544973-0106**				**Pillar, Ass'y**
	100	G- 546030-0002	C1		1	CANTILEVER
	105	546031	C		1	SPACER
Common Parts						
	110	544974	C		1	PILLAR
	130	232979	P		2	PRESSURE ROLLER
	140	249298	P		1	ROLL
	150	269053-0001	S		1	SHAFT
	160	269053-0003	S		1	SHAFT
	170	269054	S		1	ARM
	180	269056	S		1	CATCH
	190	269057	S		1	TENSION SPRING
	200	279480	C		1	STEERING RAIL
	210	547571	-		1	PLATE
	220	544730	P		2	ROLL
	230	547924	S		1	AXLE PIN
	240	547925	S		1	AXLE PIN
	250	G- 545111	S		1	ARM
	260	545112	S		1	SHAFT
	270	90005-0082	-		2	WASHER
	280	90044-0104	P		2	INDUCTIVE SWITCH
	286	90099-0002	-		1	NUT
	290	90165-0060	-		11	CLAMP
	293	90347-0004	-		1	VIBRATION DAMPER
	295	311103-0316	-		1	CYLINDRICACP M6 5X35 RFR
	300	312105-0372	-		1	SCREW M6S6X25RFR
	310	312105-0449	-		4	SCREW M6S8X16RFR
	320	312105-0452	-		10	SCREW M6S8X22RFR
	330	312115-0366	-		2	SCREW 6X12 A4 80
	340	312125-0228	-		4	SLOTTED HEMCS3X16RFR
	350	312125-0285	-		12	SLOTTED HEMCS4X6RFR
	360	312125-0287	-		2	SLOTTED HEMCS4X8RFR
	365	312605-0318	-		1	NUT M6M8RFR
	370	315105-0124	-		4	WASHER BRB3,2X6RFR
	380	315105-0136	-		12	WASHER BRB4,3X8RFR
	390	315105-0146	-		1	WASHER BRB5,3X10RFR
	400	315105-0153	-		3	WASHER BRB6,4X12RFR
	410	315105-0165	-		14	WASHER BRB8,4X16RFR
	415	315115-0153	-		2	WASHER TBRB6,4X12RFR
	420	318800-0102	-		1	HANDLE BALLA D.20-M5
	440	321120-0101	-		2	BUSHING 6/8X6
	445	352135-0106	-	MM	430	HOSE .016
	450	352137-0127	-		1	GLAND FITT

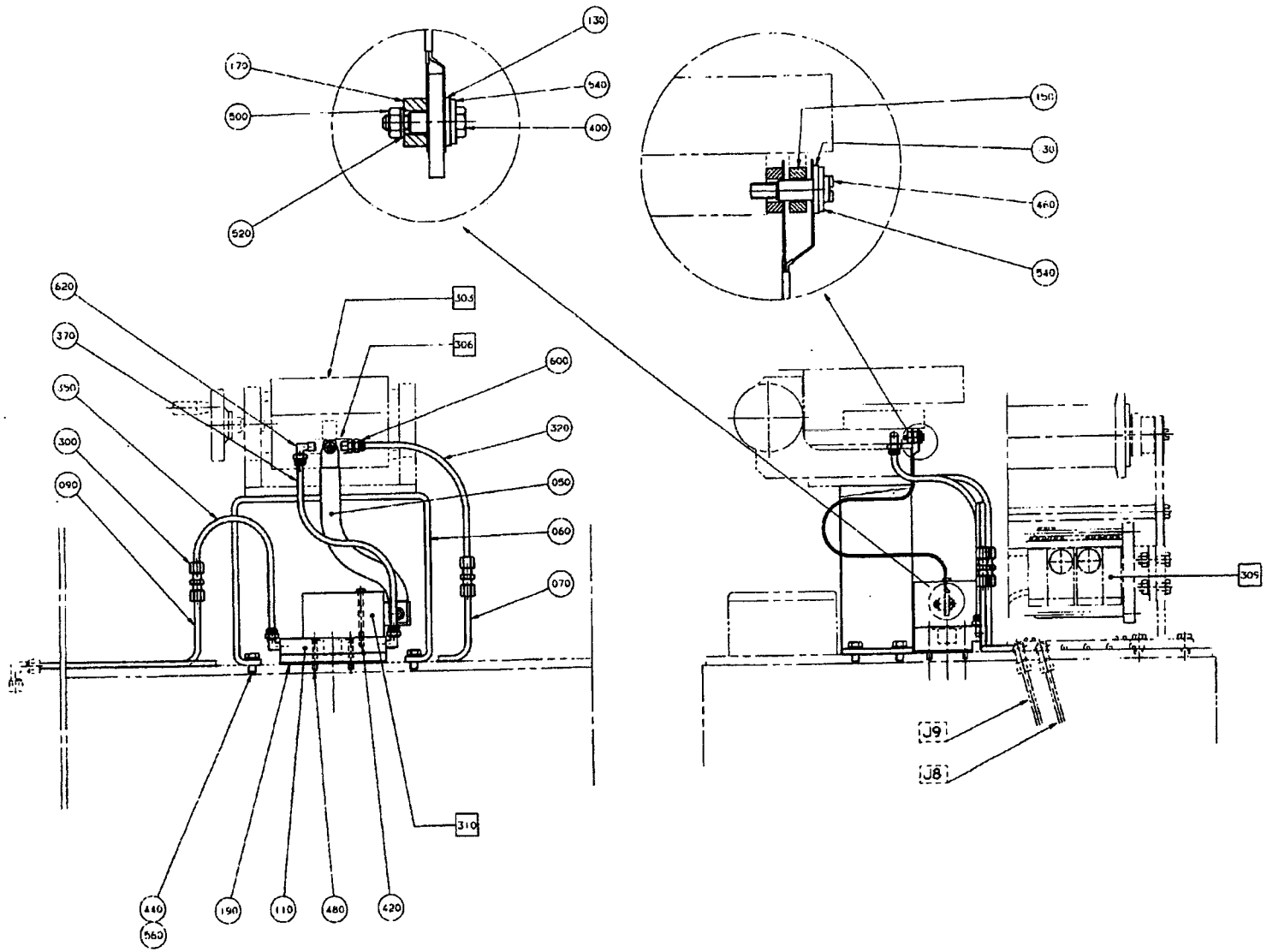

28264204.TIF
282642-4
AM

From	Pos	Part No	SP	UN	Qty	Description
	F000	**C- 282642-0401**				**Zone Heater, Ass'y**
	F303	C- 450125-0101	-		1	HEATING DEVICE
	F306	C- 450873-0201	-		1	INDUCTOR UNIT
	F309	C- 546117-010V	-		1	BAR CODE
	F310	C- 67379-0103	-		1	IH TRANSFORMATOR I
		C- 68474-0103				. COIL 4 TURN
	050	546115	C		1	BUSBAR
	060	449929	-		1	BRACKET
	070	450819	-		1	PIPE
	090	450820	-		1	PIPE
	110	546386	-		1	CANTILEVER
	130	32544	-		2	INSULATION NUT
	150	32644	-		2	WASHER
	170	449761	-		1	WASHER
	190	546387	-		1	GASKET
	300	90224-0304	-		2	CONNECTION
	320	90166-0124	-	MM	200	HOSE
	350	90166-0124	-	MM	230	HOSE
	370	90166-0124	-	MM	290	HOSE
	400	312105-0295	-		1	SCREW M6S4X20 A4 80
	420	312105-0343	-		1	SCREW M6S5X60 A4 80
	440	312105-0449	-		4	SCREW M6S8X16RFR
	460	312122-0295	-		1	SLOTTED HEMCS4X20MSGFN
	480	312155-0337	-		4	SCREW MF6S5X35RFR
	500	312605-0312	-		1	NUT M6M4RFR
	520	315105-0136	-		1	WASHER BRB4,3X8RFR
	540	315105-0153	-		2	WASHER BRB6,4X12RFR
	560	315105-0165	-		4	WASHER BRB8,4X16RFR
	600	342920-0113	-		1	PIPE COUPL6/4-1/8
	620	342930-0113	-		3	ELBOW PIPE6/4-1/8

From	Pos	Part No	SP	UN	Qty	Description

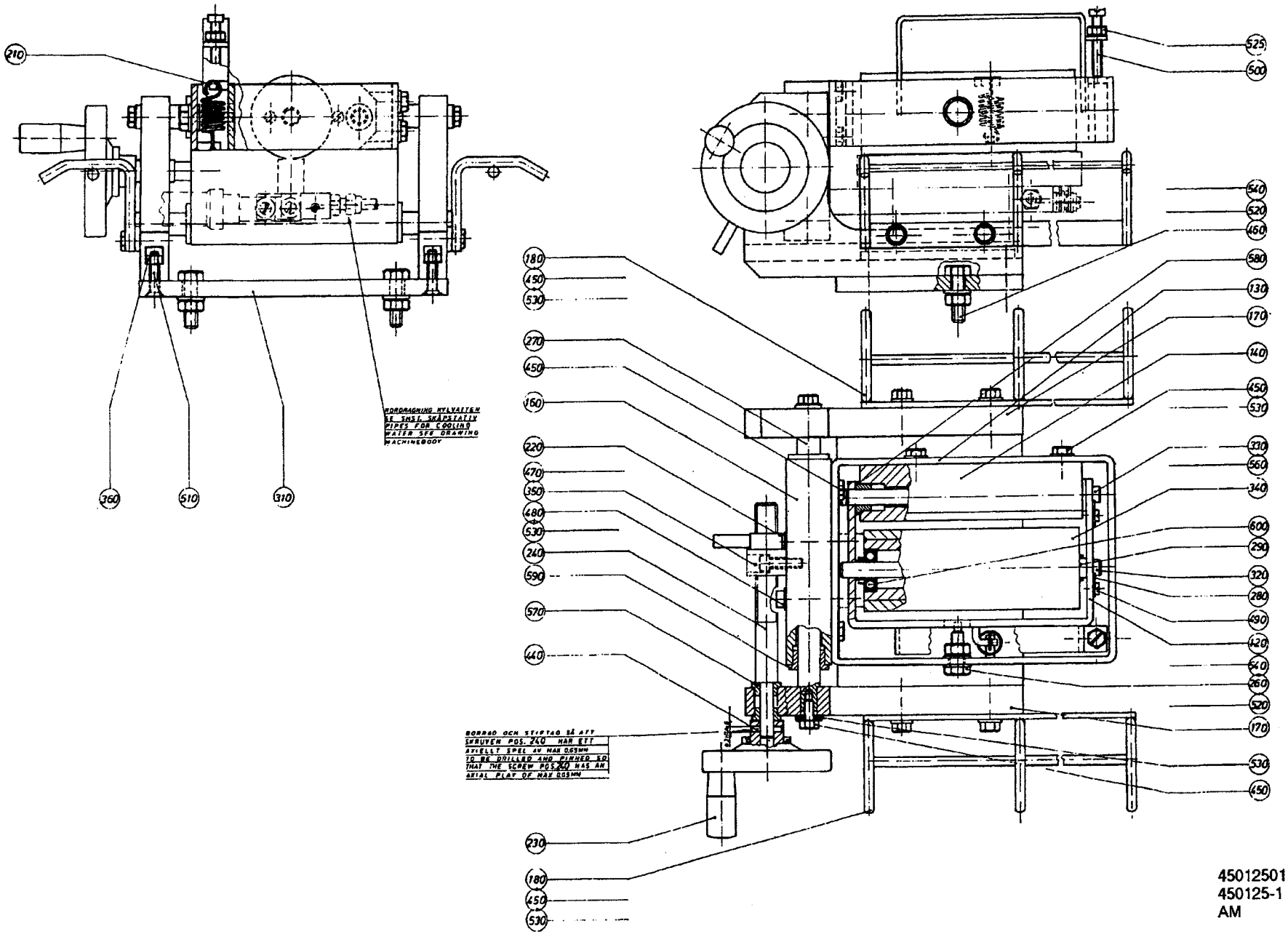

45012501.TIF
450125-1
AM

From	Pos	Part No	SP	UN	Qty	Description
TBA/3 TBA/8						
	F000	C- 450125-0101				**Heating Device, Ass'y**
	180	562141	C		2	HOLDER
TBA/9						
	F000	C- 450125-0102				**Heating Device, Ass'y**
	180	456950	C		2	HOLDER
Common Parts						
	120	445645	-		1	FRAME
	130	445646	-		1	SUPPORTING FRAME
	140	445647	C		1	BEARING HOUSING
	160	450015	C		1	HOUSE
	170	450124	-		2	CANTILEVER
	210	4623	C		1	SPRING
	220	243073	-		1	LOCK NUT
	230	243075	-		1	SHIFTER HANDLE
	240	243076	C		1	SCREW
	260	243077	-		1	SCREW
	270	243078	-		2	GUIDE SHAFT
	280	243081	-		2	SECURING PLATE
	290	243084	-		2	SPACER SLEEVE
	310	445638	-		1	BOTTOM PLATE
	320	445639	C		1	SHAFT
	330	445640	C		1	SHAFT
	340	445641	PU		1	ROLLER
	350	450016	C		1	NUT
	360	450123	-		2	BRACKET
	440	311103-0238	-		1	CYLINDRICACP M6 3X20 RFR
	450	312105-0366	-		16	SCREW M6S6X12RFR
	460	312105-0455	-		2	SCREW M6S8X30RFR
	470	312115-0368	-		2	SCREW 6X16 A4 80
	480	312115-0376	-		2	SCREW 6X35 A4 80
	490	312125-0285	-		2	SLOTTED HEMCS4X6RFR
	500	312125-0380	-		1	SLOTTED HEMCS6X50RFR
	510	312155-0372	-		4	SCREW MF6S6X25RFR
	520	312605-0318	-		3	NUT M6M8RFR
	525	312605-0316	-		1	NUT M6M6RFR
	530	315105-0156	-		8	WASHER BRB6,7X14RFR
	540	315105-0165	-		4	WASHER BRB8,4X16RFR
	560	315750-0107	-		1	CIRCLIP SGA10
	570	321110-0143	-		2	FLANGE BUS 8E7X8
	580	321110-0163	-		2	FLANGE BUS 10E7X10
	590	321110-0183	-		4	FLANGE BUS 14E7X12
	600	321308-0200	-		2	BALL BEARISKF6000-2RS

From	Pos	Part No	SP	UN	Qty	Description

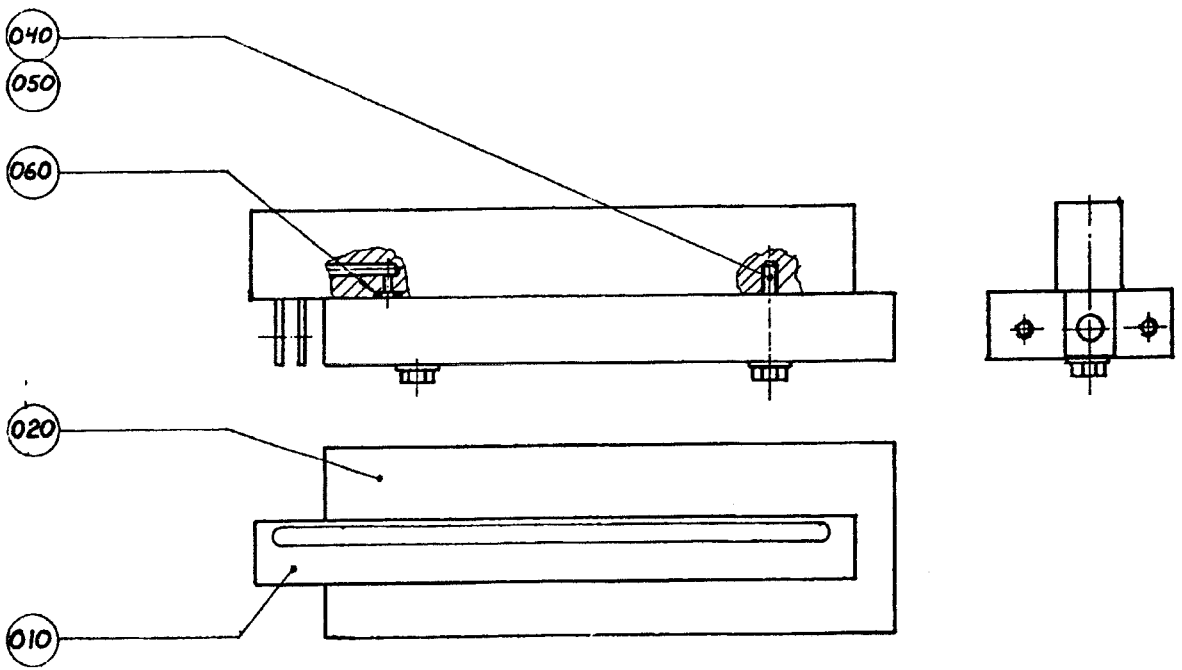

45087301.TIF
450873-1
AM

From	Pos	Part No	SP	UN	Qty	Description
	F000	**C- 450873-0201**				**Inductor Unit, Ass'y**
	010	555600	PU		1	INDUCTOR
	020	450065-0002	C		1	BRACKET
	040	312105-0295	-		2	SCREW M6S4X20 A4 80
	050	315105-0136	-		2	WASHER BRB4,3X8RFR
	060	315202-0101	-		2	O-RING 3,1X1,6

From	Pos	Part No	SP	UN	Qty	Description

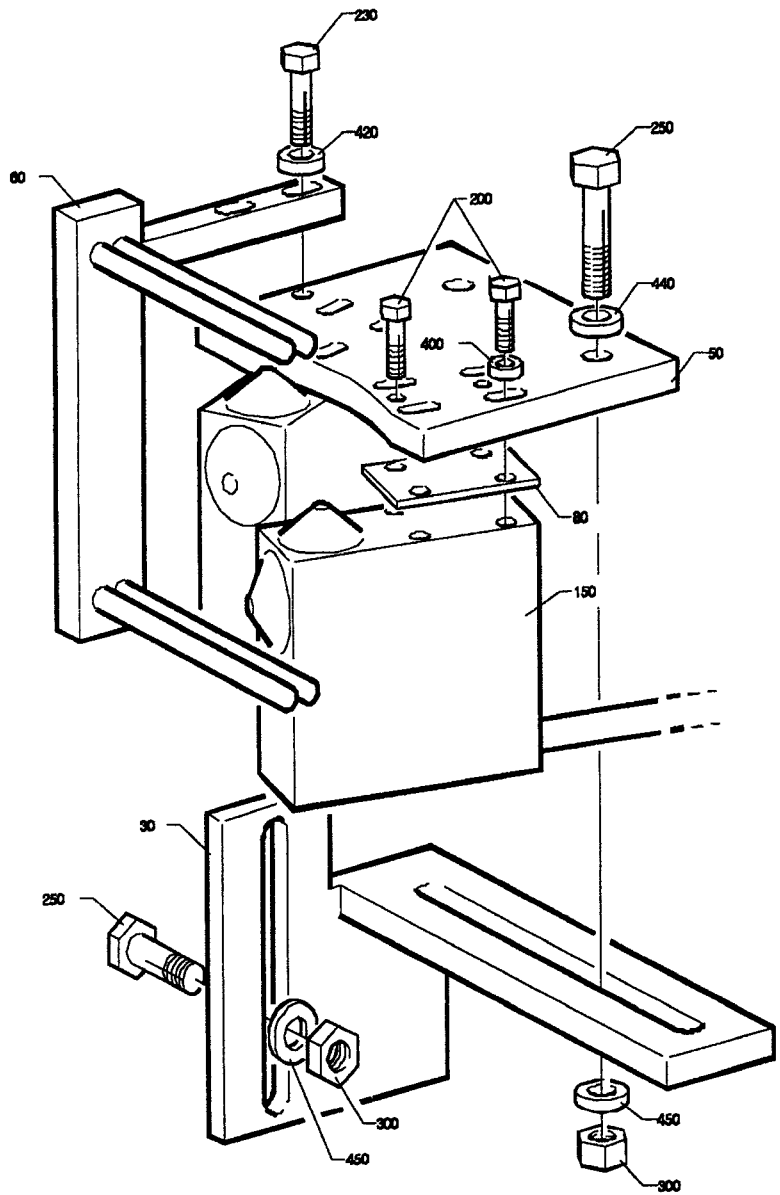

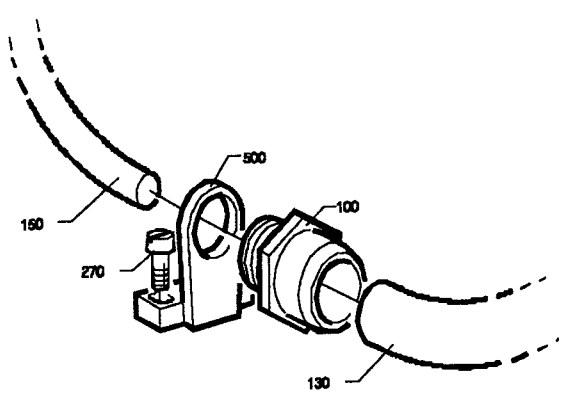

54611701.WP(
546117-1/2
AM 17189

From	Pos	Part No	SP	UN	Qty	Description
No Strip Side						
	F000	**C- 546117-0101**				**Bar Code, Ass'y**
	030	545817	C		1	CANTILEVER
	060	536694	C		1	PAPER GUIDE
	130	352135-0106	-	MM	520	HOSE .016
	270	312125-0325	-		6	SLOTTED HEMCS5X10RFR
	500	352135-0202	-		3	CRAMP 16
Strip Side						
	F000	**C- 546117-0102**				**Bar Code, Ass'y**
	030	546113	C		1	CANTILEVER
	060	546114	C		1	PAPER GUIDE
	130	352135-0106	-	MM	280	HOSE .016
	270	312125-0325	-		4	SLOTTED HEMCS5X10RFR
	500	352135-0202	-		2	CRAMP 16
Common Parts						
	050	536693	C		1	FASTENING PLATE
	080	536374	C		2	WASHER
	100	352136-0127	-		2	GLAND FITT
	150	90232-0055	S		2	PHOTOCELL
	200	312105-0328	-		10	SCREW M6S5X14 A4 80
	230	312105-0370	-		2	SCREW M6S6X20RFR
	250	312105-0455	-		4	SCREW M6S8X30RFR
	300	312605-0318	-		4	NUT M6M8RFR
	400	315105-0146	-		8	WASHER BRB5,3X10RFR
	420	315115-0153	-		2	WASHER TBRB6,4X12RFR
	440	315105-0165	-		2	WASHER BRB8,4X16RFR
	450	315115-0165	-		4	WASHER TBRB8,4X16RFR

From	Pos	Part No	SP	UN	Qty	Description

From	Pos	Part No	SP	UN	Qty	Description
Secondary=1turn, Primary=5turn						
	F000	**C- 67379-0101**				**IH Transformator I, Ass'y**
	F130	**C- 68474-0101**	**-**		**1**	**COIL 5 TURN**
	350	556518-0001	-		1	COMPONENTS WITHOUT TP-NO
Secondary=1turn, Primary=4turn						
	F000	**C- 67379-0102**				**IH Transformator I, Ass'y**
	F210	**C- 68474-0103**	**-**		**1**	**COIL 4 TURN**
	360	556518-0002	-		1	COMPONENTS WITHOUT TP-NO
Secondary=1turn, Primary=4turn						
	F000	**C- 67379-0103**				**IH Transformator I, Ass'y**
	F210	**C- 68474-0103**	**-**		**1**	**COIL 4 TURN**
	370	556518-0003	-		1	COMPONENTS WITHOUT TP-NO
Secondary=1turn, Primary=6turn						
	F000	**C- 67379-0104**				**IH Transformator I, Ass'y**
	F140	**C- 68474-0102**	**-**		**1**	**COIL 6 TURN**
	380	556518-0004	-		1	COMPONENTS WITHOUT TP-NO
Secondary=1turn, Primary=5turn						
	F000	**C- 67379-0105**				**IH Transformator I, Ass'y**
	F130	**C- 68474-0101**	**-**		**1**	**COIL 5 TURN**
	390	556518-0005	-		1	COMPONENTS WITHOUT TP-NO
Secondary=1turn, Primary=4turn						
	F000	**C- 67379-0106**				**IH Transformator I, Ass'y**
	F210	**C- 68474-0103**	**-**		**1**	**COIL 4 TURN**
	400	556518-0006	-		1	COMPONENTS WITHOUT TP-NO
Secondary=1turn, Primary=4turn						
	F000	**C- 67379-0107**				**IH Transformator I, Ass'y**
	F210	**C- 68474-0103**	**-**		**1**	**COIL 4 TURN**
	410	556518-0007	-		1	COMPONENTS WITHOUT TP-NO
Secondary=1turn, Primary=5turn						
	F000	**C- 67379-0108**				**IH Transformator I, Ass'y**
	F130	**C- 68474-0101**	**-**		**1**	**COIL 5 TURN**
	420	556518-0008	-		1	COMPONENTS WITHOUT TP-NO
Secondary=1turn, Primary=5turn						
	F000	**C- 67379-0109**				**IH Transformator I, Ass'y**
	F130	C- 68474-0101	-		1	COIL 5 TURN
	430	556518-0009	-		1	COMPONENTS WITHOUT TP-NO
Secondary=1turn, Primary=4turn						
	F000	**C- 67379-0110**				**IH Transformator I, Ass'y**
	F210	**C- 68474-0103**	**-**		**1**	**COIL 4 TURN**
	440	556518-0010	-		1	COMPONENTS WITHOUT TP-NO
Common Parts						
	060	532701	-		1	FASTENING WASHER
	070	543111	-		1	PRINTED CIRCUIT BOARD
	080	551828	-		1	CABLE
	100	532699	-		1	TRANSFORMER COVER
	150	532704	-		1	MOUNTING DRAWING, CABLE
	220	532700	-		1	BUSBAR, SECONDARY
	230	532714	-		1	SPACER PIECE
	280	532715	-		1	SPACER
	300	543115	-		1	FASTENING PLATE
	320	542036	-		1	SIGN BOARD
	330	532698	-		1	ASSEMBLY INSTRUCTION
	340	57204-01:01	-		1	PACKING INSTRUCTION

Tetra Pak

68474

576

From	Pos	Part No	SP	UN	Qty	Description
COIL 5 TURN						
	F000	C- 68474-0101				Coil, Ass'y
	120	556519-0001	-		1	COMPONENTS WITHOUT TP-NO
COIL 6 TURN						
	F000	C- 68474-0102				Coil, Ass'y
	130	556519-0002	-		1	COMPONENTS WITHOUT TP-NO
COIL 4 TURN						
	F000	C- 68474-0103				Coil, Ass'y
	140	556519-0003	-		1	COMPONENTS WITHOUT TP-NO
Common Parts						
	100	532707	-		1	COIL FORMER
	110	532708	-		1	WINDING SPECIFICATION

From	Pos	Part No	SP	UN	Qty	Description

Tetra Pak

SPC section 648013

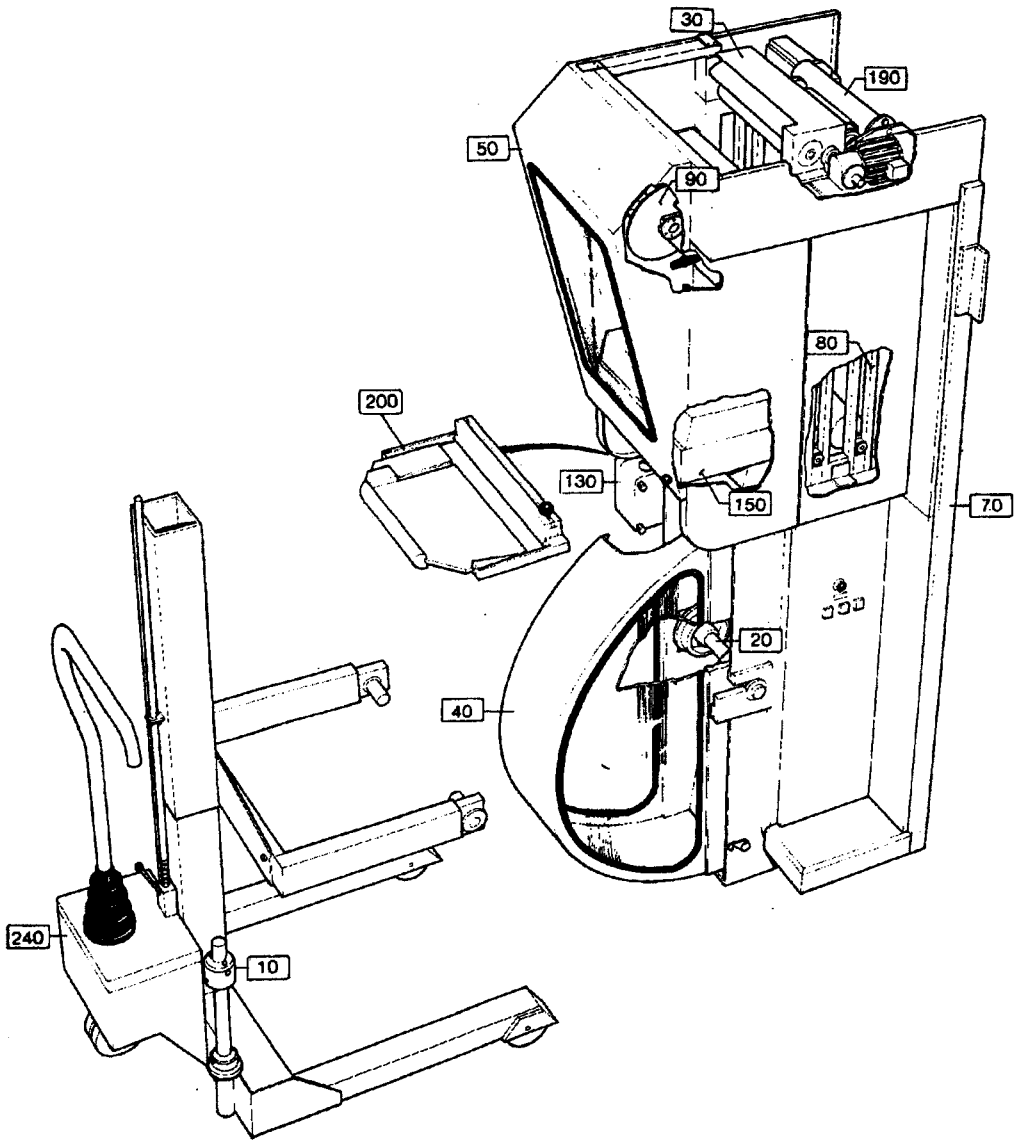

64801302.TIF
648013-2
AM

Code	Ass'y	Group No	Description	Page
13-F000	64801304	648013-050V	Automatic Splicing Unit	581
13-F010	44025801	440258-010V	Paper Reel Holder	583
13-F020	44028501	440285-010V	Paper Reel Holder	585
13-F030	44584001	445840-010V	Drive Unit TBA/8	587
13-F040	55687501	556875-010V	Cover	589
13-F050	53074503	530745-030V	Side Guard	591
13-F070	44013305	440133-040V	Machine Body	593
13-F080	44021001	440210-020V	Roll	595
13-F090	48695801	486958-010V	Dating Unit Nostrip Side	597
	48695801	486958-010V	Dating Unit Nostrip Side	599
	48695801	486958-010V	Dating Unit Nostrip Side	601
	48695801	486958-010V	Dating Unit Nostrip Side	603
	48695801	486958-010V	Dating Unit Nostrip Side	605
	44028603	440286-030V	Ink Unit	607
	29368403	293684-020V	Printing Wheel	609
	54314301	543143-010V	Adjustmentment Device	611
13-F090	53824801	538248-010V	Dating Unit Strip Side	613
	53824801	538248-010V	Dating Unit Strip Side	615
	45819203	458192-030V	Ink Unit	617
	29368502	293685-020V	Printing Wheel	619
	54314301	543143-010V	Adjustmentment Device	621
13-F130	44592012	445920-050V	El- Pneumatic Equipment	623
	53215102	532151-020V	Connection Box	625
13-F150	44588007	445880-050V	Splicing Device	627
	44588007	445880-050V	Splicing Device	629
	44013501	440135-010V	Bending Roller	631
	44018401	440184-010V	Bending Roller	633
	44963003	449630-030V	Paper Holder	635
	52241001	522410-010V	Bending Roller	637
13-F190	44593001	445930-010V	Bending Unit TBA/8	639
	44013501	440135-010V	Bending Roller	641
13-F200	52212102	522121-020V	Cutting Table	643
13-F220	440132	440132-020V	Start-Up Kit	645
13-F240	46410002	464100-020V	Carriage	647
	46410002	464100-020V	Carriage	649
	46410801	464108-010V	Hydraulic Valve	651
	46412401	464124-010V	Lifting Cylinder	653
	529278	529278-010V	Seal Kit	655
	49370001	493700-010V	Tank	657
	49372901	493729-010V	Pump	659
	529279	529279-010V	Seal Kit	661
13-F250	54290201	542902-010V	Drive Brake Unit	663
	54290401	542904-010V	Worm Gear Motor	665

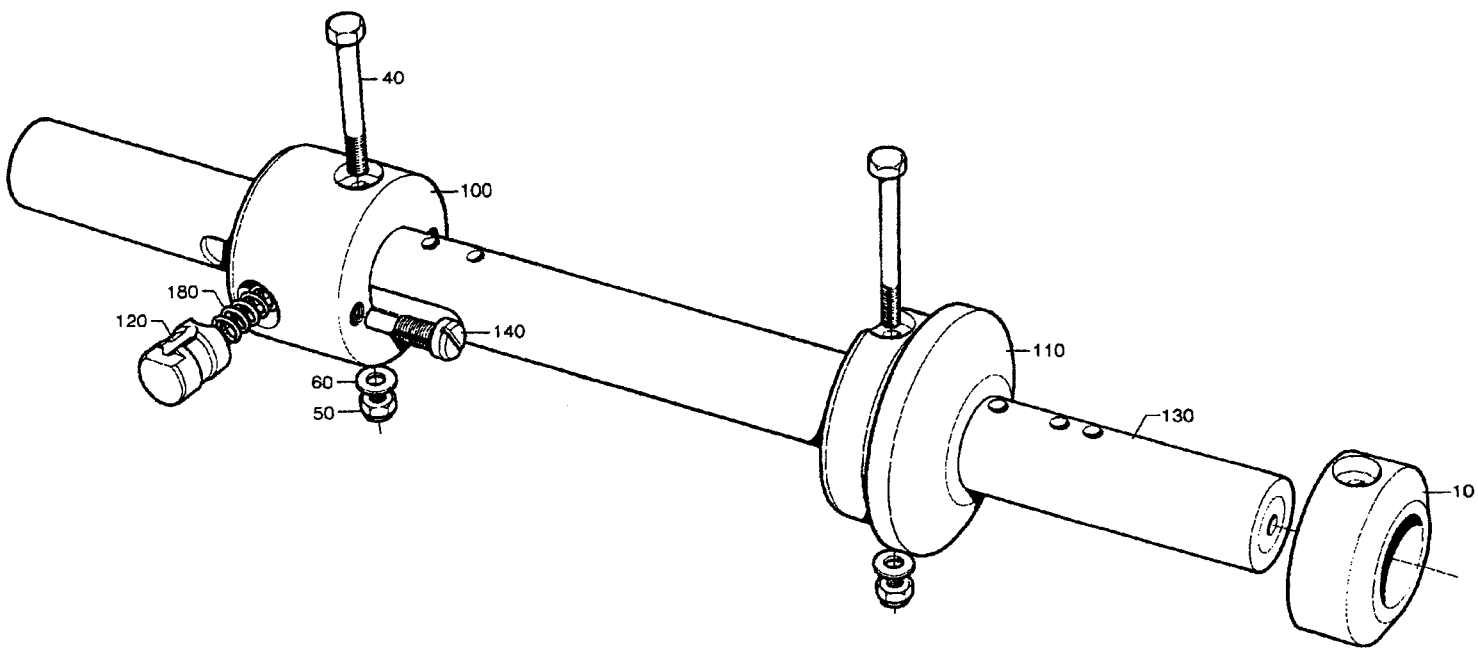

44025801.TIF
440258-1
AM

From	Pos	Part No	SP	UN	Qty	Description
1136ml-500ml						
		C- 440258-0101				**Paper Reel Holder, Ass'y**
	040	312101-0381	-		2	SCREW M6S6X55FZB
	050	312812-0316	-		2	LOCK NUT A4-M6RFR
	060	315101-0153	-		2	WASHER BRB6,4X12FZB
	100	271239	C		1	SLEEVE
	110	272810-0001	C		1	SLEEVE
375ml-180ml						
		C- 440258-0102				**Paper Reel Holder, Ass'y**
	010	440259	C		2	RETAINING RING
	040	312101-0381	-		4	SCREW M6S6X55FZB
	050	312812-0316	-		4	LOCK NUT A4-M6RFR
	060	315101-0153	-		4	WASHER BRB6,4X12FZB
	100	271239	C		1	SLEEVE
	110	272810-0001	C		1	SLEEVE
750ml Slim						
		C- 440258-0103				**Paper Reel Holder, Ass'y**
	010	544277	C		2	RETAINING RING
	040	312101-0381	-		4	SCREW M6S6X55FZB
	050	312812-0316	-		4	LOCK NUT A4-M6RFR
	060	315101-0153	-		4	WASHER BRB6,4X12FZB
	070	311112-0350	-		2	SLOTTED TURP 6X55 RFR
	100	271239	C		1	SLEEVE
	110	272810-0001	C		1	SLEEVE
1000ml Slim						
		C- 440258-0104				**Paper Reel Holder, Ass'y**
	040	312101-0381	-		2	SCREW M6S6X55FZB
	050	312812-0316	-		2	LOCK NUT A4-M6RFR
	060	315101-0153	-		2	WASHER BRB6,4X12FZB
	100	569942	C		1	SLEEVE
	110	569943	C		1	SLEEVE
Common parts						
	120	272813	S		2	PLUNGER
	130	440260	C		1	SHAFT
	140	271241	S		2	SCREW
	180	90335-0025	P		2	SPRING

From	Pos	Part No	SP	UN	Qty	Description

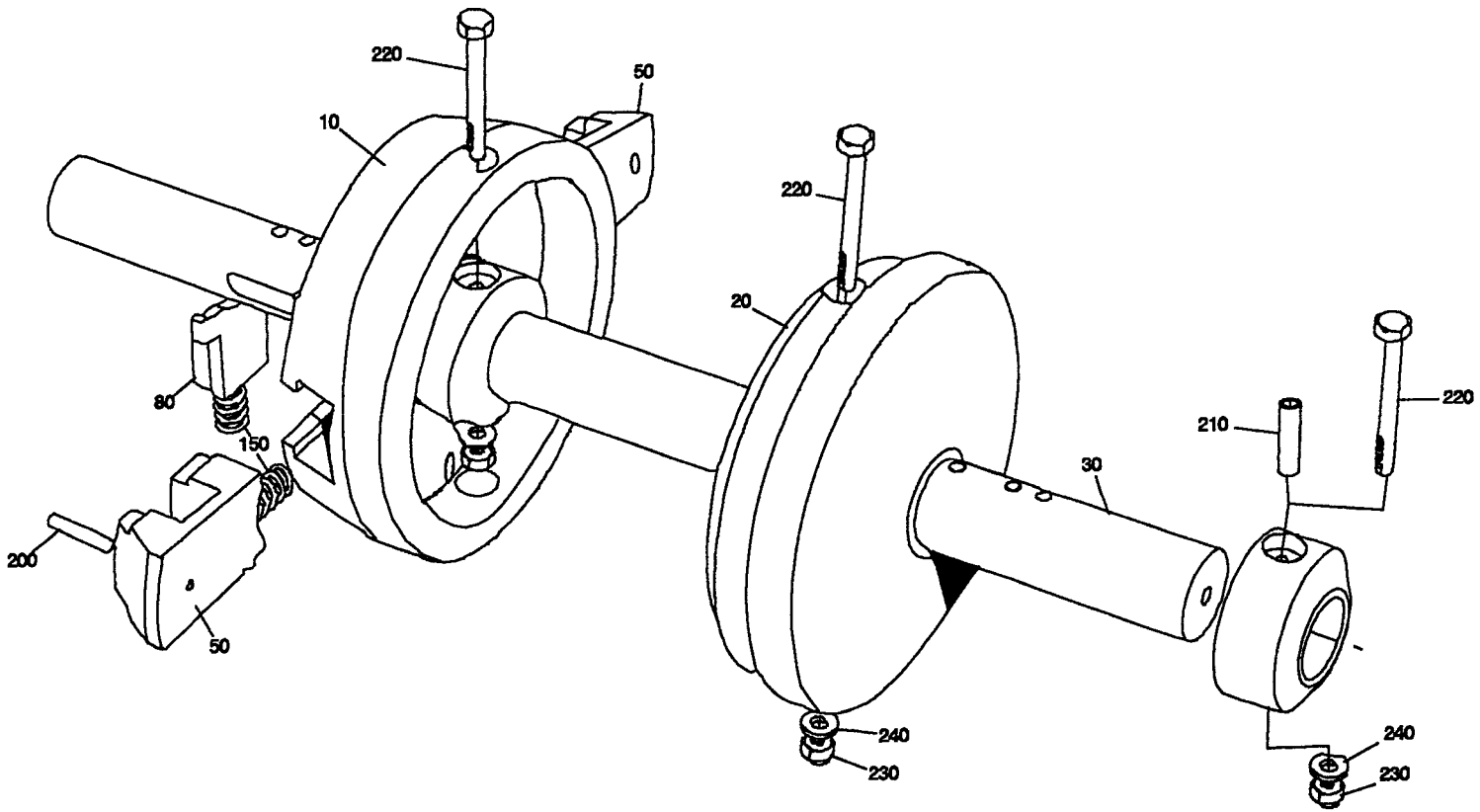

44028501.WPG
440285-1/2
AM 11764

From	Pos	Part No	SP	UN	Qty	Description
1136ml - 500ml						
		C- 440285-0101				**Paper Reel Holder, Ass'y**
	010	G- 272814	C		1	SLEEVE
	020	G- 272815-0001	C		1	SLEEVE
	050	G- 575002	S		2	PLUNGER
	220	312101-0381	-		2	SCREW M6S6X55FZB
	230	312812-0316	-		2	LOCK NUT A2-M6RFR
	240	315101-0153	-		2	WASHER BRB6,4X12FZB
400ml - 178ml 500ml Slim 200ml Slim						
		C- 440285-0102				**Paper Reel Holder, Ass'y**
	010	G- 272814	C		1	SLEEVE
	020	G- 272815-0001	C		1	SLEEVE
	050	G- 575002	S		2	PLUNGER
	090	440259	C		2	RETAINING RING
	220	312101-0381	-		4	SCREW M6S6X55FZB
	230	312812-0316	-		4	LOCK NUT A2-M6RFR
	240	315101-0153	-		4	WASHER BRB6,4X12FZB
750ml Slim						
		C- 440285-0103				**Paper Reel Holder, Ass'y**
	010	G- 272814	C		1	SLEEVE
	020	G- 272815-0001	C		1	SLEEVE
	050	G- 575002	S		2	PLUNGER
	090	544277	C		2	RETAINING RING
	210	311112-0350	-		2	SLOTTED TURP 6X55 RFR
	220	312101-0381	-		4	SCREW M6S6X55FZB
	230	312812-0316	-		4	LOCK NUT A2-M6RFR
	240	315101-0153	-		4	WASHER BRB6,4X12FZB
1000ml Slim						
		C- 440285-0104				**Paper Reel Holder, Ass'y**
	010	G- 569944	C		1	SLEEVE
	020	G- 569945	C		1	SLEEVE
	050	G- 575003	S		2	PLUNGER
	220	312101-0381	-		2	SCREW M6S6X55FZB
	230	312812-0316	-		2	LOCK NUT A2-M6RFR
	240	315101-0153	-		2	WASHER BRB6,4X12FZB
Common parts						
	030	440260	C		1	SHAFT
	080	G- 272728	S		1	BARRIER
	150	90335-0025	P		3	SPRING
	200	311103-0274	-		2	CYLINDRICACP 4X25 RFR

From	Pos	Part No	SP	UN	Qty	Description

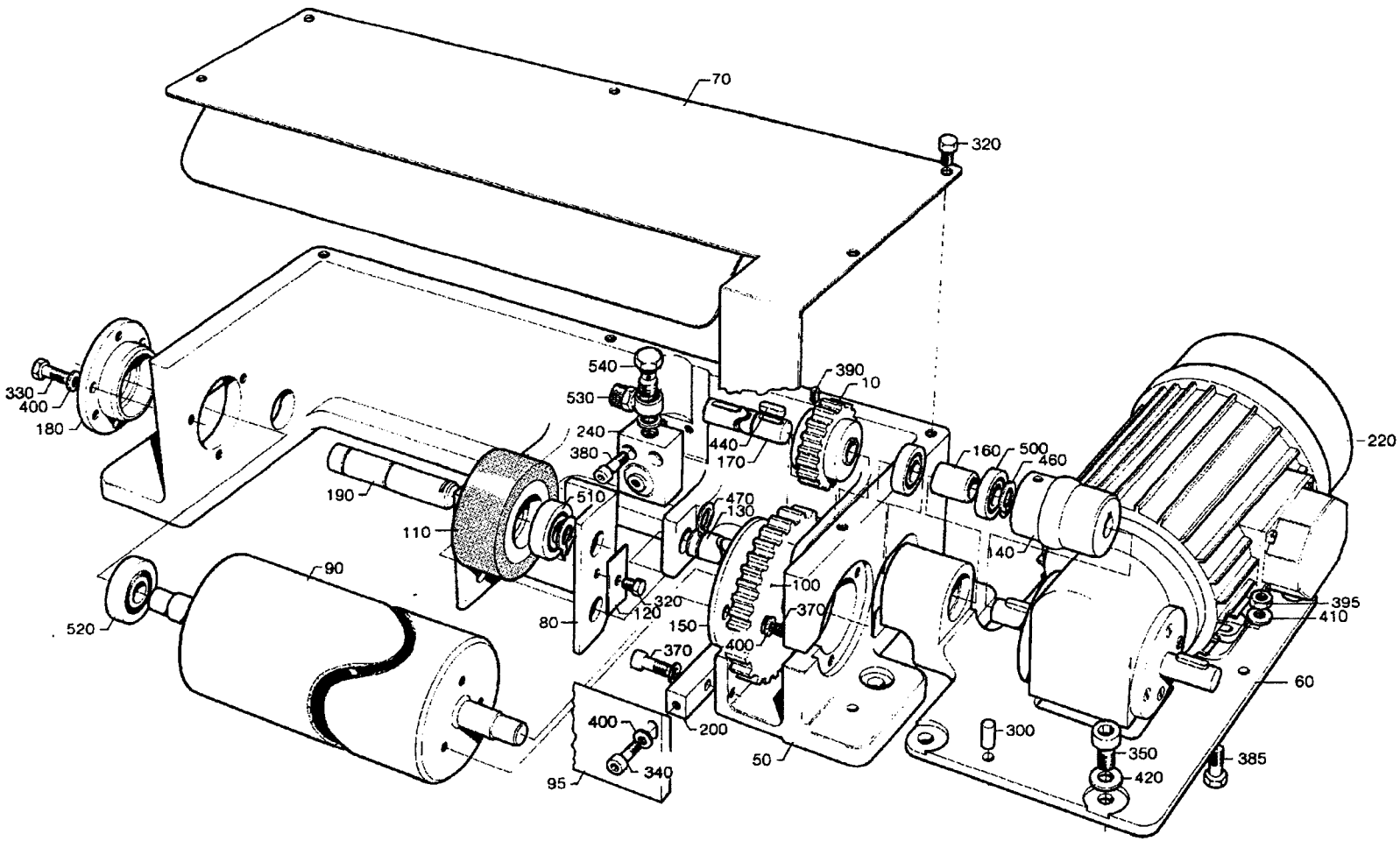

44584001.TIF
445840-1
AM

From	Pos	Part No	SP	UN	Qty	Description
TBA/8 ALL TB/8 1055ml-750ml 500ml Slim						
		C- 445840-0101				**Drive Unit, Ass'y**
	010	445854-0002	C		1	GEAR WHEEL
TB/8 568ml-300ml						
TB/1 TB/5 TBA/3 TBA/5						
		C- 445840-0102				**Drive Unit, Ass'y**
	010	445854-0001	C		1	GEAR WHEEL
Common parts						
	050	G- 445841	C		1	CANTILEVER
	060	G- 445842	C		1	MOTOR PLATE
	070	450363	-		1	LID
	080	445837	C		1	CANTILEVER
	090	445845	C		1	DRIVE ROLLER
	095	526680	-		1	FENDER WALING
	100	207019-0003	C		1	GEAR WHEEL
	110	266710	C		1	WHEEL
	120	445839	-		1	SECURING PLATE
	130	445847	-		1	SHAFT
	140	445848	C		1	ELASTIC COUPLING
	150	445849	-		1	SPACER DISC
	160	445850	C		1	SPACER SLEEVE
	170	445851	C		1	SHAFT
	180	445852	C		2	LID
	190	445838	-		1	SHAFT
	200	476503	-		2	BRACKET
	220	90069-0116	S		1	WORM GEAR MOTOR
		90056-0096	S		1	* WORM GEAR
		90069-0364	S		1	* CARBON BRUSH
		90069-0365	S		1	* CARBON BRUSH
	240	90239-0259	S		1	CYLINDER
	300	311102-0353	-		4	CYLINDRICACP M6 6X20
	320	312101-0323	-		6	SCREW M6S5X8FZB
	330	312101-0329	-		8	SCREW M6S5X16FZB
	340	312105-0331	-		2	SCREW M6S5X20 A4 80
	350	312111-0449	-		8	SCREW MC6S8X16FZB
	370	312111-0331	-		7	SCREW MC6S5X20FZB
	380	312111-0333	-		2	SCREW MC6S5X25FZB
	385	312111-0371	-		4	SCREW MC6S6X22FZB
	390	312316-0285	-		1	STOP SCREW SK6SS4X6FZB
	395	312601-0316	-		4	NUT M6M6FZB
	400	315101-0146	-		11	WASHER BRB5,3X10FZB
	410	315101-0153	-		4	WASHER BRB6,4X12FZB
	420	315101-0165	-		8	WASHER BRB8,4X16FZB
	440	315701-0169	-		2	FLAT WEDGE4X4X18
	460	315750-0109	-		1	CIRCLIP SGA12
	470	315750-0112	-		4	CIRCLIP SGA15
	500	321308-0201	-		2	BALL BEARISKF6001-2RS
	510	321308-0202	-		2	BALL BEARISKF6002-2RS
	520	321316-0201	-		2	BALL BEARISKF6301-2RS
	530	342980-0113	-		1	BANJO CONNSINGEL 6/4-1/8
	540	342980-0303	-		1	BANJO CONN SINGEL 1/8"

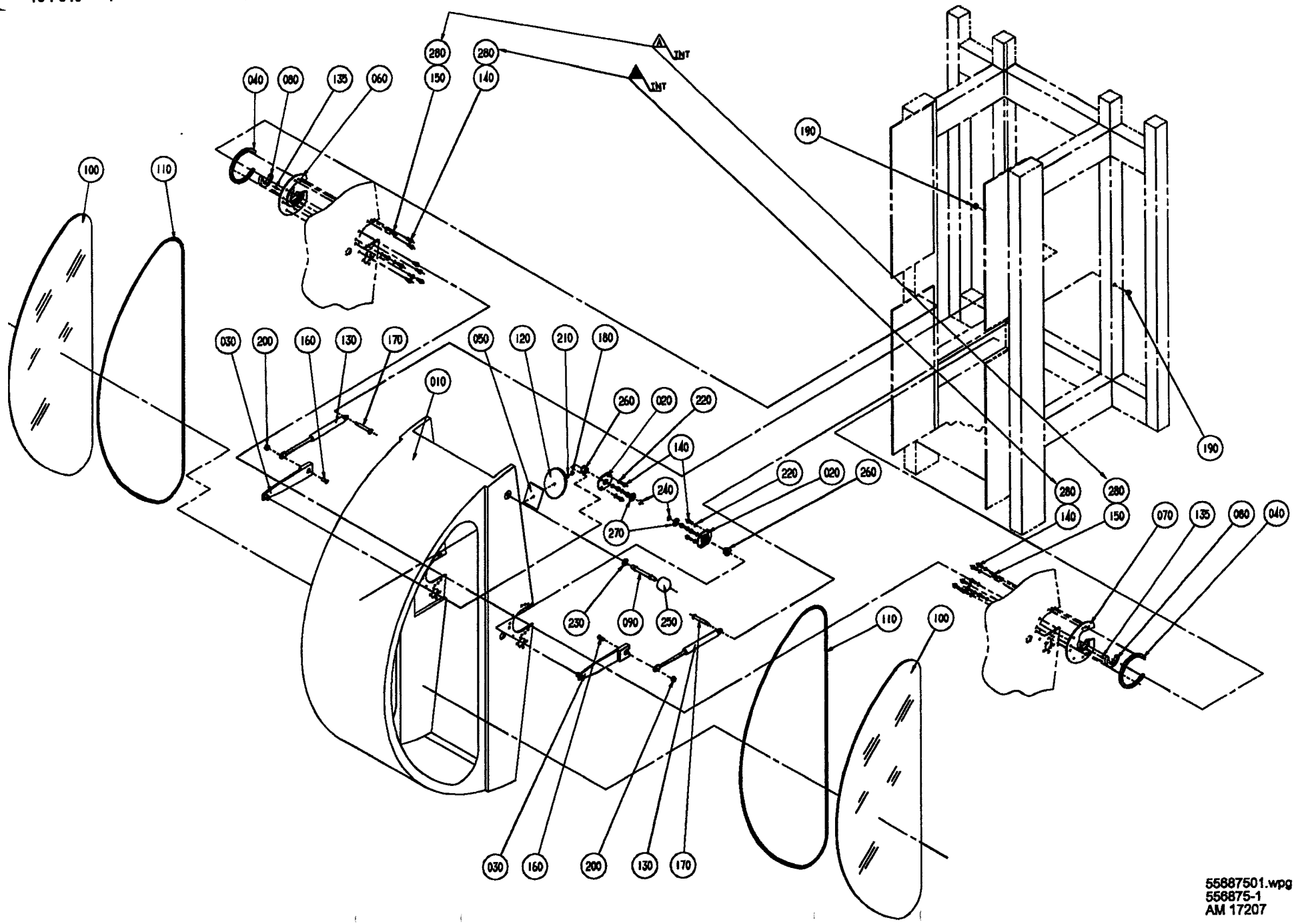

55687501.wpg
556875-1
AM 17207

From	Pos	Part No	SP	UN	Qty	Description
		C- 556875-0101				**Cover, Ass'y**
	010	556879	-		1	COVER
	020	556872	-		2	BEARING UNIT
	030	556873	-		2	EXTENSION PIECE
	040	556874	-		2	BLOCKING RING
	050	532165	-		1	SPACER
	060	440247	-		1	HOLDER
	070	440248	-		1	HOLDER
	080	440249	P		2	SLIDE BELT
	090	440250	-		1	AXLE PIN
	100	440251	C		2	GLASS PANE
	110	90143-0039	C	MM	5200	STRIP
	120	90232-0304	C		1	REFLECTOR MIRROR
	130	90347-0108	-		2	DAMPER
	135	311103-0233	-		4	CYLINDRICACP M6 3X10 RFR
	140	312105-0323	-		22	SCREW M6S5X8 A4 80
	150	312105-0331	-		6	SCREW M6S5X20 A4 80
	160	312155-0453	-		2	SCREW MF6S8X25RFR
	170	568166	-		2	REAMED BOLT
	180	312605-0312	-		1	NUT M6M4RFR
	190	312605-0316	-		2	NUT M6M6RFR
	200	312811-0318	-		2	LOCK NUT M8RFR
	210	315105-0136	-		1	WASHER BRB4,3X8RFR
	220	315105-0146	-		8	WASHER BRB5,3X10RFR
	230	315105-0173	-		1	WASHER BRB10,5X22RFR
	240	315755-0111	-		2	LOCKING WAE 10 RFR
	250	318800-0106	-		1	HANDLE BALLA D.40-M10
	260	321111-0157	-		2	FLANGE BUS 12E7X8
	270	321129-0104	-		2	THRUST WAS12/24X1,5
	280	315105-0146	-		20	WASHER BRB5,3X10RFR

From	Pos	Part No	SP	UN	Qty	Description

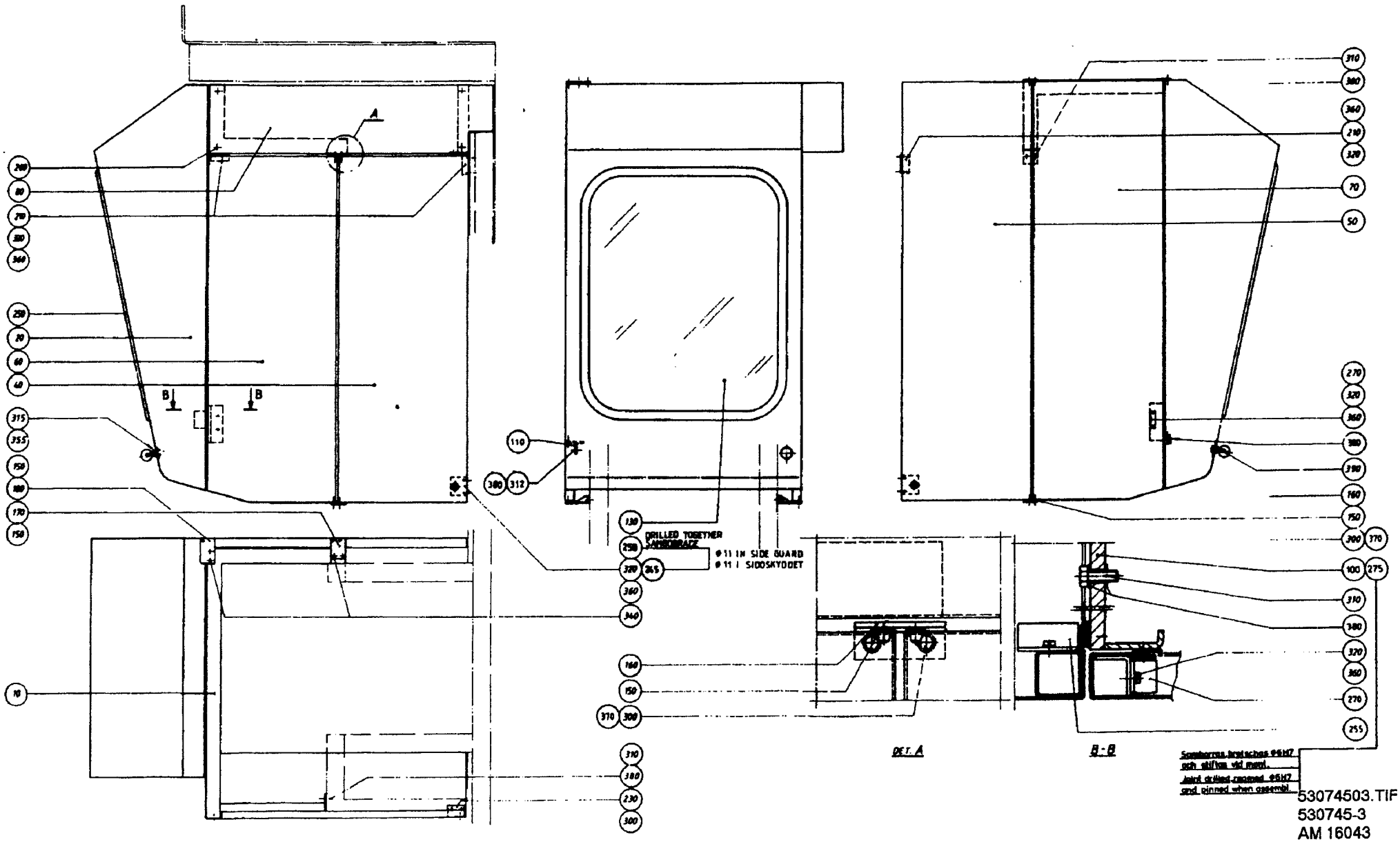

53074503.TIF
530745-3
AM 16043

From	Pos	Part No	SP	UN	Qty	Description
		C- 530745-0301				**Side Guard, Ass'y**
	010	445861	-		1	FRAME
	020	540716	-		1	HOOD
	040	445863	-		1	PROTECTION
	050	529498	-		1	SIDE GUARD RIGHT
	060	529475	-		1	SIDE GUARD LEFT
	070	529476	-		1	SIDE GUARD
	080	445867	-		1	COVER
	100	529499	-		1	MOUNTING BAR
	110	556868	-		1	ANGLE
	130	445871	-		1	GLASS PANE
	150	436991	S		9	BEARING
	160	445872	-		3	HINGE
	170	445873	-		1	HINGE
	180	445874	-		1	HINGE
	210	445877	-		3	SUPPORT
	230	445879	-		1	SUPPORT
	245	525385	-		2	BRACKET
	250	90143-0039	-	MM	2300	STRIP
	255	90237-0046	-		1	LOCK PART
	258	90237-0075	-		2	SNAP LOCK
	260	90287-0075	-		6	SCREW
	270	90339-0011	-		2	LOCK
	275	311102-0350	-		2	CYLINDRICACP M6 6X14
	300	312105-0327	-		8	SCREW M6S5X12 A4 80
	310	312105-0368	-		8	SCREW M6S6X16RFR
	312	312105-0370	-		1	SCREW M6S6X20RFR
	315	312105-0455	-		1	SCREW M6S8X30RFR
	320	312125-0222	-		22	SLOTTED HEMCS3X8RFR
	340	312155-0327	-		4	SCREW MF6S5X12RFR
	355	312605-0318	-		1	NUT M6M8RFR
	360	315105-0124	-		22	WASHER BRB3,2X6RFR
	370	315105-0146	-		6	WASHER BRB5,3X10RFR
	380	315105-0153	-		13	WASHER BRB6,4X12RFR
	390	318800-0104	-		1	HANDLE BALLA D.30-M8

From	Pos	Part No	SP	UN	Qty	Description

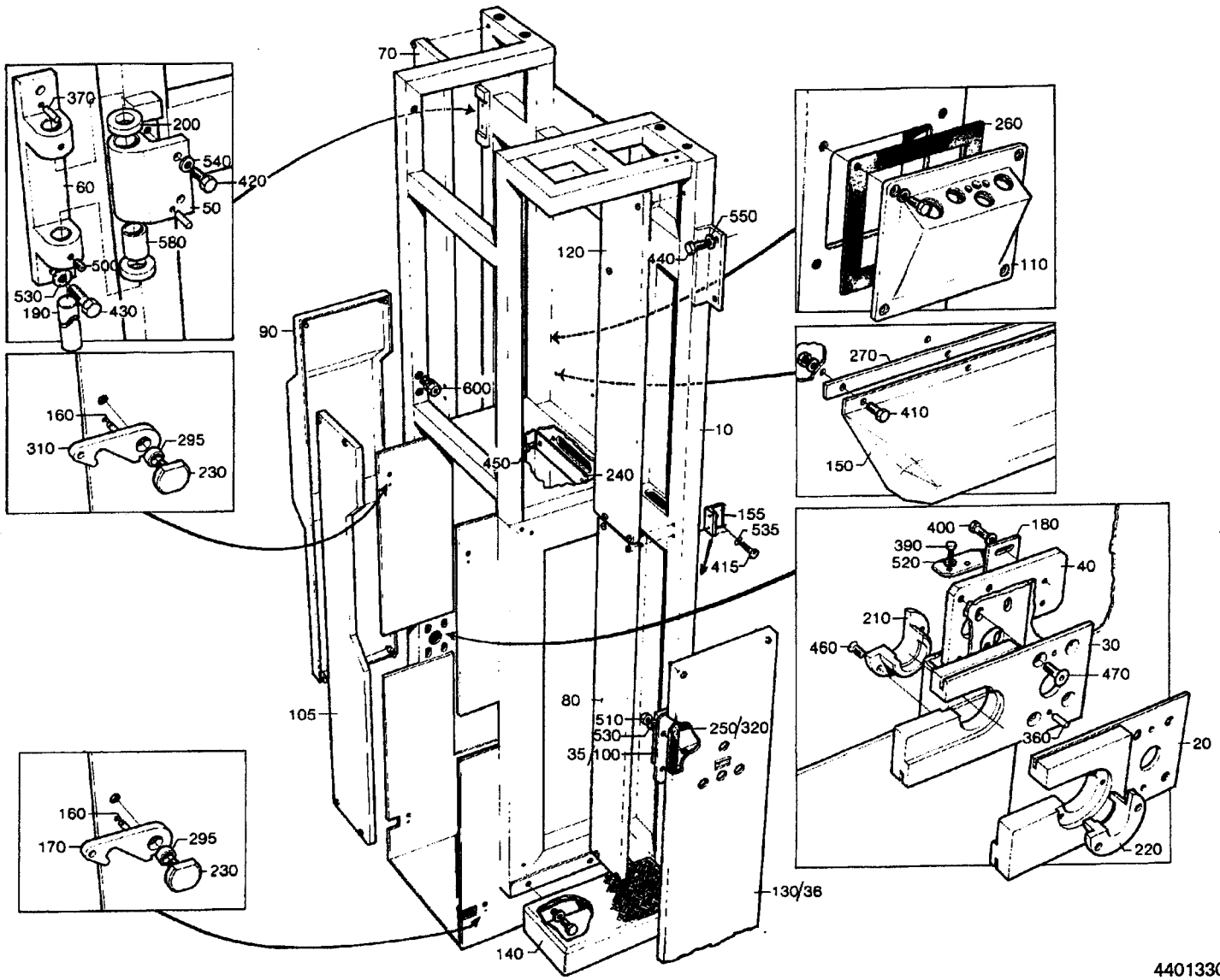

44013303.TIF
440133-3
AM

From	Pos	Part No	SP	UN	Qty	Description
TB/8 TBA/8						
		C- 440133-0401				**Machine Body, Ass'y**
	010	531337	-		1	MACHINE BODY
	035	549830	-		1	PROTECTION PLATE
	036	532026	-		1	SEAL COVER
	090	440202	-		1	PROTECTION PLATE
	105	445857	-		1	PROTECTION PLATE
	170	476117	-		1	CATCH
	310	568167	-		1	CATCH
	320	532024	-		1	GASKET
	330	540728	-		1	FASTENING BRACKET
	340	540729	-		1	FASTENING BRACKET
	400	312105-0325	-		10	SCREW M6S5X10 A4 80
	415	312105-0368	-		2	SCREW M6S6X16RFR
	510	312605-0314	-		10	NUT M6M5RFR
	530	315105-0146	-		20	WASHER BRB5,3X10RFR
	535	315105-0153	-		2	WASHER BRB6,4X12RFR
TB/1 TB/5 TBA/3 TBA/5						
		C- 440133-0402				**Machine Body, Ass'y**
	010	458920	-		1	MACHINE BODY
	100	445855	-		1	SEAL COVER
	130	445936	-		1	PROTECTION PLATE
	150	445938	-		1	SPLASH PLATE
	170	476117	-		2	CATCH
	250	445856	-		1	GASKET
	270	445939	C		1	GASKET
	400	312105-0325	-		8	SCREW M6S5X10 A4 80
	410	312105-0329	-		4	SCREW M6S5X16 A4 80
	510	312605-0314	-		14	NUT M6M5RFR
	530	315105-0146	-		22	WASHER BRB5,3X10RFR

From	Pos	Part No	SP	UN	Qty	Description
Common parts						
	020	440185	-		1	HOLDER
	030	440186	-		1	HOLDER
	040	440192	-		2	BRACKET
	050	440195	-		2	JOINT
	060	440196	-		2	HANGER
	070	440199	-		1	PROTECTION PLATE
	080	440200	-		1	PROTECTION PLATE
	110	G- 464141	-		1	LEAD-IN PLATE
	120	445935	-		1	PROTECTION PLATE
	140	445937	-		2	STAIRCASE
	160	1013	-		2	SHAFT
	180	440193	-		2	HOLDER
	190	440197	-		2	SHAFT
	200	440198	S		4	WASHER
	210	440252	P		1	SLEEVE
	220	440253	P		1	SLEEVE
	230	440271	-		2	SCREW
	240	445934	-		1	LID
	260	445929	C		1	GASKET
	295	457358	-		2	SLEEVE
	360	311103-0353	-		4	CYLINDRICACP M6 6X20 RFR
	370	311103-0355	-		6	CYLINDRICACP M6 6X25 RFR
	390	312105-0293	-		4	SCREW M6S4X16 A4 80
	420	312105-0451	-		10	SCREW M6S8X20RFR
	430	312105-0495	-		4	SCREW M6S10X30RFR
	440	312115-0495	-		4	SCREW 10X30 A4 80
	450	312125-0323	-		2	SLOTTED HEMCS5X8RFR
	460	312155-0327	-		4	SCREW MF6S5X12RFR
	470	312155-0451	-		8	SCREW MF6S8X20RFR
	500	312318-0362	-		4	STOP SCREW SK6SS6X8RFR
	520	315105-0136	-		4	WASHER BRB4,3X8RFR
	540	315105-0165	-		10	WASHER BRB8,4X16RFR
	550	315105-0171	-		8	WASHER BRB10X18RFR
	580	321105-0234	-		4	BUSHING 20F7X28X30
	600	352101-0103	-		26	LEAD-IN G 18,6

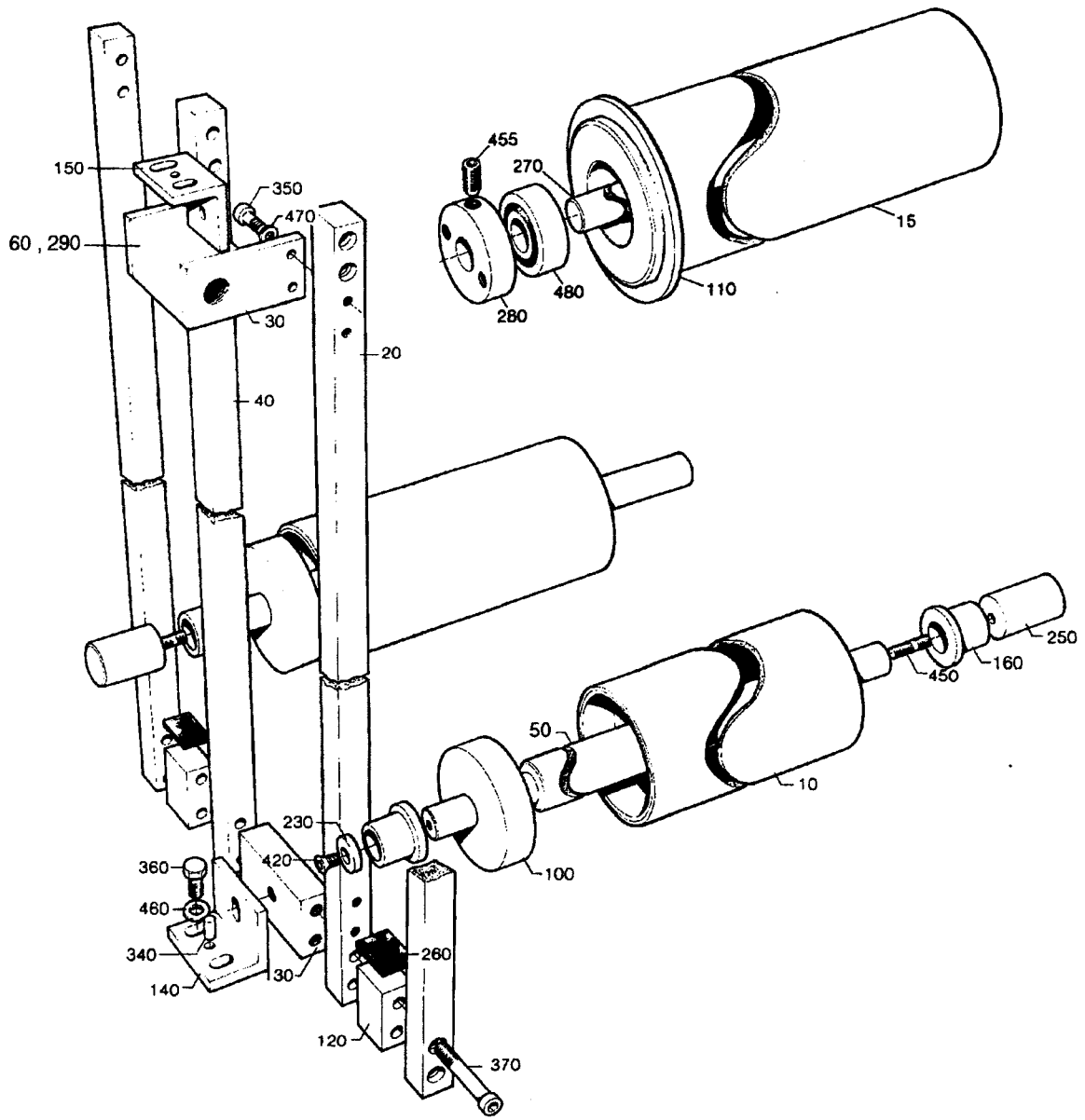

44021001.TIF
440210-1/2
AM 16903

From	Pos	Part No	SP	UN	Qty	Description
TB/1 TB/5 TBA/3 TBA/5 1000ml-500ml TBA/8 1055ml-500ml 1000ml Slim 750ml Slim						
		C- 440210-0201				**Roll, Ass'y**
	130	440213	-		4	LUG
	240	476401	C		2	SHAFT
TB/1 TB/5 TBA/3 TBA/5 300ml-200ml TBA/8 375ml-300ml 500ml Slim						
		C- 440210-0202				**Roll, Ass'y**
	130	440213	-		4	LUG
	240	466086	C		2	SHAFT
TB/8 1136ml-500ml						
		C- 440210-0203				**Roll, Ass'y**
	015	265564	-		1	BENDING ROLLER
	050	548696	-		2	SHAFT
	060	549827	-		2	LUG
	110	250588	-		2	FLANGE
	130	440213	-		2	LUG
	270	548699	-		1	SHAFT
	280	549826	-		2	WASHER
	290	549828	-		2	CAP
	365	312105-0466	-		4	SCREW M6S8X75RFR
	455	312318-0327	-		4	STOP SCREW SK6SS5X12RFR
	480	321313-0102	-		2	BALL BEARISKF6202-2RS
TB/8 300ml						
		C- 440210-0204				**Roll, Ass'y**
	015	265564	-		1	BENDING ROLLER
	050	548696	-		2	SHAFT
	060	549827	-		2	LUG
	110	250588	-		2	FLANGE
	130	440213	-		2	LUG
	270	548699	-		1	SHAFT
	280	549826	-		2	WASHER
	290	549828	-		2	CAP
	365	312105-0466	-		4	SCREW M6S8X75RFR
	455	312318-0327	-		4	STOP SCREW SK6SS5X12RFR
	480	321313-0102	-		2	BALL BEARISKF6202-2RS
Common parts						
	010	226097-0002	-		2	BENDING ROLLER
	020	440211	-		2	WAY
	030	445927	-		2	HOLDER
	040	476556	-		6	WAY
	100	226098	S		4	BEARING
	120	440212	-		8	LUG
	140	440214	-		2	HOLDER
	150	440215	-		2	HOLDER
	160	440217	S		4	BUSHING
	230	445926	-		2	WASHER
	250	476015	-		2	DOWEL
	260	476016	-		4	RUBBER
	340	311103-0350	-		4	CYLINDRICACP M6 6X14 RFR
	350	312115-0370	-		4	SCREW 6X20 A4 80
	360	312105-0451	-		12	SCREW M6S8X20RFR
	370	312111-0467	-		16	SCREW MC6S8X80FZB
	420	312155-0368	-		2	SCREW MF6S6X16RFR
	450	312303-0374	-		2	STUD SCREWMPS 6X25 RFR
	460	315105-0165	-		12	WASHER BRB8,4X16RFR
	470	315105-0153	-		4	WASHER BRB6,4X12RFR

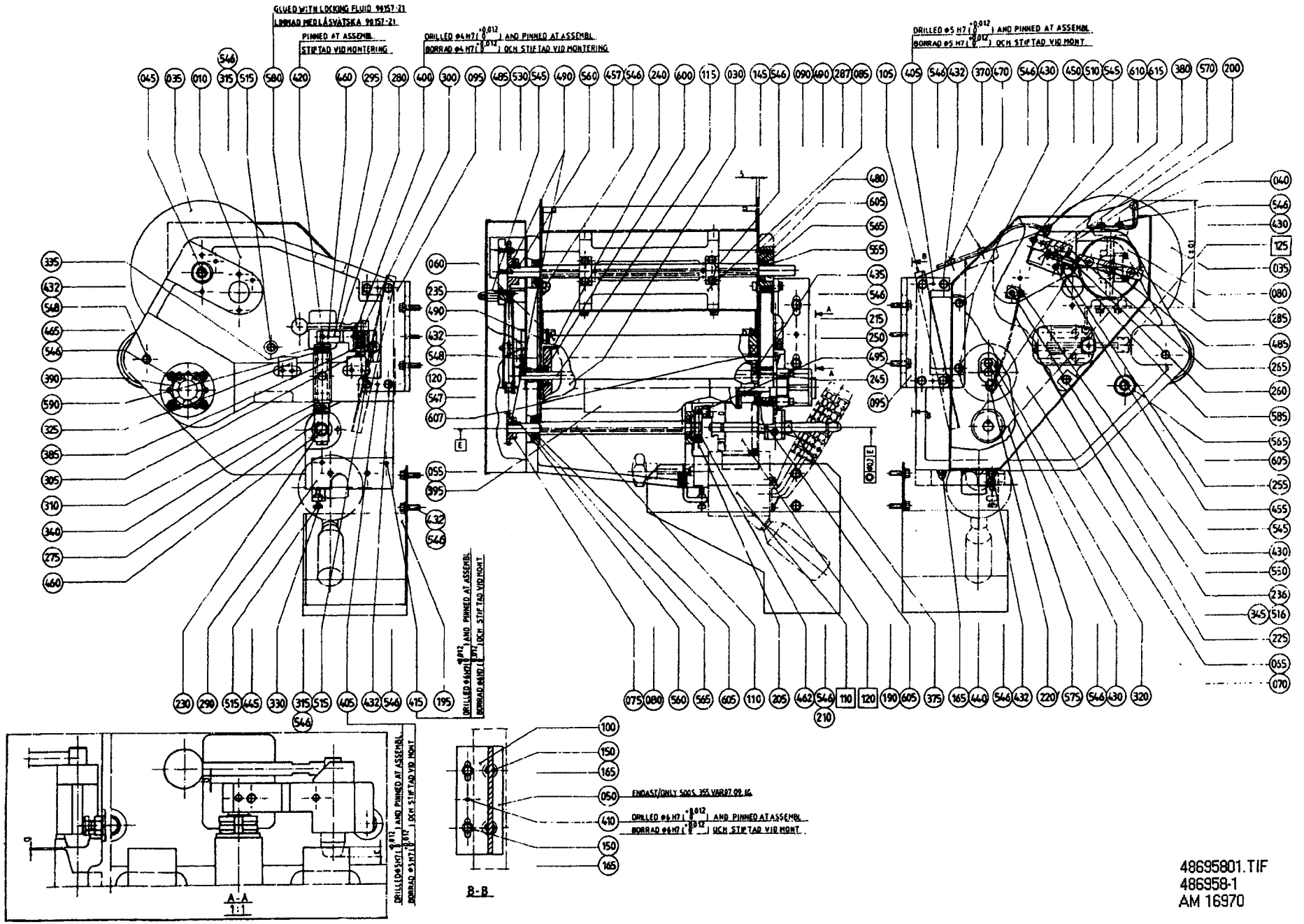

48695801.TIF
486958-1
AM 16970

From	Pos	Part No	SP	UN	Qty	Description
1055ml						
		C- 486958-0101				**Dating Unit, Ass'y**
	010	G- 484848-0001	-		1	MACHINE BODY
	030	293621-0001	C		1	BENDING ROLLER
	035	293624-0001	-		2	PROTECTION PLATE
	040	458105	S		2	CREASE FORMER
	045	486960-0001	C		1	SHAFT
	055	532719-0001	C		1	FEEDING ROLLER
	060	533449-0001	C		1	BENDING ROLLER
	065	533453	-		1	LID
	070	533454	-		1	FRAME
	075	32629	S		1	SPROCKET
	080	32630	S		1	SPROCKET
	085	G- 538241-0001	-		1	SPACER
	090	539338	-		2	CAP
	095	486962-0001	-		2	FASTENING BRACKET
	105	486964	-		1	HEAD PLATE
	110	486966-0001	-		1	SHAFT
	115	486968-0001	-		1	SHAFT FOR BENDINGROLLER
	120	533457-0001	-		1	SHAFT
	145	312105-0372	-		8	SCREW M6S6X25RFR
	150	312105-0451	-		4	SCREW M6S8X20RFR
	165	315105-0165	-		5	WASHER BRB8,4X16RFR
	490	312318-0323	-		8	STOP SCREW SK6SS5X8RFR
1000ml LoFin						
		C- 486958-0102				**Dating Unit, Ass'y**
	010	G- 484848-0001	-		1	MACHINE BODY
	030	293621-0001	C		1	BENDING ROLLER
	035	293624-0001	-		2	PROTECTION PLATE
	040	458105	S		2	CREASE FORMER
	045	486960-0001	C		1	SHAFT
	055	532719-0001	C		1	FEEDING ROLLER
	060	533449-0001	C		1	BENDING ROLLER
	065	533453	-		1	LID
	070	533454	-		1	FRAME
	075	32629	S		1	SPROCKET
	080	32630	S		1	SPROCKET
	085	G- 538241-0002	-		1	SPACER
	090	539338	-		2	CAP
	095	486962-0001	-		2	FASTENING BRACKET
	105	486964	-		1	HEAD PLATE
	110	486966-0001	-		1	SHAFT
	115	486968-0001	-		1	SHAFT FOR BENDINGROLLER
	120	533457-0001	-		1	SHAFT
	145	312105-0372	-		8	SCREW M6S6X25RFR
	150	312105-0451	-		4	SCREW M6S8X20RFR
	165	315105-0165	-		5	WASHER BRB8,4X16RFR
	490	312318-0323	-		8	STOP SCREW SK6SS5X8RFR
1000ml HiFin						
		C- 486958-0103				**Dating Unit, Ass'y**
	010	G- 484848-0001	-		1	MACHINE BODY
	030	293621-0001	C		1	BENDING ROLLER
	035	293624-0001	-		2	PROTECTION PLATE
	040	458104	S		2	CREASE FORMER
	045	486960-0001	C		1	SHAFT
	055	532719-0001	C		1	FEEDING ROLLER
	060	533449-0001	C		1	BENDING ROLLER
	065	533453	-		1	LID
	070	533454	-		1	FRAME
	075	32629	S		1	SPROCKET
	080	32630	S		1	SPROCKET
	085	G- 538241-0003	-		1	SPACER
	090	539338	-		2	CAP
	095	486962-0001	-		2	FASTENING BRACKET
	105	486964	-		1	HEAD PLATE
	110	486966-0001	-		1	SHAFT
	115	486968-0001	-		1	SHAFT FOR BENDINGROLLER
	120	533457-0001	-		1	SHAFT
	145	312105-0372	-		8	SCREW M6S6X25RFR
	150	312105-0451	-		4	SCREW M6S8X20RFR
	165	315105-0165	-		5	WASHER BRB8,4X16RFR
	490	312318-0323	-		8	STOP SCREW SK6SS5X8RFR
750ml						
		C- 486958-0104				**Dating Unit, Ass'y**
	010	G- 484848-0002	-		1	MACHINE BODY
	030	293621-0001	C		1	BENDING ROLLER
	035	293624-0001	-		2	PROTECTION PLATE
	040	458105	S		2	CREASE FORMER
	045	486960-0001	C		1	SHAFT
	055	532719-0001	C		1	FEEDING ROLLER
	060	533449-0001	C		1	BENDING ROLLER
	065	533453	-		1	LID
	070	533454	-		1	FRAME
	075	32629	S		1	SPROCKET
	080	32630	S		1	SPROCKET
	085	G- 543137-0001	-		1	SPACER
	090	539338	-		2	CAP
	095	486962-0001	-		2	FASTENING BRACKET
	105	486964	-		1	HEAD PLATE
	110	486966-0001	-		1	SHAFT

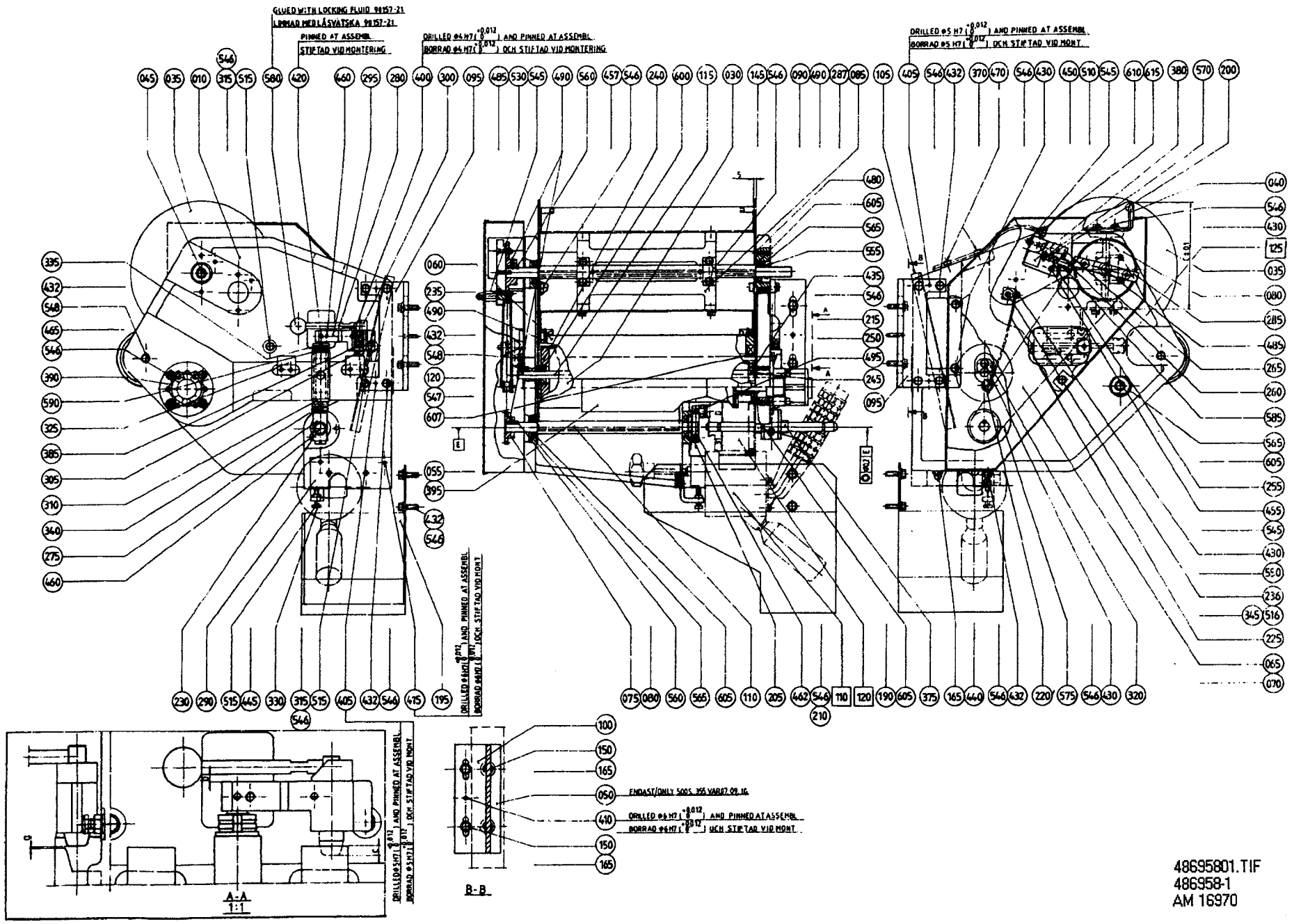

48695801.TIF
486958-1
AM 16970

From	Pos	Part No	SP	UN	Qty	Description
	115	486968-0001	-		1	SHAFT FOR BENDINGROLLER
	120	533457-0001	-		1	SHAFT
	145	312105-0372	-		8	SCREW M6S6X25RFR
	150	312105-0451	-		4	SCREW M6S8X20RFR
	165	315105-0165	-		5	WASHER BRB8,4X16RFR
	490	312318-0323	-		8	STOP SCREW SK6SS5X8RFR
568ml						
		C- 486958-0105				**Dating Unit, Ass'y**
	010	G- 484848-0003	-		1	MACHINE BODY
	030	293621-0001	C		1	BENDING ROLLER
	035	293624-0002	-		2	PROTECTION PLATE
	040	458106	S		2	CREASE FORMER
	045	544367	C		1	SHAFT
	055	532719-0001	C		1	FEEDING ROLLER
	060	533449-0001	C		1	BENDING ROLLER
	065	533453	-		1	LID
	070	533454	-		1	FRAME
	080	32630	S		2	SPROCKET
	085	440282-0003	-		2	SPACER
	095	486962-0001	-		2	FASTENING BRACKET
	105	486964	-		1	HEAD PLATE
	110	486966-0001	-		1	SHAFT
	115	486968-0001	-		1	SHAFT FOR BENDINGROLLER
	120	533457-0001	-		1	SHAFT
	145	312105-0372	-		4	SCREW M6S6X25RFR
	145	312105-0370	-		4	SCREW M6S6X20RFR
	150	312105-0451	-		4	SCREW M6S8X20RFR
	165	315105-0165	-		5	WASHER BRB8,4X16RFR
	490	312318-0323	-		6	STOP SCREW SK6SS5X8RFR
500ml						
		C- 486958-0106				**Dating Unit, Ass'y**
	010	G- 484848-0003	-		1	MACHINE BODY
	030	293621-0001	C		1	BENDING ROLLER
	035	293624-0002	-		2	PROTECTION PLATE
	040	458106	S		2	CREASE FORMER
	045	544367	C		1	SHAFT
	055	532719-0001	C		1	FEEDING ROLLER
	060	533449-0001	C		1	BENDING ROLLER
	065	533453	-		1	LID
	070	533454	-		1	FRAME
	080	32630	S		2	SPROCKET
	085	440282-0004	-		2	SPACER
	095	486962-0001	-		2	FASTENING BRACKET
	105	486964	-		1	HEAD PLATE
	110	486966-0001	-		1	SHAFT

From	Pos	Part No	SP	UN	Qty	Description
	115	486968-0001	-		1	SHAFT FOR BENDINGROLLER
	120	533457-0001	-		1	SHAFT
	145	312105-0372	-		4	SCREW M6S6X25RFR
	145	312105-0370	-		4	SCREW M6S6X20RFR
	150	312105-0451	-		4	SCREW M6S8X20RFR
	165	315105-0165	-		5	WASHER BRB8,4X16RFR
	490	312318-0323	-		6	STOP SCREW SK6SS5X8RFR
500ml Slim						
		C- 486958-0107				**Dating Unit, Ass'y**
	010	G- 484848-0002	-		1	MACHINE BODY
	030	293621-0001	C		1	BENDING ROLLER
	035	293624-0001	-		2	PROTECTION PLATE
	040	458108	S		2	CREASE FORMER
	045	486960-0001	C		1	SHAFT
	050	486961	-		1	PLATE
	055	532719-0001	C		1	FEEDING ROLLER
	060	533449-0001	C		1	BENDING ROLLER
	065	533453	-		1	LID
	070	533454	-		1	FRAME
	075	32629	S		1	SPROCKET
	080	32630	S		1	SPROCKET
	085	G- 538241-0004	-		1	SPACER
	090	539338	-		2	CAP
	095	486962-0002	-		1	FASTENING BRACKET
	100	486962-0004	-		1	FASTENING BRACKET
	105	486964	-		1	HEAD PLATE
	110	486966-0001	-		1	SHAFT
	115	486968-0001	-		1	SHAFT FOR BENDINGROLLER
	120	533457-0001	-		1	SHAFT
	145	312105-0372	-		8	SCREW M6S6X25RFR
	150	312105-0451	-		6	SCREW M6S8X20RFR
	165	315105-0165	-		7	WASHER BRB8,4X16RFR
	490	312318-0323	-		8	STOP SCREW SK6SS5X8RFR
375ml						
		C- 486958-0108				**Dating Unit, Ass'y**
	010	G- 533448	-		1	MACHINE BODY
	030	293621-0002	C		1	BENDING ROLLER
	035	293624-0002	-		2	PROTECTION PLATE
	040	458109	S		2	CREASE FORMER
	045	486960-0002	C		1	SHAFT
	055	532719-0002	C		1	FEEDING ROLLER
	060	533449-0002	C		1	BENDING ROLLER
	065	533455	-		1	LID
	070	533456	-		1	FRAME
	075	32629	S		1	SPROCKET

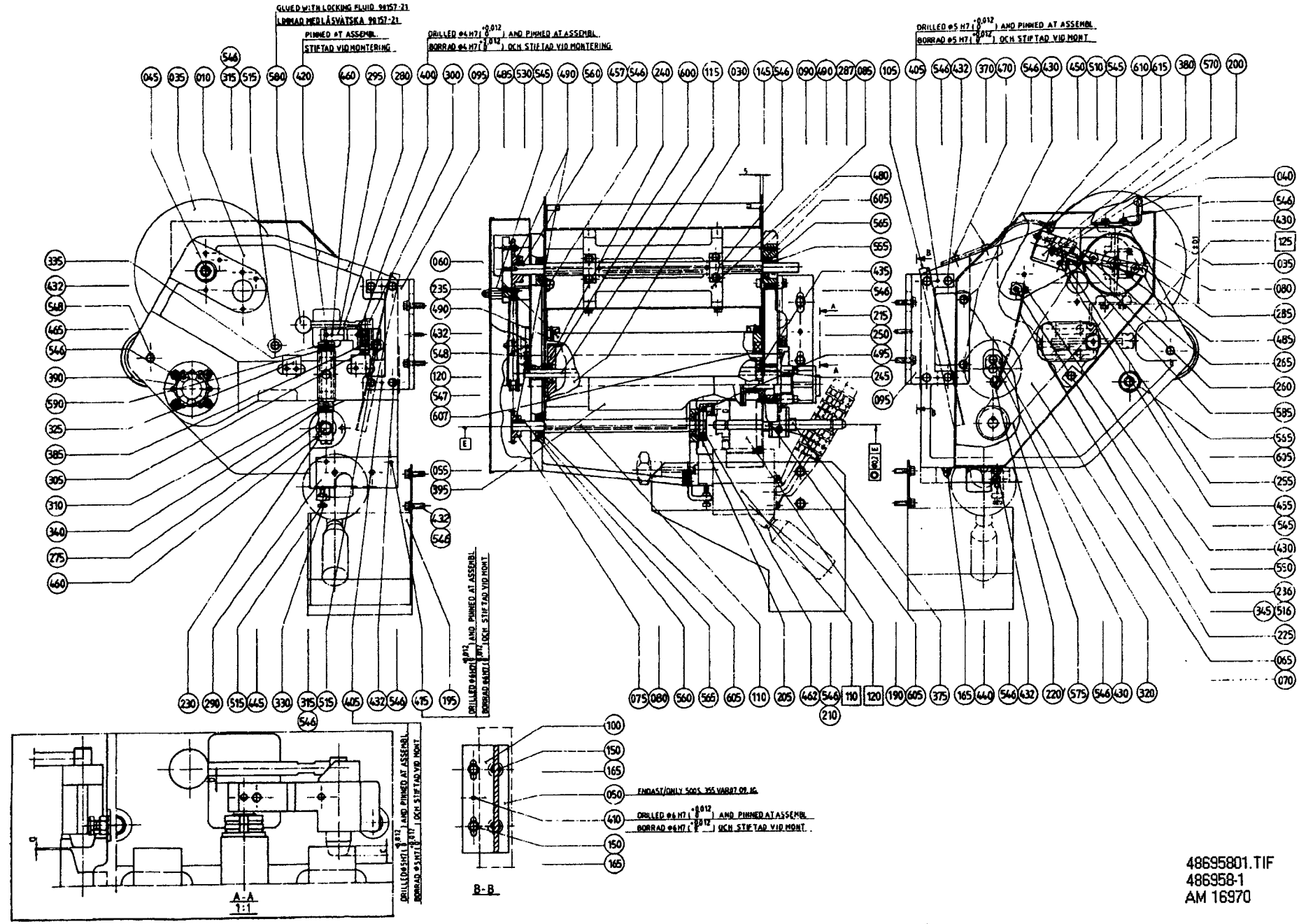
GLUED WITH LOCKING FLUID 98157-21
LIMMAD MED LÅSVÄTSKA 98157-21
PINNED AT ASSEMBL.
STIFTAD VID MONTERING
DRILLED ø4 H7 AND PINNED AT ASSEMBL.
BORRAD ø4 H7 OCH STIFTAD VID MONTERING
DRILLED ø5 H7 AND PINNED AT ASSEMBL.
BORRAD ø5 H7 OCH STIFTAD VID MONT
DRILLED ø6 H7 AND PINNED AT ASSEMBL.
BORRAD ø6 H7 OCH STIFTAD VID MONT
ENDAST/ONLY 5005 355 VA807 09 IG
A-A
1:1
B-B
48695801.TIF
486958-1
AM 16970

From	Pos	Part No	SP	UN	Qty	Description
	080	32630	S		1	SPROCKET
	085	G- 543138	-		1	SPACER
	090	539338	-		2	CAP
	095	486962-0003	-		2	FASTENING BRACKET
	105	486965	-		1	HEAD PLATE
	110	486966-0002	-		1	SHAFT FOR CARRIER
	115	486968-0002	-		1	SHAFT FOR BENDINGROLLER
	120	533457-0002	-		1	SHAFT
	145	312105-0372	-		8	SCREW M6S6X25RFR
	150	312105-0451	-		4	SCREW M6S8X20RFR
	165	315105-0165	-		5	WASHER BRB8,4X16RFR
	490	312318-0323	-		8	STOP SCREW SK6SS5X8RFR
355ml						
		C- 486958-0109				**Dating Unit, Ass'y**
	010	G- 484848-0002	-		1	MACHINE BODY
	030	293621-0001	C		1	BENDING ROLLER
	035	293624-0001	-		2	PROTECTION PLATE
	040	529139	S		2	CREASE FORMER
	045	486960-0001	C		1	SHAFT
	050	486961	-		1	PLATE
	055	532719-0001	C		1	FEEDING ROLLER
	060	533449-0001	C		1	BENDING ROLLER
	065	533453	-		1	LID
	070	533454	-		1	FRAME
	075	32629	S		1	SPROCKET
	080	32630	S		1	SPROCKET
	085	G- 543137-0002	-		1	SPACER
	090	539338	-		2	CAP
	095	486962-0002	-		1	FASTENING BRACKET
	100	486962-0004	-		1	FASTENING BRACKET
	105	486964	-		1	HEAD PLATE
	110	486966-0001	-		1	SHAFT
	115	486968-0001	-		1	SHAFT FOR BENDINGROLLER
	120	533457-0001	-		1	SHAFT
	145	312105-0372	-		8	SCREW M6S6X25RFR
	150	312105-0451	-		6	SCREW M6S8X20RFR
	165	315105-0165	-		7	WASHER BRB8,4X16RFR
	490	312318-0323	-		8	STOP SCREW SK6SS5X8RFR
750ml Slim						
		C- 486958-0110				**Dating Unit, Ass'y**
	010	G- 484848-0001	-		1	MACHINE BODY
	030	293621-0001	C		1	BENDING ROLLER
	035	293624-0001	-		2	PROTECTION PLATE
	040	544279	S		2	CREASE FORMER
	045	486960-0001	C		1	SHAFT
	050	486961	-		1	PLATE
	055	532719-0001	C		1	FEEDING ROLLER
	060	533449-0001	C		1	BENDING ROLLER
	065	533453	-		1	LID
	070	533454	-		1	FRAME
	075	32629	S		1	SPROCKET
	080	32630	S		1	SPROCKET
	085	G- 538241-0005	-		1	SPACER
	090	539338	-		2	CAP
	095	486962-0007	-		1	FASTENING BRACKET
	100	486962-0008	-		1	FASTENING BRACKET
	105	486964	-		1	HEAD PLATE
	110	486966-0001	-		1	SHAFT
	115	486968-0001	-		1	SHAFT FOR BENDINGROLLER
	120	533457-0001	-		1	SHAFT
	145	312105-0372	-		8	SCREW M6S6X25RFR
	150	312105-0451	-		6	SCREW M6S8X20RFR
	165	315105-0165	-		7	WASHER BRB8,4X16RFR
	490	312318-0323	-		8	STOP SCREW SK6SS5X8RFR
1136ml						
		C- 486958-0111				**Dating Unit, Ass'y**
	010	G- 484848-0001	-		1	MACHINE BODY
	030	293621-0001	C		1	BENDING ROLLER
	035	293624-0001	-		2	PROTECTION PLATE
	040	458105	S		2	CREASE FORMER
	045	486960-0001	C		1	SHAFT
	055	532719-0001	C		1	FEEDING ROLLER
	060	533449-0001	C		1	BENDING ROLLER
	065	533453	-		1	LID
	070	533454	-		1	FRAME
	075	32629	S		1	SPROCKET
	080	32630	S		1	SPROCKET
	085	G- 569652-0001	-		1	SPACER
	090	539338	-		2	CAP
	095	486962-0001	-		2	FASTENING BRACKET
	105	486964	-		1	HEAD PLATE
	110	486966-0001	-		1	SHAFT
	115	486968-0001	-		1	SHAFT FOR BENDINGROLLER
	120	533457-0001	-		1	SHAFT
	145	312105-0372	-		8	SCREW M6S6X25RFR
	150	312105-0451	-		4	SCREW M6S8X20RFR
	165	315105-0165	-		5	WASHER BRB8,4X16RFR
	490	312318-0323	-		8	STOP SCREW SK6SS5X8RFR

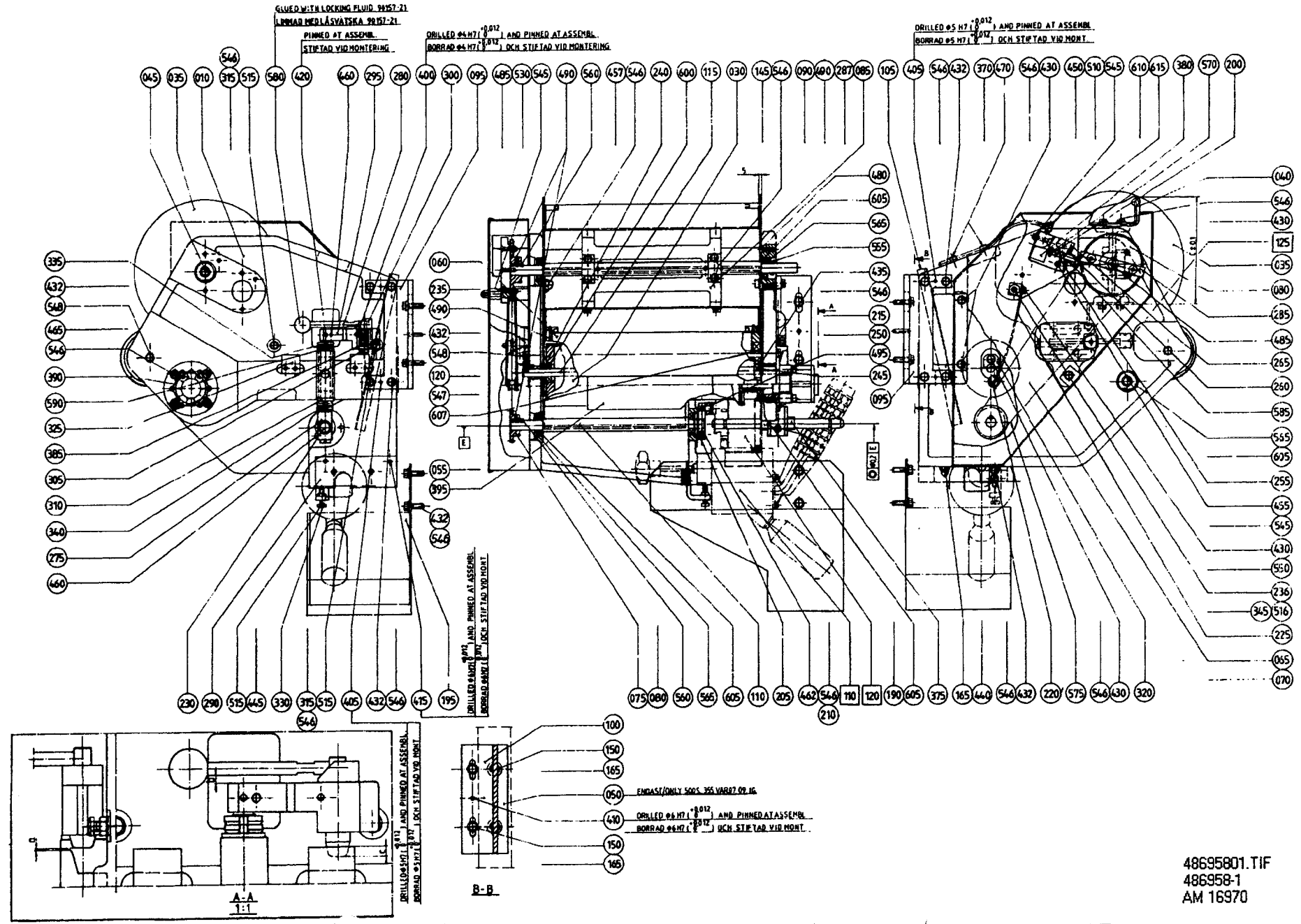

48695801.TIF
486958-1
AM 16970

From	Pos	Part No	SP	UN	Qty	Description
1000ml Slim						
		C- 486958-0112				**Dating Unit, Ass'y**
	010	G- 484848-0001	-		1	MACHINE BODY
	030	293621-0001	C		1	BENDING ROLLER
	035	293624-0001	-		2	PROTECTION PLATE
	040	569651	S		2	CREASE FORMER
	045	486960-0001	C		1	SHAFT
	055	532719-0001	C		1	FEEDING ROLLER
	060	533449-0001	C		1	BENDING ROLLER
	065	533453	-		1	LID
	070	533454	-		1	FRAME
	075	32629	S		1	SPROCKET
	080	32630	S		1	SPROCKET
	085	G- 569652-0002	-		1	SPACER
	090	539338	-		2	CAP
	095	486962-0010	-		1	FASTENING BRACKET
	100	486962-0009	-		1	FASTENING BRACKET
	105	486964	-		1	HEAD PLATE
	110	486966-0001	-		1	SHAFT
	115	486968-0001	-		1	SHAFT FOR BENDINGROLLER
	120	533457-0001	-		1	SHAFT
	145	312105-0372	-		8	SCREW M6S6X25RFR
	150	312105-0451	-		4	SCREW M6S8X20RFR
	165	315105-0165	-		5	WASHER BRB8,4X16RFR
	490	312318-0323	-		8	STOP SCREW SK6SS5X8RFR
Common parts						
	F110	**C- 440286-0301**	**-**		**1**	**INK UNIT**
	F120	**C- 293684-020V**	**-**		**2**	**PRINTING WHEEL**
	F125	**C- 543143-0101**	**-**		**1**	**ADJUSTMENTMENT DEVICE**
	190	522408	-		1	BEARING HOUSING
	195	549832	-		1	WASTE CHUTE
	200	10258	P		1	COMPRESSION SPRING
	205	533458	-		1	WASHER
	210	32925	S		1	CARRIER
	215	32926	P		1	ROLL
	220	33182	P		1	ROLL
	225	33183	S		1	SPRING
	230	228653	S		1	SHAFT
	235	544706	-		2	FLANGE
	236	293645	C		1	BRACKET
	240	293646-0001	S		1	WASHER
	245	293646-0002	S		1	WASHER
	250	293674	S		1	DOWEL
	255	436939	C		1	CYLINDER BRACKET
	260	436940	C		1	SHAFT

From	Pos	Part No	SP	UN	Qty	Description
	265	440277	C		1	LACE
	275	450497	S		1	SHAFT
	280	450500	-		1	DOWEL
	285	457430	-		1	BEATER
	287	458193-0001	P		4	WASHER
	287	458193-0002	P		4	WASHER
	287	458193-0003	P		4	WASHER
	290	458489	-		1	CANTILEVER
	295	464010	-		1	ARM
	300	464012	C		1	CURVE
	305	464011	P		1	LOCK STUD
	310	466430	-		1	BUSHING
	315	476377	-		2	SCREW
	320	486967	-		1	SHEET
	325	486969	-		2	GUIDE LUG
	330	486971	-		1	ANGLE
	335	532082	-		2	ROUND NUT
	340	532083	-		2	ROUND NUT
	345	533459	-		1	SCREW
	370	90165-0057	-		2	CLIP
	375	90166-0059	S	MM	18	HOSE
	380	90239-0259	S		1	CYLINDER
	385	90335-0064	-		1	SPRING
	390	90347-0054	C		1	DAMPER
	395	311103-0273	-		1	CYLINDRICAM6 4X22 RFR
	400	311103-0274	-		1	CYLINDRICACP 4X25 RFR
	405	311103-0310	-		4	CYLINDRICACP M6 5X20 RFR
	410	311103-0353	-		2	CYLINDRICACP M6 6X20 RFR
	415	311103-0357	-		1	CYLINDRICACP M6 6X30 RFR
	420	311202-0241	-		1	TAPER PIN KP4X25RFR
	430	312105-0366	-		12	SCREW M6S6X12RFR
	432	312105-0368	-		14	SCREW M6S6X16RFR
	435	312105-0370	-		4	SCREW M6S6X20RFR
	440	312105-0457	-		1	SCREW M6S8X35RFR
	445	312109-0374	-		1	SCREW M6S6X30HRFR
	450	312111-0333	-		2	SCREW MC6S5X25FZB
	455	312111-0335	-		2	SCREW MC6S5X30FZB
	457	312111-0364	-		3	SCREW MC6S6X10FZB
	460	312115-0370	-		2	SCREW 6X20 A4 80
	462	312115-0372	-		1	SCREW MC6S6X25 A4 80
	465	312115-0376	-		4	SCREW 6X35 A4 80
	470	312125-0285	-		2	SLOTTED HEMCS4X6RFR
	480	312155-0329	-		4	SCREW MF6S5X16RFR
	485	312155-0333	-		3	SCREW MF6S5X25RFR
	495	312318-0362	-		1	STOP SCREW SK6SS6X8RFR

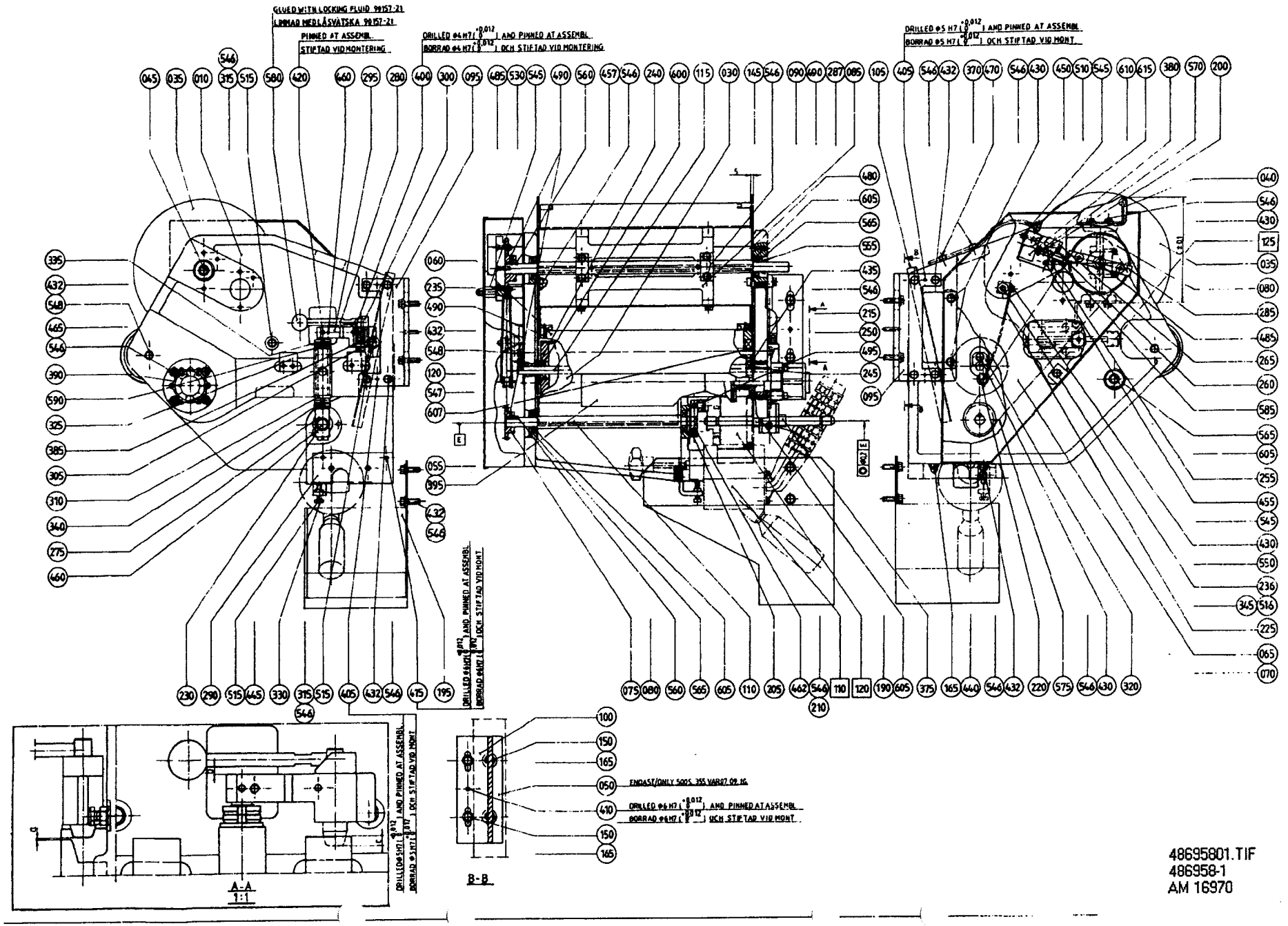
GLUED WITH LOCKING FLUID 99157-21
LIMMAD MED LÅSVÄTSKA 99157-21
PINNED AT ASSEMBL
STIFTAD VID MONTERING
DRILLED Ø4 H7 AND PINNED AT ASSEMBL
BORRAD Ø4 H7 OCH STIFTAD VID MONTERING
DRILLED Ø5 H7 AND PINNED AT ASSEMBL
BORRAD Ø5 H7 OCH STIFTAD VID MONT
DRILLED Ø5 H7 AND PINNED AT ASSEMBL
BORRAD Ø5 H7 OCH STIFTAD VID MONT
A-A
1:1
B-B
ENDAST/ONLY 500S, 355 VAR07 09 IG
DRILLED Ø6 H7 AND PINNED AT ASSEMBL
BORRAD Ø6 H7 OCH STIFTAD VID MONT
48695801.TIF
486958-1
AM 16970

From	Pos	Part No	SP	UN	Qty	Description
	510	312605-0314	-		2	NUT M6M5RFR
	515	312605-0316	-		3	NUT M6M6RFR
	516	312705-0316	-		1	CAP NUT MHM 6 A2
	530	312812-0314	-		2	LOCK NUT A4-M5RFR
	545	315105-0146	-		6	WASHER BRB5,3X10RFR
	546	315105-0153	-		40	WASHER BRB6,4X12RFR
	547	315105-0173	-		2	WASHER BRB10,5X22RFR
	548	315115-0153	-		2	WASHER TBRB6,4X12RFR
	550	315121-0153	-		1	WASHER TBRSB6,4X22FZB
	555	315220-0121	P		1	SEAL RING V-14S
	560	315701-0201	S		2	FLAT WEDGE5X5X20
	565	315752-0123	P		5	CIRCLIP SGH32
	570	315755-0801	P		1	LOCKING WAE 8RFR
	575	318207-0168	S		1	ROLLER CHA6MM
	580	318800-0103	-		1	HANDLE BALLA D.25-M6
	585	321111-0135	S		1	FLANGE BUS 10E7X10
	590	321111-0212	S		1	FLANGE BUS 15E7X15
	600	321308-0101	S		2	BALL BEARISKF6001RS
	605	321308-0202	S		6	BALL BEARISKF6002-2RS
	607	321316-0200	S		2	BALL BEARISKF6300-2RS
	610	342980-0113	-		1	BANJO CONNSINGEL 6/4-1/8
	615	342980-0303	-		1	BANJO CONN SINGEL 1/8"

From	Pos	Part No	SP	UN	Qty	Description

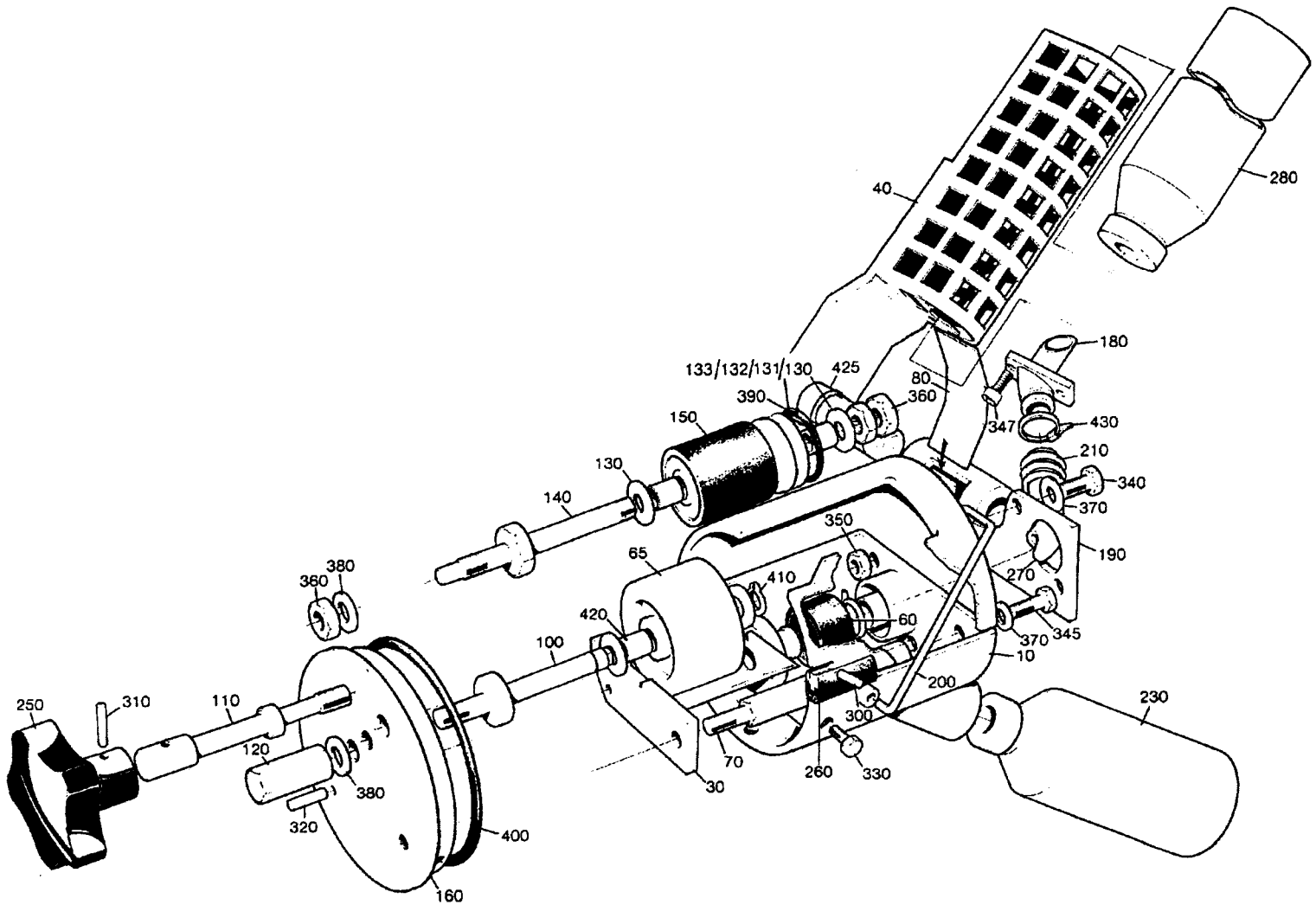

44028603.TIF
440286-3
AM

From	Pos	Part No	SP	UN	Qty	Description
		C- 440286-0301				**Ink Unit, Ass'y**
	010	440287	-		1	COVER
	030	297211	-		1	INK WELL
	040	476356	C		1	HOLDER FOR INK BOTTLE
	060	445542	P		1	MANTEL RUBBER
	065	450355	S		1	INK ROLLER
	070	33010	-		1	SCREW
	080	35547	S		1	SPRING
	100	292044	P		1	SHAFT
	110	293667	S		1	DOWEL
	120	436927	C		1	NUT
	130	293669-0001	P		4	WASHER
	131	293669-0002	P		2	WASHER
	132	293669-0003	P		2	WASHER
	133	293669-0004	P		2	WASHER
	140	293670	P		1	SHAFT
	150	543135	P		1	INK TRANSFER ROLLER
	160	293697	S		1	END SECTION
	180	476354	S		1	CANNULAR TUBE
	190	456773	C		1	PIVOT BRACKET
	200	434747	S		1	BOW CLAMP
	210	537308	-		1	SPRING
	230	90050-0008	P		1	BOTTLE
	250	90051-0077	S		1	HANDLE
	260	90143-0029	S	MM	295	STRIP
	270	90166-0138	P	MM	100	HOSE
	280	90299-0013	P		X	INK
		90299-0300	R		0	* COVER
	300	311103-0236	-		2	CYLINDRICACP M6 3X16 RFR
	310	311103-0238	-		1	CYLINDRICACP M6 3X20 RFR
	320	311103-0270	-		1	CYLINDRICACP M6 4X16 RFR
	330	312105-0291	-		3	SCREW M6S4X12RFR
	340	312105-0327	-		2	SCREW M6S5X12 A4 80
	345	312105-0329	-		1	SCREW M6S5X16 A4 80
	347	312115-0287	-		2	SCREW 4X8 A4 80
	350	312605-0314	-		2	NUT M6M5RFR
	360	312605-0318	-		3	NUT M6M8RFR
	370	315105-0146	-		3	WASHER BRB5,3X10RFR
	380	315105-0165	-		2	WASHER BRB8,4X16RFR
	390	315202-0218	P		1	O-RING 26,2X3
	400	315202-0309	P		1	O-RING 89,5X3
	410	315750-0105	P		1	CIRCLIP SGA8
	420	321120-0100	S		4	BUSHING 8/10X12
	425	321120-0109	S		2	BUSHING 12/14X10
	430	352113-0101	-		1	RIBBON CLA

From	Pos	Part No	SP	UN	Qty	Description

1000ml–750ml

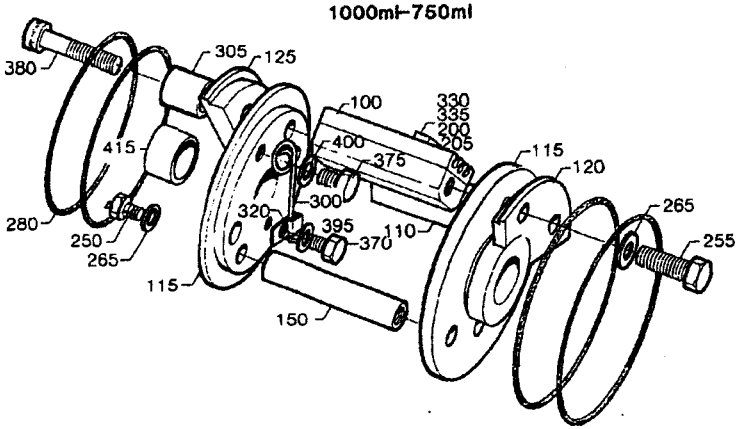

500ml slim–375ml

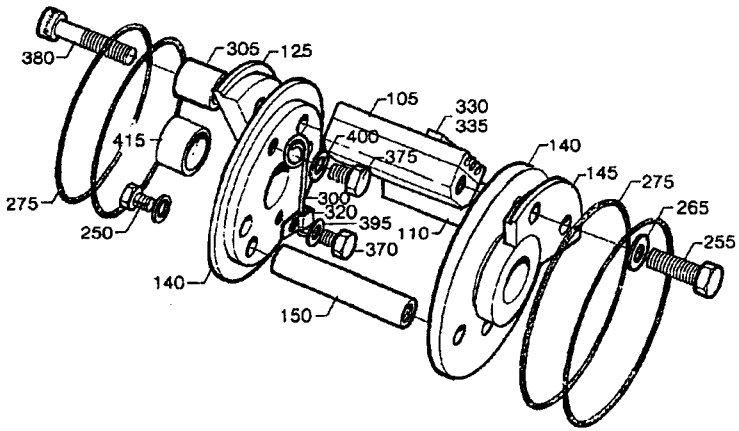

500ml–568ml

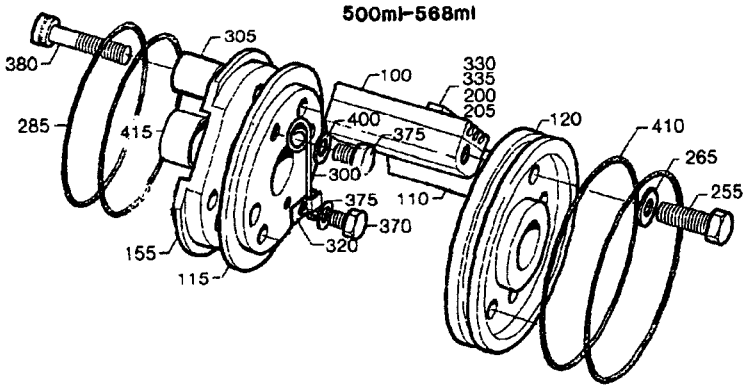

180ml–300ml

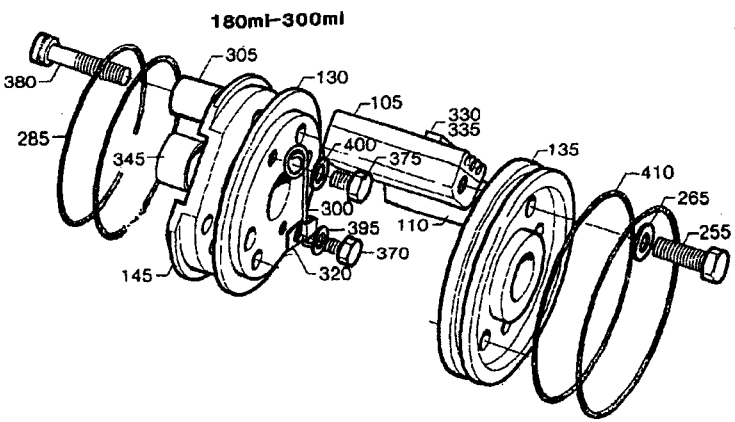

29368403.TIF
293684-3
AM

From	Pos	Part No	SP	UN	Qty	Description
1000ml LoFin 1136ml 1055ml 750ml 1000ml Slim						
		C- 293684-0201				**Printing Wheel, Ass'y**
	100	293395-0003	P		1	TYPE HOLDER
	110	293395-0001	P		1	TYPE HOLDER
	115	292409	C		2	END SECTION
	120	442072	C		1	CARRIER
	125	292411	C		1	CARRIER
	150	293671	C		1	SPACER
	200	90413-0048	P		1	CODE INSERT SET
	205	90413-0049	P		1	CODE INSERT SET
	250	312101-0329	-		2	SCREW M6S5X16FZB
	255	312101-0331	-		3	SCREW M6S5X20FZB
	265	315101-0146	-		5	WASHER BRB5,3X10FZB
	280	315202-0301	P		4	O-RING 49,5X3
568ml 500ml						
		C- 293684-0202				**Printing Wheel, Ass'y**
	100	293395-0003	P		2	TYPE HOLDER
	110	293395-0001	P		2	TYPE HOLDER
	115	434787	C		1	END SECTION
	120	292410	C		1	END SECTION
	155	293676	C		1	CARRIER
	200	90413-0048	P		1	CODE INSERT SET
	205	90413-0049	P		1	CODE INSERT SET
	255	312101-0331	-		7	SCREW M6S5X20FZB
	265	315101-0146	-		7	WASHER BRB5,3X10FZB
	285	315202-0304	P		2	O-RING 64,5X3
	410	315202-0305	P		2	O-RING 69,5X3
750ml Slim 500ml Slim 375ml 355ml						
		C- 293684-0203				**Printing Wheel, Ass'y**
	105	293395-0002	P		1	TYPE HOLDER
	110	293395-0001	P		1	TYPE HOLDER
	125	479237	C		1	CARRIER
	140	479236	C		2	END SECTION
	145	479238	C		1	CARRIER
	150	293671	C		1	SPACER
	250	312101-0329	-		2	SCREW M6S5X16FZB
	255	312101-0331	-		3	SCREW M6S5X20FZB
	265	315101-0146	-		5	WASHER BRB5,3X10FZB
	275	315202-0224	P		4	O-RING 42,2X3

From	Pos	Part No	SP	UN	Qty	Description
300ml-180ml 200ml Slim						
		C- 293684-0204				**Printing Wheel, Ass'y**
	105	293395-0002	P		2	TYPE HOLDER
	110	293395-0001	P		2	TYPE HOLDER
	130	292412	C		1	END SECTION
	135	292413	C		1	END SECTION
	145	293659	C		1	CARRIER
	255	312101-0331	-		7	SCREW M6S5X20FZB
	265	315101-0146	-		7	WASHER BRB5,3X10FZB
	285	315202-0304	P		2	O-RING 64,5X3
	410	315202-0305	P		2	O-RING 69,5X3
1000ml HiFin						
		C- 293684-0205				**Printing Wheel, Ass'y**
	100	293395-0003	P		1	TYPE HOLDER
	110	293395-0001	P		1	TYPE HOLDER
	115	293690	C		2	END SECTION
	120	442431	C		1	CARRIER
	125	293688	C		1	CARRIER
	150	293671	C		1	SPACER
	200	90413-0048	P		1	CODE INSERT SET
	205	90413-0049	P		1	CODE INSERT SET
	250	312101-0329	-		2	SCREW M6S5X16FZB
	255	312101-0331	-		3	SCREW M6S5X20FZB
	265	315101-0146	-		5	WASHER BRB5,3X10FZB
	280	315202-0301	P		4	O-RING 49,5X3
Common parts						
	300	32691	P		1	LOCKING SPRING
	305	33011	S		1	SLEEVE
	320	90165-0010	-		1	CLIP
	330	90413-0033	P		1	CODE INSERT SET
	330	90413-0043	P		1	CODE INSERT SET
	335	90413-0047	P		1	CODE INSERT SET
	335	90413-0044	P		1	CODE INSERT SET
	370	312101-0287	-		1	SCREW M6S4X8FZB
	375	312101-0364	-		1	SCREW M6S6X10FZB
	380	312111-0335	-		1	SCREW MC6S5X30FZB
	395	315101-0136	-		1	WASHER BRB4,3X8FZB
	400	315111-0153	-		1	WASHER TBRB6,4X12FZB
	415	321120-0122	S		2	BUSHING 15/17X15

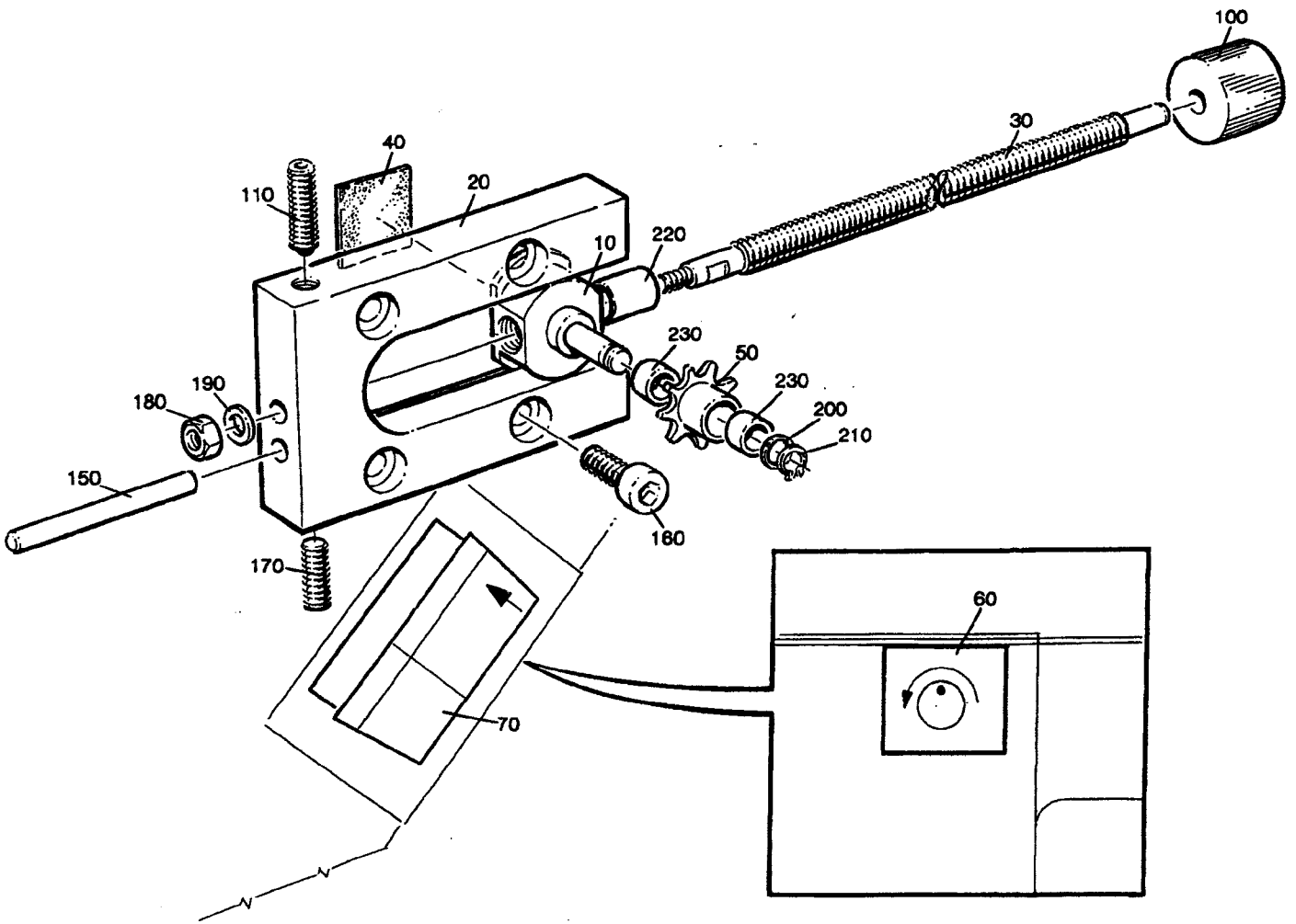

54314301.TIF
543143-1
AM 10835

From	Pos	Part No	SP	UN	Qty	Description
		C- 543143-0101				**Adjustmentment Device, Ass'y**
	010	526984	-		1	SADDLE
	020	526985	-		1	PLATE
	030	526986-0001	-		1	SHAFT
	040	527649	-		1	DISTANCE RUBBER
	050	529362	-		1	SPROCKET
	060	543141	-		1	SIGN
	070	543142	-		1	SIGN
	100	90051-0089	-		1	SHIFTER HANDLE
	110	90287-0167	-		1	SPRINGLOADED SCREW
	150	311103-0365	-		1	CYLINDRICACP M6 6X50 RFR
	160	312115-0368	-		2	SCREW 6X16 A4 80
	170	312318-0368	-		1	STOP SCREW SK6SS6X16RFR
	180	312605-0312	-		1	NUT M6M4RFR
	190	315105-0136	-		1	WASHER BRB4,3X8RFR
	200	315105-0153	-		1	WASHER BRB6,4X12RFR
	210	315751-0103	-		1	CIRCLIP SGA 6 RFR
	220	321120-0100	-		1	BUSHING 8/10X12
	230	321120-0101	-		2	BUSHING 6/8X6

From	Pos	Part No	SP	UN	Qty	Description

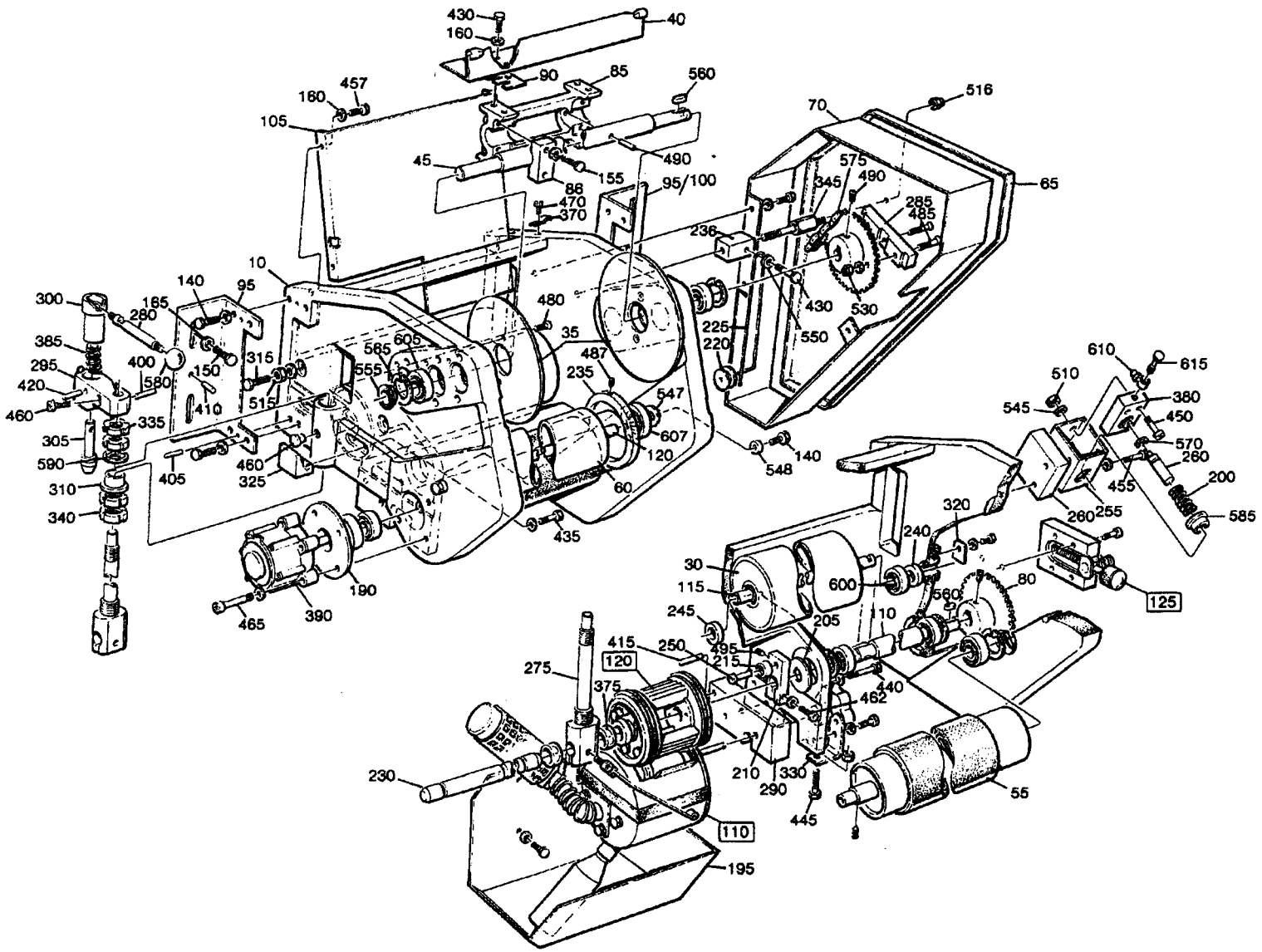

53824801.TIF
538248-1
AM

From	Pos	Part No	SP	UN	Qty	Description
300ml						
		C- 538248-0101				**Dating Unit, Ass'y**
	010	G- 538236-0002	-		1	MACHINE BODY
	040	458107	S		2	CREASE FORMER
	065	538237-0001	-		1	LID
	085	G- 543139	-		1	SPACER
	086	539338	-		2	CAP
	095	486962-0003	-		2	FASTENING BRACKET
	155	312105-0372	-		8	SCREW M6S6X25RFR
	160	315105-0153	-		40	WASHER BRB6,4X12RFR
	490	312318-0323	-		8	STOP SCREW SK6SS5X8RFR
250ml						
		C- 538248-0102				**Dating Unit, Ass'y**
	010	G- 538236-0001	-		1	MACHINE BODY
	040	458182	S		2	CREASE FORMER
	065	538237-0001	-		1	LID
	085	G- 543140	-		1	SPACER
	086	539338	-		2	CAP
	095	486962-0006	-		1	FASTENING BRACKET
	100	486962-0005	-		1	FASTENING BRACKET
	155	312105-0372	-		8	SCREW M6S6X25RFR
	160	315105-0153	-		40	WASHER BRB6,4X12RFR
	490	312318-0323	-		8	STOP SCREW SK6SS5X8RFR
200ml						
		C- 538248-0103				**Dating Unit, Ass'y**
	010	G- 538236-0003	-		1	MACHINE BODY
	040	458181	S		2	CREASE FORMER
	062	538237-0002	-		1	LID
	085	458298	-		2	SPACER
	095	486962-0006	-		1	FASTENING BRACKET
	100	486962-0005	-		1	FASTENING BRACKET
	155	312115-0364	-		4	SCREW 6X10 A4 80
	155	312105-0372	-		4	SCREW M6S6X25RFR
	160	315105-0153	-		36	WASHER BRB6,4X12RFR
	490	312318-0323	-		6	STOP SCREW SK6SS5X8RFR
Common parts						
	F110	**C- 458192-0301**	-		1	**INK UNIT**
	F120	**C- 293685-020V**	-		2	**PRINTING WHEEL**
	F125	**C- 543143-0101**	-		1	**ADJUSTMENTMENT DEVICE**
	030	293621-0002	-		1	BENDING ROLLER
	035	293624-0002	-		2	PROTECTION PLATE
	045	486960-0002	C		1	SHAFT
	055	532719-0002	C		1	FEEDING ROLLER
	060	533449-0002	C		1	BENDING ROLLER
	070	538238	-		1	FRAME
	080	32630	S		2	SPROCKET
	090	458194-0001	P		4	WASHER
	090	458194-0002	P		4	WASHER
	090	458194-0003	P		4	WASHER
	105	538239	-		1	HEAD PLATE
	110	486966-0002	-		1	SHAFT FOR CARRIER
	115	486968-0002	-		1	SHAFT FOR BENDINGROLLER
	120	533457-0002	-		1	SHAFT
	140	312105-0368	-		12	SCREW M6S6X16RFR
	150	312105-0451	-		4	SCREW M6S8X20RFR
	165	315105-0165	-		5	WASHER BRB8,4X16RFR
	190	522408	-		1	BEARING HOUSING
	195	544380	-		1	WASTE CHUTE
	200	10258	P		1	COMPRESSION SPRING
	205	533458	-		1	WASHER
	210	32925	S		1	CARRIER
	215	32926	P		1	ROLL
	220	33182	P		1	ROLL
	225	33183	S		1	SPRING
	230	228653	S		1	SHAFT
	235	544706	-		2	FLANGE
	236	293645	C		1	BRACKET
	240	293646-0001	S		1	WASHER
	245	293646-0002	S		1	WASHER
	250	293674	S		1	DOWEL
	255	436939	C		1	CYLINDER BRACKET
	260	436940	C		1	SHAFT
	265	440277	C		1	LACE
	275	450497	S		1	SHAFT
	280	450500	-		1	DOWEL
	285	457430	-		1	BEATER
	290	292047	-		1	CANTILEVER
	295	464010	-		1	ARM
	300	464012	C		1	CURVE
	305	464011	P		1	LOCK STUD
	310	466430	-		1	BUSHING
	315	476377	-		2	SCREW
	320	486967	-		1	SHEET
	325	486969	-		2	GUIDE LUG
	330	486971	-		1	ANGLE
	335	532082	-		2	ROUND NUT
	340	532083	-		2	ROUND NUT
	345	533459	-		1	SCREW
	370	90165-0057	-		2	CLIP
	375	90166-0059	S	MM	18	HOSE

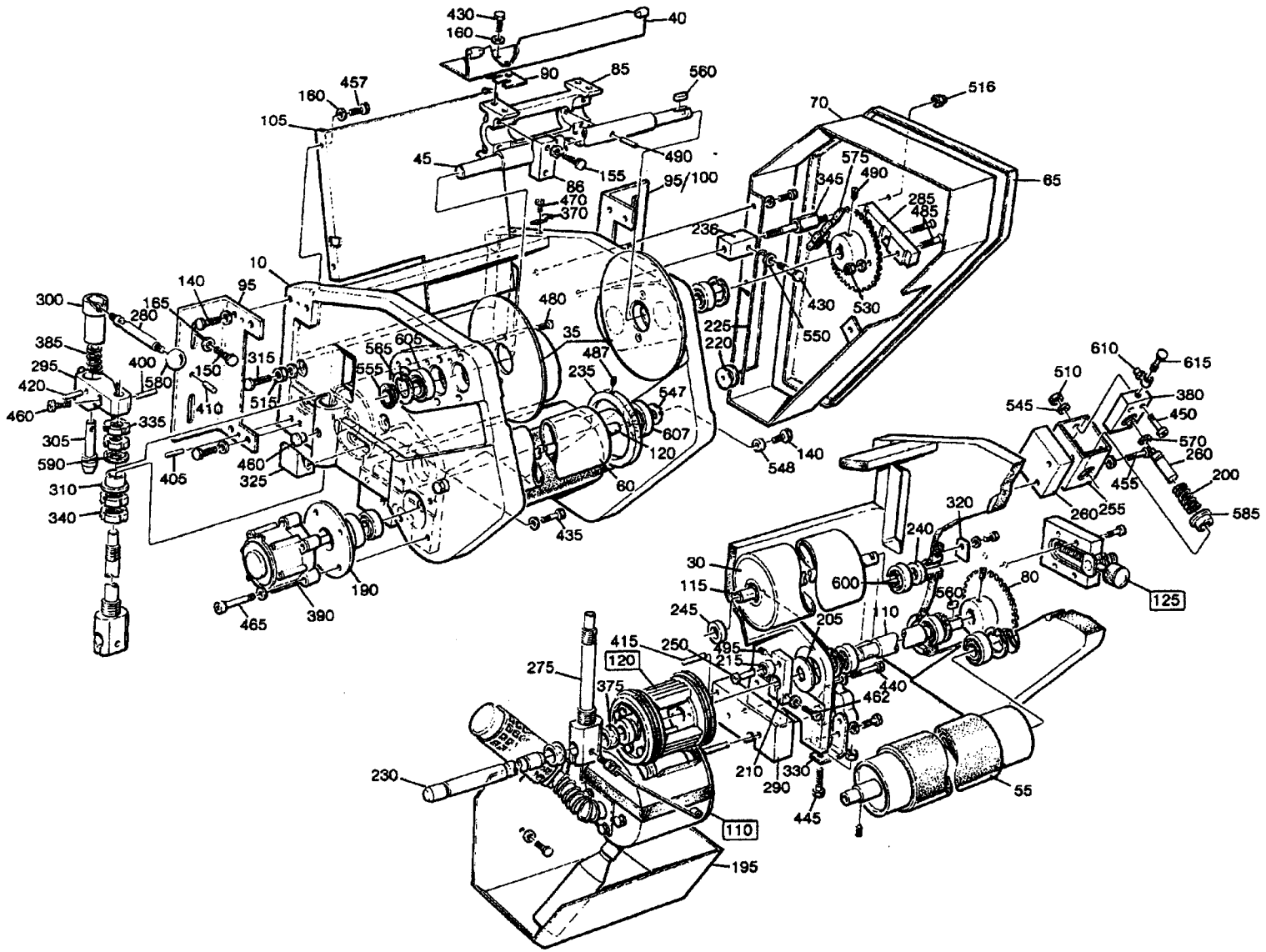

53824801.TIF
538248-1
AM

From	Pos	Part No	SP	UN	Qty	Description
	380	90239-0259	S		1	CYLINDER
	385	90335-0064	-		1	SPRING
	390	90347-0054	C		1	DAMPER
	395	311103-0273	-		1	CYLINDRICAM6 4X22 RFR
	400	311103-0274	-		1	CYLINDRICACP 4X25 RFR
	405	311103-0310	-		4	CYLINDRICACP M6 5X20 RFR
	410	311103-0353	-		2	CYLINDRICACP M6 6X20 RFR
	415	311103-0357	-		1	CYLINDRICACP M6 6X30 RFR
	420	311202-0241	-		1	TAPER PIN KP4X25RFR
	430	312105-0366	-		14	SCREW M6S6X12RFR
	435	312105-0370	-		4	SCREW M6S6X20RFR
	440	312105-0457	-		1	SCREW M6S8X35RFR
	445	312109-0374	-		1	SCREW M6S6X30HRFR
	450	312111-0333	-		2	SCREW MC6S5X25FZB
	455	312111-0335	-		2	SCREW MC6S5X30FZB
	457	312111-0364	-		3	SCREW MC6S6X10FZB
	460	312115-0370	-		2	SCREW 6X20 A4 80
	462	312115-0372	-		1	SCREW MC6S6X25 A4 80
	465	312115-0376	-		4	SCREW 6X35 A4 80
	470	312125-0285	-		2	SLOTTED HEMCS4X6RFR
	480	312155-0329	-		4	SCREW MF6S5X16RFR
	485	312155-0333	-		3	SCREW MF6S5X25RFR
	495	312318-0362	-		1	STOP SCREW SK6SS6X8RFR
	510	312605-0314	-		2	NUT M6M5RFR
	515	312605-0316	-		3	NUT M6M6RFR
	516	312705-0316	-		1	CAP NUT MHM 6 A2
	530	312812-0314	-		2	LOCK NUT A4-M5RFR
	545	315105-0146	-		6	WASHER BRB5,3X10RFR
	547	315105-0173	-		2	WASHER BRB10,5X22RFR
	548	315115-0153	-		2	WASHER TBRB6,4X12RFR
	550	315121-0153	-		1	WASHER TBRSB6,4X22FZB
	555	315220-0121	P		1	SEAL RING V-14S
	560	315701-0201	S		2	FLAT WEDGE5X5X20
	565	315752-0123	P		5	CIRCLIP SGH32
	570	315755-0801	P		1	LOCKING WAE 8RFR
	575	318207-0168	S		1	ROLLER CHA6MM
	580	318800-0103	-		1	HANDLE BALLA D.25-M6
	585	321111-0135	S		1	FLANGE BUS 10E7X10
	590	321111-0212	S		1	FLANGE BUS 15E7X15
	600	321308-0101	S		2	BALL BEARISKF6001RS
	605	321308-0202	S		6	BALL BEARISKF6002-2RS
	607	321316-0200	S		2	BALL BEARISKF6300-2RS
	610	342980-0113	-		1	BANJO CONNSINGEL 6/4-1/8
	615	342980-0303	-		1	BANJO CONN SINGEL 1/8"

From	Pos	Part No	SP	UN	Qty	Description

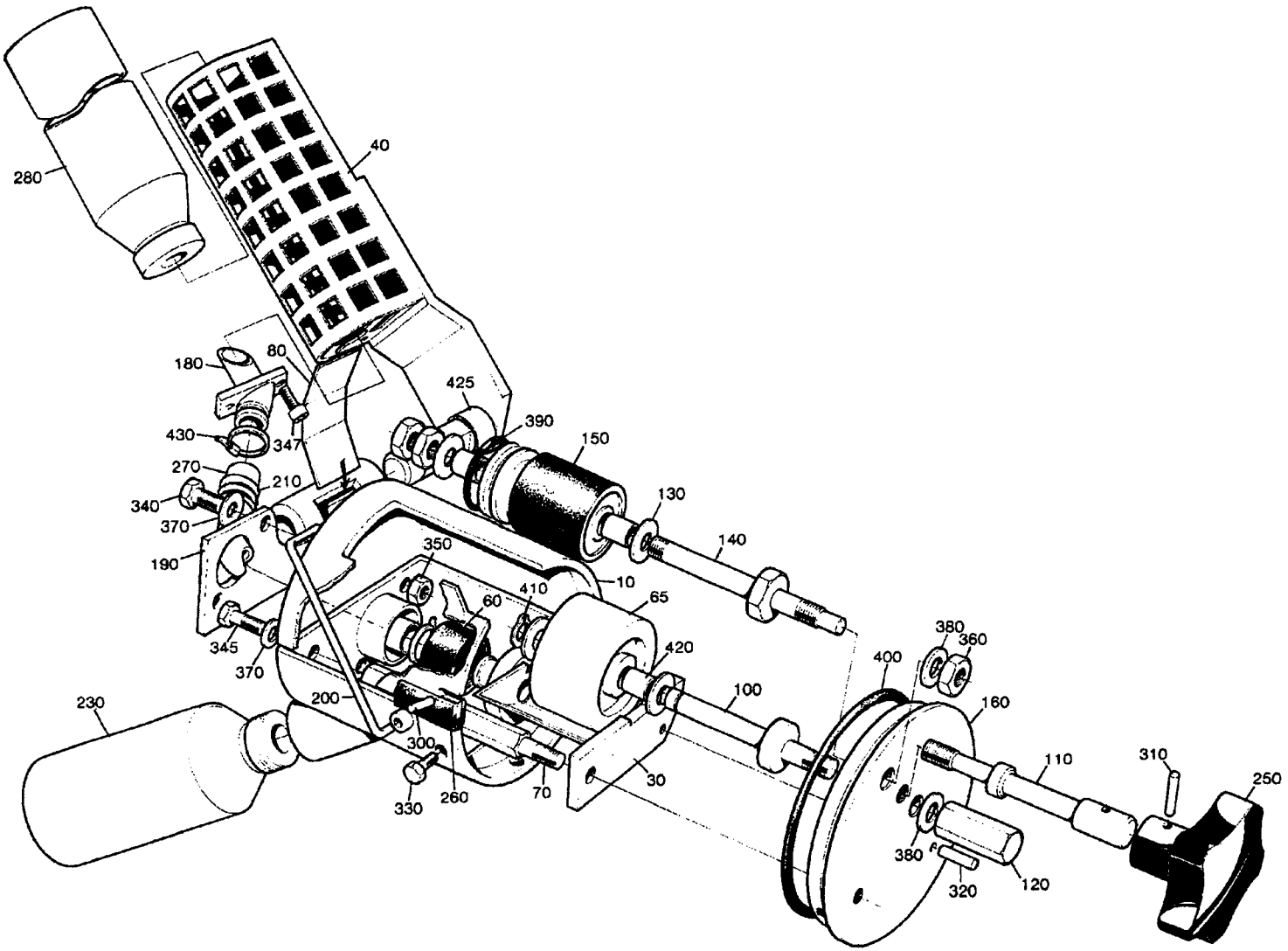

45819203.TIF
458192-3
AM

From	Pos	Part No	SP	UN	Qty	Description
		C- 458192-0301				**Ink Unit, Ass'y**
	010	458364	-		1	COVER
	030	297210	-		1	INK WELL
	040	476356	C		1	HOLDER FOR INK BOTTLE
	060	445542	P		1	MANTEL RUBBER
	065	450355	S		1	INK ROLLER
	070	33010	-		1	SCREW
	080	35547	S		1	SPRING
	100	292044	P		1	SHAFT
	110	293667	S		1	DOWEL
	120	436927	C		1	NUT
	130	293669-0001	P		4	WASHER
	130	293669-0002	P		2	WASHER
	130	293669-0003	P		2	WASHER
	130	293669-0004	P		2	WASHER
	140	293670	P		1	SHAFT
	150	543135	P		1	INK TRANSFER ROLLER
	160	297213	S		1	END SECTION
	180	476355	S		1	CANNULAR TUBE
	190	456772	C		1	PIVOT BRACKET
	200	434747	S		1	BOW CLAMP
	210	537308	-		1	SPRING
	230	90050-0008	P		1	BOTTLE
	250	90051-0077	S		1	HANDLE
	260	90143-0029	S	MM	295	STRIP
	270	90166-0138	P	MM	100	HOSE
	280	90299-0013	P		X	INK
		90299-0300	R		0	* COVER
	300	311103-0236	-		2	CYLINDRICACP M6 3X16 RFR
	310	311103-0238	-		1	CYLINDRICACP M6 3X20 RFR
	320	311103-0270	-		1	CYLINDRICACP M6 4X16 RFR
	330	312105-0291	-		3	SCREW M6S4X12RFR
	340	312105-0327	-		2	SCREW M6S5X12 A4 80
	345	312105-0329	-		1	SCREW M6S5X16 A4 80
	347	312115-0287	-		2	SCREW 4X8 A4 80
	350	312605-0314	-		2	NUT M6M5RFR
	360	312605-0318	-		3	NUT M6M8RFR
	370	315105-0146	-		3	WASHER BRB5,3X10RFR
	380	315105-0165	-		2	WASHER BRB8,4X16RFR
	390	315202-0218	P		1	O-RING 26,2X3
	400	315202-0309	P		1	O-RING 89,5X3
	410	315750-0105	P		1	CIRCLIP SGA8
	420	321120-0100	S		4	BUSHING 8/10X12
	425	321120-0109	S		2	BUSHING 12/14X10
	430	352113-0101	P		1	RIBBON CLA

From	Pos	Part No	SP	UN	Qty	Description

375ml

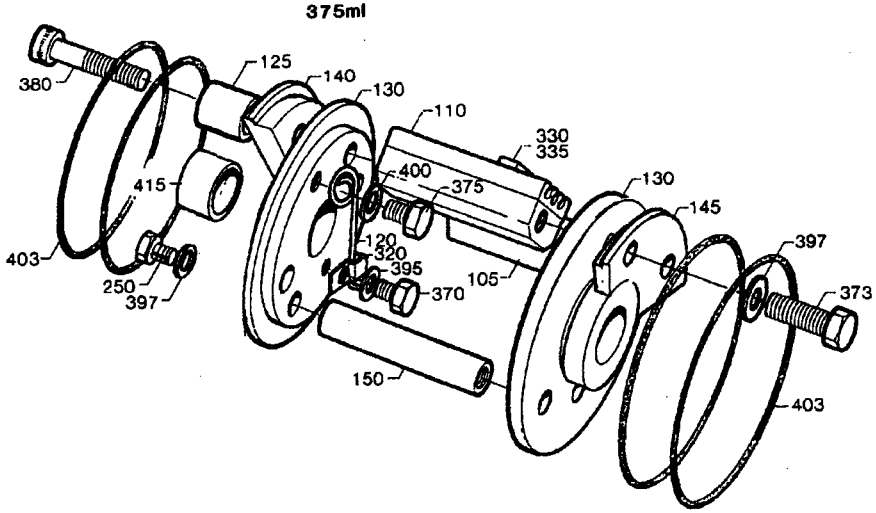

180ml–300ml

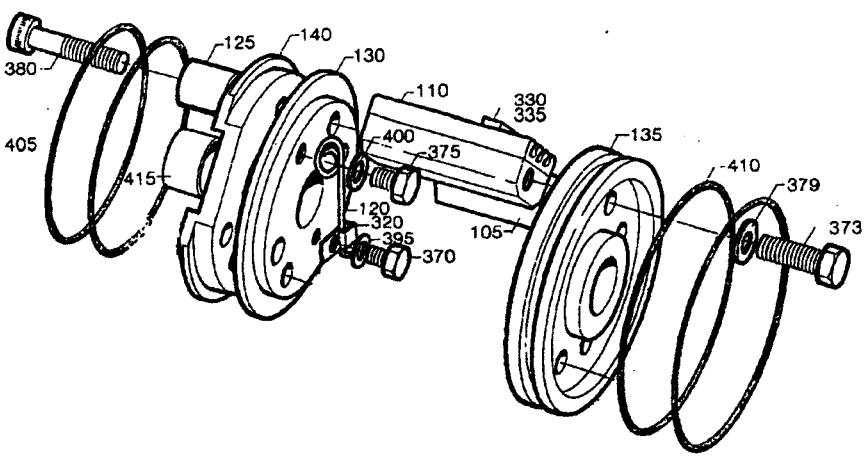

29368502.TIF
293685-2
AM

Last Alteration: AM 14947 90-12-04

Corresponding group: 293685-020V
Assembly Drawing: 293685-2

Issue: 930607

From	Pos	Part No	SP	UN	Qty	Description
300ml-125ml						
		C- 293685-0201				**Printing Wheel, Ass'y**
	105	293395-0002	P		2	TYPE HOLDER
	110	293395-0001	P		2	TYPE HOLDER
	130	292412	C		1	END SECTION
	135	292413	C		1	END SECTION
	140	292414	C		1	CARRIER
	373	312101-0331	-		7	SCREW M6S5X20FZB
	397	315101-0146	-		7	WASHER BRB5,3X10FZB
	405	315202-0304	P		2	O-RING 64,5X3
	410	315202-0305	P		2	O-RING 69,5X3
375ml						
		C- 293685-0202				**Printing Wheel, Ass'y**
	105	293395-0002	P		1	TYPE HOLDER
	110	293395-0001	P		1	TYPE HOLDER
	130	479236	C		2	END SECTION
	140	479239	C		1	CARRIER
	145	479240	C		1	CARRIER
	150	293671	C		1	SPACER
	250	312101-0329	-		2	SCREW M6S5X16FZB
	373	312101-0331	-		3	SCREW M6S5X20FZB
	397	315101-0146	-		5	WASHER BRB5,3X10FZB
	403	315202-0224	P		4	O-RING 42,2X3
Common parts						
	120	32691	P		1	LOCKING SPRING
	125	33011	S		1	SLEEVE
	320	90165-0010	-		1	CLIP
	330	90413-0033	P		1	CODE INSERT SET
	330	90413-0043	P		1	CODE INSERT SET
	335	90413-0044	P		1	CODE INSERT SET
	335	90413-0047	P		1	CODE INSERT SET
	370	312101-0287	-		1	SCREW M6S4X8FZB
	375	312101-0364	-		1	SCREW M6S6X10FZB
	380	312111-0335	-		1	SCREW MC6S5X30FZB
	395	315101-0136	-		1	WASHER BRB4,3X8FZB
	400	315111-0153	-		1	WASHER TBRB6,4X12FZB
	415	321120-0122	S		2	BUSHING 15/17X15

From	Pos	Part No	SP	UN	Qty	Description

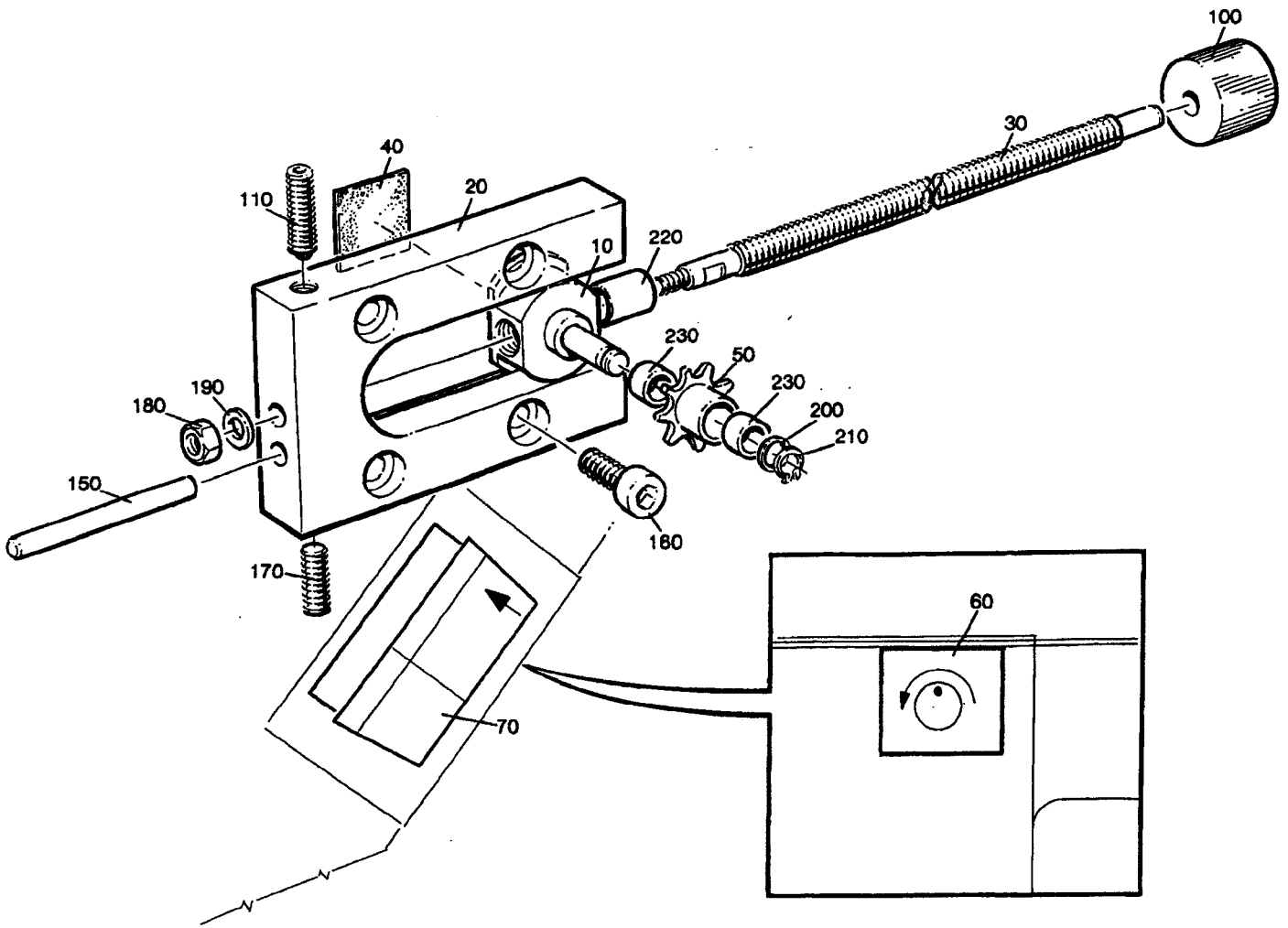

54314301.TIF
543143-1
AM 10835

From	Pos	Part No	SP	UN	Qty	Description
		C- 543143-0101				**Adjustmentment Device, Ass'y**
	010	526984	-		1	SADDLE
	020	526985	-		1	PLATE
	030	526986-0001	-		1	SHAFT
	040	527649	-		1	DISTANCE RUBBER
	050	529362	-		1	SPROCKET
	060	543141	-		1	SIGN
	070	543142	-		1	SIGN
	100	90051-0089	-		1	SHIFTER HANDLE
	110	90287-0167	-		1	SPRINGLOADED SCREW
	150	311103-0365	-		1	CYLINDRICACP M6 6X50 RFR
	160	312115-0368	-		2	SCREW 6X16 A4 80
	170	312318-0368	-		1	STOP SCREW SK6SS6X16RFR
	180	312605-0312	-		1	NUT M6M4RFR
	190	315105-0136	-		1	WASHER BRB4,3X8RFR
	200	315105-0153	-		1	WASHER BRB6,4X12RFR
	210	315751-0103	-		1	CIRCLIP SGA 6 RFR
	220	321120-0100	-		1	BUSHING 8/10X12
	230	321120-0101	-		2	BUSHING 6/8X6

From	Pos	Part No	SP	UN	Qty	Description

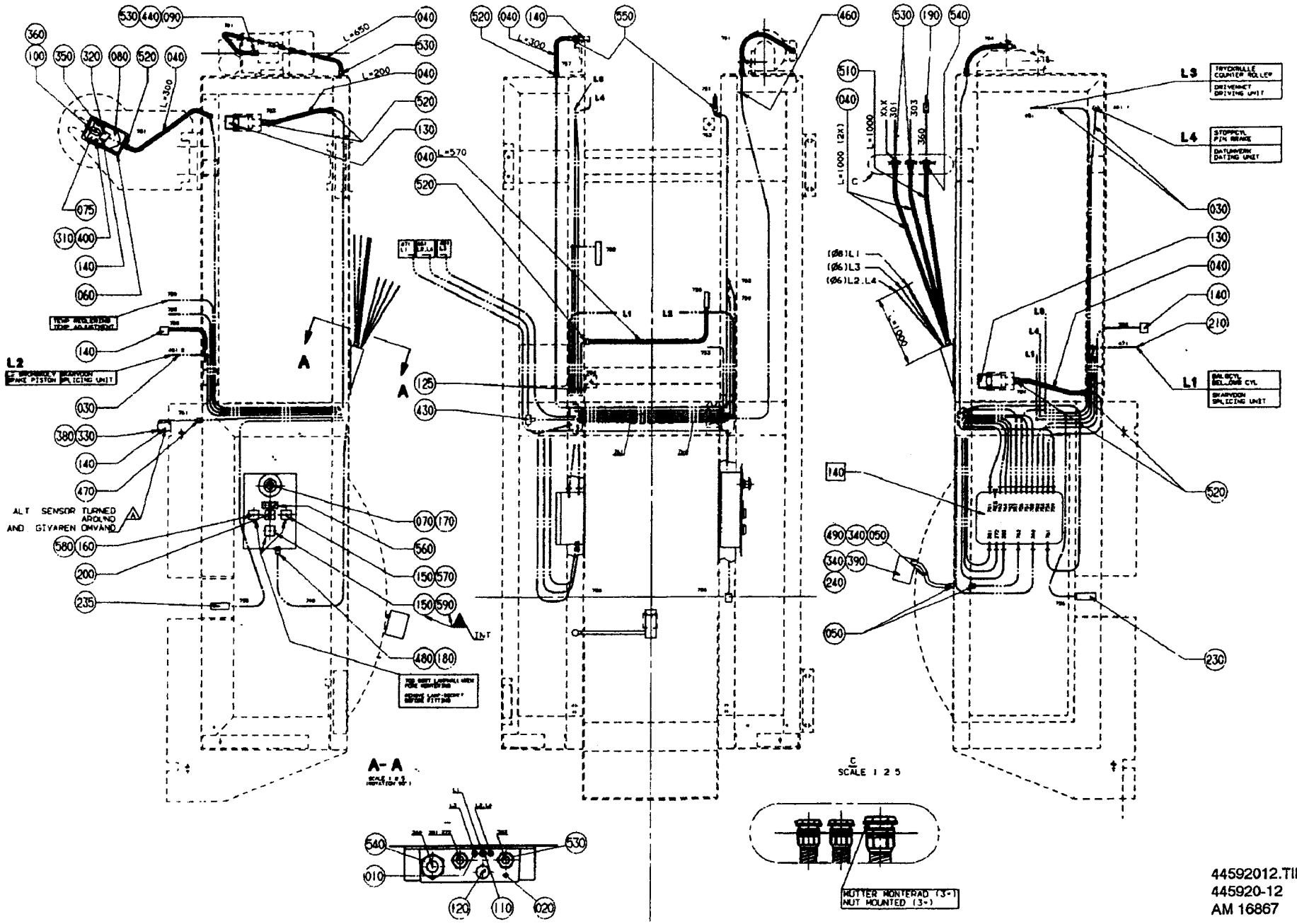

44592012.TIF
445920-12
AM 16867

From	Pos	Part No	SP	UN	Qty	Description
TBA/8						
		C- 445920-0501				El-Pneumatic Equipment, Ass'y
	010	445844	-		2	SLEEVE
	020	458362	-		1	PLUG
	030	90166-0124	-	DM	115	HOSE
	040	352135-0106	C	DM	42	HOSE .016
	050	352101-0103	-		2	LEAD-IN G 18,6
TB/8						
		C- 445920-0502				El-Pneumatic Equipment, Ass'y
	010	445844	-		3	SLEEVE
	030	90166-0124	-	DM	80	HOSE
	040	352135-0106	C	DM	45	HOSE .016
	050	352101-0103	-		6	LEAD-IN G 18,6
Common parts						
	F140	C- 532151-0201	-		1	CONNECTION BOX
	060	466337	-		1	CONNECTION BOX
	070	486826-0001	C		1	SIGN
	075	529456	-		1	PLATE
	080	529455	-		1	PLATE
	090	538243	-		1	MUFF
	100	440256	-		1	ARM
	110	445846	-		1	SLEEVE
	120	90002-0004	-		1	PLUG
	125	90002-0009	-		1	BLANK-OFF PLUG
	130	90044-0122	S		2	INDUCTIVE SWITCH
	140	90044-0104	S		5	INDUCTIVE SWITCH
	150	90064-0084	C		2	PUSH BUTTON YELLOW
	160	90064-0085	C		1	PUSH BUTTON RED
	170	90064-0105	C		1	EMERGENCY STOP
	180	90099-0003	-		1	NUT
	190	90110-0128	S		1	PLUG 24-POL
	200	90111-0150	C		1	SWITCH GEAR
	210	90166-0122	S	DM	25	HOSE
	220	90194-0016	-		2	SIGN"FLASH SIGN"
	230	90232-0059	S		1	PHOTOCELL
	235	90232-0060	S		1	PHOTOCELL
	240	90232-0026	-		1	PHOTOCELL
	310	312111-0323	-		2	SCREW MC6S5X8FZB
	320	312121-0228	-		2	SLOTTED HEMCS3X16FZB
	330	312125-0228	-		2	SLOTTED HEMCS3X16RFR
	340	312125-0293	-		4	SLOTTED HEMCS4X16RFR
	350	312155-0329	-		3	SCREW MF6S5X16RFR
	360	312316-0360	-		1	STOP SCREW SK6SS6X6FZB
	380	315105-0124	-		2	WASHER BRB3,2X6RFR
	390	315101-0136	-		6	WASHER BRB4,3X8FZB
	400	315105-0146	-		2	WASHER BRB5,3X10RFR
	430	342946-0112	-		1	T-CONNECTI6/4
	440	352100-0112	C		1	CABLE GLANR.22,5-15
	460	352101-0105	-		1	LEAD-IN G 22,5
	470	352103-0100	C		1	CABLE GLANR.STR 9
	480	352103-0111	C		1	CABLE GLANR.ST 16
	490	352110-0099	C		2	CRAMP TK 3-5
	510	352135-0109	C	DM	10	HOSE .022
	520	352136-0127	S		7	GLAND FITT
	530	352136-0129	S		6	GLAND FITT
	540	352136-0143	S		2	GLAND FITT
	550	352137-0127	S		2	GLAND FITT
	560	359241-0269	C		1	SIGN
	570	359301-0100	C		1	SIGN
	580	359301-0110	C		1	SIGN"SHORT STOP"
	590	359301-0335	C		1	SIGN T

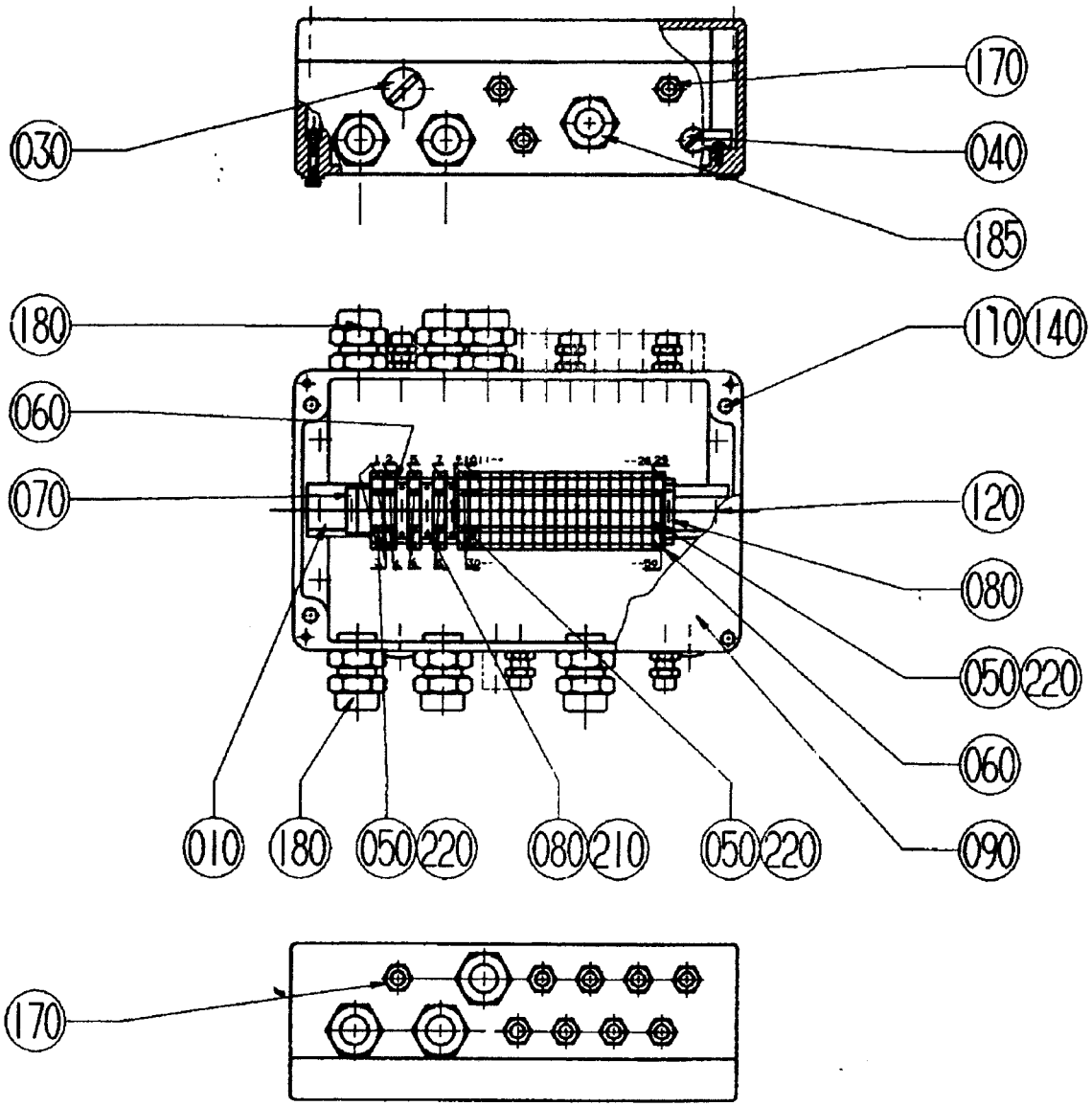

53215102.TIF
532151-2
AM 16867

From	Pos	Part No	SP	UN	Qty	Description
		C- 532151-0201				**Connection Box, Ass'y**
	010	10793-0084	-		1	MOUNTING RAIL
	030	90002-0012	-		2	BLANK-OFF PLUG
	040	90002-0013	-		1	BLANK-OFF PLUG
	050	90077-0090	-		25	FEED THROUGH TERMINAL
	060	90077-0309	-		4	END PLATE
	070	90094-0006	-		1	END SUPPORT
	080	90135-0021	-		4	EARTHING CLAMP
	090	90265-0074	-		1	APPLIANCE BOX
	110	312111-0374	-		4	SCREW MC6S6X30FZB
	120	312121-0366	-		2	SLOTTED HEMCS6X12FZB
	140	312601-0316	-		4	NUT M6M6FZB
	170	352103-0101	-		12	CABLE GLANR.ST 9
	180	352103-0115	-		5	CABLE GLANR.STR 21
	185	352103-0116	-		1	CABLE GLANR.ST 21
	210	359011-0202	-		8	SIGN BOARD(GROUND)
	220	359011-0800	-		2	MARKING PLATE KITS

From	Pos	Part No	SP	UN	Qty	Description

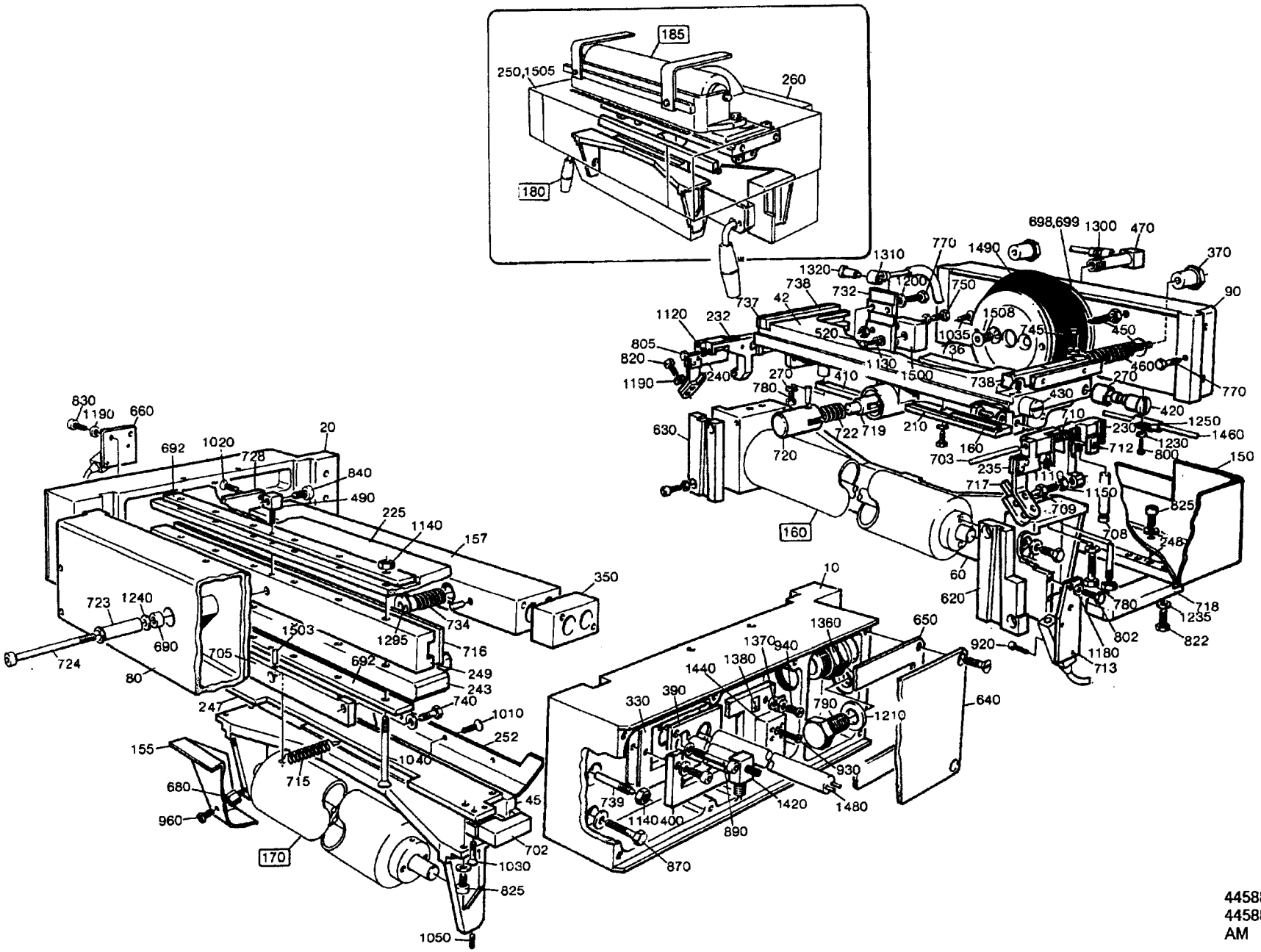

44588007.TIF
445880-7/8
AM

Last Alteration: AM 17017 91-12-03

Corresponding group: 445880-050V
Assembly Drawing: 445880-7/8

Issue: 930607

From	Pos	Part No	SP	UN	Qty	Description
1136ml-500ml						
		C- 445880-0501				**Splicing Device, Ass'y**
	042	553770-0001	C		1	PRESSURE JAW
	252	484895-0001	-		1	SHEET
500ml Slim 355ml						
		C- 445880-0502				**Splicing Device, Ass'y**
	042	553770-0002	C		1	PRESSURE JAW
	252	484895-0002	-		1	SHEET
250ml 200ml						
		C- 445880-0503				**Splicing Device, Ass'y**
	042	553770-0003	-		1	PRESSURE JAW
	252	484895-0004	-		1	SHEET
375ml 300ml						
		C- 445880-0504				**Splicing Device, Ass'y**
	042	553770-0002	C		1	PRESSURE JAW
	252	484895-0003	-		1	SHEET
750ml Slim						
		C- 445880-0505				**Splicing Device, Ass'y**
	042	553770-0001	C		1	PRESSURE JAW
	252	484895-0005	-		1	SHEET
1000ml Slim						
		C- 445880-0506				**Splicing Device, Ass'y**
	042	553770-0001	C		1	PRESSURE JAW
	252	484895-0006	-		1	SHEET
Common parts						
	F160	**C- 440135-0101**	**-**		**1**	**BENDING ROLLER**
	F170	**C- 440184-010V**	**-**		**1**	**BENDING ROLLER**
	F180	**C- 449630-030V**	**C**		**1**	**PAPER HOLDER**
	F185	**C- 522410-0101**	**-**		**1**	**BENDING ROLLER**
	010	G- 445881	C		1	BRACKET LEFT
	020	G- 445882	C		1	BRACKET RIGHT
	045	G- 457627	C		1	DOLLY
	060	G- 445911	-		1	CANTILEVER
	080	445885	-		1	BEAM
	090	445886	-		1	BEAM
	150	449751	-		1	PROTECTION
	155	450853	-		1	PROTECTION
	157	548794	C		1	HEATING JAW
	160	294009	PU		2	KNIFE
	210	539052	C		1	KNIFE HOLDER
	225	449770	C		1	INSULATION
	230	458908	C		1	BRACKET
	232	458909	C		1	BRACKET
	235	466618	S		1	CATCH
	240	466619	S		1	CATCH

From	Pos	Part No	SP	UN	Qty	Description
	243	457658	C		1	INSULATION
	247	458912	-		1	BRACKET
	248	479223	-		1	RAIL
	249	484844	C		1	INSULATION
	250	531886	-		1	PROTECTION PLATE
	260	531887	-		1	PROTECTION PLATE
	270	32079	-		1	WASHER
	330	445894	C		1	SEAL
	340	556316	-		1	INSULATION
	350	556317	C		1	INSULATION
	370	445898	-		2	NUT
	390	556318	C		1	INSULATION
	400	445901	-		1	FRAME
	410	445902	-		1	ARM
	420	445903	C		2	ECCENTRIC SHAFT
	430	445904	C		2	SHAFT
	450	445907	-		2	SCREW
	460	458062	S		2	TENSION SPRING
	470	445909	-		1	NIPPLE
	490	445915	-		1	STEERING
	520	445918	-		1	SCREW
	620	449623	C		1	STEERING
	630	449624	C		1	STEERING
	640	449625	-		2	COVERING PLATE
	650	449626	C		2	SEAL
	660	449629	-		1	BRACKET
	680	449753	-		4	SCREW
	690	449761	C		1	WASHER
	692	450017	C		2	PLATE
	698	451412	-		2	WASHER
	699	451413	-		2	WASHER
	702	458915	S		2	HEAD RAIL
	703	458916	C		2	SHAFT
	705	458917	-		1	SUPPORT
	708	553763	C		2	ADJUSTING SCREW
	709	464983	C		2	SCREW
	710	458929	S		2	TURN SPRING
	712	464547	C		4	NUT
	713	464548	-		1	BRACKET
	715	464854	S		1	TENSION SPRING
	716	561426	S		1	LACE
	717	466446	-		2	HANDLE
	718	479224	C		2	STEERING
	719	466620	C		1	PISTON
	720	466621	C		1	PISTON

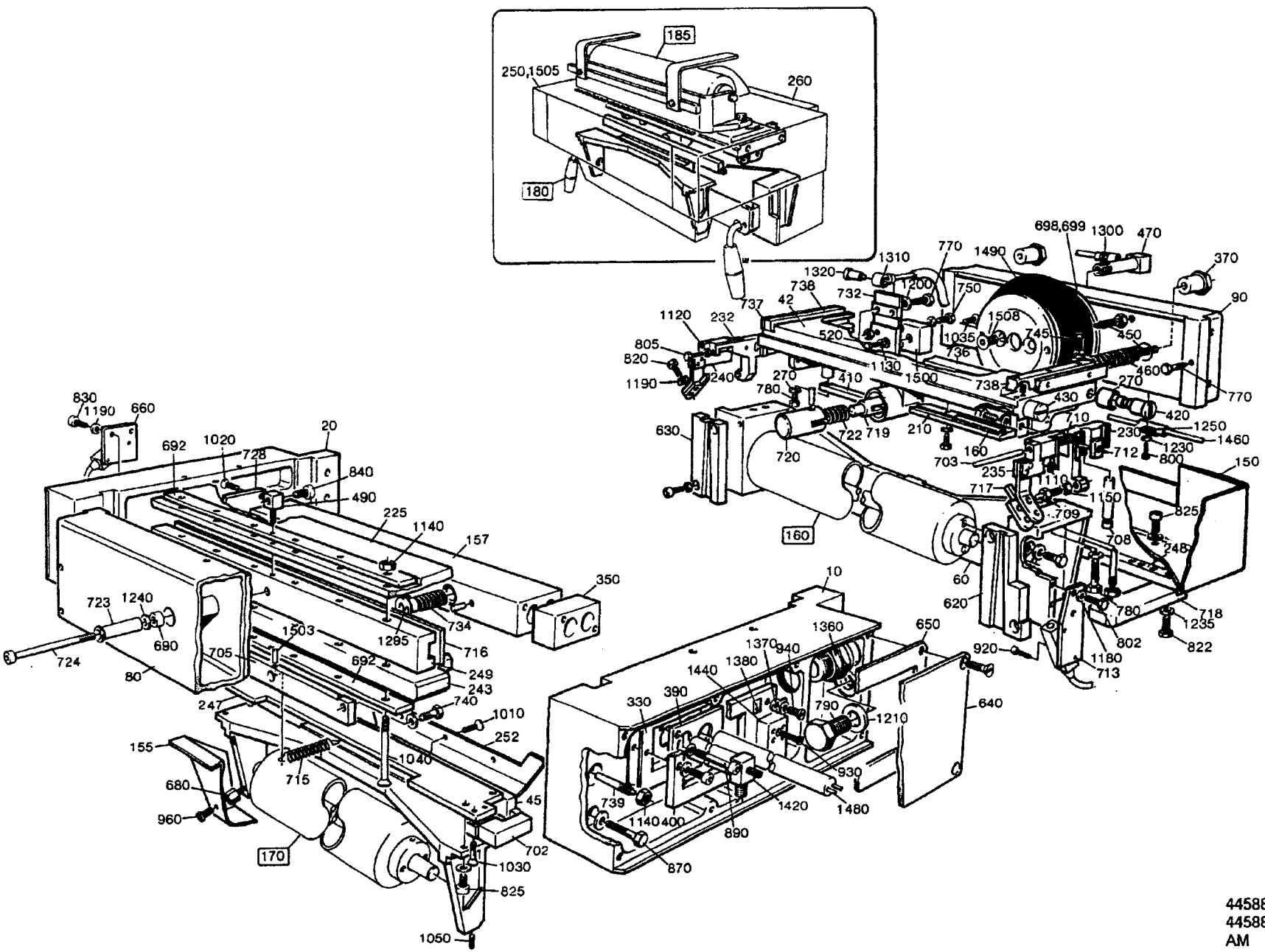

44588007.TIF
445880-7/8
AM

From	Pos	Part No	SP	UN	Qty	Description
	722	466623	C		1	COMPRESSION SPRING
	723	476288	-		1	PIPE
	724	476289	-		1	SCREW
	728	479188	C		1	INSULATION
	732	484529	C		1	CYLINDER BRACKET
	734	484682	S		2	COMPRESSION SPRING
	736	484783	C		2	RAIL
	737	484877	S		2	STEERING
	738	484878	-		2	HOLDER
	739	311211-0292	S		6	TAPER PIN GKP6X6X30
	740	312101-0329	-		8	SCREW M6S5X16FZB
	745	312101-0331	-		6	SCREW M6S5X20FZB
	747	312101-0333	-		4	SCREW M6S5X25FZB
	750	312101-0335	-		2	SCREW M6S5X30FZB
	770	312101-0366	-		4	SCREW M6S6X12FZB
	780	312101-0368	-		7	SCREW M6S6X16FZB
	790	312101-0493	-		2	SCREW M6S10X25FZB
	800	312105-0287	-		2	SCREW M6S4X8 A4 80
	802	312101-0289	-		2	SCREW M6S4X10FZB
	805	312101-0291	-		2	SCREW M6S4X12FZB
	820	312101-0323	-		4	SCREW M6S5X8FZB
	822	312105-0329	-		2	SCREW M6S5X16 A4 80
	825	312111-0325	-		6	SCREW MC6S5X10FZB
	830	312111-0327	-		10	SCREW MC6S5X12FZB
	840	312111-0329	-		1	SCREW MC6S5X16FZB
	870	312111-0372	-		8	SCREW MC6S6X25FZB
	890	312115-0340	-		2	SCREW 5X45 A4 80
	920	312121-0228	-		4	SLOTTED HEMCS3X16FZB
	930	312121-0230	-		1	SLOTTED HEMCS3X20FZB
	940	312121-0321	-		1	SLOTTED HEMCS5X6FZB
	960	312132-0323	S		7	SLOTTED HEMSCS5X8MSGFN
	1010	312145-0289	-		3	SLOTTED HEMFS4X10RFR
	1020	312145-0327	-		16	SLOTTED HEMFS5X12RFR
	1021	312145-0335	-		2	SLOTTED HEMFS5X30RFR
	1030	312145-0329	-		4	SLOTTED HEMFS5X16RFR
	1035	312151-0368	-		4	SCREW MF6S6X16FZB
	1040	312151-0384	-		6	SCREW MF6S6X70FZB
	1050	312306-0287	-		2	STOP SCREW P6SS4X8FZB
	1110	312318-0321	S		6	STOP SCREW SK6SS5X6RFR
	1120	312601-0312	-		2	NUT M6M4FZB
	1130	312601-0314	-		3	NUT M6M5FZB
	1140	312601-0316	-		12	NUT M6M6FZB
	1141	312811-0316	-		6	LOCK NUT M6RFR
	1142	319030-0125	-		40	DISC SPRIN
	1150	312605-0316	-		2	NUT M6M6RFR

From	Pos	Part No	SP	UN	Qty	Description
	1180	315101-0136	-		2	WASHER BRB4,3X8FZB
	1190	315101-0146	-		33	WASHER BRB5,3X10FZB
	1200	315101-0153	-		16	WASHER BRB6,4X12FZB
	1210	315101-0173	-		2	WASHER BRB10,5X22FZB
	1230	315105-0136	-		2	WASHER BRB4,3X8RFR
	1235	315105-0146	-		2	WASHER BRB5,3X10RFR
	1240	315105-0153	-		2	WASHER BRB6,4X12RFR
	1250	316810-0106	-		1	PIPE CLAMP 8MM RFR
	1270	321116-0179	S		4	BUSHING 14E7/18X14
	1295	342713-0210	C		2	BLIND PLUG
	1300	342722-0205	-		1	PIPE COUPLD=8-R1/4"
	1310	342980-0113	-		1	BANJO CONNSINGEL 6/4-1/8
	1320	342980-0303	-		1	BANJO CONN SINGEL 1/8"
	1350	352110-0099	-		2	CRAMP TK 3-5
	1360	352103-0108	-		1	CABLE GLANR.ST 13
	1370	353101-0132	-		1	CABLE SHOE
	1380	359020-0012	-		1	SIGN
	1410	90326-0020	-		1	SOCKET
	1420	90326-0022	-		1	PLUG
	1430	90326-0060	-		1	THERMOCOUPLE
	1440	90195-0020	C		1	TERMINAL BLOCK
	1460	90166-0122	S	MM	100	HOSE
	1480	90206-0097	S		1	HEATING CARTRIDGE
	1490	90239-0231	C		1	BELLOWS
	1500	90239-0259	C		1	CYLINDER
	1503	90258-0031	-		2	HOLLOW PIN
	1505	90287-0075	-		3	SCREW
	1508	90287-0132	-		4	SCREW
	1510	90296-0051	-		X	PASTE

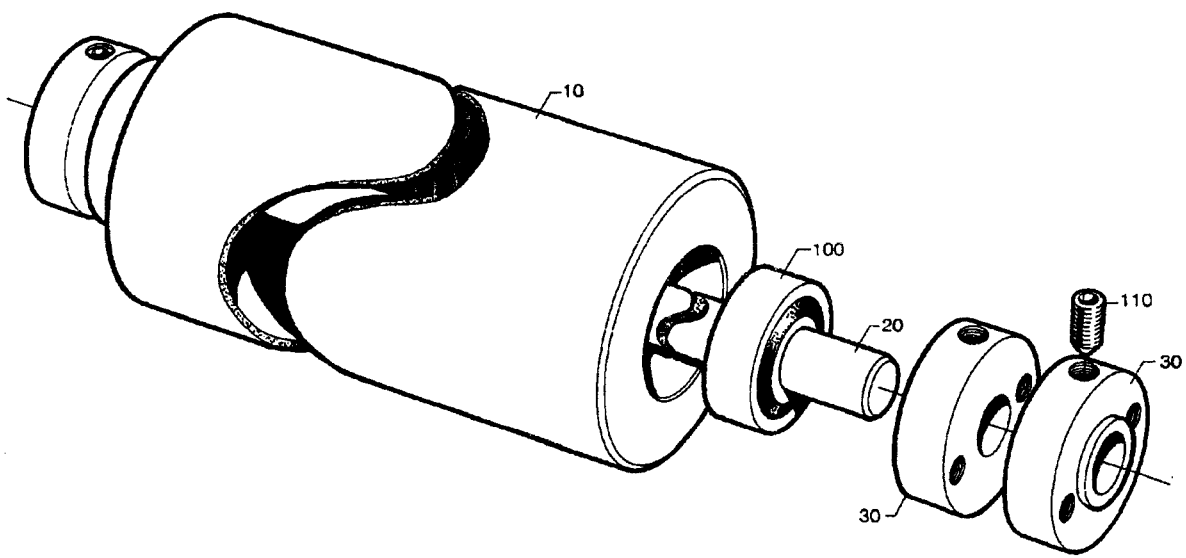

44013501.TIF
440135-1
AM

From	Pos	Part No	SP	UN	Qty	Description
		C- 440135-0101				**Bending Roller, Ass'y**
	010	440136-0001	C		1	ROLL
	020	440137-0001	-		1	SHAFT
	030	440138	-		4	LOCKING CIRCLIP
	100	321313-0102	S		2	BALL BEARISKF6202-2RS
	110	312306-0366	-		4	STOP SCREW P6SS6X12FZB

From	Pos	Part No	SP	UN	Qty	Description

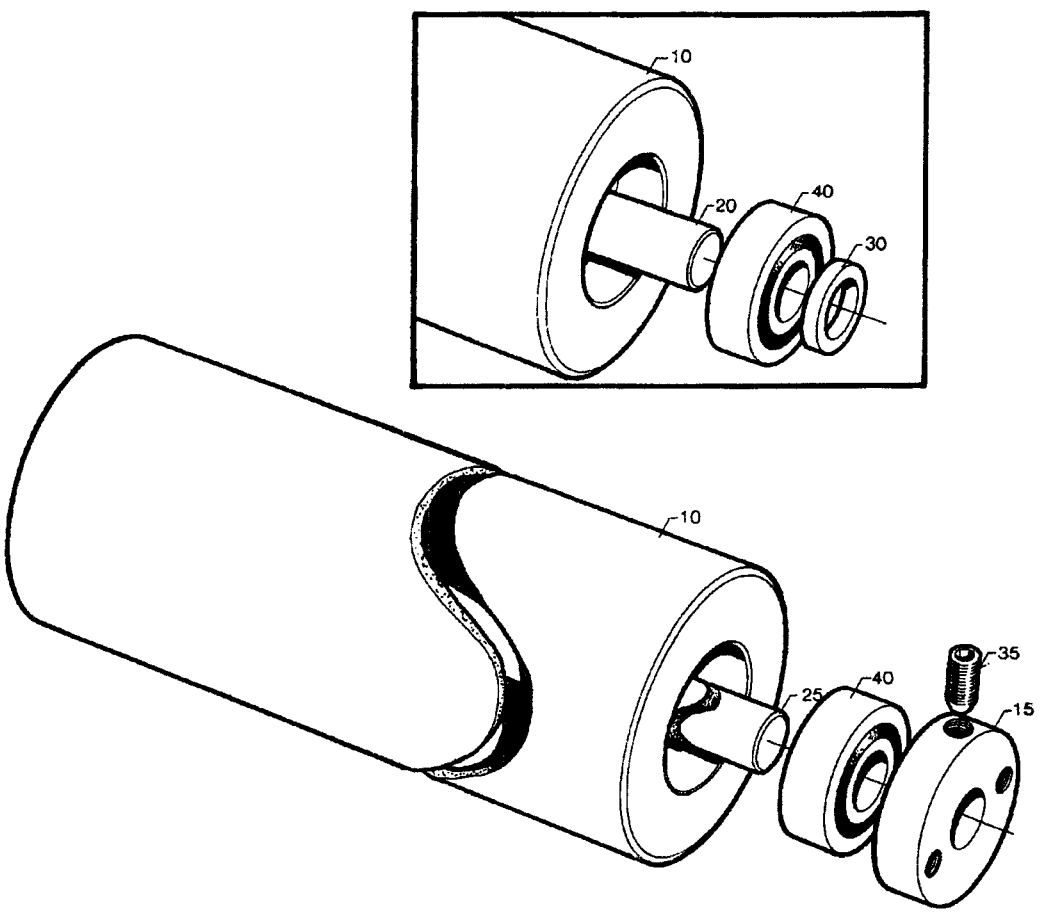

44018401.TIF
440184-1
AM

From	Pos	Part No	SP	UN	Qty	Description
1055ml-500ml						
		C- 440184-0101				**Bending Roller, Ass'y**
	010	440136-0002	C		1	ROLL
	030	440194	P		2	WASHER
500ml Slim 355ml						
		C- 440184-0102				**Bending Roller, Ass'y**
	010	440136-0003	C		1	ROLL
	015	440138	-		2	LOCKING CIRCLIP
	035	312306-0366	-		2	STOP SCREW P6SS6X12FZB
375ml 300ml						
		C- 440184-0103				**Bending Roller, Ass'y**
	010	440136-0004	C		1	ROLL
	015	440138	-		2	LOCKING CIRCLIP
	035	312306-0366	-		2	STOP SCREW P6SS6X12FZB
250ml 200ml						
		C- 440184-0104				**Bending Roller, Ass'y**
	010	440136-0005	C		1	ROLL
	015	440138	-		2	LOCKING CIRCLIP
	035	312306-0366	-		2	STOP SCREW P6SS6X12FZB
750ml Slim						
		C- 440184-0105				**Bending Roller, Ass'y**
	010	440136-0006	C		1	ROLL
	015	440138	-		2	LOCKING CIRCLIP
	035	312306-0366	-		2	STOP SCREW P6SS6X12FZB
1000ml Slim						
		C- 440184-0106				**Bending Roller, Ass'y**
	010	440136-0007	C		1	ROLL
	015	569917	-		2	LOCKING CIRCLIP
	035	312306-0366	-		2	STOP SCREW P6SS6X12FZB
Common parts						
	020	440137-0002	-		1	SHAFT
	040	321313-0102	S		2	BALL BEARISKF6202-2RS

From	Pos	Part No	SP	UN	Qty	Description

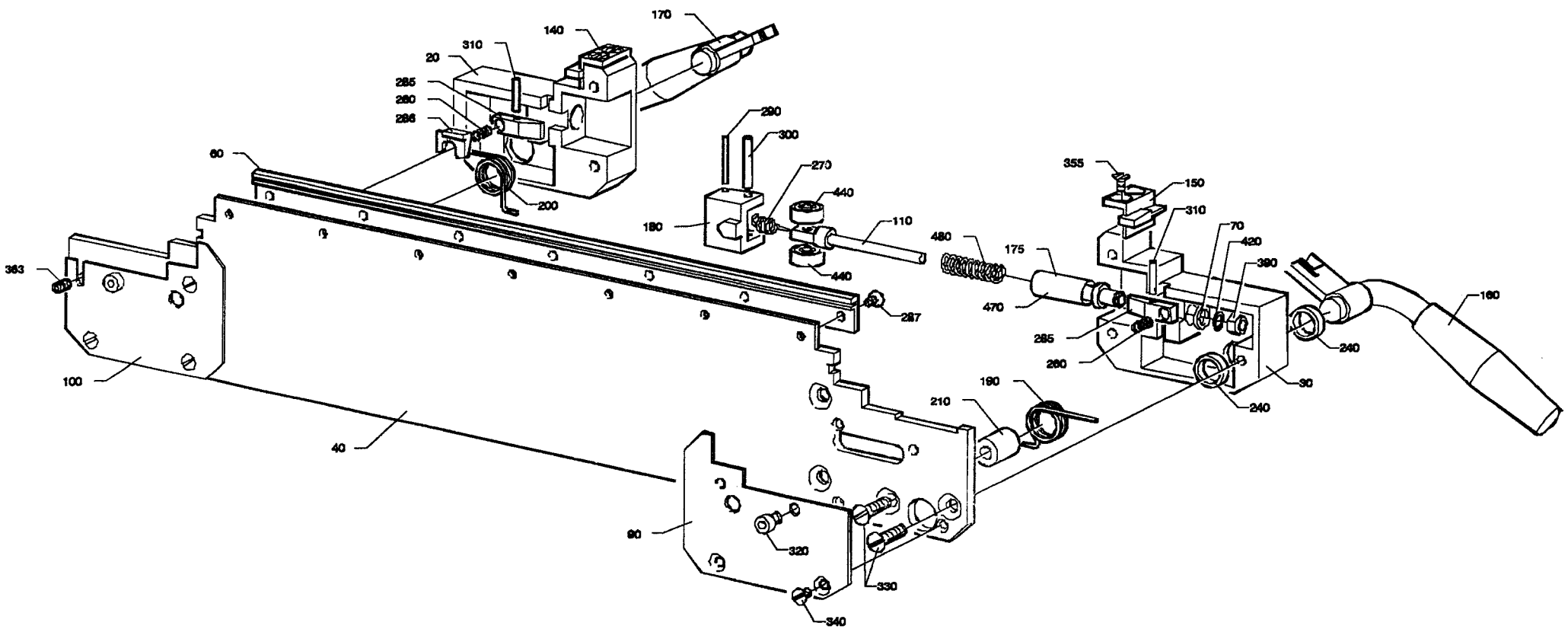
170
140
310
20
285
280
286
290
300
270
440
110
180
440
287
60
200
355
150
310
70
420
380
480
175
470
285
280
240
160
30
240
190
210
100
40
90
320
330
340
383

From	Pos	Part No	SP	UN	Qty	Description
1136ml-500ml						
		C- 449630-0301				**Paper Holder, Ass'y**
	020	449631	C		1	BEARING HOUSING
	030	449632	C		1	BEARING HOUSING
	040	549834	C		1	CUTTING RAIL
	090	449634	C		1	COVERING PLATE
	100	449635	C		1	COVERING PLATE
	110	556322	-		2	SHAFT
500ml Slim 355ml						
		C- 449630-0302				**Paper Holder, Ass'y**
	020	457486	C		1	BEARING HOUSING
	030	457488	C		1	BEARING HOUSING
	040	556394	C		1	CUTTING RAIL
	090	457492	C		1	COVERING PLATE
	100	457494	C		1	COVERING PLATE
	110	556324	-		2	SHAFT
375ml 300ml						
		C- 449630-0303				**Paper Holder, Ass'y**
	020	457487	C		1	BEARING HOUSING
	030	457489	C		1	BEARING HOUSING
	040	556395	C		1	CUTTING RAIL
	090	457493	C		1	COVERING PLATE
	100	457495	C		1	COVERING PLATE
	110	556325	-		2	SHAFT
250ml 200ml						
		C- 449630-0304				**Paper Holder, Ass'y**
	020	457588	C		1	BEARING HOUSING
	030	457589	C		1	BEARING HOUSING
	040	556396	C		1	CUTTING RAIL
	090	457591	C		1	COVERING PLATE
	100	457592	C		1	COVERING PLATE
	110	556326	-		2	SHAFT
750ml Slim						
		C- 449630-0305				**Paper Holder, Ass'y**
	020	544272	C		1	BEARING HOUSING
	030	544273	C		1	BEARING HOUSING
	040	556393	C		1	CUTTING RAIL
	090	544274	C		1	COVERING PLATE
	100	544275	C		1	COVERING PLATE
	110	556323	-		2	SHAFT
1000ml Slim						
		C- 449630-0306				**Paper Holder, Ass'y**
	020	569921	C		1	BEARING HOUSE L.
	030	569922	C		1	BEARING HOUSE R.
	040	569923	C		1	CUTTING RAIL
	090	569919	C		1	COVER PLATE R.
	100	569918	C		1	COVER PLATE L.
	110	569920	-		2	SHAFT
Common parts						
	060	549835	C		1	CUTTING RAIL
	070	556319	C		2	WASHER
	140	522474	S		1	BLOCK L
	150	522475	S		1	BLOCK R
	160	556391	C		1	HANDLE
	170	556392	C		1	HANDLE
	175	556320	C		2	SLEEVE
	180	556321	-		2	CLAMPING PIECE
	190	449744	C		1	TURN SPRING
	200	449745	C		1	TURN SPRING
	210	449746	-		2	STEERING
	240	449748	S		4	BEARING
	260	458041	C		2	COMPRESSION SPRING
	270	458042	C		2	SPRING
	285	457370	C		2	CATCH
	286	457586	C		1	SLIDE
	287	90287-0206	-		7	SLOTTED SCREW
	290	90258-0030	-		2	HOLLOW PIN
	300	311101-0274	S		2	CYLINDRICACP4H6X25
	310	311102-0236	S		2	CYLINDRICACP M6 3X16
	320	312115-0323	-		2	SCREW 5X8 A4 80
	330	312141-0366	-		8	SLOTTED HEMFS6X12FZB
	340	312145-0285	-		6	SLOTTED HEMFS4X6RFR
	355	312145-0323	-		4	SLOTTED HEMFS5X8RFR
	363	312306-0360	-		1	STOP SCREW P6SS6X6FZB
	390	312812-0314	-		2	LOCK NUT A4-M5RFR
	420	315755-0108	S		2	LOCKING WAE 6RFR
	440	321300-0094	S		4	BALL BEARISKF624
	470	90296-0009	-	ML	2	GREASE
	480	90335-0027	C		2	SPRING

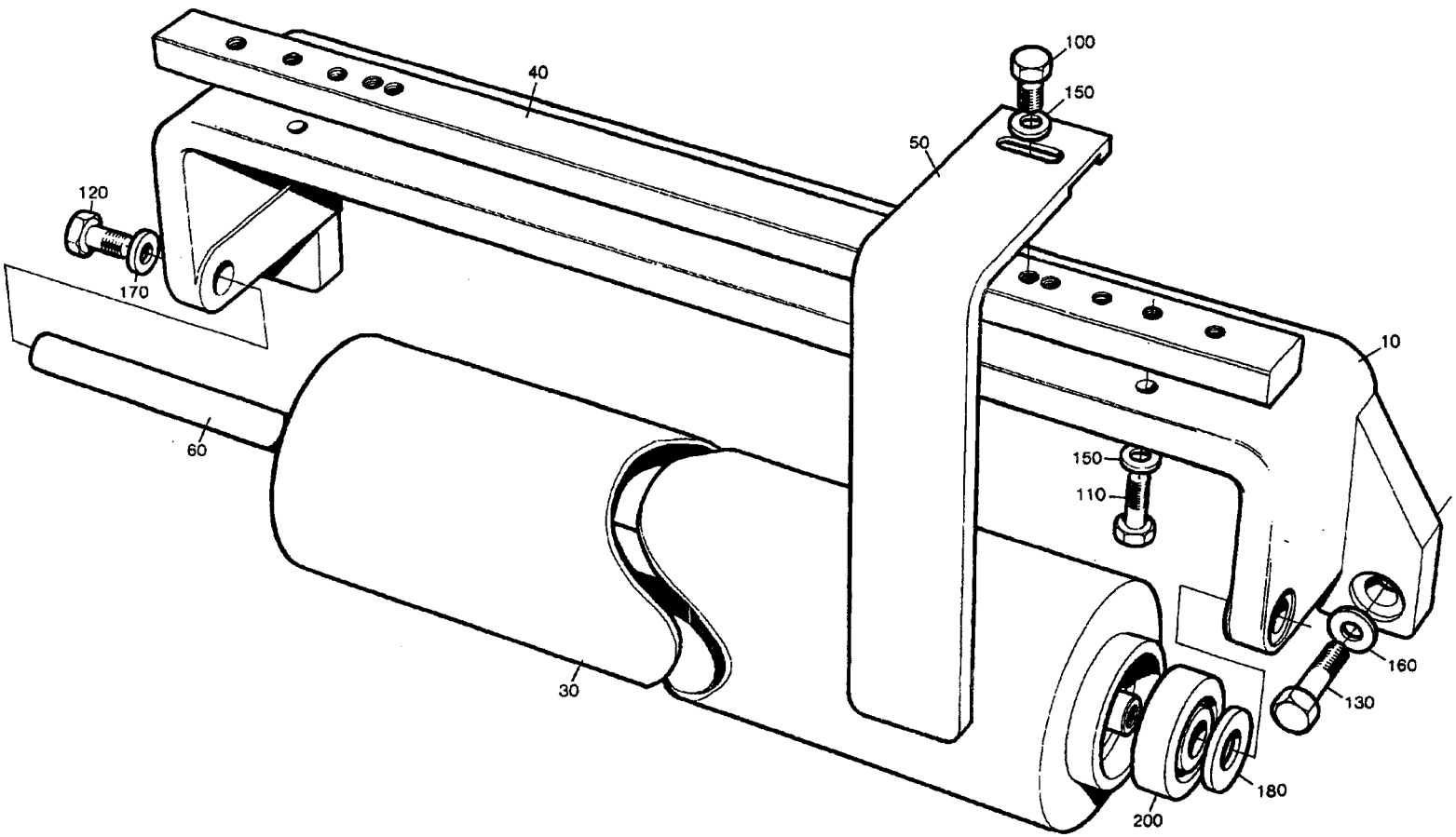

52241001.TIF
522410-1
AM

From	Pos	Part No	SP	UN	Qty	Description
		C- 522410-0101				**Bending Roller, Ass'y**
	010	G- 522173	-		1	CANTILEVER
	030	265564	C		1	BENDING ROLLER
	040	479223	-		1	RAIL
	050	531885	-		2	STEERING
	060	499132-0002	-		1	SHAFT
	100	312105-0327	-		2	SCREW M6S5X12 A4 80
	110	312105-0329	-		2	SCREW M6S5X16 A4 80
	120	312105-0368	-		2	SCREW M6S6X16RFR
	130	312105-0372	-		2	SCREW M6S6X25RFR
	150	315105-0146	-		4	WASHER BRB5,3X10RFR
	160	315105-0153	-		2	WASHER BRB6,4X12RFR
	170	315115-0153	-		2	WASHER TBRB6,4X12RFR
	180	315105-0173	-		2	WASHER BRB10,5X22RFR
	200	321316-0200	S		2	BALL BEARISKF6300-2RS

From	Pos	Part No	SP	UN	Qty	Description

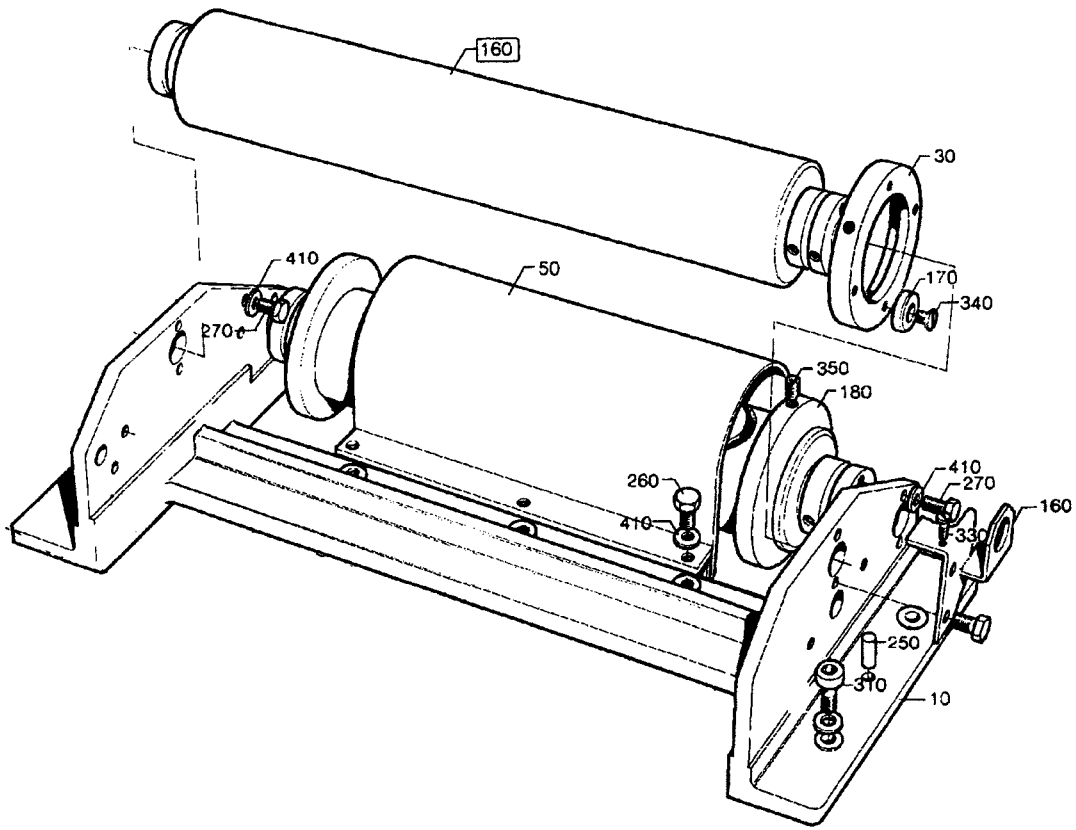

-01

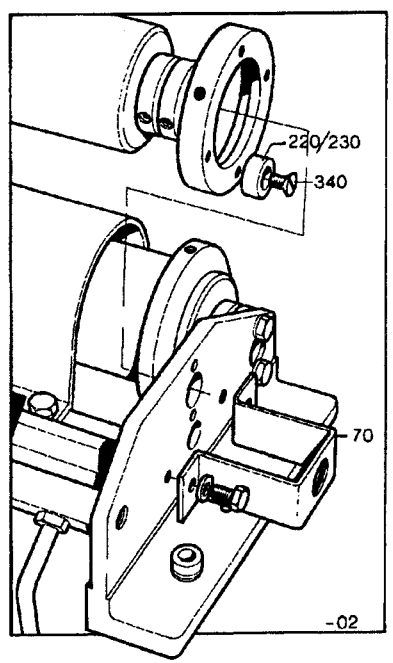

44593001.TIF
445930-1
AM

From	Pos	Part No	SP	UN	Qty	Description
TB/8 TBA/8						
		C- 445930-0101				**Bending Unit, Ass'y**
	160	466469	C		1	HOLDER
	170	440180	C		4	WASHER
	260	312105-0366	-		3	SCREW M6S6X12RFR
	330	312125-0228	-		2	SLOTTED HEMCS3X16RFR
	340	312145-0287	-		4	SLOTTED HEMFS4X8RFR
	410	315105-0153	-		9	WASHER BRB6,4X12RFR
TB/1 TB/5 TBA/3 TBA/5						
		C- 445930-0102				**Bending Unit, Ass'y**
	070	252868	C		1	BRACKET
	220	90339-0006	S		2	MAGNET
	230	90339-0007	S		2	MAGNET
	260	312105-0366	-		5	SCREW M6S6X12RFR
	340	312145-0292	-		4	SLOTTED HEMFS4X14RFR
	410	315105-0153	-		13	WASHER BRB6,4X12RFR
Common parts						
	F160	**C- 440135-0101**	**-**		**2**	**BENDING ROLLER**
	010	G- 445931	C		1	CANTILEVER
	030	440157	C		1	MAGNET BRACKET
	050	476403	-		1	HEAD PLATE
	180	250588	-		2	FLANGE
	250	311102-0353	-		2	CYLINDRICACP M6 6X20
	270	312105-0368	-		8	SCREW M6S6X16RFR
	310	312115-0451	-		4	SCREW 8X20 A4 80
	350	312316-0323	-		4	STOP SCREW SK6SS5X8FZB
	360	312316-0362	-		3	STOP SCREW SK6SS6X8FZB
	420	315105-0165	-		4	WASHER BRB8,4X16RFR

From	Pos	Part No	SP	UN	Qty	Description

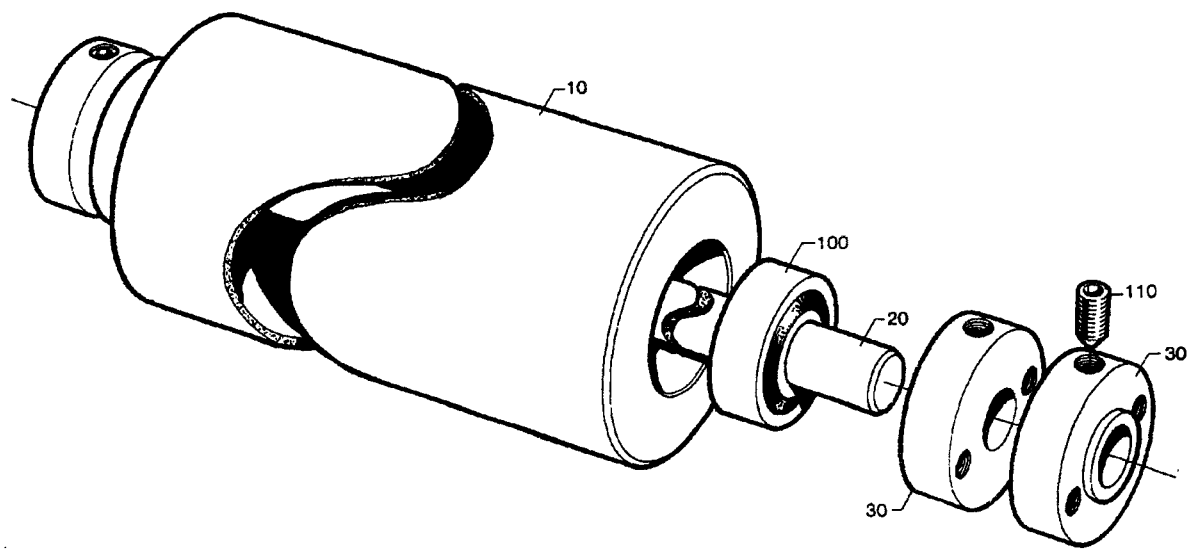

44013501.TIF
440135-1
AM

From	Pos	Part No	SP	UN	Qty	Description
		C- 440135-0101				**Bending Roller, Ass'y**
	010	440136-0001	C		1	ROLL
	020	440137-0001	-		1	SHAFT
	030	440138	-		4	LOCKING CIRCLIP
	100	321313-0102	S		2	BALL BEARISKF6202-2RS
	110	312306-0366	-		4	STOP SCREW P6SS6X12FZB

From	Pos	Part No	SP	UN	Qty	Description

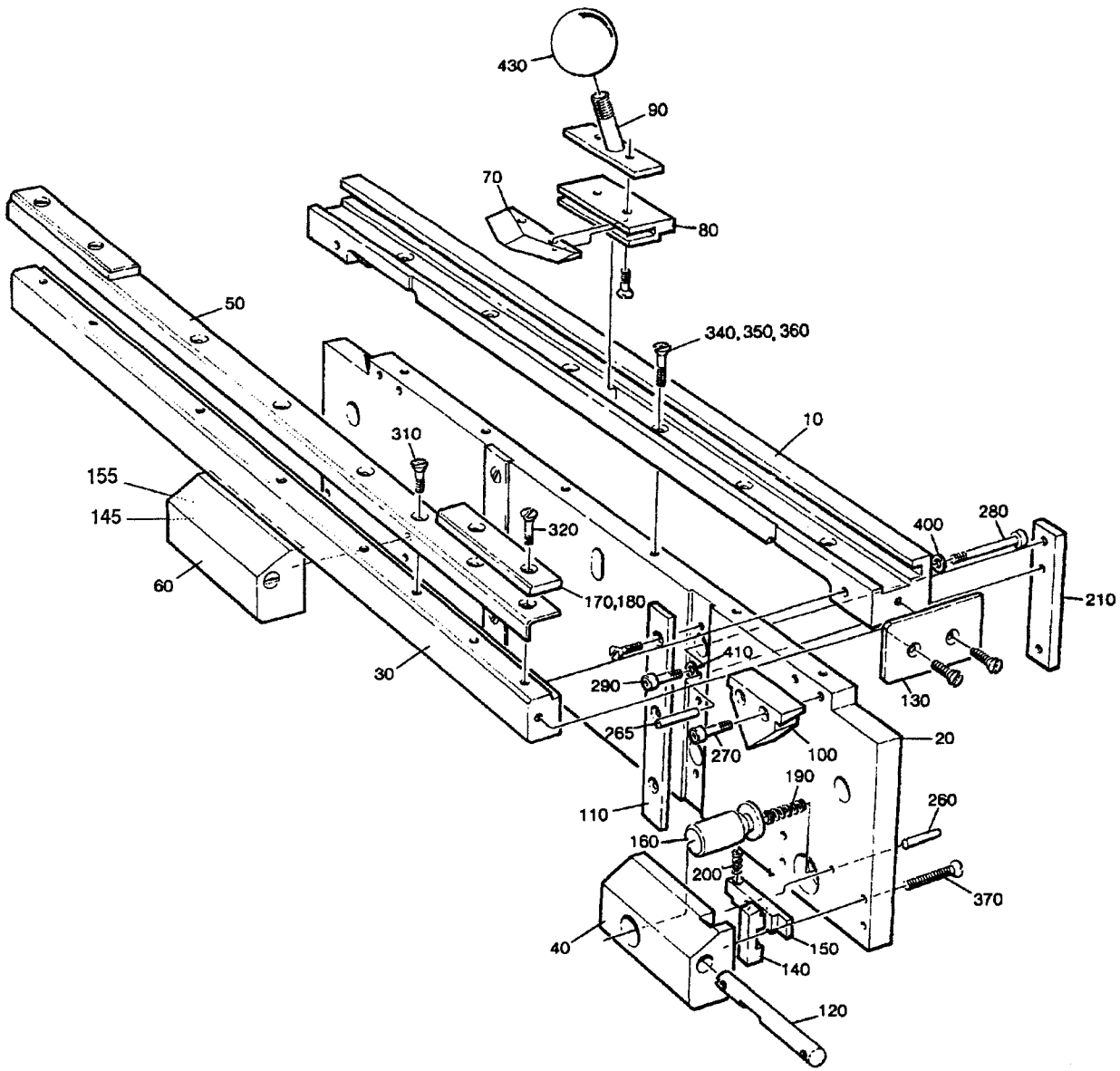

52212102.TIF
522121-2
AM 14575

From	Pos	Part No	SP	UN	Qty	Description
1136ml-500ml						
		C- 522121-0201				**Cutting Table, Ass'y**
	010	522122-0001	-		1	RAIL
	170	522138	C		1	STOPPER
	340	312145-0327	-		6	SLOTTED HEMFS5X12RFR
	360	312145-0331	-		6	SLOTTED HEMFS5X20RFR
500ml Slim 355ml						
		C- 522121-0202				**Cutting Table, Ass'y**
	010	522122-0002	-		1	RAIL
	180	522139-0001	C		1	STOPPER
	340	312145-0327	-		6	SLOTTED HEMFS5X12RFR
	350	312145-0329	-		6	SLOTTED HEMFS5X16RFR
375ml 300ml						
		C- 522121-0203				**Cutting Table, Ass'y**
	010	522122-0002	-		1	RAIL
	180	522139-0002	C		1	STOPPER
	340	312145-0327	-		6	SLOTTED HEMFS5X12RFR
	350	312145-0329	-		6	SLOTTED HEMFS5X16RFR
250ml 200ml						
		C- 522121-0204				**Cutting Table, Ass'y**
	010	522122-0003	-		1	RAIL
	180	522139-0003	C		1	STOPPER
	340	312145-0327	-		12	SLOTTED HEMFS5X12RFR
	010	522122-0001	-		1	RAIL
750ml Slim						
		C- 522121-0205				**Cutting Table, Ass'y**
	170	544270	C		1	STOPPER
	340	312145-0327	-		6	SLOTTED HEMFS5X12RFR
	360	312145-0331	-		6	SLOTTED HEMFS5X20RFR
1000ml Slim						
		C- 522121-0206				**Cutting Table, Ass'y**
	010	522122-0001	-		1	RAIL
	170	569924	C		1	STOPPER
	340	312145-0327	-		6	SLOTTED HEMFS5X12RFR
	360	312145-0331	-		6	SLOTTED HEMFS5X20RFR
Common parts						
	020	522123	-		1	PLATE
	030	522124	-		1	RULER
	040	522125	C		1	BEARING HOUSING
	050	522126	-		1	SHEET
	060	556443	C		1	BEARING HOUSING
	070	522128	S		1	KNIFE
	080	522129	C		1	KNIFE HOLDER
	090	522130	-		1	HANDLE
	100	522131	C		2	STEERING
	110	522132	C		2	SLIDE BELT
	120	522133	-		2	SHAFT
	130	522134	-		2	END PLATE
	140	556439	C		1	BARRIER
	145	556440	C		1	BARRIER
	150	556441	-		1	ARM
	155	556442	-		1	ARM
	160	522137	C		2	PUSH BUTTON
	190	522158	C		2	COMPRESSION SPRING
	200	458041	C		2	COMPRESSION SPRING
	210	530778	-		2	LACE
	250	311103-0272	-		2	CYLINDRICACP M6 4X20 RFR
	260	311112-0256	-		4	SLOTTED TURP 4X20 RFR
	265	311112-0258	-		2	SLOTTED TURP 4X24 RFR
	270	312115-0329	-		4	SCREW 5X16 A4 80
	280	312115-0339	-		2	SCREW 5X40 A4 80
	290	312115-0370	-		4	SCREW 6X20 A4 80
	310	312145-0289	-		8	SLOTTED HEMFS4X10RFR
	320	312145-0291	-		6	SLOTTED HEMFS4X12RFR
	370	312105-0337	-		4	SCREW M6S5X35RFR
	400	315105-0146	-		6	WASHER BRB5,3X10RFR
	410	315105-0153	-		4	WASHER BRB6,4X12RFR
	430	318800-0107	-		1	HANDLE BALLA D45-M10

From	Pos	Part No	SP	UN	Qty	Description
		C- 440132-0201				**Start-Up Kit, Ass'y**
	030	294009	-		2	KNIFE

From	Pos	Part No	SP	UN	Qty	Description

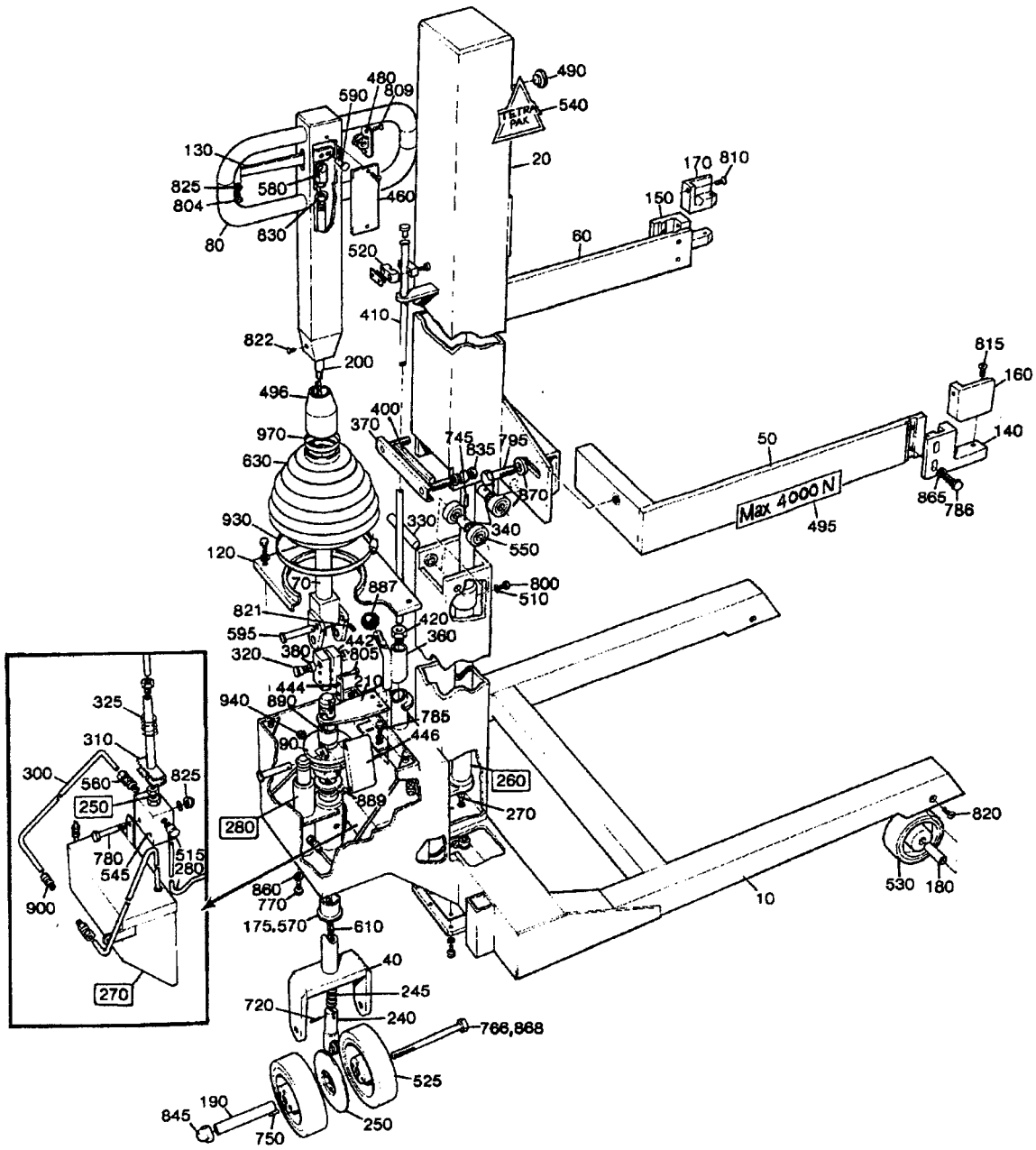

46410002.TIF
464100-2
AM

From	Pos	Part No	SP	UN	Qty	Description
TBA/3 TB/8 TBA/8 TR/7						
		C- 464100-0201				**Carriage, Ass'y**
	F250	**C- 464108-0101**	**C**		**1**	**HYDRAULIC VALVE**
	F260	**C- 464124-0101**	**-**		**1**	**LIFTING CYLINDER**
		C- 529278-0101				**. SEAL KIT**
	F270	**C- 493700-0101**	**C**		**1**	**TANK**
	F280	**C- 493729-0101**	**-**		**1**	**PUMP**
		C- 529279-0101				**. SEAL KIT**
	020	530765	-		1	PILLAR
	140	493558	C		1	HOLDER R
	150	493559	C		1	HOLDER L
	160	493560	S		1	SUPPORT R
	170	493561	S		1	SUPPORT L
TT/1						
		C- 464100-0202				**Carriage, Ass'y**
	F250	**C- 464108-0101**	**C**		**1**	**HYDRAULIC VALVE**
	F260	**C- 464124-0101**	**-**		**1**	**LIFTING CYLINDER**
		C- 529278-0101				**. SEAL KIT**
	F270	**C- 493700-0101**	**C**		**1**	**TANK**
	F280	**C- 493729-0101**	**-**		**1**	**PUMP**
		C- 529279-0101				**. SEAL KIT**
	020	464114	-		1	PILLAR
	140	493558	C		1	HOLDER R
	150	493559	C		1	HOLDER L
	160	493560	S		1	SUPPORT R
	170	493561	S		1	SUPPORT L
TR/7 Reel						
		C- 464100-0203				**Carriage, Ass'y**
	140	737592	C		1	HOLDER RIGHT
	150	737593	C		1	HOLDER LEFT
	160	737353	S		1	SUPPORT RIGHT
	170	737354	S		1	SUPPORT LEFT
Common parts						
	010	464080	-		1	MACHINE BODY
	040	464086	C		1	FORK
	050	493553	-		1	LIFTING FORK
	060	493554	-		1	LIFTING FORK
	070	493555	-		1	HANDLE BRACKET
	080	493556	-		1	HANDLE
	090	464085	-		1	CARRIER
	120	527776	-		1	LID
	130	493557	C		1	BRAKE HANDLE
	175	451719-0003	S		1	WASHER
	180	464082	C		2	SHAFT
	190	464088	C		1	SHAFT

From	Pos	Part No	SP	UN	Qty	Description
	200	464089	-		1	STRUT
	210	464090	-		1	SUPPORT
	240	464093	S		1	YOKE
	245	536387	S		1	COMPRESSION SPRING
	250	464095	S		1	BRAKE DISC
	270	464102	S		1	CONE (PRESSURE)
	280	536398	C		1	PIPE
	300	464105	C		1	PIPE
	310	464107	C		1	BRACKET
	320	527794	S		2	BOLT
	325	464112	S		1	COMPRESSION SPRING
	330	464115	S		2	SHAFT
	340	464116	C		2	SPACER PIPE
	360	464119	-		1	HANDSPIKE
	370	464121	-		1	HOLDER
	380	464122	S		2	BUSHING
	400	464129	S		1	SLIDE PLATE
	410	464130	C		1	PIPE
	420	534875	C		1	NIPPLE
	442	493562	C		1	BRACKET
	444	493563	C		1	STEERING
	446	493564	C		1	STRUT
	460	493566	-		1	LID
	480	493568	C		1	BRACKET
	490	493569	C		1	PLUG
	495	522308	C		2	SIGN
	496	527777	C		1	BUSHING
	510	90005-0010	S		1	WASHER
	515	90030-0160	C		2	BANJO CONNECTION
	520	90165-0063	-		1	CLIP
	525	90191-0037	C		2	WHEEL
	530	90191-0038	C		2	WHEEL
	540	90194-0012	C		1	LABEL
	545	90201-0018	-		1	HOUSING
	550	90214-0053	S		4	ROLLER
	560	90230-0024	S		2	NON-RETURN VALVE
	570	90240-0133	S		1	BUSHING
	580	90254-0010	-		1	LINK
	590	90258-0036	C		2	BOLT
	595	90258-0037	S		2	BOLT
	610	90288-0045	S		1	CHAIN
	630	90342-0010	S		1	BELLOWS
	720	311103-0237	S		1	CYLINDRICACP M6 3X18 RFR
	745	311111-0308	S		2	SLOTTED TUFRP5X20
	750	311111-0310	S		4	SLOTTED TUFRP5X24

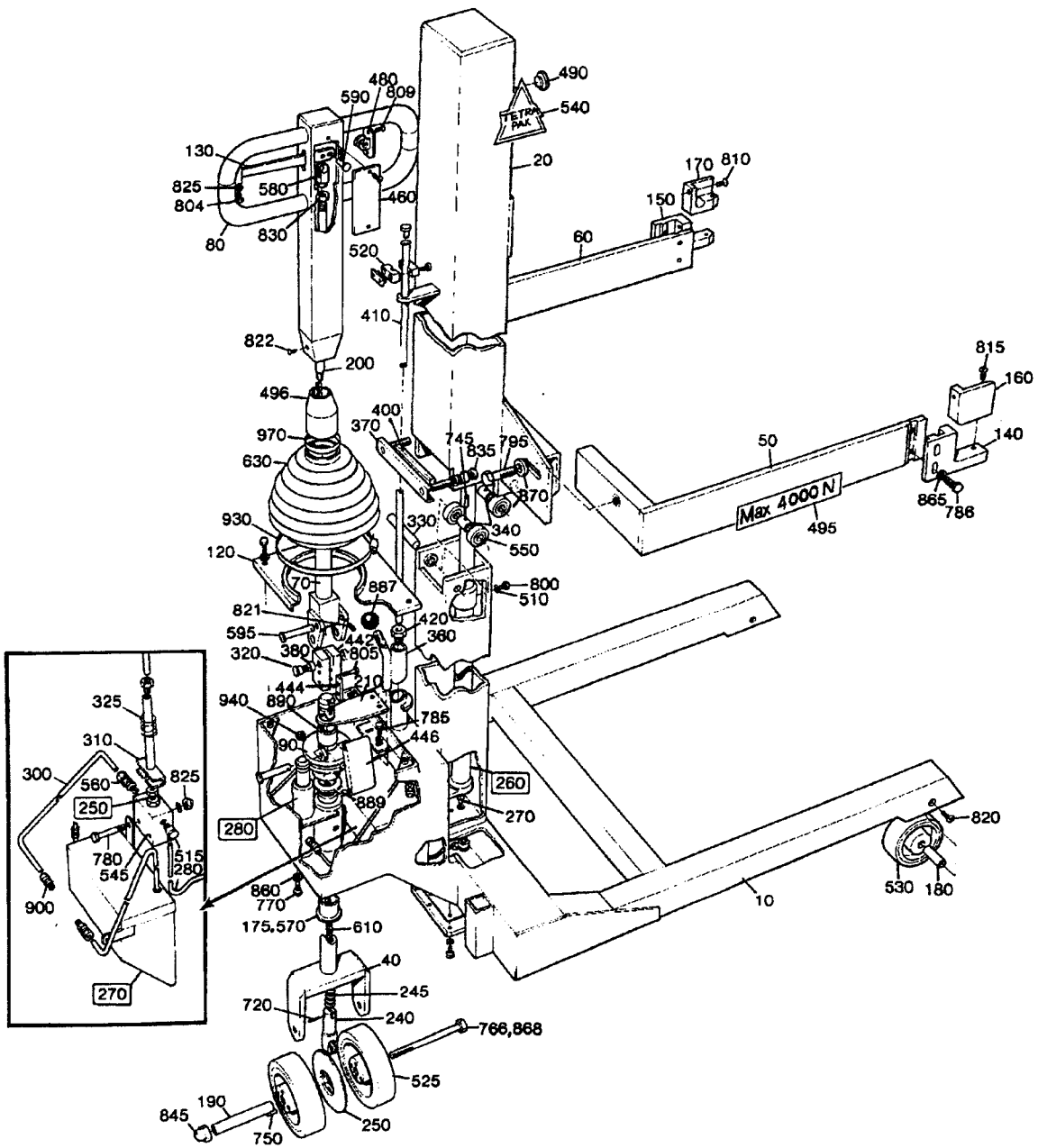

46410002.TIF
464100-2
AM

From	Pos	Part No	SP	UN	Qty	Description
	766	312101-0561	C		1	SCREW M6S12X160FZV
	770	312105-0366	-		6	SCREW M6S6X12RFR
	780	312105-0380	-		2	SCREW M6S6X50RFR
	785	312105-0451	-		2	SCREW M6S8X20RFR
	786	312105-0455	-		4	SCREW M6S8X30RFR
	795	312105-0630	-		2	SCREW M6S16X50RFR
	800	312111-0323	-		1	SCREW MC6S5X8FZB
	804	312115-0372	-		1	SCREW MC6S6X25 A4 80
	805	312115-0374	-		2	SCREW 6X30 A4 80
	809	312155-0289	-		4	SCREW MF6S4X10RFR
	810	312155-0372	-		2	SCREW MF6S6X25RFR
	815	312155-0378	-		2	SCREW MF6S6X40RFR
	820	312155-0449	-		4	SCREW MF6S8X16RFR
	821	312316-0284	-		2	STOP SCREW SK6SS4X5FZB
	822	312311-0489	S		1	STOP SCREW T6SS10X16FZB
	825	312605-0316	-		3	NUT M6M6RFR
	830	312605-0318	-		1	NUT M6M8RFR
	835	312605-0320	-		4	NUT M6M10RFR
	845	312705-0322	-		1	CAP NUT MHM 12 A2
	860	315105-0153	-		5	WASHER BRB6,4X12RFR
	865	315105-0165	-		6	WASHER BRB8,4X16RFR
	867	315105-0186	-		1	WASHER BRB17X30RFR
	868	315115-0178	-		2	WASHER TBRB13X24RFR
	870	315121-0186	-		2	WASHER TBRSB17X42FZB
	887	318800-0104	-		1	HANDLE BALLA D.30-M8
	889	321120-0104	S		4	BUSHING 10/12X10
	890	321120-0171	S		3	BUSHING 30/34X30
	900	342752-0103	C		1	STRAIGHT C
	930	342991-0116	C		1	HOSE CLIP 130-165MMRFR
	940	344502-0026	C		2	NIPPLE L AHKR1/8"
	970	352113-0103	S		1	RIBBON CLA

From	Pos	Part No	SP	UN	Qty	Description

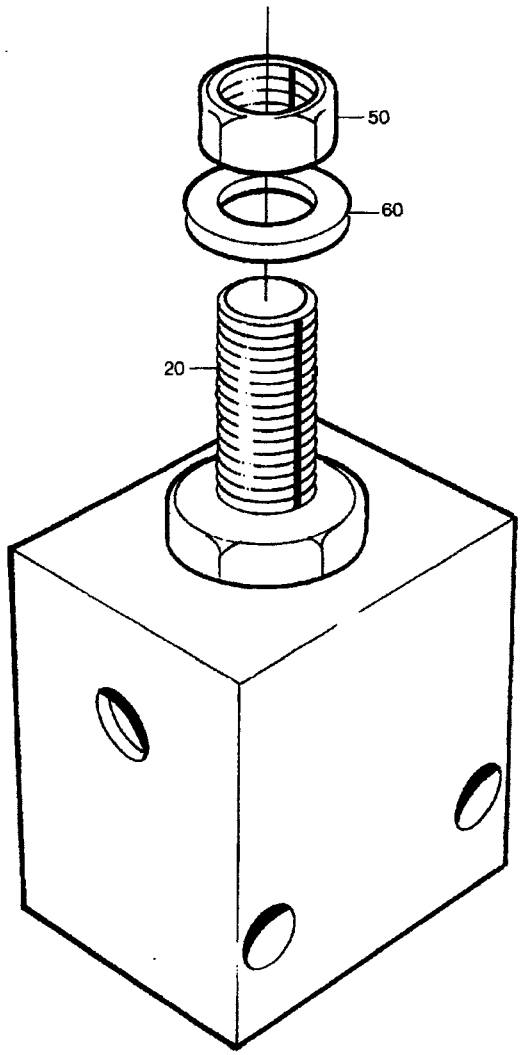

46410801.TIF
464108-1
AM 8624

From	Pos	Part No	SP	UN	Qty	Description
		C- 464108-0101				**Hydraulic Valve, Ass'y**
	020	90201-0019	S		1	VALVE
	050	312652-0301	C		1	NUT U6M1/4FZB
	060	315111-0156	-		1	WASHER TBRB6,7X14FZB

From	Pos	Part No	SP	UN	Qty	Description

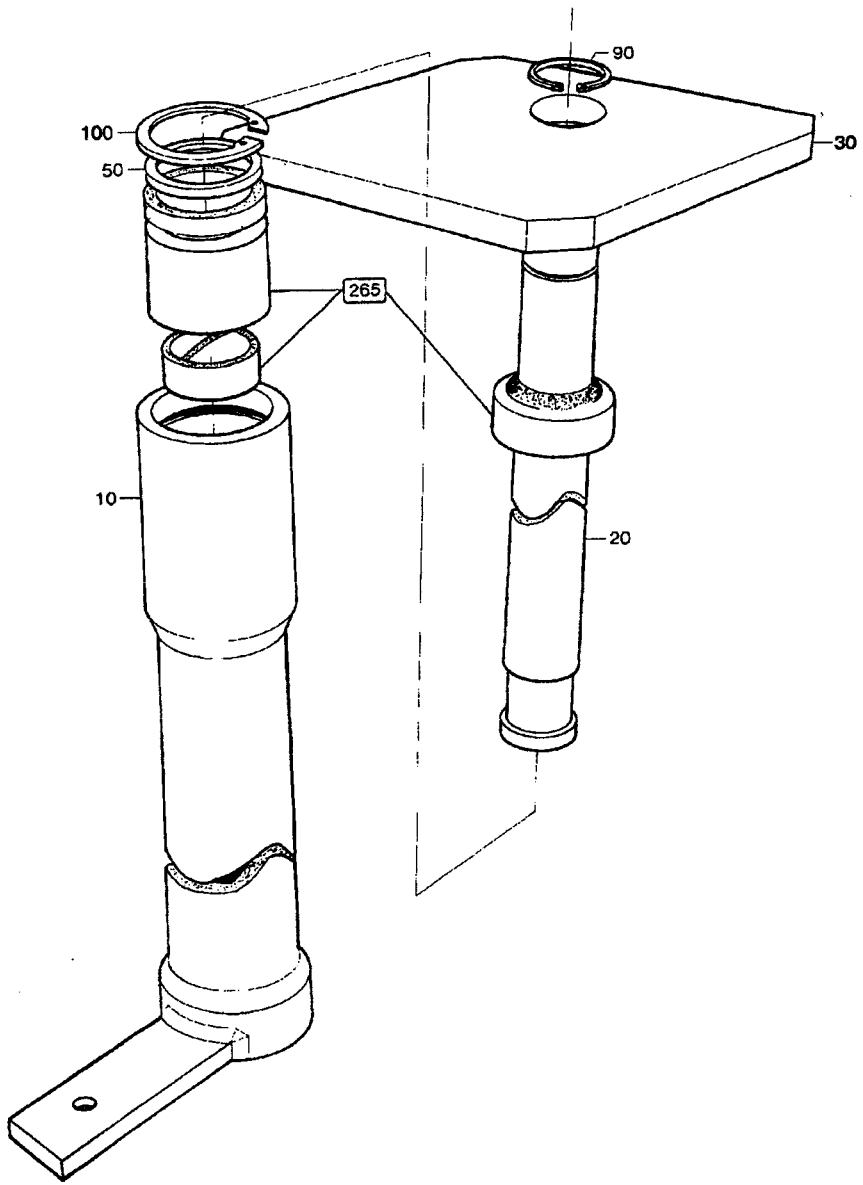

46412401.TIF
464124-1
AM 8624

From	Pos	Part No	SP	UN	Qty	Description
		C- 464124-0101				**Lifting Cylinder, Ass'y**
	F265	**C- 529278-0101**	**S**		**1**	**SEAL KIT**
	010	464101	C		1	CYLINDER SHELL
	020	464099	C		1	PISTON ROD
	030	464120	-		1	HEAD PLATE
	050	464126	C		1	SPACER RING
	090	315751-0119	S		2	CIRCLIP SGA25 RFR
	100	315753-0124	S		1	CIRCLIP GH 35 RFR

From	Pos	Part No	SP	UN	Qty	Description

From	Pos	Part No	SP	UN	Qty	Description
		C- 529278-0101				**Seal Kit, Ass'y**
	010	464125	-		1	SLIDING SLEEVE
	020	464127	-		1	SLIDING SLEEVE
	030	90091-0125	-		1	SEAL RING
	040	90091-0157	-		1	SEAL RING

From	Pos	Part No	SP	UN	Qty	Description

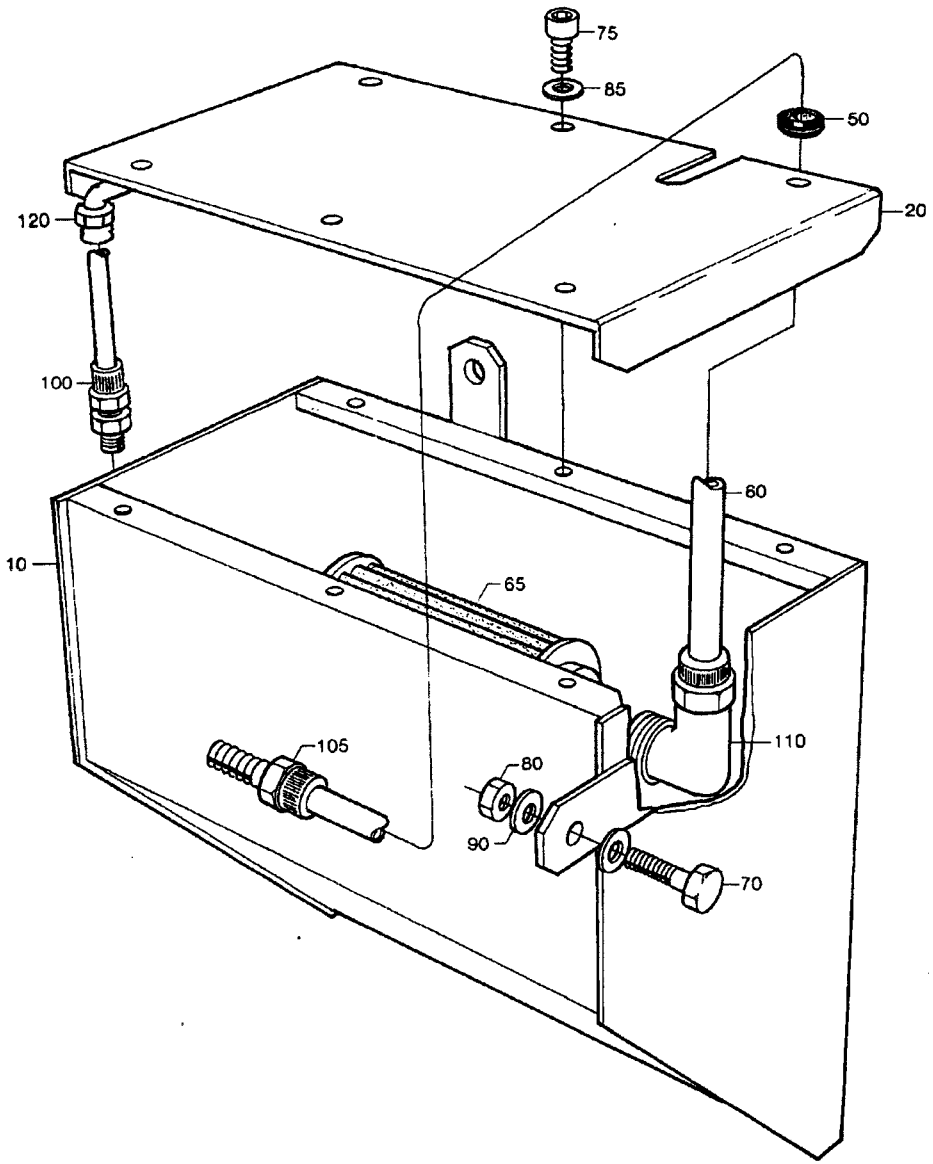

49370001.TIF
493700-1
AM

From	Pos	Part No	SP	UN	Qty	Description
		C- 493700-0101				**Tank, Ass'y**
	010	493701	-		1	TANK
	020	493702	-		1	LID
	050	90015-0011	C		1	BUSHING
	060	90166-0122	C	MM	900	HOSE
	065	90415-0031	C		1	FILTER
	070	312105-0368	-		1	SCREW M6S6X16RFR
	075	312115-0325	-		6	SCREW 5X10 A4 80
	080	312605-0316	-		1	NUT M6M6RFR
	085	315105-0146	-		6	WASHER BRB5,3X10RFR
	090	315105-0153	-		2	WASHER BRB6,4X12RFR
	100	342920-0122	C		2	PIPE COUPL8/6-1/4
	105	342929-0121	C		1	PIPE COUPL8/6-8
	110	342930-0124	C		1	ELBOW PIPE8/6-1/2
	120	342936-0122	-		1	ELBOW PIPE8/6

From	Pos	Part No	SP	UN	Qty	Description

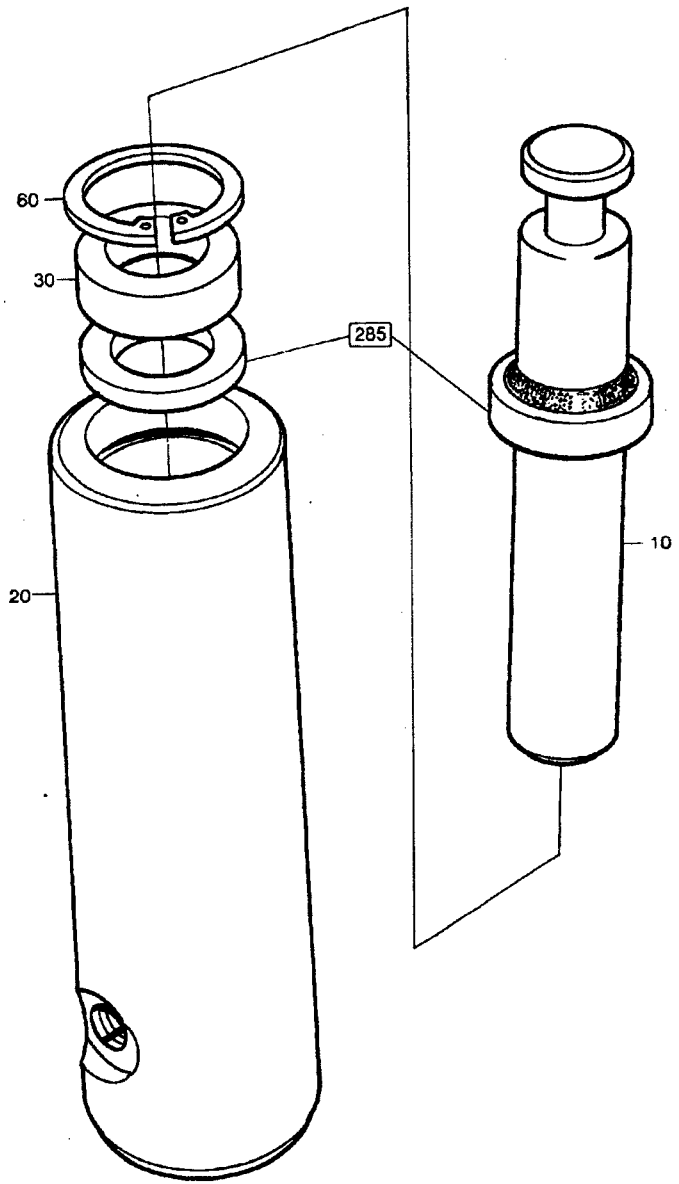

49372901.TIF
493729-1
AM

From	Pos	Part No	SP	UN	Qty	Description
		C- 493729-0101				**Pump, Ass'y**
	F285	**C- 529279-0101**	**S**		**1**	**SEAL KIT**
	010	464084	C		1	PISTON ROD
	020	493730	C		1	MANTLE
	030	493731	C		1	WASHER
	060	315753-0122	S		1	CIRCLIP GH 30 RFR

From	Pos	Part No	SP	UN	Qty	Description

Tetra Pak

529279

660

From	Pos	Part No	SP	UN	Qty	Description
		C- 529279-0101				**Seal Kit, Ass'y**
	010	90091-0038	-		1	SEAL RING
	020	90091-0158	-		1	PISTON ROD SEAL

From	Pos	Part No	SP	UN	Qty	Description

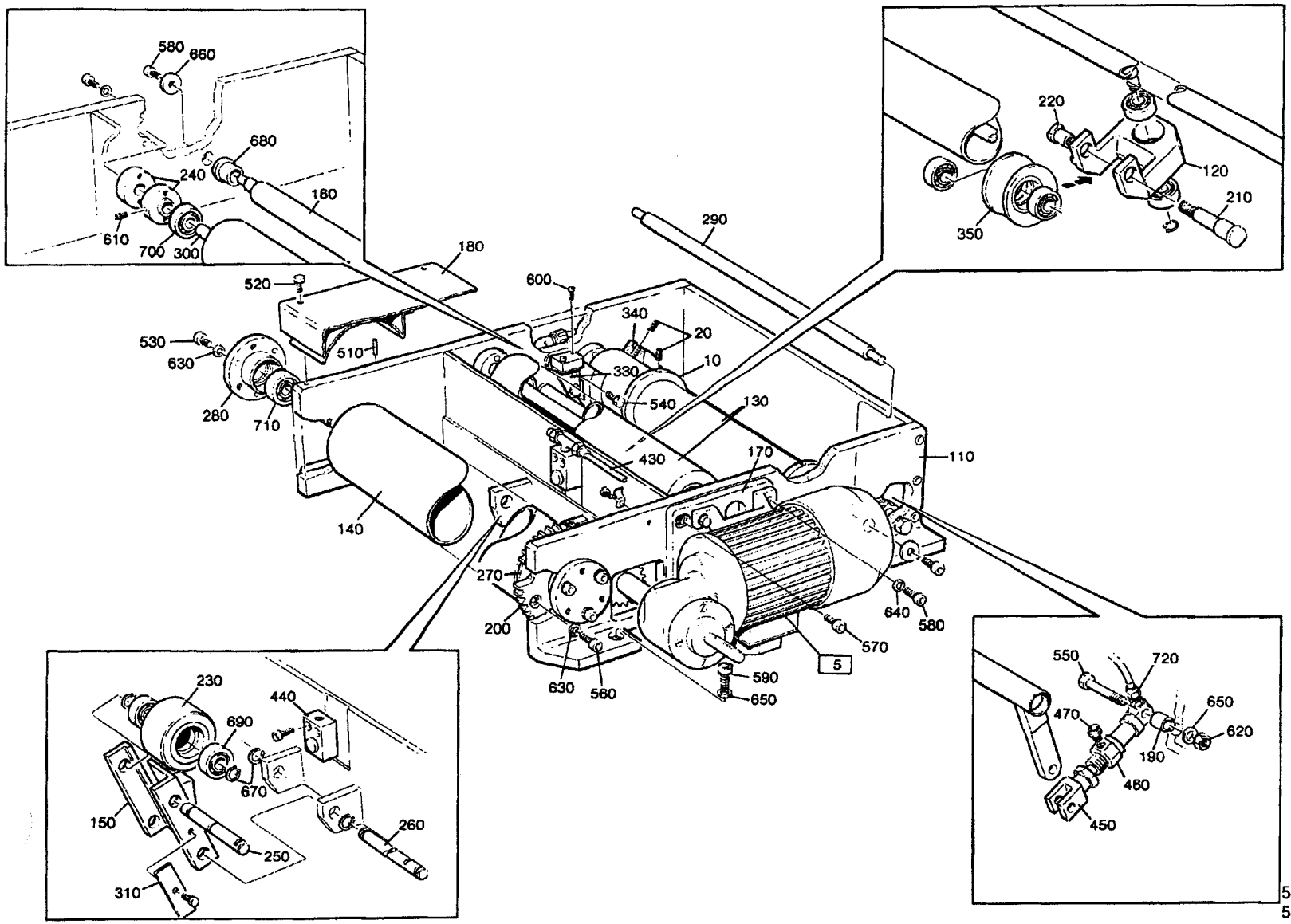

54290201.TIF
542902-1
AM

From	Pos	Part No	SP	UN	Qty	Description
1136ml-500ml		C- 542902-0101				**Drive Brake Unit, Ass'y**
	010	250588	-		1	FLANGE
	020	312318-0327	-		4	STOP SCREW SK6SS5X12RFR
300ml		C- 542902-0102				**Drive Brake Unit, Ass'y**
	010	250588	-		2	FLANGE
	020	312318-0327	-		6	STOP SCREW SK6SS5X12RFR
Common parts	F005	C- 542904-010V	-		1	**WORM GEAR MOTOR**
	110	539180	-		1	CANTILEVER
	120	263150	-		1	BRACKET
	130	440136-0001	C		2	ROLL
	140	445845	C		1	DRIVE ROLLER
	150	537388	-		1	HOLDER
	160	539181	-		1	PIPE
	170	539182	-		1	PLATE
	180	539183	-		1	PROTECTION PLATE
	190	2487	-		1	SPACER ELEMENT
	200	207019-0003	C		1	GEAR WHEEL
	210	263152	-		1	SHAFT
	220	263153	-		1	NUT
	230	266710	C		1	WHEEL
	240	440138	-		8	LOCKING CIRCLIP
	250	445838	-		1	SHAFT
	260	445847	-		1	SHAFT
	270	445849	-		1	SPACER DISC
	280	445852	-		2	LID
	290	537383	-		2	SHAFT
	300	537384	-		2	SHAFT
	310	537389	-		1	SECURING PLATE
	330	539185	-		1	HOLDER
	340	539186	-		1	RING
	350	540719	-		1	WHEEL
	430	90166-0081	-	M	2	HOSE
	440	90239-0259	-		1	CYLINDER
	450	90239-0357	-		1	BRACKET
	460	90239-0852	-		1	CYLINDER
	470	90257-0003	-		1	FILTER PLUG
	510	311102-0353	-		2	CYLINDRICACP M6 6X20
	520	312101-0323	-		6	SCREW M6S5X8FZB
	530	312101-0329	-		8	SCREW M6S5X16FZB
	540	312101-0364	-		2	SCREW M6S6X10FZB
	550	312101-0460	-		1	SCREW M6S8X45FZB
	560	312111-0331	-		2	SCREW MC6S5X20FZB
	570	312111-0366	-		4	SCREW MC6S6X12FZB
	580	312111-0370	-		16	SCREW MC6S6X20FZB
	590	312111-0449	-		4	SCREW MC6S8X16FZB
	600	312125-0228	-		2	SLOTTED HEMCS3X16RFR
	610	312306-0366	-		8	STOP SCREW P6SS6X12FZB
	620	312601-0318	-		1	NUT M6M8FZB
	630	315101-0146	-		8	WASHER BRB5,3X10FZB
	640	315101-0153	-		15	WASHER BRB6,4X12FZB
	650	315101-0165	-		5	WASHER BRB8,4X16FZB
	660	315121-0153	-		4	WASHER TBRSB6,4X22FZB
	670	315750-0112	-		5	CIRCLIP SGA15
	680	321101-0202	-		2	FLANGE BUS 16F7X12
	690	321308-0202	-		6	BALL BEARISKF6002-2RS
	700	321313-0102	-		4	BALL BEARISKF6202-2RS
	710	321316-0201	-		2	BALL BEARISKF6301-2RS
	720	342930-0113	-		2	ELBOW PIPE6/4-1/8

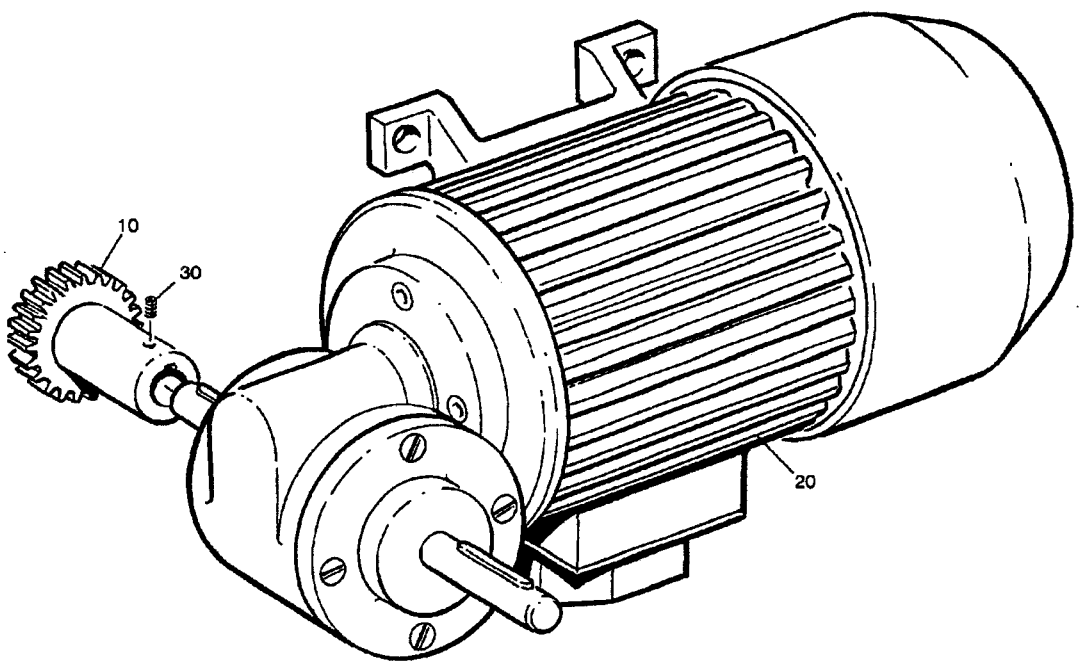

54290401.TIF
542904-1
AM

From	Pos	Part No	SP	UN	Qty	Description
		C- 542904-0101				**Worm Gear Mctor 1055ml 1000ml, Ass'y**
		C- 542904-0102				**Worm Gear Motor 568ml-300ml, Ass'y**
	010	539187-0001	-		1	GEAR WHEEL 1055ml 1000ml
	010	539187-0002	-		1	GEAR WHEEL 568ml-300ml
	020	90069-0116	-		1	WORM GEAR MOTOR
		90056-0096	S		1	* WORM GEAR
		90069-0364	S		1	* CARBON BRUSH
		90069-0365	S		1	* CARBON BRUSH
	030	312318-0284	-		1	STOP SCREW SK6SS4X5RFR

From	Pos	Part No	SP	UN	Qty	Description

SPC section 648009

Code	Ass'y	Group No	Description	Page
09-F000	648009	648009-080V	Regular Accessories	669
09-F210	24337201	243372-010V	Carriage	671
09-F240	250610	250610-020V	Tool Kit	673
09-F300	554171	554171-020V	Platform Addition	675
.	26675502	266755-020V	Platform	677
.	26675603	266756-040V	Platform	679
.	55698901	556989-010V	Ladder	681
09-F560	49908201	499082-010V	Adapter, Type 1	683

From	Pos	Part No	SP	UN	Qty	Description
	010	560874	-		1	PNEUMATIK DIAGRAM TB/8
	020	560875	-		1	PNEUMATIK DIAGRAM TBA/8
	490	90243-0133	-		1	CONTAINER
	500	90347-0111	-		4	MACHINE SHOE
	502	90347-0110	-		4	MACHINE SHOE
	510	436407	-		2	BEAM
	540	436512	-		1	PIPE TB/8
	540	436512	-		2	PIPE TBA/8
	550	436471	-		1	PIPE TB/8

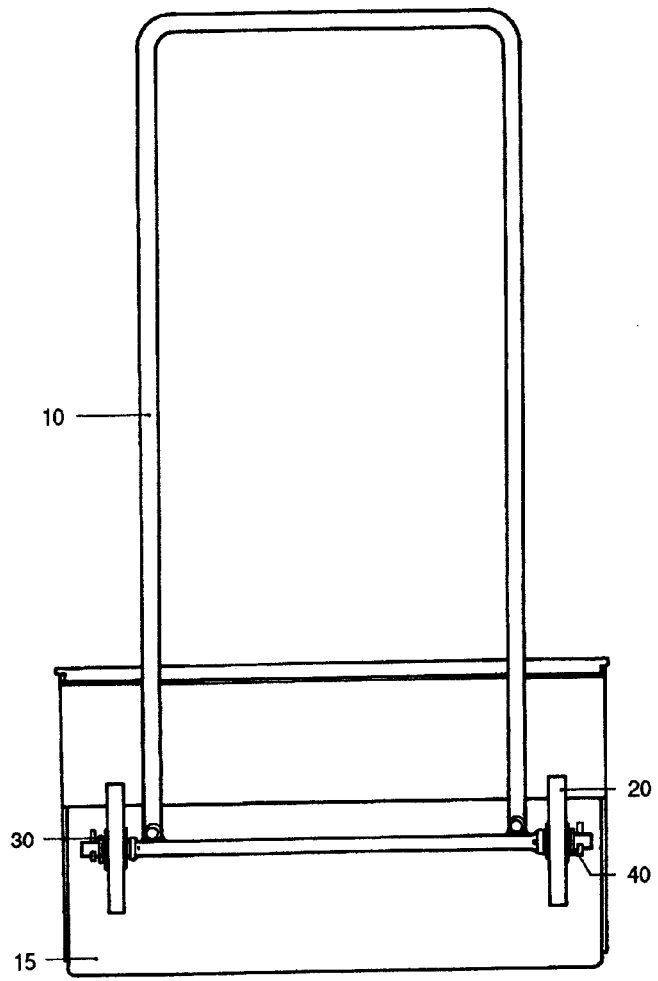

24337201.TIF
243372-1
AM

Last Alteration: AM 4125 78-09-20

Corresponding group: 243372-010V
Assembly Drawing: 243372-1

Issue: 930607

From	Pos	Part No	SP	UN	Qty	Description
		C- 243372-0101				**Carriage, Ass'y**
	010	238990	-		1	CARRIAGE
	015	90003-0014	-		2	BOX
	020	90191-0023	-		2	WHEEL
	030	311411-0181	-		2	SPLIT PIN SP3,2X20RFR
	040	315105-0178	-		4	WASHER BRB13X24RFR

From	Pos	Part No	SP	UN	Qty	Description

From	Pos	Part No	SP	UN	Qty	Description
		C- 250610-0201				**Tool Kit, Ass'y**
	015	283084	-		1	GUIDE SHAFT
	020	283085	-		1	SLEEVE
	040	72947	-		1	HOOK SPANNER
	045	74387	-		1	HOOK SPANNER
	050	245165	-		1	ASSEMBLY TOOL
	055	442173	-		2	GAUGE BLOCK
	070	76138	-		1	LOCKING LOOP
	075	434841	-		1	GAUGE
	100	90278-0001	-		1	PUMP
	110	90279-0001	-		1	OIL CAN
	125	315202-0224	-		1	O-RING 42,2X3
	130	318301-0130	-		4	LIFTING EYLTM30FZB
	150	776422-0101	-		2	BRASS WIRESTE
	160	777100-0113	-		1	SCREWDRIVEL
	170	777100-0184	-		1	SCREWDRIVEL
	180	777120-0215	-		2	C-SPANNER
	190	777120-0220	-		2	C-SPANNER
	200	777120-0232	-		2	C-SPANNER
	204	777121-0137	-		1	OPEN SPANNKEL
	206	777121-0142	-		1	OPEN SPANNKEL NV-46
	210	777150-0100	-		2	HEXAGON SPKEL N=2,5
	220	777150-0101	-		2	HEXAGON SPKEL N=3
	230	777150-0104	-		2	HEXAGON SPKEL N=4
	240	777150-0106	-		2	HEXAGON SPKEL N=5
	250	777150-0108	-		2	HEXAGON SPKEL N=6
	260	777150-0110	-		2	HEXAGON SPKEL N=8
	270	777150-0112	-		2	HEXAGON SPKEL N=10
	280	777150-0114	-		2	HEXAGON SPKEL N=12
	290	777150-0199	-		2	HEXAGON SPKEL N=2
	300	777150-0491	-		2	HEXAGON SPKEL N=1,3
	310	777155-0492	-		2	ALLEN KEY KEL N=1/16"
	320	777200-0101	-		1	PIPE WRENCEL
	330	777510-0101	-		1	SCISSORS

From	Pos	Part No	SP	UN	Qty	Description

From	Pos	Part No	SP	UN	Qty	Description
PFV 1, PFV 2, PFV 3						
		C- 554171-0201				**Platform Addition, Ass'y**
	F010	**C- 266755-020V**	**-**		**1**	**PLATFORM**
PFV 11, PFV 12, PFV 13, PFV 14						
		C- 554171-0201				**Platform Addition, Ass'y**
	F020	**C- 266756-040V**	**-**		**1**	**PLATFORM**
		C- 556989-0101				. LADDER

From	Pos	Part No	SP	UN	Qty	Description

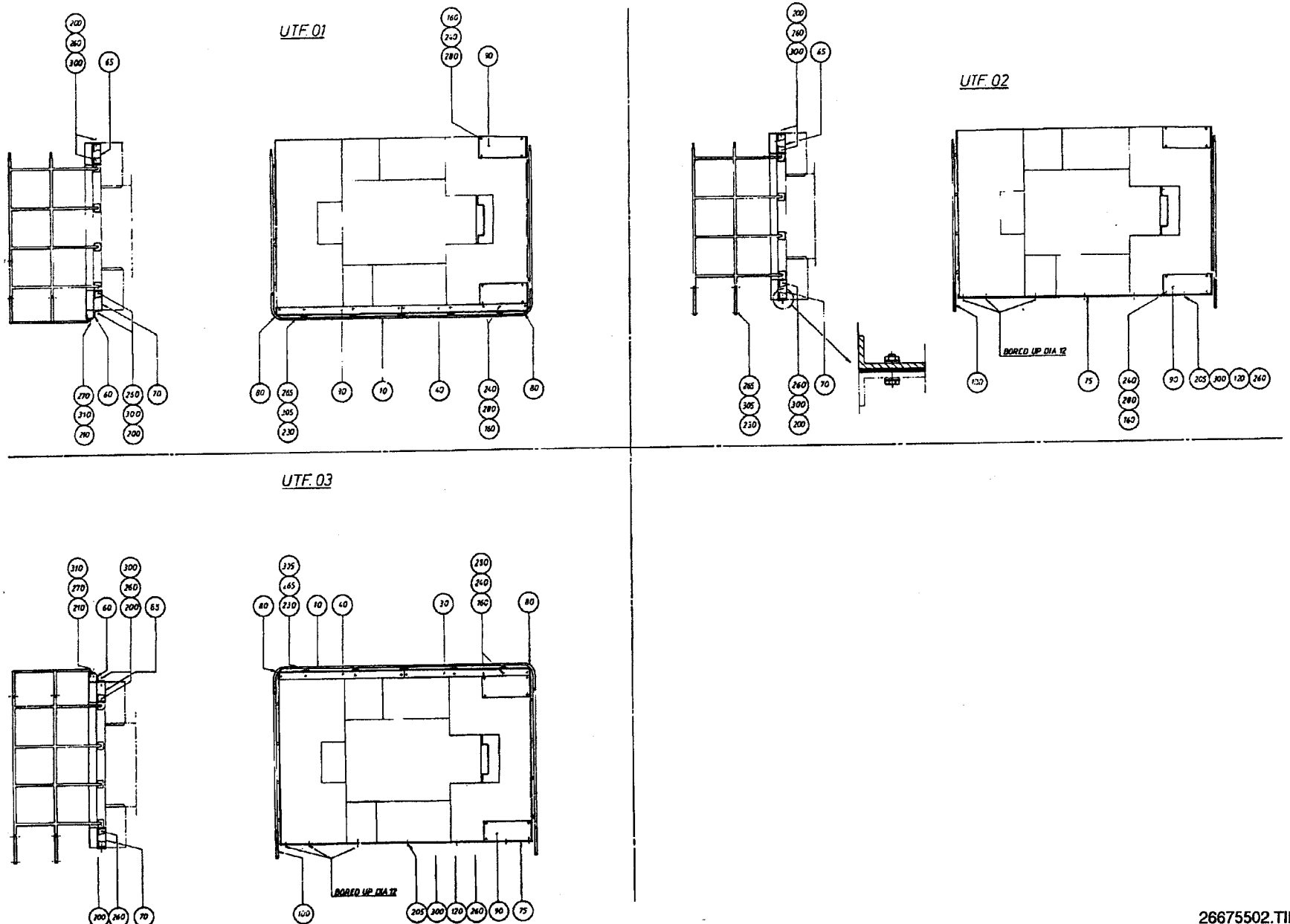

26675502.TIF
266755-2
AM

From	Pos	Part No	SP	UN	Qty	Description
PFV 1						
		C- 266755-0201				**Platform, Ass'y**
	010	257845	-		1	RAILING
	030	247146	-		1	PLATFORM
	040	257852	-		1	PLATFORM
	060	257854	-		1	CANTILEVER
	080	257859	-		4	RAILING
	160	90287-0076	-		16	SCREW
	200	312101-0495	-		13	SCREW M6S10X30FZB
	210	312105-0493	-		20	SCREW M6S10X25RFR
	230	312115-0453	-		8	SCREW 8X25 A4 80
	240	312601-0316	-		16	NUT M6M6FZB
	260	312601-0320	-		10	NUT M6M10FZB
	265	312605-0318	-		8	NUT M6M8RFR
	270	312605-0320	-		20	NUT M6M10RFR
	280	315101-0153	-		16	WASHER BRB6,4X12FZB
	300	315101-0173	-		23	WASHER BRB10,5X22FZB
	305	315105-0165	-		8	WASHER BRB8,4X16RFR
	310	315105-0173	-		20	WASHER BRB10,5X22RFR
PFV 2						
		C- 266755-0202				**Platform, Ass'y**
	075	451406	-		1	VIBRATION DAMPER
	100	451407	-		4	RAILING
	120	451408	-		14	BUFFER RING
	160	90287-0076	-		8	SCREW
	205	312101-0500	-		7	SCREW M6S10X45FZB
	230	312115-0453	-		8	SCREW 8X25 A4 80
	240	312601-0316	-		8	NUT M6M6FZB
	260	312601-0320	-		13	NUT M6M10FZB
	265	312605-0318	-		8	NUT M6M8RFR
	280	315101-0153	-		8	WASHER BRB6,4X12FZB
	300	315101-0173	-		26	WASHER BRB10,5X22FZB
	305	315105-0165	-		8	WASHER BRB8,4X16RFR
PFV 3						
		C- 266755-0203				**Platform, Ass'y**
	010	257845	-		1	RAILING
	030	247146	-		1	PLATFORM
	040	257852	-		1	PLATFORM
	060	257854	-		1	CANTILEVER
	075	451406	-		1	VIBRATION DAMPER
	080	257859	-		4	RAILING
	100	451407	-		4	RAILING
	120	451408	-		14	BUFFER RING
	160	90287-0076	-		16	SCREW
	200	312101-0495	-		13	SCREW M6S10X30FZB
	205	312101-0500	-		7	SCREW M6S10X45FZB
	210	312105-0493	-		20	SCREW M6S10X25RFR
	230	312115-0453	-		16	SCREW 8X25 A4 80
	240	312601-0316	-		16	NUT M6M6FZB
	260	312601-0320	-		17	NUT M6M10FZB
	265	312605-0318	-		16	NUT M6M8RFR
	270	312605-0320	-		20	NUT M6M10RFR
	280	315101-0153	-		16	WASHER BRB6,4X12FZB
	300	315101-0173	-		37	WASHER BRB10,5X22FZB
	305	315105-0165	-		16	WASHER BRB8,4X16RFR
	310	315105-0173	-		20	WASHER BRB10,5X22RFR
Common parts						
	065	269339	-		1	CANTILEVER
	070	269340	-		1	CANTILEVER
	090	257862	-		2	PLATFORM

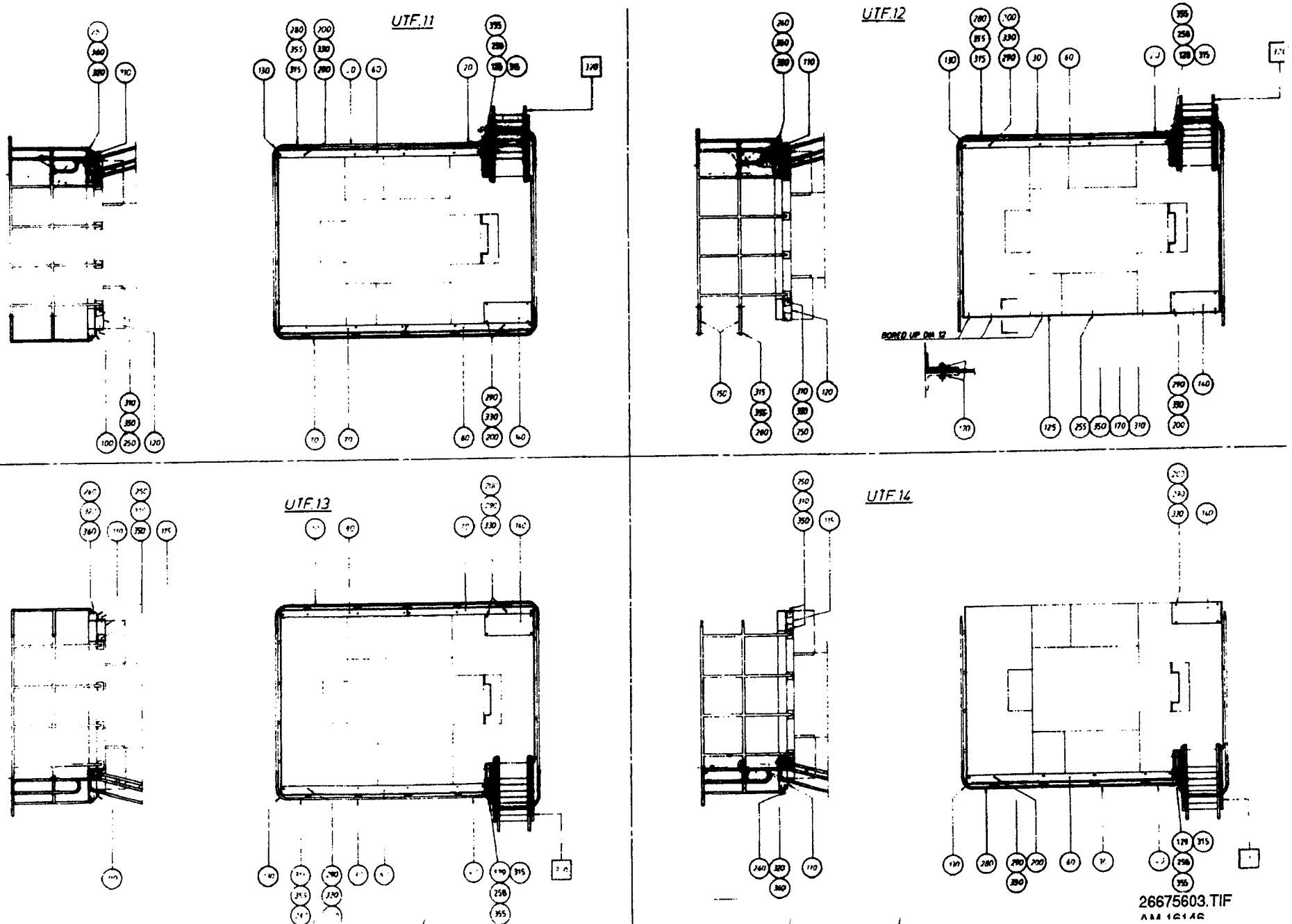
UTF.11
UTF.12
BORED UP DIA. 12
UTF.13
UTF.14
26675603.TIF

From	Pos	Part No	SP	UN	Qty	Description
PFV 11						
		C- 266756-0401				**Platform, Ass'y**
	010	257845	-		1	RAILING
	020	556988	-		1	RAILING
	070	247146	-		1	PLATFORM
	080	257852	-		1	PLATFORM
	100	257854	-		1	CANTILEVER
	120	269340	-		1	CANTILEVER
	128	551903	-		1	KICKPLATE,LEFT
	130	257859	-		6	RAILING
	200	90287-0076	-		18	SCREW
	250	312101-0495	-		16	SCREW M6S10X30FZB
	260	312105-0493	-		40	SCREW M6S10X25RFR
	280	312115-0453	-		16	SCREW 8X25 A4 80
	290	312601-0316	-		18	NUT M6M6FZB
	310	312601-0320	-		10	NUT M6M10FZB
	315	312605-0318	-		18	NUT M6M8RFR
	320	312605-0320	-		40	NUT M6M10RFR
	330	315101-0153	-		18	WASHER BRB6,4X12FZB
	350	315101-0173	-		26	WASHER BRB10,5X22FZB
	355	315105-0165	-		20	WASHER BRB8,4X16RFR
	360	315105-0173	-		40	WASHER BRB10,5X22RFR
PVF12						
		C- 266756-0402				**Platform, Ass'y**
	020	556988	-		1	RAILING
	120	269340	-		1	CANTILEVER
	125	451406	-		1	VIBRATION DAMPER
	128	551903	-		1	KICKPLATE,LEFT
	130	257859	-		2	RAILING
	150	451407	-		4	RAILING
	170	451408	-		8	BUFFER RING
	200	90287-0076	-		10	SCREW
	250	312101-0495	-		9	SCREW M6S10X30FZB
	255	312101-0500	-		7	SCREW M6S10X45FZB
	260	312105-0493	-		20	SCREW M6S10X25RFR
	280	312115-0453	-		16	SCREW 8X25 A4 80
	290	312601-0316	-		10	NUT M6M6FZB
	310	312601-0320	-		13	NUT M6M10FZB
	315	312605-0318	-		18	NUT M6M8RFR
	320	312605-0320	-		20	NUT M6M10RFR
	330	315101-0153	-		10	WASHER BRB6,4X12FZB
	350	315101-0173	-		29	WASHER BRB10,5X22FZB
	355	315105-0165	-		20	WASHER BRB8,4X16RFR
	360	315105-0173	-		20	WASHER BRB10,5X22RFR
PFV 13						
		C- 266756-0403				**Platform, Ass'y**
	010	257845	-		1	RAILING
	040	545990	-		1	RAILING
	070	247146	-		1	PLATFORM
	080	257852	-		1	PLATFORM
	100	257854	-		1	CANTILEVER
	115	269339	-		1	CANTILEVER
	129	565961	-		1	KICKPLATE,RIGHT
	130	257859	-		6	RAILING
	200	90287-0076	-		18	SCREW
	250	312101-0495	-		16	SCREW M6S10X30FZB
	260	312105-0493	-		40	SCREW M6S10X25RFR
	280	312115-0453	-		16	SCREW 8X25 A4 80
	290	312601-0316	-		18	NUT M6M6FZB
	310	312601-0320	-		10	NUT M6M10FZB
	315	312605-0318	-		18	NUT M6M8RFR
	320	312605-0320	-		40	NUT M6M10RFR
	330	315101-0153	-		18	WASHER BRB6,4X12FZB
	350	315101-0173	-		26	WASHER BRB10,5X22FZB
	355	315105-0165	-		20	WASHER BRB8,4X16RFR
	360	315105-0173	-		40	WASHER BRB10,5X22RFR
PFV 14						
		C- 266756-0404				**Platform, Ass'y**
	040	545990	-		1	RAILING
	115	269339	-		1	CANTILEVER
	129	565961	-		1	KICKPLATE,RIGHT
	130	257859	-		2	RAILING
	200	90287-0076	-		10	SCREW
	250	312101-0495	-		9	SCREW M6S10X30FZB
	260	312105-0493	-		20	SCREW M6S10X25RFR
	280	312115-0453	-		8	SCREW 8X25 A4 80
	290	312601-0316	-		10	NUT M6M6FZB
	310	312601-0320	-		6	NUT M6M10FZB
	315	312605-0318	-		10	NUT M6M8RFR
	320	312605-0320	-		20	NUT M6M10RFR
	330	315101-0153	-		10	WASHER BRB6,4X12FZB
	350	315101-0173	-		15	WASHER BRB10,5X22FZB
	355	315105-0165	-		12	WASHER BRB8,4X16RFR
	360	315105-0173	-		20	WASHER BRB10,5X22RFR
Common parts						
	F320	**C- 556989-0101**	-		1	**LADDER**
	030	263322	-		1	RAILING
	060	247145	-		1	PLATFORM
	110	257855	-		1	CANTILEVER
	140	257862	-		1	PLATFORM
	258	312105-0453	-		2	SCREW M6S8X25RFR

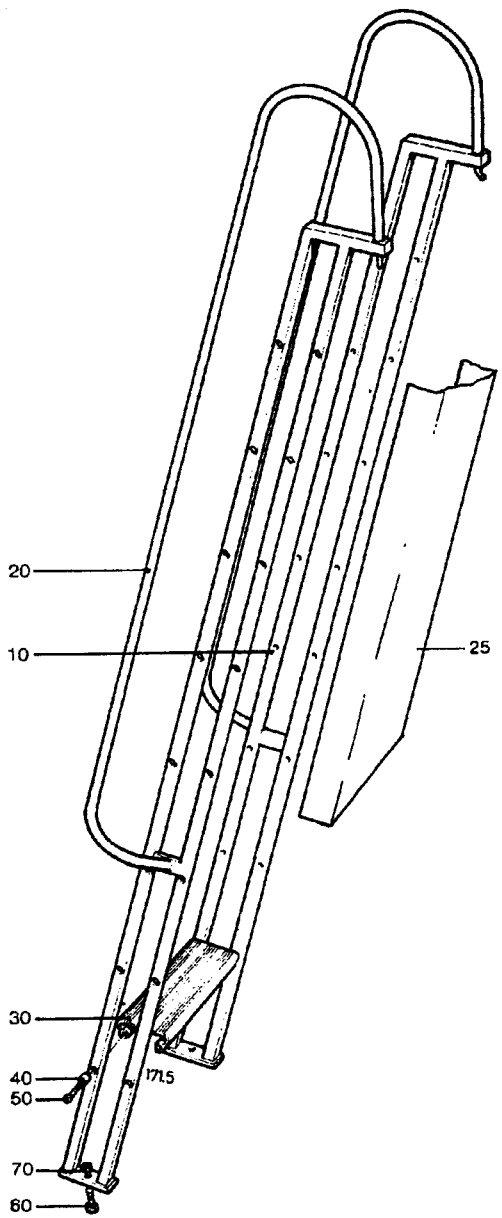

24317101.TIF
243171-1
AM

From	Pos	Part No	SP	UN Qty	Description
		C- 556989-0101			**Ladder, Ass'y**
	10	556986	-	1	SIDE PIECE
	20	556987	-	1	SIDE PIECE
	30	208361-0001	-	8	STAIR
	40	208658-0001	-	32	SPACER
	50	90287-0056	-	32	SCREW
	60	312104-0502	-	2	SCREW M6S10X55H8.8FZB
	70	312601-0320	-	2	NUT M6M10FZB

From	Pos	Part No	SP	UN Qty	Description

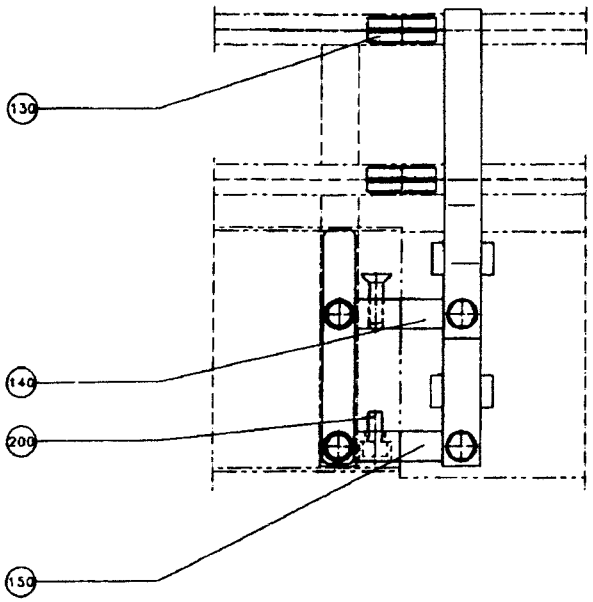

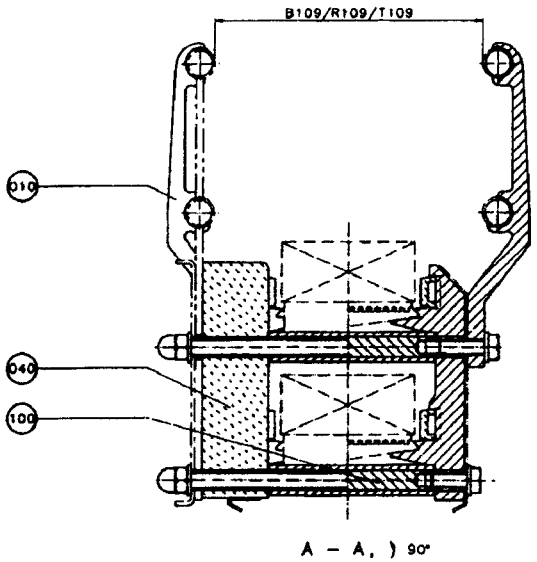

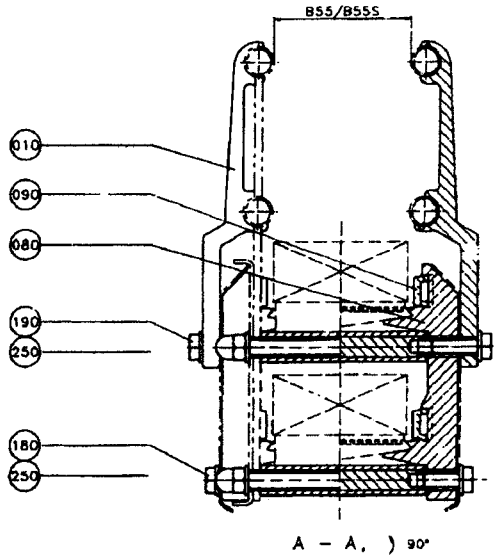

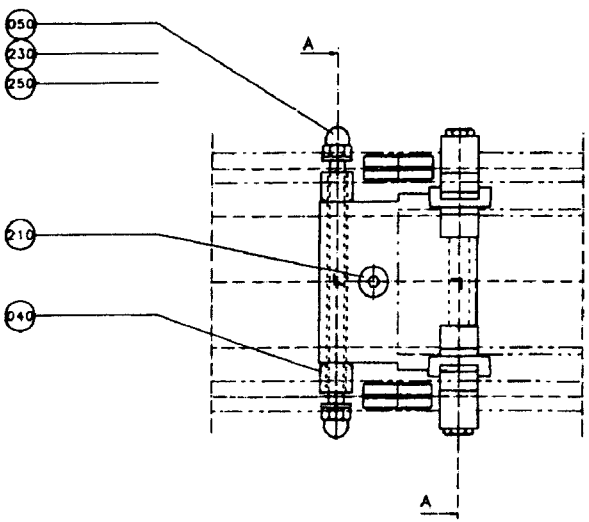

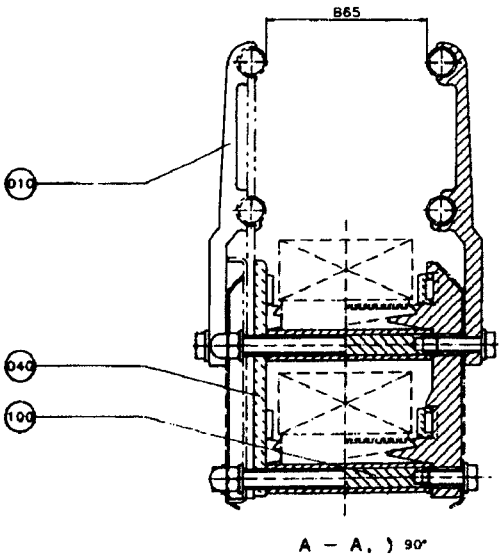

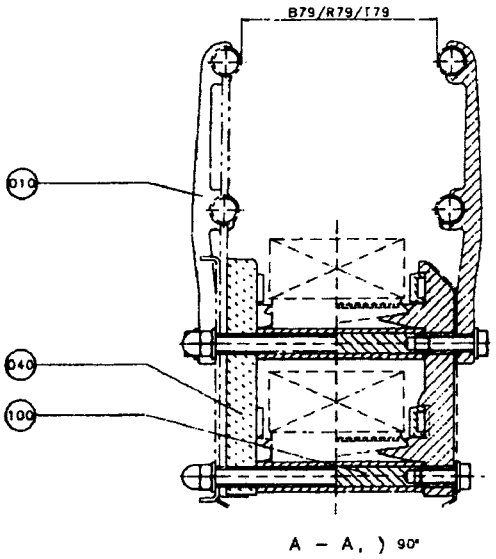

001 MONTERINGSINSTRUKTION
ASSEMBLY INSTRUCTION

49908201.TIF
499082-1/2
AM 12972

From	Pos	Part No	SP	UN	Qty	Description
CONVEYOR WIDTH B40						
		C- 499082-0101				**ADAPTER, TYPE 1, ASS'Y**
	010	476222-0001	-		2	HOLDER
	050	229508-0001	-		2	STUD SCREW
CONVEYOR WIDTH B55, B55S						
		C- 499082-0102				**ADAPTER, TYPE 1, ASS'Y**
	010	464073-0001	-		2	HOLDER
	050	229508-0001	-		2	STUD SCREW
CONVEYOR WIDTH B65						
		C- 499082-0103				**ADAPTER, TYPE 1, ASS'Y**
	010	476223-0001	-		2	HOLDER
	040	228846-0003	-		2	SPACER
	050	229508-0014	-		2	STUD SCREW
CONVEYOR WIDTH B79, R79, T79						
		C- 499082-0104				**ADAPTER, TYPE 1, ASS'Y**
	010	476224-0001	-		2	HOLDER
	040	228846-0001	-		2	SPACER
	050	229508-0002	-		2	STUD SCREW
CONVEYOR WIDTH B109, R109, T109						
		C- 499082-0106				**ADAPTER, TYPE 1, ASS'Y**
	010	529063-0001	-		2	HOLDER
	040	228846-0002	-		2	SPACER
	050	229508-0003	-		2	STUD SCREW
Common Parts						
	001	543275	-		1	ASSEMBLY INSTRUCTION
	080	464072	-		2	CLAMPING PART
	090	466074-0001	-		4	SLIDER
	100	476220	-		2	SPACER
	130	229516	-		4	PEG
	140	499746	-		1	MOUNTING BLOCK
	150	499747	-		1	MOUNTING BLOCK
	180	312105-0368	-		2	SCREW M6S6X16RFR
	190	312105-0370	-		2	SCREW M6S6X20RFR
	200	312115-0366	-		1	SCREW 6X12 A4 80
	210	312155-0370	-		1	SCREW MF6S6X20RFR
	230	312705-0316	-		4	CAP NUT MHM 6 A2
	250	315105-0153	-		8	WASHER BRB6,4X12RFR

From	Pos	Part No	SP	UN	Qty	Description

Tetra Pak