Document Folder

TBA/9 120V

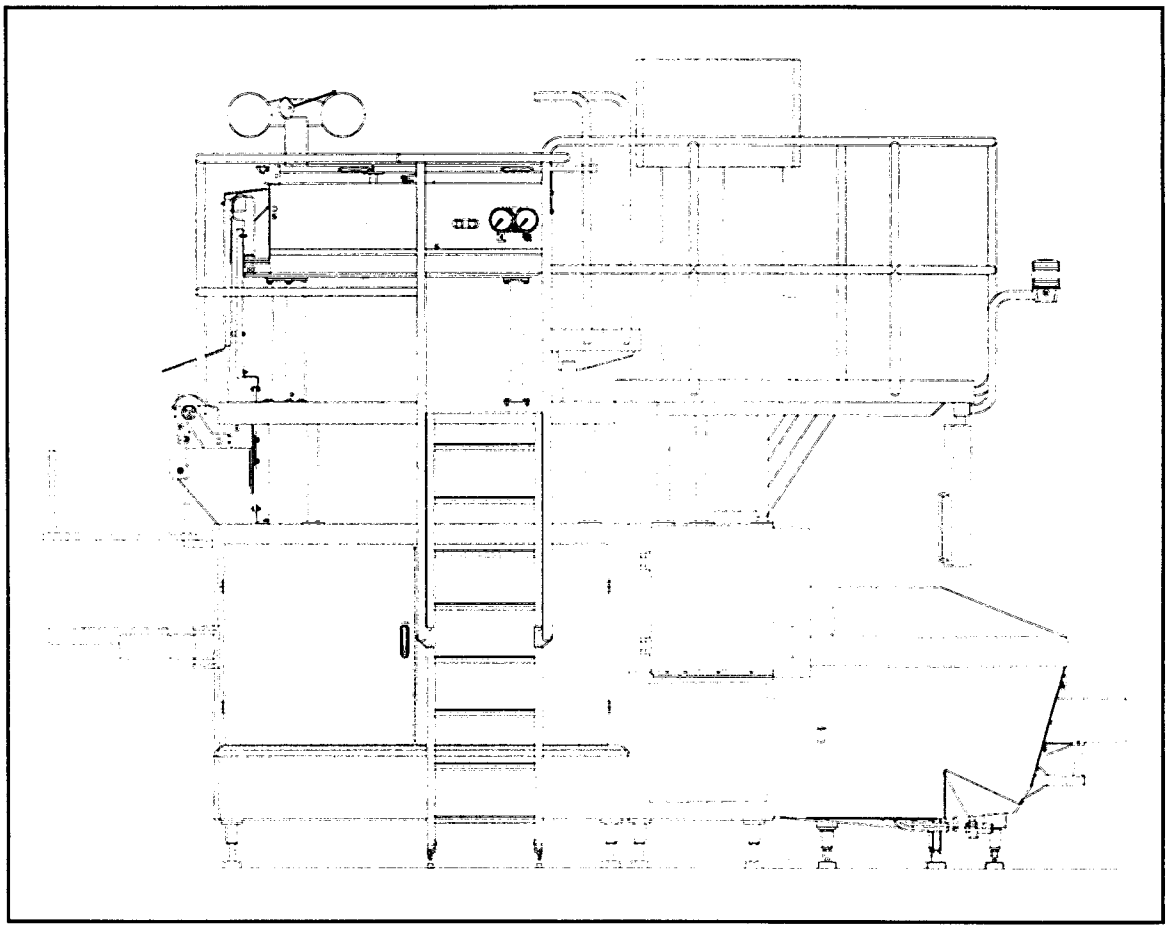

TWA/9 200 SLIM
C-595156-010V

Tetra Pak

Doc No. 594956

This documentation is valid for:

Series No/Machine No Sign.

TWA/9 200 SLIM
C-595156-010V

For:

Tetra Brik
TBA/9 648152-120V (-1201, 50 Hz, 200 SLIM)

Issue 970701
Doc No. 594956-01

Tetra Pak
Tetra Brik packaging system

Introduction

Rebuilding kit information 2
Document information 2
Abbreviations used in this document folder 2

TWA/9 200 SLIM 2

Overview 3

Enclosed documentation 4

Rebuilding time 5

1 Preparation 6

2 Rebuilding description 7

2-1 Rebuilding of Superstructure 7
2-2 Rebuilding of Drive unit 10
2-3 Replacement of Final Folder 12
2-4 Rebuilding of Jaw system 16
2-5 Rebuilding of Strip applicator 18
2-6 Rebuilding of Service unit 21
2-7 Replacement of Machine plates 23
2-8 Rebuilding of Regular accessories 23

3 Machine updating 24

Introduction

To ensure maximum safety, always read the *Safety precautions* in MM before doing any work on the equipment or making any adjustments.

Rebuilding kit information

Purpose

The purpose of this Tetra Pak rebuilding kit is a new shape of the package. Initially this is a good way of giving a second chance to TBA/9 machines, which have been replaced by TBA/19 but we also see this as an option for a new machine in the future.

Documentation information

Purpose of Document Folder

The purpose of this Documentation Folder is to provide the service technicians with information for installation of the rebuilding kit such as:

-rebuilding description

Design modification

The directives in this document are in accordance with the design and construction of the equipment at the time it was delivered from Tetra Pak production plant.

Document producer

This document has been produced by:

Tetra Brik Packaging system AB
Ruben Rausings gata
22 186 LUND
Sweden

Additional copies can be ordered from the nearest Tetra Pak service station.

Copyright © 1997
Tetra Brik Packaging Systems
All rights reserved. No part of this document may be reproduced or copied in any form or by any means without the written permission of Tetra Brik Packaging Systems.

Abbreviations used in this document folder

approx	**approx**imately
EM	**E**lectrical **M**anual
IM	**I**nstallation **M**anual
MM	**M**aintenance **M**anual
MS	**M**aintenance **S**ystem
OM	**O**peration **M**anual
RK	**R**ebuilding **K**it
SPC	**S**pare **P**art **C**atalogue
TBA	**T**etra **B**rik **A**septic
TWA	**T**etra **W**edge **A**septic

TWA/9 200 SLIM

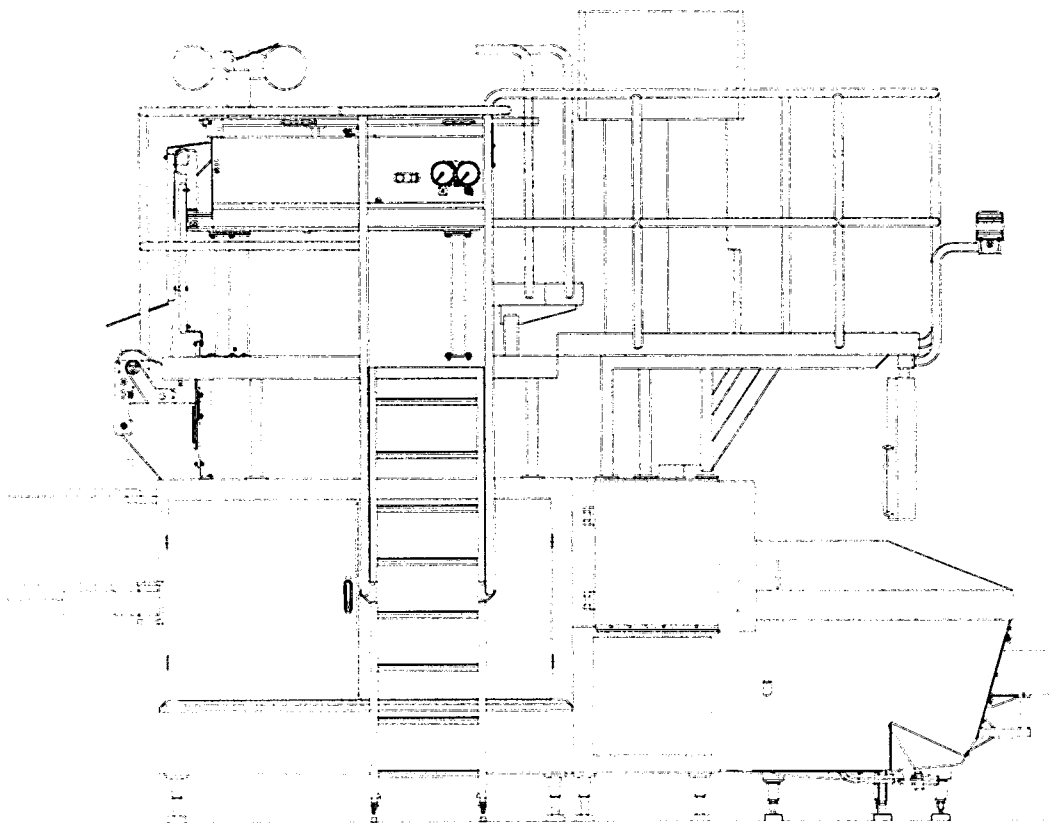

Overview

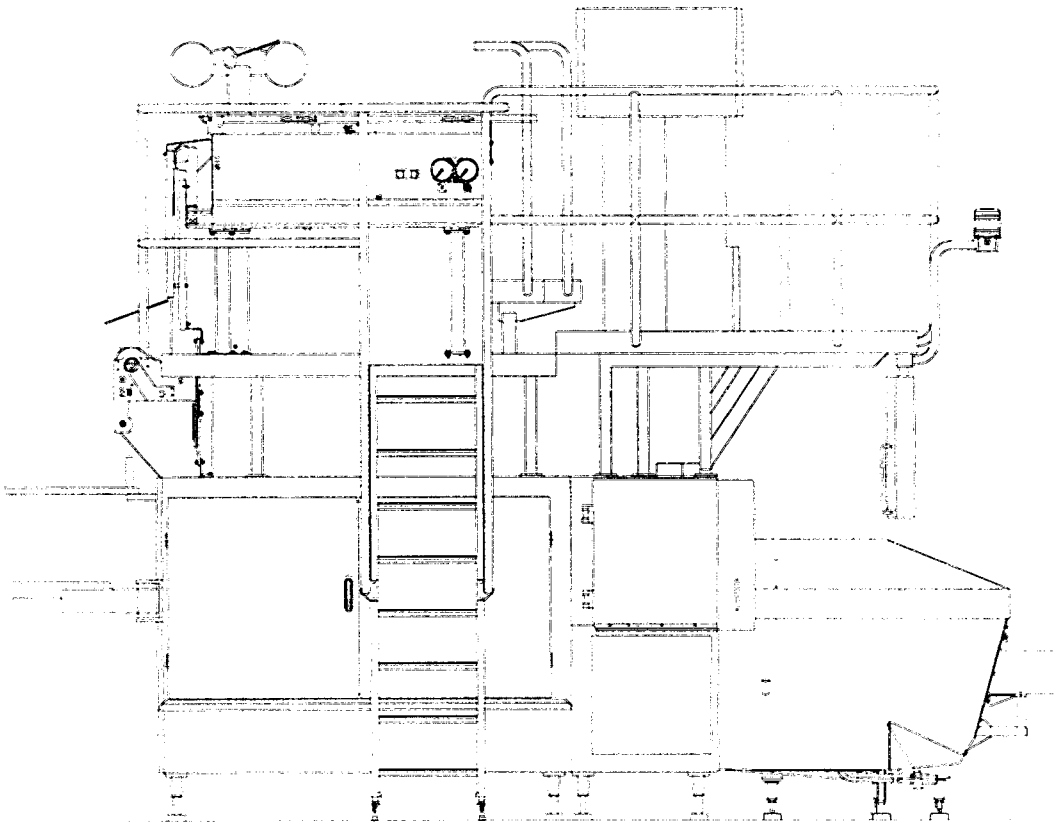

1 Preparation
2 Rebuilding description
3 After rebuilding care

Machine type	Development step	Volyme/ Package shape	Equipped with
TBA/9	648152-120V	200 Slim	UPTAB

Introduced: ECN 70883 Date: 970701

Enclosed documentation

Mechanical documents

Description	Bill of material No	Document No
TWA/9 200 SLIM KIT	595156-0100	
Modification Drawing		1-595168-1

Electrical documents

Note! - Always add the rebuilding information on the machine card.
- The original drawing must not be discarded.
- All wires must be marked on both ends

Description	Bill of material No	Document No
TETRA WEDGE EL-KIT	558861-0100	

Rebuilding time

	Number	Hours/each
Mechanics	1	90
Electricians	1	10

For further information, please contact Tetra Brik Liaison Centre in Lund Sweden.

1 Preparation

Machine status	Water **Off** Power **Off** Air **Off**
Packaging material	Removed

Before start any operation on the machine check the following items:

- that this folder is correct for the machine according to the demands
- that all lists and drawings are included according to the enclosed documentation lists
- that all parts for the rebuilding are delivered according to the bill of material.

2 Rebuilding description

2-1 Rebuilding of Superstructure

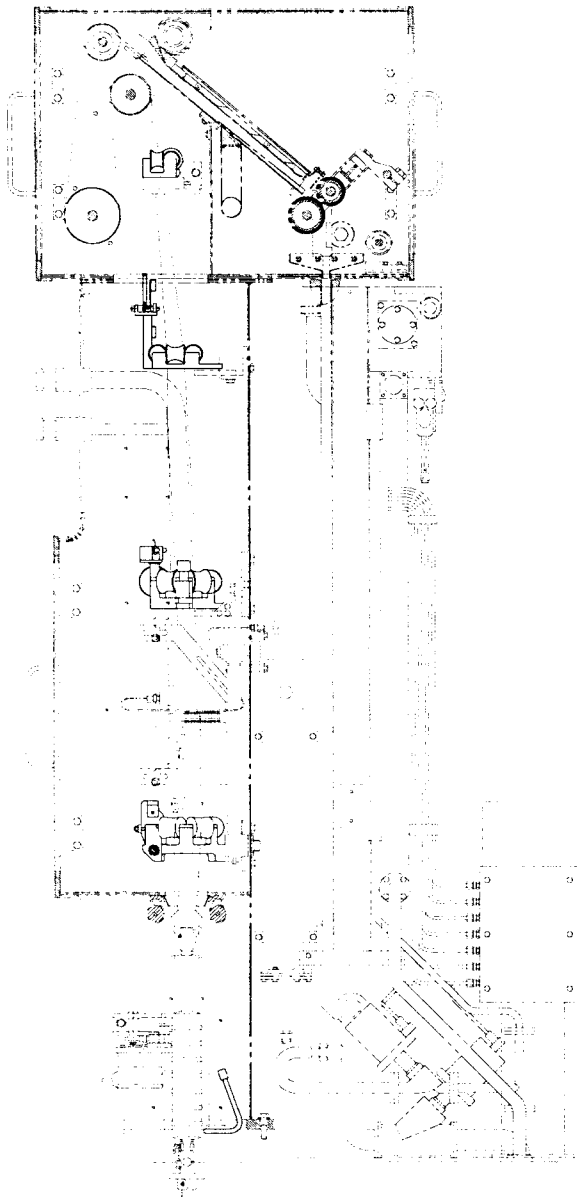

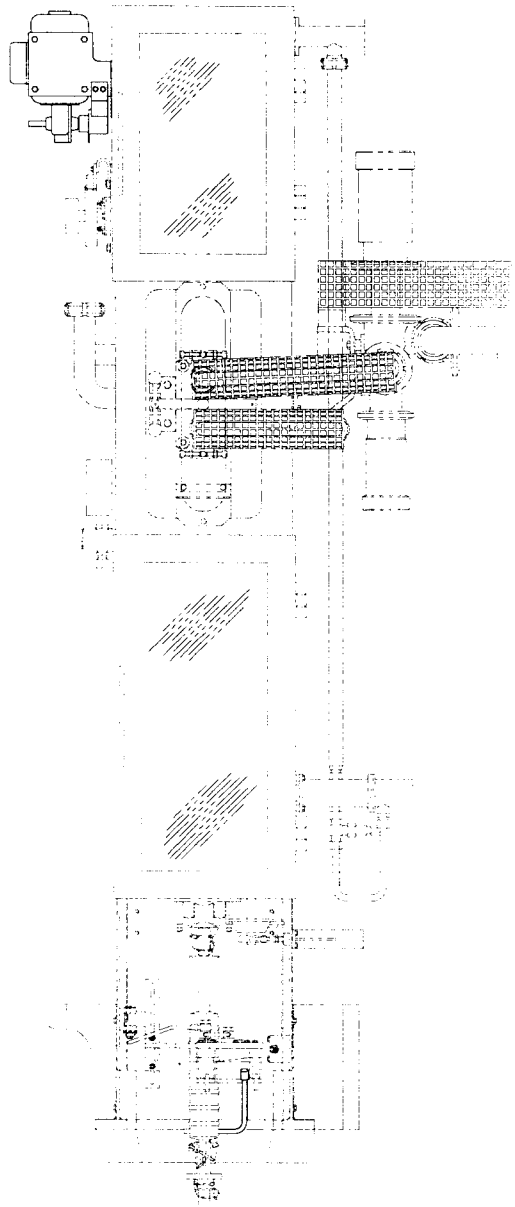

2-1.1 Change and exchange of Forming rings, Bow and Seal ring

1) Open the doors of the Aseptic chamber.

2) Loosen the upper Tube support from the L-shaped Bracket.

3) Replace it with upper Tube support 441307-503.

4) Loosen the two screws holding the Strut of the Movable forming ring 441304-403. Loosen the three screws holding the forming ring in the L-shaped Bracket. **Note!** This has to be done from below not to destroy the settings.

5) Mount the new Fixing ring with the modified Mounting plate and the new Paper guide.

6) Loosen the Divided forming ring from the L-shaped Bracket.

7) Put in the new Forming ring 441486-403.

8) Loosen the Clamp strip at the Pneumatic cylinder, right where the Strut goes into the lower Forming ring.

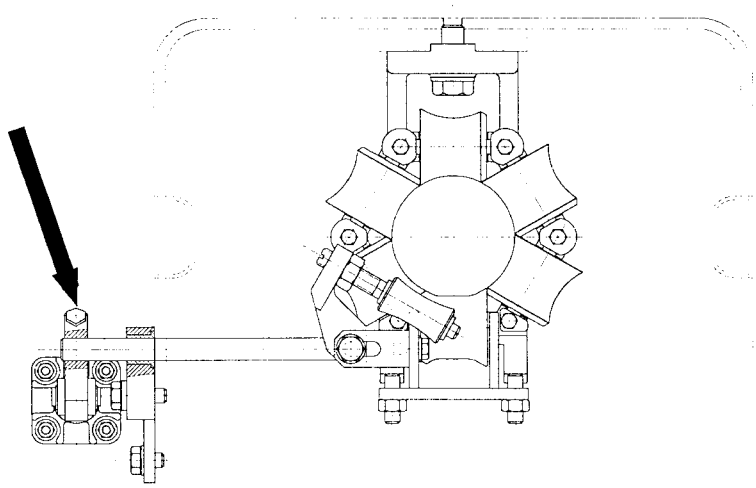

Drawing with arrow pointing to the Clamp strip of the lower Forming ring.

9) Loosen the lower Forming ring from the L-shaped Bracket.

10) Push the whole Forming ring to the side and lift it out.

11) Put in the new Forming ring 456304-503 and tighten the Clamp strip.

12) Loosen the two Index screws of the Seal ring with a five mm Key.

2-1.2 Adjustment of the Cleaning nozzle

1) Crank the machine and make sure that nothing hits the Cleaning nozzle. If something does, adjust the nozzle with a pair of Polygrip tongs.

2-1.3 Check and Exchange of the Gear wheel in the upper Driven bending roller

1) Loosen the two Protective covers over the upper Driven bending roller Gear wheel.

2) Loosen the four Mounting screws of the Motor.

3) Loosen the two screws of the driving Gear wheel and remove the Gear wheel.

4) Mount a new Free-wheel in the driving Gear wheel.

5) Mount the new Gear wheel on the outgoing Axle of the Motor.

6) Loosen the three screws of the driven Gear wheel with a 4 mm Socket screw Key.

7) Mount the new Gear wheel on the outgoing Axle of the Bending roller and tighten the three Socket screws.

8) Mount the Motor in the Bracket.

9) Check the functioning of the Upper Bending roller according to MS 153-12 and adjust if needed.

10) Put back the two Protective covers over the motor.

2-2 Rebuilding of Drive Unit

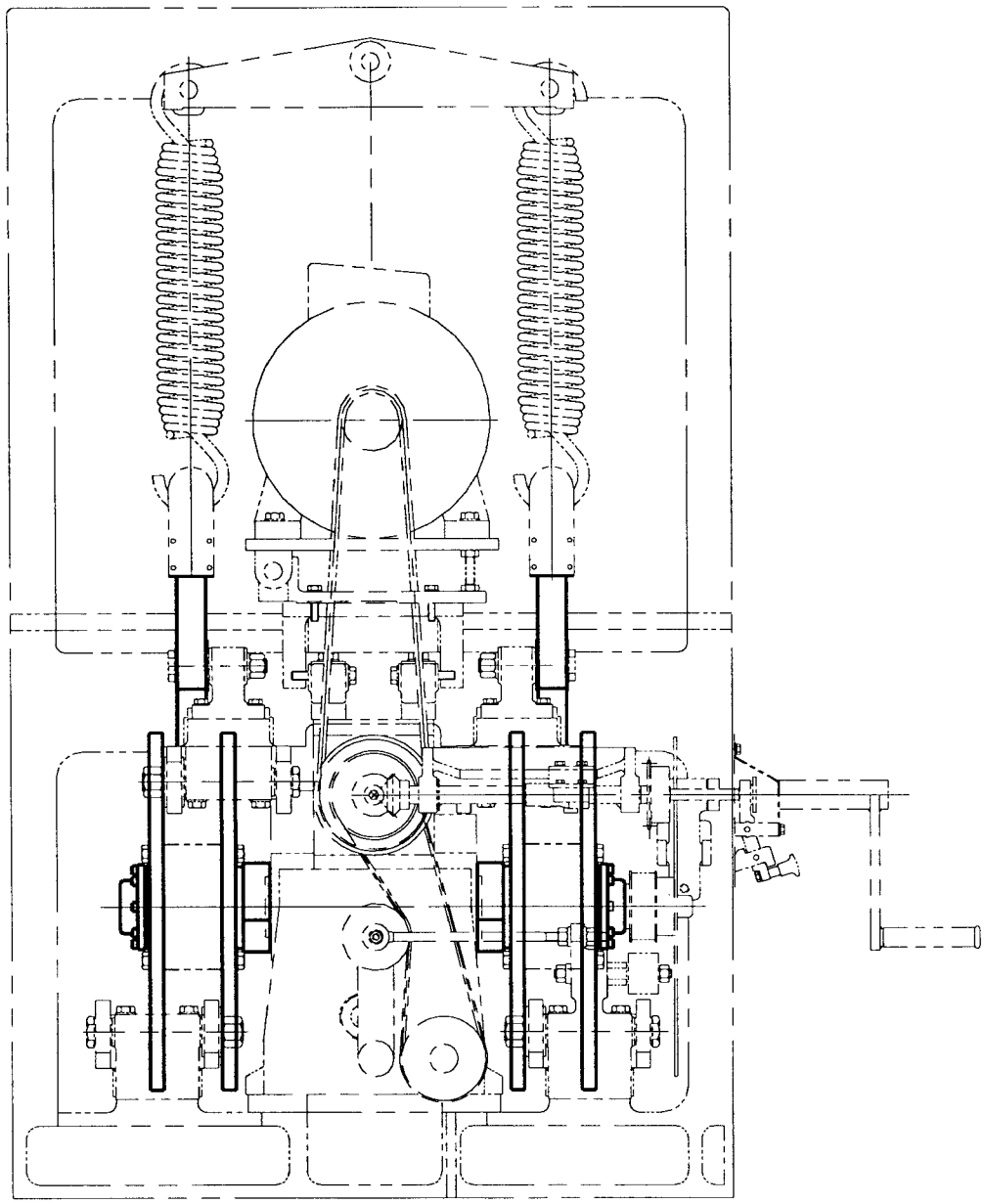

1) Take away the Cam curves according to MS 331-23.

2) Remove the Toothed belts according to MS 306-23.

3) If there are no Curve Templates or if they are of the old type (symmetric) mount Curve Templates 978609.

4) Mount the new Cam pack according to MS 331-43.

5) Mount the Protractor according to MS 336-52.

6) Mount the Indicator of the Protractor.

7) Mount the new Toothed belts according to MS 306-43.

2-3 Replacement of Final Folder

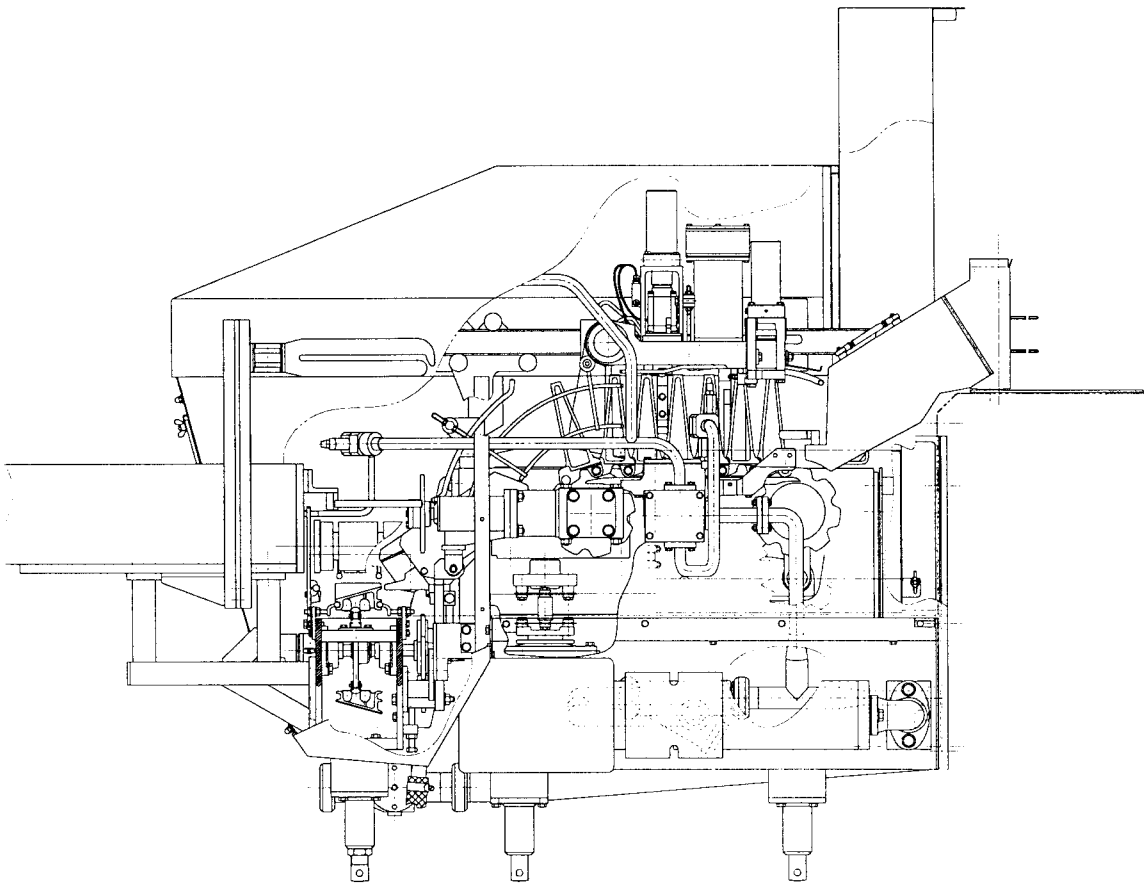

2-3.1 Mounting of the new Final folder

1) Loosen all Hoses, Electric cables, Hydraulics, Pneumatics coming from the machine and the Water pipes, the Pump and the Cleaning receptacle.

2) Loosen the Clamp strip of the outcoming Axle with a lengthened Socket key and loosen the Driving axle, going from the main machine to the Final folder and replace it by Axle 591440.

3) Draw new Pneumatic cables to the Final folder according to Air diagram 1-594555.

4) Place the new Final folder and fasten it.

5) Heat water pipe No 491854, which comes out of the machine, until the outermost part with the reinforcement can be removed. Solder on the new part 3-594959.

6) Heat water pipe No 491855, which comes out of the machine, until the outermost part with the reinforcement can be removed. Solder on the new part 3-594958.

7) Connect the air according to Air diagram 1-594555.

8) Connect the Hydraulic cables in the Final folder according to diagram 1-594955.

9) Connect the electricity according to RK 558861-0100

2-3.2 Mounting of the Side conveyor

1) Put the Side conveyor against the Final folder and put in the four screws, without tightening them.

2) Use the legs to balance the Side conveyor and pull the screws tight when it is level.

3) Mount the Chain around the Bevel gear and the Drive wheel. This is easiest to do when the Discharge fingers are dismantled.

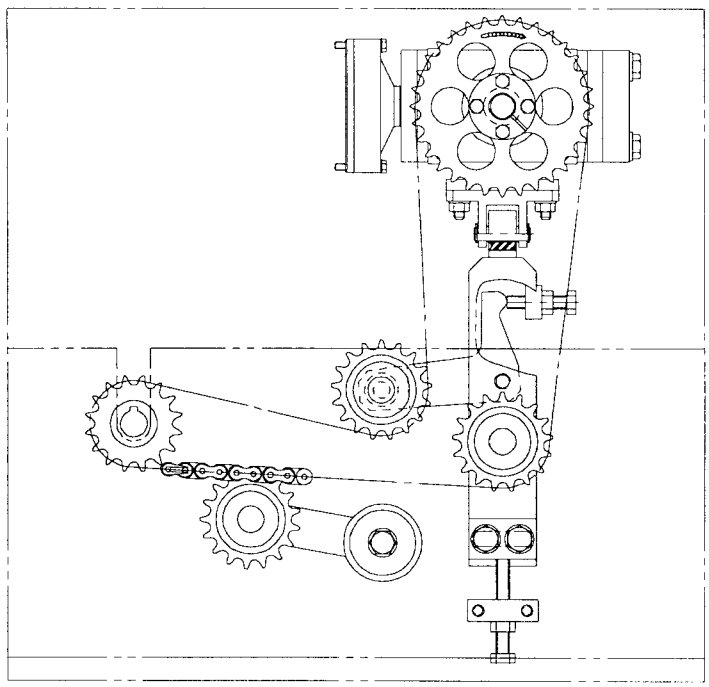

Balance the Bevel gear with a water-level and the screw for height adjustment. Tighten the Mounting screw when the Gear is level. Tighten the chain so the drop is less than 5mm, using the Articulated lever, No1 and apply the chain tensioner, No 2.

4) Turn the chain to the outfeed position.

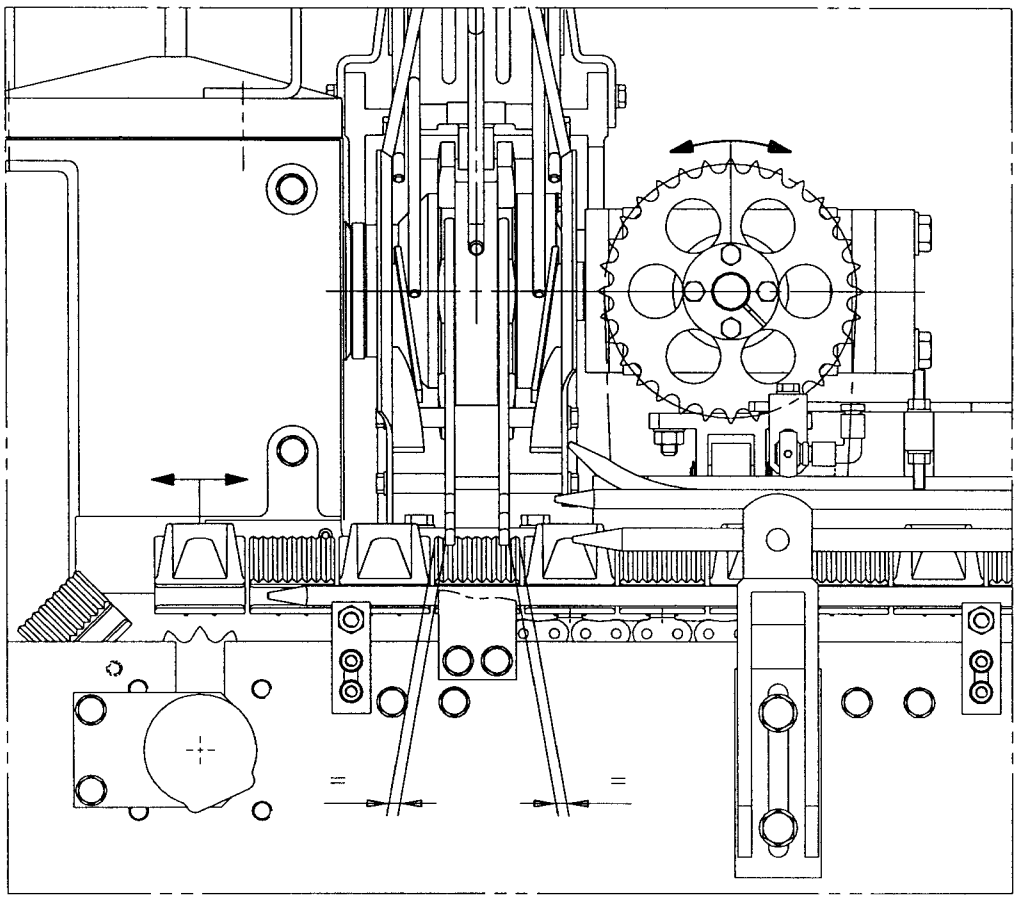

5) Tighten the Clamp strip on the Bevel gear. The measurement for the tightening is 11.5 Nm.

6) Mount the Discharge fingers and center these with a Feeler gauge.

2-3.3 Mounting of Turning device

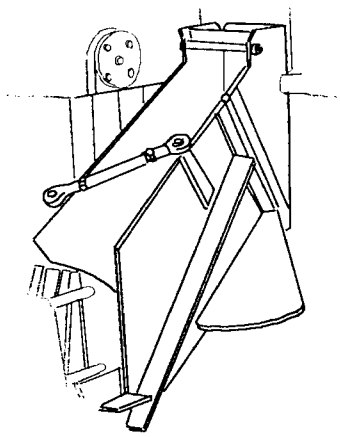

1) Dismantle the existing Overflow chute.

2) Draw new Pneumatic hoses according to Air diagram 1-594555.

3) Connect the hoses to the Bulkhead lead-ins of the Cover plate and make sure that the Congestion monitor is mounted according to RK 52807-01:01.

4) Mount the Cover plate and the Gasket.

5) Mount the tool 591653.

6) Place the Turning device and adjust it to the tool 594980, tighten all screws.

7) Connect the hoses to the Pusher, the Package outfeed, the Slideplate and adjust the Congestion monitor.

2-4 Rebuilding of Jaw System

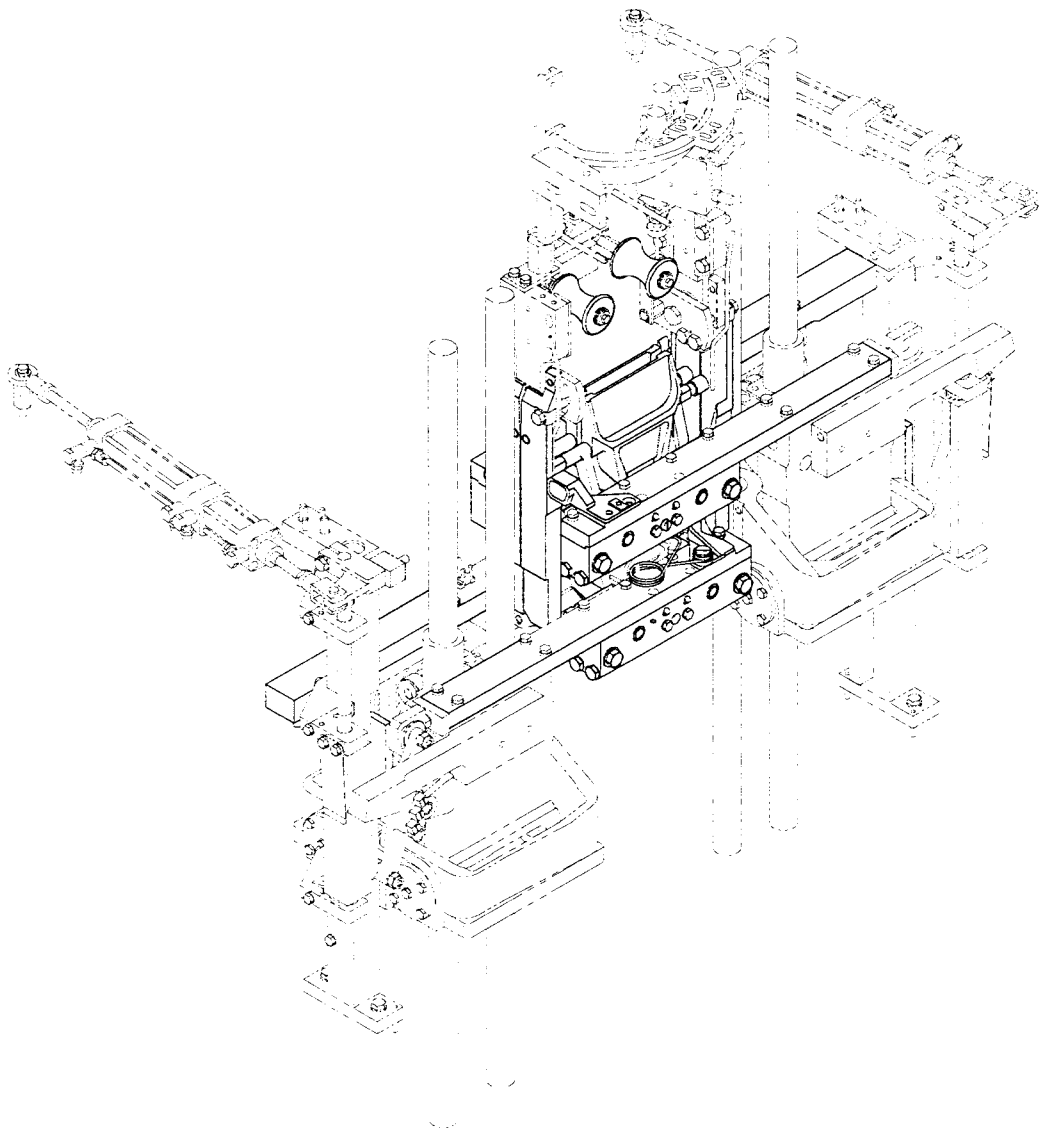

2-4.1 Changes in the Jaw system

1) Dismantle the Carriers according to MM, 4.1-9.

2) Modify the Carriers according to drawings 1-594948, 1-594949, 1-594939 and 1-594940.

3) Change the parts specific for Tetra Wedge in the Yoke, according to the list and drawing S1-595163.

4) Replace the old Volume cams by the new ones numbered 594941 and 594942.

5) Replace the old Folding flap cams by 272640-2.

6) Remount the modified Carriers.

7) Adjust the Jaw system according to MM 4.1 Jaw system settings.

2-4.2 Exchange of Tube support rollers

1) Remove the old Tube support rollers and mount the new ones according to MM, 4.1-11.

2-5 Rebuilding of Strip applicator

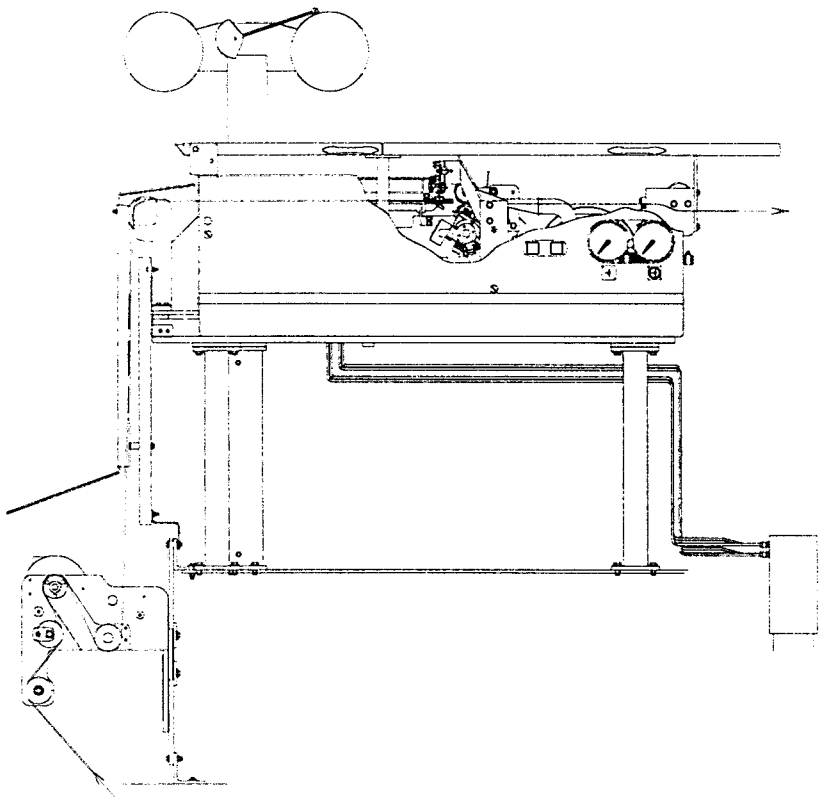

2-5.1 Exchange of Strip applicator

1) Remove the three Paper supports and the Heat guard at the Strip applicator.

2) Mount the new brackets 519606.

3) Mount the three new Paper supports and the new Heat guard according to Summary drawing S1-595166.

2-5.2 Exchange of Crease unit

1) Dismantle the Proximity switch for the Rotation monitor.

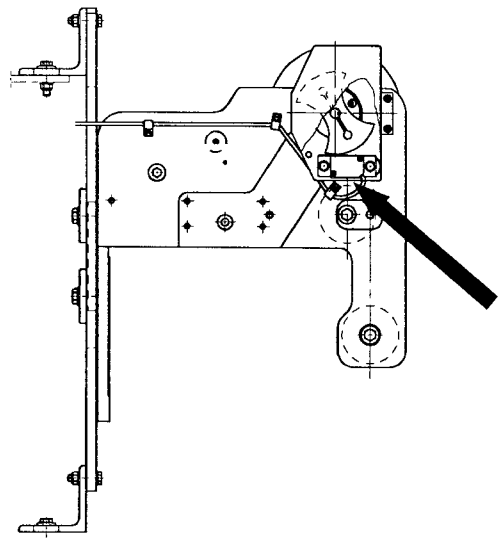

Drawing of the Crease unit with the Proximity switch marked by an arrow

2. Dismantle the Crease unit.

3) Mount the new Crease unit. Make sure that new Lock bolts are used at the mounting.

4) If the Proximity switch for the Rotation monitor is not of the type Proximity switchifm in 3002 (90044-0104) it should be replaced by the correct one.

5) Adjust the sensitivity of the Rotation monitor according to MS 701-12

6) Adjust the Crease unit according to MS 703-12, using the settings for 200 Slim.

2-5.3 Exchange of Strip guide

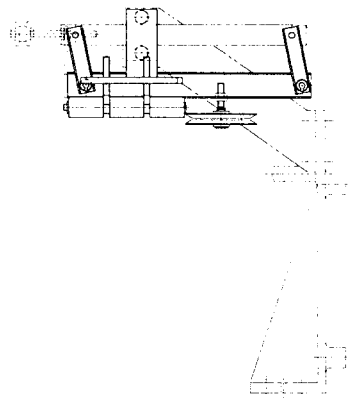

1) Dismantle the lower Axle of the Strip guide.

2) Mount the lower Axle of the Strip guide with attached parts, according to Summary drawing S1-595167.

3) Mount new Bushings in the upper Axle.

4) Mount the lower Axle in the upper Axle.

5) Adjust the Strip guide according to MS 704-51.

2-6 Rebuilding of Service Unit

2-6.1 Exchange of Driven bending roller

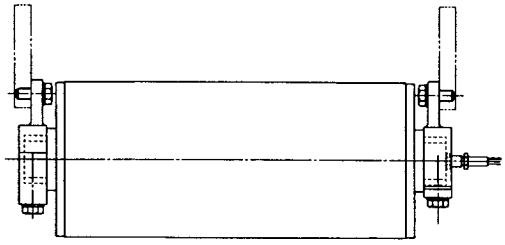

References to chapters in
MS-80231-1
MM-80255-1

1) Roll out the Paper reel trolley from the machine to get access to the Driven bending roller.

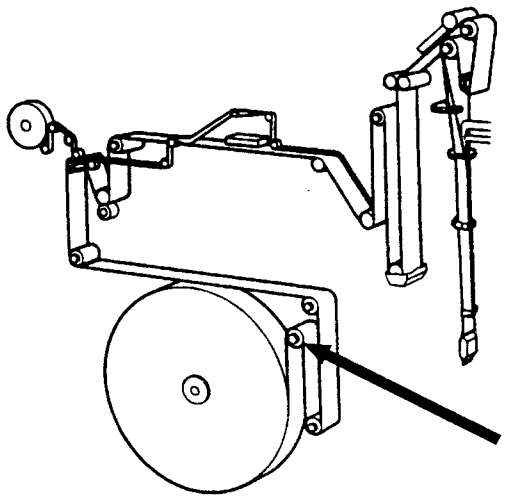

2) Dismantle the Bending roller and replace, if required, Bracket (010) and Clamp (020) with parts 570524 and 570523.

3) Mount the new Bending roller according to S1-594946.

4) Loosen the Hose clamp closest to the Bending roller on the Cable in-feed.

5) Remove the Feed cable of the old Bending roller.

6) Insulate the remaining cables from the Bending roller.

7) Connect the Leads in the Connection box according to EM 649205-050 V, page 43756-10:00 and page 60733-07:00.

8) Check that the roller is mounted according to MS 624-12

9) If needed, adjust according to MS 624-52.

2-6.2 **Rebuilding of Valve panel**

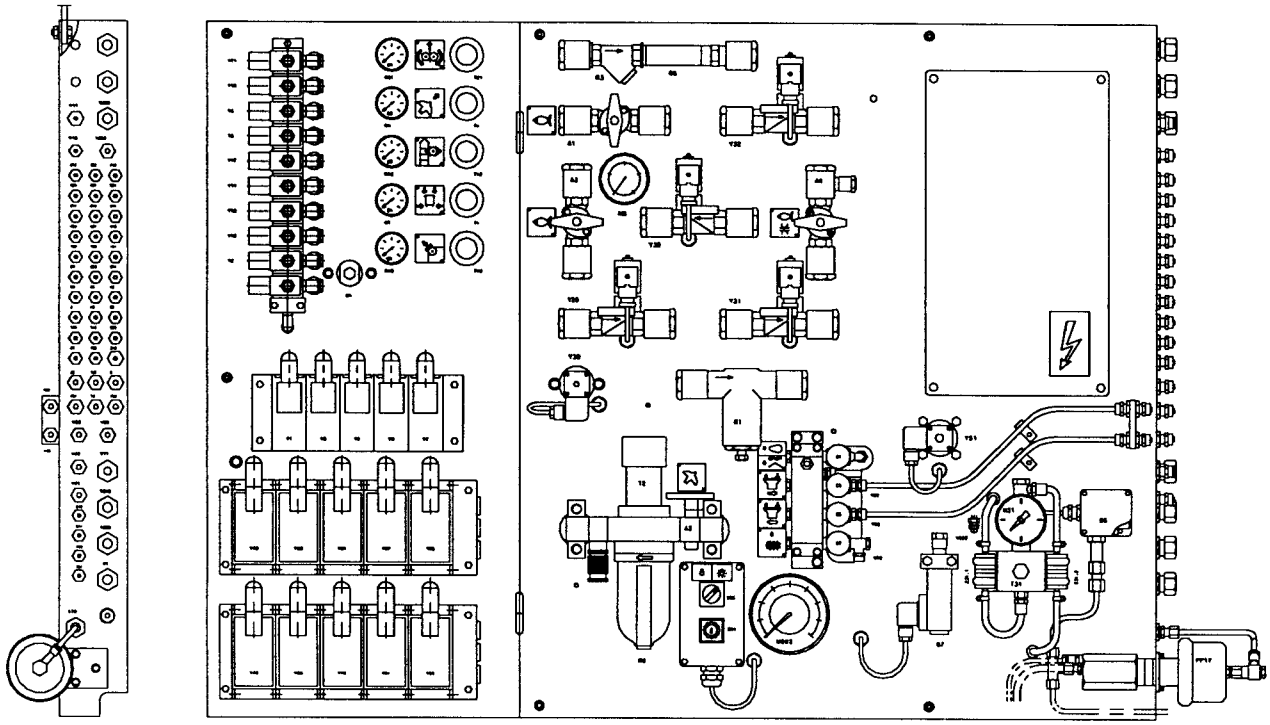

1) Mount the new Valve panel parts Y 71, Y 70, Y 72 according to S1-595164-1.

2) Draw new Pneumatic hoses according to Air diagram 1-594555.

3) Connect the electricity according to RK 558861-0100.

2-7 Replacement of Machine plates

1) Remove the old plates.

2) Put the new plates in the place of the old ones.

2-8 Rebuilding of Regular accessories

1) Remove the Air Diagram.
Note! In form of drawing copy.

2) Remove the Panel Survey.
Note! In form of drawing copy.

3) Remove the Circuit Diagram C-LUB.
Note! In form of drawing copy.

4) Put the new Air Diagram in the place of the old one.

5) Put the new Panel Survey Panel Survey in the place of the old one.

6) Put the new Circuit Diagram C-LUB in the place of the old one.

7) Add Setting Template 591653 and 591670.

3 Machine updating

Machine card
The name and number of this kit must be written on the white machine card.

Installation Manual (IM)
A new installation manual **IM-80267-0101**

Operation Manual (OM)
A new Operation manual **OM-80254-01**

Maintenance Manual (MM)
Insert the RK MM documents in the Maintenance manual **MM-80255-0101**

Spare Part Catalogue (SPC)
Insert the RK SPC documents in the Spare Part Catalogue **SPC-80270-0101**