IM

Installation Manual

TBA/9 Wedge

RK-595156-0101

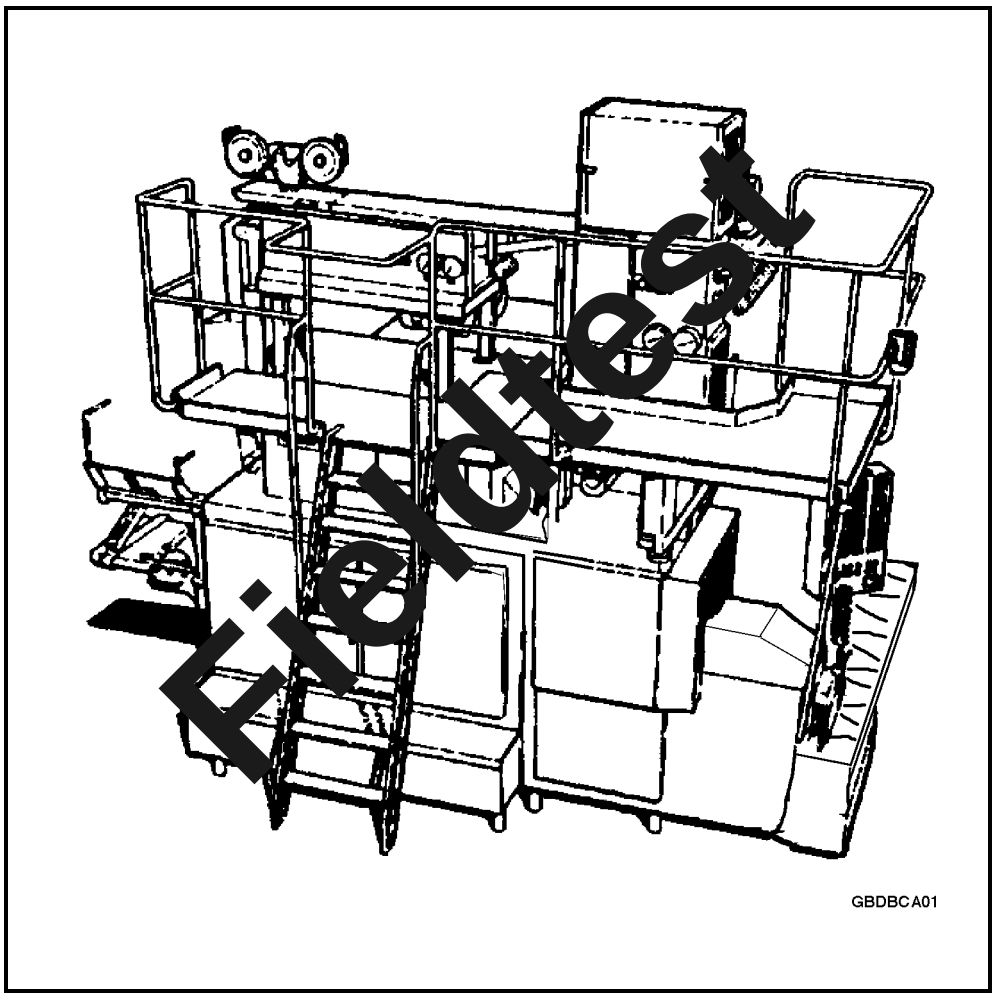

Fieldtest

2.28026701.fro

Tetra Pak

Doc. No. IM-80267-0101

This document is valid for:

Series No/ Machine No Sign.

TBA/9 Wedge
RK-595156-0101

Equipment included:

2.28026701.fro

Fieldtest

Issue 9711

Doc. No. IM-80267-0101

Tetra Pak

Tetra Brik Packaging Systems

1 Introduction

Equipment information 2

Document information 4

Terminology 5

Other documents 8

2 Safety precautions

Hazard information 12

Personnel 13

General safety precautions 14

Hygiene 14

Hearing protection. 14

Platforms and ladders 14

High voltage 14

Electrical cabinet. 15

Machine safety devices 16

Emergency stop buttons 16

Doors, covers and guards 16

Hazardous materials. 17

Hydrogen peroxide 17

Nitrogen gas 23

Ink 25

Other chemical products 27

Equipment for lifting and moving loads 28

3 Drawings and Technical Data

3.1 Installation drawings 32

3.2 Basic machine data 35

2.28026701TOC

3.3 Mass (weight) 36

3.5 Product 37

3.6 Utilities 38

3.7 Cleaning 40

3.8 Other consumptions 41

4 Site preparation

5 Machine handling

5.1 Crate data 46

5.2 Lifting equipment 47

5.3 Unloading the crate 49

5.3.1 Unloading with an overhead gantry or mobile crane 50

5.3.2 Unloading with a fork lift 51

5.4 Moving and storing the crate 53

5.5 Unpacking the crate 55

5.5.1 Unpacking the disassembled groups and equipment 55

5.5.2 Uncrating the machine with an overhead gantry or mobile crane 56

5.5.3 Uncrating the machine with a fork lift 61

5.6 Inspection 64

5.7 Disposal/return of packing 66

5.8 Fitting the transporter 67

6 Positioning, assembly, and connections

6.1 Assembly requirements 72

2.28026701TOC

6.2 Positioning 74

6.3 Approximate levelling. 77

6.4 Assembly. 79

6.4.1 Machine legs and feet 79
6.4.2 Ladder, platform, and handrail 80
6.4.5 Drying chamber. 82
6.4.6 Hydrogen peroxide generator 89
6.4.7 Large diameter pipes. 90
6.4.8 Aseptic product valve (APV) 95
6.4.9 Small diameter pipes. 101
6.4.10 Electrical connections 106
6.4.11 Protective guards and packaging material covers 110

6.5 Precision levelling 112

6.6 Conveyor connections. 115

6.7 Utility, product, and drain connections 116

6.8 Other operations. 120

7 Final installation checks

7.1 Installation and connection checks 124

7.2 Lubricant level checks. 125

7.3 Valve checks 126

7.4 Safety checks 127

8 Preparation for commissioning

8.1 Presence and correctness checks 131

8.2 Product and utility value checks. 133

8.3 Function checks 134

8.3.1 Preparation 134

2.28026701TOC

8.3.2 Normal operating checks 135
8.3.3 Fault handling and package ejection checks 136

8.4 Health and safety checks 137

8.5 Documentation 138

9 Disassembly and removal

9.1 Moving the machine and preparing it for transport 140

9.1.1 Preparing the machine for moving. 140
9.1.2 Moving and storing the machine 142
9.1.3 Preparing the machine for transport. 143

9.2 Draining 144

9.2.1 Draining methods. 144
9.2.2 Preparations 145
9.2.3 Draining procedure 147

9.3 Return to the manufacturer 158

9.4 Disposal 159

2.28026701TOC

2.28026701TOC

Table of contents

2.28026701TOC

1 Introduction

To ensure maximum safety, always read the **Safety precautions** section before doing any work on the equipment or making any adjustments.

2.28026701.int

Equipment information

Intended use

This Tetra Pak equipment is designed to package liquid products.

Manufacturer

This Tetra Pak equipment has been manufactured by:

Tetra Brik Packaging Systems AB
Ruben Rausings gata
221 86 LUND
Sweden

Service

Contact the nearest Tetra Pak service station.

(Cont'd)

Fieldtest

2.28026701.int

(Cont'd)

Machine identification

The figure below shows an example of the equipment data plate. The plate carries data needed when contacting Tetra Pak concerning this specific equipment.

CE marking

This equipment complies with the basic health and safety regulations of the European Economic Area (EEA).

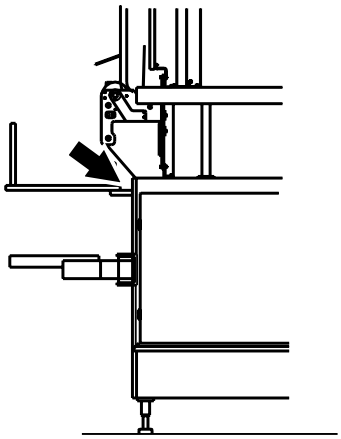

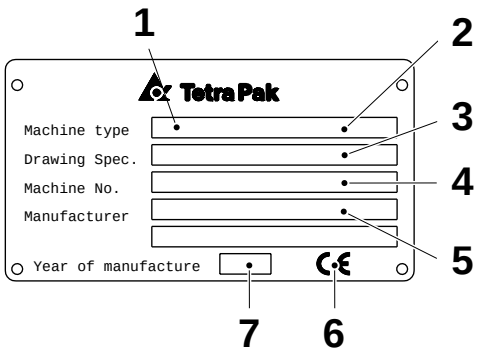

1 Machine type
2 Volume
3 Drawing specifications
4 Machine serial number
5 Manufacturer
6 CE mark
7 Year of manufacture

2.28026701.int

Fieldtest

Document information

Purpose of Installation Manual (IM)

The purpose of this Installation Manual is to provide service technicians with information on how to safely install this Tetra Pak equipment.

It is important to:

- keep the manual for the life of the equipment
- pass the manual on to any subsequent holder or user of the equipment.

Design modifications

The instructions in this document are in accordance with the design and construction of the machine at the time it was delivered from the Tetra Pak production plant.

Document producer

This document has been produced by:

Tetra Brik Packaging Systems AB
Ruben Rausings gata
221 86 LUND
Sweden

Number of pages

This document contains a total of 162 pages.

Copyright © 1997
Tetra Brik Packaging Systems
All rights reserved. No parts of this document may be reproduced or copied in any form or by any means without the written permission of Tetra Brik Packaging Systems.

Technical publications

The technical publications for this equipment are:

- Electrical Manual (EM)
- Installation Manual (IM)
- Maintenance Manual (MM)
- Operation Manual (OM)
- Spare Parts Catalogue (SPC)

Additional copies can be ordered from nearest Tetra Pak service station.

When ordering technical publications, always quote the **document number**.

Fieldtest

2.28026701.int

Terminology

Abbreviations

The following abbreviations are used in this Installation Manual.

Abbreviation	Meaning
Approx.	Approximately
APV	Aseptic Product Valve
CIP	Cleaning In Place
h	Hour, Hours, Height
HI	Headspace by Injection
L	Length
LH	Left hand
LS	Longitudinal Seal(ing)
min	Minimum
max	Maximum
p/h	Packages per Hour
Recirc	Recirculation, Recirculating, Recirculated
RH	Right Hand
SA	Strip Applicator
TMCC	Tetra Pak Multi-purpose Compact Controller
TPIH	Tetra Pak Induction Heating
TPMC	Tetra Pak Machine Control
TS	Transversal Seal(ing)

Note! Standard International System abbreviations are used for all measurement values.

(Cont'd)

2.28026701.int

Fieldtest

(Cont'd)

Orientation and names of main parts

Throughout this manual the terms **LH** and **RH** refer to the equipment and all its parts **as seen from the front**.

The following views illustrate the use of the terms LH and identify the main parts of the equipment.

Front view

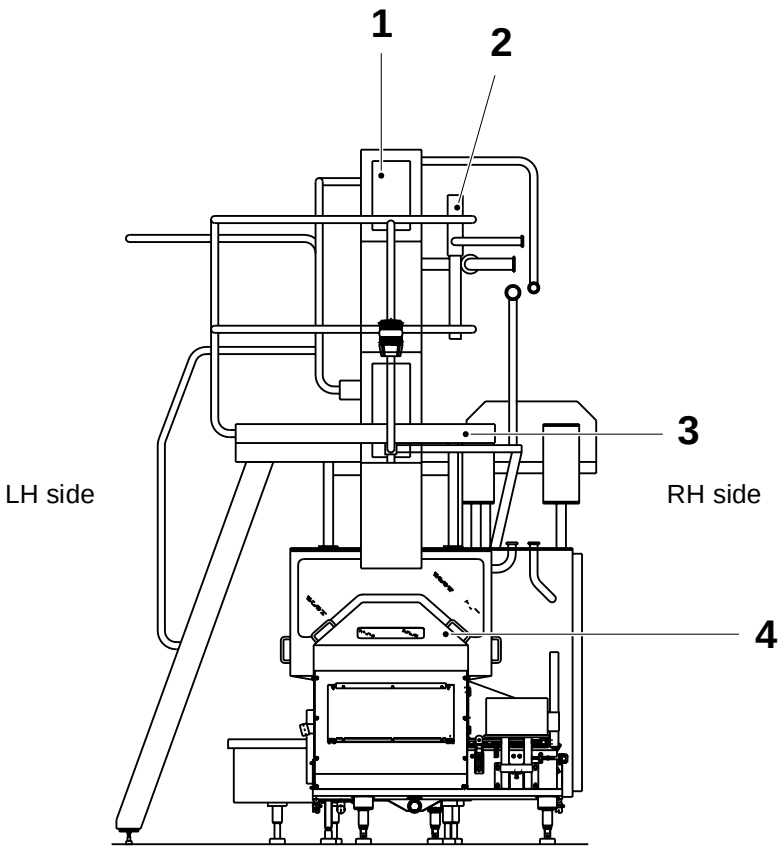

2.28026701.int

1 Drying chamber
2 APV
3 Platform
4 Final folder

(Cont'd)

Fieldtest

(Cont'd)

LH view

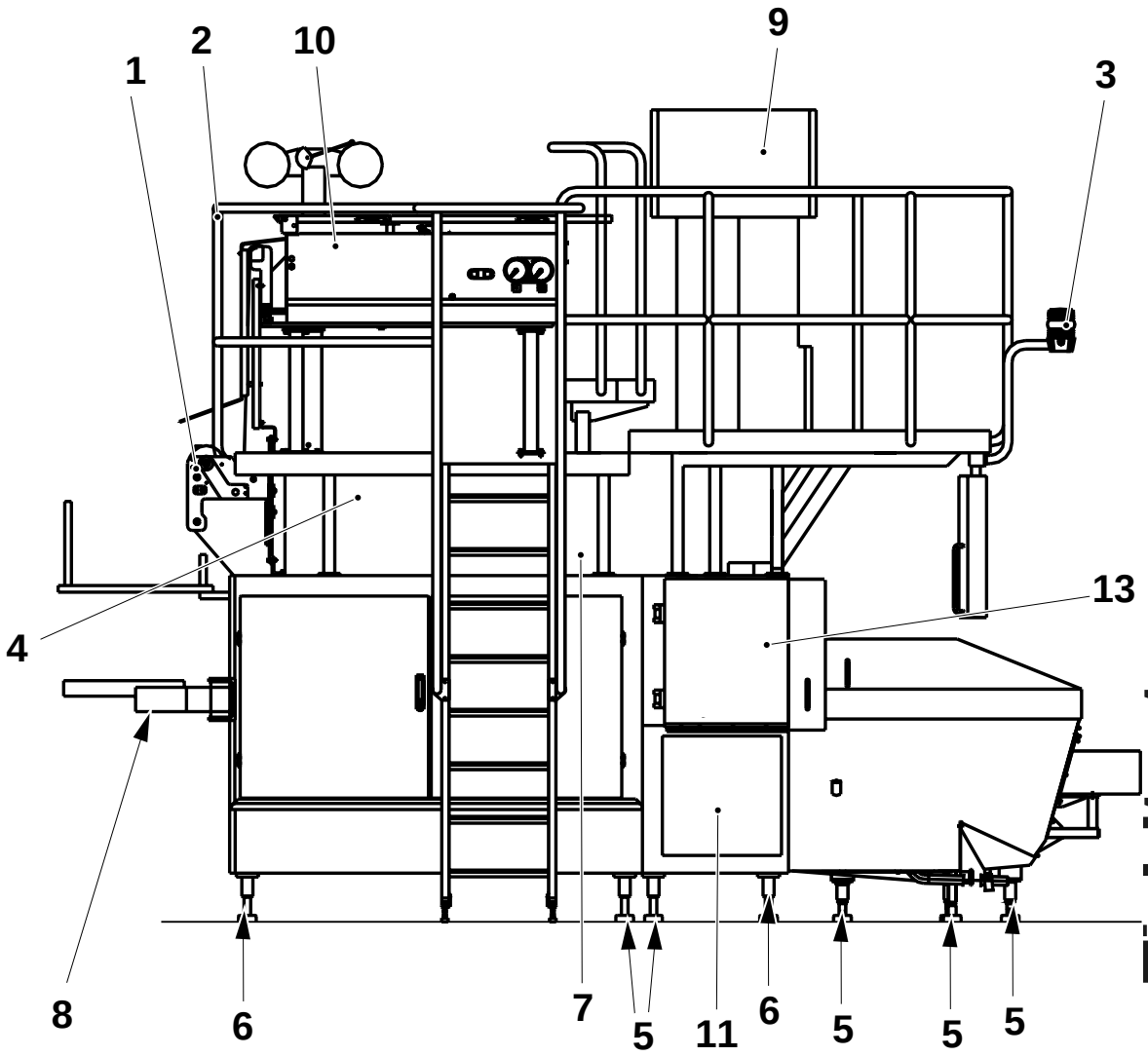

1 Crease wheel
2 Packaging material cover
3 Warning beacon
4 TPIH cabinet
5 Non-structural legs
6 Structural legs
7 Electrical cabinet
8 Splicing table
9 Superstructure
10 Strip applicator (SA)
11 Drive unit
12 Jaw system

2.28026701.int

Fieldtest

Other documents

The following documents are attached to the crate:

- Packing List
- Declaration of EC conformity (for equipment delivered in the EC only)
- Installation Manual (this manual)

The following documents are located on the equipment itself, behind the rear LH door of the service unit:

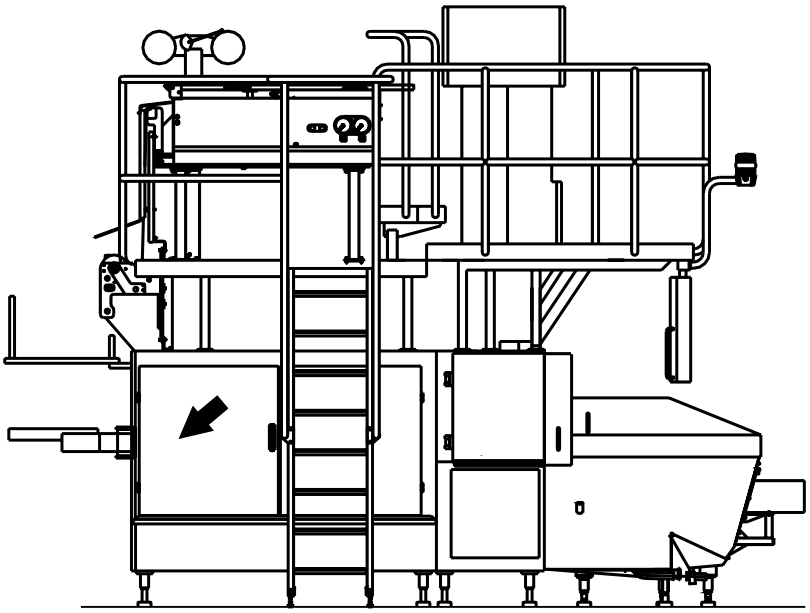

2.28026701.int

- Machine Specification Document
- Final Inspection Report
- Machine Deviation Report (if relevant)
- Transport Damage Report
- Start-up Machine Quality Report
- System drawings

Fieldtest

2.28026701.int

Fieldtest

This page intentionally left blank

2.28026701.int

2 Safety precautions

To ensure maximum safety, always read this section carefully before doing any work on the equipment or making any adjustments.

2.28026701.sp

Hazard information

Hazard information in this document has the following significance:

DANGER!	Failure to observe information marked with this symbol **puts your life in danger**.
WARNING!	Failure to observe information marked with this symbol can result in **personal injury and/or serious damage to or destruction of equipment**.
Caution!	Failure to observe information marked with this symbol can result in **damage to equipment**.

Fieldtest

2.28026701.sp

Personnel

Only skilled or instructed persons are allowed to work on the equipment.

The manufacturer declines all responsibility for injury or damage if the instructions in this manual are not followed.

Personnel are responsible for:

- the equipment and the work area around the equipment
- all personnel in the vicinity of the equipment
- making sure that all safety devices are fully operational

Personnel must regard all electrical equipment as live. Before carrying out maintenance or repair work, switch the equipment off at the mains power and padlock the switch.

Electricians should be certified according to local regulations and have experience of similar types of installations, proven skills in reading and working from drawings and cable lists, and knowledge of local safety regulations regarding power and automation. Work with the electrical equipment must be performed only by skilled or instructed technicians. According to EN 60204.3,55 a skilled person is:

– *An individual with technical knowledge or sufficient experience to enable that individual to avoid hazards which electricity can create.*

2.28026701.sp

Fieldtest

General safety precautions

Hygiene

It is important to keep hands and/or gloves clean.

Disinfect hands and/or gloves before touching the packaging material, the strip(s) or any other equipment part that may come into contact with the product.

To avoid production faults, it is important that the packaging material and the strip(s) never touch the floor, the platform or the area around the equipment.

Hearing protection

WARNING! **Risk of impaired hearing!**
Wear hearing protection while the equipment is running.

Platforms and ladders

WARNING! **Risk of slipping!**
Keep all surfaces free and clean.

Clean the platforms, the ladder and the area around the machine.

High voltage

DANGER! **Risk of electrocution!**
Make sure that the mains power is disconnected before starting any work on electrical equipment marked with this symbol. In case of accident, call for medical attention immediately.

Work with parts marked with this symbol must be performed by skilled or instructed persons only.

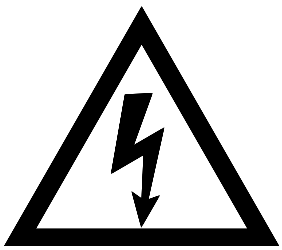

Fieldtest

2.28026701.sp

Electrical cabinet

DANGER!

Risk of electrocution!
Make sure that the mains power is disconnected before starting any work on electrical cables or connections. In case of accident, call for medical attention immediately.

There is high voltage in the electrical cabinet (up to 400 V). Work inside the electrical cabinet must be performed by skilled or instructed persons only.

Electrical cabinet doors locked with screws may be opened only by skilled or instructed persons.

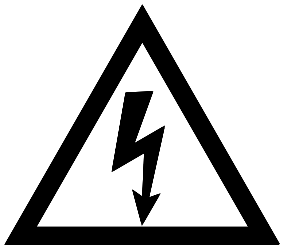

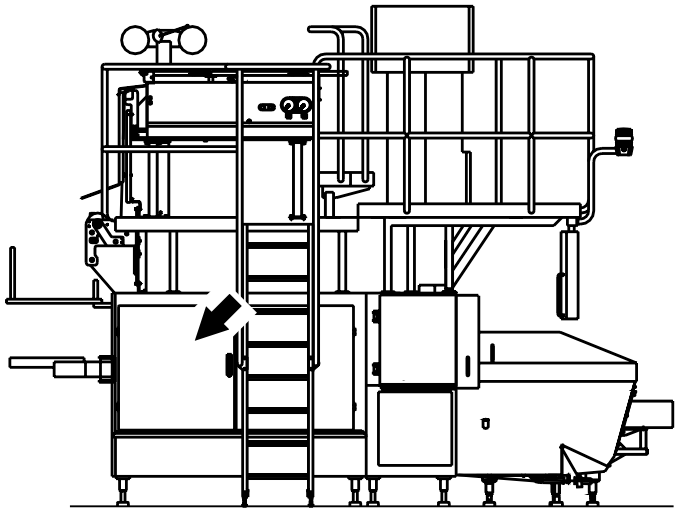

2.28026701.sp

Fieldtest

Machine safety devices

Emergency stop buttons

Learn the position of the **Emergency stop** buttons in order to stop the equipment immediately in case of danger to people or damage to the equipment.

The **Emergency stop** buttons do not switch off the power at the mains power switch.

Pushing the **Emergency stop** buttons will reset the equipment program to **Zero** position and deactivate all pneumatic cylinders.

Emergency stop buttons on LH side

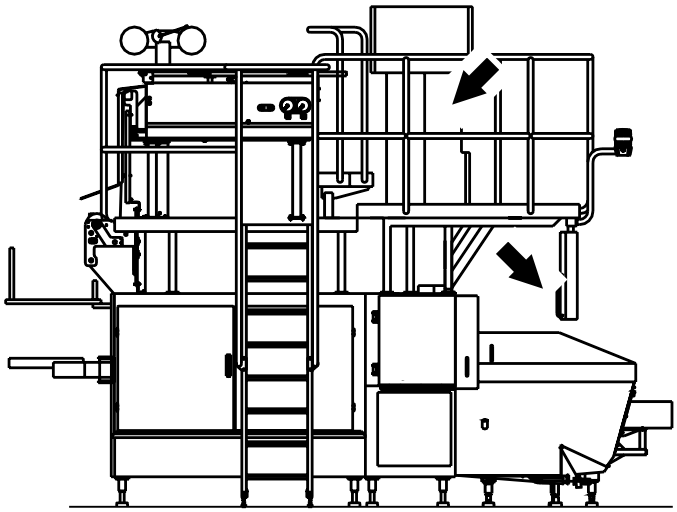

Fieldtest

2.28026701.sp

Doors, covers and guards

WARNING! **Risk of crushing and burns!**
Moving parts and hot surfaces! Make sure that all doors, covers and guards are in place and functioning before operating the equipment. The equipment may perform a reciprocating movement during the first few seconds after a stop. Some equipment parts may also be hot. In case of accident, call for medical attention.

Certain doors are fitted with safety switches. These switches are part of the safety system of the equipment and must **never** be bridged, by-passed or otherwise made non-operational**.**

- Never open doors or remove covers or guards while the equipment is operating.
- Never stop the equipment by opening a door with a safety switch.

Hazardous materials

Hydrogen peroxide

WARNING! **Risk of corrosion and intoxication!**
Wear personal protective equipment; see below. Hydrogen peroxide in liquid and gas form can cause irritation and injury if it comes into contact with the skin, mucous membranes, the eyes or clothes. In case of accident, follow the emergency procedures; see below.

The liquid used for sterilising the packaging material consists of 35% hydrogen peroxide (H_2O_2).

Personal protective equipment - hydrogen peroxide

Wear:

- **safety goggles**, TP No. 779130-102
- **apron**, TP No. 90303-5
- **shoes** made of PVC, PE plastic or rubber
- **protective gloves** made of neoprene, TP No. 90303-4

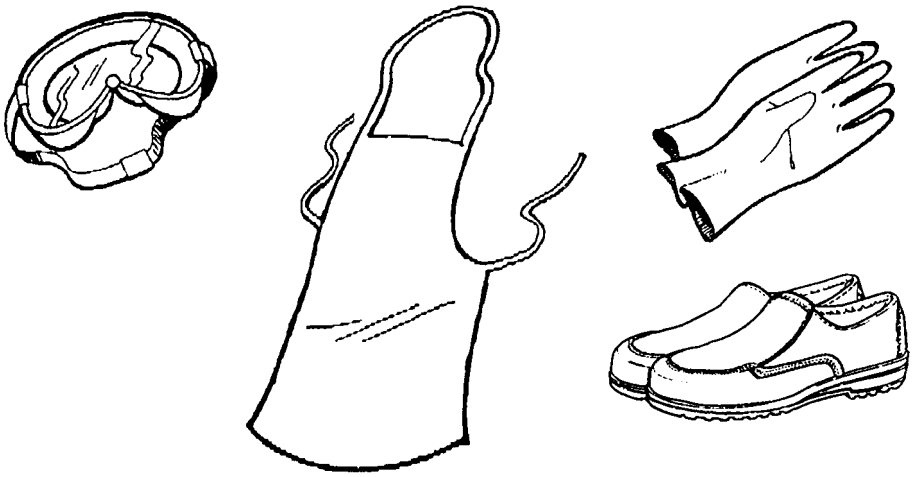

2.28026701.sp

Fieldtest

(Cont'd)

(Cont'd)

Before starting work with hydrogen peroxide, make sure that:

- the showers work
- a portable, TP No. 90303-6, or wall-mounted eyewash device is available at or near each machine site
- there are additional washing facilities

Emergency procedures - hydrogen peroxide

If you accidentally **swallow** hydrogen peroxide, drink large amounts of lukewarm water.

If you get splashes or vapour from hydrogen peroxide in your **eyes**, wash your eyes thoroughly with lukewarm water for 15 minutes (keeping eyelids wide apart).



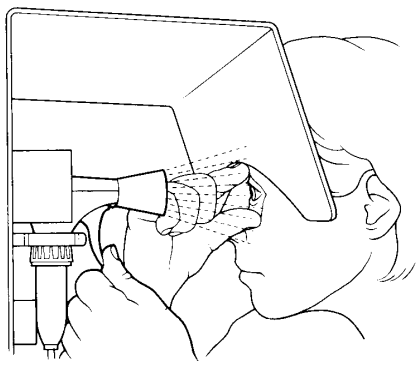

If hydrogen peroxide comes into contact with **skin** or **clothes**:

- rinse immediately with plenty of water
- if skin burns appear, call for medical attention immediately
- thoroughly wash clothes before wearing them again

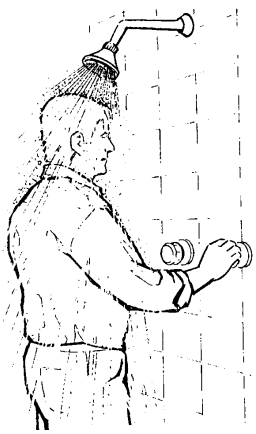

(Cont'd)

Fieldtest

2.28026701.sp

(Cont'd)

If you experience irritation or pain due to having **inhaled** hydrogen peroxide vapour:

- leave the affected area and get some fresh air
- if the symptoms get worse, call for medical attention

Spillage of hydrogen peroxide

WARNING! **Risk of fire!**
Never wipe with combustible materials, such as rags or paper, as these may self-ignite. In case of fire, cool the hydrogen peroxide with plenty of water.

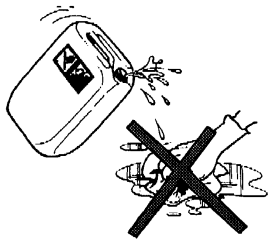

WARNING! **Risk of short-circuit!**
Do not allow hydrogen peroxide to come into contact with live electrical parts.

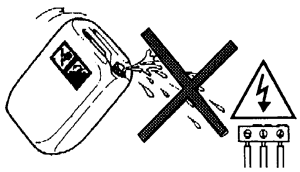

If hydrogen peroxide is spilt on the floor or on tables, dilute it with plenty of water and flush it into the drain.

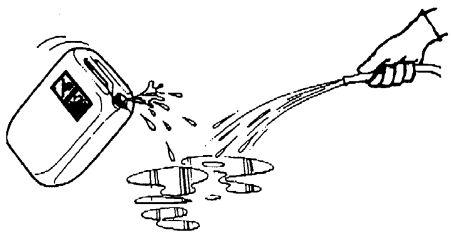

(Cont'd)

2.28026701.sp

(Cont'd)

Hydrogen peroxide can

Carefully follow the instructions on the can label (see figure below).

Hydrogen peroxide:

- 35% w/w Aqueous Solution UN No. 2014
- Corrosive. Oxidizing
- Causes burns. Contact with combustible materials may cause fire
- Keep in a cool place away from sources of heat
- Avoid contamination
- Wear suitable protective clothing, gloves, and eye/face protection
- After contact with skin, wash immediately with plenty of water and call for medical attention
- In case of contact with eyes, rinse immediately with plenty of water and call for medical attention
- In case of spillage or fire, drench with water

Reference: TP document No. M 1751.80.

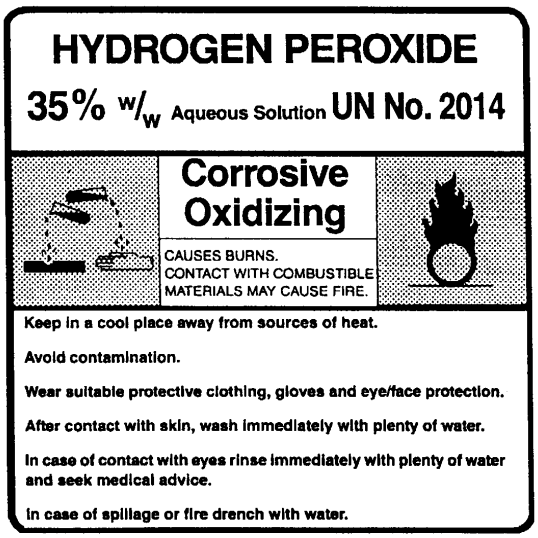

Example of can label

(Cont'd)

Fieldtest

2.28026701.sp

(Cont'd)

Storage of hydrogen peroxide

WARNING! **Risk of explosion!**
Avoid contamination of hydrogen peroxide with organic substances (for example acetone, cellulose, and ethanol). It may react and form explosive substances. In case of accident, call for medical attention immediately.

Make sure that the area or room used for storage is:

- cool, clean and well ventilated
- shielded from direct sunlight
- free from combustible materials

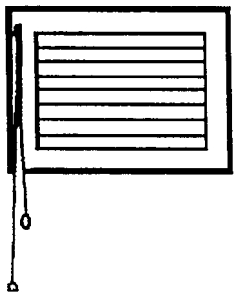

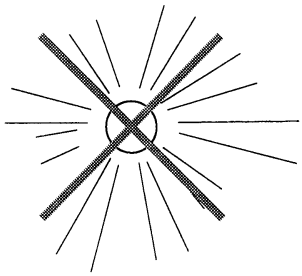

(Cont'd)

2.28026701.sp

(Cont'd)

Hydrogen peroxide must be stored only in its **original container** as delivered by the supplier.

Keep the container upright and closed with **a proper ventilation cap** (arrow in figure), which allows oxygen to escape.

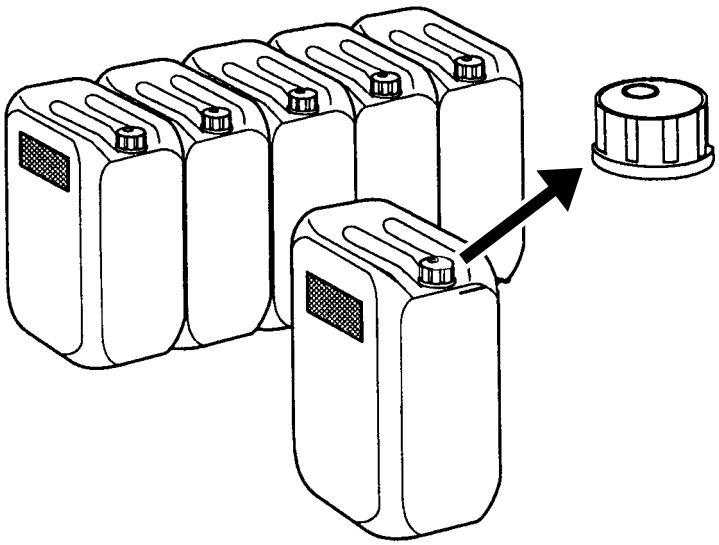

Pumps and other equipment used for hydrogen peroxide must be used **for this purpose only**.

Disposal of hydrogen peroxide

Hydrogen peroxide should be sent for destruction by waste disposal specialists.

WARNING! **Risk of explosion!**
Do not pour surplus hydrogen peroxide back into its original container. Hydrogen peroxide may decompose. In case of accident, call for medical attention immediately.

In some countries it is permitted to dilute hydrogen peroxide with water to a concentration below 1% and to dispose of it in the normal waste water drain. Hydrogen peroxide with a concentration below 1% is considered harmless.

Never put used hydrogen peroxide back into storage.

Fieldtest

2.28026701.sp

Nitrogen gas

WARNING! **Risk of intoxication and corrosion!**
Wear personal protective equipment; see below. Nitrogen gas can cause irritation in contact with the skin and shortness of breath, dizziness and a prickling feeling in the tongue if inhaled. In case of accident, follow the emergency procedures; see below.

Personal protective equipment - nitrogen gas

Wear:

- **safety goggles** TP No. 779130-102
- **protective shoes**
- **protective gloves**

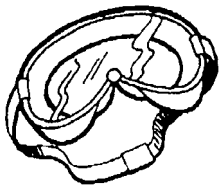
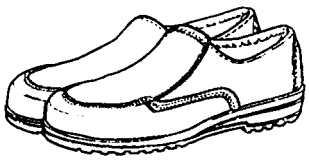
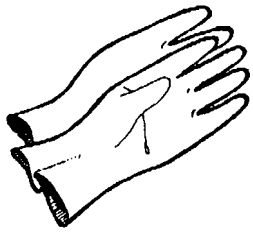

Before starting work with nitrogen gas, make sure that respiratory equipment is at hand for emergency situations.

Emergency procedures - nitrogen gas

- Leave the affected area and get some fresh air. If the symptoms get worse, call for medical attention
- In case of unconsciousness, move the affected person out into the fresh air and if necessary give artificial respiration
- The rescue party must wear respiratory equipment



(Cont'd)

2.28026701.sp

(Cont'd)

Nitrogen gas container

Carefully follow the instructions on the container label.

NITROGEN N48:
THE GAS MAY CAUSE COLD DAMAGE DURING EXPANSION

- Store and transport with valves closed and with the protection nut and safety cap fastened securely
- Protect against warming. Remove to a safe place during fire
- To be connected to connections marked only for this gas
- Open the valve slowly. Return with overpressure

Disposal of nitrogen gas

When returning the gas containers, make sure that:

- the valves are closed
- the protection nuts and safety caps are securely fastened

Do not release all the air pressure from the empty containers.

Storage of nitrogen gas

Make sure that the areas used for handling and storing the nitrogen gas are well ventilated.

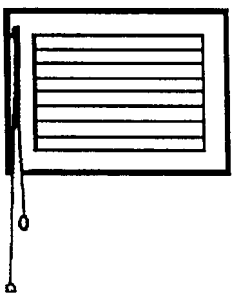

Fieldtest

2.28026701.sp

Ink

WARNING! **Risk of intoxication and burns!**
Wear personal protective equipment; see below. Ink is flammable and can be harmful if it comes into contact with the eyes or skin. In case of accident, follow the emergency procedures; see below.

Personal protective equipment - ink

Wear:

- **safety goggles** TP No. 779130-102
- **protective gloves** made of neoprene, TP No. 90303-4

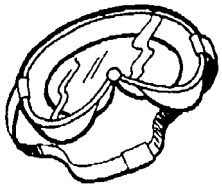

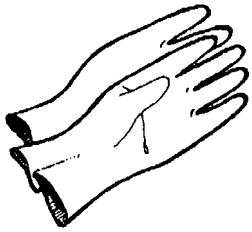

Before starting work with ink, make sure that a portable, TP No. 90303-6, or wall-mounted eyewash device is available at or near each machine site.

Emergency procedures - ink

If you get ink in your eyes, wash your eyes thoroughly with lukewarm water for 15 minutes (keeping eyelids wide apart).



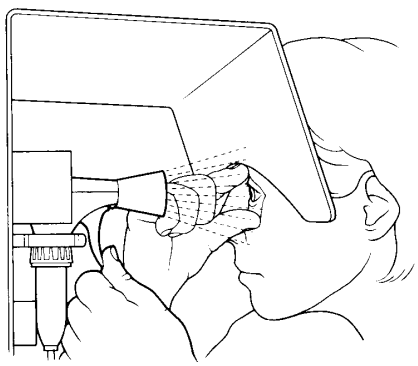

(Cont'd)

2.28026701.sp

Fieldtest

(Cont'd)

Ink container

Carefully follow the instructions on the container label (see figure below):

INFLAMMABLE

- Avoid direct contact with the product
- Use gloves and goggles
- Care for good ventilation
- Propylene glycol mono methylether >30%
- Ethanol 1-5%
- SHAKE BEFORE USE

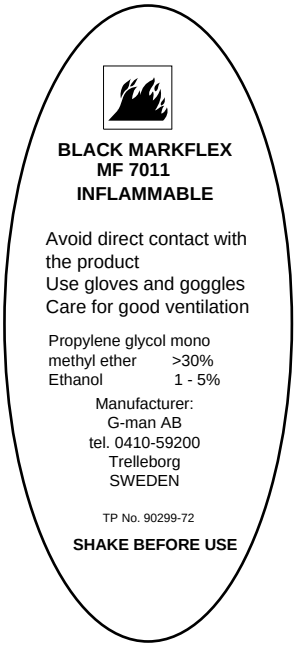

Fieldtest

2.28026701.sp

Other chemical products

WARNING! **Risk of intoxication and fire!**
Wear recommended safety equipment when handling chemical products. Certain chemical products are toxic and/or flammable. In case of accident, call for medical attention.

Carefully follow the instructions on the containers labels when handling chemical products such as:

- hydraulic fluid
- lubricants
- acids (for example nitric acid)
- caustic soda
- alkalis
- disinfectants
- detergents
- other chemical products

Follow the supplier’s instructions for disposal of the chemical products.

2.28026701.sp

Fieldtest

Equipment for lifting and moving loads

WARNING! **Risk of personal injury!**
Make sure that the capacity of the lifting equipment is adequate and that the equipment itself is in good working order.

If lifting tackle has to be joined to make up the necessary lengths, make sure that the joins are secure and have the same lifting capacity as the rest of the tackle.

Always engage the safety clip on lifting hooks to prevent the tackle from slipping off.

Use ropes or poles to steady and manoeuvre loads. Do **not** use hands or feet.

Make sure that the route and the destination are free from obstacles before moving a suspended load. It must be possible to lower the load to the floor quickly and safely in an emergency.

When depositing loads, keep the lifting equipment in place until the stability of the load has been checked.

Fieldtest

2.28026701.sp

2.28026701.sp

Fieldtest

This page intentionally left blank

2.28026701.sp

3 Drawings and Technical Data

2.2TB032671.en

Fieldtest

3.1 Installation drawings

The following drawings provide machine dimensions, connection positions and dimensions, and access dimensions. These dimensions must be respected. All dimensions are in millimetres unless otherwise stated.

Top view

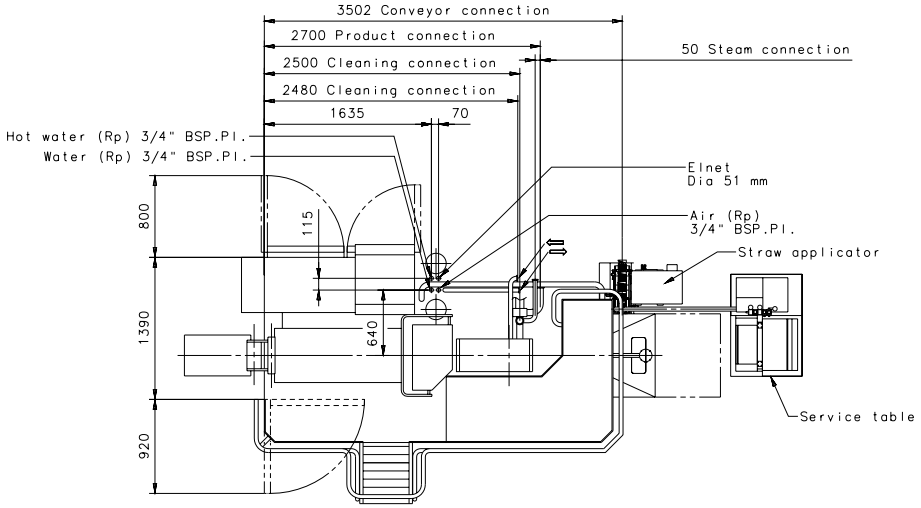

Front view

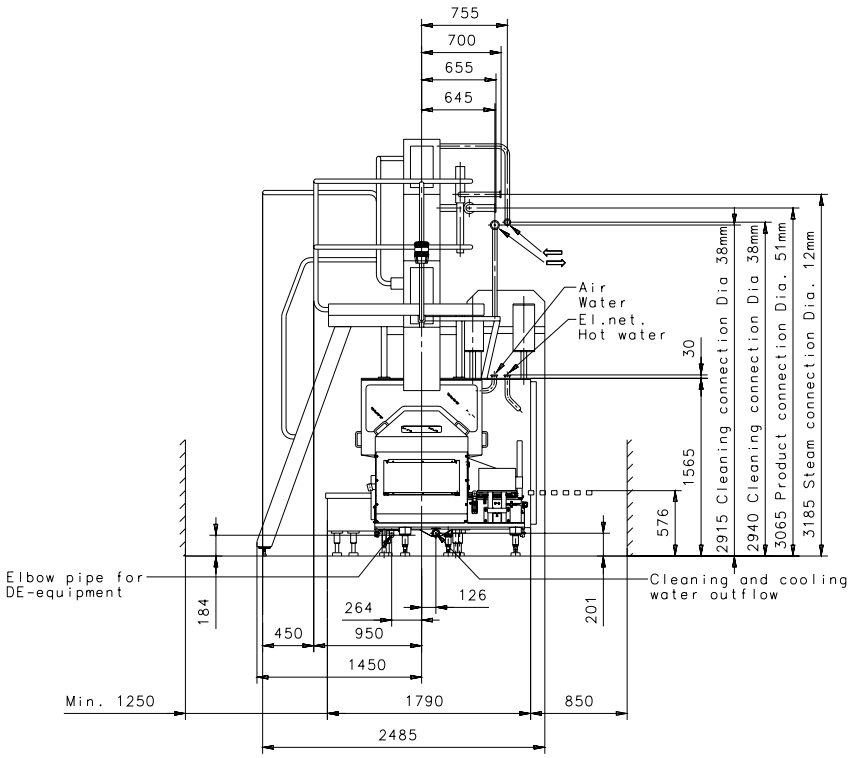

(Cont'd)

Fieldtest

2.2TB032671.en

(Cont'd)

LH side view

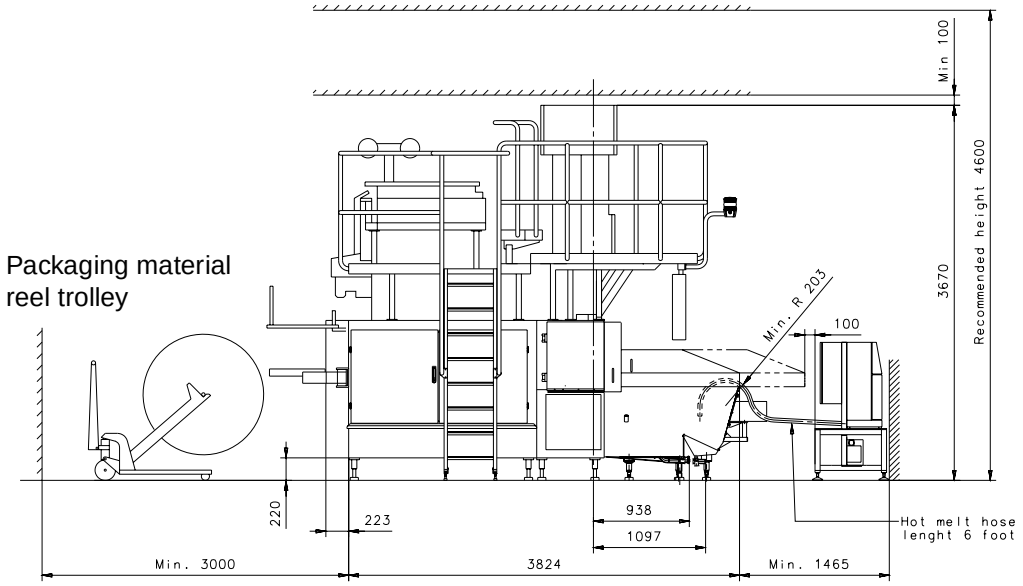

2.2TB032671.en

(Cont'd)

Fieldtest

(Cont'd)

System drawings

The system drawings are attached to the equipment, inside the rear RH door of the filling machine. These include:

- hydraulic system
- water system
- lubrication system
- compressed air system
- aseptic system
- valve panel
- extra equipment (if relevant)

Fieldtest

2.2TB032671.en

3.2 Basic machine data

Characteristic	Value	Notes
Machine type	TWA/9 200ml Slim	
Production capacity	6000 p/h, +4%, -0%	To be specified on order.

2.2TB032671.en

Fieldtest

3.3 Mass (weight)

Characteristic	Value	Notes
Weight	Approx. 5 700 kg (12 600 lbs)	

Fieldtest

2.2TB032671.en

3.5 Product

Characteristic	Value	Notes
Supply pressure	50 - 350 kPa (0.5 - 3.5 bar) [7.2 - 50.7 psi]	
Max pressure fluctuation	±100 kPa (±1 bar) [±14.3 psi]	
Max calculated pressure drop	150 kPa (1.5 bar) [22 psi]	Calculated between product inlet and product outlet.
Inlet temperature	5 - 50°C (41 - 122°F)	
Filling temperature	5 - 50°C (41 - 122°F)	Varies from inlet temperature by +1-2°C (2-4°F)
Max particle size	600 µm	
pH	2.5 - 8	

2.2TB032671.en

3.6 Utilities

Electrical power

Characteristic	Value	Notes
Supply voltage to machine	400/230 VAC, 3 phase +N + earth	Other voltages available to order with transformer.
Max voltage fluctuation	-10%, +10%	
Frequency	50/60 Hz	To be specified on order.
Recommended main fuse	63 A	Value for optimum selectivity at 400/230 VAC.
Consumption during preheating	20.2 kW	
Consumption during sterilisation	23.6 kW	
Consumption during drying	20.3 kW	
Consumption during external cleaning	5 kW	
Consumption during production	26 kW	
Control circuits voltage	24 VDC	

Compressed air

Characteristic	Value	Notes
Supply pressure	600 - 700 kPa (6 - 7 bar) [87 - 102 psi]	
Consumption	500 ±100 l/min (14.0±3.5 cu.ft/min)	
Max particle size	20 µm	
Max particle content	25 mg/m^3	
Dew point	2°C (35.6°F)	
Oil content	0.01 mg/m^3	

(Cont'd)

Fieldtest

2.2TB032671.en

(Cont'd)

Cooling water

Characteristic	Value	Notes
Supply pressure	300 - 450 kPa (3 - 4.5 bar) [43.5 - 65 psi]	
Max inlet temperature	20°C (68°F)	
Consumption	14 l/min (2.1 imp.galls/min)	Approximately 5 l/min (1.1 imp.galls/min) of total consumption can be recirculated.
pH	5 - 8	

Steam

Characteristic	Value	Notes
Water quality	Drinking water	Boiler additives must be suitable for use with drinking water.
Supply pressure	170 kPa (1.7 bar) [25 psi]	
Max pressure fluctuation	±30 kPa (±0.3 bar) [±4.5 psi]	
Inlet temperature	133 ±4°C (271±7°F)	Measured after APV.
Consumption	2.4 kg/h (5.3 lbs/h)	

Hydrogen peroxide

Characteristic	Value	Notes
Type	Aseptic grade	
Concentration	35%	
Consumption	0.6 - 1.0 l/h	

2.2TB032671.en

Fieldtest

3.7 Cleaning

Cleaning in place (CIP)

Characteristic	Value	Notes
Max inlet pressure	350 kPa (3.5 bar) [50.7 psi]	
Min flow	8000 l/h	At 220 kPa.

External cleaning (hot water connection)

Characteristic	Value	Notes
Supply pressure	300 - 450 kPa (3 - 4.5 bar) [43.5 -65 psi]	
Inlet temperature	60 - 70°C (140 - 158°F)	
Hot water consumption	300 l/cycle	Per complete cleaning cycle.
Detergent pH	8 - 12	
Detergent consumption	0.8 l/cycle	Per complete cleaning cycle.

Fieldtest

2.2TB032671.en

3.8 Other consumptions

Characteristic	Value	Notes
Lubricant consumption	0.01 l/h	See OM for further details.
Ink consumption	Average 100 ml per 8 h shift	

2.2TB032671.en

Fieldtest

This page intentionally left blank

Fieldtest

2.2TB032671.en

4 Site preparation

2.2TB042671.en

Fieldtest

Check that the dimensions of the installation site and the positions of the connections comply with the values given in the dimensional drawings. See section ***3 Drawings and Technical Data*** and the Installation Drawings.

Check that the specifications of the product, utility, and cleaning supplies comply with Tetra Pak requirements. In case of doubt, ask the customer's technical personnel. See section ***3 Drawings and Technical Data***.

If any values do not comply, inform the local Service Organisation.

Fieldtest

2.2TB042671.en

5 Machine handling

DANGER!

Risk of fatal injury and serious damage!
Make sure that the capacity of lifting equipment is adequate and that the equipment itself is in good working order. Loads can settle or swing as they are lifted. Keep well clear.

2.2TB052671.en

Fieldtest

5.1 Crate data

The TBW/9 200ml slim is shipped in one crate.

Crate specifications

Crate Identifier	Gross weight kg (lbs)	Net weight kg (lbs)	Length mm (ft-in)	Width mm (ft-in)	Height mm (ft-in)
1/1	7 200 (15 900)	5 700 (12 600)	4 850 (16’)	2 150 (7’)	3 200 (10’6’’)

Crate contents

Crate identifier	Contents	Notes
1/1	Machine body * SA Drying chamber APV group Hydrogen peroxide generator Pipes Packaging material reel holder Packaging material covers Packaging material reel lifting trolley Platform frame and plates Lateral signs End signs Warning beacon Ladder Handrails Guards Legs and feet Tools Spare parts Accessories Lifting unit Machine documents Packaging material Strip	* Pre-assembled.

See the Packing List for further details.

Fieldtest

2.2TB052671.en

5.2 Lifting equipment

Types of equipment

The following types of equipment can be used to lift and move the crate:

- overhead gantry
- mobile crane
- fork lift

The most practical equipment is an overhead gantry.

Equipment specifications

Make sure that the lifting capacities of the equipment and tackle comply with the minimum values given in the following table.

Equipment or tackle	Lifting capacity kg (lbs)	Notes
Overhead gantry	8 000 (17 700)	9 000 kg (20 000 lbs) required if gantry does not have gradual acceleration/ deceleration ramps.
Mobile crane	8 000 (17 700)	9 000 kg (20 000 lbs) required if crane does not have gradual acceleration/deceleration ramps.
Fork lift	9 000 (20 000)	Higher capacity required to allow for reach to centre of gravity of 1 000 - 1 500 mm (3’3’’ to 4’10’’).
Lifting forks	9 000 (20 000)	Min length 2 000 mm (6’6’’). Min setting width 2 000 mm (6’6’’).
Lifting chains, cables, ropes or slings	8 000 (17 700)	Min length hook to hook 15 m (50’).

(Cont’d)

2.2TB052671.en

Fieldtest

(Cont'd)

Tools and materials

The following tools and materials are needed to unpack the crate:

- hydraulic jack, minimum capacity 3 tons
- min. four wooden blocks, min. 150 - max. 200 mm in height, to support the frame members on both sides of the machine.

The following special tools may also be available from the local Service Organisation:

- transporter, TP No. 271635-401
- drying chamber lifting tool, TP No. 76500-101.

Fieldtest

2.2TB052671.en

5.3 Unloading the crate

WARNING! **Risk of serious injury and damage!**
Make sure that everybody understands all the symbols and warnings on the crate before starting to lift or move it.

Symbol	Meaning
	Centre of gravity
	Lifting points for chains, cables, ropes, or slings
	This way up
	Fragile
	Keep dry
↑TOP↑	Top of crate
FRAGILE	‘Fragile’ warning
HANDLE WITH CARE	‘Handle with care’ warning
NOT TO BE DROPPED	‘Not to be dropped’ warning
GROSS KG.	‘Gross weight’ value
NET KG.	‘Net weight’ value

2.2TB052671.en

Fieldtest

Inspection

a) Examine the outside of the crate before starting to unload, and record any damage on the **Transport Damage Report**. See section ***5.6 Inspection***.

b) Record the readings of the humidity indicator and tipping indicator attached to the outside of the crate (if present).

5.3.1 Unloading with an overhead gantry or mobile crane

If using a fork lift, see section ***5.3.2 Unloading with a fork lift***.

a) Make sure that the equipment and tackle have the correct length and lifting capacity for the crate being lifted. See section ***5.2 Lifting equipment***.

Caution! The length shown in the figure below is the hook to hook length. If lifting tackle has to be joined to make up the necessary lengths, make sure that the joins are secure and have the same lifting capacity as the rest of the tackle.

b) Manoeuvre the hook to one side of the crate.

c) Pass the two lines of lifting tackle under the crate at the points shown in the figure below.

d) Secure the tackle to the lifting hook and fit the safety clip on the hook.

e) Manoeuvre the hook over the centre of the crate.

f) Slowly take up the slack in the lifting tackle. Make sure that the tackle is secure at the crate and hook. If necessary, adjust the tackle to distribute the load evenly.

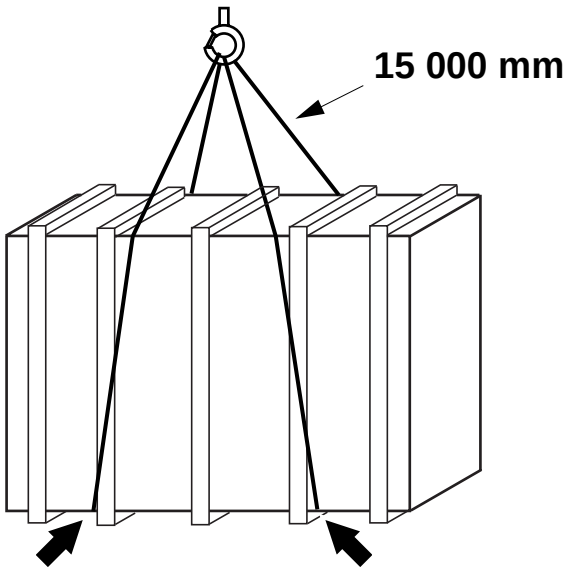

2.2TB052671.en

(Cont'd)

Fieldtest

(Cont'd)

g) Prepare ropes or poles to steady and manoeuvre the load. Do **not** use hands or feet.

h) Lift the crate **only enough to clear the platform of the vehicle**.

i) Have the vehicle driven away from under the crate.

j) Lower the crate gently to the floor.

k) Make sure that the crate is firmly supported. Place blocks or plates under it if necessary.

l) Lower the lifting hook and remove the lifting tackle.

5.3.2 Unloading with a fork lift

If using an overhead gantry or mobile crane, see section ***5.3.1 Unloading with an overhead gantry or mobile crane***.

a) Make sure that the lifting capacity of the fork lift and forks is correct and that the fork length is correct for the crate being lifted. See section ***5.2 Lifting equipment***.

b) Set the lifting forks to the correct width. See section ***5.2 Lifting equipment***.

c) Manoeuvre the fork lift so that the forks engage the crate no further apart than the points shown in the figure below, and at equal distances from the centre of gravity symbol. If the crate is fitted with fork tubes, manoeuvre the forks inside these to lift the crate.

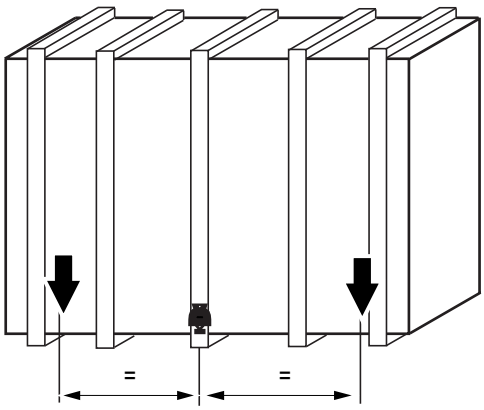

(Cont'd)

2.2TB052671.en

Fieldtest

(Cont'd)

d) Lift the crate **only enough to clear the platform of the vehicle**.

e) Have the vehicle driven away from under the crate.

f) Lower the crate gently to the floor.

g) Make sure that the crate is firmly supported. Place blocks or plates under it if necessary.

h) Remove the forks from under the crate.

Fieldtest

2.2TB052671.en

5.4 Moving and storing the crate

If the crate has to be stored before the machine can be installed, make sure that the storage area complies with specifications before taking the crate there. See ***Storing the crate*** below.

If installation is to start immediately, check whether it is possible to move the crate to the installation site. Uncrating and installation can then be performed together.

When moving the crate to the installation site, deposit it so that the machine and groups can be lifted out and positioned without being turned around. Open the customs inspection panel to see inside the crate.

Wait until installation can start before unpacking the crate.

Moving the crate

a) Lift the crate as instructed above, **only enough to clear the floor**. See section ***5.3 Unloading the crate***.

b) Make sure that the crate remains stable on the lifting equipment.

Caution! Move the crate slowly and gently.

c) Move the crate to its destination.

d) Lower the crate gently to the floor, leaving enough room around it for easy access to all sides.

e) Make sure that the crate is firmly supported. Place blocks or plates under it if necessary.

f) Remove the lifting equipment.

(Cont'd)

2.2TB052671.en

Fieldtest

(Cont'd)

Storing the crate

Caution! Store the crate indoors. Exposure to damp or to high or low temperatures may damage the machine and its equipment.

The storage area should have the following approximate dimensions:
7 000 x 4 000 x 4 000h mm

Note! These dimensions allow about 1 000 mm (3 ft) of free space around and above the crate for access and ventilation.

The storage environment should respect the conditions given in the following table.

Characteristic	Value	Notes
Min and max temperatures °C (°F)	5 - 40 (40 - 105)	If the water system is drained the machine can withstand freezing conditions.
Max relative humidity %	80	Non-condensing.

a) Manoeuvre the crate into position, leaving about 1 000 mm (3 ft) of free access space around it if possible.

b) If the floor under the crate is uneven, place blocks or plates under the crate to provide a steady support.

c) Make sure that the crate is stable and remove the lifting equipment.

Fieldtest

2.2TB052671.en

5.5 Unpacking the crate

Note! Check whether packing materials are to be returned or recycled. Dispose of packing materials in compliance with local regulations.

Unpacking area

The unpacking area should have the following approximate dimensions:
7 000 x 7 000 x 4 000 mm

Note! These dimensions allow about 1 000 mm (3 ft) of free space around and above the crate and contents, with the contents removed and placed on the floor outside the crate.

5.5.1 Unpacking the disassembled groups and equipment

a) Look through the customs inspection panel to see in which direction the machine is facing. Position the crate to face the most convenient direction.

b) Remove the top of the crate and the reinforcement beams.

c) Unscrew any screws fixing the contents to the sides or ends of the crate (if present).

d) Remove the sides and ends of the crate.

e) Remove all loose boxes and packages.

2.2TB052671.en

WARNING! **Risk of serious injury and damage**
The following items can weigh up to 500 Kg. Make sure that the capacity of the lifting equipment is adequate.

f) Remove the drying chamber.

g) Remove the railings.

h) Remove the packaging material reel.

(Cont'd)

Fieldtest

(Cont'd)

WARNING! **Risk of falling!**
Take great care when working on the platform when the railings are not fitted.

i) Remove the platform edge frame from the underside of the platform.

j) Remove the SA from the platform.

k) Remove the packaging material reel trolley from the platform.

l) Remove the railing corner sections, ladder, and platform panels from the platform.

5.5.2 Uncrating the machine with an overhead gantry or mobile crane

If using a fork lift, see section ***5.5.3 Uncrating the machine with a fork lift***.

a) Place the wooden blocks on the floor to support the machine.

WARNING! **Risk of serious injury and damage**
The machine body weighs approximately 5 000 kg. Make sure that the capacity of the lifting equipment is adequate.

WARNING! **Risk of falling!**
Take great care when working on the platform if the railings are not fitted.

b) Make sure that the lifting eyebolts on the machine are secure and are not damaged or cracked.

c) Secure the lifting unit to the hook and fit the safety clip on the hook.

(Cont'd)

Fieldtest

2.2TB052671.en

(Cont'd)

WARNING! **Risk of serious injury and damage!**
Do not fix single lines (chains, cables, ropes, or slings) lengthwise along the machine. Respect the minimum lengths given in the figure below.

d) Fit two lines to the two eyebolts on the electrical cabinet (2) and two lines to the two eyebolts on the platform frame (3).

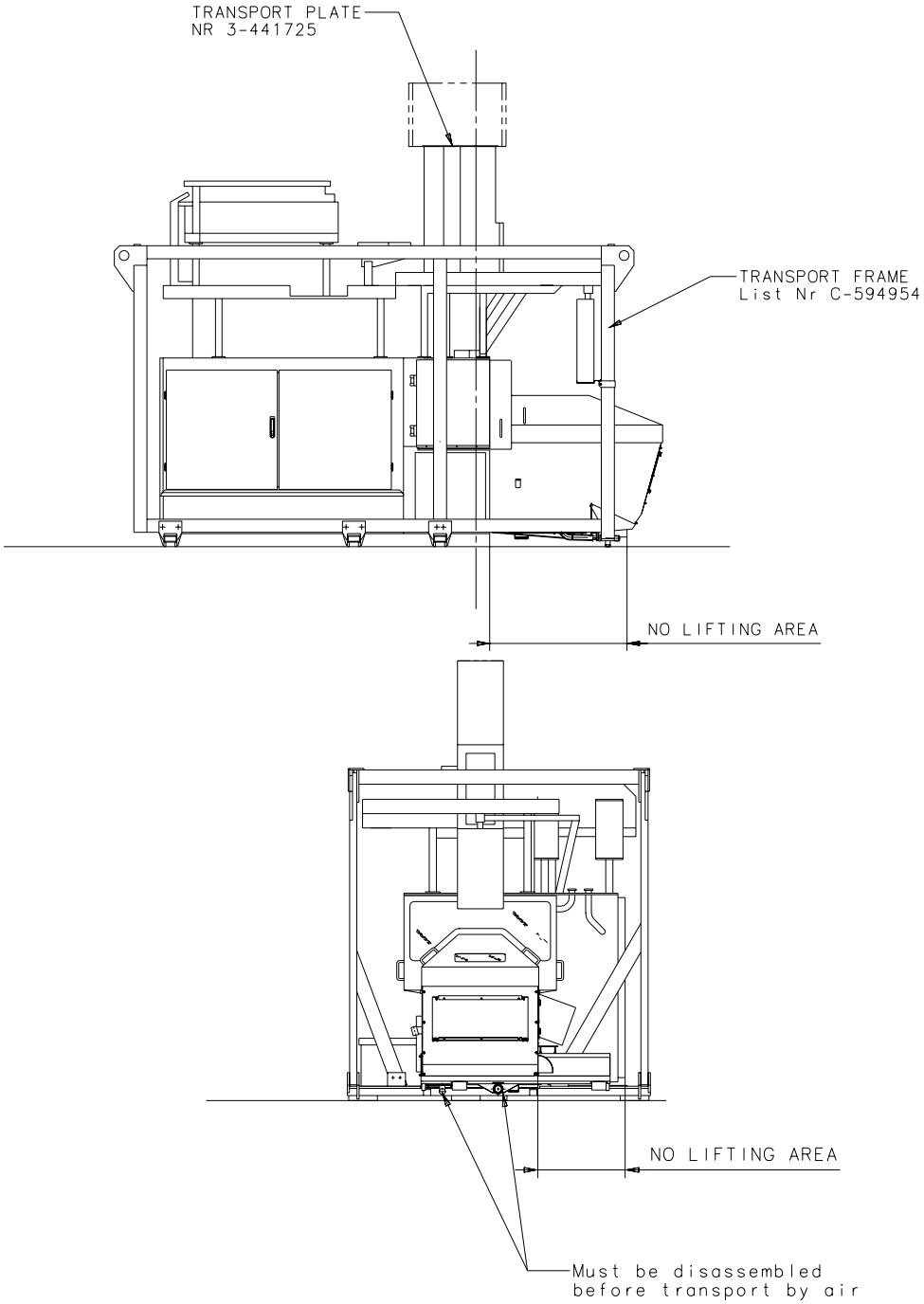

(Cont'd)

2.2TB052671.en

Fieldtest

(Cont'd)

Caution! Do not start lifting yet.

e) Slowly take up the slack in the lifting tackle.

f) Unscrew the six screws (4) fixing the transport frame to the floor of the crate.

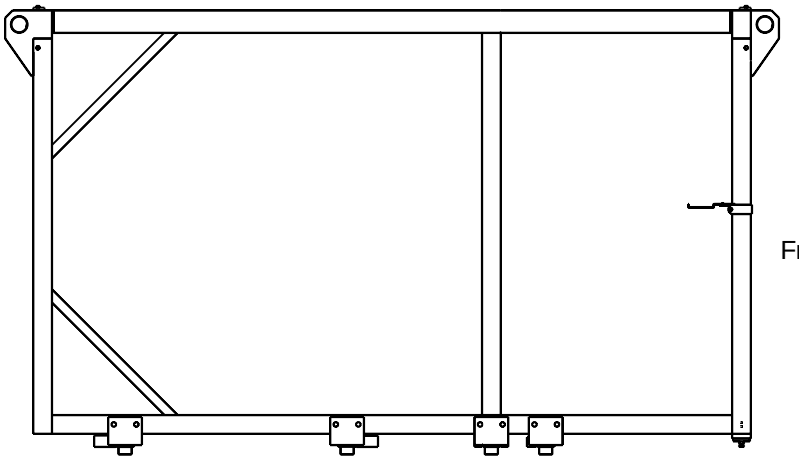

4 Screw

g) Unscrew the twelve screws (5) fixing the longitudinal bars (6) of the transport frame to the cross bars, and remove the two longitudinal bars.

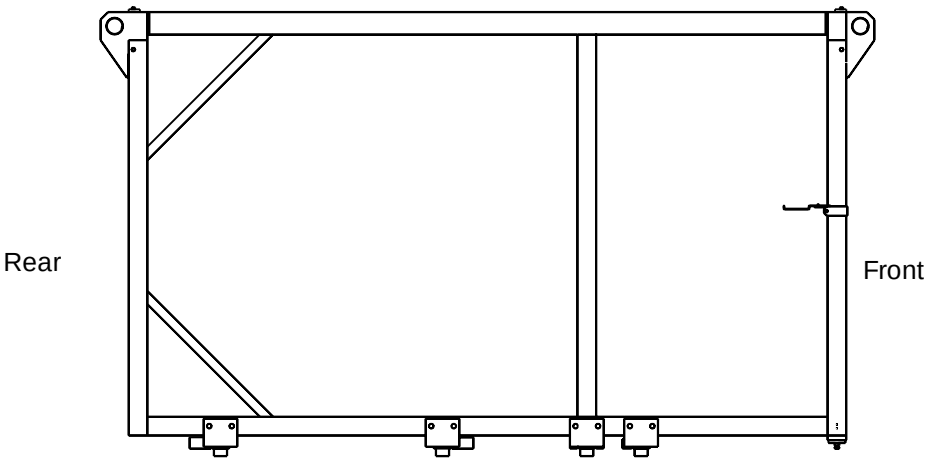

5 Screw
6 Longitudinal bar

(Cont'd)

Fieldtest

2.2TB052671.en

(Cont'd)

h) Lift the machine complete with the cross bars of the transport frame **only enough to clear the crate**.

i) Manoeuvre the machine out of the crate.

Caution! Make sure that the wooden blocks support the frame members on both sides of the machine.

j) Lower the machine complete with the cross bars of the transport frame gently on to the wooden blocks (7) so that the blocks support the bottom of the machine and leave the cross bars (8) free.

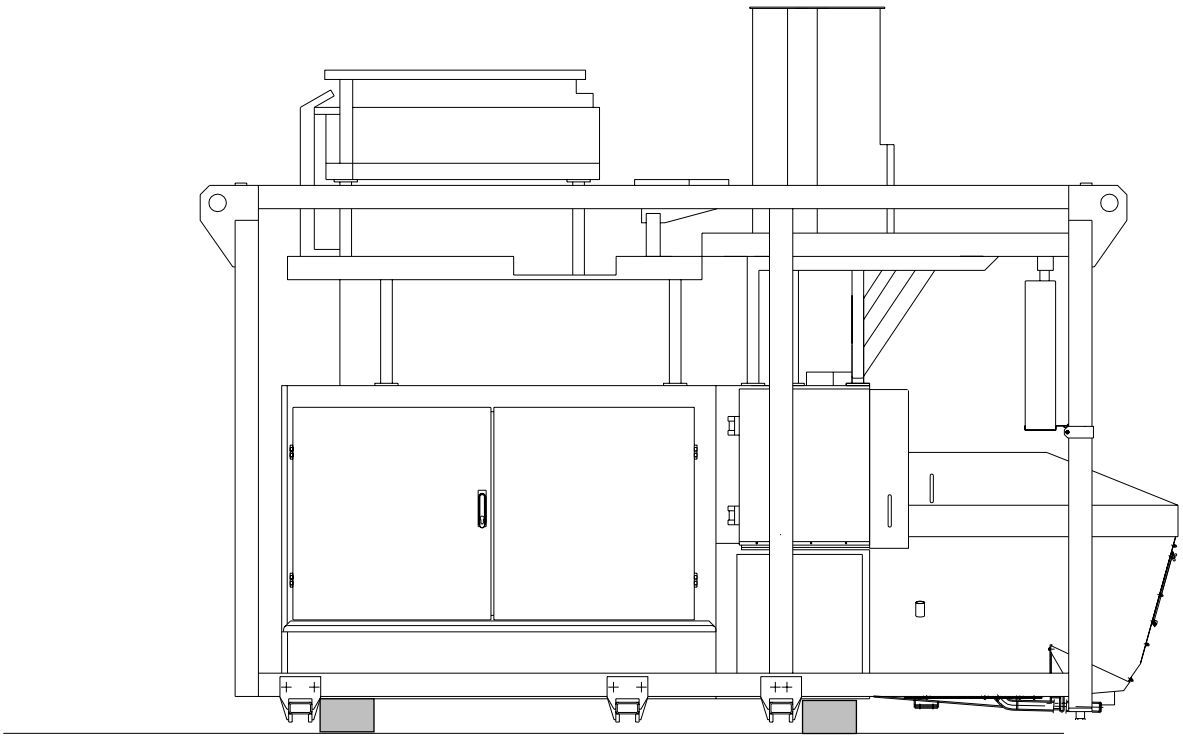

2.2TB052671.en

7 Wooden block
8 Cross bar

(Cont'd)

Fieldtest

(Cont'd)

k) Unscrew the eight screws (9) fixing the cross bars (8) to the bottom of the machine and remove the cross bars.

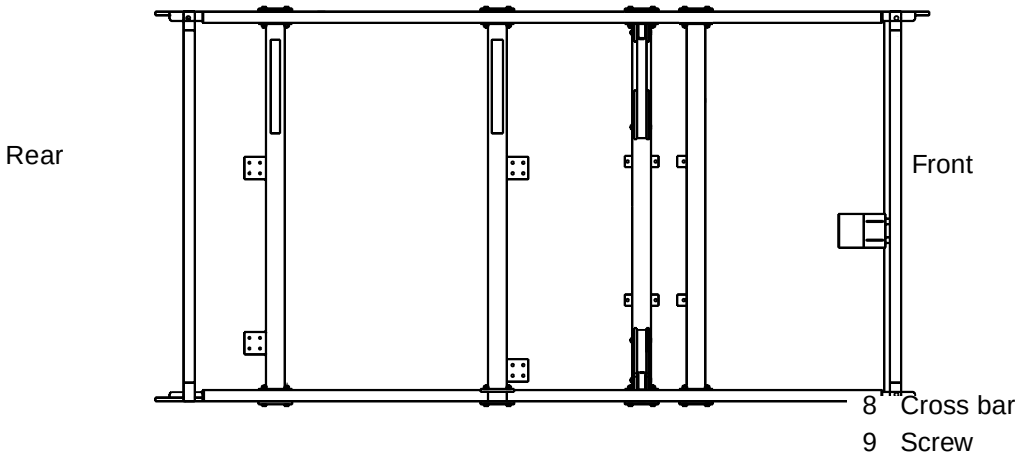

l) Make sure that the machine is stable and remove the lifting equipment.

Fieldtest

2.2TB052671.en

5.5.3 Uncrating the machine with a fork lift

If using an overhead gantry or mobile crane, see section ***5.5.2 Uncrating the machine with an overhead gantry or mobile crane***.

WARNING! **Risk of serious injury and damage**
The machine body weighs approximately 5 000 kg. Make sure that the capacity of the lifting equipment is adequate.

a) Place the wooden blocks on the floor to support the machine.

b) Unscrew the six screws (1) fixing the transport frame to the floor of the crate.

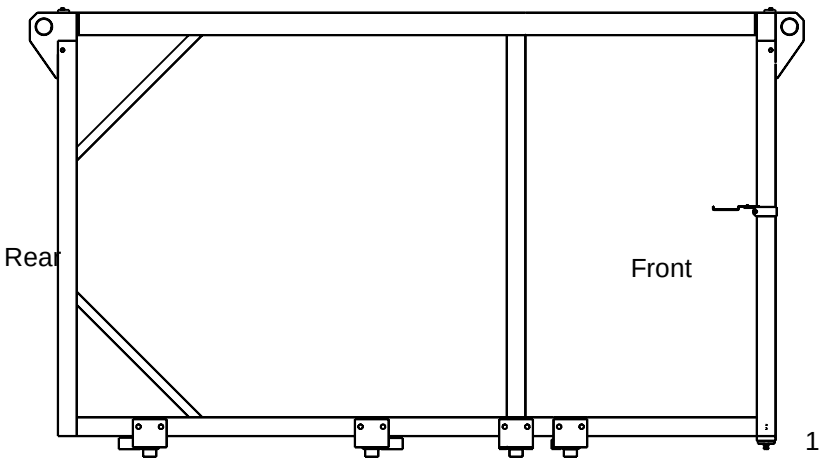

1 Screw

c) Unscrew the twelve screws (2) fixing the longitudinal bars (3) of the transport frame to the cross bars, and remove the two longitudinal bars.

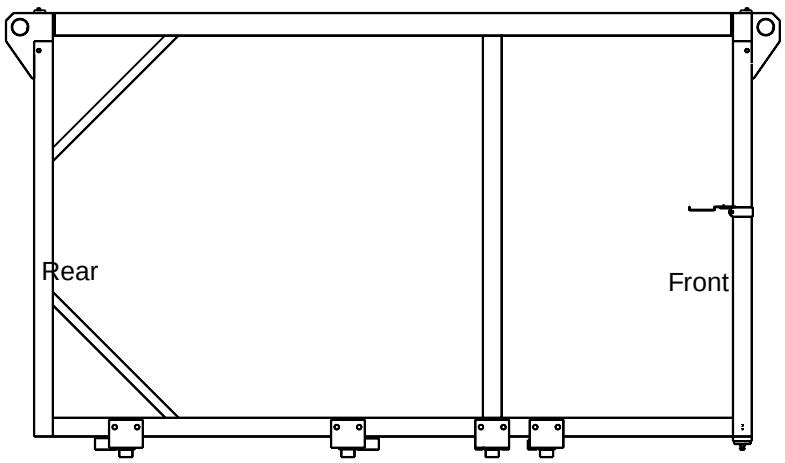

2 Screw
3 Longitudinal bar

(Cont'd)

2.2TB052671.en

Fieldtest

(Cont'd)

d) Lift the machine gently while manoeuvring the forks under it at the points shown in the figure below.

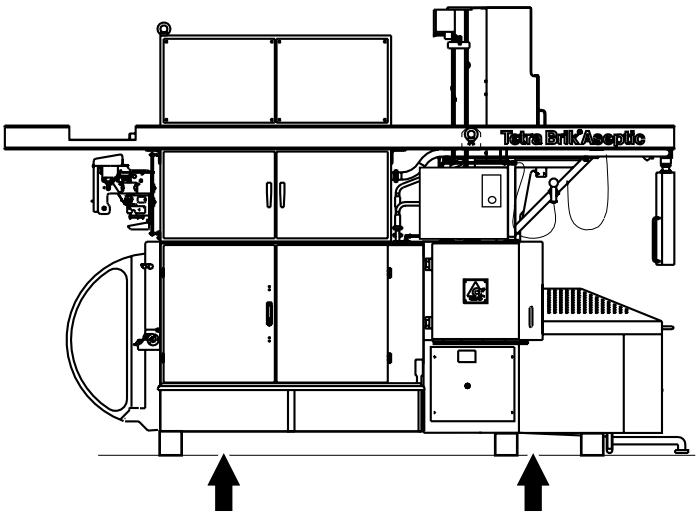

Note! Position the forks where they will not interfere with the wooden blocks.

e) Lift the machine complete with the cross bars of the transport frame **only enough to clear the crate.**

f) Manoeuvre the machine out of the crate.

Caution! Make sure that the wooden blocks support the frame members on both sides of the machine.

g) Lower the machine complete with the cross bars of the transport frame gently on to the wooden blocks (4) so that the blocks support the bottom of the machine and leave the cross bars (5) free.

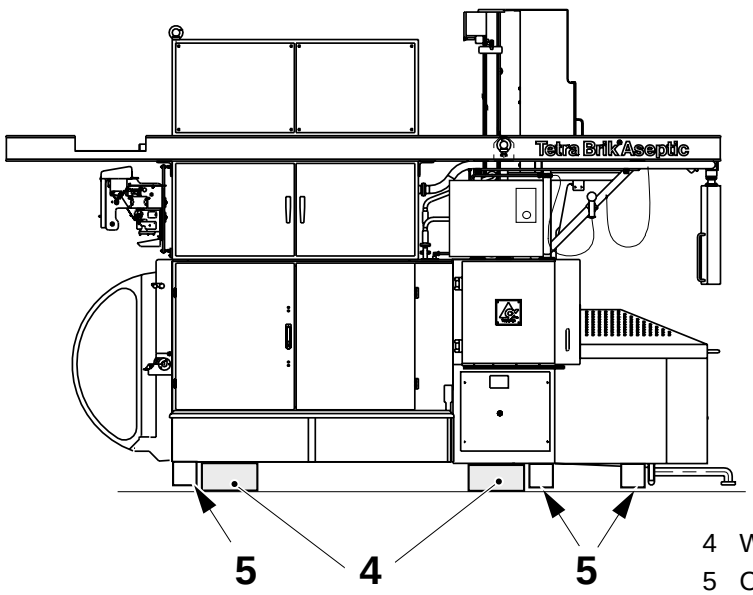

4 Wooden block
5 Cross bar

(Cont'd)

Fieldtest

2.2TB052671.en

(Cont'd)

h) Unscrew the eight screws (6) fixing the cross bars (5) to the bottom of the machine and remove the cross bars.

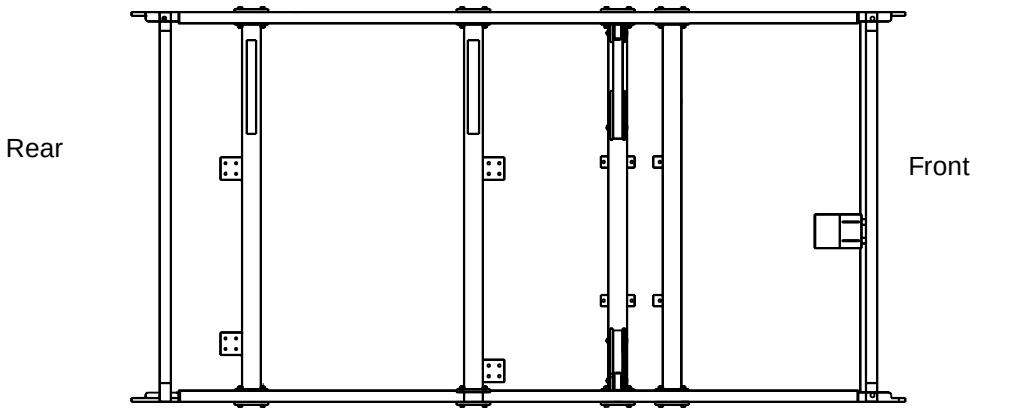

5 Cross bar
6 Screw

i) Make sure that the machine is stable and remove the lifting equipment.

2.2TB052671.en

Fieldtest

5.6 Inspection

a) Use the Packing List to check that nothing is missing from the crate.

b) Inspect the machine, the SA, the drying chamber, the electrical cabinet cooler, and all other machine parts for damage.

c) Open the boxes containing the smaller machine components and inspect these for damage.

d) Check that the data on the machine data plate corresponds with the specifications in the Machine Specification Document.

e) Open the Machine Documents box and check the documentation.

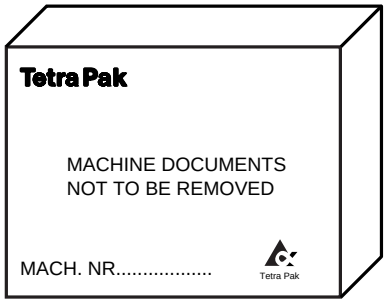

Open the rear LH door of the service unit and check the following documents:

- Machine Specification Document
- Final Inspection Report
- Machine Deviation Report (if relevant).
- Transport Damage Report
- Start-up Machine Quality Report
- System drawings

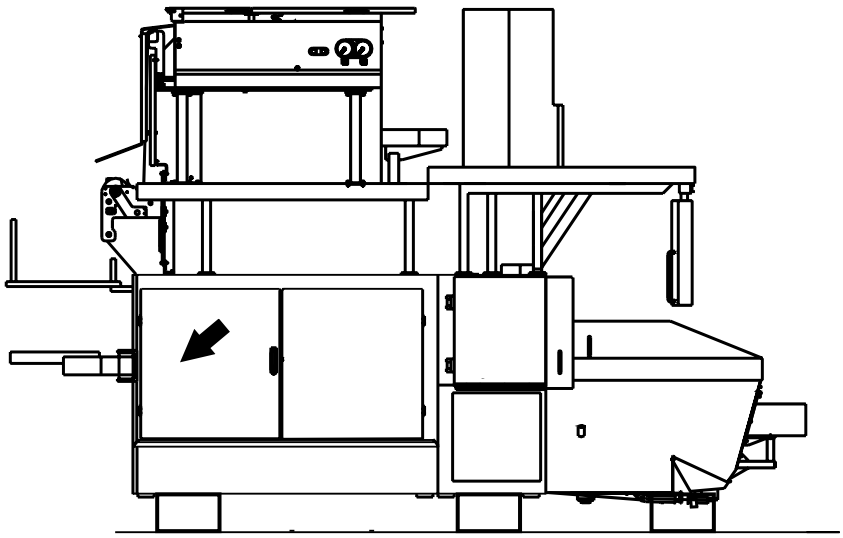

(Cont'd)

Fieldtest

2.2TB052671.en

(Cont'd)

f) Take the spare parts to the spare parts stores.

g) Fill in the **Transport Damage Report** and deliver it to the local Service Organisation for return to the manufacturer.

2.2TB052671.en

5.7 Disposal/return of packing

Note! Packing materials (including the crate, wrapping, and boxes) are not normally returned to the manufacturer.

a) Check with the customer if there is a special agreement for the return of packing to the manufacturer.

b) If packing must be returned to the manufacturer, prepare an area to store the crate and other returnable packing.

c) Check with the customer if there is a special arrangement for recycling packing.

d) If packing is not to be returned or recycled, check with the customer how to separate and dispose of packing (wood, plastic, paper, etc.).

WARNING! **Risk of intoxication!**
Stay well clear of burning plastics. They can give off dangerous toxic fumes.

e) Dispose of pollutant waste (bubble wrapping, plastic bags, expanded polystyrene, etc.) in accordance with local regulations.

Fieldtest

2.2TB052671.en

5.8 Fitting the transporter

The transporter, TP No. 271635-401, must be obtained from the local Service Organisation.

WARNING! **Risk of serious injury and damage!**
Incorrect positioning and use of the hydraulic jack can unbalance the machine.

a) Place a hydraulic jack centrally at the rear of the service unit at the point shown in the figure below. Make sure that the jack is positioned centrally between the two rear leg fixing points, and under the structural frame member.

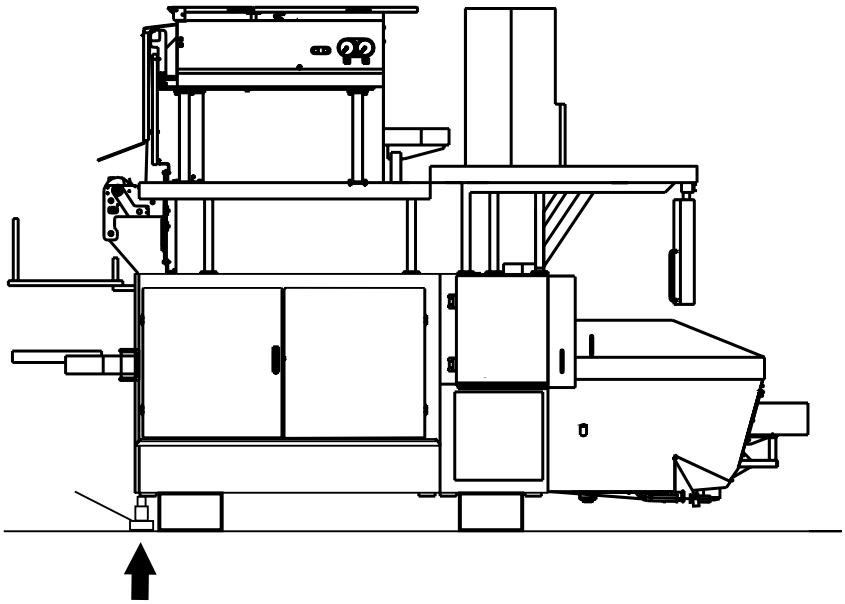

b) Slowly jack up the rear of the machine **only enough to fit the rear transporter**.

(Cont'd)

2.2TB052671.en

Fieldtest

(Cont'd)

c) Fit the rear transporter with the eight screws provided (4x2).

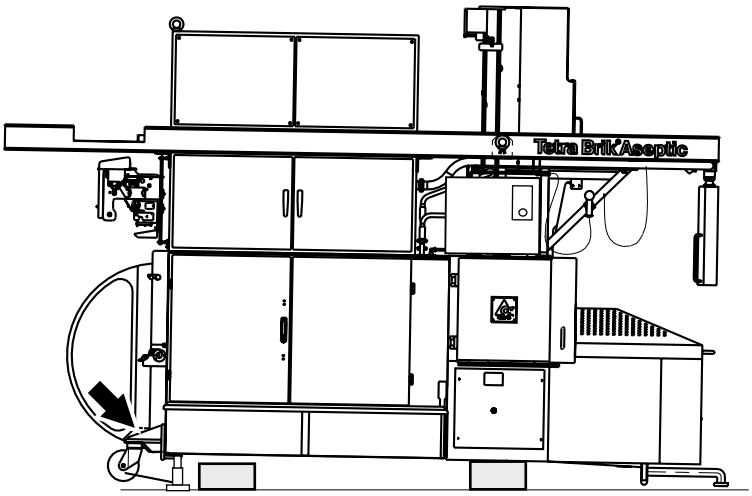

d) Remove the wooden blocks from under the rear of the machine. Gently lower the machine until the rear wheels support its weight.

e) Place the jack centrally at the front of the machine body at the point shown in the figure below. Make sure that the jack is positioned centrally between the two front leg fixing points, and under the structural frame member.

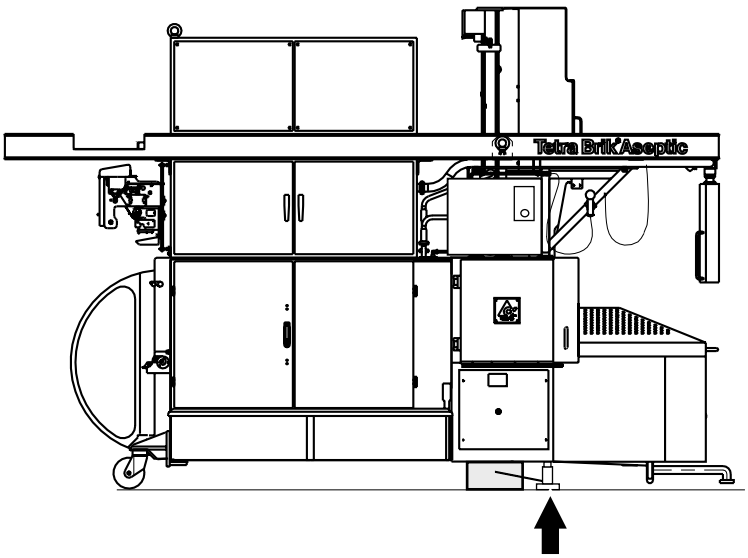

(Cont'd)

Fieldtest

2.2TB052671.en

(Cont'd)

Caution! Make sure that the jack is under the frame member of the machine body and **not** under the final folder.

f) Slowly jack up the front of the machine **only enough to fit the front transporter**.

g) Move the wooden blocks towards the rear of the machine if necessary to access the front transporter fitting points, but do not remove them yet.

h) Fit the front transporter to the bottom of the drive unit with the eight screws provided (4x2).

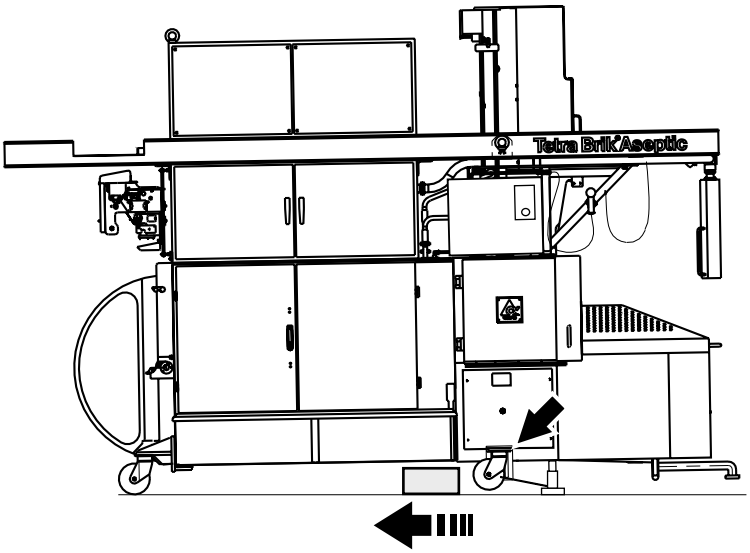

2.2TB052671.en

i) Remove the remaining wooden blocks from under the front of the machine.
Gently lower the machine until the front wheels support its weight.

Note! Block the wheels if the machine must be left on the transporter.

Removing the transporter

Follow the procedure for fitting the transporter in the reverse order to remove the transporter.

Fieldtest

This page intentionally left blank

Fieldtest

2.2TB052671.en

6 Positioning, assembly, and connections

DANGER!

Risk of fatal injury and serious damage!
Make sure that the capacity of lifting equipment is adequate and that the equipment itself is in good working order. Loads can settle or swing as they are lifted. Keep well clear.

6.1 Assembly requirements

Personnel

Only skilled or instructed Tetra Pak installation personnel are allowed to assemble the machine.

The area

a) Clear all obstacles away from the installation site and if necessary clean the floor of the site before starting to install the machine.

b) Make sure that there is sufficient room to move safely around the installation site. See section ***3.1 Installation drawings***. If machines around the site cannot be stopped, place guards around them to prevent accidental contact.

c) Make sure that lighting is adequate and arrange additional portable lights.

Equipment for lifting and moving

See section ***5.5 Unpacking the crate*** for lifting equipment specifications.

Tools and materials

The following tools and materials are needed to move and install the machine:

- lifting unit, TP No. 2-579899
- spirit level, TP No. 90243-163
- spirit level, TP No. 90243-165
- hydraulic jack, minimum capacity 3 tons
- min. four wooden blocks, min. 150 - max. 200 mm in height, to support the frame members on both sides of the machine.
- cable ties
- insulating tape
- hydraulic sealing tape.

(Cont'd)

Fieldtest

2.2TB062671.en

(Cont'd)

The following special tools may also be available from the local Service Organisation:

- transporter, TP No. 271635-401
- drying chamber lifting tool, TP No. 76500-101.

If the PLC program parameters have to be modified, the following equipment and materials will also be needed:

- portable PC running GE Fanuc LM90 software, V 6.01 or later
- GE Fanuc PLC serial cable, TP No. 90031-300
- TMCC PLC serial cable (9-pin M-F, pinned F2-M3, F3-M2, F5-M5) (only if new TMCC program has to be loaded)
- TMCC program and communications diskette (only if new TMCC program has to be loaded)

2.2TB062671.en

6.2 Positioning

WARNING! **Risk of serious injury and damage!**
The machine may be unstable if it is supported only by the wooden blocks.Take great care when climbing on it.

a) Lift the machine as instructed above. See section ***5.5 Unpacking the crate***.

b) Place the wooden blocks on the floor at the installation position.

c) Slowly manoeuvre the machine to the installation position.

Caution! Make sure that the wooden blocks support the frame members on both sides of the machine.

d) Lower the machine on to the wooden blocks (1). Make sure that the leg fixing points (2) remain free.
Do **not** remove the lifting equipment yet.

Note! The following figures show the machine without lifting tackle fitted, but apply to all types of lifting equipment.

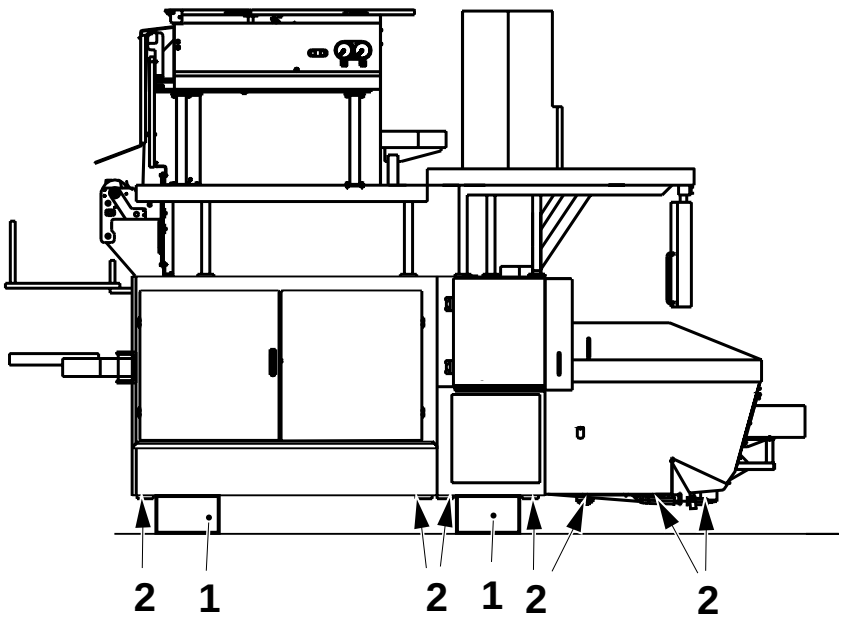

1 Wooden blocks
2 Leg fixing points

e) Check that the machine is correctly positioned with respect to the customer's plant. See section ***3.1 Installation drawings***.

(Cont'd)

Fieldtest

2.2TB062671.en

(Cont'd)

f) Fit all ten legs and secure with their screws and washers (four per leg).

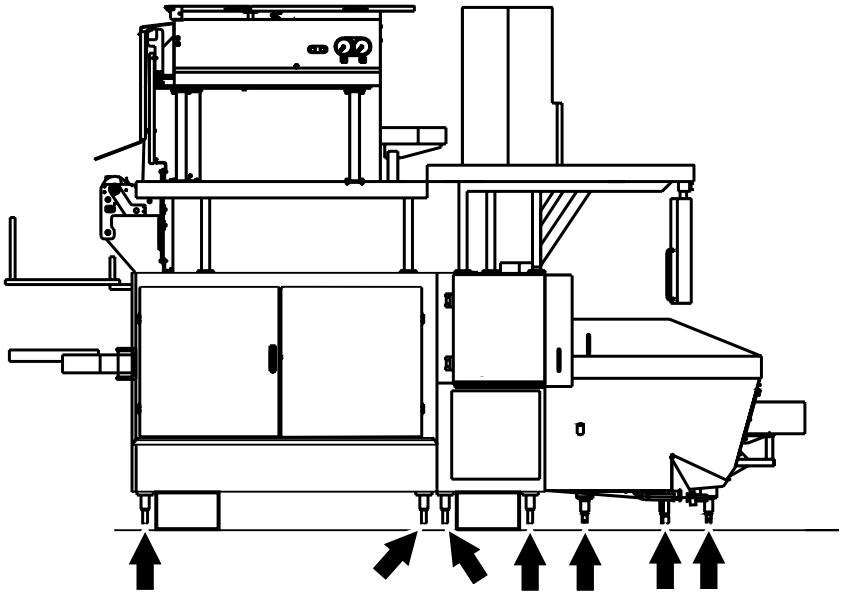

g) Screw the six non-structural legs up into the machine frame so that they will not interfere with levelling.

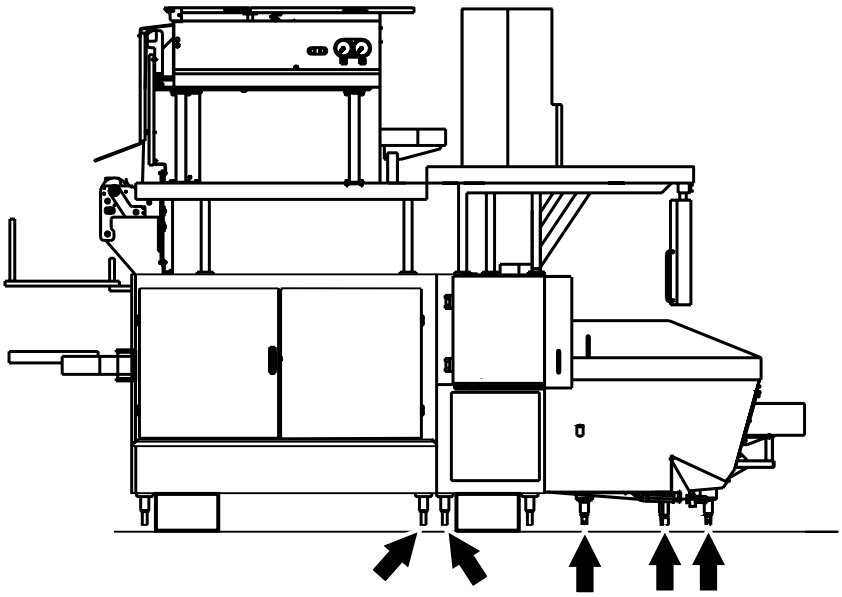

2.2TB062671.en

(Cont'd)

(Cont'd)

h) Position four feet under the four structural legs at the positions shown in the figure below.

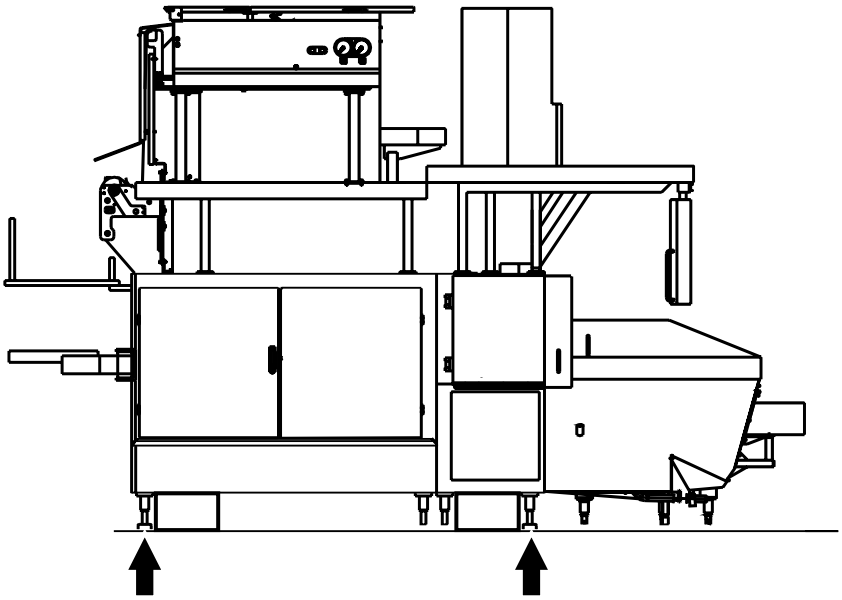

WARNING! **Risk of serious injury and damage!**
Do not unscrew the legs for more than 190 mm. They can come out completely.

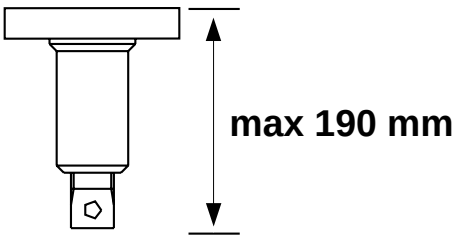

i) Screw down the four structural legs and make sure that they engage the recesses in the feet.

j) Screw down the four structural legs again **just enough to lift the machine off the wooden blocks**.

k) Make sure that the machine is supported and stable on all four structural legs and feet and remove the wooden blocks.

l) Remove the lifting equipment.

Fieldtest

2.2TB062671.en

6.3 Approximate levelling

WARNING! **Risk of serious injury and damage!**
Do not unscrew the legs for more than 190 mm. They can come out completely.

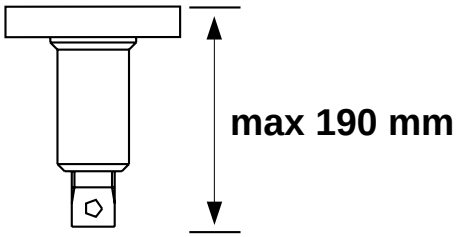

Note! Approximate levelling must be performed before assembly to ensure that the machine is stable and that there are no torsional forces on the frame. Precision levelling must be performed when assembly is complete.

a) Screw all four structural legs in or out until the machine, measured at the bottom panel, is 150 mm ±20 mm from the floor.

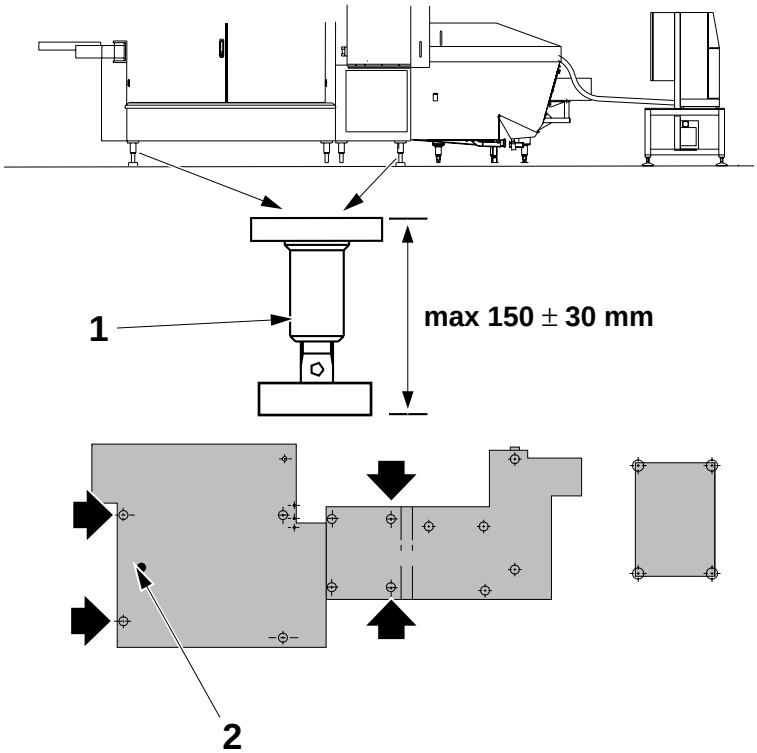

1 Structural leg
2 Lifting point hydraulic jack

Note! If you encounter problems in levelling the machine due to an uneven or sloping floor, place plates under the feet to assist in levelling.

(Cont'd)

2.2TB062671.en

Fieldtest

(Cont'd)

b) Crank the machine to raise the outer LH guide (1) of the jaw system and fit the spirit level TP No. 90243-163 (2) to it.

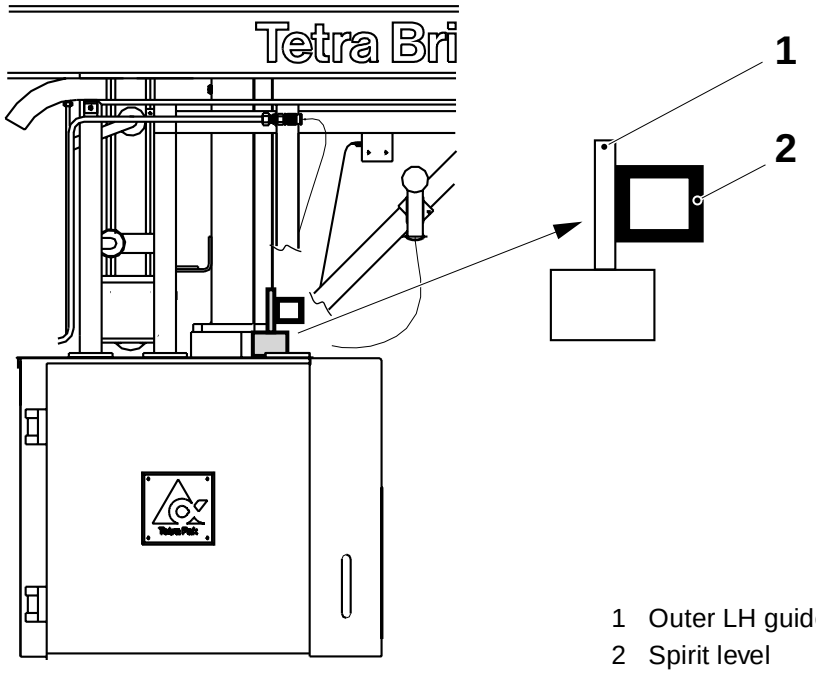

1 Outer LH guide
2 Spirit level
TP No. 90243-163

c) Adjust all four structural legs until the machine is approximately level transversely and longitudinally (150 mm ±20 mm from the floor).

Fieldtest

2.2TB062671.en

6.4 Assembly

Packing

Leave the bubble wrapping on parts until they are ready for use.

Leave the plastic plugs in the pipes until they are ready to be connected, but do **not** forget to remove them before connecting the pipes.

Leave ties in place until tied parts are ready to be used or connected.

6.4.1 Machine legs and feet

a) Place feet under the nine non-structural legs at the points shown in the figure below.

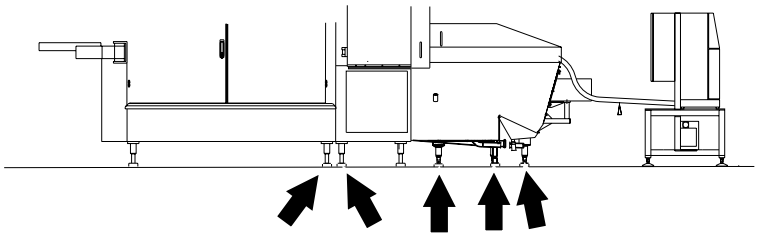

b) Screw down the nine non-structural legs until they just start to take the weight of the machine.

Note! Do not screw down too much. This could alter the levelling of the machine.

Note! If you encounter problems in adjusting the legs due to an uneven or sloping floor, place plates under the feet to assist in levelling.

c) Make sure that the levelling of the machine has not changed. See section ***6.3 Approximate levelling***.

2.2TB062671.en

6.4.2 Ladder, platform, and handrail

a) Fit the top of the ladder (1) to the platform at the two brackets at the points shown in the figure below. Tighten the screws securely.

b) Adjust the feet (2) so that the ladder is firmly supported by both of them.

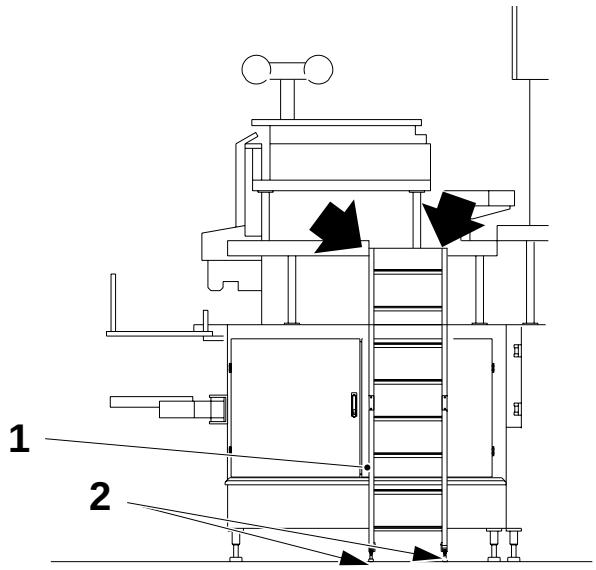

1 Ladder
2 Feet

Note! If you encounter problems in adjusting the feet of the ladder due to an uneven or sloping floor, place plates under them to assist in levelling.

c) Tighten the foot lock nuts on completion of adjustment.

(Cont'd)

Fieldtest

2.2TB062671.en

(Cont'd)

WARNING! **Risk of serious personal injury!**
It is dangerous to work on the platform when the handrail is not in place. Take great care.

d) Fit the ladder safety hoop (3).

e) Fit the two ladder handrails (4).

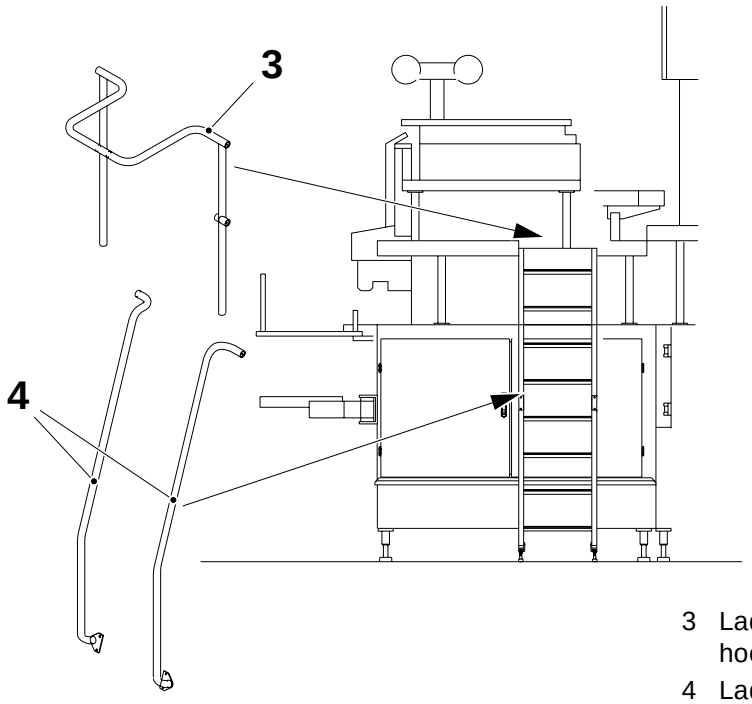

3 Ladder safety hoop
4 Ladder handrail

f) Thread the warning beacon cables through the support post (18).

Caution! Take care not to jam the cables when tightening the screws.

g) Fit the support post to the bracket at the front of the platform (two screws).

h) Connect the cables to the bulb holder. Fit the warning beacon glass (19) to the support post (18).

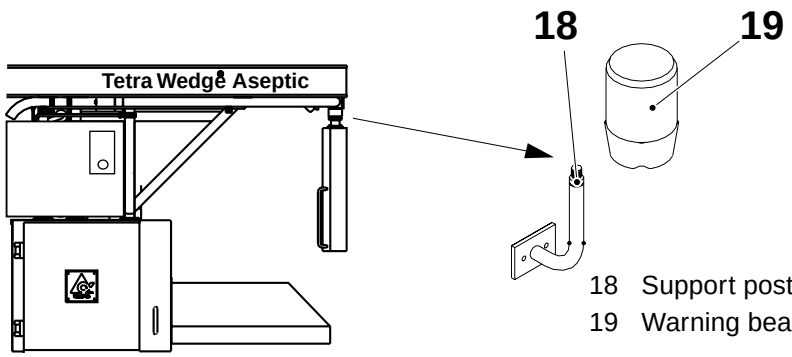

18 Support post
19 Warning beacon glass

2.2TB062671.en

Fieldtest

6.4.5 Drying chamber

Caution! Make sure that the sterilisation bath is adequately supported from beneath. When the transport plate is removed, the sterilisation bath is only held in place by the connecting pipes.

a) Remove the transport plate which covers the top of the column and supports the sterilisation bath.

Note! The transport plate is a machine accessory (TP No. 3-441725). Keep it safe.

b) **Either**:
Fit the special lifting tool which may be available from the local Service Organisation. (TP No. 76500-0101)
or:
Pass lifting ropes or slings through the top of the drying chamber on both sides at the points shown in the figure below. Take care not to damage the components inside the drying chamber.

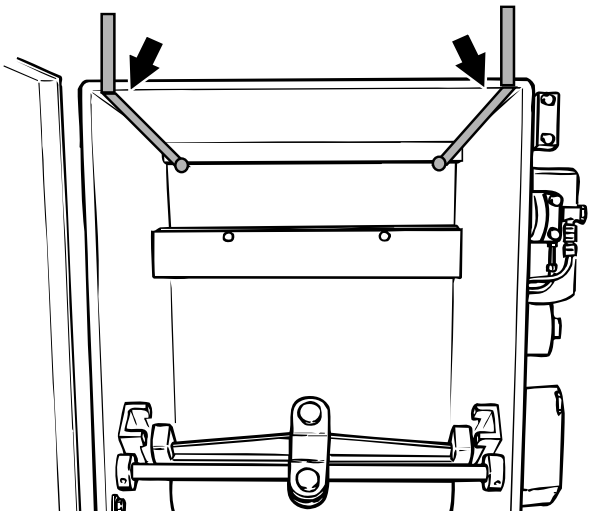

(Cont'd)

Fieldtest

2.2TB062671.en

(Cont'd)

c) Manoeuvre the drying chamber to just above the column.

d) Lift up the ends of the two chains from the sterilisation bath and pass them over the sprockets (1) and rollers (2) in the drying chamber.

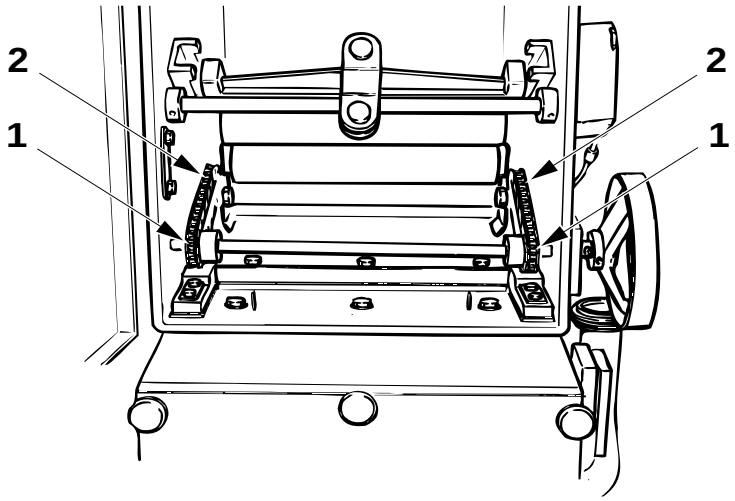

1 Sprocket
2 Roller

Caution! Tie the ends of the chains together to prevent them falling back into the sterilisation bath.

e) Lower the drying chamber on to the top of the column.

f) Make sure that the four pins (two at top of the sterilisation bath, two at top of the column) engage in the holes in the bottom of the drying chamber at the points shown in the figure below.

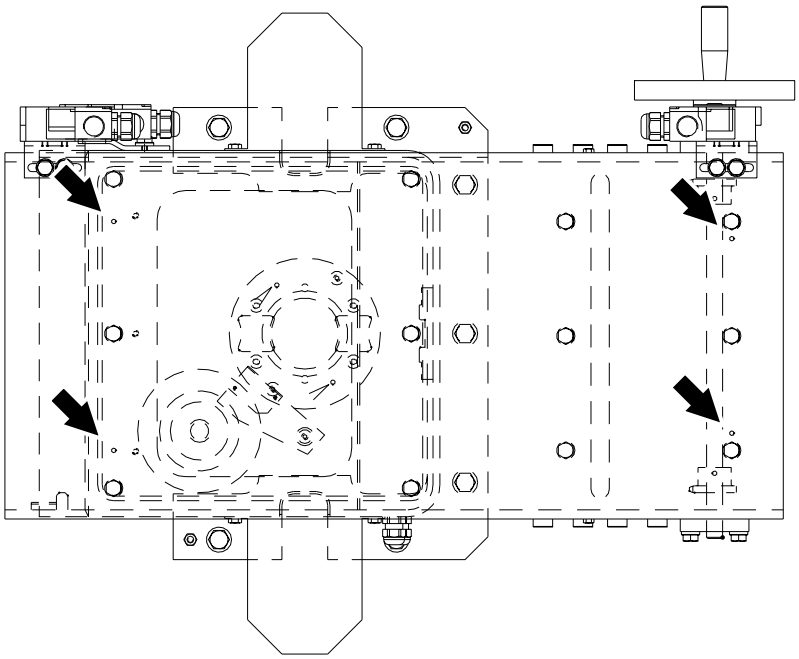

(Cont'd)

2.2TB062671.en

(Cont'd)

Inside the drying chamber

a) Fit the split links to connect up the chains.

Note! Turn the crank on the LH side of the drying chamber if necessary to rotate the chains to the most convenient position for fitting the split links.

b) Turn the crank a few times to make sure that the chains are engaged in the sprockets correctly, and that they are free to move.
Make sure that the carrier is perfectly level.

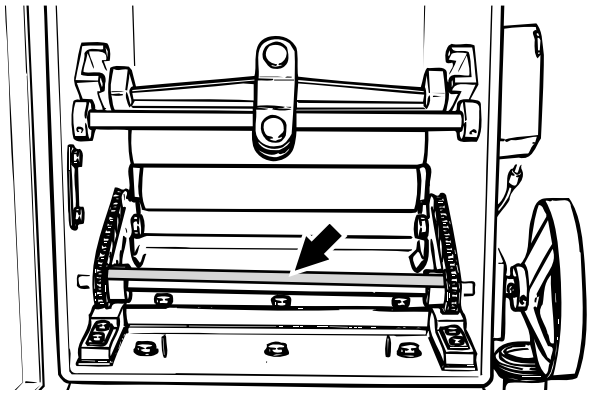

(Cont'd)

2.2TB062671.en

(Cont'd)

Caution! Take great care not to drop the chains into the sterilisation bath when working with them.

c) If necessary, remove one of the split links and move the free chain to set the carrier level.

d) Fit and tighten the twelve drying chamber fixing screws at the points shown in the figure below.

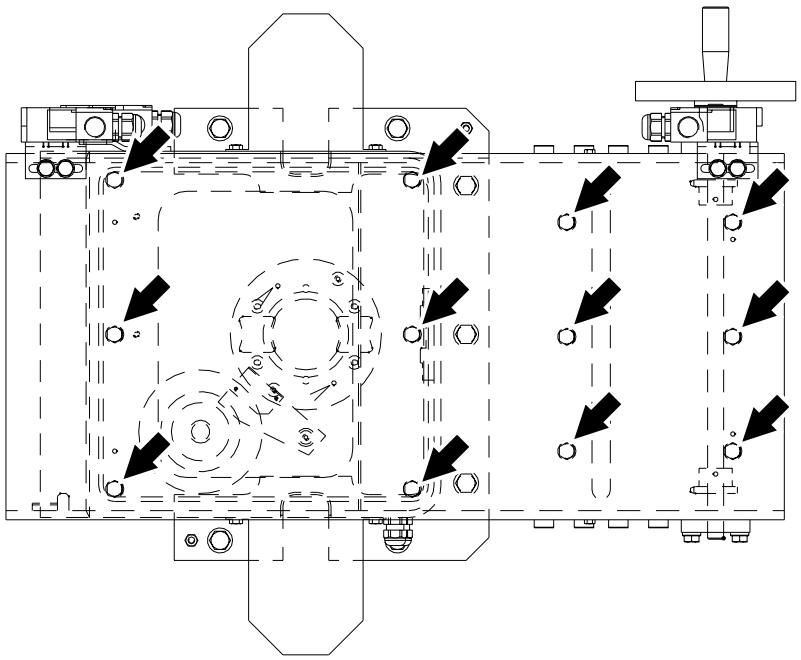

2.2TB062671.en

(Cont'd)

Fieldtest

(Cont'd)

e) Make sure that the tension of the chains is correct. See the MM for further details.

f) Fit the drip plates.

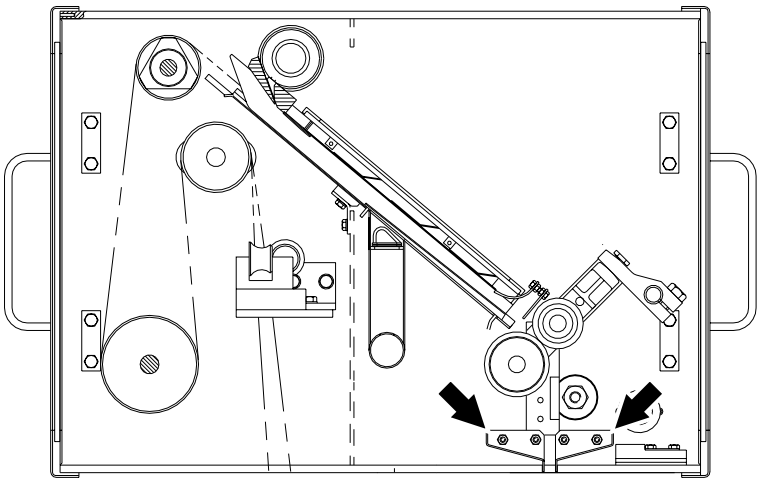

LH side of drying chamber

a) Fit the LH side cable duct, and run the cables from the LH side of the column up through it.

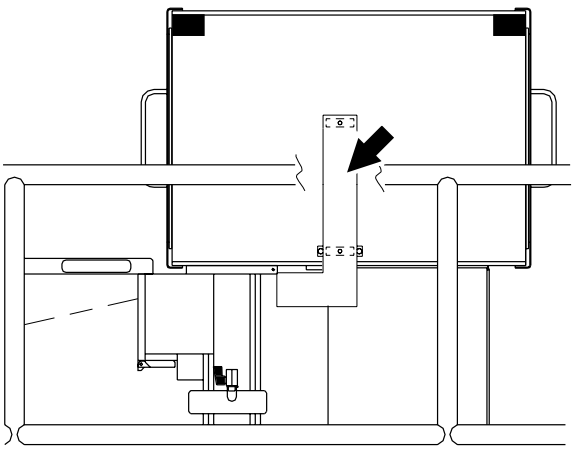

Note! Leave the cable duct open until the electrical connections have been made.

(Cont'd)

Fieldtest

2.2TB062671.en

(Cont'd)

b) Fix the two cable tubes to the bracket at the top of the cable duct.

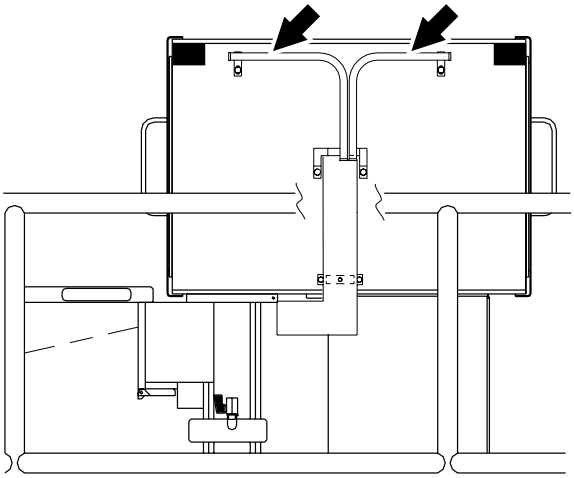

c) Pass cable No. 418 through the rear cable tube to microswitch (1). Pass cable No. 416 through the front cable tube to microswitch (2). Connect microswitch (1), cable No. 418, and microswitch (2), cable No. 416.

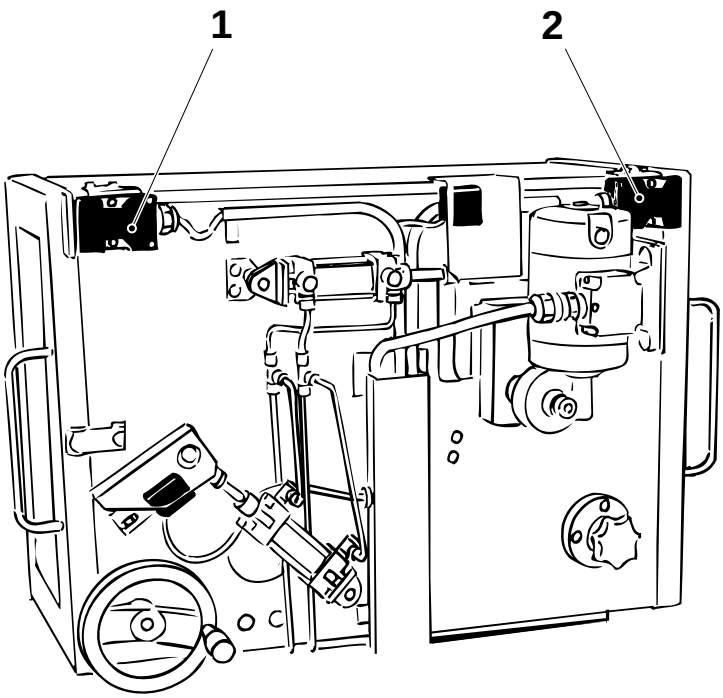

1 Microswitch
2 Microswitch

(Cont'd)

2.2TB062671.en

(Cont'd)

d) Fit the calender roller position proximity switch (3), cable No. 422.

e) Fit the air knife position proximity switch (4), cable No. 423.

f) Fit the cover plate (5) over the air knife position proximity switch.

g) Connect up the bending roller motor cable (6), cable No. 404.

Note! See the EM for further details to avoid reversing the direction of motor rotation.

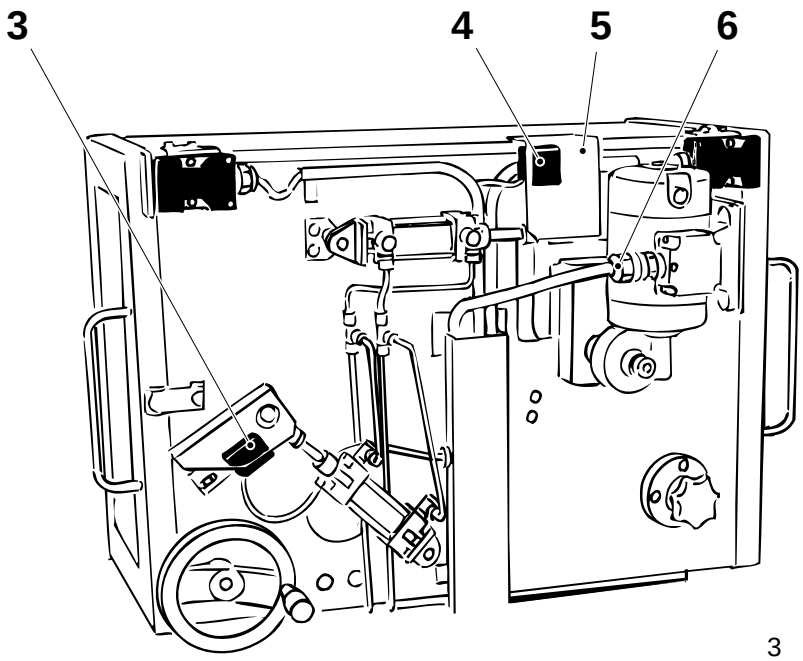

3 Proximity switch
4 Proximity switch
5 Cover plate
6 Motor cable

2.2TB062671.en

h) Arrange the cables tidily in the cable duct and close the cable duct.

(Cont'd)

Fieldtest

(Cont'd)

RH side of drying chamber

Fit the RH side cable duct and run the cables from the RH side of the column up through it.

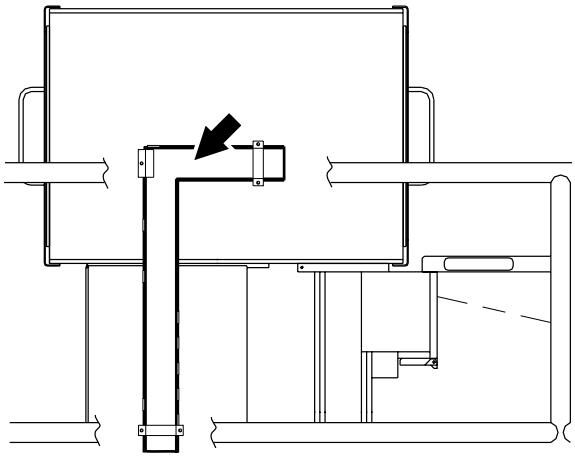

Note! Do not close the cable duct or make any electrical connections yet.

6.4.6 Hydrogen peroxide generator

Caution! Remove all sealing plugs before fitting components and pipes.

a) Fit the hydrogen peroxide generator.

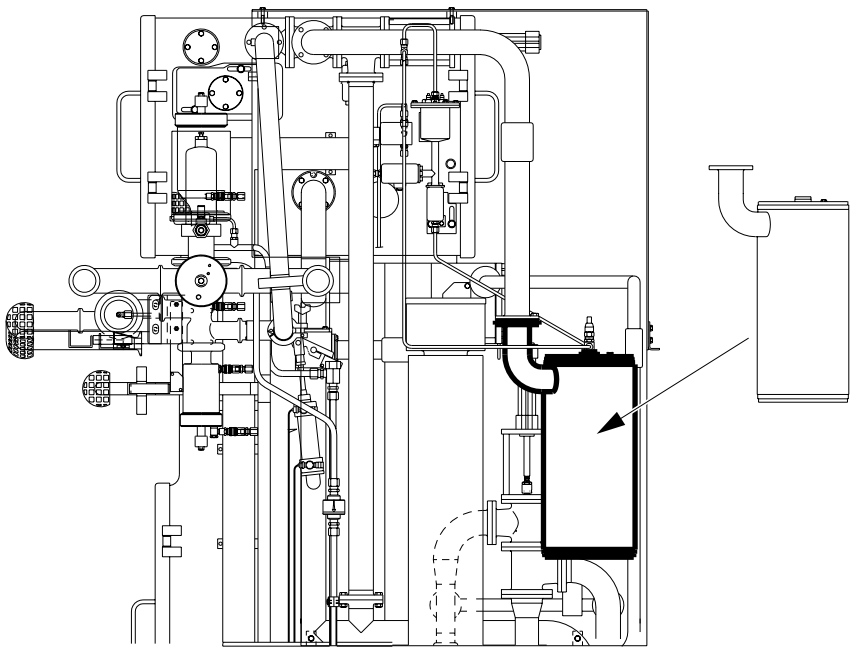

2.2TB062671.en

6.4.7 Large diameter pipes

Caution! Remove all sealing plugs before fitting components and pipes.

a) Fit pipe (1) between the top of the hydrogen peroxide generator (2) and the pre-sterilisation valve (3).

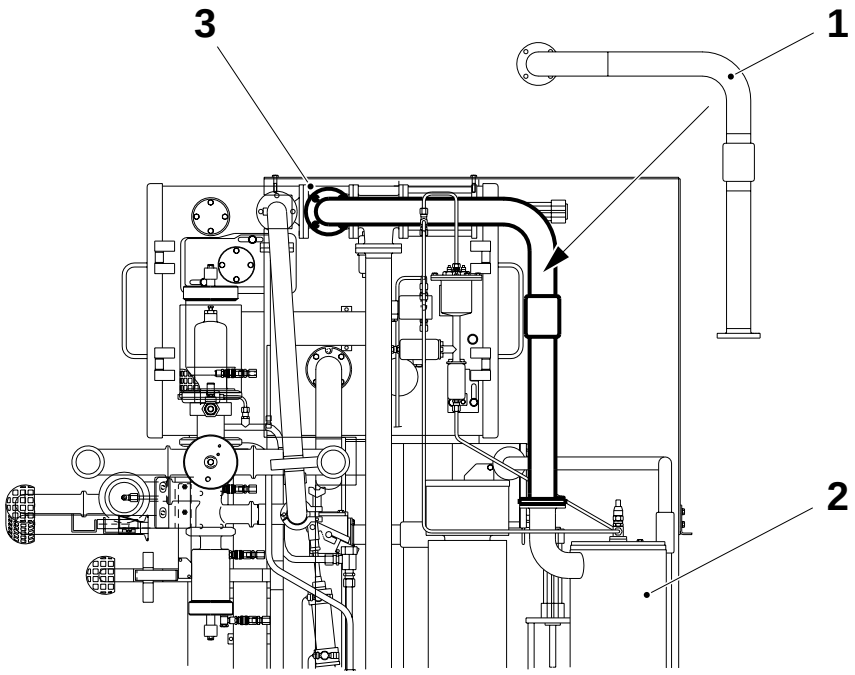

2.2TB062671.en

1 Pipe
2 Hydrogen peroxide generator
3 Pre-sterilisation valve

(Cont'd)

Fieldtest

(Cont'd)

b) Fit pipe (4) between the suction valve (5) and the drying chamber.

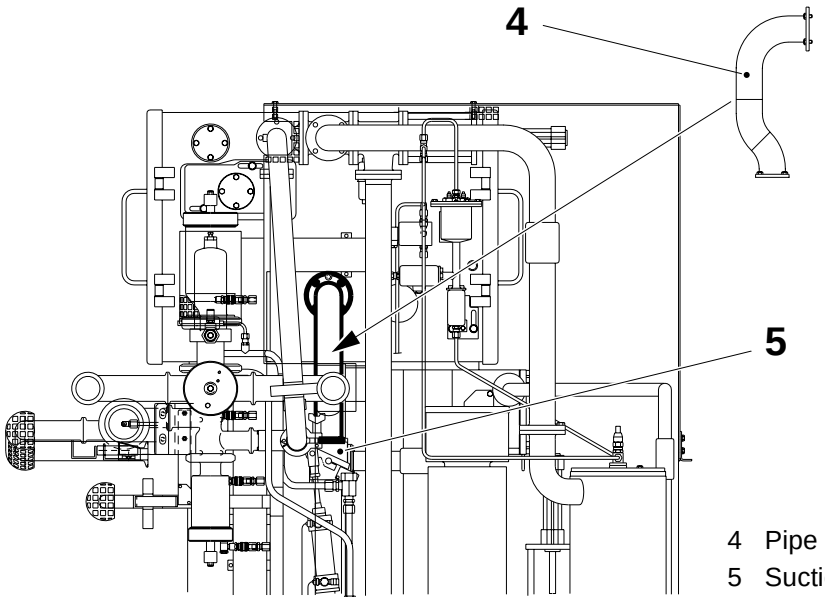

4 Pipe
5 Suction valve

c) Fit pipe (6) between the pre-sterilisation valve (3) and the flange on the horizontal pipe (7) near the platform.

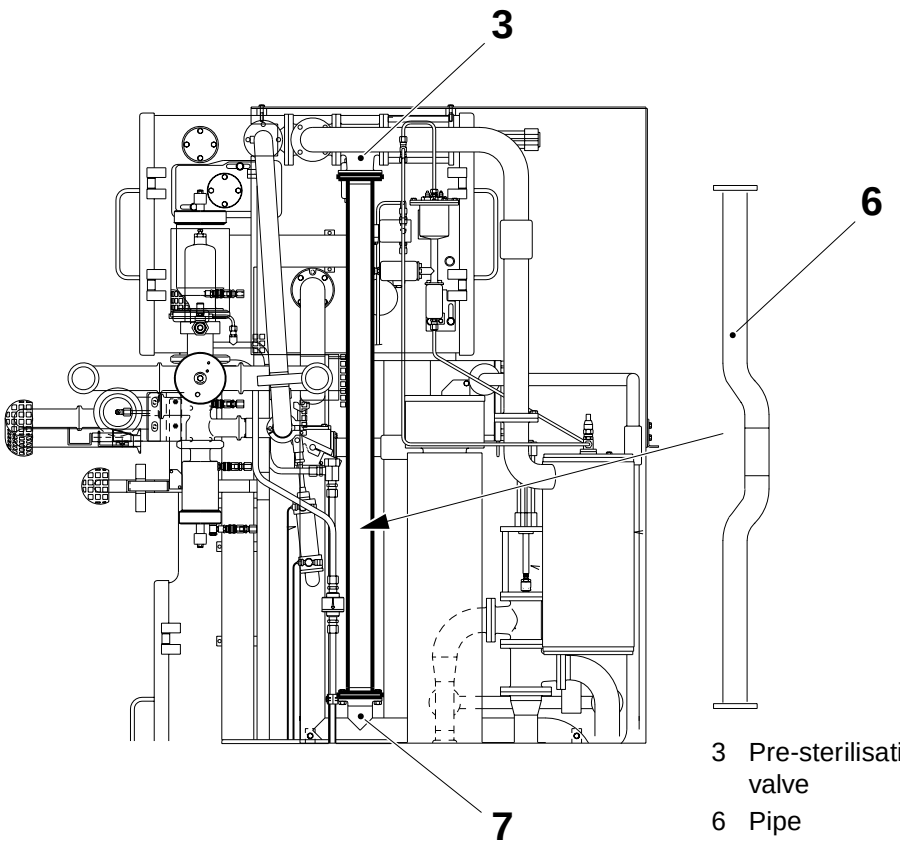

3 Pre-sterilisation valve
6 Pipe
7 Pipe

(Cont'd)

2.2TB062671.en

Fieldtest

(Cont'd)

Caution! Make sure that all cables and flexible air hoses are kept well clear of the sterile air pipe. Cables can be damaged by contact with this pipe when hot.

d) Fit the sterile air pipe (8) between the air-knife connection (9) and the LS nozzle (10).

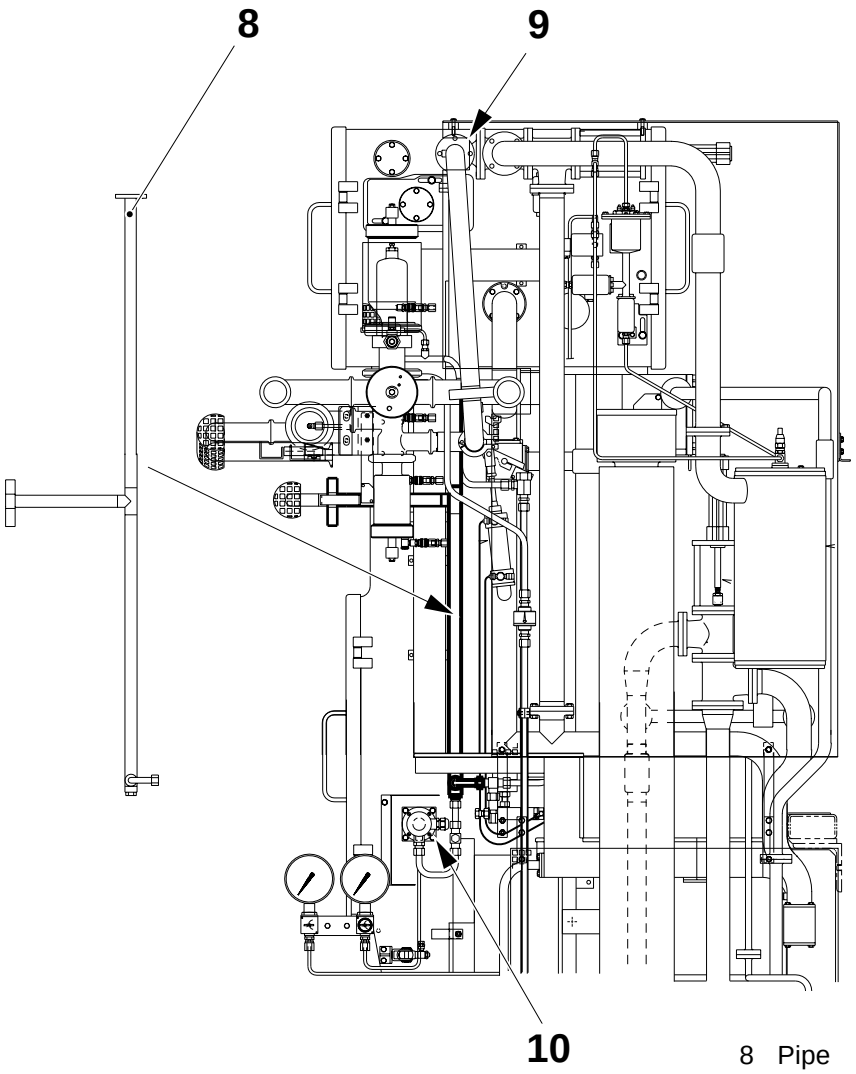

2.2TB062671.en

8 Pipe
9 Connection
10 LS nozzle

(Cont'd)

Fieldtest

(Cont'd)

e) Fit the upper filling pipe (11) inside the column.

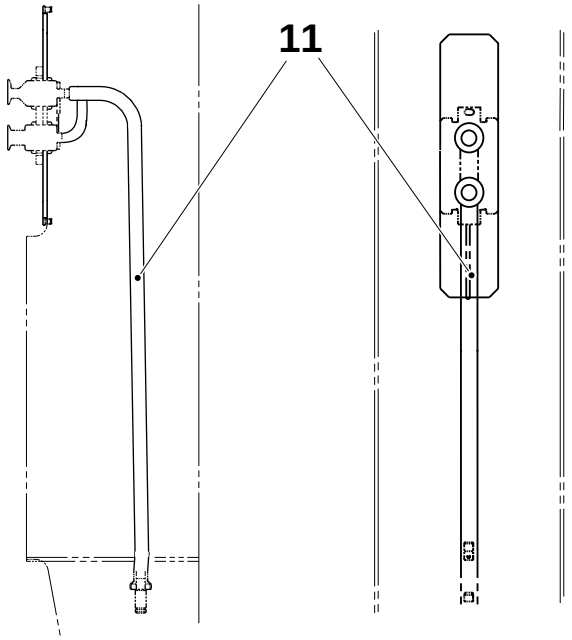

11 Upper filling pipe

f) Fix the connection plate (12) to the front of the column. Tighten the plate in place with the lock handle (13).

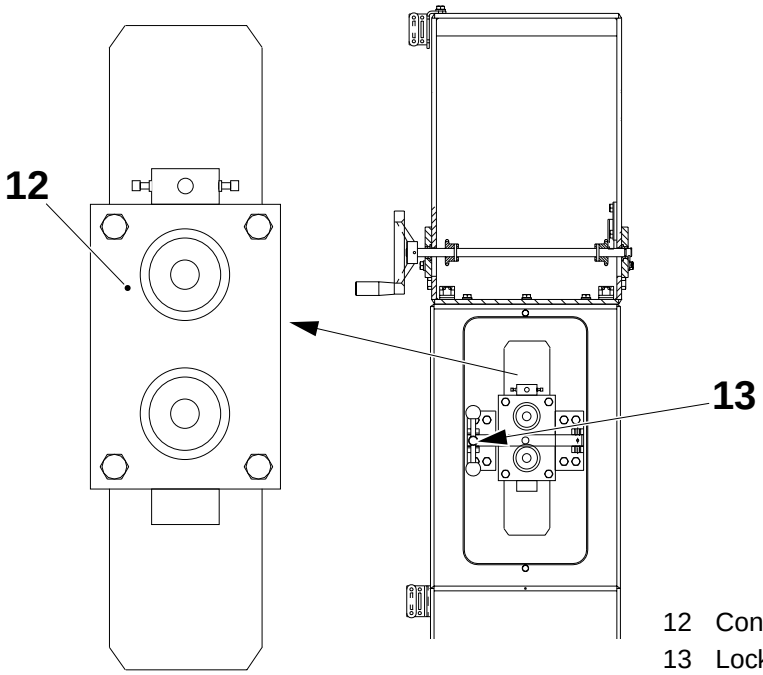

12 Connection plate
13 Lock handle

Note! Wait until test production is ready to start before fitting the lower filling pipe. See the OM for further details.

(Cont'd)

2.2TB062671.en

(Cont'd)

g) Fit the CIP pipe (14) and secure it to bracket (15) under the platform frame and to bracket (16) on the superstructure frame.

h) Fit the extension (17) to the front connection on the CIP pipe.

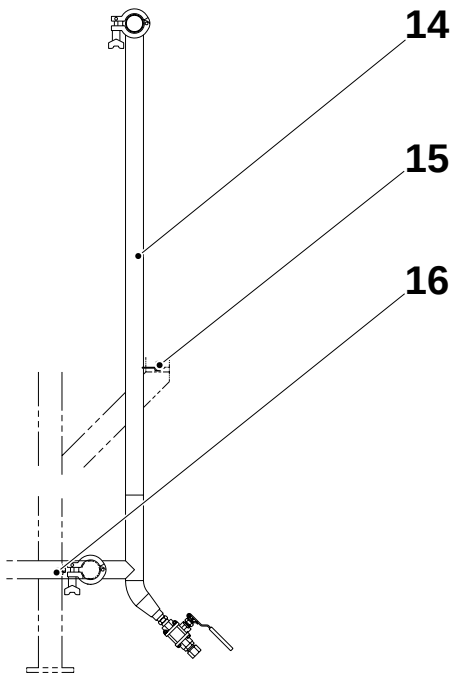

14 CIP pipe
15 Bracket
16 Bracket

2.2TB062671.en

Fieldtest

6.4.8 Aseptic product valve (APV)

Caution! Remove all sealing plugs before fitting components and pipes.

a) Fit the APV (1) to the bracket (2) on the top RH side of the column.

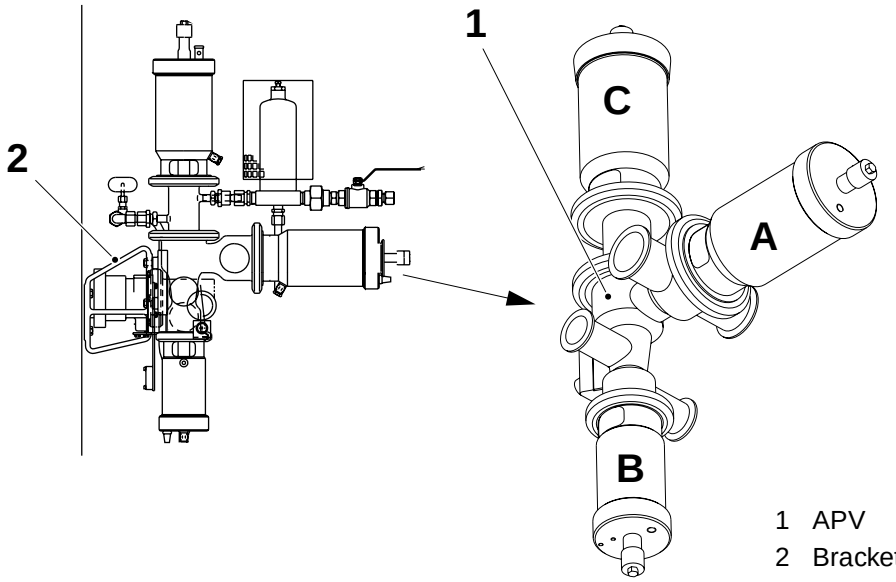

1 APV
2 Bracket

Caution! Make sure that the correct gaskets are fitted.

b) Fit the product regulating valve (3) to the APV. Make sure that the regulating valve is supported by the two fingers of bracket (4). Fit gasket TP No. 926822 between the regulating valve and the APV.

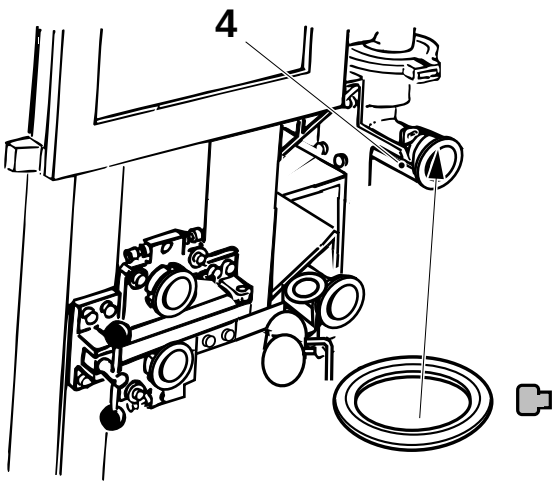

4 Bracket

TP No. 926822

(Cont'd)

2.2TB062671.en

Fieldtest

(Cont'd)

Caution! Make sure that the correct gaskets are fitted.

c) Fit the sterile air pipe with gaskets TP No. 342850-303 at both ends.

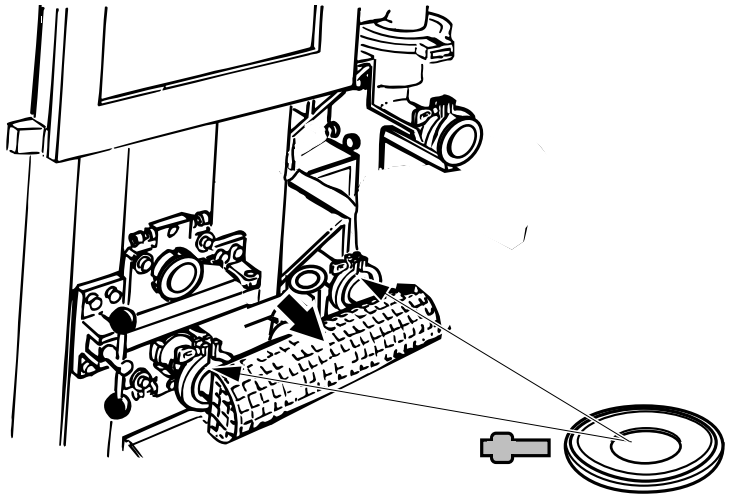

TP No. 342850-303

Fieldtest

2.2TB062671.en

(Cont'd)

Caution! Make sure that the correct gaskets are fitted.

d) Fit the product inlet pipe (13) and product outlet pipe (14) to the APV with gasket TP No. 342850-305 between both pipes and the APV.

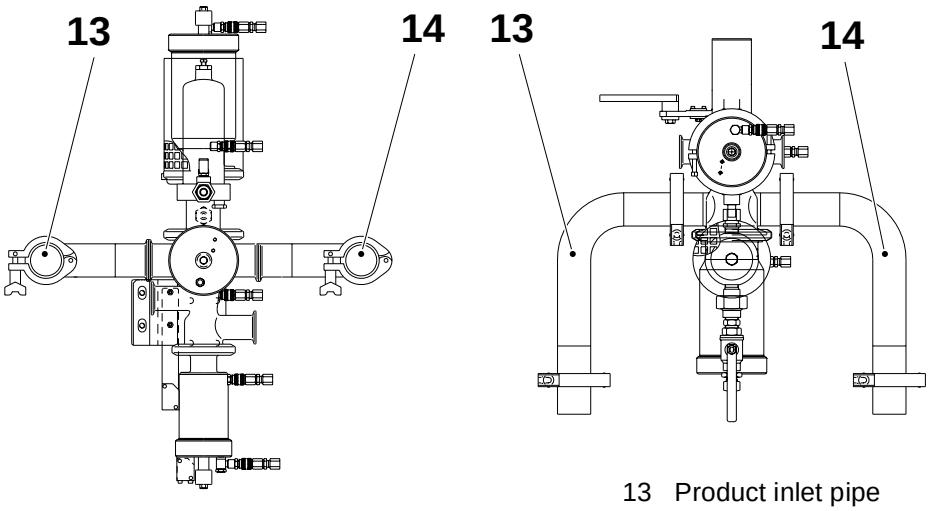

13 Product inlet pipe
14 Product outlet pipe

Note! Gasket TP No. 342850-305 is also used for the supply connections to and from the product pipes.

(Cont'd)

2.2TB062671.en

(Cont'd)

Caution! Make sure that the correct gaskets are fitted.

e) Fit the three sterile air L pipes (15) between the B-valve connection (16) and the air knife connection (17) with gaskets TP No. 342850-304 at all joints.

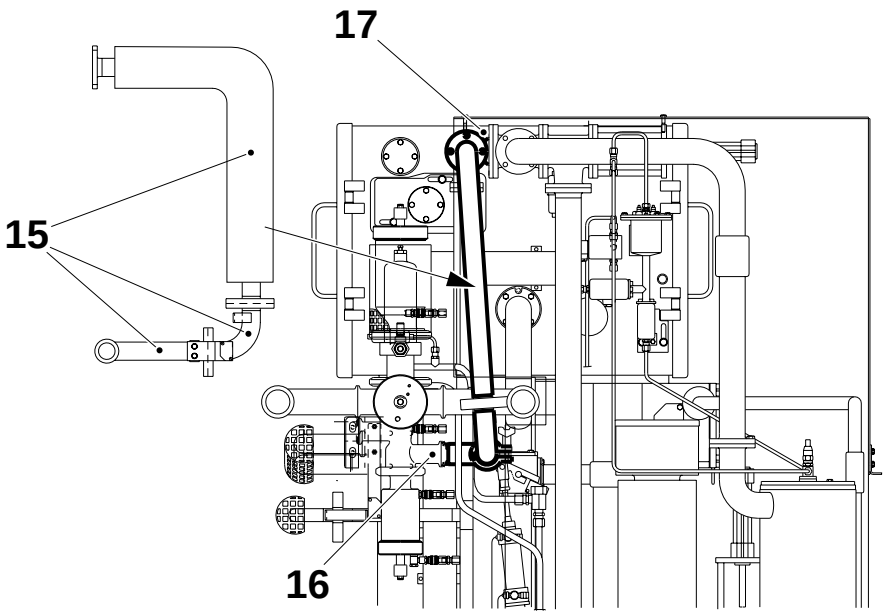

15 Pipe
16 Connection
17 Connection

2.2TB062671.en

(Cont'd)

Fieldtest

(Cont'd)

f) Fit pipe (18) between the steam filter connection (19) and the lower steam trap (20).

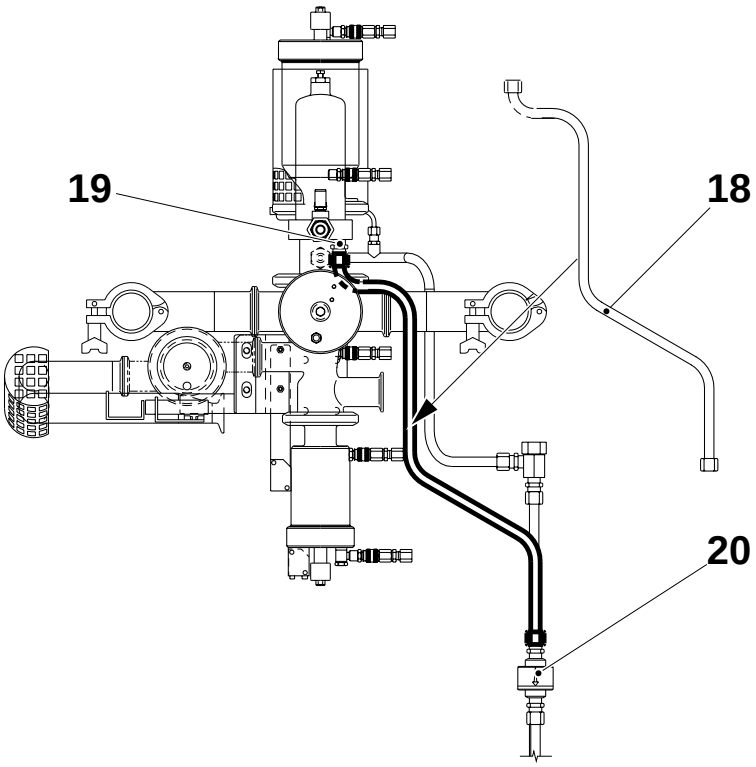

2.2TB062671.en

18 Pipe
19 Connection
20 Steam trap

(Cont'd)

Fieldtest

(Cont'd)

g) Fit pipe (21) between the APV connection (22) and the upper steam trap (23).

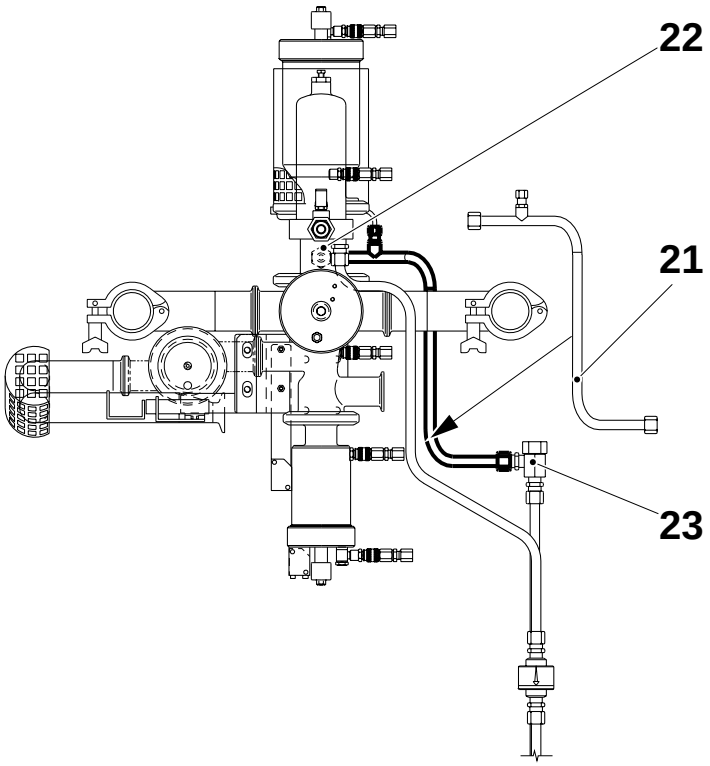

21 Pipe
22 Connection
23 Steam trap

2.2TB062671.en

Fieldtest

6.4.9 Small diameter pipes

Caution! Remove all sealing plugs before fitting components and pipes.

Note! See the System Drawings for further details on the following operations.

Caution! Make sure that you fit the air and hydrogen peroxide pipes to the correct fittings on the hydrogen peroxide generator. Check the 'AIR' and 'LIQUID markings on the valve on top of the generator.

a) Fit pipe (1) between the **air** side of connection valve (2) on the hydrogen peroxide generator and the 'T' connection (3) on the pipe between solenoid valve MY4 and spray tank MB43BA.

b) Fit pipe (4) between the **liquid** side of connection valve (2) on the hydrogen peroxide generator and the bottom of solenoid valve MY35 (5).

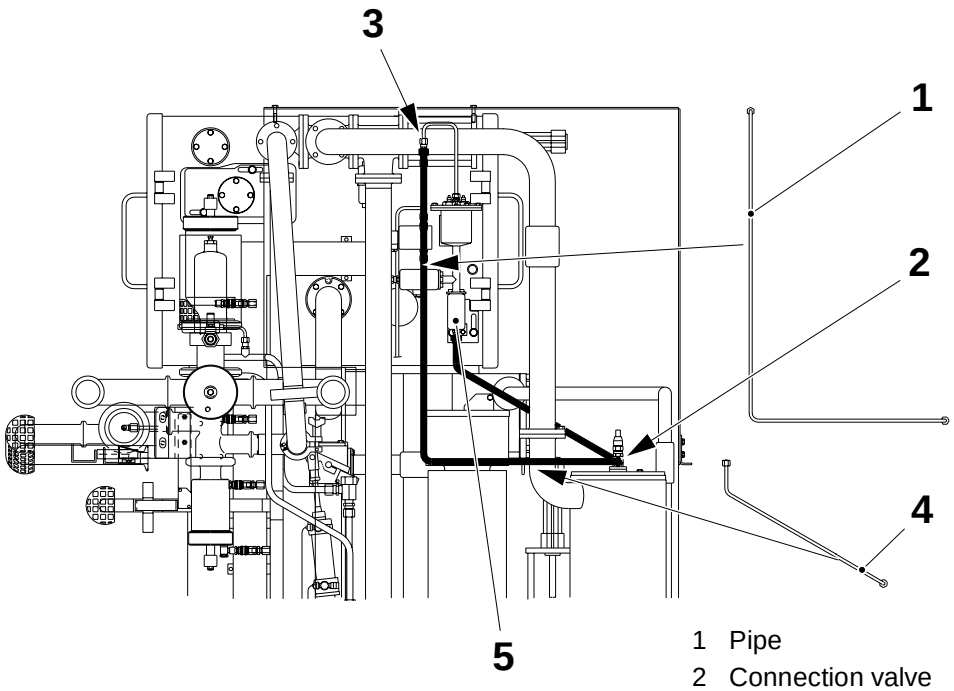

1 Pipe
2 Connection valve
3 Connection
4 Pipe
5 Solenoid valve MY35

(Cont'd)

2.2TB062671.en

Fieldtest

(Cont'd)

c) Fit pipe (6) between the bottom of solenoid valve MY4 (7) and the connection (8) at the LH side of the air superheater.

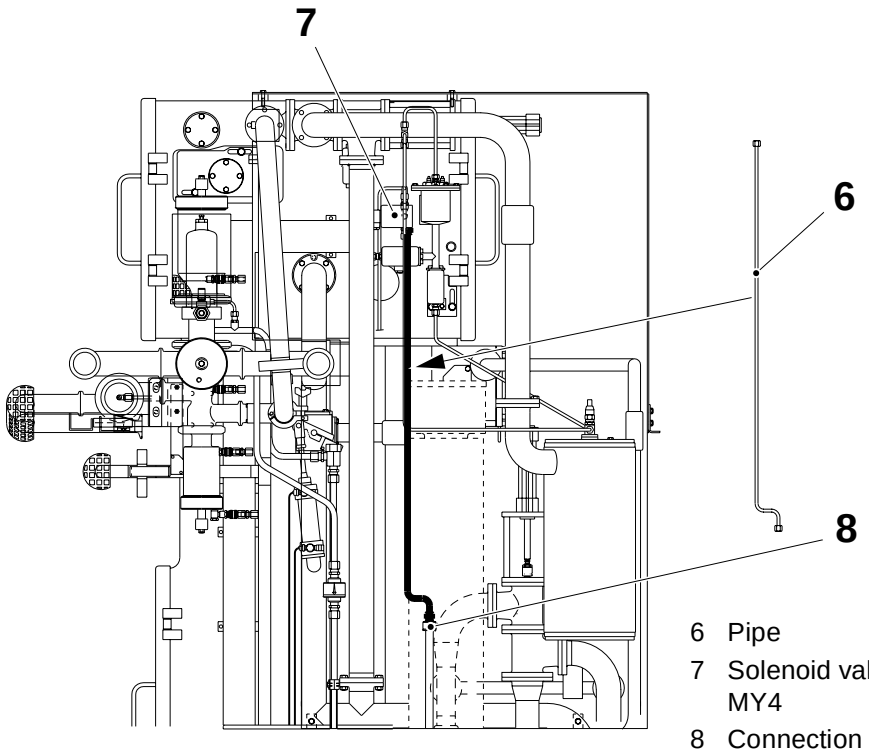

6 Pipe
7 Solenoid valve MY4
8 Connection

2.2TB062671.en

d) Fit pipe 70 (9) between the bottom of the C-valve and connection 70 at the bottom of the drying chamber.

e) Fit pipe 71 (10) between the top of the C-valve and connection 71 at the bottom of the drying chamber.

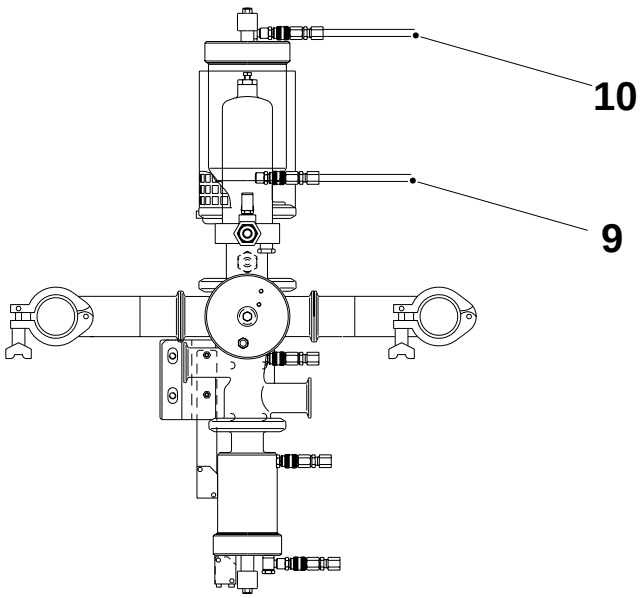

9 Pipe 70
10 Pipe 71

(Cont'd)

Fieldtest

(Cont'd)

f) Fit pipe 90 (11) between the LH side of the A-valve and connection 90 at the bottom of the drying chamber.

g) Fit pipe 91 (12) between the RH side of the A-valve and connection 91 at the bottom of the drying chamber.

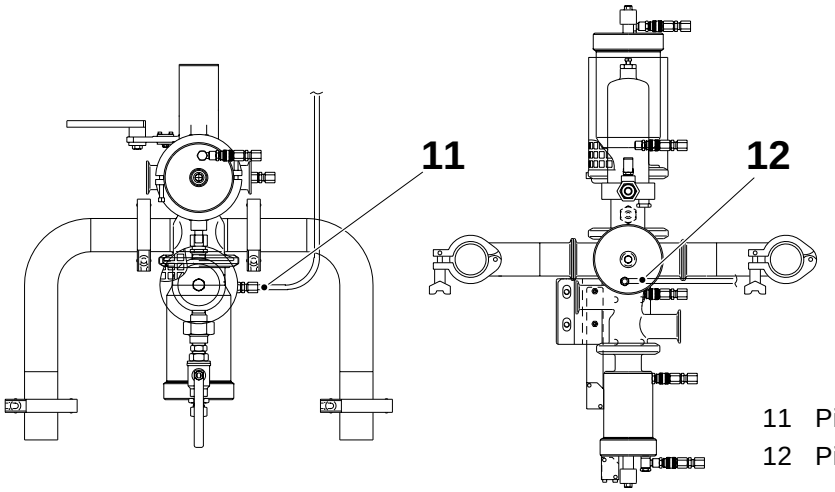

11 Pipe 90
12 Pipe 91

h) Connect pipe 80 (13) to the top of the B-valve.

i) Connect pipe 90 (14) to the bottom of the B-valve.

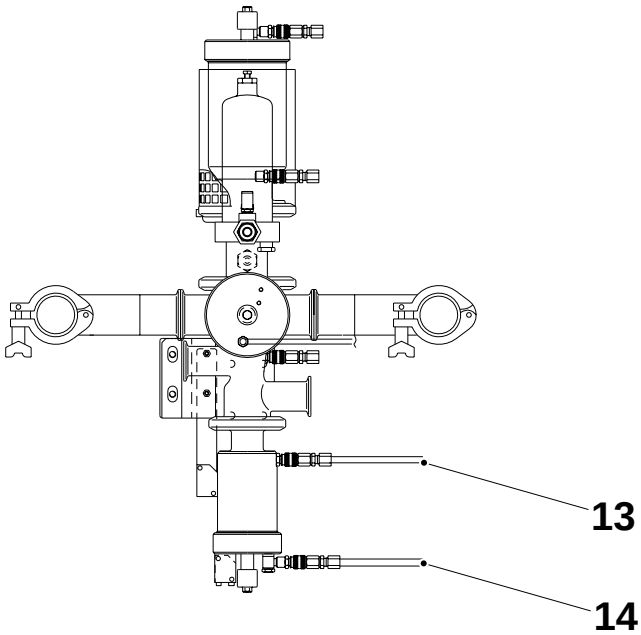

13 Pipe 80
14 Pipe 90

(Cont'd)

2.2TB062671.en

(Cont'd)

j) Fit pipe (15) from the bottom of the T connection at the front of solenoid valve MY34 to connection (16).

k) Fit pipe (17) from the front of the T connector to the connection at the LH side of the sterilisation bath.

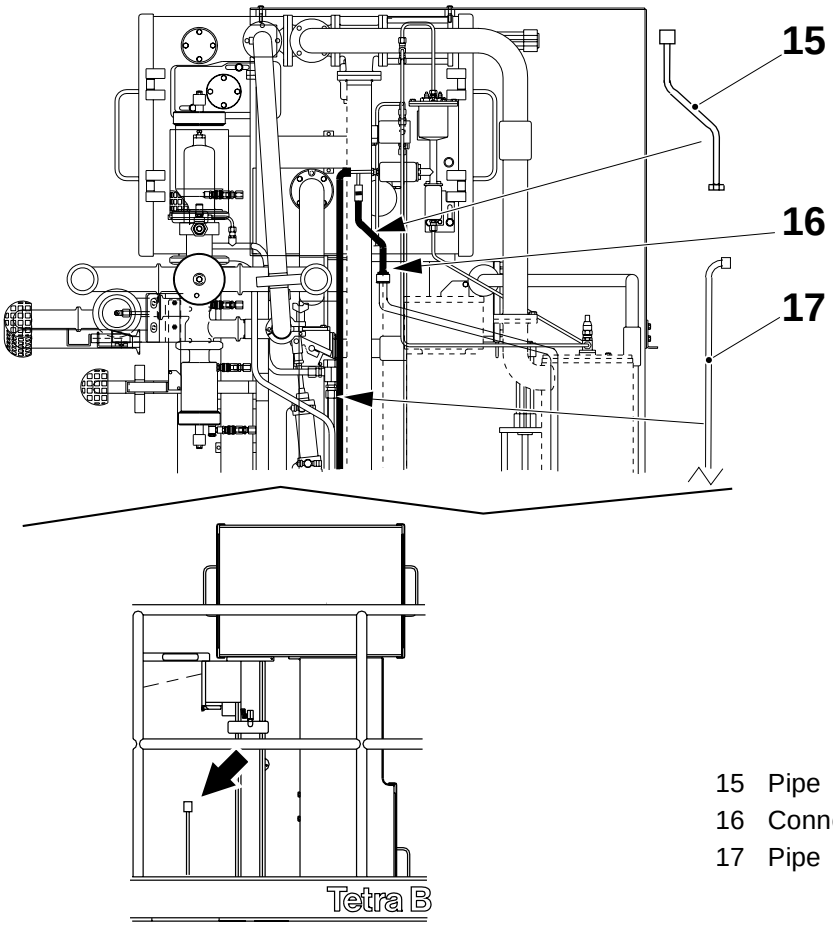

2.2TB062671.en

15 Pipe
16 Connection
17 Pipe

(Cont'd)

Fieldtest

(Cont'd)

Note! The following pipes are connected at the bottom of the drying chamber.

l) Fit pipe 40 (18) from solenoid valve MY4.

m) Fit pipe 190 (19) from the front of the pre-sterilisation air inlet valve.

n) Fit pipe 191 (20) from the rear of the pre-sterilisation air inlet valve.

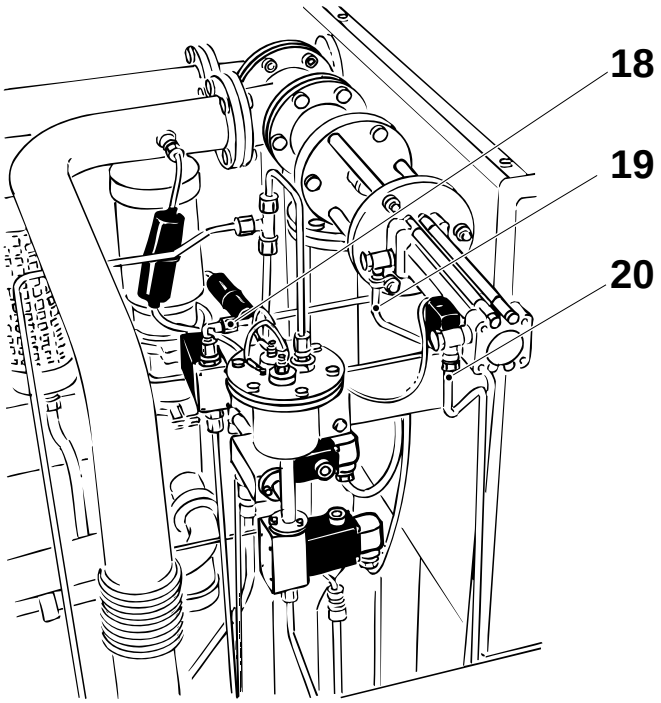

18 Pipe 40
19 Pipe 190
20 Pipe 191

o) Fit pipes 210 (21) and 211 (22) from the calender roller and air knife cylinders.

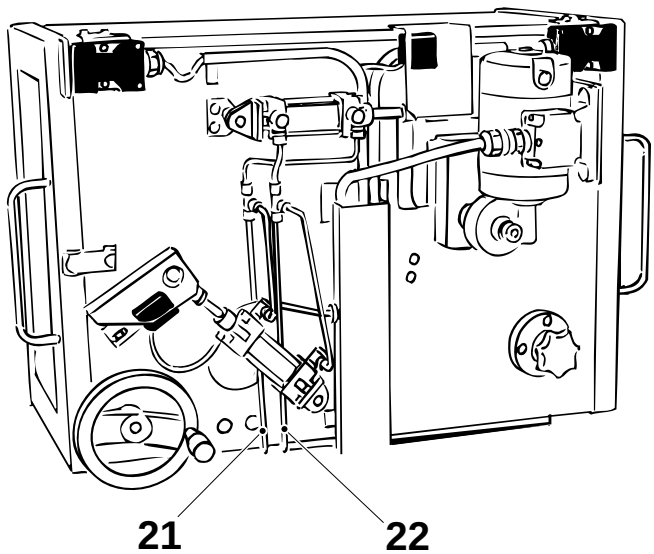

21 Pipe 210
22 Pipe 211

2.2TB062671.en

Fieldtest

6.4.10 Electrical connections

Note! See the EM for further details on the following operations.

a) Connect the pre-sterilisation thermocouple, cable No. 407.

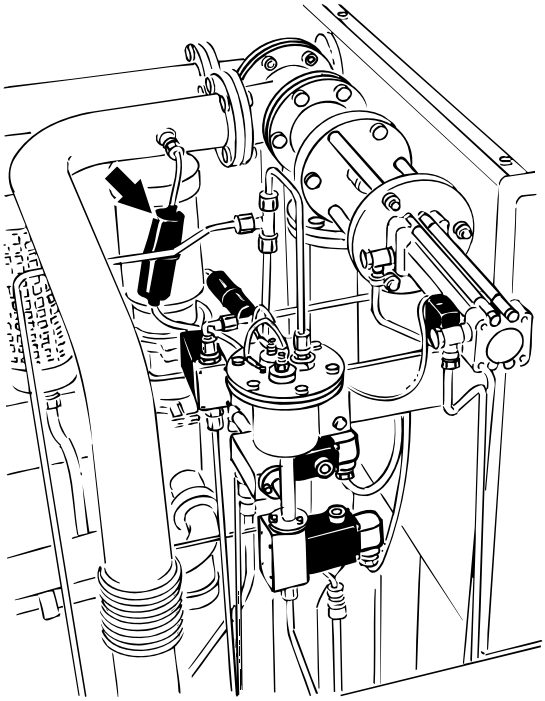

b) Connect the air-knife thermocouple (1), cable No. 411.

c) Connect the steam thermocouple (2), cable No. 412.

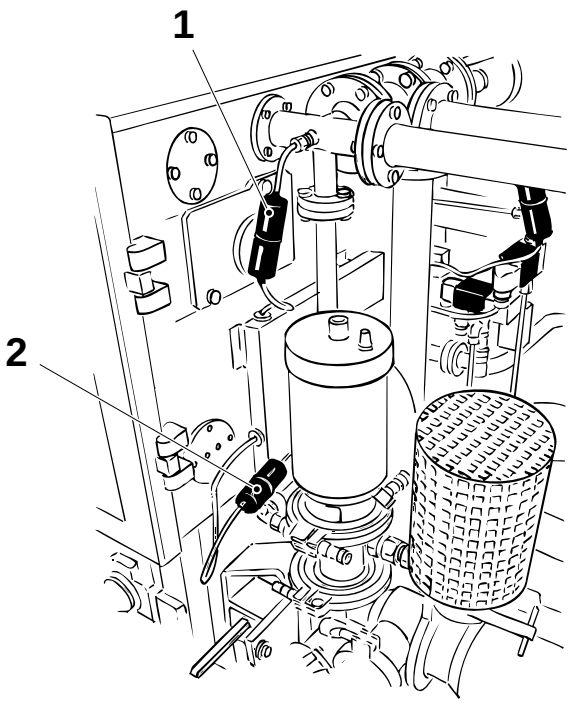

1 Thermocouple
2 Thermocouple

(Cont'd)

Fieldtest

2.2TB062671.en

(Cont'd)

d) Connect solenoid valve MY34 (3), cable No. 430.
e) Connect solenoid valve MY35 (4), cable No. 431.
f) Connect solenoid valve MY4 (5), cable No. 432.
g) Connect the position switch (6) of valve B71, cable No. 454.

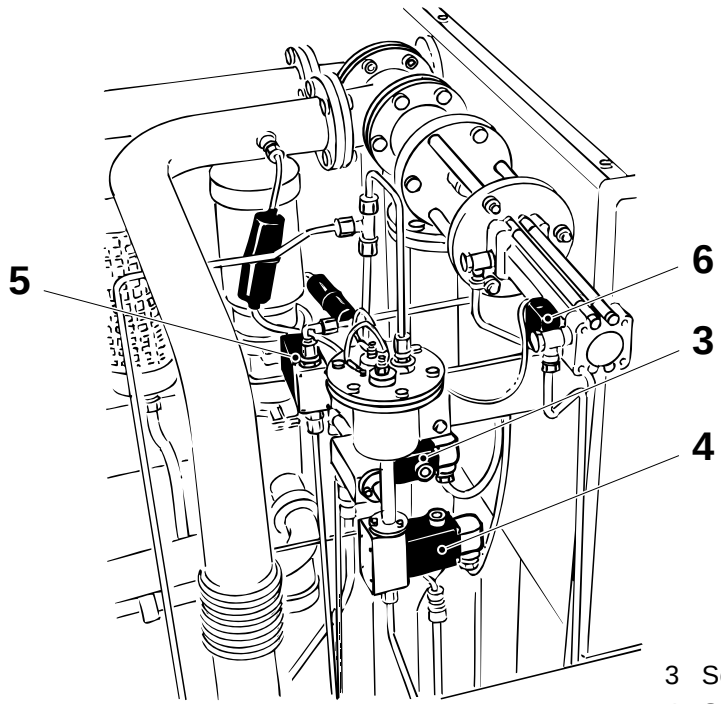

3 Solenoid valve
4 Solenoid valve
5 Solenoid valve
6 Position switch

(Cont'd)

2.2TB062671.en

Fieldtest

(Cont'd)

h) Fit regulating valve position proximity switch (7), cable No. 413.

i) Connect the regulating valve leakage detector cable No. 405 to the regulating valve leakage detection terminals (8).

Note! Connect one wire to the terminal on the metal section of the valve body and the other wire to the terminal on the nylon section of the valve body.

j) Fit product pipe detection proximity switch (9), cable No. 421.

k) Fit B-valve position proximity switch (11), cable No. 424.

l) Fit cleaning pipe detection proximity switch (12), cable No. 440.

m) Fit sterile air pipe detection proximity switch (13), cable No. 456.

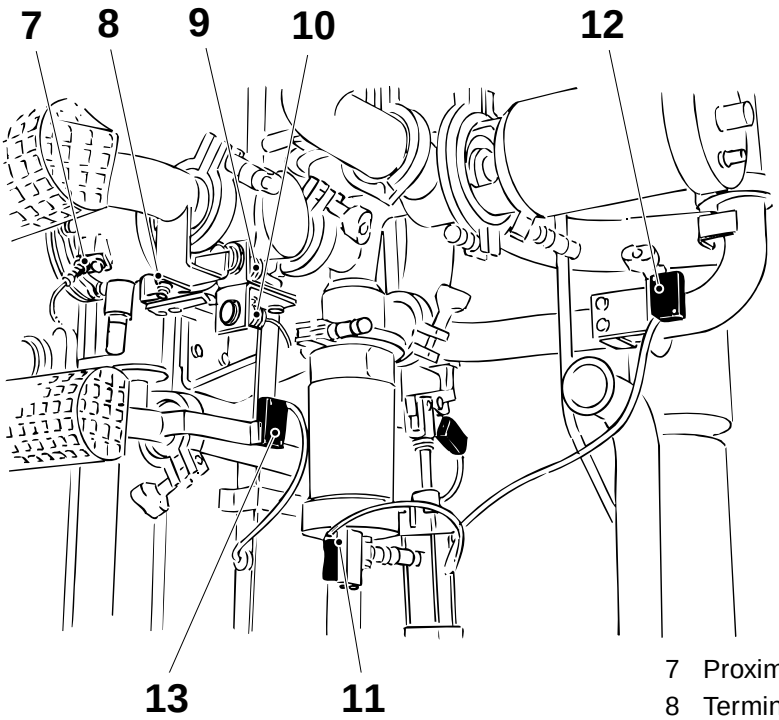

2.2TB062671.en

7 Proximity switch
8 Terminals
9 Proximity switch
10 Proximity switch
11 Proximity switch
12 Proximity switch
13 Proximity switch

(Cont'd)

Fieldtest

(Cont'd)

n) Connect level sensor cable No. 425 to spray tank MB43BA.

Note! Connect the three wires of the level sensor cable to the studs with the corresponding numbers on the cover of the tank.

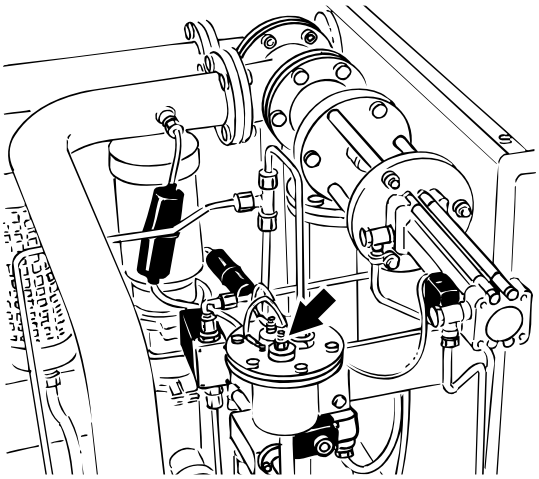

o) Arrange the cables tidily in the cable duct and close the cable duct.

6.4.11 Protective guards and packaging material covers

Protective guards

a) Fit the main RH top guard (1). Secure with screws at fixing points (2).

b) Fit the front RH top guard (3). Secure with screws at fixing points (4).

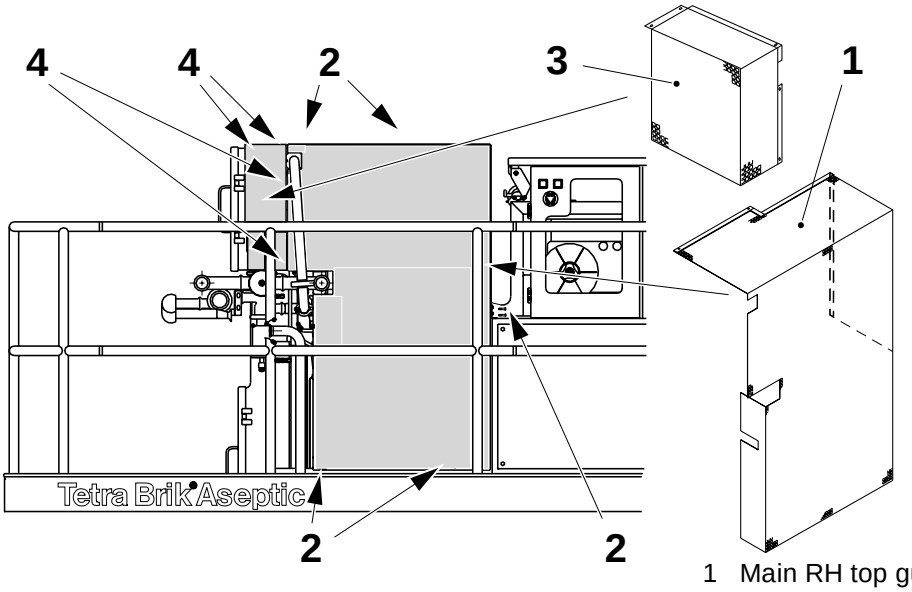

1 Main RH top guard
2 Fixing point
3 Front RH top guard
4 Fixing point

2.2TB062671.en

c) Fit the RH bottom guard (5) over the pipes below platform level. Secure with screws at fixing points (6).

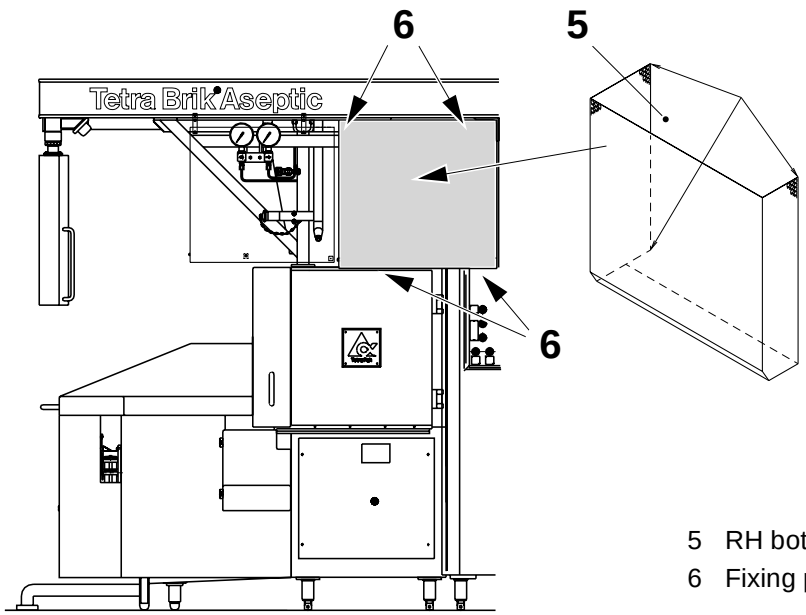

5 RH bottom guard
6 Fixing point

(Cont'd)

Fieldtest

(Cont'd)

Packaging material covers

a) Fit the rear packaging material cover (1) over the two bars on either side of the SA infeed roller and the outside edge of the opening in the platform.

b) Fit the front packaging material cover (2) over the two bars on either side of the SA outfeed roller. and simply rest the front edge on the top of the sterilisation bath.

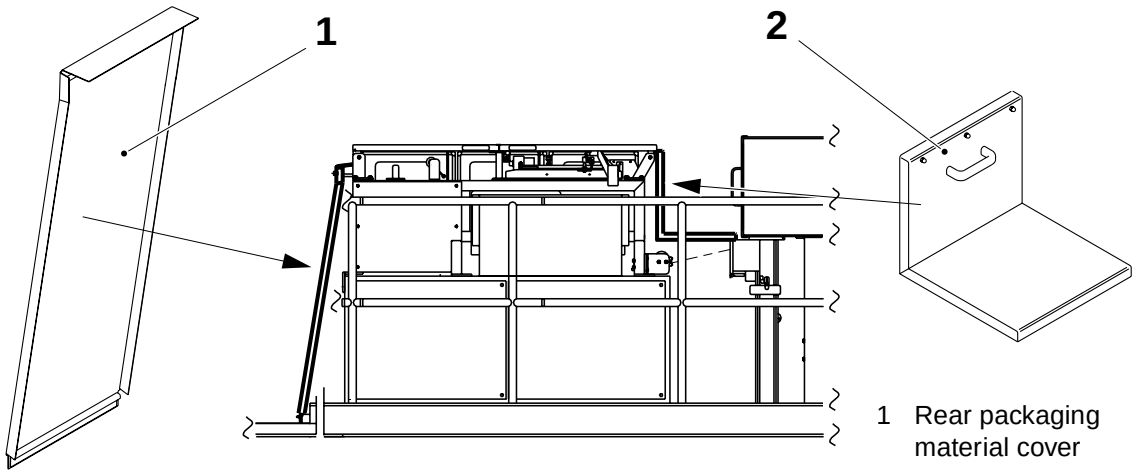

1 Rear packaging material cover
2 Front packaging material cover

2.2TB062671.en

Fieldtest

6.5 Precision levelling

WARNING! **Risk of serious injury and damage!**
Do not unscrew the legs for more than 190 mm. They can come out completely.

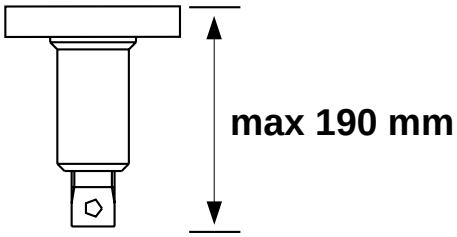

Caution! Do not raise the machine more than 170 mm from the floor when levelling, or it may be impossible to connect the product supply pipes later.

Note! If the slope of the floor makes longitudinal levelling difficult, a greater tolerance can be accepted in longitudinal levelling.

(Cont'd)

Fieldtest

2.2TB062671.en

(Cont'd)

a) **Either**:
Obtain the special levelling tool (if available) from the local Service Organisation, and fit the spirit level to it.
or:
Fit the spirit level (1) across the infeed roller (2) at the rear of the SA.

b) Rotate the roller to obtain the average spirit level value.

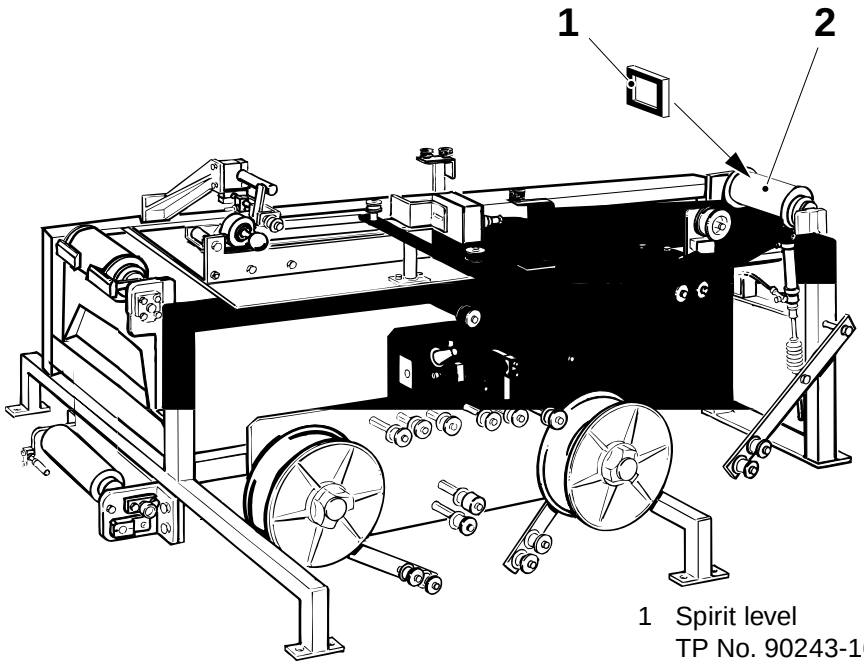

1 Spirit level
TP No. 90243-163
2 Roller

c) Adjust the two rear structural legs until the rear of the machine is approximately level transversely and longitudinally.

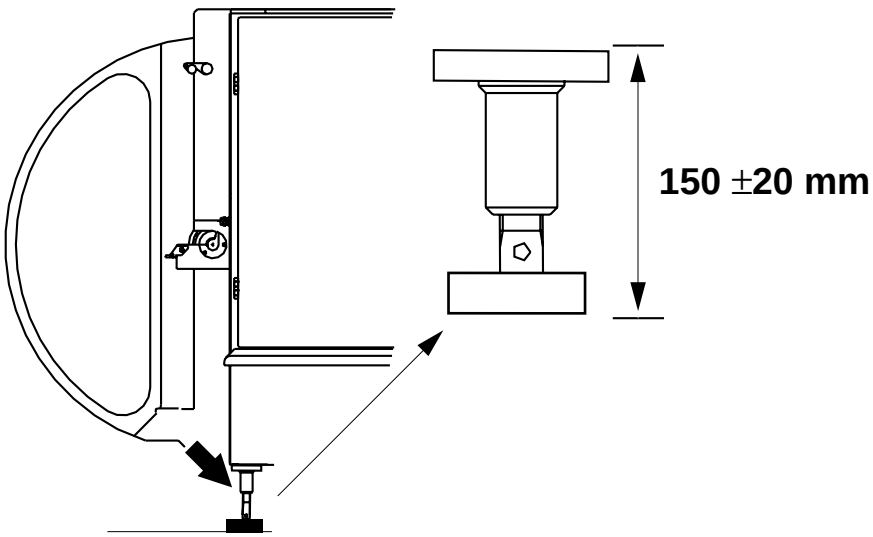

(Cont'd)

2.2TB062671.en

(Cont'd)

d) Fit the spirit level to the outer LH guide of the jaw system again. See section ***6.3 Approximate levelling***.

e) Adjust the front structural legs until the machine is level transversely and longitudinally ± 0.2 mm/m.

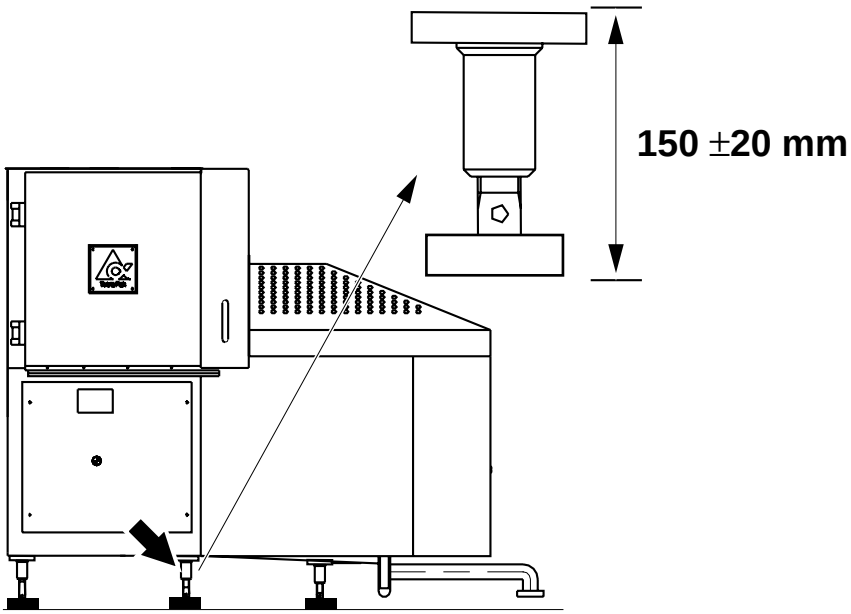

f) Fit the spirit level to the special tool or SA infeed roller at the rear of the machine again.

g) Adjust the two rear structural legs until the rear of the machine is level transversely and longitudinally ± 0.2 mm/m.

Fieldtest

2.2TB062671.en

6.6 Conveyor connections

a) Connect the package outfeed conveyor in accordance with the plant installation and connection drawings. See the package outfeed conveyor's own installation manual for instructions.

b) If the installation has an eject conveyor, connect it in accordance with the plant installation and connection drawings. See the eject conveyor's own installation manual for instructions.

c) If an eject bin is to be used, position it under the eject chute where it will catch all ejected packages.

2.2TB062671.en

6.7 Utility, product, and drain connections

Electrical power connections

DANGER!

Risk of electrocution and short circuits!
Make sure that power is switched off upstream before performing any work on cables and electrical components.

a) Make sure that power is switched off upstream.

b) Pass the power cable through the cable guide.

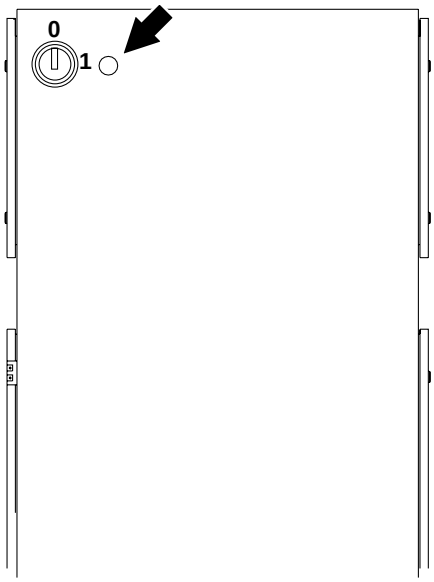

Caution! Leave a loop of cable hanging inside the electrical cabinet. There must be no pull on the cable terminals. A length of slack cable inside the electrical cabinet avoids dangerous disconnections if the cable is accidentally pulled.

c) Connect the wires of the power cable to the power terminal board inside the cabinet. See the EM.

(Cont'd)

Fieldtest

2.2TB062671.en

(Cont'd)

Utility connections

a) Connect the cold water hose to the cold water inlet (1), with the **blue** fish symbol.

b) Connect the recirculation water inlet hose to the recirculation water inlet (2) (if used).

c) Connect the recirculation water outlet hose to the recirculation water outlet (3) (if used).

d) Connect the compressed air hose to compressed air inlet (4).

e) Connect the hot water supply hose to the hot water inlet (5), with the **red** fish symbol.

f) Connect the nitrogen supply line to the nitrogen inlet (6).

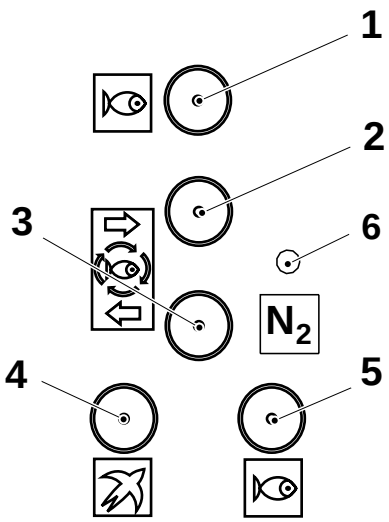

1 Cold water inlet
2 Recirculation water inlet
3 Recirculation water outlet
4 Compressed air inlet
5 Hot water inlet
6 Nitrogen inlet

2.2TB062671.en

Heidtest

(Cont'd)

(Cont'd)

g) Connect the steam hose to the connection at the steam filter on the APV.

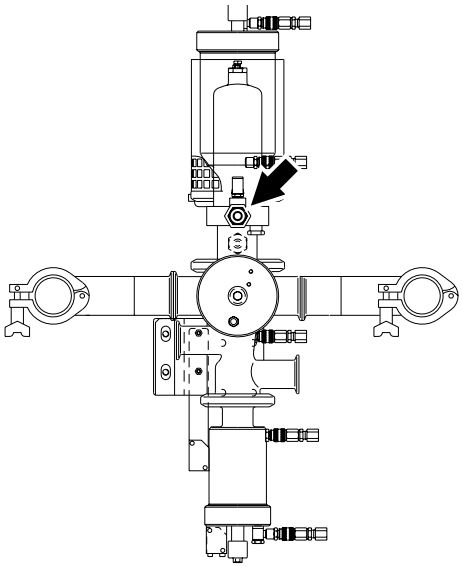

Product connections

Caution! Make sure that the product supply and forwarding lines are connected to the correct connections.

Caution! Make sure that the correct gaskets are fitted.

a) Connect the product supply pipe to the inlet pipe (1), fitting gasket TP No. 342850-305 in the joint.

b) Connect the product forwarding pipe to the product outlet pipe (2), fitting gasket TP No. 342850-305 in the joint.

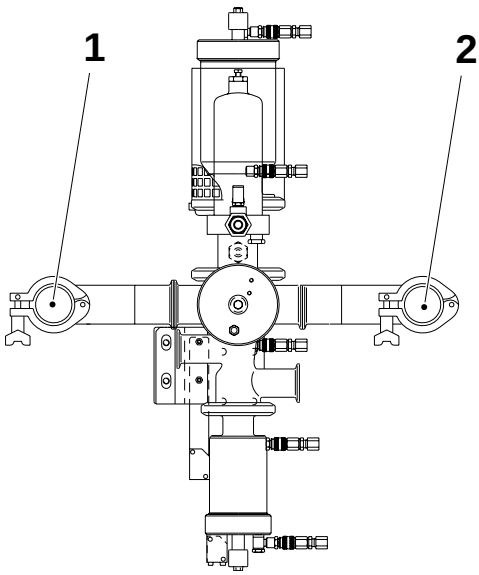

1 Inlet pipe
2 Outlet pipe

(Cont'd)

Fieldtest

2.2TB062671.en

(Cont'd)

Drain connections

a) Connect the cleaning pump outlet to the waste water drain.

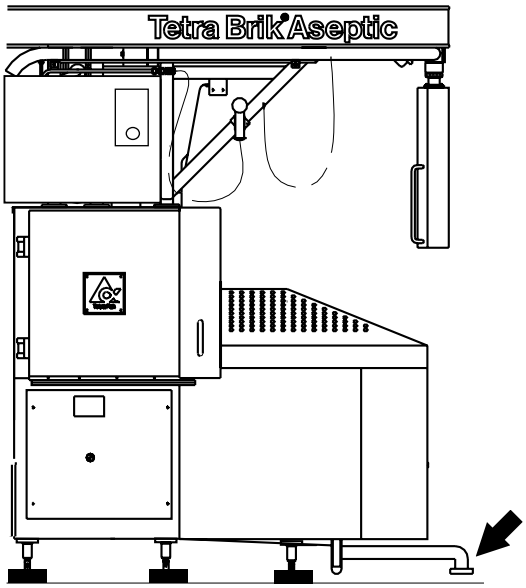

Caution! Check on the legal requirements applicable to the disposal of diluted hydrogen peroxide. You may have to connect this outlet to a separate drain.

b) Connect the water overflow (1) and the dilution tank drain connection (2) to the waste water drain.

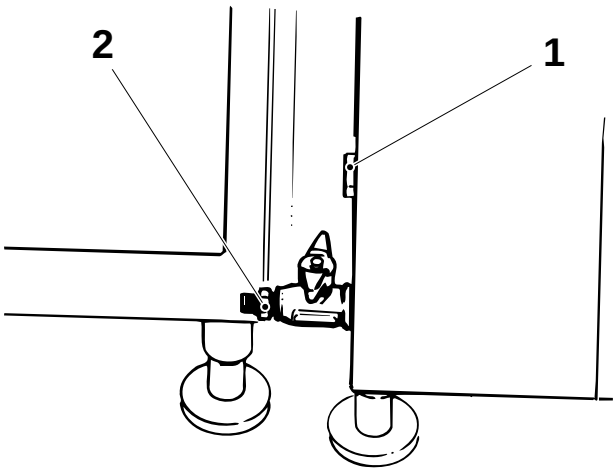

1 Water overflow
2 Dilution tank drain connection

2.2TB062671.en

6.8 Other operations

a) Make sure that all ties have been removed from moving parts all around the machine.

b) Fit the air and water guns to the corresponding connections above the final folder.

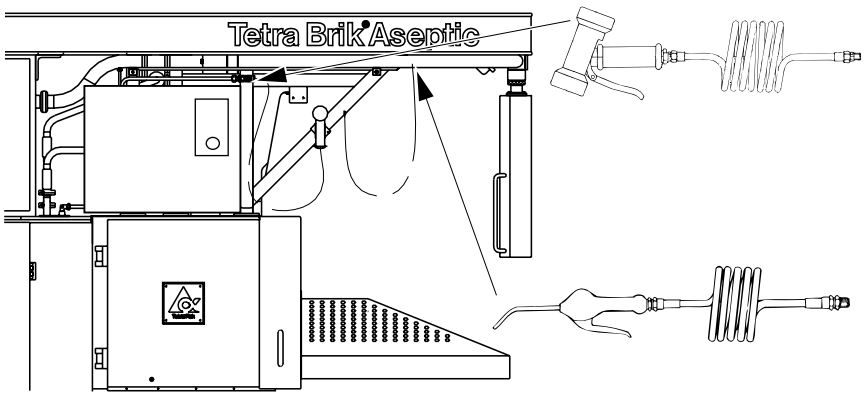

(Cont'd)

Fieldtest

2.2TB062671.en

(Cont'd)

c) Fill the detergent bottle with detergent of the correct pH. See section ***3.7 Cleaning***. Also see the OM for further details.

d) Fit the ink bottle in the dating unit. See the OM for further details.

e) Fit and connect up the hydrogen peroxide container. See the OM for further details.

f) Thread the packaging material and strip and prepare the machine for start-up. See the OM for further details.

Note! The following operations are required only if the GE Fanuc or TMCC PLC parameters have to be read, modified, or downloaded. See the EM for further details.

Caution! Make a copy of the existing parameters before modifying them. Also keep a copy of the new parameters for future reference.

g) **If the GE Fanuc PLC parameters have to be read and/or modified**:

- Connect the GE Fanuc serial cable (TP No. 90031-300) between the portable PC running GE Fanuc LM 90 software (V 6.01 or later) and the 15 pin connector on the PLC.
- Proceed to read and/or modify the parameters.

2.2TB062671.en

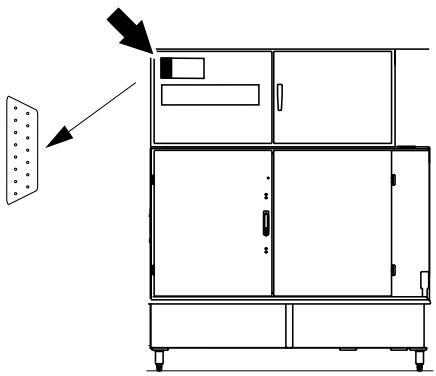

LH side
View with temperature setting panel open

Fieldtest

(Cont'd)

(Cont'd)

h) **If the TMCC parameters have to be downloaded**:

- Connect the TMCC PLC serial cable between the portable PC and the RS232 9-pin serial connector on the TMCC.
- Run the program on the TMCC program and communications diskette to download the parameters.

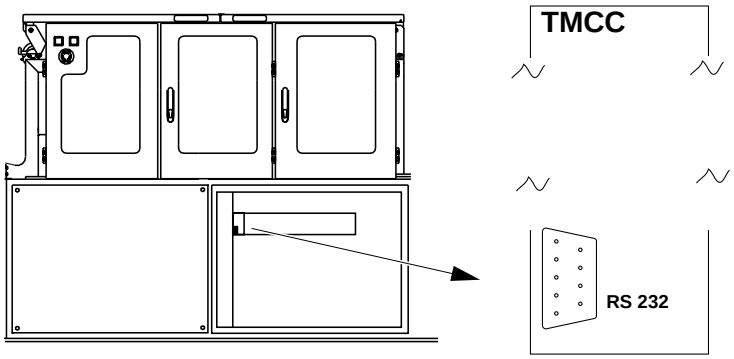

RH side

Fieldtest

2.2TB062671.en

7 Final installation checks

2.2TB072671.en

Fieldtest

7.1 Installation and connection checks

See section *6 Positioning, assembly, and connections* for further details on the following checks.

No.	Check	Done
1	The machine is perfectly level.	
2	The outfeed conveyor is correctly connected. The eject conveyor/bin is connected/positioned.	
3	The drain connections are secure: – external cleaning pump – water overflow – dilution tank	
4	The utility connections are secure: – cold water inlet – hot water inlet – recirculated cooling water inlet (plugged if not used) – recirculated cooling water outlet (plugged if not used) – compressed air inlet – steam inlet – nitrogen inlet	
5	The product inlet and outlet connections are secure.	
6	The product regulating valve is level.	
7	The electrical power cable is correctly connected: – cable guide secure – loop of cable inside cabinet – terminals correct and secure	
8	The hydrogen peroxide container if fitted.	
9	The detergent bottle is installed and filled.	
10	The tool locker and tools are in position (if relevant).	
11	Upstream valves/switches are open/on: – electrical power – cold water – hot water – recirculated cooling water supply and return (if relevant) – compressed air – steam – nitrogen	

Fieldtest

2.2TB072671.en

7.2 Lubricant level checks

See the OM for further details on the following checks.

No.	Check	Done
1	Drive unit worm gear	
2	Central lubrication	
3	Hydraulic system	
4	Final folder indexing unit	
5	Final folder worm gear	
6	Outfeed unit	

2.2TB072671.en

7.3 Valve checks

No.	Check		Done
1	Make sure that the drain valve is closed.	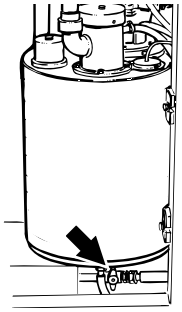	
2	Make sure that the sampling valve is closed.	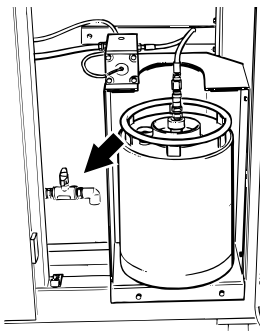	
3	Make sure that the drain valve is closed.	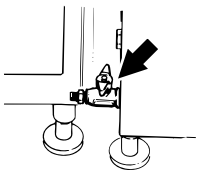	

Fieldtest

2.2TB072671.en

7.4 Safety checks

No.	Check	Done
1	All the machine doors open and close correctly.	
2	All door microswitches are correctly operated by the blades on the doors.	
3	All removable hatches and covers are secure.	
4	All the **Emergency stop** buttons engage and release correctly.	
5	All protective guards are in place and secure.	

2.2TB072671.en

This page intentionally left blank

Fieldtest

2.2TB072671.en

8 Preparation for commissioning

2.2TB082671.en

Fieldtest

Perform the following checks even if an actual commissioning test is not required.

Note! Commissioning covers only the functioning of the individual machine. A line performance test is required to check the functioning of the machine as part of a complete line. Check with the local service organisation what arrangements have been made for a line performance test.

Fieldtest

2.2TB082671.en

8.1 Presence and correctness checks

No.	Check	Done
1	The data on the machine plate corresponds with the specifications in the Machine Specification Document.	
2	The TP No. on the program diskette corresponds to the TP No. in the EM.	
3	The required spare parts have been delivered and have been deposited in the spare parts stores.	
4	The required accessories are available to the operator: – apron – gloves – goggles	
5	All the documents correspond to the specific machine. – OM – EM – MM – SPC – Installation and system drawings – Machine Specification Document – Final Inspection Report – Machine Deviation Report (if relevant)	
6	The tool locker is conveniently positioned and the tools are all in place.	
7	The packaging material reel trolley is conveniently positioned and functioning correctly.	
8	The supply and quality of product is sufficient for the purposes of commissioning.	
9	Packaging material, strip, hydrogen peroxide, nitrogen, ink, and detergent are all of the correct type and are available in sufficient quantities for the purpose of commissioning.	

(Cont'd)

2.2TB082671.en

Fieldtest

(Cont'd)

No.	Check		Done
10	The compressed air valve key is present.	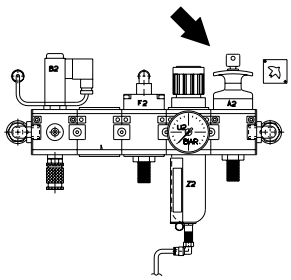	
11	The electrical cabinet keys are present.	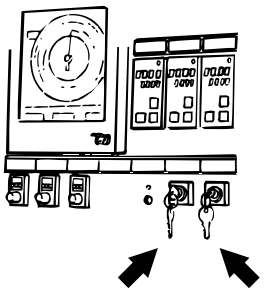	

Fieldtest

2.2TB082671.en

8.2 Product and utility value checks

Make sure that the product and utility values are correct. Ask for the assistance of the customer's technical personnel if necessary. If values are incorrect, inform the customer's technical personnel. See section ***3 Drawings and Technical Data***.

No.	Check	Done
1	Product supply: – pressure – max pressure fluctuation – inlet temperature – max particle size	
2	Electrical power supply: – voltage – max voltage fluctuation – frequency – fuse rating	
3	Cold water supply: – pressure – max inlet temperature – pH	
4	Hot water supply: – pressure – inlet temperature	
5	Detergent supply: – pH	
6	Compressed air supply: – pressure – max particle size – max particle content – dew point – oil content	
7	Steam supply: – water quality – pressure – max pressure fluctuation – inlet temperature	
8	Hydrogen peroxide supply: – aspectic (food) grade – concentration (35%)	
9	Nitrogen supply: – aseptic (food) grade – pressure	

2.2TB082671.en

Fieldtest

8.3 Function checks

8.3.1 Preparation

Note! If program parameters need to be changed, make a backup copy of the original parameters before making any changes. Also keep a copy of the new parameter settings for future reference.

a) Make sure that the PLC program on the diskette corresponds with that in the machine PLC. See the EM for further details.

b) Connect a cold water supply to the product inlet connection.

c) Prepare the machine for production. See the OM for further details.

d) Make sure that start-up from cold takes less than 45 minutes at an ambient temperature of no less than 20ºC (68ºF).

e) Start up the package outfeed conveyor (and eject conveyor if present).

f) Step up the machine to **Production**.

Fieldtest

2.2TB082671.en

8.3.2 Normal operating checks

Note! The machine is supplied with **two** injection nozzles. If normal adjustments cannot eliminate filling or headspace problems, fit the **other nozzle** and repeat the adjustments.

No.	Check	Done
1	The packaging material and LS strip move freely through the machine and are correctly aligned.	
2	The package outfeed conveyor (and eject conveyor if present) remove the packages correctly.	
3	Finished packages are correct in terms of: – size and shape – longitudinal and transversal sealing – date code printing – filled package weight/volume	
4	Production capacity is as specified (count the packages produced in ten minutes and multiply by six.	
5	All pressures remain within tolerance. See OM.	
6	There are no fluid leaks.	
7	There are no unusual noises which could indicate loose or misaligned parts.	
8	There are no unusual smells which could indicate internal leaks or burning of electrical circuits.	

2.2TB082671.en

Fieldtest

8.3.3 Fault handling and package ejection checks

No.	Check	Done
1	Defective packages are ejected (start-up, short stop, material splice, strip splice, production stop). See the OM for further details.	
2	The machine stops if out of range temperatures are set for the following temperature parameters: – pre-sterilisation (sterilisation cycle) – air superheater – sterilisation bath (water) – sterilisation bath (hydrogen peroxide) – steam – air knife See the OM for further details.	
3	The machine stops if the following pressures drop below their setting values: – sterile air – nitrogen supply	

Fieldtest

2.2TB082671.en

8.4 Health and safety checks

No.	Check	Done
1	The door microswitches activate the correct alarms and stop the machine: – 3 aseptic chamber doors – final folder cover – 2 jaw system doors – dating unit cover	
2	The manual strip splice button is disabled when the SA doors with microswitches are opened.	
3	All the **Emergency stop** buttons stop the machine immediately and activate the alarm.	
4	The hydrogen peroxide supply conforms with specifications: – food grade – concentration (35%)	
5	Filled packages and outlet water samples have the correct hydrogen peroxide residue/content as measured using: – Test kit 90298-31 for packages – Test kit 90298-30 for outlet water	

2.2TB082671.en

Fieldtest

8.5 Documentation

Compile the **Startup Machine Quality Report** and deliver it to the local Service Organisation for return to the manufacturer.

Fieldtest

2.2TB082671.en

9 Disassembly and removal

DANGER! **Risk of fatal injury and serious damage!**
Make sure that the capacity of lifting equipment is adequate and that the equipment itself is in good working order. Loads can settle or swing as they are lifted. Keep well clear.

Caution! Only skilled or instructed installation technicians are allowed to disassemble the machine for moving to other installation positions.

9.1 Moving the machine and preparing it for transport

See section ***6 Positioning, assembly, and connections*** for further details on the following operations. See section ***5 Machine handling*** for further details on lifting, moving, packing, and storing the equipment and the crates.

Note! The fully assembled machine can be moved either on transporter (TP No. 271635-401, available from the local service organisation) or by fork lift. Overhead gantries and mobile cranes cannot be used because the rear lifting eyes cannot be fitted without removing the SA.

9.1.1 Preparing the machine for moving

a) Turn off and padlock the main power switch.
Turn off the power switch upstream from the machine.

b) Shut off all the utility and product supplies upstream from the machine:
- electrical power
- cold water
- hot water
- reirculated cooling water in and out (machines with recirculated cooling water only)
- compressed air
- steam
- nitrogen
- product

c) Release pressure from the water and air circuits by operating the water and air guns.
Close all the utility and drain valves on the machine:
- compressed air valve (A2, compressed air system)
- water valve (A1, water system)
- steam valve (at APV)
- dilution tank drain valve

(Cont'd)

Fieldtest

2.2TB092671.en

(Cont'd)

d) Disconnect the power, utility, drain, and product lines:
   - electrical power (disconnect at power terminals and remove cable from electrical cabinet)
   - cold water
   - hot water
   - reirculating cooling water in and out (machines with recirculated cooling water only)
   - compressed air
   - steam
   - nitrogen
   - product
   - water overflow
   - dilution tank drain
   - external cleaning pump outlet

e) Plug or protect all open connections.

f) Disconnect the package outfeed conveyor.

g) Disconnect the eject conveyor or remove the eject bin.

h) Remove the ladder and ladder handrails.

2.2TB092671.en

9.1.2 Moving and storing the machine

Caution! The machine can only be moved for short distances without being disassembled. If the machine must be moved for long distances, it must be disassembled. See section ***9.1.3 Preparing the machine for transport***.

Caution! If the machine is going to stand or travel in cold conditions, the water circuits must be drained to avoid damage by freezing. See section ***9.2 Draining***.

Caution! If leaving the machine temporarily on the transporter, block the wheels to prevent accidental movement. Do not store the machine on the transporter.

a) Move the machine to its new position.

b) Level the machine approximately. See section ***6.3 Approximate levelling***.

c) If the machine must be stored for a long time, perform the following additional operations:
   - Drain the machine. See section ***9.2 Draining***.
   - Lubricate all sliding components (rods, cams, etc.).
   - Drain the hydraulic system and refill with a suitable flushing fluid. See the MM for further details.

d) Cover the filling machine with a suitable protective covering.

e) Make sure that the storage conditions comply with specifications.

Fieldtest

2.2TB092671.en

9.1.3 Preparing the machine for transport

Caution! If the machine is going to stand or travel in cold conditions, the water circuits must be drained to avoid damage by freezing.

a) Drain the machine. See section ***9.2 Draining***.

b) Perform the operations listed in section ***9.1.1 Preparing the machine for moving***, if not already done.

c) Remove the protective guards and packaging material covers.

d) Disconnect the electrical connections on the RH side of the drying chamber.

e) Remove all small diameter pipes.

f) Remove the APV.

g) Remove the large diameter pipes.

h) Remove the hydrogen peroxide generator.

i) Remove the cable duct on the RH side of the drying chamber.

j) Disconnect the electrical connections on the LH side of the drying chamber and remove the cable duct.

k) Disconnect and secure the sterilisation bath chains, remove the drip plates, and remove the drying chamber.

l) Fit the transport plate across the top of the column and sterilisation bath.

m) Remove the SA.

n) Remove the electrical cabinets cooler.

o) Remove the warning beacon.

p) Remove the handrail.

q) Remove the platform panels and edge frame.

r) Remove the ladder.

s) Remove the feet and legs.

t) Wrap small components in bubble wrapping to prevent damage.

u) Fit the machine to the transport frame. See section ***5.5 Unpacking the crate***.

v) Pack the machine in a suitable crate. Make sure that all groups and components are adequately protected. Fix any loose sub-crates or boxes to the floor or walls of the crate to prevent them moving during transport.

2.2TB092671.en

9.2 Draining

Caution! If the machine is going to stand or travel in cold conditions, the water circuits must be drained to avoid damage by freezing.

9.2.1 Draining methods

To drain the various circuits, the solenoid valves controlling them must be energised. This can be done in two ways:

- electronically (using a PC)
- by bridging the solenoid valve's control terminal to a power terminal

The following is needed to energise the solenoid valves electronically:

- Portable PC running GE Fanuc LM90 software, V 6.0 or later
- GE Fanuc PLC serial cable, TP No. 90031-300
- EM

The following is needed to energise the solenoid valves manually:

- EM
- Piece of cable, approx. 2 metres in length

Fieldtest

2.2TB092671.en

9.2.2 Preparations

a) Disconnect the rapid coupling to the pressure accumulator, located above the separator.

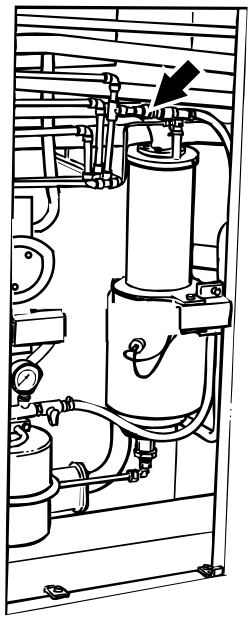

b) Leave the compressed air supply to the machine connected, and connect a second compressed air supply line to the cold water inlet.

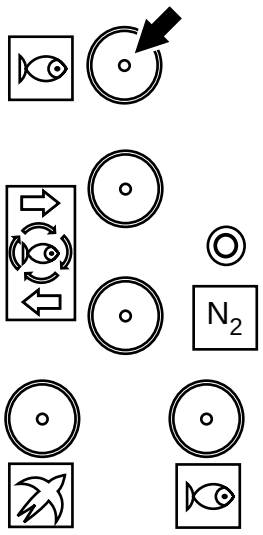

(Cont'd)

2.2TB092671.en

(Cont'd)

Note! If the compressed air circuit is de-pressurised, it will not be possible to perform the following procedure.

Caution! If it is not possible to adjust the supply pressure of the second air supply, open all the valves listed below very slowly to avoid pressure surges.

c) Adjust the compressed air supply pressure to approx. 4 bar.

d) Make sure that no **Emergency stops** are engaged, all doors with microswitches are closed, and no error conditions are present. Turn on the main power switch and step up to step **Preheating I**.

e) **Either**:
On a machine without recirculated cooling water make sure that all the water valves A1 (1), A2 (2), A3 (3), and A4 (4) are **open**;
or:
On a machine with recirculated cooling water, make sure that water valves A1 (1) and A3 (3) are **open** and water valves A2 (2) and A4 (4) are **closed**.

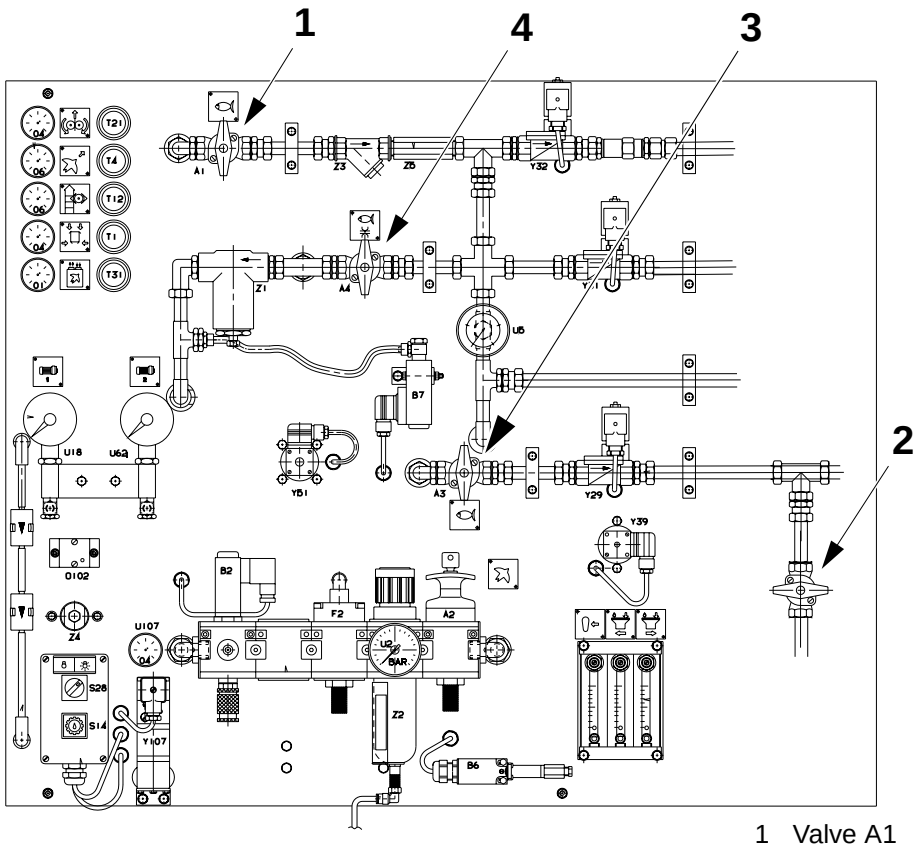

1 Valve A1
2 Valve A2
3 Valve A3
4 Valve A4

(Cont'd)

Fieldtest

2.2TB092671.en

(Cont'd)

WARNING! **Risk of injury and damage!**
Make sure that water expelled from the connections under pressure cannot cause damage or injury.

f) Position a splash guard and warning notices in front of the connection panel if possible.

9.2.3 Draining procedure

If possible, use the PC to force the PLC outputs. Connect the PC to the PLC using the cables specified above. See the EM for further details.

Caution! When bridging two terminals, connect the cable to the control terminal first and then to the power terminal. Take care not to cause short circuits.

If the solenoids have to be energised manually, connect the piece of cable to the +24 VDC power terminal XL.11.30 for all the bridging operations. See the EM for further details.

Note! The following instructions list the PLC outputs. The control terminals for the manual procedure are listed in brackets.

Note! The force symbol on the operator panel lights when an output is forced on, and goes out when the output is forced off again.

2.2TB092671.en

Water gun circuit

Operate the water gun until only dry air comes out.

Compressor circuit (solenoid valve Y32)

a) Open (switch off) contact breaker Q006 to prevent the compressor motor starting up.

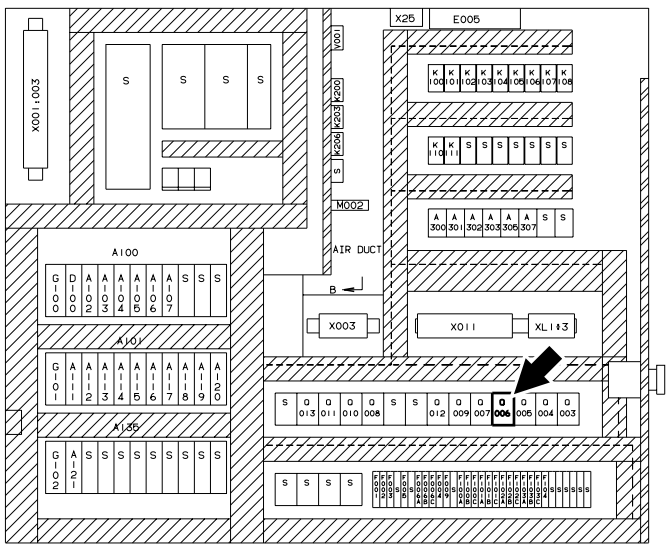

(Cont'd)

(Cont'd)

b) Force PLC output Q19 on from the PC. (Control terminal X1.414.)

c) Wait for 5 - 10 seconds and force the output off again.

Final folder sprinkler circuit (solenoid valve Y31)

a) Force PLC output Q72 on from the PC. (Control terminal X1.412.)

b) Wait for 5 - 10 seconds and force the output off again.

Tube flusher circuit (solenoid valve Y39)

a) Force PLC output Q76 on from the PC. (Control terminal X1.416.)

b) Wait for 5 - 10 seconds and force the output off again.

Cooling water circuit (solenoid valve Y33)

For machines **with recirculated cooling water**, see below. For machines **without recirculated cooling water**, proceed as follows.

a) Force PLC output Q73 on from the PC. (Control terminal X1.372.)

b) Wait until all the water from the cooling circuit drains to the cleaning tray under the final folder.

c) Close valve A4.

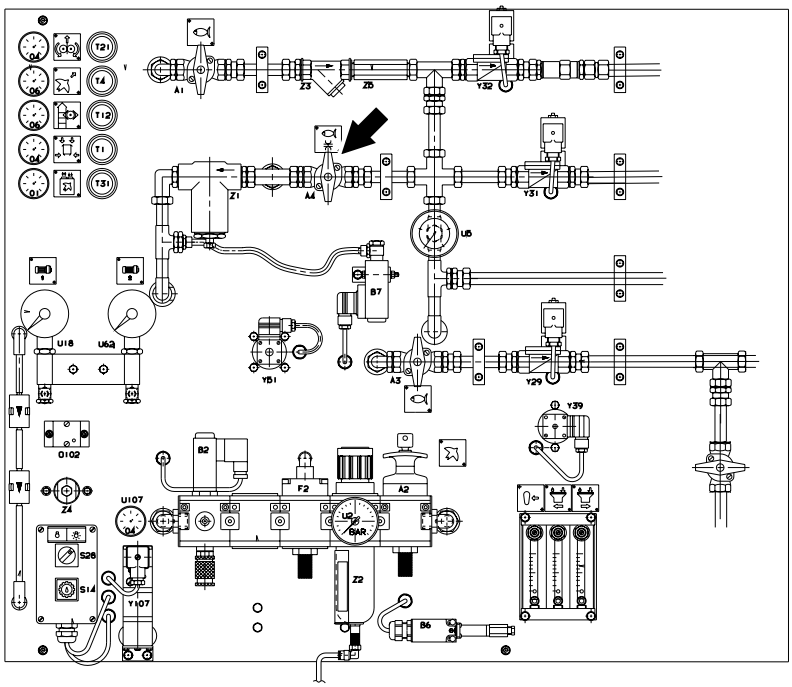

(Cont'd)

Fieldtest

2.2TB092671.en

(Cont'd)

d) Remove the recirculated cooling water outlet plug.

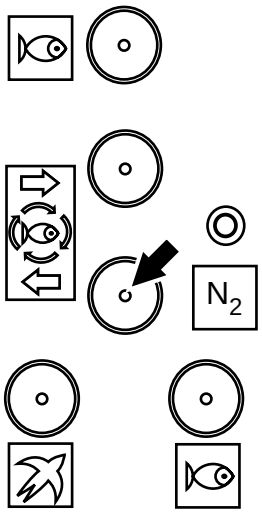

e) Open valve A4 again.

f) Wait until only dry air comes out of the recirculated cooling water outlet.

g) Close valve A4 again.

h) Fit the recirculated cooling water outlet plug.

i) Remove the recirculated cooling water inlet plug.

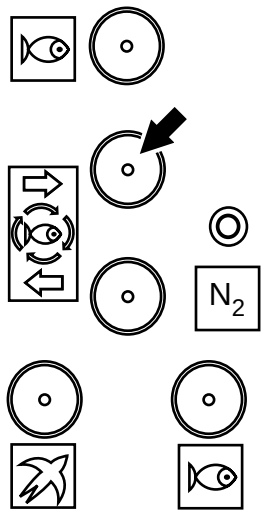

j) Open valve A4 again.

k) Wait until only dry air comes out of the recirculated cooling water inlet.

l) Force output Q73 off again.

(Cont'd)

2.2TB092671.en

Fieldtest

(Cont'd)

m) Fit the recirculated cooling water inlet plug.

n) Remove the compressed air connection from the cold water inlet and fit the cold water inlet plug.

For machines **without recirculated cooling water**, see above. For machines **with recirculated cooling water**, proceed as follows.

a) Remove the recirculated cooling water inlet and outlet connections (1) and (2).

b) Remove the compressed air supply line from the cold water inlet (3) and connect it to the recirculated cooling water inlet (1).

c) Fit the cold water inlet plug (3).

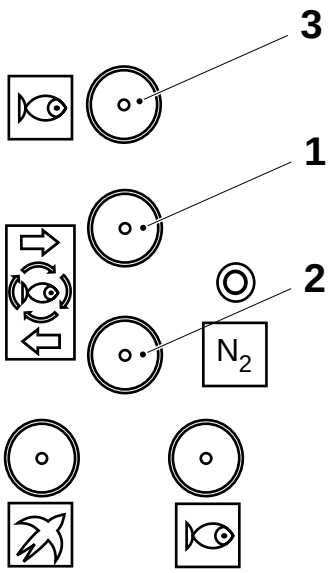

1 Recirculated cooling water inlet
2 Recirculated cooling water outlet
3 Cold water inlet

d) Force PLC output Q73 on from the PC. (Control terminal X1.372.)

e) Wait until only dry air comes out of the recirculated cooling water outlet and force the output off again.

f) Force PLC output Q73 off again.

g) Remove the compressed air connection from the recirculated cooling water inlet and fit the recirculated cooling water inlet plug.

h) Fit the recirculated cooling water outlet plug.

(Cont'd)

Fieldtest

2.2TB092671.en

(Cont'd)

Sterilisation bath

a) Open the valve (1) on the pressure accumulator.

b) Wait until the pressure on the gauge (2) drops to zero.

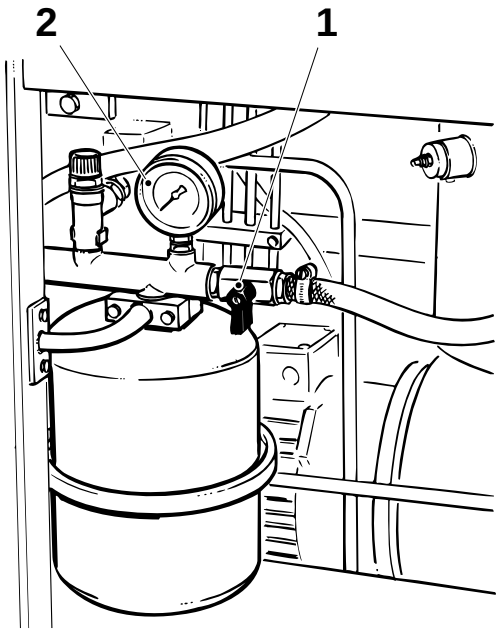

1 Valve
2 Gauge

c) Open the air bleeder valve at the top of the sterilisation bath.

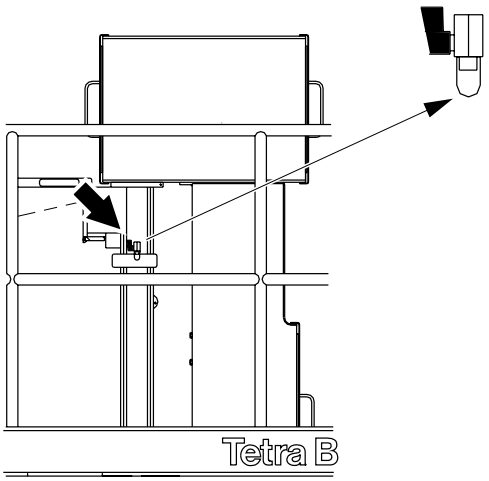

(Cont'd)

2.2TB092671.en

(Cont'd)

d) Wait for all the water to drain from the sterilisation bath.

Note! This may take a significant length of time since the water drains only under the effect of gravity.

e) Close the bleeder valve at the top of the sterilisation bath.

f) Connect the rapid coupling (3).

g) Close the valve (1) on the pressure accumulator.

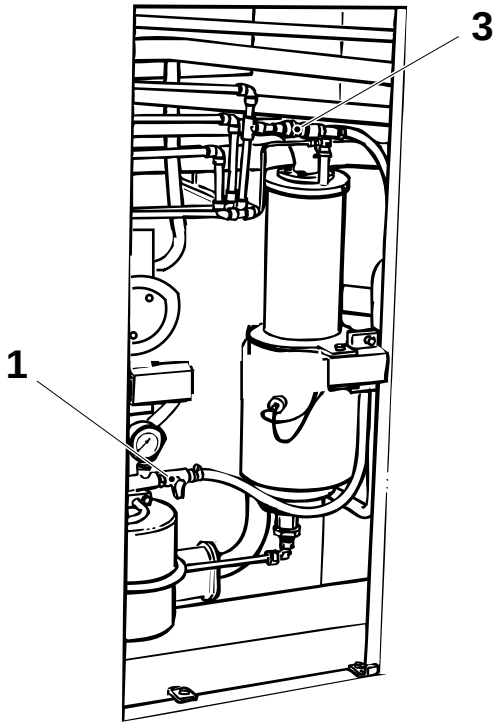

1 Valve
3 Rapid coupling

(Cont'd)

Fieldtest

2.2TB092671.en

(Cont'd)

Sterilisation bath water pump (M17)

a) Remove the flange from the pump and dry inside the pump.

b) Fit the flange.

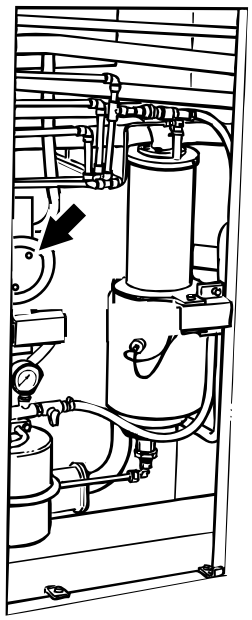

Hot water circuit (solenoid valve Y29)

a) Close valve A2 (**machines without recirculated cooling water only**).

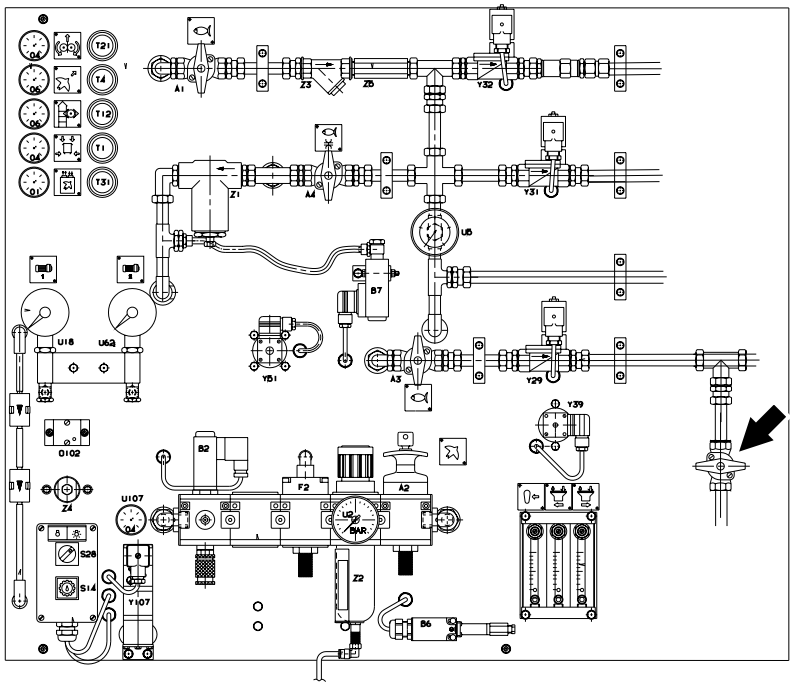

(Cont'd)

2.2TB092671.en

(Cont'd)

b) Connect the compressed air supply line to the hot water inlet.

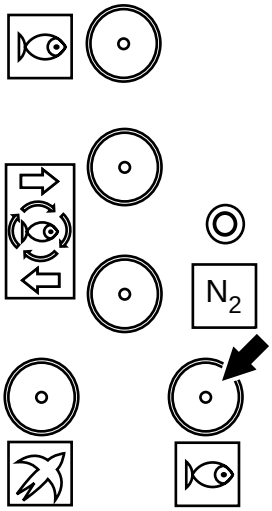

c) Force PLC output Q71 on from the PC. (Control terminal X1.410.)

d) Wait for 5 - 10 seconds and force the output off again.

e) Remove the compressed air supply line and fit the hot water inlet plug.

Cleaning system water circulation pump (M4)

f) Force PLC output Q16 on from the PC. (Close contactor K008.)

g) Wait for 5 - 10 seconds and force the output off again.

Compressor (M7)

a) Remove the drain plug from the bottom of the compressor flange.

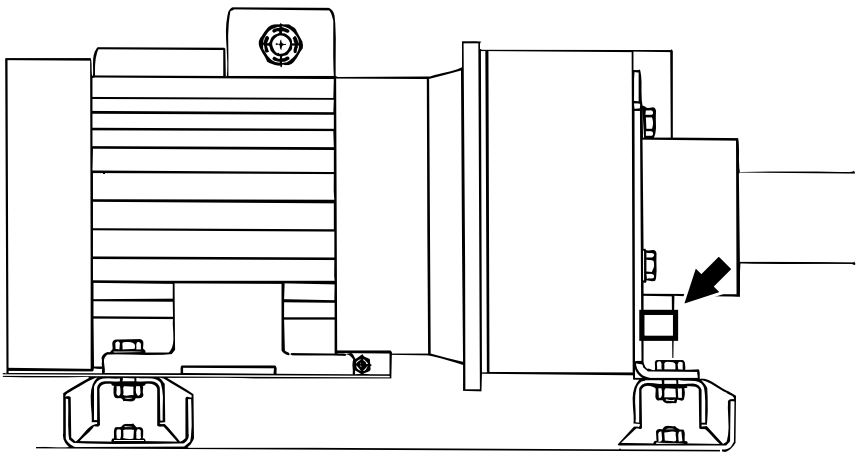

b) Wait for all the water to drain out and securely fit the plug.

(Cont'd)

Fieldtest

2.2TB092671.en

(Cont'd)

Separator

a) Unscrew the float chamber at the bottom of the separator.

b) Drain off all the water and fit the float chamber.

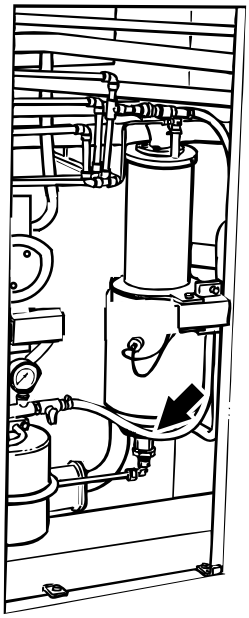

Peroxide tank

WARNING! **Risk of burns and irritation!**
See the Safety Precautions section before working with hydrogen peroxide.

a) Disconnect and remove the hydrogen peroxide container.

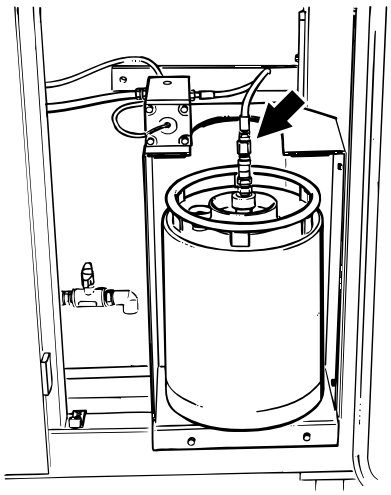

(Cont'd)

2.2TB092671.en

(Cont'd)

b) Open the drain valve under the hydrogen peroxide tank and wait for all the hydrogen peroxide to drain into the dilution tank (15 minutes).

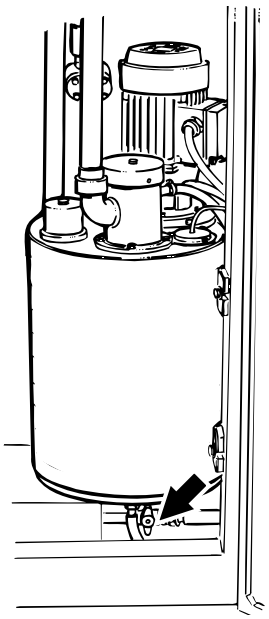

c) Force PLC output Q110 on from the PC. (Control terminal X1.246.)

d) Wait for 5 - 10 seconds and force the output off again.

e) Close the valve under the hydrogen peroxide tank.

f) Place a suitable container under the dilution tank drain outlet (1), open the drain valve (2) and drain the tank into the container for disposal in compliance with local regulations.

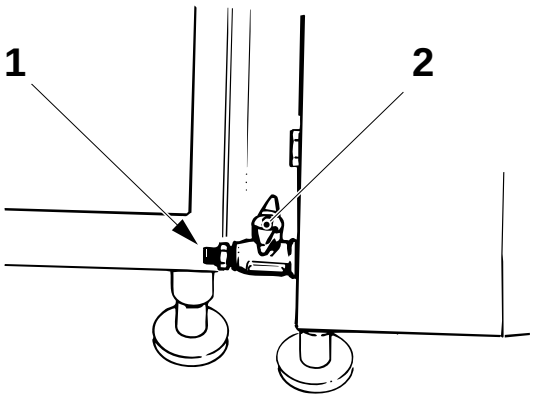

1 Drain outlet
2 Drain valve

(Cont'd)

Fieldtest

2.2TB092671.en

(Cont'd)

Final checks

a) Make sure that all the connections on the connections panel are plugged.

b) Make sure that all cables used for the draining procedure (electronic procedure or bridge procedure) are disconnected.

c) Make sure that all the valves on the valve panel, dilution tank, water and hydrogen peroxide circuits are set to the correct operating position.

d) Make sure that the drain plug on the compressor is tight.

e) Make sure that the separator float chamber is fitted and tight.

f) Make sure that the flange of the sterilisation bath water pump is tight.

2.2TB092671.en

9.3 Return to the manufacturer

Contact the local Service Organisation for further instructions and to arrange shipment.

Fieldtest

2.2TB092671.en

9.4 Disposal

If the machine is to be permanently disposed of, perform the following operations.

a) Drain the machine. See section ***9.2 Draining***.

b) Drain the hydraulic tank and dispose of the hydraulic fluid in compliance with local regulations. See the MM for further details.

c) Remove the packaging material and strip and dispose of these in compliance with local regulations.

d) Disassemble the machine as far as possible and separate the following materials:
   - stainless steel (panels and doors)
   - cast iron (frames)
   - rubber (seals, O-rings, etc.)
   - nylon and other plastics
   - electrical cables
   - hydraulic and pneumatic hoses
   - electrical components.

e) Recycle or dispose of all materials, groups, and components in compliance with local regulations.

2.2TB092671.en

Fieldtest

This page intentionally left blank

Fieldtest

2.2TB092671.en

Tetra Pak