MS

Maintenance System

Tetra Brik Aseptic TBA/9–100V→130V

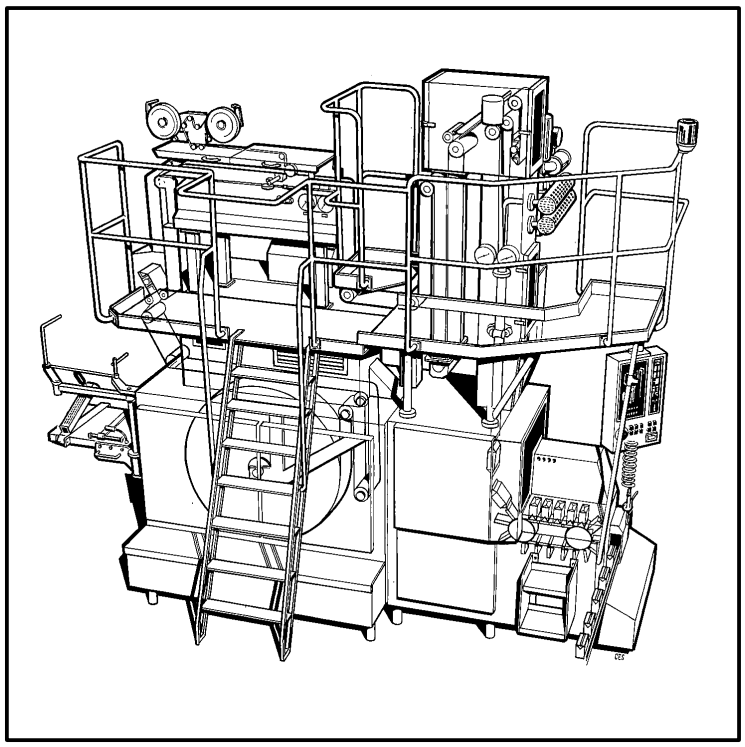

Tetra Pak

Doc. No. 80234–1

MS
Maintenance System

Tetra Brik Aseptic TBA/9
648152–100V→130V

Issue 9310

Introduction	000
Superstructure	100
Machine Body	200
Drive Unit	300
Jaw System	400
Final Folder	500
Service Unit	600
Strip Applicator	700
Pull Tab Device	800
Settings Lubricants	900
Electrical Equipment	1000

Tetra Pak

Tetra Brik Packaging Systems AB

Description TBA/9

Safety precautions – service technician	001 (1)
Safety precautions – emergency stop	001 (2)
Safety precautions – doors and safety covers	001 (3)
Safety precautions – electrical cabinet; IH generator	001 (4)
Safety precautions – handling of sterilization liquid (2 pages)	001 (5)
Safety precautions – hydrogen peroxide storage; disposal of hydrogen peroxide	001 (7)
Safety precautions – hydrogen peroxide can	001 (8)
Safety precautions – ink	001 (9)
Safety precautions – hydraulic oil, lubricants and cleaning solutions; ear protectors	001 (10)
Introduction - machine specification	002 (1)
Introduction – page number	002 (2)
Introduction – B list development step, TBA	002 (3)

The warning symbol and texts apply as follows:

DANGER!
Danger to life.

WARNING!
Risk of personal injury.

Caution!
Risk of damage to or destruction of equipment.

Service technician

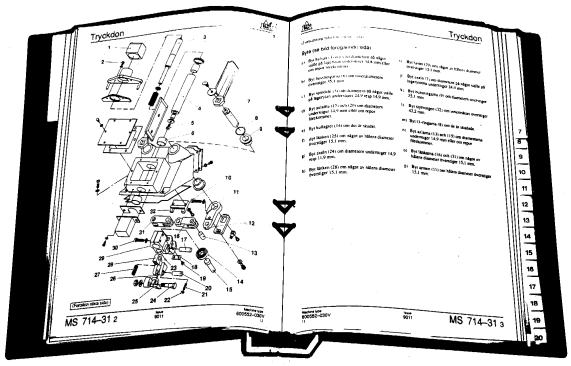

Only trained or instructed service technicians are allowed to carry out work on the machine.

The work is to be carried out in such a way that there will be no risk of personal injury.

During maintenance or service work, the technician is responsible not only for the machine and the working area around the machine, but also for the personnel in the vicinity of the machine!

It is also the responsibility of the technician to assure that the machine safety devices are fully operational before he finishes the maintenance or service work.

WARNING!
If the Safety precautions are not followed, there is risk of personal injury.

Emergency stop

In case of danger to people or machine, one of the emergency stop buttons must immediately be depressed.



WARNING!
In a situation involving risk of personal injury or damage to the machine, immediately stop the machine by pushing the emergency stop button.

Emergency stop must only be used in case of danger to people or machine. To stop production in the normal way, see the ”Stop” section in the OS-book.

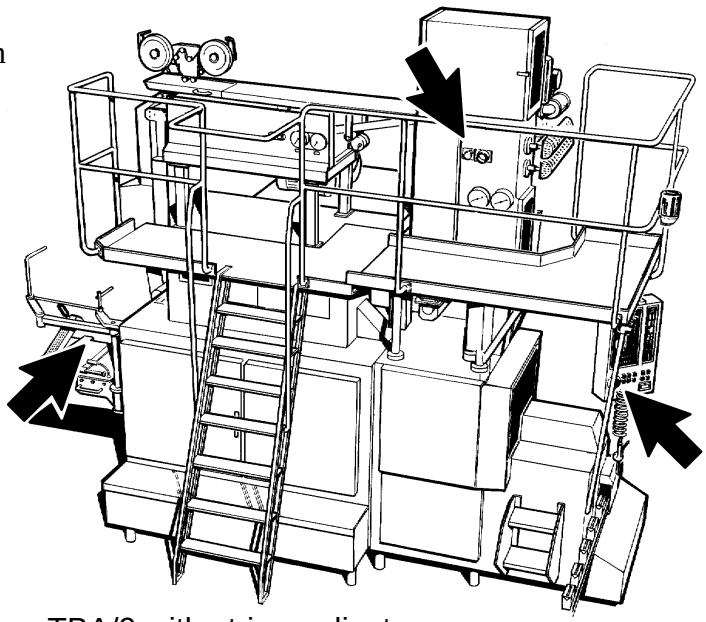

TBA/9 with strip applicator

Doors and safety covers

The doors shown in the picture are provided with safety switches. These switches form part of the safety system of the machine and **must under no circumstances be bridged, or by-passed, or otherwise made non-operational**.

Do not open doors during production. Never stop the machine by opening a door with a safety switch. The machine may perform a reciprocating movement during the first few seconds after a stop; also some machine parts may be hot.

After maintenace, check that all safety covers are fitted to the machine before it is inched or run.

WARNING!
Moving parts and hot surfaces can cause serious injuries. Never inch or run the machine if any safety switch is non-operational or any safety cover is not fitted.

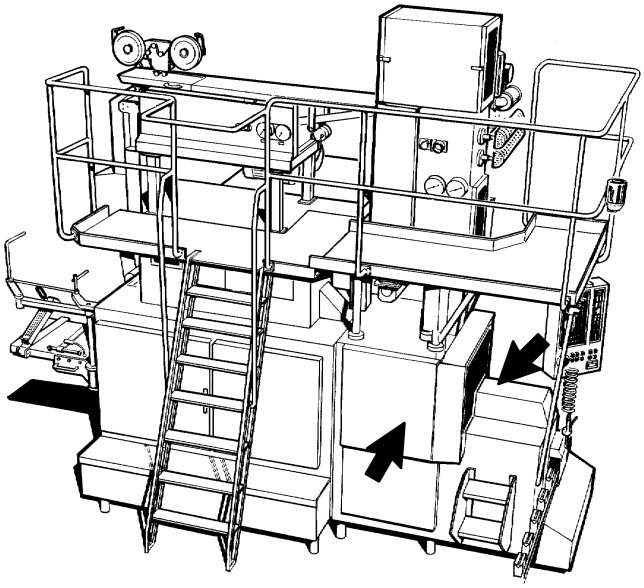

TBA/9 with strip applicator

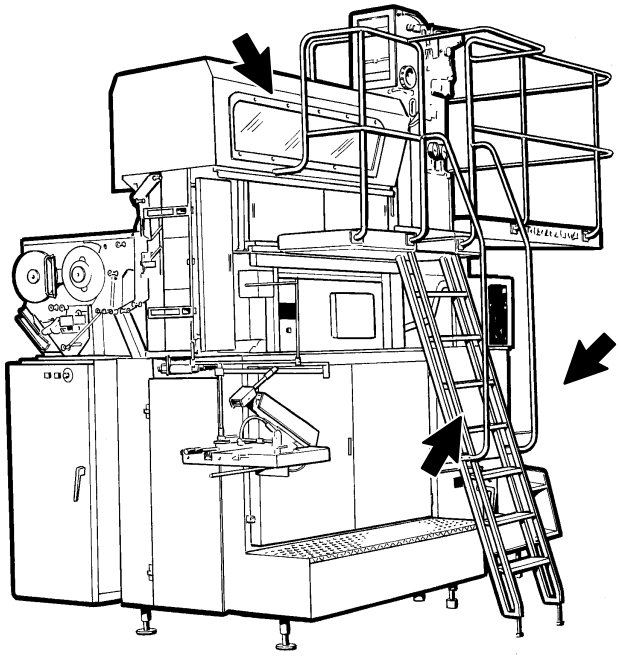

TBA/9 with pull tab device

Electrical cabinet

Work inside the electrical cabinet must be performed by skilled or instructed persons only.

WARNING!
The voltage is 380V inside the electrical cabinet. This can cause electroshock or serious injury. In case of accident, immediately call for medical attention.

IH generator

Only authorized service personnel are allowed to open the IH generator section.

WARNING!
The voltage inside the IH generator is 6000 V. Will shock, burn, or cause death. In case of accident, immediately call for medical attention.

The safety precautions in chapter MS 1000 must be followed unconditionally!

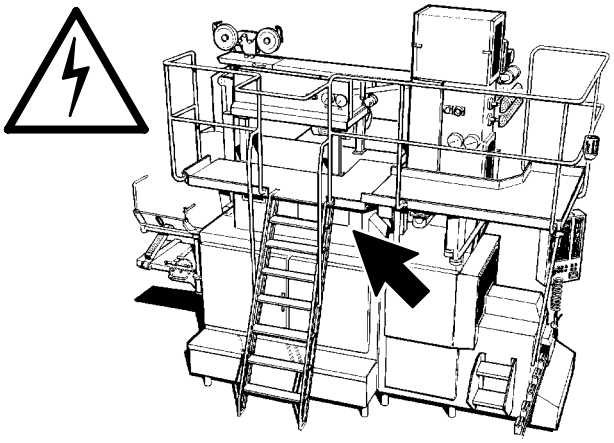

TBA/9 with strip applicator

Handling of sterilization liquid

The sterilization liquid used for sterilizing the packaging material consists of 35% hydrogen peroxide (H_2O_2).

WARNING!
In both liquid and gas form, hydrogen peroxide may cause irritation or damage if in contact with skin, mucous membranes, eyes, or clothes.

Whenever there is risk of contact with the sterilization liquid, always wear **safety glasses** (1), **protective gloves** (2), **apron** (3), and **shoes** made of PVC or PE plastic, or rubber.

In case of accident involving hydrogen peroxide, the basic rule is to rinse as soon as possible with as much water as possible. For this reason, always make sure that the **showers** (4) work, that there are additional washing facilities, and that an **eyewash device** (5) is available at or near each machine site.

It is necessary to keep in mind:

- If you get splashes or vapour from hydrogen peroxide in your **eyes**, wash the eyes thoroughly with lukewarm water for 15 minutes (keep eyelids widely apart); then **seek medical attention immediately**.

(Cont'd overleaf)

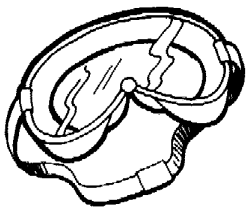
1

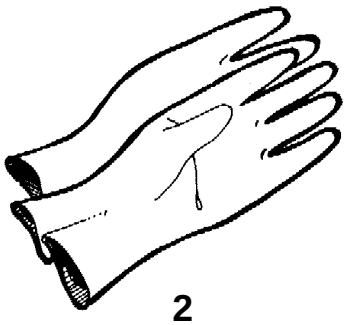
2

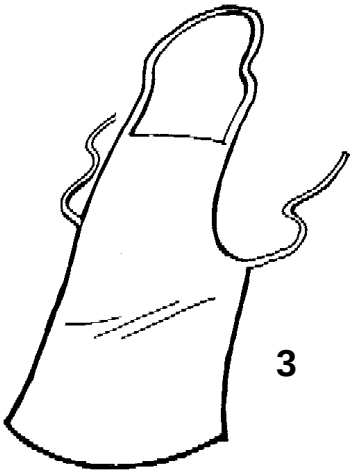
3


4

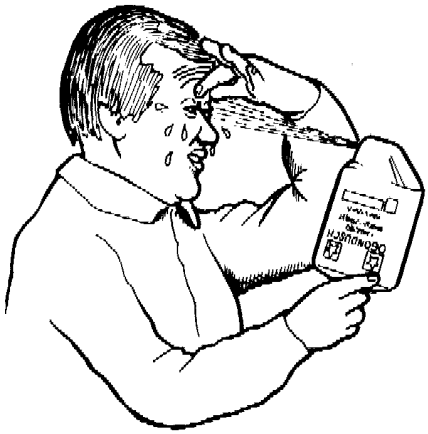
5

1 Safety glasses (TP No. 779130–102)
2 Protective gloves (TP No. 90303–4)
3 Apron (TP No. 90303–5)
4 Shower
5 Eyewash device (TP No. 90303–6)

(Cont'd)

- If you happen to **swallow** hydrogen peroxide, drink large amounts of lukewarm water (in order to dilute the hydrogen peroxide); then **seek medical attention immediately**.
- If you experience irritation or pain due to having **inhaled** peroxide vapour, leave the affected area and get some fresh air. If the symptoms get worse, seek medical advice.
- If hydrogen peroxide gets in **contact** with skin or clothes, immediately rinse with plenty of water. Thoroughly wash the clothes before they are worn again. If skin burns appear, seek medical advice immediately.
- If peroxide is **spilt** on the floor or a table, dilute it with large amounts of water and flush it into the drain.

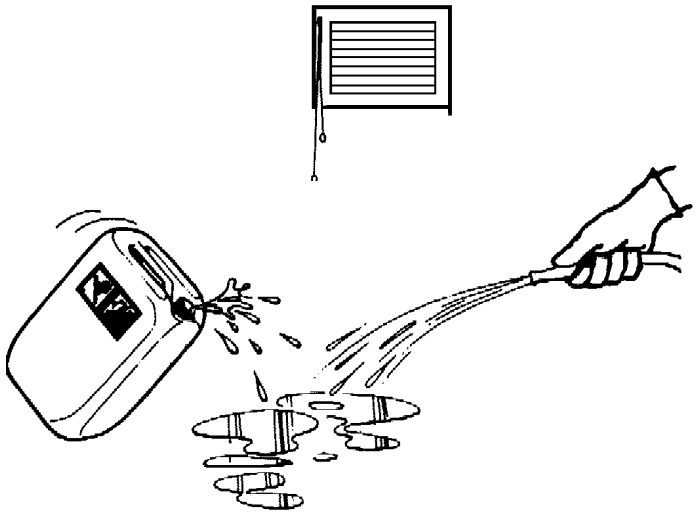

WARNING!
Never wipe with combustible material, such as rags or paper, as these may self-ignite.

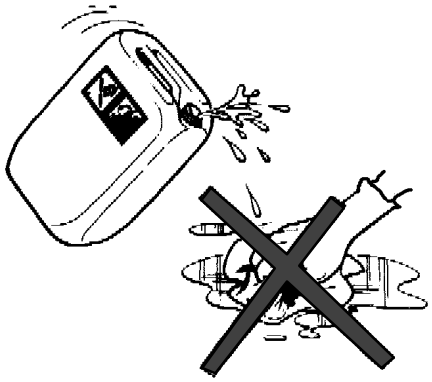

WARNING!
Do not allow hydrogen peroxide to get in contact with live electrical parts. Risk of short-circuit.

- Make sure that areas or rooms used for handling or storing hydrogen peroxide are well **ventilated**.
- In case of fire, cool the hydrogen peroxide containers by hosing with large quantities of water.

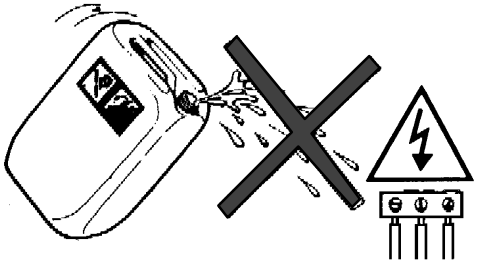

Hydrogen peroxide storage

The hydrogen peroxide has been stabilized but may nevertheless decompose into oxygen and water, if exposed to heat, pollution, or strong sunlight. For this reason, it must be stored in a cool, clean, and well ventilated area or room, where it should be shielded from direct sunlight. Also, keep the room free from combustible materials.

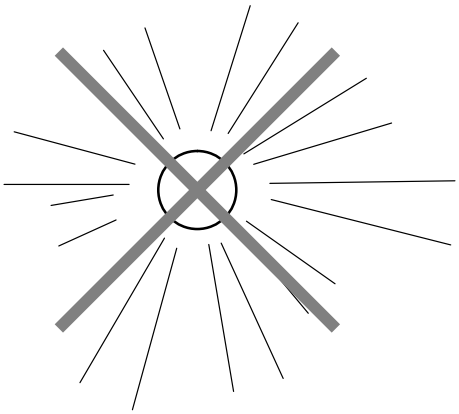

WARNING!
Avoid contamination of hydrogen peroxide. It may react to, or form explosive products with many organic substances (for instance acetone, cellulose, and ethanol).

Hydrogen peroxide must be stored only in the original container as delivered by the supplier.

WARNING!
Do not pour surplus hydrogen peroxide back into the original container. Risk of explosion.

The container must be kept upright and must only be closed with a ventilation cap (arrow in picture), which allows oxygen to escape. If not, there may be an explosion if decomposition of the peroxide occurs violently.

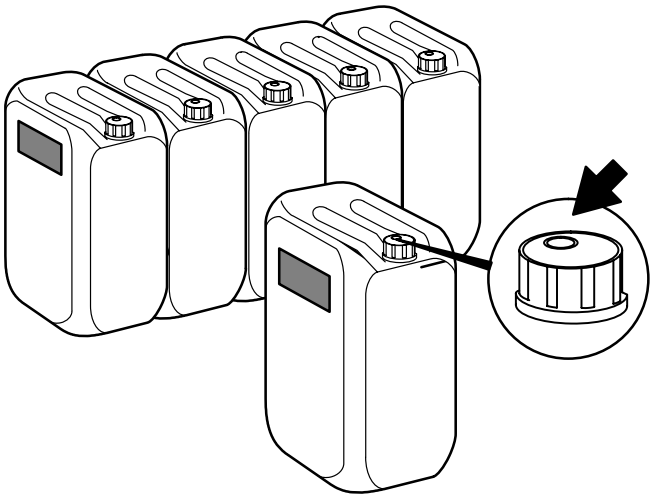

Always make sure that the container is properly closed.
Pumps or other facilities, used for hydrogen peroxide, must be used for this purpose only.

Disposal of hydrogen peroxide

The hydrogen peroxide should be sent for destruction, or be diluted with water to a concentration below 1% and poured into drainage. Hydrogen peroxide with a concentration below 1% is considered harmless when poured into the drain.
Never put used hydrogen peroxide back into storage.

Hydrogen peroxide can

Example of warning text

35% w/w Aqueous Solution UN No. 2014.

WARNING!
Corrosive.
Oxidizing.
Causes burns.
Contact with combustible materials may cause fire.

Keep in a cool place away from sources of heat.

Avoid contamination.

Wear suitable protective clothing, gloves, and eye/face protection.

After contact with skin, wash immediately with plenty of water.

In case of contact with eyes, rinse immediately with plenty of water and seek medical advice.

In case of spillage or fire, drench with water.

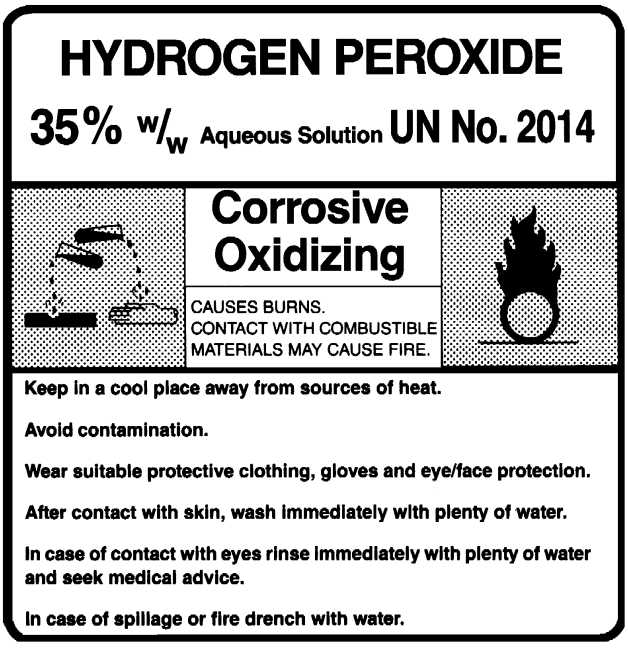

Example of warning text

Reference

TP document No. M 1751.80.

Ink

WARNING!
Flammable and harmful.
Carefully follow the warning text on the bottle label (see picture).

These safety precautions apply to the handling of larger quantities of ink than what a single bottle holds.

When using a bottle in the prescribed manner, no respiratory equipment is needed. Nevertheless, gloves should be worn to avoid irritation of the skin.

Shake before use.

If ink is accidentally spilled, avoid inhalation; use respiratory masks and ventilate the area thoroughly.

Do not empty ink into drains.

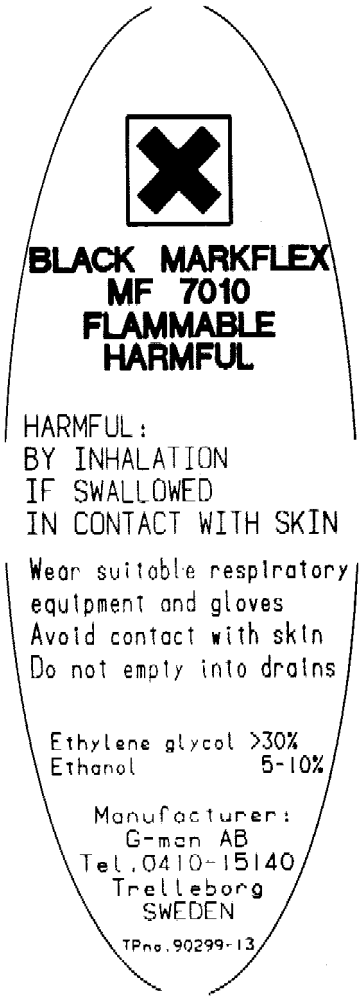

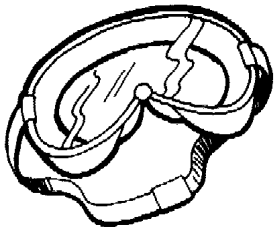



Hydraulic oil, lubricants, and cleaning solutions

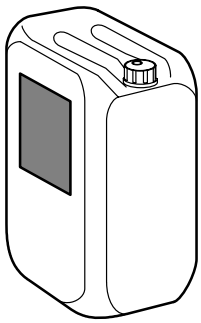

WARNING!
Can be flammable or hazardous to health.
Read the warning texts!

When handling hydraulic oil, lubricants, and cleaning solutions, carefully follow the warning texts on the container labels.

Always use safety equipment according to the instructions on the container labels. For final handling of solutions, follow the instructions in the product information sheets.

Ear protectors



WARNING!
Use ear protectors to minimize the risk of impaired hearing.

Always wear ear protectors while the machine is running.

Machine specification

The machine specification is stamped into a plate attached to the service unit. Here is information on machine type, A list (machine) development step, machine variant in A list, series number, and machine number.

Development step

At the bottom of every MS page, the machine type is specified. If any MS page does not apply to all the machines of this type, the relevant development step is stated.

Arrow pointing at development step signifies up to and including the development step.

→050V = up to and including development step 050V

Arrow pointing away from development step signifies from and including the development step.

050V→ = from and including development step 050V

Footnote
Machine variant ”0V” in the A list means that the A list contains optional variants of the machine. On delivery the variant is to be specified and ”0V” replaced by, for instance, 01.

XX01 = Machine with strip applicator
XX02 = Machine with pull tab device
XX03 = Compact body machine

Machine specification plate

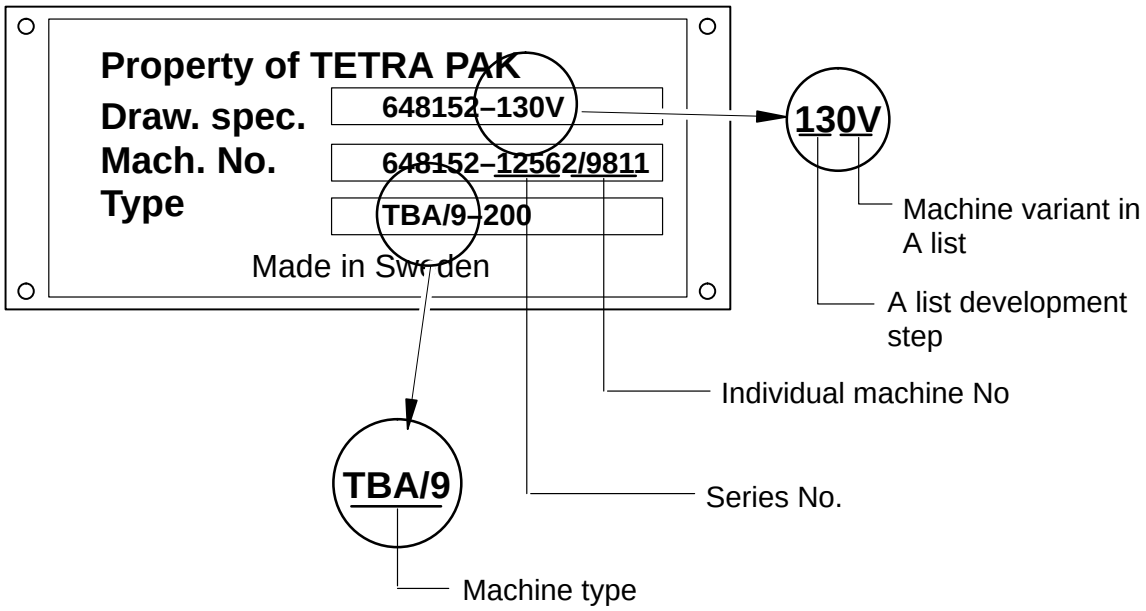

Page number

MS 141–11 1(2)

Maintenance system

Main group

For example Superstructure.

Machine function

For example Forming rings and Tube supports.

Action code

1 Checking/cleaning
2 Removal
3 Overhaul/replacement
4 Fitting
5 Setting
6 Setting during operation
7 Miscellaneous

Running No.

Depending on development step.

Page

In case there is more than one page with the same page number.

Group No. plate

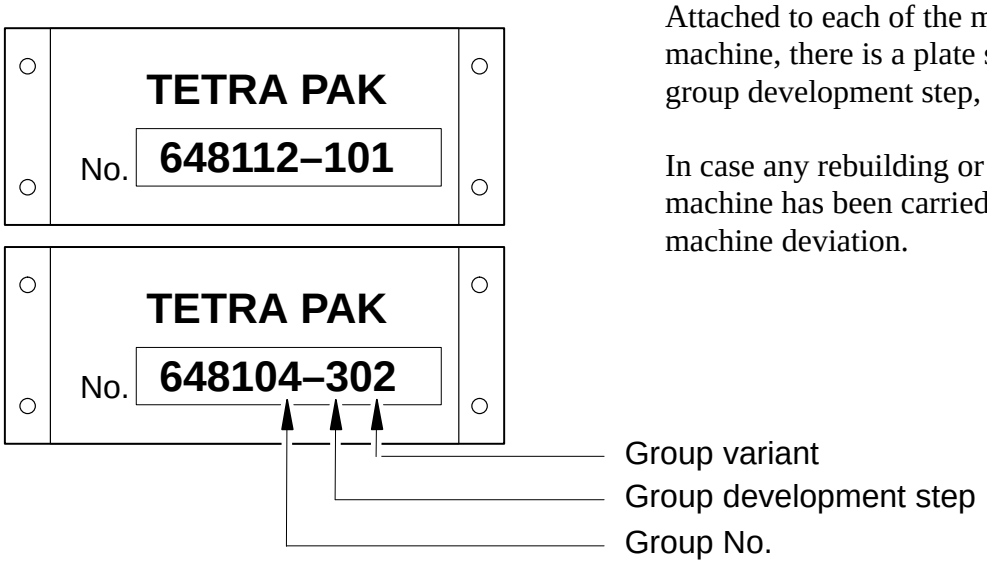

Group No.

Attached to each of the main groups of the machine, there is a plate specifying group No, group development step, and group variant.

In case any rebuilding or remodelling of the machine has been carried out, this is recorded as a machine deviation.

B list development step, TBA

V = Variant of development step

B list / From serial No. (Sweden) (Italy) A list		12270 20059 648152–100V	12463 20079 648152–110V	12562 20088 648152–120V	12839 20121 648152–130V
Superstructure	648111–	060V	070V	080V	090V
Machine body	648102–	060V	070V	080V	090V
Drive unit	648103–	060V	060V	070V	080V
Jaw system	648104–	060V	070V	080V	090V
Final folder	648105–	060V	070V	080V	090V
Service unit	648106–	060V	070V	080V	090V
Strip applicator	648107–	060V	070V	080V	090V
Pull tab device	648118–	060V	060V	070V	080V
Standard equipment	648109–	060V	070V	080V	090V
Extra equipment	648119–	060V	070V	080V	090V
Electrical equipment	E–649205–	030V	030V	050V 070V*	080V

* Compact body machine

Description	TB/9	TBA/9
Steam trap – overhaul		101–31
Steam filter – overhaul/cleaning (3 pages)		103–31
LS nozzle – checking/cleaning	116–11	116–11
LS nozzle – checking/cleaning	116–12	116–12
LS nozzle – setting		116–51
LS nozzle – setting (3 pages)		116–52
LS nozzle – setting (2 pages)		116–53
LS nozzle – setting	117–51	
LS nozzle – setting (2 pages)	117–52	
LS, short stop nozzle – checking/setting	119–11	119–11
LS, short stop nozzle – checking/setting	119–12	119–12
LS, short stop nozzle – checking/setting	119–13	119–13
SA/LS-heating – setting	120–52	
SA/LS-heating – setting		121–52
Low level guard, water bath – checking/setting		125–11
Product pressure gauge – checking	126–11	126–11
Product valve – overhaul (2 pages)		127–31
Product valve – overhaul (2 pages)		127–32
Product valve – overhaul (2 pages)		127–33
Product valve – cylinder and drive motor sequence diagram		127–71
Product valve – cylinder and drive motor sequence diagram		127–72
Product valve – cylinder and drive motor sequence diagram		127–73
Valve group – checking	128–11	
Suction valve – checking		129–11
Suction valve – setting		129–51

Description	TB/9	TBA/9
Sealing lip – checking/replacement		131–11
Support rollers – checking/replacement		133–11
Lower filling pipe – checking	134–11	134–11
Tube alignment – checking/setting	135–51	
Tube alignment – checking/setting	135–52	
Tube alignment – checking/setting	135–53	
Tube alignment – checking/setting	135–54	
Tube alignment – checking/setting		136–51
Tube alignment – checking/setting		136–52
Tube alignment – checking/setting		136–53
Tube alignment – checking/setting		136–54
Pressure roller, filling pipe – checking	137–11	137–11
Pressure roller, filling pipe – setting	137–51	137–51
Support roller, lower forming ring – setting	138–51	138–51
Support roller, lower forming ring – setting	138–52	138–52
LS overlap – checking	139–11	139–11
LS overlap – setting	139–52	139–52
LS overlap – setting	139–53	139–53
Tube supports and forming rings – checking	140–11	
Tube supports and forming rings – checking	140–12	
Tube supports and forming rings – checking		141–11
Tube supports and forming rings – checking		141–12
Tube supports and forming rings – checking		141–13
Bending rollers – checking	143–12	
Bending rollers – checking		144–12

Description	TB/9	TBA/9
Bending rollers – checking		144–13
Design correction, bar code – basic setting (7 pages)	148–51	148–51
Design correction, bar code – basic setting (7 pages)	148–52	148–52
Driven bending roller – checking	152–11	
Driven bending roller – checking		153–12
Design correction/dating crease wheel – checking/setting	154–11	
Design correction/dating crease wheel – setting (2 pages)	154–51	
Design correction crease wheel – checking/setting		155–12
Design correction crease wheel – setting		155–52
Printed design sensor – basic setting	156–51	
Compressor – checking		160–12
Compressor – dismantling		160–21
Compressor – reassembly		160–41
Compressor – setting		160–51
Constant flow valve, compressor – checking		161–11
Sterile air pressure, compressor – setting/balancing		162–52
Pressure, aseptic chamber/peroxide bath – checking (3 pages)		163–11
Pressure, aseptic chamber/peroxide bath – checking (3 pages)		163–12
Pressure switch – checking		165–12
Compressor, balance pipe – cleaning/checking		166–11
Water separator – cleaning/checking float		167–11
Air superheater – cleaning/checking element		168–11
Heat exchanger – cleaning/checking tightness (2 pages)		169–11
Heat exchanger – cleaning/checking tightness (2 pages)		169–12
Valve for heat exchanger – replacement of teflon seals		170–21

Description	TB/9	TBA/9
Air knife – checking		172–11
Air knife – checking		172–12
Air knife – setting		172–52
Sterile air system (2 pages)		175–72
Sterile air system (2 pages)		175–73
Sterile air system (2 pages)		175–74
Air inlet valve – checking		177–11
Air inlet valve – checking		177–12
Air inlet valve – checking		177–13
Air inlet valve – removal		177–21
Air inlet valve – removal		177–22
Air inlet valve – removal		177–23
Seal at suction box – checking		179–12
Seal at suction box – checking		179–13
Peroxide bath, bending roller – checking/cleaning		181–11
Peroxide bath, bending roller – checking/cleaning		181–12
Peroxide bath bending roller – overhaul		181–31
Peroxide bath bending roller – overhaul		181–32
Peroxide filter, spray tank – cleaning		183–11
Squee-gee rollers – checking		184–11
Squee-gee rollers – checking		184–12
Squee-gee rollers – removal (2 pages)		184–21
Squee-gee rollers – removal (2 pages)		184–22
Squee-gee rollers – setting (2 pages)		184–51
Squee-gee rollers – setting (2 pages)		184–52

Description	TB/9	TBA/9
Peroxide system – checking tightness		187–11
Tube flushing – checking	190–11	190–11
Splice monitor– checking	192–11	192–11
Splice monitor– checking		192–12
Splice monitor– setting	192–51	192–51
Splice monitor– setting		192–52
Forming rings – setting (2 pages)		196–51
Forming rings – setting (2 pages)		196–52

Overhaul

Undo the cap (1). Remove the disc (2) and replace it.

When reassembling, the disc should be placed in position with the **grooved side** in contact with body seating face.

Fit the cap. A fine smear of Molybdenum Disulphide grease (TP No. 90256–57) should be applied to the threads.

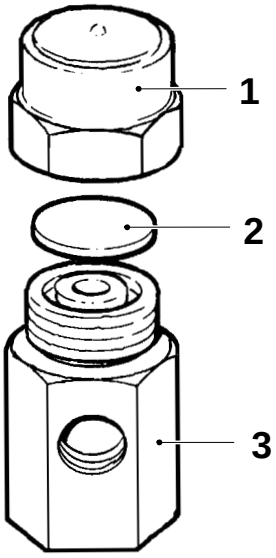

1 Cap
2 Disc
3 Body

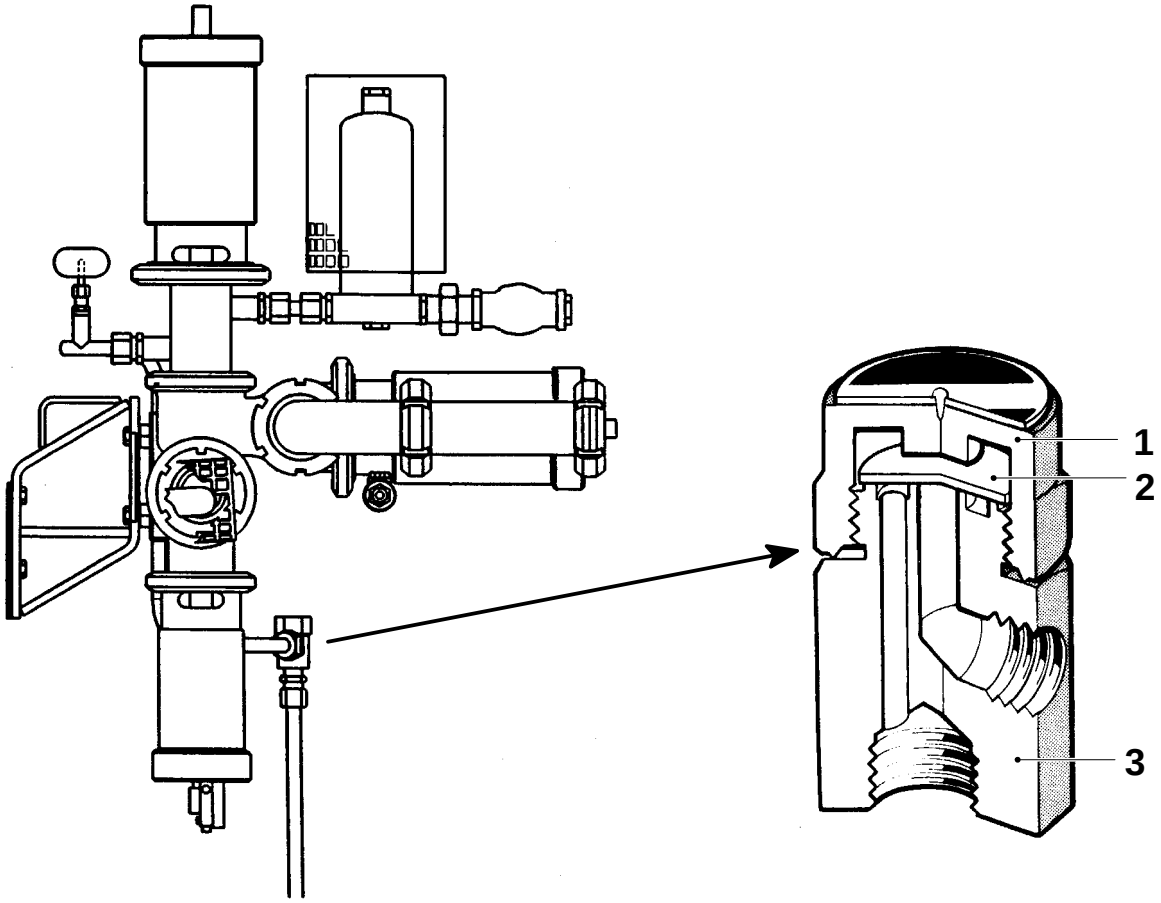

Overhaul/Cleaning

Close the system inlet valve and slowly open the vent and drain valve to release the pressure.

WARNING!
Hot steam. Risk of personal injury or damage to equipment. Check the system pressure gauge to ensure no residual pressure remains in the filter housing. Do not open under pressure.

Undo the tee-nut (3) and remove the protective cover (1).
Clean the inside of the cover.

Remove the filter cartridge (4).

Clean the filter, see page MS 103–3X:2.

Refit the filter cartridge and cover.

Do not overtighten the tee-nut.
Finger tight only.

(Cont'd overleaf)

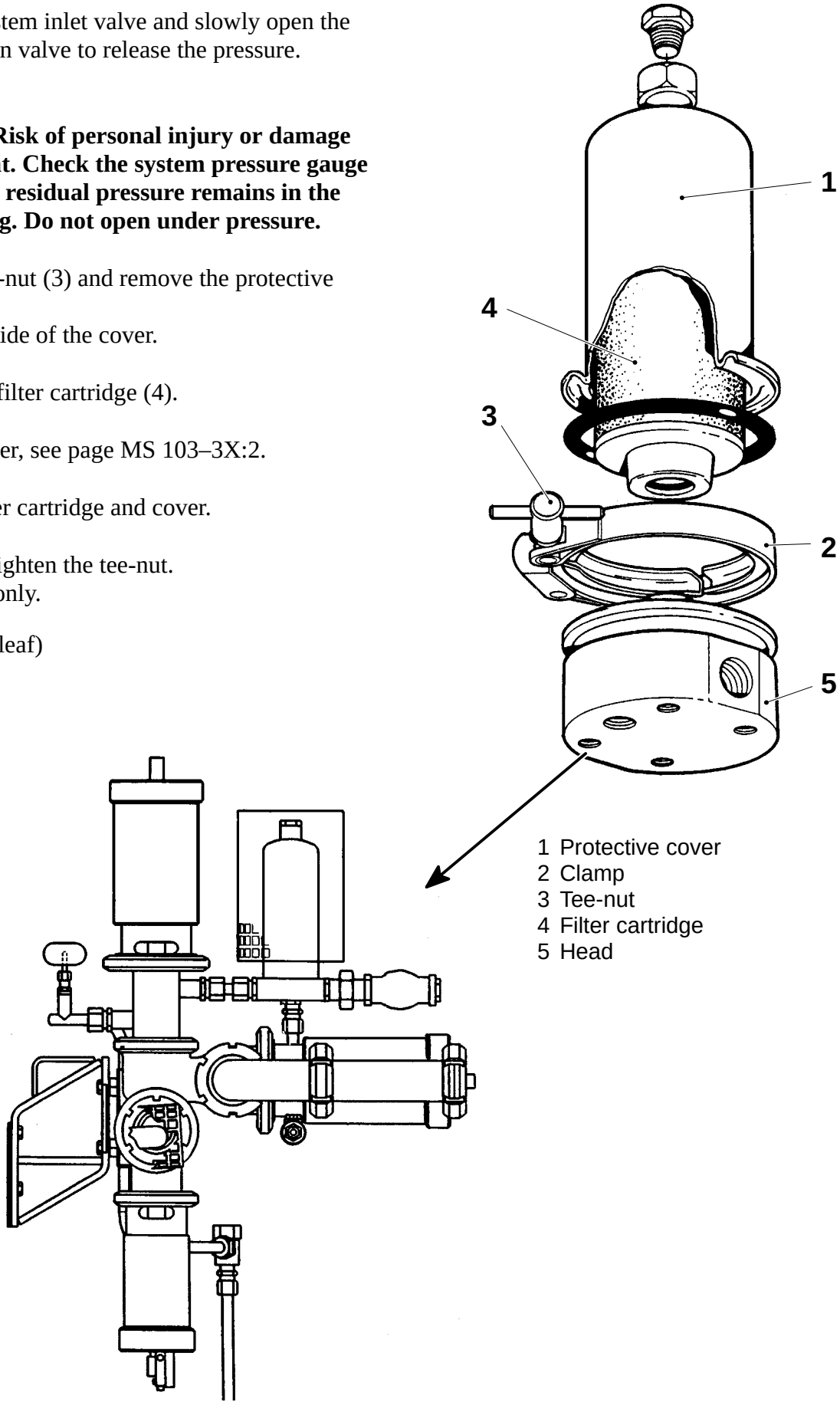

1 Protective cover
2 Clamp
3 Tee-nut
4 Filter cartridge
5 Head

(Cont'd)

General information

To obtain optimum performance of the filter cartridges:

- clean the filter cartridges thoroughly (**or** return to Pall for cleaning and testing) before rensing, and
- label and store used cartridges **after** removing the O-ring.

Water used in the procedure should be deionized **and** filtered.

For rinsing, use a 50 litre tank, designed to avoid "dead spaces". Incoming water (renewal rate 5 l/min) must be filtered with Pall Profile 10µm. The contents of the tank should be agitated by means of compressed air, filtered through a Coalecher element from the Pall SU-range.

Cleaning with nitric acid

WARNING!
Nitric acid is extremely corrosive and causes severe burns.
Carefully observe the Safety precautions in section 000.
The cleaning procedure must not contravene any legal or local safety regulations.

a) Immerse the filter cartridge in 14 – 15% (w/w) nitric acid at 60 – 70°C for 10 – 20 minutes.
Footnote!
If the cartridge is highly contaminated or if the recommended temperature cannot be used, contact **Pall Scientific and Laboratory Services** for advice.

b) Rinse the cartridge in water for **at least** 10 minutes.

c) Empty the tank and refill with water. The pH level of the tank contents should now be 6 – 8.

d) Rinse the cartridges again for at least two hours, or until the pH level of the tank contents is the same as that of the incoming water.

e) Flush the cartridges in reverse direction with water.
If the water emerging from the cartridge is discoloured or contains visible contaminants, repeat steps a) and b).

(Cont'd overleaf)

(Cont'd)

Reverse bubble point testing

Footnote
Perform these steps **immediately** after step e) in the previous section.

a) Thoroughly soak and wet the filter cartridge in water.

b) Seal one end of the cartridge to a compressed air line. The pressure should be in the range of 0 – 50 ins. w. g.

c) Submerge the filter cartridge in water. The filter should be kept approximately 125 mm below the surface.

d) Gradually increase the air pressure while rotating the filter cartridge slowly, until air bubbles can be seen emerging from it. Record the air pressure at this point.

e) Carefully inspect the filter cartridge to ensure that the air bubbles emerge at a similar rate from the entire cartridge.

f) Lower the pressure to half the recorded pressure. If air bubbles emerge from an isolated area of the cartridge at this pressure, contact **Pall Scientific and Laboratory Service** for advice.

Drying procedure

Dry the filter at 105 – 120°C for 1 – 2 hours to constant weight.

After drying, visually check the filter cartridge for damage and/or corrosion. Replace the cartridge, if required.

Fit the filter cartridge with new O-ring seals.

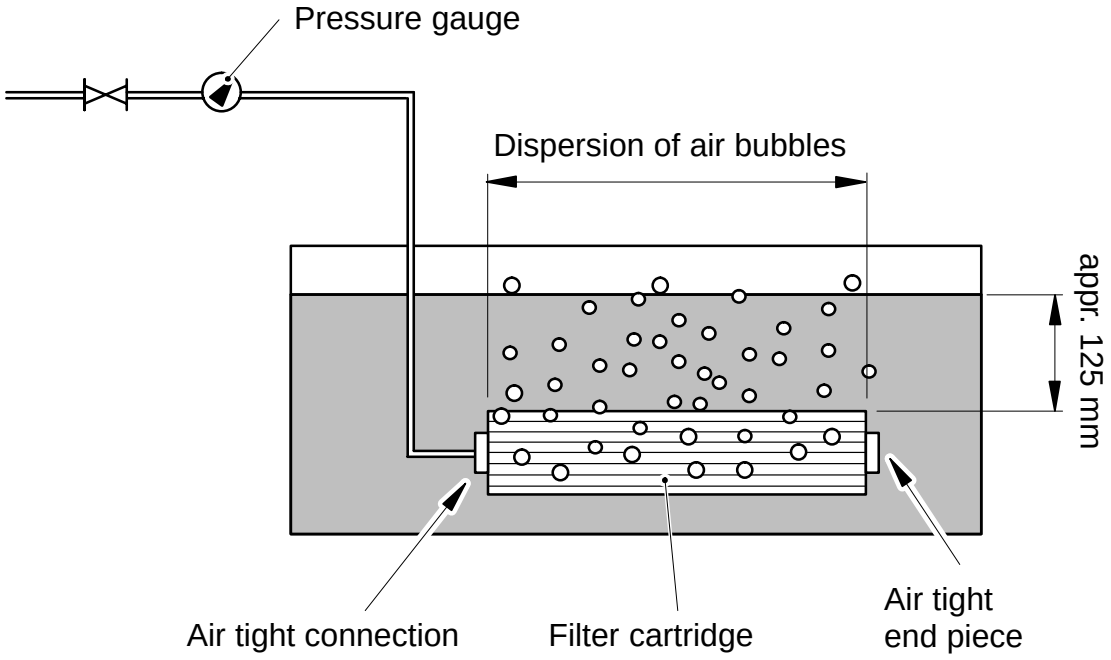

Checking/Cleaning

Clean the nozzle. Check that the air holes are not blocked.

Check that the support plate (6) is not worn or deformed. Replace as required.

Check that rollers (1) and shafts are not worn and that the rollers rotate freely. Replace as required.

Footnote
To remove the guide plate (2), remove the rollers (1).

Remove the air nozzle (4) and support plate (6) by undoing the screws (3).

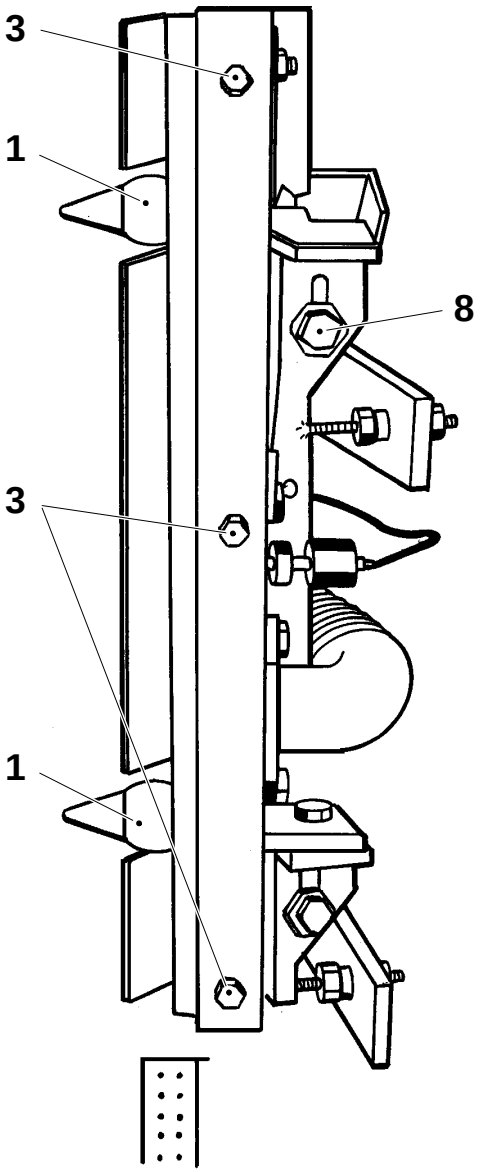

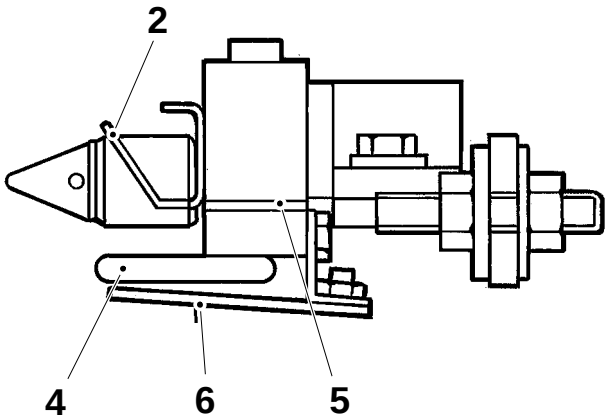

1 Roller
2 Guide plate
3 Screw
4 Air nozzle
5 Distributing plate
6 Support plate

Checking/Cleaning

Remove the cover plates (2) by means of the screws (3).

Clean the nozzle. Check that the air holes are not blocked.

Check that the rollers (1) and axles are not worn and that they rotate freely. Replace as required.

Undo the screws (4) to remove the blow nozzle (5).

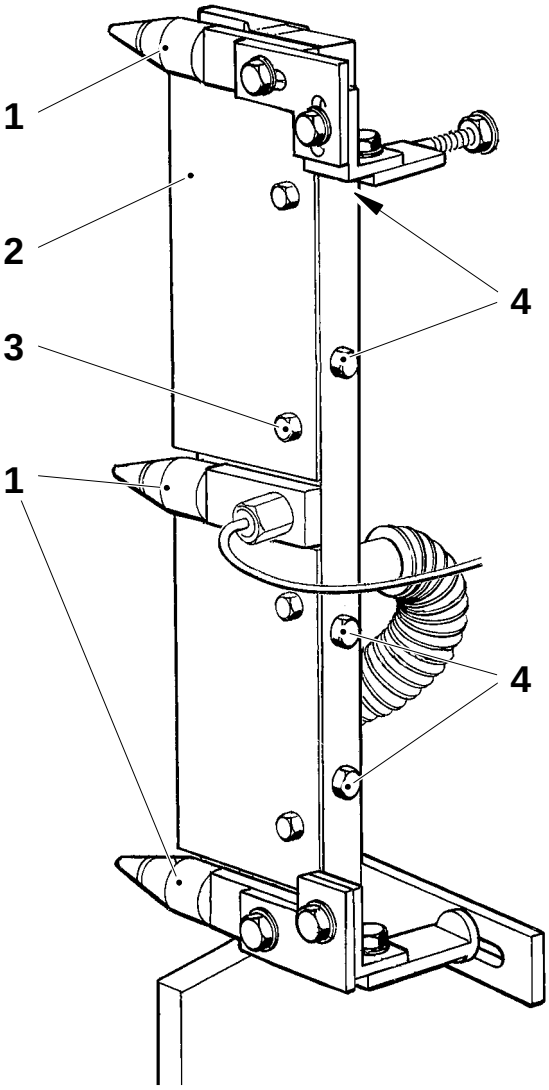

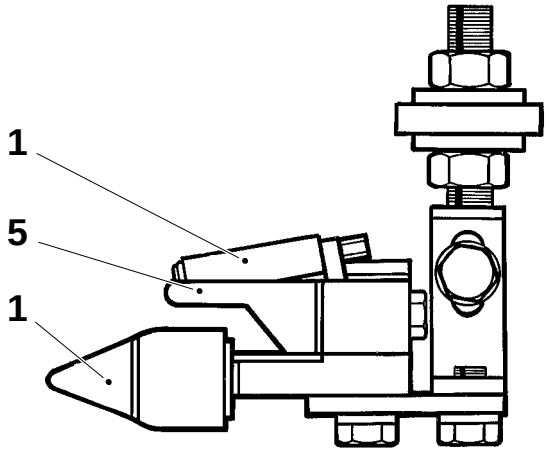

1 Roller
2 Cover plate
3 Screw
4 Screw
5 Blow nozzle

Setting

Set the inner row of holes aligned directly underneath the edge of the packaging material (indicated in fig. 1).

Set the LS nozzle according to fig. 2. The upper end of the LS nozzle is to be set A mm from the packaging material web, and the lower end approximately 2 mm from the web, see fig. 2. Lesser lateral deviations can be eliminated by means of the limit screw (1).

If the nozzle is out of alignment and the deviation is considerable, set it by means of template TP No. 76344 (180–250 ml).

Set gap B between the LS nozzle and the short stop nozzle (4) when the machine is **cold**. To adjust, loosen the screws (3), see fig. 3.

Set the LS overlap and the tube centering, see page MS 139–1X and MS 139–5X.

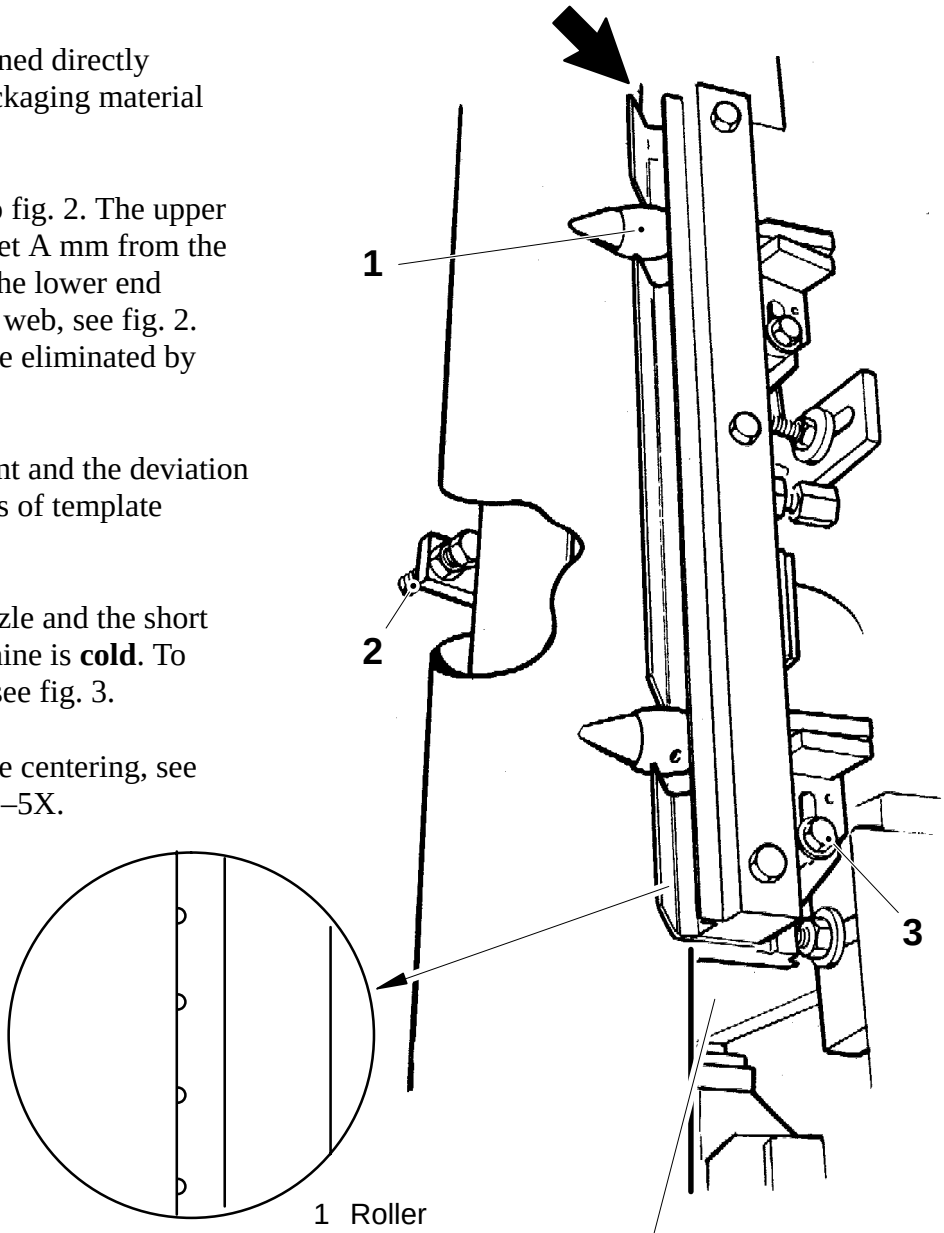

Fig. 1

1 Roller
2 Limit screw
3 Screw
4 Short-stop nozzle

A = 2 – 3 mm
B = 2 ±1 mm

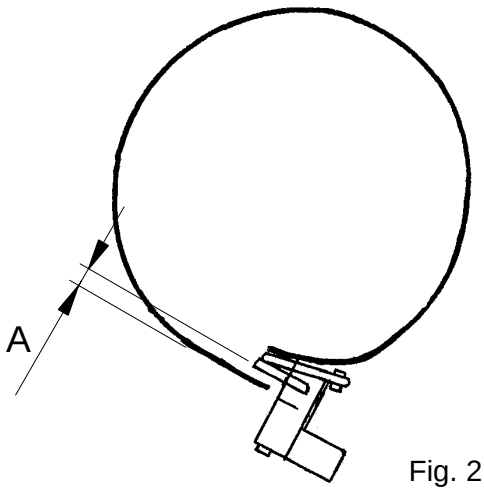

Fig. 2

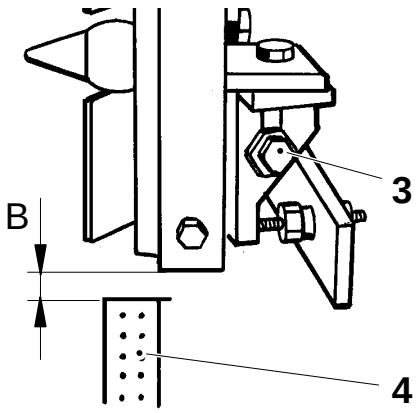

Fig. 3

Setting

Remove the cover plates of the LS nozzle.

Set the rollers (4) correctly, see fig.

Remove the lock plates (6) and the roller (5) in the lower forming ring.

Put the lower pin of the LS template (3), see table, in the place of the roller in the forming ring and secure the template with the screw (2). Do not forget the spacer ring (1).

Volume ml,	100V→110V LS template, TP No.	120V LS template, TP No.
180–250	76595–101 *	76595–201
200S	76606–101	76606–201
125	76133–101	76133–201

∗ Applies to 110V

(Cont'd overleaf)

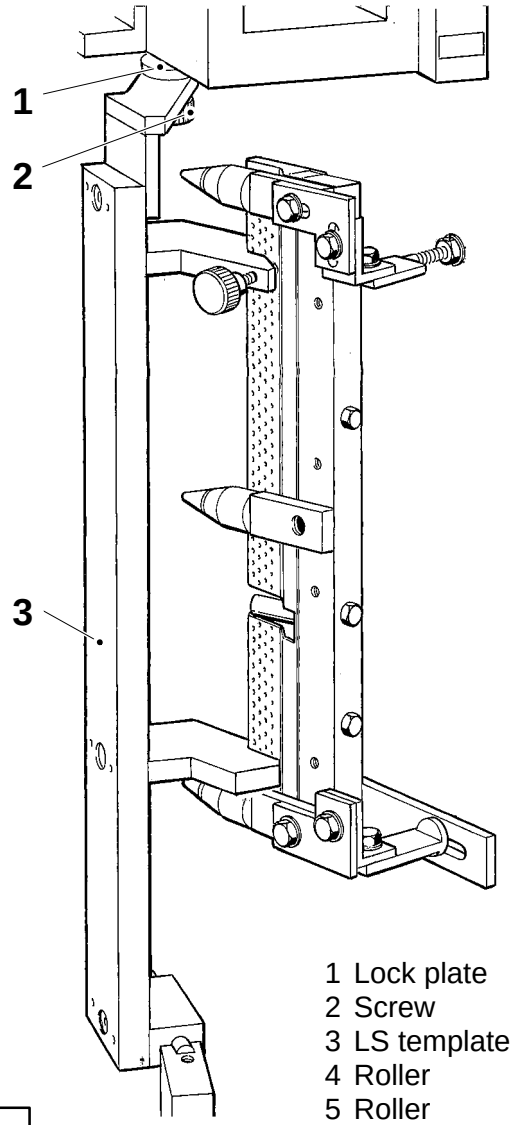

1 Lock plate
2 Screw
3 LS template
4 Roller
5 Roller
6 Lock plates

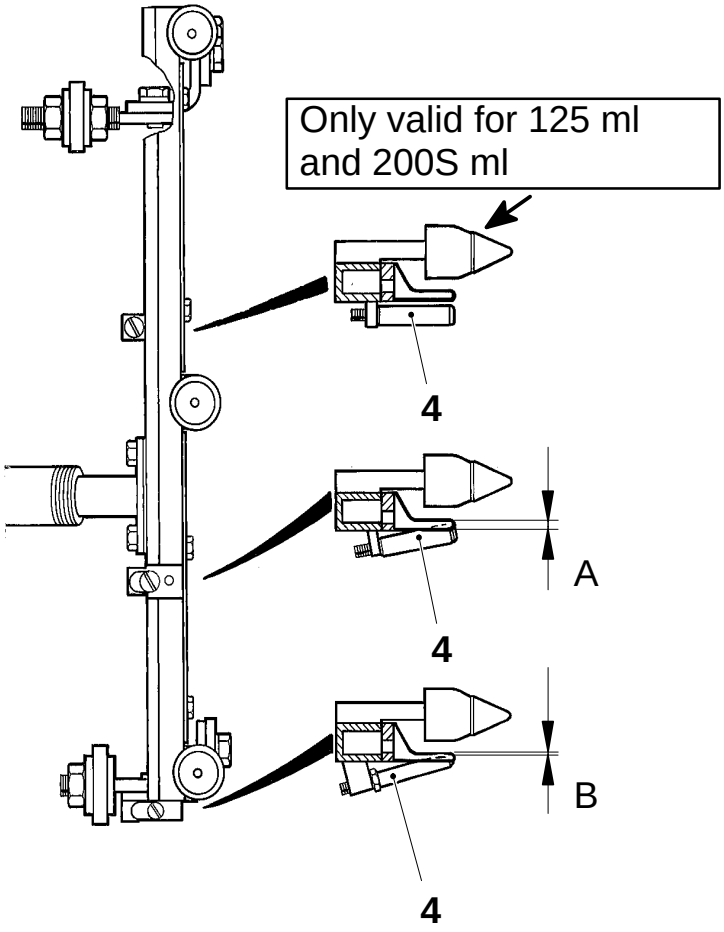

A = 1.0 – 1.5 mm
B = 0.5 – 1.0 mm

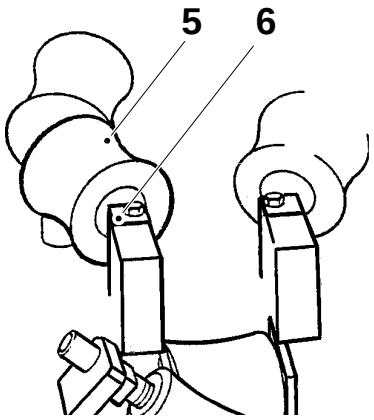

(Cont'd)

Turn out the limit screw (11).

Loosen the screws (8) and nuts (9) and move up the LS nozzle (10) against the contact surfaces of the LS template (3). It may be necessary to adjust the cylinder stroke.

Tighten the screw (7).

(Cont'd)

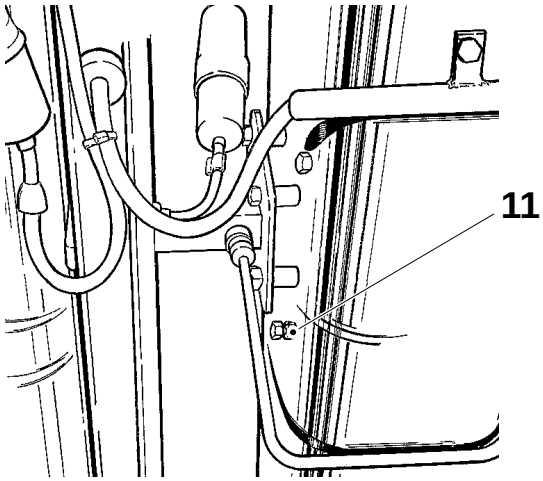

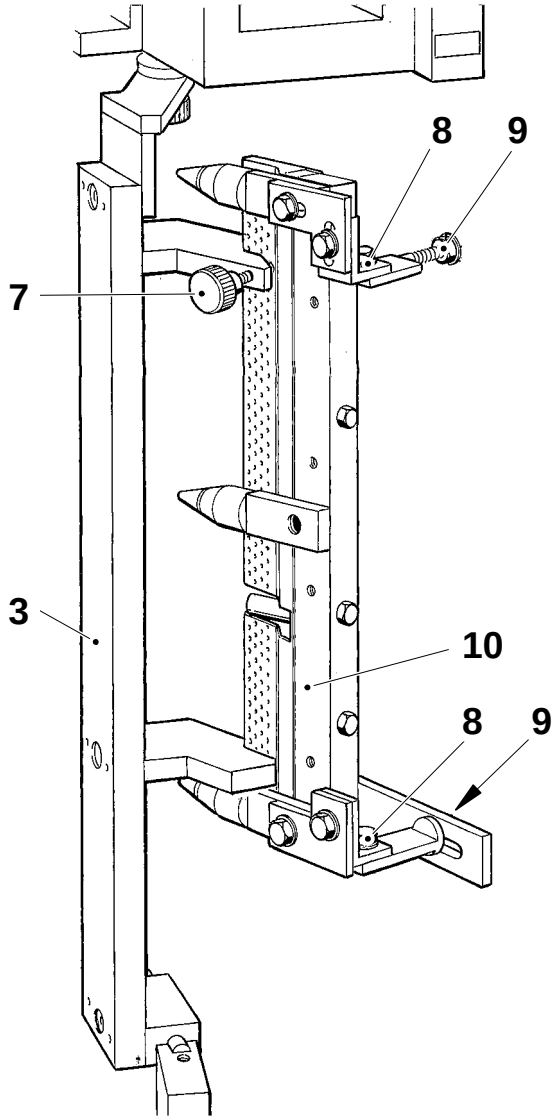

3 LS template
7 Screw
8 Screw
9 Nut
10 LS nozzle
11 Limit screw

(Cont'd)

Turn in the limit screw (11) against the contact point on the LS nozzle.

Secure the LS nozzle. If required, finally adjust lateral deviations during operation by means of the limit screw. The inner row of holes (125 and 200S; second hole row) is to be aligned directly underneath the edge of the packaging material, see fig.

Set gap C between the LS nozzle (10) and the LS short stop nozzle (12) when the machine is **cold**. To adjust, loosen the screws (13).

Set the LS overlap and the tube centering, see page MS 139–1X and MS 139–5X.

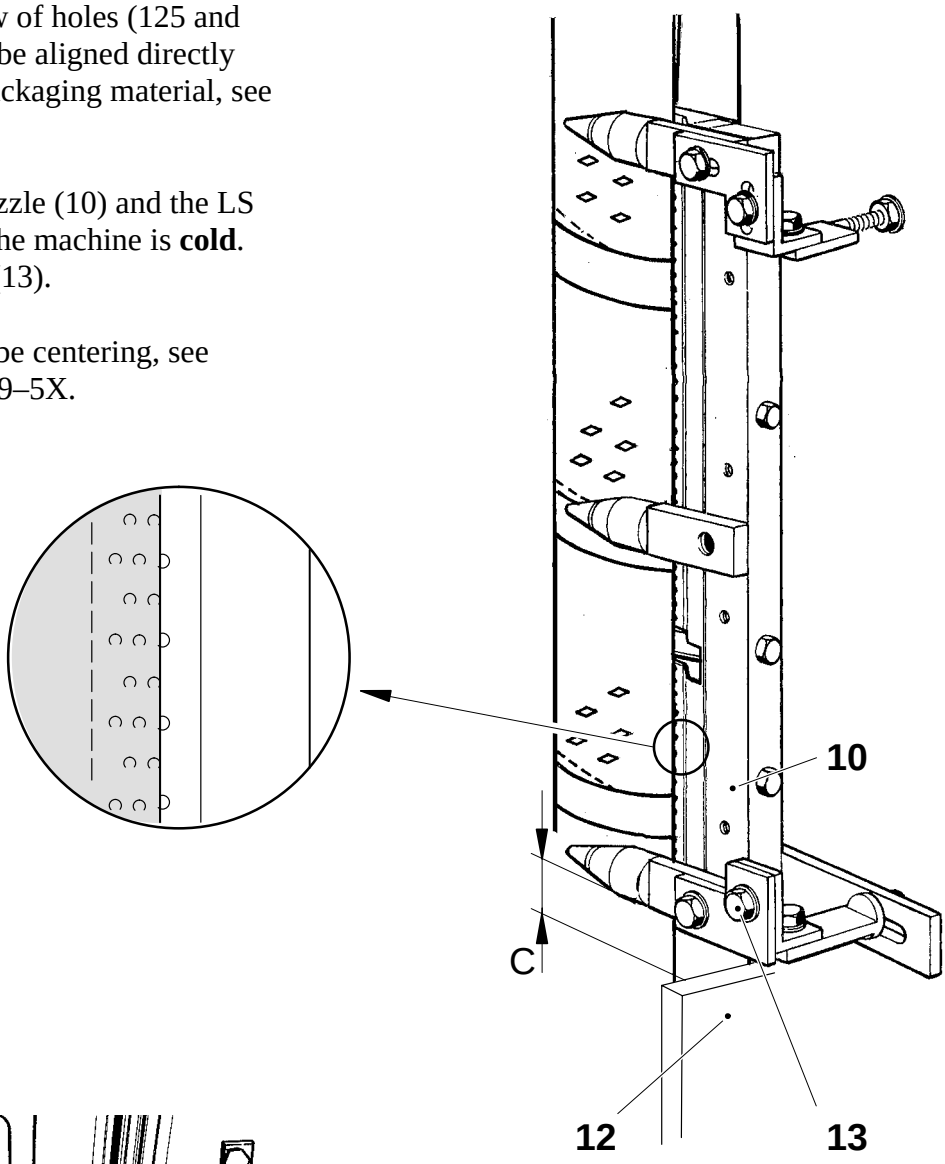

C = 2 ±1 mm

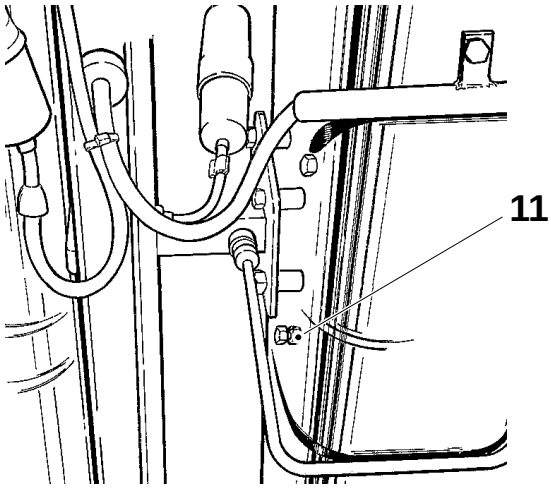

10 LS nozzle
11 Limit screw
12 LS short stop nozzle
13 Screw

Setting

Remove the cover plates of the LS nozzle.

Set the rollers (4) correctly, see fig.

Remove the lock plates (6) and the roller (5) in the lower forming ring.

Put the lower pin of the LS template (3) in the place of the roller in the forming ring and secure the template with the screw (2). Do not forget the spacer ring (1).

Volume, ml	LS template, TP No.
180–250	76595–301
200S	76606–301
125	76133–301

(Cont'd overleaf)

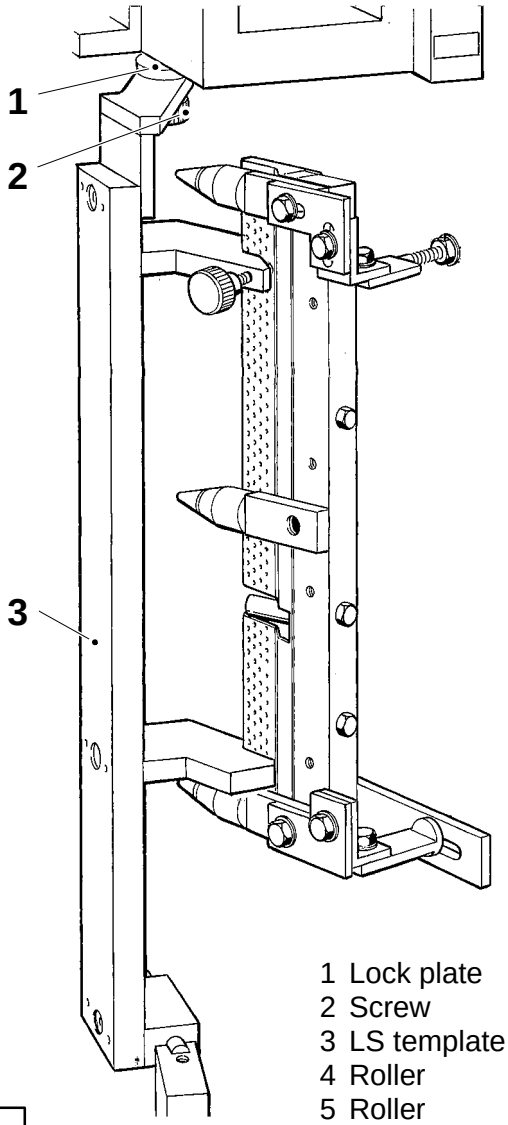

1 Lock plate
2 Screw
3 LS template
4 Roller
5 Roller
6 Lock plates

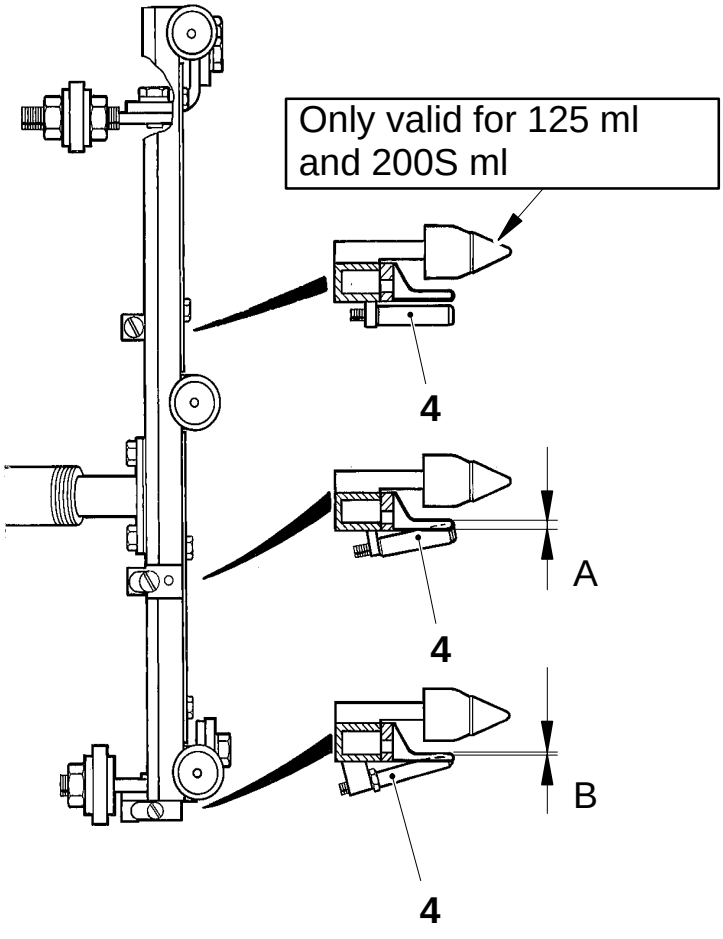

A = 1.0 – 1.5 mm
B = 0.5 – 1.0 mm

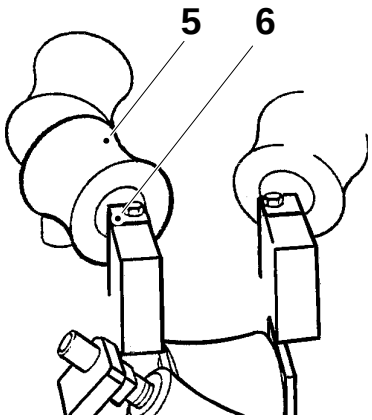

(Cont'd)
Turn out the limit screw (11).

Loosen the screws (8) and nuts (9) and move up the LS nozzle (10) against the contact surfaces of the template. It may be necessary to adjust the cylinder stroke.

Tighten the screw (7).

Turn in the limit screw (11) against the contact point on the LS nozzle.

Secure the LS nozzle. If required, finally adjust lateral deviations during operation by means of the limit screw. The inner row of holes (125 and 200S; second hole row) is to be aligned directly underneath the edge of the packaging material, see fig.

Set gap C between the LS nozzle (10) and the LS short stop nozzle (12) when the machine is cold. To adjust loosen the screws (13).

Set the LS overlap and the tube centering, see page MS 139–1X and 139–5X.

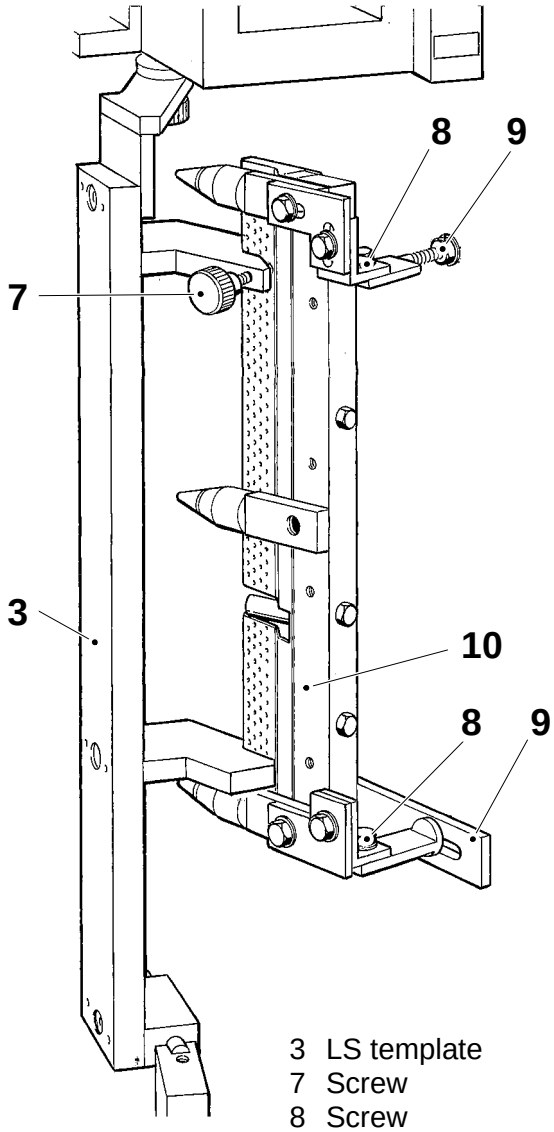

3 LS template
7 Screw
8 Screw
9 Nut
10 LS nozzle
11 Limit screw
12 LS short stop nozzle
13 Screw

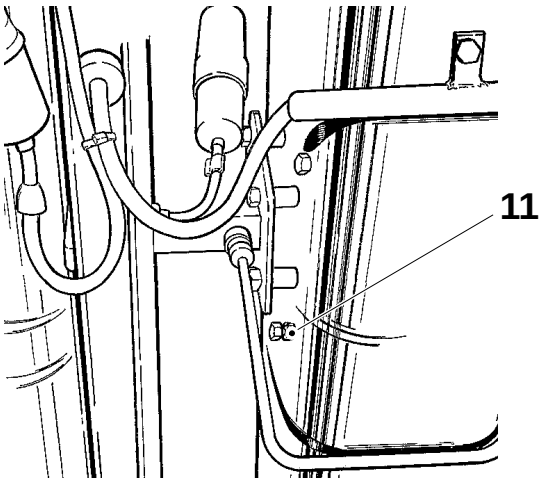

C = 2 ±1 mm

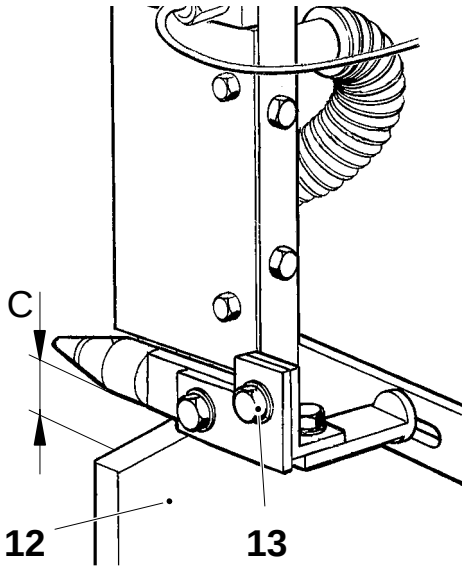

Checking/Setting

Set the edge of the heat shield (1) outside the short stop nozzle (2) with dimensions A and B, see fig. 1.

The corner of the short stop nozzle is to protrude distance C beyond the edge of the packaging material, see fig. 2.

Setting relative the LS nozzle, see page MS 116–5X.

Set the air pressure, see page MS 910–7X/920–7X.

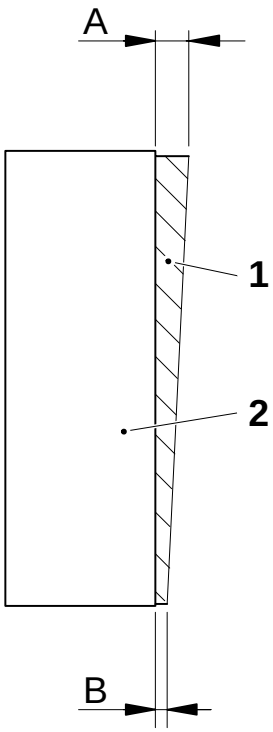

Fig. 1

During production

Push **Short stop** and check that the nozzle moves without fouling the pressure roller and LS nozzle.

Check that the LS seal is without fault in the package that remained opposite the short stop nozzle during the stop.

The heating can be altered by adjusting the clamp union (4), see fig. 2. More heat is transferred if the nozzle is closer to the material tube (3).

The heating of the short stop nozzle can also be altered by reconnecting transformer T9 in the electrical cabinet, but this must only be done by a qualified electrician.

Footnote
The short stop movement can be simulated with the aid of the PLC unit, or by actuating the pneumatic valve Y20 on the valve panel.

A = 8 ±0.5 mm
B = 3 ±0.5 mm
C = 1 ±0.5 mm

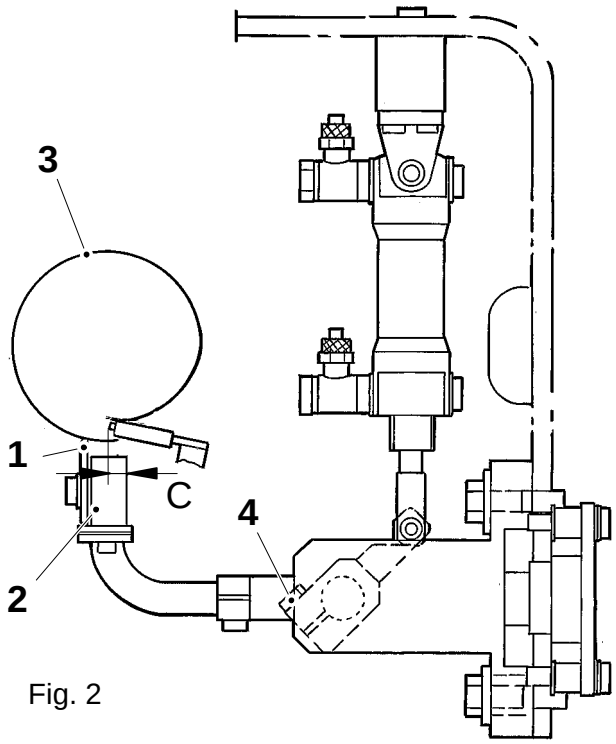

Fig. 2

1 Heat shield
2 Short stop nozzle
3 Material tube
4 Clamp union

Checking/Setting

Set the edge of the heat shield (1) outside the short stop nozzle (2) with dimensions A and B, see fig. 1.

The corner of the short stop nozzle is to protrude distance C beyond the edge of the packaging material, see fig. 2.

Setting relative the LS nozzle, see page MS 116–5X.

Set the air pressure, see page MS 910–7X/920–7X.

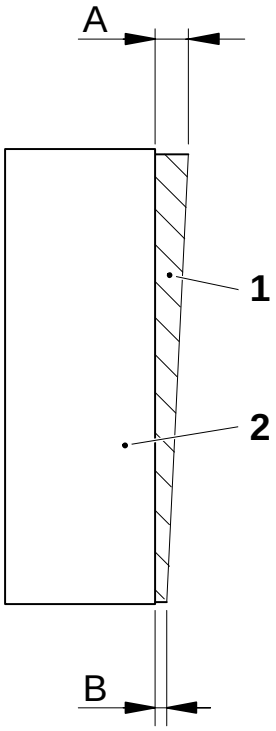

Fig. 1

A = 8 ±0.5 mm
B = 3 ±0.5 mm
C = 1 ±0.5 mm

During production

Push **Short stop** and check that the nozzle moves without fouling the pressure roller and LS nozzle.

Check that the LS seal is without fault in the package that remained opposite the short stop nozzle during the stop.

The heating can be altered by adjusting the clamp union (4), see fig. 2. More heat is transferred if the nozzle is closer to the material tube (3).

The heating of the short stop nozzle can also be altered by reconnecting transformer T9 in the electrical cabinet, but this must only be done by a qualified electrician.

Footnote
The short stop movement can be simulated with the aid of the PLC unit, or by actuating the pneumatic valve Y20 on the valve panel.

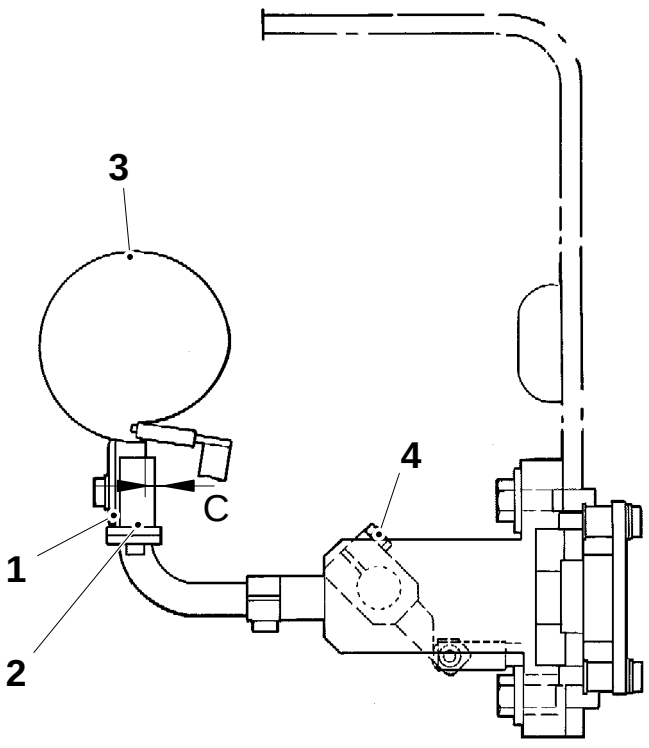

1 Heat shield
2 Short stop nozzle
3 Material tube
4 Clamp union

Fig. 2

Checking/Setting

Set the edge of the heat shield (1) outside the short stop nozzle (2) with dimensions A and B, see fig. 1.

The corner of the short stop nozzle is to protrude distance C beyond the edge of the packaging material, see fig. 2.

Setting relative the LS nozzle, see page MS 116–3X.

Set the air pressure, see page MS 910–7X/ 920–7X.

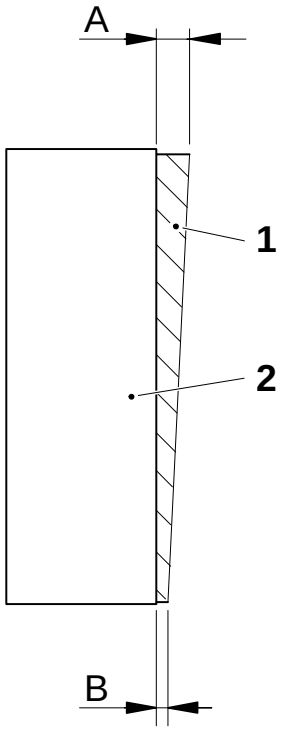

Fig. 1

A = 8 ±0.5 mm
B = 3 ±0.5 mm
C = 1 ±0.5 mm

During production

Push **Short stop** and check that the nozzle moves without fouling the pressure roller and LS nozzle.

Check that the LS seal is without fault in the package that remained opposite the short stop nozzle during the stop.

The heating can be altered by adjusting the clamp union (4), see fig. 2. More heat is transferred if the nozzle is closer to the material tube (3).

The heating of the short stop nozzle can also be altered by reconnecting transformer T9 in the electrical cabinet, but this must only be done by a qualified electrician.

Footnote
The short stop movement can be simulated with the aid of the PLC unit, or by actuating the pneumatic valve Y20 on the valve panel.

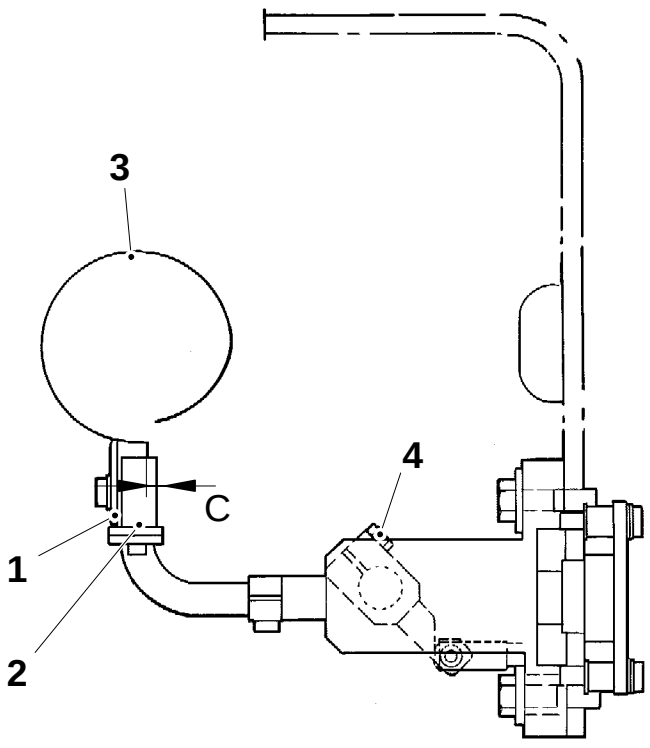

1 Heat shield
2 Short stop nozzle
3 Material tube
4 Clamp union

Fig. 2

Setting

a) Set the SA nozzle, see pages MS 715–1X/5X and the LS nozzle, see pages MS 116–1X/3X.

b) The LS and SA air pressures are to be set, see table on page MS 910–7X.

c) The temperature instruments for SA and LS sealing and for LS tube sealing, A202 and A12 and A8, are to be set, see page MS 910–7X.

d) In case of incorrect heating, check the element voltage by means of a universal electrical measuring instrument over the output terminals, and the amperage by means of a clip-on ammeter in the electrical cabinet, see table.

If the heating is too low with intact elements the reason is either air leakage or defective instruments A202/A12/A8.

SA (220 V)	LS (220 V)
2330 W	3000 W
10.6 A	13.6 A

Checking/Setting

a) Loosen the nut (4) and vent the pressure guard (2).

b) Connect a transparent hose (approx 1500 mm) to the valve (1).

c) Open the valve carefully and drain the water bath of the peroxide bath.

d) When the input I 05.03. goes out, close the valve immediately and put the hose in an upright position.

e) Open the valve again and check that the distance from the plate (5) to the water level is 1300±30 mm WC.

f) If the level is too high, lift the cap (3) and clockwise adjust on the screw. Make the adjustments in very small steps.

g) Check that the low level guard is correctly set by repeating items c), d) and e).

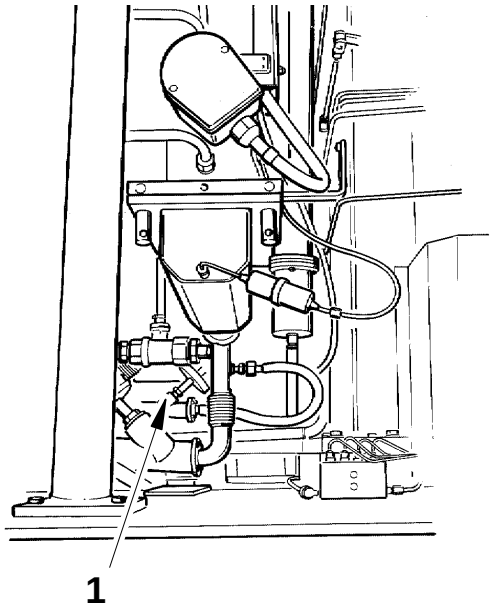

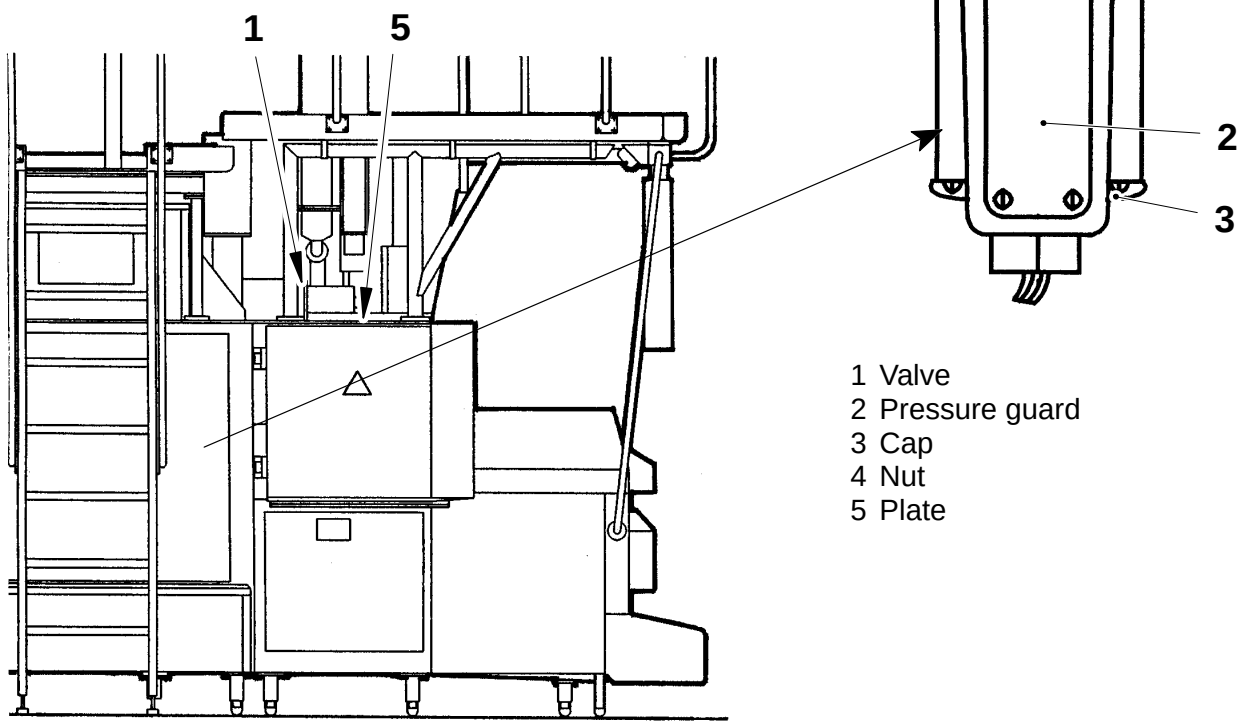

1 Valve
2 Pressure guard
3 Cap
4 Nut
5 Plate

Checking

Footnote
Extra equipment from 130V.

Check that the pressure gauge indicates zero when there is no pressure in the system.

Check that the diaphragm is not damaged.

Replace the flange seal.

Footnote
If a **pressure gauge** with screw is **vertically mounted** and it has to be replaced, the screw (1) must be loosened **one** turn.

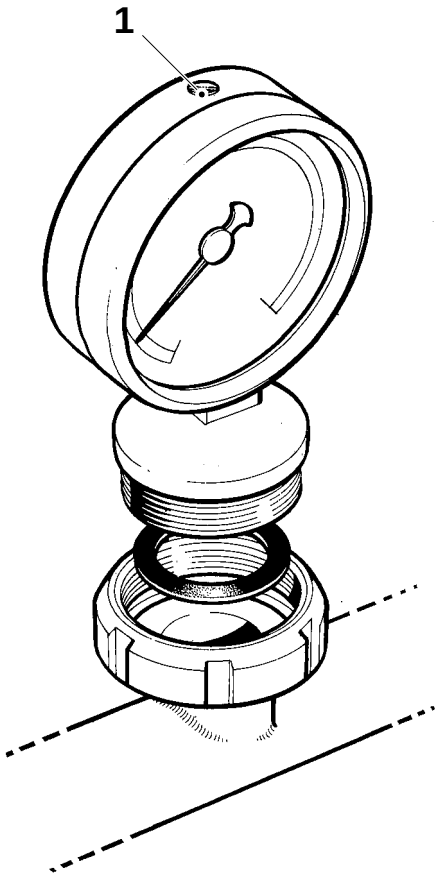

1 Screw

Overhaul

Replacement of seals and membranes

Close the system inlet valve and slowly open the vent and drain valve to release the pressure.

WARNING!
Hot steam. Risk of personal injury or damage to equipment. Check the system pressure gauge to ensure no residual pressure remains in the filter housing. Do not open under pressure.

a) Disconnect the steam and air lines, and monitors.

(Cont'd overleaf)

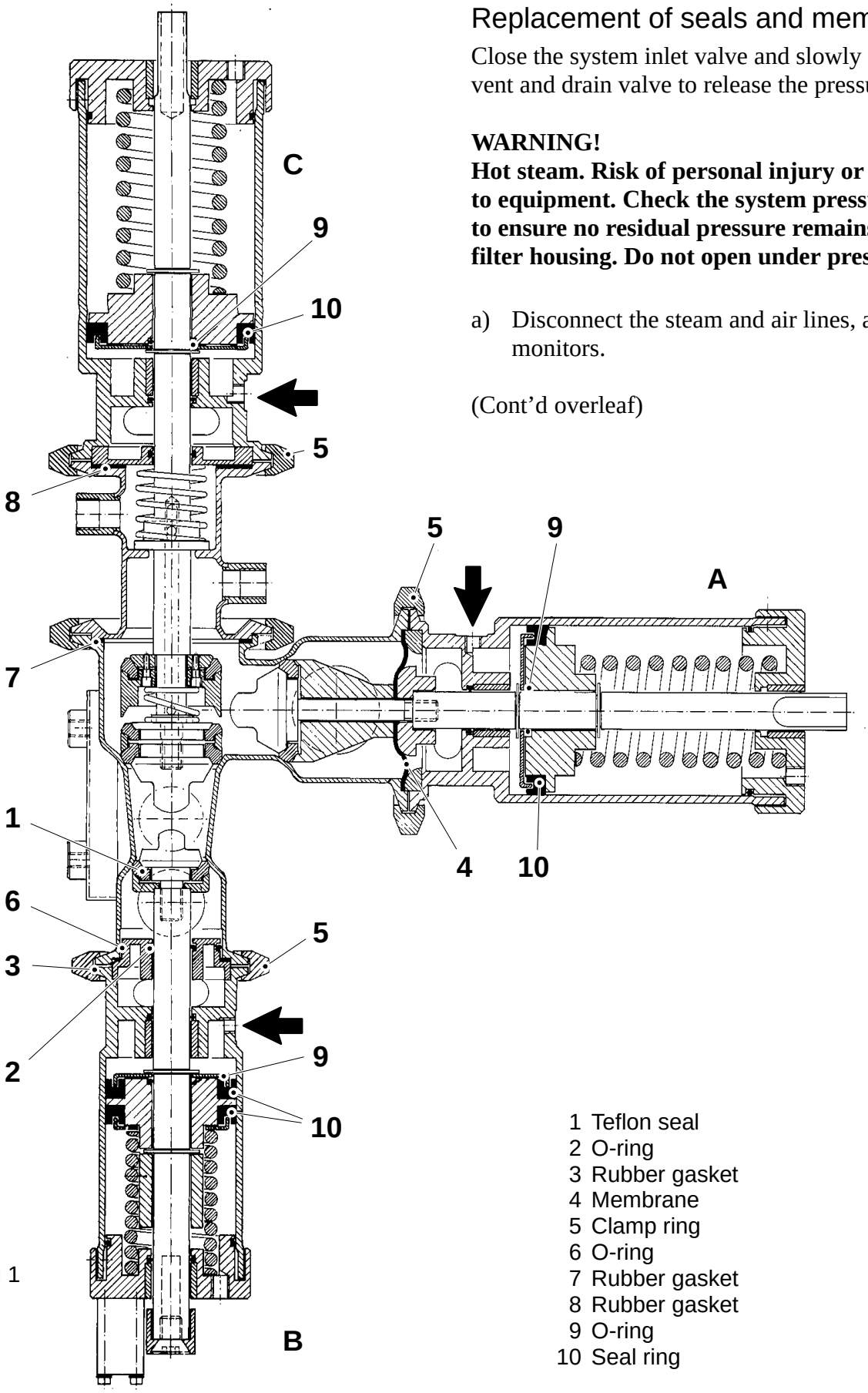

Fig 1

1 Teflon seal
2 O-ring
3 Rubber gasket
4 Membrane
5 Clamp ring
6 O-ring
7 Rubber gasket
8 Rubber gasket
9 O-ring
10 Seal ring

(Cont'd)

b) Fit tool TP No. 449969–101 by means of the outer handle. Compress the valve spring to take the load off the inner clamp ring.

c) Loosen the inner clamp ring (5), see fig. 1, and remove the valve.

d) **Product valve (A)**
Get a hold with the tool (fig. 2) and unscrew the valve cone (fig. 3). Replace the teflon seal and the membrane.

e) **Steam valve (C)**
Unscrew the valve cone. Dismantle the teflon ring holder by loosening four screws (fig. 4). Unscrew the valve rod. Replace the three teflon seals, the O-ring, and the two rubber gaskets.

f) **Sterile air valve (B)**
Unscrew the valve cone. Replace the teflon seal, O-ring, and rubber gasket.

g) If required, clean the valves and valve housings.

h) Reassemble and fit the valves. Torque on valve cones 50 Nm. Before the clamp rings are tightened, check that the valves move freely.

i) Reconnect the steam and air lines, and the monitors.

Footnote
In case work is done to the A, B, or C valve pneumatic cylinders, replace the O-rings (9) and seal rings (10). Use tool TP No. 449969–101 (fig. 2) to unload the spring.

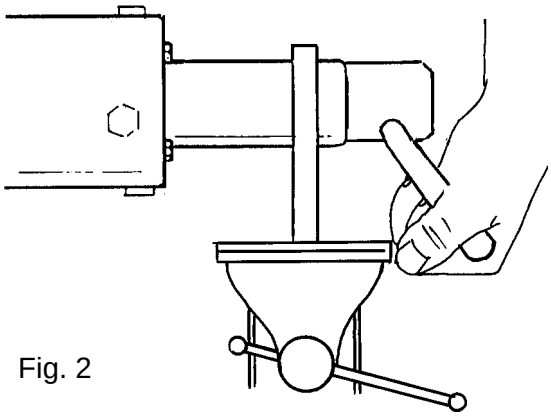

Fig. 2

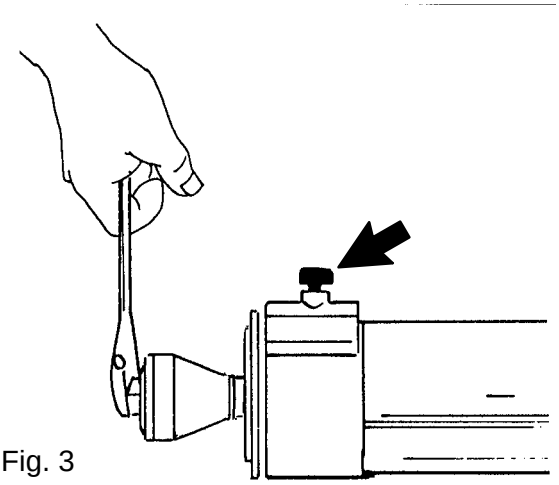

Fig. 3

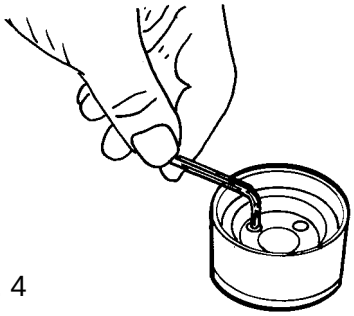

Fig. 4

Overhaul

Replacement of seals and membranes

Close the system inlet valve and slowly open the vent and drain valve to release the pressure.

WARNING!
Hot steam. Risk of personal injury or damage to equipment. Check the system pressure gauge to ensure no residual pressure remains in the filter housing. Do not open under pressure.

a) Disconnect the steam and air lines, and monitors.

(Cont'd overleaf)

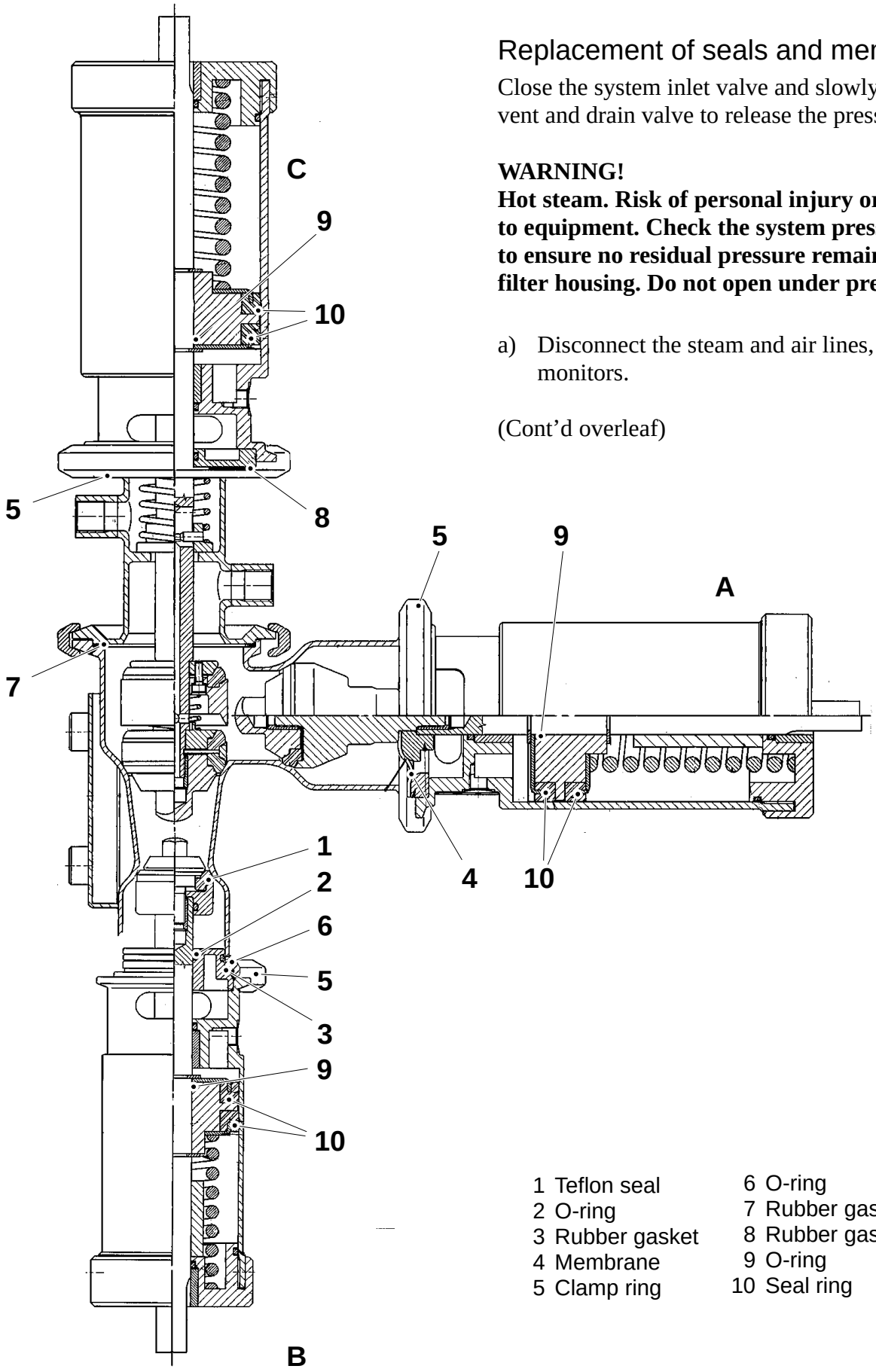

1 Teflon seal
2 O-ring
3 Rubber gasket
4 Membrane
5 Clamp ring
6 O-ring
7 Rubber gasket
8 Rubber gasket
9 O-ring
10 Seal ring

(Cont'd)

b) Fit tool TP No. 449969–101 by means of the outer handle. Compress the valve spring to take the load off the inner clamp ring.

c) Loosen the inner clamp ring (5), see fig. 1, and remove the valve.

d) **Product valve (A)**
Get a hold with the tool (fig. 2) and unscrew the valve cone (fig. 3). Replace the teflon seal and the membrane).

e) **Steam valve (C)**
Unscrew the valve cone. Dismantle the teflon ring holder by loosening four screws (fig. 4). Unscrew the valve rod. Replace the three teflon seals, the O-ring, and the two rubber gaskets.

f) **Sterile air valve (B)**
Unscrew the valve cone. Replace the teflon seal, O-ring, and rubber gasket.

g) If required, clean the valves and valve housings.

h) Reassemble and fit the valves. Torque on valve cones 50 Nm. Before the clamp rings are tightened, check that the valves move freely.

i) Reconnect the steam and air lines, and the monitors.

Footnote
In case work is done to the A, B, or C valve pneumatic cylinders, replace the O-rings (9) and seal rings (10). Use tool TP No. 449969–101 (fig. 2) to unload the spring.

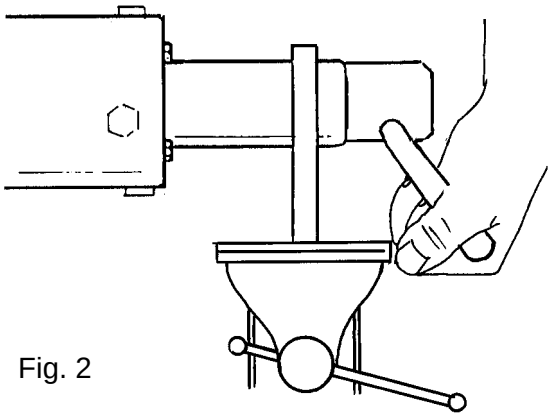

Fig. 2

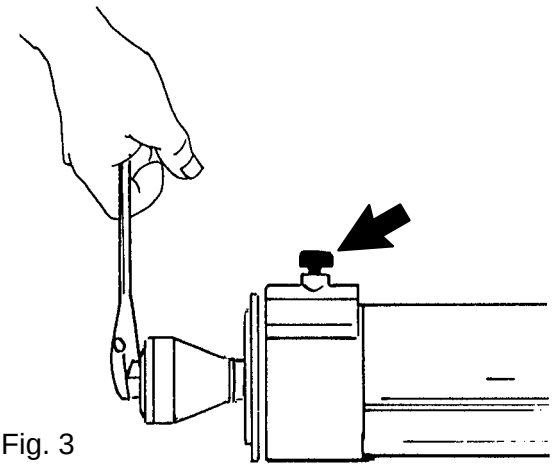

Fig. 3

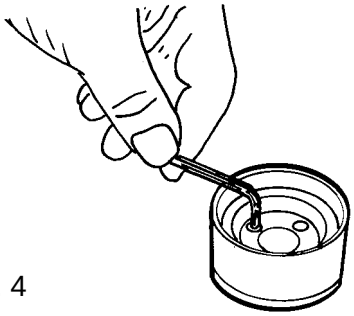

Fig. 4

Overhaul

Replacement of seals and membranes

Close the system inlet valve and slowly open the vent and drain valve to release the pressure.

WARNING!
Hot steam. Risk of personal injury or damage to equipment. Check the system pressure gauge to ensure no residual pressure remains in the filter housing. Do not open under pressure.

a) Disconnect the steam and air lines, and monitors.

(Cont'd overleaf)

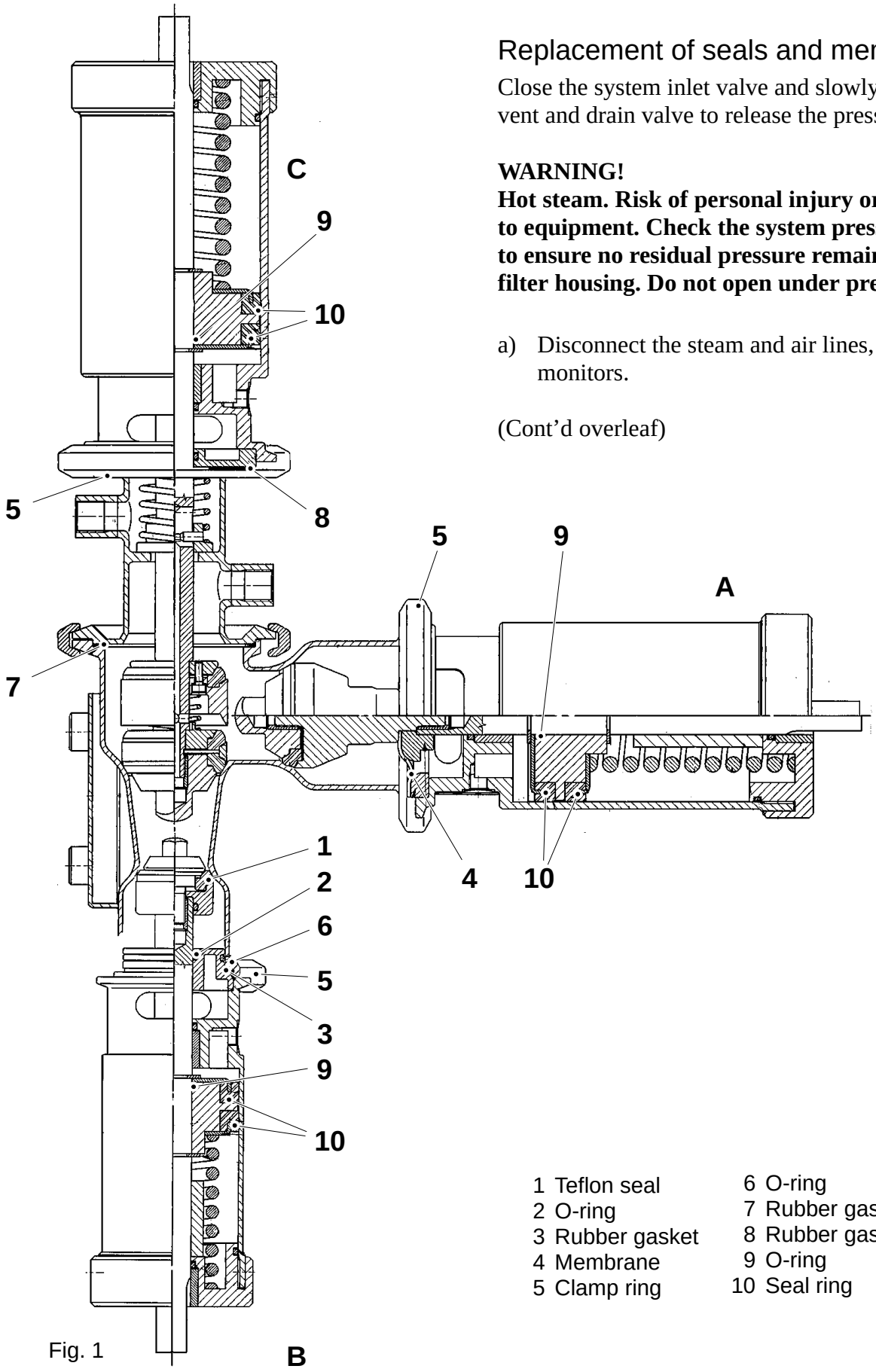

Fig. 1

1 Teflon seal
2 O-ring
3 Rubber gasket
4 Membrane
5 Clamp ring
6 O-ring
7 Rubber gasket
8 Rubber gasket
9 O-ring
10 Seal ring

(Cont'd)

b) Fit tool TP No. 449969–101 by means of the outer handle. Compress the valve spring to take the load off the inner clamp ring.

c) Loosen the inner clamp ring (5), see fig. 1, and remove the valve.

d) **Product valve (A)**
Get a hold with the (fig. 2) and unscrew the valve cone (fig. 3). Replace the teflon seal and the membrane.

e) **Steam valve (C)**
Unscrew the valve cone. Dismantle the teflon ring holder by loosening four screws (fig. 4). Unscrew the valve rod. Replace the three teflon seals, the O-ring, and the two rubber gaskets.

f) **Sterile air valve (B)**
Unscrew the valve cone. Replace the teflon seal, the O-ring, and the rubber gasket.

g) If required, clean the valves and valve housings.

h) Reassemble and fit the valves. Torque on valve cones 50 Nm. Before the clamp rings are tightened, check that the valves move freely.

i) Reconnect the steam and air lines, and the monitors.

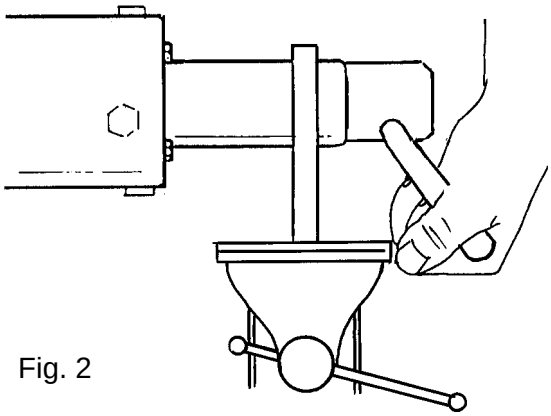

Fig. 2

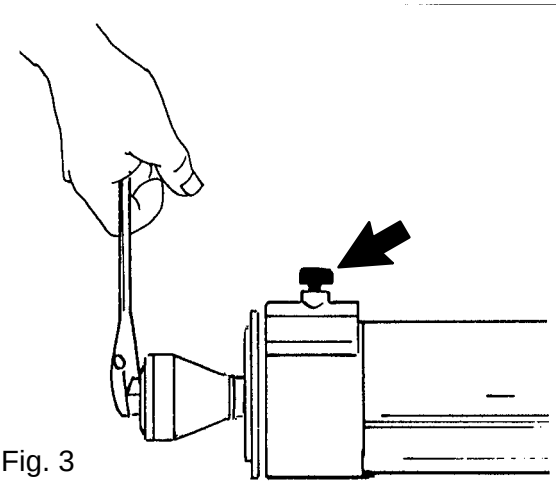

Fig. 3

Footnote
In case work is done to the A, B, or C valve pneumatic cylinders, replace the O-rings (9) and seal rings (10). Use tool TP No. 449969–101 (fig. 2) to unload the spring.

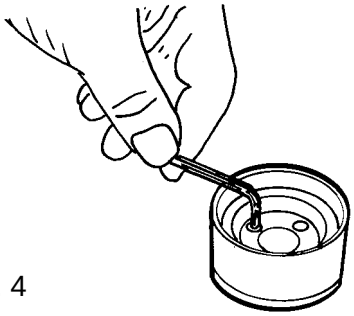

Fig. 4

Cylinder and drive motor sequence diagram

The synchronization between the valves must follow the diagram.

*The closing time of the C valve varies, depending on product viscosity, the higher the viscosity the longer the time.

All valves are shown in closed position. The cylinders are vented and springs are closing them.

1 Open position
2 Closed position
3 Exhaust with throttle
4 Air intake

A Product
B Hot air or cleaning
C Steam

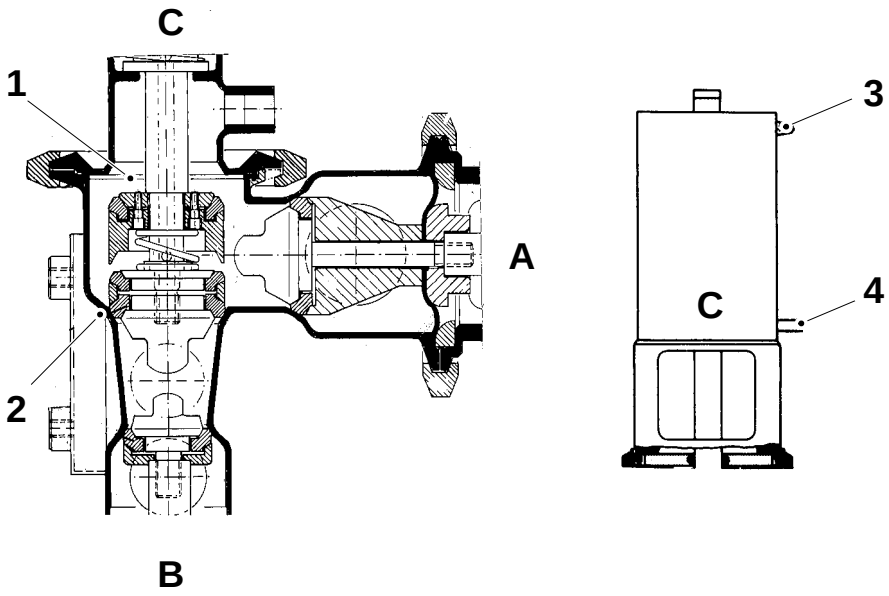

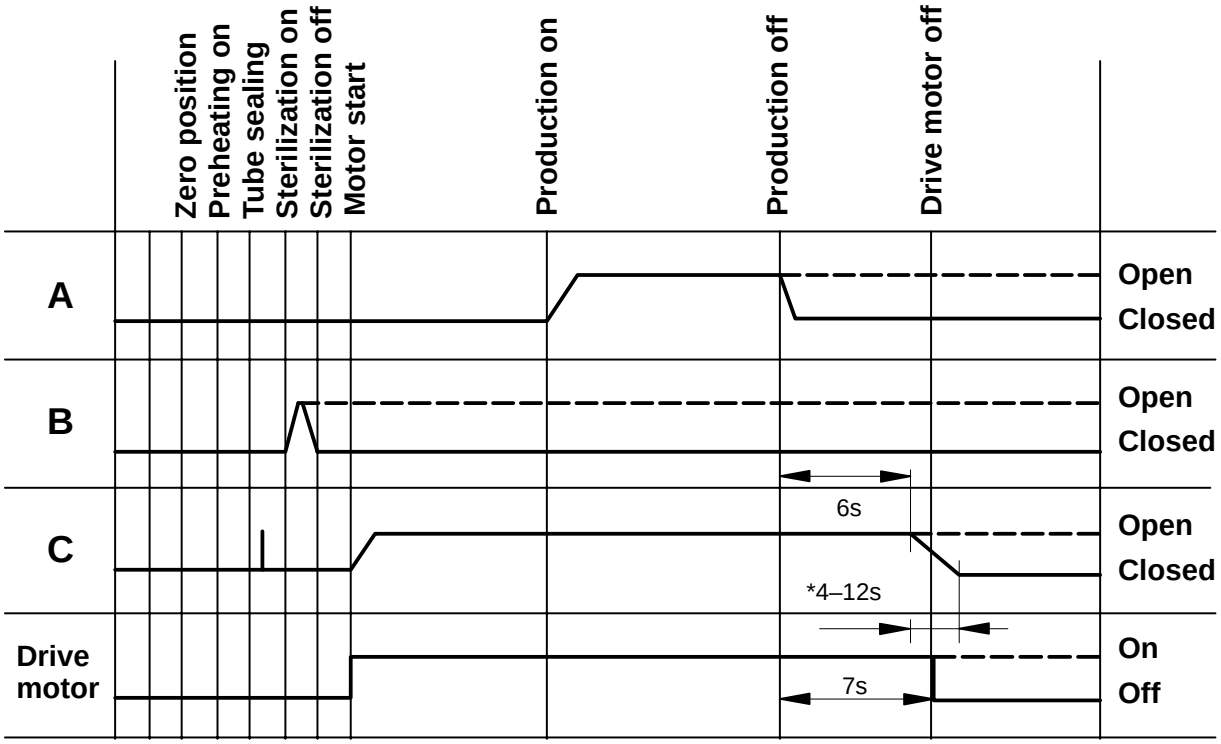

Cylinder and drive motor sequence diagram

The synchronization between the valves must follow the diagram.

*The closing time of the C valve varies, depending on product viscosity, the higher the viscosity the longer the time.

A Product
B Hot air or cleaning
C Steam

All valves are shown in closed position. The cylinders are vented and springs are closing them.

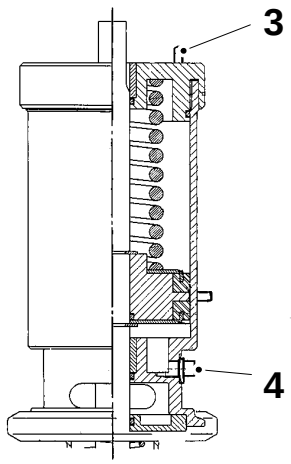

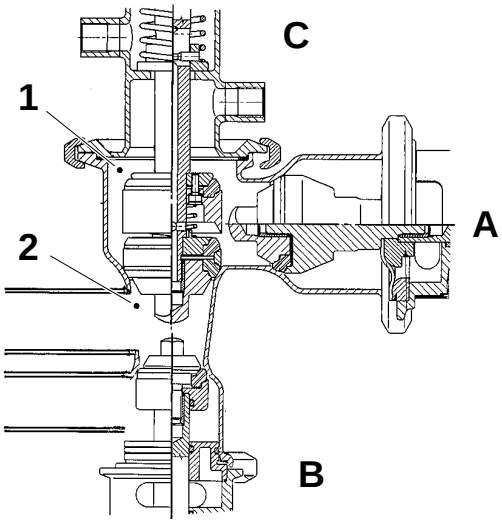

1 Open position
2 Closed position
3 Exhaust with throttle
4 Air intake

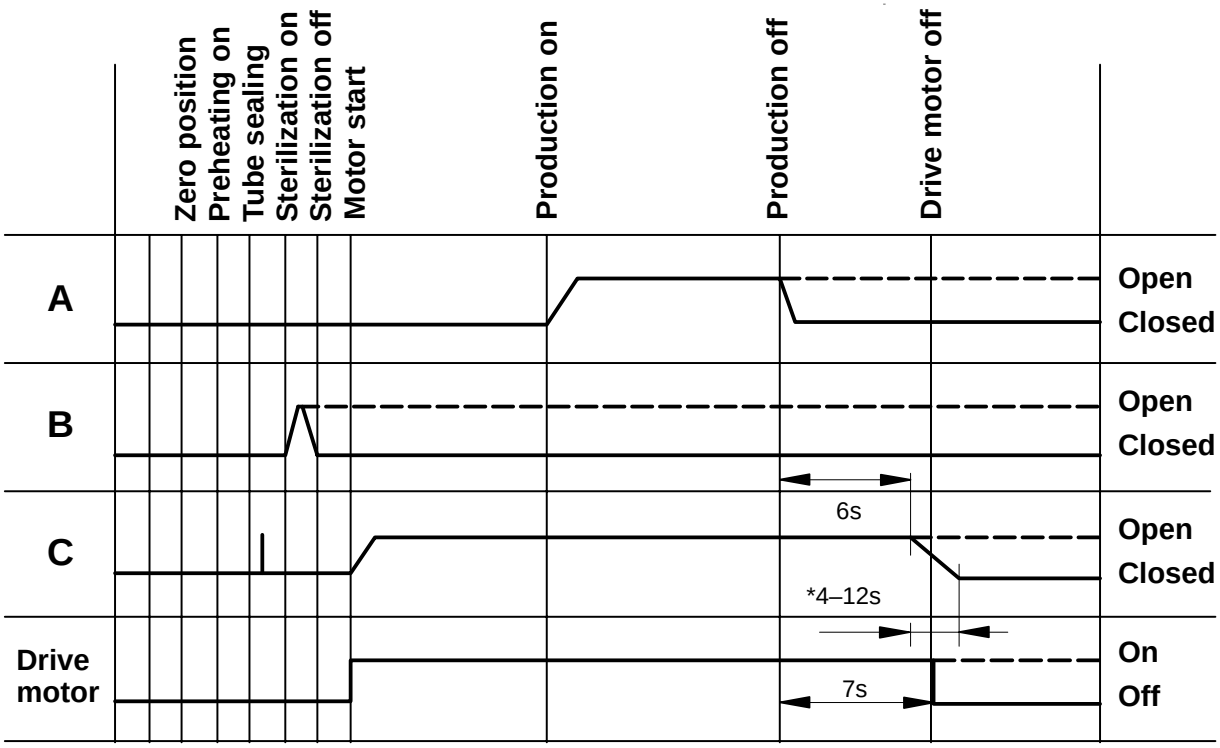

Cylinder and drive motor sequence diagram

The synchronization between the valves must follow the diagram.

*The closing time of the C valve varies, depending on product viscosity, the higher the viscosity the longer the time.

All valves are shown in closed position. The cylinders are vented and springs are closing them.

A Product
B Hot air or cleaning
C Steam

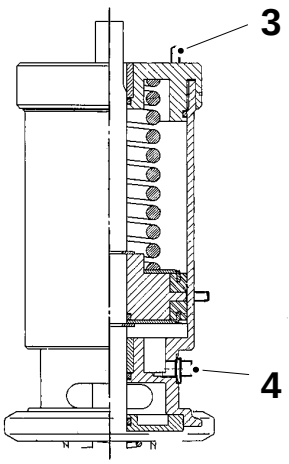

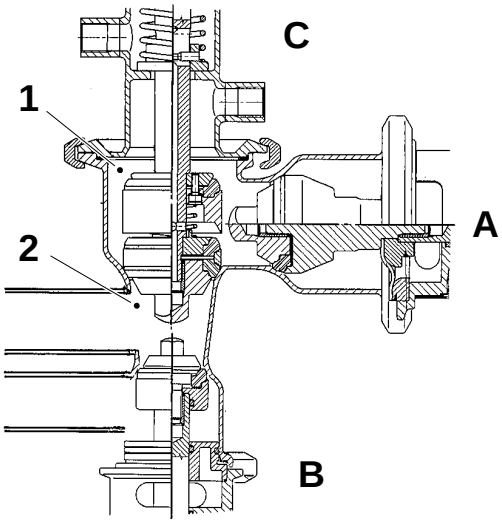

1 Open position
2 Closed position
3 Exhaust with throttle
4 Air intake

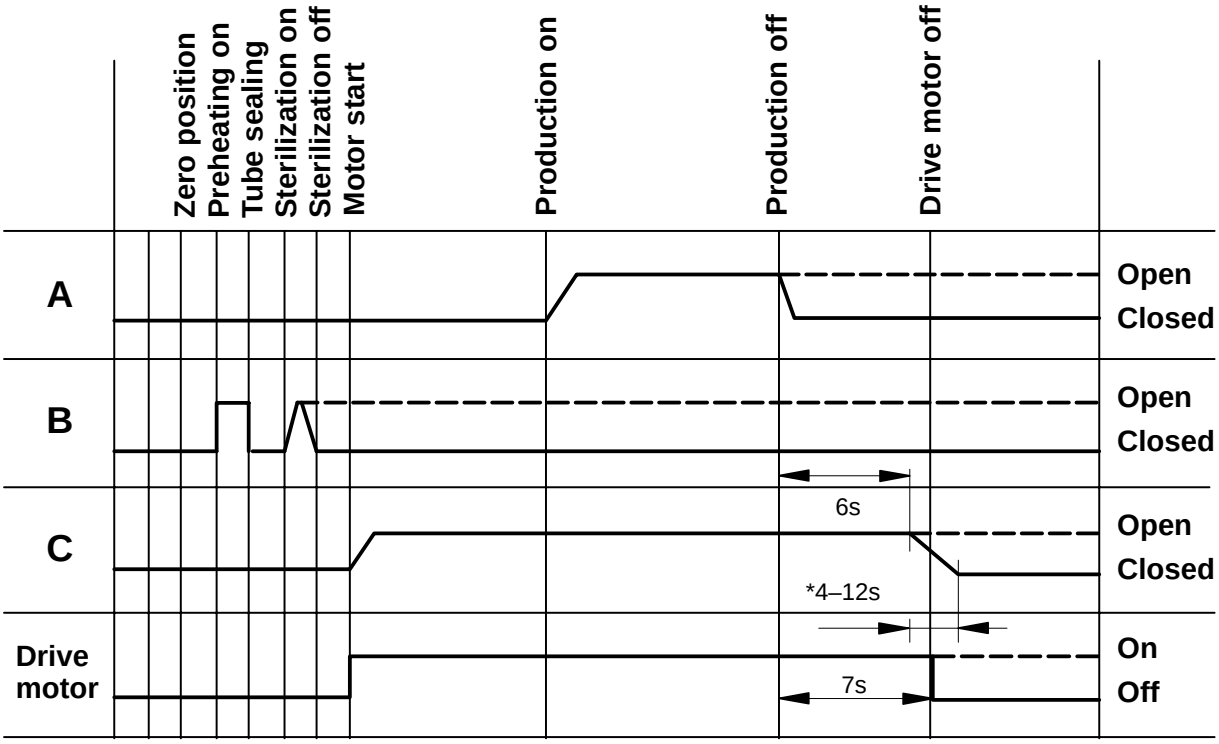

Checking

Close for compressed air. Loosen the screw (1) and swing aside the cylinder bracket (2).

Undo the four screws (3) and the cover (4).

Pull out the bracket (5) and the block (6) and then the two springs (7).

Check the following details for wear and/or damage:

a) the inside of the valve housing (8),

b) the three O-rings (9) and (10),

c) the two bushings (11),

d) the block (6),

e) the two springs (7),

f) the two axle ends (12) on the bracket (5), and

g) the cylinder (13); it must move smoothly.

Replace worn and/or damaged details.

Reassemble in reverse order. Set the valve, see page MS 129–5X.

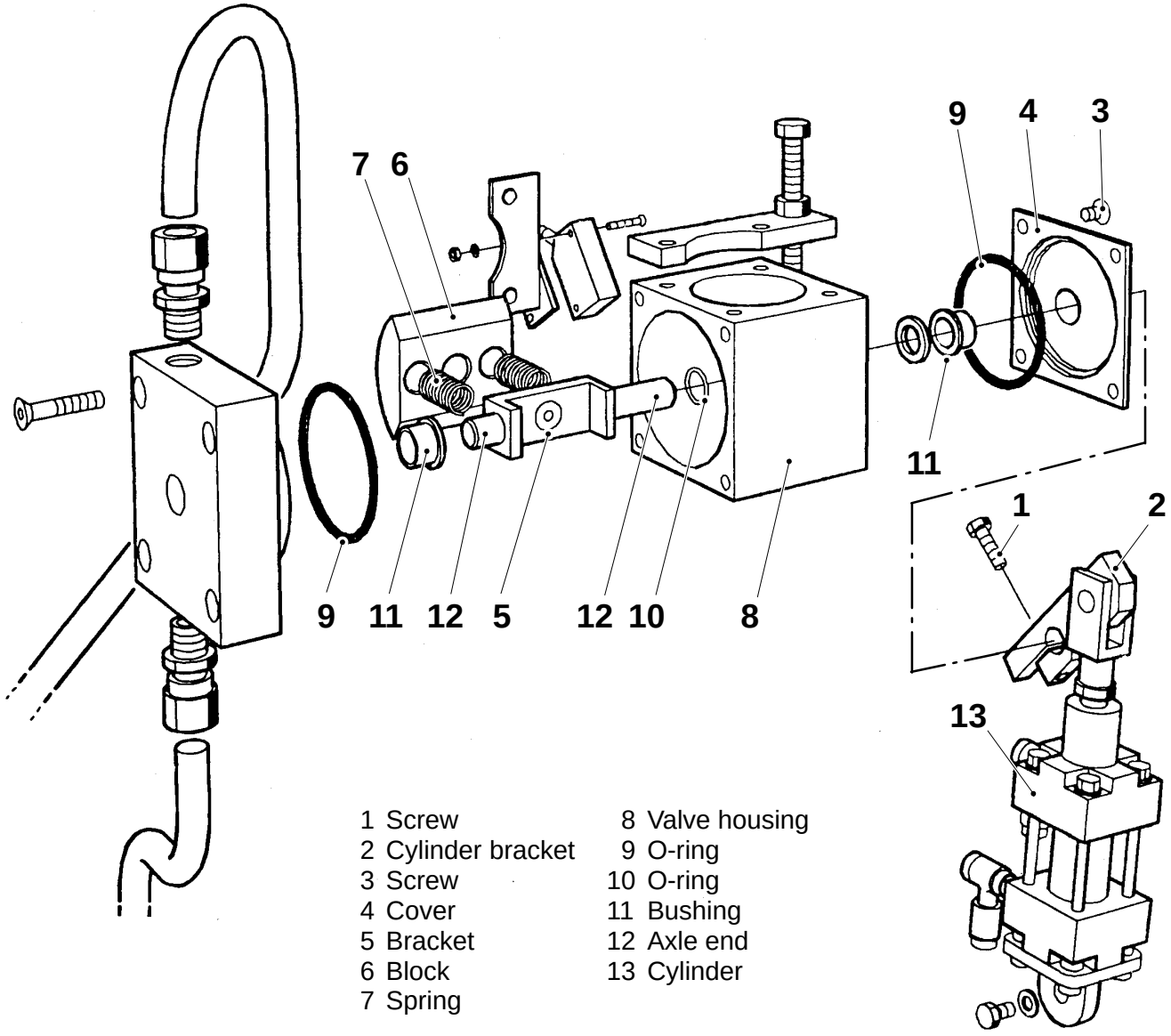

1 Screw
2 Cylinder bracket
3 Screw
4 Cover
5 Bracket
6 Block
7 Spring
8 Valve housing
9 O-ring
10 O-ring
11 Bushing
12 Axle end
13 Cylinder

Setting

Set the correct position of the valve shaft (1) on the suction valve. The mark on the shaft must be positioned as illustrated when the piston rod (2) is outside the cylinder.

Loosen the screw (3) and adjust on the clamp fitting.

Set gap A by means of the screws (4).

Set distance B on the stop screw.

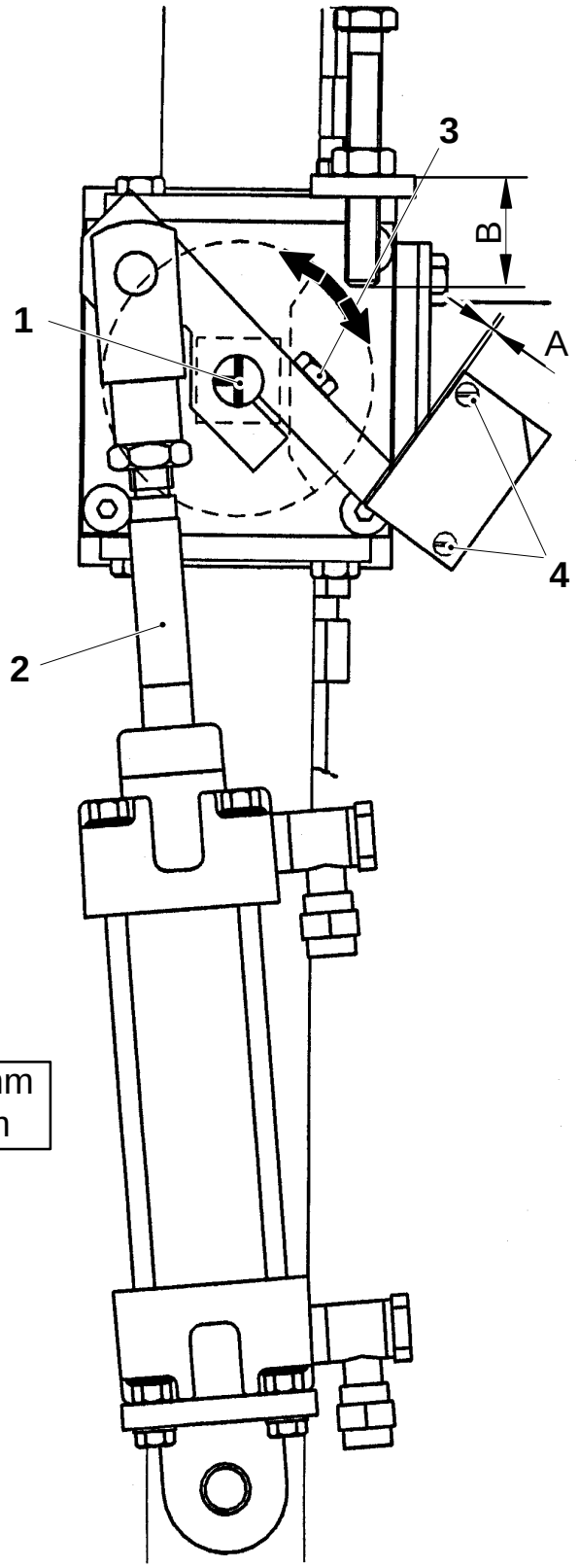

A = 0.5 – 1.0 mm
B = 39 ±0.5 mm

1 Position, valve shaft
2 Piston rod
3 Screw
4 Screw

Checking/Replacement

Check that the sealing lip (3) is not worn and that it is tight around the tube. Check measurement A.

If required, undo the screws (1) and remove the ring (2) with all its components.

Replace the sealing lip (3).

Reassemble in reverse order.

A < 0.5 mm

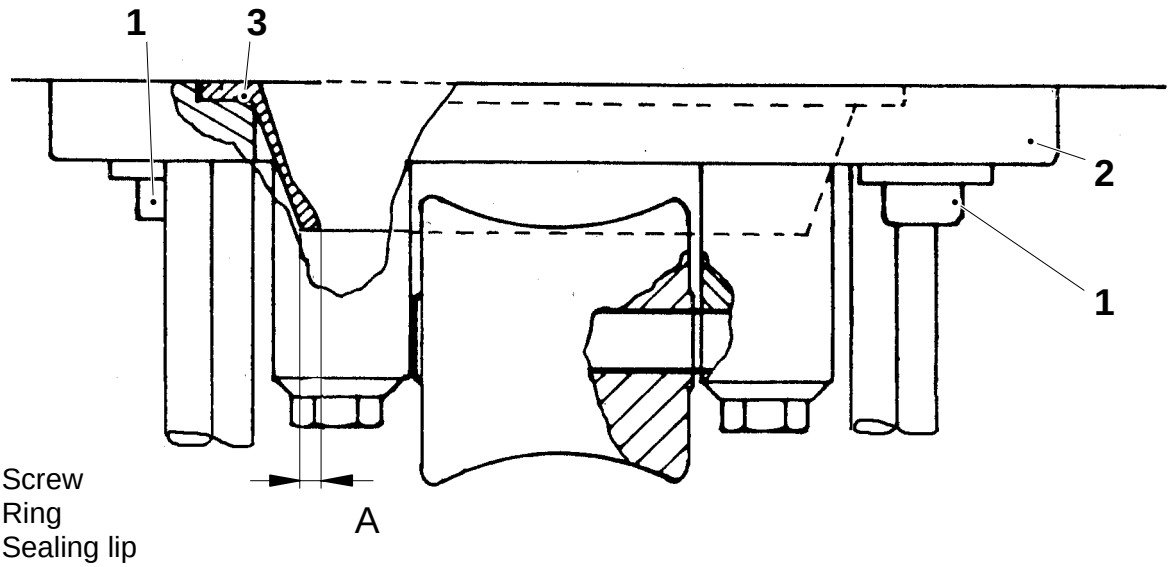

1 Screw
2 Ring
3 Sealing lip

Checking/Replacement

Check that the rollers (3) run smoothly and that their running surfaces are not damaged.

If required, undo the screws (1) and remove the axle support (2) and the roller (3). Replace the rollers and/or axle (4).

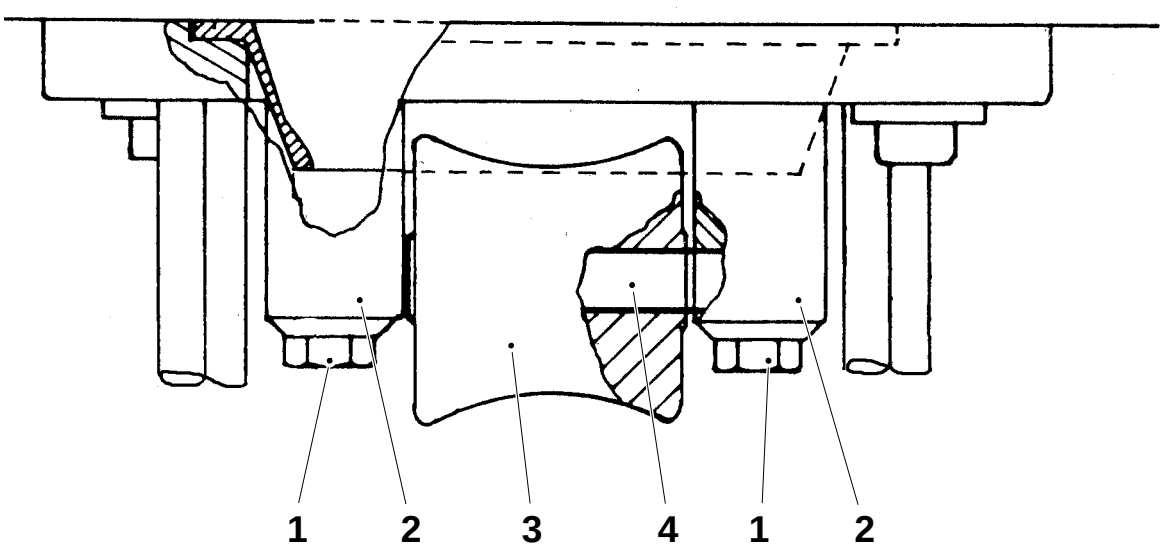

1 Screw
2 Axle support
3 Roller
4 Axle

Checking

Check that the mechanism operates smoothly without binding, and that the axle pins and links are not worn.

Check that the butterfly valve (1) is closed when the float is in its top position, and open when the float is in its bottom position.

Check by shaking the float that liquid has not leaked into it.
(The weight of the float is stamped into it so it can be by checked by weighing).

Check the float and filling pipe for mechanical damage.

Check that the locking pin is not worn and/or damaged.

Replace worn and/or damaged details.

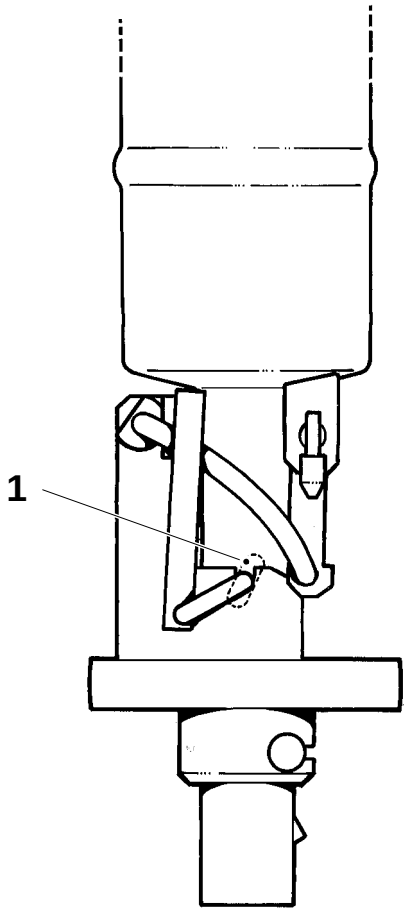

1 Butterfly valve

Checking/Setting

During production, pick out a package. Unfold the top flaps and check that the crease lines marked with arrows are opposite one another (fig. 1) or displaced symmetrically (fig. 2 and fig. 3).

The pictures show the **top** of the package, with the flaps unfolded.

If required, adjust by means of the knob (1) on the superstructure.

Turning the knob clockwise moves the tube as illustrated in fig. 4.

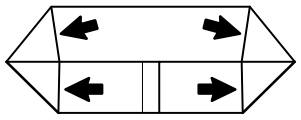

Fig.1

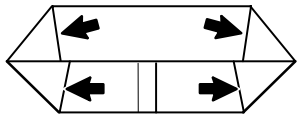

Fig. 3

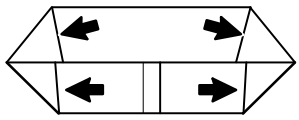

Fig. 2

Fig. 1–3 show the top of the packages.

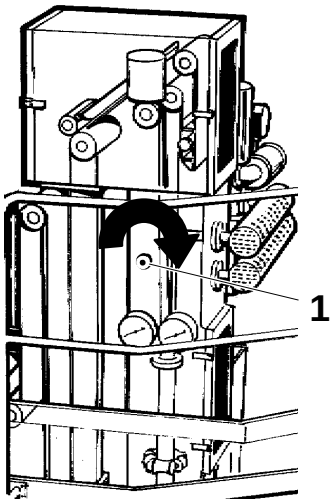

1 Knob

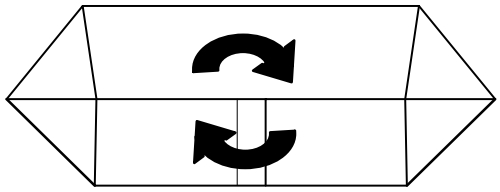

Fig. 4

Checking/Setting

The divided forming ring (fig. 4) and the movable forming ring are to be set in the centre.

During production, pick out a package. Unfold the top flaps and check that the crease lines marked with arrows are opposite one another (fig. 1) or displaced symmetrically (fig. 2 and fig. 3).

The pictures show the **top** of the package, with the flaps unfolded.

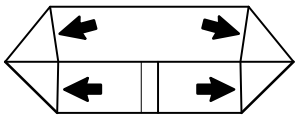

Fig.1

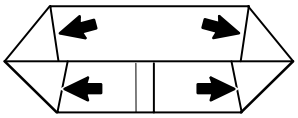

Fig. 3

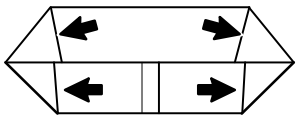

Fig. 2

Fig. 1–3 show the top of the packages.

Basic setting

If required, stop the machine and adjust by loosening the lock nuts (2) and adjusting by means of the screws (1). Retighten the nuts.

Check the setting of the LS nozzle, see page MS 116–5X.

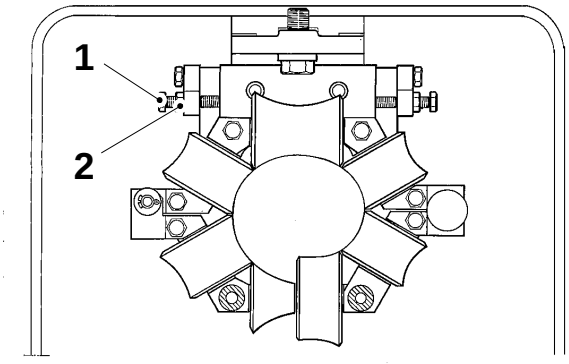

Fig. 4

Final setting

If required, adjust by means of the knob (3) on the superstructure.

Turning the knob clockwise moves the tube as illustrated in fig. 5.

1 Screw
2 Lock nut
3 Knob

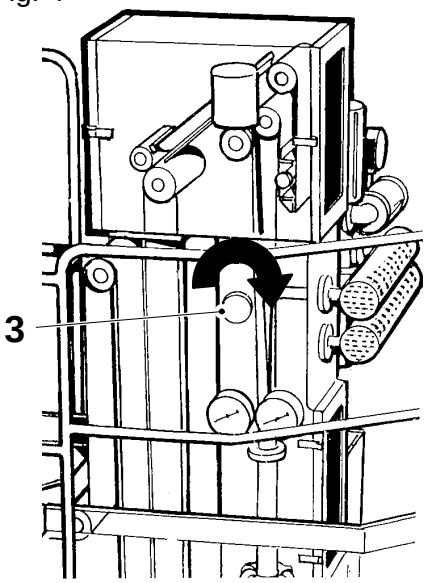

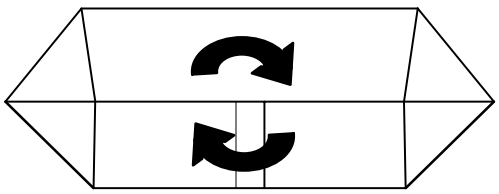

Fig. 5

Checking/Setting

During production, pick out a package. Unfold the top flaps and check that the crease lines marked with arrows are opposite one another (fig. 1) or displaced symmetrically (fig. 2 and fig. 3).

The pictures show the **top** of the package, with the flaps unfolded.

If required, adjust as follows:

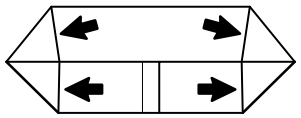

Fig.1

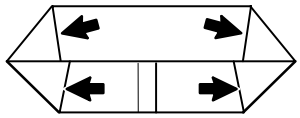

Fig. 3

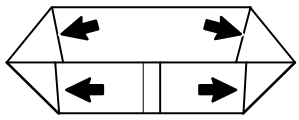

Fig. 2

Fig. 1–3 show the top of the packages.

Basic setting

Turn the knob (1), on the strip applicator. The pointer (2) indicates how much the packaging material web is adjusted.

Turning the knob clockwise moves the tube as illustrated in fig. 4.

Check the setting of the LS nozzle, see page MS 116–5X.

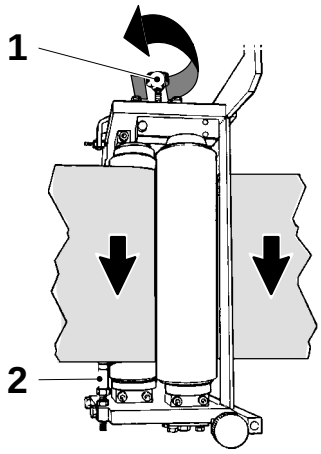

Final setting

Turn the knob (3) on the superstructure.

Turning the knob clockwise moves the tube as illustrated in fig. 4.

1 Knob
2 Pointer
3 Knob

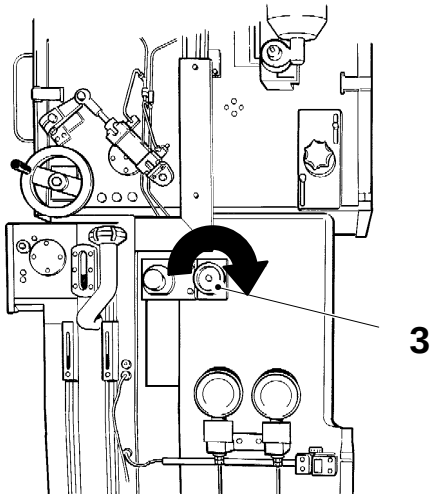

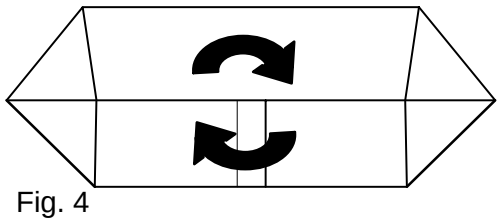

Fig. 4

Checking/Setting

During production, pick out a package. Unfold the flaps and check that the crease lines marked with top arrows are opposite one another (fig. 1) or displaced symmetrically (fig. 2 and fig. 3).

The pictures show the **top** of the package, with the flaps unfolded.

If required, adjust as follows:

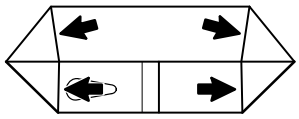

Fig. 1

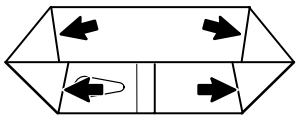

Fig. 2

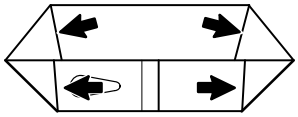

Fig. 3

Fig. 1–3 show the top of the packages.

Basic setting

Turn the knob (1), on the packaging material magazine.

Turning the knob clockwise moves the tube as illustrated in fig. 4.

Check the setting of the LS nozzle, see page MS 116–5X.

Final setting

Turn the knob (2) on the superstructure.

Turning the knob clockwise moves the tube as illustrated in fig. 4.

1 Knob
2 Knob

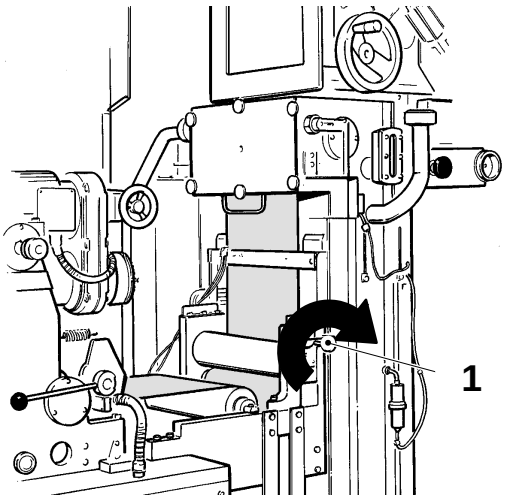

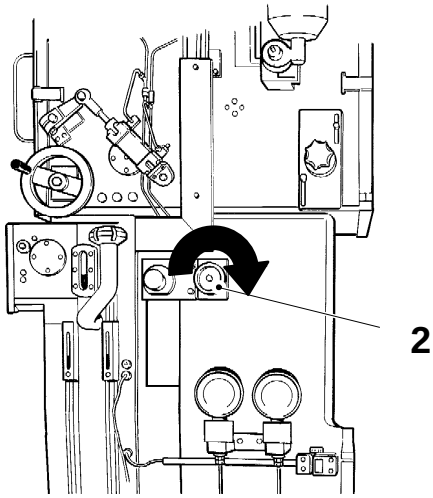

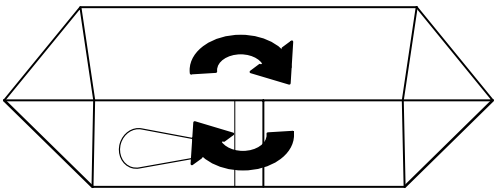

Fig. 4

Checking

Check the following details for wear and/or damage:

- the spring (1),
- the fork (2),
- the pressure roller (3); make sure the roller rotates freely,
- the bearing (4); the play must not exceed 0.5 mm, and
- the locking pin (5).

Replace worn and/or damaged details.

Check that the pressure roller (3) is aligned with the counter roller.

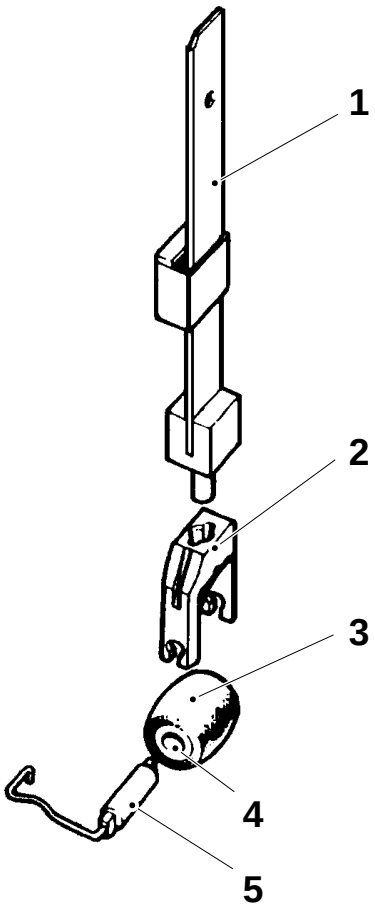

1 Spring
2 Fork
3 Pressure roller
4 Bearing
5 Locking pin

Setting

a) Actuate the hydraulic valve (Y26) for the counter roller.

b) Measure without packaging material inserted. Measure the spring force by pushing against the fork head with the tool (5) (TP No.74767) until the pressure roller (3) just eases off the counter roller (4).
The spring force is to be 30 – 40 N.

c) Replace the spring (1) or bend it until the correct force is obtained.

d) Put a piece of packaging material folded double between the pressure roller and counter roller.

e) The pressure roller should yield to 2 – 3 mm. The spring must not touch the cover (2) when the counter roller is engaged.

f) If required, bend the spring to adjust.

Note!
The spring force must still be 30 – 40 N.

Make sure the spring is not twisted – the parallelity between the pressure roller and the counter roller must be retained.

Set the height relatively the forming ring, see page MS 196–5X.

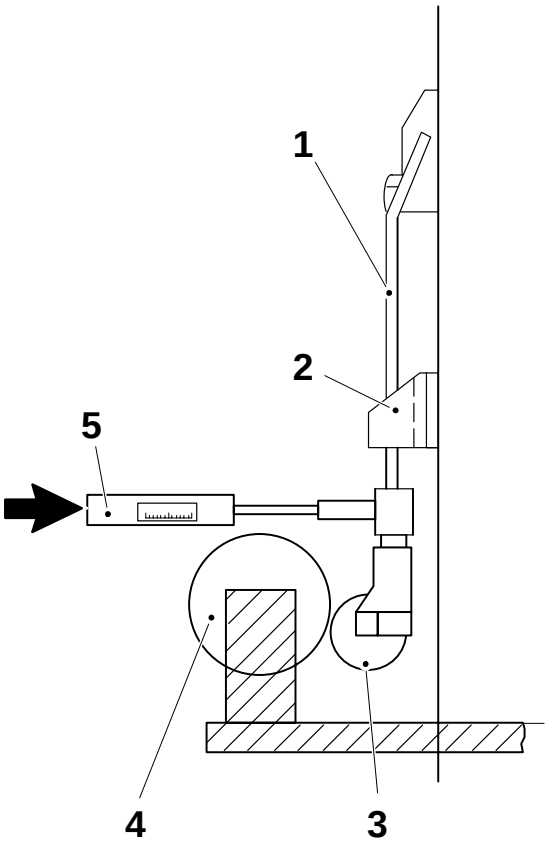

1 Spring
2 Cover
3 Pressure roller
4 Counter roller
5 Tool TP No. 74767

Setting

Set distance A, see fig.

Adjust during operation so that the support rollers (1) and (2) does not guide the tube or affect the overlap.

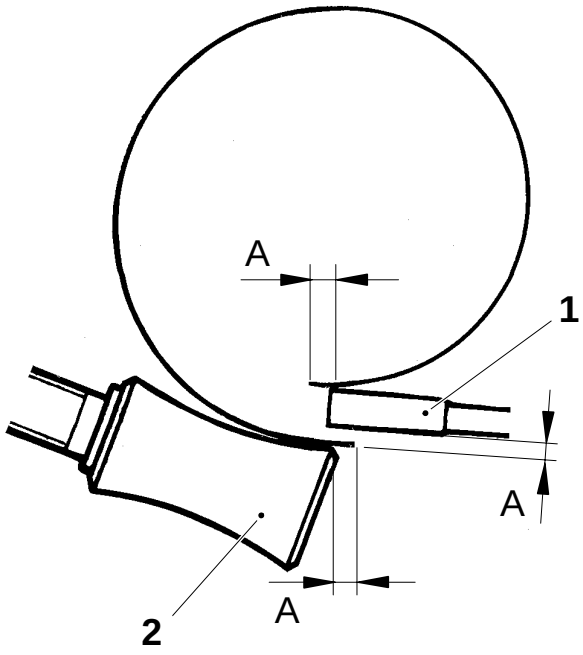

A = 1 ±0.2 mm

1 Support roller
2 Support roller

Setting

Set distance A, see fig.

Adjust during operation so that the support roller (1) does not guide the tube or affect the overlap.

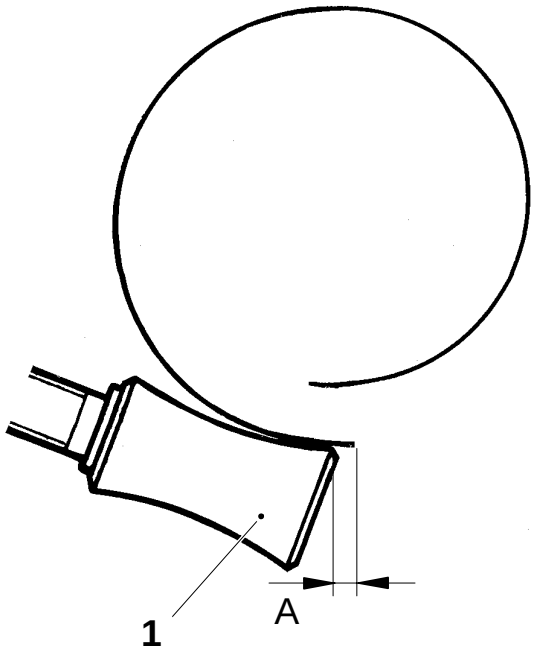

A = 1 ±0.2 mm

1 Support roller

Checking

Check the width A of the LS overlap.

The specified overlap applies to the listed, nominal paper width. If the paper width varies, the overlap has to be increased or decreased correspondingly.

In case of incorrect overlap width, adjust according to page MS 139–5X.

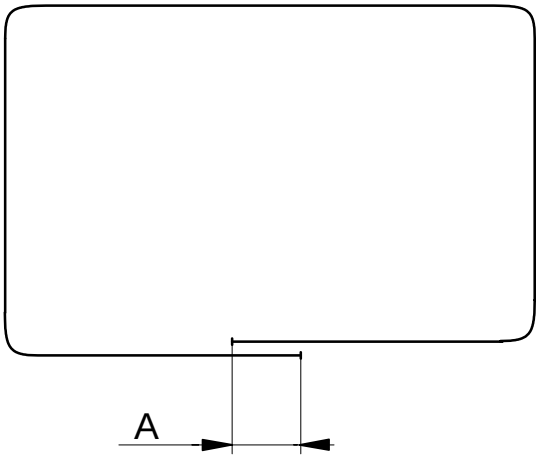

Volume, ml	Paper width, mm	Overlap A, mm
125	162	4
180	214	8
200	214	8
200S	174	4
236	214	8
250	214	8
284	214	8

Setting

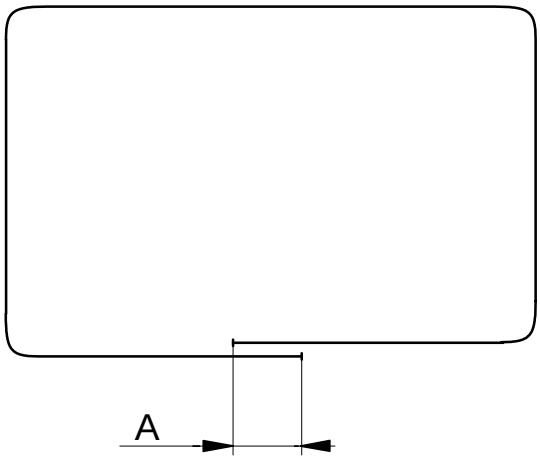

Overlap A (see page MS 139–1X) may be altered. Replace one to three regular rollers with minus trimming rollers to **increase** the overlap (A).

Replace one to three regular rollers with plus trimming rollers to **decrease** the overlap.

Trimming rollers must always be fitted **symmetrically** relative to the pressure roller (4).

Plus and minus rollers must **never** be fitted at the same time in the forming ring.

Check the setting of the LS nozzle, see page MS 116–1X.

Volume, ml	Regular roller	Minus trimming roller	Plus trimming roller
TB 180–250	4–28326	4–28838	4–28837
TB 200S (100V)	4–441152	4–441155	4–441154
TB 200S (110V→120V)	4–491966	4–491969	4–491968
TBA 180–250	4–456090	4–456092	4–456091
TBA 125	4–441876	4–441878	4–441879
TBA 200S	4–456996	4–456998	4–456999

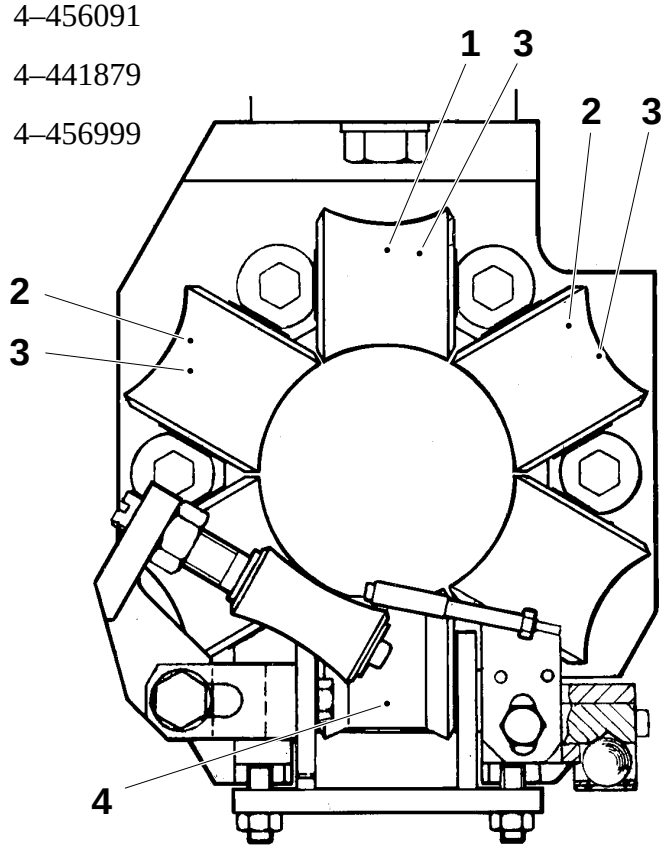

1 Where to put one trimming roller
2 Where to put two trimming rollers
3 Where to put three trimming rollers
4 Pressure roller

Setting

Overlap A (see page MS 139–1X) may be altered. Replace one to three regular rollers with minus trimming rollers to **increase** the overlap (A).

Replace one to three regular rollers with plus trimming rollers to **decrease** the overlap.

Trimming rollers must always be fitted **symmetrically** relative to the pressure roller (4).

Plus and minus trimming rollers must **never** be fitted at the same time in the forming ring.

Check the setting of the LS nozzle, see page MS 116–1X.

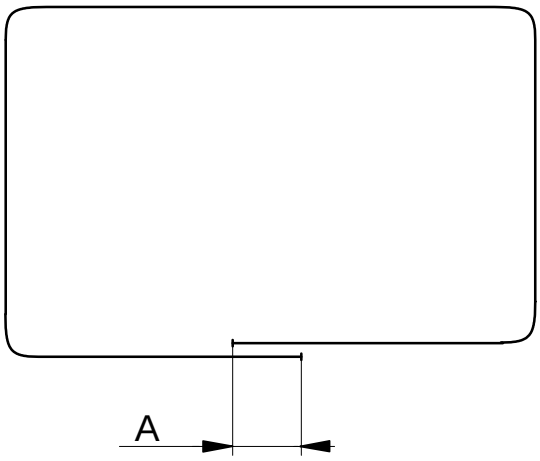

Volume, ml	Regular roller	Minus trimming roller	Plus trimming roller
TB 180–250	4–28326	4–28838	4–28837
TB 200S	4–491966	4–491969	4–491968
TBA 180–284	3–751502	3–752463	3–752462
TBA 125	3–752153	3–752467	3–752466
TBA 200S	3–752138	3–752465	3–752464

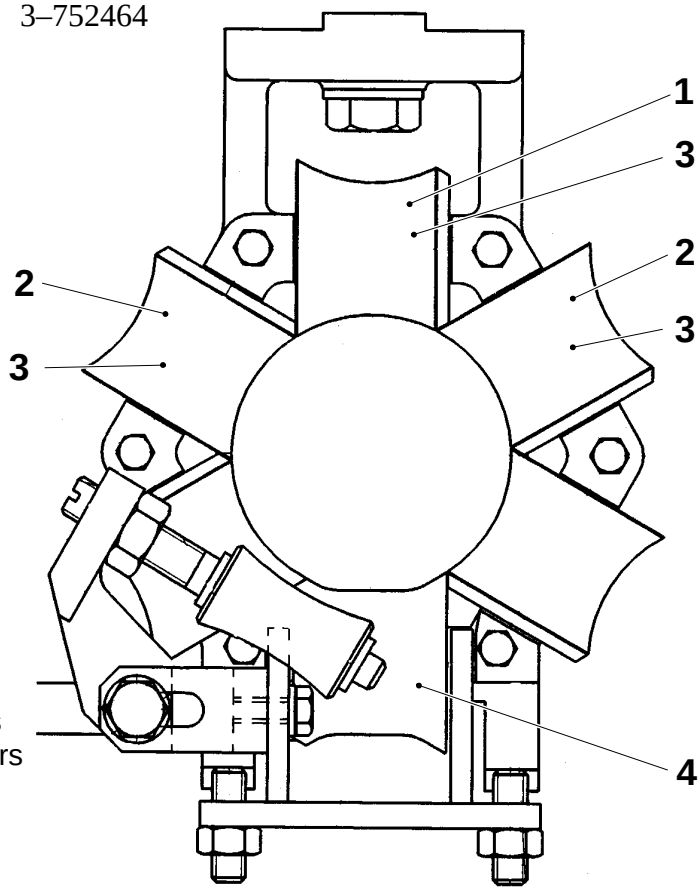

1 Where to put one trimming roller
2 Where to put two trimming rollers
3 Where to put three trimming rollers
4 Pressure roller

Checking

a) Check that all rollers are intact and undamaged.
Replace worn and/or damaged rollers.

b) With **cold** machine, check that the play between the rollers (8), distance A, does not exceed 0.3 mm. If required, replace worn bushings (9) or axle pins (6).

The play between the rollers (8) is to be the same all the way around. Adjust by means of shimming washers (7).

c) Check that the rollers of the paper guide (2) rotate easily and without play.

d) With **warm** machine, check that all rollers rotate freely.
If required, adjust according to item b).

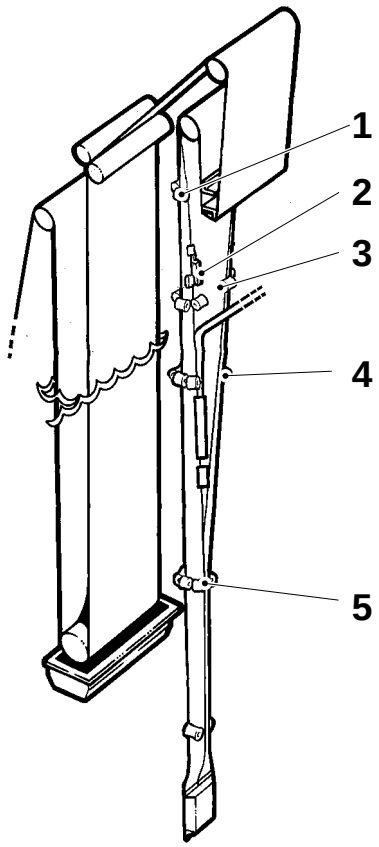

A = max 0.3 mm

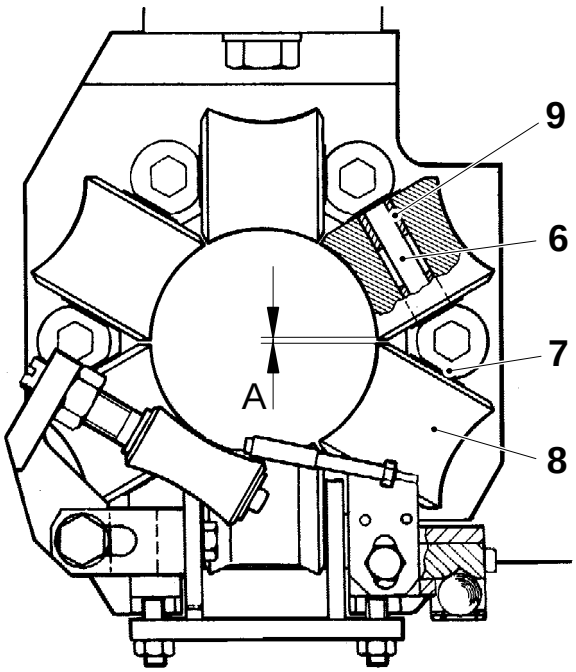

1 Upper tube support
2 Paper guide
3 Movable forming ring
4 Divided forming ring
5 Lower forming ring
6 Axle pin
7 Shimming washer TP No. 2033–11
8 Roller
9 Bushing

Checking

a) Check that all rollers are intact and undamaged.
Replace worn and/or damaged rollers.

b) With **cold** machine, check that the play between the rollers (7), distance A, does not exceed 0.3 mm. If required, replace worn bushings (8) or axle pins (5).

The play between the rollers (7) is to be the same all the way around. Adjust by means of shimming washers (6).

c) With **warm** machine, check that all rollers rotate freely.
If required, adjust according to item b).

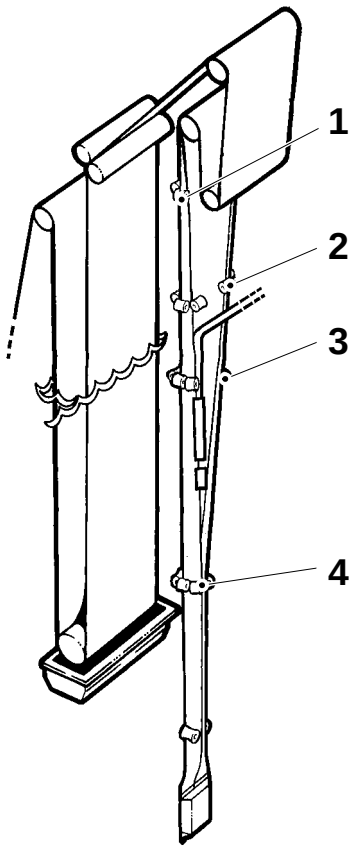

A = max 0.3 mm

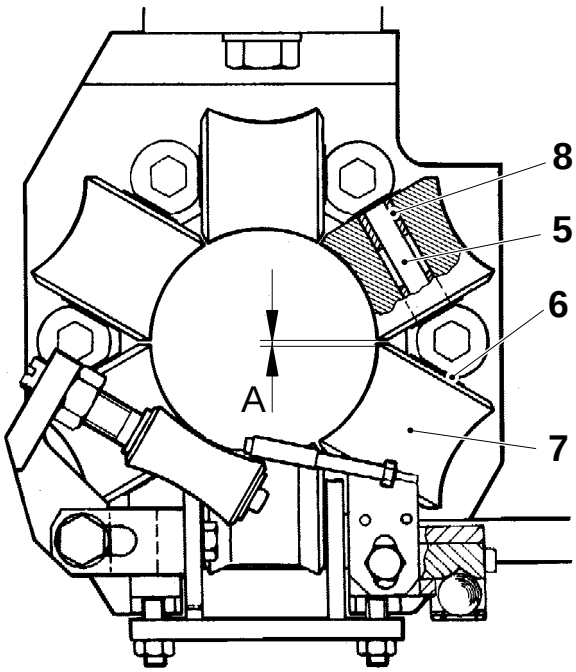

1 Upper tube support
2 Movable forming ring
3 Divided forming ring
4 Lower forming ring
5 Axle pin
6 Shimming washer TP No. 2033–11
7 Roller
8 Bushing

Checking

a) Check that all rollers are intact and undamaged.
Replace worn and/or damaged rollers.

b) With **cold** machine, check that the play between the rollers (7), distance A, does not exceed 0.1 mm. If required, replace worn bushings (8) or axle pins (5).

The play between the rollers (7) is to be the same all the way around. Adjust by means of shimming washers (6).

c) With **warm** machine, check that all rollers rotate freely.
If required, adjust according to item b).

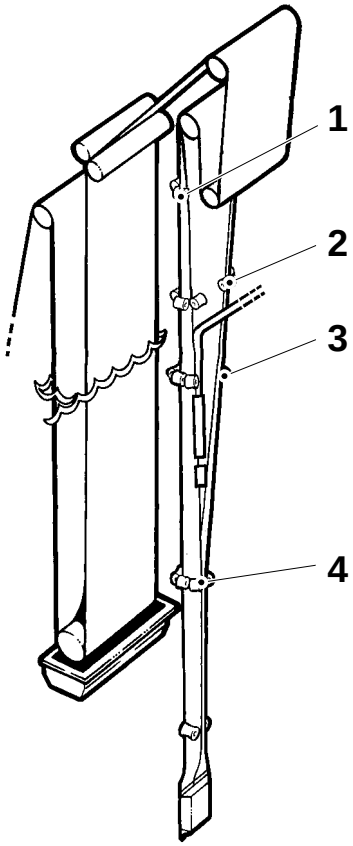

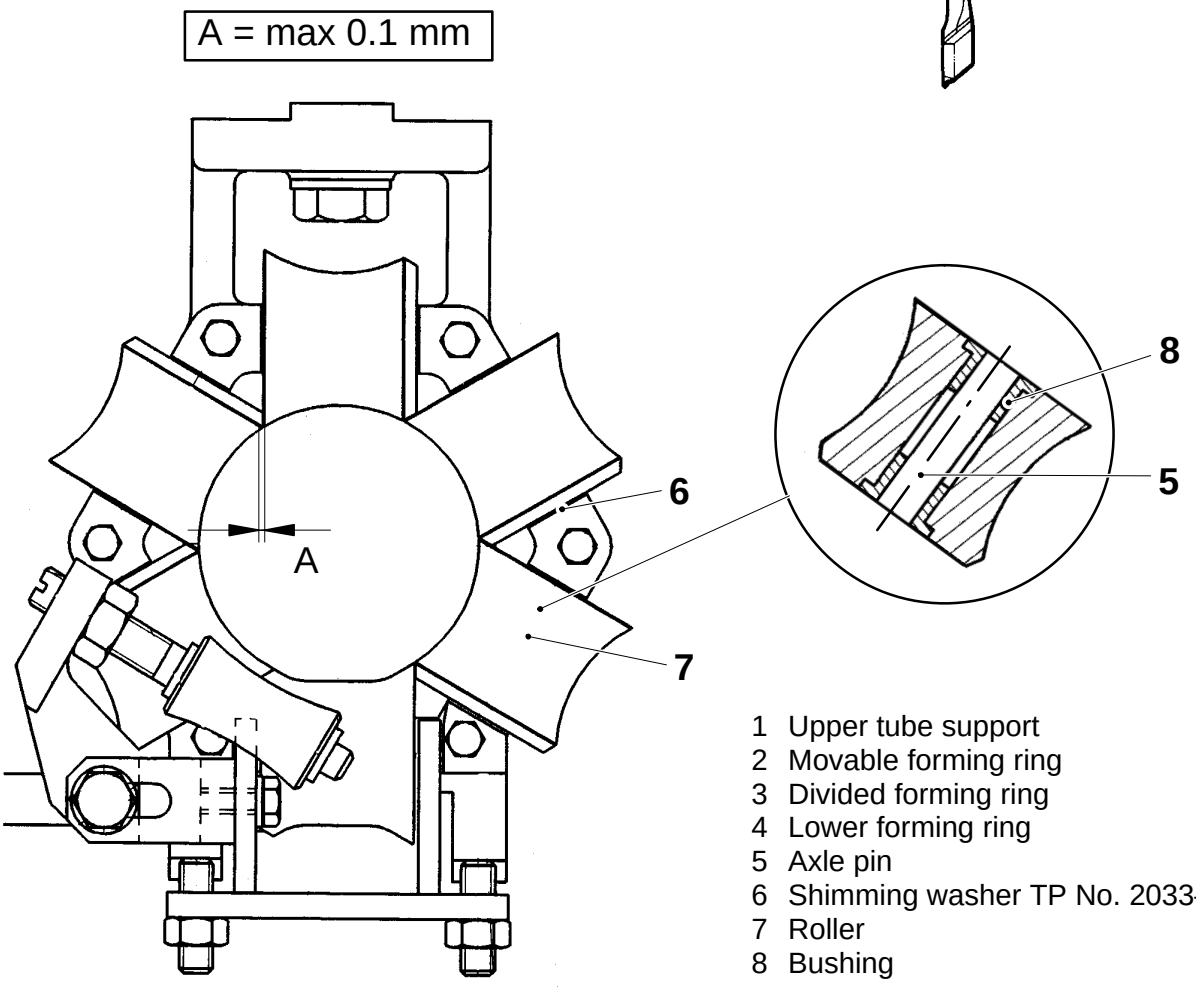

1 Upper tube support
2 Movable forming ring
3 Divided forming ring
4 Lower forming ring
5 Axle pin
6 Shimming washer TP No. 2033–11
7 Roller
8 Bushing

Checking

Check the radial play of all bending rollers. If the play is too big, or the rollers do not rotate freely, replace the bearings.

Footnote
When checking the bending roller of the peroxide bath, see page MS 181–1X.

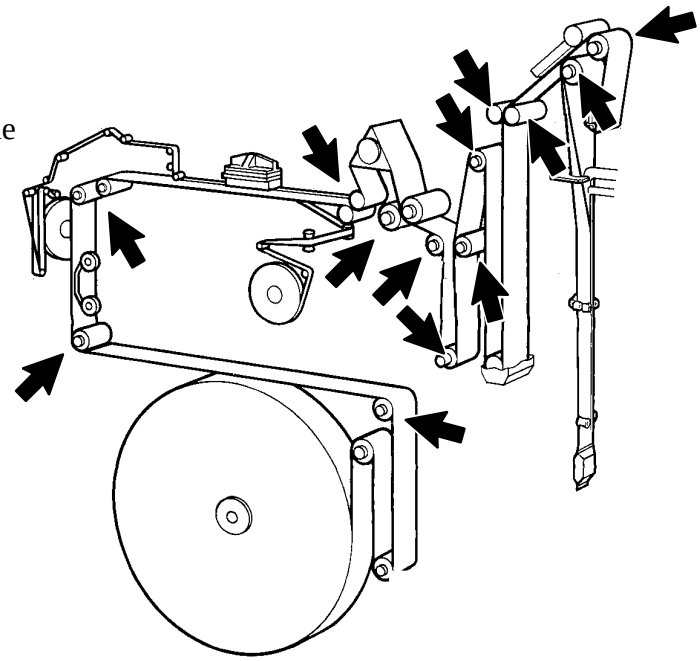

TBA with pull tab device

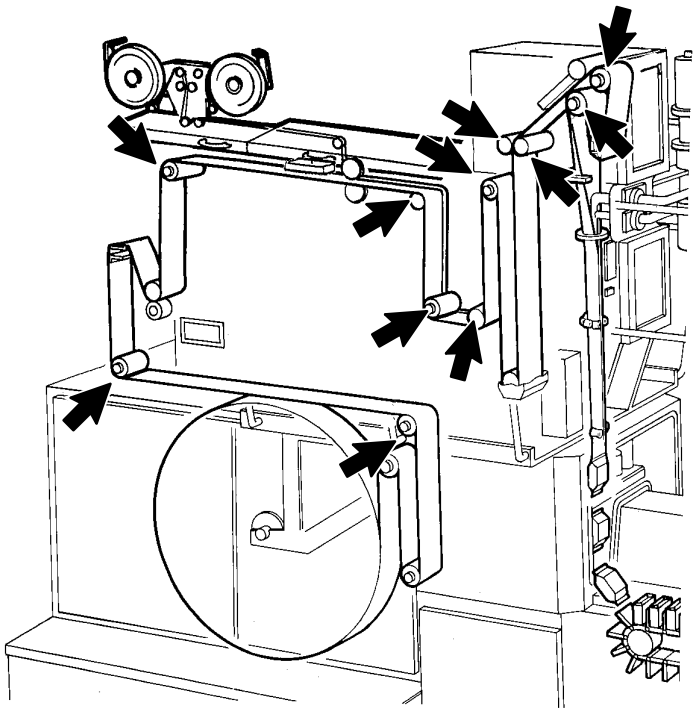

TBA with strip applicator

Checking

Check the radial play of all bending rollers. If the play is too big, or the rollers do not rotate freely, replace the bearings.

Footnote
When checking the bending roller of the peroxide bath, see page MS 181–1X.

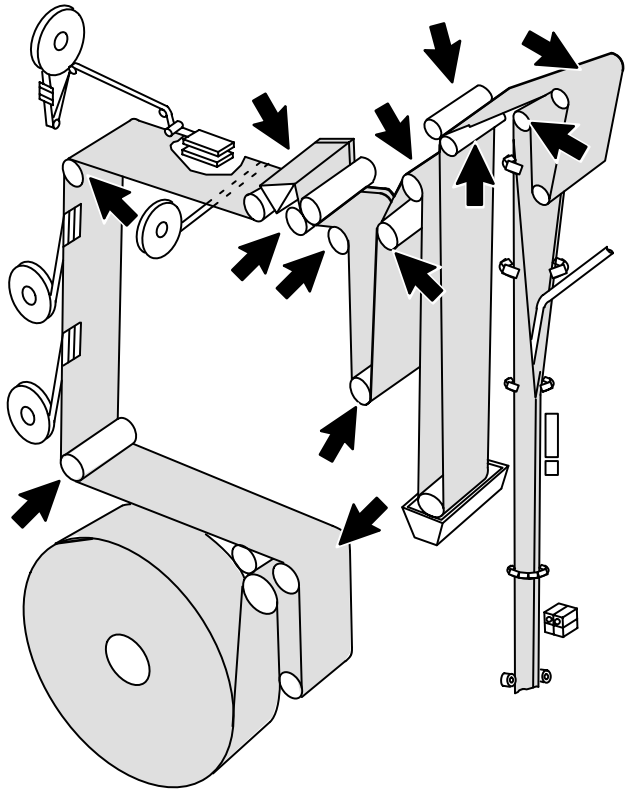

TBA with pull tab device

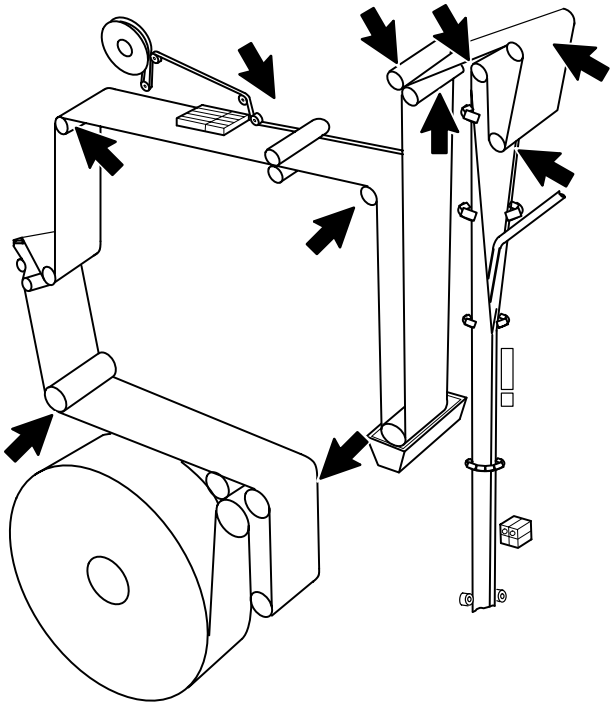

TBA with strip applicator

Basic setting

Code circuit board

Set the potentiometers on the code circuit board (see OS-book) in the electrical cabinet, see table below.

Machine	Volume, ml	Potentiometer P1	Potentiometer P2	Switch S3
TB	250	25	25	8
	200S	30	20	8
	200	0	35	8
TBA –1202	250	25	25	C
	236	20	20	C
	200S	30	20	C
	200	0	35	C
	180	0	40	C
	125	0	40	C
TBA –1201 –1203	250	40	15	C
	236	35	20	C
	200S	45	10	C
	200	30	25	C
	180	20	25	C
	125	20	25	C

Set the switch (1) in position ”PH”.

(Cont’d overleaf)

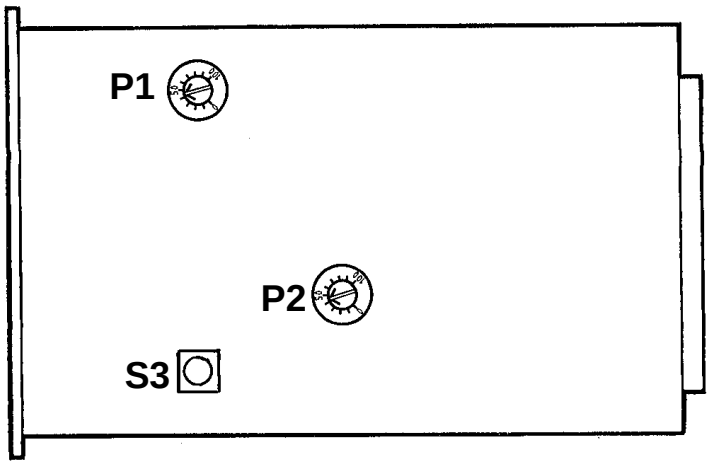

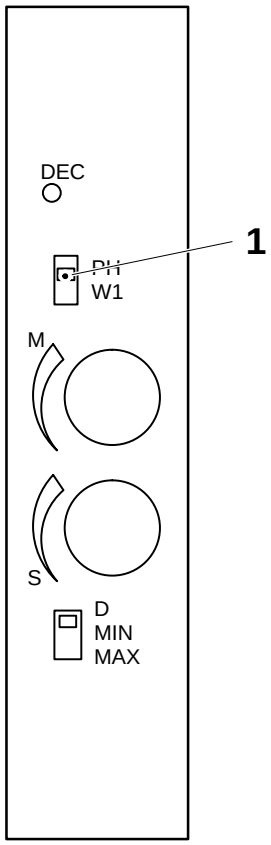

1 Switch

(Cont'd)

Driven bending roller

WARNING!
Remember that all metal components of the board are electrically live.

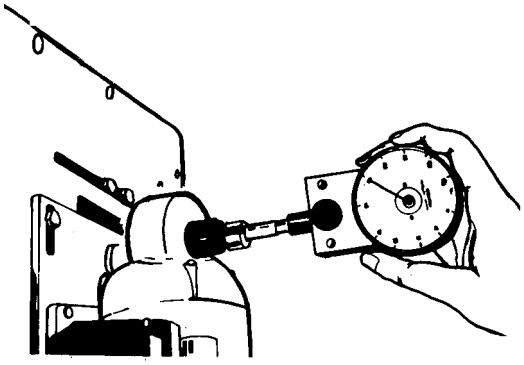

Push **Programme up** to step **Preheating**.

Start the bending roller by pushing the **Short stop** button. If the machine is cold, the bending roller must run for approximately five minutes before setting begins. Note that the bending roller only runs for two minutes each time it is started.

Alternatively, the bending roller can be started by activating output 01003 (O14.03, TBA 1203).

Put the switch (6) in position MIN.

Check the speed of the driven bending roller by means of a tachometer, see fig. If no tachometer is available, stick a piece of tape on the shaft and count revolutions during a defined period of time.

Adjust the minimum speed to 100 r/min by means of potentiometer M (4).

Put the switch (6) in position MAX and adjust the maximum speed to 130 r/min by means of potentiometer S (5).

Put the switch (6) in position MIN and check the minimum speed.

Check the maximum speed.

Deactivate the PLC output.

Put the switch (6) in position D.

Note that light emitting diode DEC (2) indicates that the photocells are reading the code correctly.

(Cont'd overleaf)

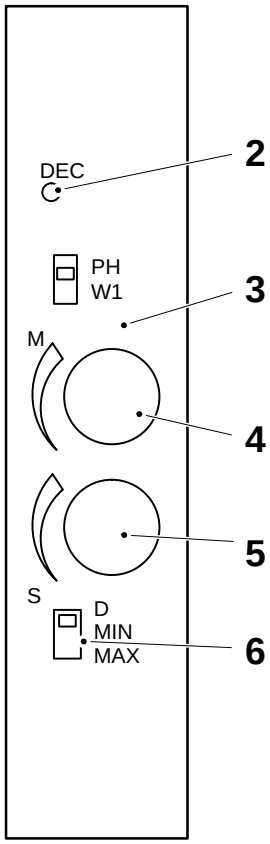

2 Light emitting diode DEC
3 Code circuit board
4 Potentiometer M (min)
5 Potentiometer S (max)
6 Switch

(Cont'd)

Photocell positions

Inch the machine until a sealed tube is obtained.

Set the bracket (8) in production position (locked).

Set the limit screw (9) so that it bears against the bracket (8) and eliminates any play.

Crank the machine to 0°.

Loosen the screws (7) and set gap A between the carrier and the photocell focal point basically, see table below.

Footnote
Push the bracket (10) against the wall when tightening the screws after adjustments in order to ensure that the play always works in the same direction.

Volume, ml	Gap A, mm
250	415
200	489
200S	447
180	—
125	460

(Cont'd overleaf)

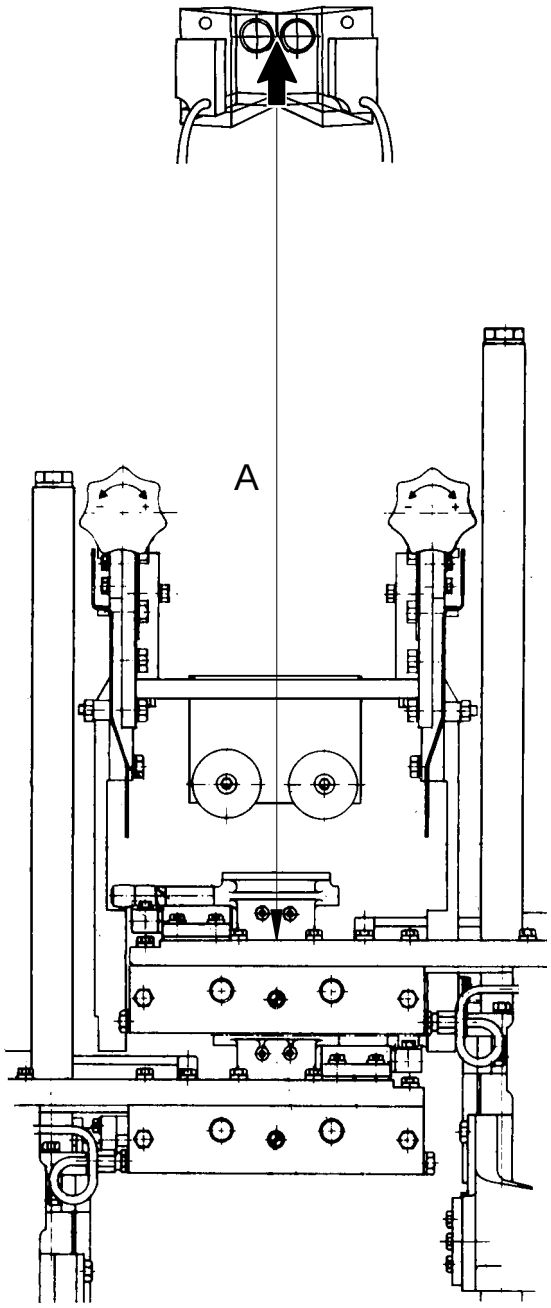

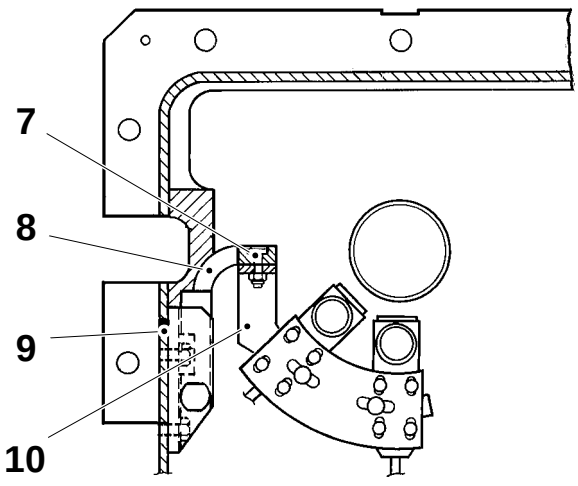

7 Screw
8 Bracket
9 Limit screw
10 Bracket

(Cont'd)

Photocells

Footnote
Each photocell is equipped with two separate light sources.

Always use the left-hand light source first. When it has been used up, transfer to the right hand source. **Whenever there is a change of light source, the photocell must be reset.** Start from page MS 148–51:3.

Select light source with the selector (12).

Loosen the screws (16) and set gap B between the photocell (17) and the sealed tube (18).

Set the photocells so that the light spots are centred on the photocell trigger marks on the tube by means of the screws (14).

Remove the covers (15) over the adjustment knobs. Set the light source selector at position O.

Crank forward a section of white packaging material in front of the photocell. Thereafter, turn the selector to position J. Attach a piece of black tape along the edge of a sheet of white paper and stick this paper around the tube. Move up the black tape in front of the photocells.

Check whether the light emitting diode (11) on the photocell is on or off. If it is off, turn the setting knob (13) counter-clockwise until the light emitting diode lights up.

(Cont'd overleaf)

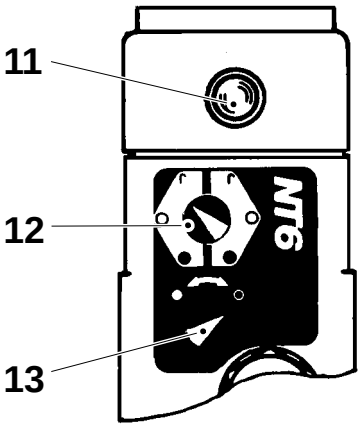

B = 9 ±1 mm

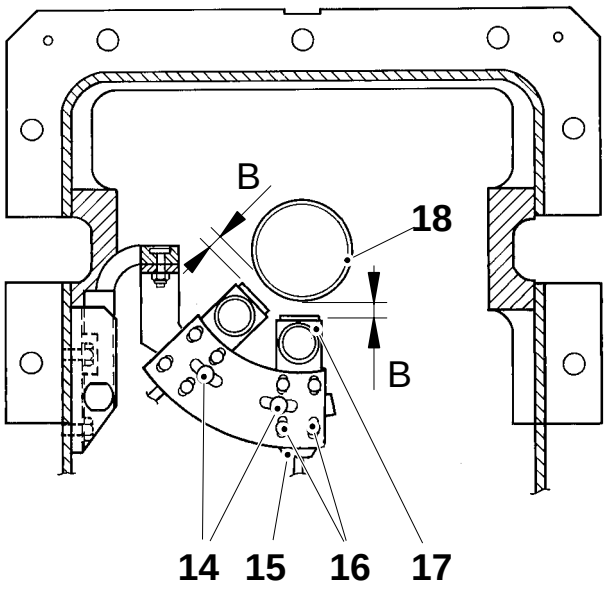

11 Light emitting diode
12 Selector
13 Setting knob
14 Screw
15 Cover
16 Screw
17 Photocell
18 Sealed tube

(Cont'd)

Thereafter follow either one of the two alternative procedures below, without shifting the paper.

Alternative 1

Only packaging material with white background for the photocell mark is being used:

Turn the setting knob (13) clockwise until the light emitting diode (11) just goes out.

Alternative 2

Packaging material with both white and unbleached background for the photocell mark is being used:

Turn the setting knob clockwise until the light emitting diode (11) just goes out and then turn it back, counter-clockwise, one turn.

Both alternatives

Turn the light source selector (12) to position ●.

Fit the photocell covers.

(Cont'd overleaf)

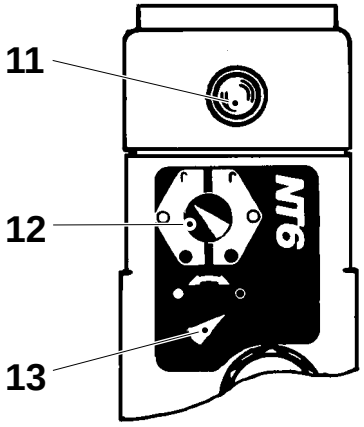

11 Light emitting diode
12 Selector
13 Setting knob

(Cont'd)

Photocells levelling

Stick black tape very accurately along the edge of a sheet of white paper. Attach the paper around the tube. The edges of the black tape must match a crease exactly.

Move the paper slowly upwards/downwards so that the photocell light spots pass across the horizontal borderline between white and black.

Stop dead when the light emitting diode on the inner photocell (15) lights up.

Both photocells are to light up exactly simultaneously.

If required, loosen the screws (14) on the **outer photocell** (17) and adjust the position vertically by means of the screws (16). Check gap B between the photocell and the sealed tube.

Retighten the screws (14).

Repeat the setting procedure until the light emitting diodes of both photocells light up exactly simultaneously.

Note that all settings are to be made **on the outer photocell only**.

(Cont'd overleaf)

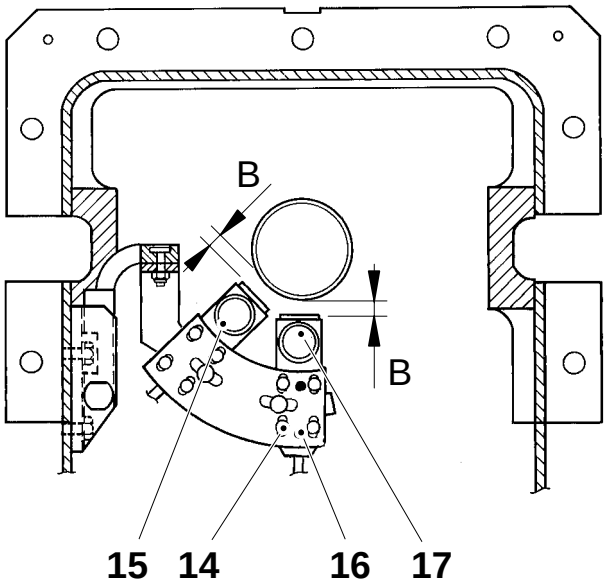

Valid for 180 ml – 250 ml

B = 9 ±1 mm

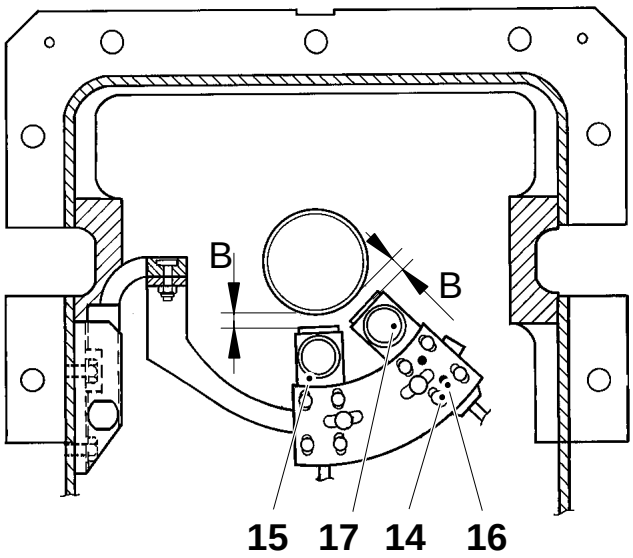

Valid for 125 ml, 200S ml

14 Screw
15 Inner photocell
16 Screw
17 Outer photocell

(Cont'd)

During operation

During operation, check that light emitting diode D1 on the printed design circuit board (19) flashes.

Check the function of the design correction cylinders.

Set the potentiometer (20) at 0. Check the crease positions on the package. If required, alter the position of creases by loosening the screws (7) and raising or lowering the photocells. Push the bracket (8) against the wall when tightening the screws after adjustment.

Check the settings in level, see page MS 148–5X:6.

When the mechanical setting has been completed, final adjustment may be made by means of the potentiometer (20).

To shift the crease upwards on the package, turn clockwise.

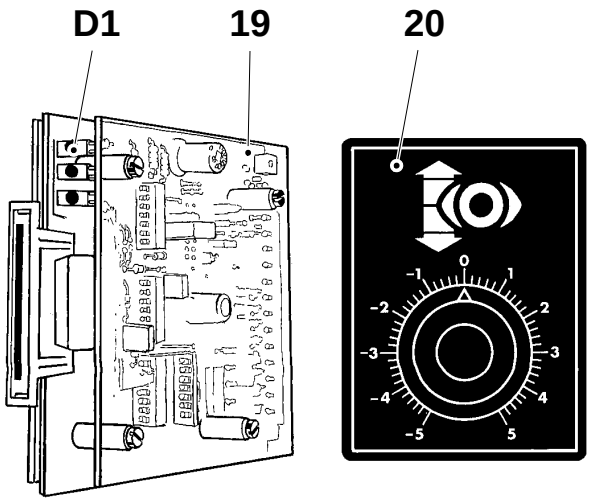

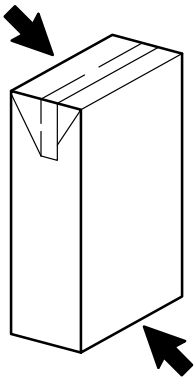

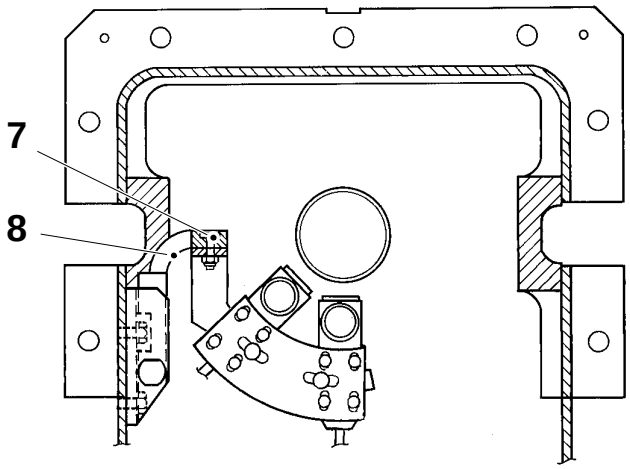

7 Screw
8 Bracket
19 Printed design circuit board
20 Potentiometer

Setting

Code circuit board

Set the potentiometers on the code circuit board A016B in the electrical cabinet according to the table below.

Machine	Volume, ml	Potentiometer P1	Potentiometer P2	Switch S3
TB	250	25	25	8
	236	20	25	8
	200S	30	20	8
	200	0	35	8
TBA	284	40	15	C
	250	40	15	C
	236	35	20	C
	200S	45	10	C
	200	30	25	C
	180	20	25	C
	125	20	25	C

Set the switch (1) in position ”PH”.

(Cont’d overleaf)

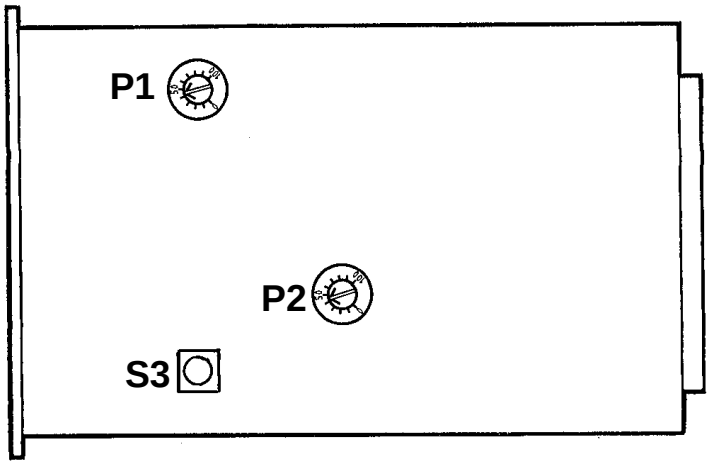

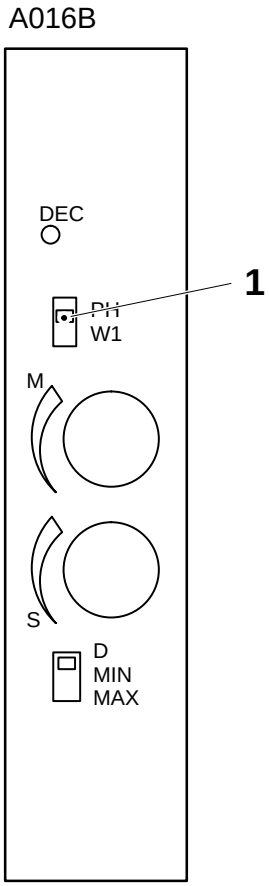

1 Switch

(Cont'd)

Driven bending roller

WARNING!
Remember that all metal components of the board are electrically live.

Start the bending roller by activating PLC output 014.03.

Put the switch (7) in position MIN on board A016B.

Check the speed of the driven bending roller by means of a tachometer, see fig. If no tachometer is available, stick a piece of tape on the shaft and count revolutions during a defined period of time.

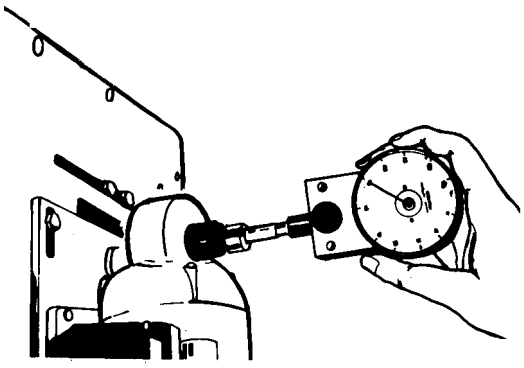

Adjust the minimum speed to 100 r/min by means of potentiometer M (5).

Put the switch (7) in position MAX and adjust the maximum speed to 130 r/min by means of potentiometer S (6).

Put the switch in position MIN and check the minimum speed.

Check the maximum speed.

RI compensation. Put the switch (7) in MAX position.

Slowly turn the potentiometer marked I × R (2) on the A001 control board until the speed of the bending roller becomes unsteady and begins to self-oscillate. Turn the potentiometer back so the speed just steadies itself.

Turn the Acc ramp potentiometer (3) fully counter clockwise.

Deactivate the PLC output.

Put the switch (7) in position D.

Note that light emitting diode DEC (4) indicates that the photocells are reading the code correctly.

(Cont'd overleaf)

A001 A016B

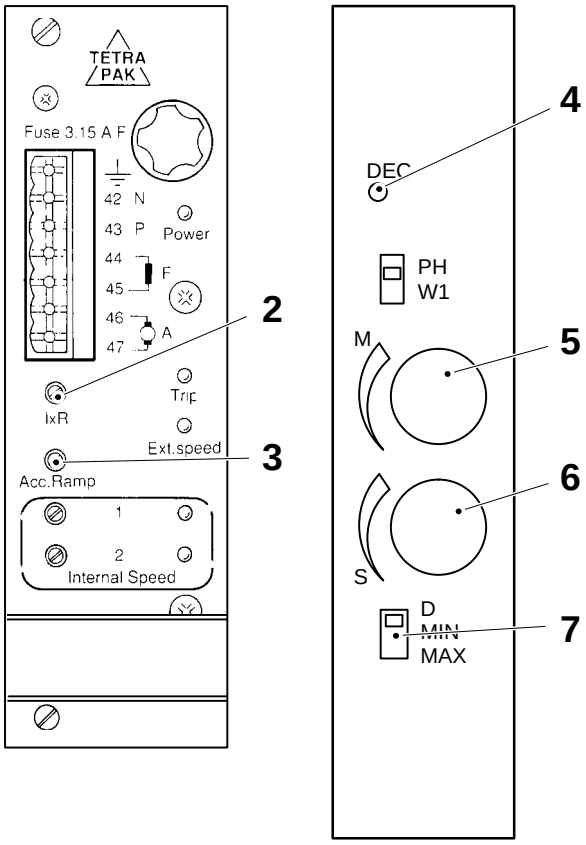

2 Potentiometer
3 Acc ramp potentiometer
4 Light emitting diode DEC
5 Potentiometer M (min)
6 Potentiometer S (max)
7 Switch

(Cont'd)

Photocell positions

Inch the machine until a sealed tube is obtained.

Set the bracket (9) in production position.

Set the limit screw (10) so that it bears against the bracket (9) and eliminates any play.

Crank the machine to 0°.

Loosen the screws (8) and basically set gap A between the carrier and the photocell focal point, see table below.

Footnote
Push the bracket (11) against the wall when tightening the screws after adjustments in order to ensure that the play always works in the same direction.

Volume, ml	Gap A, mm
284	455
250	415
236*	552
200	489
200S	447
180	–
125	460

* Note that the photocells are fitted upside down on TB volume 236 ml.

(Cont'd overleaf)

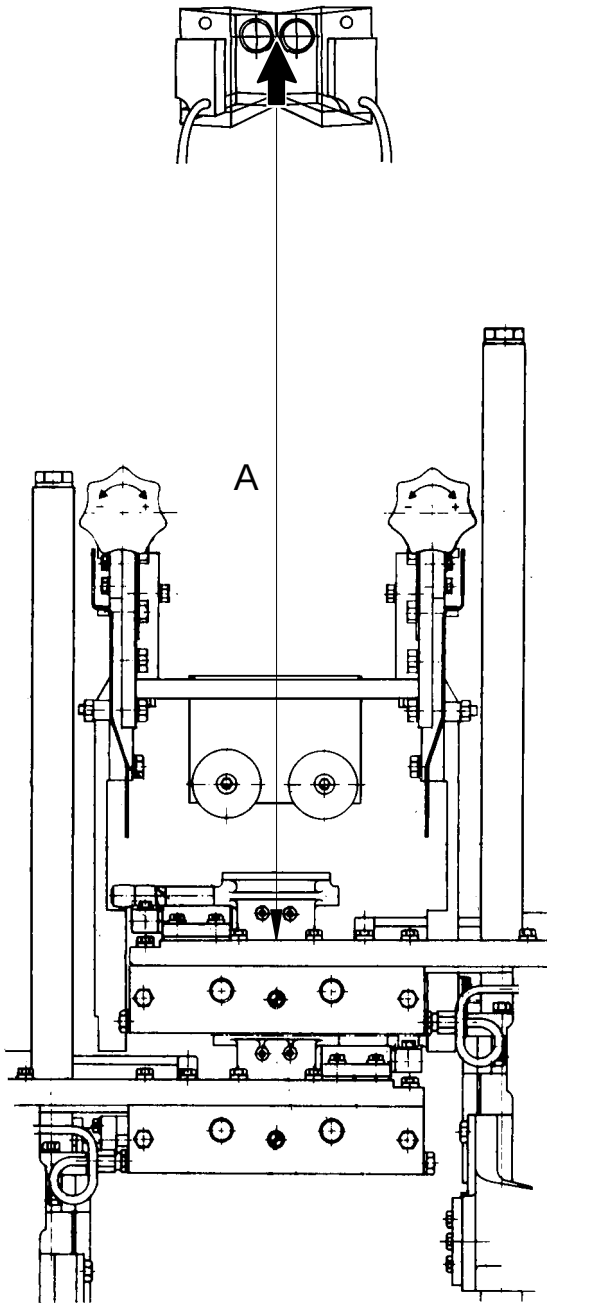

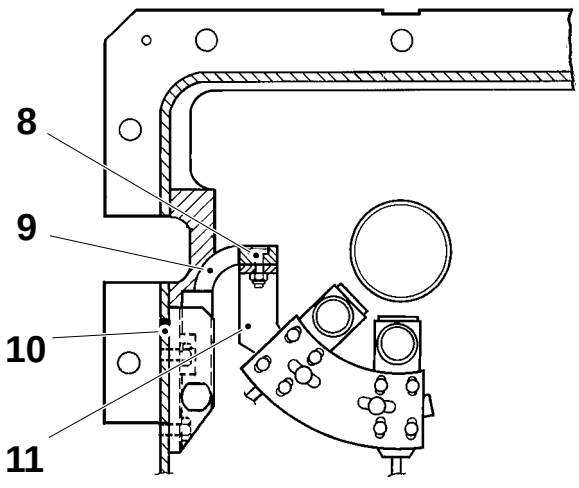

8 Screw
9 Bracket
10 Limit screw
11 Bracket

(Cont'd)

Photocells

Each photocell is equipped with two separate light sources.

Always use the left hand light source first. When it has been used up, transfer to the right hand source. **Whenever there is a change of light source, the photocell must be reset.** Start from page MS 148–52:3.

Select light source with the selector (13).

Loosen the screws (17) and set gap B between the photocell (18) and the sealed tube (19).

Set the photocells so that the light spots are centred on the photocell trigger marks on the tube by means of the screws (15).

Remove the covers (16) over the adjustment knobs. Set the light source selector at position O.

Crank forward a section of white packaging material in front of the photocell. Thereafter, turn the selector to position J. Attach a piece of black tape along the edge of a sheet of white paper and stick this paper around the tube. Move up the black tape in front of the photocells.

Check whether the light emitting diode (12) on the photocell is on or off. If it is off, turn the setting knob (14) counter-clockwise until the light emitting diode lights up.

(Cont'd overleaf)

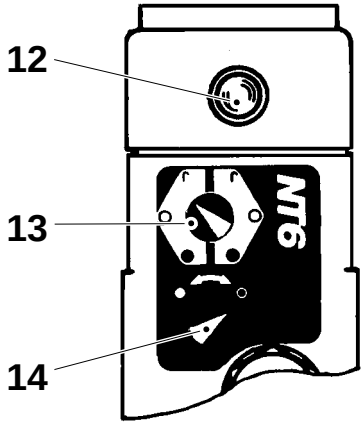

B = 9 ±1 mm

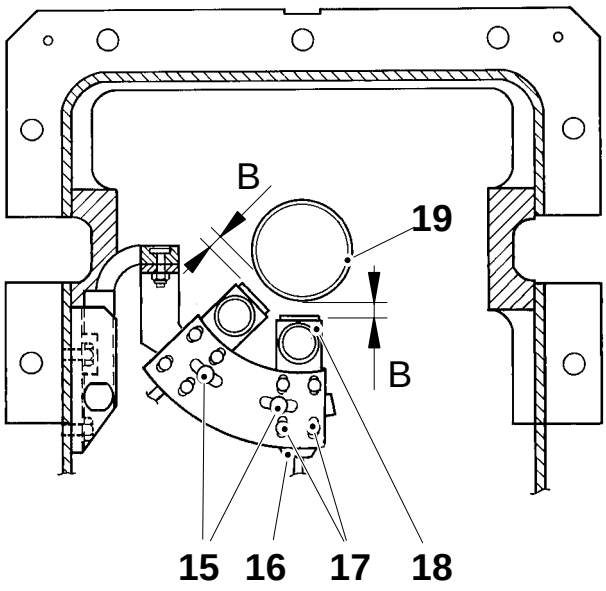

12 Light emitting diode
13 Selector
14 Setting knob
15 Screw
16 Cover
17 Screw
18 Photocell
19 Sealed tube

(Cont'd)

Thereafter follow either one of the two alternative procedures below, without shifting the paper.

Alternative 1

Only packaging material with white background for the photocell mark is being used:

Turn the setting knob (14) clockwise until the light emitting diode (12) just goes out.

Alternative 2

Packaging material with both white and unbleached background for the photocell mark is being used:

Turn the setting knob clockwise until the light emitting diode (12) just goes out and then turn it back, counter-clockwise, one turn.

Both alternatives

Turn the light source selector (13) to position ●.

Fit the photocell covers.

(Cont'd overleaf)

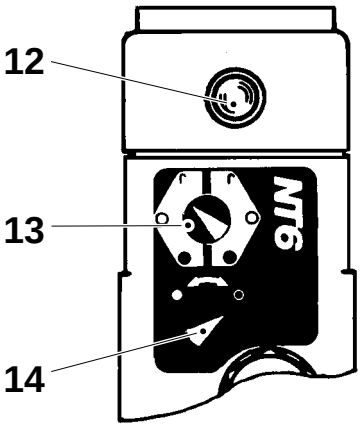

12 Light emitting diode
13 Selector
14 Setting knob

(Cont'd)

Photocells – levelling

Stick black tape very accurately along the edge of a sheet of white paper. Attach the paper around the tube so that the black tape matches a crease exactly.

Move the paper slowly upwards/downwards so that the photocell light spots pass across the horizontal borderline between white and black.

Stop dead when the light emitting diode on the inner photocell (20) lights up.

Both photocells are to light up exactly simultaneously.

If required, loosen the screws (17) on the **outer photocell** (18) and adjust the position vertically by means of the screws (21). Check gap B between the photocell and tube.

Retighten the screws (17).

Repeat the setting procedure until the light emitting diodes of both photocells light up exactly simultaneously.

Note that all settings are to be made on the outer photocell only.

(Cont'd overleaf)

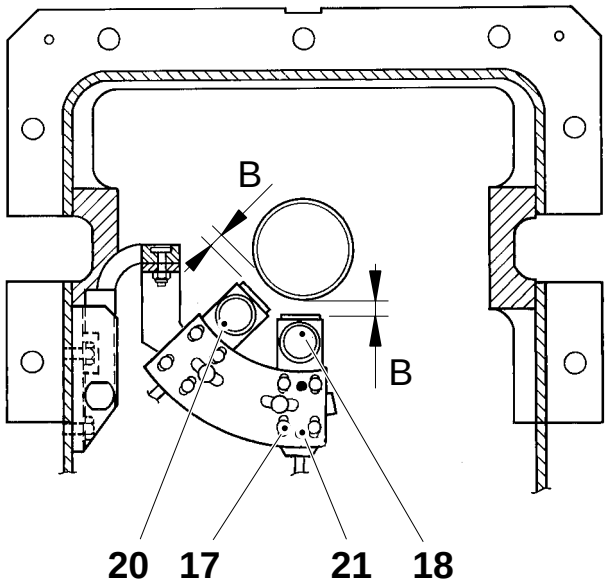

Valid for 180 ml – 284 ml

B = 9 ±1 mm

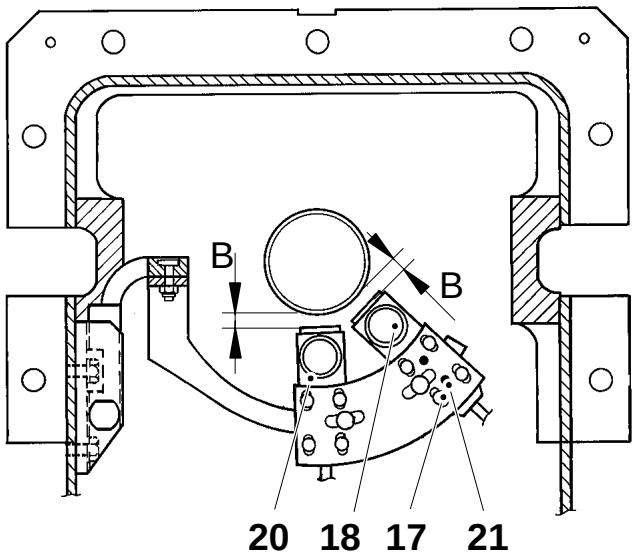

Valid for 125 ml, 200S ml

17 Screw
18 Outer photocell
20 Inner photocell
21 Screw

(Cont'd)

During operation

During operation, check that light emitting diode D1 on the printed design circuit board (22) flashes.

Check the function of the design correction cylinders.

Set the potentiometer (23) at 0. Check the crease positions on the package. If required, alter the position of the creases by loosening the screws (8) and raising or lowering the photocells.
Push the bracket (9) against the wall when tightening the screws after adjustment.

Check the settings in level, see page MS 148–5X:6.

When the mechanical setting has been completed, final adjustment may be made by means of the potentiometer (23).

To shift the crease upwards on the package, turn clockwise.

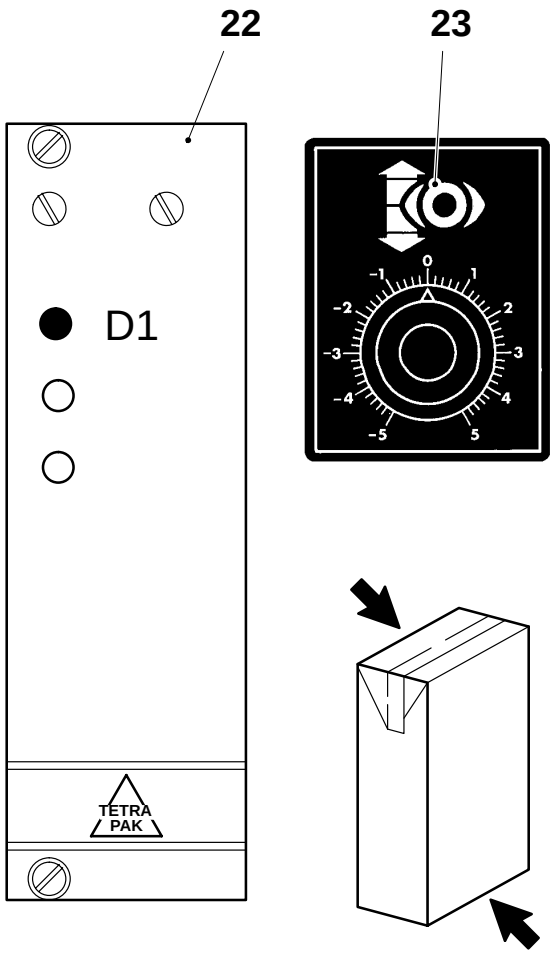

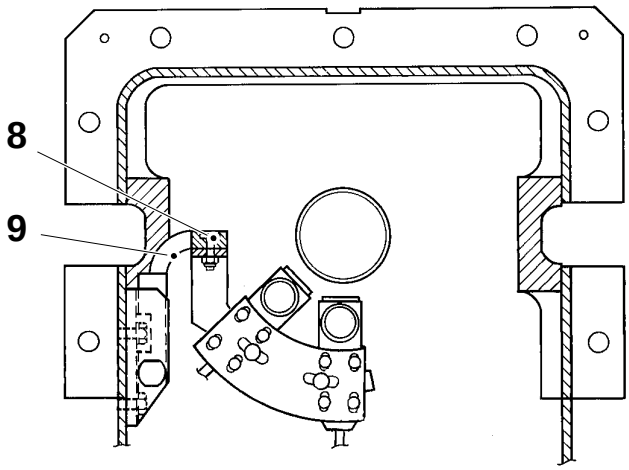

8 Screw
9 Bracket
22 Printed design circuit board
23 Potentiometer

Checking

a) Check the function of the free-wheel hub (5).

b) Check the bearings (2) for excessive radial play. If required, replace them.

c) Check the gear wheels (3) and (4) for excessive wear and gear play. If required, adjust the gear play by loosening the screws (1) and shifting the motor up or down.

Note!
In case of dismantling, the free-wheel hub, gear wheels, and bearings are to be lubricated with silicon grease, TP No. 90296–9.

d) Check the function of the motor and its carbon brushes. If shorter than 5 mm, replace them.

e) Check the centering of the bending roller according to the figure below. If required, adjust by loosening the clamp device (6) and move the bending roller sideways.

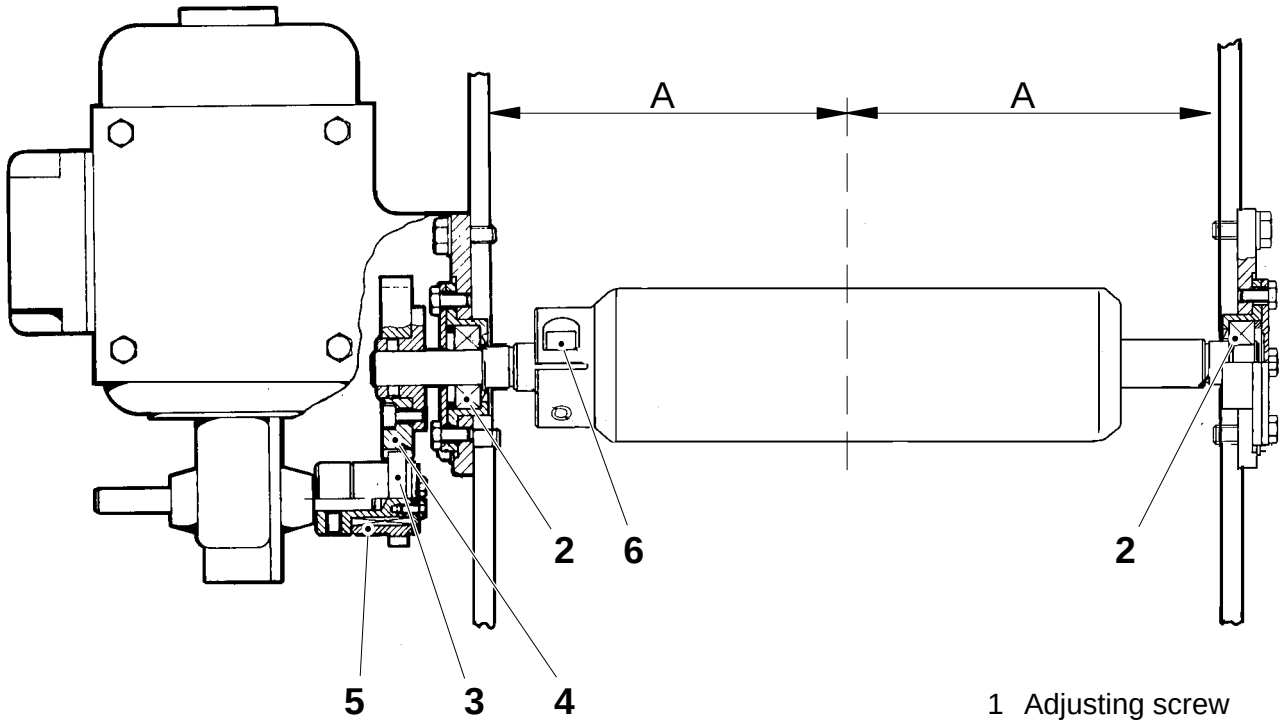

1 Adjusting screw
2 Bearing
3 Gear wheel
4 Gear wheel
5 Free-wheel hub
6 Clamp device

Checking/Setting

Check that the crease bars (1) are not bent or have burrs. Replace as required.

Set distances A and B of the design correction crease wheel (3), see table.

Set distance A, by aligning or replacing the crease bars.

Set distance B by means of shimming washers (2) under the crease bars.

Check that the crease bars are parallel within 0.2 mm, see fig.

Check the hinge of the design correction crease wheel.

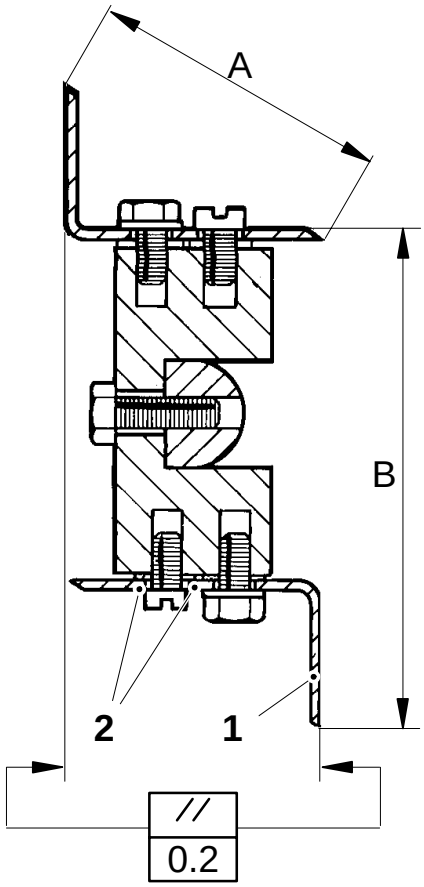

1 Crease bar
2 Shimming washer
3 Design correction crease wheel

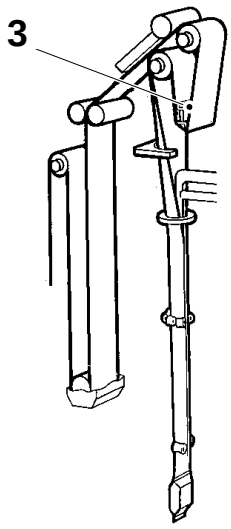

Basic setting measurements

Volume, ml	A ±0.2 mm	B ±0.2 mm
TBA 125	44	86.0
TBA 180	57	75.5
TBA 200	57	83.0
TBA 236	57	98.4
TBA 250	57	106.0
TBA 200S	54	118.6
TBA 284	57	118.9

* **Note!** Also valid as extra equipment for TBA/9 120V and 130V.

Setting

a) Cut the tube in the bottom crease.

b) Crank the machine to X°, see table.

c) Synchronize the creases of the web with the design correction crease wheel (1).

d) Pull down the tube in level with the upper edge of the left side volume flaps.

e) Loosen the screws (2), see fig. 2, on both sides of the sterile house and shift the design correction crease wheel (1) up or down to get it horizontal, see fig. 1.

It is very important that the design correction crease wheel and the creases are synchronized during the adjustment, and that the packaging material web is well tensioned through the machine.

Volume, ml	X°
TBA 125 SA	198
TBA 125 PT	176
TBA 180	225
TBA 200	225
TBA 250	225
TBA 200S	225
TBA 284	225

SA = strip applicator machine
PT = pull tab machine

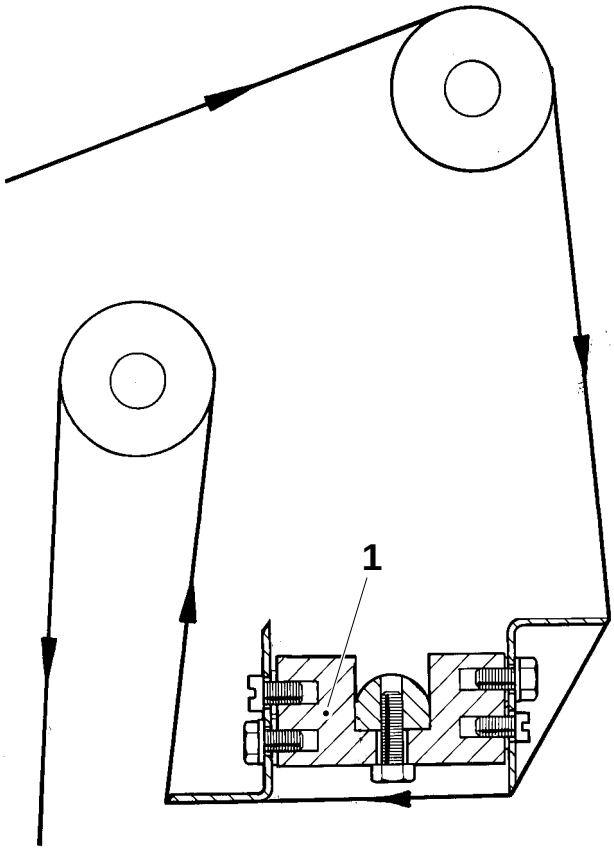

Fig. 1

1 Crease wheel
2 Screw

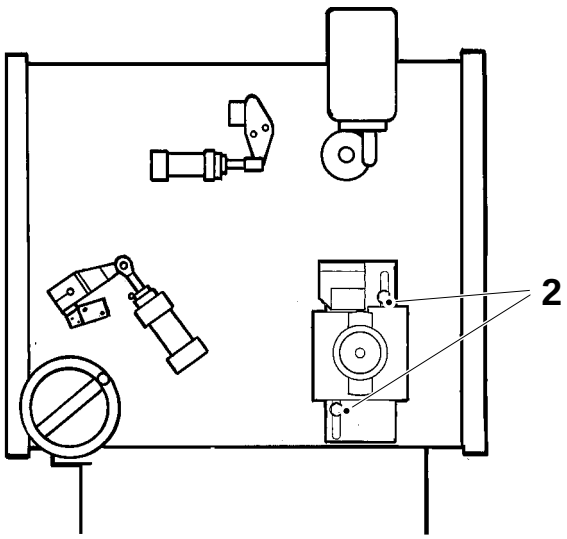

Fig. 2

* **Note!**
Also valid as extra equipment for TBA/9 120V and 130V.

Checking

a) Check that the compressor is running without any abnormal sounds. Abnormal sound may be caused by dirt in the compressor housing. Clean it by removing the drain plug and flushing with water. Check that the nuts (2) are tightened.

b) Check that the axial seal of the compressor does not leak. Any leakage can be seen on the underside at the joint between the motor and the compressor housing (1).

c) Check that the pressure, indicated by the separator pressure gauge, is 25–40 kPa in production position.

- **Too high pressure** may be due to blocking somewhere in the air system.
- **Too low pressure** may be due to leakage in the air system or too low compressor capacity. The reason for the latter may be inadequate water supply, faulty solenoid valve (MY32), faulty constant flow valve or clogged suction filter in the air knife.

d) Check that the compressor starts when the **Preheating** position is chosen with the **Programme up** button.

If the compressor will not start, check:

- If the motor overload protection has been tripped.
- If the motor is running while the button is kept depressed but stops when the operator lets go of the button, see item c).
- If sterile air pressure switch MB18 and/or MB62 is out of action.

e) If checks as per items a) – d) have been done and the prescribed pressure of 25 – 40 kPa cannot be obtained:

- Replace the pressure gauge.
- Replace the compressor.

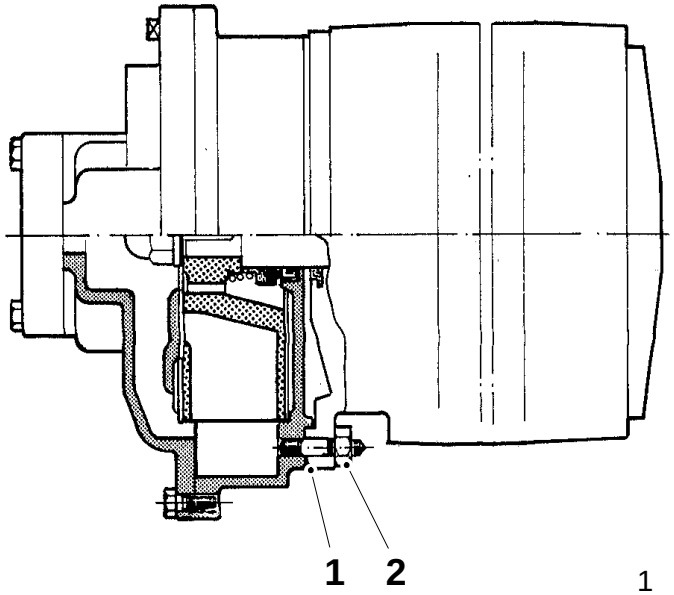

1 Compressor housing
2 Nut

Dismantling

a) Remove the screws (7) and the gasket (6).

b) Remove the locking nut (4), the washer (3), and the rotor (8). There are two holes in the rotor for extractor TP No. 74305–101.

c) Remove the rotor key (2).

d) Remove the four nuts (5) and separate the compressor housing (9) from the motor (11). The seal (10) will then come away with the compressor housing when it is detached. Take care not to damage the ceramic sealing surfaces when removing the compressor housing.

e) Remove the sealing (1) from the compressor housing by applying an even pressure from the motor side.

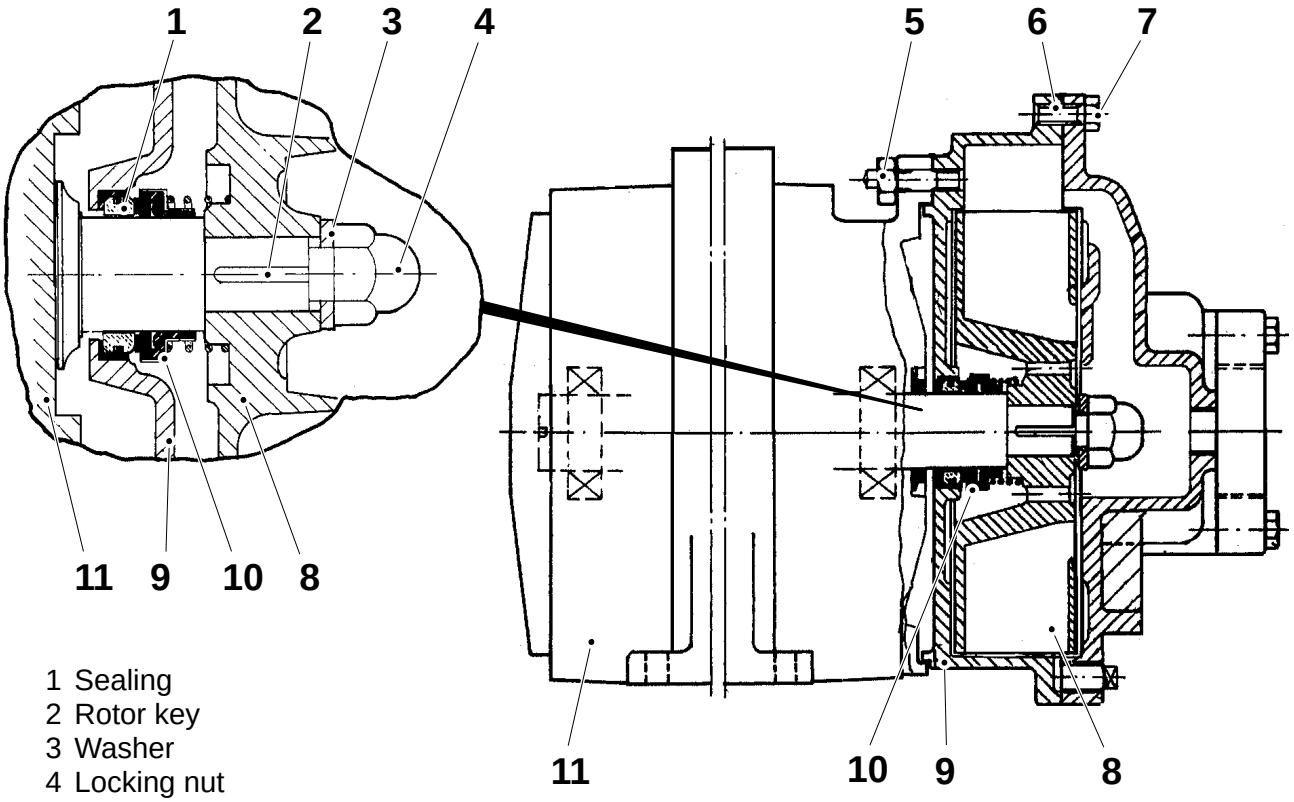

1 Sealing
2 Rotor key
3 Washer
4 Locking nut
5 Nut
6 Gasket
7 Screw
8 Rotor
9 Compressor housing
10 Seal
11 Motor

Reassembly

a) Fit the seal (15) in the compressor housing (14) aided by a thin film of oil on the rubber sleeve.

Caution!
No grease on the sealing surfaces. Fit the water deflector ring (16) on the motor shaft.

b) Mount the compressor housing (14) loosely against the motor with the nuts (6).

c) Fit the rotating section (1) of the seal on the motor shaft. Fit the coil spring (2).

d) Place the key (3) in its keyway in the shaft.

e) Fit the rotor (13).

f) Fit the washer (4) and locking nut (5) on the shaft and tighten properly.

g) Put the gasket (17) in place. Then fit the end cover (9), and attach it with the screws (8). Undo the nuts (6) of the compressor housing **before** tightening the end cover screws.

h) Fit shims (7) at the four screws between the compressor housing and the mounting flange of the motor. Shim thickness as follows: Measure play A at the four screws with the nuts (6) loosened. Add 0.1 – 0.2 mm to the average value of play A.

i) Tighten the nuts (6).

j) Check that the gap between the rotor (13) and the end cover (9) is appr. 0.1 mm by inserting a feeler gauge through the inlet pipe or outlet pipe.

k) Loosen the screws (8) again. Position the end cover (9) in the centre. Tighten the screws (8).

l) Check that the rotor does not scrape against the cover when turned (turn by the motor fan).

m) Fit the inlet and outlet flanges (11) and the gasket (12) with the screws (10).

n) Check once more that the rotor rotates freely.

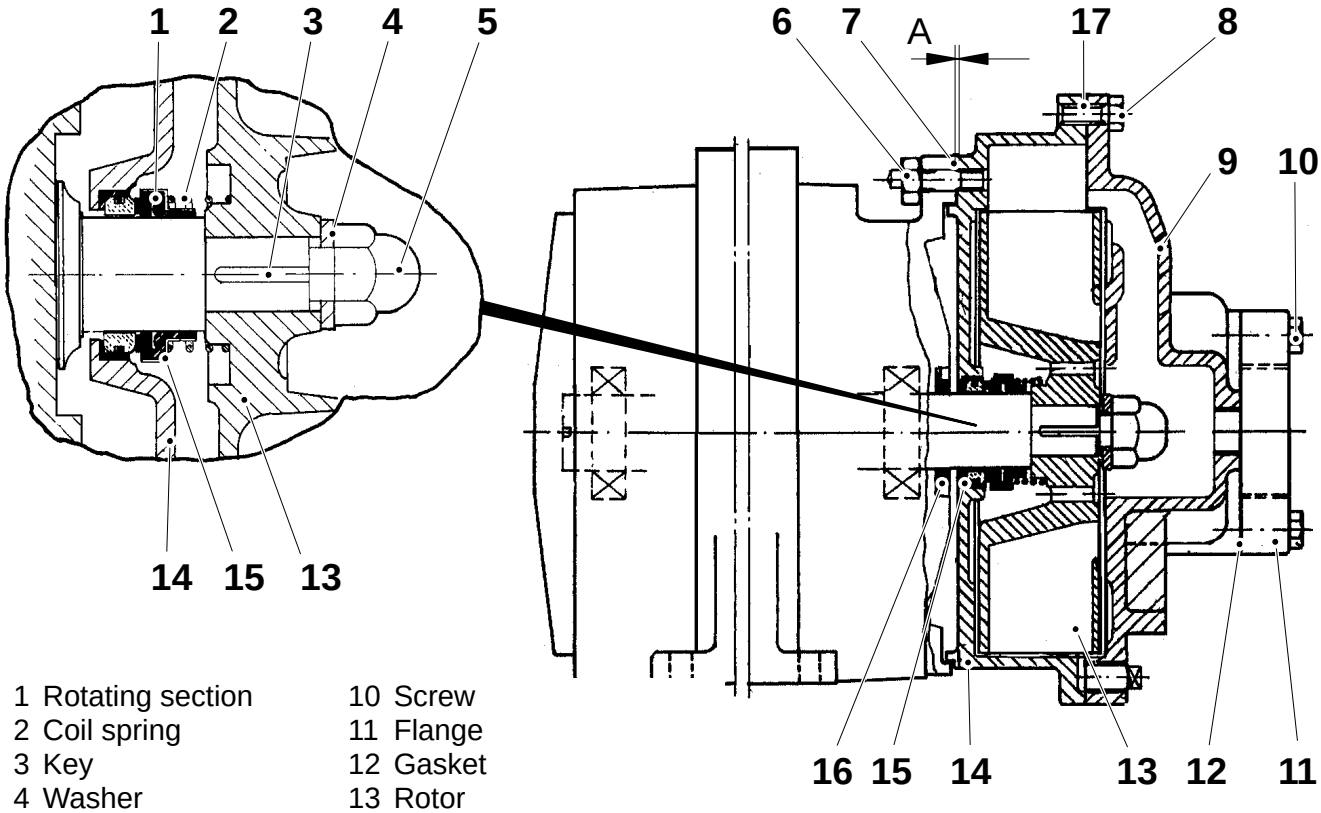

1 Rotating section
2 Coil spring
3 Key
4 Washer
5 Locking nut
6 Nut
7 Shim
8 Screw
9 End cover
10 Screw
11 Flange
12 Gasket
13 Rotor
14 Compressor housing
15 Seal
16 Water deflector ring
17 Gasket

Setting

a) Rotate the compressor rotor by rotating the motor cooling fan with a screwdriver.

b) Check that no abnormal noise is heard and no binding is felt. Abnormal noise may be caused by dirt in the compressor housing. Remove the drain plug and flush with water.

c) Turn in the LS and LS short stop air pressure setting screws fully and then turn them out one and a half turn.

d) Open the cold water cock.

e) Push **Programme up** to select **Preheating** and check that the pressure indicated by the water separator gauge rises to the normal working pressure of 25 kPa. If no pressure at all is obtained, check that the compressor rotates in the right direction. If the obtained pressure is too low, see page MS 160–1X, item 3b).

f) Put the compressor cover back on.

Checking

Remove the constant flow valve (1) and check that the rubber ring (2) is intact.

Make sure the valve is not clogged with lime deposits.

Replace if required.

Refit the valve.

Direction of the flow (3) is marked on the side of the valve.

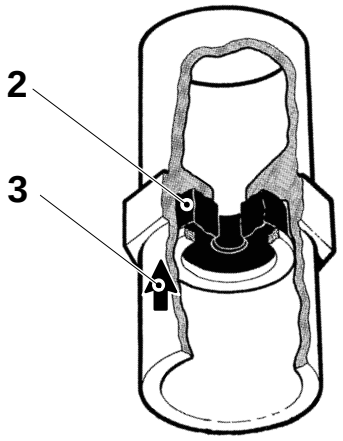

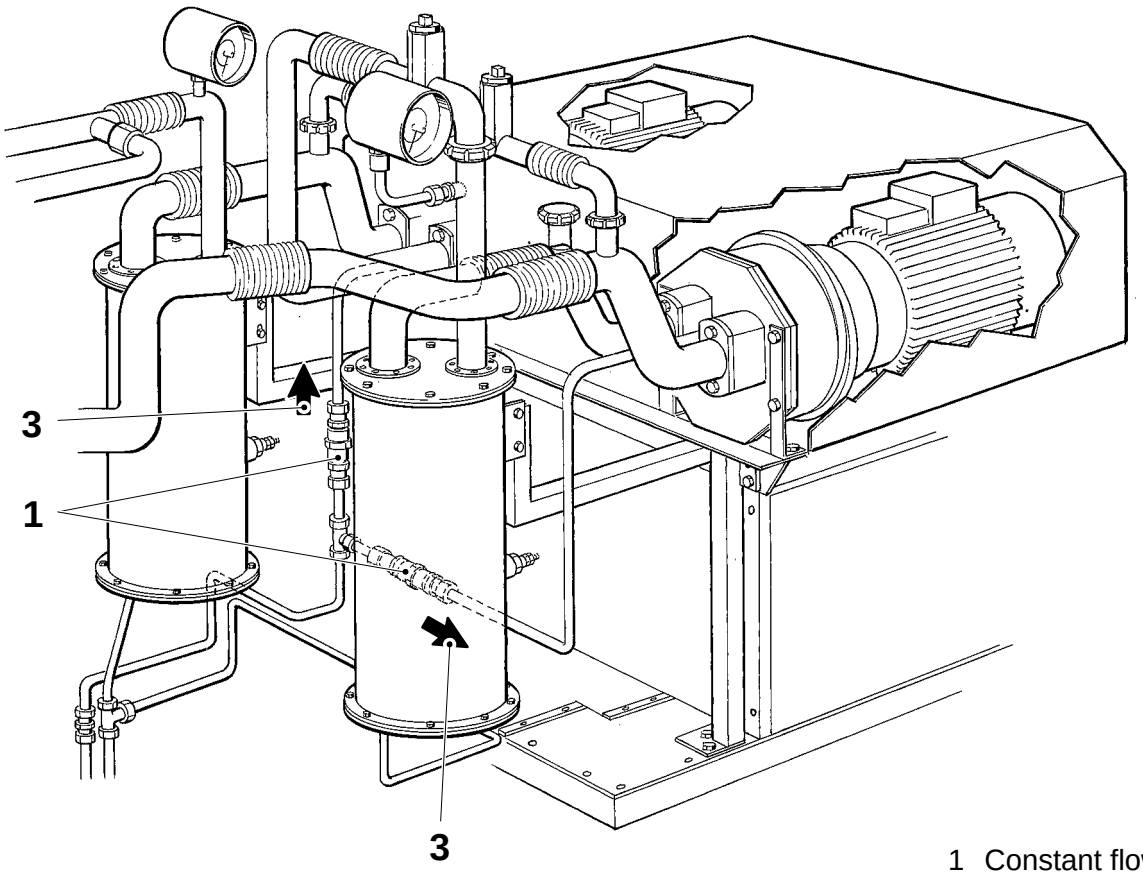

1 Constant flow valve
2 Rubber ring
3 Direction of flow

Setting/Balancing

Push **Programme up** to step **Preheating**.

Adjust the shunt valve (1), and on 60 Hz machines the shunt valve (2), until pressure gauges MB18 and MB62 indicate 25 – 35 kPa.

Start the machine. Adjust in the same way as above until the pressure gauges indicate 25 – 40 kPa.

Check the pressures in the aseptic chamber and peroxide bath, see page MS 163–1X.

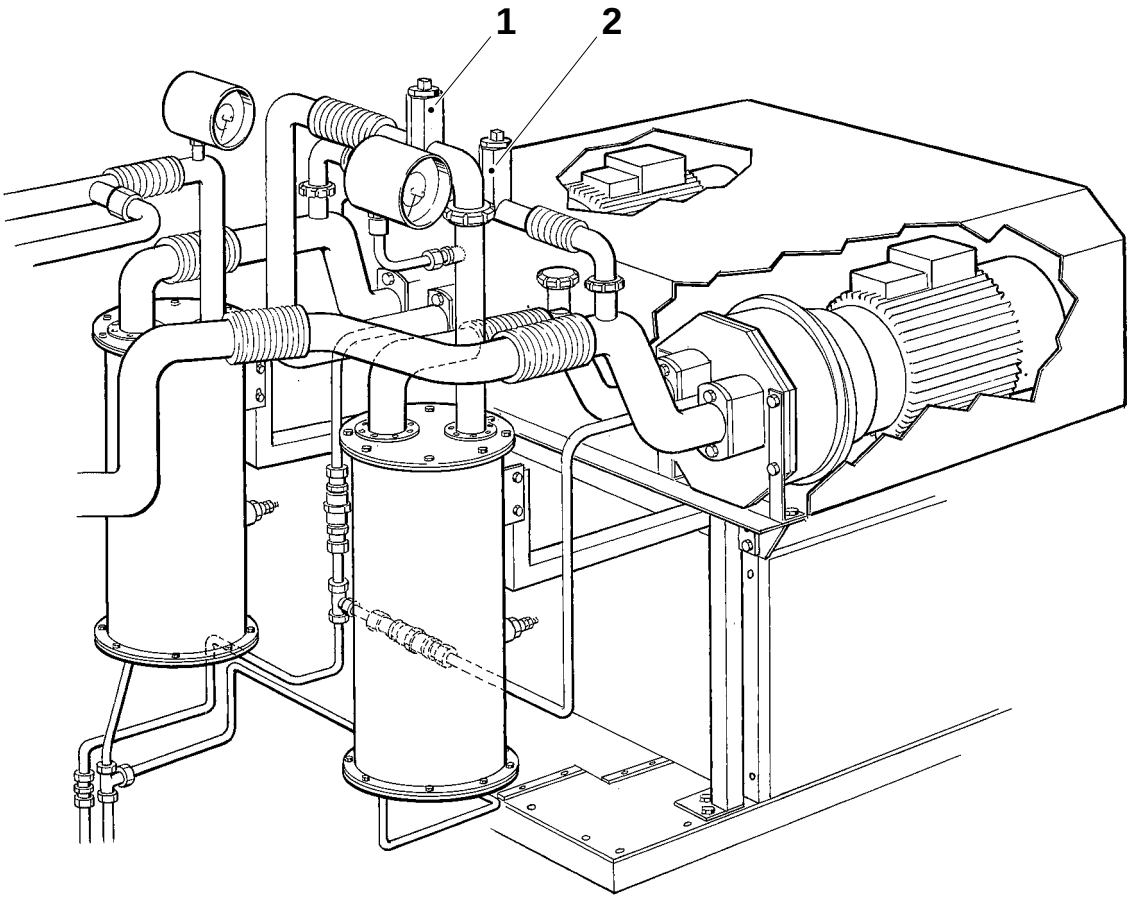

1 Shunt valve
2 Shunt valve

Checking

Check the seals, see pages MS 131–1X and MS 179–1X.

Check that the compressors are correctly set/ balanced, see page MS 162–5X.

Check the pressures in the aseptic chamber and peroxide bath during operation as follows:

a) Undo the screw (1) in the aseptic chamber and the screw (2) in the peroxide bath.

b) Fit the hose connections in place of the screws.

c) Connect pressure gauges (TP No. 90243–137) to the hose connections and check the pressures:

- Aseptic chamber – **overpressure 20 – 50 mmWC**
- Peroxide bath – **underpressure 1 – 15 mmWC**

d) If required, adjust by means of the screw (3). Turn it in to reduce the overpressure/increase the underpressure.

e) Measure the pressures once more during a **Short stop**:

- Aseptic chamber – **overpressure 10 – 40 mmWC**
- Peroxide bath – **underpressure 1 – 15 mm WC**

If it is not possible to obtain the recommended pressures, the seals around the chain in the peroxide bath should be checked first of all. If this does not help, measure the leakages, see page MS 163–1X:2.

(Cont'd overleaf)

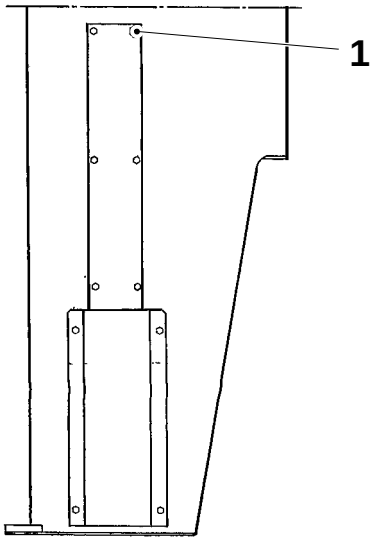

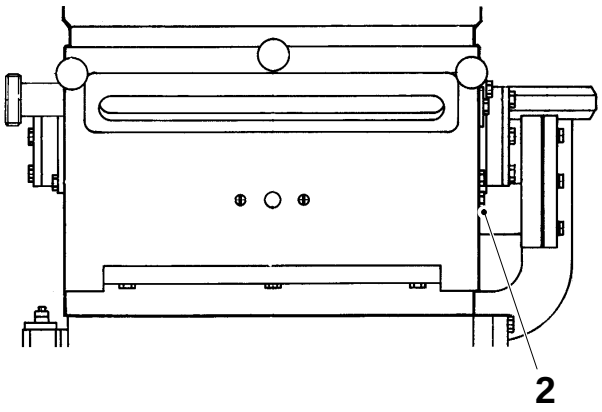

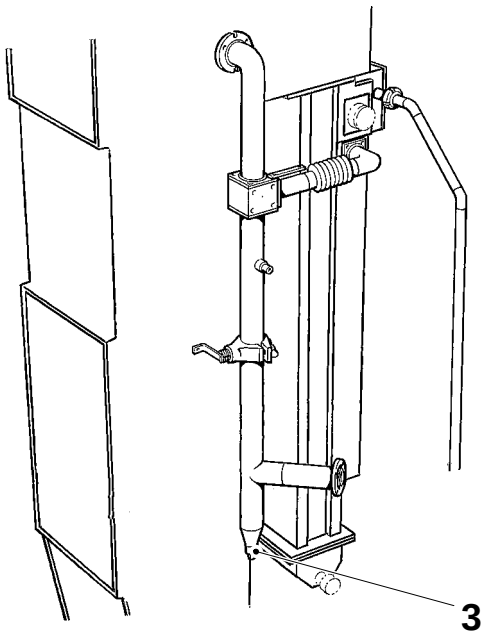

1 Screw, aseptic chamber
2 Screw, peroxide bath
3 Setting screw

(Cont'd)

Measuring leakages

Operate the machine in production and perform a **Short stop**.
Push **Programme down** to step **0**.
Let the machine cool off.
Undo the thermocouple (4) at the air knife and connect the hose from the pressure gauge (6).

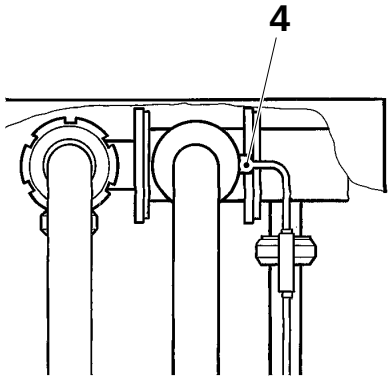

Connect a compressed air line to the regulator (7).
Substitute a hose connection for the screw (1) in the aseptic chamber and connect the pressure gauge (10).

Seal the membrane valve (5) with tape. Activate valve Y19 on the valve panel.
Open the regulator slowly until the pressure gauge indicates **20 mm WC.**

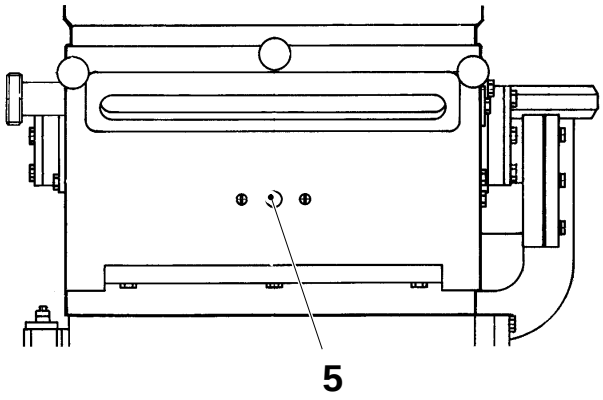

Read the flow rate on the flow meter (8) and the pressure on the pressure gauge (10). Enter these values on the diagram and read the leakage quantity (Q). $\mathbf{Q_{max} = 2.0\ m^3/h.}$

If the leakage quantity is excessive, check the tightness at the following points:

- the safety valve in the peroxide tank,
- the lead-in of the driven bending roller shaft,
- the shaft lead-in and bearing cover of the crease wheel and creasing roller,
- the door seals in the aseptic chamber,
- the pipe connections, and
- the seals, see pages MS 131–1X and MS 179–1X.

(Cont'd overleaf)

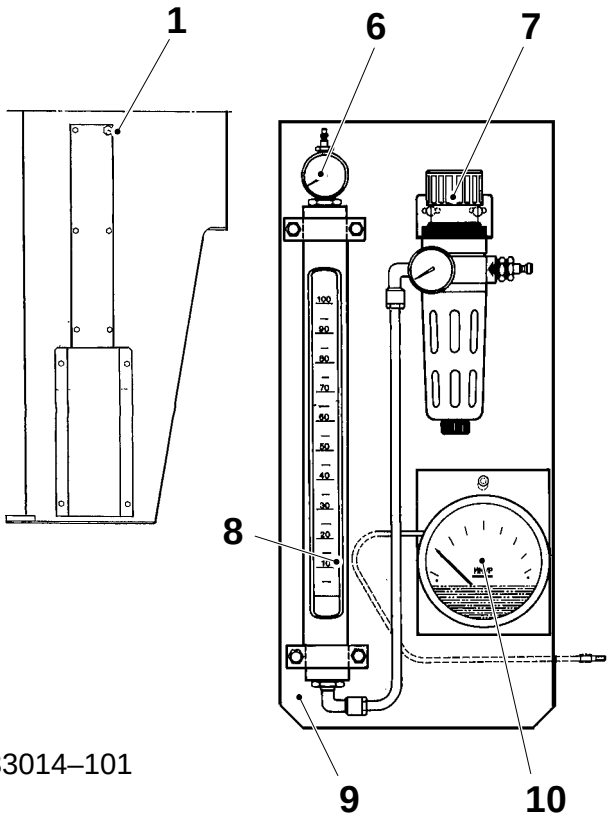

1 Screw
4 Thermocouple
5 Membrane valve
6 Pressure gauge (P2)
7 Regulator
8 Flow meter (F)
9 Test equipment TP No. 533014–101
10 Pressure gauge

(Cont'd)

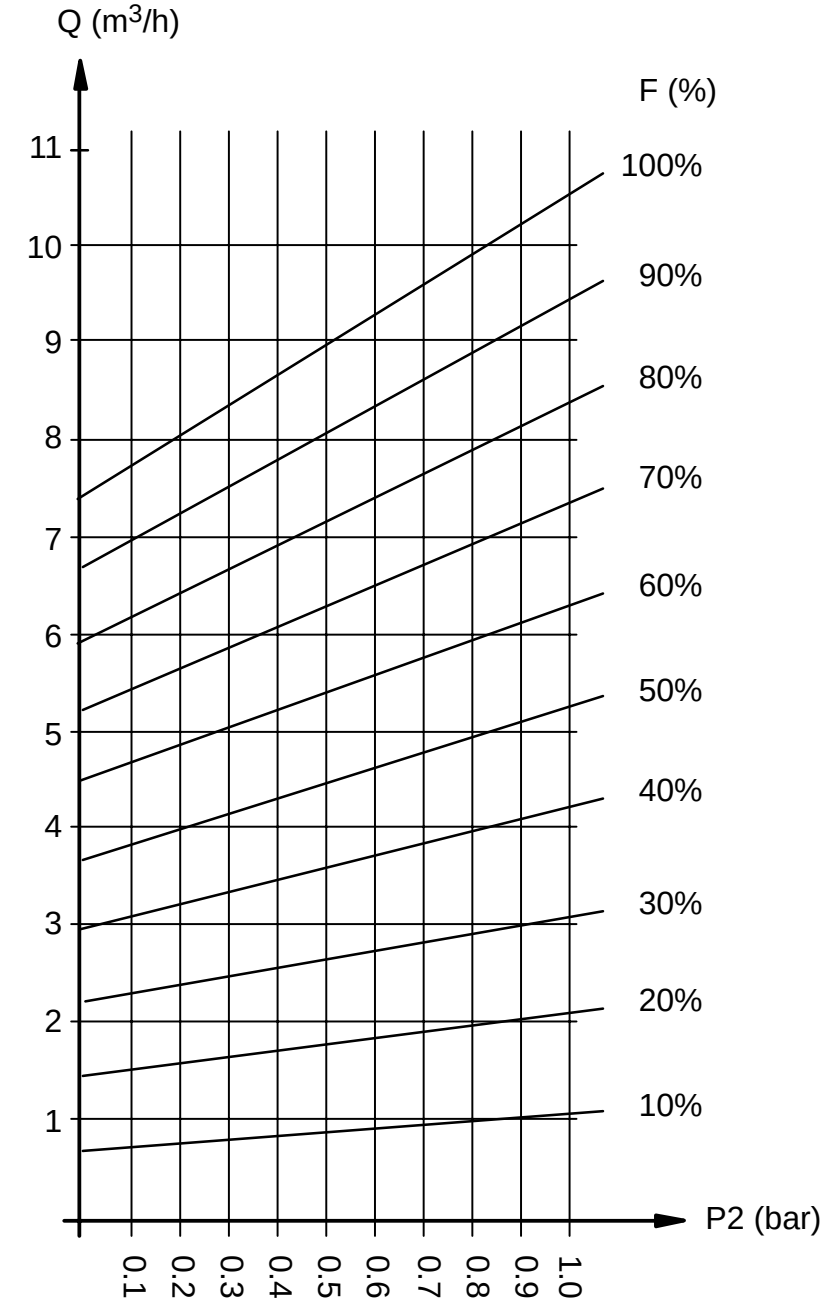

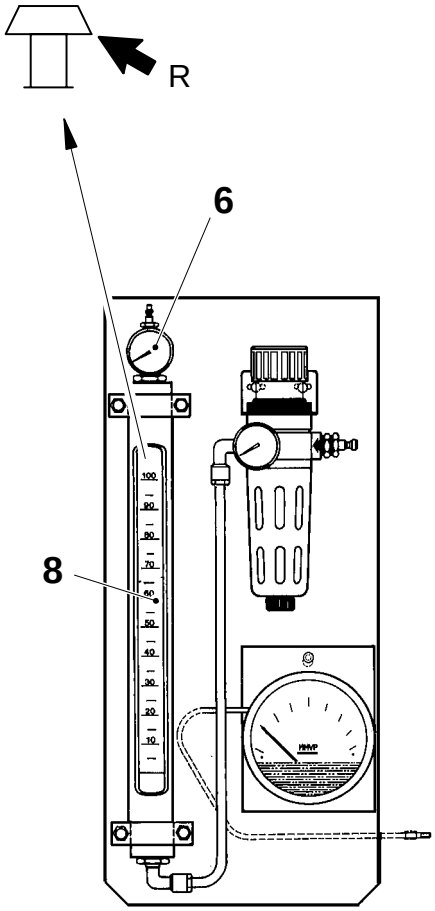

Q = Leakage
F = Flow (flow meter (8))
R = Reading point
P2 = Pressure (pressure gauge (6))

Checking

Check the seals, see pages MS 131–1X and MS 179–1X.

Check that the compressors are correctly set/ balanced, see page MS 162–5X.

Check the pressures in the aseptic chamber and peroxide bath during operation as follows:

a) Undo the screw (1) in the aseptic chamber and the screw (2) in the peroxide bath.

b) Fit the hose connections in place of the screws.

c) Connect pressure gauges (TP No. 90243–137) to the hose connections and check the pressures:

- Aseptic chamber – **overpressure 20 – 50 mmWC**
- Peroxide bath – **underpressure 1 – 15 mm WC**

d) If required, adjust by means of the screw (3). Turn it in to reduce the overpressure/increase the underpressure.

e) Measure the pressures once more during a **Short stop:**

- Aseptic chamber – **overpressure 10 – 40 mmWC**
- Peroxide bath – **underpressure 1 – 15 mmWC**

If it is not possible to obtain the recommended pressures, the seals around the chain in the peroxide bath should be checked first of all. If this does not help, measure the leakages, see page MS 163–1X:2.

(Cont'd overleaf)

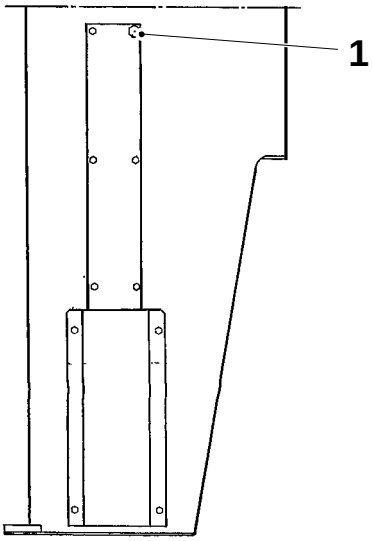

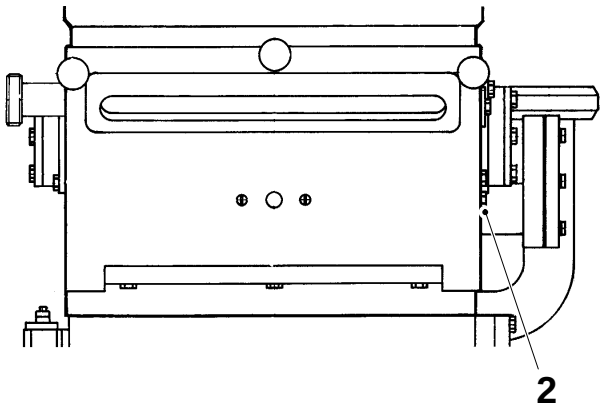

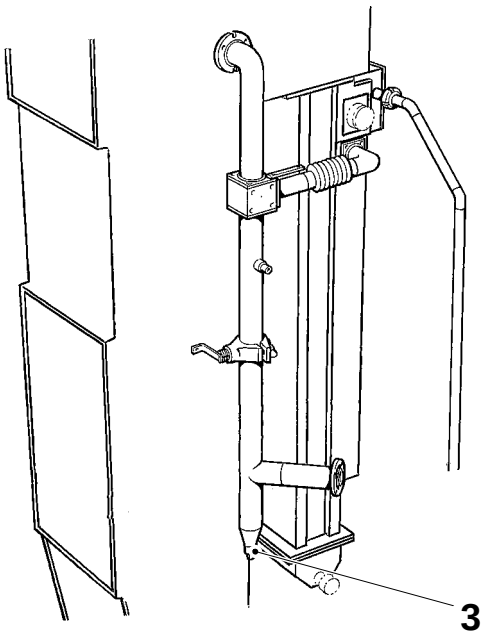

1 Screw, aseptic chamber
2 Screw, peroxide bath
3 Setting screw

(Cont'd)

Measuring leakages

Operate the machine in production and perform a **Short stop**.
Push **Programme down** to step **0**.
Let the machine cool off.
Undo the thermocouple (4) at the air knife and connect the hose from the pressure gauge (6).

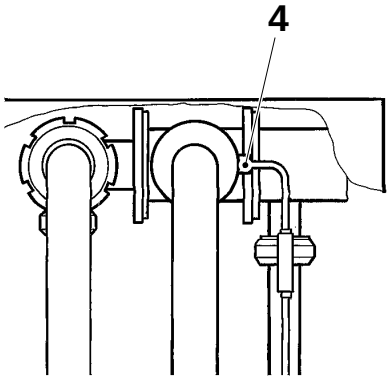

Connect a compressed air line to the regulator (7).
Substitute a hose connection for the screw (1) in the aseptic chamber and connect the pressure gauge (10).

Seal the membrane valve (5) with tape. Activate Y19 on the valve panel.
Open the regulator slowly until the pressure gauge indicates **20 mmWC.**

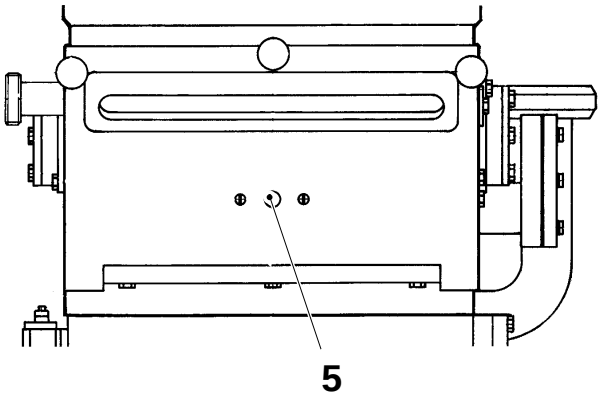

Read the flow rate on the flow meter (8) and the pressure on the pressure gauge (10). Enter these values on the diagram and read the leakage quantity (Q). **Q_{max} = 2.0 m^3/h.**

If the leakage quantity is excessive, begin by checking the tightness at the following points:

- the safety valve in the peroxide tank,
- the lead-in of the driven bending roller shaft,
- the shaft lead-in and bearing cover of the crease wheel and creasing roller,
- the door seals in the aseptic chamber,
- the pipe connections, and
- the seals, see pages MS 131–1X and MS 179–1X.

(Cont'd overleaf)

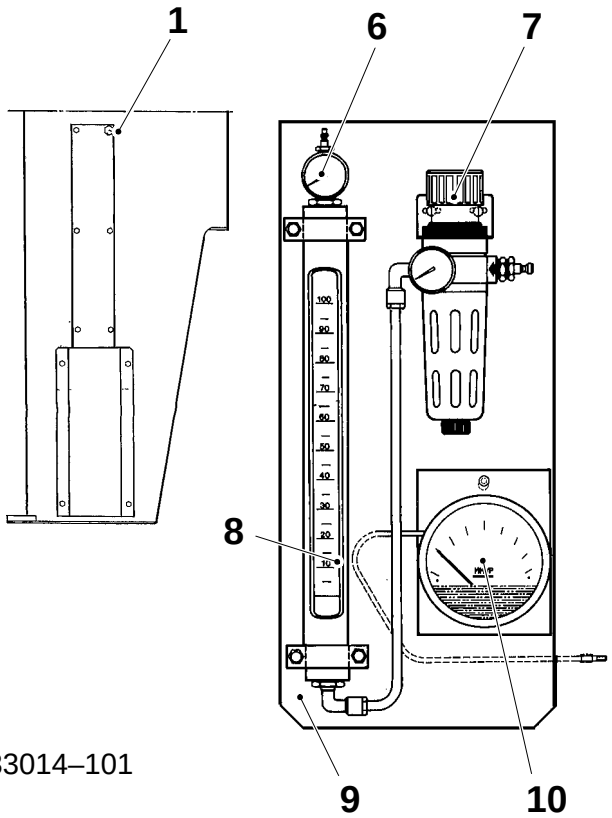

1 Screw
4 Thermocouple
5 Membrane valve
6 Pressure gauge
7 Regulator
8 Flow meter
9 Test equipment TP No. 533014–101
10 Pressure gauge

(Cont'd)

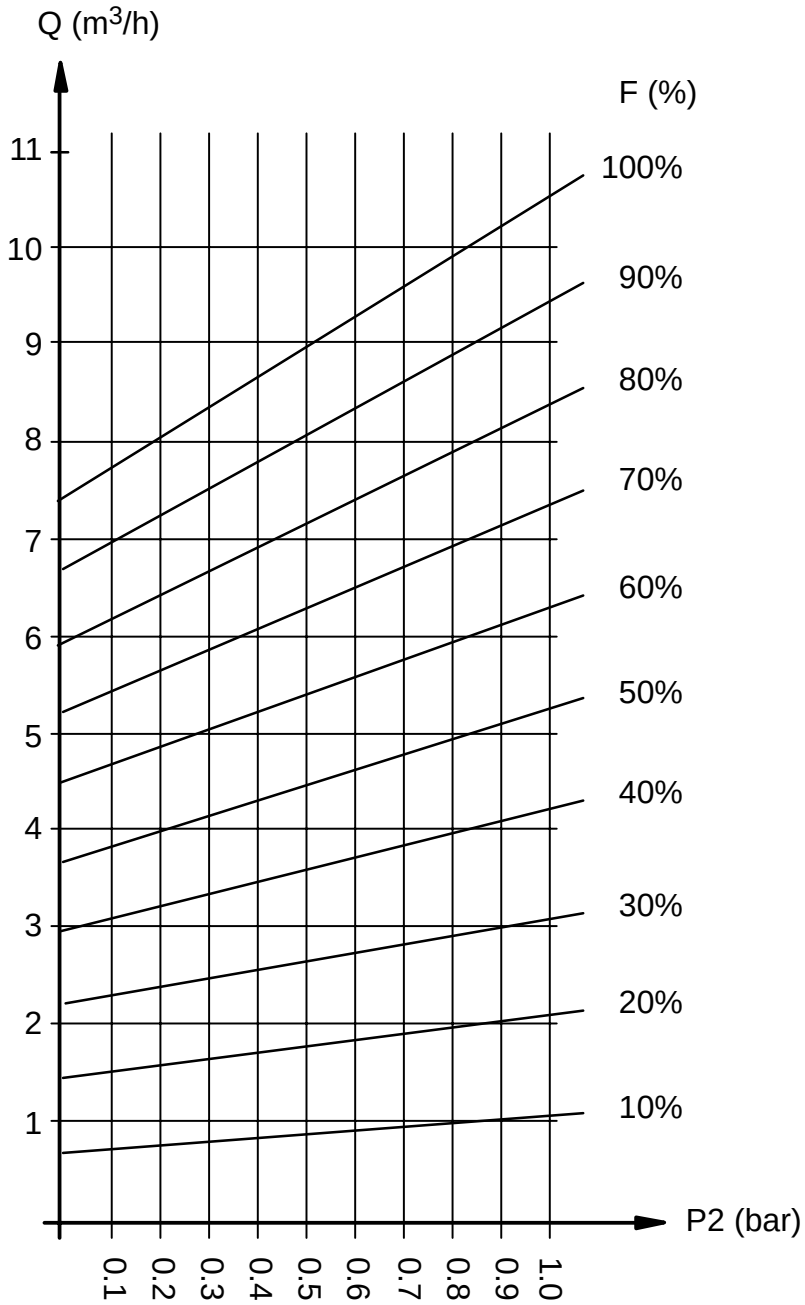

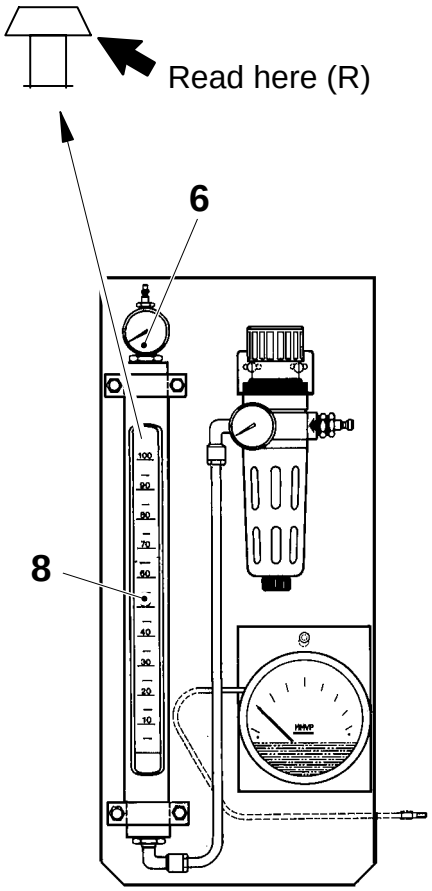

Q = Leakage
F = Flow (flow meter (8))
R = Reading point
P2 = Pressure (pressure gauge (6))

Checking

a) The machine is to be in step **Preheating**.

b) Close the cold water supply to the machine.

c) Check on the water separator pressure gauge that the machine goes down to step **0** when the pressure has dropped to about 15 kPa.

d) If this does not happen, replace the pressure switches MB18 and/or MB62.

1 Pressure switch

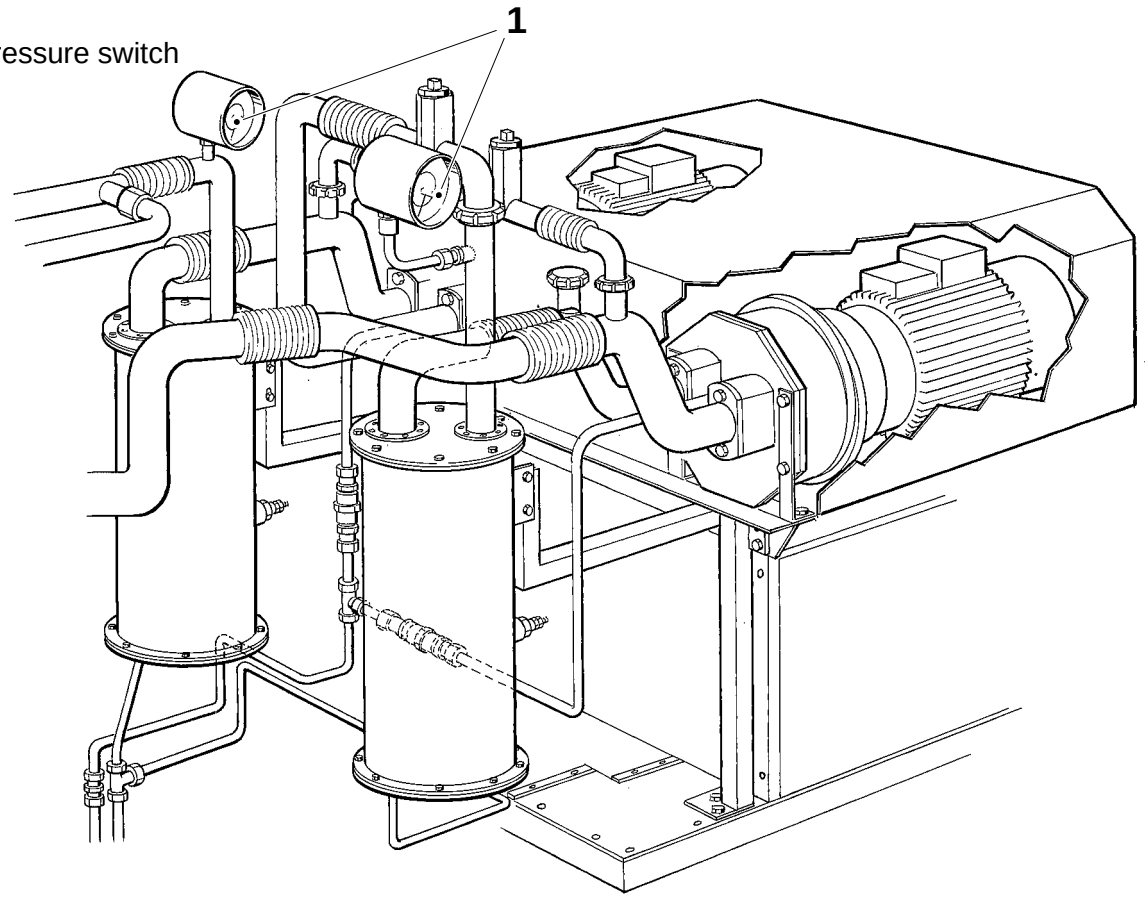

Cleaning/Checking

Undo the balance pipe (1) (on 60 Hz machines also undo the pipe (4)).

Loosen the nuts (2). Undo the shunt valves (3). Remove the O-rings (5).

Delime the pipes and valves with one of the four acids listed below. All solutions must have a temperature of 50° – 60° C during deliming.

- acetic acid (CH_3COOH), 20%.
- nitric acid (HNO_3), 5–10%.
- citric acid ($C_6H_8O_7$), 20%.
- phosphoric acid (H_3PO_4), 5–10%.

Check that the O-rings are intact. Replace if worn or damaged.

Fit the O-rings and the shunt valves on the pipes. Fit the pipes on the machine.

Set the sterile air pressure, see page MS 162–5X.

1 Balance pipe
2 Nut
3 Shunt valve
4 Pipe
5 O-ring

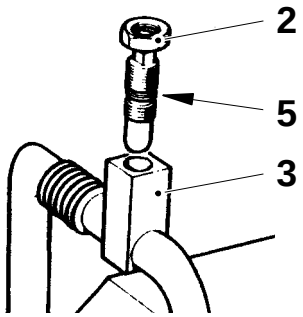

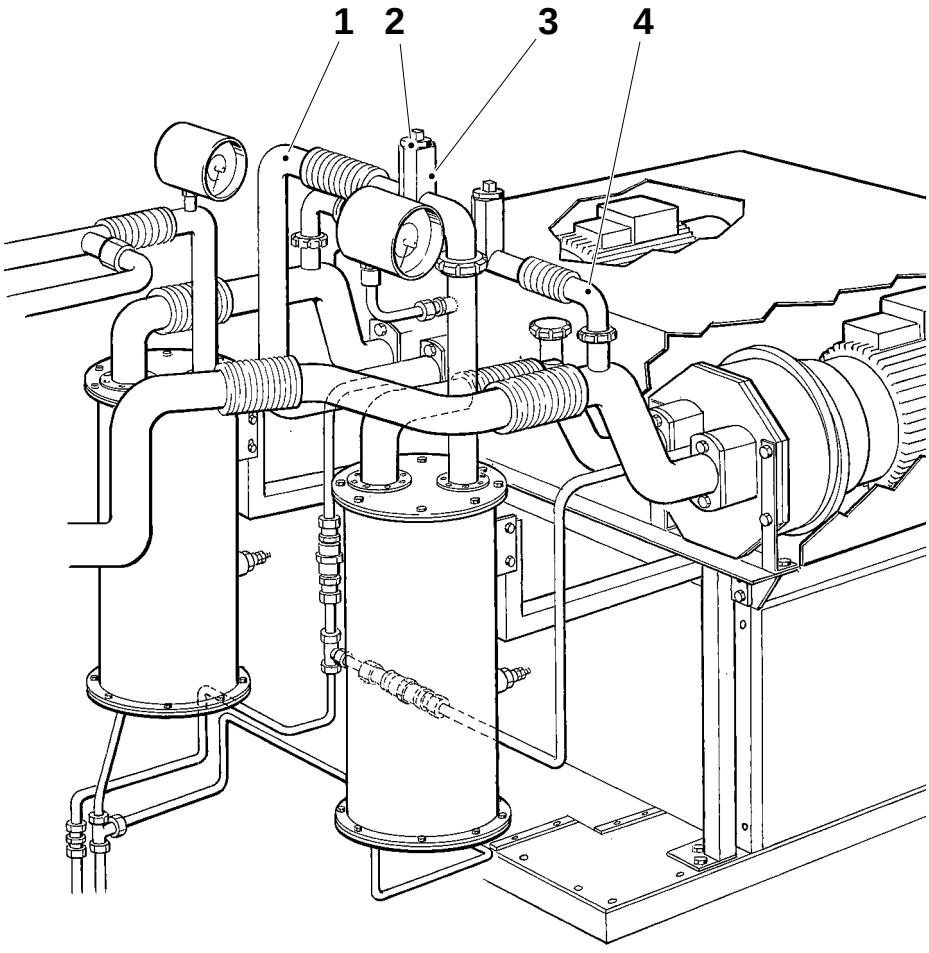

Cleaning/Checking float

a) Detach the separator from the machine.

b) Remove the top cover (1) and the bottom cover (3).

c) Clean the float mechanism (5), the container, the level switch (6), and the pipe-work. If required, use a deliming agent.
One of the four solutions listed below must be used. All solutions must have a temperture of 50° – 60° C during deliming.

- acetic acid (CH_3COOH), 20%
- nitric acid (HNO_3), 5–10%
- citric acid ($C_6H_8O_7$), 20%
- phosphoric acid (H_3PO_4), 5–10%

d) Replace the O-rings on the flanges and the pipe joint seals.

e) Reassemble the separator and fit it to the machine.
Note!
Make sure the O-rings are correctly placed in their grooves.

f) After starting the compressor, check that water is pouring out of the overflow pipe (4). If not, the separator must be taken off the machine again and its float mechanism checked.

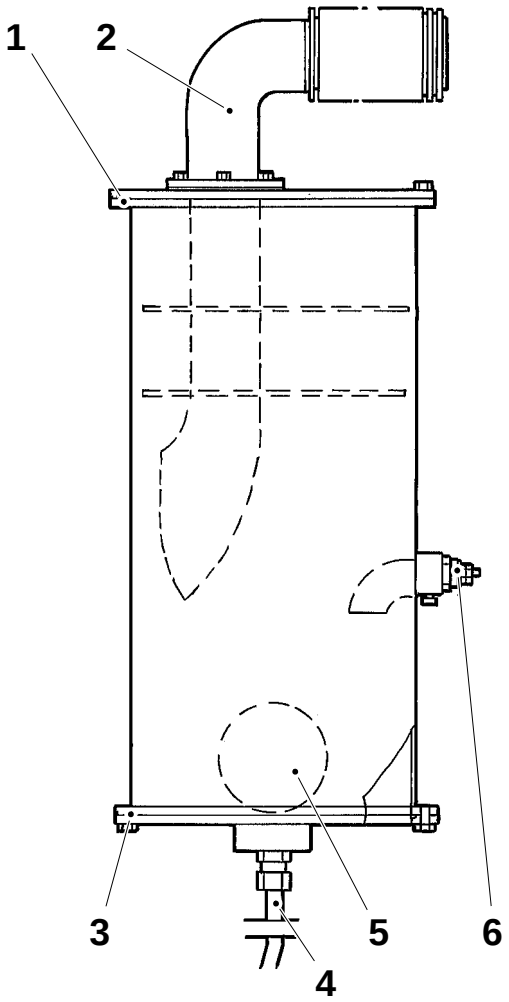

1 Top cover
2 Inlet pipe
3 Bottom cover
4 Overflow pipe
5 Float mechanism
6 Level switch

Cleaning

a) Remove the cover (1) and undo the screws (2).

b) Remove the clamp (3).

c) Disconnect the pipe joints (4). Pull off the contact (5) of the temperature transmitter.

d) Pull the container (6) forward and away from the element unit.

e) Clean the element and the container. Flush through the container and check that there are no deposits in the outer chamber (7) of the container.

f) Replace the pipe joint gaskets.

g) Reassemble.

Checking element

The temperature of the air from the superheater is to reach 360°C.

a) Check instrument A10.

b) Check that all six elements function by measuring the phase amperage. In each phase there should be approximately 15A. Considerably lower values indicate defective elements.
This check should be done in the electrical cabinet or at the terminal block (8).

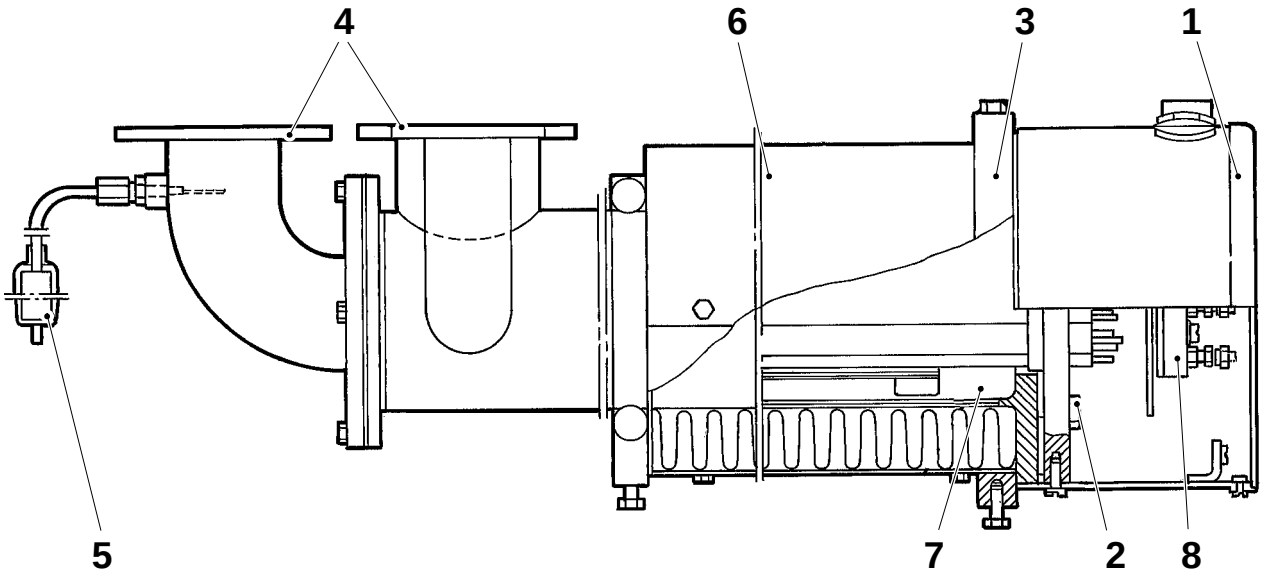

1 Cover
2 Screw
3 Clamp
4 Pipe joint
5 Contact
6 Container
7 Outer chamber
8 Terminal block

Cleaning/Checking tightness

a) Loosen the screws (7) and remove the heat exchanger from the machine.

b) Check for tightness as follows:

- Plug one of the connections by means of blank off flange TP No. 565532.
- Connect the hydrostatic test equipment TP No. 565536, with flange TP No. 565534, to one of the heat exchanger connections (8), diagonally placed to the plugged connection (9).
  Make sure the equipment is connected in the correct direction – the flow is to run **from** the valve (2) **towards** the pressure gauge (5).
  Caution!
  Before compressed air (1) is connected, turn the adjustment screw (4) counter-clockwise until the spring load is released.
- Submerge the whole heat exchanger in water. Make sure **not** to drench the pressure controller (3). Let the air bubbles disappear.
- Open the valve (2). Adjust the pressure to 50 kPa (0.5 bar), indicated on the pressure gauge (5) by means of the adjustment screw (4). Telltale air bubbles will immediately show any leaking points.
- Repeat the procedure with the other cooling coil. If leakage is suspected, replace the heat exchanger.

(Cont'd overleaf)

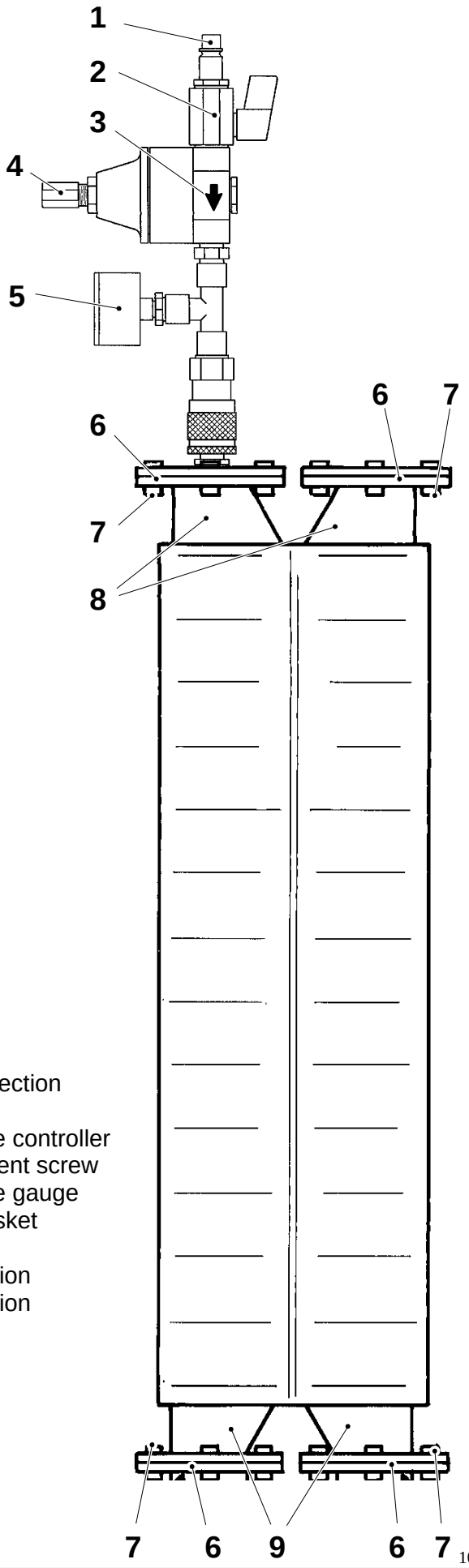

1 Air connection
2 Valve
3 Pressure controller
4 Adjustment screw
5 Pressure gauge
6 Joint gasket
7 Screw
8 Connection
9 Connection

106

(Cont'd)

c) If the temperature of the air knife exceeds 135°C during production, deliming of the heat exchanger with one of the four acid solutions listed below must be done. All solutions must have a temperature of 50°– 60°C during deliming.

- acetic acid (CH_3COOH), 20%
- nitric acid (HNO_3), 5–10%
- citric acid ($C_6H_8O_7$), 20%
- phosphoric acid (H_3PO_4), 5–10%

d) Replace the pipe joint gaskets (6).

e) Fit the exchanger with the same prepunched digit on each flange against each other, see fig.

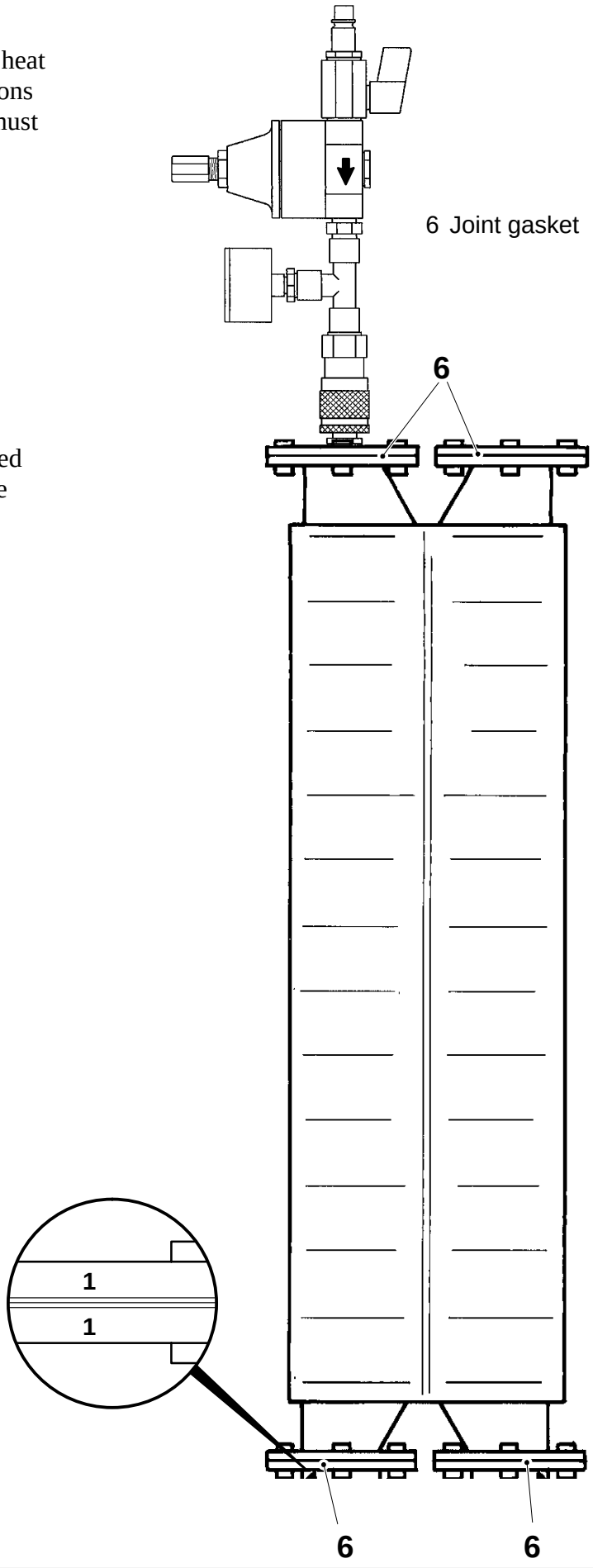

Cleaning/Checking tightness

a) Loosen the screws (6) and remove the heat exchanger from the machine.

b) Check for tightness as follows:

- Plug one of the connections by means of blank off flange TP No. 565533.
- Connect the hydrostatic test equipment TP No. 565536, with flange TP No. 565535, to one of the heat exchanger connections (7), diagonally placed to the plugged connection (8).
  Make sure the equipment is connected in the correct direction – the flow is to run **from** the valve (2) **towards** the pressure gauge (5).
  Caution!
  Before compressed air (1) is connected, turn the adjustment screw (4) counter-clockwise until the spring load is released.
- Submerge the whole heat exchanger in water. Make sure **not** to drench the pressure controller (3). Let the air bubbles disappear.
- Open the valve (3). Adjust the pressure to 50 kPa (0.5 bar), indicated on the pressure gauge (5) by means of the adjustment screw (4). Telltale air bubbles will immediately show any leaking points.
- Repeat the procedure with the other cooling coil. If leakage is suspected, replace the heat exchanger.

(Cont'd overleaf)

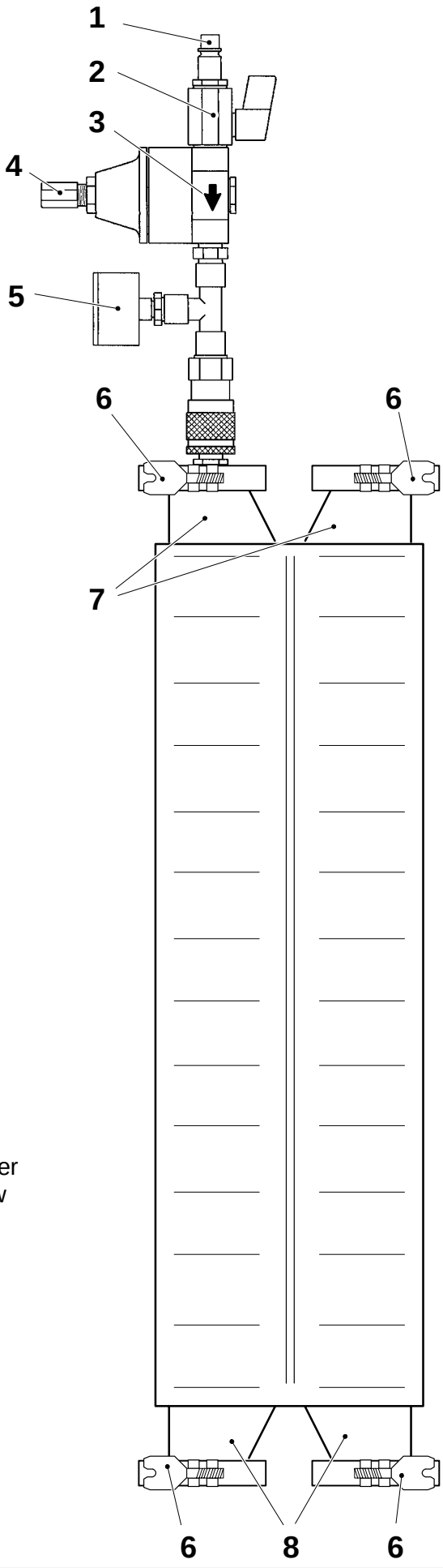

1 Air connection
2 Valve
3 Pressure controller
4 Adjustment screw
5 Pressure gauge
6 Clamp
7 Connection
8 Connection

108

(Cont'd)

c) If the temperature of the air knife exceeds 135°C during production, deliming of the heat exchanger with one of the four acid solutions listed below must be done. All solutions must have a temperature of 50°– 60°C during deliming.

- acetic acid (CH_3COOH), 20%
- nitric acid (HNO_3), 5–10%
- citric acid ($C_6H_8O_7$), 20%
- phosphoric acid (H_3PO_4), 5–10%

d) Replace the joint gaskets.

e) Fit the exchanger with the same prepunched digit on each flange against each other, see fig.

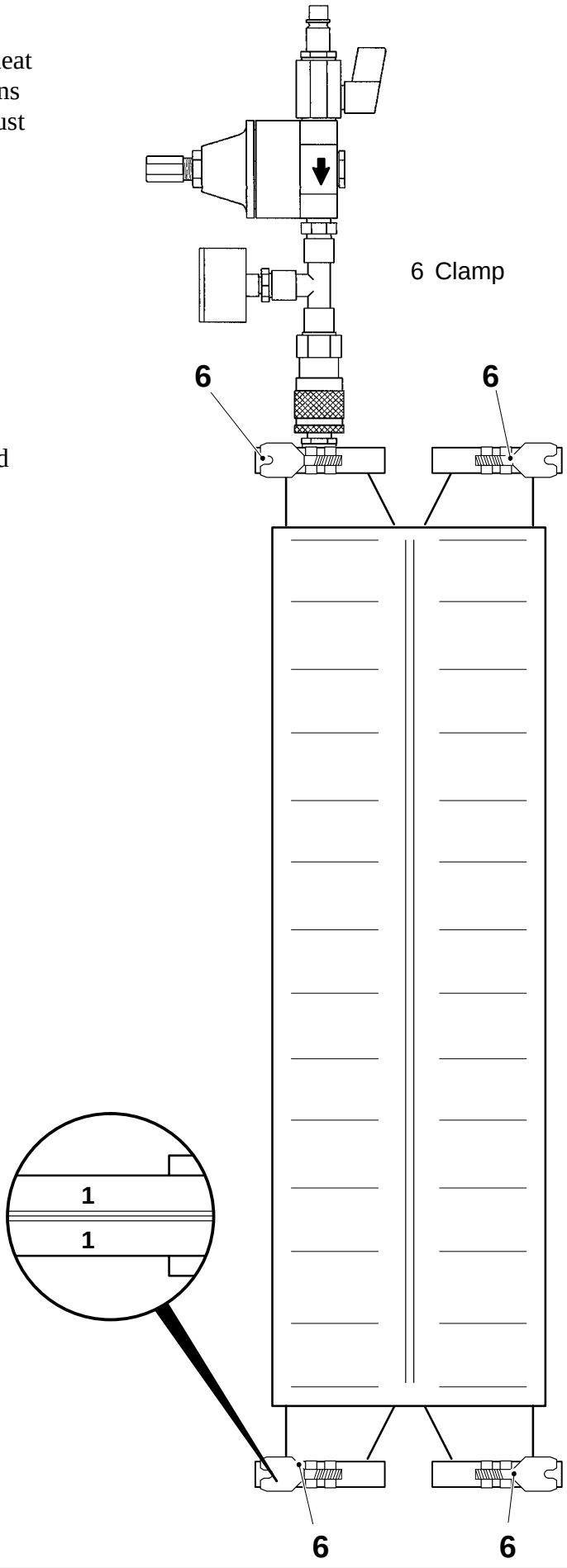

Replacement of teflon seals

Disconnect the air lines (6) and pipe union (1) and undo the screws (2).

Remove the valve.

Clean the valve.

Check that the spindle (5) moves smoothly.

Undo the screw (4) and replace the teflon seals (3).

Reassemble.

When the spindle is warm, check that it moves smoothly.

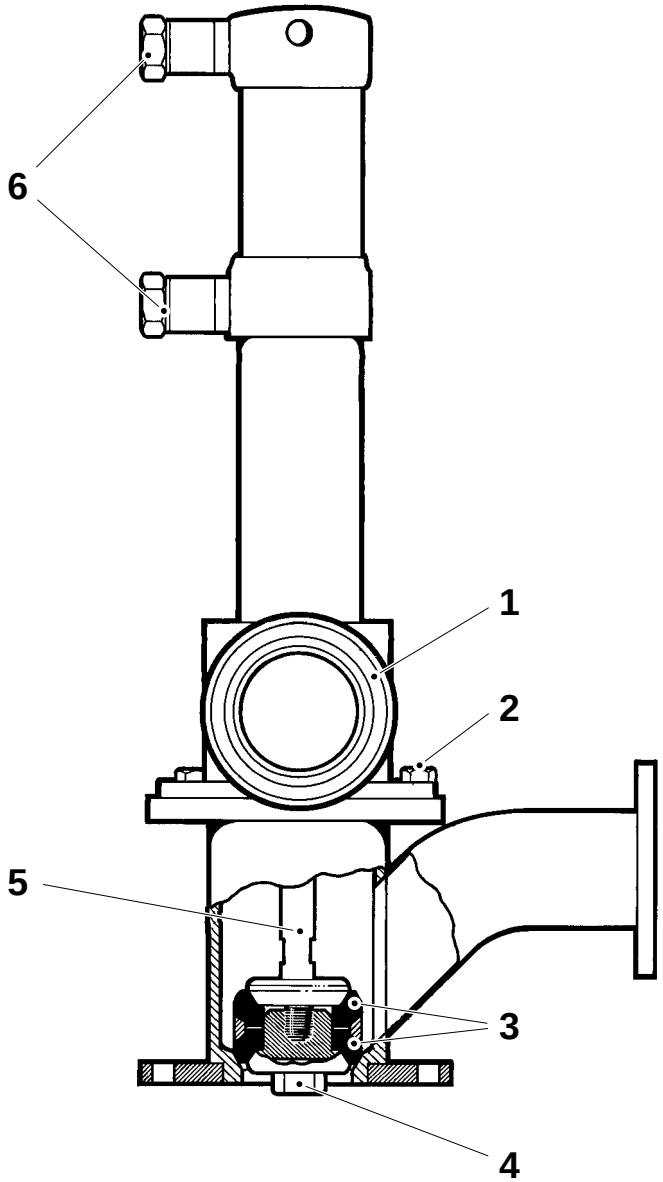

1 Pipe union
2 Screw
3 Teflon seal
4 Screw
5 Spindle
6 Air lines

Checking

Check that the cylinder (1) moves smoothly.

Check that the cylinder does not move fully home when the air knife is in working position, distance A.

A = max 34 mm

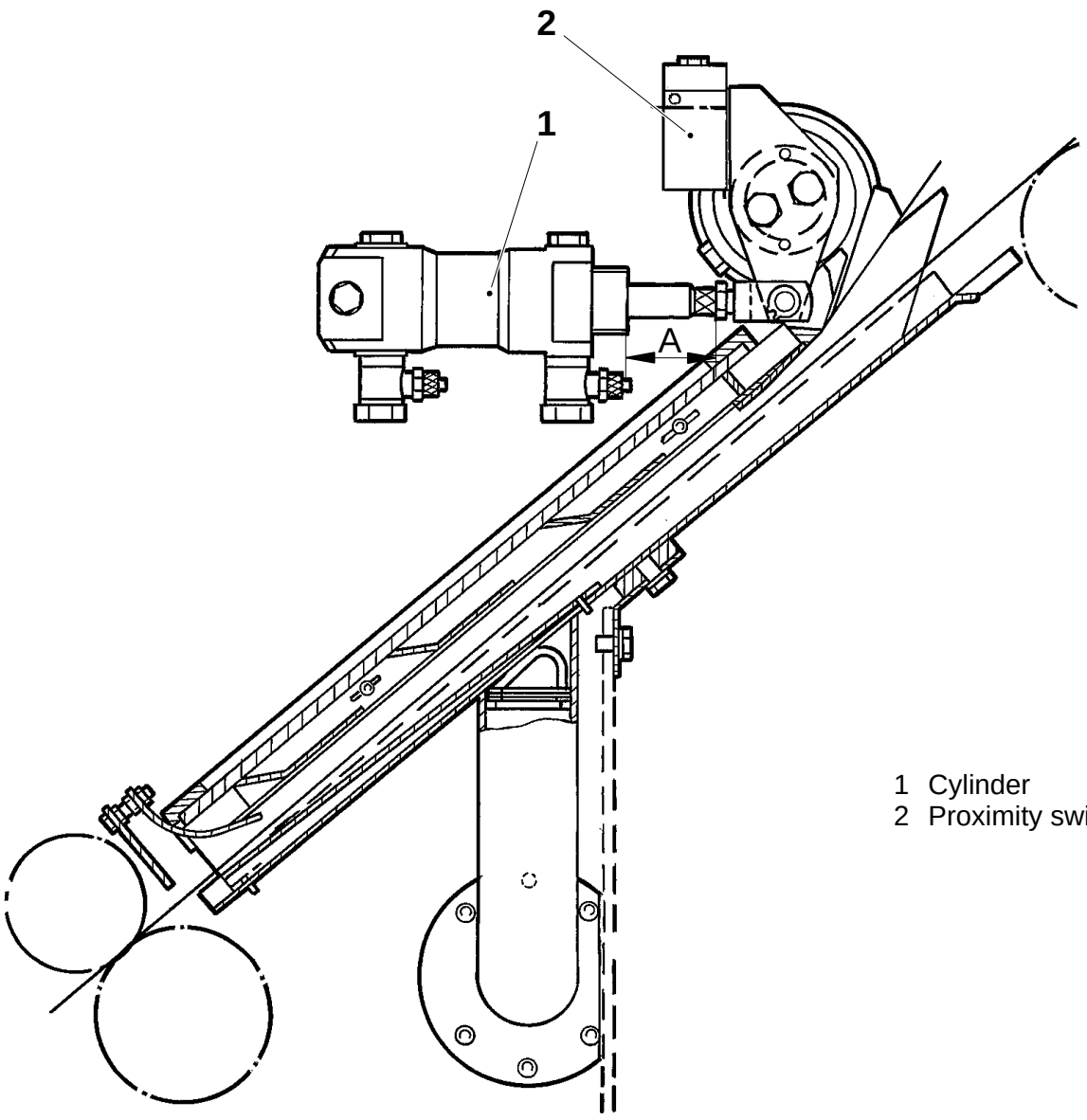

1 Cylinder
2 Proximity switch

Checking

Check that the cylinder (1) moves smoothly.

Check that the cylinder does not move fully home when the air knife is in working position, distance A.

A = max 39 mm

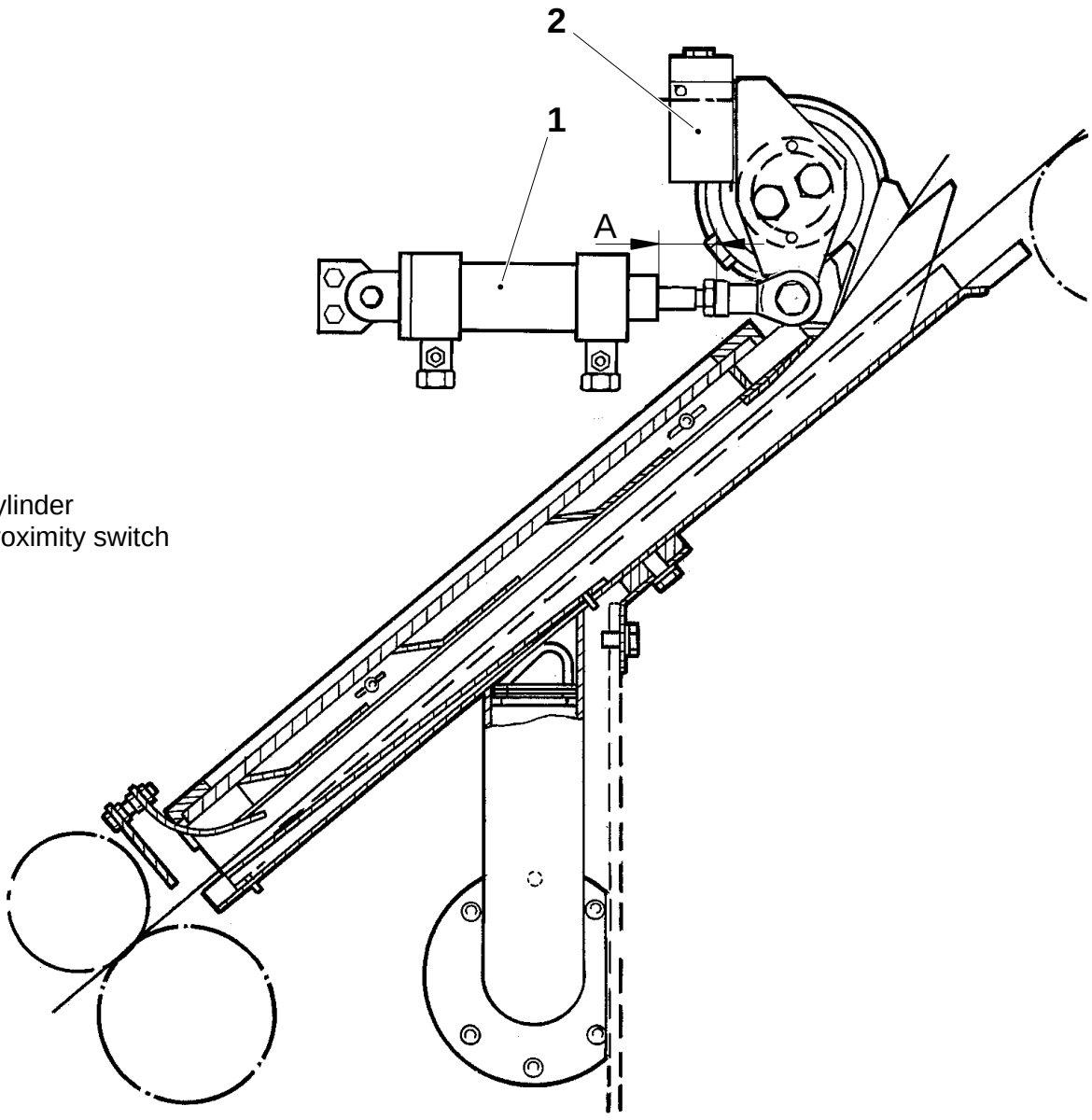

1 Cylinder
2 Proximity switch

Setting

A = 9 ±1 mm
B = 3 – 4 mm
C = 30 ±2 mm
D = 1.2 ±0.05 mm
E = 0.5 – 1.0 mm

Basic setting

Set measurement A by means of the screws (1).

Place a ruler (2) between the squee-gee roller (3) and the bending roller (4). Set measurement B by loosening the screws (5) and turning the bracket (6).

Set distance C by loosening the nuts (7) and shifting the air guide (8).

Set the proximity switch, gap E.

Valid for 125 ml and 200S ml

Check gap D along the whole width. Adjust by shimming under the guide rail (9).

Place a ruler (10) on the guide rail (9). Loosen the screws (11) and shift the guide rail so that the ruler touches the lug (12) at point (13). Retighten the screws.

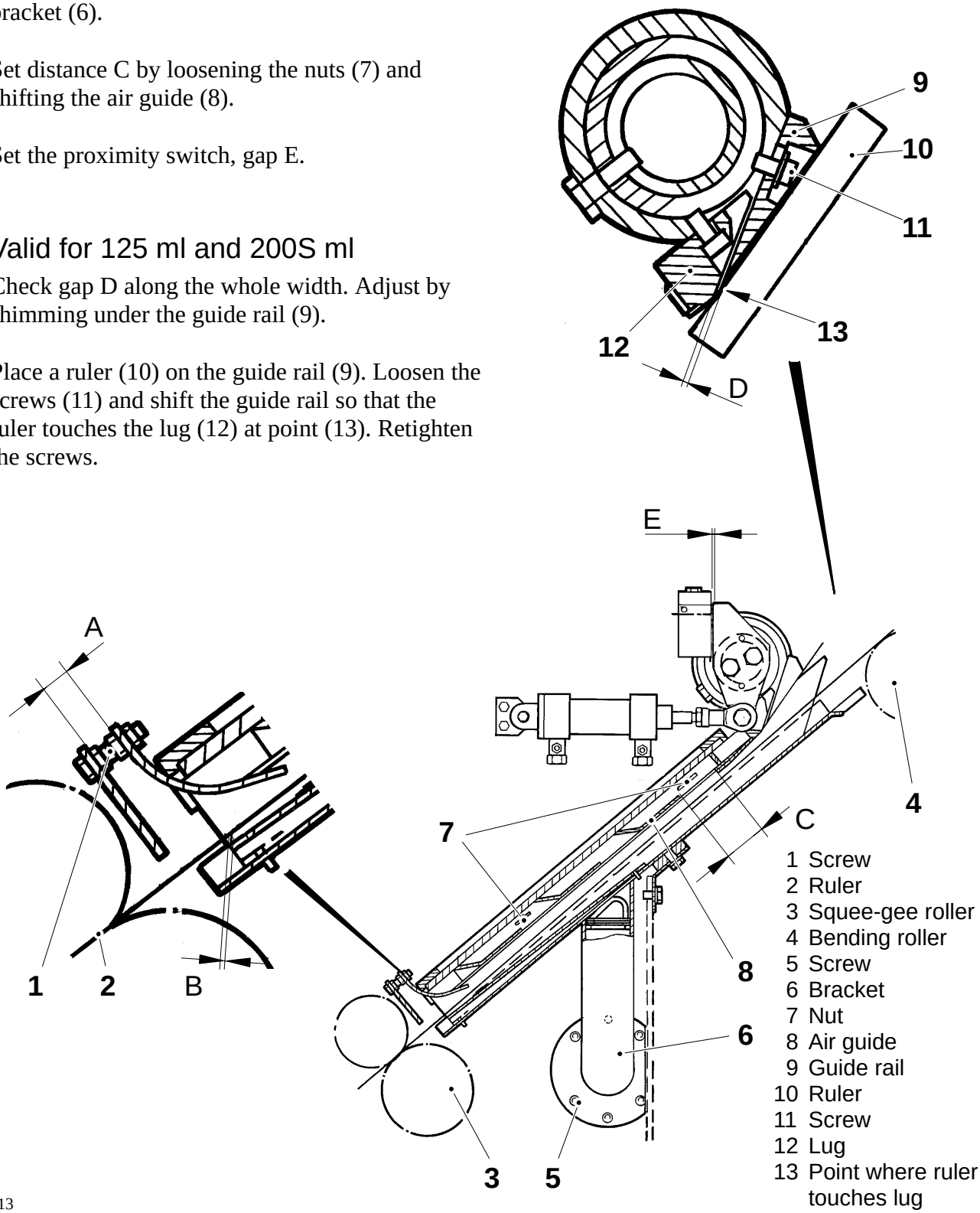

1 Screw
2 Ruler
3 Squee-gee roller
4 Bending roller
5 Screw
6 Bracket
7 Nut
8 Air guide
9 Guide rail
10 Ruler
11 Screw
12 Lug
13 Point where ruler touches lug

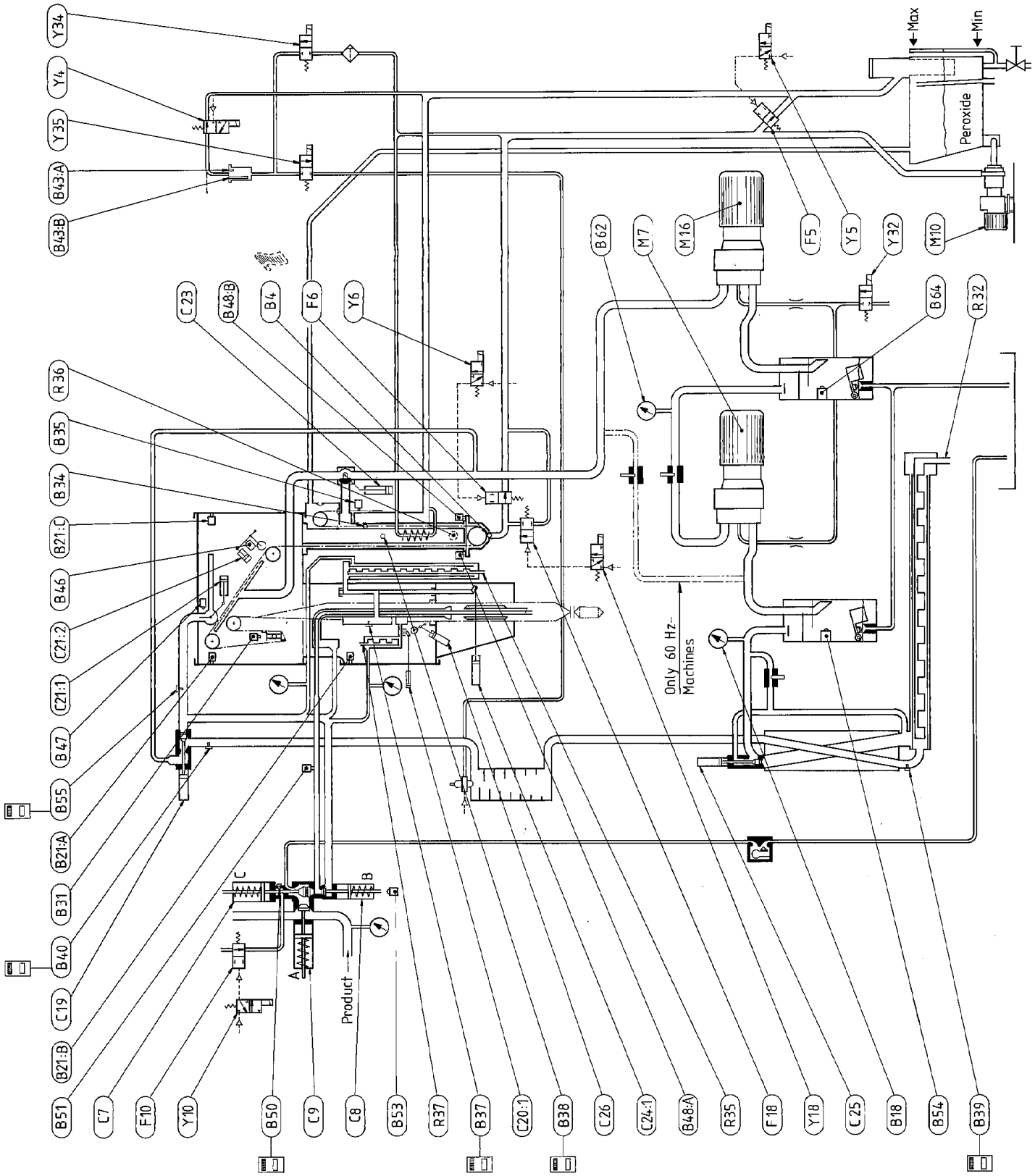
Y34
Y4
Y35
B43:A
B43:B
Max
Min
Peroxide
B 62
M7
M16
F5
Y5
Y32
M10
B64
R32
C 23
B48:B
B4
F6
Y6
R 36
B35
B34
B21:C
B46
C21:2
C21:1
B47
B55
B21:A
B31
B40
C19
B21:B
Only 60 Hz-Machines
C
B
A
Product
B51
C7
F10
Y10
B50
C9
C8
B53
R37
B37
C20:1
B38
C26
C24:1
B48:A
R35
F18
Y18
C25
B18
B54
B39

Text for picture on page MS 175–72:1

B4	Temperature, peroxide bath
B18	Sterile air pressure, inlet
B21:A	Upper front door, superstructure
B21:B	Lower front door, superstructure
B21:C	Rear door, superstructure
B31	Printed design, signal
B34	Level, peroxide bath
B35	Splice, packaging material
B37	Temperature, LS element
B38	Water temperature, peroxide bath
B39	Temperature, air super heater
B40	Temperature, pre-sterilization
B43:A	Maximum level, spray tank
B43:B	Minimum level, spray tank
B46	Squee-gee roller
B47	Air knife
B48:A	Front bottom cover, peroxide bath
B48:B	Rear bottom cover, peroxide bath
B50	Temperature, steam
B51	Product line
B53	Sterile air valve
B54	Level, inlet water separator
B55	Temperature, air knife
B62	Sterile air pressure, suction side
B64	Level, suction side water separator
C7	Steam barrier, valve C
C8	Sterile air valve B
C9	Product valve A
C19	Air valve
C20:1	Short stop nozzle
C21:1	Air knife
C21:2	Squee-gee roller
C23	Suction valve
C24:1	LS element
C25	Heat exchanger, valve
C26	LS counter roller, short stop
F5	Draining, peroxide bath
F6	Filling/draining, peroxide bath
F10	Valve, steam line
F18	Topping up, peroxide bath
M7	Compressor, inlet
M10	Peroxide pump
M16	Compressor, suction side
R32	Air superheater
R35	Longitudinal seal (LS)
R36	Water, peroxide bath
R37	Short stop, LS
Y4	Spray tank
Y5	Draining, peroxide bath
Y6	Filling/draining, peroxide bath
Y10	Steam line
Y18	Topping up, peroxide bath
Y32	Water, compressor
Y34	Filling, spray tank
Y35	Spraying of peroxide, spray tank

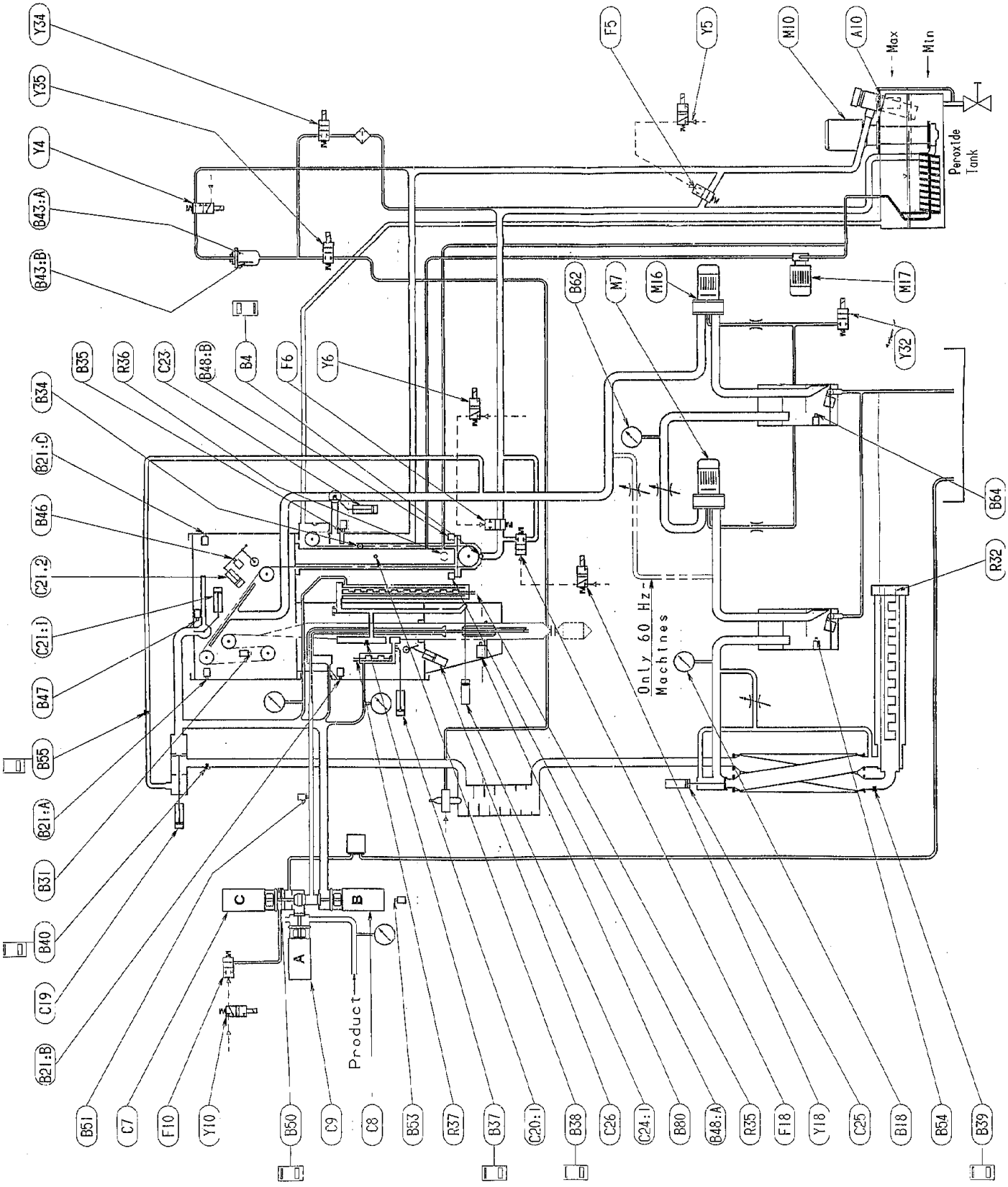
Y34
Y35
Y4
B43:A
B43:B
F5
Y5
M10
A10
Max
Min
Peroxide Tank
B62
M7
M16
M17
Y32
B35
R36
C23
B48:B
B4
F6
Y6
B34
B21:C
B46
C21:2
C21:1
B47
B55
B21:A
B31
B40
C19
B21:B
B64
R32
Only 60 Hz-Machines
C
B
A
Product
B61
C7
F10
Y10
B50
C9
C8
B53
R37
B37
C20:1
B38
C26
C24:1
B80
B48:A
R35
F18
Y18
C25
B18
B54
B39

Text for picture on page MS 175–73:1

A10	Safety valve, peroxide tank
B4	Temperature, peroxide bath
B18	Sterile air pressure, inlet
B21:A	Upper front door, superstructure
B21:B	Lower front door, superstructure
B21:C	Rear door, superstructure
B31	Printed design, signal
B34	Level, peroxide bath
B35	Splice, packaging material
B37	Temperature, LS element
B38	Water temperature, peroxide bath
B39	Temperature, air super heater
B40	Temperature, pre-sterilization
B43:A	Maximum level, spray tank
B43:B	Minimum level, spray tank
B46	Squee-gee roller
B47	Air knife
B48:A	Front bottom cover, peroxide bath
B48:B	Rear bottom cover, peroxide bath
B50	Temperature, steam
B51	Product line
B53	Sterile air valve
B54	Level, inlet water separator
B55	Temperature, air knife
B62	Sterile air pressure, suction side
B64	Level, suction side water separator
B80	Photocell, bar code
C7	Steam barrier, valve C
C8	Sterile air valve B
C9	Product valve A
C19	Air valve
C20:1	Short stop nozzle
C21:1	Air knife
C21:2	Squee-gee roller
C23	Suction valve
C24:1	LS element
C25	Heat exchanger, valve
C26	LS counter roller, short stop
F5	Draining, peroxide bath
F6	Filling/draining, peroxide bath
F10	Valve, steam line
F18	Topping up, peroxide bath
M7	Compressor, inlet
M10	Peroxide pump
M16	Compressor, suction side
M17	Circulation pump, hot water
R32	Air superheater
R35	Longitudinal seal (LS)
R36	Water, peroxide bath
R37	Short stop, LS
Y4	Spray tank
Y5	Draining, peroxide bath
Y6	Filling/draining, peroxide bath
Y10	Steam line
Y18	Topping up, peroxide bath
Y32	Water, compressor
Y34	Filling, spray tank
Y35	Spraying of peroxide, spray tank

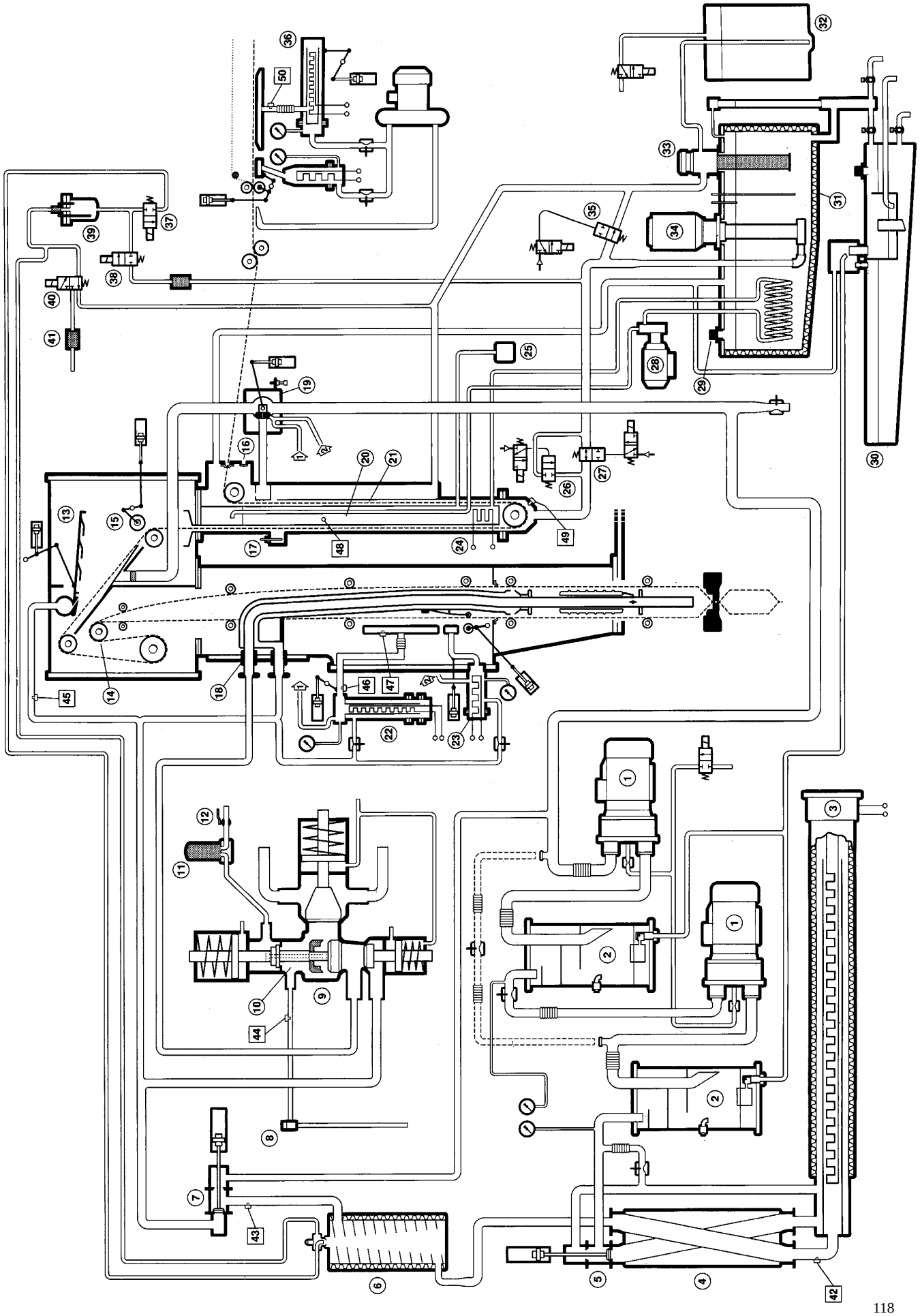

Text for picture on page MS 175–74:1

1 Compressor
2 Water separator
3 Air superheater
4 Heat exchanger
5 Heat exchanger valve
6 Peroxide evaporator
7 Air inlet valve
8 Steam trap
9 AP-valve
10 Steam barrier space
11 Steam filter
12 Valve, steam pipe
13 Air knife
14 Driven bending roller
15 Squee-gee roller
16 Membrane valve
17 Level sensor, peroxide bath
18 Filling pipe
19 Suction valve
20 Water bath
21 Peroxide bath
22 LS element
23 LS, short stop element
24 Water bath heater
25 Low level guard, water bath
26 Valve, top filling peroxide bath
27 Valve, filling/draining peroxide bath
28 Circulation pump, hot water
29 Safety cap
30 Diluting tank
31 Peroxide tank
32 Container
33 Filter
34 Peroxide pump
35 Valve, draining peroxide bath
36 SA element
37 Valve, spraying peroxide
38 Valve, filling spray tank
39 Spray tank
40 Air valve, spraying
41 Sterile air filter
42 Air superheater temp.
43 Presterilization temp.
44 Steam temp.
45 Air knife temp.
46 LS element temp
47 LS nozzle temp.
48 Water bath temp.
49 Peroxide bath temp.
50 SA element temp.

Checking

Check the following details for wear and/or damage:

- the rings (1),
- the gaskets (3),
- the O-ring (2),
- the seal rings (4),
- the piston rod (5),
- the spindle guide (6), and
- the socket (8).

Check that the cylinder (7) moves smoothly and that there is no air leakage.

Replace worn and/or damaged parts.

1 Ring
2 O-ring
3 Gasket (2 off)
4 Seal ring
5 Piston rod
6 Spindle guide
7 Cylinder
8 Socket

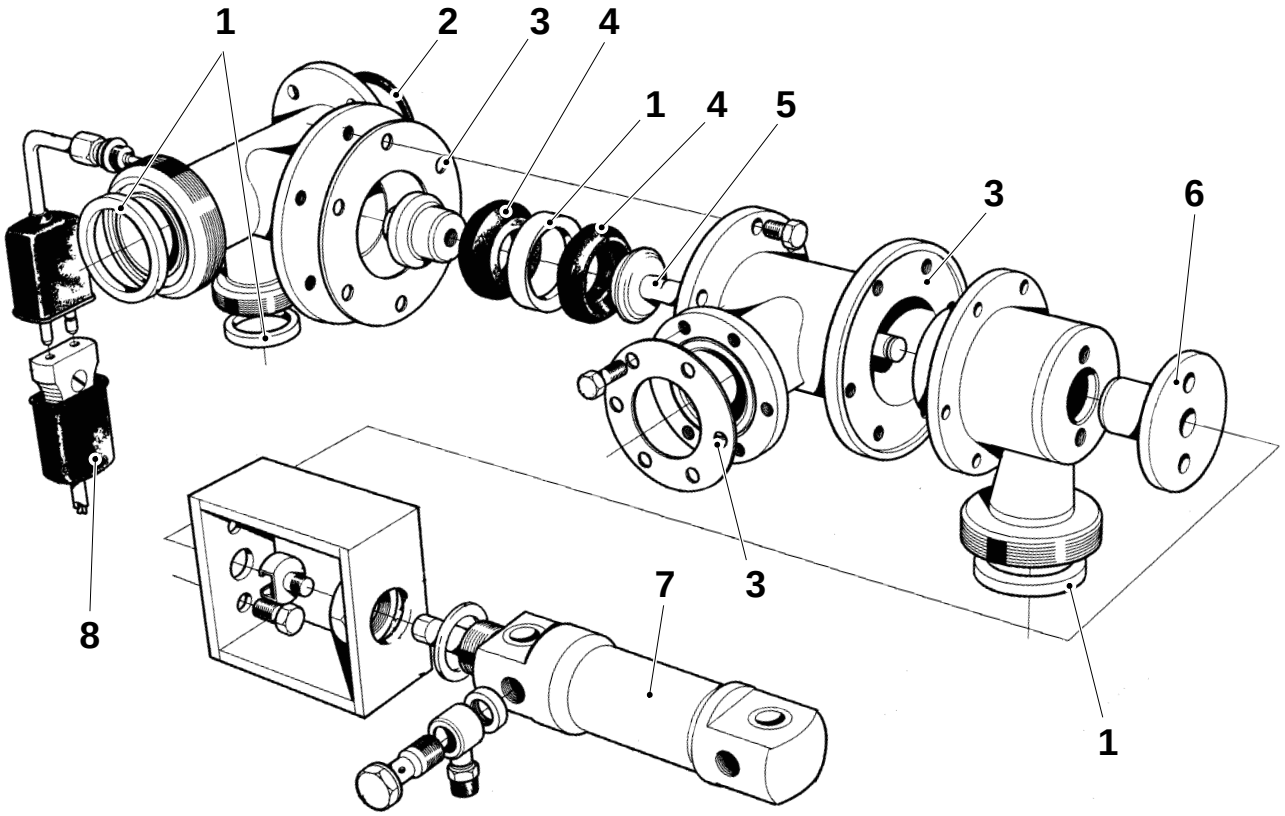

Checking

Check the following details for wear and/or damage:

- the ring (1),
- the gaskets (3),
- the seal rings (4),
- the O-rings (2) and (6),
- the piston rod (5),
- the spindle guide (7),
- the plan bearings (8), and
- the socket (10).

Check that the cylinder (9) moves smoothly and that there is no air leakage.

Replace worn and/or damaged parts.

1 Ring
2 O-ring
3 Gasket (2 off)
4 Seal ring
5 Piston rod
6 O-ring
7 Spindle guide
8 Plan bearing (2 off)
9 Cylinder
10 Socket

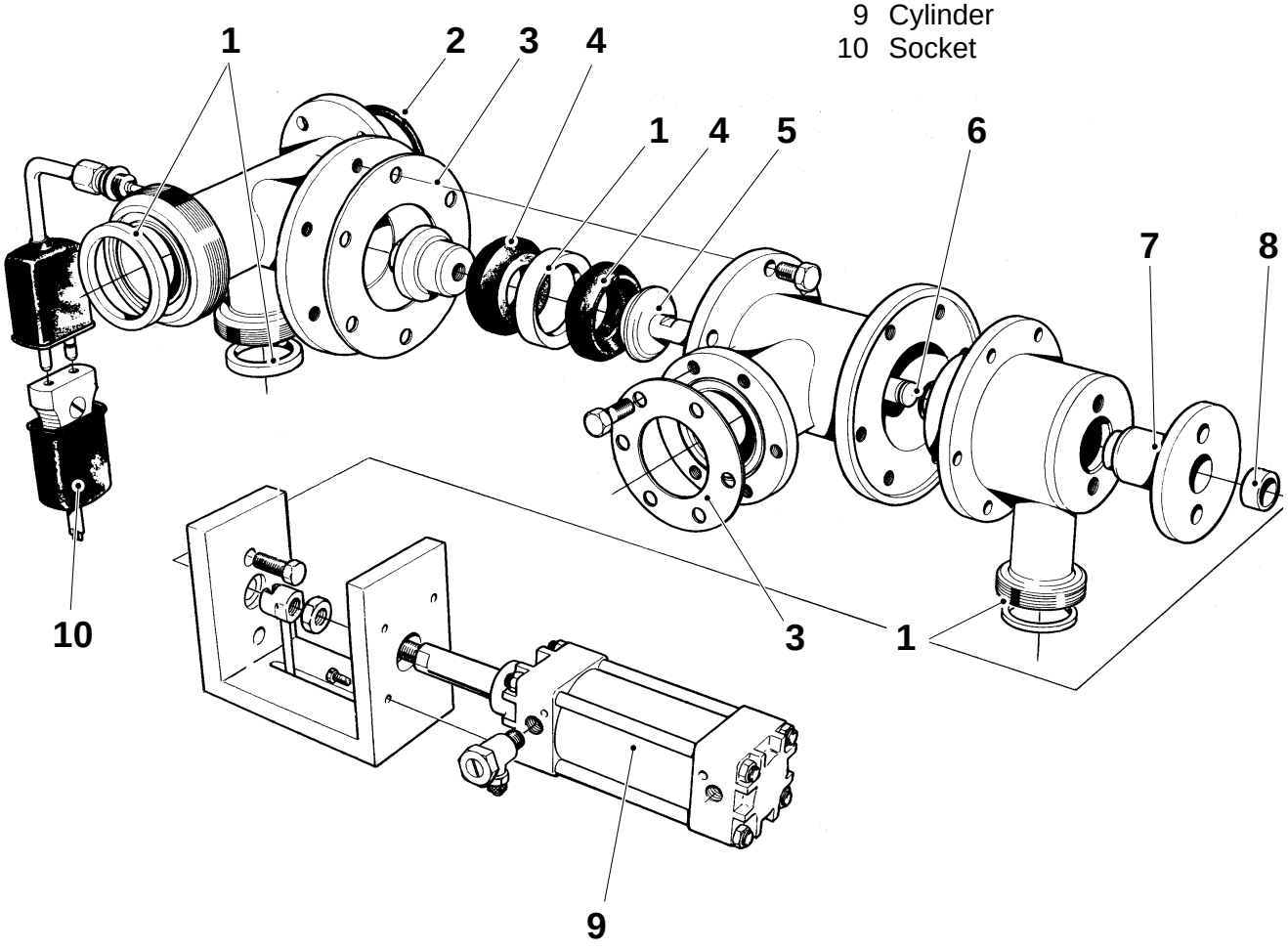

Checking

Check the following details for wear and/or damage:

- the ring (1),
- the gaskets (3),
- the seal rings (4),
- the O-rings (2) and (6),
- the piston rod (5),
- the spindle guide (7),
- the plan bearings (8),
- the proximity switch (10), and
- the socket (11).

Check that the cylinder (9) moves smoothly and that there are no air leakage.

Replace worn and/or damaged parts.

1 Ring
2 O-ring
3 Gasket (2 off)
4 Seal ring
5 Piston rod
6 O-ring
7 Spindle guide
8 Plan bearing (2 off)
9 Cylinder
10 Proximity switch
11 Socket

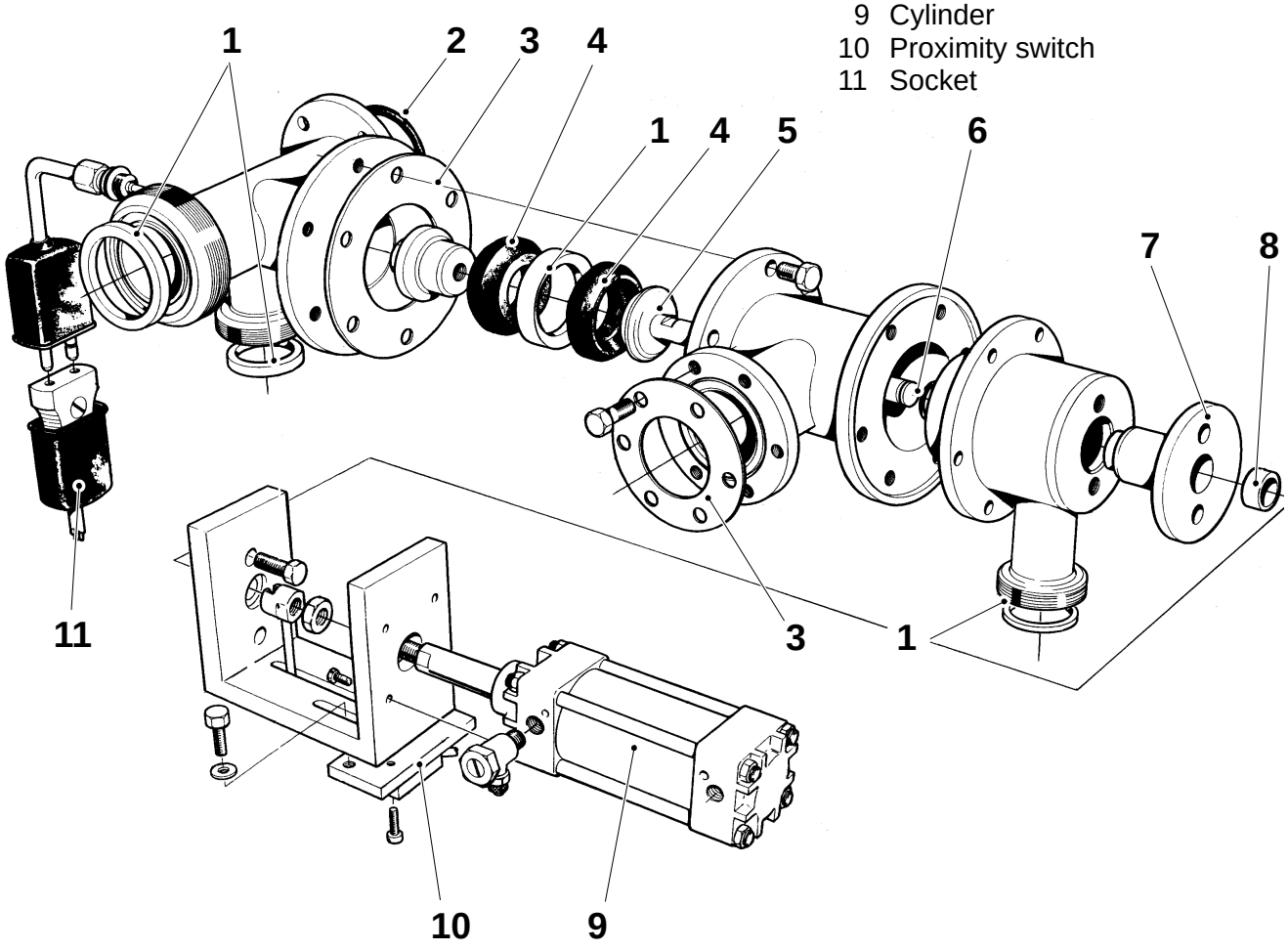

Removal

Close the valve for incoming air.

Undo the socket (7). Disconnect the two air lines (5) and the three pipe unions (1). Remove the gaskets.

Undo the two screws (6) and remove the cylinder and the bracket.

Undo the screws (2) and (3) and remove the valve from the machine.

Undo the screws (4) and take the valve apart.

Undo the nut (8) and remove the two seal rings (9) and the ring (10).

Reassemble in reverse order.

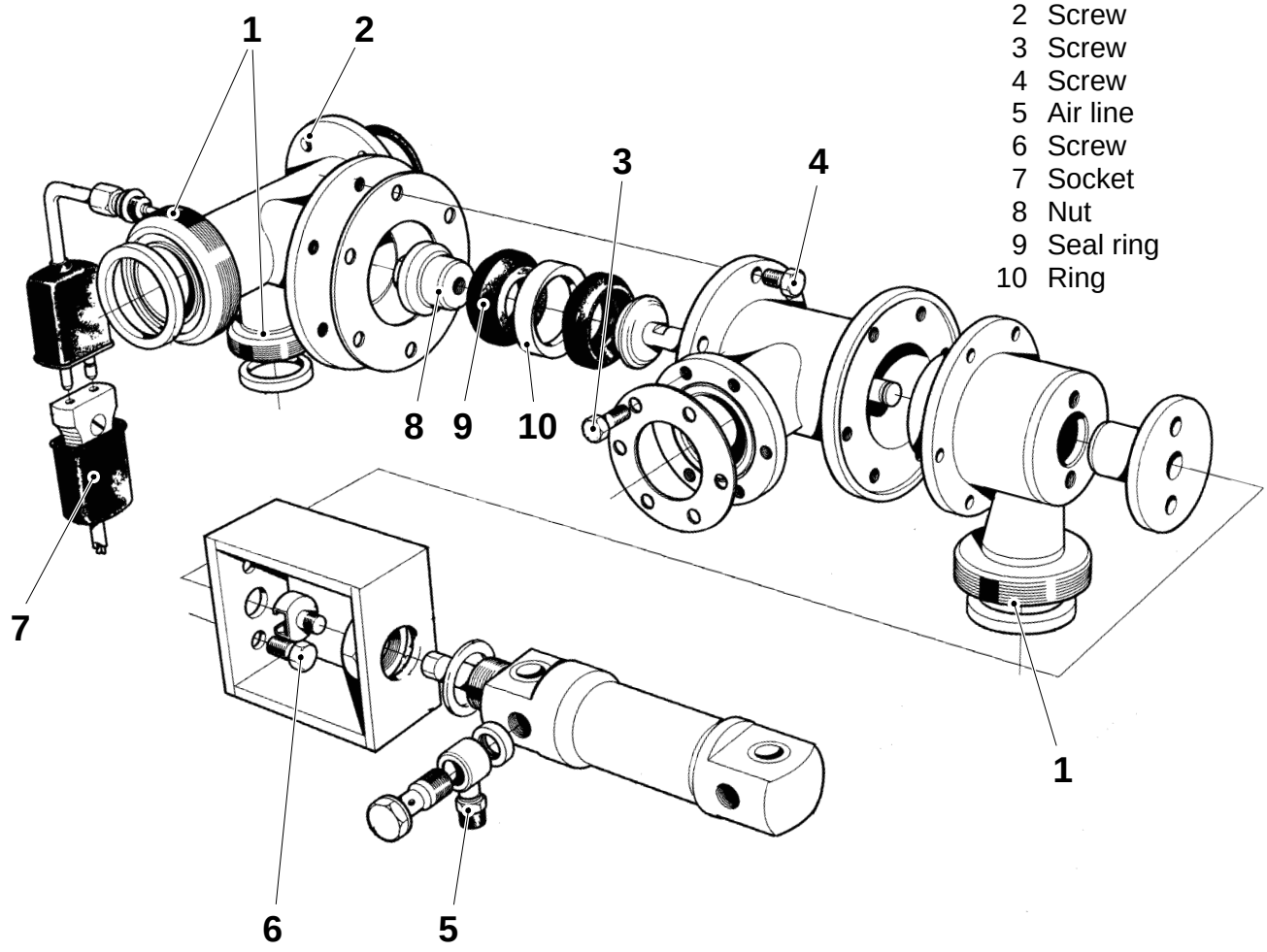

1 Pipe union
2 Screw
3 Screw
4 Screw
5 Air line
6 Screw
7 Socket
8 Nut
9 Seal ring
10 Ring

Removal

Close the valve for incoming air.

Undo the socket (7). Disconnect the two air lines (5) and the three pipe unions (1). Remove the gaskets.

Undo the two screws (6) and remove the cylinder and the bracket.

Undo the screws (2) and (3) and remove the valve from the machine.

Undo the screws (4) and take the valve apart.

Undo the nut (8) and remove the two seal rings (9) and the ring (10).

Reassemble in reverse order.

1 Pipe union
2 Screw
3 Screw
4 Screw
5 Air line
6 Screw
7 Socket
8 Nut
9 Seal ring
10 Ring

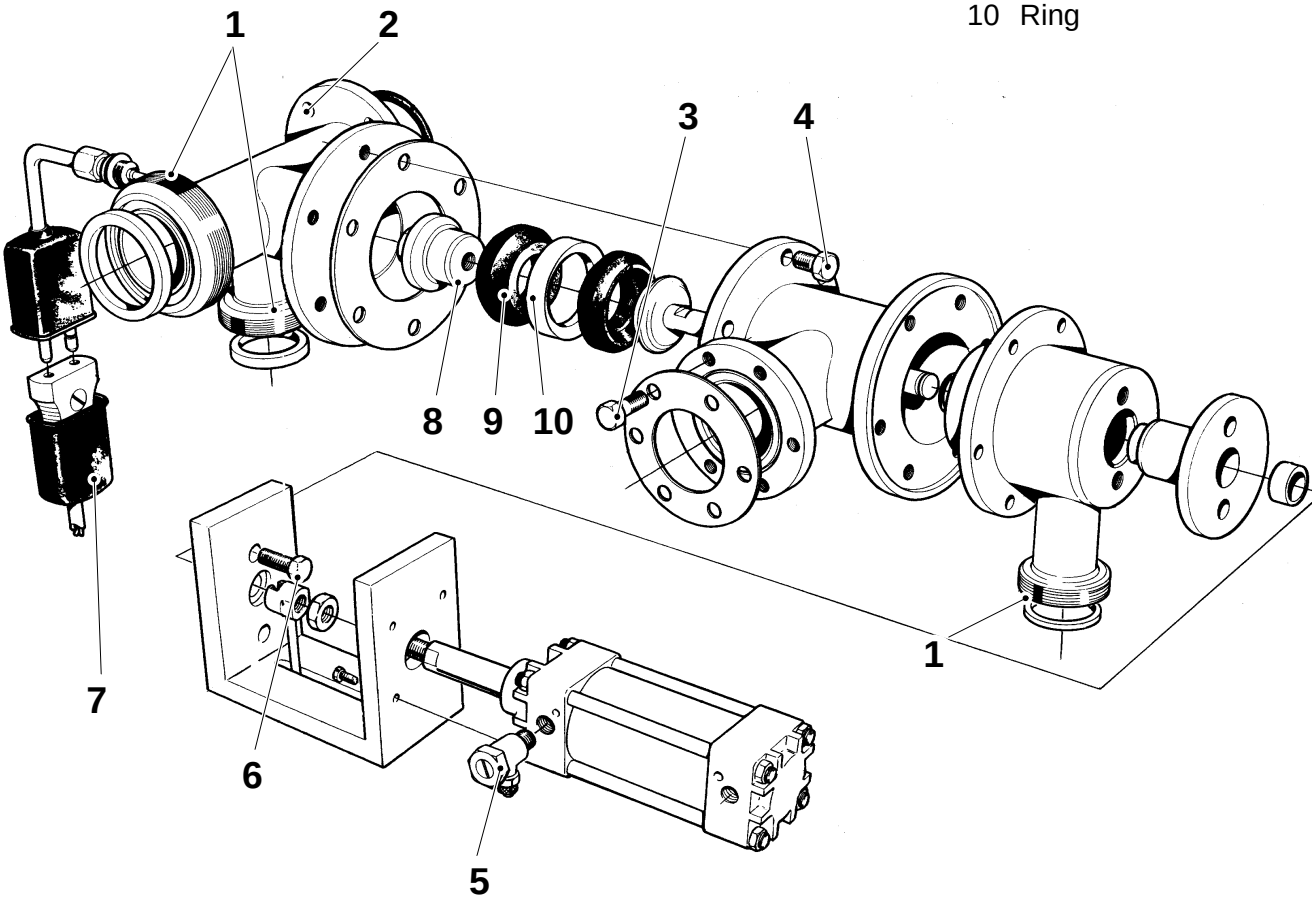

Removal

Close the valve for incoming air.

Undo the socket (8). Disconnect the two air lines (5) and the three pipe unions (1). Remove the gaskets.

Undo the two screws (7) and remove the cylinder and the bracket.

Undo the screws (6) and remove the proximity switch.

Undo the screws (2) and (3) and remove the valve from the machine.

Undo the screws (4) and take the valve apart.

Undo the nut (9) and remove the two seal rings (10) and the ring (11).

Reassemble in reverse order.

Set the proximity switch (12). There should be a 0.5 mm gap between the proximity switch and the flag.

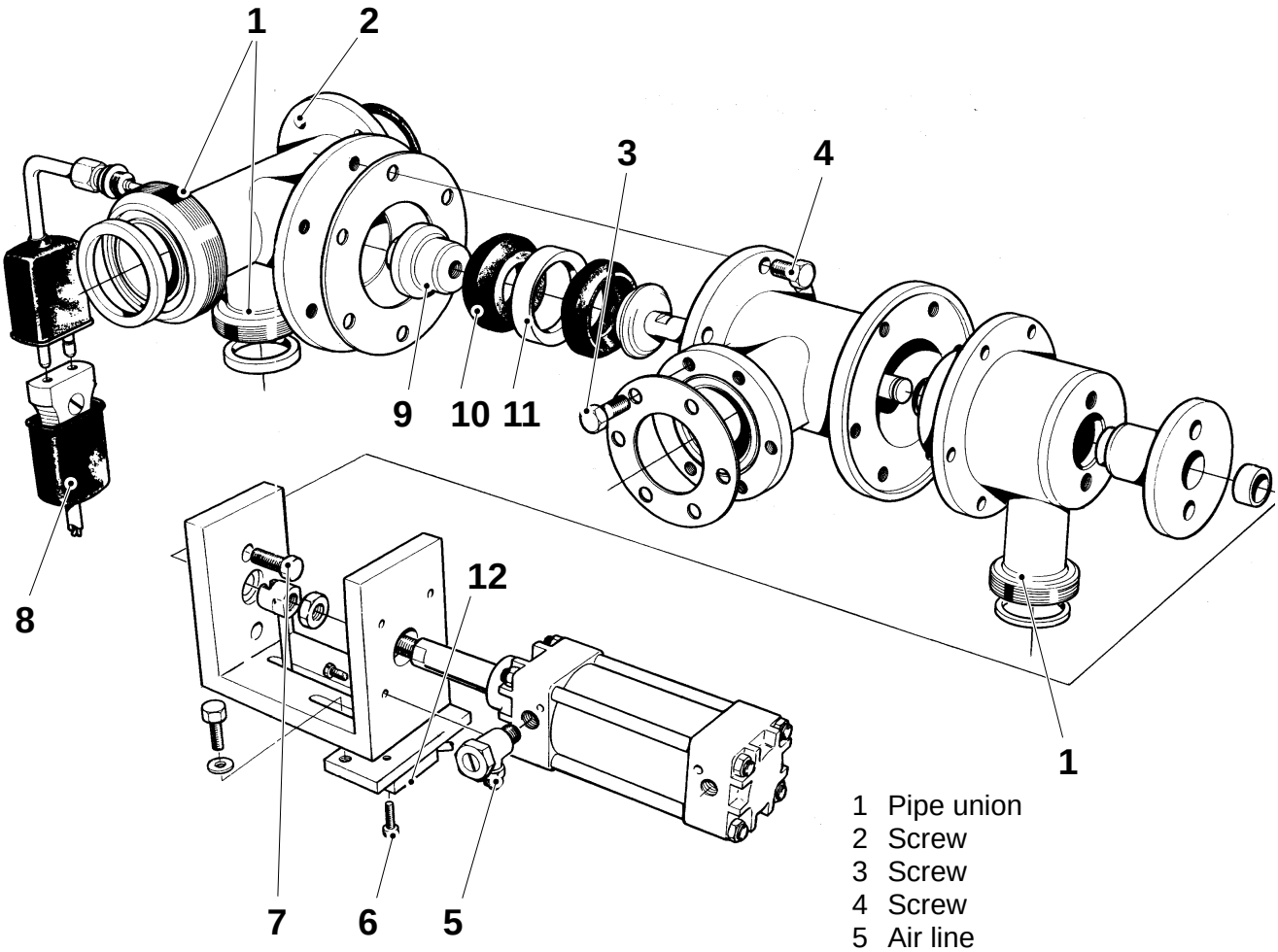

1 Pipe union
2 Screw
3 Screw
4 Screw
5 Air line
6 Screw
7 Screw
8 Socket
9 Nut
10 Seal ring
11 Ring
12 Proximity switch

Checking

WARNING!
Peroxide. Wear safety equipment according to Safety precautions on page MS 001.

Undo the knobs (1) and remove the cover (2). Check the seal (3). If required, replace the seal.

Check the membrane valve (4) and, if damaged, replace it.
The slits in the valve are angled, and the valve is to be fitted as illustrated. The valve is correctly fitted if it reverts to **closed position** after actuation **from the outside.**

Insert a piece of packaging material of the correct width through the seal (5). Check that the latter closes tightly and that the bevelled edges are not worn. If required, replace the seal.

After replacement, check the pressure in the aseptic chamber/ peroxide bath, see page MS 163–1X.

Fit the cover.

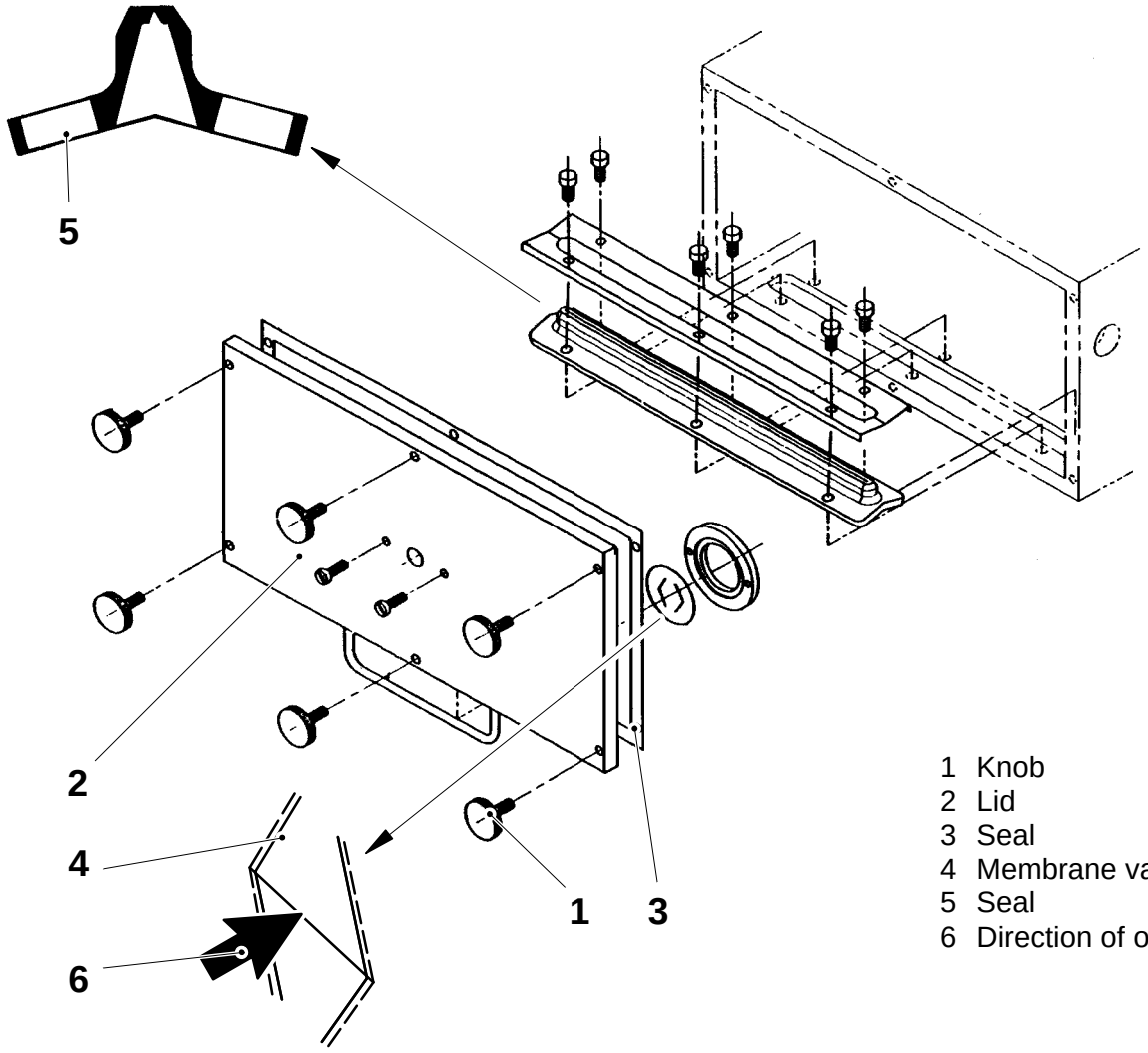

1 Knob
2 Lid
3 Seal
4 Membrane valve
5 Seal
6 Direction of opening

Checking

WARNING!
Peroxide. Wear safety equipment according to Safety precautions on page MS 001.

Undo the three knobs (1) and lower the lid (2). Check the seal (3). Replace as required.

Check the membrane valve (4). Replace as required.
The slits in the valve are angled, and the valve is to be fitted as illustrated. The valve is correctly fitted if it reverts to **closed position** after actuation **from the outside.**

Insert a piece of packaging material of the correct width through the seal (5). Check that the seal closes tightly and that the bevelled edges are not worn. If required, replace the seal.

After replacement, check the pressure in the aseptic chamber peroxide bath, see page MS 163–1X.

Raise the cover and fit the knobs (1).

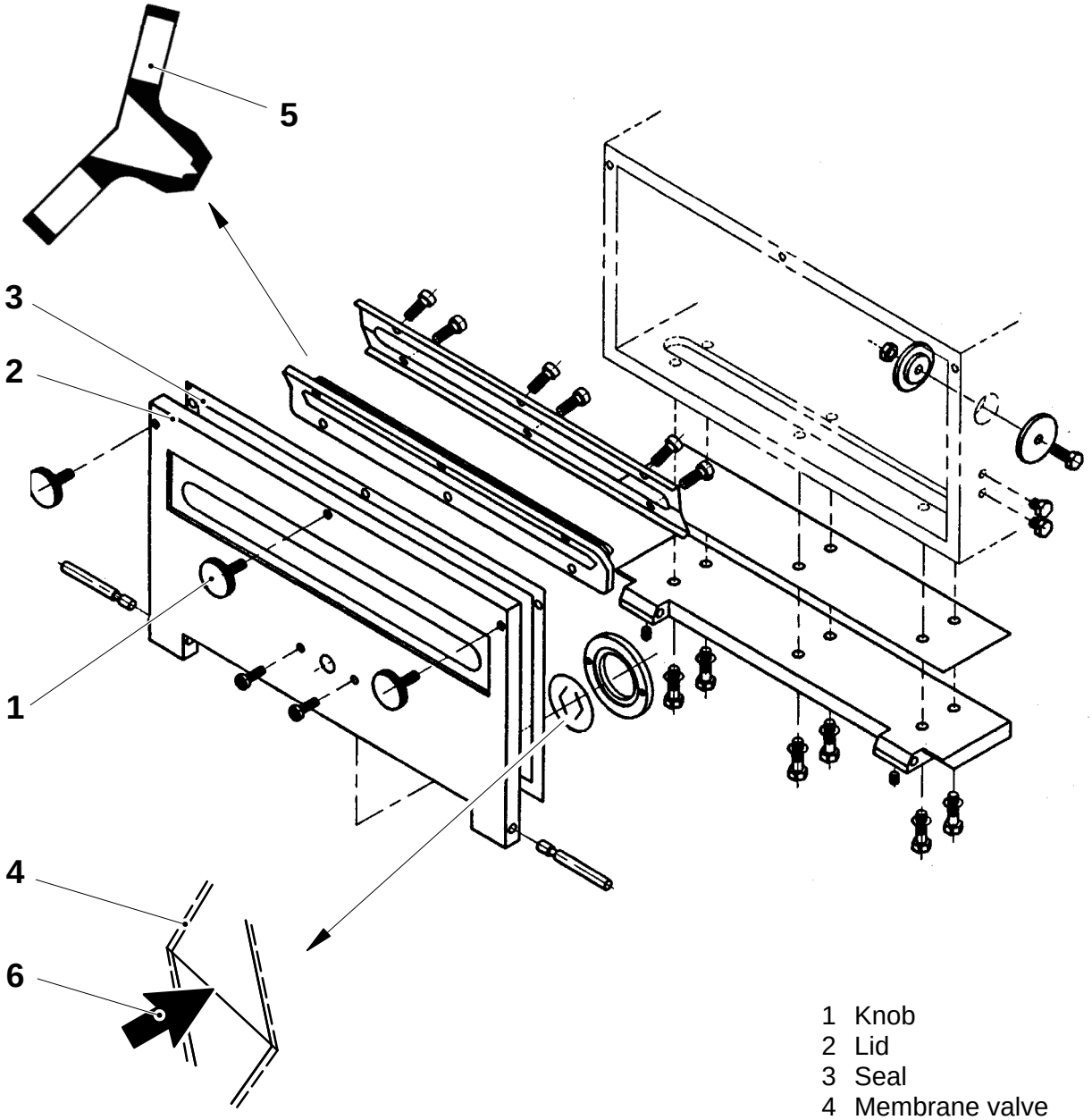

1 Knob
2 Lid
3 Seal
4 Membrane valve
5 Seal
6 Direction of opening

Checking/Cleaning

WARNING!
Peroxide. Wear safety equipment according to safety precautions on page MS 001.

Loosen the screws (1), undo the pipe (5), and lower the bottom lid (2).

Check and, if required, replace the seal (6).

Clean the bottom lid and check that there are no strip remnants left.

Check that the lower bending roller rotates easily. If required, overhaul (for 120V→; see page MS 181–3X).

Caution!
The bearings must not be lubricated**.**

Raise the bottom lid and tighten the screws (1). Check that the microswitches (3) are not triggered until the screws have been tightened hard.

If required, adjust with the screws (4).

Fit the pipe (5).

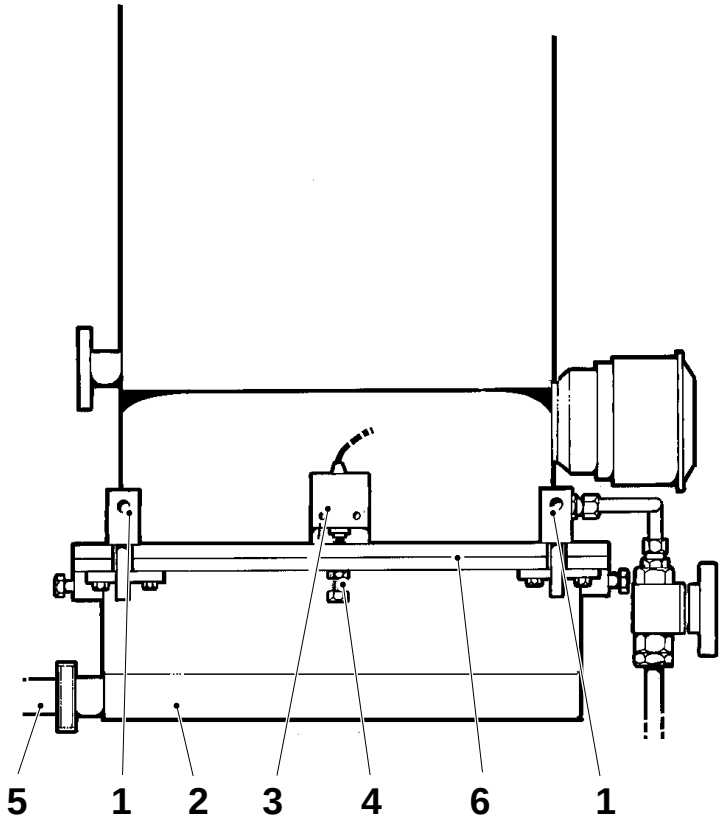

1 Screw
2 Bottom lid
3 Microswitch
4 Adjusting screw
5 Pipe
6 Seal

Checking/Cleaning

WARNING!
Peroxide. Wear safety equipment according to safety precautions on page MS 001.

Put the proximity switch (1) aside and undo the pipe (2).

Loosen the screws (3) and lower the bottom lid (4).

Check and, if required, replace the seal (7). Clean the bottom lid and check that there are no strip remnants left.

Check and, if required, replace the O-ring of the bottom lid.

Caution!
The bearings must not be lubricated**.**

Check that the lower bending roller rotates easily. If required, overhaul, see page MS 181–3X.

Raise the bottom lid and tighten the screws (3). Check that the microswitches (5) are not triggered until the screws have been tightened hard.

If required, adjust with the screws (6).

Fit the pipe (2) and put the proximity switch (1) back in position. Check that the LED lights up. If required set gap A.

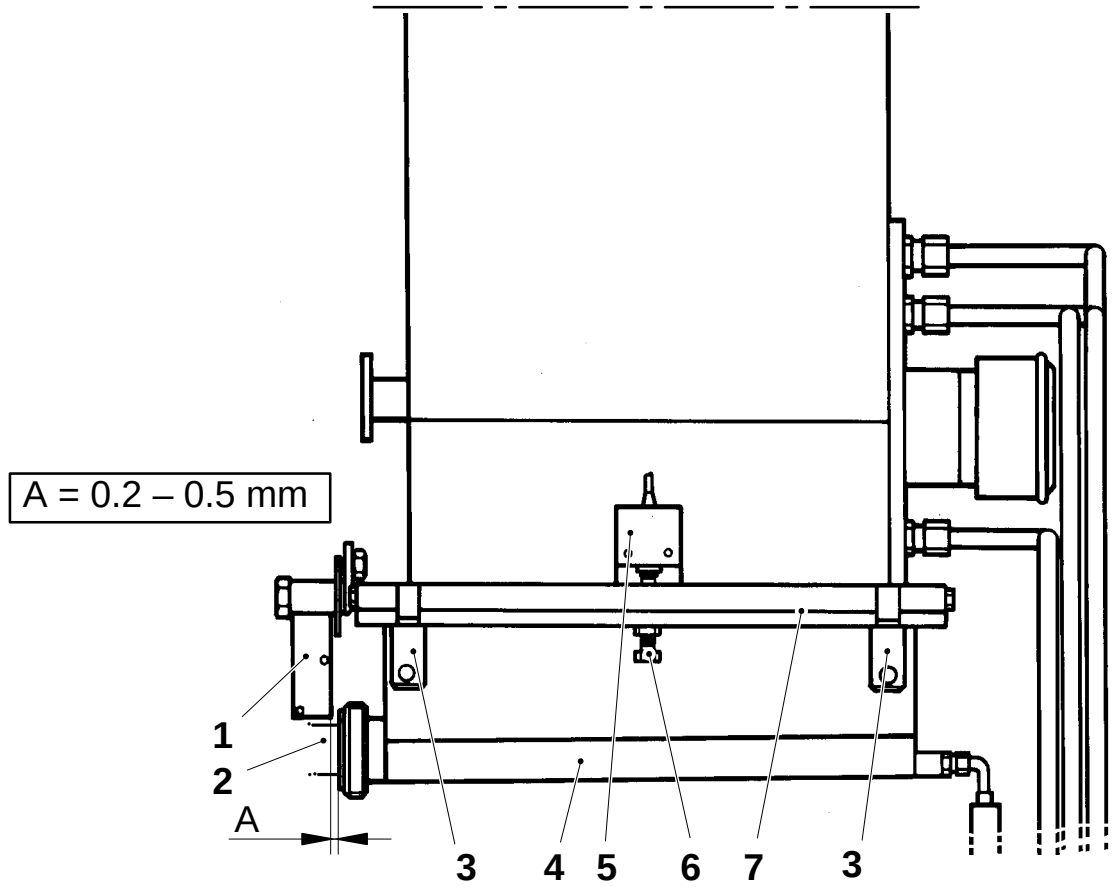

1 Proximity switch
2 Pipe
3 Screw
4 Bottom lid
5 Micro switch
6 Adjusting screw
7 Seal

Overhaul

WARNING!
Peroxide. Wear safety equipment according to safety precautions on page MS 001.

Remove the bottom cover, see page MS 181–1X.

Remove the bending roller from its brackets:

- Undo the screws (1), two on each side.
- Undo the screw (5) holding the shaft.
- Pull out the axle supports (2).
- On one side, push the chain off the wheel (3) (towards the roller) and remove the wheel. If required, slacken the chain tension.
- Swing out the bending roller (4) and remove it.

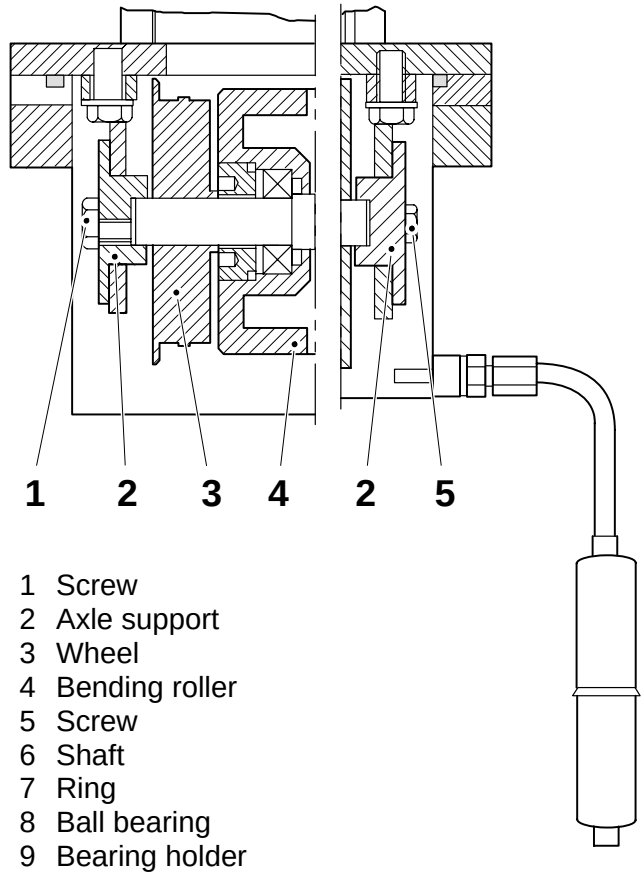

1 Screw
2 Axle support
3 Wheel
4 Bending roller
5 Screw
6 Shaft
7 Ring
8 Ball bearing
9 Bearing holder
10 Nut

Undo the nuts (10) and remove the bearing holders (9), rings (7), ball bearings (8), and shaft (6).

Clean or replace the roller, the bearings and the shaft.

Caution!
The bearings **must not** be lubricated.

Reassemble in reverse order.

Do not forget to tension the chains.

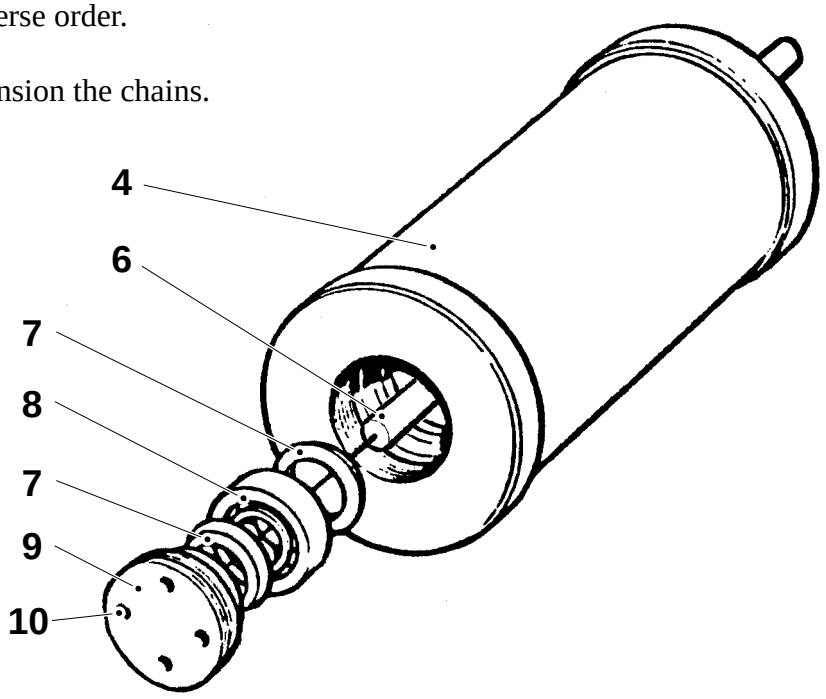

Overhaul

WARNING!
Peroxide. Wear safety equipment according to safety precautions on page MS 001.

Remove the bottom cover, see page MS 181–1X.

Remove the bending roller from its brackets:

- Undo the screws (1), two on each side.
- Undo the screw (5) that holds the shaft.
- Pull out the axle supports (2).
- On one side, push the chain off the wheel (3) (towards the roller) and remove the wheel. If required, slacken the chain tension.
- Swing out the bending roller (4) and remove it.

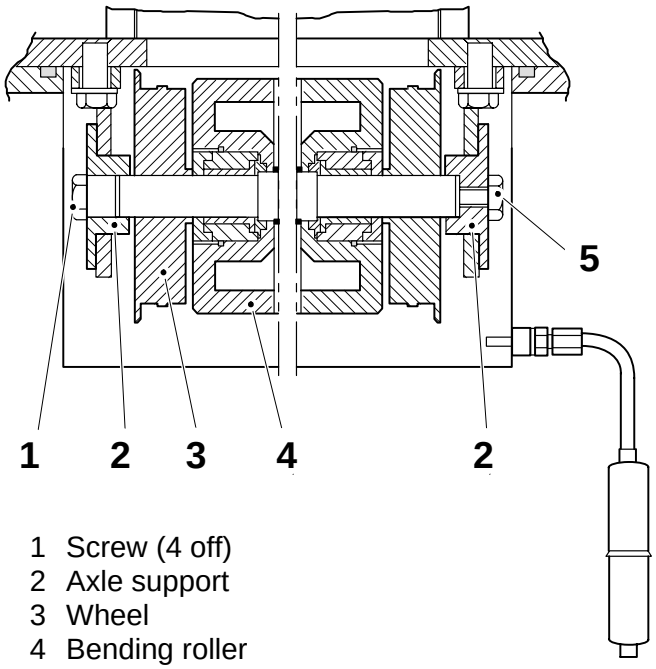

1 Screw (4 off)
2 Axle support
3 Wheel
4 Bending roller
5 Screw
6 Nut (2 off)
7 Bearing holder
8 Bushing
9 Thrust bearing
10 Shaft

Undo the nuts (6) and remove the bearing holders (7), bushings (8), thrust bearings (9), and shaft (10).

Clean or replace the bearings and the shaft.

Caution!
The bearings **must not** be lubricated.

Reassemble in reverse order.

Do not forget to tension the chains.

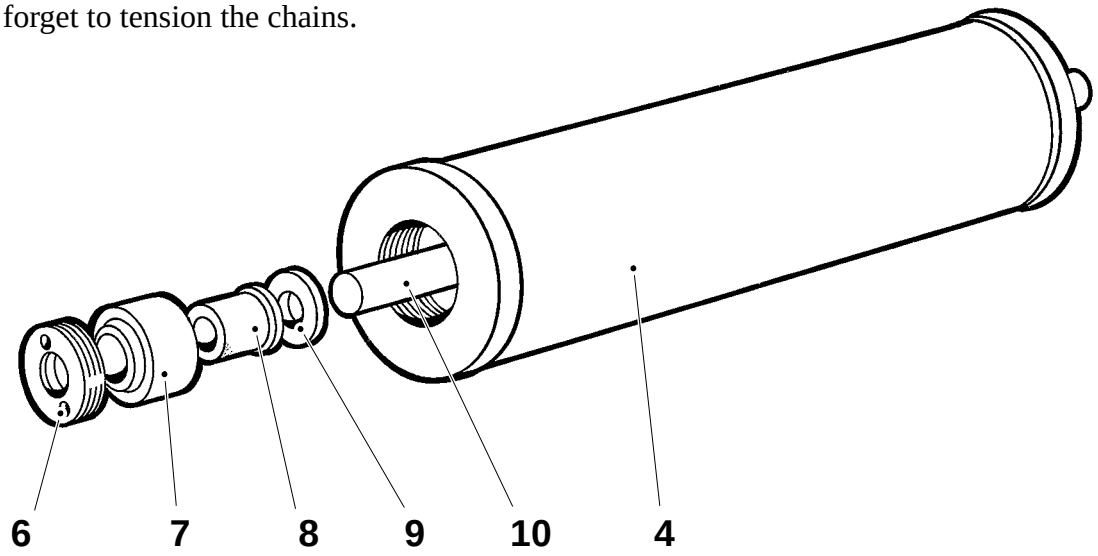

Cleaning

WARNING!
Peroxide. Wear safety equipment according to safety precautions on page MS 001.

Dismantle the filter unit (1) and clean the filter insert with compressed air.

If the filter insert is badly clogged, replace it.

Dismantle the filter (2) and clean it with compressed air.

If the filter is badly clogged, replace it.

Before removing the lid (3), mark its position. Make sure the lid is fitted correctly.

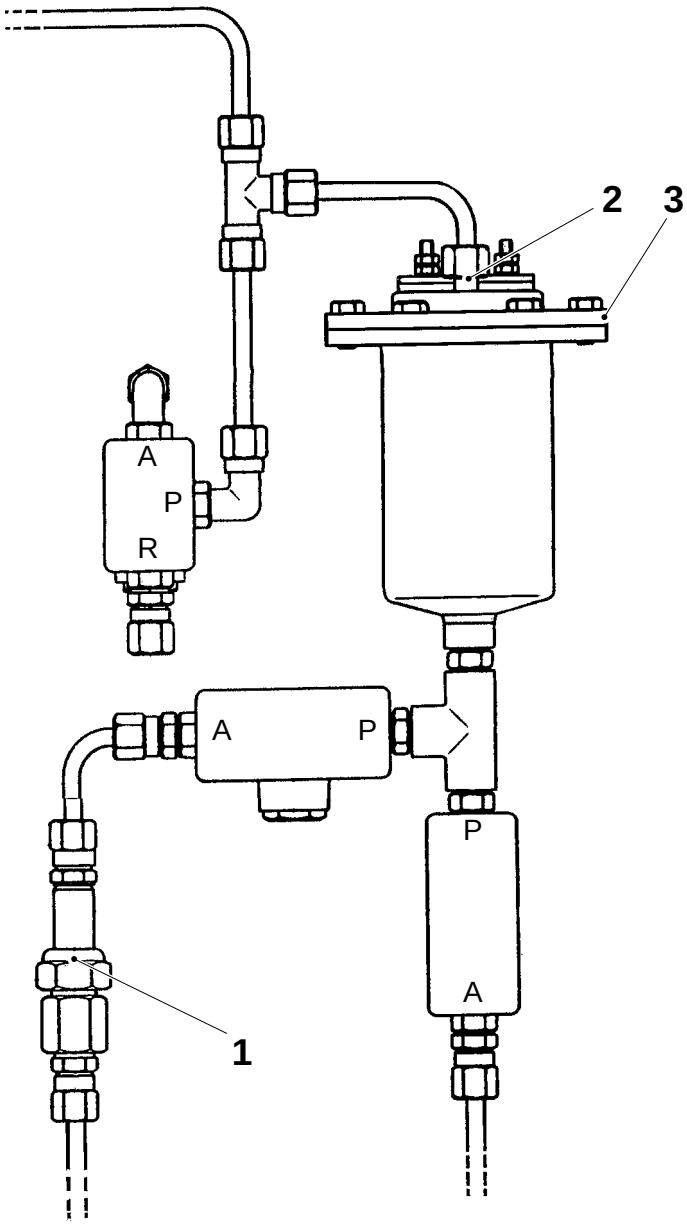

1 Filter unit
2 Filter
3 Lid

Checking

WARNING!
Peroxide. Wear safety equipment according to Safety precautions on page MS 001.

Check the following details for wear and/or damage:

- the proximity switch (1),
- the cylinder (2); make sure the cylinder moves smoothly,
- the axle supports (3),
- the bearing covers (4),
- the cylindrical jackets of the squee-gee rollers (5) and the rollers,
- the bushings (6) and (10),
- the ball bearings (7) and (8),
- the shafts (9) and (12), and
- the brackets (11).

Replace worn and/or damaged details.

Grease the ball bearings (7) and (8). Use silicon grease, TP No. 90296–9.

Open the valve for incoming air.
Set the correct air pressure, see page MS 910–7X.

During operation

Check that there are no drops of peroxide on the packaging material web after the squee-gee rollers.

1 Proximity switch
2 Cylinder
3 Axle support
4 Bearing cover
5 Squee-gee roller
6 Bushing
7 Ball bearing
8 Ball bearing
9 Shaft
10 Bushing
11 Bracket
12 Shaft

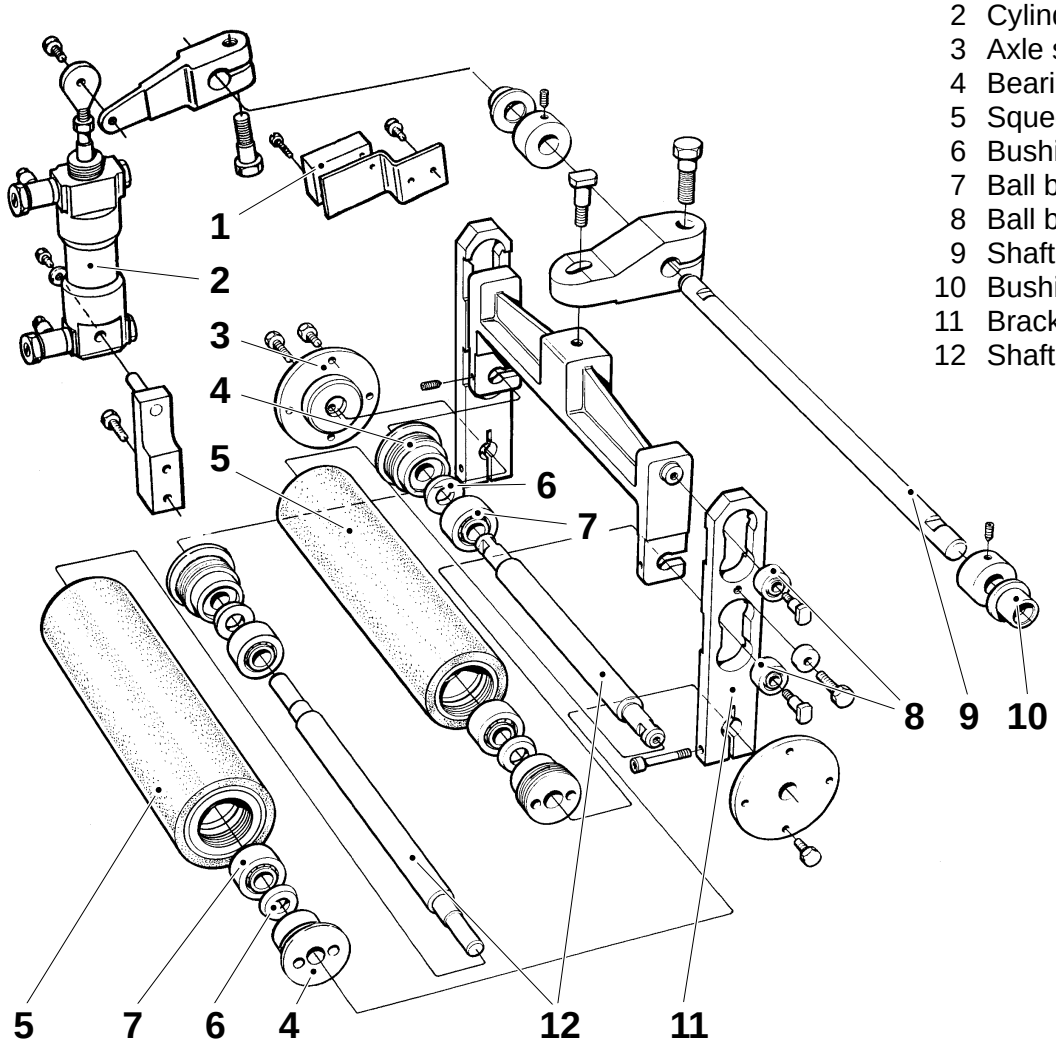

Checking

WARNING!
Peroxide. Wear safety equipment according to Safety precautions on page MS 001.

Check the following details for wear and/or damage:

- the proximity switch (1),
- the cylinder (2); make sure the cylinder moves smoothly,
- the axle supports (3),
- the bearing covers (4),
- the cylindrical jackets of the squee-gee rollers (5) and the rollers,
- the bushings (6) and (10),
- the ball bearings (7) and (8),
- the shafts (9) and (13),
- the O-rings (11), and
- the brackets (12).

Replace worn and/or damaged details.

Grease the ball bearings (7) and (8). Use silicon grease, TP No. 90296–9.

Open the valve for incoming air.
Set the correct air pressure, see page MS 910–7X.

During operation

Check that there are no drops of peroxide on the packaging material web after the squee-gee rollers.

1 Proximity switch
2 Cylinder
3 Axle support
4 Bearing cover
5 Squee-gee roller
6 Bushing
7 Ball bearing
8 Ball bearing
9 Shaft
10 Bushing
11 O-ring
12 Bracket
13 Shaft

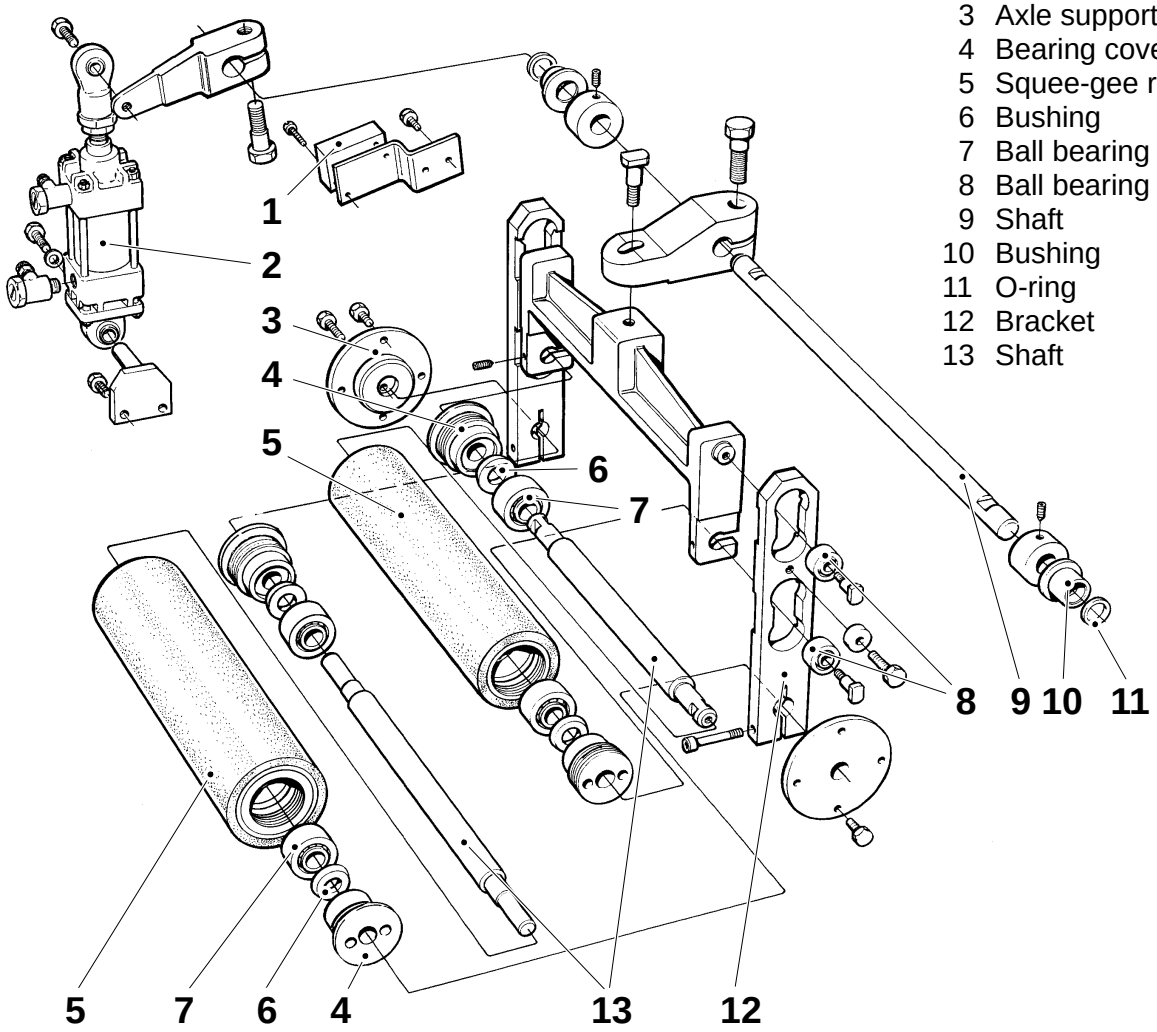

Removal

WARNING!
Peroxide. Wear safety equipment according to Safety precautions on page MS 001.

Close the valve for incoming air.

Mark the position of the pressure arm (4) on the shaft (10).

Undo the screw (3). Loosen the screw (5) and turn the pressure arm upwards.

Loosen the allen screws (12).

Undo the screw (1). Loosen the screw (2). Pull out the shaft (9) with bushings (13) and retainers (11) and remove the pressure arm.

Undo the screws (15) and remove the spacer.

Undo the two screws (6) and the eight screws (7), and remove the shaft supports (8).

Remove the brackets (16) with fork (9) and squee-gee rollers (18) and (19).

Loosen the screws (17) and remove the movable squee-gee roller (19).

Undo the screws (14), remove the bearings and the fixed squee-gee roller (18).

(Cont'd overleaf)

1 Screw
2 Screw
3 Screw
4 Pressure arm
5 Screw
6 Screw
7 Screw
8 Axle support
9 Fork
10 Shaft
11 Retainer
12 Allen screw
13 Bushing
14 Screw
15 Screw
16 Bracket
17 Screw
18 Fixed squee-gee roller
19 Movable squee-gee roller

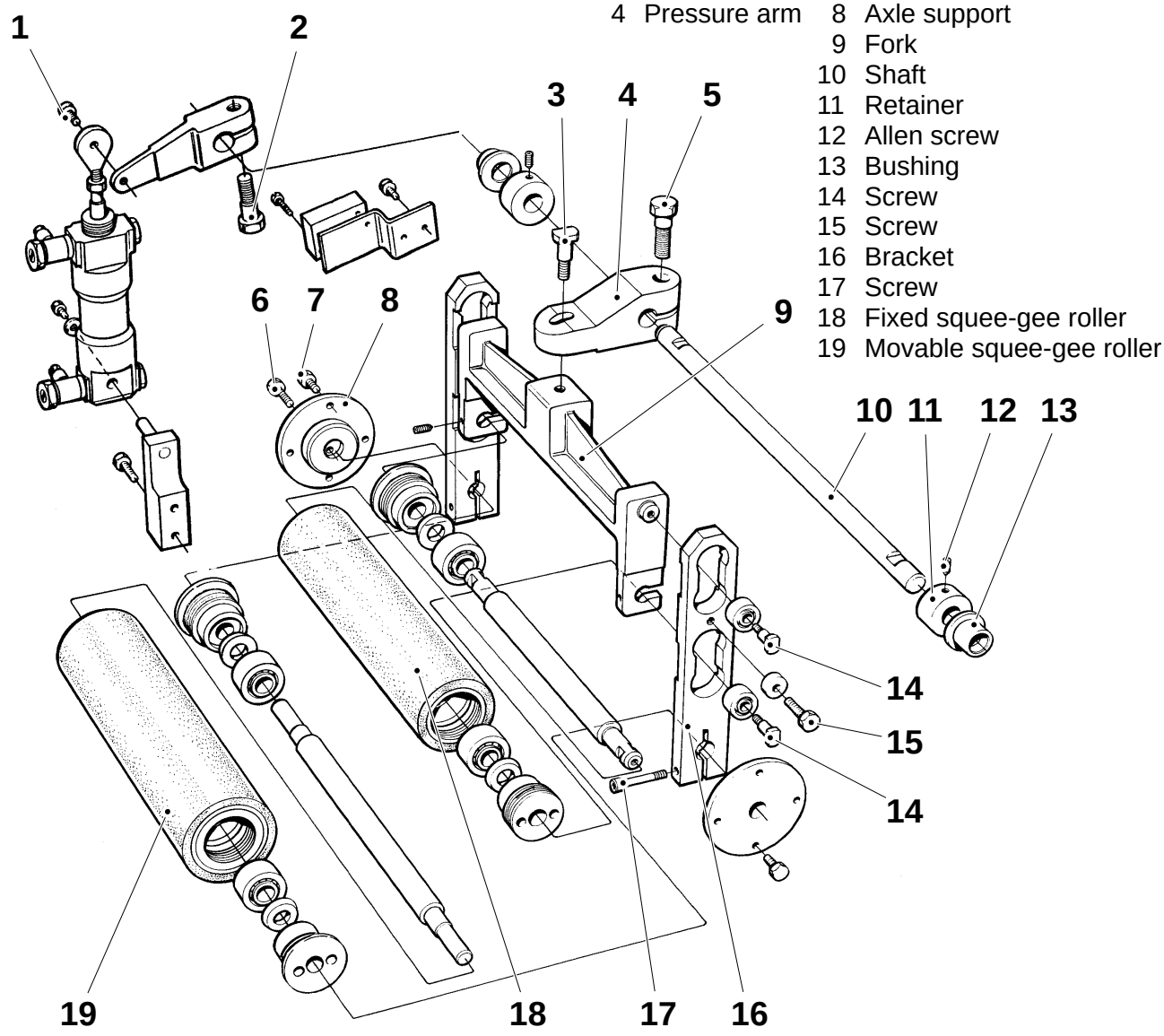

135

(Cont’d overleaf)

Movable squee-gee roller

Remove the bearing covers (22) and pull out the shaft (23).

Remove the bushings (21) and the ball bearings (20).

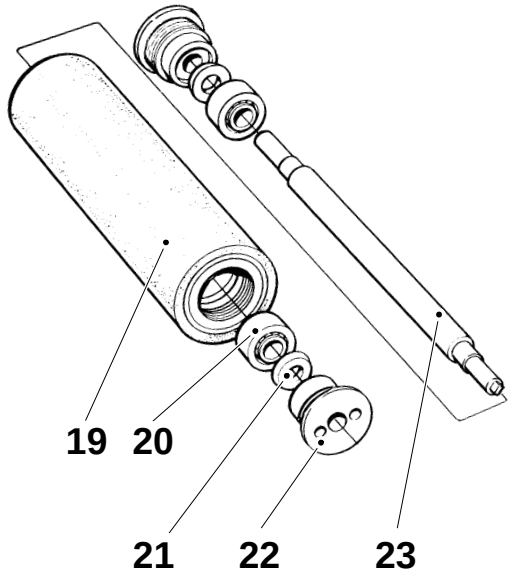

Fixed squee-gee roller

Remove the bearing covers (26) and pull out the shaft (27).

Remove the bushings (25) and the ball bearings (24).

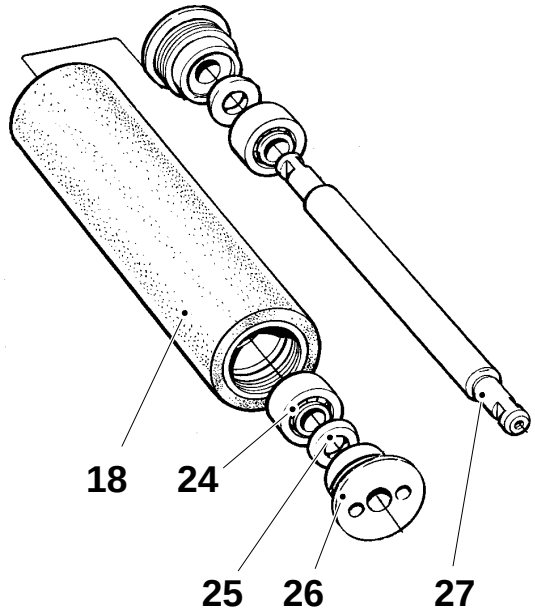

Reassemble in reverse order.

Setting, see page MS 184–5X.

Open the valve for compressed air.

18 Fixed squee-gee roller
19 Movable squee-gee roller
20 Ball bearing
21 Bushing
22 Ball bearing
23 Shaft
24 Ball bearing
25 Bushing
26 Bearing cover
27 Shaft

Removal

WARNING!
Peroxide. Wear safety equipment according to Safety precautions on page MS 001.

Close the valve for incoming air.

Mark the position of the pressure arm (4) on the shaft (10).

Undo the screw (3). Loosen the screw (5) and turn the pressure arm upwards.

Loosen the allen screws (12).

Undo the screw (1). Loosen the screw (2). Pull out the shaft (10) with bushings (13), O-rings (14) and retainers (11), and remove the pressure arm.

Undo the screws (16) and remove the spacer.

Undo the two screws (6) and the eight screws (7), and remove the shaft supports (8).

Remove the brackets (17) with fork (9), and squee-gee rollers (19) and (20).

Loosen the screws (18) and remove the movable squee-gee roller (20).

Undo the screws (15), remove the bearings and the fixed squee-gee roller (19).

(Cont'd overleaf)

1 Screw
2 Screw
3 Screw
4 Pressure arm
5 Screw
6 Screw
7 Screw
8 Axle support
9 Fork
10 Shaft
11 Retainer
12 Allen screw
13 Bushing
14 O-ring
15 Screw
16 Screw
17 Bracket
18 Screw
19 Fixed squee-gee roller
20 Movable squee-gee roller

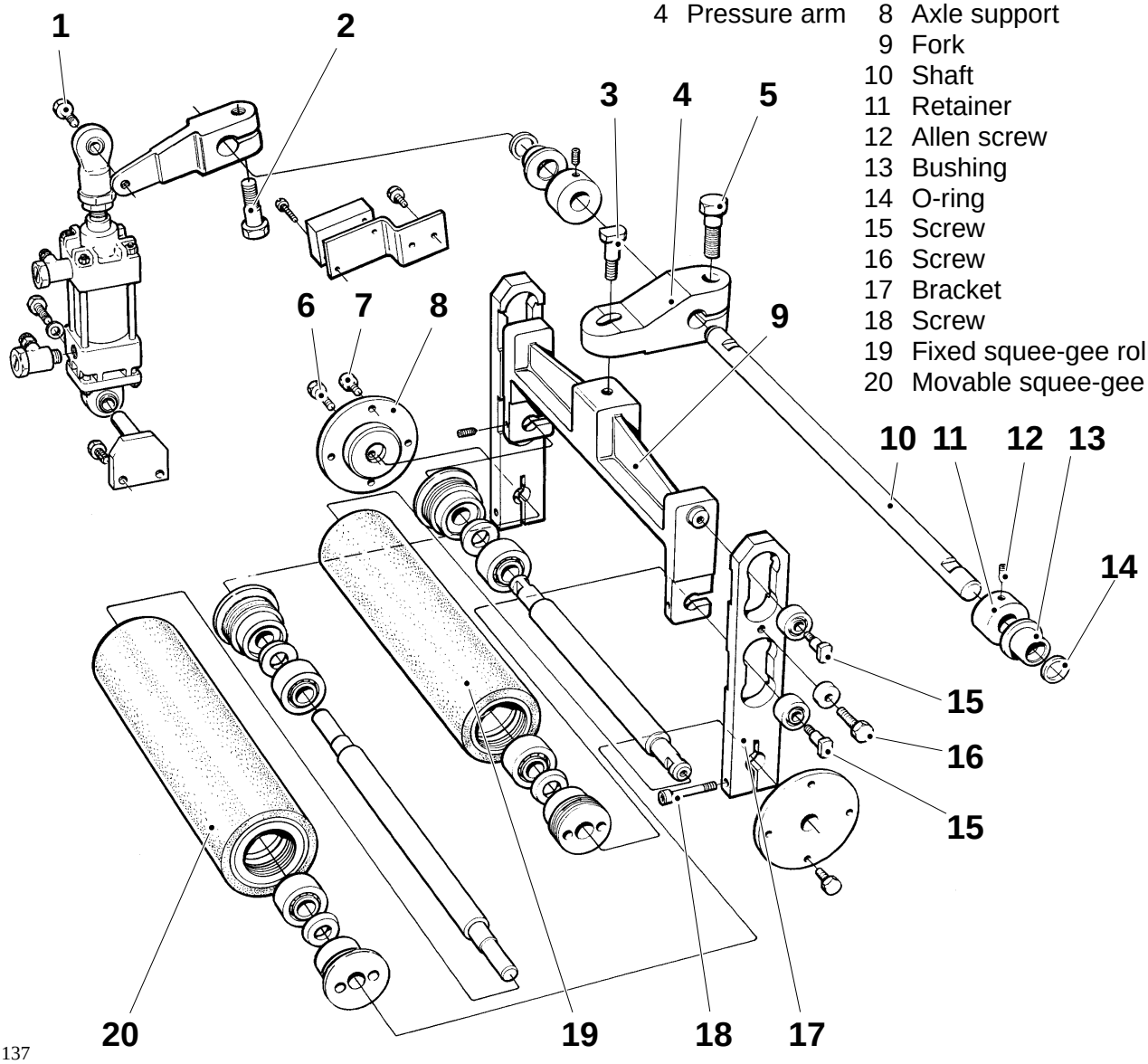

137

(Cont’d overleaf)

Movable squee-gee roller

Remove the bearing covers (23) and pull out the shaft (24).

Remove the bushings (22) and the ball bearings (21).

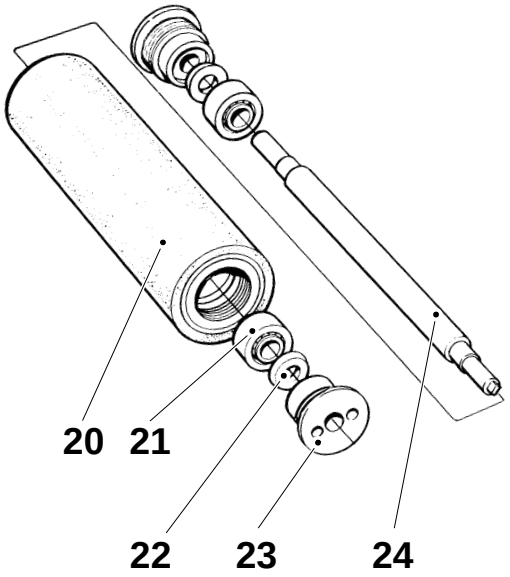

Fixed squee-gee roller

Remove the bearing covers (27) and pull out the shaft (28).

Remove the bushings (26) and the ball bearings (25).

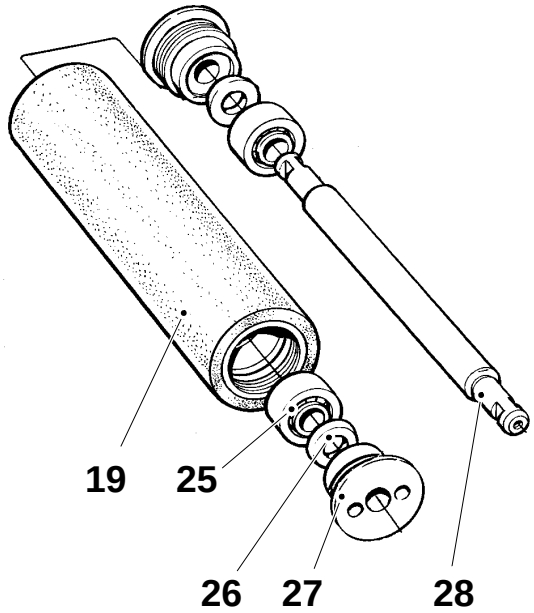

Reassemble in reverse order.

Setting, see page MS 184–5X.

Open the valve for compressed air.

19 Fixed squee-gee roller
20 Movable squee-gee roller
21 Ball bearing
22 Bushing
23 Ball bearing
24 Shaft
25 Ball bearing
26 Bushing
27 Bearing cover
28 Shaft

Setting

WARNING!
Peroxide. Wear safety equipment according to Safety precautions on page MS 001.

a) Turn off the squee-gee roller air pressure.

b) Check that the cylinder (5) does not reach its end position when the rollers are pressed against each other, measurement A. If required, adjust on the link head (4).

c) Check that the proximity switch (1) functions, gap B.

d) Raise the movable squee-gee roller (2), so that it does not touch the packaging material.

e) Select fast inching and inch the machine for about one minute.

f) Stop the machine and, without moving the packaging material web, mark the position of the web edge on the fixed squee-gee roller (see arrow).

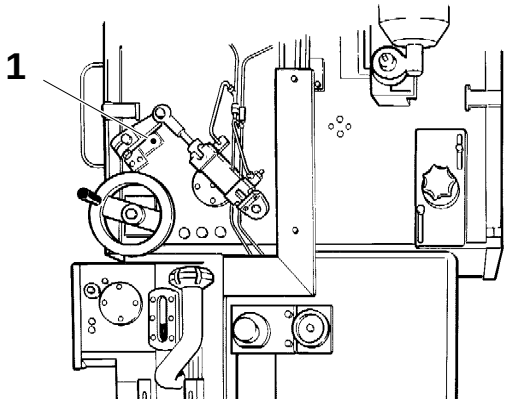

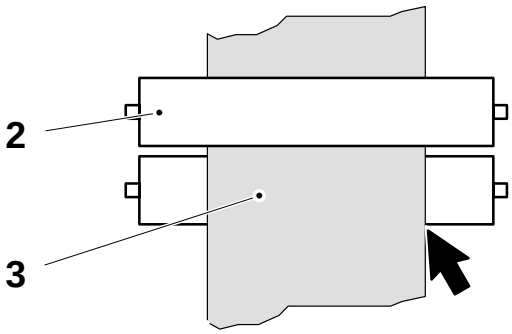

(Cont'd overleaf)

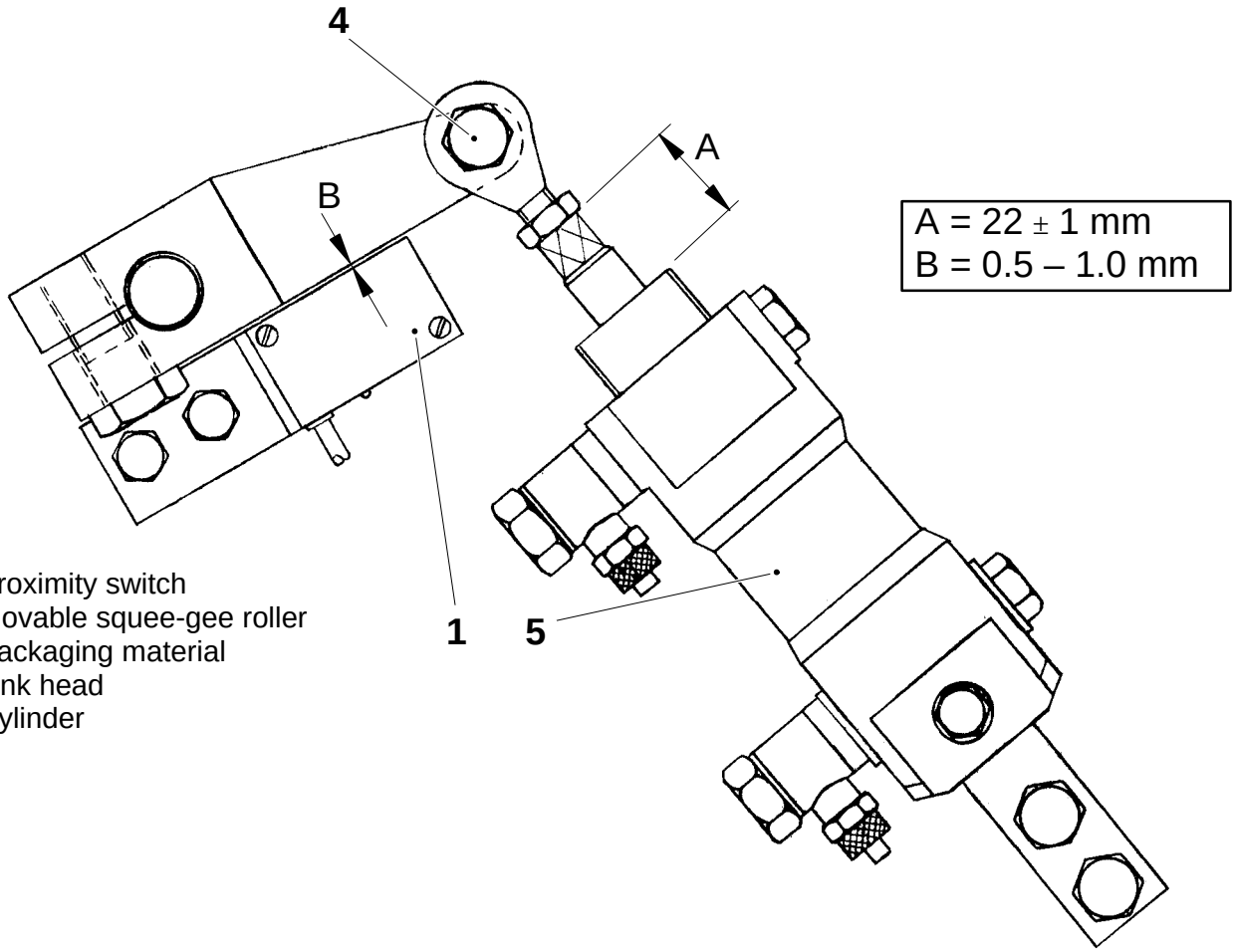

1 Proximity switch
2 Movable squee-gee roller
3 Packaging material
4 Link head
5 Cylinder

(Cont'd)

g) Loosen the screws (6) on the outside of the aseptic chamber (one on each side).

h) Set the correct squee-gee roller air pressure, see page MS 910–7X.

i) Select fast inching and inch the machine for about one minute. Tighten the screws (6).

j) Stop the machine and check that the edge of the packaging material web is in line with the previously made mark on the fixed squee-gee roller (3).

k) If further adjustment is required, loosen the screws (6) and correct the position of the movable squee-gee roller by shifting the brackets (7). Tighten the screws.

l) Inch the machine, stop it again, and recheck.

Repeat items j) – l) until correct setting has been obtained.

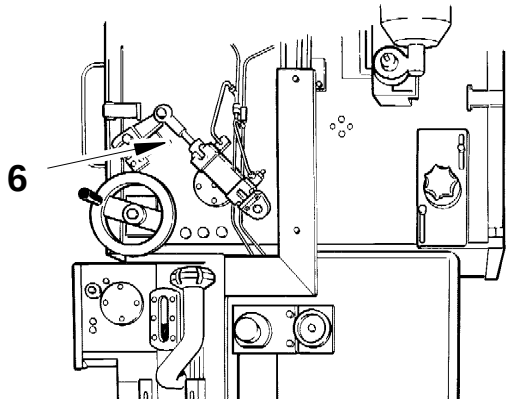

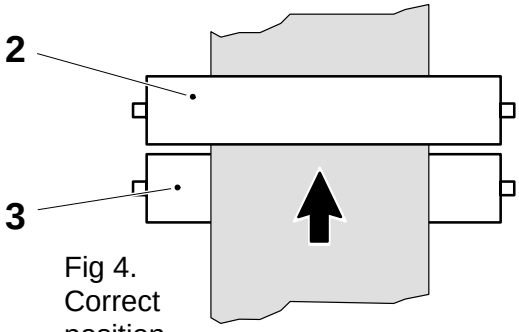

Fig 4.
Correct position

2 Movable squee-gee roller
3 Fixed squee-gee roller
6 Screw
7 Bracket

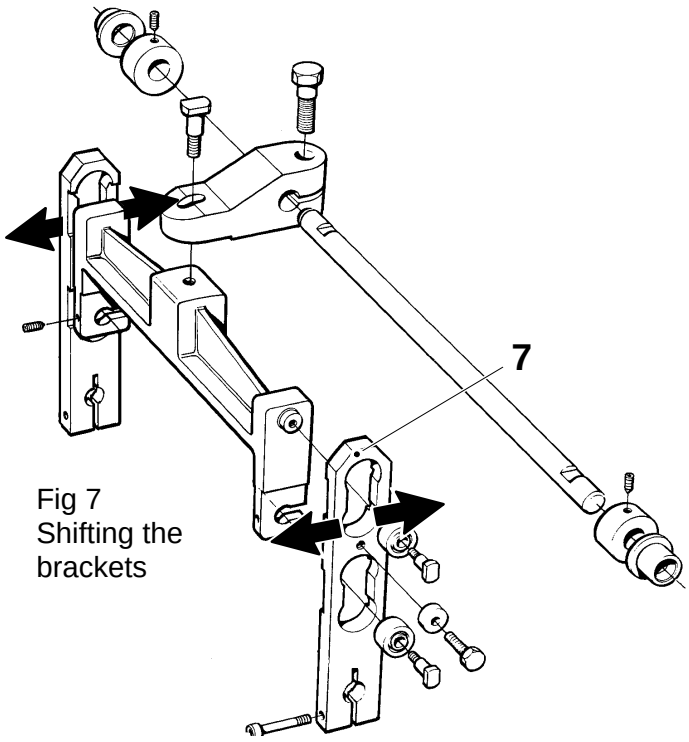

Fig 7
Shifting the brackets

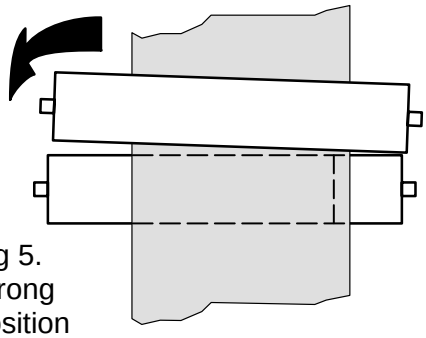

Fig 5.
Wrong position

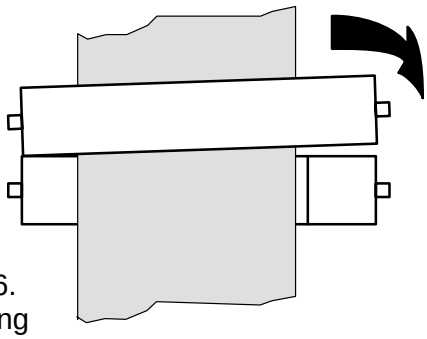

Fig 6.
Wrong position

Setting

WARNING!
Peroxide. Wear safety equipment according to Safety precautions on page MS 001.

a) Turn off the squee-gee roller air pressure.

b) Check that the cylinder (5) does not reach its end position when the rollers are pressed against each other, measurement A. If required, adjust on the link head (4).

c) Check that the proximity switch (1) functions, gap B.

d) Raise the movable squee-gee roller (2), so that it does not touch the packaging material.

e) Select fast inching and inch the machine for about one minute.

f) Stop the machine and, without moving the packaging material web, mark the position of the web edge on the fixed squee-gee roller (see arrow).

(Cont'd overleaf)

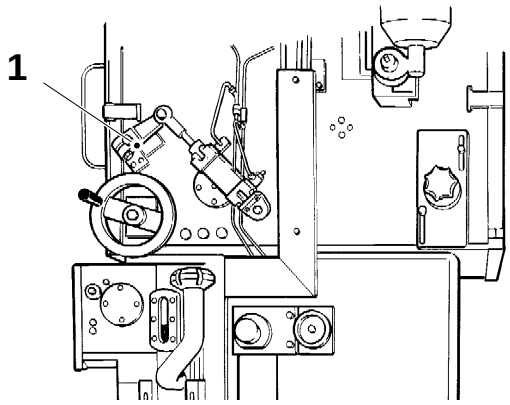

1 Proximity switch
2 Movable squee-gee roller
3 Packaging material
4 Link head
5 Cylinder

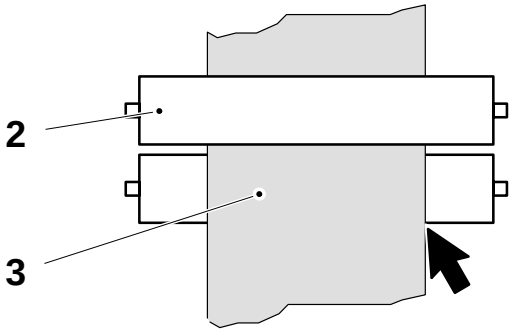

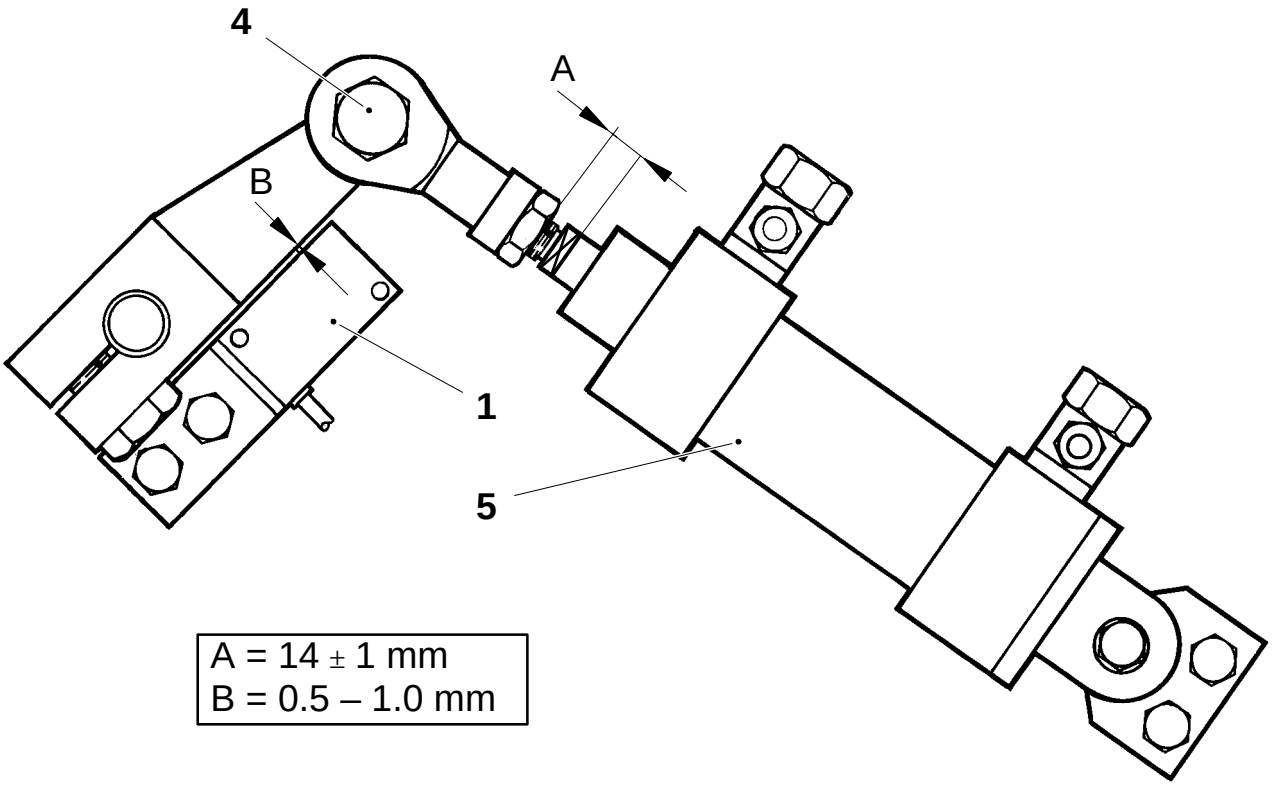

A = 14 ± 1 mm
B = 0.5 – 1.0 mm

(Cont'd)

g) Loosen the screws (6) on the outside of the aseptic chamber (one on each side).

h) Set the correct squee-gee roller air pressure, see page MS 910–7X.

i) Select fast inching and inch the machine for about one minute. Tighten the screws (6).

j) Stop the machine and check that the edge of the packaging material web is in line with the previously made mark on the fixed squee-gee roller (3).

k) If further adjustment is required, loosen the screws (6) and correct the position of the movable squee-gee roller by shifting the brackets (7). Tighten the screws.

l) Inch the machine, stop it again, and recheck.

Repeat items j) – l) until correct setting has been obtained.

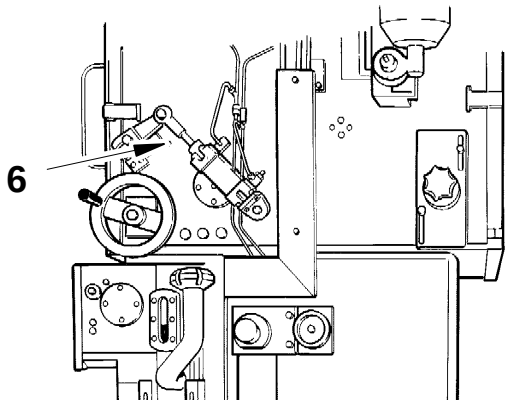

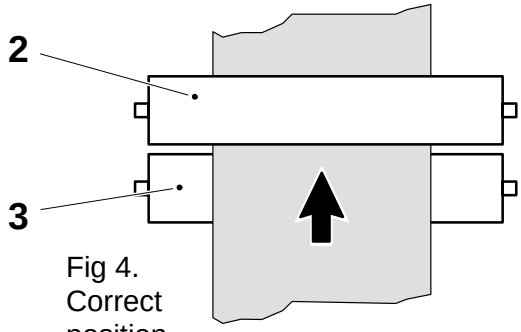

Fig 4.
Correct position

2 Movable squee-gee roller
3 Fixed squee-gee roller
6 Screw
7 Bracket

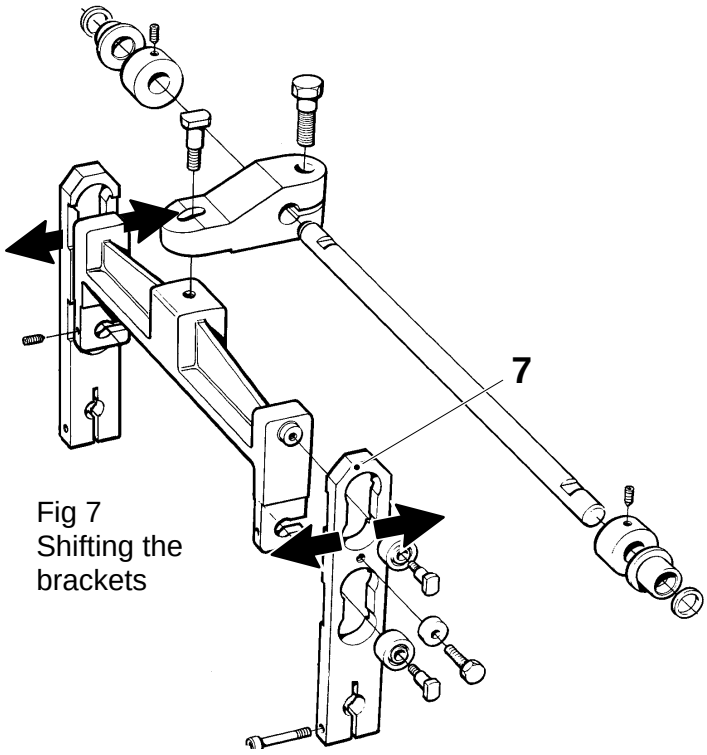

Fig 7
Shifting the brackets

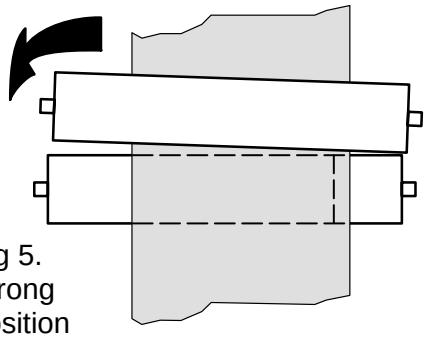

Fig 5.
Wrong position

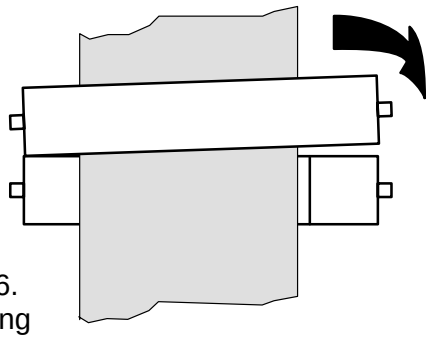

Fig 6.
Wrong position

Checking tightness

Check, when peroxide is being pumped through the system, that components, pipe connections, and pipes do not leak.

Checking

a) Check that no holes for water or air are blocked.

b) Check that the water jets reach the tube.

TBA with pull tab device

c) Check that the tabs are lifted by the air jets and flushed underneath by the water jets.

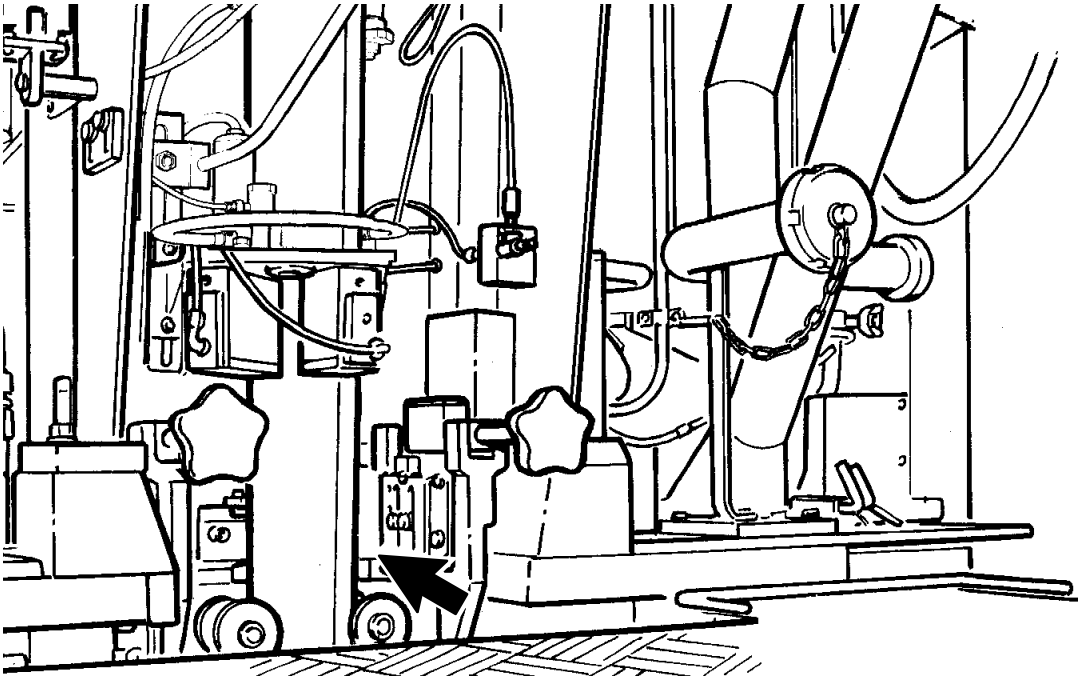

Checking

Check that the roller (1) rotates easily.

During operation

Tape a piece of packaging material to the material web and check that LED lights up when the taped-on piece passes the roller (1).

Thereafter, check that the machine ejects two to three packages and that the package with the taped-on piece of packaging material is one of these.

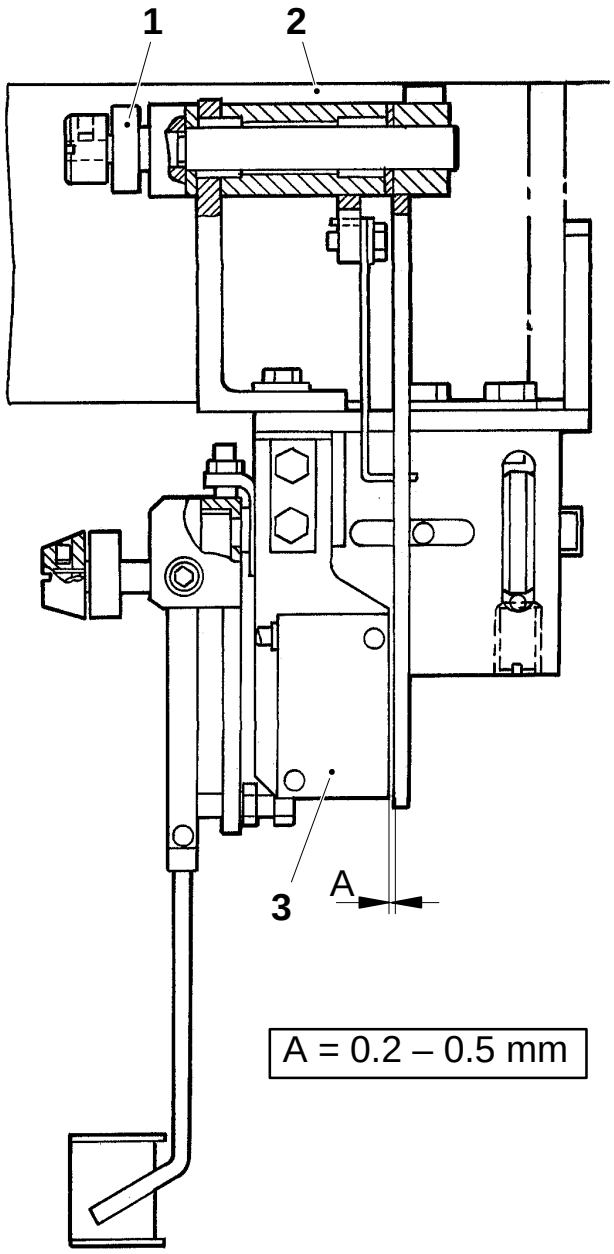

1 Roller
2 Bending roller
3 Proximity switch

Checking

Check that the roller (1) rotates easily.

During operation

Tape a piece of packaging material to the material web and check that LED lights up when the taped-on piece passes the roller (1).

Thereafter, check that the machine ejects two to three packages and that the package with the taped-on piece of packaging material is one of these.

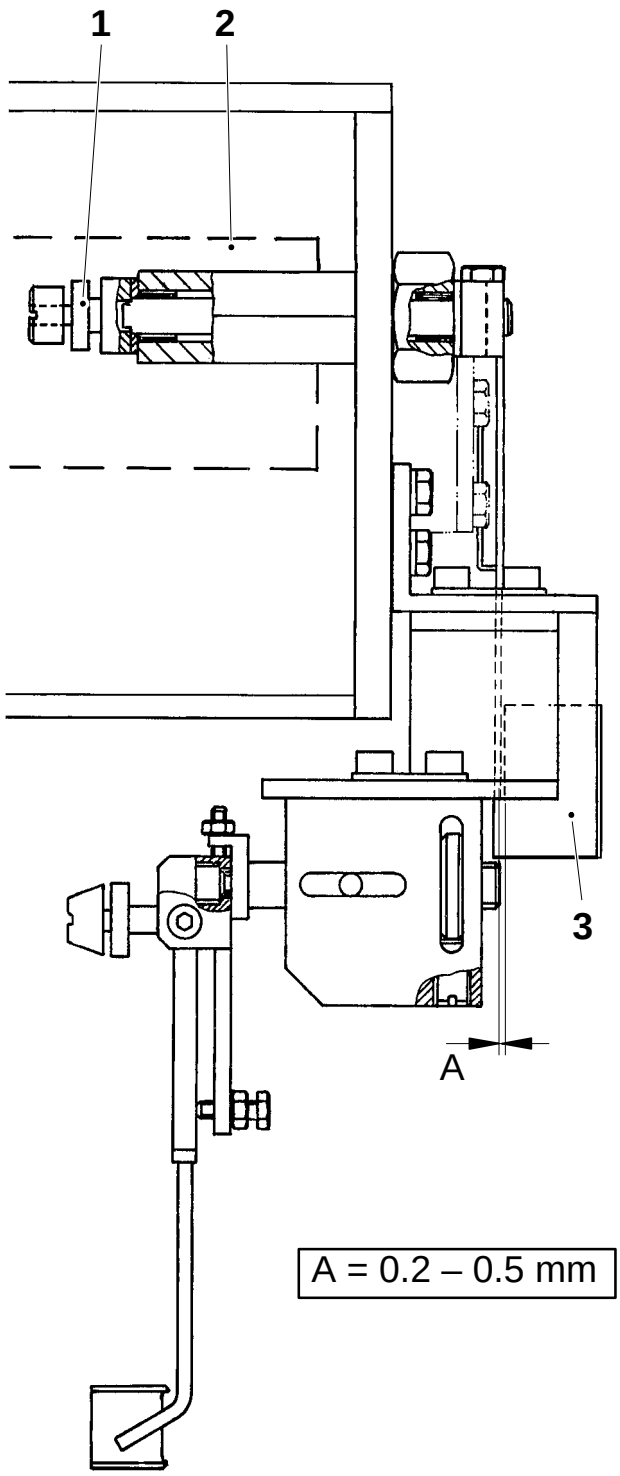

1 Roller
2 Bending roller
3 Proximity switch

Setting

a) Set the proximity switch (1), gap A between the arm (2) and the switch (1).

b) Place a piece of double packaging material between the roller (3) and the bending roller (4).

c) Loosen the screw (5) and shift the arm (2) until the LED of the proximity switch (1) lights up.

d) Retighten the screw (5).

e) Remove the double packaging material and check that the LED goes out.

f) Thereafter, insert the double packaging material between the roller (3) and the bending roller (4) and check that the LED of the proximity switch lights up. Remove the packaging material and check that the LED goes out.

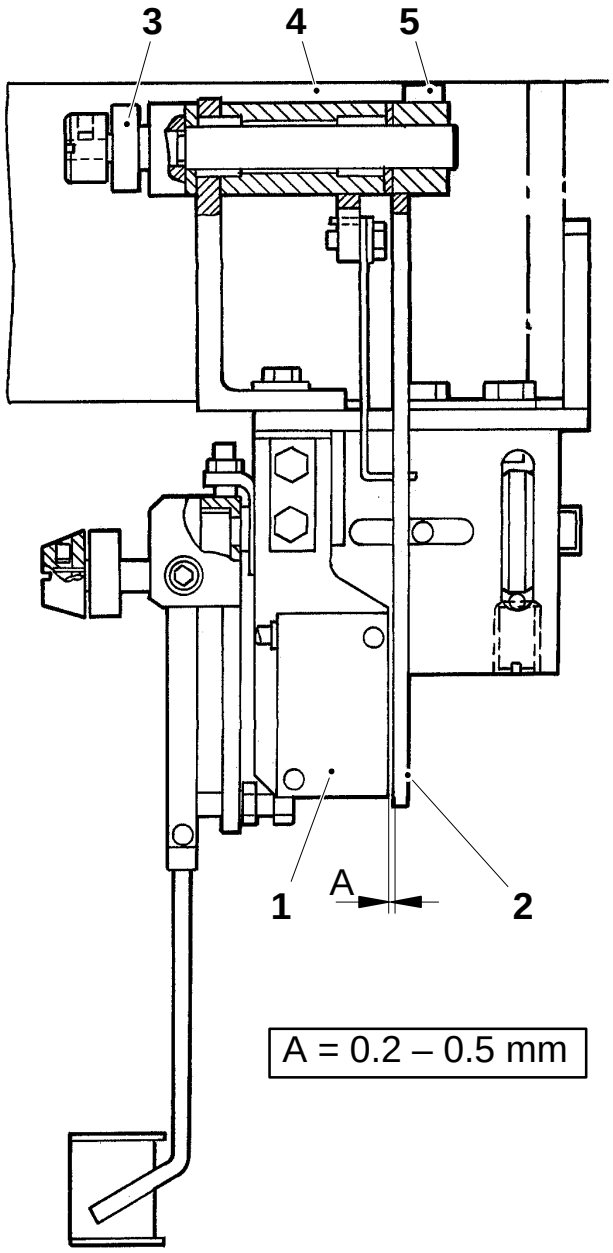

1 Proximity switch
2 Arm
3 Roller
4 Bending roller
5 Screw

Setting

a) Set the proximity switch (1), gap A, between the arm (2) and the switch (1).

b) Place a piece of double packaging material between the roller (3) and the bending roller (4).

c) Loosen the screw (5) and depress the arm (2) until the LED of the proximity switch (1) lights up.

d) Retighten the screw (5).

e) Remove the double packaging material and check that the LED goes out.

f) Thereafter, insert the double packaging material between the roller (3) and the bending roller (4) and check that the LED of the proximity switch lights up. Remove the packaging material and check that the LED goes out.

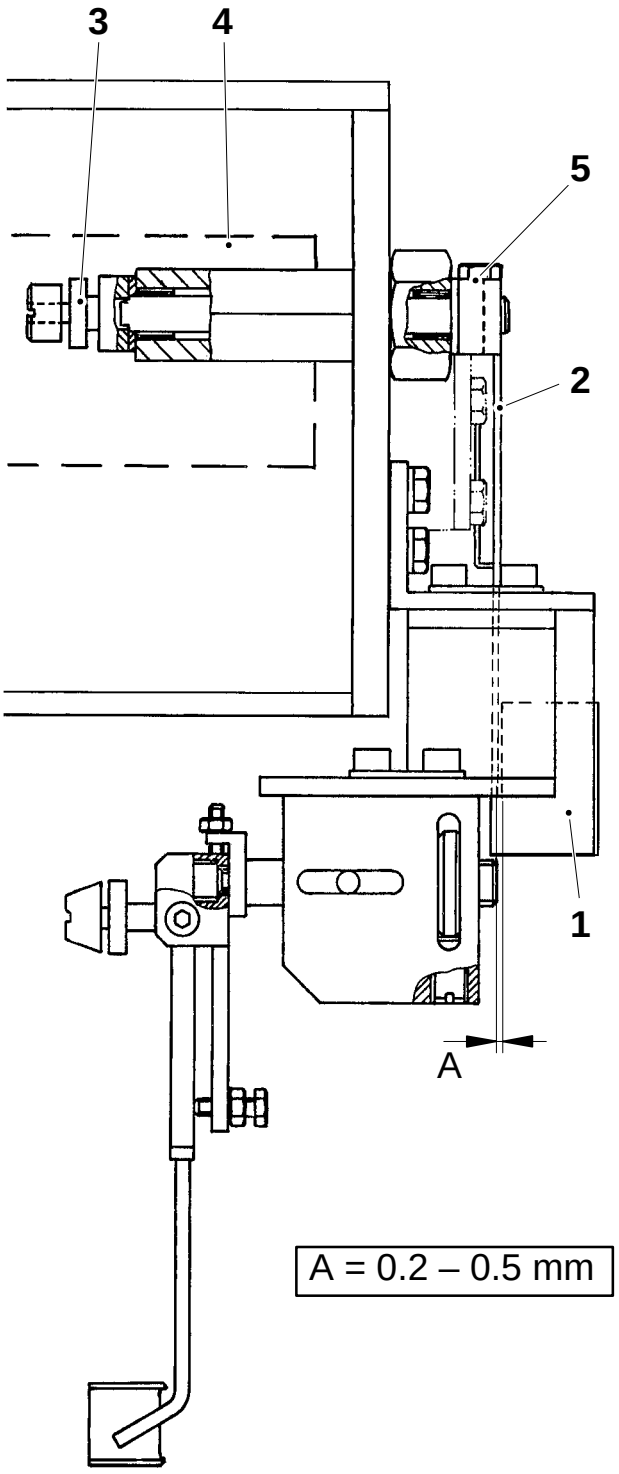

1 Proximity switch
2 Arm
3 Roller
4 Bending roller
5 Screw

Setting

Set the height of the forming rings, see table below.

Volume, ml	A ±1.0 mm	B ±1.0 mm	C ±1.0 mm
180 – 250	532	973	1322
125	542	962	1345
200S	542	977	1283

(Cont’d overleaf)

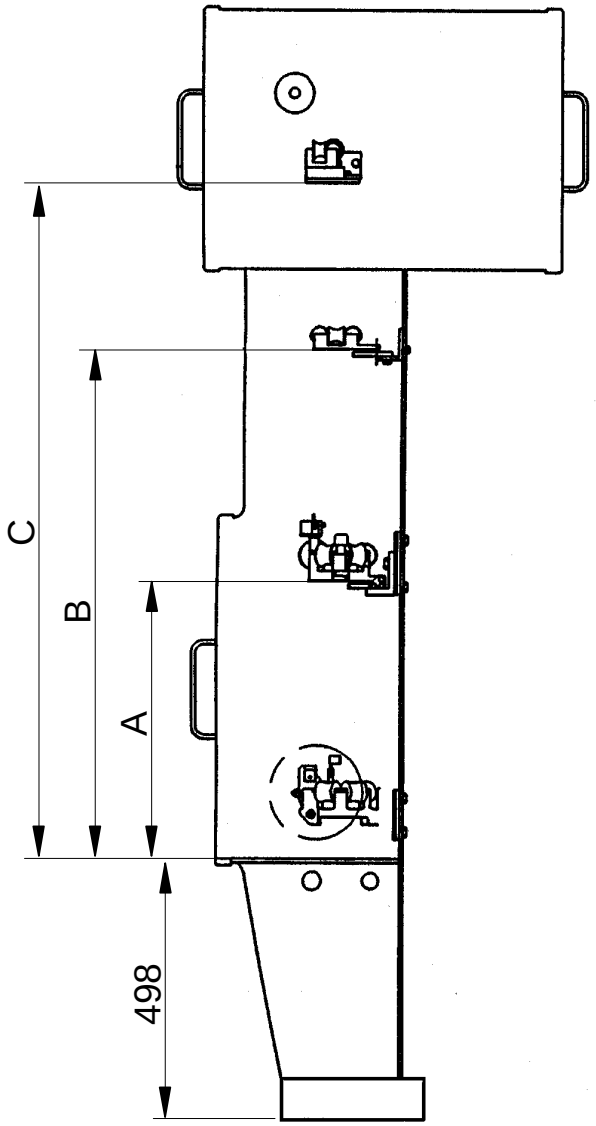

(Cont'd)

Set the height D by holding slide callipers (2) or similar measuring tool on the bracket of the counter roller (1), see fig. 2.

Volume, ml	D ±0.5 mm	
	100V→110V	120V
180 – 250	53	38
125, 200S	53	53

If required, adjust by shifting the lower forming ring (3) up or down.

1 Counter roller
2 Slide callipers
3 Lower forming ring
4 Pressure roller

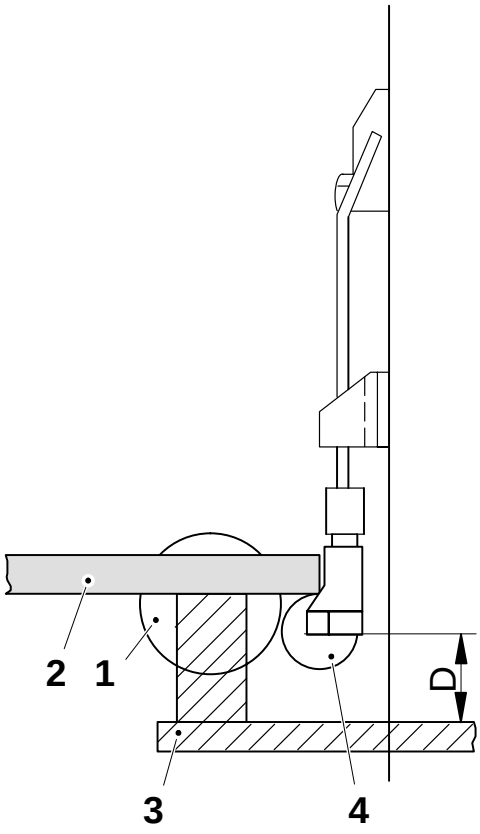

Fig. shows dev. step 100V→110V

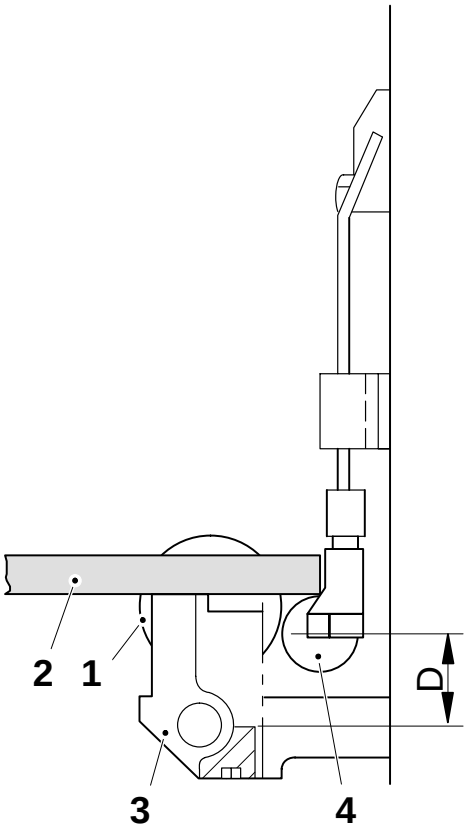

Fig. shows dev. step 120V

Setting

Set the height of the forming rings, see table below.

Volume, ml	A ±1.0 mm	B ±1.0 mm	C ±1.0 mm
180 – 284	532	956	1292
125	540	962	1326
200S	541	977	1283

(Cont’d overleaf)

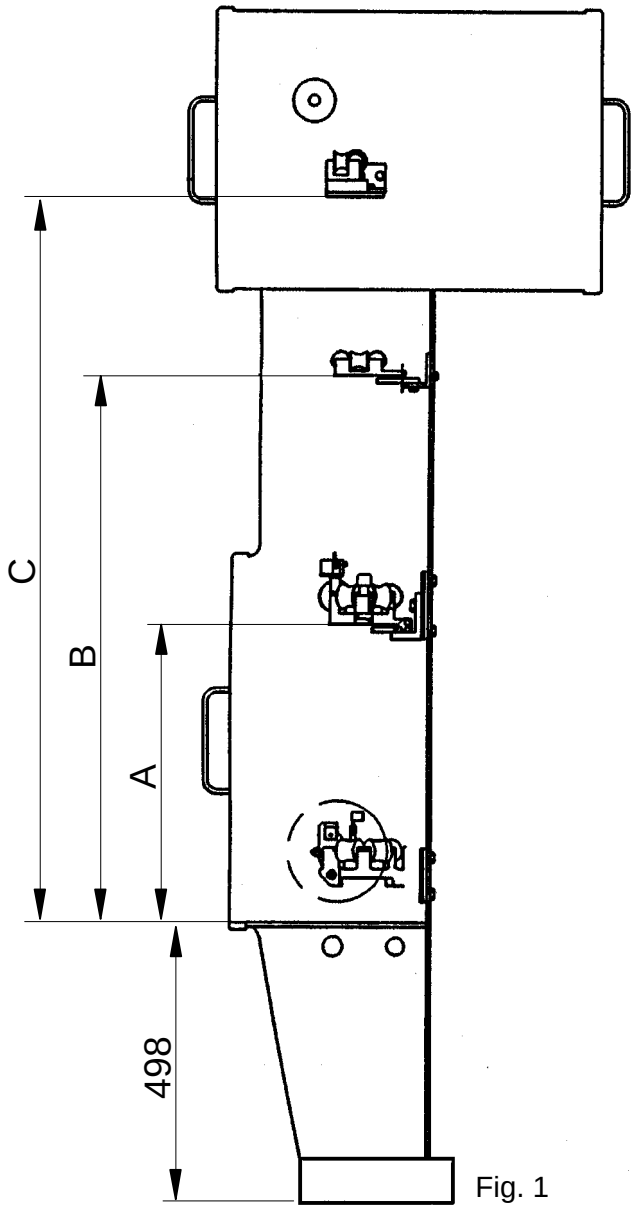

Fig. 1

(Cont'd)

Set the height D by holding slide callipers (2) or similar measuring tool on the bracket of the counter roller (1), see fig. 2.

Volume, ml	D ±0.5 mm
180 – 284	38
125, 200S	53

If required, adjust by shifting the lower forming ring (3) up or down.

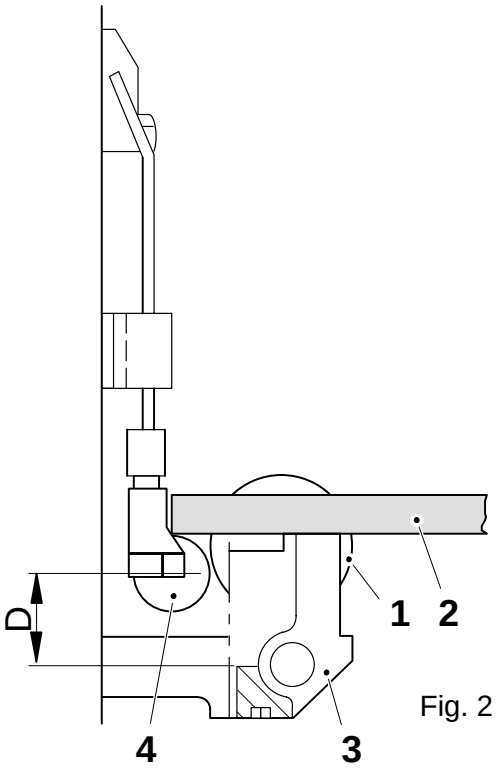

Fig. 2

1 Counter roller
2 Slide callipers
3 Lower forming ring
4 Pressure roller

Description	TB/9	TBA/9
Safety functions – checking	249–11	249–11

Checking

Inch the machine and check that the machine **stops immediately** when:

- the cover of the final folder is opened,
- any of the doors to the jaw system are opened,
- the cover of the pull tab device is opened,
- the crank mechanism is in engaged position, or
- any of the emergency stop buttons is pushed.

Description	TB/9	TBA/9
Link system – checking	301–11	301–11
Link system – checking	301–12	301–12
Yoke lifter arm – removal	303–22	303–22
Hold-down device – checking	306–11	306–11
Hold-down device – removal	306–21	306–21
Hold-down device – removal	306–22	306–22
Hold-down device – timing belt replacement	306–31	306–31
Hold-down device – fitting	306–41	306–41
Hold-down device – fitting	306–42	306–42
Link arm – removal	311–21	311–21
Link arm – removal	311–22	311–22
Overload protection, jaw system – setting/checking	313–51	313–51
Overload protection, jaw system – setting/checking	313–52	313–52
Overload protection jaw system – checking (2 pages)	314–11	314–11
Overload protection jaw system – removal	314–21	314–21
Overload protection jaw system – removal	314–22	314–22
Overload protection, jaw system – setting cut out force	314–51	
Overload protection, jaw system – setting cut out force	314–52	314–52
Cam segment, overload protection – setting	315–51	315–51
Cam pack, RH side and LH side – checking	331–11	331–11
Cam pack, RH side and LH side – checking	331–12	331–12
Cam pack – removal (2 pages)	331–21	331–21
Cam pack – removal (2 pages)	331–22	331–22
Cam pack – fitting	331–41	331–41
Cam pack – fitting	331–42	331–42

Description	TB/9	TBA/9
Cam pack – synchronization (2 pages)	331–51	331–51
Arm cam and yoke cam – synchronization (2 pages)	332–51	332–51
Degree scale – setting	336–51	336–51
Degree scale – setting	336–52	336–52
Degree scale pointer – setting	337–51	337–51
Degree scale pointer – setting	337–52	337–52
Worm gear – oil change	345–12	345–12
Worm gear – removal (3 pages)	345–22	345–22
Worm gear – removal (3 pages)	345–23	345–23
Worm gear – fitting (3 pages)	345–41	345–41
Worm gear – fitting (3 pages)	345–42	345–42
Worm gear – fitting (3 pages)	345–43	345–43
Worm gear – setting	345–51	345–51
Worm gear – setting	345–52	345–52
Belt transmission – checking/setting	347–11	347–11
Brake – checking	360–11	360–11
Brake – checking	360–12	360–12
Brake – checking	360–13	360–13
Brake – removal	360–21	360–21
Brake – fitting	360–41	360–41
Brake – fitting	360–42	360–42
Coupling – checking	361–11	361–11
Coupling – checking	361–12	361–12
Coupling – removal (2 pages)		361–21
Coupling – removal (2 pages)	361–22	361–22

Description	TB/9	TBA/9
Coupling – fitting (3 pages)		361–41
Coupling – fitting (2 pages)	361–42	361–42
Crank mechanism – checking	362–12	362–12
Crank mechanism – removal	362–22	362–22
Crank mechanism – fitting	362–42	362–42
Crank mechanism – setting	362–52	362–52
Crank switch – checking	363–12	363–12
Crank switch – setting	363–52	363–52
Clamp fitting – checking	370–11	370–11
Clamp fitting – removal	370–21	370–21
Clamp fitting – fitting	370–41	370–41

Checking

Bearings, link heads and cam rollers

On RH side and LH side, check that there is no play in:

- the bearings (3), (4), and (6),
- the link heads (2), and
- the cam rollers (1).

Replace worn parts.

Check the lubrication of the the timing belt rollers (5).

1 Cam roller
2 Link head
3 Bearing, link arm
4 Bearing, yoke lifter arm
5 Timing belt roller
6 Bearing, hold-down device
7 Roller, belt tension

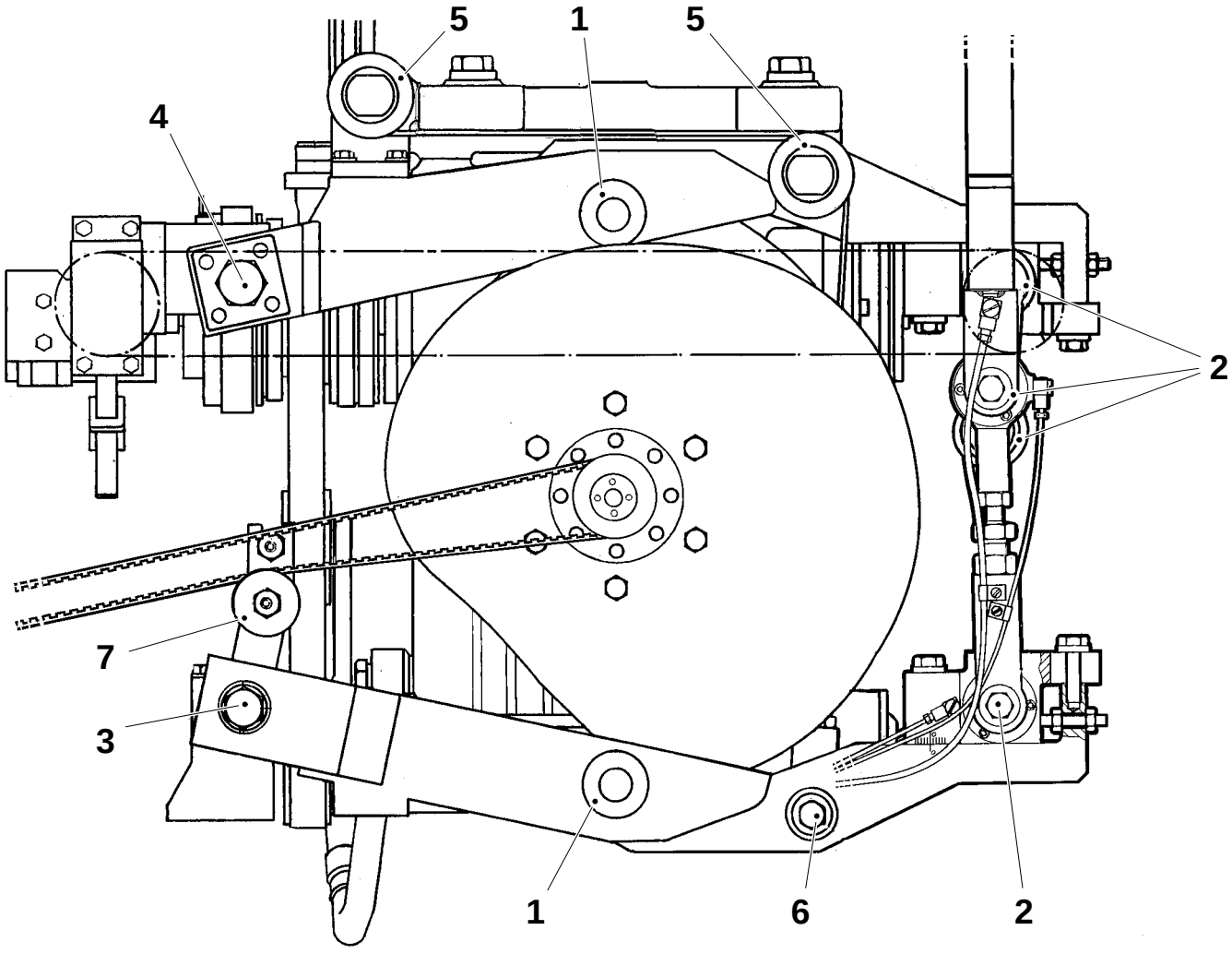

161

Checking

Bearings, link heads and cam rollers

On RH side and LH side, check that there is no play in:

- the bearings (3), (4), and (6),
- the link heads (2), and
- the cam rollers (1).

Replace worn parts.

Check the lubrication of the the timing belt rollers (5).

Check the cam segment (8) for wear.

1 Cam roller
2 Link head
3 Bearing, link arm
4 Bearing, yoke lifter arm
5 Timing belt roller
6 Bearing, hold-down device
7 Cam segment

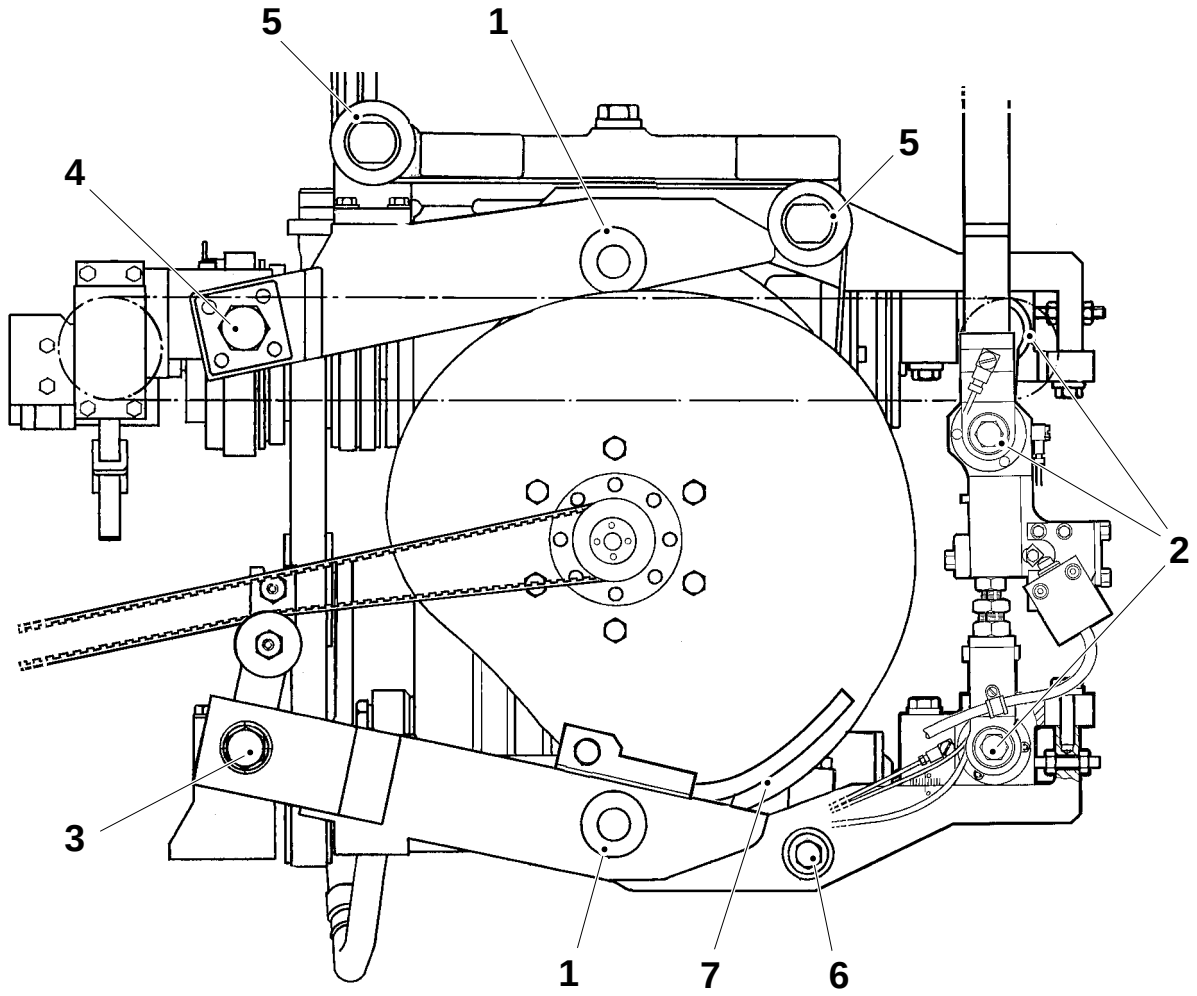

Removal

Release hold-down device spring force, see page MS 306–2X.

Remove the LH and RH link arms, see page MS 311–2X.

Disconnect the lubrication oil pipes (1).

Lift the timing belt (2) out of the way.

Undo the four screws (3).

Undo the screws securing the crank bracket to the LH yoke lifter arm.

Undo the screws (5) and lift out the yoke lifter arm (4).

Reassemble in reverse order.

Apply the hold-down device spring force, see page MS 306–4X.

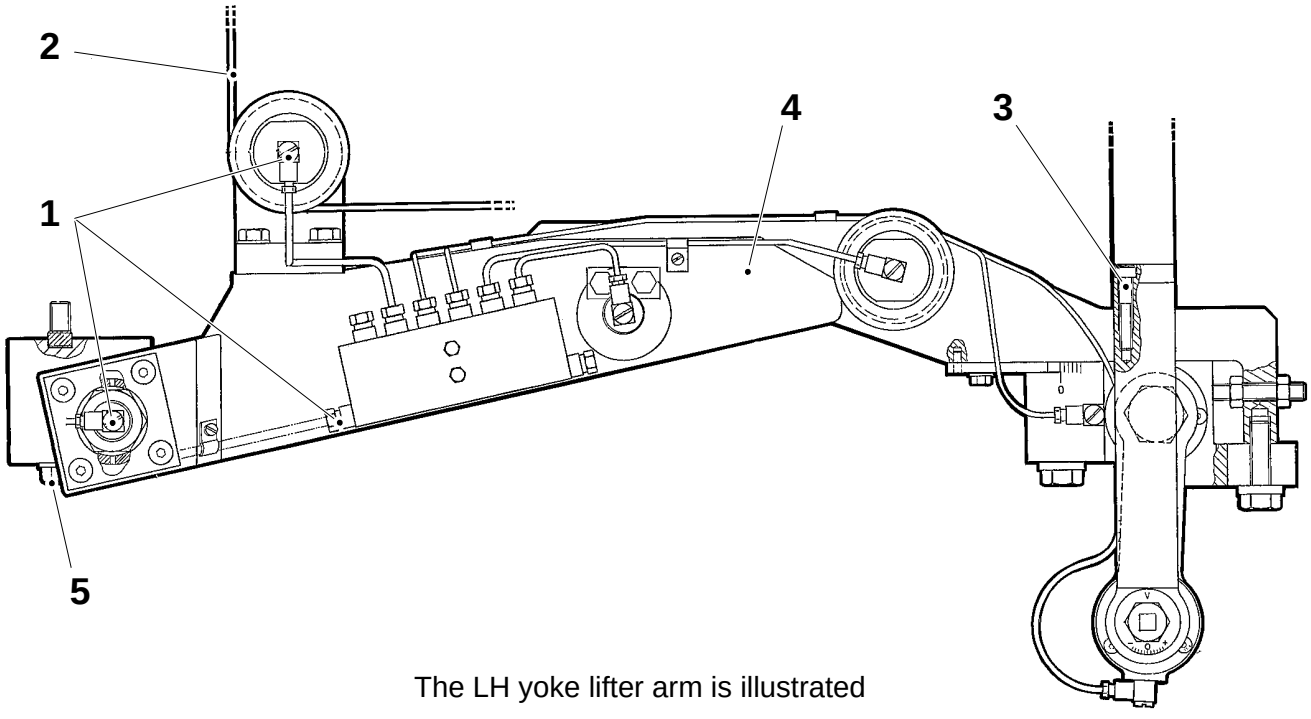

The LH yoke lifter arm is illustrated

1 Lubrication oil pipe
2 Timing belt
3 Screw
4 Yoke lifter arm
5 Screw

Checking

Timing belt wear

Check the wear of the timing belts especially at the arrow indications in fig. 1.

Footnote
Crank the machine to make the parts of the timing belt that run against the rollers (1) accessible.

If necessary, change the timing belts, see page MS 306–3X.

Bearing play

Release the spring force, see page MS 306–2X.

Check the bearing play of the yoke (2), see fig. 2.

Apply the spring force, see page MS 306–4X.

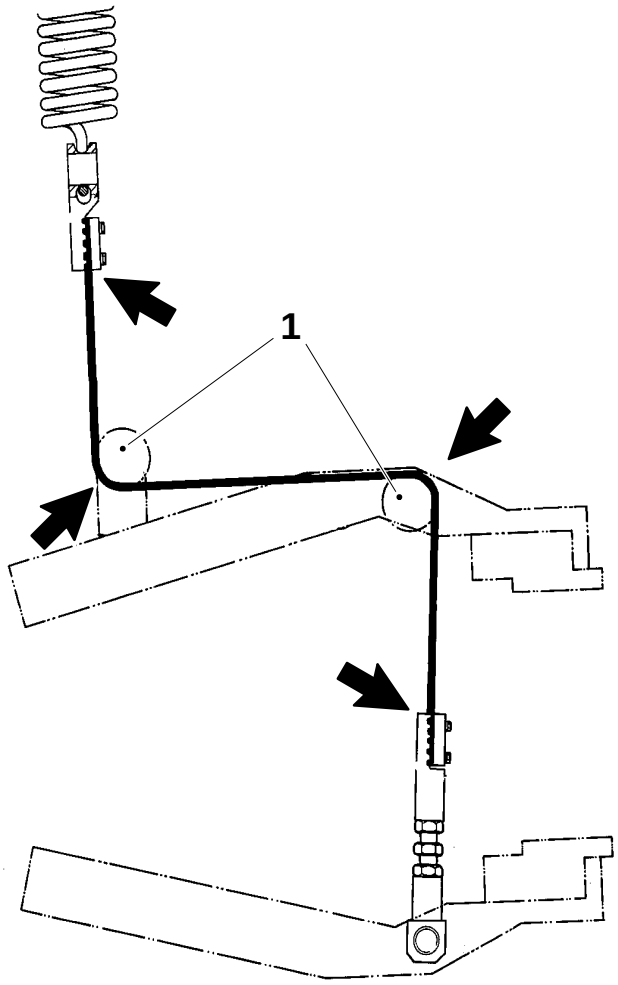

Fig. 1

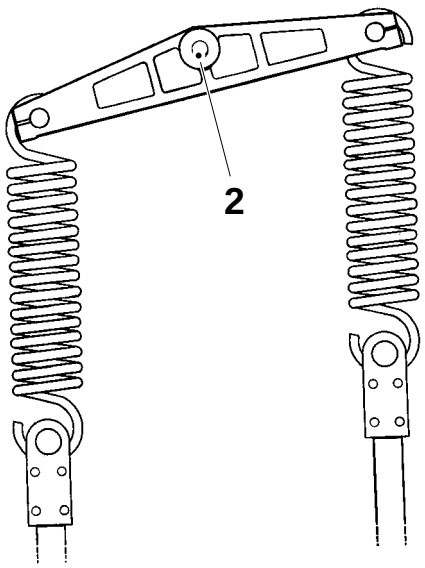

Fig .2

1 Timing belt roller
2 Yoke

Removal

Releasing the spring force

a) Remove the degree scale and the pointer.

b) Slacken the rigging screw (2) of the LH link arm until distance A is 114 – 116 mm.

WARNING!
This operation must be done with utmost care and caution to avoid injury in case the screw is inadvertently unscrewed too far and comes off the timing belt bracket (1) or the link arm (3), see fig.1.

c) Slacken the RH link arm rigging screw in the same way.

d) Crank the machine so that the RH jaw pair is open and opposite the LH pair.

e) Insert the fitting tool (5) into the hole behind the LH design correction cylinder and lock the yoke (4) in its lower left position, see fig. 2.

f) Crank the machine until the LH timing belt on the hold-down device goes slack.

g) Remove the LH rigging screw.

h) Crank the machine

Caution!
The jaw system must be forcibly guided by hand so that the RH rigging screw becomes accessible.

Increase distance A to 123 – 125 mm.

i) Extract the fitting tool and remove the RH rigging screw.

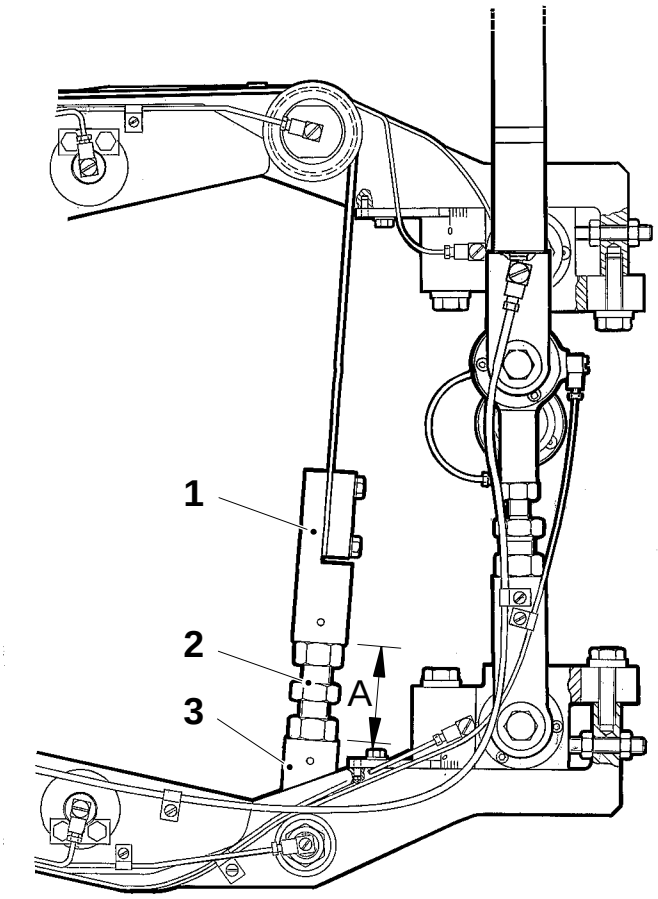

Fig. 1

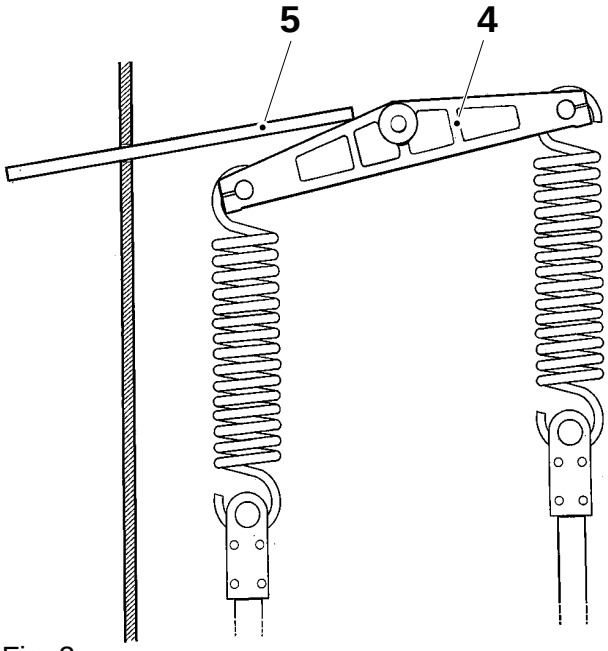

Fig. 2

1 Timing belt bracket
2 Rigging screw
3 Link arm
4 Yoke
5 Fitting tool TP No. 75514

Removal

Releasing the spring force

a) Remove the degree scale and the pointer.

b) Slacken the rigging screw (2) of the LH link arm until distance A is 114 – 116 mm.

WARNING!
This operation must be done with utmost care and caution to avoid injury in case the screw is inadvertently unscrewed too far and comes off the timing belt bracket (1) or the link arm (3), see fig.1.

c) Slacken the RH link arm rigging screw in the same way

Caution!
Whenever cranking the machine with reduced hold-down tension, the jaw system must be guided by hand.

d) Crank the machine so that the RH jaw pair is open and opposite the LH pair.

e) Insert the fitting tool (5) into the hole behind the LH design correction cylinder and lock the yoke (4) in its lower left position, see fig. 2.

f) Crank the machine until the LH timing belt on the hold-down device goes slack.

g) Remove the LH rigging screw.

h) Crank the machine

Caution!
The jaw system must be forcibly guided by hand so that the RH rigging screw becomes accessible.
Increase distance A to 123 – 125 mm.

i) Extract the fitting tool and remove the RH rigging screw.

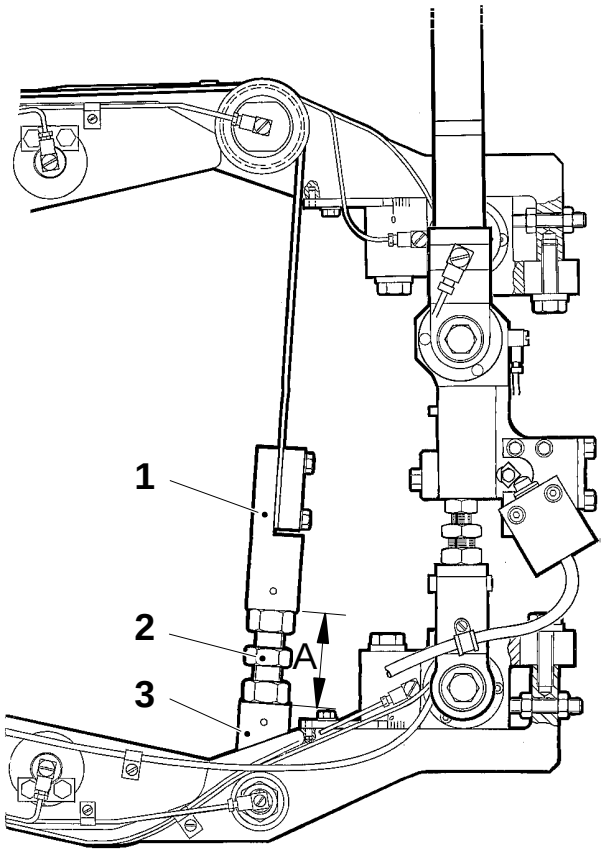

Fig. 1

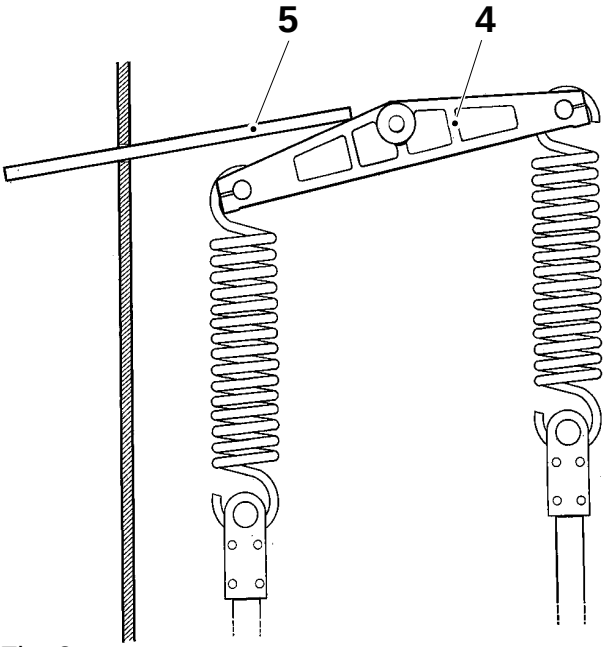

Fig. 2

1 Timing belt bracket
2 Rigging screw
3 Link arm
4 Yoke
5 Fitting tool TP No. 75514

Timing belt replacement

Release the spring force of the hold-down device, see page MS 306–2X.

a) Loosen the oil pipe connection (2).

b) Lift the timing belt from the yoke.

c) Undo the brackets (1) from the belt.

d) Cut the belt to measurement A, see table below.
Note! There are two different types of timing belts.

e) Fit the brackets (1) to the new belt.

f) Fit the new belt and oil pipe connection and apply the spring force, see page MS 306–4X.

Make sure the belt is not twisted.

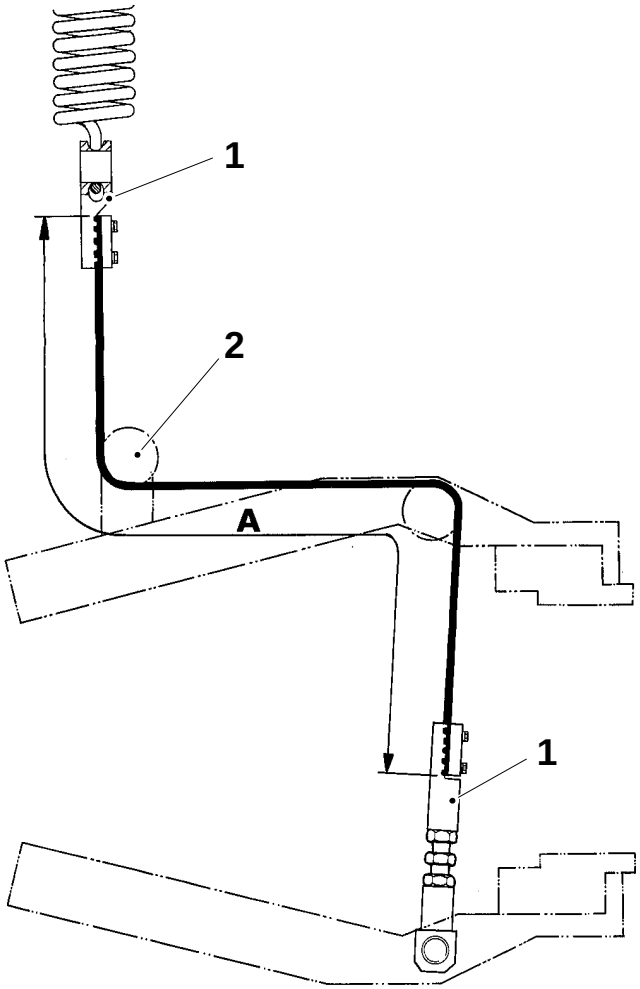

1 Bracket
2 Oil pipe connection

Volume,	Timing belt (old type)		Timing belt (new type)	
ml	A, mm	TP No.	A, mm	TP No.
TB 180	750	490566–1	740	566404–1
TB 200	750	490566–1	740	566404–1
TB 200S	710	490566–3	700	566404–3
TB 236	720	490566–2	710	566404–2
TB 250	720	490566–2	710	566404–2
TBA 125	750	490566–1	740	566404–1
TBA 180	750	490566–1	740	566404–1
TBA 200	750	490566–1	740	566404–1
TBA 200S	720	490566–2	710	566404–2
TBA 236	720	490566–1	740	566404–1
TBA 250	720	490566–2	710	566404–2
TBA 284	720	490566–2	710	566404–2

Fitting

Applying the spring force

Crank the machine so that the RH jaw pair is open and opposite the LH jaw pair.

Screw the RH rigging screw (2) three to four turns into the link arm (3) and the timing belt bracket (1). Check that the threads of the rigging screw are equally applied in link arm and bracket.

Hammer the fitting tool (5) into the hole behind the LH design correction cylinder so that the left side of the yoke (4) is forced downwards.

Screw the LH rigging screw likewise.

Extract the fitting tool.

Crank the machine so that the RH rigging screw can be tightened another 20 mm.

Footnote
The jaw system must be forcibly guided by hand.

Tighten the LH rigging screw until distance B is obtained, see table. Tighten the lock nuts.
Repeat the setting procedure on the RH rigging screw.

Volume, ml	B ±1mm
TB 180	62
TB 200	57
TB 200S	45
TB 250	46
TBA 125	70
TBA 180	63
TBA 200	52
TBA 200S	45
TBA 236	45
TBA 250	60

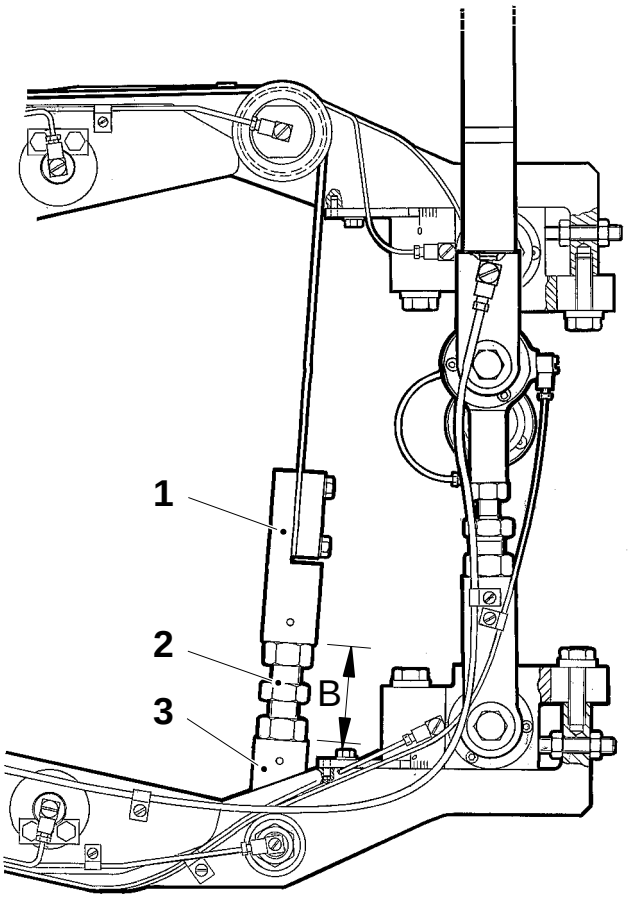

Fig. 1

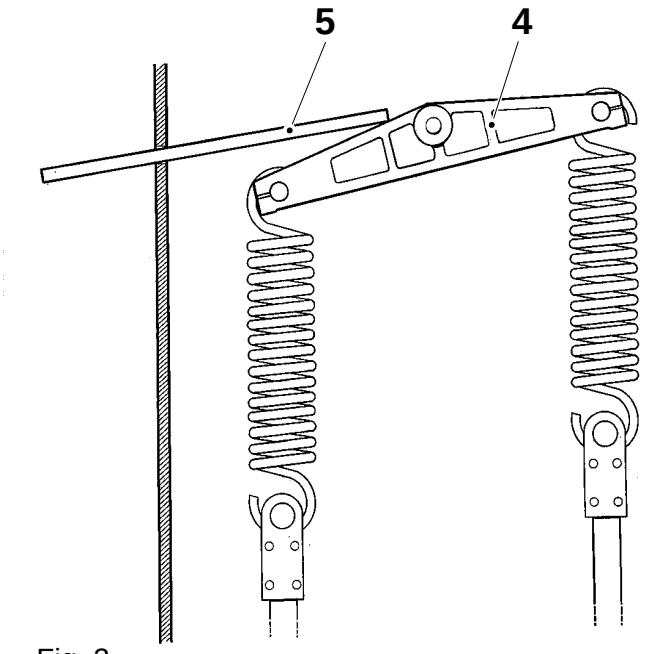

Fig. 2

1 Bracket
2 Rigging screw
3 Link arm
4 Yoke
5 Fitting tool TP No. 75514

Fitting

Applying the spring force

Crank the machine so that the RH jaw pair is open and opposite the LH jaw pair.

Screw the RH rigging screw (3) three to four turns into the link arm (3) and the timing belt bracket (1). Check that the threads of the rigging screw are equally applied in link arm and bracket.

Hammer the fitting tool (5) into the hole behind the LH design correction cylinder so that the left side of the yoke (4) is forced downwards.

Screw the LH rigging screw likewise.

Extract the fitting tool.

Crank the machine so that the RH rigging screw can be tightened another 20 mm.

Footnote
The jaw system must be forcibly guided by hand.

Tighten the LH rigging screw until distance B is obtained, see table. Tighten the lock nuts. Repeat the setting procedure on the RH rigging screw.

Volume, ml	B ±1mm
TB 180	62
TB 200	57
TB 200S	45
TB 236	62
TB 250	46
TBA 125	70
TBA 180	63
TBA 200	52
TBA 200S	45
TBA 236	45
TBA 250	60
TBA 284	60

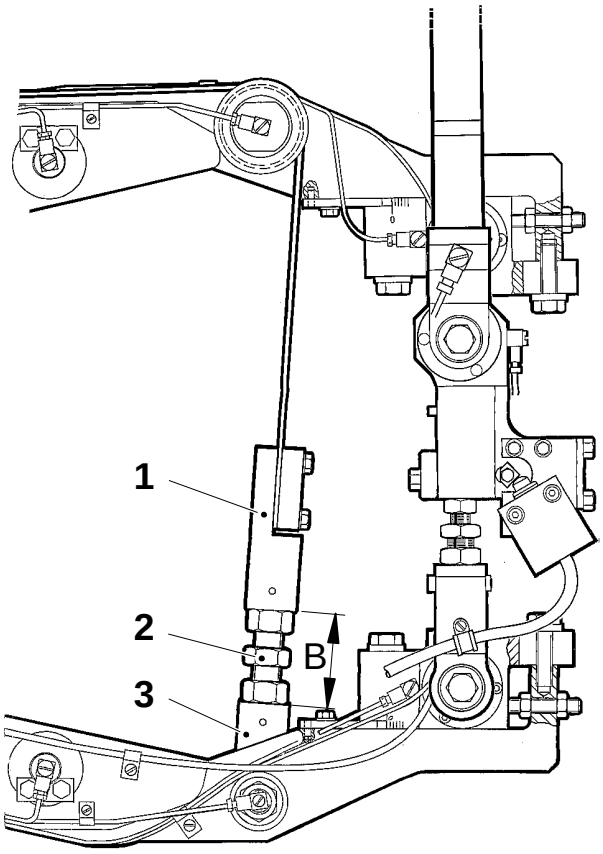

Fig. 1

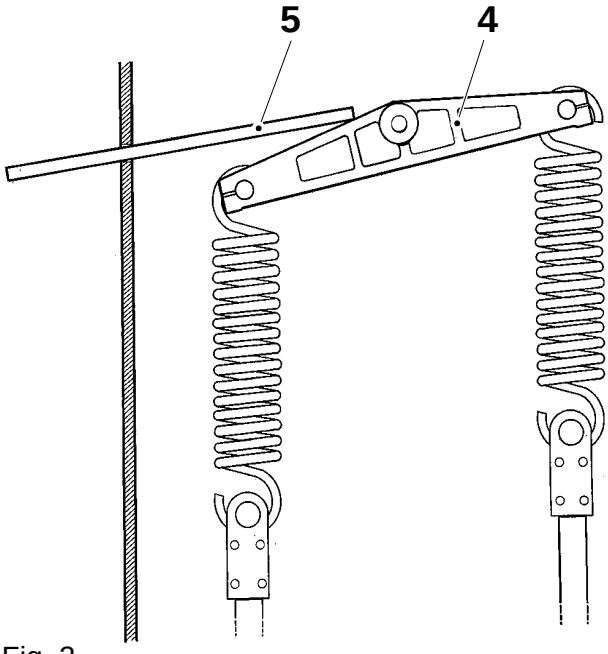

Fig. 2

1 Timing belt bracket
2 Rigging screw
3 Link arm
4 Yoke
5 Fitting tool TP No. 75514

Removal

Release the hold-down device spring force, see page MS 306–2X.

Remove the belt tensioner (2) from the LH link arm bracket.

Undo the banjo connections (5). Undo the screw (6) and drive out the axle pin. Lower the link arm to the bottom plate.

Disconnect the oil pipes (3).

Undo the screws (1).

Lift out the link arm (4).

Reassemble in reverse order.

Apply the spring force of the hold-down device, see page MS 306–4X.

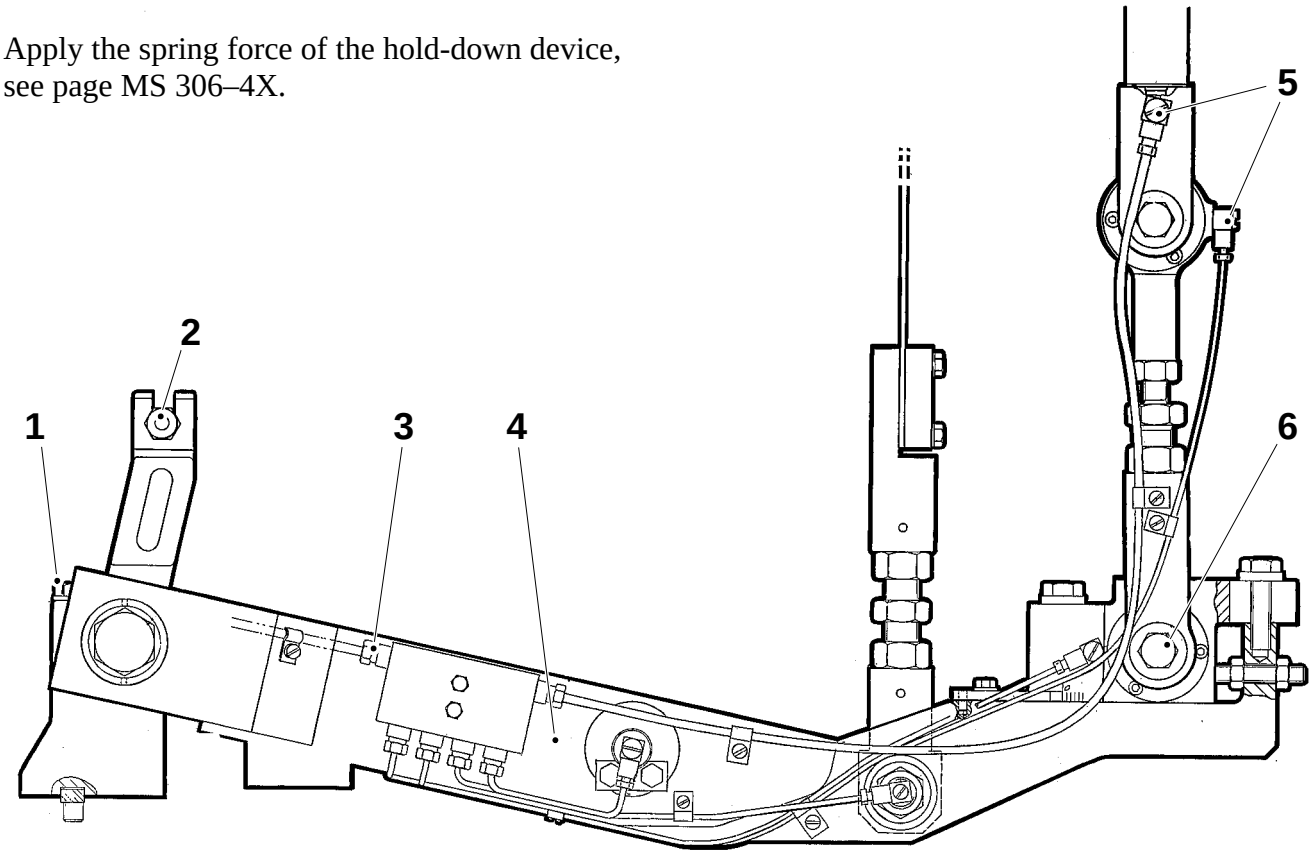

The LH link arm is illustrated

1 Screw
2 Belt tensioner
3 Oil pipe
4 Link arm
5 Oil pipe
6 Screw

Removal

Release the hold-down device spring force, see page MS 306–2X.

Remove the belt tensioner (2) from the LH link arm bracket.

Undo the banjo connections (5). Disconnect the microswitch cable from the clamps (7). Undo the screw (6) and drive out the axle pin. Lower the link arm to the bottom plate.

Disconnect the oil pipes (3).

Undo the screws (1).

Lift out the link arm (4).

Reassemble in reverse order.

Apply the spring force of the hold-down device, see page MS 306–4X.

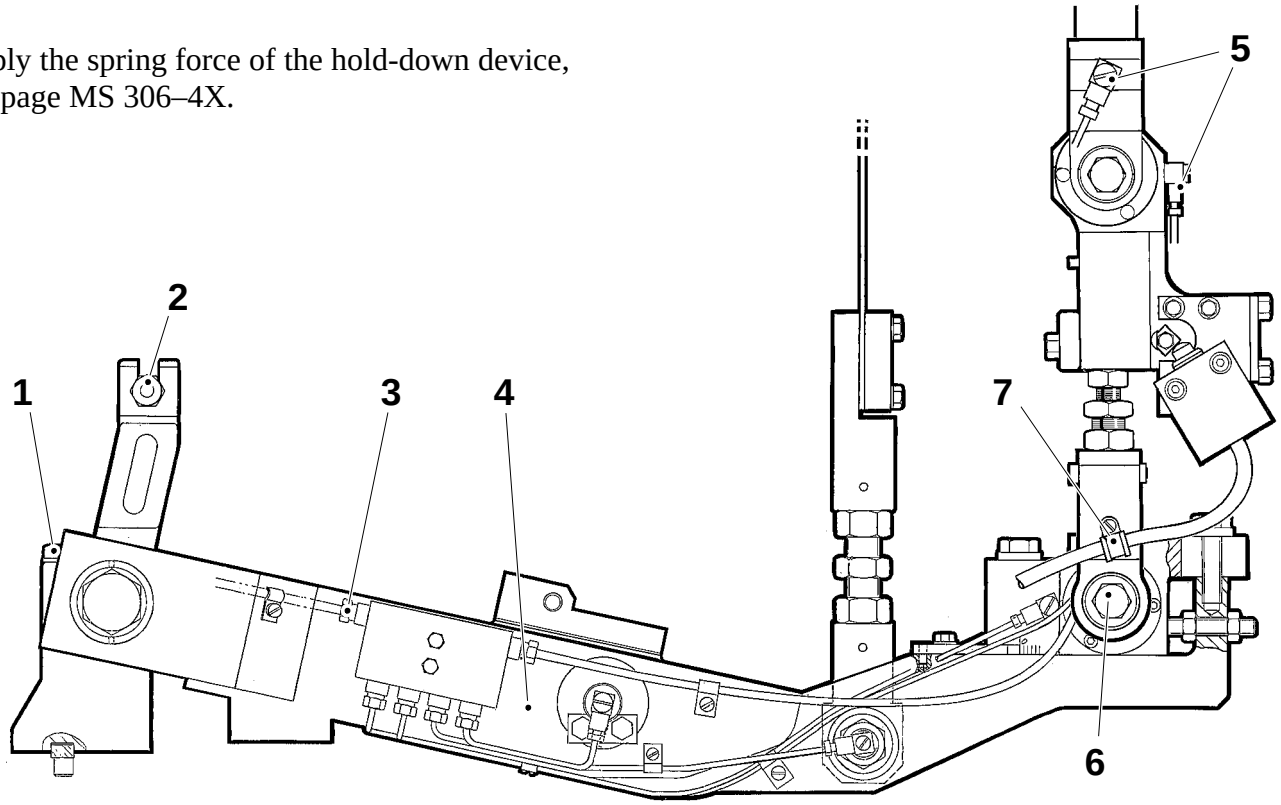

The LH link arm is illustrated

1 Screw
2 Belt tensioner
3 Oil pipe
4 Link arm
5 Banjo connection
6 Screw
7 Clamp

Setting/Checking

Setting of monitor

Set gap A between the link arm (1) and the monitor (2), see fig. The setting is to be effected on both LH side and RH side of the machine.

Crank the machine to X_8, see table, and position the monitor (2) vertically until the LED (3) is just to go out.

Check of monitor setting

Crank the machine and check that the LED (3) goes out when the machine is passing X_8, see table.

Volume,	X_8	
ml	RH side	LH side
TB 200 – 250	166_8	366_8
TB 200S	167_8	367_8
TBA 125	151_8	351_8
TBA 180 – 250	153_8	353_8

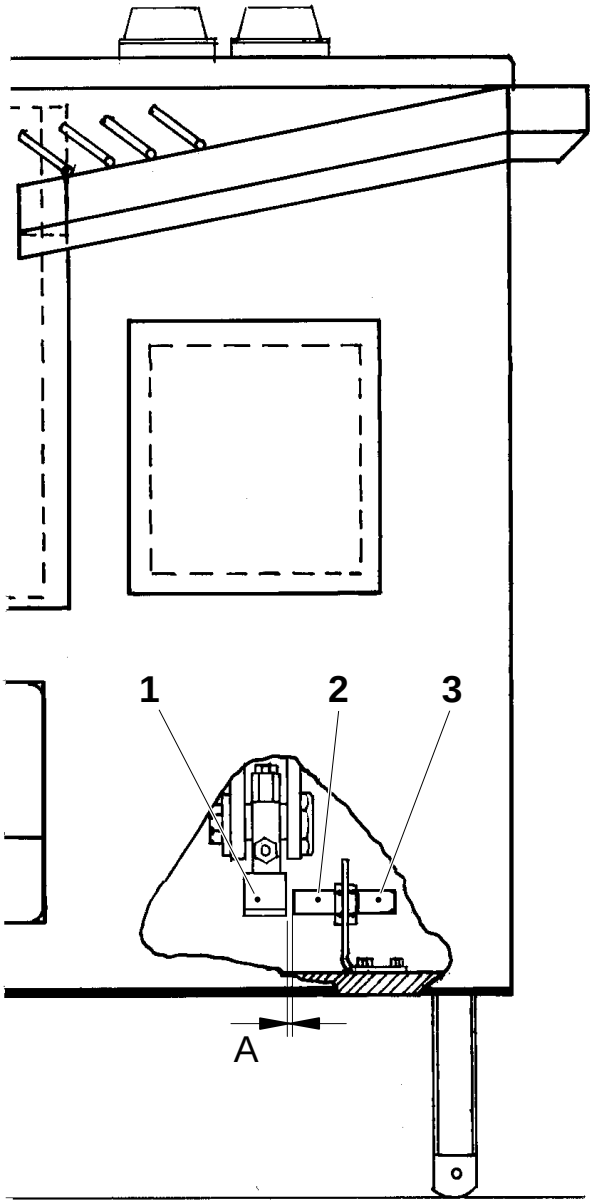

A = 0.5 – 1 mm

1 Link arm
2 Monitor
3 LED

Setting/Checking

Loosen the screws (1).

Shift the plate (2) sideways and set the gap between the switch (3) and the carrier (4) to satisfy the following conditions:

- the overload protection must **not** be activated when a 0.8 mm feeler gauge is inserted between the switch and the carrier,
- the overload protection **is to be** activated when a 0.9 mm feeler gauge is inserted between the switch and the carrier.

Retighten the screws.

Recheck the setting.

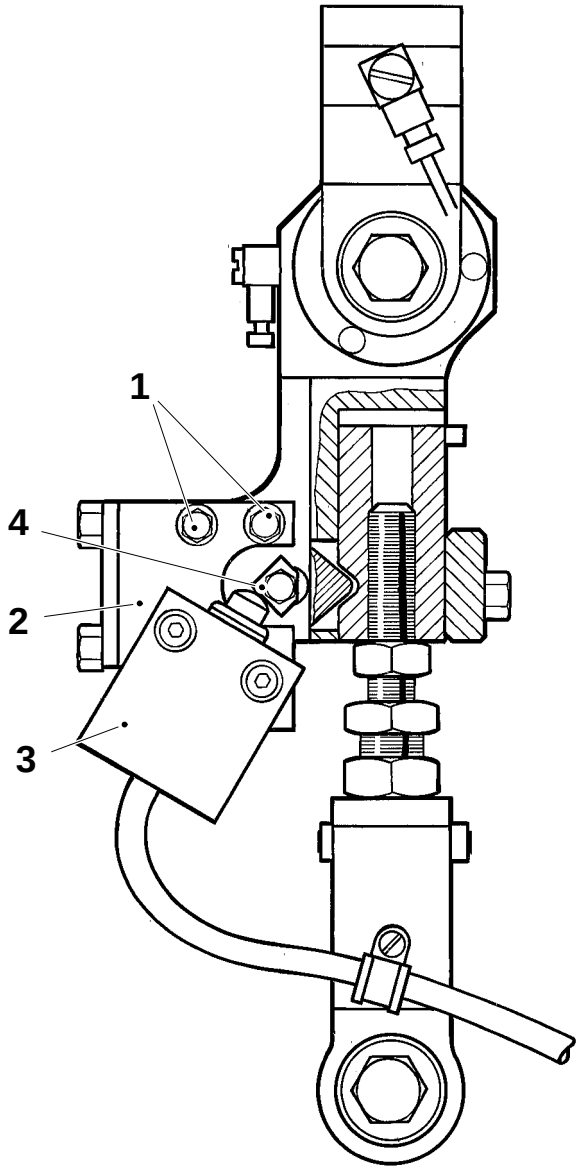

1 Screw
2 Plate
3 Switch
4 Carrier

Checking

Crank to approximately 120° (LH side) and 300° (RH side). This has to be done to allow the overload protection to cut out without the cam roller of the volume flap fouling the volume cam.

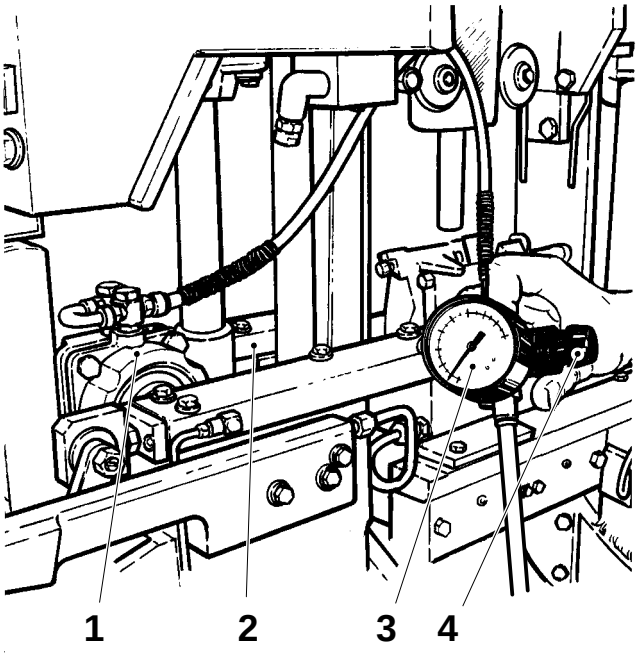

Place the tool (1) between the carriers, as illustrated. Make sure that the plate on the back of the tool bears against the inner carrier (2).

Close for the incoming air by means of the regulator (4).

Connect compressed air from the connection on the valve panel of the machine to the tool.

Slowly increase the air pressure by means of the regulator (4) until the protection cuts out mechanically.
To make the protection cut out the first time, it may be necessary to help it by hand or loosen the screws (5) a little at a time.

Pull the jaws as far as possible apart when the overload protection has cut out. Retighten the screws.

(Cont’d overleaf)

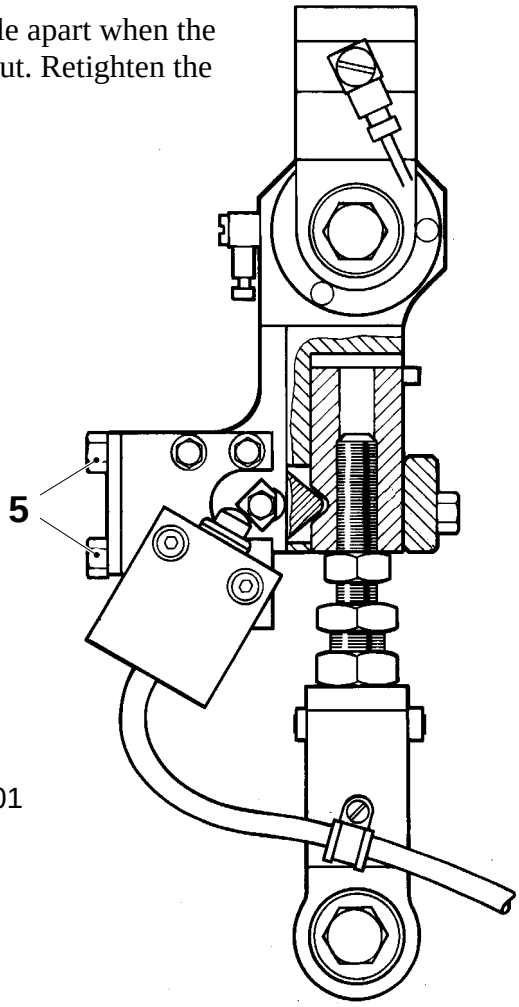

1 Tool TP No. 563740–101
2 Inner carrier
3 Pressure gauge
4 Regulator
5 Screw

(Cont'd)

Thoroughly lubricate all friction surfaces with Molycote TP No. 90296–12.

Gently move the jaws back to their initial position.

Footnote
Make sure the cam roller on the folding flap cam returns to its correct position.

Place the tool once more between the jaws and increase the air pressure slowly until the overload protection cuts out.
Repeat this procedure a couple of times so that the lubricant is spread out evenly.

Check that the overload protection cuts out when the pressure gauge (3) indicates 3 – 4.5 bar.

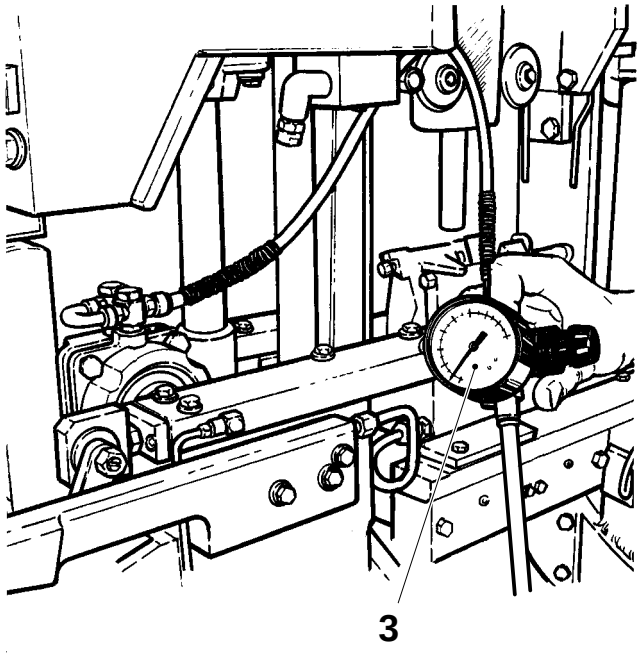

Set the overload protection, see page MS 314–5X (does not apply to TBA/9 development step 120V; for this step, the spring piston and slide lug are to be replaced, if required).

Repeat the procedure on the other jaw pair.

Check cables (7) for cracks.

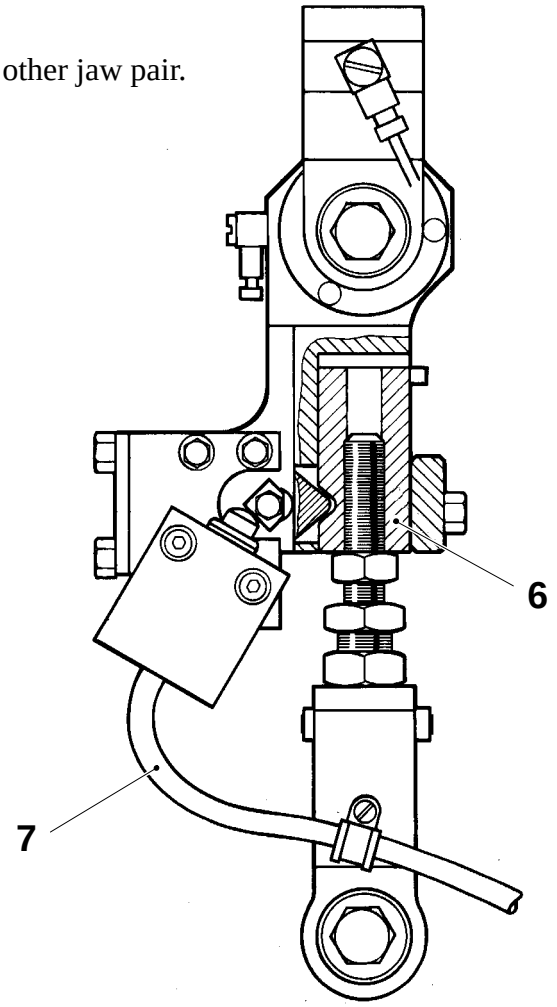

3 Pressure gauge
6 Slide lug
7 Cable

Removal

Crank the machine to 120° (LH side)/300° (RH side).

Undo the screw (3) and remove the carrier (2).

Undo the screws (1) and remove the cover (8) and the shims.

Remove the spring (7) and the piston (6).

Undo the screw (5) and move out slide lug (4).

Thoroughly lubricate all friction surfaces of the slide lug (4) and the piston (6) with Molykote, TP No. 90296–12.

Move the slide lug back and fit the screws.

Reassemble in reverse order.

Setting, see page MS 313–5X.

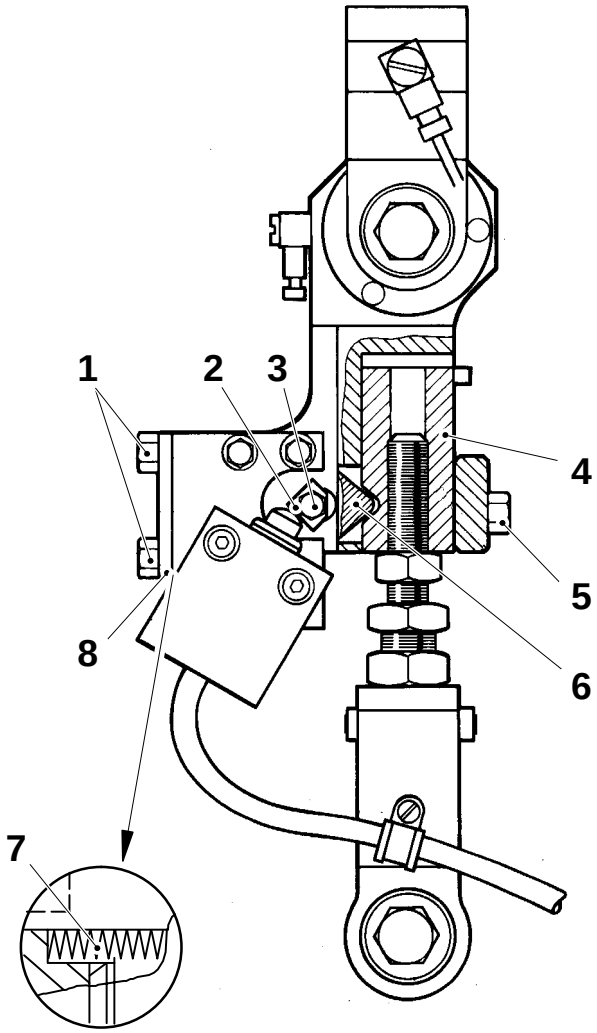

1 Screw
2 Carrier
3 Screw
4 Slide lug
5 Screw
6 Piston
7 Spring
8 Cover

Removal

Crank the machine to 120° (LH side)/300° (RH side).

Undo the screw (3) and remove the carrier (2).

Undo the screws (1) and remove the cover (8) and the shims.

Remove the cup springs (7) and the piston (6).

Undo the screw (5) and move out slide lug (4).

Thoroughly lubricate all friction surfaces of the slide lug (4) and the piston (6) with Molykote, TP No. 90296–12.

Move the slide lug back and fit the screws.

Reassemble in reverse order.

Setting, see page MS 313–5X.

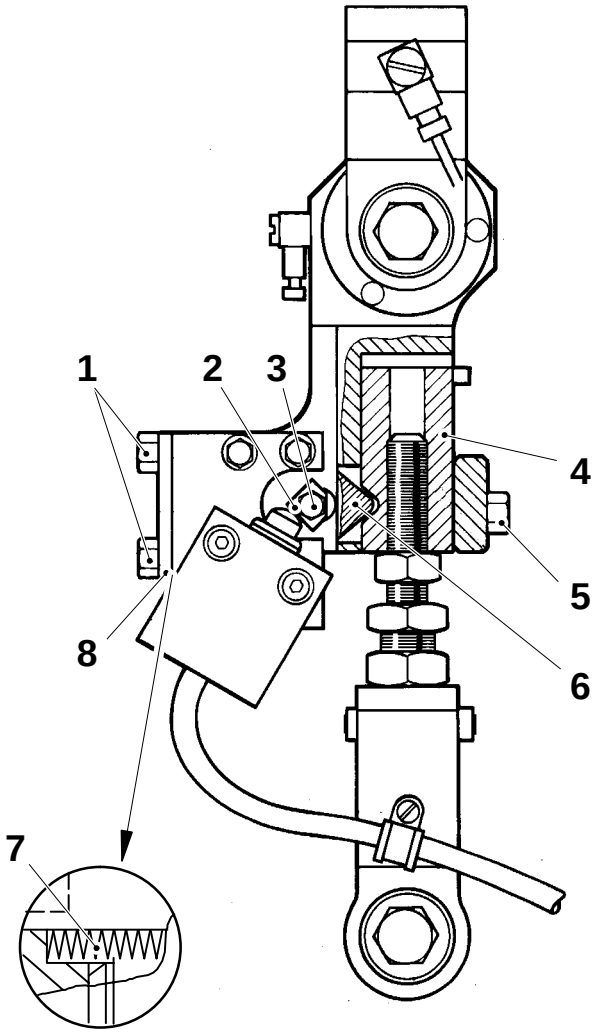

1 Screw
2 Carrier
3 Screw
4 Slide lug
5 Screw
6 Piston
7 Cup spring (42 off)
8 Cover

Setting cut-out force

Place the assembly stud (1) in the hole.

Undo the screws (2) and carefully remove the cover.

Caution!
There are cup springs behind the cover.

Adjust the cut-out force by means of shims (3). Reduce the shimming thickness to increase the spring force.
Not **less than 0.5 mm** and not **more than 5.0 mm** shimming may be used. Basic setting = 2.0 mm.

Check that the cut-out force is correctly set, see page MS 314–1X.
Carry out checking at least twice a side.

If correct cut-out force cannot be set, the cup springs (4) must be replaced.
Make sure that the springs are correctly positioned on assembly, as illustrated.

Also check that the piston (5) and slide lug (6) are intact and move freely.

Shim, TP No. 752674	Thickness, mm
–7	1.0
–6	1.5
–5	0.4
–4	0.8
–3	0.7
–2	0.6
–1	0.5

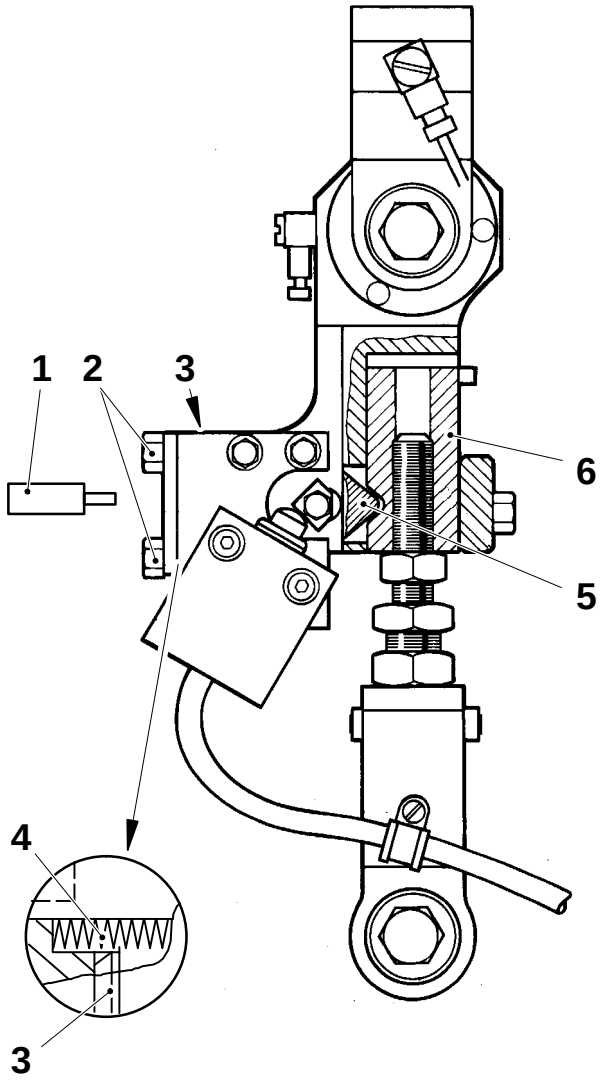

1 Assembly stud TP No. 77247
2 Screw
3 Shim TP No. 752674
4 Cup spring
5 Piston
6 Slide lug

Setting

Fit the cam segments (1) on the RH/LH side cam arm with the screws (2).

Crank the machine until the roller (3) is positioned at the beginning of the cam segment.

Set gap A between the roller and the cam segment. Check in the vicinity of the screws (2).

To adjust, remove/add shims (4) under the holder (5) or shift the cam segments within its holes.

If required, drill new ∅3.8 mm holes next to the old ones and broach them to ∅4.0 H7.

Fit the pins (6).

This setting is to be carried out on both the LH side and the RH side of the machine.

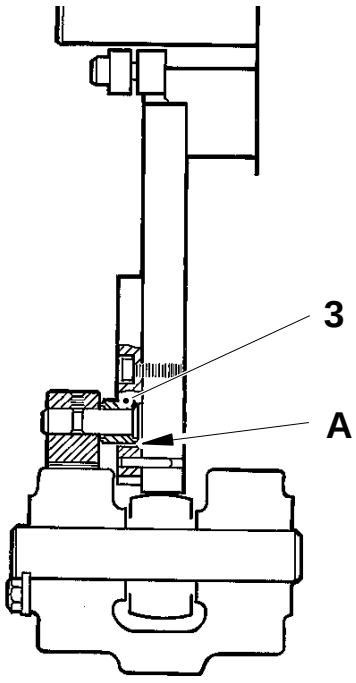

A = 0.2 – 0.3 mm

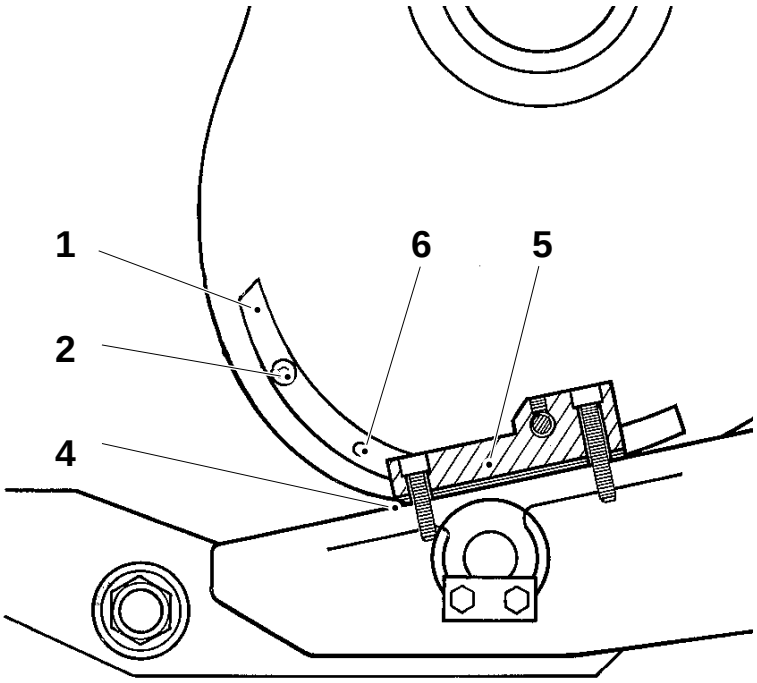

1 Cam segment
2 Screw
3 Roller
4 Shim TP No.491319
5 Holder
6 Pin

Checking

Release the hold-down device spring force, see page MS 306–2X.

Check the running surface (1) of the cams for wear. Replace worn parts.

Apply the hold-down device spring force, see page MS 306–4X.

Check the tension of the timing belt (2), 8 ±1 mm deflection with 15 ±1 N load force, see fig.

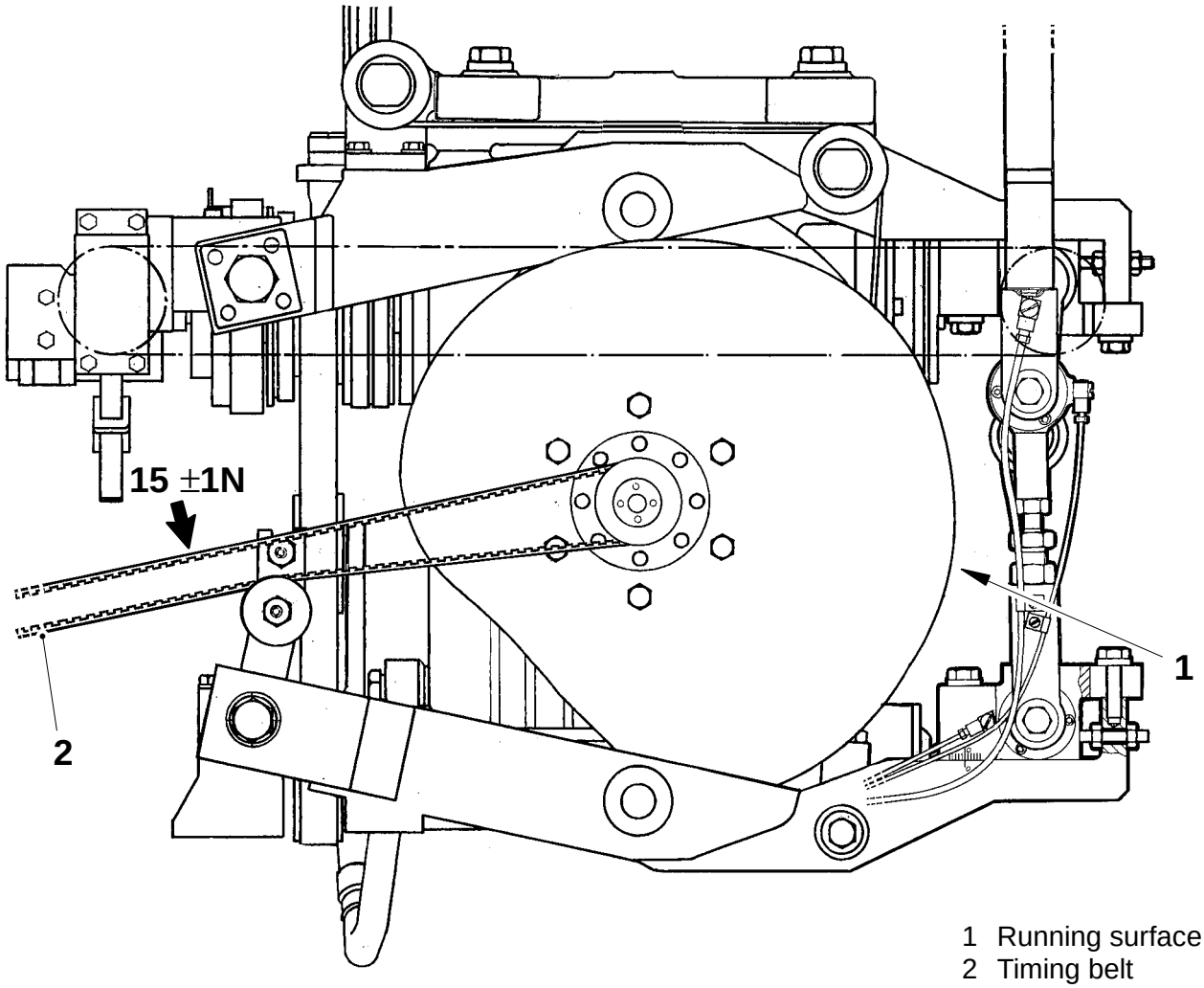

1 Running surface
2 Timing belt

Checking

Release the hold-down device spring force, see page MS 306–2X.

Check the running surface (1) of the cams for wear. Replace worn parts.

Apply the hold-down device spring force, see page MS 306–4X.

Check the tension of the timing belt (2), 8 ±1 mm with deflection with 15 ±1 mm load force, see fig.

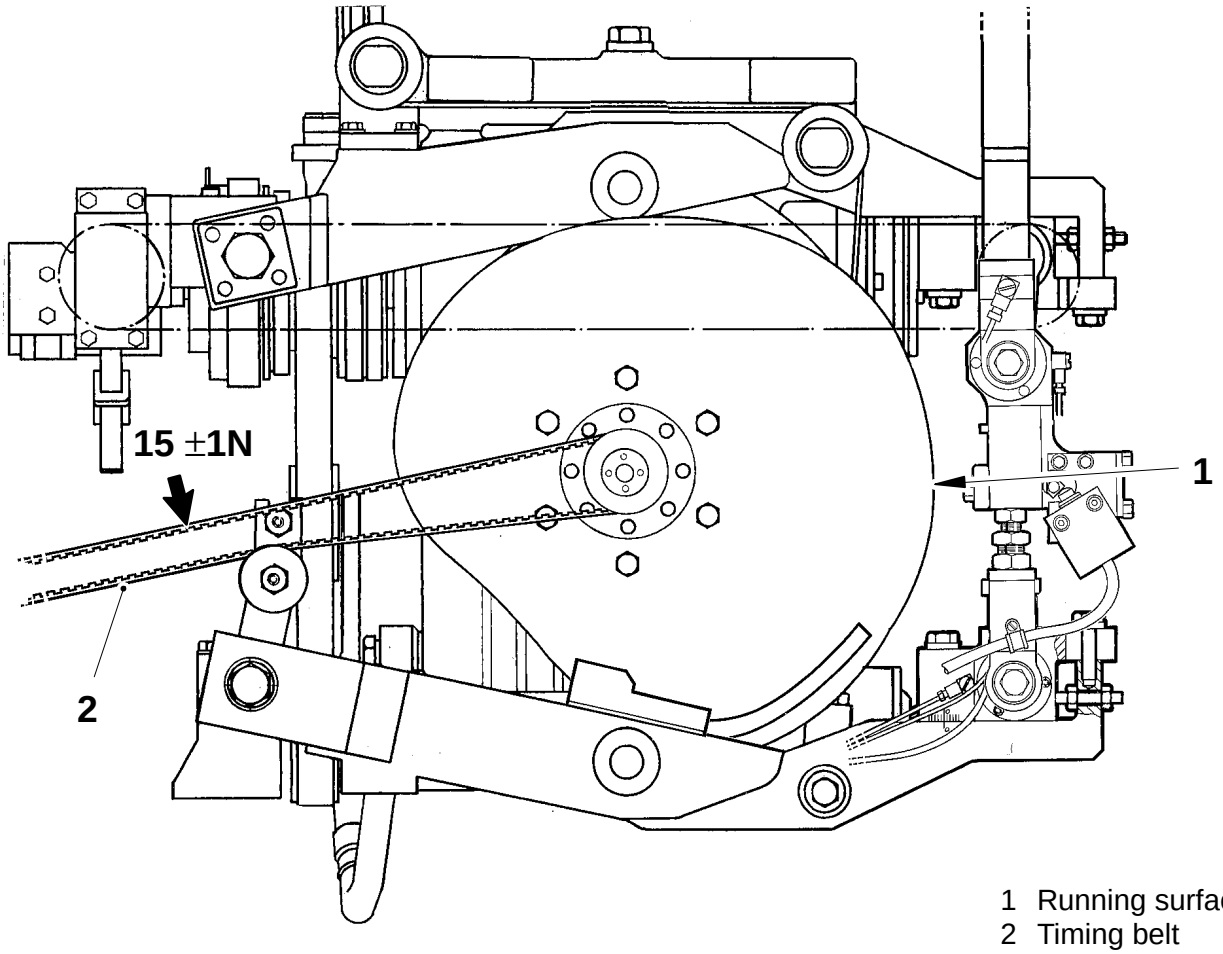

1 Running surface
2 Timing belt

Removal

- Release the hold-down device spring force, see page MS 306–2X.
- Crank the machine.
  Caution! The jaw system has to be forcibly guided by hand so that the RH jaw pair is open and opposite the LH jaw pair.

Removing the RH cam pack

a) Undo the banjo connections (5) from the link arm (2). Undo the screw (3) and drive out the axle pin. Lower the link arm (2) to the bottom plate.

b) Raise the yoke lifter arm (1) and put an approximately 180 mm high wooden block (6) under the yoke.

c) Loosen the clamp fitting (4), see page MS 370–2X, and lift out the cam pack.

(Cont'd overleaf)

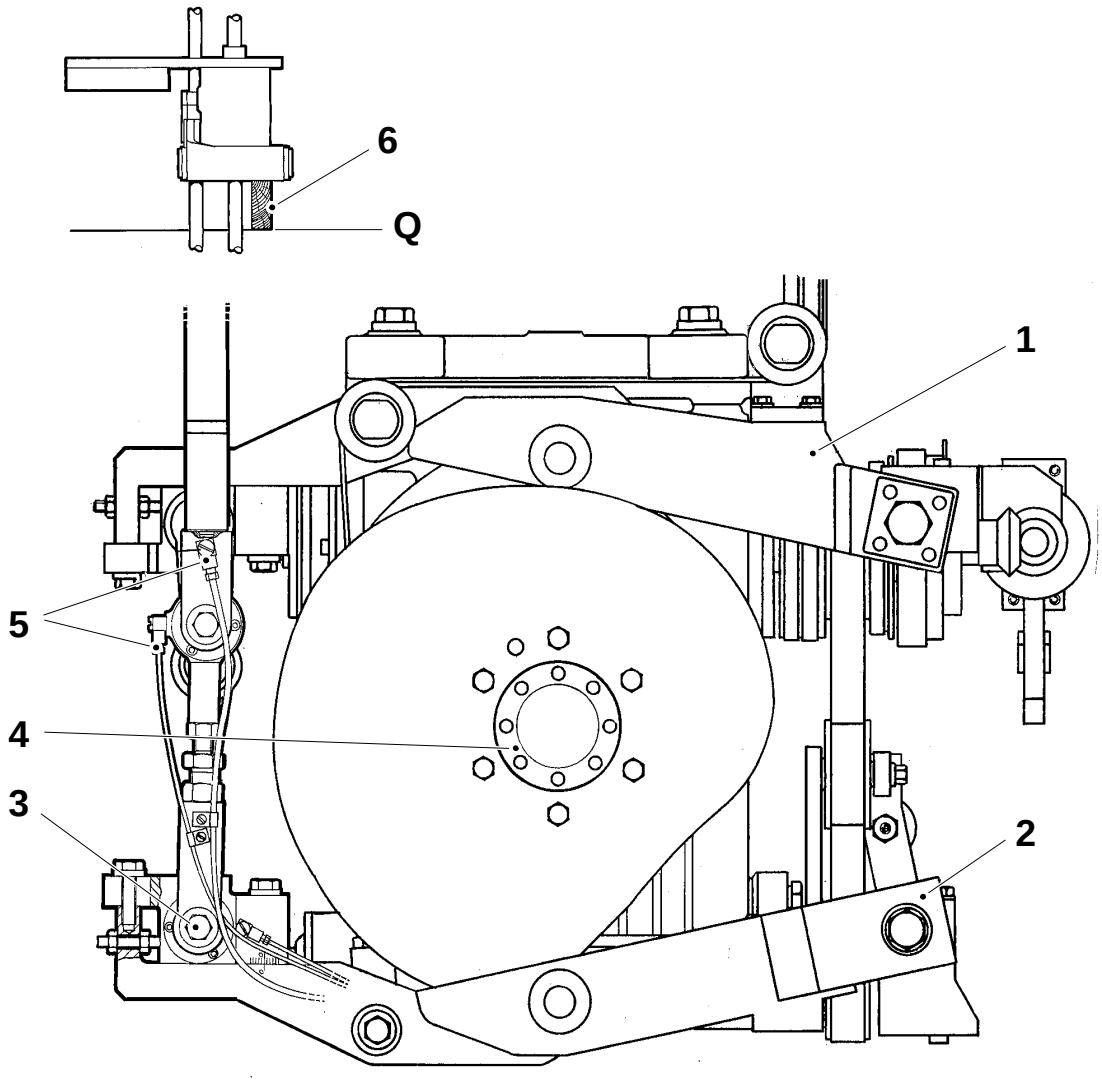

1 Yoke lifter arm
2 Link arm
3 Screw
4 Clamp fitting
5 Banjo connection
6 Wooden block

(Cont'd)

Removing the LH cam pack

d) Slacken the belt tensioner (7) of the angle encoder. Loosen the clamp fitting (8) and remove the belt and pulley (9).

e) Open the chain lock on the crank chain and remove the chain (10).

f) Remove the LH cam pack, see previous page, items a) – c).

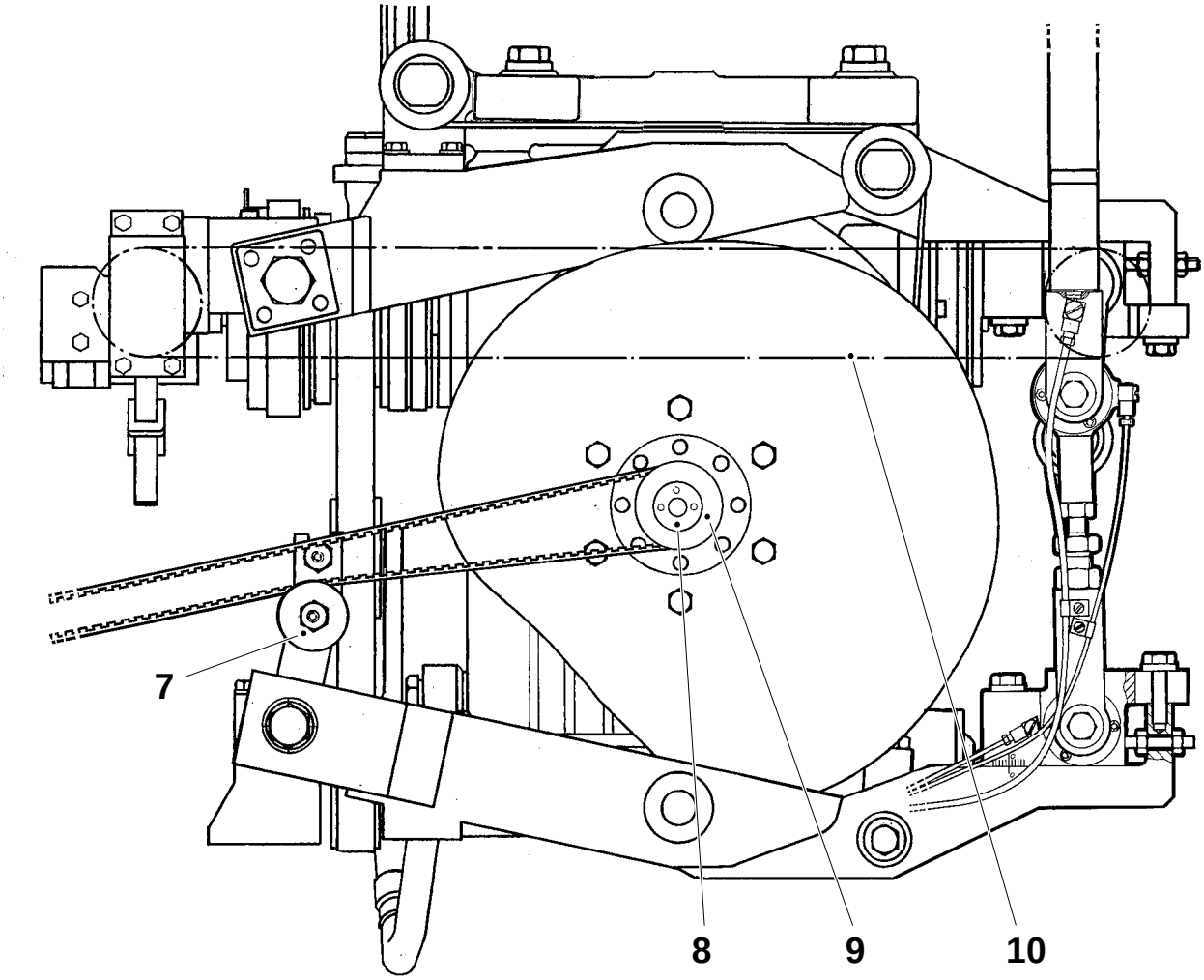

7 Belt tensioner
8 Clamp fitting
9 Pulley
10 Chain

Removal

- Release the hold-down device spring force, see page MS 306–2X.
- Crank the machine.
  Caution!
  The jaw system has to be forcibly guided by hand so that the RH jaw pair is open and opposite the LH jaw pair.

Removing the RH cam pack

a) Disconnect the banjo connections (5) from the link arm (2). Disconnect the microswitch (7) from the connection link. Undo the screw (3) and drive out the axle pin. Lower the link arm (2) to the bottom plate.

b) Raise the yoke lifter arm (1) and put an approximately 180 mm high wooden block (6) under the yoke.

c) Loosen the clamp fitting (4), see page MS 370–2X and lift out the cam pack.

(Cont'd overleaf)

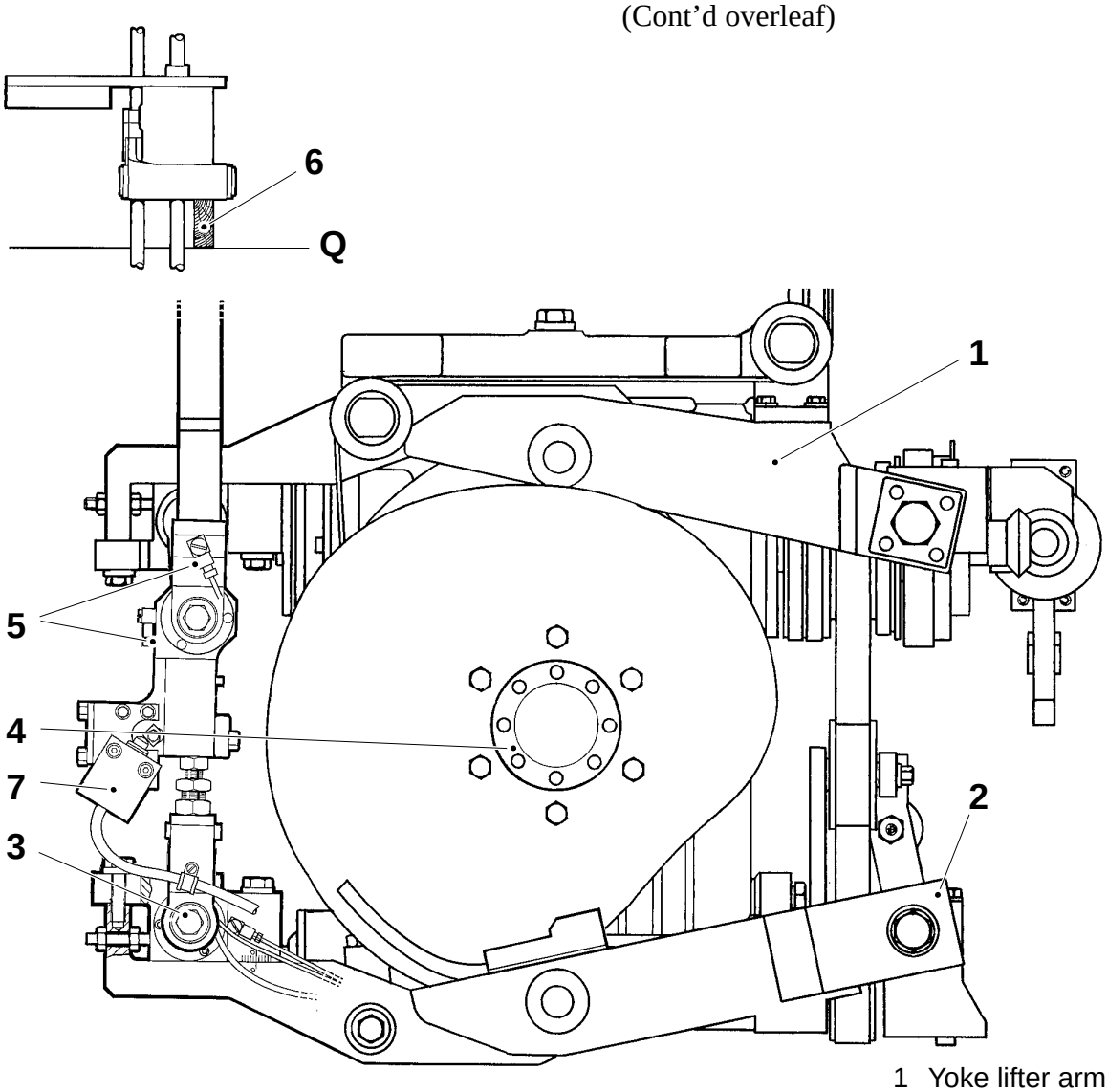

1 Yoke lifter arm
2 Link arm
3 Screw
4 Clamp fitting
5 Banjo connection
6 Wooden block
7 Microswitch

(Cont'd)

Removing the LH cam pack

d) Slacken the belt tensioner (8) of the angle encoder. Loosen the clamp fitting (9) and remove the belt, pulley (10) and spacer (12), if any.

e) Open the chain lock on the crank chain and remove the chain (11).

f) Remove the LH cam pack, see previous page, items a) – c).

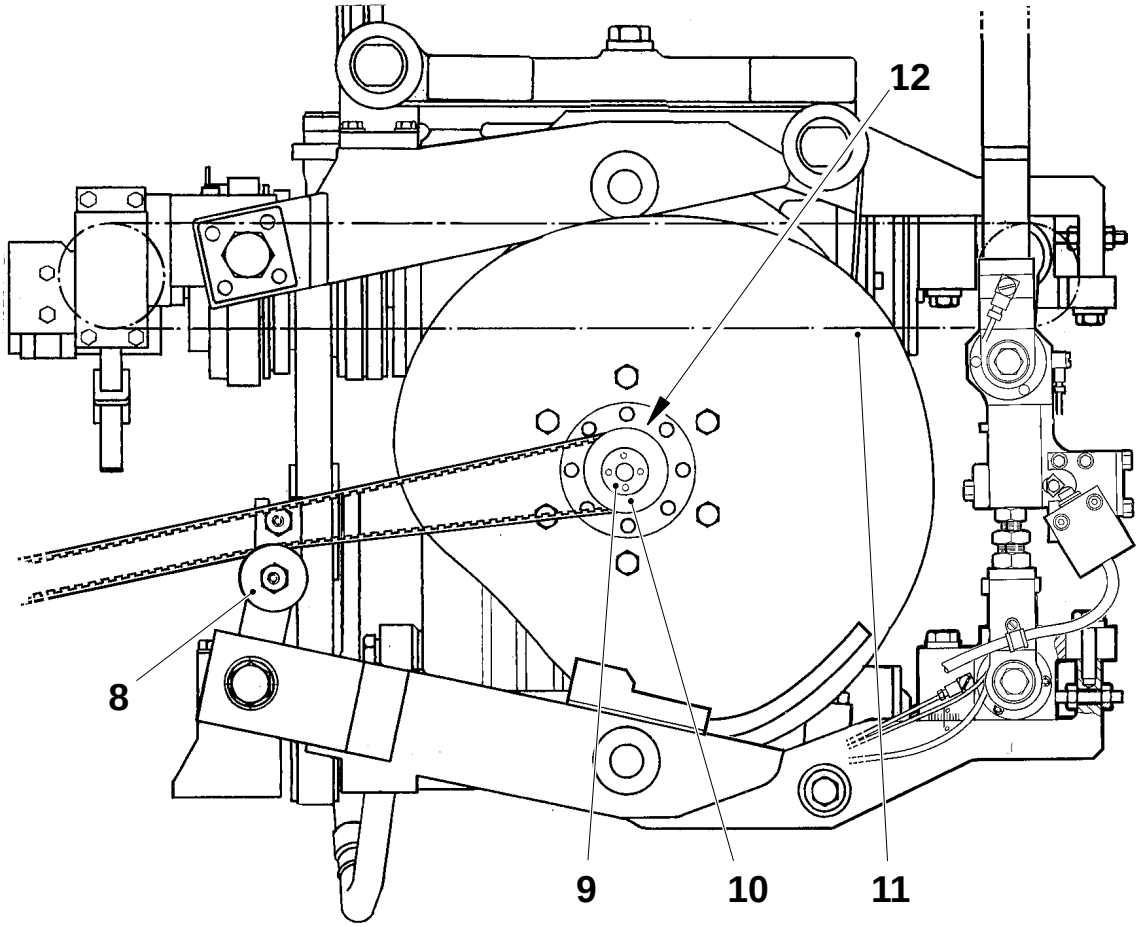

8 Belt tensioner
9 Clamp fitting
10 Pulley
11 Chain
12 Spacer

Fitting

a) Put the LH (3) and RH cam packs in place without tightening the clamp fittings. Do not forget the spacer ring between the gear box and the cam pack.

Note!
The shafts, cam packs, and clamp fittings must be degreased and cleaned prior to the fitting, see page MS 370–4X.

b) Synchronize the LH and RH cam packs, see page MS 331–5X.

c) Fit the LH (2) and RH link arms to the guide.

d) Connect all banjo connections to the link arms.

e) Fit the impulse transmitter, see page MS 603–5X.

f) Remove the wooden blocks under the LH and RH yokes.

g) Fit and tension the crank chain (1).

h) Apply the spring force of the hold-down device, see page MS 306–4X.

i) Fit the timing belt (7) and pulley (6) of the angle encoder to the worm gear. Do not tighten the clamp fitting (4) yet. Tension timing belt with the belt tensioner (8).
8 ±1 mm deflection with 15 ±1 N load force, see fig.

j) Fit and set the degree scale, see page MS 336–5X, and the pointer, see page MS 337–5X.

k) Set the impulse transmitter, see page MS 603–5X.

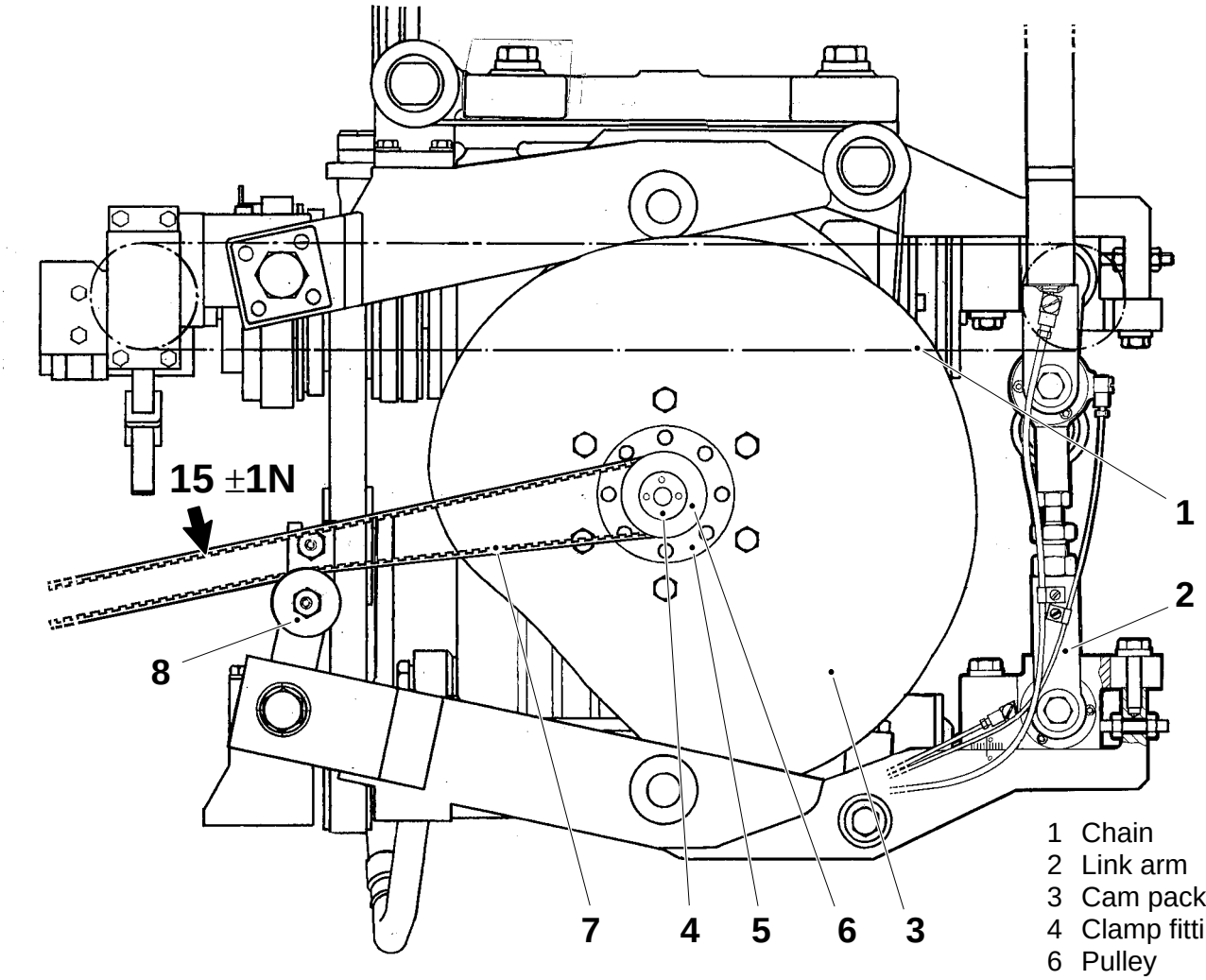

1 Chain
2 Link arm
3 Cam pack
4 Clamp fitting
6 Pulley
7 Timing belt
8 Belt tensioner

Fitting

a) Put the LH (3) and RH cam packs in place without tightening the clamp fittings. Do not forget the spacer ring between the gear box and the cam pack.

   Note!
   The shafts, cam packs, and clamp fittings must be degreased and cleaned prior to the fitting, see page MS 370–4X.

b) Synchronize the LH and RH cam packs with one another, see page MS 331–5X.

c) Fit the LH (2) and RH link arms to the guide.

d) Connect all banjo connections to the link arms.

e) Remove the wooden blocks under the LH and RH yokes.

f) Fit and tension the crank chain (1).

g) Apply the spring force of the hold-down device, see page MS 306–4X. Fit the microswitch to the connection link and set it, see page MS 313–5X.

h) Fit and set the segment, see page MS 315–5X.

i) Fit the spacer (9), if any, timing belt (7) and pulley (6) of the angle encoder to the worm gear. Do not tighten the clamp fitting (4) yet. Tension timing belt with the belt tensioner (8). 8 ±1 mm deflection with 15 ±1 N, load force, see fig.

j) Fit and set the degree scale, page MS 336–5X, and the pointer, see page MS 337–5X. Set the impulse transmitter, see page MS 603–5X.

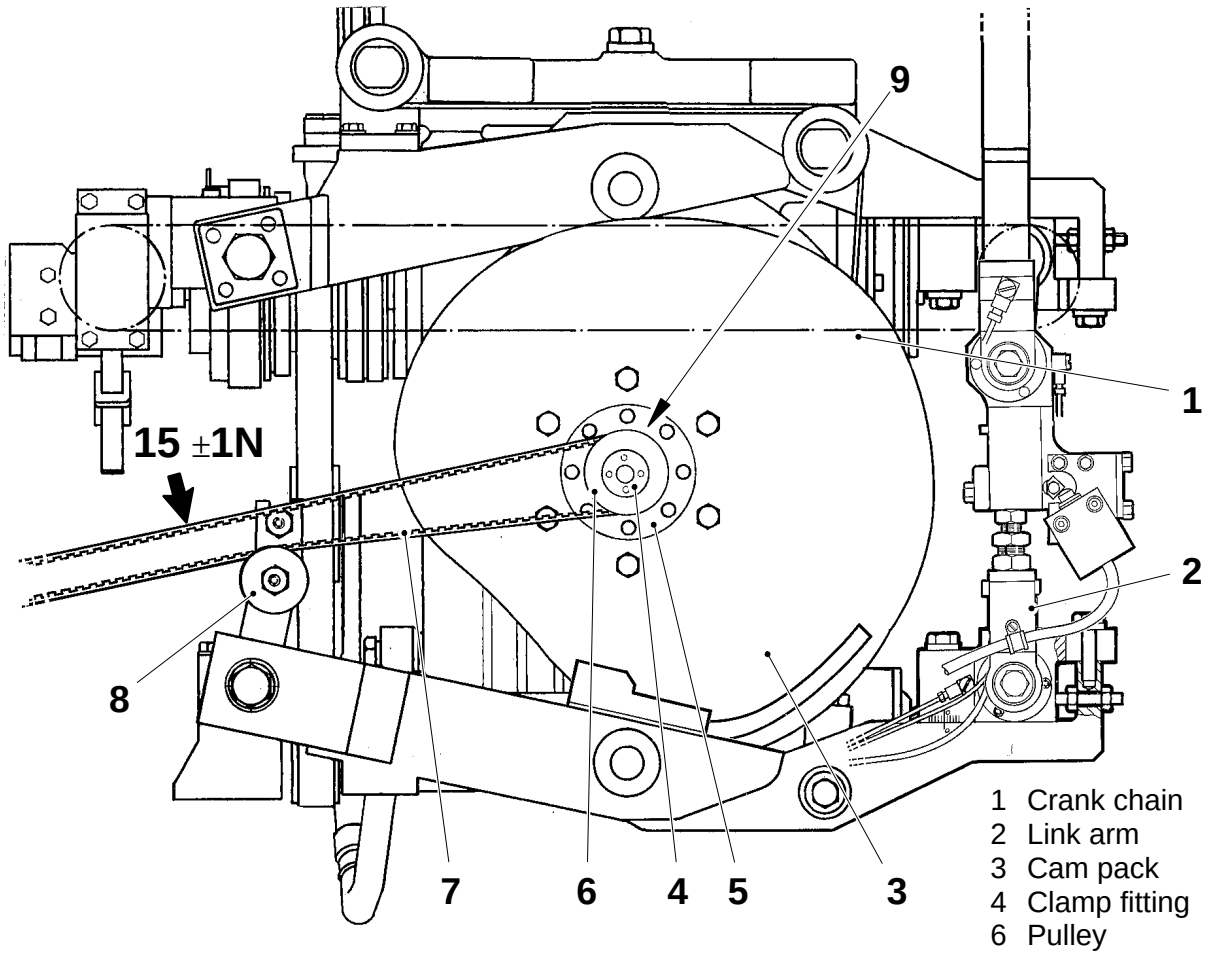

1 Crank chain
2 Link arm
3 Cam pack
4 Clamp fitting
6 Pulley
7 Timing belt
8 Belt tensioner
9 Spacer

Synchronization

Level the cam packs relative one another within ±3 scale divisions on the spirit level (2).

a) Fit the LH cam pack (1) and clamp fitting (5) in any position on the gear box shaft. Make sure the cam pack bears against the spacer ring (8) when the clamp fitting is tightened. Torque, see page MS 370-4X. The cam packs are marked with arrows (4). On the LH cam pack, the arrow points clockwise, on the RH pack counter clockwise.

b) Insert the two guide pins (6) into the holes of the LH cam pack. The holes are marked 120°L and 120°R (applies to TB 200S) or 90°L and 90°R (applies to all other volumes).

c) Fit the template (5) to the guide pins and place the spirit level (2) on top.

d) Crank the gear until the spirit level is horizontal.

(Cont'd overleaf)

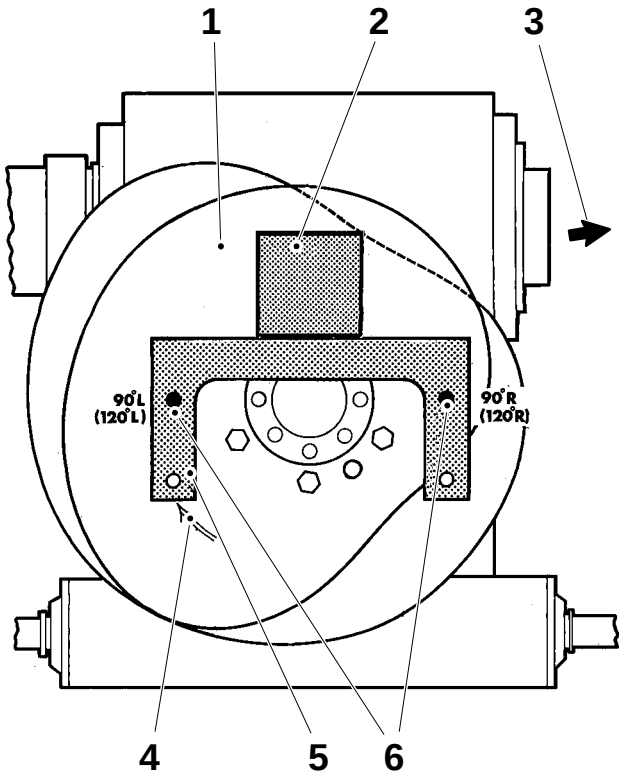

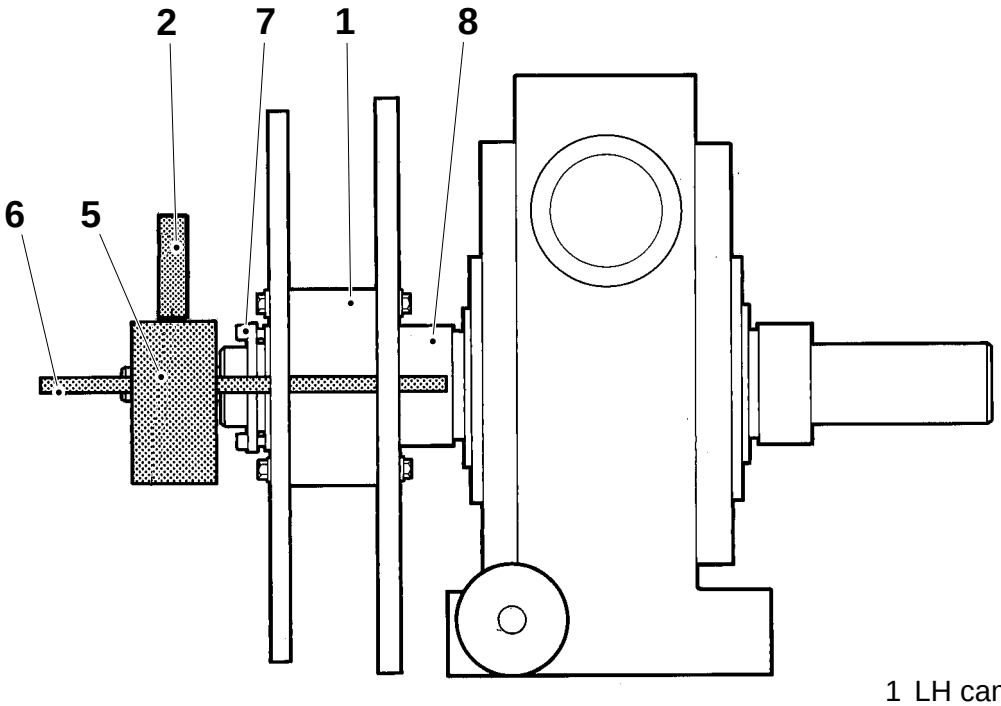

1 LH cam pack
2 Spirit level TP No. 90243–163
3 Towards final folder
4 Arrow
5 Template TP No. 76338
6 Guide pin TP No. 75451
7 Clamp fitting
8 Spacer ring

(Cont'd)

e) Fit and turn the RH cam pack (7) on the shaft until it is displaced by 180° in relation to the LH cam pack.

f) Fit the setting templates to the RH cam pack.

g) Tighten the clamp fitting lightly and turn the cam pack so that it is horizontal.

h) Tighten the clamp fitting (10), see page MS 370–4X.

i) Check, by means of the setting templates that the LH cam pack is still horizontal. Remove the setting templates.

j) Set the degree scale, see page MS 336–5X.

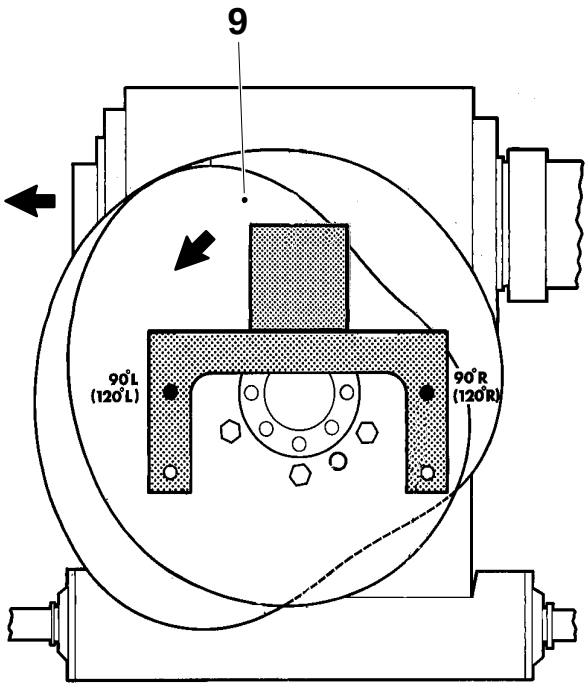

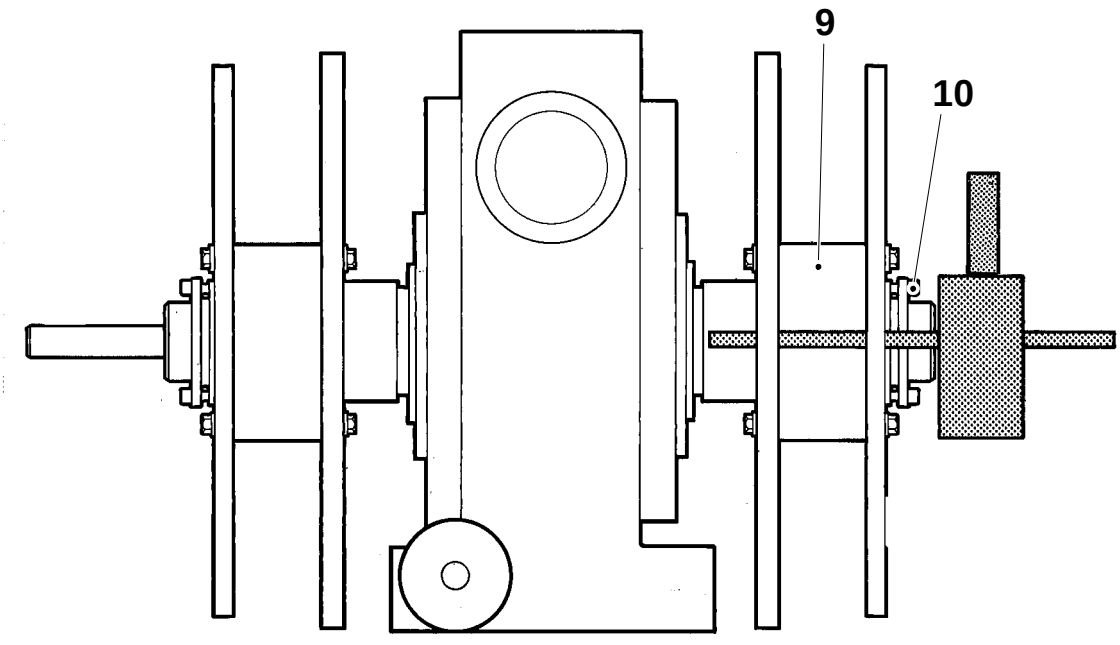

9 RH cam pack
10 Clamp fitting

Synchronization

LH side cam pack

Place the arm cam (1) and the yoke cam (5) so that the text at the holes (4) reads right side up and the arrow (3) points **clockwise**, see fig. 1.

The text at the holes either reads 120°L and 120°R (applies to TB 200S) or 90°L and 90°R (applies to all other volumes).

Footnote
The cams are marked on both sides as they are used for both LH and RH cam packs.

In this position, fit the cams together and tighten the screws (2) lightly, see fig. 1.

Check that the hole marked 90°L (120°L) on the upper cam is right above the hole marked 90°L (120°L) on the lower cam.

Place the template (9) between the cams. Insert the guide pin (8) through the cams and the template, see fig. 2.

Tighten the screws (2). Torque 50 ±2 Nm (5 kpm). Fit the pin (7).

Remove the template and guide pins. If the RH cam pack is going to be synchronized, see page MS 332–5X:2. If not, synchronize the cam packs, see page MS 331–5X.

(Cont'd overleaf)

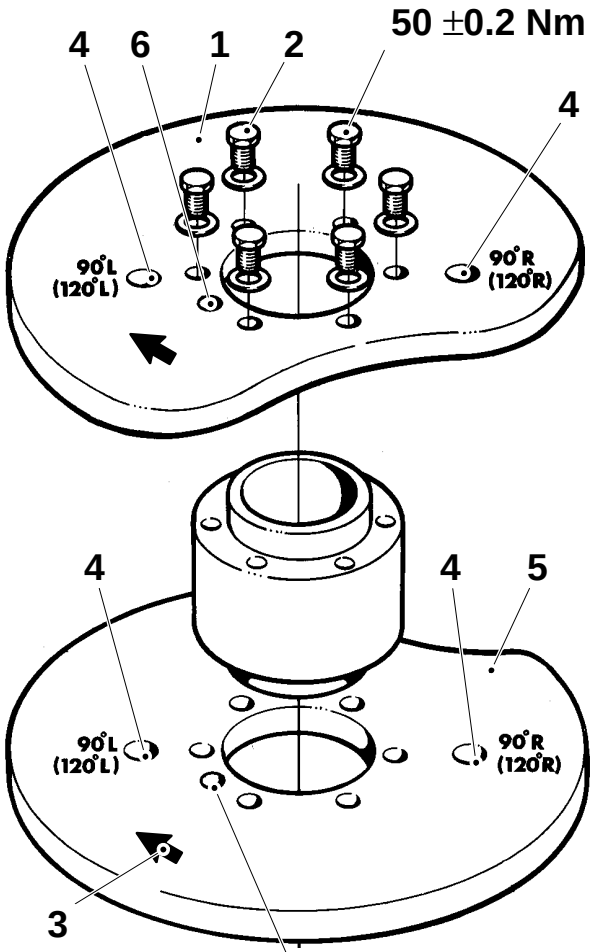

Fig. 1

1 Arm cam
2 Screw
3 Arrow
4 Hole
5 Yoke cam
6 Pin hole
7 Pin
8 Guide pin TP No. 75451
9 Template TP No. 76338

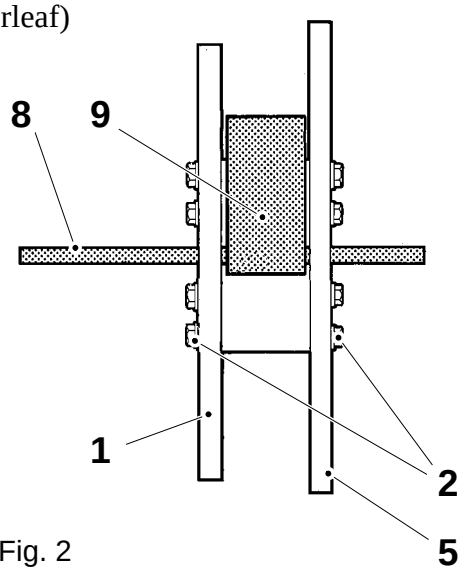

Fig. 2

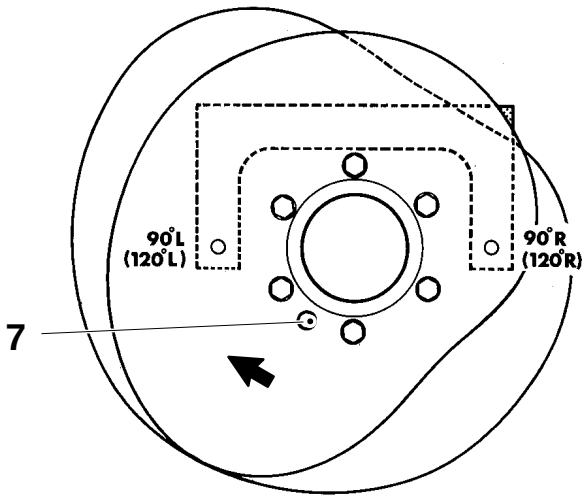

(Cont'd)

RH side cam pack

Place the arm cam (12) and the yoke cam (15) so that the text at the holes (10) reads right side up and the arrow (11) points **counter-clockwise**, see fig. 1.

The text at the hole either reads 120°L and 120°R (applies to TB 200S) or 90°L and 90°R (applies to all other volumes).

Footnote
Note that the cams are marked on both sides as they are used for both LH and RH cam packs.

In this position, fit the cams together and tighten the screws (13) lightly, see fig. 1.

Check that the hole marked 90°L (120°L) on the upper cam is right above the hole marked 90°L (120°L) on the lower cam.

Place the template (9) between the cams. Insert the guide pin (8) through the cams and template, see fig. 2.

Tighten the screws (13). Torque 50 ±2 Nm (5 kpm). Fit the pin (16).

Remove template and guide pins. Synchronize the cam packs, see page MS 331–5X.

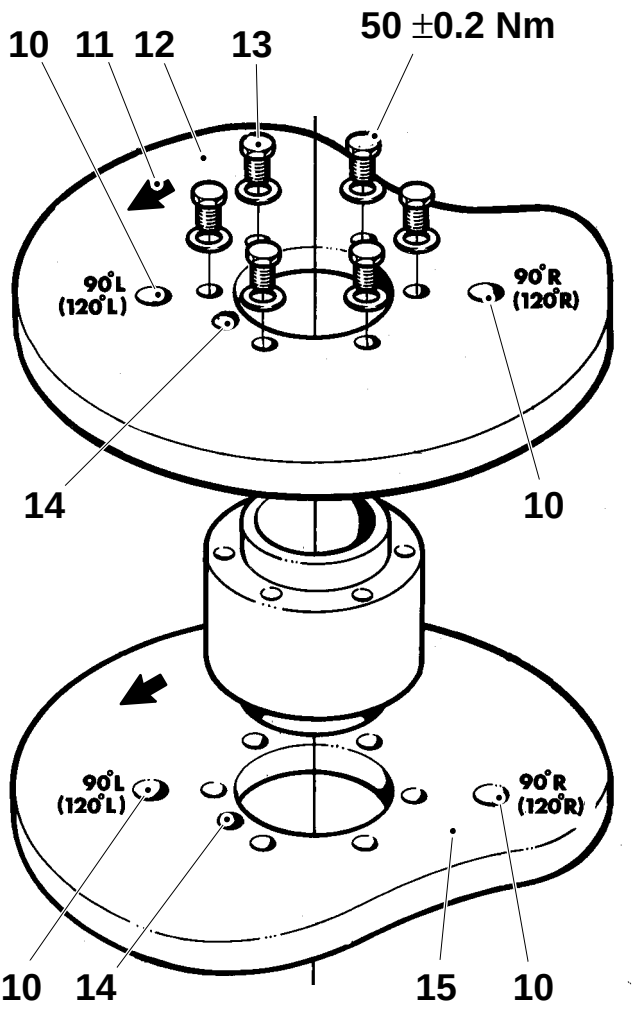

Fig.1

8 Guide pin TP No. 75451
9 Template TP No. 76338
10 Hole
11 Arrow
12 Arm cam
13 Screw
14 Pin hole
15 Yoke cam
16 Pin

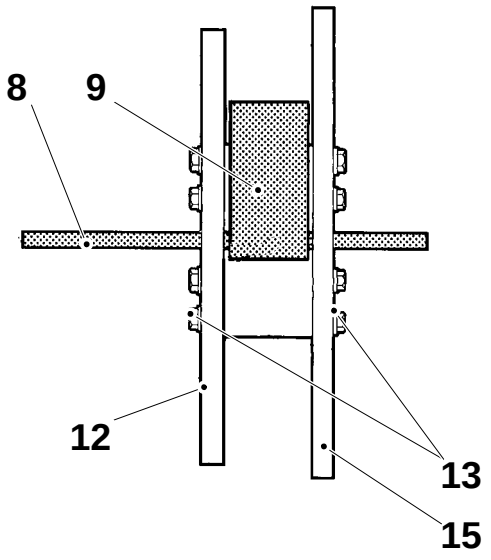

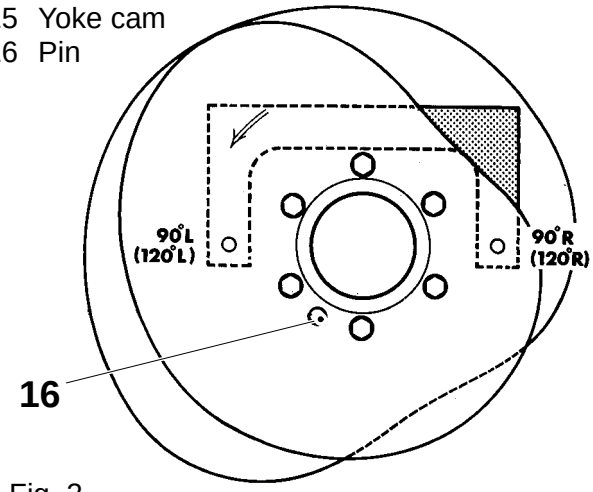

Fig. 2

Setting

a) Crank the machine until the RH jaw pair is just touching the tube.

b) Fit and tighten the degree scale (1) on the timing belt pulley (2).

c) Loosen the clamp fitting (3) of the timing belt pulley. Turn the degree scale so that the 230°–240° divisions face upwards.

d) **TB 200S ml**
Check that the hole at the 300° divisions is in front of the hole marked 120°R on the arm cam behind.

All other volumes
Check that the hole at the 270° divisions is in front of the hole marked 90°R on the arm cam behind.

e) **TB 200S ml**
Insert the guide pins (4) through the holes at the 120° and 300° divisions and through the arm cam and yoke cam.

All other volumes
Insert the guide pins (4) through the holes at the 90° and 270° divisions and through the arm cam and yoke cam.

f) Tighten the clamp fitting (3), Torque, see page MS 370–4X.

g) Pull out the guide pins.

h) Set the pointer, see page MS 337–5X.

i) Set the impulse transmitter, see page MS 603–5X.

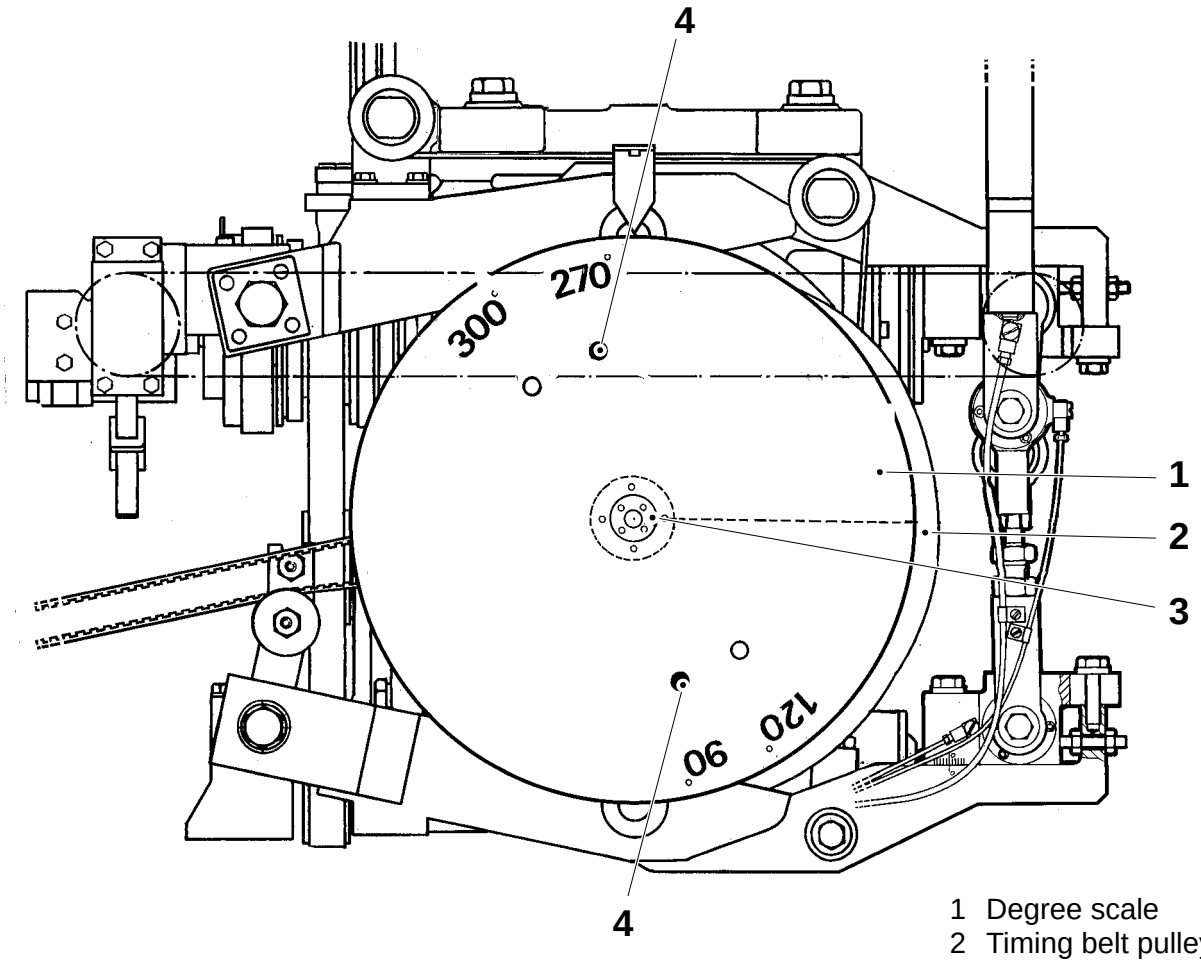

1 Degree scale
2 Timing belt pulley
3 Clamp fitting
4 Guide pin TP No. 75451

Setting

a) Crank the machine until the RH jaw pair is just touching the tube.

b) Fit and tighten the degree scale (1) on the timing belt pulley (2).

c) Loosen the clamp fitting (3) of the timing belt pulley. Turn the degree scale so that the 230°–240° divisions face upwards.

d) **TB 200S ml**
Check that the hole at the 300° divisions is in front of the hole marked 120°R on the arm cam behind.

All other volumes
Check that the hole at the 270° divisions is in front of the hole marked 90°R on the arm cam behind.

e) **TB 200S ml**
Insert the guide pins (4) through the holes at the 120° and 300° divisions and through the arm cam and yoke cam.

All other volumes
Insert the guide pins (4) through the holes at the 90° and 270° divisions and through the arm cam and yoke cam.

f) Tighten the clamp fitting (3).
Torque, see page MS 370–4X.

g) Pull out the guide pins.

h) Set the pointer, see page MS 337–5X.

i) Set the impulse transmitter, see page MS 603–5X.

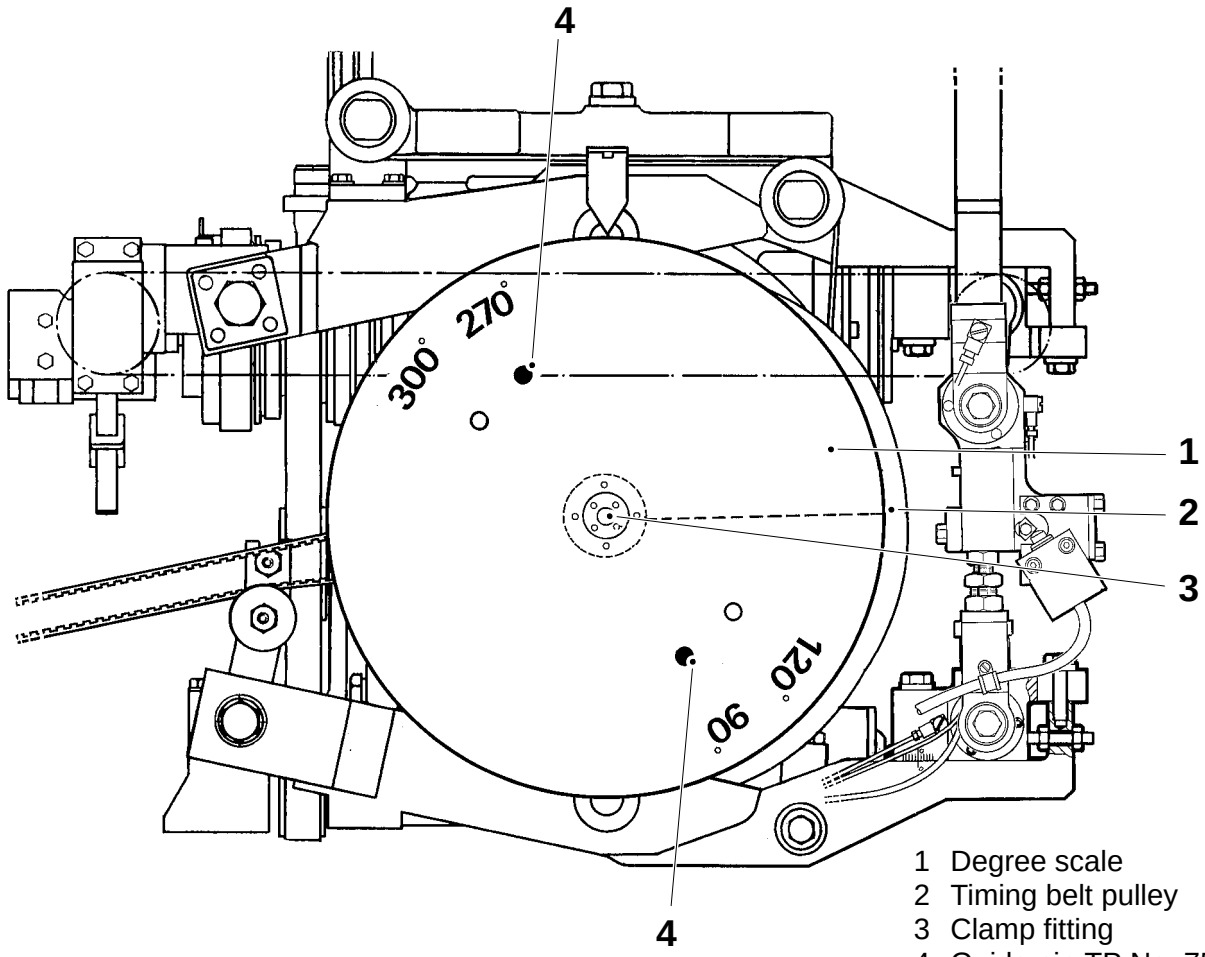

1 Degree scale
2 Timing belt pulley
3 Clamp fitting
4 Guide pin TP No. 75451

Setting

a) Crank the machine so that 0° on the scale faces upward (30° upward on TB 200S ml).

b) Fit the guide pins (4), the tool (3) and the spirit level (2) on the cam pack.

c) Crank the machine until the spirit level is horizontal.

d) Fit and secure the pointer (1) opposite 0° on the degree scale (30° on TB 200S ml).

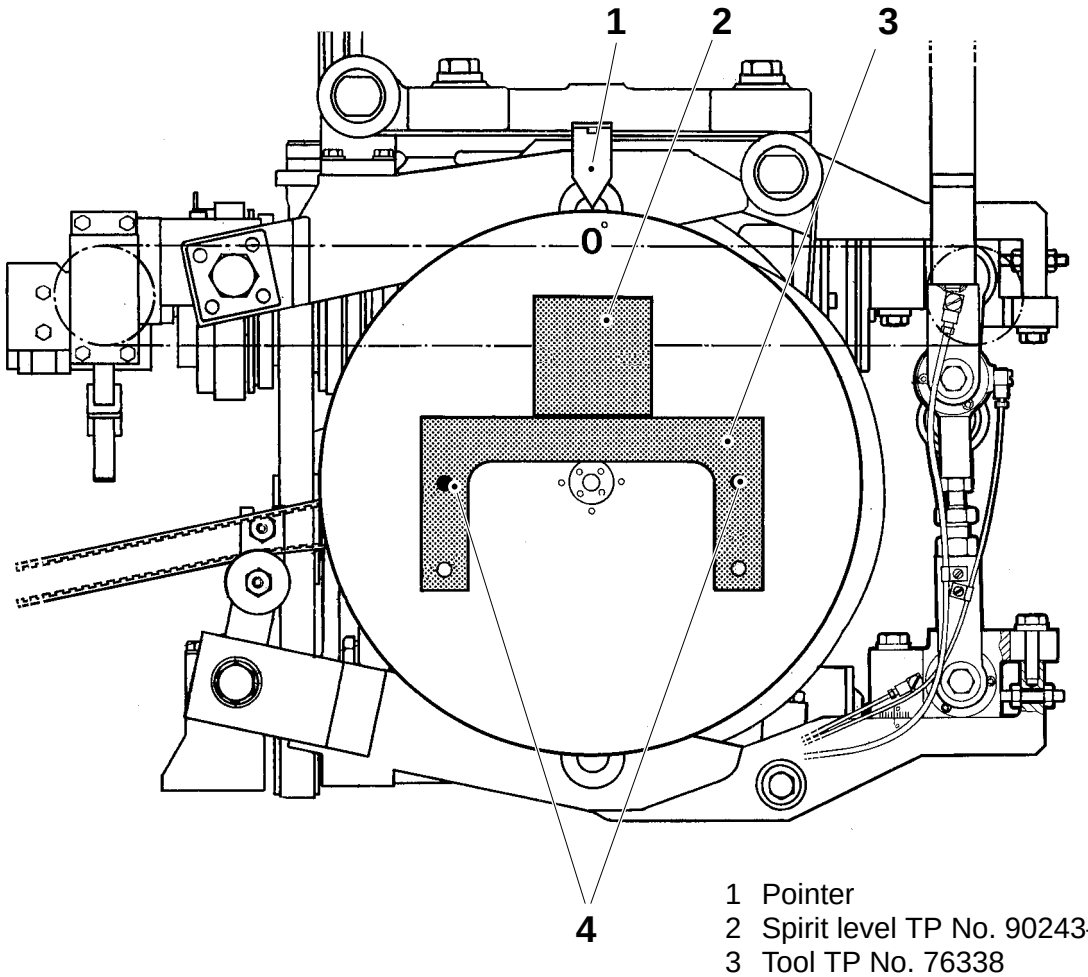

1 Pointer
2 Spirit level TP No. 90243–163
3 Tool TP No. 76338
4 Guide pin TP No. 75451

Setting

a) Crank the machine so that 0° on the scale faces upward (30° upward on TB 200S).

b) Fit the guide pins (4), the tool (3) and the spirit level (2) on the cam pack.

c) Crank the machine until the spirit level is horizontal.

d) Fit and secure the pointer (1) opposite 0° on the degree scale (30° on TB 200S).

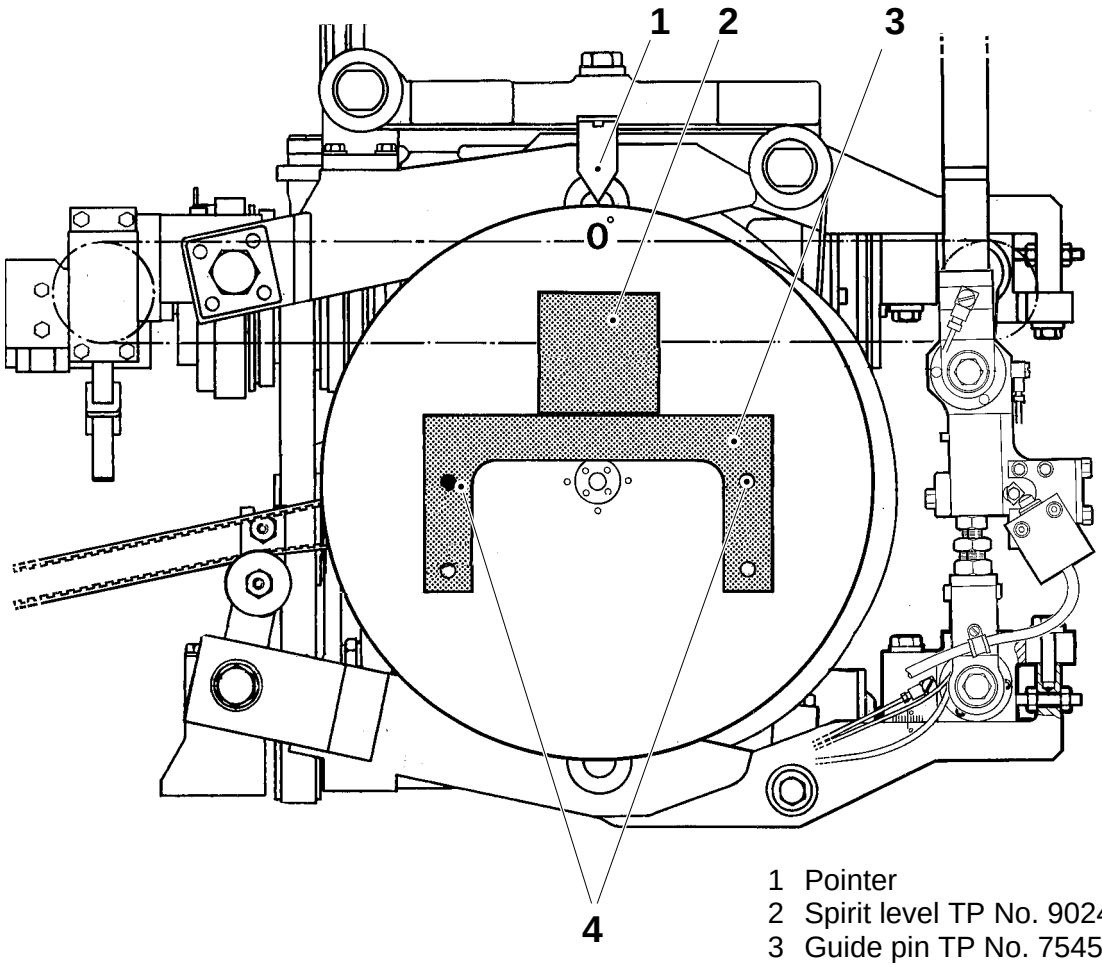

1 Pointer
2 Spirit level TP No. 90243–163
3 Guide pin TP No. 75451
4 Tool TP No. 76338

Oil change

Footnote
Always fill oil into the worm gear when it is **cold**.

Undo the plug (3).

Remove the hose (1) from the clips (2) and empty the oil.

Fill up with oil, type B, to the recommended level (4).

Refit the plug.

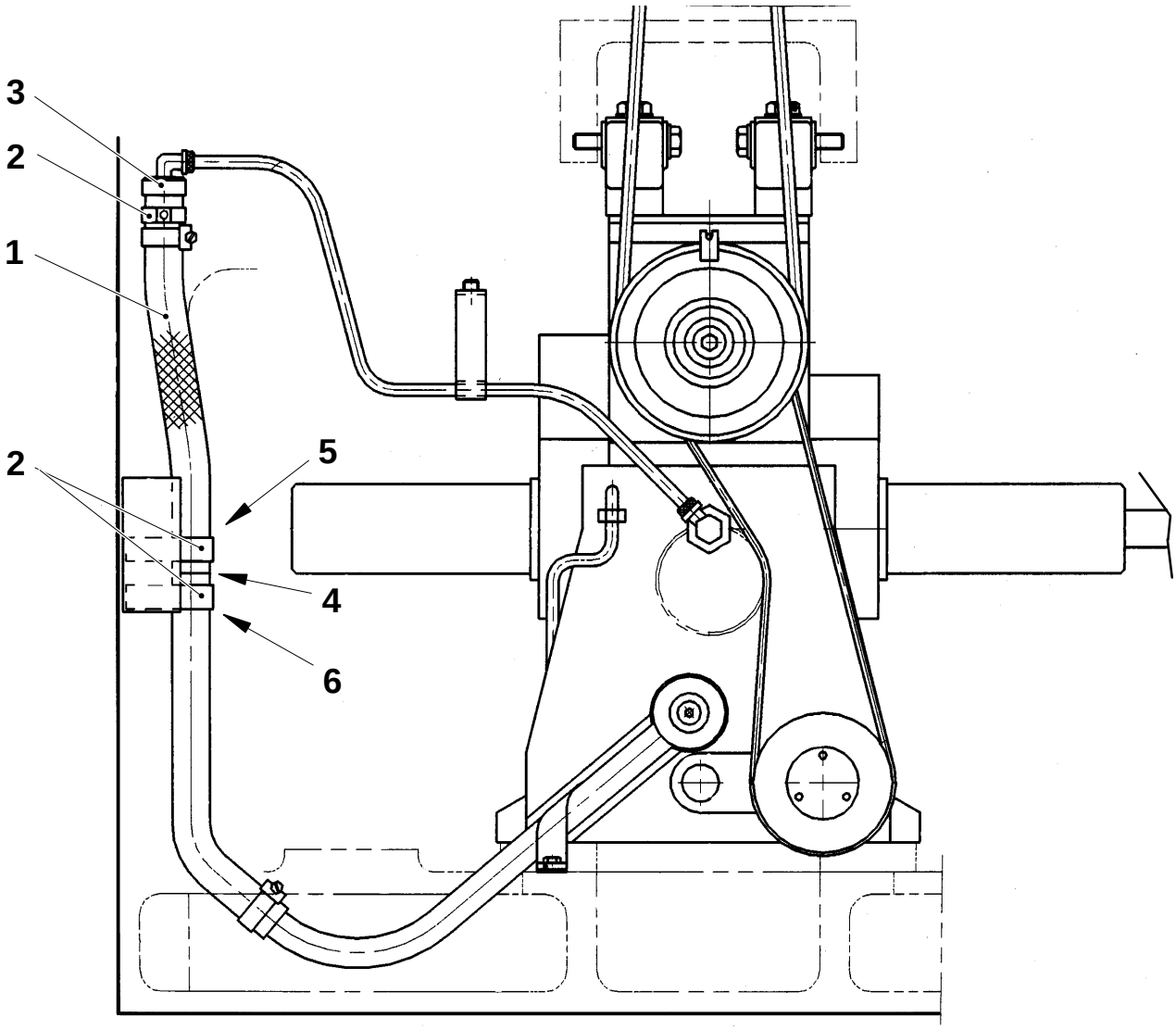

1 Hose
2 Clip
3 Plug
4 Recommended oil level
5 Maximum level
6 Minimum level

Removal

a) Mark the position of the bracket (3) on the frame.

b) Remove the slide lug (2), drop chute (1), and bracket (3). Disconnect the air blow and air lines (4) from the cylinder. Lift out the bracket.

(Cont’d overleaf)

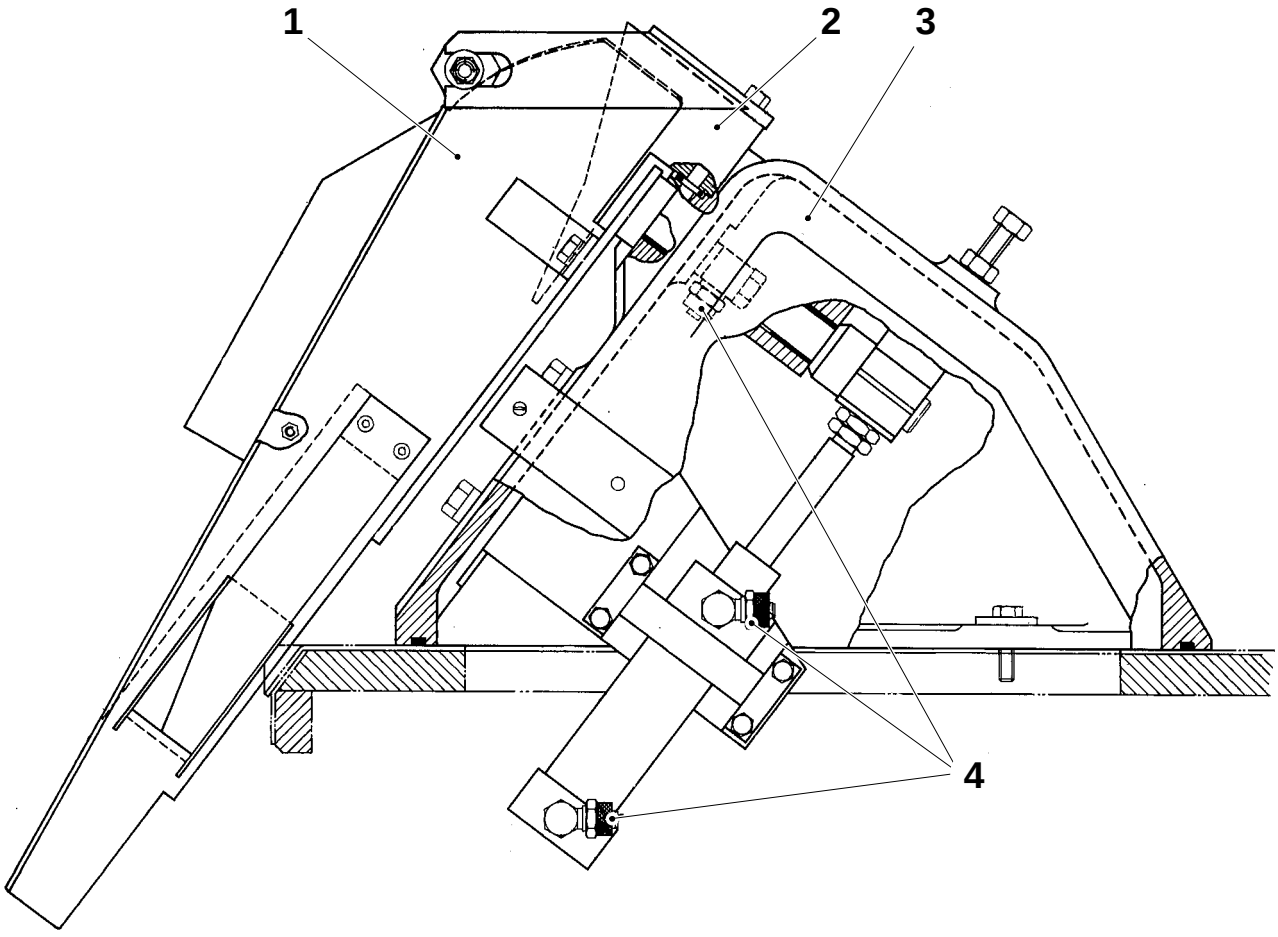

1 Drop chute
2 Slide lug
3 Bracket
4 Air line

(Cont'd)

c) Remove the lugs (6) which hold the top of the gear against the frame.

d) Disconnect the cable between the worm gear brake and the terminal box above the gear. Disconnect the cable between the worm gear coupling and the box underneath the drive motor.

e) Remove the RH and LH cam packs (7), see page MS 331–2X.

f) Remove the oil filler hose (5) from the frame and tie up the hose to the gear.

g) Remove the belt tensioner (8).

h) Disconnect the two oil pipes on the gear.

(Cont'd overleaf)

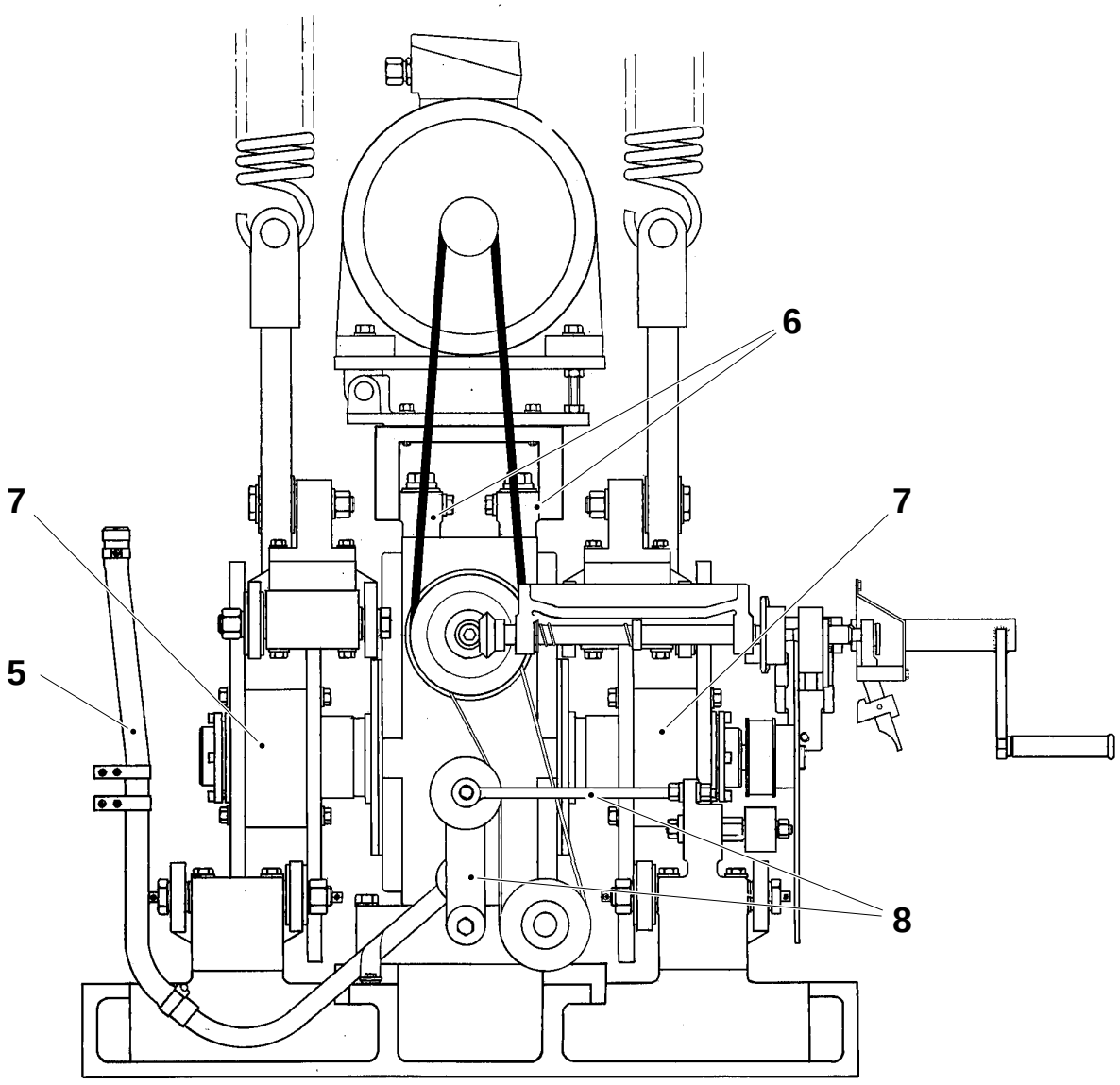

5 Oil filler hose
6 Lug
7 Cam pack
8 Belt tensioner

(Cont'd)

i) Remove the LH and RH link arms (12), see page MS 311–2X, items d) – f).

j) Remove the LH and RH yoke lift arms (10), see page MS 303–2X, items c) – h).

k) Slacken the drive motor Vee-belts (13) and remove them.

l) Loosen the screws holding the bracket (14) a couple of turns.

m) Separate the worm gear from the final folder by removing the clamp connection (9). Loosen the screw (15) and remove the shaft (16).

n) Remove the cleaning system manifold beside the shaft clutch (17).

o) Undo the screws (11) and remove the pins.

p) Lift out the gear to the right, from the machine.

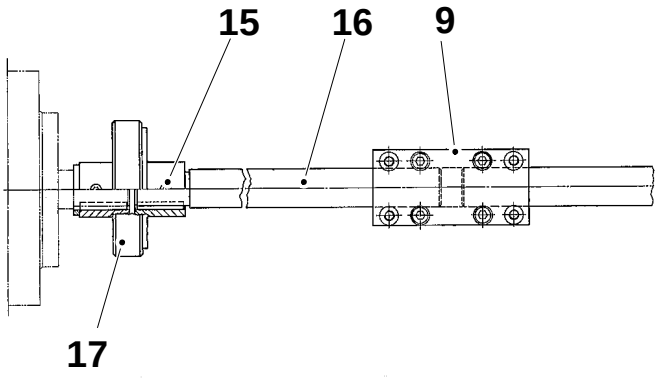

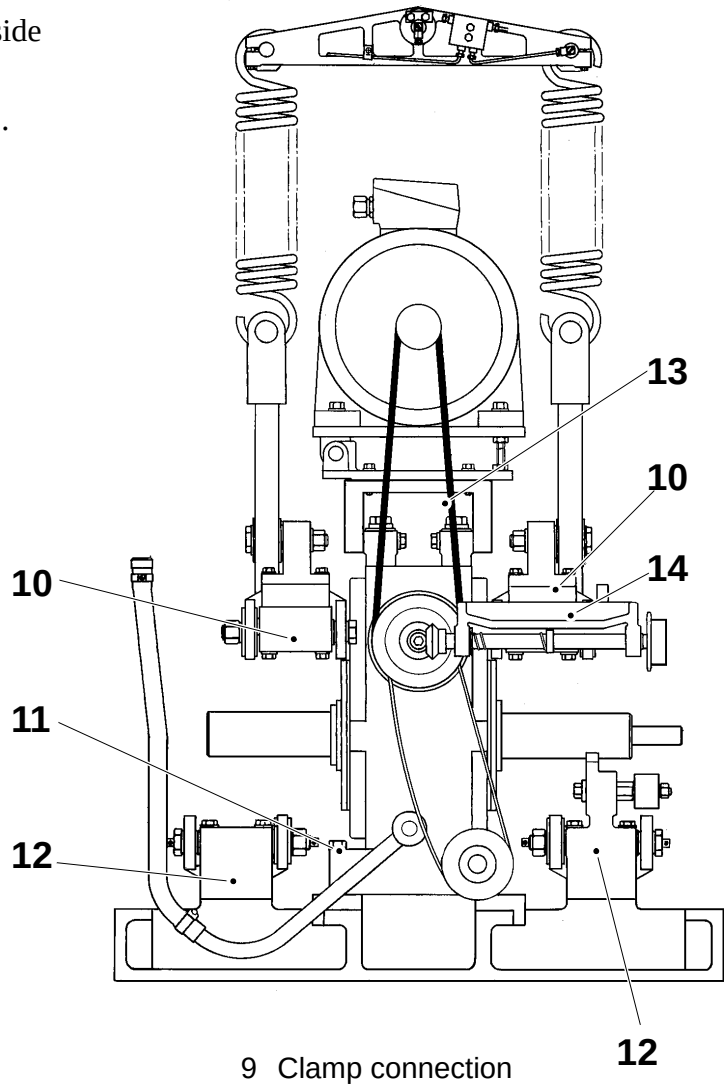

9 Clamp connection
10 Yoke lift arm
11 Screw
12 LH and RH link arm
13 Vee-belt
14 Bracket
15 Screw
16 Shaft
17 Shaft clutch

Removal

a) Mark the position of the bracket (3) on the frame.

b) Remove the slide lug (2), drop chute (1), and bracket (3). Disconnect the air blow and air lines (4) to the cylinder. Lift out the bracket.

(Cont’d overleaf)

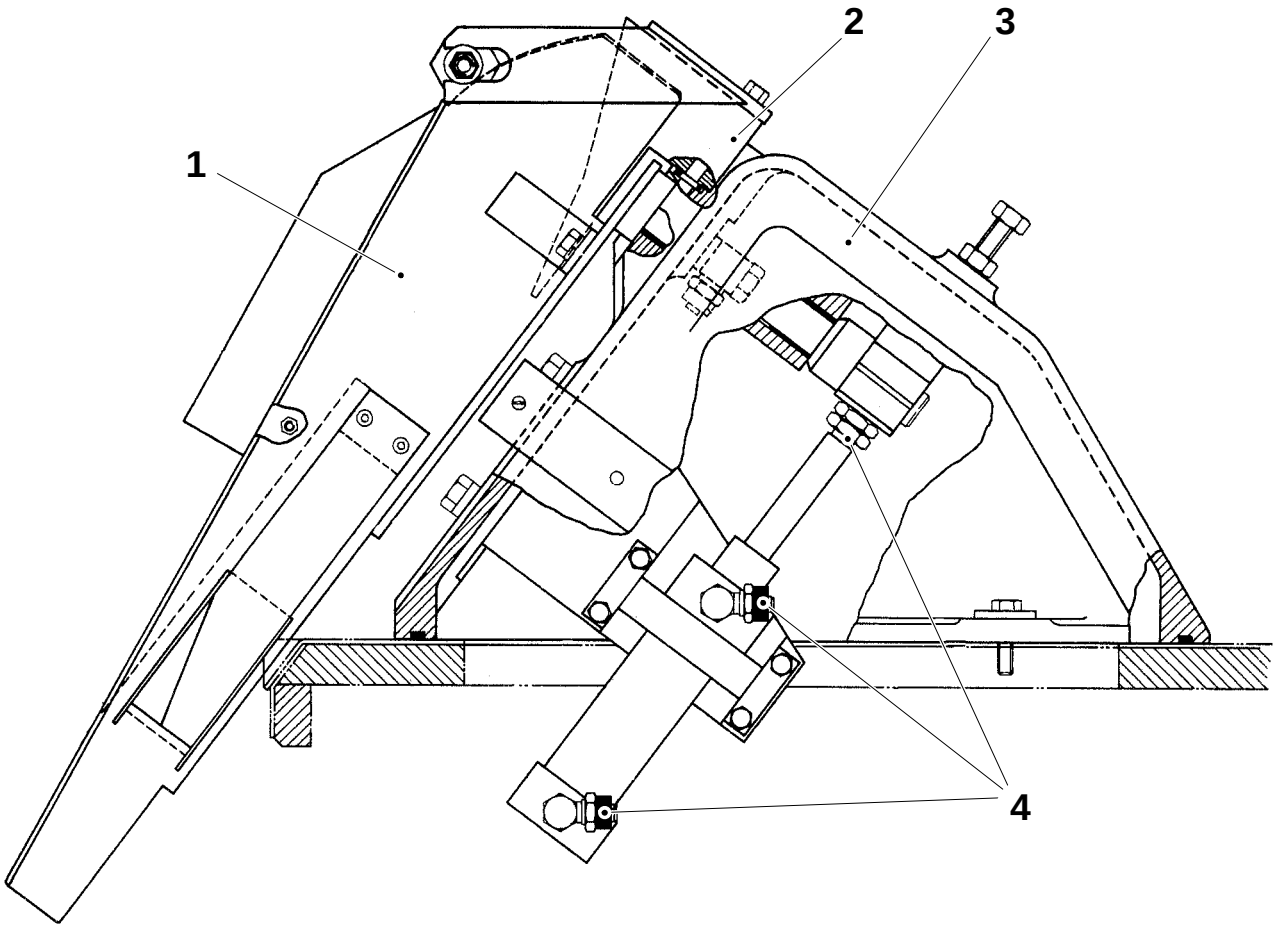

1 Drop chute
2 Slide lug
3 Bracket
4 Air line

200

(Cont'd)

c) Remove the lugs (6) holding the top of the gear against the frame.

d) Disconnect the cable between the worm gear brake and the terminal box above the gear. Disconnect the cable between the worm gear coupling and the box underneath the drive motor.

e) Remove the RH and LH cam packs (7), see page MS 331–2X.

f) Remove the oil filler hose (5) from the frame and tie up the hose to the gear.

g) Remove the belt tensioner (8).

h) Disconnect the two oil pipes on the gear.

(Cont'd overleaf)

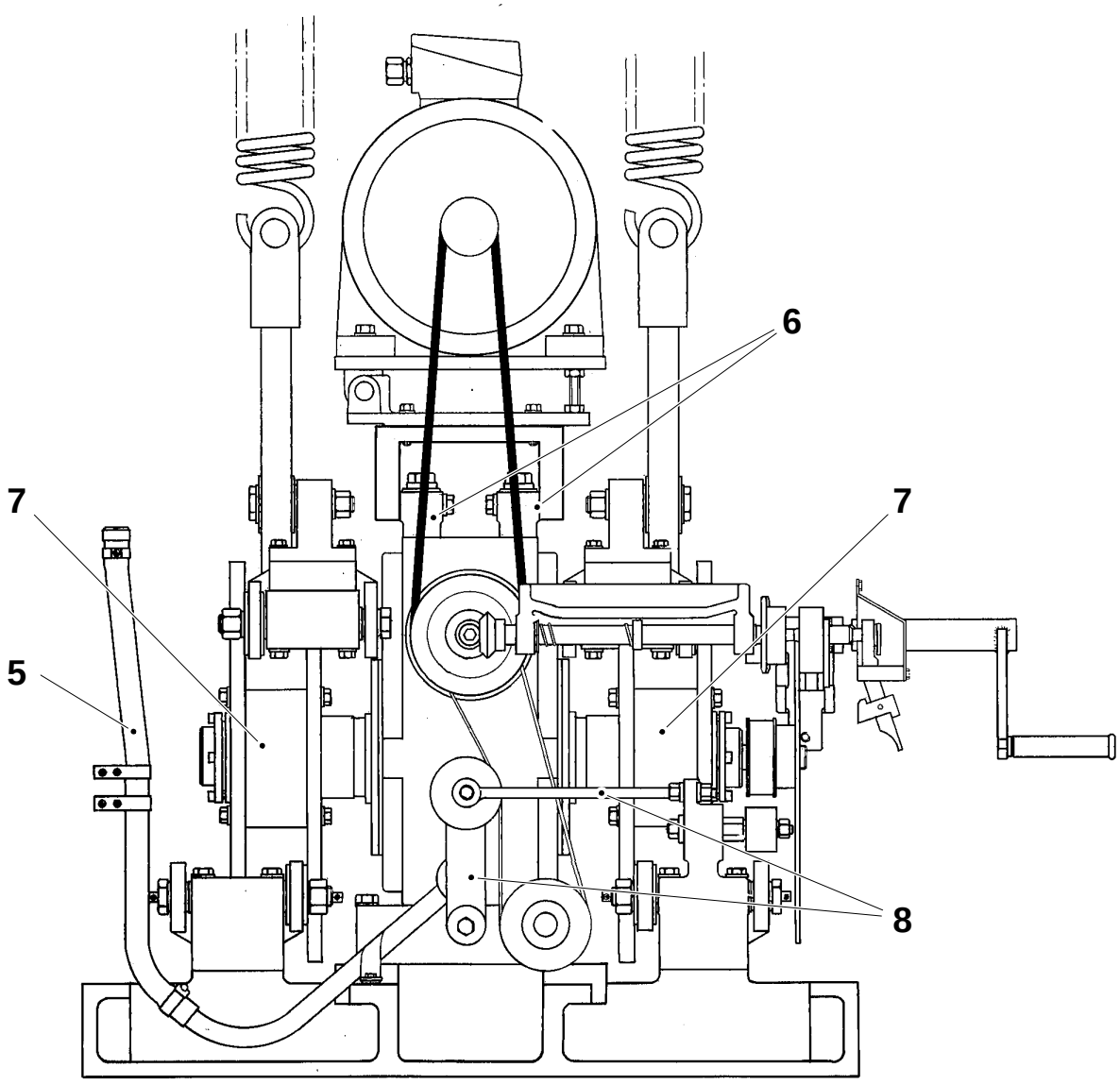

5 Oil filler hose
6 Lug
7 Cam pack
8 Belt tensioner

(Cont'd)

i) Remove the LH and RH microswitch cables from the clamps on the link arm (12).

j) Remove the LH and RH link arms (12), see page MS 311–2X, items d) – f).

k) Remove the LH and RH yoke lift arms (10), see page MS 303–2X, items c) – h).

l) Slacken the drive motor Vee-belts (13) and remove them.

m) Loosen the screws holding the bracket (14) a couple of turns.

n) Separate the worm gear from the final folder by removing the clamp connection (9). Loosen the screw (15) and remove the shaft (16).

o) Remove the cleaning system manifold beside the shaft clutch (17).

p) Undo the screws (11) and remove the pins.

q) Lift out the gear to the right, from the machine.

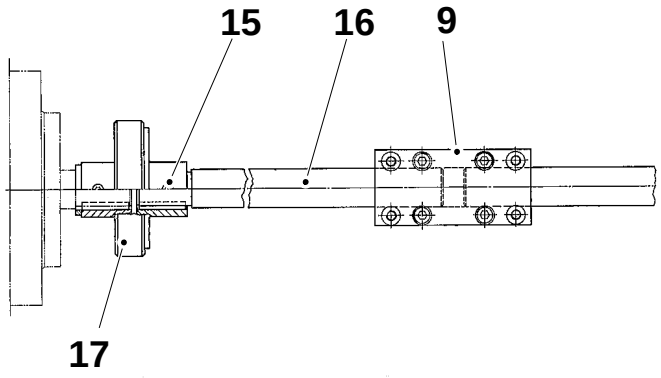

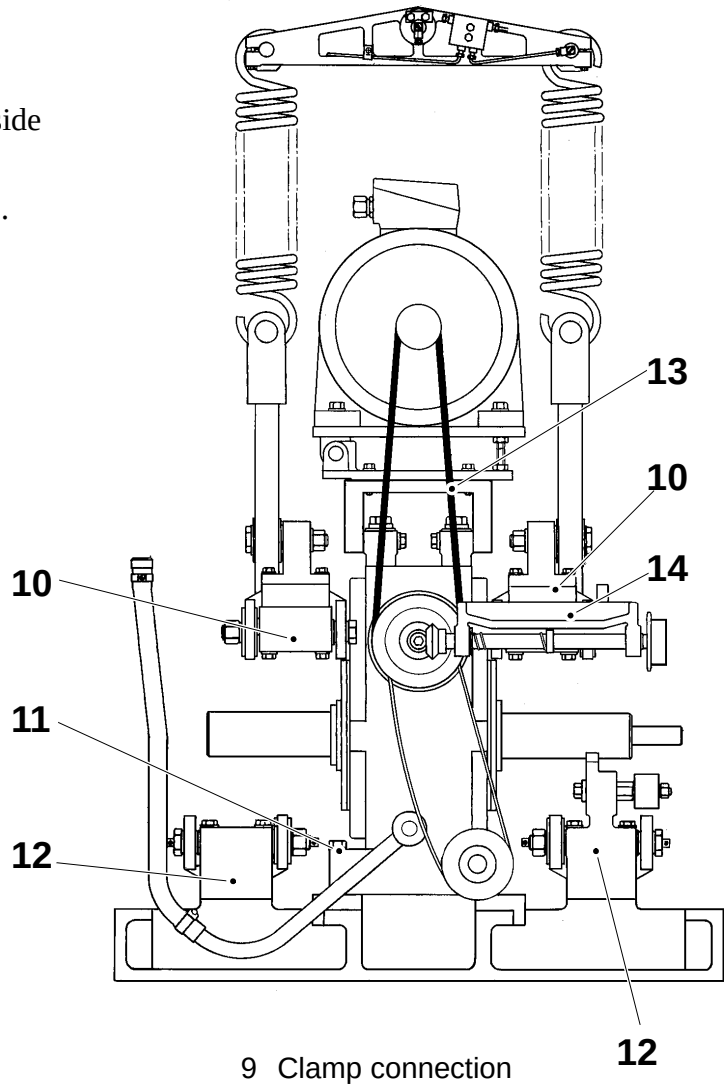

9 Clamp connection
10 Yoke lift arm
11 Screw
12 LH and RH link arm
13 Vee–belt
14 Bracket
15 Screw
16 Shaft
17 Shaft clutch

Fitting

Place the gear in the machine.

a) Fit the Vee-belts (2) between the drive motor and gear.

b) Attach the bow (1) of the coupling to the pin on the frame.

c) Put in the gear pins (3) and secure the gear to the bottom plate.
Torque = 80 Nm ±3 Nm (8 kpm).
If the gear is not pinned, set it, see page MS 345–5X.

d) Tension the Vee-belts (2).

(Cont'd overleaf)

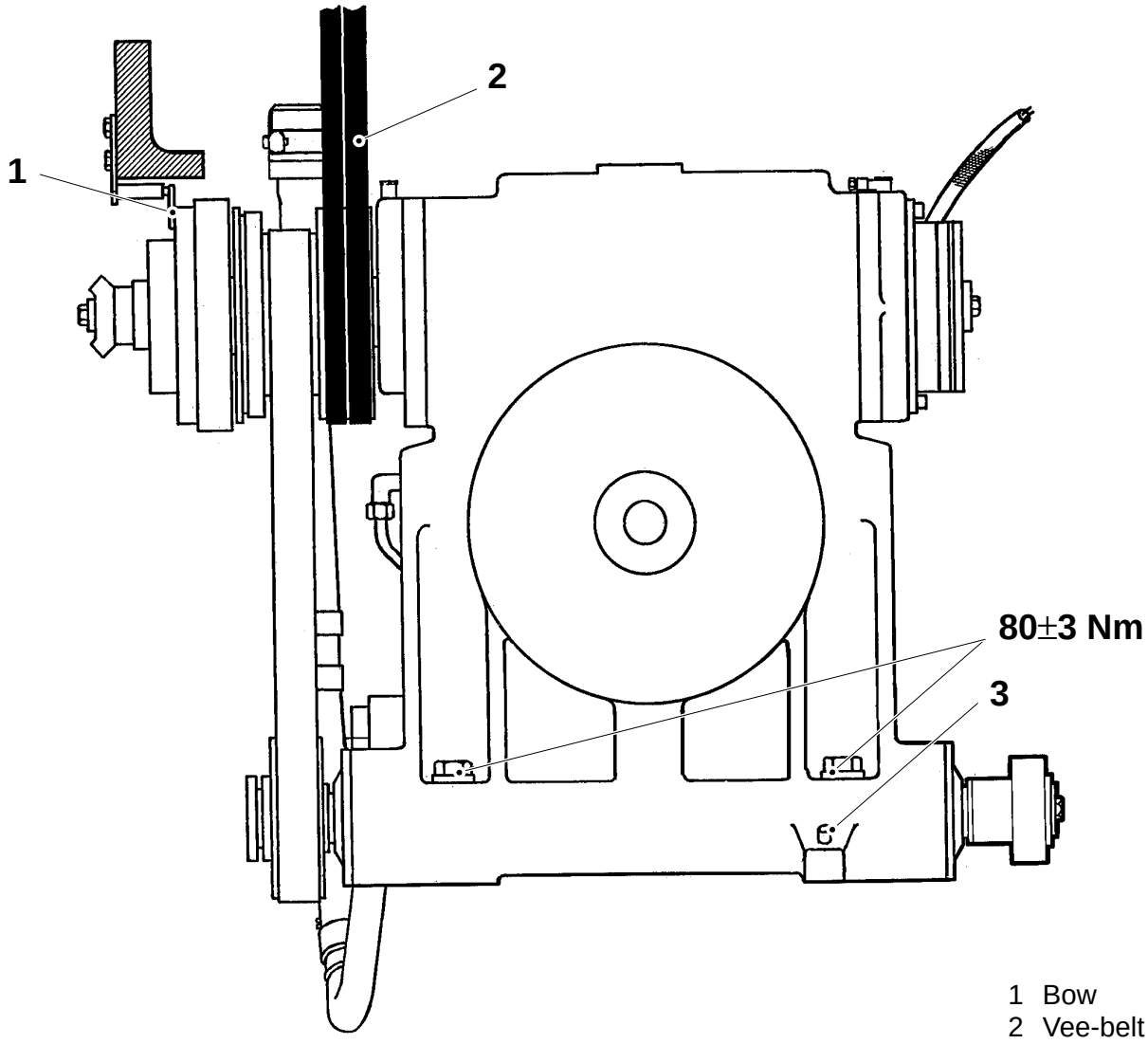

1 Bow
2 Vee-belt
3 Pin

(Cont'd)

e) Set the crank mechanism (9), page MS 362–5X, and crank switch, see page MS 363–5X.

f) Fit and tighten
- the final folder coupling,
- the cleaning manifold,
- the gear oil pipes,
- the lugs (4). Torque, see fig.,
- the cables from the worm gear brake and coupling, and
- the oil filler hose (6).

g) Fit the LH and RH yoke lift arms (5) and the reinforcement beam to the frame (applies only to 020V→030V).

h) Fit the link arms (8) to the frame.

i) Fit the belt tensioner (10) and tension the timing belt.

j) Put the LH and RH cam packs (7) in place without tightening their clamp fittings. Do not forget the spacer ring between gear and cam packs.

Note!
The shafts, the cam packs and the clamp fittings are to be degreased before fitting, see page MS 370–4X.

k) Synchronize the LH and RH cam packs, see page MS 331–5X.

(Cont'd overleaf)

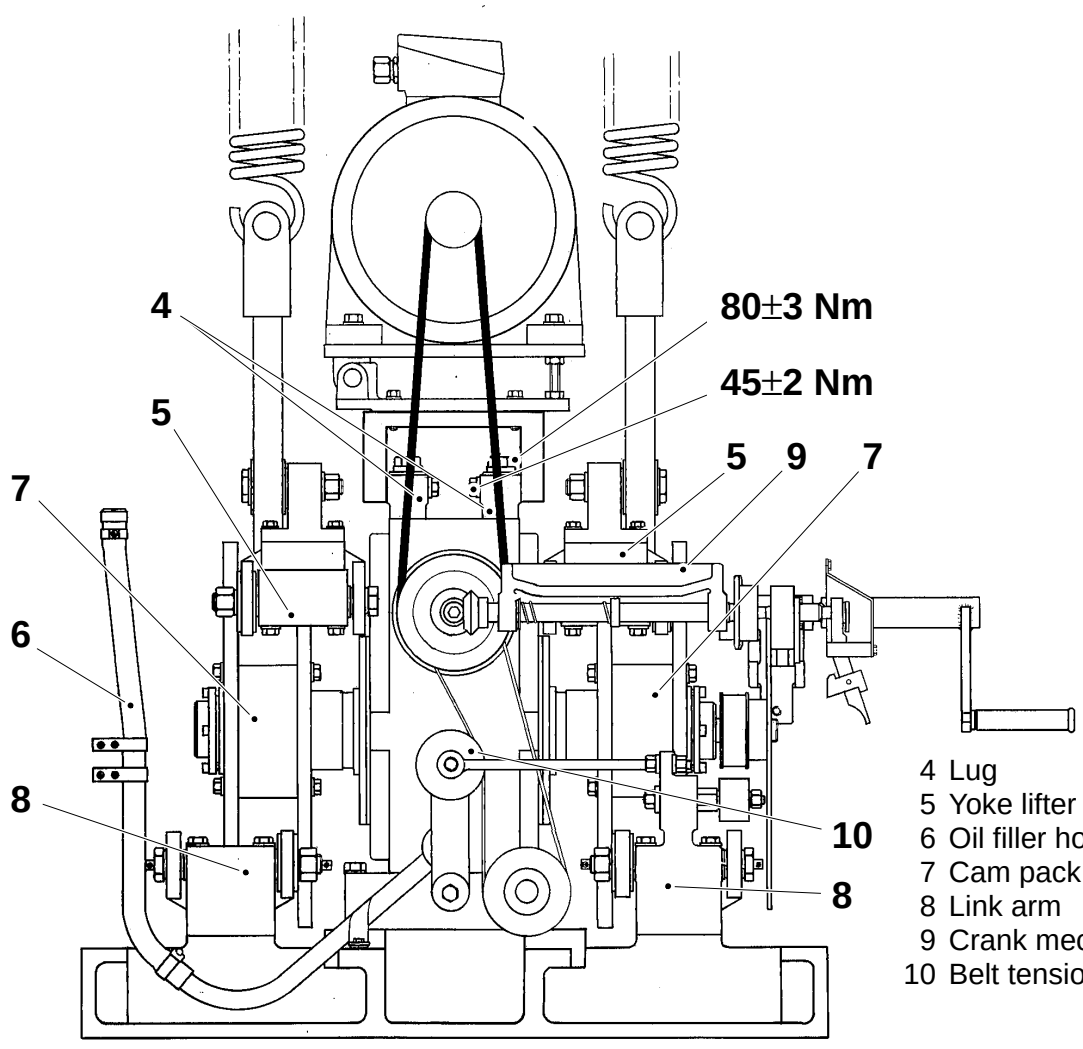

4 Lug
5 Yoke lifter arm, LH and RH
6 Oil filler hose
7 Cam pack, LH and RH
8 Link arm
9 Crank mechanism
10 Belt tensioner

(Cont'd)

l) Fit the LH and RH yoke lifter arms (5) to the guide.

m) Fit the LH and RH link arms (8) to the guide.

n) Connect all the oil pipes to the yoke lifter arm and link arm.

o) Remove the wooden blocks under the LH and RH yokes.

p) Fit and tension the crank chain (11).

q) Apply the spring force of the hold-down device, see page MS 306–4X.

r) Fit the timing belt (12) and pulley (13) of the angle encoder to the worm gear. Do not tighten the clamp fitting (14) yet.

s) Fit and set the degree scale, see page MS 336–5X, and the pointer, page MS 337–5X.

t) Set the impulse transmitter, see page MS 603–5X.

u) Fit the slide lug, the drop chute, and the bracket.

v) Check the oil level in the worm gear. If necessary top up with oil, see page MS 345–1X.

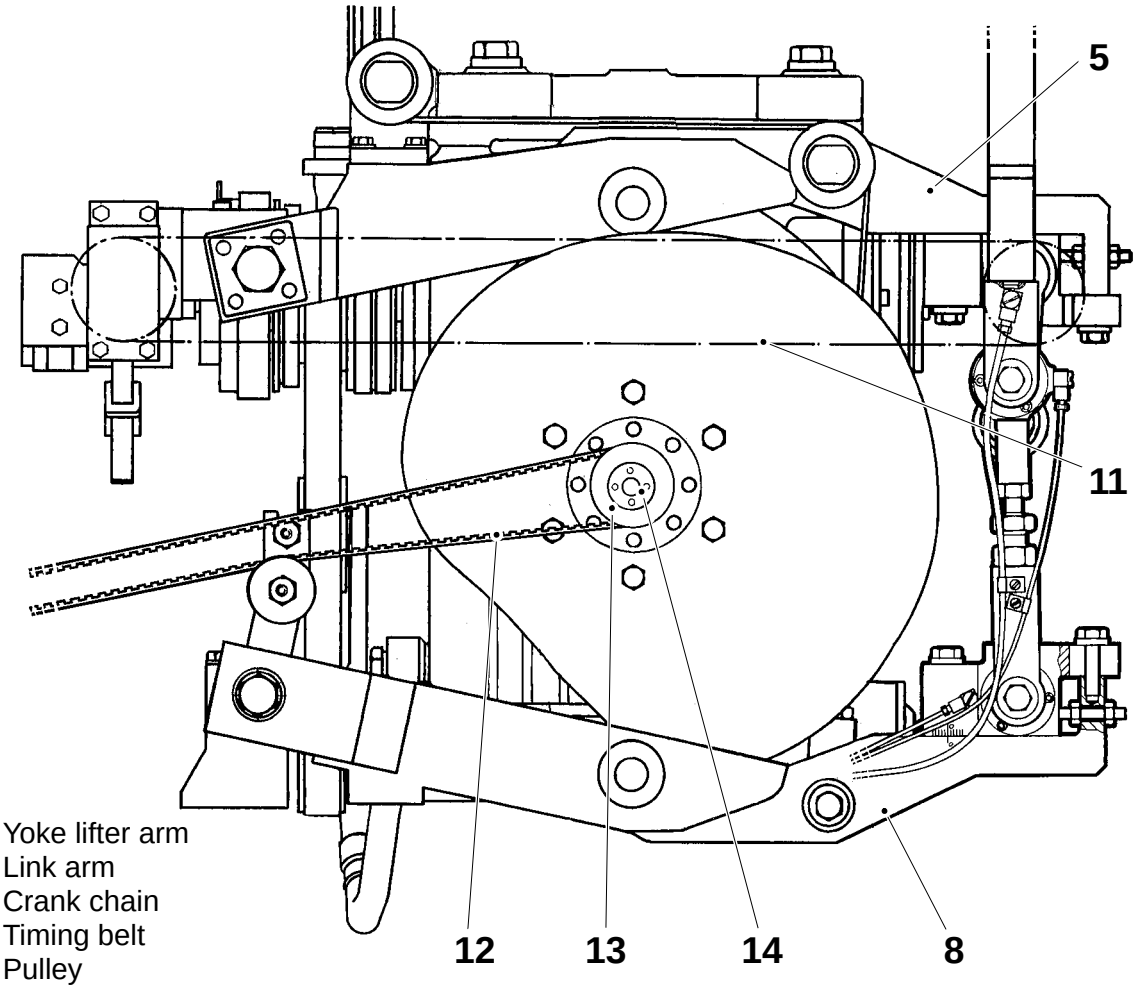

5 Yoke lifter arm
8 Link arm
11 Crank chain
12 Timing belt
13 Pulley
14 Clamp fitting

Fitting

Place the gear in the machine.

a) Fit the Vee-belts (2) between the drive motor and gear.

b) Attach the bow (1) of the coupling to the pin on the frame.

c) Put in the gear pins (3) and secure the gear to the bottom plate. Torque
80 Nm ±3 Nm (8 kpm).
If the gear is not pinned, set it, see page MS 345–5X.

d) Tension the Vee-belts (2).

(Cont'd overleaf)

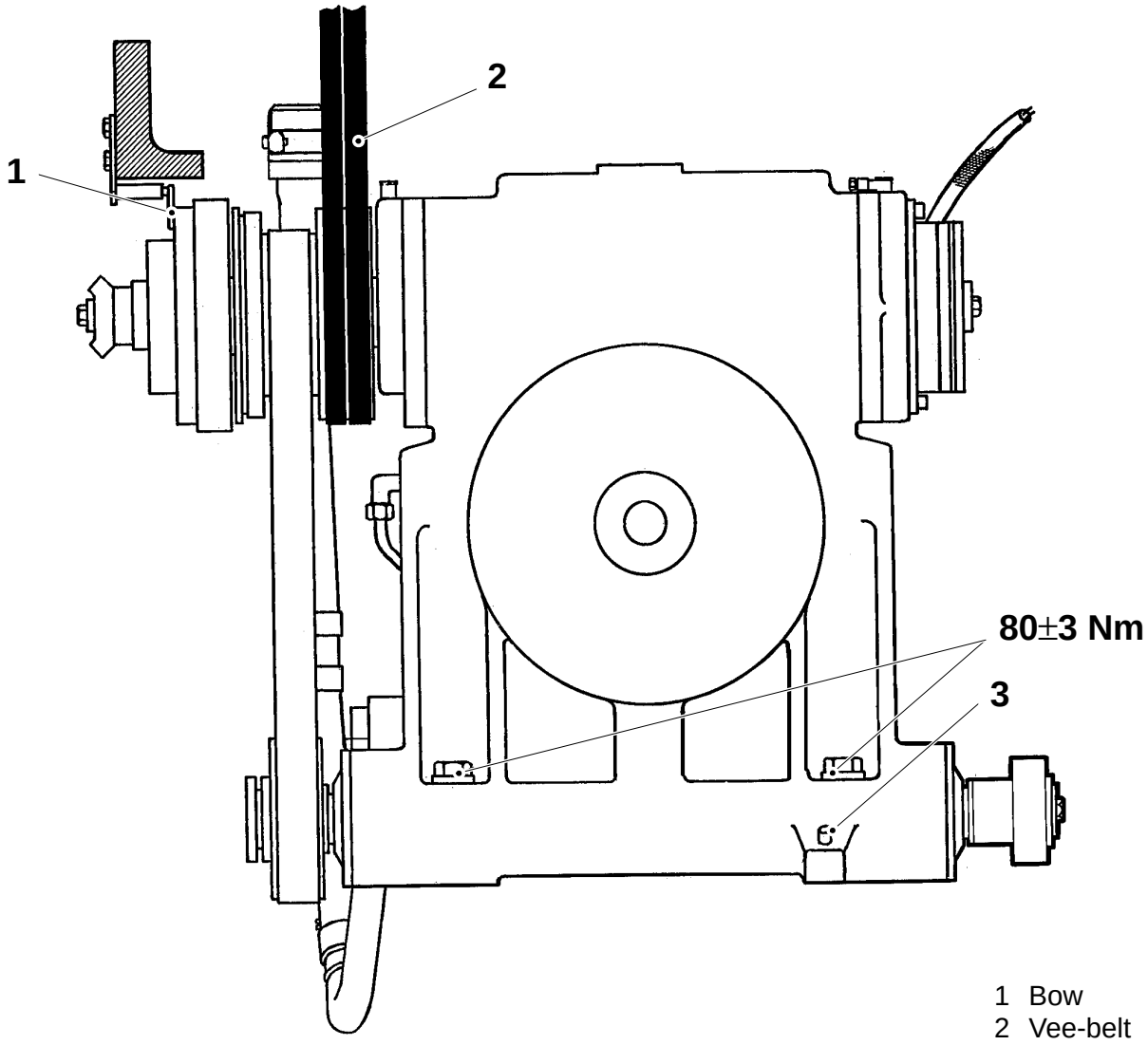

1 Bow
2 Vee-belt
3 Pin

(Cont'd)

e) Set the crank mechanism (9), see page MS 362–5X, and the crank switch, see page MS 363–5X.

f) Fit and tighten
- the final folder coupling,
- the cleaning manifold,
- the gear oil pipes,
- the lugs (4). Torque, see fig.,
- the cables from the worm gear brake and coupling, and
- the oil filler hose (6).

g) Fit the LH and RH yoke lifter arms.

h) Fit the link arms (8) to the frame.

i) Fit the belt tensioner (10) and tension the timing belt.

j) Put the LH and RH cam packs (7) in place without tightening their clamp fittings. Do not forget the spacer ring between gear and cam packs.

Note!
The shafts, the cam packs and the clamp fittings are to be degreased before fitting, see page MS 370–4X.

k) Synchronize the LH and RH cam packs with one another, see page MS 331–5X.

(Cont'd overleaf)

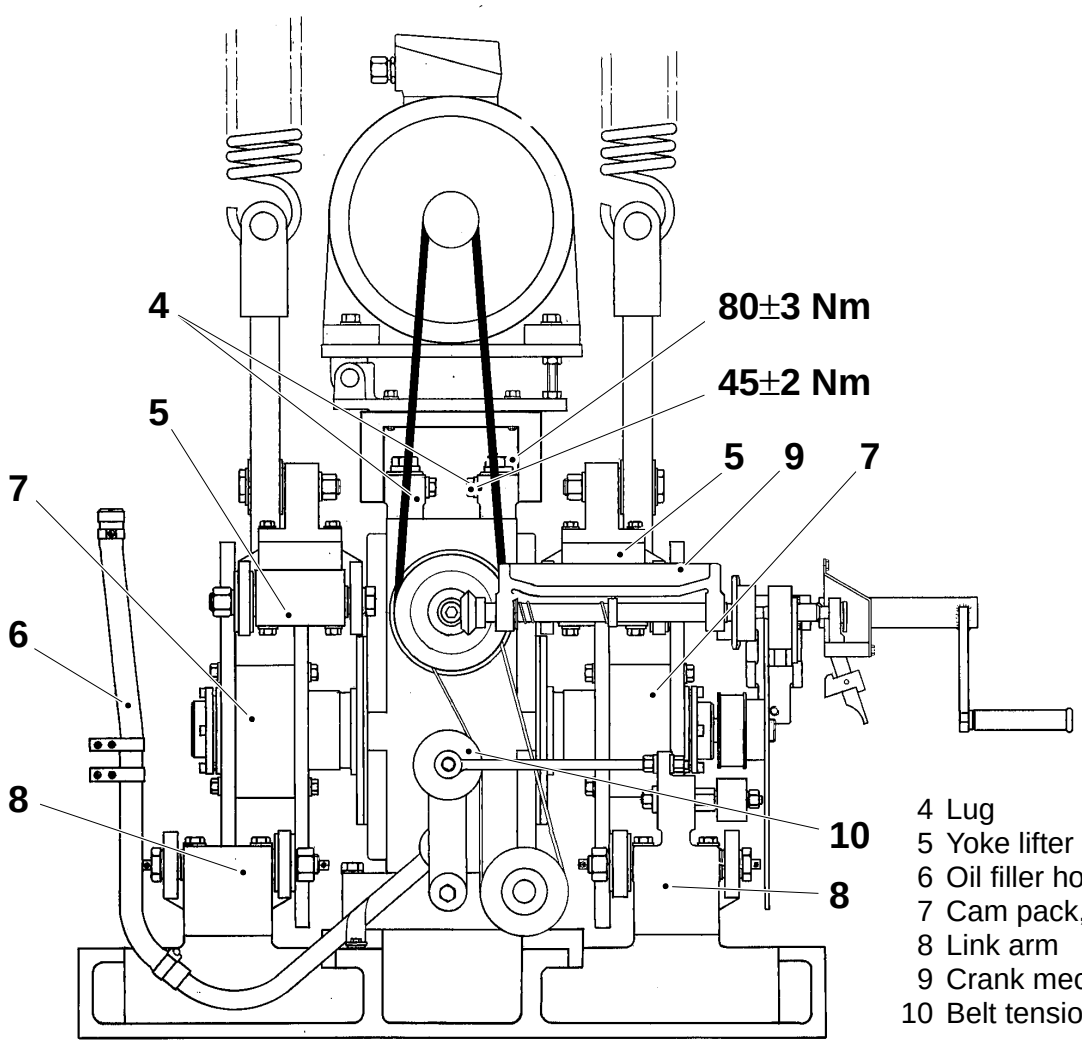

4 Lug
5 Yoke lifter arm, LH and RH
6 Oil filler hose
7 Cam pack, LH and RH
8 Link arm
9 Crank mechanism
10 Belt tensioner

(Cont'd)

l) Fit the LH and RH yoke lifter arms (5) to the guide.

m) Fit the LH and RH link arms (8) to the guide.

n) Connect all the oil pipes to the yoke lifter arm and link arm.

o) Remove the wooden blocks under the LH and RH yokes.

p) Fit and tension the crank chain (11).

q) Apply the spring force of the hold-down device, page MS 306–4X.

r) Fit the microswitch (15) to the link arm and set, see page MS 313–5X.

s) Fit the timing belt (12) and the angle encoder pulley (13) to the worm gear. Do not tighten the clamp fitting (14) yet.

t) Fit and set the degree scale, see page MS 336–5X, and the pointer, see page MS 337–5X.

u) Set the impulse transmitter, see page MS 603–5X.

v) Fit the slide lug, the drop chute, and the bracket.

w) Check the oil level in the worm gear. If necessary top up with oil, see page MS 345–1X.

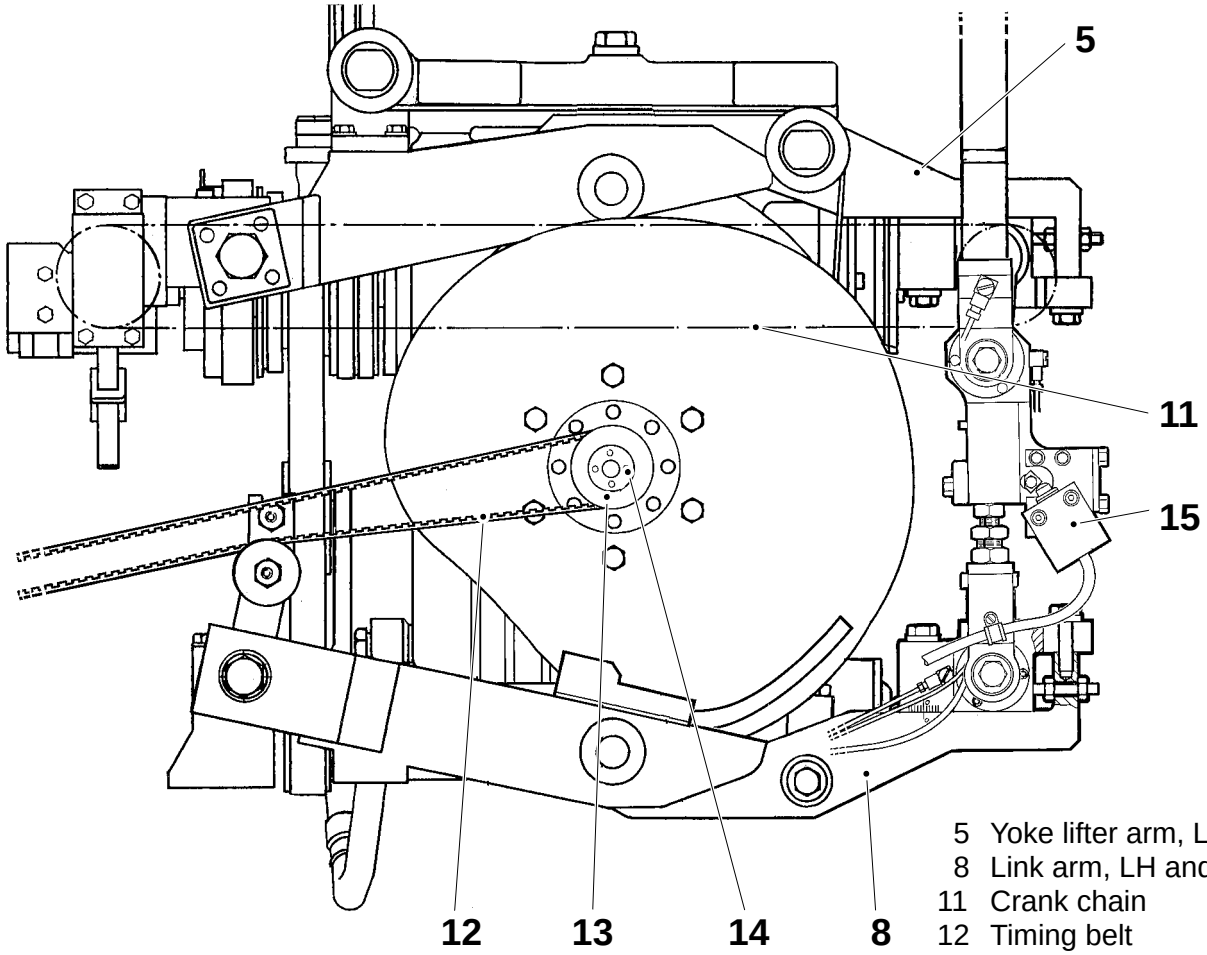

5 Yoke lifter arm, LH and RH
8 Link arm, LH and RH
11 Crank chain
12 Timing belt
13 Pulley
14 Clamp fitting
15 Microswitch

Fitting

Place the gear in the machine.

a) Fit the Vee-belt (2) between the drive motor and gear.

b) Attach the bow (1) of the coupling to the pin on the frame.

c) Put in the gear pins (3) and secure the gear to the bottom plate.
Torque = 80 Nm ± 3 Nm (8 kpm). If the gear is not pinned, set it, see page MS 345–5X.

d) Tension the Vee-belts (2).

(Cont'd overleaf)

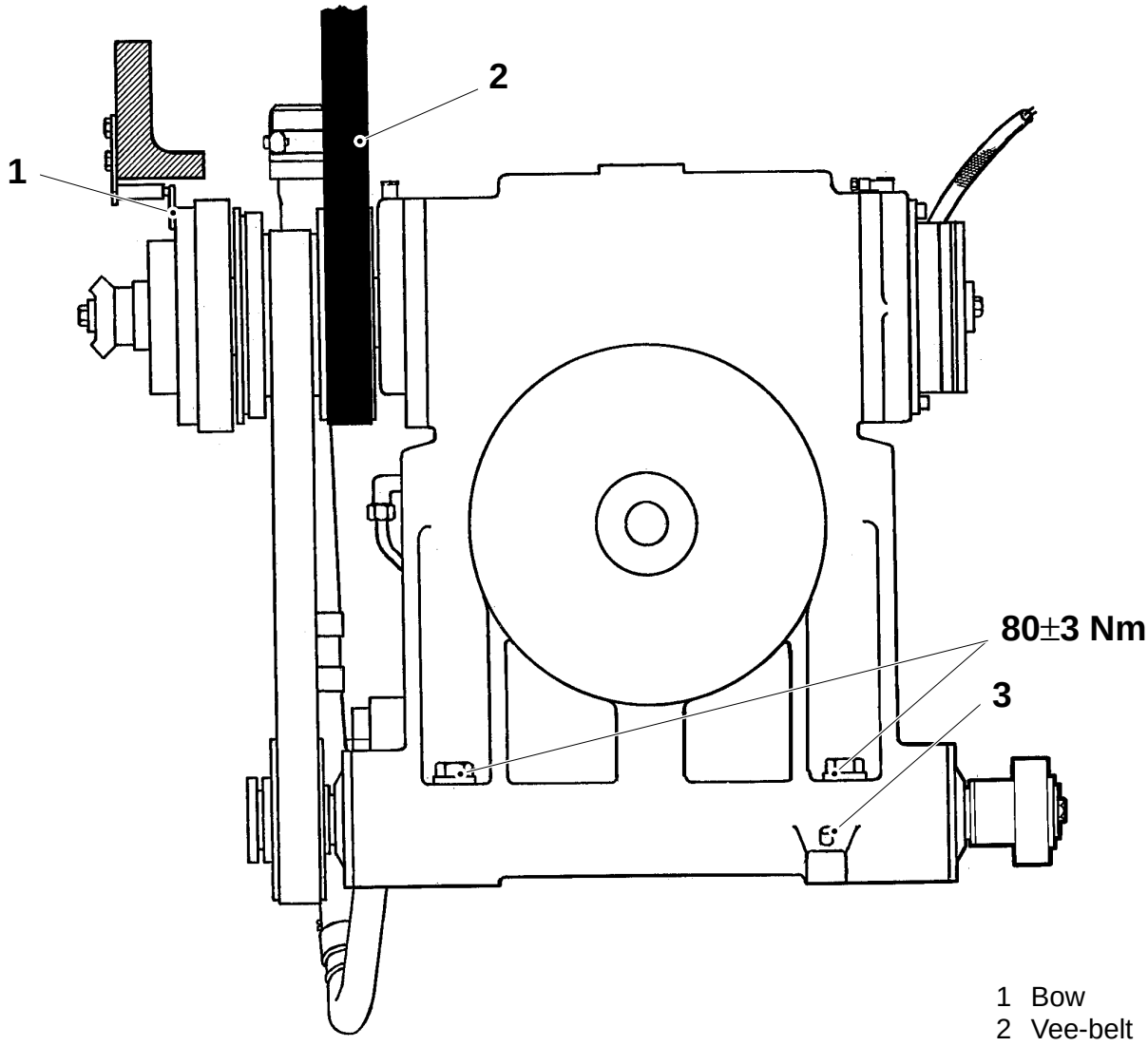

1 Bow
2 Vee-belt
3 Pin

(Cont'd)

e) Set the crank mechanism (9), see page MS 362–5X, and crank switch, see page MS 363–5X.

f) Fit and tighten
- the final folder coupling,
- the cleaning manifold,
- the gear oil pipes,
- the lugs (4). Torque, see fig.,
- the cables from the worm gear brake and coupling, and
- the oil filler hose (6).

g) Fit the LH and RH yoke lifter arms.

h) Fit the link arms (8) to the frame.

i) Fit the belt tensioner (10) and tension the timing belt.

j) Put the LH and RH cam packs (7) in place without tightening their clamp fittings. Do not forget the spacer ring between gear and cam packs.

Note!
The shafts, the cam packs and the clamp fittings are to be degreased before fitting, see page MS 370–4X.

k) Synchronize the LH and RH cam packs with one another, see page MS 331–5X.

(Cont'd overleaf)

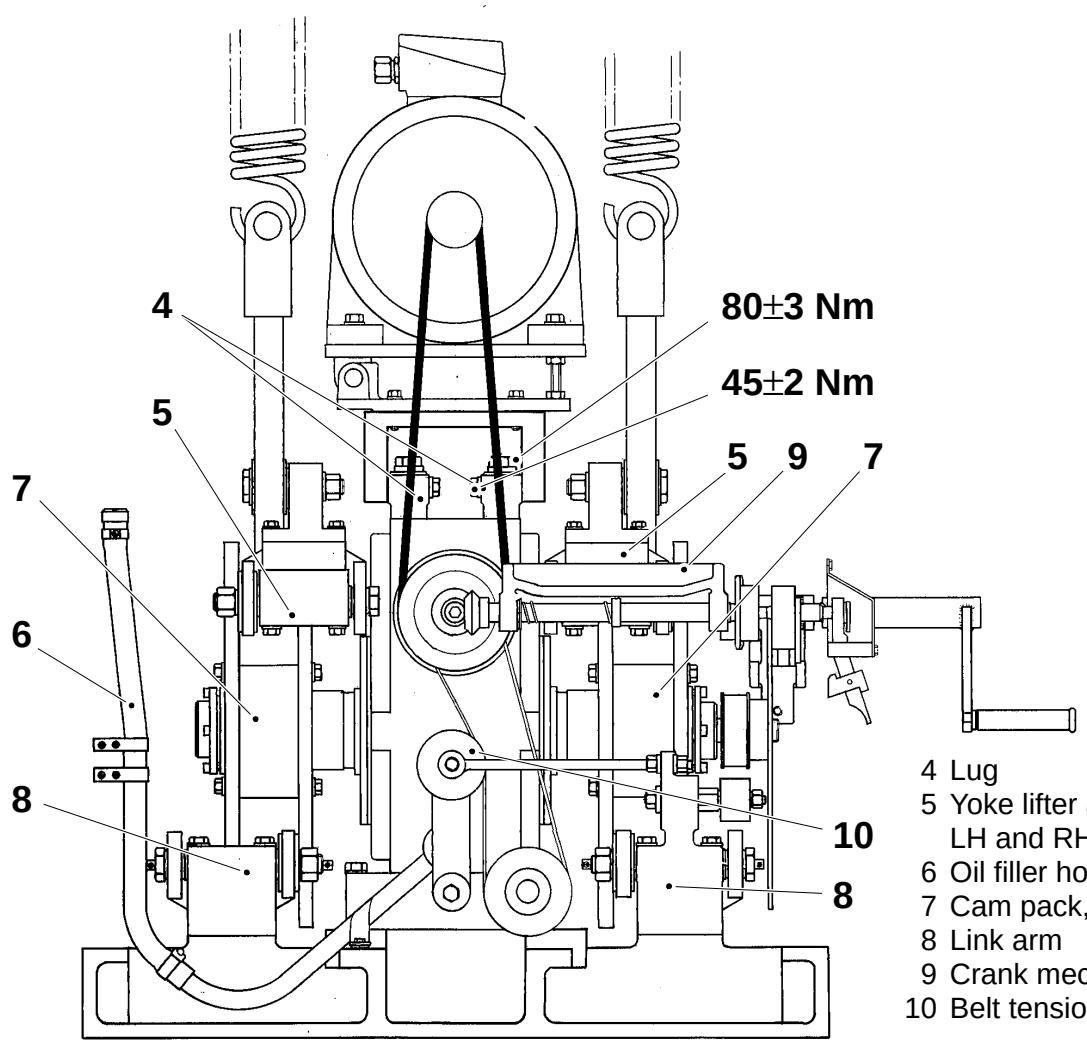

4 Lug
5 Yoke lifter arm, LH and RH
6 Oil filler hose
7 Cam pack, LH and RH
8 Link arm
9 Crank mechanism
10 Belt tensioner

(Cont'd)

l) Fit the LH and RH yoke lifter arms (5) to the guide.

m) Fit the LH and RH link arms (8) to the guide.

n) Connect all the oil pipes to the yoke lifter arm and link arm.

o) Remove the wooden blocks under the LH and RH yokes.

p) Fit and tension the crank chain (11).

q) Apply the spring force of the hold-down device, see page MS 306–4X.

r) Fit the microswitch (15) to the link arm and set it, see page MS 313–5X.

s) Fit the timing belt (12) and the angle encoder pulley (13) to the worm gear. Do not tighten the clamp fitting (14) yet.

t) Fit and set the degree scale, see page MS 336–5X, and the pointer, page MS 337–5X.

u) Set the impulse transmitter, see page MS 603–5X.

v) Fit the slide lug, drop chute, and bracket.

w) Check the oil level in the worm gear. If necessary top up with oil, see page MS 345–1X.

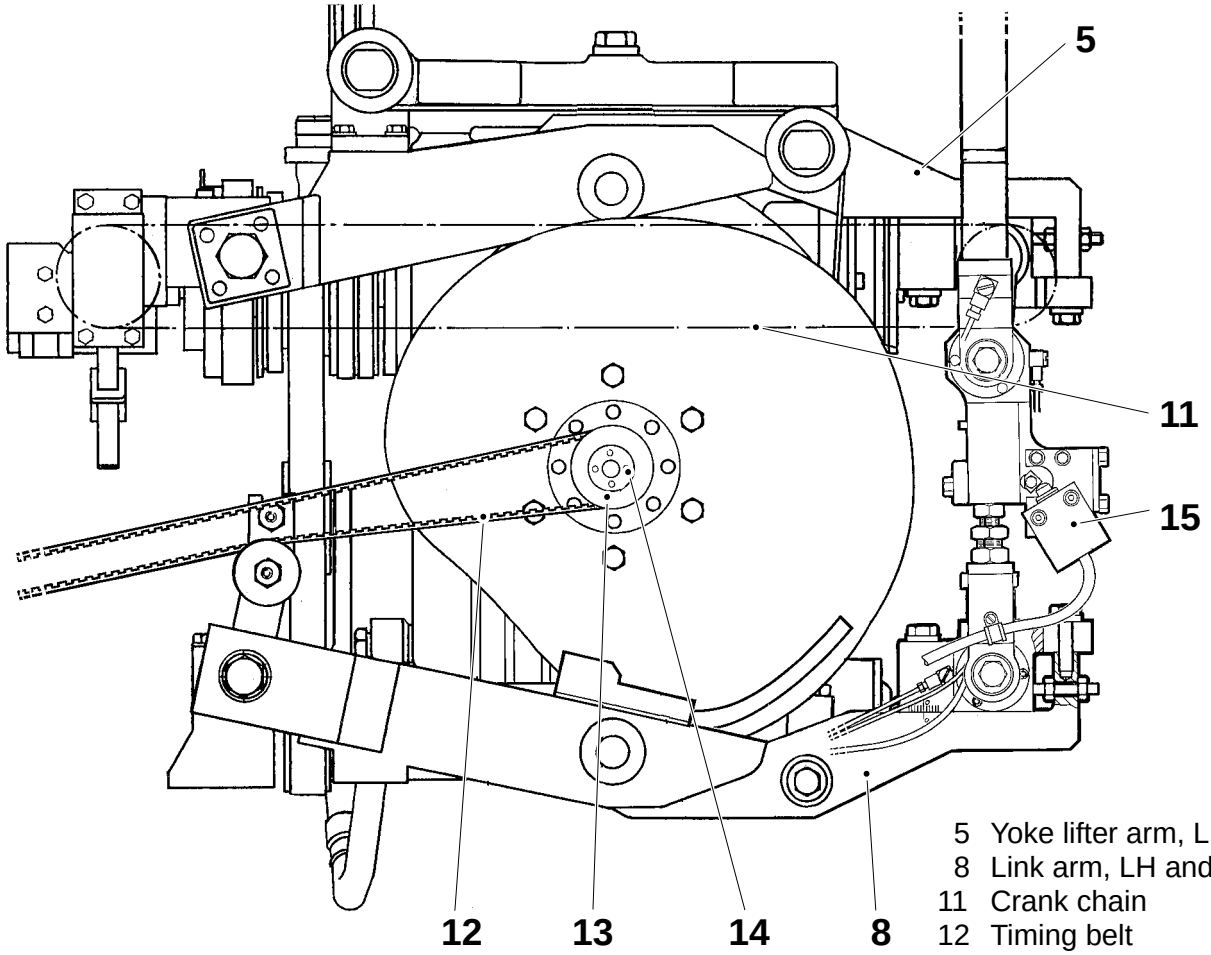

5 Yoke lifter arm, LH and RH
8 Link arm, LH and RH
11 Crank chain
12 Timing belt
13 Pulley
14 Clamp fitting
15 Microswitch

Setting

The gear is pinned, but if setting has to be done, proceed as follows:

a) Put the gear in place.

b) Fit the setting templates (8) together with the spacer rods (9). Fit the templates at the mounting points (1) of the link arm and yoke lifter arm, one template on the RH side and one on the LH side.

c) Move the gear towards the templates so that the shafts of the gear bear against the spacer rods (9).

d) If the guides have been removed, fit the template (7) in the holes for the LH side guides.

e) Move the gear sideways towards the template so that the brake (3) bears against the template.

f) If the guides have already been fitted, put a set-square (5) against the guides (6), and set distance B, see fig. 2.

g) Secure the gear on the base plate. Torque 80 ±3 Nm (8 kpm). Check, with a feeler gauge (2), gap A between the spacer rod (9) and the shaft (4). Carry out this check on both sides. Pin the gear.

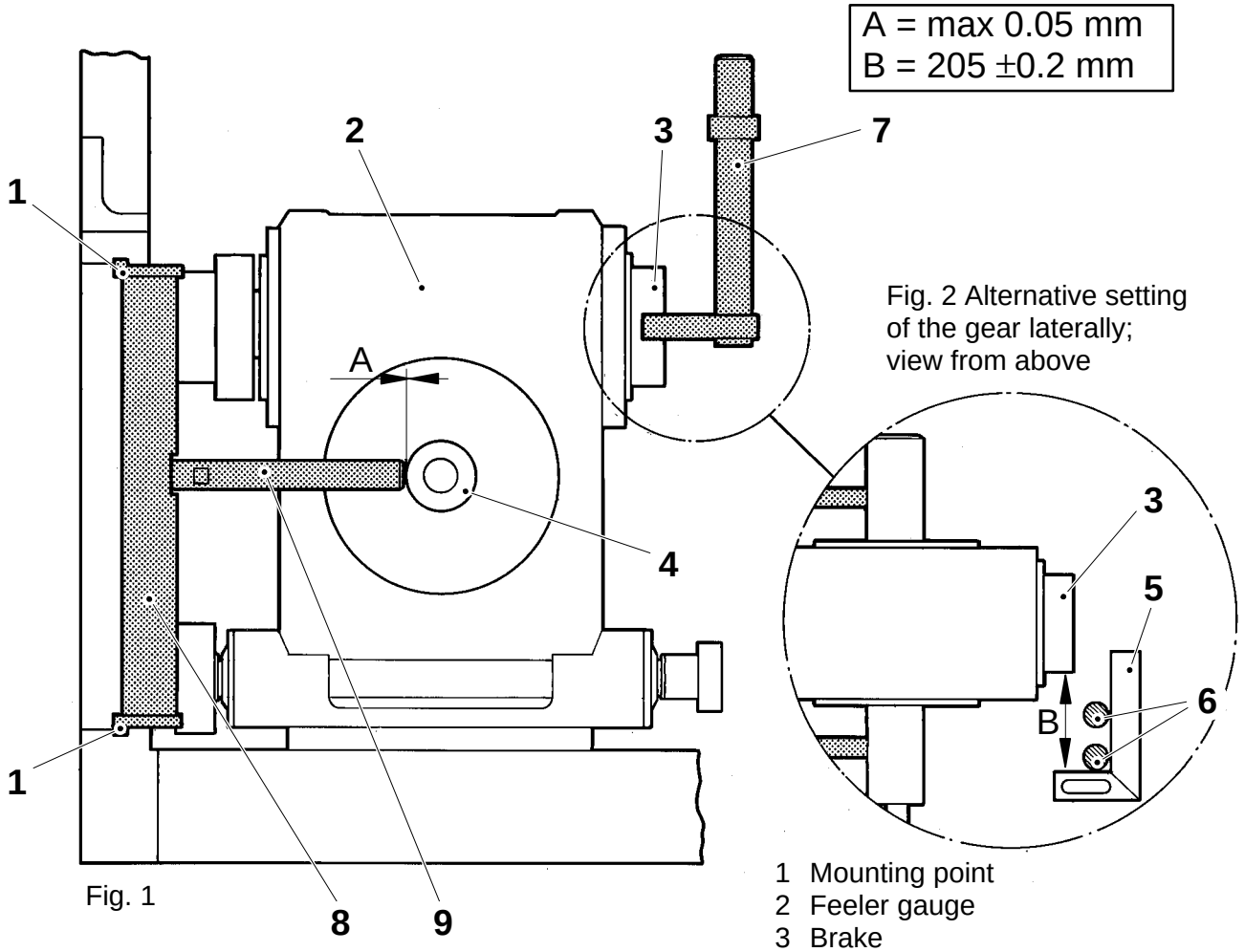

Fig. 1

Fig. 2 Alternative setting of the gear laterally; view from above

1 Mounting point
2 Feeler gauge
3 Brake
4 Shaft
5 Set square
6 Guide
7 Template TP No. 75515
8 Template TP No. 75453
9 Spacer rod TP No. 75454

Setting

The gear is pinned, but if setting has to be done, proceed as follows:

a) Put the gear in place.

b) Fit the setting templates (8) together with the spacer rods (9). Fit the templates at the mounting points (1) of the link arm and yoke lifter arm, one template on the RH side and one on the LH side.

c) Move the gear towards the templates so that the shafts of the gear bear against the spacer rods (9).

d) If the guides have been removed, fit the template (7) in the holes for the LH side guides

e) Move the gear sideways towards the template so that the brake (3) bears against the template.

f) If the guides have already been fitted, put a set-square (5) against the guides (6), and set distance B, see fig. 2.

g) Secure the gear on the base plate. Torque 80 ±3 Nm (8 kpm). Check, with a feeler gauge (2), gap A between spacer rod (9) and the shaft (4). Carry out this check on both sides. Pin the gear.

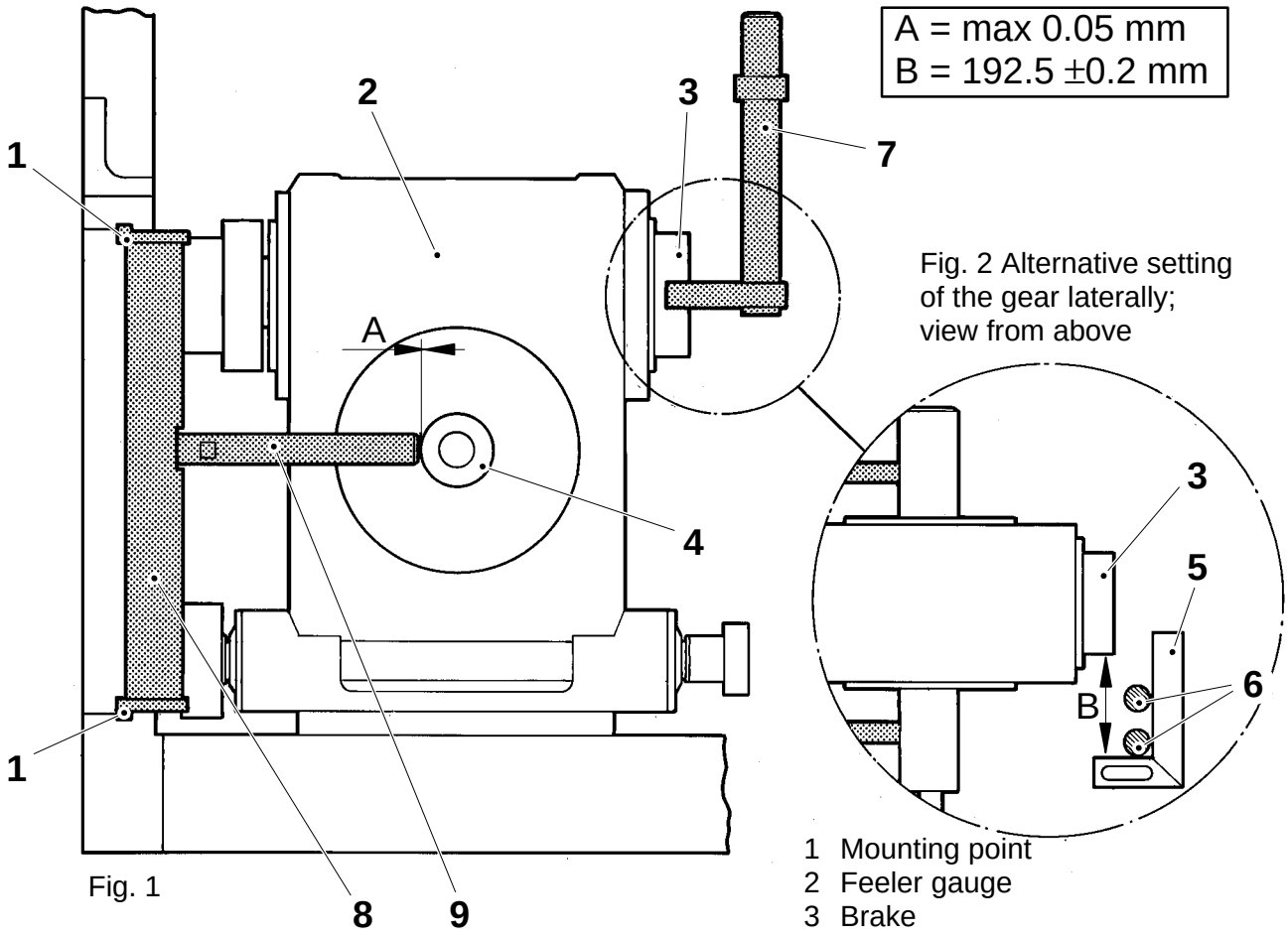

Fig. 1

Fig. 2 Alternative setting of the gear laterally; view from above

1 Mounting point
2 Feeler gauge
3 Brake
4 Shaft
5 Set square
6 Guide
7 Template TP No. 978421
8 Template TP No. 75453
9 Spacer rod TP No. 75454

Checking/Setting

Check the tension of the belts as illustrated. The spring balance is applied at right angles to the belt and in the middle of the free span of the belt.

Belt A is to be adjusted by means of the belt tensioner (1).

Belt B is to be adjusted by means of the screw (2).

Belt	Load force, N	Deflection, mm
A	14 – 16	4 – 6
B	24 – 26	9 –11

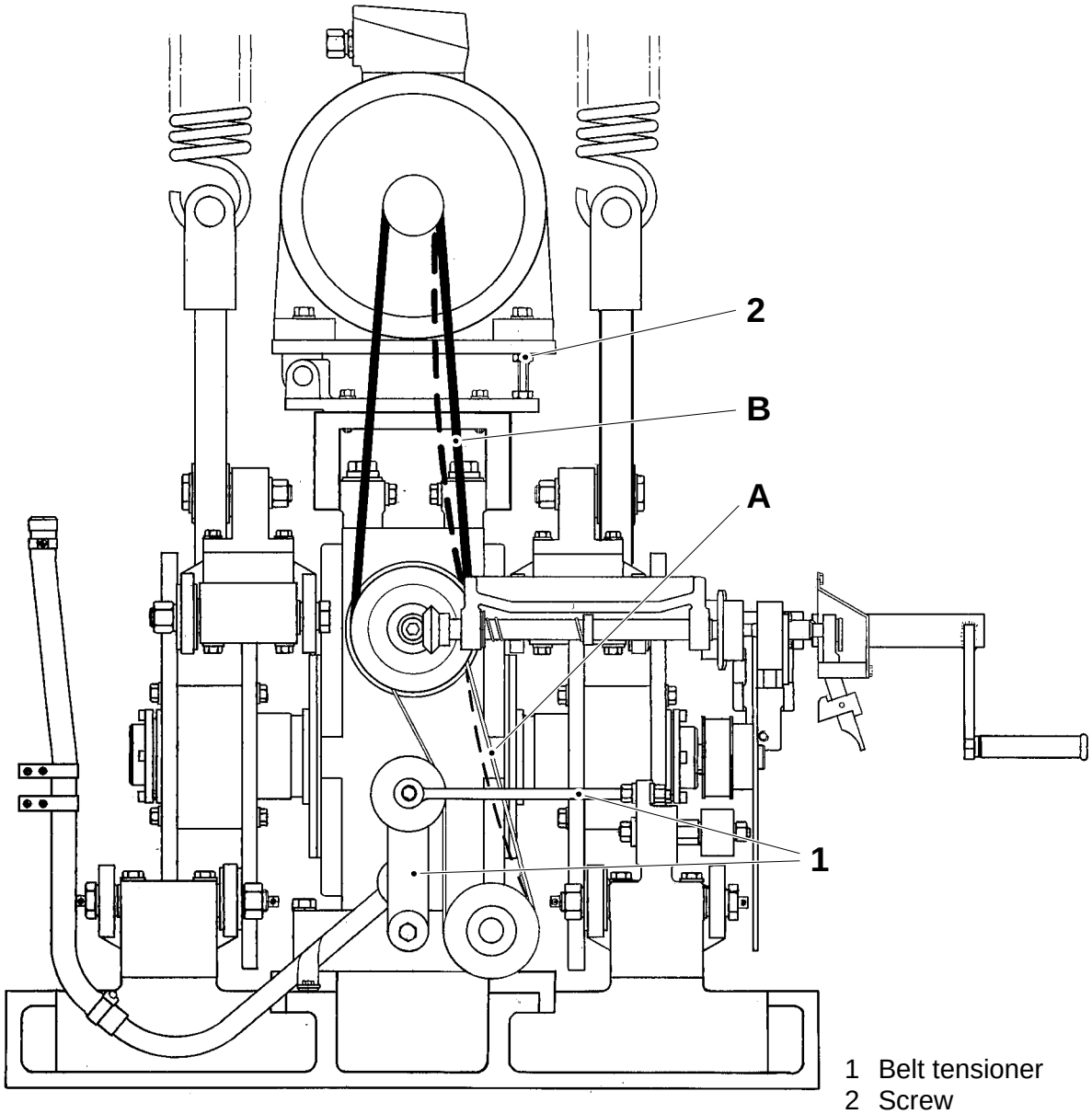

1 Belt tensioner
2 Screw

Checking

Check the function of the brake. Start the machine, push the **Emergency stop** button, and check that the machine stops dead.

Check gap A between the brake housing (1) and the brake disc (2). If required, adjust by means of the screw (3). The screw is to be secured with lock fluid.

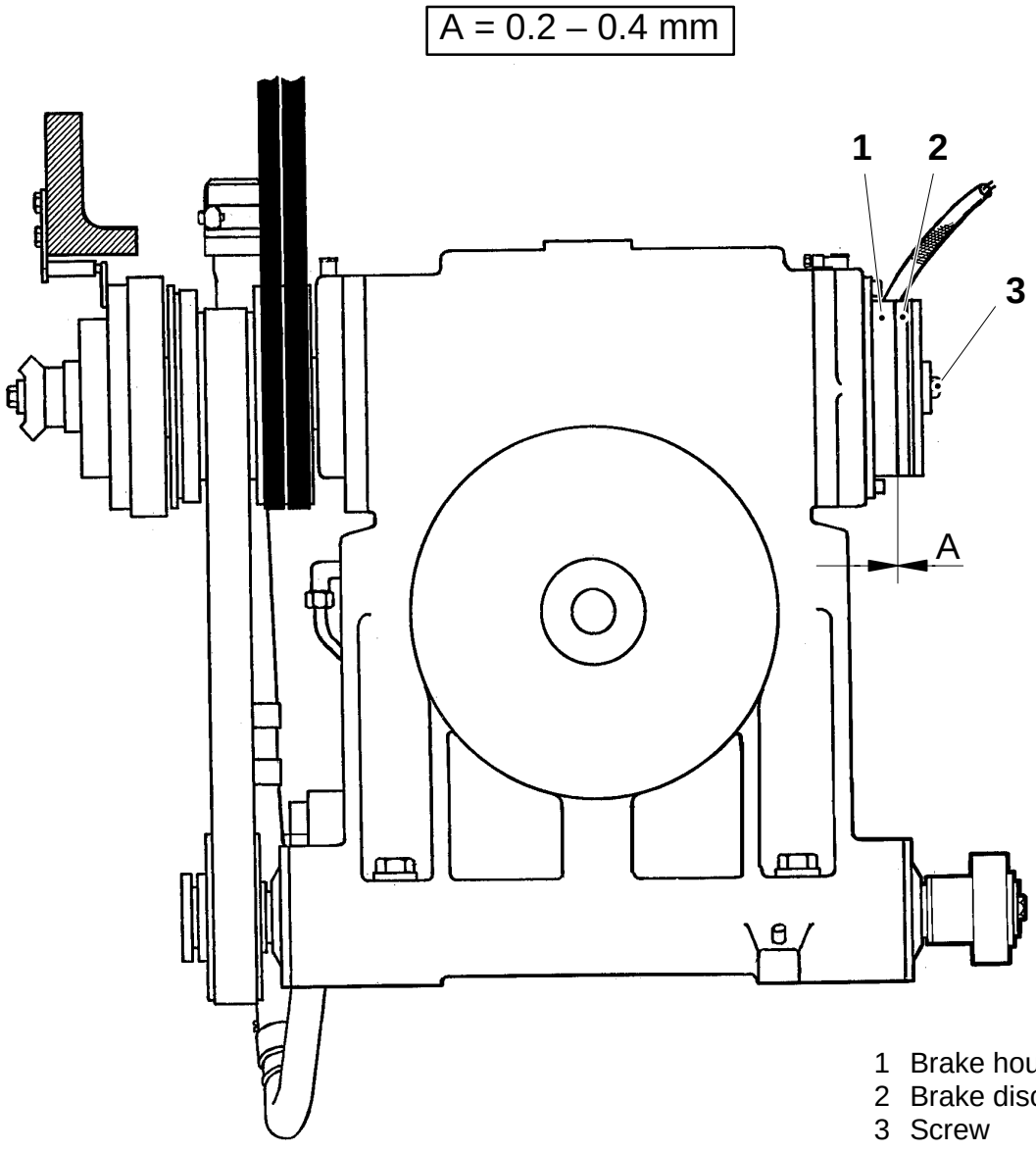

1 Brake housing
2 Brake disc
3 Screw

Checking

Check the function of the brake. Start the machine, push the **Emergency stop** button, and check that the machine stops dead.

Check gap A between the brake housing (1) and the brake disc (2). If required, adjust by means of the screw (3). The screw is to be secured with lock fluid.

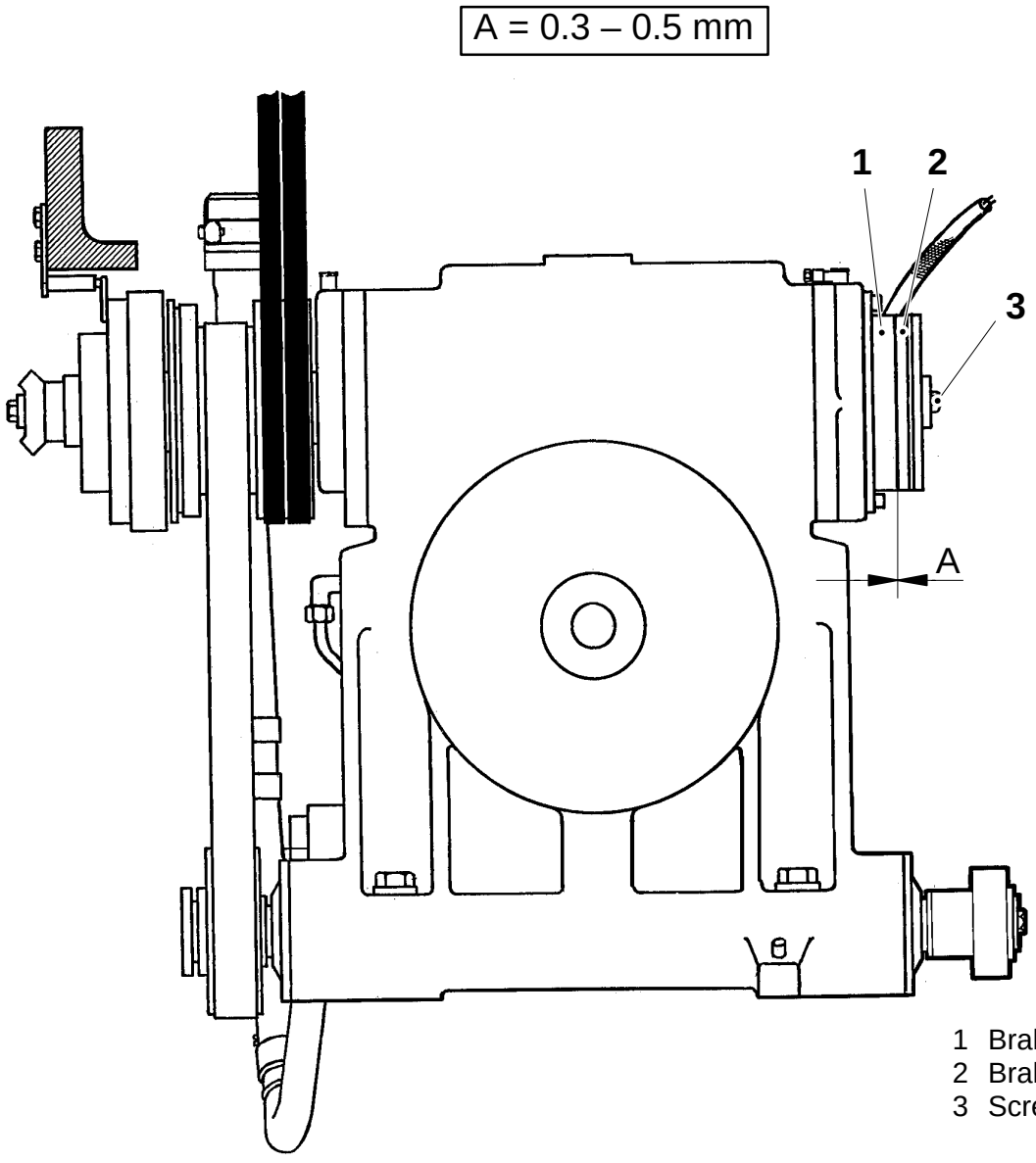

1 Brake housing
2 Brake disc
3 Screw

Checking

Check the function of the brake. Start the machine, push the **Emergency stop** button, and check that the machine stops dead.

Check gap A between the brake housing (1) and the brake disc (2). If required, adjust by means of the screw (3). The screw is to be secured with lock fluid.

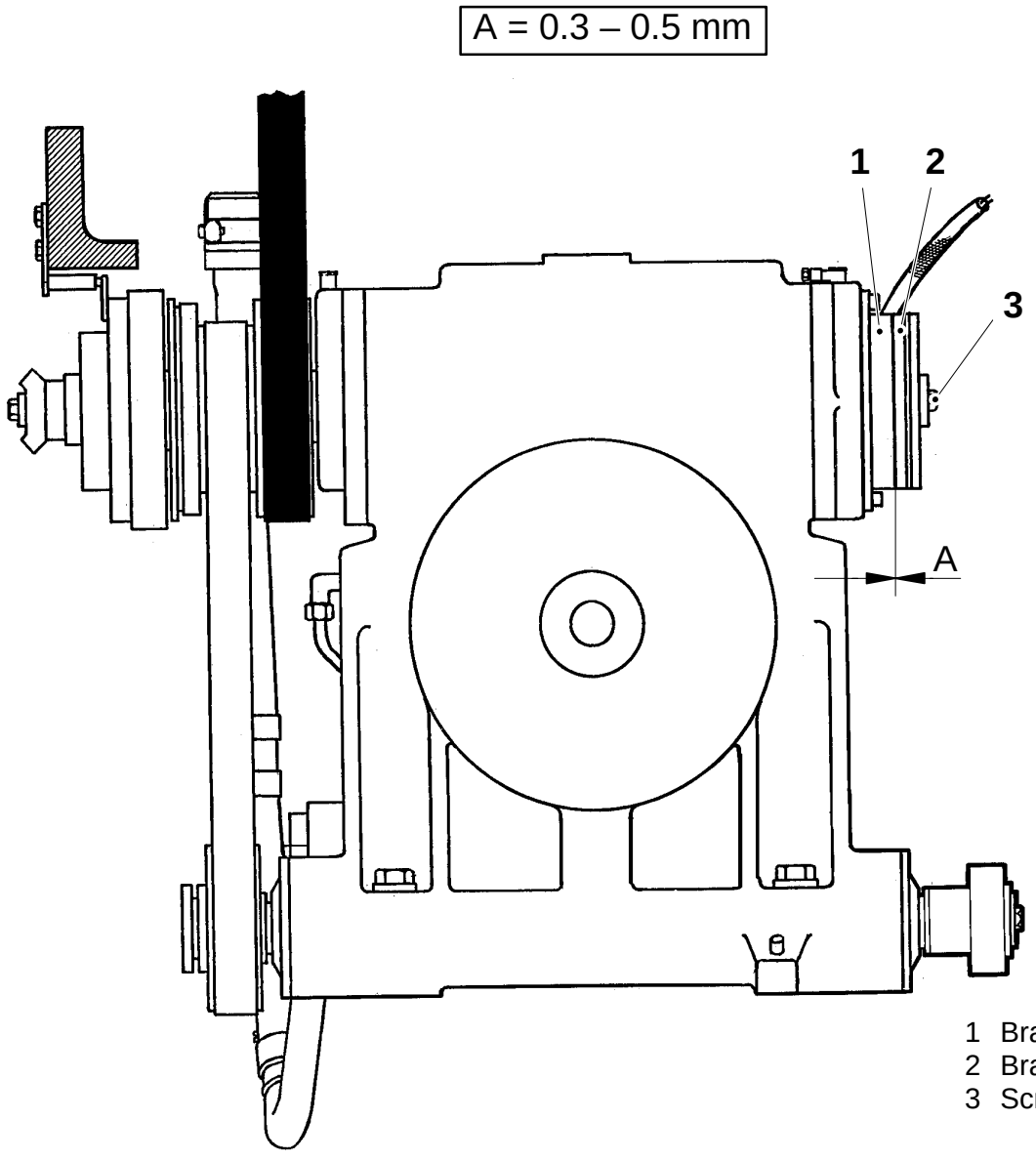

1 Brake housing
2 Brake disc
3 Screw

Removal

a) Mark and disconnect the cable (1) between the brake and the terminal box above the worm gear.

b) Undo the screw (5) and remove the washer (4).

c) Pull off the disc (6) together with the brake disc (7).

d) Remove the key (3) and cup springs (2).

e) Undo the screws (9) and remove the brake housing (8).

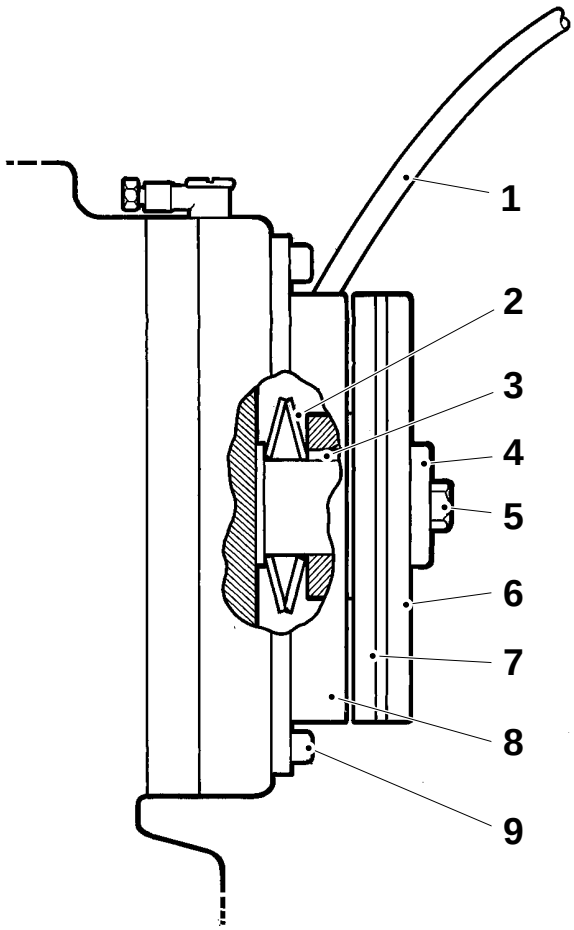

1 Cable
2 Cup spring
3 Key
4 Washer
5 Screw
6 Disc
7 Brake disc
8 Brake housing
9 Screw

Fitting

a) Secure the brake housing (8) by tightening the screws (9). Torque 16 ±2 Nm (1.6 kpm).

b) Fit the cup springs (2) and put the key (3) in place.

c) Fit the disc (6) together with the brake disc (7).

d) Fit the washer (4) and screw (5). Tighten this screw (5) until gap A is obtained. Secure the screw with lock fluid.

e) Connect the cable (1) to the terminal box.

f) Engage the brake a couple of times and make sure gap A stays the same.

A = 0.2 – 0.4 mm

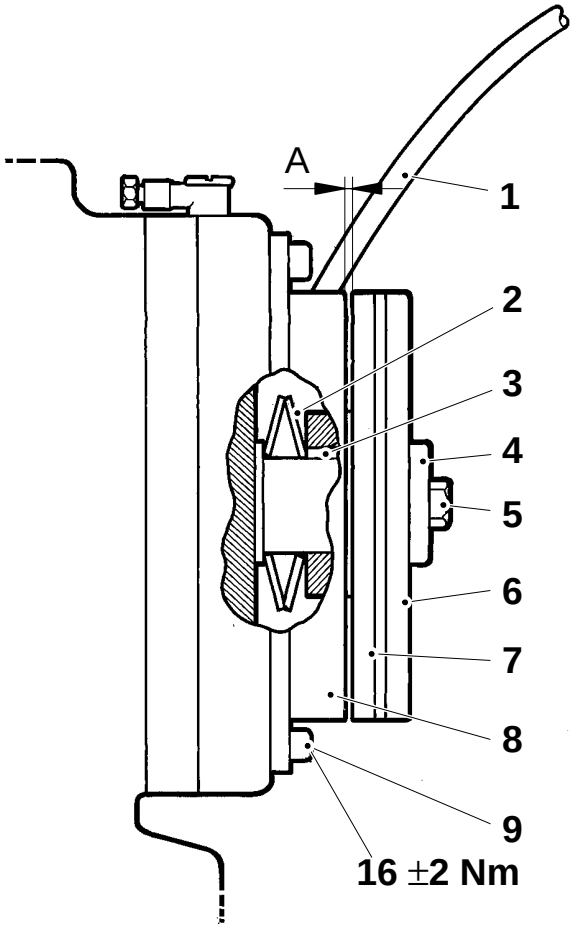

1 Cable
2 Cup spring
3 Key
4 Washer
5 Screw
6 Disc
7 Brake disc
8 Brake housing
9 Screw

Fitting

a) Secure the brake housing (8) by tightening the screws (9). Torque 16 ±2 Nm (1.6 kpm).

b) Fit the cup springs (2) and put the key (3) in place.

c) Fit the disc (6) together with the brake disc (7).

d) Fit the washer (4) and screw (5). Tighten this screw (5) until gap A is obtained. Secure the screw with lock fluid.

e) Connect the cable (1) to the terminal box.

f) Engage the brake a couple of times and make sure gap A stays the same.

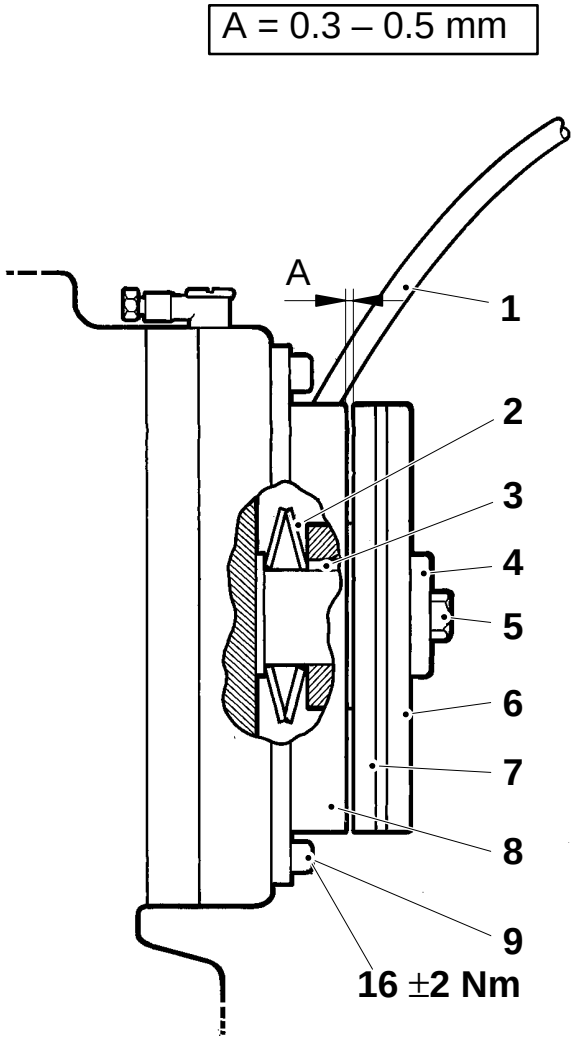

1 Cable
2 Cup spring
3 Key
4 Washer
5 Screw
6 Disc
7 Brake disc
8 Brake housing
9 Screw

Checking

Check the pin (1) for wear and/or damage.
Replace as required.

Check gap A. In case of deviation, the coupling has to be removed and reset, see pages MS 361–2X and MS 361–4X.

Start the machine and listen for any abnormal noise from the coupling.

A = 0.2 – 0.45 mm

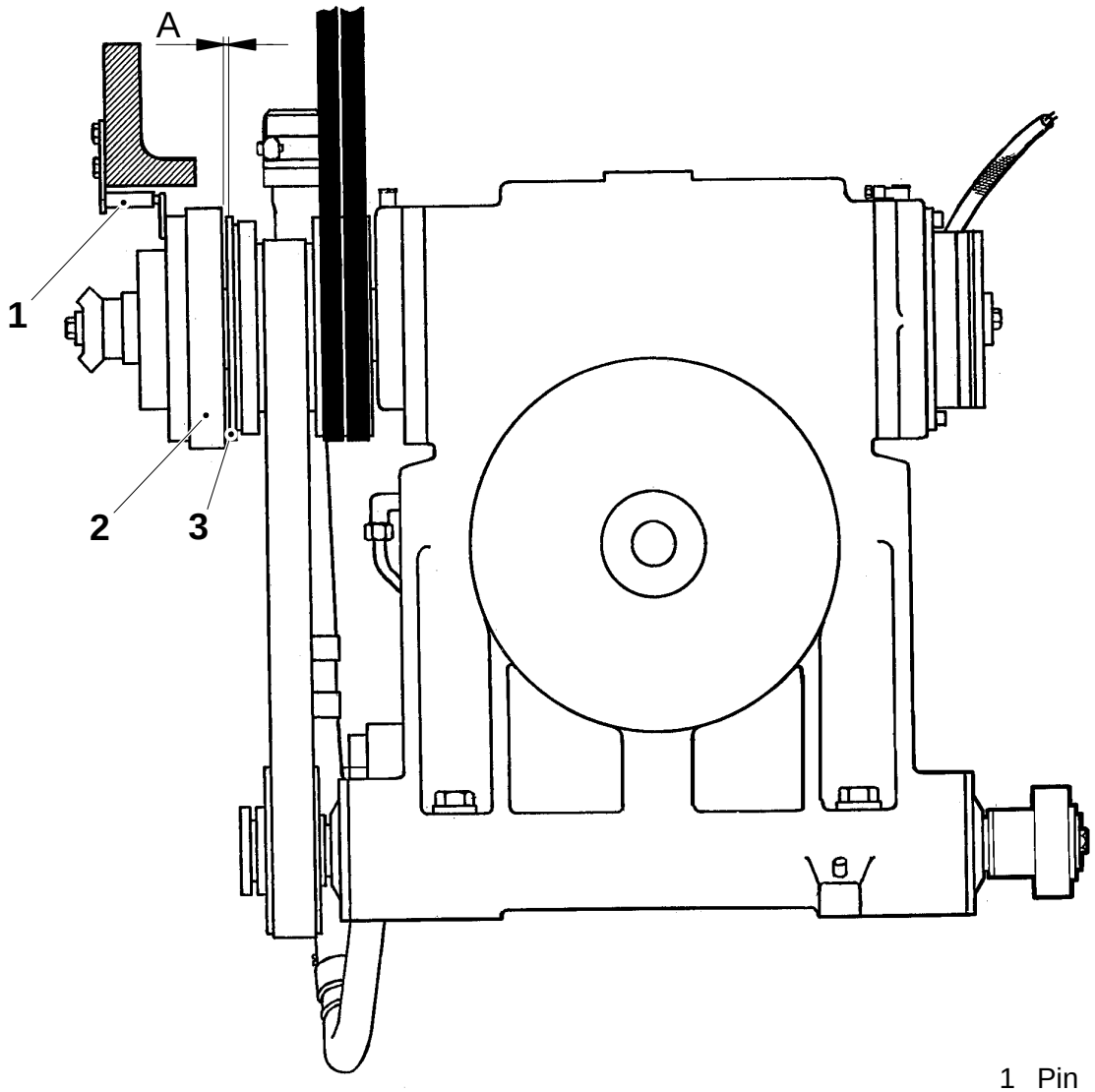

1 Pin
2 Coupling
3 Disc

Checking

Check the pin (1) for wear and/or damage.
Replace as required.

Check gap A. In case of deviation, the coupling has to be removed and reset, see pages MS 361–2X and MS 361–4X.

Start the machine and listen for any abnormal noise from the coupling.

If required, replace the bearings, see page MS 361–2X.

A = 0.2 – 0.45 mm

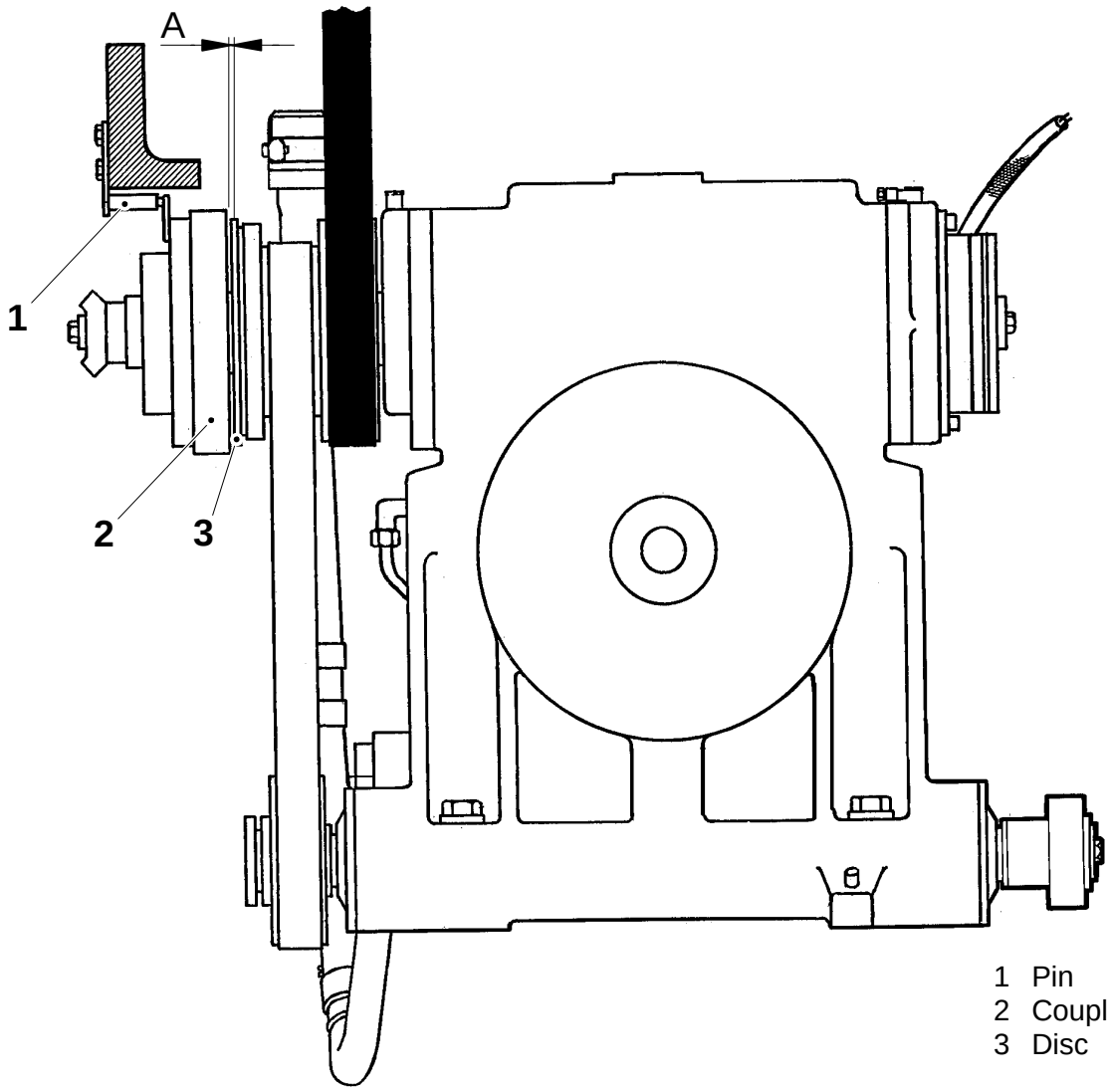

1 Pin
2 Coupling
3 Disc

Removal

Disengage fuse F54.

WARNING!
Peroxide. Wear safety equipment according to Safety precautions on page MS 001.

a) Drain the peroxide tank.

b) Fill the tank with distilled water.

c) Rinse the peroxide system by starting the peroxide pump and let it run for a minute or so.

d) Undo the hose couplings (1), (2), (3) and (4).

e) Loosen the fixing screws of the peroxide tank and remove the tank from the machine.

f) Remove the crank mechanism, see page MS 362–2X.

g) Undo the screws (5) and remove the pin (6).

h) Remove the reinforcement beam, if any, between the yoke lifter arms, see page MS 303–2X, item c) (applies only to 020V→030V).

(Cont'd overleaf)

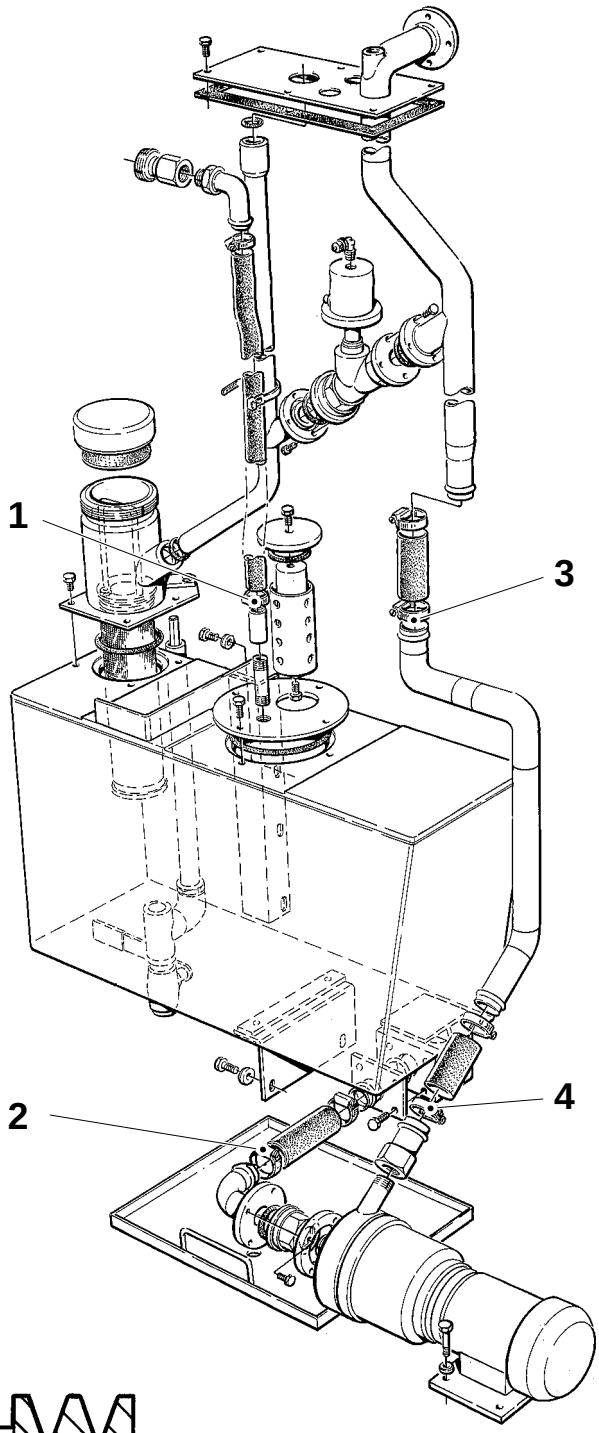

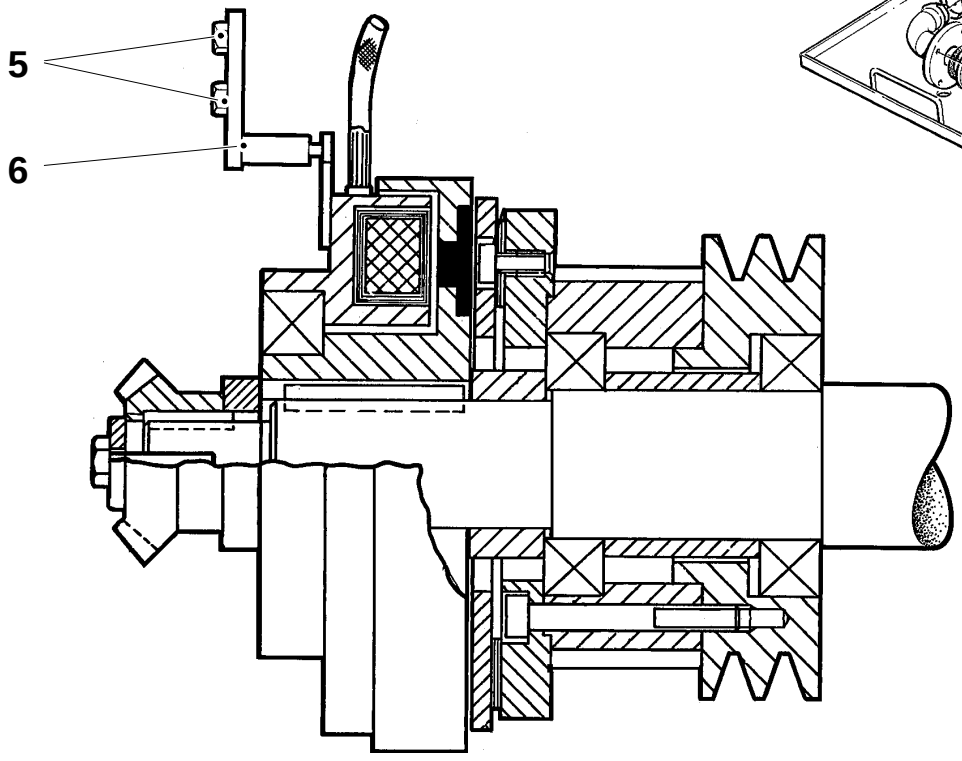

1 Hose coupling
2 Hose coupling
3 Hose coupling
4 Hose coupling
5 Screw
6 Pin

(Cont'd)

i) Mark and disconnect the cable (7) between the coupling and the terminal box underneath the drive motor.

j) Undo the screw (18) and remove the washer (17).

k) Pull off the gear wheel (16) by means of a puller.

l) Remove the key (19) and spacer ring (15).

m) Fit a puller at points B and pull off the coupling housing (20).

n) Remove the key (14) and spacer ring (9). Do not loosen the shims (13).

o) Undo the screws (8) and remove the disc (12).

p) Undo the screws (10) and remove the mounting ring (11).

q) Pull off the pulleys by means of a puller.

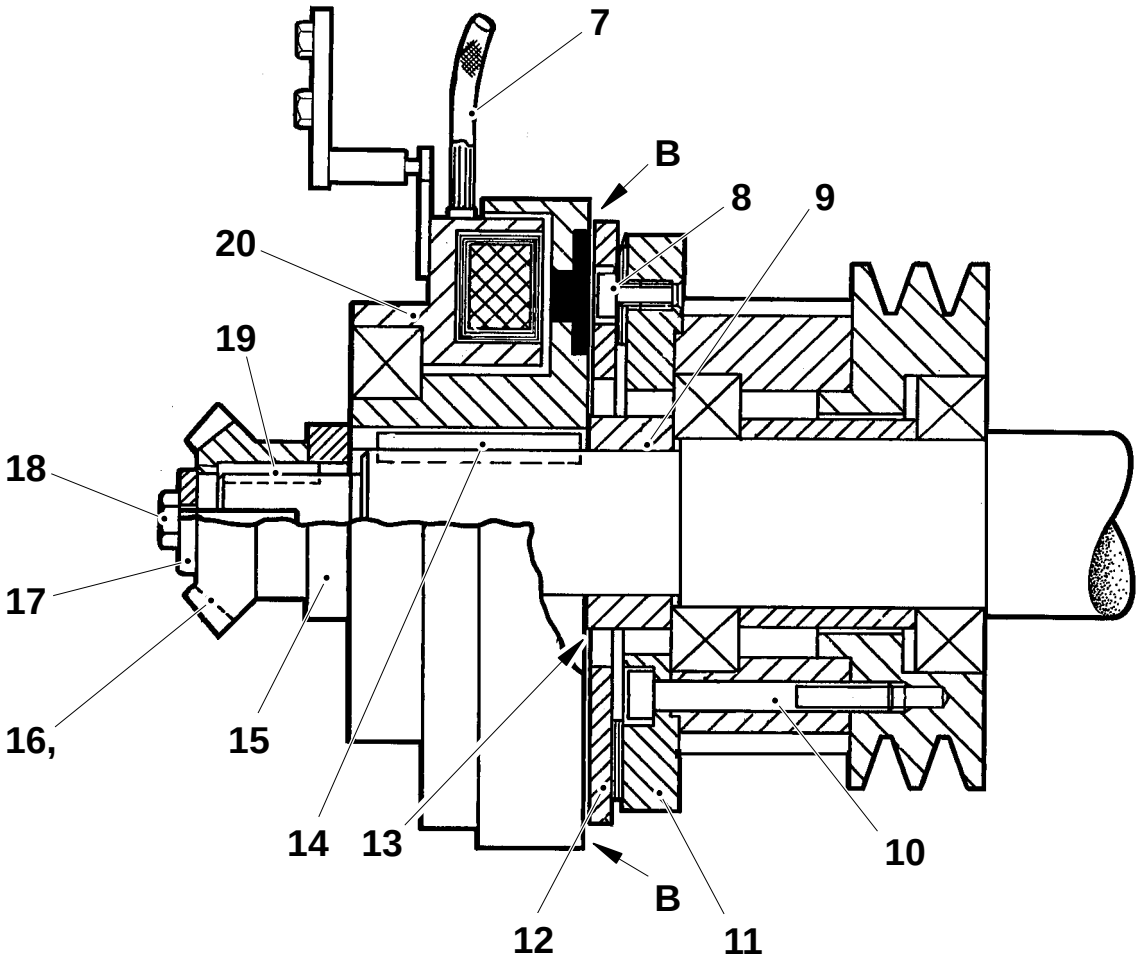

7	Cable	14	Key
8	Screw	15	Spacer ring
9	Spacer ring	16	Gear wheel
10	Screw	17	Washer
11	Mounting ring	18	Screw
12	Disc	19	Key
13	Shims	20	Coupling housing

Removal

Disengage fuse F54 (for TB 130V – F55; for TBA 1203, 130V – F56. **Note!** Make sure the TPMC battery voltage is OK).

a) Remove the crank mechanism, see page MS 362–2X.

b) Undo the screws (12) and remove the pin (11).

c) **Valid for TB:**
Remove the reinforcement beam, if any, between the yoke lifter arms, see page MS 303–2X, item c).

d) Mark and disconnect the cable (1) between the coupling and the terminal box underneath the drive motor.

e) Undo the screw (9) and remove the washer (8).

f) Pull off the gear wheel (7) by means of a puller.

g) Remove the key (10) and spacer ring (6).

h) Fit a puller at points B and pull off the coupling housing (2).

i) Remove the key (5) and spacer ring (3). Do not loose the shims (4).

(Cont'd overleaf)

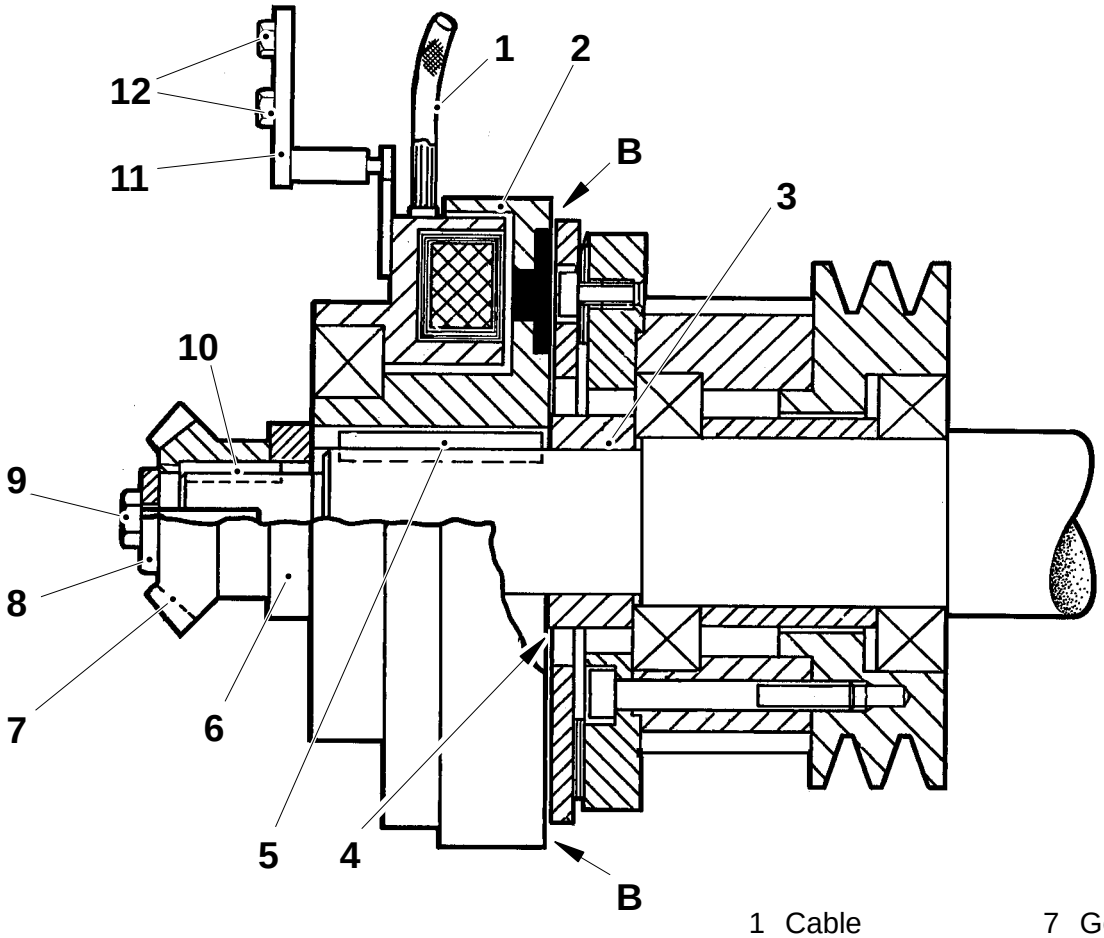

1	Cable	7	Gear wheel
2	Coupling housing	8	Washer
3	Spacer ring	9	Screw
4	Shim	10	Key
5	Key	11	Pin
6	Spacer ring	12	Screw

(Cont'd)

j) Undo the screws (13) and remove the disc (16).

k) Undo the screws (14) and remove the mounting ring (15).

l) Pull off the pulleys by means of a puller.

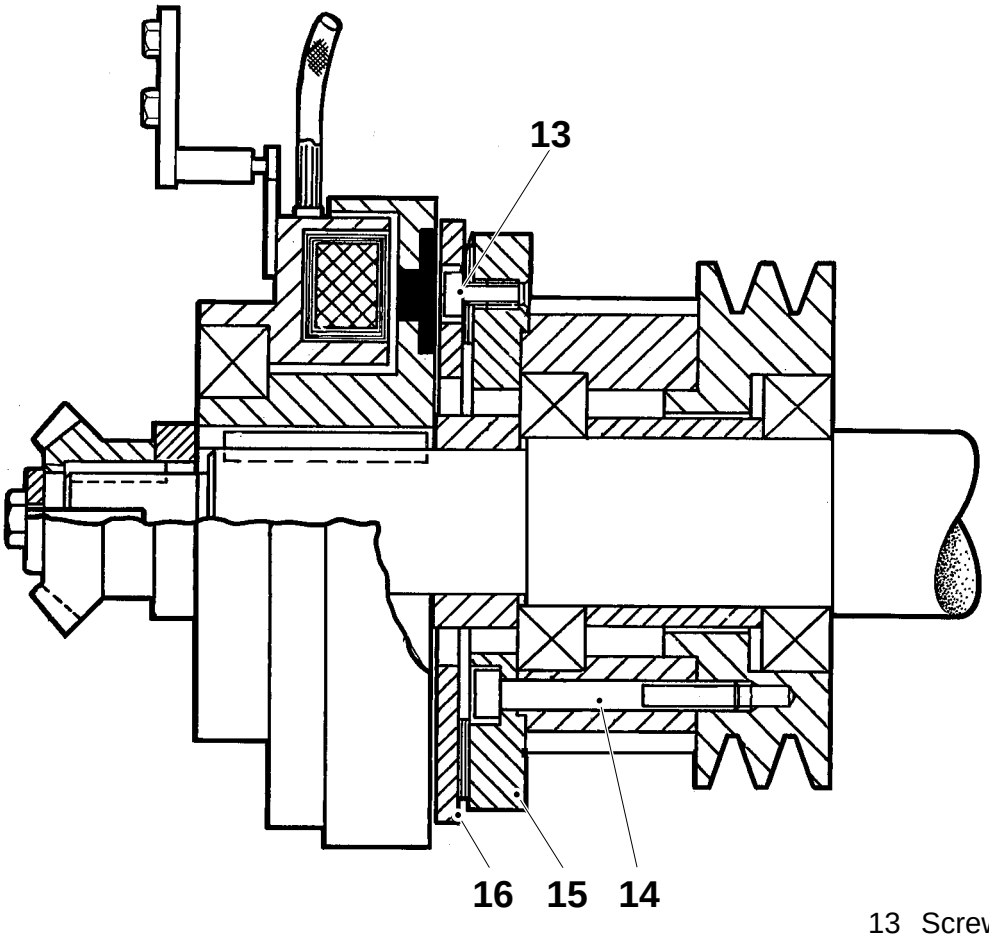

13 Screw
14 Screw
15 Mounting ring
16 Disc

Fitting

a) Fit the Vee-belt pulley (5) and the timing belt pulley (4).

b) Fit the mounting ring (7) and secure it with the screws (6). Torque 10 ±1 Nm (1 kpm).

c) Fit the spacer ring (3).

d) Fit the disc (8) and secure it with the screws (2). Torque 16 ±2 Nm (1.6 kpm).

e) Check that the spacer ring (3) is outside the disc.
This corresponds to gap A between the disc and coupling housing.
If required, put in shims (9) to obtain correct gap A.

f) Fit the key (10).

g) Fit the coupling housing (1) and check gap A.

(Cont'd overleaf)

A = 0.2 – 0.45 mm

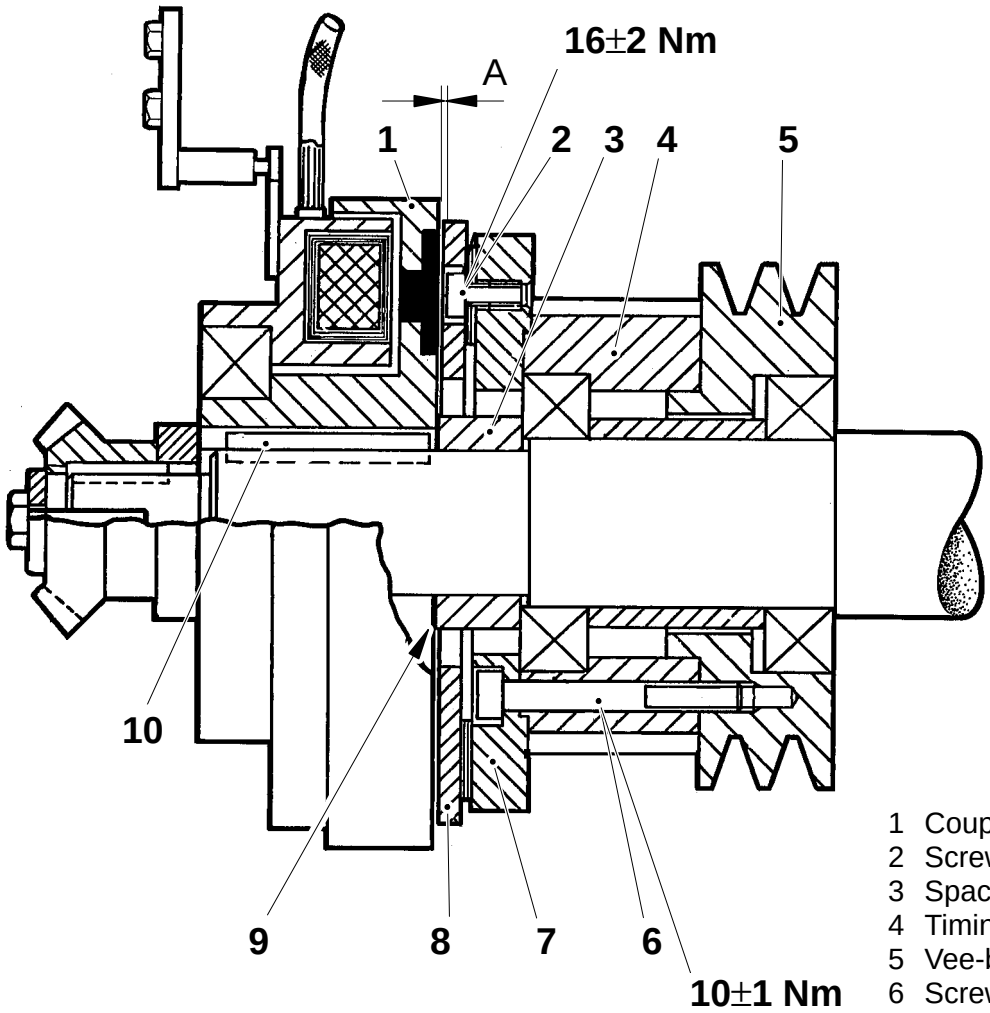

1 Coupling housing
2 Screw
3 Spacer ring
4 Timing belt pulley
5 Vee-belt pulley
6 Screw
7 Mounting ring
8 Disc
9 Shims
10 Key

(Cont'd)

h) Fit the key (15) and spacer ring (19).

i) Fit the gear wheel (18) and washer (17). Tighten the screw (16) and secure it with lock fluid.

j) Check gap A.

k) Fit the reinforcement beam if the machine is equipped with one (applies only for 020V→030V).

l) Fit and set the crank mechanism and crank switch, see pages MS 362–5X and MS 363–5X.

m) Fit the pin (13) against the bow (14) and tighten the screws (12).

n) Connect the cable (11) to the terminal box.

WARNING!
Peroxide. Wear safety equipment according to Safety precautions on page MS 001.

(Cont'd overleaf)

A = 0.2 – 0.45 mm

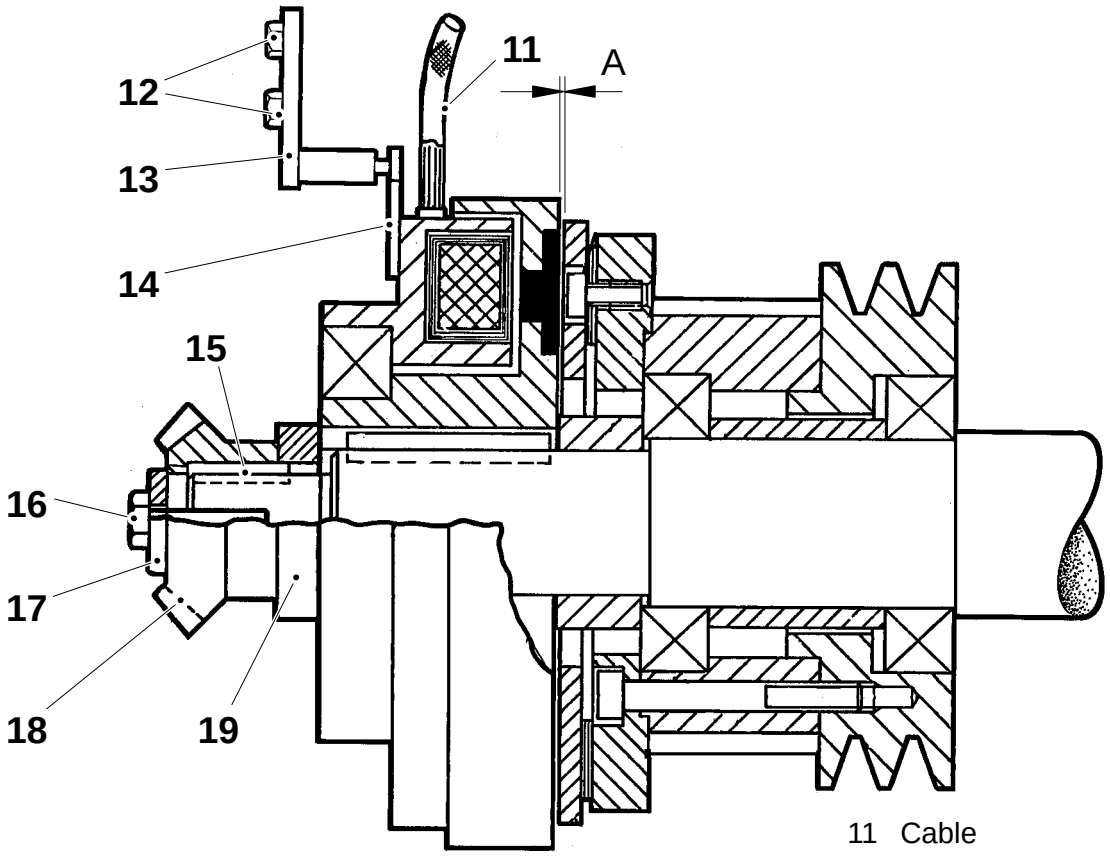

11 Cable
12 Screw
13 Pin
14 Bow
15 Key
16 Screw
17 Washer
18 Gear wheel
19 Spacer ring

(Cont'd)

o) Fit the hose couplings (20), (21), (22) and (23).

p) Fill the peroxide tank with distilled water and start the peroxide pump.

q) Check the tightness of the peroxide system.

r) Stop the peroxide pump.

s) Drain the peroxide tank.

t) Engage fuse F54.

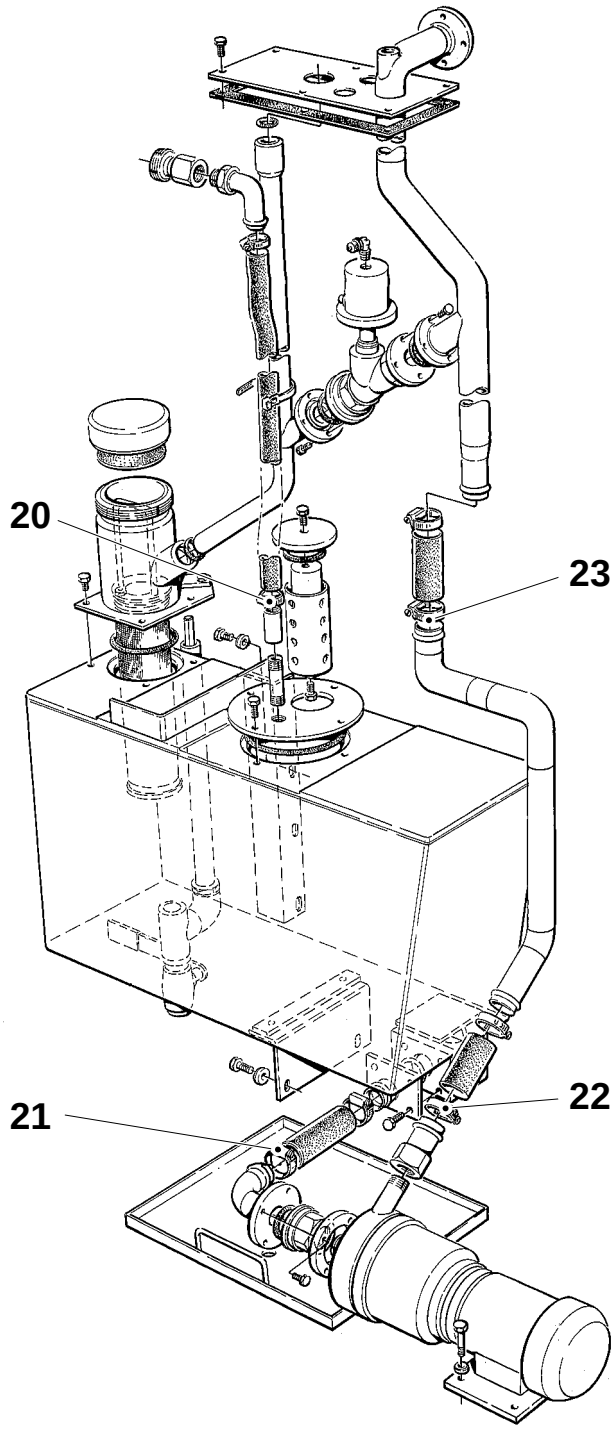

20 Hose coupling
21 Hose coupling
22 Hose coupling
23 Hose coupling

Fitting

a) Fit the Vee-belt pulley (5) and the timing belt pulley (4).

b) Fit the mounting ring (7) and secure it with the screws (6). Torque 10 ±1 Nm (1 kpm).

c) Fit the spacer ring (3).

d) Fit the disc (8) and secure it with the screws (2). Torque 16 ±2 Nm (1.6 kpm).

e) Check that the spacer ring (3) is outside the disc.
This corresponds to gap A between the disc and coupling housing.
If required, put in shims (9) to obtain correct gap A.

f) Fit the key (10).

g) Fit the coupling housing (1) and check gap A.

(Cont'd overleaf)

A = 0.2 – 0.45 mm

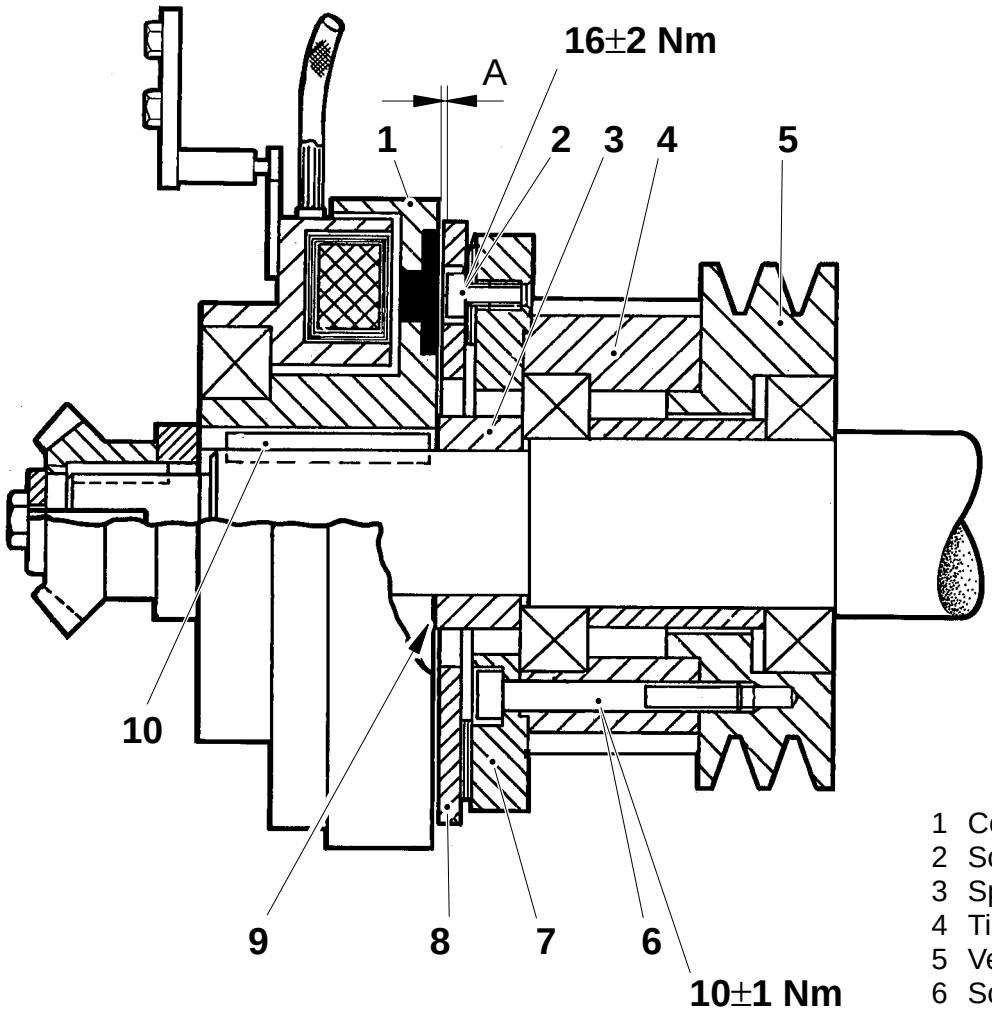

1 Coupling housing
2 Screw
3 Spacer ring
4 Timing belt pulley
5 Vee-belt pulley
6 Screw
7 Mounting ring
8 Disc
9 Shims
10 Key

(Cont'd)

h) Fit the key (15) and spacer ring (19).

i) Fit the gear wheel (18) and washer (17). Tighten the screw (16) and secure it with lock fluid.

j) Check gap A.

k) **Valid for TB:**
Fit the reinforcement beam if the machine is equipped with one.

l) Fit and set the crank mechanism and crank switch, see pages MS 362–5X and MS 363–5X.

m) Fit the pin (13) against the bow (14) and tighten the screws (12).

n) Connect the cable (11) to the terminal box.

o) Engage fuse F54 (for TB 130V – F55; for TBA 130V – F56)

A = 0.2 – 0.45 mm

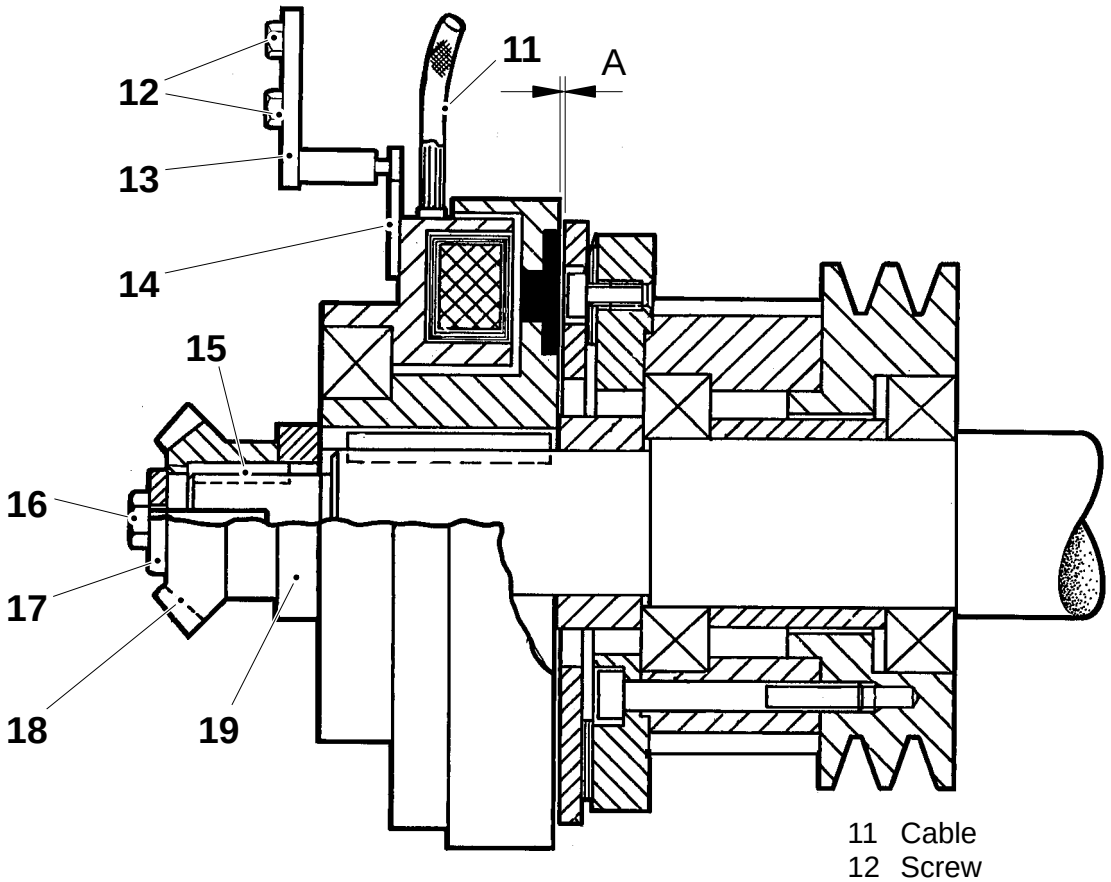

11 Cable
12 Screw
13 Pin
14 Bow
15 Key
16 Screw
17 Washer
18 Gear wheel
19 Spacer ring

Checking

Check the play between the gear wheels (1).
Replace as required.

Check that the bearing (2) is not worn.
Replace as required.

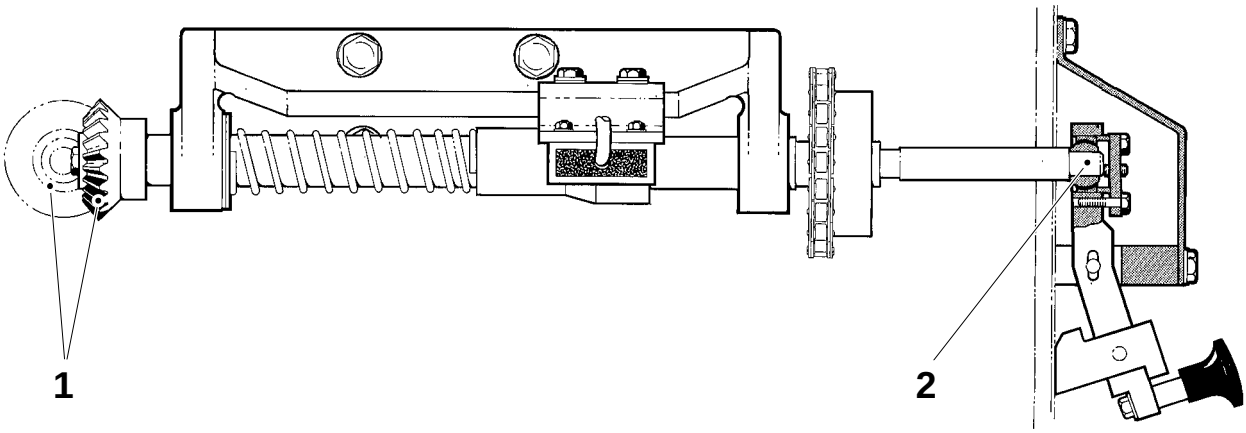

1 Gear wheel
2 Bearing

Removal

Slacken the chain (9) with the chain tensioner and open the chain lock.

Remove the crank switch (8).

Undo the screws (10) and (12) and remove the cover (11).

Undo the screws (4). Remove the cap (3) and ring (2).

Fit a puller, and pull the bearing (1) and lock mechanism (5) off the shaft (6).

Undo the screws (7) and lift out the crank mechanism.

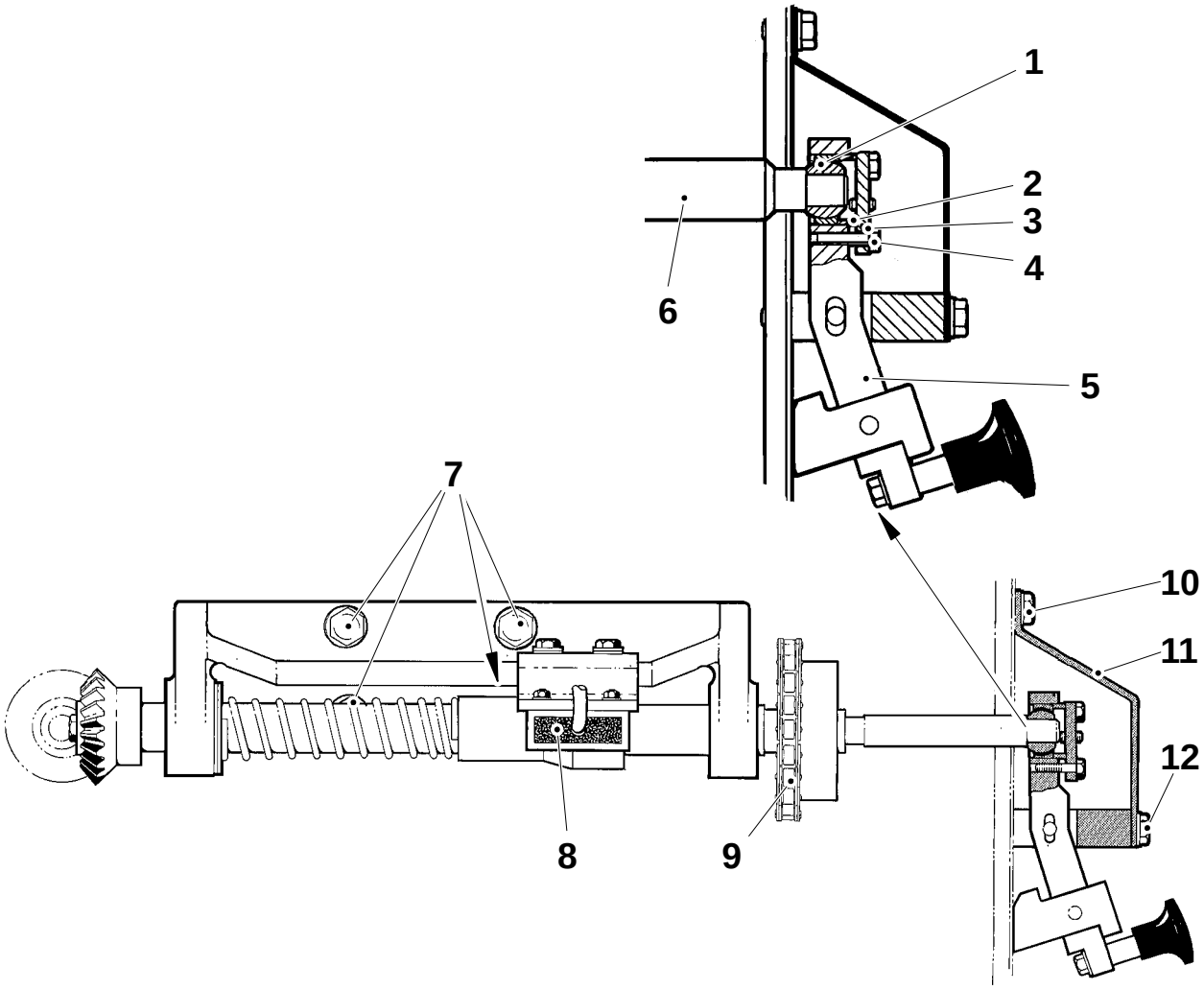

1	Bearing	7	Screw
2	Ring	8	Crank switch
3	Cap	9	Chain
4	Screw	10	Screw
5	Lock mechanism	11	Cover
6	Shaft	12	Screw

Fitting

Put the crank mechanism in place in the machine and tighten the screws (10) loosely.

Align the gear wheels (7) and (8) with one another by pushing in the shaft (11) by hand and then shifting the bracket (9) up or down.

Tighten the screws (10).

Fit the bearing (1), ring (2), and cap (3). Tighten the screws (4).

Secure the lock mechanism (6) with the screws (5).

Set the crank mechanism, see page MS 362–5X.

Fit the cover (14).

Fit the crank switch (12) and set it, see page MS 363–5X.

Fit and tension the chain (13).

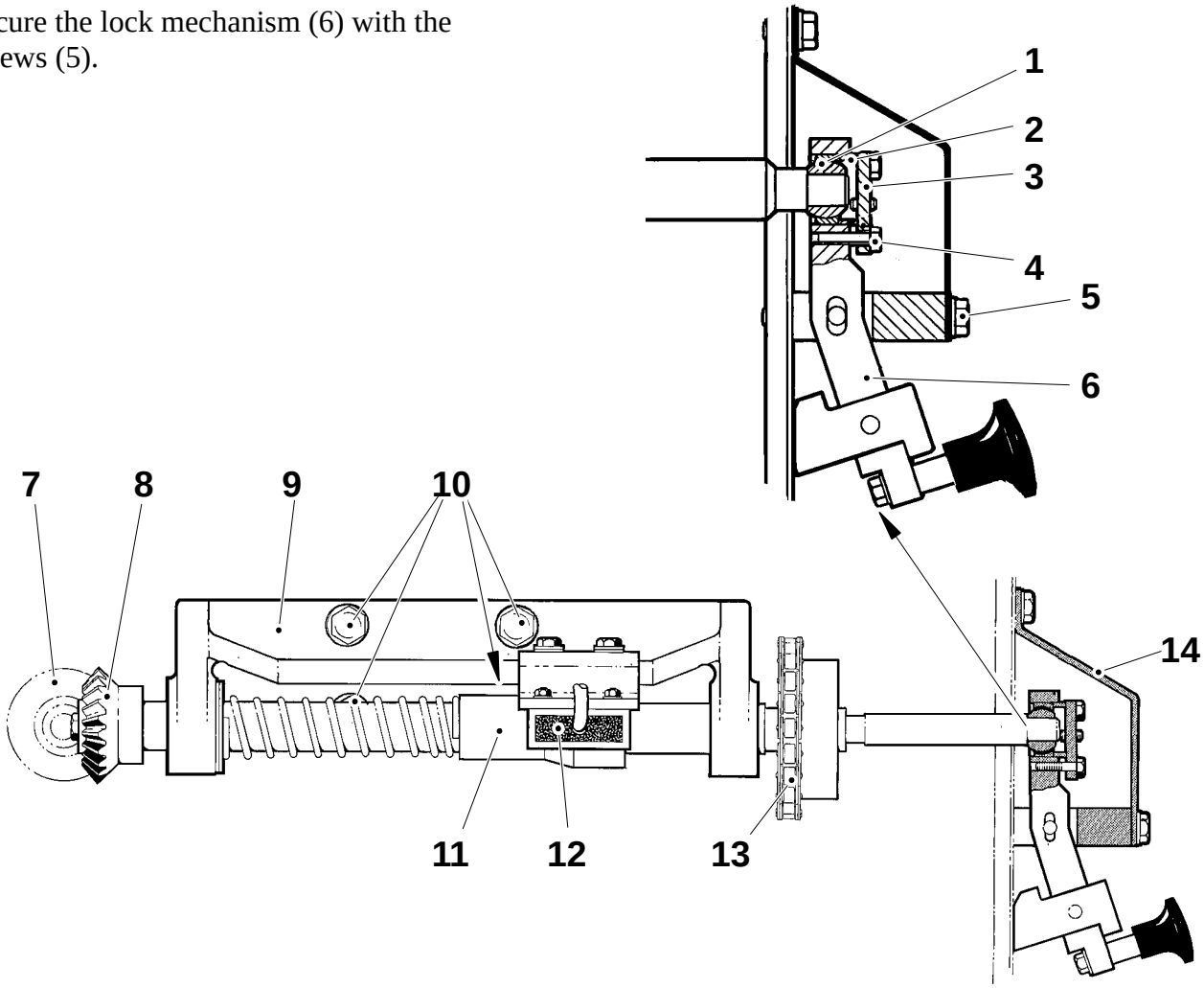

1 Bearing
2 Ring
3 Cap
4 Screw
5 Screw
6 Lock mechanism
7 Gear wheel
8 Gear wheel
9 Bracket
10 Screw
11 Shaft
12 Crank switch
13 Chain
14 Cover

Setting

a) The gear wheels (6) and (7) must be aligned with one another. Loosen the screws (9), push the shaft (10), and shift the bracket (8) up or down until the gear wheels are aligned.

b) Undo the screws (12) and (4). Remove the cover (13).

Retighten the lock mechanism (5) with the screws (4).

c) Lock the mechanism in engaged position.

d) Check the gear play.

e) **If the gear play is too big:**
Loosen the allen screws (2). Tighten the screws (3) until correct gear play is obtained. Retighten the allen screws.

f) **If the gear play is too small:**
Release the lock mechanism (5). Loosen the screws (2) and (3) and tap the lock mechanism to shift it slightly on the bearing (1). Lock the mechanism in engaged position and repeat item e).

Note!
If there is not enough adjustment range left, loosen the screws (9) and shift the bracket sideways. Watch the gear wheel alignment. Repeat items e) or f).

g) Undo the screws (4). Fit the cover (13) and the screws (4) and (12).

h) Set the crank switch (11), see page MS 363–5X.

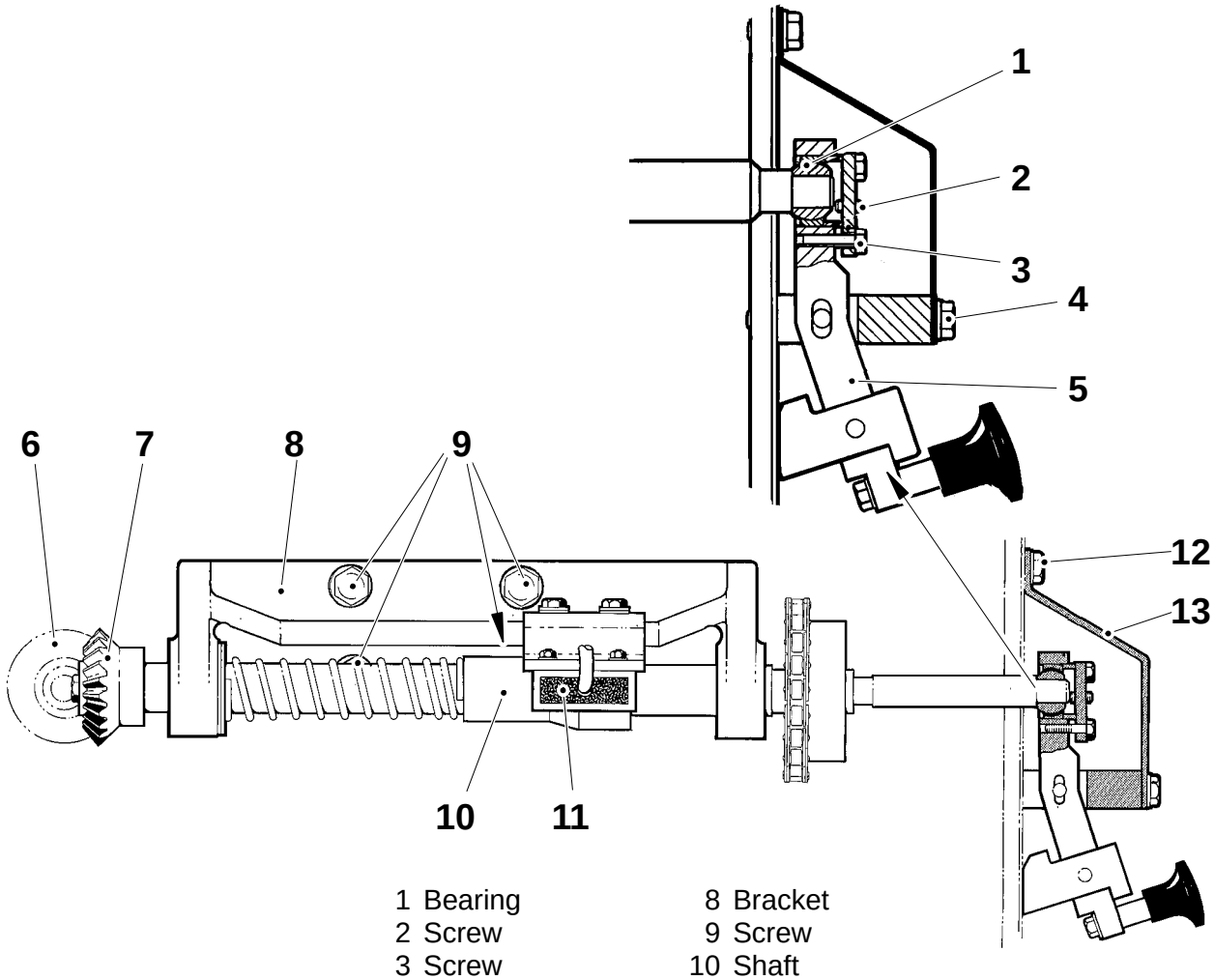

1 Bearing
2 Screw
3 Screw
4 Screw
5 Lock mechanism
6 Gear wheel
7 Gear wheel
8 Bracket
9 Screw
10 Shaft
11 Crank switch
12 Screw
13 Cover

Checking

Check that the gear wheels (1) and (2) do not mesh until signal lamp **Safety monitor** (see OS-book) on the control panel lights up. The check is done best by slowly pulling out the lock mechanism (3), cranking at the same time.

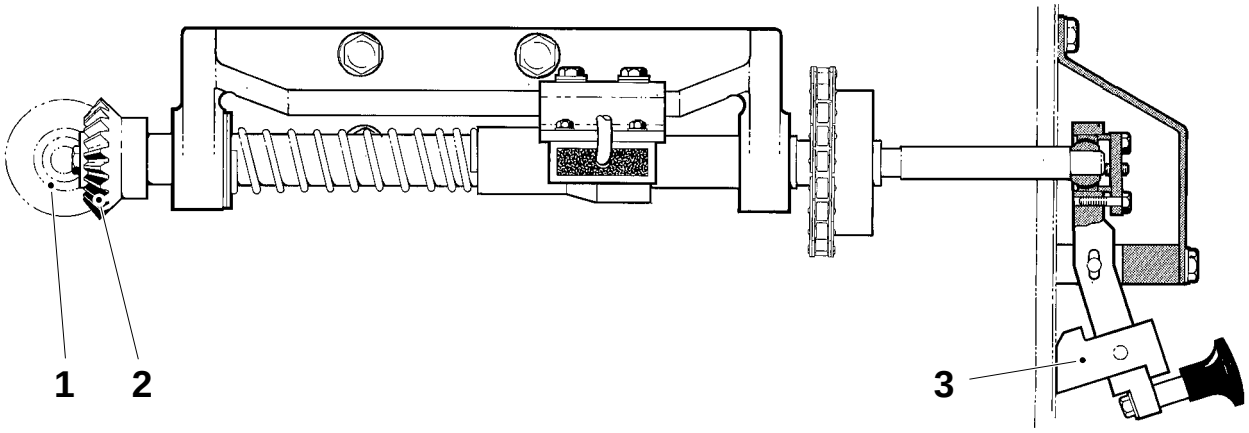

1 Gear wheel
2 Gear wheel
3 Lock mechanism

Setting

The crank switch (1) is to be set so that it is triggered when the crank is engaged and untriggered when the lock mechanism (3) is disengaged.

The switch is to cause an indication by signal lamp **Safety monitor** (see OS-book) almost immediately when the lock mechanism (3) is engaged.

To adjust the position of the switch, loosen the screws (2) and shift the switch forwards or backwards.

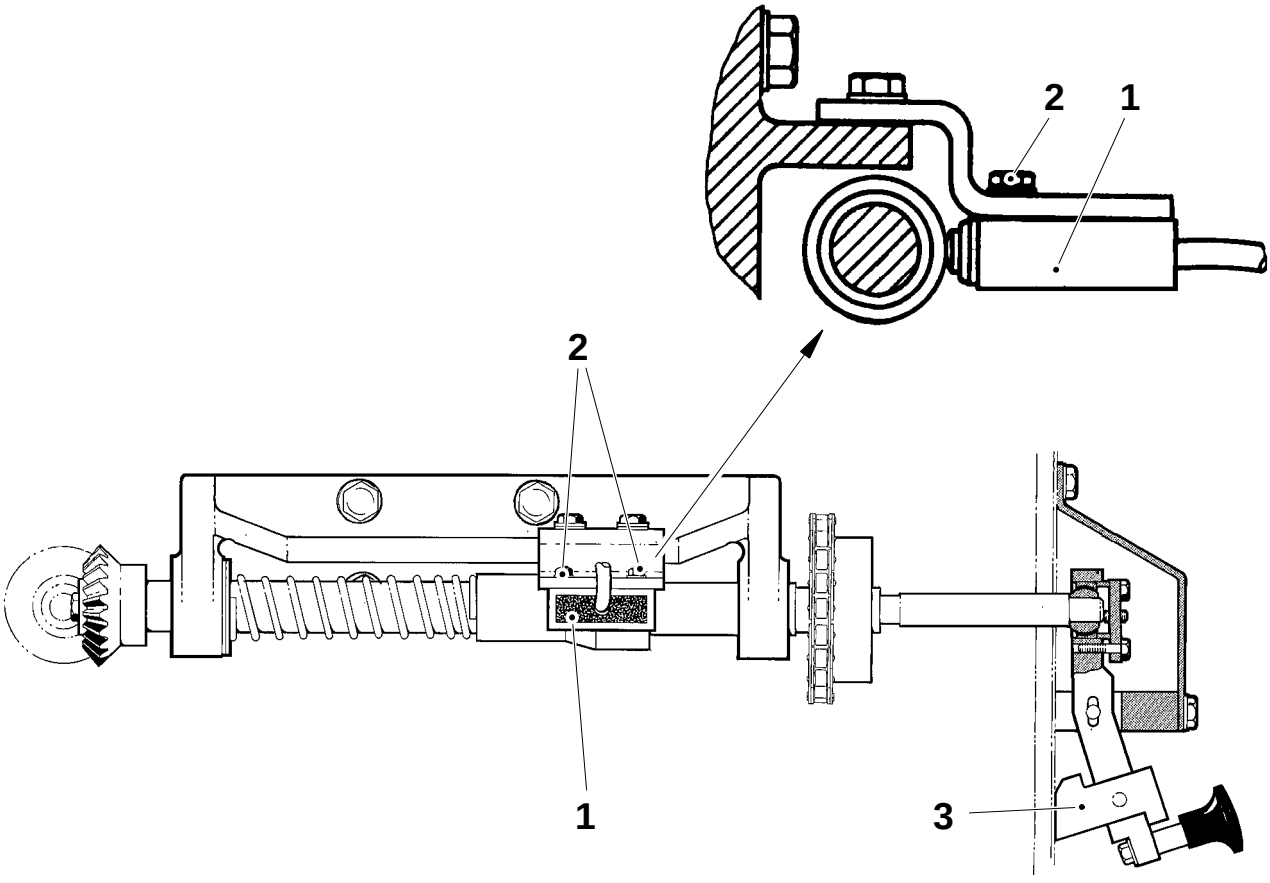

1 Crank switch
2 Screw
3 Lock mechanism

Checking

Check that no screws (1) are missing and that they are tightened.

If required, fit a new screw and tighten, see page MS 370–4X.

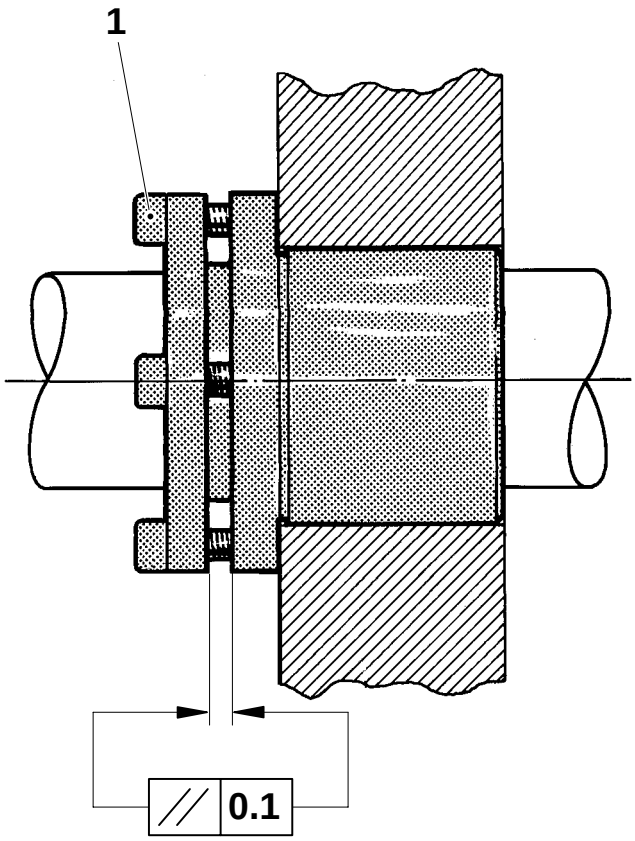

1 Screw

Removal

Loosen the screws (1) **in sequence** around the flange, half a turn at a time.

The screws are not to be unscrewed completely.

If the clamp fitting sticks to the hub (2), long screws may be used as puller tools, see fig. 2.

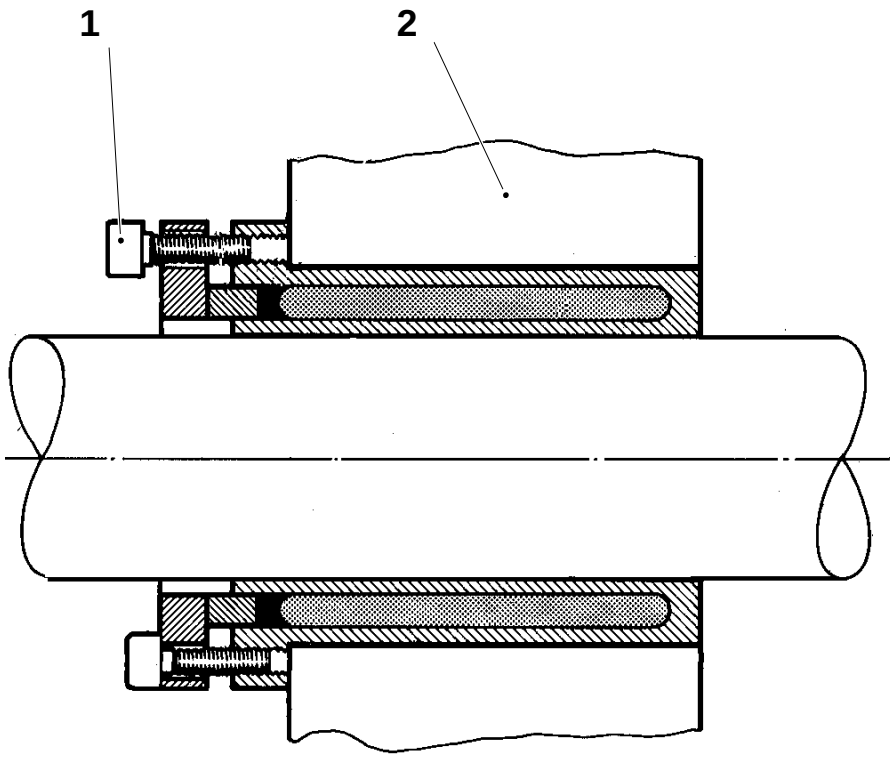

1 Screw
2 Hub

Fitting

Wash off rust inhibitor and grease from the clamp fitting, the shaft (3) and hub (2). Use white spirit.

Do not tighten the screws until the clamp fitting has been positioned between the shaft and the hub.

Put the clamp fitting in place and tighten the screws in sequence around the flange, half a turn at a time until maximum torque is reached, see table.

Caution!
Do not tighten the pressure ring (2) and sleeve (3) against one another, gap A.

WARNING!
Never adjust the tightening torque afterwards by turning out the screws, as the result may be that the screws shake loose.

Shaft diameter, mm	Tightening torque, Nm
20 – 42	8.0 ±1
45 – 65	13.0 ±1

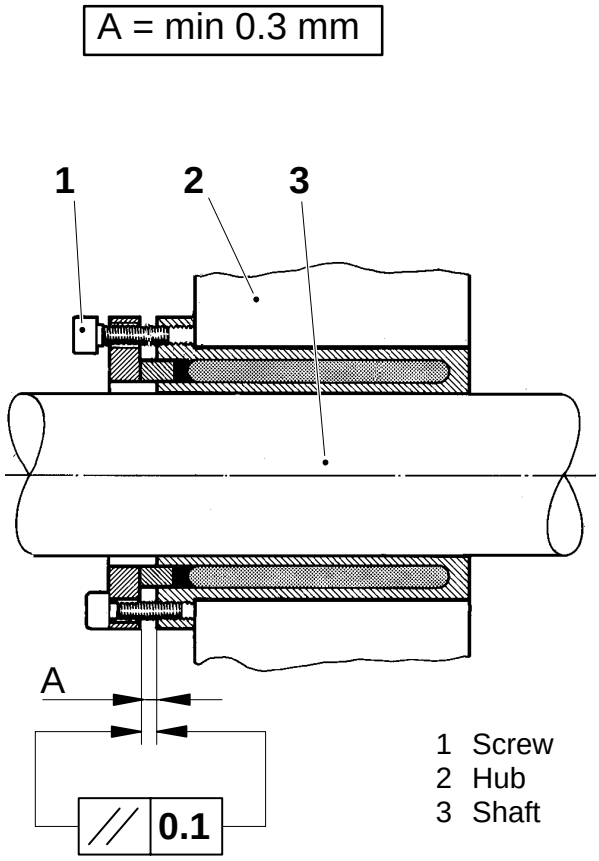

Description	TB/9	TBA/9
Setting sequence – basic setting	401–51	401–51
Setting sequence – basic setting	401–52	401–52
Cutting jaws – oil change	402–12	402–12
Hydraulic seals, cutting knife – fitting	405–41	405–41
Hydraulic seals, cutting knife – fitting	405–42	405–42
Inductor – checking/cleaning		409–11
Yoke turning positions – setting (2 pages)	412–51	412–51
Yoke symmetry – setting (2 pages)	414–51	414–51
Alignment – setting (2 pages)	415–51	415–51
Volume flap – checking	417–11	417–11
Volume flap – checking	417–12	417–12
Volume flap – replacement	417–31	417–31
Volume flap – replacement	417–32	417–32
Damper unit – setting	419–51	419–51
Damper unit – setting	419–52	419–52
Volume cam section – checking	421–11	421–11
Volume cam section – removal	421–21	421–21
Volume cam section – setting (2 pages)	421–51	421–51
Package weight – setting	422–51	422–51
Design correction mechanism – checking	423–11	423–11
Design correction mechanism – setting (3 pages)	423–51	423–51
Folding flaps – checking cam and support rollers	426–11	426–11
Folding flaps – checking bearing play	428–11	428–11
Folding flap mechanism – setting	429–51	429–51
Folding flap mechanism – setting	430–51	430–51

Description	TB/9	TBA/9
Cutting pistons – checking	433–11	433–11
Cutting pistons – overhaul	433–31	433–31
Cutting pistons – overhaul	433–32	433–32
Stroke – checking	436–11	436–11
Stroke – setting (2 pages)	436–51	436–51
Stroke – setting (2 pages)	436–52	436–52
T-gap – checking	438–11	438–11
Volume flap alignment – setting	442–51	442–51
Tube support rollers – basic/final setting (2 pages)	443–52	443–52
Jaw gap and non-parallelity in movement – checking	445–11	445–11
Jaw gap and non-parallelity in movement – setting	445–51	445–51
Jaw gap and non-parallelity in movement – setting	445–52	445–52
Jaws, vertical position – checking/setting	448–11	448–11
Jaw-over-jaw – checking/final setting	458–11	458–11
Jaw-over-jaw – basic setting	458–51	458–51
Hoses, cables and lubrication connections – checking	461–11	461–11
Catches – checking	465–11	465–11
Catches – checking/overhaul	465–31	465–31
Catches – checking/overhaul	465–32	465–32
Catch clearance – checking	467–11	467–11
Catch pivot spring – setting	468–52	468–52
Catch lifter cams and rollers – checking	469–11	469–11
Catch lifter cams and rollers – setting	469–52	469–52

Basic setting

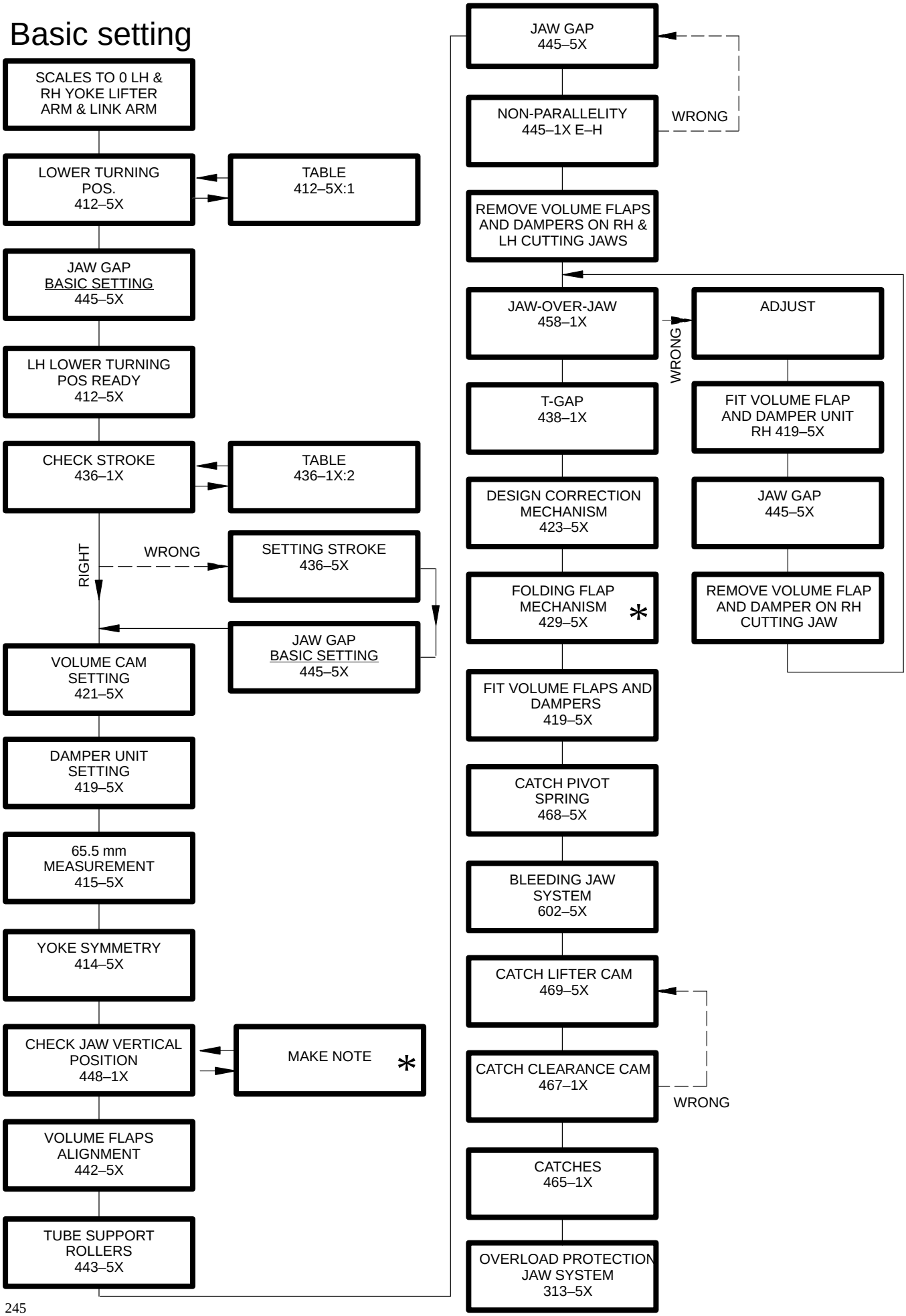

Basic setting

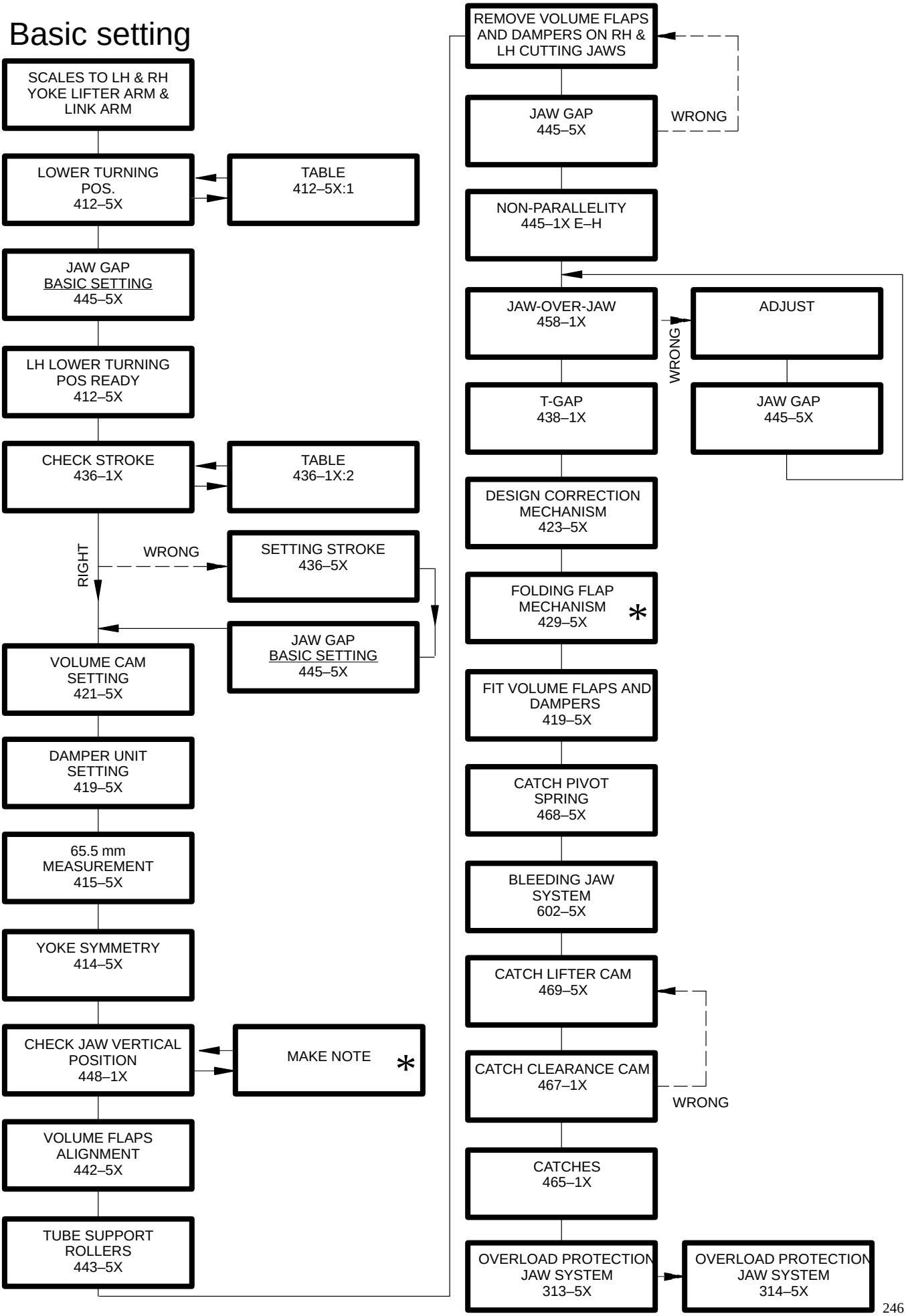

Oil change

Crank the machine until one jaw pair is in horizontal position.

- Drain the oil from the bearing housing by undoing the plugs in the holes (1), (2), (3) and (4).
- Blow clear with compressed air through the bleeding holes (3) and (4).
- Undo the banjo connection (5). Push **Lubrication on** and check that oil is discharged to the connection.
- Reconnect the banjo connection (5).
- Fill the bearing housing with oil, type H, see page MS 940–7X.
- Pump the oil with an oil can through the hole (1), see fig.
- When the oil is flowing out through the bleeding hole (3), put a finger over the hole, take away the oil can and fit the plug in the hole (1).
- Repeat the same procedure as is mentioned above, and fill up with oil through the hole (2).
- Fit the plugs in the bleeding holes (3) and (4).
- Crank the machine and repeat the procedure for the other cutting jaw.

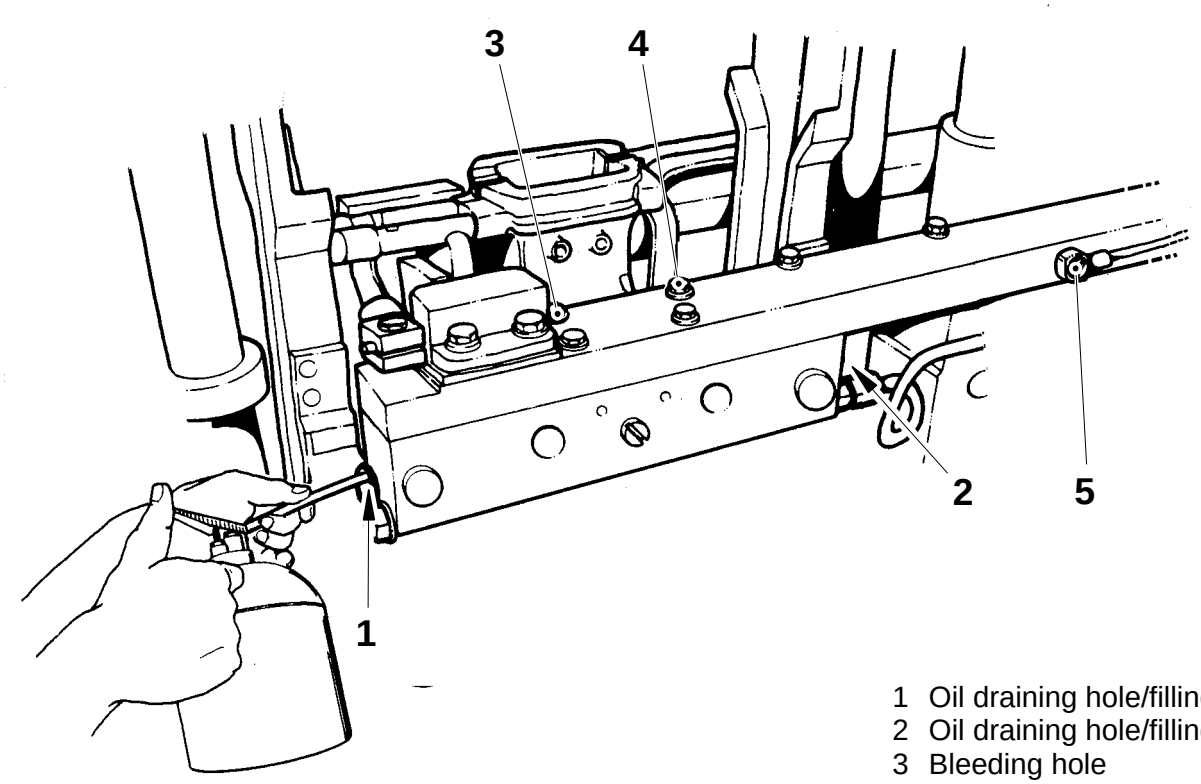

1 Oil draining hole/filling hole
2 Oil draining hole/filling hole
3 Bleeding hole
4 Bleeding hole
5 Banjo connection

Fitting

Slide the assembly cone (1) on to the piston (2) so that the piston is fully home in the cone.

Slide the O-ring (3) over the cone.

Move the O-ring over the cone to the groove in the piston by means of the assembly tool (4).

Turn the seal ring (5) as illustrated. Slide the seal ring onto the cone.

Move the seal ring to the groove by means of the assembly tool.

Calibrate the seal ring by forcing the piston through the calibration tool (6).

Fit the support rings (7) in their grooves. Shaping the rings will be easier if they are heated in boiling water.

Insert the calibration tool (6) into the bearing housing (8).
Put the piston (2) through the calibration tool and into the bearing housing.

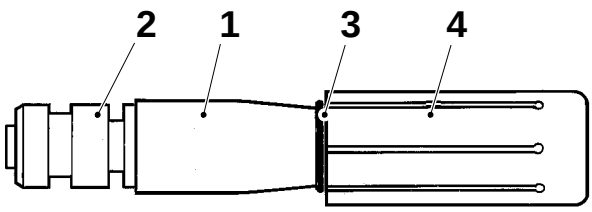

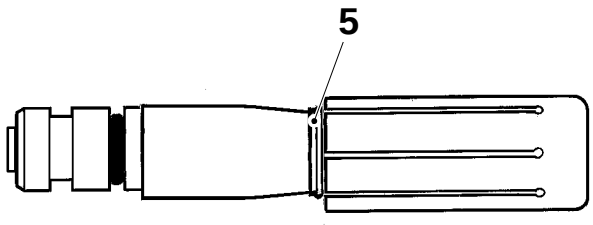

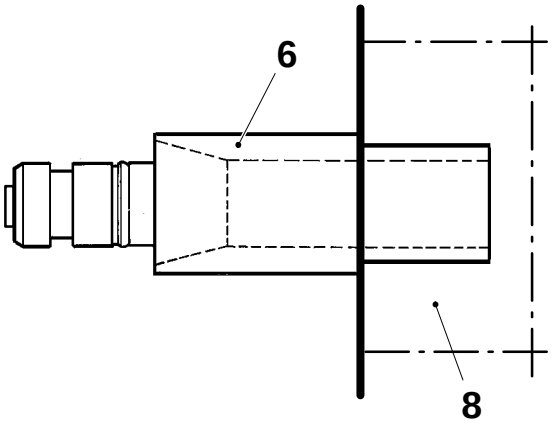

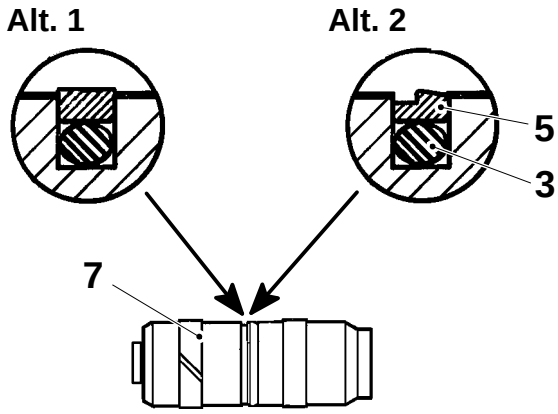

1 Assembly cone TP No. 76131
2 Piston
3 O-ring
4 Assembly tool TP No. 76132
5 Seal ring
6 Calibration tool 76153
7 Support ring
8 Bearing housing

Fitting

Slide the assembly cone (1) on to the piston (2) so that the piston is fully home in the cone.

Slide the O-ring (3) over the cone.

Move the O-ring over the cone to the groove in the piston by means of the assembly tool (4).

Slide the seal ring (5) onto the cone.

Move the seal ring to the groove by means of the assembly tool.

Calibrate the seal ring by forcing the piston through the calibration tool (6).

Fit the support rings (7) in their grooves. Shaping the rings will be easier if they are heated in boiling water.

Insert the calibration tool (6) into the bearing housing (8).
Put the piston (2) through the calibration tool and into the bearing housing.

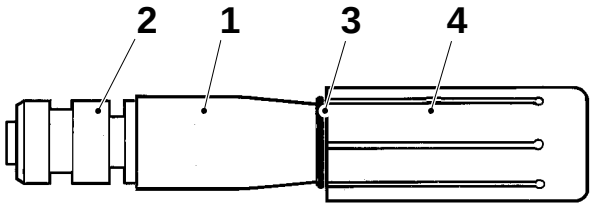

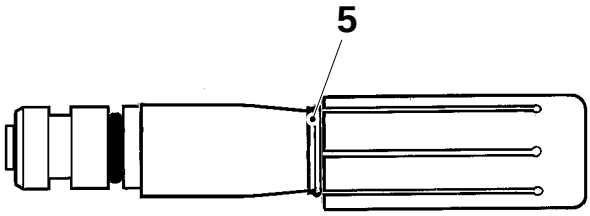

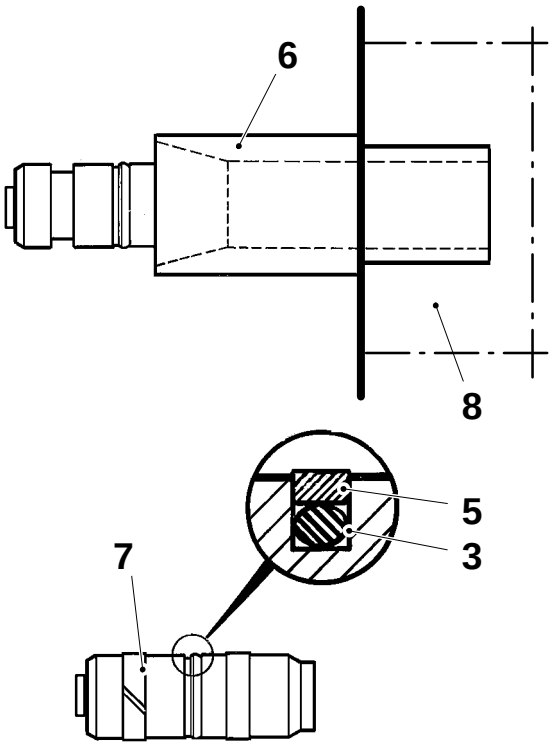

1 Assembly cone TP No. 76131
2 Piston
3 O-ring
4 Assembly tool TP No. 76132
5 Seal ring
6 Calibration tool TP No. 78801
7 Support ring
8 Bearing housing

Checking/Cleaning

Check that the slot (4) in the inductor has not been blocked and that the edges have not been deformed.

Check that the electrical conductors (3) are free from oxidation; if required, clean with a brass wire brush.

Check that the insulator parts are intact.

After reassembly, check that the cutting jaw (1) is correctly positioned in relation to the inductor (2), see page MS 448–1X.

Flush through the cooling water pipes to make sure they are not blocked by lime deposits.

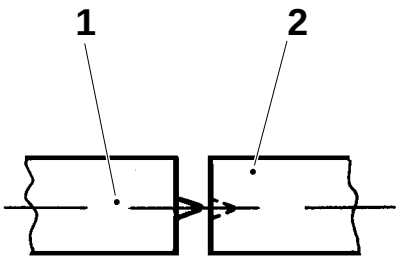

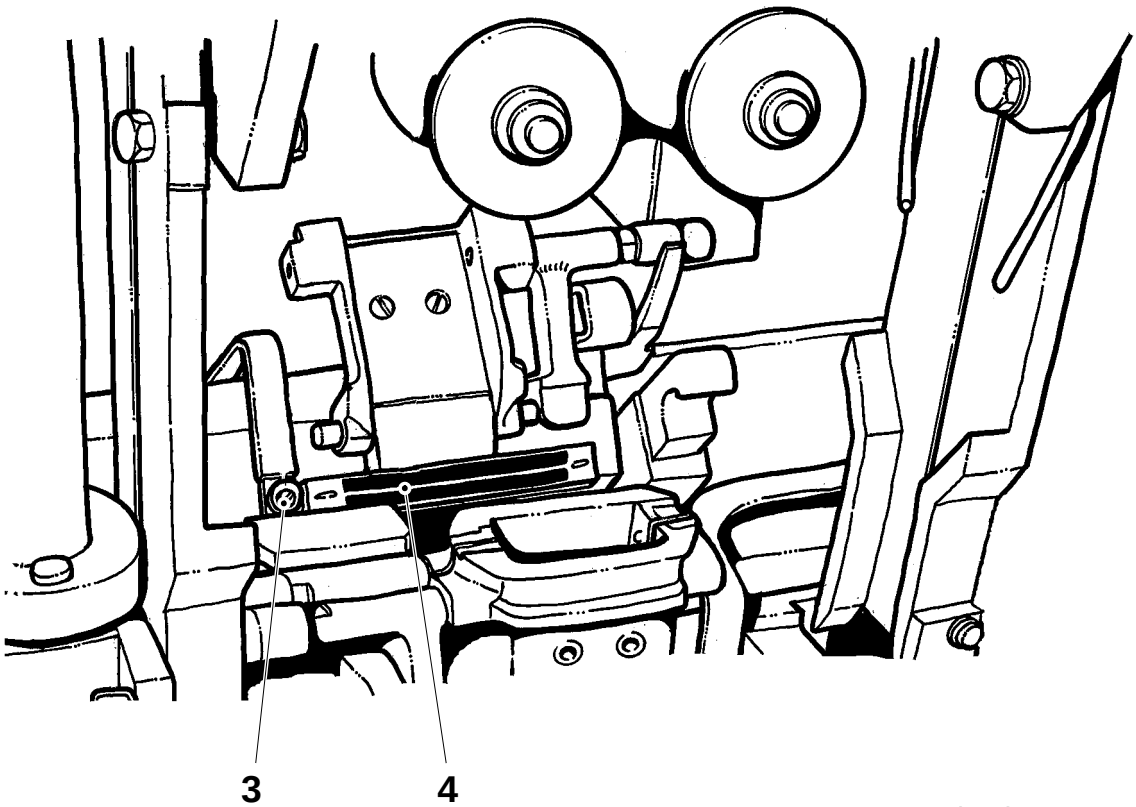

1 Cutting jaw
2 Inductor
3 Electrical conductor
4 Slot

Setting

Set the scales of the LH and RH yoke lifter arms and also the LH and RH link arms at 0.

Crank the machine until the LH yoke (3) is in its lower turning position, see table.

a) Loosen the two screws (1) and six screws (2).

b) Place the template (4), see table, on the Q level and let the yoke rest against the template.

(Cont'd overleaf)

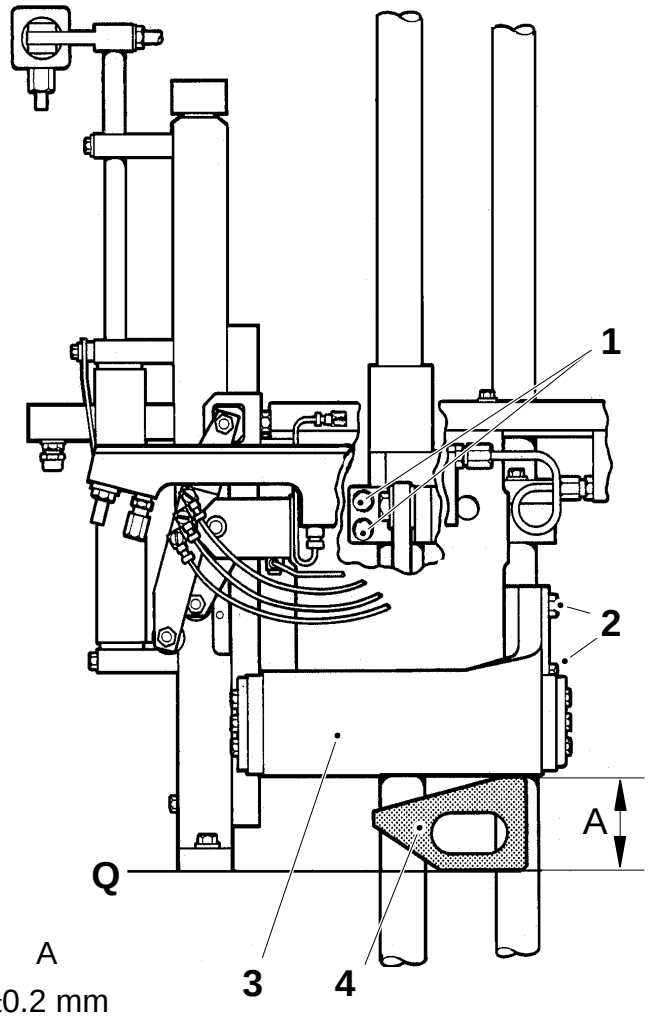

1 Screw
2 Screw
3 Yoke, LH
4 Template TP No. 75931–X

Volume, ml	Turning position LH Yoke	RH Yoke	Template X, TP No.	A ±0.2 mm
TB 180	346°	166°	75931–3	53.1
TB 200	348°	168°	75931–2	51.3
TB 200S	348°	168°	75931–4	47.4
TB 236	346°	166°	75931–13	48.9
TB 250	346°	166°	75931–1	50.1
TBA 125	330°	150°	75931–9	48.4
TBA 180	332°	152°	75931–8	47.4
TBA 200	330°	150°	75931–11	47.9
TBA 200S	330°	150°	75931–10	40.1
TBA 236	330°	150°	75931–6	46.5
TBA 250	330°	150°	75931–5	46.0
TBA 284	330°	150°	75931–12	41.8

(Cont'd)

c) Set surface B on the bracket (5) parallel to surface C on the yoke lifter arm (6).

d) Tighten the six screws (2).

e) Set the jaw gap, basic setting, see page MS 445–5X.

Caution!
During this setting procedure, the jaw system must be forcibly guided by hand while the machine is being cranked.

f) Tighten the screws (1).

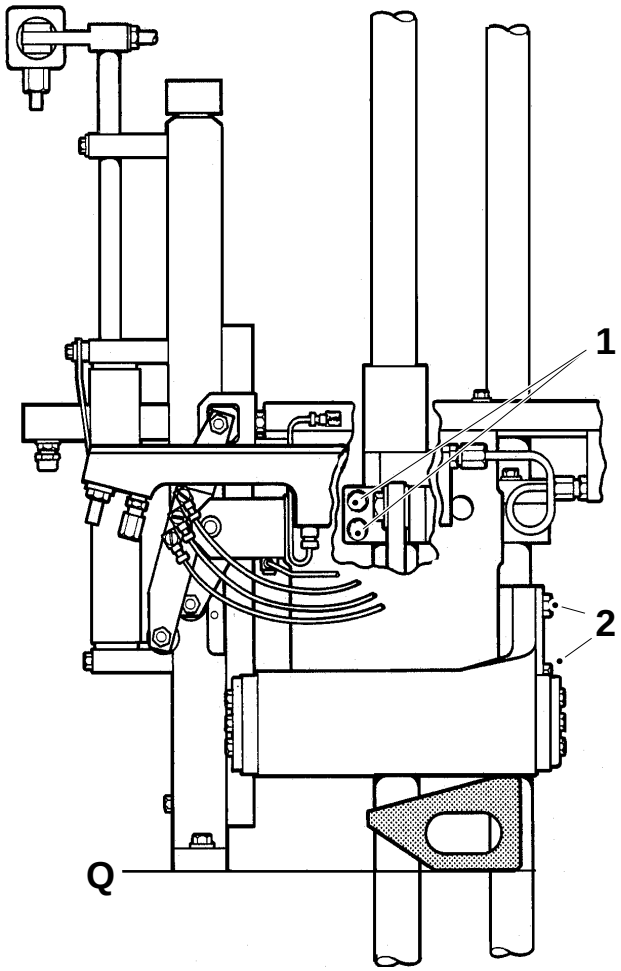

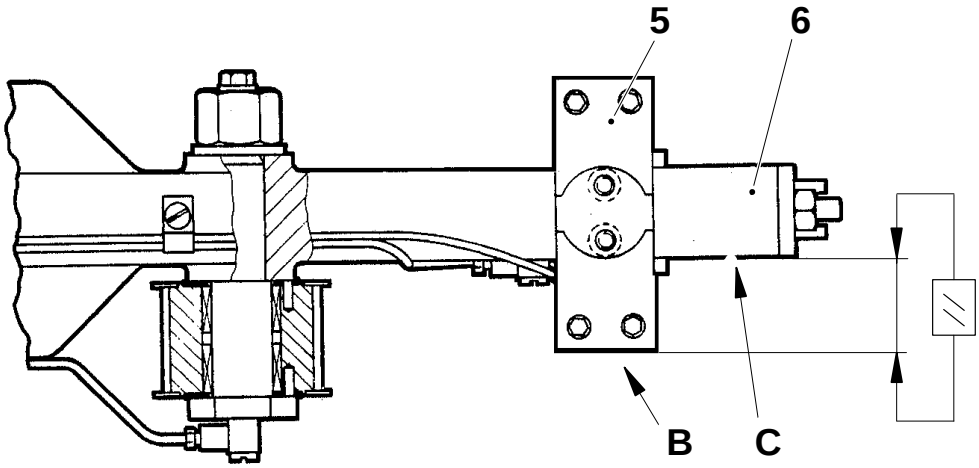

1 Screw
2 Screw
5 Bracket
6 Yoke lifter arm

Setting

LH Yoke

a) Crank the machine to 175°.

b) Place the template (2) between the carriers.

c) Fit the template (3) to the carrier (1) on the cutting side, LH yoke, see fig. 1.

d) Measure gap A by means of the template (3) and a feeler gauge, record the result.

(Cont'd overleaf)

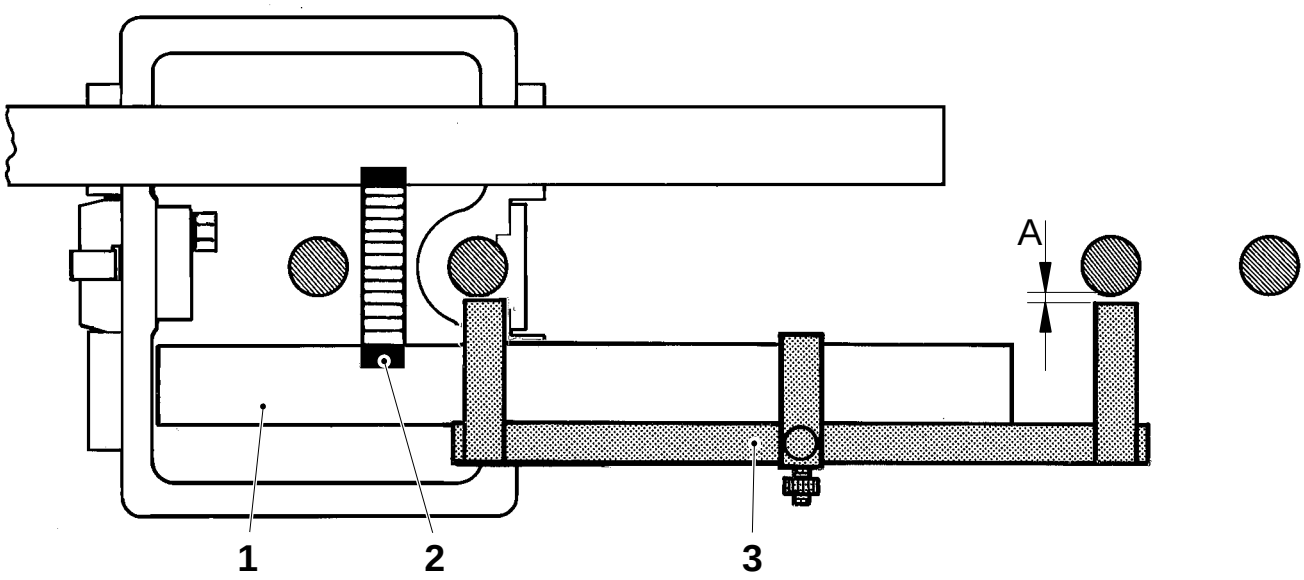

Fig 1

1 Carrier, cutting jaw side
2 Template TP No. 76304–101
3 Template TP No. 76301–101

(Cont'd)

e) Shift the template (3) to the carrier (4) on the pressure jaw side, see fig 2.

f) Measure gap B by means of the template (3) and a feeler gauge, record the result. Gaps A and B are to be the same within 0.1 mm. If not, adjust by loosening the upper and lower screws (5), and altering the thickness of the shimming (6). (Altering the shimming by 0.1 mm, changes the symmetry gaps A and B by approximately 0.15 mm).

g) Retighten the screws (5) and double-check the symmetry gaps A and B.

RH Yoke

a) Crank the machine to 355°.

b) Place the template (2) between the carrier rails.

c) Fit the template (3) to the carrier (1) on the cutting side, RH yoke.

d) Repeat the procedure for items d) – g) from the LH yoke on the RH yoke.

e) Set the clearance between the support roller and cam, see page MS 426–1X.

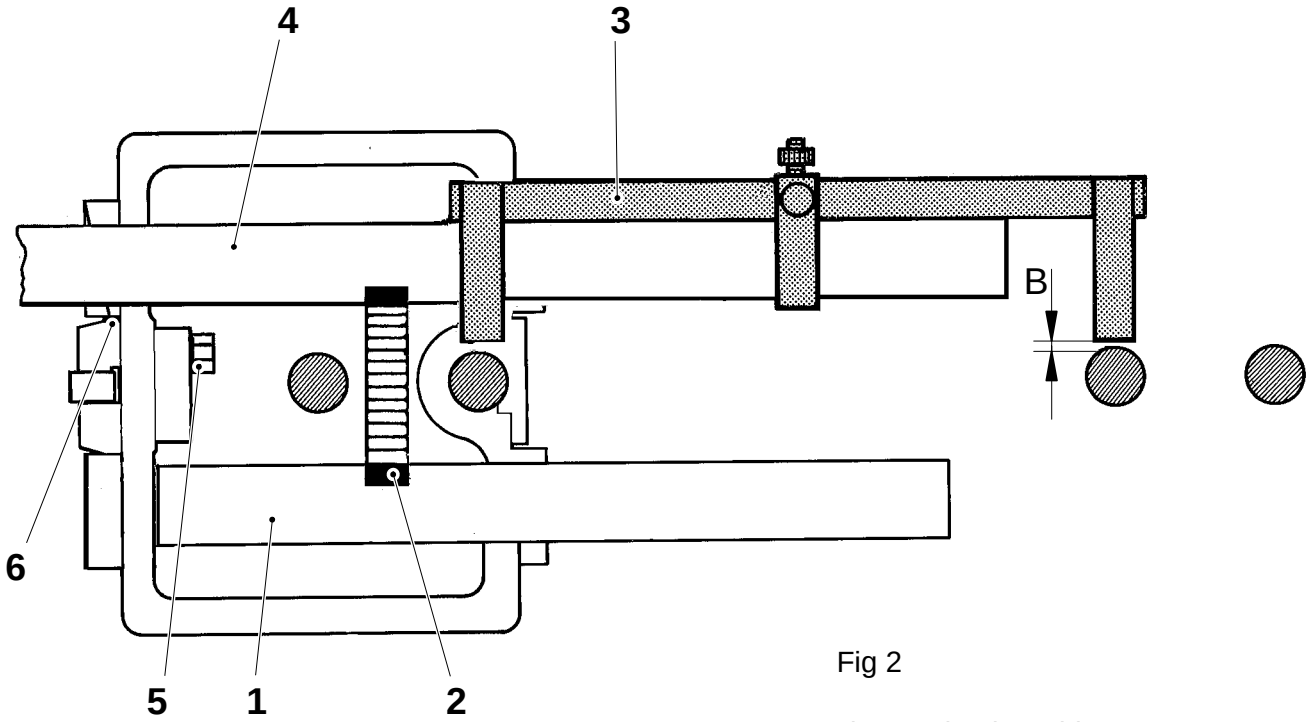

Fig 2

1 Carrier, cutting jaw side
2 Template TP No. 76304–101
3 Template TP No. 76301–101
4 Carrier, pressure jaw side
5 Screw
6 Shim TP No. 257317

Setting

Cutting jaw and pressure jaw arms (65.5 mm measurement)

LH Yoke

a) Crank the machine to 175°.

b) Check that the support roller (6) does not bear against the cam, see page MS 426–1X.

c) Place the template (8) between the carriers.

d) Place template (7) on the carrier (3) of the pressure jaw side, see fig. 3.

e) Set gap A by loosening the screws (1) and shifting the bracket (2) up or down, see fig. 2. If no template is available, set measurement B.

f) Tighten the screws (1) after completing the setting.

(Cont'd overleaf)

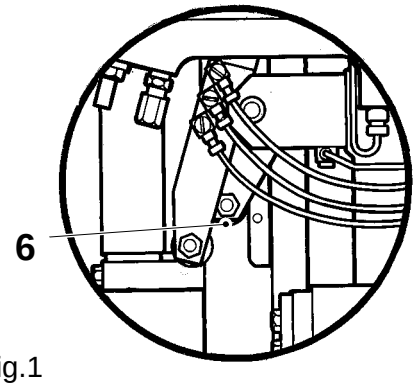

Fig.1

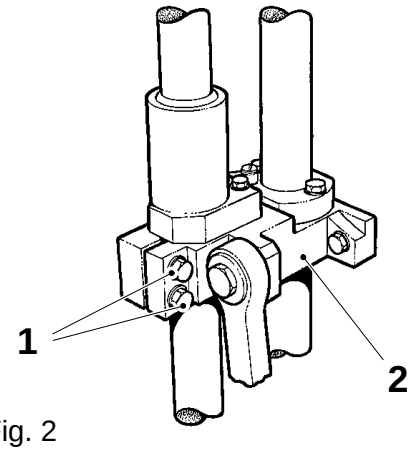

Fig. 2

A = 1.0 ±0.05 mm
B = 65.5 ±0.05 mm

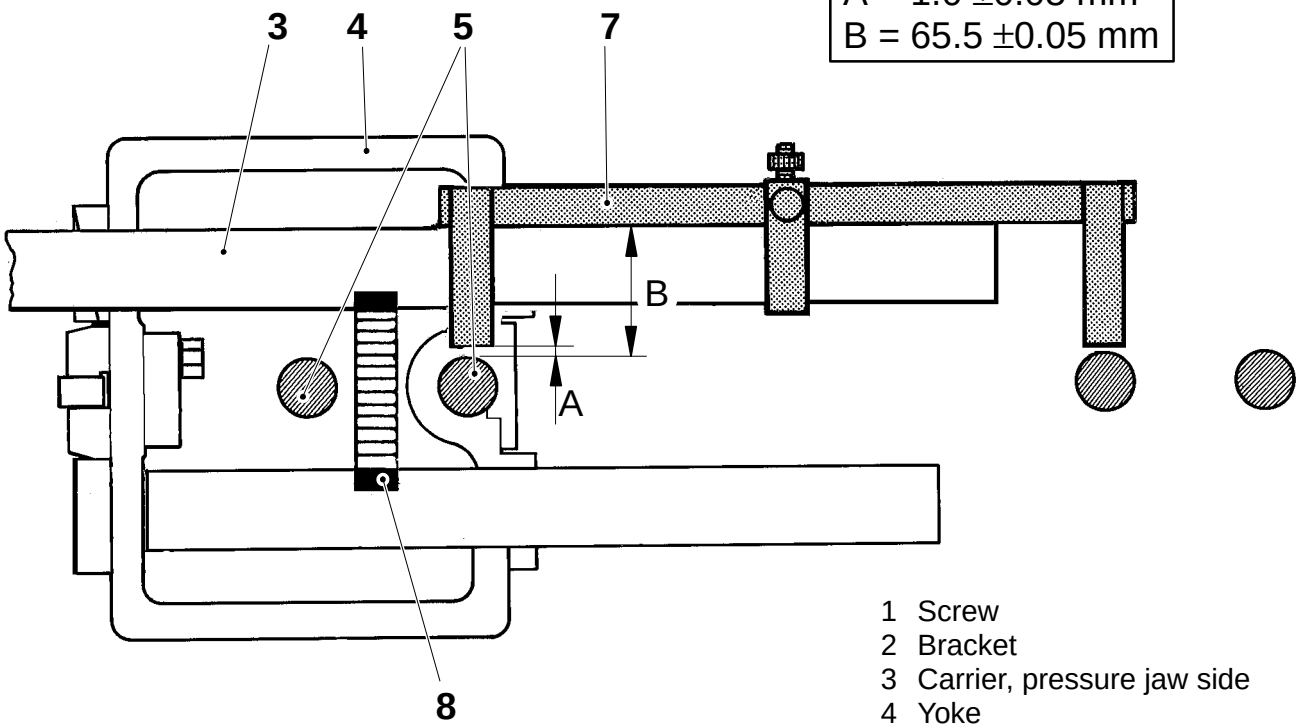

1 Screw
2 Bracket
3 Carrier, pressure jaw side
4 Yoke
5 Guide, LH jaw pair
6 Support roller
7 Template TP No. 76301–101
8 Template TP No. 76304–101

Fig.3

(Cont'd)

g) Transfer the template to the carrier (7) of the cutting jaw side, see fig. 5.

h) Set gap C by means of shimming (8). The shims may be put in position after the screws (11) and bracket (12) have been removed, see fig. 4. (Altering the shim thickness by 0.1 mm, changes gap C by approx 0.15 mm.)

   If no template is available, set measurement D.

RH Yoke

a) Crank the machine to 355°.

b) Repeat the procedure according to items b) – h) on the RH yoke.

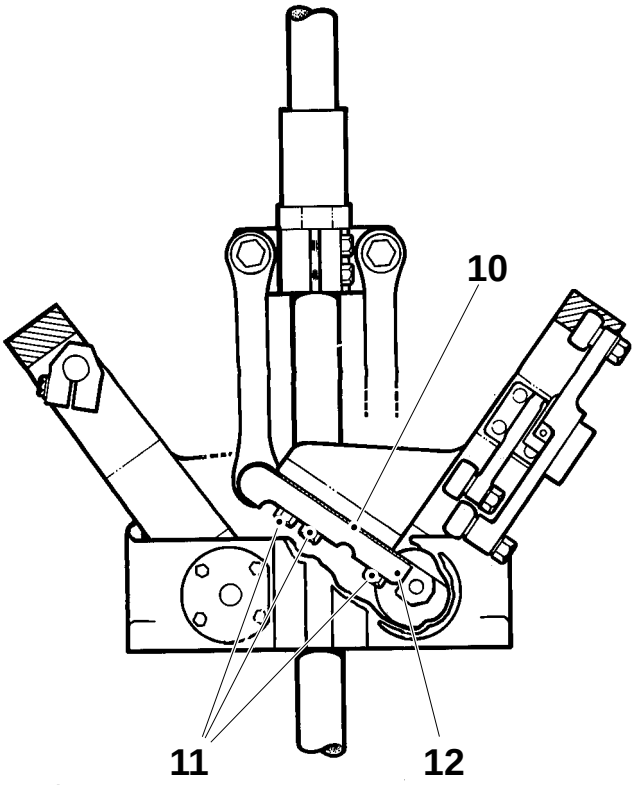

Fig. 4

C = 1.0 ±0.05 mm
D = 65.5 ±0.05 mm

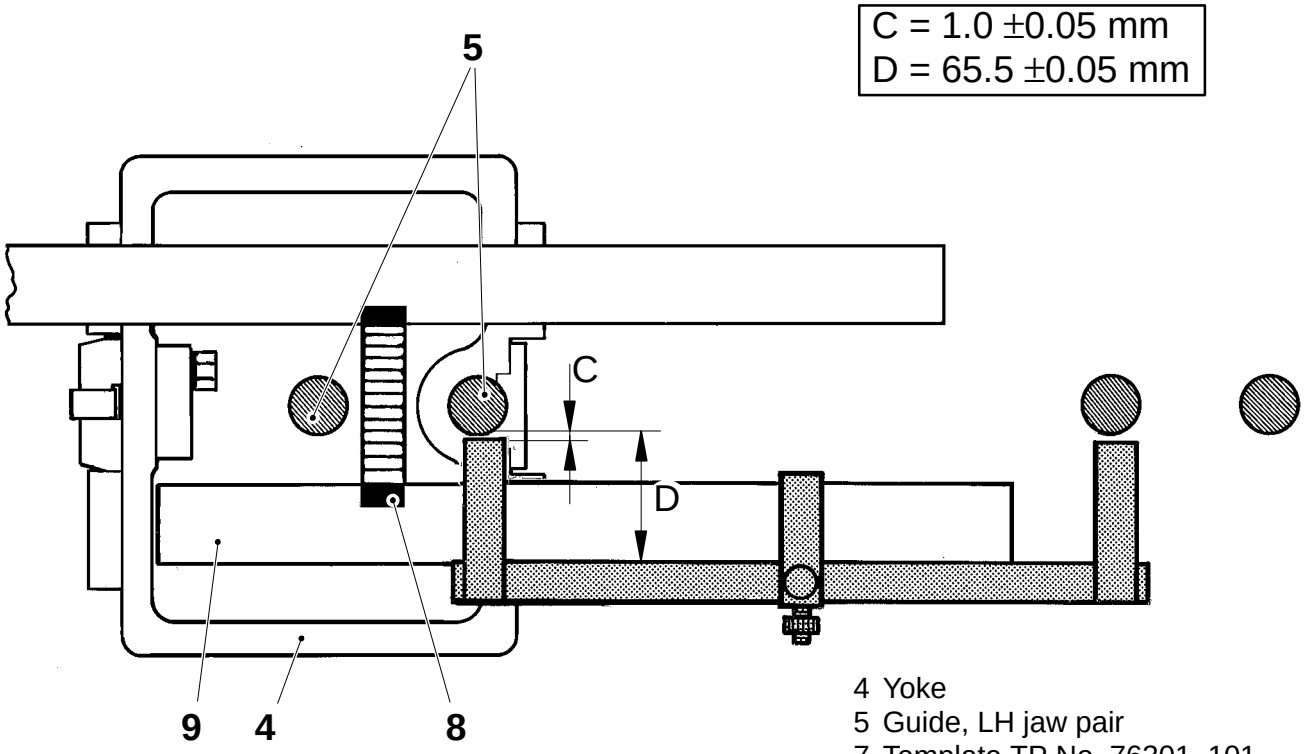

Fig. 5

4 Yoke
5 Guide, LH jaw pair
7 Template TP No. 76301–101
8 Template TP No. 76304–101
9 Carrier, cutting jaw side
10 Shim TP No. 256880
11 Screw
12 Bracket

Checking

Check the following details for wear and/or damage:

- the volume flaps,
- the cam rollers (1); the bearing play must not exceed 0.5 mm,
- The volume flap bushings (2); the bearing play must not exceed 0.5 mm, and
- the rubber hose (3).

Replace worn and/or damaged details.

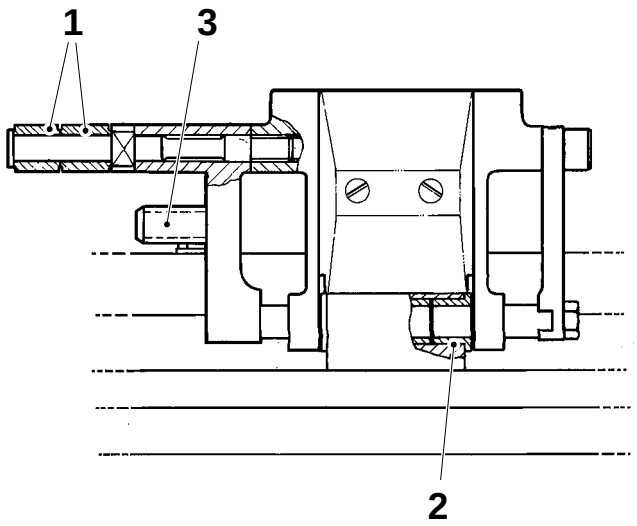

1 Cam roller
2 Volume flap bushing
3 Rubber hose

Checking

Check the following details for wear and/or damage:

- the volume flaps,
- the cam rollers (1); the bearing play must not exceed 0.5 mm,
- The volume flap bushings (2); the bearing play must not exceed 0.5 mm,
- the rubber hose (3),
- the spring (4); make sure it moves easily in its fitting points (5),
- the link (6), and
- the sleeve (7).

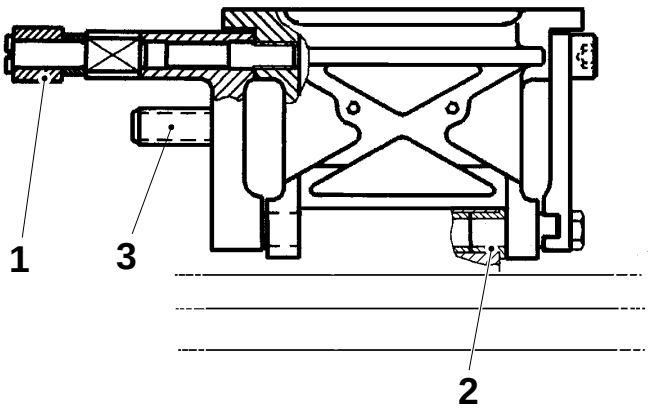

Replace worn and/or damaged details.

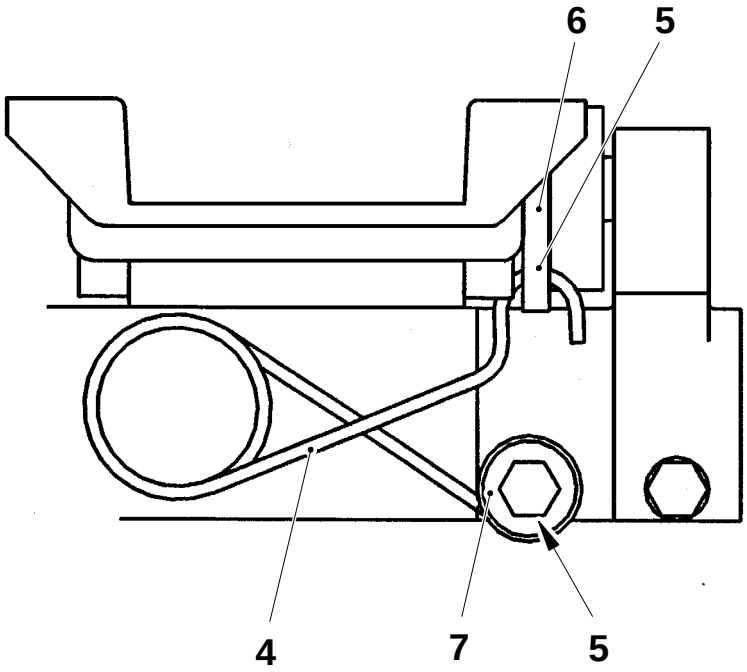

1 Cam roller
2 Volume flap bushing
3 Rubber hose
4 Spring
5 Fitting point
6 Link
7 Sleeve

Replacement

Volume flap bushing, cutting jaw

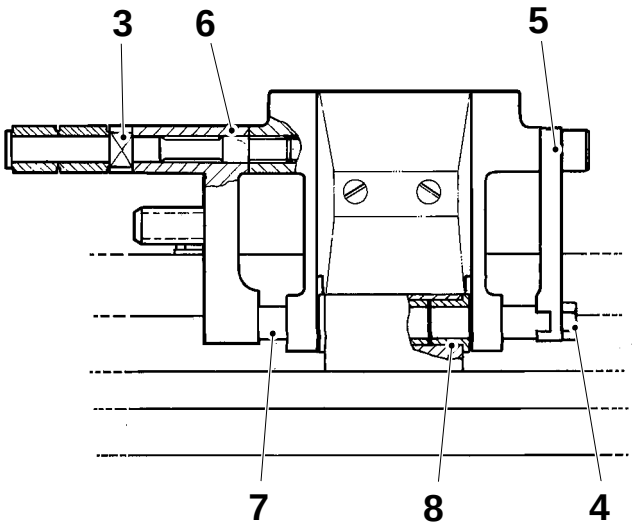

- Undo the screws (1) and remove the damper unit (2).
- Undo the axle pin (3).
- Undo the screw (4).
- Pull out the carrier (6) together with the axle pin (7) and remove the volume flap.
- Replace the bushings (8).

Volume flap bushing, pressure jaw

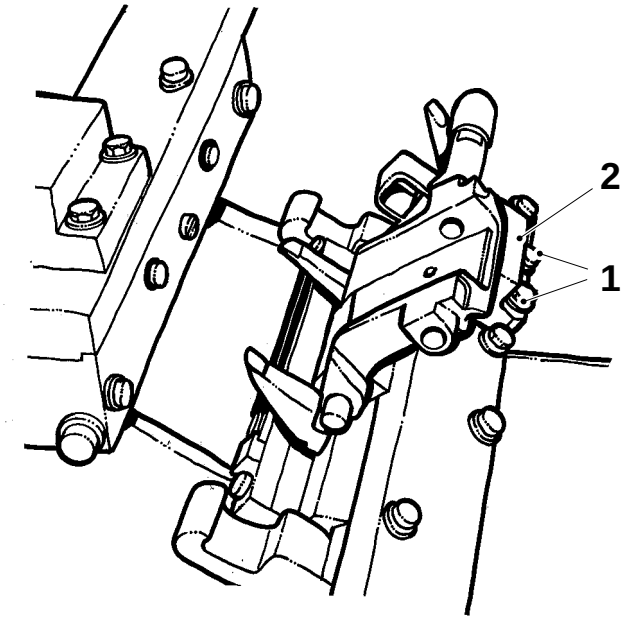

- Undo the screws (1) and remove the damper unit (2).
- Undo the axle pin (3).
- Undo the screw (4).
- Measure and note distance A between the volume cams.
- Close the volume adjustment device by means of the adjustment knob.
- Crank the machine until the catches are engaged and the carrier (6) is clear of the volume cam.
- Pull out the carrier (6) together with the axle pin (7) and remove the volume flap.
- Replace the bushings (8).
- Set distance A (noted earlier).

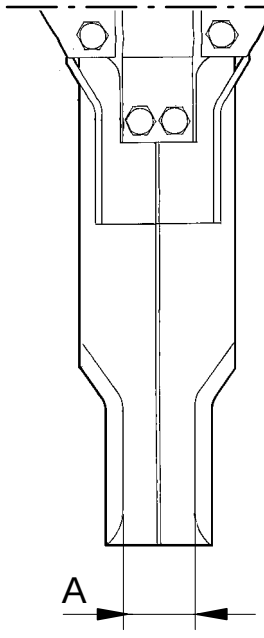

1 Screw
2 Damper unit
3 Axle pin
4 Screw
5 Arm
6 Carrier
7 Axle pin
8 Bushing

Replacement

Volume flap bushing, cutting jaw

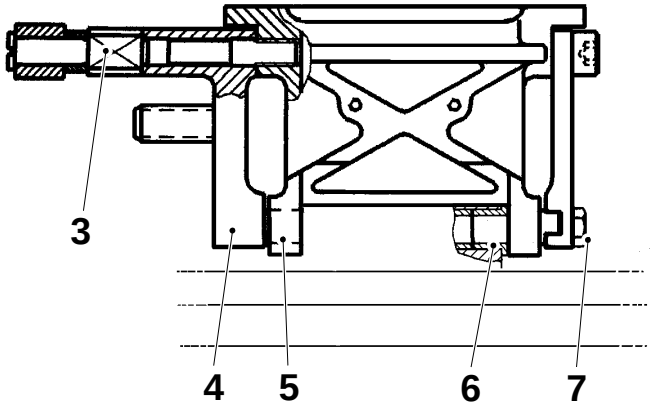

- Undo the screws (1) and remove the damper unit (2).
- Undo the axle pin (3).
- Undo the screw (7).
- Pull out the carrier (4) together with the axle pin (5) and remove the volume flap.
- Replace the bushings (6).

Volume flap bushing, pressure jaw

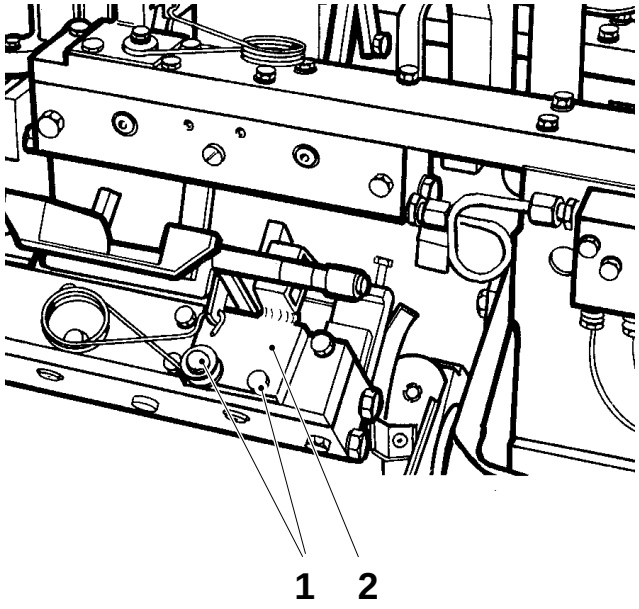

- Undo the screws (1) and remove the damper unit (2).
- Undo the axle pin (3).
- Undo the screw (7).
- Measure and note distance A between the volume cams.
- Close the volume adjustment device by means of the adjustment knob.
- Crank the machine until the catches are engaged and the carrier (4) is clear of the volume cam.
- Pull out the carrier (4) together with the axle pin (5) and remove the volume flap.
- Replace the bushings (6).
- Set distance A (noted earlier).

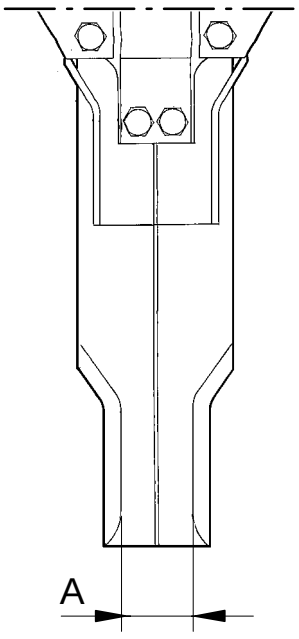

1 Screw
2 Damper unit
3 Axle pin
4 Carrier
5 Axle pin
6 Bushing
7 Screw

260

Setting

Crank the machine so that the jaws are in open position.

Loosen the screws (1) and shift the stop (2) and the damper unit (3) as far forward as possible. Tighten the screws (1).

Retract the volume flap to its rear position.

Loosen the screw (4) and move the arm (5) up against the roller (6).

Then pre-tension the spring element by turning the axle (7) clockwise, see fig. 1.

The pre-tension is to be such, that with the volume flap in its rear position, the arm (5) only bears lightly against the rollers (6).

Tighten the screw (4). Make sure there is a clearance A between the arm and bushing.

Rotate the roller (6) to check that it runs freely.

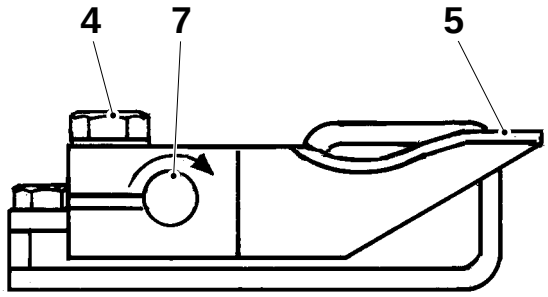

Fig. 1

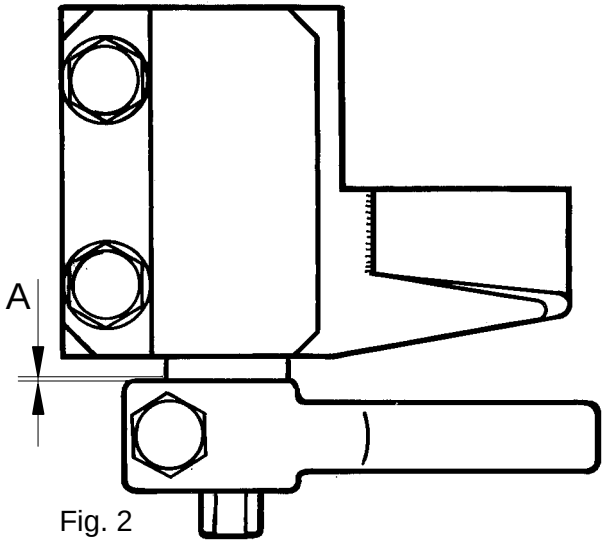

Fig. 2

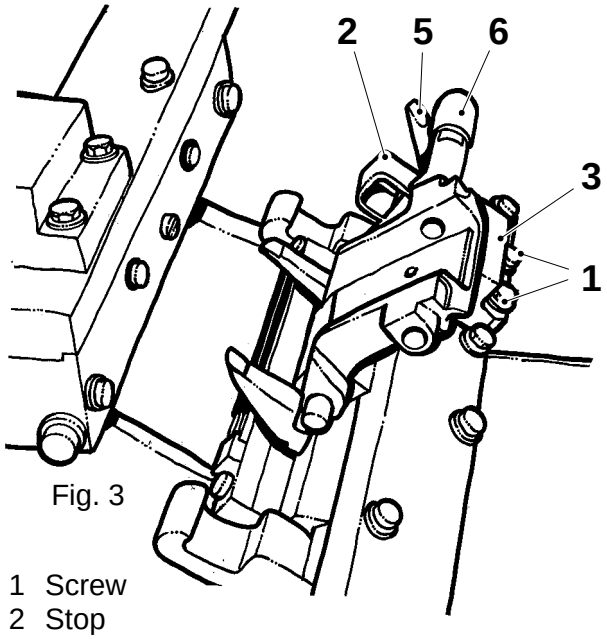

Fig. 3

1 Screw
2 Stop
3 Damper unit
4 Screw
5 Arm
6 Roller
7 Axle

Setting

Crank the machine so that the jaws are in open position.

Loosen the screws (1) and move the stop (2) and the damper unit (3) as far forward as possible. Tighten the screws.

Retract the volume flap to its rear position.

Loosen the screw (4) and move the arm (5) down against the flag (8) on the stop.

Pre-tension the spring by carefully turning the axle (7) clock-wise until it stops, see fig.

The pre-tension is to be such, that with the volume flap in its rear position, the arm (5) only bears lightly against the rollers (6).

Loosen the tension a little, if necessary.

Tighten the screw (4). Make sure there is a clearence A between the arm and bushing.

Rotate the roller (6) to check that it runs freely.

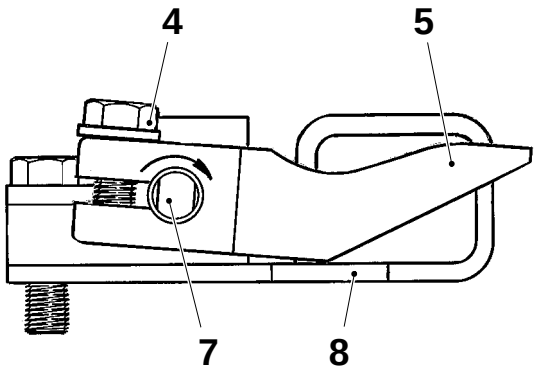

Fig. 1

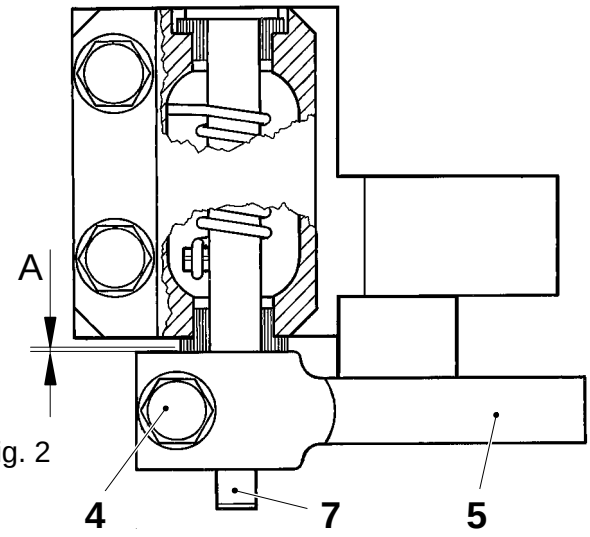

Fig. 2

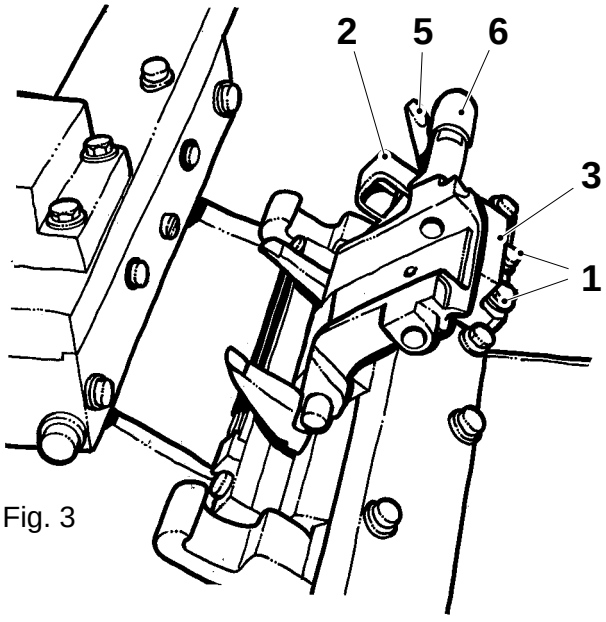

Fig. 3

1 Screw
2 Stop
3 Damper unit
4 Screw
5 Arm
6 Roller
7 Axle
8 Flag

Checking

Check the following details for wear and/or damages:

- the nuts (1),
- the spring (2) and ball (3),
- the spindle (4),
- the pins (5), and
- the volume cams, especially the section that determines the volume (6). Maximum allowed wear A, see fig. Check that the volume cams are parallel, gap B.

Replace worn and/or damaged details.

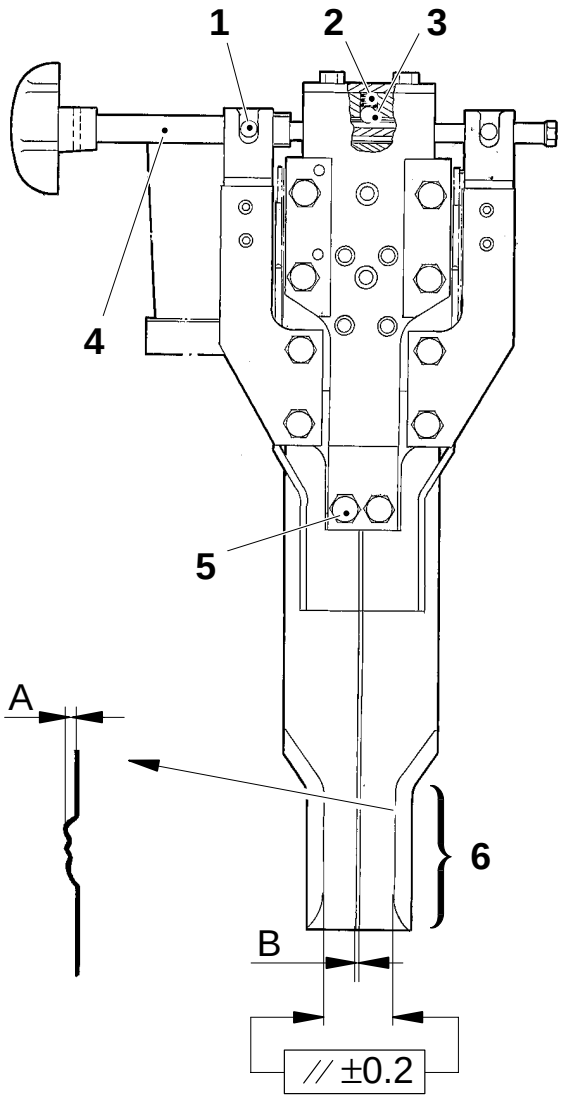

1 Nut
2 Spring
3 Ball
4 Spindle
5 Pin
6 Section of cam that determines volume

A = max 0.5 mm

Removal

Undo the four screws (5) and remove the volume cam section.

Undo the two pins (7).

Undo the four screws (6) and remove the volume cams (1).

Undo the two screws (3). Remove the spring and the ball.

Unscrew the spindle by means of the knob (2). Remove the nuts (4) and the spindle.

Reassemble in reverse order.

Set the volume cam, see page MS 421–5X.

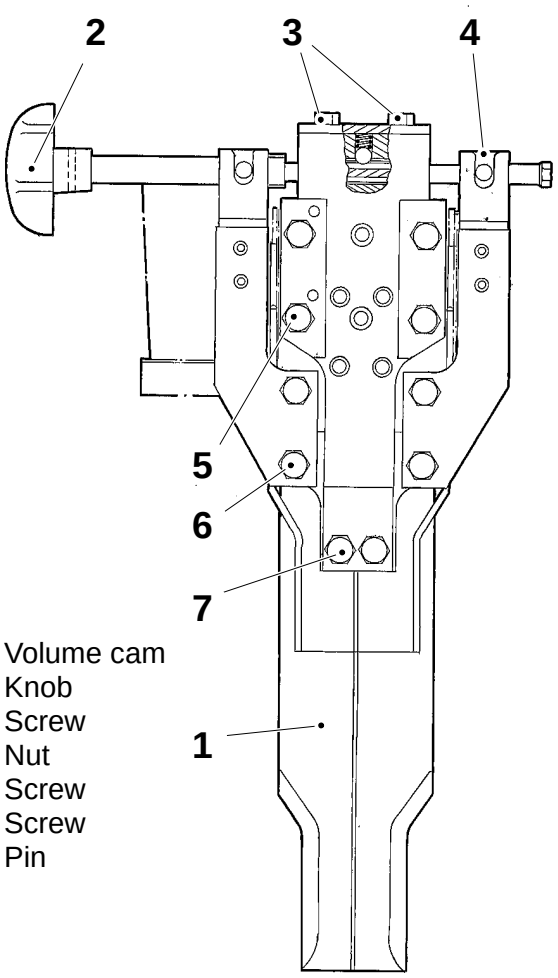

1 Volume cam
2 Knob
3 Screw
4 Nut
5 Screw
6 Screw
7 Pin

Setting

Crank the machine to 0°/180°.

Turn the knob (3) fully in and then out one and a half turns (to make sure that there is still a gap between the volume cams when the knobs are turned fully in).

Loosen the screws (4) and fit the setting tool (2), see fig. 1. If required, loosen the screws (6).

Set the outer volume cam (1) parallel with the setting tool. Tighten the screws (4) and remove the tool.

Undo the four screws (5) and remove the volume cam section from the machine.

Loosen the screws (6) and set the inner volume cam (7) parallel with the outer volume cam. Tighten the screws.

Fit the volume cam section.

Fit the setting tool and check that the volume cams are parallel.

Undo the screw (8) and shift the lug of the setting tool. Fit the screw (8) in the hole (9). Fit the template on the other volume cam section and set according to above.

(Cont'd overleaf)

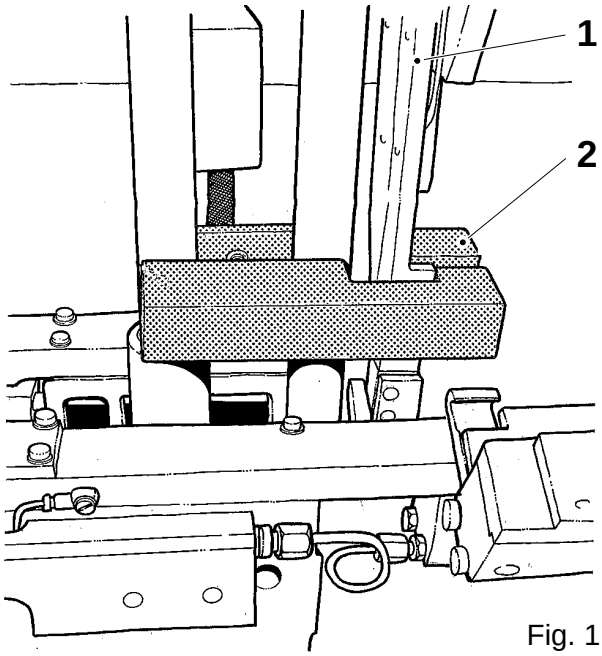

Fig. 1

1 Outer volume cam
2 Setting tool TP No. 75469–201
3 Knob
4 Screw
5 Screw
6 Screw
7 Inner volume cam

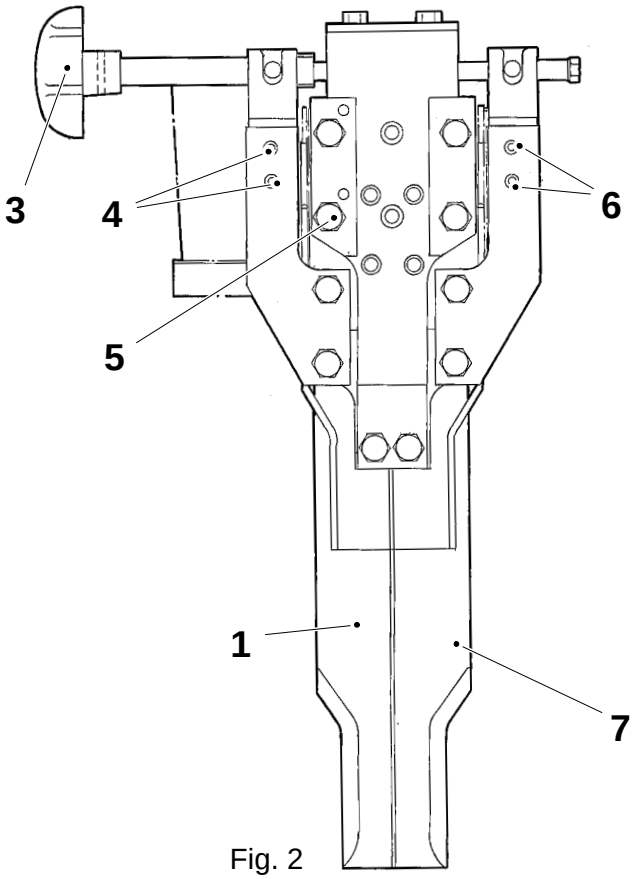

Fig. 2

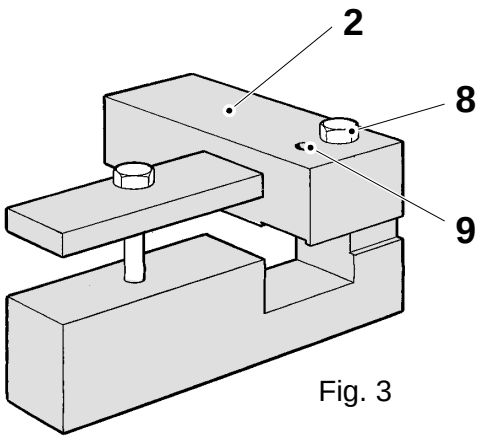

Fig. 3

(Cont'd)

Undo the screws (5) and set height A, see table below.

Set the package weight, see page MS 422–5X.

Volume ml	A ±1mm
TB 180	355.5
TB 200	364.0
TB 200S	362.5
TB 236	357.5
TB 250	360.0
TBA 125	369.0
TBA 180	361.5
TBA 200	369.0
TBA 200S	357.5
TBA 236	363.0
TBA 250	362.5
TBA 284	362.5

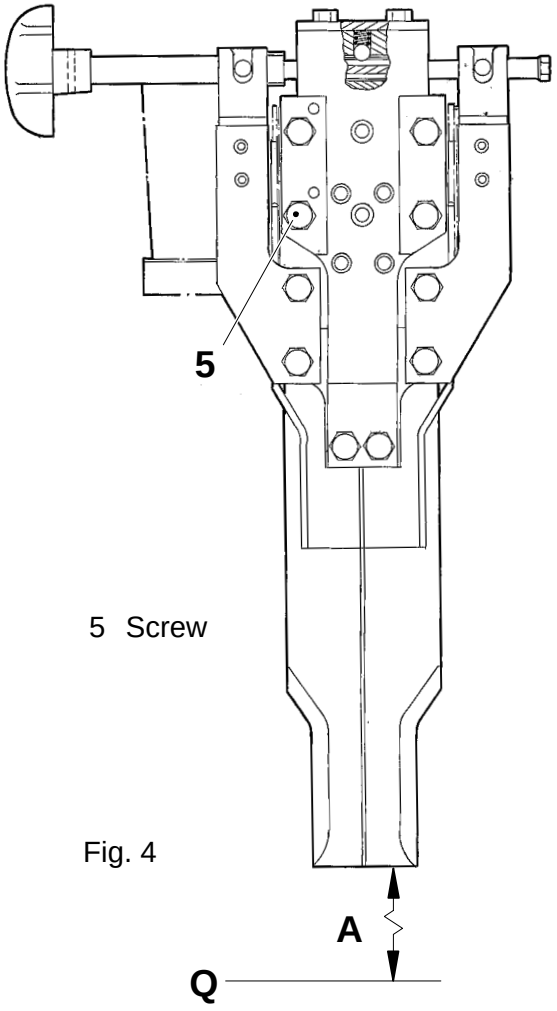

5 Screw

Fig. 4

Note!
Alt. design
TBA180 ml
and 125 ml

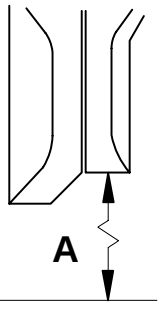

Setting

Basic setting

Set distance A by means of the volume adjustment knob (1).

Set the weight by means of shims (2) under the volume bulges (3). There should be approximately the same number of shims on the cutting and pressure sides.

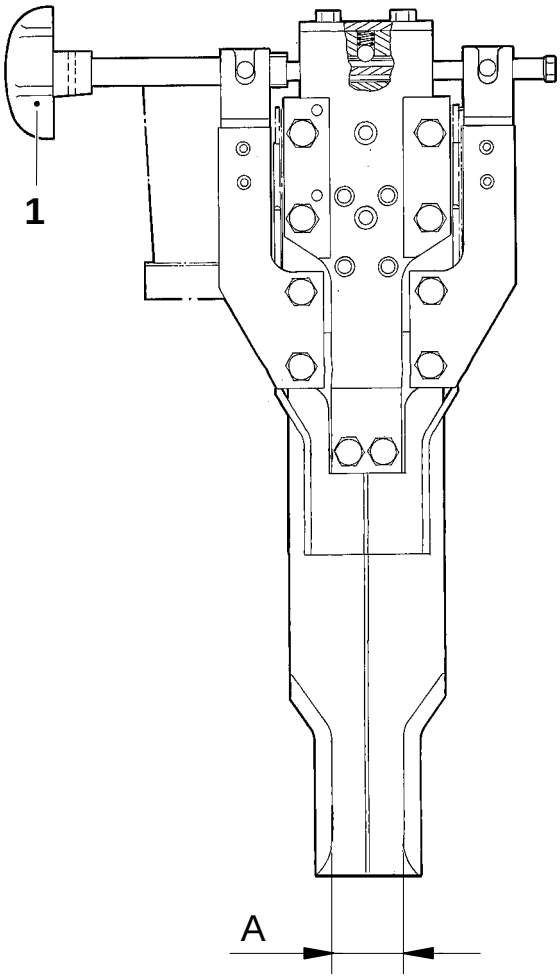

Final setting

The package weight may be finaly adjusted by means of the volume adjustment knobs. The left hand knob affects the right hand jaw pair, and adjustment can be carried out during production.

Volume, ml	Shim, TP No.	A, mm
284	272986–5	33.5
250	272986–1	33.5
236	272986–2	34.0
200S	272991	34.0
200	272986–3	34.0
180	272986–4	34.0
125	272987	34.0

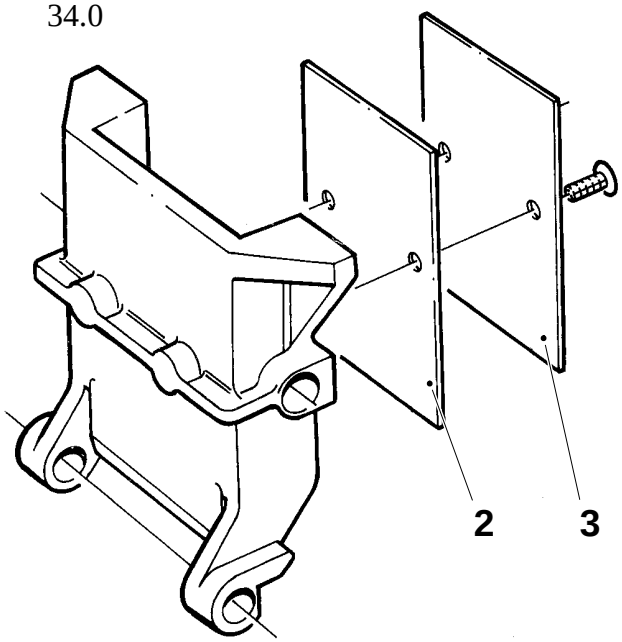

1 Volume adjustment knob
2 Shim
3 Volume bulge

Checking

- Check the play in the link head (6) and at the four points (5).
- Lubricate at the four points (5). Pull the piston rod (1) backwards and forwards and check that the mechanism runs smoothly.
- Check the running surface (2) of the cam for wear.
- Check that the springs (3) bear against the back of the cam.

Caution!
The adjusting screws (4) of the end position damper are to be fully open.

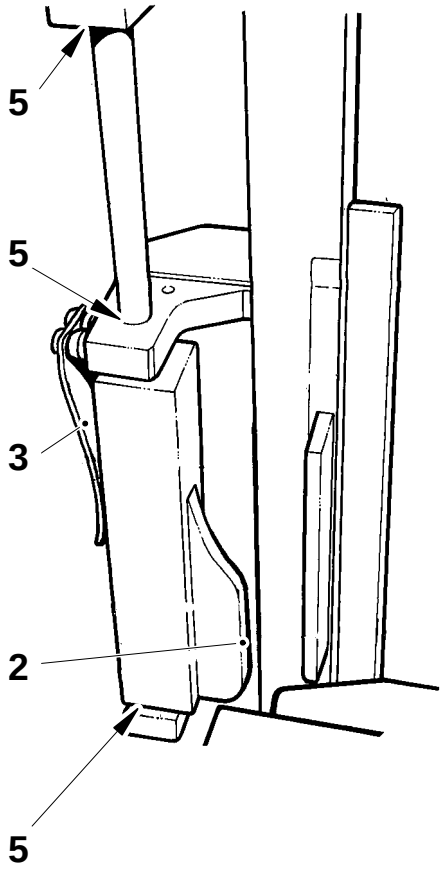

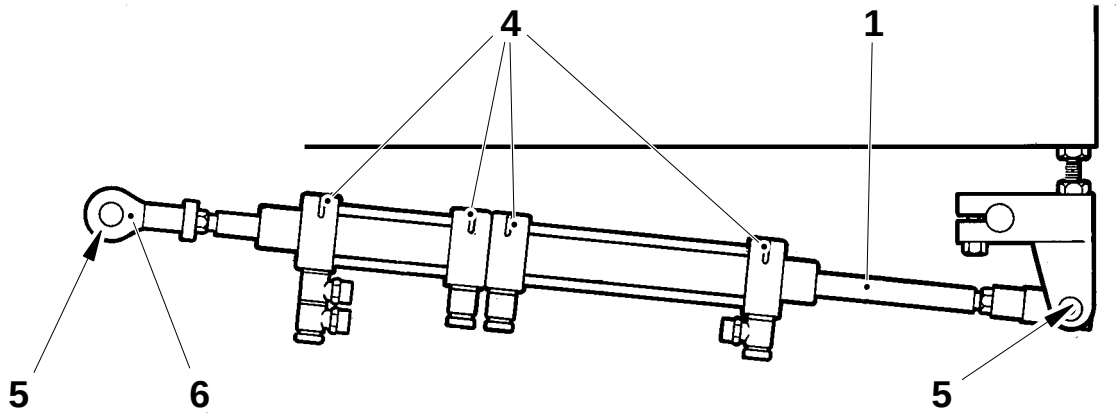

1 Piston rod
2 Surface, cam
3 Spring
4 Screw
5 Lubrication point
6 Link head

Setting

a) Turn off the air supply.

b) Crank the machine to approximately 10°(LH side)/190°(RH side).
Caution
The adjusting screws (4) of the end position damper are to be fully open.

c) Adjust the arm (8) by means of the screw (6) so the arm is parallel to the frame (5).

d) Basically set distances C and D.

e) Place the template (2) with the chamfered corner A facing forwards, see fig. 1. Loosen the screw (7) and turn the eccentric shaft (1) until the cam (3) bears against the gauge with its contact surface B. Tighten the screw (7).

(Cont'd overleaf)

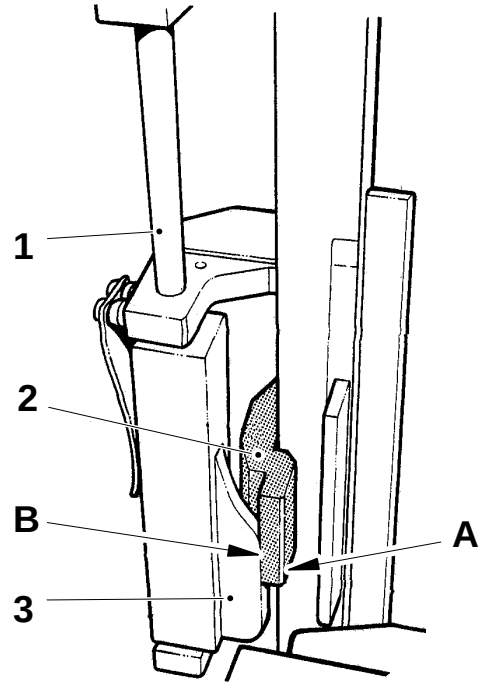

Fig.1

C = 10 mm D = 8 mm

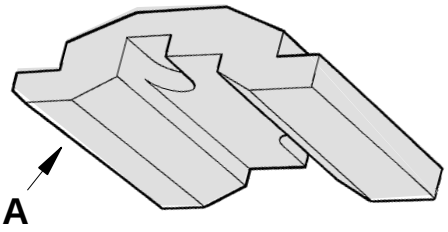

1 Eccentric shaft
2 Template TP No. 75945
3 Cam
4 Adjusting screw
5 Frame
6 Screw
7 Screw
8 Arm

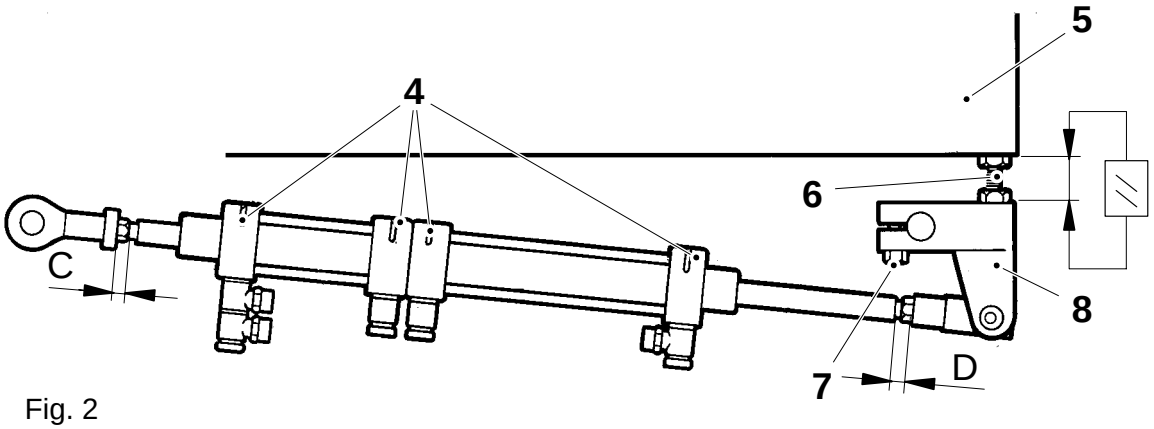

Fig. 2

(Cont'd)

f) Pull out the piston rod (12) on the cylinder (11) and keep it pulled out. At the same time, move the cylinder combination (10) and (11) back to end position, so that the arm (8) pivots.

g) Turn the template (2) 180° (the chamfered corner facing backwards).
Check that the cam (3) bears against surface B. If required, adjust distance C.

h) Set gap E between the lug and the cam holder, see fig. 4. If required, shift the lug.

i) Set the air pressure, see page MS 910/920–1X.

(Cont'd overleaf)

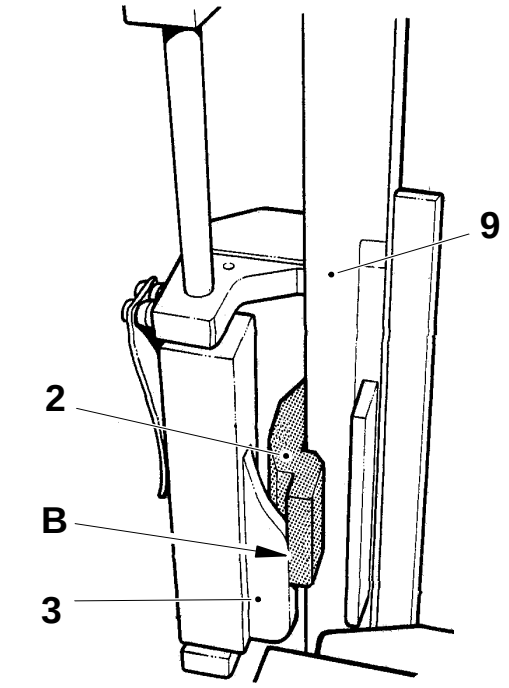

Fig. 3

2 Template TP No. 75945
3 Cam
8 Arm
9 Column
10 Cylinder
11 Cylinder
12 Piston rod

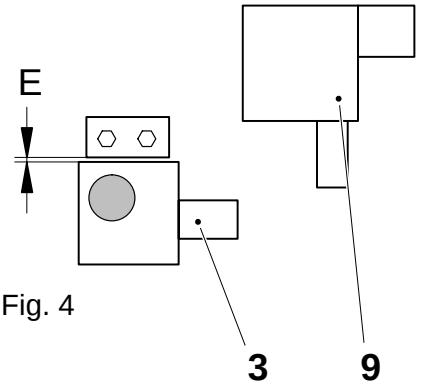

Fig. 4

C = 10 mm
D = 8 mm
E = 0.1 ±0.05 mm

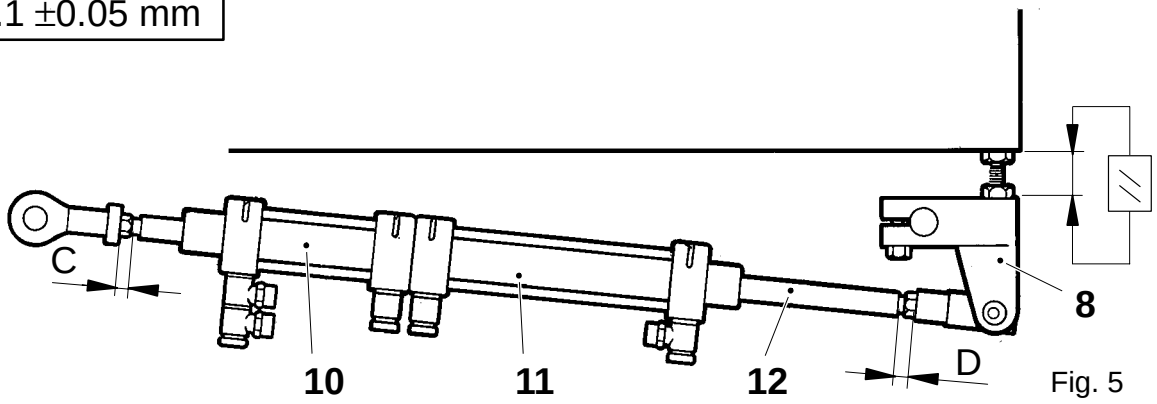

Fig. 5

(Cont'd)

If no template is available

Set according to items a) – d) on page MS 423–5X:1.

j) Move the cylinder combination (10) and (11), with the piston rods in, back to end position and turn the arm (8) (= pre-correction position).

k) Set gap F between the cam (3) and the column (9) see fig. 7.

l) Set gap E between the lug and the cam holder. If required, shift the lug.

m) Pull out the piston rod (12) on the cylinder (11) and keep it pulled out. At the same time, move the cylinder combination (10) and (11) back to end position, so that the arm (8) pivots.

n) Set stroke G of the cylinder (10). If required, adjust distance C.

o) Set the air pressure, see page MS 910/920–1X.

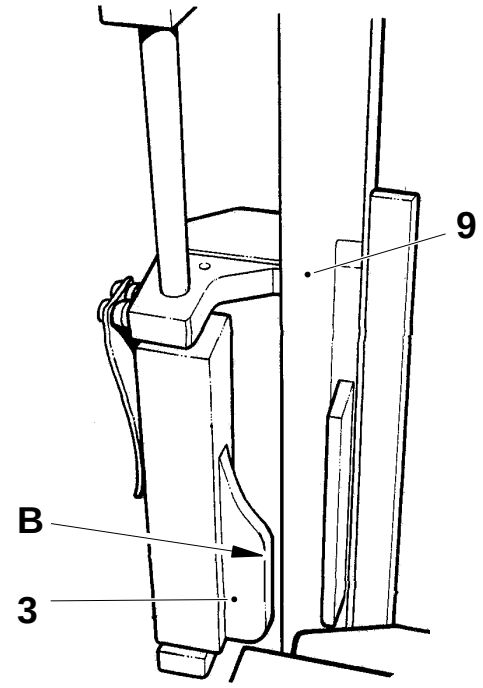

Fig. 6

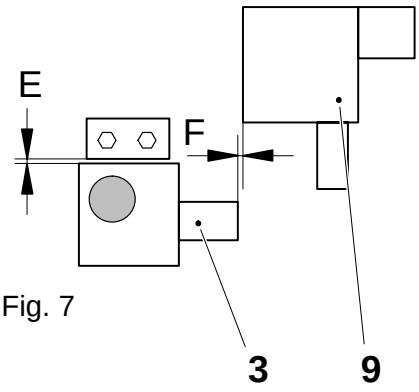

Fig. 7

2 Template TP No. 75945
3 Cam
8 Arm
9 Column
10 Cylinder
11 Cylinder
12 Piston rod

C = 10 mm
D = 8 mm
E = 0.1 ±0.05 mm
F = 0.5 ±0.05 mm
G = 15 ±0.5 mm

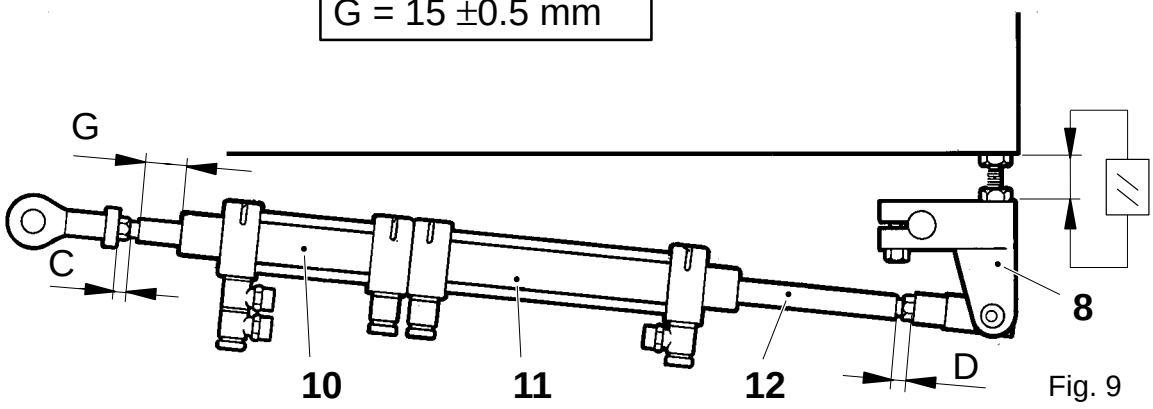

Fig. 9

Checking cam and support rollers

Check that the cam rollers (1) and support rollers (2) have not been worn flat and that their bearing play does not exceed 0.1 mm.

If required, replace the bearings.

Turn off the compressed air to the design correction cylinders.

Check clearence A, between the support rollers and the cam (3). Adjust by means of the eccentric screw (4).

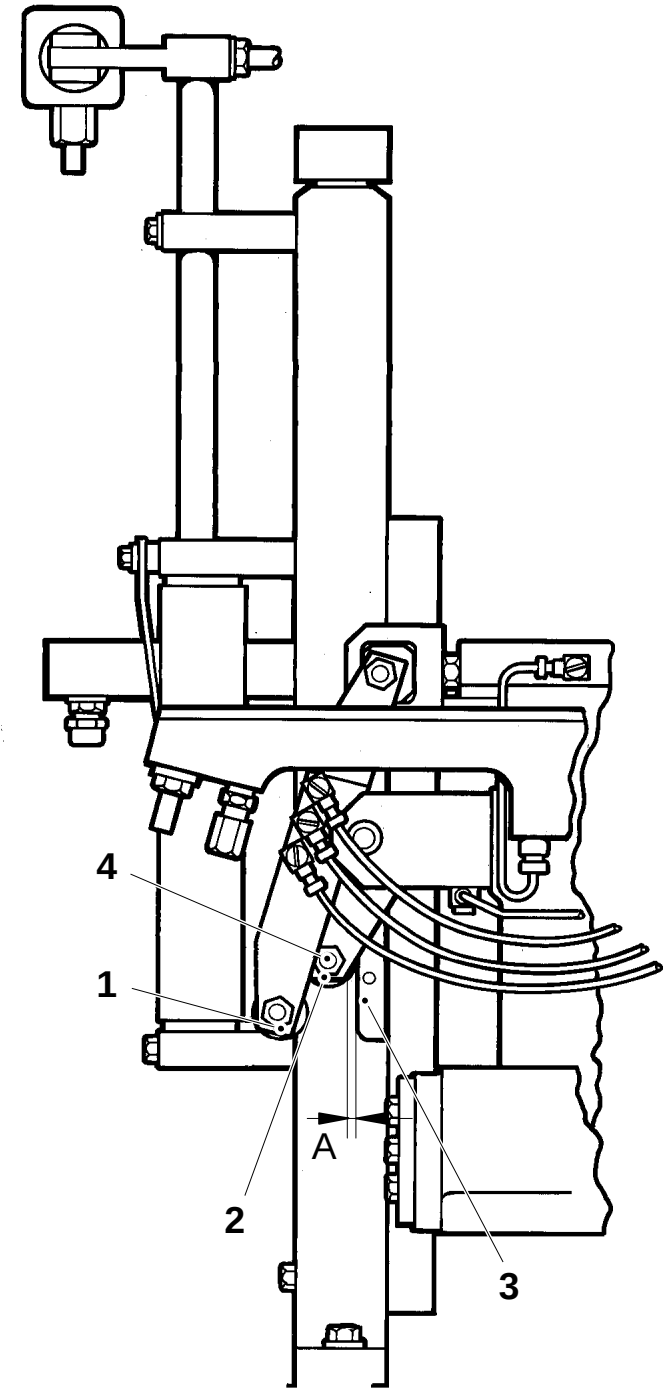

A = 0.05 – 0.10 mm

1 Cam roller
2 Support roller
3 Cam
4 Eccentric screw

Checking bearing play

Check that the play of first one and then the other folding flap bearing in the cutting jaw does not exceed A mm.

Put a load on the operating rod (1) so that the folding flaps are pressed against the cutting jaw. Check that the play in the folding flaps does not exceed B mm.

Check the other folding flap correspondingly.

Replace rollers, bearings, and beam, as required.

A = max 0.2 mm B = max 0.3 mm

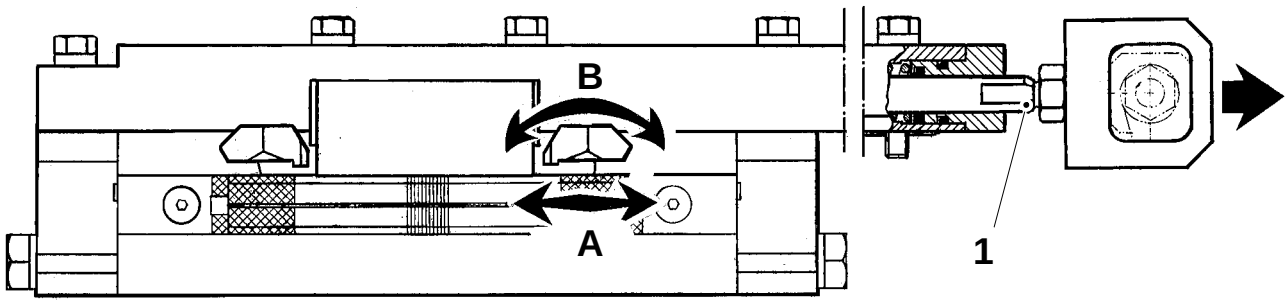

1 Operating rod

Setting

Remove the volume flaps on the cutting jaw side.

Crank to 0° (RH side)/180° (LH side).

Place a feeler gauge, thickness 0.7 mm, under the folding flaps.

Move the design correction cylinder into non-corrective position, i.e. full paper feed.

Loosen the lock nut (1) and turn the operating rod (3) to obtain gap A.

Check that the ear (2) can be twisted slightly sideways, measurement B.

Adjust by moving the bracket (4).

Check the folding flap gap A at the top and bottom parts of the folding flap cam.

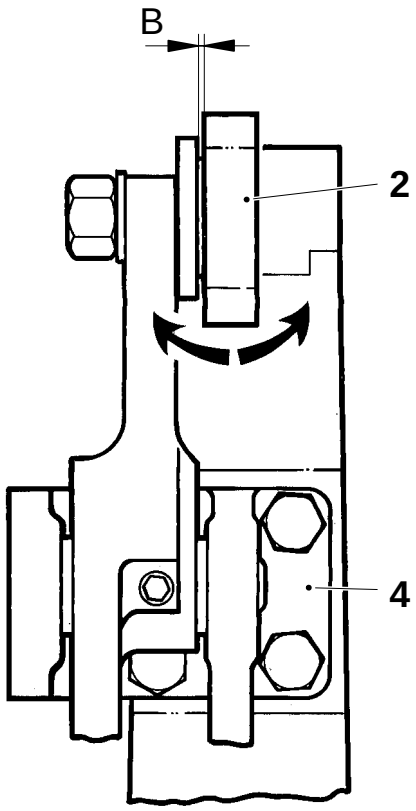

A = 0.7 ±0.05 mm
B = 0.1 – 0.5 mm

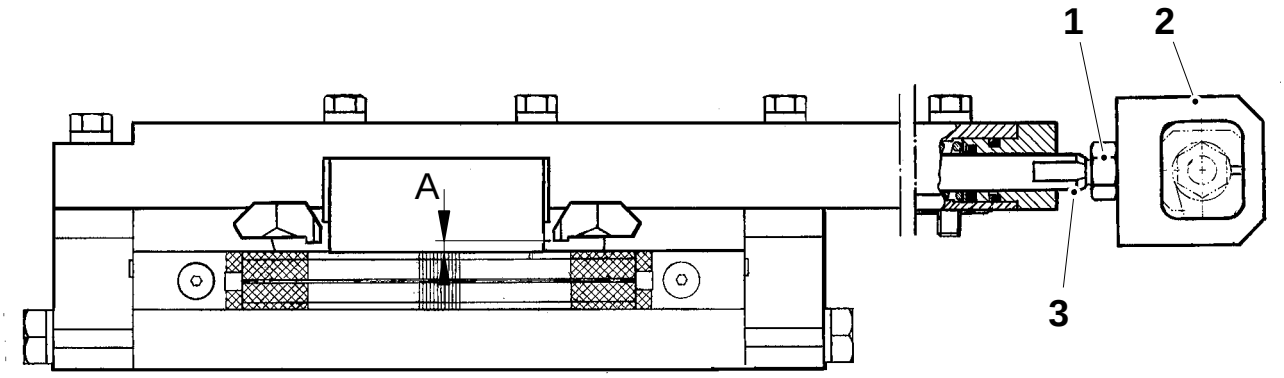

1 Lock nut
2 Ear
3 Operating rod
4 Bracket

Setting

Parallelity

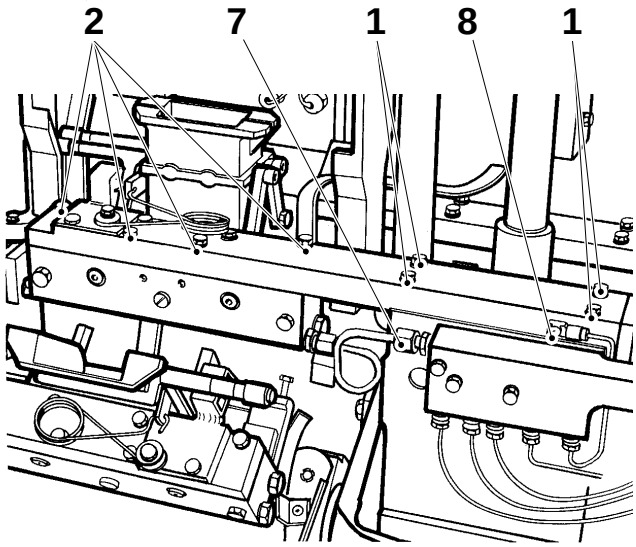

a) Undo the four screws (1), the oil connection (7) and the banjo connection (8). Remove the carrier on the cutting side.

b) Undo the four screws (2) and remove the cutting jaw from the carrier.

c) Loosen the screws (3) and (4).

d) Adjust by means of altering the shims (5) in the carrier ruler (6). (Altering the shim thickness 0.05 mm changes gap A 0.07 mm)

e) Tighten the screws (3) and (4).
Fit the cutting jaw on the carrier. Place a feeler gauge (0.7 mm) under one folding flap and move the carrier ruler into non-corrective position.

f) Check that the other folding flap have the same gap within ± 0.05 mm. If not, adjust according to the above.

g) After the setting, fit the carrier.

h) Fill the bearing housing with oil, see page MS 402–1X.

i) Bleed the cutting mechanism, see page MS 602–5X.

j) Set the volume flap alignment, see page MS 442–5X.

k) Set the folding flap mechanism, see page MS 429–5X.

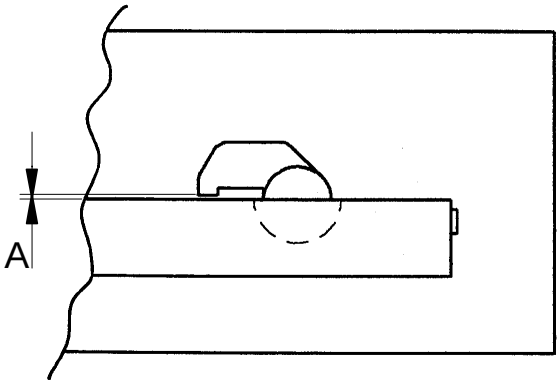

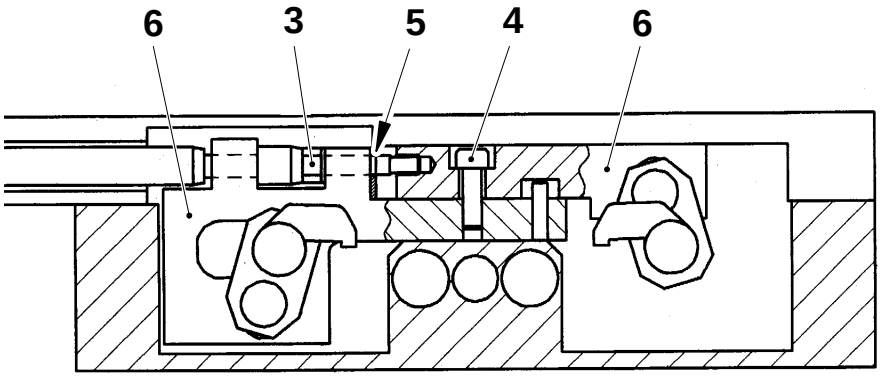

1 Screw
2 Screw
3 Screw
4 Screw
5 Shim TP No. 751580
6 Carrier ruler
7 Oil connection
8 Banjo connection

Checking

a) Turn on the cooling water.

b) Start the hydraulic pump.

c) Clean and blow the cutting knives to dry.

d) Crank the machine until the knives are in cutting position.

e) Check that the cutting pistons do not leak any hydraulic oil. If required, overhaul, see page MS 433–3X.

Overhaul

a) Undo the two screws (1) and remove the outer cutting jaw (2).

b) Undo the two screws (3) and remove the inner cutting jaw (4).

c) Undo the nut (5) and pull the pipe aside.

d) Blow **very gently** with compressed air in the pipe connection (6) on the cutting jaw.

e) Pull out the pistons (7). Check for wear and/or damages. Replace as required.
Use the tool TP No. 75665 to replace the seals.

f) Check the bearing housing (8) for wear and/or damages. Replace as required.

g) Reassemble in reverse order.

h) Bleed the cutting mechanism, see page MS 602–5X.

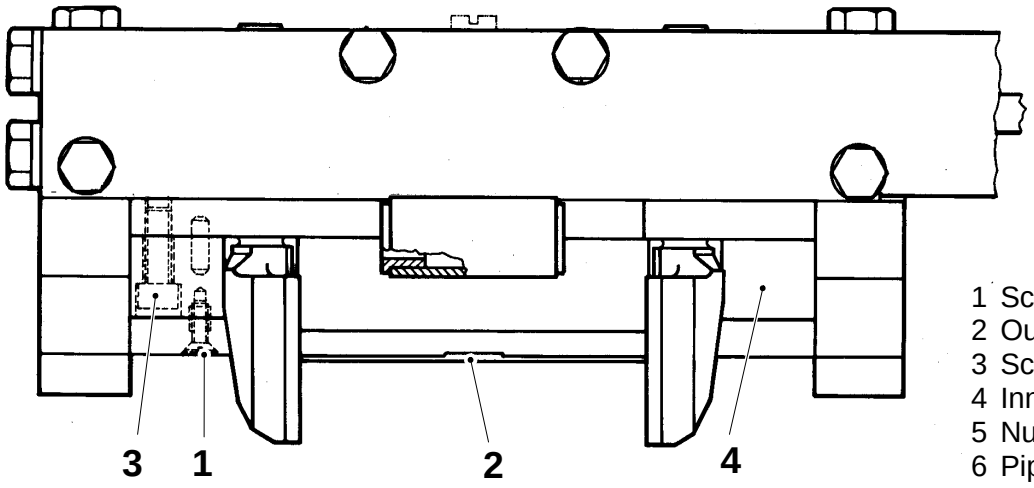

1 Screw
2 Outer cutting jaw
3 Screw
4 Inner cutting jaw
5 Nut
6 Pipe connection
7 Piston
8 Bearing housing

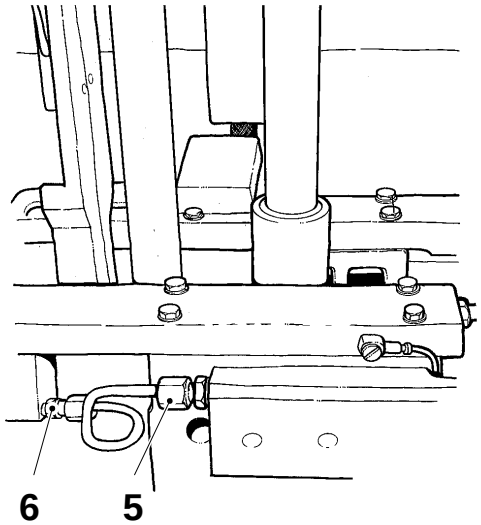

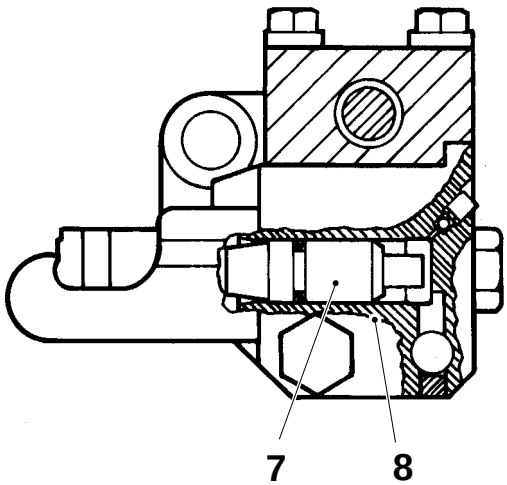

Overhaul

a) Undo the two screws (1) and remove the outer cutting jaw (2).

b) Undo the two screws (3) and remove the inner cutting jaw (4).

c) Undo the nut (5) and pull the pipe aside.

d) Blow **very gently** with compressed air in the pipe connection (6) on the cutting jaw.

e) Pull out the pistons (7). Check for wear and/or damages. Replace as required.
Use tool TP No. 75665, to replace the seals.

f) Check the bushings (8) for wear and damage. Undo the screw (9) and replace the bushing, if required.
Note! Replace the O-ring (10) at replacement of bushing.

g) Reassemble in reverse order.

h) Bleed the cutting mechanism according to page MS 602–5X.

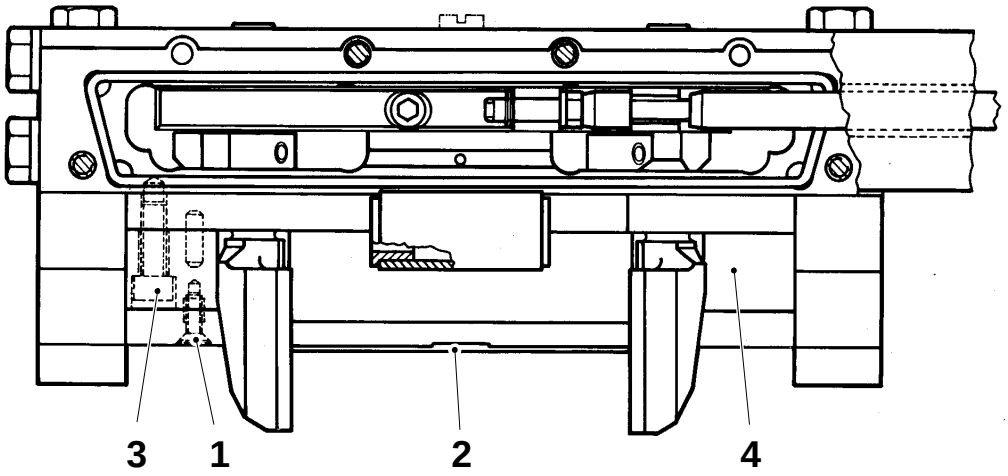

1 Screw
2 Outer cutting jaw
3 Screw
5 Nut
6 Pipe connection
7 Piston
8 Bushing
9 Screw
10 O-ring

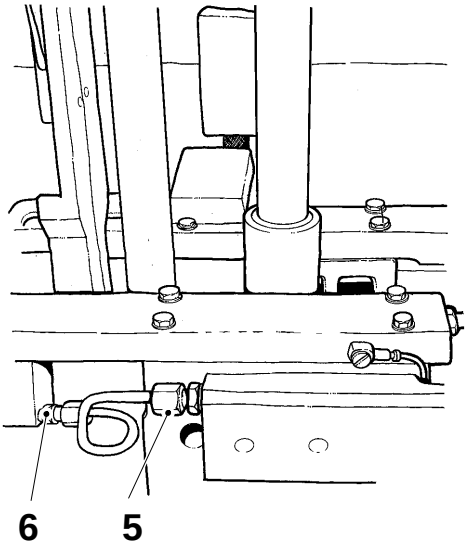

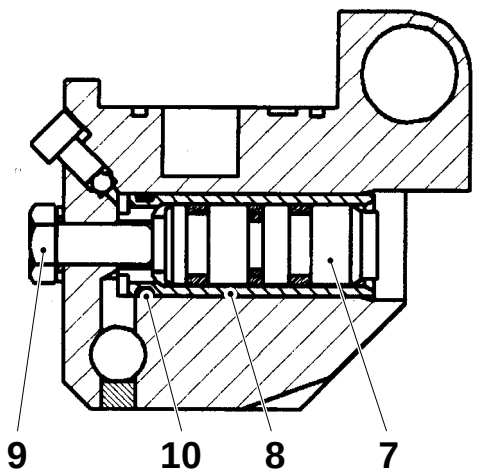

Checking

a) Crank the machine to 35° (30° for 200S) and fit point measuring clamp (1), on the LH yoke guide, see fig. 1.

b) Crank until the yoke (2) reaches its lower turning position, see page MS 412–5X.

c) Measure the stroke A with a rod micrometer and record the result, see fig. 2.

d) Remove the point measuring clamp (1)

e) Crank to 215° (210° for 200S) and fit the point measuring clamp (1) to the RH yoke guide and measure the stroke A as described above. Record the result.

   The difference between the stroke measured on the two sides must not exceed 0.2 mm.

f) If required, adjust the stroke, see page MS 436–5X.

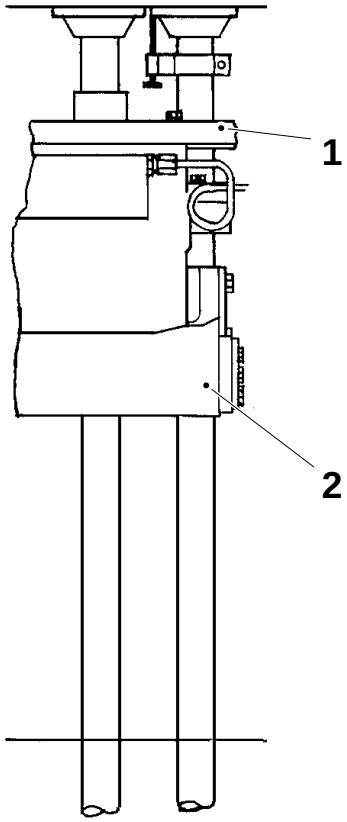

Fig. 1

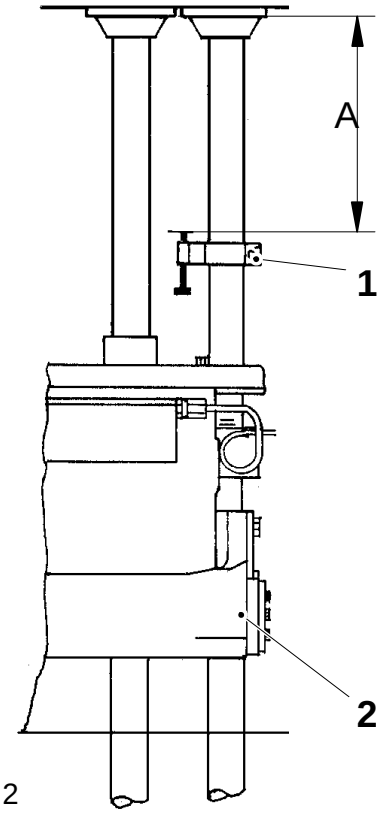

Fig. 2

1 Measuring clamp TP No. 76416–101
2 Yoke

Setting

a) Basically set the scales (1) and (6) on the link arms and yoke lifter arms at 0.

b) Loosen the screws (3) on the yoke lifter arm (2). Alter the stroke by means of the adjustment nuts (4).

c) The stroke on the LH side and the RH side must not differ more than 0.2 mm. Tighten the screws.

d) Readjust the link arm (5), so that the scale (6) shows the same setting as the yoke lifter arm scale (1).

e) Always make the same adjustment on the yoke lifter arms as on the link arms (5). The adjustments on the LH side is to be equal to the adjustment on the RH side.

f) To increase the stroke, shift the scale towards the discharge unit.

(Cont'd overleaf)

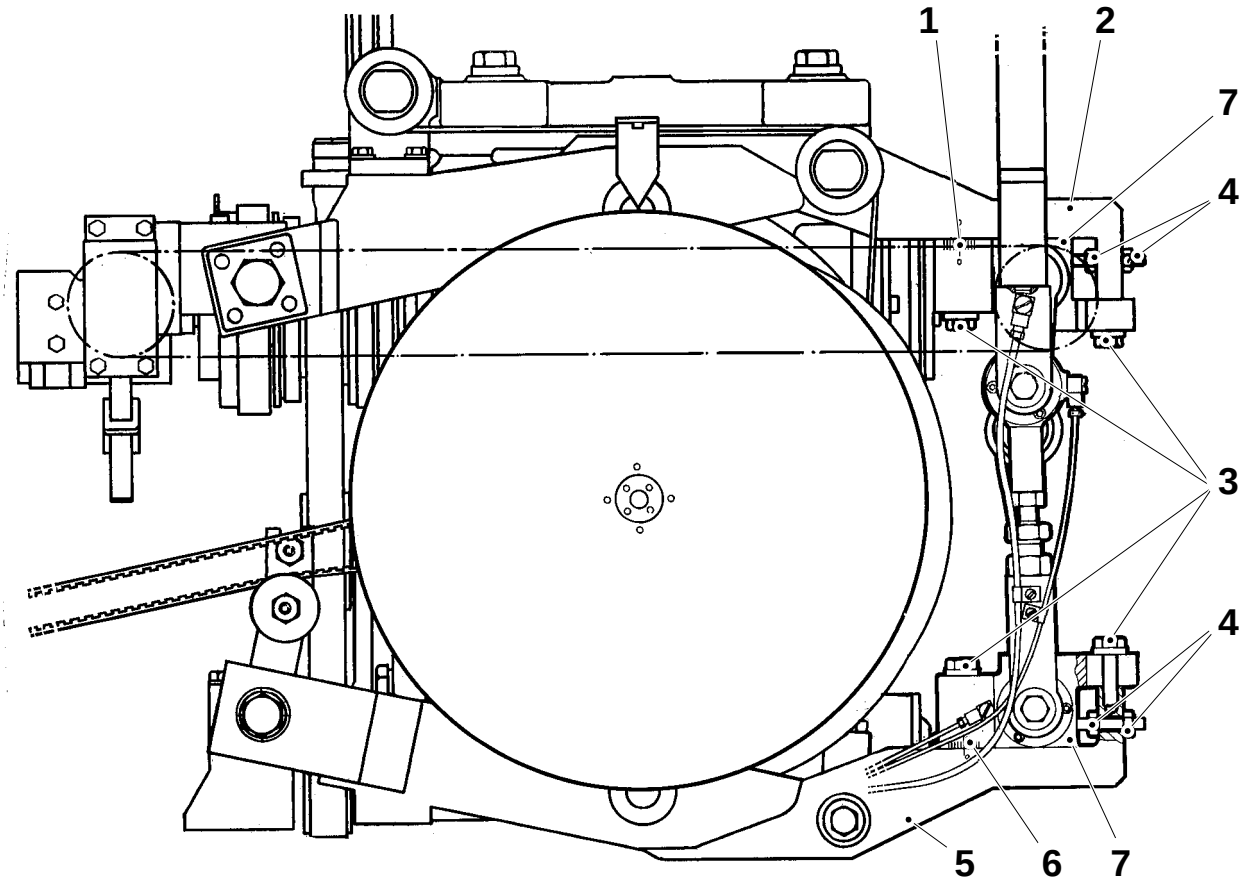

1 Scale
2 Yoke lifter arm
3 Screw
4 Adjustment nut
5 Link arm
6 Scale
7 Adjustment device

(Cont'd)

g) Check the T-gap, see page MS 438–1X.

h) Check the jaw gap, see page MS 445–1X.

Basic setting

Volume, ml	Stroke length A, mm
TB 180	181.3
TB 200	190.2
TB 200S	244.4
TB 250	226.6
TBA 125	175.1
TBA 180	174.0
TBA 200	181.2
TBA 200 (yoke cam 456020)	180.2
TBA 200S	236.2
TBA 236	206.0
TBA 250	215.3

Setting

a) Basically set the scales (1) and (6) on the link arms and yoke lifter arms at 0.

b) Loosen the screws (3) on the yoke lifter arm (2). Alter the stroke by means of the adjustment nuts (4).

c) The stroke on the LH side and the RH side must not differ more than 0.2 mm. Tighten the screws.

d) Readjust the link arm (5), so that the scale (6) shows the same setting as the yoke lifter arm scale (1).

e) Always make the same adjustment on the yoke lifter arms as on the link arms (5). The adjustments on the LH side is to be equal to the adjustment on the RH side.

f) To increase the stroke, shift the scale towards the discharge unit.

(Cont'd overleaf)

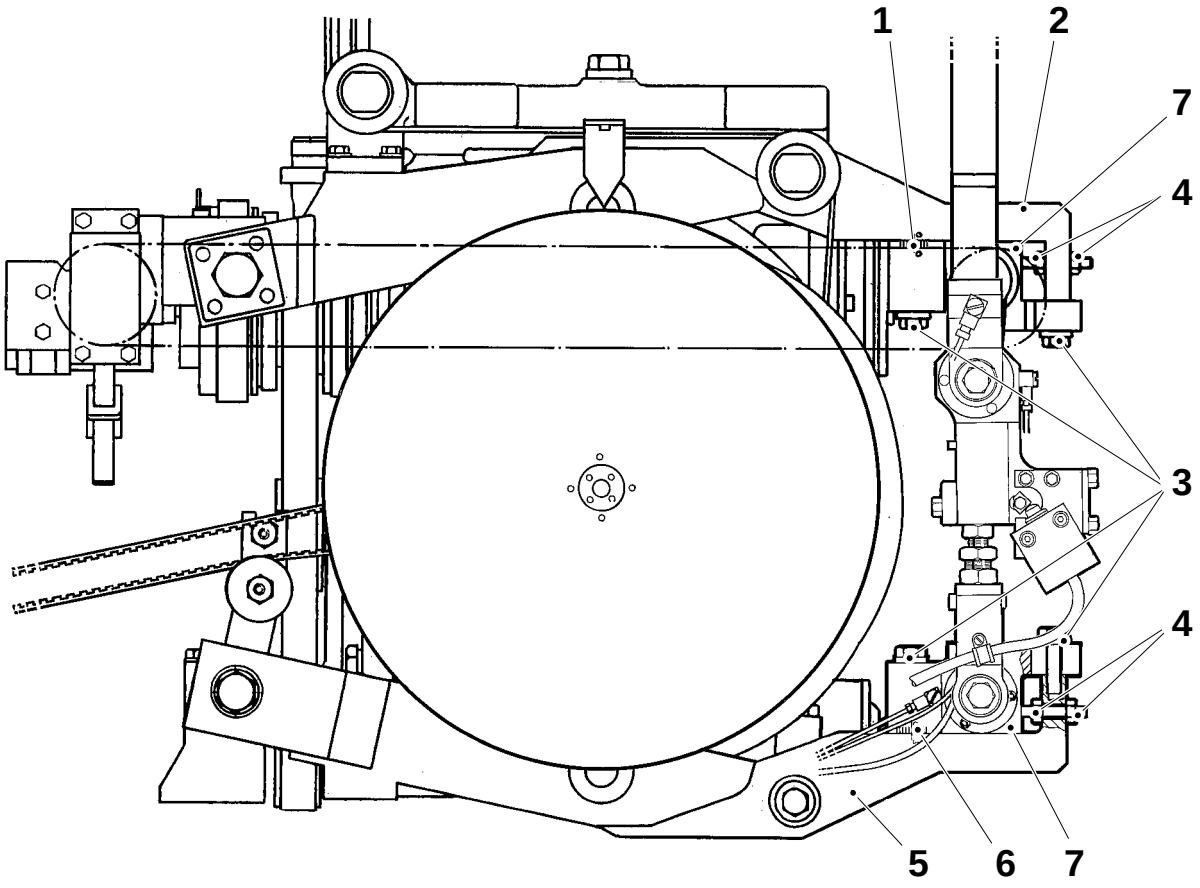

1 Scale
2 Yoke lifter arm
3 Screw
4 Adjustment nut
5 Link arm
6 Scale
7 Adjustment device

(Cont'd)

g) Check the T-gap, see page MS 438–1X.

h) Check the jaw gap, see page MS 445–1X.

Basic setting

Volume, ml	Stroke length A, mm
TB 180	181.3
TB 200	190.2
TB 200S	244.4
TB 236	217.6
TB 250	226.6
TBA 125	175.1
TBA 180	174.0
TBA 200	181.2
TBA 200S	236.2
TBA 236	206.0
TBA 250	214.7
TBA 284	234.7

Checking

After altering the stroke, crank the machine to 90° and check the T-gap between the volume flap and the jaw.

Crank the machine to 270° and repeat the check.

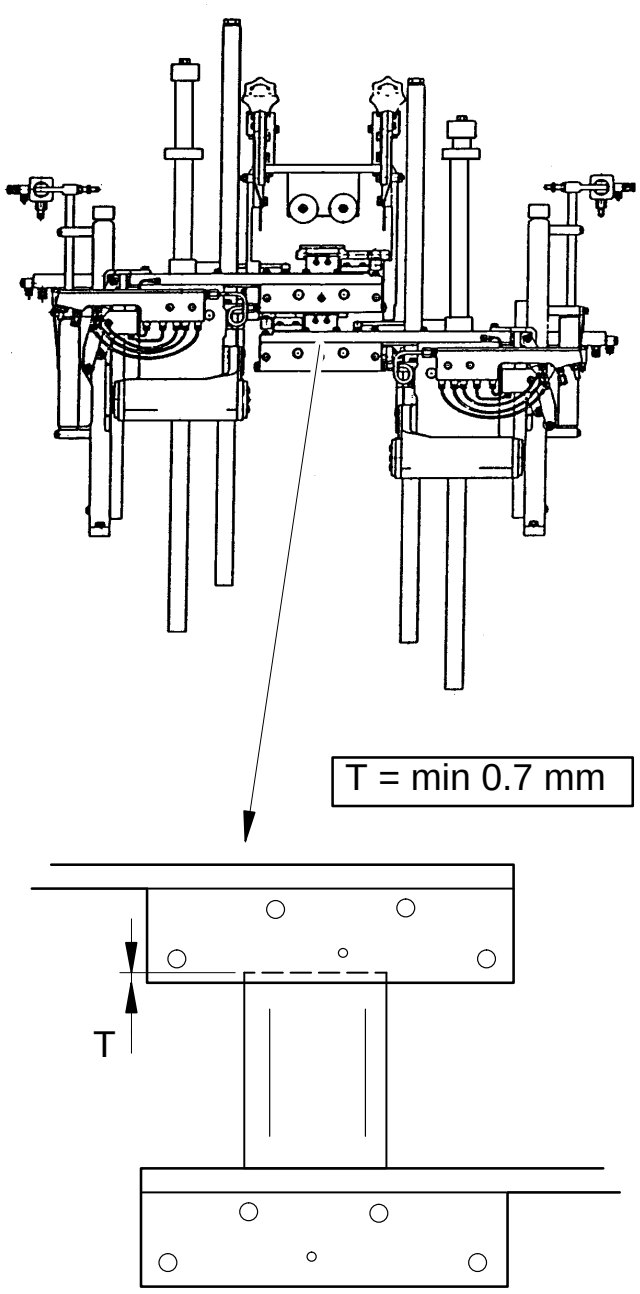

Setting

Remove the volume bulges, if any, from the volume flaps. Remove the bracket of the tube support rollers (applies to 125 ml).

Crank to 5°, RH volume flap.

Fit the setting fixtures (2) and (3) together with the template (C), see table.

Loosen the screws (1) and shift the carrier sideways until the template (C) moves easily in the volume flaps from either side of the ruler.

Tighten the screws.

Detach the setting fixture.

Crank to 185° and repeat the setting procedure with the LH volume flap.

Set the folding flaps, see page MS 429–5X.

Volume, ml	Template C, TP No.
125	75943
180 – 284	75939
200S	75944

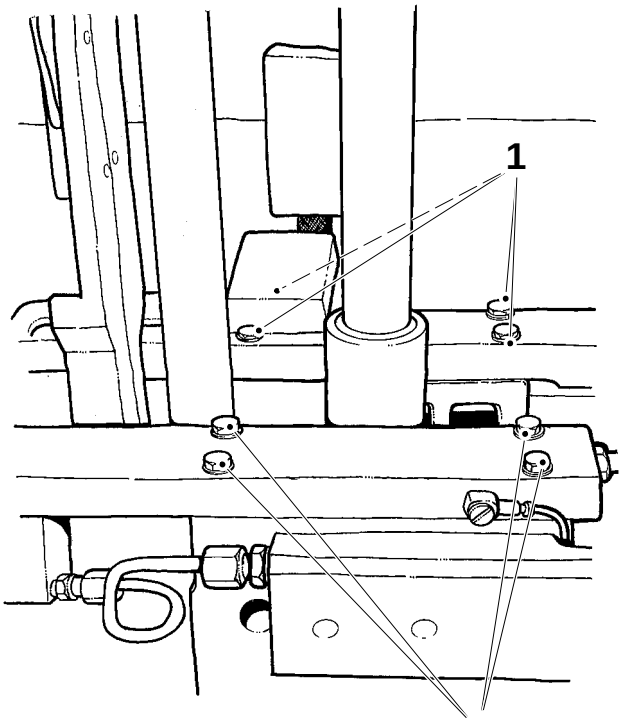

1 Screw
2 Fixture TP No. 76291–101
3 Fixture TP No. 76298

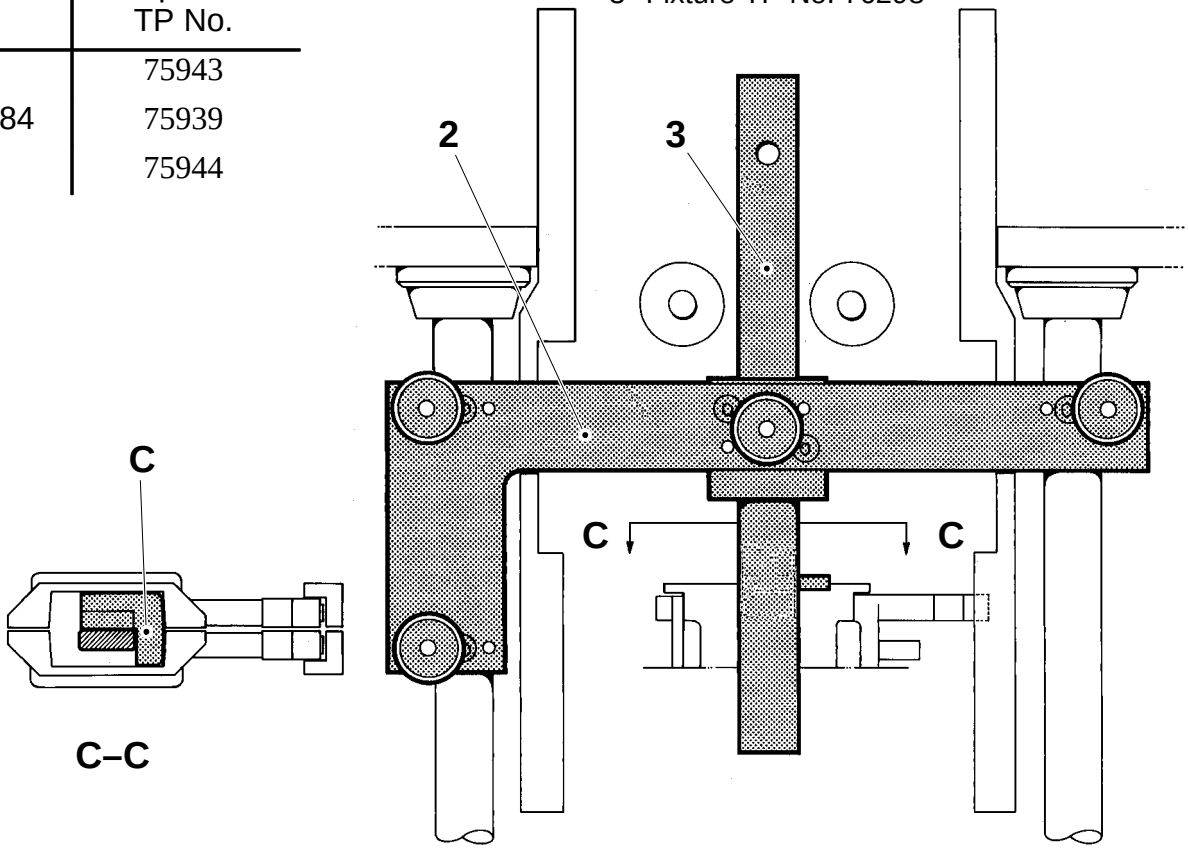

Basic setting

Alignment and vertical position

Crank the machine to 5° or 185°. Align the support rollers by means of the setting fixtures (8) and (9) together with the template (B), see table below.

a) Loosen the screws (7) and set height A, see table and fig.

b) Loosen the locking screw (1) and turn the adjustment screw (6) until the LH tube support roller (2) bears against the template (B). Tighten the locking screw (1).

c) Set the roller (2) so that it bears evenly against the template by means of the shims (4), gap C. After setting, check that the roller rotates freely.

d) Loosen the nut (3) and slide the RH tube support roller (5) against the template. Tighten the nut (3) and repeat the setting according to item c) on the RH roller.

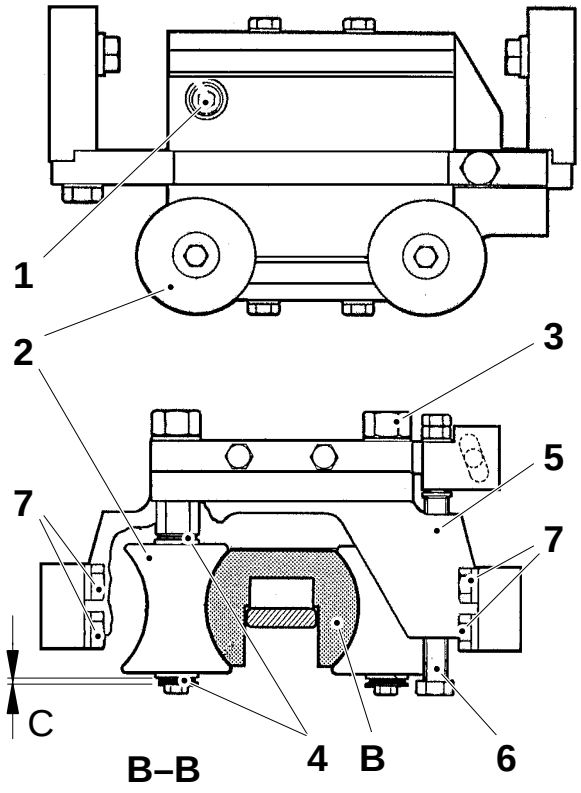

C = 0.2 – 0.3 mm

Volume, ml	Template B, TP No.
125	75937
180 – 284	75936
200S	76176

Volume, ml	A ±1mm
TB 200	60
TB 200S	10
TB 236	40
TB 250	50
TBA 125	110
TBA 200	60
TBA 200S	40
TBA 236	40
TBA 250	50
TBA 284	50

(Cont'd overleaf)

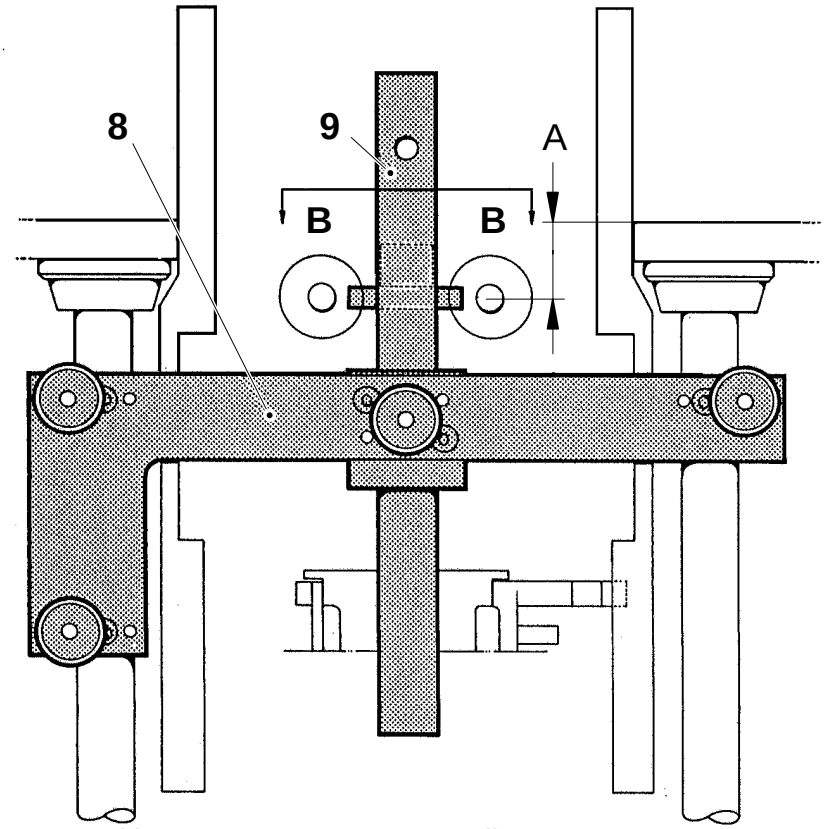

1 Locking screw
2 Tube support roller, LH
3 Nut
4 Shim TP No. 2033–14
5 Tube support roller, RH
6 Adjustment screw
7 Screw
8 Fixture TP No. 76291–101
9 Fixture TP No. 76298

(Cont'd)

Final setting

Centering and vertical position

Start the machine and push out the drop chute. Pick two consecutive semi-finished packages and check that the short sides are indentically shaped.

Fig. 1 shows a section through a semi-finished package, seen from above. Shift the support rollers in the direction of the arrow.

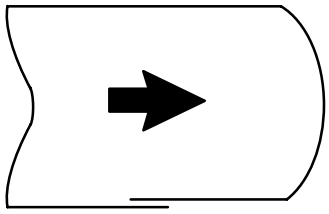

Fig. 1

To adjust, push **Short stop** and loosen the screw (1). Adjust by means of the adjustment screw (6).

Fig. 2 shows a semi-finished package made with correctly positioned support rollers.

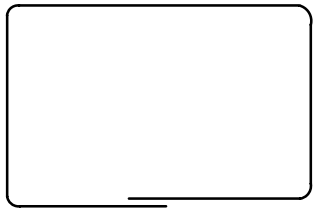

Fig. 2

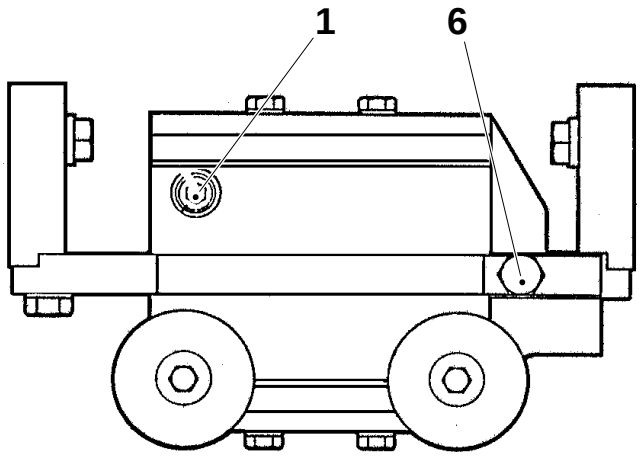

Fig. 3

1 Locking screw
6 Adjustment screw

Checking

Jaw gap

a) Place the tool (2) between the carriers (1).

b) Crank the machine to 80°(LH side)/260°(RH side).

c) With a feeler gauge, check from above jaw gap A between the pressure and cutting jaws, see table.

d) In case of deviation, set the jaw gap, see page MS 445–5X.

Volume, ml	A, mm
125	1.3 ±0.1
180 – 284	1.5 ±0.1

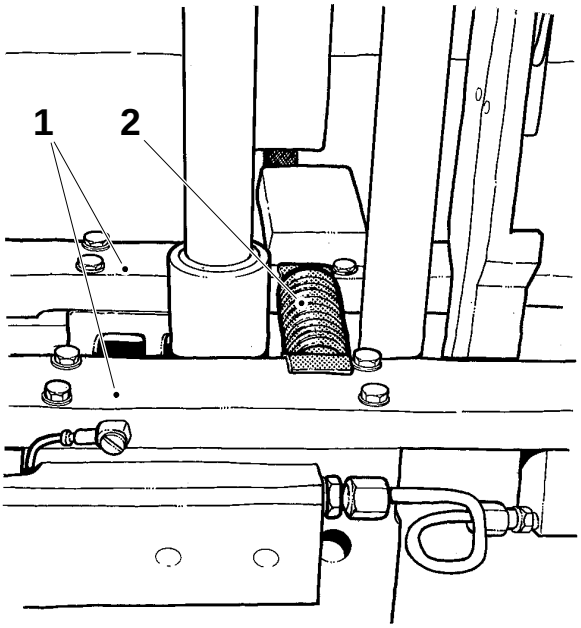

Non-parallelity in movement

e) Crank the machine to 190°(LH side)/10°(RH side). Measure the jaw gap from above and record the value.

f) Crank the machine to:
for TB: 310°(LH side)/130°(RH side) for TBA: 290°(LH side)/110°RH side). Measure the jaw gap from underneath and record the value.

g) If any of the jaw gap measurements is wider than 1.8 mm, shift the adjustment device (3) on the link arm half a scale division forwards. If the jaw gap is smaller than 0.4 mm at any point, shift the adjustment device backwards half a scale division.

h) After setting according to the above, double-check the jaw gap according to items a) – d).

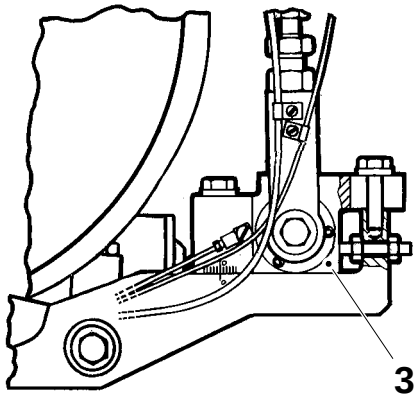

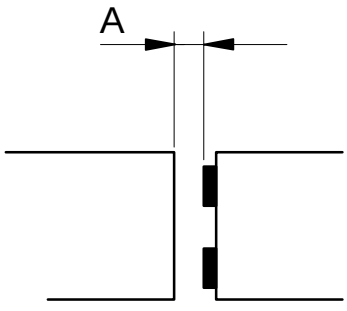

1 Carrier
2 Tool TP No. 76304–101
3 Adjustment device

Setting

Tool TP No. 76304–101 is to be positioned according to the directions on page MS 445–1X.

Crank the machine to 80°(LHside)/260°(RH side).

Basic setting

Loosen the oil pipe clamps (4) and the lock nuts (2). Set heights B and C (see table) by means of the screw (3).

Measure jaw gap A between the pressure and cutting jaws. If it exceeds 2 mm or is less than 0.05 mm, loosen the screws (1) and compress the jaws to a jaw gap of 0.5 – 1.0 mm. Retighten the screws (1).

Final setting

Fine setting is done by means of the screw (3). Set jaw gap A, see table. Increasing height B, increases jaw gap A.

Tighten the lock nuts and double-check the jaw gap.

Also double-check the non-parallelity in movement of the jaw gap, see page MS 445–1X, items e) – h).

Volume, ml	A ±0.1mm	B ±1mm	C ±1mm
125	1.3	55	21
180	1.5	55	21
200	1.5	55	21
200S	1.5	50	19
236	1.5	55	21
250	1.5	55	21

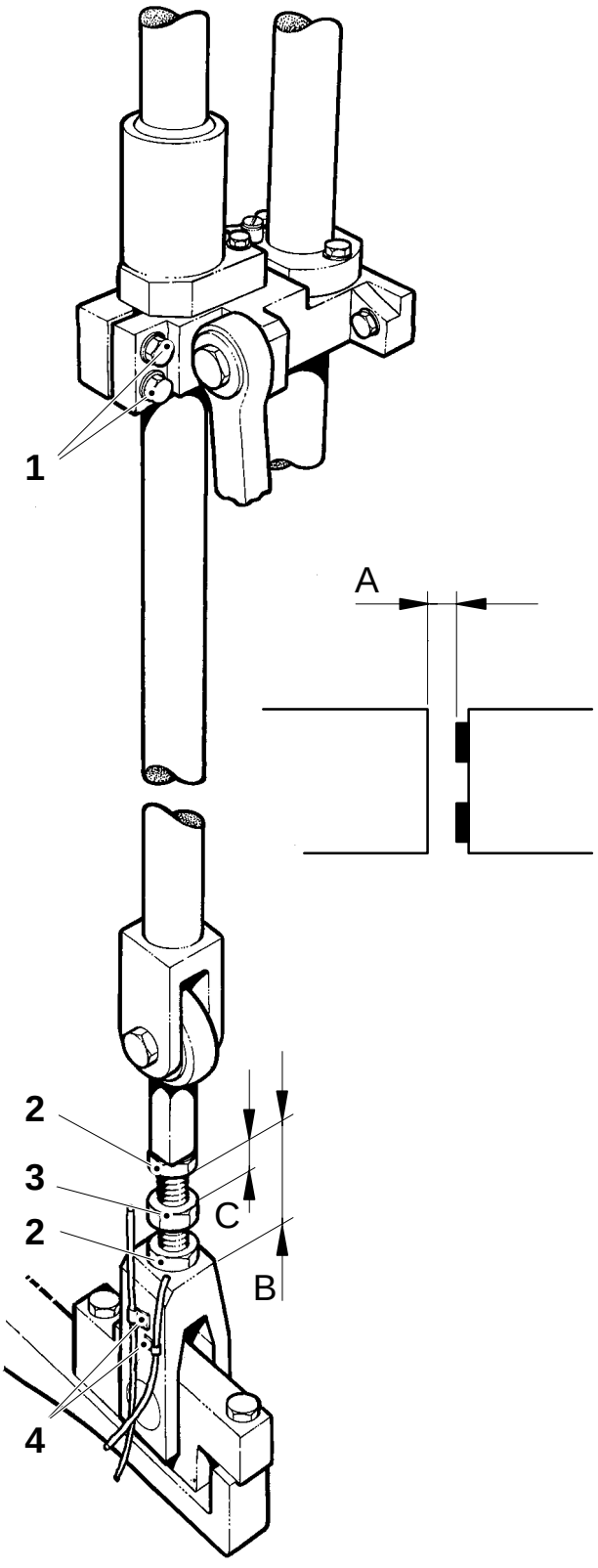

1 Screw
2 Lock nut
3 Screw
4 Oil pipe clamp

Setting

Tool TP No. 76304–101 is to be positioned according to the directions on page MS 445–1X.

Crank the machine to 80°(LH side)/260°(RH side).

Basic setting

Loosen the oil pipe clamps and the lock nuts (2). Set heights B and C (see table) by means of the screw (3).

Measure jaw gap A between the pressure and the cutting jaws. If it exceeds 2 mm or is less than 0.05 mm, loosen the screws (1) and compress the jaws to a jaw gap of 0.5 – 1.0 mm. Retighten the screws (1).

Final setting

Fine setting is done by means of the screw (3). Set jaw gap A, see table. Increasing height B, increases jaw gap A.

Tighten the lock nuts and double-check the jaw gap.

Also double-check the non-parallelity in movement of the jaw gap, see page MS-445–1X, items e) – h).

Volume, ml	A ±0.1mm	B ±1 mm	C ±1 mm
125	1.3	44	17
180	1.5	44	17
200	1.5	44	17
200S	1.5	39	15
236	1.5	44	17
250	1.5	44	17
284	1.5	44	17

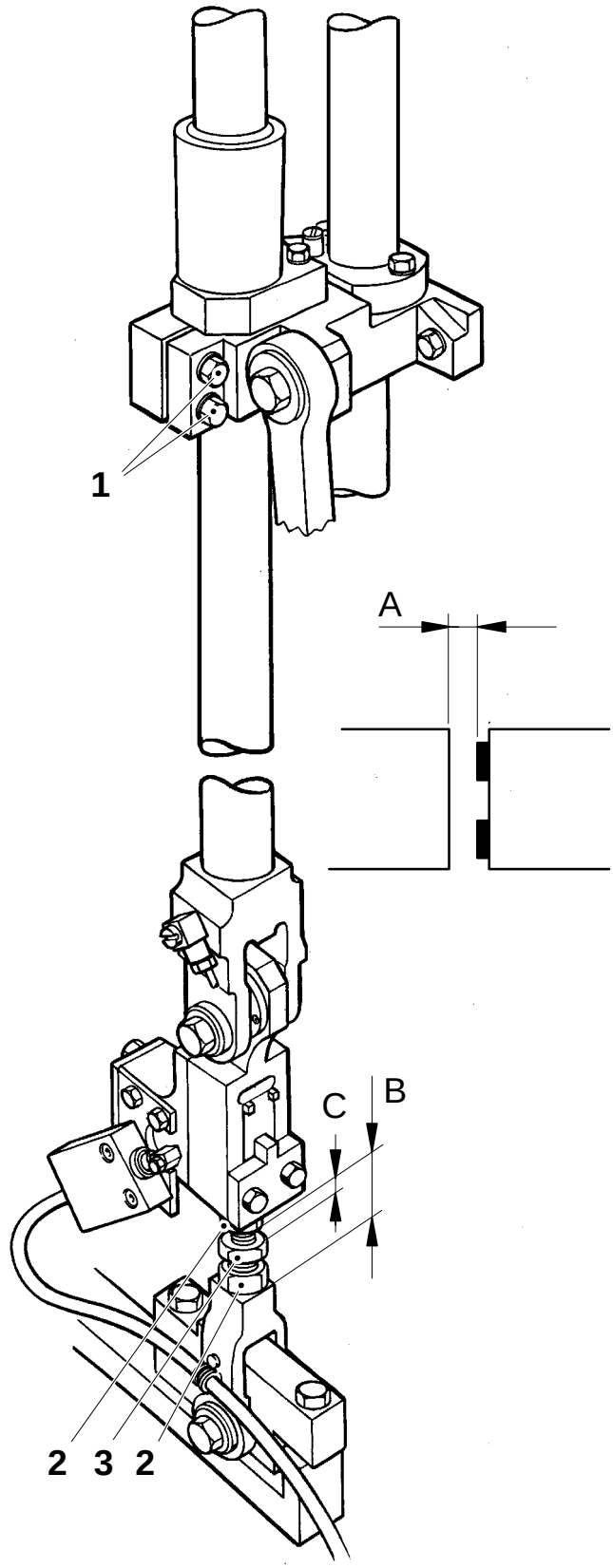

1 Screw
2 Lock nut
3 Screw

Checking/Setting

Crank the machine to 30°(RH side)/210°(LH side).

Stick two pieces of adhesive tape (1) to each IH (or TPC) bar, see fig. 1.

Crank to 79°(RH side)/259°(LH side).

Tap the head of the screw lightly so that the knife cuts through the tape.

Crank the jaws open. Remove the upper right and lower left pieces of tape. Check the vertical position, whether the jaws are out of square, and that the knife hits the centre of the groove, fig. 2 and fig. 3.

Eliminate any fault by shimming underneath the carrier on the cutting side.

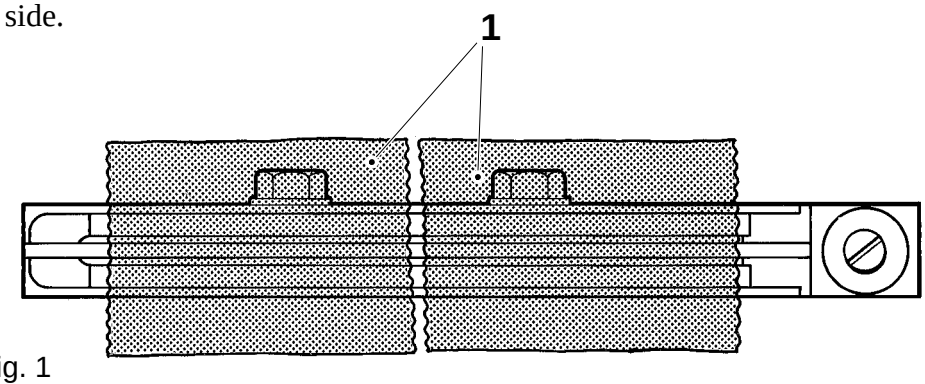

Fig. 1

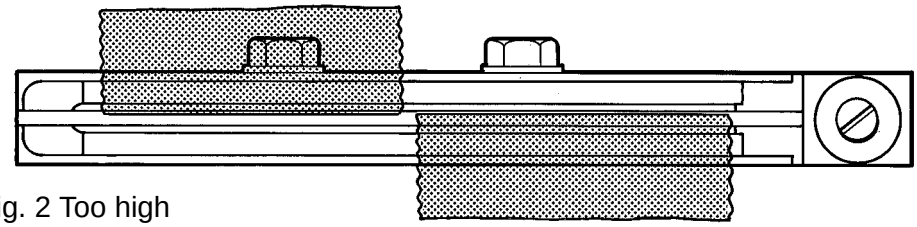

Fig. 2 Too high

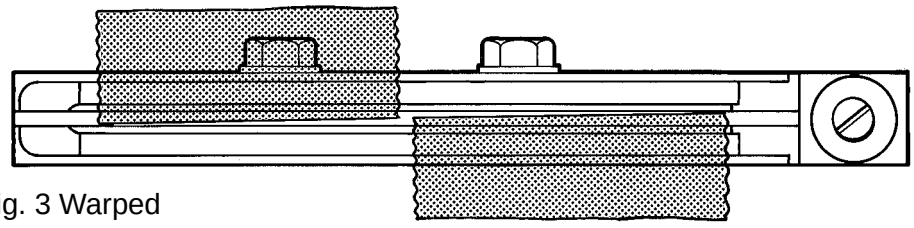

Fig. 3 Warped

1 Adhesive tape

Checking/Final setting

Remove the volume flaps on the LH side and RH side cutting jaws.

Crank to 90°.

Measure and record height A between the IH bars (1) (or TPC bars).

Crank to 270° and measure height A again.
Note!
Measure the height at the same place on the bars both times.

The difference between the two measurements must not exceed 0.1 mm. Adjust as required. When the difference exceeds 1.0 mm, see page MS 458–5X.

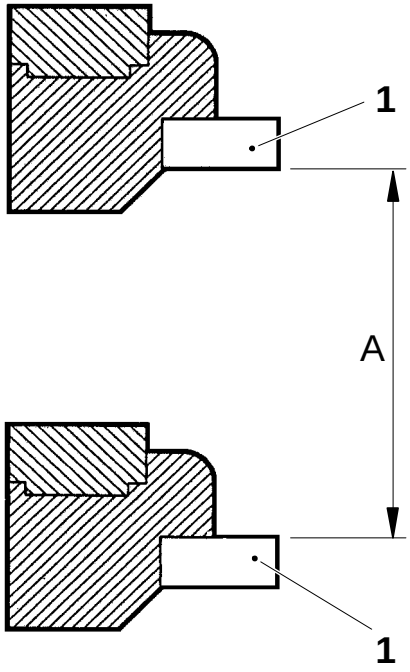

Final setting

(Difference **below** 1.0 mm)

Always make adjustment on the **RH** yoke lifter arm.

Loosen the lock nut (3) on the **RH** yoke lifter arm and turn the eccentric axle pin (2) in plus or minus direction on the scale, as required; one scale division = 0.1 mm.
Note! Adjust only half the difference.

Check the jaw gap measurement, see page MS 445–1X.

If necessary, reset height A and the jaw gap until both are within their tolerances.

RH yoke lifter arm

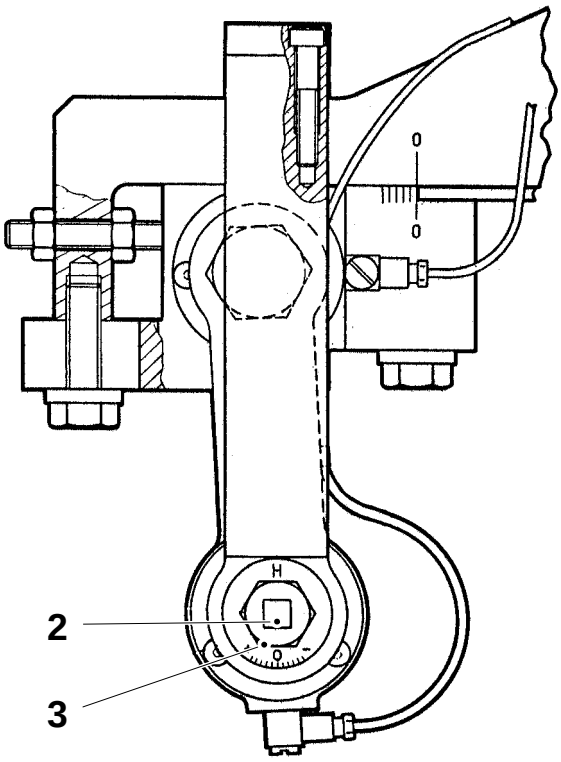

1 IH bar/TPC bar
2 Eccentric axle pin
3 Lock nut

Basic setting

If the difference between measured values of distance A **exceeds** 1.0 mm, adjust as follows. (Below 1.0 mm, see page MS 458–1X.)

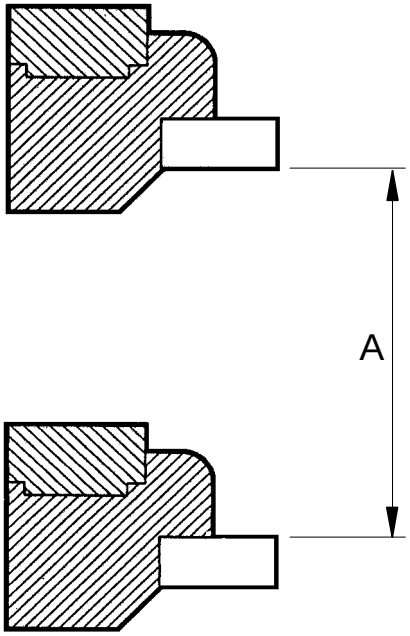

To increase jaw-over-jaw distance

a) Place the template (3) upright plus a feeler gauge with a thickness equal to the adjustment underneath the RH yoke.
Note!
Adjust only half the difference

b) Crank the machine so that the yoke rests against the template and feeler gauge.

c) Loosen the two screws (1) and the six screws (2).

d) Remove the feeler gauge and lower the yoke against the template.

e) Tighten the screws (2).

f) Set the jaw gap, see page MS 445–5X.
Caution!
During this setting procedure, the jaw system must be forcibly guided by hand when the machine is being cranked.

g) Check distance A, see page MS 458–1X.

To reduce jaw-over-jaw distance

a) Place the template (3) upright underneath the RH yoke.

b) Crank the machine so that the yoke rests against the template.

c) Loosen the two screws (1) and the six screws (2).

d) Lift the yoke and place a feeler gauge with thickness equal to the adjustment between the template and the yoke.

e) Tighten the screws (2).

f) Set the jaw gap, see page MS 445–5X.
Caution!
During this setting procedure, the jaw system must be forcibly guided by hand when the machine is being cranked.

g) Check distance A, see page MS 458–1X.

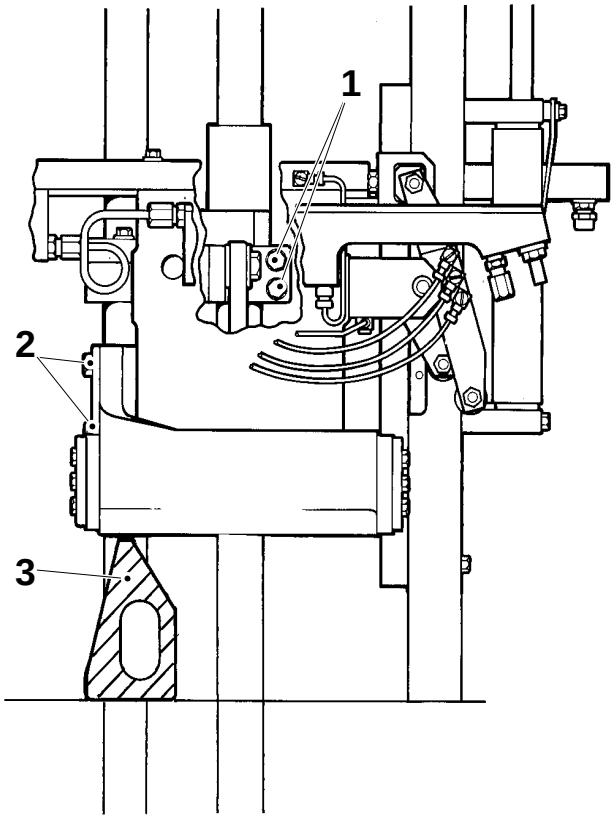

RH side

1 Screw
2 Screw
3 Template TP No. 75931

Checking

Make sure the cooling water hoses, hydraulic hoses, and lubrication pipes do not leak, and that they are intact and their connections tight.

Check that all hoses and cables are properly clamped.

Check that the insulation of the electrical cables and their connections are not damaged, and that the electrical conductors are not oxidized. If required, clean them with a brass wire brush.

Checking

- Check that the engagements of the catches are not worn.
- Turn on cooling water.
- Start the hydraulic pump.
- Clean and blow among the catches to dry
- Put a double packaging material (0.7 – 0.8 mm) with the same width as the transversal sealing between the jaws.
  Cut the packaging material so that the folding flaps pass by.
- Crank the machine to 180°(LH side)/360°(RH side), and check clearance A, see fig.
- If clearance A is less than 0.3 mm, check and, if required, replace/overhaul the pressure jaws, the pressure rubbers (TBA) and the catches.
- Check that the catches do not leak any hydraulic oil. If required, overhaul them, see page MS 465–3X.

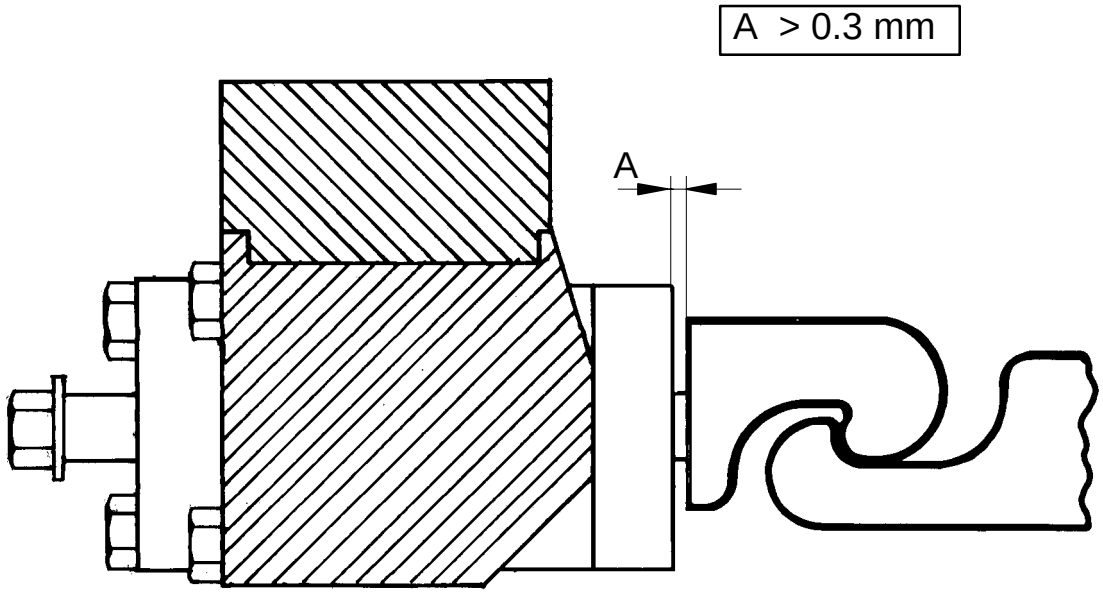

Overhaul

a) Undo the screw (1) and remove the catch (2).

b) Undo the screws (3) and remove the lid (4).

c) Remove the springs (5) and (6) and check that they are not damaged.

d) Press out the piston (7) and check for wear and/or damage.

e) Replace the sealings (8) and (9).

f) Reassemble in reverse order.

Note! The space (10) is to be filled with grease, type F, see page MS 940–7X. Tighten the screw (1). Torque 25 ±2 Nm.

g) Bleed the catches, see page MS 602–5X.

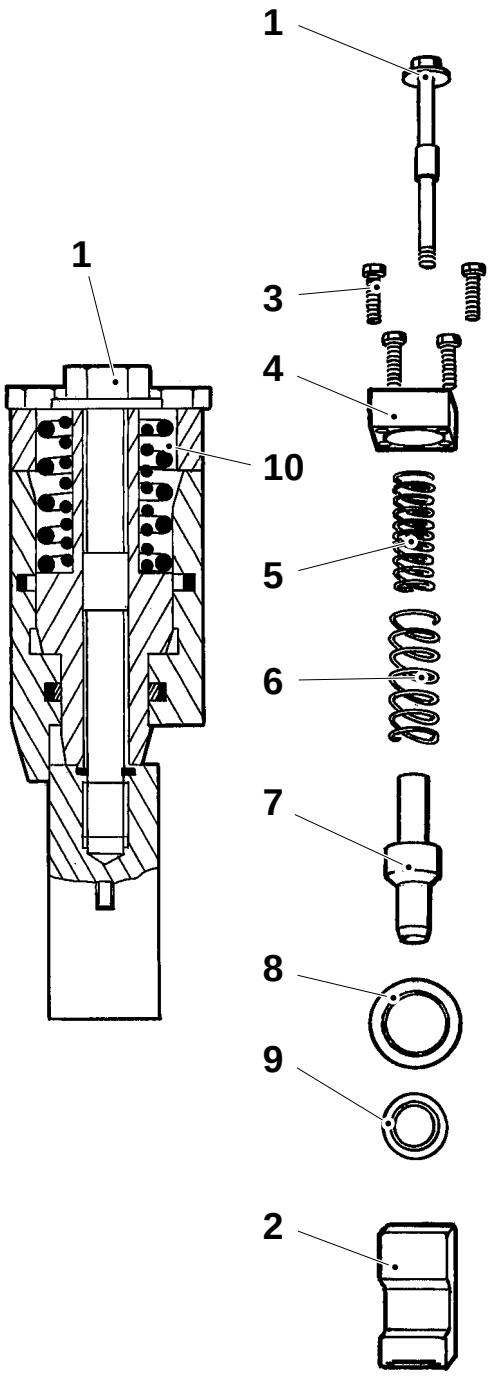

1 Screw
2 Catch
3 Screw
4 Lid
5 Spring
6 Spring
7 Piston
8 Sealing
9 Sealing
10 Space

Overhaul

a) Undo the screw (1) and remove the catch (2).

b) Undo the screws (3) and remove the lid (4).

c) Remove the springs (5) and (6) and check that they are not damaged.

d) Press out the piston (7) and check it for wear and/or damage.

e) Replace the sealings (8) and (9) and the support rings (11) and (12). Use tool 90243–146.

f) Reassemble in reverse order.

Note!
The space (10) is to be filled with grease, type F, see page MS 940–7X.
Tighten the screw (1). Torque 25 ±2 Nm.

g) Bleed the catches, see page MS 602–5X.

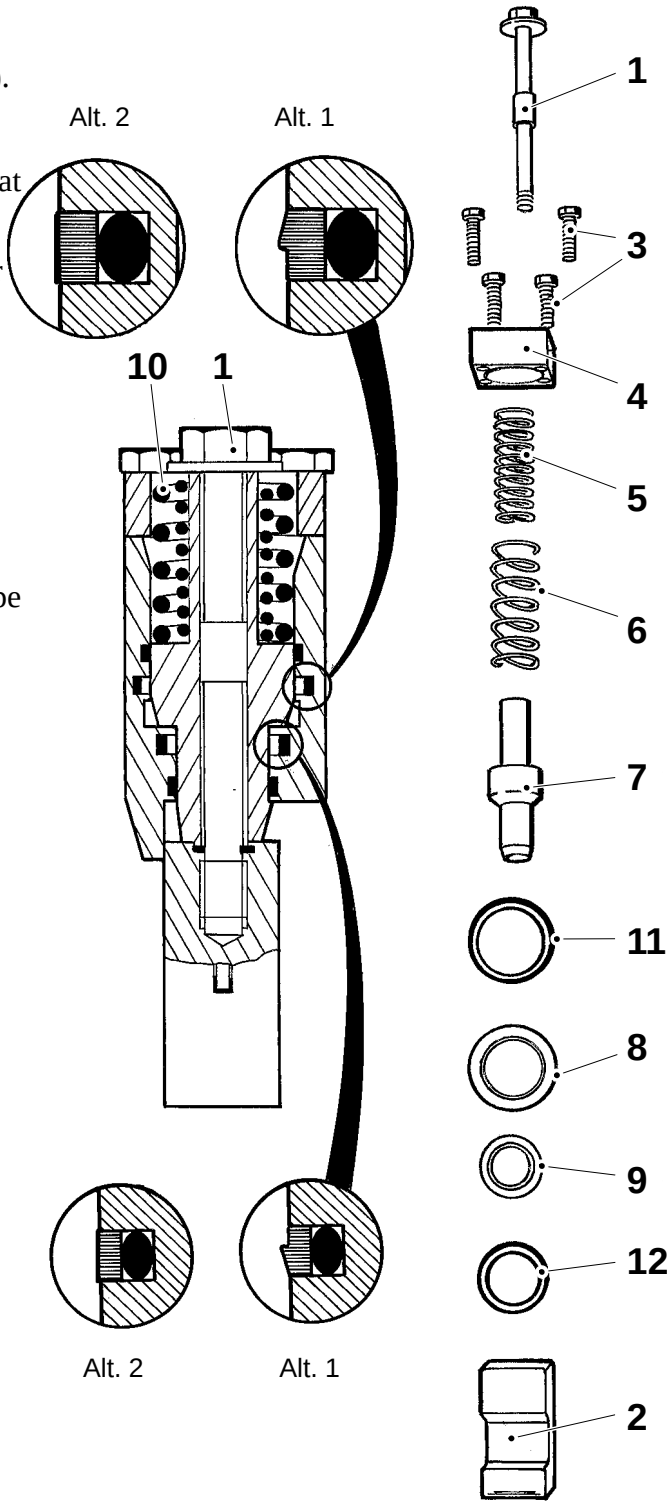

1	Screw	7	Piston
2	Catch	8	Sealing
3	Screw	9	Sealing
4	Lid	10	Space
5	Spring	11	Support ring
6	Spring	12	Support ring

Checking

Turn on cooling water and start the hydraulic pump.

Crank the machine and check that clearance A between the catches on the disengagement movement is at least 0.7 mm.

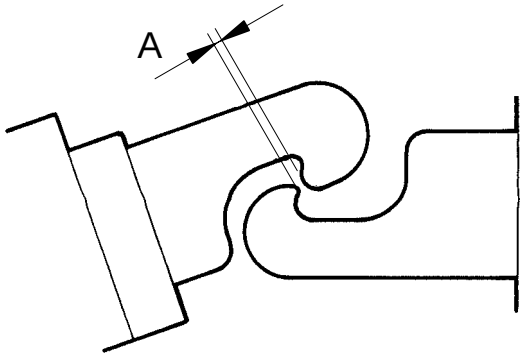

If not, check the setting of the catch lifter cams, see page MS 469–5X and the catch pivot spring, see page MS 465–1X.

Crank the machine to 15° (TB) or 5° (TBA) and check that clearance B is at least 4 mm. Crank on to 195° (TB) or 185° (TBA) and check clearance B once more.

Stop the hydraulic pump.

A = min 0.7 mm B = min 4 mm

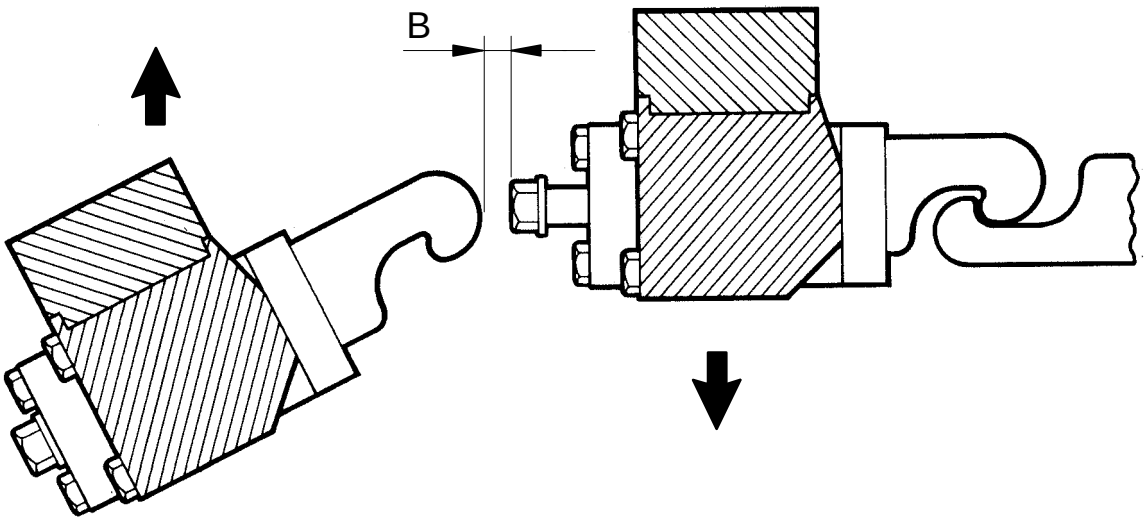

Setting

With the catch in down position, set distance A between the bottom corner of the lug (3) and the carrier (1).

A = 59 ±2 mm

Adjust by loosening the screw (2) and turning the lug (3).

Make sure that the lug (3) after the setting can move freely.

Lubricate the bushing with grease, type F, see page MS 940–7X.

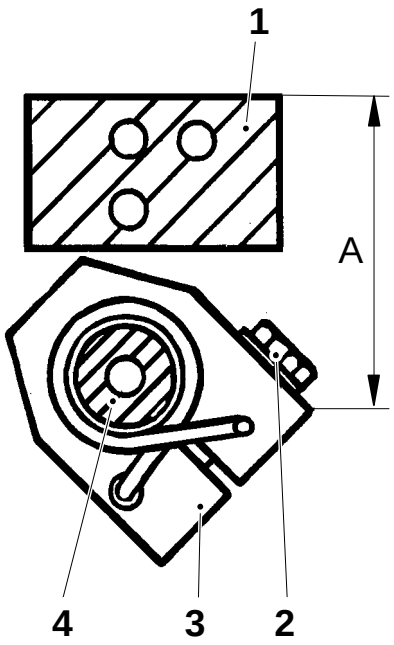

1 Carrier
2 Screw
3 Lug
4 Bushing

Checking

- Check the running surfaces of the catch lifter cams (1) for wear.
- Check that the running surface of the cam rollers (2) have not got an angular shape caused by abnormal wear.
- Check gap A, see page MS 469–5X.

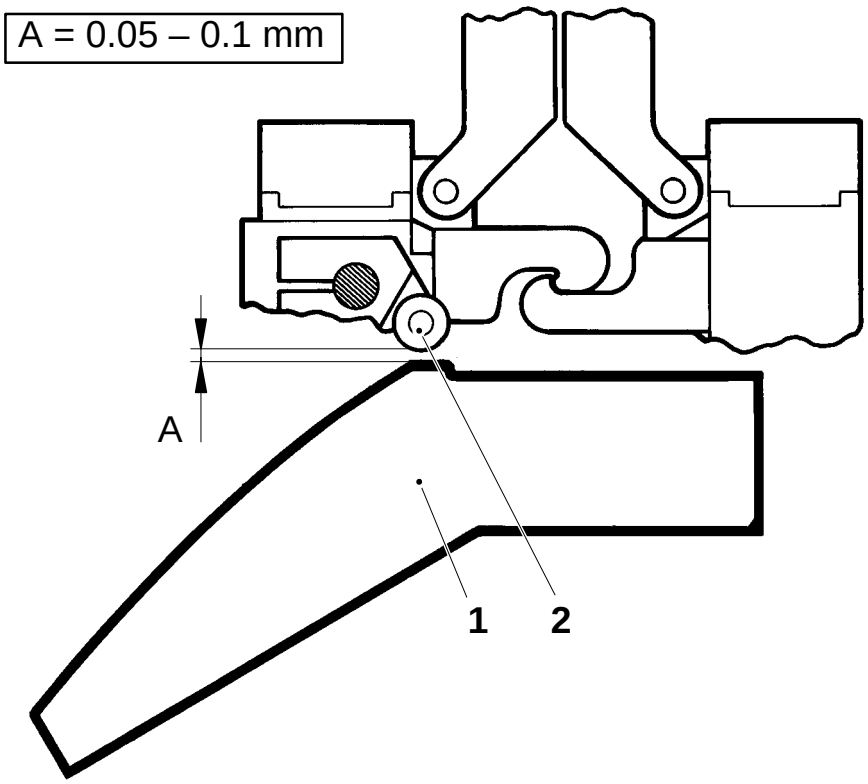

1 Catch lifter cam
2 Cam roller

Setting

Put a piece of packaging material folded double between the jaws. Crank the machine to approximately 0°(RH side)/180°(LH side).

Turn on cooling water and start the hydraulic pump.

Set gap A between the cam (1) and cam roller (2) by means of shims (3) between the bracket (4) and yoke (5).
Measure the gap while the catches are under full stress.

Undo the screws (6) and (7) and put the shims in place. Fit the cam and yoke edge-to-edge in order to obtain the same initial position when measuring gap A. On assembly, tighten the screws (7) first.

Crank the machine and lift the catch manually in the direction of the arrow (8). Check that an overtravel B can be obtained between the cam and cam roller at the highest point of the cam.

Check the catch clearance, see page MS 467–1X.

Stop the hydraulic pump.

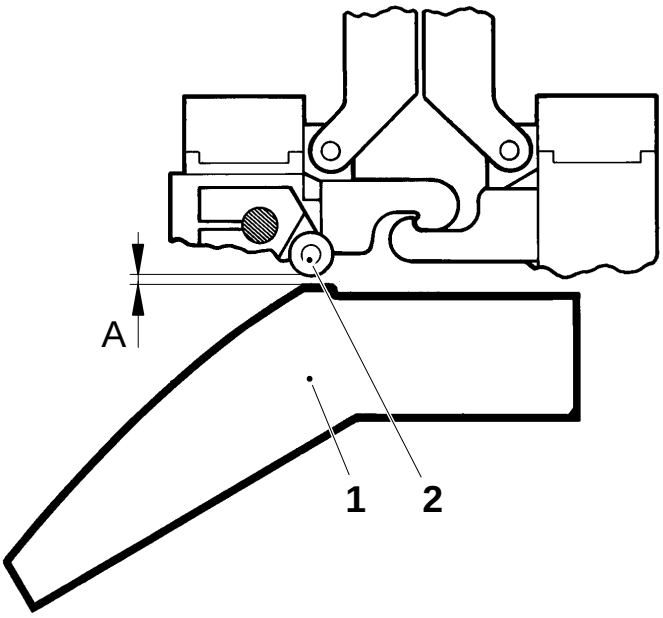

A = 0.05 – 0.10 mm
B = min 0.5 mm

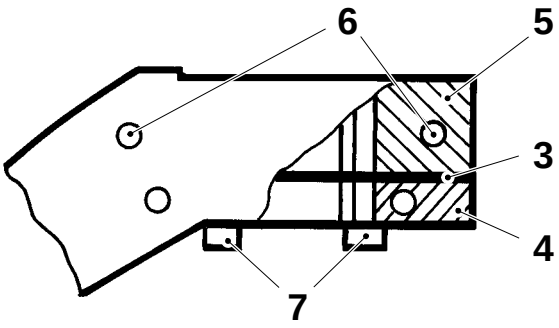

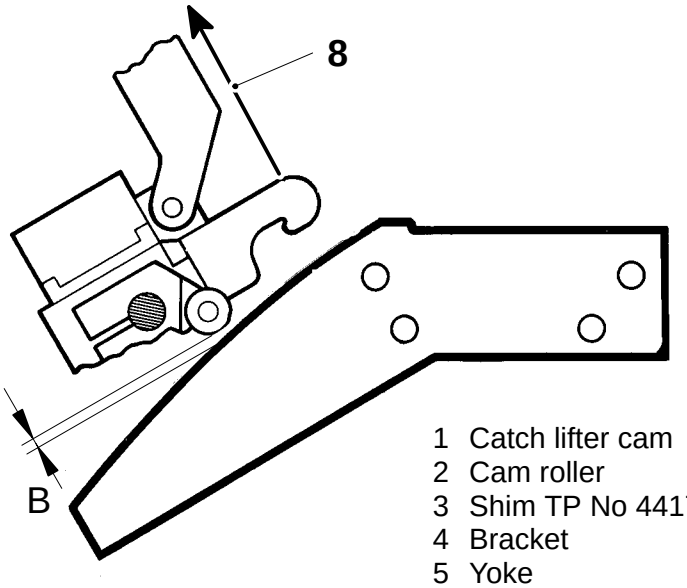

1 Catch lifter cam
2 Cam roller
3 Shim TP No 441751
4 Bracket
5 Yoke
6 Screw
7 Screw
8 Direction of lifting

Description	TB/9	TBA/9
Setting sequence	501–52	501–52
Setting sequence	501–53	501–53
Machine cleaning – checking	502–11	502–11
Machine cleaning – cleaning program		502–71
Machine cleaning – cleaning program	502–72	502–72
Machine cleaning – cleaning program	502–73	502–73
Machine cleaning – cleaning program	502–74	502–74
Guide system – checking	503–11	503–11
Guide system – checking	503–12	503–12
Guide system – checking	503–13	503–13
Guide system – removal	503–21	503–21
Guide system – removal	503–22	503–22
Guide system – removal	503–23	503–23
Guide system – fitting (7 pages)	503–42	503–42
Guide system – fitting (5 pages)	503–43	503–43
Guide system – fitting (5 pages)	503–44	503–44
Station chain – checking	505–11	505–11
Station chain – checking	505–12	505–12
Station chain – removal	505–21	505–21
Station chain – removal	505–22	505–22
Station chain – fitting	505–41	505–41
Station chain – fitting	505–42	505–42
Station chain – setting	505–51	505–51
Station chain – setting	505–52	505–52

Description	TB/9	TBA/9
Drop chute – checking	507–11	507–11
Drop chute – removal/fitting	507–21	507–21
Drop chute – setting	507–51	507–51
Lift rails – setting	509–51	509–51
Folding bars – setting	509–52	509–52
Pull-down lug and bar – checking	511–11	511–11
Pull-down lug and bar – checking	511–12	511–12
Pull-down lug and bar – checking	511–13	511–13
Pull-down lug and bar – setting (2 pages)	511–51	511–51
Pull-down lug and bar – setting (2 pages)	511–52	511–52
Pull-down arms, sideways position – setting	515–51	515–51
Pull-down arms, sideways position – setting	515–52	515–52
Pull-down lug, vertical position – setting	517–51	517–51
Pull-down lug, vertical position – setting	517–52	517–52
Pull-down arms, vertical position – setting	519–51	519–51
Pull-down arms, vertical position – setting	519–52	519–52
Pressure unit – checking	521–11	521–11
Pressure unit – checking	521–12	521–12
Pressure unit – checking	521–13	521–13
Pressure unit – setting (2 pages)	521–51	521–51
Pressure unit – setting (2 pages)	521–52	521–52
FS element – cleaning	525–11	525–11
FS element – removal	525–21	525–21
FS element – overhaul	525–31	525–31

Description	TB/9	TBA/9
FS element – fitting	525–41	525–41
FS element – setting	525–51	525–51
Discharge finger – checking	529–11	529–11
Discharge finger – checking	529–12	529–12
Discharge finger – setting	529–51	529–51
Discharge finger – setting (2 pages)	529–52	529–52
Discharge finger – setting (2 pages)	529–53	529–53
Chain tensioner, discharge finger – basic setting	530–51	530–51
Discharge roller – checking	531–11	531–11
Discharge roller – setting (2 pages)	531–52	531–52
Discharger shear pin – fitting	532–41	532–41
Discharger shear pin – fitting		532–42
Congestion monitor – setting/checking	533–51	533–51
Pivot frame – checking	535–11	535–11
Pivot frame – overhaul	535–31	535–31
Pivot frame, alignment with station chain – setting	535–51	535–51
Safety sprocket – checking	537–11	537–11
Safety coupling – checking	537–12	537–12
Safety coupling – checking	537–13	537–13
Safety sprocket – setting	537–51	537–51
Discharge unit, worm gear – checking	539–11	539–11
Discharge unit, worm gear – checking		539–12
Drive wheel – checking	542–11	542–11
Drive wheel – removal	542–21	542–21

Description	TB/9	TBA/9
Drive wheel – removal	542–22	542–22
Tensioner sprocket – checking	544–11	544–11
Tensioner sprocket – removal/fitting	544–21	544–21
Tensioner sprocket – removal/fitting	544–22	544–22
External cleaning – checking	550–11	550–11
External cleaning – checking	550–12	550–12
External cleaning – overhaul	550–31	550–31
External cleaning – setting (2 pages)	550–51	550–51
Synchronization, main machine – final folder – setting	574–51	574–51
Indexing unit – oil change	578–71	578–71
Worm gear – oil change	579–72	579–72

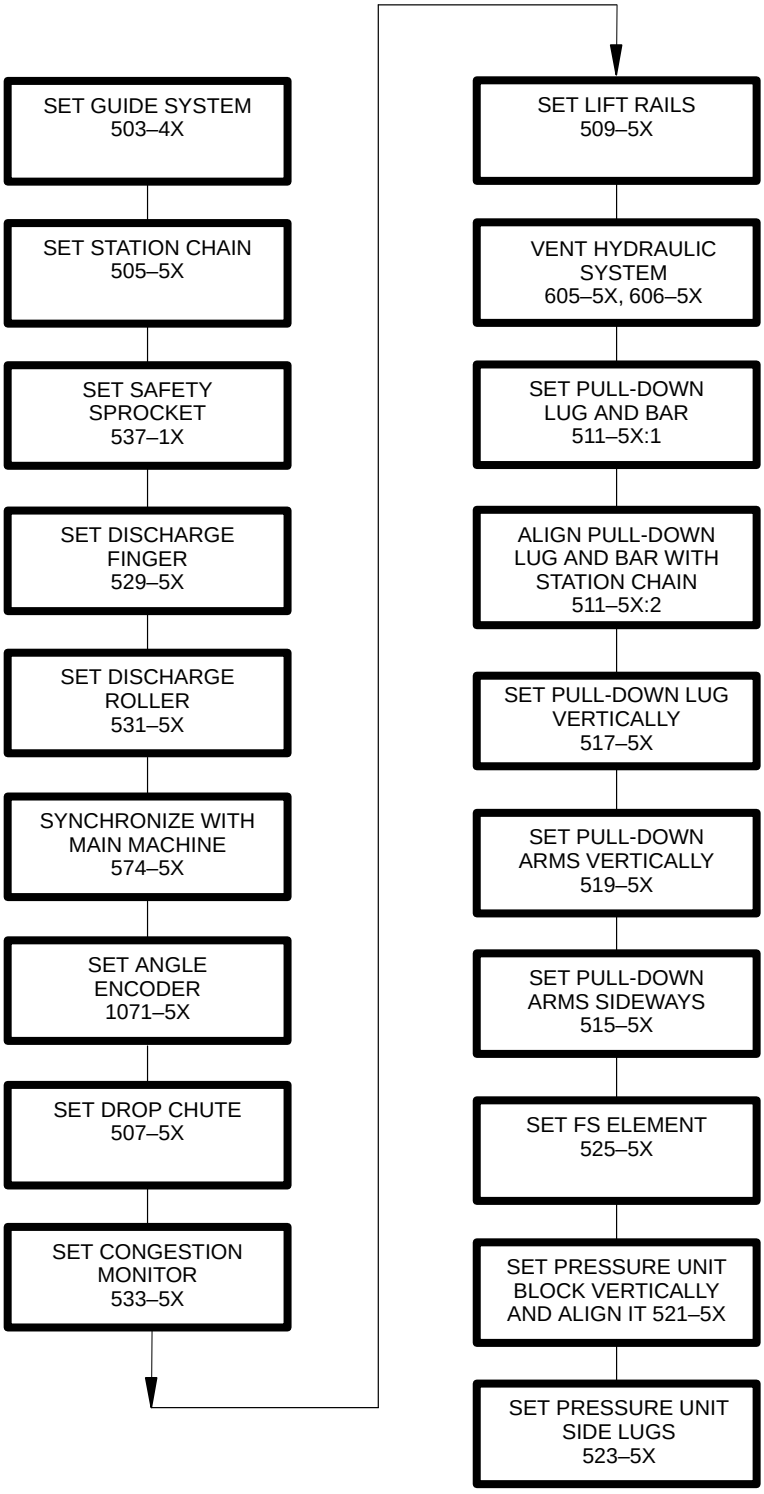
SET GUIDE SYSTEM
503–4X
SET STATION CHAIN
505–5X
SET SAFETY
SPROCKET
537–1X
SET DISCHARGE
FINGER
529–5X
SET DISCHARGE
ROLLER
531–5X
SYNCHRONIZE WITH
MAIN MACHINE
574–5X
SET ANGLE
ENCODER
1071–5X
SET DROP CHUTE
507–5X
SET CONGESTION
MONITOR
533–5X
SET LIFT RAILS
509–5X
VENT HYDRAULIC
SYSTEM
605–5X, 606–5X
SET PULL-DOWN
LUG AND BAR
511–5X:1
ALIGN PULL-DOWN
LUG AND BAR WITH
STATION CHAIN
511–5X:2
SET PULL-DOWN LUG
VERTICALLY
517–5X
SET PULL-DOWN
ARMS VERTICALLY
519–5X
SET PULL-DOWN
ARMS SIDEWAYS
515–5X
SET FS ELEMENT
525–5X
SET PRESSURE UNIT
BLOCK VERTICALLY
AND ALIGN IT 521–5X
SET PRESSURE UNIT
SIDE LUGS
523–5X

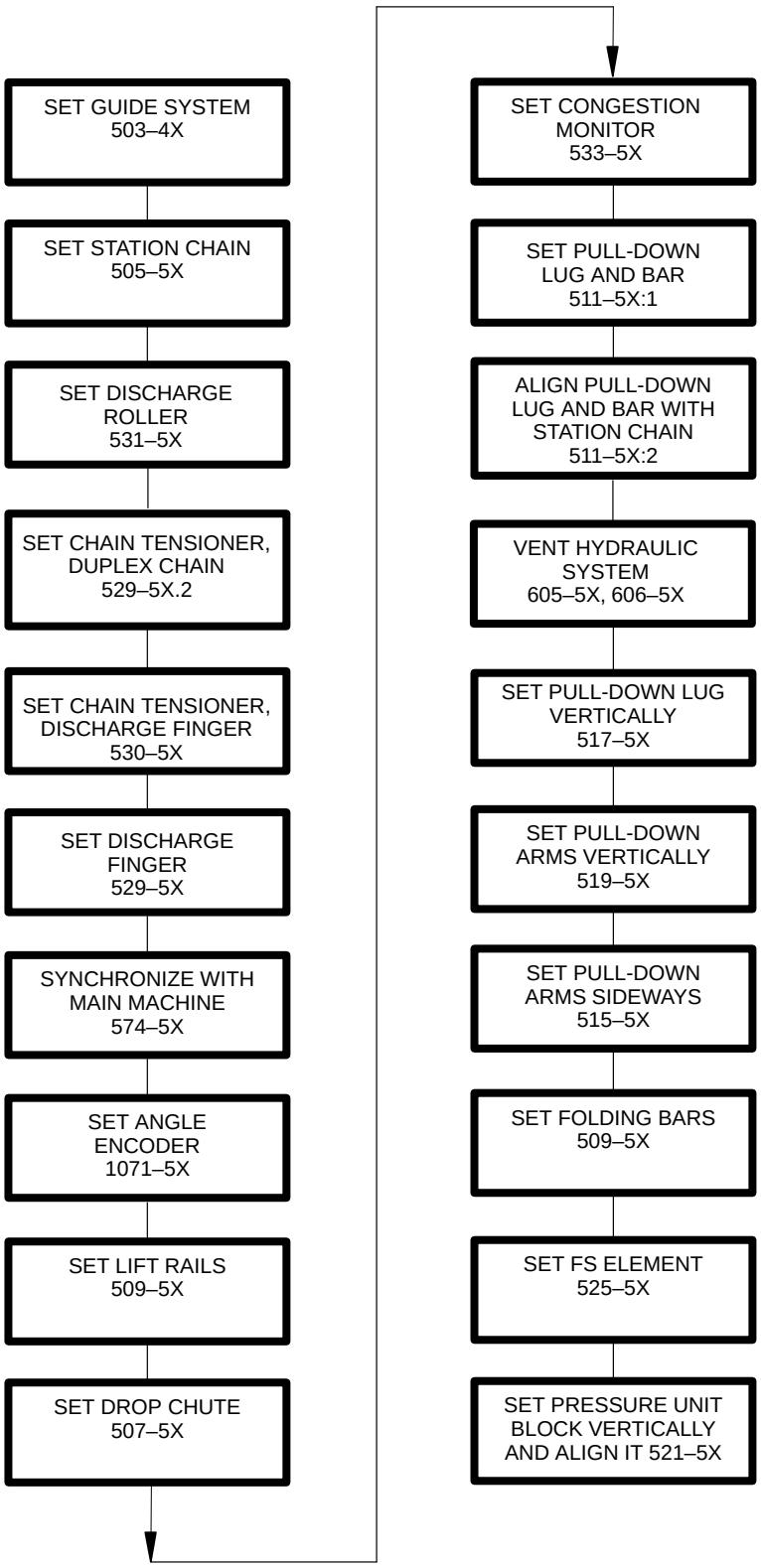
SET GUIDE SYSTEM
503–4X
SET STATION CHAIN
505–5X
SET DISCHARGE ROLLER
531–5X
SET CHAIN TENSIONER, DUPLEX CHAIN
529–5X.2
SET CHAIN TENSIONER, DISCHARGE FINGER
530–5X
SET DISCHARGE FINGER
529–5X
SYNCHRONIZE WITH MAIN MACHINE
574–5X
SET ANGLE ENCODER
1071–5X
SET LIFT RAILS
509–5X
SET DROP CHUTE
507–5X
SET CONGESTION MONITOR
533–5X
SET PULL-DOWN LUG AND BAR
511–5X:1
ALIGN PULL-DOWN LUG AND BAR WITH STATION CHAIN
511–5X:2
VENT HYDRAULIC SYSTEM
605–5X, 606–5X
SET PULL-DOWN LUG VERTICALLY
517–5X
SET PULL-DOWN ARMS VERTICALLY
519–5X
SET PULL-DOWN ARMS SIDEWAYS
515–5X
SET FOLDING BARS
509–5X
SET FS ELEMENT
525–5X
SET PRESSURE UNIT BLOCK VERTICALLY AND ALIGN IT 521–5X

Checking

Pull out and check the filter insert (1) in the pressure line. If required, clean it.

Make sure the pump and the piping do not leak.

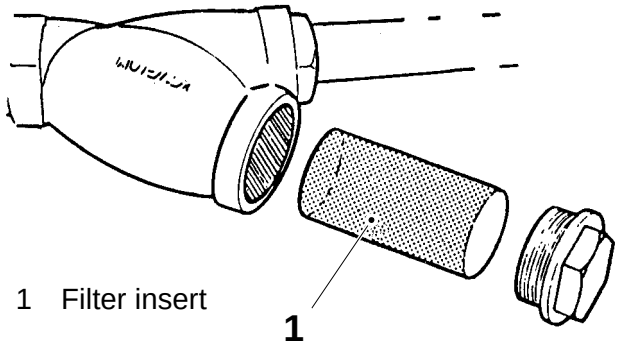

1 Filter insert

Cleaning program

	Program	Quantity, l	Appr. time, min.
a	Filling hot water I	70 – 80	–
b	Rinsing, hot water I	–	2.4
c	Draining I	–	0.9
d	Filling, hot water II + dosing detergent	70 – 80 appr. 0.8	–
e	Cleaning	–	4.5
f	Draining II	–	1.2
g	Filling hot water III	70 – 80	–
h	Rinsing, hot water II	–	2.4
i	Draining III	–	0.9
j	Filling hot water IV	70 – 80	
k	Rinsing, hot water III	–	2.4
l	Draining IV + lubrication (machine program steps down to 0)	–	0.9
m	Drainage valve open	–	–
n	Sprinkler open	–	–

Footnote
The filling sequence is controlled by a level monitor

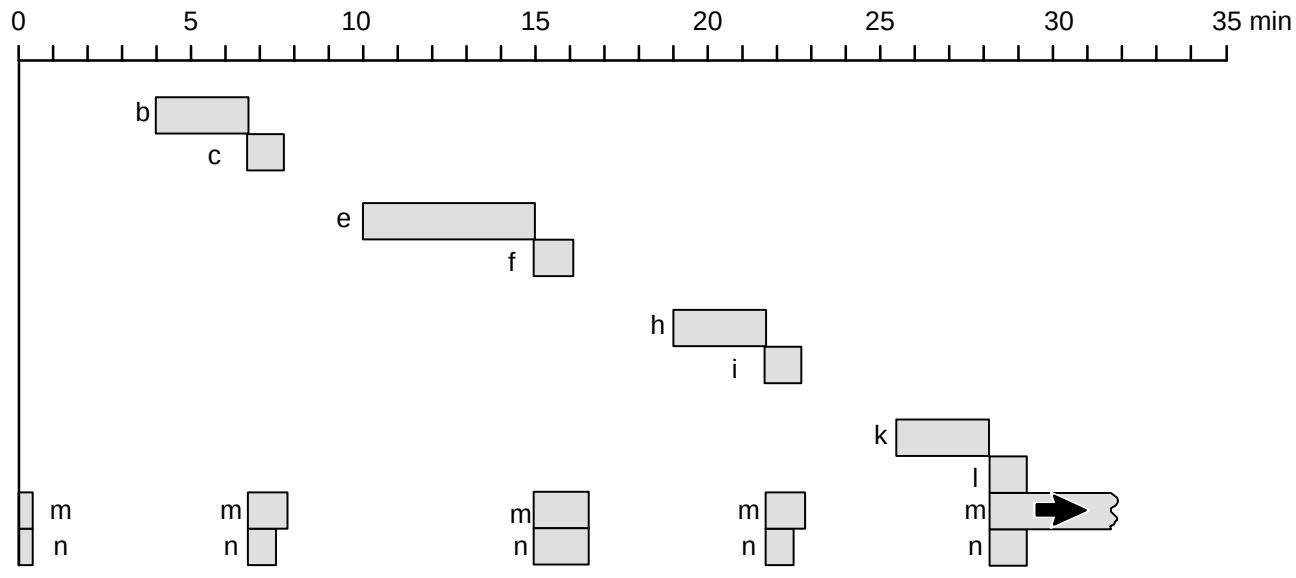

Cleaning program

	Program	Quantity, l	Appr. time, min.
a	Filling hot water I	70 – 80	–
b	Rinsing, hot water I	–	2.9
c	Draining I	–	1.1
d	Filling, hot water II + dosing detergent	70 – 80 appr. 0.8	–
e	Cleaning	–	5.4
f	Draining II	–	1.4
g	Filling hot water III	70 – 80	–
h	Rinsing, hot water II	–	2.9
i	Draining III	–	1.1
j	Filling hot water IV	70 – 80	
k	Rinsing, hot water III	–	2.9
l	Draining IV + lubrication (machine program steps down to 0)	–	1.1
m	Drainage valve open	–	–
n	Sprinkler open	–	–

Footnote
The filling sequence is controlled by a level monitor

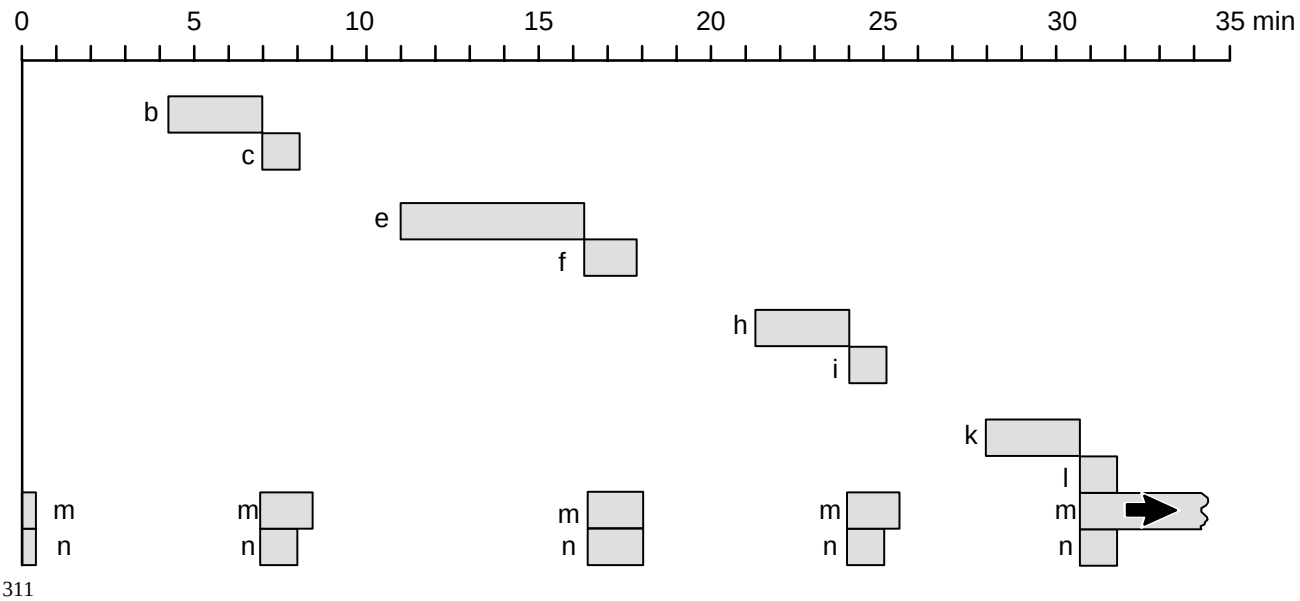

311

Cleaning program

	Program	Quantity, l	Appr. time, min.
a	Filling hot water I	70 – 80	–
b	Rinsing, hot water I	–	2.3
c	Draining I	–	0.3
d	Filling, hot water II + dosing detergent	70 – 80 appr. 0.8	–
e	Cleaning	–	9.0
f	Draining II	–	0.3
g	Filling hot water III	70 – 80	–
h	Rinsing, hot water II	–	2.3
i	Draining III	–	0.3
j	Filling hot water IV	70 – 80	–
k	Rinsing, hot water III	–	2.3
l	Draining IV + lubrication (machine program steps down to 0)	–	0.3
m	Drainage valve open	–	–
n	Sprinkler open	–	–

Footnote
The filling sequence is controlled by a level monitor

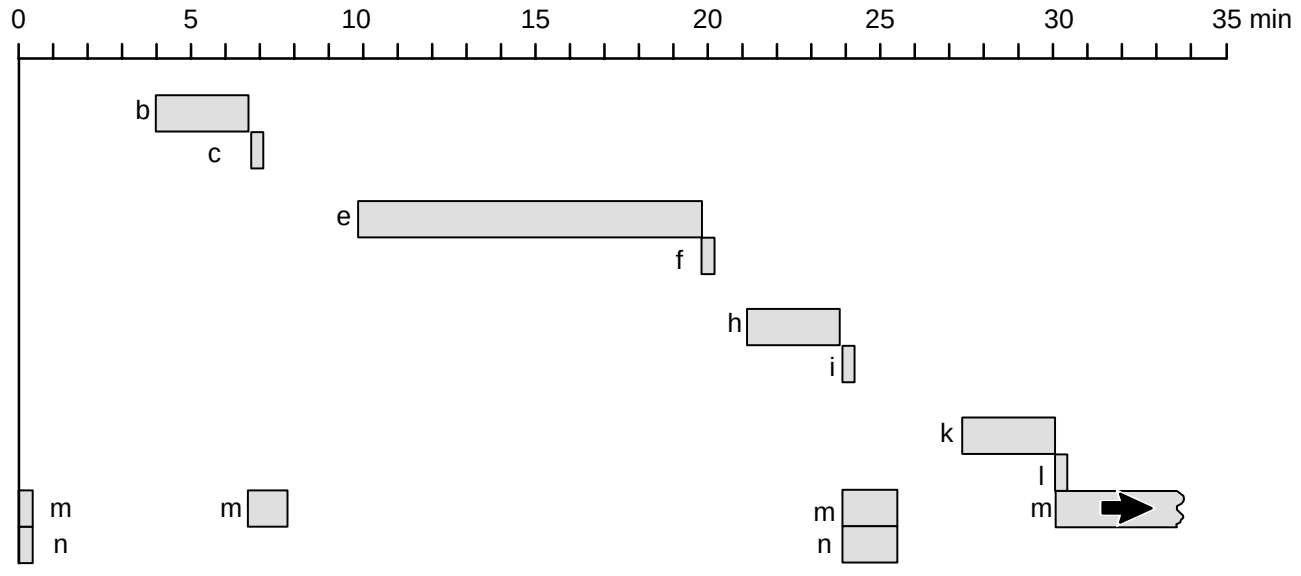

312

Checking

Remove the station chain, see page MS 505–2X.

Check the guides (1), the plates (2), and the pressure plate (3) for wear and/or damage. Replace worn and/or damaged parts.

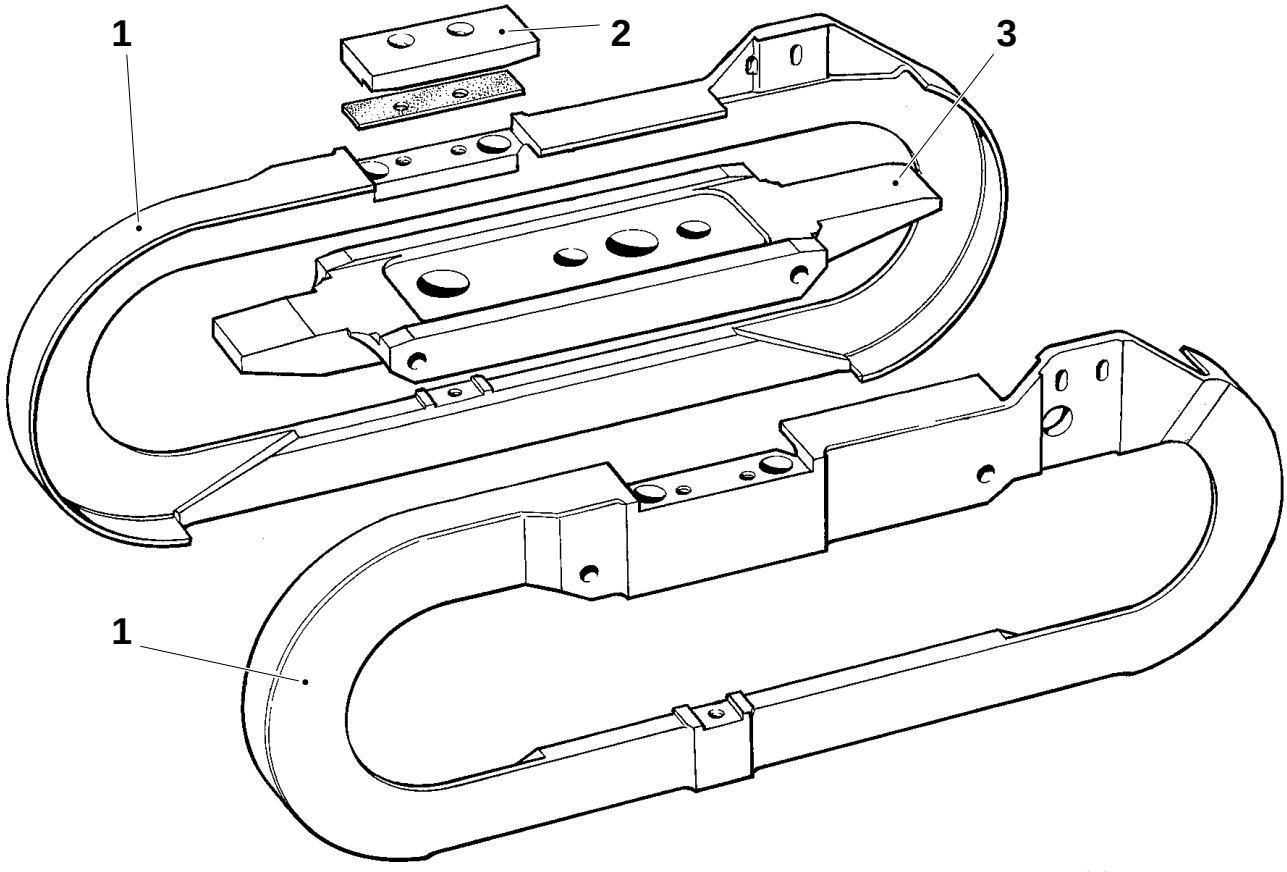

1 Guide
2 Plate
3 Pressure plate

Checking

Remove the station chain, see page MS 505–2X.

Check the slide rails (1) and plates (2) for wear and/or damage.
Replace worn and/or damaged parts.

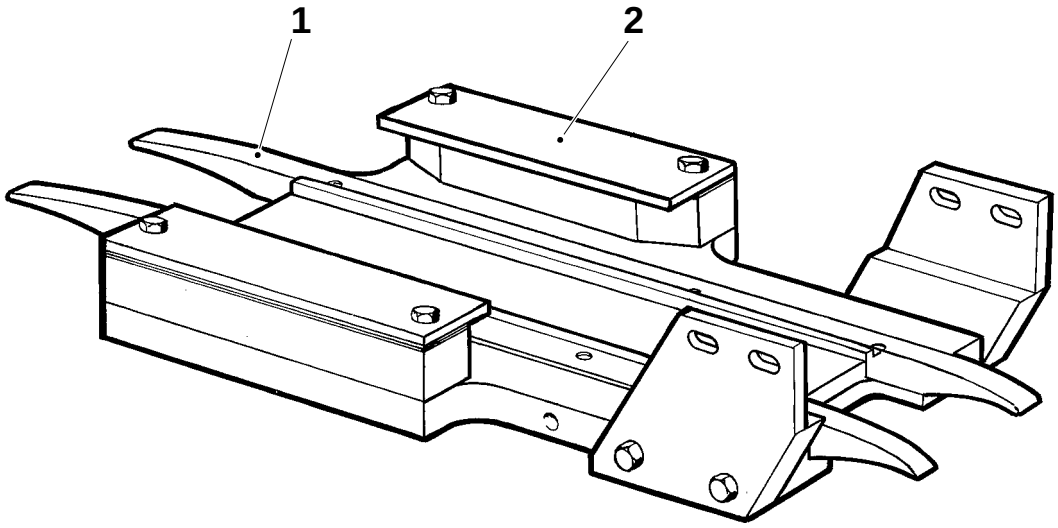

1 Slide rail
2 Plate

Checking

Remove the station chain, see page MS 505–2X.

Check the slide rails (1) and plates (2) for wear and/or damage. Replace worn and/or damaged parts.

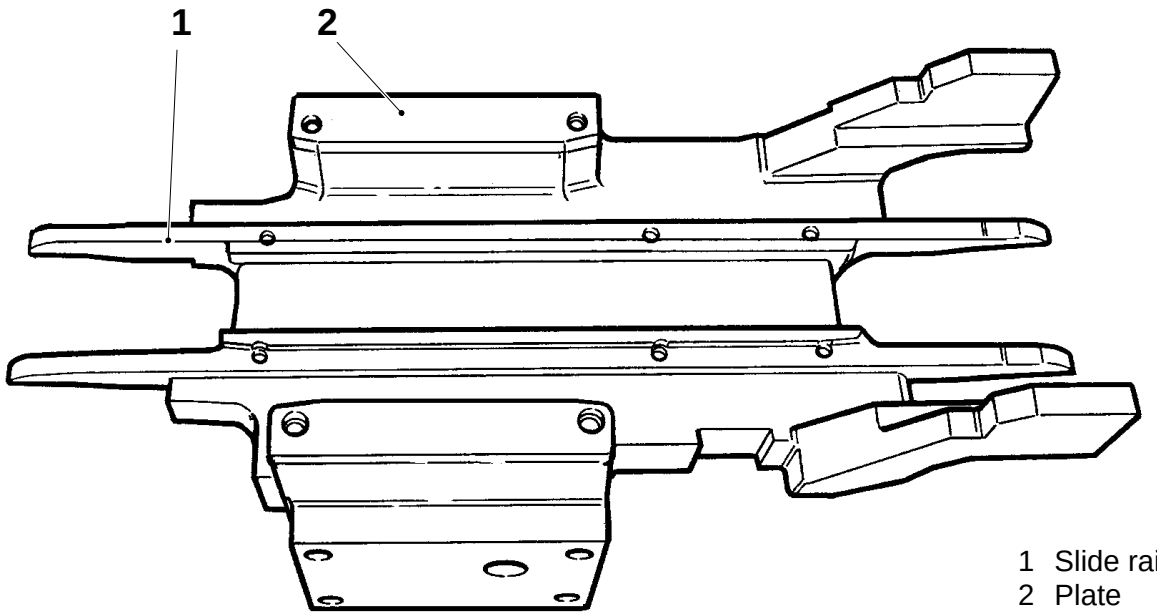

1 Slide rail
2 Plate

Removal

a) Remove the protection cover (1).

b) Remove the side cover (2).

c) Remove the guide rail (3) of the protection cover.

d) Remove the bracket (4).

e) Remove the external cleaning system (5).

f) Remove the station chain (6), see page MS 505–2X.

g) Remove the plates.

h) Remove the outer guide (7) and the pressure plate.

i) Remove the LH side cover of the machine. Dismantle the tensioner sprocket (8) by removing the outer guide flange and loosening the clamp fitting, see page MS 370–2X.

j) Dismantle the safety sprocket (9) by removing the outer guide flange, the nut, the washer, and the disc springs.

k) Remove the inner guide (10).

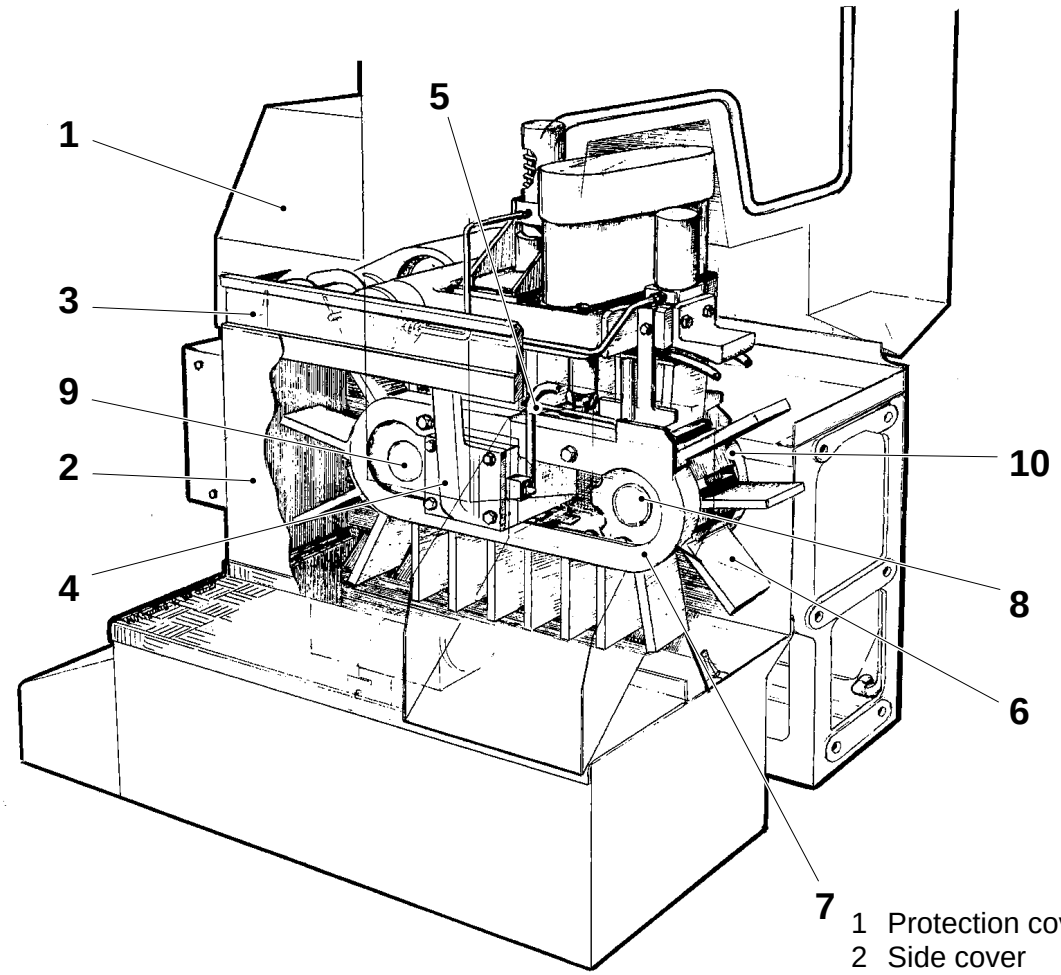

1 Protection cover
2 Side cover
3 Guide rail
4 Bracket
5 External cleaning system
6 Station chain
7 Outer guide
8 Tensioner sprocket
9 Safety sprocket
10 Inner guide

Removal

Remove:

- the protection cover (1),
- the side cover (3),
- the guide rail (2) of the protection cover, and
- the pipe (4).

Undo the banjo connection, the two screws (5) and (6) and remove the distributor block.

Undo the screws (10), two on each side, and remove the plates (9) and the shims (8).

Remove the station chain, see page MS 505–2X.

Undo the screws (11), two on each side, and remove the spacer lugs (12).

Undo the screws (13), three on each side, and remove the slide rails (7).

Remove the guide plate (14).

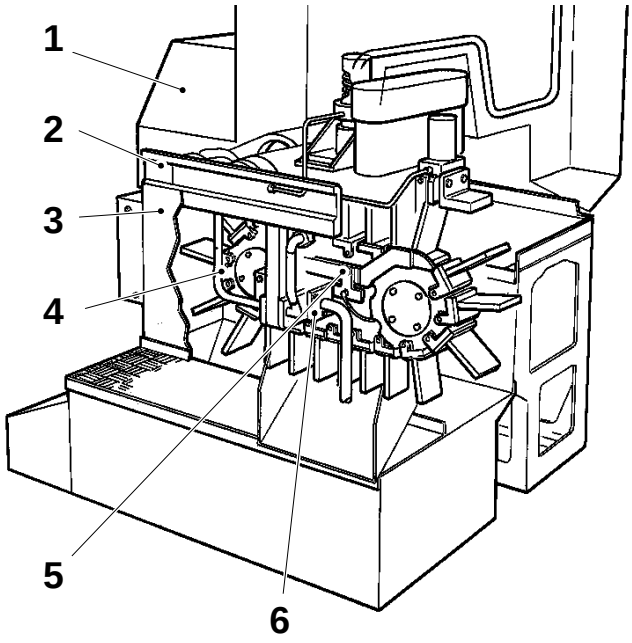

1 Protection cover
2 Guide rail
3 Side cover
4 Pipe
5 Screw
6 Screw
7 Slide rail
8 Shim
9 Plate
10 Screw
11 Screw
12 Spacer lug
13 Screw
14 Guide plate

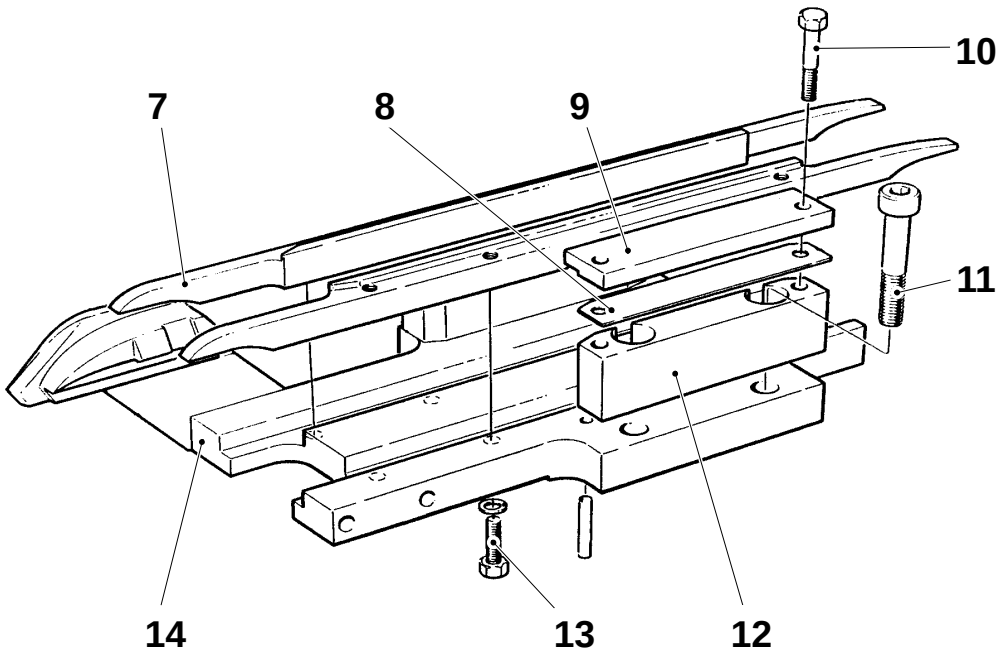

Removal

Remove:

- the protection cover (1),
- the side cover (3),
- the guide rail (2) of the protection cover, and
- the pipe (4).

Undo the banjo connection, the screws (5) and (6) and remove the distributor block.

Undo the screws (10), two on each side, and remove the plates (8) and the shims (9).

Remove the station chain, see page MS 505–2X.

Undo the screws (11), three on each side, and remove the slide rails (7).

Undo the two screws and remove the support arm.

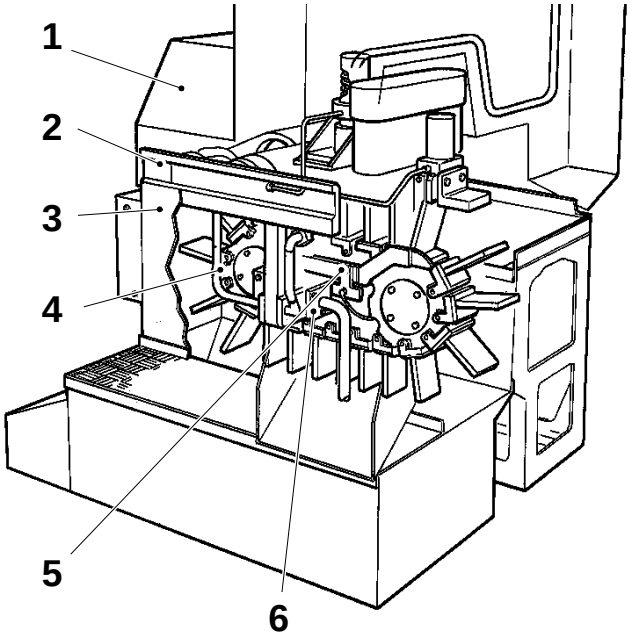

1 Protection cover
2 Guide rail
3 Side cover
4 Pipe
5 Screw
6 Screw
7 Slide rail
8 Plate
9 Shims
10 Screw
11 Screw

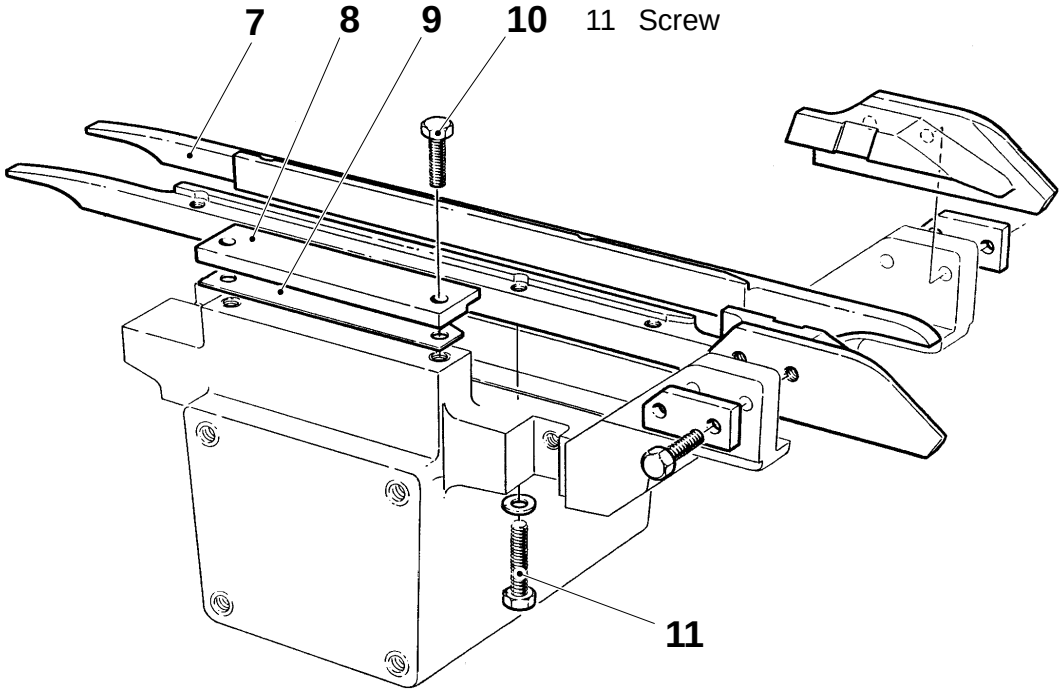

Fitting

a) Fit the inner guide square with the drive shaft (4) close to the frame, see fig. 1.

b) Tighten the screws (1), see fig. 1.

c) Fit the guide plate on the inner guide by means of the screws (2) with a maximum length of 12 mm, see fig. 2.

d) Fit the axle pin (3). Torque 90 – 95 Nm, see fig. 3.

e) Fit and set the safety sprocket as follows:

- **Distance A:** Remove the outer guide flange of the safety sprocket and measure the width of the sprocket, see fig. 4. Record the result.

(Cont'd overleaf)

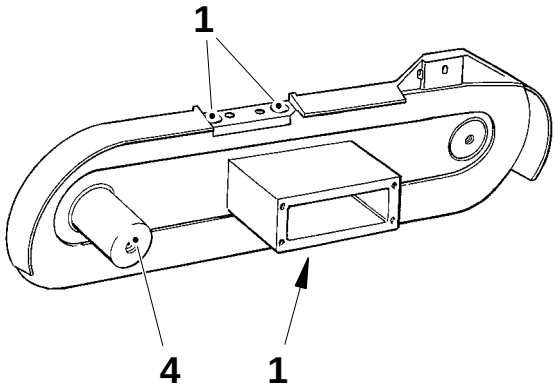

Fig. 1

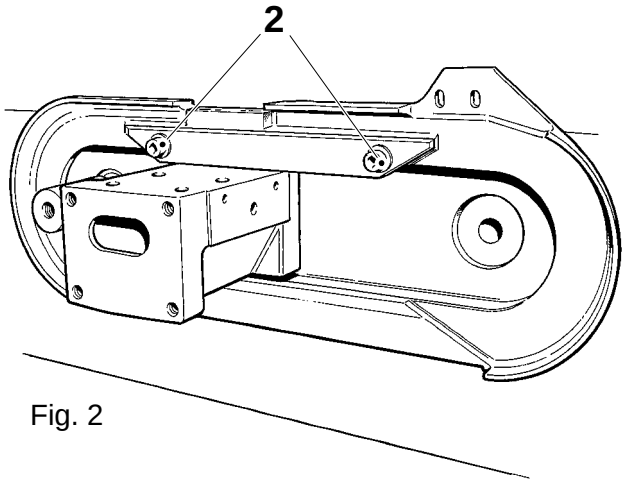

Fig. 2

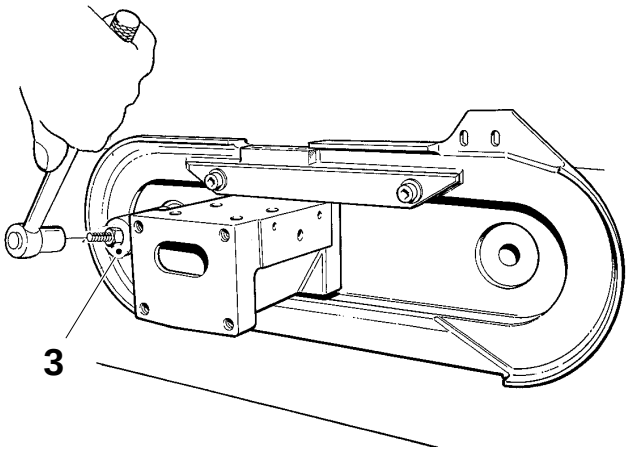

Fig. 3

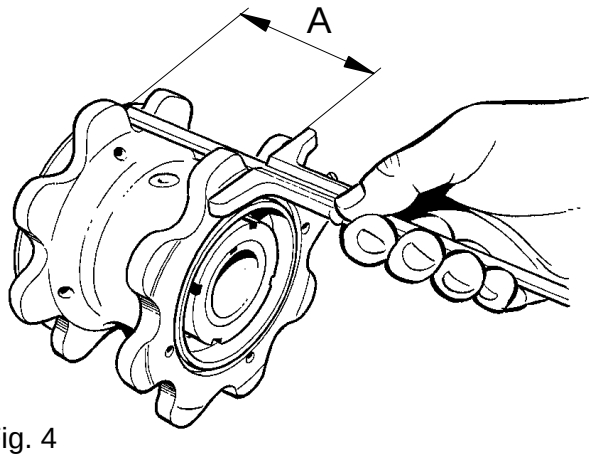

Fig. 4

1 Screw
2 Screw
3 Axle pin
4 Drive shaft

(Cont'd)

- **Distance B:** Measure the width of the pressure plate, see fig. 5. Record the result.
- Put shims TP No. 469383 in the safety sprocket, see fig. 6.
- **Distance C:** Put the safety sprocket on the shaft and measure the distance between the front side of the sprocket and the guide plate, see fig 7. Record the result.
- Adjust the thickness of the shims. The thickness should correspond to the difference between the measured distances C and B, plus or minus half the difference between the distances A and B.
- Reapeat the measurement of distance C. Distance C will be equal to distance B plus or minus half the difference between the distances A and B, see fig. 7. With that the safety sprocket is in the middle position between the inner guide and the outer guide.

(Cont'd overleaf)

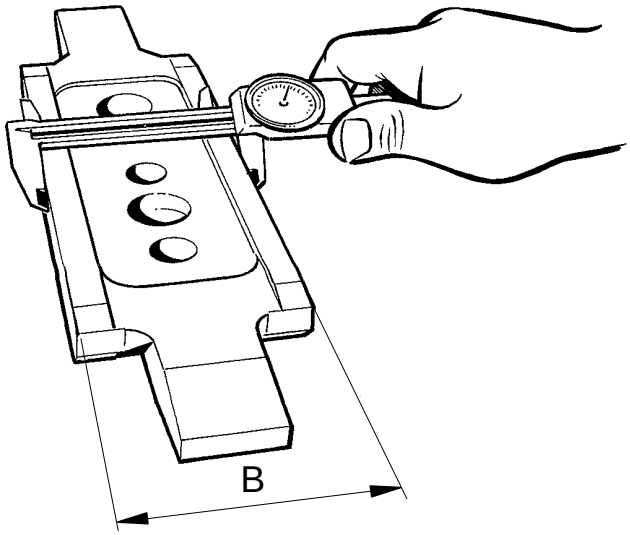

Fig. 5

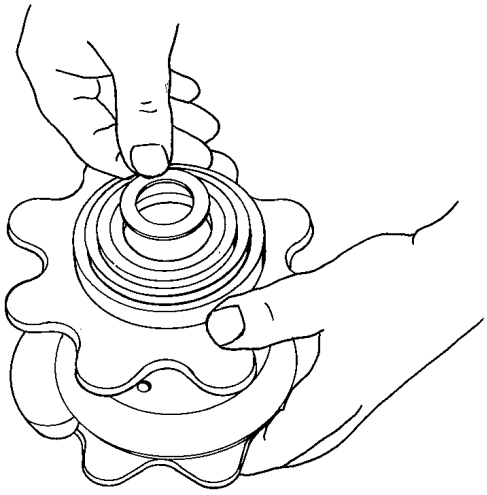

Fig. 6

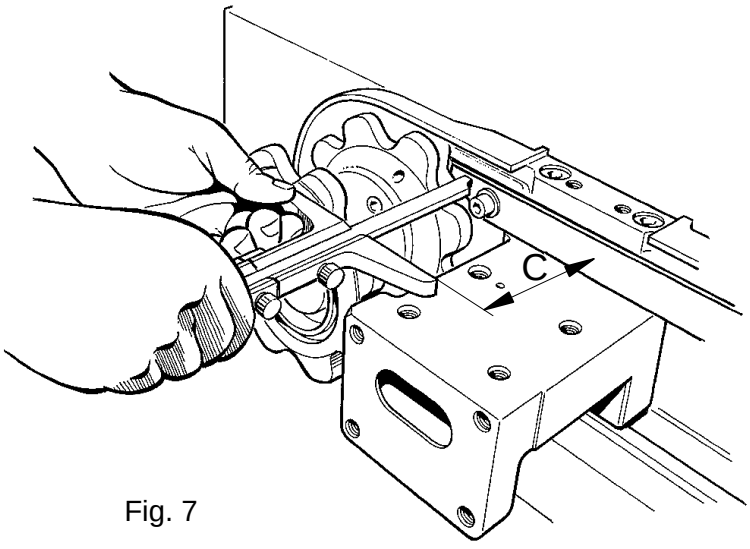

Fig. 7

(Cont'd)

f) Fit and set the tensioner sprocket as follows:

- **Distance D:** Put the tensioner sprocket in the tension shaft. Remove the outer guide flange and measure the width of the sprocket, see fig. 8. Record the result.
- **Distance B:** Measure the width of the pressure plate, see fig. 5. Record the result.
- **Distance E:** Measure the distance between the front side of the sprocket and the guide plate, see fig. 9. Record the result.
- Put shims TP No. 441589 on the shaft of the tensioner sprocket, see fig. 10. The thickness of the shims corresponds to the difference between the measured distances E and B, plus or minus half the difference between the distances D and B.
- Fit the tensioner sprocket.
- Repeat the measurement of distance E. Distance E will be equal to distance B, plus or minus half the difference between the distances D and B, see fig. 9. With that the tensioner sprocket is in the middle position between the inner guide and the outer guide.

(Cont'd overleaf)

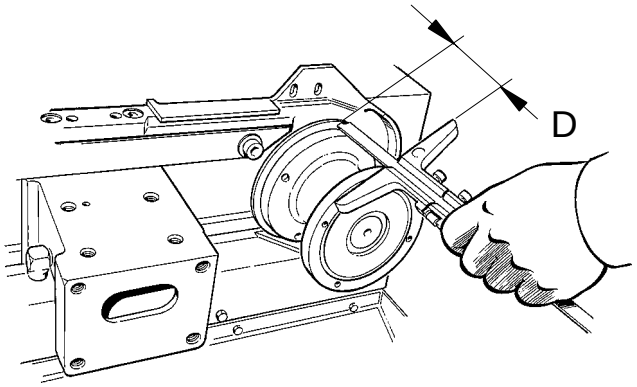

Fig. 8

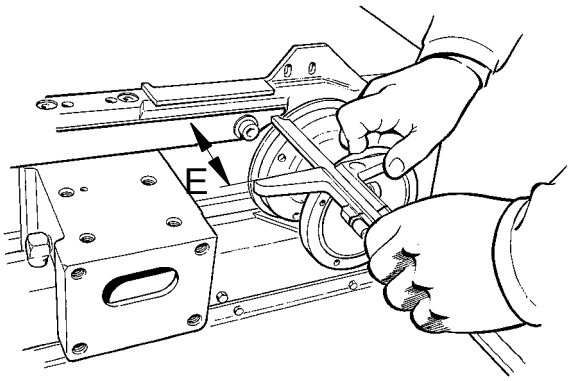

Fig. 9

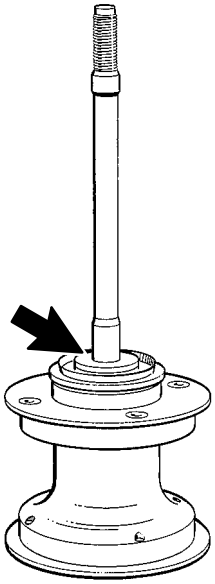

Fig.10

(Cont'd)

g) Remove the screws holding the guide plate, see fig. 2. Keep the guide plate in position. Fit the pressure plate (4), the other guide plate, and the outer guide (5), see fig. 11.

h) Set the outer guide in parallel to the inner one. See fig. 12 and fig. 13.

i) Tighten the pressure plate and the outer guide.

(Cont'd overleaf)

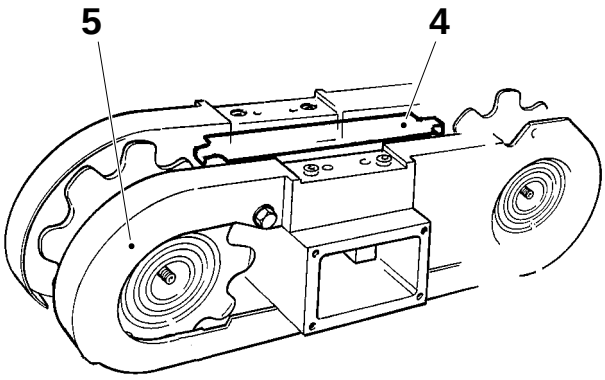

Fig. 11

4 Pressure plate
5 Outer guide

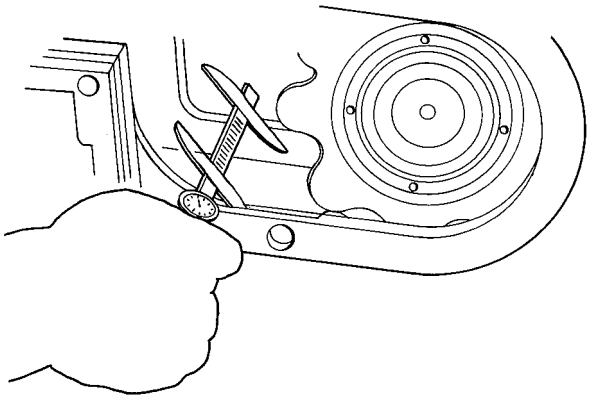

Fig. 12

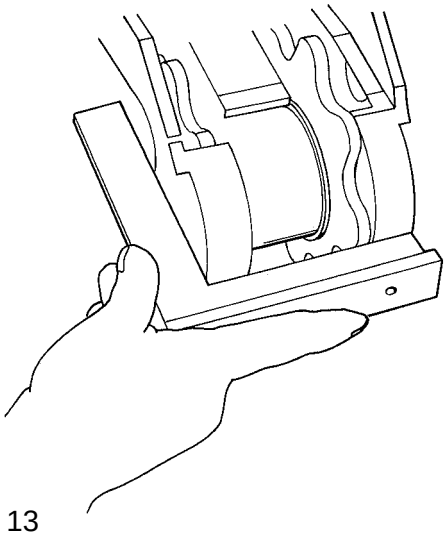

Fig. 13

(Cont'd)

j) Measure the distance from the inner guide down to the pressure plate and record it. See fig 14. The difference between the measured distance and the nominal distance $24\ ^{+0.1}_{-0.05}$ mm will be equal to the thickness of shim TP No. 272998, that is put under the plate.

k) Fit the plate (6) and the shim (7), see fig 15.

l) Check that a station chain roller is free to pass between the plate and the pressure plate.

m) Repeat positions i) – l) for the outer guide and its plate.

n) Fit the station chain, see page MS 505–4X.

o) Set the station chain, see page MS 505–5X.

(Cont'd overleaf)

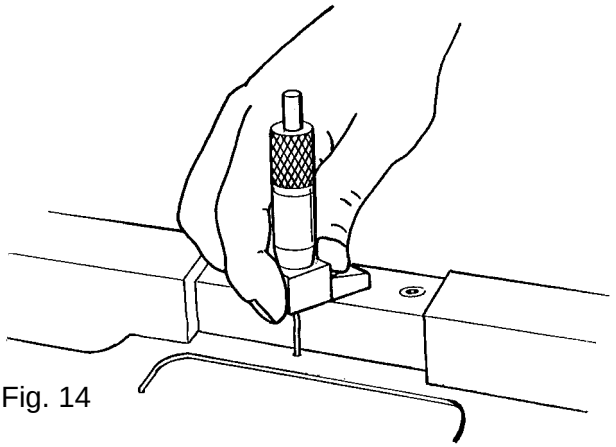

Fig. 14

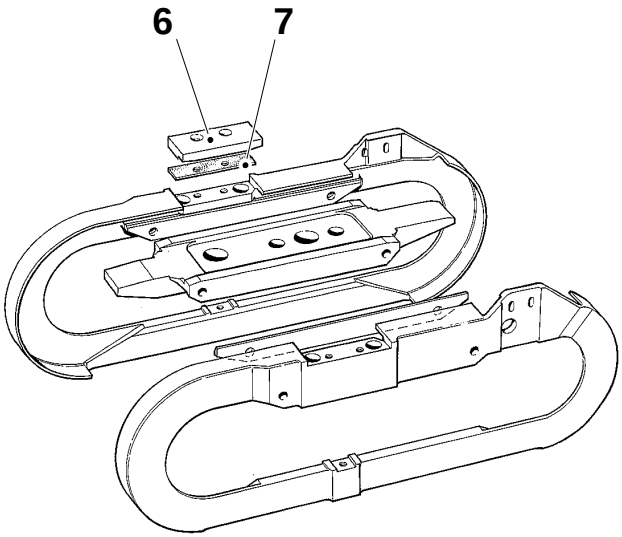

Fig. 15

6 Plate
7 Shim

(Cont'd)

p) Fit the disc springs **one by one** in the safety sprocket by means of a sleeve, see fig. 16.

q) Fit the washer (8) and nut (9).
Torque 34–38 Nm, see fig. 17 and fig. 18.

r) Check the setting of the station chain, see page MS 505–5X.

s) Check the cut-out torque of the safety sprocket, see page MS 537–1X.

t) Fit the outer guide flange and fill the safety sprocket with grease type F,
see page MS 940–7X.

(Cont'd overleaf)

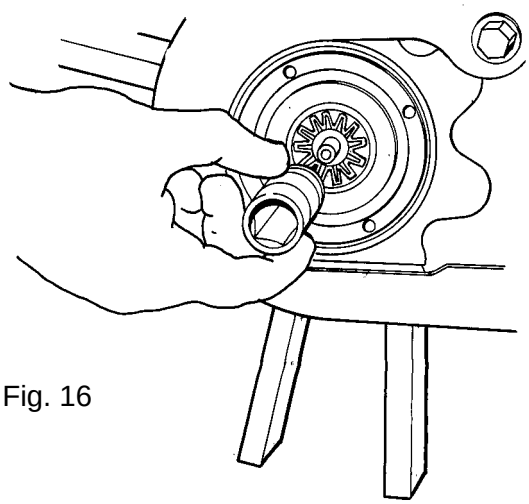

Fig. 16

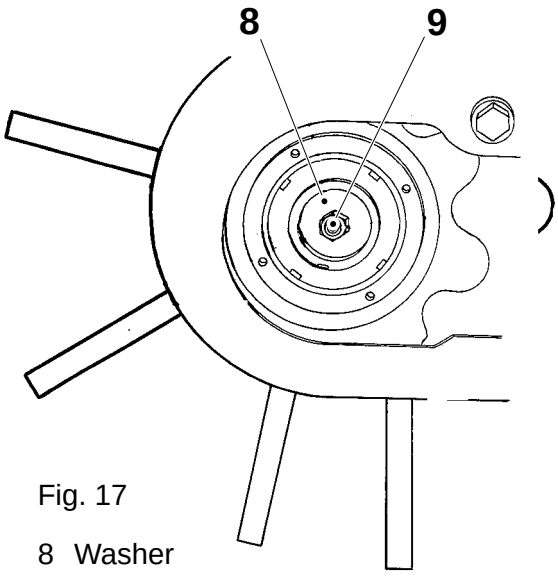

Fig. 17

8 Washer
9 Nut

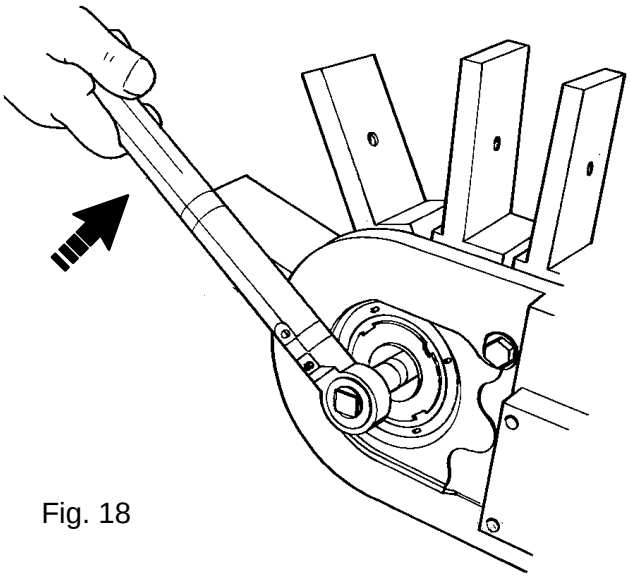

Fig. 18

(Cont'd)

u) Fit the external cleaning system (5).

v) Fit the bracket (4).

w) Fit the guide rail (3) of the protection cover.

x) Fit the side cover (2).

y) Fit the protection cover (1).

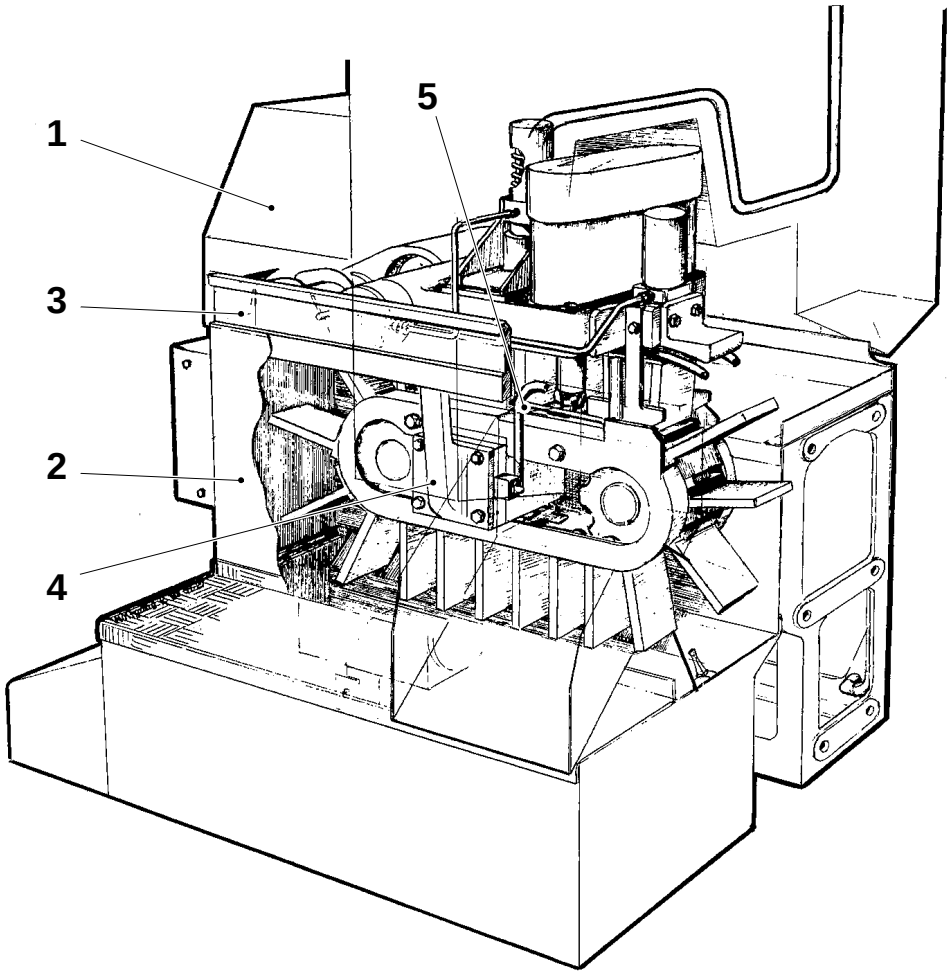

1 Protection cover
2 Side cover
3 Guide rail
4 Bracket
5 Cleaning system

Fitting

a) Fit the LH slide rail (2) on the rail holder (1). Adjust the slide rail, distance A.

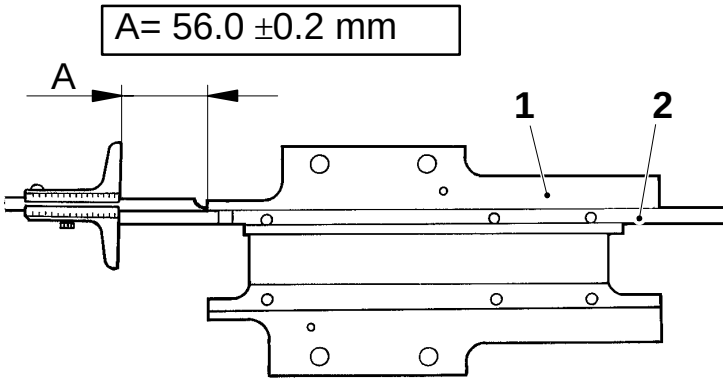

1 Rail holder
2 LH slide rail
3 RH slide rail
4 Bracket

b) Carefully fit the RH slide rail (3) so it is parallel to the LH slide rail by means of a set square.

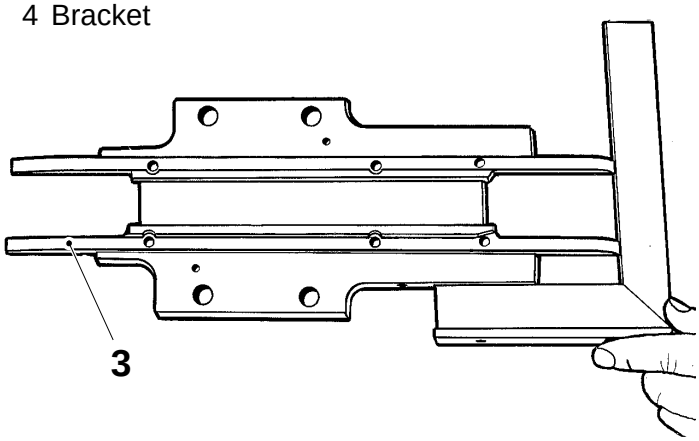

c) Fit the brackets (4) on the rail holder. There are two ways of fitting, depending on type of brackets, see below.

Alternative 1:
Fit the bracket so its lower edge is level with the bottom of the rail holder.

Alternative 2:
Fit the bracket so that the flange bears against the top of the rail holder.

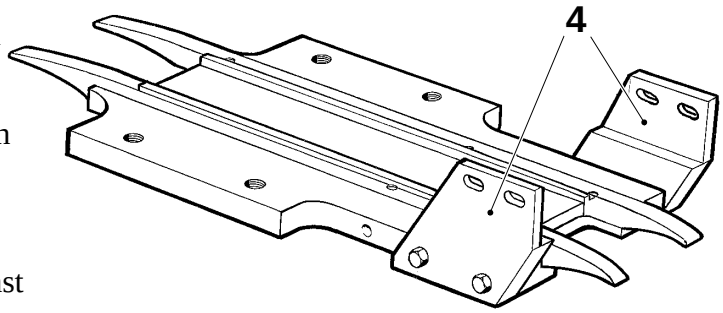

(Cont'd overleaf)

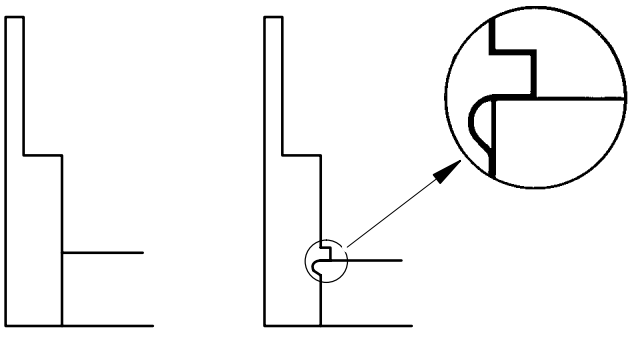

Alt 1 Alt 2

(Cont'd)

d) Slide the drive sprocket (6) on to the shaft without securing it.

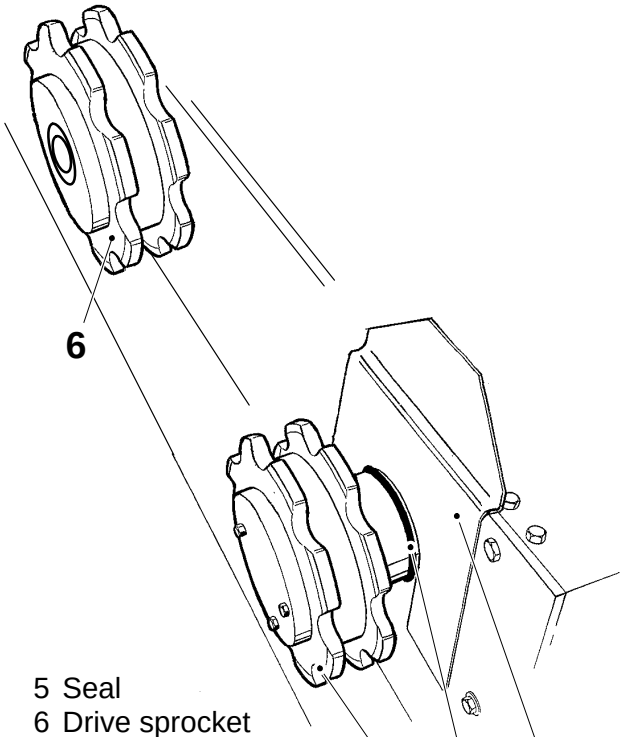

e) Fit the tensioner sprocket (7) in its place in the final folder. Take care not to damage the seal (5). Use guard plate (19) during fitting.

5 Seal
6 Drive sprocket
7 Tensioner sprocket
8 Nut
9 Support arm
19 Guard plate TP No. 77240

f) Tighten the nut (8). Torque 140 ±5 Nm.

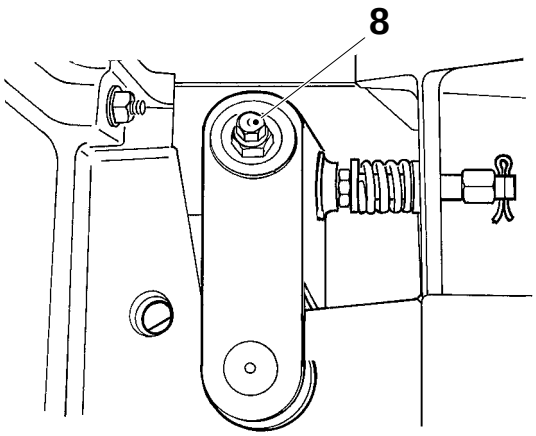

g) Fit the rail holder to the support arm (9) by slipping the former on to the pins.

(Cont'd overleaf)

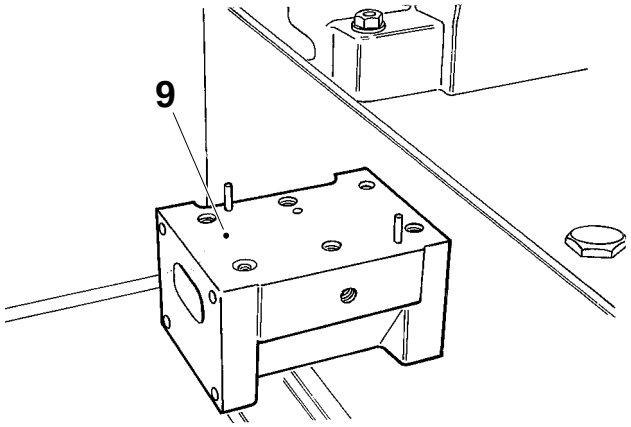

(Cont'd)

h) Place a ruler (10) with the edge on the LH side of the rail holder and measure the gap between the rail holder and the tensioner sprocket.

i) Repeat item b) on the RH side of the rail holder.

The gaps must be the same within 0.2 mm.

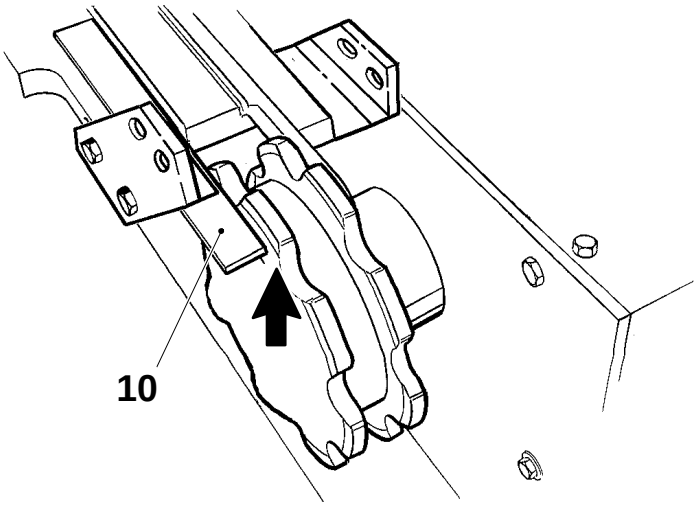

j) In case of incorrect setting, remove the tensioner sprocket and adjust by means of shims.

There are two different types of shims, depending on how the machine is equipped. Fit shims (11:1) for alternative 1 and shim (11:2) for alternative 2.

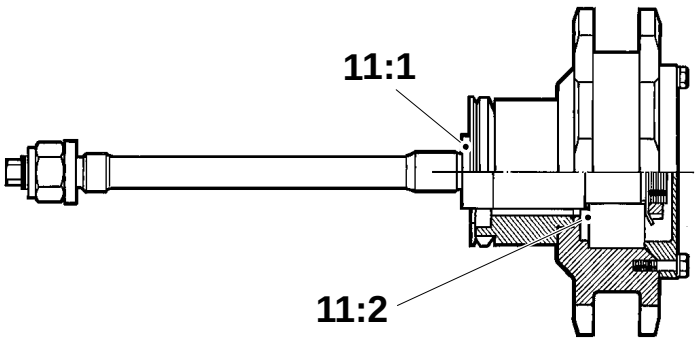

10 Ruler
11:1 Shim TP No. 441589
11:2 Shim TP No. 491849
12 Spacer lug

k) Fit the spacer lugs (12) edge-to-edge with the outside of the rail holder and with the bevel facing in towards the rails.

(Cont'd overleaf)

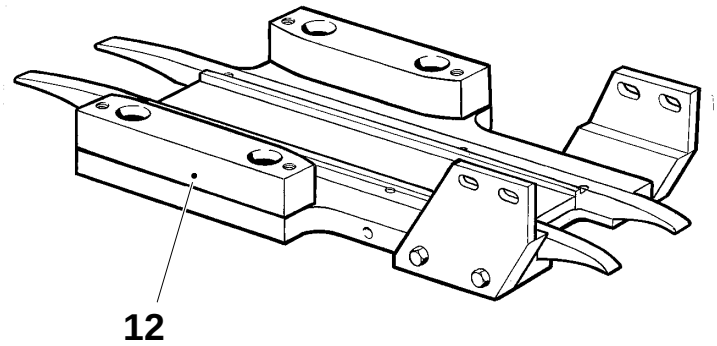

(Cont'd)

l) Fit the station chain, see page MS 505–4X.

m) Fit the plates (13) (with the bevelling direction inwards and downwards) and shims (14), two on each side.

n) Adjust by means of the shims (14) so that there is gap A between the station chain and plate.

o) Set the plates sidewards so that gaps B are obtained between the plates and station chain (17).

p) Set the station chain, see page MS 505–5X.

q) Set the discharge finger, see page MS 529–5X:1.

r) Synchronize the main machine with the final folder, see page MS 574–5X.

s) Fit and set the folding bars, see page MS 509–5X.

t) Fit the distribution block with the lubrication brushes. Fit the banjo connection to the lubrication block.

u) Adjust the lubrication brushes (15) so that they touch the station chain lugs (16) lightly, distance C below station chain lugs.

(Cont'd overleaf)

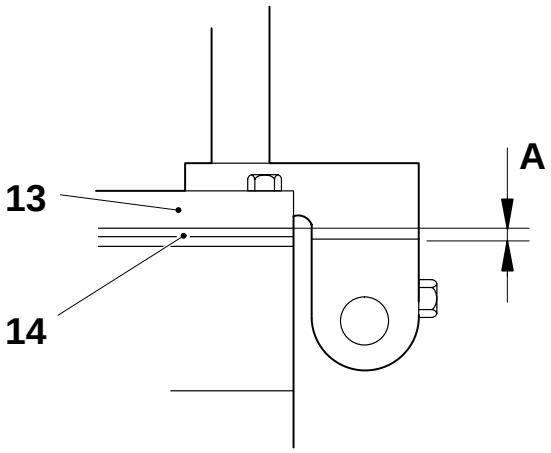

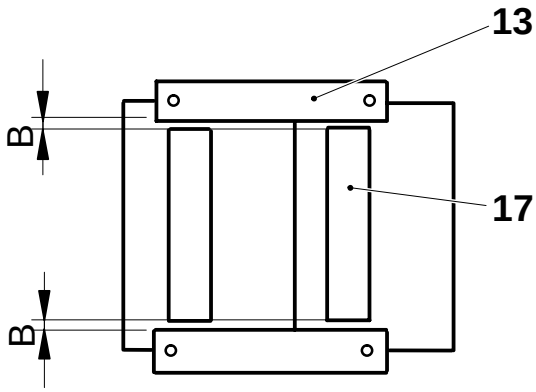

A = 0.1 – 0.2 mm
B = 0.3 – 0.5 mm
C = 2 – 3 mm

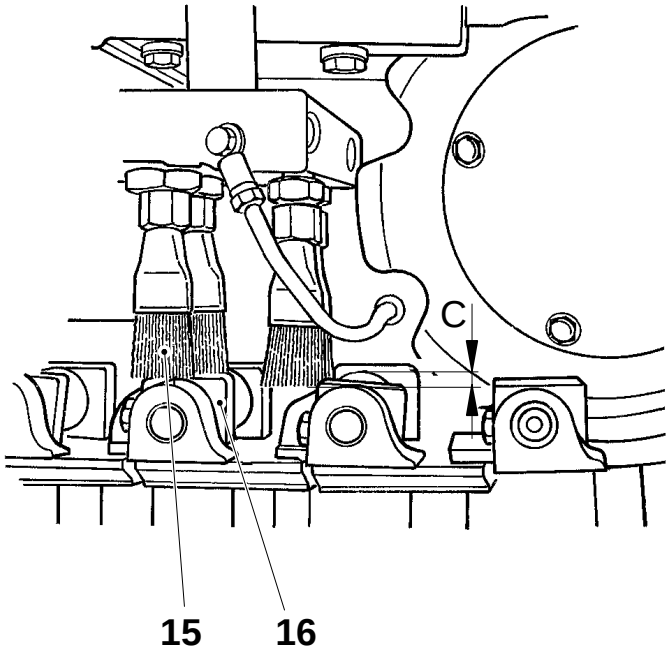

13 Plate
14 Shim TP No. 491266
15 Lubrication brush
16 Station chain lug
17 Station chain

(Cont'd)

v) Fit the cleaning pipe (18).

w) Fit the side plate.

x) Fit the cover.

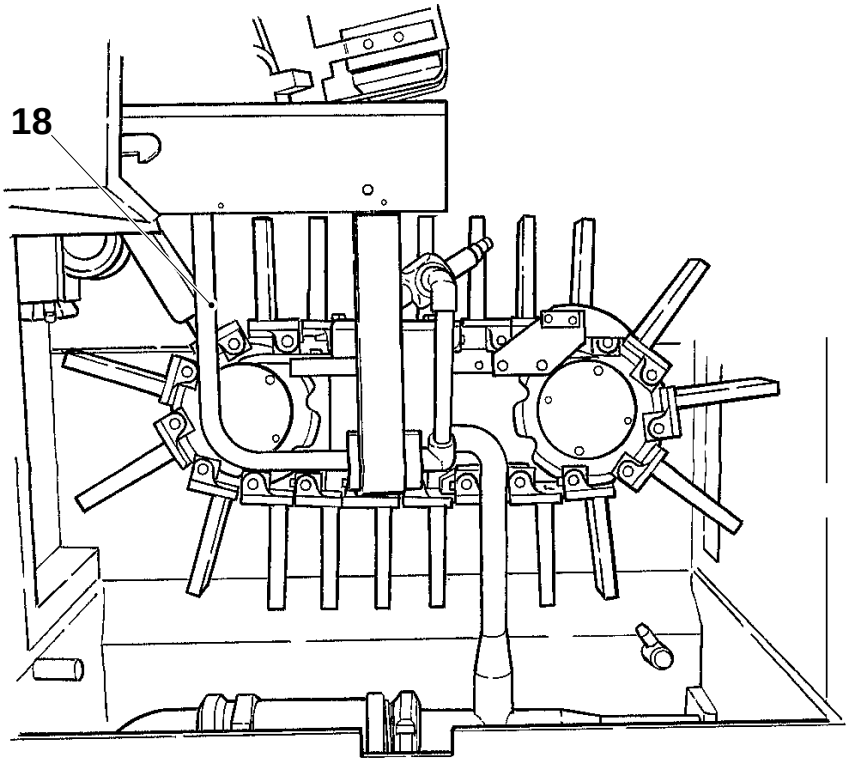

18 Cleaning pipe

Fitting

a) Fit the LH slide rail (2) on the rail holder (1). Adjust the slide rail, distance A.

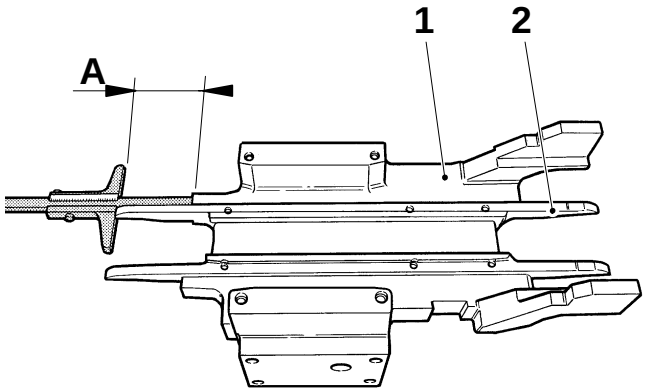

A = 61.0 ± 0.2 mm

1 Rail holder
2 Left hand slide rail
3 Right hand slide rail

b) Fit the RH slide rail (3) parallel with the LH slide rail by means of a set square very carefully.

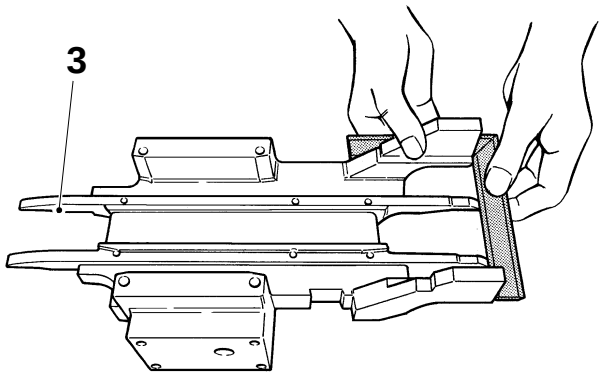

c) Measure distance B between the RH slide rail and the rail holder very carefully. Record the result.

d) Remove the RH slide rail.

e) Fit the rail holder on the final folder and tighten it.

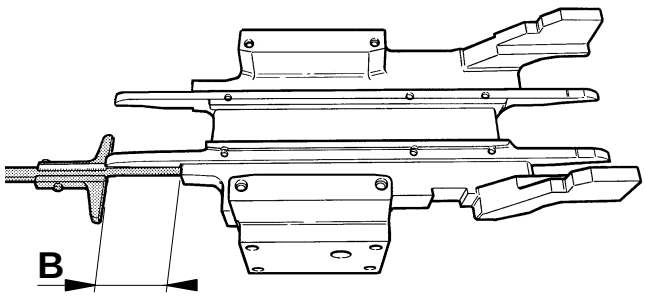

(Cont’d overleaf)

(Cont'd)

f) Slide the drive sprocket (6) on to the shaft without securing it.

g) Put the tensioner sprocket (7) in its place in the final folder. Take care not to damage the seal (5). Use the protection plate (18) during fitting.

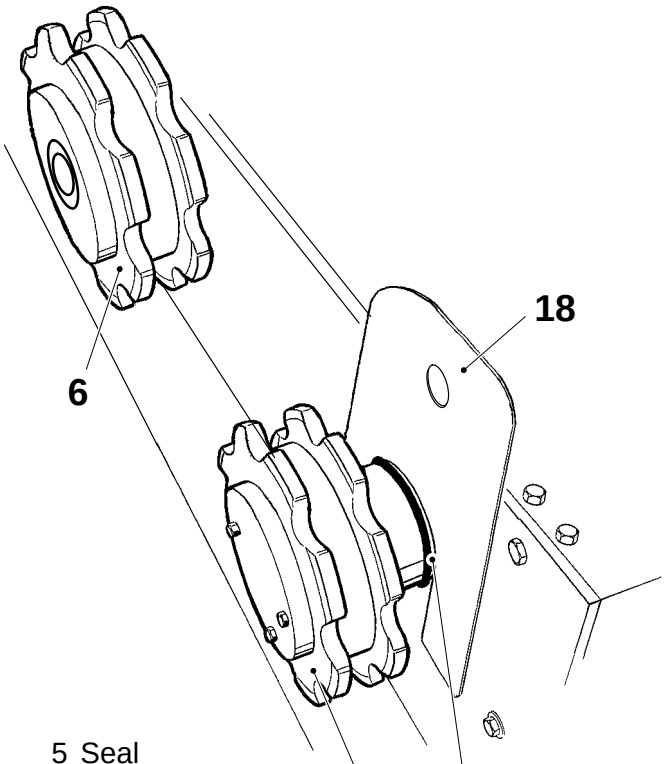

5 Seal
6 Drive sprocket
7 Tensioner sprocket
8 Nut
9 RH slide rail
18 Protection plate TP No. 79003

h) Tighten the nut (8). Torque 140 ±5 Nm.

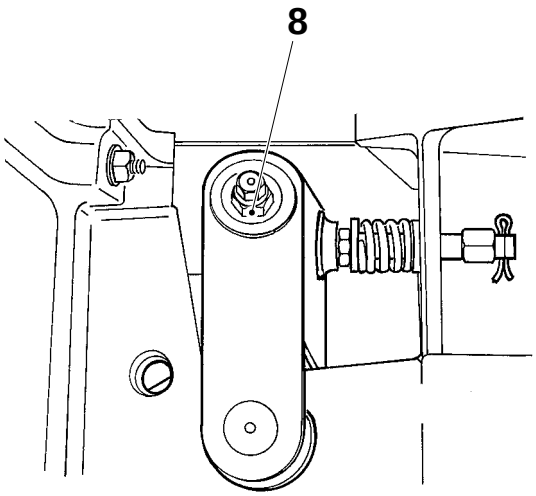

i) Fit the RH slide rail (9) on the rail holder.

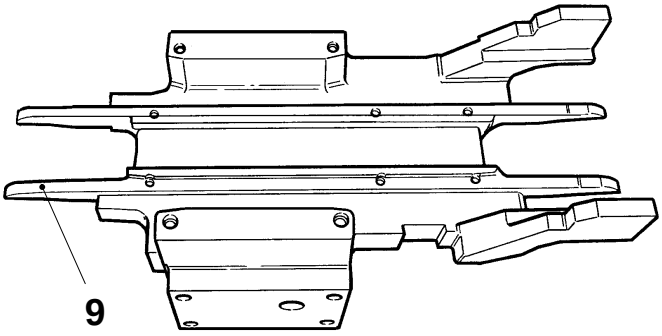

(Cont'd overleaf)

(Cont'd)

j) Place a ruler (10) with the edge on the LH of the rail holder and measure the gap between the rail holder and the tensioner sprocket.

k) Repeat item j) on the RH side of the rail holder.
The gaps must be the same within 0.2 mm.

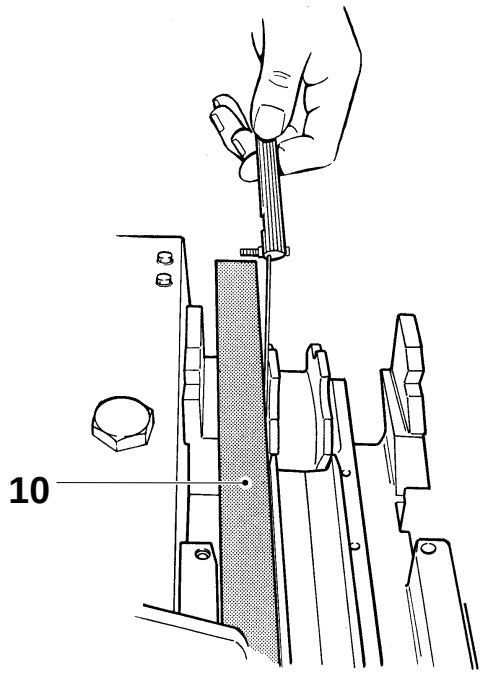

10 Ruler
11 Shim TP No. 441589

l) In case of incorrect setting, remove the RH rail, the tensioner sprocket and adjust by means of shims (11).

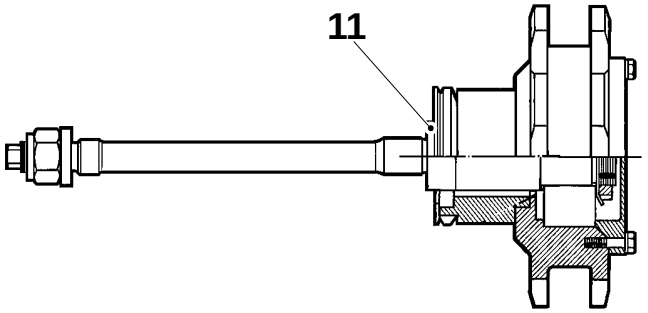

m) Set measure B between the RH slide rail and the rail holder. Use the recorded measure from page 1.

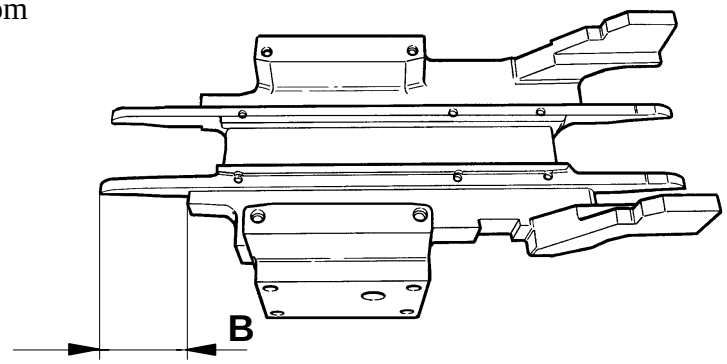

(Cont'd overleaf)

(Cont'd)

n) Fit the station chain, see page MS 505–4X.

o) Fit the plates (12) (with the bevelling direction inwards and downwards) and shims (13), two on each side.

p) Adjust by means of shims (13) so that there is gap C between the station chain and the plate.

q) Set the plates sidewards so that gaps D are obtained between the plates and station chain (16).

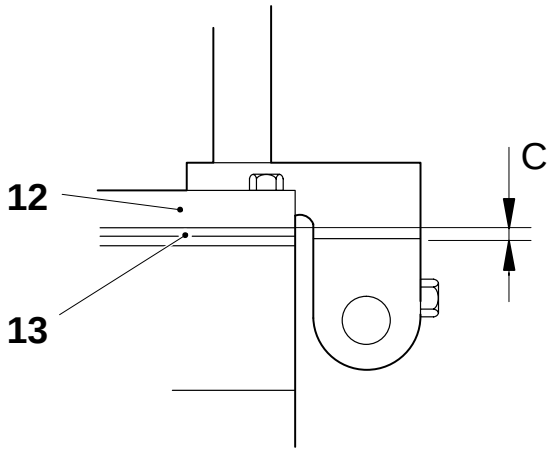

12 Plate
13 Shim TP No. 491266
14 Lubrication brush
15 Station chain lug
16 Station chain

r) Set the station chain, see page MS 505–5X.

s) Set the discharge finger, see page MS 529–5X:1.

t) Synchronize the main machine with the final folder, see page MS 574–5X.

u) Fit and set the folding bars, see page MS 509–5X.

v) Fit the distribution block with the lubrication brushes. Fit the banjo connection to the lubrication block.

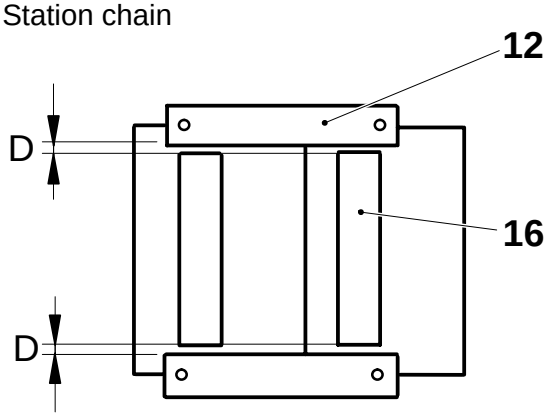

C = 0.1 – 0.2 mm
D = 0.3 – 0.5 mm
E = 2 – 3 mm

w) Adjust the lubrication brushes (14) so that they touch the station chain lugs (15) lightly, distance E below the station chain lugs.

(Cont'd overleaf)

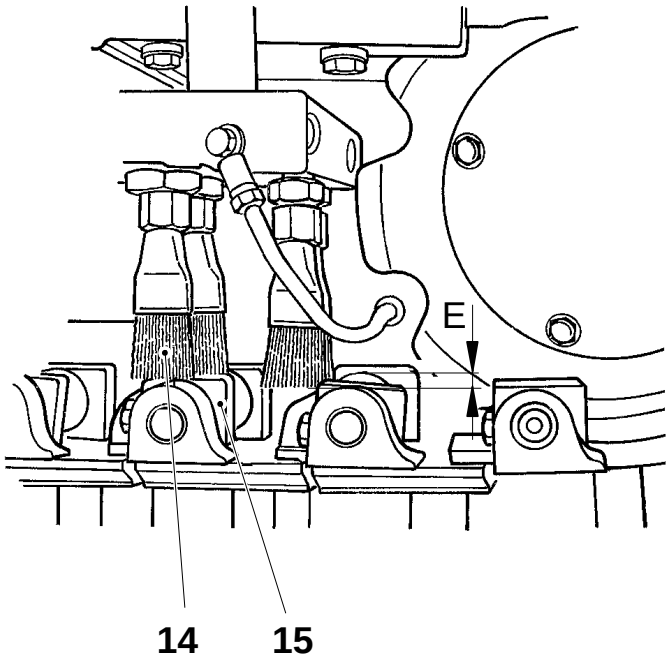

(Cont'd)

x) Fit the cleaning pipe (17).

y) Fit the side plate.

z) Fit the cover.

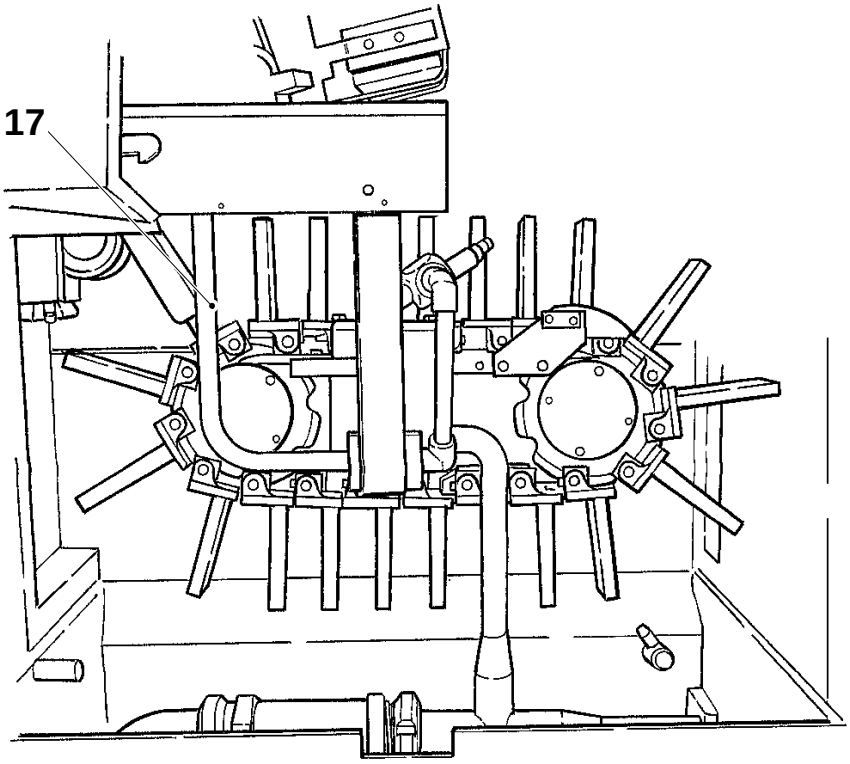

17 Cleaning pipe

Checking

Remove the station chain, see page MS 505–2X.

Check the stations (1), the bushings (2), the rollers (3), the shafts (4), the drive sprocket and the tensioner sprocket for wear and/or damages.

Replace worn and/or damaged details.

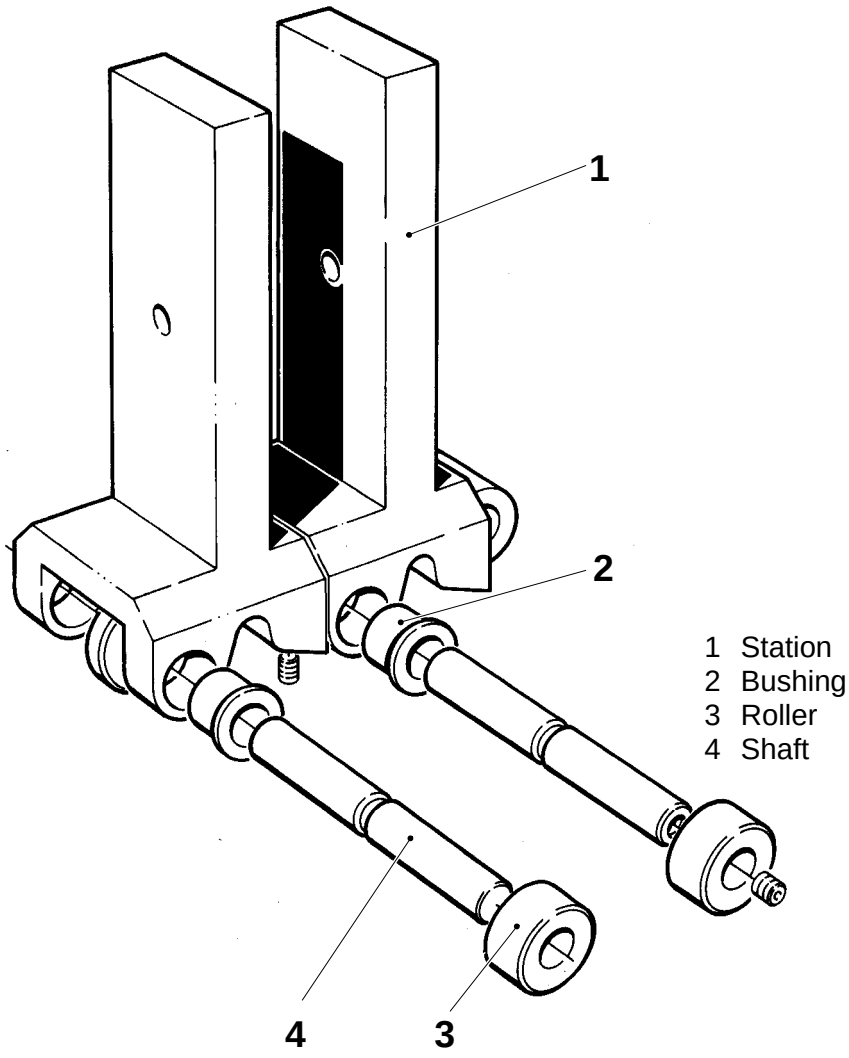

Checking

Remove the station chain, see page MS 505–2X.

Check the stations (1), bushings (2), slide lugs (3), axle pins (4), drive sprocket, and tensioner sprocket for wear and/or damages.

Replace worn and/or damaged details.

Footnote
If the axle pin is worn, turn it around 180° once before replacing it.

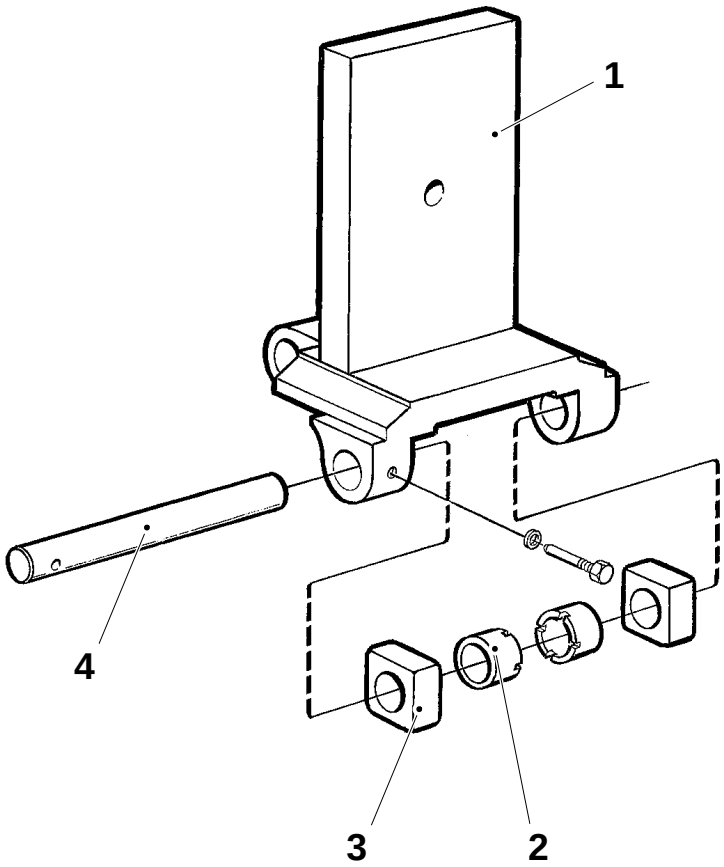

1 Station
2 Bushing
3 Slide lug
4 Axle pin

Removal

a) Remove the side plates of the final folder.

b) Crank the machine until an axle with a grub screw (1) is visible in the hole (10), fig. 1.
Note!
Make sure that the discharge finger (9) runs clear of the station chain.

c) Slacken the station chain by tightening the nut (2), fig 2.

d) Remove the lift rails (3) after undoing the screws (4), fig. 1.

e) Remove the outer guide flange (5) and loosen the safety sprocket.

f) Undo the grub screw (6) on top of the axle visible in the hole. Undo the grub screw (1) at the axle end. Fit a long screw at the end of the axle (7) and pull it out.

g) Grip the stations (8) on either side of the extracted axle and pull the chain round by hand in the direction of rotation until the stations arrive at the drop chute, fig. 3.

h) Pull out the rear end of the chain through the opening left free by the removal of the lift rails (3), fig. 4.

i) Pull out the chain.

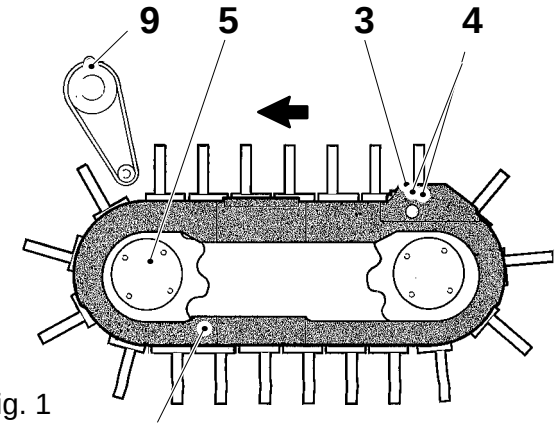

Fig. 1

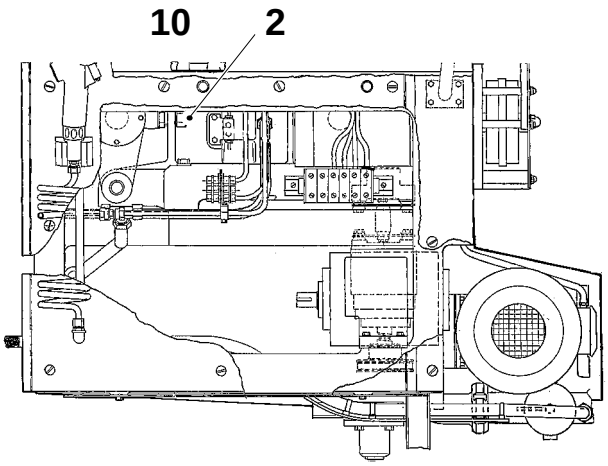

Fig. 2

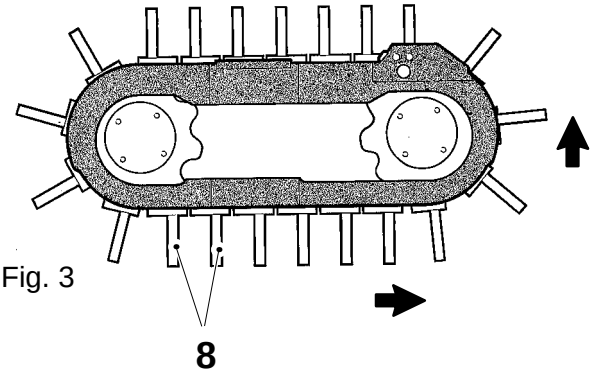

Fig. 3

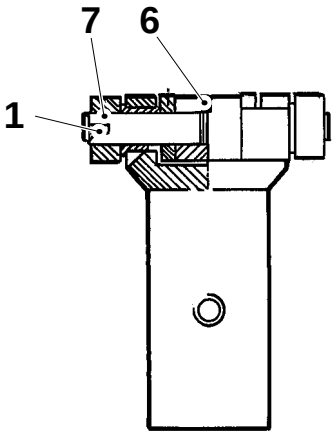

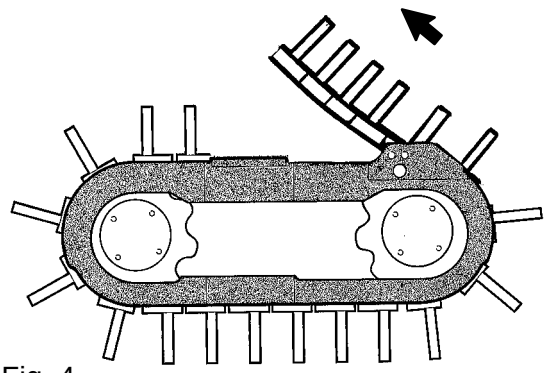
Fig. 4

1 Grub screw
2 Nut
3 Lift rail
4 Screw
5 Outer guide flange
6 Grub screw
7 Shaft
8 Station
9 Discharge finger
10 Hole

Removal

a) Remove the side plates of the final folder.

b) Remove the cover (5) and loosen the clamp fitting, see page MS 370–2X.

c) Move the chain around until an axle with a threaded hole in the axle end is in the dismantling position (1), see fig. 1.
Note!
Make sure that the discharge finger (9) runs clear of the station chain.

d) Reduce the tension of the station chain by tightening the nut (2). Undo the screws (4) to remove the folding bars (3).

e) Undo the grub screw (6) and fit a long screw in the axle end (8). Pull out the axle (7).

f) Pull out the rear end of the chain through the opening left free by the folding bars.

g) Pull out the chain.

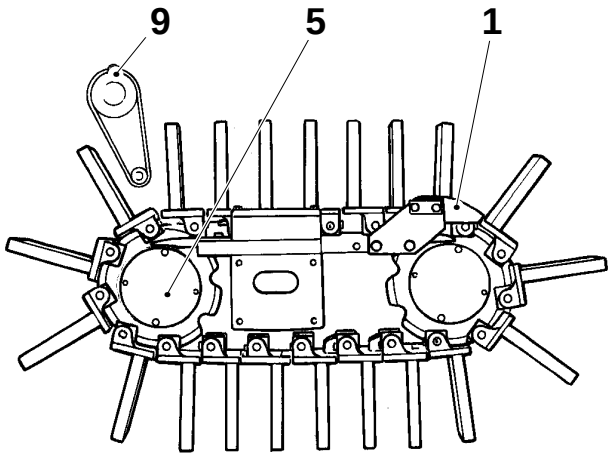

Fig. 1

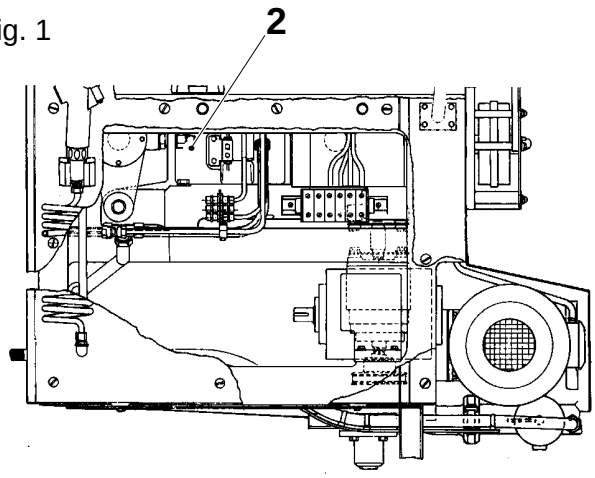

Fig. 2

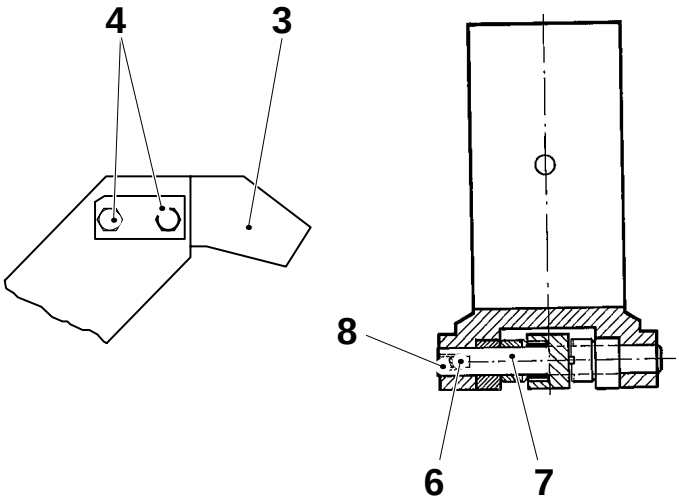

Fig. 3

1 Dismantling position
2 Nut
3 Folding bar
4 Screw
5 Cover
6 Grub screw
7 Axle
8 Axle end
9 Discharge finger

Fitting

a) Put in the chain at the rear bearing against the direction of rotation.
Note!
The chain is to be turned according to fig. 1.

b) Move the chain around until the chain ends (1) are opposite the hole in the guide, see fig. 2.

c) Fit the rollers (2) and (3) and the axle (4). Fit the grub screws (5) and (6), see fig. 4.

d) Tension the station chain by screwing out the nut (7) to the stop at the end of the screw, see fig. 3.

e) Set the station chain, see page MS 505–5X.

f) Fit and set the lift rails (8), see page MS 509–5X.

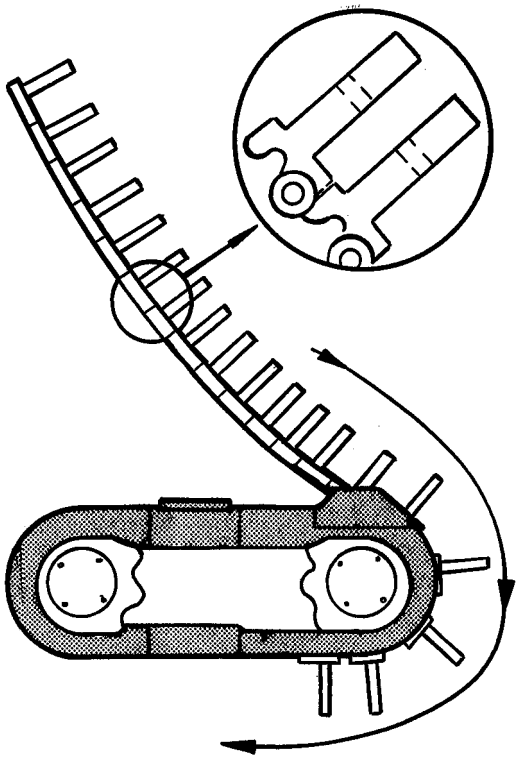

Fig. 1

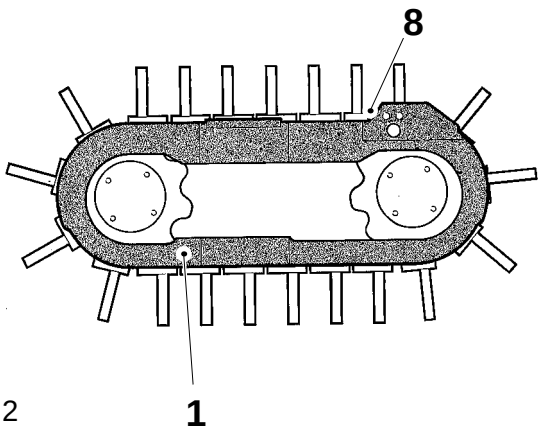

Fig. 2

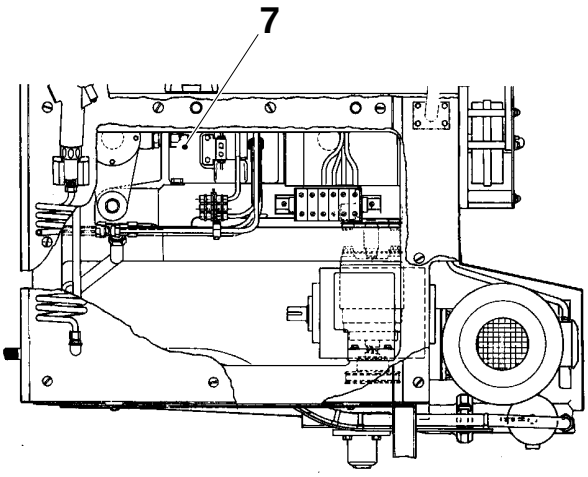

Fig. 3

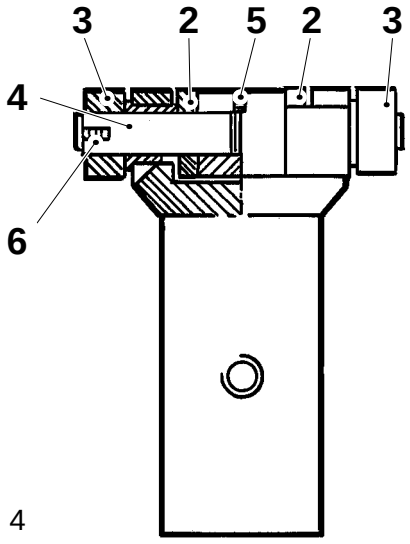

Fig. 4

1 Chain end
2 Roller
3 Roller
4 Axle
5 Grub screw
6 Grub screw
7 Nut
8 Lift rail

Fitting

a) Insert the station chain (1) against the direction of rotation at the rear bearing.
Note!
The station chain must be turned according to fig. 1.

b) Move the chain around until the chain ends meet.

c) Fit the bushings (2), slide lugs (3), and the axle pin (4). Fit the grub screw (5), see fig. 2.

d) Tension the station chain by turning out the nut (6) to the stop at the end of the screw, see fig. 3.

e) Set the station chain, see page MS 505–5X.

f) Fit and set the folding bars, see page MS 509–5X.

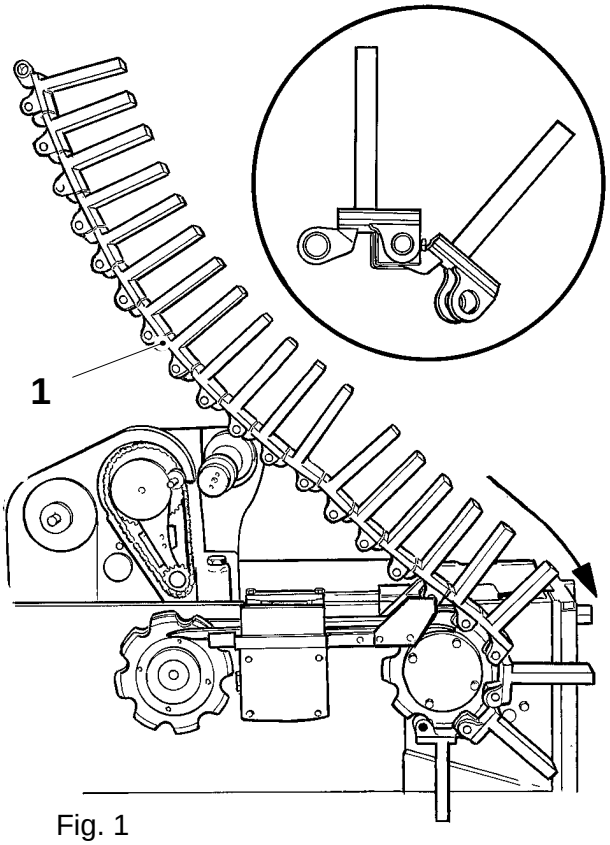

Fig. 1

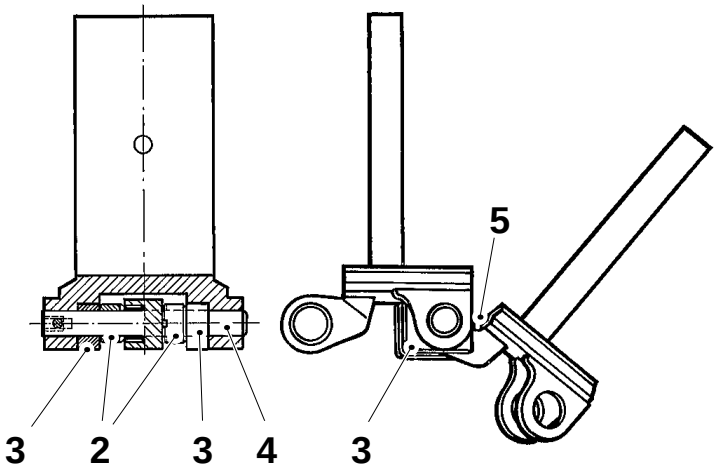

Fig. 2

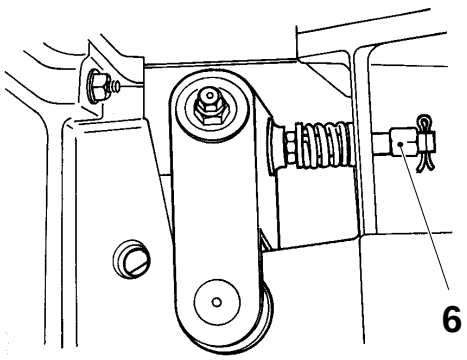

Fig. 3

1 Station chain
2 Bushing
3 Slide lug
4 Axle pin
5 Grub screw
6 Nut

Setting

a) Crank the machine until the station chain stops indexing.

b) Remove the outer guide flange (1) and loosen the clamp fitting (2).

c) Place the setting template (6) (or, if no template is available, an angle gauge (3)) in the station chain at the drop chute and turn the station chain until angle A.

d) Tighten the safety sprocket. Torque 34 – 38 Nm. Fit the outer guide flange.

e) Set the discharge finger (4), see page MS 529–5X.

f) Synchronize the main machine with the final folder, see page MS 574–5X.

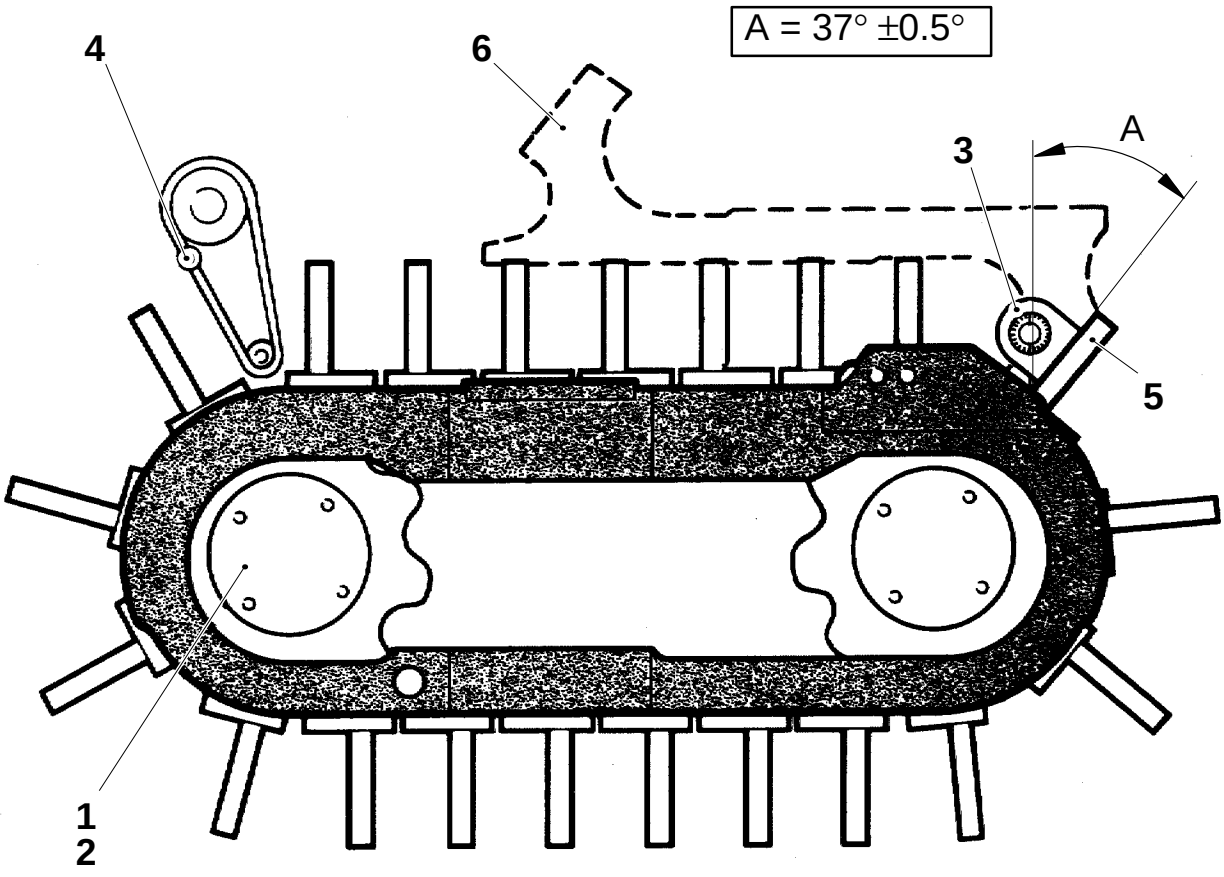

1 Outer guide flange
2 Clamp fitting
3 Angle gauge
4 Discharge finger
5 Station
6 Setting template TP No. 76128

Setting

a) Crank the machine until the station chain stops indexing.

b) Remove the cover over the drive sprocket (1) and loosen the clamp fitting (2), see page MS 370–2X.

c) Place the setting template (3) (or, if no template is available, an angle gauge (4)) in the station chain at the drop chute and turn the chain to angle A.

d) Check that gap B is obtained between the side of the slide rail and the side of the drive sprocket.

e) Tighten the clamp fitting, see page MS 370–4X, and fit the cover.
Make sure that measures A and B are still correct.

f) Set the discharge finger, see page MS 529–5X:1.

g) Synchronize the main machine with the final folder, see page MS 574–5X.

h) Check that the drive sprocket is centered by turning the station chain slide lugs on both sides of the sprocket to make sure they move clear.

i) Set the pressure unit side lugs, see page MS 521–5X.

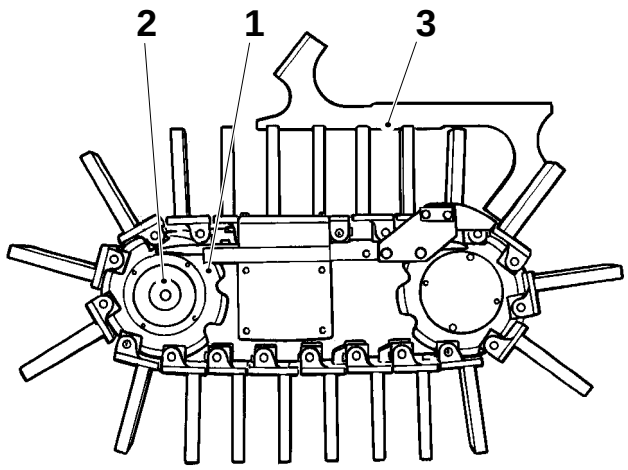

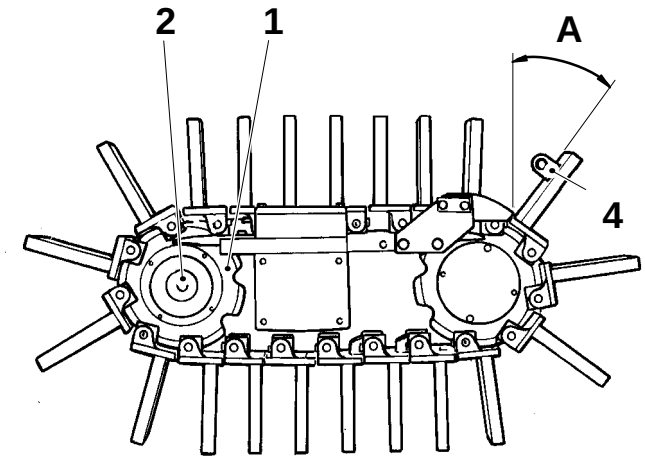

A= 37° ±0.5°
B= 9.1 ±0.1 mm

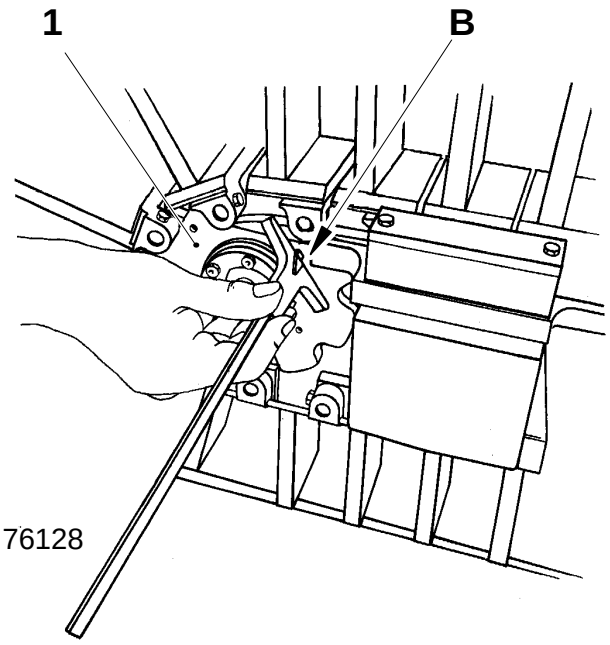

1 Drive sprocket
2 Clamp fitting
3 Setting template TP No. 76128
4 Angle gauge

Checking

Check the following details for wear and/or damage:

- the drop chute (1),
- the O-ring (2),
- the finger (3),
- the pivot arm (4),
- the friction bearing (5),
- the seal ring (6)
- the link head (8),
- the leaf springs (10); make sure they spring back to prevent the packages from bouncing, and
- the proximity switch (11).

Replace worn and/or damaged details.

Check if there is oil and/or water on top of the indexing unit. If necessary, clean it and then replace the O-ring (7).

Check that the cylinder (9) moves smoothly and that there is no air leakage.

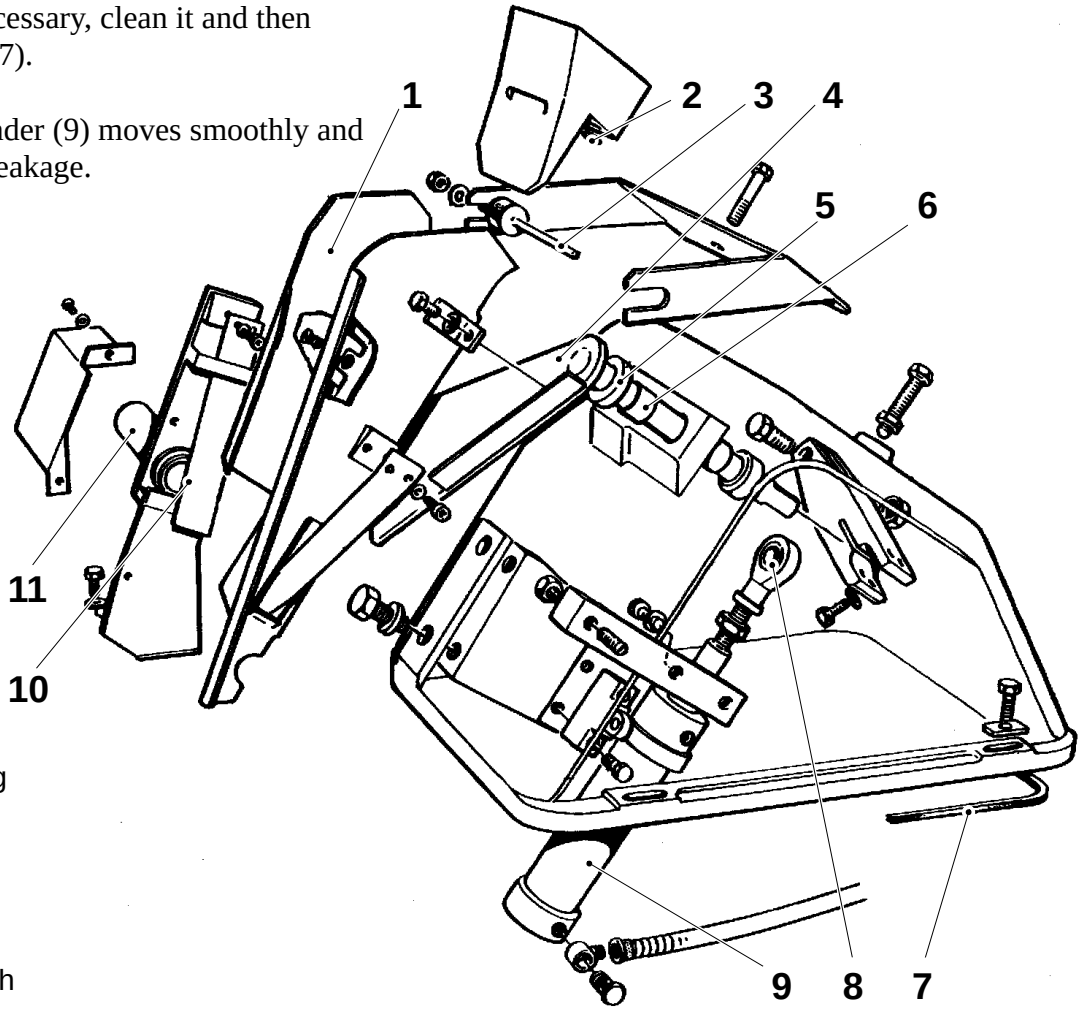

1 Drop chute
2 O-ring
3 Finger
4 Pivot arm
5 Friction bearing
6 Seal ring strip
7 O-ring strip
8 Link head
9 Cylinder
10 Leaf spring
11 Proximity switch

344

Removal/Fitting

Mark the position of the bracket (10) on the frame.

Undo the screw (6) and remove the slide lug (4) and the O-ring (5). Undo the two screws (1) and remove the drop chute (2).

Loosen the nuts and remove the finger (3). Undo the screws (16) and remove the two leaf springs (17).

Remove the cover (19). Undo the nuts and remove the congestion monitor (18).

Undo the four screws (11) and lift up the bracket (10). Remove the O-ring (12).

Loosen the screw (13). Remove the pivot arm (7), the friction bearing (8) and the seal ring (9).

Disconnect the air blow and air lines to the cylinder.

Undo the screws (16). Remove the cylinder (14). Lift out the bracket.

Reassemble in reverse order. Put silicon on the edge around the bracket (arrow).

Set the drop chute, see page MS 507–5X.

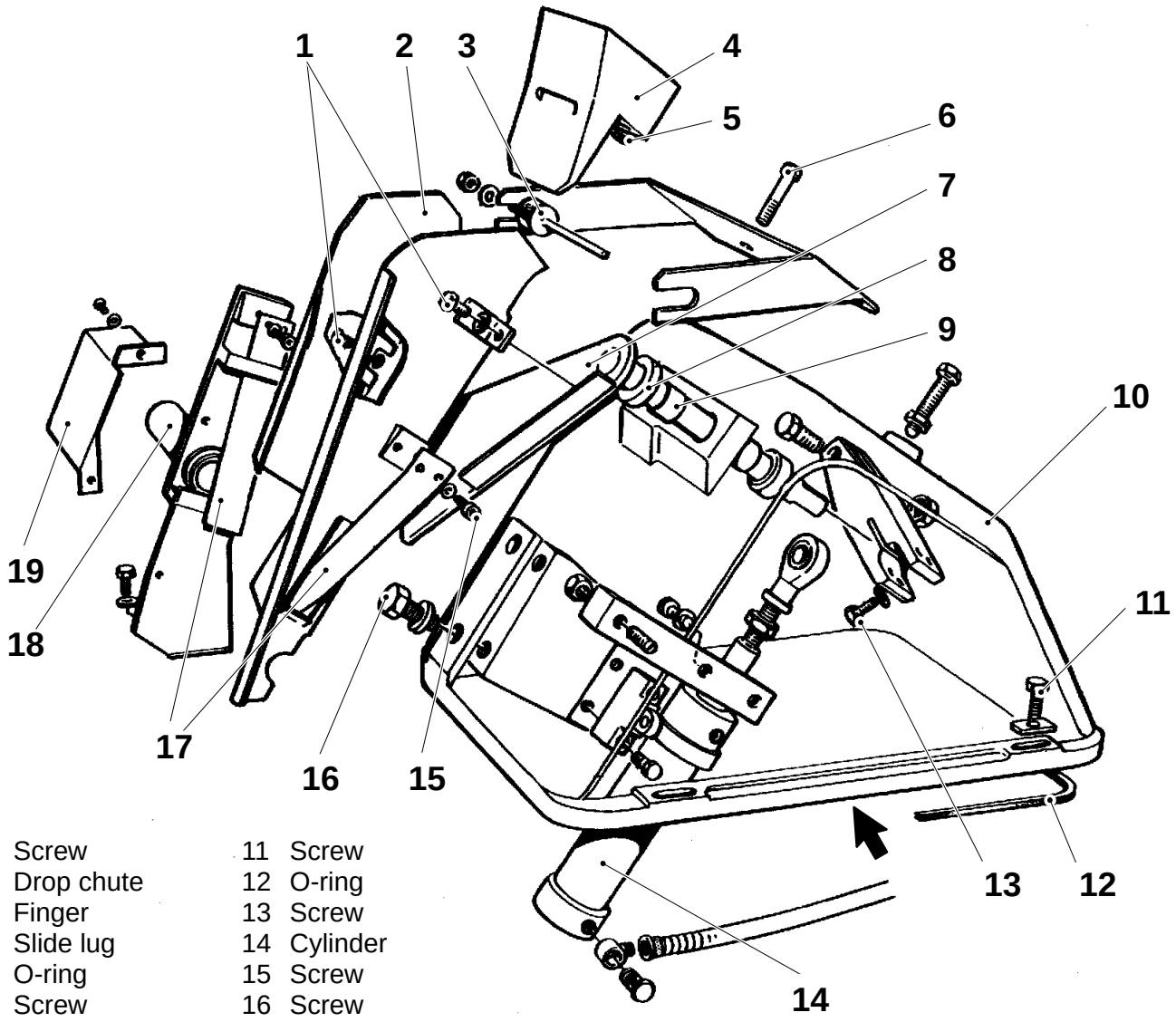

1 Screw
2 Drop chute
3 Finger
4 Slide lug
5 O-ring
6 Screw
7 Pivot arm
8 Friction bearing
9 Seal ring
10 Bracket
11 Screw
12 O-ring
13 Screw
14 Cylinder
15 Screw
16 Screw
17 Leaf spring
18 Congestion monitor
19 Cover

Setting

Turn on air. Actuate valve Y27 so that the drop chute is positioned opposite the station chain.

Setting in depth

a) Crank the machine until the final folder stops indexing.

b) Put a ruler (6) into the drop chute (7). Set gap A by loosening the screws (4) and shifting the bracket (2).

c) Set distance B, see table, between the station (5) and the leaf spring (8). Adjust by means of the screws (1).

Machine type	B, mm
TBA	17
TB	22

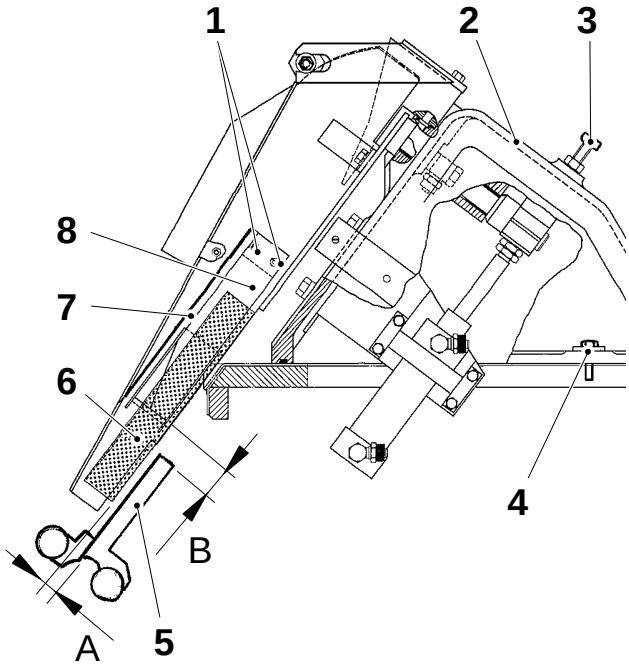

A = 0 – 1 mm

Fig. 1

Setting sideways

Place the ruler (6) against the RH side of the drop chute. Set it aligned with the RH guide plate (9) on the final folder by means of the adjustment screw (3).

Set the bracket (11) of the congestion monitor aligned with the LH guide plate (10) by means of a ruler. To adjust, loosen the screws (12) and shift the bracket.

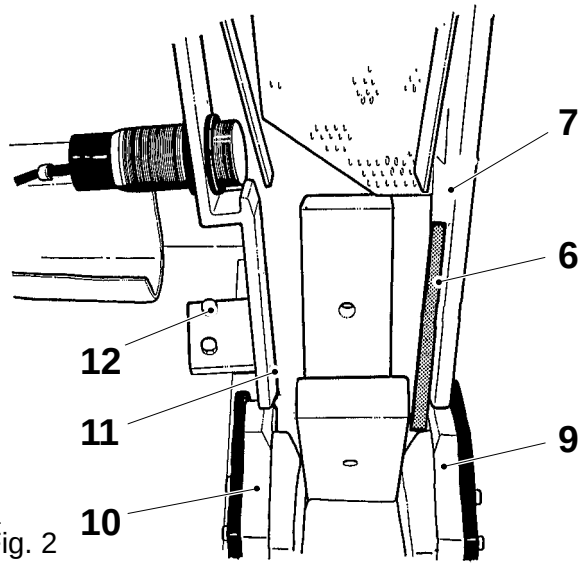

Fig. 2

1 Screw
2 Bracket
3 Adjustment screw
4 Screw
5 Station
6 Ruler
7 Drop chute
8 Leaf spring
9 Guide plate
10 Guide plate
11 Bracket
12 Screw

Setting

a) Crank the machine until the station chain stops indexing.

b) Place template X, see table, in the station chain as illustrated. The template is to rest against the forward station (1).

c) Loosen the screws (2) (two on each side). Set the lift rails (3) so that they bear against the steps of the template.

d) Tighten the screws (2).

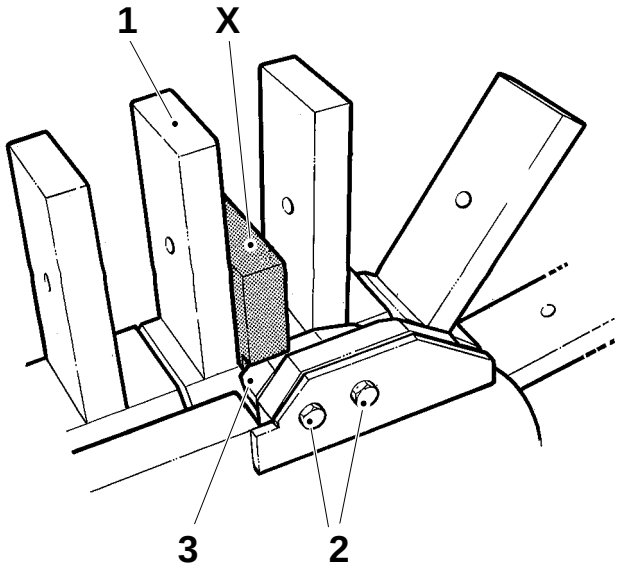

1 Station
2 Screw
3 Lift rail

Volume, ml	Template X, TP No.	A, ±0.1mm
125, 200S	75545	11.5
180 – 250	76308	11.5

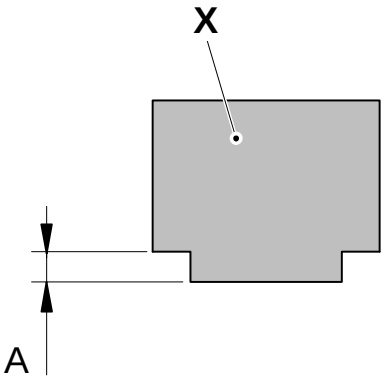

Setting

Fit the folding bars (1) with the plates (2).

Lower the pivot frame and set the folding bars sideways so that the cut-outs (alt. scribed lines) on the pull-down arms (3) are opposite the cut-outs in the folding bars.

The folding bars are to bear against the lugs vertically.

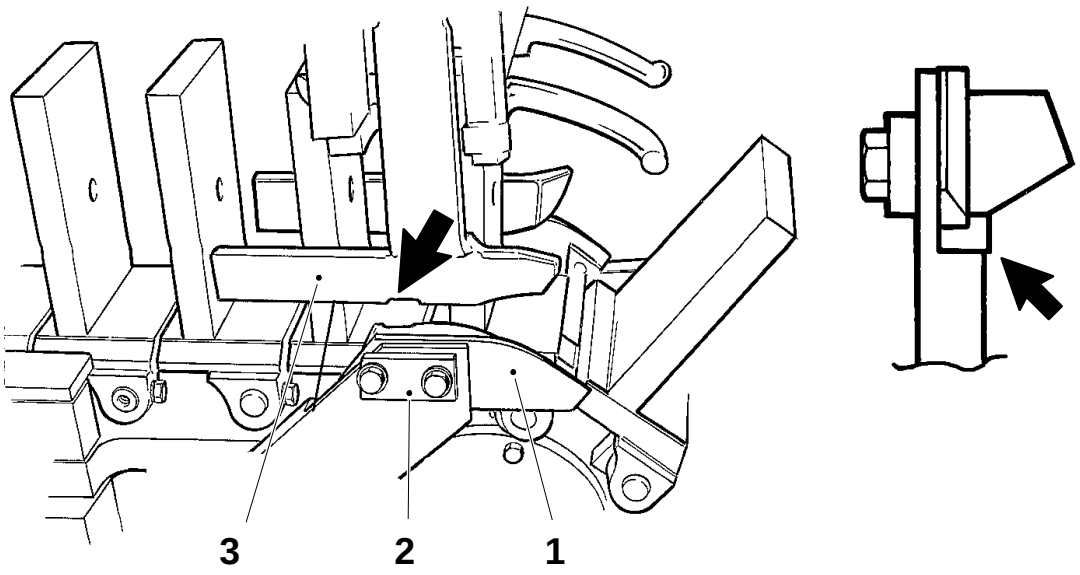

1 Folding bar
2 Plate
3 Pull-down arm

Checking

a) Raise the pivot frame.

b) Clean and blow the pull-down device dry.

c) Check that the sliding surface of the bracket and the lug are not worn.
Replace worn and/or damaged parts.

d) Check that the folding surface of the pull-down arms are not worn. Replace worn and/or damaged parts.

e) Turn on cooling water.

f) Start the hydraulic pump and forcibly actuate hydraulic valve Y41 by means of tool TP No. 76167.

g) Check that there is no leakage of hydraulic oil from the pull-down device. If there is, replace the seal rings (1), see fig.

h) Remove the tool and stop the hydraulic pump.

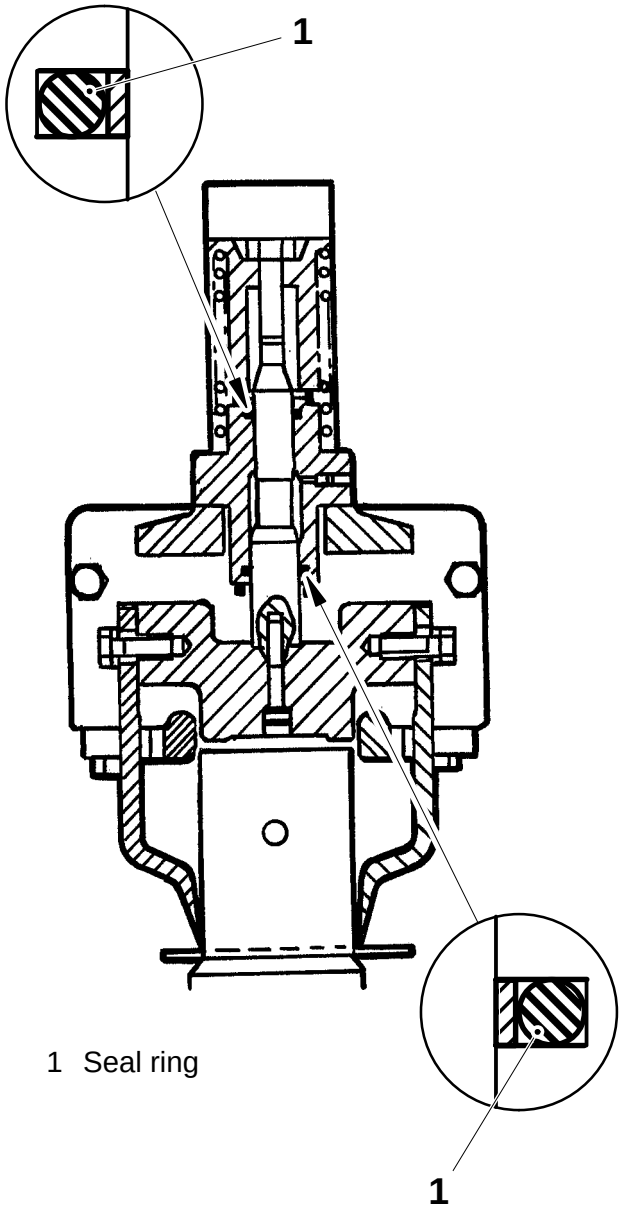

1 Seal ring

Checking

a) Raise the pivot frame.

b) Clean and blow the pull-down device dry.

c) Check that the sliding surface of the bracket and the lug are not worn. Replace worn and/or damaged parts.

d) Check that the folding surface of the pull-down arms are not worn. Replace worn and/or damaged parts.

e) Turn on cooling water.

f) Start the hydraulic pump and forcibly actuate hydraulic valve Y41 by means of tool TP No. 76167.

g) Check that there is no leakage of hydraulic oil from the pull-down device. If there is, replace the seal rings (1) and the support rings (2).
Note!
Fit the seal rings according to fig.

h) Remove the tool and stop the hydraulic pump.

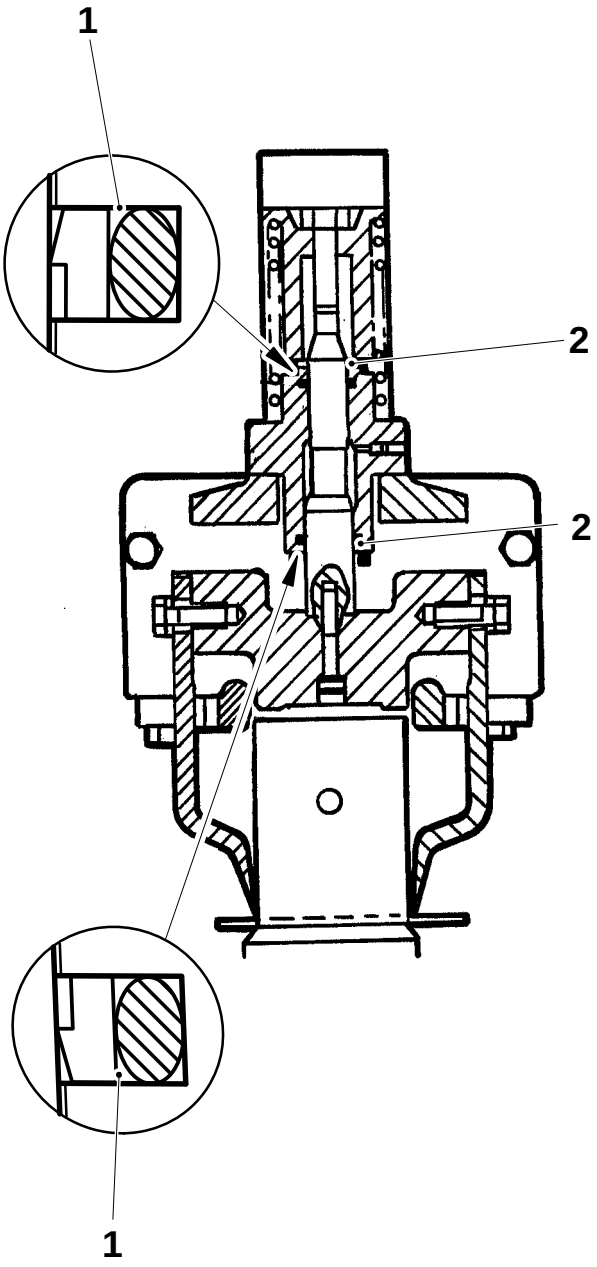

1 Seal ring
2 Support ring

Checking

a) Raise the pivot frame.

b) Clean and blow the pull-down device dry.

c) Check that the sliding surface of the bracket (3), the lug (4) and the guidings (5) are not worn. Replace worn and/or damaged parts.

d) Check that the folding surface of the pull-down arms are not worn. Replace worn and/or damaged parts.

e) Turn on cooling water.

f) Start the hydraulic pump and forcibly actuate hydraulic valve Y41 by means of tool TP No. 76167.

g) Check that there is no leakage of hydraulic oil from the pull-down device. If there is, replace the seal rings (1) and (2) and the support rings (6).
Note!
Fit the seal rings according to fig.

h) Remove the tool and stop the hydraulic pump.

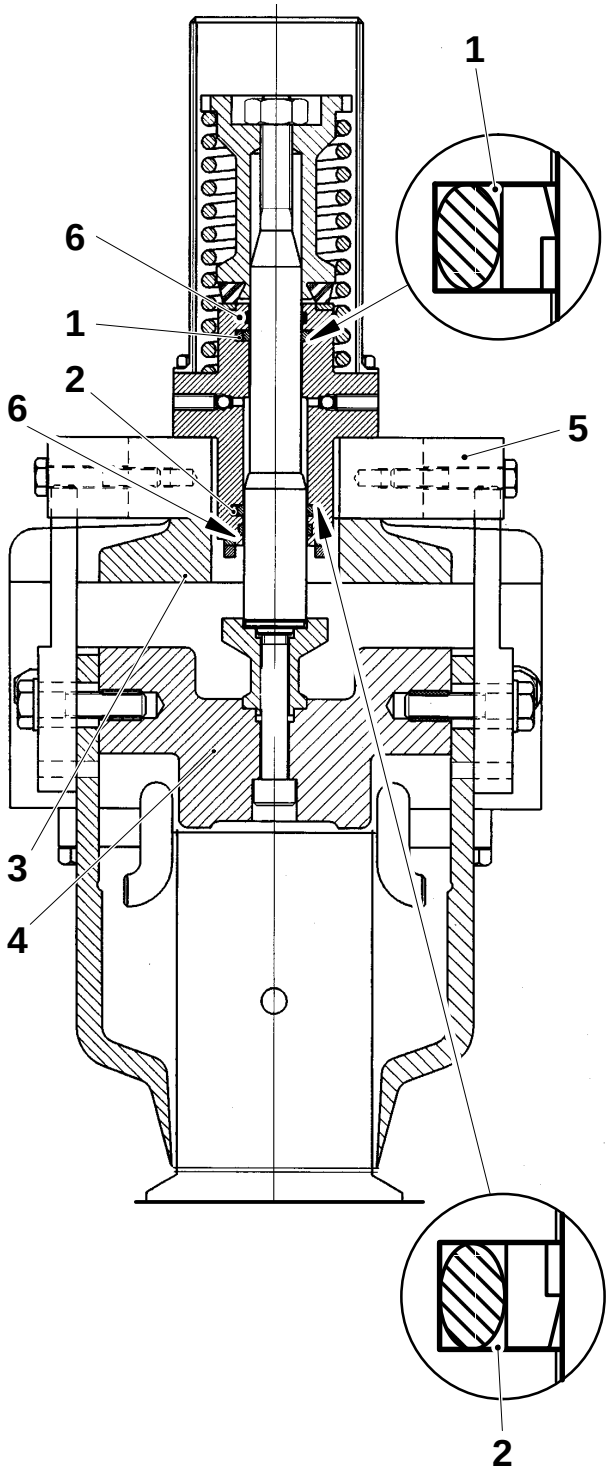

1 Seal ring
2 Seal ring
3 Bracket
4 Lug
5 Guiding
6 Support ring

Setting

a) Raise the pivot frame, remove the pull-down arms (1), and loosen the screws (3).

b) Position template X, see table, against the pull-down lug (4), see fig.

c) Adjust the bars (2) so that they lightly touch the template. Move the template forth and back on the pull-down lug (4) and check that the bars are parallel to the lug. Tighten the screws (3).

d) Remove the template and lower the pivot frame.

Volume, ml	Template X, TP No.	A ±0.2 mm
125	76307–5	48
180	76307–4	64
200	76307–3	64
200S	76307–6	48
236	76307–2	64
250	76307–1	64

(Cont’d overleaf)

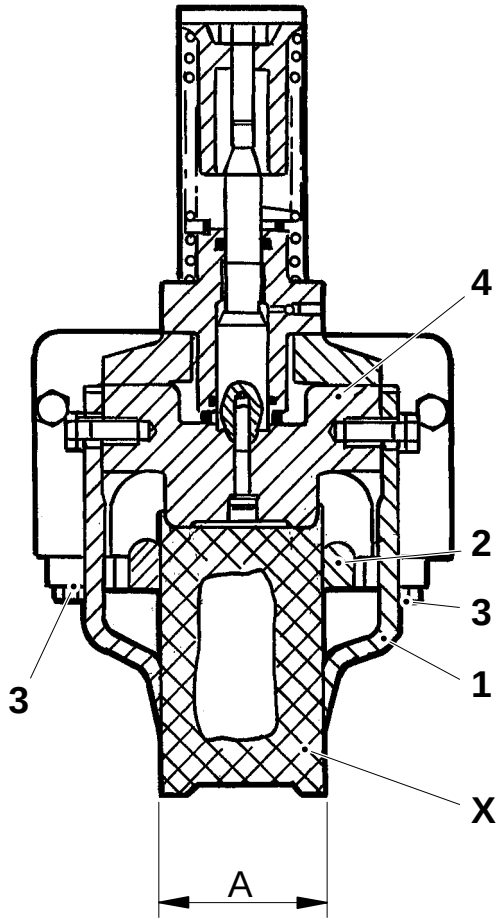

1 Pull-down arm
2 Bar
3 Screw
4 Pull-down lug

(Cont'd)

Alignment with station chain

Crank the machine until the station chain stops indexing.

e) Measure gap A between one station (4) on the station chain and the bar (2) with a feeler gauge. Gaps A must be the same within 0.2 mm on both sides. If not adjust, see page MS 535–5X. Check gap A on all stations.

f) Fit the pull-down arms and set, see pages MS 515–5X and MS 519–5X.

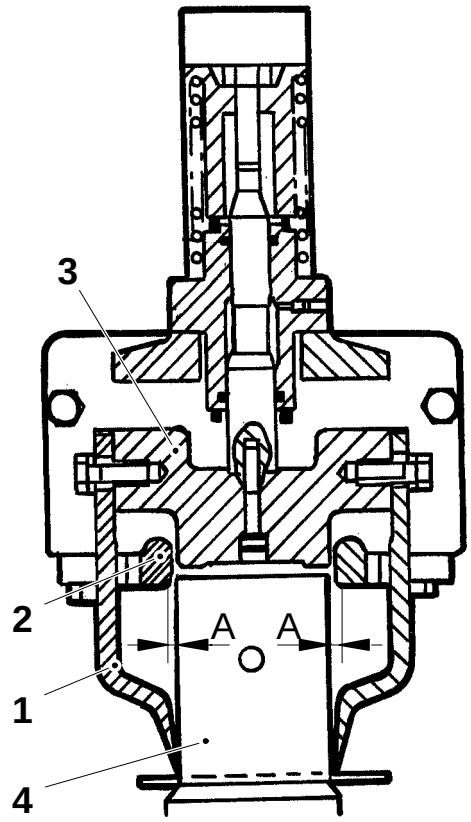

1 Pull-down arm
2 Bar
3 Pull-down lug
4 Station

Setting

a) Raise the pivot frame, remove the pull-down arms (1), and loosen the screws (3).

b) Position template X, see table, against the pull-down lug (4), see fig.

c) Adjust the bars (2) so that they lightly touch the template. Move the template forth and back on the pull-down lug (4) and check that the bars are parallel to the lug. Tighten the screws (3).

d) Remove the template and lower the pivot frame.

Volume, ml	Template X, TP No.	A ±0.2mm
125	76307–5	48
180	76307–4	64
200	76307–3	64
200S	76307–6	48
236	76307–2	64
250	76307–1	64
284	76307–8	64

(Cont’d overleaf)

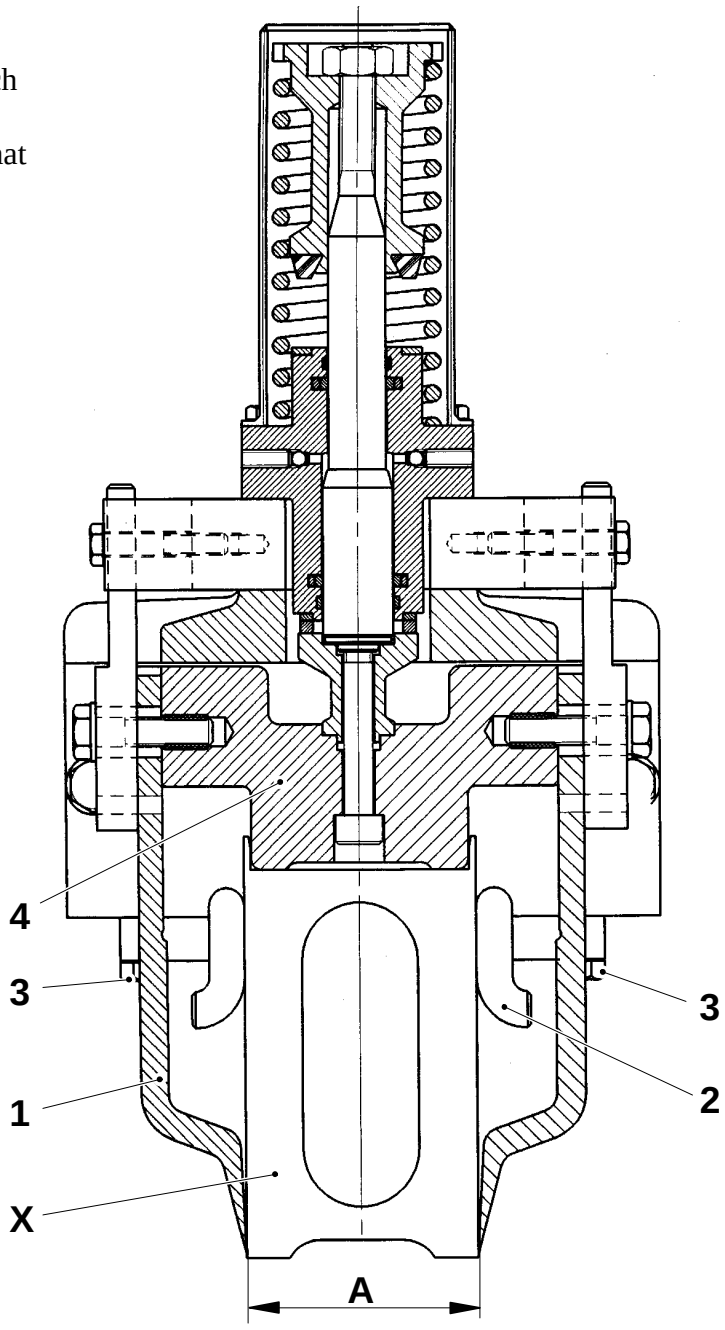

1 Pull-down arm
2 Bar
3 Screw
4 Pull-down lug

(Cont'd)

Alignment with station chain

Crank the machine until the station chain stops indexing.

e) Measure gap A between one station (3) on the station chain and the bar (2) with a feeler gauge. Gaps A must be the same within 0.2 mm on both sides. If not adjust, see page MS 535–5X.

f) Fit the pull-down arms and set, see pages MS 515–5X and MS 519–5X.

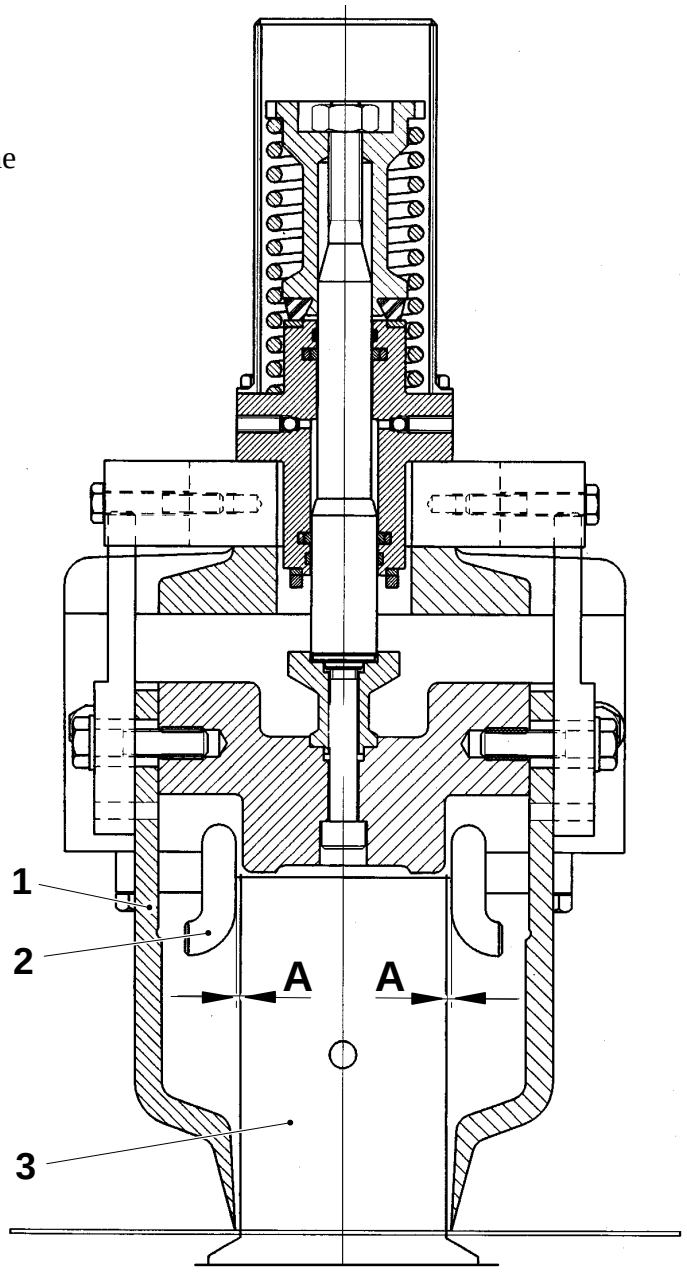

1 Pull-down arm
2 Bar
3 Station

Setting

Crank the machine until the station chain stops indexing.

a) Place template X, see table, in the station chain.

b) Lower the pivot frame.

c) Adjust the pull-down arms (1) so that they lightly touch the template.

Note!
This adjustment is to be carried out by bending the arms lightly by hand.

If the arms have to be bent more than just slightly, they must be removed, placed in a vice, and bent as required.

d) Raise the pivot frame and remove the template.

Set the vertical position of the pull-down arms, see page MS 519–5X.

Volume, ml	Template X, TP No.	A, ±0.2 mm
125	76307–5	48
180	76307–4	64
200	76307–3	64
200S	76307–6	48
236	76307–2	64
250	76307–1	64

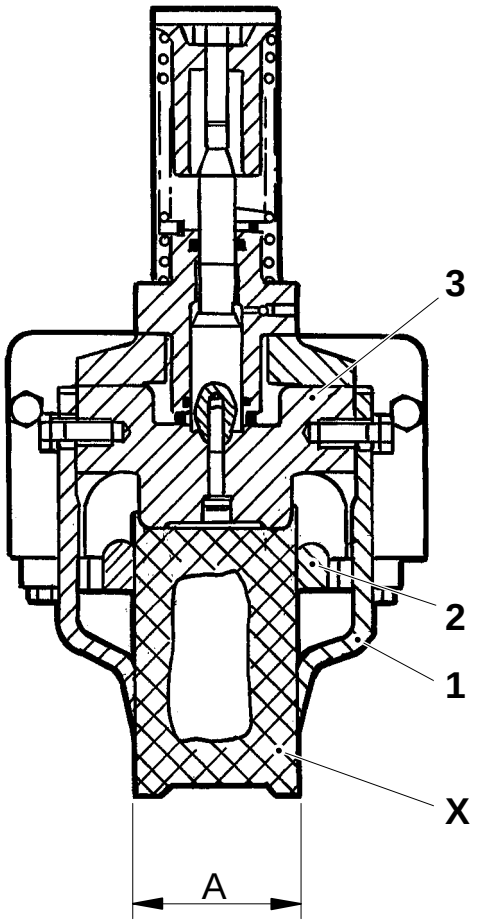

1 Pull-down arm
2 Bar
3 Pull-down lug

Setting

Crank the machine until the station chain stops indexing.

a) Place template X, see table, in the station chain.

b) Lower the pivot frame.

c) Shift the pull-down arms (1) so that they lightly touch the template.

Note!
This adjustment is to be carried out by bending the arms lightly by hand.

If the arms have to be bent more than just slightly, they must be removed, placed in a vice, and bent as required.

d) Raise the pivot frame and remove the template.

Set the vertical position of the pull-down arms, see page page MS 519–5X.

Volume, ml	Template X, TP No.	A ±0.2 mm
125	76307–5	48
180	76307–4	64
200	76307–3	64
200S	76307–6	48
236	76307–2	64
250	76307–1	64
284	76307–8	64

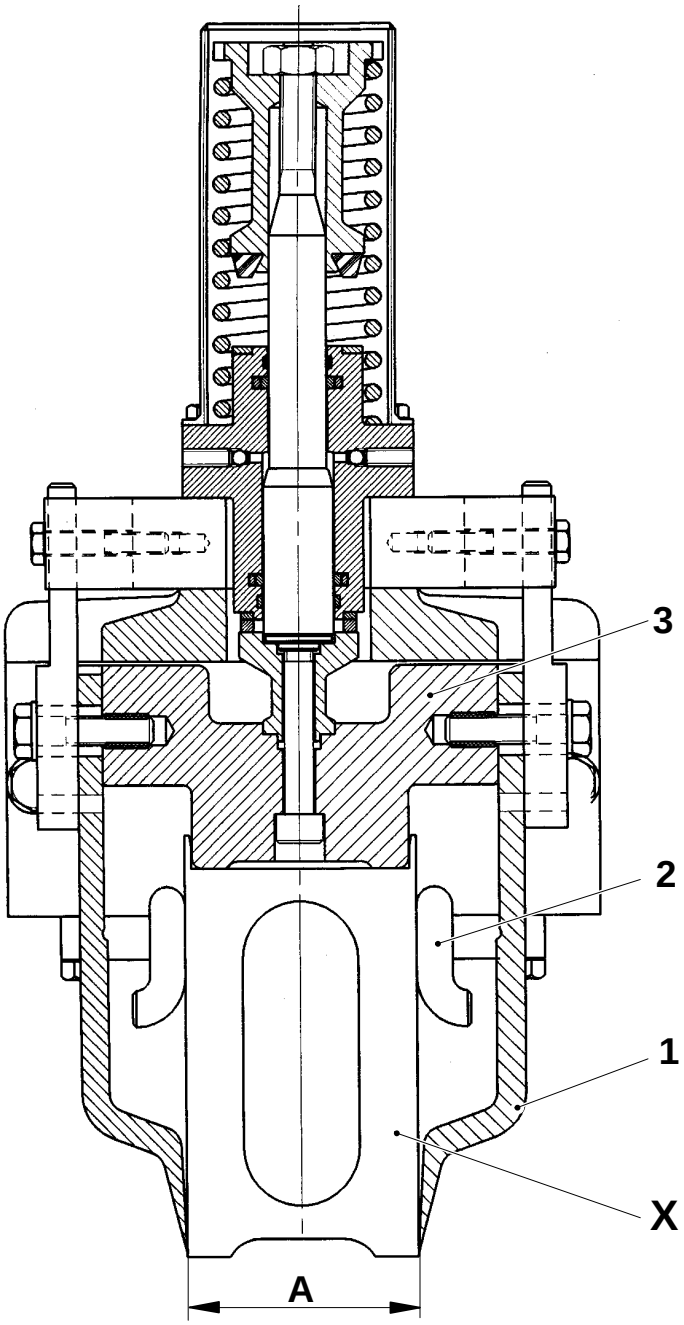

1 Pull-down arm
2 Bar
3 Pull-down lug

Setting

Crank the machine until the station chain stops indexing.

a) Remove the cover (1). Loosen the screws (4) and move up the pull-down arms (5) as far as possible.

b) Raise the pivot frame.

c) Start the hydraulic pump and forcibly actuate hydraulic valve Y41 by means of tool TP No. 76167 so that the pull-down lug (6) moves down.

d) Place template X, see table, in the station chain centered underneath the pull-down lug (6).

e) Carefully tilt back the pivot frame.

f) Loosen the nut (2) and turn the threaded sleeve (3) until there is a play, 0.05 mm, under the stop lug (7) of the pivot frame.

g) Tighten the nut (2).

h) Set the vertical position of the pull–down arms, see page MS 519–5X.

i) Remove tool TP No. 76167 from the hydraulic valve and stop the hydraulic pump.

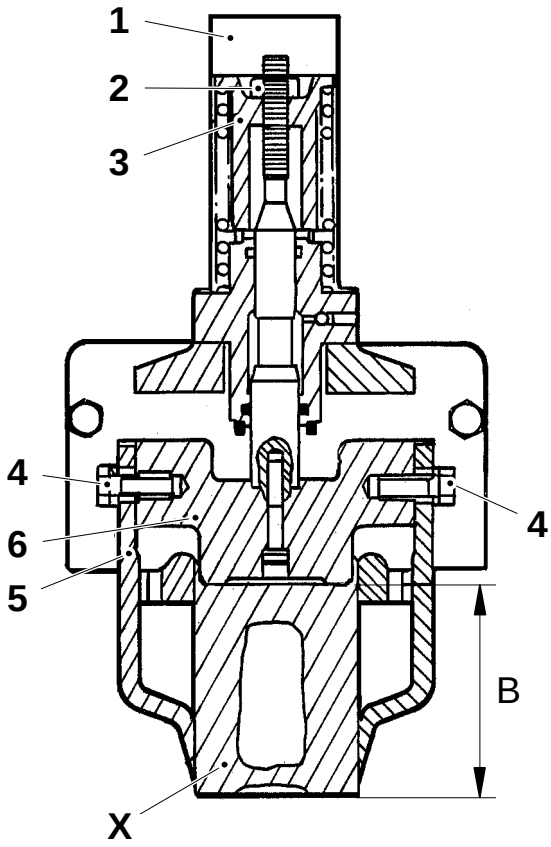

Volume, ml	Template X, TP No.	B ±0.2 mm
125	76307–5	86.5
180	76307–4	76.0
200	76307–3	83.5
200S	76307–6	119.8
236	76307–2	100.2
250	76307–1	106.8

1 Cover
2 Nut
3 Threaded sleeve
4 Screw
5 Pull-down arm
6 Pull-down lug
7 Stop lug

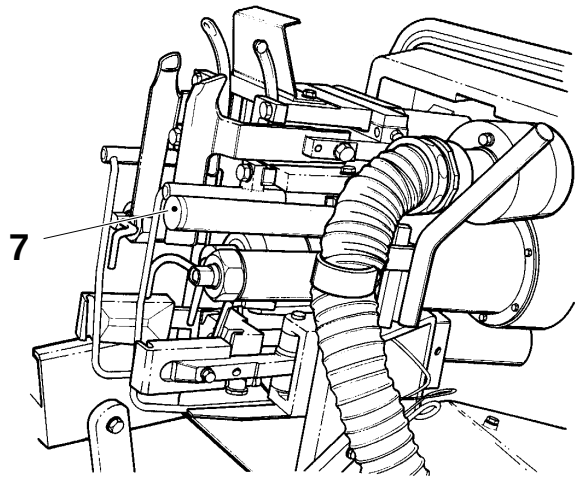

Setting

Crank the machine until the station chain stops indexing.

a) Remove the cover (1). Loosen the screws (4) and move up the pull-down arms (5) as far as possible.

b) Raise the pivot frame.

c) Start the hydraulic pump and forcibly actuate hydraulic valve Y41 by means of tool TP No. 76167 so that the pull-down lug (6) moves down.

d) Place template X, see table, in the station chain centered underneath the pull-down lug (6).

e) Carefully tilt back the pivot frame.

f) Loosen the nut (2) and turn the threaded sleeve (3) until there is a play, 0.05 mm, under the stop lug (7) of the pivot frame.

g) Tighten the nut (2).

h) Set the vertical position of the pull-down arms, see page MS 519–5X.

i) Remove tool TP No. 76167 from the hydraulic valve and stop the hydraulic pump.

Volume, ml	Template X, TP No.	B ±0.2 mm
125	76307–5	86.5
180	76307–4	76.0
200	76307–3	83.5
200S	76307–6	119.8
236	76307–2	100.2
250	76307–1	106.8
284	76307–8	120.2

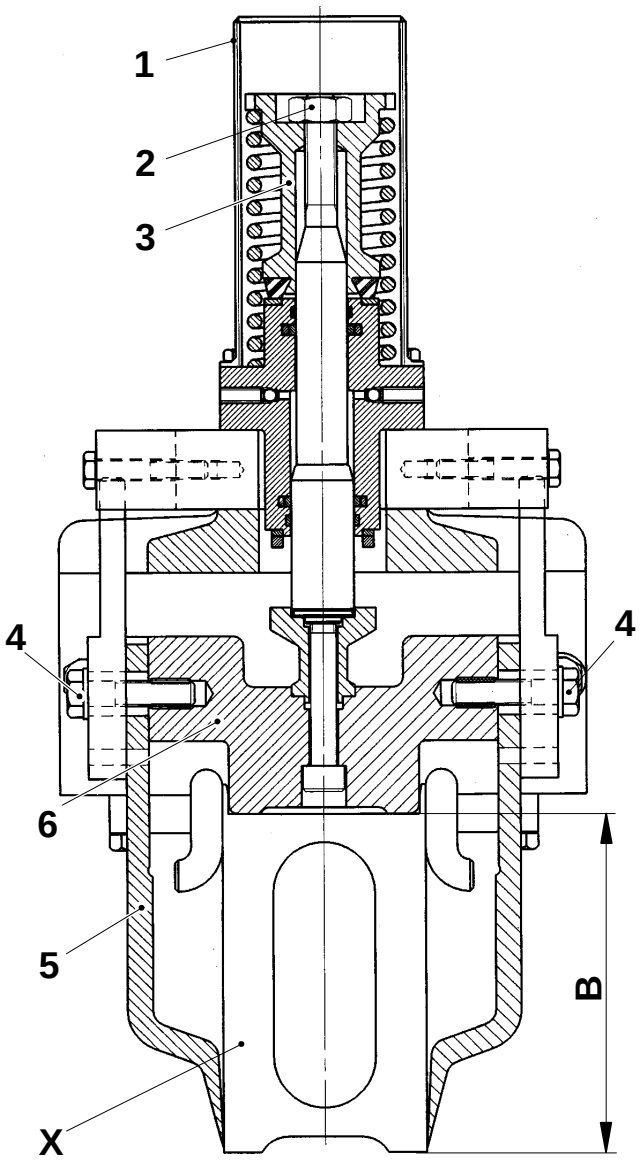

1 Cover
2 Nut
3 Threaded sleeve
4 Screw
5 Pull-down arm
6 Pull-down lug
7 Stop lug

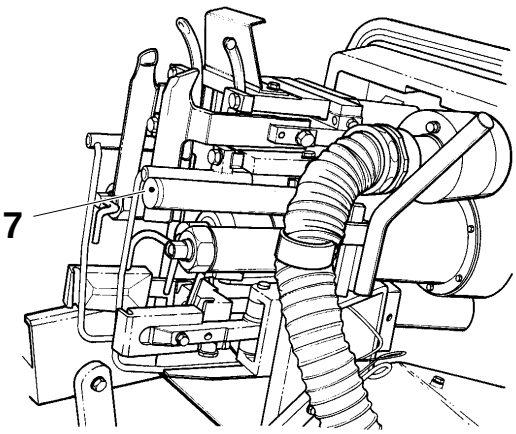

Setting

a) Put a piece of sheet metal (3), thickness 1.25 mm, in the station (5) at the front edge of the pull-down arms (1).

b) Turn on cooling water.

c) Start the hydraulic pump.

d) Forcibly actuate hydraulic valve Y41 by means of tool TP No. 76167 so that the pull-down arms (1) move down.

e) Loosen the screws (4) and shift the pull-down arms (1) so that they lightly touch the piece of metal (3).

f) Remove the piece of sheet metal and tool TP No. 76167 and stop the pump.

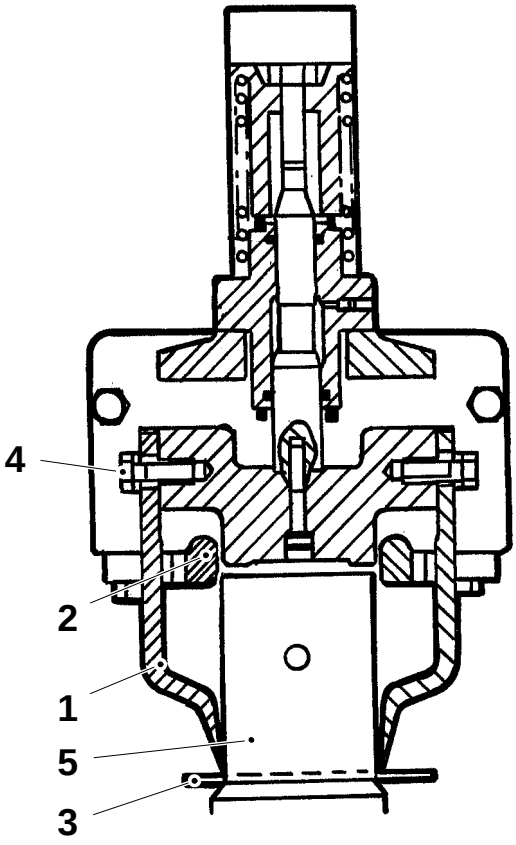

1 Pull-down arm
2 Rail
3 Piece of sheet metal, thickness 1.25 mm
4 Screw
5 Station

Setting

a) Put a piece of sheet metal (2), thickness 1.25 mm, in the station (4) at the front edge of the pull-down arms (1).

b) Turn on cooling water.

c) Start the hydraulic pump.

d) Forcibly actuate hydraulic valve Y41 by means of tool TP No. 76167 so that the pull-down arms (1) move down.

e) Loosen the screws (3) and shift the pull-down arms (1) so that they lightly touch the piece of metal (2).

f) Remove the piece of sheet metal and tool TP No. 76167 and stop the pump.

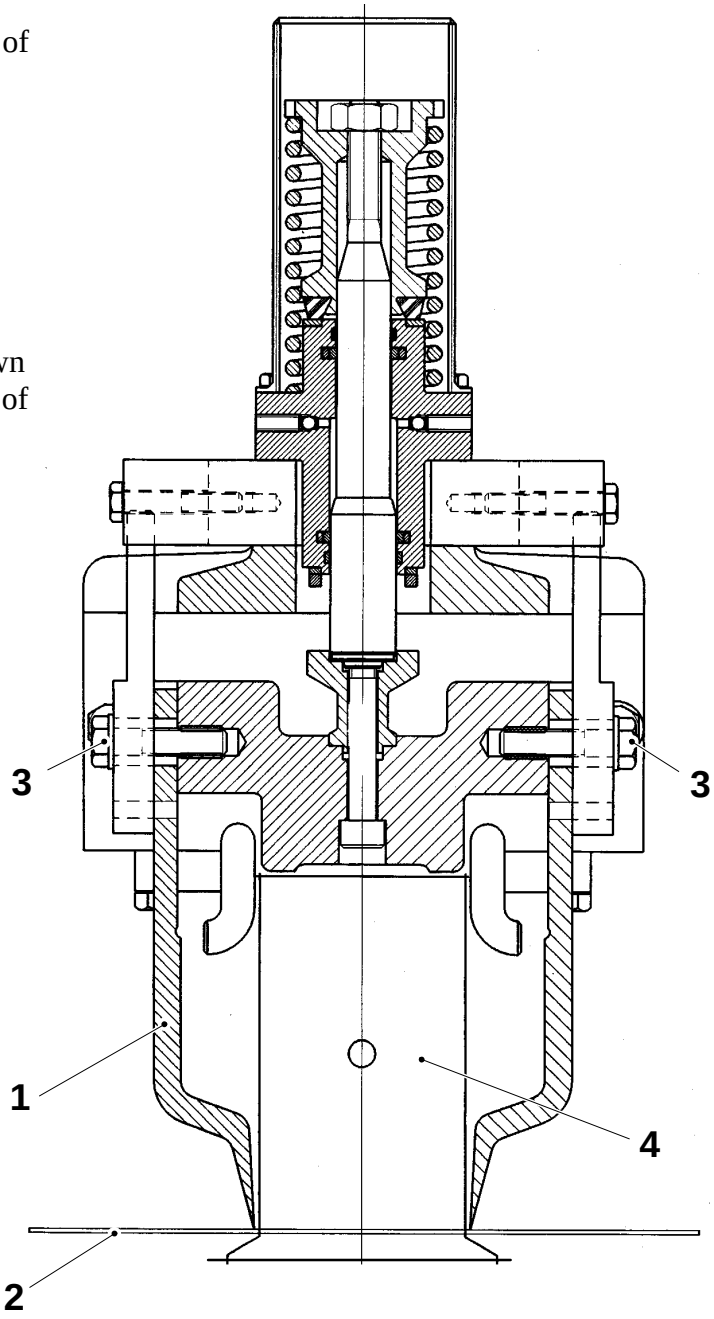

1 Pull-down arm
2 Piece of sheet metal, thickness 1.25 mm
3 Screw
4 Station

Checking

a) Raise the pivot frame.

b) Clean the pressure unit and blow it dry.

c) Check that the bushings and shafts are not worn and/or damaged. Replace worn and/or damaged parts.

d) Check that the pressure block and the side blocks are not worn. Replace worn and/or damaged parts.

e) Turn on cooling water.

f) Start the hydraulic pump and forcibly actuate hydraulic valve Y42 by means of tool TP No. 76167.

g) Check that there is no leakage of hydraulic oil from the pressure unit. If there is, replace the seal rings (1) and (2), see fig.

h) Remove tool TP No. 76167 and stop the hydraulic pump.

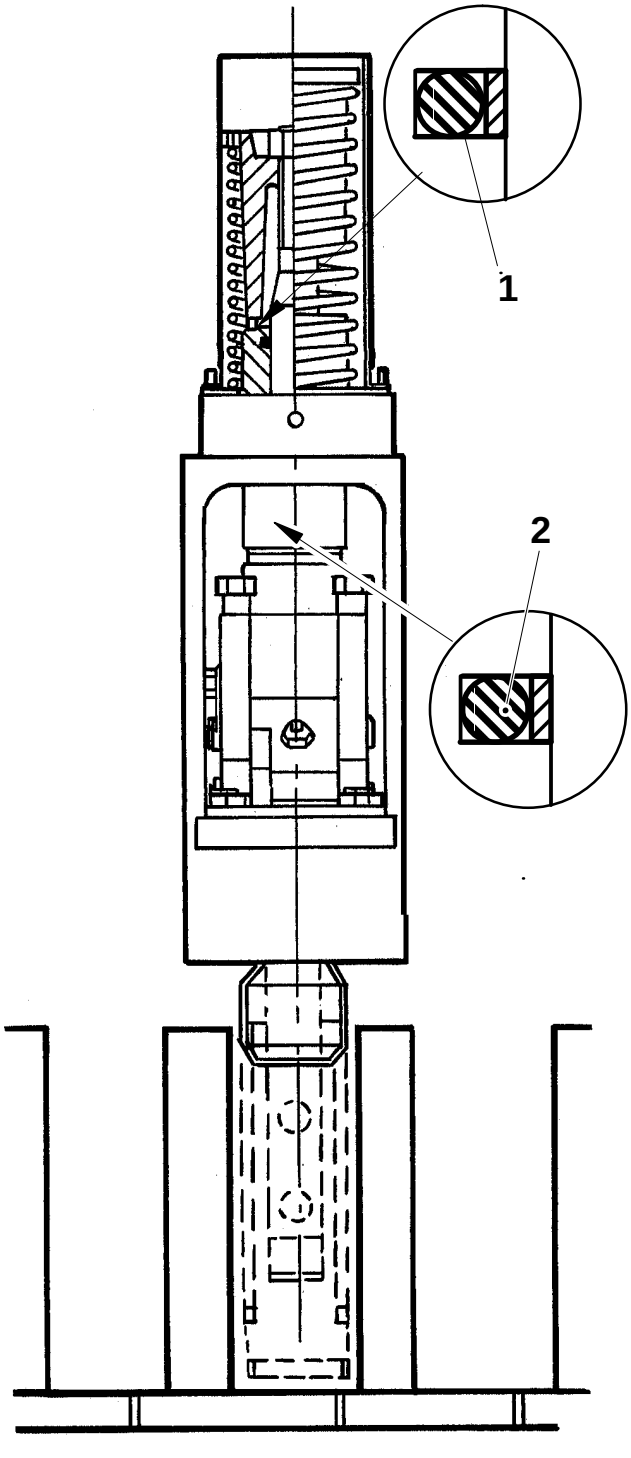

1 Seal ring
2 Seal ring

Checking

a) Raise the pivot frame.

b) Clean the pressure unit and blow it dry.

c) Check the bushings and shafts for wear and/or damages. Replace worn and/or damaged parts.

d) Check that the pressure block and the side blocks are not worn and/or damaged. Replace worn and/or damaged parts.

e) Turn on cooling water.

f) Start the hydraulic pump and forcibly actuate hydraulic valve Y42 by means of tool TP No. 76167.

g) Check that there is no leakage of hydraulic oil from the pressure unit. If there is, replace the seal rings (1) and the support rings (2).
Note!
Fit the seal rings according to fig.

h) Remove tool TP No. 76167 and stop the hydraulic pump.

i) Check that the pressure unit is correctly set, see page MS 521–5X.

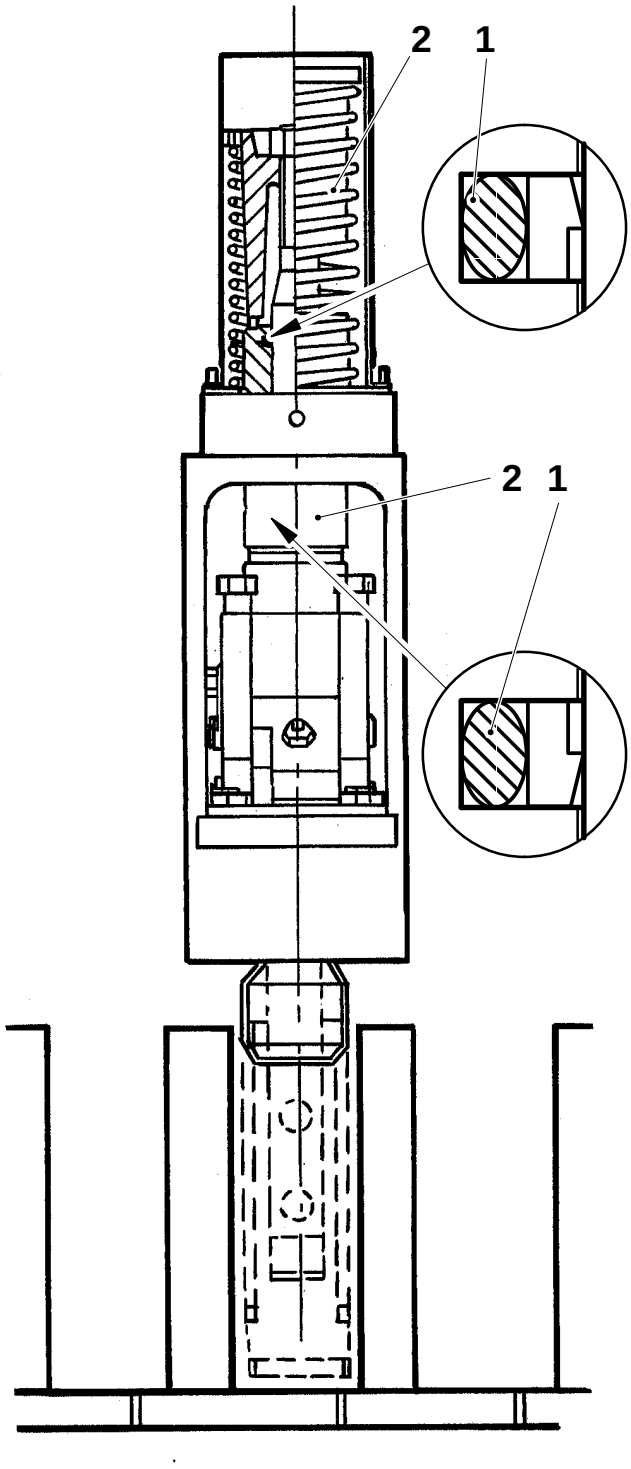

1 Seal ring
2 Support ring

Checking

a) Raise the pivot frame.

b) Clean the pressure unit and blow it dry.

c) Check the bushings and shafts for wear and/or damages. Replace worn and/or damaged parts.

d) Check that the pressure block and the side blocks are not worn and/or damaged. Replace worn and/or damaged parts.

e) Turn on cooling water.

f) Start the hydraulic pump and forcibly actuate hydraulic valve Y42 by means of tool TP No. 76167.

g) Check that there is no leakage of hydraulic oil from the pressure unit.
If there is, replace the seal rings (1) and the support rings (2).
Note!
Fit the seal rings according to fig.

h) Remove tool TP No. 76167 and stop the hydraulic pump.

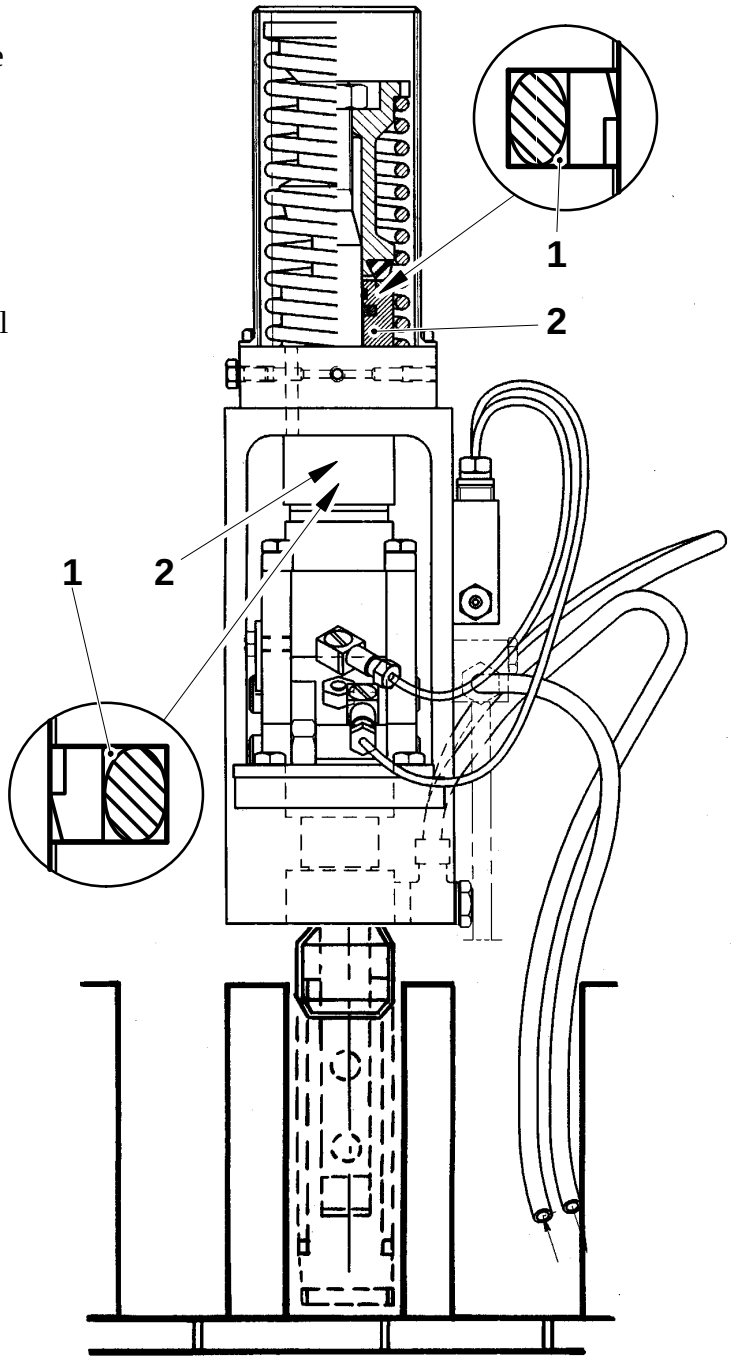

1 Seal ring
2 Support ring

Setting

Vertical position

a) Remove the cover (1).

b) Set height B by loosening the nut (2) and turning the threaded sleeve (3).
Further adjustment can be carried out during operation. Make sure measurement B is within the limits.

(Cont'd overleaf)

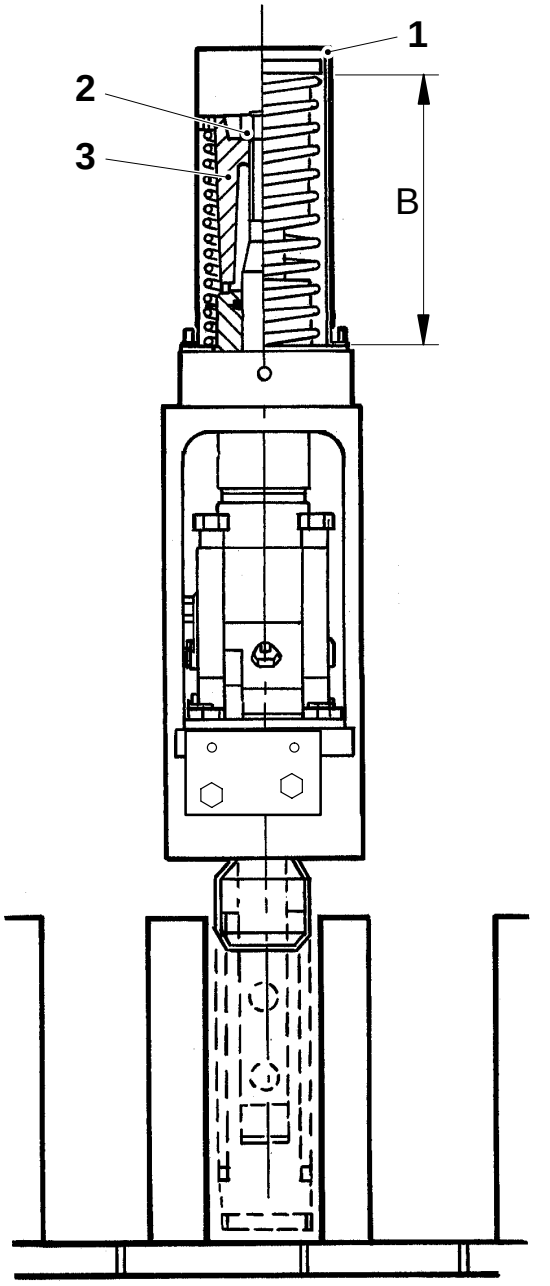

B = 100 mm ±1 mm

1 Cover
2 Nut
3 Threaded sleeve

Fig. 1

(Cont'd)

Parallelity

Crank the machine until the station chain stops indexing.

a) Loosen the nuts (6) and tap on the locking pin to set the eccentric axle pin (5) free. Set the side lugs (7) in their outer position.

b) Open for cooling water.

c) Start the hydraulic pump. Forcibly actuate hydraulic valve Y42 by means of tool TP No. 76167.

d) Set the side lugs parallel to the station (8), see fig. 2. Tighten the nut (6).

e) Loosen the screws (4). Shift the pressure unit lengthwise.
The side lugs (7) are to be positioned symmetrically ±0.2 mm between the stations (8), see fig. 3.

f) Shift the pressure unit sideways.
The side lugs (7) are to be positioned symmetrically ±0.2 mm between the stations (8), see fig. 4. If required, loosen/ tighten the allen screws (9); make sure they both bear against the frame.

g) Tighten the screws (4).

h) Set the cooling pipes as close to the side lugs as possible without touching them. All cooling pipes must go clear.

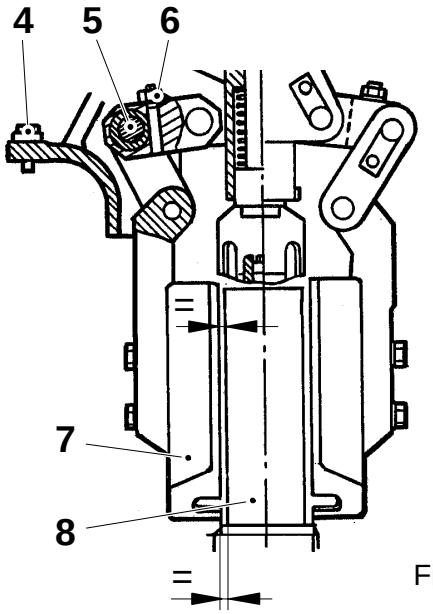

Fig. 2

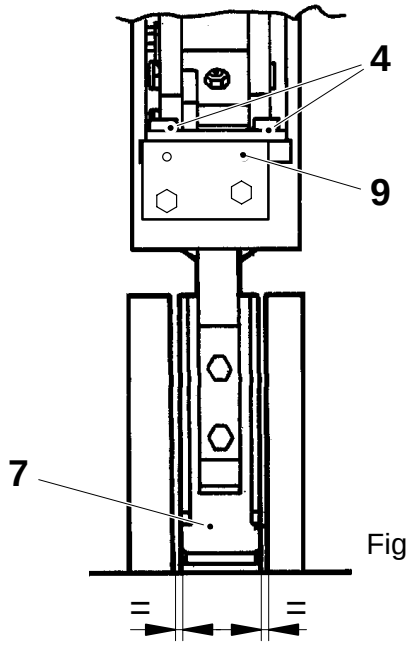

Fig. 3

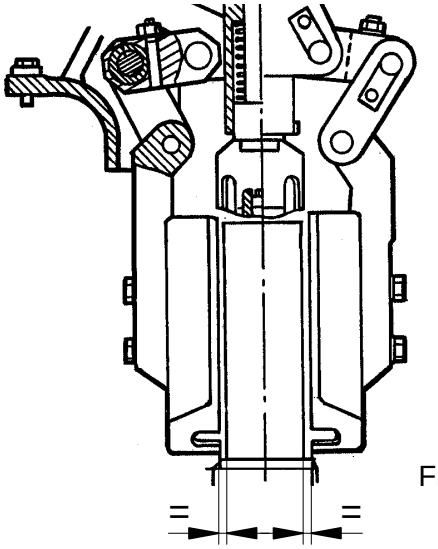
Fig. 4

4 Screw
5 Eccentric axle pin
6 Nut
7 Side lug
8 Station
9 Allen screw

Setting

Vertical position

a) Remove the cover (1).

b) Set height B by loosening the nut (2) and turning the threaded sleeve (3).
Further adjustment can be carried out during operation. Make sure measurement B is within limits.

(Cont'd overleaf)

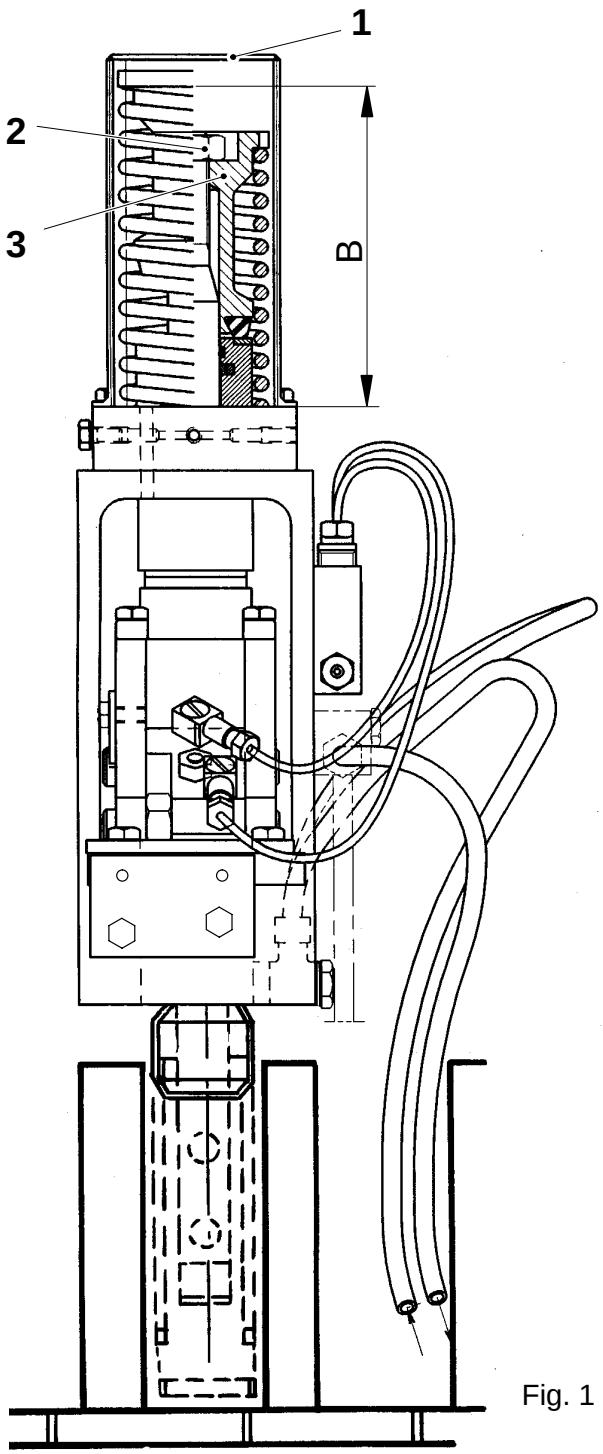

B = 100 mm ±1 mm

Fig. 1

1 Cover
2 Nut
3 Threaded sleeve

(Cont'd)

Parallelity

Crank the machine until the station chain stops indexing.

a) Loosen the nuts (6) and tap on the locking pin to set the eccentric axle pin (5) free. Set the side lugs (7) in their outer position.

b) Open for cooling water.

c) Start the hydraulic pump. Forcibly actuate hydraulic valve Y42 by means of tool TP No. 76167.

d) Set the cooling pipes as close to the side lugs as possible without touching them. All cooling pipes must go clear.

e) Set the side lugs parallel to the station (8), see fig. 2. Tighten the nut (6).

f) Loosen the screws (4). Shift the pressure unit lengthwise.
The side lugs (7) are to be positioned symmetrically ±0.2 mm between the stations (8), see fig. 3.

g) Shift the pressure unit sideways.
The side lugs (7) are to be positioned symmetrically ±0.2 mm between the stations (8), see fig. 4. If required, loosen/ tighten the allen screws (9); make sure they both bear against the frame.

h) Tighten the screws (4).

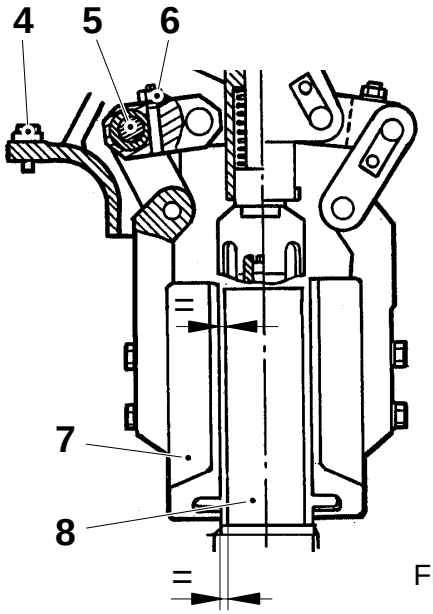

Fig. 2

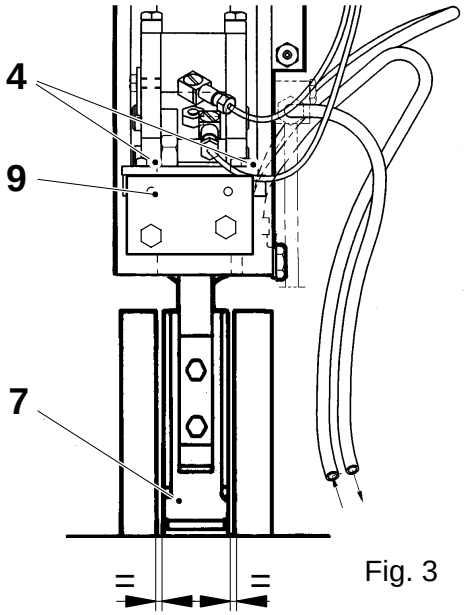

Fig. 3

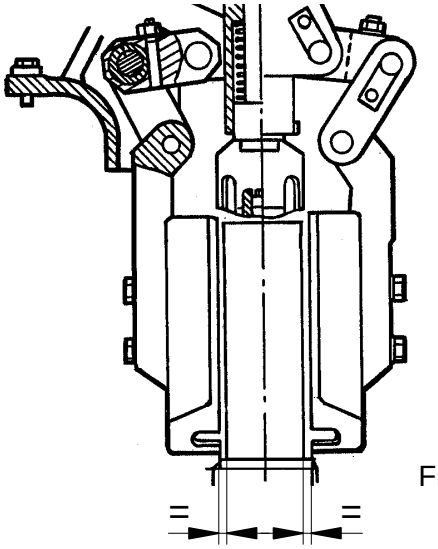
Fig. 4

4 Screw
5 Eccentric axle pin
6 Nut
7 Side lug
8 Station
9 Allen screw

Cleaning

Clean the nozzles (1) from plastic deposits.

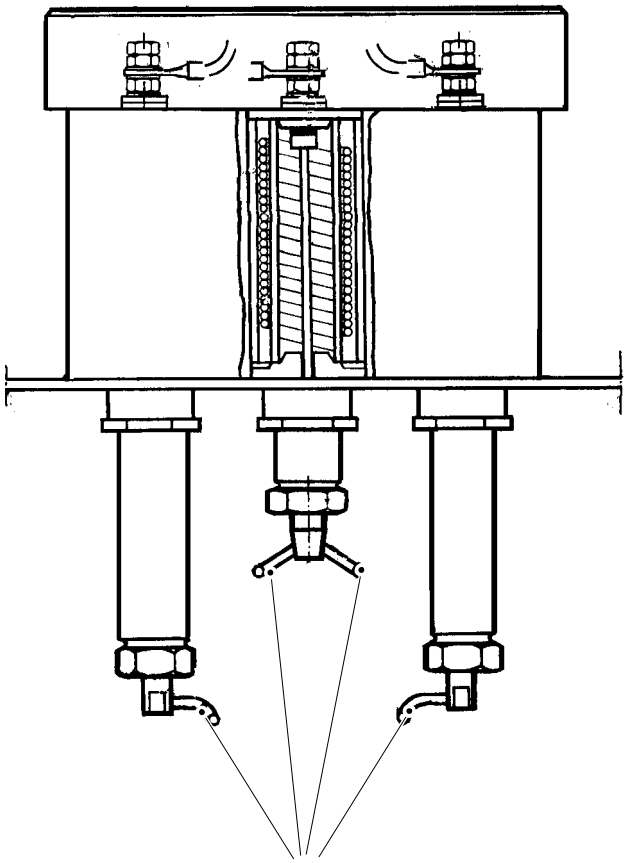

1 Nozzle

Removal

a) Remove the element cover (1).

b) Undo the two cable connections (3).

c) Undo the four screws (4) and remove the element.

d) Attach the element units so that they cannot drop out if the FS element is turned upside down.

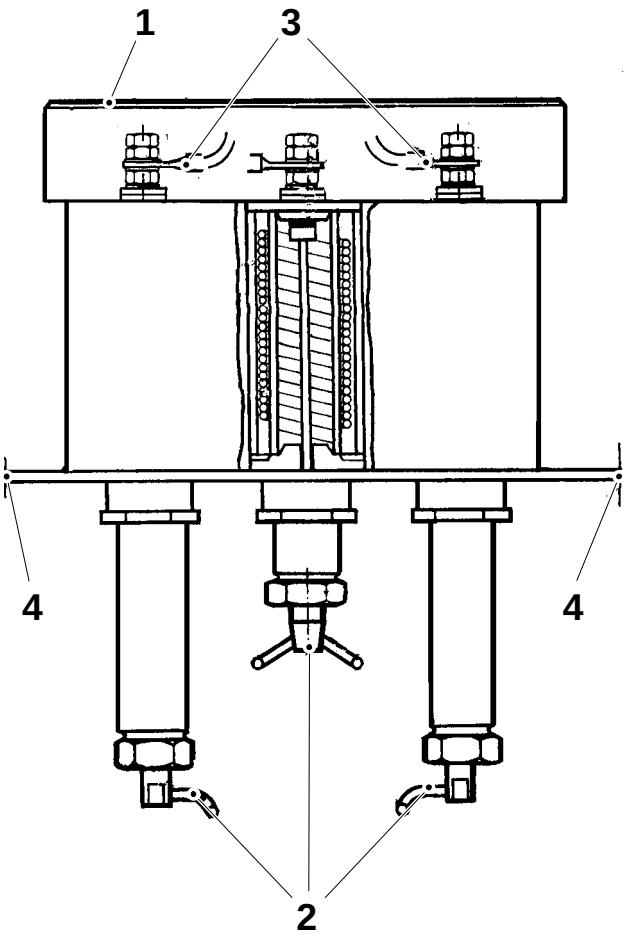

1 Element cover
2 Air nozzle
3 Cable connection
4 Screw

Overhaul

a) Remove and clean the air nozzles (4) and the insulation sleeve (2).

b) Lift up the three element units (1).

c) Remove the ceramic sleeves (3) from the heating coil (5). Replace discoloured or damaged element units.

d) Make sure the insulation sleeves (2) are not damaged. If they are, replace them.

e) Check that all seals are intact.

f) Reassemble air nozzles, insulation sleeves, element units, heating coils and ceramic sleeves.

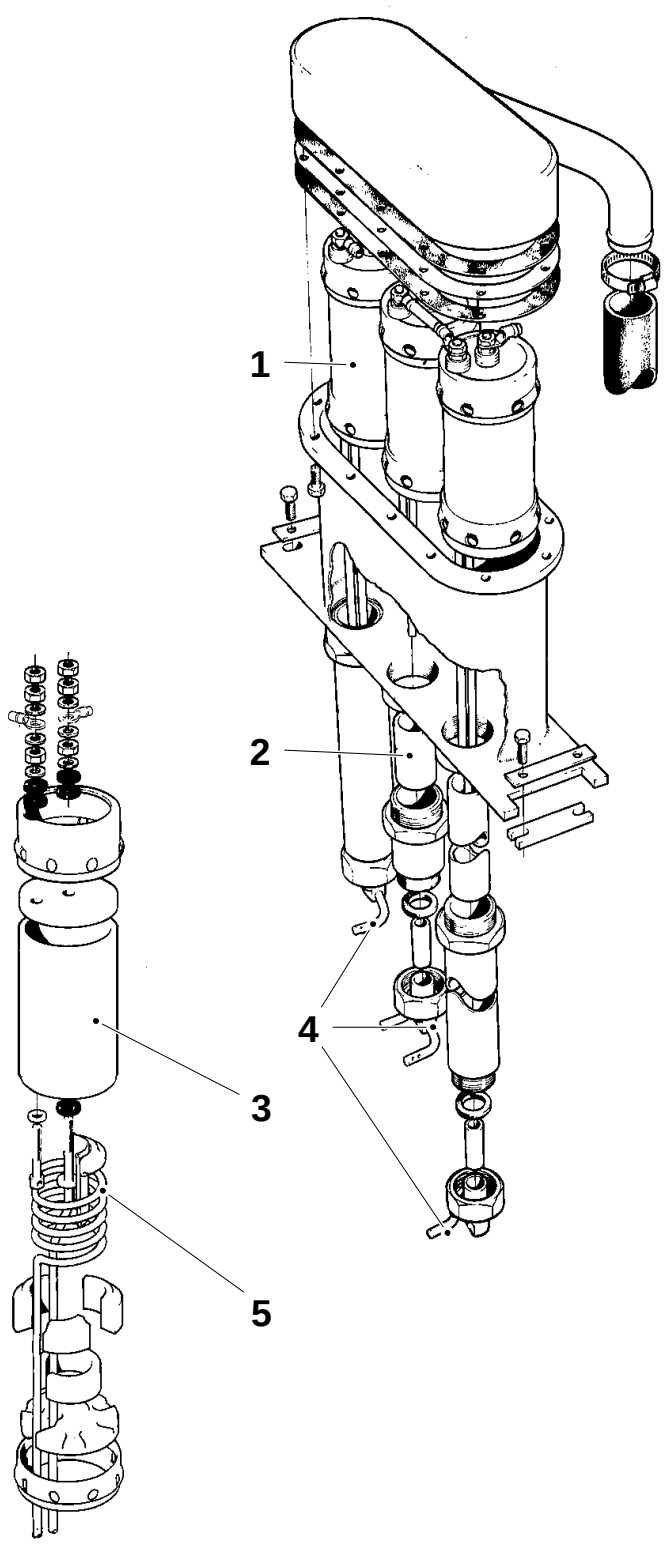

1 Element unit
2 Insulation sleeve
3 Ceramic sleeve
4 Air nozzle
5 Heating coil

Fitting

a) Fit the element with the four screws (4).

b) Attach the cables (3).

c) Before fitting the element cover the air nozzles must be adjusted by means of a template.

d) Set the air nozzles, see page MS 525–5X.

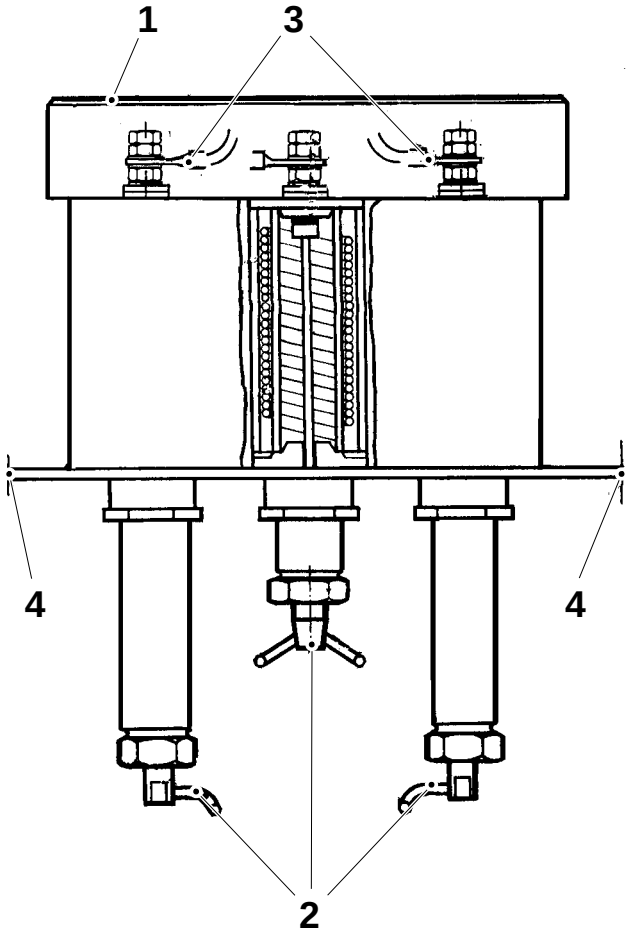

1 Element cover
2 Air nozzle
3 Cable connection
4 Screw

Setting

Crank the machine until the station chain stops indexing.

Put templates A and B on the stations with the arrows in the running direction of the station chain, see fig. 1.

Adjust the air nozzles vertically by undoing the nut (1) and remove or add copper washers (2) so that each nozzle is touching the template.

Adjust the air nozzles sideways and in longitudinal direction by loosening the nut (1) and moving each air nozzle so that it touches the pin and the shoulder of the template.

The complete FS element can be moved in longitudinal direction by loosening the screws (3), see fig. 2.

Volume, ml	Template A, TP No.	Template B, TP No.
125		75531–2
180	76467	75531–1
200	76467	75531–1
200S		76348
236	76467	75531–1
250	76467	75531–1
284	76467	75531–1

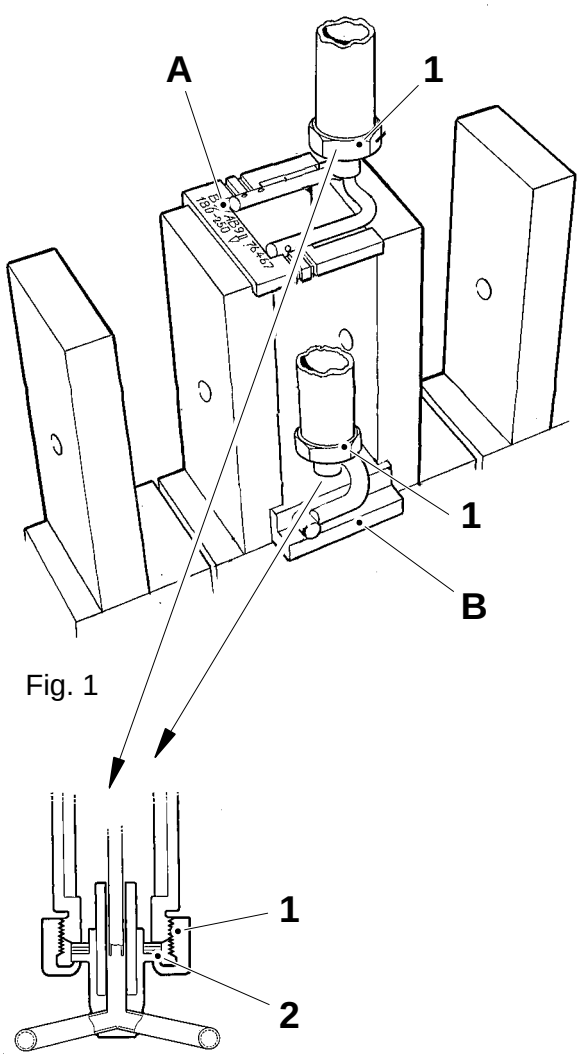

Fig. 1

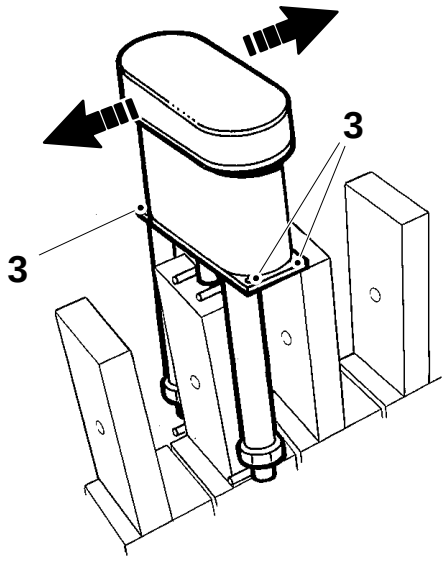

Fig. 2

1 Nut
2 Washer
3 Screw

Checking

a) Check that discharge finger (1) is straight and that the vulcanization (2) is intact.

b) Check duplex chain (3), sprockets (4), and bearing for wear and/or damages. If required replace worn and/or damaged parts.

c) Check the slide blocks (5) of the duplex chain. Replace as required.

d) Set the discharge finger, see page MS 529–5X.

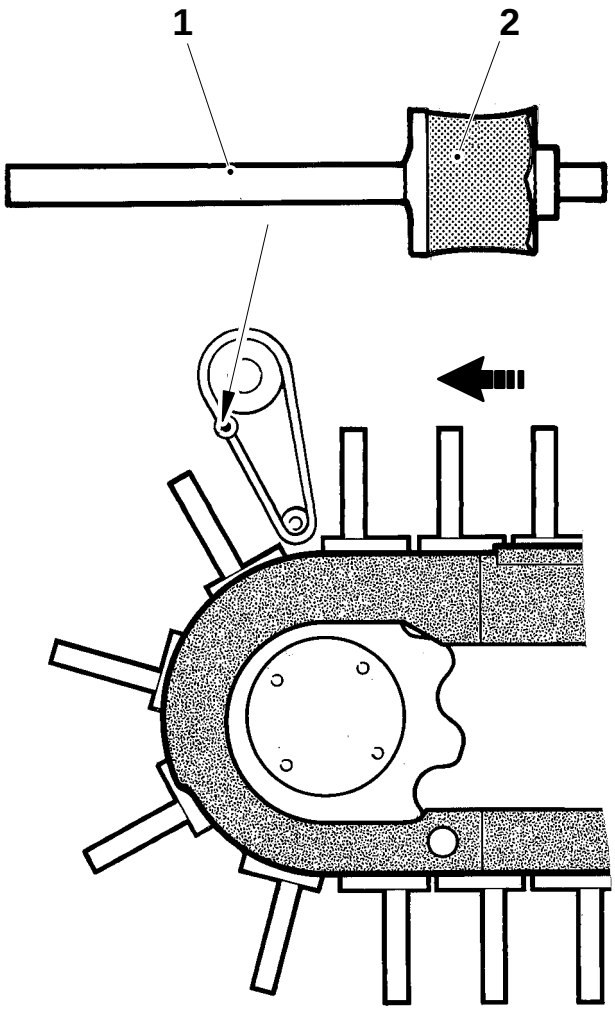

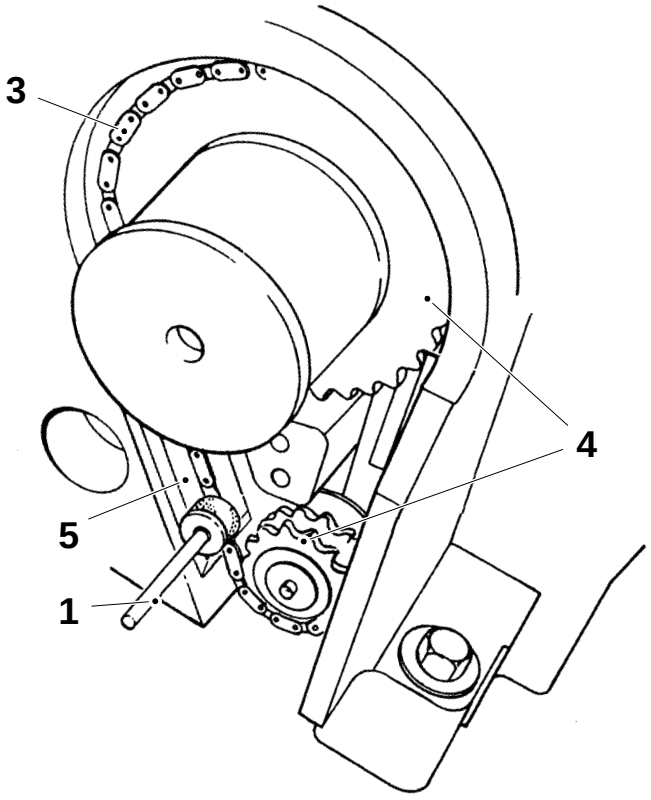

1 Discharge finger
2 Vulcanization
3 Duplex chain
4 Sprocket
5 Slide block

Checking

Check that the discharge finger (1) is straight and that the vulcanization (2) is intact.

Check the duplex chain (3), sprockets (4), and bearing for wear and/or damages. If required, replace worn and/or damaged parts.

Check the duplex chain slide lugs (5) and the slide segment (6) of the chain tensioner for wear and/or damages. Replace as required.

Set the discharge finger, see page MS 529–5X:1.

Check gap A between the holder (7) and cover plate (8). Setting, see page MS 529–5X:2.

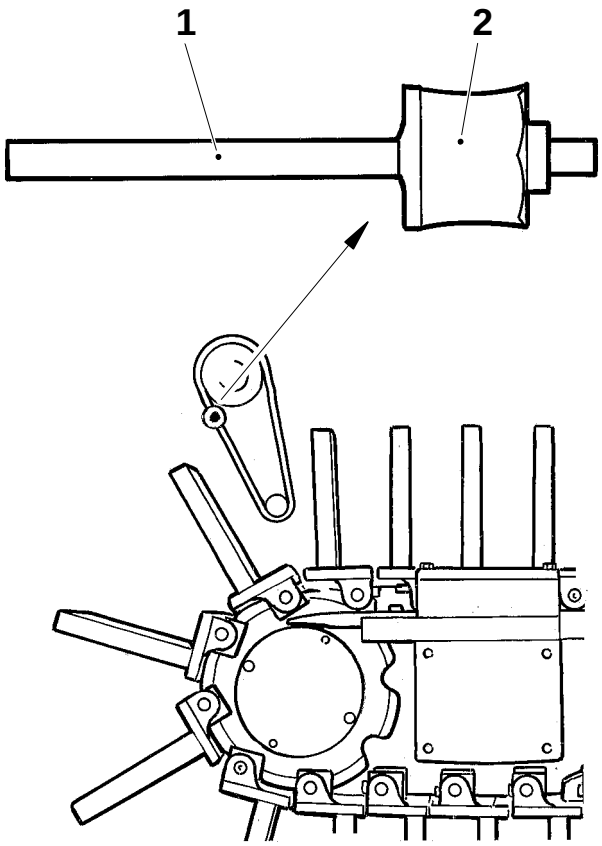

A = min 2 mm

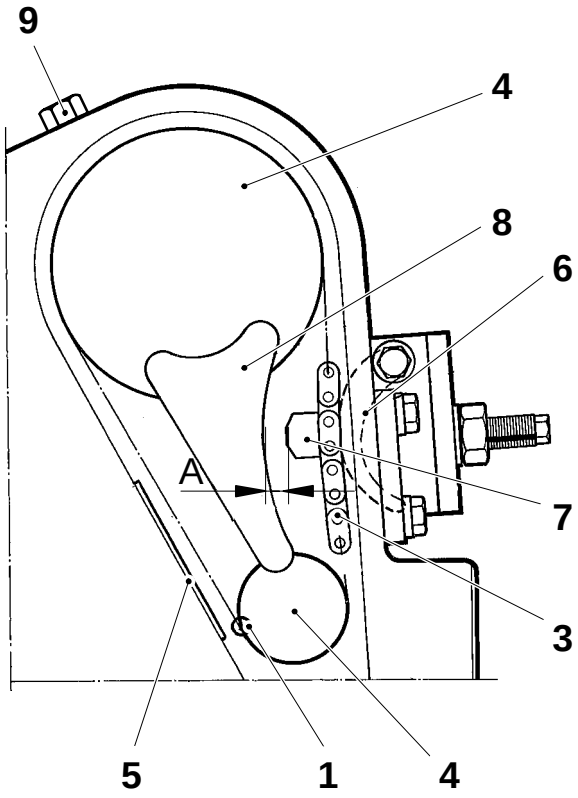

1 Discharge finger
2 Vulcanization
3 Duplex chain
4 Sprocket
5 Slide lug
6 Slide segment
7 Holder
8 Cover plate
9 Chain tensioner

Setting

a) Crank the machine until the station chain (6) just begins to index.

Note!
Make sure the discharge finger runs clear of the station chain.

b) Remove the cover on the left hand side of the discharge unit (1).

c) Remove the lock of the chain (2). Set measurement A by skipping the sprocket teeth.

d) Fit the chain lock and cover.

e) Crank the machine and check that the discharge finger (3) moves without obstruction.

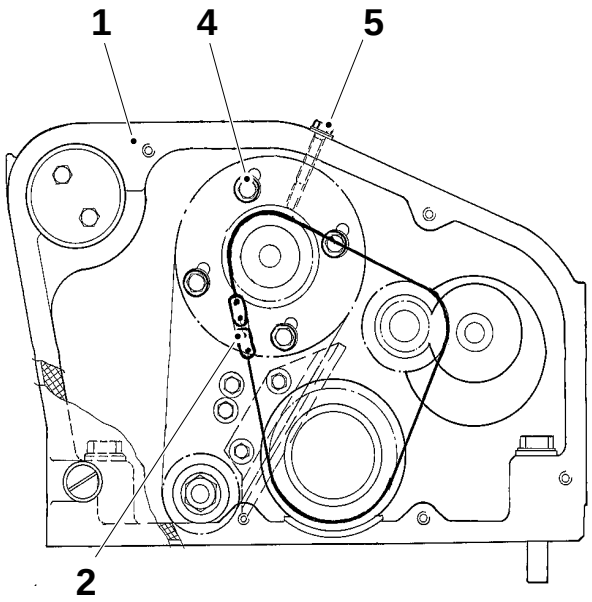

Adjusting the duplex chain

f) Loosen the screws (4).

g) Reduce the tension of the chain (2), see page MS 531–5X.

h) Loosen the screw (5) and slacken the duplex chain (7).

i) Tighten the screw (5) until the duplex chain (7) is just to be tensioned between the two sprockets.

j) Tighten the screw (5) another 1/4 of a turn.

k) Tighten the screws (4).

l) Tension the chain (2), see page MS 531–5X.

A = 5 – 30 mm

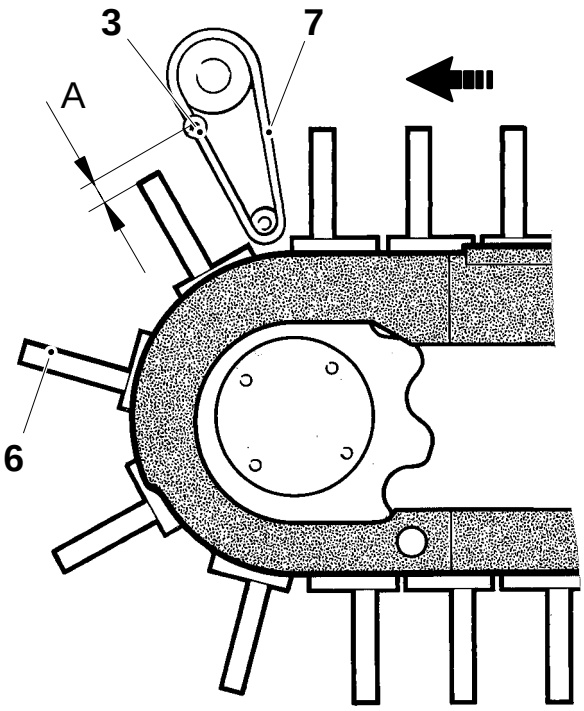

1 Discharge unit
2 Chain
3 Discharge finger
4 Screw
5 Screw
6 Station chain
7 Duplex chain

Setting

a) Crank the machine until the station chain (1) just begins to index.

Note!
Make sure the discharge finger (4) runs clear of the station chain.

b) Remove the cover on the LH side of the discharge unit (2).

c) Detach the chain lock (3) on the chain. Set gap A by shifting the chain on the sprocket.

d) Attach the chain lock and fit the cover.

e) Crank the machine and check that the discharge finger (4) runs clear.

(Cont'd overleaf)

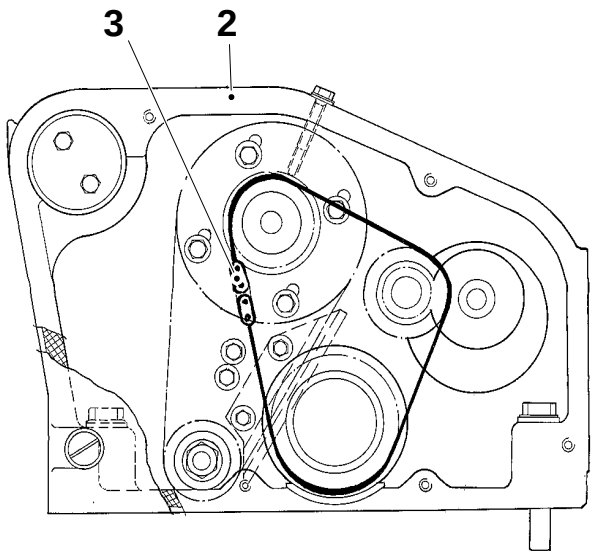

A = 5 – 30 mm

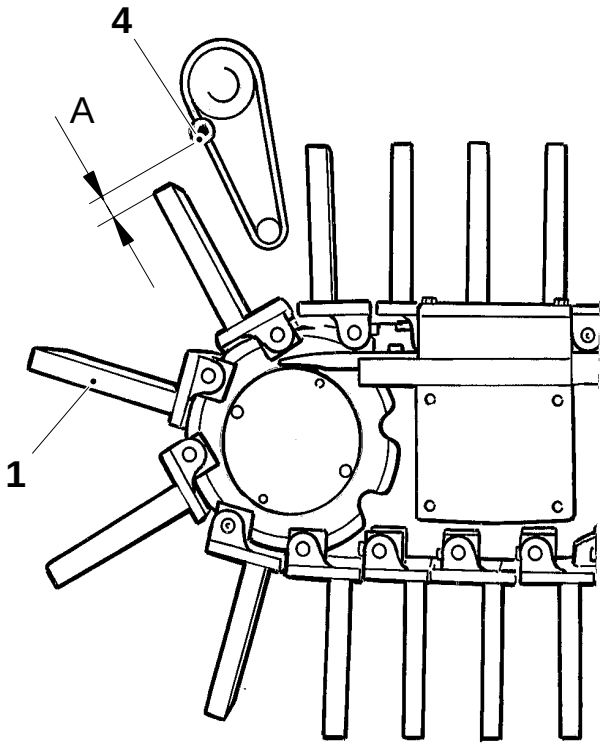

1 Station chain
2 Discharge unit
3 Chain lock
4 Discharge finger

(Cont'd)

Setting of duplex chain

f) Remove the cover on the LH side of the discharge unit (2).

g) Loosen the screws (5).

h) Reduce the tension of the chain (3) by loosening the nut (7).

i) Tighten the screw (6) until the duplex chain (8) is tensioned to such an extent that the chain tensioner (9) is capable of depressing the chain by a link width.

j) Retighten the screws (2).

k) Tighten the chain (3), see page MS 531–5X.

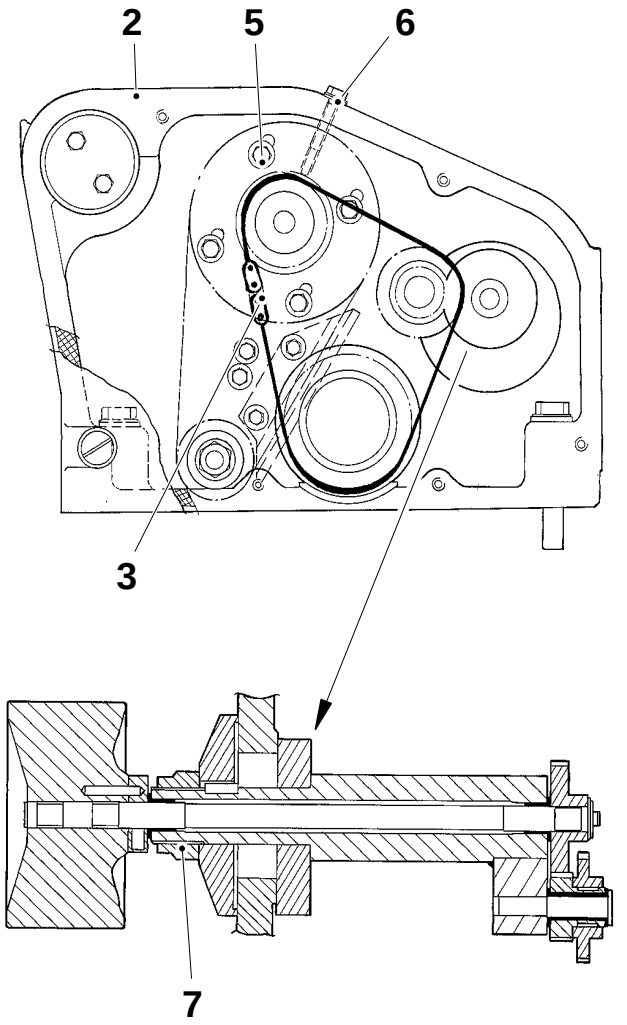

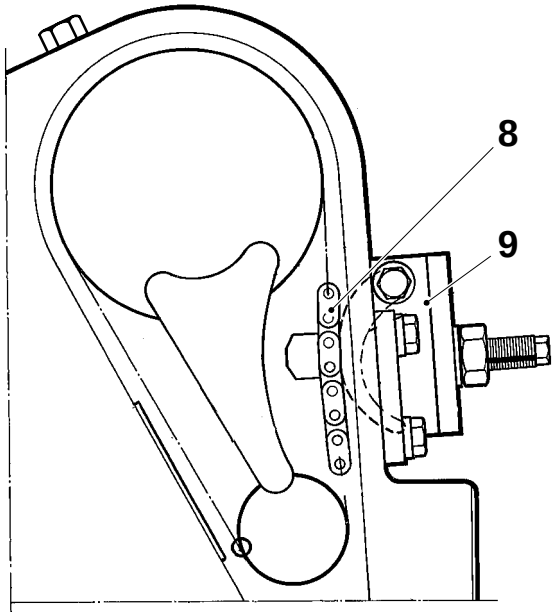

2 Discharge unit
3 Chain
5 Screw
6 Screw
7 Nut
8 Duplex chain
9 Chain tensioner

Setting

a) Crank the machine until the station chain (1) just begins to index.

Note!
Make sure the discharge finger runs clear of the station chain.

b) Remove the cover on the LH side of the discharge unit (2).

c) Reduce the tension of the chain (3) by loosening the nut (6). Set gap A by shifting the chain on the sprocket.

d) Turn the axle (5) to tension the chain. Tighten the nut (6) and fit the cover.

e) Crank the machine and check that the discharge finger (4) runs clear.

(Cont'd overleaf)

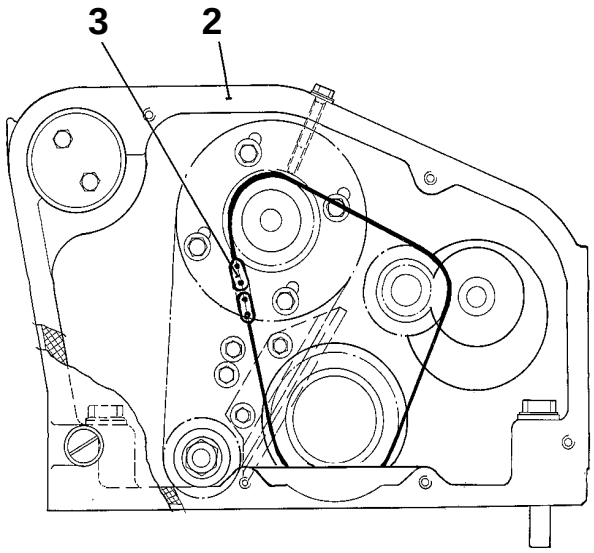

A = 5 – 30 mm

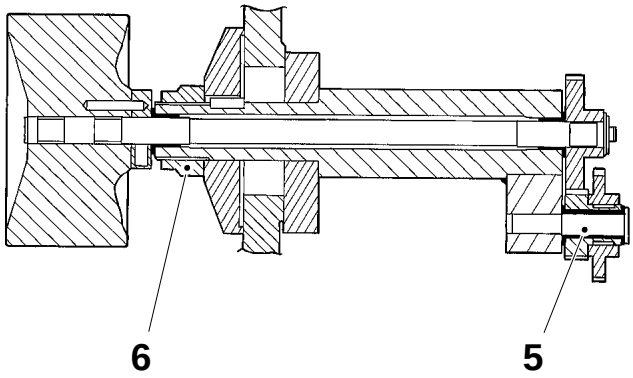

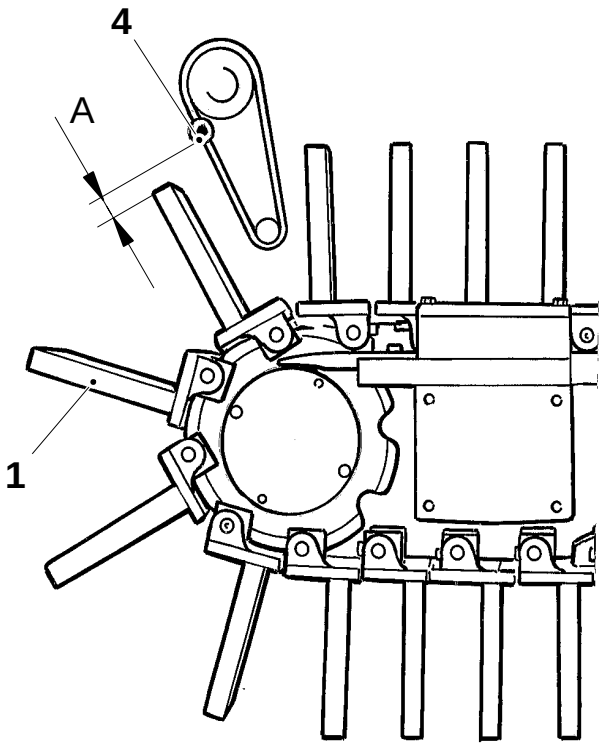

1 Station chain
2 Discharge unit
3 Chain
4 Discharge finger
5 Axle
6 Nut

(Cont'd)

Setting of duplex chain

f) Remove the cover on the LH side of the discharge unit (2).

g) Loosen the screws (7).

h) Reduce the tension of the chain (3) by loosening the nut (6).

i) Tighten the screw (8) until the duplex chain (9) is tensioned to such an extent that the chain tensioner (10) is capable of depressing the chain by half a link width.

j) Tighten the screws (7).

k) Tighten the chain (3), see page MS 531–5X.

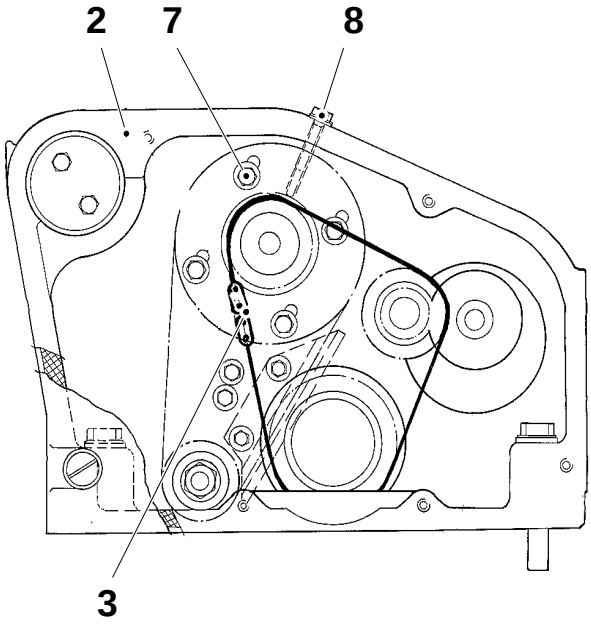

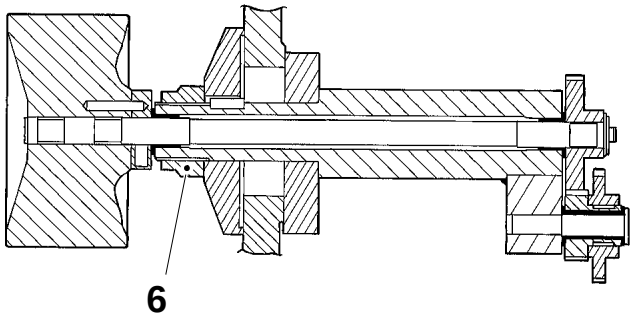

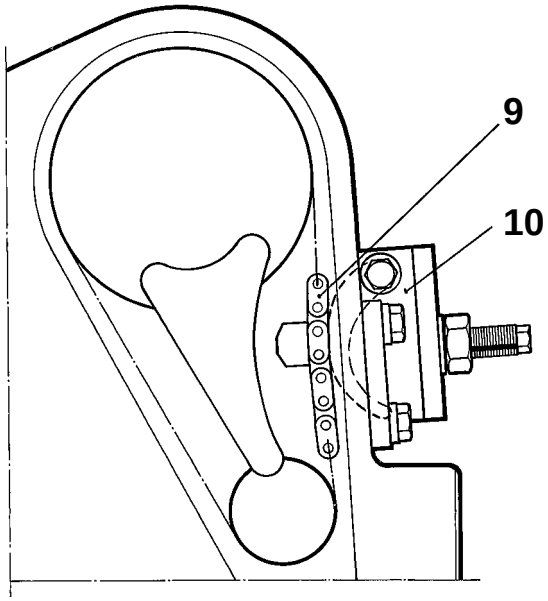

2 Discharge unit
3 Chain
6 Nut
7 Screw
8 Screw
9 Duplex chain
10 Chain tensioner

Basic setting

Basically set gap A between the setting screw (1) and the holder (2).

A = 3 ± 0.5 mm

Assemble the chain tensioner completely.

Compress the spring (3) by depressing the pressure pin (4).

Lock the spring in this position by inserting a locking pin (5) through the hole in the setting screw and pressure pin.

Fit the chain tensioner to the discharge housing. Position the chain tensioner so that it is aligned symmetrically over the duplex chain (6).

Tighten the screws (7).

Remove the locking pin.

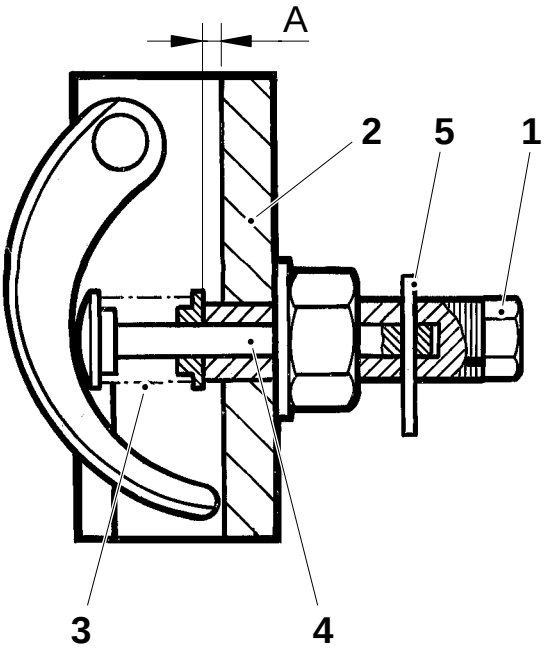

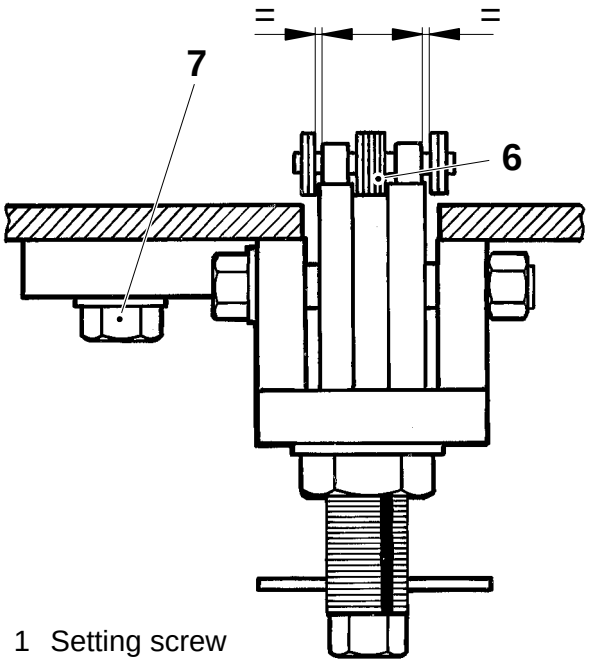

1 Setting screw
2 Holder
3 Spring
4 Pressure pin
5 Locking pin
6 Duplex chain
7 Screw

Checking

Check the drive of the discharge roller, i.e. gears, sprockets, chain, bushings, and shafts concerning any wear and/or damages. Replace worn and/or damaged parts.

Check that the discharge roller is not worn and/or deformed. Replace as required.

Set the discharge roller and the tension of the chain (3), see page MS 531–5X.

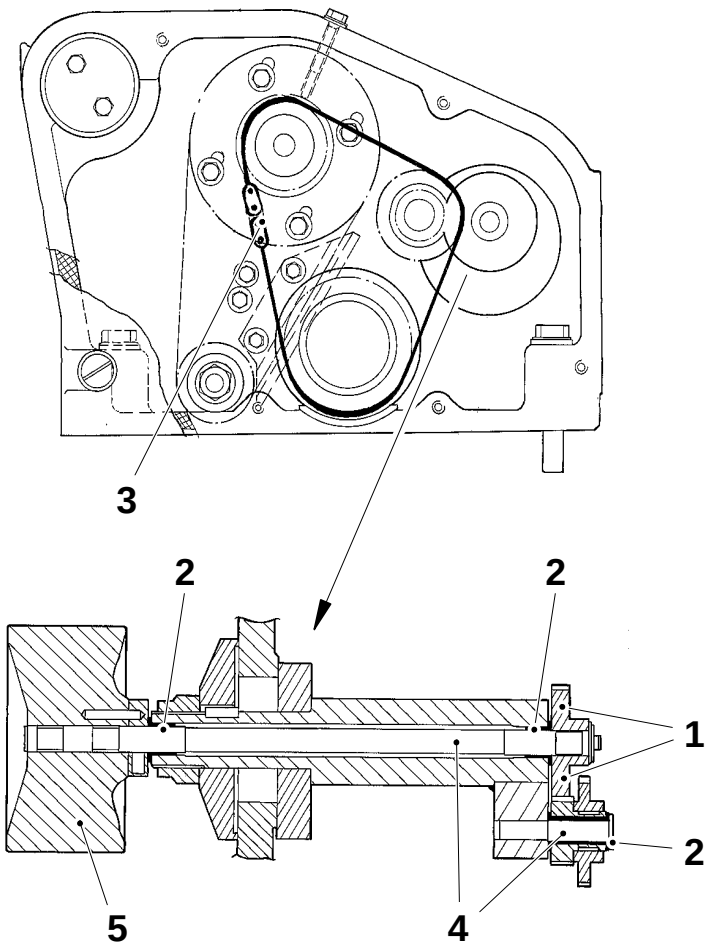

1 Gear, sprocket
2 Bearing
3 Chain
4 Shaft
5 Discharge roller

Setting

Crank the machine until the station chain stops indexing.

Remove the cover on the LH side of the discharge unit (1).

Loosen the nut (2) and set the vertical and sideways positions of the discharge roller (6) by shifting the position of the setting ring (8) in the discharge unit, see table page 2. At the same time, turn the axle (4) to tension the chain (5).

Tighten the nut (2).

Check the tension of the chain (5), deflection 5 ±0.5 mm with 50 ±2 N load force, see fig.

(Cont'd overleaf)

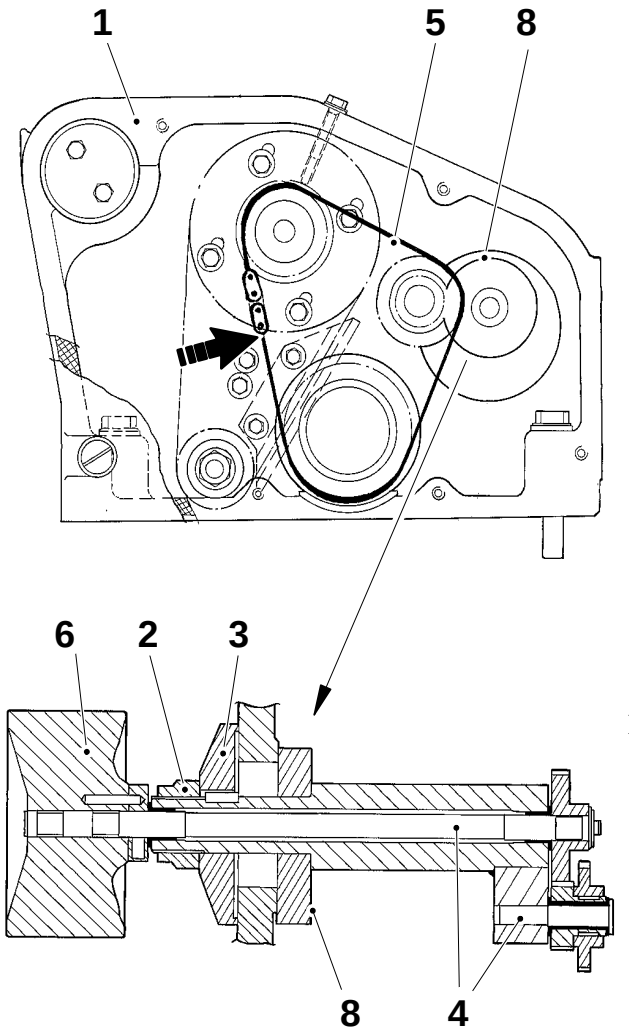

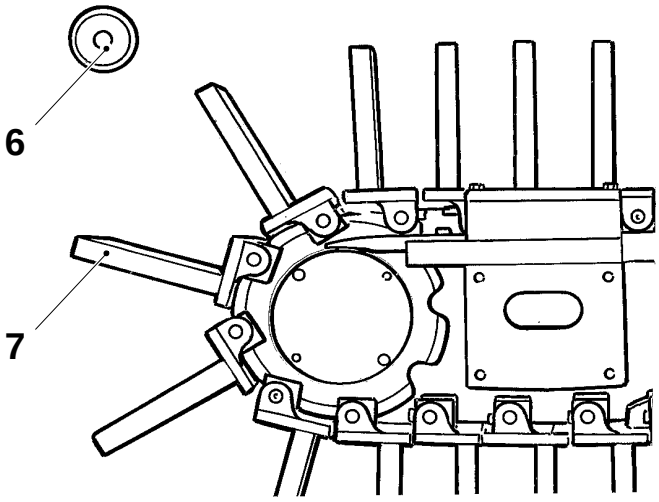

1 Discharge unit
2 Nut
3 Mount
4 Axle
5 Chain
6 Discharge roller
7 Station chain
8 Setting ring

(Cont'd)

**)These letters are stamped on the back of the setting ring.

Volume 180 – 284 ml:
The letter at pin No. I always has to be visible.

Volume 125 ml:
The letter at pin No. II always has to be visible.

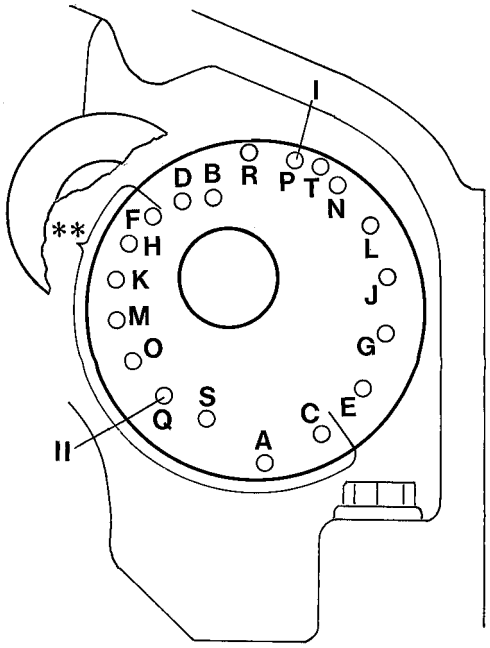

Volume, ml	Speed, pkg/h	Hole on pin I	Hole on pin II
125	5000	J	M
	6000	J	M
180	5000	–	–
	6000	A	B
200S	5000	M	L
	6000	F	E
TBA 200	5000	N	O
	6000	J	K
TB 200	5000	T	O
	6000	–	–
236	5000	M	L
	6000	M	L
250	5000	Q	P
	6000	Q	P
284	5000	–	–
	6000	F	E

Fitting

Remove the cover on the left hand side of the discharge unit.

Set the sprocket (1) in the correct position by turning the discharge roller so that the hole for the shear pin in the sprocket is opposite the hole (2) for the shear pin in the hub. This position is obtained when the reference hole (3) in the hub is opposite the groove in the sprocket.

Gently tap a new shear pin into the hole.

Caution!
Take care to remove the broken shear pin from the gear.

Fit the cover.

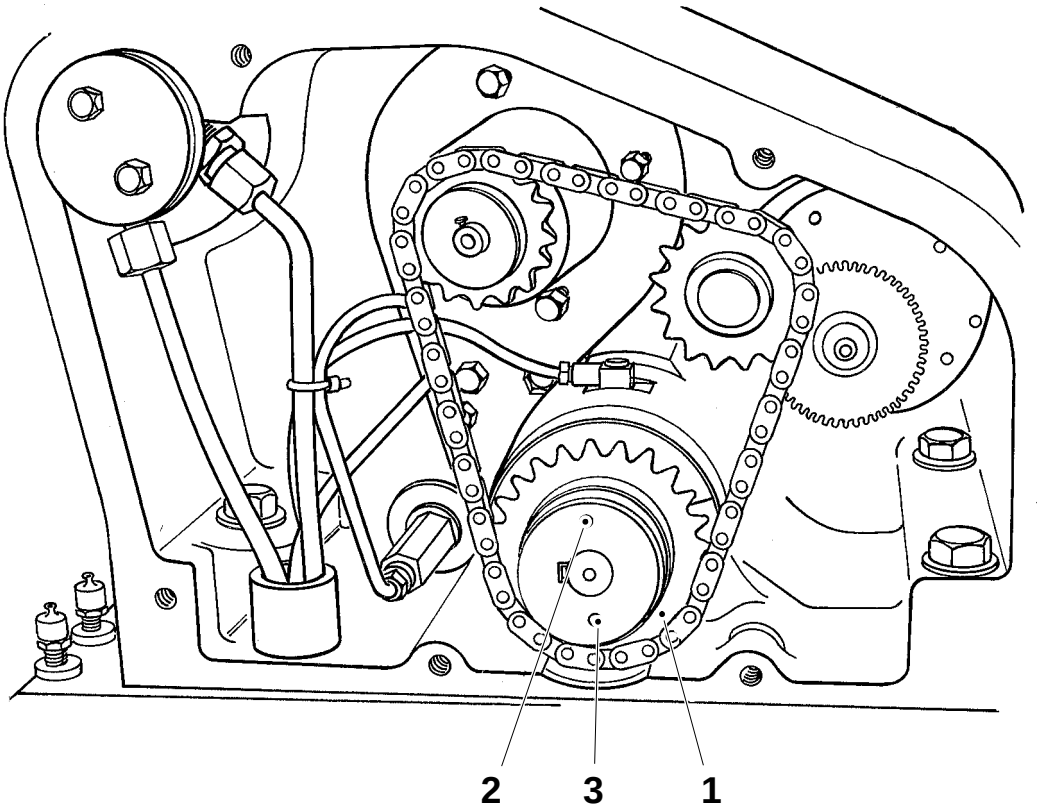

1 Sprocket
2 Shear pin hole
3 Reference hole

Fitting

a) Remove the cover on the left hand side of the discharge unit.

b) Set the sprocket (1) in the correct position by turning the discharge roller so that the hole for the shear pin in the sprocket is opposite the hole (2) for the shear pin in the hub. This position is obtained when the reference hole (3) in the hub is opposite the groove in the sprocket.

c) Gently tap a new shear pin into the hole.

Caution!
Take care to remove the broken shear pin from the gear.

Footnote
If the sealing washer (5) has been removed, top up with oil, code H, see page MS 940–7X, through the banjo connection (4). Top up until the level reaches the edge of the sealing washer.

d) Fit the cover.

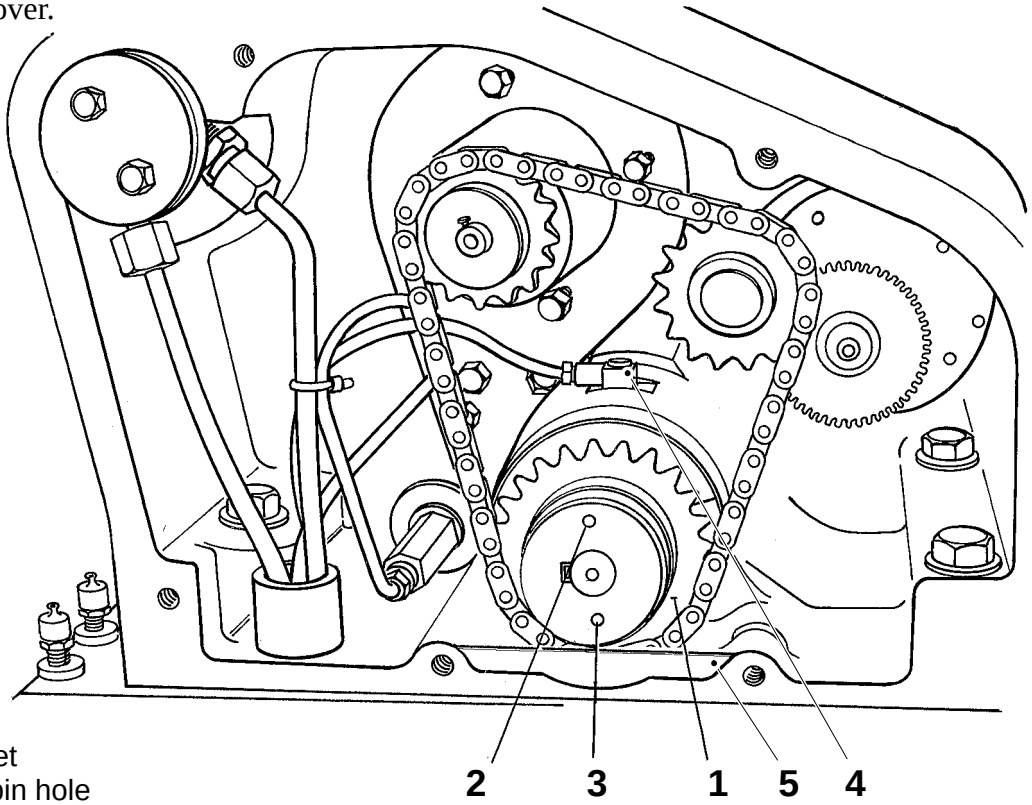

1 Sprocket
2 Shear pin hole
3 Reference hole
4 Banjo connection
5 Sealing washer

Setting/Checking

Take a semi-finished package and move it slowly down through the drop chute (2).

Set the congestion monitor (1) so that it transmits a signal when the package passes. If required, shift the monitor.

Check that the signal from the congestion monitor ceases when the package has passed.

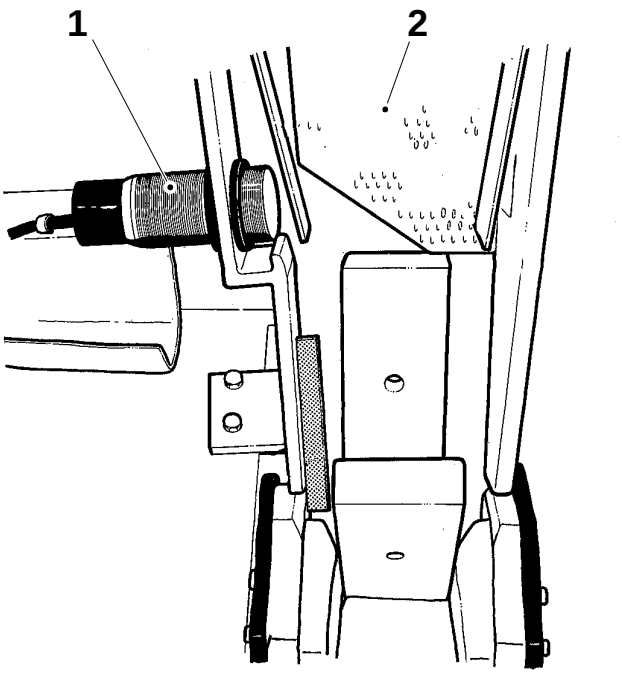

1 Congestion monitor
2 Drop chute

Checking

Crank the machine until the station chain stops indexing.

- Clean and blow the pivot frame dry.
- Turn on cooling water.
- Start the hydraulic pump and forcibly actuate the valve Y41 by means of tool TP No. 76167.
- Check the positions (1), (2) and (3) for leakage of hydraulic oil, see fig.
- Shift the tool to valve Y42 position and repeat the check on positions (1), (2) and (3).
- Remove tool TP No. 76167 and stop the hydraulic pump.
- If required, overhaul, see page MS 535–3X.

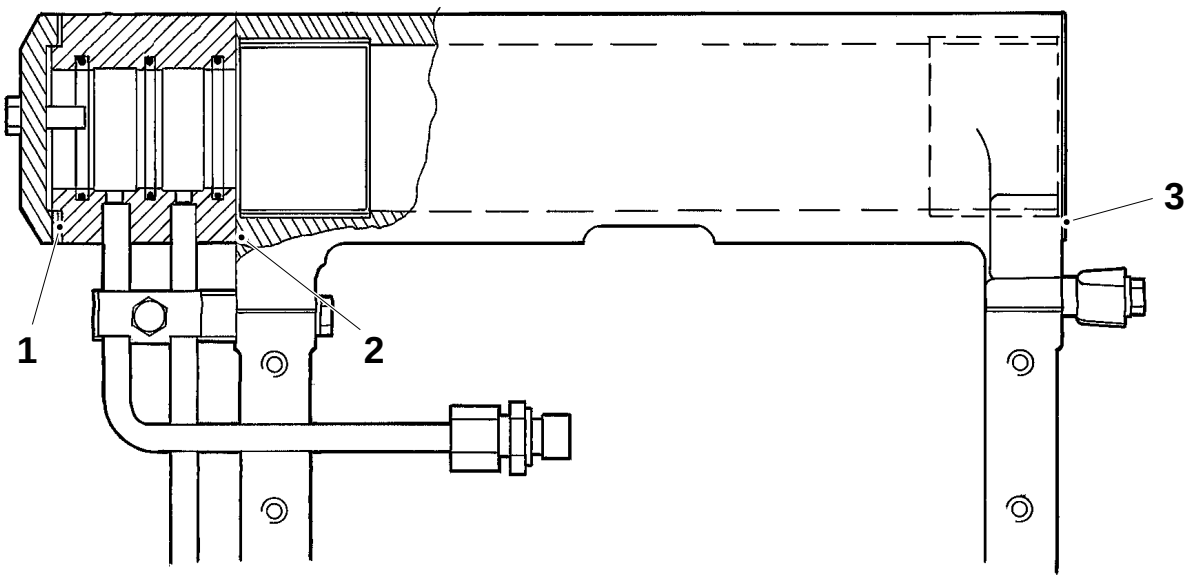

1 Inspection position, oil leakage
2 Inspection position, oil leakage
3 Inspection position, oil leakage

Overhaul

- Remove the FS element and put it aside, see page MS 525–2X.
- Undo the screws (1) and remove the cover (2). Make a note of the number of shims (3), see fig.
- Raise the pivot frame (4) and pull it off the shaft (5).
- Replace the three sealings (6).
- Fit the pivot frame (4) to the shaft (5).
- Fit the shims (3). Fit the cover (2) and tighten the screws (1).
- Fit the FS element, see page MS 525–4X.
- Bleed the hydraulic system, see page MS 605–5X and MS 606–5X.
- Check the pivot frame, see page MS 535–1X.

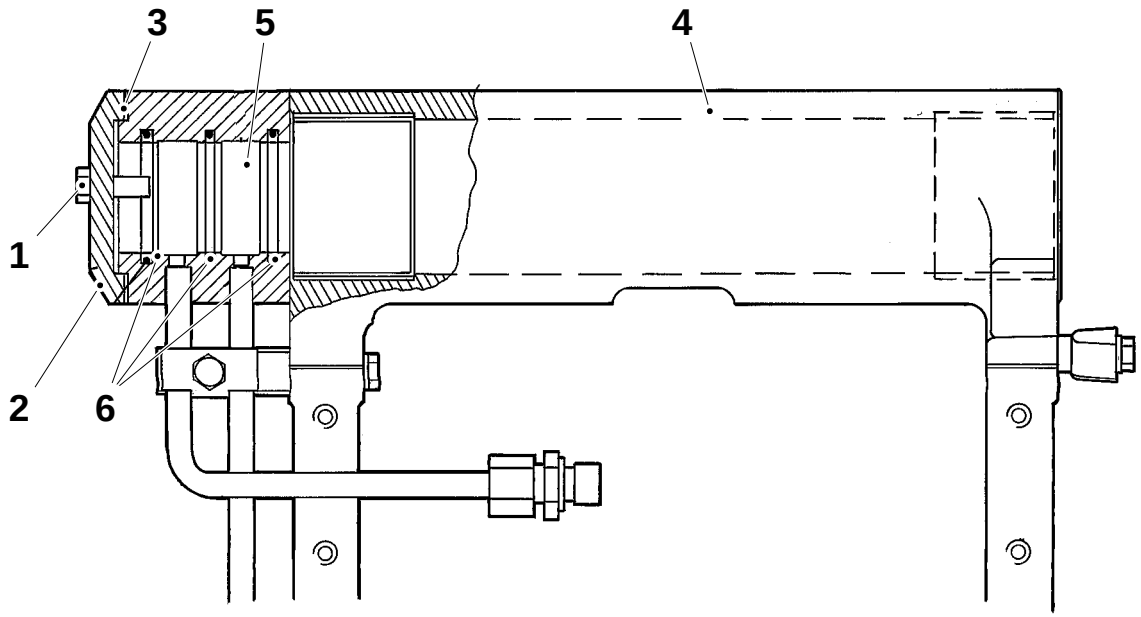

1 Screw
2 Cover
3 Shims
4 Pivot frame
5 Shaft
6 Sealing

Setting

a) Remove the FS element and put it aside, see page MS 525–4X.

b) Undo the screws (1) and remove the cover (2). Make a note of the number of shims (3), see fig.

c) Raise the pivot frame (4) and pull it off the shaft (5).

d) Add or remove the number of shims (6) required to align the pivot frame symmetrically, see page MS 511–5X.

e) Fit the pivot frame (4) to the shaft (5).

f) Fit the shims (3). Fit the cover (2) and tighten the screws (1).

g) Fit the FS element, see page MS 525–4X.

h) Vent the hydraulic system, see page MS 605–5X or MS 606–5X.

Footnote
For example: if shims have to be added at point (6), these are to be taken from point (3). Similarly, if shims have to be removed at point (6), they are to be added at point (3).

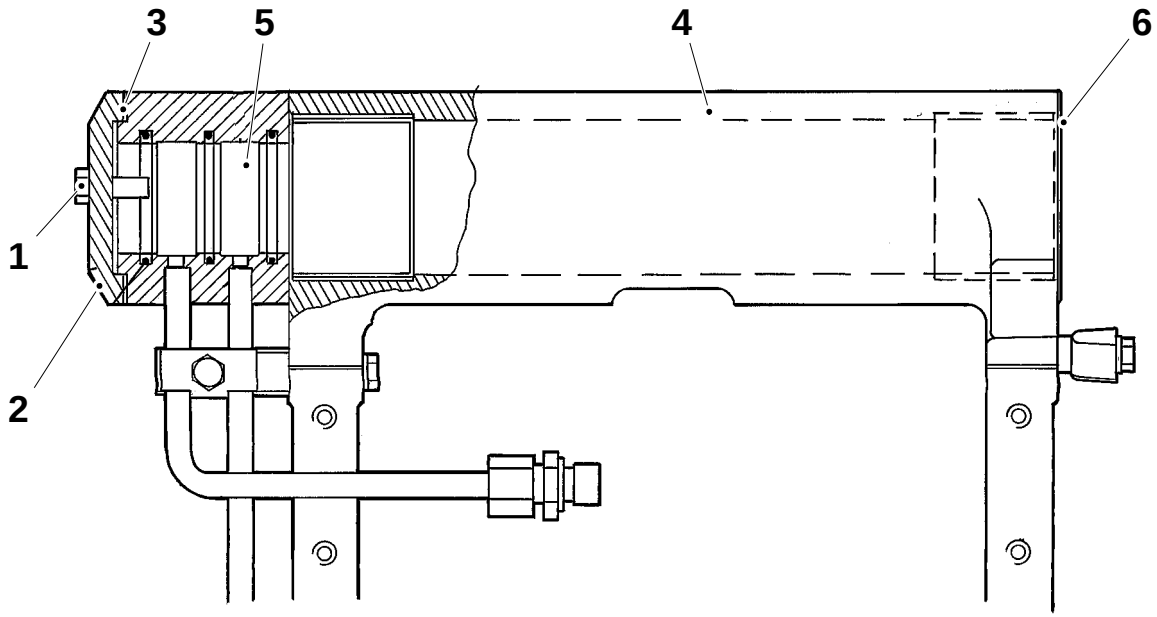

1 Screw
2 Cover
3 Shim TP No. 295204
4 Pivot frame
5 Shaft
6 Shim

Checking

Cut-out torque

a) Remove the outer guide flange (1).

b) Fit the tool (2) by means of the two screws (3), see fig.

c) Turn the safety sprocket and the station chain **backwards** by means of a torque wrench, se fig. The safety sprocket should cut out when the torque is 65 ±5 Nm. Turn the sprocket and check the cut-out torque at each coupling step. If incorrect cut-out torque, set according to page MS 537–5X.

d) Remove the tool (2) and fit the guide flange (1).

Caution!
The station chain must not be turned in **forward** direction. If the safety sprocket has cut out the station chain must be turned **backwards** until the safety sprocket comes into the correct position.

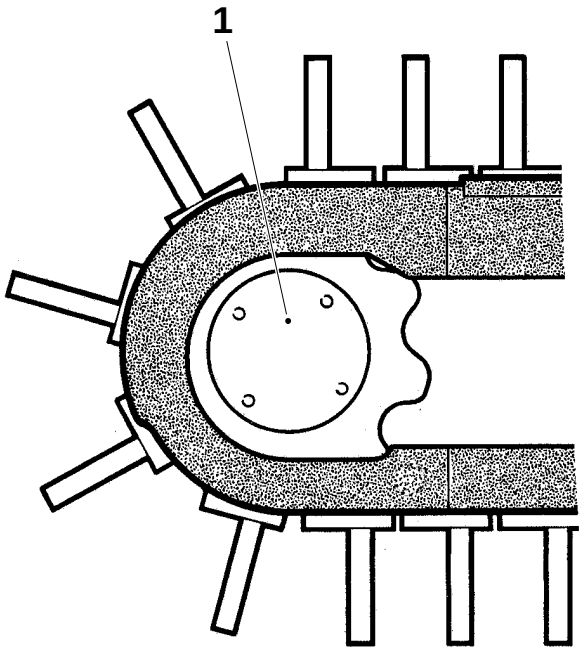

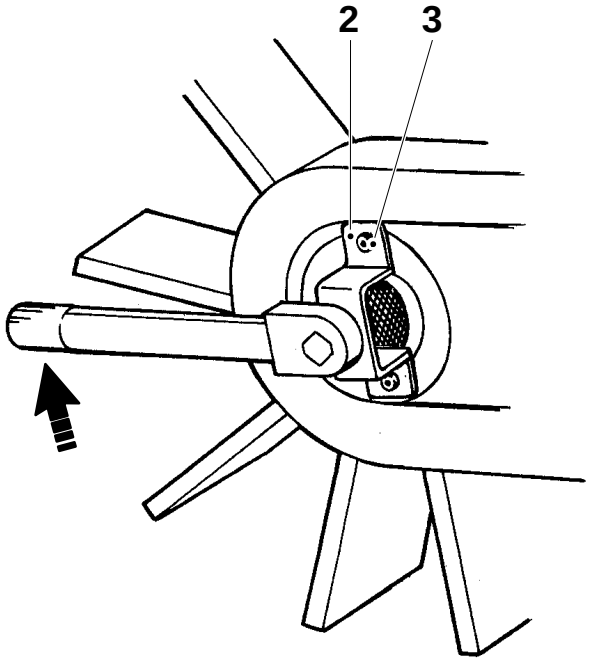

1 Guide flange
2 Tool TP No. 77100
3 Screw

Checking

Cut-out torque

a) Remove the outer guide flange (1).

b) Fit the tool (2) by means of the two screws (3).

c) Turn the drive sprocket and station chain **in reverse direction** by means of a dynamometric wrench. The coupling should cut out when the tourqe is 85 ±5 Nm. Turn the sprocket and check the cut-out torque at each coupling step. If incorrect cut-out torque, replace the indexing unit.

d) Remove the tool (2) and fit the guide flange.

Caution!
If the safety coupling has cut out, make sure that the coupling is reset.

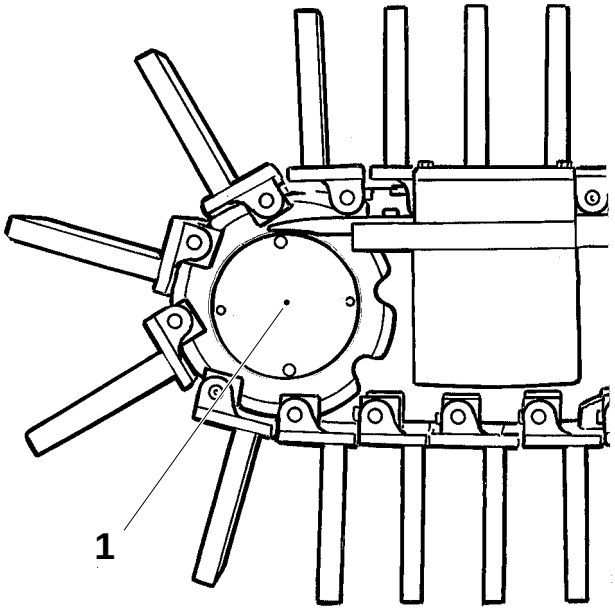

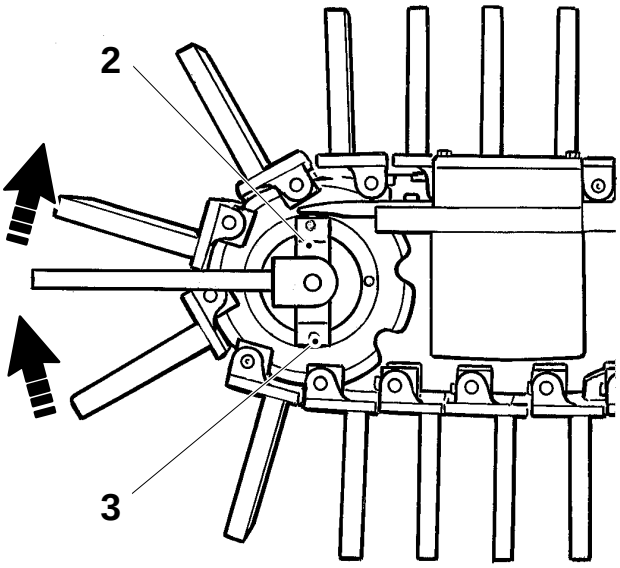

1 Guide flange
2 Tool TP No. 77100
3 Screw

Checking

Cut-out torque

a) Remove the outer guide flange (1).

b) Loosen the clamp fitting, see page MS 370–2X.

c) Fit a 18 mm socket on the nut and turn it in **reverse direction** by means of a dynamometric wrench (2). The coupling should cut out at 85 ±5 Nm. Turn the sprocket and check the cut-out torque at each coupling step.
If incorrect torque, replace the indexing unit.

d) Remove the wrench and set the station chain, see page MS 505–5X.

e) Fit the guide flange (1).

Caution!
If the safety coupling has cut out, make sure that the coupling is reset.

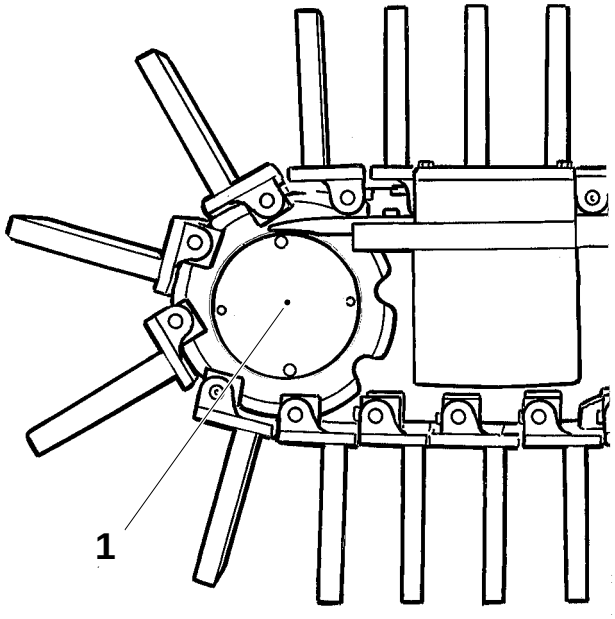

1 Guide flange
2 Dynamometric wrench

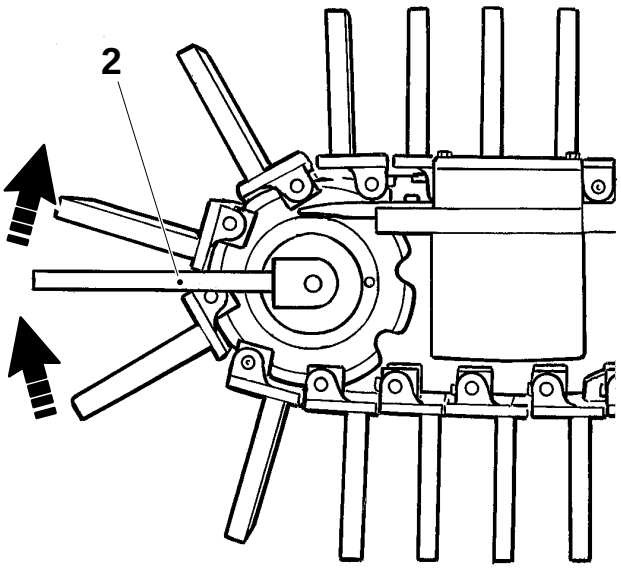

Setting

Cut-out torque

Caution!
When measuring the torque, turn the safety sprocket backwards.

a) Remove the outer guide flange (1).

b) Tighten the carrier (2) to 90 ±5 Nm by means of tool TP No. 76129 and a torque wrench.

c) Set the cut-out torque by tightening the nut (3) step by step. At the same time measure the torque, by means of the tool (4) and a torque wrench, until the cut-out torque reaches 65 ±5 Nm.

d) Lock the nut (3) by means of the lock washer (5).

e) Remove the tool (4) and fit the guide flange (1).

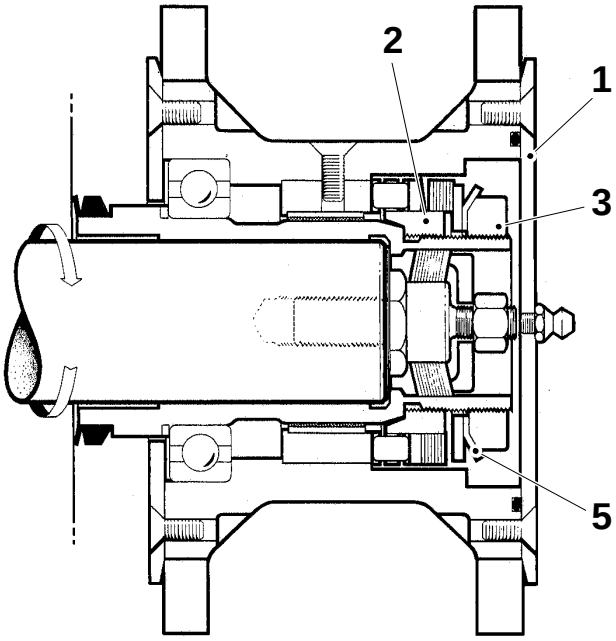

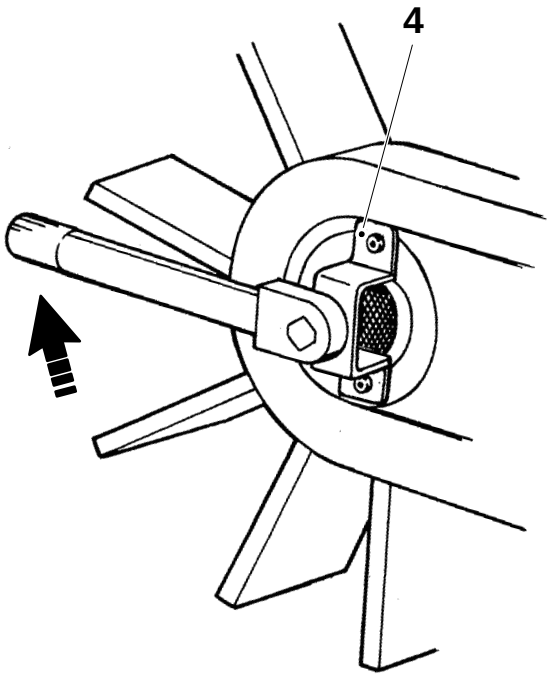

1 Outer guide flange
2 Carrier
3 Nut
4 Tool TP No. 77100
5 Lock washer

Checking

Check the play of the worm gear, see fig.

Check the bearings for wear. If necessary, replace worn and/or damaged parts.

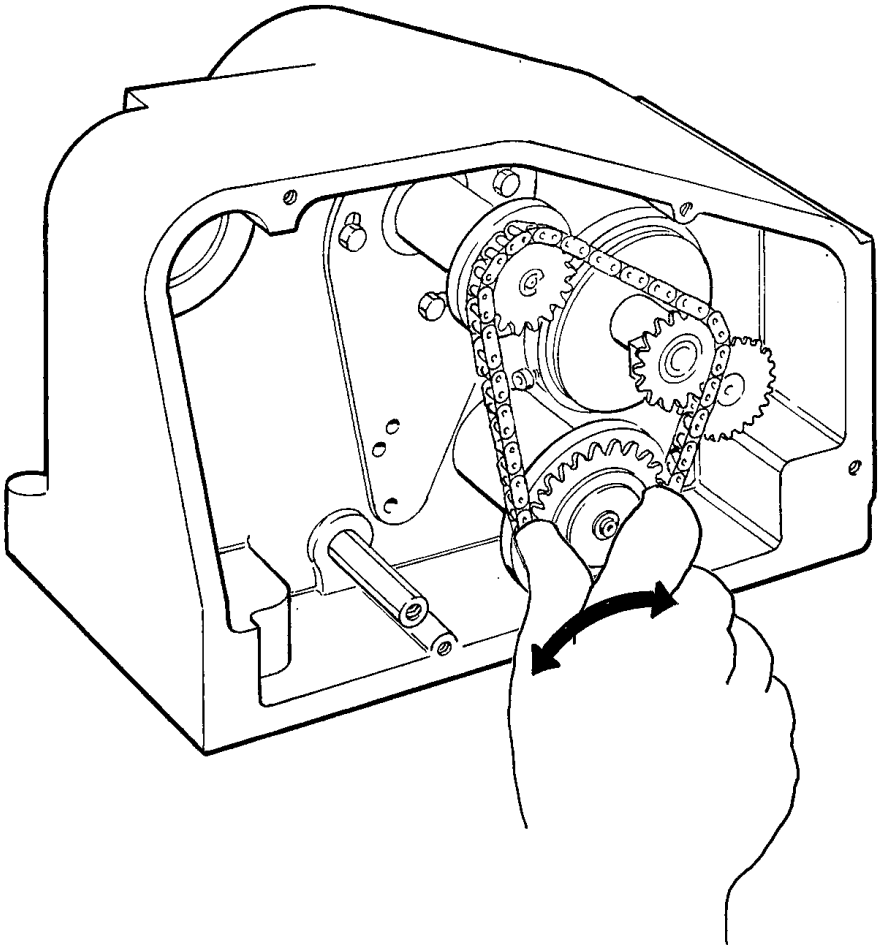

Checking

Check the play of the worm gear, see fig.

Check the bearings for wear. If necessary, replace worn or damaged parts.

If required, top up with oil in the oil bath, see page MS 532–42, item c).

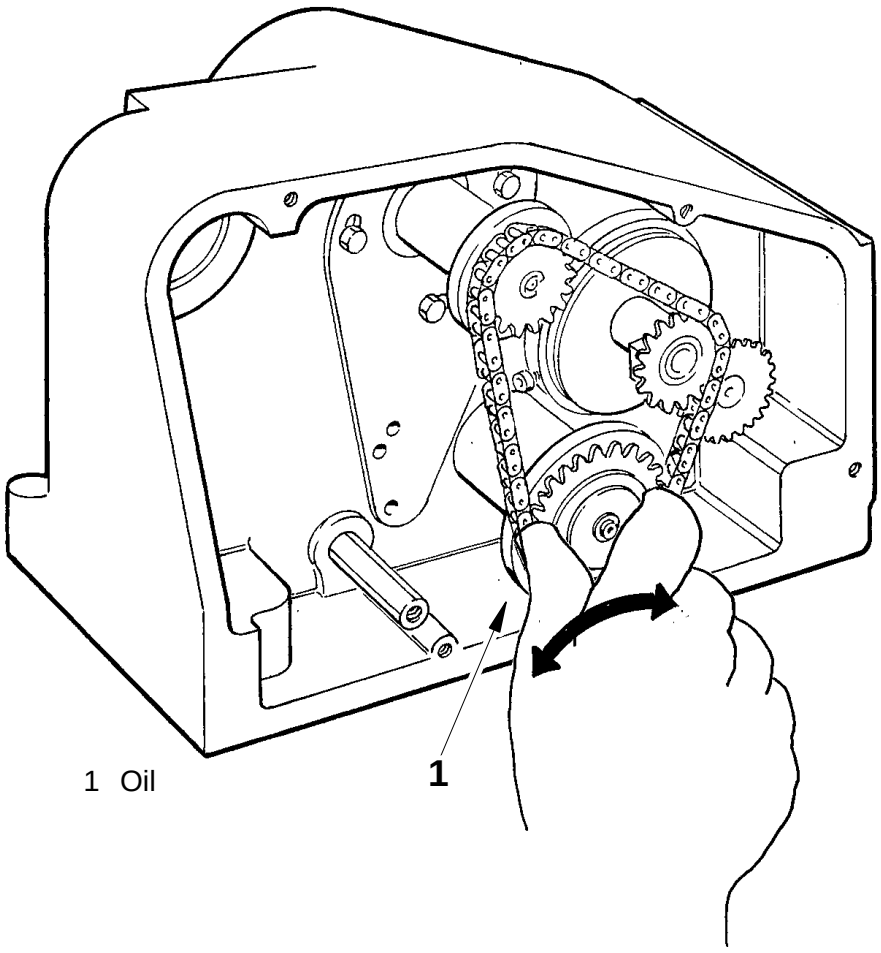

1 Oil

Checking

Check the following details for wear and/or damage:

- the seal ring (1),
- the drive wheel (2),
- the clamp fitting (3),
- the O-ring (4), and
- the lid (5).

Replace worn and/or damaged details.

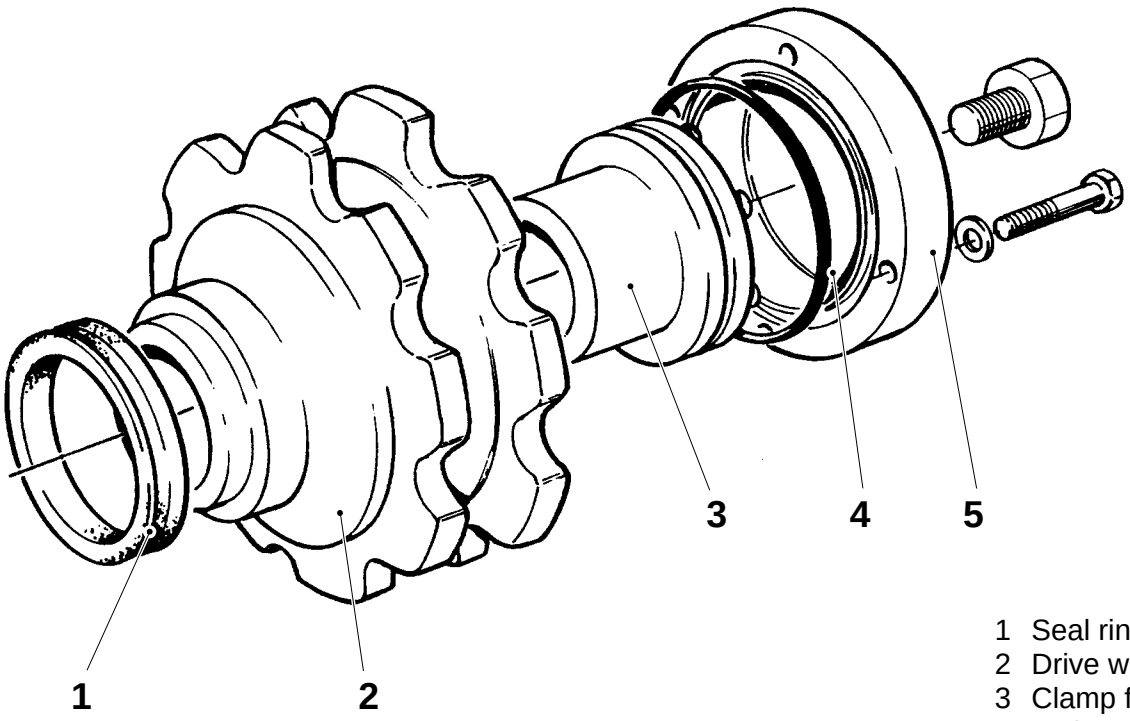

1 Seal ring
2 Drive wheel
3 Clamp fitting
4 O-ring
5 Lid

Removal

Remove the following details according to page MS 503–2X:

- the protection cover,
- the side cover,
- the guide rail and the pipe, and
- the plates.

Remove the station chain, see page MS 505–2X.

Remove the slide rails, see page MS 503–2X.

Undo the screws and remove the lid (5) and the O-ring (4).

Remove the seal ring (1).

Remove the clamp fitting (3) from the drive wheel (2).

Reassemble in reverse order.

1 Seal ring
2 Drive wheel
3 Clamp fitting
4 O-ring
5 Lid

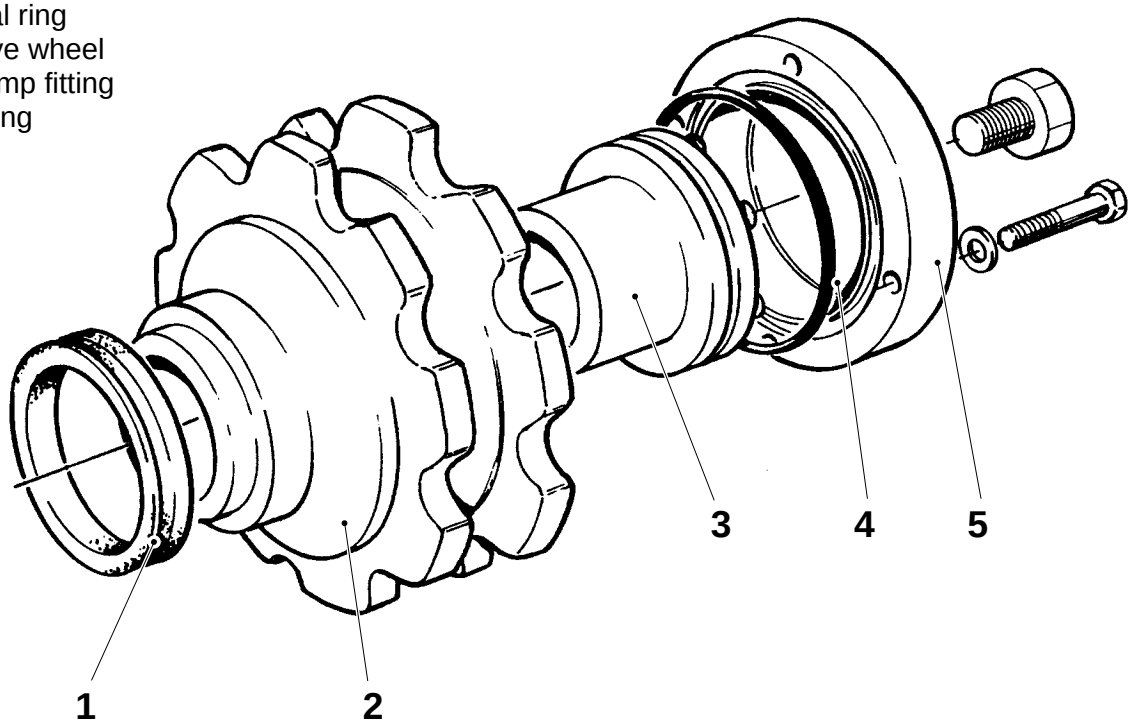

Removal

Remove the following details according to page MS 503–2X:

- the protection cover,
- the side cover,
- the guide rail and the pipe, and
- the plates.

Remove the station chain, see page MS 505–2X.

Undo the screws and remove the lid (5) and the O-ring (4).

Remove the seal ring (1).

Remove the clamp fitting (3) from the drive wheel (2).

Reassemble in reverse order.

1 Seal ring
2 Drive wheel
3 Clamp fitting
4 O-ring
5 Lid

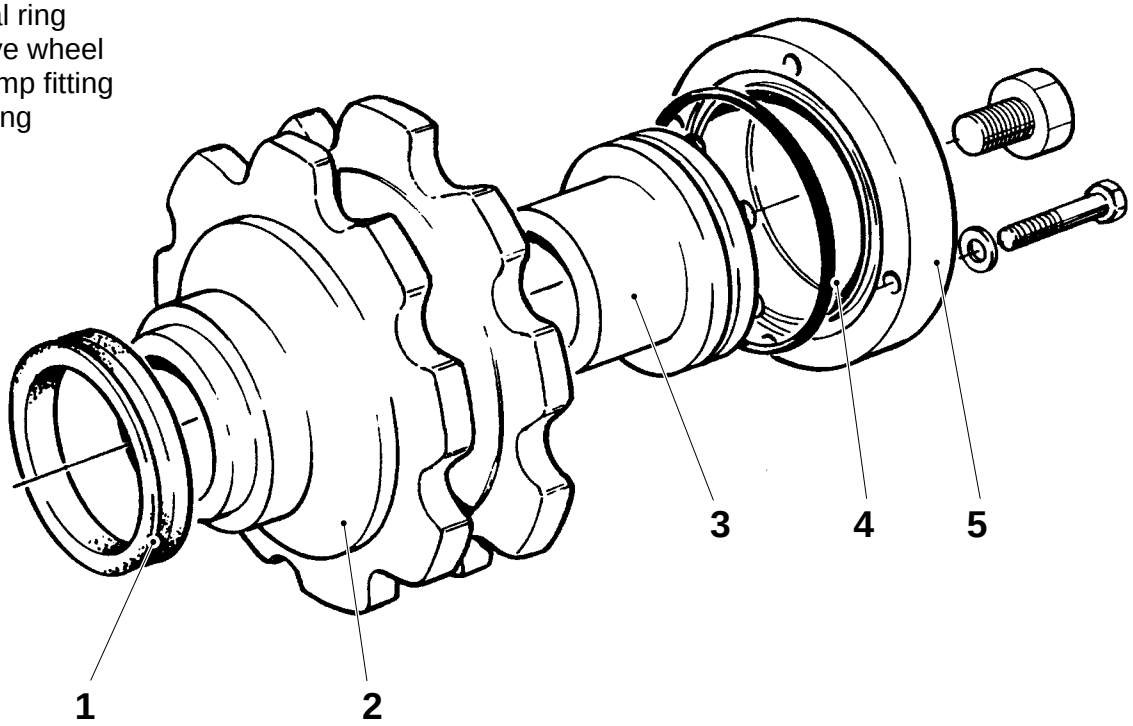

Checking

Check the following details for wear and/or damage:

- the shim (1);
  Note! on 120V machines there are two alternative locations of the shim, 1:1 and 1:2, see fig. 1. Alternative 1:1 applies to 130V machines,
- the ball bearing (2),
- the lock washer (3),
- the nut (4),
- the O-ring (5),
- the lid (6),
- the seal rings (7) and (8),
- the tensioner sprocket (9), and
- the shaft (10).

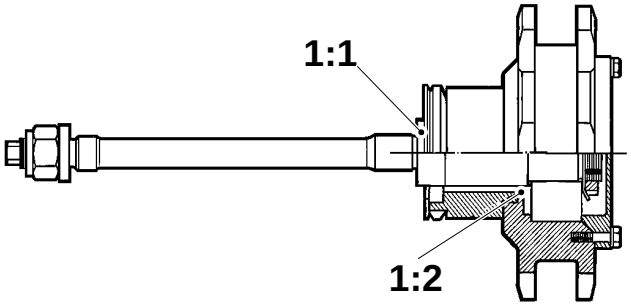

Fig. 1

1:1 Shim TP No. 441589
1:2 (Valid only for 120V) Shim TP No. 491849
2 Ball bearing
3 Lock washer
4 Nut
5 O-ring
6 Lid
7 Seal ring
8 Seal ring
9 Tensioner sprocket

Replace worn and/or damaged details.

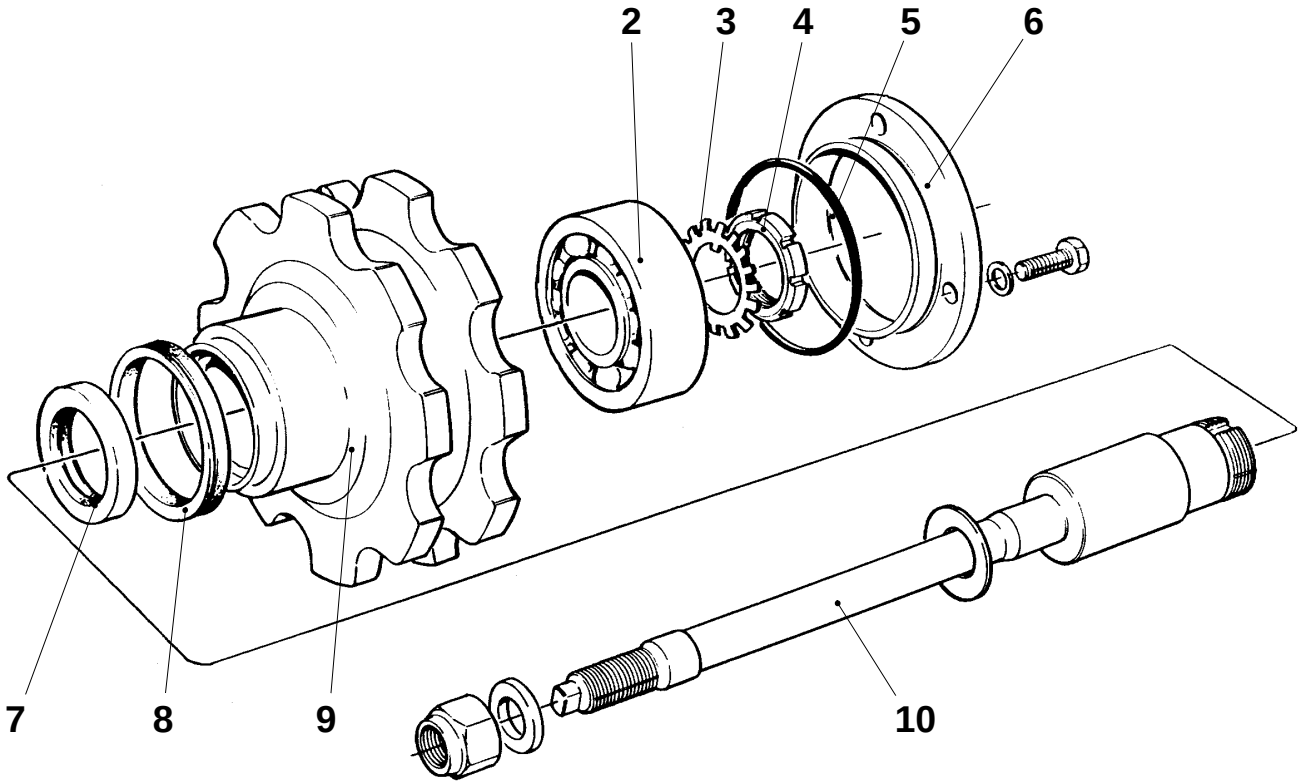

Removal/Fitting

Remove the following details according to page MS 503–2X:

- the protection cover,
- the side cover,
- the guide rail and the pipe, and
- the plates.

Remove the station chain, see page MS 505–2X.

Remove the slide rails, see page MS 503–2X.

Undo the screws (7). Remove the lid (6) and the O-ring (5).

Unlock the lock washer (3). Undo the nut (4).

Pull out the shaft (11) from the tensioner sprocket (10). Pull out the shim (1:1), if any.

Remove the seal ring (8), the seal ring (9) and the ball bearing (2).

Reassemble in reverse order.

Footnote
Do not forget to lock the nut (4) by means of the lock washer (3).

Fit the guide system, see page MS 503–4X.

Fit the station chain, see page MS 505–4X.

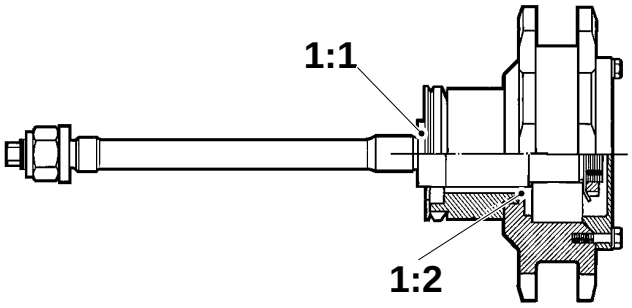

Fig. 1

1:1 **Alt**. Shim TP No. 441589
1:2 **Alt**. Shim TP No. 491849
2 Ball bearing
3 Lock washer
4 Nut
5 O-ring
6 Lid
7 Screw
8 Seal ring
9 Seal ring
10 Tensioner sprocket
11 Shaft

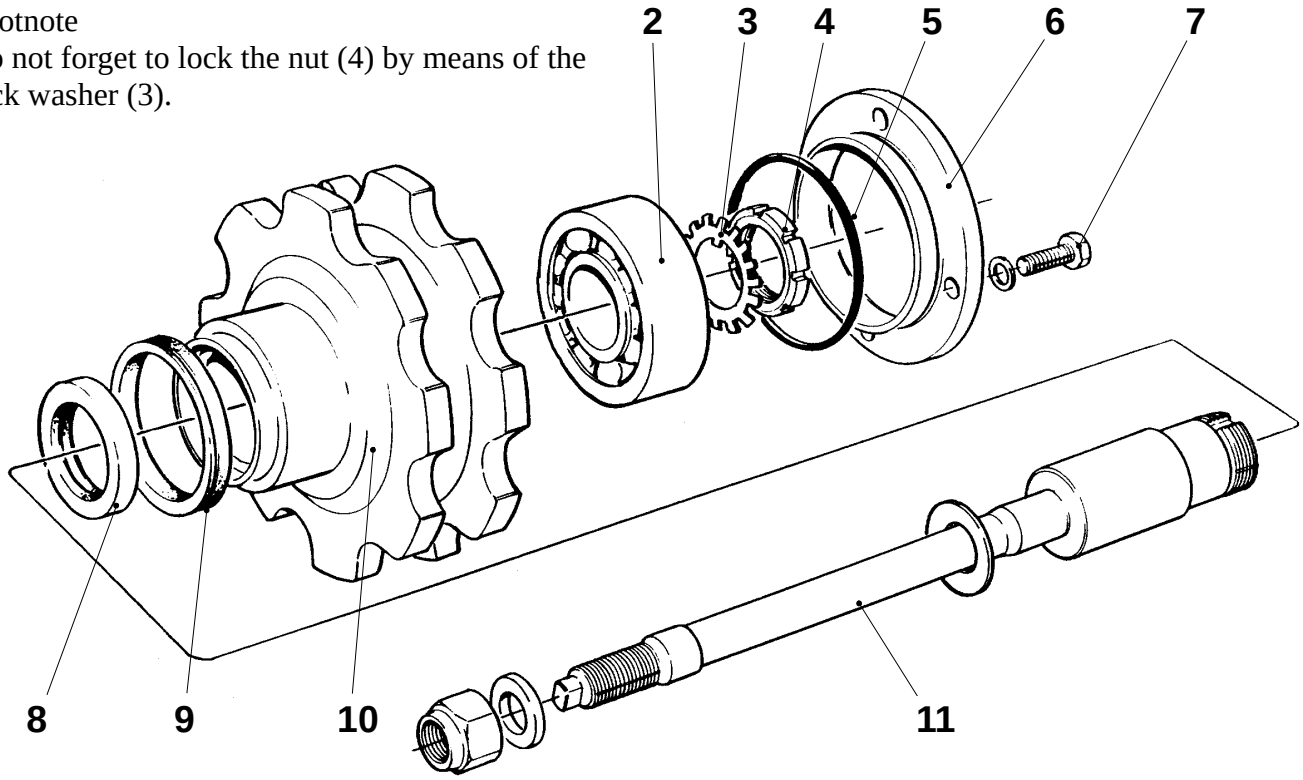

Removal/Fitting

Remove the following details according to page MS 503–2X:

- the protection cover,
- the side cover,
- the guide rail and the pipe, and
- the plates.

Remove the station chain, see page MS 505–2X.

Undo the screws (7). Remove the lid (6) and the O-ring (5).

Unlock the lock washer (3). Undo the nut (4).

Pull out the shaft (11) from the tensioner sprocket (10).

Remove the seal ring (8), the seal ring (9) and the ball bearing (2).

Reassemble in reverse order.

Footnote
Do not forget to lock the nut (4) by means of the lock washer (3).

Fit the guide system, see page MS 503–4X.

Fit the station chain, see page MS 505–4X.

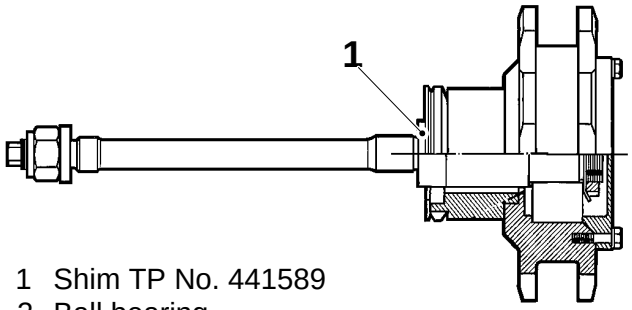

1 Shim TP No. 441589
2 Ball bearing
3 Lock washer
4 Nut
5 O-ring
6 Lid
7 Screw
8 Seal ring
9 Seal ring
10 Tensioner sprocket
11 Shaft

Fig. 1

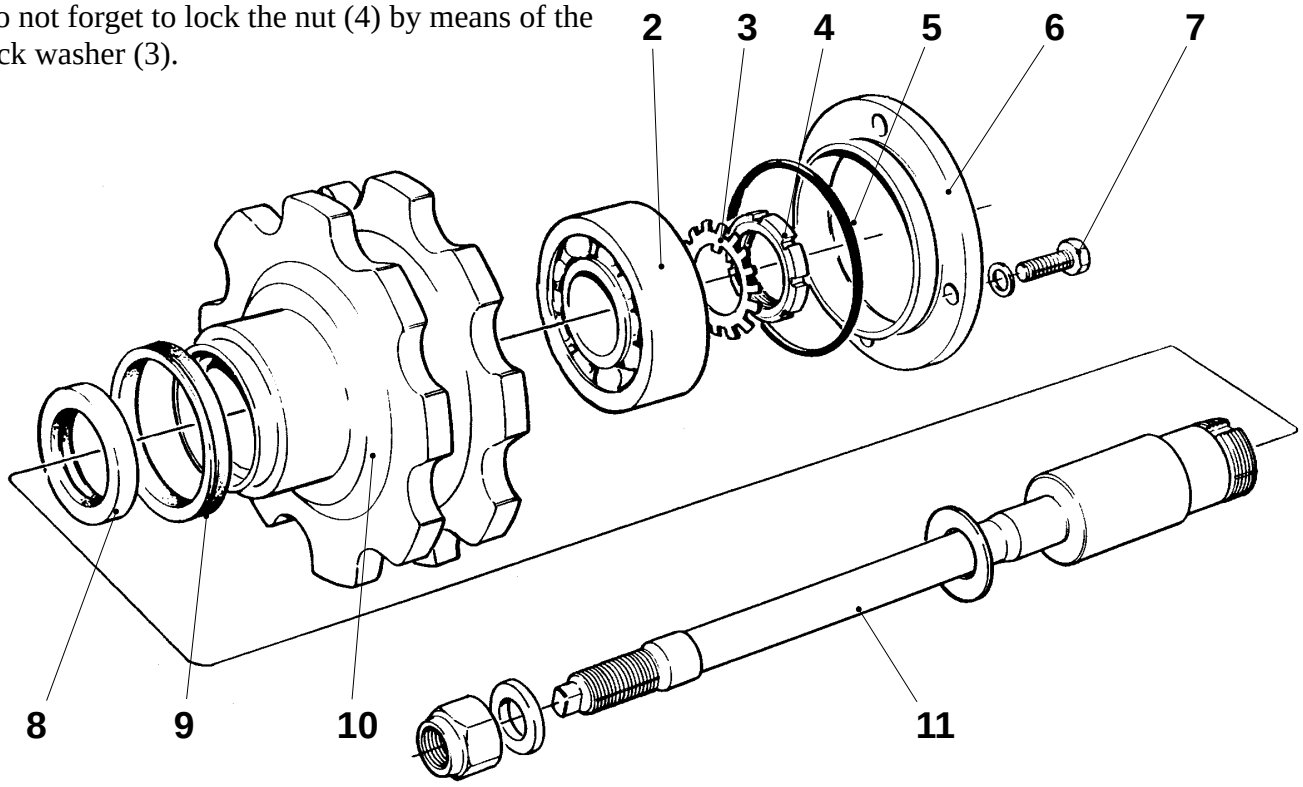

Checking

Check that the cleaning rotors (1) and (3) rotate freely.
If required, overhaul the rotors, see page MS 550–3X.

Check that all nozzles (2) are clean and without defects.
If required, clean or replace the nozzles.

Check all pipes and pipe connections for leaks.

Make sure there are no abnormal sound or vibrations in the cleaning pump.
If required, overhaul the pump.

Set the nozzles, see page MS 550–5X.

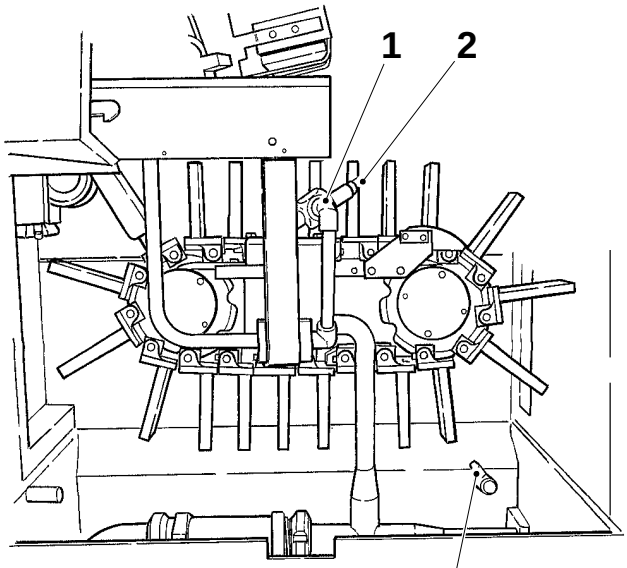

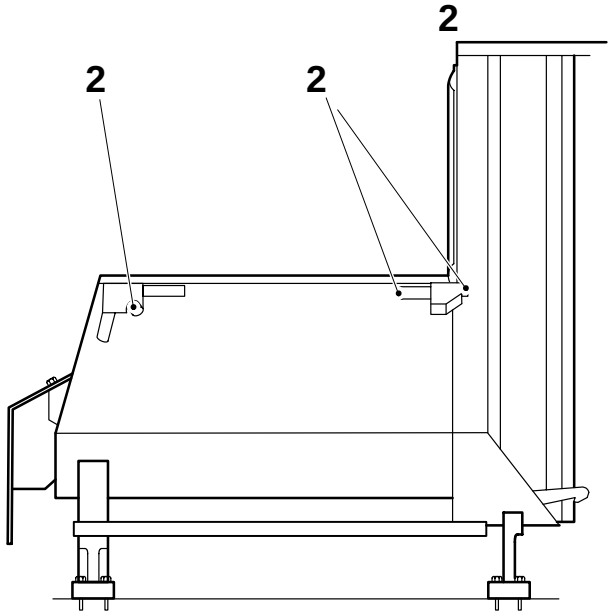

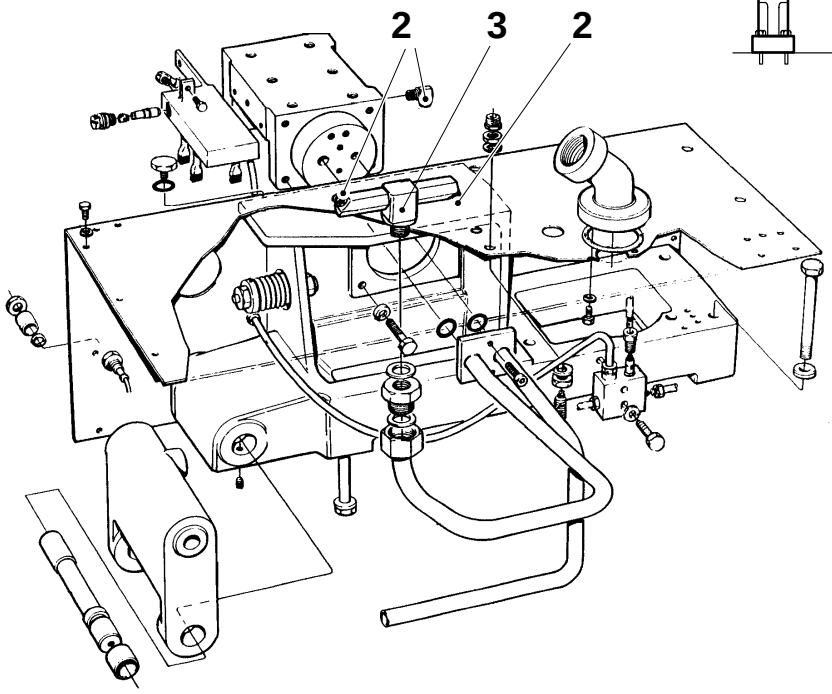

1 Cleaning rotor
2 Nozzle
3 Cleaning rotor

403

Checking

Check that the cleaning rotors (1) and (3) rotate freely.
If required, overhaul the nozzles, see page MS 550–3X.

Check that all nozzles (2) are clean and without defects.
If required, clean or replace the nozzles.

Check all pipes and pipe connections for leaks.

Make sure there are no abnormal sound or vibrations in the cleaning pump.
If required, overhaul the pump.

Set the nozzles, see page MS 550–5X.

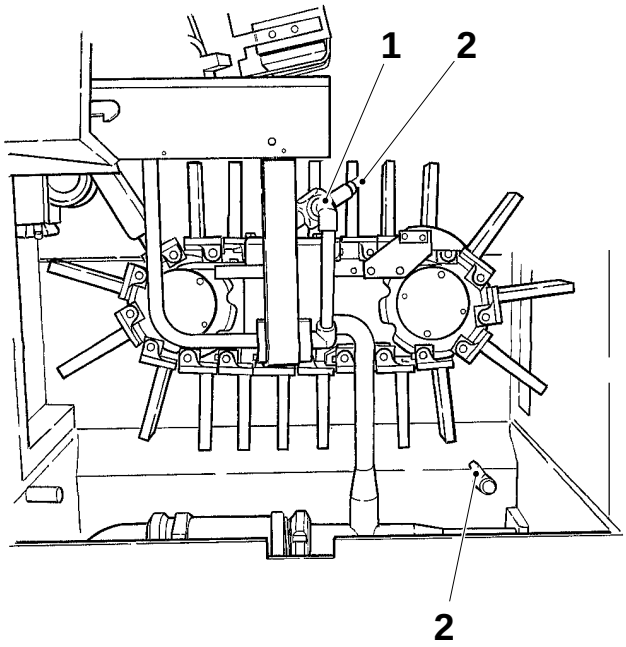

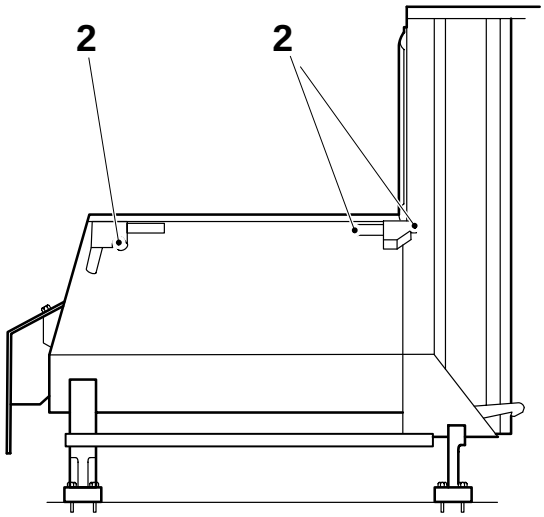

1 Cleaning rotor
2 Nozzle
3 Cleaning rotor

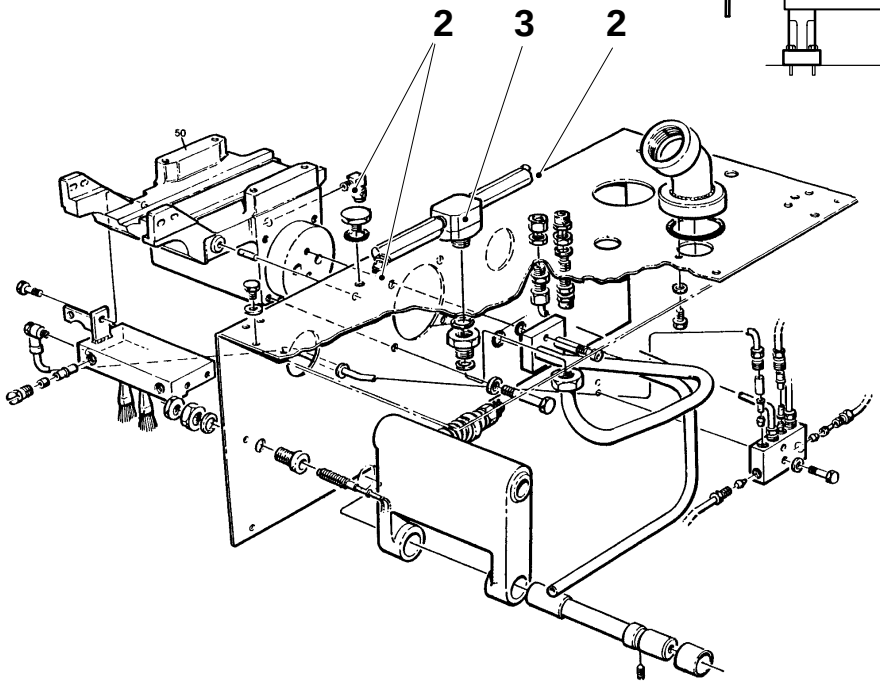

Overhaul

Cleaning rotors

a) Undo the screws (1). Remove the cover (2) and the O-ring (3).

b) Carefully remove the seal (4).

c) Undo the pivot pin (10) by means of an allen key.

d) Remove the washer (5) and the circlip (7).

e) Remove the pivot pin from the bearing housing, and the ball bearings (8).

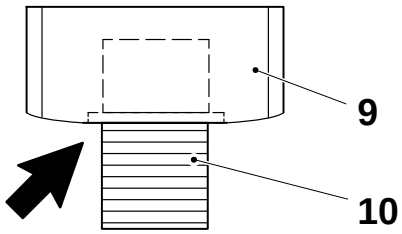

Fig.1

Replace worn and/or damaged details.

Reassemble in reverse order and check that the cleaning rotors rotate freely.

Footnote
Make sure the pivot pin flange is in level with the bottom of the bearing housing (9), see fig. 1.

Set the nozzles (6) and (11), see page MS 550–5X.

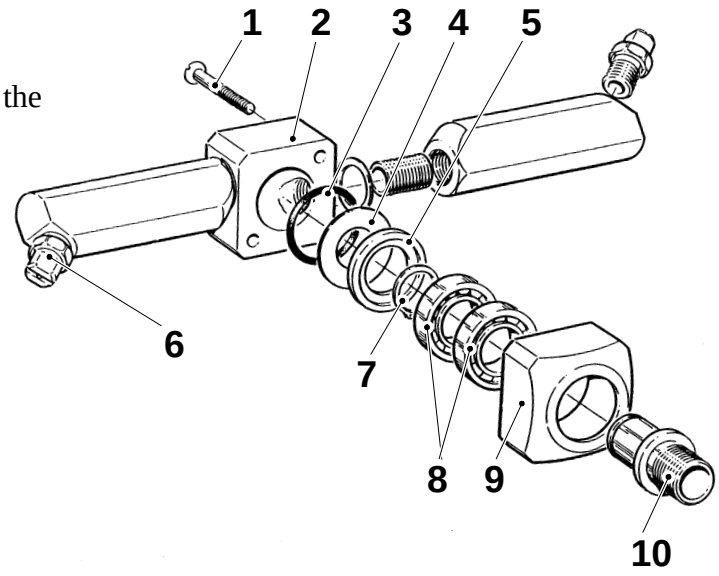

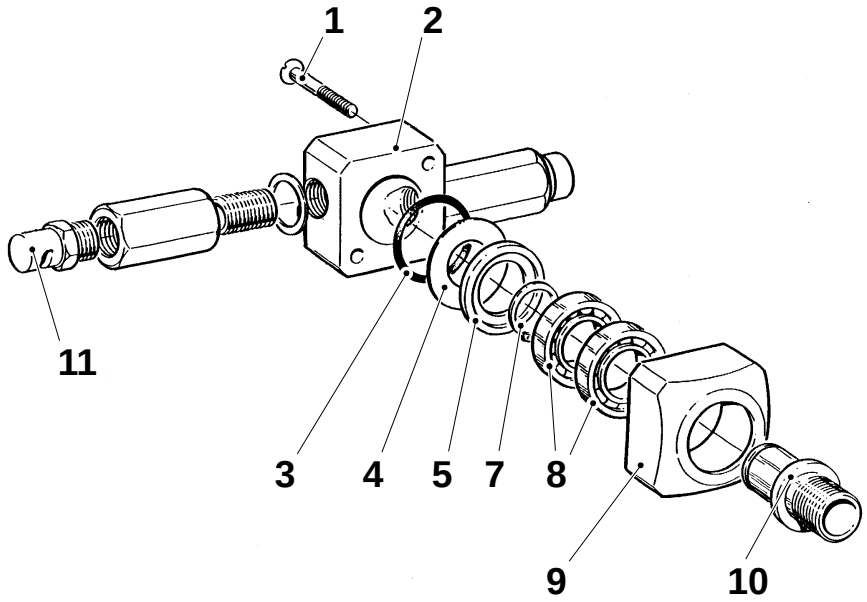

1 Screw
2 Cover
3 O-ring
4 Seal
5 Washer
6 Nozzle
7 Circlip
8 Ball bearing
9 Bearing housing
10 Pivot pin
11 Nozzle

Setting

Cleaning rotor nozzles

Set the opening of the nozzle (2) at right angles to the key handle (1), with the jet direction at 70° ±5° angle, see fig. 1.

Set the opening of the nozzle (3) in parallel with the key handle (4), with the jet direction at 50° ±5° angle, see fig. 1.

Set the jet direction of the nozzle (5) at 60° ±5° angle and nozzle (6) at 10° ±5° angle to the key handle (7), see fig. 2.

(Cont'd overleaf)

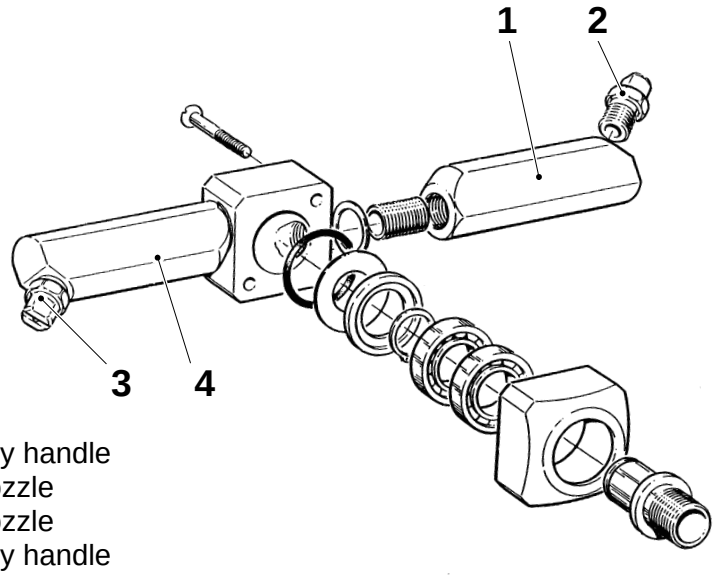

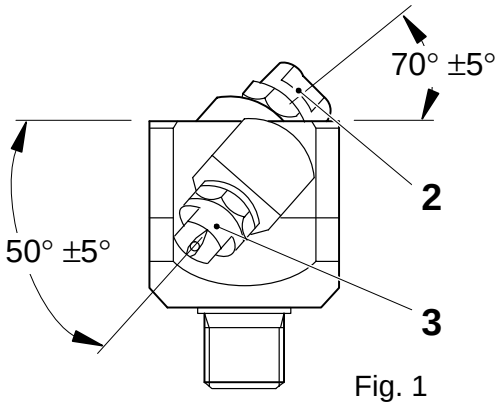

Fig. 1

1 Key handle
2 Nozzle
3 Nozzle
4 Key handle
5 Nozzle
6 Nozzle
7 Key handle

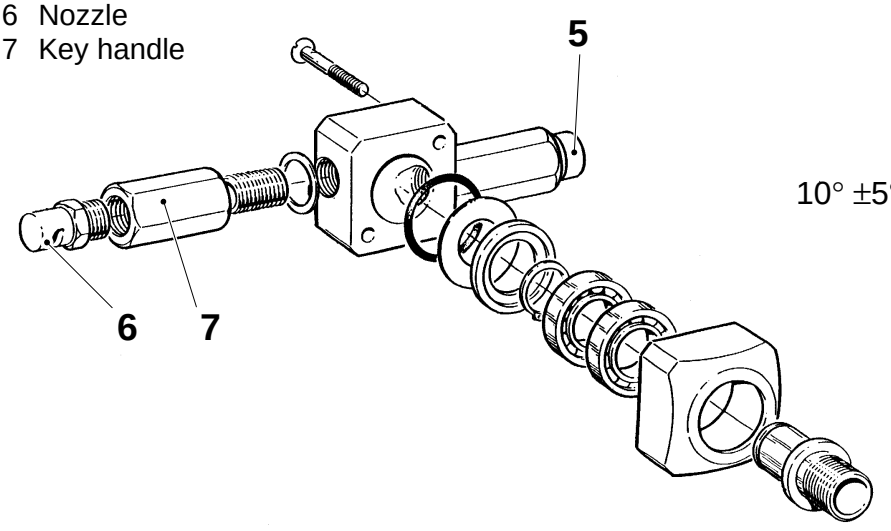

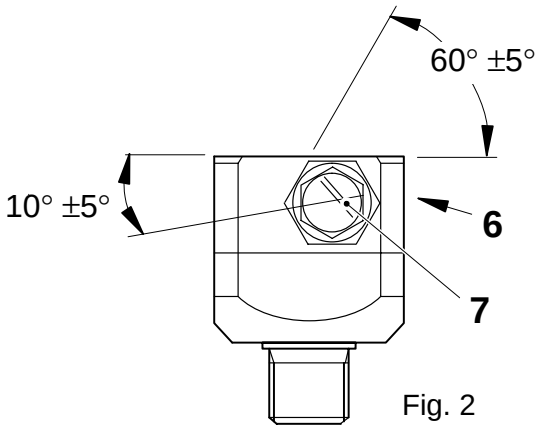

Fig. 2

(Cont'd)

Fixed nozzles

Turn the nozzles (10) so that the slots are horizontal.

Set the jet direction of the nozzle (9) at 45° ±5° angle and the nozzle (8) at 70 ±5 mm distance from the inside of the tank, see fig. 3.

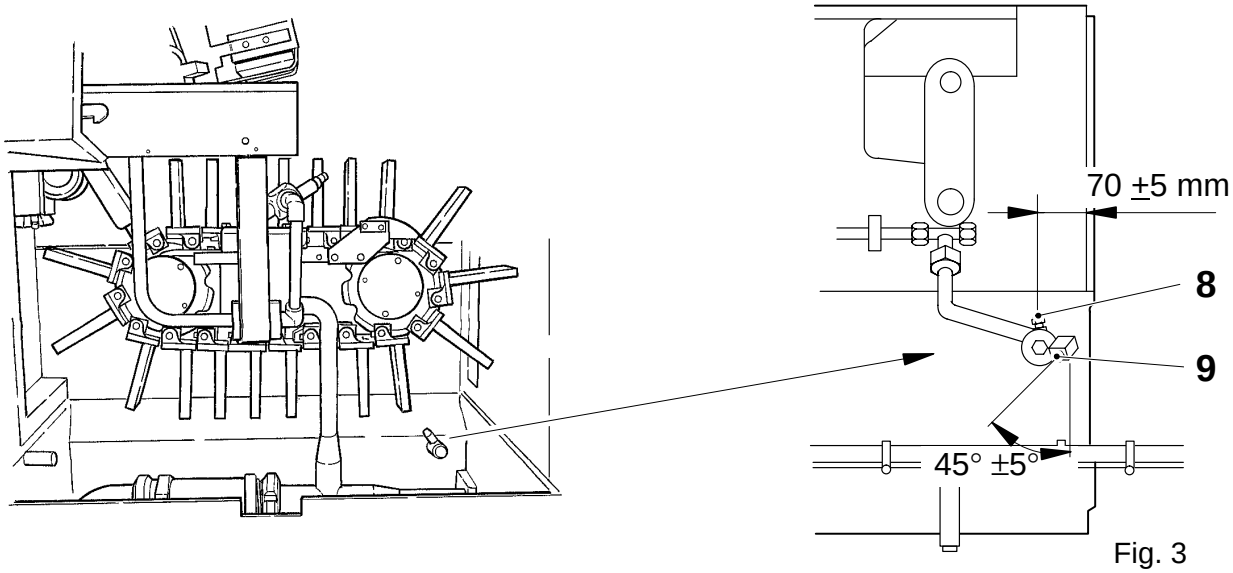

Fig. 3

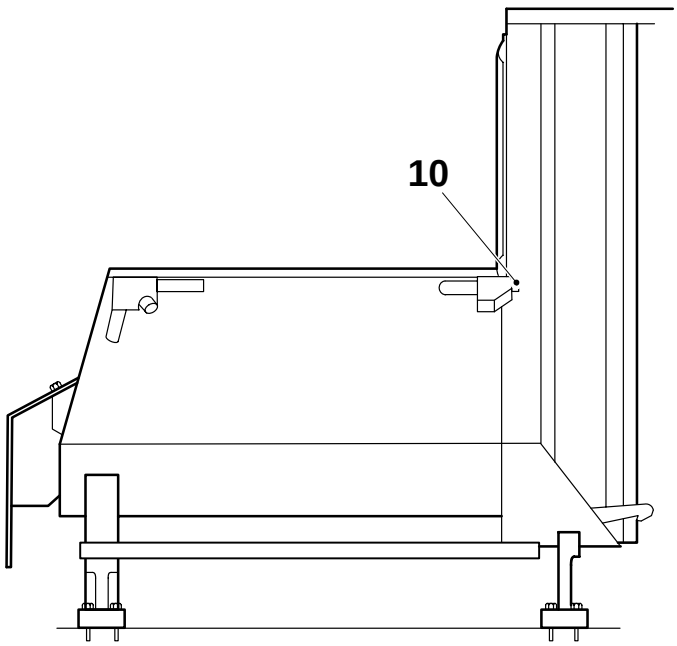

8 Nozzle
9 Nozzle
10 Nozzle (2 off)

Setting

a) Crank the main machine until the final folder just begins to index.

b) Switch off the main power.

c) Crank the machine until the catches lift off one another (approximately 140°/320° on TB and 120°/300° on TBA).

The final folder is to be stationary during cranking.

d) Switch on mains power.

e) Crank the machine to 0°.

f) Set the angle encoder (1) of the final folder, see page MS 1071–5X.

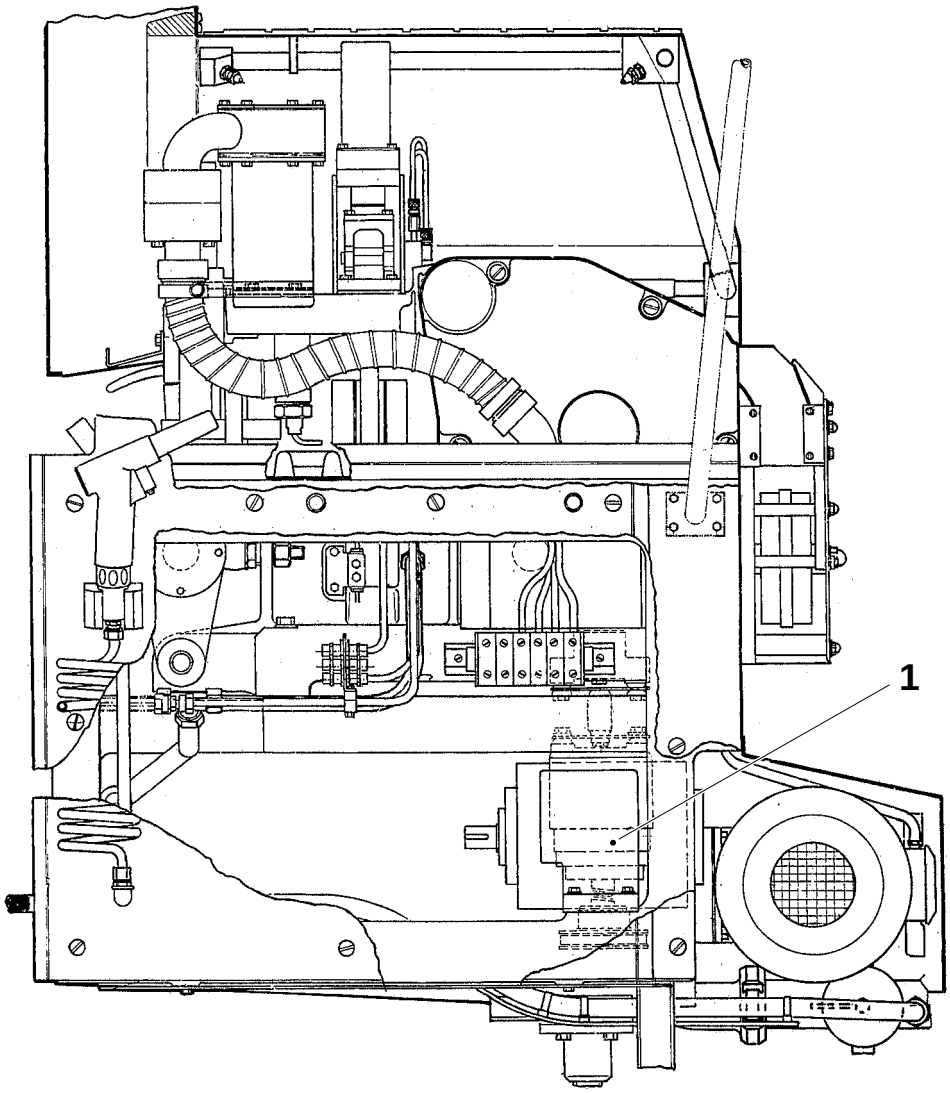

1 Angle encoder

Oil change

Undo the filling plug (2).

Undo the drain plug (3) and drain the oil.

When all oil is emptied, fit drain plug and top up with oil type B, see page MS 940–7X to correct level in the level glass (1).

Fit the filling plug.

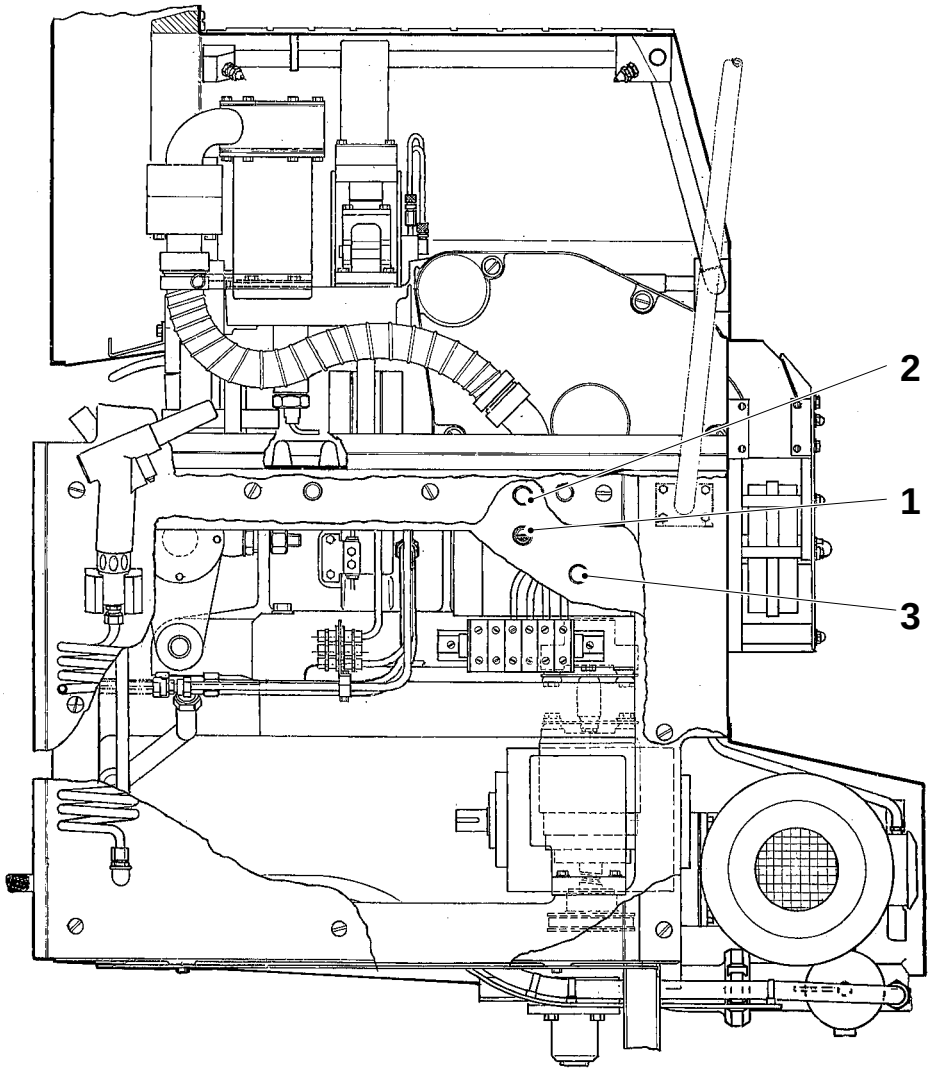

1 Level glass
2 Filling plug
3 Drain plug

Oil change

With hose

Undo the filter plug (1). Undo the hose plug, lower the hose (3) and drain the oil.

When all oil has been drained, top up with oil through the hose to correct level in the level glass (2).
Oil type B, see page MS 940–7X.

Check that the filter is not clogged. If required, clean it with compressed air.

Fit the filter plug and the hose plug. Fit the hose in its clip.

Without hose

Undo the drain plug (5) and the filling plug (4), and drain the oil.

When all oil has been drained, top up with oil through the filling plug to correct level in the level glass (2).
Oil type B, see page MS 940–7X.

Check that the filter is not clogged. If required, clean it with compressed air.

Fit the filling plug.

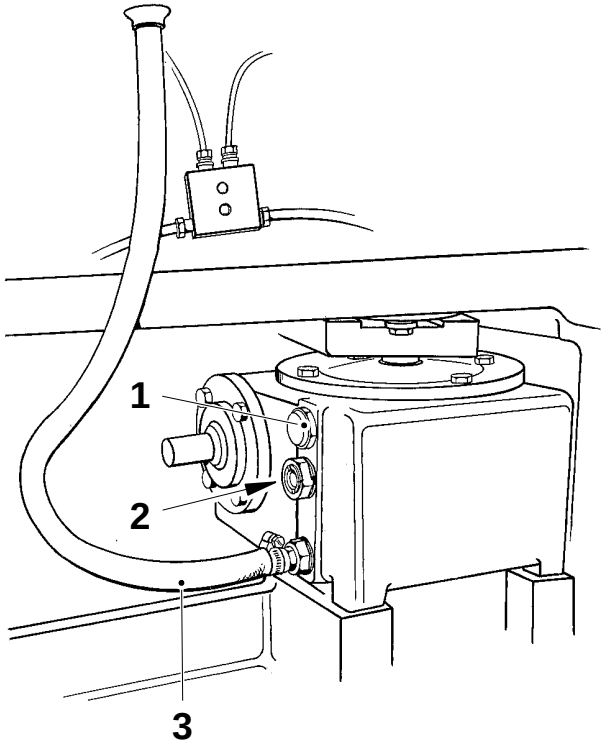

1 Filter plug
2 Level glass
3 Hose
4 Filling plug
5 Drain plug

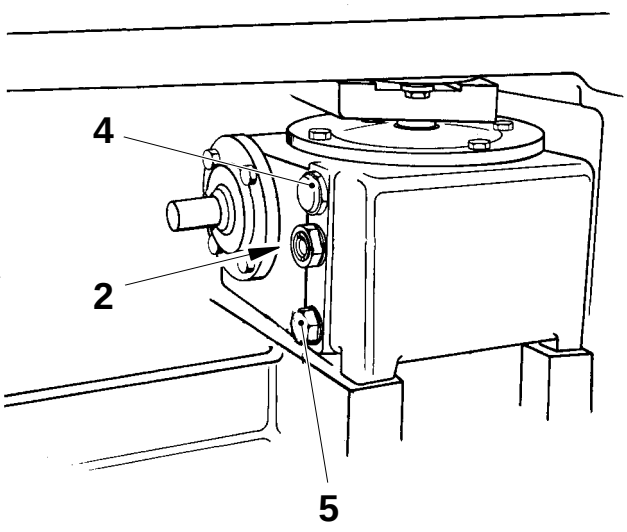

Description	TB/9	TBA/9
Hydraulic system – checking	601–11	601–11
Hydraulic system – checking	601–12	601–12
Hydraulic system – pressure setting	601–61	601–61
Hydraulic system – pressure setting	601–62	601–62
Hydraulic system – bleeding jaw system	602–51	602–51
Hydraulic system – bleeding jaw system	602–52	602–52
Impulse transmitter – setting zero position	603–51	603–51
Impulse transmitter – setting zero position	603–52	603–52
Impulse transmitter valve clearance – checking/setting	604–11	604–11
Impulse transmitter valve clearance – checking/setting	604–12	604–12
Hydraulic system – bleeding pull-down device	605–51	605–51
Hydraulic system – bleeding pull-down device	605–52	605–52
Hydraulic system – bleeding pressure unit	606–51	606–51
Hydraulic system – bleeding pressure unit	606–52	606–52
Air system – checking	610–11	610–11
Filter regulator – checking/setting	612–11	612–11
Filter regulator – removal/fitting	612–31	612–31
Photocell air filters – checking	613–11	613–11
Spray air filter – checking		614–11
Cooling water system – checking	615–12	
Cooling water system – checking	615–13	
Cooling water system – setting	615–52	
Cooling water system – setting	615–53	
Cooling water system – checking		616–12
Cooling water system – checking		616–13

Description	TB/9	TBA/9
Cooling water system – setting		616–52
Cooling water system – setting		616–53
Water filter – cleaning	617–31	617–31
Central lubrication, high–pressure – checking	621–11	621–11
Central lubrication, high–pressure – removal/fitting	621–21	621–21
Central lubrication, high–pressure – removal/fitting	621–22	621–22
Carriage – checking	624–11	624–11
Carriage – checking	624–12	624–12
Carriage – setting	624–51	624–51
Carriage – setting	624–52	624–52
Packaging material monitor – setting	628–52	628–52
Splicing device – checking/setting	630–12	630–12
Brake, power feed roller – checking/setting	631–11	631–11
Power feed roller – checking	632–11	632–11
Power feed roller – checking	632–12	632–12
Power feed roller – setting	632–51	632–51
Power feed roller – setting	632–52	632–52
Paper guide roller – checking/setting	633–51	633–51
Dancer roller – checking/setting	634–11	634–11
Dancer roller – checking	634–12	634–12
Reel holder – checking/setting	636–11	636–11
Constant flow valve – checking	653–11	653–11
Receiver – checking	663–11	663–11

Checking

Check whether the red filter button (1) protrudes out of the filter housing. If that is the case, replace the filter insert (2).

Check that the oil level reaches the level sight glass (3).

Check that there is no water in the oil. Drain any water through the cock (4).

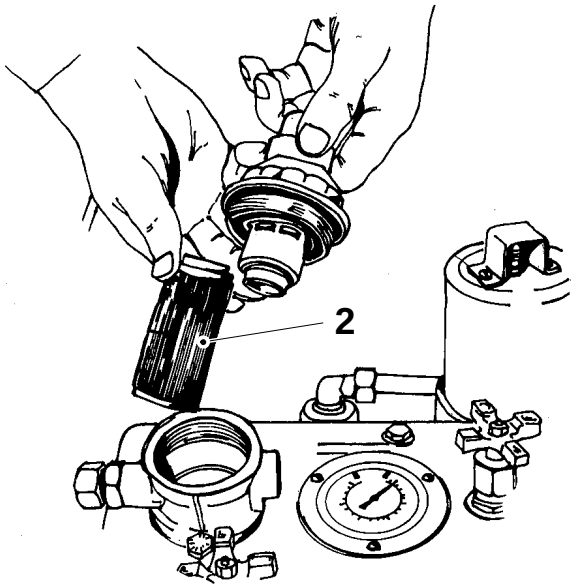

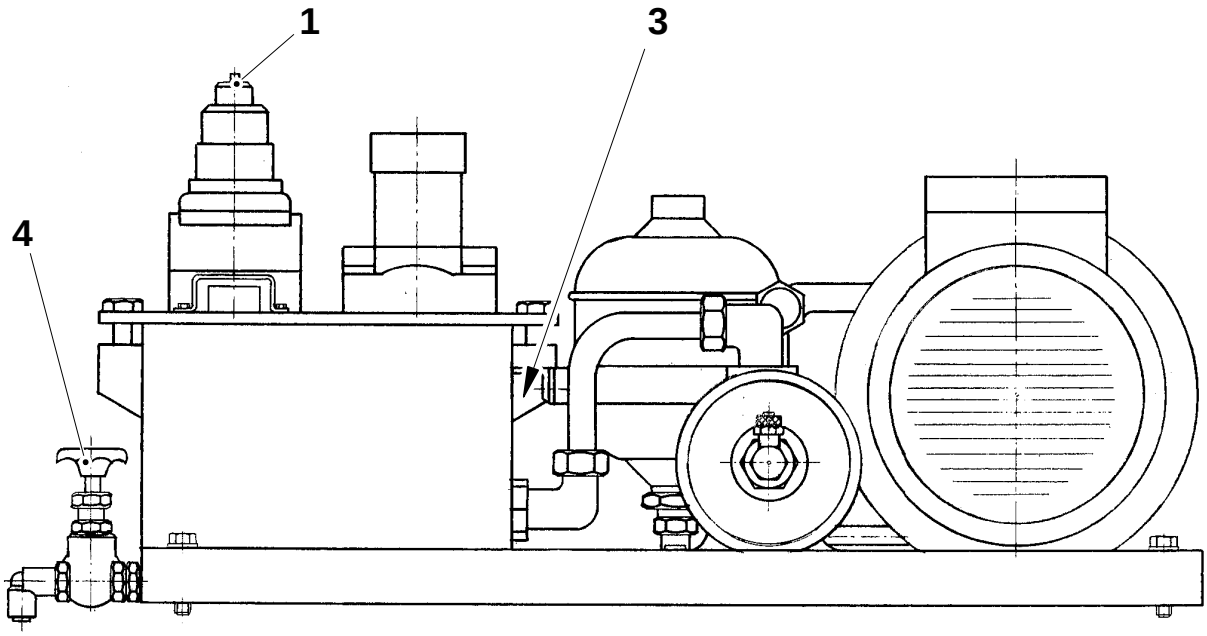

1 Filter button
2 Filter insert TP No. 90415–312
3 Level sight glass
4 Cock

Checking

Check whether the filter button (1) protrudes out of the filter housing. If that is the case, replace the filter insert, TP No. 90415–323.

Check that the oil level reaches the level sight glass (2).

Check that there is no water in the oil. Drain any water through the cock (3).

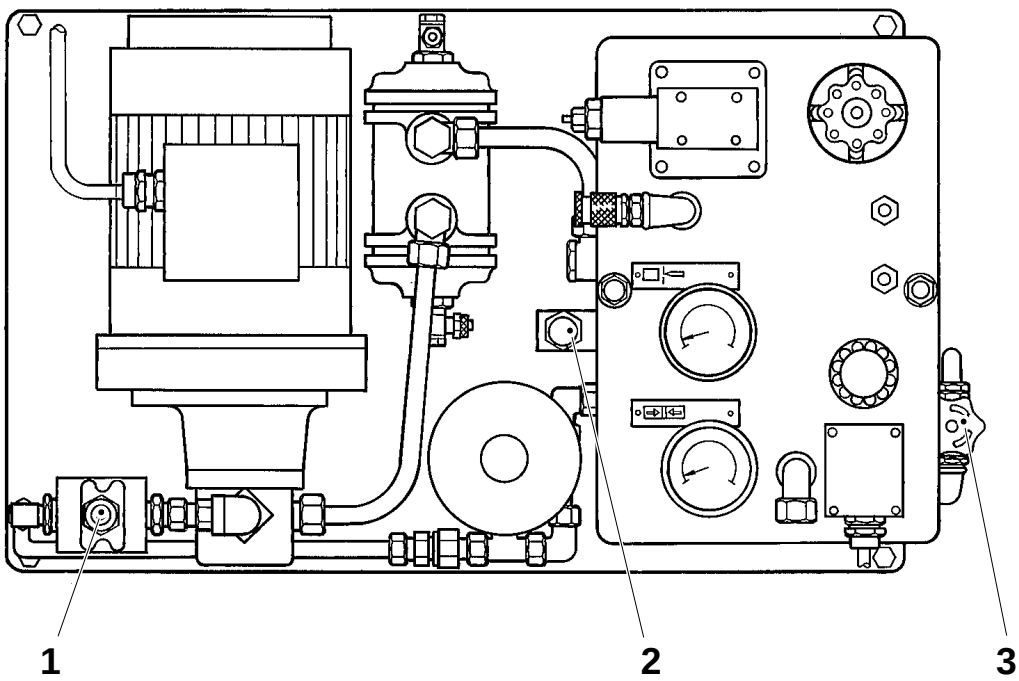

1 Button
2 Level sight glass
3 Cock

Pressure setting

Pressures, see pages MS 910/920–7X.

Set the hydraulic pressure (jaw pressure) by means of the overflow valve (4) and the pressure gauge (5).

Set the cutting pressure on the reducing valve by loosening the lock nut (2) and adjusting with the setting screw (3). Read the pressure on the pressure gauge (1).

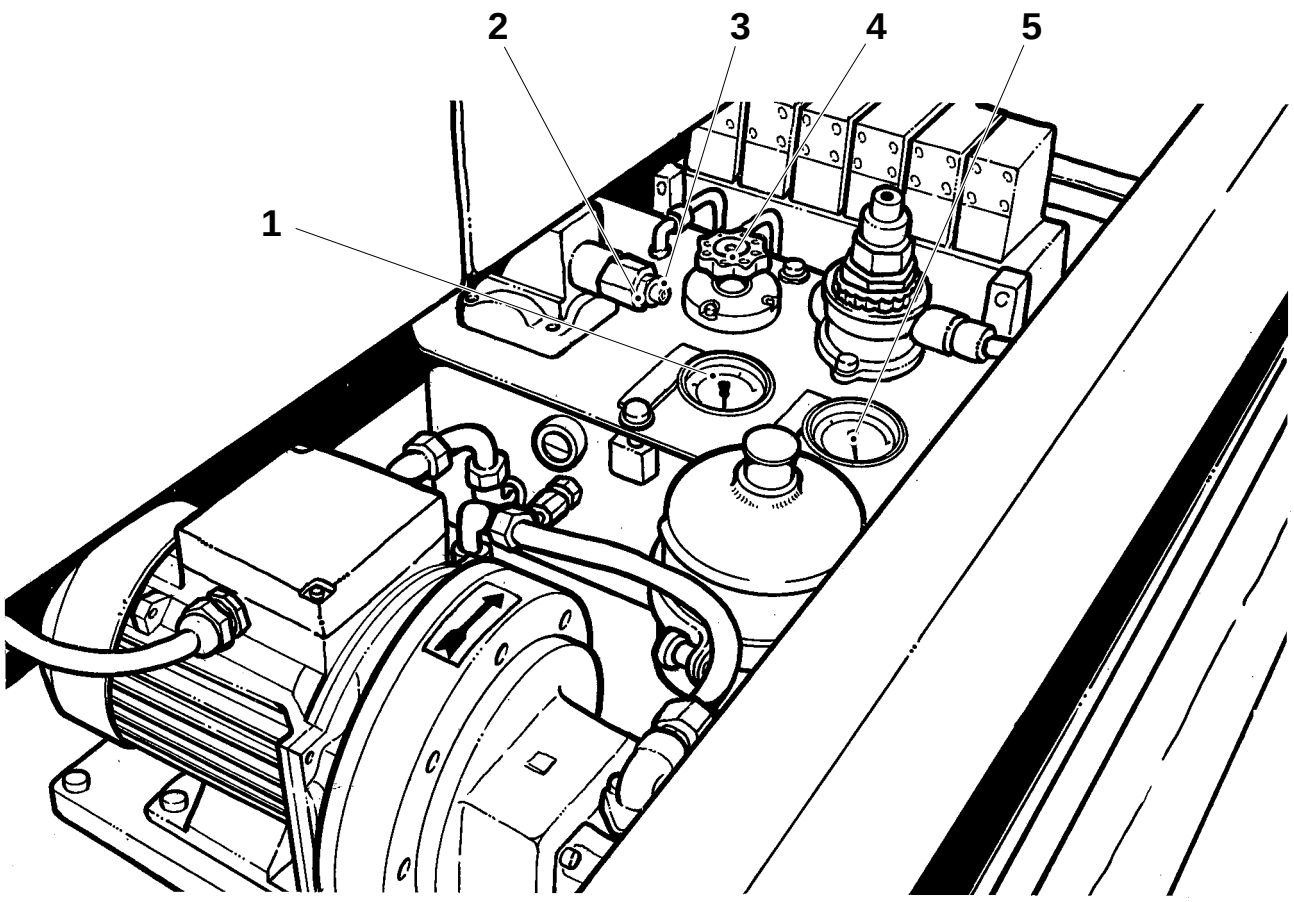

1 Pressure gauge, cutting pressure
2 Lock nut
3 Setting screw
4 Overflow valve
5 Pressure gauge, jaw pressure

Pressure setting

Pressures, see pages MS 910/920–7X.

Set the hydraulic pressure (jaw pressure) by means of the overflow valve (4) and the pressure gauge (5).

Set the cutting pressure on the reducing valve by loosening the lock nut (2) and adjusting with the setting screw (3). Read the pressure on the pressure gauge (1).

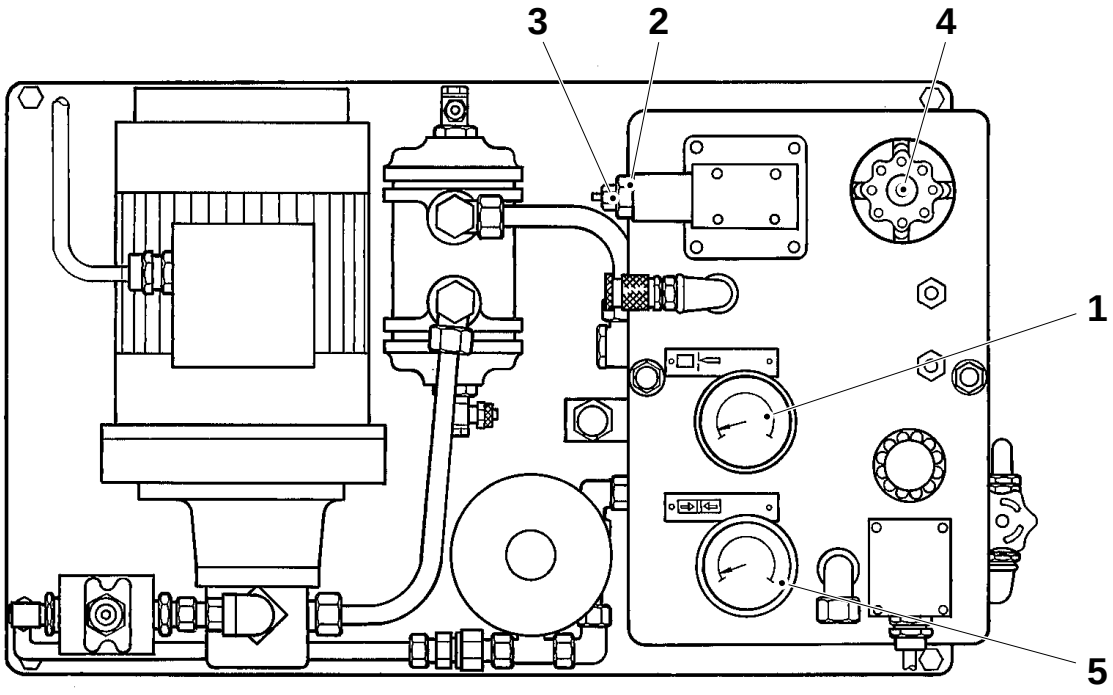

1 Pressure gauge, cutting pressure
2 Lock nut
3 Setting screw
4 Overflow valve
5 Pressure gauge, jaw pressure

Bleeding jaw system

Catches

a) Crank to 0° for the RH jaw pair.

b) Turn on cooling water and start the hydraulic pump.

c) Reduce the hydraulic pressure (jaw pressure) to approximately 4 MPa, see page MS 601–6X.

d) Loosen the screws (1) carefully (two on each carrier), and bleed until oil without any air bubbles emerges.
WARNING!
Wach out for splashing.

e) Retighten the screws.
Caution!
Do not overtighten.

f) Crank to 180° and bleed the catches of the LH jaw pair.

g) Set the correct hydraulic pressure according to pages MS 910/920–7X.
Setting procedure, see page MS 601–6X.

h) Check that there is no oil leakage.

i) Stop the hydraulic pump.

Cutting mechanism

a) Crank to 75° for the RH jaw pair.

b) Turn on the cooling water and start the hydraulic pump.

c) Reduce the hydraulic pressure (cutting pressure) to approximately 4 MPa, see page MS 601–6X.

d) Loosen the screws (2) carefully and bleed until oil without any air bubbles emerges.

e) Retighten the screws.
Caution!
Do not overtighten.

f) Crank to 255° and bleed the cutting mechanism on the LH jaw pair.

g) Set the correct hydraulic pressure, see pages MS 910/920–7X.
Setting procedure, see page MS 601–6X.

h) Check that there is no oil leakage.

i) Stop the hydraulic pump.

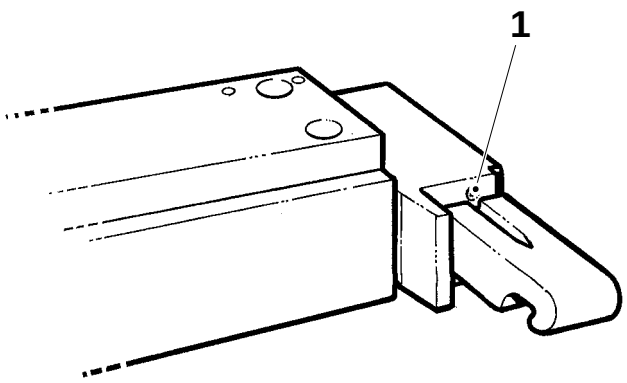

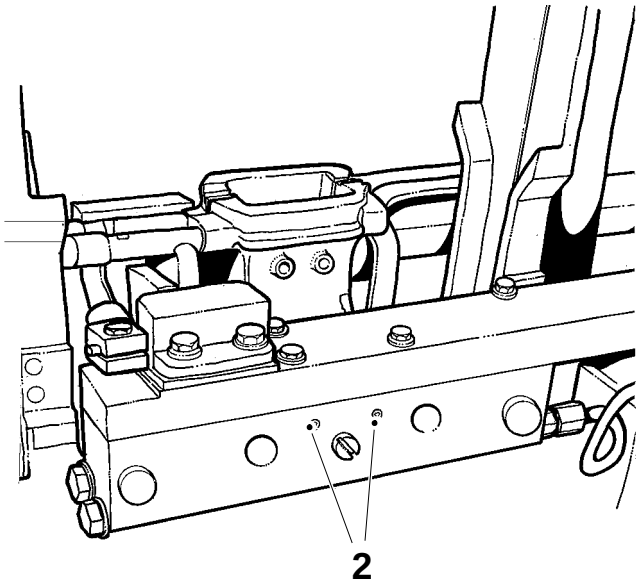

1 Screw
2 Screw

Bleeding jaw system

Catches

a) Crank to 0° for the RH jaw pair.

b) Turn on cooling water and start the hydraulic pump.

c) Reduce the hydraulic pressure (jaw pressure) to approximately 4 MPa, see page MS 601–6X.

d) Loosen the screws (1) carefully (two on each carrier), and bleed until oil without any air bubbles emerges.

e) Retighten the screws.

f) Crank to 180° and bleed the catches of the LH jaw pair.

g) Set the correct hydraulic pressure, see pages MS 910/920–7X.
Setting procedure, see page MS 601–6X.

h) Check that there is no oil leakage.

i) Stop the hydraulic pump.

Cutting mechanism

a) Crank to 75° for the RH jaw pair.

b) Turn on the cooling water and start the hydraulic pump.

c) Reduce the hydraulic pressure (cutting pressure) to approximately 4 MPa, see page MS 601–6X.

d) Loosen the screws (2) carefully and bleed until oil without any air bubbles emerges.

e) Retighten the screws.

f) Crank to 255° and bleed the cutting mechanism on the LH jaw pair.

g) Set the correct hydraulic pressure, see pages MS 910/920–7X.
Setting procedure, see page MS 601–6X.

h) Check that there is no oil leakage.

i) Stop the hydraulic pump.

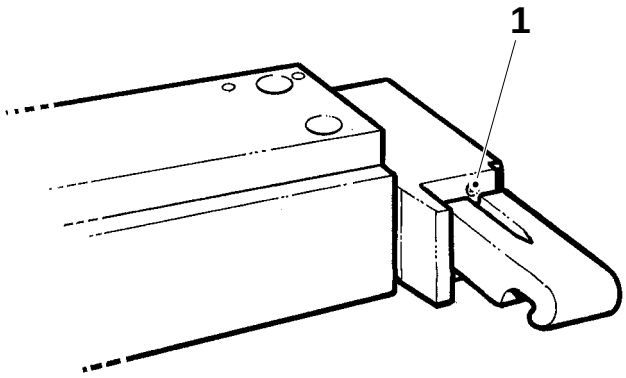

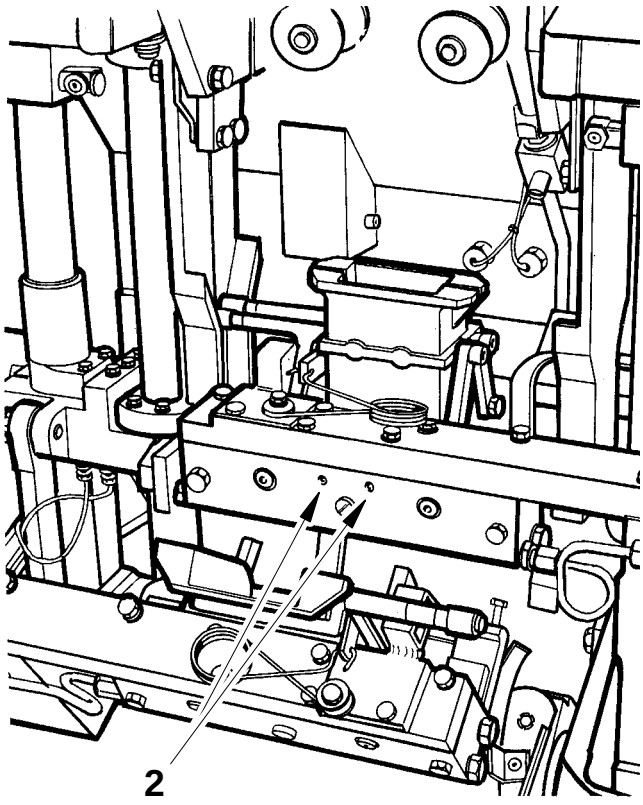

1 Screw
2 Screw

418

Setting zero position

Crank the machine to 0° exactly.

a) Loosen the clamp fitting (2).

b) Zero the cam pack by means of a ∅ 4 mm rod (1) inserted through the bracket and all the cams. Insert the rod through the holes marked in fig.

c) Tighten the clamp fitting. Torque, see page MS 370–4X.

Set the angle encoder, see page MS 1070–5X.

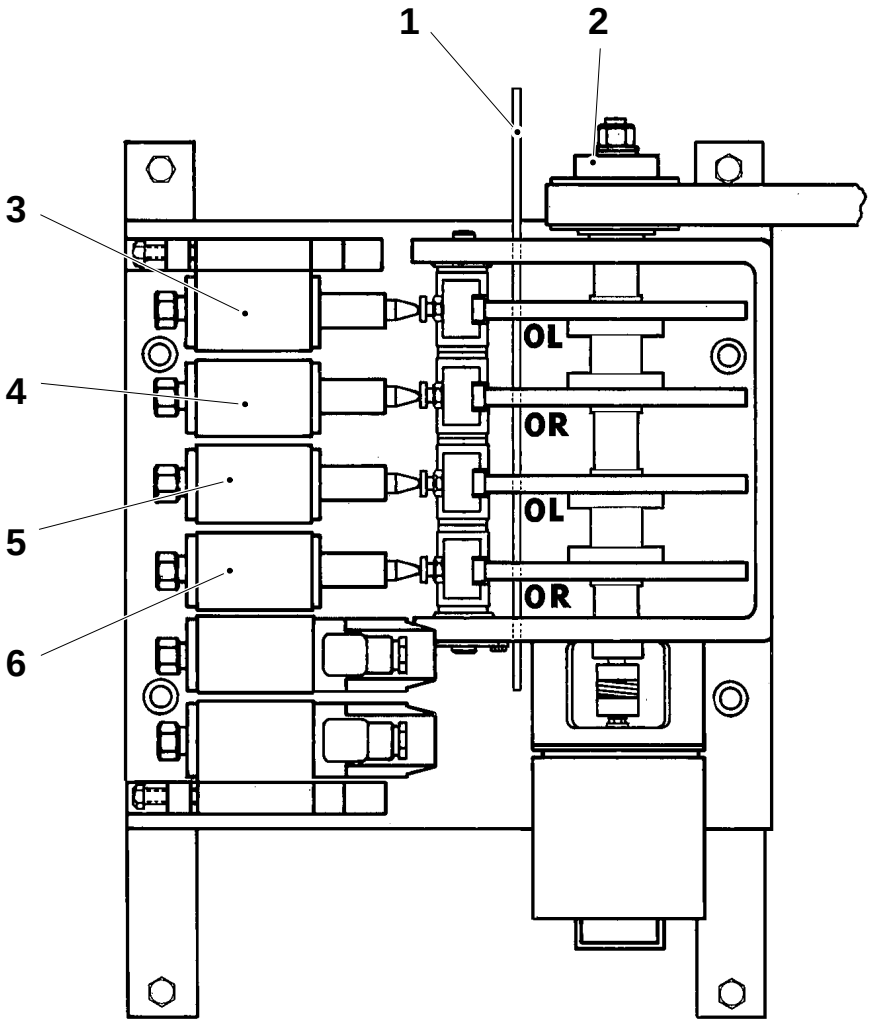

1 Rod ∅ 4 mm
2 Clamp fitting
3 Valve, jaw pressure LH side
4 Valve, jaw pressure RH side
5 Valve, cutting pressure LH side
6 Valve, cutting pressure RH side

Setting zero position

Crank the machine to 0° exactly.

a) Loosen the screws and the clamp element (1). If required, use two of the screws in the treaded holes to separate the clamp element.

b) Zero the cam pack by turning the axle until the mark on the cam (2) is opposite the indication plate (3). If required, apply a small amount of oil.

Note!
Never use grease or oil which contains molybdenum sulphide or oil with high pressure agent.

c) Tighten the clamp element.
The screws have to be tightened crosswise.
Torque 17 ±1 Nm.

Set the angle encoder, see page MS 1070–5X.

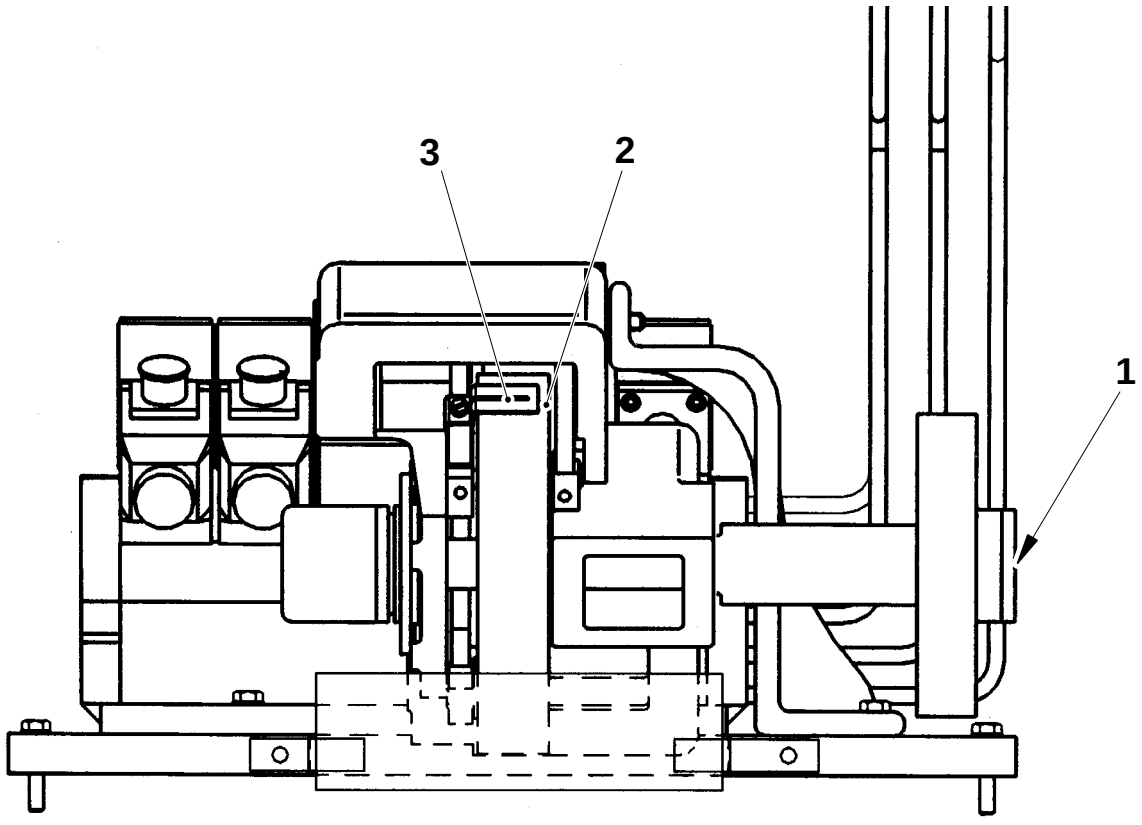

1 Clamp element
2 Cam
3 Indication plate

Checking/Setting

Check cam roller (2) and cam, the screw (1) and the valve (4) for wear and/or damages. Replace damaged and/or worn parts.

Setting

- Crank the machine until the cam roller (2) raises on the cam.
- Fit the tool (3) and tighten until the valve reaches the bottom.
- Measure gap A at three evenly spred points along the entire cam.
- Adjust measurement A by means of the screw (1).
- Remove the tool.

A = 0.15 – 0.35 mm

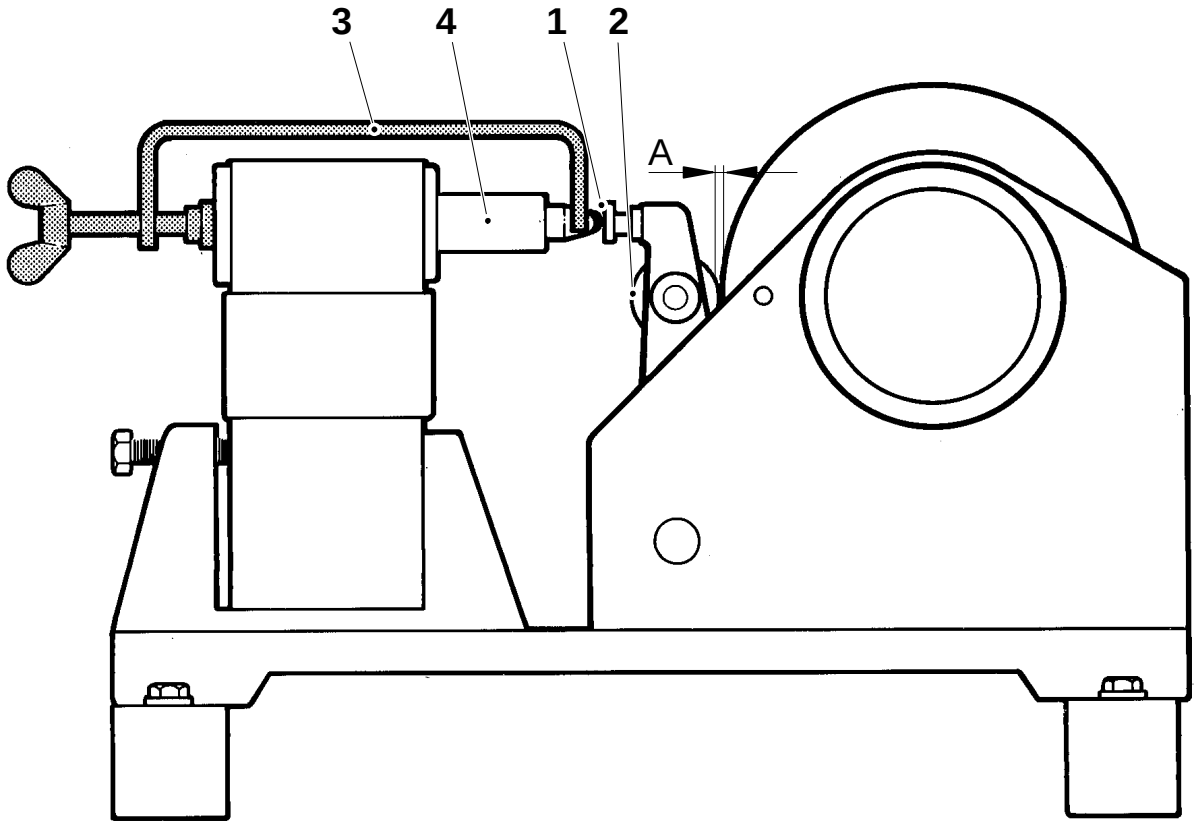

1 Screw
2 Cam roller
3 Tool TP No. 76138
4 Valve

Checking/Setting

Check the following parts for wear and/or damages:

- the cam rollers (1),
- the cams (3),
- the belt (5),
- the valves (2),
- the screws (4),
- the axles (10) and (11),
- the bushings (12) and (13),

Replace worn and/or damaged parts.

Set the valve clearance A, as follows:

a) Undo the screws (6), the oil pipe connections (7), and remove the plate (8), together with the distribution block.

b) Crank the machine until one of the cam rollers raises on the cam.

c) Fit tool TP No. 76138 and tighten until the valve reaches the bottom.

d) Adjust measurement A by means of the screw (4).

e) Repeat the procedure for each of the four valves.

f) Remove the tool, fit the distribution block and connect the oil pipes.

g) Push the manual lubrication button on the valve panel five to six times to bleed the oil pipes.

h) Check that there is no leakage in the oil pipe connections.

A = 0.3 – 0.4 mm

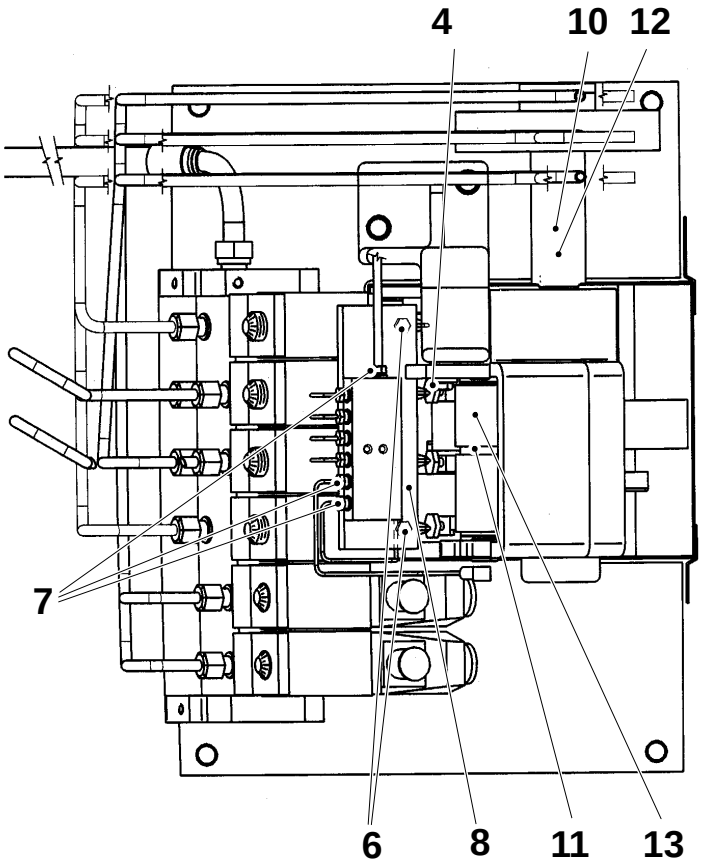

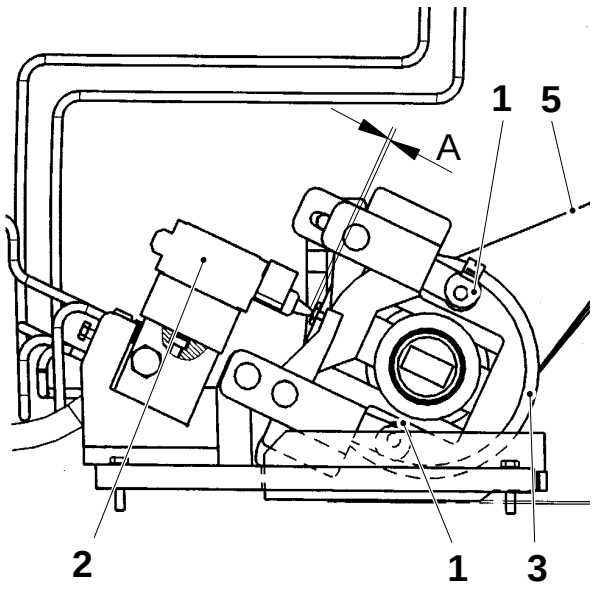

1 Cam roller	6 Axle	11 Axle
2 Valve	7 Bushing	12 Bushing
3 Cam	8 Axle	13 Bushing
4 Screw	9 Bushing	
5 Belt	10 Axle	

422

Bleeding pull-down device

a) Crank the machine until the final folder stops indexing.

b) Turn on cooling water.

c) Start the hydraulic pump.

d) Reduce the hydraulic pressure (jaw pressure) to approximately 4 MPa, see page MS 601–6X.

e) Actuate the hydraulic valve (Y41) for the pull-down device with tool TP No. 76167.

f) Loosen the allen screw (1) and bleed the pull-down device.

WARNING!
Watch out for splashing.

g) Tighten the screw (1).

h) Set the correct hydraulic pressure, see page MS 910/920–7X.
Setting, see page MS 601–6X.

i) Check that there is no oil leakage.

j) Remove the tool.

k) Stop the hydraulic pump.

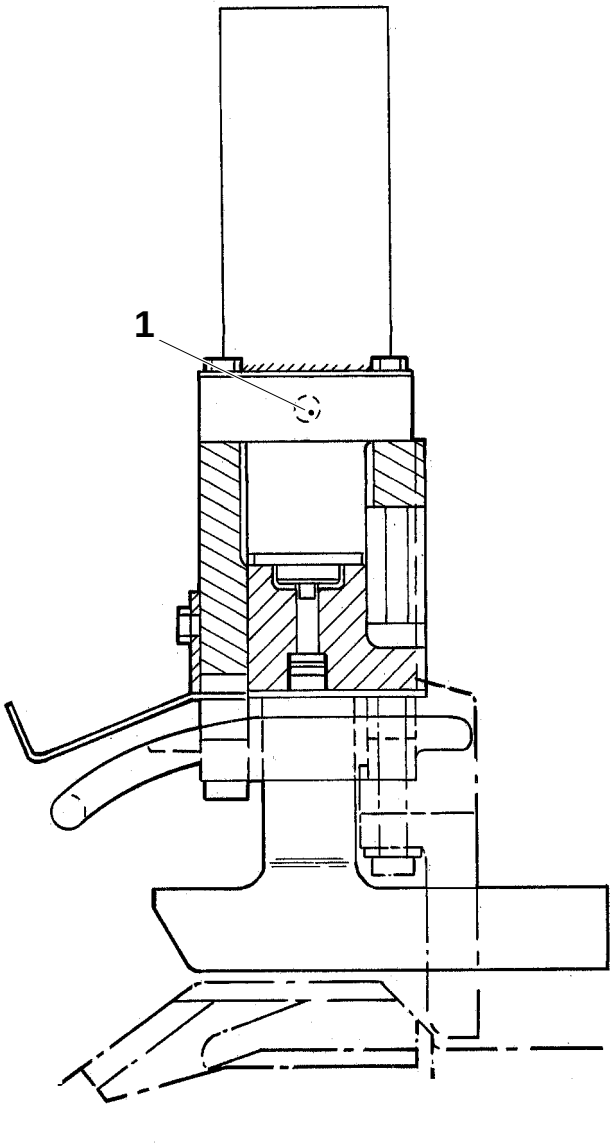

1 Screw

Bleeding pull-down device

a) Crank the machine until the final folder stops indexing.

b) Turn on cooling water.

c) Start the hydraulic pump.

d) Reduce the hydraulic pressure (jaw pressure) to approximately 4 MPa, see page MS 601–6X.

e) Actuate the hydraulic valve (Y41) for the pull-down device with tool TP No. 76167.

f) Loosen the allen screw (1) and bleed the pull-down device.

WARNING!
Watch out for splashing.

g) Tighten the screw (1).

h) Set the correct hydraulic pressure, see page MS 910/920–7X.
Setting, see page 601–6X.

i) Check that there is no oil leakage.

j) Remove the tool.

k) Stop the hydraulic pump.

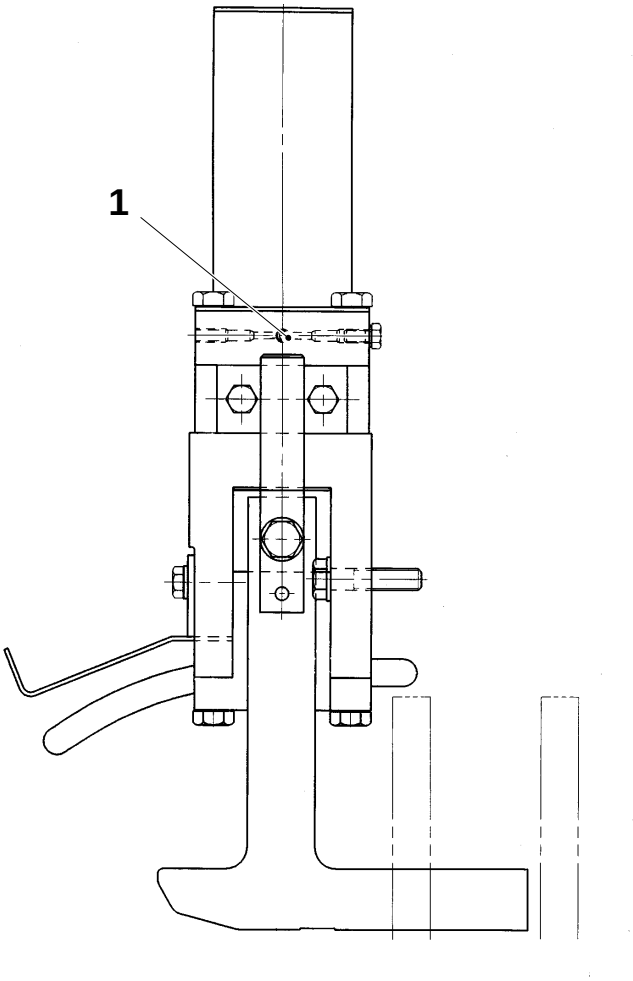

1 Screw

Bleeding pressure unit

a) Crank the machine until the final folder stops indexing.

b) Turn on cooling water.

c) Start the hydraulic pump.

d) Reduce the hydraulic pressure (jaw pressure) to approximately 4 MPa, see page MS 601–6X.

e) Actuate the hydraulic valve (Y42) for the pressure unit with tool TP No. 76167.

f) Loosen the allen screw (1) and bleed the pressure unit.

WARNING!
Watch out for splashing.

g) Tighten the screw (1).

h) Set the correct hydraulic pressure, see page MS 910/920–7X.
Setting, see page MS 601–6X.

i) Check that there is no oil leakage.

j) Remove the tool.

k) Stop the hydraulic pump.

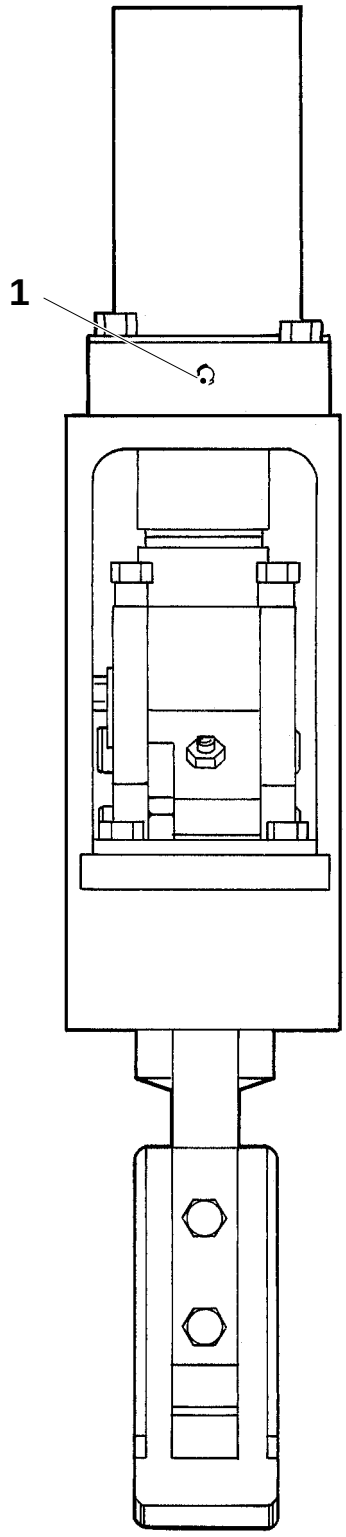

1 Screw

Bleeding pressure unit

a) Crank the machine until the final folder stops indexing.

b) Turn on cooling water.

c) Start the hydraulic pump.

d) Reduce the hydraulic pressure (jaw pressure) to approximately 4 MPa, see page MS 601–6X.

e) Actuate the hydraulic valve (Y42) for the pressure unit with tool TP No. 76167.

f) Loosen the allen screw (1) and bleed the pressure unit.

WARNING!
Watch out for splashing.

g) Tighten the allen screw (1).

h) Set the correct hydraulic pressure, see page MS 910/920–7X.
Setting, see page MS 601–6X.

i) Check that there is no oil leakage.

j) Remove the tool.

k) Stop the hydraulic pump.

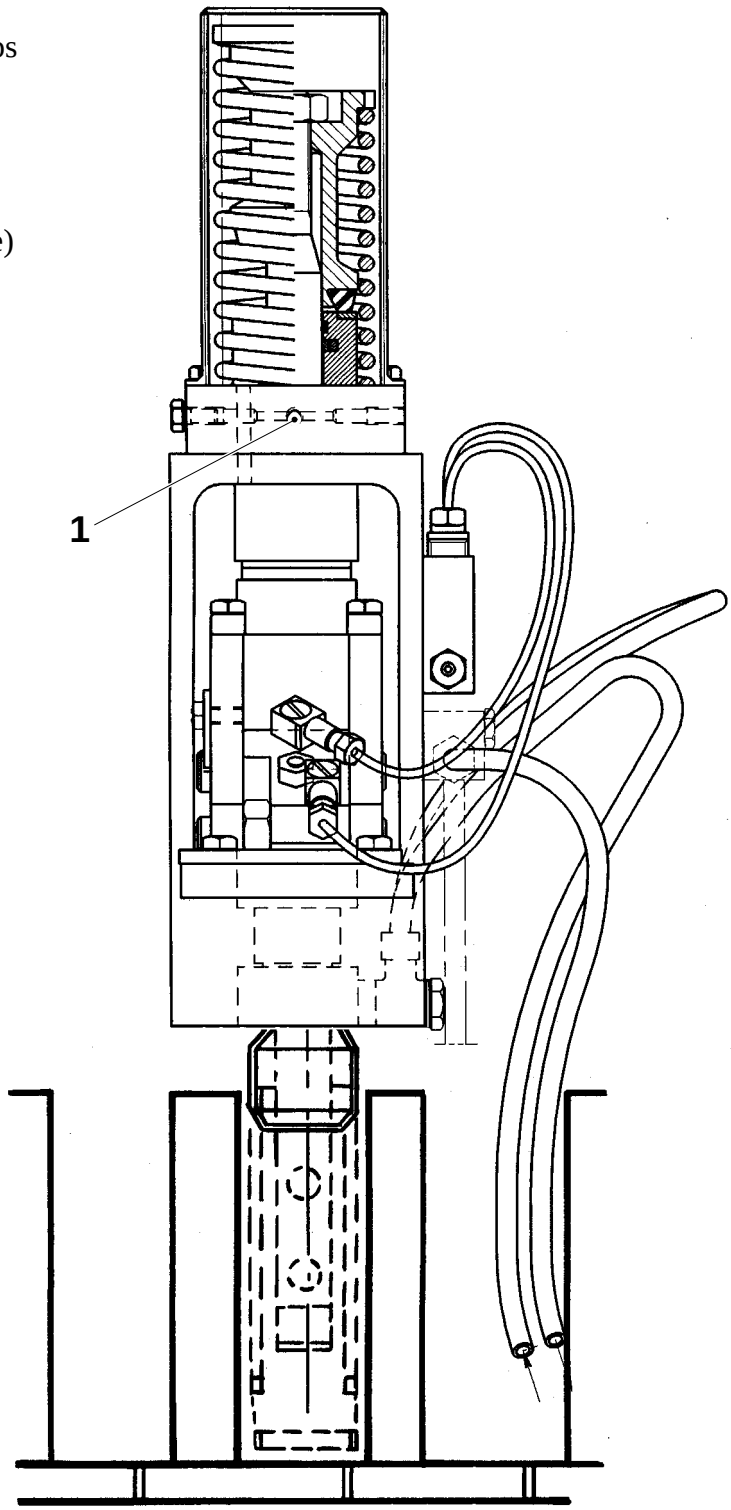

1 Allen screw

Checking

- Check that the air system is tight, preferably after production and while the room is silent.
- Open the main air valve.
- Listen for escaping air.
- If required, replace or overhaul leaking parts.

Checking/Setting

a) Check that there is no liquid in the indication tube (3). If required, close the compressed air valve (1) and unscrew the reservoir (2).

b) Clean the reservoir with soapy water.

c) Fit the reservoir. Make sure the O-ring is correctly fitted.

d) Open the valve and check that the filter regulator is tight.

e) Check and, if necessary, set the correct air pressure by means of the knob (4), see page MS 910/920–7X.

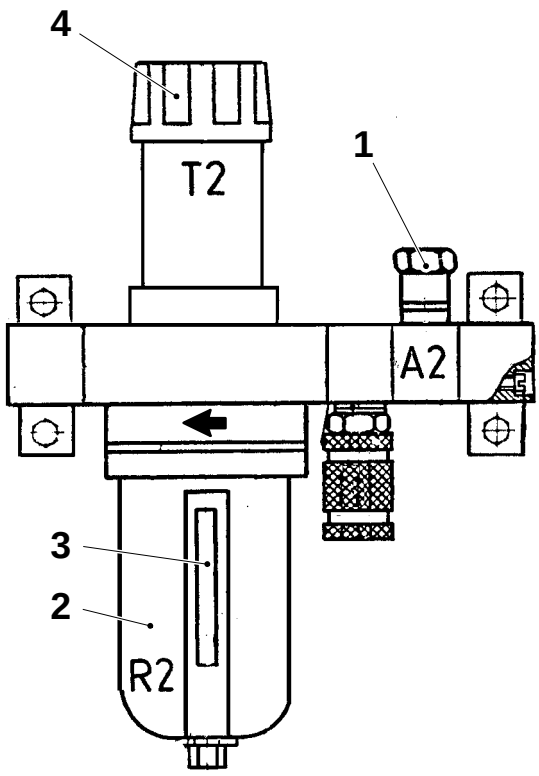

1 Compressed air valve
2 Reservoir
3 Indication tube
4 Knob

Removal

a) Close the compressed air valve (4).

b) Loosen the ring nut (1) and lower the filter regulator (2).

Fitting

a) Position the ring nut so that its flange is underneath the lugs of the filter reservoir (3).

b) Check that the O-rings at the filter regulator (2) inlet and outlet are correctly placed in their grooves. Apply some silicon grease to the O-rings.

c) Lift up the filter regulator into its holder (3), making sure that the arrow on the filter points in the right direction. Tighten the ring nut (1).

d) Open the compressed air valve (4).

e) Check that there is no air leakage.

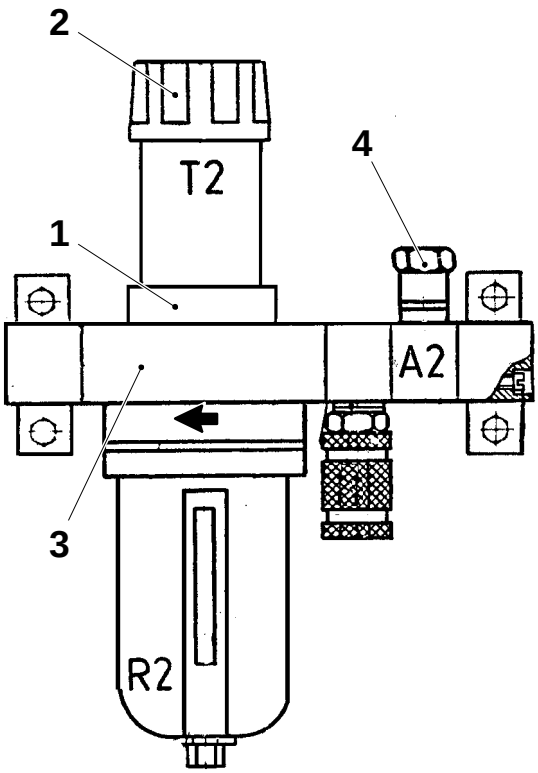

1 Ring nut
2 Filter regulator
3 Filter reservoir
4 Compressed air valve

Checking

Check the colour of the air filters of the photocells.

The liquid and gas filter (1) are to be replaced when they are red.

The moisture-absorbing filter (2) is to be replaced when it is pink.

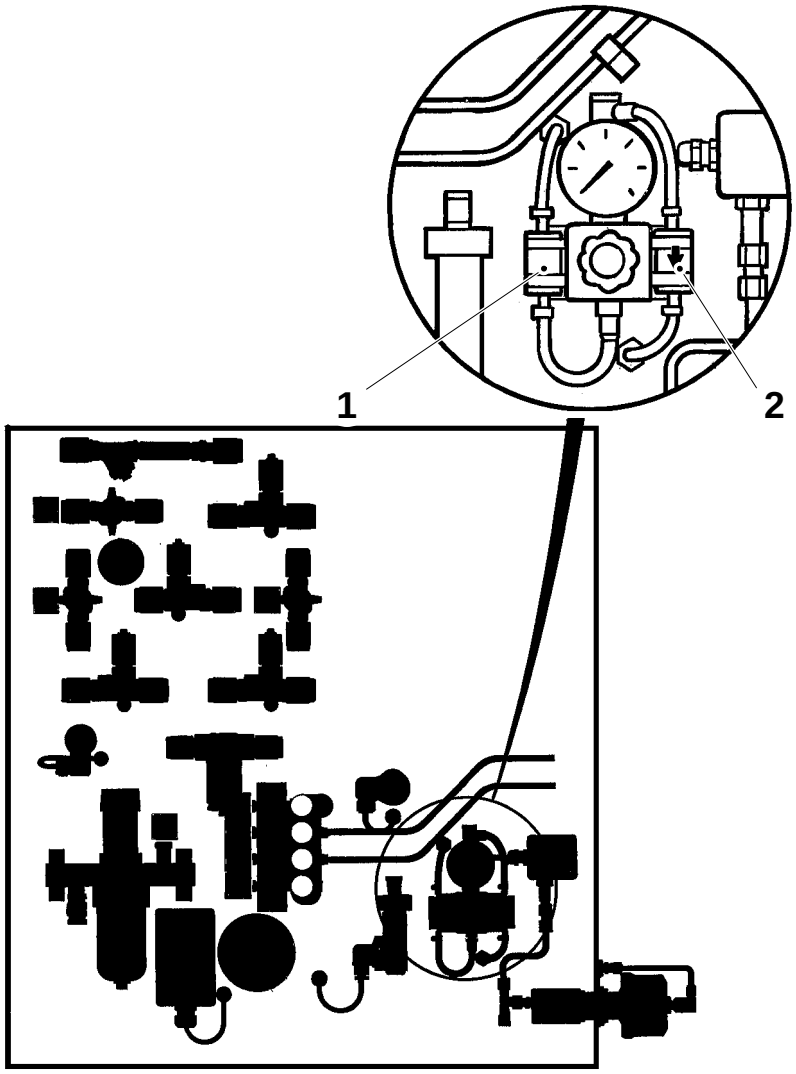

1 Liquid and gas filter
2 Moisture-absorbing filter

Checking

Turn off input air.

Undo the filter cover (1). Check and, if required, replace the filter cartridge.

Fit the filter cover.

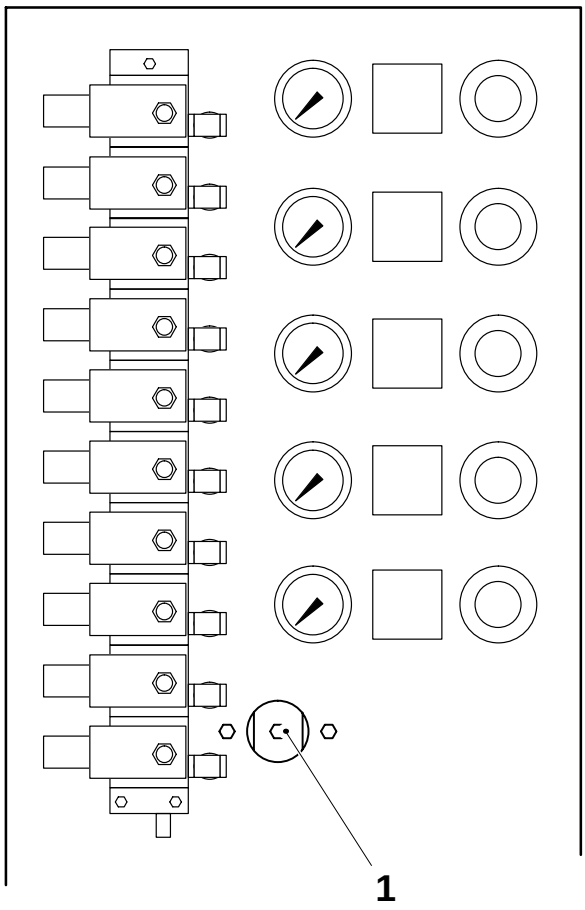

1 Filter cover

Checking

Cooling water temperature

Check that the temperature of the incoming cooling water is below 20°C.

Water flow rate

Check that the water flow rate is as listed below. If not, blow the pipe–line clear with compressed air.

Unit	Min flow rate, l/min
Pull tab device/ Zone heater	0.8
Inductor	0.8 per side
Final folder Oil cooler Flow rate monitor	1.2

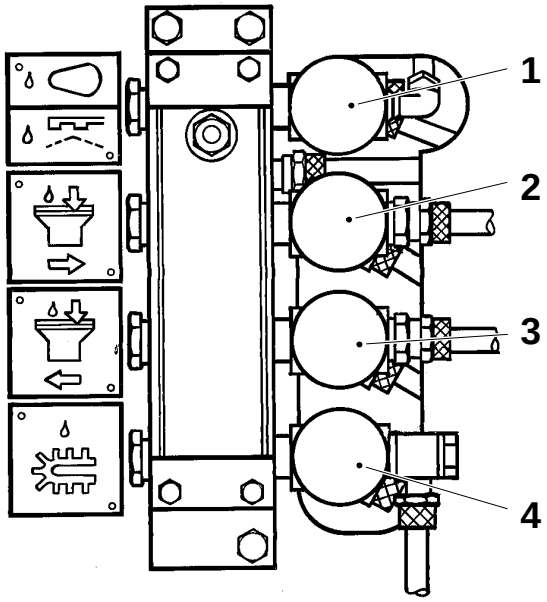

1 Pull tab device
2 Inductor RH
3 Inductor LH
4 Final folder
Oil cooler
Flow rate monitor

Checking

Cooling water temperature

Check that the temperature of the incoming cooling water is below 20°C.

Water flow rate

Check that the water flow rate is as listed below. If not, blow the pipe-line clear with compressed air.

Unit	Min flow rate l/min
Pull tab device/ Zone heater	0.8
Inductor	0.8 per side
Final folder Oil cooler Flow rate monitor	1.2

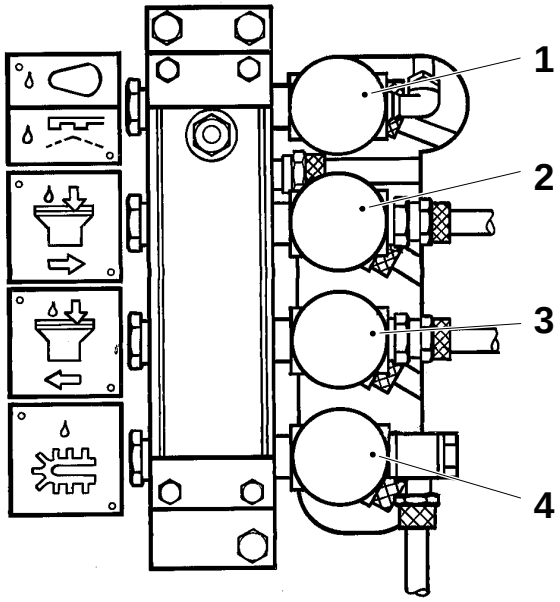

1 Pull tab device/Zone heater
2 Inductor RH
3 Inductor LH
4 Final folder
Oil cooler
Flow rate monitor

Setting

Flow switch

Slowly open the cold water valve on the valve panel until the water flow meter (3) indicates a minimum flow of 1.0 l/min.

Loosen the screw (1) and raise the flow switch (2) to its upper position. Then slowly lower the switch until the **Cooling water** signal lamp on the control panel just is to go out.

Tighten the screw (1).

Check the correct setting of the flow switch by slowly closing the cold water valve. The signal lamp is to light up when the flow meter (3) indicates 1.0 l/min.

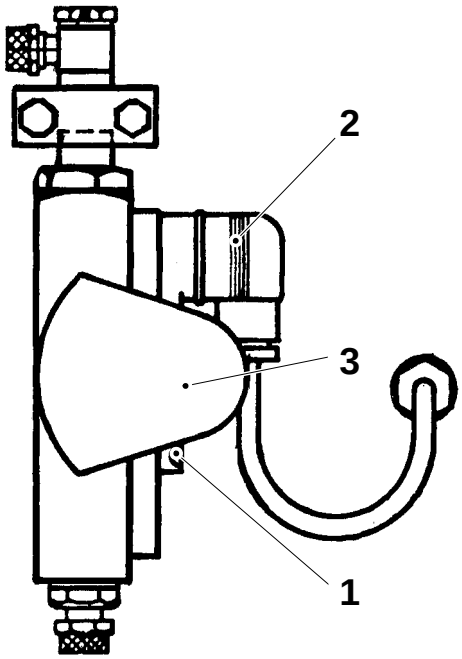

1 Screw
2 Flow switch
3 Flow meter

Setting

Pressure switch

Slowly open the cold water valve on the valve panel until the cooling water pressure gauge indicates 200 kPa.

Remove the lid (1).

Slowly adjust with the screw (2) until the cooling water signal lamp on the control panel just lights up.

Open the cold water valve further until the pressure gauge indicates 300 kPa.

Slowly adjust with the screw (3) until the signal lamp extinguished.

Check that the pressure switch is correctly set by slowly closing the cold water valve. When the pressure pass 200 kPa the signal lamp lights up.

Put the lid back on.

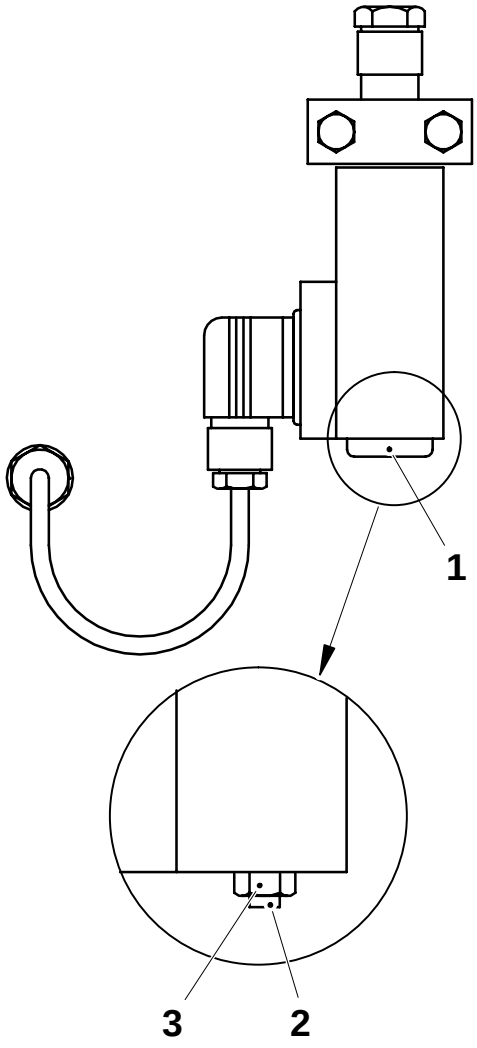

1 Lid
2 Adjustment screw, min pressure
3 Adjustment screw, min pressure re-setting

Cleaning

a) Close the water valves.

b) Remove the plug (1) and the seal ring (2) and pull out the filter insert (3).

c) Clean or replace the filter insert.

d) Check that the seal ring (2) is intact.

e) Fit the filter insert (3), the seal ring (2) and the plug (1).

f) Remove the magnetic filter (4) and blow it clean. Fit the filter.

g) Remove the lime separator (5) and blow it clean. Fit the separator.

h) Open the water valves and check that there is no leakage at the seal ring (2).

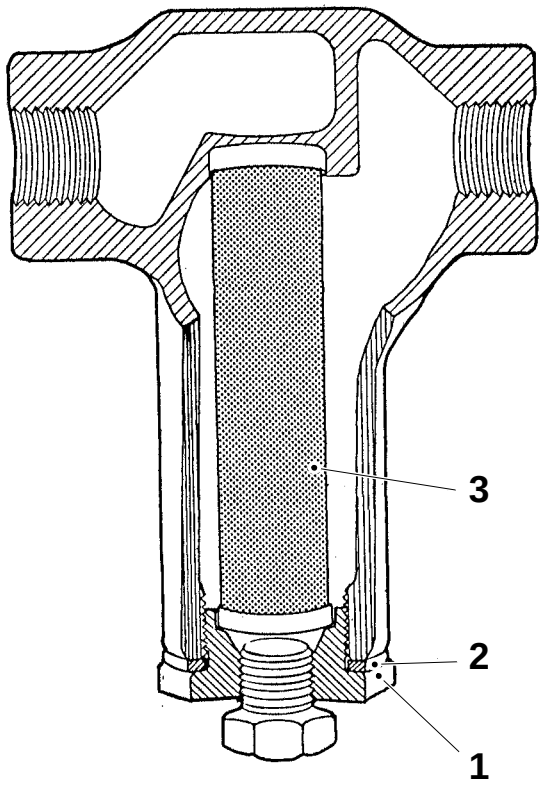

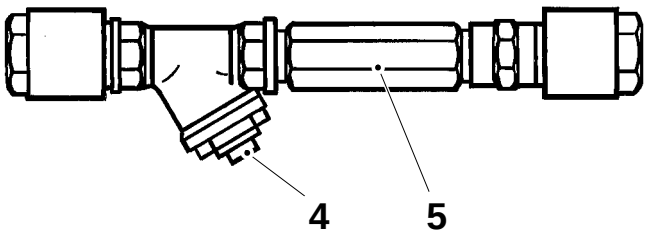

1 Plug
2 Seal ring
3 Filter insert TP No. 90415–314
4 Magnetic filter
5 Lime separator

Checking pressure

- Undo the blank plug (1).
- Connect a 0 – 6 MPa pressure gauge (2) to the distribution block of the LH yoke lifter arm, see fig.
- Push **Manual lubrication**.
- Check that the pressure raises to 3 – 5 MPa. If required, overhaul the pump and/or cylinder.
- Remove the pressure gauge and fit the blank plug.

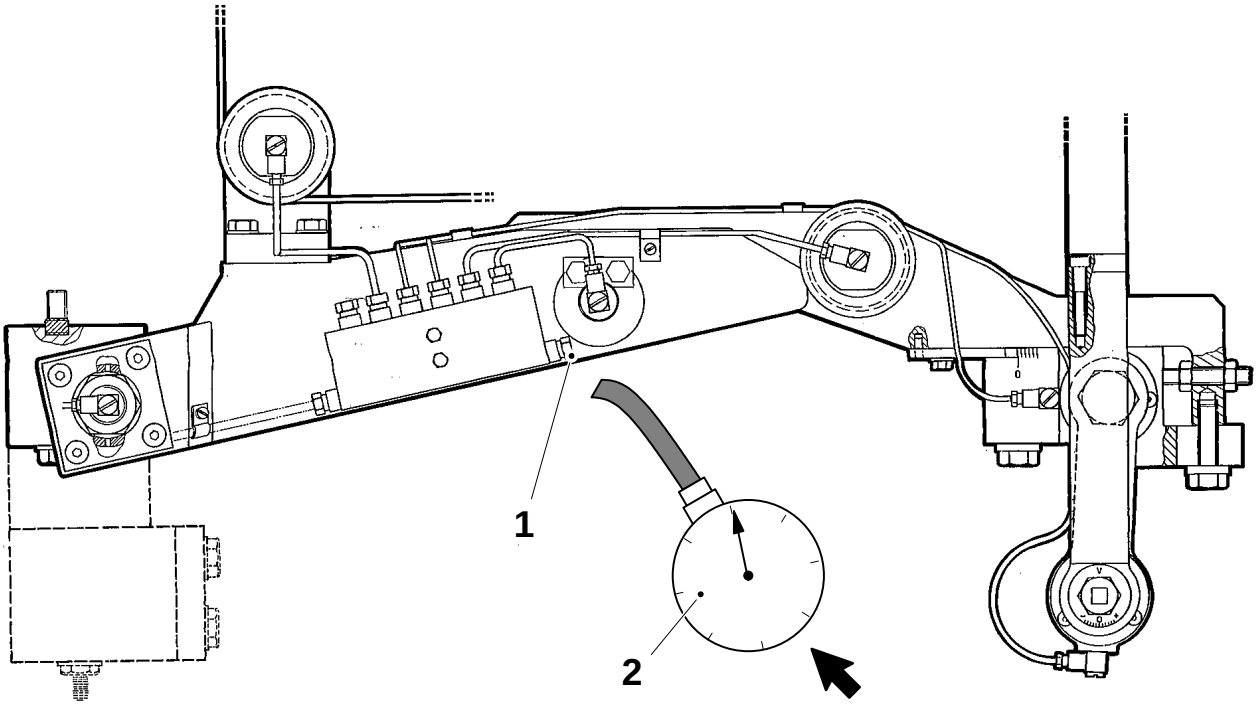

1 Blank plug
2 Pressure gauge

Removal/Fitting

Oil pump

Removal:

- Disconnect the air line (1), suction line (2), pressure line (3), (and bleed line (8), if any) from the oil pump (4). Blank off the lines.
- Remove the pneumatic cylinder (5) and sleeve (6). Remove the oil pump from its bracket (7).

Fitting:

- Place the oil pump in its bracket (7) and fit the sleeve (6) and the pneumatic cylinder (5).
- Connect the pressure line (3), the suction line (2), and the air line (1) (and the bleed line (8), if any).
- Bleed the central lubrication system.
- Check the oil pressure, see MS page 621–1X.

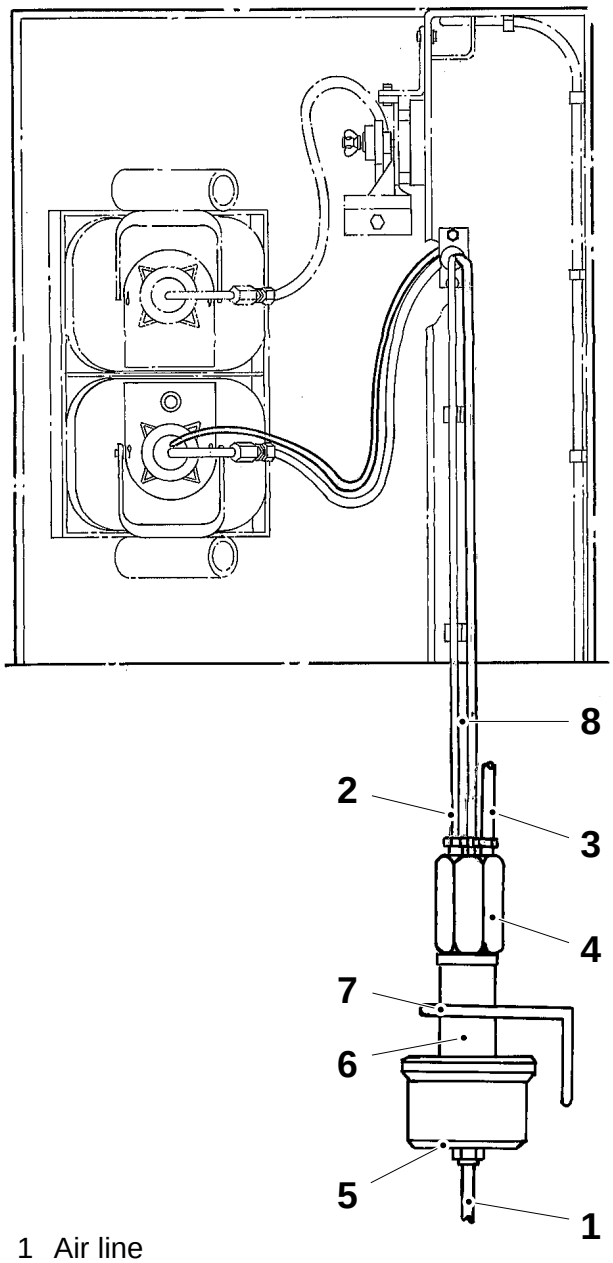

1 Air line
2 Suction line
3 Pressure line
4 Oil pump
5 Pneumatic cylinder
6 Sleeve
7 Oil pump bracket
8 Bleed line (alt design)

Removal/Fitting

Oil pump

Removal:

- Disconnect the air line (1), suction line (2), pressure line (3), (and bleed line (8), if any) from the oil pump (4). Blank off the lines.
- Remove the pneumatic cylinder (5) and sleeve (6). Remove the oil pump from its bracket (7).

Fitting:

- Place the oil pump in its bracket (7) and fit the sleeve (6) and the pneumatic cylinder (5).
- Connect the pressure line (3), the suction line (2), and the air line (1) (and bleed line (8), if any).
- Bleeding, see page MS 621–6X.
- Check the oil pressure, see page MS 621–1X.

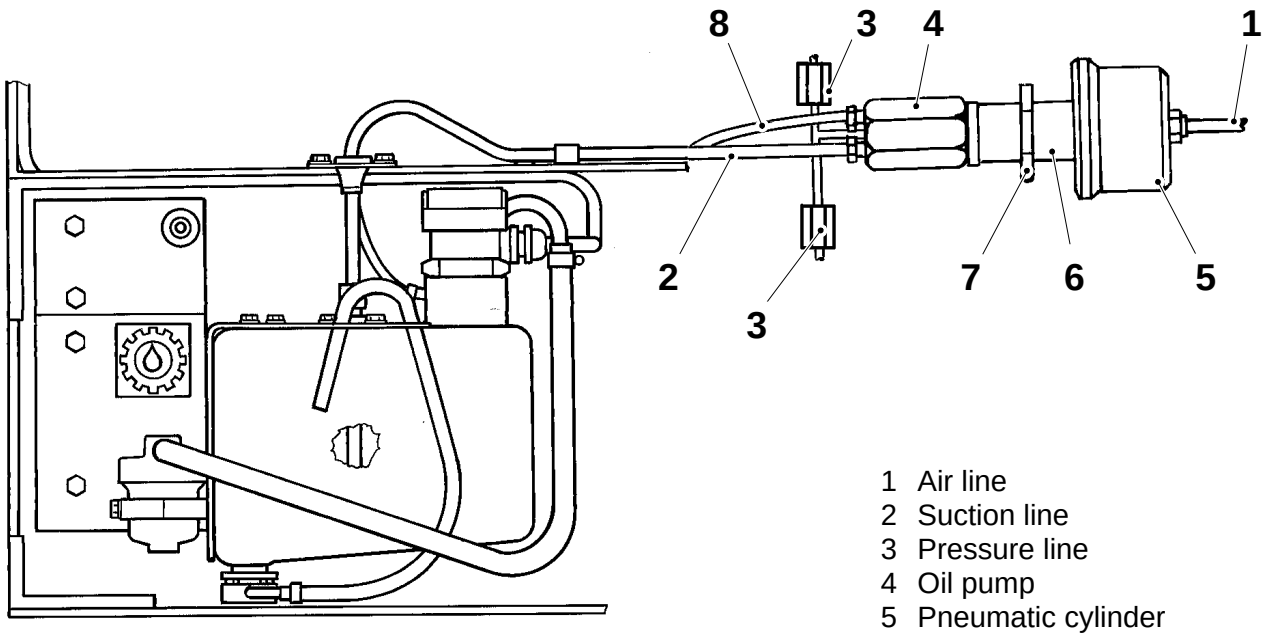

1 Air line
2 Suction line
3 Pressure line
4 Oil pump
5 Pneumatic cylinder
6 Sleeve
7 Oil pump bracket
8 Bleed line (alt design)

Checking

a) Check that the locking device of the carriage is running easily.

b) Check the catch mechanism for wear.

c) Lift out the carriage (if required, use tool TP No. 75542–101 fitted on the carriage to lift it out of the cassette) and check the guides for wear and damage. If required, replace the guides.

d) Check that the rollers (1) of the carriage are running easily and that their running surfaces have not got an angular shape caused by abnormal wear. If required, replace the rollers.

e) Lift the carriage back on the guides and check that it is running easily.

f) Check that the rollers of the carriage (1) do not press against the guide bars.

g) Check the bearing blocks (2). Min. thickness A , see fig.
Replace as required

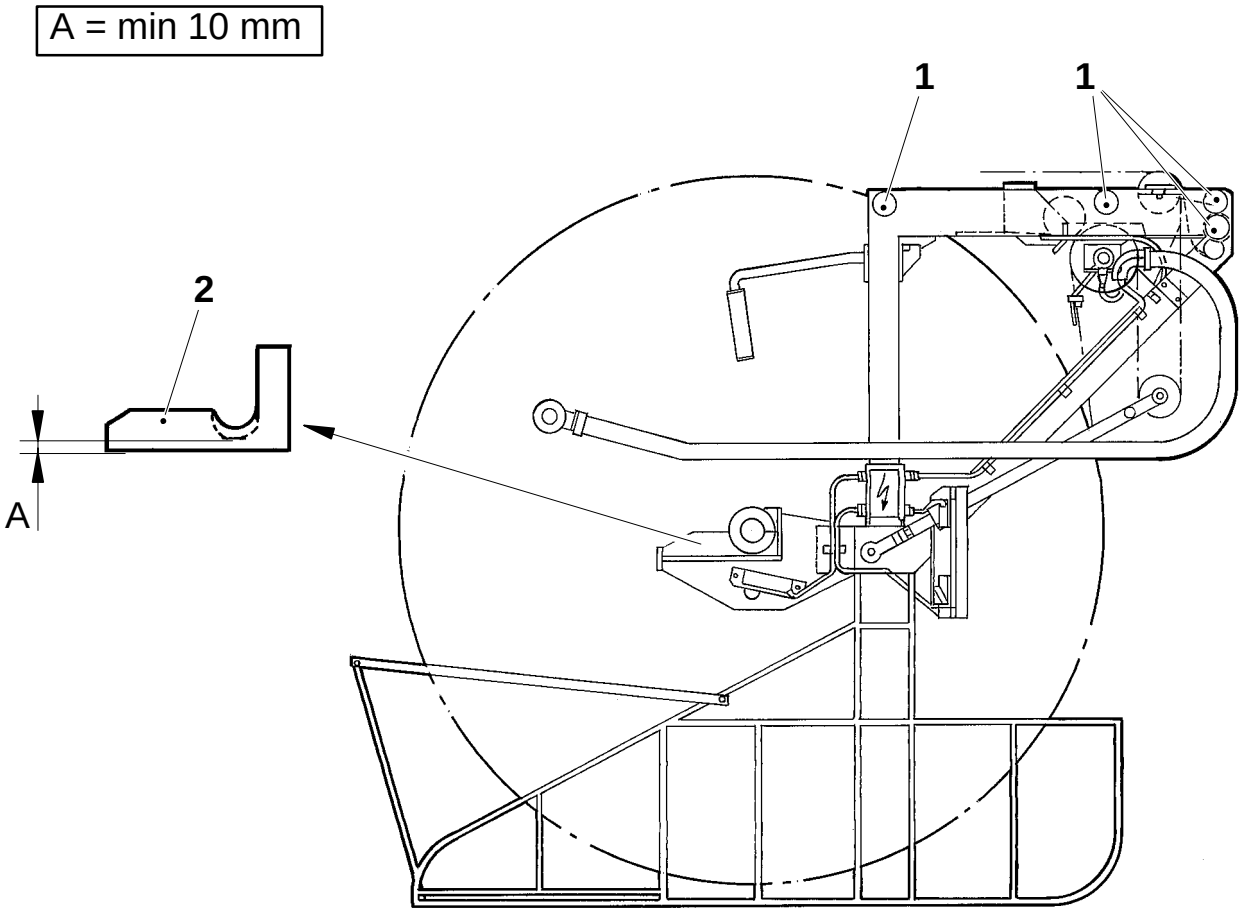

1 Roller
2 Bearing block

Checking

a) Check that the locking device of the carriage is running easily.

b) Check the catch mechanism for wear.

c) Lift out the carriage (if required, use tool TP No. 75542–101 fitted on the carriage to lift it out of the cassette) and check the guides for wear and damage. If required, replace the guides.

d) Check that the rollers (1) of the carriage are running easily and that their running surfaces have not got an angular shape caused by abnormal wear. If required, replace the rollers.

e) Lift the carriage back on the guides and check that it is running easily.

f) Check that the rollers of the carriage (1) do not press against the guide bars. Adjust by reducing the quantity of spacers from 3 pcs to 2 pcs.

g) Check the bearing blocks (2). Min. thickness A, see fig.
Replace as required.

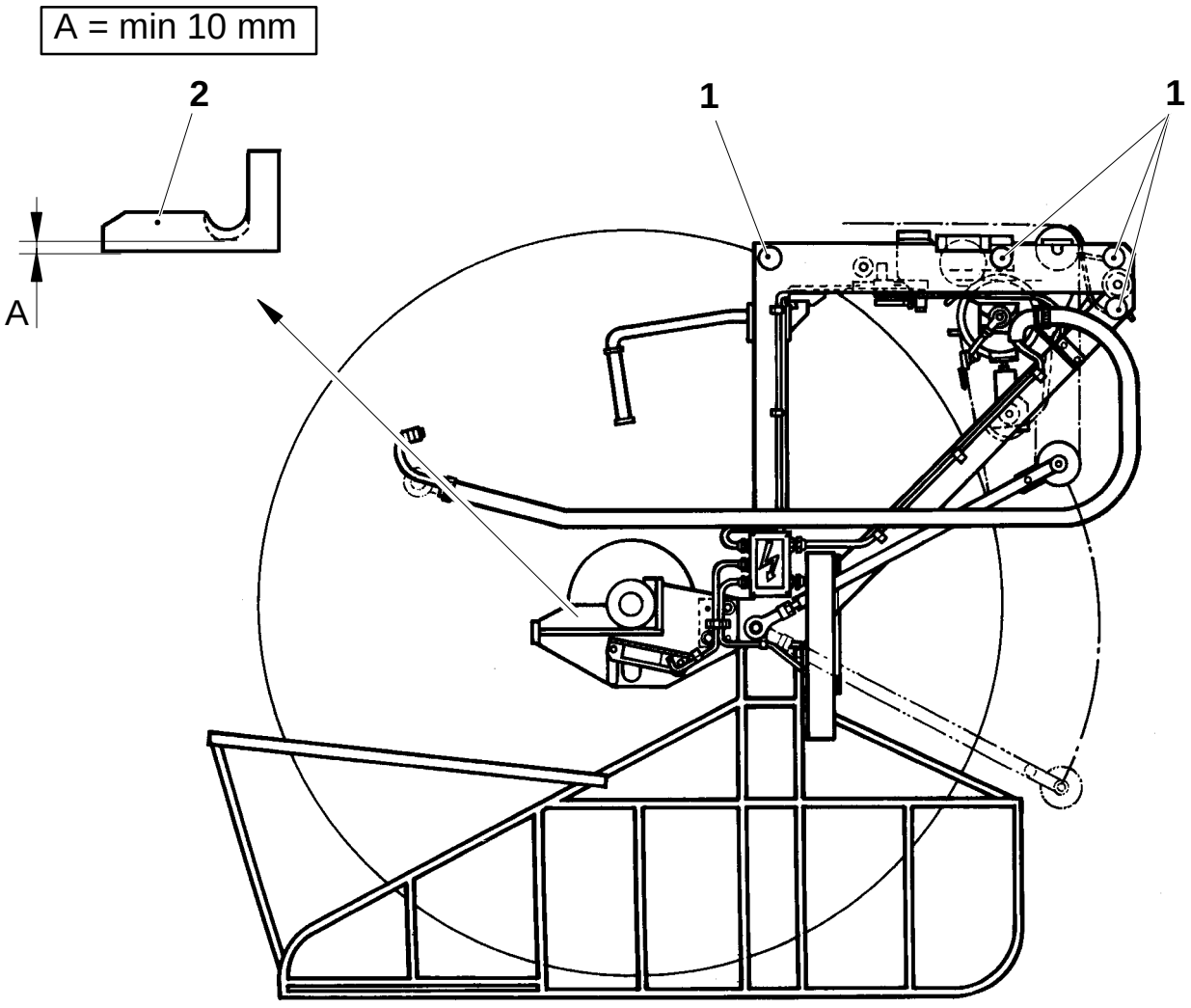

1 Roller
2 Bearing block

Setting

Assembly and setting of carriage

a) Set length B of the arms (1), see fig.

b) Assemble the carriage.

c) Hang up the carriage on two horizontal and parallel rulers.

d) Check that the bending roller (2) is fitted horizontal to the rollers (3) of the carriage as normal.

e) Loosen the screws (4) 4 pcs, and set the power feed roller (5) horizontal and parallel (±0.2 mm) to the bending roller (2). Tighten the screws (4).

f) Put a straight axle (6), ∅32 mm, in the bearing blocks (7).

g) Loosen the screws (8) 2 pcs on each side, and set the axle (6) horizontal and parallell (±0.2 mm) to the bending roller (2). Tighten the screws (8).

h) Set the dancer roller (9) parallel (± 1.0 mm) to the axle (6) in the bearing blocks (7).

Note!
Measure B must be within the limits, see fig.

i) Lift up the carriage on the guides and check that it is running easily forwards and backwards in the machine.

j) For 120V: Check the brake for the power feed roller, see page MS 631–1X.

B = 534 ±1 mm

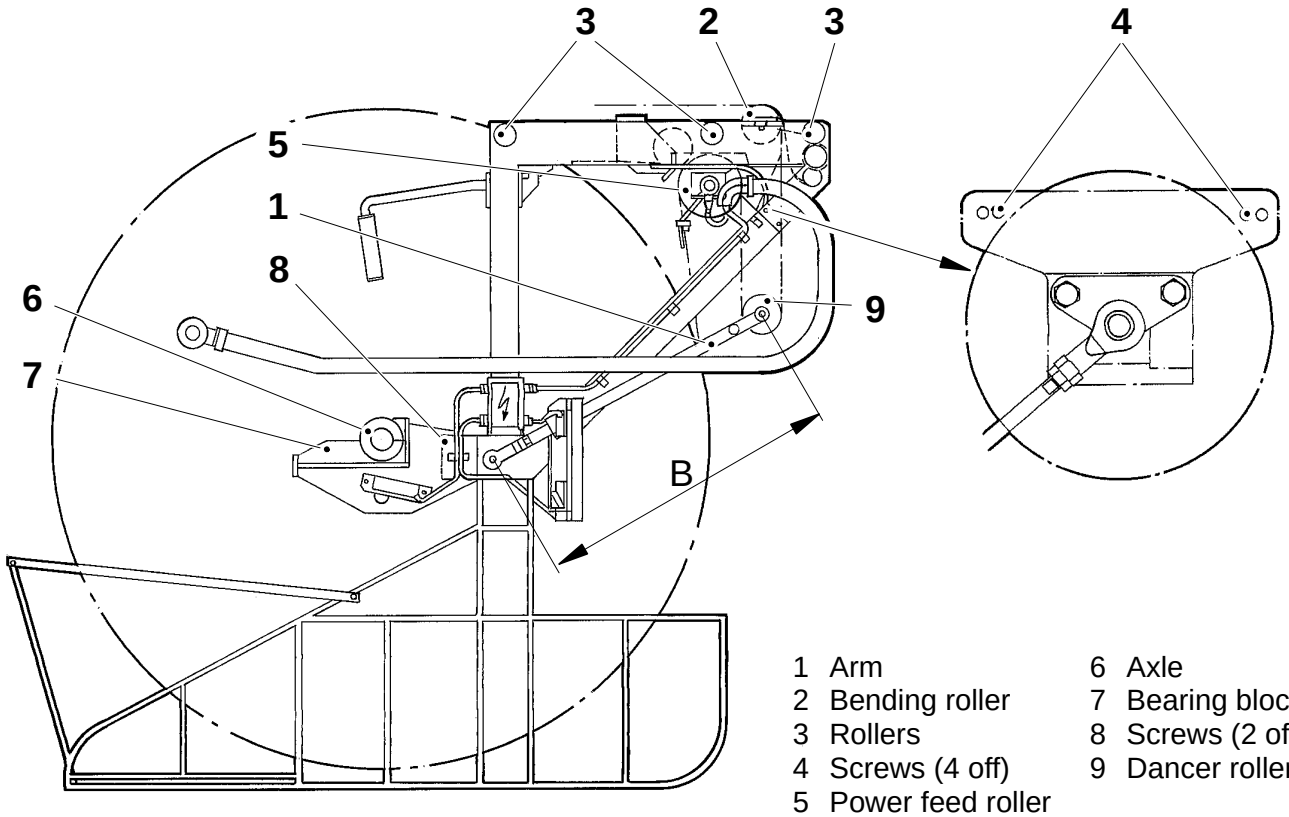

1 Arm
2 Bending roller
3 Rollers
4 Screws (4 off)
5 Power feed roller
6 Axle
7 Bearing blocks
8 Screws (2 off)
9 Dancer roller

Setting

a) Set length B of the arms (1), see fig.

b) Assemble the carriage.

c) Hang up the carriage on two horizontal and parallel rulers.

d) Check that the bending roller (2) is fitted horizontal and normal to the rollers (3) of the carriage.

e) Loosen the screws (4) 4 pcs, and set the power feed roller (5) horizontal and parallel (±0.2 mm) to the bending roller (2). Tighten the screws (4).

f) Put a straight axle (6) ∅32 mm in the bearing blocks (7).

g) Loosen the screws (8) 2 pcs on each side, and set the axle (6) horizontal and parallel (±0.2 mm) to the bending roller (2). Tighten the screws (8).

h) Set the dancer roller (9) parallel (±1.0 mm) to the axle (6) in the bearing blocks (7).

Note!
Measure B must be within the limits, see fig.

i) Lift up the carriage on the guides and check that it is running easily forwards and backwards in the machine.

j) Setting of the brake for the power feed roller, see page MS 631–1X.

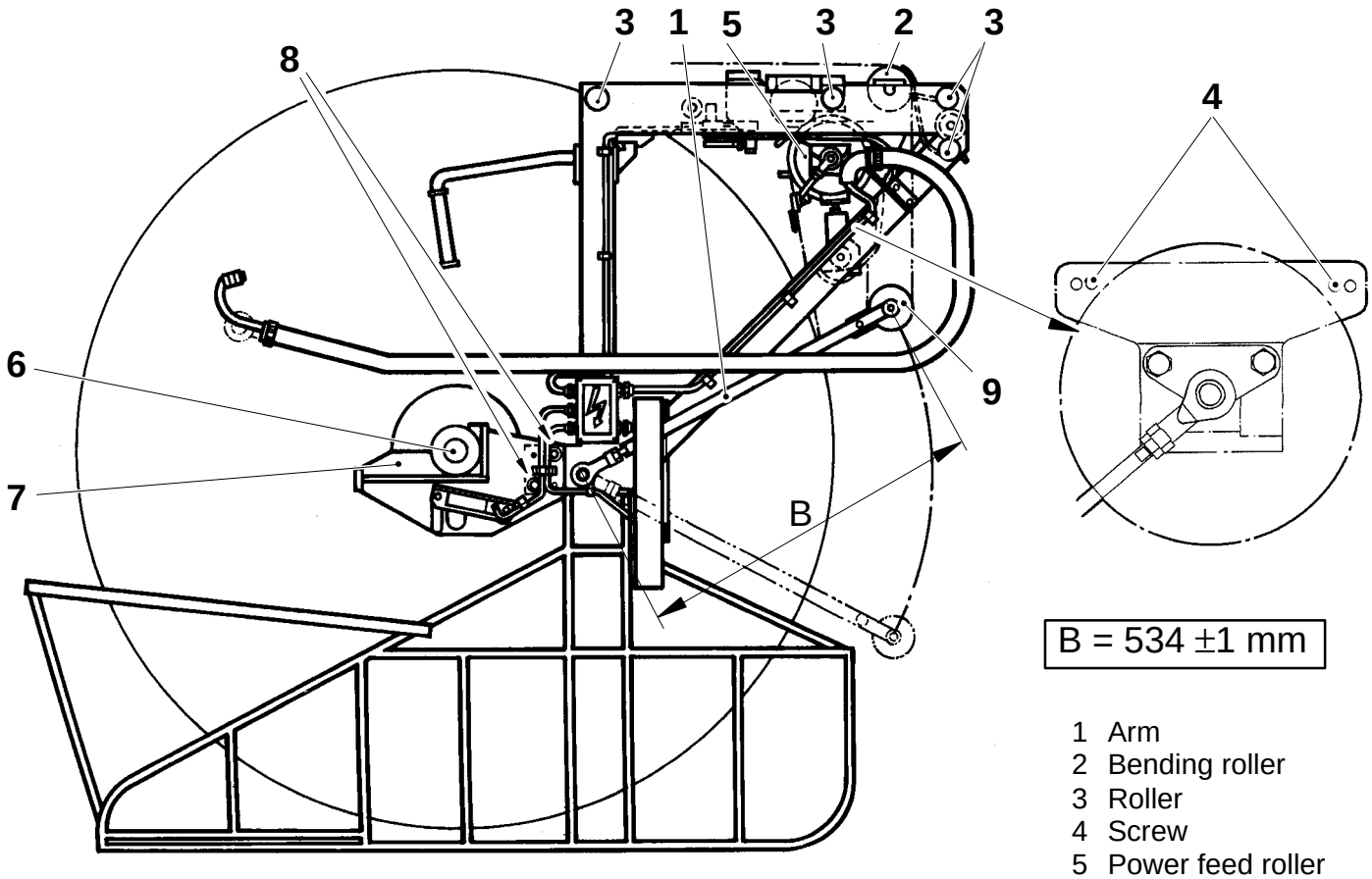

B = 534 ±1 mm

1 Arm
2 Bending roller
3 Roller
4 Screw
5 Power feed roller
6 Axle
7 Bearing block
8 Screw
9 Dancer roller

Setting

The packaging material monitor can be set in two positions, (1) and (2) see fig, depending on which type of packaging material reel the machine is equipped with.

Upper position (1)

The machine is equipped with **normal packaging material reel**.

Lower position (2)

The machine is equipped with **jumbo packaging material reel**.

Footnote
After the replacement of a photocell, it may become necessary to reset the photocell in order to obtain an alarm when the prescribed amount of packaging material is left in the reel.

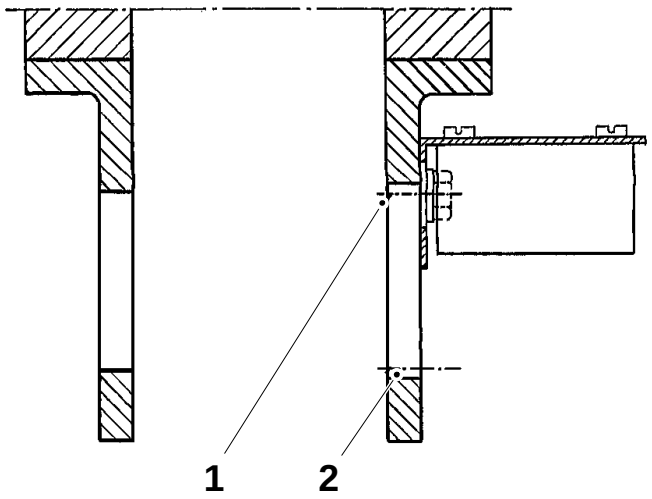

1 Upper postion
2 Lower position

Checking/Setting

Check the teflon tape (4) and teflon cloth (5). Replace, as required.

Set the knife so that the edge is level with the underside of the sealing arm.

Set distance A and check that the knife is parallel with the sealing arm. Check that the overlap in the sealing zone is 10 – 15 mm on either side.

Volume, ml	A ±0.5 mm
125	219
180	211
200	86
200S	122
236	103
250	109
284	122

Set the temperature of the outer section of the sealing arm to approximately 200°C by means of a pyrometer. The temperature can be checked on the side surface of the heating element (2), as close to the clamp bar as possible. Remove the cover and set the temperature with the screw (3).

The on and off of the thermostat can be checked with a voltmeter.

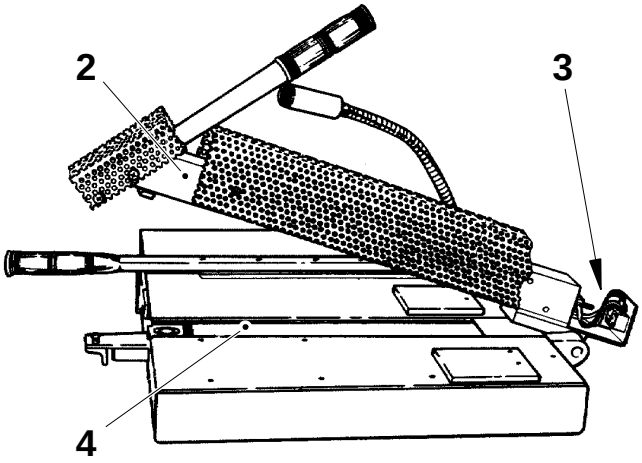

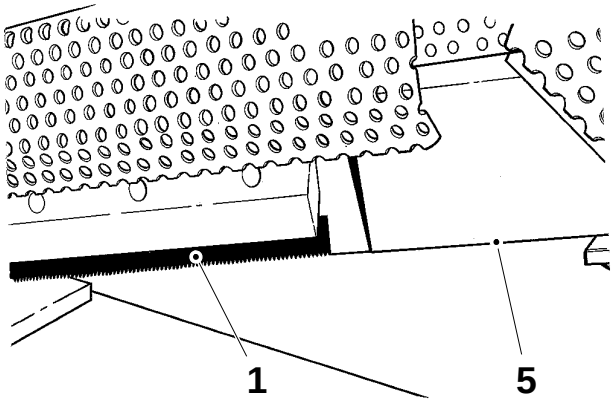

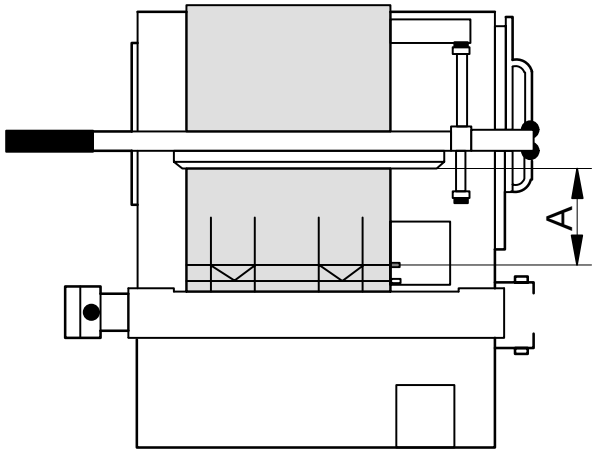

1 Knife
2 Side surface of heating element
3 Adjustment screw
4 Teflon tape (TP No. 90144–30)
5 Teflon cloth (TP No. 31723)

Checking/Setting

Close the air supply valve.

Clean the brake lug (1) and check it for wear. If required, it may be turned 180° before it has to be replaced.

Check that the friction surface (2) is free from oil, grease, etc. Clean as required.

Check that the air cylinder (3) moves freely. Replace as required.

Setting

Move the brake lug forwards by hand towards the feed roller and set:

- the brake lug aligned with the power feed roller,
- **valid for old design:**
  the brake lug so that it lightly touches the covering coating on the feed roller,
- **valid for new design:**
  measurement B.

To set the sideways position, loosen the clamp union (4).

Move the brake lug back and set gap A between the brake lug and feed roller. Adjust at the cylinder piston rod.

Open the air supply valve and set the air pressure, see page MS 910/920–7X.

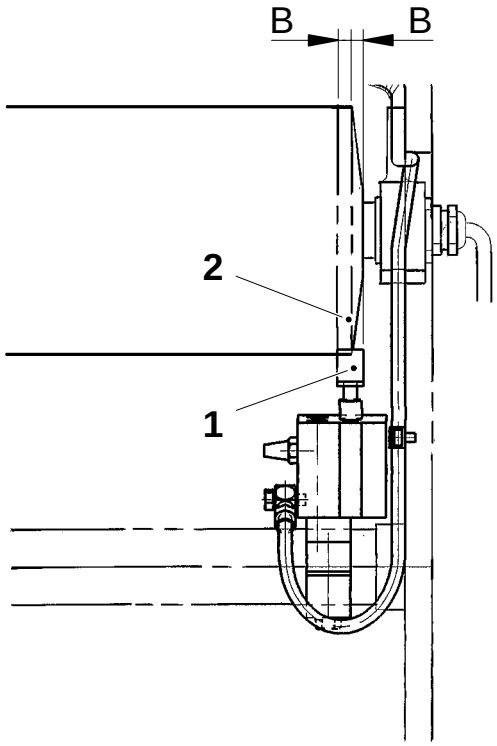

A = 4 ±0.2 mm

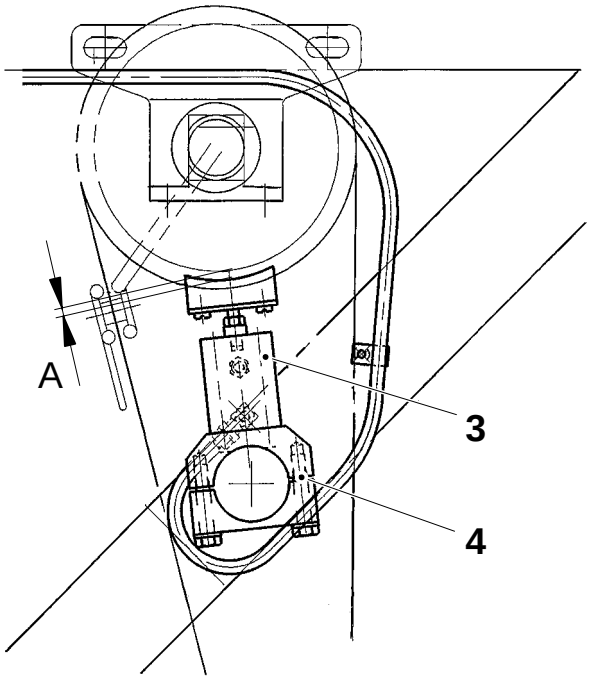

1 Brake lug
2 Friction surface
3 Cylinder
4 Clamp union

Checking

Check:

- that the power feed roller (1) is horizontal,
- **valid for old design:**
  the vulcanized rubber covering for wear,
- the bearings (2) and (4) for wear; replace as required,
- that the paper guide (3) and the running surfaces are clean and without defects,
- that there is no oil leakage from the power feed roller.

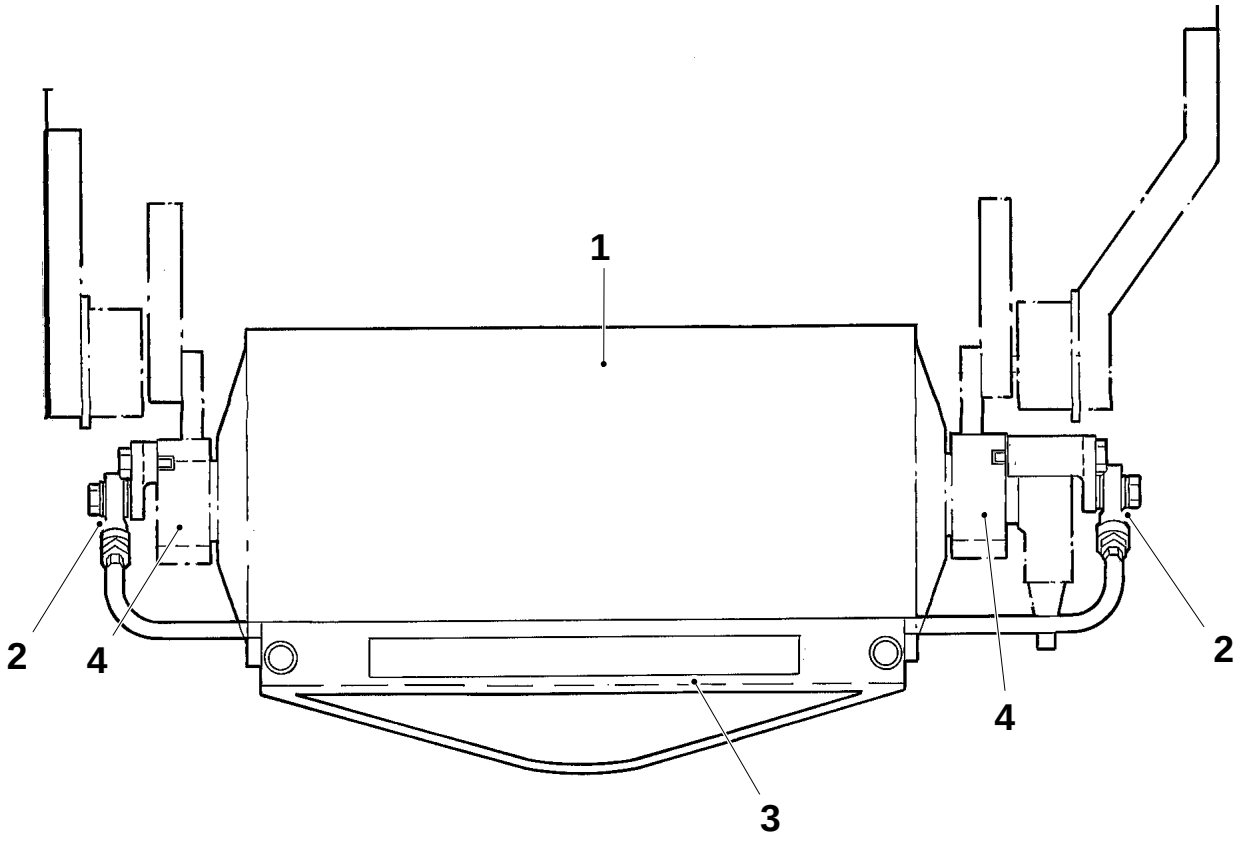

1 Power feed roller
2 Bearing
3 Paper guide
4 Bearing

447

Checking

Check:

- that the power feed roller (1) is horizontal,
- the bearings (2) and (4) for wear; replace as required,
- that the paper guide (3) and the running surfaces are clean and without defects,
- that the paper guide is easy to move in sideways direction,
- that the paper guide springs back and check also that the two springs (5) are not damaged, and
- that the paper guide is straight.

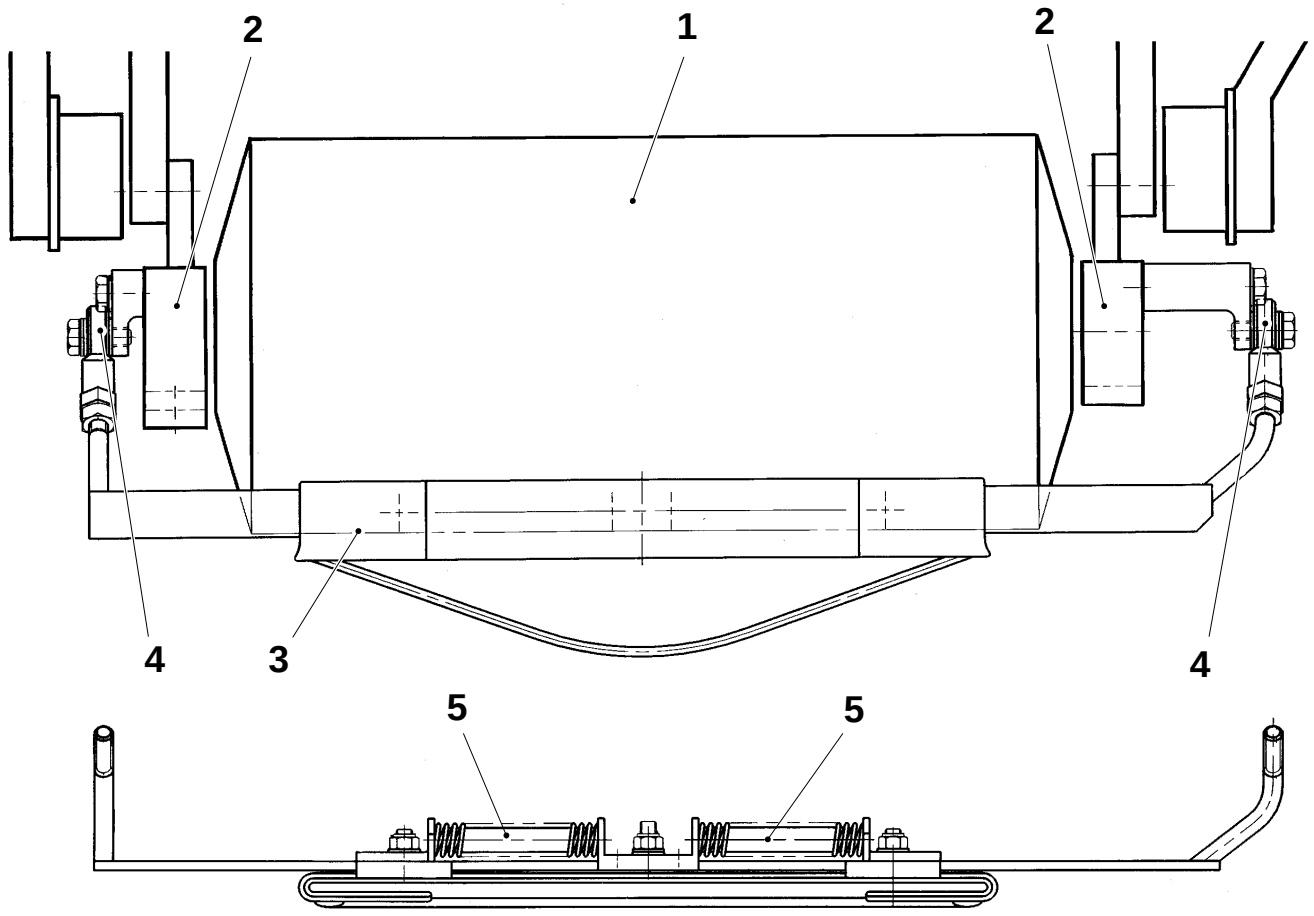

1 Power feed roller
2 Bearing
3 Paper guide
4 Bearing
5 Spring

Setting

Paper guide

Set the paper guide (2) parallel to the power feed roller (1) as follows:

Undo the screws (3).

Remove the paper guide (2).

Adjust using the link heads (4).

Tighten the nuts (5) and refit the paper guide.

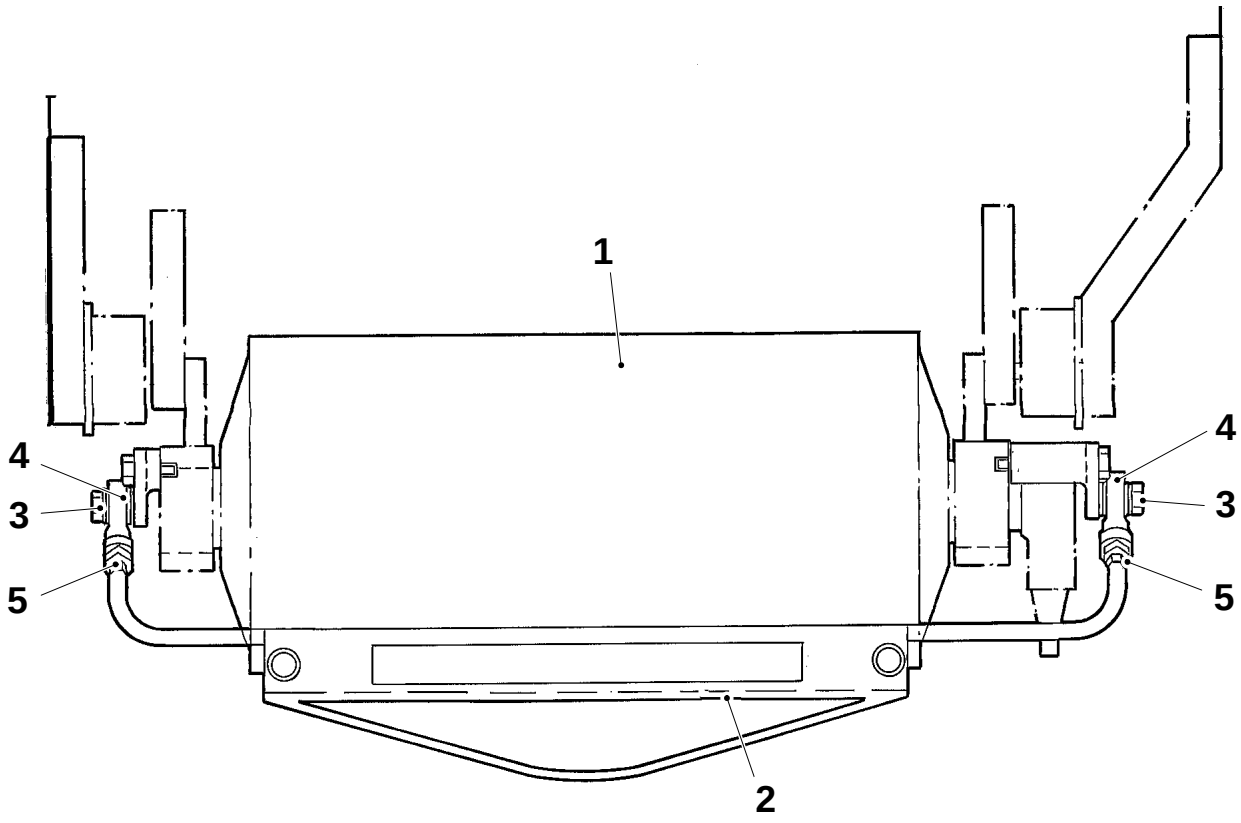

1 Power feed roller
2 Paper guide
3 Screw
4 Link head
5 Nut

Setting

Paper guide

Set the paper guide (3) parallel to the power feed roller (1) as follows:

Undo the screws (2).

Remove the paper guide (3).

Adjust using the link heads (4).

Tighten the nuts (5) and refit the paper guide.

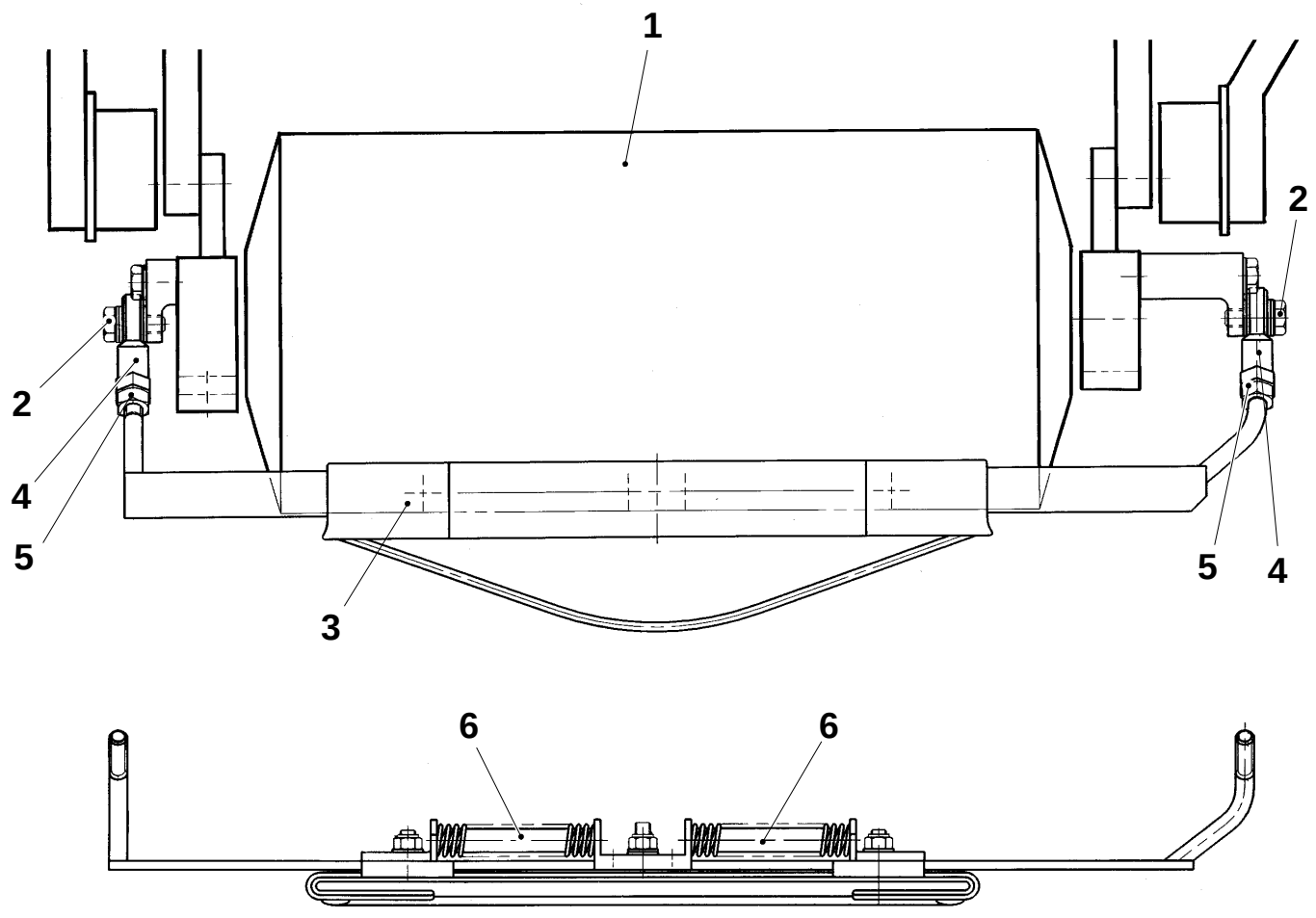

1 Power feed roller
2 Screw
3 Paper guide
4 Link head
5 Nut
6 Spring

Checking/Setting

Close the air supply valve.

Clean the roller (1) and check it for wear.

Check that the roller and shafts are running easily. Replace worn and/or defect bearings.

Check that the pneumatic cylinder (2) is running easily. Set distance A between the roller (1) and the feed roller (3). Adjust by means of the screw (6).

Open the air supply valve.

Set the air pressure, see page MS 910/920–7X.

Set distance B between the power feed roller (3) and the clamp (4), see fig.
Adjust by means of the screws (5).

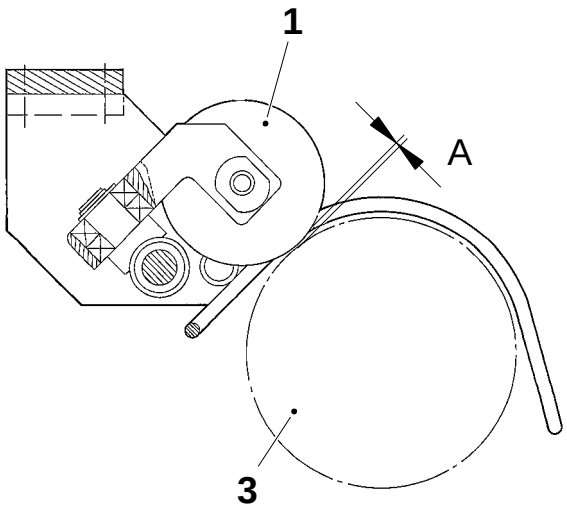

A = 2 – 3 mm
B = 3 – 4 mm

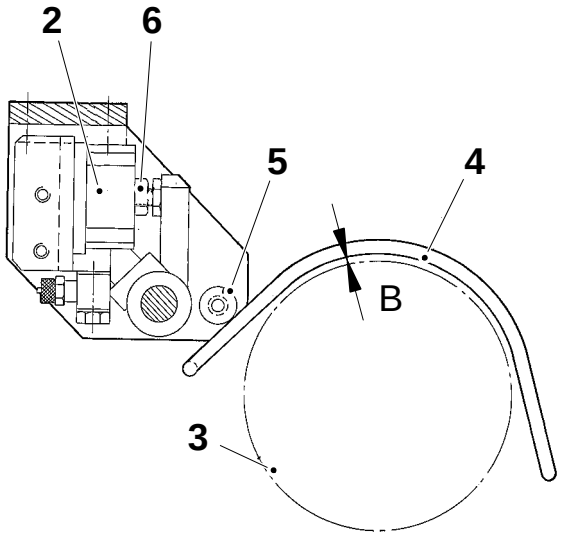

1 Roller
2 Pneumatic cylinder
3 Power feed roller
4 Clamp
5 Screw
6 Screw

Checking/Setting

Check:

- that the dancer roller (1) is running easily,
- the bearings for wear,
- that the power feed roller is started when raising the dancer roller (1), and is stopped when lowering it.

Set distance A between the monitors (2) and the arm (3), see fig.

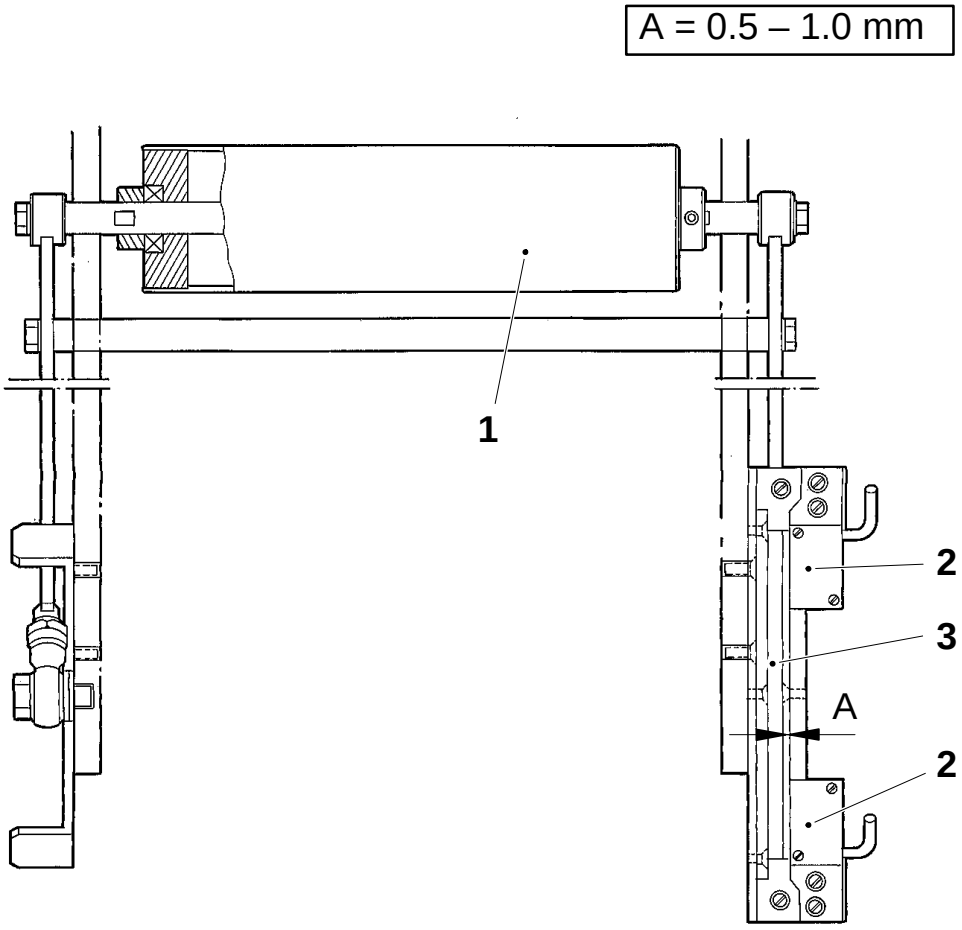

1 Dancer roller
2 Monitor
3 Arm

Checking/Setting

Check:

- that the dancer roller (1) is running easily,
- the bearings for wear,
- the slide (2) runs smoothly in the guiding (3),
- that the power feed roller is started when raising the dancer roller (1), and is stopped when lowering it, and

When the dancer roller (1) is in its **stop position**, the LED on the monitor (4) is to be on.

When the dancer roller is in its **bottom position**, the LED on the monitor (5) is to be on.

If required, adjust the dancer roller stop position by means of the screws (6).

Setting

Set distance A between the monitors (4), (5) and the slide (2), see fig.

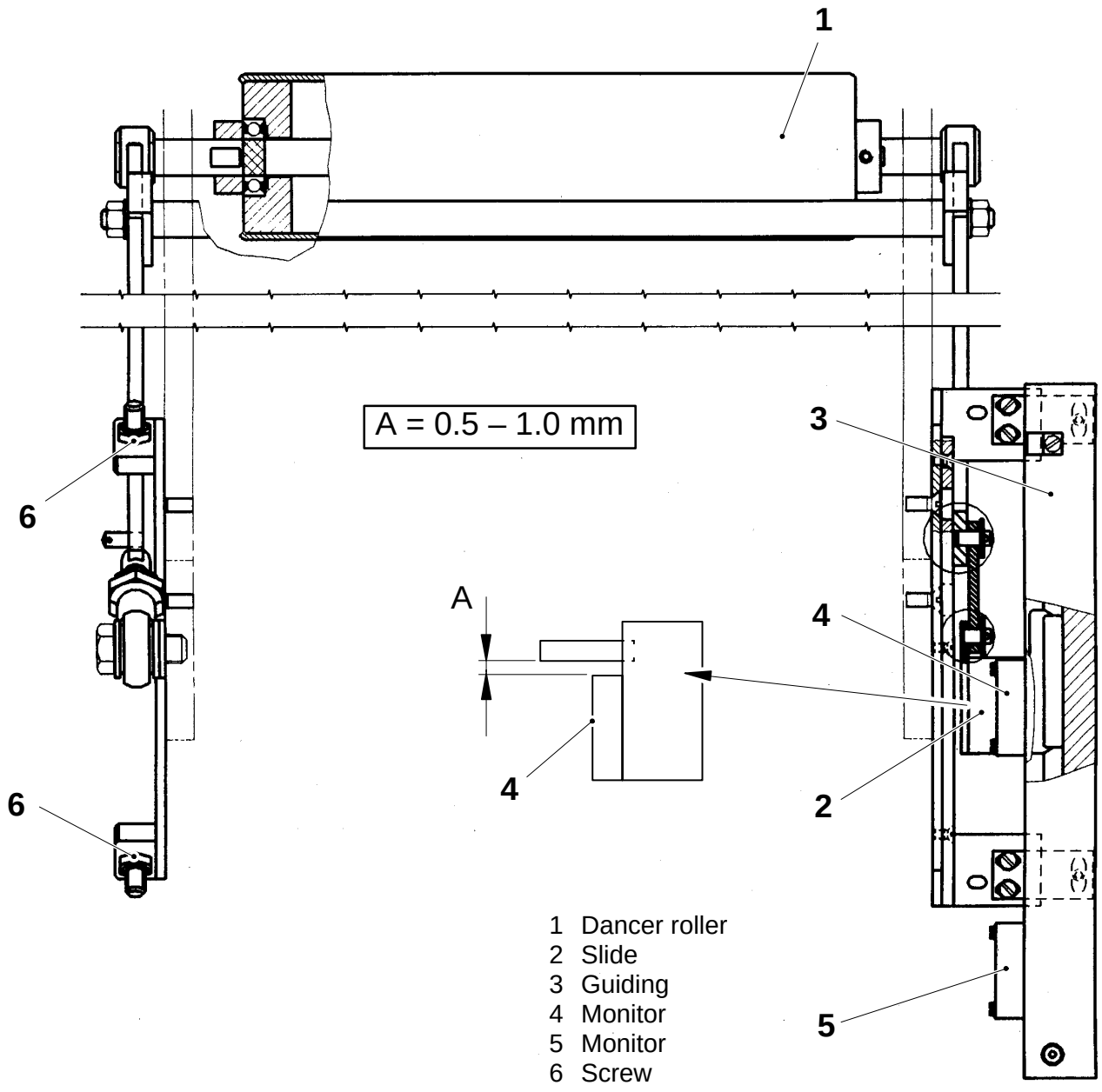

453

Checking

Check:

- that the locking device (1) is running easily.
- the locking device (1) for wear,
- that the shaft of the reel holder is straight, and
- that the surfaces of those parts of the reel holder, that rotate in the bearing blocks of the carriage trolley, are not worn, see fig. Replace as required.

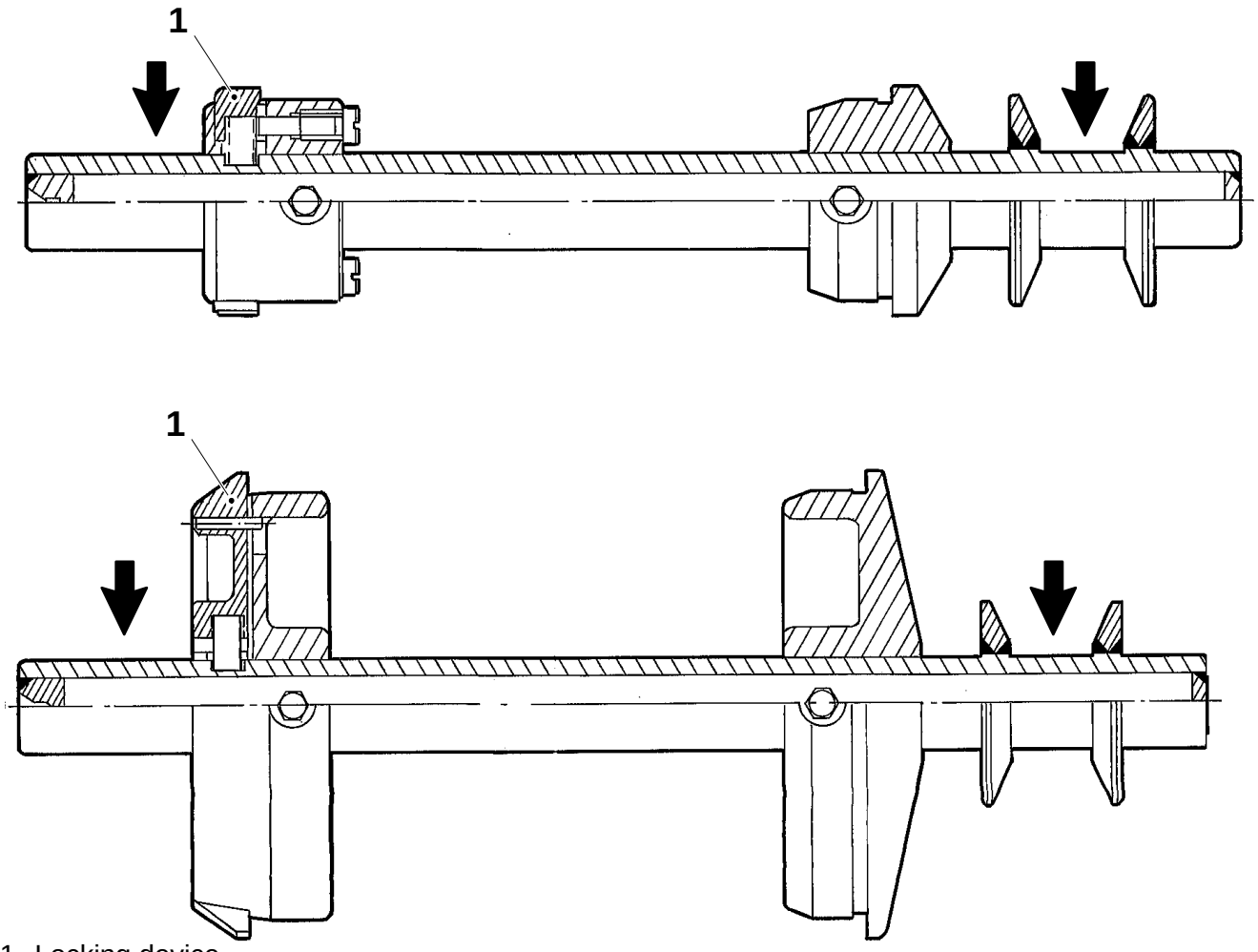

1 Locking device

Checking

Remove the constant flow valve (1) and check that the rubber ring (2) is intact.

Make sure the constant flow valve is not clogged with lime deposits.

Replace as required.

Refit the constant flow valve.

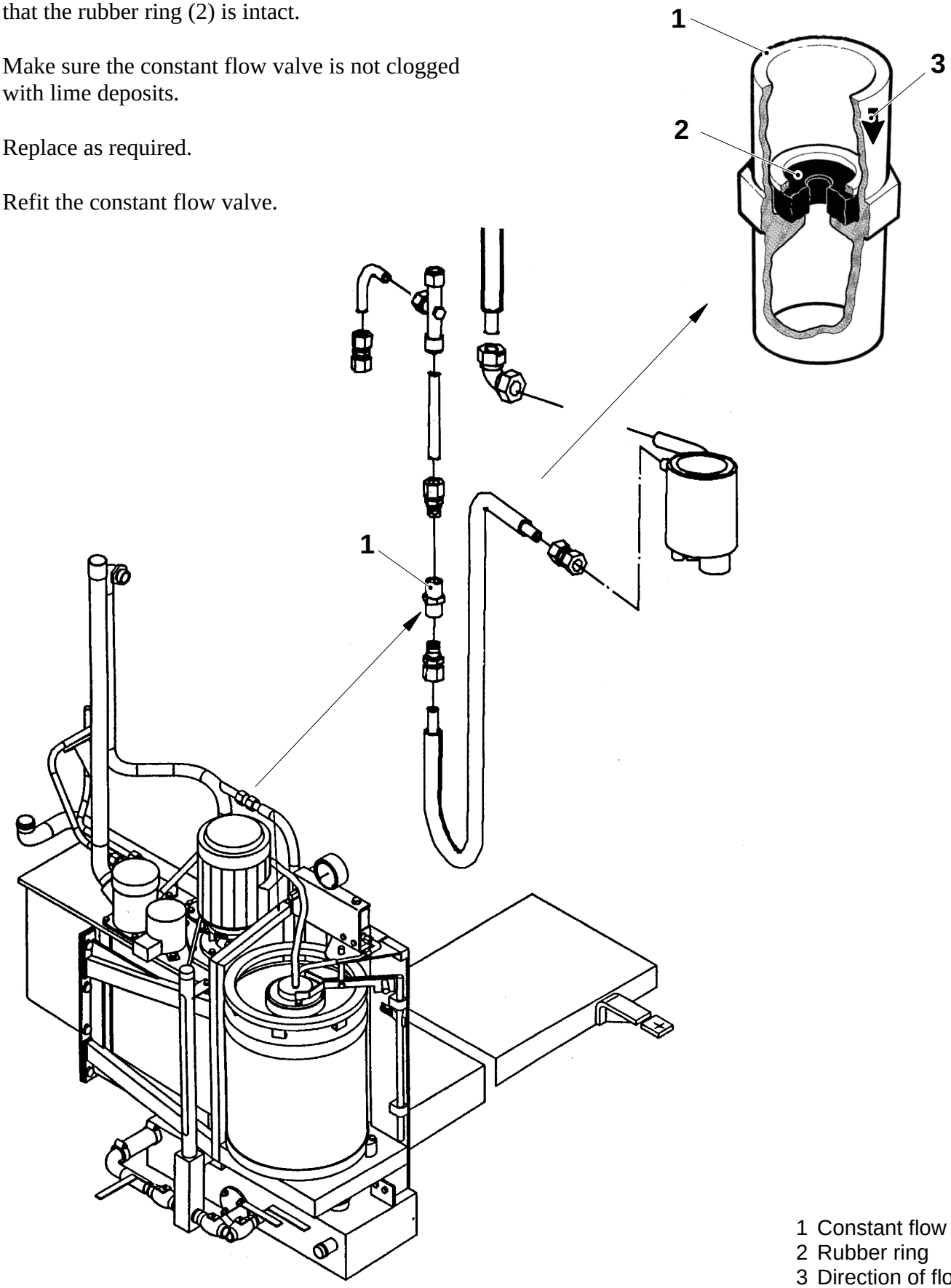

1 Constant flow valve
2 Rubber ring
3 Direction of flow

Checking

Check the pressure in the receiver (1) as follows:

- Allow the pressure in the hydraulic system to drop by means of the overflow valve (2), or stop the hydraulic pump by pushing **Programme down**.
- When the receiver pressure is being passed, a sudden pressure drop is obtained, i.e. the pointer of the pressure gauge (3) jerks briefly.
- If this pressure is below 4.0 MPa, the receiver must be replaced.

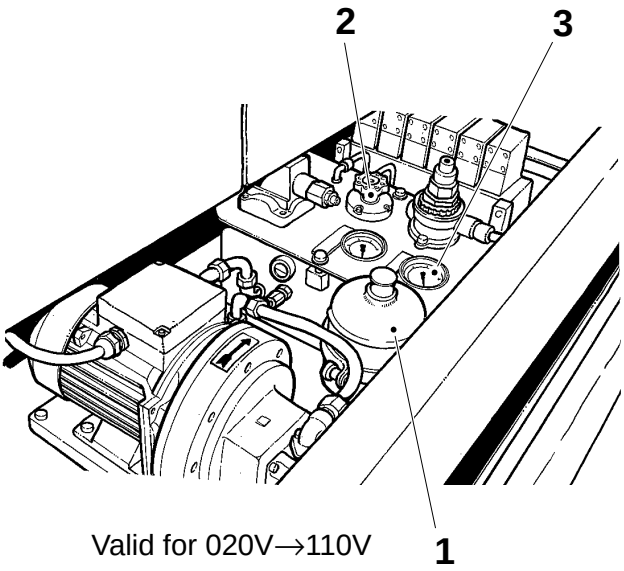

Valid for 020V→110V

1 Receiver
2 Overflow valve
3 Pressure gauge

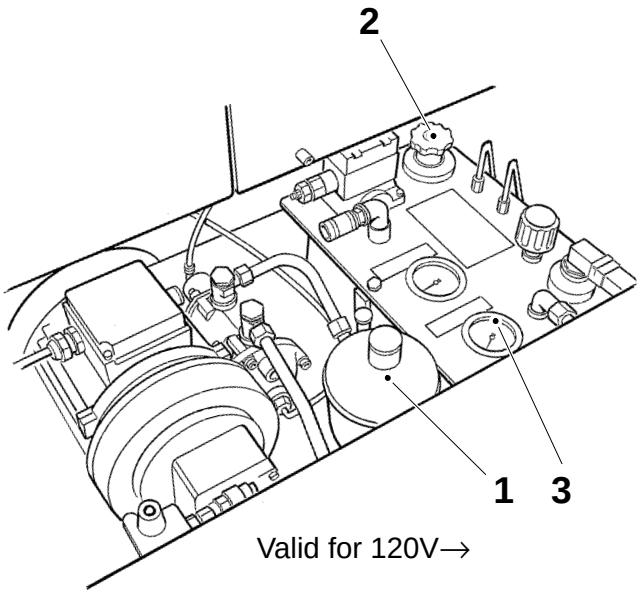

Valid for 120V→

Description	TB/9	TBA/9
Rotation monitor – checking/setting	701–11	701–11
Rotation monitor – checking/setting		701–12
SA-sealing, air pressure – setting	702–51	702–51
Dating unit crease wheel – checking/setting	703–12	703–12
Dating unit crease wheel – setting		703–52
Dating unit crease wheel – setting		703–53
Dating unit crease wheel – setting		703–54
Dating unit crease wheel – setting	703–55	703–55
Strip guide – setting	704–51	704–51
Dating unit – checking	705–11	705–11
Dating unit – checking	705–12	705–12
Dating unit – setting (2 pages)	705–51	705–51
Dating unit – setting (2 pages)	705–52	705–52
Strip guide and holder – checking	710–11	710–11
Strip guide and holder – checking	710–12	710–12
Strip guide and holder – checking	710–13	710–13
Monitors and brakes – setting	711–51	711–51
Monitors and brakes – setting	711–52	711–52
Monitors and brakes – setting	711–53	711–53
SA nozzle – checking	715–11	715–11
SA nozzle – setting	715–51	715–51
SA, short stop nozzle – checking	718–11	718–11
SA, short stop nozzle – setting	718–51	718–51
Pressure and counter rollers – checking/setting	720–11	720–11
Pressure and counter rollers – replacing teflon sleeve	720–31	720–31

Description	TB/9	TBA/9
Paper guide – checking	722–11	722–11
Paper guide – removal	722–21	722–21
Paper guide – setting	722–51	722–51
Ink unit – checking/cleaning	737–11	737–11
Ink unit – removal	737–21	737–21
Ink unit – setting	737–51	737–51
Ink unit – setting	737–52	737–52
Printing wheel – checking	738–11	738–11
Stamping position – checking	740–11	740–11
Adjustment device, stamping position – basic setting	741–51	741–51
Adjustment device, web – checking	742–11	742–11
Splice monitor – checking	793–11	793–11
Splice monitor – checking	793–51	793–51

Checking/Setting

Check the monitor (1) function.

Loosen the screws (2) and set gap A.

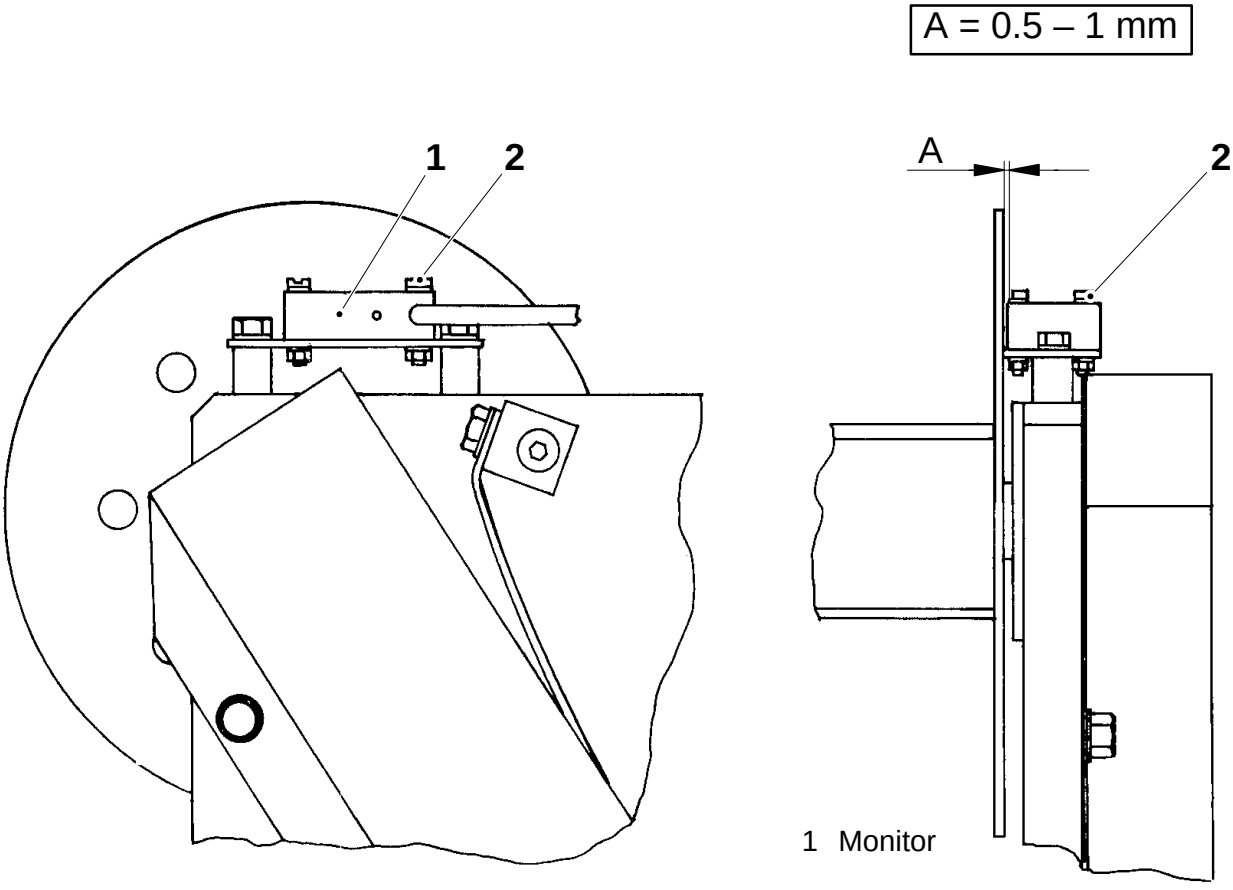

Checking/Setting

Check the monitor (1) function.

Loosen the screws (2) and set gap A.

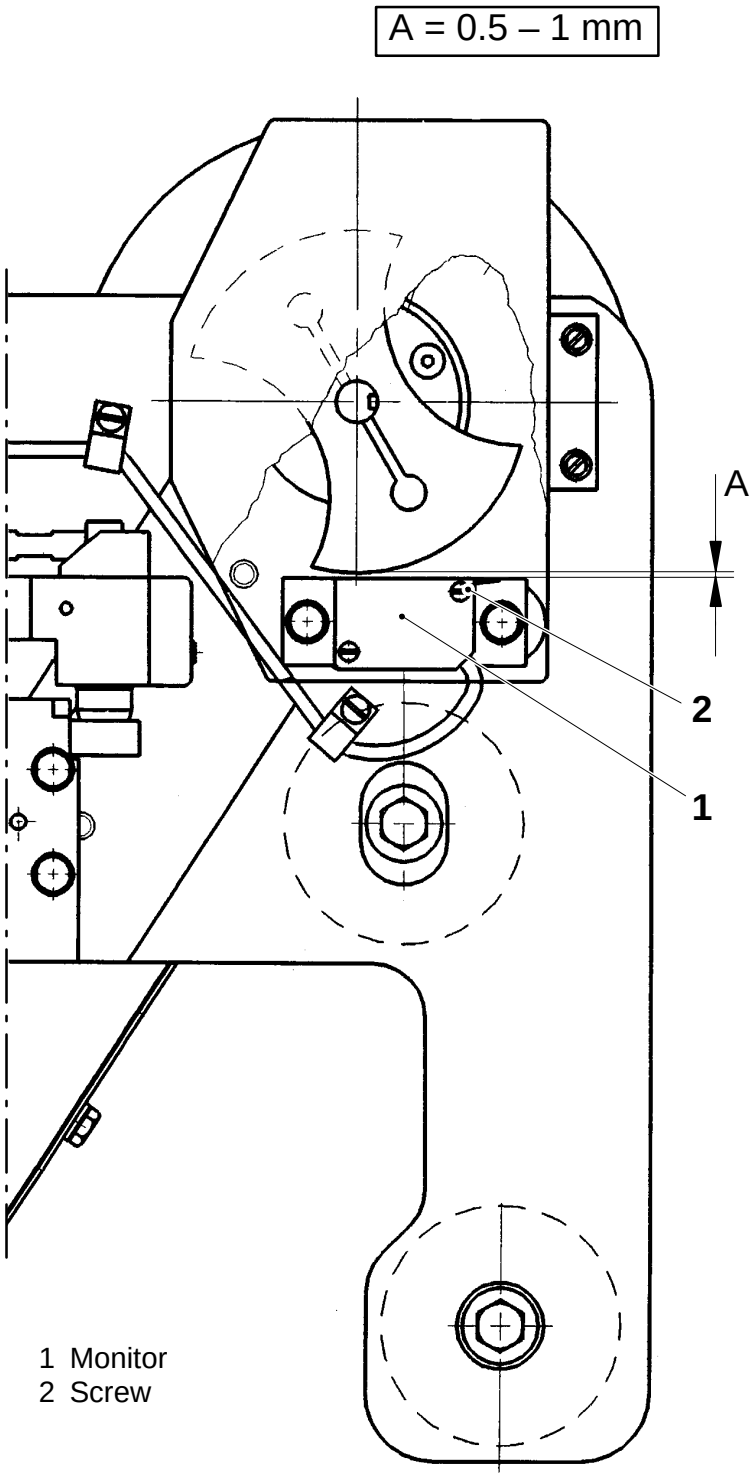

Setting

Step up the machine to **Signal to sterilizer**.

Set the air pressures for SA (5) and SA short stop (6) by turning the adjustment screws (1) and (2).
Setting values, see page MS 910–7X/920–7X.

Lock with the locking nuts (3) and (4).

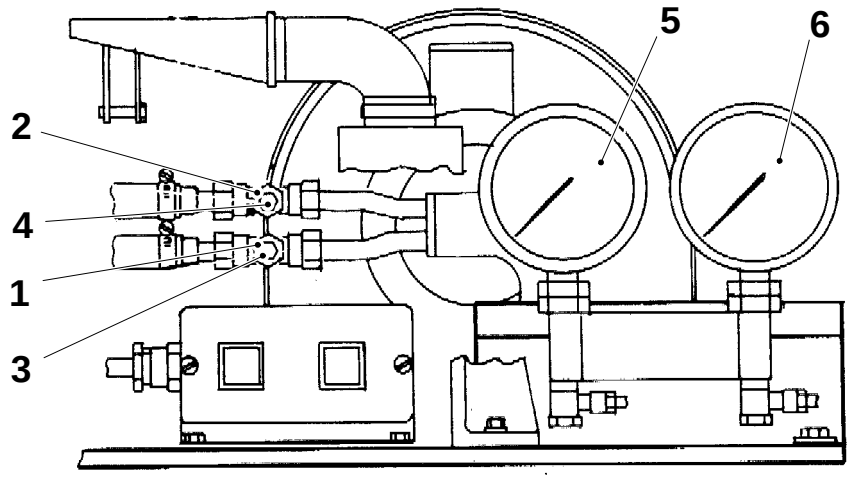

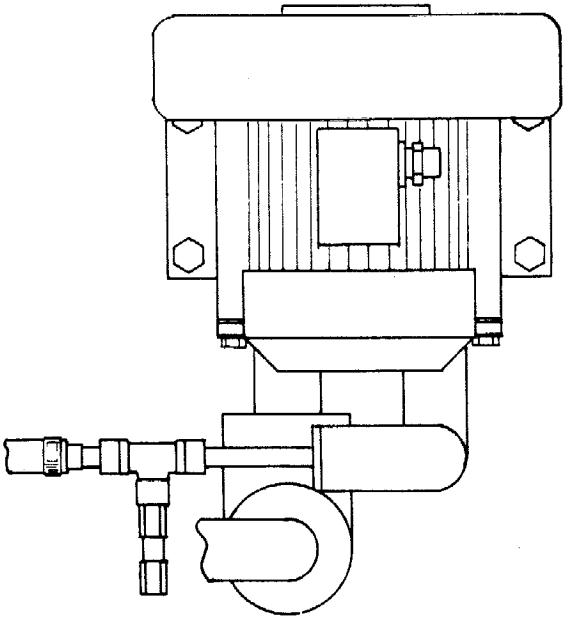

1 Adjustment screw, SA
2 Adjustment screw, SA short stop
3 Locking nut
4 Locking nut
5 SA pressure
6 SA short stop pressure

Checking/Setting

a) Check that the crease bars (1) are not bent or have burrs. Replace as required.

b) Set distances A and B of the dating unit crease wheel (3), see table.

c) Set distance A by aligning or replacing the crease bars (1).

d) Set distance B by means of shimming washers (2) under the crease bars (1).

e) Check that the crease bars are parallel to each other within 0.2 mm, see fig.

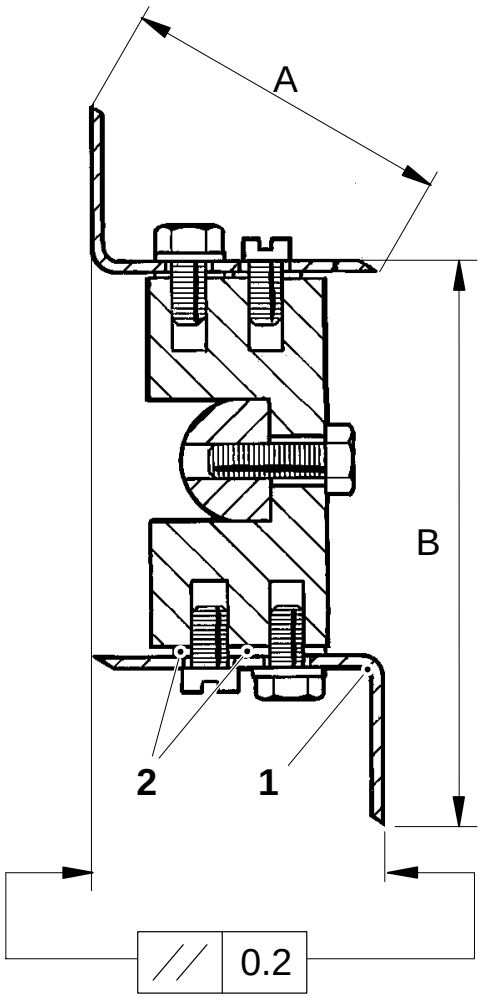

Basic setting measurements:

Volume, ml	A ±0.2 mm	B ±0.2 mm
125	44	86.0
180	57	75.5
200	57	83.0
200S	54	118.6
236	57	98.4
250	57	106.0
284	57	118.6

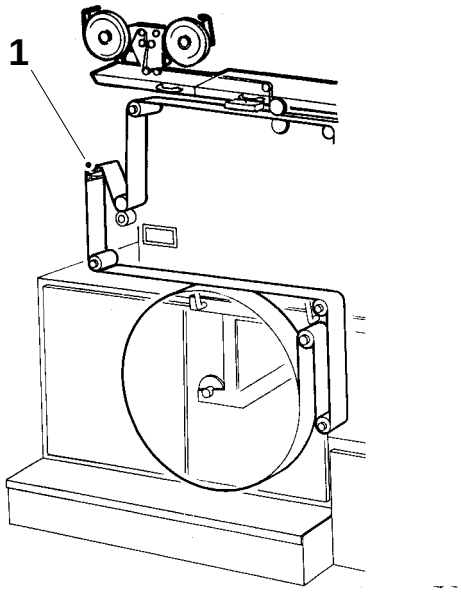

1 Crease bar
2 Shimming washer
3 Dating unit crease wheel

Setting

Volumes 125 ml, 180 – 250 ml

a) Cut the tube in the bottom crease.

b) Crank the machine to X°, see table.

c) Synchronize the creases of the web with the crease wheel (1). The top creases are to match the short edge (3) of the crease wheel.

d) Pull down the tube in level with the upper edge of the left side volume flaps.

e) Loosen the screws (2), see fig. 2, and shift the crease wheel (1) up or down to get it horizontal, see fig. 1.

It is very important that the crease wheel and the creases are synchronized during the adjustment, and that the packaging material web is well tensioned through the machine.

Volume, ml	X°
125	200
180	180
200	180
250	180

Footnote
Setting of 200S ml, see page MS 703–53.

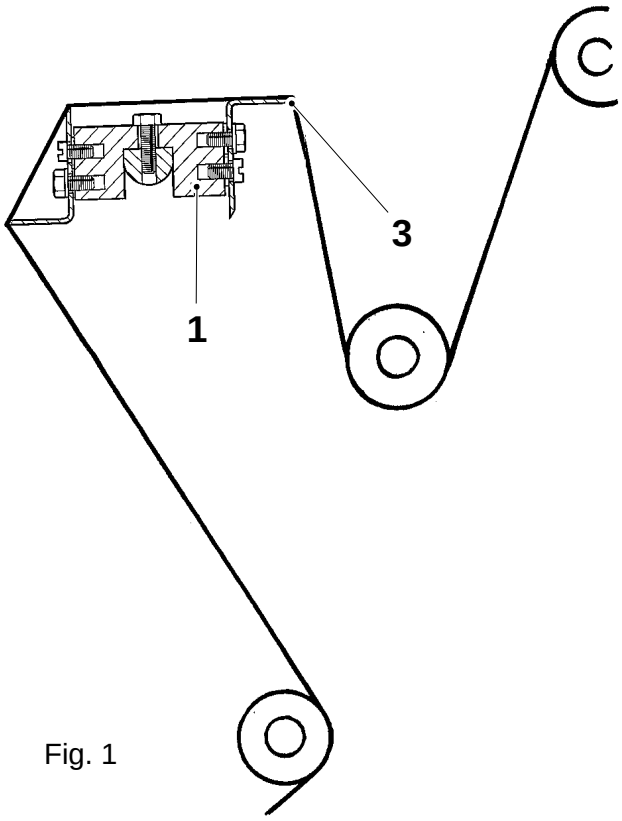

Fig. 1

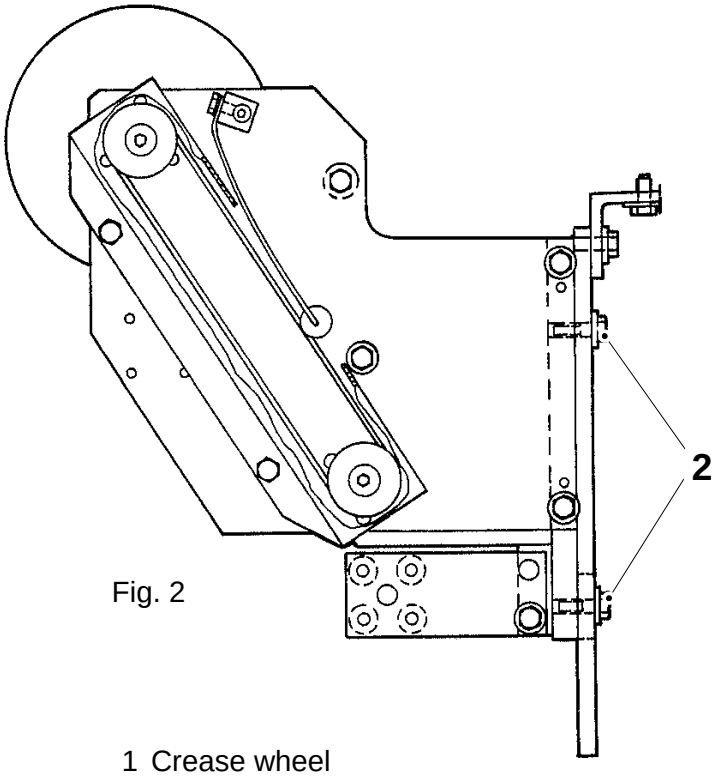

Fig. 2

1 Crease wheel
2 Screw
3 Short edge of crease wheel

Setting

Volume 200S ml

a) Cut the tube in the bottom crease.

b) Crank the machine to 150°.

c) Synchronize the creases of the web with the crease wheel (1). The top creases are to match the short edge (3) of the crease wheel.

d) Pull down the tube until its lower edge is in level with the upper edge of the left side volume flaps.

e) Loosen the screws (2), see fig. 2, and shift the crease wheel (1) up or down to get it vertical, see fig. 1.

It is very important that the crease wheel and the creases are synchronized during the adjustment, and that the packaging material web is well tensioned through the machine.

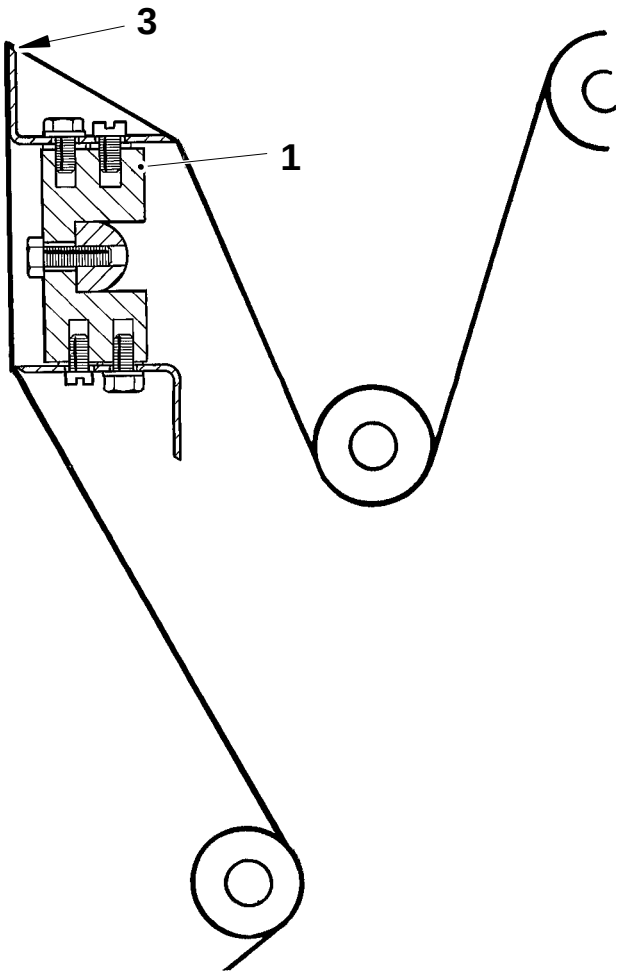

Fig.1

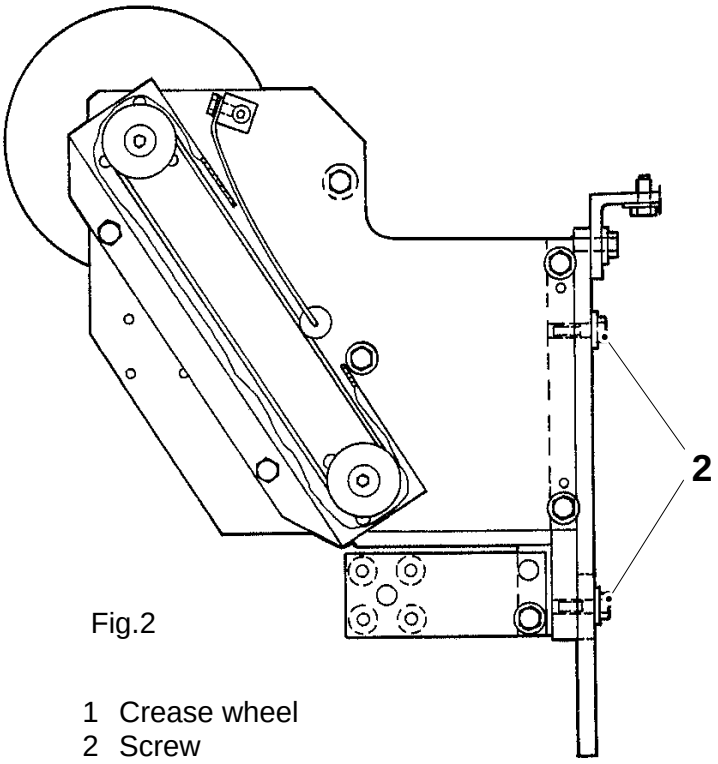

Fig.2

1 Crease wheel
2 Screw
3 Short edge of crease wheel

Setting

Loosen the screws (1) and set the bending roller in its bottom position (on volume 200S ml, there should be a 26±0.5 mm gap between the bearing and the bottom of the groove), see fig. 1.

Retighten the screws.

Start the machine in production and perform a **Short stop**.

Crank the machine to X°, see table.

Check that the creases are correctly positioned in the crease wheel.

Loosen the screws (2) and adjust the bracket up or down until the dating crease wheel (3) is horizontal. Retighten the screws.

It is very important that the dating crease wheel is correctly positioned in the creases throughout the setting procedure and that the material web is well tensioned through the machine.

Volume, ml	X°
TBA 125	90
TBA 200S	120
TBA 200	170
TBA 250	90

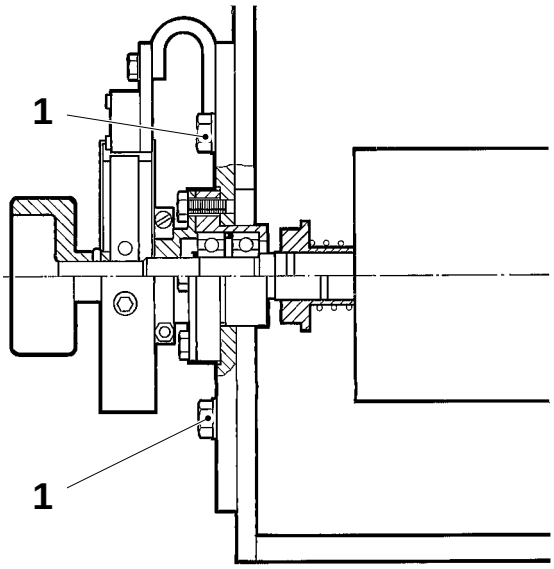

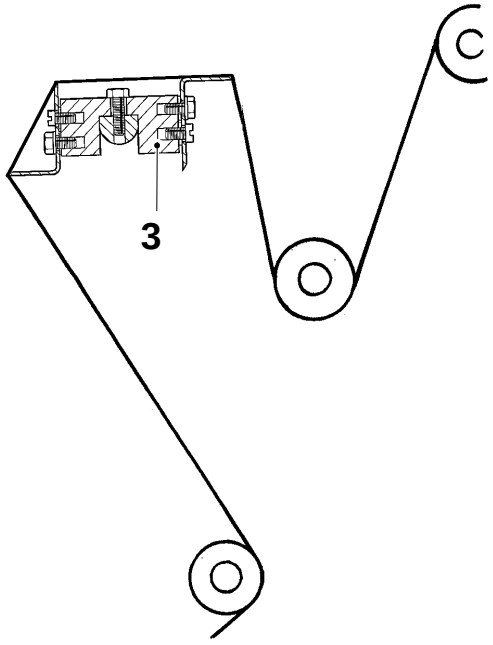

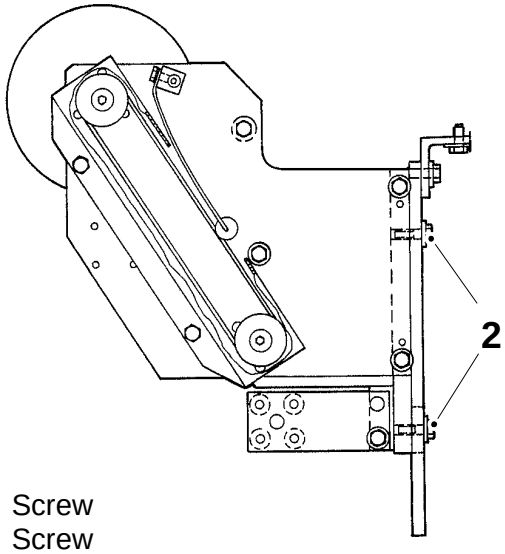

1 Screw
2 Screw
3 Dating crease wheel

Setting

Loosen the screws (1) and set the bending roller in its bottom position.

Retighten the screws.

Run the machine in production and perform a **Short stop**.

Crank the machine to X°, see table.

Check that the crease wheel is correctly positioned in the creases.

Loosen the screws (2) and adjust the bracket up or down until the dating crease wheel (3) is horizontal. Retighten the screws.

It is very important that the dating crease wheel is correctly positioned in the creases throughout the setting procedure and that the material web is well tensioned through the machine.

Volume, ml	X°
TB 236	105
TBA 125	90
TBA 200S	120
TBA 200	170
TBA 250	90
TBA 284	32

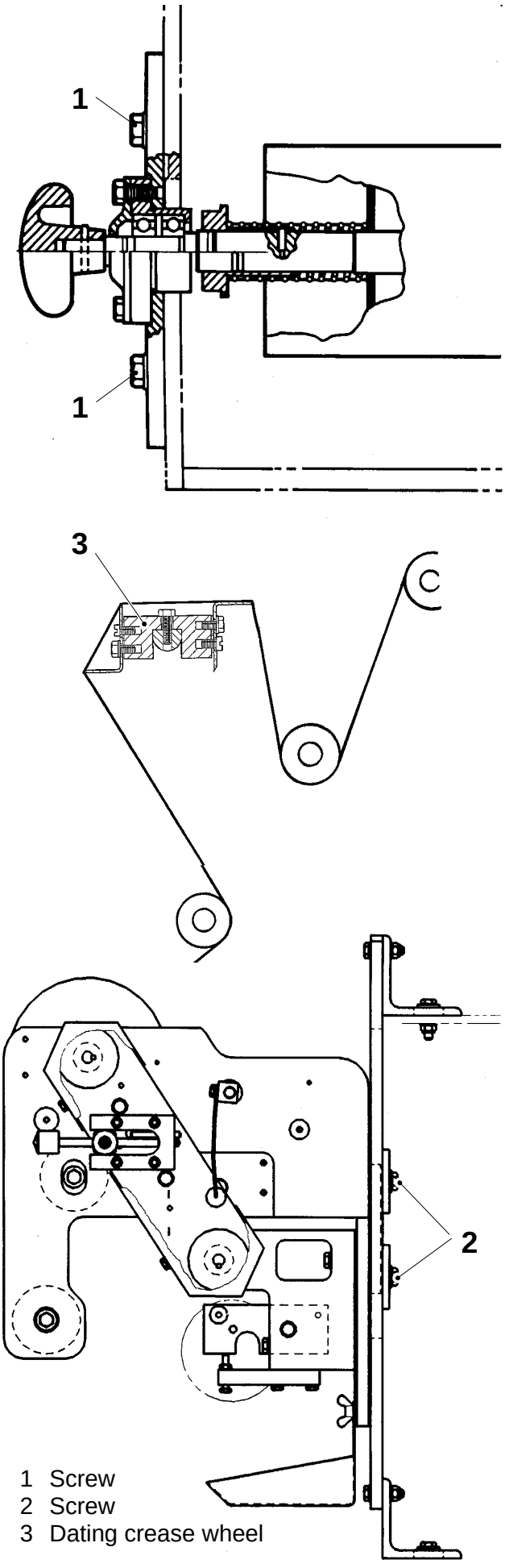

1 Screw
2 Screw
3 Dating crease wheel

Setting

Set the guide wheel (6) parallel with the packaging material web and at the same height as the web.

Set distance A. Adjust by means of the clamp fitting (5).

Set the guide bracket (4) so that it slightly touches the packaging material web.

Set the LS strip (2) so that it is positioned symmetrically over the edge of the packaging material web (1). Adjust by means of the guide roller (3).

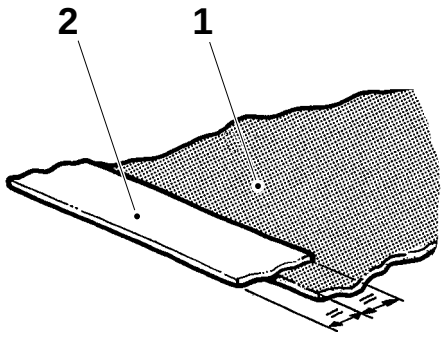

A = 10 ±1 mm

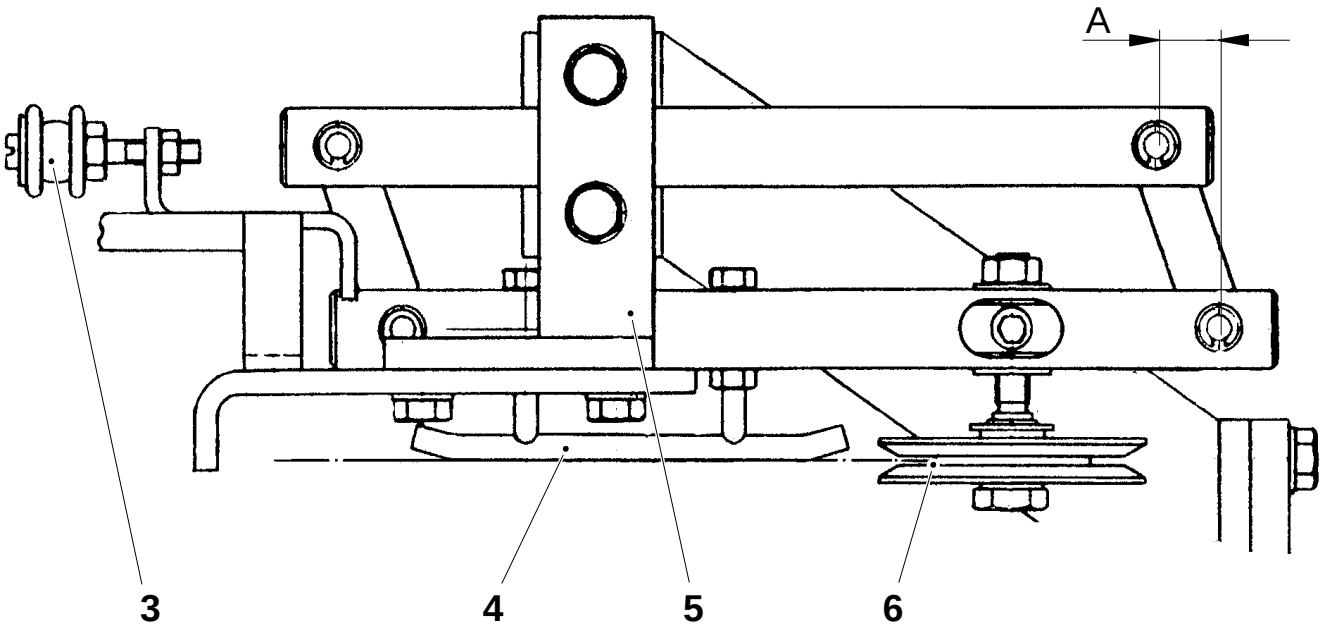

1 Packaging material web
2 LS strip
3 Guide roller
4 Guide bracket
5 Clamp fitting
6 Guide wheel

Checking

Check the following details for wear and/or damage:

- the toothed wheels (1),
- the proximity switch (2),
- the bearings (3),
- the timing belt (4),
- the spring (5),
- the nylon roller (6),
- the bending rollers (7) with bearings (9) and shafts (10), and
- the bending roller (8) with bearings (11) and shaft (12).

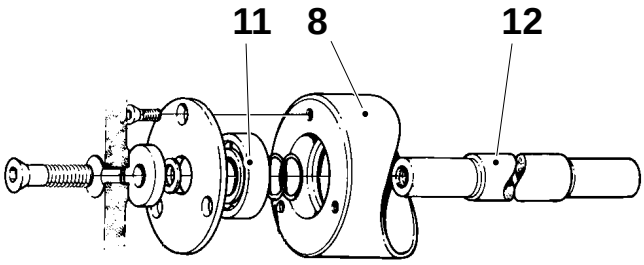

Replace worn and/or damaged details.

1 Toothed wheel
2 Proximity switch
3 Bearing
4 Timing belt
5 Spring
6 Nylon roller
7 Bending roller
8 Bending roller
9 Bearing
10 Shaft
11 Bearing
12 Shaft

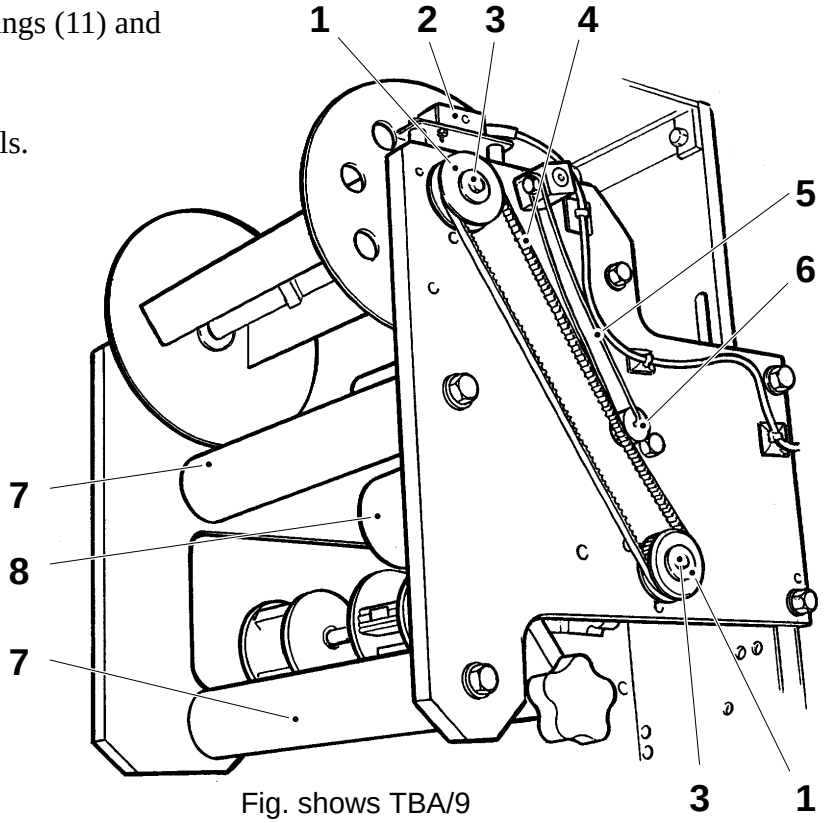

Fig. shows TBA/9

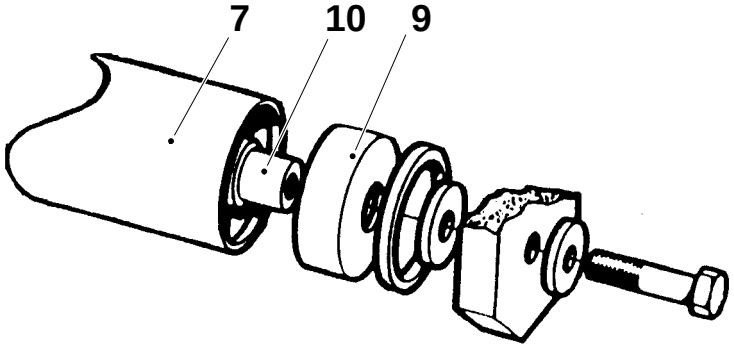

Checking

Check the following details for wear and/or damage:

- the bearings (1),
- the sprockets (2) and (7),
- the chain (3),
- the spring (4),
- the nylon roller (5),
- the bending rollers (6) with bearings (9) and shafts (10), and
- the bending roller (8) with bearings (11) and shaft (12).

Replace worn and/or damaged details.

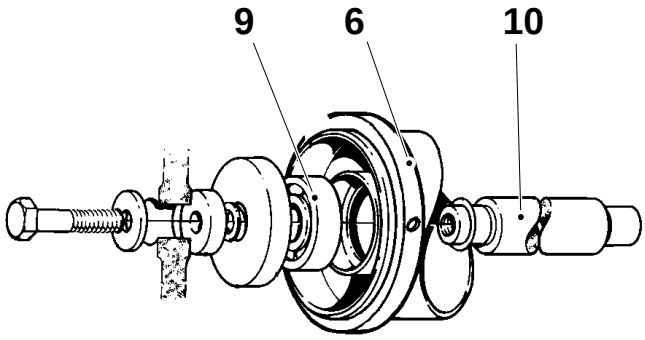

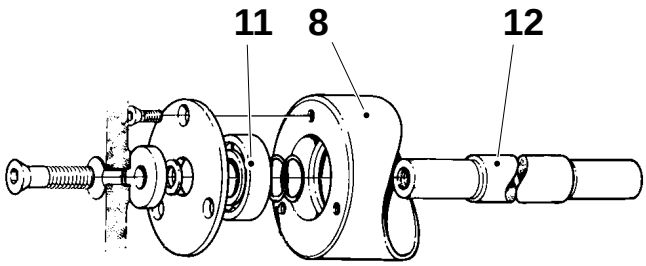

1 Bearing
2 Sprocket
3 Chain
4 Spring
5 Nylon roller
6 Bending roller
7 Sprocket
8 Bending roller
9 Bearing
10 Shaft
11 Bearing
12 Shaft

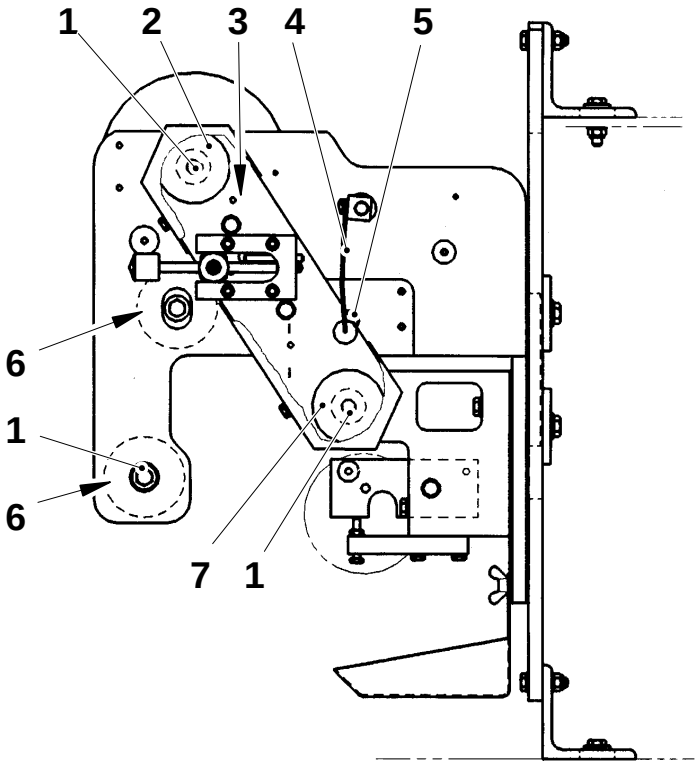

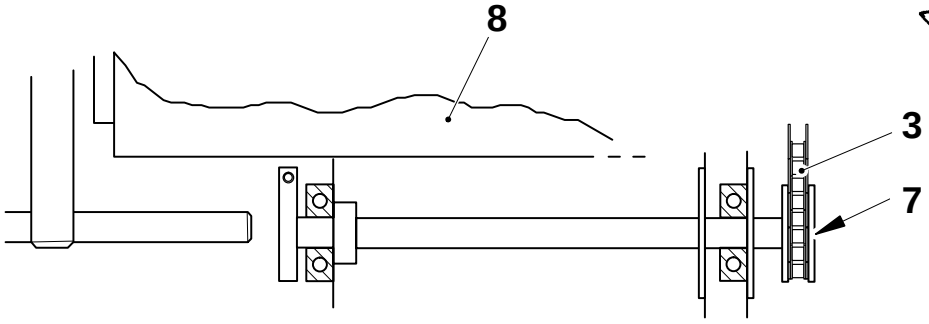

Setting

Set the carrier axle (8) and the printing wheel axle (4) parallel vertically. Apply the template (7), see fig. 2. If required, loosen the screws (1) and shift the bracket (2).

Set measurement A between the printing wheel axle and the bending roller (5) by means of the setting screw (6), see fig. 2. Use the template (7).

Apply the template (7), see fig. 3, and set the carrier axle (8) and the printing wheel axle (4) parallel sideways. If required, loosen the screw (3) and shift the spring pack and the ball.

Set the ink unit, see page MS 737–5X.

(Cont'd overleaf)

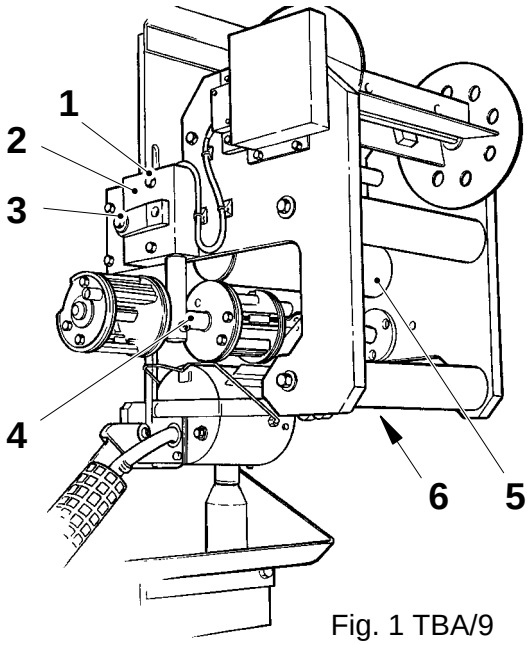

Fig. 1 TBA/9

1 Screw
2 Bracket
3 Screw
4 Printing wheel axle
5 Bending roller
6 Setting screw
7 Template TP No. 76602
8 Carrier axle

A = 31.3 ±0.1 mm

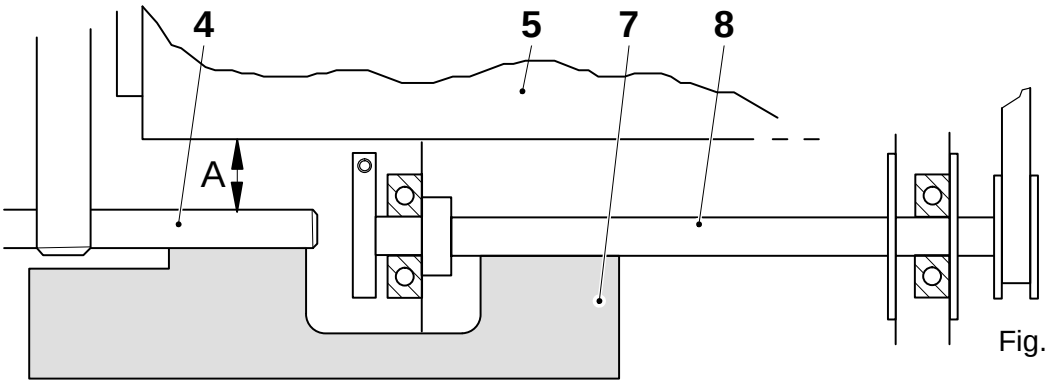

Fig. 2

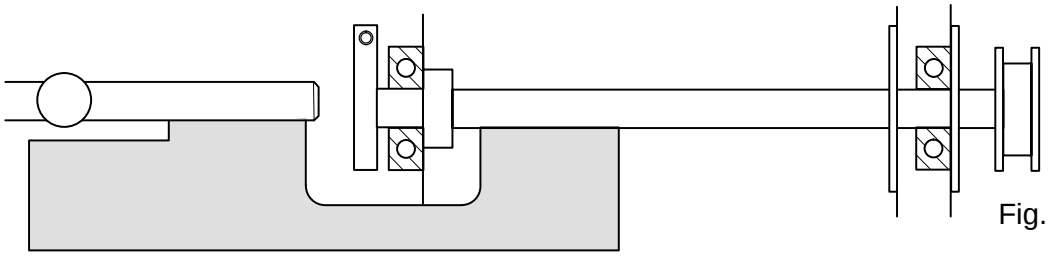

Fig. 3

(Cont'd)

Synchronization

Synchronize by skipping the timing belt (9) over the sprocket teeth until the date print ends up in the right place on the packaging material.

Final adjustment can be made by undoing the clamp union (10) and turning the axle. Always mark the position of the clamp union on the carrier axle (8) before undoing the union.

Start the machine and set the stamping position, see page MS 740–1X.

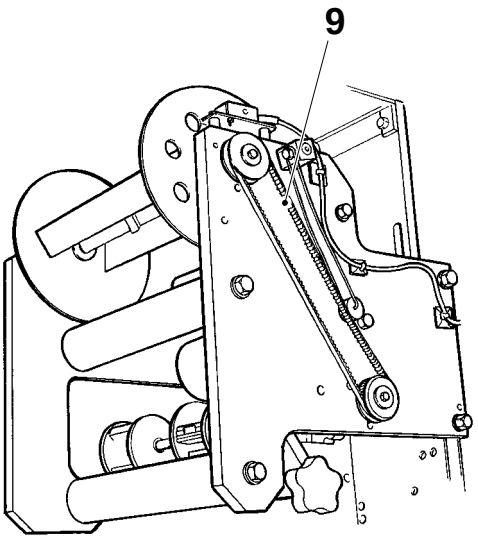

Fig. shows TBA/9

8 Carrier axle
9 Timing belt
10 Clamp uniont

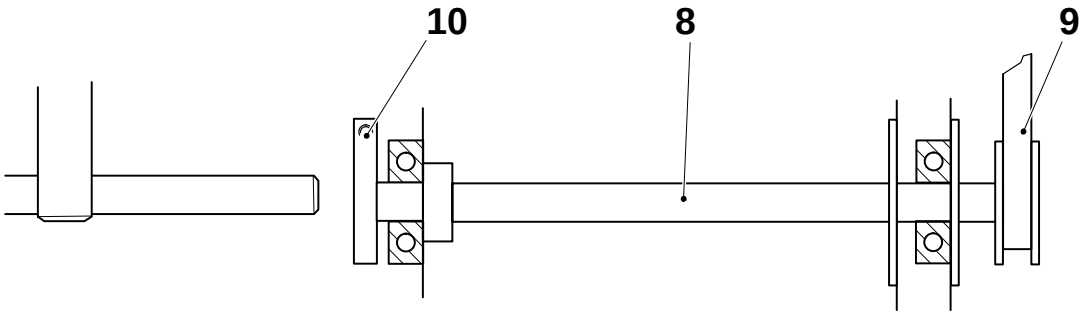

Setting

Apply the template, see fig. 4, and set the carrier axle (7) and the printing wheel axle (4) parallel sideways by loosening the screws (1).

Set the carrier axle (7) and the printing wheel axle (4) in line sideways. Apply the template (6), see fig. 3. If required, adjust by means of the ring nuts (2).

At the same time, set measurement A, see fig. 3, between the printing wheel axle and the bending roller (5). Use the template (6).

Set the ink unit, see page MS 737–5X.

(Cont'd overleaf)

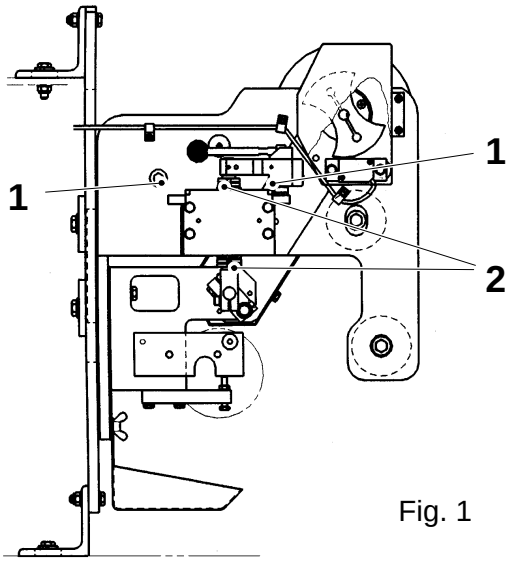

Fig. 1

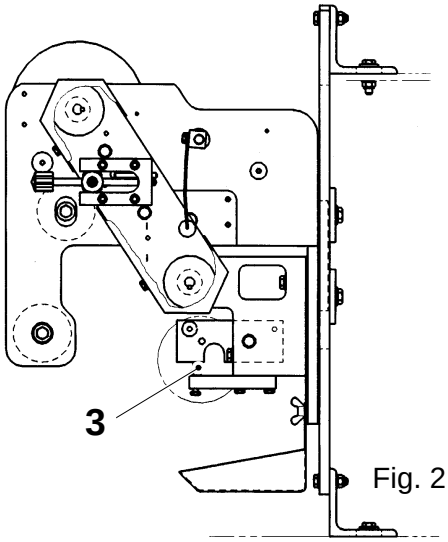

Fig. 2

1 Screw
2 Ring nut
3 Setting screw
4 Printing wheel axle
5 Bending roller
6 Template TP No. 76602
7 Carrier axle

A = 31.3 ±0.1 mm

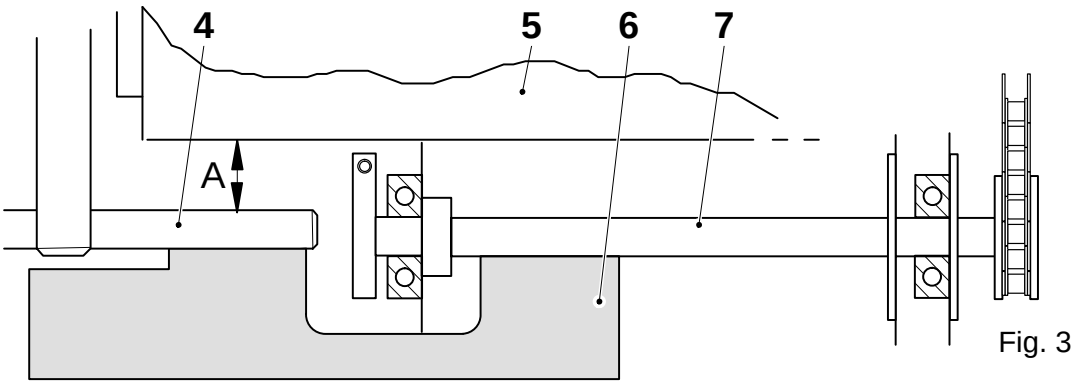

Fig. 3

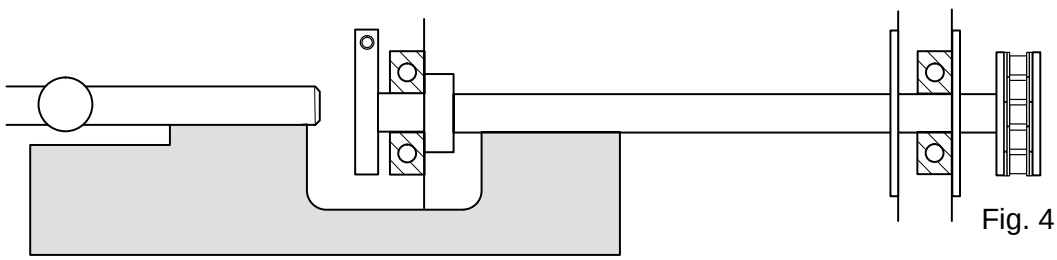

Fig. 4

(Cont'd)

Loosen the clamp fitting (10) and set distance B.

Synchronization

Synchronize the date printing with the printed design on the packaging material web by undoing the clamp union (8) and turning the axle. Always mark the position of the clamp union on the axle before undoing the union.

Final adjustment can be made by means of the knob (9).

Start the machine and set the stamping position, see page MS 740–1X.

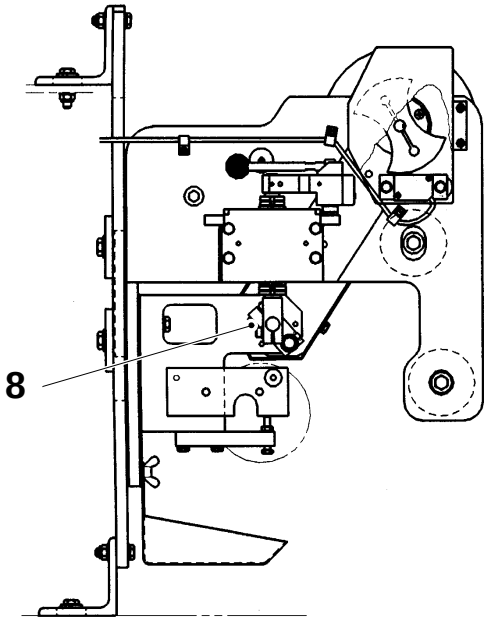

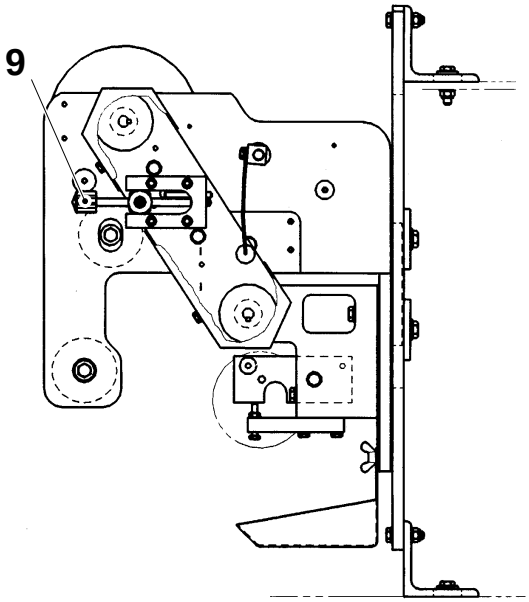

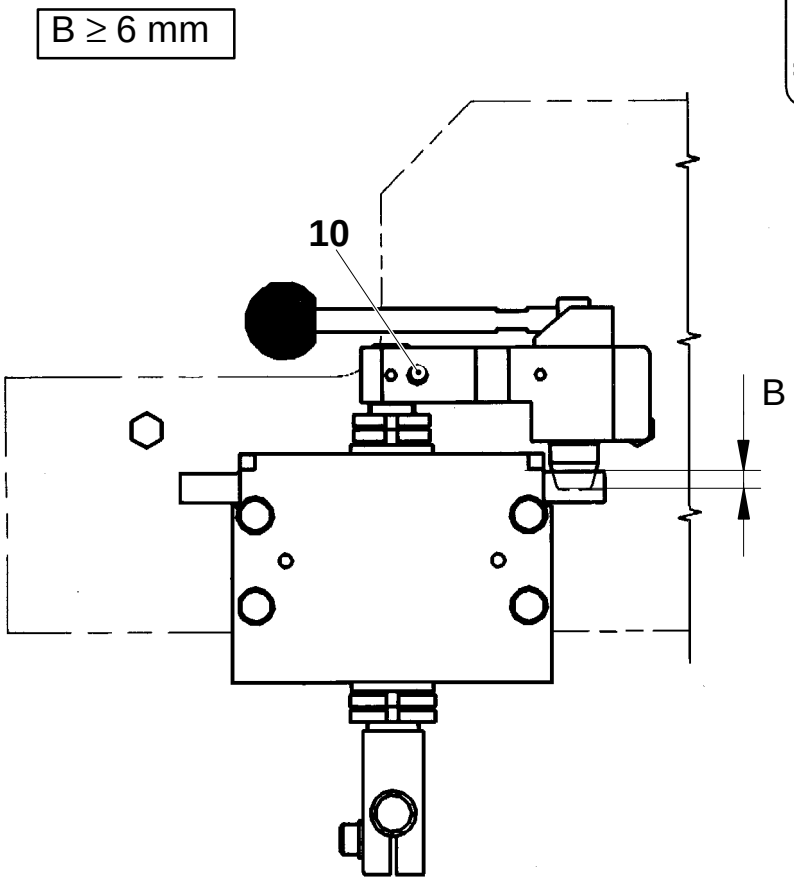

8 Clamp union
9 Adjustment knob
10 Clamp fitting

Checking

a) All rollers must rotate freely and be intact.

b) Bearing A = max radial play 0.5 mm
Roller B = max radial play 1.0 mm
Roller C = max radial play 1.0 mm
max axial play 0.5 mm
Roller D = max radial play 1.5 mm

c) Clean and check that the strip guide moves freely and that the bushings (1) are intact.

d) Check the eyelets (2) for deformation.

e) Check the brake shoes (3). Replace as required.

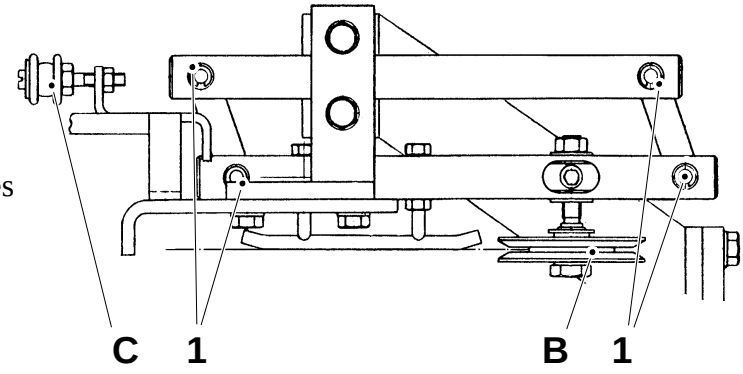

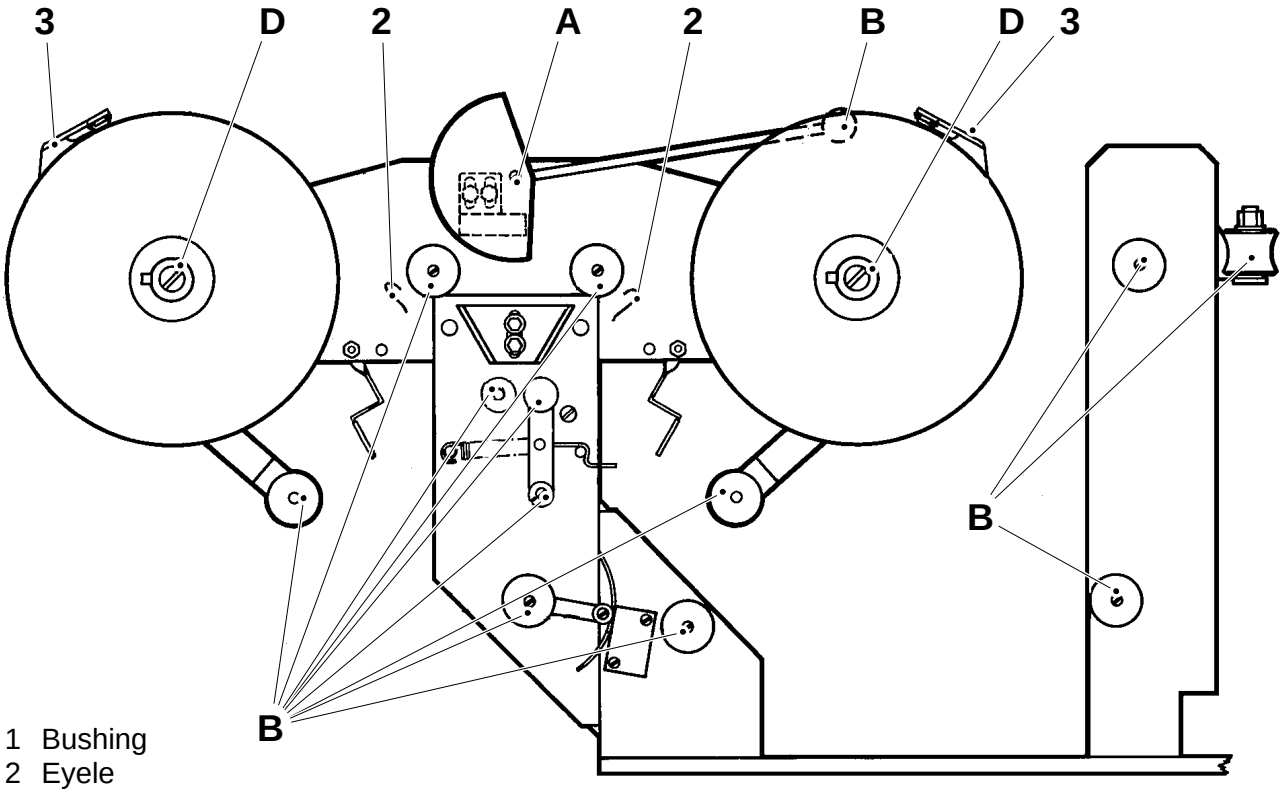

1 Bushing
2 Eyele
3 Brake shoe
A Bearing
B Roller
C Roller
D Roller

Checking

a) All rollers must rotate freely and be intact.

Bearing A = max radial play 0.5 mm
Roller B = max radial play 1.0 mm
Roller C = max radial play 1.0 mm
max axial play 0.5 mm
Roller D = max radial play 1.5 mm

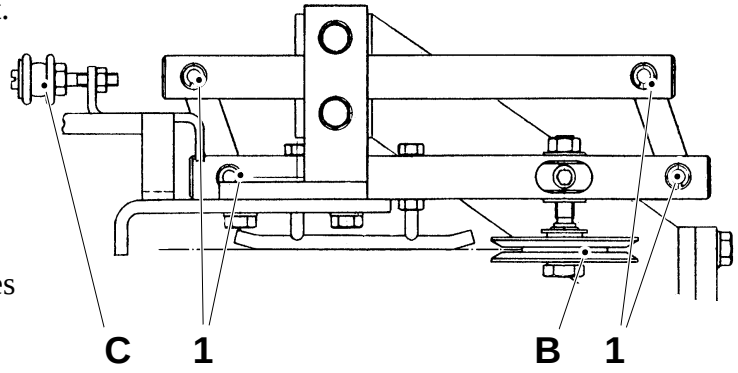

b) Clean and check that the strip guide moves freely and that the bushings (1) are intact.

c) Check the eyelets (2) for deformation.

d) Check the brake springs (3). Replace as required.

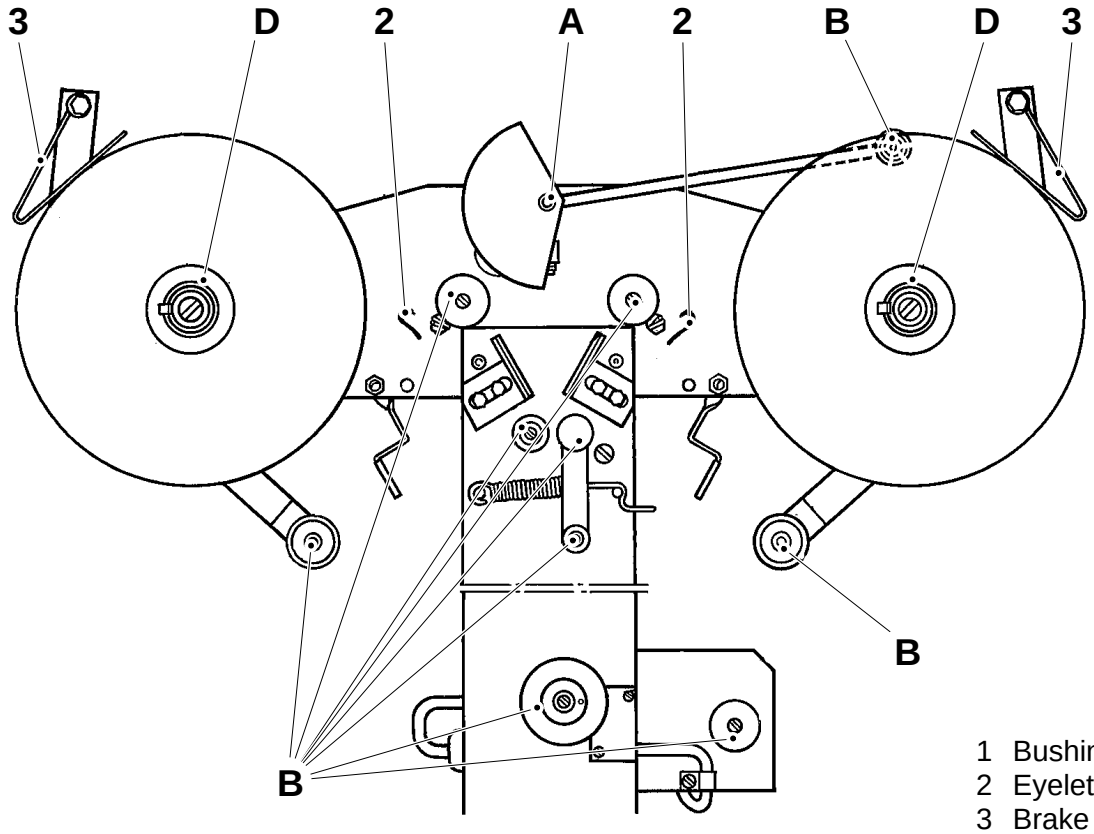

1 Bushing
2 Eyelet
3 Brake spring
A Bearing
B Roller
C Roller
D Roller

Checking

a) All rollers must rotate freely and be intact.

Bearing A = max radial play 0.5 mm
Roller B = max radial play 1.0 mm
Roller C = max radial play 1.0 mm
max axial play 0.5 mm
Roller D = max radial play 1.5 mm

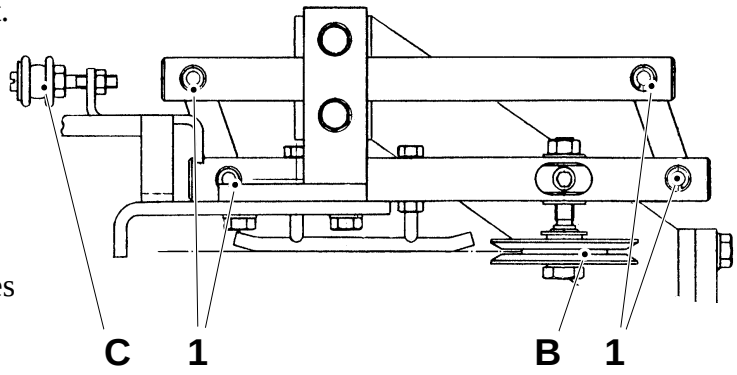

b) Clean and check that the strip guide moves freely and that the bushings (1) are intact.

c) Check the brake springs (2). Replace as required.

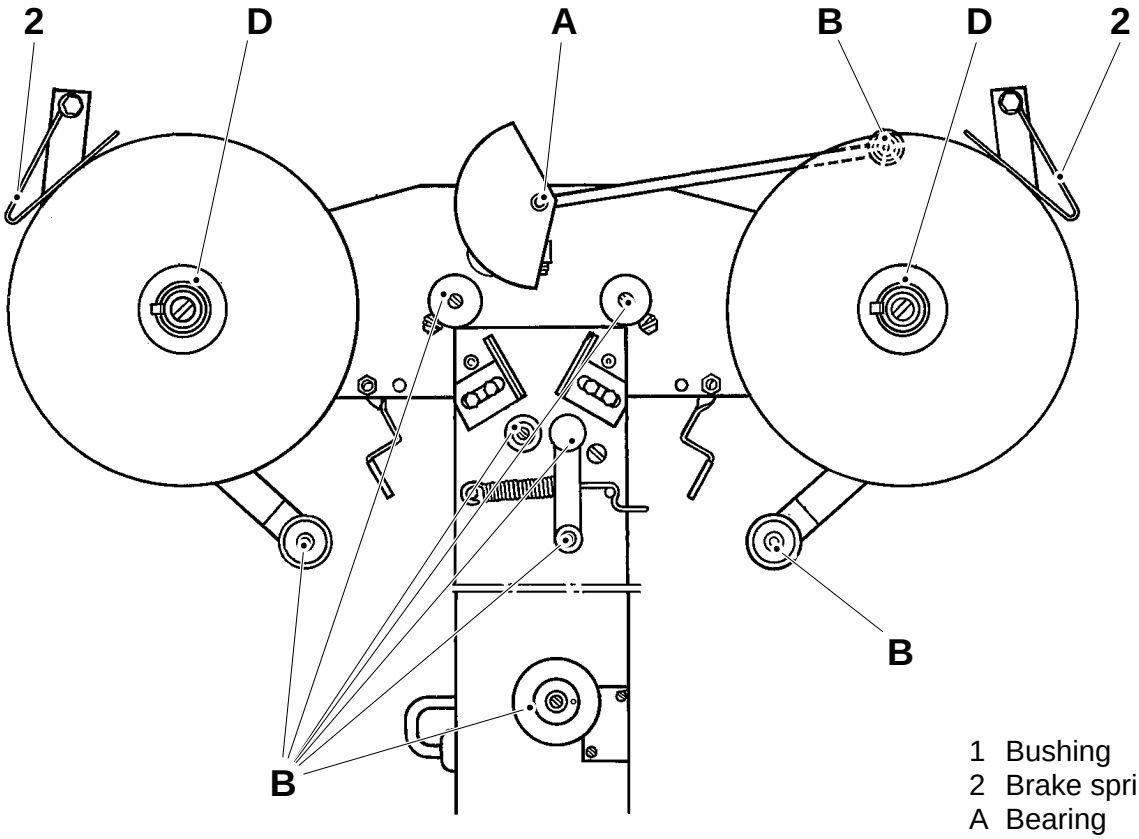

1 Bushing
2 Brake spring
A Bearing
B Roller
C Roller
D Roller

Setting

Supply monitor

Set the proximity switch (1) so that it triggers an alarm when approximately 15 mm of strip wraps remain on the reel. Loosen the screws and shift the proximity switch. Set on both strip reels.

Strip breakage monitor

Set the proximity switch (2) so that it triggers an alarm as the roller (3) stops after the strip has been cut or removed.

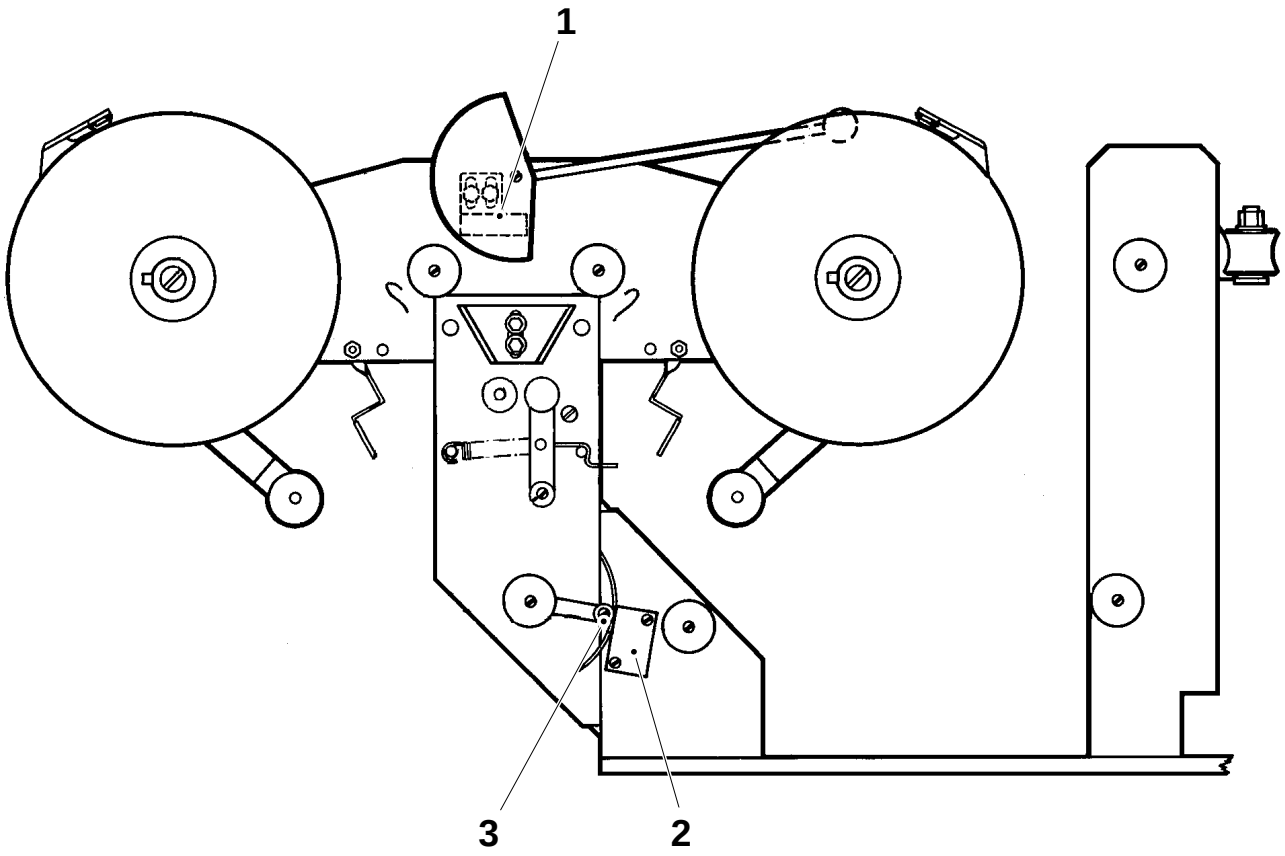

1 Proximity switch
2 Proximity switch
3 Roller

Setting

Supply monitor

Set the proximity switch (1) so that it triggers an alarm when approximately 15 mm of strip wraps remain on the reel. Loosen the screws and shift the proximity switch. Set on both strip reels.

Strip breakage monitor

Set the proximity switch (2) so that it triggers an alarm as the roller (3) stops after the strip has been cut or removed.

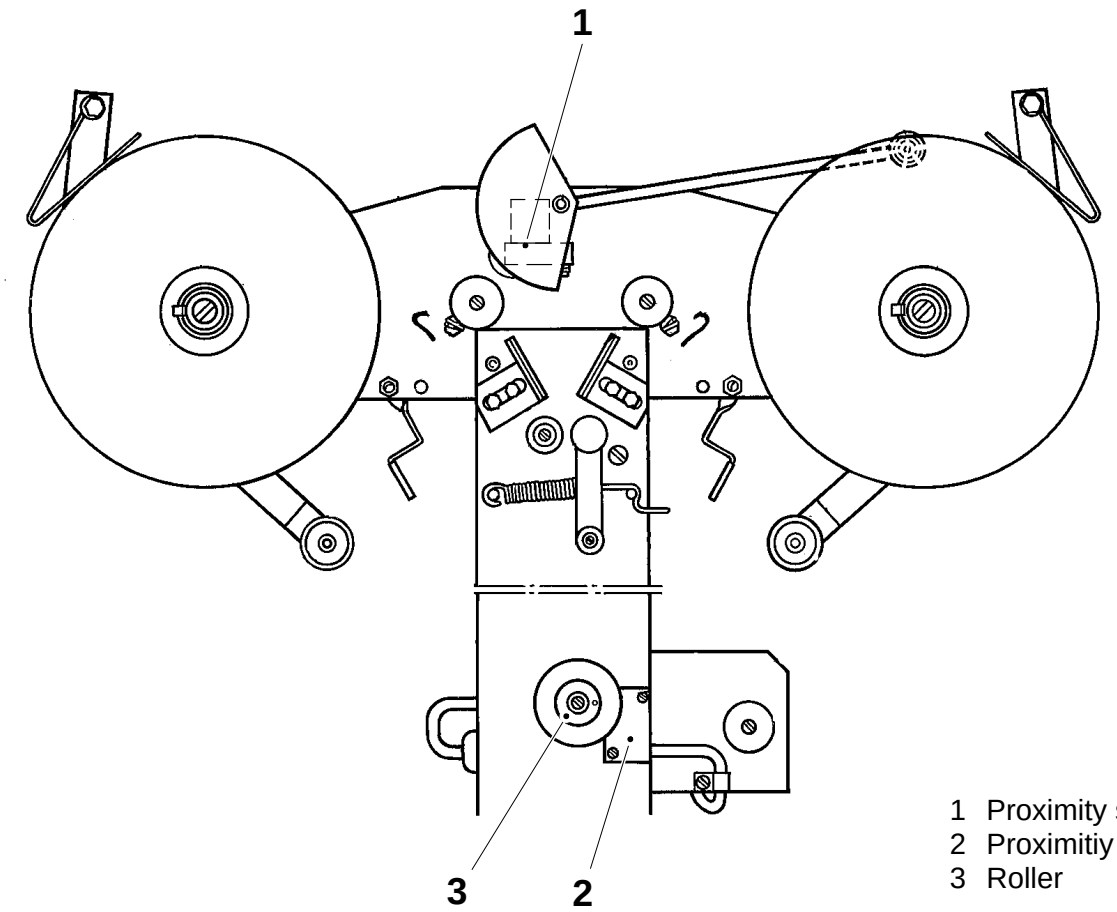

1 Proximity switch
2 Proximitiy switch
3 Roller

Setting

Supply monitor

Set the proximity switch (1) so that it triggers an alarm when approximately 15 mm of strip wraps remain on the reel. Loosen the screws and shift the proximity switch. Set on both strip reels.

Strip breakage monitor

Set the proximity switch (2) so that it triggers an alarm as the roller (3) stops after the strip has been cut or removed.

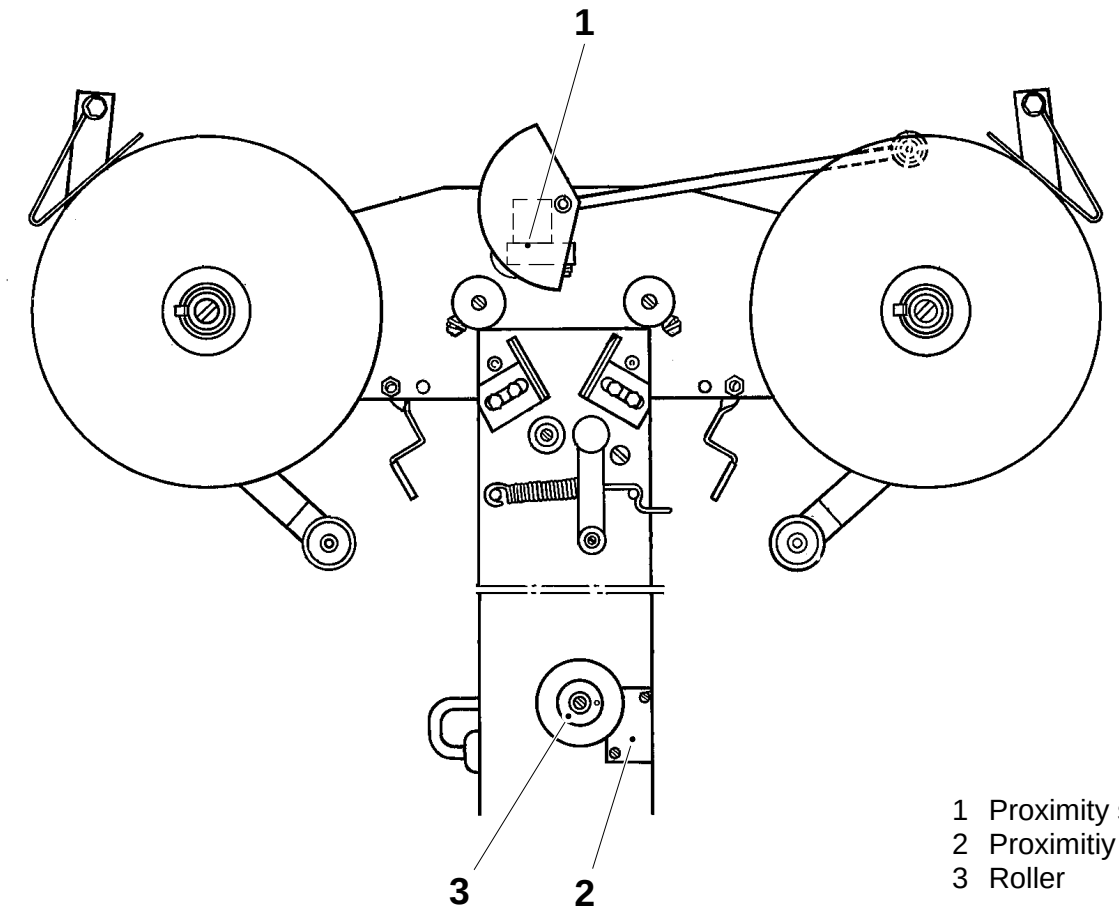

1 Proximity switch
2 Proximitiy switch
3 Roller

Checking

Undo the screws (2) and remove the nozzle.

Check that the SA nozzle is clean and that the air holes (1) are not blocked.

Check that the nozzle is straight (not warped by heat). Replace as required.

When fitting the nozzle, check the gasket (3) and pins (4).

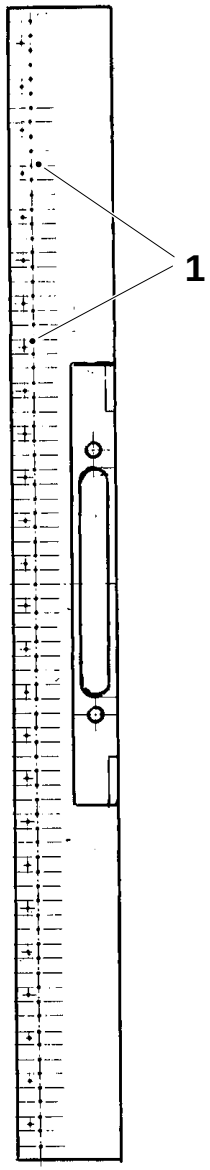

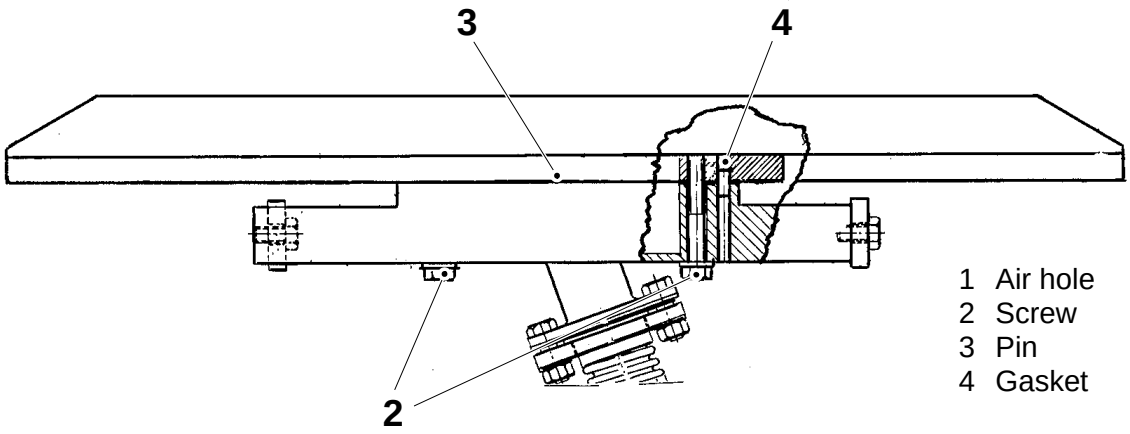

1 Air hole
2 Screw
3 Pin
4 Gasket

Setting

The nozzle is to overlap the packaging material by distance A. Both ends of the SA nozzle (3) carry marks (1) to coincide with the edge of the packaging material web.

Set the vertical clearance B between nozzle and packaging material (4).

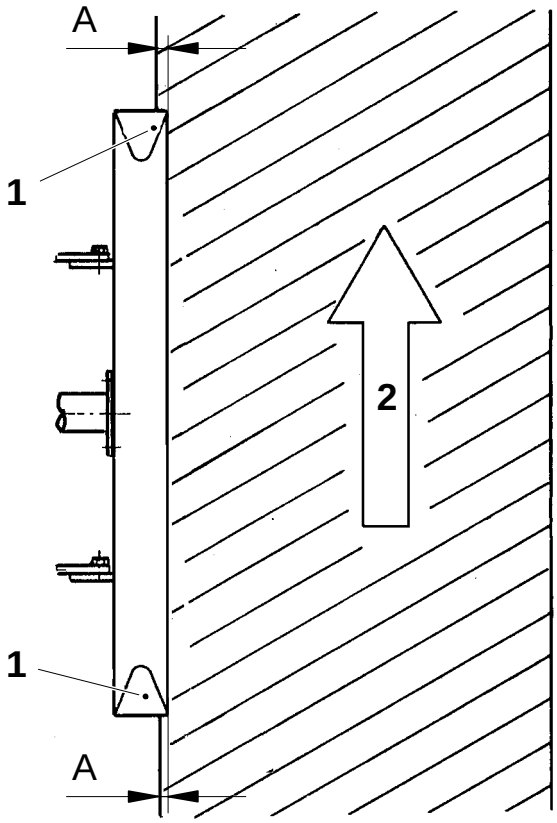

A = 8 ±0.5 mm
B = 2 – 3 mm

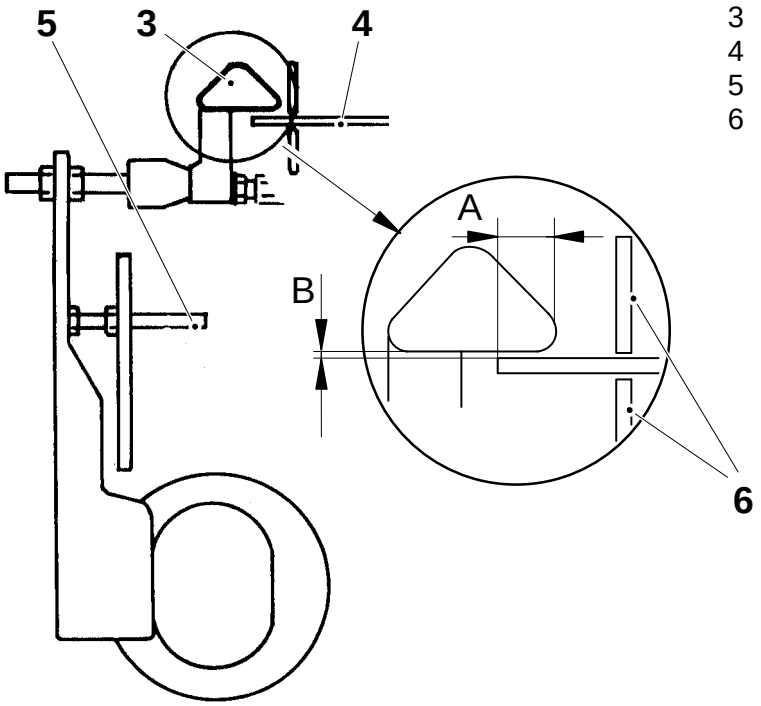

1 Mark on nozzle
2 Flow direction of packaging material
3 SA nozzle
4 Packaging material
5 Limit screw
6 Paper support

Checking

Check the function of the cylinder and that the short stop nozzle (1) turns freely.

Check the support plate (2) for wear and/or damages. Replace as required.

Check that the short stop nozzle is clean and without defects. Make sure the air holes are not blocked.

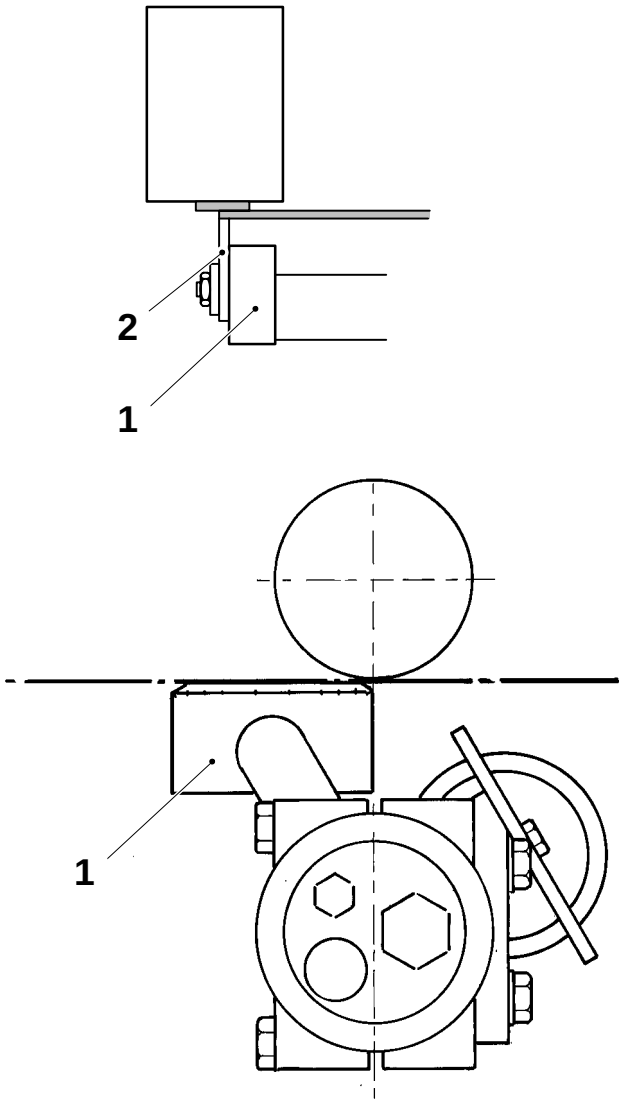

1 Short stop nozzle
2 Support plate

Setting

a) Set the edge of the support plate (2) so that it overlaps the short stop nozzle (1) by distance A. In **Short stop** position, the support plate is to be in line with the edge of the packaging material.

b) Set the movement of the nozzle. If the nozzle moves too fast, there is risk of damaging; adjust the movement by means of the throttles on the valves.

c) Set the air pressure, see page MS 910/920–7X.

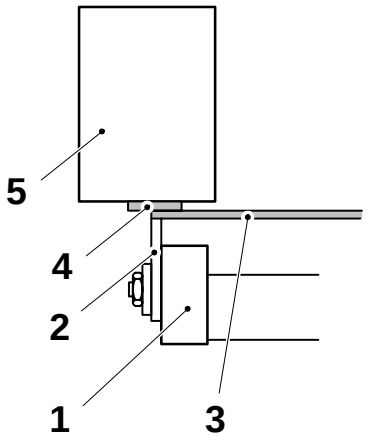

During production

After a **Short stop**, check that the SA sealing is faultless in the packages that has been opposite the short stop nozzle.

The initial heating after a **Short stop** can be altered by increasing or reducing the speed of the engagement movement of the SA nozzle. (This is done by means of the valve throttles.)

The temperature setting of the short stop nozzle can be altered by reconnecting the wiring on transformer T9 in the electrical cabinet. This must only be done by a qualified electrician.

A = 8 ±0.5 mm

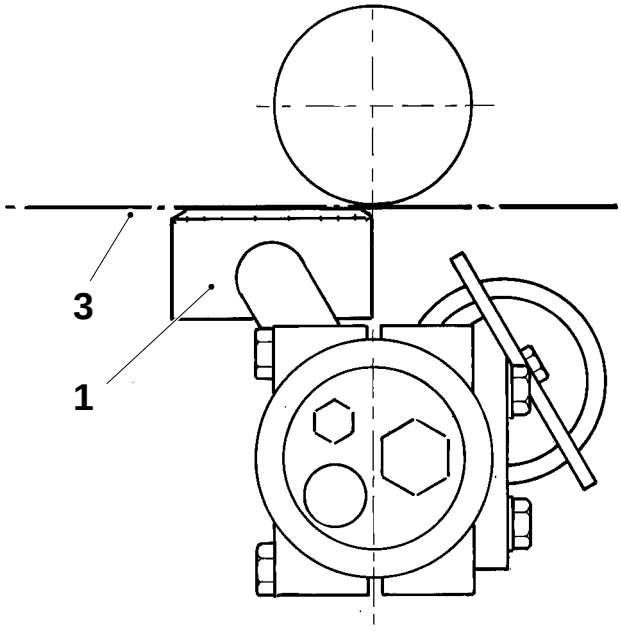

1 Short stop nozzle
2 Support plate
3 Packaging material
4 LS strip
5 Upper pressure roller

Checking/Setting

a) Make sure the rollers rotate freely and that they are intact.

The bearing play must not exceed 0.5 mm.

b) Check that the teflon sleeve of the rollers has not been damaged. If required, replace the teflon sleeve, see page MS 720–3X.

c) Remove the cap (6) of tool TP No. 74767–102. Use the tool to check the roller force. Force 35 – 58 N (3.5 – 5.8 kp).

d) Open the valve for input air. When the counter roller is in its upper position, set gap A between the stud bolt (4) and the screw (5).

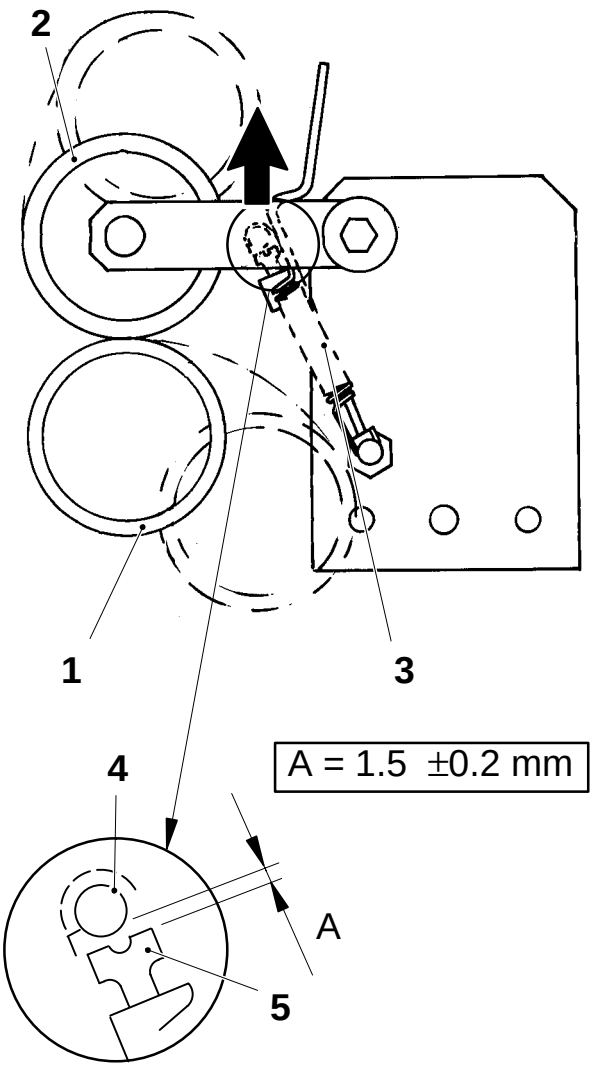

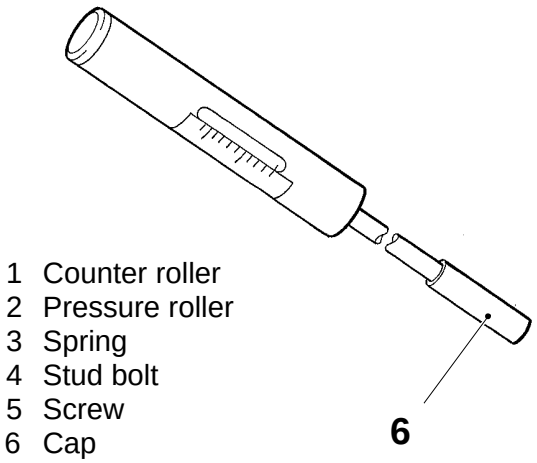

1 Counter roller
2 Pressure roller
3 Spring
4 Stud bolt
5 Screw
6 Cap

Replacing teflon sleeve

Use a hot air gun or an oven. Temperature 260–400°C.

a) Clean off any grease or other deposits, and sand the surface by hand so it becomes rough.

b) Put the roller on an axle so that it can revolve i. e. a lathe.

c) Cut off the required length of teflon hose for the sleeve; width of roller plus 5 mm.

d) If required, clean the inside of the sleeve with a cloth that does not leave any fluff.

e) Slip the sleeve over the roller and rotate the roller and the sleeve at a reasonably even speed.

f) Aim the hot air gun at the middle of the roller at a range of 50 – 80 mm.

   Heat this area until the sleeve shrinks evenly around the roller, see fig. 1.

   When the sleeve has shrunk so it hugs the roller closely, the range should be reduced to 25 mm. Move the hot air gun sideways to first one and then the other edge making sure the protruding free butt of the sleeve shrinks to its minimum size, see fig. 2.

g) After the sleeve has been shrunk on, cut off excess material leaving approximately 1 mm protruding outside the edge of the roller.

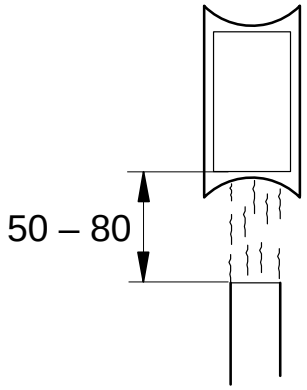

Fig. 1

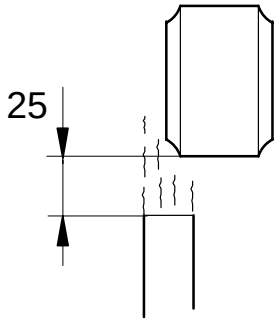

Fig. 2

Checking

Check the following details for wear and/or damage:

- the rollers (1),
- the bearings (2),
- the pins (3), and
- the guide (4).

Replace worn and/or damaged details.

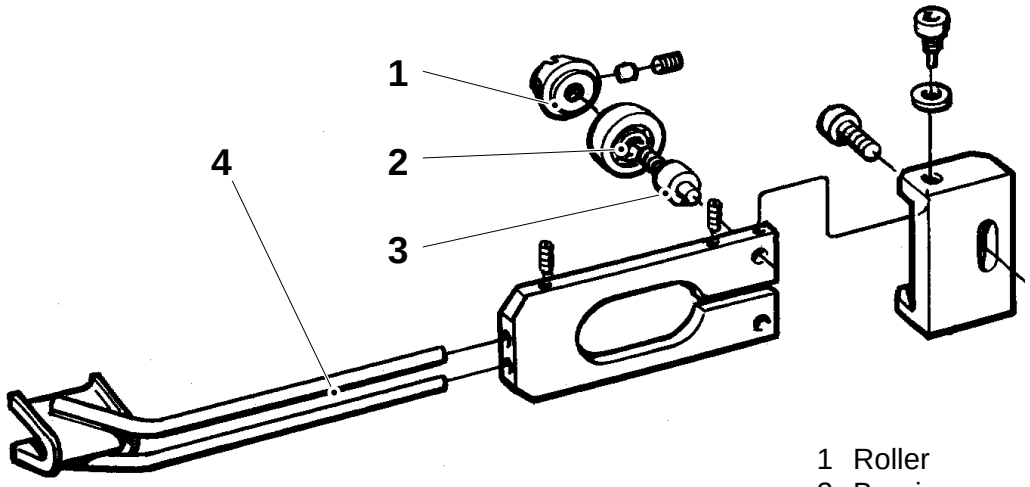

1 Roller
2 Bearing
3 Pins
4 Guide

Removal

Remove the paper guide from its bracket.

Undo the grub screws (2) and remove the guide (1).

Undo the screws (8) and remove the holder.

Loosen the grub screw (7).

Undo the grub screws (5), remove the blocks, the rollers (4), the bearings (3) and the pins (6).

Reassemble in reverse order. Fit the paper guide.

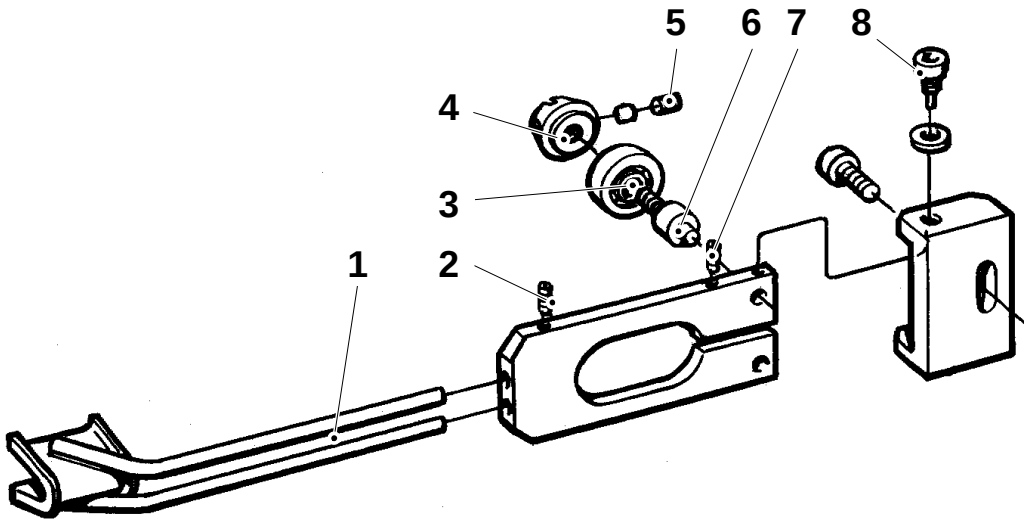

1 Guide
2 Grub screw
3 Bearing
4 Roller
5 Grub screw
6 Pin
7 Grub screw
8 Screw

Setting

Set the guide (1) at the same height as the packaging material web. The guide is to be parallel with the web.
If required, adjust by shifting the bracket (4) up or down.

The rollers (2) are to grip the packaging material without making marks on it. Adjust by means of the grub screw (3).

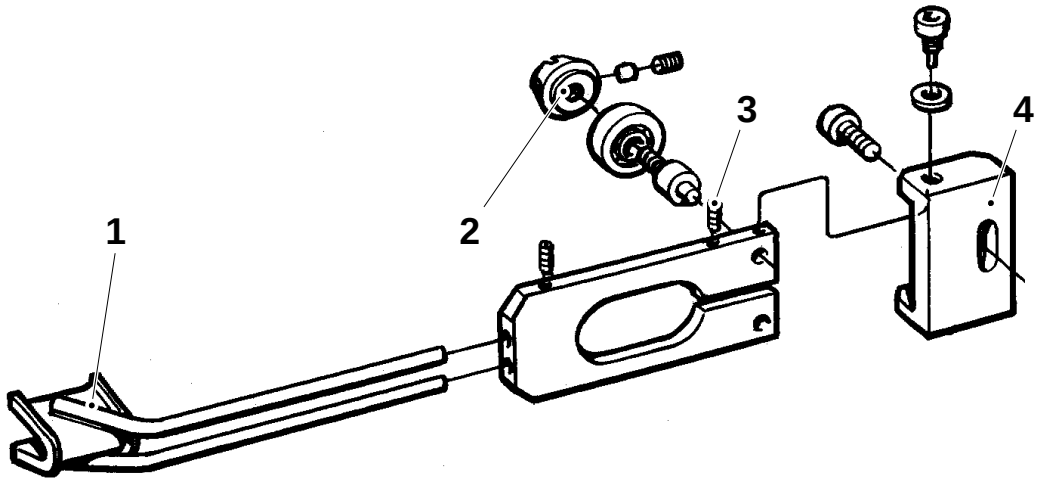

1 Guide
2 Roller
3 Grub screw
4 Bracket

Checking/Cleaning

Check that there is no ink in the spillage bottle.

Check that the ink bottle stays in its upper position, when it has been raised.

Remove the ink unit. Clean the parts in methylated spirit, rinse them in water, and let them air-dry.

Check the following details for wear and/or damage:

- the clamp (1),
- the strip (2),
- the transfer roller (3); make sure the roller rotates freely,
- the ink roller (4); make sure the roller rotates freely,
- the O-rings (5) and (6),
- the shaft (7) and the eccentric shaft (8); the axial play is to be 0.2 – 0.3 mm,
- the rubber gasket (9),
- the hose (10); make sure the hose is not folded when the ink bottle is raised/lowered, and
- the spring (11).

Replace worn and/or damaged details.

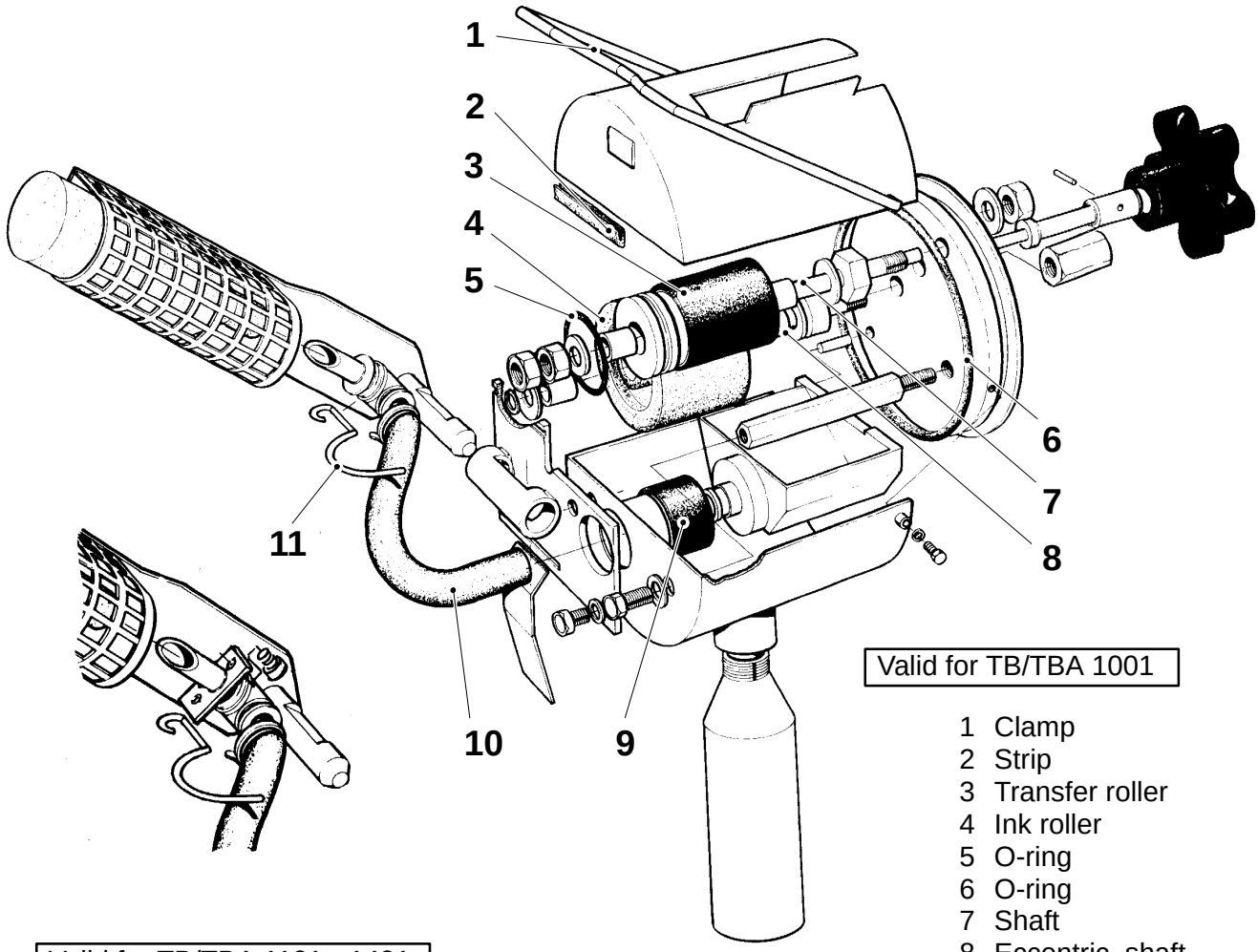

Valid for TB/TBA 1001

1 Clamp
2 Strip
3 Transfer roller
4 Ink roller
5 O-ring
6 O-ring
7 Shaft
8 Eccentric shaft
9 Rubber gasket
10 Hose
11 Spring

Valid for TB/TBA 1101→1401
TBA 1203→1403

Removal

Remove the ink bottle (2) and the spillage bottle (4). Undo the knob (7) and pull the ink unit off its bracket.

Loosen the clamp and remove the cover (1) of the ink unit.

Carefully remove the O-ring (10). Undo the nuts (11) and remove the shaft with the washers, the bushing (9) and the transfer roller (8).

Undo the nut (18) and remove the ink roller (13).

Undo the screws (3) and (6), loosen the spacing screw (16) and remove the trough (15) and the gasket (14).

Remove the hose (12).

Reassemble in reverse order.

Caution!
Shafts and bushings must not be oiled.

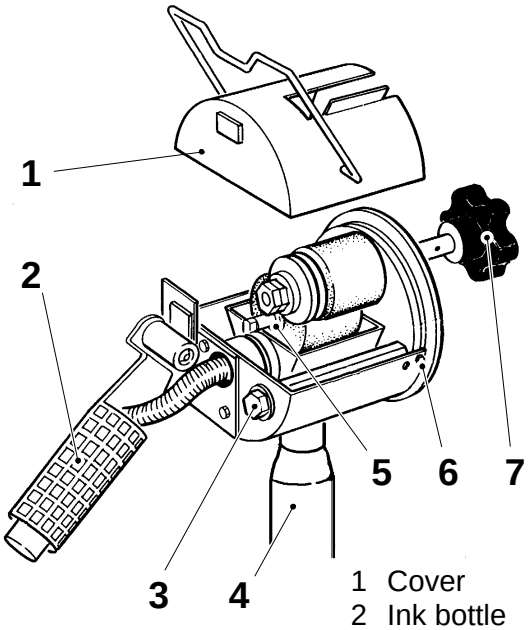

1 Cover
2 Ink bottle
3 Screw
4 Spillage bottle
5 Screw
6 Screw
7 Knob
8 Transfer roller
9 Bushing
10 O-ring
11 Nut
12 Hose
13 Ink roller
14 Gasket
15 Trough
16 Spacing screw
17 O-ring
18 Nut

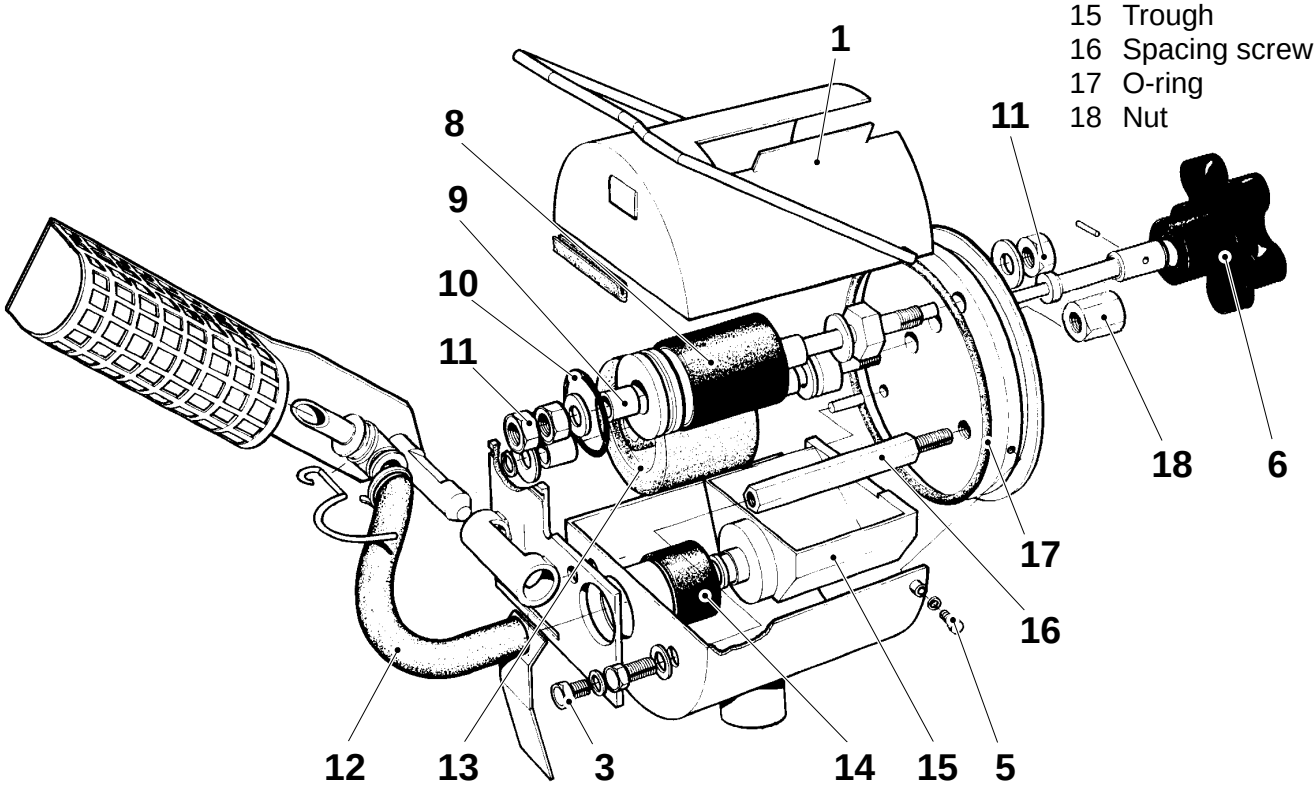

Setting

Set the O-ring (2) of the transfer roller exactly in the middle between the O-rings of the printing wheel.
If required, adjust by shimming under the flanges of the roller shafts.

A = 31.0 ±0.1 mm

Set the ink roller (4) exactly opposite the transfer roller (3). Adjust by shimming (shimming washer TP No. 293669) under the flange of the eccentric shaft (5) of the ink roller.

Adjust the eccentric shaft of the ink roller until there is no slip between the rollers (turning the axle clockwise closes up the rollers). Use the bracket as a fixture.

Apply template TP No. 76602 and set measurement A between the transfer roller (3) and printing wheel shaft (1).

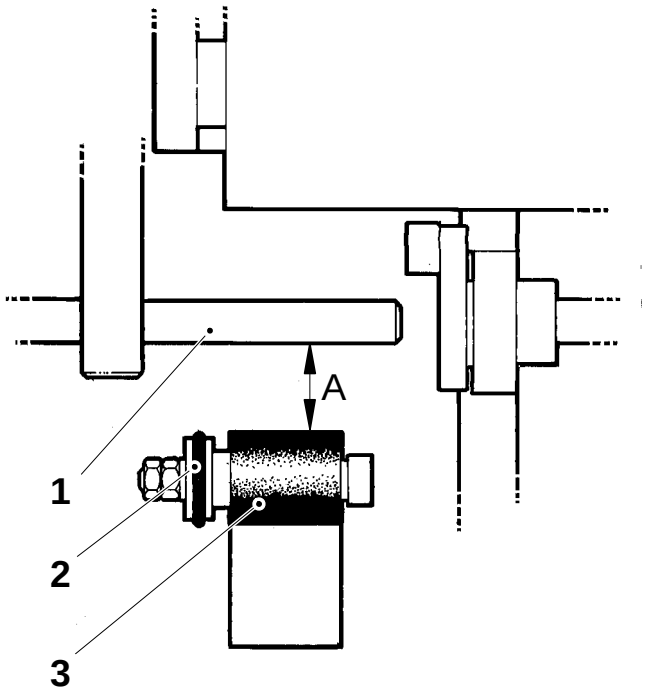

1 Printing wheel shaft
2 O-ring
3 Transfer roller
4 Ink roller
5 Eccentric shaft

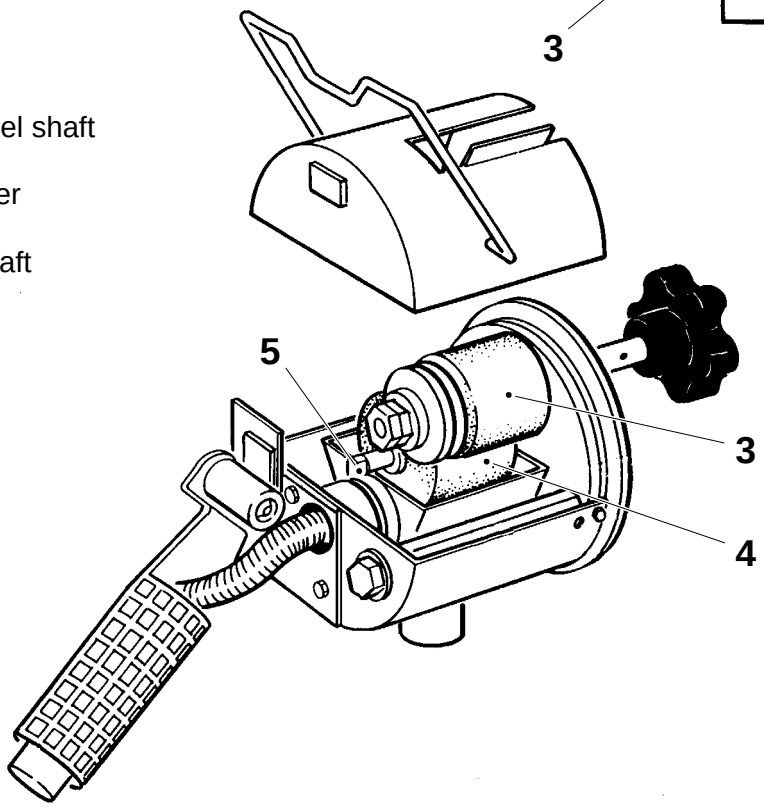

Setting

Set the O-ring (4) of the transfer roller is located exactly in the middle between the O-rings of the printing wheel.
Adjust by shimming under the flanges of the roller shafts.

Set the ink roller (6) exactly opposite the transfer roller (2). Adjust by shimming (shimming washer TP No. 293669) under the flange of the eccentric shaft (5) of the ink roller.

Set the eccentric shaft (5) of the ink roller (6) until there is no slip between the rollers (turning the shaft clockwise closes up the rollers).

Apply template TP No. 76602 and set distance A between the printing wheel shaft (1) and the transfer roller (2). Adjust by means of the screw (3).

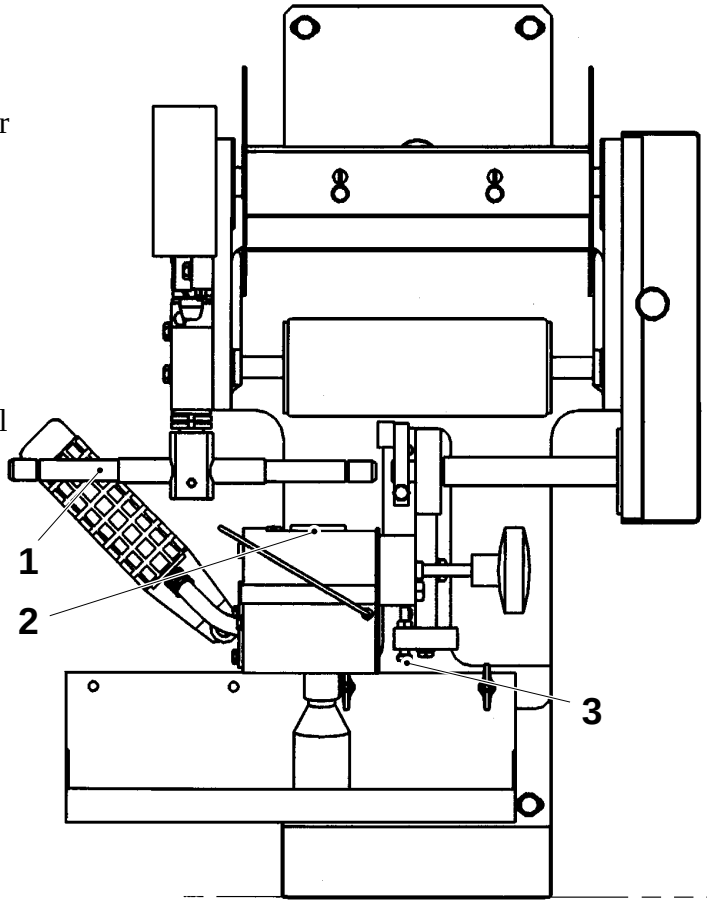

1 Printing wheel shaft
2 Transfer roller
3 Screw
4 O-ring
5 Eccentric shaft
6 Ink roller

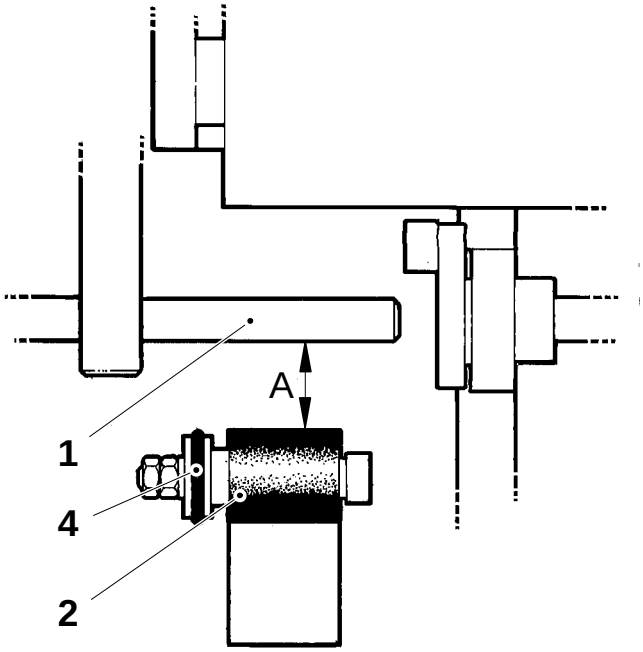

A = 31.3 ±0.1 mm

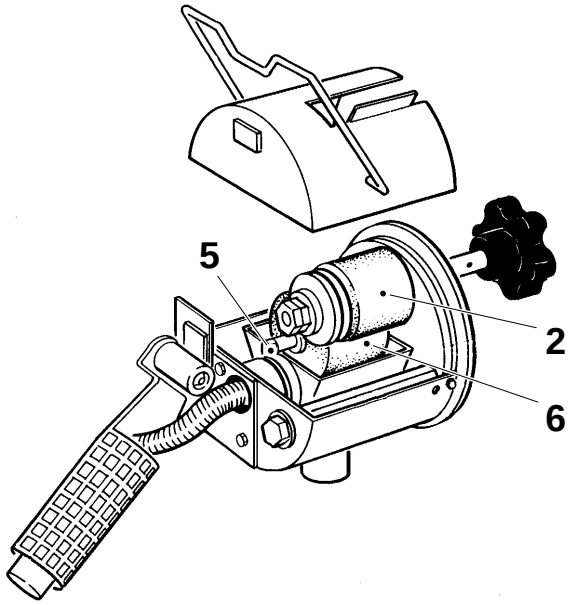

Checking

Check the following details for wear and/or damages:

- the bushings (1),
- the sleeve (2),
- the type holders (3),
- the locking spring (4), and
- the O-rings (5).

Replace worn and/or damaged details.

Measure the carrier of the printing wheel, distance A by means of a slide callipers. Replace the O-ring as required.

A = min 78 mm

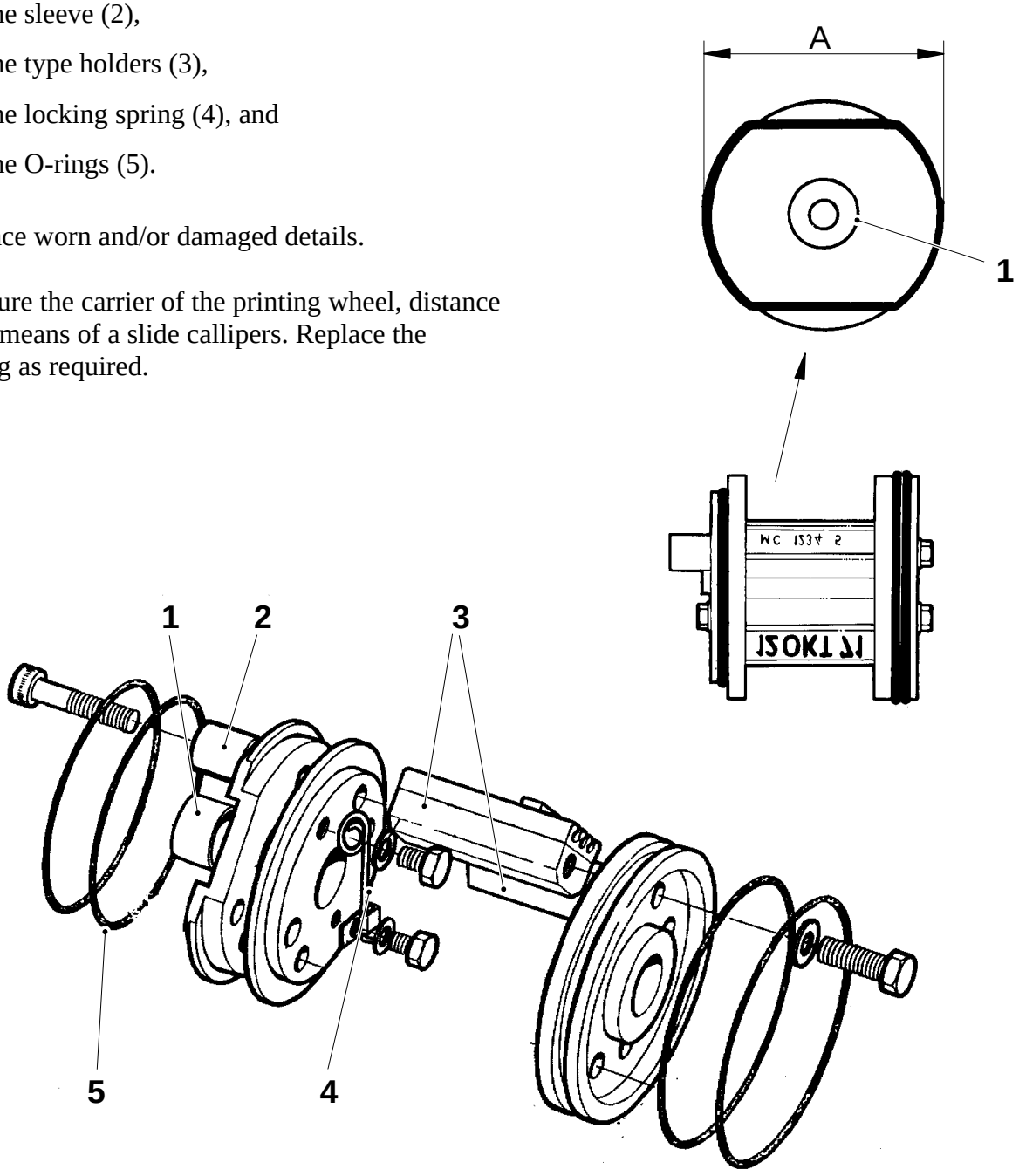

1 Bushing
2 Sleeve
3 Type holder
4 Locking spring
5 O-ring

Checking

Put in printing inserts, so that stamping is done within the whole of the stamping area. (One of the areas marked). Check that the stamp is clear within this area.

Volume, ml	A	B	C	D	E	F	G	H
125	4	12	8	21.5	11	–	9.5	–
200S	4	12.5	10.5	21.5*/22**	11	–	9.5	–
180	4	17.5*	9.5	30*	11	26.5	9.5	17.5
200	4	17.5*	9.5	30*	11	26.5	9.5	17.5
236	4	17.5	11.5*/9.5**	30	11	–	9.5	–
250	4	17.5*	11.5*/9.5**	30*	11	26.5	9.5	17.5
284	4	–	–	–	11	26.5	9.5	17.5

* only valid for pull tab machine
** only valid for strip applicator machine

Package seen from above

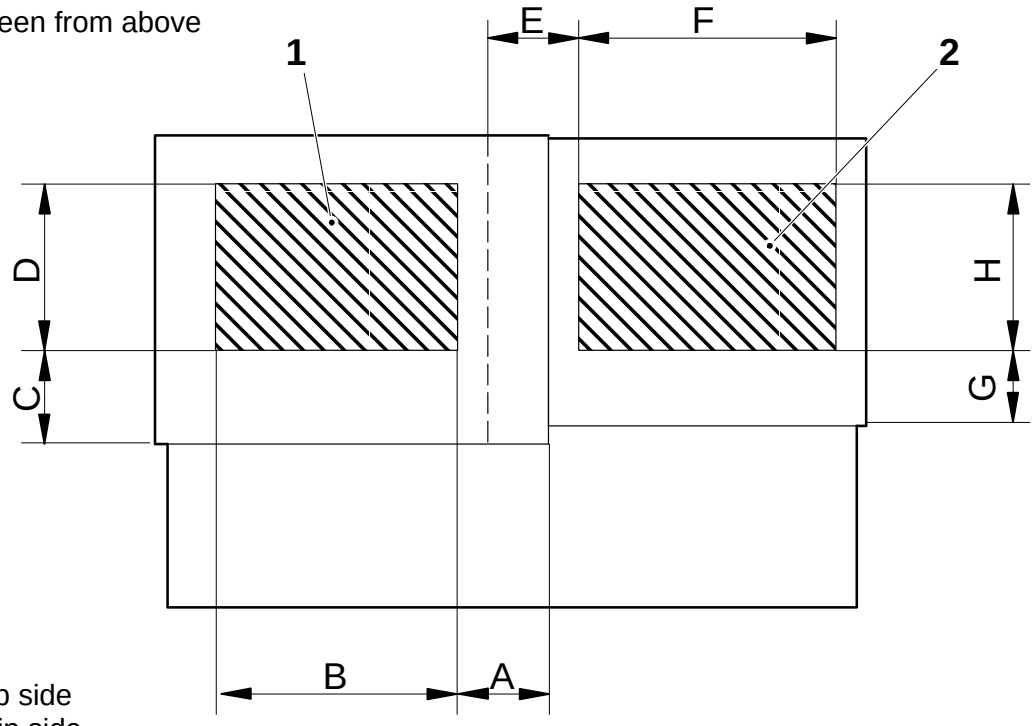

1 Pulltab side
2 LS strip side

Basic setting

Move the sprocket (3) inwards as much as possible by means of the knob (4).
Note! The sides of the chain (5) must not touch each other.

Set the stop (6) against the sprocket and lock it by means of the locking screw (7).

Move the sprocket out as far as possible (but not that far that the chain loses contact with the sprocket).
Mark the end position (8).

Move the sprocket in to 2/3 of the adjustable distance.
Mark the basic setting position (9).

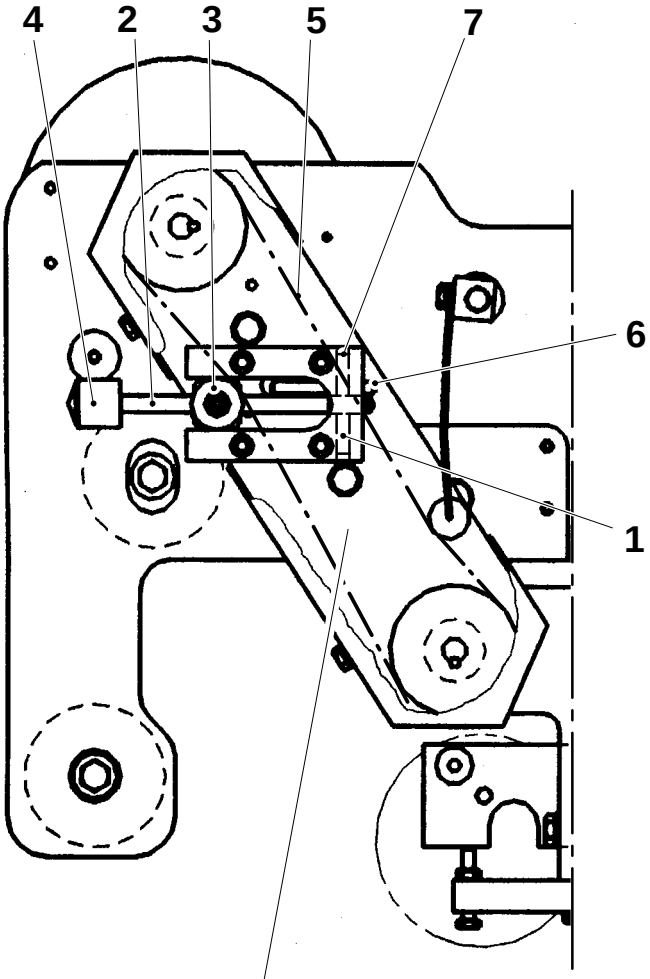

Setting during operation

Set the force of the spring loaded screw (1). It must prevent the shaft (2) from rotating during operation.

Footnote
The shaft must not bind.

Set the stamping position, see page MS 740–1X, by means of the knob (4).

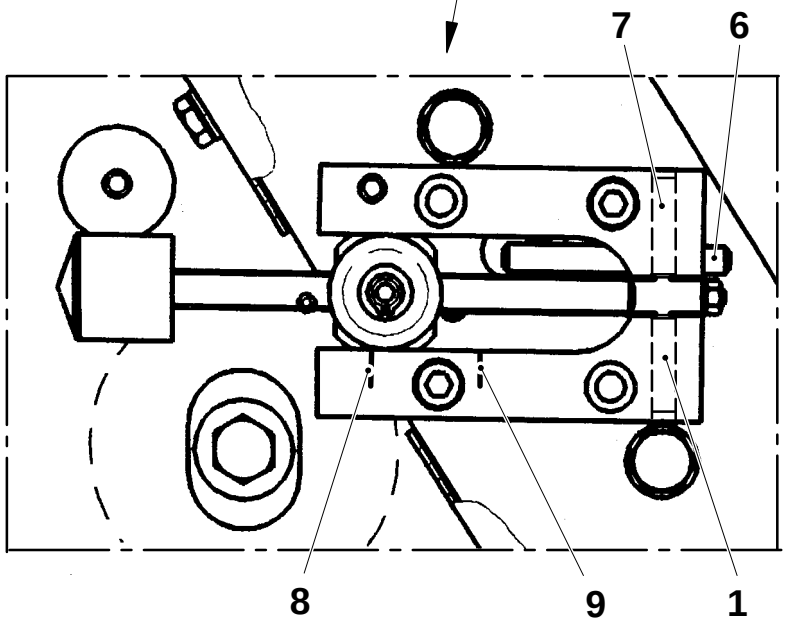

1 Spring loaded screw
2 Shaft
3 Sprocket
4 Knob
5 Chain
6 Stop
7 Locking screw
8 End position
9 Basic setting position

Checking

Turn the knob (1) and check that it does not bind.

Check that the adjustment device is working properly. It must be possible to set the roller (2) in its end positions by means of the knob.

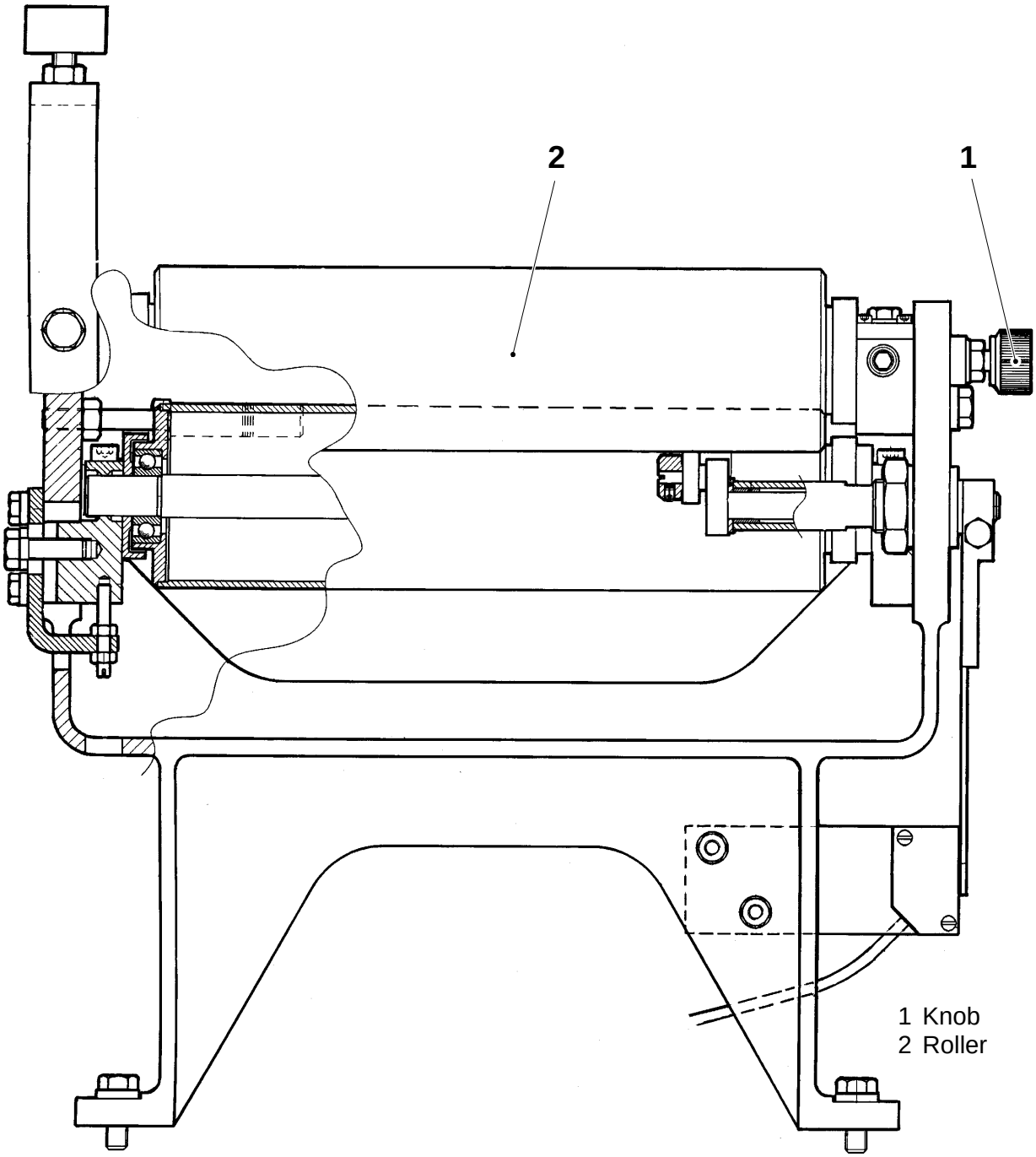

Checking

Check that the roller (1) rotates easily.

Checking during production

Tape a piece of packaging material to the material web and check that the taped-on piece passes the roller (1).

Thereafter, check that the machine ejects two to three packages and that the package with the taped-on piece of material is one of these.

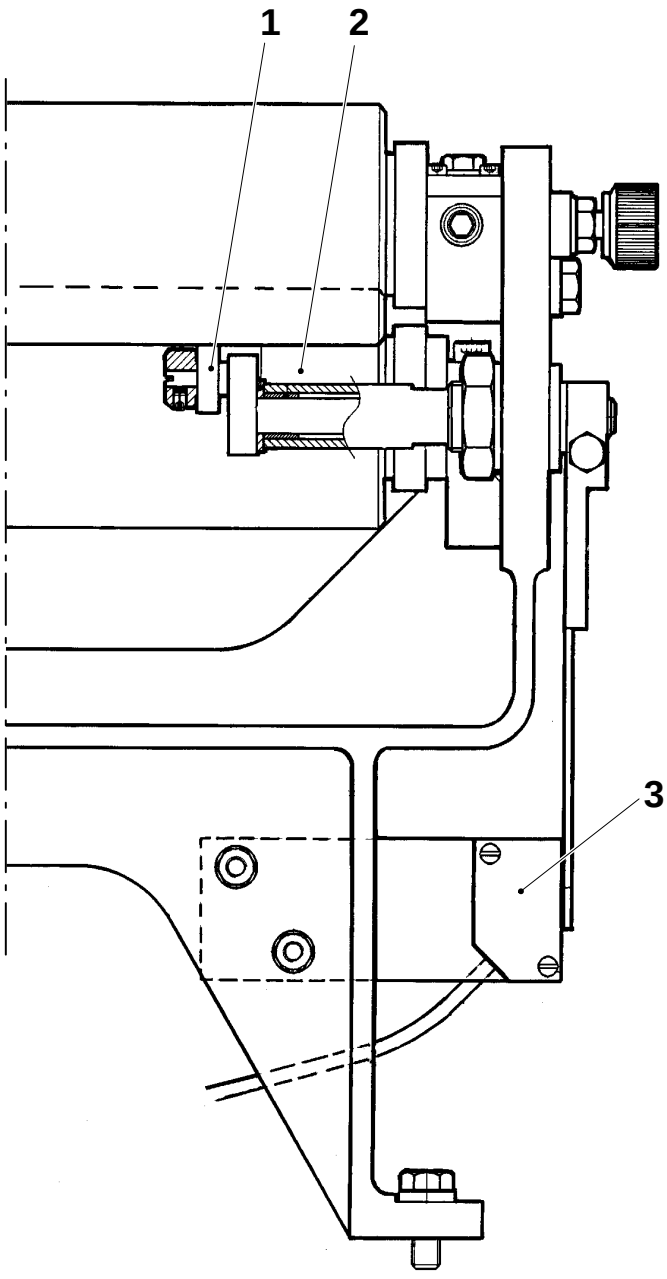

1 Roller
2 Bending roller
3 Proximity switch

497

Setting

a) Set the proximity switch (1), gap A between the arm (2) and the switch (1).

b) Place double a piece of packaging material between the roller (3) and the bending roller (4).

c) Loosen the screw (5) and shift the arm (2) until the LED of the proximity switch (1) lights up.

d) Retighten the screw (5).

e) Remove the double packaging material and check that the LED goes out.

f) Recheck, insert the double packaging material between the roller (3) again and the bending roller (4) and check that the switch LED lights up.
Remove the packaging material and check that the LED goes out.

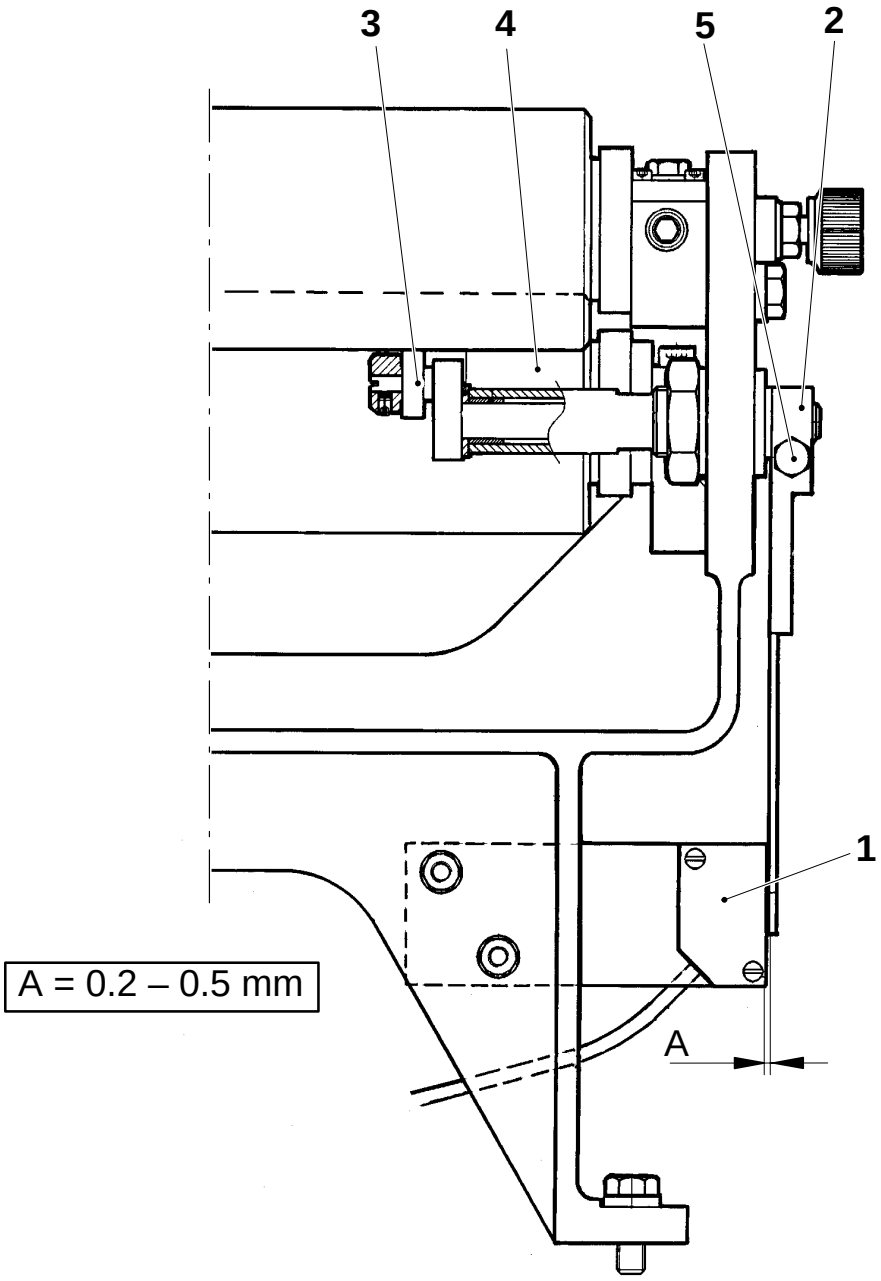

1 Proximity switch
2 Arm
3 Roller
4 Bending roller
5 Screw

Description	TB/9	TBA/9
Reference planes	801–71	801–71
Cover – removal	802–21	802–21
Strip magazine – checking (2 pages)	803–11	803–11
Strip magazine – checking (2 pages)	803–12	803–12
Strip magazine – setting (3 pages)	803–51	803–51
Strip magazine – setting (2 pages)	803–52	803–52
Strip magazine, splicing unit – checking (2 pages)	805–11	805–11
Strip magazine, splicing unit – checking (2 pages)	805–12	805–12
Strip magazine, splicing unit – overhaul/replacement (4 pages)	805–31	805–31
Strip magazine, splicing unit – setting (2 pages)	805–51	805–51
Strip magazine, splicing – checking during operation	808–61	808–61
Powder brake – checking/cleaning	812–11	812–11
Powder brake – overhaul (3 pages)	812–31	812–31
Powder brake – setting	812–51	812–51
Brake unit – checking/cleaning	813–11	813–11
Brake unit – checking/cleaning		813–12
Brake unit – setting	813–51	813–51
Brake unit – setting (2 pages)		813–52
Strip feed – checking		814–11
Strip feed – setting		814–51
Hole punch – checking	815–11	815–11
Hole punch – replacement	815–31	815–31
Hole punch – setting	815–51	815–51
Strip guide – checking/cleaning	816–11	816–11

Description	TB/9	TBA/9
Strip guide – checking/cleaning (2 pages)		816–12
Strip guide – setting	816–51	816–51
Strip guide – setting (2 pages)		816–52
Strip applicator – checking		817–11
Strip applicator – checking	817–12	
Strip applicator – setting		817–51
Strip applicator – setting	817–52	
Sealing jaw – checking		818–11
Sealing jaw – checking	818–12	
Sealing jaw – replacement		818–31
Sealing jaw – replacement		818–32
Sealing jaw – replacement	818–33	
Sealing jaw – setting		818–51
Counter jaw – checking		819–11
Counter jaw – checking	819–12	
Counter jaw – replacement		819–31
Counter jaw – setting		819–51
Counter jaw – setting		819–52
Air filter – replacement	821–31	821–31
Tab unit – checking	823–11	823–11
Tab unit – checking	823–12	823–12
Tab unit – checking	823–13	823–13
Tab unit – setting (2 pages)	823–51	823–51
Tab unit – setting (2 pages)	823–52	823–52

Description	TB/9	TBA/9
Tab unit, counter jaw – checking	825–11	825–11
Tab unit, counter jaw – replacement	825–31	825–31
Tab strip feed device – checking/cleaning	827–11	827–11
Tab strip feed device – checking/cleaning	827–12	827–12
Tab strip feed device – setting (4 pages)	827–51	827–51
Tab strip feed device – setting (4 pages)	827–52	827–52
Tab strip magazine – checking	828–11	828–11
Tab strip magazine – checking	828–12	828–12
Knives – checking	829–11	829–11
Knives – replacement (4 pages)	829–31	829–31
Knives – replacement (4 pages)	829–32	829–32
Twisted strip guard – checking	831–11	831–11
Twisted strip guard – setting	831–51	831–51
Bending rollers – checking/cleaning	833–11	833–11
Bending rollers – setting	833–51	833–51
Vacuum pump – checking/cleaning	834–11	834–11
Vacuum pump – setting	834–51	834–51
Crease wheel – checking	835–11	835–11
Crease wheel – setting (2 pages)	835–51	835–51
Crease wheel, suction cup – checking	836–11	836–11
Crease wheel, suction cup – setting	836–51	836–51
Crease wheel, vacuum – checking	837–11	837–11
Crease wheel, vacuum – overhaul	837–31	837–31
Crease wheel, vacuum – setting	837–51	837–51

Description	TB/9	TBA/9
Pull tab position – setting	840–51	840–51
Pull tab position – setting	841–51	841–51
Pull tab hole – setting (2 pages)	842–51	842–51
Pull tab hole – setting (2 pages)	842–52	842–52
Start up sequence of pull tab hole and tab – setting	843–52	843–52
Drive roller – checking/cleaning	844–11	844–11
Pressure roller – checking	845–11	845–11
Pressure roller – setting	845–51	845–51
Pressure roller – setting	845–52	845–52
Packaging material magazine – checking	847–11	847–11
Packaging material magazine – setting	847–51	847–51
Cams and indexing – sequence diagram and positioning cams (2 pages)	849–11	849–11
Cams and indexing – sequence diagram and positioning cams (2 pages)	849–12	849–12
Brake – checking	855–11	855–11
Brake – setting	855–51	855–51
Safety clutch – replacement	856–31	856–31
Drive belt, pull tab device – checking	858–11	858–11
Drive belt, pull tab device – replacement	858–31	858–31
Drive belts – checking	861–11	861–11
Rollers, cam rollers, and belt tension rollers – checking	863–11	863–11
Lubrication – checking oil level	865–11	865–11
Lubrication – lubrication	865–71	865–71

Description	TB/9	TBA/9
Synchronization – setting (3 pages)	871–51	871–51
Synchronization – setting (3 pages)	871–52	871–52
Pull tab device, motor – setting during production	873–61	873–61
Pull tab device, motor – setting during production	873–62	873–62
Pneumatic diagram	878–71	878–71
Black tape detector – setting	880–51	880–51
Black tape detector, sensor control – setting	881–51	881–51
Dating unit – checking	885–11	885–11
Dating unit – checking (3 pages)	885–12	885–12
Dating unit – setting	885–51	885–51
Dating unit – setting (2 pages)	885–52	885–52
Dating unit, feeding cylinder – overhaul (2 pages)	886–31	886–31
Dating unit, main cylinder – overhaul (3 pages)	887–31	887–31
Dating unit, counter plate – checking	888–11	888–11
Dating unit, counter plate – setting	888–51	888–51
Dating unit, brake – setting	889–51	889–51
Dating unit, imprinting sheet feed – setting	890–51	890–51
Dating unit, foil feeding – setting	891–51	891–51
Dating unit, heating cartridge – removal	892–21	892–21
Dating unit, temperature sensor – removal	893–21	893–21
Dating unit, monitors – checking	894–11	894–11
Dating unit, monitors – setting	894–51	894–51

Reference planes

Plane A (1) runs horizontally in the pull tab device.

Plane B (2) runs vertically in the pull tab device.

1 Plane A
2 Plane B

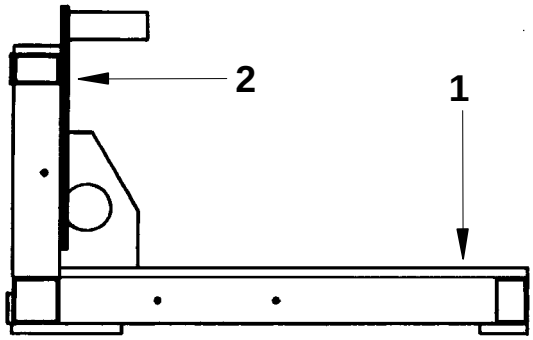

A — A

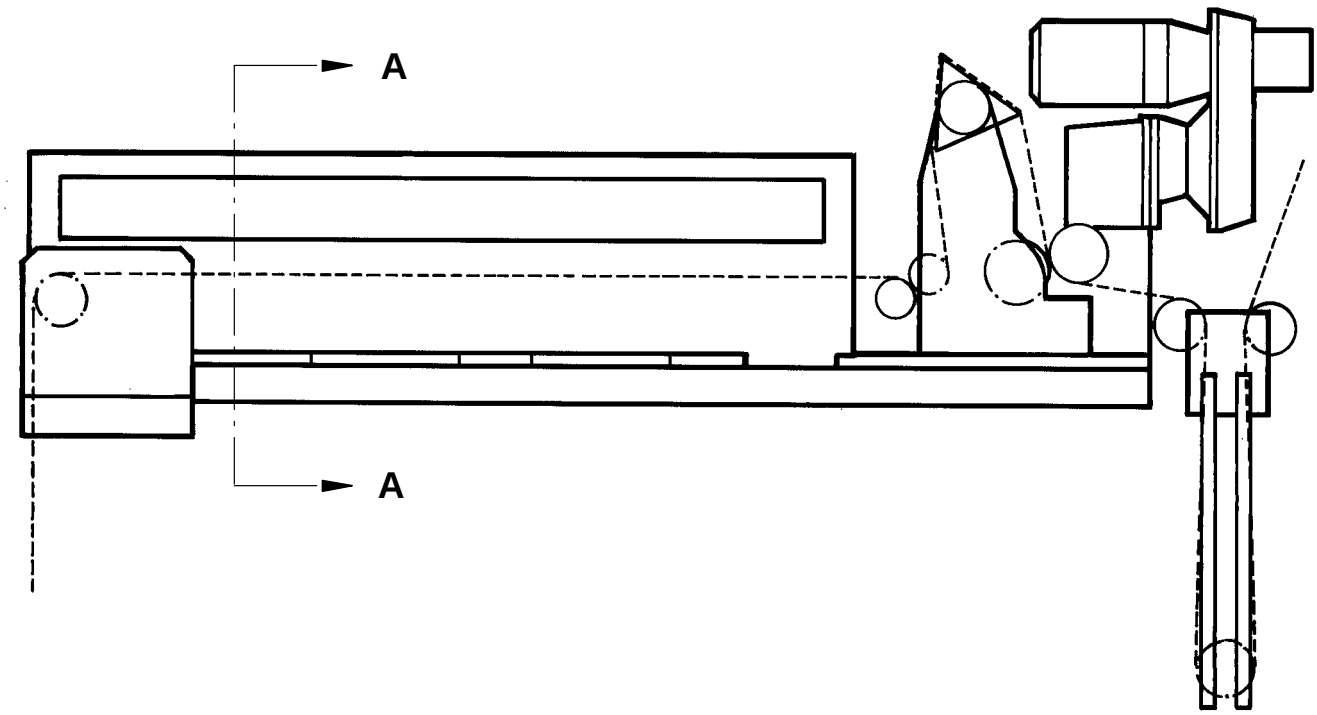

Removal

Remove the cover of the strip magazine as follows:

- the screws (1),
- swing out IS strip magazine (2),
- the screws (3),
- the screws (4),
- the cover (5).

Fitting in reverse order.

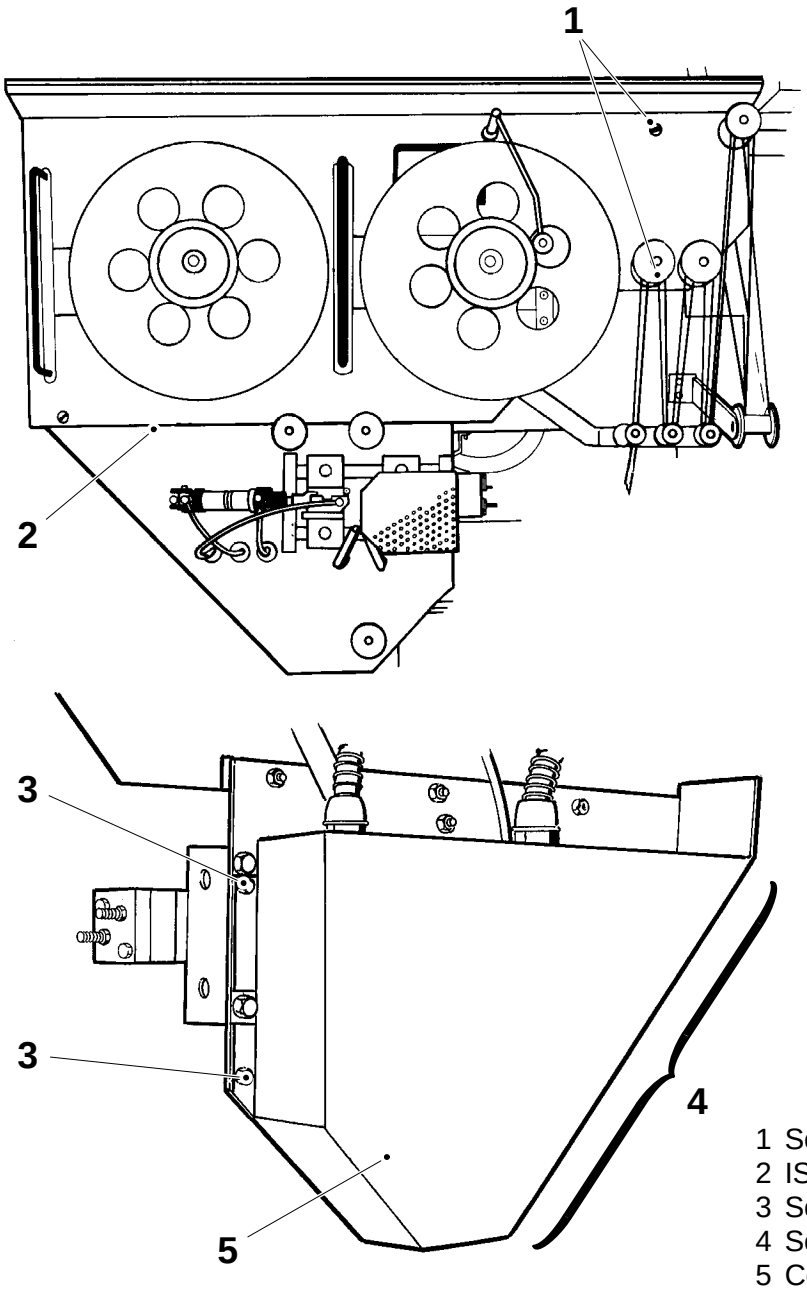

1 Screw
2 IS strip magazine
3 Screw
4 Screw(3 off)
5 Cover

Checking

Check:

- that LED goes out on the proximity switch (1) then the arm is in the inner position,
- the lip brake (2) for wear and/or damage,
- that IS strip wheels (3) rotate freely and without radial play,
- the brake rubber (4) and the leaf spring for cracks,
- that all rollers in the strip magazine rotate freely,
- that rollers (5) and (6) are parallel to each other; max axial play 0.5 mm,
- that rollers (7) and (8) are parallel to each other; max axial play 0.5 mm,

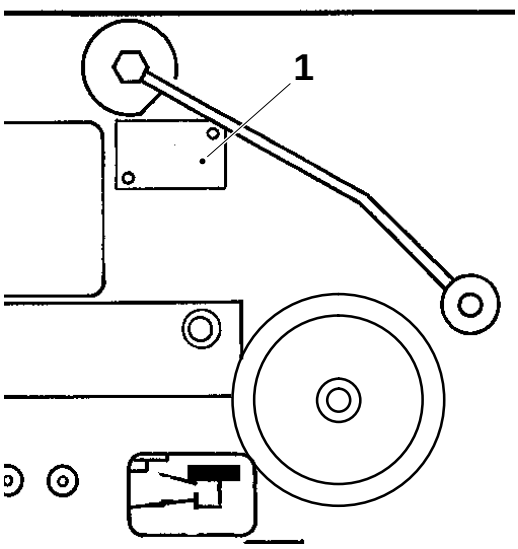

(Cont’d overleaf)

1 Proximity switch
2 Lip brake
3 IS strip wheel
4 Brake rubber
5 Roller
6 Roller
7 Roller
8 Roller

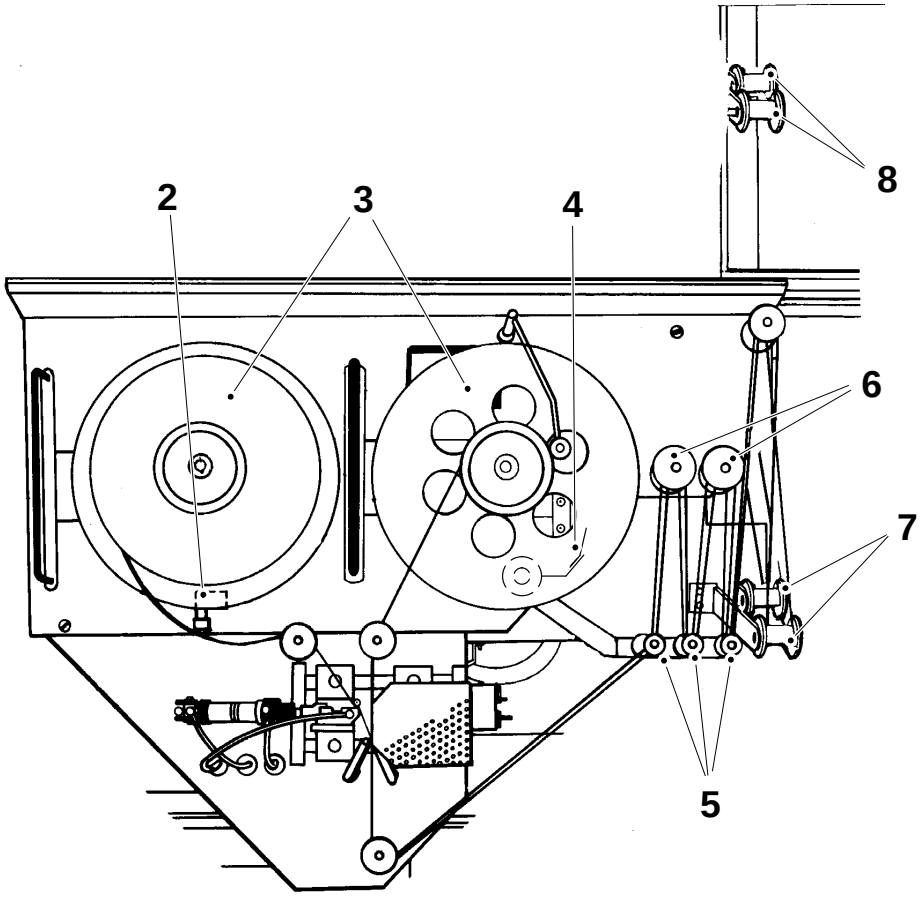

(Cont'd)

Check:

- the spring (9),
- the bushing (10) in the arm,
- that LED lights up on the proximity switch (11) when lifting the brake arm.

Replace worn and/or damaged details.

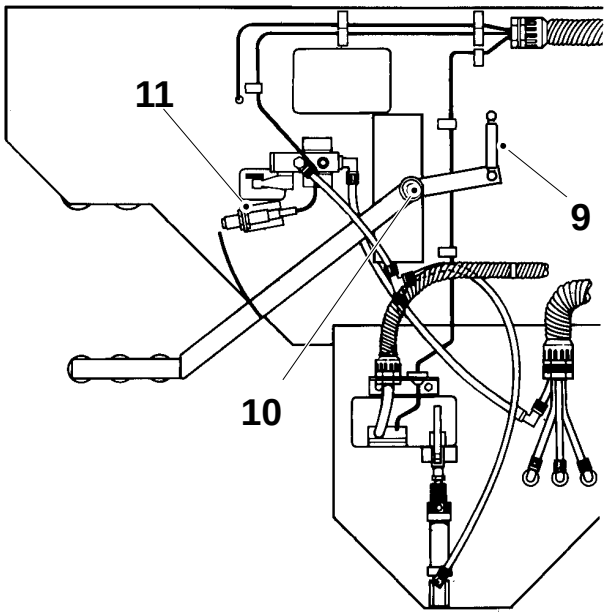

9 Spring
10 Bushing
11 Proximity switch

Checking

Check:

- that LED lights up on the proximity switch (2) for both lugs on the flag (1),
- the lip brake (3) for wear and/or damages,
- that IS strip wheels (4) rotate freely and without radial play,
- the brake rubber (5) and the leaf spring for cracks,
- that all rollers on the strip magazine rotate freely,
- that rollers (6) and (7) are parallel to each other; max axial play 0.5 mm,
- that rollers (8) and (9) are parallel to each other; max axial play 0.5 mm,
- that the proximity switch (10) works when spinning the roller,

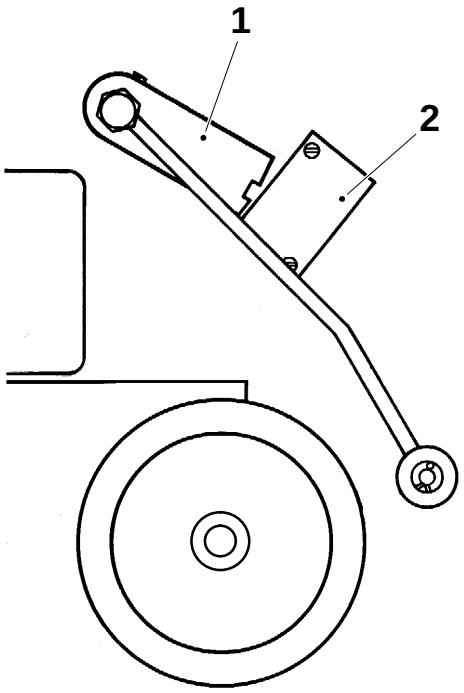

(Cont’d overleaf)

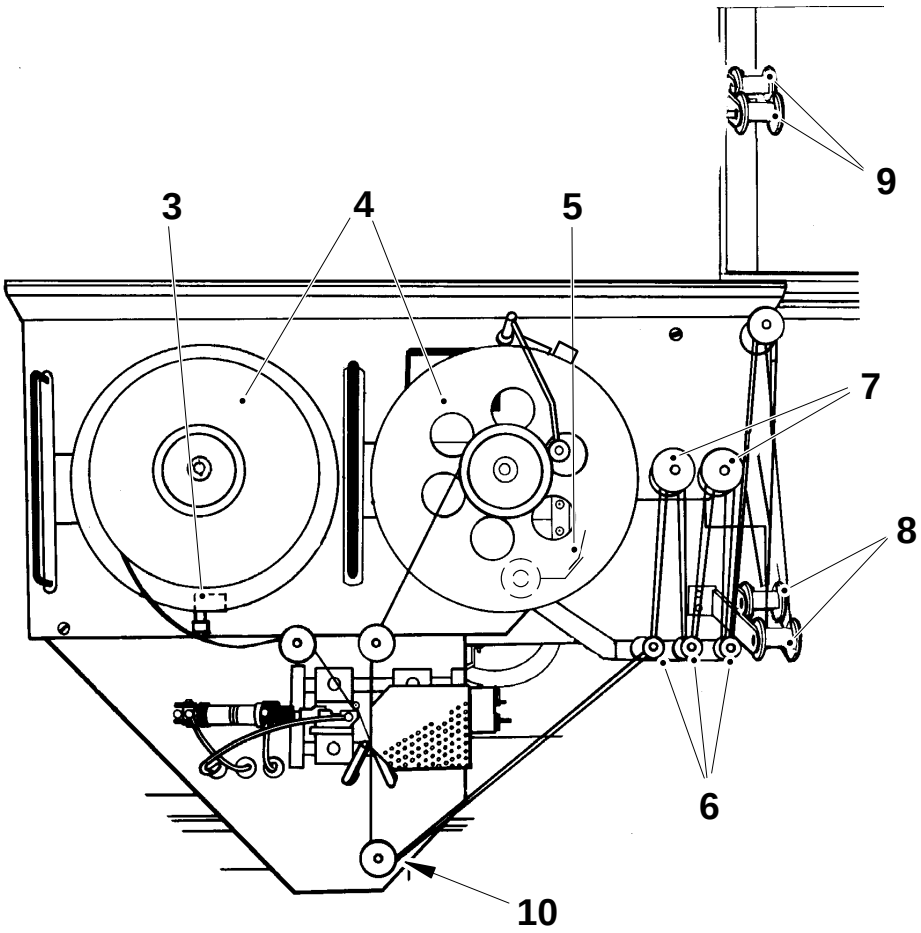

1 Flag
2 Proximity switch
3 Lip brake
4 IS strip wheel
5 Brake rubber
6 Roller
7 Roller
8 Roller
9 Roller
10 Proximity switch

(Cont'd)

Check the following details for wear and/or damages:

- springs (11), and
- the bushing (12) in the arm.

Replace worn and/or damaged details.

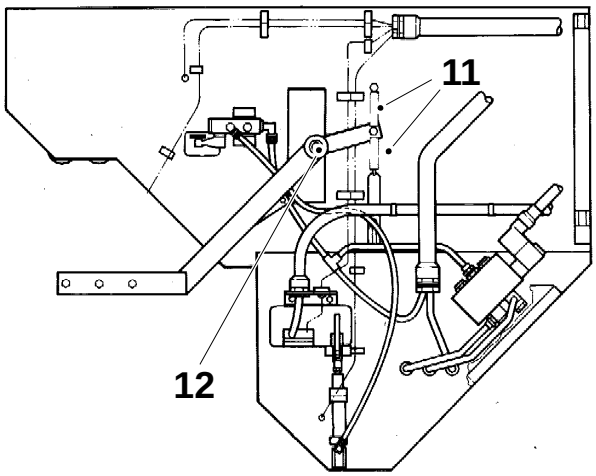

11 Spring
12 Bushing

Setting

IS strip breakage monitor

Adjust the proximity switch (1) so that the flag (2) on the brake arm is distance A from the proximity switch.

(Cont’d overleaf)

A = 1 mm

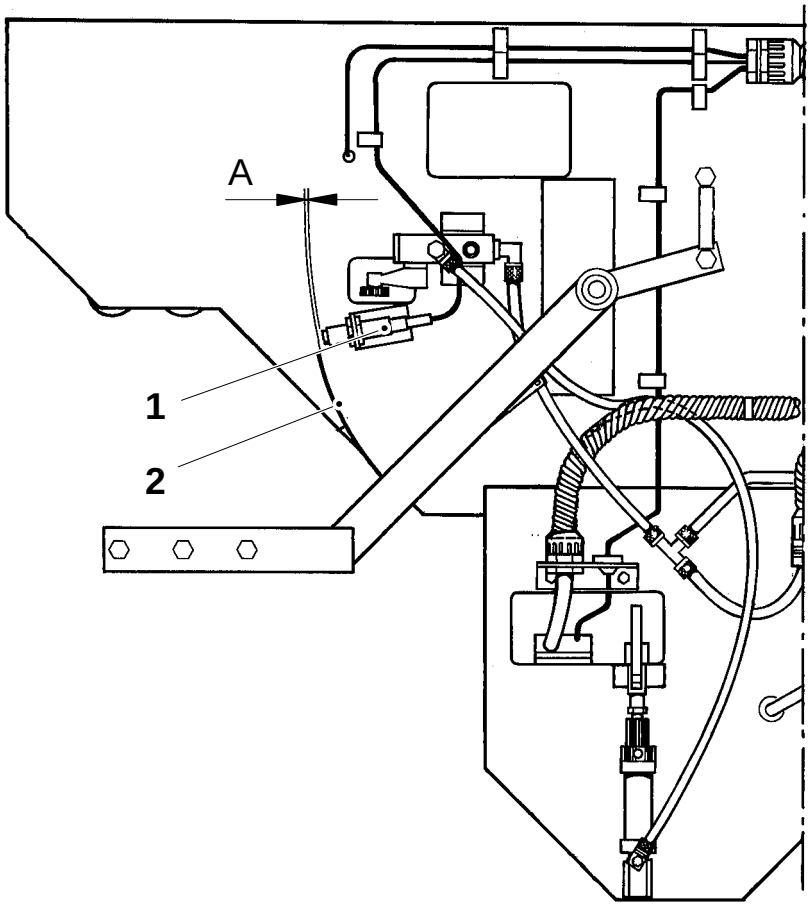

1 Proximity switch
2 Flag

(Cont'd)

Strip supply monitor

Set gap A between the switch (5) and the cam (4).

Place an empty IS strip roller for (7) in the strip magazine.

Loosen the screw (3) to set the flag so that the roller (6) is distance B over the empty roller when the LED on the switch lights up.

Tighten the screw (3).

(Cont'd overleaf)

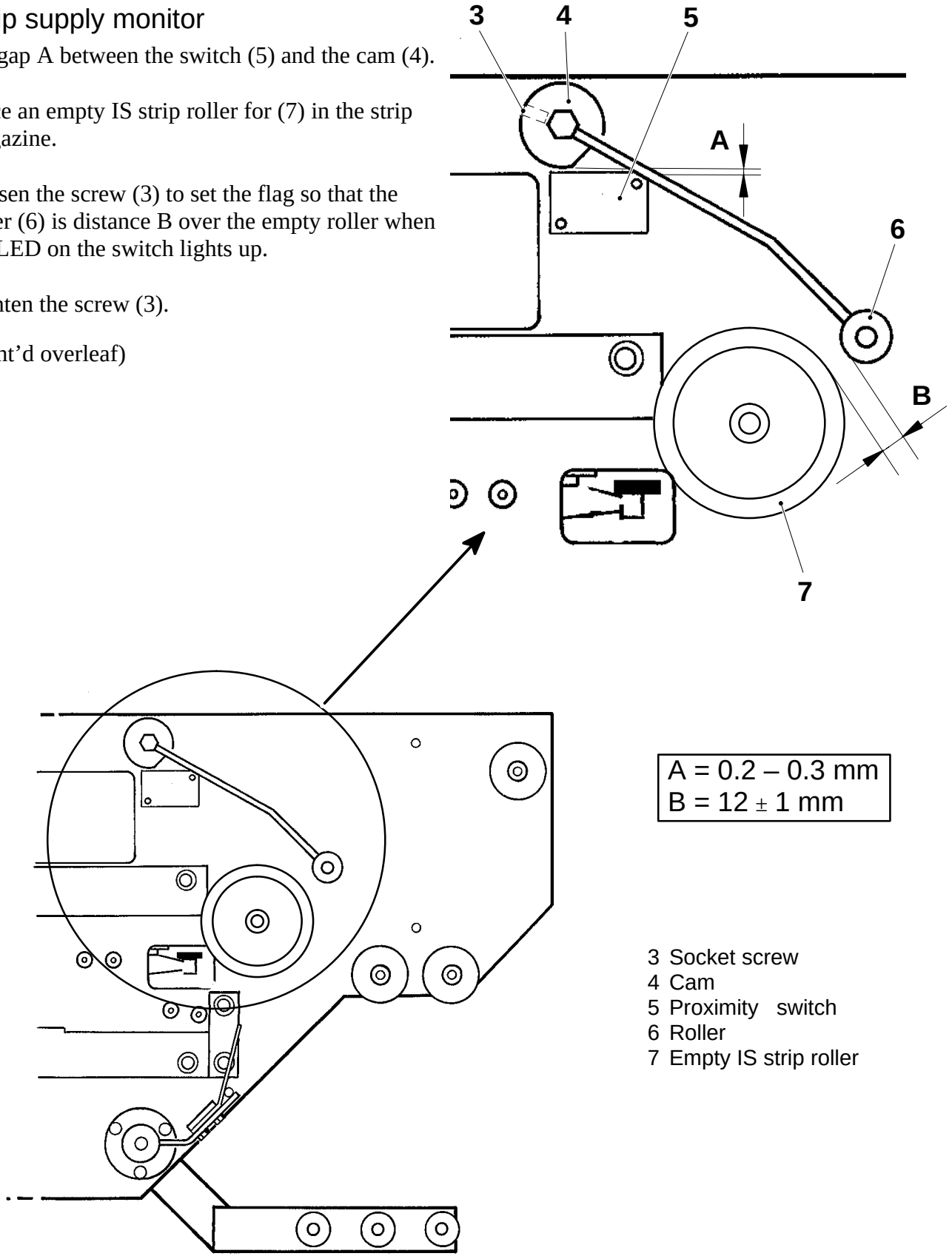

A = 0.2 – 0.3 mm
B = 12 ± 1 mm

3 Socket screw
4 Cam
5 Proximity switch
6 Roller
7 Empty IS strip roller

(Cont'd)

Basic setting of brake arm

Place a bobbin holder for the IS strip. The roller shall be fully braked when the arm (8) is in its lower position. When the arm is lifted 20–30 mm the brake shall be released and the roller be able to rotate freely.

The position of the brake lip is set by undoing the screws (9) and sliding the brake lip and spring to the correct position.

Adjusting can also be done by undoing the grub screw (10).

Lip brake

Set the lip brake (11):

- **sufficiently hard** to prevent the IS strip wheel to rotate by itself.
- **sufficiently light** to allow the IS strip wheel to rotate when splicing takes place. Adjust on the screw (12).

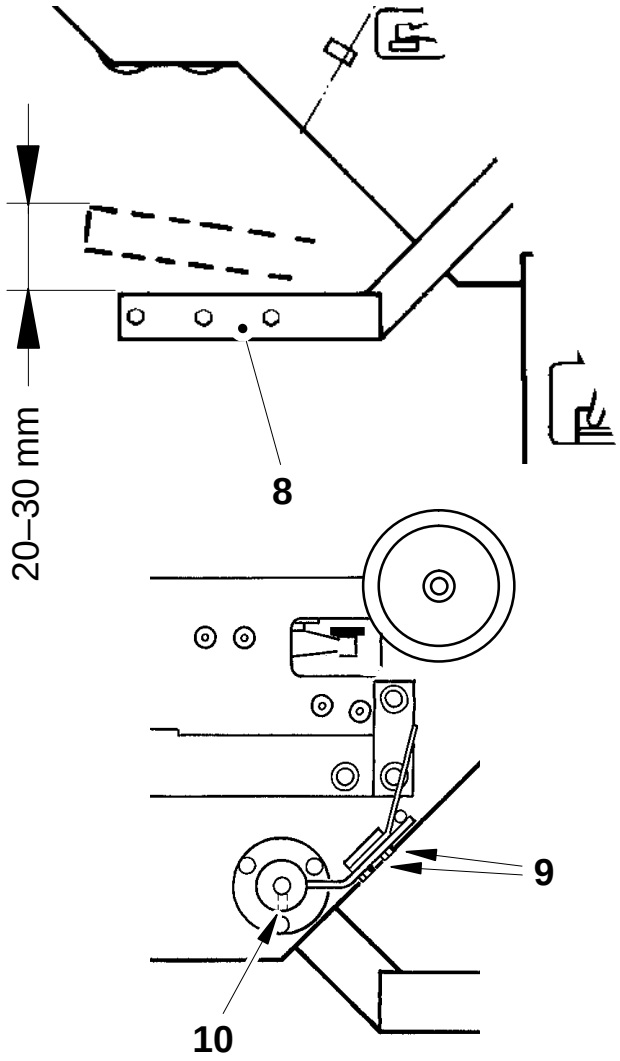

8 Brake arm
9 Screws
10 Grub screw
11 Screw
12 Lip brake

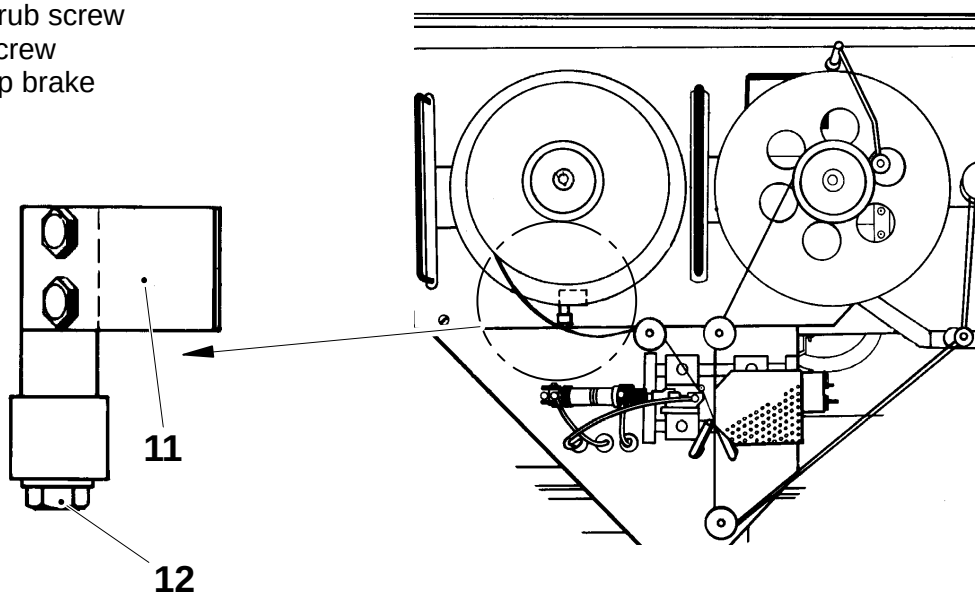

Setting

IS strip breakage monitor

Adjust the proximity switch (1) so there is gap A between the proximity switch and the roller (2).

A = 1–2 mm

(Cont’d overleaf)

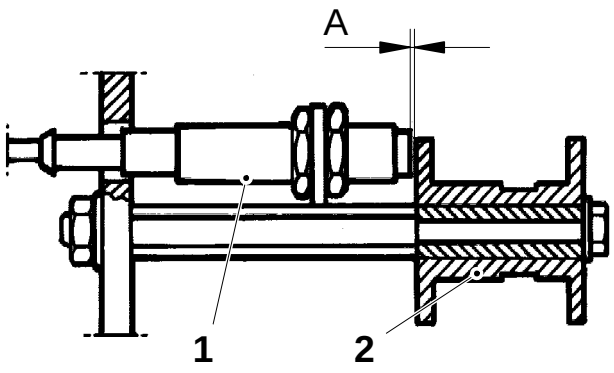

1 Proximity switch
2 Roller

(Cont'd)

Strip supply monitor

Set gap B between the switch (5) and the flag (4).

Place an empty IS strip roller for wide strip (7) in the strip magazine.

Loosen the screw (3) to set the flag so that the roller (6) is distance C over the empty roller when the LED on the switch lights up on the first lug.

Tighten the screw (3).

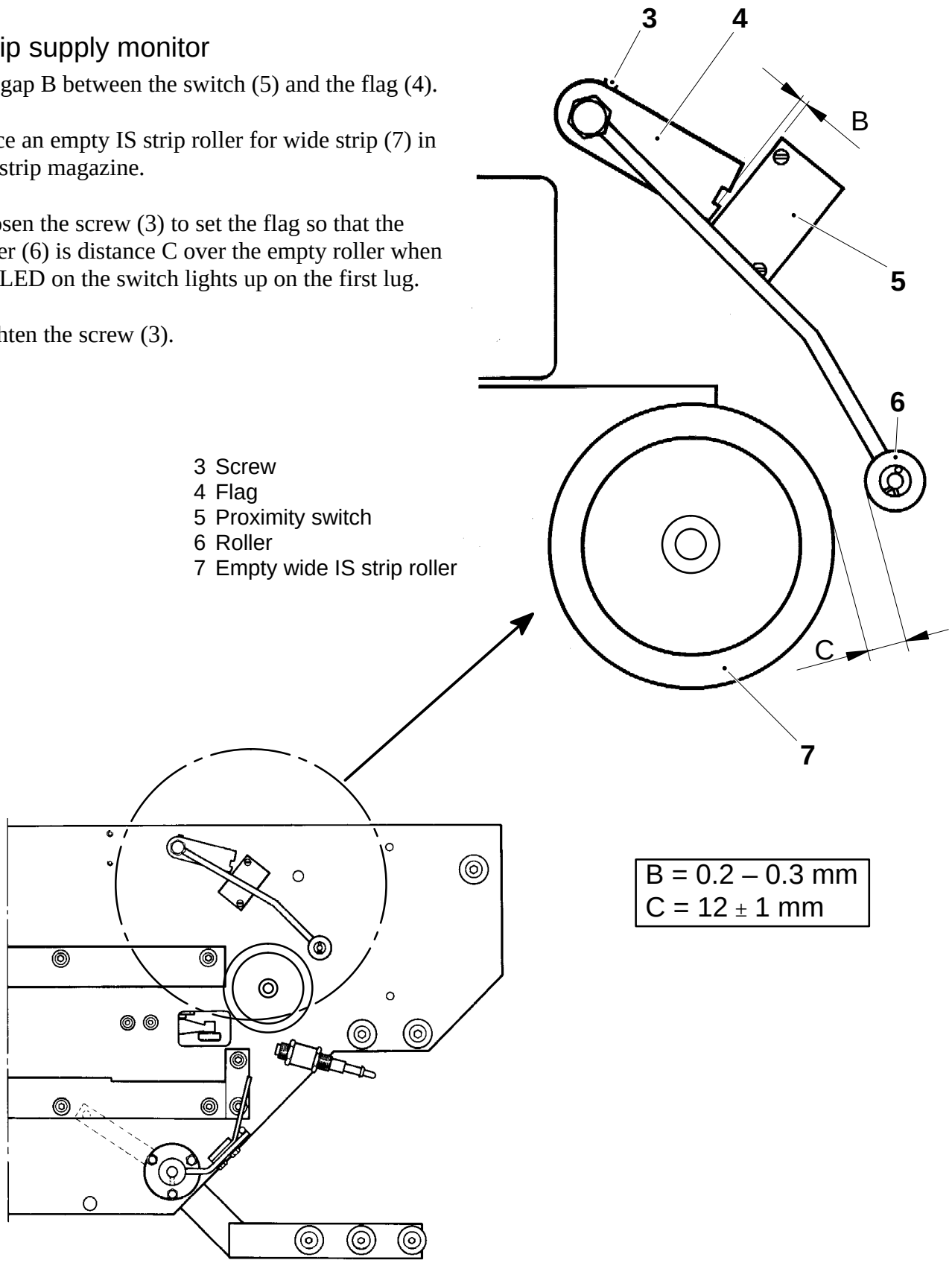

3 Screw
4 Flag
5 Proximity switch
6 Roller
7 Empty wide IS strip roller

B = 0.2 – 0.3 mm
C = 12 ± 1 mm

Checking

Check:

- that there is gap A on either side of the IS strip to the two fender pins, see fig. Loosen the screws (1) and adjust,
- that the ball bushings (6) don't get stuck,
- try if you can turn the the ball bushings (6) if that is the case thighten the screw (5),
- that the V-notch (4) moves easily,
- the speed and function of the sealing cylinder. Set the speed with the screws for input and outlet air,

(Cont'd overleaf)

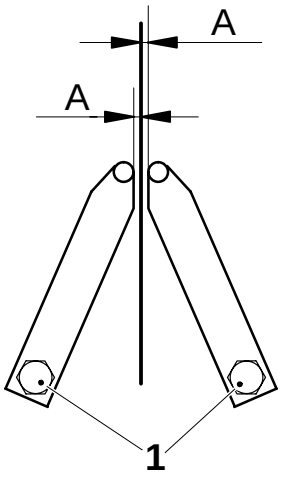

A = 1 mm

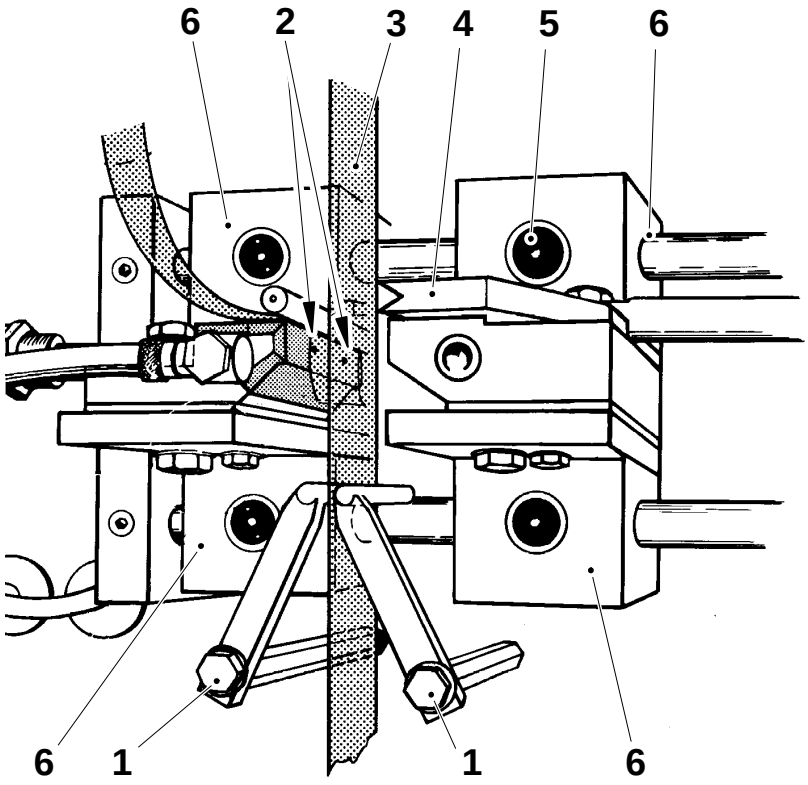

1 Screw
2 Vacuum holes
3 IS strip
4 V-notch
5 Screw
6 Ball bushing

(Cont'd)

- the teflon cloths (8) on the jaws (7) and (10),
- that the teflon cloths (8) are correctly positioned on the jaws, see fig,
- that the edge (9) for burning off the IS strip is not coated with charred plastic residues.

Replace worn and/or damaged details.

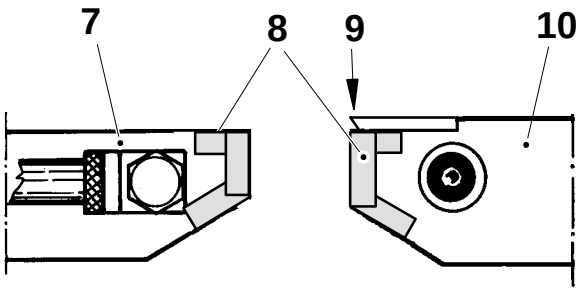

7 Counter jaw
8 Teflon cloth
9 Edge
10 Heating jaw

Parallelity between jaws

Put a piece of IS strip between the jaws. Activate the solenoid vale to the counter jaw.
Pull both edges of the IS strip. The IS strip must be held equally hard on both sides.

Parallelity between pin and V-notch

Put a piece of IS strip between the pin and V-notch. Activate the solenoid vale to the counter jaw. Pull both edges of the IS strip. The IS strip must be held equally hard on both sides.

Checking

Check:

- gap A on either side of the IS strip to the two fender pins, see fig. Loosen the screws (1) and adjust,
- the speed and function of the cylinder to the pin; set the speed with the screw for input air,
- that the vacuum holes (2) are clear, and that the vacuum is sufficient to hold the IS strip (3) in position,
- that the ball bushings (6) do not get stuck,
- try to turn the the ball bushings (6); if that is possible, tighten the screw (5),
- that the V-notch (4) moves easily,
- the speed and function of the sealing cylinder. Set the speed with the screws for input and outlet air,

(Cont'd overleaf)

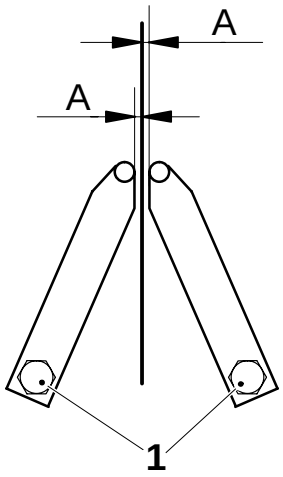

A = 1 mm

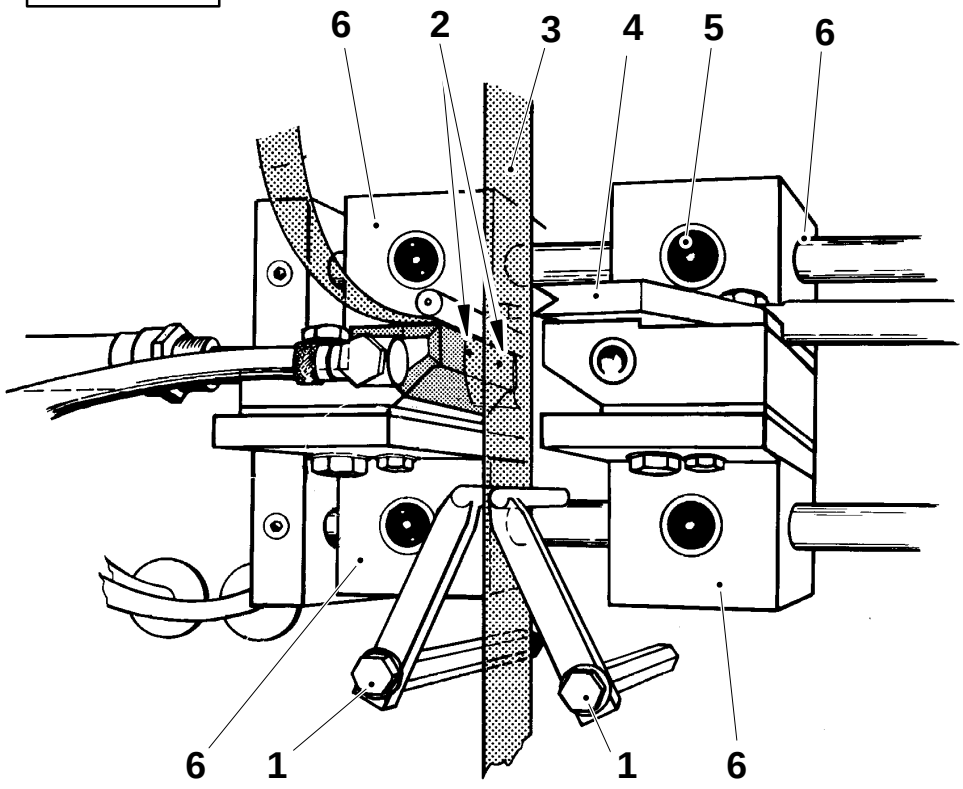

1 Screw
2 Vacuum holes
3 IS strip
4 V-notch
5 Screw
6 Ball bushing

(Cont'd)

- that the teflon cloths (8) on the counter jaw (7) are correctly positioned on the counter jaw, see fig,
- that the edge (9) for burning off the IS strip is not coated with charred plastic residues.

Replace worn and/or damaged details

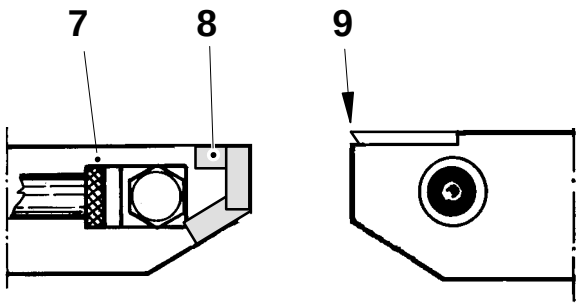

7 Counter jaw
8 Teflon cloth
9 Edge

Parallelity between jaws

Put a piece of IS strip between the jaws. Activate the solenoid valve of the counter jaw.
Pull both edges of the IS strip. The IS strip must be held equally hard on both sides.

Parallelity between pin and V-notch

Put a piece of IS strip between the pin and V-notch. Activate the solenoid valve of the counter jaw. Pull both edges of the IS strip. The IS strip must be held equally hard on both sides.

Overhaul/Replacement

Replacement of heater or sensor

a) Swing out the IS strip magazine and remove the cover, see page MS 802–2X.

b) Remove the clamp (1) to the cables.

c) Replace heater or sensor.

d) Use heat-zink compound when fitting in reverse order.

Replacement of knife

a) Remove the heating protection.

b) Remove the string clamp (2) on top of the V-notch.

c) Undo the screws (3).

d) Replace knife.

e) Use heat-zink compound when fitting in reverse order.

(Cont'd overleaf)

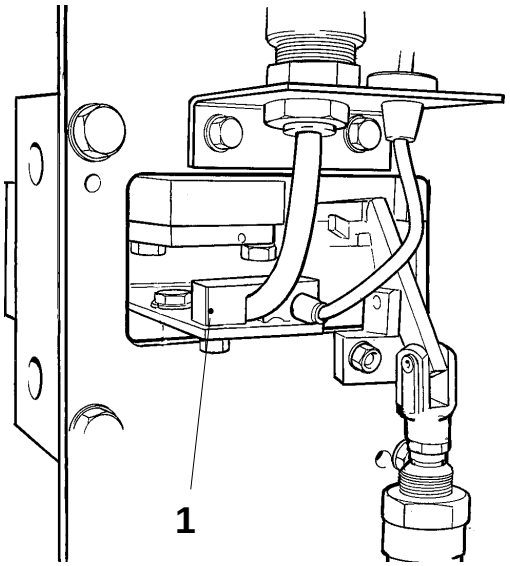

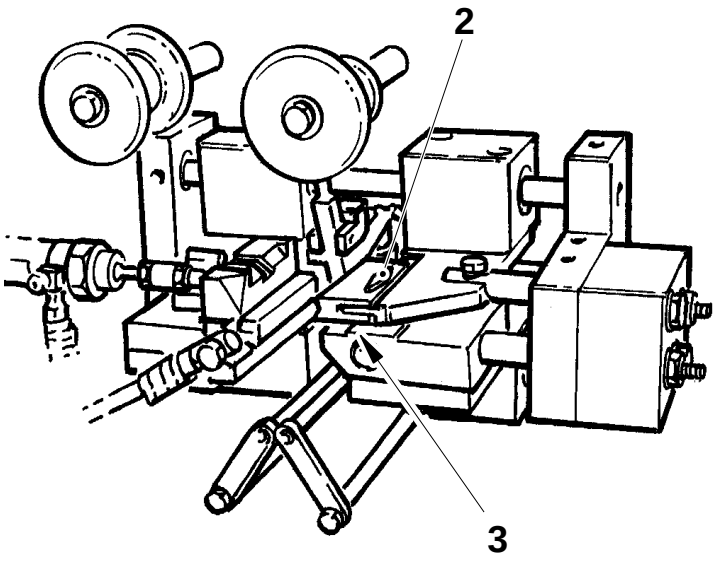

1 Clamp
2 String clamp
3 Screw

(Cont'd)

Replacement of ball bushing (4)

a) Loosen the clamp to the cylinder axle (7).
b) Undo the screw (6).
c) Loosen the socket screws (9).
d) Knock out the axle (10).
e) Undo the screws (8) to the bracket.
f) Replace the bushing (4).
g) Fit in reverse order
h) Set the parallelity between the pin and the V-notch, see page MS 805–5X.

Replacement of ball bushing (5)

a) Remove the screw to the V-notch (11).
b) Loosen the socket screws (9).
c) Knock out the axle (10).
d) Undo the screws (12).
e) Replace the bushing (5).
f) Fit in reverse order.
g) Set the parallelity between the pin and the V-notch, see page MS 805–5X.

(Cont'd overleaf)

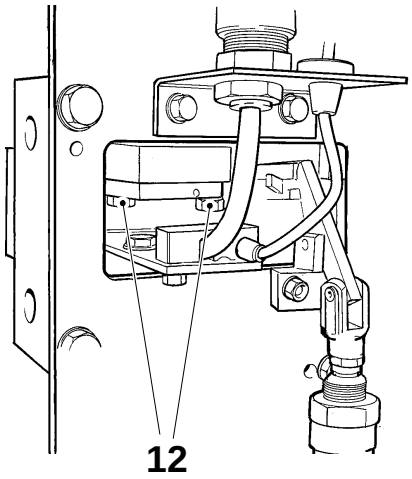

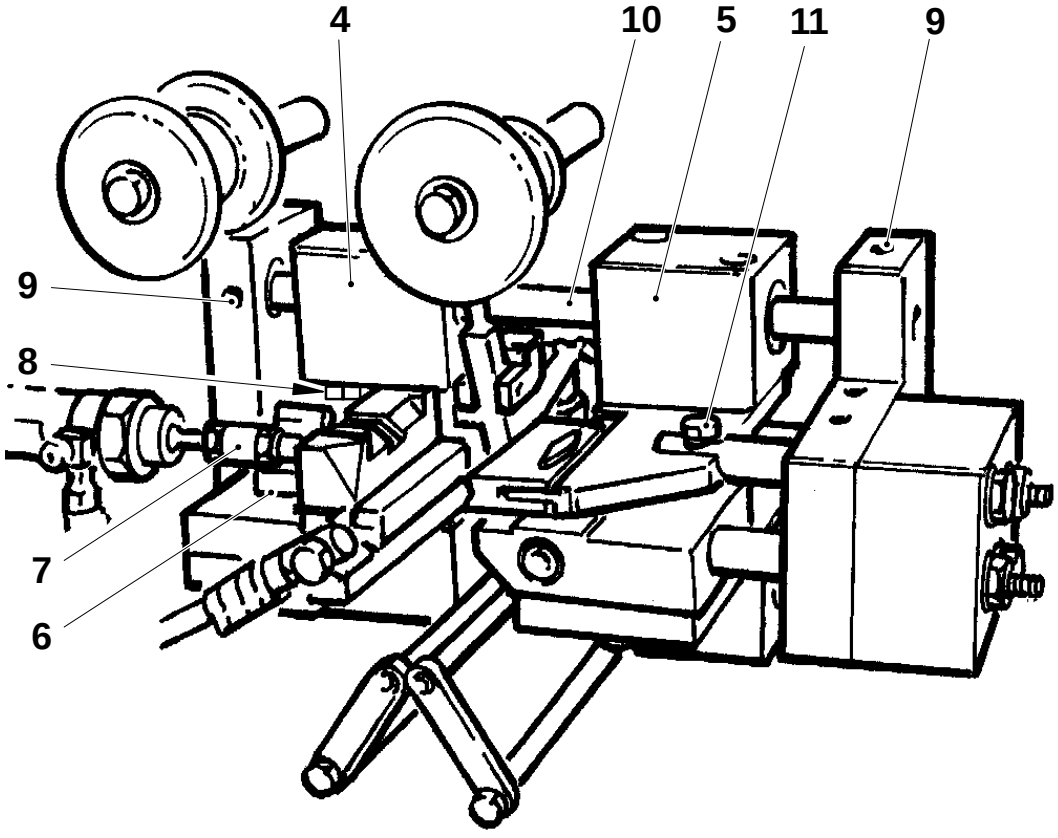

4 Ball bushing
5 Ball bushing
6 Screw
7 Clamp
8 Screw
9 Socket screw
10 Axle
11 Screw
12 Screw

(Cont'd)

Replacement of ball bushing (15)

a) Loosen the clamp to the cylinder axle (7).
b) Loosen the socket screws (14).
c) Knock out the axle (16).
d) Undo the screws (13) from the jaw bracket.
e) Replace the bushing (15).
f) Fit in reverse order.
g) Check the parallelity between the jaws.

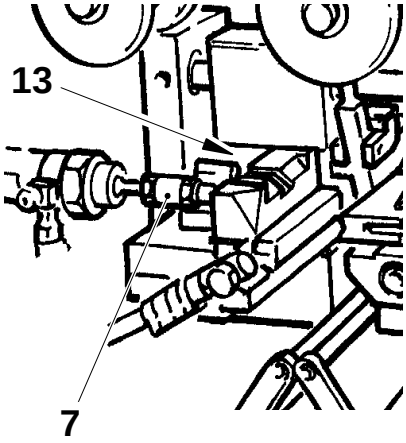

(Cont'd overleaf)

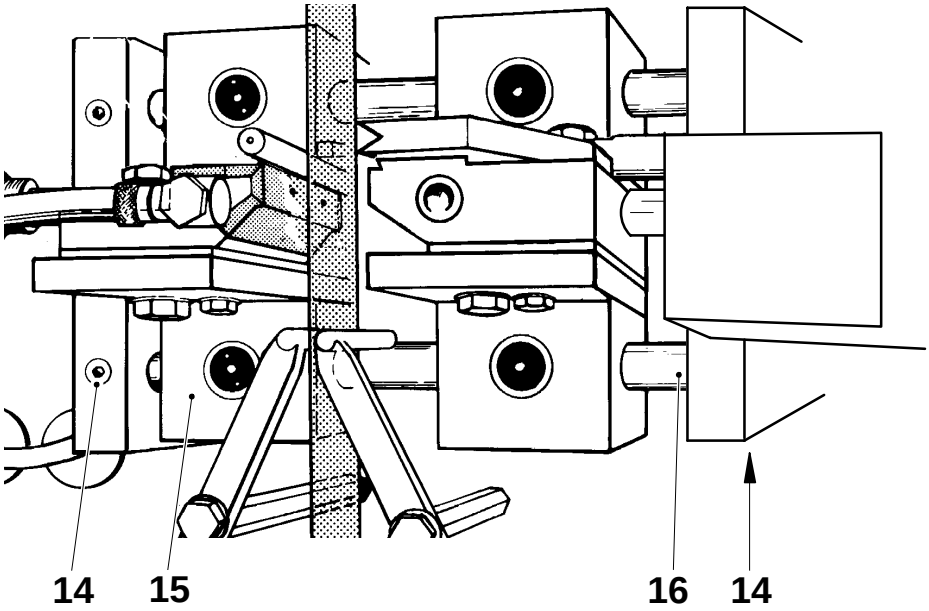

7 Clamp
13 Screw
14 Socket screw
15 Ball bushing
16 Axle

(Cont'd)

Replacement of ball bushing (19)

a) Remove the heater and the sensor, see page MS 805–3X 1(4).

b) Undo the screws (18).

c) Loosen the socket screws (14).

d) Knock out the axle (16).

e) Undo the screws (17).

f) Replace the bushing (19).

g) Fit in reverse order.

h) Set the parallelity between the jaws, see page MS 805–5X.

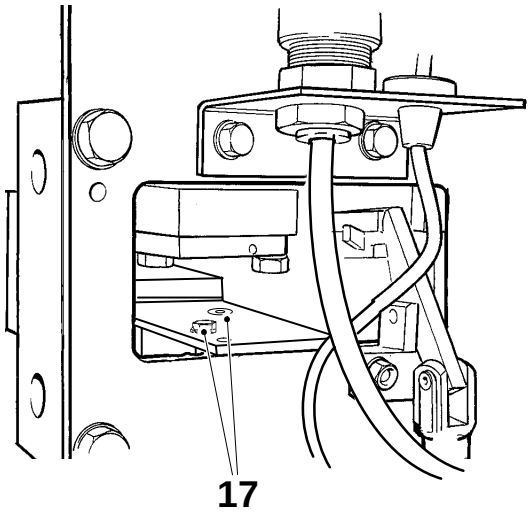

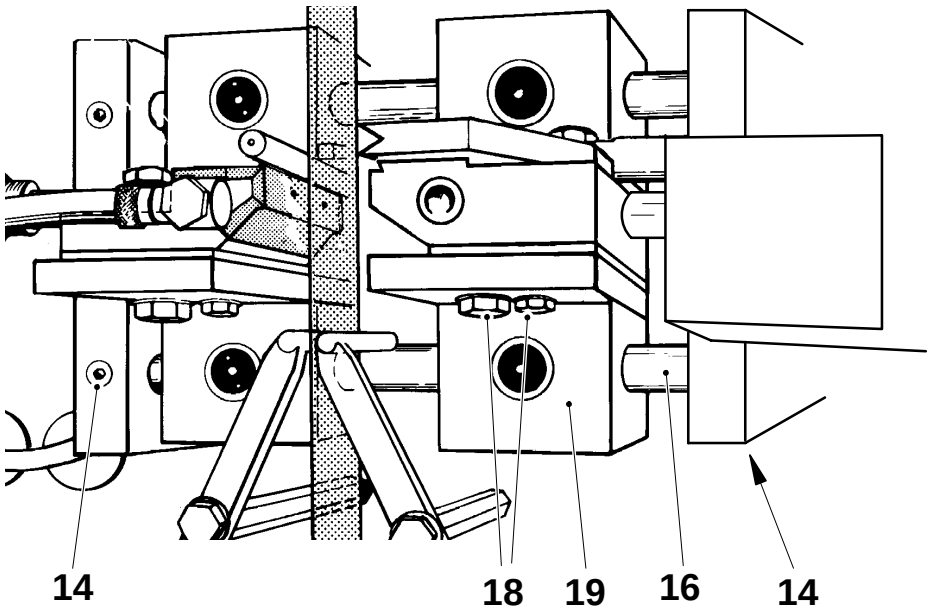

14 Socket screw
16 Axle
17 Screws
18 Screw
19 Ball bushing

Setting

Setting sequence for splicing

a) Set the parallelity between the jaws, see next page.

b) Set the parallelity between pin and V-notch, see next page.

c) Set measurement A, see fig. 1.

d) Activate the solenoid valve (2) of the pressure jaw cylinder. The jaw pressure should now press back the heating jaw so that it moves measure C (fig. 3). If this does not occur, adjust the cylinder shaft and make a new stroke with the cylinder and repeat until the correct measurement is obtained.

e) Deactivate the solenoid valve and align the stop screw (3) so that the cylinder does not reach/touch the bottom, see fig. 4.

f) Check that the pin (4) is free from the roller.

g) Activate the solenoid valve and adjust the screw (1) so measure B is maintained. The pin overlap, see fig. 3.

(Cont'd overleaf)

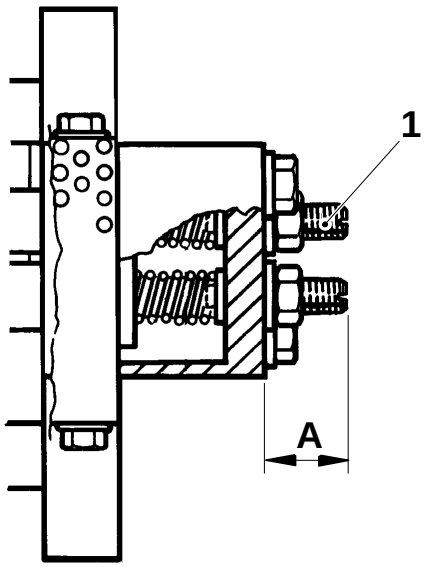

Fig 1

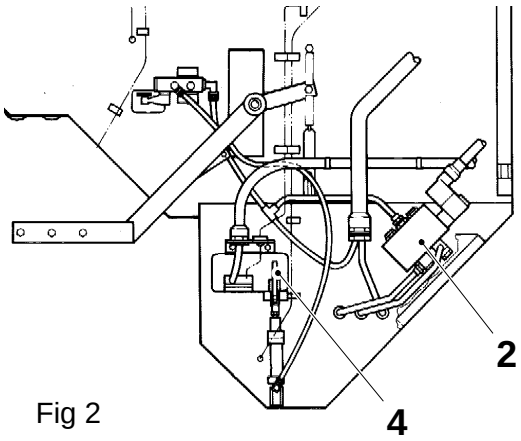

Fig 2

A = 13 mm
B = 8 –10 mm
C = 0.1 – 0.5 mm

1 Screw
2 Solenoid valve
3 Stop screw
4 Pin

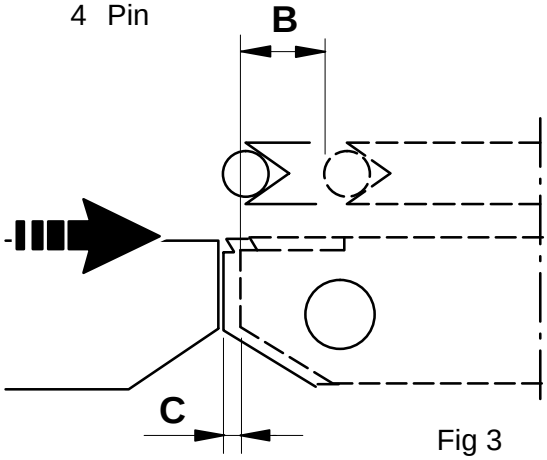

Fig 3

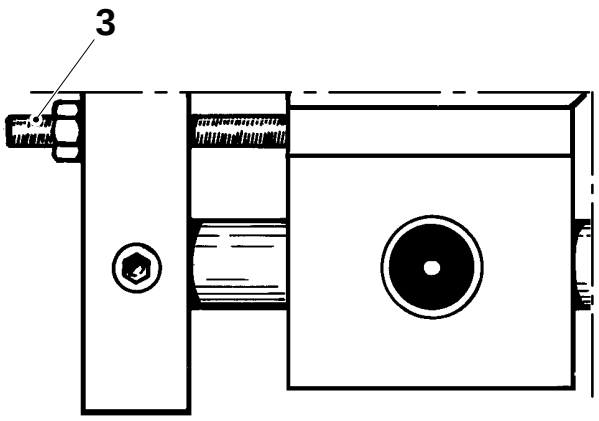

Fig 4

(Cont'd)

Parallelity between jaws

Loosen the two screws (5) and set the counter jaw (6) parallel to the heating jaw.

Recheck:

With IS strip (10) inserted between the jaws, check that the counter jaw (6) and heating jaw (11) are parallel. Actuate the cylinder by hand. Thereafter, pull both edges of the IS strip. The IS strip must be held equally hard on both sides.

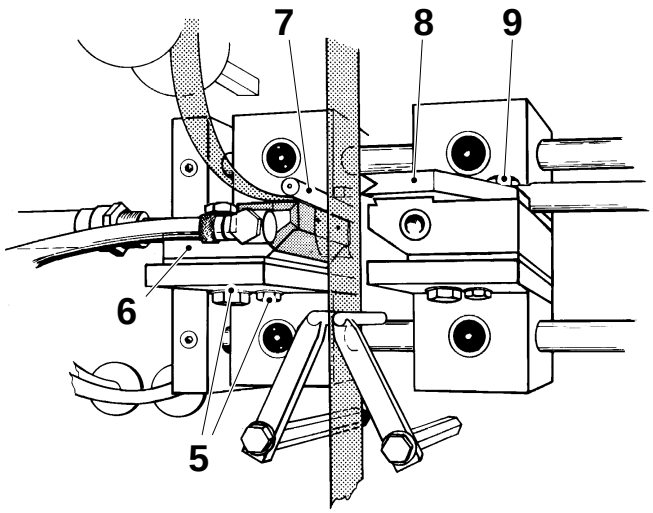

Parallelity between pin and V-notch

Loosen the two screws (12) and the screw (9) to set the V-notch stop block (8) so that it is parallel to the pin (7).

Recheck:

Check by placing the IS strip between the pin and the V-notch stop block. The IS strip is to be held equally on both sides. Tighten the screws (12) and (9).

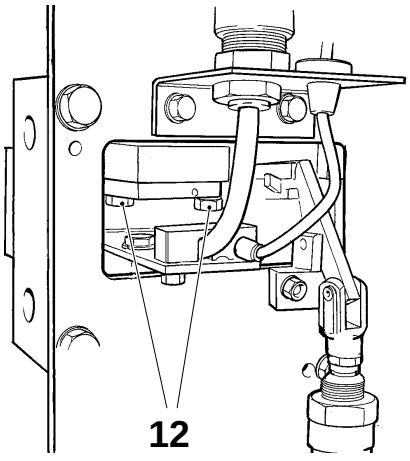

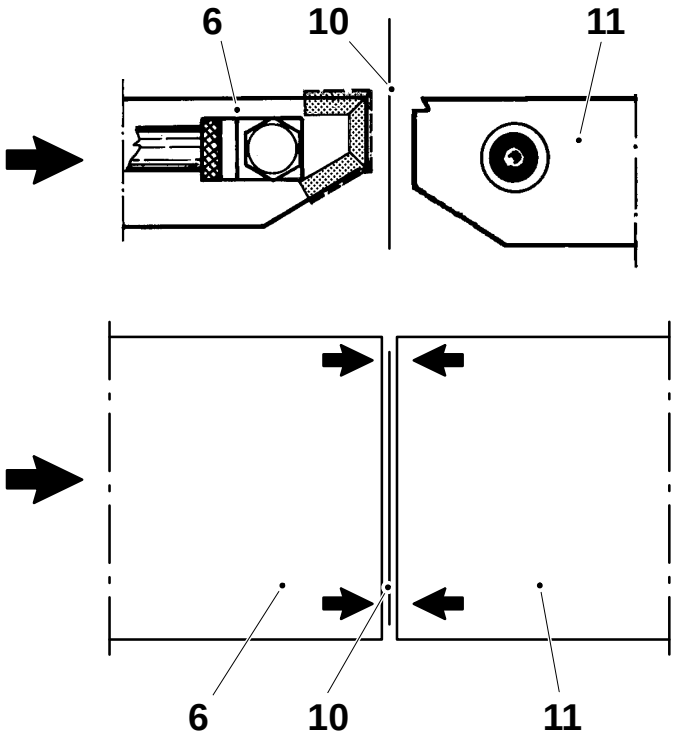

5 Screw
6 Counter jaw
7 Pin
8 V-notch
9 Screw
10 IS strip
11 Heating jaw
12 Screw

Checking during operation

a) Prepare the strip splicer.

b) Press the **Manual strip splice** button.

c) Stop the machine and check the quality of the splice.

d) Start the machine again.

e) Put in a new roller and check that the pin (1) is up until the roller (2) is in the correct position.

f) Check that the pin goes down on the correct side of the strip, see fig.

g) If there is anything wrong, re-install according to page MS 805–5X.

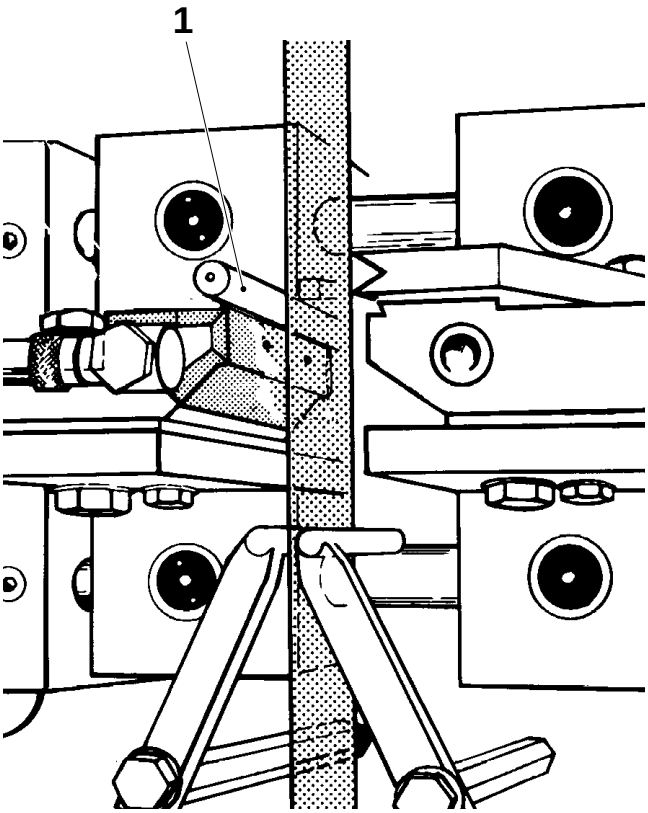

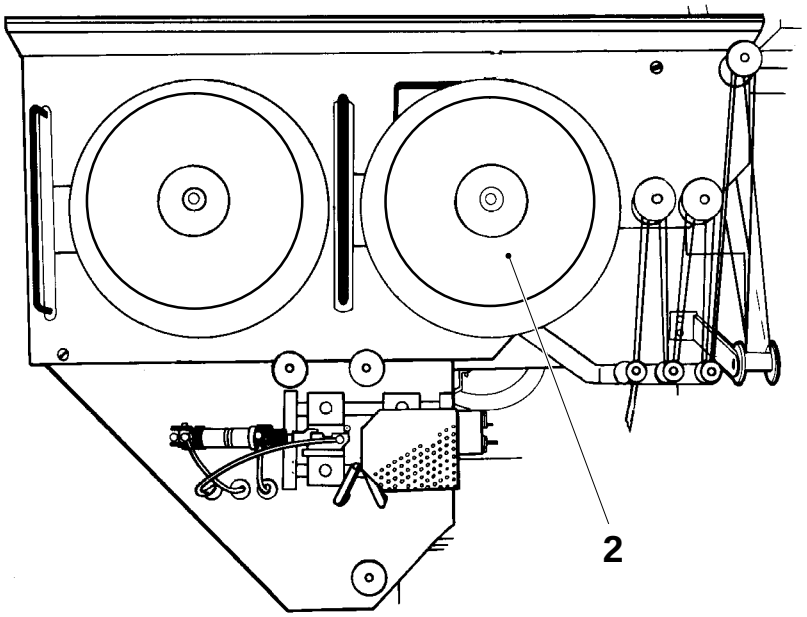

1 Pin
2 IS strip roller

Checking/Cleaning

Check the rubber covering of the roller (1) for wear and/or damage.

Clean or replace as required.

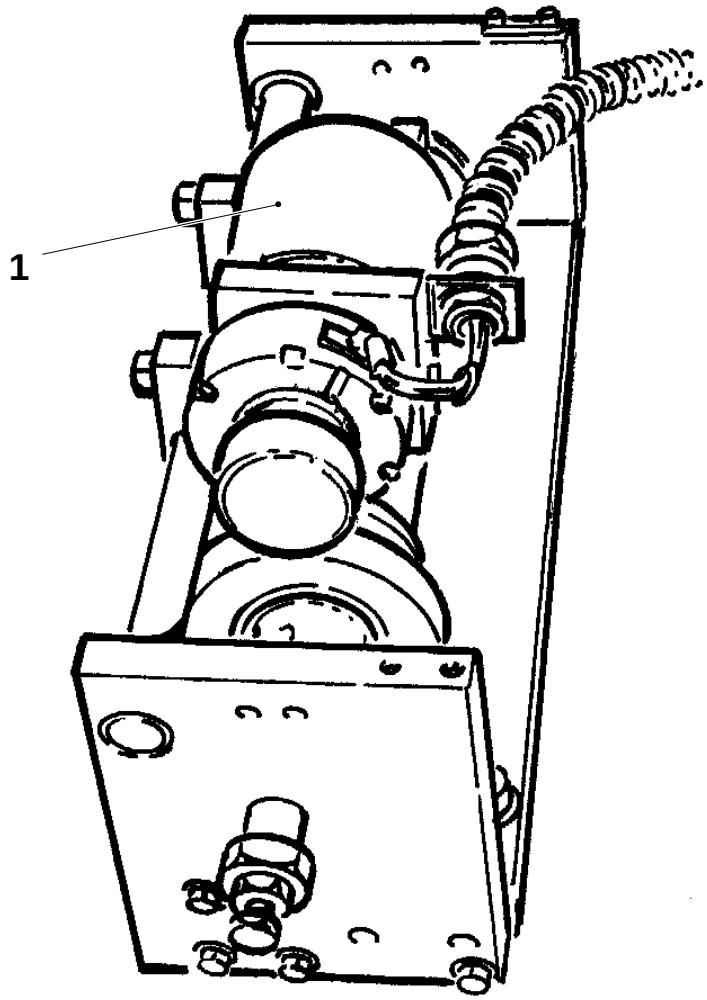

1 Roller

Overhaul

Remove the packaging material. Turn the main shaft so that the cam to the brake is LOW cam.

Remove the powder brake components as follows:

- the nut (1),
- the screws (2),
- the screws (3),
- the end section (4),
- the powder brake unit (5) from the axle,

(Cont'd overleaf)

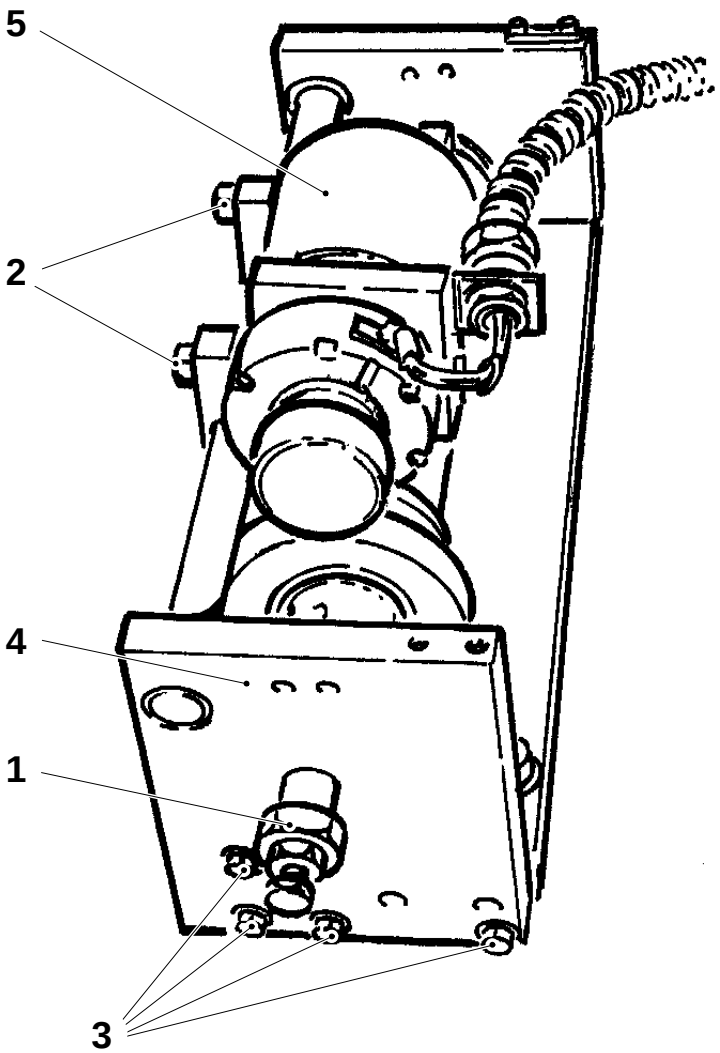

1 Nut
2 Screw
3 Screw
4 End section
5 Powder brake unit

(Cont'd)

- the screws (6) to cable bracket
- look from the side to see which **three** socket screws (7) are through, and remove them, see fig. 3,
- prise loose the electrical brake from the axle, see fig. 2,

(Cont'd overleaf)

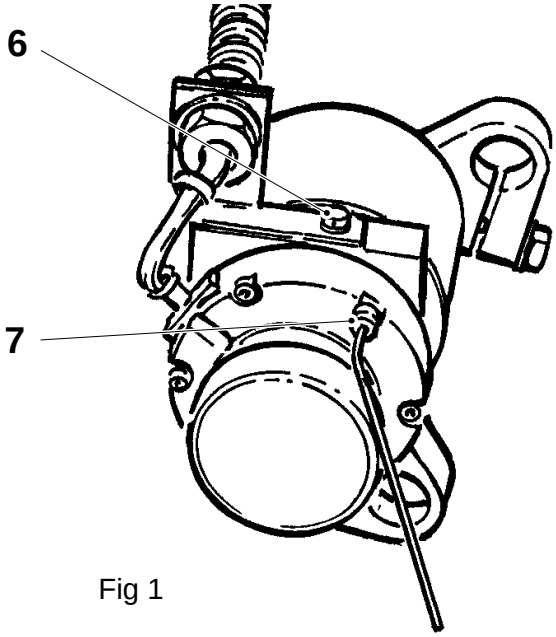

6 Screw
7 Socket screw

Fig 1

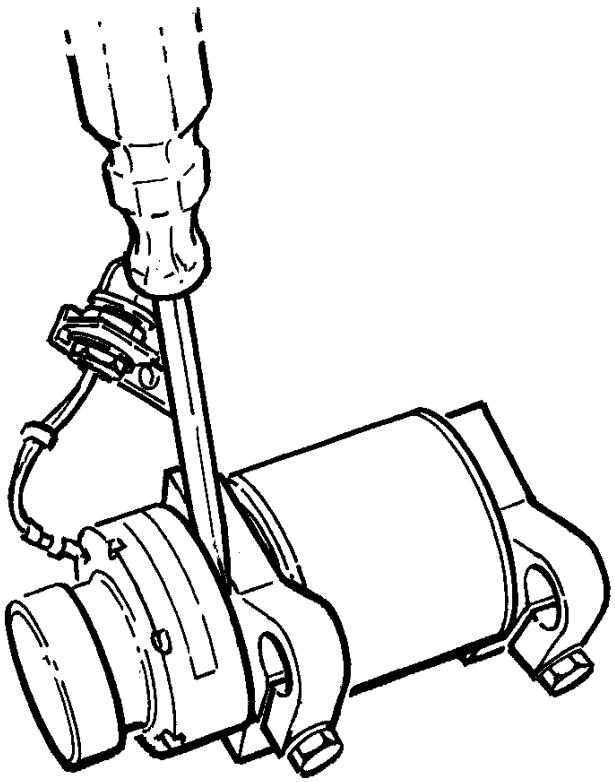

Fig 2

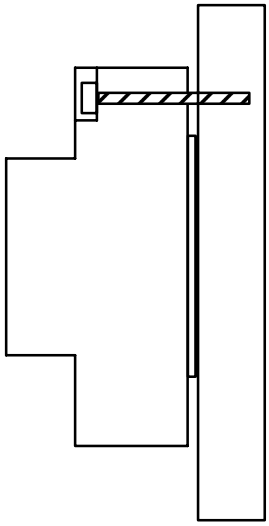

Fig 3

(Cont'd)

- the clamp ring (8),
- the clamping plate (9),
- the screws (10); take two of the screws and screw in the hole (11). Repeat on the other side.

Replace the roller (12).

Fit in reverse order.

Footnote
Press the roller (12) against the bending roller and tighten the screws (2).

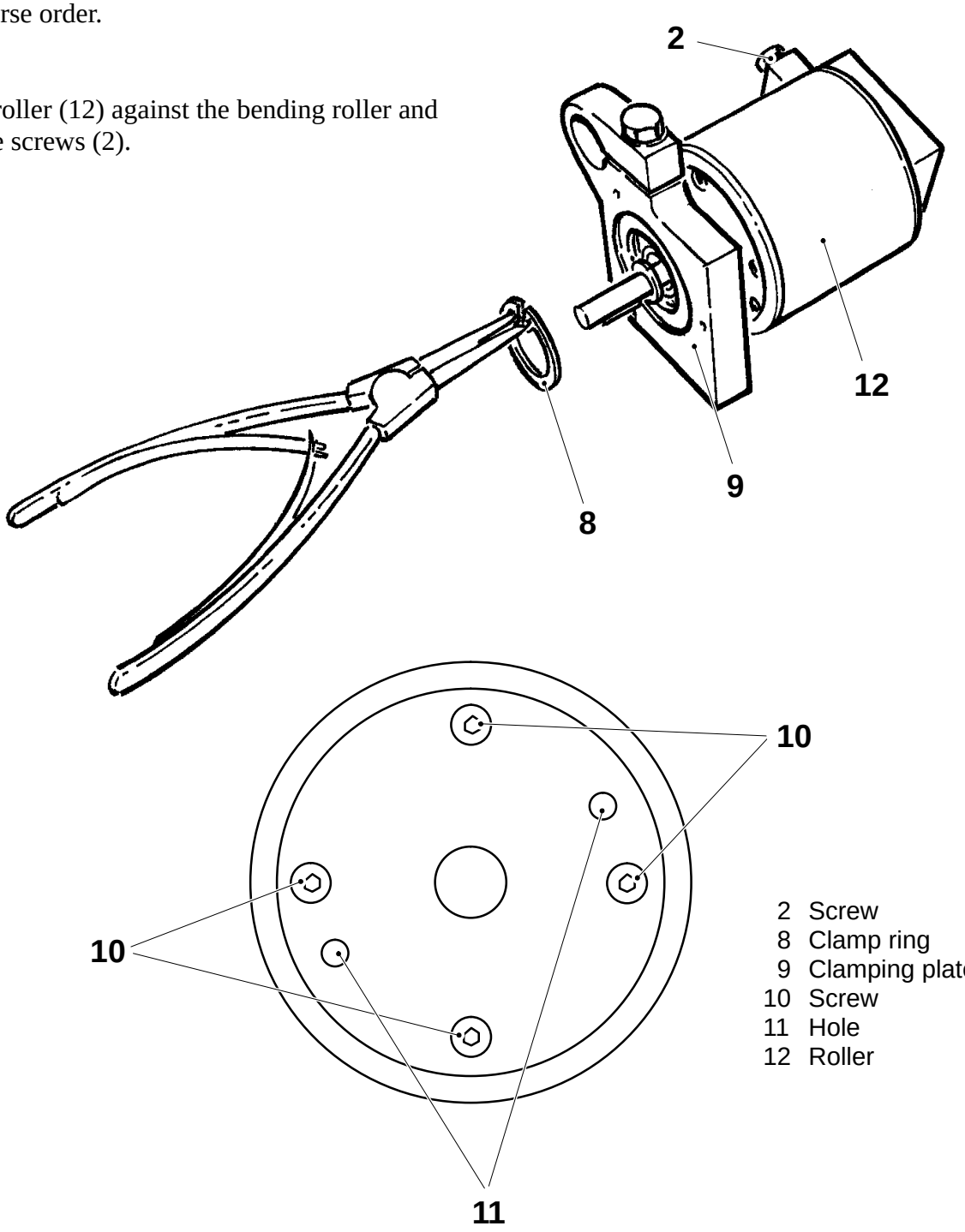

2 Screw
8 Clamp ring
9 Clamping plate
10 Screw
11 Hole
12 Roller

Setting

Set the powder brake unit in the centre of the bending roller.

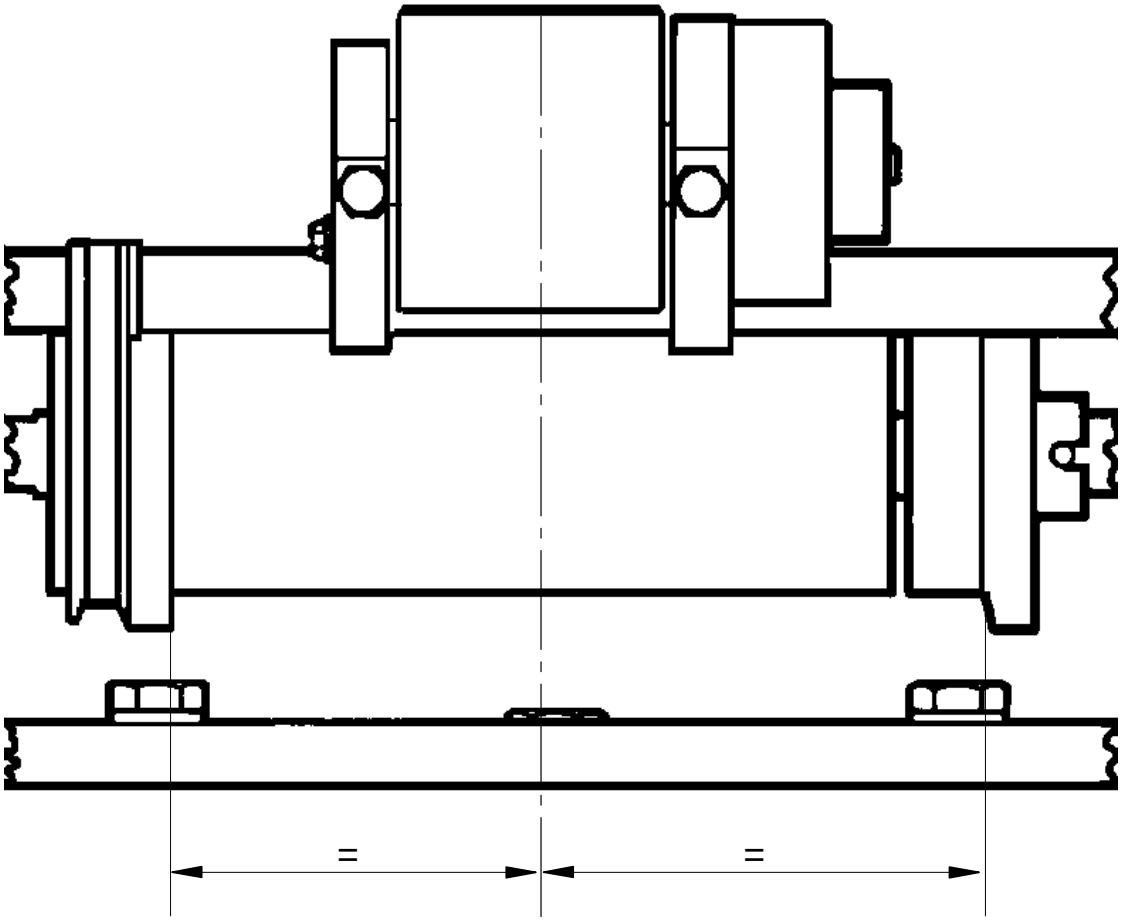

Checking/Cleaning

Check the following details for wear and/or damage:

- the bearings (1) and the link (3),
- the cam (2) and the roller,
- the rubber covering of the roller (4) and check the axle and the bearing,
- the belt (5),
- the radial play of the bending rollers; if excessive, replace the bearings (6),
- the flange (7); make sure it moves easily,
- the powder brake roller (8); make sure it is centered, see page MS 812–5X.

Replace worn and/or damaged details.

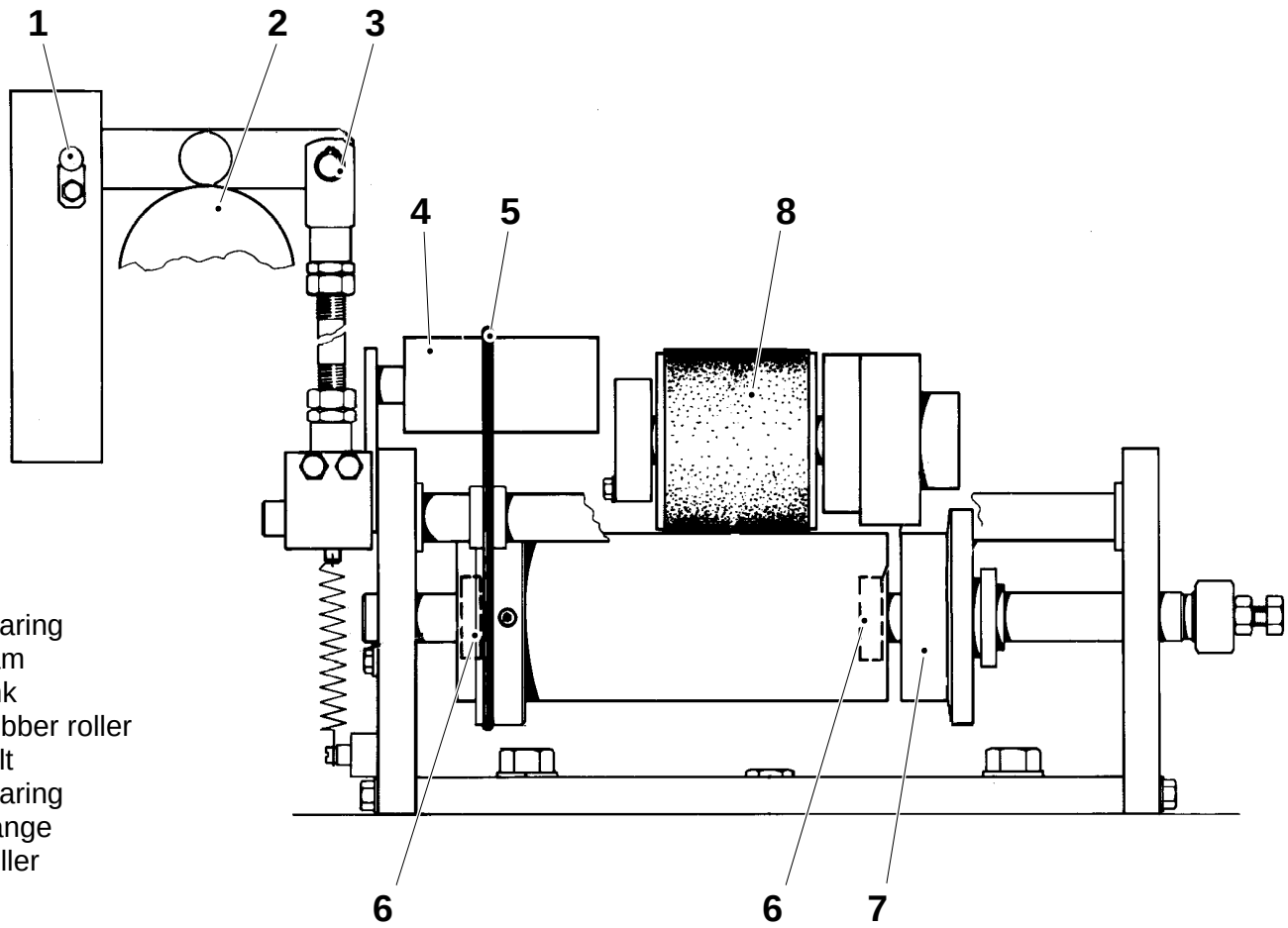

1 Bearing
2 Cam
3 Link
4 Rubber roller
5 Belt
6 Bearing
7 Flange
8 Roller

Checking/Cleaning

Check the following details for wear and/or damage:

- the bearing (1) and the link (3),
- the cam (2) and the roller,
- the function of the proximity switch (5),
- the flange (6); make sure moves easily,
- the radial play of the bending rollers; if excessive replace the bearings (7), and
- the plastic wheel (8).

Replace worn and/or damaged details.

Check that the powder brake roller (9) is centered, see page MS 812–51.

Clean the rubber roller (4).

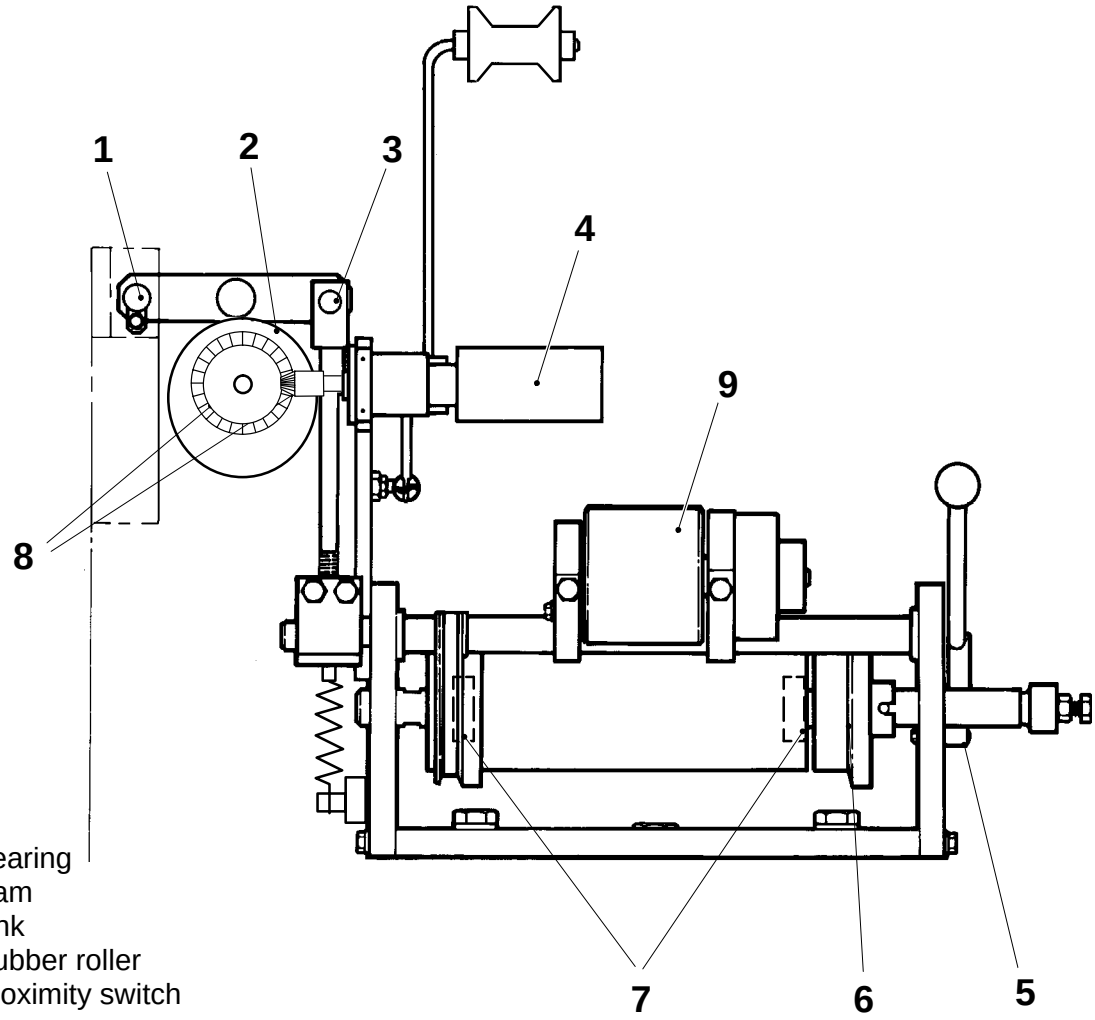

1 Bearing
2 Cam
3 Link
4 Rubber roller
5 Proximity switch
6 Flange
7 Bearing
8 Plastic wheel
9 Roller

Setting

Loosen the screws (1) and set distance A, see table, according to paper width.

Paper width, mm	A ± 0.2 mm
214	203.5
174	210.0
162	210.0

Place the packaging material between the bending roller and the brake roller.

Set the springing flange, see page MS 833–5X.

Crank the unit until the roller (2) enters the lowest section of the cam (3).

Loosen the turnbuckle (4) and set gap C between the roller and the cam.
Note! The arm (6) is to be horisontal.

Set the force of the spring (5) to 150 N.

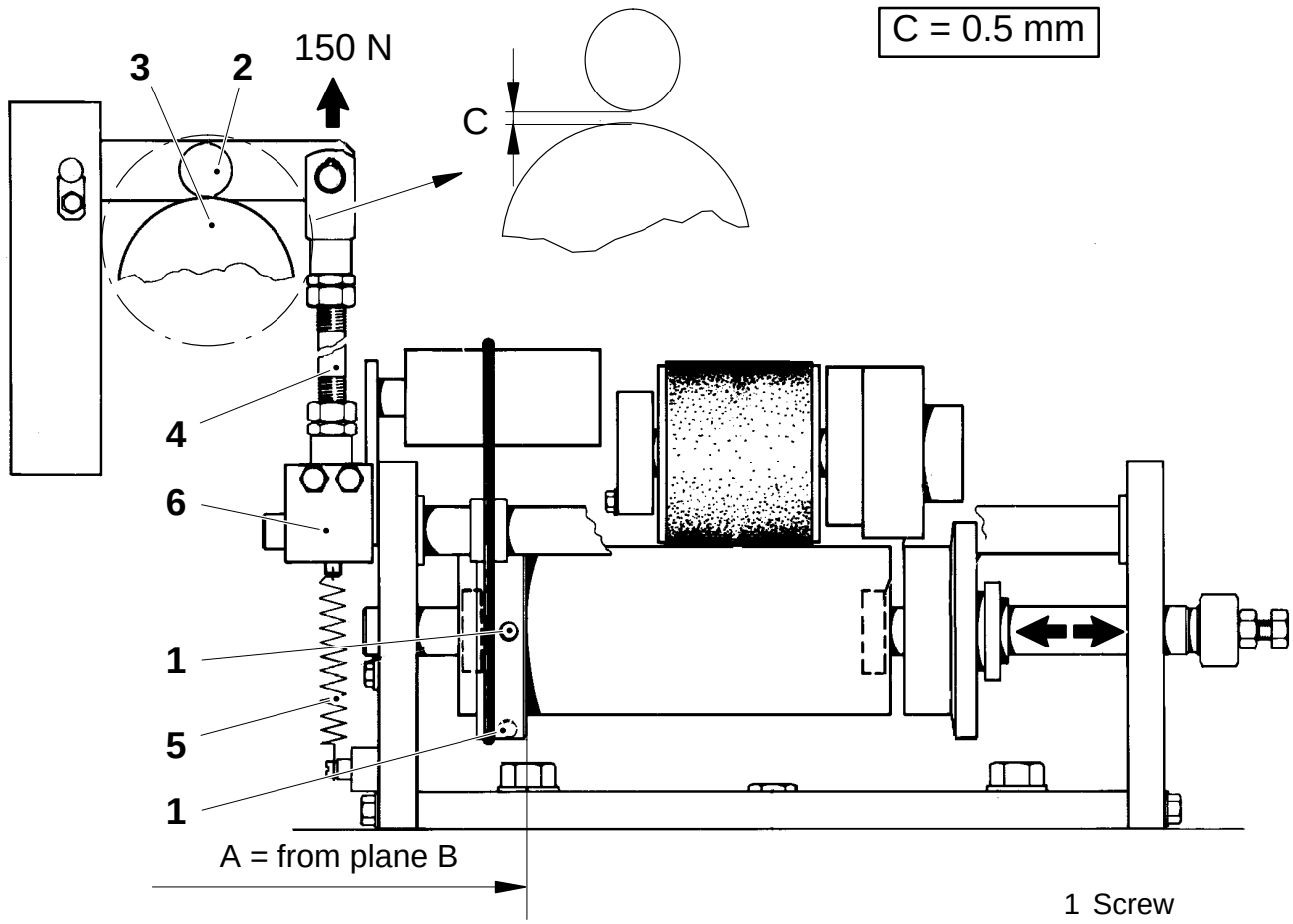

1 Screw
2 Roller
3 Cam
4 Turnbuckle
5 Spring
6 Arm

Setting

Loosen the screws (6) to set the distance A, see table, according to paper width.

Paper width, mm	A ± 0.2 mm
214	203.5
174	210.0
162	210.0

Place the packaging material between the bending roller and the brake roller.

Set the springing flange, see page MS 833–5X.

Crank the unit until the roller (1) enters the lowest section of the cam (2).

Loosen the turnbuckle (3) and set gap C between the roller and the cam.
Note! The arm (4) is to be horisontal.

Set the force of the spring (5) to 150 N.

(Cont’d overleaf)

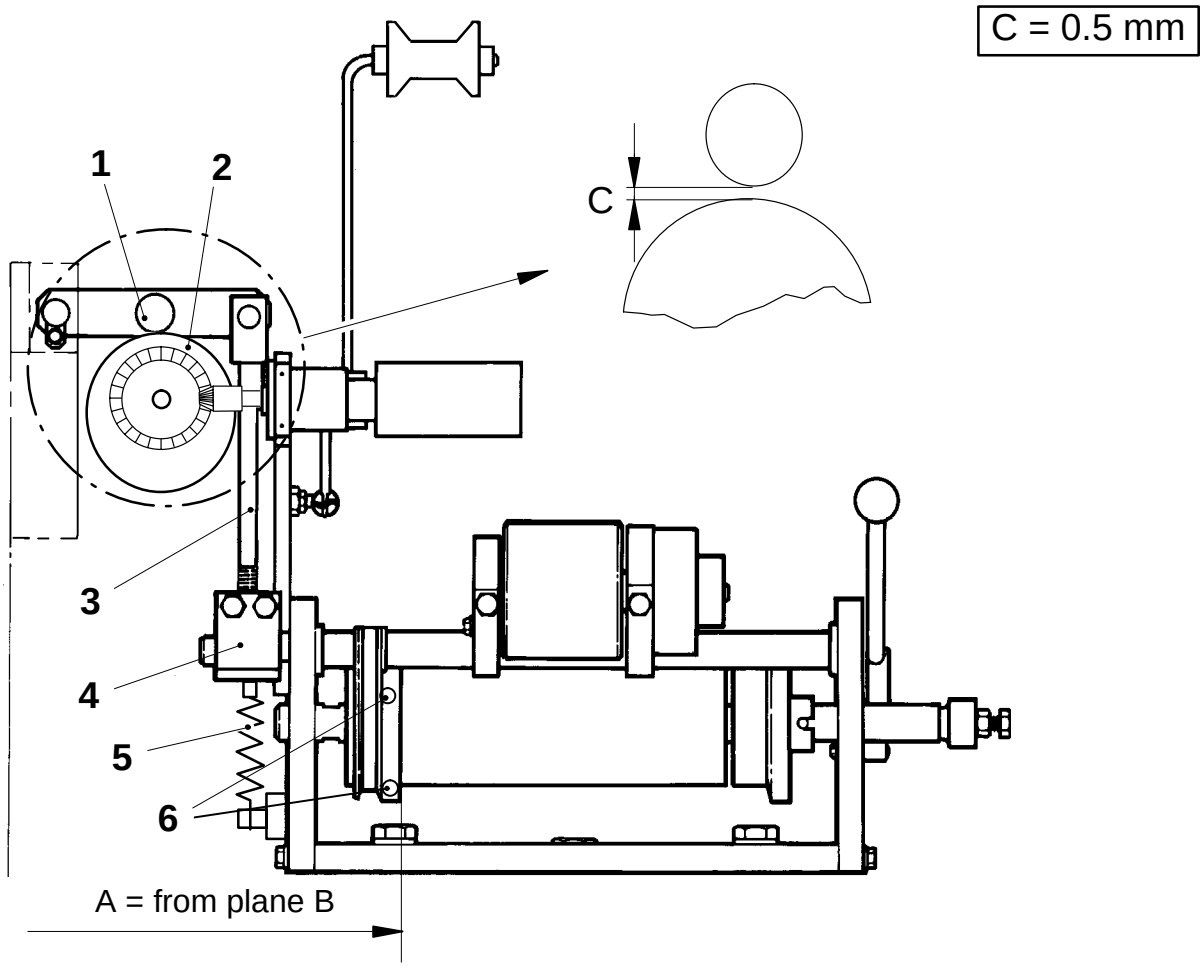

1 Roller
2 Cam
3 Turnbuckle
4 Arm
5 Spring
6 Screw

(Cont'd)
Turn the main shaft to HIGH cam (1).

Turn the releasing handle (3) to the released position, releasing the handle in upper position.

Adjust the gap between the rollers to D mm. Loosen the screws (4) in the clamp to adjust.

Set the function of the proximity switch (2). It should be activated with the handle in the lower position and not activated with the handle in the upper position.

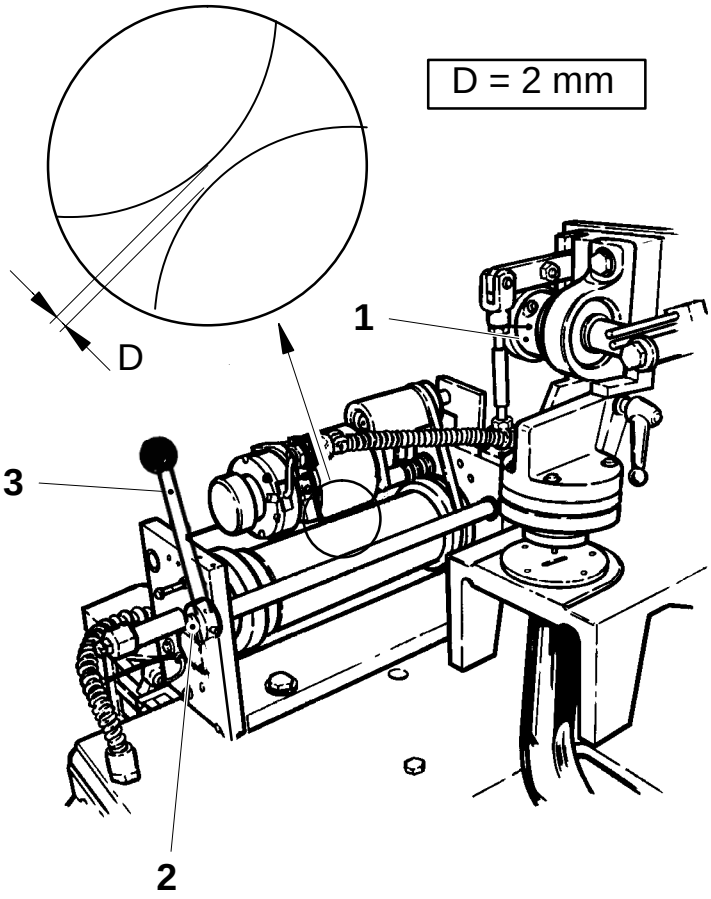

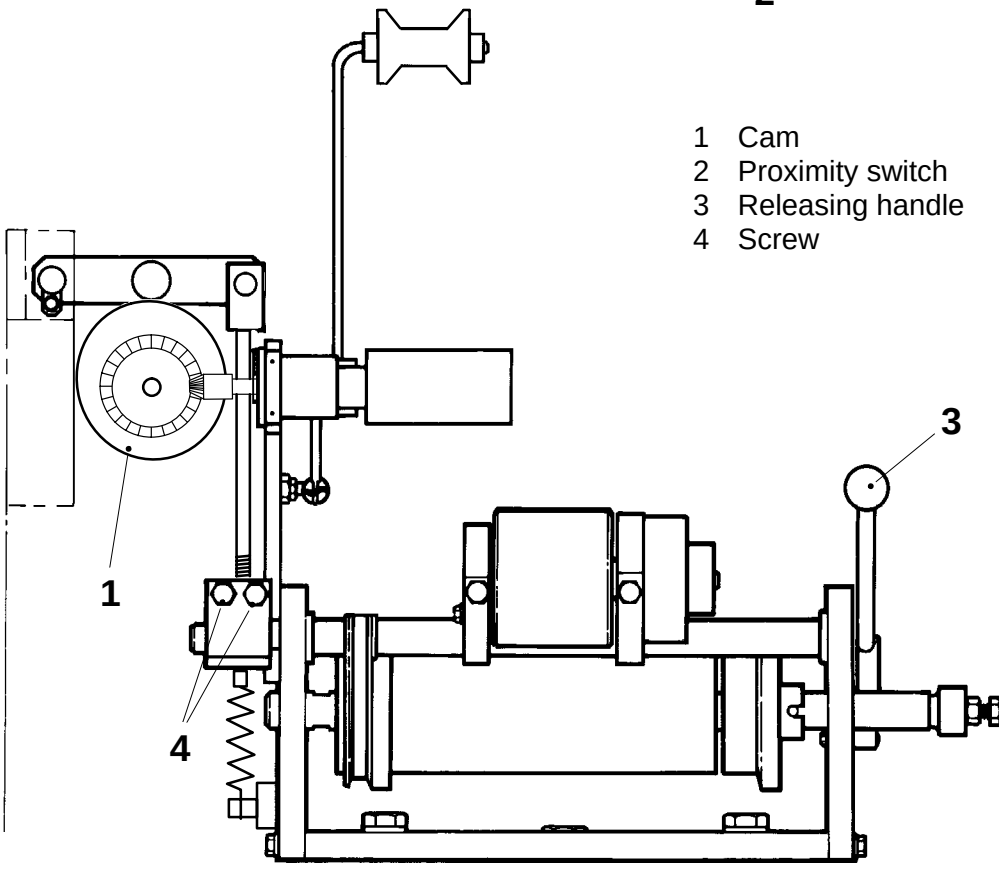

1 Cam
2 Proximity switch
3 Releasing handle
4 Screw

Checking

Check the following details for wear and/or damages:

- the play in all bearings; max axial play 0.5 mm,
- the spring (1), and
- the plastic gear wheels (2); max play 0.4 mm.

Replace worn and/or damaged details.

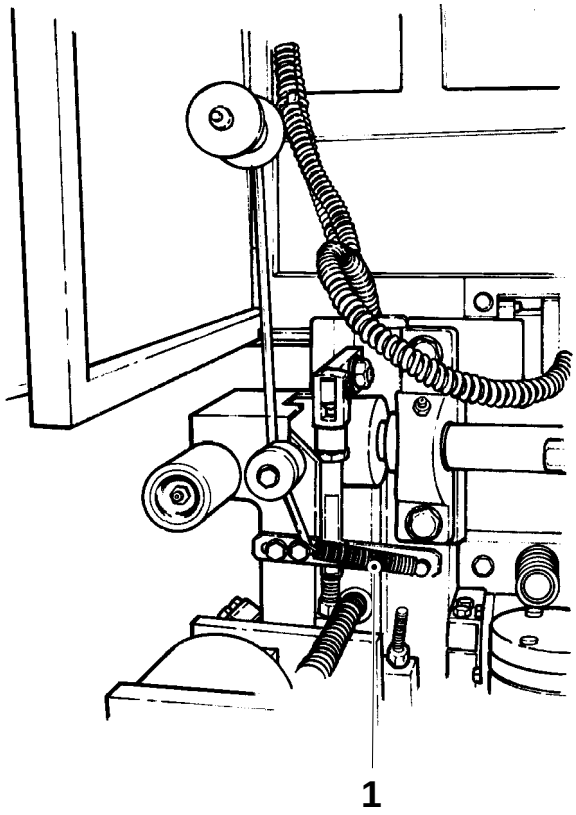

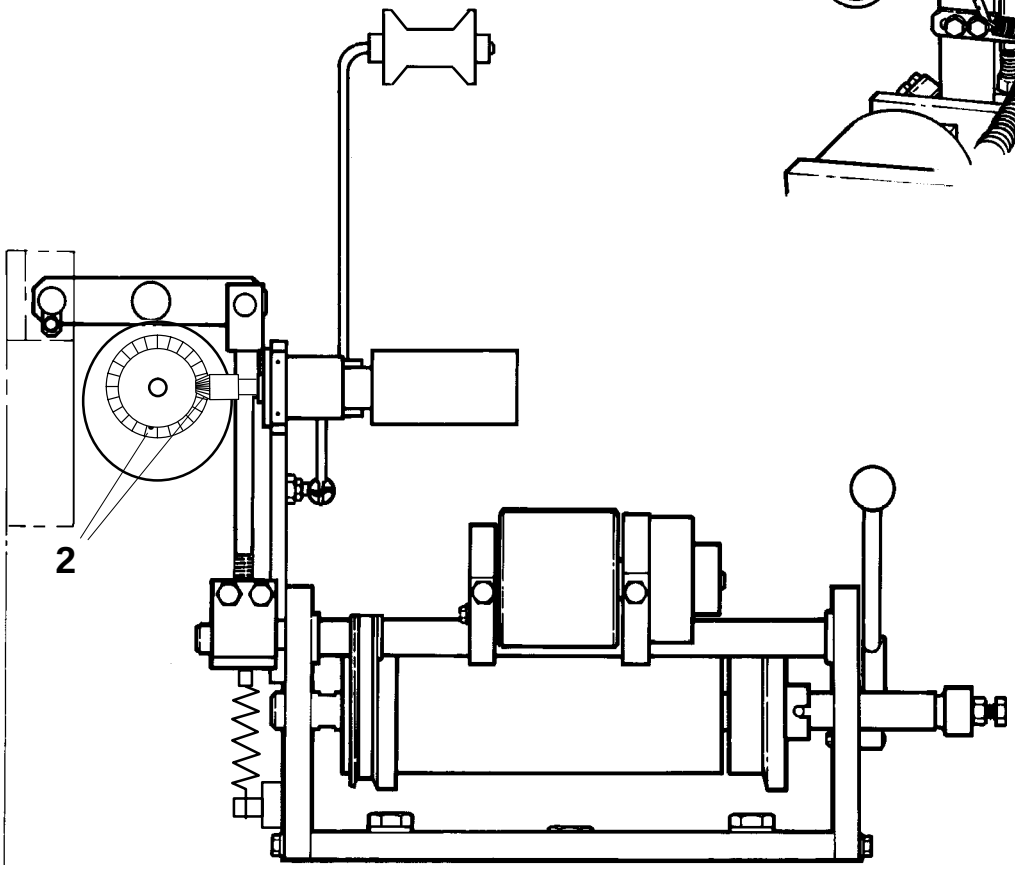

1 Spring
2 Gear wheel

Setting

Basic setting

The arm (4) should be under no spring tension when standing vertical. The gear wheels (5) should be centered to each other. Set the gear play to 0.1 – 0.2 mm.

Loosen the retaining ring (3) and bend the arm (4) forward and set distance A between the B plane and the inner edge of the roller (1), see table. Tighten retaining ring (3).

Loosen and adjust the retaining ring (2) so that there is a minimal play in the roller (1).

Final setting

Check distance A during production. Adjust as required.

Volume, ml	Hole type	A ±0.5 mm
125, 200S	10, 11	207.0
180 – 284	20	200.0
180 – 284	21	199.5

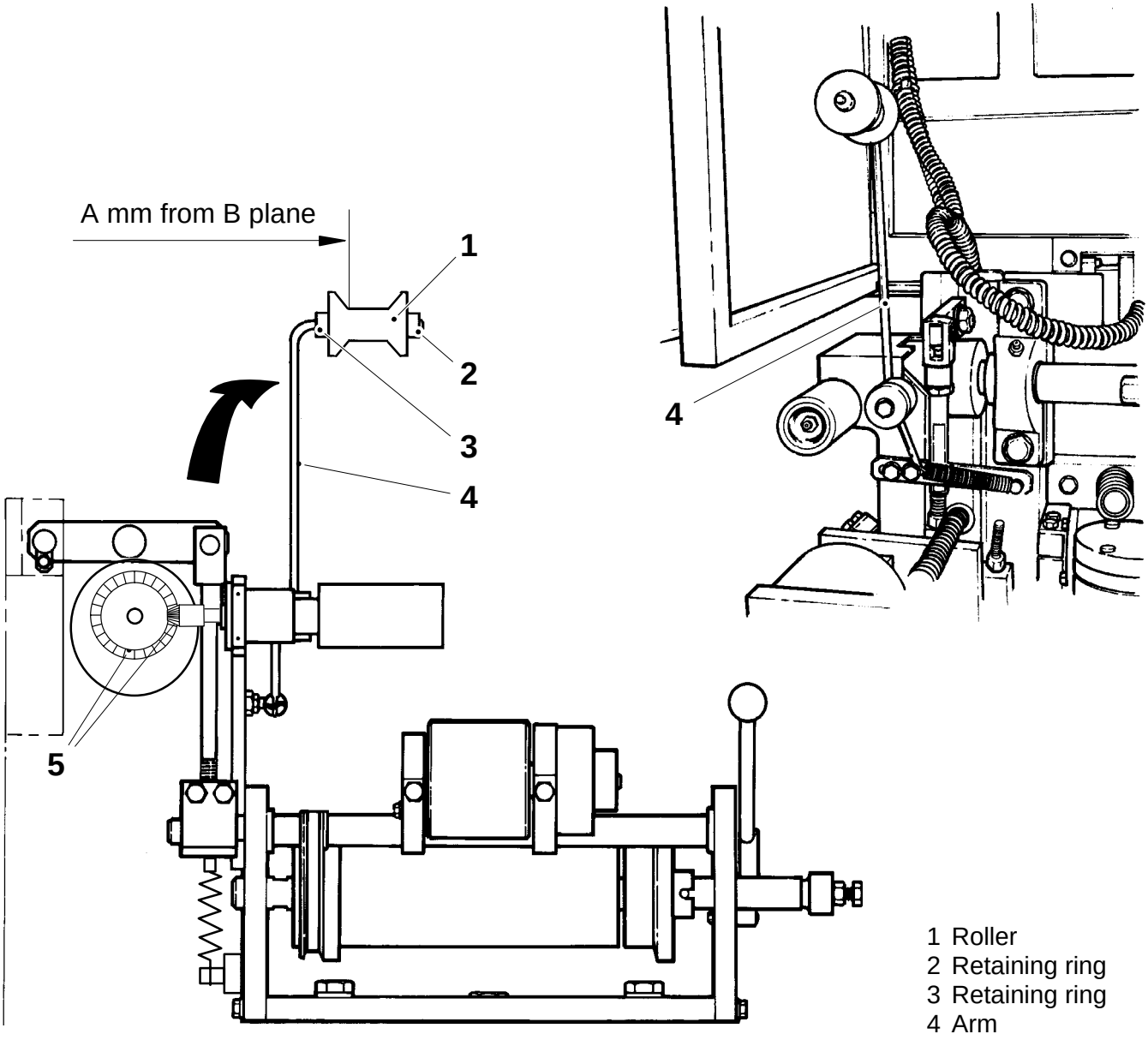

1 Roller
2 Retaining ring
3 Retaining ring
4 Arm
5 Gear wheel

Checking

Check:

- that the plastic pegs (3) do not jam,
- the surfaces of the punch (6) and the die (4); place a distance piece (9), 3 mm thick, between the punch and the die,
- that the punch runs smoothly into the die,
- that the edges of the punched holes in the packaging material are clean-cut. If defects occur, adjust according to page MS 815–5X. If this does not help, replace the punch and die,
- for wear of the cam surface and the cam roller bearing,

  Footnote
  When replacing the cam, synchronize the cam to the cam shaft, see page MS 871–5X.

- the bearing (8) for wear and/or damages,
- that the cam roller rests against the cam after the return movement of the lever (2). If required, replace the springs (1),
- that the air duct (5) and air pipe (7) are not blocked and that a sufficient flow of air blows through.

Replace worn and/or damaged details.

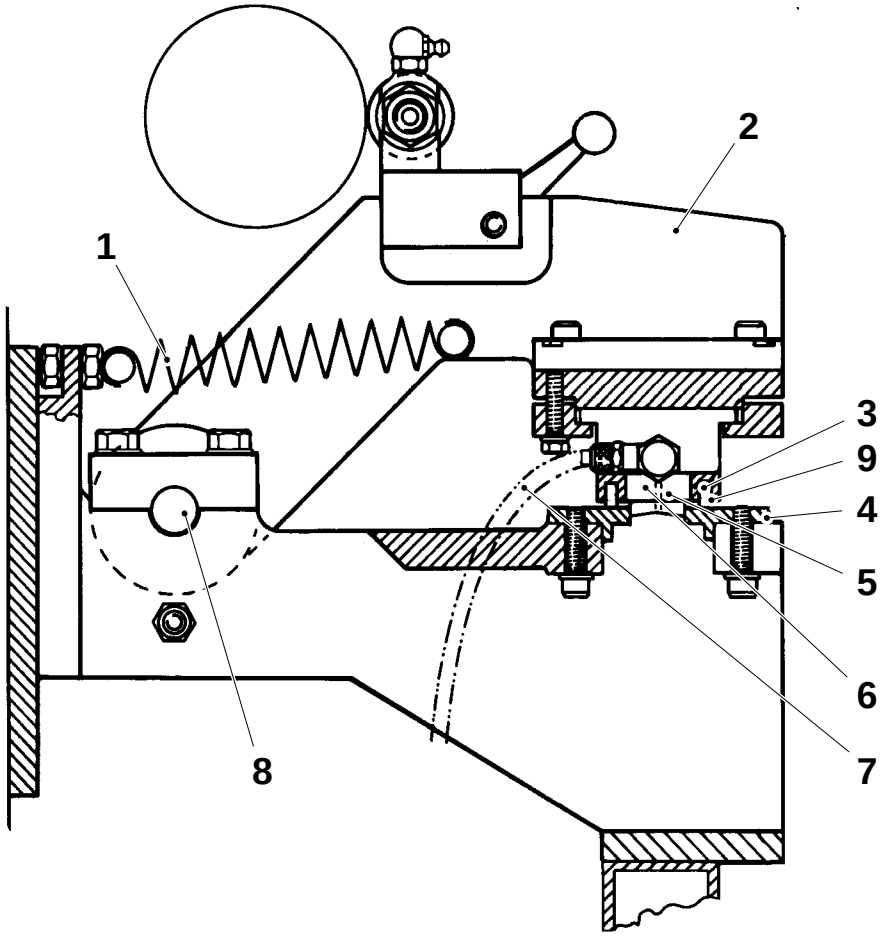

1 Spring
2 Lever
3 Plastic peg
4 Die
5 Air duct
6 Punch
7 Air pipe
8 Bearing
9 Distance pipe

Replacement

Remove the hole punch components as follows:

- the air nipple (10),
- the waste pipe (9),
- the screws (8), if the die (7) is to be replaced,
- the screws (4),
- the air nipple (5),
- the screws (1),
- the screws (2) if the plastic pegs are to be replaced, and
- the screws (3) if the punch knife (6) is to be replaced.

Fit in reverse order.

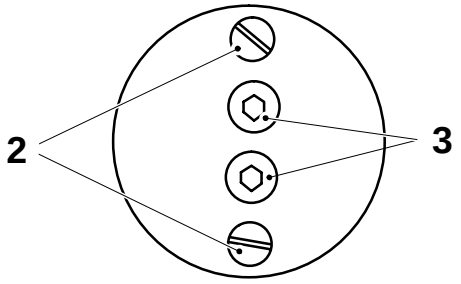

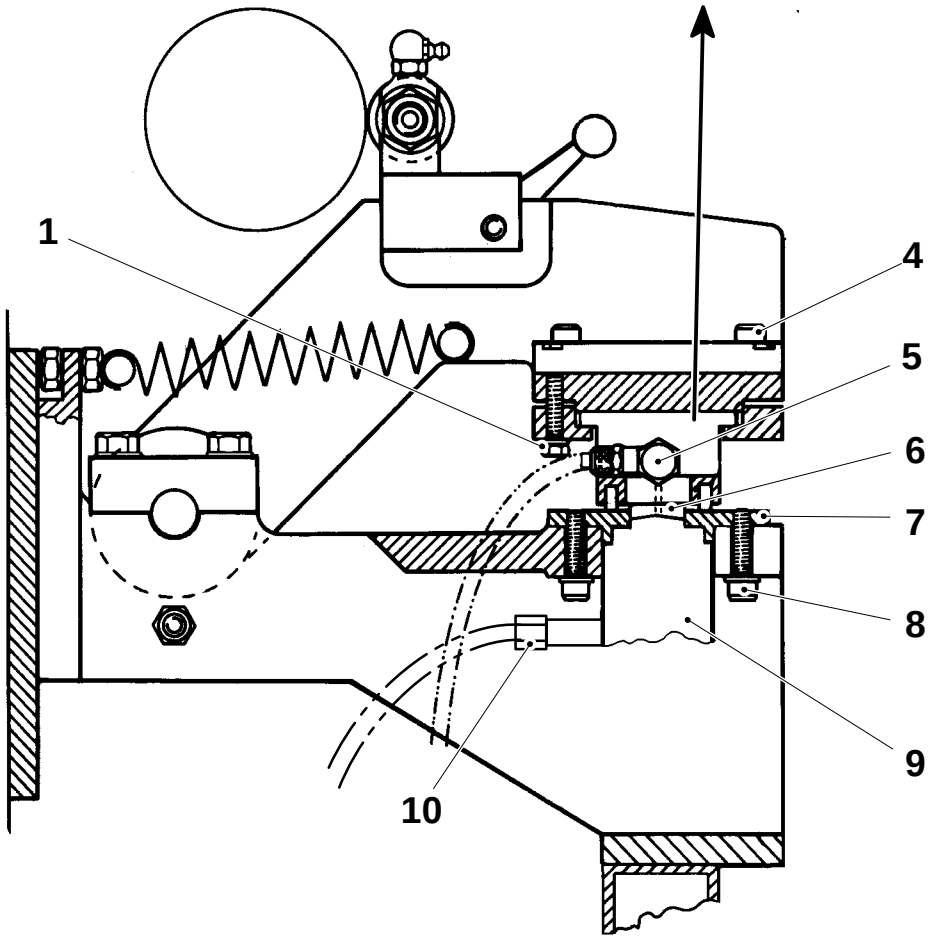

1 Screw
2 Screw
3 Screw
4 Screw
5 Air nipple
6 Punch knife
7 Die
8 Screw
9 Waste pipe
10 Air nipple

Setting

Remove the waste pipe (6).

Loosen the screws (5) and adjust the die (2) so that it is straight. Retighten the screws stepwise and alternately.

Loosen the screws (1).

Place a distance piece (7), 3 mm thick, between the punch and the die. This will prevent the punch from being pushed in too far. Operate the punch by hand.

Press the punch (3) slowly into the die. Retighten the screws (1) stepwise and alternately, while the punch still is in the die.

Check that the punch moves easily through the die. Remove the distance piece.

Place a sheet of thin paper in the hole punch and check that it is working by turning the main shaft. The edges of the hole must be clean-cut.

Fit the waste pipe.

1 Screw
2 Die
3 Punch
4 Air pipe
5 Screw
6 Waste pipe
7 Distance pipe

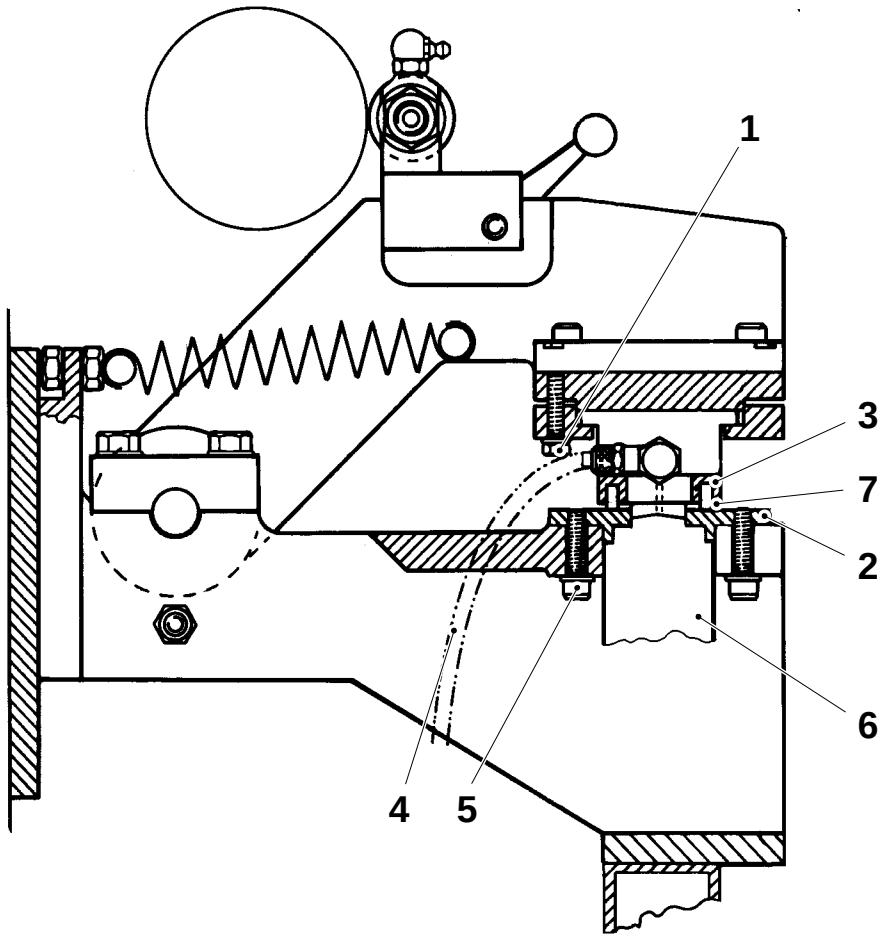

Checking/Cleaning

Check the rollers (1) – (6) for wear and/or damages; make sure they rotate easily.

Check rollers (1) – (3), (5) and (6) for axial and radial wear;

- max axial play 0.5 mm,
- max radial play 0.5 mm.

Check the roller (4) for axial and radial wear;

- max axial play 0.1 mm,
- max radial play 0.1 mm.

Check the function of the IS strip tensioner (7) and make sure its slide surfaces are not worn,

Check that the spring force applied to the pressure roller (6) is 35 – 45 N. Use tool TP No. 74767–102.

Clean the rollers (1) – (6).

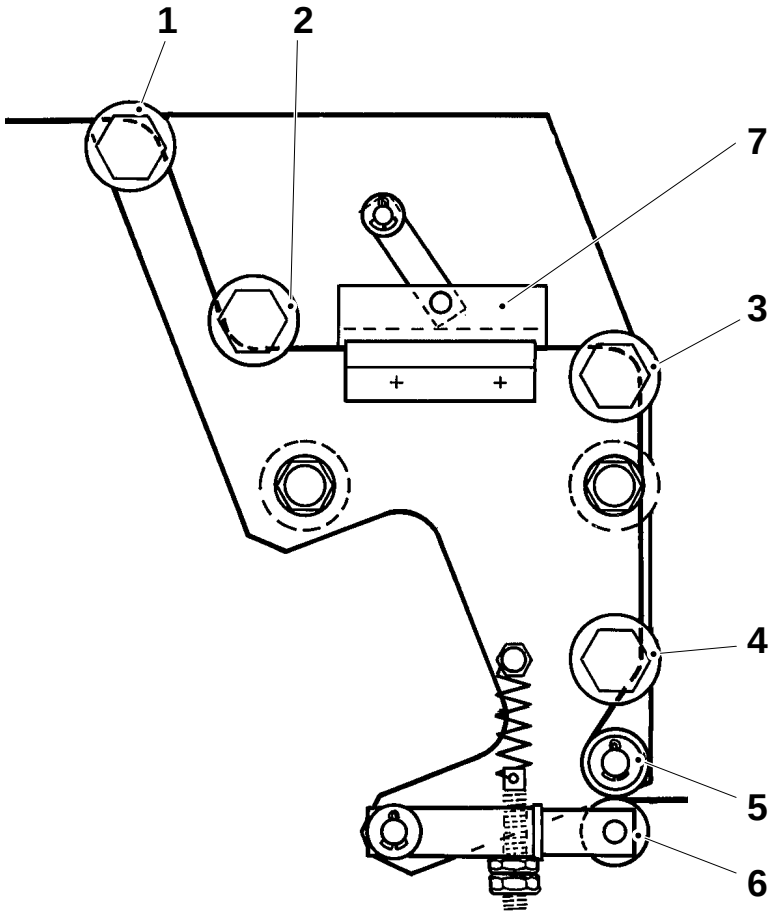

1 Roller
2 Roller
3 Roller
4 Roller
5 Roller
6 Pressure roller
7 IS strip tensioner

Checking/Cleaning

Check the rollers (1) – (3) for wear and/or damages; make sure they rotate easily.

Check rollers (1) and (2) for axial and radial wear;

- max axial play: 0.1 – 0.2 mm,
- max radial play: 0.05 – 0.2 mm,

Check that the spring force applied to the pressure roller (3) is 35 – 45 N. Use tool TP No. 74767–102, and

Check the function of the release eccenter (4) and the proximity switch (5).

Footnote
How to thread the strip, see OS book.

(Cont'd overleaf)

1 Roller
2 Roller
3 Pressure roller
4 Release eccenter
5 Proximity switch

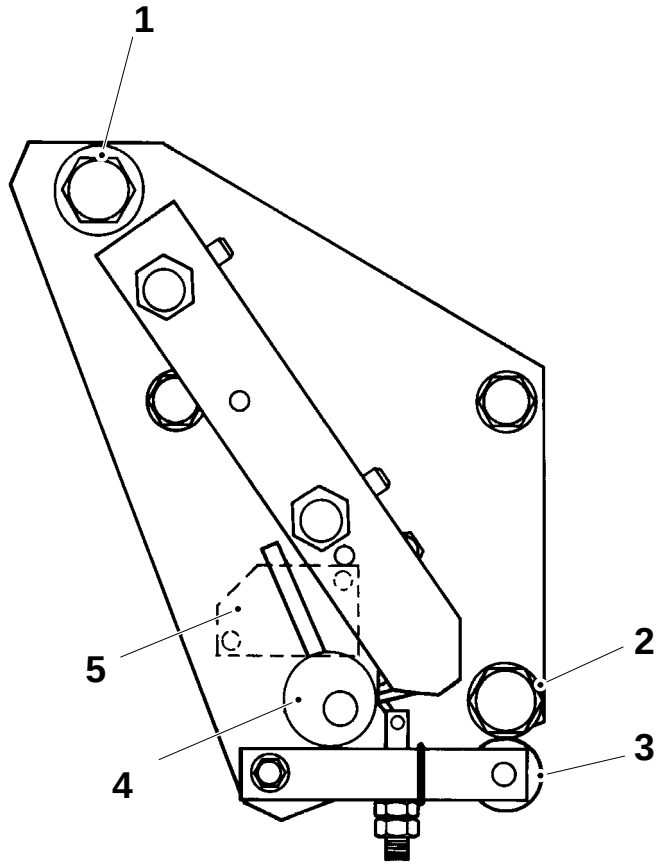

(Cont'd)

Cleaning

Clean the rollers (1) – (3).

Undo the screws (6) and pull off the vacuum plate (5).

Undo the vacuum line at the filter (7). Blow through with compressed air.

When fitting the vacuum plate (5), check the O-rings (4 pcs). Grease with silicone grease, type L.

Push the vacuum plate approximately 20 mm on to the screws (6). Tighten the grub screws (4) until they touch the screws, then another half-turn. Push the plate into the correct position.

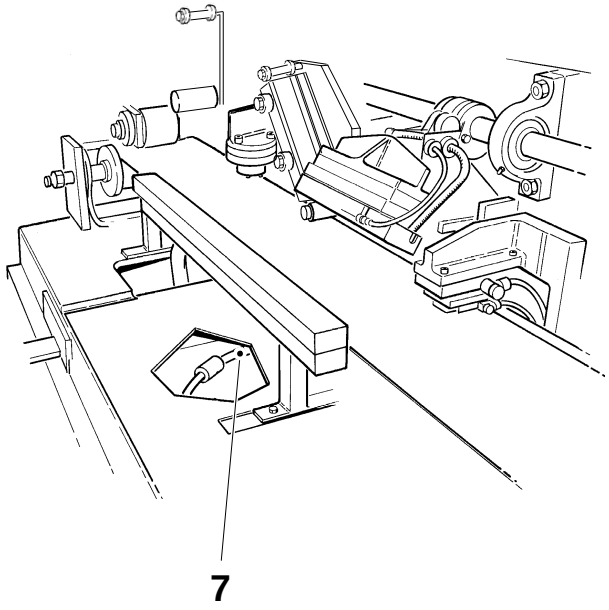

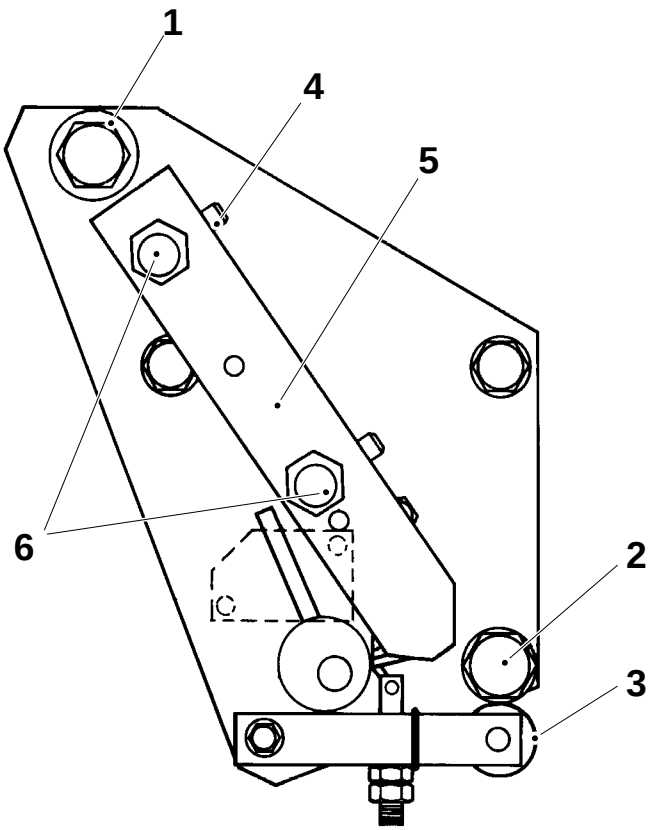

1 Roller
2 Roller
3 Roller
4 Grub screw
5 Vaccum plate
6 Screw
7 Filter

Setting

Set the IS strip guide so that the packaging material is placed A mm above the inductor card, see fig.

Loosen the two screws (1) and (2) and adjust by lowering or lifting the IS strip guide at the screw (2).

Set the spring force for the pressure roller to 35 – 45 N. Use tool TP No. 74767–102. Adjust the spring force with the adjustment screw (3).

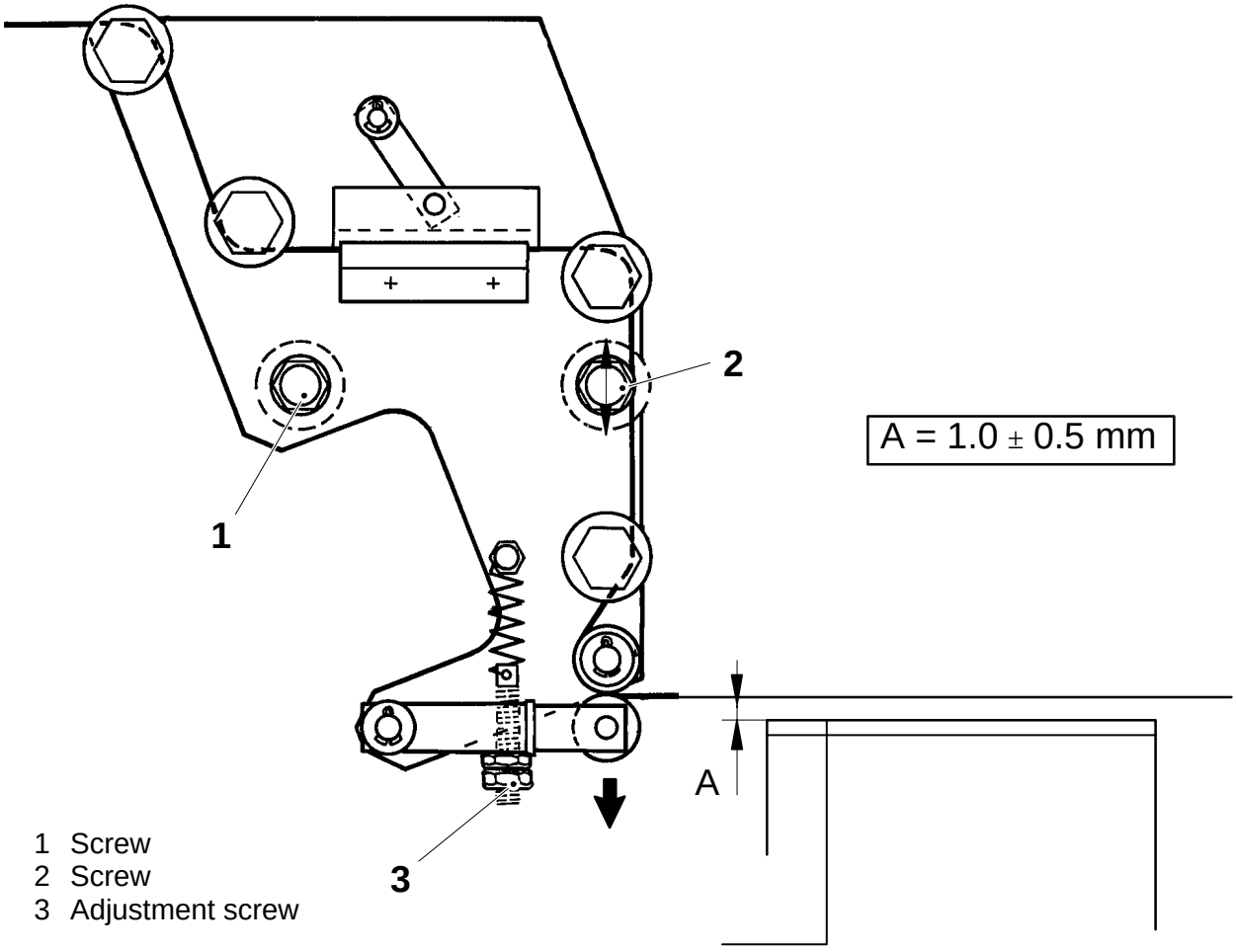

1 Screw
2 Screw
3 Adjustment screw

Setting

Place ruler (1) in the groove in the vacuum plate. Adjust the position of the vacuum plate by loosening the nuts (7) and moving the pins (6). The ruler shall touch the roller (5).

Set the pressure screws (2) so that the vacuum plate (9) can only be moved sidways.

Place a ruler (8) in the grove and check that the flanges of the roller (5) and the grove are in line. Adjust by means of shims (6) behind the roller (5). Check with both LS and IS strips

Undo the screws (4) and pull off the vacuum plate (9). Put tool TP No. 74767–102, see arrow fig. 3. Set the spring force for the pressure roller to 35 – 45 N. Adjust the spring force with the adjustment screw (3).

(Cont'd overleaf)

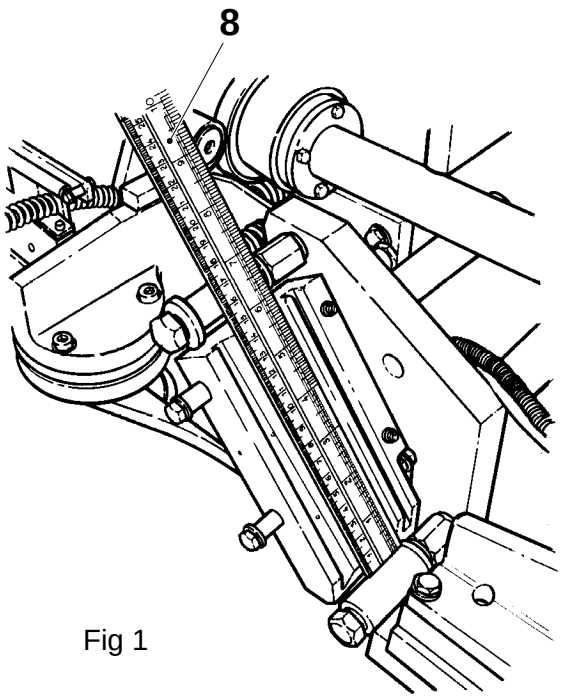

Fig 1

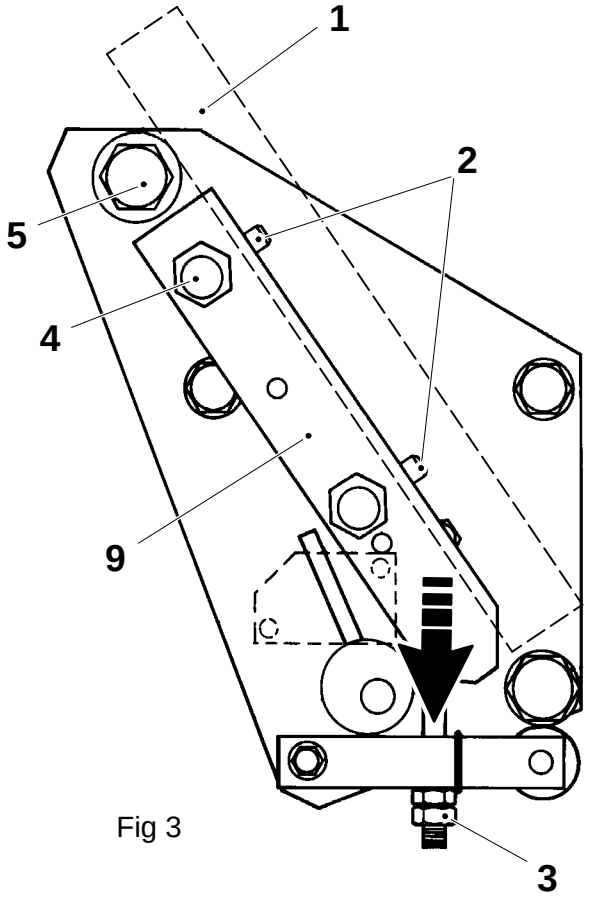

Fig 3

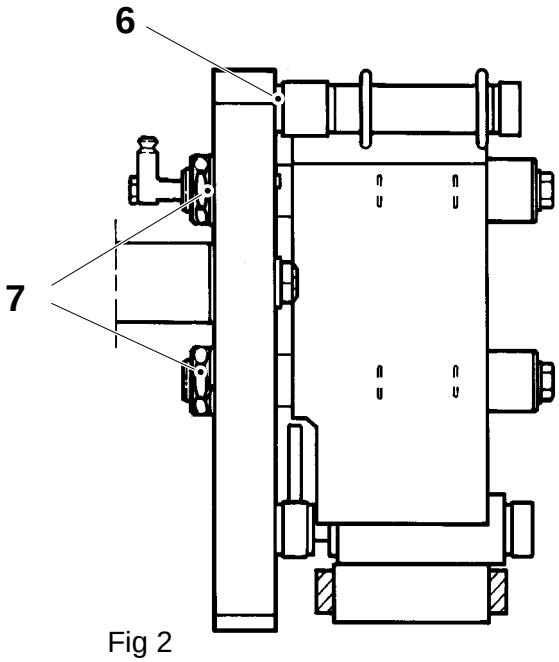

Fig 2

1 Ruler
2 Pressure screw
3 Adjustment screw
4 Screw
5 Roller
6 Shim
7 Nuts
8 Ruler
9 Vacuum plate

(Cont'd)

Adjust the strip, see page MS 814–5X. Check both LS and IS strips. Adjust by means of shims (3) behind the plate on screws (1) and (2).

Set the IS strip guide so that the packaging material is placed A mm above the inductor card according to the picture. Loosen the two screws (1) and (2) and adjust by lowering or lifting the IS strip guide at the screw (2).

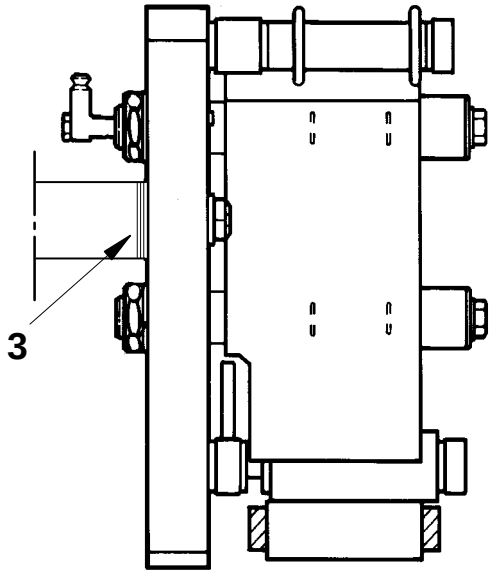

Check, during production, the strip's position on the web. Adjust by means of shims (3) behind the plate on screws (1) and (2). Adjust measure A again.

Check the vacuum setting, see page MS 834–5X.

Footnote
How to thread the strip, see OS-book.

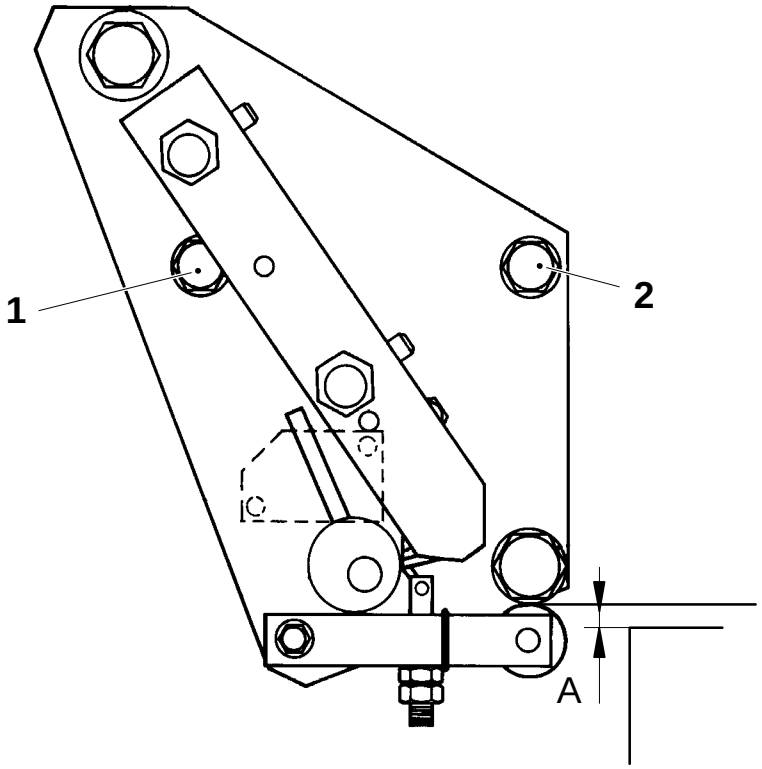

A = 1.0 ± 0.5 mm

1 Screw
2 Screw
3 Shim

Checking

Check the following details for wear and/or damage:

- the cooling water flow through the sealing jaw (1). Check which one is the outlet (12) of the sealing jaw. Check that the water flows out of the outlet,
- the function of the air spring (2), see page MS 817–5X,
- the bearings (9) and the bushings (3), (6), and (10),
- the bearing of the cam roller (4),
- the surfaces of the roller (4) and cam (5),
- that the cam roller rests against the cam after the return movement of the lever (8); if required, replace the spring (7),
- the function of the **Short stop** cylinder (11) and that the cylinder and its links move easily.

Replace worn and/or damaged details.

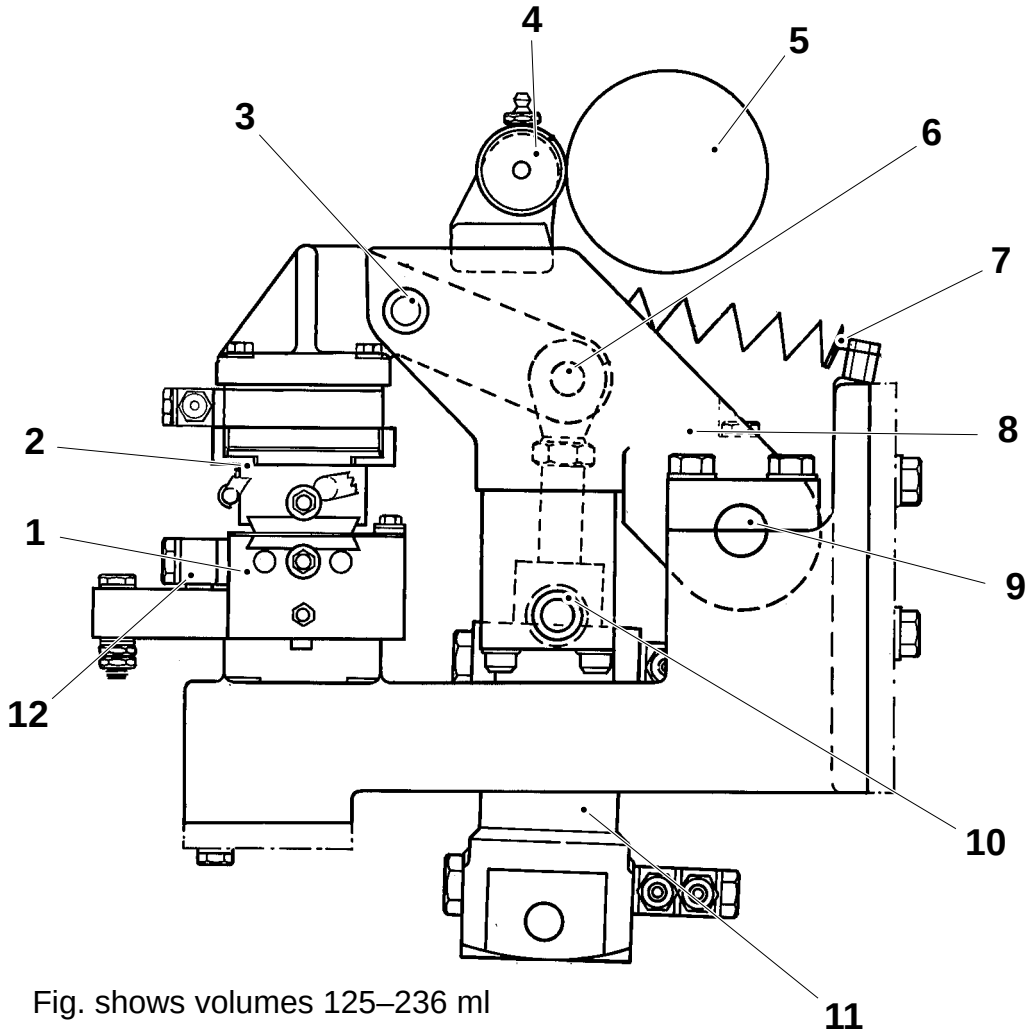

Fig. shows volumes 125–236 ml

1 Inductor
2 Air spring
3 Bushing
4 Cam roller
5 Cam
6 Bushing
7 Spring
8 Lever
9 Bearing
10 Bushing
11 Cylinder
12 Cooling water connection

Setting

Turn the main shaft to LOW cam.

Move the cylinder (1) to its plus position by manually actuating the solenoid valve of the cylinder.

Turn thereafter main shaft to HIGH cam.

Caution!
Reversal of this procedure will damage the inductor card!

Set the sealing pressure to 0.2 MPa. Adjust the cylinder piston rod head (4) until the counter jaw (5) is parallel with the inductor (6). Place a piece of packaging material and a piece of IS strip between the counter jaw (5) and the inductor (6). Adjust with shims (7) so that the air spring (8) is been compressed to half its stroke, A.

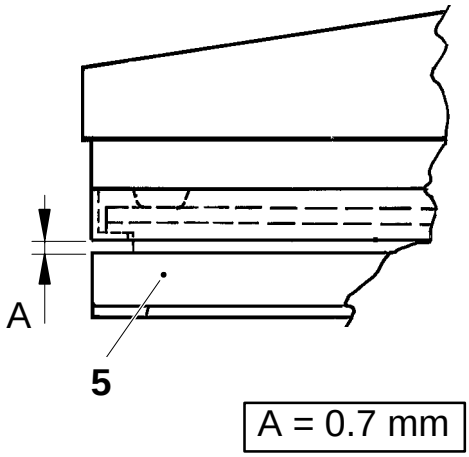

Set the sealing pressure, see page MS 910–7X.

1 Cylinder
2 Cam
3 Cam roller
4 Piston rod head
5 Counter jaw
6 Inductor
7 Shim
8 Air spring

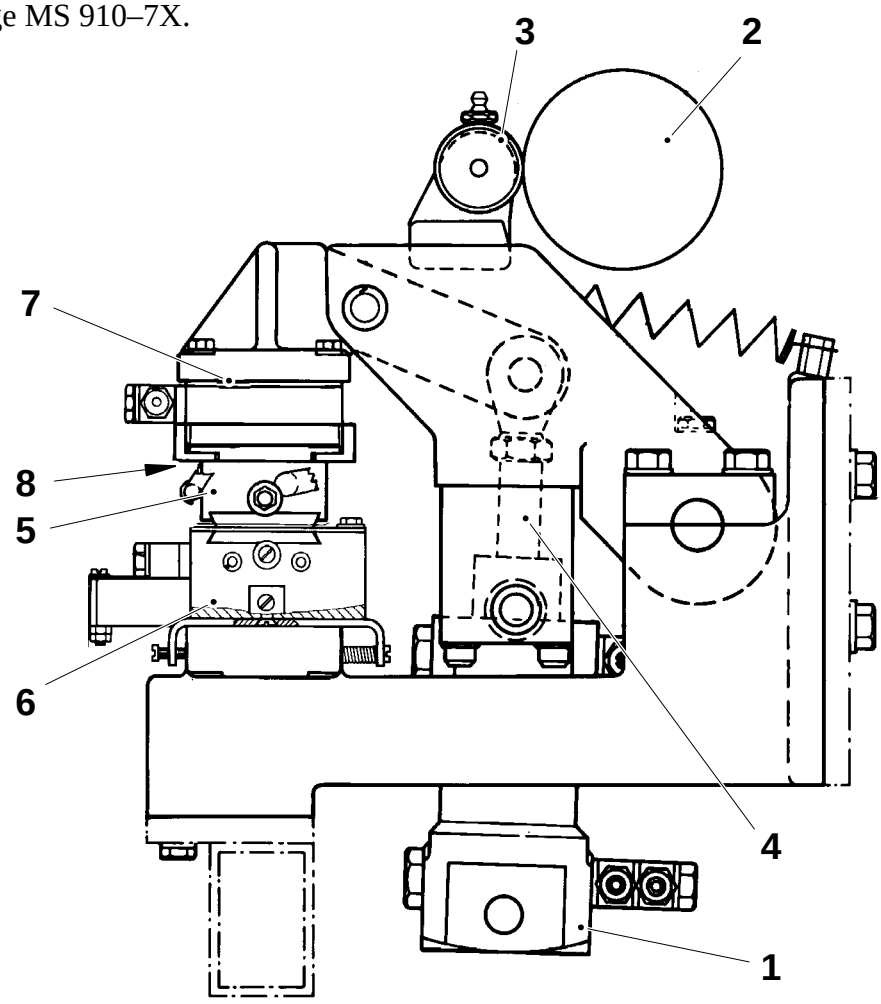

Fig. shows volume 250 ml

Checking

Check the teflon cloth (1); if the teflon cloth is damaged or if there are plastic deposits, replace it. Tear the cloth carefully away without damaging the inductor (2). Clean the inductor from remnants of the teflon cloth, if any.

Check the inductor (2); change to a new teflon cloth if the inductor is not cracked and make sure that there are no folds. The teflon cloth is to be large enough to cover the entire inductor exactly.

Footnote
Excess parts of the cloth are to be removed and must **not** be folded under the inductor.

Check the inside of the packaging material; make sure the heat image is complete.

Check the cooling water flow through the sealing jaw; check which one is the outlet (2) of the sealing jaw. Check that the water flows out of the outlet.

Fig. shows volume 250 ml

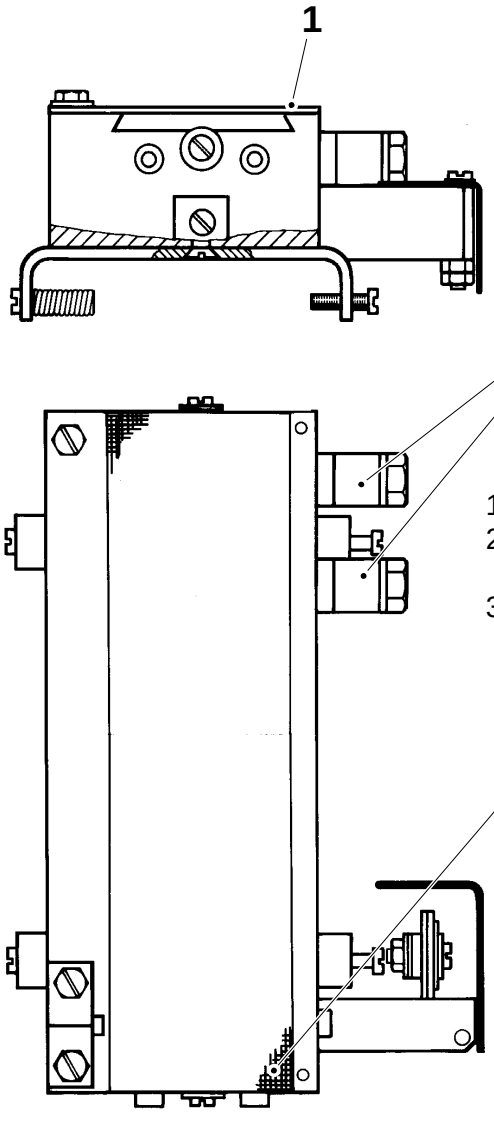

Fig. shows volumes 125–236 ml

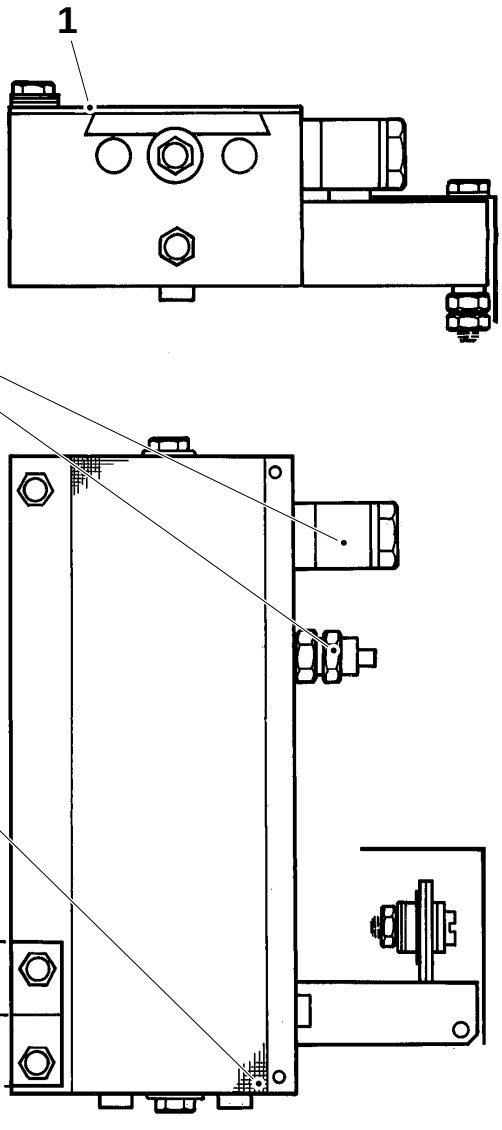

1 Inductor
2 Cooling water connection
3 Teflon cloth

Replacement

Valid for volumes 125 – 236 ml

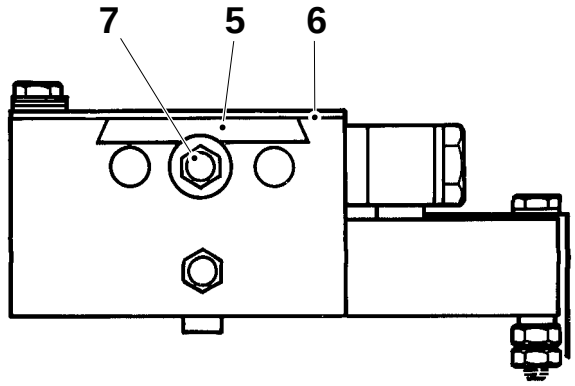

Inductor

Loosen the screws (1) and (2).

Remove the defective inductor with a screwdriver where the pins (3) and (4) are positioned.

Remove the inductor.

Check the dolly (5) for wear and/or damages. Replace as required.

Change the dolly by removing the screw (7) on one side and push out the dolly.

Replace the inductor.

Reassemble in reverse order.

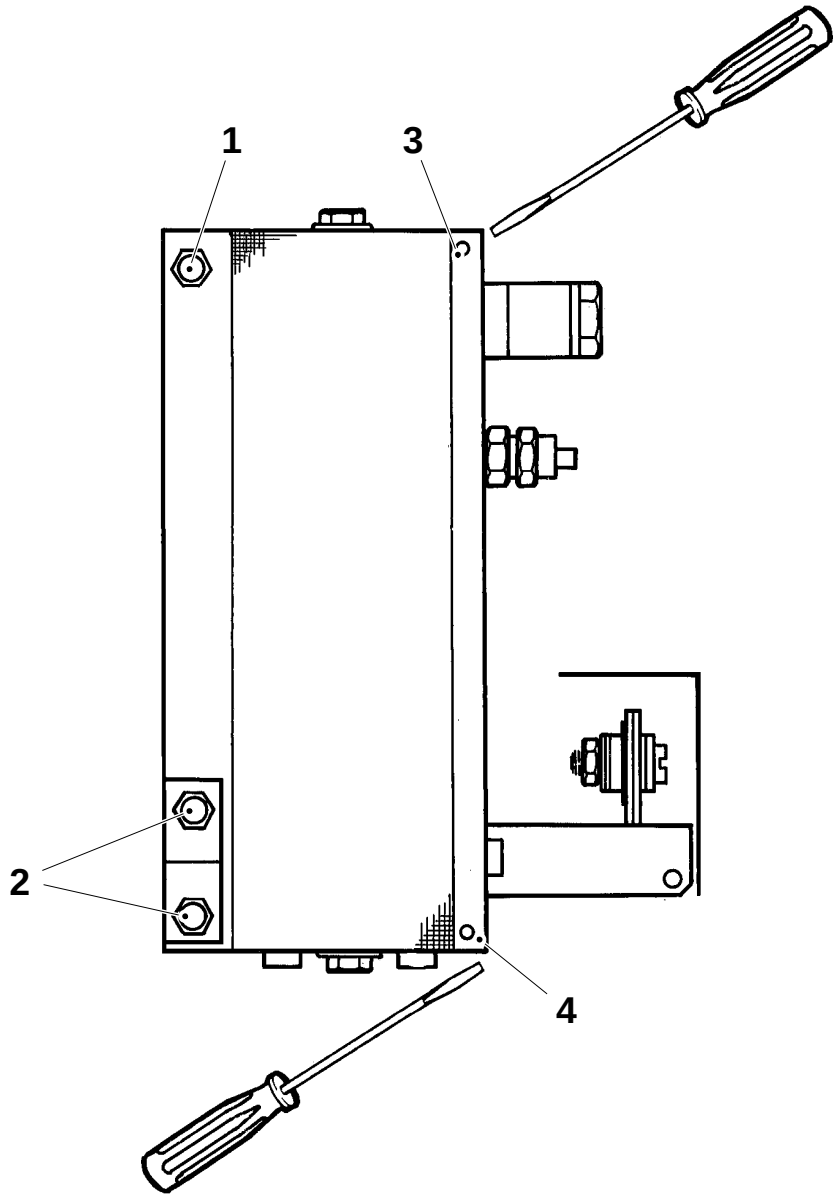

1 Screw
2 Screw
3 Pin
4 Pin
5 Dolly
6 Inductor
7 Screw

Replacement

Valid for volume 250 ml only

Inductor

Undo the screws (1) and (2).

Remove the inductor (3) with a screw driver where the pins (4) and (5) are positioned.

Check the ceramic dolly (6) for wear and/or damage. Replace as required.

Change the dolly by removing the screw (7) on one side and push out the dolly.

Replace the inductor.

Reassemble in reverse order.

Check the positioning of the inductor.

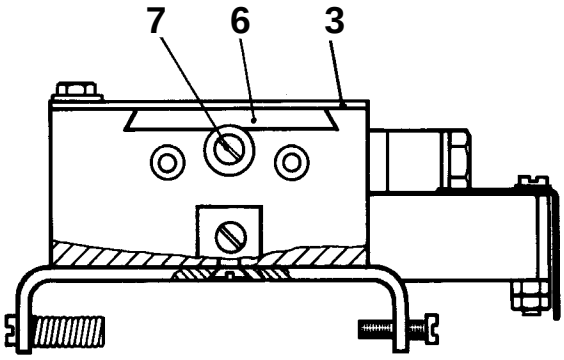

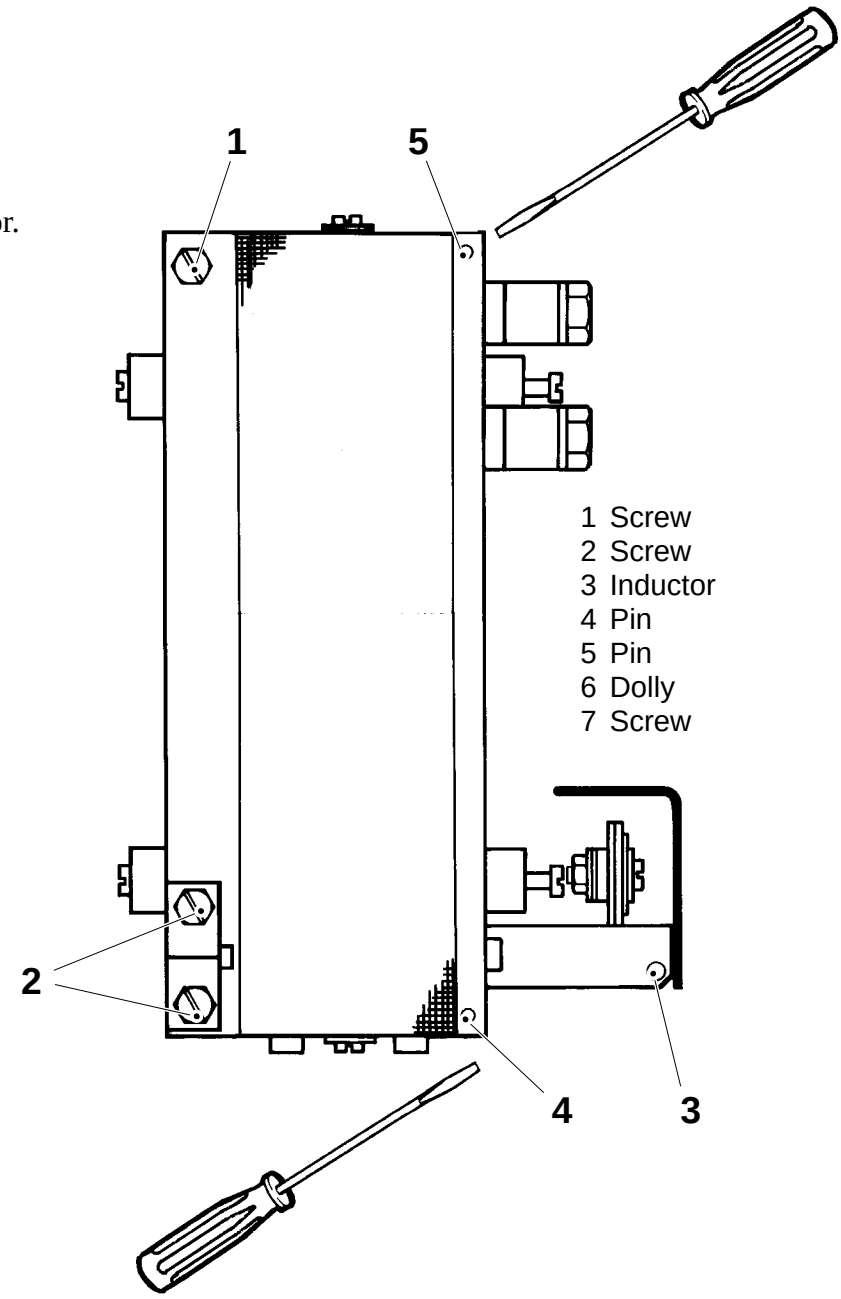

1 Screw
2 Screw
3 Inductor
4 Pin
5 Pin
6 Dolly
7 Screw

Setting

Valid for 250 ml only

Inductor position

The positioning shall be done with the wide strip, 45 mm.

Set distance A between the B plane and the longitudinal inductor bar according to fig., by loosening screw (1).

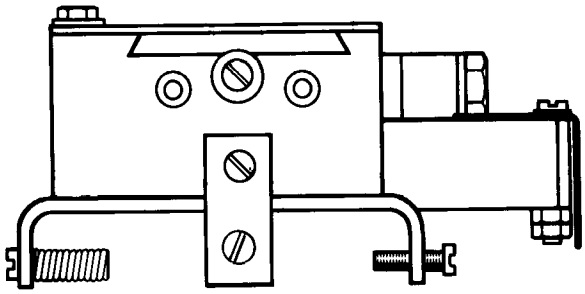

Run the pulltab device and check that the sealing voltage and time is correctly set, see section MS 1000.

Check distance A, see page MS 813–5X and MS 833–5X.

A = 204 mm

Check the LS strip position, see page MS 814–5X.

Run the pull tab device and examine the sealed strip, if necessary adjust the position of the inductor by loosening the screw (1) and adjusting with the screws (2).

The heated zone shall be parallel with an overlap of 0.5 mm.

If any of the settings of the inductor position are changed the dolly position must be checked, see page MS 819–52.

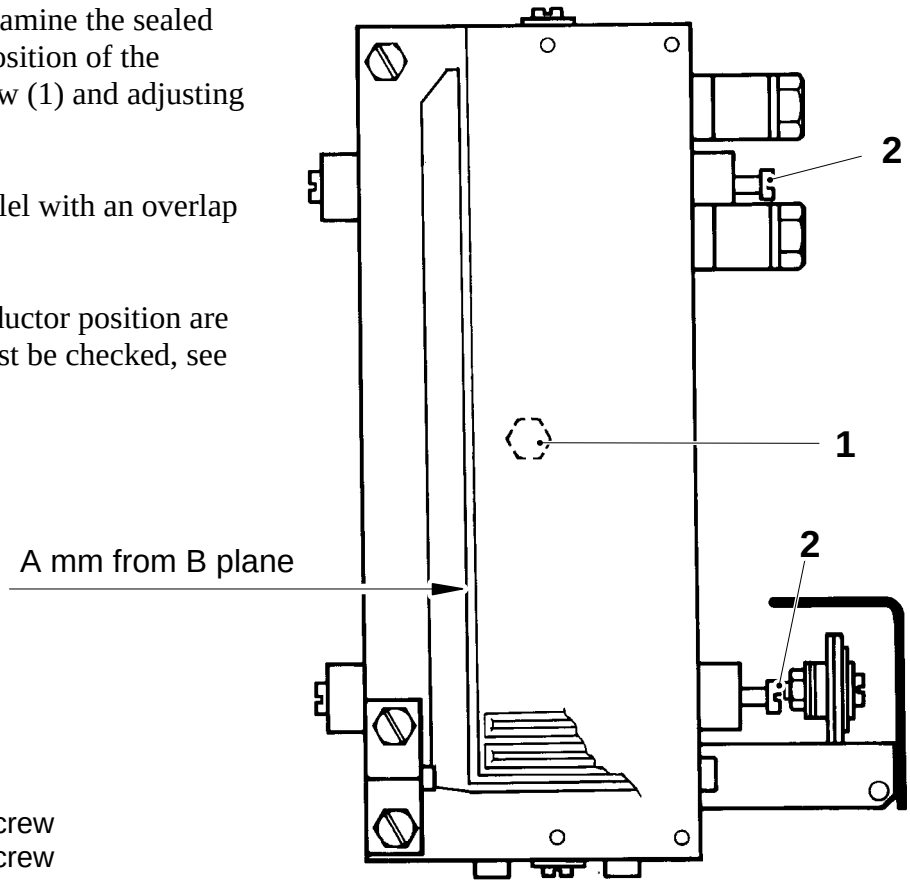

1 Screw
2 Screw

Checking

Check the ceramic dolly (1) in the counter jaw for wear and/or damage. Replace as required.

Check that the temperature is correct, see page MS 910–7X,

Check that the settings of the heating element (2) and temperature probe (3) are intact.

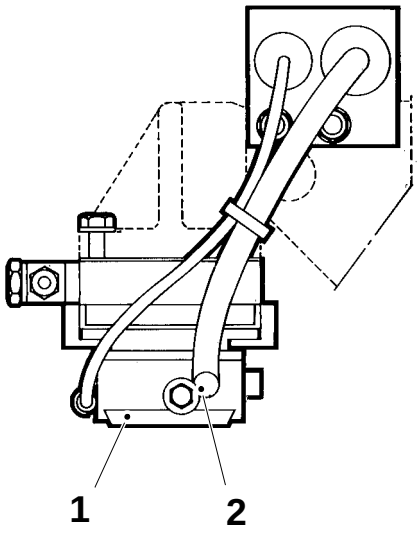

1 Dolly
2 Heating element
3 Temperature probe

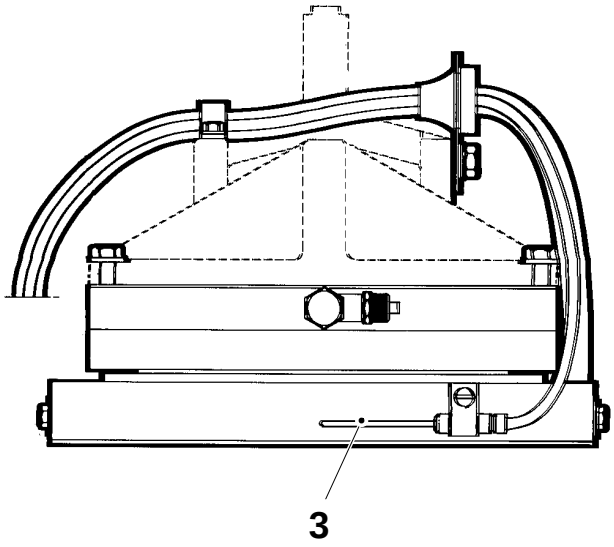

Replacement

Turn the main shaft to LOW cam.

To replace the ceramic dolly, loosen the screws (5) and slide out the dolly (3). Fit a new dolly.

To replace the heating element, remove the counter jaw after removing four bolts (1) and the screw (4), and pull out the heating element. Fit a new one with heat-dissipating paste.

To replace the temperature probe, loosen the screw (2) and pull out the probe. Fit a new probe.

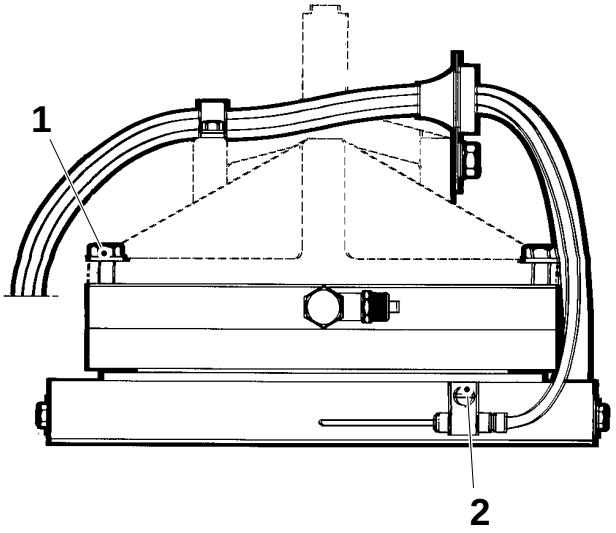

1 Bolt
2 Screw
3 Dolly
4 Screw
5 Screw

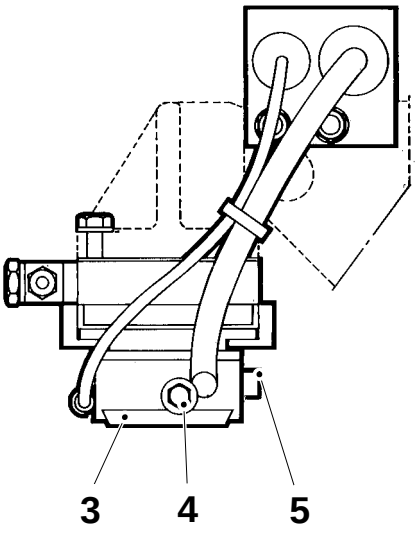

Setting

Valid for volumes 125–236 ml

Turn the main shaft to LOW cam.

Move the cylinder to its plus position by manually actuating the solenoid valve of the cylinder.

Reduce the air pressure to 0.05 MPa during setting.

Place pins (∅3 x 12, TP No. 311102–234) in the holes of the inductor card. Loosen the screws (1).

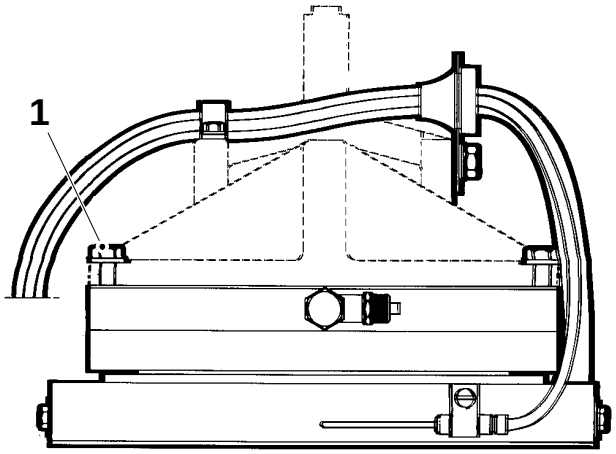

Turn the main shaft to HIGH cam.

Adjust the position of the counter, using the pins as guides. Tighten the screws. Remove the pins and reset the air pressure. Run the pulltab unit for 5 – 10 s and examine the sealed strip.

A = 1.5 mm

The longitudinal sealed zone towards the centre of the packaging material shall be A mm. If not, the air pressure must be reduced to 0.05 MPa, the screws (1) loosened and the position of the counter jaw adjusted.

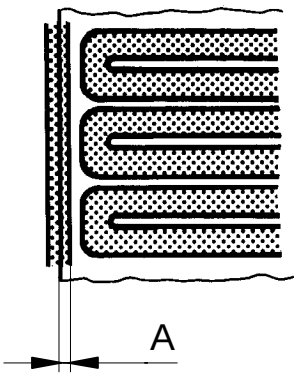

After setting, tighten the screws and reset the air pressure.

Setting

Valid for volume 250 ml only

Turn the main shaft to LOW cam.

Move the cylinder to its plus position by manually actuating the solenoid valve of the cylinder.

Reduce the air pressure to 0.05 MPa during setting.

Set the sealing jaw see MS 818–5X.

Place pins (∅3 x 12, TP No. 311102–234) in the holes of the inductor card. Loosen the bolts (1).

Turn the main shaft to HIGH cam.

Adjust the position of the counter, using the pins as guides. Tighten the screws. Remove the pins and reset the air pressure. Run the pull tab unit for 5 – 10 s and examine the sealed strip.

The longitudinal sealed zone towards the centre of the packaging material shall be A mm. If not, the air pressure must be reduced to 0.05 MPa, the screws (1) loosened and the position of the counter jaw adjusted.

The pressure from the dolly shall be centered above the bars in the inductor. If necessary, loosen the screw (3) and adjust with screw (2).

After setting, tighten the screws and reset the air pressure.

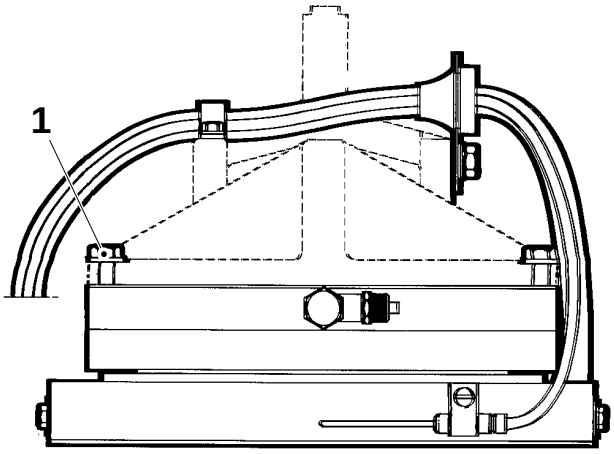

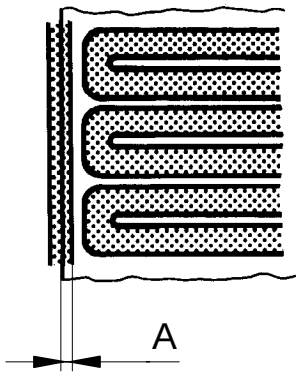

A = 1.5 mm

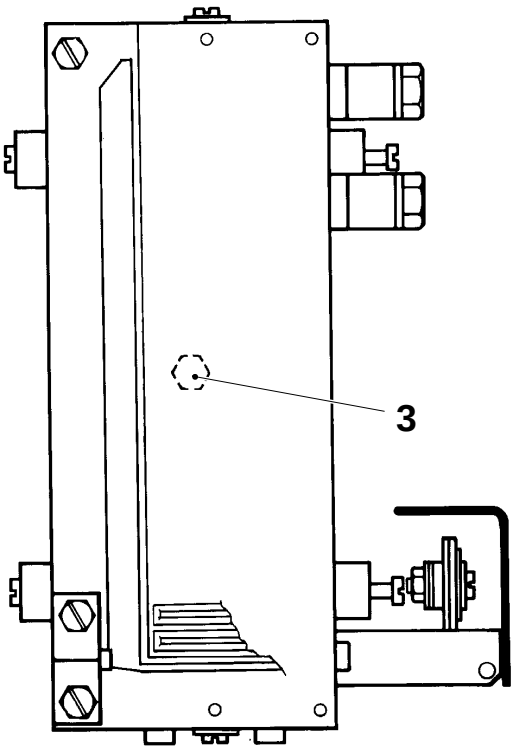

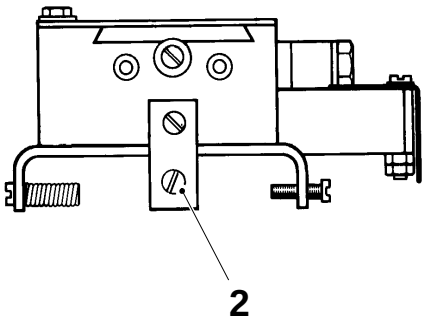

1 Bolt
2 Screw
3 Screw

Replacement

Remove the plate (1) and change air filters.

Flow direction, see pneumatic diagram on page MS 878–7X.

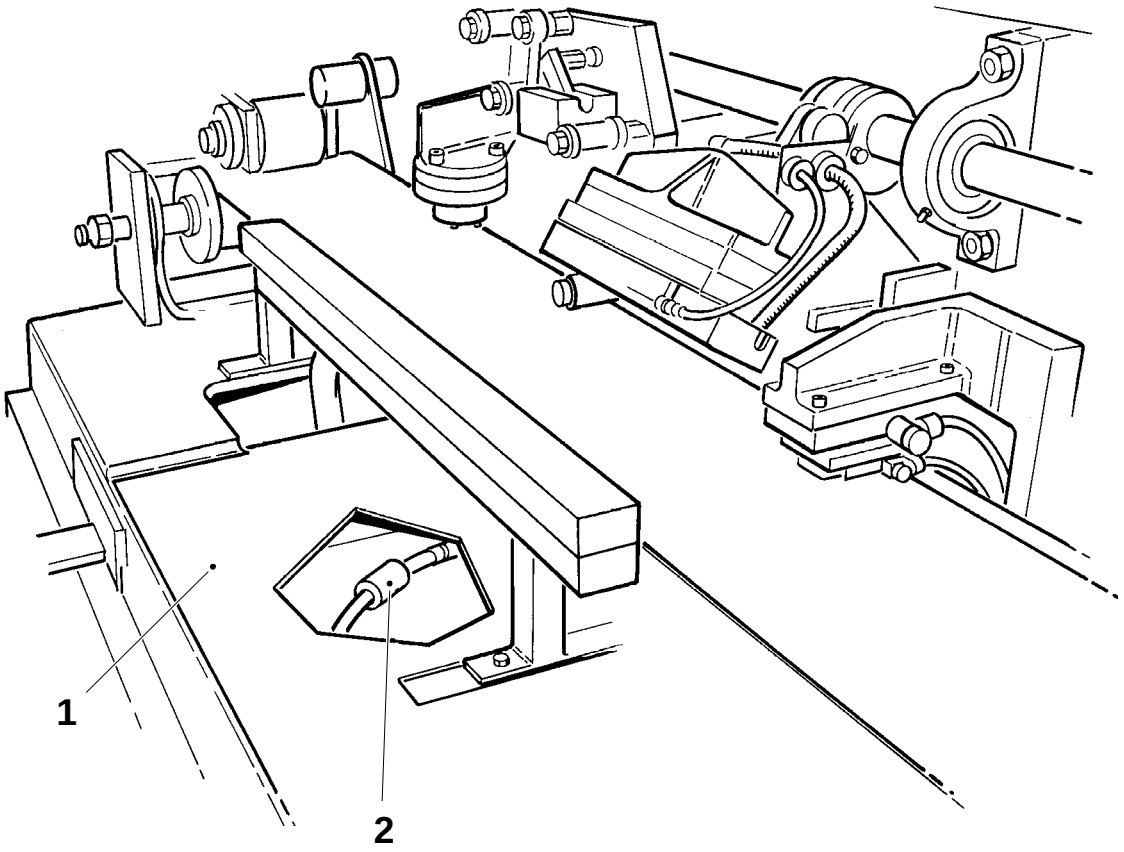

1 Plate
2 Filter

Checking

Valid for volumes 125 – 236 ml

Check:

- that the cam (1), and the roller (2) are not worn and/or damaged,
- that the bearing (4) and the bushings (7), (8), and (9) are not worn and/or damaged.
- that the cam roller rests against the cam after the return movement of the lever (3). If required, replace the spring (5).
- the function of the cylinder (6),
- the function of the cutting knife (11),
- that the heating rail (10) is not worn and/or damaged, and
- that the support roller (12) rotates easily.

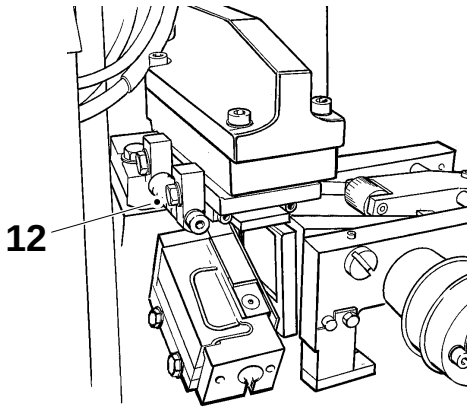

Replace worn and/or damaged details.

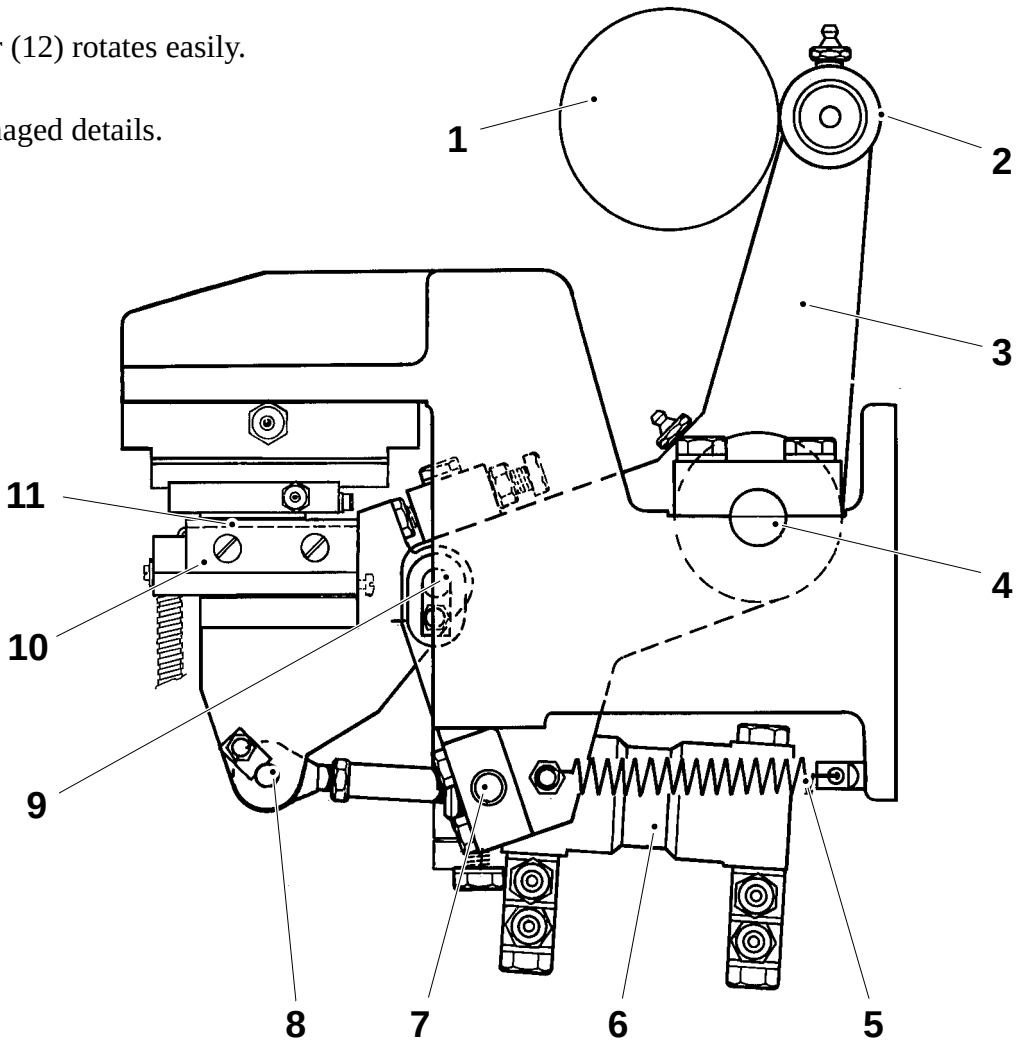

1 Cam
2 Cam roller
3 Lever
4 Bearing
5 Spring
6 Cylinder
7 Bushing
8 Bushing
9 Bushing
10 Heating rail
11 Cutting knife
12 Support roller

Checking

Valid for volume 250 ml only

Check:

- the cam (1) and the roller (2) are not worn and/or damaged,
- the bearing (4) and the bushings (7), (8), and (9)are not worn and/or damaged,
- that the cam roller rests against the cam after the return movement of the lever (3). If required, replace the spring (5),
- the function of the cylinder (6),
- the function of the cutting knife (11),
- the heating rail (10),
- that there is no water leaking from the connections (12),
- that the support roller (13) rotate easily.

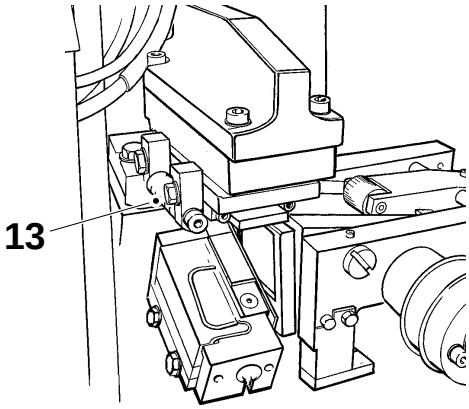

Replace worn and/or damaged details.

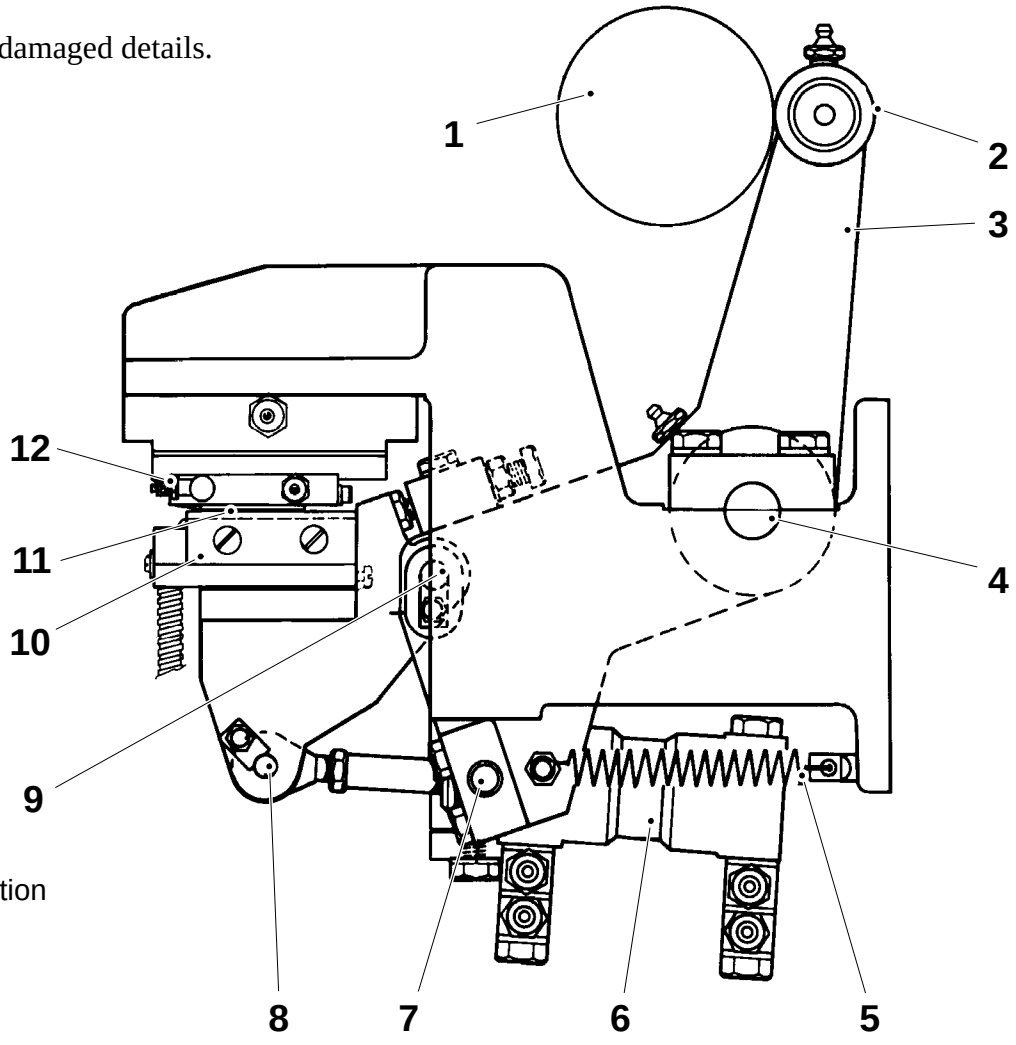

1 Cam
2 Cam roller
3 Lever
4 Bearing
5 Spring
6 Cylinder
7 Bushing
8 Bushing
9 Bushing
10 Heating rail
11 Cutting knife
12 Water connection
13 Support roller

560

Checking

Valid for volume 250 ml only

Check:

- that the cam (1), and the roller (2), are not worn and/or damaged,
- that the bearing (4) and the bushings (7), (8), and (9), are not worn and/or damaged,
- that the cam roller rests against the cam after the return movement of the lever (3). If required, replace the spring (5),
- the function of the cylinder (6),
- the function of the cutting knife (11),
- that the heating rail (10) is not worn and/or damaged,
- that there is no water leakage in the connections (12)

Replace worn and/or damaged details.

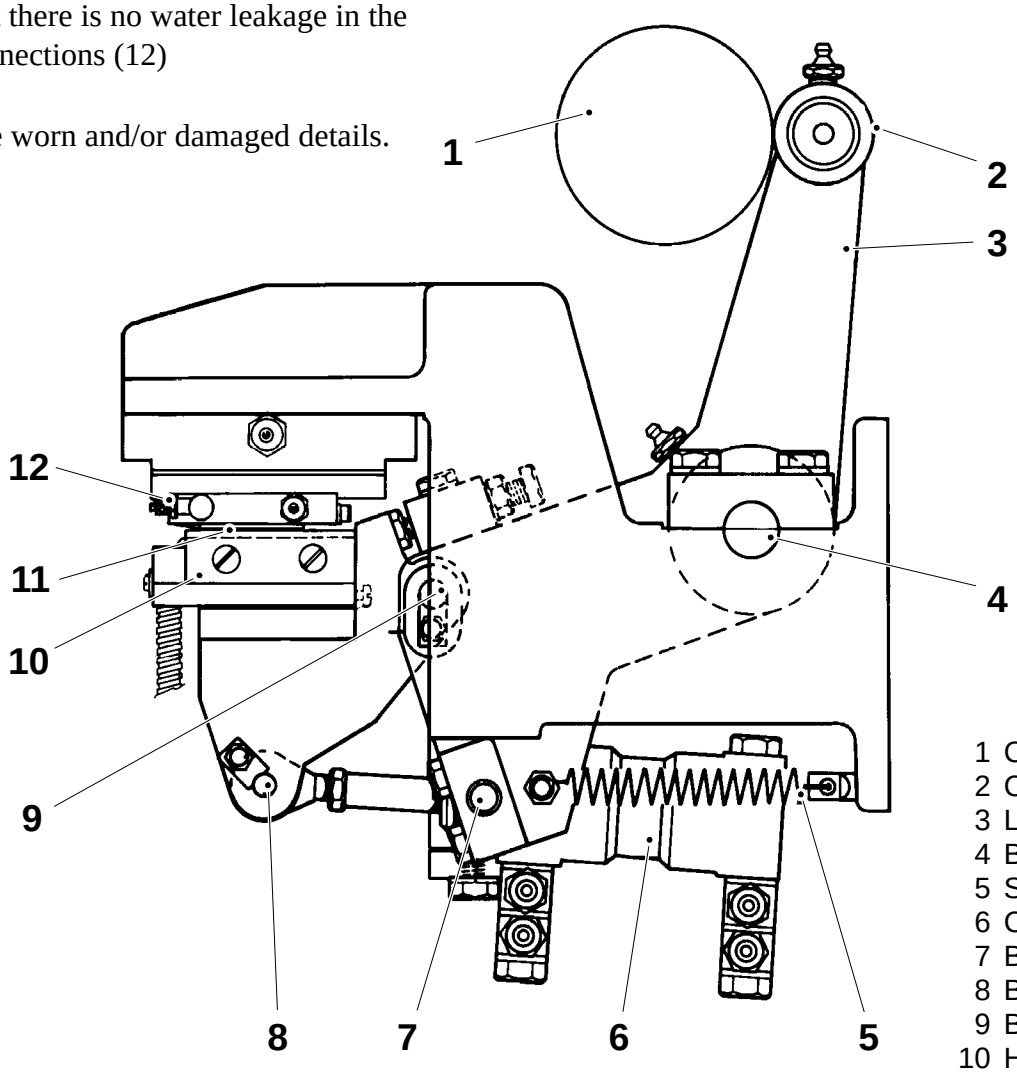

1 Cam
2 Cam roller
3 Lever
4 Bearing
5 Spring
6 Cylinder
7 Bushing
8 Bushing
9 Bushing
10 Heating rail
11 Cutting knife
12 Water connection

Setting

Valid for volumes 125 – 236 ml

Remove the heating block according to page MS 829–3X

Set the heating rail (1) so that the knife (2) is located B mm below the heating rail. Adjust with shims (3) between the heating rail (1) and the heating block (4).

Set the position of the guide roller (5) to measure A below. Adjust with the screws (6).

(Cont’d overleaf)

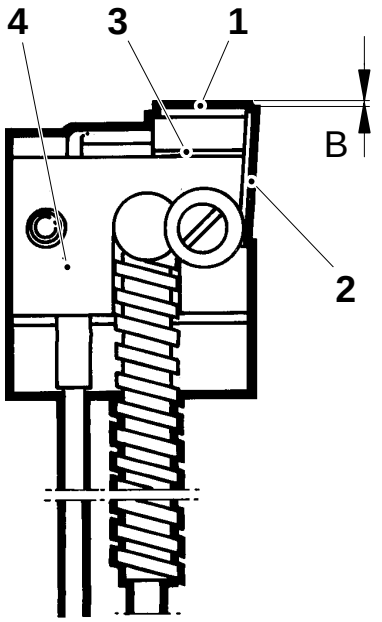

1 Heating rail
2 Knife
3 Shim
4 Heating block
5 Guide roller
6 Screw

A = 0.5 – 1.0 mm
B = 0.5 mm

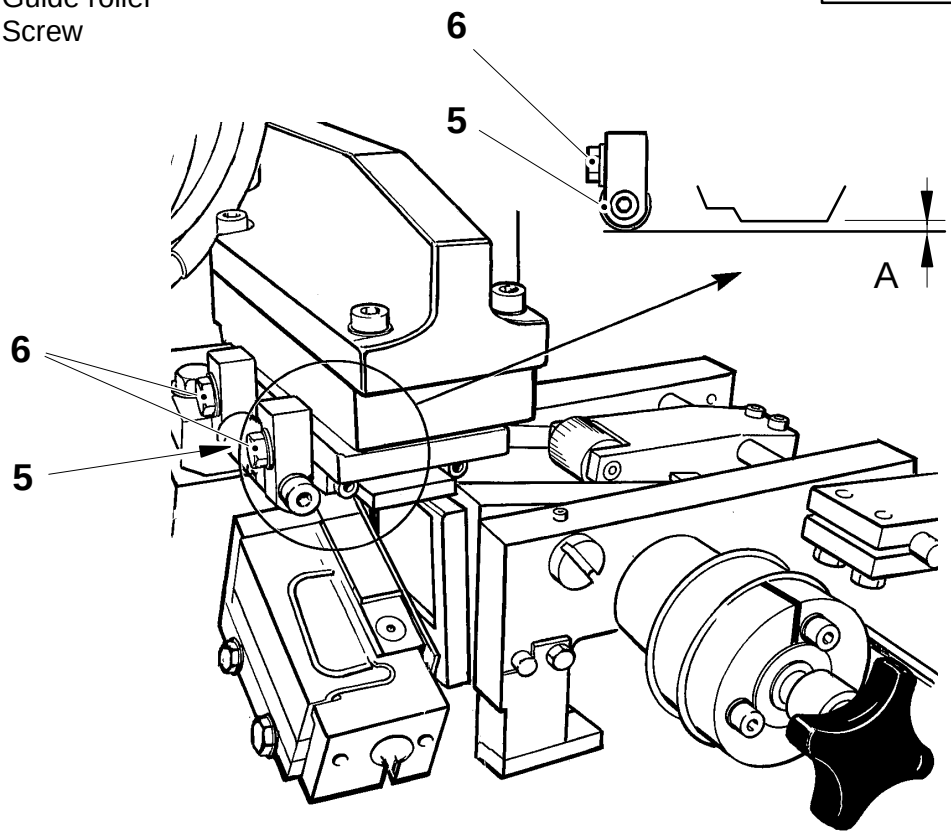

Fig 1

(Cont'd)

Turn the main shaft to LOW cam.

Set the sealing pressure at 0.2 MPa.

Move the cylinder (8) to its plus position by manually actuating the solenoid valve of the cylinder.

Thereafter turn main shaft to HIGH cam.

Caution!
Reversal of this procedure will damage the heating rail!

Check that the piston rod does not reach its bottom position. Adjust the setting screw (7) until the heating block (4) is parallel with the counter jaw (11). Check with a feeler gauge.

Place a piece of packaging material IS strip and tab strip between the counter jaw (11) and the heating block (4). Adjust with shims (10) between the heating block (4) and the insulation block (9) until the air spring (7) has been compressed **to half its stroke**, gap A.

Set the sealing jaw so that the tab is sealed, see page MS 842–5X.

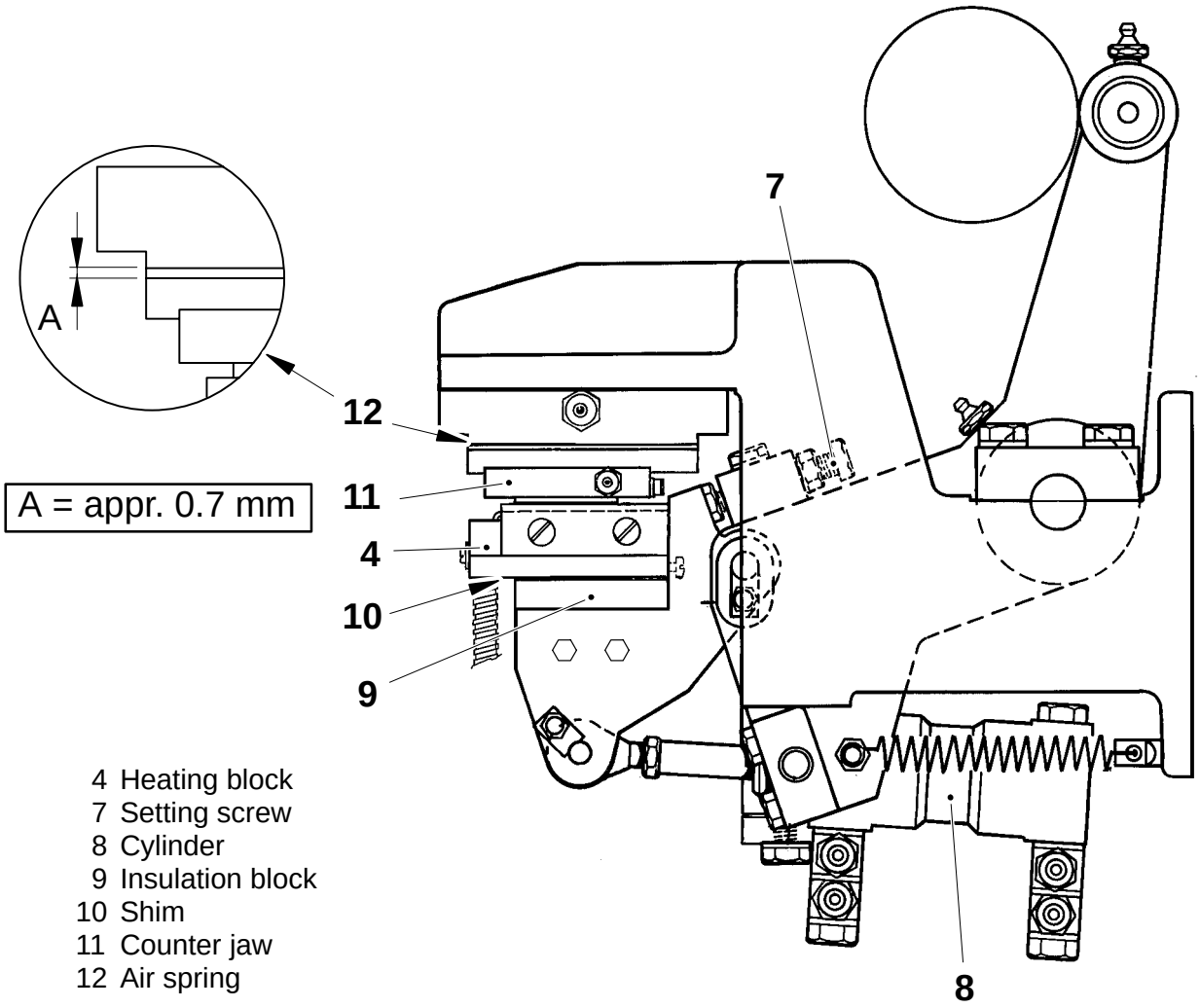

4 Heating block
7 Setting screw
8 Cylinder
9 Insulation block
10 Shim
11 Counter jaw
12 Air spring

Setting

B = 0.5 mm

Valid for volume 250 ml only

Remove the heating block, see page MS 829–3X

Set the heating rail (1) so that the knife (2) is located B mm below the heating rail. Adjust with shims (3) between the heating rail (1) and the heating block (4).

(Cont’d overleaf)

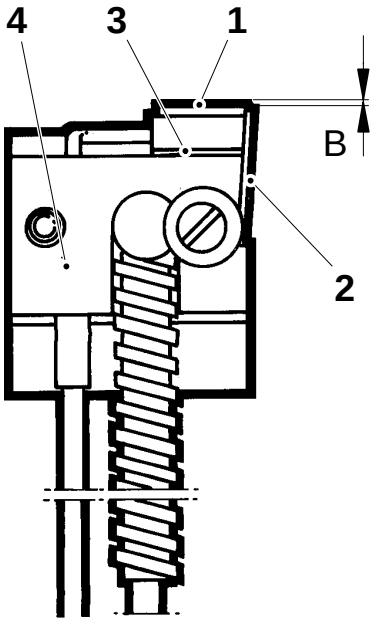

1 Heating rail
2 Knife
3 Shim
4 Heating block

(Cont'd)

Turn the main shaft to LOW cam.

Set the sealing pressure at 0.2 MPa.

Move the cylinder (6) to its plus position by manually actuating the solenoid valve of the cylinder.

Thereafter turn main shaft to HIGH cam.

Caution!
Reversal of this procedure will damage the heating rail!

Check that the piston rod does not reach its bottom position. Adjust the setting screw (5) until the heating block (4) is parallel with the counter jaw (9). Check with a feeler gauge.

Place a piece of packaging material IS strip and tab strip between the counter jaw (9) and the heating block (4). Adjust with shims (8) between the heating block (4) and the insulation block (9). until the air spring (10) has been compressed **to half its stroke**, gap A.

Set the sealing jaw so that the tab is sealed, see page MS 842–5X sealing length.

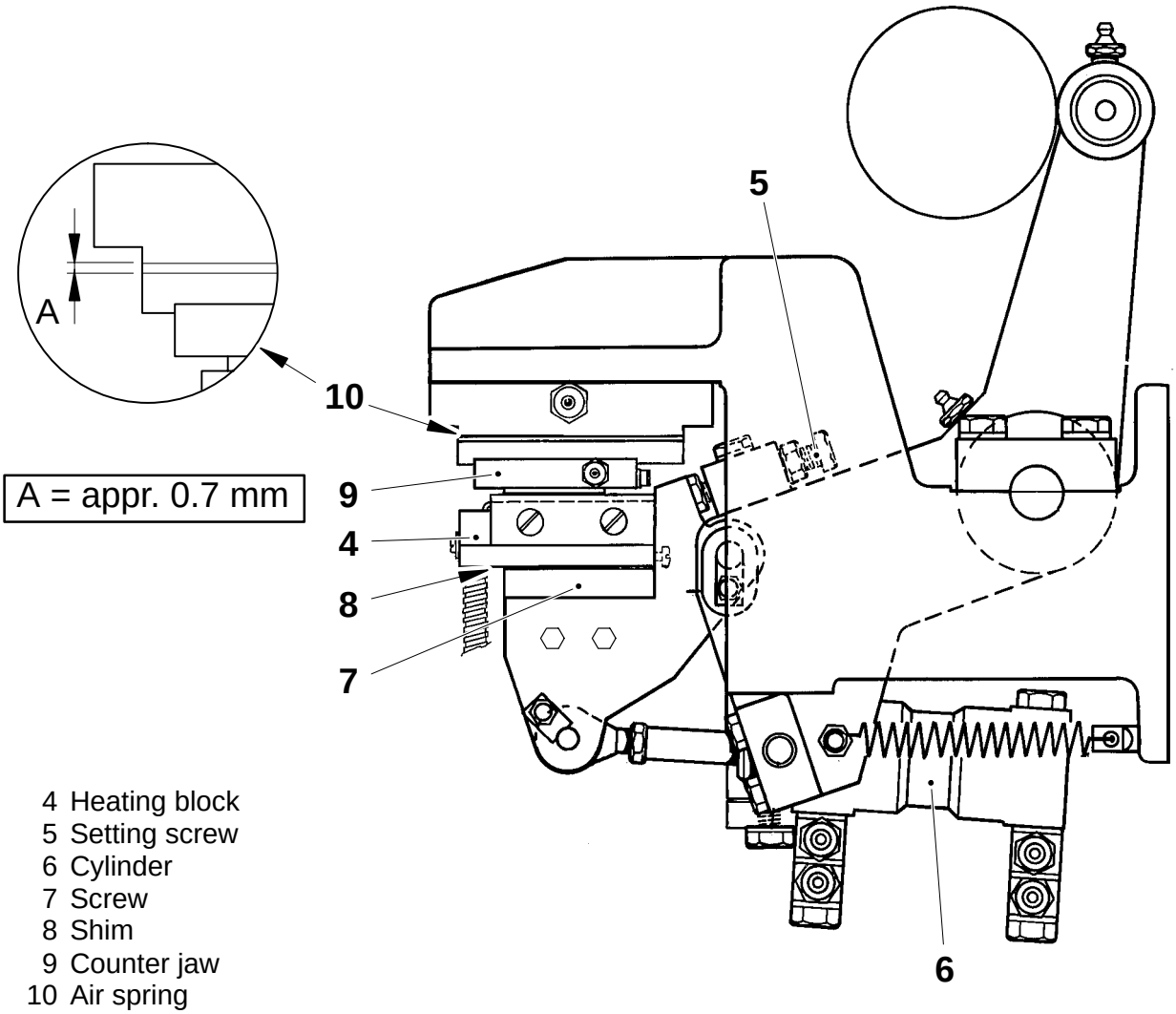

4 Heating block
5 Setting screw
6 Cylinder
7 Screw
8 Shim
9 Counter jaw
10 Air spring

Checking

Check the dolly (1) for cracks and/or damage.
Replace as required.

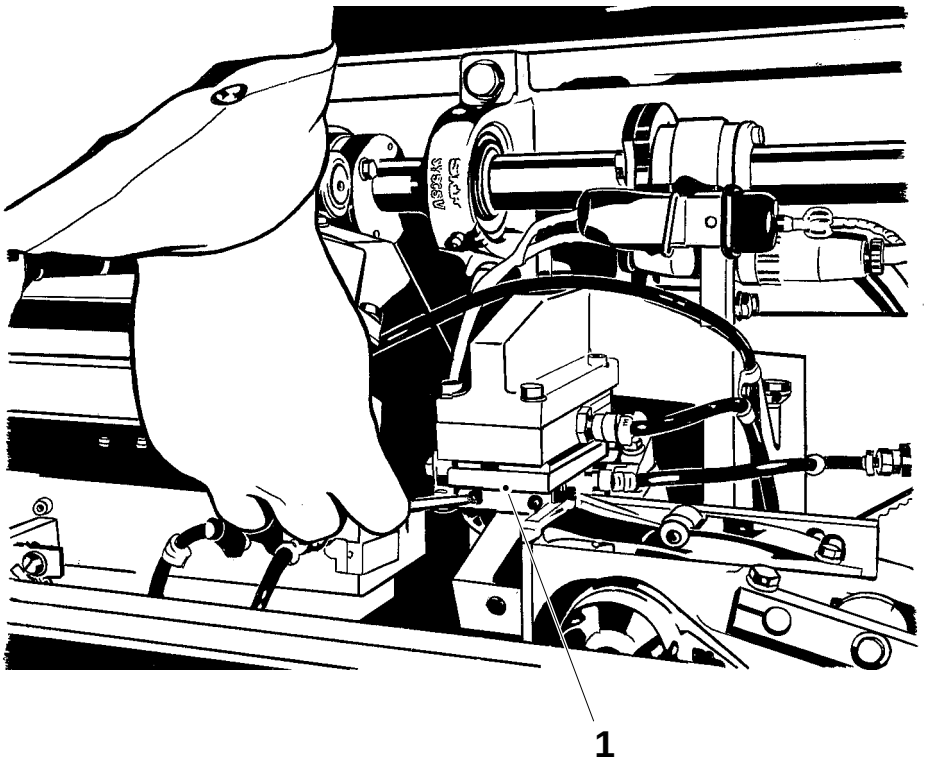

1 Dolly

Replacement

Undo the two screws (1) and remove the washer (2). Slide off the dolly and, fit a new dolly.

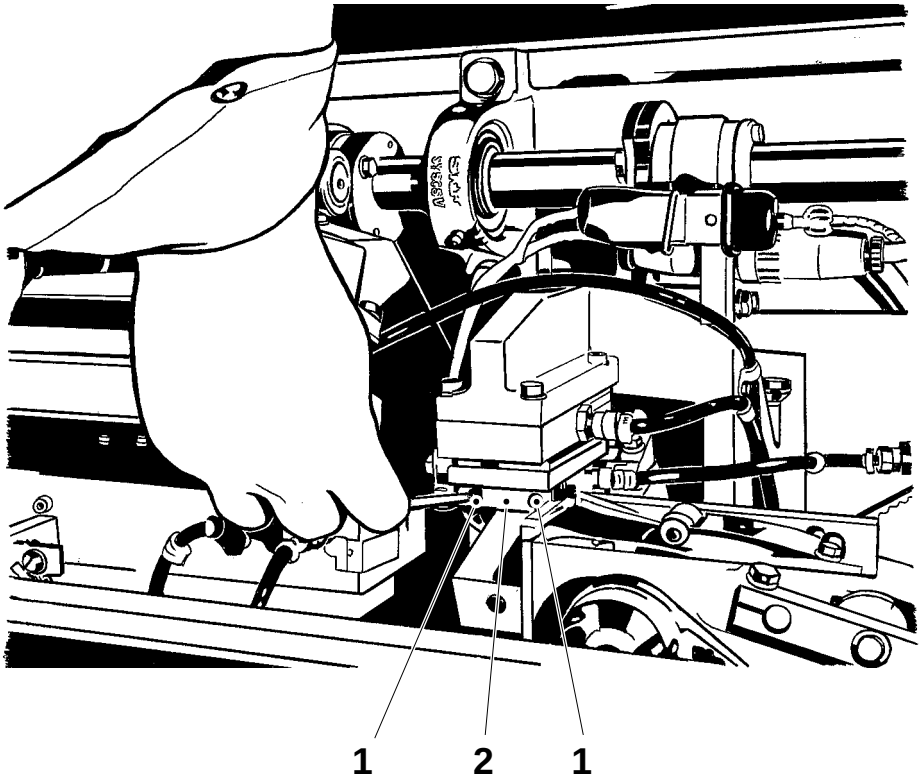

1 Screw
2 Washer

Checking/Cleaning

Clean the rollers (1), (2) and (3).

Check the rollers for wear and/or damage.
Replace as required.

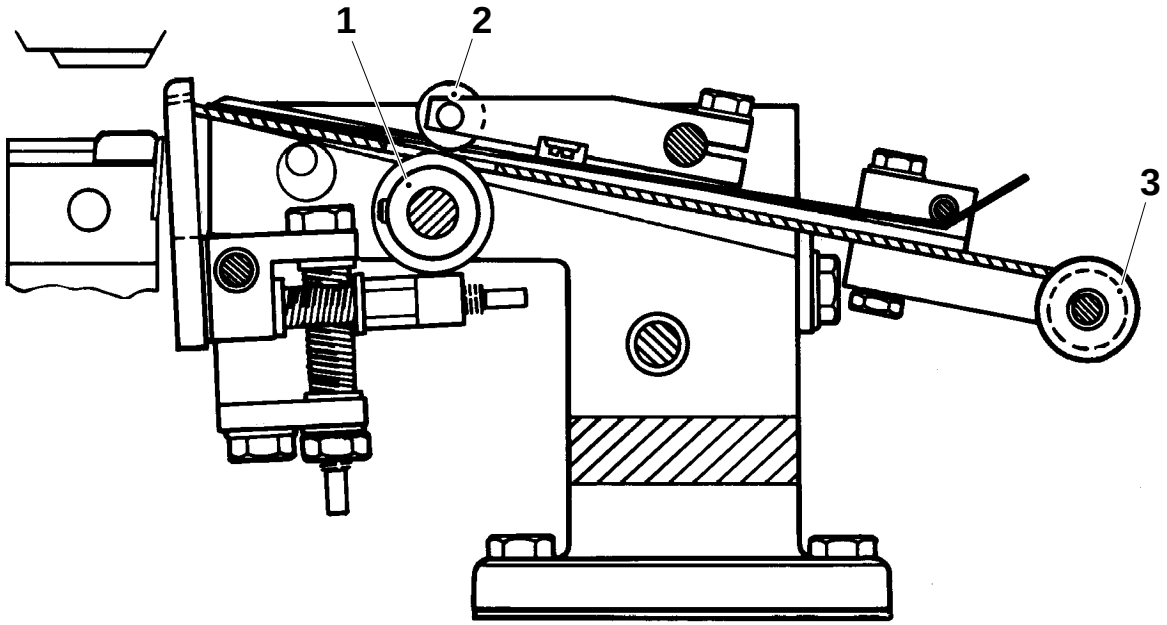

1 Roller
2 Roller
3 Roller

Checking/Cleaning

Clean the rollers (1), (2) and (3).

Check the rollers for wear and/or damage.
Replace as required.

Check that the spring (4) gives the correct pressure at the roller (2), see page MS 827–5X.

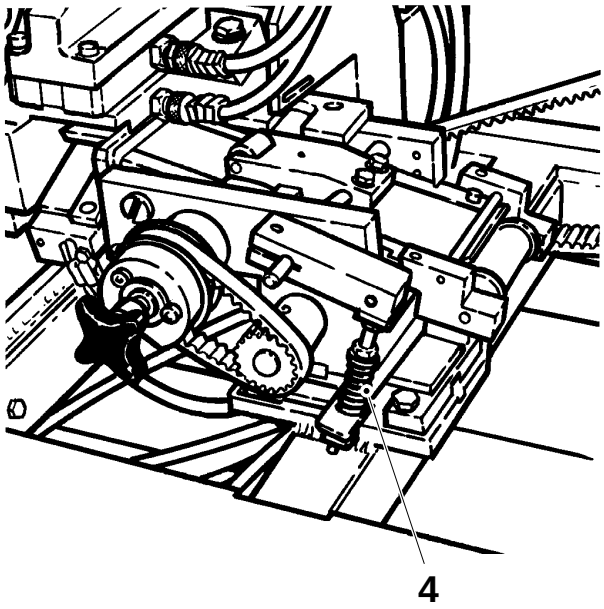

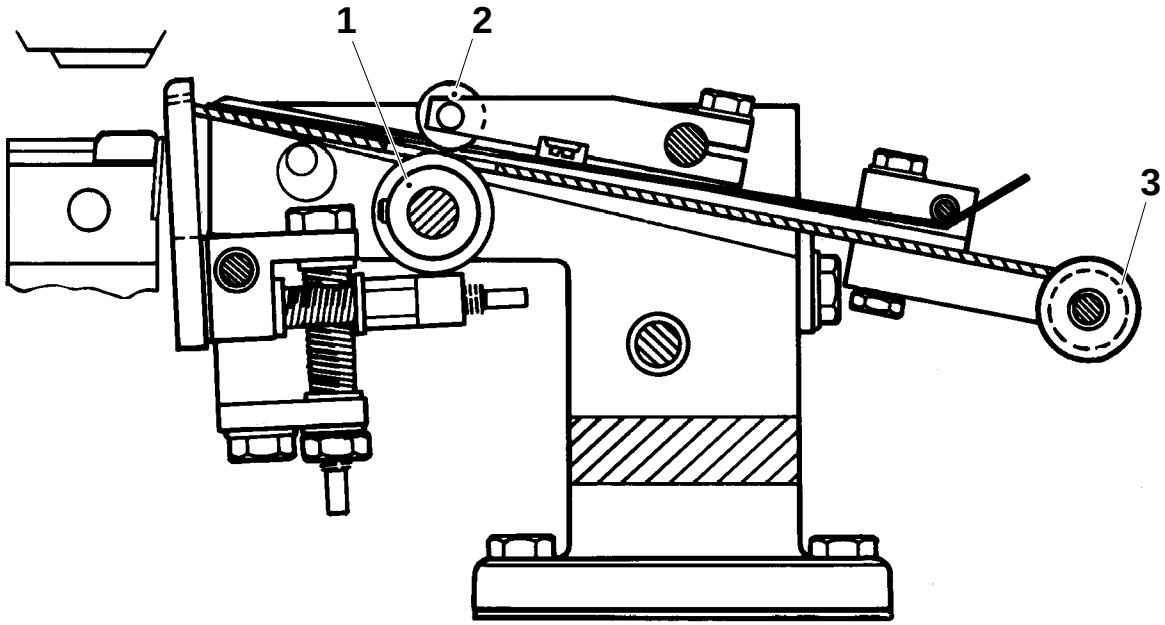

1 Roller
2 Roller
3 Roller
4 Spring

Setting

Pull tab strip unit guide

Dismantle the tab strip feed device from the pull tab, see page MS 829–3X.

The following settings are to be done at the work bench.

Pre–set the window knife (8) by loosening the lock nut (7) and adjust with the screw (3) and set measure A against a vertical plane (9).

Insert the tab strip unit guide (4) and secure it in its position

Set the tab strip chute so that the roller (10) is in line with the slide plate according to fig 3 and so that the unit guide is positioned B mm below the **corners** of the window knife, see fig 2. This must be done with great care.

Footnote
Adjust so that the tab strip chute is stable.

To adjust, loosen the two screws (5), loosen the grub screw (2) of the eccentric pin (1). Lift or lower the plate (6) and also adjust the eccentric shaft. Set measure B making sure that the roller (10) is correctly aligned before you tighten the screws (5).

(Cont'd overleaf)

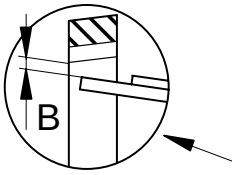

Fig. 2

A = 1.0 mm
B = 0.5 mm

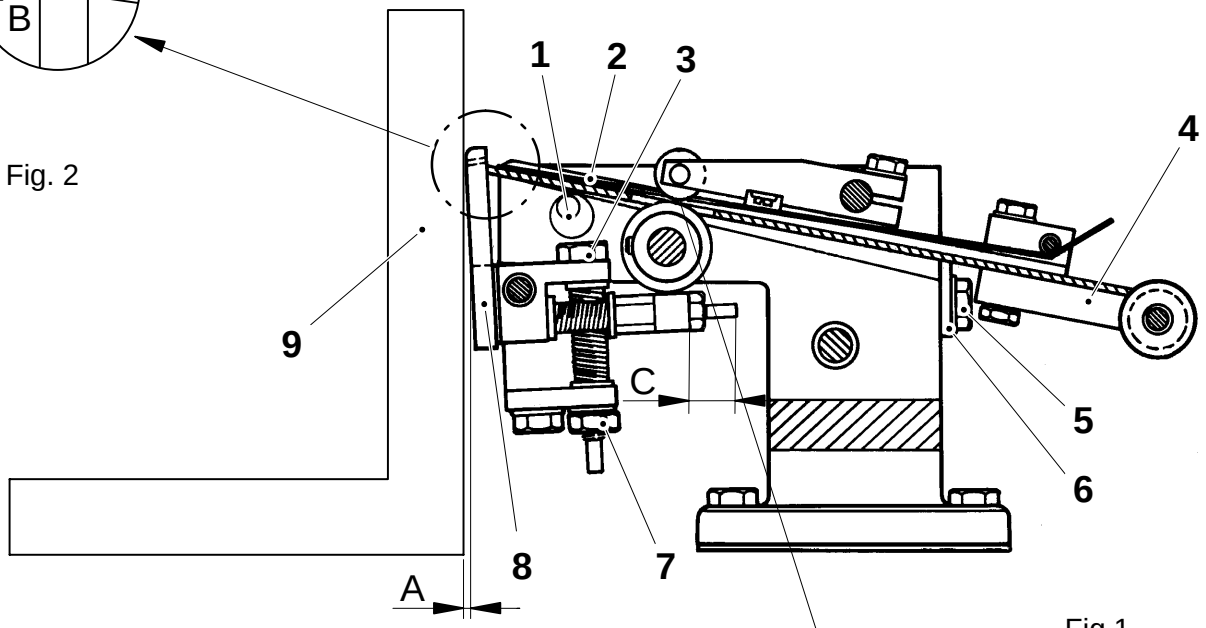

Fig.1

1 Eccentric pin
2 Grub screw
3 Screw
4 Tab strip unit guide
5 Screw
6 Plate
7 Nut
8 Window knife
9 Composing stick
10 Feed roller

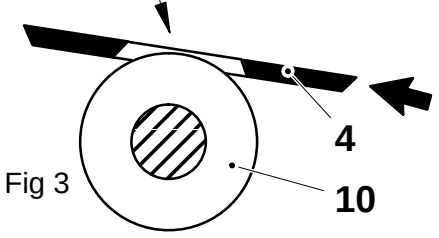

Fig 3

(Cont'd)

Window knife

Loosen the two lock nuts (12) and adjust the nuts (11) equally so that the distance from the nuts to the end of the thread is C mm, see fig. After adjustments, tighten the nuts.

Place the tab strip feeder on a straight flat surface. Loosen the lock nut (7) and turn the screw (3) such that the distance from the bottom outside edge of the opening in the tab window knife to the vertical plane is D mm. Tighten the lock nut. Put the tab strip feeder back to its place.

(Cont'd overleaf)

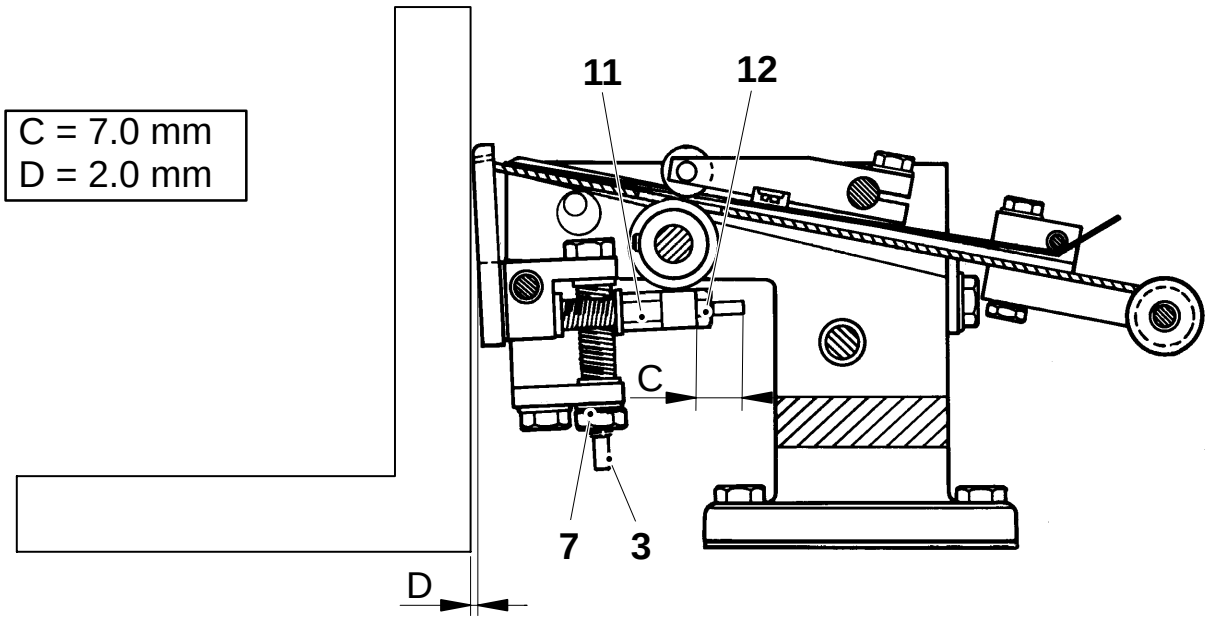

3 Screw
7 Lock nut
11 Nut
12 Lock nut

(Cont'd)

Lengthwise and vertically

Deactivate the solenoid valve to the sealing jaw.
Turn the main shaft until the knife is on the same level as the corner of the window knife.

Set measure E.

Activate the solenoid valve to the sealing jaw.
Turn the main shaft to LOW cam.
Set measure F between the counter jaw and the top of the window knife.

Footnote
After adjustment of gap F, recheck gap E.

(Cont'd overleaf)

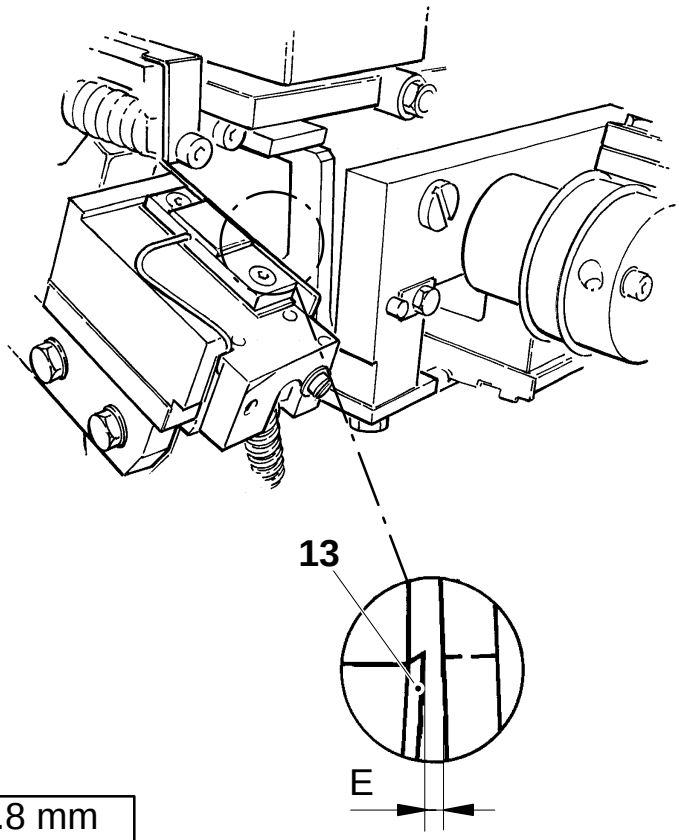

E = 0.8 mm
F = 1.5 mm

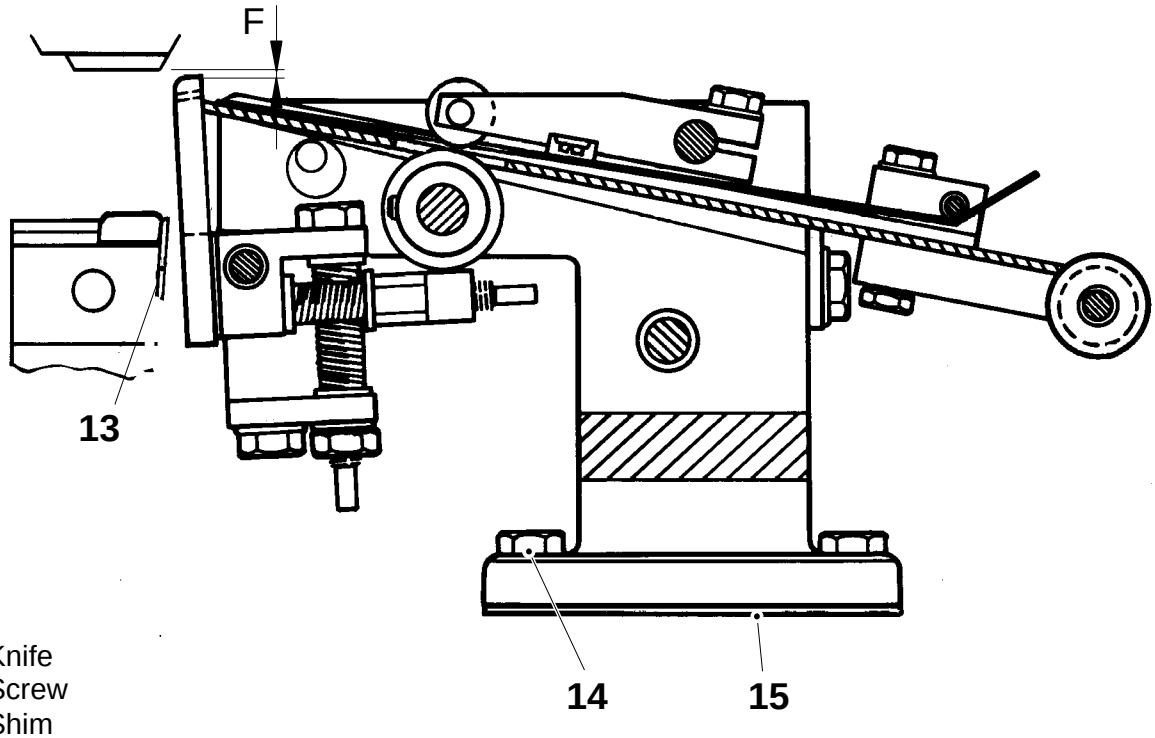

13 Knife
14 Screw
15 Shim

(Cont'd)

Loosen the two screws (16) and move the piston (17) to its minus position.

Push the holder (18) against the feed roller (10) and keep it there. Raise the piston (17) G mm. Retighten the screws (16).

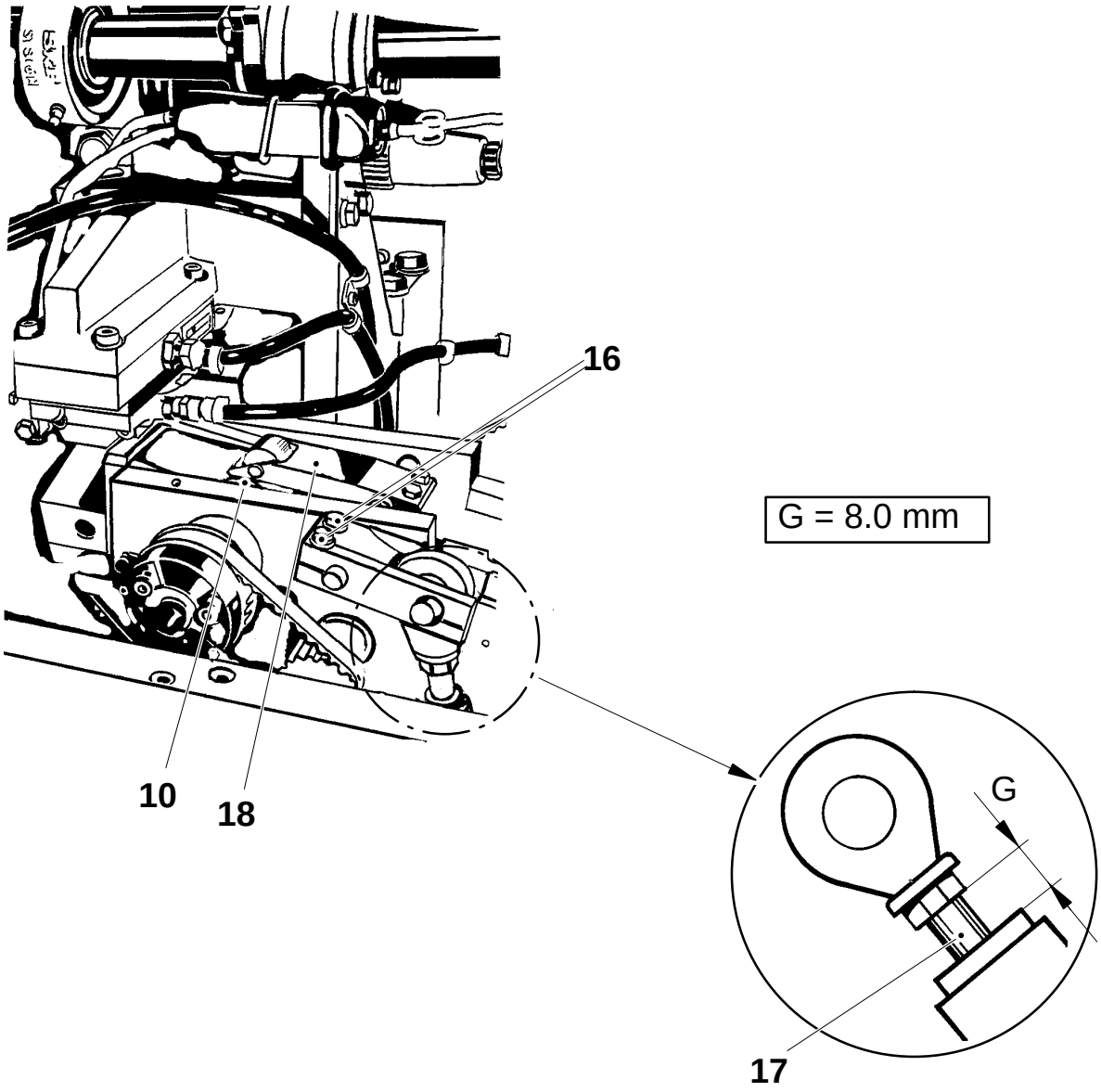

10 Feed roller
16 Screw
17 Piston
18 Holder

Setting

Pull tab strip unit guide

Dismantle the tab strip feed device from the pulltab, see page MS 829–3X.

The following settings are to be done at the work bench.

Pre-set the window knife (8) by loosening the lock nut (7) and adjust with the screw (3) and set measure A against a vertical plane (9).

Insert the tab strip unit guide (4) and secure it in its position

Set the tab strip chute so that the roller (10) is in line with the slide plate according to fig 3 and so that the unit guide is positioned B mm below the **corners** of the window knife, see fig. 2. This must be done with great care.

Footnote
Adjust so that the tab strip chute is stable.

To adjust, loosen the two screws (5), loosen the grub screw (2) of the eccentric pin (1). Lift or lower the plate (6) and also adjust the eccentric shaft. Set measure B making sure that the roller (10) is correctly aligned before tightening the screws (5).

(Cont'd overleaf)

A = 1.0 mm
B = 0.5 mm

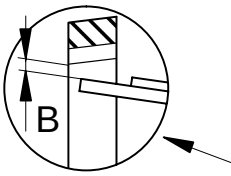

Fig. 2

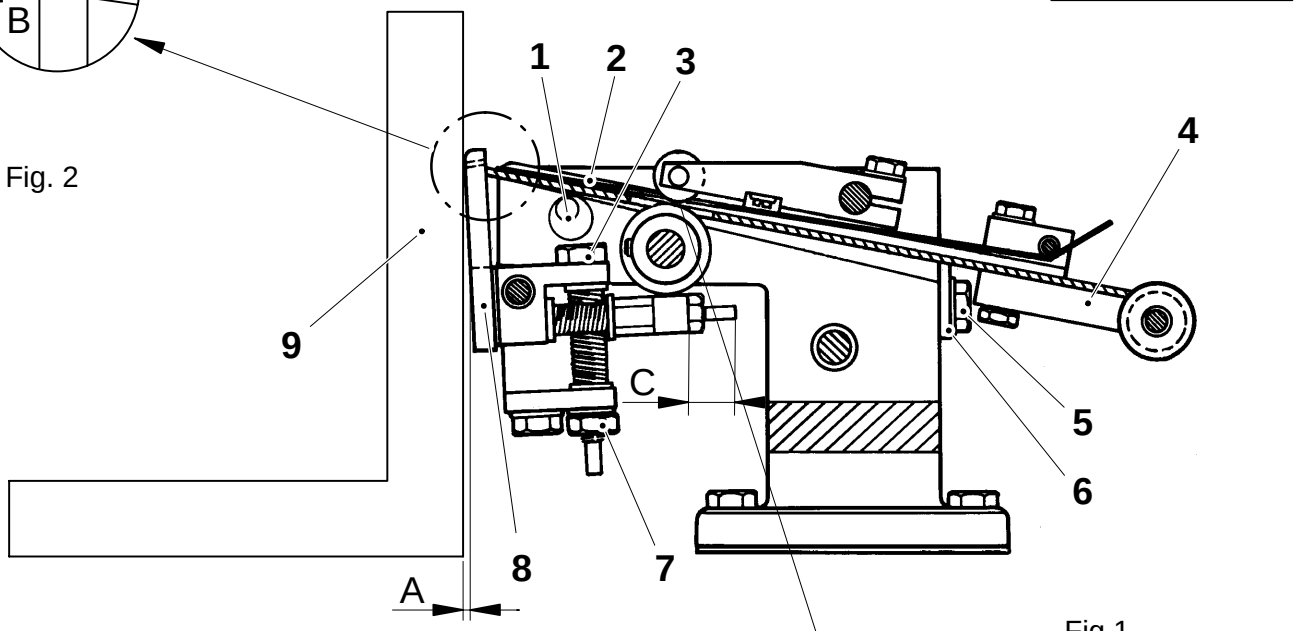

Fig.1

1 Eccentric pin
2 Grub screw
3 Screw
4 Tab strip unit guide
5 Screw
6 Plate
7 Nut
8 Window knife
9 Composing stick
10 Roller

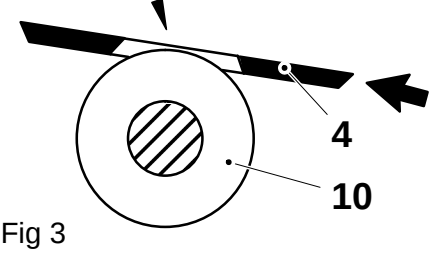

Fig 3

(Cont'd)

Window knife

Loosen the two lock nuts (12) and adjust the nuts (11) equally so that the distance from the nuts to the end of the thread is C mm, see fig. After adjustments, tighten the nuts.

Place the tab strip feeder on a straight flat surface. Loosen the lock nut (7) and turn the screw (3) such that the distance from the bottom outside edge of the opening in the tab window knife to the vertical plane is D mm. Tighten the lock nut.

(Cont'd overleaf)

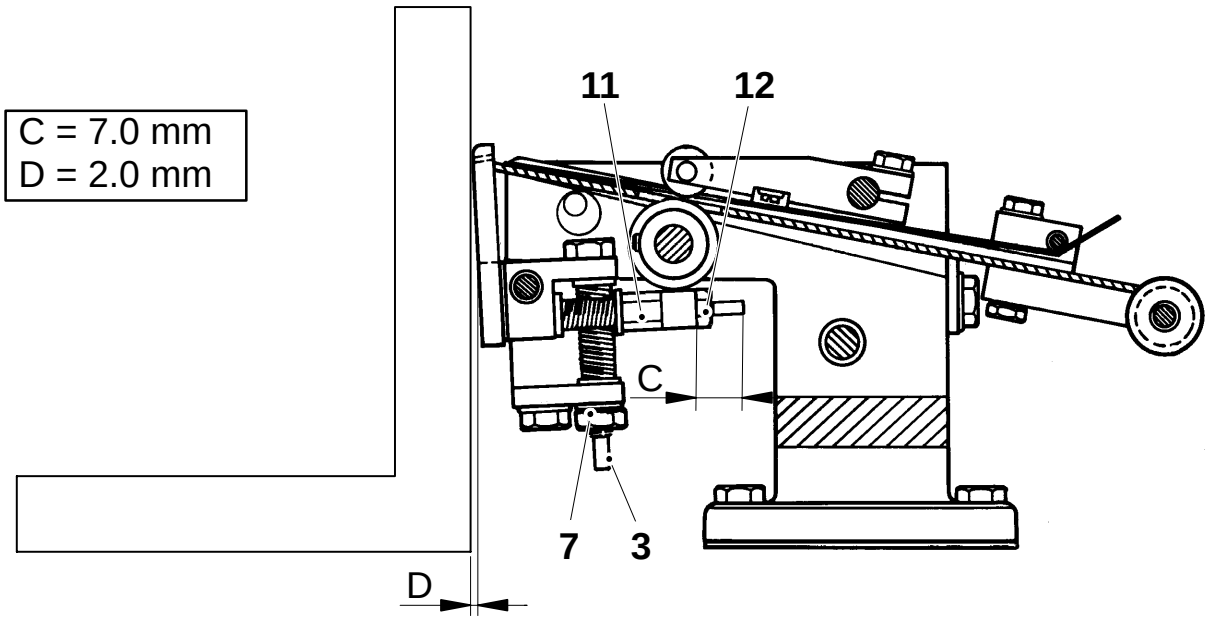

3 Lock nut
7 Screw
11 Nut
12 Lock nut

(Cont'd)

Lengthwise and vertically

Deactivate the solenoid valve to the sealing jaw.
Turn the main shaft until the knife is on the same level as the corner of the window knife.

Set measure E.

Activate the solenoid valve to the sealing jaw.
Turn the main shaft to LOW cam.
Set measure F between the counter jaw and the top of the window knife.

Footnote
After adjustment of gap F, recheck gap E.

(Cont'd overleaf)

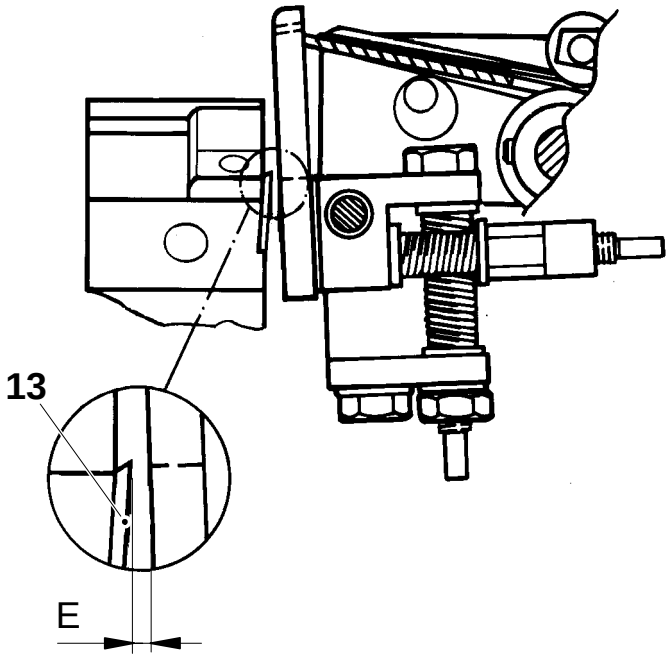

E = 0.8 mm
F = 1.5 mm

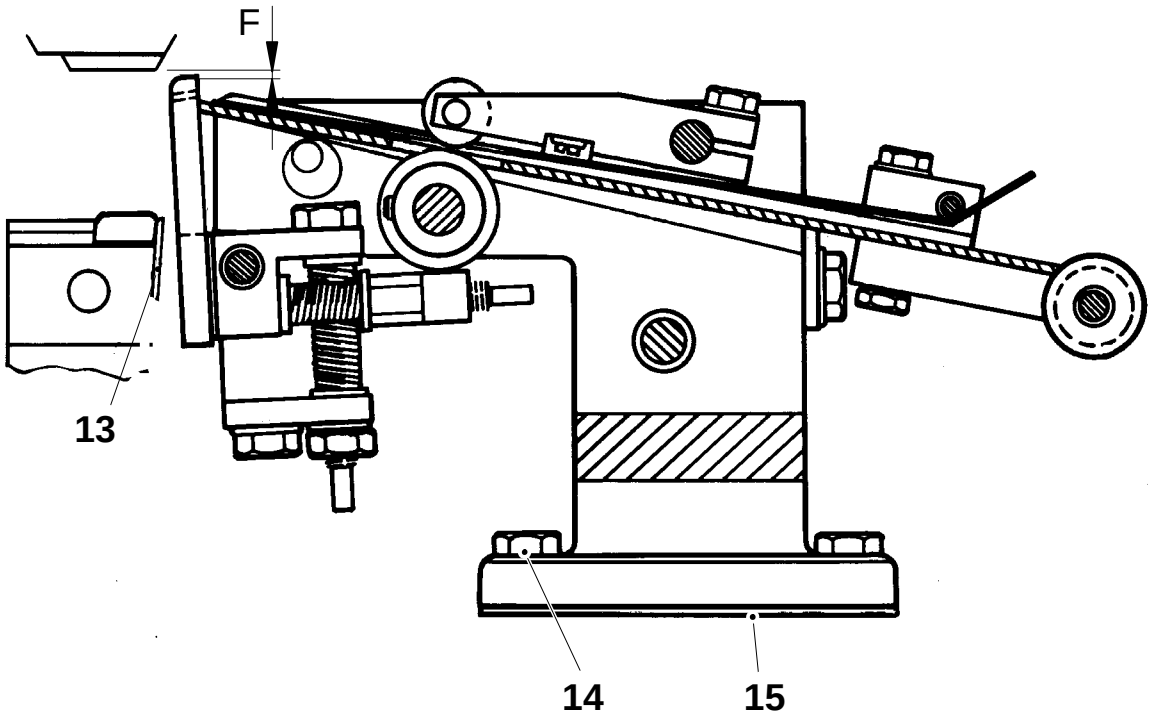

13 Knife
14 Screw
15 Shim

(Cont'd)
Set the length of the spring (18) to G mm.

Loosen screw (16).

Push the holder (17) against the feed roller (10) and keep it there. Retighten the screw (16).

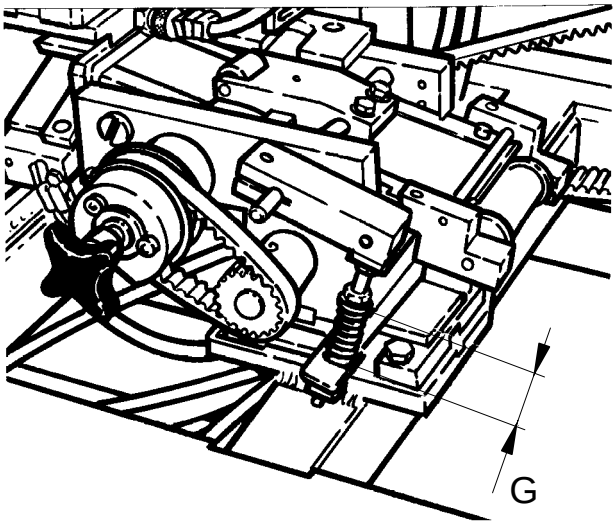

G = 26.5 mm

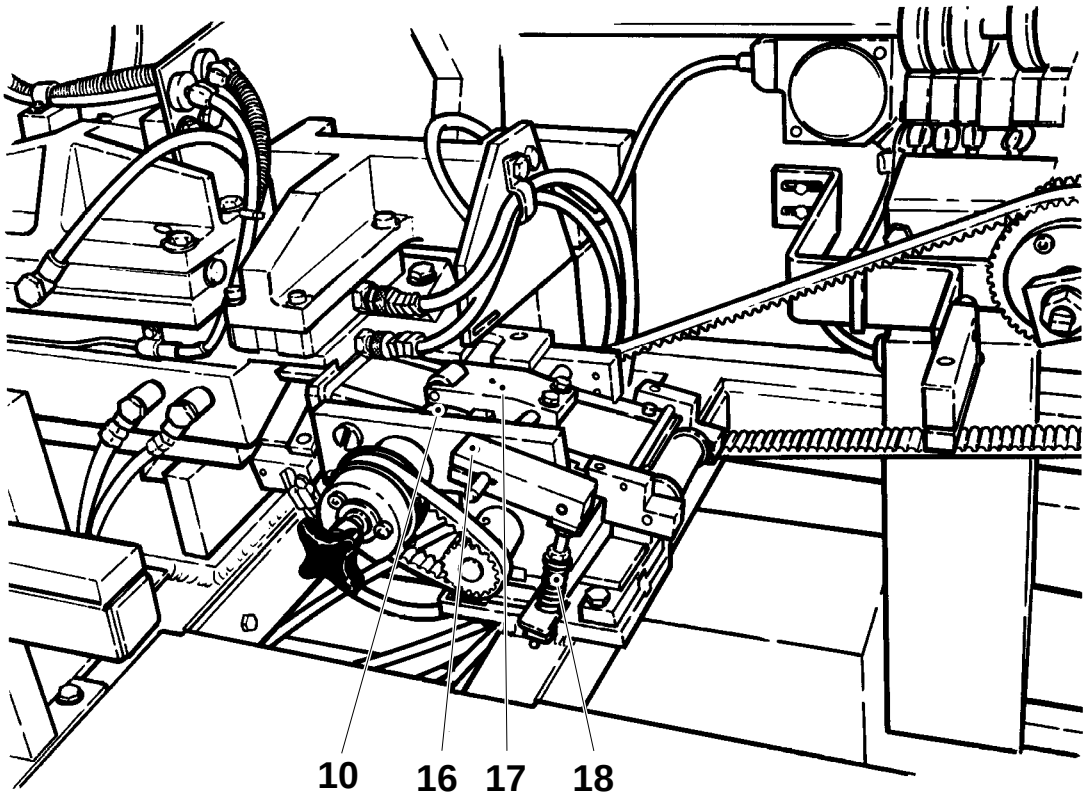

10 Feed roller
16 Screw
17 Holder
18 Spring

Checking

Check:

- the function of the proximity switch (1). The alarm should be triggered when there is A mm of strip left on the reel,
- all the rollers (2) for axial and radial wear and that all rollers run smoothly,
- for play in the bushing (3),
- that the rubber ring (4) locks the reel holder in position, when tightened.

Replace worn and/or damaged details.

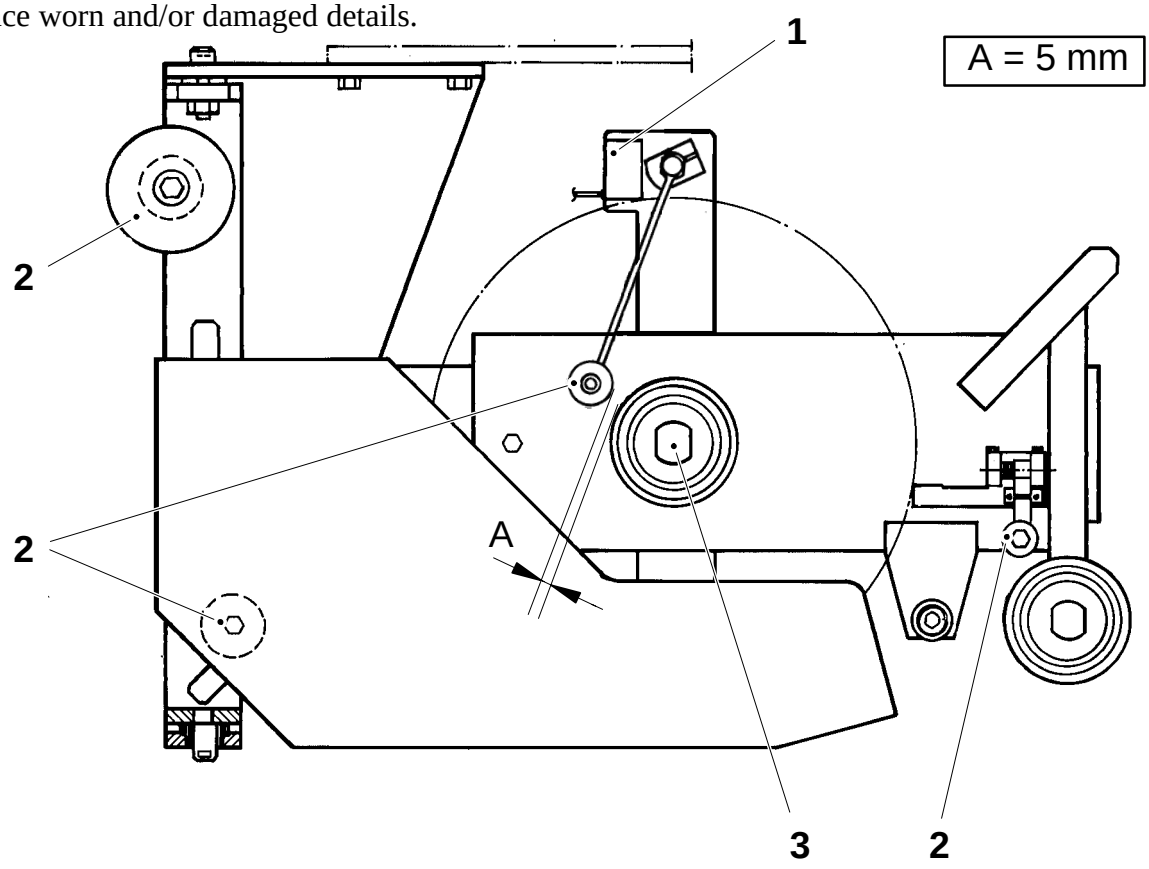

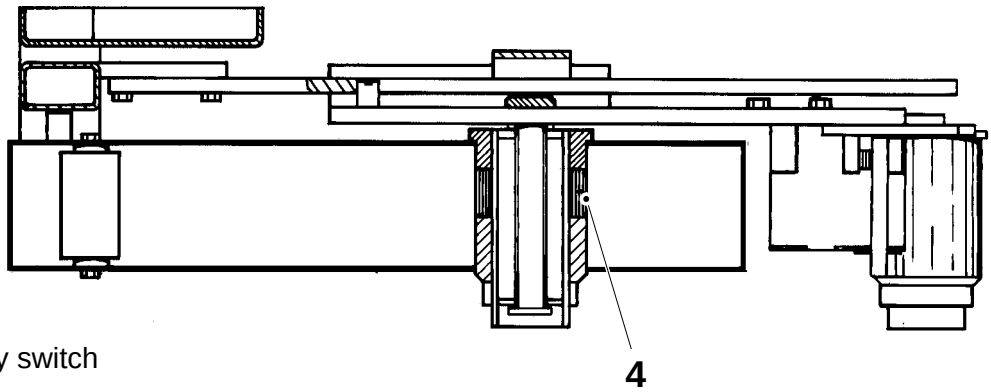

1 Proximity switch
2 Roller
3 Bushing
4 Rubber ring

Checking

Check:

- all the rollers (1) for axial and radial wear; make sure all rollers run smoothly,
- the bearing (2) for wear and/or damage,
- the function of the proximity switch (3). The alarm should be triggered when there is A mm of strip left on the reel,
- that the guides (4) are straight,
- that the roller on the arm (5) does not hit the bottom bracket, gap B. Loosen the screws (6) to adjust,
- the function of the spring-loaded ball (7),
- the function of the knife (8),
- the function of the clamps (9). If they do not brake the strip, adjust after loosening the screws (10).

Replace worn and/or damaged details.

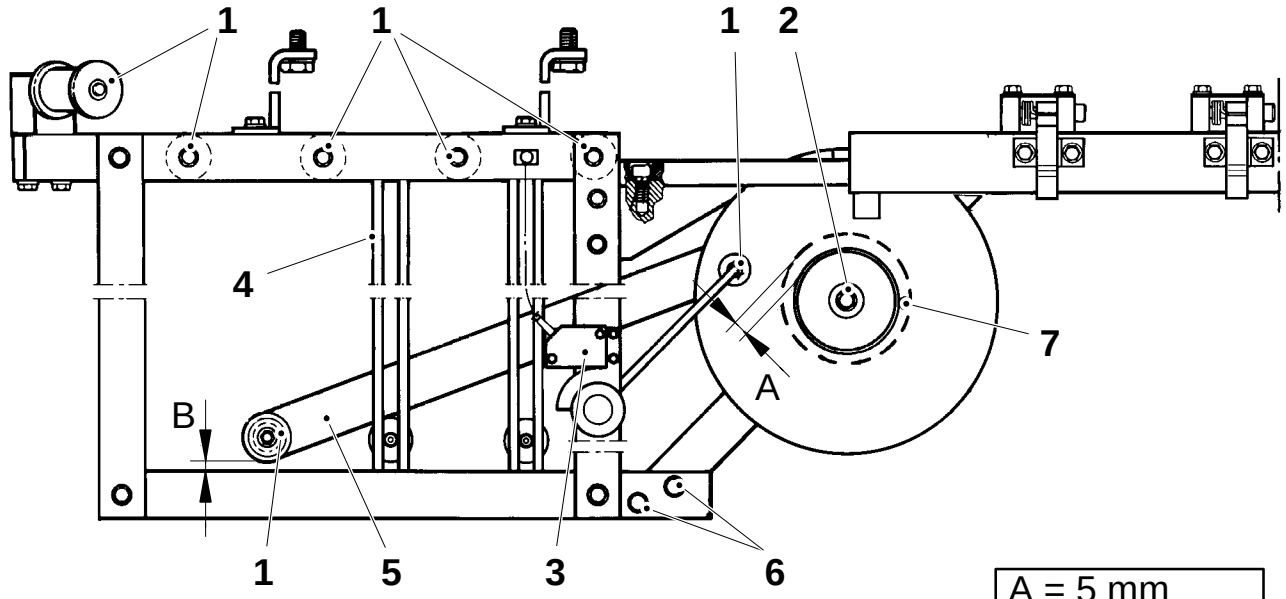

A = 5 mm
B = min 5 mm

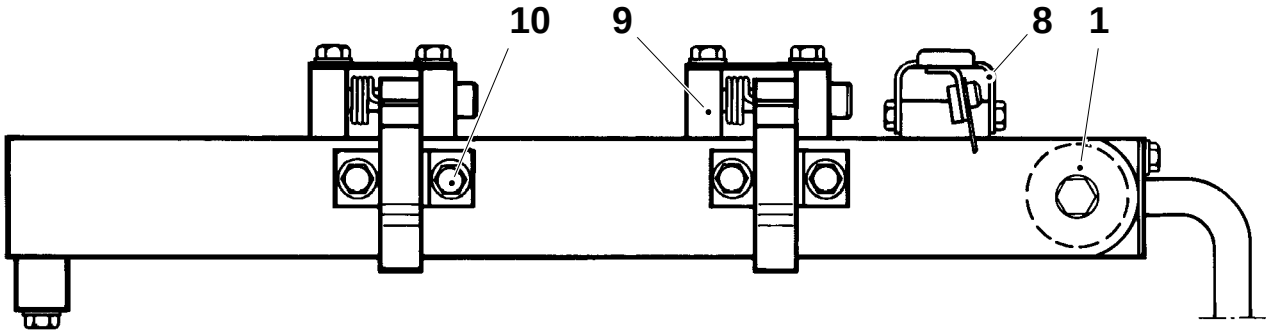

1	Roller	6	Screw
2	Bearing	7	Ball
3	Proximity switch	8	Knife
4	Guide	9	Clamp
5	Arm	10	Screw

Checking

Check:

- the cut of the pull tab strip on a package,
- that the knife edges of the window knife (2) and of the moving knife (1) are undamaged. Replace the window and moving knives if the cut is not straight and even.
- the rubber roller (3) for wear and/or damage. Replace as required.

Lift off the tab strip feed device.

Check the rubber roller (4) for wear and/or damage. Replace as required.

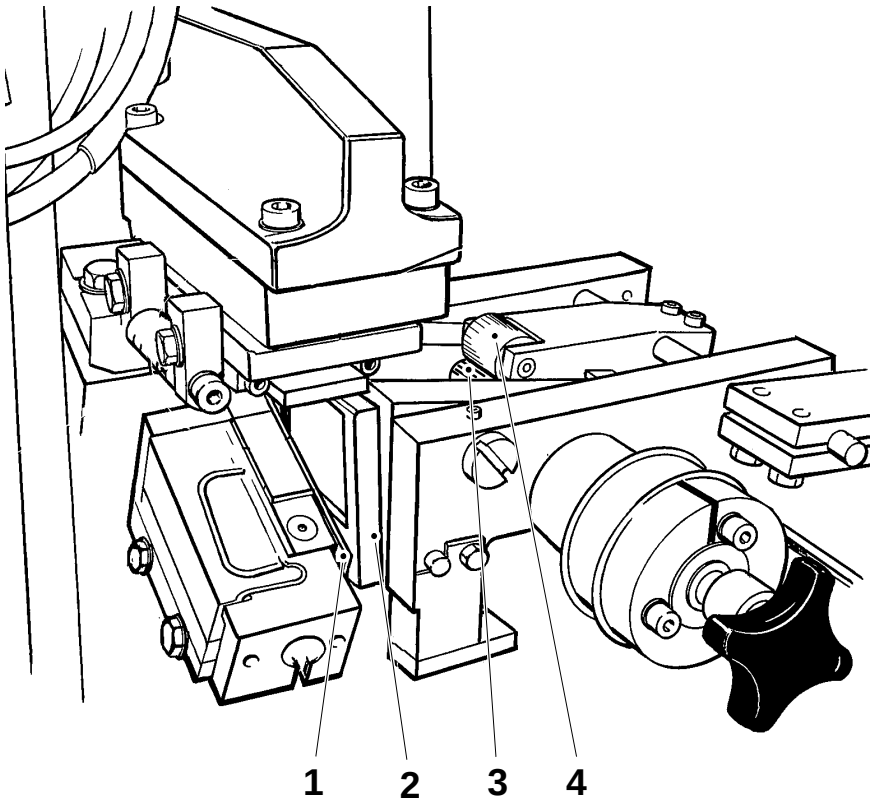

1 Moving knife
2 Window knife
3 Rubber roller
4 Rubber roller

Replacement

Window knife

Close the compressed air supply valve.

Slacken the belt tensioner (1).

Remove the tab guard (2).

Remove the feed drive belt (3).

Turn the cam shaft to 25° – 155°.

Loosen the cylinder bracket (5).

Undo the four screws (4) and remove the tab strip feed device.

Footnote
Check if there are shims under the tab strip feed device (6).

(Cont'd overleaf)

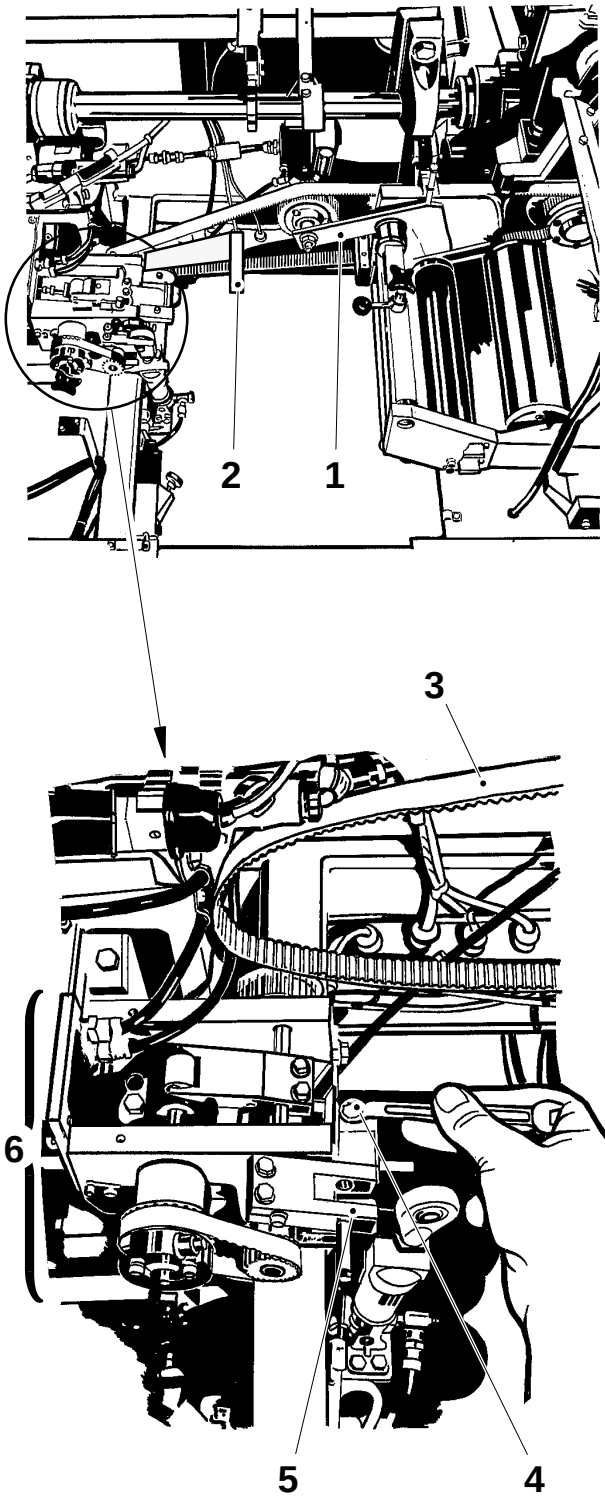

1 Belt tensioner
2 Tab guard
3 Feed drive belt
4 Screw
5 Bracket
6 Tab strip feed device

(Cont'd)

Replace the window knife (8) secured with the two screws (7) and check the setting, see page MS 827–5X.

(Cont'd overleaf)

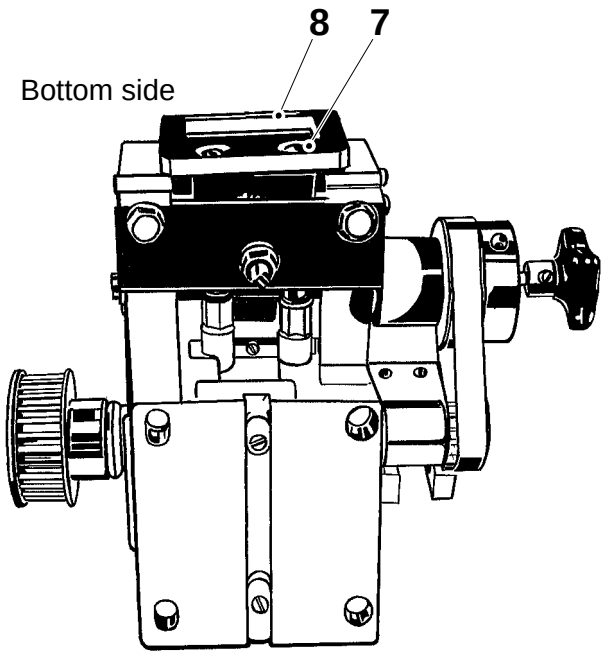

7 Screw
8 Window knife

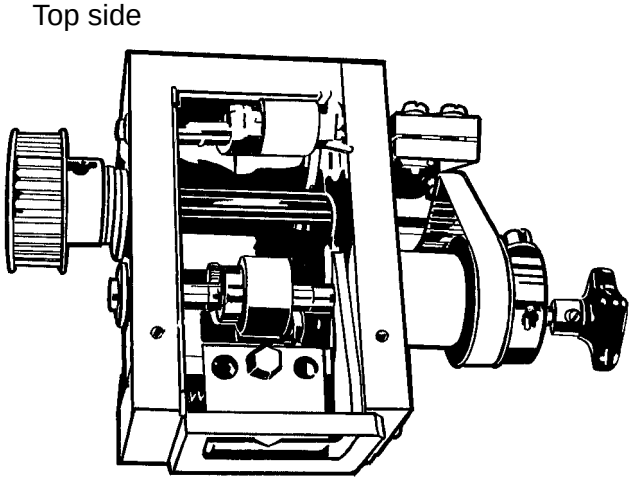

(Cont'd)

Reassemble the tab strip feeder. **Make sure all shims are correctly positioned. Setting, see page MS 827–5X.**

Fit the tab guard.

Open the compressed air supply valve. Check clearance B between the knife and the die by means of a feeler gauge (9).
If required, adjust the shims underneath the tab strip feed.

Start the machine and check that both cutting and feeding function correctly.

Footnote
Synchronization is not necessary after fitting the belt.

(Cont'd overleaf)

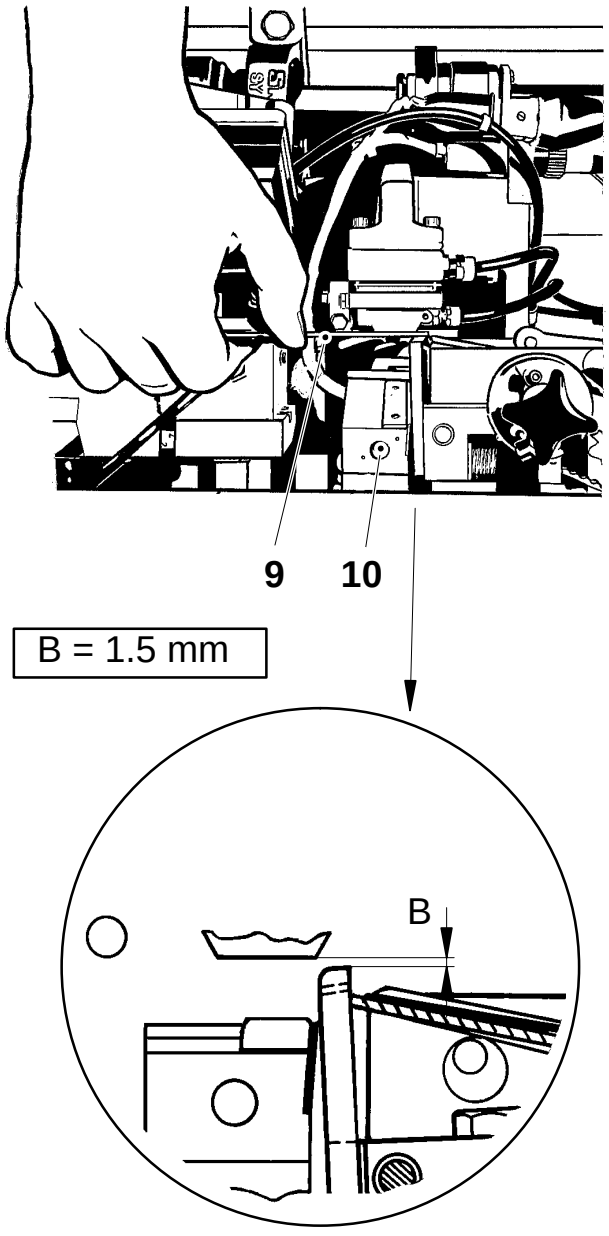

9 Feeler gauge
10 Heating element (pull tab)

(Cont'd)

Moving knife

If only the moving knife is to be replaced. Loosen the two screws (13) and then take away the heating block.

Replace the moving knife (11) secured with the two screws (12).

Check the height, see page MS 823–5X.

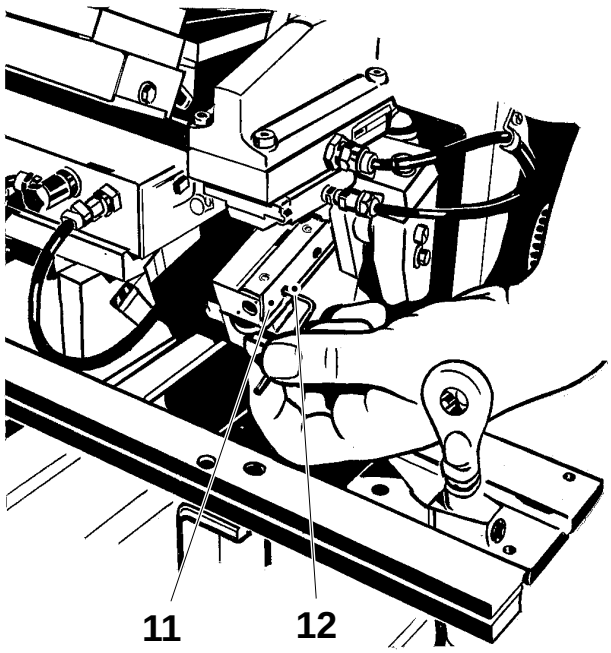

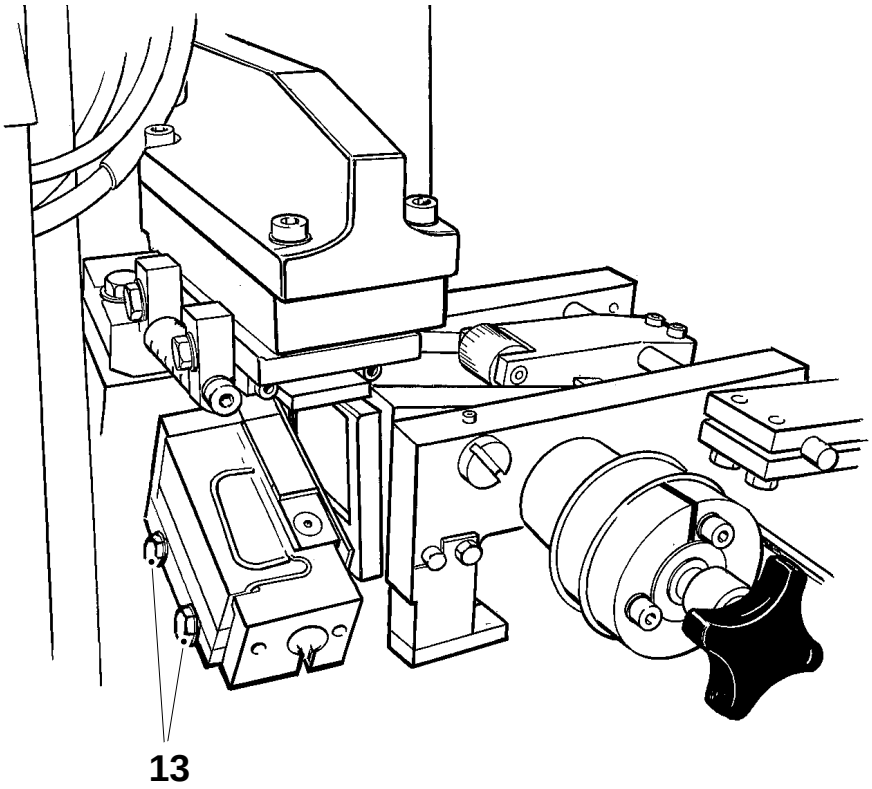

11 Moving knife
12 Screw
13 Screw

Replacement

Window knife

Slacken the belt tensioner (1).

Remove the feed drive belt (2).

Turn the cam shaft to 25° – 155°.

Loosen the spring (3).

Undo the four screws (4) and remove the tab strip feed device.

Footnote
Check if there are shims under the tab strip feed device.

(Cont’d overleaf)

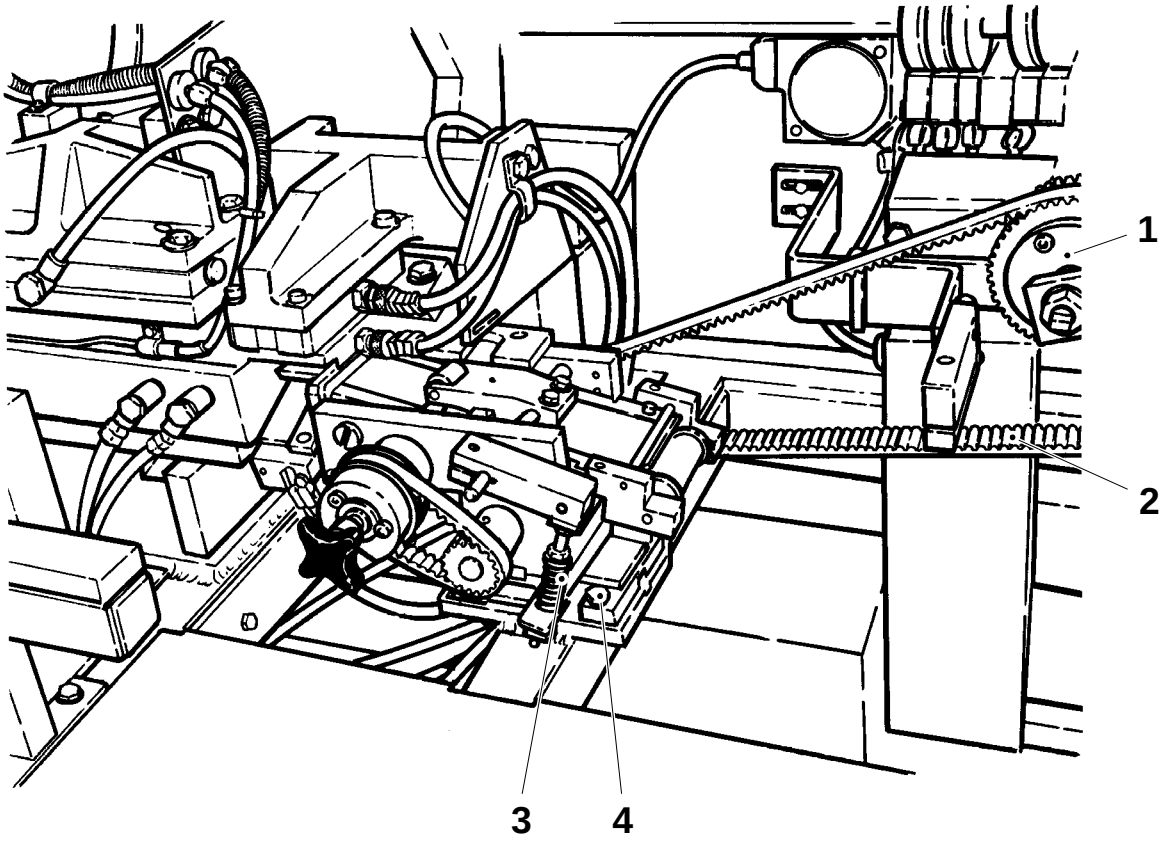

1 Belt tensioner
2 Feed drive belt
3 Spring
4 Screw

(Cont’d)

Replace the window knife (6) secured with the two screws (5) and check the setting, see page MS 827–5X.

(Cont’d overleaf)

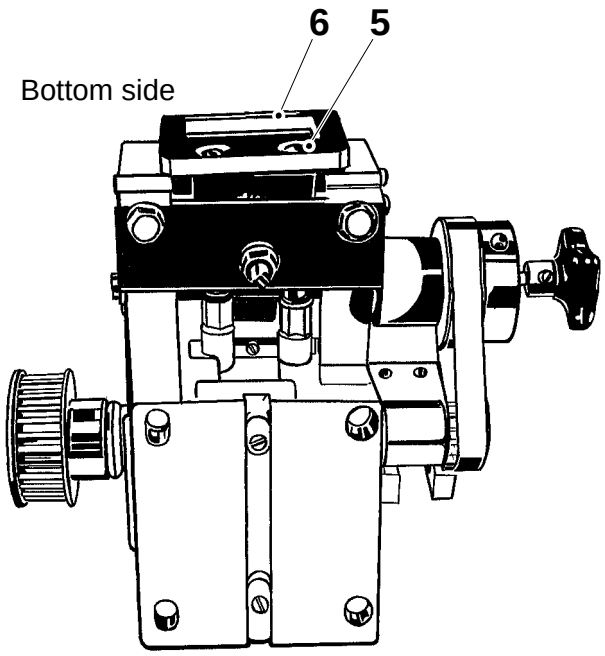

5 Screw
6 Window knife

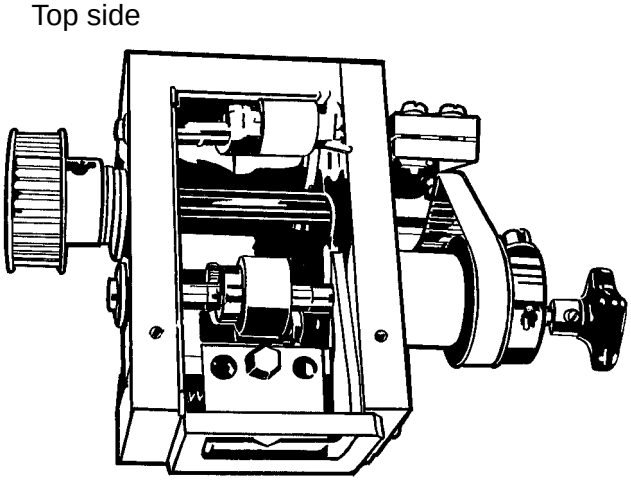

(Cont'd)

Reassemble the tab strip feeder. **Make sure all shims are correctly positioned. Setting, see page MS 827–5X.**

Open the compressed air supply valve. Check clearance B between the knife and the die by means of a feeler gauge (7).
If required, adjust the shims underneath the tab strip feed.

Footnote
Synchronization is not necessary after fitting the belt.

Start the machine and check that both cutting and feeding function correctly.

(Cont'd overleaf)

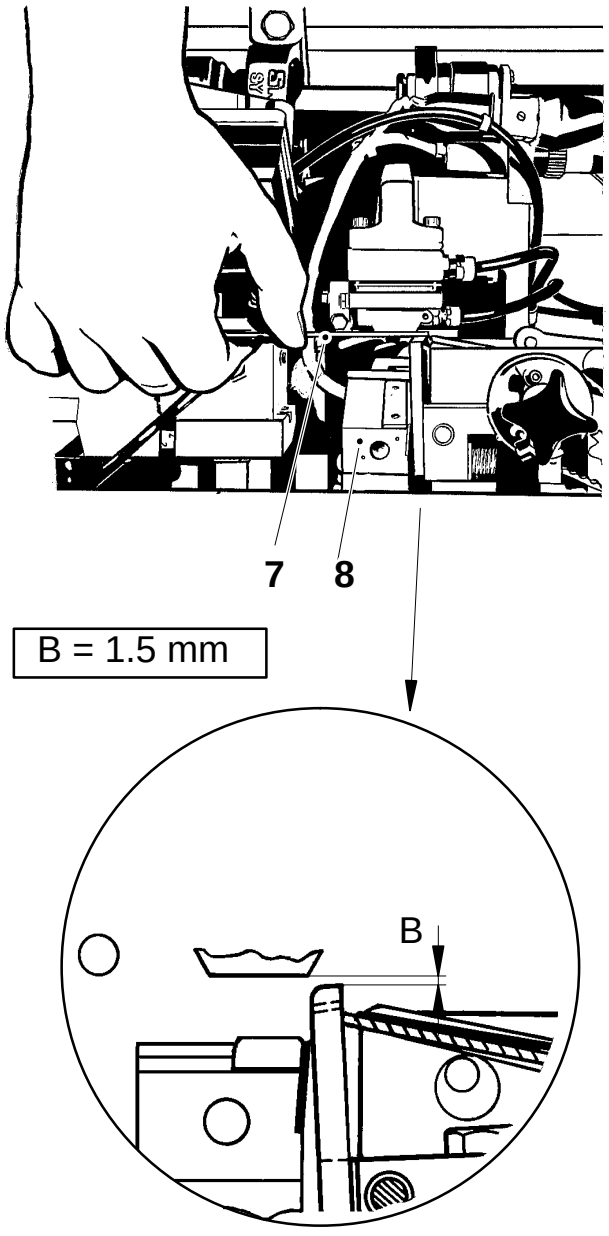

7 Feeler gauge
8 Heating element (pull tab)

(Cont'd)

Moving knife

If only the moving knife is to be replaced, loosen the two screws (11) and then remove the heating block.

Replace the moving knife (9) by undoing the two screws (10).

Check the height, see page MS 823–5X.

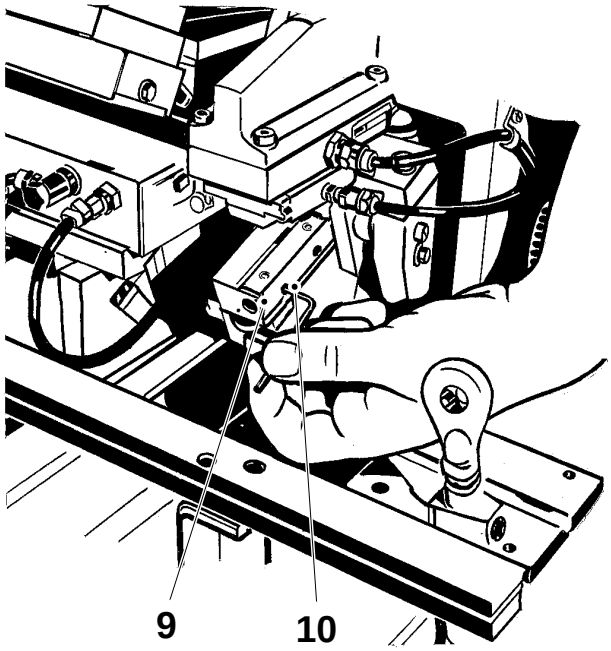

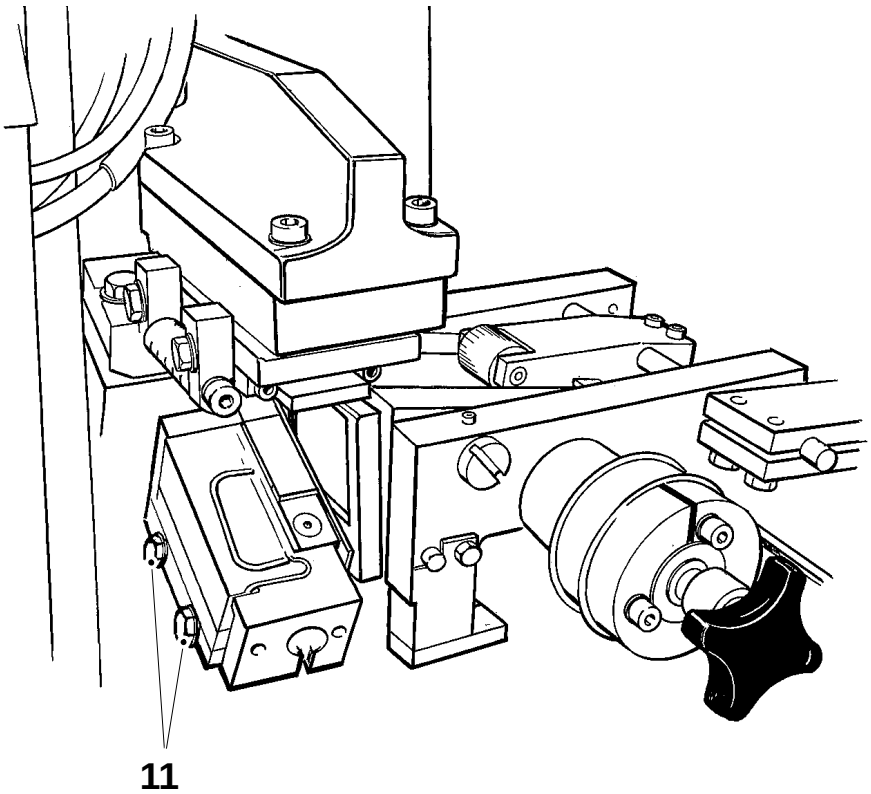

9 Moving knife
10 Screw
11 Screw

Checking

Cut a mark in the IS strip and the web, see fig. 1.

Start the machine and check that there is an alarm on the monitor panel and that one package is ejected.

If not, set the twisted strip guard (1), see page MS 831–5X.

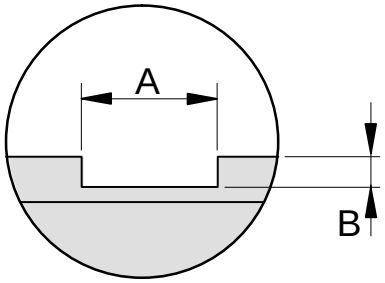

Fig. 1

A = 25 mm
B = 4 mm

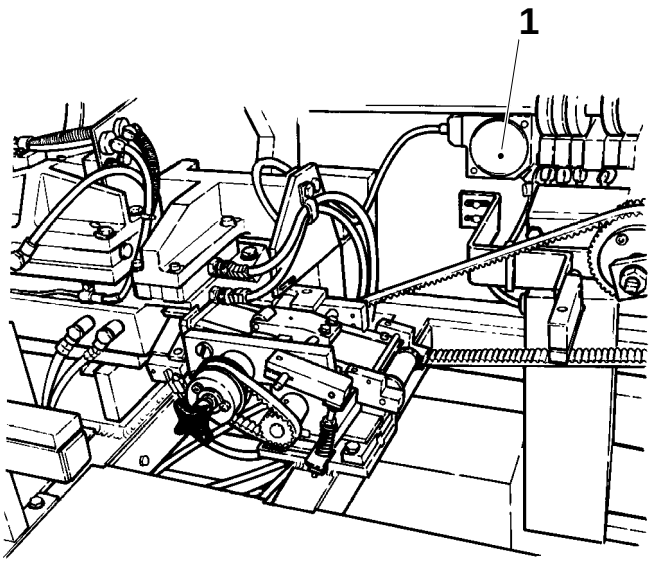

Fig. 2

1 Twisted strip guard

Setting

Undo the screws (1) and set the height of the guide (2) with shims (3). The guide should be in level with the inductor.

Set gap A with the screws (4).

Set measure B with the screws (1).

Loosen the screws (5) and set the sideways position of the lens (6). The mark (7) should be aligned with the packaging material web (8).

Remove the packaging material web and set the sensitivity of the photocell as follows:

- Turn the setting knob (9) clockwise until the LED (10) lights up.
- Turn the setting knob counter-clockwise until the LED just goes out and then rotate it once counter-clockwise.

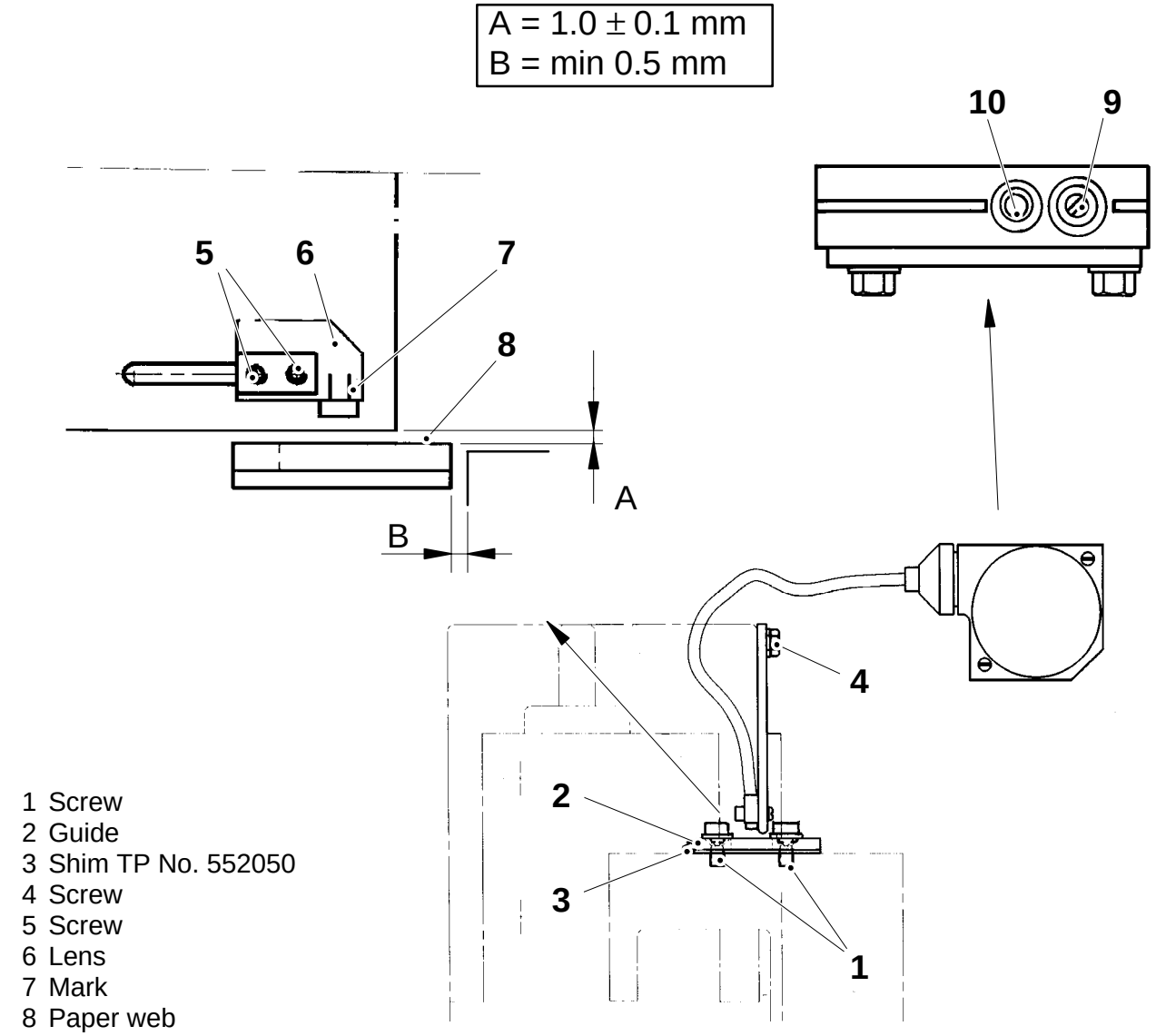

1 Screw
2 Guide
3 Shim TP No. 552050
4 Screw
5 Screw
6 Lens
7 Mark
8 Paper web
9 Setting knob
10 LED

Checking/Cleaning

Check:

- the rollers so that there are no burrs or foreign particles on them,
- the radial play in the fixed roller (2),
- that the spring-loaded flange (3) runs easily, and that it has not worn a groove in the shaft,
- that the packaging material is positioned between the flange (1) and the spring-loaded flange as in fig 2.

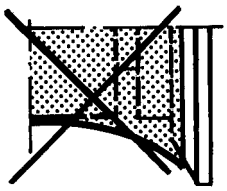

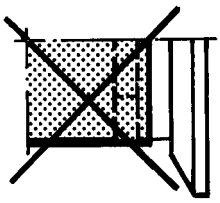

Replace worn and/or damaged details.

Clean the rollers (2) and (3).

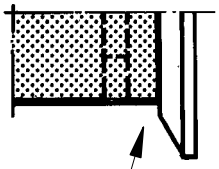

Fig. 2

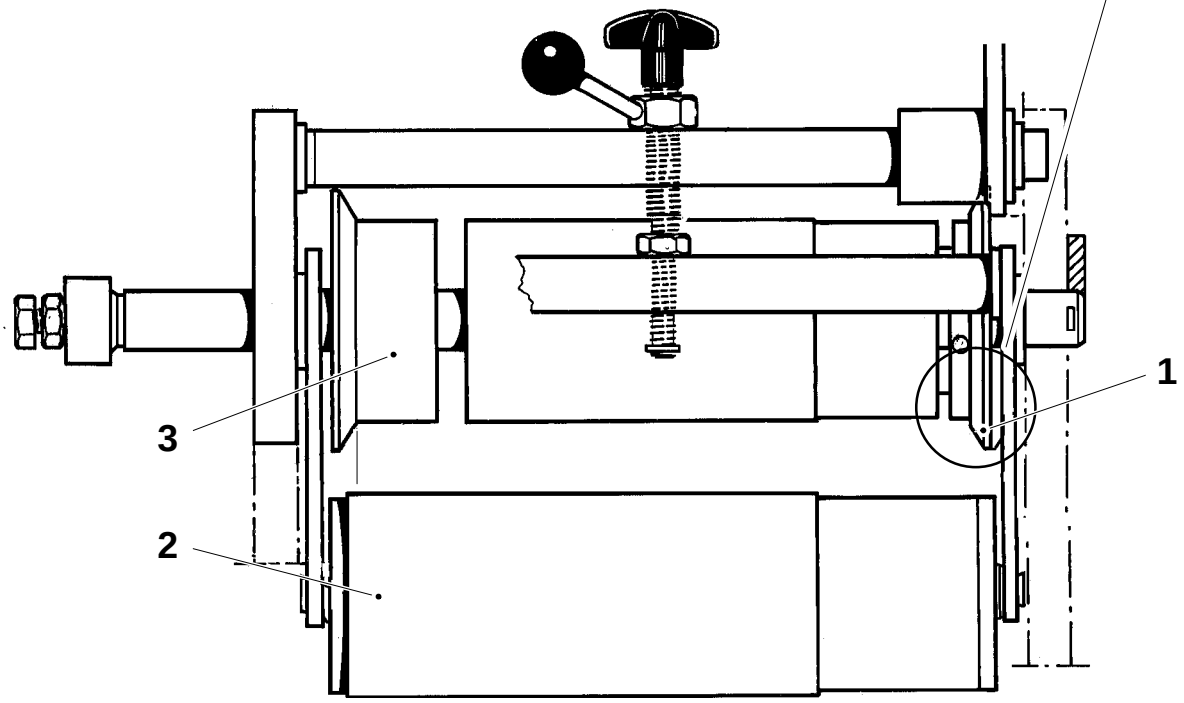

Fig. 1

1 Flange
2 Fixed roller
3 Spring-loaded flange

Setting

Basic setting

Loosen the screws (4) and set A mm, according to paper width, see table.

Paper width mm	A ± 0.2 mm
214	203.5
174	210.0
162	210.0

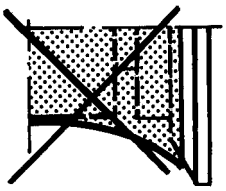

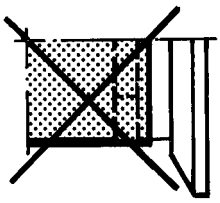

Final setting during operation

Loosen the nut (3) and adjust with the screw (2).
Set the spring not too loose or to hard, see fig 2.
Lock at the correct setting with the nut (3).

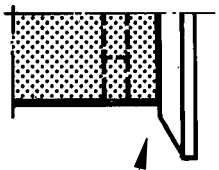

Fig. 2

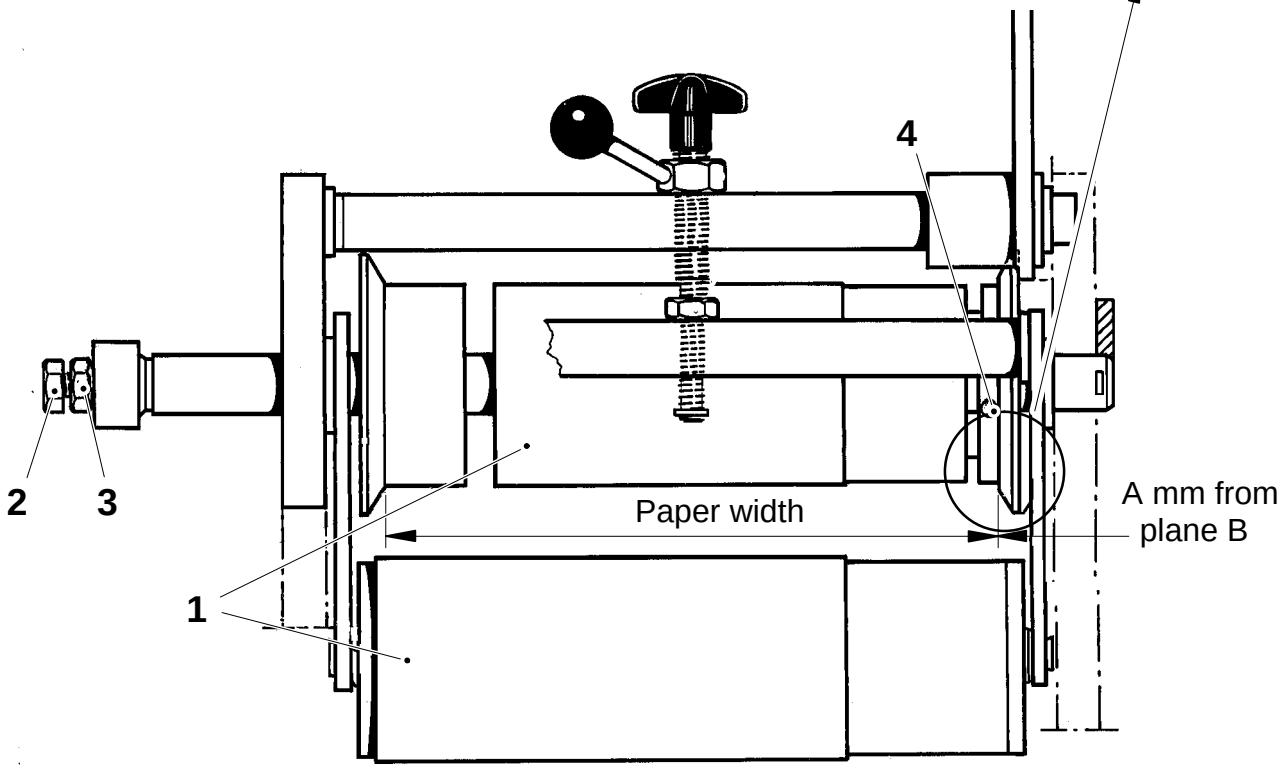

Fig. 1

1 Roller
2 Screw
3 Nut
4 Grub screw

Checking/Cleaning

Footnote
Ensure that the **Emergency stop** button is activated, and that the air and vacuum supply are OFF.

Remove the two screws (1) and the twelve screws (2). Carefully pull the pump apart. Gently pull out the rubber diaphragm valves (3) and examine them for any cracks or brittle edges. Replace as required.

Slide out the filter (4) and clean it with compressed air. Replace as required.

Assemble the vacuum pump in reverse order.

Check that the muffler (5) is not clogged with dust. If necessary, clean the muffler with compressed air.

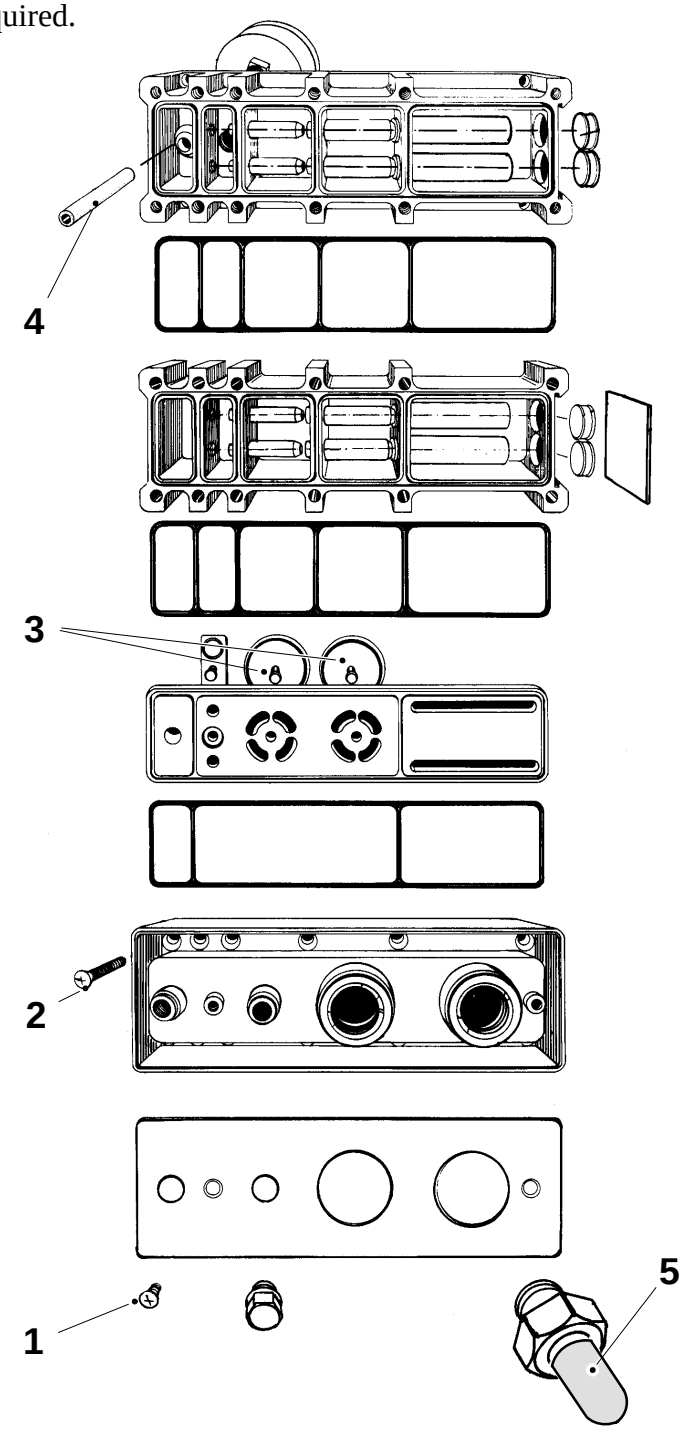

1 Screw
2 Screw
3 Rubber diaphragm valve
4 Filter
5 Muffler

Setting

The LS/IS strip should be threaded according to the OS book.

Set the strip guide in the LS position. Place a LS strip in the groove in the vacuum plate. Run the pulltab unit and adjust the vacuum to -20 kPa by using the screw marked (5).

Set the strip guide in the IS position. Place a IS strip in the groove in the vacuum plate. Activate valve Y211. Adjust the vaccum to 0 kPa using the screw marked (3).

Check the settings during production.

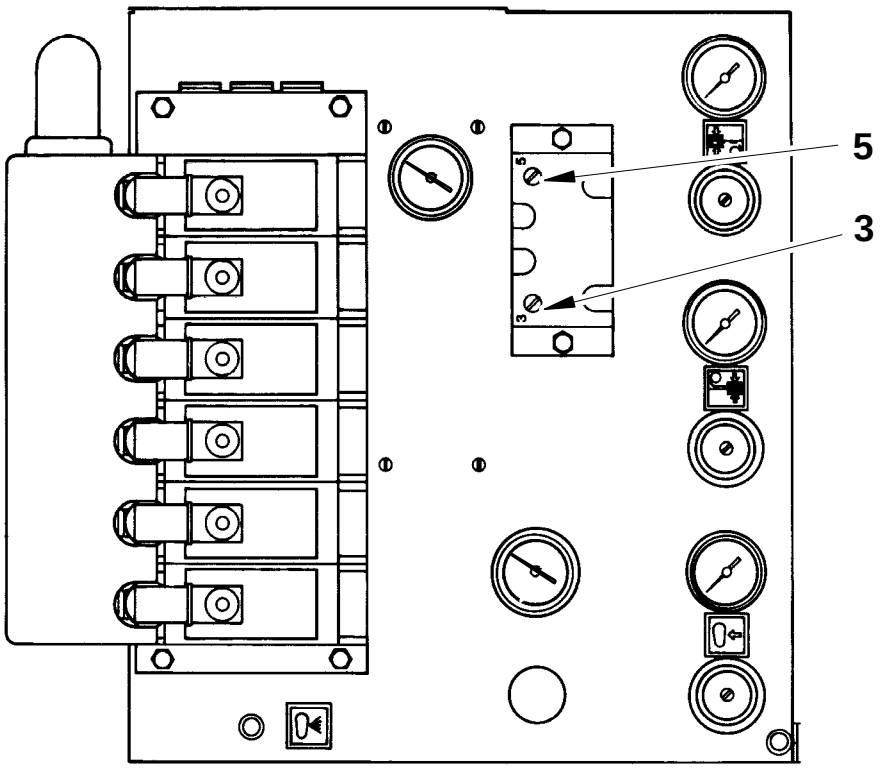

3 Screw
5 Screw

Checking

Check:

- the ruler edges (1) so they are not worn to the stage where they begin to become round,
- that the rulers (2) are straight.

Replace as required.

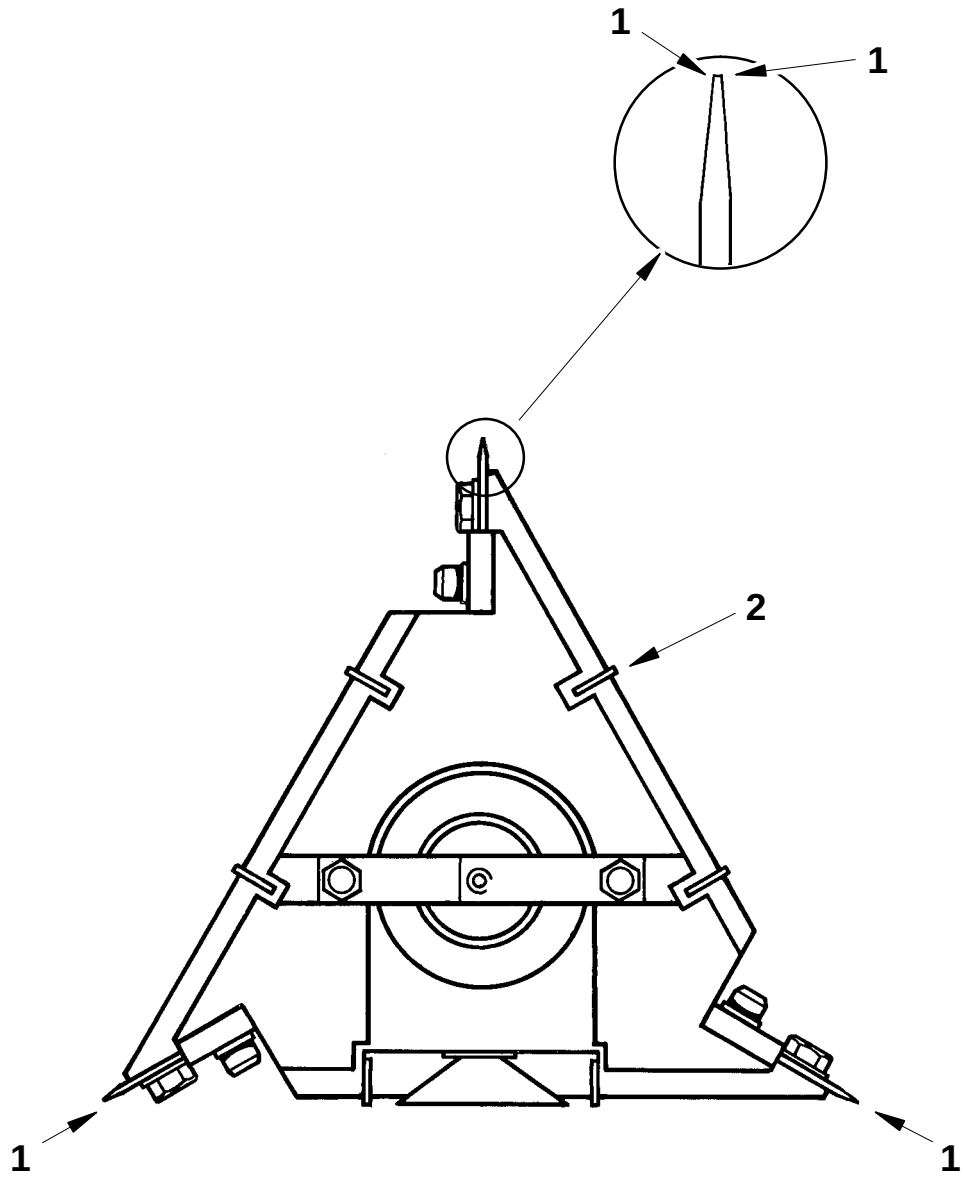

1 Engagement edge
2 Ruler

Setting

Basic setting

Set distance A between the edges of the carriers, as listed in the table, by turning the setting ring (1). Turn it clockwise to increase the measure.

Lock with the locking nut (2).

The screws (3) may be tightened very lightly to permit adjusting.

Volume, ml	A, mm
125	129.4
200S	172.7
180	131.9
200	139.4
236	156.0
250	162.7
284	175.9

(Cont’d overleaf)

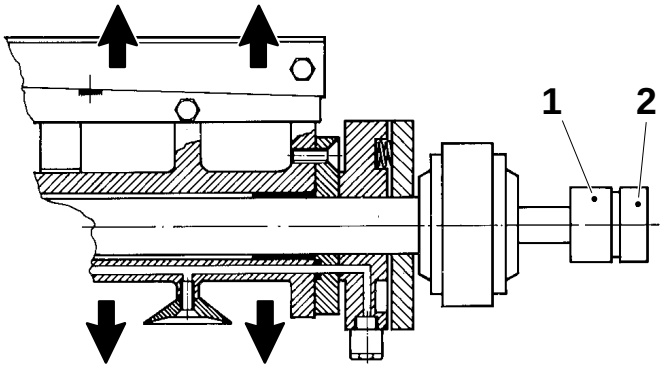

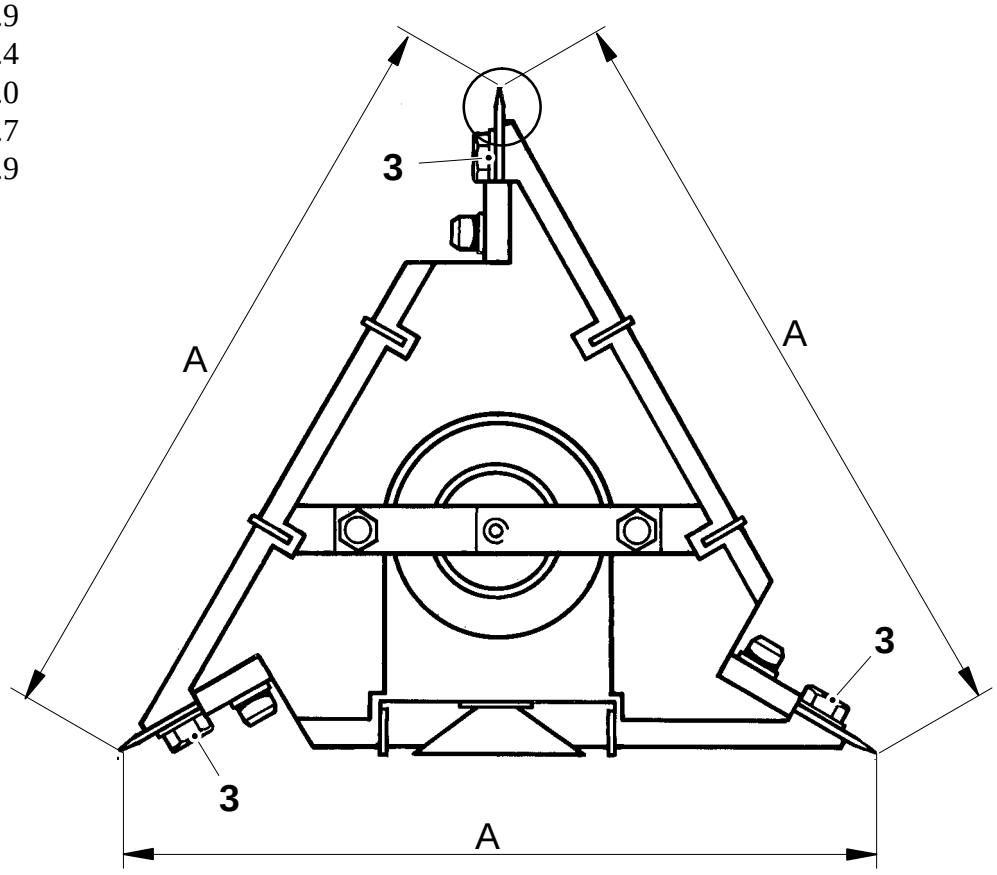

1 Setting ring
2 Locking nut
3 Screw

(Cont'd)

Crank the device by hand until the roller (1), fig 2, for the return feed has moved fully to the LOW cam section fig 1.

Loosen the ETP bushing (2) fig 3.

Set the crease wheel at 40° using an angle measuring instrument, see fig 4.

Tighten the ETP bushing, see page MS 370–4X.

When the **cam (5) on the main shaft** is in its highest position, there should be a gap A between the roller (1) and the cam (3). Loosen the screws (4) to adjust.

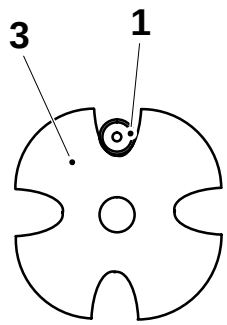

Fig. 1

A = 0.2 mm

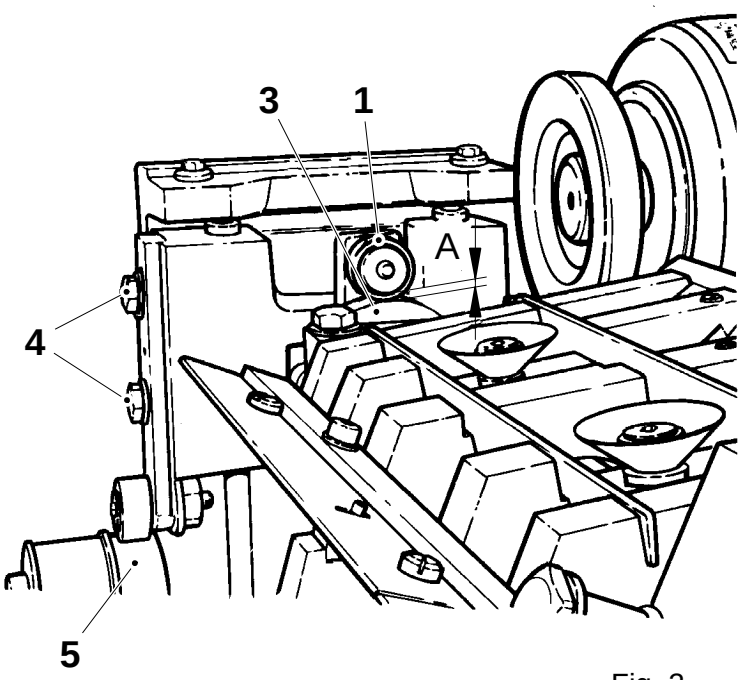

Fig. 2

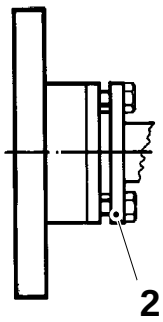

Fig. 3

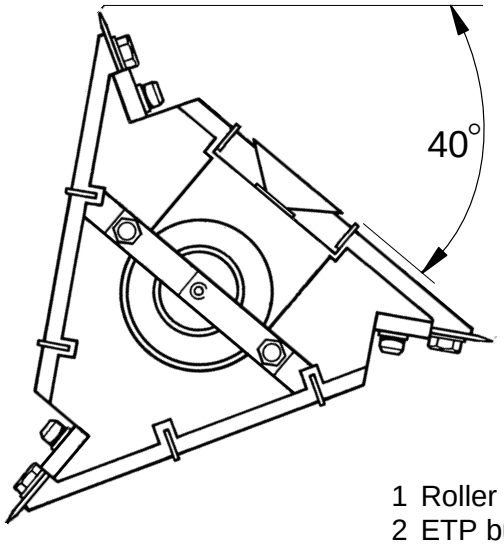

Fig. 4

1 Roller
2 ETP bushing
3 Cam
4 Screw
5 Cam

Checking

Check the suction cups (1) for wear and/or damage. Replace as required.

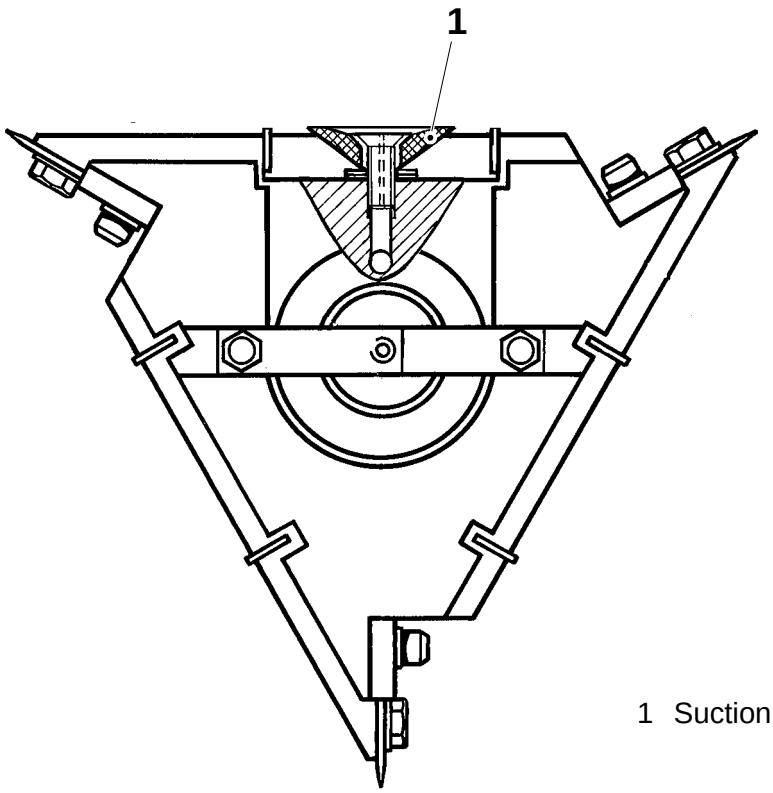

1 Suction cup

Setting

Check that the rulers (2) are in the correct position. Set the suction cups vertically by placing a ruler (1) with parallel sides above the rulers (2). Measure gap A between the lower edge of the ruler (1) and the top of the screw head (3), see fig. Adjust with shims (4).

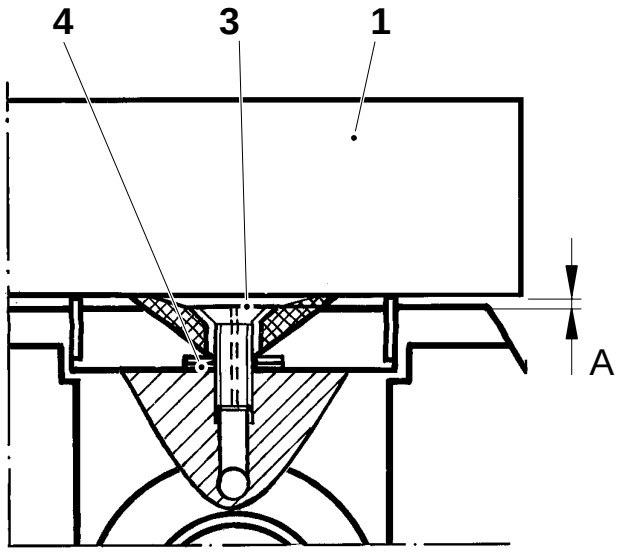

A = 0.8 –1 mm

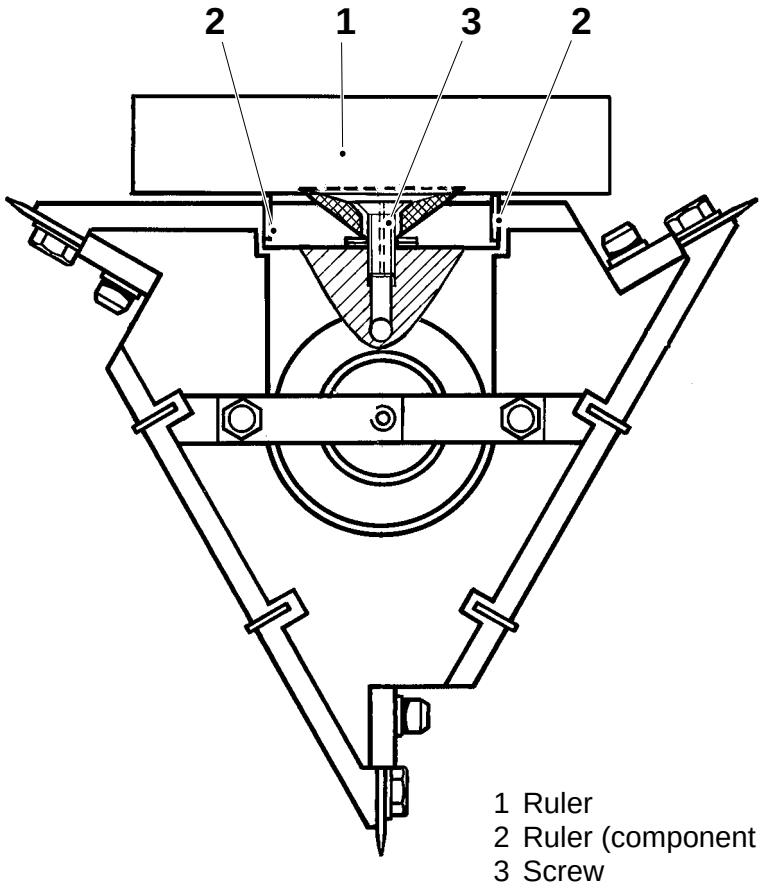

1 Ruler
2 Ruler (component part of machine)
3 Screw
4 Shim 0.3 mm, TP No. 2033–13
Shim 0.2 mm, TP No. 255119

Checking

The tightness of the system can be checked with packaging material in the machine.

If the vacuum achieved is not at least 40 kPa, check:

- that the hoses and hose couplings are intact,
- the vacuum pump, see page MS 834–1X, and
- the suctions cups, see page MS 836–1X.

Overhaul

Reconditioning plate connector vacuum

Undo the screws (7) and remove the top plate (8).

Undo the vacuum line connection (1).

Undo the setting screw (9).

Remove the two plates (2) and (3). Check that the wear of the vacuum coupling plate (3) does not exceed 1.5 mm (2.5 mm of the groove is to remain). Replace as required.

Undo the three screws (4) and detach the plate (5).

Check the three O-rings (6). Replace as required.

Reassemble in reverse order.

Synchronize the vacuum device, see page MS 837–5X.

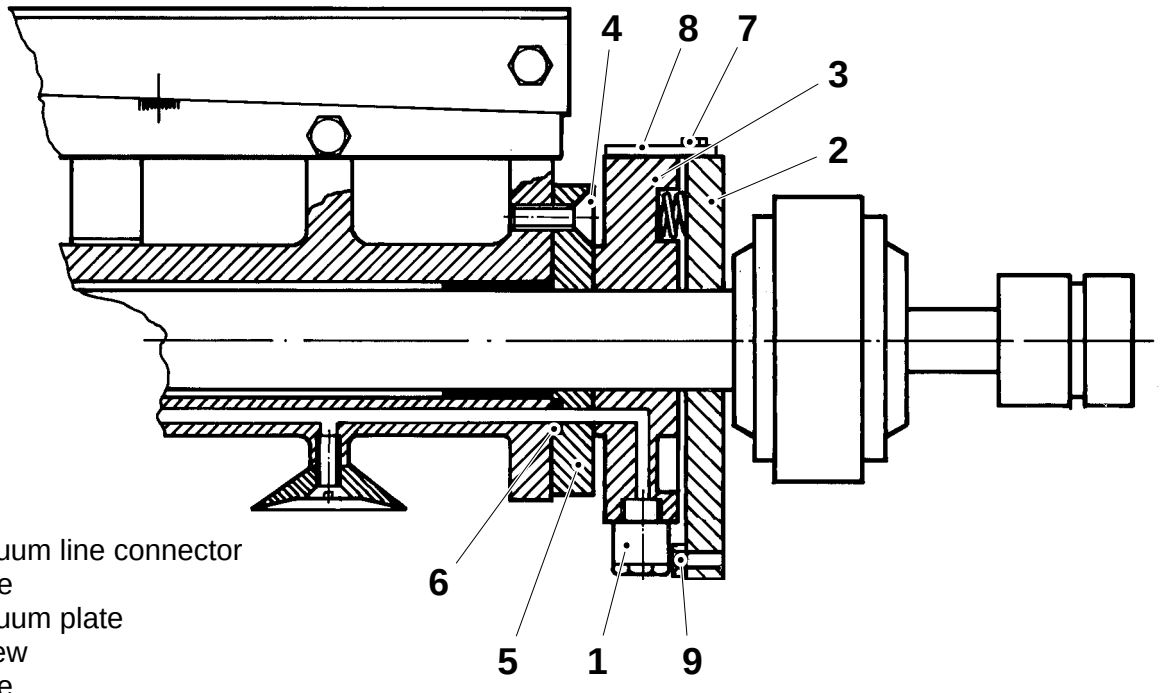

1 Vacuum line connector
2 Plate
3 Vacuum plate
4 Screw
5 Plate
6 O-ring
7 Screw
8 Plate
9 Setting screw

Setting

Basic setting
Vacuum synchronization

Place a ruler (1) on the crease wheel and turn the crease wheel (in the normal direction of rotation) until the ruler is measure A above the rollers. In this position, there should be no vacuum whatsoever.

To adjust, loosen the setting screw (2) and turn the plate to the correct position. Retighten the screw.

Final setting during operation

Look and listen if the paper is forced off the suction cups, see fig below. Adjust as required.

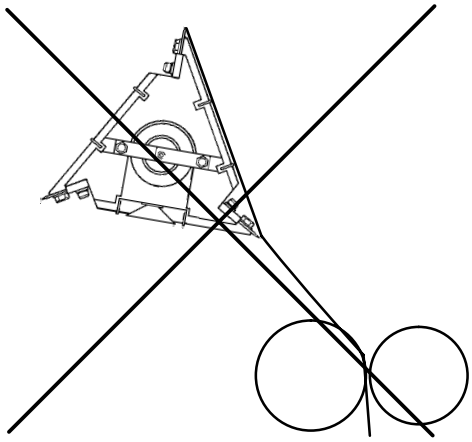

A = 8 – 10 mm

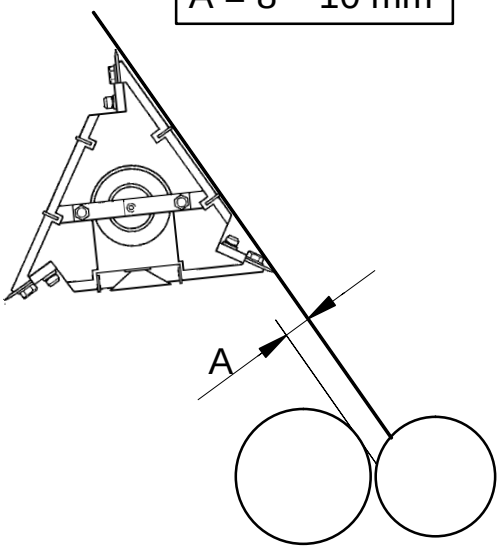

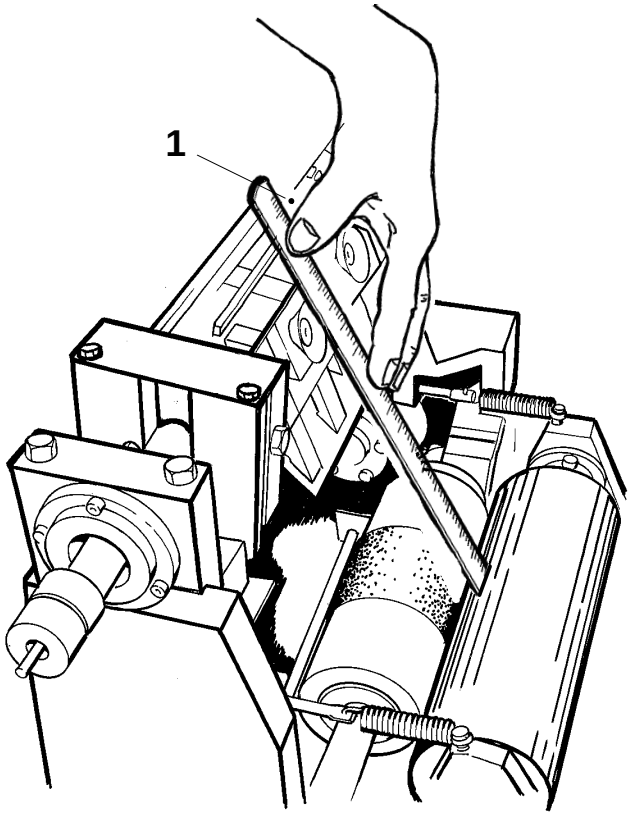

1 Ruler
2 Setting screw

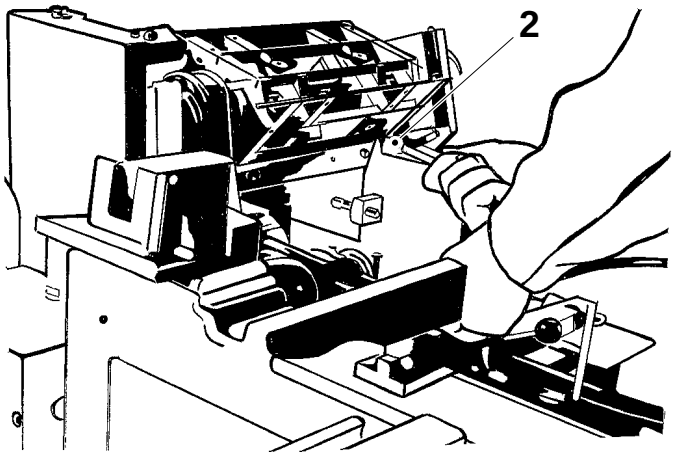

Setting

Check the packaging material web position, see page MS 814–5X and MS 833–5X.

The distance between the rear edge (2) of the tab and the edge of the packaging material (1) is to be measure A.

Set the distance by loosening the screws (3) and shifting the bracket (4). After setting, tighten the screws.

Volume, ml	A ±0.5 mm
125	2.5
200S	2.5
180	4.0
200	4.0
236	4.0
250	4.0
284	4.0

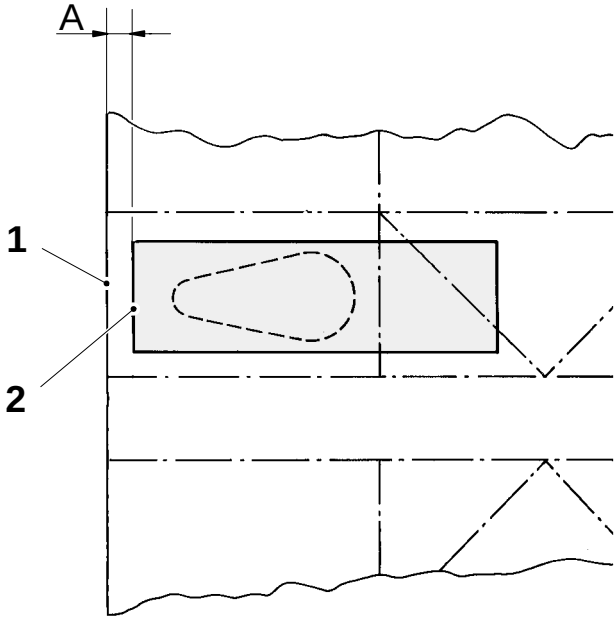

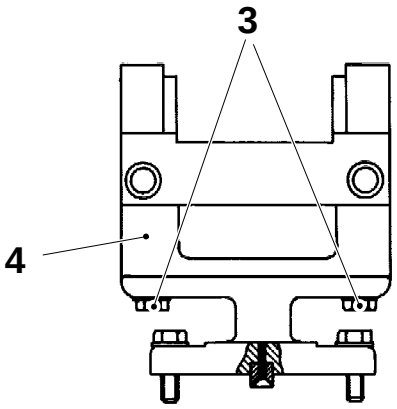

1 Edge of packaging material
2 Tab, rear edge
3 Screw
4 Tab strip feed device

Setting

Adjust the bending rollers (6) with setting handle (4) until the tab (1) is positioned according to measure A, see fig 1.

Release the locking handle (3) and loosen the nut (5). Turn the setting handle (4) clockwise to increase the distance and vice versa.
After setting, engage the locking handle and tighten the nut.

Set the position of the pull tab hole, see page MS 842–5X.

Volume, ml	A ± 1 mm
125	1.5
200S hole 10	3.5
200S hole 11	4.0
180 – 284	5.0

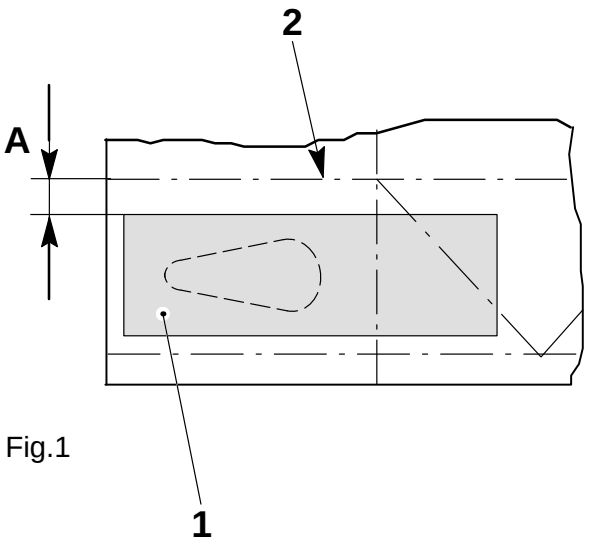

Fig.1

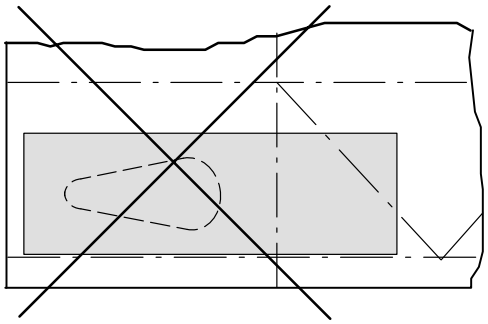

Fig.2

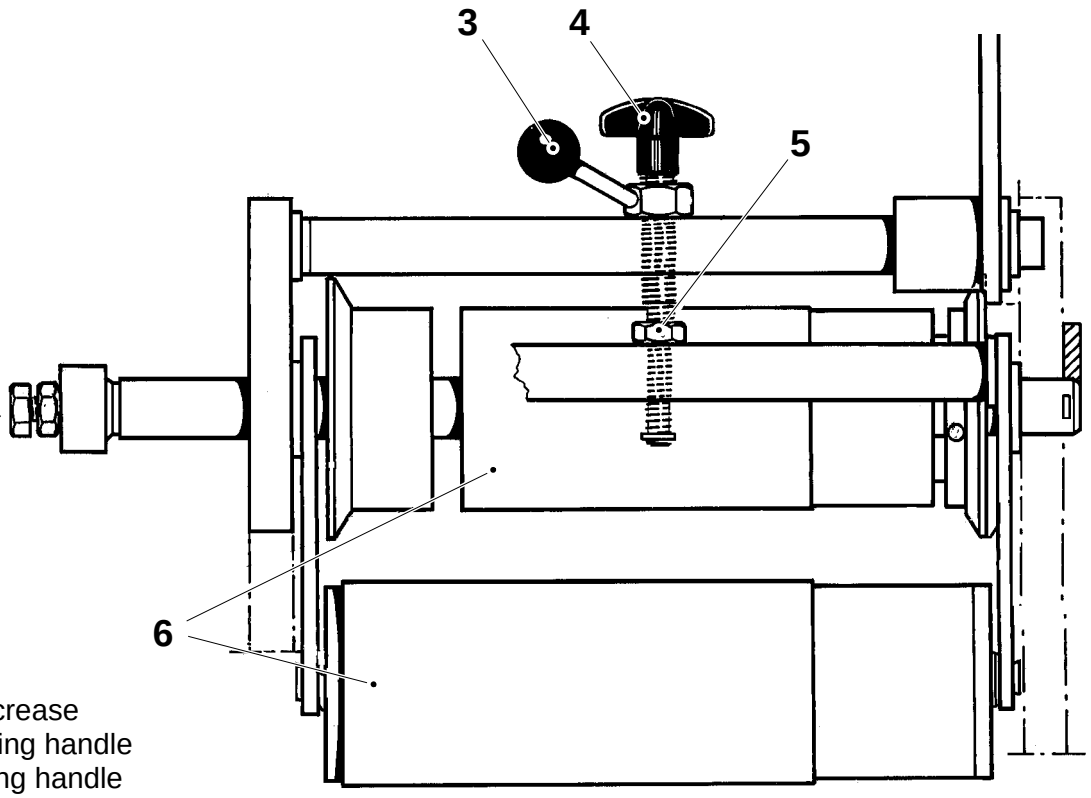

1 Tab
2 Top crease
3 Locking handle
4 Setting handle
5 Nut
6 Bending roller

Setting

The mark after the unsealed zone by the pull tab hole (1) should be placed in the middle of the sealed zone (2).

Distance A shall be at least 0.5 mm.

Adjust the hole by loosening the screws (3), and adjusting with the handle (5). After setting, tighten the screws.

(Cont'd overleaf)

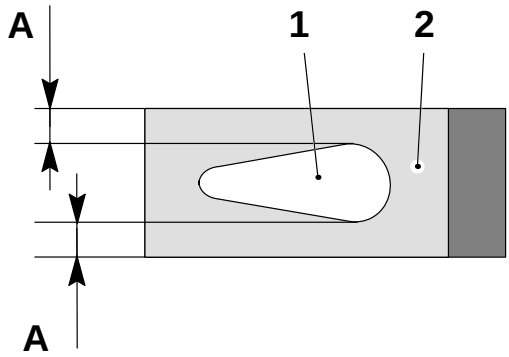

A = Min 0.5 mm

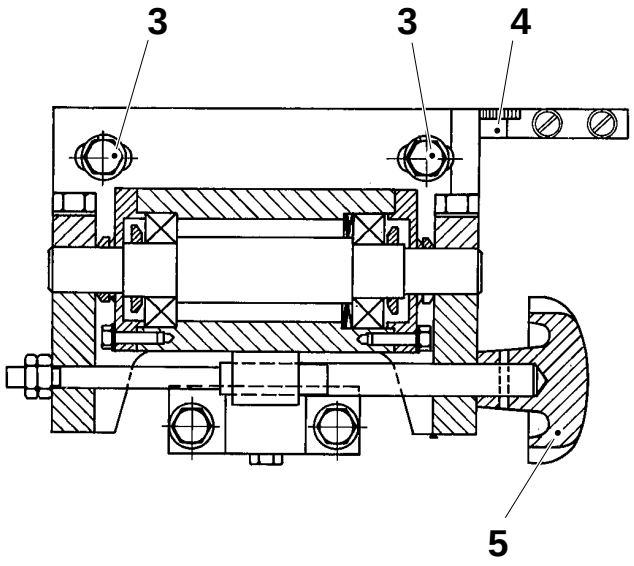

1 Pull tab hole
2 Sealed zone
3 Screw
4 Scale
5 Handle

(Cont'd)

Sealing length

After removal/fitting, check that the sealing (1) continues measures, (see fig) past the pull tab hole.

Loosen the screws (2) and set the sealing length with the screw (3).

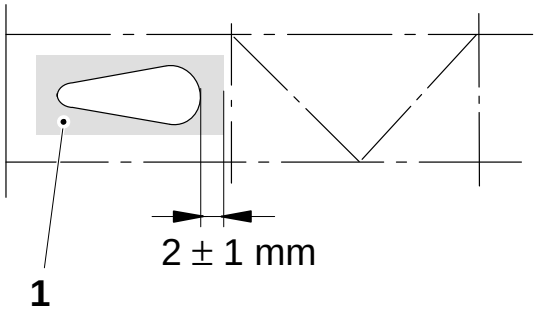

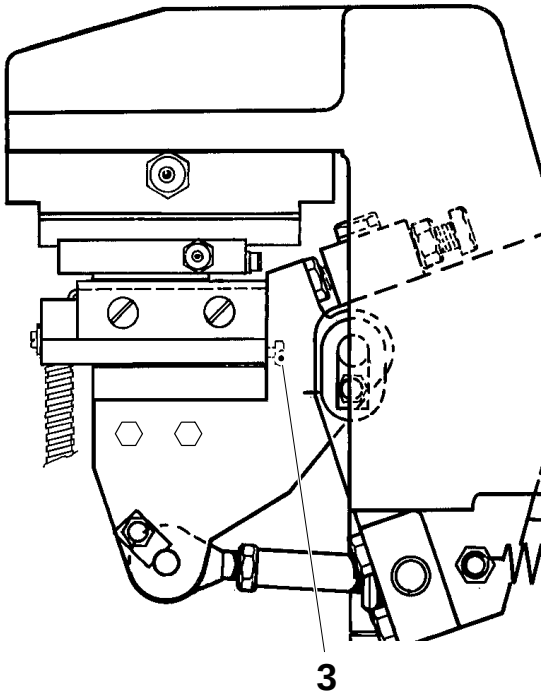

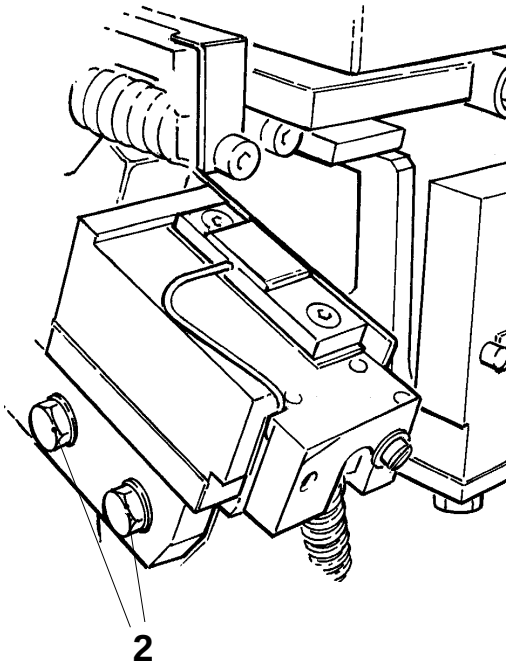

1 Sealing zone
2 Screw
3 Adjustment screw

Setting

The mark after the unsealed zone by the pull tab hole (1) should be placed in the middle of the sealed zone (2).

Distance A shall be at least 0.5 mm.

Adjust the hole by loosening the screws (3), and adjusting with the handle (5). After setting, tighten the screws.

(Cont'd overleaf)

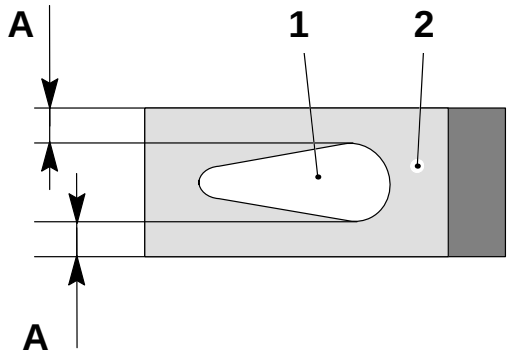

A = Min 0.5 mm

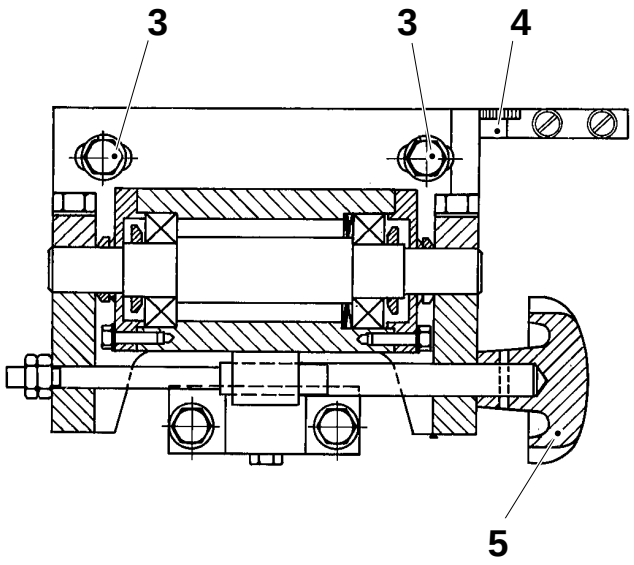

1 Pull tab hole
2 Sealed zone
3 Screw
4 Scale
5 Handle

(Cont'd)

Sealing length

After removal/fitting, check that the sealing (1) continues past the pull tab hole; measures, see fig.

Loosen the screws (2) and set the sealing length with the screw (3).

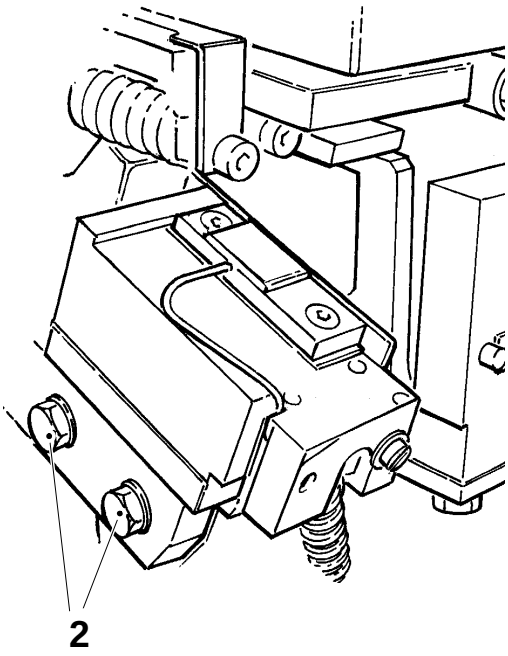

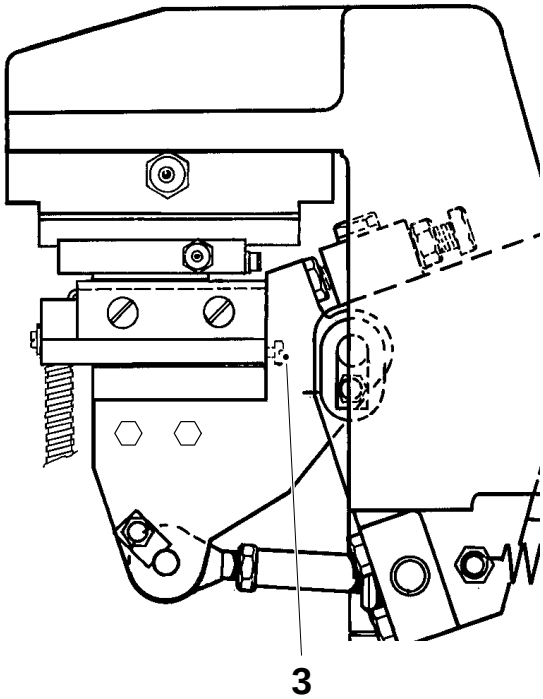

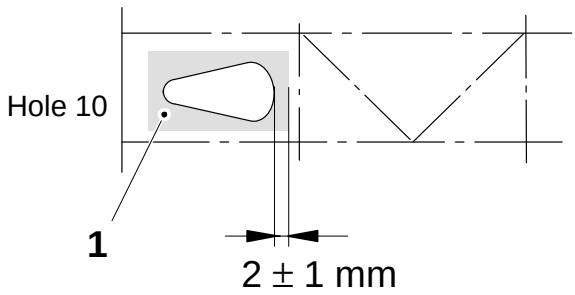

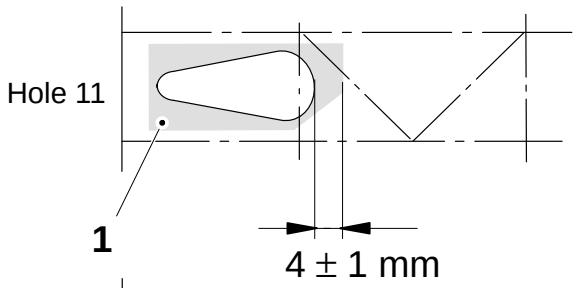

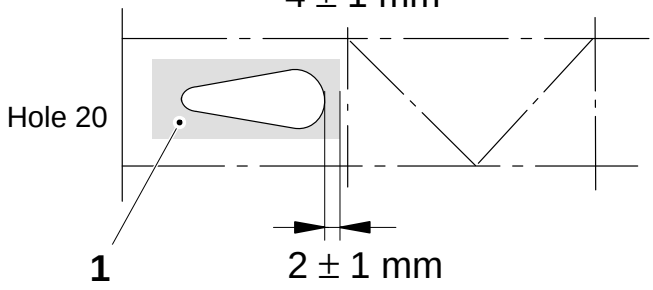

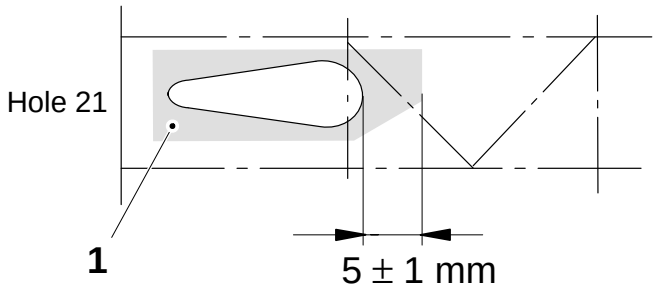

1 Sealing zone
2 Screw
3 Adjustment screw

Setting

Sequence for setting of pull tab hole and tab position during start-up.

Note!
All settings according to the MS book must be done before the machine is to be started.

As the tab unit (3) is secured in a fixed position, all measurements are counted from this unit.

a) Put the packaging material into the machine and start.

b) Adjust the bending rollers (4) until the tab is positioned, see page MS 841–5X.
Note! Be aware of the unsealed part of the tab.

c) Adjust the hole punch (1) so that the hole is positioned according to page MS 842–5X.

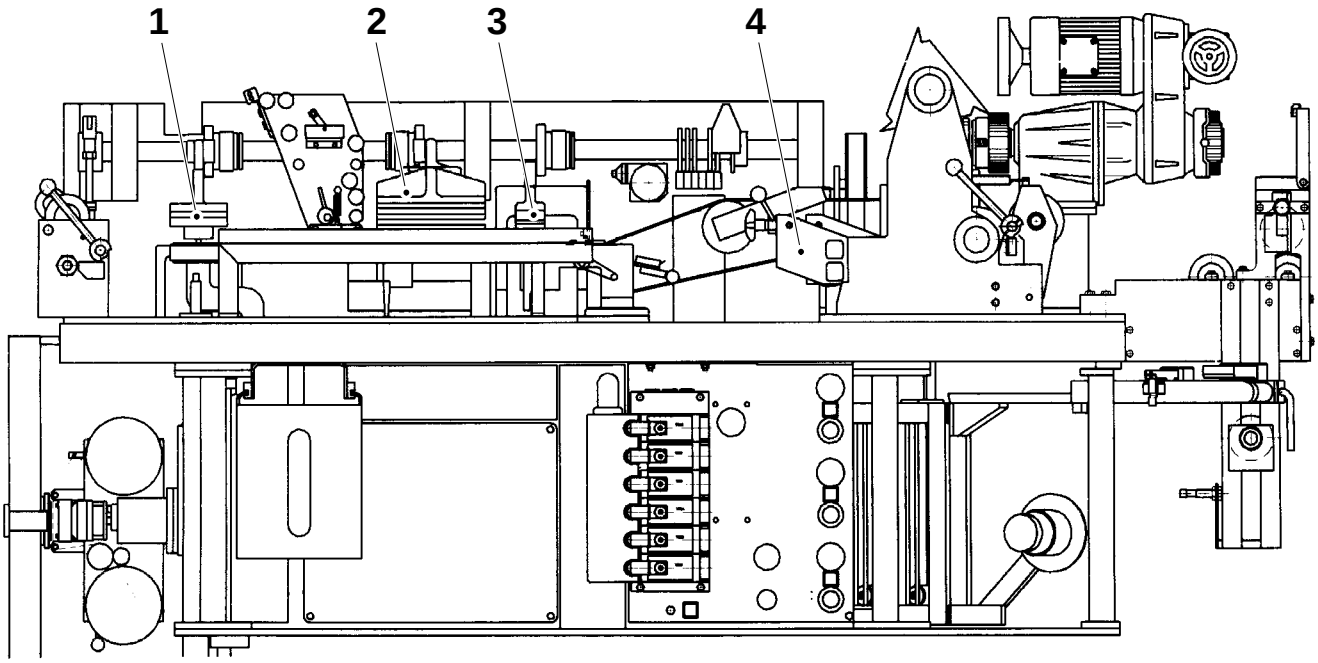

1 Hole punch
2 IS strip applicator
3 Tab unit
4 Bending roller

Checking/Cleaning

Check the following details for wear and/or damages:

- the rubber covering (1), and
- the gear wheels (2).

Replace as required.

Footnote
During stoppages longer than 24 hours, the drive roller must be disengaged from the counter roller.

Clean the rubber roller (1).

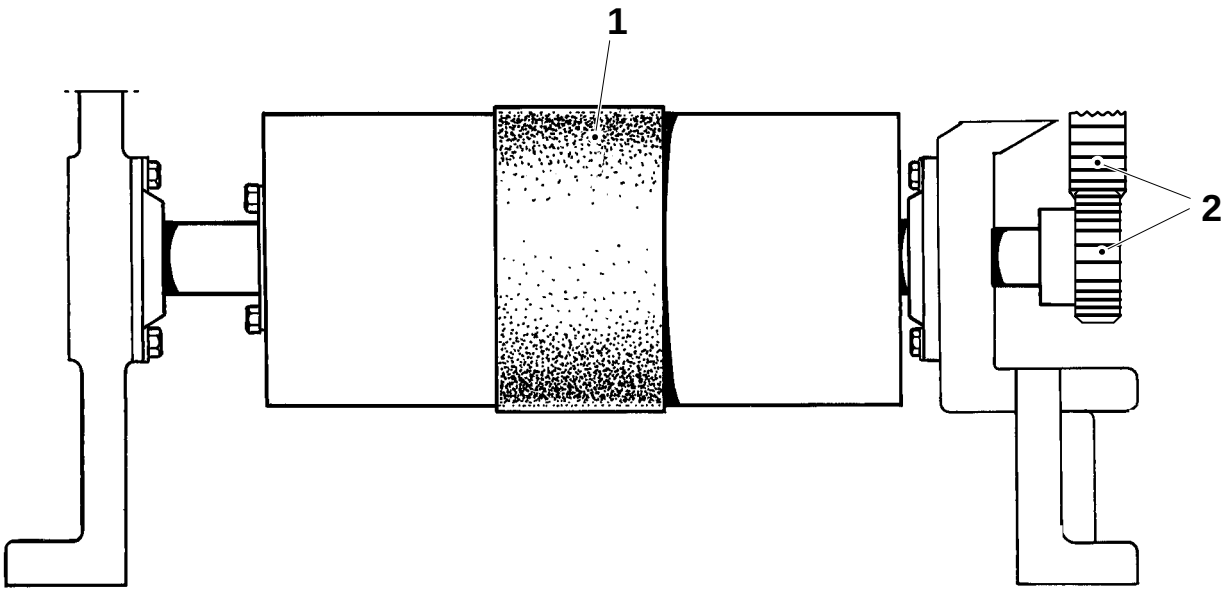

1 Rubber covering
2 Gearwheel

Checking

Check the following details for wear and/or damage:

- the release handle (1), and
- the proximity switch (2).

Replace worn and/or damaged details.

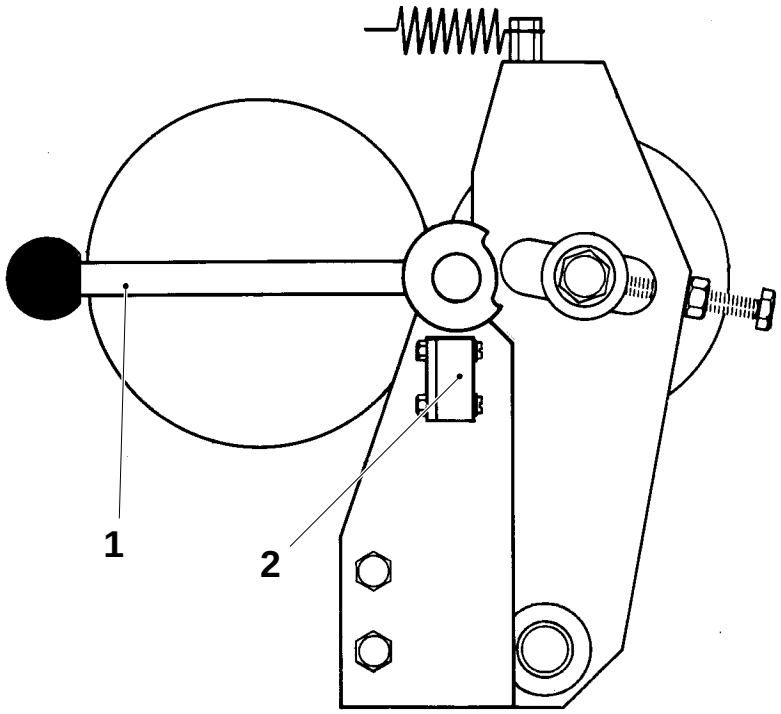

1 Release handle
2 Proximity switch

Setting

Spring force

Measure the spring force for each of the two springs by means of a spring balance. For each of the springs, the force is to be 150 N. If required, adjust the force at the threaded spring holder. Loosen one spring and test the other one.

Gap

Put packaging material between the rollers (3) and (5).

Crank the unit until the roller (2) is in the lower cam section.

Set gap A between the cam (1) and roller (2) after loosening the two screws (4) and the two nuts (6).

Adjust equally on either side with the two screws (7) until the gap A is obtained between the cam and the roller. Fineadjust so that the counter roller (5) is parallel to drive roller (3).

Tighten the two nuts (6) and thereafter the two screws (4). Double check the gap between the cam (1) and cam roller (2).

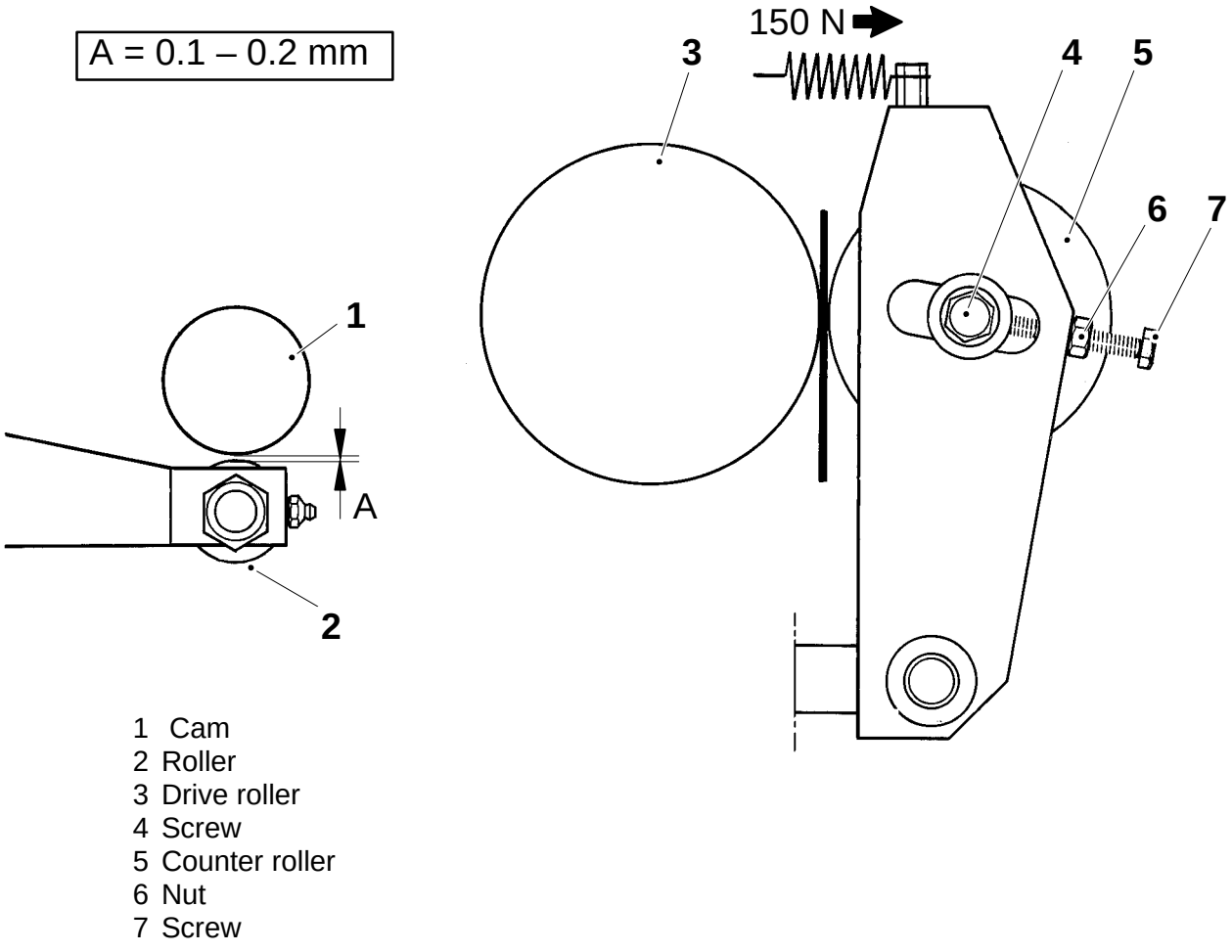

1 Cam
2 Roller
3 Drive roller
4 Screw
5 Counter roller
6 Nut
7 Screw

Setting

Spring force

Measure the spring force for each of the two springs by means of a spring balance. For each of the springs, the force is to be 150 N. If required, adjust the force at the threaded spring holder. Loosen one spring and test the other one.

Gap

Put packaging material between the rollers (3) and (5).

Crank the unit until the roller (2) is in the lower cam section.

Set gap A between the cam (1) and roller (2) after loosening the two screws (4) and the two nuts (6).

Adjust equally on either side with the two screws (7) until the gap A is obtained between the cam and the roller. Finally adjust so that the counter roller (5) is parallel to the drive roller (3).

Tighten the two nuts (6) and thereafter the two screws (4). Double check the gap between the cam (1) and the cam roller (2).

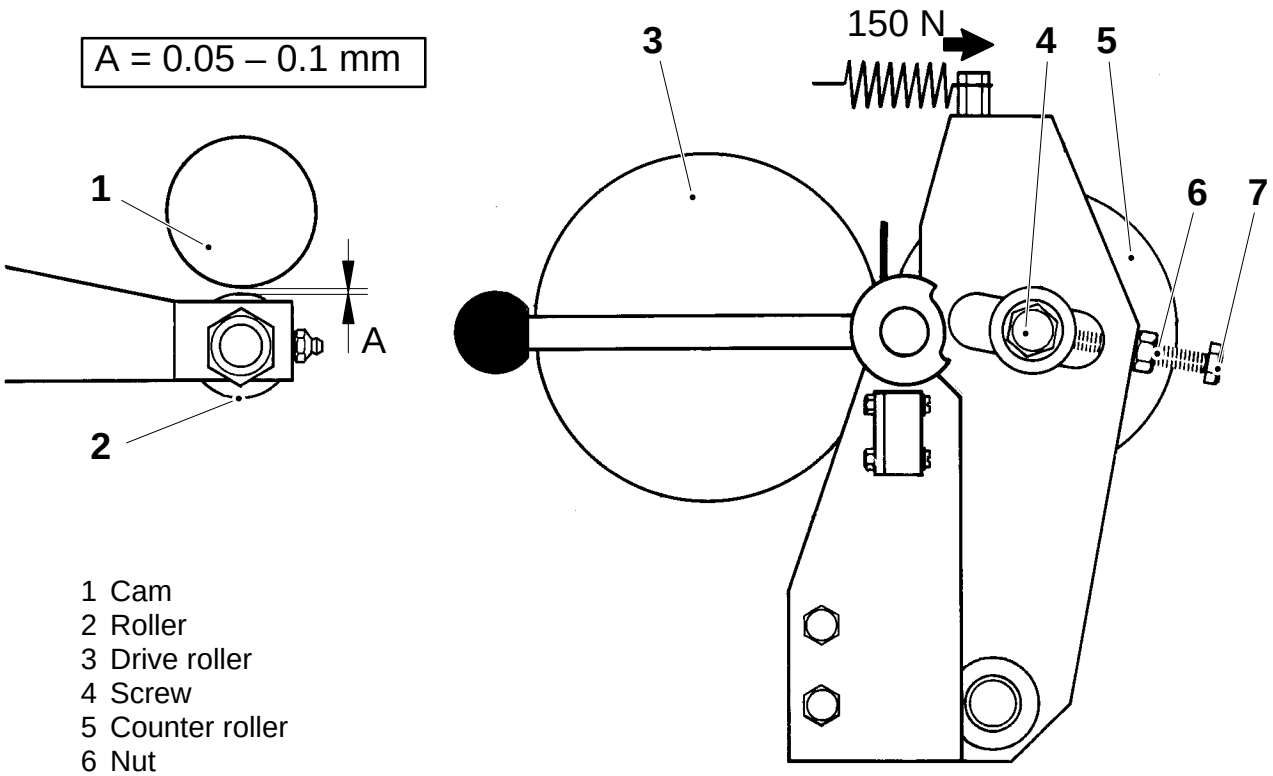

1 Cam
2 Roller
3 Drive roller
4 Screw
5 Counter roller
6 Nut
7 Screw

Checking

Check the proximity switch (1) for wear and/or damage. Replace as required.

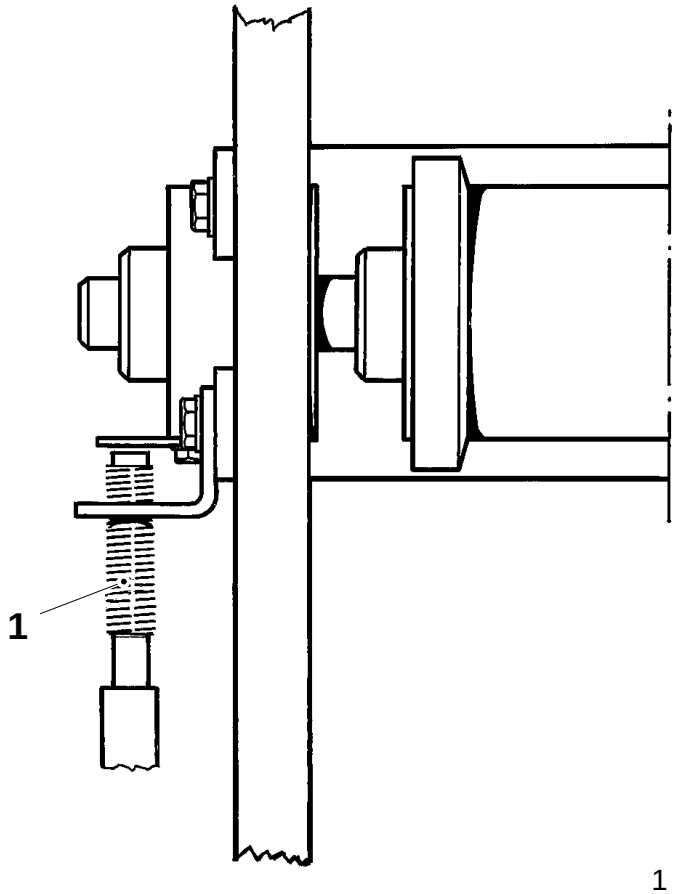

1 Proximity switch

Setting

Footnote
Make sure the guides (1) are parallel and at right angles to the flat surface of the plane (4).

Tighten the screws (3).

Measure distance B and set the guide on the other side at the same distance. Thereafter set the other guide to obtain a maximum sideways movement of 0.5 mm between the slide lug and guides.

Proximity switches

Set the two proximity switches (5) so that the clearance between them and the trigger flags (6) do not exceed A mm when the slide lug (2) is in its outermost position.

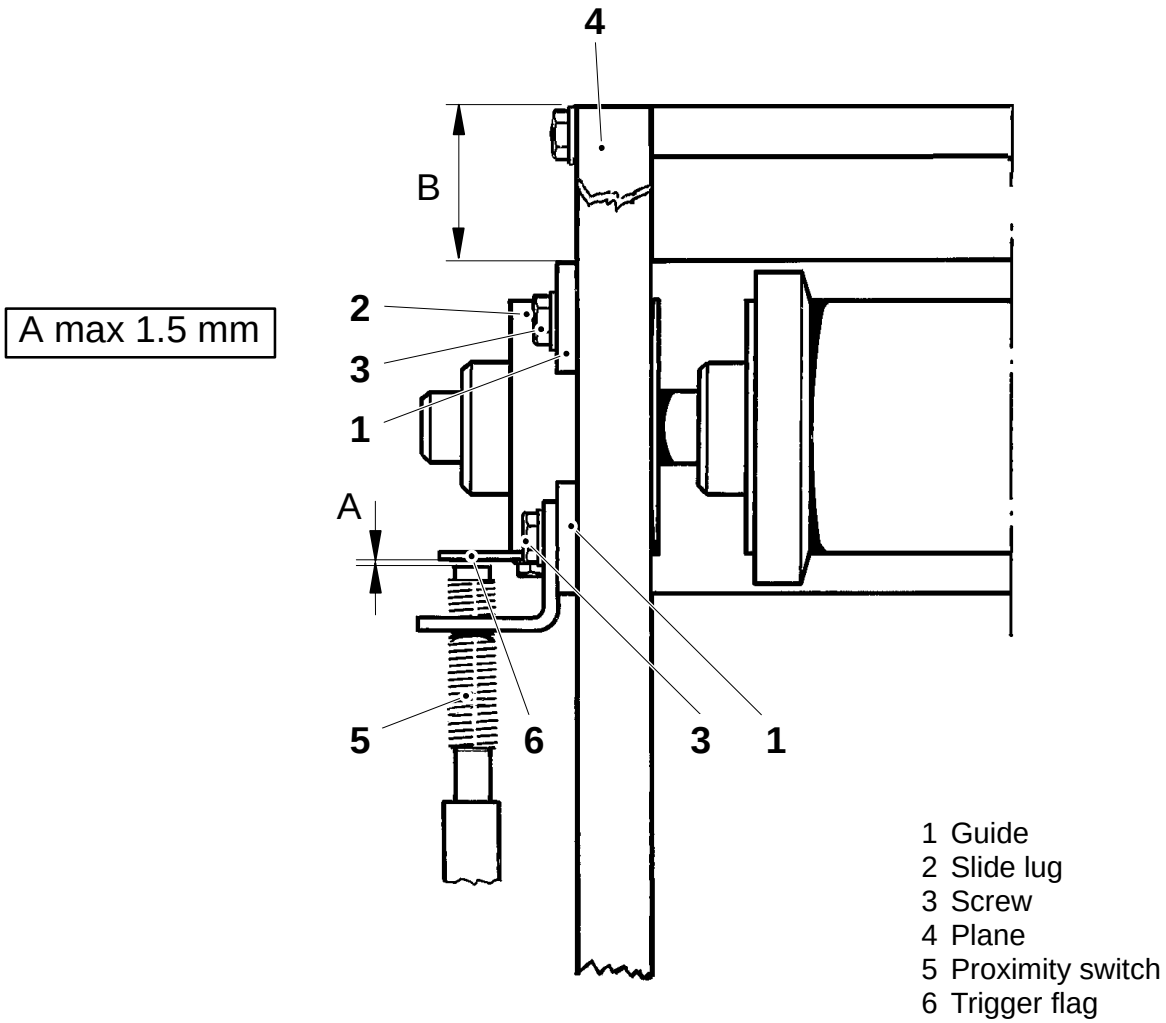

1 Guide
2 Slide lug
3 Screw
4 Plane
5 Proximity switch
6 Trigger flag

Sequence diagram and positioning of cams

The numbering below refers to the fig on this page and the sequence diagram on page 849–11:2.

1 Brake release
2 Punch
3 IS strip sealing, pressure
4 Tab sealing, pressure
5 Brake (Web tension)
6 Synchronization to main machine
7 IS strip sealing, IH generator
8 Synchronous stop
9 Tab sealing, CAP Date marking
10 Adjustment of crease wheel

The cams 1, 2, 3, 4, and 10 are fixed by a clamp devices.

The cams 5, 6, 7, 8, and 9 are fixed by grub screws.

(Cont'd overleaf)

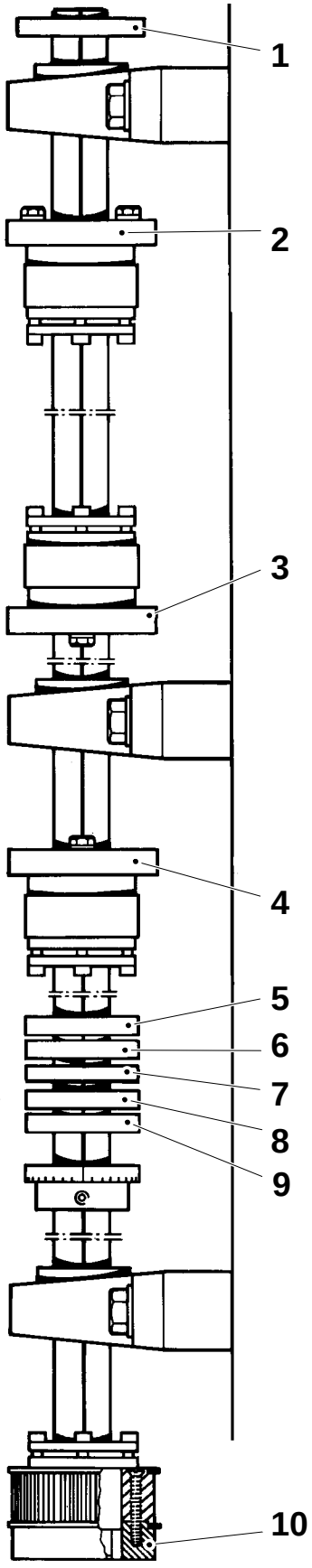

(Cont'd)

(Numbering, see reference on page
MS 849–1X:1.)

Footnote
The graphs shows the profiles of the cams.

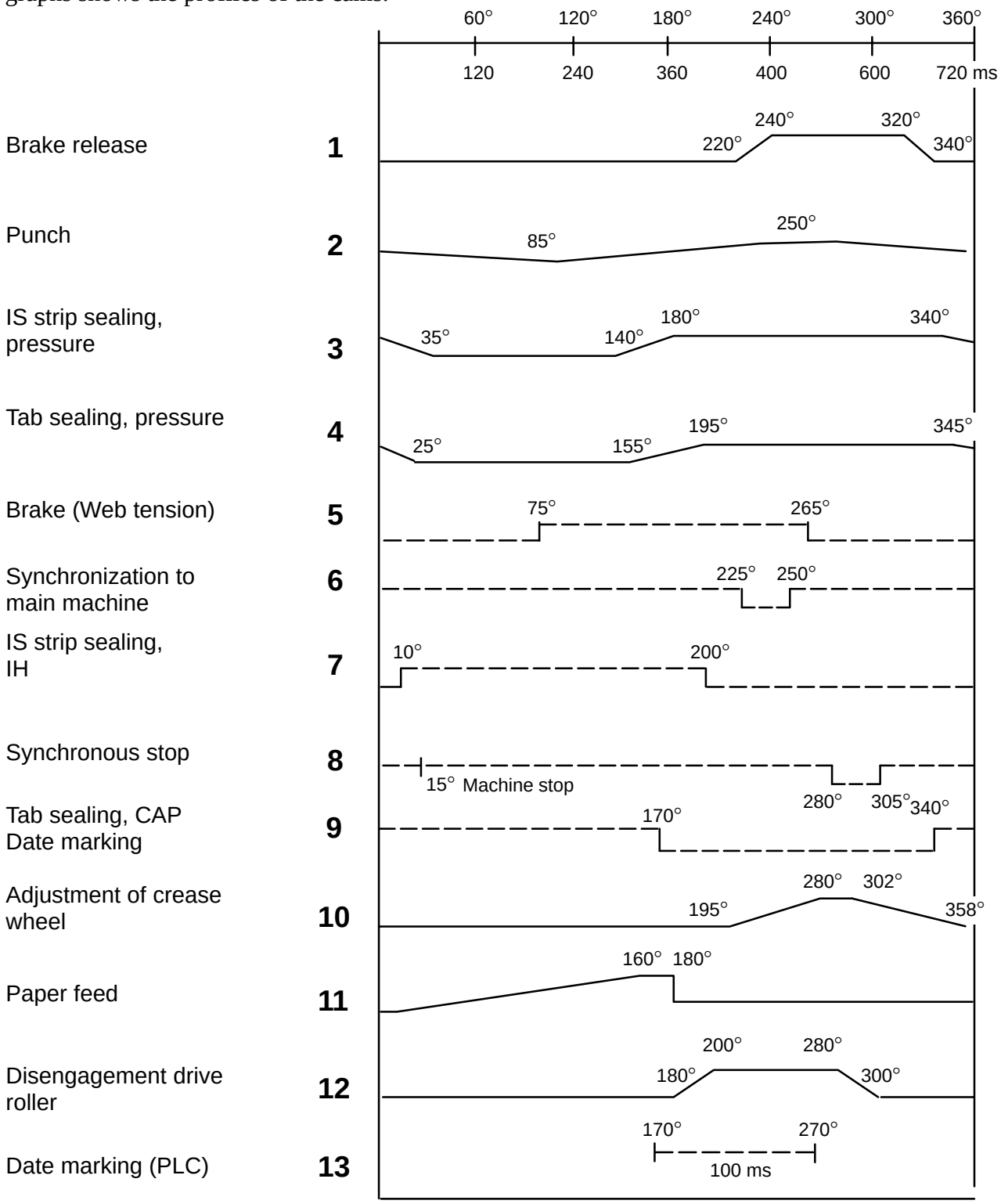

Sequence diagram and positioning cams

The numbering below refers to the fig on this page and the sequence diagram on page MS 849–12:2.

1 Brake release
2 Punch
3 IS strip sealing, pressure
4 Tab sealing, pressure
5 Brake (web tension)
6 Synchronization to main machine
7 IS strip sealing, IH generator
8 Synchronous stop
9 Tab sealing, CAP, date marking
10 Adjustment of crease wheel

The cams 1, 2, 3, 4, and 10 are fixed by clamp devices.

The cams 5, 6, 7, 8, and 9 are fixed by grub screws.

(Cont’d overleaf)

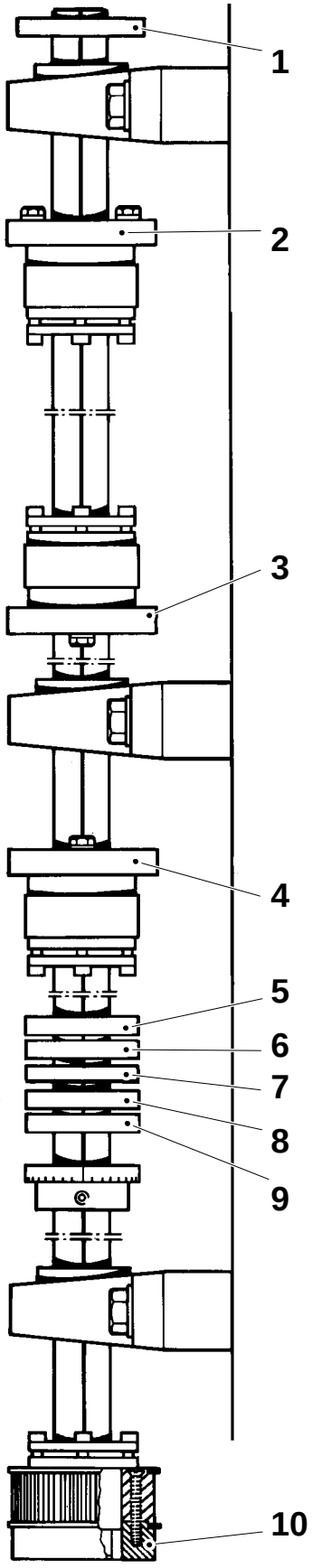

(Cont'd)

(Numbering, see reference on page MS 849–1X:1.)

Footnote

The graphs shows the profiles of the cams.

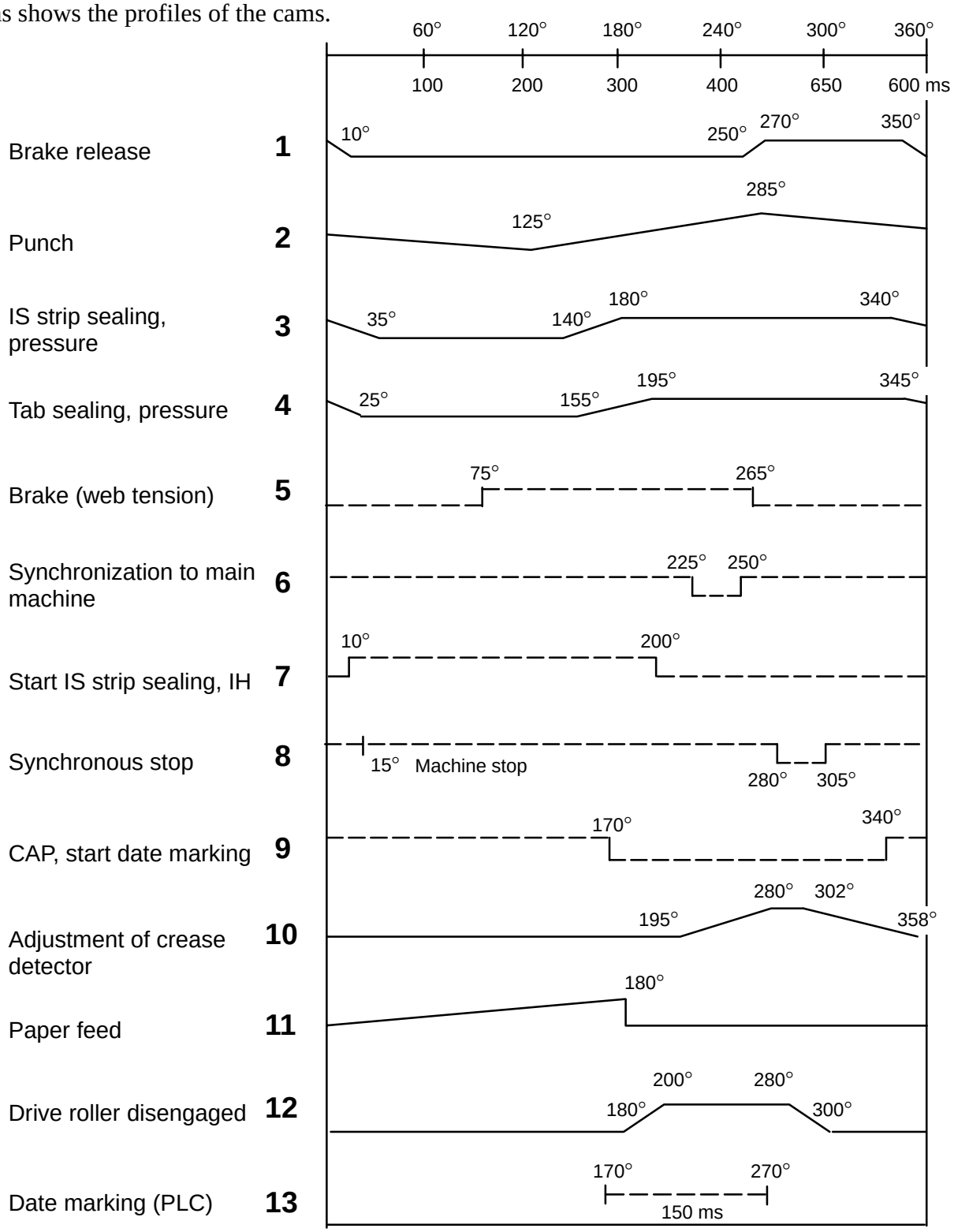

Checking

Check the function of the brake.

Make sure the brake can be properly disengaged with the lever (1).

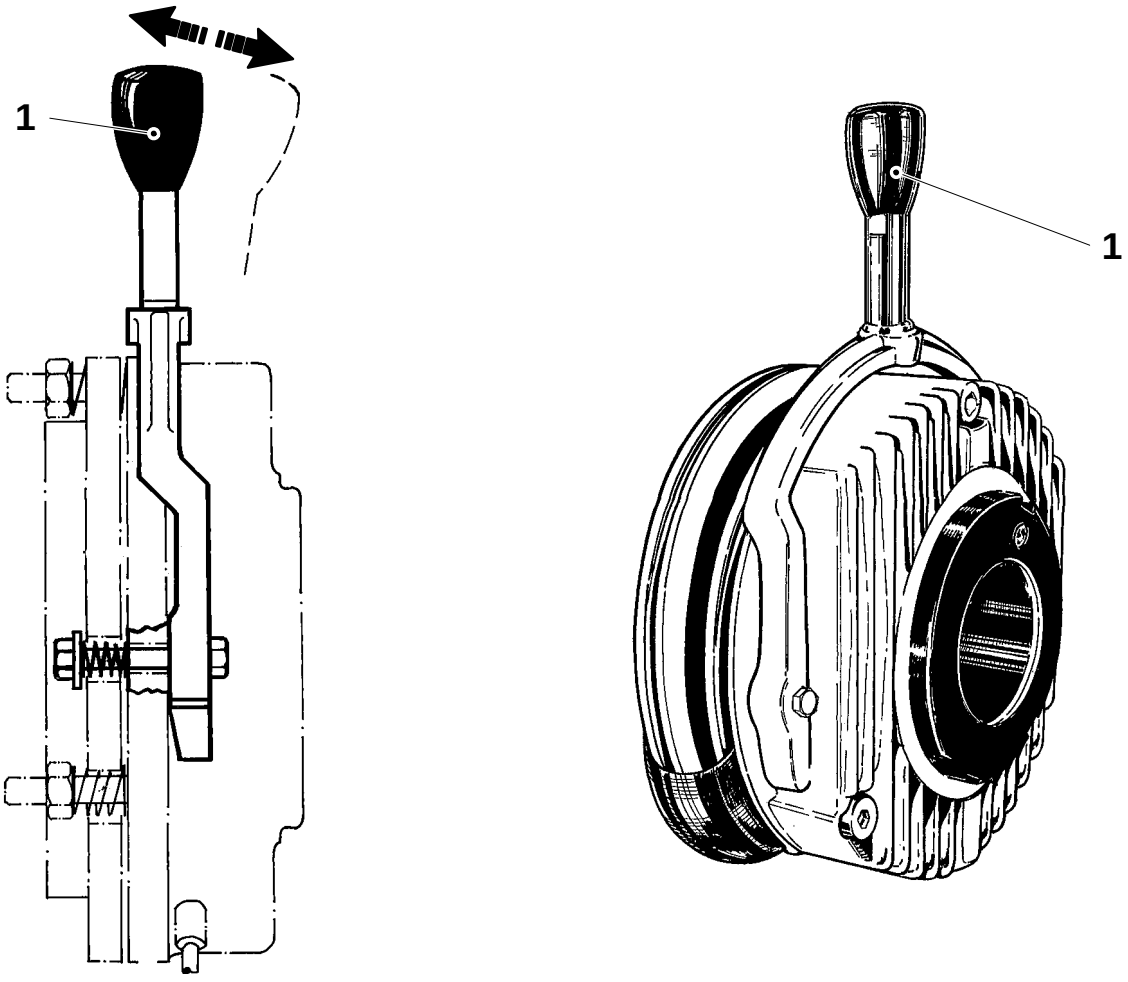

1 Lever

Setting

If the brake is weak, set gap A.

- Loosen the nuts (3).
- Hold the nut and adjust with the screw (1) and set gap A.
- Tighten the nut (3).

Pull the handle by hand. If the brake can not be properly disengaged, set gap B.

Adjust with the two screws (2).

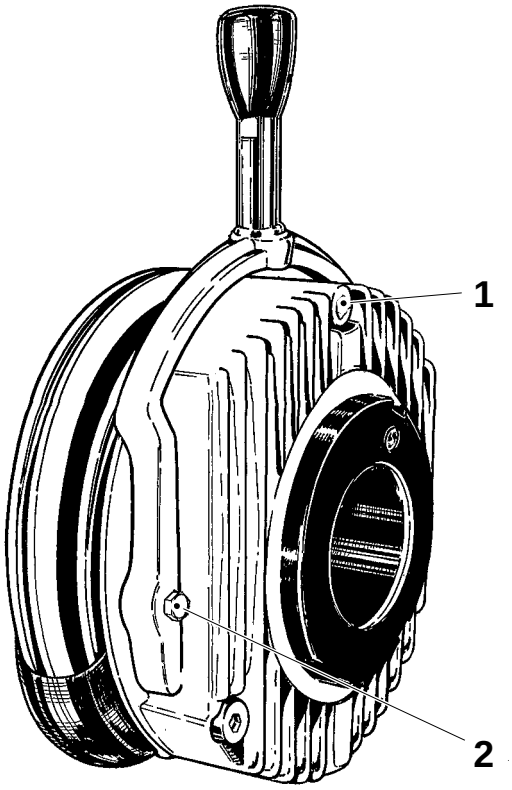

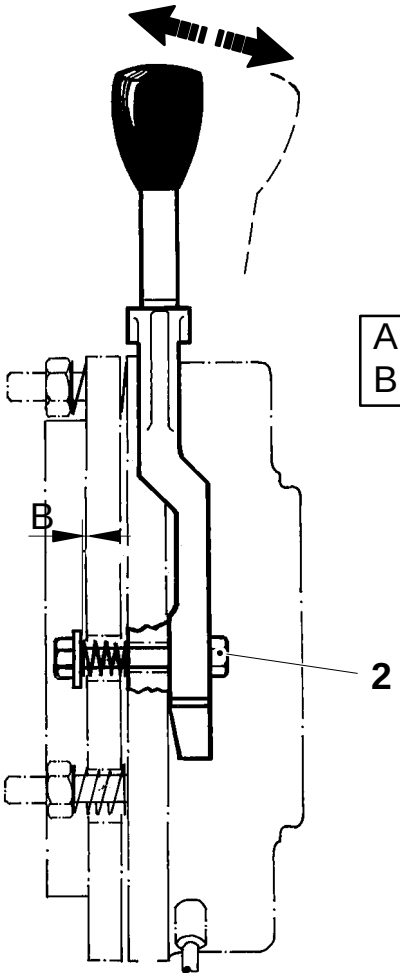

A = 0.2 mm
B = 1.0 mm

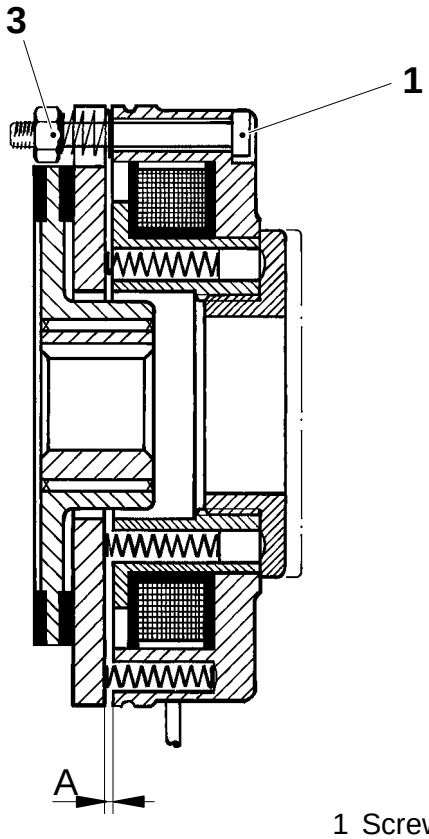

1 Screw
2 Screw
3 Nut

Replacement

Segment

a) Loosen the screw (1).

b) Undo the lock nut (2).

c) Remove the segments (3).

Fit in reverse order

Footnote
Whilst fitting the segments check that the outer segment is correctly positioned **in all three tracks**.
Tighten the nut (2) very securely.

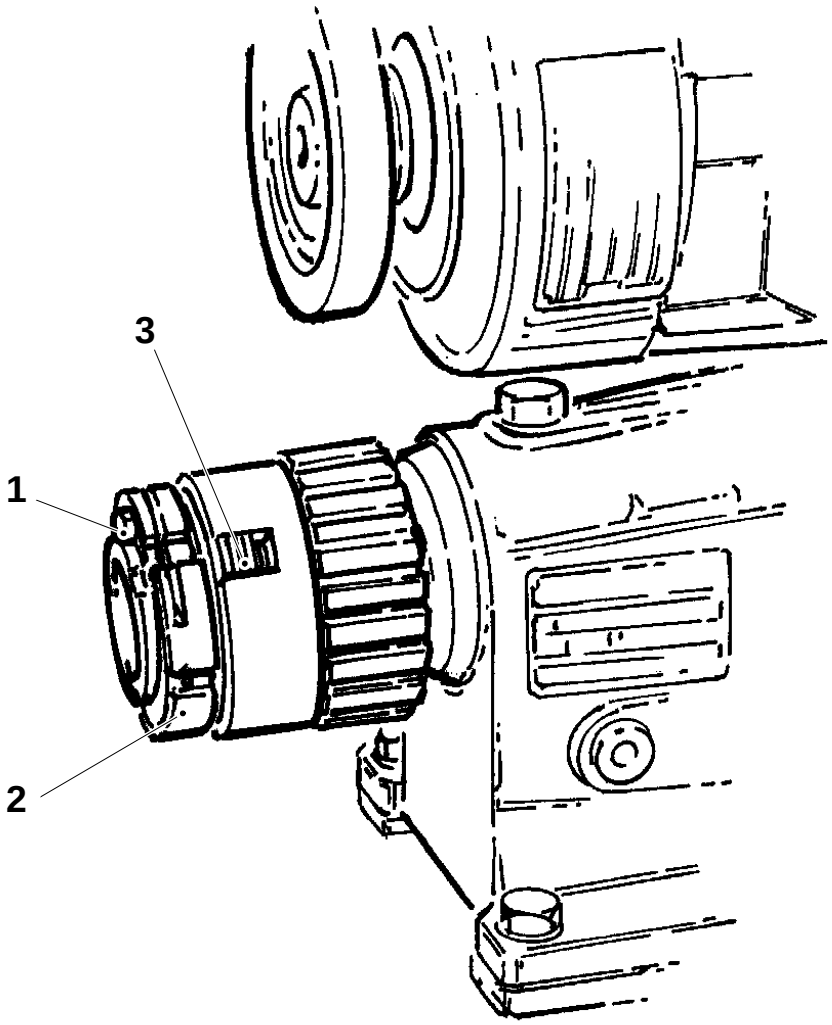

1 Screw
2 Lock nut
3 Segment

Checking

Remove the cover (1).

Check the belt (2) for wear and/or damage. Replace as required.

The belt (2) is to be positioned in the middle of the lower belt pulley see fig 3.

Refit the cover while rotating the motor by hand. Check that the belt does not catch.

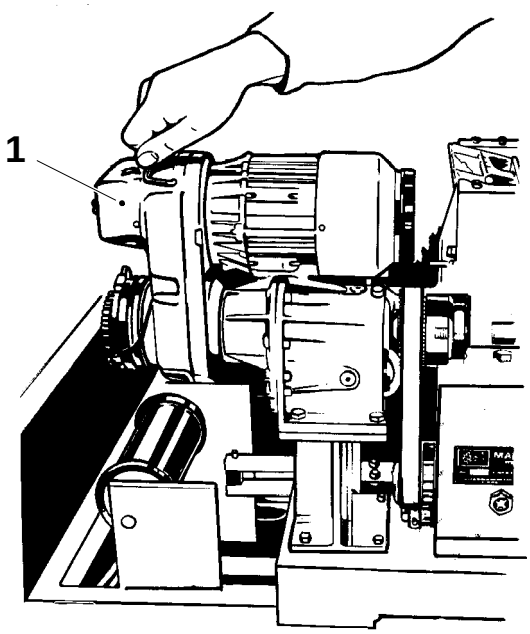

Fig 1

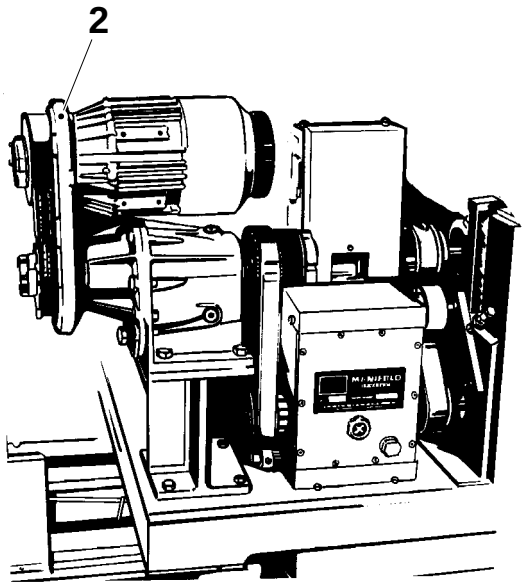

Fig 2

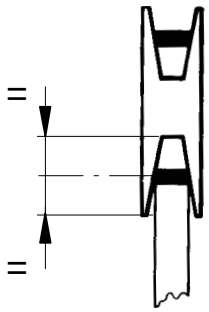

Fig 3

1 Cover
2 Belt

Replacement

Remove the pull tab device components as follows:

- the cover (1), see fig 1,
- the clamp ring (2), see fig 3,
- the outer wheel (3),
- put the new strip on the upper wheel first and then on the lower wheel,
- press the belt into the lower track, see fig 2,
- try to put the belt as far out on the track on the upper wheel as possible.

Fit the cover (1).

If the machine has already been in production before the belt has changed, it is not necessary to make new setting.

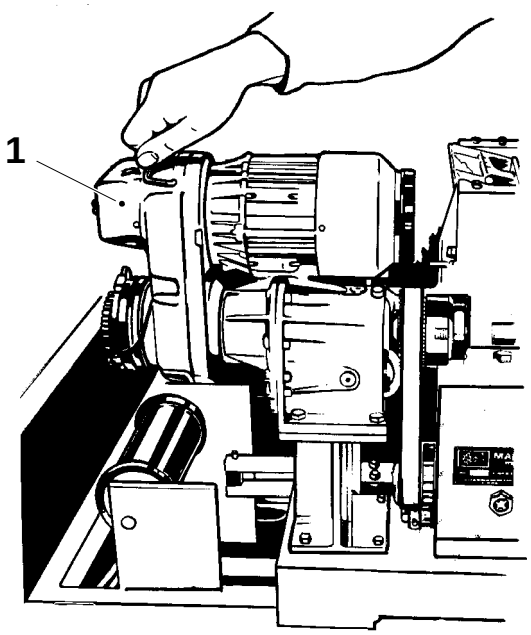

Fig 1

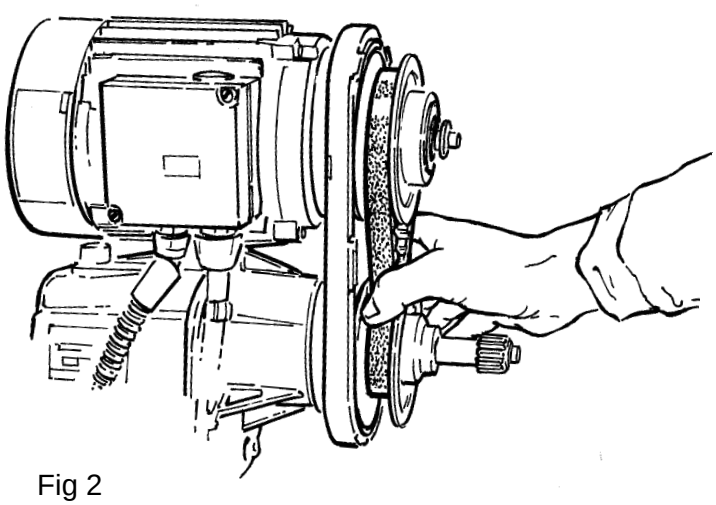

Fig 2

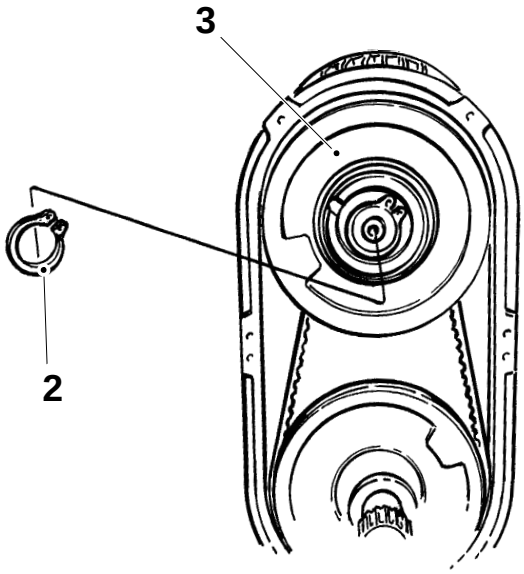

Fig 3

1 Cover
2 Clamp ring
3 Outer wheel

Checking

Check:

- the belts (A), (B), (C), and (D) for wear and/or damages. Replace as required,
- the tension of the belts (A) and (B). The free length of the belt should yield 3 – 5 mm when depressed by hand, and
- the tension of the belt (D). The free length of the belt should yield 10 – 15 mm when depressed by hand.

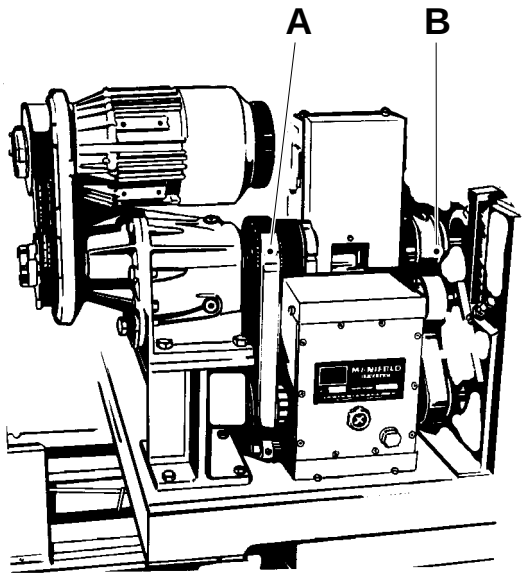

Belt (A) = gear box – indexing unit
Belt (B) = indexing unit – main shaft
Belt (C) = tab feeder
Belt (D) = indexing unit – tab feeder

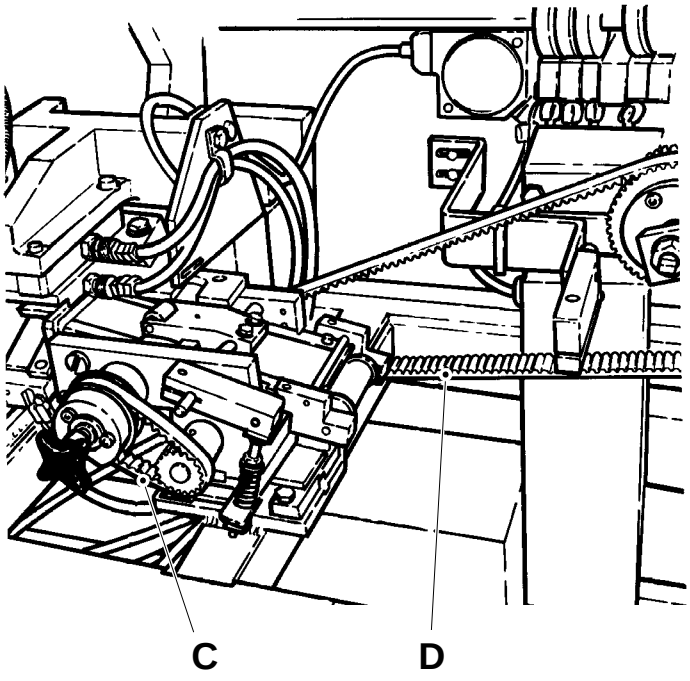

Checking

Check that all rollers run smoothly. If required, replace the bearings.

Checking

Oil level

Check the oil level (1) in the indexing unit (2). If required, top up to the level glass with oil, code B, (only TP No. 90296–72), see page MS 940–7X.

1 Oil level
2 Indexing unit

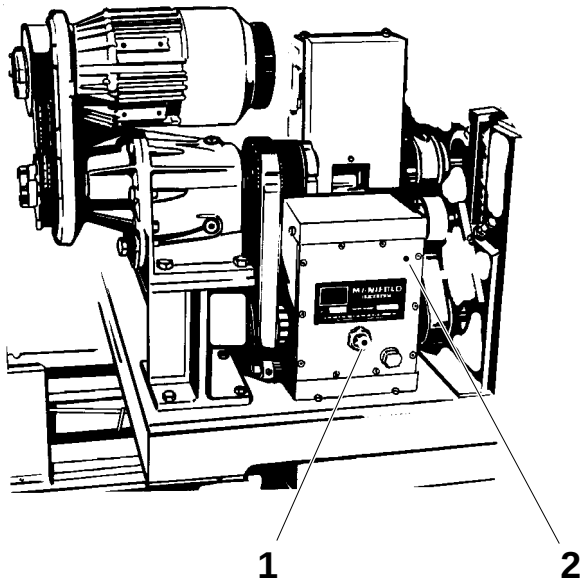

Lubrication

Rollers and bearings

Lubricate the three bearings (1) and the five rollers (2) with grease, code F, see page MS 940–7X.

The other grease nipples are only used once, on delivery of the machine.

Gear wheel

Grease the gear wheels (4) with Molykote, TP No. 90296–12. Wipe away any remaining grease.

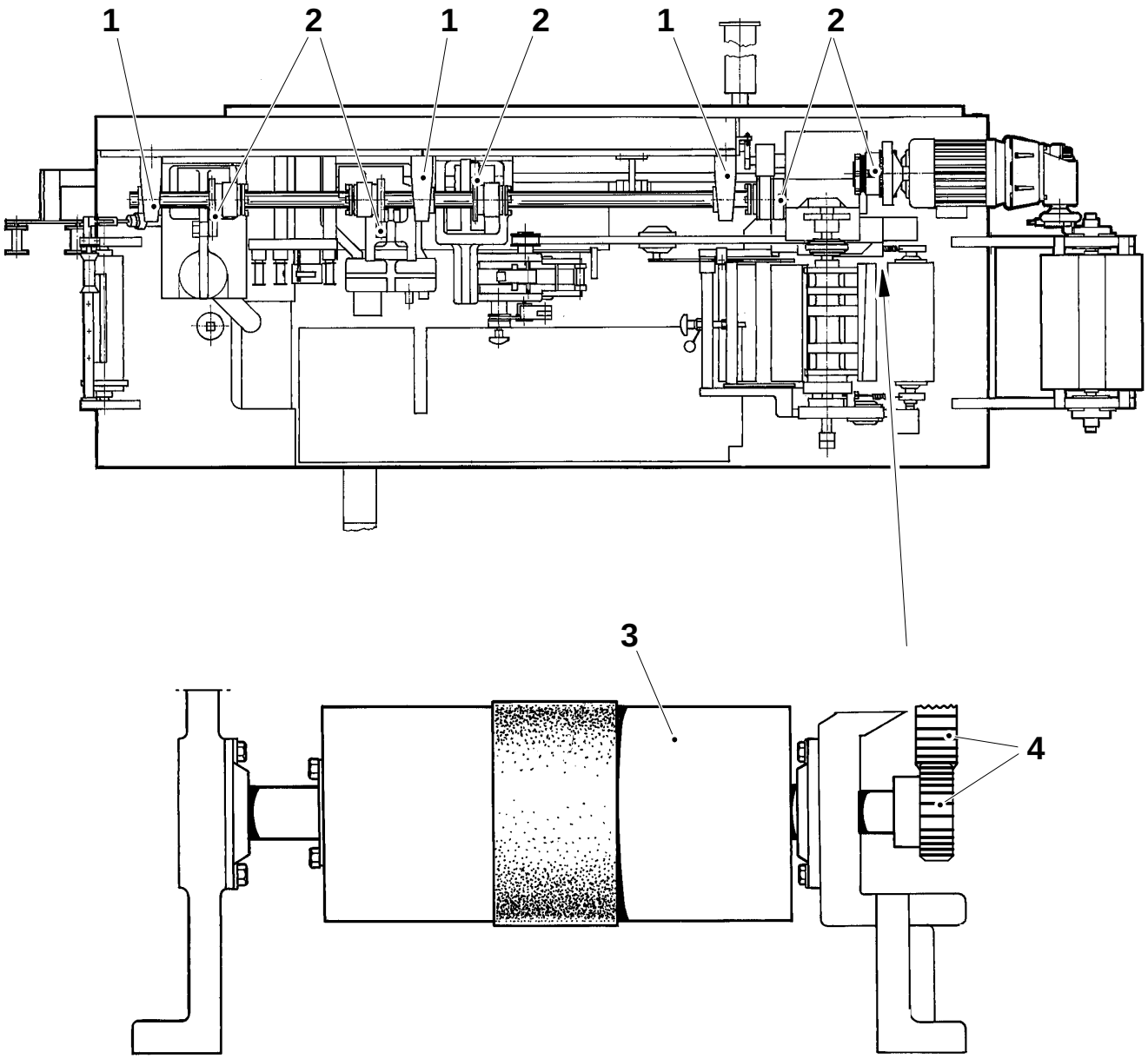

1 Bearing
2 Roller
3 Drive roller
4 Gear wheel

Setting

Set the four cams (1) and the degree scale (2) on the shaft (3) so that the scribe line (4) is exactly aligned with the scribe line (5) on the shaft.

(Cont'd overleaf)

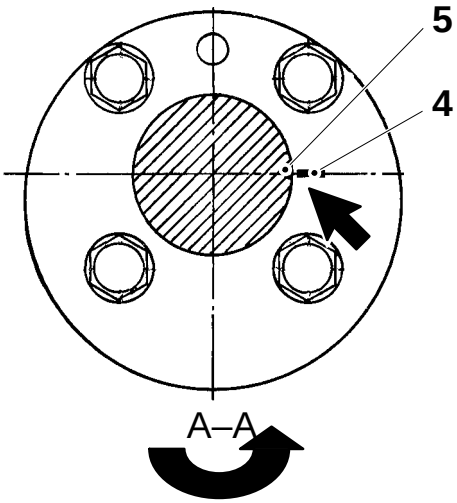

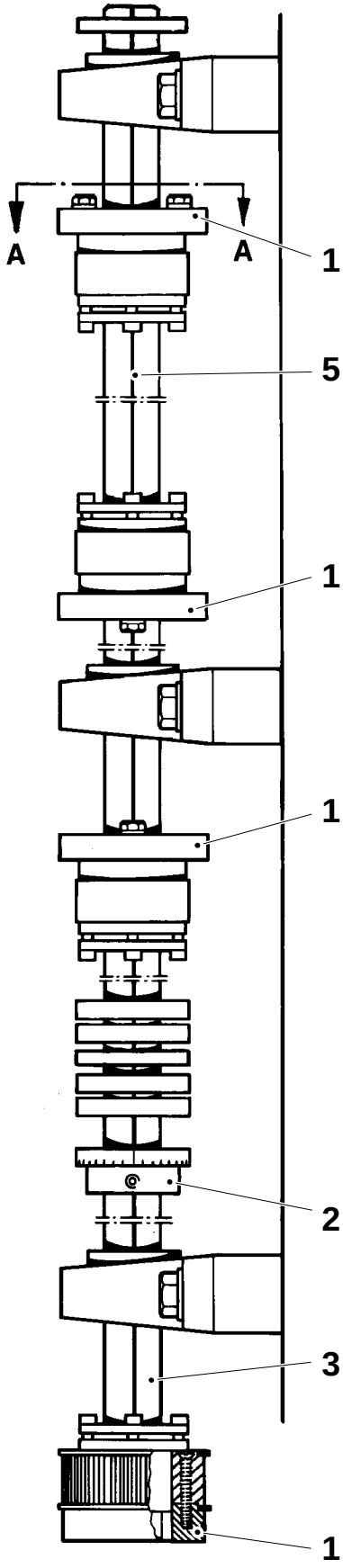

1 Cam
2 Degree scale
3 Shaft
4 Scribe line
5 Scribe line

(Cont'd)

Loosen the ETP bushings (7).

Alternative 1
Fit a dial indicator (11) against one of the teeth of the gear wheel (8) on the drive roller.

Alternative 2
Fasten a piece of tape (6) between the gearwheel (8) and the bracket , see fig. Make sure that the tape is properly stretched. Then the indexing movement starts the tape will crease.

Disengage the brake of the pull tab device drive motor with the lever (9). Turn the input shaft of the gear with the wheel (10) until the dial indicator shows that the indexing movement starts. Turn the shaft (3) so that it is at right angles to plane B, see fig. 1, and so that the lengthwise scribe line is positioned as illustrated.

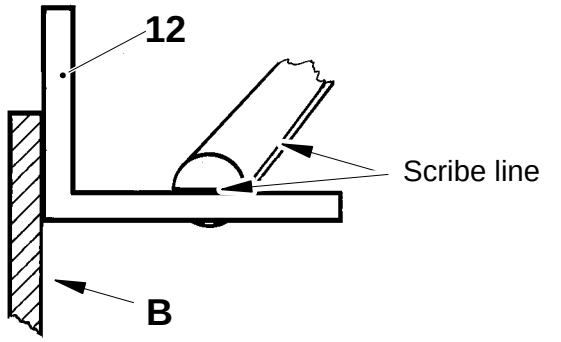

Fig. 1

3 Shaft
6 Tape
7 ETP bushing
8 Gear wheel
9 Brake lever
10 Wheel
11 Dial indicator
12 Set-square

(Cont'd)

Set the cams (1), (5), (6), (7), (8), and (9) according to the degree settings shown in the function diagram, see page MS 849–1X.

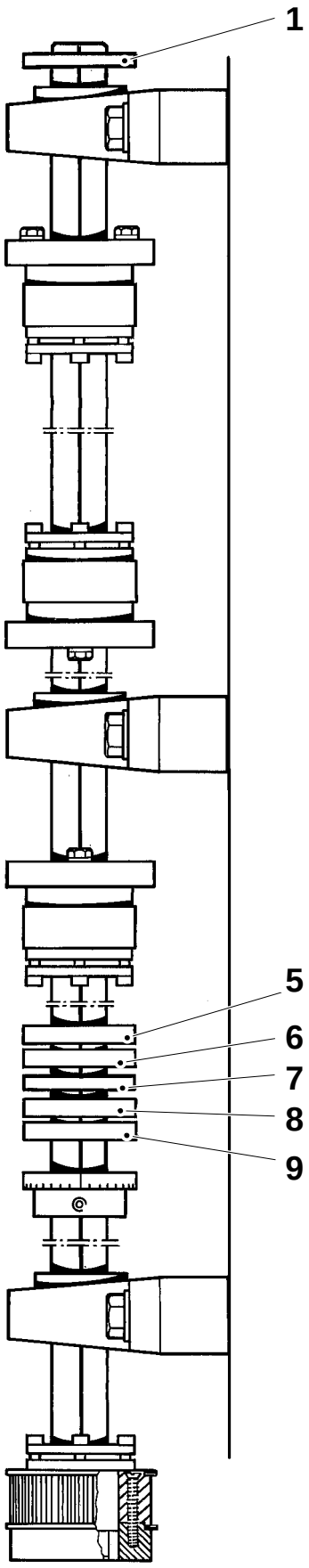

1 Brake release
5 Brake (Web tension)
6 Synchronization to main machine
7 IS strip sealing, IH-generator
8 Synchronous stop
9 Tab sealing CAP, date marking

Setting

Set the four cams (1) and the degree scale (2) on the shaft (3) so that the scribe line (4) is exactly aligned with the scribe line (5) on the shaft.

Remove the gear wheel unit (6) from the shaft

(Cont’d overleaf)

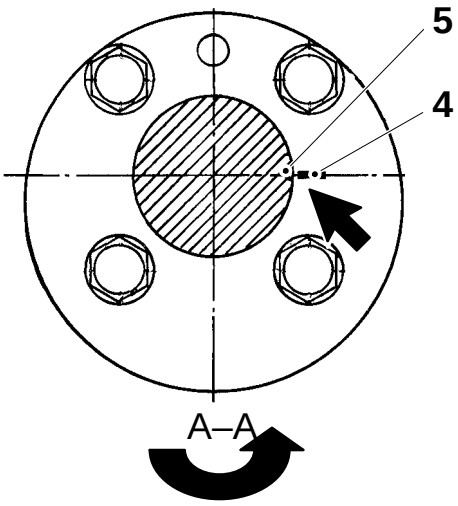

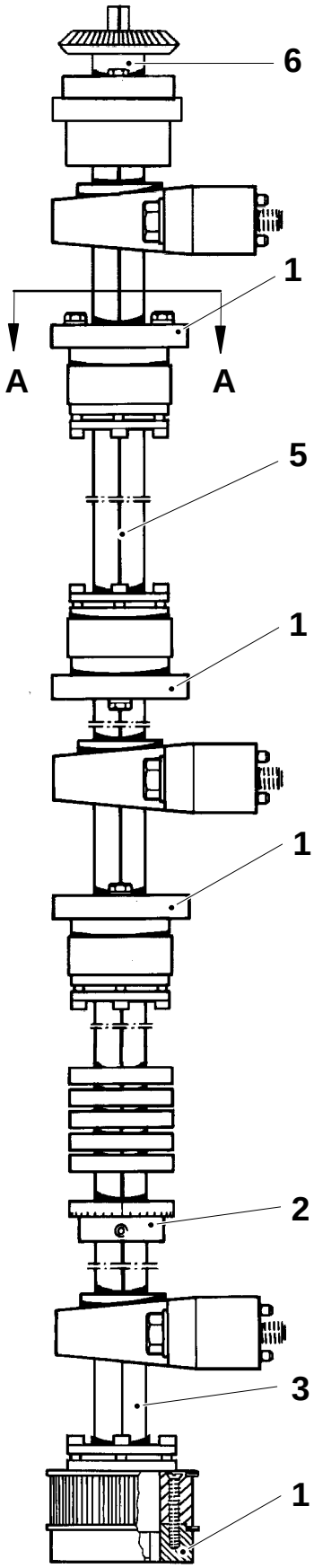

1 Cam
2 Degree scale
3 Shaft
4 Scribe line
5 Scribe line
6 Gear wheel unit

(Cont'd)

Loosen the ETP bushings (8).

Alternative 1
Fit a dial indicator (12) against one of the teeth of the gear wheel (9) on the drive roller.

Alternative 2
Fasten a piece of tape (6) between the gear wheel (8) and the bracket , see fig. Make sure that the tape is properly stretched. Then the indexing movement starts the tape will crease.

Disengage the brake of the pulltab device drive motor with the lever (10). Turn the input shaft of the gear with the wheel (11) until the dial indicator shows that the indexing movement starts. Turn the shaft (3) so that it is at right angles to plane B, see fig. 1, and so that the lengthwise scribe line is positioned as illustrated.

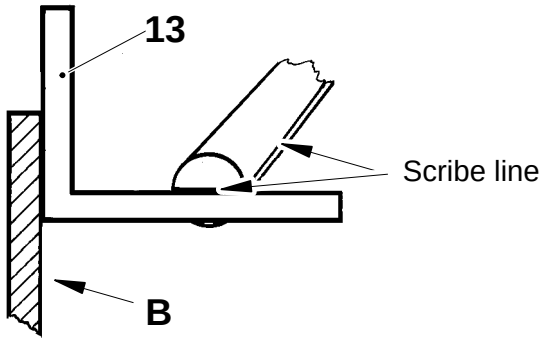

Fig. 1

Tighten the ETP bushing (8), see page MS 370–4X. Set the degree scale on the indication window at 0 ±2.5°. Remove the dial indicator or the tape.

Crank the machine one turn and recheck the setting.

(Cont'd overleaf)

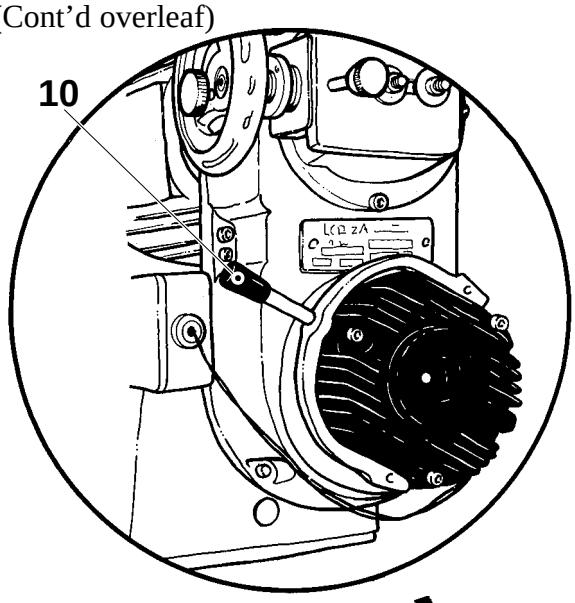

3 Shaft
7 Tape
8 ETP bushing
9 Gear wheel
10 Brake lever
11 Wheel
12 Dial indicator
13 Set-square

(Cont'd)

Set the cams (1), (5), (6), (7), (8), and (9) according to the degree settings shown in the function diagram, see page MS 849–1X.

Fit the gear wheel unit

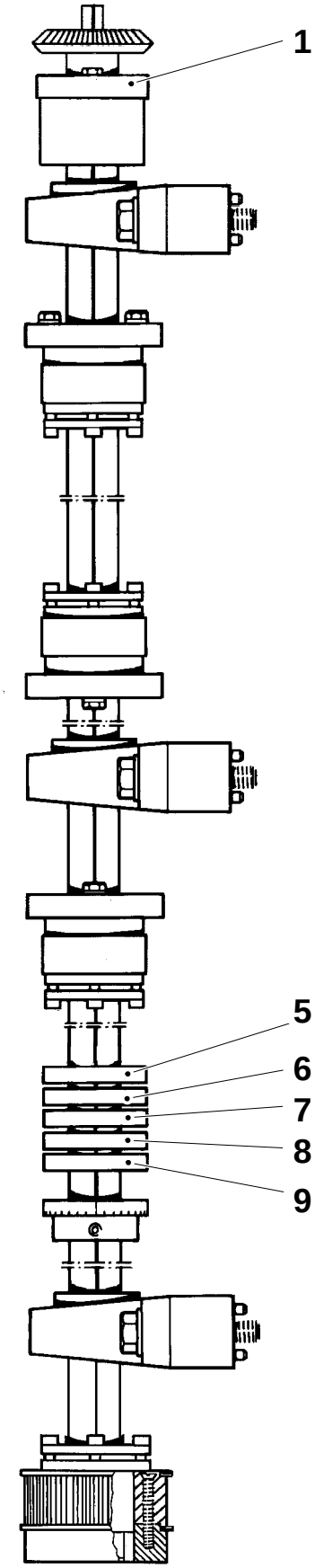

1 Brake release
5 Brake (web tension)
6 Synchronization to main machine
7 IS strip sealing, IH-generator
8 Synchronous stop
9 Tab sealing CAP, date marking

Setting during production

Note!
The setting must be carried out with the motor of the pull tab device **running**.

Alternative 1

By means of a PLC screen, the speed of the device can be checked through the use of histogram.

”Search 6”
01605 (Output for solid state relay to motor)
Display

The screen now shows the stoppage time and pull tab time of the opening device motor. Adjust the motor until the stoppage time is 50 – 70 ms.

Alternative 2

Connect a pulstimer to the PLC between O 16.05 and O 16.00A and adjust the motor until the pulstimer shows 50 – 70 ms.

Coarse adjustment is done by turning out the screw (1) so it does not engages the hole of the flange (3). Turn the hand wheel (2) clockwise to increase the speed, or counter-clockwise to reduce the speed. Carry out fine adjustment, see below.

Final adjustment is done by turning in the screw (1) so it engages the hole of the flange (3). Loosen the locking screw (4). Turn the hand wheel clockwise to increase the speed, or counter-clockwise to reduce the speed.

After completed setting, tighten the locking screw (4).

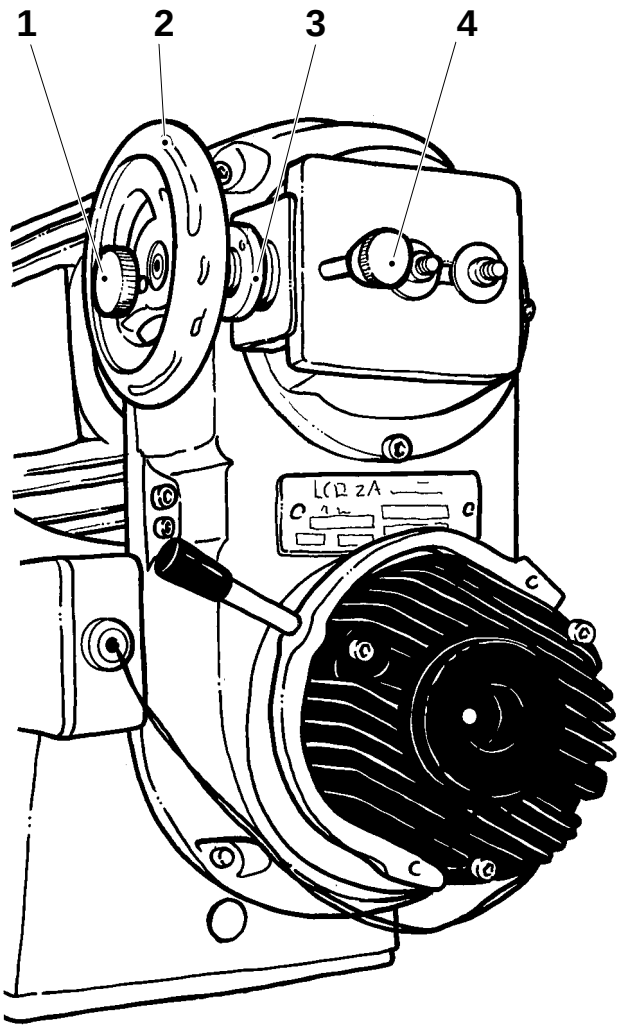

1 Screw
2 Hand wheel
3 Flange
4 Locking screw

Setting during operation

Note!
The setting must be carried out with the motor of the pull tab device **running**.

Connect a pulse timer to the TPMC between O22.11 and O 22.00A and adjust the motor until the pulse timer shows 50 – 70 ms.

Coarse adjustment

Coarse adjustment is done by turning out the screw (1) so it does not engage the hole of the flange (3). Turn the hand wheel (2) clockwise to increase the speed.

Final adjustment

Final adjustment is done by turning in the screw (1) so it engages the hole of the flange (3). Loosen the locking screw (4). Turn the hand wheel clockwise to increase the speed.

After completed setting, tighten the locking screw (4).

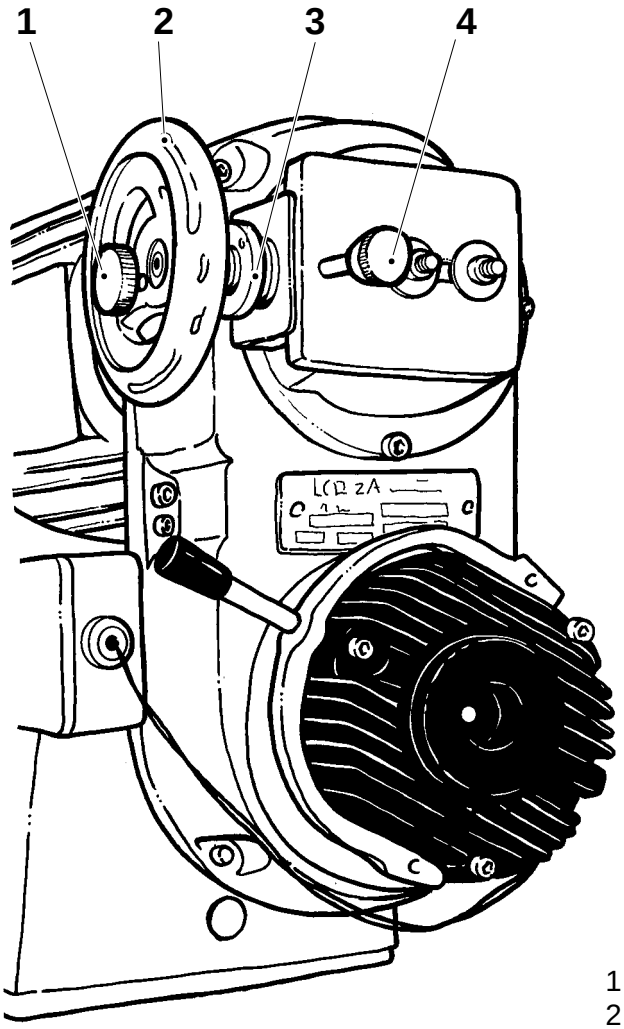

1 Screw
2 Hand wheel
3 Flange
4 Locking screw

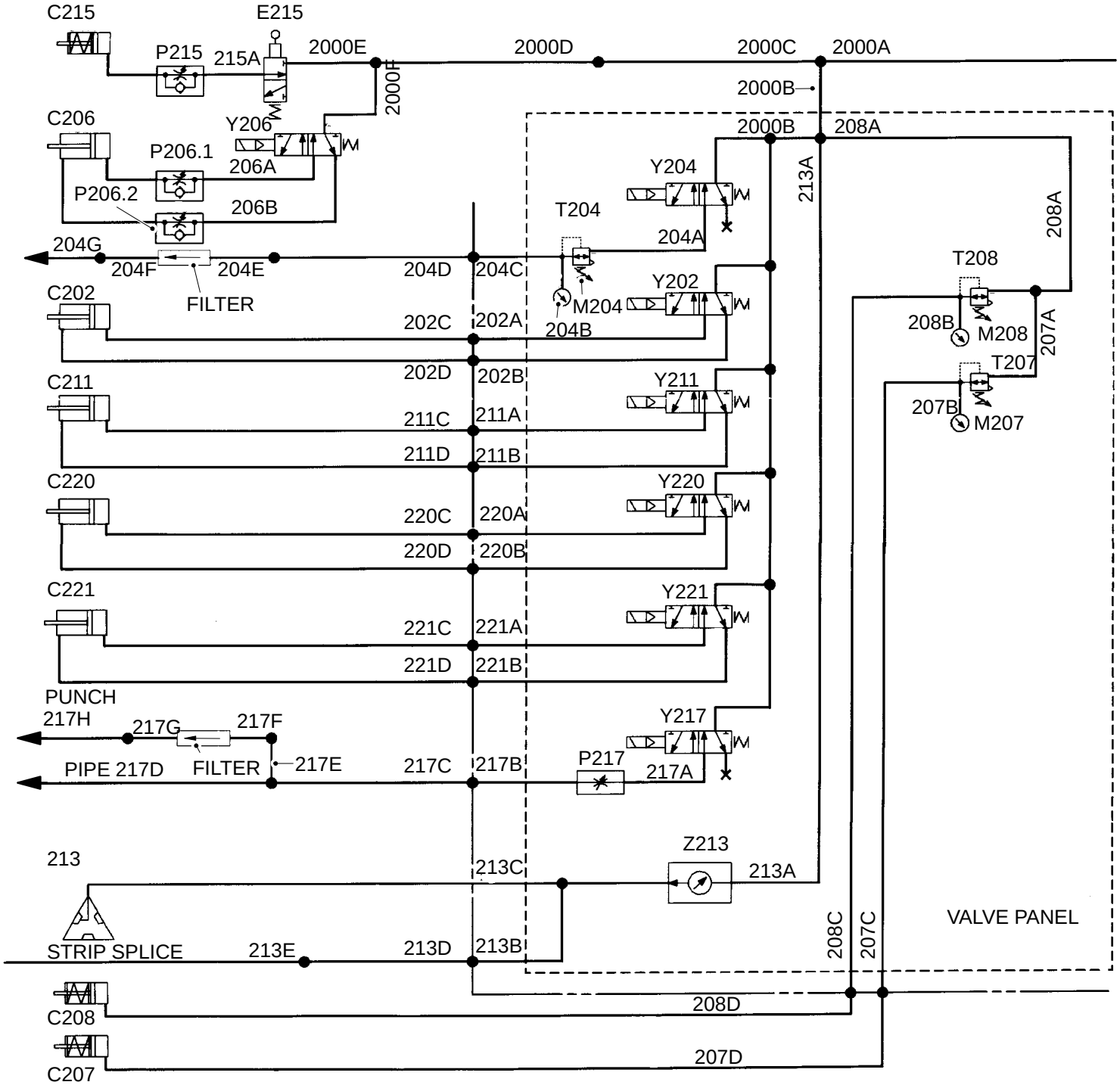
C215
E215
P215
215A
2000E
2000D
2000C
2000A
2000F
2000B
C206
Y206
P206.1
206A
P206.2
206B
Y204
T204
204A
213A
208A
204G
204F
204E
FILTER
204D
204C
M204
204B
T208
C202
Y202
202C
202A
208B
M208
207A
202D
202B
T207
C211
Y211
207B
M207
211C
211A
211D
211B
C220
Y220
220C
220A
220D
220B
C221
Y221
221C
221A
221D
221B
PUNCH
217H
217G
217F
Y217
PIPE 217D
FILTER
217E
217C
217B
P217
217A
213
Z213
213C
213A
VALVE PANEL
STRIP SPLICE
213E
213D
213B
208C
207C
C208
208D
C207
207D

Setting

This setting should be done **with** packaging material in the pull tab device.

Undo the screws (1) and set gap A between the rails with shims (2).

Set the position of the lenses with the screws (3). The focal point of the outer lens (4) should be aligned with the edge of the packaging material, see fig.

Set the sensitivity of the photocells (5) and (8) as follows:

- Turn the setting knob (6) counter-clockwise until the LED (7) goes out.
- Turn the setting knob clockwise until the LED lights up and then turn it 3/4 of a turn further clockwise.

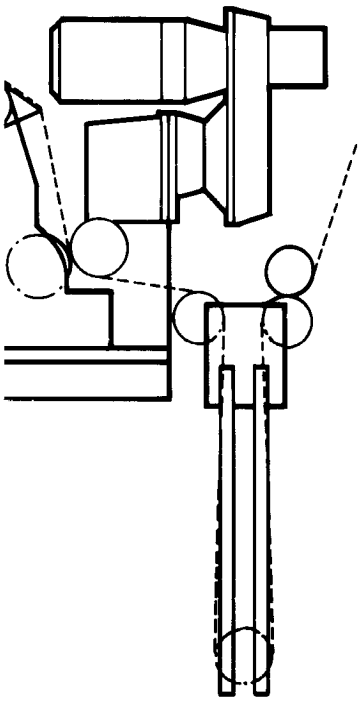

A = 1.0 ± 0.1 mm

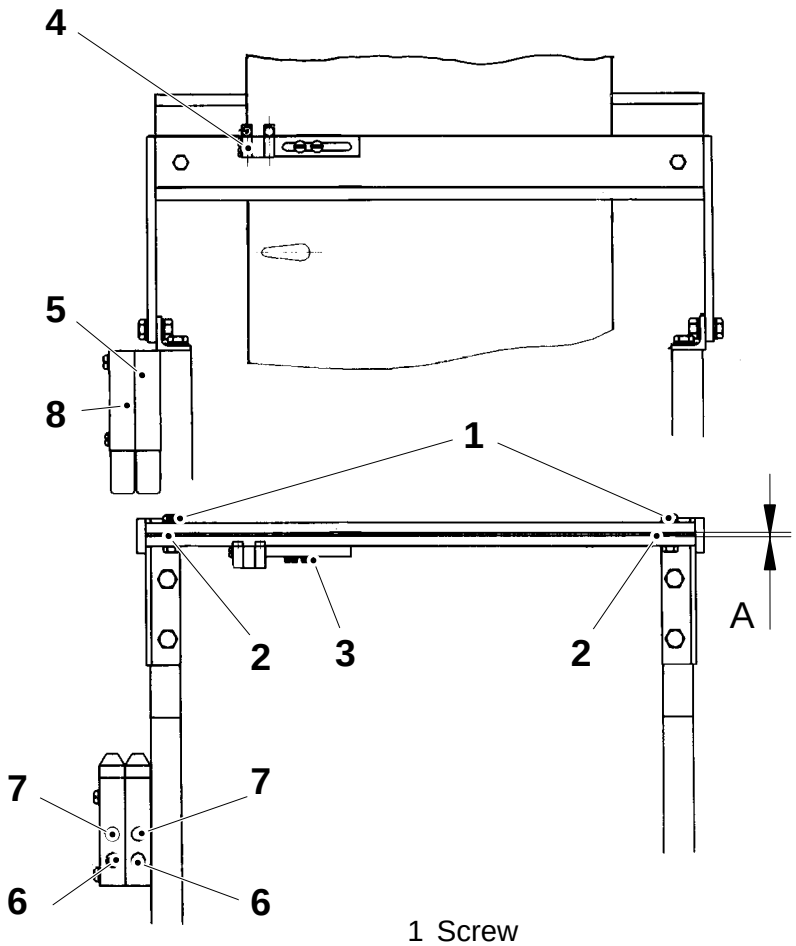

1 Screw
2 Shims TP No. 315105–146
3 Screw
4 Outer lens
5 Photocell
6 Setting knob
7 LED
8 Photocell

Setting

Set the dip switches (1) and (2) on the sensor control in position **off**. Set the dip switches (3) and (4) in position **on**.

Turn the knob (5) fully counter-clockwise.

Check the function of the sensor control as follows:

a) Attach a patch of black tape to the inner strip, see OS book ”Splicing of strips”.

b) Connect a pulse time counter TP102 (TP No. 90243–90) between pins 1 and 2.

c) Start the machine.

The correct pulse duration should be between 20 and 100 ms.

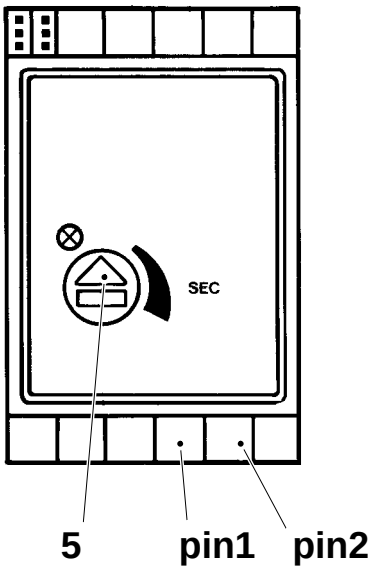

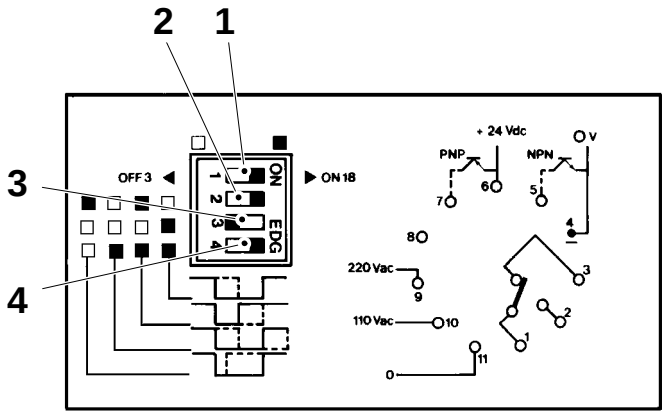

1 Position OFF
2 Position OFF
3 Position ON
4 Position ON
5 Knob

Checking

Check:

- all the bushings (1),
- the link rod head (2),
- the cooling water flow through the pressure plate (3). Check which one is the outlet (4) of the pressure plate. Check if the water flows out of the outlet,
- that the water in the return hose to the main machine flows through the dating unit,
- the tightness of all connections for air and water,
- the condition of teflon cloth (6),
- the rubber plate (5). Replace or turn, as required,
- the return movement of the spring (7).

Replace worn and/or damaged details.

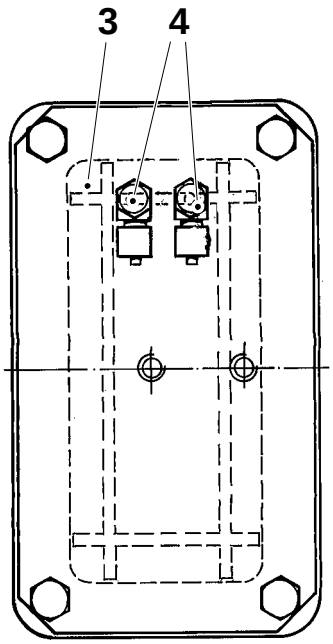

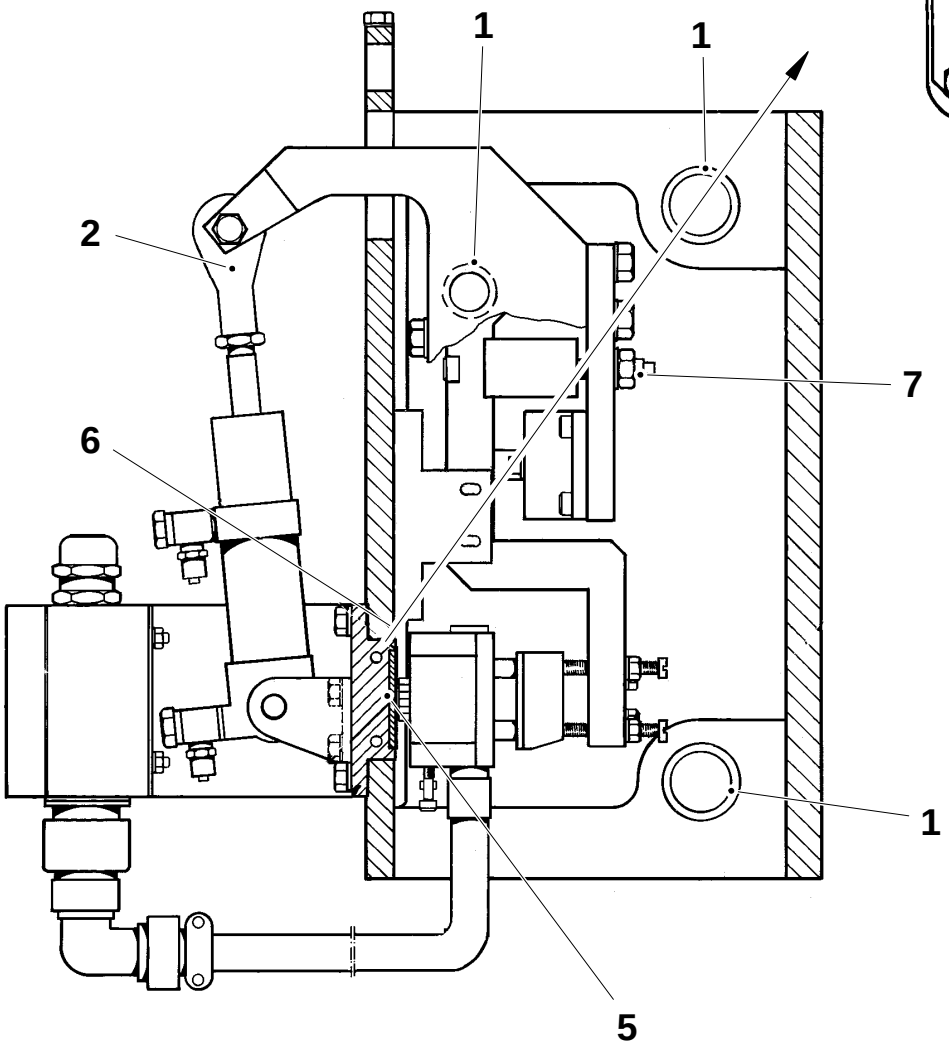

1 Bushing
2 Link rod head
3 Pressure plate
4 Outlet
5 Rubber plate
6 Teflon cloth
7 Spring

Checking

Check the tightness of all air connections and cylinders.

Remove the drive belt (1) and check it for wear and/or damage. Replace as required.

Check the bushings and contact surfaces on details indicated by arrows for wear and/or damage. Replace as required.

Remove the pulley (2).

(Cont’d overleaf)

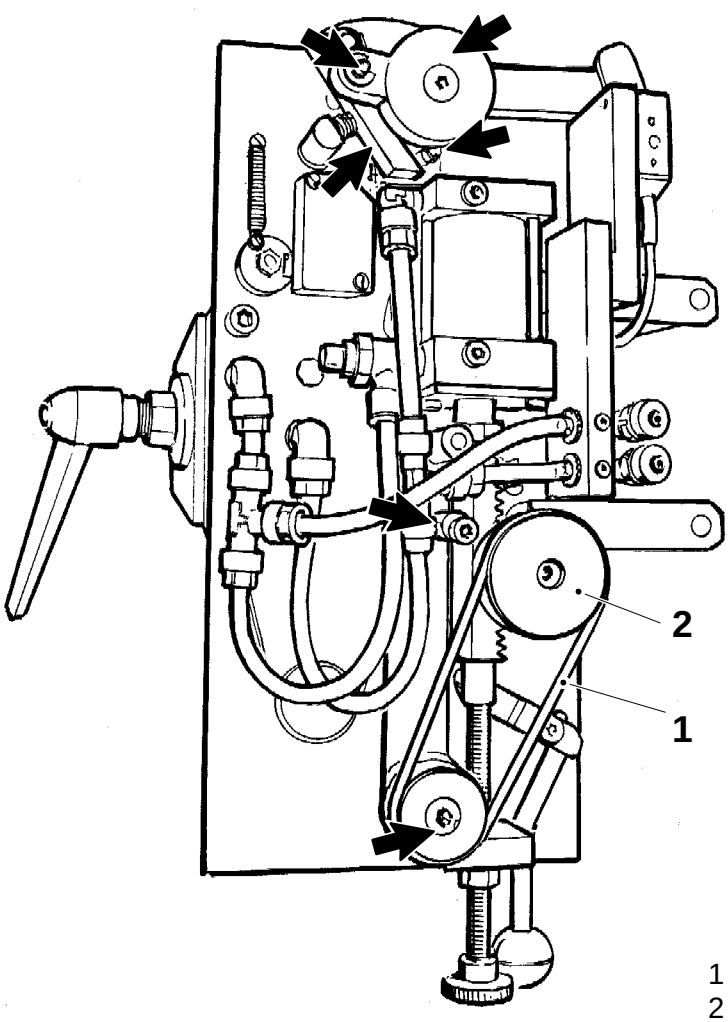

1 Drive belt
2 Pulley

(Cont'd)

Check:

- the function of the bearing (3),
- the toothed bar (4) and the toothed wheel (5) for wear and/or damages. Replace as required. The toothed bar and the toothed wheel should be applied with grease,
- the play between the toothed bar and the toothed wheel; backlash approximately 0.2 mm. If necessary, loosen the screws (6) and adjust on the cylinder. Adjust the play with the eccentric shaft (7). Tighten the screws.

Clean the bearing (3).

(Cont'd overleaf)

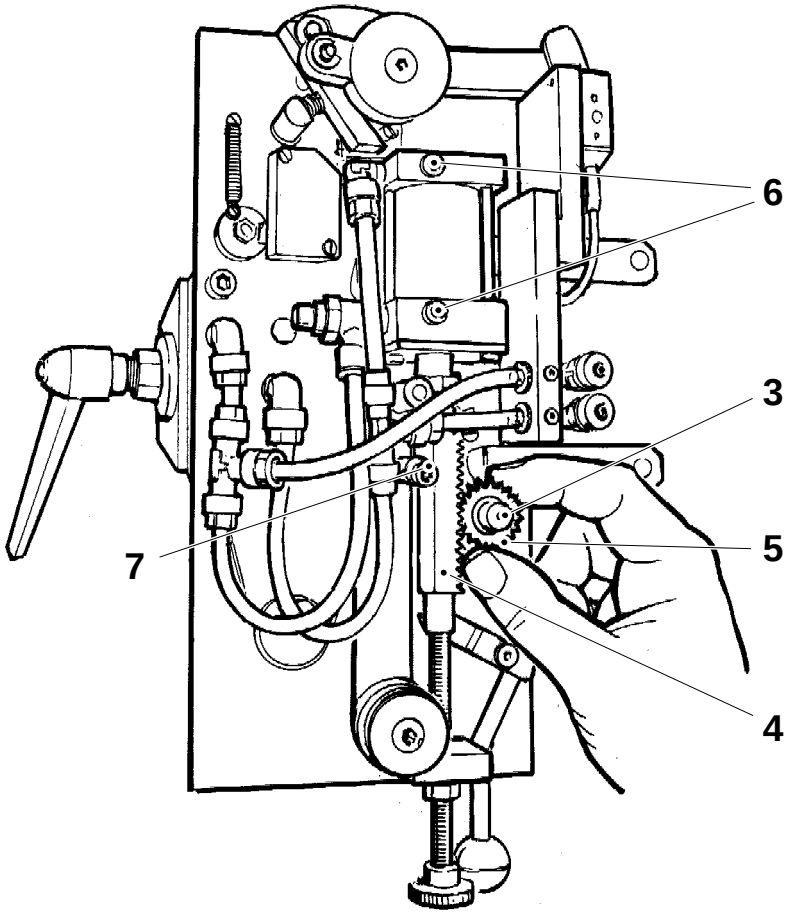

3 Bearing
4 Toothed bar
5 Toothed wheel
6 Screw
7 Eccentric shaft

(Cont'd)

Check the counter roller (8) and the feeding roller (9) for wear and/or damage. Replace as required.

Check measure A by disengaging the counter roller (8) with handle (10) so that it just touches the feeding roller in the outer corner.

Clean the counter roller (8) and the feeding roller (9).

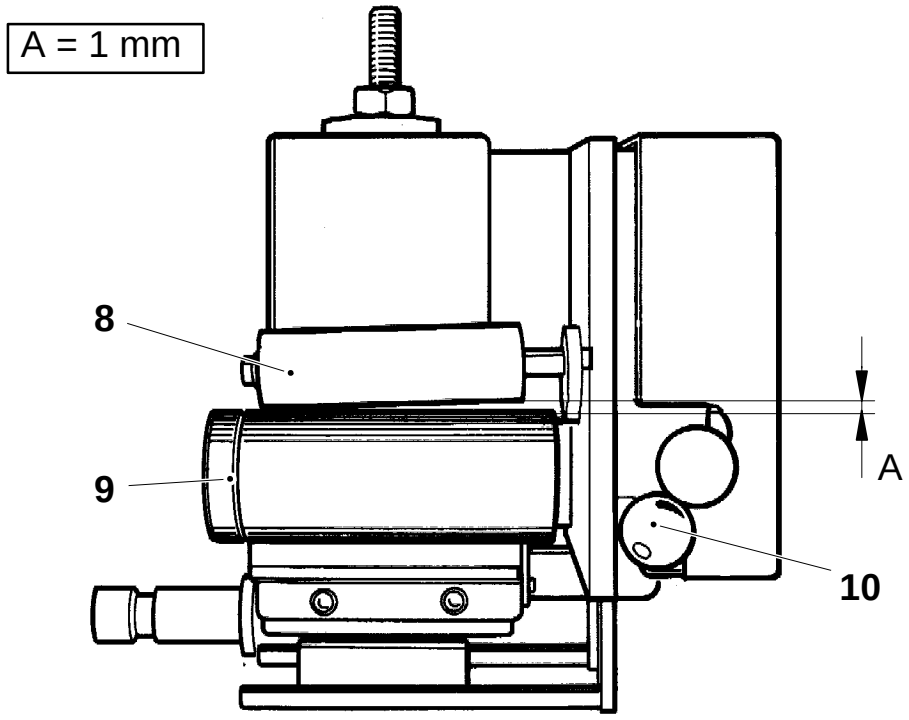

8 Counter roller
9 Feeding roller
10 Handle

Setting

Basic setting

Set measure A by adjusting on cylinder (6).

Set the spring force for the return movement by adjusting screw (2) to distance B.

Footnote
The spring force increases when the screw is turned counter-clockwise.

Final setting

Put a piece of packaging material and duplicating carbon paper between the heating block (4) and the pressure plate (5).

Loosen the guide plate (7).

Move the cylinders (6) and (1) to their plus positions by actuating their solenoid valves.

Set the heating blocks so that an even pressure is obtained. Adjust with the screws (3).

Set the guide plate (7) parallel with the plane (8).

Check the print on the packaging material.

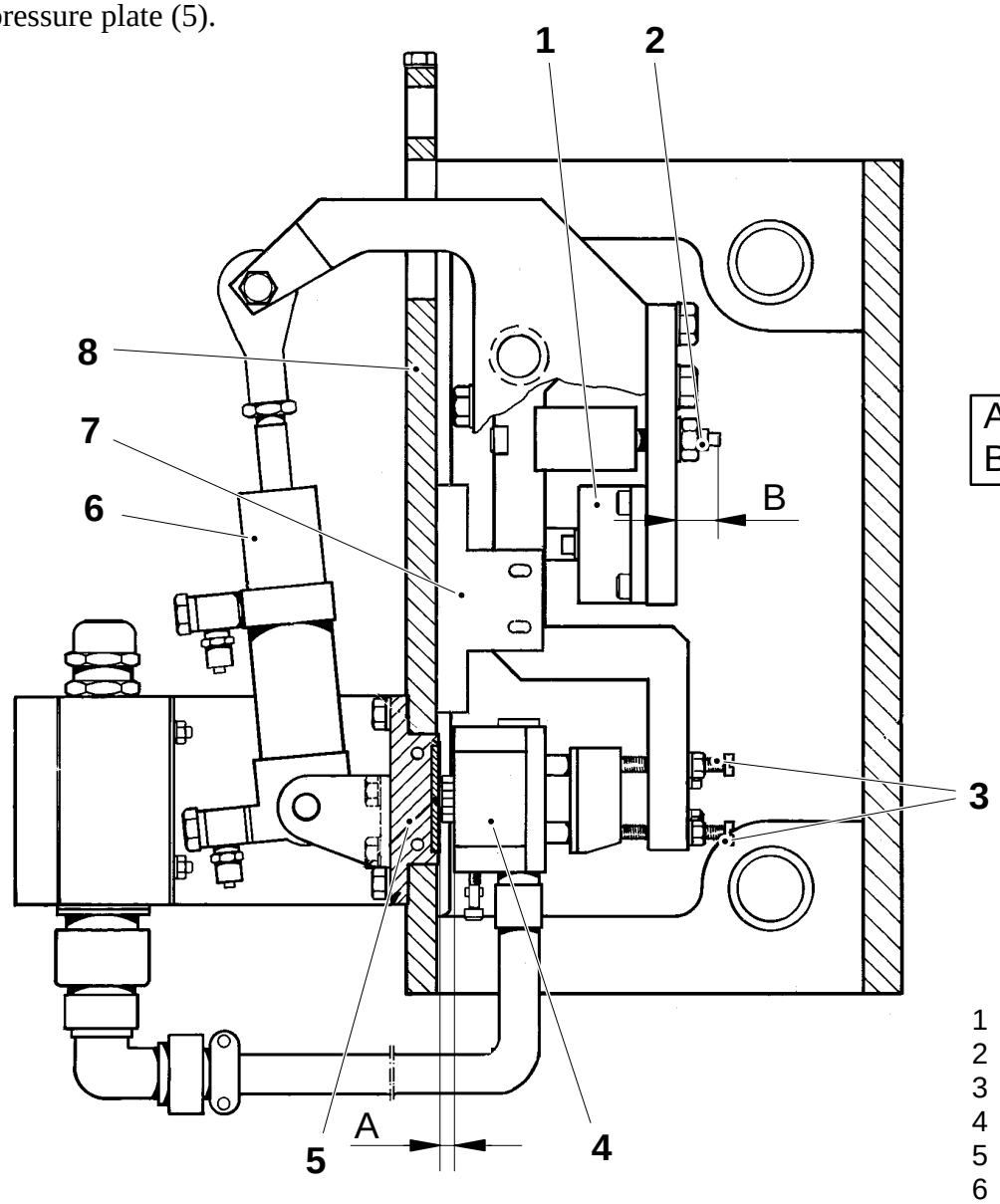

A = 8 ±1 mm
B = 14 ±1 mm

1 Cylinder
2 Screw
3 Screw
4 Heating block
5 Pressure plate
6 Cylinder
7 Guide plate
8 Plane

644

Setting

Set gap A by undoing the screw (1) and place the axle in a vice. Adjust the axle by bending it lightly by hand.

(Cont’d overleaf)

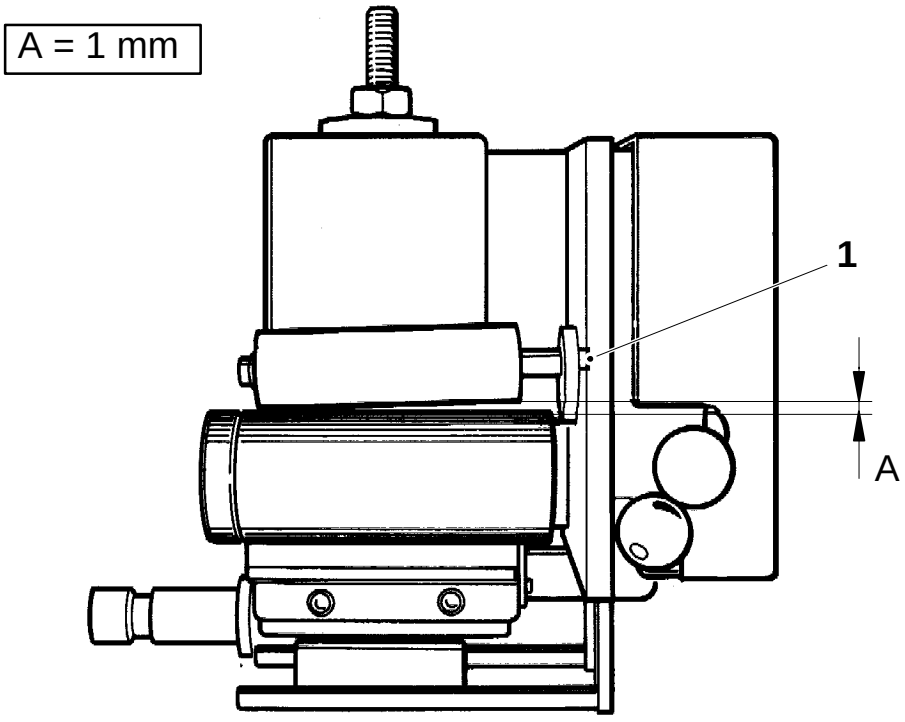

1 Screw

(Cont'd)

Basic setting

Set the distances B and C, see table below.

Volume, ml	B, mm	C, mm
125	390.0	218
180	397.5	240
200	420.0	218
200S	520.0	193
236	470.0	145
250	490.0	240
284	530.1	

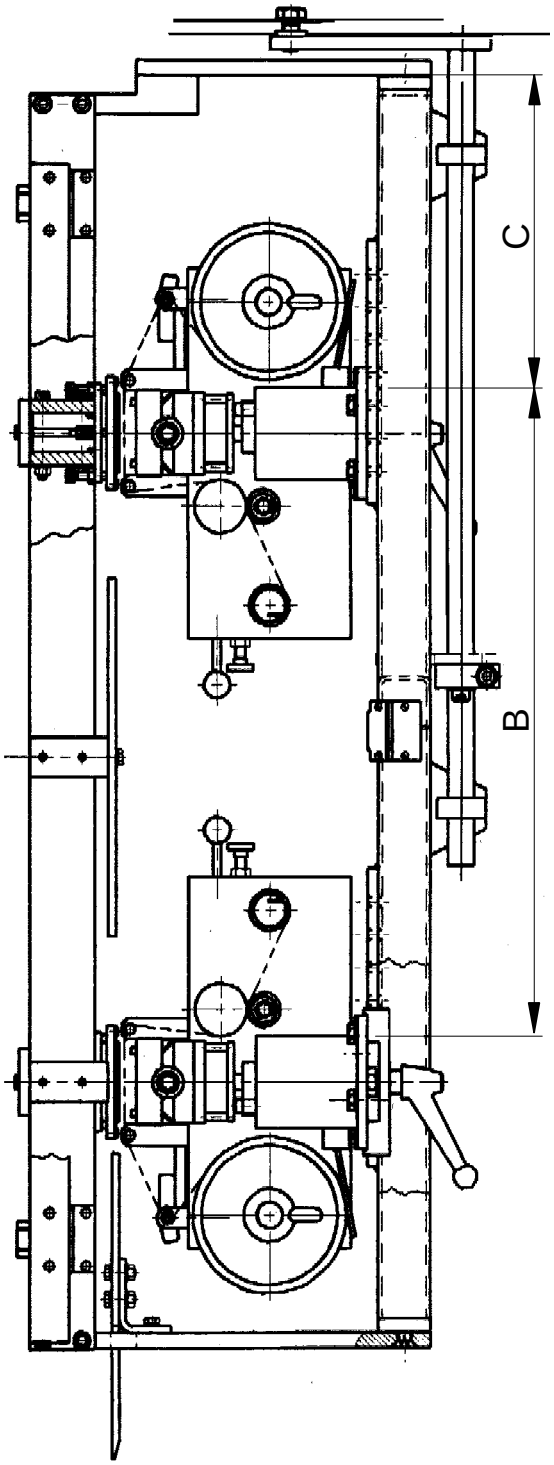

Overhaul

Disconnect the air connections (1).

Undo the screw (2) and remove the cylinder from the dating unit.

(Cont’d overleaf)

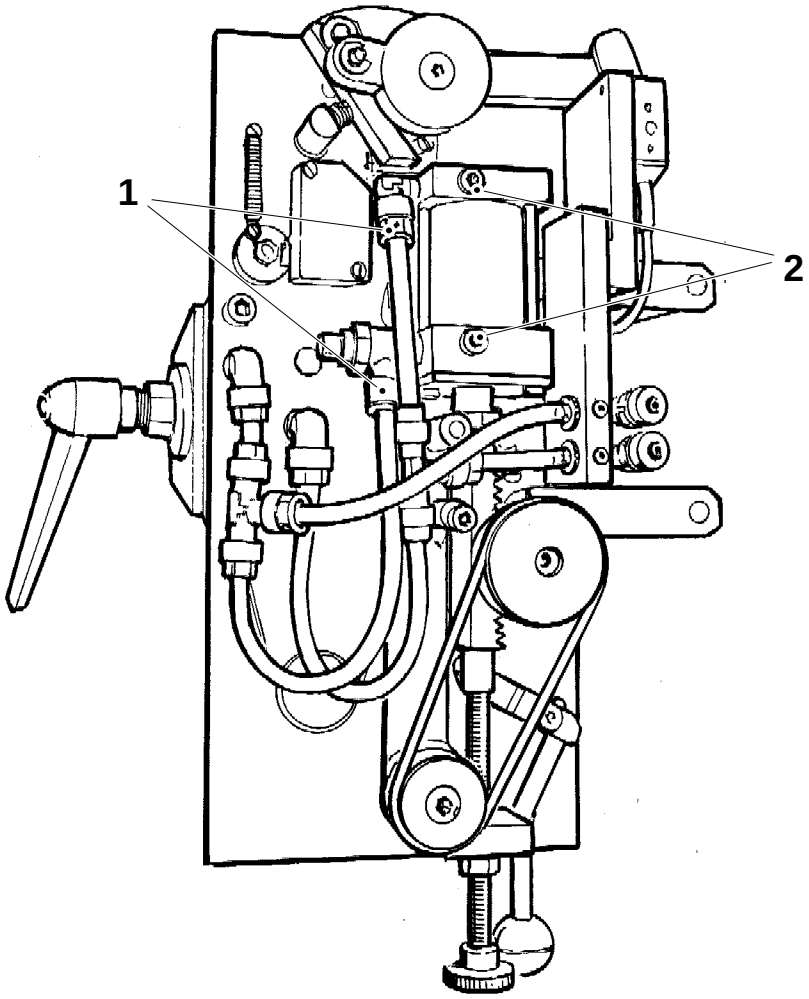

1 Air connection
2 Screw

(Cont'd)

Undo the screws (3) and separate the cylinder.

Dismount the toothed bar (4) and the gasket holder (5) from the axle.

Replace the gasket (6), the paper gaskets (7) and the bushing (8).

Reassemble in reverse order.

Footnote
When assembling, remember to secure the gasket holder and the toothed bar with locking fluid, TP No. 90157–16, and to apply grease on the toothed bar.

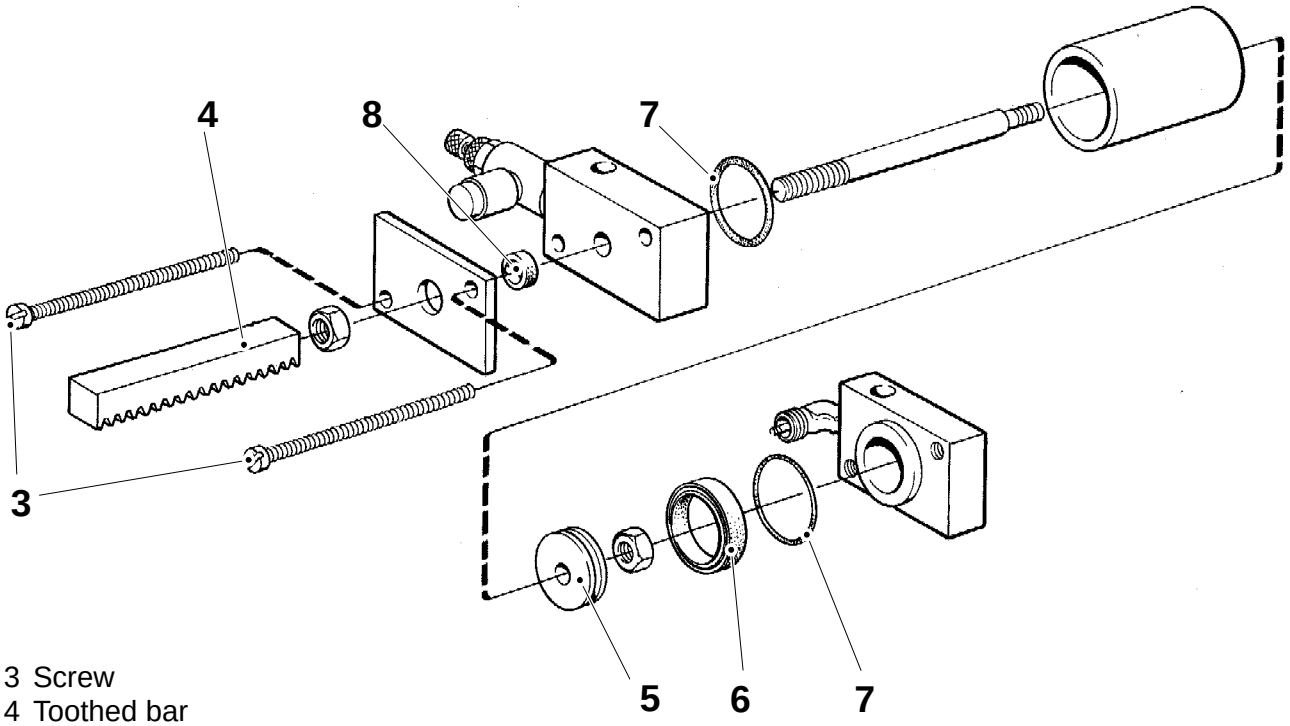

3 Screw
4 Toothed bar
5 Gasket holder
6 Gasket
7 Paper gasket
8 Bushing

Overhaul

Dismount the cliché holder.

Undo the four screws (1) and remove the plate (2).

Undo the screw (3) and remove the bracket (4).

(Cont’d overleaf)

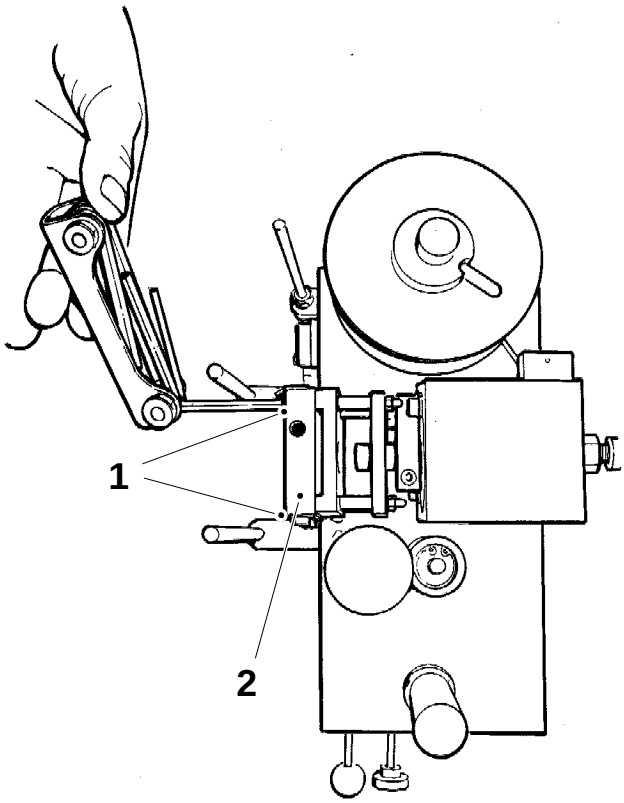

1 Screw
2 Plate
3 Screw
4 Braket

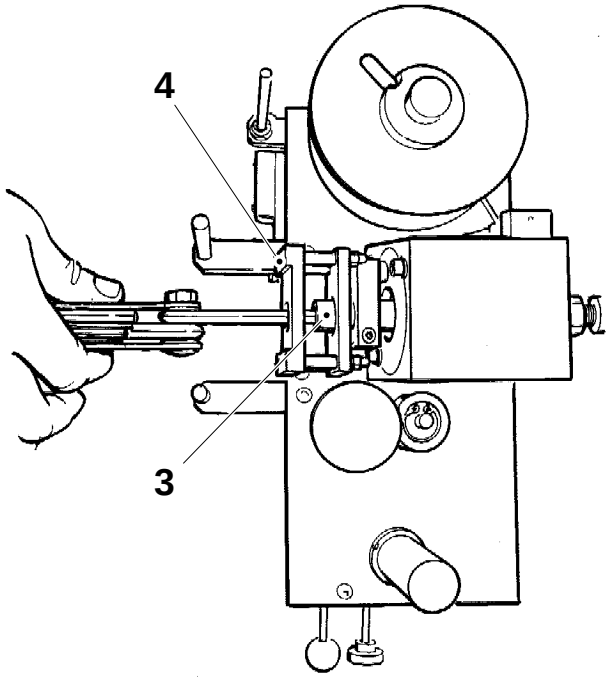

(Cont'd)

Undo the two screws (5).

Pull out the plunger (6).

(Cont'd overleaf)

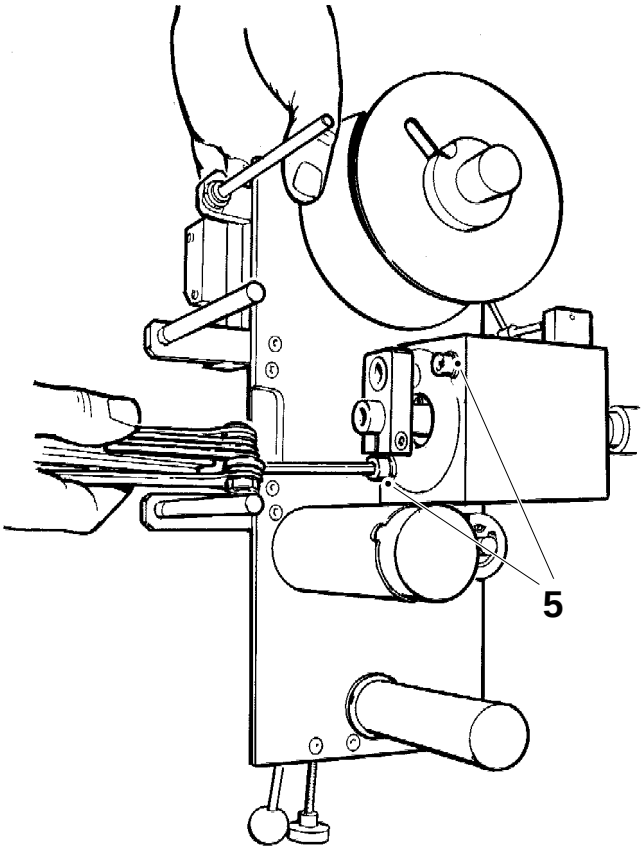

5 Screw
6 Plunger

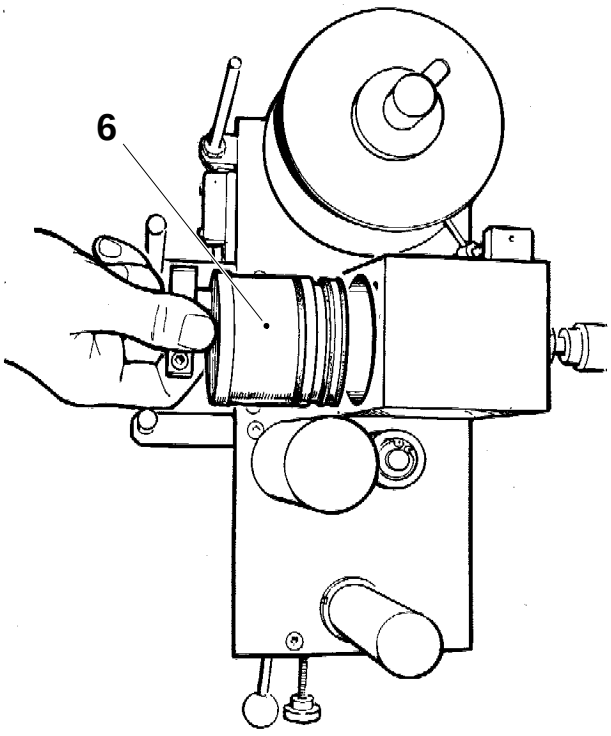

(Cont'd)

Loosen the screw (7) and remove the clamp joint (8).

Pull out the piston (9) from the plunger.

Remove the circlip (10) and replace the sealing (1).

Replace the support rings (12) in the plunger.

Replace the O-ring (13) and the sealing (14).

Replace the bushing (15) in the clamp joint.

Reassemble in reverse order.

Footnote
When assembling the clamp joint, set distance A.

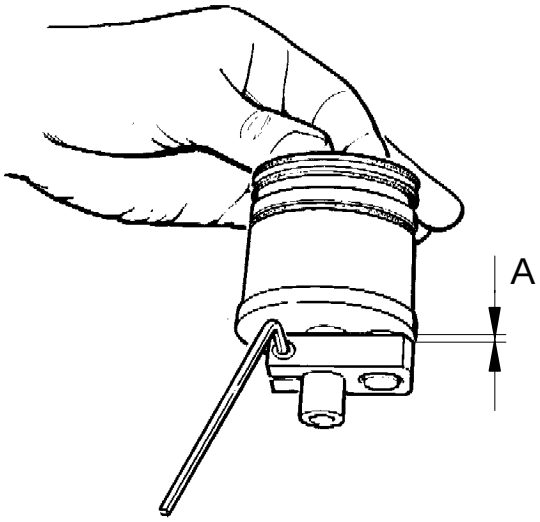

A = 0.5 – 1.0 mm

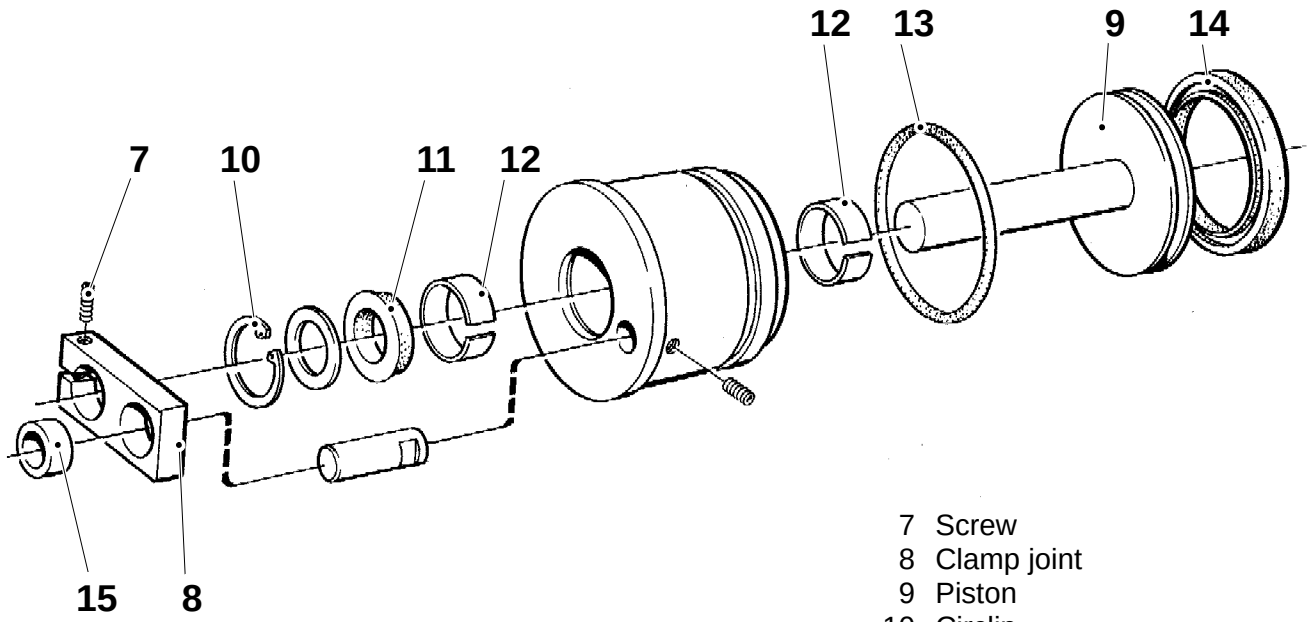

7 Screw
8 Clamp joint
9 Piston
10 Circlip
11 Sealing
12 Support ring
13 O-ring
14 Sealing
15 Bushing

Checking

Check the counter plate (1). Replace, if damaged all over. Loosen the screw (2), push the bracket aside and undo the screws (3), to make the plate accessible.

Run the dating unit and check it.

Check the date printing. The entire impression must be visible and clear.

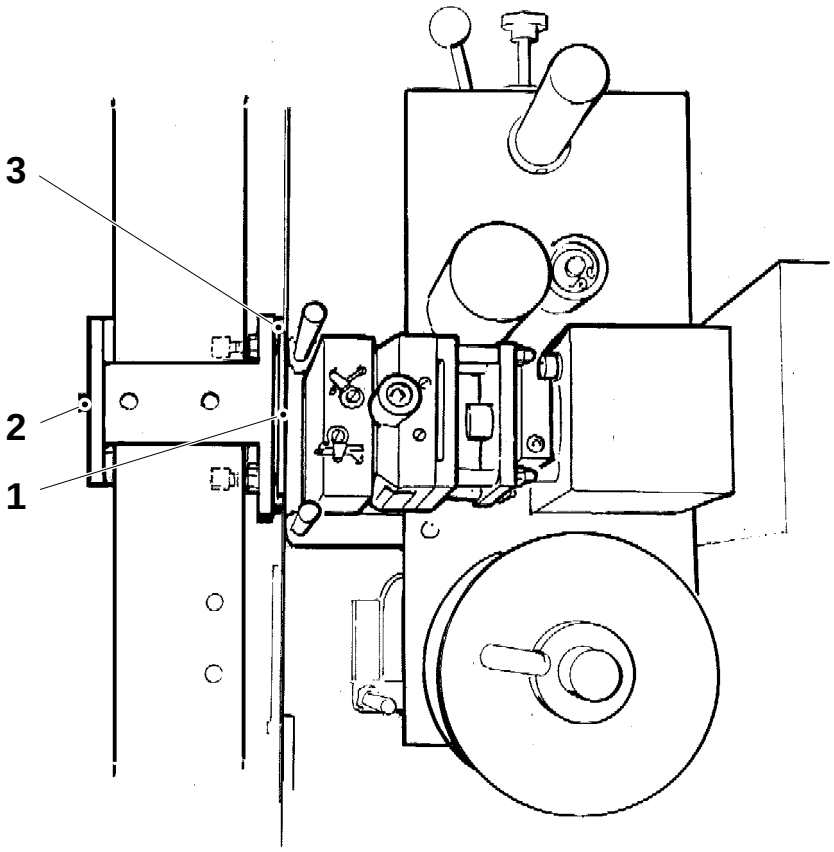

1 Counter plate
2 Screw
3 Screw

Setting

Adjust with the screws (2) until an even pressure is obtained. If necessary, move the plate in longitudinal or transversal direction until an undamaged surface is in front of the types.

Use the screws (3) to adjust in longitudinal or screws (4) in transversal direction.

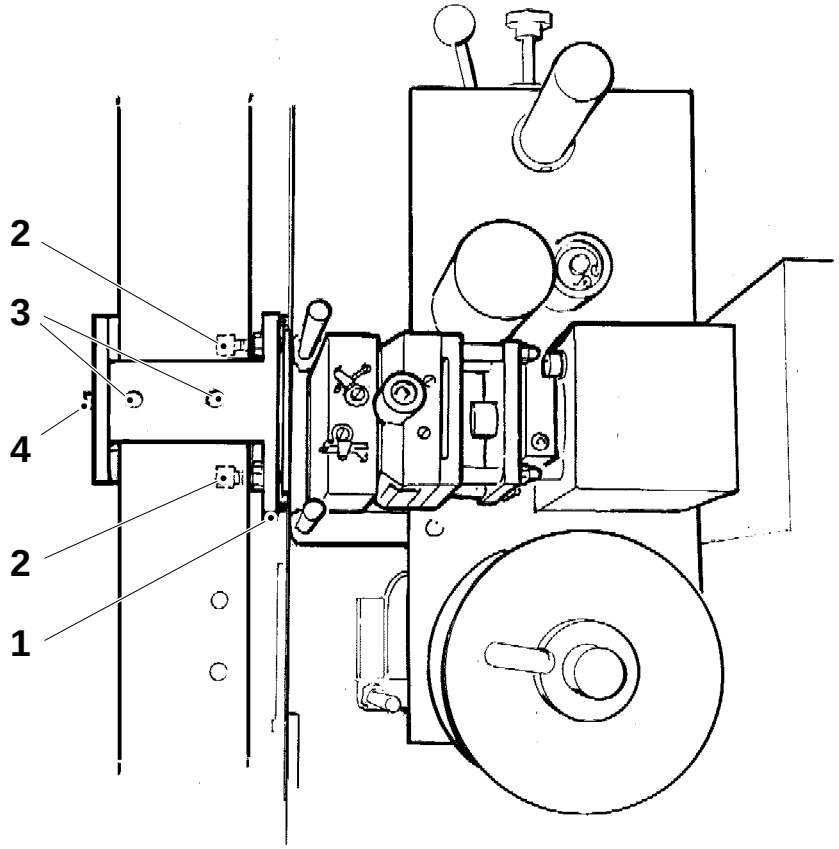

1 Counter plate
2 Screw
3 Screw
4 Screw

Setting

Move the brake lever (1) until the eccentric screw (2) just touches the carrier (3).

Set measure A between the lever and the pin (4). To adjust, loosen the locking screw (5) and turn the eccentric screw in position.

Set measure B between the carrier and the washer (6) with the setting screw (7).

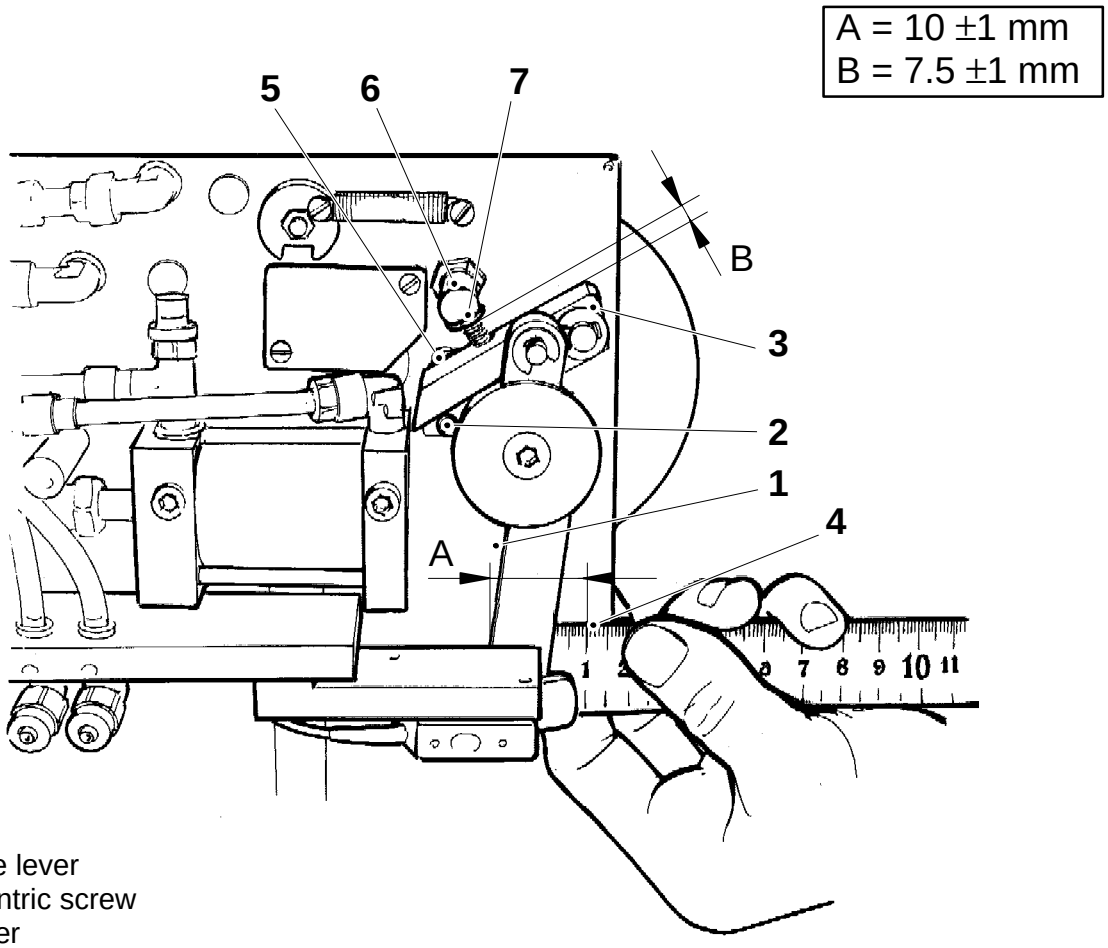

1 Brake lever
2 Eccentric screw
3 Carrier
4 Pin
5 Locking screw
6 Washer
7 Screw

Setting

Basic setting

The brake must be set, see page MS 889–5X.

Loosen the locking nut (1) and close the throttle screw (2). Open the screw four turns.

Final setting

Run the dating unit.

Slowly adjust with the throttle screw until the cylinder feeds exactly the same amount of imprinting sheet with each stroke.

Lock the throttle screw with the locking nut.

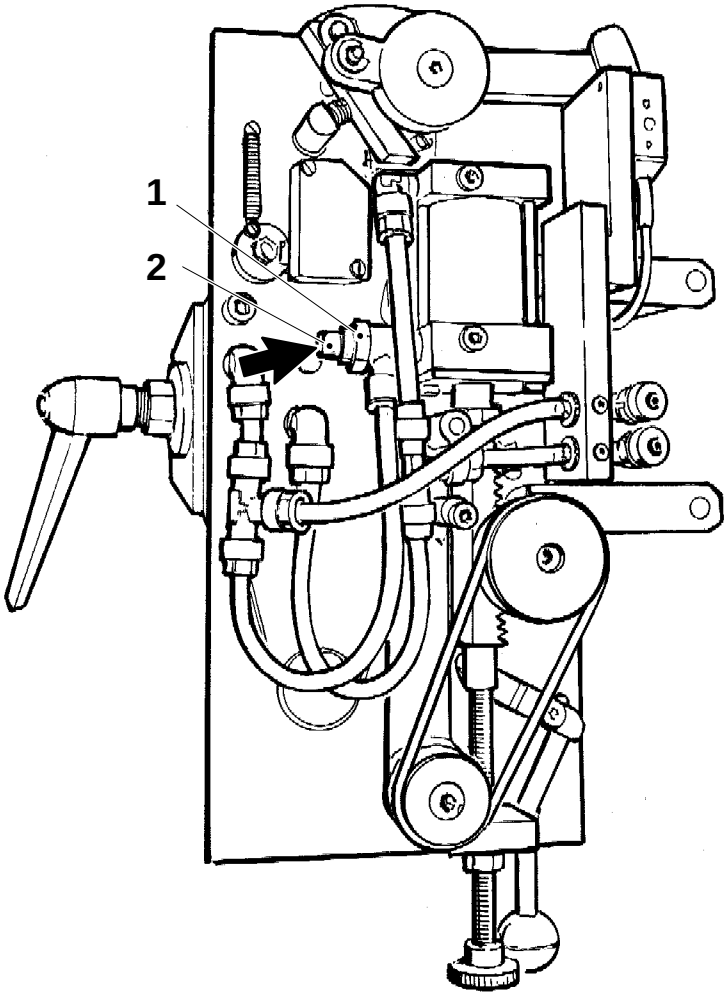

1 Locking nut
2 Throttle screw

Setting

Basic setting

Set distance A, see table below, between the stop (1) on the setting screw and the end of the toothed bar (2). To adjust, loosen the locking nut (3) and adjust on the setting screw (4).

Footnote
The toothed bar must be in its rear position.

Final setting

Final setting must be carried out during operation.

Check the imprintings on the foil, in order not to use more foil than necessary.

To adjust, loosen the locking nut (3) and adjust on the setting screw (4).

Number of stamping lines	Feed, mm	A, mm
One	4.0	2.50
Two	9.0	5.50
Three	13.5	7.35

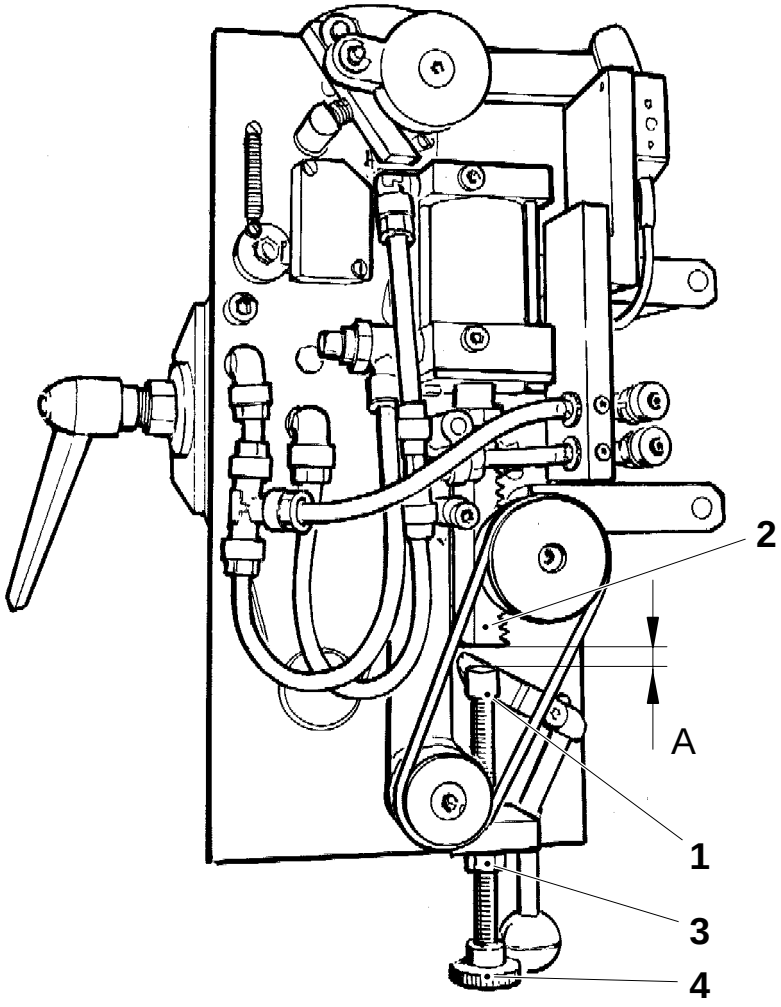

1 Stop
2 Toothed bar
3 Locking nut
4 Setting screw

Removal

Remove the heating cartridge components as follows:

- the screw (1),
- the cliché carrier (2),
- loosen the hexagonal screw which is placed under the cliché carrier,
- the heating cartridge (3).

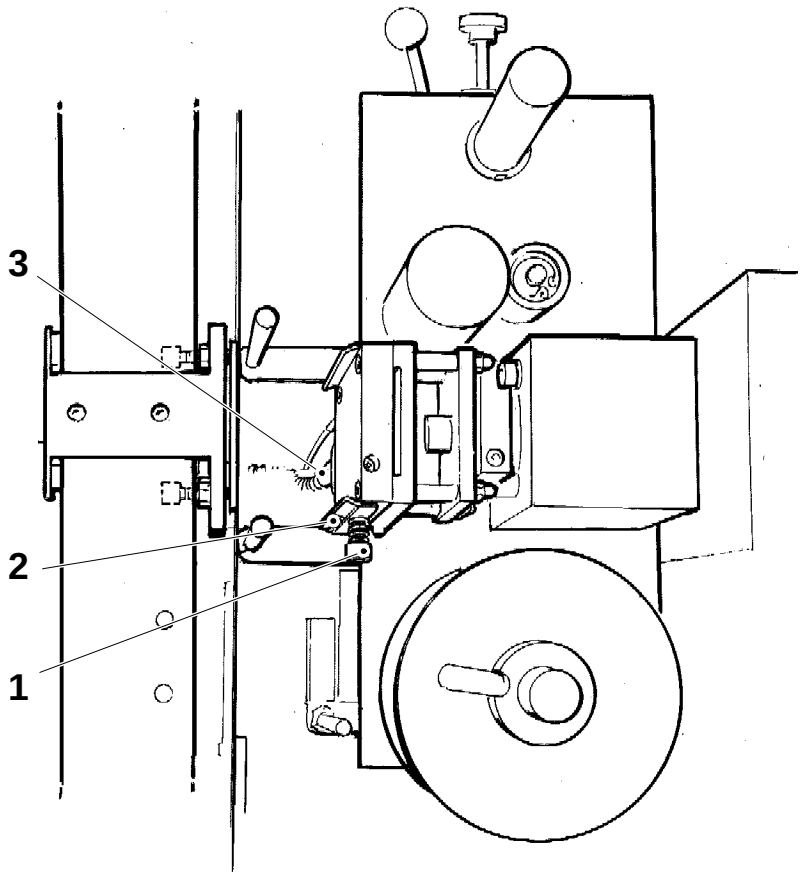

1 Screw
2 Cliché carrier
3 Heating cartridge

Removal

Loosen the screw (1) and remove the temperature sensor (2).

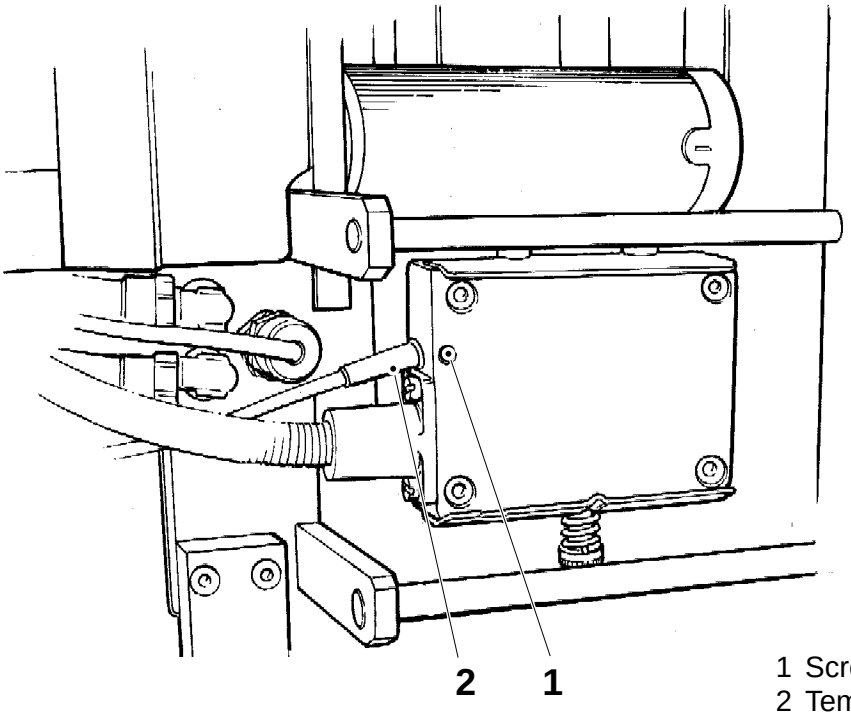

1 Screw
2 Temperature sensor

Checking

Supply monitor

Check the function of the proximity switch (1).

Sheet breakage monitor

Check that the proximity switch (3) triggers an alarm when the brake lever (2) is moved away from the switch.

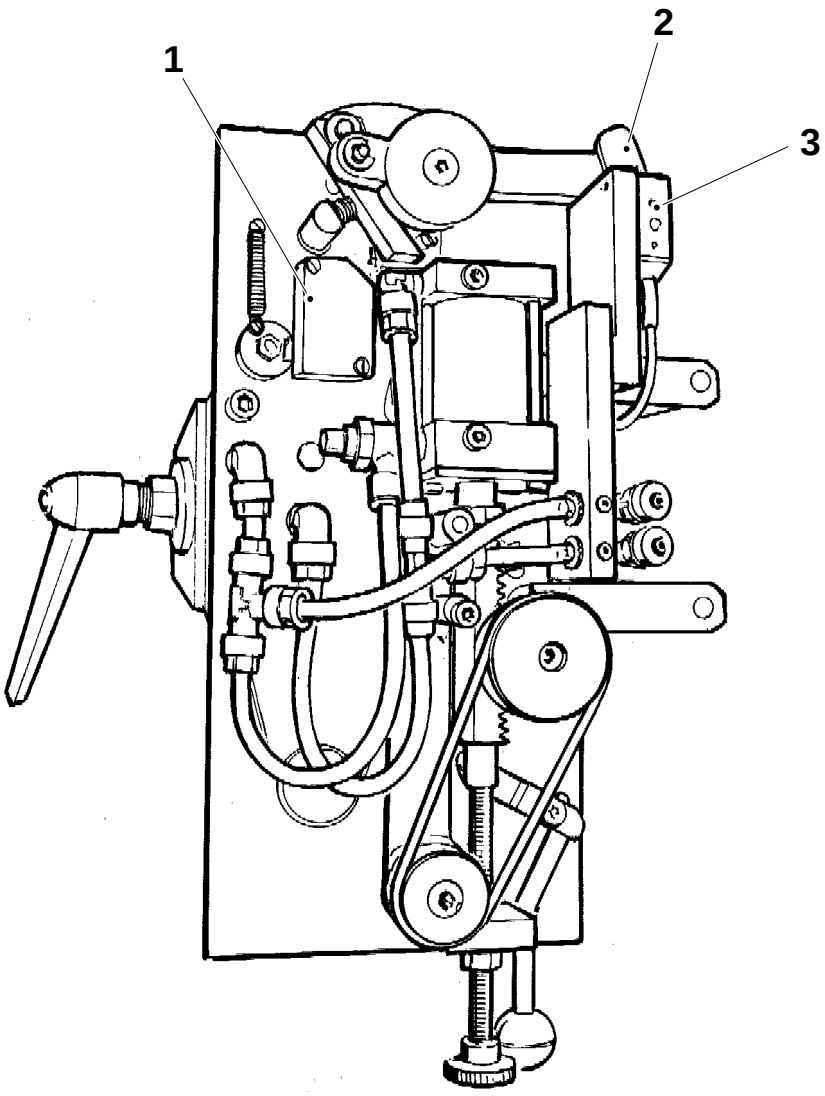

1 Proximity switch
2 Brake lever
3 Proximity switch

Setting

Supply monitor

The proximity switch (1) shall trigger an alarm when approximately 2 mm of strip wraps remain on the reel. If required adjust with the screw (2).

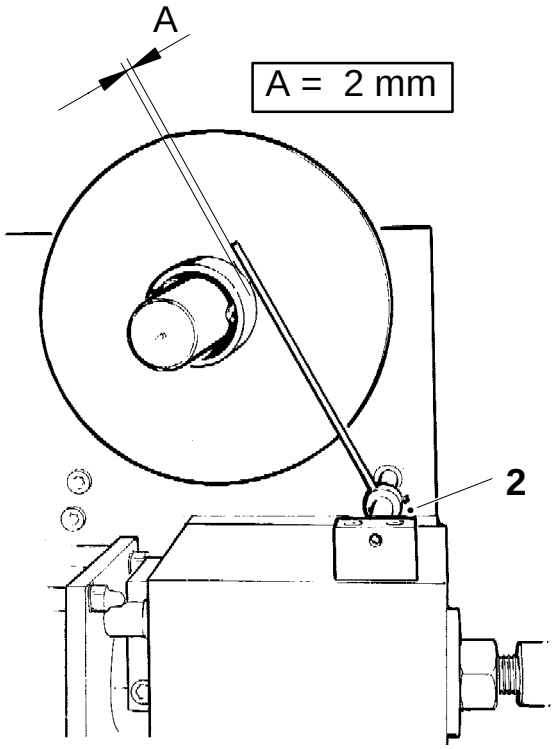

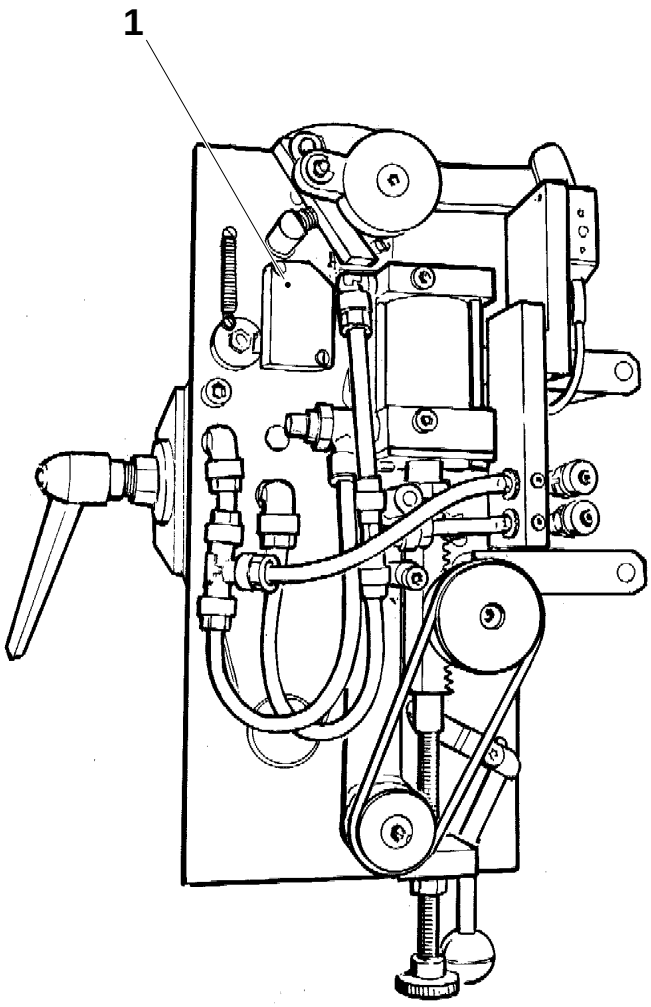

1 Proximity switch
2 Screw

Description	TB/9	TBA/9
Setting – 100V → 120V (2 pages)		910–72
Setting – 130V (3 pages)		910–73
Setting – 100V → 120V	920–72	
Setting – 130V (2 pages)	920–73	
Lubricant recommendations (3 pages)	940–71	940–71
Peroxide system – cleaning and passivation (2 pages)		950–72
Peroxide system – cleaning and passivation (2 pages)		950–73
Peroxide system – cleaning and passivation (2 pages)		950–74
Tools supplied with machine	975–72	975–72
Tools supplied with machine	975–73	975–73
Templates and tools (18 pages)	980–71	980–71

Description	TB/9	TBA/9
Induction heating (IH) – general		1001–71
IH safety precautions (2 pages)		1002–71
IH safety precautions (2 pages)		1002–72
IH trouble shooting – general		1003–71
IH trouble shooting – section A		1004–71
IH trouble shooting – section A		1004–72
IH trouble shooting – section A		1004–73
IH trouble shooting – section B		1005–71
IH trouble shooting – section B		1005–72
IH trouble shooting – section B		1005–73
IH trouble shooting – section C		1006–71
IH trouble shooting – section C		1006–72
IH trouble shooting – section C		1006–73
IH trouble shooting – section D		1007–71
IH trouble shooting – section E		1009–71
IH trouble shooting – section E		1009–72
IH anode voltage – checking		1011–11
IH anode voltage – checking		1011–12
IH anode current – checking		1012–11
IH anode current – checking		1012–12
IH anode current – checking		1012–13
IH grid current – checking		1013–11
IH grid current – checking		1013–12
IH grid current – checking		1013–13

Description	TB/9	TBA/9
IH pulse duration – checking (2 pages)		1014–11
IH pulse duration – checking (2 pages)		1014–12
IH pulse duration – checking (2 pages)		1014–13
IH blocking voltage – checking (2 pages)		1015–11
IH blocking voltage – checking (2 pages)		1015–12
IH blocking voltage – checking (2 pages)		1015–13
IH, HF voltage – setting (3 pages)		1017–51
IH, HF voltage – setting (3 pages)		1017–52
IH, HF voltage – setting (4 pages)		1017–53
IH, HF voltmeter – general		1018–71
IH oscillator section – checking/cleaning		1021–11
IH oscillator section – removal		1021–21
IH oscillator section – fitting		1021–41
IH control and high voltage section – checking/cleaning		1022–11
IH contact rails and flexible cables – checking		1023–11
IH air filter – cleaning		1025–31
IH simulated operation – setting		1031–51
IH simulated operation – setting		1031–52
IH transversal sealing – setting		1040–52
IH transversal sealing – setting		1040–53
Temperature regulators – checking	1050–12	
Temperature regulators – checking	1050–13	
Temperature regulators – checking		1051–12

Description	TB/9	TBA/9
Temperature regulators – checking		1051–13
Electrical cabinet – checking/cleaning	1055–11	1055–11
Converting table, octal degrees	1058–71	1058–71
Angle encoder, main machine – checking degree setting	1070–11	1070–11
Angle encoder, main machine – checking degree setting		1070–12
Angle encoder, main machine – checking degree setting	1070–13	1070–13
Angle encoder, main machine – degree setting	1070–52	1070–52
Angle encoder, main machine – degree setting	1070–53	1070–53
Angle encoder, final folder – checking degree setting	1071–11	1071–11
Angle encoder, final folder – checking degree setting		1071–12
Angle encoder, final folder – checking degree setting	1071–13	1071–13
Angle encoder, final folder – degree setting	1071–52	1071–52
Angle encoder, final folder – degree setting	1071–53	1071–53
PLC, battery PLC–2/20 – checking/replacement/cleaning	1072–11	1072–11
Battery, TPMC– checking/replacement		1072–12
Battery, TPMC– checking/replacement	1072–13	1072–13
Driven bending roller – setting (2 pages)	1075–51	
Driven bending roller – setting (2 pages)		1076–52
Release pulse – setting	1080–51	

General

Caution!
Always follow the safety precautions on page MS 1002–7X when working in the generator section!

Two independent IH-generator-systems are used on the TBA/9.

The transversal sealing (TS) generator uses two separate oscillators (2), one for each side.

These oscillators have separate pulse cards (1), but are controlled by a common timer and the PLC. The high voltage transformer, which is also common, is connected for 3 X 3000 V.

The generator for the pull tab device or the zone heater uses **one** oscillator section **only**. The high-voltage transformer is normally connected for 3 X 4400 V if the generator is used with a pull tab device or for 3 X 3700 V when used with a zone heater.

Instruments and tools

IH-generator test instrument TP101A,
TP No. 67026
Pulse time counter TP102, TP No. 90243–90
HF voltmeter TP103, TP No. 67024
Charger TP No. 90243–91
Ground wire TP No. 75994
Recorder Gould brush 200

1 Pulse card
2 Oscillator

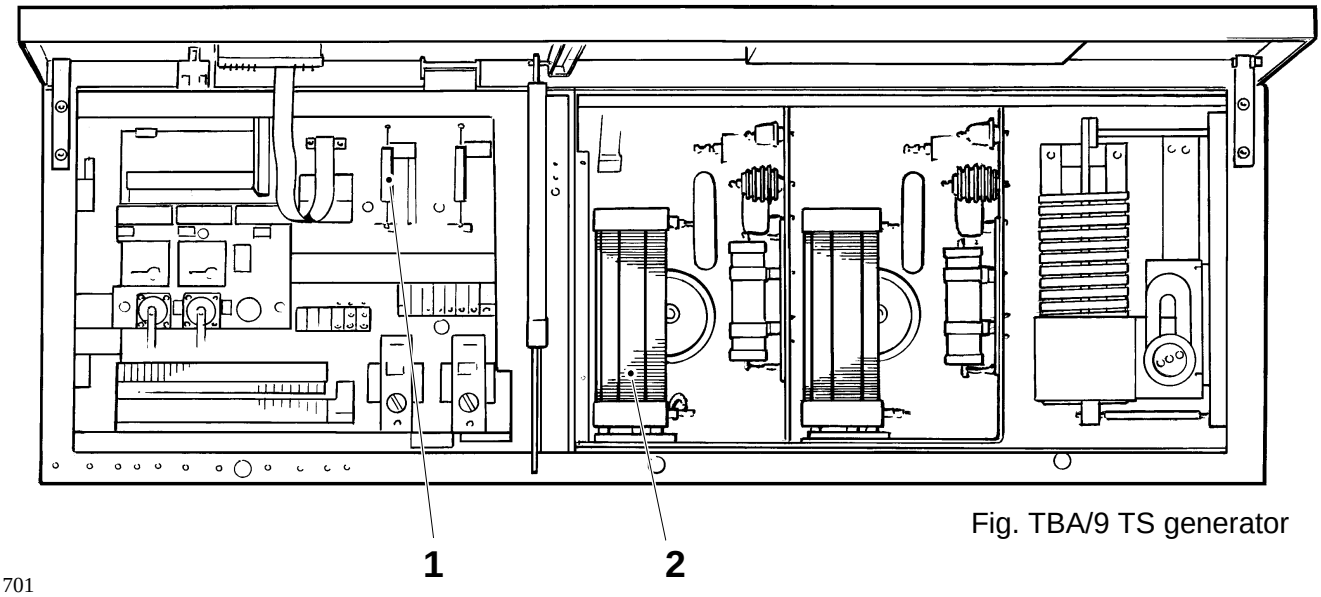

Fig. TBA/9 TS generator

701

Oscillator section

WARNING!
High voltage. Work inside the generator must be performed by authorized service personnel only!

Before any work inside the oscillator section is undertaken:

a) Turn the main switch of the machine to position **off** and padlock it.

b) Open fuses F27 for the high voltage transformer and F3 for the blocking voltage transformers.

c) Check that the high voltage meter reads zero volts.

d) Remove the protection cover from the oscillator section.

e) Make sure the high voltage lead (6) is properly grounded by the automatic grounding device (1), see fig 1.

WARNING!
The high voltage line must remain grounded until the protection cover has been refitted.

f) Discharge the blocking voltage and retain ground by connecting a lead between ground and capacitor 4C6 (3) in the oscillator section to work with.

(Cont'd overleaf)

1 Automatic grounding device
2 Manual grounding
3 Capacitor 4C6
4 Stand-off 4X2
5 Capacitor 4C4
6 High voltage lead

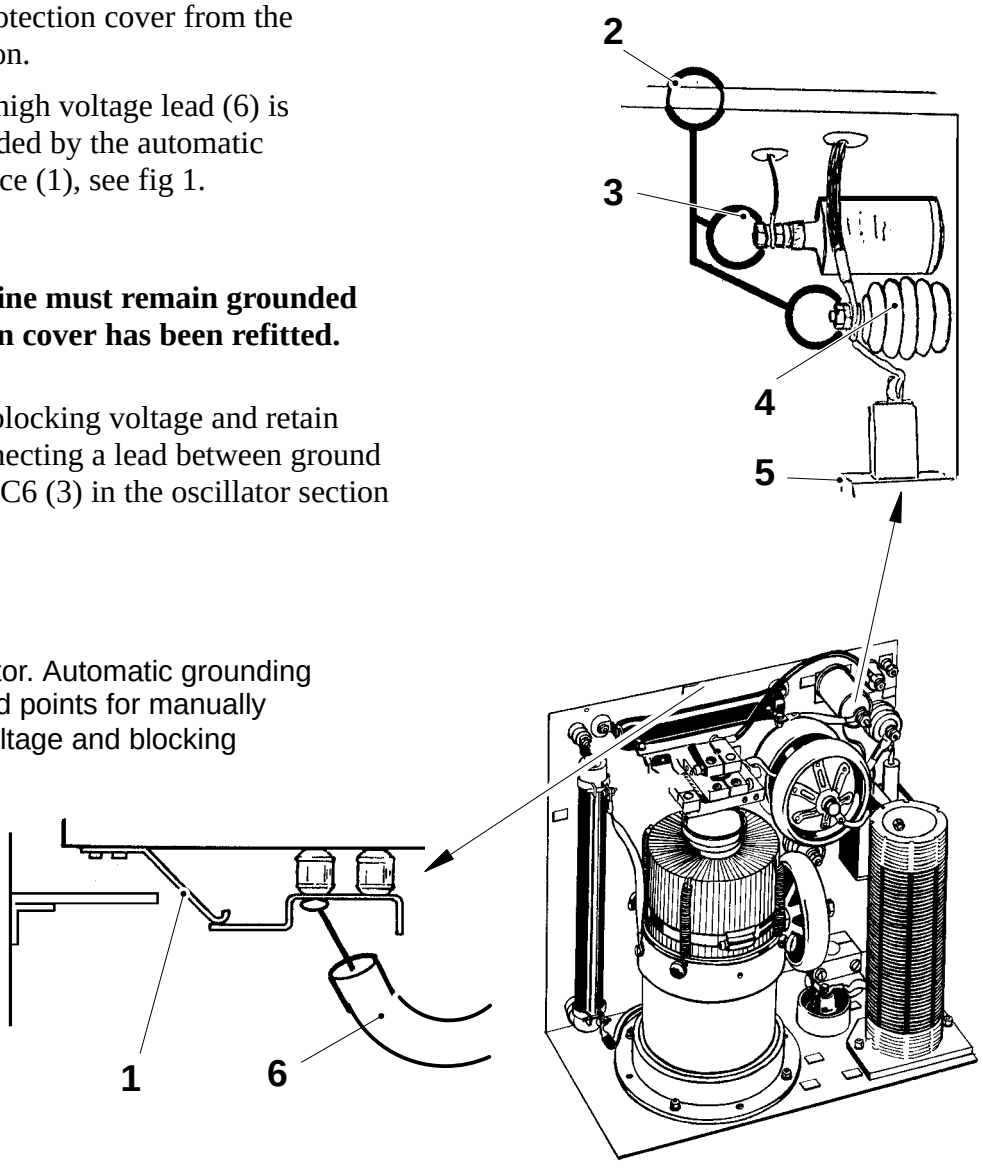

Fig. 1 TS generator. Automatic grounding and recommended points for manually grounding high voltage and blocking voltage.

(Cont'd)

Control section

Caution!
The control section contains a 3000 V high voltage transformer with rectifier and two 700 V transformers with rectifiers for the blocking voltage.

Before any work inside the control section is undertaken:

a) Turn the main switch of the machine to position **off** and padlock it.

b) Open fuses F27 for the high voltage transformer and F3 for the blocking voltage transformers.

c) Check that the high voltage meter reads zero volts.

d) Discharge all six capacitors in the mains filter.

e) Discharge the blocking voltage between ground and pin 20 on the connectors for **both** rectifier cards.

f) When carrying out work on the high-voltage transformer and/or rectifier the ground wire must be connected between two of the capacitors in the mains filter, see fig.2.

Caution!
The ground wire must be connected between two capacitors with either odd or even number designations, e. g. **between C1 and C3**, or **between C2 and C4**.

When working with one of the blocking voltage sections, a ground wire must be connected between ground and pin 20 on the connector for the pulse card for that section.

Caution!
Prior to reconnecting the generator, the technician responsible for the work must make sure that this can be done safely.

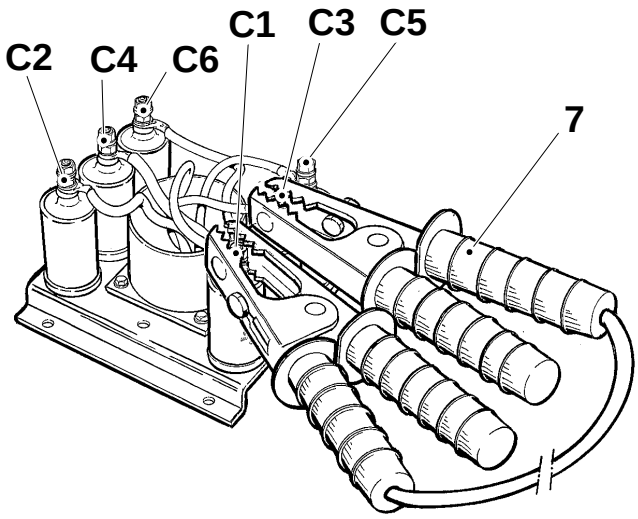

Fig 2. Mains filter

7 Ground wire
8 Cathode 6.3 V AC
9 Grid -700 V
10 Anode 3800 – 6000 V

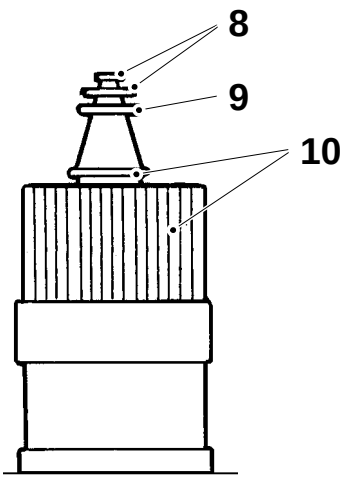

Fig. 3. Tube connections and applicable voltages

Oscillator section

WARNING!
High voltage. Work inside the generator must be performed by authorized service personnel only!

Before any work inside the oscillator section is undertaken:

a) Turn the main switch of the machine to position **off** and padlock it.

b) Open fuses Q27 for the high voltage transformer and F3A for the blocking voltage transformers to position **off**.

c) Check that the high voltage meter reads zero volts.

d) Remove the protection cover from the oscillator section.

e) Make sure the high voltage lead (6) is properly grounded by the automatic grounding device (1), see fig 1.

WARNING!
The high voltage line must remain grounded until the protection cover has been refitted.

f) Discharge the blocking voltage and retain ground by connecting a lead between ground and capacitor C406 (3) in the oscillator section to work with.

(Cont'd overleaf)

1 Automatic grounding device
2 Manual grounding
3 Capacitor C406
4 Stand Off E403
5 Capacitor C404
6 High voltage lead

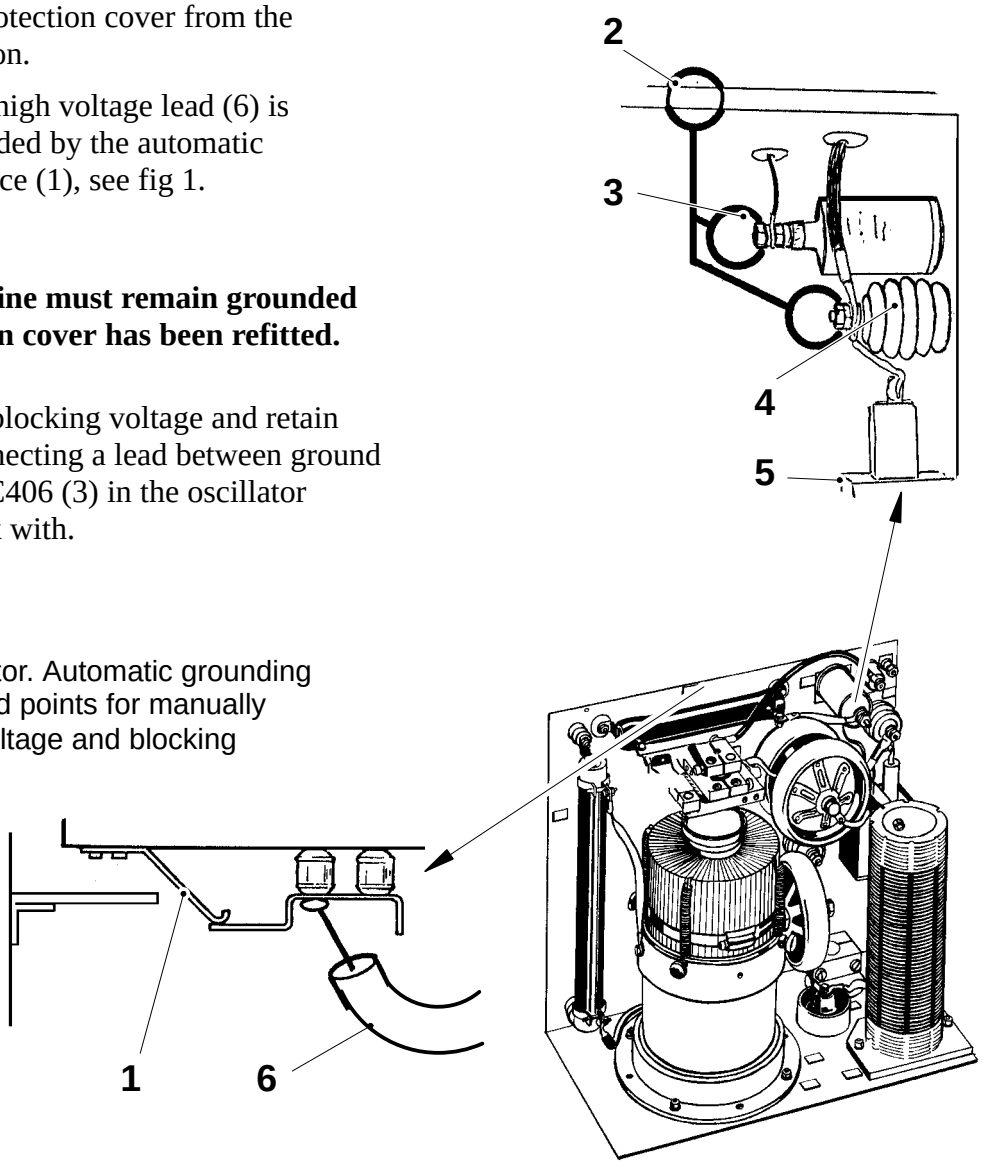

Fig. 1 TS generator. Automatic grounding and recommended points for manually grounding high voltage and blocking voltage.

704

(Cont'd)

Control section

Caution!
The control section contains a 3000 V high voltage transformer with rectifier and two 700 V transformers with rectifiers for the blocking voltage.

Before any work inside the control section is undertaken:

a) Turn the main switch of the machine to position **off** and padlock it.

b) Turn fuses Q27 for the high voltage transformer and F3A for the blocking voltage transformers to position **off**.

c) Check that the high voltage meter reads zero volts.

d) Discharge all six capacitors in the mains filter.

e) Discharge the blocking voltage between ground and pin 20 on the connectors for **both** rectifier cards.

f) When carrying out work on the high-voltage transformer and/or rectifier the ground wire must be connected between two of the capacitors in the mains filter, see fig. 2.

Caution!
The ground wire must be connected between two capacitors with either odd or even number designations, e. g. **between C1 and C3**, or **between C2 and C4**.

When working with one of the blocking voltage sections, a ground wire must be connected between ground and pin 20 on the connector for the pulse card for that section.

Caution!
Prior to reconnecting the generator, the technician responsible for the work must make sure that this can be done safely.

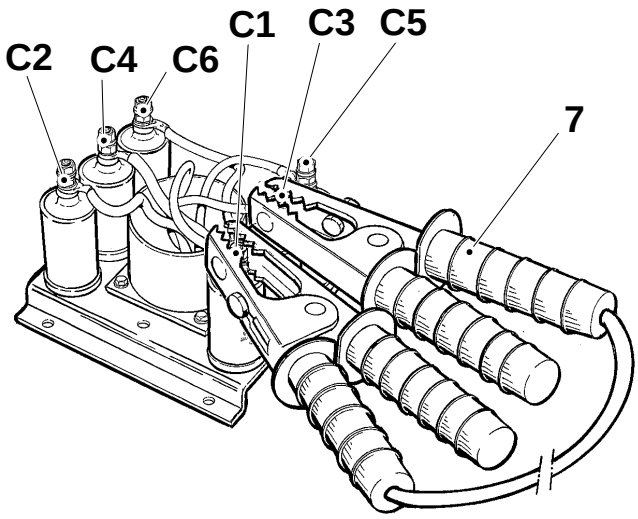

Fig 2. Mains filter

7 Ground wire
8 Cathode 6.3 V AC
9 Grid -700 V
10 Anode 3800 – 6000 V

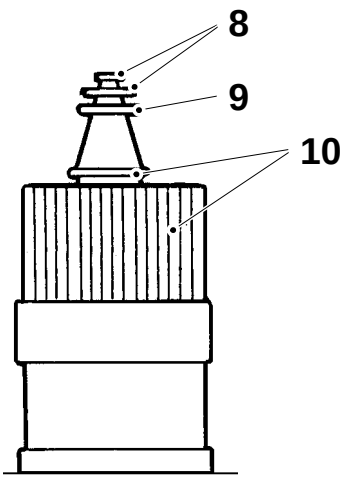

Fig. 3. Tube connections and applicable voltages

General

WARNING!
Follow the safety precautions on page MS 1002–7X unconditionally whenever the generator section is opened!

The trouble shooting information is divided into five (four for pull tab generator) sections with reference to pages MS 1004–7X – MS 1009–7X.

TS generator

The monitor panel, see fig., aids in identifying the origin of a fault. It manages to locate several of the more frequent reasons for a generator malfunction.

If the overload relay has tripped, the monitor will indicate the oscillator in use when the overload occurred. Likewise the location of an overheat warning or an open door monitor will be shown. If the mains voltage drops below 85% of its nominal value, the **Phase monitor** light will appear.

A failure in the high voltage rectifier, an inoperative timer or a pulse card are faults **not** detected by the monitor.

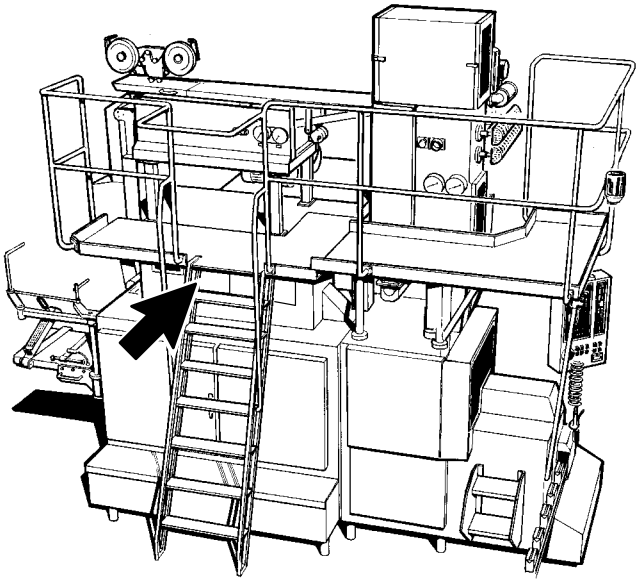

Footnote. Fig. shows TBA/9 1301

Section A

Check by means of the high-voltage meter when no oscillator is pulsed

	Fault	Action
A:1	Voltmeter indicates 0V despite energized high voltage contactor (K2 in electrical cabinet)	Check: • fuse F27 • overload relay 1F3* • phase monitor 1F4* • door monitors* • high voltage contactor (K2 in electrical cabinet) * fault should be indicated by monitor panel
A:2	Overload relay 1F3 is tripping	Check automatic grounding device and connections. Residual gas in new tube might lead to internal flash-over. Restart a few times. Check that tube connections (see page MS 1002–7X, fig. 3.) are parallel. Make sure spacing between grid and cathode connection tube is >3 mm at any point. Check capacitor 4C4 in both oscillator sections of TS-generators.
A:3	Fuse F27 is tripping	Check: • rectifier 2V1 – 2V6 • filter 1LC1 • transformer 1T1
A:4	Voltmeter for: TS-generator shows that voltage differs substantially from appr. 4.3 kV. Pull tab device generator shows that voltage differs substantially from appr. 6.3 kV. Zone heater generator shows that voltage differs substantially from appr. 5.2 kV.	Check: • mains voltage • connections, transformer 1T1 (Transformer for pull tab device generator is normally connected to 4400V and zone heater generator for 3700V.)
A:5	Voltmeter for: TS-generator shows appr. 4.3 kV. Pull tab device generator shows appr. 6.3 kV. Zone heater generator shows appr. 5.2 kV.	Correct. Proceed to section B.

Section A

Check by means of the high-voltage meter when no oscillator is pulsed

Footnote
This information is valid for TBA/9 1301 and 1303.

	Fault	Action
A:1	Voltmeter indicates 0V despite energized high voltage contactor (K2 in electrical cabinet)	Check: • motor switch Q27 • overload relay Q101* • phase monitor K101* • door monitors* • high voltage contactor (K2 in electrical cabinet) * fault should be indicated by monitor panel
A:2	Overload relay Q101 is tripping	Check automatic grounding device and connections. Residual gas in new tube might lead to internal flash-over. Restart a few times. Check that tube connections (see page MS 1002–7X, fig. 3.) are parallel. Make sure spacing between grid and cathode tube is >3 mm at any point. Check capacitor C404 in both oscillator sections of TS-generators.
A:3	Motor switch Q27 is tripping	Check: • rectifier V201 – V206 • filter Z101 • transformer T101
A:4	Voltmeter for: TS-generator shows that voltage differs substantially from appr. 4.3 kV. Zone heater generator shows that voltage differs substantially from appr. 5.2 kV.	Check: • mains voltage • connections, transformer T101 (Transformer for pull tab device generator is normally connected. to 4400V and zone heater generator for 3700V.)
A:5	Voltmeter for: TS-generator shows appr. 4.3 kV. Zone heater generator shows appr. 5.2 kV.	Correct. Proceed to section B.

Section A

Check by means of the high-voltage meter when no oscillator is pulsed

Footnote
This information is valid for TBA/9 1302 only.

	Fault	Action
A:1	Voltmeter indicates 0V despite energized high voltage contactor (K2 in electrical cabinet)	Check: • motor switch Q27 • overload relay Q101* • phase monitor K101* • door monitors* • high voltage contactor (K2 in electrical cabinet) * fault should be indicated by monitor panel
A:2	Overload relay Q101 is tripping	Check automatic grounding device and connections. Residual gas in new tube might lead to internal flash-over. Restart a few times. Check that tube connections (see page MS 1002–7X, fig. 3.) are parallel. Make sure spacing between grid and cathode tube is >3 mm at any point. Check capaitor C404 oscillator section.
A:3	Motor switch Q27 is tripping	Check: • rectifier V201 – V206 • filter Z101 • transformer T101
A:4	Voltmeter for pull tab device generator shows that voltage differs substantially from appr. 6.3 kV.	Check: • mains voltage • connections, transformer T101 (Transformer for pull tab device generator is normally connected. to 4400V and zone heater generator for 3700V.)
A:5	Voltmeter for pull tab device generator shows appr. 6.3 kV.	Correct. Proceed to section B.

Section B

Check by means of the high-voltage meter when oscillator is pulsed.

	Fault	Action
B:1	No voltage drop for oscillator during pulse a) pulse cards do not indicate pulse b) pulse cards indicate pulse	Check: • low voltage fuse F3A • transformer 1T2 and connections on 1X4 • resistor 2R1 in high voltage rectifier
B:2	No voltage drop for one of the oscillators during pulse	Replace pulse card. If required, check if pulse card indicates pulse: a) If pulse is indicated: Check filament voltage Check all oscillator connections Replace tube Check 4R1 and connections Check 4L2 and connections b) If pulse is not indicated: Check timer (page MS 1014–1X) Check rectifier card (page MS 1015–1X)
B:3	Abnormal voltage drop during pulse. (1000V or more)	Check: • rectifier 2V1 – 2V6 • transformer 1T1 • fuse F27 • mains voltage
B:4	Unsymmetrical voltage drops for the two TS oscillators (or abnormal voltage drop for ZH oscillator or pull tab device oscillator).	Adjust oscillator, see page MS 1017–5X. Check (on malfunctioning side): • contact rails • flexible cables • carrier • knife • inductor
B:5	Voltage drops approximately 500 V	Correct. Proceed to section C.

Section B

Check by means of the high-voltage meter when oscillator is pulsed.

Footnote
This information is valid for TBA/9 1301 and 1303.

	Fault	Action
B:1	No voltage drop for oscillator during pulse a) pulse cards do not indicate pulse b) pulse cards indicate pulse	Check: • low voltage fuse F3A • transformer T102 and connections on X004 • resistor R201 in high voltage rectifier
B:2	No voltage drop for one of the oscillators during pulse	Replace pulse card. If required, check if pulse card indicates pulse: a) If pulse is indicated: Check filament voltage Check all oscillator connections Replace tube Check R401 and connections Check L402 and connections b) If pulse is not indicated: Check timer (page MS 1014–1X) Check rectifier card (page MS 1015–1X)
B:3	Abnormal voltage drop during pulse. (1000V or more)	Check: • rectifier V201 – V206 • transformer T101 • fuse Q27 • mains voltage
B:4	Unsymmetrical voltage drops for the two TS oscillators (or abnormal voltage drop for ZH oscillator).	Adjust oscillator, see page MS 1017–5X. Check (on malfunctioning side): • contact rails • flexible cables • carrier • knife • inductor
B:5	Voltage drops approximately 500 V	Correct. Proceed to section C.

Section B

Check by means of the high-voltage meter when oscillator is not pulsed.

Footnote
This information is valid for TBA/9 1302 only.

	Fault	Action
B:1	No voltage drop for oscillator during pulse	Replace pulse card. If required, check if pulse card indicates pulse: a) If pulse is indicated: Check filament voltage Check all oscillator connections Replace tube Check R401 and connections Check L402 and connections b) If pulse is not indicated: Check timer (page MS 1014–1X) Check rectifier card (page MS 1015–1X)
B:2	Abnormal voltage drop during pulse. (1000V or more)	Check: • rectifier V201 – V206 • transformer T101 • fuse Q27 • mains voltage
B:3	Voltage drops approximately 500 V	Correct. Proceed to section C.

Section C

Check by means of the am-meter when oscillator is pulsed.

	Fault	Action
C:1	No current despite correct high voltage	Return to B:1 or B:2
C:2	Current for one TS oscillator below 0.6 A or above 1.0 A.	Return to B:4
C:3	Current for zone heater oscillator below 0.4 A or above 1.0 A.	Check: • flex cable and inductor connections for open circuit or short circuit • generator adjustments
C:4	Current for pull tab device oscillator below 0.6 A or above 1.0 A.	Check: • contact rails • flex cable and inductor connections for open circuit or short circuit • generator adjustments
C:5	Current too high for all oscillators	Mains voltage (max + 10% accepted)
C:6	Overload relay 1F3 is tripping when one TS-oscillator is pulsed.	Check: • short-circuit or flash-over between connections on tube or in HF transformer • pulse starting position • knife starting position • knife return movement • that no Al-foil is stuck on inductor • short-circuit in contact rails • counter rubber
C:7	Overload relay 1F3 is tripping when a zone heater-oscillator or pull tab oscillator is pulsed.	Check: • contact rails • felx cable • inductor conections regarding short-circuit
C:8	Am-meter shows 0.6 – 0.9 A during TS pulse	Correct current. Proceed to section D.
C:10	Am-meter shows 0.5 – 0.8 A during zone heater pulse 0.8 – 1.0 A during pull tab pulse	Correct current. Proceed to section D.

Section C

Check by means of the am-meter when oscillator is pulsed.

Footnote
This information is valid for TBA/9 1301 and 1303.

	Fault	Action
C:1	No current despite correct high voltage	Return to B:1 or B:2
C:2	Current for one TS oscillator below 0.6 A or above 1.0 A.	Return to B:4
C:3	Current for zone heater oscillator below 0.4 A or above 1.0 A.	Check: • flex cable and inductor connections for open circuit or short circuit • generator adjustments
C:4	Current too high for all oscillators	Mains voltage (max + 10% accepted)
C:5	Overload relay Q101 is tripping when one TS oscillator is pulsed.	Check: • short-circuit or flash-over between connections on tubes or in HF transformer • pulse starting position • knife starting position • knife return movement • that no Al-foil is stuck on inductor • short-circuit in contact rails • counter rubber
C:6	Overload relay Q101 is tripping when a zone heater oscillator or pull tab oscillator is pulsed.	Check: • contact rails • felx cable • inductor conections regarding short-circuit
C:7	Am-meter shows 0.6 – 0.9 A during TS oscillator pulse	Correct current. Proceed to section D.
C:8	Am-meter shows 0.5 – 0.8 A during zone heater oscillator pulse	Correct current. Proceed to section D.

Section C

Check by means of the am-meter when oscillator section is pulsed.

Footnote
This information is valid for TBA/9 1302 only.

	Fault	Action
C:1	No current despite correct high voltage	Return to B:1
C:2	Current for pull tab oscillator below 0.6 A or above 1.0 A.	Check: • contact rails • flex cable connections for open cirquit or short circuit • inductor • generator adjustments
C:3	Current too high for all oscillators	Mains voltage (max + 10% accepted)
C:4	Overload relay Q101 is tripping when oscillator is pulsed.	Check: • short-circuit or flash-over between connections on tubes or in HF transformer • components L401, C403 and RL401 • inductor and inductor connections

Section D

Check transversal sealing (TS).

	Fault	Action
D:1	Faulty TS seals on both sides	Check: • sealing time, see page MS 1014–1X, • anode voltage, see page MS 1011–1X, • sealing pulse starting position, • HF-voltage, see page MS 1017–5X, • anode current, see page MS 1012–1X. Replace pulse card and rectifier card, see page MS 1015–1X
D:2	Both sides overheated	Check: • sealing time, see page MS 1014–1X, • mains voltage (max +10% accepted), • HF-voltage, see page MS 1017–5X, • anode voltage, see page MS 1011–1X, • anode current, see page MS 1012–1X.
D:3	Faulty TS-seal on one side	Check: • flex cable • carrier • inductor • knife • contact rails • oscillator unit, see page MS 1017–5X and MS 1012–1X Replace pulse card and rectifier card, see page MS 1015–1X
D:4	No seals at all	Return to A:1 and B:1.
D:5	Uneven seal or bad seals at corners	Check: • jaw pressure • knife return movement • knife starting position • counter rubber • replace inductor

Section E

WARNING!
Follow the safety precautions on page 1002–7X unconditionally!

Interference caused by an oscillator.

An oscillator is in fact a high power radio transmitter, the difference being that a transmitter is designed to radiate its available power from an external antenna, while the IH-oscillator must retain its power within the system.

A certain amount of HF-radiation can always be measured in the vicinity of the oscillator, but the level is normally negligible. Should the level be too high, it might lead to malfunctioning of nearby equipment, such as temperature regulators or it might interfere with TV or radio reception in the vicinity.

Remedies

Interference caused by a TBA/9-system will probably have its origin in one oscillator system only. To find out which one, remove the pulse cards one by one to disable the oscillator sections.

When it has been established which oscillator is disturbing the operation of other equipment, the first things to suspect are the interconnections between the oscillator and the inductors. An improper joint or worn insulation might lead to excessive HF-radiation.

If the interconnections are perfect, the problem is probably inside the oscillator section.

Faulty joints might lead to arcing. Check all joints.

Contamination might cause flash-over.

The tube itself might create interference and a tube replacement might cure the problem.

Section E

WARNING!
Follow the safety precautions on page MS 1002–7X unconditionally!

Interference caused by an oscillator.

An oscillator is in fact a high power radio transmitter, the difference being that a transmitter is designed to radiate its available power from an external antenna, while the IH-oscillator must retain its power within the system.

A certain amount of HF-radiation can always be measured in the vicinity of the oscillator, but the level is normally negligible. Should the level be too high, it might lead to malfunctioning of nearby equipment, such as temperature regulators or it might interfere with TV or radio reception in the vicinity.

Remedies

Check the joints between the oscillator and the inductor. An improper joint or worn insulation might lead to excessive HF-radiation.

If the interconnections are perfect, the problem is probably inside the oscillator section.

Faulty joints might lead to arcing. Check all joints.

Contamination might cause flash-over.

The tube itself might create interference and a tube replacement might cure the problem.

Checking

The control section is equipped with a voltmeter to monitor the high-voltage during operation.

The high-voltage shall be approximately according to the table below.

Unit	No pulse, kV	Pulse, kV
TS	4.3	4.0
Pull tab	6.3	5.7
Zone heater	5.2	4.7

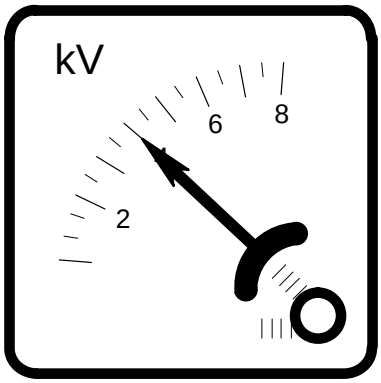

When the pulse starts the voltage drops approximately 0.5 kV.

The phase sensor monitors the three-phase system. Should an unbalance occur, the phase sensor disables the high voltage contactor.

The monitor panel displays **Phase monitor**.

Should one phase fail inside the generator, this will not be detected by the phase sensor. The quiescent high voltage is normal, but during the pulse the voltage will drop approximately 1 kV. The origin of such a problem will be found in an open diode in 2V1 – 2V6, or in transformer 1T1.

Checking

The control section is equipped with a voltmeter to monitor the high-voltage during operation.

The high-voltage shall be approximately according to the table below.

Unit	No pulse, kV	Pulse, kV
TS	4.3	4.0
Pull tab	6.3	5.7
Zone heater	5.2	4.7

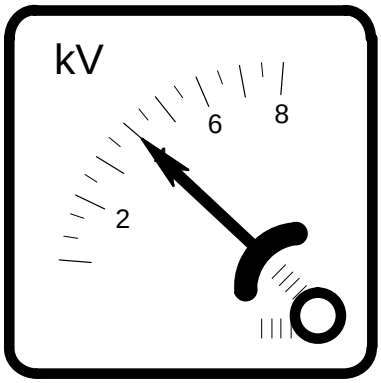

When the pulse starts the voltage drops approximately 0.5 kV.

The phase sensor monitors the three-phase system. Should an unbalance occur, the phase sensor disables the high voltage contactor.

The monitor panel displays **Phase monitor**.

Should one phase fail inside the generator, this will not be detected by the phase sensor. The quiescent high voltage is normal, but during the pulse the voltage will drop approximately 1 kV. The origin of such a problem will be found in an open diode in V201 – V206, or in transformer T101.

Checking

The anode current is affected by the load.
With the oscillator unloaded, i.e with the contact rails disconnected, the current should be around 300 mA.

When the inductor is loaded by Al-foil, the anode current increases. The actual anode current is an indication of the power applied to the seal.
A thinner Al-foil absorbs more power and thus leads to a higher anode current.

If an oscillator is to be pulsed with the machine idle, +48 V must be applied to the pulse card. Use a test cable , see page MS 1017–5X.

Connect the test instrument (3) to one of the test outlets, in the control section.

Footnote
The anode currents for both TS-oscillators can be measured in any one of the test-outlets (1) or (2). The current displayed is the current for the oscillator that is presently pulsing.

Check the anode current.

Oscillator	Anode current, mA
TS	600 – 900
Pull tab	min 1000
Zone heater	appr. 500

Footnote
The test instrument should be connected for this measurement. If the current is measured without the test instrument, the displayed current will be around 50 mA too low.

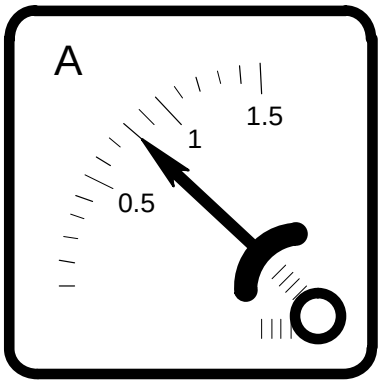

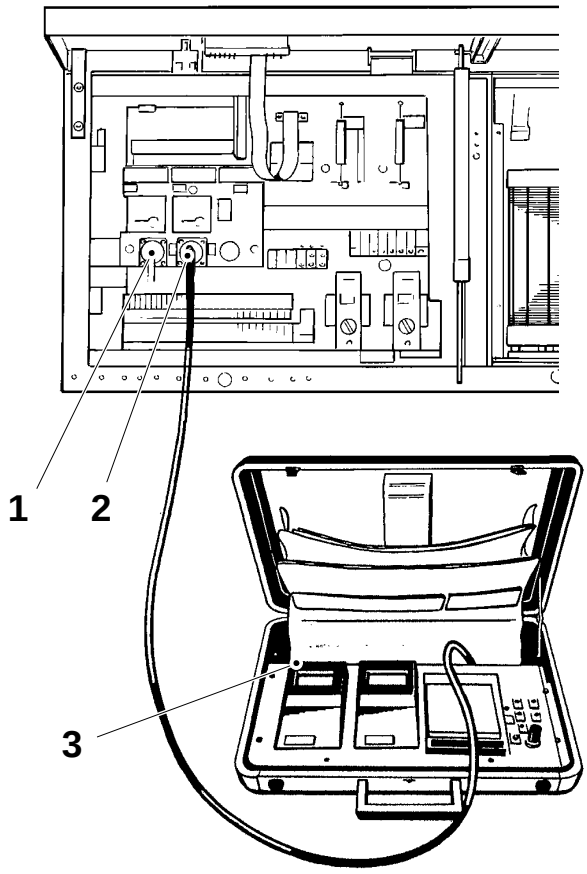

1 Test outlet 1X6
2 Test outlet 1X7
3 Test instrument TP101A

Checking

The anode current is affected by the load.
With the oscillator unloaded, i.e with the contact rails disconnected, the current should be around 300 mA.

When the inductor is loaded by Al-foil, the anode current increases. The actual anode current is an indication of the power applied to the seal.
A thinner Al-foil absorbs more power and thus leads to a higher anode current.

If an oscillator is to be pulsed with the machine idle, +48 V must be applied to the pulse card. Use a test cable , see page MS 1017–5X.

Connect the test instrument (3) to one of the test outlets, in the control section.

Footnote
The anode currents for both TS-oscillators can be measured in any one of the test-outlets (1) or (2). The current displayed is the current for the oscillator that is presently pulsing.

Check the anode current.

Oscillator	Anode current, mA
TS	600 – 900
Pull tab	min 1000
Zone heater	appr. 500

Footnote
The test instrument should be connected for this measurement. If the current is measured without the test instrument, the displayed current will be around 50 mA too low.

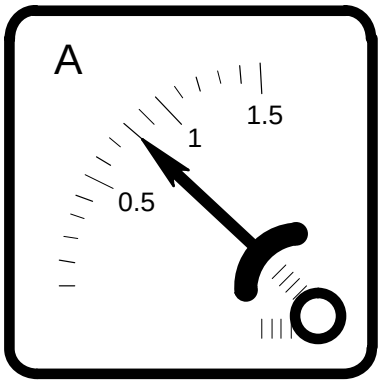

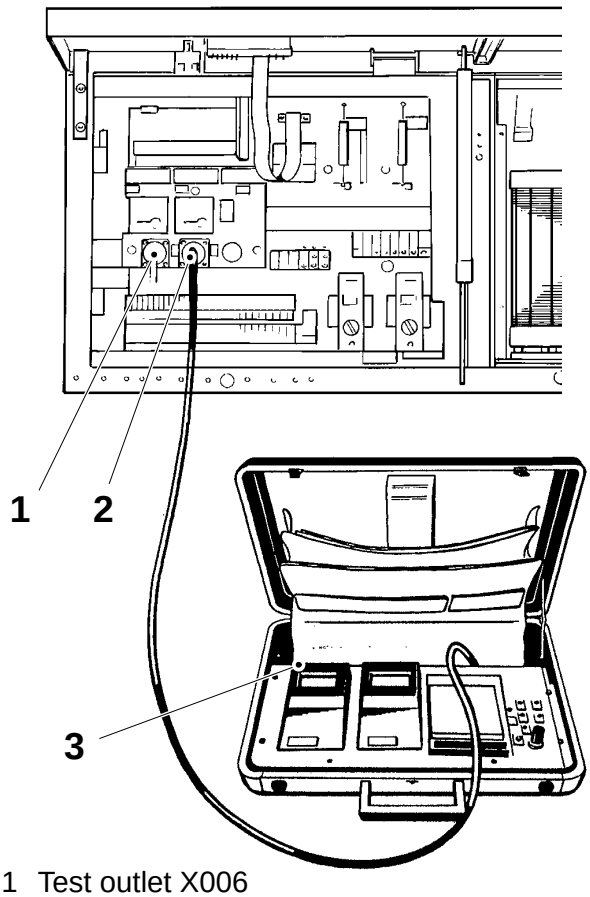

1 Test outlet X006
2 Test outlet X007
3 Test instrument TP101A

Checking

The anode current is affected by the load. The difference in current for a pulsed oscillator when it is loaded by Al-foil compared to without this load is related to the power applied to the seal.

Connect the test instrument (2) to the test outlet (1) in the generator.

Check the anode current.

Oscillator	Anode current, mA
Wide IS strip	900 – 1500
Narrow IS strip	400 – 750

With the oscillator unloaded, i.e with the contact rails disconnected, the current should be around 400 mA in the wide IS strip position.

Footnote
The test instrument should be connected for this measurement. If the current is measured without the test instrument, the displayed current will be around 50 mA too low.

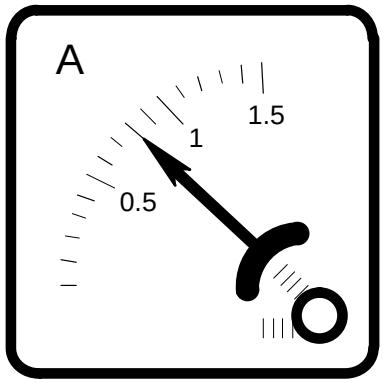

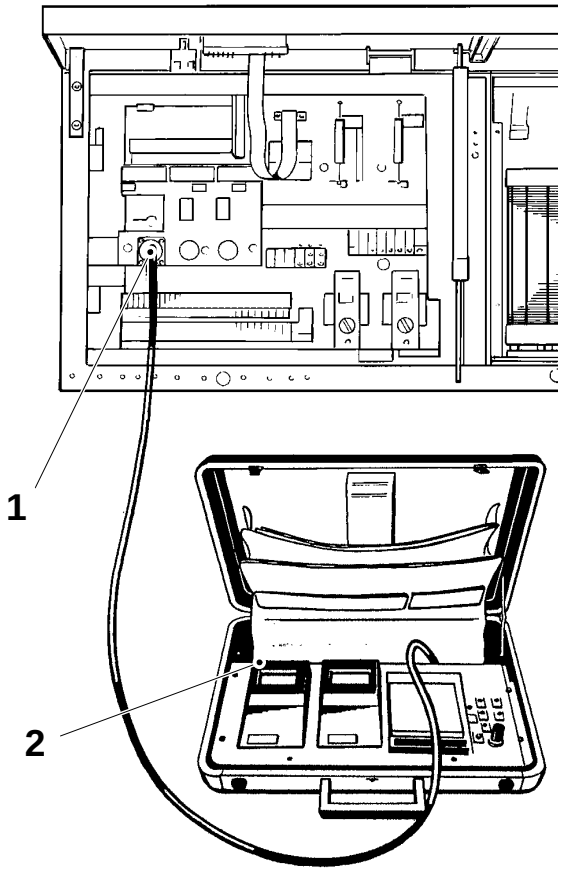

1 Test outlet X006
2 Test instrument TP101A

Checking

The grid current is measured separately for each oscillator section. Connect the test instrument (3) to the test outlet (1) or (2).

The grid current during pulse should be 100 – 280 mA.

Footnote
If a tube is replaced, **record** the grid current **and** the mains voltage. This information must be used, when the condition of the tube shall be checked.

Since the grid current for a new tube might be anything from 100 to 300 mA, there is no absolute value to advice about the condition of the tube. The **decline** of the grid current, however, is the best indication of the tube emission. When the grid current has **dropped to around 35%** of its original value, the tube is probably due for replacement.

If the contact rails are disconnected, the current should be 300 – 400 mA.
(The grid current increases for an unloaded oscillator.)

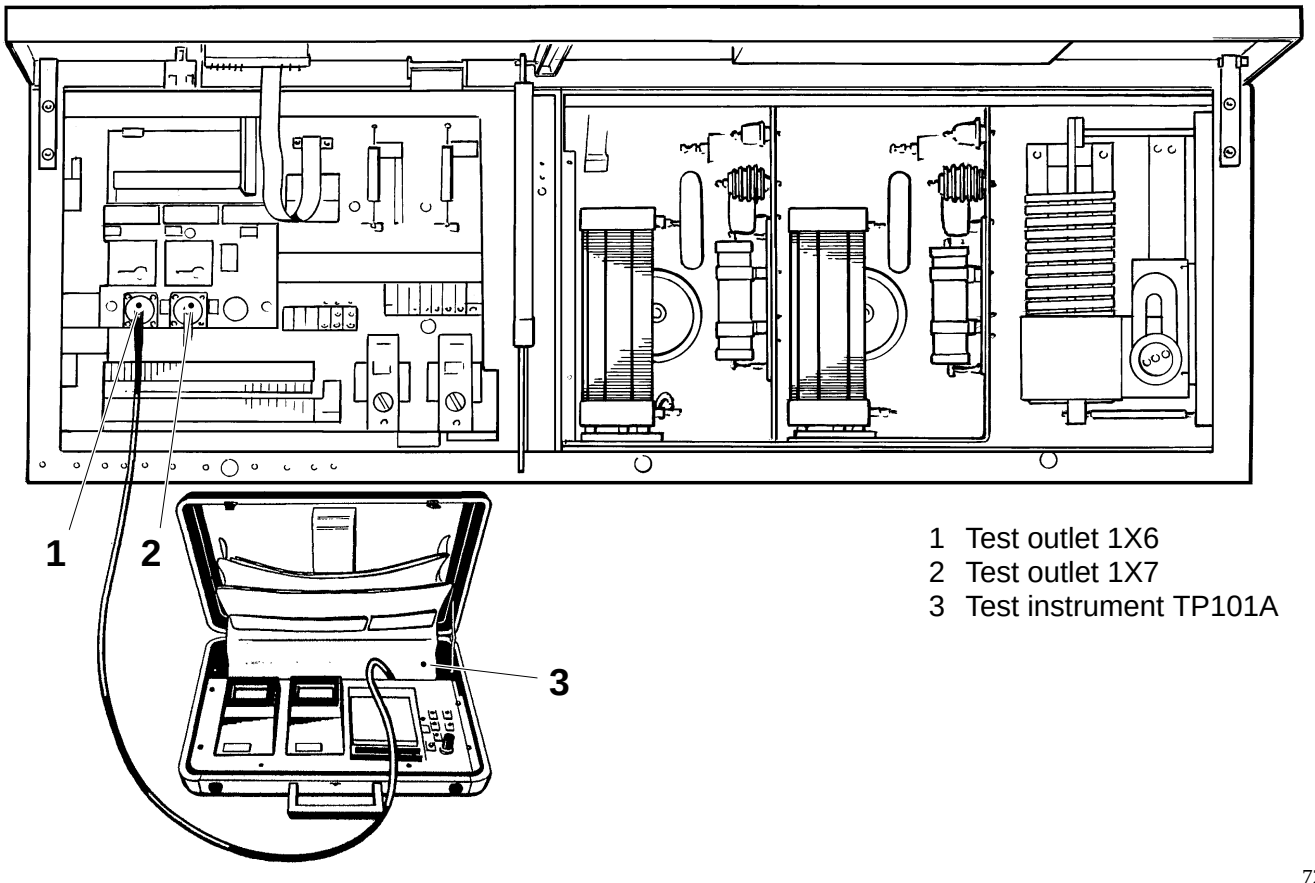

1 Test outlet 1X6
2 Test outlet 1X7
3 Test instrument TP101A

Checking

The grid current is measured separately for each oscillator section. Connect the test instrument (3) to the test outlet (1) or (2).

The grid current during pulse should be 100 – 280 mA.

Footnote
If a tube is replaced, **record** the grid current **and** the mains voltage. This information must be used, when the condition of the tube shall be checked.

Since the grid current for a new tube might be anything from 100 to 300 mA, there is no absolute value to advice about the condition of the tube. The **decline** of the grid current, however, is the best indication of the tube emission. When the grid current has **dropped to around 35%** of its original value, the tube is probably due for replacement.

If the contact rails are disconnected, the current should be 300 – 400 mA.
(The grid current increases for an unloaded oscillator.)

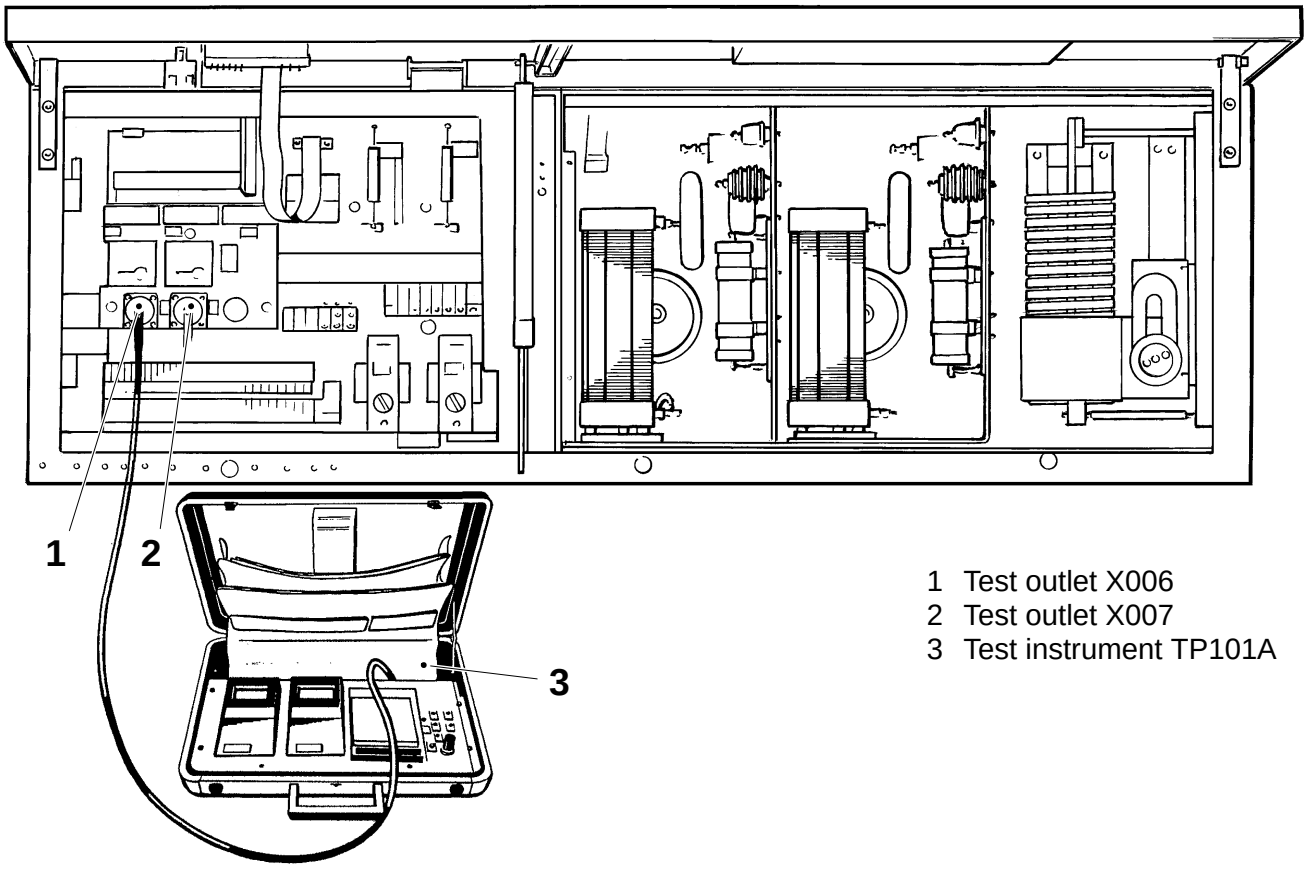

1 Test outlet X006
2 Test outlet X007
3 Test instrument TP101A

725

Checking

Connect the test instrument (3) to the test outlet (1).

The grid current during pulse, see table below.

Oscillator	Grid current, mA
Wide IS strip	350 – 550
Narrow IS strip	5 – 150

If the contact rails are disconnected, the current might rise to 750 mA. (The grid current increases for an unloaded oscillator.)

Footnote
If a tube is replaced, **record** the grid current **and** the mains voltage. This information must be used, when the condition of the tube shall be checked.

Since the grid current for a new tube might be anything from 100 to 550 mA, there is no absolute value to advice about the condition of the tube. The **decline** of the grid current, however, is the best indication of the tube emission. When the grid current has **dropped to around 35%** of its original value, the tube is probably due for replacement.

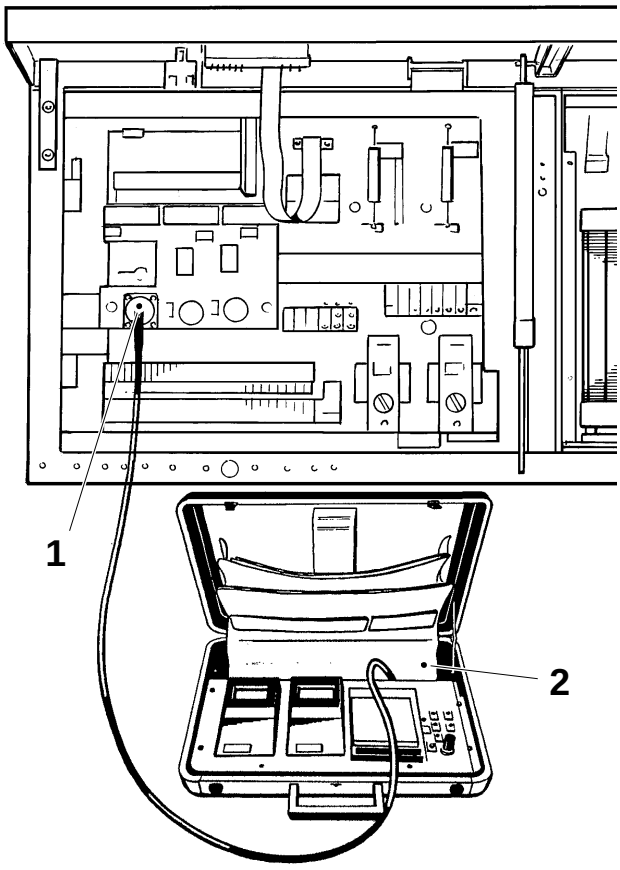

1 Test outlet X006
2 Test instrument TP101A

Checking

The timers for the TS and pull tab device generators create a voltage dependent pulse, i.e. a lower mains voltage leads to an increased pulse duration.

The zone heater generator is controlled by a separate timer. Its pulse duration is not affected by voltage fluctuations.

Use pulse time counter TP102 (1) to measure the pulse duration.

Footnote
The pulse duration can be measured on the carrier (HF signal) or on the input to the pulse card (DC signal). The most convenient place is the connector (2), where the input to the pulse card is available between pins 3 and 4 (or 5 and 6). (Between pins 1 and 2 for pull tab device generator or zone heater generator.)

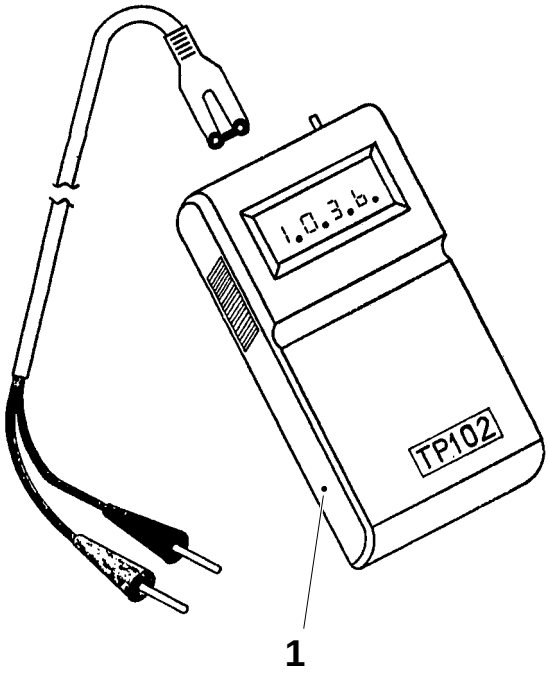

Caution!
Use the same type of inductor on both carriers. If one inductor must be replaced, the new inductor must have **the same type number** as the old one.

(Cont'd)

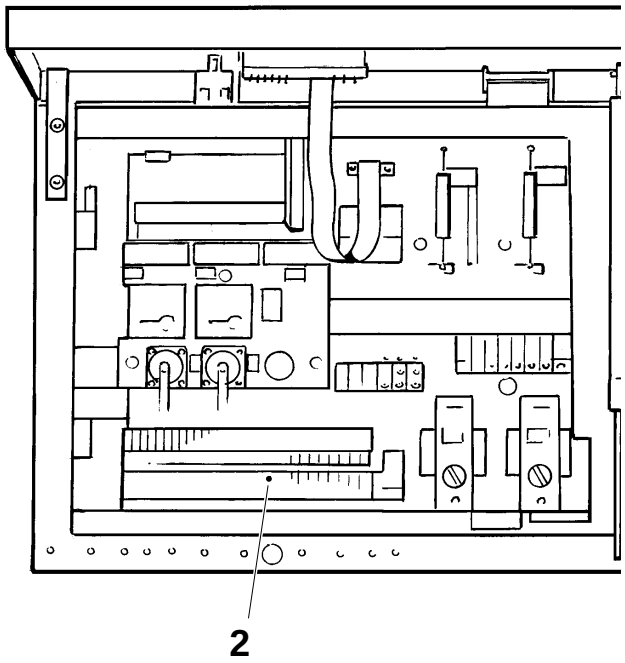

1 Pulse time counter TP102, TP No. 90243–90
2 Connector 1X1

(Cont'd)

Recommended pulse durations

Mains voltage, V	Pulse duration, ms		
	125 ml	180 – 250 ml	200S ml
323/187	332	242	311
328/190	322	235	302
337/195	306	223	286
345/200	290	212	272
354/205	276	202	259
363/210	264	192	247
371/215	251	183	236
380/220	240	175	225
389/225	229	167	215
397/230	220	160	206
406/235	210	153	197
415/240	202	147	189
418/242	198	145	186

Footnote
The recommended pulse durations are to be used as initial settings. The final setting must be done by examination of the seal quality.

The formula for the applicable pulse duration is:

$$TA = \frac{TN}{(V)^2}$$

TA = Applicable pulse duration

TN = Time at nominal mains voltage

V = Applicable voltage in per cent of nominal.
Note! This value is squared.

Example:
If the nominal time is 200 ms and you want to calculate the pulse duration when the mains voltage is 10% above nominal

$$TA = \frac{200}{(1.10)^2} = 165 \text{ ms}$$

Trouble shooting

If the generator is not activated by the pulse, i.e. the blocking voltage (see page MS 1015–1X) remains high, check the pulse card function by temporarily connecting +48V DC to pin 32 on the pulse card (see page MS 1017–5X:1).

If this activates the generator, the pulse card is OK and the problem is most probably in the timer or PLC.

Checking

The timers for the TS and pull tab device generators create a voltage dependent pulse, i.e. a lower mains voltage leads to an increased pulse duration.

The zone heater generator is controlled by a separate timer. Its pulse duration is not affected by voltage fluctuations.

Use pulse time counter TP102 (1) to measure the pulse duration.

Footnote
The pulse duration can be measured on the carrier (HF signal) or on the input to the pulse card (DC signal). The most convenient place is the connector (2), where the input to the pulse card is available between pins 3 and 4 (or 5 and 6). (Between pins 1 and 2 for zone heater generator.)

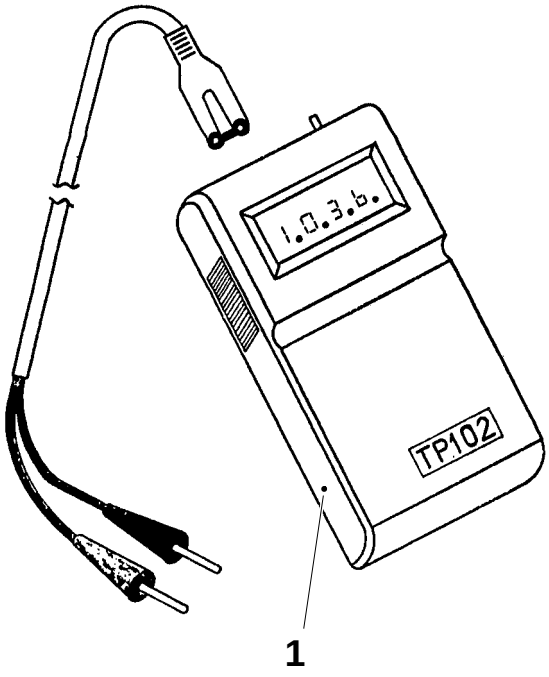

Caution!
Use the same type of inductor on both carriers. If one inductor must be replaced, the new inductor must have **the same type number** as the old one.

(Cont'd)

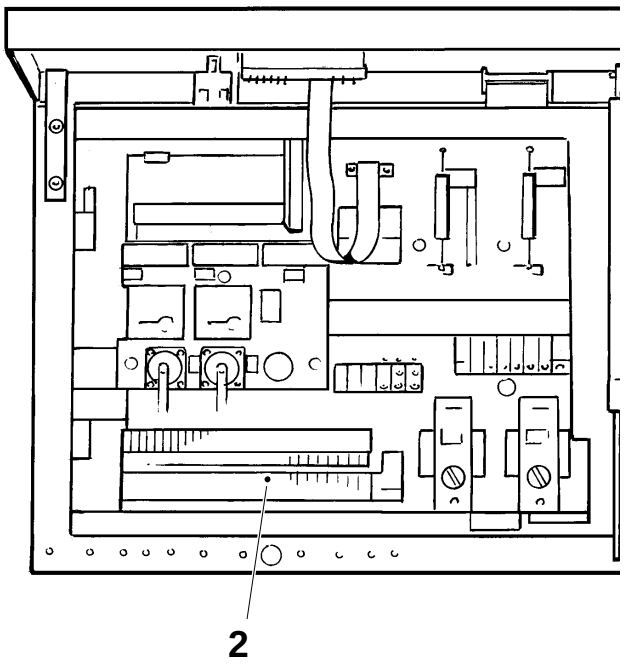

1 Pulse time counter TP102, TP No. 90243–90
2 Connector X001

(Cont'd)

Recommended pulse durations

Footnote
This information is valid for TBA/9 1301 and 1303.

Mains voltage, V	Pulse duartion, ms		
	125 ml	180 – 284 ml	200S ml
323/187	272	242	311
328/190	264	235	302
337/195	250	223	286
345/200	238	212	272
354/205	227	202	259
363/210	216	192	247
371/215	206	183	236
380/220	197	175	225
389/225	188	167	215
397/230	180	160	206
406/235	172	153	197
415/240	165	147	189
418/242	163	145	186

Footnote
The recommended pulse durations are to be used as initial settings. The final setting must be done by examination of the seal quality.

The formula for the applicable pulse duration is:

$$TA = \frac{TN}{(V)^2}$$

TA = Applicable pulse duration

TN = Time at nominal mains voltage

V = Applicable voltage in per cent of nominal.
Note! This value is squared.

Example:
If the nominal time is 200 ms and you want to calculate the pulse duration when the mains voltage is 10% above nominal

$$TA = \frac{200}{(1.10)^2} = 165 \text{ ms}$$

Trouble shooting

If the generator is not activated by the pulse, i.e. the blocking voltage (see page MS 1015–1X) remains high, check the pulse card function by temporarily connecting +24V DC to pin 32 on the pulse card (see page MS 1017–5X:1).

If this activates the generator, the pulse card is OK and the problem is most probably in the timer or PLC.

Checking

The timer for the pull tab device generator creates a voltage dependent pulse, i.e. a lower mains voltage leads to an increased pulse duration.

Use pulse time counter TP102 (1) to measure the pulse duration.

Footnote
The pulse duration can be measured on the inductor (HF-signal) or on the input to the pulse card (DC-signal). The most convenient place is the connector X001 (2), where the input to the pulse card is available between pins 1 and 2.

(Cont'd overleaf)

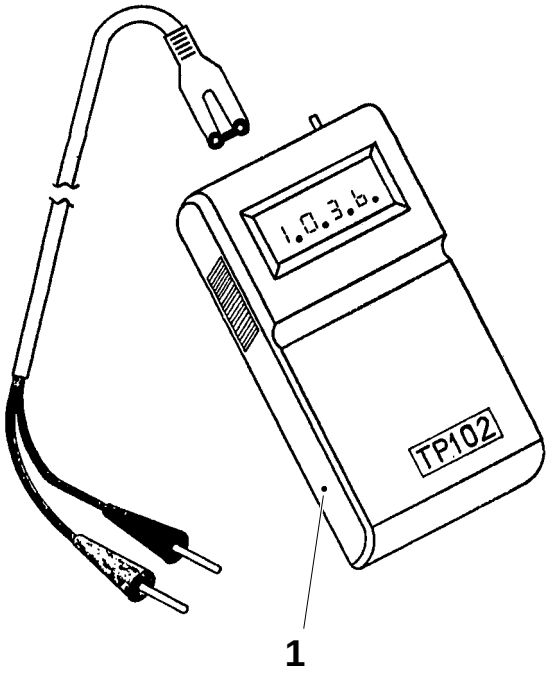

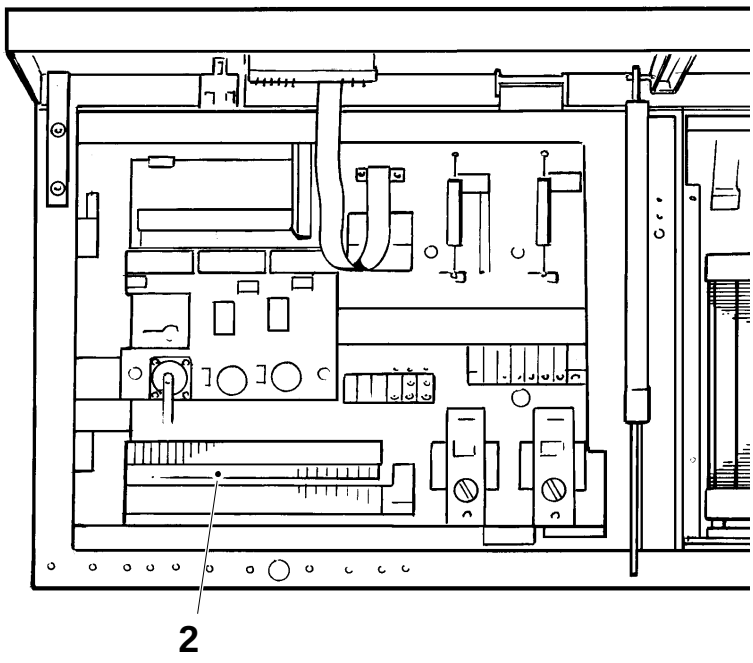

1 Pulse time counter TP102, TP No. 90243–90
2 Connector X001

(Cont'd)

Recommended pulse durations

Footnote
This information is valid for TBA/9 1302 only.

Mains voltage, V	Pulse duration, ms						
	125 ml 7.5/29	125 ml 7.5/35	180 ml 7.5/35	200S ml 7.5/29	200S ml 7.5/35	200 ml 7.5/37.5	250 ml 7.5/37.5
323/187	152	143	–	125	125	159	138
328/190	147	138	130	121	121	154	134
337/195	140	131	124	115	115	146	127
345/200	133	125	120	109	109	139	121
354/205	127	119	114	104	104	132	115
363/210	121	113	108	99	99	126	110
371/215	115	108	102	94	94	120	105
380/220	110	103	98	90	90	115	100
389/225	105	98	94	86	86	110	96
397/230	101	94	90	82	82	105	91
406/235	96	90	86	79	79	101	88
415/240	92	87	82	76	76	97	84
418/242	91	85	81	74	74	95	83

Footnote
The recommended pulse durations are to be used as initial settings. The final setting must be done by examination of the seal quality.

The formula for the applicable pulse duration is:

$$TA = \frac{TN}{(V)^2}$$

TA = Applicable pulse duration

TN = Time at nominal mains voltage

V = Applicable voltage in per cent of nominal. Note! This value is squared.

Example:
If the nominal time is 100 ms and you want to calculate the pulse duration when the mains voltage is 10% above nominal

$$TA = \frac{100}{(1.10)^2} = 83 \text{ ms}$$

Trouble shooting

If the generator is not activated by the pulse, i.e. the blocking voltage (see page MS 1015–1X) remains high, check the pulse card function by temporarily connecting +24V DC to pin 32 on the pulse card (see page MS 1017–5X:1.

Checking

The oscillators have separate transformers and rectifier cards for their blocking voltages.

The blocking voltage is derived from the rectifier card (2), which is located underneath the pulse card (1), see fig. The rectifier card also contains a 12 V rectifier for the pulse card.

The pulse card operates as a switch to enable the oscillator.

Connect the test instrument (3) and read the blocking voltage.

The voltage for a quiescent oscillator (i.e. with no pulse) shall be -700 V. During the pulse the voltage will be close to zero.

Footnote
The blocking voltage can be measured by means of the test instrument (3).

Footnote
The purpose of the blocking voltage is to assure the oscillator is absolutely quiescent between the pulses. If the blocking voltage is lacking and the grid circuit is not grounded, the oscillator will start and stop at its own pace. A situation might exist, in which the blocking voltage is lacking, while the rest of the pulse circuit is operating properly. In this case the operation of the oscillator will appear correct, apart from the additional pulses.

If the oscillator fails to operate, see page MS 1005–7X.

(Cont'd overleaf)

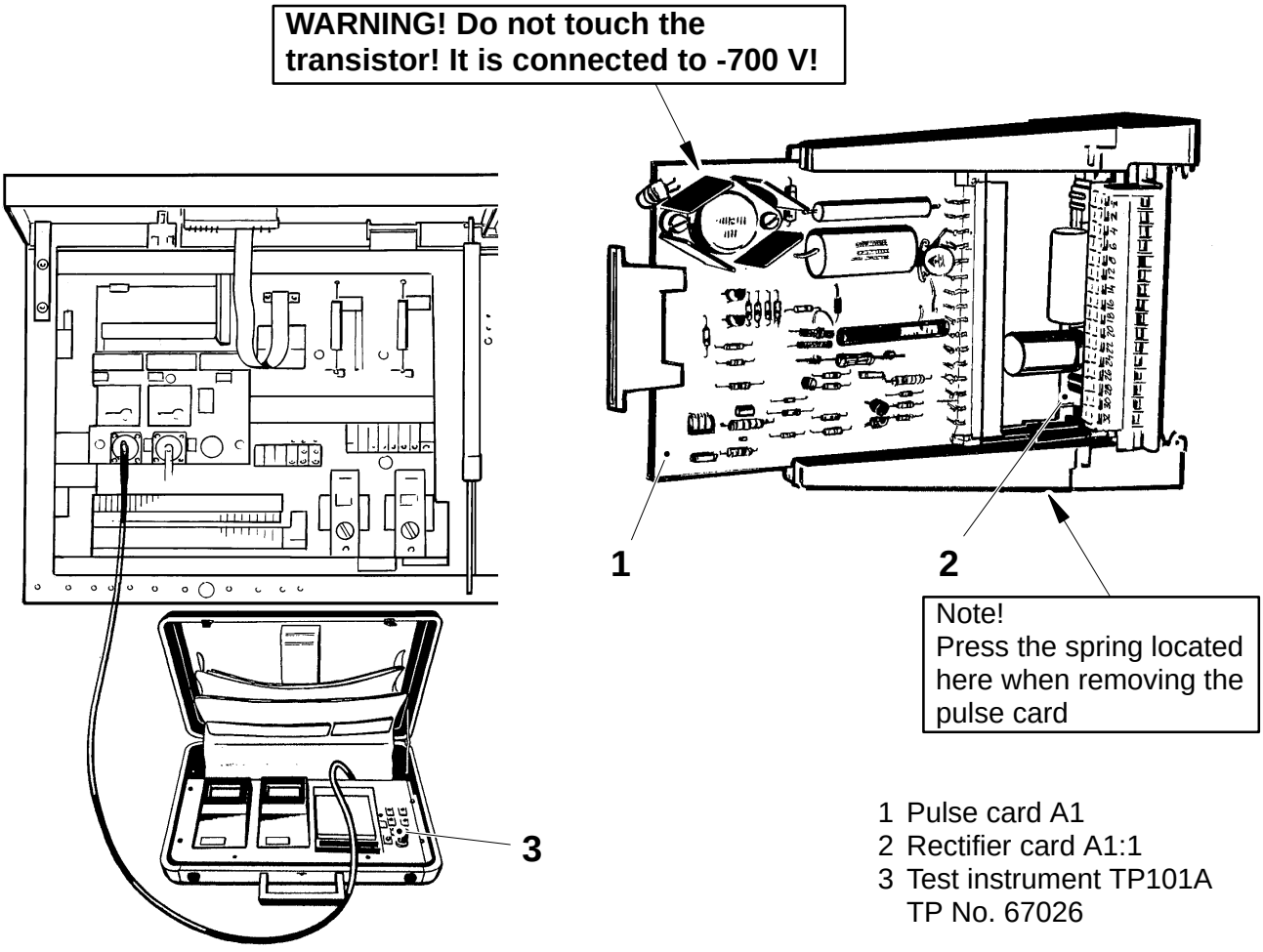

1 Pulse card A1
2 Rectifier card A1:1
3 Test instrument TP101A
TP No. 67026

733

(Cont'd)

Trouble shooting

WARNING!
Always follow the safety precautions on page MS 1002–7X when working in the generator section!

a) If both TS-oscillators fail to operate and the blocking voltages are missing, check the connections (1).

b) If one oscillator is inoperative and its blocking voltage is missing, check its transformer (1T4 (2) or 1T5 (3)), the fuse, the rectifier card (5) and the connector (1).

c) If one oscillator is inoperative and the blocking voltage remains around -700V, replace the pulse card. If this does not cure the problem, make sure the **enable** signal from the timer is received. This signal shall be around 48 V between pins 32 (7) and 30 (6) on the rectifier card. A broken low-voltage winding in the transformer (2) or (3) or an open diode on the rectifier card might create the same problem.

d) If there is no enable signal, check the timer and the PLC.

e) If the blocking voltage is controlled by the pulse, but the oscillator does not operate, check if resistor (9) is broken. If not, see page MS 1005–7X, B:2.

f) If an oscillator gives a constant pulse, switch it off to prevent damage to the inductor. Replace the pulse card. If the fault remains, check the capacitor (8) for short-circuit. If required, replace the rectifier card (5).

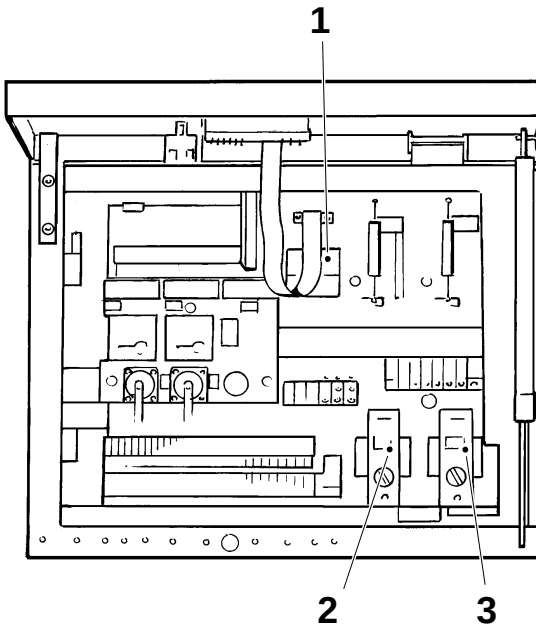

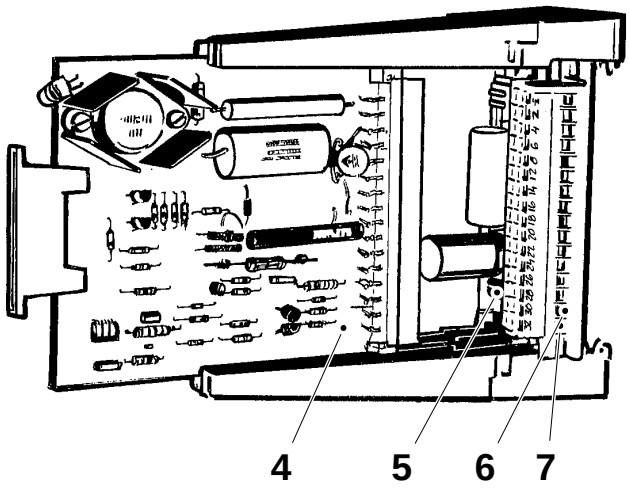

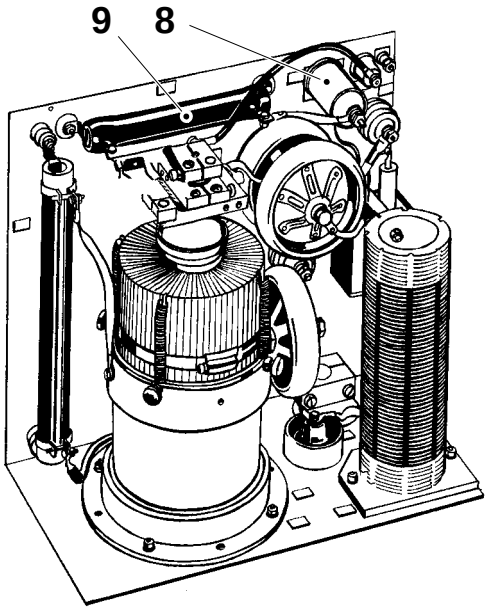

1 Connector 1X4
2 Transformer 1T4
3 Transformer 1T5
4 Pulse card
5 Rectifier card
6 Pin 30 (–)
7 Pin 32 (+)
8 Capacitor 4C6
9 Resistor 4R1

Checking

The oscillators have separate transformers and rectifier cards for their blocking voltages.

The blocking voltage is derived from the rectifier card (2), which is located underneath the pulse card (1), see fig. The rectifier card also contains a 12 V rectifier for the pulse card.

The pulse card operates as a switch to enable the oscillator.

Connect the test instrument (3) and read the blocking voltage.

The voltage for a quiescent oscillator (i.e. with no pulse) shall be -700 V. During the pulse the voltage will be close to zero.

Footnote
The blocking voltage can be measured by means of the test instrument (3).

Footnote
The purpose of the blocking voltage is to assure the oscillator is absolutely quiescent between the pulses. If the blocking voltage is lacking and the grid circuit is not grounded, the oscillator will start and stop at its own pace. A situation might exist, in which the blocking voltage is lacking, while the rest of the pulse circuit is operating properly. In this case the operation of the oscillator will appear correct, apart from the additional pulses.

If the oscillator fails to operate, see page MS 1005–7X.

(Cont'd overleaf)

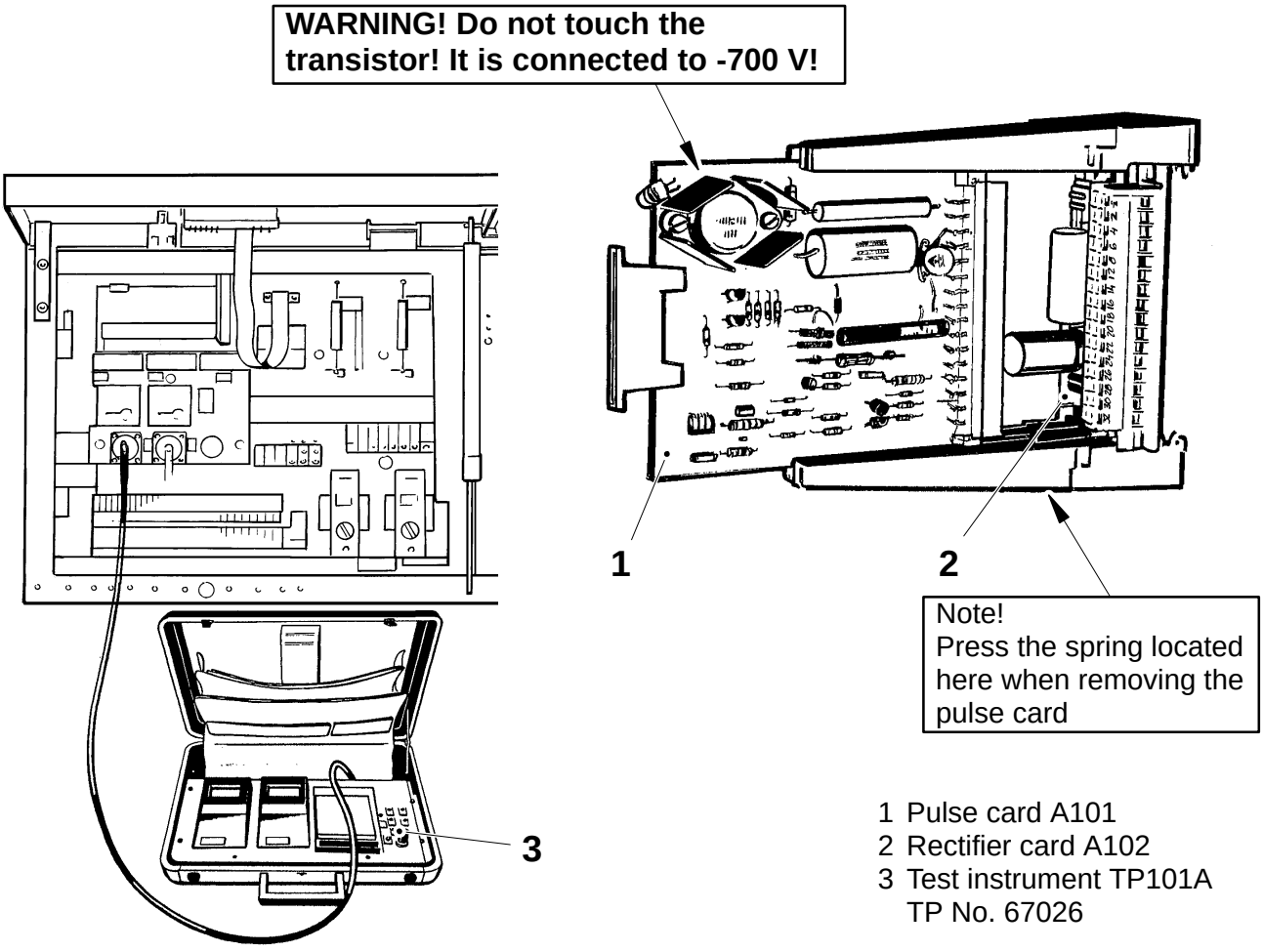

1 Pulse card A101
2 Rectifier card A102
3 Test instrument TP101A
TP No. 67026

735

(Cont'd)

Trouble shooting

WARNING!
Always follow the safety precautions on page MS 1002–7X when working in the generator section!

a) If both TS-oscillators fail to operate and the blocking voltages are missing, check the connections (1).

b) If one oscillator is inoperative and its blocking voltage is missing, check its transformer (T104 (2) or T105 (3)), the fuse, the rectifier card (5) and the connector (1).

c) If one oscillator is inoperative and the blocking voltage remains around -700V, replace the pulse card. If this does not cure the problem, make sure the **enable** signal from the timer is received. This signal shall be around 24 V between pins 32 (7) and 30 (6) on the rectifier card. A broken low-voltage winding in the transformer (2) or (3) or an open diode on the rectifier card might create the same problem.

d) If there is no enable signal, check the timer and the PLC.

e) If the blocking voltage is controlled by the pulse, but the oscillator does not operate, check if resistor (9) is broken. If not, see page MS 1005–7X, B:2.

f) If an oscillator gives a constant pulse, switch it off to prevent damage to the inductor. Replace the pulse card. If the fault remains, check the capacitor (8) for short-circuit. If required, replace the rectifier card (5).

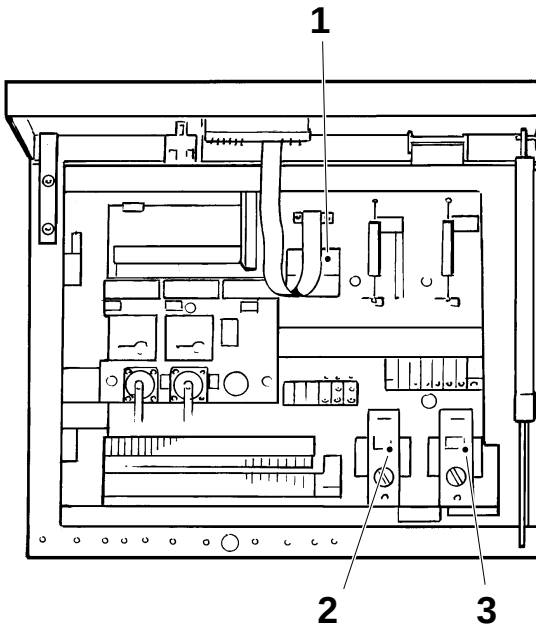

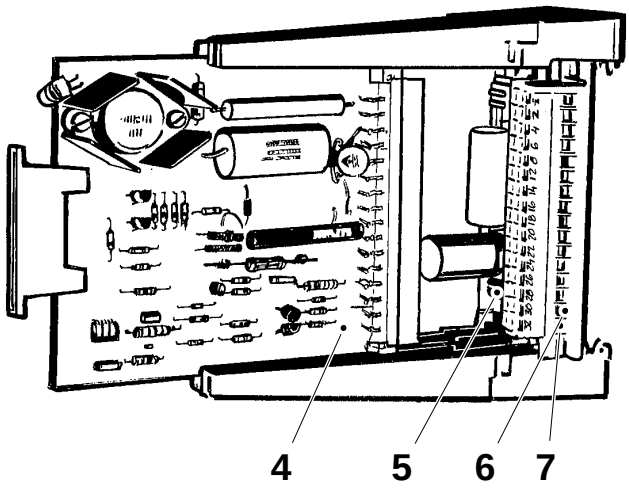

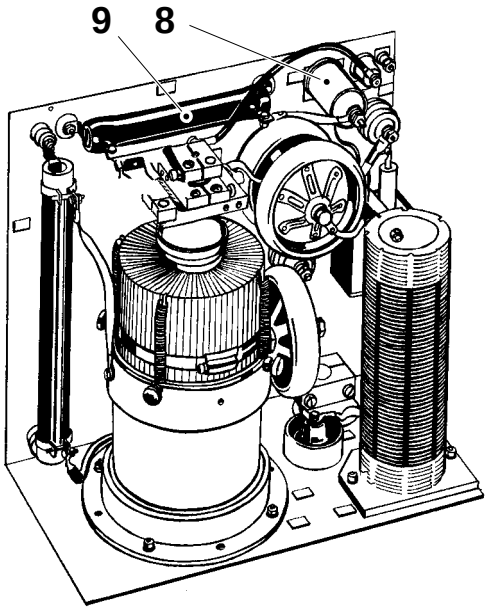

1 Connector X004
2 Transformer T104
3 Transformer T105
4 Pulse card
5 Rectifier card
6 Pin 30 (–)
7 Pin 32 (+)
8 Capacitor C406
9 Resistor R401

Checking

The blocking voltage is derived from the rectifier card (2), which is located underneath the pulse card (1), see fig. The rectifier card also contains a 12 V rectifier for the pulse card.

The pulse card operates as a switch to enable the oscillator.

Connect the test instrument (3) and read the blocking voltage.

The voltage for a quiescent oscillator (i.e. with no pulse) shall be -700 V. During the pulse the voltage will be close to zero.

Footnote
The blocking voltage can be measured by means of the test instrument (3).

Footnote
The purpose of the blocking voltage is to assure the oscillator is absolutely quiescent between the pulses. If the blocking voltage is lacking and the grid circuit is not grounded, the oscillator will start and stop at its own pace. A situation might exist, in which the blocking voltage is lacking, while the rest of the pulse circuit is operating properly. In this case the operation of the oscillator will appear correct, apart from the additional pulses.

If the oscillator fails to operate, see page MS 1005–7X.

(Cont'd overleaf)

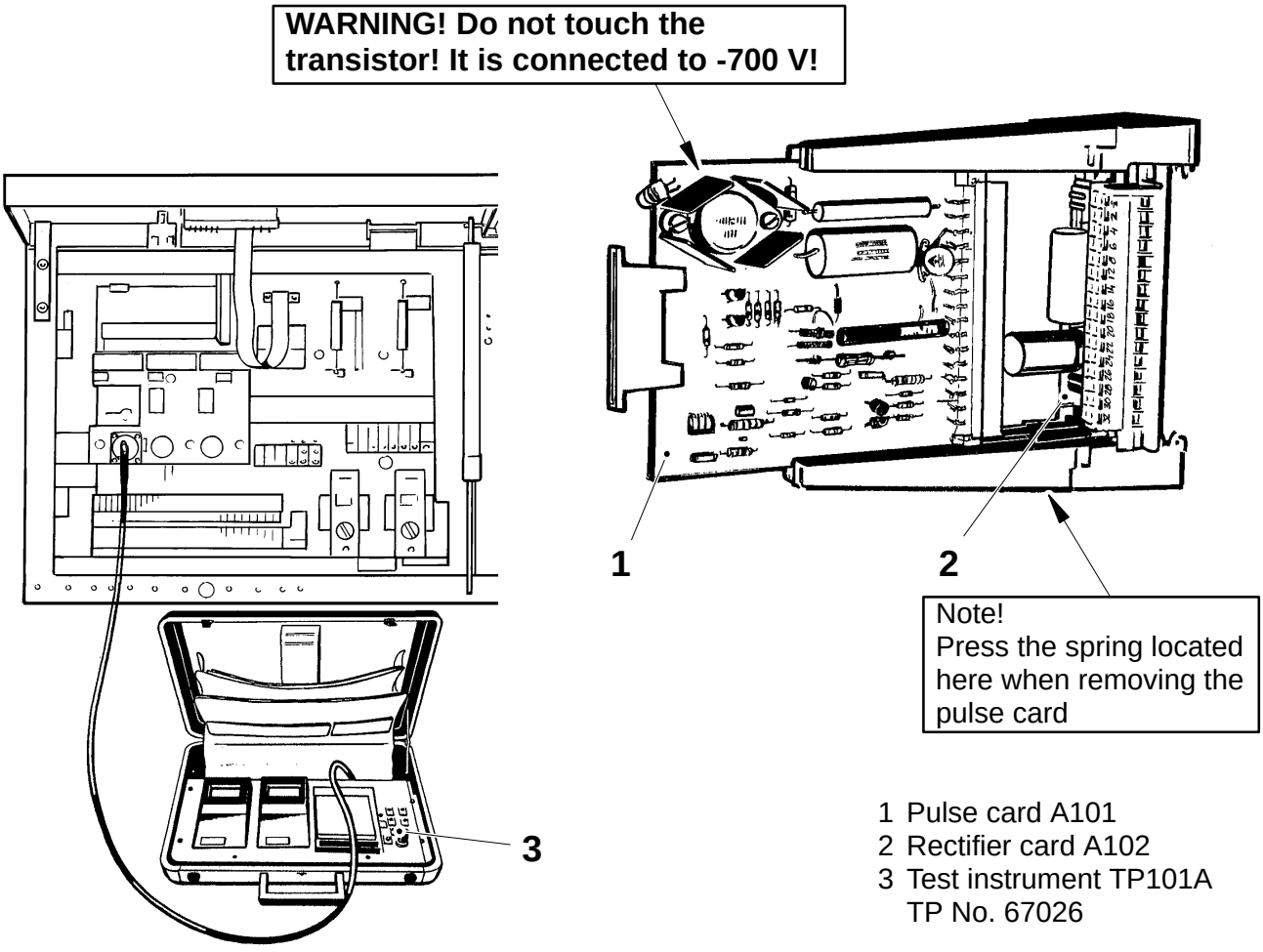

1 Pulse card A101
2 Rectifier card A102
3 Test instrument TP101A
TP No. 67026

737

(Cont'd)

Trouble shooting

WARNING!
Always follow the safety precautions on page MS 1002–7X when working in the generator section!

a) If the oscillator fails to operate and the blocking voltage is missing, check fuse F101. If the fuse is OK and the fan is operating, check the transformer (2) and the connector (1).

b) If the oscillator is inoperative and the blocking voltage remains around -700V, replace the pulse card (3). If this does not cure the problem, make sure the **enable** signal from the timer is received. This signal shall be around 24 V between pins 32 (6) and 30 (5) on the rectifier card. A broken low-voltage winding in the transformer (2) or an open diode on the rectifier card might create the same problem.

c) If the blocking voltage is controlled by the pulse, but the oscillator does not operate, check if the resistor (8) is broken.

d) If the oscillator gives a constant pulse, switch it off to prevent damage to the inductor. Replace the pulse card. If the fault remains, check the capacitor (7) for short-circuit. If required, replace the rectifier card (4).

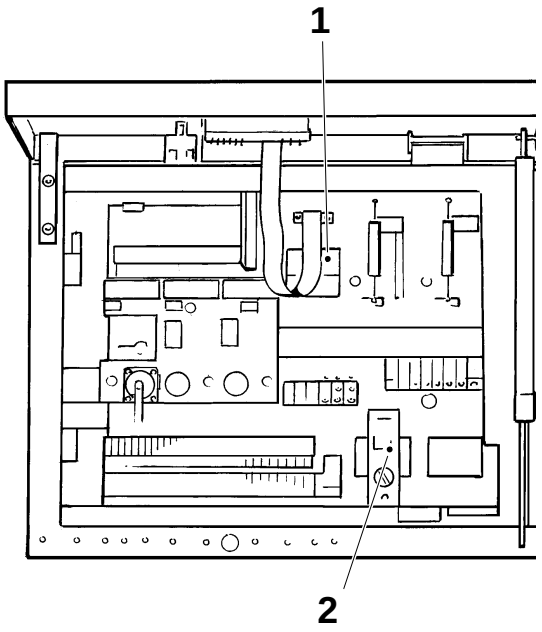

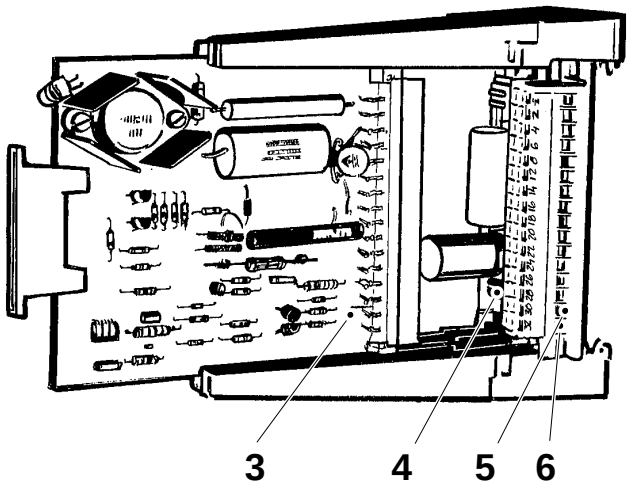

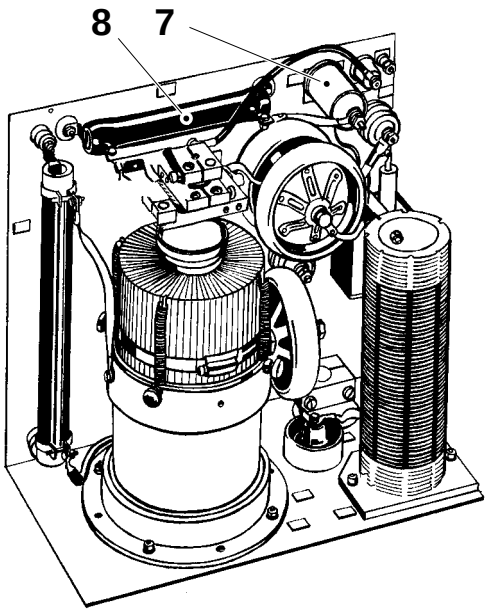

1 Connector X004
2 Transformer T104
3 Pulse card
4 Rectifier card
5 Pin 30 (–)
6 Pin 32 (+)
7 Capacitor C406
8 Resistor R401

Adjustment

General

The generator can be seen as a battery feeding a series of resistors. The ideal situation would be the generator feeding all its power into **one** resistor, i.e. the inductor.

Every piece of rail, flex cable or joint constitutes a resistor and power is lost in every one of them. A voltage drop of 15 – 20 V in a contact rail or a flex cable **can be accepted**.

A home-made test cable is needed every time the generator is to be operated manually. The cable is easily made of a 1 meter length of insulated thin wire with a microswitch and a resistor connected in series as shown in figure 2.

The resistor used might be any value from 200 to 2000 Ω and with a power rating of 1/8 or 1/4 W. (Its purpose is to act as a protection if the + 48 V DC-system should accidentally be short-circuited).

The resistor must be embedded in insulating material in such a manner that it under no circumstances can touch any metal part.

Open the connector on the carrier (D in fig. 1) and connect two test leads in parallel with the connector. Secure the connector. Make sure the test cables do not create a short-circuit and that they are free to move with the carrier.

Connect the test leads to the probe (3) of the HF voltmeter.

The machine may be operated normally provided the test leads are free to move. If it is preferable to use only one oscillator, the test cable described above can be used to enable the oscillator.

With the machine disconnected from mains, connect the test leads between pin 32 on the pulse card and pin 7 on connector 1X1.

(Cont'd overleaf)

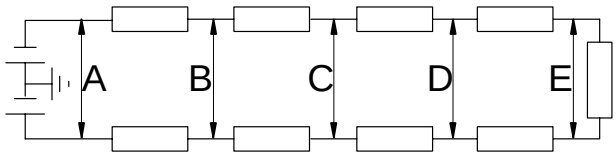

Fig. 1. IH-system. Simplified diagram for TS

A to B = Contact rail
B to C = Contact rail
C to D = Flexible cable
D to E = Carrier
E = Inductor

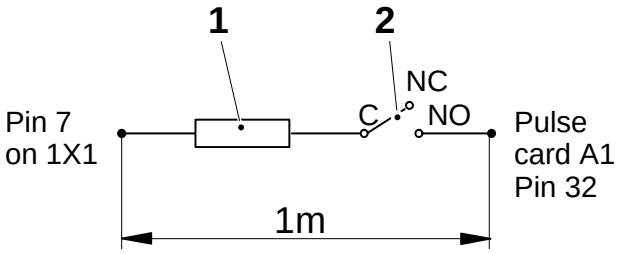

Fig. 2 Test cable

1 Resistor
2 Microswitch
3 Probe

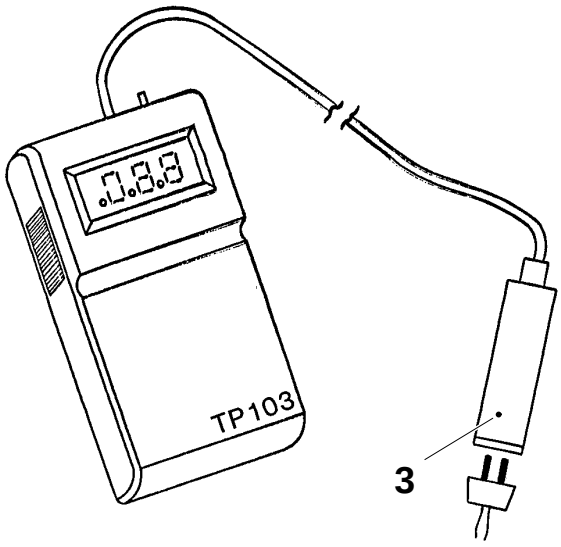

(Cont'd)

WARNING!
Always follow the safety precautions on page MS 1002–7X when working in the generator section.

Follow the instructions for **Simulated operation**, pages MS 1031–7X. Connect the test instrument to the test outlet (1X6 or 1X7) for the generator to be tested, see page MS 1013–1X.

Footnote
The anode current for both TS-oscillators can be measured in any one of the test outlets, i.e. when a current is displayed, it is the current for the oscillator that is presently pulsing.

If required, deactivate the oscillator by removing its pulse card.

WARNING!
The pulse cards have components carrying –700V!

Alternatively, use the test leads, shown on the previous page, to enable the oscillator.

Checking HF voltage for TS

Caution!
Use the same type of inductor on both carriers. If one inductor must be replaced, the new inductor must have **the same type number** as the old one.

Check the mains voltage.
Close the microswitch for a moment to generate a pulse or operate the machine in **Production**.

Read the HF voltage displayed on the HF voltmeter. Use HF voltmeter TP103 for this purpose.

The actual HF voltage – measured on the carrier (D in fig. 1) – depends on the mains voltage as follows:

Mains voltage, V	Deviation %	HF voltage, V 125 ml	180 – 250 ml	200S ml
323	–15	43 – 44	57 – 59	57 – 59
342	–10	46 – 47	60 – 62	60 – 62
361	– 5	48 – 49	64 – 66	64 – 66
380	0	51 – 52	67 – 69	67 – 69
399	+ 5	53 – 54	70 – 72	70 – 72
418	+ 10	56 – 57	74 – 76	74 – 76

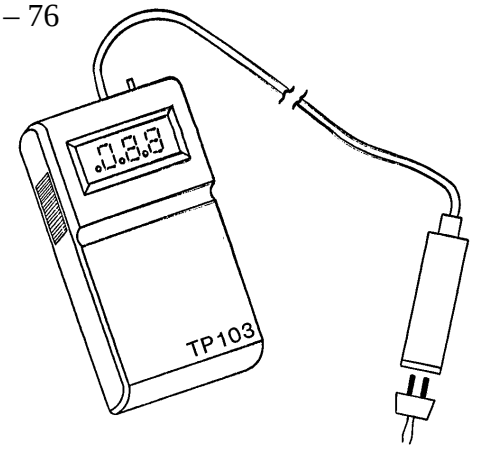

Footnote
If a packaging materal with a thinner Al-foil than 7.0 µm is used, a lower HF voltage might be obtained.

(Cont'd overleaf)

740

(Cont'd)

Recommended pulse durations, see MS 1014–1X.

If the HF voltage is not within the applicable limits, adjust the HF-transformer. Adjustment **must be done with the generator idle**, i e with no pulse. Perform a **Short stop**.

The high voltage may remain on. The HF transformer is completely isolated from the DC-voltage and when there is no pulse, the HF transformer is quiescent. If the HF voltage remains below the prescribed limits even with the adjustment in the maximum position, replace the tube.

Check the HF voltage for the other oscillator the same way.

The HF voltages on the LH side and the RH side should not differ more than 2 V.

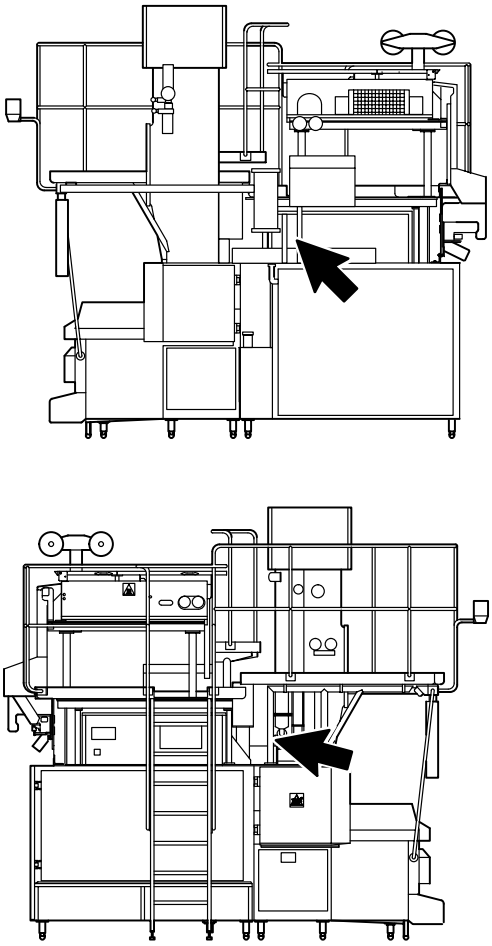

Footnote. Fig shows TBA/9 1201

Adjustment of HF voltage

WARNING!
Always follow the safety precautions on page MS 1002–7X when working in the generator section!

a) Push the **Short stop**-button.

b) Open the front cover and remove the small cover on the rear of the IH-cabinet (RH side), see fig.

c) Loosen the outer nut (4) and then the allen screw (5) (5 mm key) through the outer nut.

d) Adjust.

e) Retighten the allen screw and the outer nut.

f) Recheck.

Footnote
Sometimes it is difficult to measure the HF-voltage on one side, because the reading is lost almost immediately after it has stabilized. (This is caused by the fact that a fraction of the signal from the adjacent side is picked up by the HF-voltmeter.)
The easiest way to overcome this problem is – provided you are testrunning the machine with water – to temporaily remove the pulse card for the side, wich is creating the interferance.

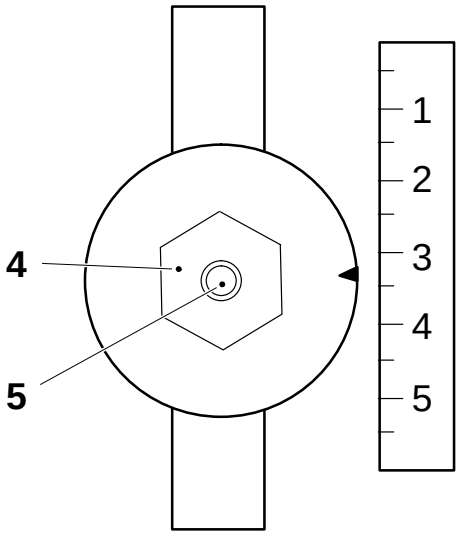

741

Setting

Footnote
This information is valid for TBA/9 1301 and 1303.

General

The generator can be seen as a battery feeding a series of resistors. The ideal situation would be the generator feeding all its power into **one** resistor, i.e. the inductor.

Every piece of rail, flexible cable or joint constitutes a resistor and power is lost in every one of them. A voltage drop of 15 – 20 V in a contact rail or a flex cable **can be accepted**.

A home-made test cable is needed every time the generator is to be operated manually. The cable is easily made of a 1 meter length of insulated thin wire with a microswitch and a resistor connected in series as shown in figure 2.

The resistor used might be any value from 200 to 2000 Ω and with a power rating of 1/8 or 1/4 W. (Its purpose is to act as a protection if the + 48 V DC-system should accidentally be short-circuited).

The resistor must be embedded in insulating material in such a manner that it under no circumstances can touch any metal part.

Open the connector on the carrier (D in fig. 1) and connect two test leads in parallel with the connector. Secure the connector. Make sure the test cables do not create a short-circuit and that they are free to move with the carrier.

Connect the test leads to the probe (3) of the HF voltmeter.

The machine may be operated normally provided the test leads are free to move. If it is preferable to use only one oscillator, the test cable described above can be used to enable the oscillator.

With the machine disconnected from mains, connect the test leads between pin 32 on the pulse card and pin 7 on connector X101.

(Cont'd overleaf)

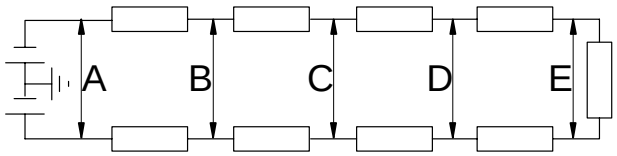

Fig. 1. IH-system. Simplified diagram for TS

A to B = Contact rail
B to C = Contact rail
C to D = Flexible cable
D to E = Carrier
E = Inductor

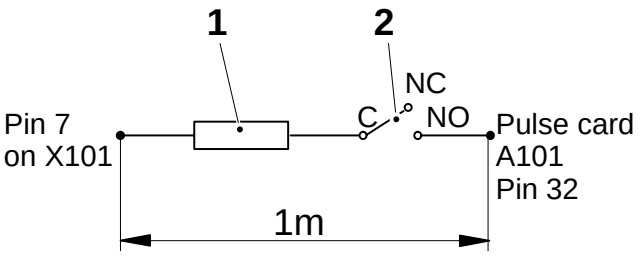

Fig. 2 Test cable

1 Resistor
2 Microswitch
3 Probe

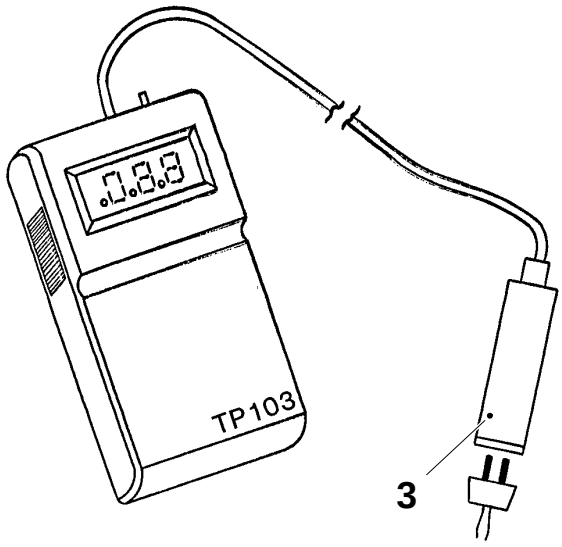

(Cont'd)

WARNING!
Always follow the safety precautions on page MS 1002–7X when working in the generator section.

Follow the instructions for **Simulated operation**, pages MS 1031–7X. Connect the test instrument to the test outlet (X006 or X007) for the generator to be tested, see page MS 1013–1X.

Footnote
The anode current for both TS-oscillators can be measured in any one of the test outlets, i.e. when a current is displayed, it is the current for the oscillator that is presently pulsing.

If required, deactivate the oscillator by removing its pulse card.

WARNING!
The pulse cards have components carrying –700V!

Alternatively, use the test leads, shown on the previous page, to enable the oscillator.

Checking HF voltage for TS

Caution!
Use the same type of inductor on both carriers. If one inductor must be replaced, the new inductor must have **the same type number** as the old one.

Check the mains voltage.
Close the microswitch for a moment to generate a pulse or operate the machine in **Production**.

Read the HF voltage displayed on the HF voltmeter. Use HF voltmeter TP103 for this purpose.

The actual HF voltage – measured on the carrier (D in fig. 1) – depends on the mains voltage as follows:

Mains voltage, V	Deviation %	HF voltage, V		
		125 ml	180 – 284 ml	200S ml
323	–15	43 – 44	57 – 59	57 – 59
342	–10	46 – 47	60 – 62	60 – 62
361	– 5	48 – 49	64 – 66	64 – 66
380	0	51 – 52	67 – 69	67 – 69
399	+ 5	53 – 54	70 – 72	70 – 72
418	+ 10	56 – 57	74 – 76	74 – 76

Footnote
If a packaging materal with a thinner Al-foil than 7.0 µm is used, a lower HF-voltage is obtained.

(Cont'd overleaf)

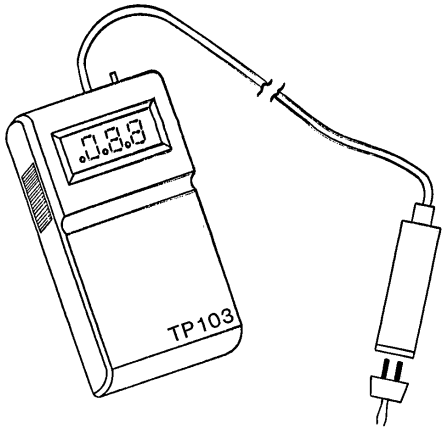

(Cont'd)

Recommended pulse durations, see MS 1014–1X.

If the HF voltage is not within the applicable limits, adjust the HF-transformer. Adjustment **must be done with the generator idle**, i e with no pulse. Perform a **Short stop**.

The high voltage may remain on. The HF transformer is completely isolated from the DC-voltage and when there is no pulse, the HF transformer is quiescent. If the HF-voltage remains below the prescribed limits even with the adjustment in the maximum position, replace the tube.

Check the HF voltage for the other oscillator the same way.

The HF voltages on the LH side and the RH side should not differ more than 2 V.

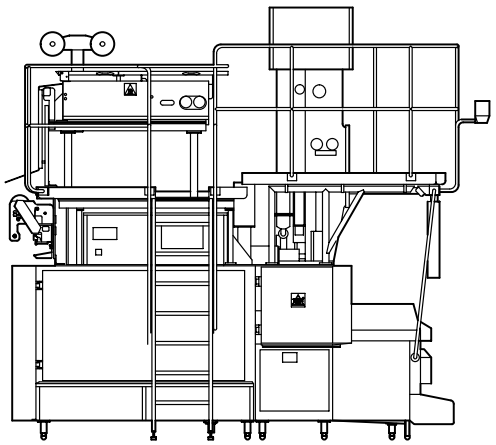

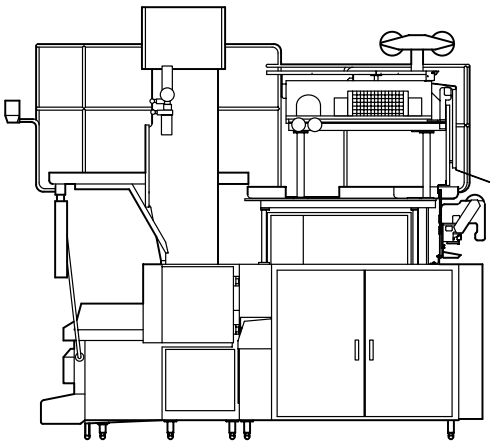

Footnote. Fig. shows TBA/9 1301

Adjustment of HF voltage

WARNING!
Always follow the safety precautions on page MS 1002–7X when working in the generator section!

a) Push the **Short stop**-button.

b) Open the front cover and remove the small cover on the rear of the IH-cabinet (RH side), see fig.

c) Loosen the outer nut (4) and then the allen screw (5) (5 mm key) through the outer nut.

d) Adjust.

e) Retighten the allen screw and the outer nut.

f) Recheck.

Footnote
Sometimes it is difficult to measure the HF-voltage on one side, because the reading is lost almost immediately after it has stabilized. (This is caused by the fact that a fraction of the signal from the adjacent side is picked up by the HF-voltmeter.)
The easiest way to overcome this problem is – provided you are testrunning the machine with water – to temporaily remove the pulse card for the side, wich is creating the interferance.

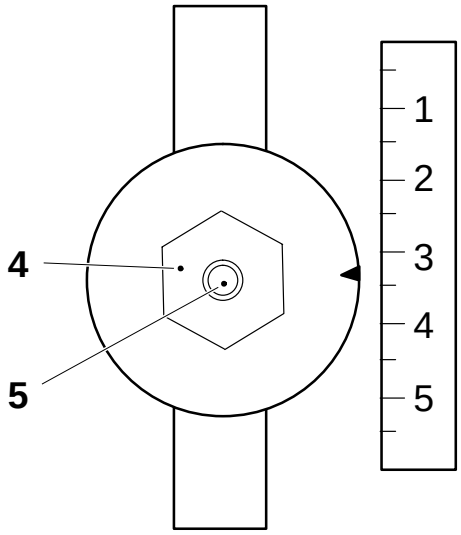

Setting

Footnote
This information is valid for TBA/9 1302 only.

General

The generator can be seen as a battery feeding a series of resistors. The ideal situation would be the generator feeding all its power into **one** resistor, i.e. the inductor.

Every piece of rail, flexible cable or joint constitutes a resistor and power is lost in every one of them. A voltage drop of 15 – 20 V in a contact rail or a flexible cable **can be accepted**.

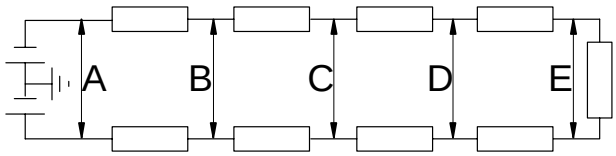

Fig. 1. IH-system. Simplified diagram

A till B = Contact rail
B till C = Contact rail
C till D = Flexible cable
D till E = Carrier
E = Inductor

Wide IS strip

Caution!
Settings for wide IS strip must be performed **before** adjustment of for narrow IS strip.

WARNING!
Always follow the safety precautions on page MS 1002–7X when working in the generator section!

Check the main voltage and record it.

Connect the test leads of the HF voltmeter probe (1) to the connections on the inductor card.

Start the machine and check the HF voltage, see table below.

(Cont’d overleaf)

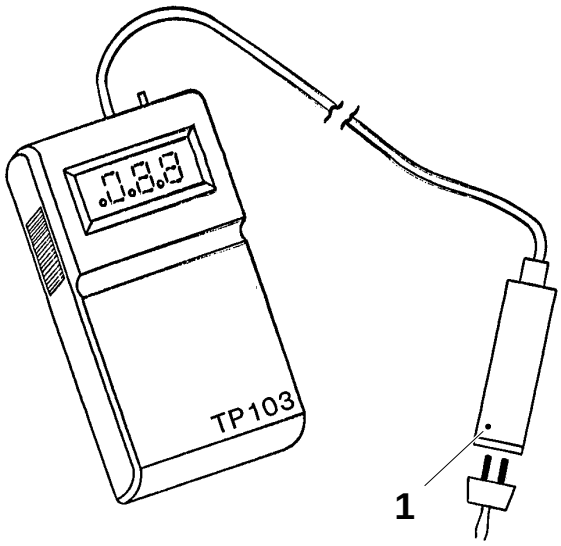

1 Probe, HF voltmeter TP103 (TP No. 67024)

(Cont'd)

Main voltage, V	HF voltage, wide IS strip, V						
	125 ml 29 mm	125 ml 35 mm	180 ml 35 mm	200S ml 29 mm	200S ml 35 mm	200 ml 37.5 mm	250 ml 37.5 mm
328/190	121	142	198	181	199	181	212
337/195	124	146	205	186	204	186	217
345/200	127	150	209	191	209	191	223
354/205	130	154	214	196	214	196	228
363/210	134	157	218	200	220	200	234
371/215	137	161	225	205	225	205	239
380/220	140	165	230	210	230	210	245
389/225	143	169	235	215	235	215	251
397/230	146	172	242	220	240	220	256
406/235	150	176	246	224	246	224	262
415/240	153	180	251	229	251	229	267
418/242	154	182	253	231	253	231	269

Adjustment of HF voltage, wide IS strip

WARNING!
Always follow the safety precautions on page MS 1002–7X when working in the generator section!

a) Push **Short stop**.

b) Loosen the outer nut (2) and then the allen screw (3) (5 mm key) through the outer nut on one of the transformers.

c) Adjust. If additional adjustment is required, adjust on the other transformer as well.

d) Retighten the allen screw and the outer nut.

e) Recheck.

Check the pulse duration, see page MS 1014–1X

(Cont'd overleaf)

1 Outer nut
2 Allen screw

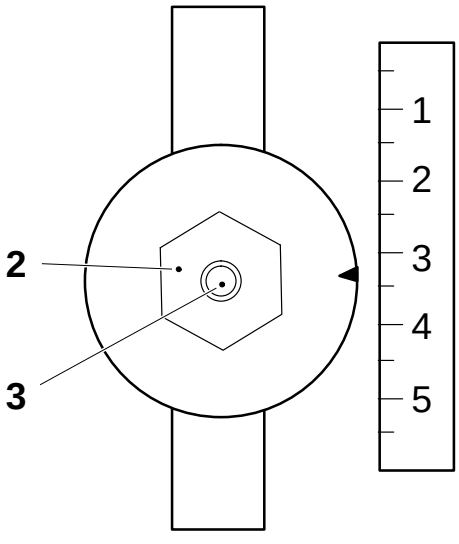

(Cont’d overleaf)

Narrow IS strip

Caution!
The output adjustment for wide IS strip must be performed before the adjustment for narrow IS strip is started.

WARNING!
Always follow the safety precautions on page MS 1002–7X when working in the generator section!

Connect two test leads between the HF voltmeter probe (1) and the inductor card.

Start the machine and record the HF voltage. If the voltage is not in accordance with the table below, adjust as follows:

Main voltage, V	HF voltage, narrow IS strip, V					
	125 ml 7.5/29 mm	125 ml 7.5/35 mm	180 ml 35 mm	200S ml 7.5 mm	200 ml 7.5 mm	250 ml 7.5 mm
323/187	60	61		94	61	94
328/190	60	62		95	62	95
337/195	62	64		97	64	97
345/200	64	65		100	65	100
354/205	65	67		102	67	102
363/210	67	69		105	69	105
371/215	68	70		107	70	107
380/220	70	72		110	72	110
389/225	72	74		112	74	112
397/230	73	75		115	75	115
406/235	75	77		117	77	117
415/240	76	79		120	79	120
418/242	77	79		121	79	121

(Cont’d overleaf)

(Cont’d overleaf)

Adjustment of HF voltage, narrow IS strip

WARNING!
Always follow the safety precautions on page MS 1002–7X when working in the generator section!

a) Turn the main switch to position **off** and padlock it.

b) Remove the cover of the oscillator section.

c) Loosen the screw (4) and shift the adjustment clip (5) on one of the resistors. The voltage **increases** if the clip is shifted towards plus, see fig. Tighten the screw.

d) If a major adjustment is required, adjust on the other resistor as well.

e) Fit the cover and start the machine.

f) Check that the voltage is in accordance with the table. If not, repeat from item a).

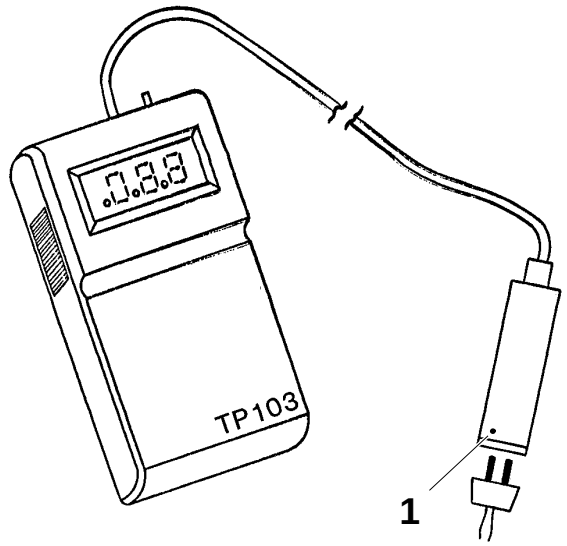

1 Probe, HF voltmeter TP103 (TP No. 67024)
4 Screw
5 Adjustment clip

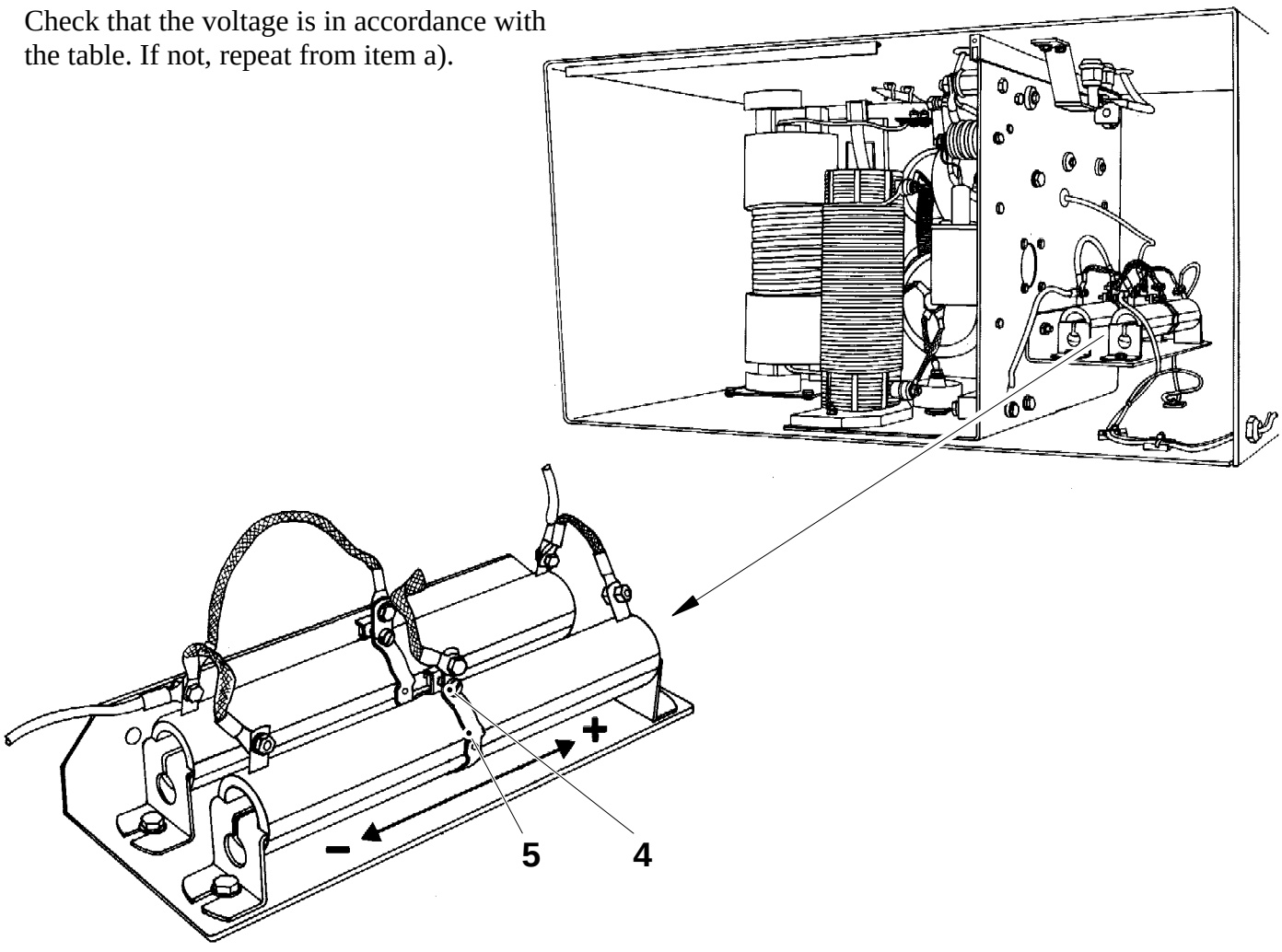

General

HF voltmeter TP 103 (TP No. 67024)

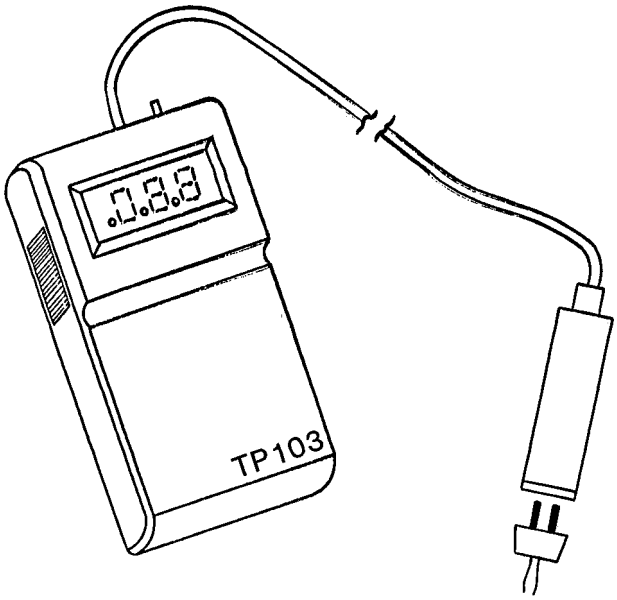

The instrument TP 103 used for measuring the HF voltage has a three digit display giving an immediate presentation of the actual HF voltage. The hold function retains the measured voltage until the next pulse is received. (A voltage fluctuation of ±1 V is normal.) Whenever a pulse is present the three decimal points are displayed.

When the battery voltage drops below 7.5 V, a ”BAT”-indication is shown in the upper left hand corner of the display. The instrument **can be used for about another hour** after the ”BAT”-indication appears.

The minimum voltage needed to trigger the voltmeter is around 20 V and the minimum pulse duration is around 50 ms.

Footnote
A voltage reading around 20 V implies only one pole of the probe is in contact with the rail.

Whenever the instrument is switched on, a random number is displayed. Disregard this number completely.

Cleaning/Checking

WARNING!
Always follow the safety precautions on page MS 1002–7X when working in the generator section!

Use compressed air and/or white spirit.

Remove the oscillator modules, see page MS 1021–2X.

Remove the tube and clean its cooling flanges (3).

Clean the tube socket (4) on the inside and the outside.

Clean the rest of the module.

Reinstall the tube.

Check all connections. Pay particular attention to the tube connectors. These must be parallel and a clearance of at least 3 mm must be maintained between the cathode (1) and the grid connectors and their leads (2).

Replace defective screws and nuts and secure them with lacquer.

Clean the HF transformers (5) and the capacitors.

Check all connections.

Replace defective parts.

Footnote
Contamination leads to flash-over and overheating.

Reinstall the oscillator module, see page MS 1021–4X.

1 Cathode
2 Grid
3 Cooling flange
4 Tube socket
5 HF transformer

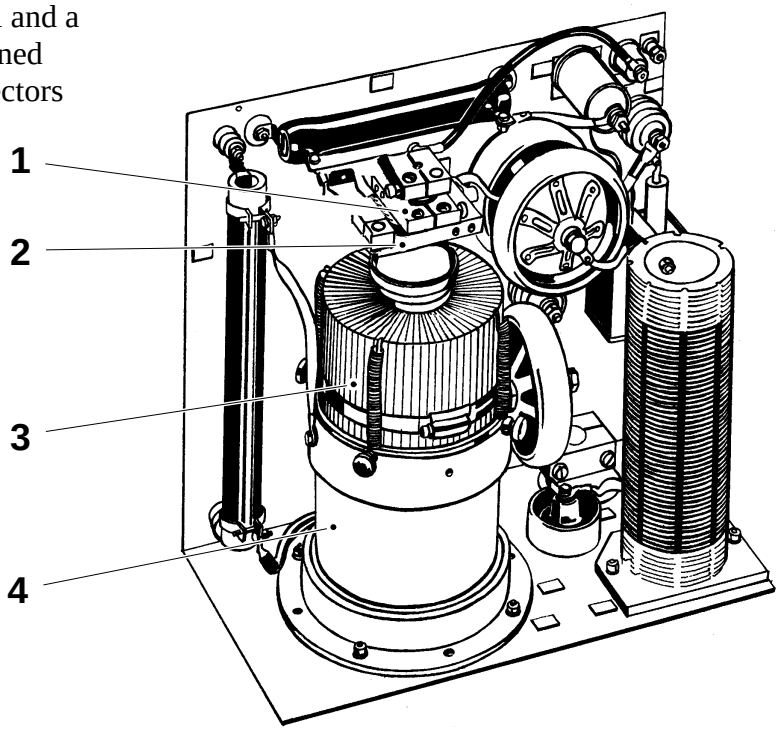

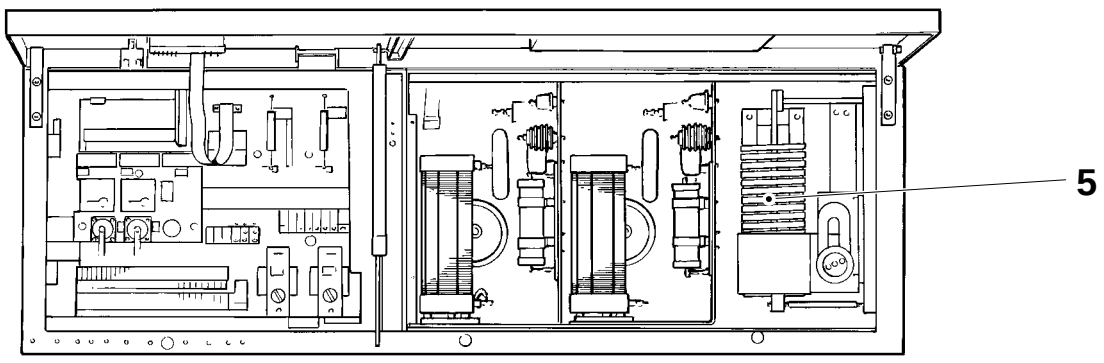

Removal

WARNING!
Always follow the safety precautions on page MS 1002–7X when working in the generator section!

Undo the screws (1). Disconnect and label the leads to (3), (4), (5) and (6), and the HF connector (2).

Carefully bend the leads to prevent damage to their insulation when the module is pulled out.

Carefully remove the module.

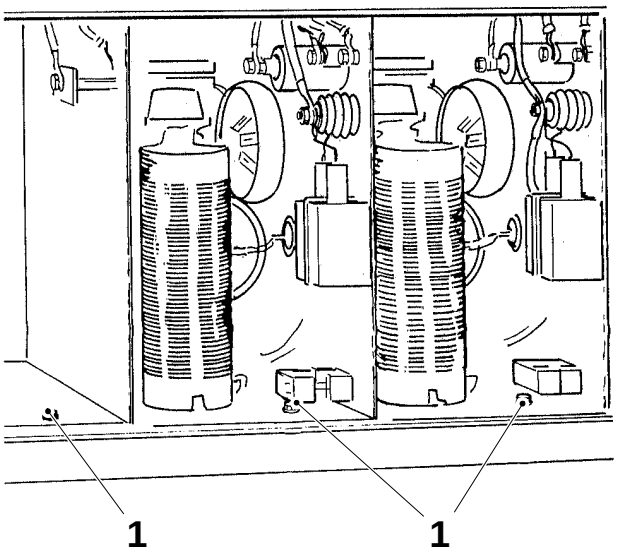

Fig. 1 TS oscillator module

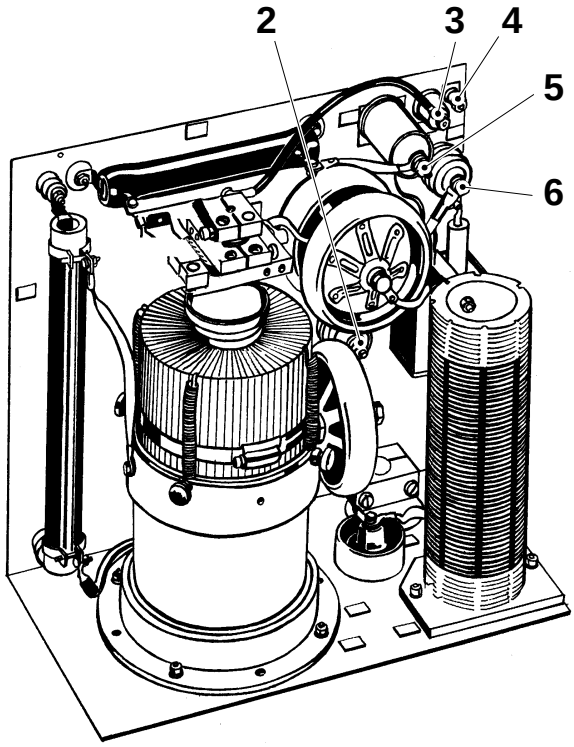

Fig. 2

1 Screw
2 HF connector
3 Filament voltage connection
4 Ground
5 Blocking voltage connection
6 High voltage connection

Fitting

Clean the HF transformer, see page MS 1022–1X.

Carefully bend the leads and hold them. Carefully push the module in place.

Reconnect the HF connector (2), the leads to (3), (4), (5) and (6). Check on the adjacent module to make sure the leads are connected correctly.

Fit the screws (1).

Footnote
If flash-over problems occur after installing a tube, check the tube connectors. After installation of a new tube, flash-over might occur inside the tube. This problem will disappear after resetting the overload relay three or four times.

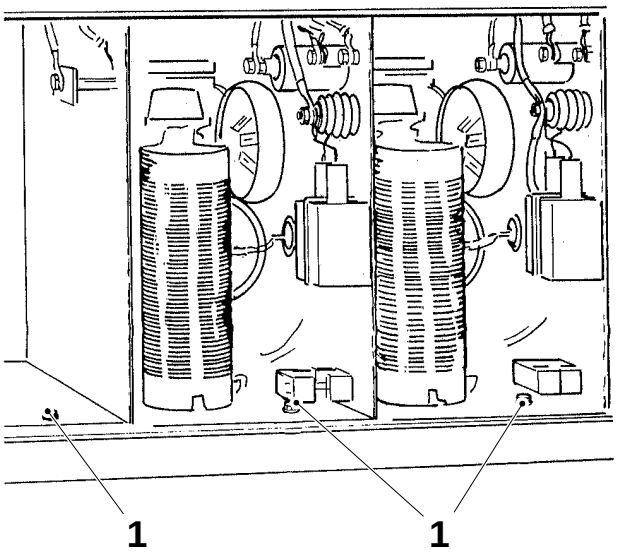

Fig. 1 TS oscillator module

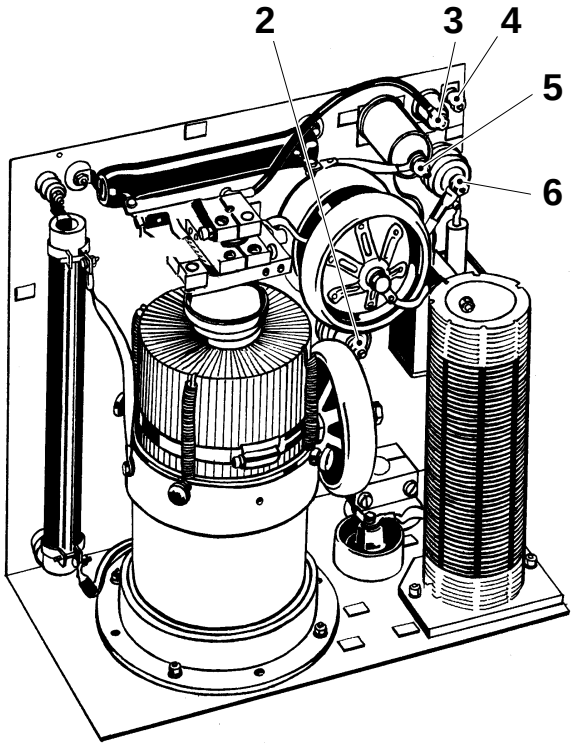

Fig. 2

1 Screw
2 HF connector
3 Filament voltage connection
4 Ground
5 Blocking voltage connection
6 High voltage connection

Cleaning/Checking

WARNING!
Always follow the safety precautions on page MS 1002–7X when working in the generator section!

Clean the high voltage section (1) with white spirit. Blow with dry compressed air.

Remove the fan and clean it.

Check all connections. Replace defective screws and nuts and secure them with lacquer.

1 High voltage section

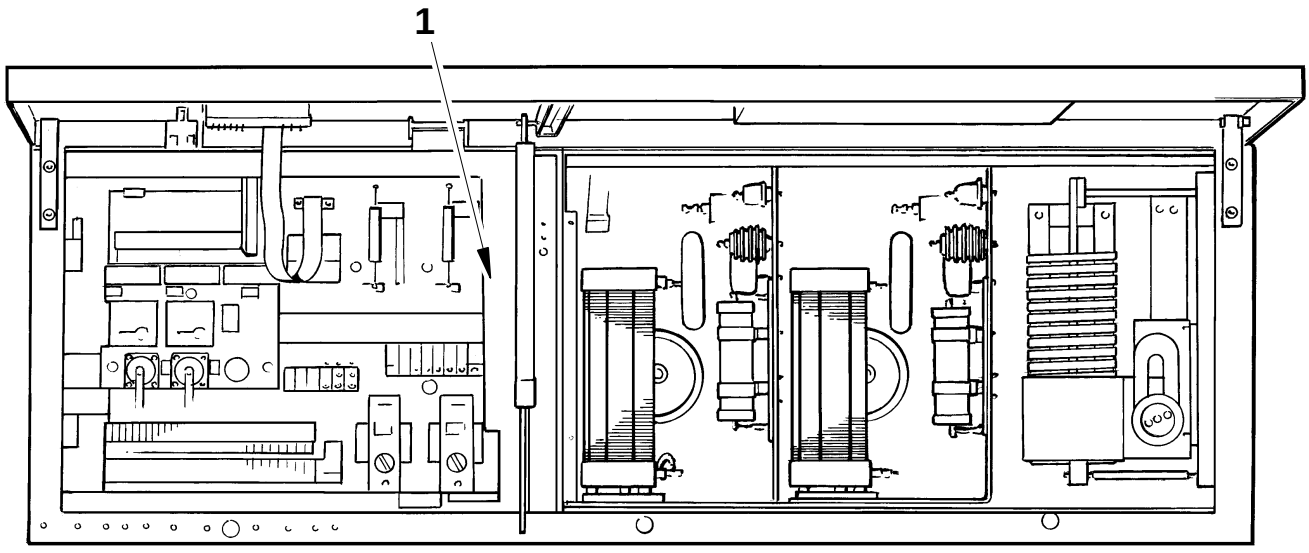

Checking

Check the contact rails and flex cables of the machine for signs of deterioration of insulation or mechanical wear. Tighten the screws at the contact points.

Cleaning

Undo the screws (1) on the side of the IH cabinet.

Remove the air filter (2) from the inside.

Blow the filter clean with compressed air, or, if it is excessively dirty, replace it.

Footnote
To replace the air filter, use the old filter as a template.

Blow the air intake clean **from the inside** with compressed air.

Fit the filter and close the doors.

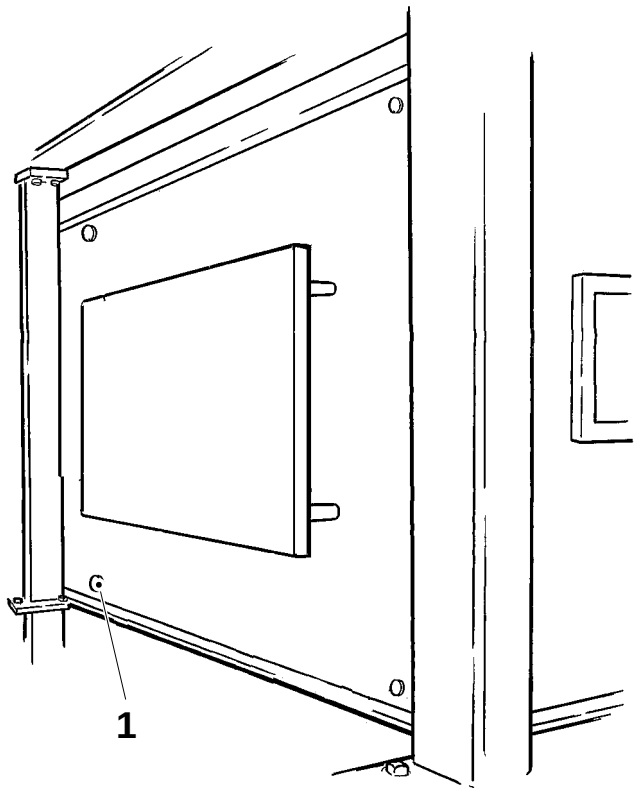

1 Screw
2 Air filter TP No 90264–345

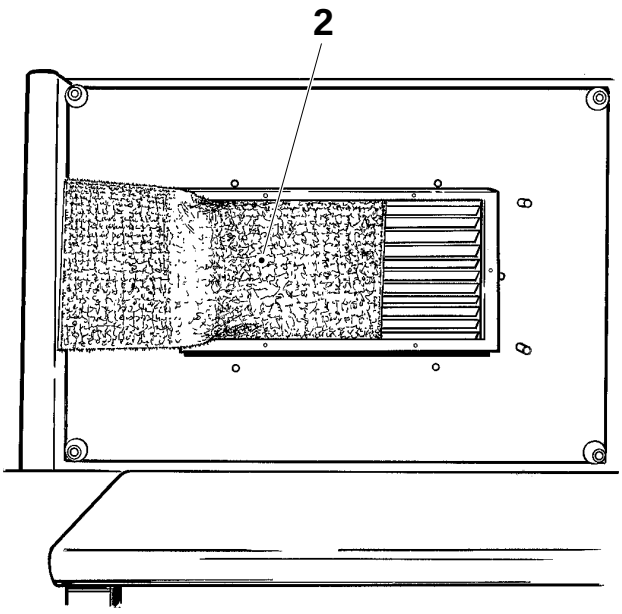

Setting

Set the following fuses to position **off**:

- F28 ABC Element, peroxide bath
- F29 ABC Air superheater
- F5 A Flap sealing
- F8 A Short stop element
- F10 A LS element
- F27 IH sealing

TS-sealing

Turn the **Service switch** to position 1.

Step up the machine program to step **Tube sealing**.

The IH circuit receives filament voltage.

Set fuse F27 to position **on**. The IH circuit receives high voltage.

Inch the machine at high speed or activate the IH circuit manually by means of a test button.

Check the sealing.

Pull tab sealing

Step up the machine program to step **Preheating pull tab device**.

The IH circuit receives filament voltage.

When the pre-set temperature for the tab strip has been reached, set fuse F27 to position **on**. The IH circuit receives high voltage.

Inch the machine at high speed or pull out packaging material from the pull tab supply.

Check the sealing.

Setting

Turn the following fuses to position **off**:

- F28 Element, peroxide bath
- F29 Air superheater
- F5 A Flap sealing
- F8 A Short stop element
- F10 A LS element
- Q27 IH sealing

TS sealing

Turn the **Service switch** to position 1.

Step up the machine program to step **Tube sealing**.

The IH circuit receives filament voltage.

Set monitor switch Q27 to position **on**. The IH circuit receives high voltage.

Inch the machine at high speed or activate the IH circuit manually by means of a test button.

Check the sealing.

Pull tab sealing

Step up the machine program to step **Preheating pull tab device**.

The IH circuit receives filament voltage.

When the pre-set temperature for the tab strip has been reached, set monitor switch Q27 to position **on**. The IH circuit receives high voltage.

Inch the machine at high speed or pull out packaging material from the pull tab supply.

Check the sealing.

Setting

TS generator

Sealing pulse start:	Fixed in program 104_8 respectively 304_8
Cutting start, left hand side:	Mechanically controlled cam
Phase sensor:	85% 1 s
Temperature sensor in oscillator section:	80°C
K125 Timer TS:	See page MS 1014–6X

Pull tab device generator

Sealing pulse start:	From sensor MB203 and cam on shaft of pull tab device
Sealing pulse duration at 220 V:	80 – 100 ms
Phase sensor:	85% 1 s
Temperature sensor in oscillator section:	80°C
K225 Timer:	See page MS 1014–6X.

Setting

TS generator

Sealing pulse start:	Fixed in program 114_8 respectively 314_8
Cutting start, left hand side:	Mechanically controlled cam
Phase sensor:	85% 1 s
Temperature sensor in oscillator section:	80°C
K125 Timer TS:	See page MS 1014–6X

Pull tab device generator

Sealing pulse start:	From sensor MB203 and cam on shaft of pull tab device
Sealing pulse duration at 220 V:	80 – 100 ms
Phase sensor:	85% 1 s
Temperature sensor in oscillator section:	80°C
K225 Timer:	See page MS 1014–6X.

Checking

Check that the preset values conform to those listed in the table.

Regulator	Designation	T, °C	L–C, °C	TV_s, s	X_p, %
Pre-sterilization	A4	270	–	–	–
Sterilization bath, water	A6	80	10	20	1.5
LS sealed tube	A8	305	20	20	1.5
Air superheater	A10	360	20	20	1.5
LS	A12	approx. 270	20	20	1.5
Air knife	A13	125	10	70	4.0
Steam	A14	125	–	–	–
Sterilization bath, peroxide (120V)	A30	70	–	–	–
SA	A202	approx. 290	20	20	1.5
*Sealing, tab strip	A202	approx. 175	20	20	3.0
*Dating unit I	A203	approx. 500	20	20	1.5
*Dating unit II	A204	approx. 500	20	20	1.5
*IS strip splice	A205	approx. 190	20	5	3.0
*Preheated counter jaw	A206	75	10	10	5.0

* = Machines with pull tab device
T = Preset temperature
Approx. = Values may vary depending on packaging material, web speed, strip, package volume
L–C = Alarm limit
TV_s = Derivation time
X_p = Proportionality band

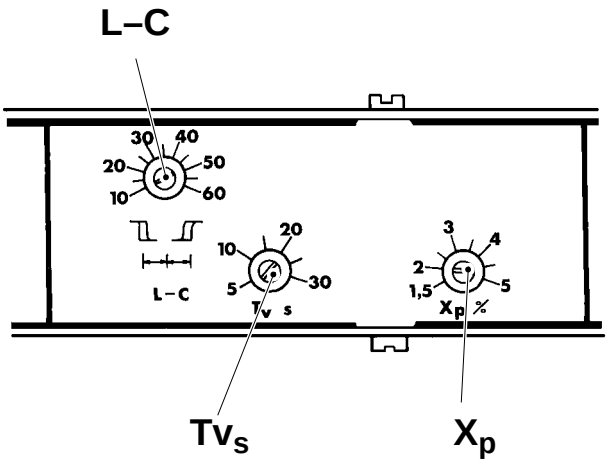

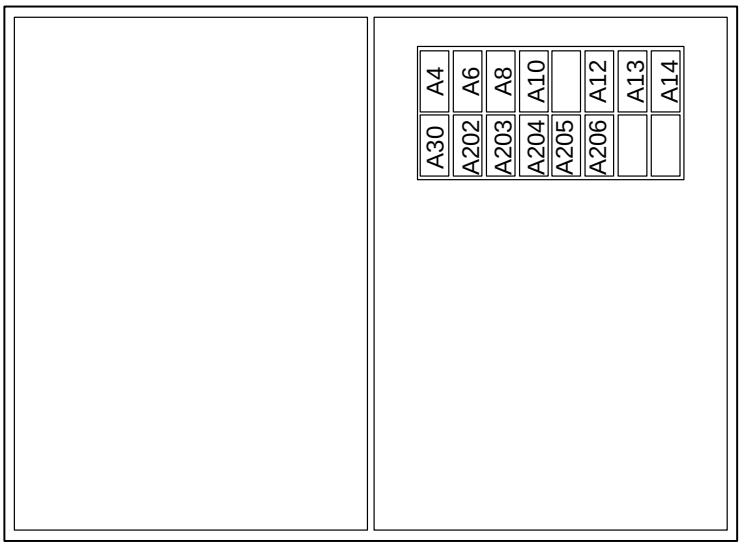

Checking

Check that the preset values conform to those listed in the table.

Regulator	Designation	T, °C	L–C, °C	TV_s, s	X_p, %
Pre-sterilization	A4	270	–	–	–
Sterilization bath, water	A6	80	10	20	1.5
LS sealed tube	A8	approx. 260	20	20	2.0
Air superheater	A10	360	20	20	1.5
Air super heater, preheating	A11	400	20	20	1.5
LS	A12	approx. 380	20	20	5.0
Air knife	A13	125	10	70	4.0
Steam	A14	125	–	–	–
Sterilization bath, peroxide	A30	70	–	–	–
SA	A202	approx. 290	20	20	1.5
*Sealing, tab strip	A202	175	20	20	3.0
*Dating unit I	A203	130	20	20	1.5
*Dating unit II	A204	130	20	20	1.5
*IS Strip splice	A205	190	20	10	5.0
*Pre-heated counter jaw	A206	75	10	10	5.0

* = Machines with pull tab device
T = Preset temperature
Approx. = Values may vary depending on packaging material, web speed, strip, package volume
L–C = Alarm limit
TV_s = Derivation time
X_p = Proportionality band

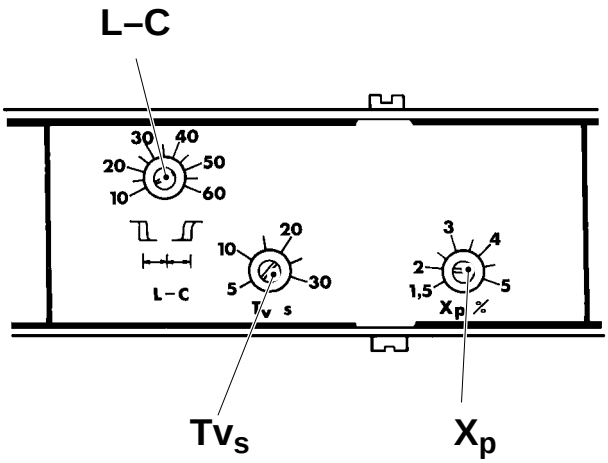

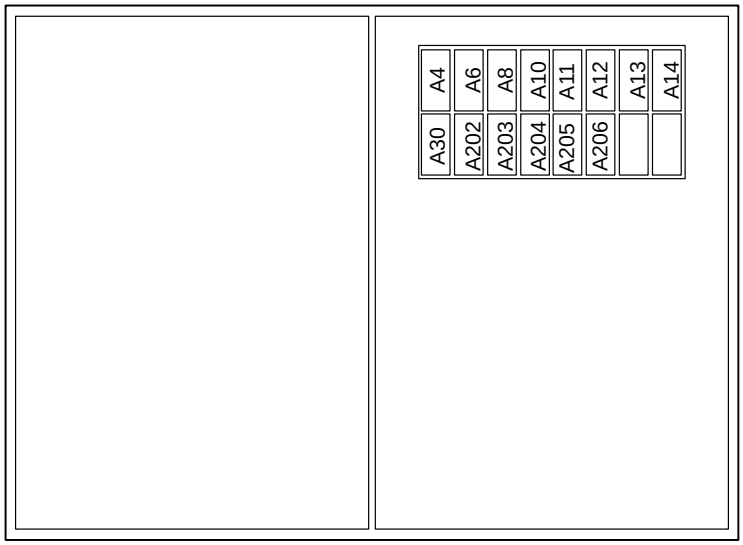

761

Checking/Cleaning

Cooling fan

Open the RH side door of the electrical cabinet. Engage the proximity switch and check that the cooling fan (2) functions. Close the door.

Open the LH side door of the electrical cabinet. Engage the proximity switch and check that the cooling fan functions. Close the door.

Turn the main switch to position **off** and padlock it.

To replace the cooling fan, first pull out and lift off the carriage. If available, use tool TP No 75542–101 fitted on the carriage, to lift it off.

Remove the plate inside the cassette, on the electrical cabinet side.

Mark the electrical wires to the cooling fan before disconnecting them. Replace the fan.

Refit.

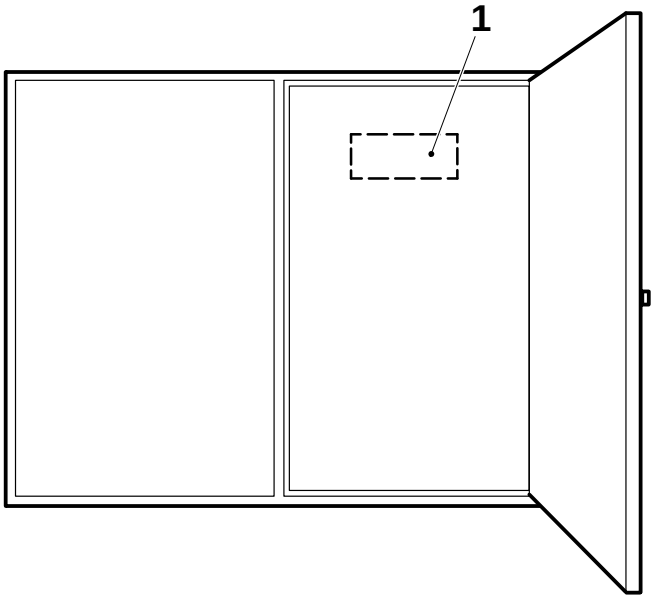

1 Air filter TP No. 90264–336
2 Cooling fan

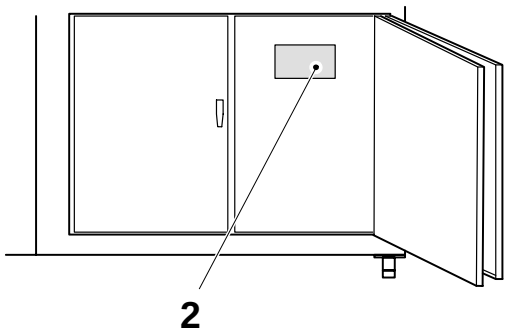

Air filter

Turn the main switch to position **off** and padlock it.

Open the RH door of the electrical cabinet.

Swing aside the pivot frame.

Remove the air filter (1) from its holder.
Blow the filter clean with compressed air or, if it is excessively dirty, replace it.

Use the old filter as a template to cut the new one correctly.

Clean the air intake and replace the filter.

Converting table, octal degrees

Octal degrees	Degrees	Octal degrees	Degrees	Octal degrees	Degrees	Octal degrees	Degrees	Octal degrees	Degrees	Octal degrees	Degrees
000	0	060	67.5	140	135.0	220	202.5	300	270.0	360	337.5
001	1.4	061	68.9	141	136.4	221	203.9	301	271.4	361	338.9
002	2.8	062	70.3	142	137.8	222	205.3	302	272.8	362	340.3
003	4.2	063	71.7	143	139.2	223	206.7	303	274.2	363	341.7
004	5.6	064	73.1	144	140.6	224	208.1	304	275.6	364	343.1
005	7.0	065	74.5	145	142.0	225	209.5	305	277.0	365	344.5
006	8.4	066	75.9	146	143.4	226	210.9	306	278.4	366	345.9
007	9.8	067	77.3	147	144.8	227	212.3	307	279.8	367	347.3
010	11.3	070	78.8	150	146.3	230	213.8	310	281.3	370	348.8
011	12.7	071	80.2	151	147.7	231	215.2	311	282.7	371	350.2
012	14.1	072	81.6	152	149.1	232	216.6	312	284.1	372	351.6
013	15.5	073	83.0	153	150.5	233	218.0	313	285.5	373	353.0
014	16.9	074	84.4	154	151.9	234	219.4	314	286.9	374	354.4
015	18.3	075	85.8	155	153.3	235	220.8	315	288.3	375	355.8
016	19.7	076	87.2	156	154.7	236	222.2	316	289.7	376	357.2
017	21.1	077	88.6	157	156.1	237	223.6	317	291.1	377	358.6
020	22.5	100	90.0	160	157.5	240	225.0	320	292.5	400	360
021	23.9	101	91.4	161	158.9	241	226.4	321	293.9		
022	25.3	102	92.8	162	160.3	242	227.8	322	295.3		
023	26.7	103	94.2	163	161.7	243	229.2	323	296.7		
024	28.1	104	95.6	164	163.1	244	230.6	324	298.1		
025	29.5	105	97.0	165	164.5	245	232.0	325	299.5		
026	30.9	106	98.4	166	165.9	246	233.4	326	300.9		
027	32.3	107	99.8	167	167.3	247	234.8	327	302.3		
030	33.8	110	101.3	170	168.8	250	236.3	330	303.8		
031	35.2	111	102.7	171	170.2	251	237.7	331	305.2		
032	36.6	112	104.1	172	171.6	252	239.1	332	306.6		
033	38.0	113	105.5	173	173.0	253	240.5	333	308.0		
034	39.4	114	106.9	174	174.4	254	241.9	334	309.4		
035	40.8	115	108.3	175	175.8	255	243.3	335	310.8		
036	42.2	116	109.7	176	177.2	256	244.7	336	312.2		
037	43.6	117	111.1	177	178.6	257	246.1	337	313.6		
040	45.0	120	112.5	200	180.0	260	247.5	340	315.0		
041	46.4	121	113.9	201	181.4	261	248.9	341	316.4		
042	47.8	122	115.3	202	182.8	262	250.3	342	317.8		
043	49.2	123	116.7	203	184.2	263	251.7	343	319.2		
044	50.6	124	118.1	204	185.6	264	253.1	344	320.6		
045	52.0	125	119.5	205	187.0	265	254.5	345	322.0		
046	53.4	126	120.9	206	188.4	266	255.9	346	323.4		
047	54.8	127	122.3	207	189.8	267	257.3	347	324.8		
050	56.3	130	123.8	210	191.2	270	258.8	350	326.3		
051	57.7	131	125.2	211	192.7	271	260.2	351	327.7		
052	59.1	132	126.6	212	194.1	272	261.6	352	329.1		
053	60.5	133	128.0	213	195.5	273	263.0	353	330.5		
054	61.9	134	129.4	214	196.9	274	264.4	354	331.9		
055	63.3	135	130.8	215	198.3	275	265.8	355	333.3		
056	64.7	136	132.2	216	199.7	276	267.2	356	334.7		
057	66.1	137	133.6	217	201.1	277	268.6	357	336.1		

Checking degree setting

With the degree scale at 0_8, the PLC inputs (1), see table, are to be off.

With the degree scale at 252_8, all these inputs are to be on.

Machine type	PLC inputs
TB	12110 – 12117
TBA	11700 – 11710

Fig. 1 TB

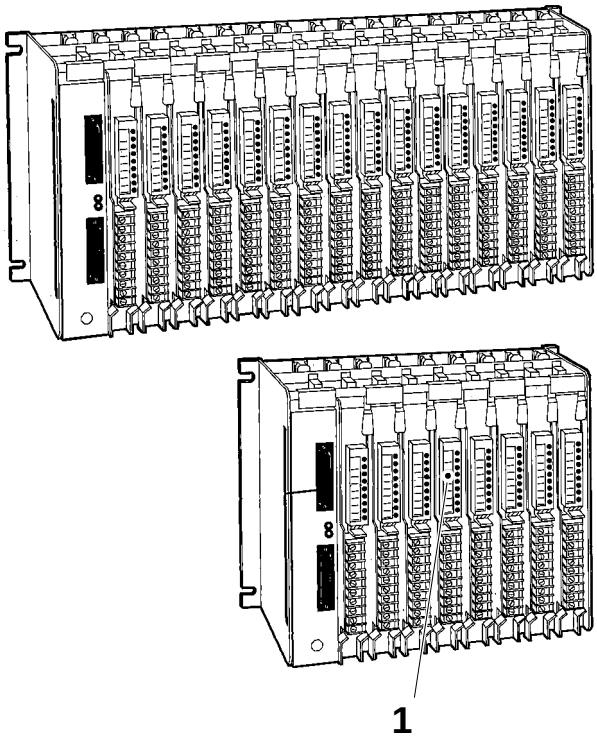

Fig. 2 TBA

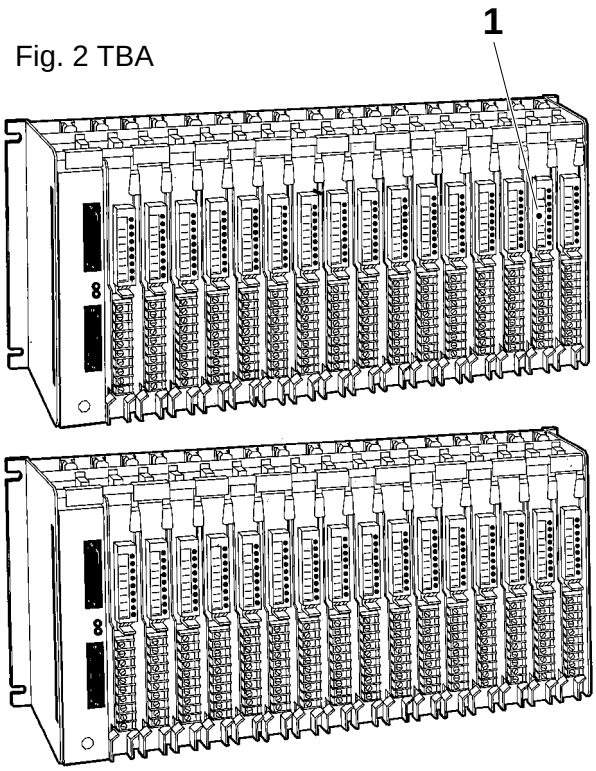

1 Input

Checking degree setting

With the degree scale at 0_8, the inputs E 00.00 – E 00.07 (1) are to be off.

With the degree scale at 252_8, all these inputs are to be on.

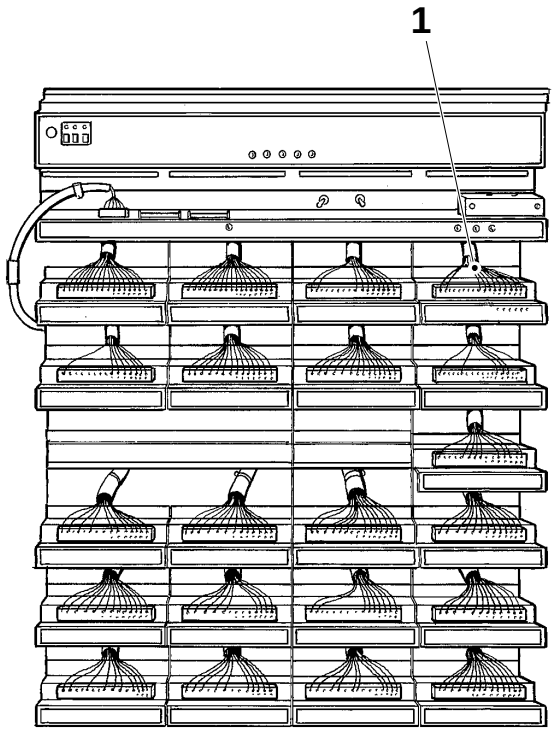

1 Input

Checking degree setting

With the display (1) at 0_8, the inputs A 10100 – A 10107 (2) are to be off.

With the display (1) at 252_8, all these inputs are to be on.

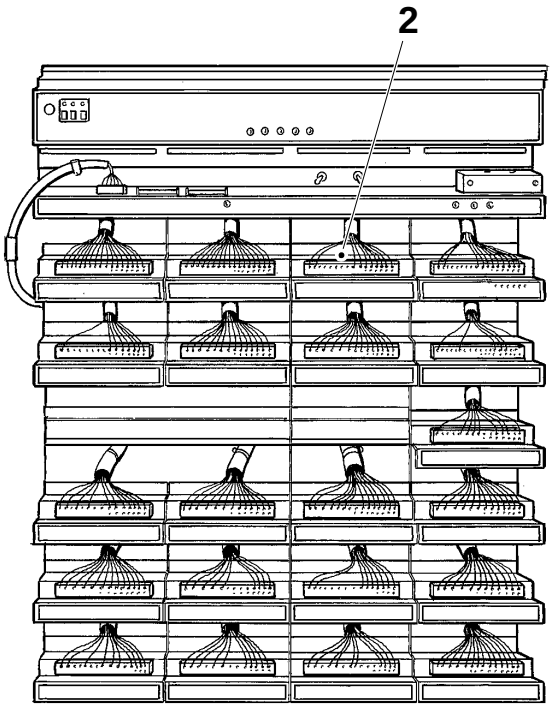

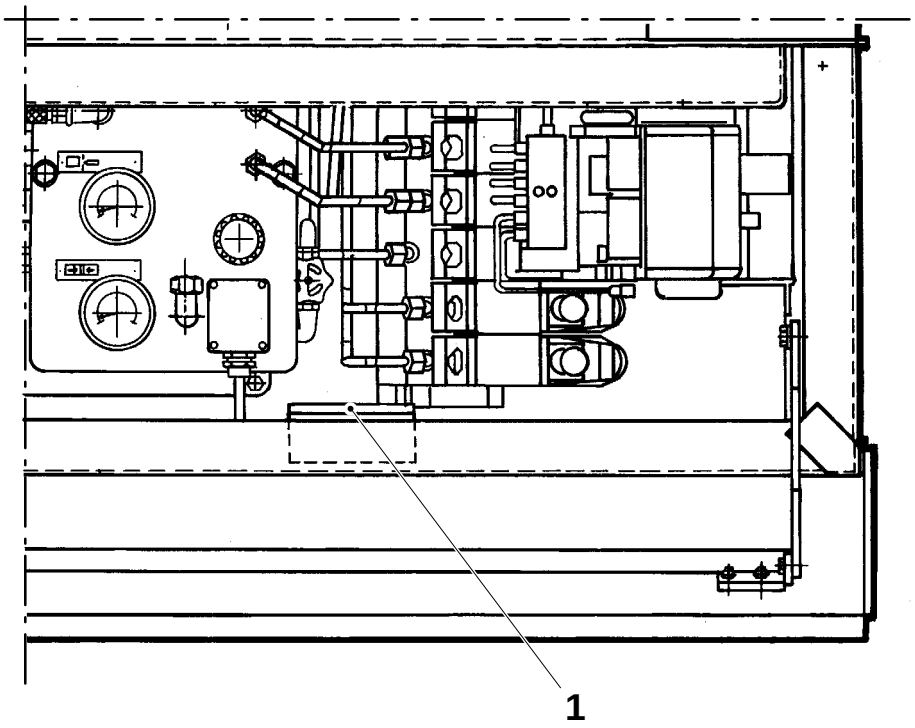

1 Display
2 Inputs

Degree setting

The zero position of the impulse transmitter must be set beforehand, see page MS 603–5X.

a) Crank the machine to exactly 0°.

b) Loosen the screws (1).

c) Turn the angle encoder (2) until the PLC inputs, see table, go off.

d) Crank the machine to 252_8, all these inputs are to be on.

e) Tighten the screws.

Machine type	PLC inputs
TB	12110 – 12117
TBA	11700 – 11710
TBA 1203	E 00.00 – E 00.07

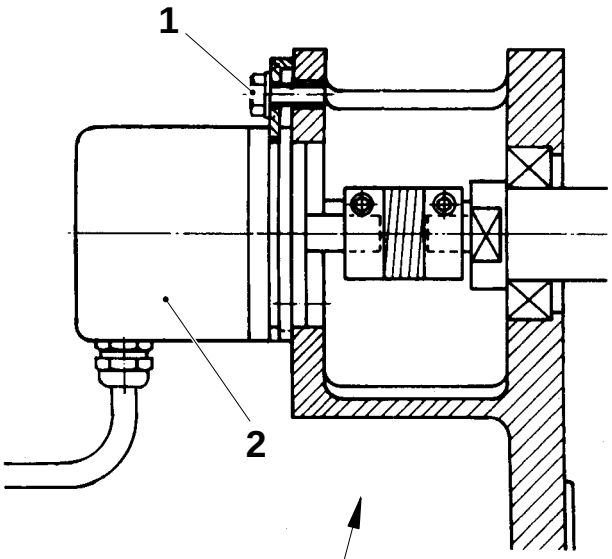

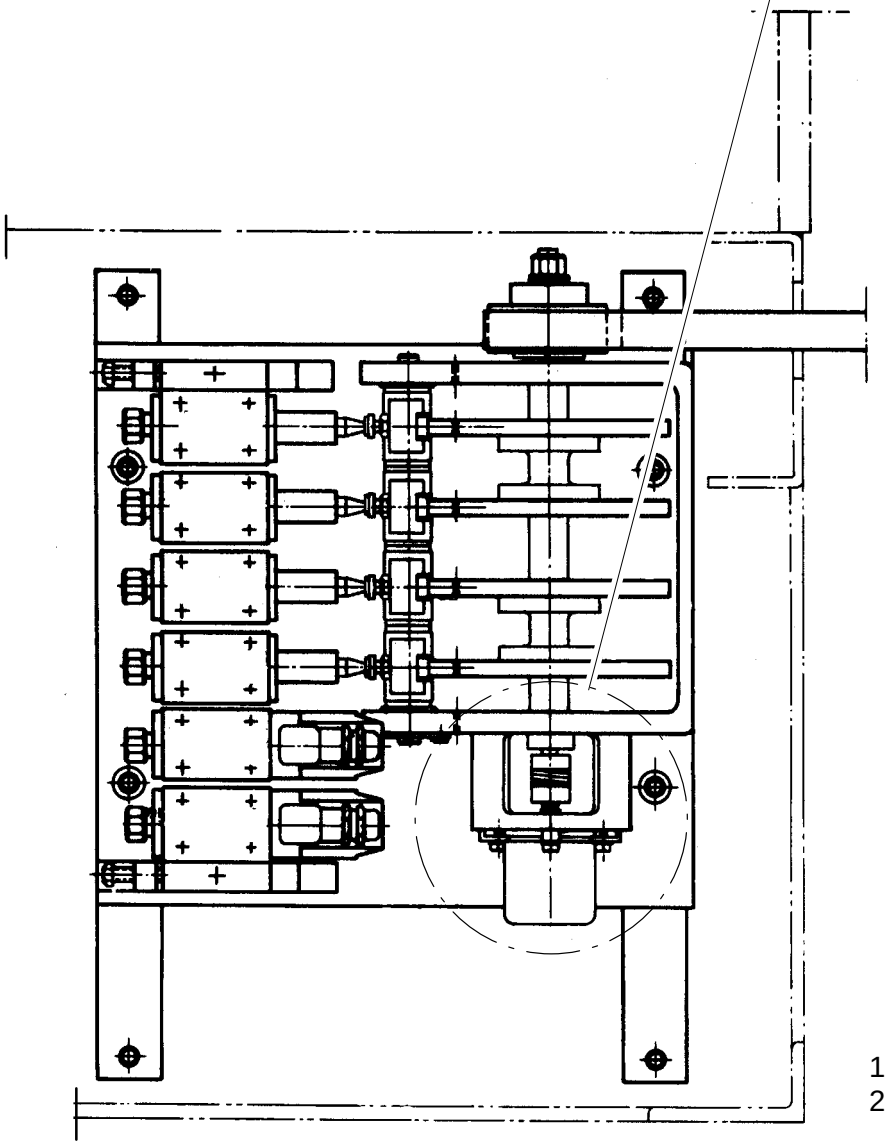

1 Screw
2 Angle encoder

Degree setting

The zero position of the impulse transmitter must be set beforehand, see page MS 603–5X.

a) Crank the machine to exactly 0°.

b) Loosen the screws (1).

c) Turn the angle encoder (2) until the display (3) shows 0_8 alternatively the PLC inputs A10100 – A10107 goes off.

d) Crank the machine to 252_8, all these inputs are to be on alt the display should show 252_8.

e) Tighten the screws.

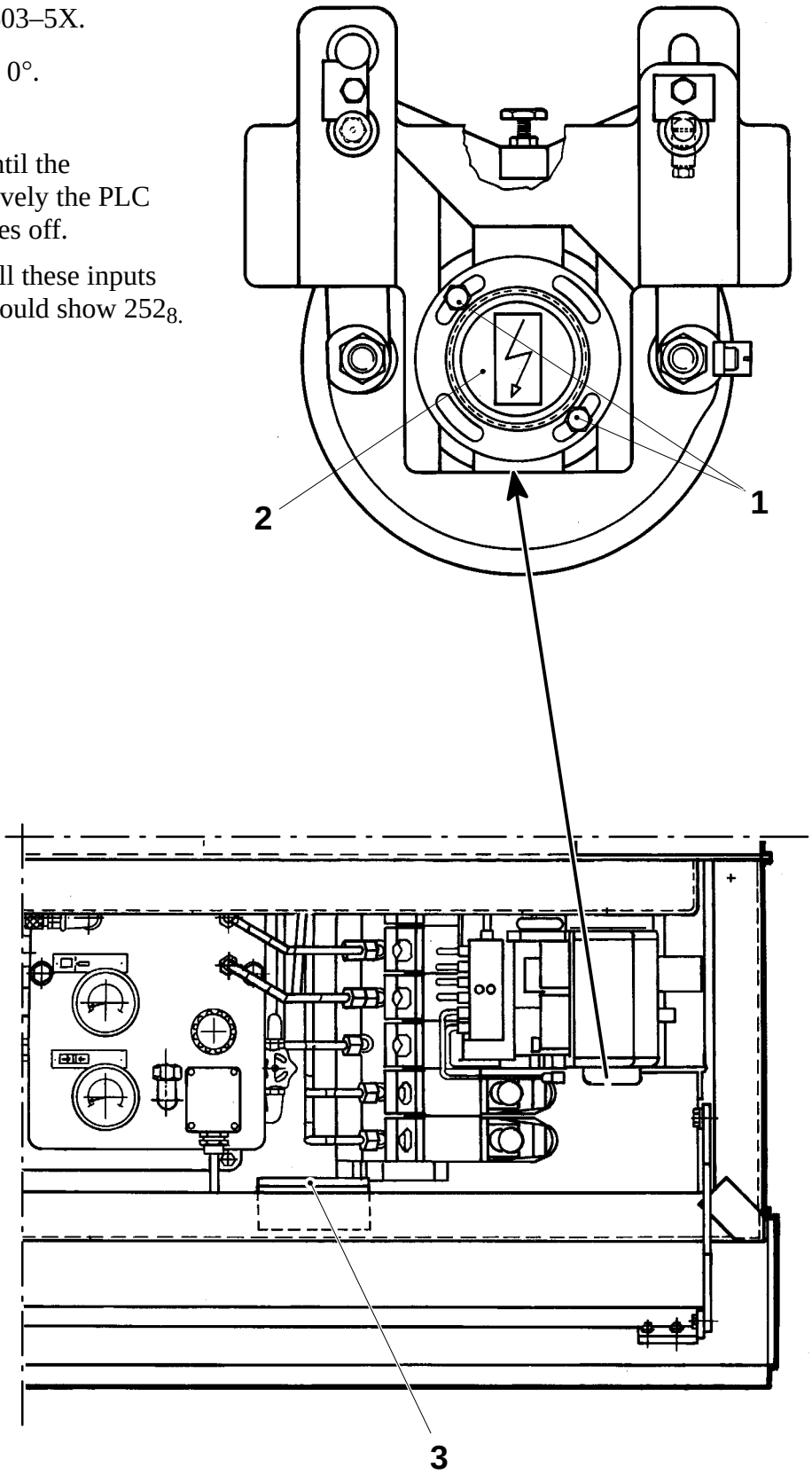

1 Screw
2 Angle encoder
3 Display

Checking degree setting

With the degree scale at 0_8, the PLC inputs (1), see table, are to be off.

With the degree scale at 252_8, all these inputs are to be on.

Machine type	PLC inputs
TB	12200 – 12207
TBA	11710 – 11717

Fig. 1 TB

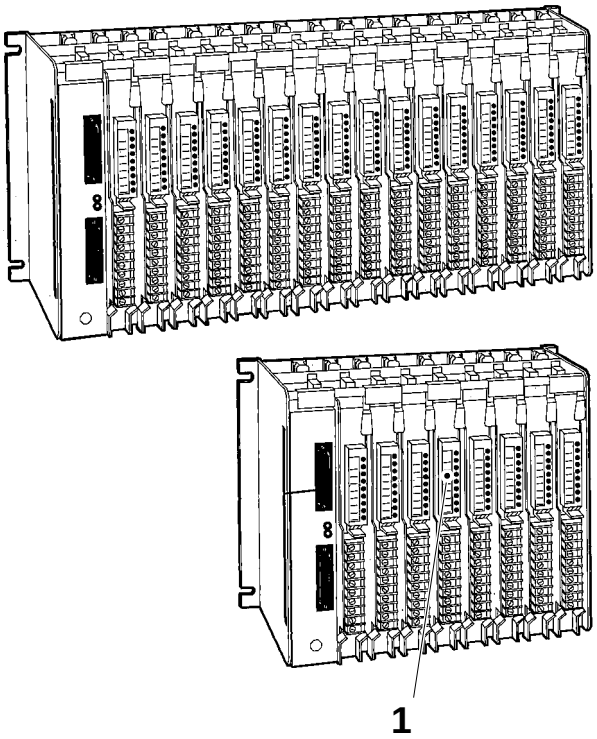

Fig. 2 TBA

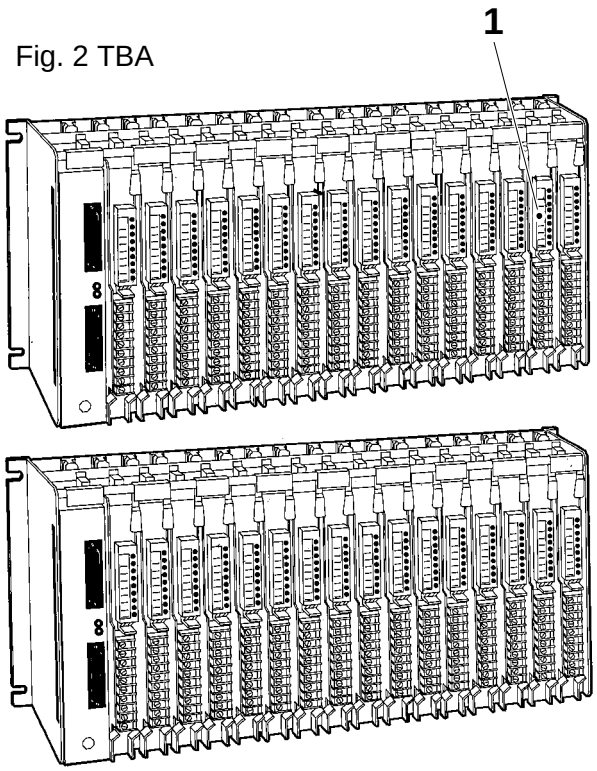

1 Input

Checking degree setting

With the degree scale at 0_8, the inputs E 01.00 – E 01.07 (1) are to be off.

With the degree scale at 252_8, all these inputs are to be on.

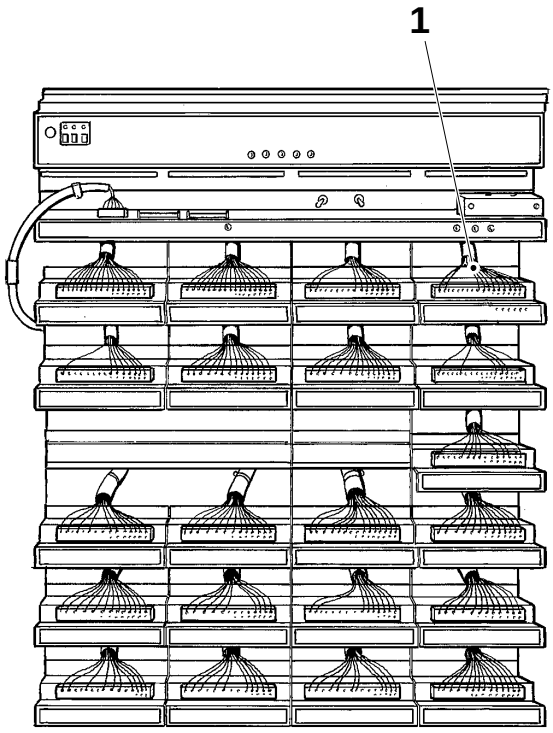

1 Input

Checking degree setting

With the display (1) at 0_8, the inputs A10200 – A10207 (2) are to be off.

With the display at 252_8, all these inputs are to be on.

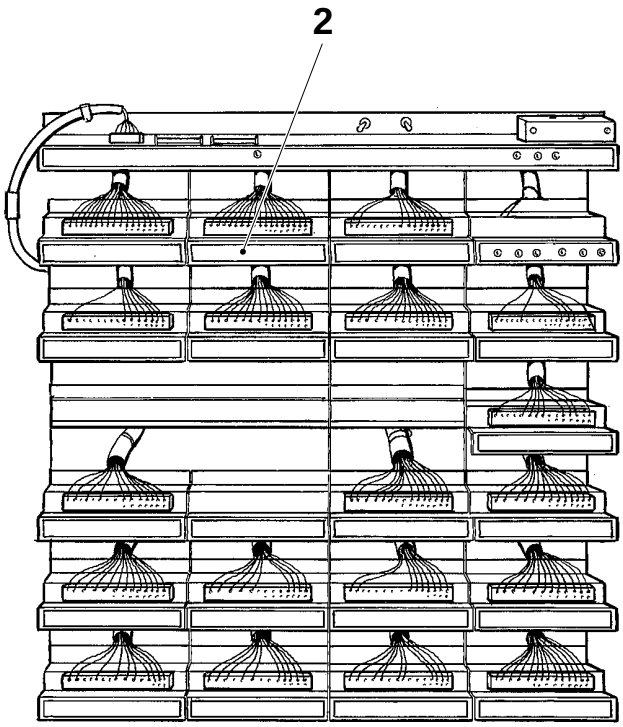

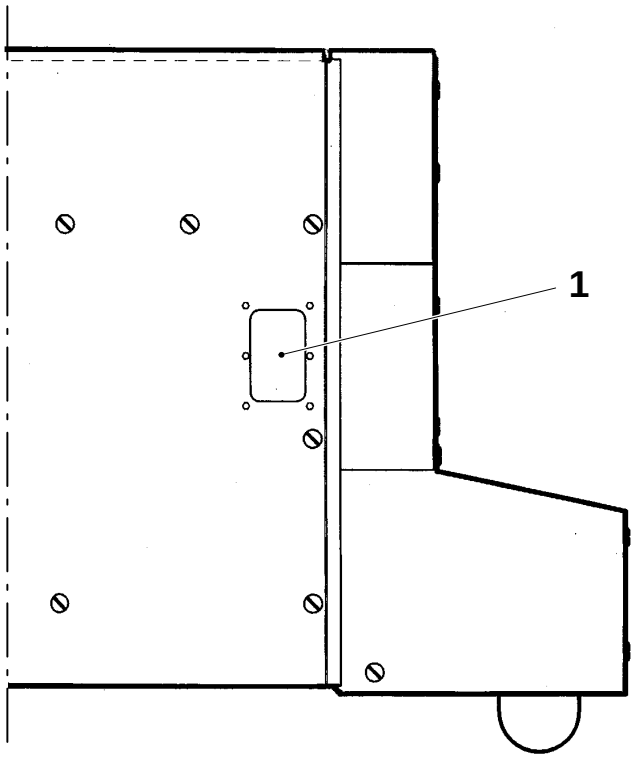

1 Display
2 Input

Degree setting

The main machine is to be synchronized with the final folder, see page MS 574–5X.

Crank the machine to 0_8 on the degree scale.

a) Loosen the two screws (1).

b) Turn the angle encoder until the PLC inputs, see table, go out.

c) Crank the machine to 252_8. All these PLC inputs are now to be on.

d) Tighten the screws carefully.

Machine type	PLC inputs
TB	12200 – 12207
TBA	11710 – 11717
TBA 1203	E 01.00 – E 01.07

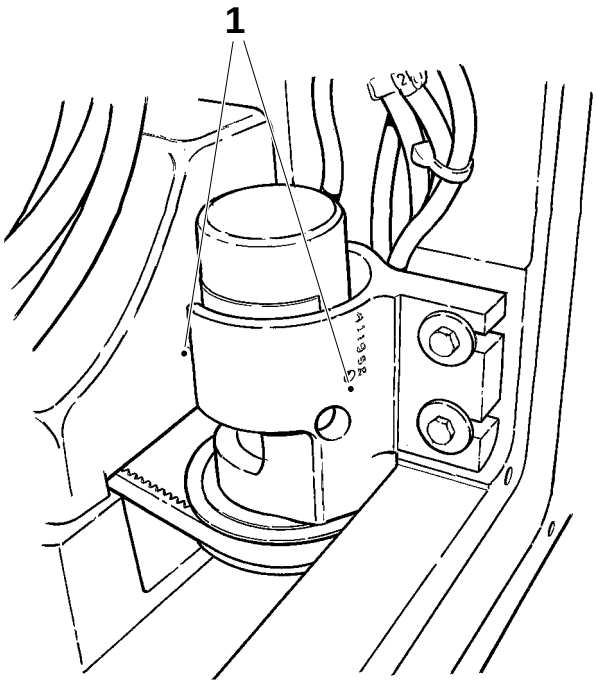

1 Screw

Degree setting

The main machine is to be synchronized with the final folder, see page MS 574–5X.

Crank the machine to 0_8 on the degree scale.

a) Loosen the two screws (1).

b) Turn the angle encoder until the PLC inputs A10200 – A10207 go out alternatively the display (2) should show 0_8.

c) Crank the machine to 252_8, all inputs are now to be on or the display should show 252_8.

d) Tighten the screws carefully.

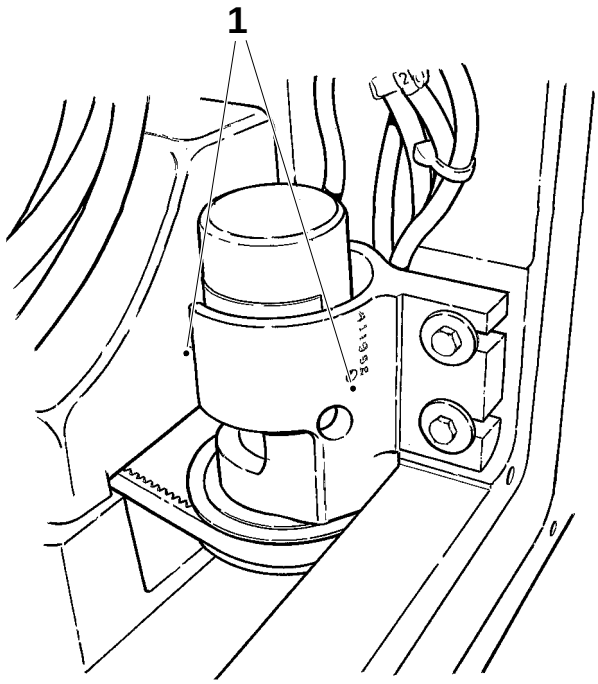

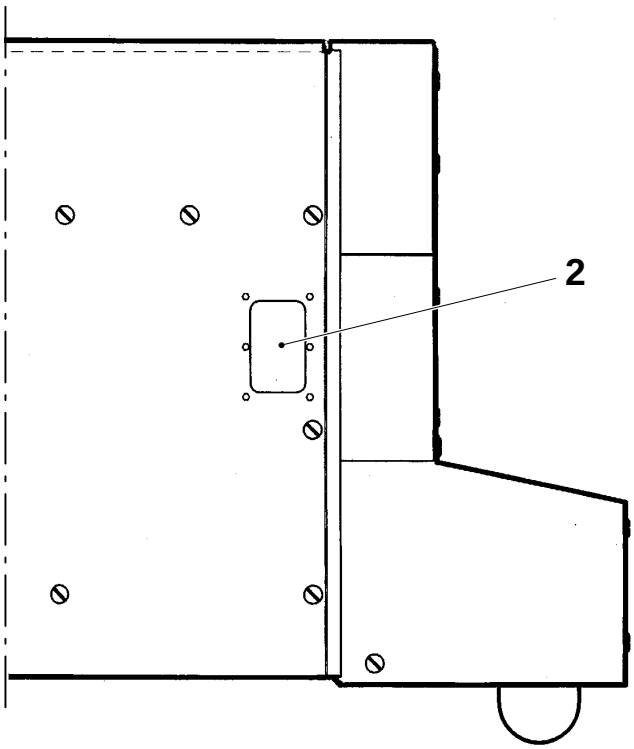

1 Screw
2 Display

Checking/Replacement/Cleaning

If the battery voltage drops below a certain level, **Stand-by low** begins to flash.
Then the battery has to be replaced.

Caution!
The power to the PLC unit must not be cut when the battery is removed.

If the **Memory fault** lamp (3) lights up, the program has to be reloaded.

A battery in storage (mounted in the PLC unit with the mains power switched on) retains 90% of the original power for three years. (Thus, changing the battery (1) annually, ensures intact PLC memory.)

A new battery retains the PLC memory without mains power being switched on for 6 months. When **Stand-by low** lamp (2) begins to flash, there is power left for approximately one week.

Footnote
Clean the battery connections before fitting a new battery.

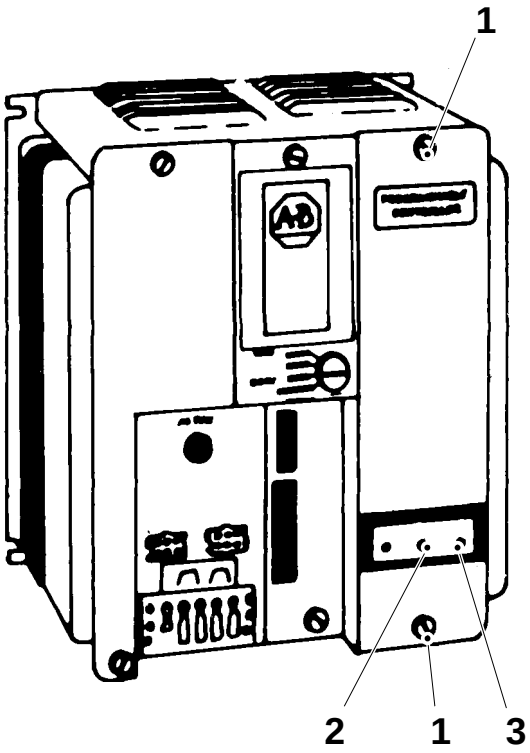

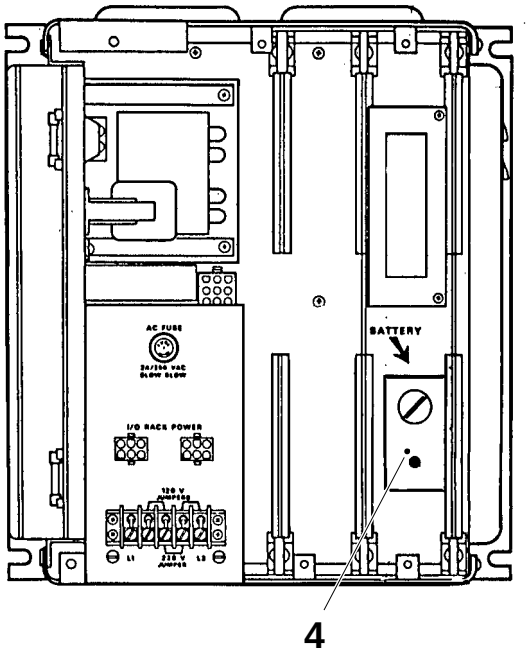

1 Battery location behind this plate
2 Battery power low (Stand-by low)
3 Memory fault
4 Battery holder for two alkaline batteries (TP No. 90023–73)

Checking/Replacement

When the battery voltage has dropped below a certain level, the **Battery** signal lamp (1) lights up. The battery **must** then be replaced.

Power to the TPMC unit **must not** be cut while the battery is being removed.

Caution!
If the mains power has been switched off, the replacement of the battery must not take more than 20 seconds. TPMC loses power after 20 seconds.

To replace the battery, loosen the screws (3) and remove the battery holder.

Footnote
Clean the battery connections before fitting a new battery.

The battery (TP No. 90 334–6), type ”AA”, **should be replaced every two years**, as a new battery is capable of preserving the PC memory for two years without any mains voltage.

Make sure to note the date (year and month) of the replacement on the sign.

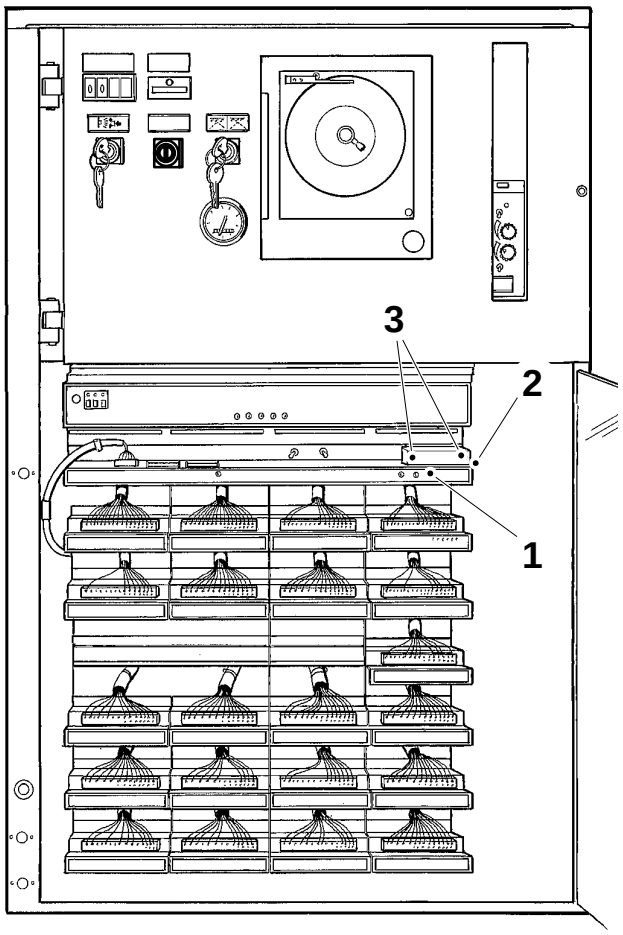

1 Battery signal lamp
2 Battery cover plate
3 Screw

Checking/Replacement

When the battery voltage has dropped below a certain level, the **Battery** signal lamp (1) lights up. The battery **must** then be replaced.

Power to the TPMC unit **must not be** cut while the battery is being removed.

Caution!
If the mains power is off, the replacement of the battery must not take more than 20 seconds. TPMC loses power after 20 seconds.

To replace the battery, loosen the screws (3) and remove the battery holder.

Footnote
Clean the battery connections before fitting a new battery.

The battery (TP No. 90 334–6), type ”AA”, **should be replaced every two years**, as a new battery is capable of preserving the PC memory for two years without any mains voltage.

Make sure to note the date (year and month) of the replacement on the sign.

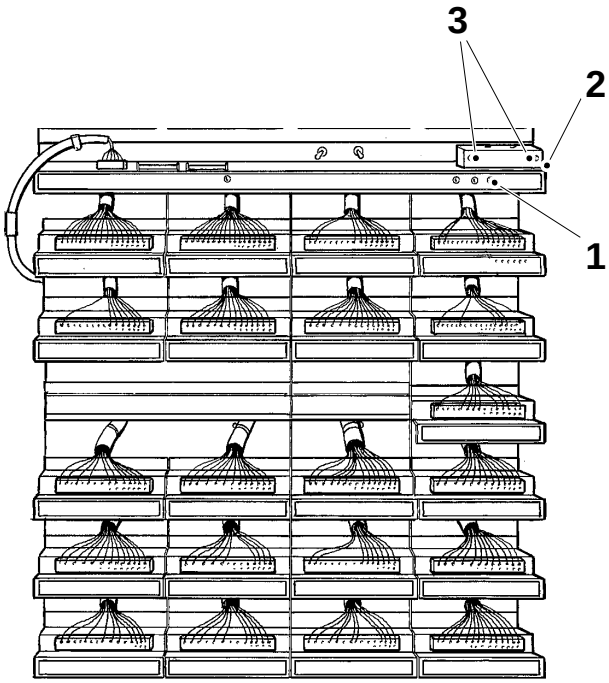

1 BATTERY signal lamp
2 Battery cover plate
3 Screw

Setting

Setting the speed range, machine at stand–still.

a) Turn the main switch to position **off** and padlock it.

b) Bridge (short-circuit) the contacts 1 – 2 on contactor K14 for the driven bending roller.

c) Disconnect the wire to the 01610 PLC output (1).

d) Switch on mains power. Turn up P3 (2) on the TP203 accommodation circuit board so the motor runs at high speed.

Slowly turn the potentiometer marked ”RI comp” (3) on the T406/TP1 control board until the speed becomes unsteady and begins to self-oscillate. Turn the potentiometer back so the speed just steadies itself.

Warning!
All metal components of the board are electrically live.

e) Adjust P3 on TP203 until the speed of the free motor shaft is 100 rpm. This is the minimum limit of the speed range.

If no tachometer (4) is available, stick a piece of tape (5) on the shaft and count revolutions during a defined period of time.

f) Switch off mains power. Connect the wire, see item c), to distribution terminal block M11 at the rear of the door holding the PLC unit (any one of the terminals may be used).
Switch on mains power. After 45 seconds, the motor will be running at top speed.
Adjust this speed to 130 rpm, by means of P4 (6) on TP203.

(Cont’d overleaf)

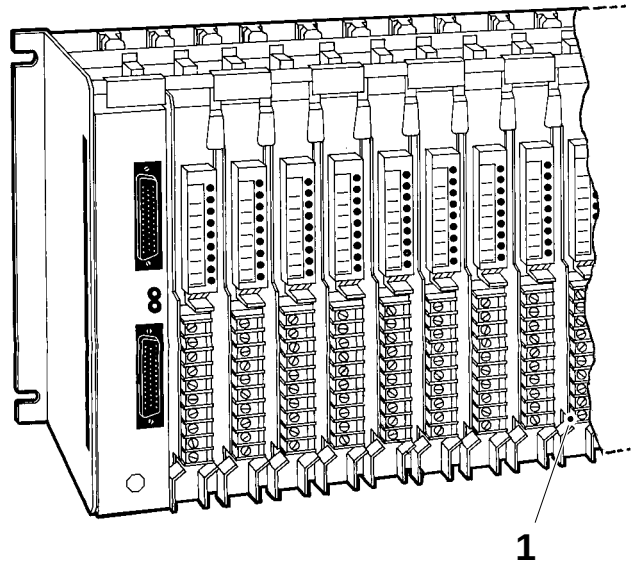

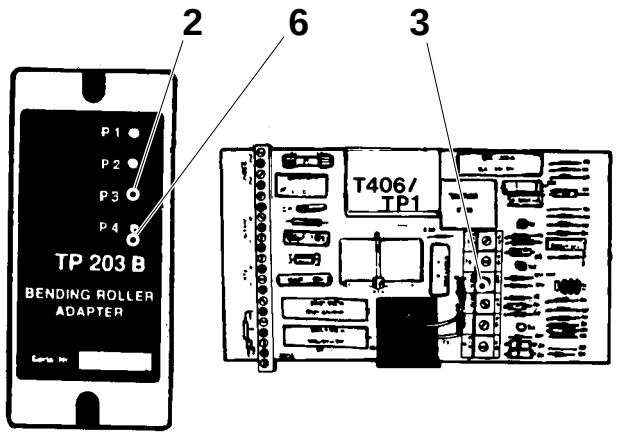

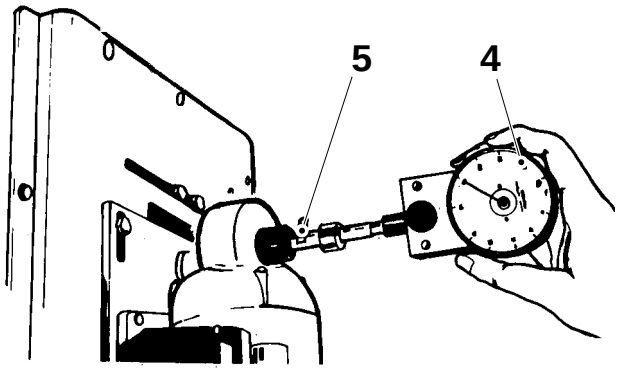

1 PLC output 01610
2 P3
3 Potentiometer RI comp
4 Tachometer
5 Piece of tape
6 P4

(Cont'd)

g) Switch off mains power. Reconnect the wire to the 01610 PLC output. Remove the bridge of the K14 contactor.

Footnote
If a PLC programming screen is available, command the output 01610 **Force off** instead of disconnecting the 01610 wire. At item f) give the **Force on** command.
When finished, give the **Force on remove** command.

100V→120V

Recommended pressures

Input air		MPa	0.6 – 0.7
Input cooling water		MPa	0.30 – 0.45
Steam, overpressure		kPa	170 ±30
LS sealing (basic setting) SA 180 – 250 ml		kPa	2.7
LS sealing (basic setting), SA 125 ml		kPa	2.0
LS sealing (basic setting), pull tab device		kPa	2.0
LS sealing, short stop		kPa	2.0
Jaw pressure, 180 – 250 ml		MPa	10.0 – 11.0
Jaw pressure, 125 ml		MPa	8.0 – 9.0
Jaw pressure, 200S ml		MPa	8.6 – 9.6
Cutting pressure		MPa	8.0 – 9.0
Squee-gee roller, 125 ml		kPa	230
Squee-gee roller, 180 – 250 ml		kPa	300
Air to spray container		kPa	300
Design correction		kPa	200 – 300
Flap sealing		kPa	150 – 200
Paper guide roller/120V: Brake, power feed roller		kPa	100 – 150
120V: Air to photocell unit		kPa	40
Product pressure (depends on pro–duct and local production conditions)		kPa	50 – 150
Product pressure, permitted variation during production		kPa	±10
Sterile air pressure		kPa	25 – 40
SA sealing (basic setting)		kPa	2.7
SA sealing, short stop		kPa	2.0
Tab strip sealing		MPa	0.3
IS strip sealing		MPa	0.3
Vacuum, IS strip	narrow strip wide strip	kPa kPa	

cont’d overleaf

cont'd

Vacuum	kPa	max –60
CAP sealing	MPa	0.3

Pressure switches

Sterile air	kPa	15
Input air	MPa	0.4

Temperatures

Hot water	°C	50 – 75
Sterilization bath, water	°C	80
120V: Sterilization bath, peroxide	°C	70
Air super heater	°C	360
LS, sealed tube, (basic setting)	°C	305
LS sealing, (basic setting)	°C	270
Air knife	°C	125
Pre-sterilization	°C	270
Input steam	°C	125 – 140
SA sealing (basic setting)	°C	290
SA sealing, 125 ml (basic setting)	°C	255
Tab strip sealing	°C	175
IS strip splice	°C	200
Pre-heated counter jaw (pull tab)	°C	75

Timers

Transversal seal	See page MS 1014–6X:2

130V

Recommended pressures

Input air		MPa	0.6 – 0.7
Input cooling water		MPa	0.30 – 0.45
Steam, overpressure		kPa	170 ±30
LS sealing (basic setting)		kPa	2.7
LS sealing, short stop		kPa	2.0
Jaw pressure, 180 – 284 ml		MPa	10.0 – 11.0
Jaw pressure, 125 ml		MPa	8.0 – 9.0
Jaw pressure, 200S ml		MPa	8.6 – 9.6
Cutting pressure		MPa	8.0 – 9.0
Squee-gee roller, 125 ml		kPa	230
Squee-gee roller, 180 – 284 ml		kPa	300
Air to spray container		kPa	300
Design correction		kPa	200 – 300
Flap sealing		kPa	150 – 200
Paper guide roller/Brake, power feed roller		kPa	100 – 150
Air to photocell unit		kPa	40
Product pressure (depends on product and local production conditions)		kPa	50 – 150
Product pressure, permitted variation during production		kPa	± 10
Air to peroxide container		kPa	20 – 30
Sterile air pressure		kPa	25 – 40
SA sealing (basic setting)		kPa	2.7
SA sealing, short stop		kPa	2.0
Tab strip sealing		MPa	0.3
IS strip sealing		MPa	0.3
Vacuum, IS strip	narrow strip	kPa	–20
	wide strip	kPa	±0
Vacuum		kPa	min. 40
CAP sealing		MPa	0.3

cont’d overleaf

cont'd

Pressure switches

Sterile air	kPa	15
Input air	MPa	0.4

Temperatures

Hot water	°C	50 – 75
Sterilization bath, water	°C	80
Sterilization bath, peroxide	°C	70
Air super heater	°C	360
Air super heater, preheating	°C	400
LS, sealed tube, (basic setting)	°C	260
LS sealing, (basic setting)	°C	380
Air knife	°C	125
Pre-sterilization	°C	270
Input steam	°C	125 – 140
SA-sealing (basic setting)	°C	290
SA-sealing, 125 ml (basic setting)	°C	255
Tab strip sealing	°C	175
IS strip splice	°C	200
Pre-heated counter jaw (pull tab)	°C	75
Dating unit (pull tab)	°C	130

Timers

Transversal seal	See page MS 1014–6X:2

cont'd overleaf

cont'd

Noise declaration

TBA/9 with strip applicator:

Sound power level (acc. to ISO 3746)	dB (A)	94 ± 4
(Sound pressure level at optimal room conditions)	dB (A)	76

TBA/9 with pull tab device

Sound power level (acc. to ISO 3746)	dB (A)	96 ± 4
(Sound pressure level at optimal room conditions)	dB (A)	77

Lubrication

The table below lists only a selection of lubricants with their respective designations. Comparable lubricants from other suppliers may be selected with the aid of the lubricant specifications (document No in the table).

Lubricant specifications may be ordered from:
Tetra Pak, R & D Services AB
Technical Standardization
Ruben Rausings gata
221 86 LUND, Sweden.

Lubricant Code	Document No	Material No (internal TP designation)	Part No (used when ordering from TP)	Example	
				Supplier	Product designation
A Motoroil	M 1251.122	51122–85	90 296–28	BP Esso Statoil Mobil Shell Caltex/ Texaco Optimol	Vanellus FE 10W–30 Essolube XD–3 10W–30 PowerWay D2 10W–30 Delwac 1400 Super 10W–30 Myrina TX 10W–30 Ursa LA 10W –30 Non Plus Ultra 10W–40
B High-pressure oil	M 1254.322	54322–220	90 296–73 90 296–78	BP Esso Statoil Mobil Shell Caltex/ Texaco Imperial Klüber Optimol	Energol GR–XP 220 Spartan EP 220 LoadWay EP 220 Mobilgear 630 Omala oil 220 Meropa Lubricant 220 Tribol ET 280–220 Lamora 220 Optigear 5150 VG 220
		54322–150 For use in production plant with start temperature below 5°C.	90 296–72	BP Esso Statoil Mobil Shell Caltex/ Texaco Imperial Klüber Optimol	Energol GR–XP 150 Spartan EP 150 LoadWay EP 150 Mobilgear 629 Omala oil 150 Meropa Lubricant 150 Tribol ET 280–150 Lamora 150 Optigear 5120 VG 150
C Hydraulic oil	M 1252.122	52122–32	90 296–53	BP Esso Statoil Mobil Shell	Bartran HV 32 Univis N 32 HydraWay HV 32 DTE Oil 13 Tellus Oil T 32

Table cont'd overleaf

Cont'd from previous page

Lubricant Code	Document No	Material No (internal TP designation)	Part No (used when ordering from TP)	Example	
				Supplier	Product designation
D Mist lubrication oil	M 1251.822	51822–37	90 296–80	BP Esso Statoil Mobil Shell Caltex/ Texaco	Autran GM – MP ATF Dexron TransWay DX II ATF 220 ATF Dexron II Texamatic Fluid (DEXRON II)
E Compounded cylinder oil	M 1254.922	54922–460	90 296–77 90 296–2	BP Esso Statoil Mobil Shell Caltex/ Texaco	Energol AC–C460 Cylesso TK 460 CylWay FZ 460 600W Super Cylinder Oil Valvata Oil J460 Vanguard Cylinder Oil
F Litihum, grease EP type	M 1255.115	55115–20	90 296–68	BP Esso Statoil Mobil Shell Klüber Optimol	Energrease LS EP 2 Esso MP Grease/ Beacon EP 2 UniWay EP 2N Mobillux EP 2 Grease 1344 LiEP 2 Centoplex 2 EP Longtime PD 2
H High-pressure oil	M 1254.322	54322–320	90 296–75 90 296–76 (20 l)	BP Esso Statoil Mobil Shell Caltex/ Texaco Imperial Klüber Optimol	Energol GR–XP 320 Spartan EP 320 LoadWay EP 320 Mobilgear 632 Omala oil 320 Meropa Lubricant 320 Tribol ET 280–320 Lamora 320 Optigear 5180 VG 320
		54322–220 For use in production plant with start temperature below 5°C.	90 296–73 90 296–78	BP Esso Statoil Mobil Shell Caltex/ Texaco Imperial Klüber Optimol	Energol GR–XP 220 Spartan EP 220 LoadWay EP 220 Mobilgear 630 Omala oil 220 Meropa Lubricant 220 Tribol ET 280–220 Lamora 220 Optigear 5150 VG 220

Table cont'd overleaf

Cont’d from previous page

Lubricant Code	Document No	Material No (internal TP designation)	Part No (used when ordering from TP)	Example	
				Supplier	Product designation
K Circulation oil	M 1254.942	54942–100	90 296–15	BP Esso Statoil Mobil Shell Caltex/ Texaco Imperial Klüber	Energol CS 100 Turbesso 100 TurbWay 100 DTE Oil Heavy Tellus Oil 100 Regal Oil R & O 100 Tribol 775 Crucolan 100
L Silicon grease	M 1255.322	55322–30	90 296–9	Dow Klüber	Dow Corning 7 Compound Unisilikon L 250 L
M Litihum, grease EP type	M 1255.112	55112–10	90 296–70	BP Esso Statoil Mobil Klüber Optimol	Energrease LS EP 1 Beacon EP 1 UniWay EP 1 Mobillux EP 1 Centoplex 1 EP Longtime PD 1
O Lithium–complex grease	M 1255.122	55122–30	90 296–61	BP Esso Statoil Imperial	Energrease LS 3 Unirex N3 UniWay HT–63 Molub–Alloy ET 860–220
P Synthetic compressor oil	M 1254.632	54632–68	90 296–54	BP Esso Statoil Mobil Shell Caltex/ Texaco	Energol RC–R68 Compressor oil 68 CompWay 68 Rarus 427 Corena Oil H 68 Compressor Oil VDL 68

9309

Passivation

In case the peroxide system has been polluted, all internal surfaces in contact with the peroxide must be treated with nitric acid in order to obtain a thin protective oxide film.
Passivation is to be carried out whenever service activities in the peroxide system have taken place.

Preparations

Caution!
Always observe the safety precautions on MS 001 page 5 – 8 when handling acids, alkalis and hydrogen peroxide.

Pull out the packaging material web from the peroxide bath and the aseptic chamber.

Clean the peroxide filters, see page MS 183–3X, as well as the filling filter of the peroxide tank. Remove any dirt. If there are any stabilizer deposits on the sqee-gee rollers, replace the rollers.

Thereafter, seal:

- the suction valve (1), peroxide bath/drying chamber by means of seal disc TP No. 752099,
- the membrane valve (2),
- the packaging material web entry (3) into the peroxide bath,
- the passage (4) from the peroxide bath to the drying chamber.

In addition to the sealing disc, use packaging material and adhesive tape as sealing material.

(Cont'd overleaf)

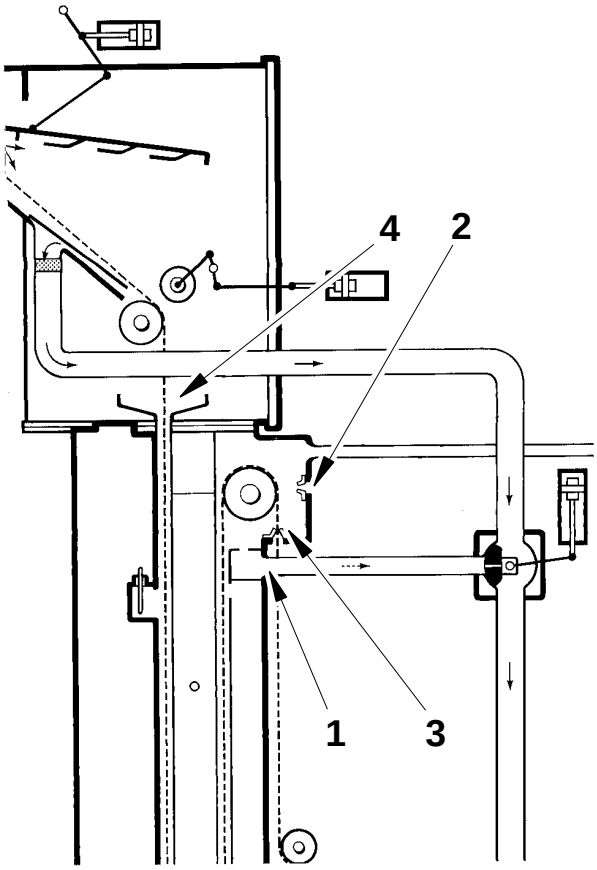

1 Suction valve
2 Membrane valve
3 Packaging material web entry
4 Passage, peroxide bath/drying chamber

(Cont'd)

Start with circulation of drinking water

Empty the peroxide tank and fill it with 25 litres of water.

Set the circulation pump overload protection Q82, located behind the left hand door of the electrical cabinet, in position 0.

Activate the peroxide pump contactor K82 by bridging TPMC outputs A116.06 and A116.A2.

Close the peroxide bath drain valve by opening valve Y5 on the valve panel.

Open the topping-up valve Y18 on the valve panel.

Start the circulation pump by changing the overload protection to position 1.

Let the water circulate for 10 minutes.

Check if there is any leakage.
Empty the peroxide tank.

Proceed with degreasing

Caution!
When mixing alkali and water, the alkali must always be added to the water – never the other way around!

Degrease by means of 25 litres of 5% sodium hydroxide (NaOH) at room temperature.

The water in the water bath (the water warming the peroxide) must be at room temperature. To achieve this, change the water.

Degreasing is carried out in the same way as circulating the water. Degreasing is to go on for two hours with a one minute interruption every 15 minutes.

Thereafter, rinse with drinking water for at least 3 x 5 minutes, changing the water every five minutes. Check that the pH value of the outcoming rinsing water is not more than 0.5 units higher than that of the incoming water. If required, rinse once more.

Finish with passivation

Caution!
When mixing acid and water, the acid must always be added to the water – never the other way around!

Passivation is carried out with 25 l of 33% nitric acid (HNO_3) at room temperature, in the same way as degreasing.

Rinse with drinking water until the pH value of the outcoming rinsing water is not less than 0.5 units lower than that of the incoming water. If required, rinse once more.

After the last water rinse, rinse once more by circulating de-ionized or distilled water for five minutes.

Remove the sealing disc and the rest of the material used for sealing purposes.

Fill the tank with peroxide. Test-run the machine and check the peroxide concentration, section N "Sterilization liquid".

The machine is now ready for production

Check the peroxide concentration at intervals shorter than normal during the first 24 hours.

Passivation

In case the peroxide system has been polluted, all internal surfaces in contact with the peroxide must be treated with nitric acid in order to obtain a thin protective oxide film.
Passivation is to be carried out whenever service activities in the peroxide system have taken place.

Preparations

Caution!
Always observe the safety precautions on MS 001 page 5 – 8 when handling acids, alkalis and hydrogen peroxide.

Pull out the packaging material web from the peroxide bath and aseptic chamber.

Clean the peroxide filters, see page MS 183–3X, as well as the filling filter of the peroxide tank. Remove any dirt. If there are any stabilizer deposits on the sqee-gee rollers, replace the rollers.

Thereafter, seal:

- the suction valve (1), peroxide bath/drying chamber by means of sealing disc TP No. 752099,
- the membrane valve (2),
- the packaging material web entry (3) into the peroxide bath,
- the passage (4) from the peroxide bath to the drying chamber.

In addition to the sealing disc, use packaging material and adhesive tape as sealing material.

(Cont'd overleaf)

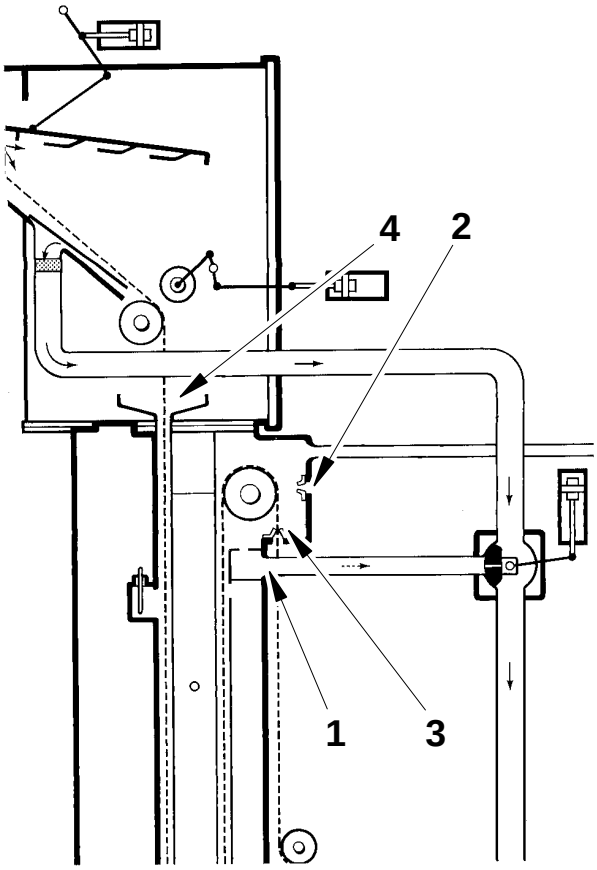

1 Suction valve
2 Membrane valve
3 Packaging material web entry
4 Passage, peroxide bath/drying chamber

(Cont'd)

Start with circulation of drinking water

Empty the peroxide tank and fill it with 25 litres of water.

Set the circulation pump overload protection Q82, located behind the left hand door of the electrical cabinet, in position 0.

Activate the peroxide pump contactor K82 by bridging TPMC outputs A116.06 and A116.A2.

Close the peroxide bath drain valve by opening valve Y5 on the valve panel.

Open the topping-up valve Y18 on the valve panel.

Start the circulation pump by changing the overload protection to position 1.

Let the water circulate for 10 minutes.

Check if there is any leakage.

Empty the peroxide tank.

Proceed with degreasing

Caution!
When mixing alkali and water, the alkali must always be added to the water – never the other way around!

Degrease by means of 25 litres of 5% sodium hydroxide (NaOH) at room temperature.

The water in the water bath (the water warming the peroxide) must be at room temperature. The simplest way to achieve this is to change the water.

Degreasing is carried out in the same way as circulating the water. Degreasing is to go on for two hours with a one minute interruption every 15 minutes.

Thereafter, rinse with drinking water for at least 3 x 5 minutes, changing the water every five minutes. Check that the pH value of the outcoming rinsing water is not more than 0.5 units higher than that of the incoming water. If required, rinse once more.

Finish with passivation

Caution!
When mixing acid and water, the acid must always be added to the water – never the other way around!

Passivation is carried out with 25 litres of 33% nitric acid (HNO_3) at room temperature, in the same way as degreasing.

Rinse with drinking water until the pH value of the outcoming rinsing water is not less than 0.5 units lower than that of the incoming water. If required, rinse once more.

After the last water rinse, rinse once more by circulating de-ionized or distilled water for five minutes.

Remove the sealing disc and the rest of the material used for sealing purposes.

Fill the tank with peroxide. Test-run the machine and check the peroxide concentration, see the OS book, section N "Sterilization liquid".

The machine is now ready for production

Check the peroxide concentration at intervals shorter than normal during the first 24 hours.

Passivation

In case the peroxide system has been polluted, all internal surfaces in contact with the peroxide must be treated with nitric acid in order to obtain a thin protective oxide film.
Passivation is to be carried out whenever service activities in the peroxide system have taken place.

Preparations

Caution!
Always observe the safety precautions on MS 001 page 5 – 8 when handling acids, alkalis and hydrogen peroxide.

Pull out the packaging material web from the peroxide bath and aseptic chamber.

Clean the peroxide filters, see page MS 183–3X, as well as the filling filter of the peroxide tank. Remove any dirt. If there are any stabilizer deposits on the sqee-gee rollers, replace the rollers.

Thereafter, seal:

- the suction valve (1), peroxide bath/drying chamber by means of sealing disc TP No. 752099,
- the membrane valve (3),
- the packaging material web entry (2) into the peroxide bath,
- the passage (4) from the peroxide bath to the drying chamber.

In addition to the sealing disc, use packaging material and adhesive tape as sealing material.

(Cont'd overleaf)

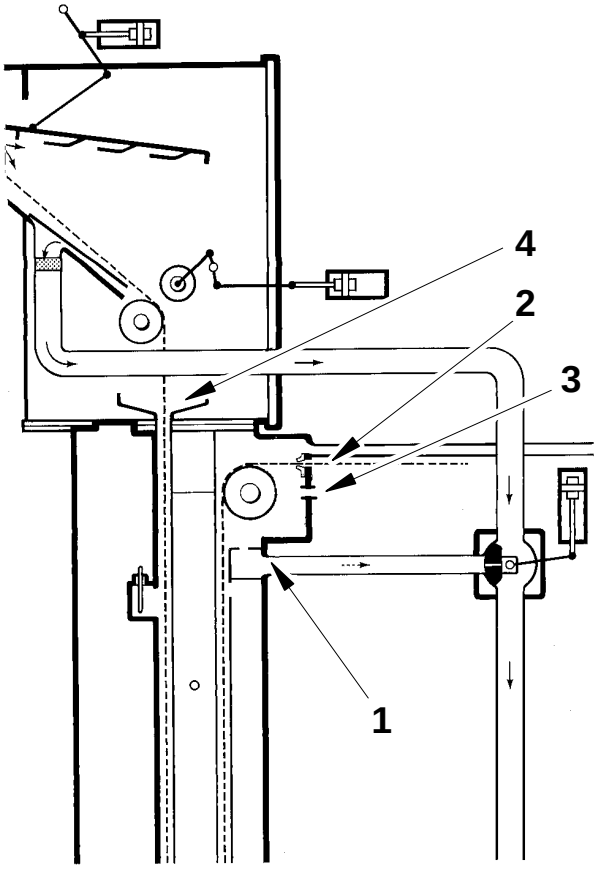

Valid for 1301

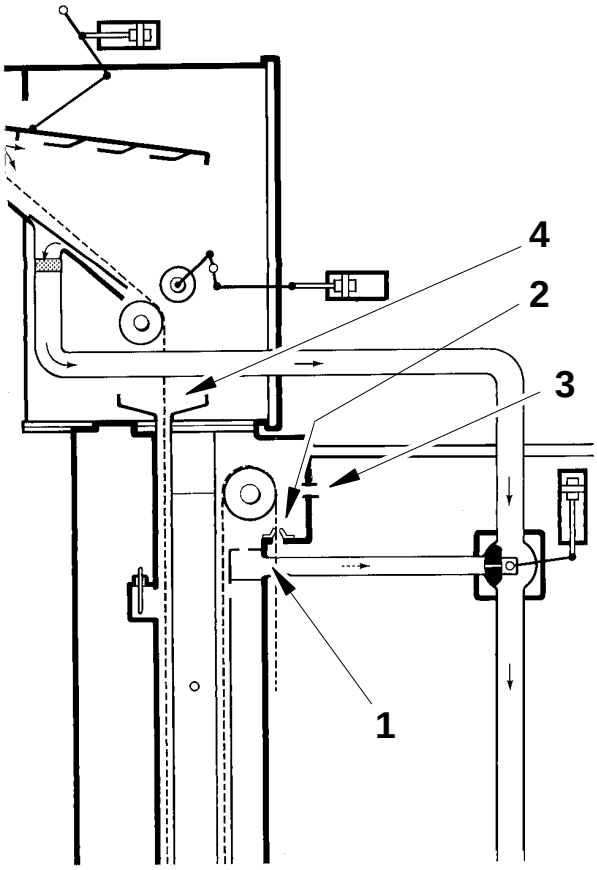

Valid for 1302

1 Suction valve
2 Packaging material web entry
3 Membrane valve
4 Passage, peroxide bath/ drying chamber

(Cont'd)

Start with circulation of drinking water

Empty the peroxide tank and fill it with 25 litres of water.

Set the circulation pump overload protection Q82, located behind the left hand door of the electrical cabinet, in position 0.

Activate the peroxide pump contactor K82 by bridging TPMC outputs A115.06 and A115.A3.

Close the peroxide bath drain valve by opening valve Y5 on the valve panel.

Open the topping-up valve Y18 on the valve panel.

Start the circulation pump by changing the overload protection to position 1.

Let the water circulate for 10 minutes.

Check if there is any leakage. Empty the peroxide tank.

Proceed with degreasing

Caution!
When mixing alkali and water, the alkali must always be added to the water – never the other way around!

Degrease by means of 25 litres of 5% sodium hydroxide (NaOH) at room temperature.

The water in the water bath (the water warming the peroxide) must be at room temperature. The simplest way to achieve this is to change the water.

Degreasing is carried out in the same way as circulating the water. Degreasing is to go on for two hours with a one minute interruption every 15 minutes.

Thereafter, rinse with drinking water for at least 3 x 5 minutes, changing the water every five minutes. Check that the pH value of the outcoming rinsing water is not more than 0.5 units higher than that of the incoming water. If required, rinse once more.

Finish with passivation

Caution!
When mixing acid and water, the acid must always be added to the water – never the other way around!

Passivation is carried out with 25 litres of 33% nitric acid (HNO_3) at room temperature, in the same way as degreasing.

Rinse with drinking water until the pH value of the outcoming rinsing water is not less than 0.5 units lower than that of the incoming water. If required, rinse once more.

After the last water rinse, rinse once more by circulating de-ionized or distilled water for five minutes.

Remove the sealing disc and the rest of the material used for sealing purposes.

Fill the tank with peroxide. Test-run the machine and check the peroxide concentration, see the OS book, section N "Sterilization liquid".

The machine is now ready for production

Check the hydrogen peroxide concentration at intervals shorter than normal during the first 24 hours.

Tool cabinet

Tool	TP No	Quantity
Assembly tool	4–75665	1
Assembly tool, seal	4–36489	1
C spanner, fixed	4–72947	1
Locking clamp	3–76167	1
Locking clamp	3–76138	1
Gauge	4–434841	1
Assembly cone	4–76131	1
Assembly tool	4–76132	1
Setting tool	4–76153	1
Cabinet	90226–4	1
Pump	90278–1	1
Oil can	90279–1	1
Spirit level	90243–136	1
O-ring 42.2x3	315202–224	1
Brass wire brush	776422–101	2
Screwdriver	777100–113	1
Screwdriver	777100–184	1
Open spanner	777120–215	2
Open spanner	777120–220	2
Open spanner	777120–232	2
Open spanner, 36 mm	777122–137	1
Open spanner, 46 mm	777122–142	1
Spanner set, hexagonal	777150–801	2
Union spanner	777200–101	1
Scissors	777510–101	1
Assembly pin Vomo 6–L	772220–100	1
Assembly pin Vomo 8–L	772220–101	1
Assembly pin Vomo 12–L	772220–103	1
Assembly pin Vomo 15–L	772220–104	1

Tool cabinet

Tool	TP No.	Quantity
Assembly tool	4–75665	1
C spanner, fixed	4–72947	1
Locking clamp	3–76167	1
Locking clamp	3–76138	1
Gauge	4–434841	1
Assembly cone	4–76131	1
Assembly tool	4–76132	1
Setting tool	4–76153	1
Open spanner	777120–215	2
Open spanner	777120–220	2
Open spanner	777120–232	2
Open spanner, 36 mm	777122–137	1
Open spanner, 46 mm	777122–142	1
Spanner set, hexagonal	777150–801	2
Union spanner	777200–101	1

Superstructure

Intended for	MS-page	TP No.	Fig.
Pressure roller, filling pipe	137–1X	74767–102	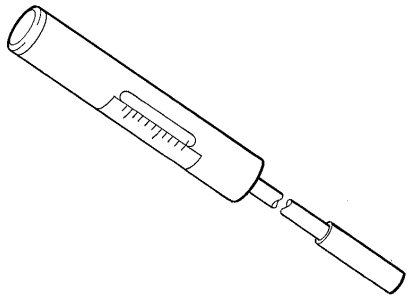
SA pressure roller	720–1X		
LS nozzle TB/TBA 180 – 284 ml 100V	116–1X	76344–101	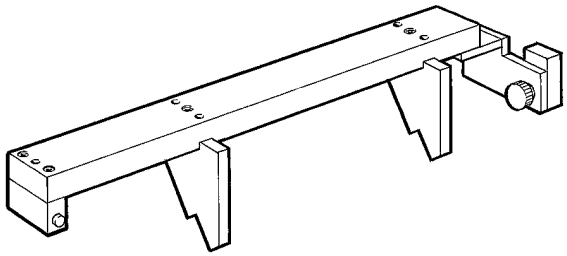
LS nozzle TB/TBA 100V→120V (→T–20095;T–12628)	116–5X		
125 ml		76133–101	
200S ml		76606–101	
110V→120V 180 250 ml		76595–101	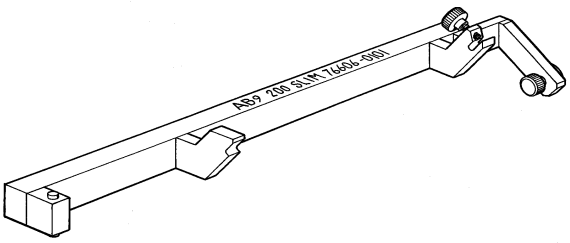
TB/TBA 120V (T–20097;T–12635→)			
125 ml		76133–201	
200S ml		76606–201	
180 250 ml		76595–201	
TB/TBA 130V			
125 ml		76133–301	
200S ml		76606–301	
180 250 ml		76595–301	
Filling pipe TBA 125 ml, TBA 200S ml, TBA 180 – 284 ml		76187 76188 76398	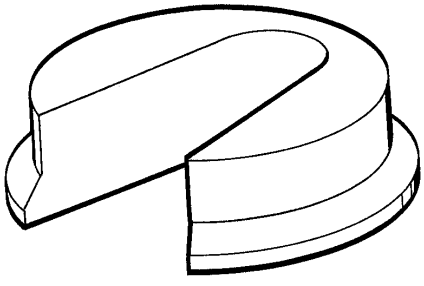

Superstructure

Intended for	MS-page	TP No.	Fig.
Driven bending roller		76402–101	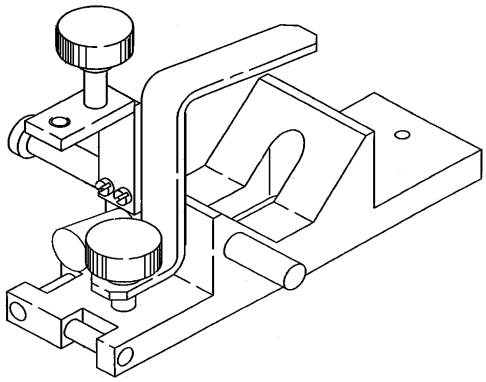
Tube forming Laser template, upper forming clamp, TBA 180 – 250 ml **not** 200S ml		76333–101	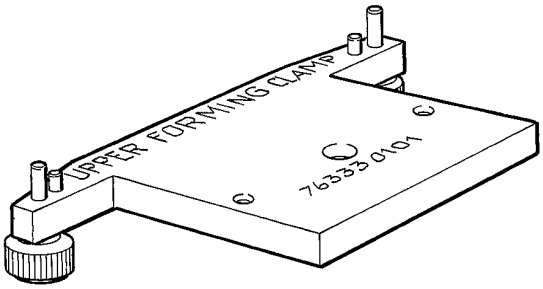
Tube forming Laser template, divided forming ring TBA 180 – 250 ml **not** 200S ml		76407–101	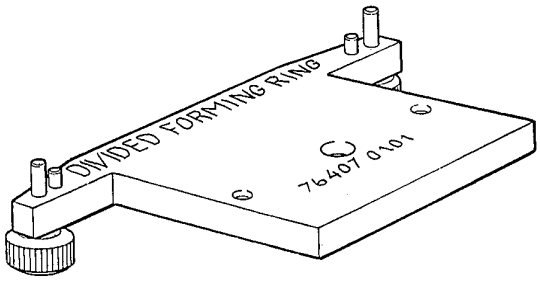
Tube forming Laser template, movable forming ring TBA 180 – 284 ml		76409–101	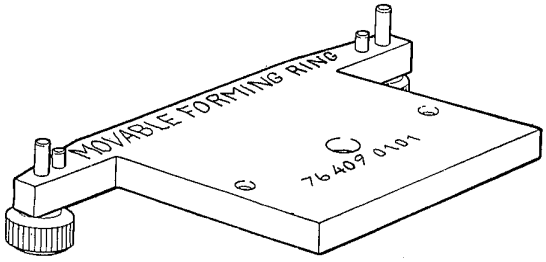
Laser template, column		76406	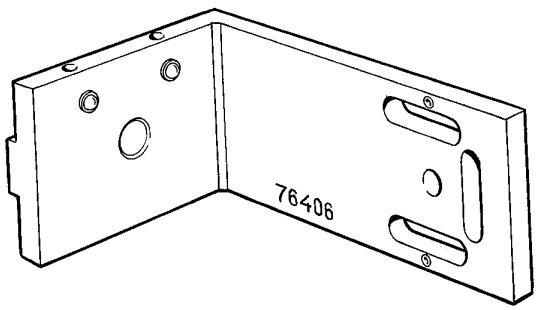

Superstructure

Intended for	MS-page	TP No.	Fig.
Laser template, movable forming ring, upper forming ring intermediate forming clamp TB 200S ml TB 180 – 284 ml TBA 125 ml TBA 200S ml		 76182–101 76468–101 76592–101 76598–101	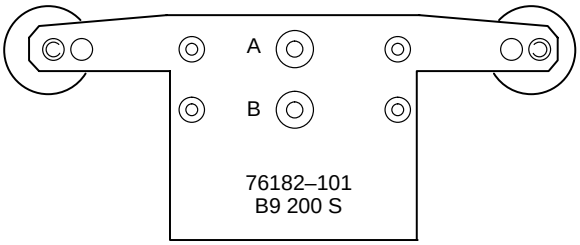 76182–101 B9 200 S
Removal pneumatic cylinder Product valve TBA	127–3X	449969–101	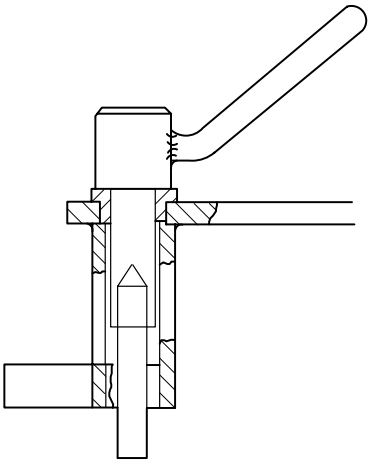
Tachometer Driven bending roller	148–5X 1075–5X 1076–5X	90243–105	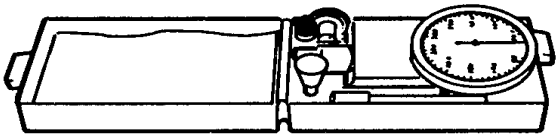
Tube forming Laser template, movable forming ring TBA 180 – 284 ml	160–3X	74305–101	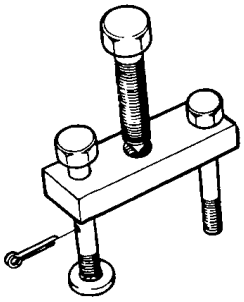
Hydrostatic test instrument	169–1X	565536–101	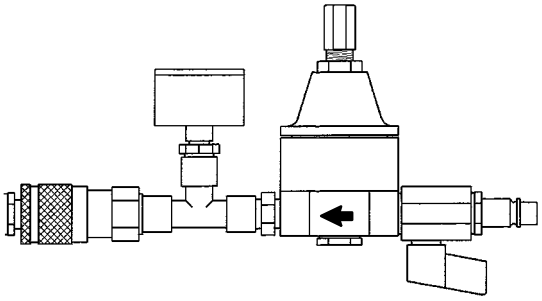

Superstructure

Intended for	MS-page	TP No.	Fig.
Gasket Valve group TB	128–1X	36489	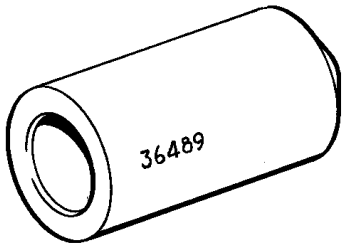
Sleeve, heater cartridge water bath TBA		90206–330	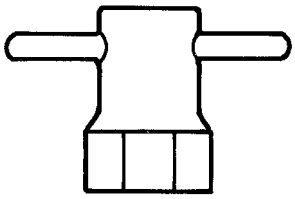
Leakage tracing device Pressure aseptic chamber TBA	163–1X	533014–010V	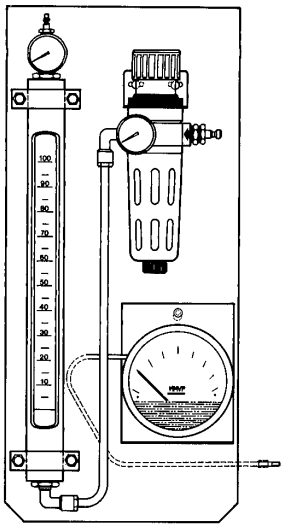
Tube forming Laser template, movable forming ring TBA 180 – 284 ml	160–3X	74305–101	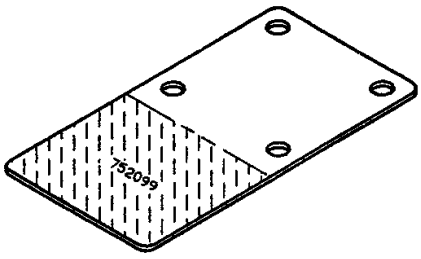
Hydrostatic test instrument	169–1X	565536–101	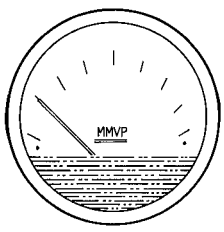

Superstructure

Intended for	MS-page	TP No.	Fig.
Gasket Valve group TB		76350–101 442080–101	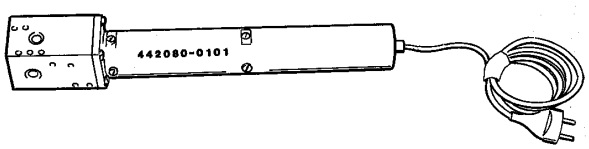
		90220–58 442094–101	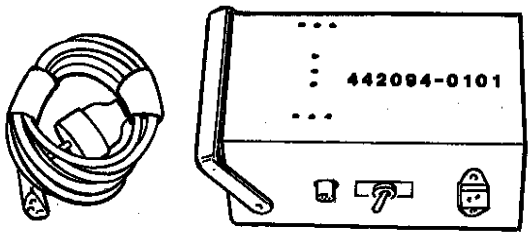
		539691 442089–101	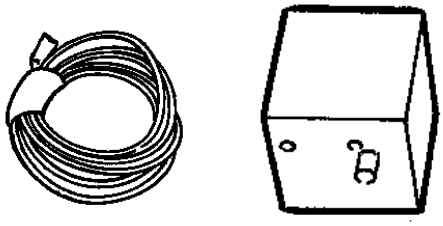
		90243–126	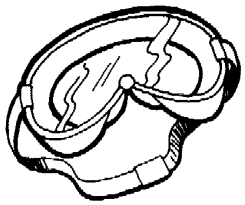

Drive unit

Intended for	MS-page	TP No.	Fig.
Worm gear 020V→110V 120V→130V	345–5X	75466–201 75466–301	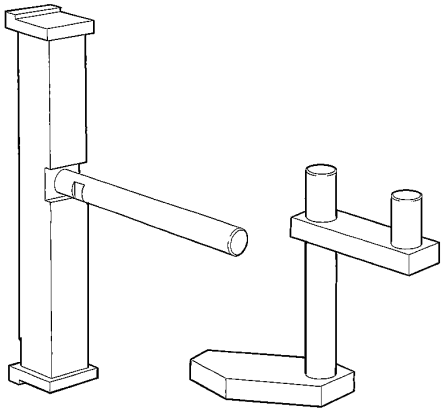
Cam pack synchronization Degree scale Spirit level	331–5X 332–5X 337–5X	75467–201 90243–163	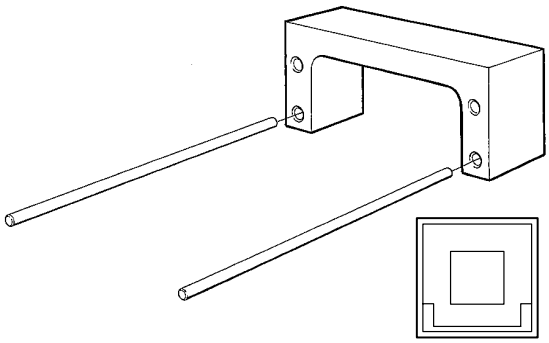
Leaf springs, overload protection	314–5X	77247	
Puller Yoke lifter arm 020V→ Link arm 020V→110V Coupling link 120→	 361–2X	77165–101	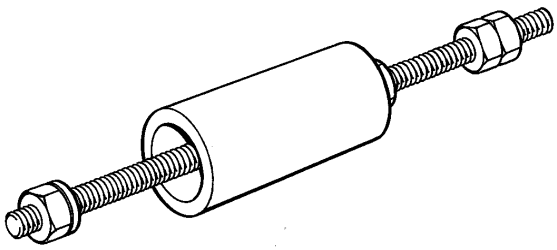
Fitting Hold-down device	 306–2X 306–4X	75514	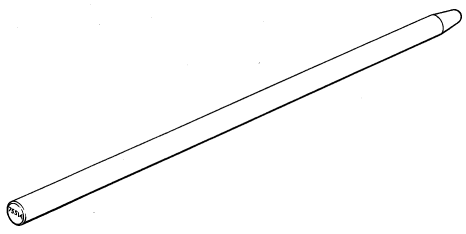
Puller Discharge unit		79201	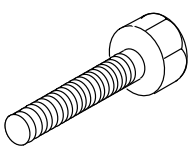

Drive unit

Intended for	MS-page	TP No.	Fig.
Puller Bearingcoupling Worm gear		76175–101	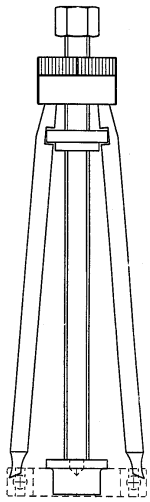
Overload protection	314–1X	563740–101	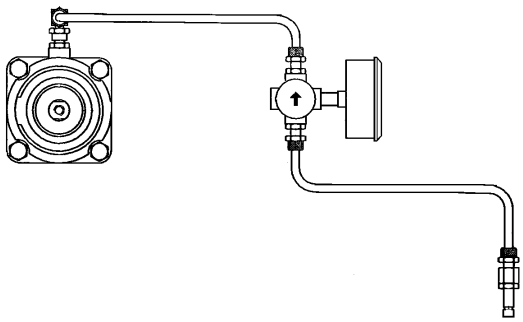

Jaw system

Intended for	MS-page	TP No.	Fig.
Volume cam	421–5X	75469–201	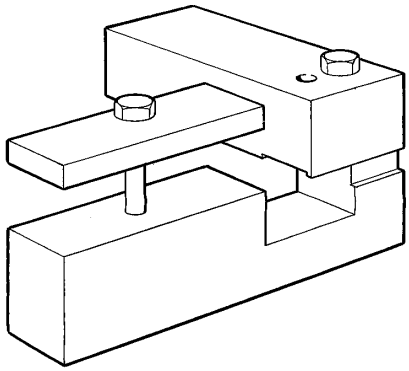
Jaw-over-jaw	458–5X		
Yoke turning position	412–5X		
TB 250 ml		75931–1	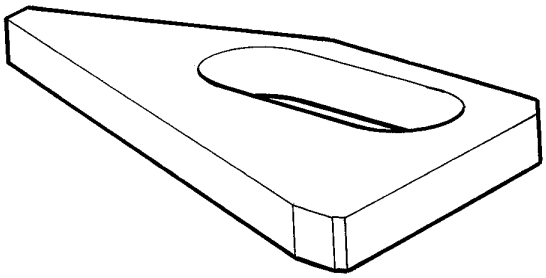
TB 236 ml		75931–13	
TB 200 ml		75931–2	
TB 200S ml		75931–4	
TBA 284 ml		75931–12	
TBA 250 ml		75931–5	
TBA 236 ml		75931–6	
TBA 200S ml		75931–10	
TBA 200 ml		75931–11	
TBA 180 ml		75931–8	
TBA 125 ml		75931–9	
Tube suport rollers, alignment and vertical position 180 – 284 ml **not** 200S ml	443–5X	75936	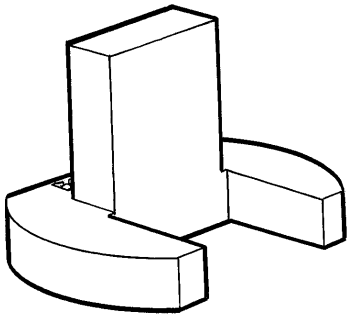
Tube suport rollers, alignment and vertical position 125 ml	443–5X	75937	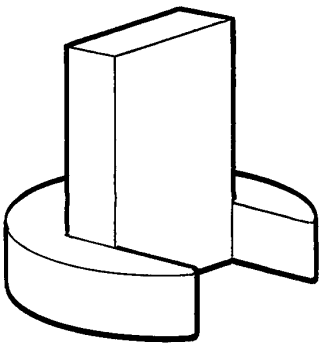

686

Jaw system

Intended for	MS-page	TP No.	Fig.
Tube support rollers alignment and vertical position TBA 200S ml TB 200S ml	443–5X	76176 75938	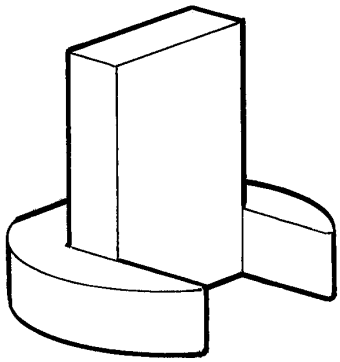
Volume flap alignment 180 – 284 ml **not** 200S ml	442–5X	75939	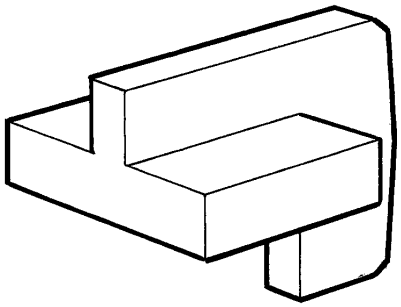
Volume flap alignment 125 ml	442–5X	75943	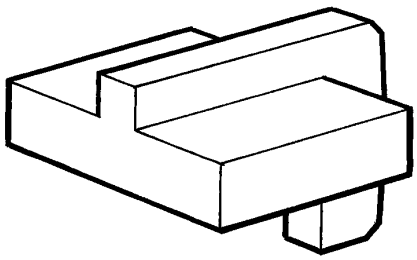
Volume flap alignment 200S ml	442–5X	75944	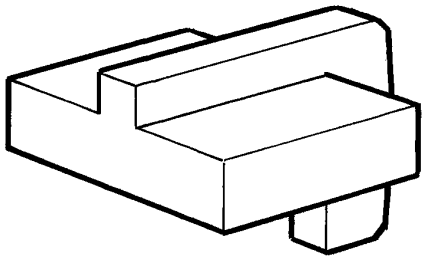
Design correction mechanism 180 – 284 ml	423–5X	75945	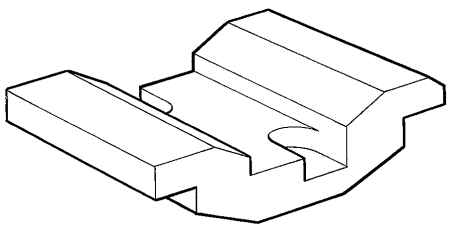

Jaw system

Intended for	MS-page	TP No.	Fig.
Yoke Volume flap alignment Tube support rollers, alignment and vertical position Bracket for tube support rollers	442–5X 443–5X	76291–101	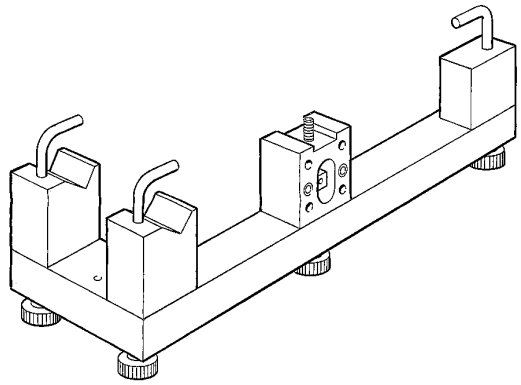
Ruler Volume flap alignment Tube support rollers, alignment and vertical position Bracket for tube support rollers	442–5X 443–5X	76298	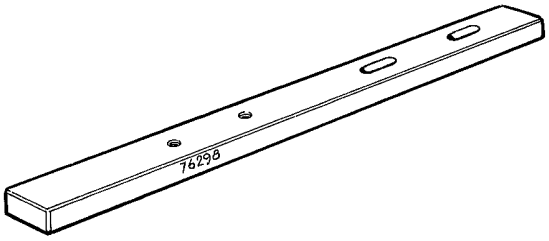
Bracket for tube support rollers		76299	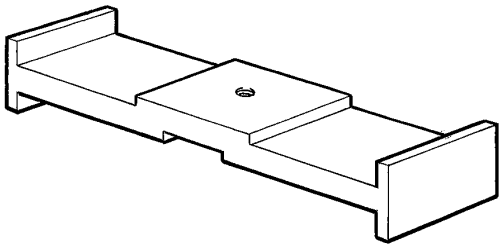
Yoke symmetry Alignment of cutting jaw and pressure jaw arms	414–5X 415–5X	76301–101	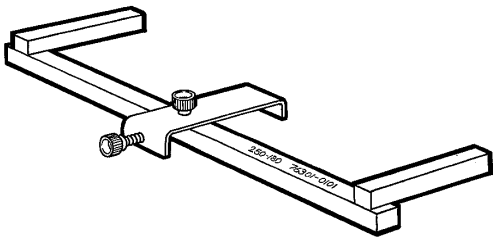
Jaw gap and non parallellity in movement Yoke symmetry Alignment of cutting jaw and pressure jaw arms	445–1X 414–5X 415–5X	76304–101	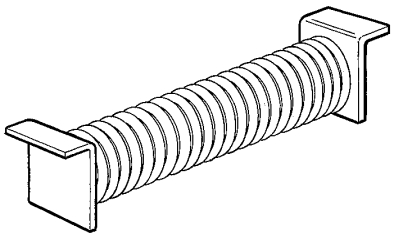

Jaw system

Intended for	MS-page	TP No.	Fig.
Stroke, point measuring clamp	436–1X	76416–101	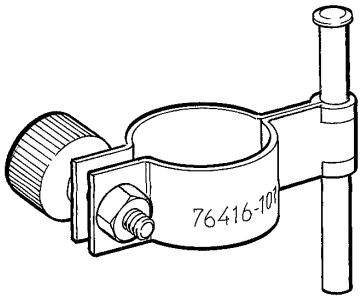
Fitting Hydraulic seal	433–3X	75665	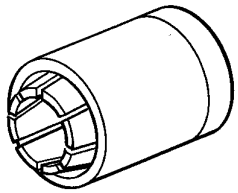
Fitting Hydraulic seal, cutting knife	405–4X	76132	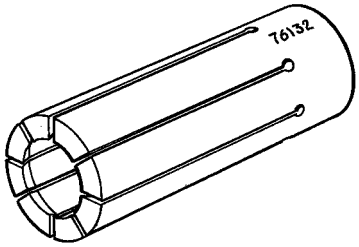
Fitting code Hydraulic seal, cutting knife	405–5X	76131	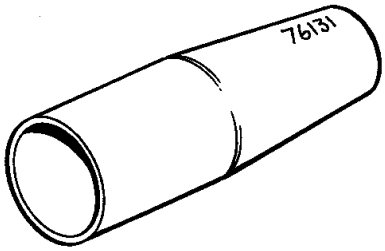
Calibration Hydraulic seal, cutting Knife 120V 130V	405–4X	 76153 78801	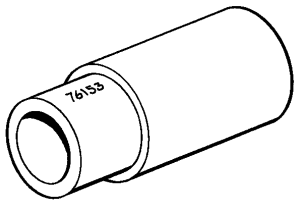
Fitting Hydraulic seal, catches	465–3X	90243–146	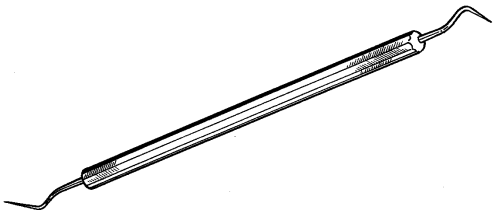

Final folder

Intended for	MS-page	TP No.	Fig.
FS-element, air nozzle of top flaps 125 ml 180 – 284 ml	525–5X	 75531–2 75531–1	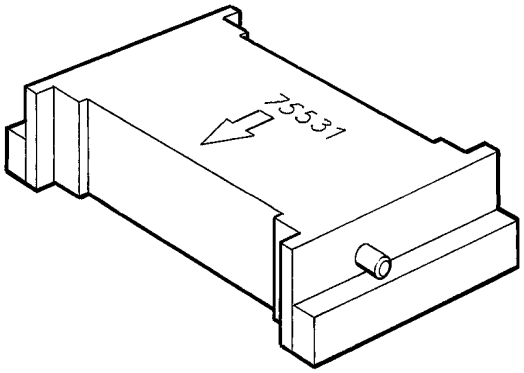
FS-element, air nozzle of top flaps, 200S ml	525–5X	76348	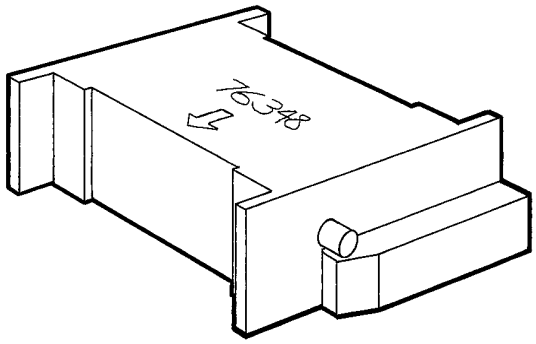
FS-element, air nozzle of bottom flaps, 180 – 284 ml **not** 200S ml	525–5X	76467	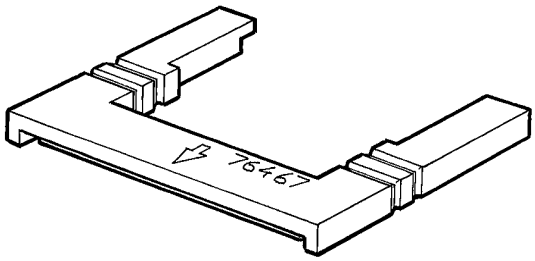
Lift rails, 200S ml TBA 125 ml	509–5X	75545	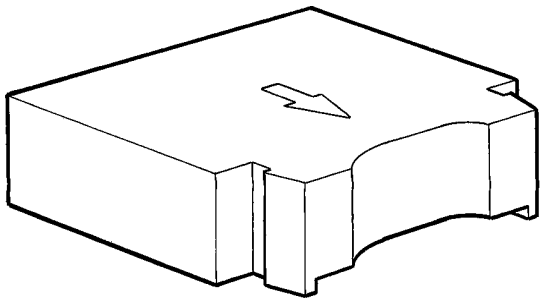

Final folder

Intended for	MS-page	TP No.	Fig.
Lift rails, 180 – 284 ml	509–5X	76308	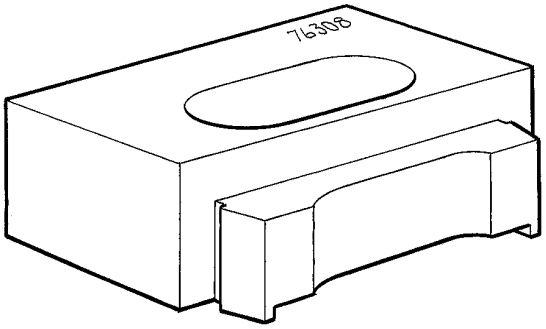
Station chain	505–5X	76128	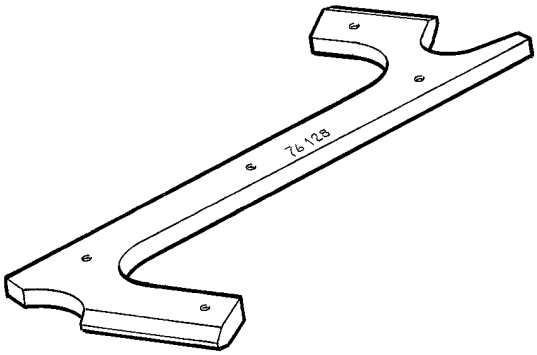
Safety sprocket 020V→110V	537–5X	76129	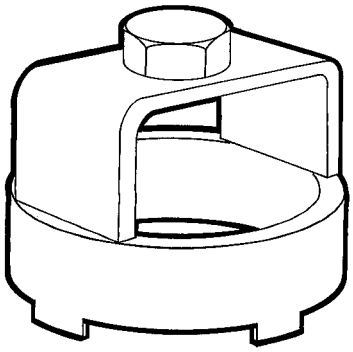
Safety sprocket 020V→130V	537–1X	77100	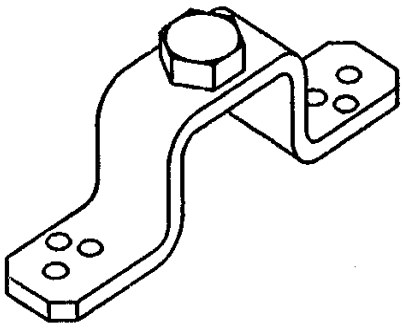

Final folder

Intended for	MS-page	TP No.	Fig.
Pull-down block and rail	511–5X		
284 ml		76307–8	
250 ml		76307–1	
236 ml		76307–2	
Pull-down arms, sideways position	515–5X		
200 ml		763307–3	
180 ml		763307–4	
125 ml		763307–5	
20S ml		763307–6	
Pull-down block, vertical position	517–5X		

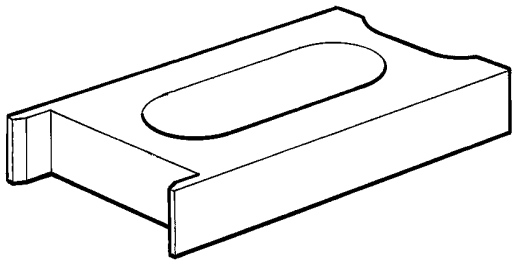

Pressure unit alignment		76130	

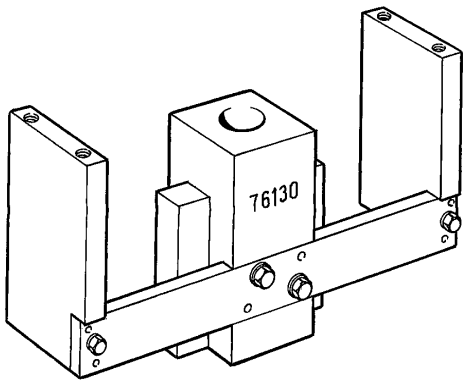

Guard plate for tensioner sprocket 120V	503–42	77240	

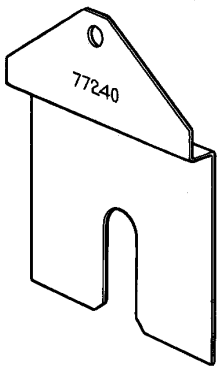

Guard plate for tensioner sprocket 130V	503–43	79003	

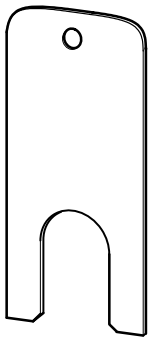

692

Service unit

Intended for	MS-page	TP No.	Fig.
Liftingcarriage	624–1X	75542–101	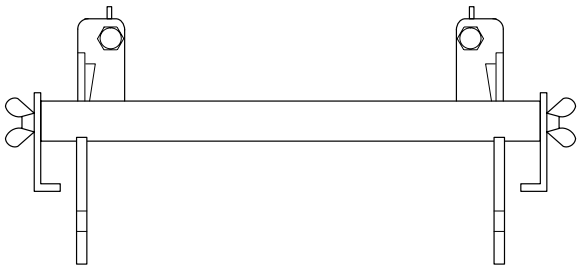
Valve clearance Impulse transmitter	604–1X	76138	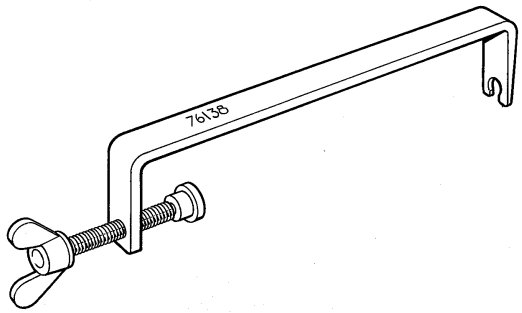
Forcing hydraulic valves Pull-down device Pressure unit	606–5X 517–5X 521–1X	76167	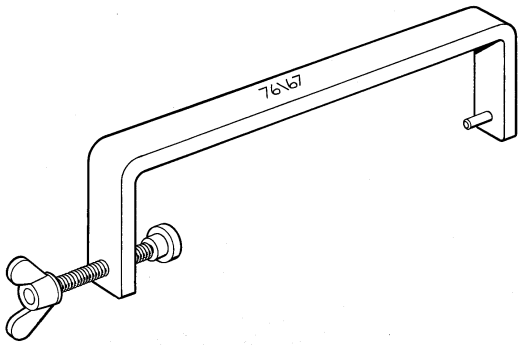
Accumulator pre-pressure		90321–537 90321–538 (hose only)	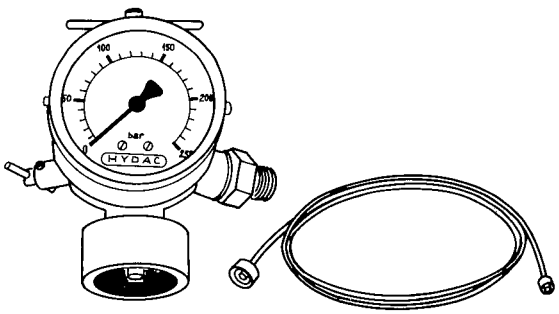

Strip applicator

Intended for	MS-page	TP No.	Fig.
Dating unit Ink unit	705–5X 737–5X	76602	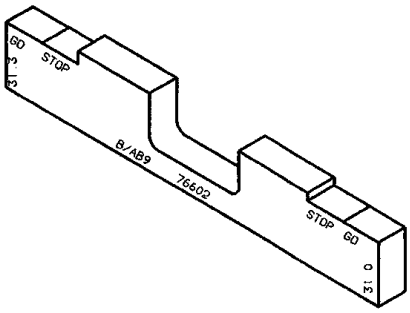
Ink roller, ink unit	737–5X	43448	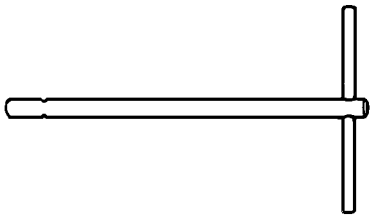
Dating unit		466397–1	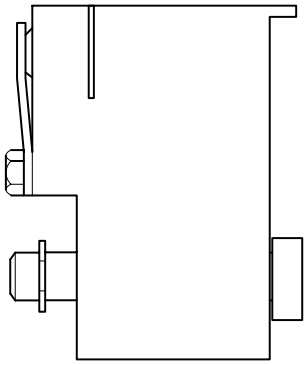

Electrical equipment

Intended for	MS-page	TP No.	Fig.
IH test instrument TP 101A	1015–1X	67026	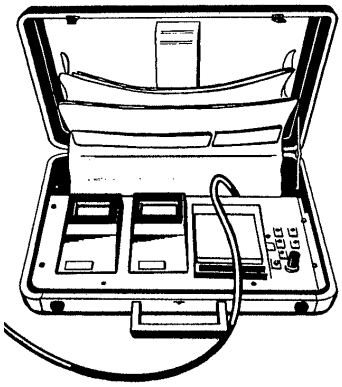
HF volt meter TP 103	1017–5X 1018–7X	67024	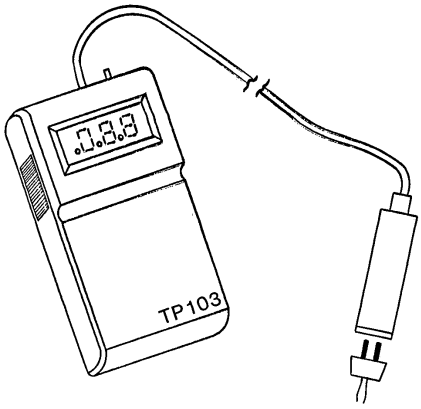
Pulse time counter TP 102 Charger	1014–1X	90243–90 90243–91	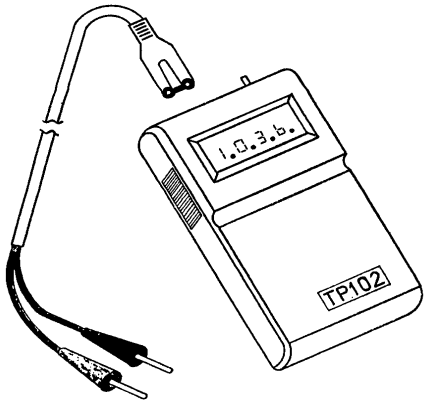
Ground cable	1002–7X	75994	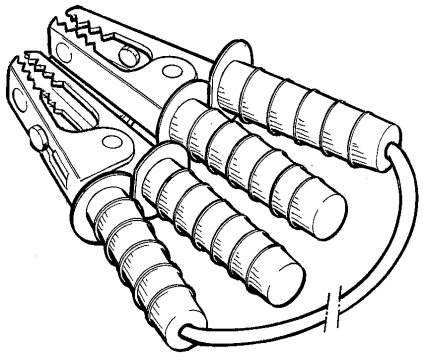

Electrical equipment

Intended for	MS-page	TP No.	Fig.
Shaft angle meter		90243–120	

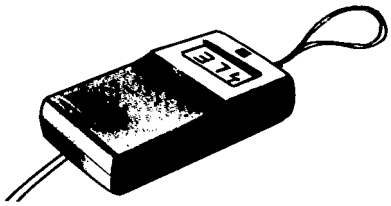

Voltmeter		90243–103	



Description	TB/9	TBA/9
Induction heating (IH) – general		1001–71
IH safety precautions (2 pages)		1002–71
IH safety precautions (2 pages)		1002–72
IH trouble shooting – general		1003–71
IH trouble shooting – section A		1004–71
IH trouble shooting – section A		1004–72
IH trouble shooting – section A		1004–73
IH trouble shooting – section B		1005–71
IH trouble shooting – section B		1005–72
IH trouble shooting – section B		1005–73
IH trouble shooting – section C		1006–71
IH trouble shooting – section C		1006–72
IH trouble shooting – section C		1006–73
IH trouble shooting – section D		1007–71
IH trouble shooting – section E		1009–71
IH trouble shooting – section E		1009–72
IH anode voltage – checking		1011–11
IH anode voltage – checking		1011–12
IH anode current – checking		1012–11
IH anode current – checking		1012–12
IH anode current – checking		1012–13
IH grid current – checking		1013–11
IH grid current – checking		1013–12
IH grid current – checking		1013–13

Description	TB/9	TBA/9
IH pulse duration – checking (2 pages)		1014–11
IH pulse duration – checking (2 pages)		1014–12
IH pulse duration – checking (2 pages)		1014–13
IH blocking voltage – checking (2 pages)		1015–11
IH blocking voltage – checking (2 pages)		1015–12
IH blocking voltage – checking (2 pages)		1015–13
IH, HF voltage – setting (3 pages)		1017–51
IH, HF voltage – setting (3 pages)		1017–52
IH, HF voltage – setting (4 pages)		1017–53
IH, HF voltmeter – general		1018–71
IH oscillator section – checking/cleaning		1021–11
IH oscillator section – removal		1021–21
IH oscillator section – fitting		1021–41
IH control and high voltage section – checking/cleaning		1022–11
IH contact rails and flexible cables – checking		1023–11
IH air filter – cleaning		1025–31
IH simulated operation – setting		1031–51
IH simulated operation – setting		1031–52
IH transversal sealing – setting		1040–52
IH transversal sealing – setting		1040–53
Temperature regulators – checking	1050–12	
Temperature regulators – checking	1050–13	
Temperature regulators – checking		1051–12

Description	TB/9	TBA/9
Temperature regulators – checking		1051–13
Electrical cabinet – checking/cleaning	1055–11	1055–11
Converting table, octal degrees	1058–71	1058–71
Angle encoder, main machine – checking degree setting	1070–11	1070–11
Angle encoder, main machine – checking degree setting		1070–12
Angle encoder, main machine – checking degree setting	1070–13	1070–13
Angle encoder, main machine – degree setting	1070–52	1070–52
Angle encoder, main machine – degree setting	1070–53	1070–53
Angle encoder, final folder – checking degree setting	1071–11	1071–11
Angle encoder, final folder – checking degree setting		1071–12
Angle encoder, final folder – checking degree setting	1071–13	1071–13
Angle encoder, final folder – degree setting	1071–52	1071–52
Angle encoder, final folder – degree setting	1071–53	1071–53
PLC, battery PLC–2/20 – checking/replacement/cleaning	1072–11	1072–11
Battery, TPMC– checking/replacement		1072–12
Battery, TPMC– checking/replacement	1072–13	1072–13
Driven bending roller – setting (2 pages)	1075–51	
Driven bending roller – setting (2 pages)		1076–52
Release pulse – setting	1080–51	

General

Caution!
Always follow the safety precautions on page MS 1002–7X when working in the generator section!

Two independent IH-generator-systems are used on the TBA/9.

The transversal sealing (TS) generator uses two separate oscillators (2), one for each side.

These oscillators have separate pulse cards (1), but are controlled by a common timer and the PLC. The high voltage transformer, which is also common, is connected for 3 X 3000 V.

The generator for the pull tab device or the zone heater uses **one** oscillator section **only**. The high-voltage transformer is normally connected for 3 X 4400 V if the generator is used with a pull tab device or for 3 X 3700 V when used with a zone heater.

Instruments and tools

IH-generator test instrument TP101A,
TP No. 67026
Pulse time counter TP102, TP No. 90243–90
HF voltmeter TP103, TP No. 67024
Charger TP No. 90243–91
Ground wire TP No. 75994
Recorder Gould brush 200

1 Pulse card
2 Oscillator

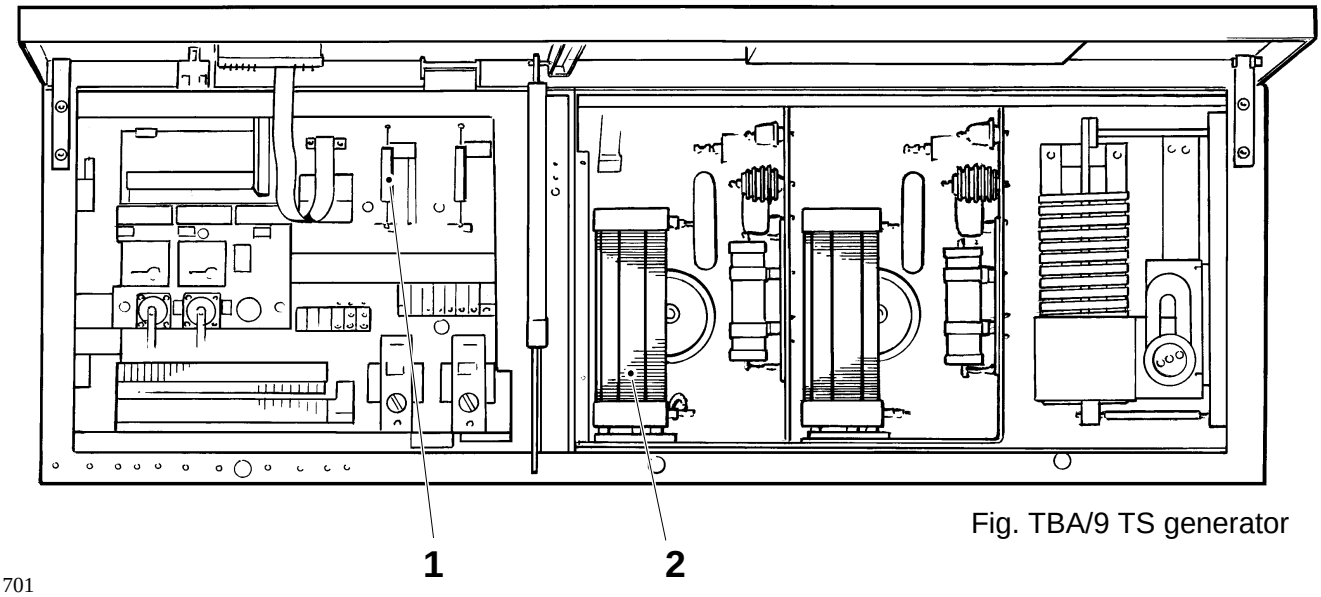

Fig. TBA/9 TS generator

701

Oscillator section

WARNING!
High voltage. Work inside the generator must be performed by authorized service personnel only!

Before any work inside the oscillator section is undertaken:

a) Turn the main switch of the machine to position **off** and padlock it.

b) Open fuses F27 for the high voltage transformer and F3 for the blocking voltage transformers.

c) Check that the high voltage meter reads zero volts.

d) Remove the protection cover from the oscillator section.

e) Make sure the high voltage lead (6) is properly grounded by the automatic grounding device (1), see fig 1.

WARNING!
The high voltage line must remain grounded until the protection cover has been refitted.

f) Discharge the blocking voltage and retain ground by connecting a lead between ground and capacitor 4C6 (3) in the oscillator section to work with.

(Cont'd overleaf)

1 Automatic grounding device
2 Manual grounding
3 Capacitor 4C6
4 Stand-off 4X2
5 Capacitor 4C4
6 High voltage lead

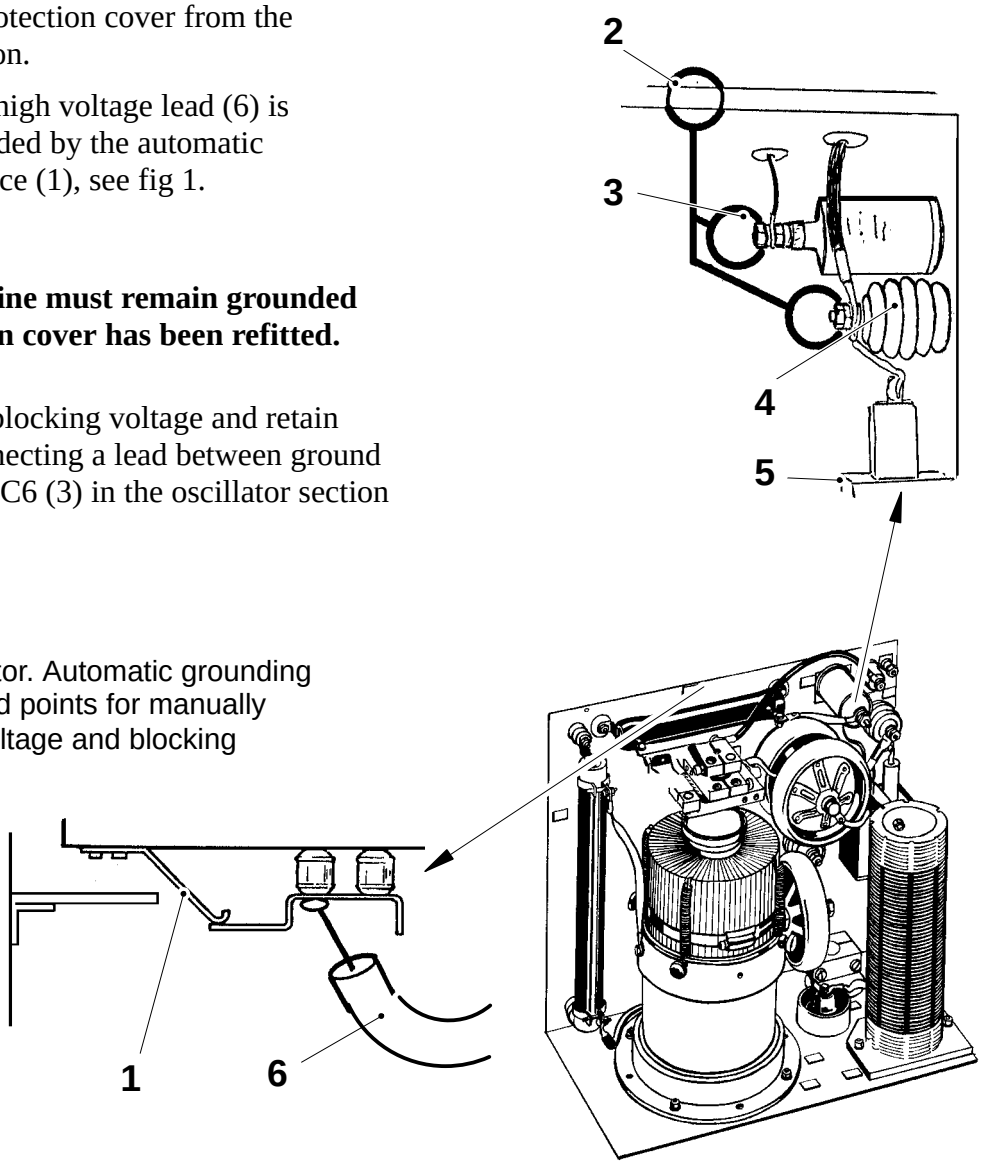

Fig. 1 TS generator. Automatic grounding and recommended points for manually grounding high voltage and blocking voltage.

(Cont'd)

Control section

Caution!
The control section contains a 3000 V high voltage transformer with rectifier and two 700 V transformers with rectifiers for the blocking voltage.

Before any work inside the control section is undertaken:

a) Turn the main switch of the machine to position **off** and padlock it.

b) Open fuses F27 for the high voltage transformer and F3 for the blocking voltage transformers.

c) Check that the high voltage meter reads zero volts.

d) Discharge all six capacitors in the mains filter.

e) Discharge the blocking voltage between ground and pin 20 on the connectors for **both** rectifier cards.

f) When carrying out work on the high-voltage transformer and/or rectifier the ground wire must be connected between two of the capacitors in the mains filter, see fig.2.

Caution!
The ground wire must be connected between two capacitors with either odd or even number designations, e. g. **between C1 and C3**, or **between C2 and C4**.

When working with one of the blocking voltage sections, a ground wire must be connected between ground and pin 20 on the connector for the pulse card for that section.

Caution!
Prior to reconnecting the generator, the technician responsible for the work must make sure that this can be done safely.

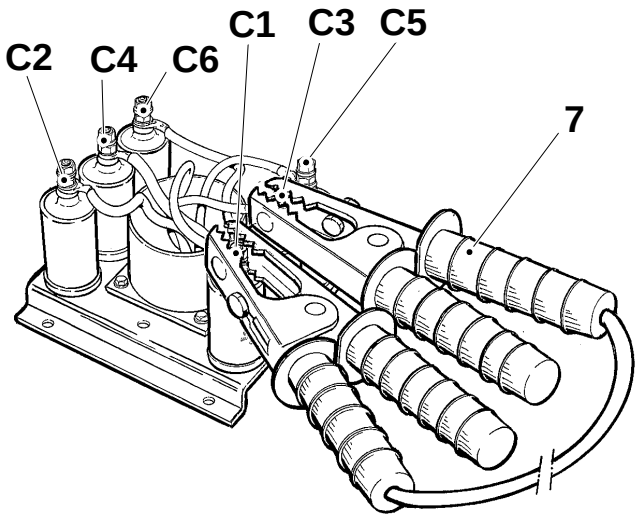

Fig 2. Mains filter

7 Ground wire
8 Cathode 6.3 V AC
9 Grid -700 V
10 Anode 3800 – 6000 V

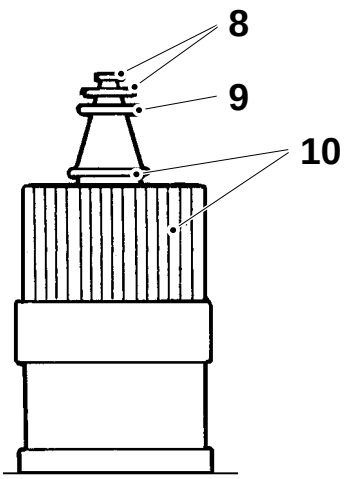

Fig. 3. Tube connections and applicable voltages

Oscillator section

WARNING!
High voltage. Work inside the generator must be performed by authorized service personnel only!

Before any work inside the oscillator section is undertaken:

a) Turn the main switch of the machine to position **off** and padlock it.

b) Open fuses Q27 for the high voltage transformer and F3A for the blocking voltage transformers to position **off**.

c) Check that the high voltage meter reads zero volts.

d) Remove the protection cover from the oscillator section.

e) Make sure the high voltage lead (6) is properly grounded by the automatic grounding device (1), see fig 1.

WARNING!
The high voltage line must remain grounded until the protection cover has been refitted.

f) Discharge the blocking voltage and retain ground by connecting a lead between ground and capacitor C406 (3) in the oscillator section to work with.

(Cont'd overleaf)

1 Automatic grounding device
2 Manual grounding
3 Capacitor C406
4 Stand Off E403
5 Capacitor C404
6 High voltage lead

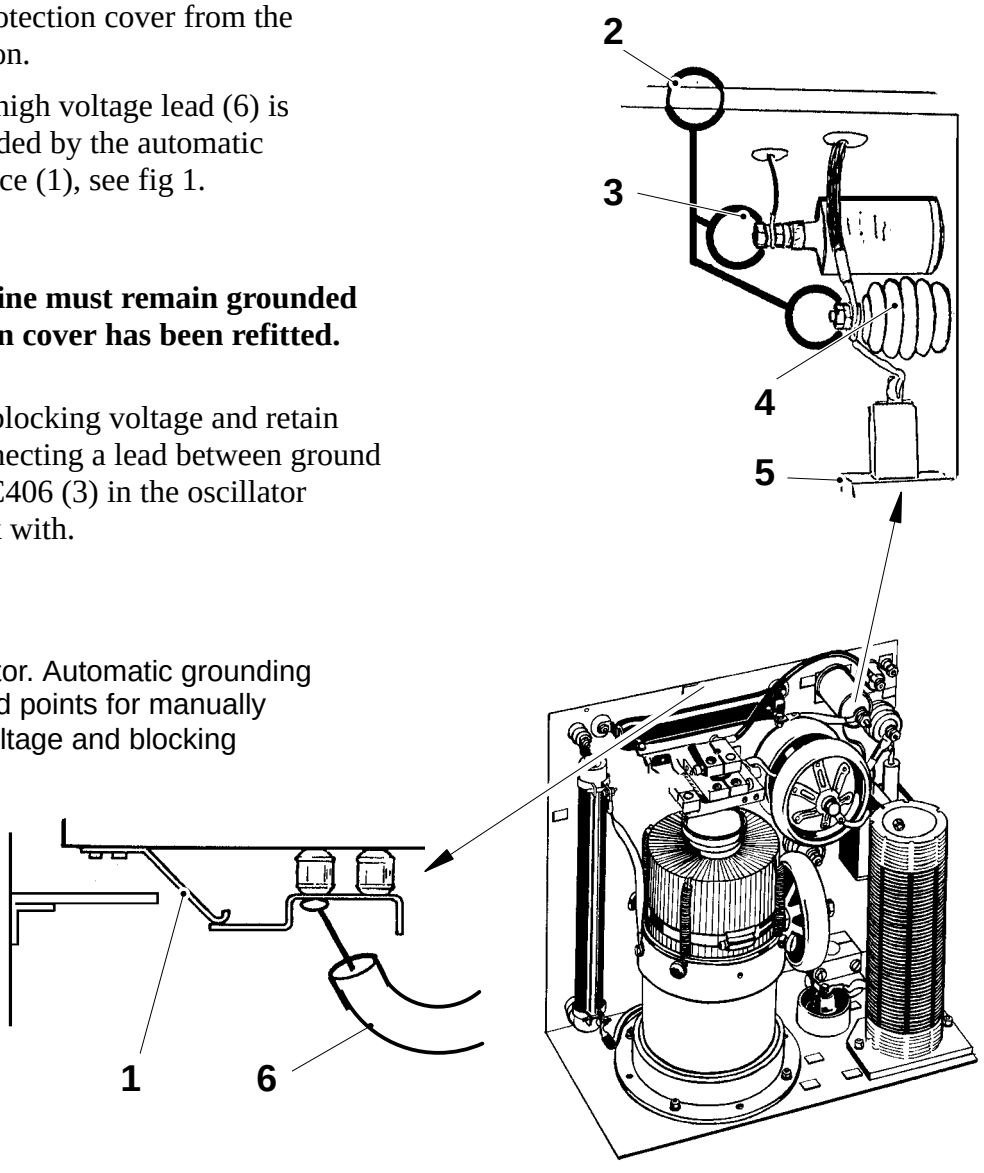

Fig. 1 TS generator. Automatic grounding and recommended points for manually grounding high voltage and blocking voltage.

704

(Cont'd)

Control section

Caution!
The control section contains a 3000 V high voltage transformer with rectifier and two 700 V transformers with rectifiers for the blocking voltage.

Before any work inside the control section is undertaken:

a) Turn the main switch of the machine to position **off** and padlock it.

b) Turn fuses Q27 for the high voltage transformer and F3A for the blocking voltage transformers to position **off**.

c) Check that the high voltage meter reads zero volts.

d) Discharge all six capacitors in the mains filter.

e) Discharge the blocking voltage between ground and pin 20 on the connectors for **both** rectifier cards.

f) When carrying out work on the high-voltage transformer and/or rectifier the ground wire must be connected between two of the capacitors in the mains filter, see fig. 2.

Caution!
The ground wire must be connected between two capacitors with either odd or even number designations, e. g. **between C1 and C3**, or **between C2 and C4**.

When working with one of the blocking voltage sections, a ground wire must be connected between ground and pin 20 on the connector for the pulse card for that section.

Caution!
Prior to reconnecting the generator, the technician responsible for the work must make sure that this can be done safely.

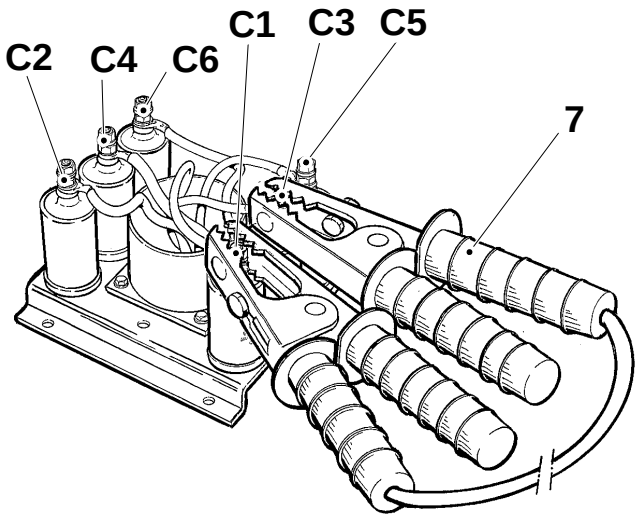

Fig 2. Mains filter

7 Ground wire
8 Cathode 6.3 V AC
9 Grid -700 V
10 Anode 3800 – 6000 V

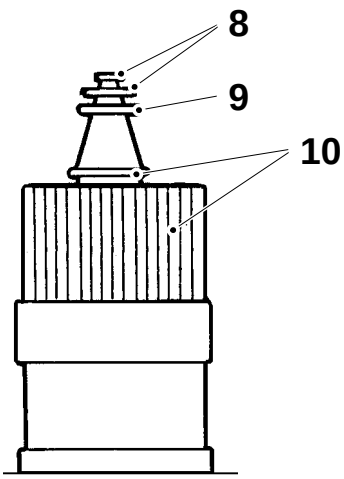

Fig. 3. Tube connections and applicable voltages

General

WARNING!
Follow the safety precautions on page MS 1002–7X unconditionally whenever the generator section is opened!

The trouble shooting information is divided into five (four for pull tab generator) sections with reference to pages MS 1004–7X – MS 1009–7X.

TS generator

The monitor panel, see fig., aids in identifying the origin of a fault. It manages to locate several of the more frequent reasons for a generator malfunction.

If the overload relay has tripped, the monitor will indicate the oscillator in use when the overload occurred. Likewise the location of an overheat warning or an open door monitor will be shown. If the mains voltage drops below 85% of its nominal value, the **Phase monitor** light will appear.

A failure in the high voltage rectifier, an inoperative timer or a pulse card are faults **not** detected by the monitor.

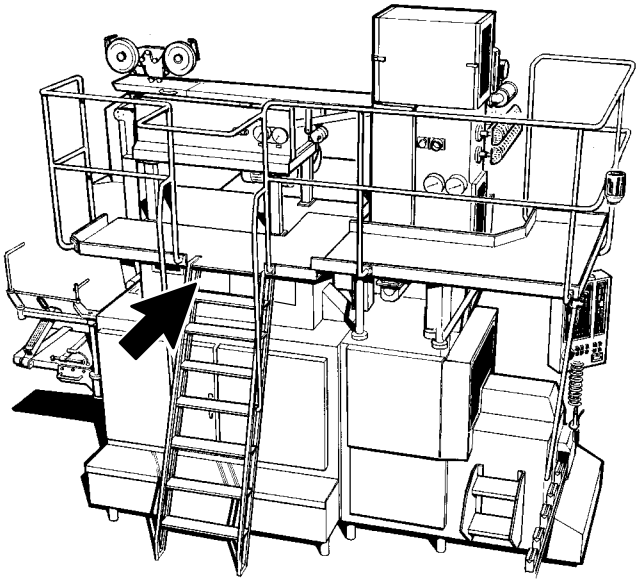

Footnote. Fig. shows TBA/9 1301

Section A

Check by means of the high-voltage meter when no oscillator is pulsed

	Fault	Action
A:1	Voltmeter indicates 0V despite energized high voltage contactor (K2 in electrical cabinet)	Check: • fuse F27 • overload relay 1F3* • phase monitor 1F4* • door monitors* • high voltage contactor (K2 in electrical cabinet) * fault should be indicated by monitor panel
A:2	Overload relay 1F3 is tripping	Check automatic grounding device and connections. Residual gas in new tube might lead to internal flash-over. Restart a few times. Check that tube connections (see page MS 1002–7X, fig. 3.) are parallel. Make sure spacing between grid and cathode connection tube is >3 mm at any point. Check capacitor 4C4 in both oscillator sections of TS-generators.
A:3	Fuse F27 is tripping	Check: • rectifier 2V1 – 2V6 • filter 1LC1 • transformer 1T1
A:4	Voltmeter for: TS-generator shows that voltage differs substantially from appr. 4.3 kV. Pull tab device generator shows that voltage differs substantially from appr. 6.3 kV. Zone heater generator shows that voltage differs substantially from appr. 5.2 kV.	Check: • mains voltage • connections, transformer 1T1 (Transformer for pull tab device generator is normally connected to 4400V and zone heater generator for 3700V.)
A:5	Voltmeter for: TS-generator shows appr. 4.3 kV. Pull tab device generator shows appr. 6.3 kV. Zone heater generator shows appr. 5.2 kV.	Correct. Proceed to section B.

Section A

Check by means of the high-voltage meter when no oscillator is pulsed

Footnote
This information is valid for TBA/9 1301 and 1303.

	Fault	Action
A:1	Voltmeter indicates 0V despite energized high voltage contactor (K2 in electrical cabinet)	Check: • motor switch Q27 • overload relay Q101* • phase monitor K101* • door monitors* • high voltage contactor (K2 in electrical cabinet) * fault should be indicated by monitor panel
A:2	Overload relay Q101 is tripping	Check automatic grounding device and connections. Residual gas in new tube might lead to internal flash-over. Restart a few times. Check that tube connections (see page MS 1002–7X, fig. 3.) are parallel. Make sure spacing between grid and cathode tube is >3 mm at any point. Check capacitor C404 in both oscillator sections of TS-generators.
A:3	Motor switch Q27 is tripping	Check: • rectifier V201 – V206 • filter Z101 • transformer T101
A:4	Voltmeter for: TS-generator shows that voltage differs substantially from appr. 4.3 kV. Zone heater generator shows that voltage differs substantially from appr. 5.2 kV.	Check: • mains voltage • connections, transformer T101 (Transformer for pull tab device generator is normally connected. to 4400V and zone heater generator for 3700V.)
A:5	Voltmeter for: TS-generator shows appr. 4.3 kV. Zone heater generator shows appr. 5.2 kV.	Correct. Proceed to section B.

Section A

Check by means of the high-voltage meter when no oscillator is pulsed

Footnote
This information is valid for TBA/9 1302 only.

	Fault	Action
A:1	Voltmeter indicates 0V despite energized high voltage contactor (K2 in electrical cabinet)	Check: • motor switch Q27 • overload relay Q101* • phase monitor K101* • door monitors* • high voltage contactor (K2 in electrical cabinet) * fault should be indicated by monitor panel
A:2	Overload relay Q101 is tripping	Check automatic grounding device and connections. Residual gas in new tube might lead to internal flash-over. Restart a few times. Check that tube connections (see page MS 1002–7X, fig. 3.) are parallel. Make sure spacing between grid and cathode tube is >3 mm at any point. Check capaitor C404 oscillator section.
A:3	Motor switch Q27 is tripping	Check: • rectifier V201 – V206 • filter Z101 • transformer T101
A:4	Voltmeter for pull tab device generator shows that voltage differs substantially from appr. 6.3 kV.	Check: • mains voltage • connections, transformer T101 (Transformer for pull tab device generator is normally connected. to 4400V and zone heater generator for 3700V.)
A:5	Voltmeter for pull tab device generator shows appr. 6.3 kV.	Correct. Proceed to section B.

Section B

Check by means of the high-voltage meter when oscillator is pulsed.

	Fault	Action
B:1	No voltage drop for oscillator during pulse a) pulse cards do not indicate pulse b) pulse cards indicate pulse	Check: • low voltage fuse F3A • transformer 1T2 and connections on 1X4 • resistor 2R1 in high voltage rectifier
B:2	No voltage drop for one of the oscillators during pulse	Replace pulse card. If required, check if pulse card indicates pulse: a) If pulse is indicated: Check filament voltage Check all oscillator connections Replace tube Check 4R1 and connections Check 4L2 and connections b) If pulse is not indicated: Check timer (page MS 1014–1X) Check rectifier card (page MS 1015–1X)
B:3	Abnormal voltage drop during pulse. (1000V or more)	Check: • rectifier 2V1 – 2V6 • transformer 1T1 • fuse F27 • mains voltage
B:4	Unsymmetrical voltage drops for the two TS oscillators (or abnormal voltage drop for ZH oscillator or pull tab device oscillator).	Adjust oscillator, see page MS 1017–5X. Check (on malfunctioning side): • contact rails • flexible cables • carrier • knife • inductor
B:5	Voltage drops approximately 500 V	Correct. Proceed to section C.

Section B

Check by means of the high-voltage meter when oscillator is pulsed.

Footnote
This information is valid for TBA/9 1301 and 1303.

	Fault	Action
B:1	No voltage drop for oscillator during pulse a) pulse cards do not indicate pulse b) pulse cards indicate pulse	Check: • low voltage fuse F3A • transformer T102 and connections on X004 • resistor R201 in high voltage rectifier
B:2	No voltage drop for one of the oscillators during pulse	Replace pulse card. If required, check if pulse card indicates pulse: a) If pulse is indicated: Check filament voltage Check all oscillator connections Replace tube Check R401 and connections Check L402 and connections b) If pulse is not indicated: Check timer (page MS 1014–1X) Check rectifier card (page MS 1015–1X)
B:3	Abnormal voltage drop during pulse. (1000V or more)	Check: • rectifier V201 – V206 • transformer T101 • fuse Q27 • mains voltage
B:4	Unsymmetrical voltage drops for the two TS oscillators (or abnormal voltage drop for ZH oscillator).	Adjust oscillator, see page MS 1017–5X. Check (on malfunctioning side): • contact rails • flexible cables • carrier • knife • inductor
B:5	Voltage drops approximately 500 V	Correct. Proceed to section C.

Section B

Check by means of the high-voltage meter when oscillator is not pulsed.

Footnote
This information is valid for TBA/9 1302 only.

	Fault	Action
B:1	No voltage drop for oscillator during pulse	Replace pulse card. If required, check if pulse card indicates pulse: a) If pulse is indicated: Check filament voltage Check all oscillator connections Replace tube Check R401 and connections Check L402 and connections b) If pulse is not indicated: Check timer (page MS 1014–1X) Check rectifier card (page MS 1015–1X)
B:2	Abnormal voltage drop during pulse. (1000V or more)	Check: • rectifier V201 – V206 • transformer T101 • fuse Q27 • mains voltage
B:3	Voltage drops approximately 500 V	Correct. Proceed to section C.

Section C

Check by means of the am-meter when oscillator is pulsed.

	Fault	Action
C:1	No current despite correct high voltage	Return to B:1 or B:2
C:2	Current for one TS oscillator below 0.6 A or above 1.0 A.	Return to B:4
C:3	Current for zone heater oscillator below 0.4 A or above 1.0 A.	Check: • flex cable and inductor connections for open circuit or short circuit • generator adjustments
C:4	Current for pull tab device oscillator below 0.6 A or above 1.0 A.	Check: • contact rails • flex cable and inductor connections for open circuit or short circuit • generator adjustments
C:5	Current too high for all oscillators	Mains voltage (max + 10% accepted)
C:6	Overload relay 1F3 is tripping when one TS-oscillator is pulsed.	Check: • short-circuit or flash-over between connections on tube or in HF transformer • pulse starting position • knife starting position • knife return movement • that no Al-foil is stuck on inductor • short-circuit in contact rails • counter rubber
C:7	Overload relay 1F3 is tripping when a zone heater-oscillator or pull tab oscillator is pulsed.	Check: • contact rails • felx cable • inductor conections regarding short-circuit
C:8	Am-meter shows 0.6 – 0.9 A during TS pulse	Correct current. Proceed to section D.
C:10	Am-meter shows 0.5 – 0.8 A during zone heater pulse 0.8 – 1.0 A during pull tab pulse	Correct current. Proceed to section D.

Section C

Check by means of the am-meter when oscillator is pulsed.

Footnote
This information is valid for TBA/9 1301 and 1303.

	Fault	Action
C:1	No current despite correct high voltage	Return to B:1 or B:2
C:2	Current for one TS oscillator below 0.6 A or above 1.0 A.	Return to B:4
C:3	Current for zone heater oscillator below 0.4 A or above 1.0 A.	Check: • flex cable and inductor connections for open circuit or short circuit • generator adjustments
C:4	Current too high for all oscillators	Mains voltage (max + 10% accepted)
C:5	Overload relay Q101 is tripping when one TS oscillator is pulsed.	Check: • short-circuit or flash-over between connections on tubes or in HF transformer • pulse starting position • knife starting position • knife return movement • that no Al-foil is stuck on inductor • short-circuit in contact rails • counter rubber
C:6	Overload relay Q101 is tripping when a zone heater oscillator or pull tab oscillator is pulsed.	Check: • contact rails • felx cable • inductor conections regarding short-circuit
C:7	Am-meter shows 0.6 – 0.9 A during TS oscillator pulse	Correct current. Proceed to section D.
C:8	Am-meter shows 0.5 – 0.8 A during zone heater oscillator pulse	Correct current. Proceed to section D.

Section C

Check by means of the am-meter when oscillator section is pulsed.

Footnote
This information is valid for TBA/9 1302 only.

	Fault	Action
C:1	No current despite correct high voltage	Return to B:1
C:2	Current for pull tab oscillator below 0.6 A or above 1.0 A.	Check: • contact rails • flex cable connections for open cirquit or short circuit • inductor • generator adjustments
C:3	Current too high for all oscillators	Mains voltage (max + 10% accepted)
C:4	Overload relay Q101 is tripping when oscillator is pulsed.	Check: • short-circuit or flash-over between connections on tubes or in HF transformer • components L401, C403 and RL401 • inductor and inductor connections

Section D

Check transversal sealing (TS).

	Fault	Action
D:1	Faulty TS seals on both sides	Check: • sealing time, see page MS 1014–1X, • anode voltage, see page MS 1011–1X, • sealing pulse starting position, • HF-voltage, see page MS 1017–5X, • anode current, see page MS 1012–1X. Replace pulse card and rectifier card, see page MS 1015–1X
D:2	Both sides overheated	Check: • sealing time, see page MS 1014–1X, • mains voltage (max +10% accepted), • HF-voltage, see page MS 1017–5X, • anode voltage, see page MS 1011–1X, • anode current, see page MS 1012–1X.
D:3	Faulty TS-seal on one side	Check: • flex cable • carrier • inductor • knife • contact rails • oscillator unit, see page MS 1017–5X and MS 1012–1X Replace pulse card and rectifier card, see page MS 1015–1X
D:4	No seals at all	Return to A:1 and B:1.
D:5	Uneven seal or bad seals at corners	Check: • jaw pressure • knife return movement • knife starting position • counter rubber • replace inductor

Section E

WARNING!
Follow the safety precautions on page 1002–7X unconditionally!

Interference caused by an oscillator.

An oscillator is in fact a high power radio transmitter, the difference being that a transmitter is designed to radiate its available power from an external antenna, while the IH-oscillator must retain its power within the system.

A certain amount of HF-radiation can always be measured in the vicinity of the oscillator, but the level is normally negligible. Should the level be too high, it might lead to malfunctioning of nearby equipment, such as temperature regulators or it might interfere with TV or radio reception in the vicinity.

Remedies

Interference caused by a TBA/9-system will probably have its origin in one oscillator system only. To find out which one, remove the pulse cards one by one to disable the oscillator sections.

When it has been established which oscillator is disturbing the operation of other equipment, the first things to suspect are the interconnections between the oscillator and the inductors. An improper joint or worn insulation might lead to excessive HF-radiation.

If the interconnections are perfect, the problem is probably inside the oscillator section.

Faulty joints might lead to arcing. Check all joints.

Contamination might cause flash-over.

The tube itself might create interference and a tube replacement might cure the problem.

Section E

WARNING!
Follow the safety precautions on page MS 1002–7X unconditionally!

Interference caused by an oscillator.

An oscillator is in fact a high power radio transmitter, the difference being that a transmitter is designed to radiate its available power from an external antenna, while the IH-oscillator must retain its power within the system.

A certain amount of HF-radiation can always be measured in the vicinity of the oscillator, but the level is normally negligible. Should the level be too high, it might lead to malfunctioning of nearby equipment, such as temperature regulators or it might interfere with TV or radio reception in the vicinity.

Remedies

Check the joints between the oscillator and the inductor. An improper joint or worn insulation might lead to excessive HF-radiation.

If the interconnections are perfect, the problem is probably inside the oscillator section.

Faulty joints might lead to arcing. Check all joints.

Contamination might cause flash-over.

The tube itself might create interference and a tube replacement might cure the problem.

Checking

The control section is equipped with a voltmeter to monitor the high-voltage during operation.

The high-voltage shall be approximately according to the table below.

Unit	No pulse, kV	Pulse, kV
TS	4.3	4.0
Pull tab	6.3	5.7
Zone heater	5.2	4.7

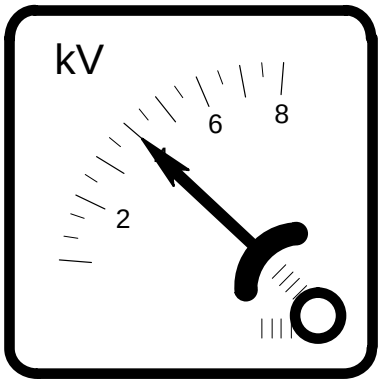

When the pulse starts the voltage drops approximately 0.5 kV.

The phase sensor monitors the three-phase system. Should an unbalance occur, the phase sensor disables the high voltage contactor.

The monitor panel displays **Phase monitor**.

Should one phase fail inside the generator, this will not be detected by the phase sensor. The quiescent high voltage is normal, but during the pulse the voltage will drop approximately 1 kV. The origin of such a problem will be found in an open diode in 2V1 – 2V6, or in transformer 1T1.

Checking

The control section is equipped with a voltmeter to monitor the high-voltage during operation.

The high-voltage shall be approximately according to the table below.

Unit	No pulse, kV	Pulse, kV
TS	4.3	4.0
Pull tab	6.3	5.7
Zone heater	5.2	4.7

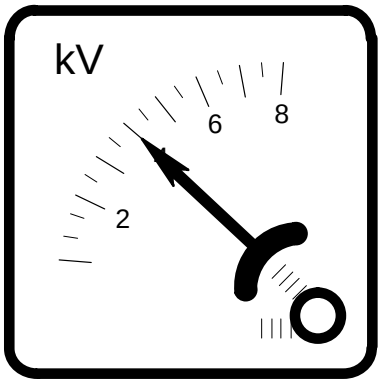

When the pulse starts the voltage drops approximately 0.5 kV.

The phase sensor monitors the three-phase system. Should an unbalance occur, the phase sensor disables the high voltage contactor.

The monitor panel displays **Phase monitor**.

Should one phase fail inside the generator, this will not be detected by the phase sensor. The quiescent high voltage is normal, but during the pulse the voltage will drop approximately 1 kV. The origin of such a problem will be found in an open diode in V201 – V206, or in transformer T101.

Checking

The anode current is affected by the load.
With the oscillator unloaded, i.e with the contact rails disconnected, the current should be around 300 mA.

When the inductor is loaded by Al-foil, the anode current increases. The actual anode current is an indication of the power applied to the seal.
A thinner Al-foil absorbs more power and thus leads to a higher anode current.

If an oscillator is to be pulsed with the machine idle, +48 V must be applied to the pulse card. Use a test cable , see page MS 1017–5X.

Connect the test instrument (3) to one of the test outlets, in the control section.

Footnote
The anode currents for both TS-oscillators can be measured in any one of the test-outlets (1) or (2). The current displayed is the current for the oscillator that is presently pulsing.

Check the anode current.

Oscillator	Anode current, mA
TS	600 – 900
Pull tab	min 1000
Zone heater	appr. 500

Footnote
The test instrument should be connected for this measurement. If the current is measured without the test instrument, the displayed current will be around 50 mA too low.

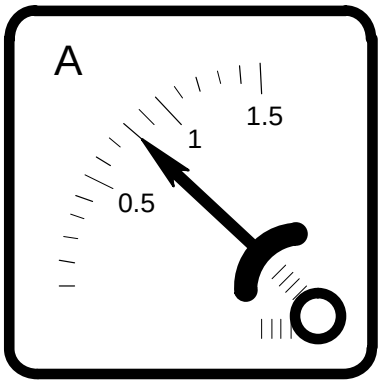

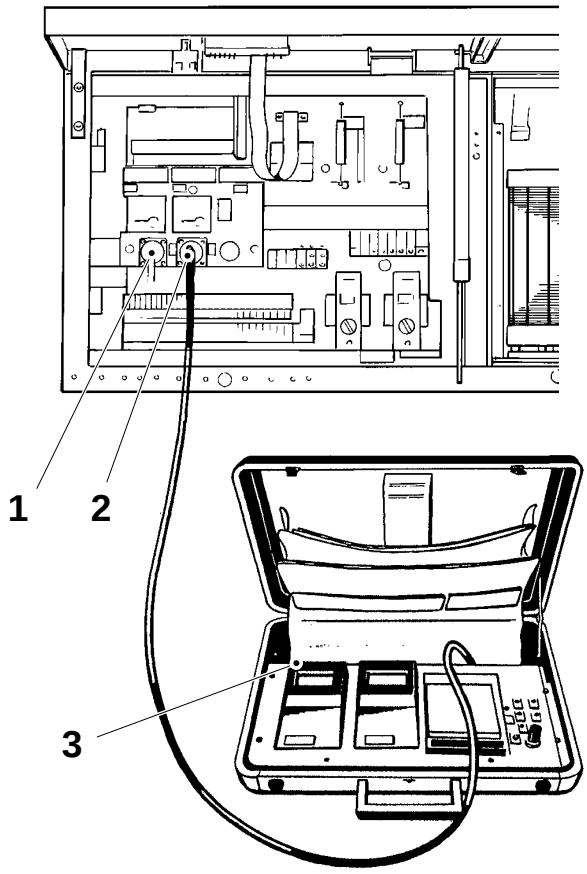

1 Test outlet 1X6
2 Test outlet 1X7
3 Test instrument TP101A

Checking

The anode current is affected by the load.
With the oscillator unloaded, i.e with the contact rails disconnected, the current should be around 300 mA.

When the inductor is loaded by Al-foil, the anode current increases. The actual anode current is an indication of the power applied to the seal.
A thinner Al-foil absorbs more power and thus leads to a higher anode current.

If an oscillator is to be pulsed with the machine idle, +48 V must be applied to the pulse card. Use a test cable , see page MS 1017–5X.

Connect the test instrument (3) to one of the test outlets, in the control section.

Footnote
The anode currents for both TS-oscillators can be measured in any one of the test-outlets (1) or (2). The current displayed is the current for the oscillator that is presently pulsing.

Check the anode current.

Oscillator	Anode current, mA
TS	600 – 900
Pull tab	min 1000
Zone heater	appr. 500

Footnote
The test instrument should be connected for this measurement. If the current is measured without the test instrument, the displayed current will be around 50 mA too low.

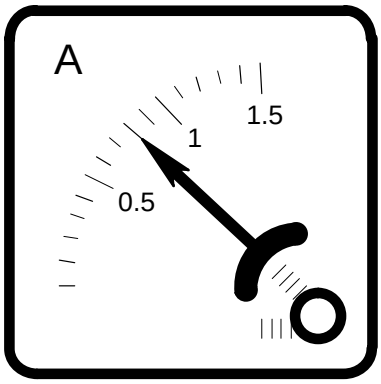

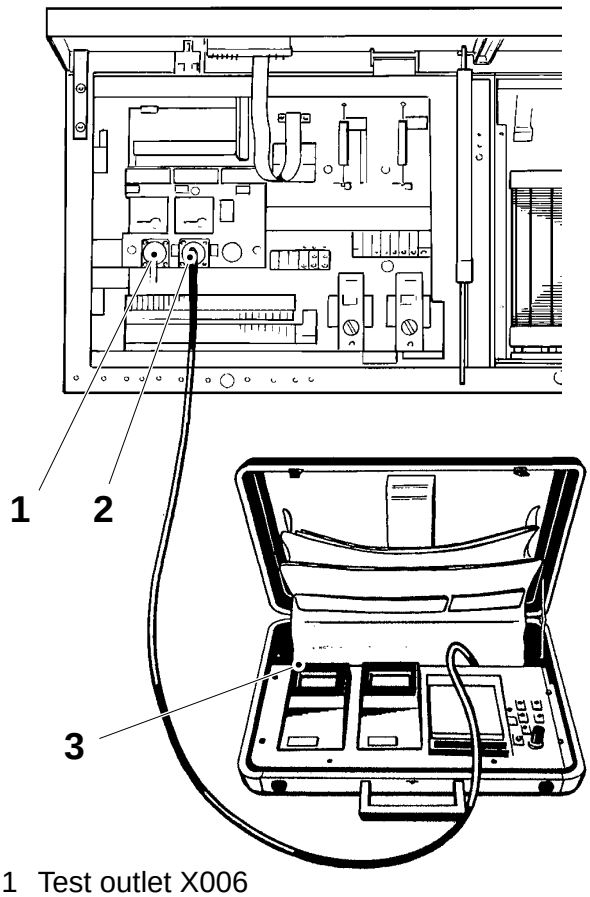

1 Test outlet X006
2 Test outlet X007
3 Test instrument TP101A

Checking

The anode current is affected by the load. The difference in current for a pulsed oscillator when it is loaded by Al-foil compared to without this load is related to the power applied to the seal.

Connect the test instrument (2) to the test outlet (1) in the generator.

Check the anode current.

Oscillator	Anode current, mA
Wide IS strip	900 – 1500
Narrow IS strip	400 – 750

With the oscillator unloaded, i.e with the contact rails disconnected, the current should be around 400 mA in the wide IS strip position.

Footnote
The test instrument should be connected for this measurement. If the current is measured without the test instrument, the displayed current will be around 50 mA too low.

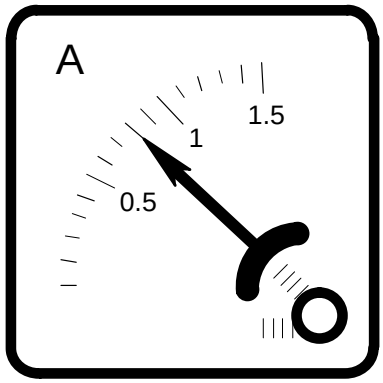

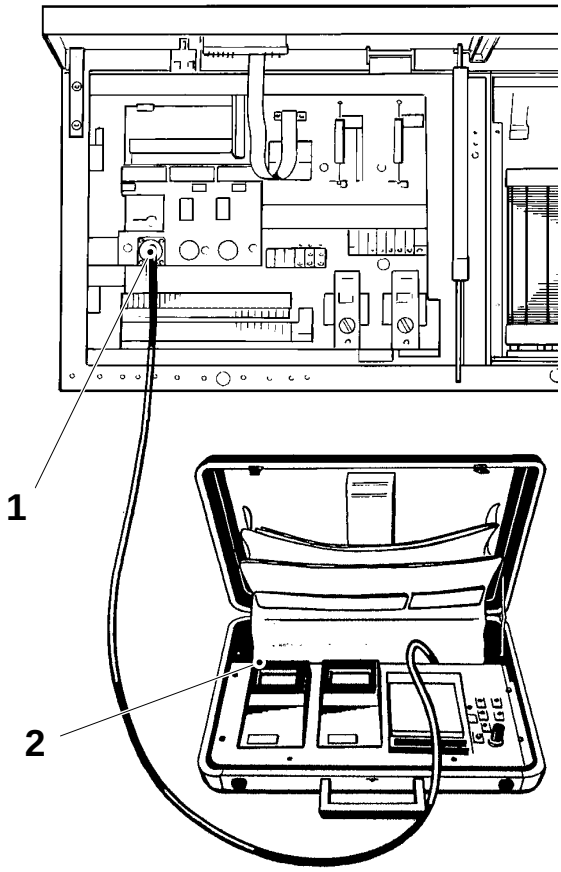

1 Test outlet X006
2 Test instrument TP101A

Checking

The grid current is measured separately for each oscillator section. Connect the test instrument (3) to the test outlet (1) or (2).

The grid current during pulse should be 100 – 280 mA.

Footnote
If a tube is replaced, **record** the grid current **and** the mains voltage. This information must be used, when the condition of the tube shall be checked.

Since the grid current for a new tube might be anything from 100 to 300 mA, there is no absolute value to advice about the condition of the tube. The **decline** of the grid current, however, is the best indication of the tube emission. When the grid current has **dropped to around 35%** of its original value, the tube is probably due for replacement.

If the contact rails are disconnected, the current should be 300 – 400 mA.
(The grid current increases for an unloaded oscillator.)

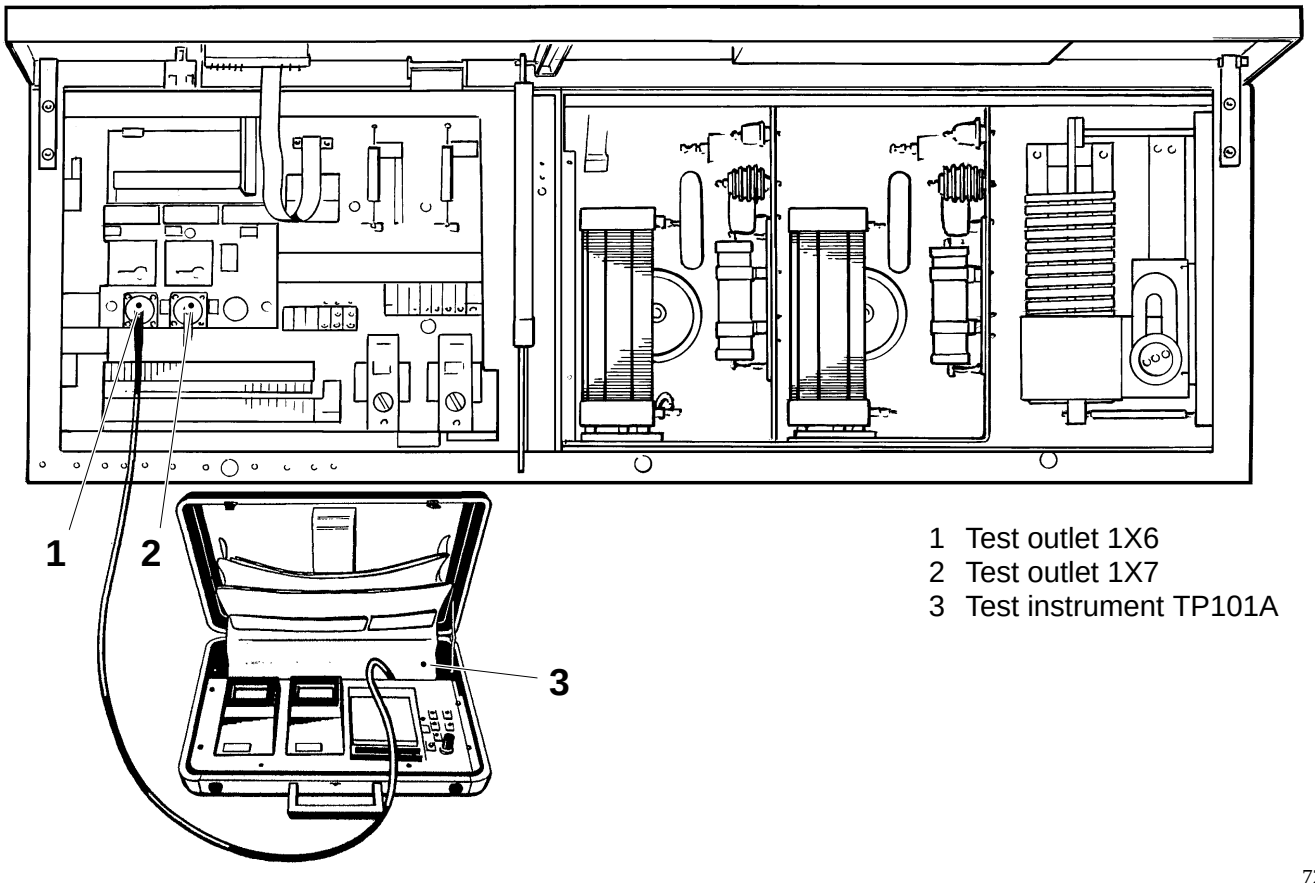

1 Test outlet 1X6
2 Test outlet 1X7
3 Test instrument TP101A

Checking

The grid current is measured separately for each oscillator section. Connect the test instrument (3) to the test outlet (1) or (2).

The grid current during pulse should be 100 – 280 mA.

Footnote
If a tube is replaced, **record** the grid current **and** the mains voltage. This information must be used, when the condition of the tube shall be checked.

Since the grid current for a new tube might be anything from 100 to 300 mA, there is no absolute value to advice about the condition of the tube. The **decline** of the grid current, however, is the best indication of the tube emission. When the grid current has **dropped to around 35%** of its original value, the tube is probably due for replacement.

If the contact rails are disconnected, the current should be 300 – 400 mA.
(The grid current increases for an unloaded oscillator.)

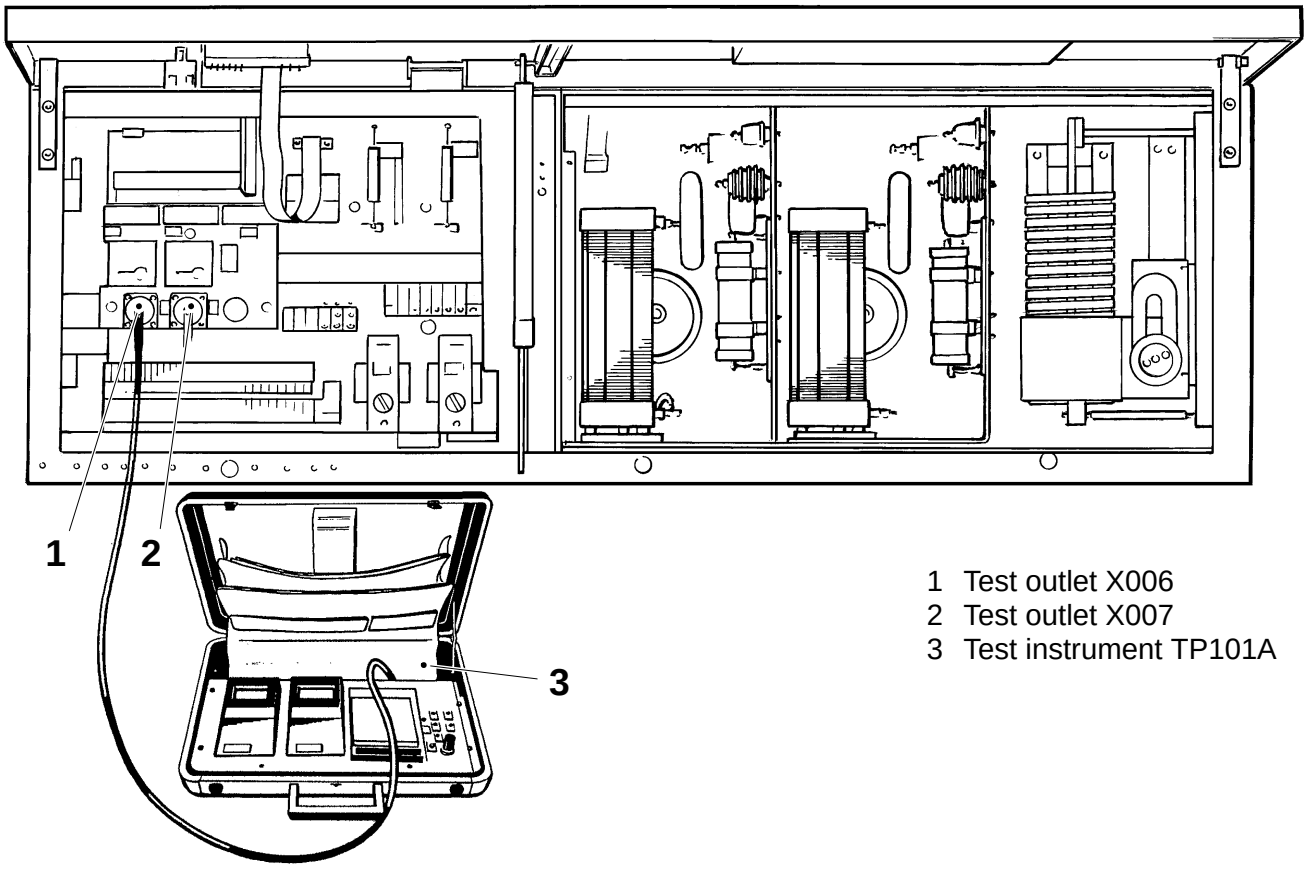

1 Test outlet X006
2 Test outlet X007
3 Test instrument TP101A

725

Checking

Connect the test instrument (3) to the test outlet (1).

The grid current during pulse, see table below.

Oscillator	Grid current, mA
Wide IS strip	350 – 550
Narrow IS strip	5 – 150

If the contact rails are disconnected, the current might rise to 750 mA. (The grid current increases for an unloaded oscillator.)

Footnote
If a tube is replaced, **record** the grid current **and** the mains voltage. This information must be used, when the condition of the tube shall be checked.

Since the grid current for a new tube might be anything from 100 to 550 mA, there is no absolute value to advice about the condition of the tube. The **decline** of the grid current, however, is the best indication of the tube emission. When the grid current has **dropped to around 35%** of its original value, the tube is probably due for replacement.

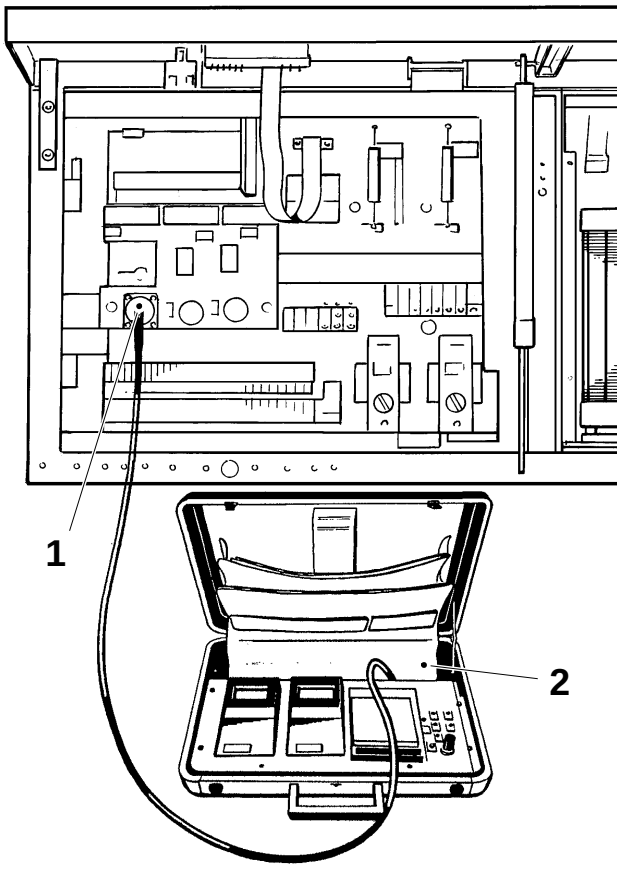

1 Test outlet X006
2 Test instrument TP101A

Checking

The timers for the TS and pull tab device generators create a voltage dependent pulse, i.e. a lower mains voltage leads to an increased pulse duration.

The zone heater generator is controlled by a separate timer. Its pulse duration is not affected by voltage fluctuations.

Use pulse time counter TP102 (1) to measure the pulse duration.

Footnote
The pulse duration can be measured on the carrier (HF signal) or on the input to the pulse card (DC signal). The most convenient place is the connector (2), where the input to the pulse card is available between pins 3 and 4 (or 5 and 6). (Between pins 1 and 2 for pull tab device generator or zone heater generator.)

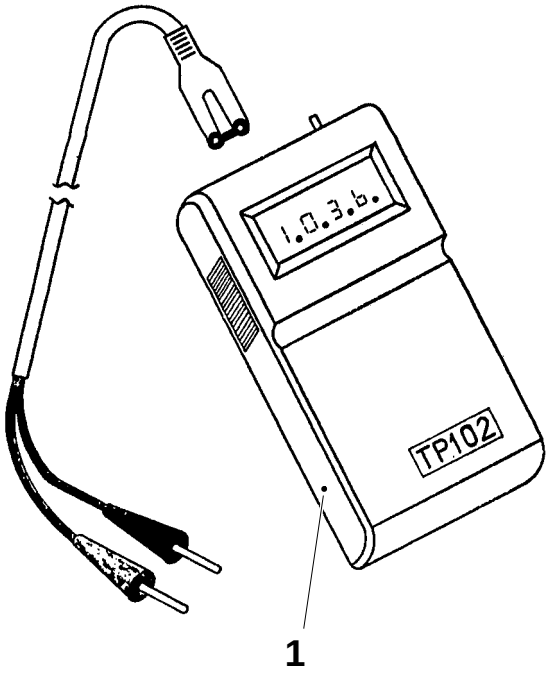

Caution!
Use the same type of inductor on both carriers. If one inductor must be replaced, the new inductor must have **the same type number** as the old one.

(Cont'd)

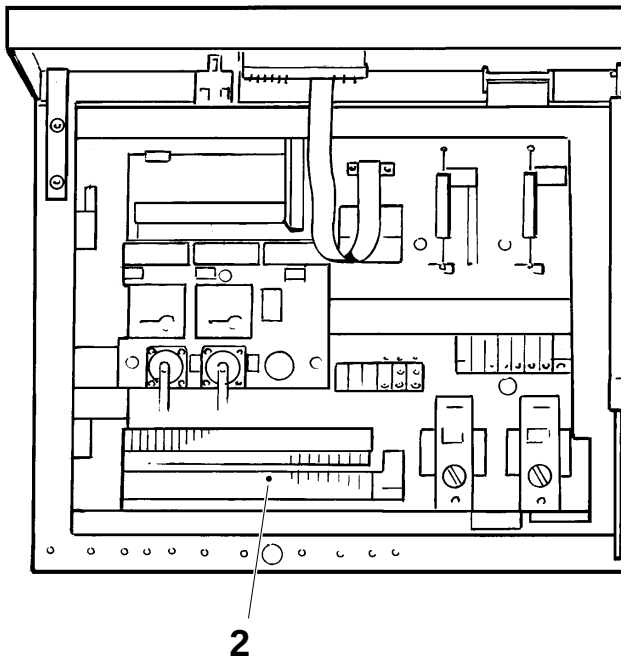

1 Pulse time counter TP102, TP No. 90243–90
2 Connector 1X1

(Cont'd)

Recommended pulse durations

Mains voltage, V	Pulse duration, ms		
	125 ml	180 – 250 ml	200S ml
323/187	332	242	311
328/190	322	235	302
337/195	306	223	286
345/200	290	212	272
354/205	276	202	259
363/210	264	192	247
371/215	251	183	236
380/220	240	175	225
389/225	229	167	215
397/230	220	160	206
406/235	210	153	197
415/240	202	147	189
418/242	198	145	186

Footnote
The recommended pulse durations are to be used as initial settings. The final setting must be done by examination of the seal quality.

The formula for the applicable pulse duration is:

$$TA = \frac{TN}{(V)^2}$$

TA = Applicable pulse duration

TN = Time at nominal mains voltage

V = Applicable voltage in per cent of nominal.
Note! This value is squared.

Example:
If the nominal time is 200 ms and you want to calculate the pulse duration when the mains voltage is 10% above nominal

$$TA = \frac{200}{(1.10)^2} = 165 \text{ ms}$$

Trouble shooting

If the generator is not activated by the pulse, i.e. the blocking voltage (see page MS 1015–1X) remains high, check the pulse card function by temporarily connecting +48V DC to pin 32 on the pulse card (see page MS 1017–5X:1).

If this activates the generator, the pulse card is OK and the problem is most probably in the timer or PLC.

Checking

The timers for the TS and pull tab device generators create a voltage dependent pulse, i.e. a lower mains voltage leads to an increased pulse duration.

The zone heater generator is controlled by a separate timer. Its pulse duration is not affected by voltage fluctuations.

Use pulse time counter TP102 (1) to measure the pulse duration.

Footnote
The pulse duration can be measured on the carrier (HF signal) or on the input to the pulse card (DC signal). The most convenient place is the connector (2), where the input to the pulse card is available between pins 3 and 4 (or 5 and 6). (Between pins 1 and 2 for zone heater generator.)

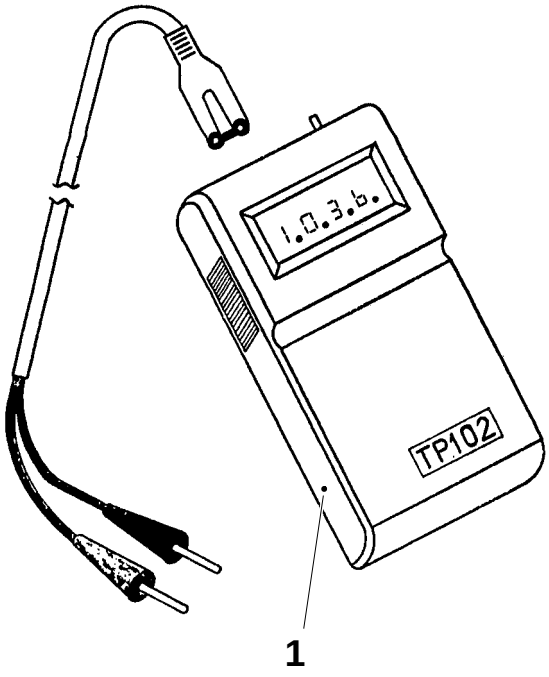

Caution!
Use the same type of inductor on both carriers. If one inductor must be replaced, the new inductor must have **the same type number** as the old one.

(Cont'd)

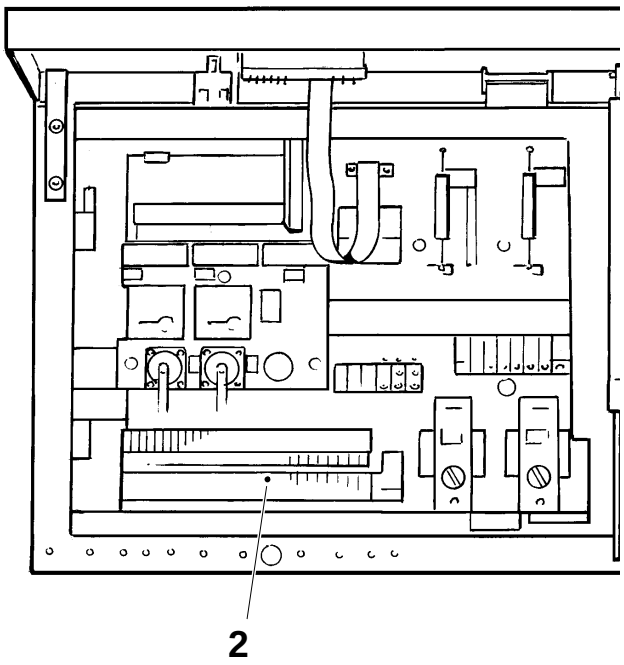

1 Pulse time counter TP102, TP No. 90243–90
2 Connector X001

(Cont'd)

Recommended pulse durations

Footnote
This information is valid for TBA/9 1301 and 1303.

Mains voltage, V	Pulse duartion, ms		
	125 ml	180 – 284 ml	200S ml
323/187	272	242	311
328/190	264	235	302
337/195	250	223	286
345/200	238	212	272
354/205	227	202	259
363/210	216	192	247
371/215	206	183	236
380/220	197	175	225
389/225	188	167	215
397/230	180	160	206
406/235	172	153	197
415/240	165	147	189
418/242	163	145	186

Footnote
The recommended pulse durations are to be used as initial settings. The final setting must be done by examination of the seal quality.

The formula for the applicable pulse duration is:

$$TA = \frac{TN}{(V)^2}$$

TA = Applicable pulse duration

TN = Time at nominal mains voltage

V = Applicable voltage in per cent of nominal.
Note! This value is squared.

Example:
If the nominal time is 200 ms and you want to calculate the pulse duration when the mains voltage is 10% above nominal

$$TA = \frac{200}{(1.10)^2} = 165 \text{ ms}$$

Trouble shooting

If the generator is not activated by the pulse, i.e. the blocking voltage (see page MS 1015–1X) remains high, check the pulse card function by temporarily connecting +24V DC to pin 32 on the pulse card (see page MS 1017–5X:1).

If this activates the generator, the pulse card is OK and the problem is most probably in the timer or PLC.

Checking

The timer for the pull tab device generator creates a voltage dependent pulse, i.e. a lower mains voltage leads to an increased pulse duration.

Use pulse time counter TP102 (1) to measure the pulse duration.

Footnote
The pulse duration can be measured on the inductor (HF-signal) or on the input to the pulse card (DC-signal). The most convenient place is the connector X001 (2), where the input to the pulse card is available between pins 1 and 2.

(Cont'd overleaf)

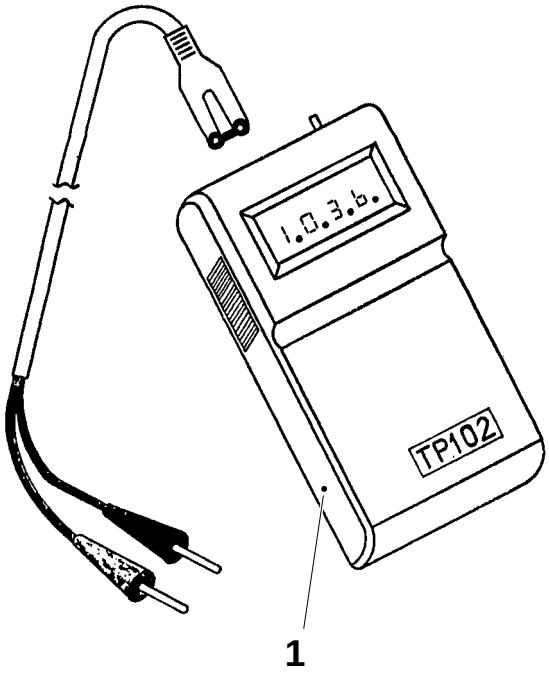

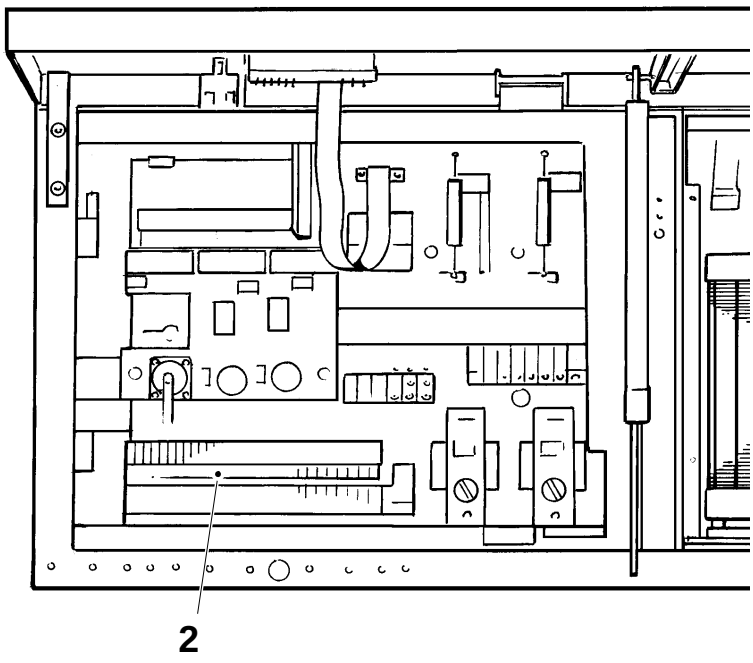

1 Pulse time counter TP102, TP No. 90243–90
2 Connector X001

(Cont'd)

Recommended pulse durations

Footnote
This information is valid for TBA/9 1302 only.

Mains voltage, V	Pulse duration, ms						
	125 ml 7.5/29	125 ml 7.5/35	180 ml 7.5/35	200S ml 7.5/29	200S ml 7.5/35	200 ml 7.5/37.5	250 ml 7.5/37.5
323/187	152	143	–	125	125	159	138
328/190	147	138	130	121	121	154	134
337/195	140	131	124	115	115	146	127
345/200	133	125	120	109	109	139	121
354/205	127	119	114	104	104	132	115
363/210	121	113	108	99	99	126	110
371/215	115	108	102	94	94	120	105
380/220	110	103	98	90	90	115	100
389/225	105	98	94	86	86	110	96
397/230	101	94	90	82	82	105	91
406/235	96	90	86	79	79	101	88
415/240	92	87	82	76	76	97	84
418/242	91	85	81	74	74	95	83

Footnote
The recommended pulse durations are to be used as initial settings. The final setting must be done by examination of the seal quality.

The formula for the applicable pulse duration is:

$$TA = \frac{TN}{(V)^2}$$

TA = Applicable pulse duration

TN = Time at nominal mains voltage

V = Applicable voltage in per cent of nominal. Note! This value is squared.

Example:
If the nominal time is 100 ms and you want to calculate the pulse duration when the mains voltage is 10% above nominal

$$TA = \frac{100}{(1.10)^2} = 83 \text{ ms}$$

Trouble shooting

If the generator is not activated by the pulse, i.e. the blocking voltage (see page MS 1015–1X) remains high, check the pulse card function by temporarily connecting +24V DC to pin 32 on the pulse card (see page MS 1017–5X:1.

Checking

The oscillators have separate transformers and rectifier cards for their blocking voltages.

The blocking voltage is derived from the rectifier card (2), which is located underneath the pulse card (1), see fig. The rectifier card also contains a 12 V rectifier for the pulse card.

The pulse card operates as a switch to enable the oscillator.

Connect the test instrument (3) and read the blocking voltage.

The voltage for a quiescent oscillator (i.e. with no pulse) shall be -700 V. During the pulse the voltage will be close to zero.

Footnote
The blocking voltage can be measured by means of the test instrument (3).

Footnote
The purpose of the blocking voltage is to assure the oscillator is absolutely quiescent between the pulses. If the blocking voltage is lacking and the grid circuit is not grounded, the oscillator will start and stop at its own pace. A situation might exist, in which the blocking voltage is lacking, while the rest of the pulse circuit is operating properly. In this case the operation of the oscillator will appear correct, apart from the additional pulses.

If the oscillator fails to operate, see page MS 1005–7X.

(Cont'd overleaf)

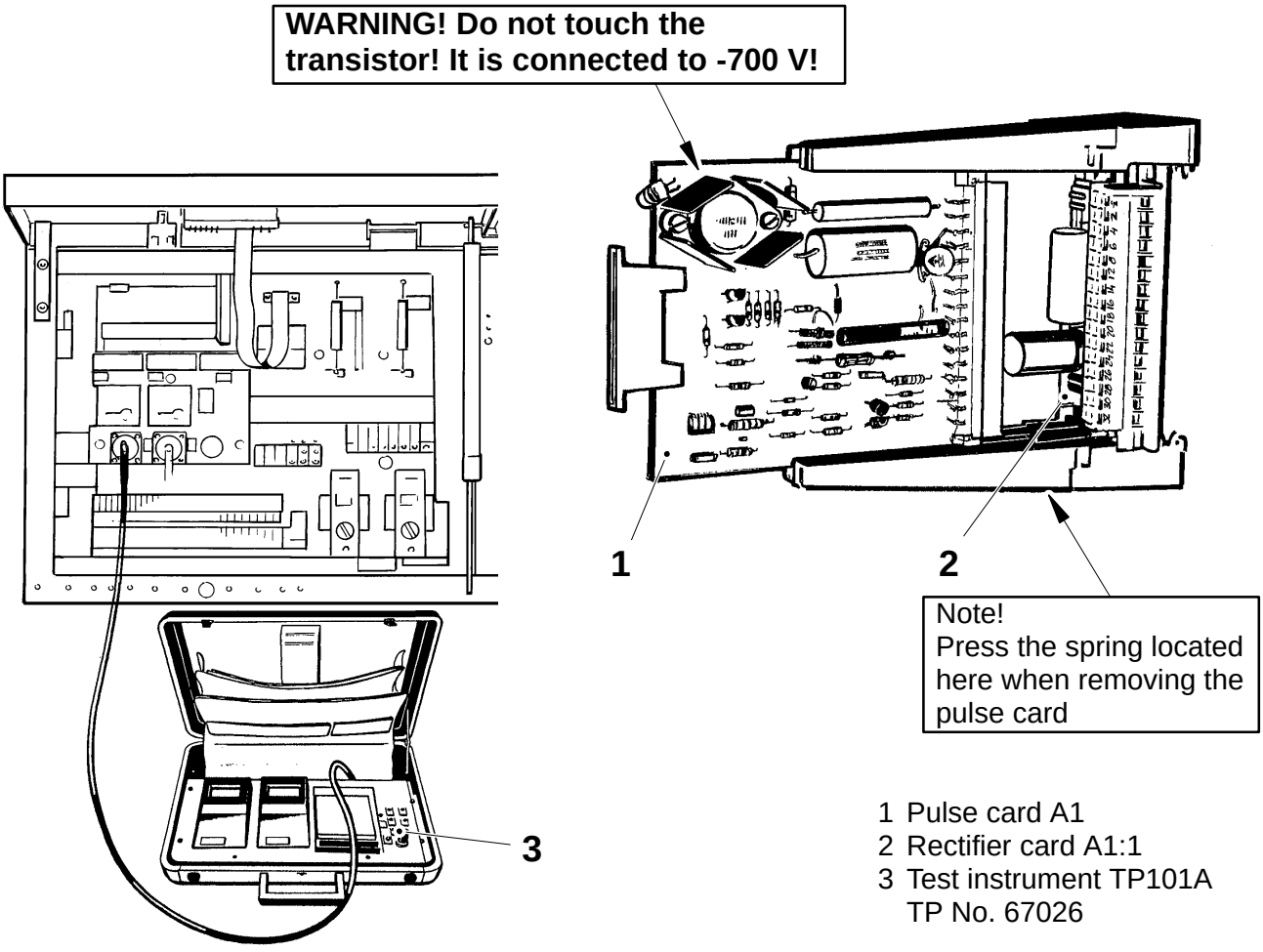

1 Pulse card A1
2 Rectifier card A1:1
3 Test instrument TP101A
TP No. 67026

733

(Cont'd)

Trouble shooting

WARNING!
Always follow the safety precautions on page MS 1002–7X when working in the generator section!

a) If both TS-oscillators fail to operate and the blocking voltages are missing, check the connections (1).

b) If one oscillator is inoperative and its blocking voltage is missing, check its transformer (1T4 (2) or 1T5 (3)), the fuse, the rectifier card (5) and the connector (1).

c) If one oscillator is inoperative and the blocking voltage remains around -700V, replace the pulse card. If this does not cure the problem, make sure the **enable** signal from the timer is received. This signal shall be around 48 V between pins 32 (7) and 30 (6) on the rectifier card. A broken low-voltage winding in the transformer (2) or (3) or an open diode on the rectifier card might create the same problem.

d) If there is no enable signal, check the timer and the PLC.

e) If the blocking voltage is controlled by the pulse, but the oscillator does not operate, check if resistor (9) is broken. If not, see page MS 1005–7X, B:2.

f) If an oscillator gives a constant pulse, switch it off to prevent damage to the inductor. Replace the pulse card. If the fault remains, check the capacitor (8) for short-circuit. If required, replace the rectifier card (5).

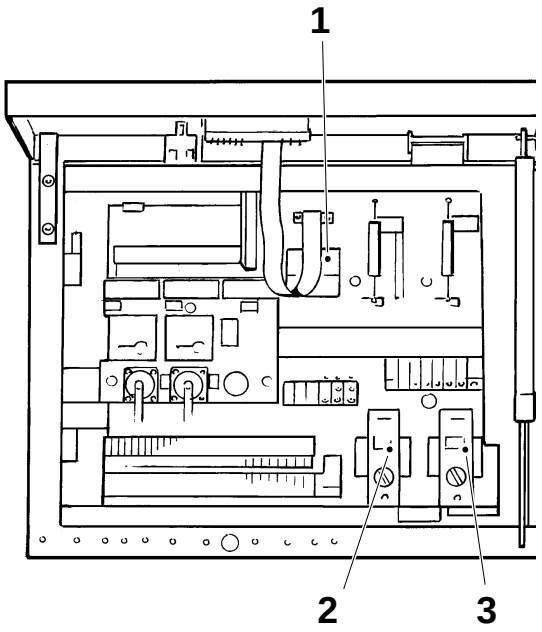

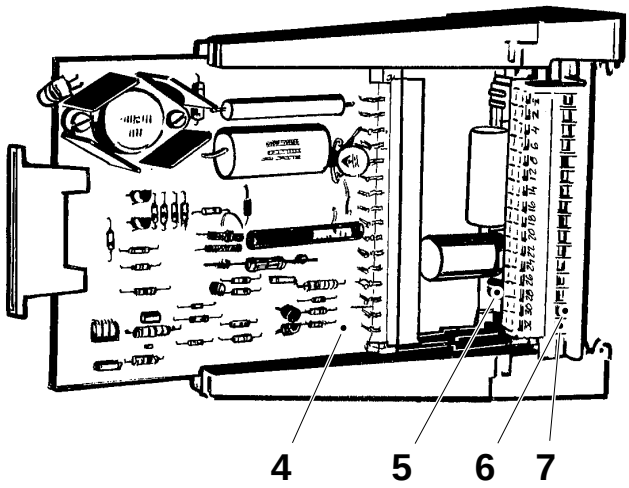

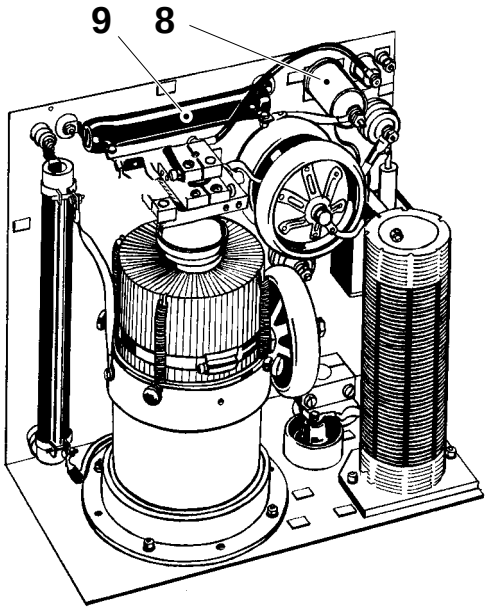

1 Connector 1X4
2 Transformer 1T4
3 Transformer 1T5
4 Pulse card
5 Rectifier card
6 Pin 30 (–)
7 Pin 32 (+)
8 Capacitor 4C6
9 Resistor 4R1

Checking

The oscillators have separate transformers and rectifier cards for their blocking voltages.

The blocking voltage is derived from the rectifier card (2), which is located underneath the pulse card (1), see fig. The rectifier card also contains a 12 V rectifier for the pulse card.

The pulse card operates as a switch to enable the oscillator.

Connect the test instrument (3) and read the blocking voltage.

The voltage for a quiescent oscillator (i.e. with no pulse) shall be -700 V. During the pulse the voltage will be close to zero.

Footnote
The blocking voltage can be measured by means of the test instrument (3).

Footnote
The purpose of the blocking voltage is to assure the oscillator is absolutely quiescent between the pulses. If the blocking voltage is lacking and the grid circuit is not grounded, the oscillator will start and stop at its own pace. A situation might exist, in which the blocking voltage is lacking, while the rest of the pulse circuit is operating properly. In this case the operation of the oscillator will appear correct, apart from the additional pulses.

If the oscillator fails to operate, see page MS 1005–7X.

(Cont'd overleaf)

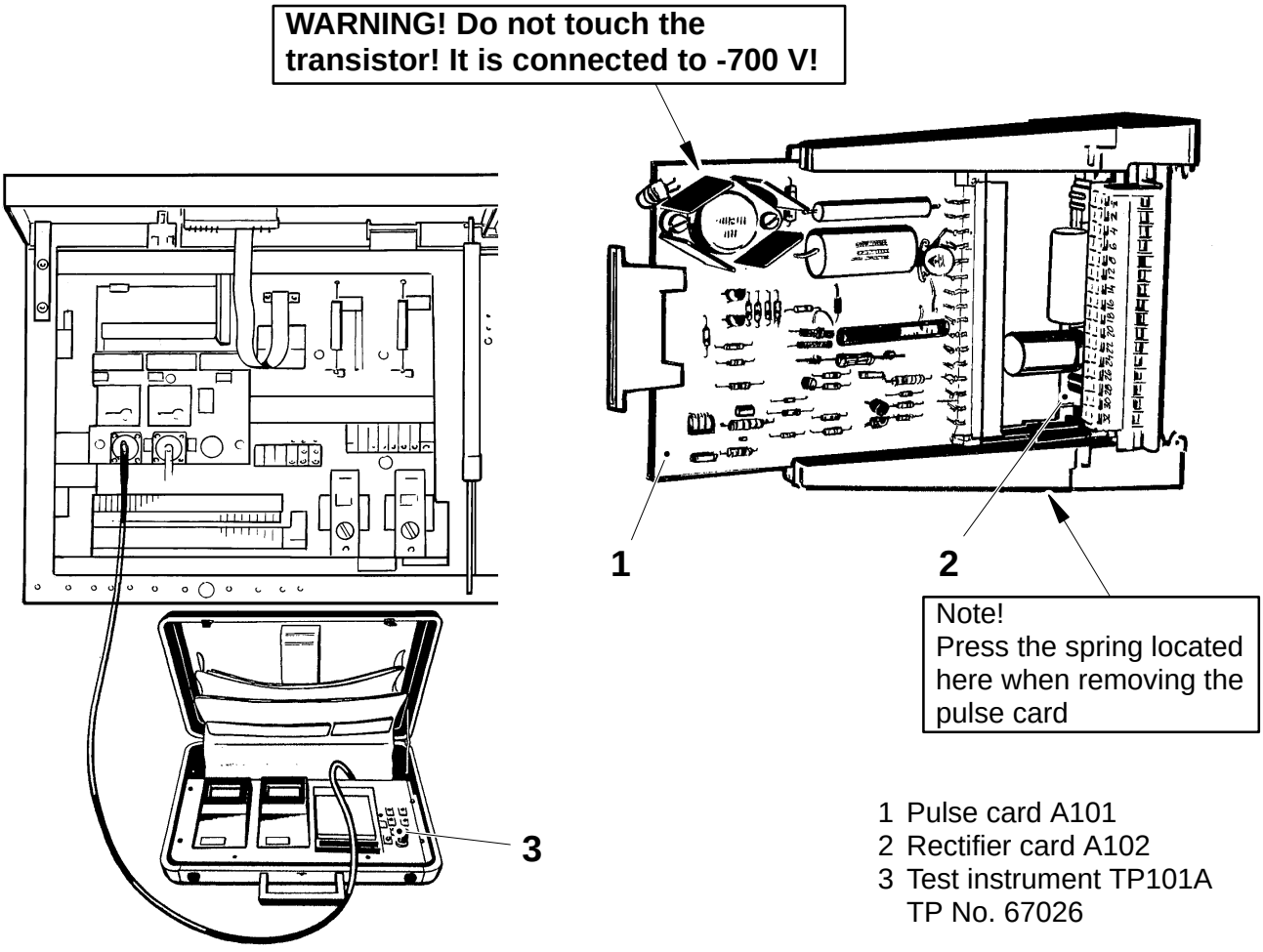

1 Pulse card A101
2 Rectifier card A102
3 Test instrument TP101A
TP No. 67026

735

(Cont'd)

Trouble shooting

WARNING!
Always follow the safety precautions on page MS 1002–7X when working in the generator section!

a) If both TS-oscillators fail to operate and the blocking voltages are missing, check the connections (1).

b) If one oscillator is inoperative and its blocking voltage is missing, check its transformer (T104 (2) or T105 (3)), the fuse, the rectifier card (5) and the connector (1).

c) If one oscillator is inoperative and the blocking voltage remains around -700V, replace the pulse card. If this does not cure the problem, make sure the **enable** signal from the timer is received. This signal shall be around 24 V between pins 32 (7) and 30 (6) on the rectifier card. A broken low-voltage winding in the transformer (2) or (3) or an open diode on the rectifier card might create the same problem.

d) If there is no enable signal, check the timer and the PLC.

e) If the blocking voltage is controlled by the pulse, but the oscillator does not operate, check if resistor (9) is broken. If not, see page MS 1005–7X, B:2.

f) If an oscillator gives a constant pulse, switch it off to prevent damage to the inductor. Replace the pulse card. If the fault remains, check the capacitor (8) for short-circuit. If required, replace the rectifier card (5).

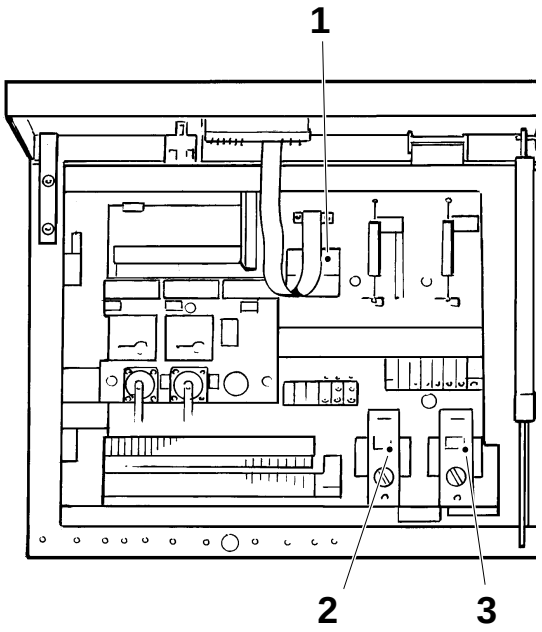

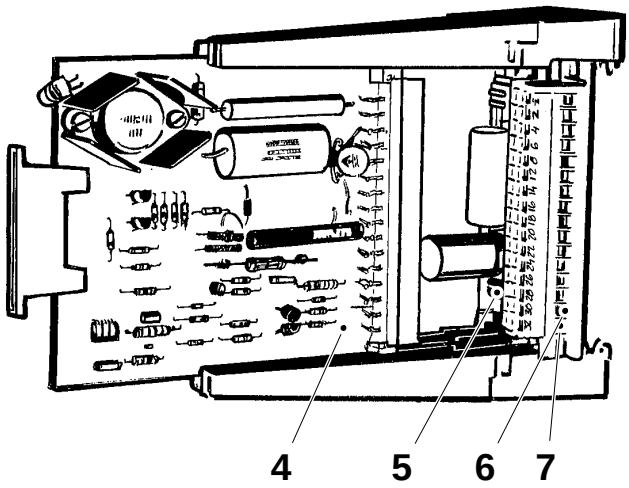

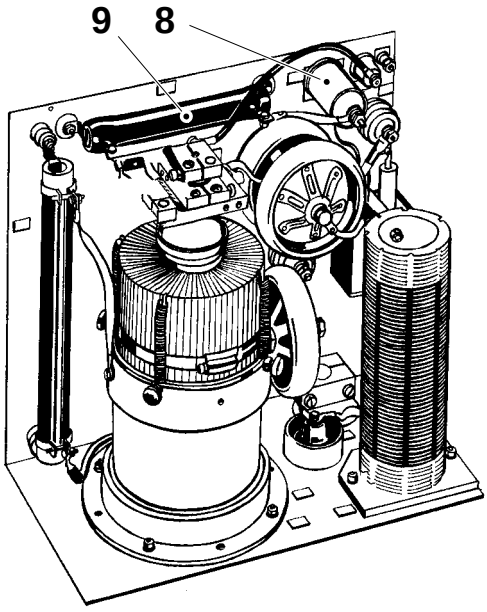

1 Connector X004
2 Transformer T104
3 Transformer T105
4 Pulse card
5 Rectifier card
6 Pin 30 (–)
7 Pin 32 (+)
8 Capacitor C406
9 Resistor R401

Checking

The blocking voltage is derived from the rectifier card (2), which is located underneath the pulse card (1), see fig. The rectifier card also contains a 12 V rectifier for the pulse card.

The pulse card operates as a switch to enable the oscillator.

Connect the test instrument (3) and read the blocking voltage.

The voltage for a quiescent oscillator (i.e. with no pulse) shall be -700 V. During the pulse the voltage will be close to zero.

Footnote
The blocking voltage can be measured by means of the test instrument (3).

Footnote
The purpose of the blocking voltage is to assure the oscillator is absolutely quiescent between the pulses. If the blocking voltage is lacking and the grid circuit is not grounded, the oscillator will start and stop at its own pace. A situation might exist, in which the blocking voltage is lacking, while the rest of the pulse circuit is operating properly. In this case the operation of the oscillator will appear correct, apart from the additional pulses.

If the oscillator fails to operate, see page MS 1005–7X.

(Cont'd overleaf)

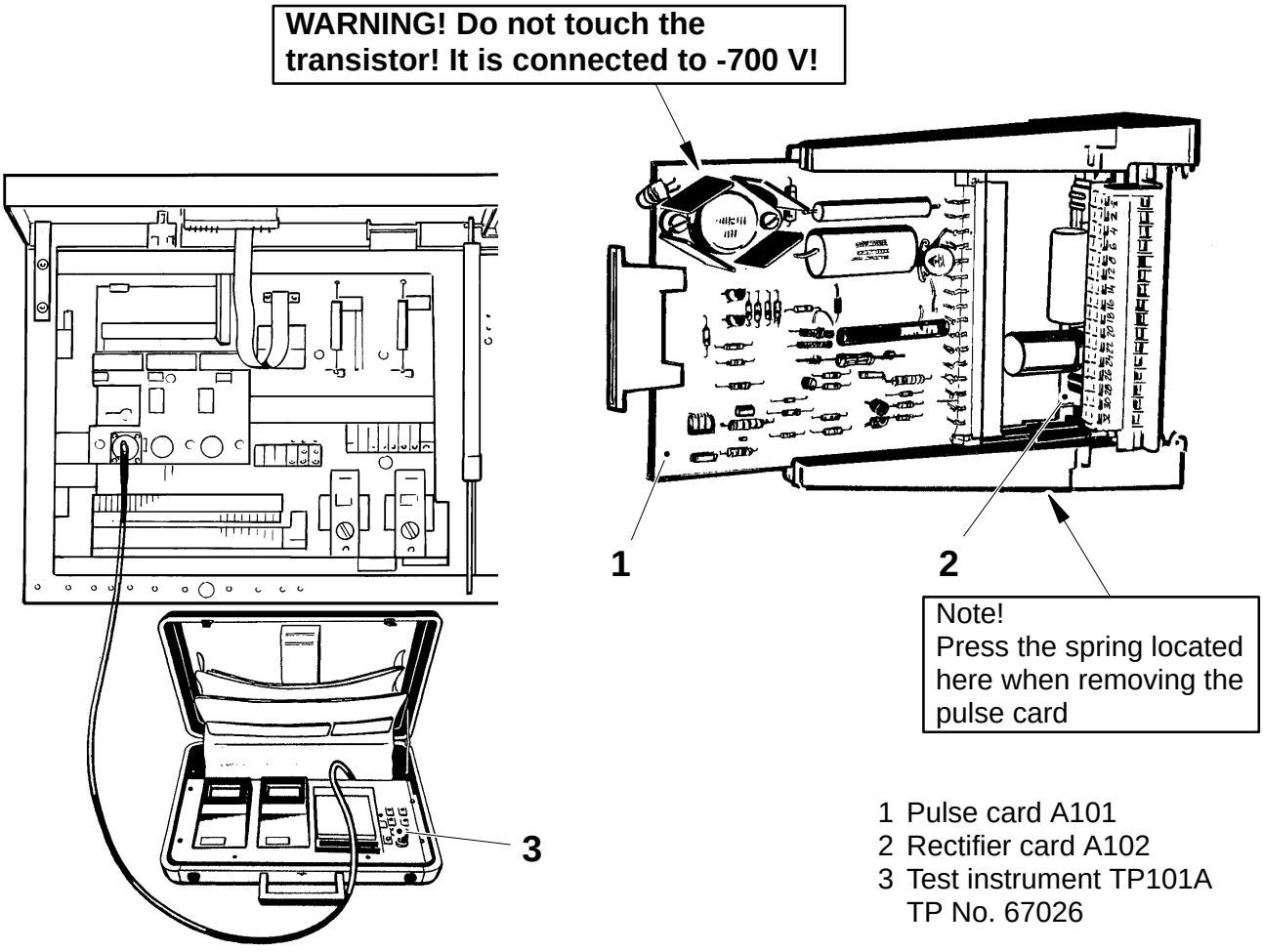

1 Pulse card A101
2 Rectifier card A102
3 Test instrument TP101A
TP No. 67026

737

(Cont'd)

Trouble shooting

WARNING!
Always follow the safety precautions on page MS 1002–7X when working in the generator section!

a) If the oscillator fails to operate and the blocking voltage is missing, check fuse F101. If the fuse is OK and the fan is operating, check the transformer (2) and the connector (1).

b) If the oscillator is inoperative and the blocking voltage remains around -700V, replace the pulse card (3). If this does not cure the problem, make sure the **enable** signal from the timer is received. This signal shall be around 24 V between pins 32 (6) and 30 (5) on the rectifier card. A broken low-voltage winding in the transformer (2) or an open diode on the rectifier card might create the same problem.

c) If the blocking voltage is controlled by the pulse, but the oscillator does not operate, check if the resistor (8) is broken.

d) If the oscillator gives a constant pulse, switch it off to prevent damage to the inductor. Replace the pulse card. If the fault remains, check the capacitor (7) for short-circuit. If required, replace the rectifier card (4).

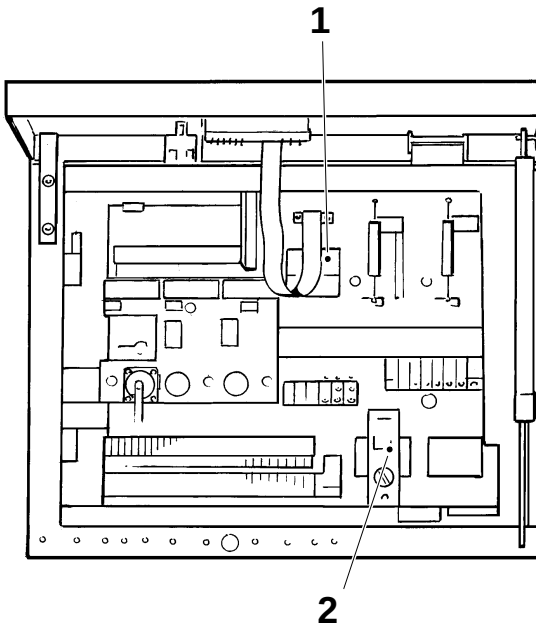

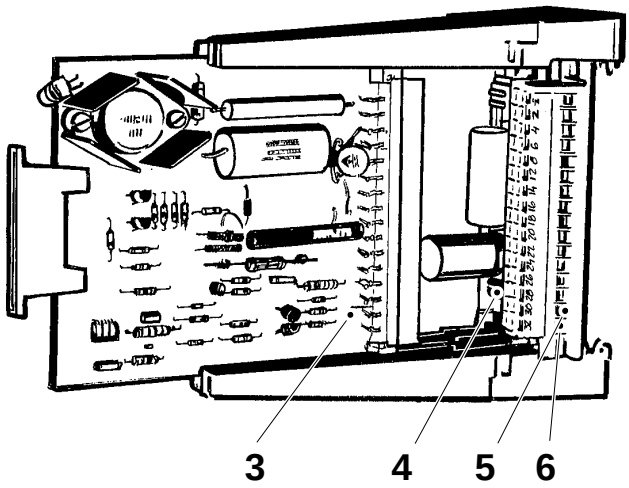

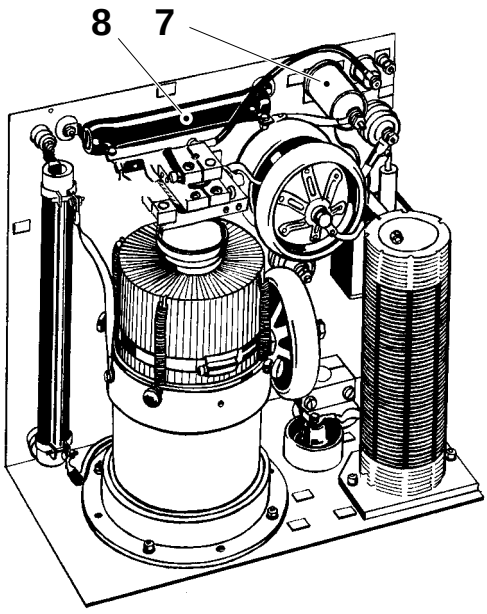

1 Connector X004
2 Transformer T104
3 Pulse card
4 Rectifier card
5 Pin 30 (–)
6 Pin 32 (+)
7 Capacitor C406
8 Resistor R401

Adjustment

General

The generator can be seen as a battery feeding a series of resistors. The ideal situation would be the generator feeding all its power into **one** resistor, i.e. the inductor.

Every piece of rail, flex cable or joint constitutes a resistor and power is lost in every one of them. A voltage drop of 15 – 20 V in a contact rail or a flex cable **can be accepted**.

A home-made test cable is needed every time the generator is to be operated manually. The cable is easily made of a 1 meter length of insulated thin wire with a microswitch and a resistor connected in series as shown in figure 2.

The resistor used might be any value from 200 to 2000 Ω and with a power rating of 1/8 or 1/4 W. (Its purpose is to act as a protection if the + 48 V DC-system should accidentally be short-circuited).

The resistor must be embedded in insulating material in such a manner that it under no circumstances can touch any metal part.

Open the connector on the carrier (D in fig. 1) and connect two test leads in parallel with the connector. Secure the connector. Make sure the test cables do not create a short-circuit and that they are free to move with the carrier.

Connect the test leads to the probe (3) of the HF voltmeter.

The machine may be operated normally provided the test leads are free to move. If it is preferable to use only one oscillator, the test cable described above can be used to enable the oscillator.

With the machine disconnected from mains, connect the test leads between pin 32 on the pulse card and pin 7 on connector 1X1.

(Cont'd overleaf)

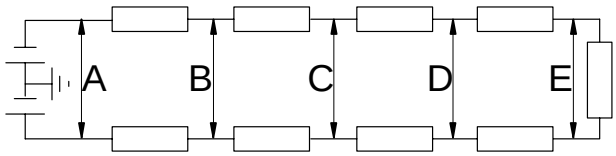

Fig. 1. IH-system. Simplified diagram for TS

A to B = Contact rail
B to C = Contact rail
C to D = Flexible cable
D to E = Carrier
E = Inductor

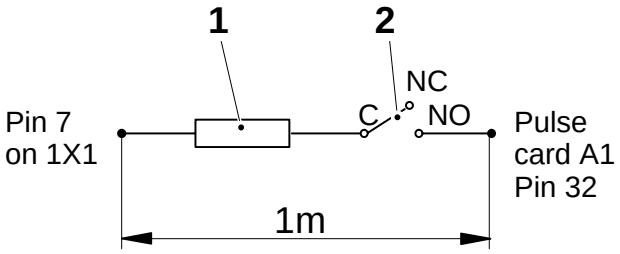

Fig. 2 Test cable

1 Resistor
2 Microswitch
3 Probe

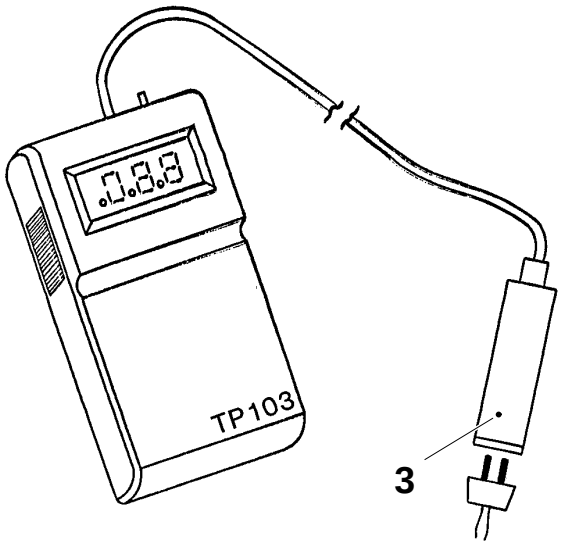

(Cont'd)

WARNING!
Always follow the safety precautions on page MS 1002–7X when working in the generator section.

Follow the instructions for **Simulated operation**, pages MS 1031–7X. Connect the test instrument to the test outlet (1X6 or 1X7) for the generator to be tested, see page MS 1013–1X.

Footnote
The anode current for both TS-oscillators can be measured in any one of the test outlets, i.e. when a current is displayed, it is the current for the oscillator that is presently pulsing.

If required, deactivate the oscillator by removing its pulse card.

WARNING!
The pulse cards have components carrying –700V!

Alternatively, use the test leads, shown on the previous page, to enable the oscillator.

Checking HF voltage for TS

Caution!
Use the same type of inductor on both carriers. If one inductor must be replaced, the new inductor must have **the same type number** as the old one.

Check the mains voltage.
Close the microswitch for a moment to generate a pulse or operate the machine in **Production**.

Read the HF voltage displayed on the HF voltmeter. Use HF voltmeter TP103 for this purpose.

The actual HF voltage – measured on the carrier (D in fig. 1) – depends on the mains voltage as follows:

Mains voltage, V	Deviation %	HF voltage, V 125 ml	180 – 250 ml	200S ml
323	–15	43 – 44	57 – 59	57 – 59
342	–10	46 – 47	60 – 62	60 – 62
361	– 5	48 – 49	64 – 66	64 – 66
380	0	51 – 52	67 – 69	67 – 69
399	+ 5	53 – 54	70 – 72	70 – 72
418	+ 10	56 – 57	74 – 76	74 – 76

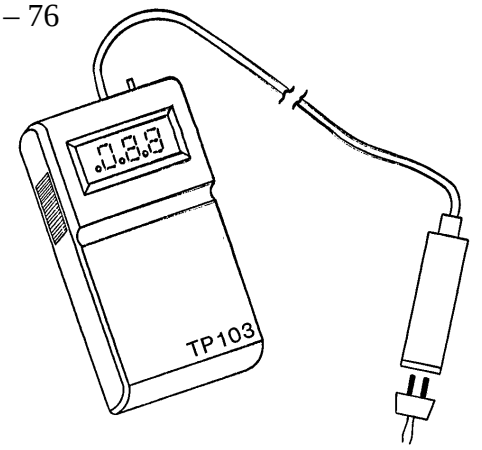

Footnote
If a packaging materal with a thinner Al-foil than 7.0 µm is used, a lower HF voltage might be obtained.

(Cont'd overleaf)

740

(Cont'd)

Recommended pulse durations, see MS 1014–1X.

If the HF voltage is not within the applicable limits, adjust the HF-transformer. Adjustment **must be done with the generator idle**, i e with no pulse. Perform a **Short stop**.

The high voltage may remain on. The HF transformer is completely isolated from the DC-voltage and when there is no pulse, the HF transformer is quiescent. If the HF voltage remains below the prescribed limits even with the adjustment in the maximum position, replace the tube.

Check the HF voltage for the other oscillator the same way.

The HF voltages on the LH side and the RH side should not differ more than 2 V.

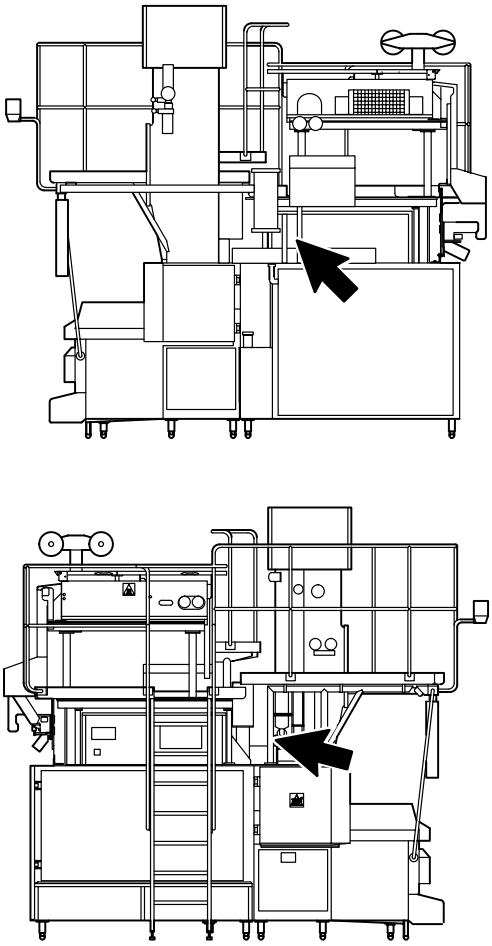

Footnote. Fig shows TBA/9 1201

Adjustment of HF voltage

WARNING!
Always follow the safety precautions on page MS 1002–7X when working in the generator section!

a) Push the **Short stop**-button.

b) Open the front cover and remove the small cover on the rear of the IH-cabinet (RH side), see fig.

c) Loosen the outer nut (4) and then the allen screw (5) (5 mm key) through the outer nut.

d) Adjust.

e) Retighten the allen screw and the outer nut.

f) Recheck.

Footnote
Sometimes it is difficult to measure the HF-voltage on one side, because the reading is lost almost immediately after it has stabilized. (This is caused by the fact that a fraction of the signal from the adjacent side is picked up by the HF-voltmeter.)
The easiest way to overcome this problem is – provided you are testrunning the machine with water – to temporaily remove the pulse card for the side, wich is creating the interferance.

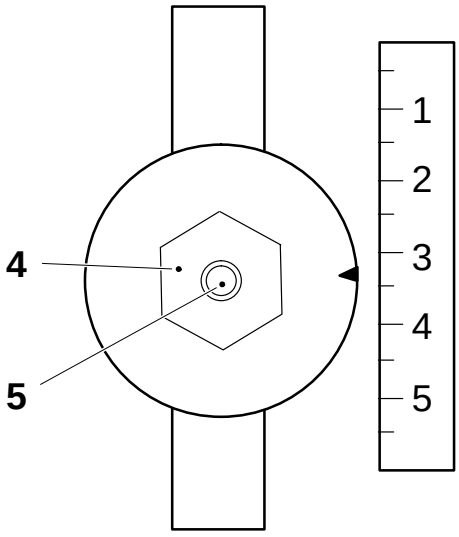

741

Setting

Footnote
This information is valid for TBA/9 1301 and 1303.

General

The generator can be seen as a battery feeding a series of resistors. The ideal situation would be the generator feeding all its power into **one** resistor, i.e. the inductor.

Every piece of rail, flexible cable or joint constitutes a resistor and power is lost in every one of them. A voltage drop of 15 – 20 V in a contact rail or a flex cable **can be accepted**.

A home-made test cable is needed every time the generator is to be operated manually. The cable is easily made of a 1 meter length of insulated thin wire with a microswitch and a resistor connected in series as shown in figure 2.

The resistor used might be any value from 200 to 2000 Ω and with a power rating of 1/8 or 1/4 W. (Its purpose is to act as a protection if the + 48 V DC-system should accidentally be short-circuited).

The resistor must be embedded in insulating material in such a manner that it under no circumstances can touch any metal part.

Open the connector on the carrier (D in fig. 1) and connect two test leads in parallel with the connector. Secure the connector. Make sure the test cables do not create a short-circuit and that they are free to move with the carrier.

Connect the test leads to the probe (3) of the HF voltmeter.

The machine may be operated normally provided the test leads are free to move. If it is preferable to use only one oscillator, the test cable described above can be used to enable the oscillator.

With the machine disconnected from mains, connect the test leads between pin 32 on the pulse card and pin 7 on connector X101.

(Cont'd overleaf)

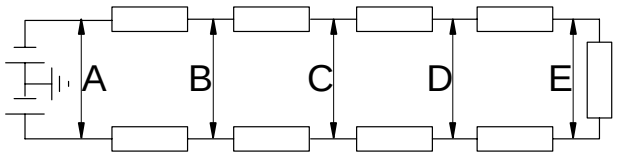

Fig. 1. IH-system. Simplified diagram for TS

A to B = Contact rail
B to C = Contact rail
C to D = Flexible cable
D to E = Carrier
E = Inductor

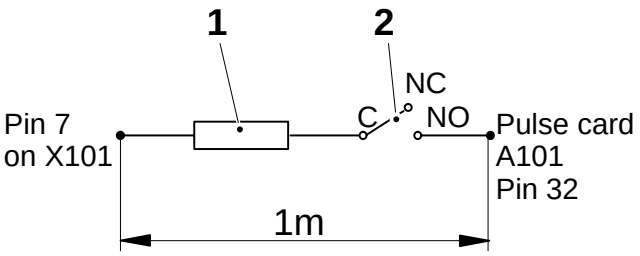

Fig. 2 Test cable

1 Resistor
2 Microswitch
3 Probe

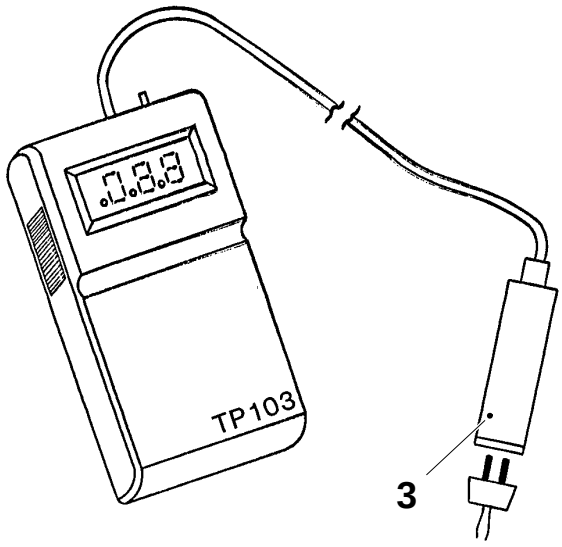

(Cont'd)

WARNING!
Always follow the safety precautions on page MS 1002–7X when working in the generator section.

Follow the instructions for **Simulated operation**, pages MS 1031–7X. Connect the test instrument to the test outlet (X006 or X007) for the generator to be tested, see page MS 1013–1X.

Footnote
The anode current for both TS-oscillators can be measured in any one of the test outlets, i.e. when a current is displayed, it is the current for the oscillator that is presently pulsing.

If required, deactivate the oscillator by removing its pulse card.

WARNING!
The pulse cards have components carrying –700V!

Alternatively, use the test leads, shown on the previous page, to enable the oscillator.

Checking HF voltage for TS

Caution!
Use the same type of inductor on both carriers. If one inductor must be replaced, the new inductor must have **the same type number** as the old one.

Check the mains voltage.
Close the microswitch for a moment to generate a pulse or operate the machine in **Production**.

Read the HF voltage displayed on the HF voltmeter. Use HF voltmeter TP103 for this purpose.

The actual HF voltage – measured on the carrier (D in fig. 1) – depends on the mains voltage as follows:

Mains voltage, V	Deviation %	HF voltage, V		
		125 ml	180 – 284 ml	200S ml
323	–15	43 – 44	57 – 59	57 – 59
342	–10	46 – 47	60 – 62	60 – 62
361	– 5	48 – 49	64 – 66	64 – 66
380	0	51 – 52	67 – 69	67 – 69
399	+ 5	53 – 54	70 – 72	70 – 72
418	+ 10	56 – 57	74 – 76	74 – 76

Footnote
If a packaging materal with a thinner Al-foil than 7.0 µm is used, a lower HF-voltage is obtained.

(Cont'd overleaf)

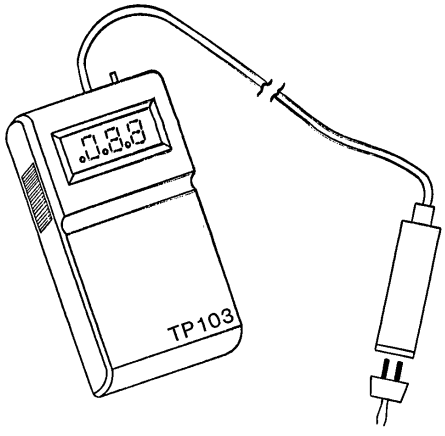

(Cont'd)

Recommended pulse durations, see MS 1014–1X.

If the HF voltage is not within the applicable limits, adjust the HF-transformer. Adjustment **must be done with the generator idle**, i e with no pulse. Perform a **Short stop**.

The high voltage may remain on. The HF transformer is completely isolated from the DC-voltage and when there is no pulse, the HF transformer is quiescent. If the HF-voltage remains below the prescribed limits even with the adjustment in the maximum position, replace the tube.

Check the HF voltage for the other oscillator the same way.

The HF voltages on the LH side and the RH side should not differ more than 2 V.

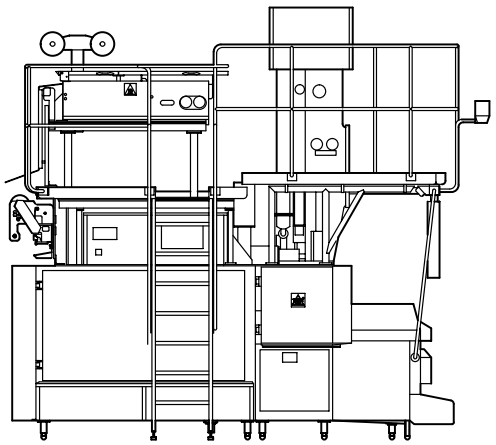

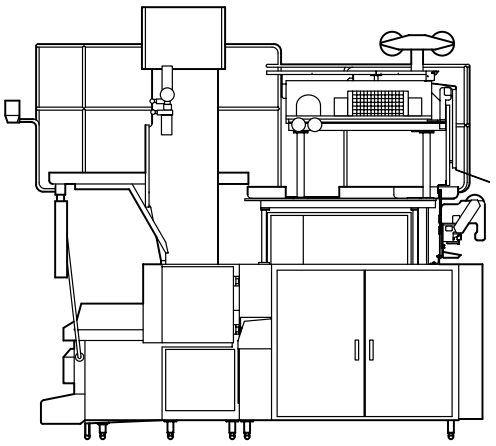

Footnote. Fig. shows TBA/9 1301

Adjustment of HF voltage

WARNING!
Always follow the safety precautions on page MS 1002–7X when working in the generator section!

a) Push the **Short stop**-button.

b) Open the front cover and remove the small cover on the rear of the IH-cabinet (RH side), see fig.

c) Loosen the outer nut (4) and then the allen screw (5) (5 mm key) through the outer nut.

d) Adjust.

e) Retighten the allen screw and the outer nut.

f) Recheck.

Footnote
Sometimes it is difficult to measure the HF-voltage on one side, because the reading is lost almost immediately after it has stabilized. (This is caused by the fact that a fraction of the signal from the adjacent side is picked up by the HF-voltmeter.)
The easiest way to overcome this problem is – provided you are testrunning the machine with water – to temporaily remove the pulse card for the side, wich is creating the interferance.

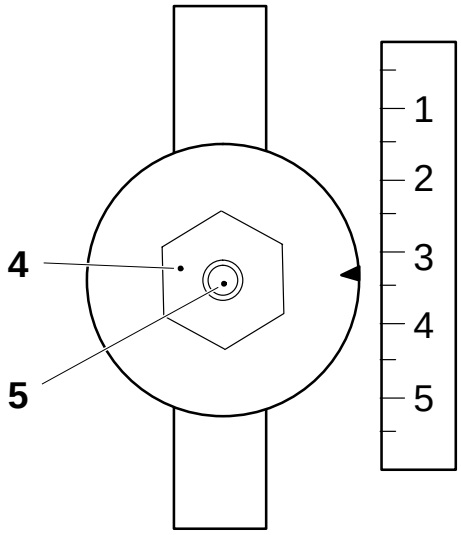

Setting

Footnote
This information is valid for TBA/9 1302 only.

General

The generator can be seen as a battery feeding a series of resistors. The ideal situation would be the generator feeding all its power into **one** resistor, i.e. the inductor.

Every piece of rail, flexible cable or joint constitutes a resistor and power is lost in every one of them. A voltage drop of 15 – 20 V in a contact rail or a flexible cable **can be accepted**.

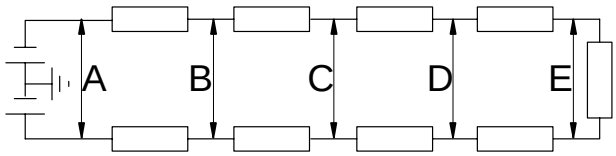

Fig. 1. IH-system. Simplified diagram

A till B = Contact rail
B till C = Contact rail
C till D = Flexible cable
D till E = Carrier
E = Inductor

Wide IS strip

Caution!
Settings for wide IS strip must be performed **before** adjustment of for narrow IS strip.

WARNING!
Always follow the safety precautions on page MS 1002–7X when working in the generator section!

Check the main voltage and record it.

Connect the test leads of the HF voltmeter probe (1) to the connections on the inductor card.

Start the machine and check the HF voltage, see table below.

(Cont’d overleaf)

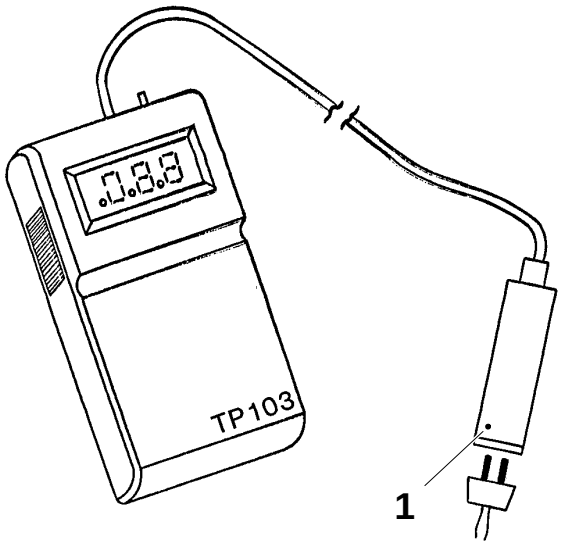

1 Probe, HF voltmeter TP103 (TP No. 67024)

(Cont'd)

Main voltage, V	HF voltage, wide IS strip, V						
	125 ml 29 mm	125 ml 35 mm	180 ml 35 mm	200S ml 29 mm	200S ml 35 mm	200 ml 37.5 mm	250 ml 37.5 mm
328/190	121	142	198	181	199	181	212
337/195	124	146	205	186	204	186	217
345/200	127	150	209	191	209	191	223
354/205	130	154	214	196	214	196	228
363/210	134	157	218	200	220	200	234
371/215	137	161	225	205	225	205	239
380/220	140	165	230	210	230	210	245
389/225	143	169	235	215	235	215	251
397/230	146	172	242	220	240	220	256
406/235	150	176	246	224	246	224	262
415/240	153	180	251	229	251	229	267
418/242	154	182	253	231	253	231	269

Adjustment of HF voltage, wide IS strip

WARNING!
Always follow the safety precautions on page MS 1002–7X when working in the generator section!

a) Push **Short stop**.

b) Loosen the outer nut (2) and then the allen screw (3) (5 mm key) through the outer nut on one of the transformers.

c) Adjust. If additional adjustment is required, adjust on the other transformer as well.

d) Retighten the allen screw and the outer nut.

e) Recheck.

Check the pulse duration, see page MS 1014–1X

(Cont'd overleaf)

1 Outer nut
2 Allen screw

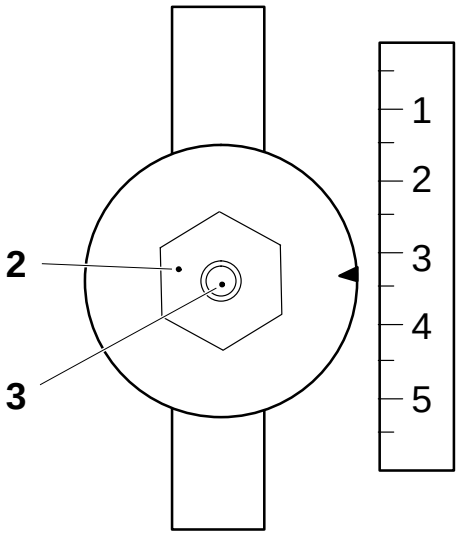

(Cont’d overleaf)

Narrow IS strip

Caution!
The output adjustment for wide IS strip must be performed before the adjustment for narrow IS strip is started.

WARNING!
Always follow the safety precautions on page MS 1002–7X when working in the generator section!

Connect two test leads between the HF voltmeter probe (1) and the inductor card.

Start the machine and record the HF voltage. If the voltage is not in accordance with the table below, adjust as follows:

Main voltage, V	HF voltage, narrow IS strip, V					
	125 ml 7.5/29 mm	125 ml 7.5/35 mm	180 ml 35 mm	200S ml 7.5 mm	200 ml 7.5 mm	250 ml 7.5 mm
323/187	60	61		94	61	94
328/190	60	62		95	62	95
337/195	62	64		97	64	97
345/200	64	65		100	65	100
354/205	65	67		102	67	102
363/210	67	69		105	69	105
371/215	68	70		107	70	107
380/220	70	72		110	72	110
389/225	72	74		112	74	112
397/230	73	75		115	75	115
406/235	75	77		117	77	117
415/240	76	79		120	79	120
418/242	77	79		121	79	121

(Cont’d overleaf)

(Cont’d overleaf)

Adjustment of HF voltage, narrow IS strip

WARNING!
Always follow the safety precautions on page MS 1002–7X when working in the generator section!

a) Turn the main switch to position **off** and padlock it.

b) Remove the cover of the oscillator section.

c) Loosen the screw (4) and shift the adjustment clip (5) on one of the resistors. The voltage **increases** if the clip is shifted towards plus, see fig. Tighten the screw.

d) If a major adjustment is required, adjust on the other resistor as well.

e) Fit the cover and start the machine.

f) Check that the voltage is in accordance with the table. If not, repeat from item a).

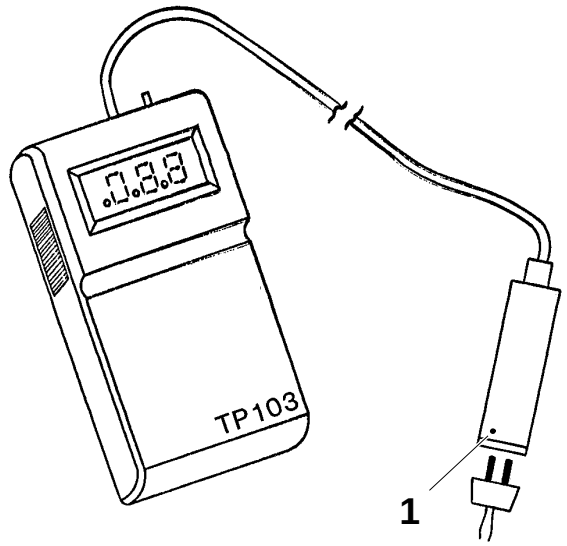

1 Probe, HF voltmeter TP103 (TP No. 67024)
4 Screw
5 Adjustment clip

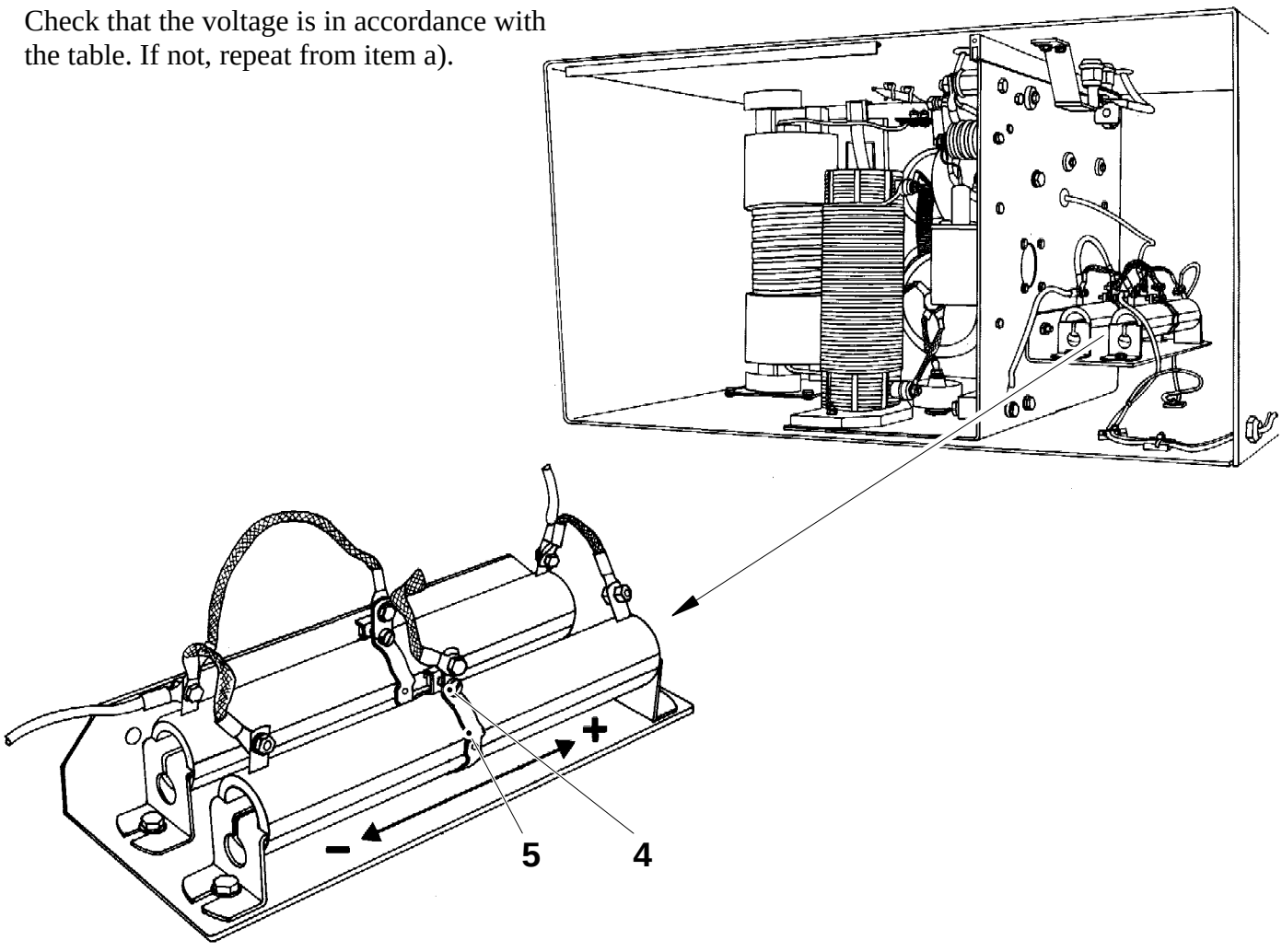

General

HF voltmeter TP 103 (TP No. 67024)

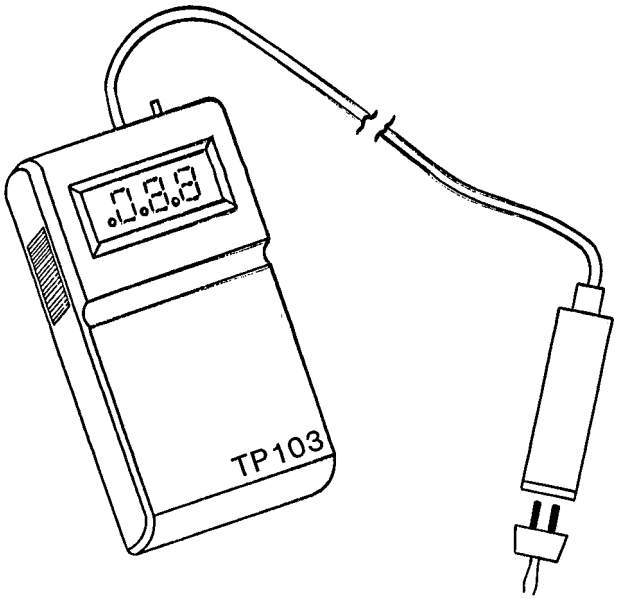

The instrument TP 103 used for measuring the HF voltage has a three digit display giving an immediate presentation of the actual HF voltage. The hold function retains the measured voltage until the next pulse is received. (A voltage fluctuation of ±1 V is normal.) Whenever a pulse is present the three decimal points are displayed.

When the battery voltage drops below 7.5 V, a ”BAT”-indication is shown in the upper left hand corner of the display. The instrument **can be used for about another hour** after the ”BAT”-indication appears.

The minimum voltage needed to trigger the voltmeter is around 20 V and the minimum pulse duration is around 50 ms.

Footnote
A voltage reading around 20 V implies only one pole of the probe is in contact with the rail.

Whenever the instrument is switched on, a random number is displayed. Disregard this number completely.

Cleaning/Checking

WARNING!
Always follow the safety precautions on page MS 1002–7X when working in the generator section!

Use compressed air and/or white spirit.

Remove the oscillator modules, see page MS 1021–2X.

Remove the tube and clean its cooling flanges (3).

Clean the tube socket (4) on the inside and the outside.

Clean the rest of the module.

Reinstall the tube.

Check all connections. Pay particular attention to the tube connectors. These must be parallel and a clearance of at least 3 mm must be maintained between the cathode (1) and the grid connectors and their leads (2).

Replace defective screws and nuts and secure them with lacquer.

Clean the HF transformers (5) and the capacitors.

Check all connections.

Replace defective parts.

Footnote
Contamination leads to flash-over and overheating.

Reinstall the oscillator module, see page MS 1021–4X.

1 Cathode
2 Grid
3 Cooling flange
4 Tube socket
5 HF transformer

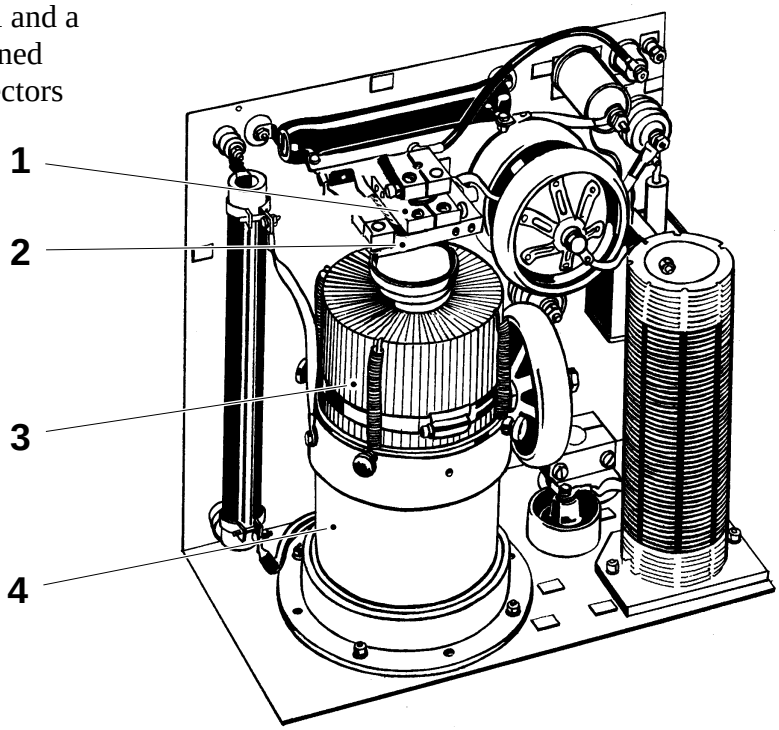

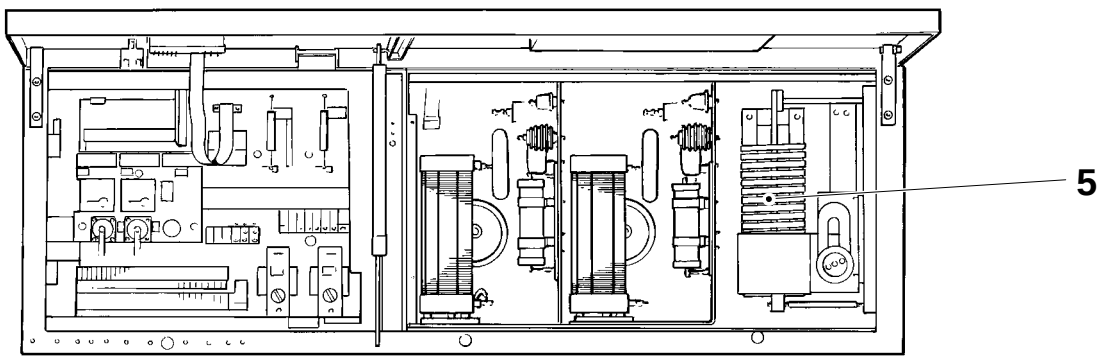

Removal

WARNING!
Always follow the safety precautions on page MS 1002–7X when working in the generator section!

Undo the screws (1). Disconnect and label the leads to (3), (4), (5) and (6), and the HF connector (2).

Carefully bend the leads to prevent damage to their insulation when the module is pulled out.

Carefully remove the module.

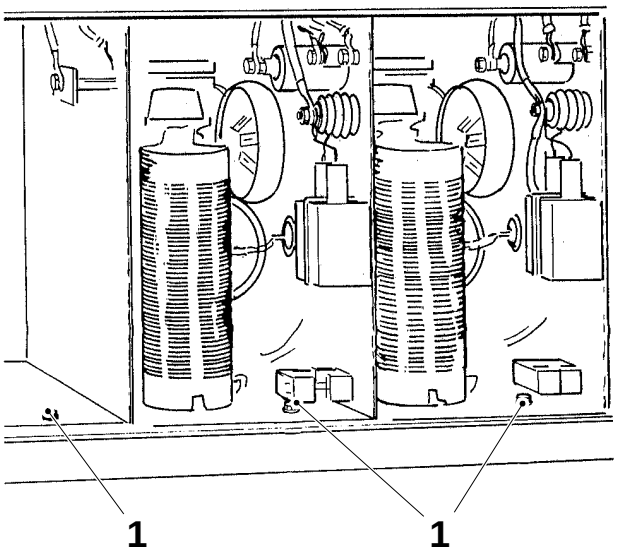

Fig. 1 TS oscillator module

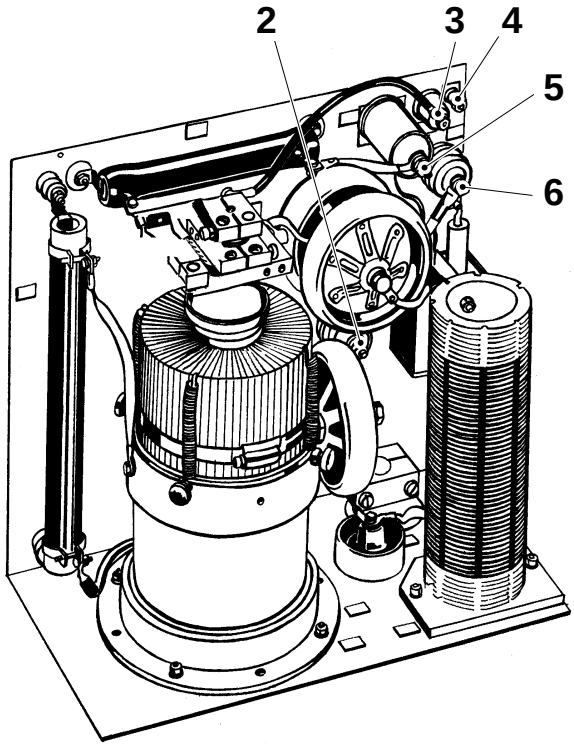

Fig. 2

1 Screw
2 HF connector
3 Filament voltage connection
4 Ground
5 Blocking voltage connection
6 High voltage connection

Fitting

Clean the HF transformer, see page MS 1022–1X.

Carefully bend the leads and hold them. Carefully push the module in place.

Reconnect the HF connector (2), the leads to (3), (4), (5) and (6). Check on the adjacent module to make sure the leads are connected correctly.

Fit the screws (1).

Footnote
If flash-over problems occur after installing a tube, check the tube connectors. After installation of a new tube, flash-over might occur inside the tube. This problem will disappear after resetting the overload relay three or four times.

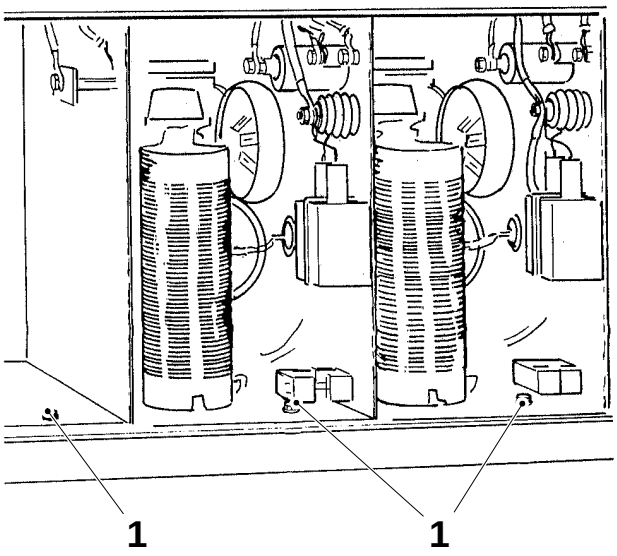

Fig. 1 TS oscillator module

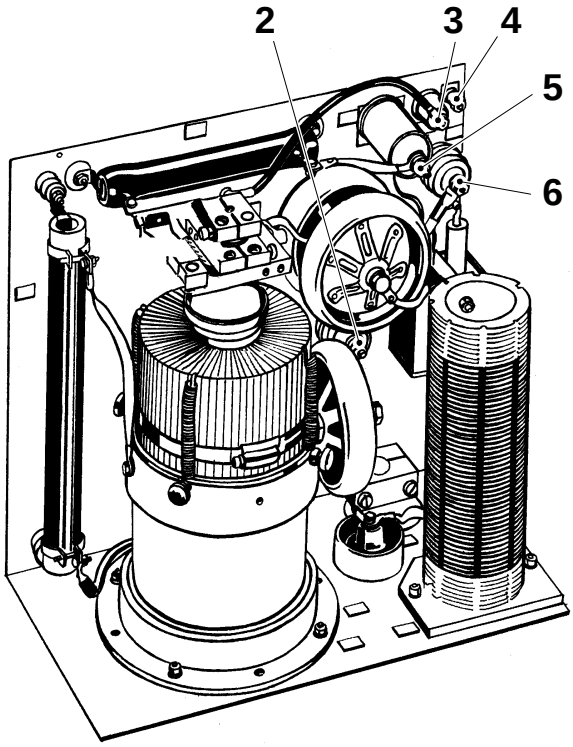

Fig. 2

1 Screw
2 HF connector
3 Filament voltage connection
4 Ground
5 Blocking voltage connection
6 High voltage connection

Cleaning/Checking

WARNING!
Always follow the safety precautions on page MS 1002–7X when working in the generator section!

Clean the high voltage section (1) with white spirit. Blow with dry compressed air.

Remove the fan and clean it.

Check all connections. Replace defective screws and nuts and secure them with lacquer.

1 High voltage section

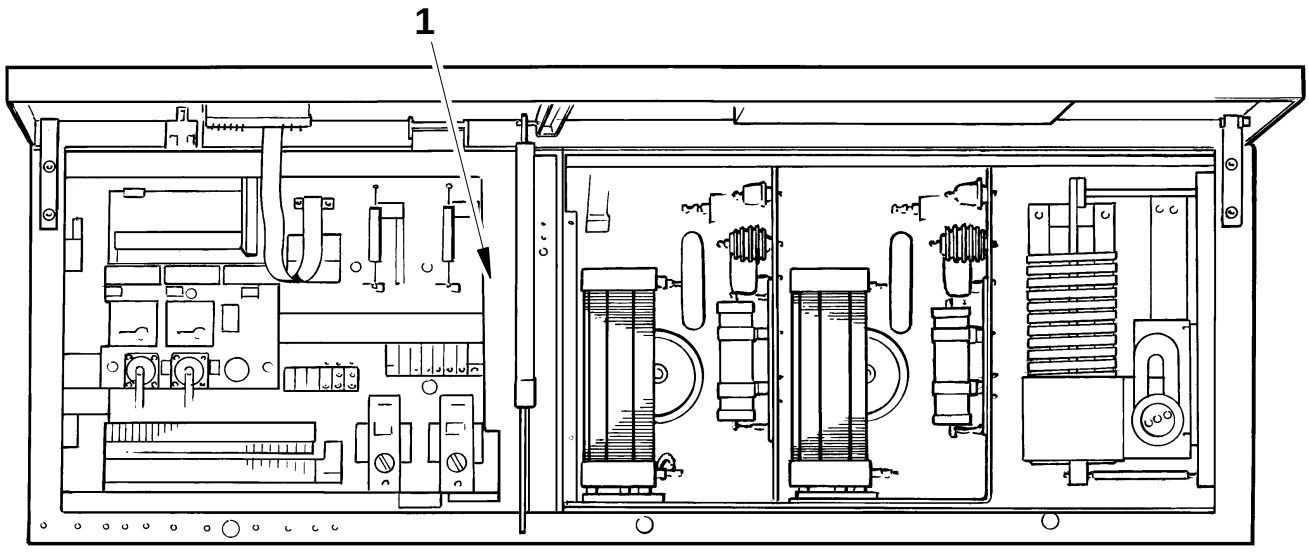

Checking

Check the contact rails and flex cables of the machine for signs of deterioration of insulation or mechanical wear. Tighten the screws at the contact points.

Cleaning

Undo the screws (1) on the side of the IH cabinet.

Remove the air filter (2) from the inside.

Blow the filter clean with compressed air, or, if it is excessively dirty, replace it.

Footnote
To replace the air filter, use the old filter as a template.

Blow the air intake clean **from the inside** with compressed air.

Fit the filter and close the doors.

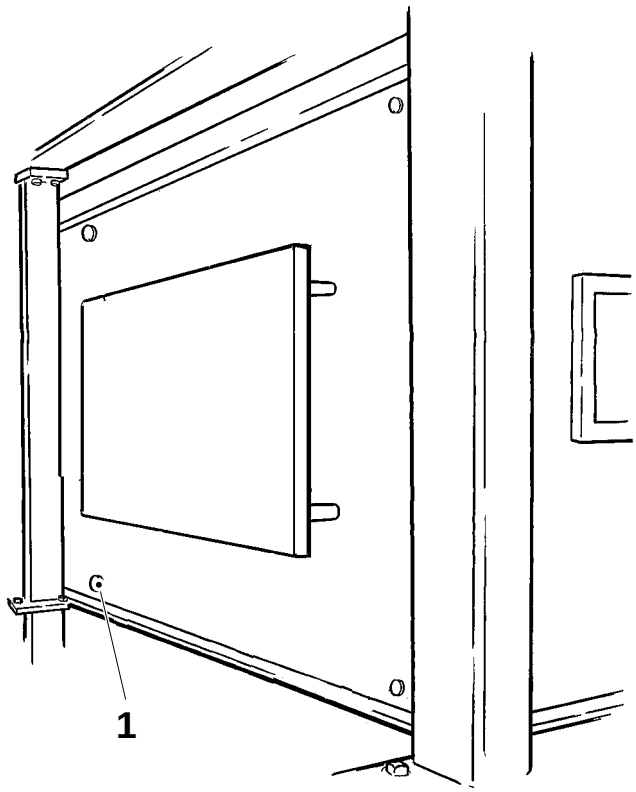

1 Screw
2 Air filter TP No 90264–345

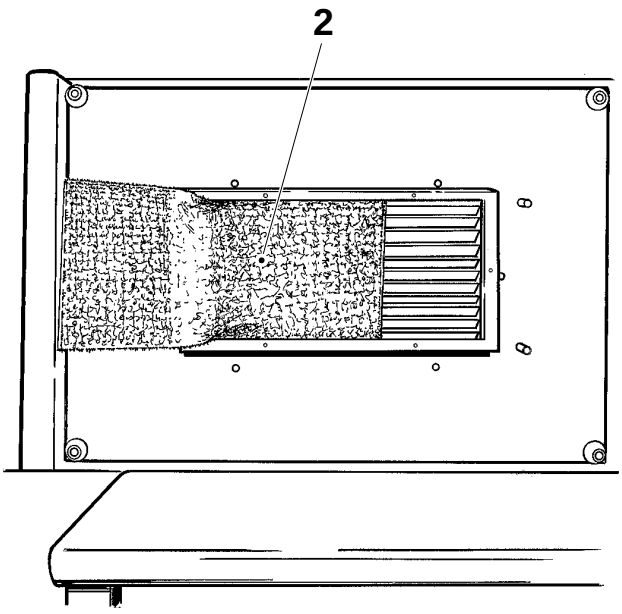

Setting

Set the following fuses to position **off**:

- F28 ABC Element, peroxide bath
- F29 ABC Air superheater
- F5 A Flap sealing
- F8 A Short stop element
- F10 A LS element
- F27 IH sealing

TS-sealing

Turn the **Service switch** to position 1.

Step up the machine program to step **Tube sealing**.

The IH circuit receives filament voltage.

Set fuse F27 to position **on**. The IH circuit receives high voltage.

Inch the machine at high speed or activate the IH circuit manually by means of a test button.

Check the sealing.

Pull tab sealing

Step up the machine program to step **Preheating pull tab device**.

The IH circuit receives filament voltage.

When the pre-set temperature for the tab strip has been reached, set fuse F27 to position **on**. The IH circuit receives high voltage.

Inch the machine at high speed or pull out packaging material from the pull tab supply.

Check the sealing.

Setting

Turn the following fuses to position **off**:

- F28 Element, peroxide bath
- F29 Air superheater
- F5 A Flap sealing
- F8 A Short stop element
- F10 A LS element
- Q27 IH sealing

TS sealing

Turn the **Service switch** to position 1.

Step up the machine program to step **Tube sealing**.

The IH circuit receives filament voltage.

Set monitor switch Q27 to position **on**. The IH circuit receives high voltage.

Inch the machine at high speed or activate the IH circuit manually by means of a test button.

Check the sealing.

Pull tab sealing

Step up the machine program to step **Preheating pull tab device**.

The IH circuit receives filament voltage.

When the pre-set temperature for the tab strip has been reached, set monitor switch Q27 to position **on**. The IH circuit receives high voltage.

Inch the machine at high speed or pull out packaging material from the pull tab supply.

Check the sealing.

Setting

TS generator

Sealing pulse start:	Fixed in program 104_8 respectively 304_8
Cutting start, left hand side:	Mechanically controlled cam
Phase sensor:	85% 1 s
Temperature sensor in oscillator section:	80°C
K125 Timer TS:	See page MS 1014–6X

Pull tab device generator

Sealing pulse start:	From sensor MB203 and cam on shaft of pull tab device
Sealing pulse duration at 220 V:	80 – 100 ms
Phase sensor:	85% 1 s
Temperature sensor in oscillator section:	80°C
K225 Timer:	See page MS 1014–6X.

Setting

TS generator

Sealing pulse start:	Fixed in program 114_8 respectively 314_8
Cutting start, left hand side:	Mechanically controlled cam
Phase sensor:	85% 1 s
Temperature sensor in oscillator section:	80°C
K125 Timer TS:	See page MS 1014–6X

Pull tab device generator

Sealing pulse start:	From sensor MB203 and cam on shaft of pull tab device
Sealing pulse duration at 220 V:	80 – 100 ms
Phase sensor:	85% 1 s
Temperature sensor in oscillator section:	80°C
K225 Timer:	See page MS 1014–6X.

Checking

Check that the preset values conform to those listed in the table.

Regulator	Designation	T, °C	L–C, °C	TV_s, s	X_p, %
Pre-sterilization	A4	270	–	–	–
Sterilization bath, water	A6	80	10	20	1.5
LS sealed tube	A8	305	20	20	1.5
Air superheater	A10	360	20	20	1.5
LS	A12	approx. 270	20	20	1.5
Air knife	A13	125	10	70	4.0
Steam	A14	125	–	–	–
Sterilization bath, peroxide (120V)	A30	70	–	–	–
SA	A202	approx. 290	20	20	1.5
*Sealing, tab strip	A202	approx. 175	20	20	3.0
*Dating unit I	A203	approx. 500	20	20	1.5
*Dating unit II	A204	approx. 500	20	20	1.5
*IS strip splice	A205	approx. 190	20	5	3.0
*Preheated counter jaw	A206	75	10	10	5.0

* = Machines with pull tab device
T = Preset temperature
Approx. = Values may vary depending on packaging material, web speed, strip, package volume
L–C = Alarm limit
TV_s = Derivation time
X_p = Proportionality band

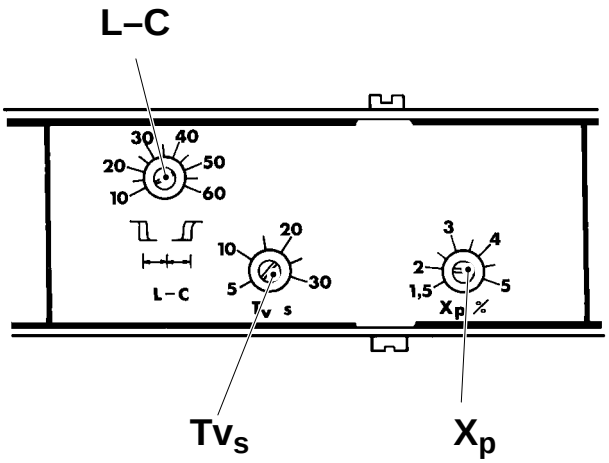

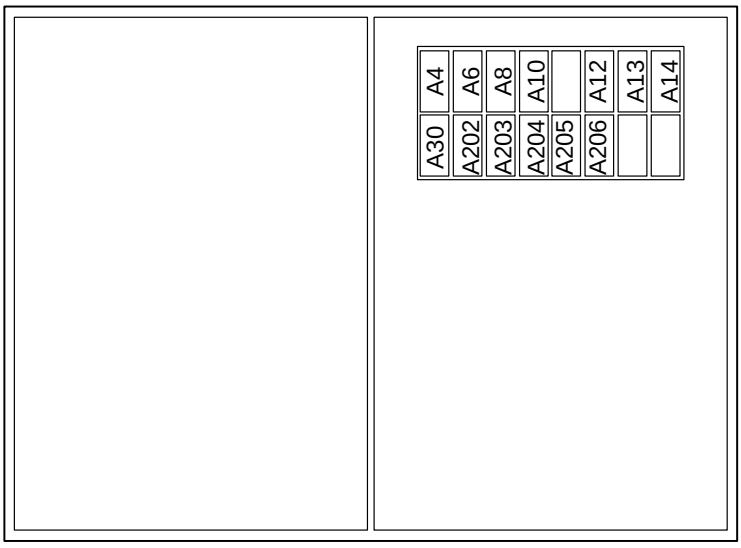

Checking

Check that the preset values conform to those listed in the table.

Regulator	Designation	T, °C	L–C, °C	TV_s, s	X_p, %
Pre-sterilization	A4	270	–	–	–
Sterilization bath, water	A6	80	10	20	1.5
LS sealed tube	A8	approx. 260	20	20	2.0
Air superheater	A10	360	20	20	1.5
Air super heater, preheating	A11	400	20	20	1.5
LS	A12	approx. 380	20	20	5.0
Air knife	A13	125	10	70	4.0
Steam	A14	125	–	–	–
Sterilization bath, peroxide	A30	70	–	–	–
SA	A202	approx. 290	20	20	1.5
*Sealing, tab strip	A202	175	20	20	3.0
*Dating unit I	A203	130	20	20	1.5
*Dating unit II	A204	130	20	20	1.5
*IS Strip splice	A205	190	20	10	5.0
*Pre-heated counter jaw	A206	75	10	10	5.0

* = Machines with pull tab device
T = Preset temperature
Approx. = Values may vary depending on packaging material, web speed, strip, package volume
L–C = Alarm limit
TV_s = Derivation time
X_p = Proportionality band

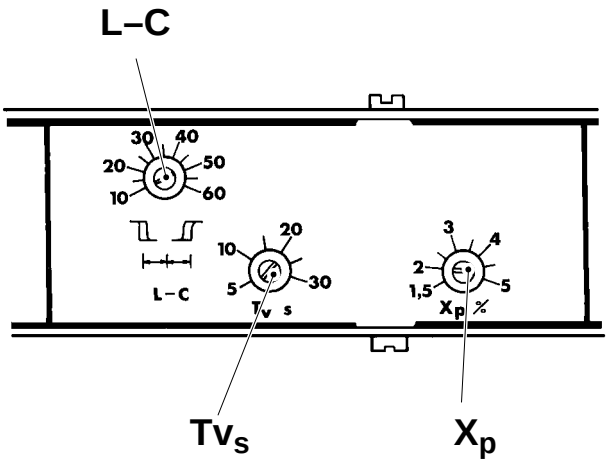

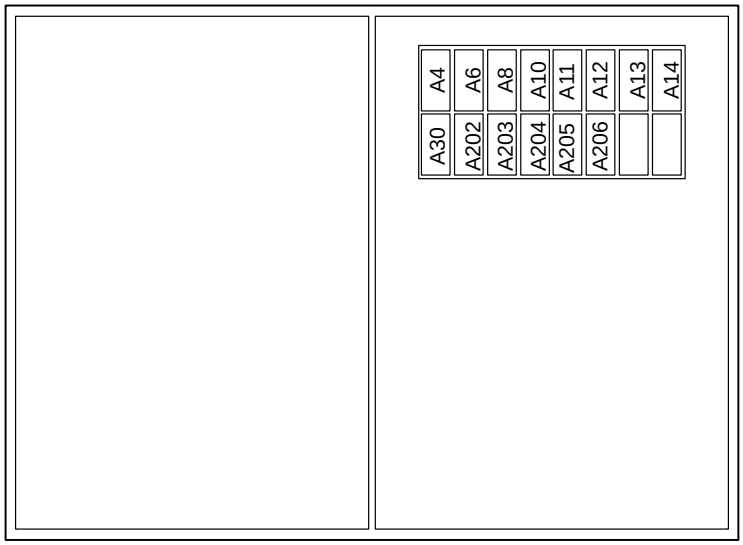

761

Checking/Cleaning

Cooling fan

Open the RH side door of the electrical cabinet. Engage the proximity switch and check that the cooling fan (2) functions. Close the door.

Open the LH side door of the electrical cabinet. Engage the proximity switch and check that the cooling fan functions. Close the door.

Turn the main switch to position **off** and padlock it.

To replace the cooling fan, first pull out and lift off the carriage. If available, use tool TP No 75542–101 fitted on the carriage, to lift it off.

Remove the plate inside the cassette, on the electrical cabinet side.

Mark the electrical wires to the cooling fan before disconnecting them. Replace the fan.

Refit.

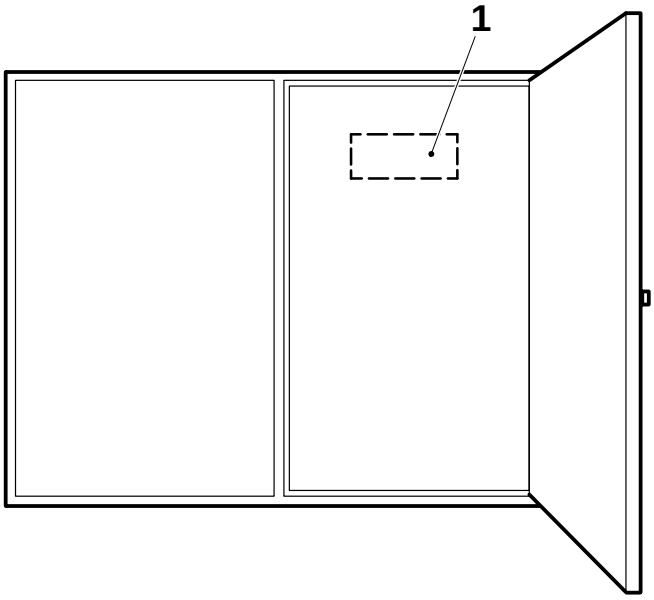

1 Air filter TP No. 90264–336
2 Cooling fan

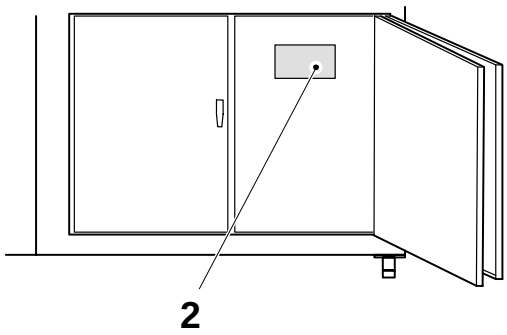

Air filter

Turn the main switch to position **off** and padlock it.

Open the RH door of the electrical cabinet.

Swing aside the pivot frame.

Remove the air filter (1) from its holder.
Blow the filter clean with compressed air or, if it is excessively dirty, replace it.

Use the old filter as a template to cut the new one correctly.

Clean the air intake and replace the filter.

Converting table, octal degrees

Octal degrees	Degrees	Octal degrees	Degrees	Octal degrees	Degrees	Octal degrees	Degrees	Octal degrees	Degrees	Octal degrees	Degrees
000	0	060	67.5	140	135.0	220	202.5	300	270.0	360	337.5
001	1.4	061	68.9	141	136.4	221	203.9	301	271.4	361	338.9
002	2.8	062	70.3	142	137.8	222	205.3	302	272.8	362	340.3
003	4.2	063	71.7	143	139.2	223	206.7	303	274.2	363	341.7
004	5.6	064	73.1	144	140.6	224	208.1	304	275.6	364	343.1
005	7.0	065	74.5	145	142.0	225	209.5	305	277.0	365	344.5
006	8.4	066	75.9	146	143.4	226	210.9	306	278.4	366	345.9
007	9.8	067	77.3	147	144.8	227	212.3	307	279.8	367	347.3
010	11.3	070	78.8	150	146.3	230	213.8	310	281.3	370	348.8
011	12.7	071	80.2	151	147.7	231	215.2	311	282.7	371	350.2
012	14.1	072	81.6	152	149.1	232	216.6	312	284.1	372	351.6
013	15.5	073	83.0	153	150.5	233	218.0	313	285.5	373	353.0
014	16.9	074	84.4	154	151.9	234	219.4	314	286.9	374	354.4
015	18.3	075	85.8	155	153.3	235	220.8	315	288.3	375	355.8
016	19.7	076	87.2	156	154.7	236	222.2	316	289.7	376	357.2
017	21.1	077	88.6	157	156.1	237	223.6	317	291.1	377	358.6
020	22.5	100	90.0	160	157.5	240	225.0	320	292.5	400	360
021	23.9	101	91.4	161	158.9	241	226.4	321	293.9		
022	25.3	102	92.8	162	160.3	242	227.8	322	295.3		
023	26.7	103	94.2	163	161.7	243	229.2	323	296.7		
024	28.1	104	95.6	164	163.1	244	230.6	324	298.1		
025	29.5	105	97.0	165	164.5	245	232.0	325	299.5		
026	30.9	106	98.4	166	165.9	246	233.4	326	300.9		
027	32.3	107	99.8	167	167.3	247	234.8	327	302.3		
030	33.8	110	101.3	170	168.8	250	236.3	330	303.8		
031	35.2	111	102.7	171	170.2	251	237.7	331	305.2		
032	36.6	112	104.1	172	171.6	252	239.1	332	306.6		
033	38.0	113	105.5	173	173.0	253	240.5	333	308.0		
034	39.4	114	106.9	174	174.4	254	241.9	334	309.4		
035	40.8	115	108.3	175	175.8	255	243.3	335	310.8		
036	42.2	116	109.7	176	177.2	256	244.7	336	312.2		
037	43.6	117	111.1	177	178.6	257	246.1	337	313.6		
040	45.0	120	112.5	200	180.0	260	247.5	340	315.0		
041	46.4	121	113.9	201	181.4	261	248.9	341	316.4		
042	47.8	122	115.3	202	182.8	262	250.3	342	317.8		
043	49.2	123	116.7	203	184.2	263	251.7	343	319.2		
044	50.6	124	118.1	204	185.6	264	253.1	344	320.6		
045	52.0	125	119.5	205	187.0	265	254.5	345	322.0		
046	53.4	126	120.9	206	188.4	266	255.9	346	323.4		
047	54.8	127	122.3	207	189.8	267	257.3	347	324.8		
050	56.3	130	123.8	210	191.2	270	258.8	350	326.3		
051	57.7	131	125.2	211	192.7	271	260.2	351	327.7		
052	59.1	132	126.6	212	194.1	272	261.6	352	329.1		
053	60.5	133	128.0	213	195.5	273	263.0	353	330.5		
054	61.9	134	129.4	214	196.9	274	264.4	354	331.9		
055	63.3	135	130.8	215	198.3	275	265.8	355	333.3		
056	64.7	136	132.2	216	199.7	276	267.2	356	334.7		
057	66.1	137	133.6	217	201.1	277	268.6	357	336.1		

Checking degree setting

With the degree scale at 0_8, the PLC inputs (1), see table, are to be off.

With the degree scale at 252_8, all these inputs are to be on.

Machine type	PLC inputs
TB	12110 – 12117
TBA	11700 – 11710

Fig. 1 TB

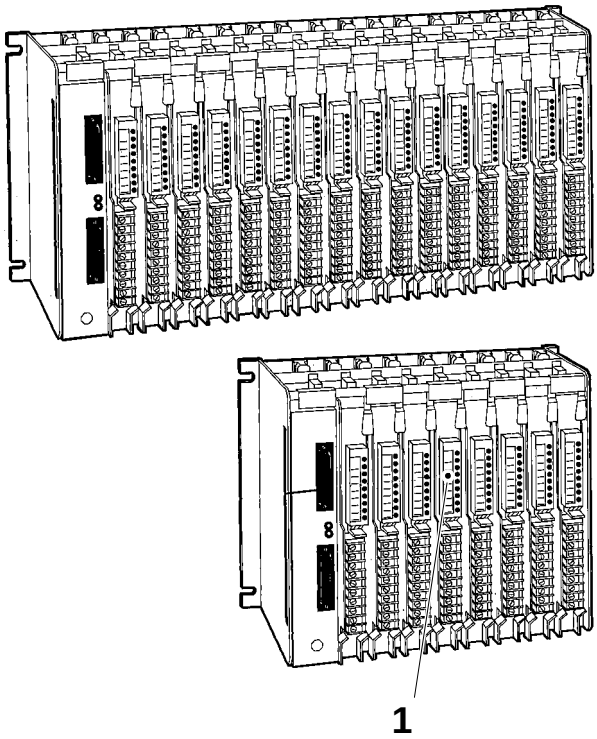

Fig. 2 TBA

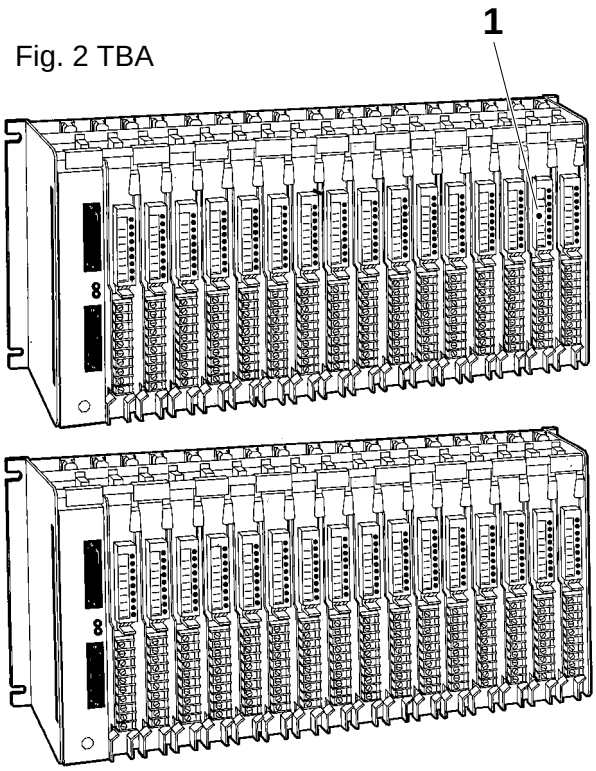

1 Input

Checking degree setting

With the degree scale at 0_8, the inputs E 00.00 – E 00.07 (1) are to be off.

With the degree scale at 252_8, all these inputs are to be on.

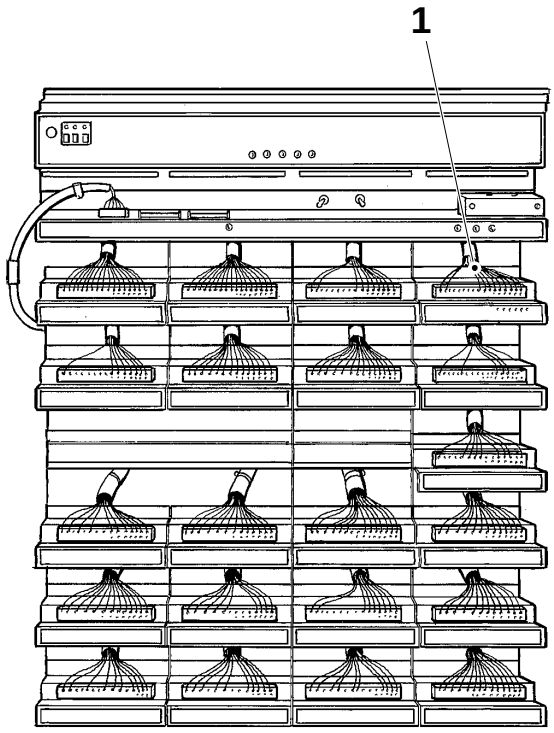

1 Input

Checking degree setting

With the display (1) at 0_8, the inputs A 10100 – A 10107 (2) are to be off.

With the display (1) at 252_8, all these inputs are to be on.

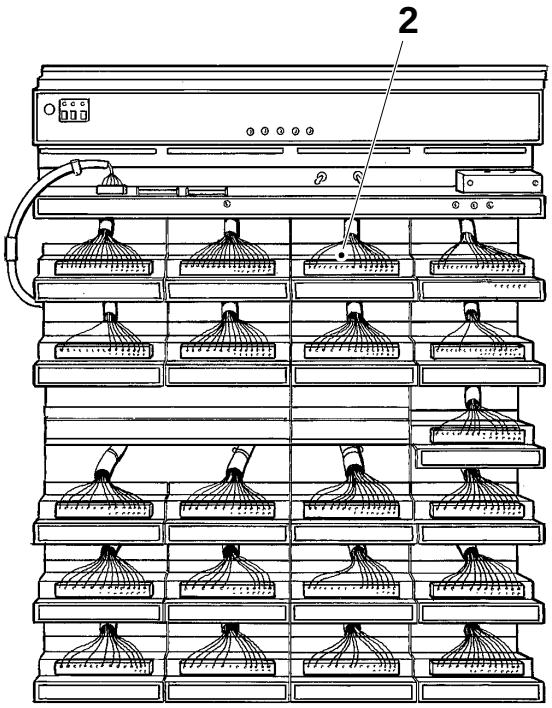

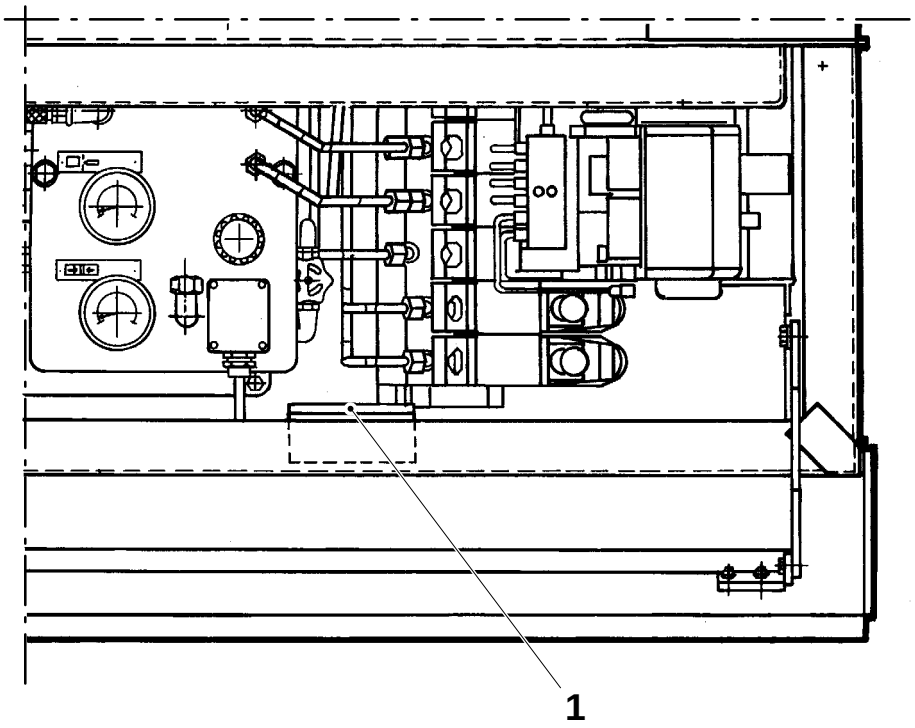

1 Display
2 Inputs

Degree setting

The zero position of the impulse transmitter must be set beforehand, see page MS 603–5X.

a) Crank the machine to exactly 0°.

b) Loosen the screws (1).

c) Turn the angle encoder (2) until the PLC inputs, see table, go off.

d) Crank the machine to 252_8, all these inputs are to be on.

e) Tighten the screws.

Machine type	PLC inputs
TB	12110 – 12117
TBA	11700 – 11710
TBA 1203	E 00.00 – E 00.07

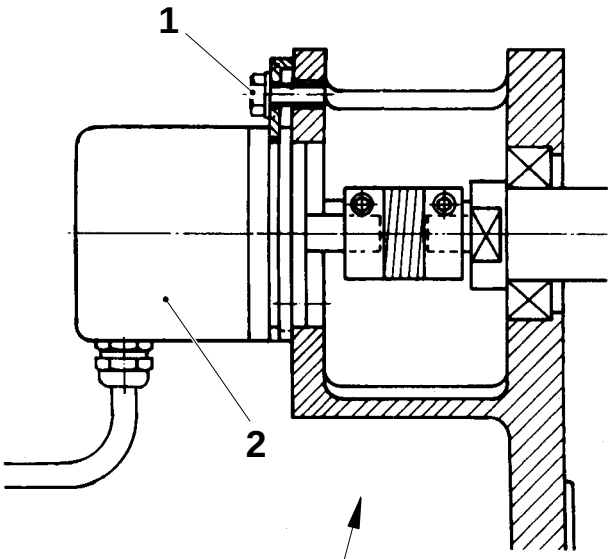

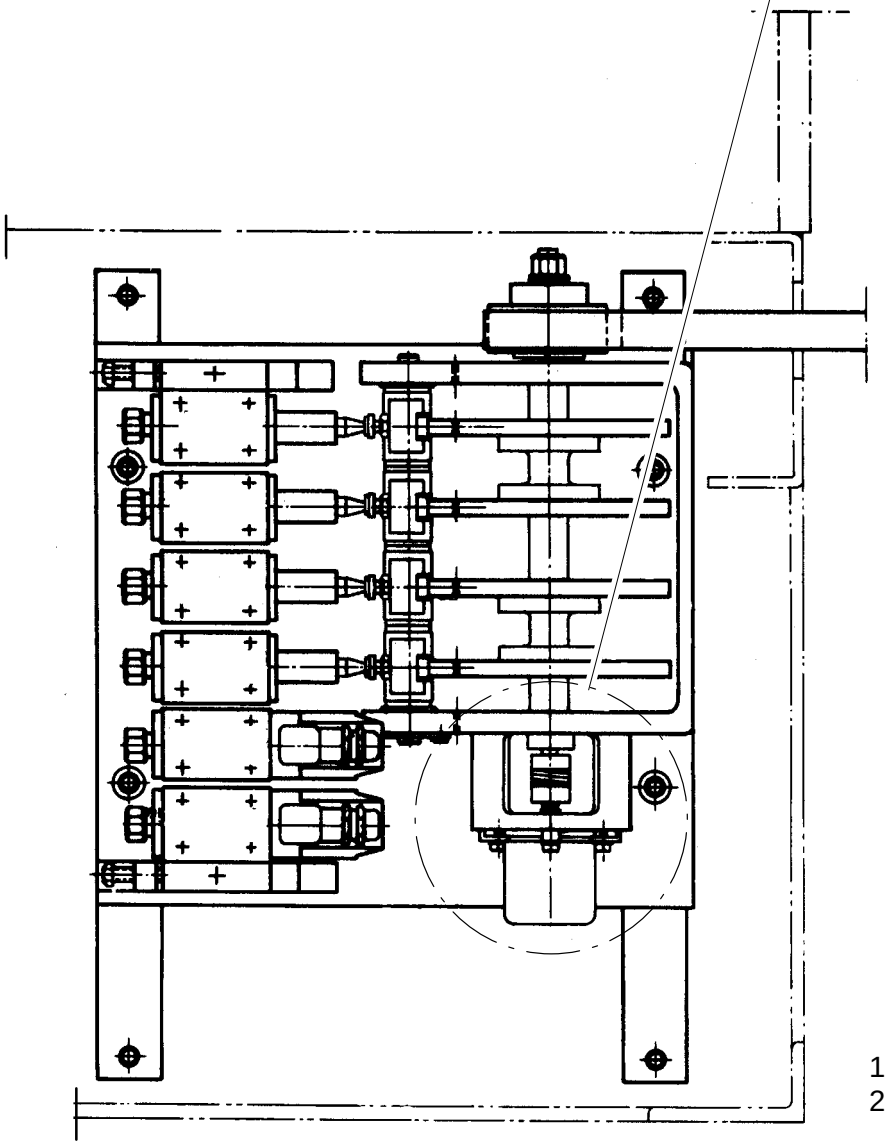

1 Screw
2 Angle encoder

Degree setting

The zero position of the impulse transmitter must be set beforehand, see page MS 603–5X.

a) Crank the machine to exactly 0°.

b) Loosen the screws (1).

c) Turn the angle encoder (2) until the display (3) shows 0_8 alternatively the PLC inputs A10100 – A10107 goes off.

d) Crank the machine to 252_8, all these inputs are to be on alt the display should show 252_8.

e) Tighten the screws.

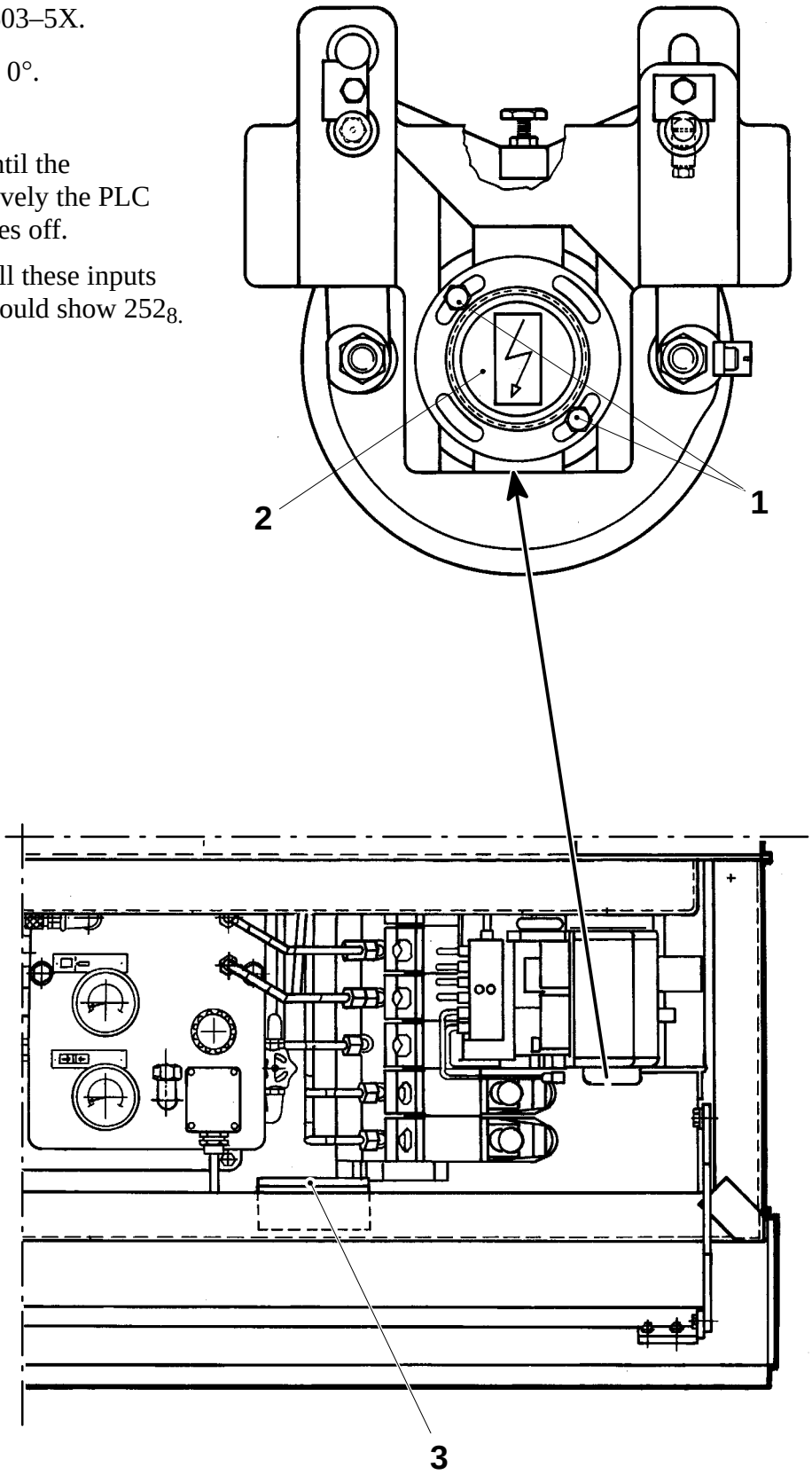

1 Screw
2 Angle encoder
3 Display

Checking degree setting

With the degree scale at 0_8, the PLC inputs (1), see table, are to be off.

With the degree scale at 252_8, all these inputs are to be on.

Machine type	PLC inputs
TB	12200 – 12207
TBA	11710 – 11717

Fig. 1 TB

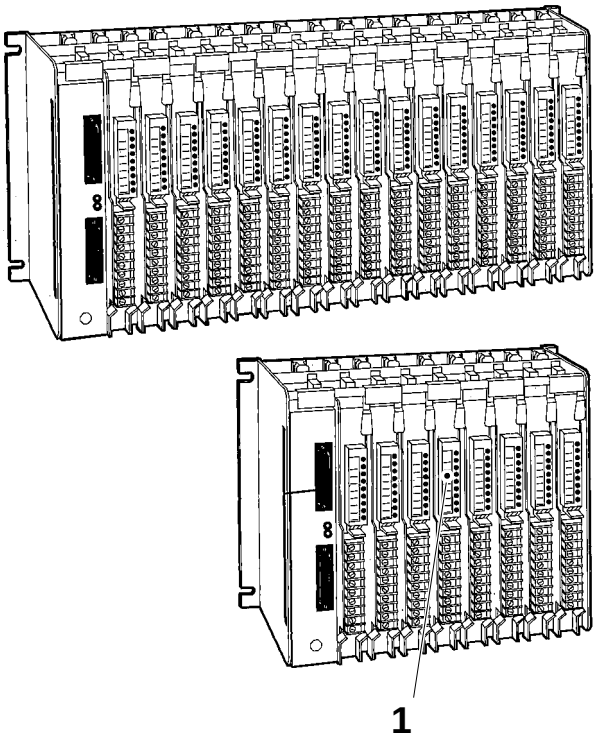

Fig. 2 TBA

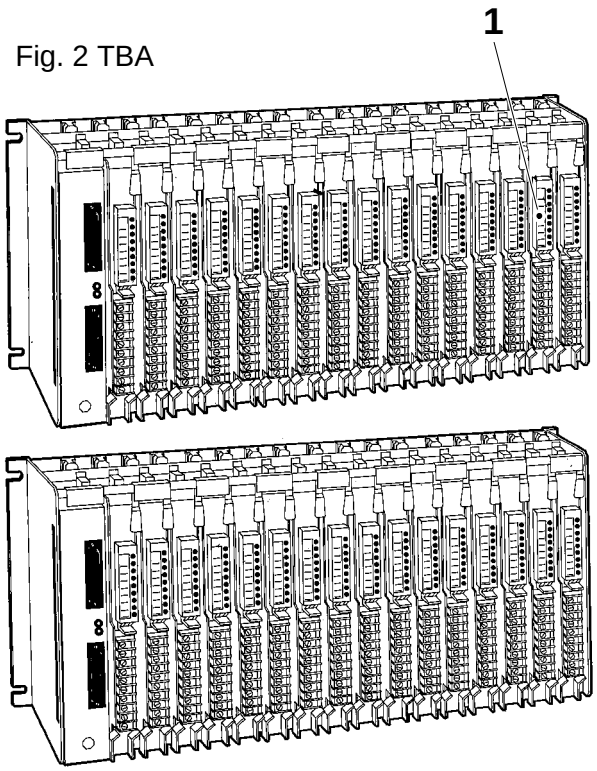

1 Input

Checking degree setting

With the degree scale at 0_8, the inputs E 01.00 – E 01.07 (1) are to be off.

With the degree scale at 252_8, all these inputs are to be on.

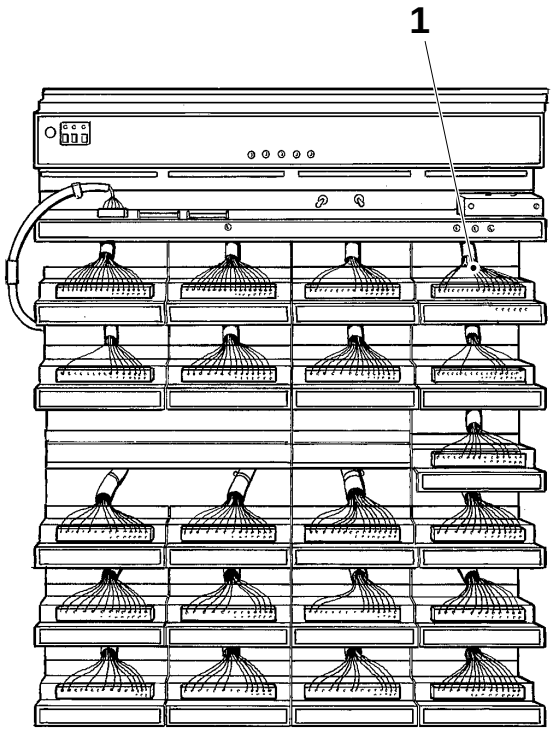

1 Input

Checking degree setting

With the display (1) at 0_8, the inputs A10200 – A10207 (2) are to be off.

With the display at 252_8, all these inputs are to be on.

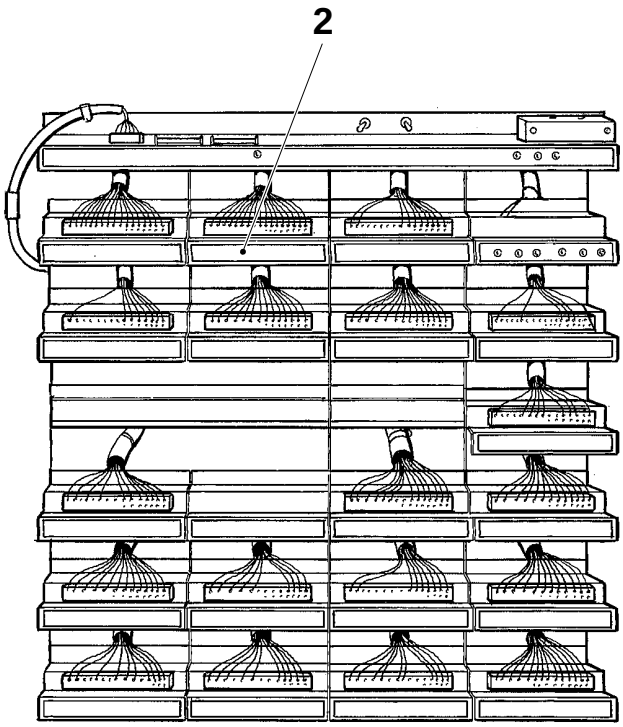

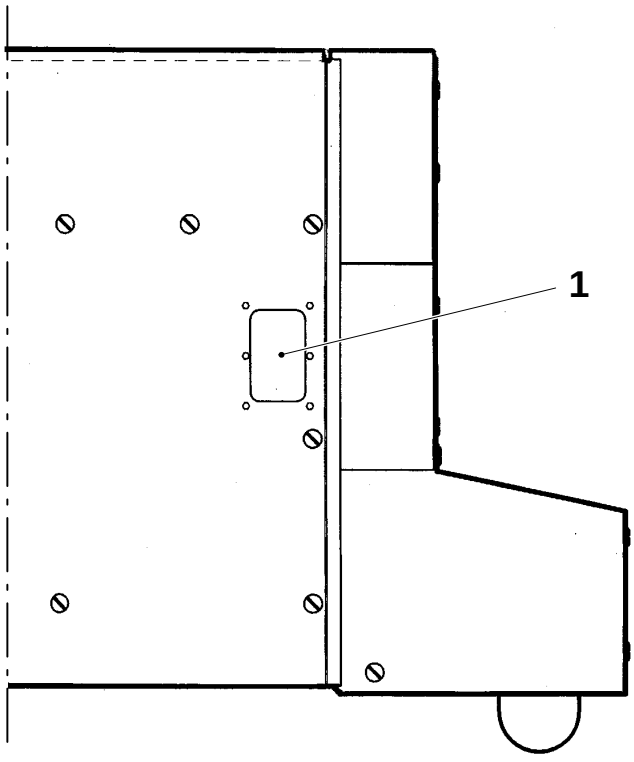

1 Display
2 Input

Degree setting

The main machine is to be synchronized with the final folder, see page MS 574–5X.

Crank the machine to 0_8 on the degree scale.

a) Loosen the two screws (1).

b) Turn the angle encoder until the PLC inputs, see table, go out.

c) Crank the machine to 252_8. All these PLC inputs are now to be on.

d) Tighten the screws carefully.

Machine type	PLC inputs
TB	12200 – 12207
TBA	11710 – 11717
TBA 1203	E 01.00 – E 01.07

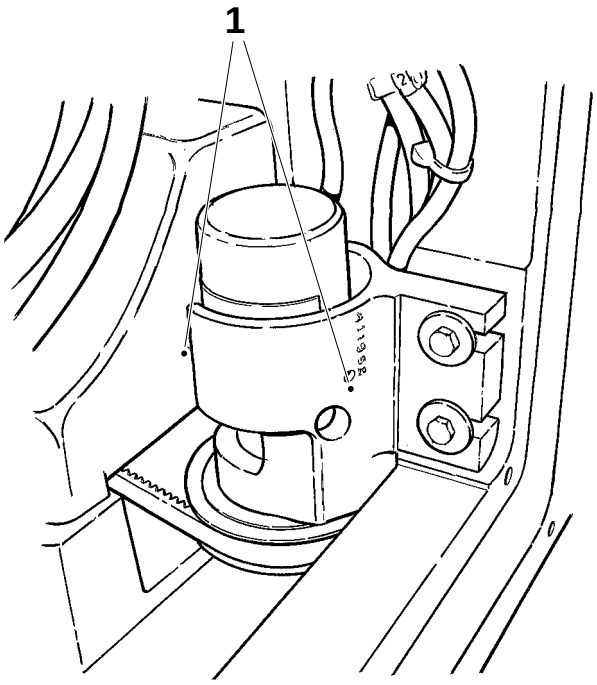

1 Screw

Degree setting

The main machine is to be synchronized with the final folder, see page MS 574–5X.

Crank the machine to 0_8 on the degree scale.

a) Loosen the two screws (1).

b) Turn the angle encoder until the PLC inputs A10200 – A10207 go out alternatively the display (2) should show 0_8.

c) Crank the machine to 252_8, all inputs are now to be on or the display should show 252_8.

d) Tighten the screws carefully.

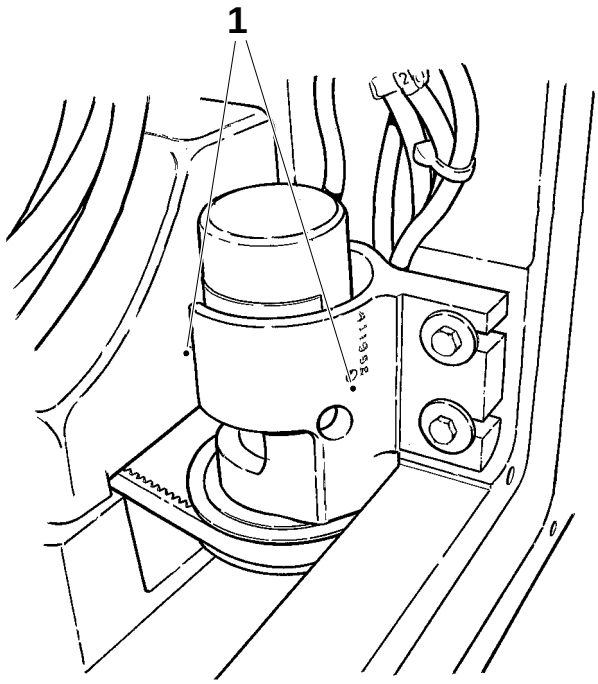

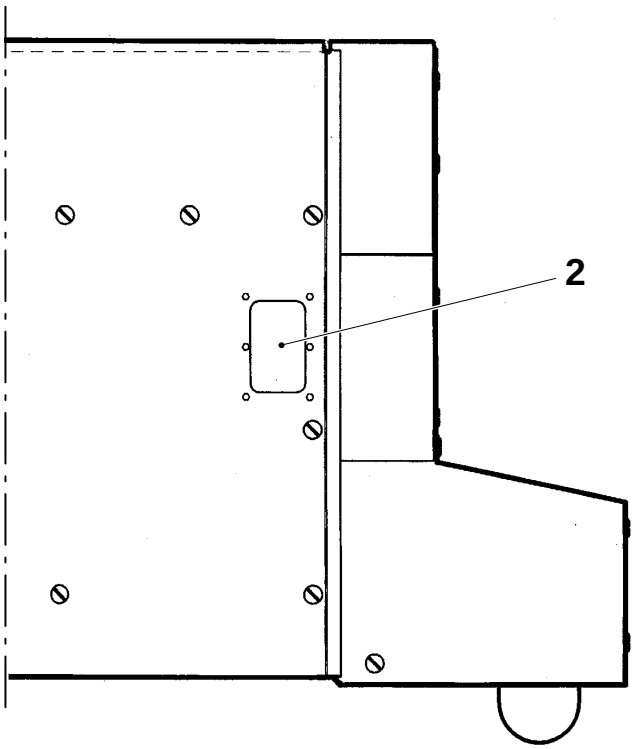

1 Screw
2 Display

Checking/Replacement/Cleaning

If the battery voltage drops below a certain level, **Stand-by low** begins to flash.
Then the battery has to be replaced.

Caution!
The power to the PLC unit must not be cut when the battery is removed.

If the **Memory fault** lamp (3) lights up, the program has to be reloaded.

A battery in storage (mounted in the PLC unit with the mains power switched on) retains 90% of the original power for three years. (Thus, changing the battery (1) annually, ensures intact PLC memory.)

A new battery retains the PLC memory without mains power being switched on for 6 months. When **Stand-by low** lamp (2) begins to flash, there is power left for approximately one week.

Footnote
Clean the battery connections before fitting a new battery.

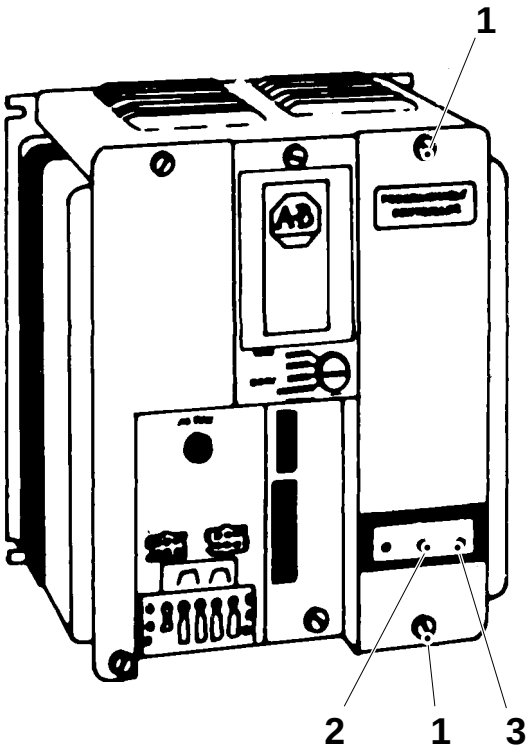

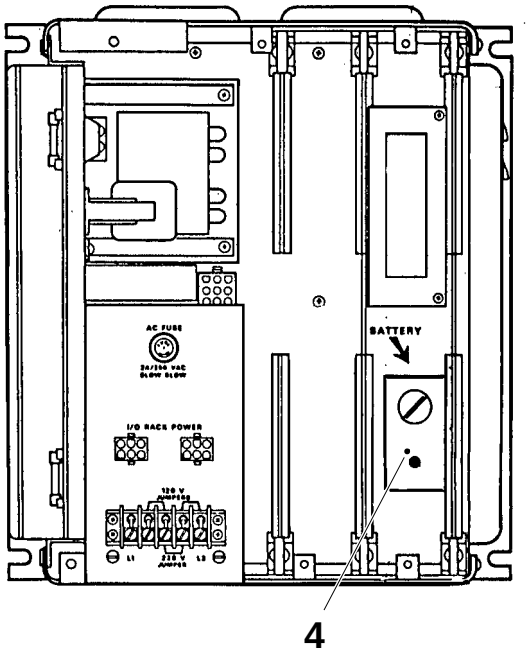

1 Battery location behind this plate
2 Battery power low (Stand-by low)
3 Memory fault
4 Battery holder for two alkaline batteries (TP No. 90023–73)

Checking/Replacement

When the battery voltage has dropped below a certain level, the **Battery** signal lamp (1) lights up. The battery **must** then be replaced.

Power to the TPMC unit **must not** be cut while the battery is being removed.

Caution!
If the mains power has been switched off, the replacement of the battery must not take more than 20 seconds. TPMC loses power after 20 seconds.

To replace the battery, loosen the screws (3) and remove the battery holder.

Footnote
Clean the battery connections before fitting a new battery.

The battery (TP No. 90 334–6), type ”AA”, **should be replaced every two years**, as a new battery is capable of preserving the PC memory for two years without any mains voltage.

Make sure to note the date (year and month) of the replacement on the sign.

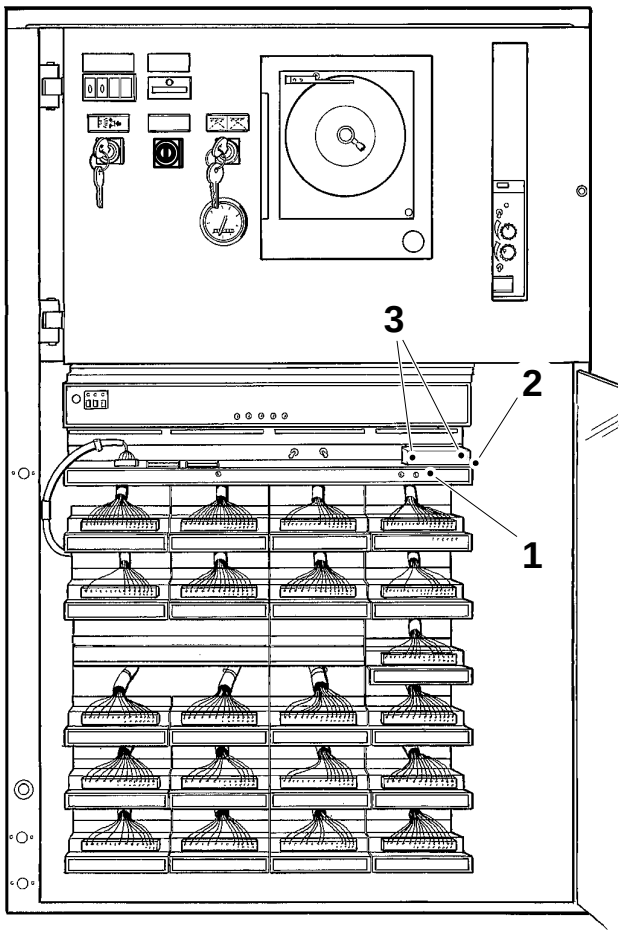

1 Battery signal lamp
2 Battery cover plate
3 Screw

Checking/Replacement

When the battery voltage has dropped below a certain level, the **Battery** signal lamp (1) lights up. The battery **must** then be replaced.

Power to the TPMC unit **must not be** cut while the battery is being removed.

Caution!
If the mains power is off, the replacement of the battery must not take more than 20 seconds. TPMC loses power after 20 seconds.

To replace the battery, loosen the screws (3) and remove the battery holder.

Footnote
Clean the battery connections before fitting a new battery.

The battery (TP No. 90 334–6), type ”AA”, **should be replaced every two years**, as a new battery is capable of preserving the PC memory for two years without any mains voltage.

Make sure to note the date (year and month) of the replacement on the sign.

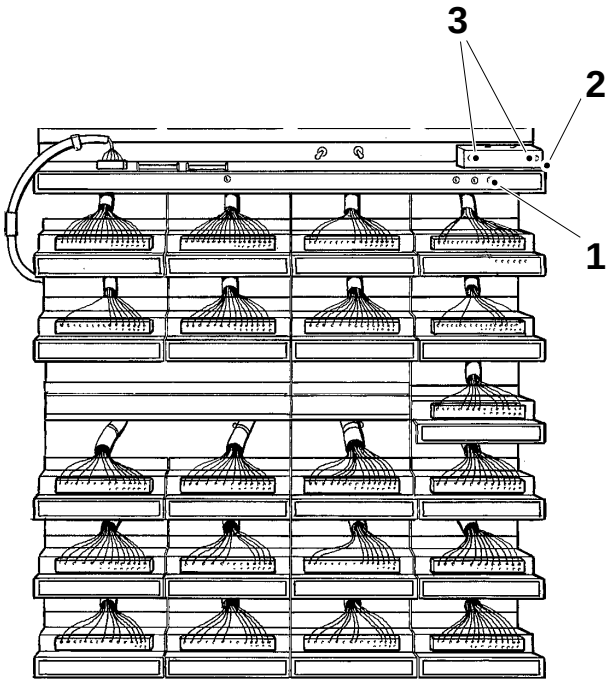

1 BATTERY signal lamp
2 Battery cover plate
3 Screw

Setting

Setting the speed range, machine at stand–still.

a) Turn the main switch to position **off** and padlock it.

b) Bridge (short-circuit) the contacts 1 – 2 on contactor K14 for the driven bending roller.

c) Disconnect the wire to the 01610 PLC output (1).

d) Switch on mains power. Turn up P3 (2) on the TP203 accommodation circuit board so the motor runs at high speed.

Slowly turn the potentiometer marked ”RI comp” (3) on the T406/TP1 control board until the speed becomes unsteady and begins to self-oscillate. Turn the potentiometer back so the speed just steadies itself.

Warning!
All metal components of the board are electrically live.

e) Adjust P3 on TP203 until the speed of the free motor shaft is 100 rpm. This is the minimum limit of the speed range.

If no tachometer (4) is available, stick a piece of tape (5) on the shaft and count revolutions during a defined period of time.

f) Switch off mains power. Connect the wire, see item c), to distribution terminal block M11 at the rear of the door holding the PLC unit (any one of the terminals may be used).
Switch on mains power. After 45 seconds, the motor will be running at top speed.
Adjust this speed to 130 rpm, by means of P4 (6) on TP203.

(Cont’d overleaf)

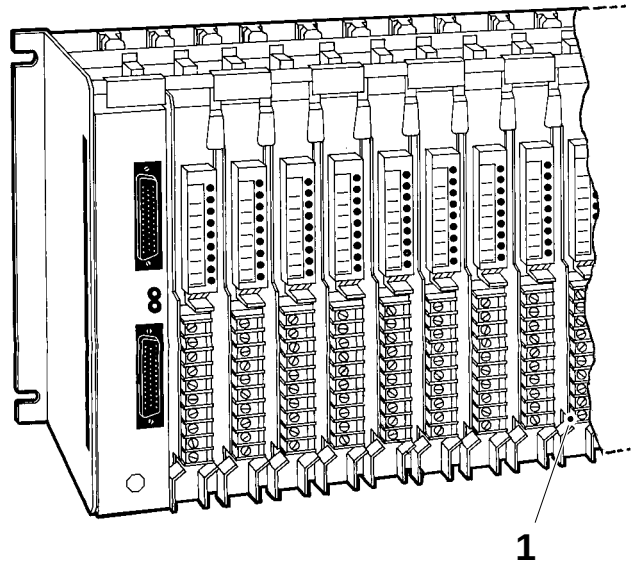

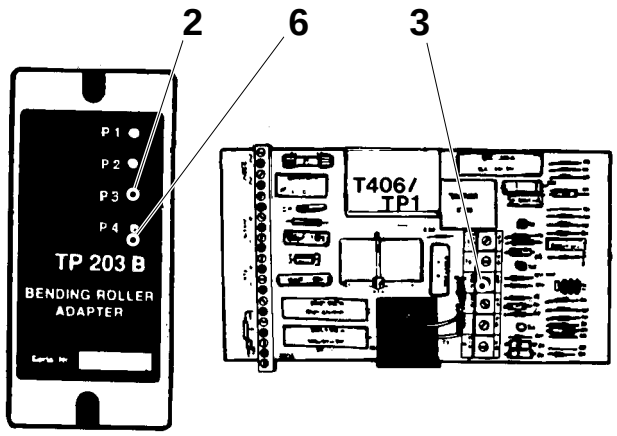

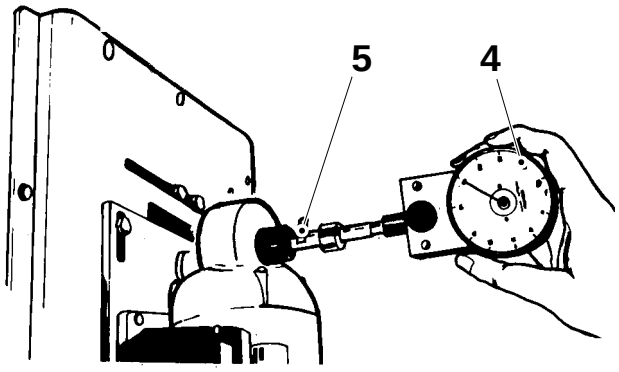

1 PLC output 01610
2 P3
3 Potentiometer RI comp
4 Tachometer
5 Piece of tape
6 P4

(Cont'd)

g) Switch off mains power. Reconnect the wire to the 01610 PLC output. Remove the bridge of the K14 contactor.

Footnote
If a PLC programming screen is available, command the output 01610 **Force off** instead of disconnecting the 01610 wire. At item f) give the **Force on** command.
When finished, give the **Force on remove** command.