SPC
Spare Parts Catalogue

TBA/9 Wedge

595156-0100

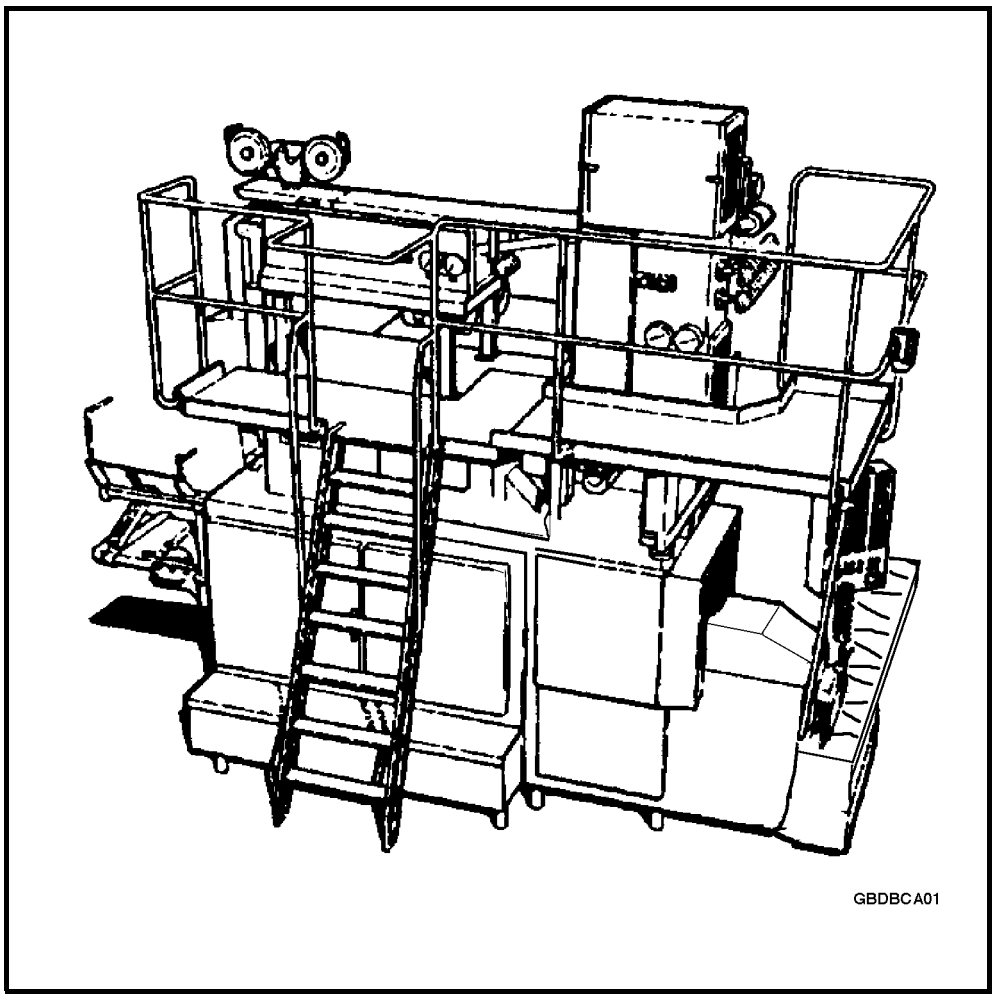

Tetra Pak

Doc No: SPC-80270-0101

For the correct machine data, check your machine specification, supplied with the machine!

This document is valid for:

Series No/ Machine No Sign.

SPC
Spare Parts Catalogue

TBA/9 Wedge
595156-0100

Equipment Included:

To check your actual machine data and eventual installed extra equipments, check the machine specification, supplied with the machine
delivery!

Order/add necessary documents.

Table of Content:

Introduction **4**

Superstructure
595168-0100 ..... **7**

Machine Body
595164-0100 ..... **21**

Drive Unit
595161-0100 ..... **23**

Jaw System
595163-0100 ..... **27**

Final Folder
648112-0100 ..... **49**

Service Unit
594946-0100 ..... **139**

Strip Applicator
595162-0100 ..... **141**

Regular Accessories
595170-0100 ..... **151**

Tetra Wedge El-kit
558861-0100 ..... **159**

Part number index **171**

Doc No: SPC-80270-0101

Issue 9712

Tetra Pak

Tetra Brik Packaging Systems AB

General information

Manufacturer

This machine is produced by:
Tetra Brik Packaging Systems AB
Ruben Rausings gata
221 86 Lund /Sweden

Document producer

This document has been produced by:
Tetra Brik Packaging Systems AB
Technical Publications
Ruben Rausings gata
221 86 Lund /Sweden

Number of pages

This document contains totally **186 pages,** including the first **14** introduction pages.

Copyright © 1997 Tetra Brik Packaging Systems AB

All rights reserved. No parts of this document may be reproduced or copied in any forms or by any means, without written permission from Tetra Brik Packaging Systems AB.

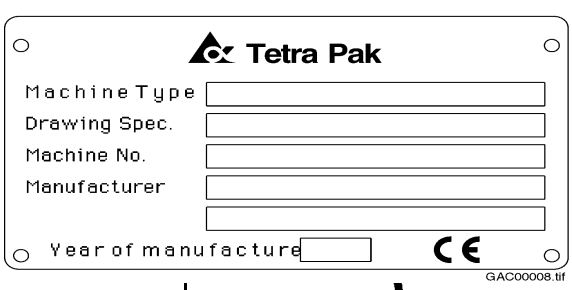

Figure 1

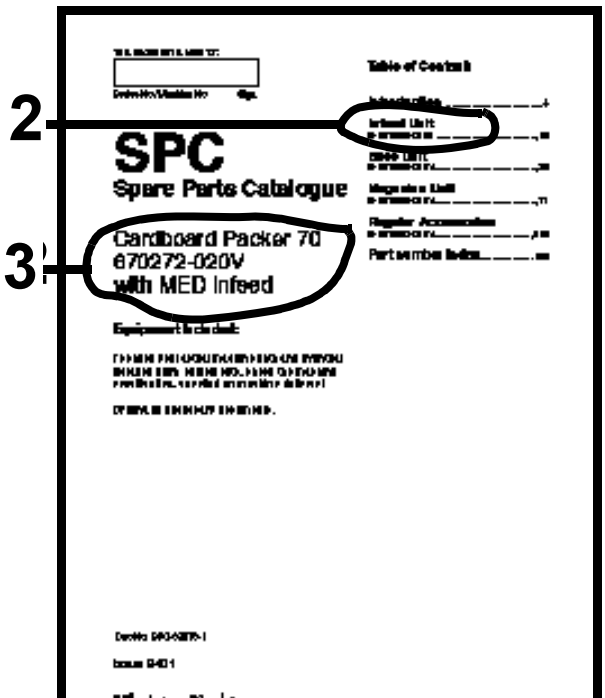

Figure 2

Figure 3



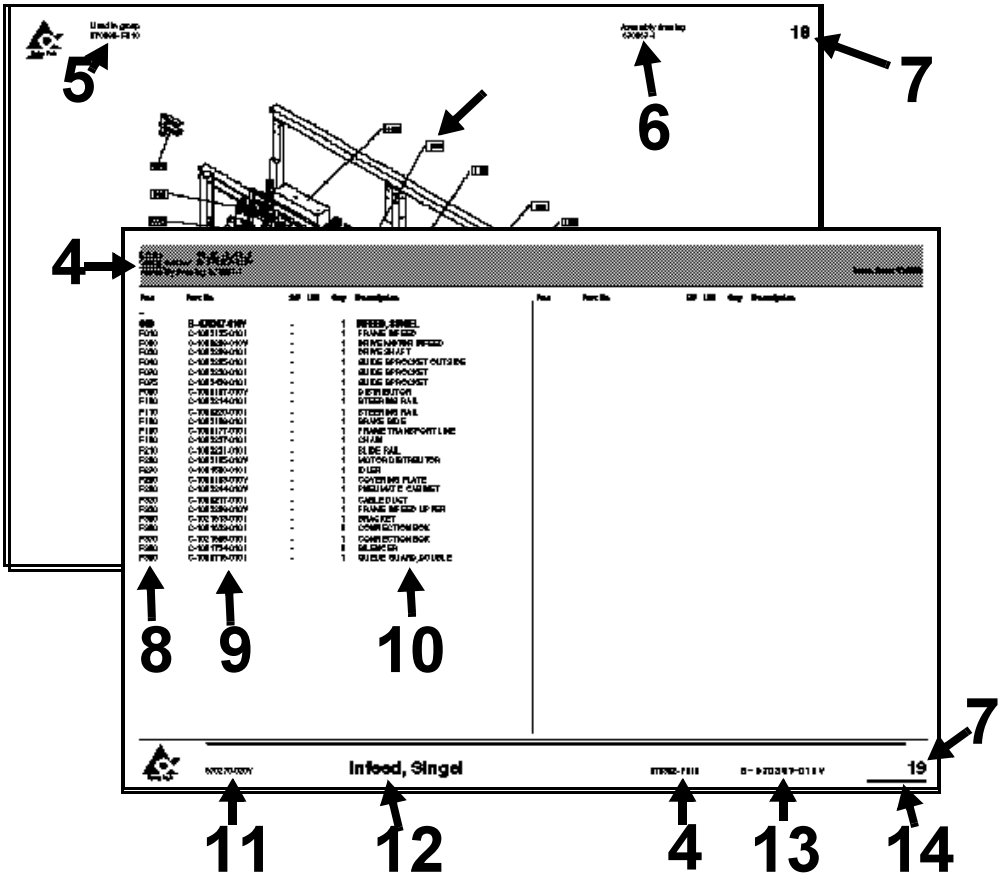

Figure 4

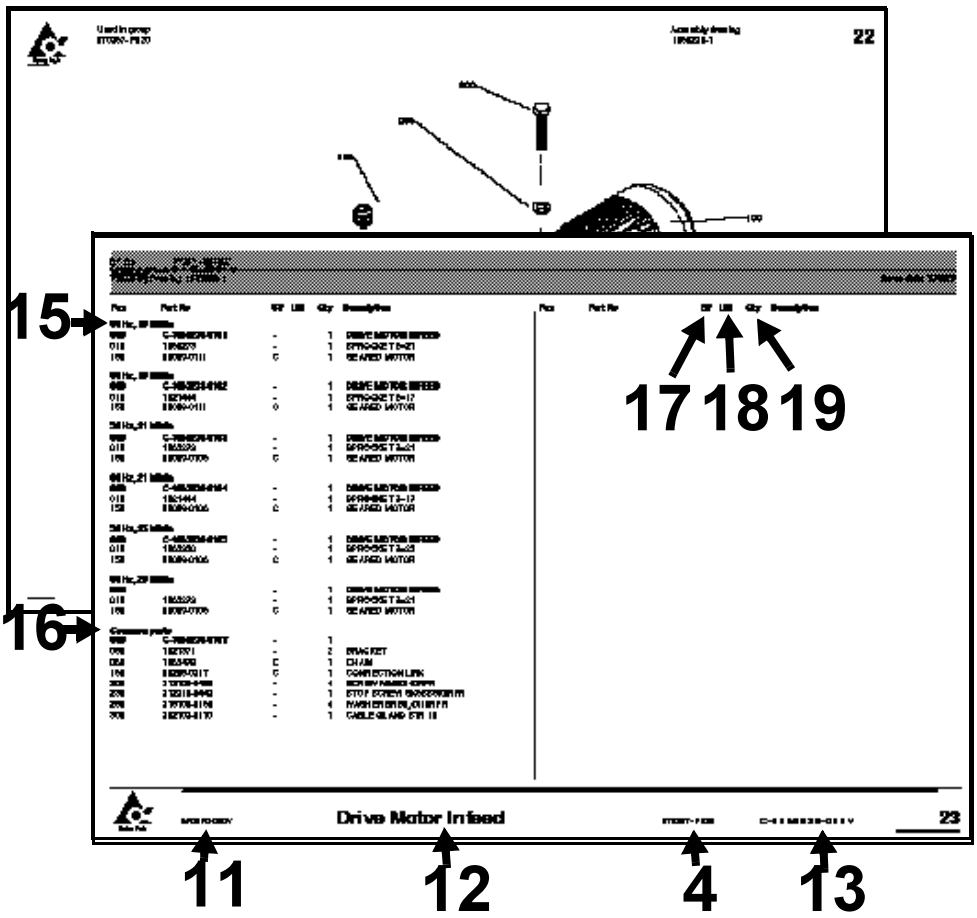

Figure 5

General information

Service

When ordering spare parts for your machine, contact the nearest Tetra Pak service station.

Machine identification

This machine plate is an example of the type of machine plate, attached to the machine frame. The plate carries data needed when contacting Tetra Pak concerning this particular machine.
The location of the different machine plates is shown on the page “Location of machine number plates”, **see page 2**

Purpose of the Spare Parts Catalogue.

The purpose of the Spare Parts Catalogue (SPC) is to provide the technicians and contact personnel with information on how to find and order spare parts for maintenance and service of the machine.
For instructions of how to replace parts and adjust machine setup, see the Maintenance Manual (MM).

Delivered documentation

The technical documentation delivered with this machine is stated in the Machine Specification.
Note! If any of these documents is missing, it must be reported in the document **Start Up Machine Quality Report.** For more information, see chapter 8 Preparation for Commissioning in the Installation Manual.
It is important that you keep these documents for the life of the equipment, and pass the documents on to any subsequent holder or user of the equipment.

Design modification

The content of this document is in accordance with the design and construction of the machine at the time it was delivered from the Tetra Pak machine production facility.

Copyright © 1997 Tetra Brik Packaging Systems AB

All rights reserved. No parts of this document may be reproduced or copied in any forms or by any means, without written permission from Tetra Brik Packaging Systems AB.

Further copies

Additional copies can be ordered from the nearest Tetra Pak service station. When ordering technical publications, always quote the document number printed on the front cover of the document concerned.

Tetra Pak Part numbering system

The third and forth digits in the subnumber, specify one unique group which can be ordered. If the forth digit is replaced by a “V”, the number combination only points to a bill-of-material document.
The first and second digits in the sub-number, specify the development step (model) of the machine or group. **(see fig. 3)**
Main number of machine /group /article, depending on level.
Prefix, giving information about level, eg.
A = Machine
B = Main section (*)
C = Groups and subgroups
***)** Customized distribution machines are registered as B-level as well.

How to find the correct Spare Part Number

A. Check that the data on your machine sign, and /or machine specification, corresponds with the catalogue. **(see fig.1)**

1) Main groups of the machine

B. The second catalogue sheet contains a table of content for the main groups, included in the catalogue. The information regarding machine and main group status MUST correspond with your machine specification.
Locate and choose the main groups page number (1), in which you want to search for spare parts.
(see fig. 2)

2) Main group
3) Machine type

C. Search in the main group illustration, the item number, which may hold your wanted spare part. Go to the text page below and find the page number for the actual group. **(see fig. 4)**

4) Internal information, such as latest Engineering Change, bill-of-material included in the catalogue page.
5) Used-In reference to next higher level in the machine structure
6) Assembly drawing number
7) Continuous page numbering through the document
8) Pos number corresponding to illustration
9) Group or article number.
10) Group or article description. The letter “B” in front of some article numbers indicates that this article contains other parts, shown in an additional page at the end the section. Letter “A” indicatates a subgroup number with an own page directly after the actual page.
11) Machine type including development staus
12) Group description
13) Group number (bill-of-material) including development status
14) Document number

D. Continue to the found page number, and search in the illustration for your spare part. Go to the text row for the found item number, and read the part number. Take eventual variant headings in consideration; if you are unsure, read your machine specification. **(see fig. 5)**

15) Variant heading, eg volume, left /right etc.
16) Heading for common parts
17) SP = Code for articles, which are included into various spare part kits.

A = Stop function, no rep/available/bypassed	I = 1000 operating hours
B = Stop function, rep/available/bypassed	J = 2000 operating hours
C = Don’t stop function, can be bypassed	K = 3000 operating hours
D = Seldom break, long time production	L = 4000 operating hours
E = 100 operating hours	M = 5000 operating hours
F = 250 operating hours	N = 6000 operating hours
G = 500 operating hours	O = 7000 operating hours
H = 750 operating hours	P = 8000 operating hours

18) UN = Short code for measure units, eg mm, kg etc.
19) Qty = Number of items needed in the complete assembly.

SPC

Spare Parts Catalogue

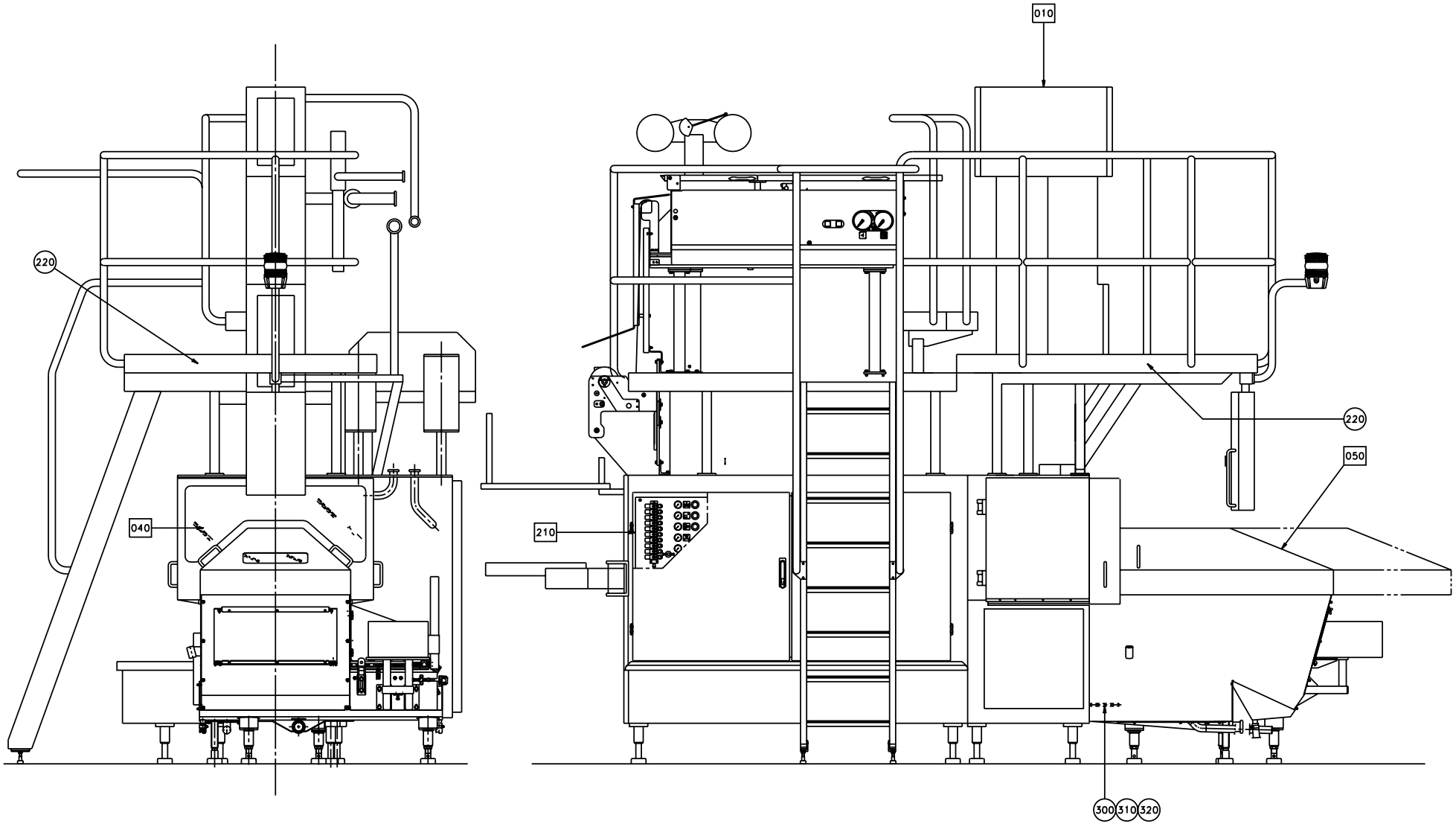

59516801.eps
595168-1
ECN 70960

Pos	Part No	SP	UN	Qty	Description	Page No
-						
F010	A 595165-0100	-		1	SUPERSTRUCTURE	
F030	A 595161-0100	-		1	DRIVE UNIT	
F040	A 595163-0100	-		1	JAW SYSTEM	
F050	A 648112-0100	-		1	FINAL FOLDER	
F070	A 595162-0100	-		1	STRIP APPLICATOR	
F090	A 595170-0100	-		1	REGULAR ACCESSORIES	
F200	A 594946-0100	-		1	BENDING ROLLER	
F210	A 595164-0100	-		1	VALVE PANEL FRONT	
220	591441-0000	-		2	MACHINE PLATE	
300	594958-0000	-		1	PIPE WATER	
310	594959-0000	-		1	PIPE WATER	
320	342736-0109	-		1	ELBOW PIPE W-12	

Pos	Part No	SP	UN	Qty	Description	Page No

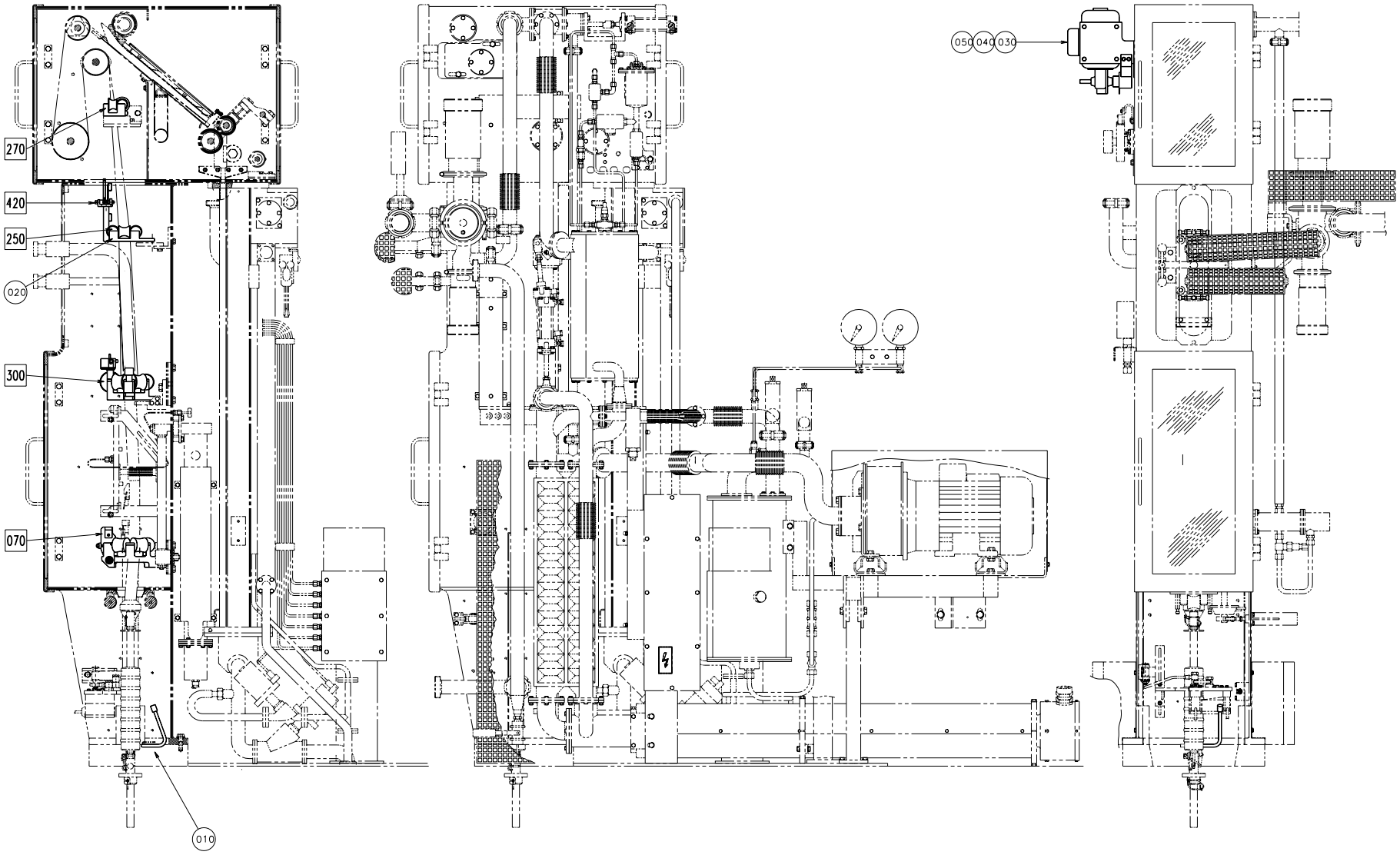

59516501.EPS
595165-1
ECN 70865

Pos	Part No	SP	UN	Qty	Description	Page No
-						
F070	A 456309-0500	-		1	LOWER FORMING RING	
F250	A 441304-0400	-		1	MOVABLE FORMING RING	
F270	A 441307-0300	-		1	UPPER TUBE SUPPORT	
F300	A 441486-0400	-		1	DIVIDED FORMING RING	
F420	A 591618-0100	-		1	PAPER GUIDE	
010	571103-0000	-		1	NOZZLE	
020	594938-0000	-		1	FASTENING PLATE	
030	209331-0005	-		1	GEAR WHEEL	
040	579974-0000	-		1	GEAR WHEEL	
050	90348-0007	-		1	FREE WHEEL COUPLING	

Pos	Part No	SP	UN	Qty	Description	Page No

This page is intentionally left blank

Pos	Part No	SP	UN	Qty	Description	Page No
-						
020	1279095-0000	-		1	LOCKING PLATE	
030	1279096-0000	-		1	LOCKING PLATE	
040	491022-0000	-		1	CYLINDER BRACKET	
055	1279092-0000	-		4	LOCKING PLATE	
060	2033-0011	F		12	WASHER	
080	239440-0000	F		1	SHAFT	
090	90240-0172	F		12	FLANGE BUSHING	
130	255969-0000	K		1	SHAFT	
180	441483-0000	-		1	CYLINDER BRACKET	
200	257042-0000	-		1	BRACKET	
210	257043-0000	-		1	ANGLE BRACKET	
220	257044-0000	F		1	ROLL	
315	752038-0000	-		4	SHIM	
330	90235-0274	K		2	VALVE	
345	90239-0453	K		1	BRACKET	
346	90239-0516	K		1	PISTON ROD HEAD	
350	B 90239-0779	K		1	CYLINDER	
500	311103-0238	-		2	CYLINDRICACP M6 3X20 RFR	
510	311411-0140	-		1	SPLIT PIN SP1,6X16RFR	
520	312105-0364	-		1	SCREW M6S6X10RFR	
530	312105-0368	-		2	SCREW O4017 M6X16A280	
545	312105-0372	-		1	SCREW O4017 M6X25A280	
547	312105-0447	-		2	SCREW O4017 M8X12A280	
560	312105-0451	-		1	SCREW SO4017 8X20A280	
565	312105-0453	-		2	SCREW O4017 M8X25A280	
580	312105-0536	-		1	SCREW 4017 M12X30A280	
590	312318-0285	-		1	STOP SCREW SK6SS4X6RFR	
650	312605-0320	-		1	NUT M6M10RFR	
660	315105-0153	-		3	WASHER BRB6,4X12RFR	
665	315105-0165	-		4	WASHER BRB8,4X16RFR	
670	315115-0165	-		3	WASHER TBRB8,4X16RFR	
680	315115-0178	-		1	WASHER TBRB13X24RFR	
710	342797-0121	K		2	BANJO CONNSINGEL 6-1/8	
751503-0000						
	90166-0179	-	M	1	SHRINKABLE HOSE	
752155-0000						
	90166-0179	-	M	1	SHRINKABLE HOSE	
752140-0000						
	90166-0179	-	M	1	SHRINKABLE HOSE	
90239-0779						
	90239-0442	K		1	SEAL KIT	

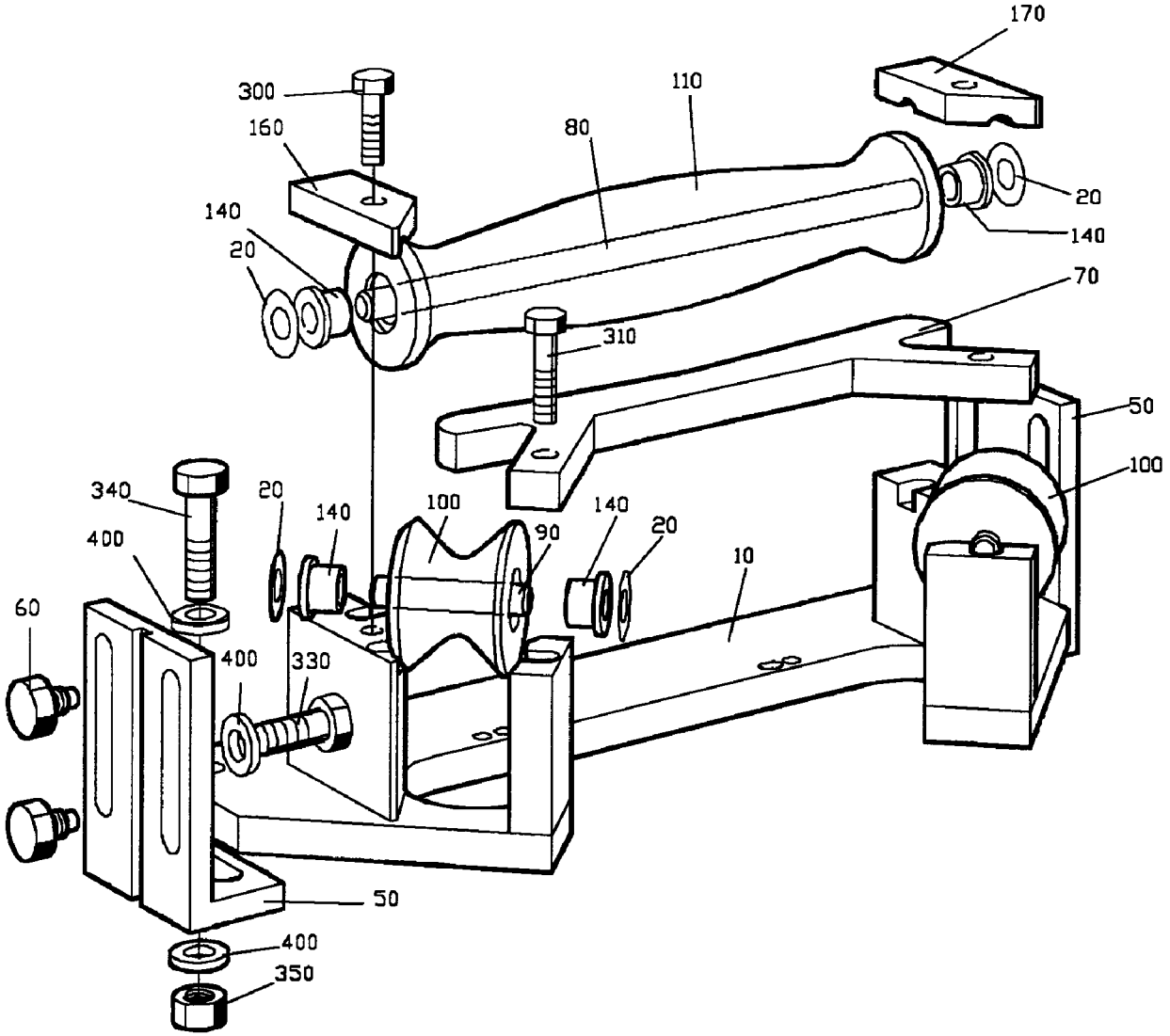

44130704.tif
441307-4
ECN

Pos	Part No	SP	UN	Qty	Description	Page No
TBA 0100B or TBA 0125S						
010	B 456905-0000	-		1	FASTENING PLATE	
030	571536-0000	-		1	CANTILEVER	
050	752141-0000	-		1	FORMING ROLLER	
060	752142-0000	-		2	FORMING ROLLER	
075	1296912-0000	D		1	ROLL	
080	752143-0000	D		1	FORMING ROLLER	
090	752186-0002	-		2	SHAFT	
100	752186-0008	-		1	SHAFT	
110	752186-0006	-		2	SHAFT	
140	456907-0000	-		2	LOCK PLATE	
250	90240-0172	F		6	FLANGE BUSHING	
255	752156-0000	F		4	FLANGE BUSHING	
500	312105-0332	-		6	SCREW M6S5X22RFR	
TBA 0160S or TBA 0200S						
010	B 456905-0000	-		1	FASTENING PLATE	
030	571535-0000	-		1	CANTILEVER	
050	752126-0000	-		1	FORMING ROLLER	
060	752127-0000	-		2	FORMING ROLLER	
075	1296914-0000	D		1	ROLL	
080	752128-0000	D		1	FORMING ROLLER	
090	752186-0002	-		2	SHAFT	
100	752186-0008	-		1	SHAFT	
110	752186-0006	-		2	SHAFT	
140	456907-0000	-		2	LOCK PLATE	
250	90240-0172	F		6	FLANGE BUSHING	
255	752156-0000	F		4	FLANGE BUSHING	
500	312105-0332	-		6	SCREW M6S5X22RFR	
TBA 0200M or TBA 0250S						
010	B 574404-0000	-		1	BRACKET	
030	571535-0000	-		1	CANTILEVER	
050	574479-0000	-		1	ROLL	
060	574480-0000	-		2	ROLL	
075	1296915-0000	D		1	ROLL	
080	574481-0000	D		1	ROLL	
090	752186-0002	-		2	SHAFT	
100	752186-0008	-		1	SHAFT	
110	752186-0006	-		2	SHAFT	
140	1279087-0000	-		2	LOCKING PLATE	
250	90240-0172	F		6	FLANGE BUSHING	
255	752156-0000	F		4	FLANGE BUSHING	
500	312105-0332	-		6	SCREW M6S5X22RFR	
TBA 0180B						
010	978792-0000	-		1	PLATE	
030	571535-0000	-		1	CANTILEVER	
050	751491-0000	K		1	ROLL	
060	751492-0000	K		2	ROLL	
075	1296913-0000	D		1	ROLL	
080	751494-0000	K		1	ROLL	
090	752186-0005	K		2	SHAFT	
100	752186-0009	K		1	SHAFT	
110	752187-0000	K		1	SHAFT	
250	90240-0172	F		10	FLANGE BUSHING	
500	312105-0368	-		4	SCREW O4017 M6X16A280	
-						
020	751333-0000	-		1	SETTING PLATE	
040	256309-0000	K		1	SHAFT	
150	1279091-0000	-		4	LOCKING PLATE	
160	256312-0000	-		1	WASHER	
170	2033-0011	F		10	WASHER	
180	26490-0000	-		2	WASHER	
190	256280-0000	K		2	DOWEL	
200	571534-0000	-		1	PLATE	
210	257090-0000	-		1	SHIFTER HANDLE	
220	751334-0000	K		3	SPACER	
260	456042-0000	K		1	SCREW	
265	28037-0000	-		2	WASHER	
295	491153-0000	F		1	COMPRESSION GLAND	
300	90335-0008	K		1	SPRING	
520	312105-0371	-		3	SCREW M6S6X22RFR	
530	312105-0451	-		6	SCREW SO4017 8X20A280	
540	315105-0165	-		2	WASHER BRB8,4X16RFR	
550	315115-0165	-		4	WASHER TBRB8,4X16RFR	
456905-0000						
0010	1282582-0000	-		1	CAST WORKPIECE	
574404-0000						
0010	1282582-0000	-		1	CAST WORKPIECE	

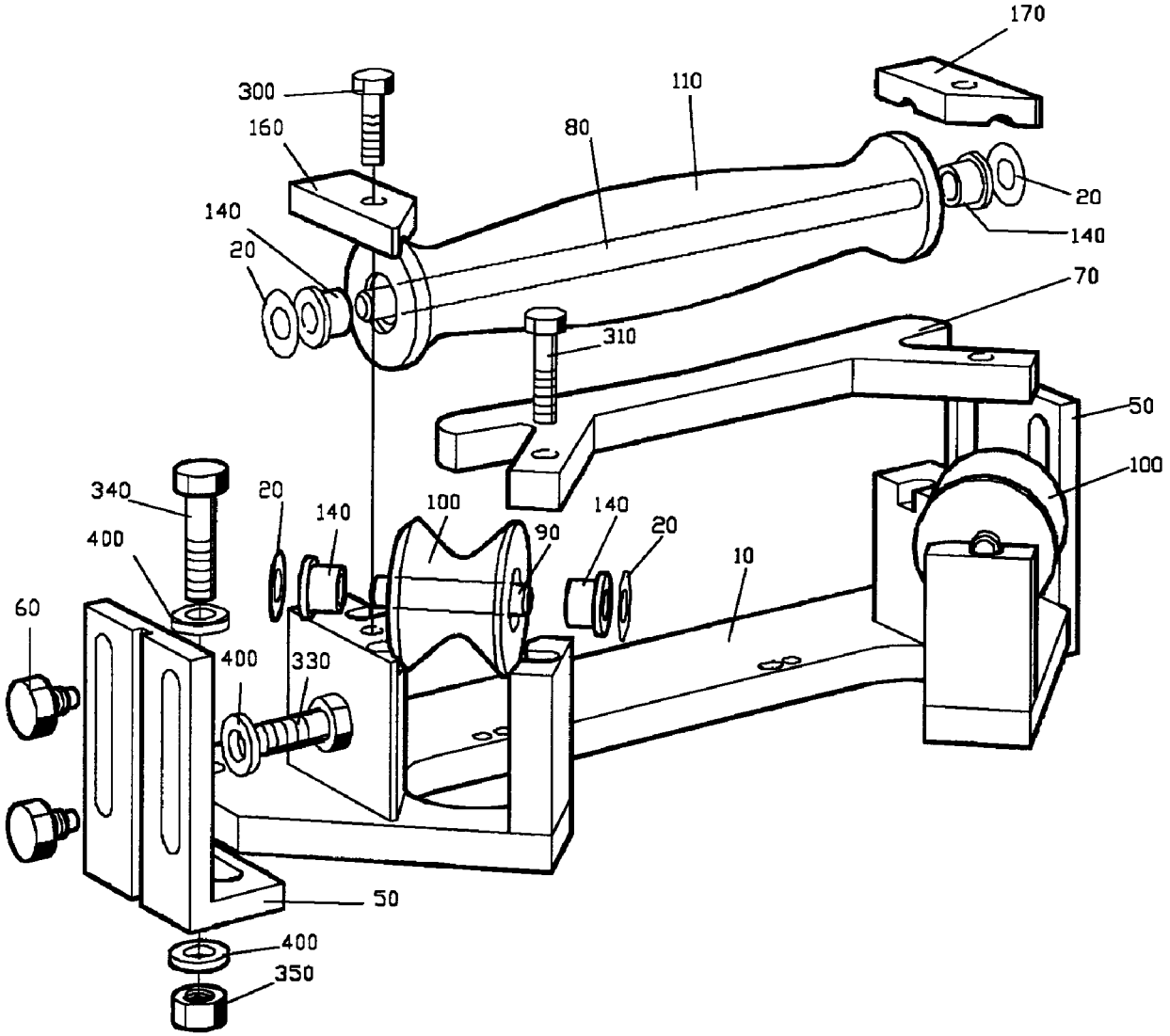

44130704.tif
441307-4
ECN

Pos	Part No	SP	UN	Qty	Description	Page No
TBA 0100B or TBA 0125S						
010	469078-0000	-		1	HOLDER	
050	256279-0000	-		2	ANGLE	
080	752186-0010	-		1	SHAFT	
090	752186-0001	-		2	SHAFT	
100	752145-0000	-		2	FORMING ROLLER	
110	752144-0000	-		1	FORMING ROLLER	
160	1279089-0000	-		1	LOCKING PLATE	
170	1279088-0000	-		1	LOCKING PLATE	
290	312105-0368	-		2	SCREW O4017 M6X16A280	
345	312105-0457	-		2	SCREW O4017 M8X35A280	
TBA 0160S or TBA 0200S						
010	B 469041-0000	-		1	HOLDER	
050	469047-0000	-		2	ANGLE	
080	752186-0010	-		1	SHAFT	
090	752186-0004	K		2	SHAFT	
100	752130-0000	-		2	FORMING ROLLER	
110	752129-0000	-		1	FORMING ROLLER	
160	1279089-0000	-		1	LOCKING PLATE	
170	1279088-0000	-		1	LOCKING PLATE	
300	312105-0368	-		2	SCREW O4017 M6X16A280	
340	312105-0455	-		2	SCREW O4017 M8X30A280	
TBA 0200M or TBA 0250S						
010	B 574416-0000	-		1	BRACKET	
050	469047-0000	-		2	ANGLE	
080	752186-0010	-		1	SHAFT	
090	752186-0012	-		2	SHAFT	
100	574418-0000	-		2	ROLL	
110	574417-0000	-		1	ROLL	
160	1279089-0000	-		1	LOCKING PLATE	
170	1279088-0000	-		1	LOCKING PLATE	
300	312105-0368	-		2	SCREW O4017 M6X16A280	
340	312105-0455	-		2	SCREW O4017 M8X30A280	
TBA 0180B or TBA 0200B or TBA 0236B or TBA 0250B or TBA 0284B or TBA 0300S or TBA 0330S						
010	978791-0000	-		1	HOLDER	
050	751267-0000	-		2	CANTILEVER	
080	752186-0011	K		1	SHAFT	
090	752186-0004	K		2	SHAFT	
160	751287-0000	-		1	PLATE	
170	751288-0000	-		1	PLATE	
300	312105-0368	-		2	SCREW O4017 M6X16A280	
340	312105-0455	-		2	SCREW O4017 M8X30A280	

Pos	Part No	SP	UN	Qty	Description	Page No
TPA 0330SQ						
010	978791-0000	-		1	HOLDER	
050	751267-0000	-		2	CANTILEVER	
080	752186-0011	K		1	SHAFT	
090	752186-0004	K		2	SHAFT	
100	751284-0000	K		2	ROLL	
110	751283-0000	K		1	ROLL	
160	751287-0000	-		1	PLATE	
170	751288-0000	-		1	PLATE	
300	312105-0368	-		2	SCREW O4017 M6X16A280	
340	312105-0455	-		2	SCREW O4017 M8X30A280	
Common parts						
F040	A 565462-0100	-		1	LOCK PLATE	
020	2033-0011	F		6	WASHER	
060	256280-0000	K		4	DOWEL	
140	90240-0172	F		6	FLANGE BUSHING	
330	312105-0451	-		4	SCREW SO4017 8X20A280	
350	312605-0318	-		2	NUT M6M8RFR	
400	315115-0165	-		8	WASHER TBRB8,4X16RFR	
469041-0000						
0010	1282583-0000	-		1	CAST WORKPIECE	
574416-0000						
0010	1282583-0000	-		1	CAST WORKPIECE	
-						
010	1279087-0000	-		2	LOCKING PLATE	

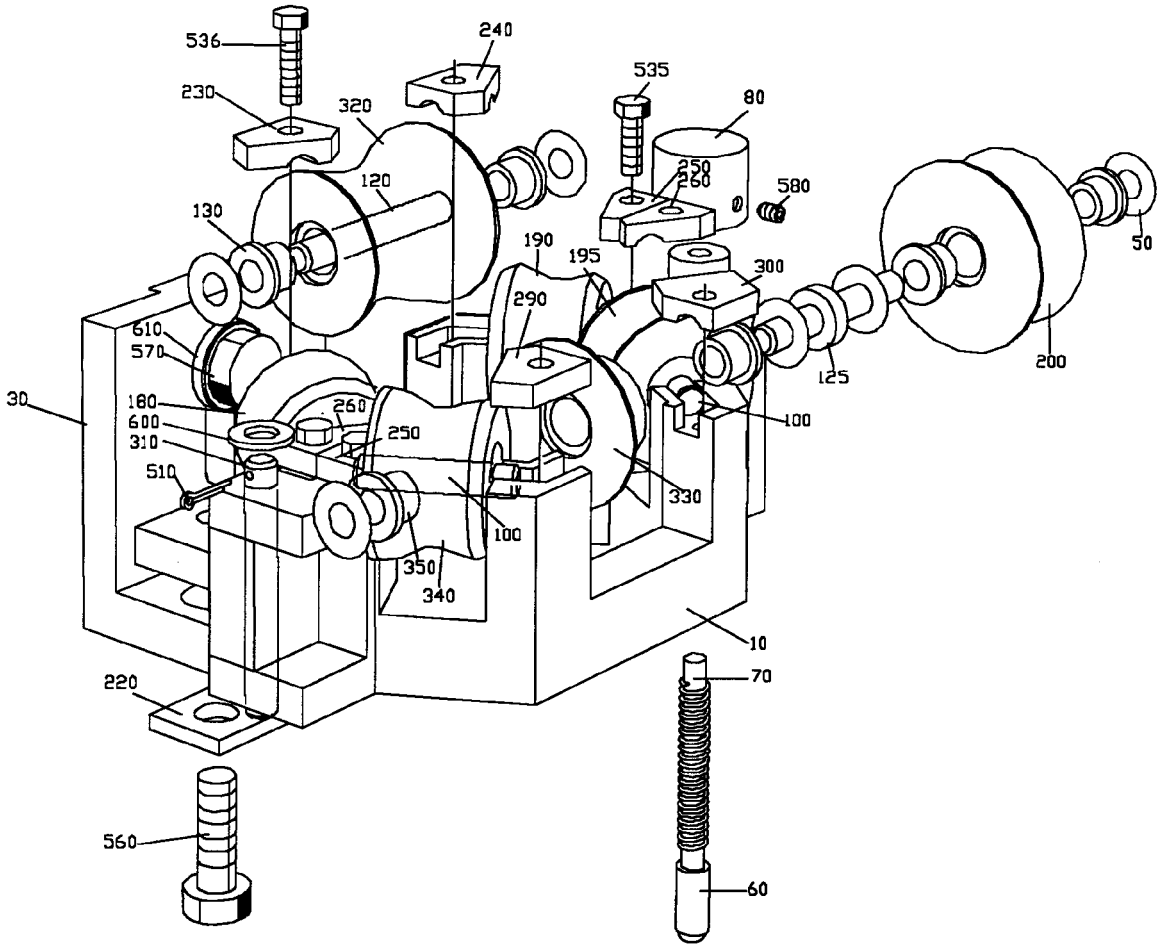

44148608.tif
441486-8
ECN

Pos	Part No	SP	UN	Qty	Description	Page No
TBA 0100B or TBA 0125S						
010	469745-0000	-		1	BRACKET	
050	2033-0011	F		14	WASHER	
100	752186-0003	K		4	SHAFT	
120	752186-0006	-		1	SHAFT	
125	752185-0000	K		1	SHAFT	
130	90240-0172	F		12	FLANGE BUSHING	
180	752147-0000	K		1	FORMING ROLLER	
190	752148-0000	K		1	FORMING ROLLER	
195	752150-0000	K		1	FORMING ROLLER	
200	752151-0000	K		1	FORMING ROLLER	
300	456872-0000	-		1	LOCK PLATE	
320	752146-0000	K		1	FORMING ROLLER	
330	752152-0000	K		1	FORMING ROLLER	
340	752149-0000	K		1	FORMING ROLLER	
350	752156-0000	F		2	FLANGE BUSHING	
535	312105-0329	-		4	SCREW O4017 M5X16A280	
536	312105-0332	-		4	SCREW M6S5X22RFR	
600	315105-0165	-		2	WASHER BRB8,4X16RFR	
TBA 0160S or TBA 0180B or TBA 0200B or TBA 0200M or TBA 0200S or TBA 0236B or TBA 0250B or TBA 0250S or TBA 0284B or TBA 0300S or TBA 0330S or TPA 0330SQ						
010	469745-0000	-		1	BRACKET	
050	2033-0011	F		14	WASHER	
100	752186-0003	K		4	SHAFT	
120	752186-0006	-		1	SHAFT	
125	752185-0000	K		1	SHAFT	
130	90240-0172	F		12	FLANGE BUSHING	
180	752132-0000	K		1	FORMING ROLLER	
190	752133-0000	K		1	FORMING ROLLER	
195	752135-0000	K		1	FORMING ROLLER	
200	752136-0000	K		1	FORMING ROLLER	
300	456872-0000	-		1	LOCK PLATE	
320	752131-0000	K		1	FORMING ROLLER	
330	752137-0000	K		1	FORMING ROLLER	
340	752134-0000	K		1	FORMING ROLLER	
350	752156-0000	F		2	FLANGE BUSHING	
535	312105-0329	-		4	SCREW O4017 M5X16A280	
536	312105-0332	-		4	SCREW M6S5X22RFR	
600	315105-0165	-		2	WASHER BRB8,4X16RFR	
Common parts						
030	456230-0000	-		1	ANGLE BRACKET	
060	35918-0000	K		1	SHAFT	
070	35919-0000	K		1	COMPRESSION SPRING	
080	36325-0000	K		1	KNOB	
220	456182-0000	-		1	PLATE	
230	1279086-0000	-		1	LOCKING PLATE	
240	1279090-0000	-		2	LOCKING PLATE	
250	1279093-0000	-		2	LOCKING PLATE	
260	1279094-0000	-		2	LOCKING PLATE	
310	751318-0000	-		1	SHAFT	
510	311411-0150	-		2	SPLIT PIN SP2X12RFR	
560	312105-0495	-		2	SCREW 4017 M10X30A280	
570	312105-0536	-		1	SCREW 4017 M12X30A280	
580	312318-0285	-		1	STOP SCREW SK6SS4X6RFR	
610	315115-0178	-		1	WASHER TBRB13X24RFR	

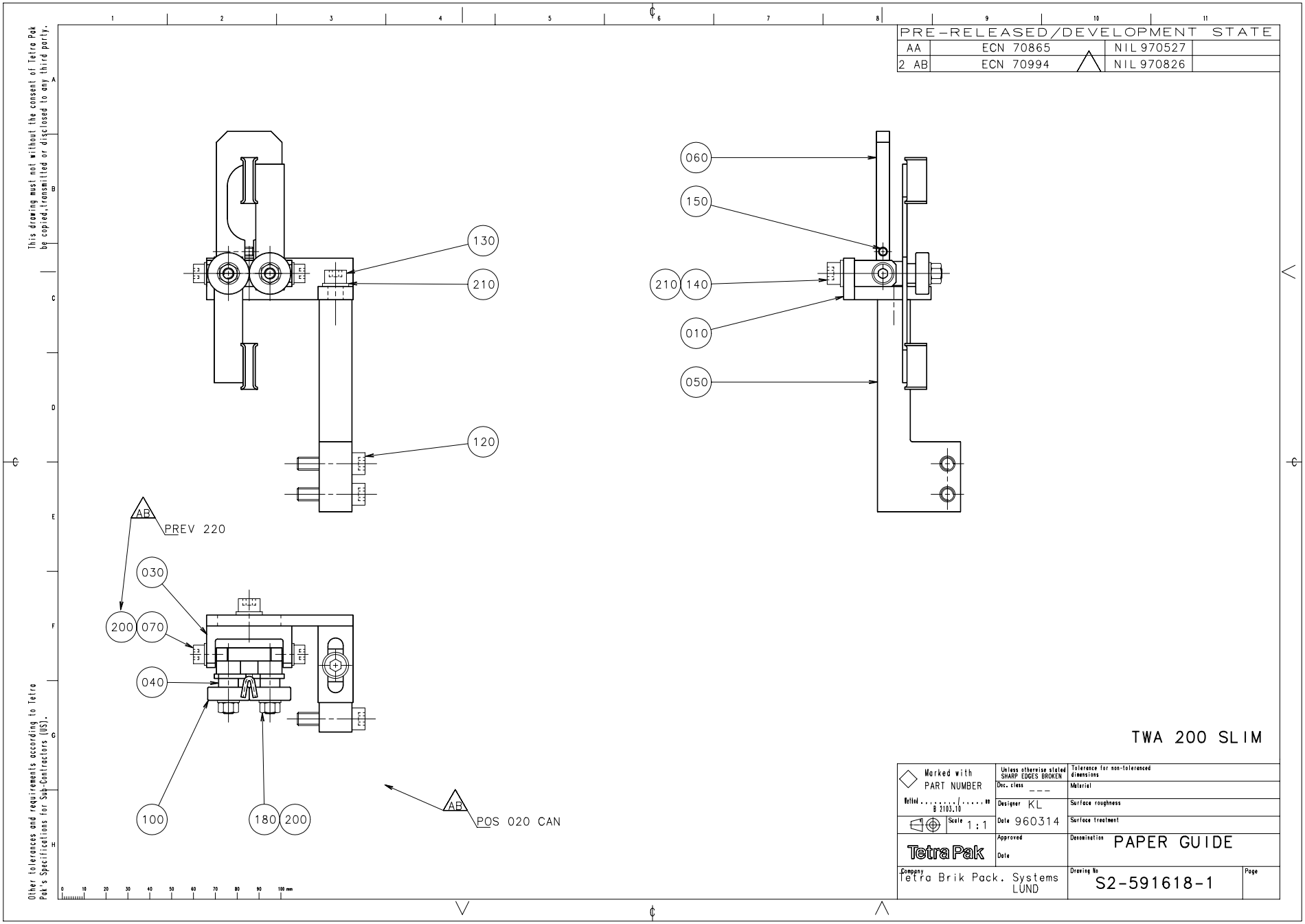
PRE-RELEASED/DEVELOPMENT STATE
AA ECN 70865 NIL 970527
2 AB ECN 70994 NIL 970826
This drawing must not without the consent of Tetra Pak be copied, transmitted or disclosed to any third party.
130
210
120
060
150
210 140
010
050
AB
PREV 220
030
200 070
040
100
180 200
AB
POS 020 CAN
Other tolerances and requirements according to Tetra Pak's Specifications for Sub-Contractors (US).
TWA 200 SLIM
Marked with PART NUMBER
Unless otherwise stated SHARP EDGES BROKEN
Tolerance for non-toleranced dimensions
Material
Surface roughness
Surface treatment
Doc. class ___
Designer KL
Date 960314
Scale 1:1
Approved
Date
Tetra Pak
Denomination PAPER GUIDE
Company Tetra Brik Pack. Systems LUND
Drawing No S2-591618-1
Page

Pos	Part No	SP	UN	Qty	Description	Page No
-						
010	1105377-0000	-		1	FASTENING BRACKET	
020	1105375-0000	-		1	FASTENING BRACKET	
030	1105373-0000	-		1	BOW CLAMP	
040	1105381-0000	-		2	GUIDE FINGER	
050	1105378-0000	-		1	BRACKET	
060	23582-0000	-		1	HOLDER	
070	23584-0000	-		2	SCREW	
100	90214-0138	-		2	BALL BEARING	
120	312115-0372	-		2	SCREW O4762 M6X25A280	
130	312115-0368	-		1	SCREW O4762 M6X16A280	
140	312115-0366	-		1	SCREW O4762 M6X12A280	
150	312318-0291	-		1	STOP SCREW SK6SS4X12RFR	
180	312605-0314	-		2	NUT M6M5RFR	
200	315105-0146	-		4	WASHER BRB5,3X10RFR	
210	315105-0153	-		2	WASHER BRB6,4X12RFR	

Pos	Part No	SP	UN	Qty	Description	Page No

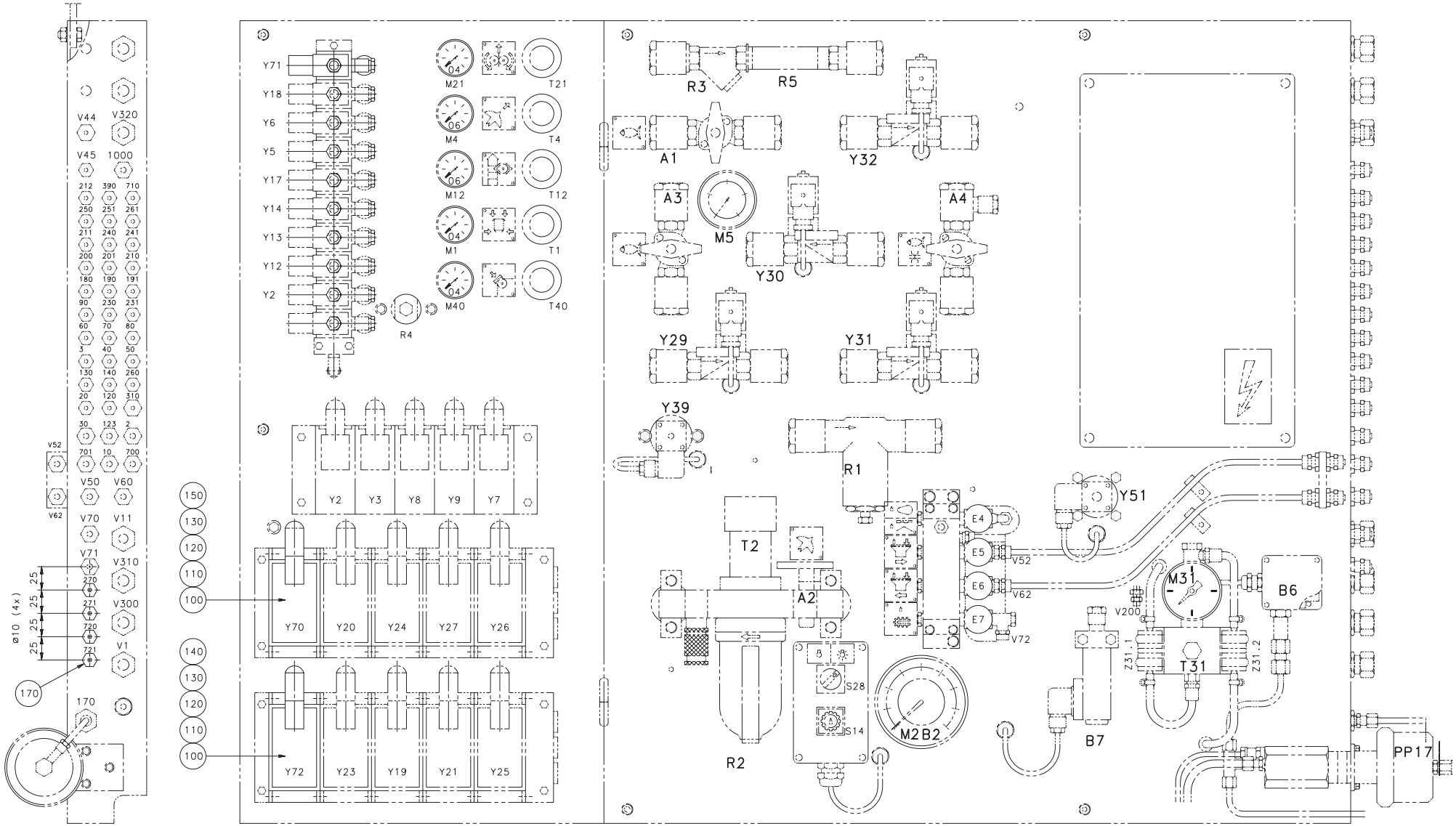

59516401.EPS
595164-1
ECN 70866

Pos	Part No	SP	UN	Qty	Description	Page No
-						
100	B 90042-0074	-		2	SOLENOID VALVE	
110	90042-0326	-		2	COIL	
120	90042-0366	-		2	CONTACT	
130	342980-0304	-		4	BANJO CONN SINGEL 1/4	
140	342980-0114	-		2	BANJO CONNSINGEL 6/4-1/4	
150	342980-0122	-		2	BANJO CONNSINGEL 8/6-1/4	
170	342960-0121	-		4	BULKHEAD L8/6-6/4	
90042-0074						
	90042-0371	F		1	WEAR & TEAR PARTS KIT	
90042-0074						
	90042-0385	-		1	SEAL KIT	

Pos	Part No	SP	UN	Qty	Description	Page No

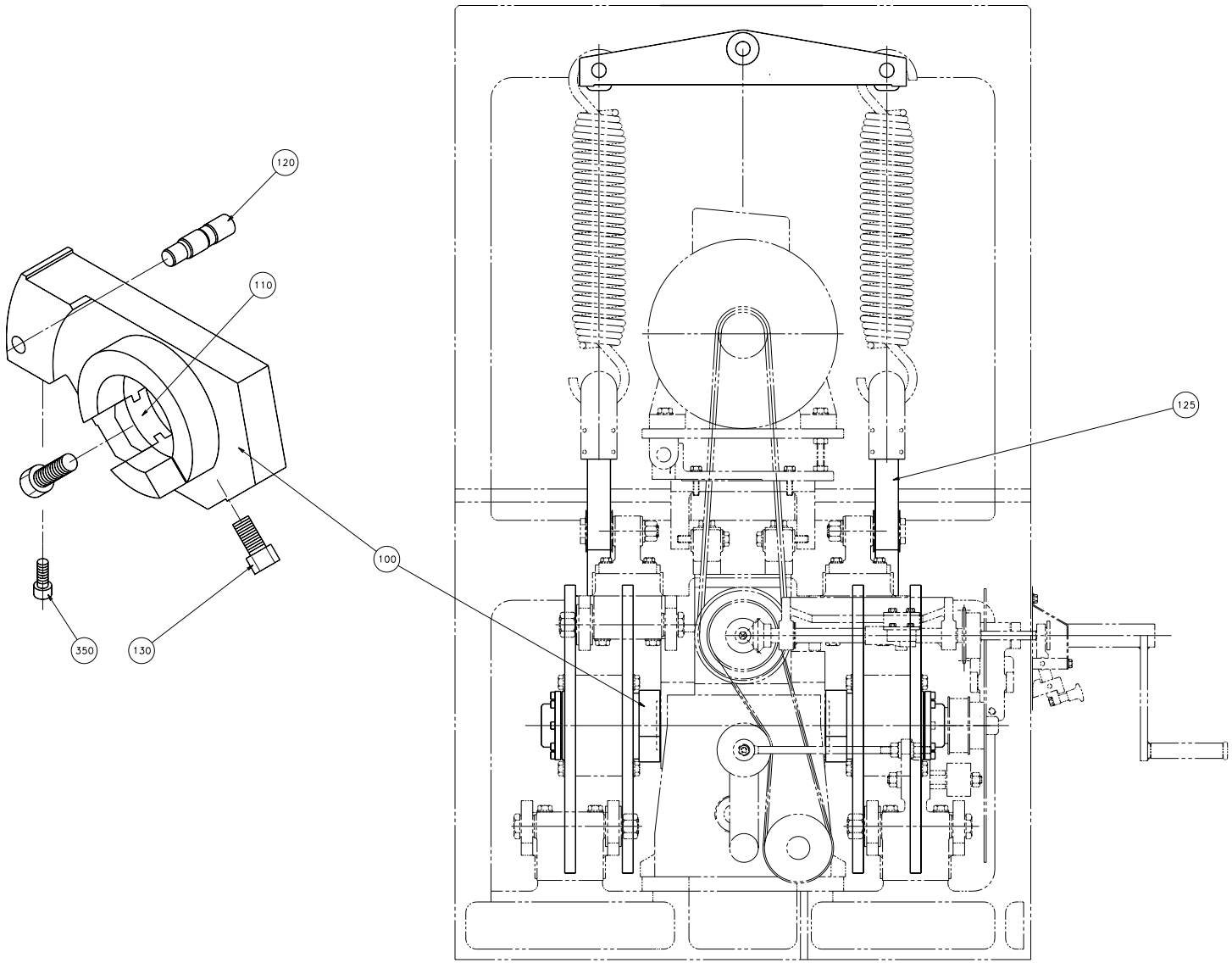

59516101.EPS
595161-1
ECN 70725

Pos	Part No	SP	UN	Qty	Description	Page No
-						
010	591440-0000	-		1	SHAFT	
100	978609-0000	-		2	ALIGNMENT TEMPLATE	
110	752774-0000	-		4	PLUNGER	
120	978262-0000	-		2	GUIDE PIN	
125	566404-0002	-		2	TIMING BELT	
130	312105-0492	-		4	SCREW M6S10X22RFR	
140	90208-0091	-		2	CLAMPING ELEMENT	
150	90208-0052	-		1	CLAMPING ELEMENT	
180	591486-0000	-		2	CURVE	
190	591485-0000	-		2	CURVE	
210	591483-0000	-		1	CURVE SEGMENT	
220	591484-0000	-		1	CURVE SEGMENT	
230	311103-0272	-		4	CYLINDRICACP M6 4X20 RFR	
350	312115-0366	-		2	SCREW O4762 M6X12A280	

Pos	Part No	SP	UN	Qty	Description	Page No

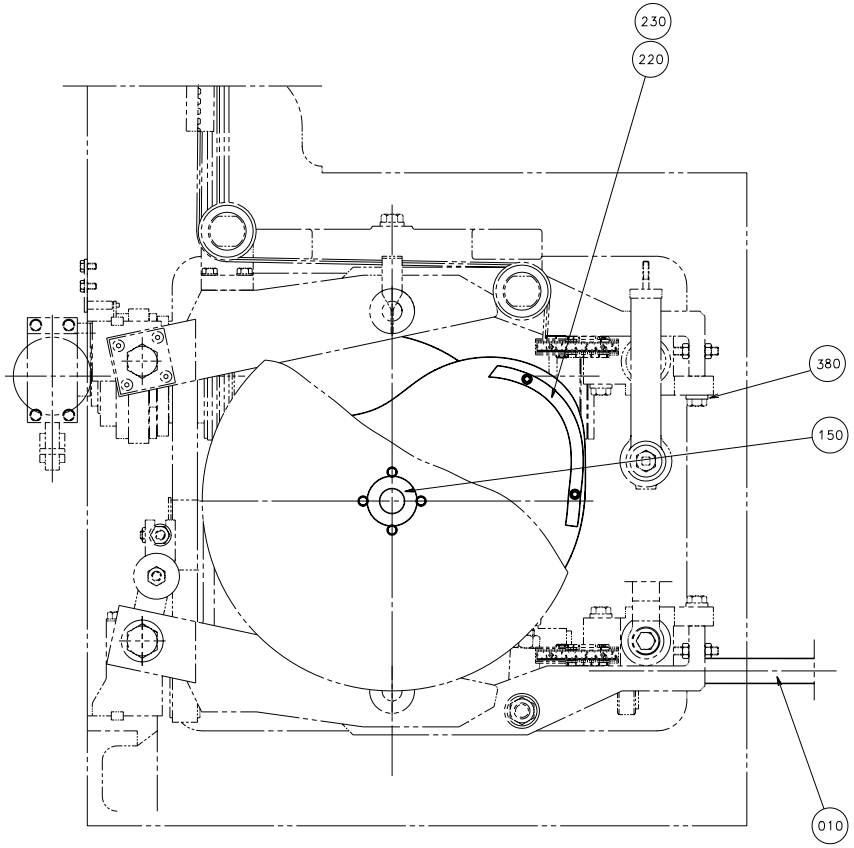

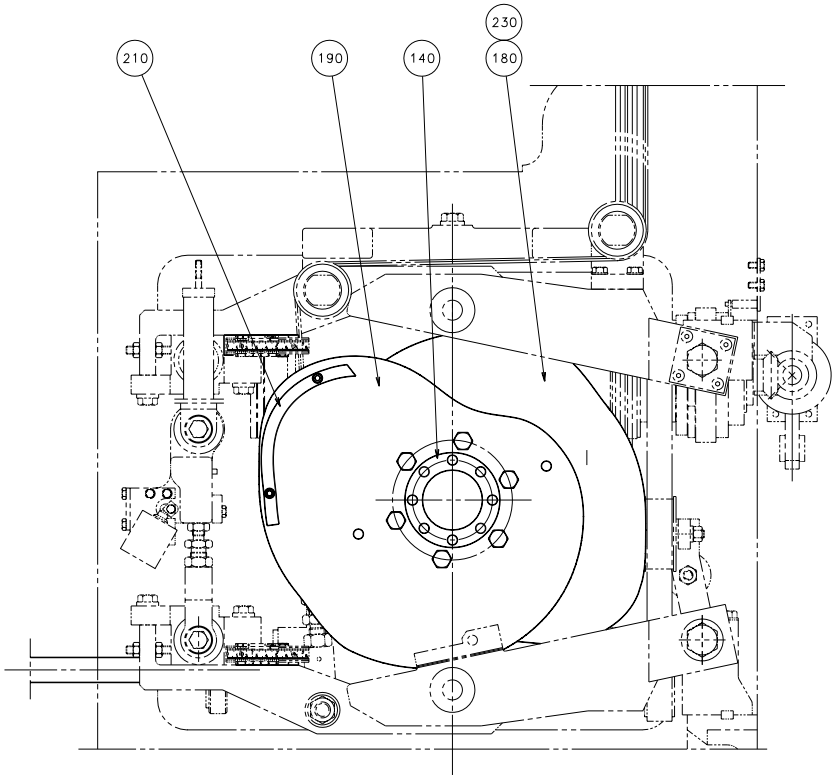

59516102.EPS
595161-1
ECN 70994

Pos	Part No	SP	UN	Qty	Description	Page No
-						
010	591440-0000	-		1	SHAFT	
100	978609-0000	-		2	ALIGNMENT TEMPLATE	
110	752774-0000	-		4	PLUNGER	
120	978262-0000	-		2	GUIDE PIN	
125	566404-0002	-		2	TIMING BELT	
130	312105-0492	-		4	SCREW M6S10X22RFR	
140	90208-0091	-		2	CLAMPING ELEMENT	
150	90208-0052	-		1	CLAMPING ELEMENT	
180	591486-0000	-		2	CURVE	
190	591485-0000	-		2	CURVE	
210	591483-0000	-		1	CURVE SEGMENT	
220	591484-0000	-		1	CURVE SEGMENT	
230	311103-0272	-		4	CYLINDRICACP M6 4X20 RFR	
350	312115-0366	-		2	SCREW O4762 M6X12A280	

Pos	Part No	SP	UN	Qty	Description	Page No

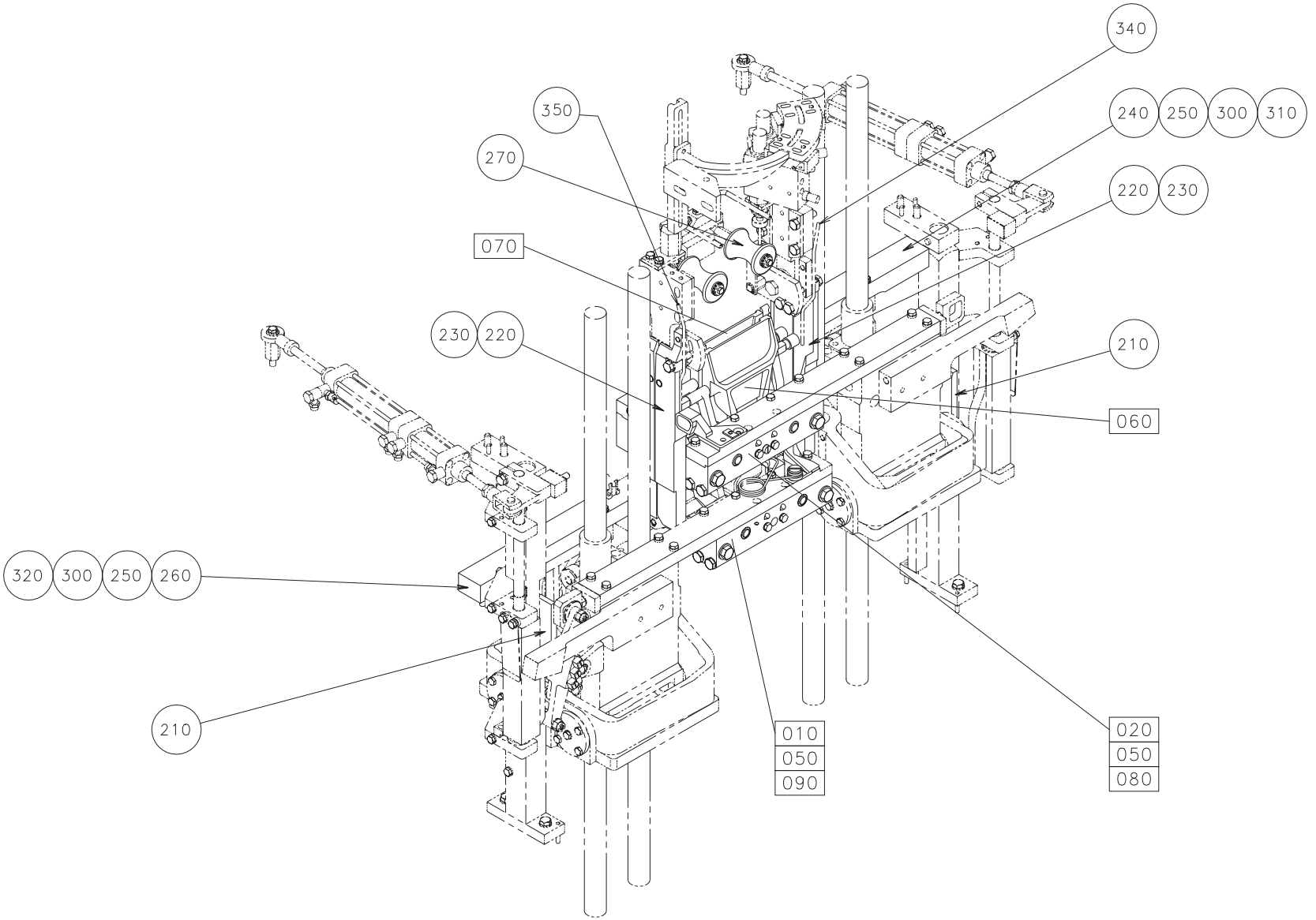
340
350
240 250 300 310
270
220 230
070
230 220
210
060
320 300 250 260
210
010
050
090
020
050
080

Pos	Part No	SP	UN	Qty	Description	Page No
-						
F010	A 595159-0100	-		1	CUTTING JAW RIGHT	
F020	A 595160-0100	-		1	CUTTING JAW LEFT	
F050	A 256208-0400	-		2	KNIFE HOLDER	
F060	A 591425-0100	-		2	VOLUME FLAP	
F070	A 591426-0100	-		2	VOLUME FLAP	
F080	A 591423-0100	-		2	SHOCK ABSORBER	
F090	A 591424-0100	-		2	SHOCK ABSORBER	
210	272640-0002	-		2	COUNTER CAM	
220	594942-0000	-		2	VOLUME CAM LEFT	
230	594941-0000	-		2	VOLUME CAM RIGHT	
240	578628-0000	-		1	BEARING HOUSING	
250	978746-0000	-		4	CATCH	
260	578628-0000	-		1	BEARING HOUSING	
270	978760-0000	-		2	ROLLER TBA200SL	
300	978749-0000	-		2	INDUCTOR 200SLIM	
310	594948-0000	-		1	CARRIER RIGHT	
320	594949-0000	-		1	CARRIER LEFT	

Pos	Part No	SP	UN	Qty	Description	Page No

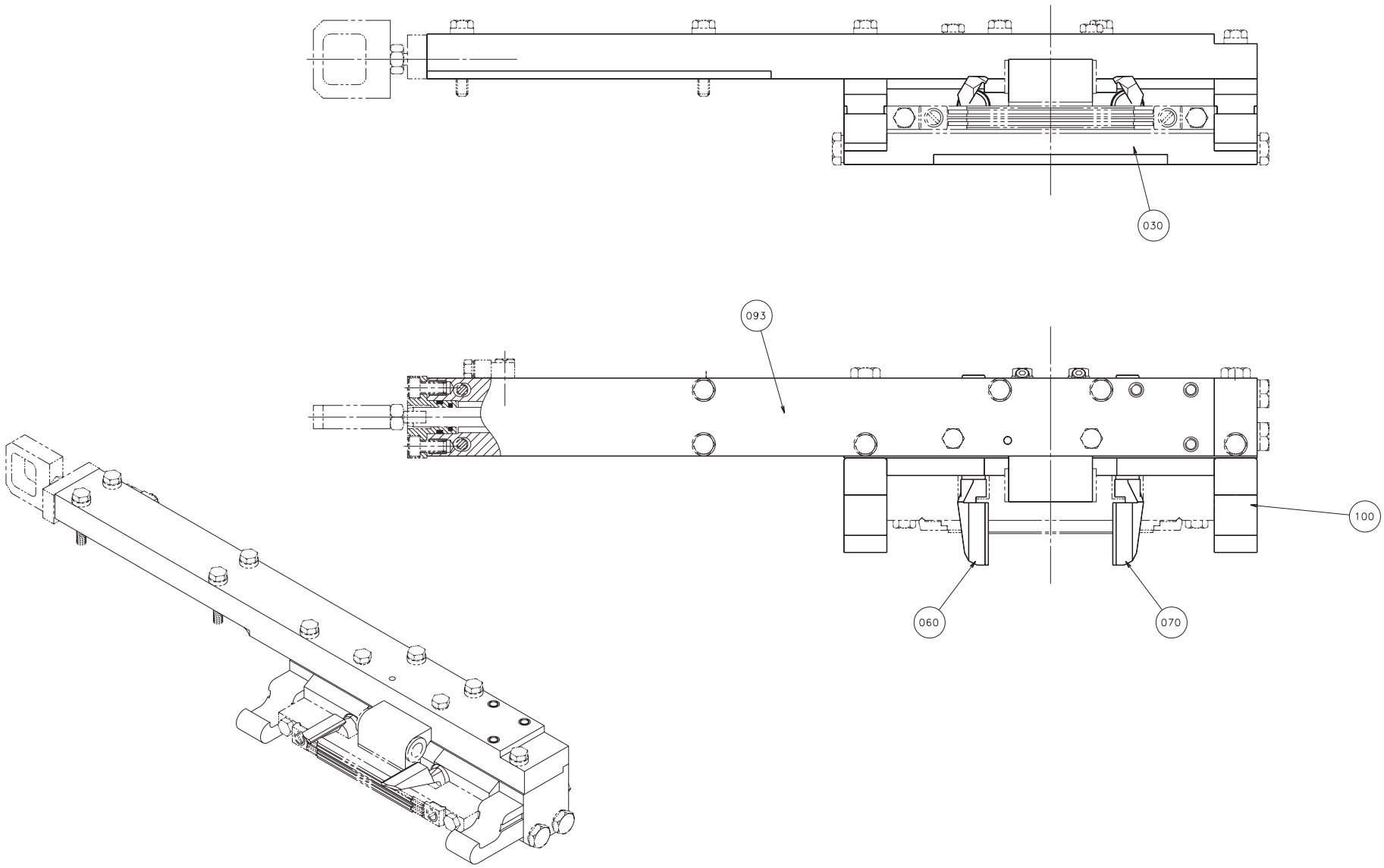
030
093
100
060
070

Pos	Part No	SP	UN	Qty	Description	Page No
-						
030	1282424-0000	K		1	BEARING HOUSING	
040	752009-0000	K		1	RULERPART R	
045	752010-0000	K		1	RULERPART R	
060	591445-0000	-		1	FOLDING FLAP RIGHT	
070	591446-0000	-		1	FOLDING FLAP LEFT	
093	594939-0000	-		1	CARRIER RIGHT	
100	978745-0000	K		2	CATCH	
210	752115-0000	K		2	PLUNGER	
240	751579-0000	K		1	ADJUSTING SCREW	
250	751580-0000	K		1	SHIM	
260	752288-0000	K		2	SLEEVE	
270	752476-0000	K		2	SCREW	
340	90153-0015	-	KG	x	ADHESIVE	
520	312105-0367	-		2	SCREW M6S6X14RFR	
533	312115-0329	-		1	SCREW O4762 M5X16A280	
586	315202-0110	K		2	O-RING 12,1X1,6	
589	315211-0103	F		2	SEALING WASHER	

Pos	Part No	SP	UN	Qty	Description	Page No

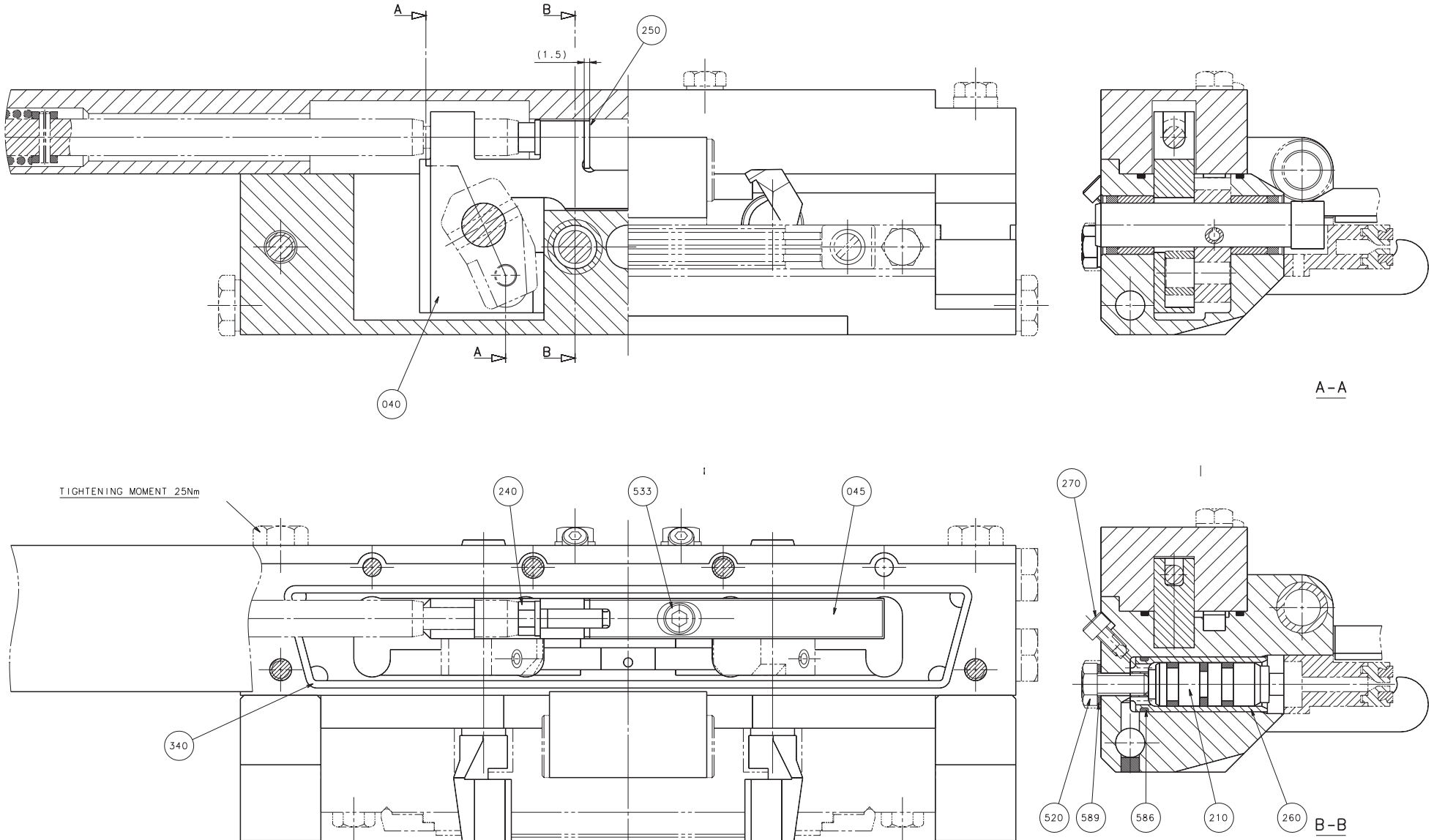

59515902.EPS
595159-02
ecn 70838

Pos	Part No	SP	UN	Qty	Description	Page No
-						
030	1282424-0000	K		1	BEARING HOUSING	
040	752009-0000	K		1	RULERPART R	
045	752010-0000	K		1	RULERPART R	
060	591445-0000	-		1	FOLDING FLAP RIGHT	
070	591446-0000	-		1	FOLDING FLAP LEFT	
093	594939-0000	-		1	CARRIER RIGHT	
100	978745-0000	K		2	CATCH	
210	752115-0000	K		2	PLUNGER	
240	751579-0000	K		1	ADJUSTING SCREW	
250	751580-0000	K		1	SHIM	
260	752288-0000	K		2	SLEEVE	
270	752476-0000	K		2	SCREW	
340	90153-0015	-	KG	x	ADHESIVE	
520	312105-0367	-		2	SCREW M6S6X14RFR	
533	312115-0329	-		1	SCREW O4762 M5X16A280	
586	315202-0110	K		2	O-RING 12,1X1,6	
589	315211-0103	F		2	SEALING WASHER	

Pos	Part No	SP	UN	Qty	Description	Page No

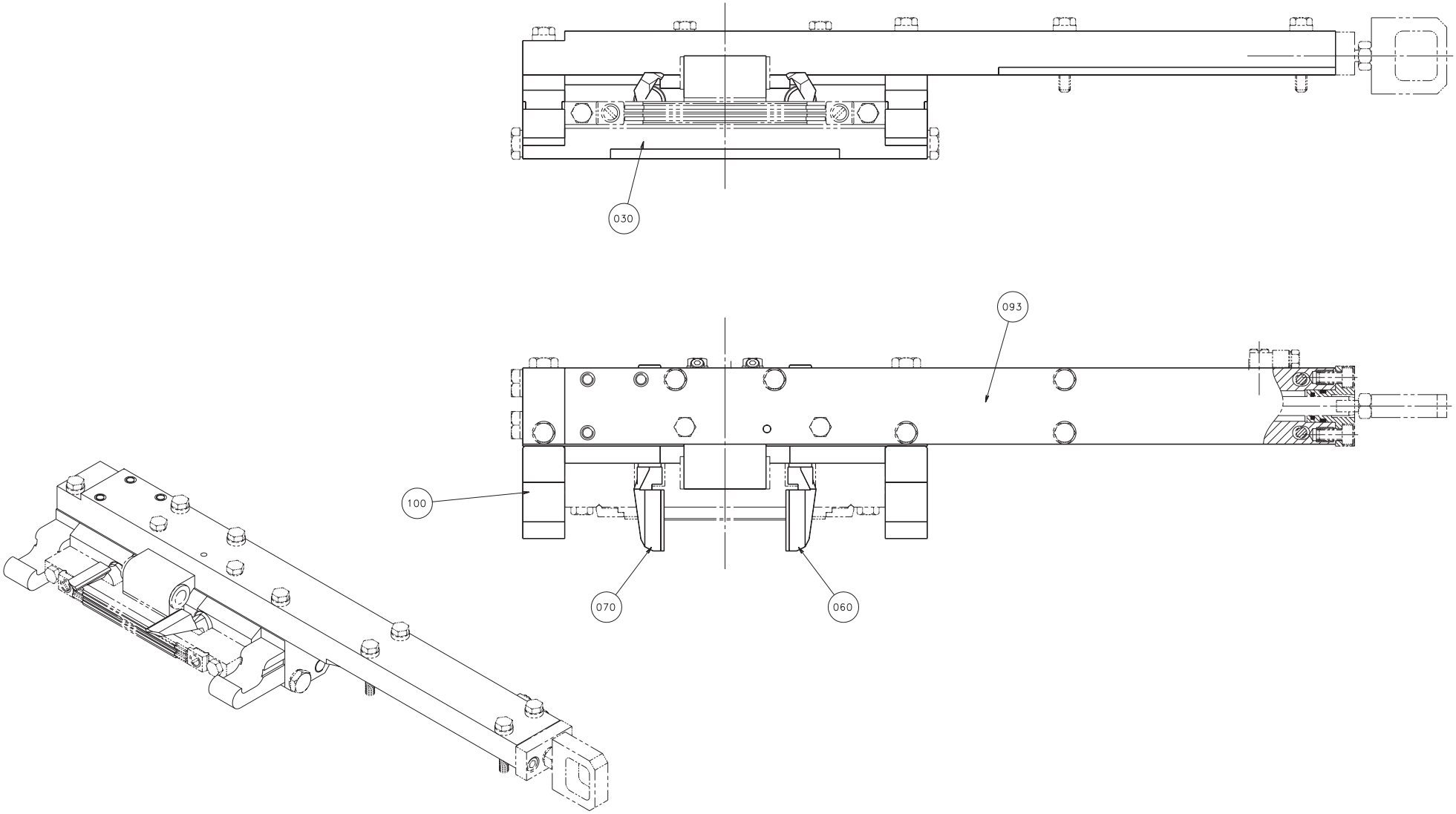

59516001.EPS
595160-1
ECN 70838

Pos	Part No	SP	UN	Qty	Description	Page No
-						
030	1282424-0000	K		1	BEARING HOUSING	
040	752011-0000	-		1	RULERPART L	
045	752012-0000	-		1	RULERPART L	
060	591445-0000	-		1	FOLDING FLAP RIGHT	
070	591446-0000	-		1	FOLDING FLAP LEFT	
093	594940-0000	-		1	CARRIER LEFT	
100	978745-0000	K		2	CATCH	
210	752115-0000	K		2	PLUNGER	
240	751579-0000	K		1	ADJUSTING SCREW	
250	751580-0000	K		1	SHIM	
260	752288-0000	K		2	SLEEVE	
270	752476-0000	K		2	SCREW	
340	90153-0015	-	KG	x	ADHESIVE	
520	312105-0367	-		2	SCREW M6S6X14RFR	
533	312115-0329	-		1	SCREW O4762 M5X16A280	
586	315202-0110	K		2	O-RING 12,1X1,6	
589	315211-0103	F		2	SEALING WASHER	

Pos	Part No	SP	UN	Qty	Description	Page No

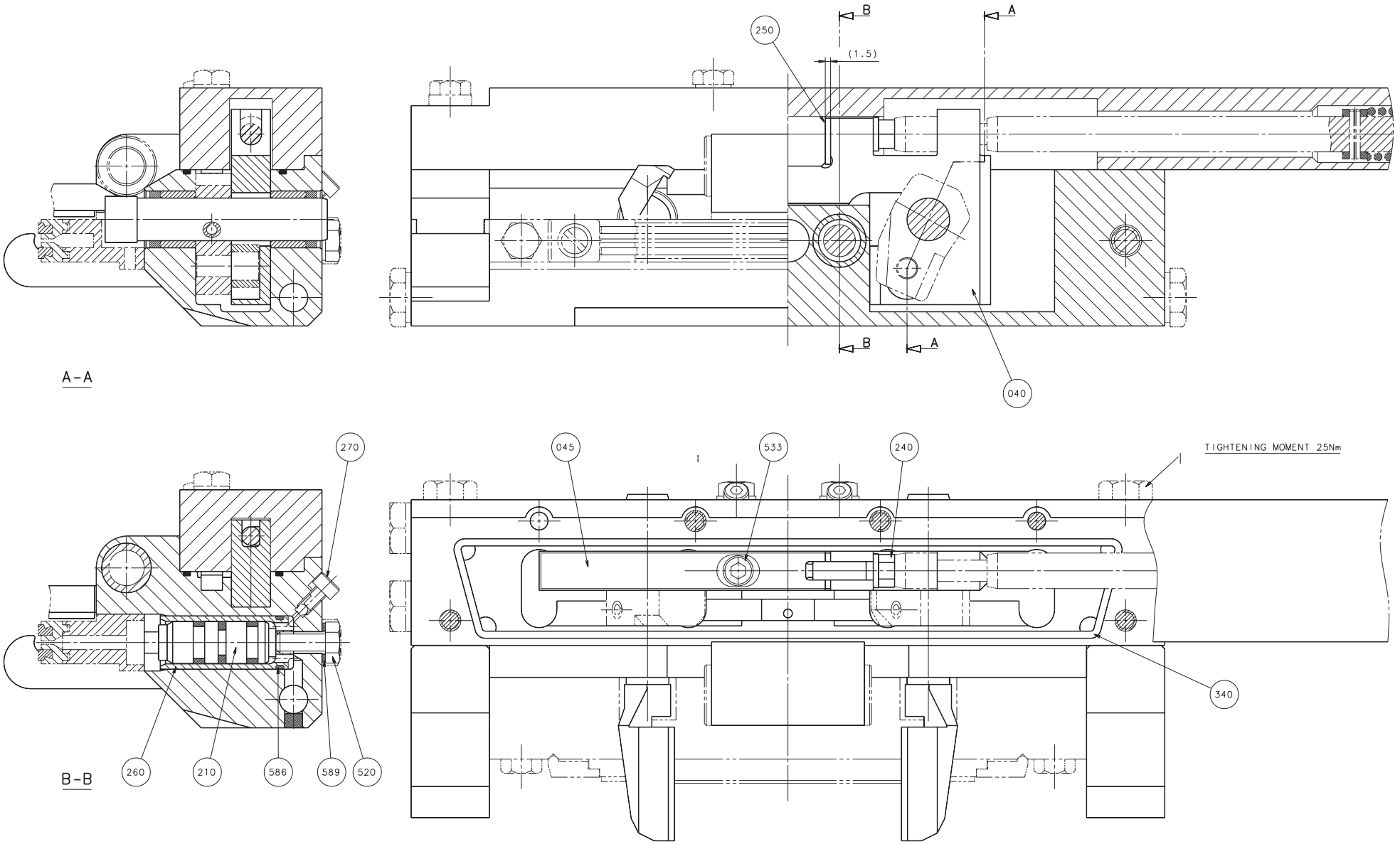

59516002.eps
595160-2
ECN 70838

Pos	Part No	SP	UN	Qty	Description	Page No
-						
030	1282424-0000	K		1	BEARING HOUSING	
040	752011-0000	-		1	RULERPART L	
045	752012-0000	-		1	RULERPART L	
060	591445-0000	-		1	FOLDING FLAP RIGHT	
070	591446-0000	-		1	FOLDING FLAP LEFT	
093	594940-0000	-		1	CARRIER LEFT	
100	978745-0000	K		2	CATCH	
210	752115-0000	K		2	PLUNGER	
240	751579-0000	K		1	ADJUSTING SCREW	
250	751580-0000	K		1	SHIM	
260	752288-0000	K		2	SLEEVE	
270	752476-0000	K		2	SCREW	
340	90153-0015	-	KG	x	ADHESIVE	
520	312105-0367	-		2	SCREW M6S6X14RFR	
533	312115-0329	-		1	SCREW O4762 M5X16A280	
586	315202-0110	K		2	O-RING 12,1X1,6	
589	315211-0103	F		2	SEALING WASHER	

Pos	Part No	SP	UN	Qty	Description	Page No

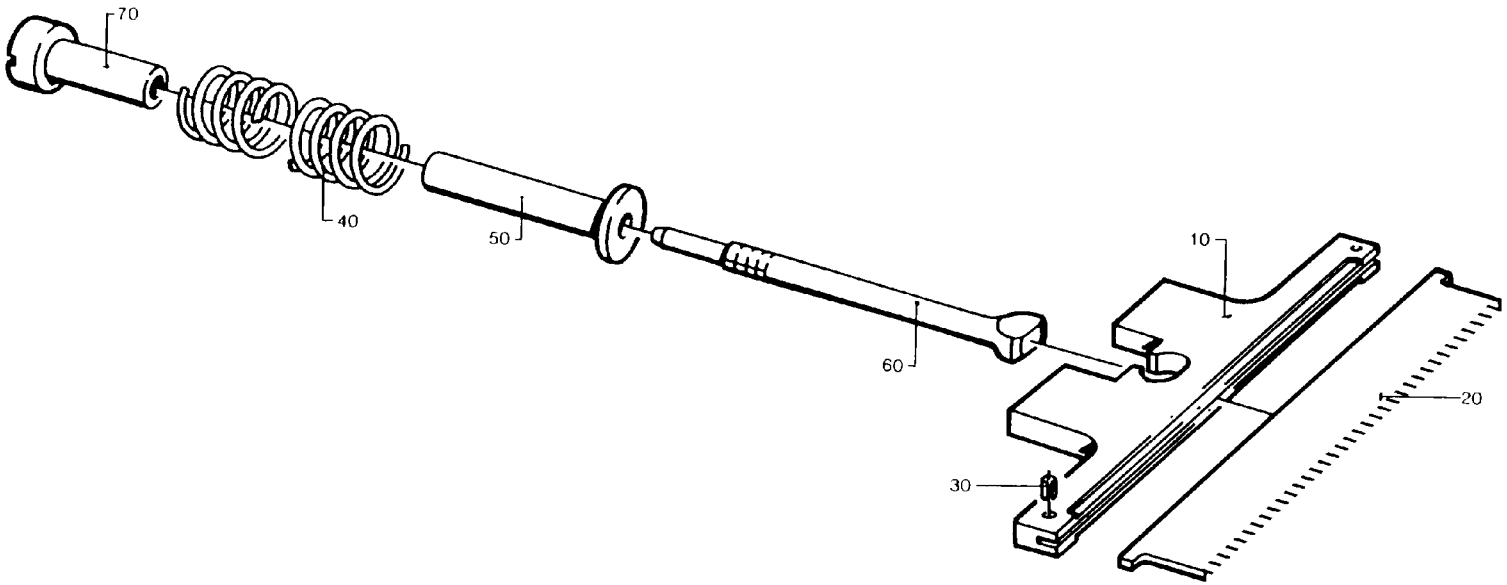

25620811.tif
256208-11
ECN

Pos	Part No	SP	UN	Qty	Description	Page No
-						
F010	A 978763-0100	-		1	CUTTING UNIT	
040	441726-0000	F		1	COMPRESSION SPRING	
050	272753-0000	F		1	STEERING	
060	456009-0000	F		1	LINK	
070	272755-0000	F		1	NUT	

Pos	Part No	SP	UN	Qty	Description	Page No

This page is intentionally left blank

Pos	Part No	SP	UN	Qty	Description	Page No
-						
030	90153-0054	-	L	x	ADHESIVE	
035	90153-0055	-	L	x	ADHESIVE	

Pos	Part No	SP	UN	Qty	Description	Page No

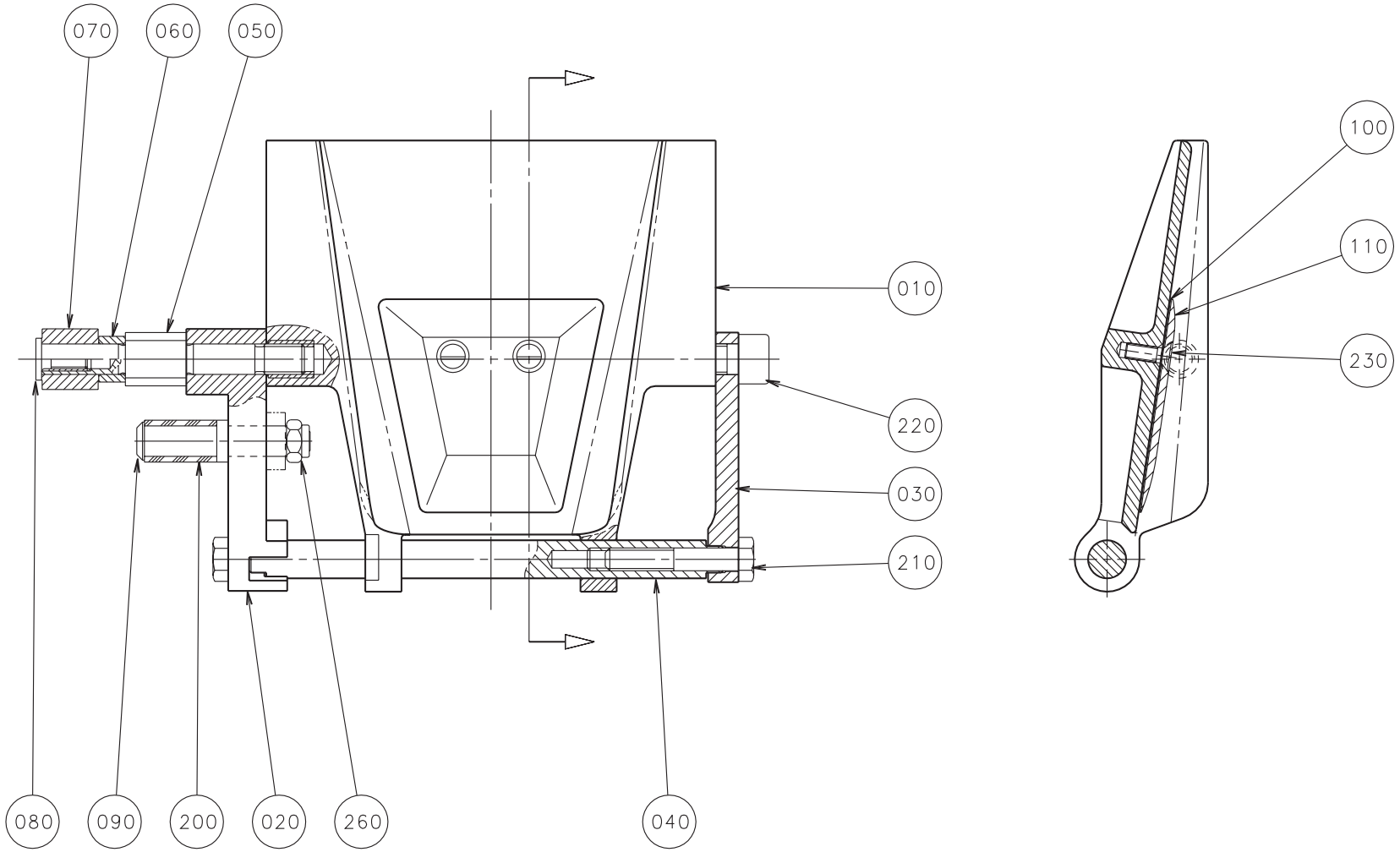

59142501.EPS
591425-1
ECN 70838

Pos	Part No	SP	UN	Qty	Description	Page No
-						
010	591439-0000	-		1	VOLUME FLAP	
020	591435-0000	-		1	CARRIER	
030	272985-0001	-		1	ARM	
040	591436-0000	-		1	SHAFT	
050	591438-0000	-		1	SHAFT	
060	752615-0000	-		1	SPACER	
070	256860-0000	-		1	ROLL	
080	256859-0000	-		1	SCREW	
090	591437-0000	-		1	DOWEL	
100	591560-0000	-		3	VOLUME SHIM	
110	591559-0000	-		1	VOLUME BULGE	
200	90166-0159	-	M	x	RUBBER HOSE	
210	312105-0376	-		2	SCREW O4017 M6X35A280	
220	312115-0449	-		1	SCREW O4762 M8X16A280	
230	312145-0291	-		2	SLOTTED HEMFS4X12RFR	
260	312812-0316	-		1	LOCK NUT A2-M6RFR	

Pos	Part No	SP	UN	Qty	Description	Page No

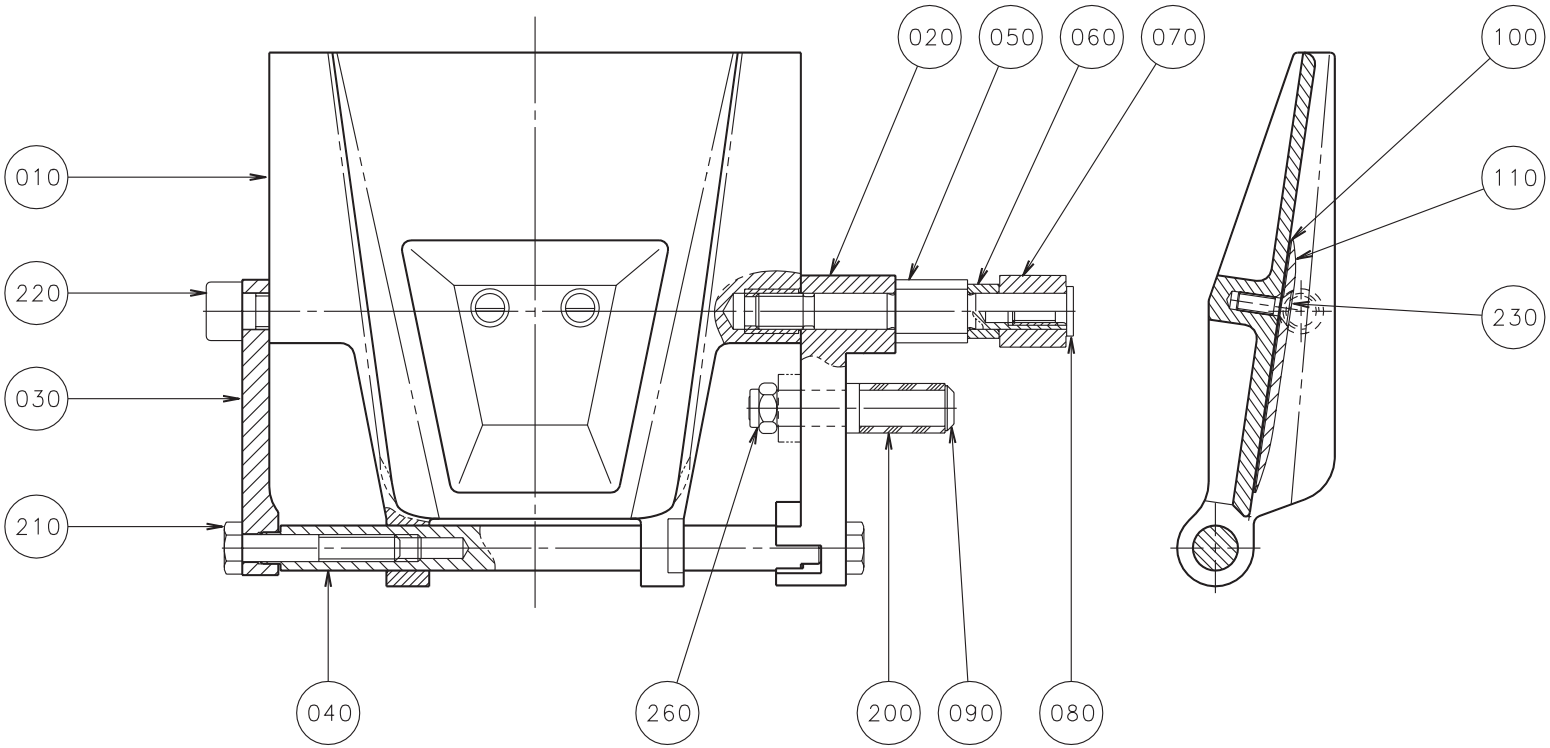

59142601.EPS
591426-1
ECN 70838

Pos	Part No	SP	UN	Qty	Description	Page No
-						
010	591439-0000	-		1	VOLUME FLAP	
020	591435-0000	-		1	CARRIER	
030	272985-0001	-		1	ARM	
040	591436-0000	-		1	SHAFT	
050	591438-0000	-		1	SHAFT	
060	752615-0000	-		1	SPACER	
070	256860-0000	-		1	ROLL	
080	256859-0000	-		1	SCREW	
090	591437-0000	-		1	DOWEL	
100	591560-0000	-		3	VOLUME SHIM	
110	591559-0000	-		1	VOLUME BULGE	
200	90166-0159	-	M	x	RUBBER HOSE	
210	312105-0376	-		2	SCREW O4017 M6X35A280	
220	312115-0449	-		1	SCREW O4762 M8X16A280	
230	312145-0291	-		2	SLOTTED HEMFS4X12RFR	
260	312812-0316	-		1	LOCK NUT A2-M6RFR	

Pos	Part No	SP	UN	Qty	Description	Page No

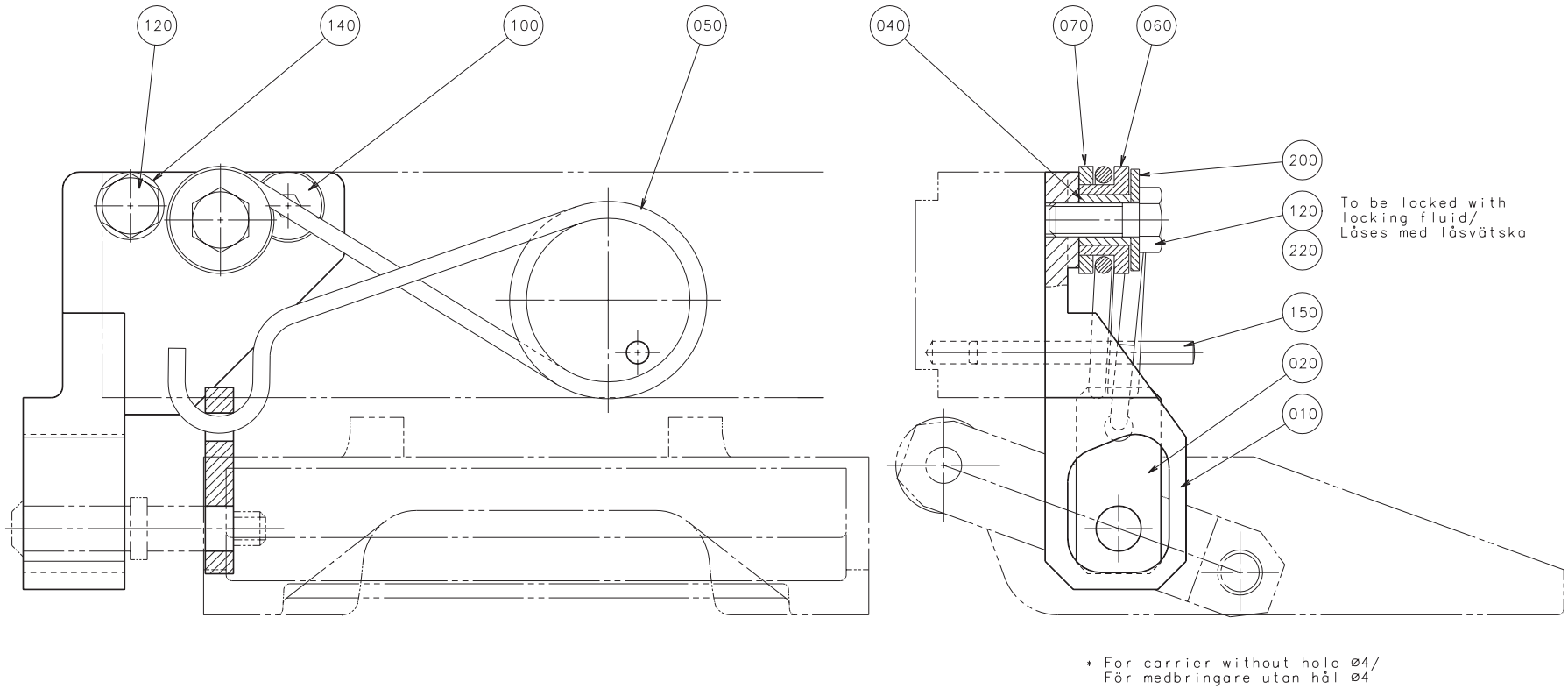

59142301.EPS
591423-1
ECN 70994

Pos	Part No	SP	UN	Qty	Description	Page No
-						
010	591427-0000	-		1	STOPPER	
020	591431-0000	-		1	LINK	
040	591432-0000	-		1	SPACER	
050	591429-0000	K		1	SPRING	
060	591433-0000	-		1	SLEEVE	
070	591434-0000	-		1	WASHER	
100	312155-0366	-		1	SCREW MF6S6X12RFR	
120	312105-0368	-		2	SCREW O4017 M6X16A280	
140	315105-0153	-		1	WASHER BRB6,4X12RFR	
150	311103-0280	-		1	CYLINDRICACP M6 4X40 RFR	
200	90005-0060	-		1	WASHER	
220	90157-0016	-	ML	x	LOCKING FLUID	

Pos	Part No	SP	UN	Qty	Description	Page No

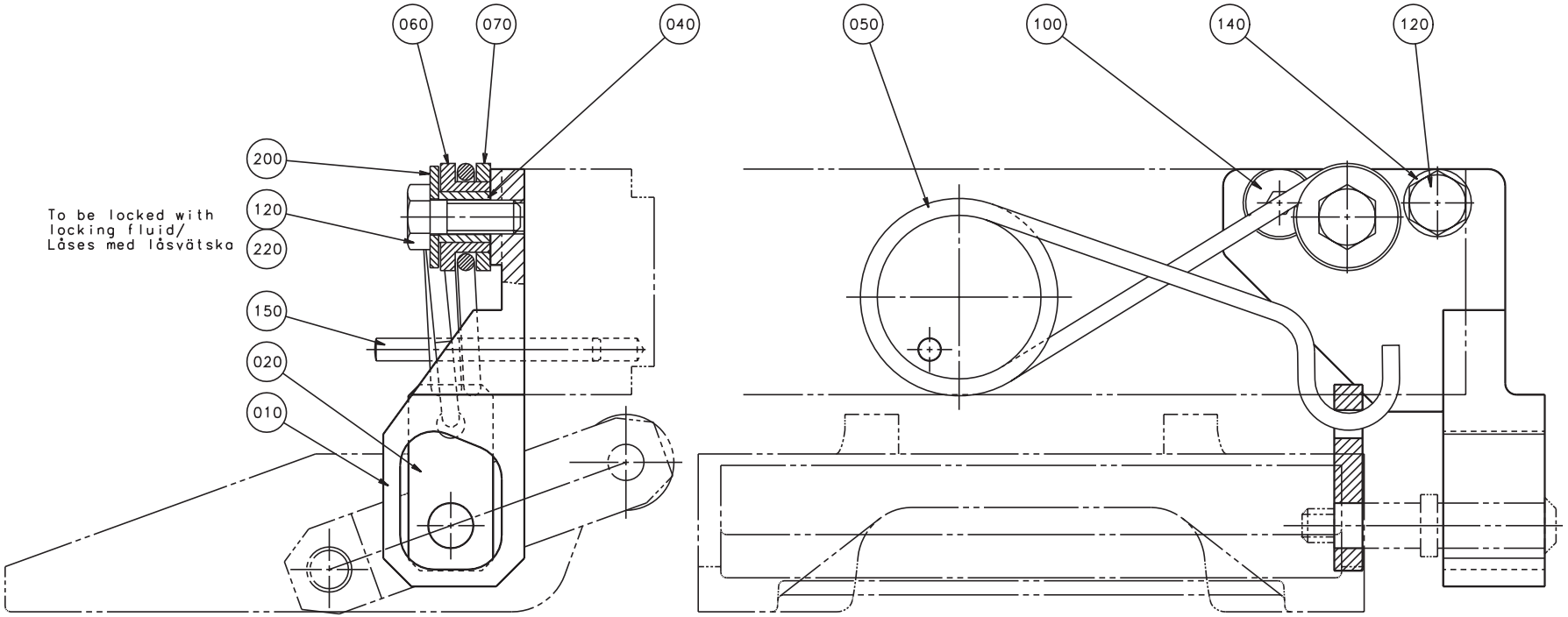
060
070
040
050
100
140
120
200
120
220
150
020
010
To be locked with
locking fluid/
Låses med låsvätska
* For carrier without hole ø4/
För medbringare utan hål ø4

Pos	Part No	SP	UN	Qty	Description	Page No
-						
010	591428-0000	-		1	STOPPER	
020	591431-0000	-		1	LINK	
040	591432-0000	-		1	SPACER	
050	591430-0000	K		1	SPRING	
060	591433-0000	-		1	SLEEVE	
070	591434-0000	-		1	WASHER	
100	312155-0366	-		1	SCREW MF6S6X12RFR	
120	312105-0368	-		2	SCREW O4017 M6X16A280	
140	315105-0153	-		1	WASHER BRB6,4X12RFR	
150	311103-0280	-		1	CYLINDRICACP M6 4X40 RFR	
200	90005-0060	-		1	WASHER	
220	90157-0016	-	ML	x	LOCKING FLUID	

Pos	Part No	SP	UN	Qty	Description	Page No

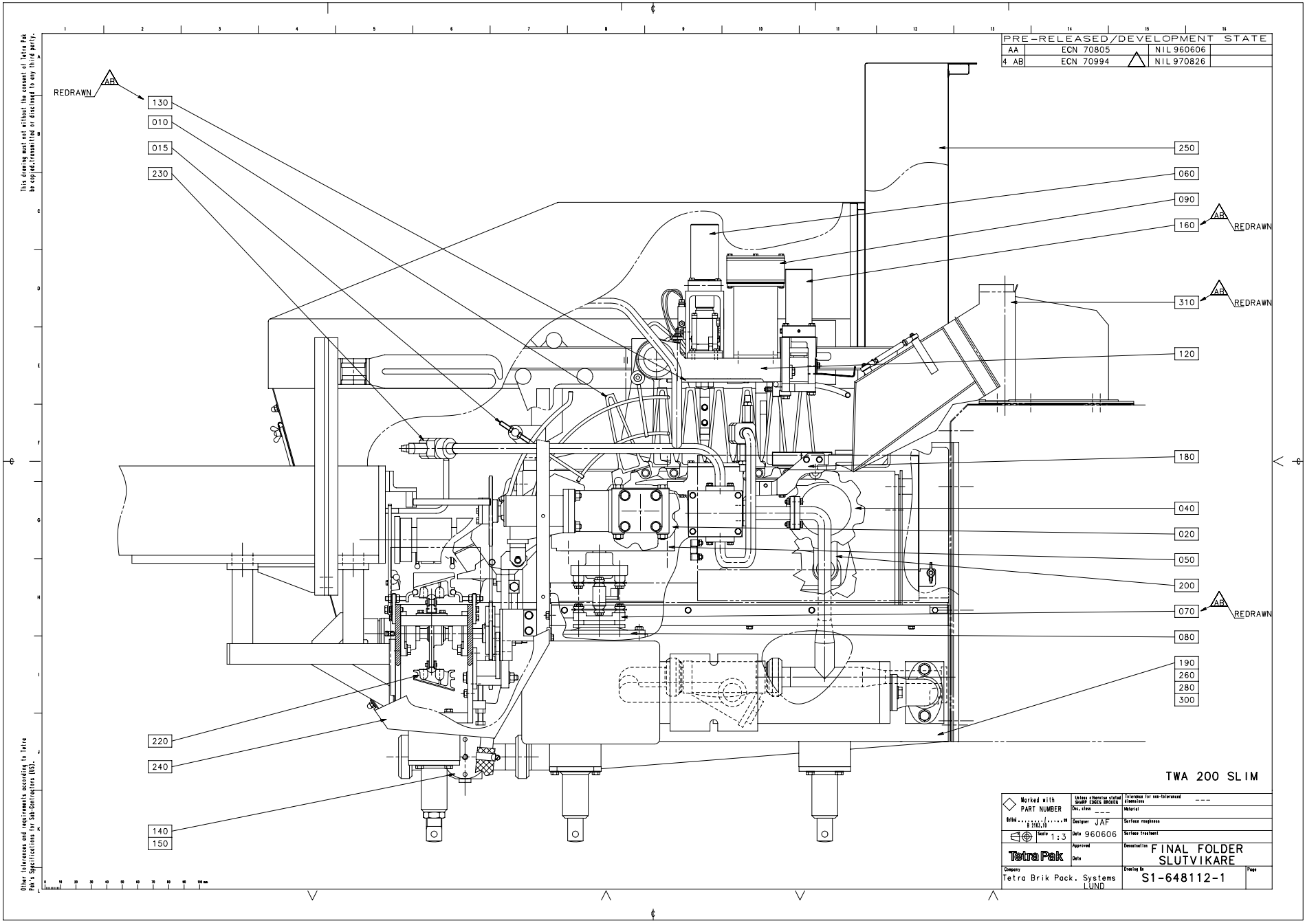
PRE-RELEASED/DEVELOPMENT STATE
AA ECN 70805 NIL 960606
4 AB ECN 70994 NIL 970826
REDRAWN AF
130
010
015
230
250
060
090
160 AF REDRAWN
310 AF REDRAWN
120
180
040
020
050
200
070 AF REDRAWN
080
190
260
280
300
220
240
140
150
TWA 200 SLIM
Tetra Pak
Tetra Brik Pack. Systems LUND
FINAL FOLDER
SLUTVIKARE
S1-648112-1
Designer JAF
Date 960606
Scale 1:3

Pos	Part No	SP	UN	Qty	Description	Page No
-						
F010	A 591634-0100	-		1	STATION CHAIN	
F015	A 591635-0100	-		1	GUIDE RAIL	
F020	A 591503-0100	-		1	DRIVE WHEEL	
F040	A 491846-0200	-		1	TENSION SPROCKET	
F050	A 256410-0600	-		1	INDEXING UNIT	
F060	A 591643-0100	-		1	PRESSURE DEVICE	
F070	A 256437-0200	-		1	DISC COUPLING	
F080	A 256438-0200	-		1	WORM GEAR	
F090	A 594932-0100	-		1	FLAP SEALING UNIT	
F120	A 591675-0100	-		1	PIVOTING FRAME	
F130	A 591678-0100	-		1	FOLDING BAR	
F140	A 591676-0100	-		1	TUBE ASSEMBLY	
F150	A 591679-0100	-		1	BOTTOM VALVE	
F160	A 591677-0100	-		1	PULL DOWN DEVICE	
F180	A 591680-0100	-		1	GUIDE	
F190	A 591681-0100	-		1	MACHINE BODY	
F200	A 591682-0100	-		1	CANTILEVER	
F220	A 591570-0100	-		1	DISCHARGE UNIT	
F230	A 591672-0100	-		1	CLEANING SYSTEM	
F240	A 591671-0100	-		1	COVERING PANEL	
F250	A 591621-0100	-		1	PROTECTIVE COVER	
F260	A 271116-0300	-		1	ANGULAR TRANSMITTER	
F280	A 271387-0300	-		1	SPRAY GUN	
F300	A 591683-0100	-		1	CABLE ASSEMBLY	
F310	A 591514-0100	-		1	TURNING DEVICE	

Pos	Part No	SP	UN	Qty	Description	Page No

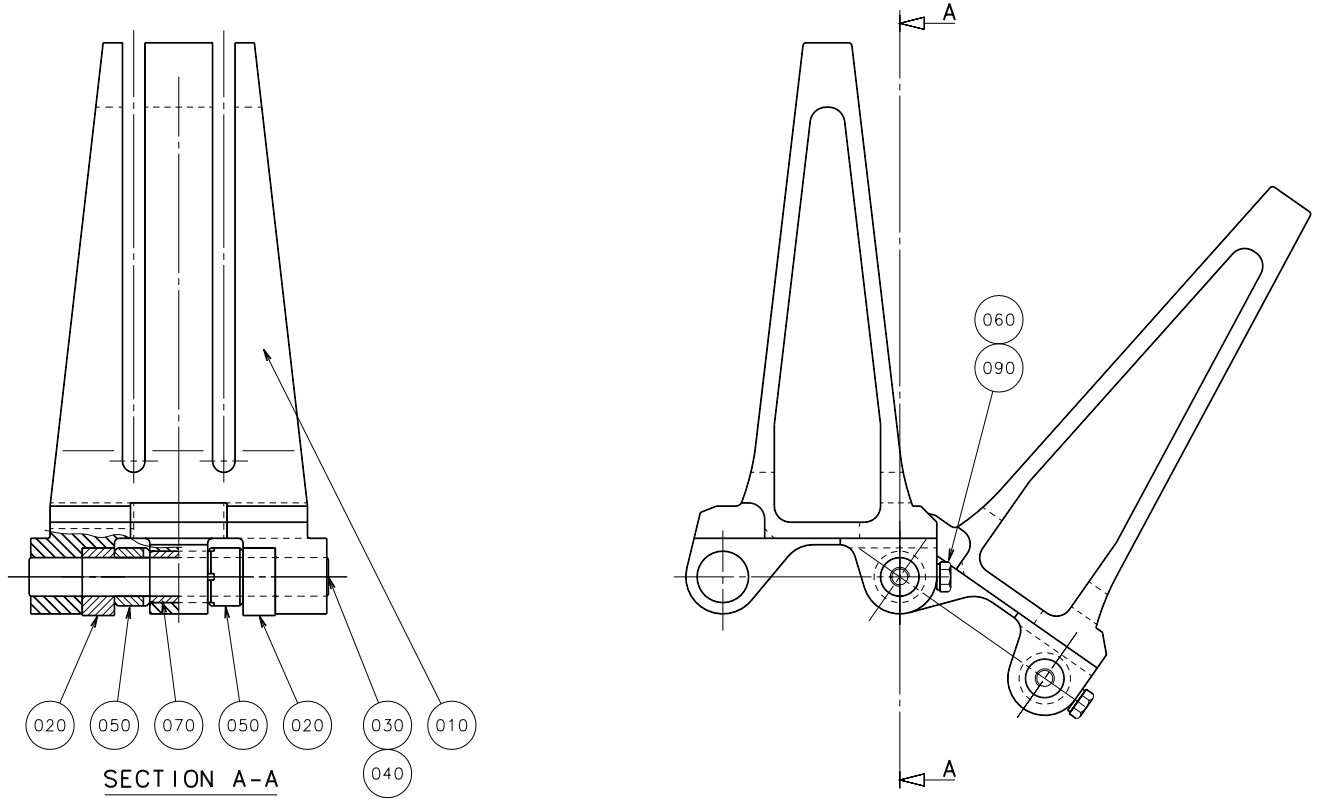

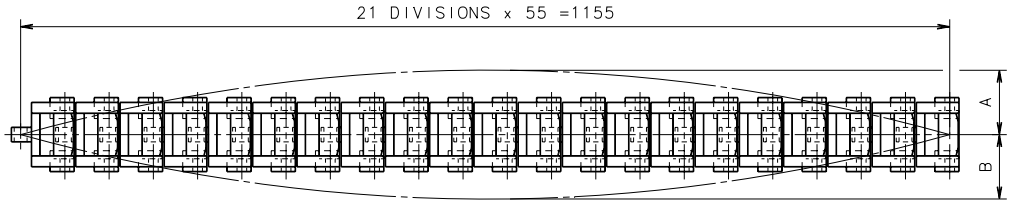

The difference between A and B has to be less than 3mm.
The torsional tolerance has to be the same.

Pos	Part No	SP	UN	Qty	Description	Page No
-						
010	591417-0000	K		21	CARTON STATION	
020	491227-0000	K		42	SLIDER	
030	491228-0001	K		18	SHAFT	
040	491228-0002	K		3	SHAFT	
050	491229-0000	K		42	BUSHING	
060	491230-0000	K		21	GRUB SCREW	
070	491231-0000	K		21	BUSHING	
080	315233-0101	K		21	SEAL RING M5	

Pos	Part No	SP	UN	Qty	Description	Page No

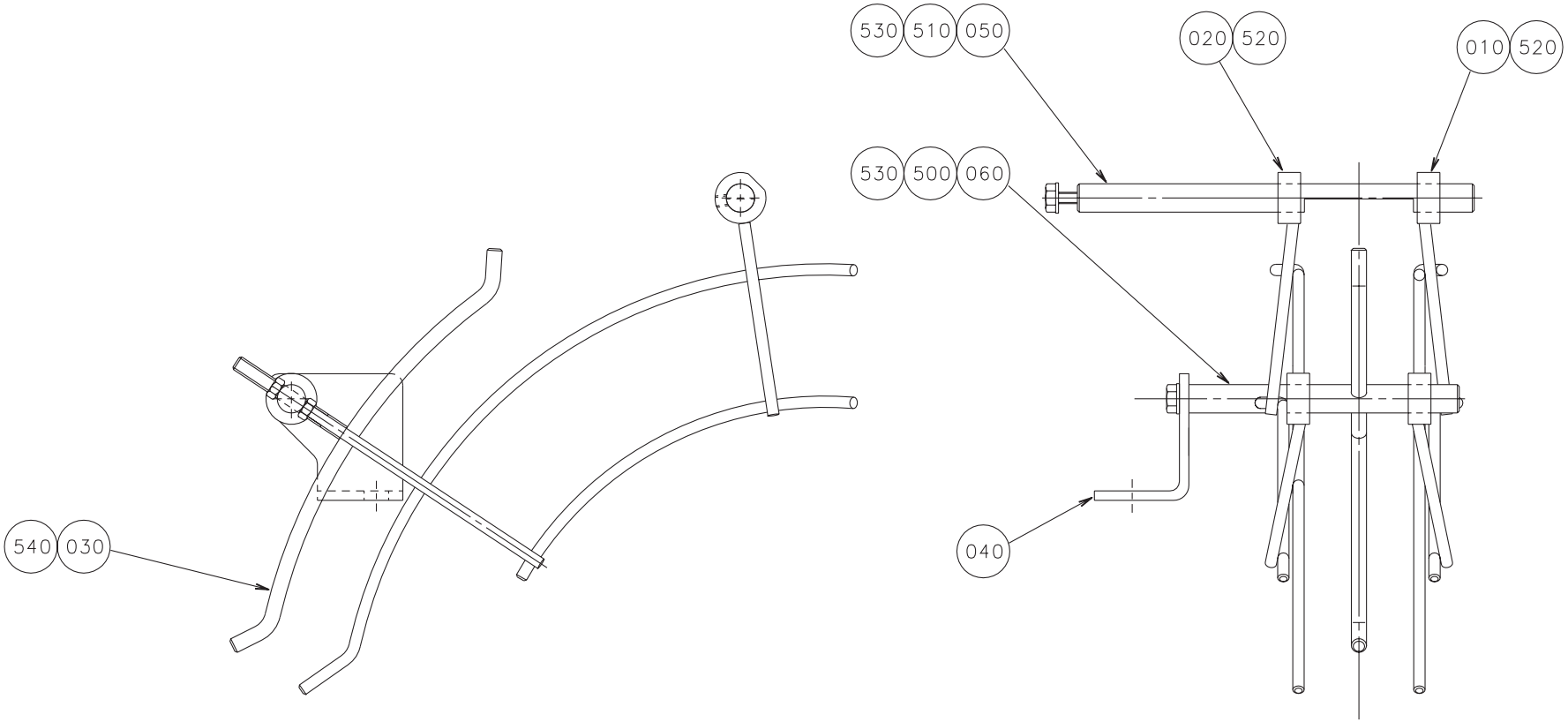
530 510 050
020 520
010 520
530 500 060
540 030
040

Pos	Part No	SP	UN	Qty	Description	Page No
-						
010	591650-0000	-		1	GUIDE RAIL RUGHT	
020	591651-0000	-		1	GUIDE RAIL LEFT	
030	594937-0000	-		1	GUIDE	
040	591648-0000	-		1	ANGLE BRACKET	
050	591542-0000	-		1	SHAFT	
060	591649-0000	-		1	SHAFT	
500	312105-0368	-		1	SCREW O4017 M6X16A280	
510	312105-0370	-		1	SCREW O4017 M6X20A280	
520	312318-0362	-		4	STOP SCREW SK6SS6X8RFR	
530	315105-0153	-		2	WASHER BRB6,4X12RFR	
540	312605-0318	-		2	NUT M6M8RFR	

Pos	Part No	SP	UN	Qty	Description	Page No

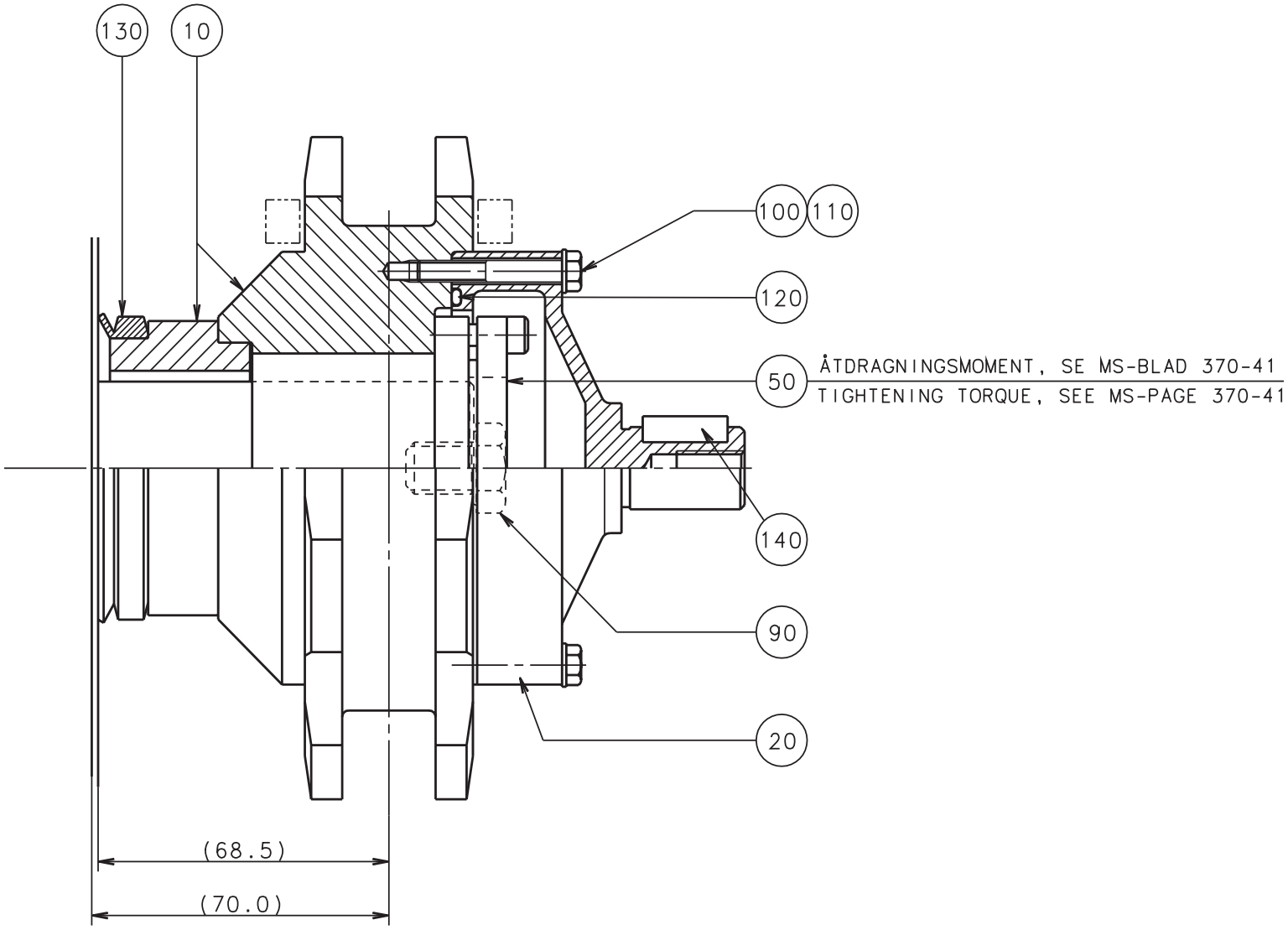
130
10
100
110
120
50
ÅTDRAGNINGSMOMENT, SE MS-BLAD 370-41
TIGHTENING TORQUE, SEE MS-PAGE 370-41
140
90
20
(68.5)
(70.0)

Pos	Part No	SP	UN	Qty	Description	Page No
-						
010	591504-0000	-		1	DRIVE WHEEL	
020	591467-0000	-		1	COVER HOUSING	
050	90208-0031	-		1	BUSHING "REPBY 90208-125"	
090	312101-0530	K		1	SCREW M6S12X16FZB	
100	312105-0337	-		4	SCREW O4014 M5X35A280	
110	315105-0146	K		4	WASHER BRB5,3X10RFR	
120	315202-0306	K		1	O-RING 74,5X3	
130	315220-0210	K		1	SEAL RING V-60S	
140	315705-0232	-		1	FLAT WEDGE	

Pos	Part No	SP	UN	Qty	Description	Page No

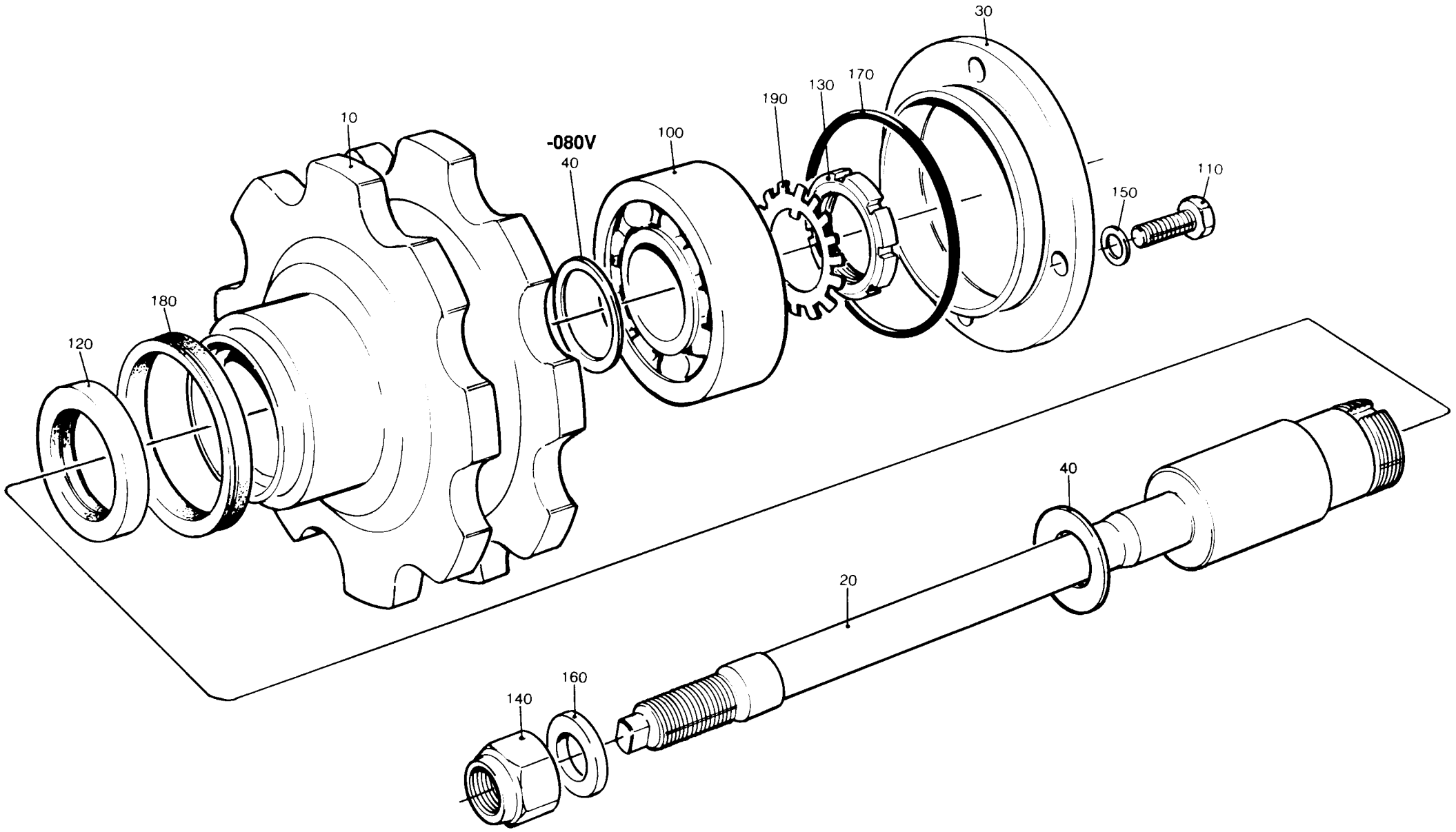

49184601.tif
491846-1
ECN 951223

Pos	Part No	SP	UN	Qty	Description	Page No
-						
020	491848-0000	D		1	SHAFT	
030	491291-0000	D		1	LID	
040	441589-0000	K		1	SHIM	
100	90214-0122	K		1	BALL BEARING	
105	90296-0070	K	G	40	GREASE	
110	312105-0331	K		4	SCREW O4017 M5X20A280	
120	315221-0177	K		1	SEAL RING CB35X52X7	
130	312805-0106	D		1	ROUND NUT KM6	
140	312810-0324	K		1	LOCK NUT 16FZB	
150	315105-0146	K		4	WASHER BRB5,3X10RFR	
160	315111-0186	K		1	WASHER TBRB17X30FZB	
170	315202-0306	K		1	O-RING 74,5X3	
180	315220-0210	K		1	SEAL RING V-60S	
190	315410-0106	D		1	LOCK WASHESKFMB6	
491847-0000						
	491289-0000	-		1	TENSION SPROCKET	

Pos	Part No	SP	UN	Qty	Description	Page No

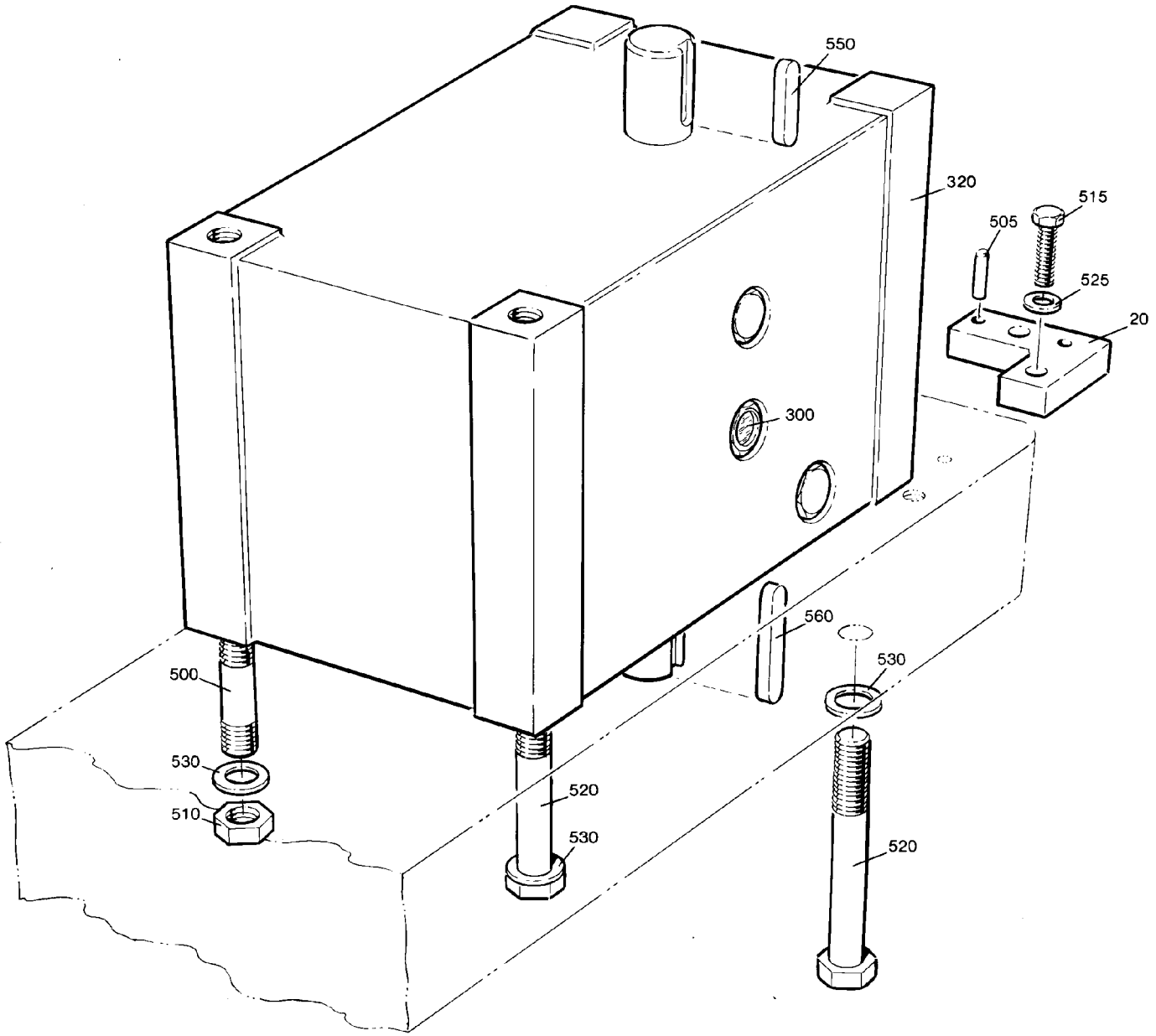

25641003.tif
256410-3
ECN

Pos	Part No	SP	UN	Qty	Description	Page No
-						
100	978573-0000	K		1	BUSHING	
300	90166-0011	K	MM	1000	HOSE	
310	90296-0028	F	L	4	OIL (QTY OF STOCK REFLECTS LITERS)	
320	B 90416-0021	K		1	INDEXING DEVICE	
500	312303-0548	K		2	STUD SCREWMPS 12X70 RFR	
510	312605-0322	K		2	NUT M6M12RFR	
520	312105-0547	-		2	SCREW M6S12X75RFR	
530	315101-0178	-		4	WASHER BRB13X24FZB	
550	315701-0263	K		1	FLAT WEDGE8X7X20	
560	315701-0271	K		1	FLAT WEDGE8X7X45	
570	342920-0114	K		1	PIPE COUPL6/4-1/4	
90416-0021						
	90416-0373	K		1	CAM ROLLER	
90416-0021						
	90416-0374	K		1	PROTECTION RING	
90416-0021						
	90416-0375	K		1	CAM	

Pos	Part No	SP	UN	Qty	Description	Page No

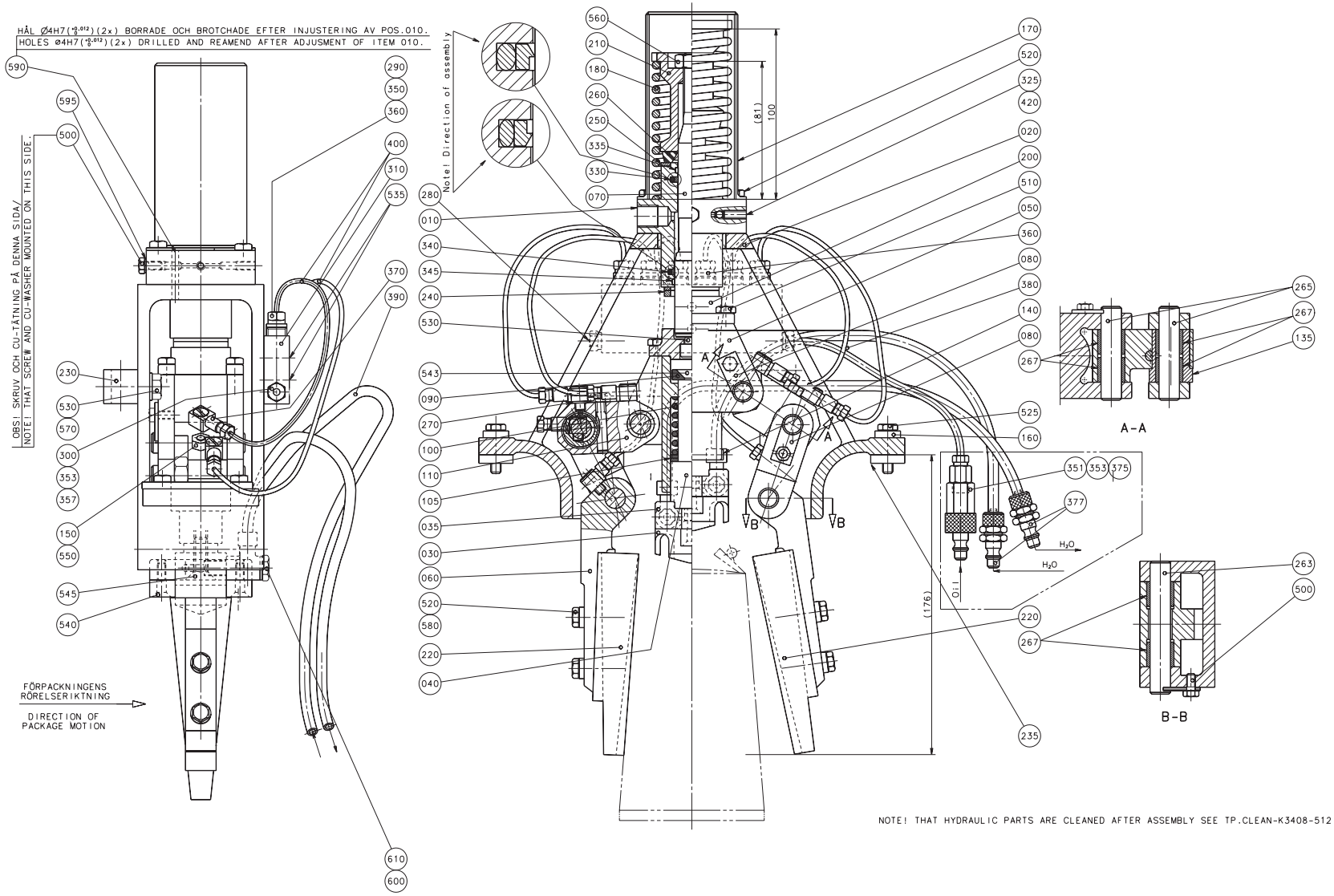

59164301.EPS
591643-1
ECN 70805

Pos	Part No	SP	UN	Qty	Description	Page No
-						
010	490980-0000	K		1	CYLINDER	
020	272576-0000	D		1	BRACKET	
030	591667-0000	D		1	BLOCKING PIECE	
035	591657-0000	K		1	HOLDER PRESSURE BLOCK	
040	491772-0001	K		1	SPINDLE	
050	491803-0000	D		1	HOUSE	
060	751552-0000	F		2	ARM	
070	752083-0000	K		1	PISTON	
080	21047-0000	-		6	LOCK WASHER	
090	491802-0000	-		1	WASHER	
100	490942-0000	F		1	COMPRESSION SPRING	
105	260427-0000	K		2	WASHER	
110	751553-0000	K		2	ARM	
135	751557-0000	K		2	SLEEVE	
140	256461-0000	K		1	DOWEL	
150	256462-0000	K		2	SCREW	
160	256463-0000	D		2	WASHER	
170	751163-0000	D		1	COVER	
180	271731-0000	K		1	COMPRESSION SPRING	
200	491771-0000	K		1	BRACKET	
210	441894-0000	K		1	SLEEVE	
220	591529-0000	K		2	BLOCK	
230	591659-0000	D		1	YOKE	
240	295072-0000	K		1	BUFFER RING	
250	441896-0000	D		1	WASHER	
260	441895-0000	F		1	BUFFER RING	
263	751554-0001	F		2	SHAFT	
265	751554-0002	K		4	SHAFT	
267	751555-0000	K		12	BUSHING	
270	90005-0056	-		2	WASHER	
280	90087-0019	-		1	PLUG	
290	90028-0020	-		6	CONE	
300	90028-0021	-		1	CONE	
310	90032-0040	-		1	BLOCK	
325	90090-0013	F		1	STEEL BALL	
330	90091-0160	F		1	SEAL RING	
335	90091-0162	-		1	GUIDE RING	
340	90091-0165	F		1	SEAL RING	
345	90091-0163	F		1	GUIDE RING	
350	90092-0054	-		6	VALVE	
351	90134-0004	K		1	PIPE CONNECTION	
353	90134-0031	-		2	SLEEVE	
357	90134-0038	-		1	BUSHING	
360	90134-0039	-		6	BUSHING	
370	90134-0058	-		6	BANJO CONNECTION	
375	90163-0048	K		1	NIPPLE	
377	90163-0063	K		2	NIPPLE	
380	90166-0109	-	MM	700	HOSE	
390	90166-0117	-	MM	2500	HOSE	
400	90166-0143	-	MM	1500	HOSE	
420	90287-0119	F		1	STOPSCREW M5X12 STAINLESS	
500	312105-0325	-		7	SCREW M6S5X10 A2 80	
510	312105-0368	-		4	SCREW O4017 M6X16A280	
520	312105-0374	-		8	SCREW O4017 M6X30A280	
525	312105-0372	-		4	SCREW O4017 M6X25A280	
530	312115-0449	-		3	SCREW O4762 M8X16A280	
535	312155-0295	-		2	SCREW MF6S4X20RFR	
540	312115-0331	-		2	SCREW O4762 M5X20A280	
543	312155-0449	-		1	SCREW MF6S8X16RFR	
545	312155-0453	-		1	SCREW MF6S8X25RFR	
550	312605-0316	-		2	NUT M6M6RFR	
560	312605-0320	-		1	NUT M6M10RFR	
570	315105-0165	-		2	WASHER BRB8,4X16RFR	
580	315115-0153	-		4	WASHER TBRB6,4X12RFR	
590	311103-0276	-		2	CYLINDRICACP M6 4X30 RFR	
595	315234-0101	-		1	SEAL RING M5	
600	342980-0113	-		2	BANJO CONNSINGEL 6/4-1/8	
610	342980-0303	-		2	BANJO CONN SINGEL 1/8"	

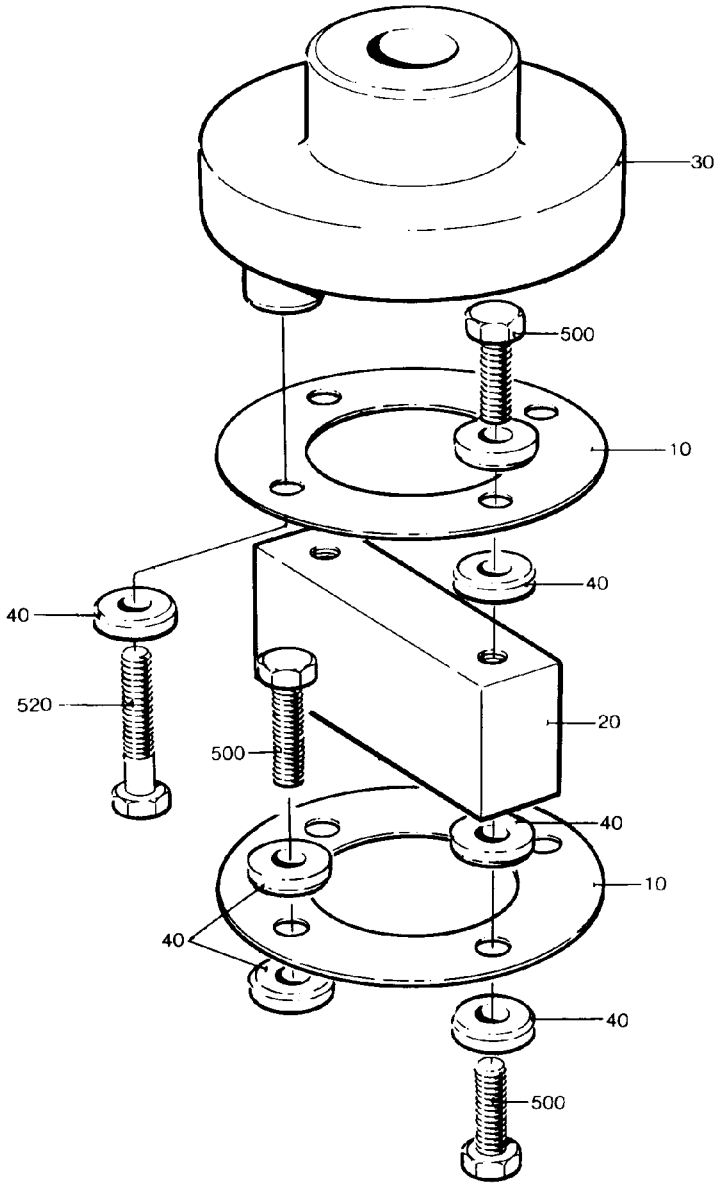

25643702.tif
256437-2
ECN

Pos	Part No	SP	UN	Qty	Description	Page No
-						
010	31559-0000	K		20	SPRING PLATE	
020	272746-0000	K		1	ROD	
030	272747-0000	K		1	CONNECTION	
040	31553-0001	-		14	WASHER	
500	312101-0453	-		4	SCREW M6S8X25FZB	
510	312101-0455	-		2	SCREW M6S8X30FZB	
520	312101-0459	-		2	SCREW M6S8X40FZB	

Pos	Part No	SP	UN	Qty	Description	Page No

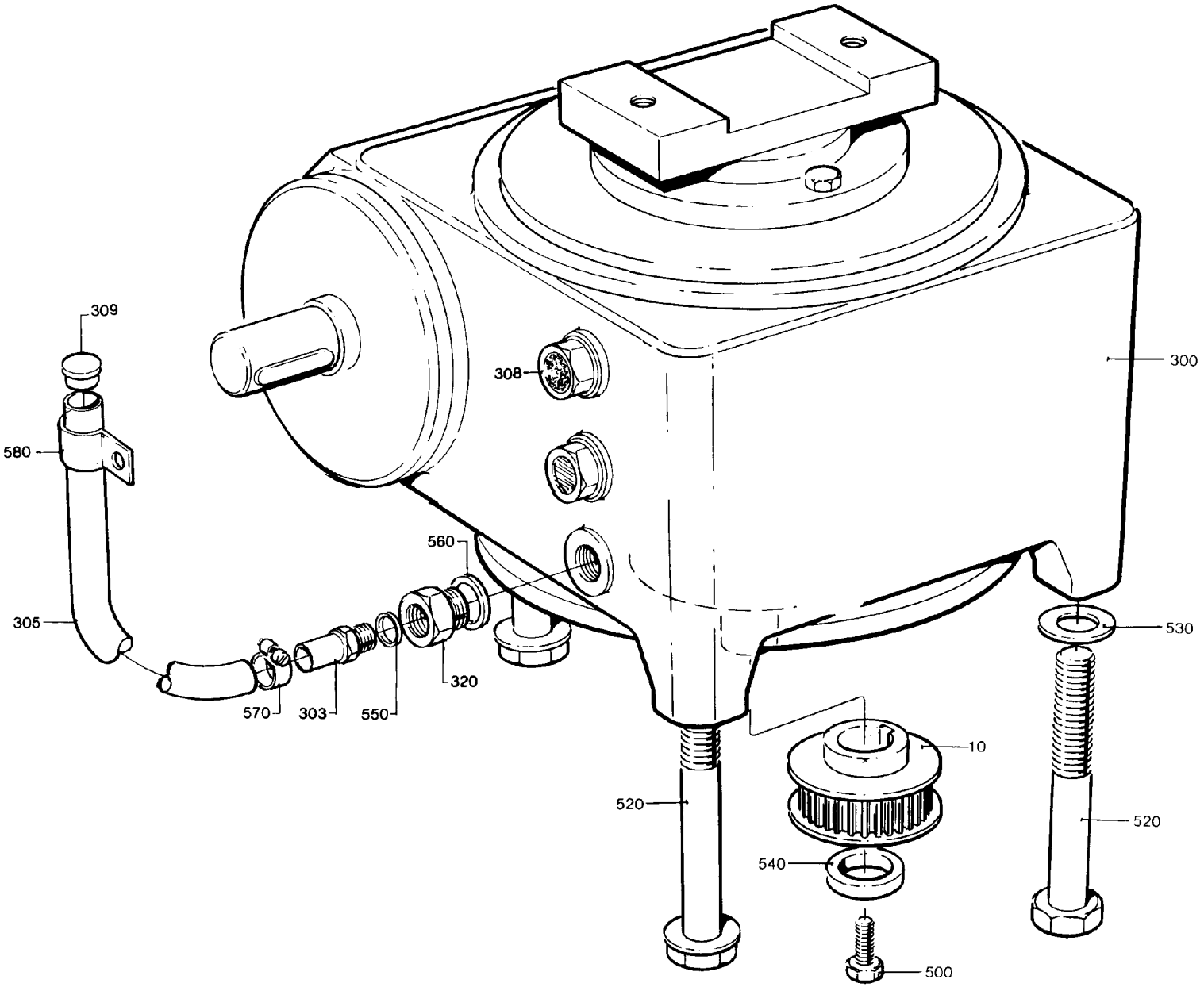

25643803.tif
256438-3
ECN

Pos	Part No	SP	UN	Qty	Description	Page No
-						
010	272758-0000	K		1	TIMING BELT PULLEY	
300	90056-0071	K		1	WORM GEAR	
303	90163-0052	-		1	NIPPLE	
305	90166-0113	-	MM	500	HOSE	
308	90257-0002	-		1	FILTER PLUG	
309	90261-0018	-		1	PIPE PLUG	
310	90296-0076	-	L	2	OIL	
320	90330-0085	-		1	BUSHING	
500	312101-0329	-		1	SCREW M6S5X16FZB	
520	312101-0552	-		3	SCREW M6S12X100FZB	
530	315101-0178	-		3	WASHER BRB13X24FZB	
540	315121-0153	-		1	WASHER TBRSB6,4X22FZB	
550	315234-0110	-		1	SEAL RING R1/4"	
560	315234-0113	-		1	SEAL RING R1/2"	
570	342991-0101	-		1	HOSE CLIP 11-17MMRFR	
580	352110-0103	-		1	CRAMP TK 14-20	

Pos	Part No	SP	UN	Qty	Description	Page No

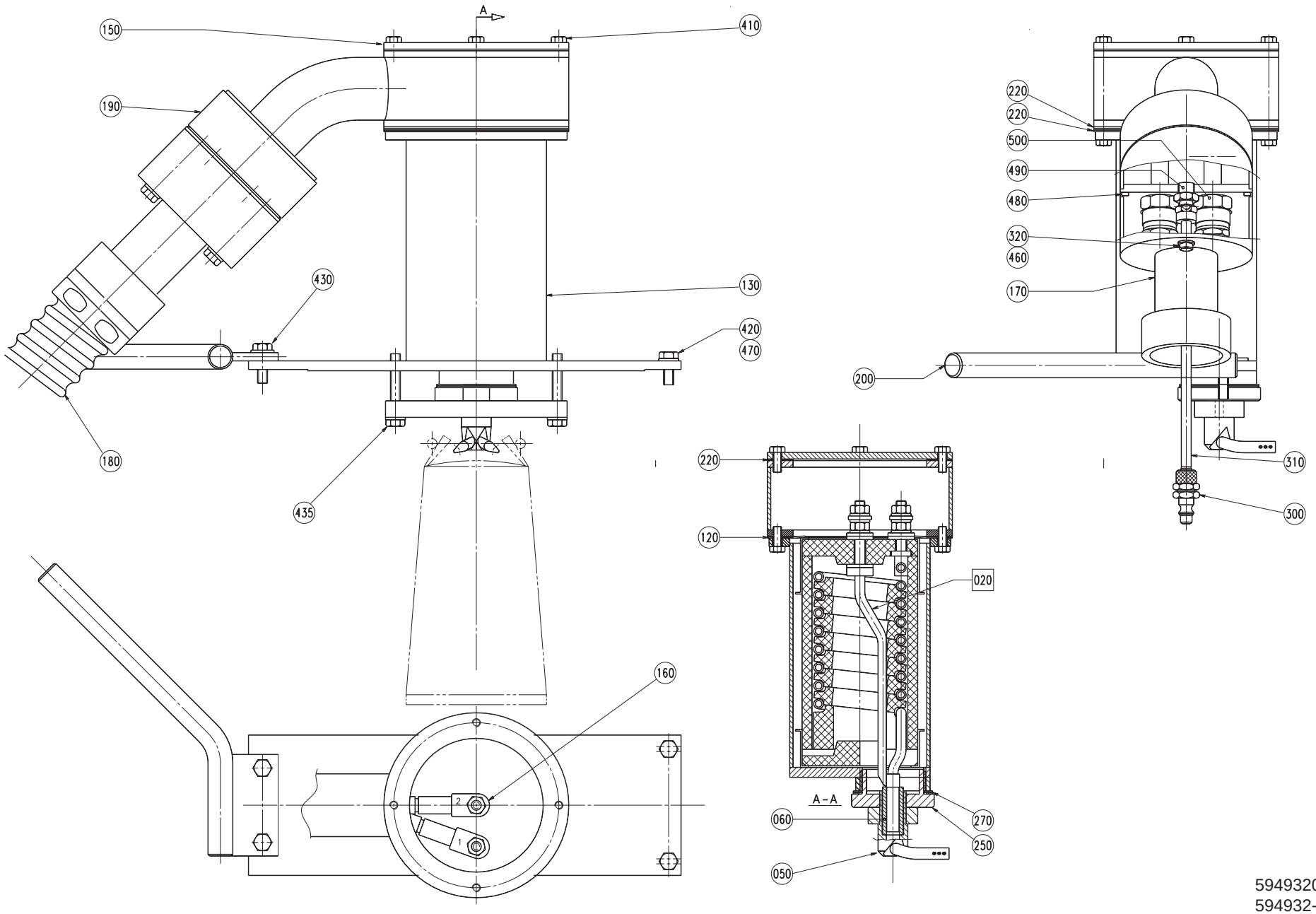

59493201.EPS
594932-1
ECN 70805

Pos	Part No	SP	UN	Qty	Description	Page No
-						
F020	A 31390-0110	-		1	ELEMENT	
050	591661-0000	K		1	AIR NOZZLE	
060	252766-0001	F		1	INSULATING PIPE	
120	591554-0000	K		1	STOP PLATE	
130	591550-0000	K		1	HEATING CHAMBER	
150	591552-0000	K		1	LID	
160	B 271499-0000	K		2	ELECTRICAL CONNECTION	
170	295306-0000	-		1	COVER	
180	B 295307-0000	-		1	FLEXIBLE CONDUIT	
190	591551-0000	K		1	SPACER PIECE	
200	591688-0000	D		1	HANDLE	
220	591553-0000	F		3	FLANGE SEAL	
250	591662-0000	D		1	NUT	
270	978527-0000	-		2	GASKET	
300	90163-0080	-		1	NIPPLE	
310	90166-0133	-	MM	1200	HOSE	
320	312105-0341	-		2	SCREW O4014 M5X50A280	
410	312105-0327	-		8	SCREW O4017 M5X12A280	
420	312105-0368	-		2	SCREW O4017 M6X16A280	
430	312105-0370	-		2	SCREW O4017 M6X20A280	
435	312105-0378	-		2	SCREW O4017 M6X40A280	
460	315105-0146	-		2	WASHER BRB5,3X10RFR	
470	315105-0153	-		6	WASHER BRB6,4X12RFR	
480	315204-0305	-		1	O-RING 69,5X3	
490	342920-0122	-		1	PIPE COUPL8/6-1/4	
500	352100-0107	-		2	CABLE GLANR.18,6-12	
271499-0000						
	351121-0110	-	M	1	CABLE RHH 25	
271499-0000						
	353102-0175	-		1	CABLE SHOEYAEV25-M6	
295307-0000						
	90012-0058	-		1	GLAND	
295307-0000						
	90152-0019	-	M	1	HOSE	

Pos	Part No	SP	UN	Qty	Description	Page No

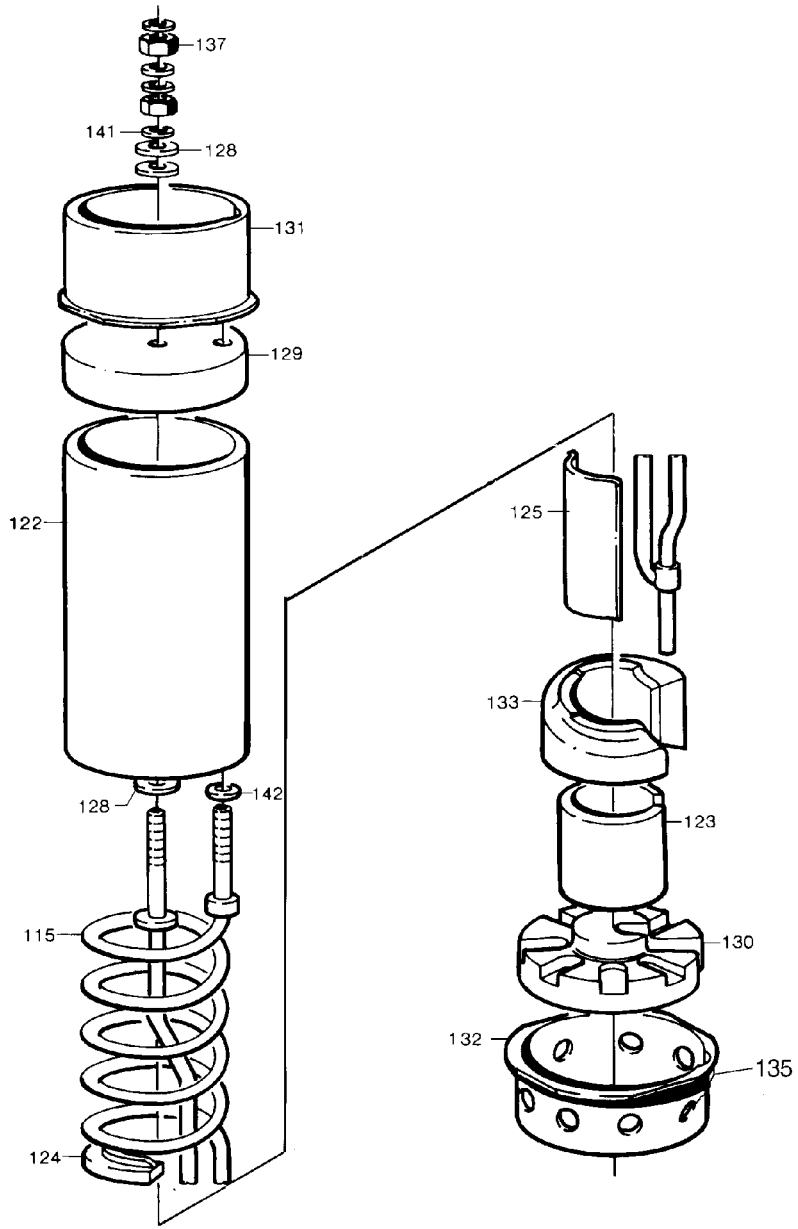

03139001.TIF
31390-1
AM 13601

Pos	Part No	SP	UN	Qty	Description	Page No
0300B 640005 or 0300B 648005 or 0300B 648035 or 0355B 648035 or 0375S 648035 or 0400B 648035 or 0500S 648035 or 0500SQ 648035 or 0568B 640005 or 0568B 648005 or 0568B 648025 or 0568B 648035 or 0750B 648035 or 1000SQ 648035 or 1136B 640005 or 1136B 648005 or TBA 0200B 648105 or TBA 0236B 640005 or TBA 0236B 648005 or TBA 0236B 648035 or TBA 0236B 648105 or TBA 0250B 640005 or TBA 0250B 648005 or TBA 0250B 648035 or TBA 0250B 648105 or TBA 0250S 648105 or TBA 0284B 640005 or TBA 0284B 648005 or TBA 0284B 648035 or TBA 0284B 648105 or TWA						
115	30311-0001	F		1	HEATING ELEMENT	
0500B 640005 or 0500B 648005 or 0500B 648025 or 0500B 648035 or 0750S 648035 or 1000B 640005 or 1000B 648005 or 1000B 648025 or 1000B 648035 or 1000S 648035 or 1055B 648035 or 1136B 648035 or TBA 0100B 648105 or TBA 0125S 648105 or TBA 0180B 640005 or TBA 0180B 648005 or TBA 0180B 648105 or TBA 0189B 640005 or TBA 0189B 648005 or TBA 0189B 648105 or TBA 0200B 640005 or TBA 0200B 648005 or TBA 0200S 648105						
115	30311-0002	F		1	HEATING ELEMENT	
Common parts						
122	20705-0001	K		1	INSULATING PIPE	
124	29413-0000	K		21	LACE	
125	31653-0002	K		1	SHEET	
128	525233-0000	K		5	GASKET	
129	20772-0000	K		1	INSULATOR BODY	
130	37536-0000	K		1	INSULATOR BODY	
131	23771-0000	K		1	SPACER RING	
132	37537-0000	K		1	SPACER RING	
133	37535-0000	K		1	SUPPORTING PART	
137	312605-0316	-		6	NUT M6M6RFR	
141	315105-0153	-		4	WASHER BRB6,4X12RFR	
142	315115-0153	-		1	WASHER TBRB6,4X12RFR	

Pos	Part No	SP	UN	Qty	Description	Page No

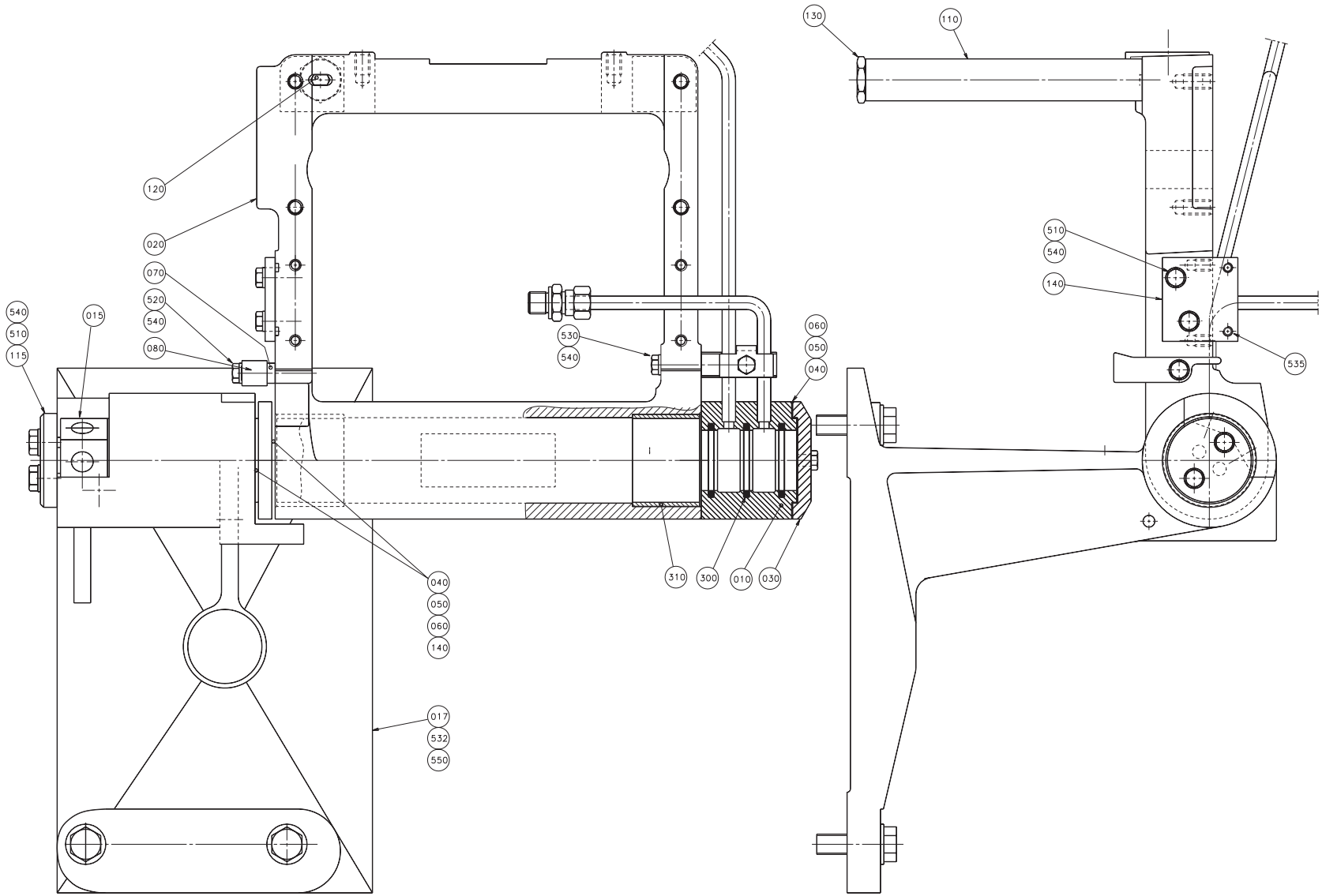

59167501.EPS
591675-1
ECN 70805

Pos	Part No	SP	UN	Qty	Description	Page No
-						
010	B 295202-0002	D		1	SWIVEL	
015	295313-0000	-		1	SHAFT	
017	591456-0000	D		1	CANTILEVER	
020	B 295201-0000	D		1	FRAME	
030	295203-0000	D		1	LID	
040	295204-0001	K		4	SHIM	
050	295204-0002	K		4	SHIM	
060	295204-0003	K		4	SHIM	
070	295205-0000	-		1	SPACER SLEEVE	
080	295206-0000	-		1	FLAP	
090	295207-0000	-		1	HOLDER	
100	295208-0000	-		1	SECURING PLATE	
110	591545-0000	D		1	SUPPORT	
115	295317-0000	-		1	WASHER	
120	295431-0000	-		1	SCREW	
130	295432-0000	-		1	SCREW	
140	591588-0000	K		2	SHIM	
300	90091-0136	K		3	SEAL RING	
310	90240-0094	K		2	PLAIN BEARING	
500	312105-0366	-		1	SCREW O4017 M6X12A280	
510	312105-0370	-		6	SCREW O4017 M6X20A280	
520	312105-0374	-		1	SCREW O4017 M6X30A280	
530	312105-0376	-		1	SCREW O4017 M6X35A280	
532	312105-0540	-		4	SCREW 4017 M12X40A280	
535	312318-0323	-		2	STOP SCREW SK6SS5X8RFR	
540	315105-0153	-		4	WASHER BRB6,4X12RFR	
550	315105-0178	-		4	WASHER BRB13X24RFR	

Pos	Part No	SP	UN	Qty	Description	Page No

This page is intentionally left blank

Pos	Part No	SP	UN	Qty	Description	Page No
-						
	90030-0052	-		1	PIPE CONNECTION	
295201-0000						
	312911-0118	-		11	THREADED I M6X1,5D	
295201-0000						
	312911-0126	-		2	THREADED I M8X1,5D	

Pos	Part No	SP	UN	Qty	Description	Page No

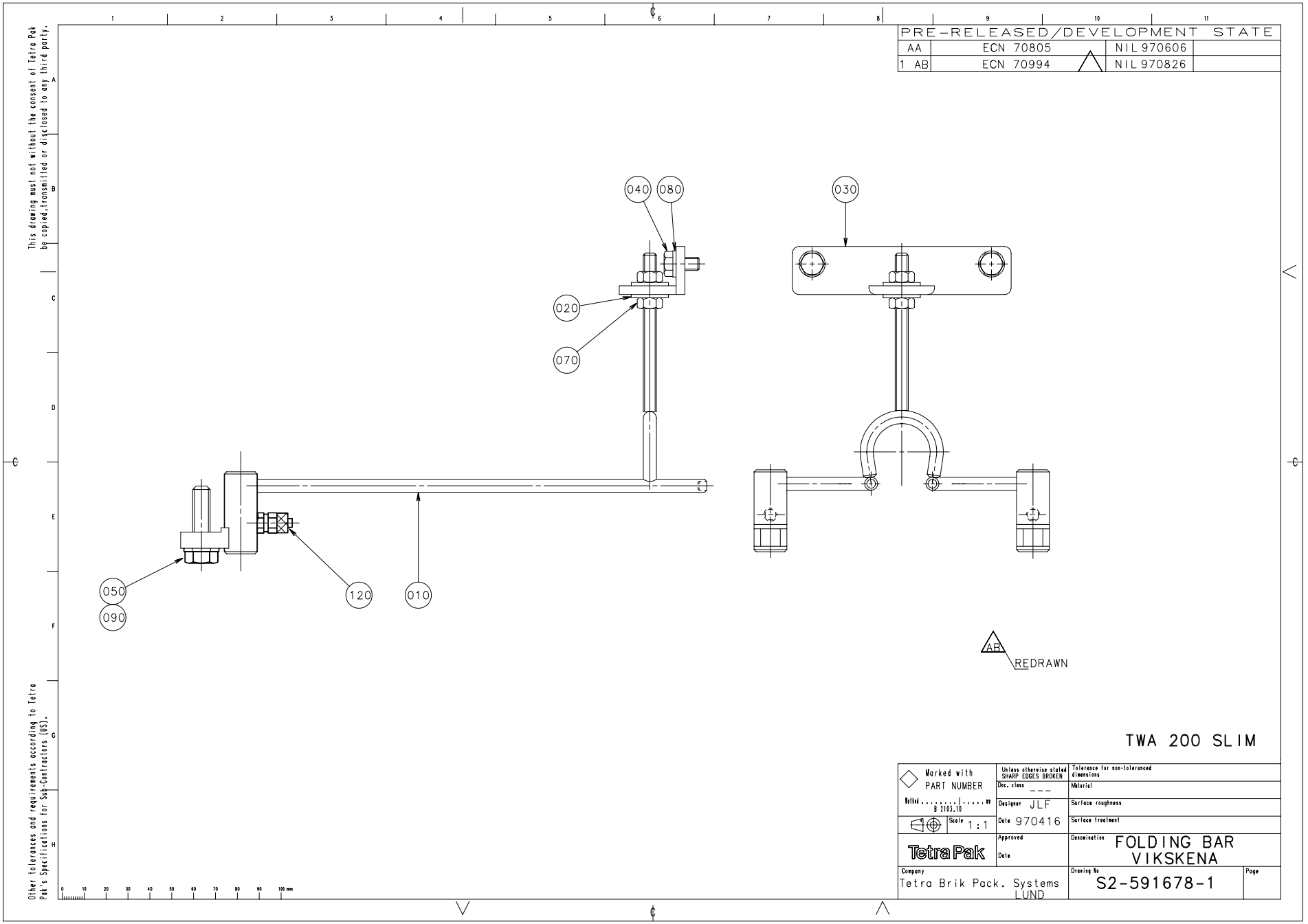
PRE-RELEASED/DEVELOPMENT STATE
AA ECN 70805 NIL 970606
1 AB ECN 70994 NIL 970826
040
080
030
020
070
050
090
120
010
AB
REDRAWN
TWA 200 SLIM
Marked with PART NUMBER
Unless otherwise stated SHARP EDGES BROKEN
Tolerance for non-toleranced dimensions
Doc. class ---
Material
Designer JLF
Surface roughness
Date 970416
Surface treatment
Scale 1:1
Approved
Date
Denomination FOLDING BAR VIKSKENA
Company Tetra Brik Pack. Systems LUND
Drawing No S2-591678-1
Page
This drawing must not without the consent of Tetra Pak be copied, transmitted or disclosed to any third party.
Other tolerances and requirements according to Tetra Pak's Specifications for Sub-Contractors (US).

Pos	Part No	SP	UN	Qty	Description	Page No
-						
010	591666-0000	K		1	FOLDING BAR	
020	6278-0000	-		4	WASHER	
050	312105-0455	-		2	SCREW O4017 M8X30A280	
070	312605-0316	-		4	NUT M6M6RFR	
090	315105-0165	-		2	WASHER BRB8,4X16RFR	
120	342921-0112	K		2	PIPE COUPL6/4-6M	

Pos	Part No	SP	UN	Qty	Description	Page No

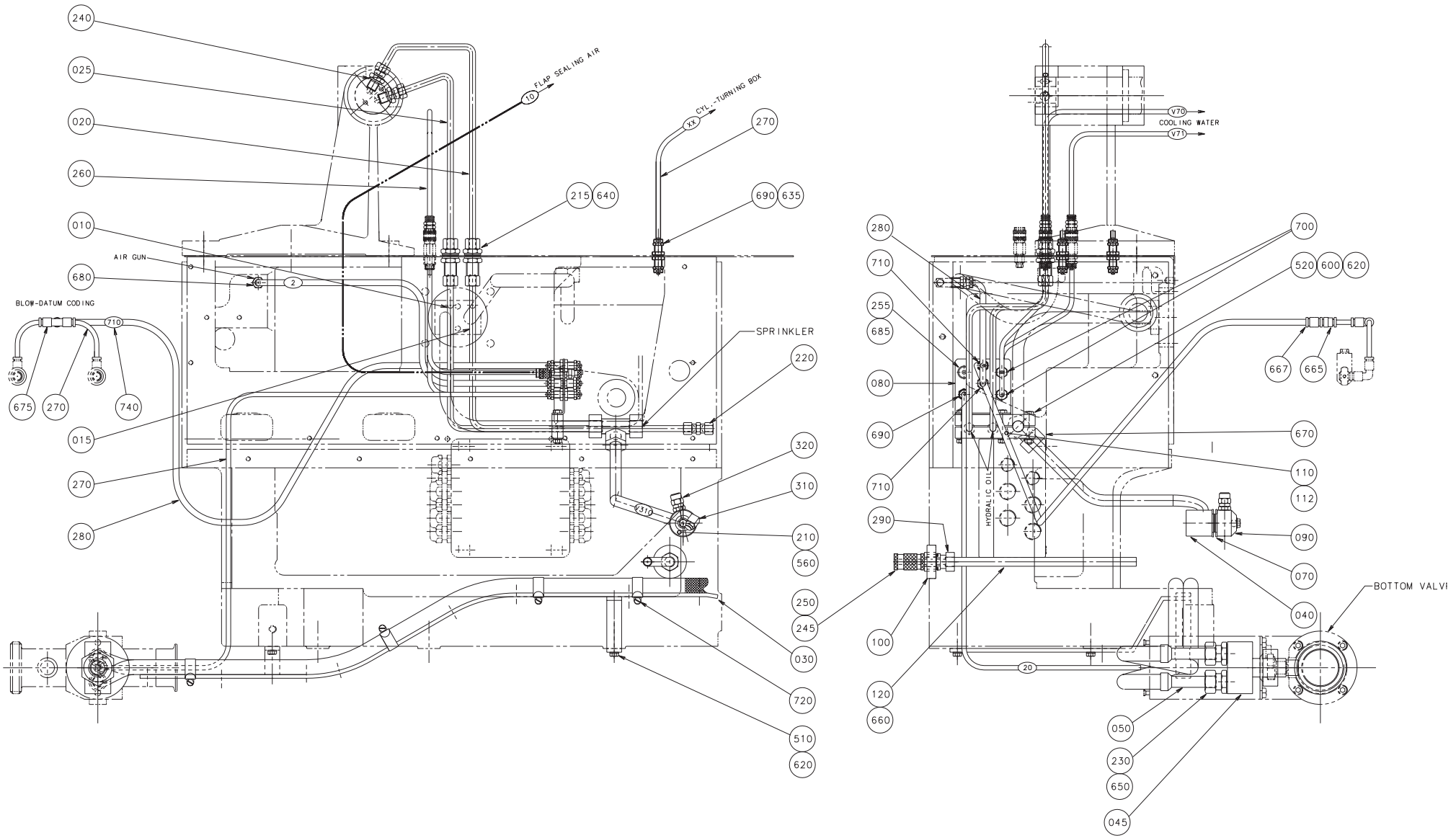

59167601.EPS
591676-1
ECN 70805

Pos	Part No	SP	UN	Qty	Description	Page No
-						
010	591579-0000	-		1	PIPE	
015	591578-0000	K		1	PIPE	
020	591577-0000	K		1	PIPE	
025	591576-0000	K		1	PIPE	
030	441499-0000	-		1	HOLDER	
040	591630-0000	-		1	DISTRIBUTOR	
045	B 490618-0000	-		1	BRANCH	
050	441500-0000	-		2	HOSE	
070	256907-0000	-		2	WASHER	
080	591689-0000	D		1	PLATE	
090	272191-0000	K		1	DISTRIBUTOR	
100	272741-0000	K		1	SEAL	
110	456854-0001	-		1	CRAMP	
112	456854-0002	-		1	CRAMP	
120	491807-0000	-		1	PIPE	
210	90005-0007	K		1	WASHER	
215	90030-0067	-		2	GROMMET	
220	90030-0091	-		2	PIPE CONNECTION	
230	90030-0151	-		2	CONNECTION	
240	90030-0185	-		2	PIPE CONNECTION	
245	90157-0034	-		x	SEALING COMPOUND	
250	90163-0028	-		1	SLEEVE	
255	90163-0062	K		1	SLEEVE	
260	90166-0117	F	MM	1640	HOSE	
270	90166-0132	F	MM	3400	HOSE	
280	90166-0133	-	MM	1520	HOSE	
290	90224-0186	-		1	NIPPLE	
310	90424-0009	K		1	NOZZLE	
320	90424-0016	K		1	NOZZLE	
510	312105-0372	-		4	SCREW O4017 M6X25A280	
520	312105-0378	-		3	SCREW O4017 M6X40A280	
560	312105-0463	-		1	SCREW O4014 M8X60A280	
600	312605-0316	-		3	NUT M6M6RFR	
620	315105-0153	-		7	WASHER BRB6,4X12RFR	
635	315233-0109	-		2	SEAL RING R1/8"	
640	315233-0111	-		2	SEAL RING R3/8"	
650	315233-0113	-		2	SEAL RING R1/2"	
660	342708-0107	-		2	SLEEVE 12X1/MS	
665	342716-0203	-		1	REDUCER 6-8	
667	342728-0103	-		1	PIPE COUPLING	
670	342746-0114	-		1	T-CONNECTI T-15	
675	342748-0102	-		1	T-CONNECTI D=6	
680	342920-0122	-		1	PIPE COUPL8/6-1/4	
685	342921-0121	K		1	PIPE COUPL8/6-1/8"	
690	342960-0112	-		3	BULKHEAD L6/4	
700	342960-0121	-		2	BULKHEAD L8/6-6/4	
710	342960-0122	-		2	BULKHEAD L8/6	
720	342991-0106	-		7	HOSE CLIP 26-38MMRFR	
740	359000-0400	-		1	MARKING CO2/4"0"	
740	359000-0401	-		1	MARKING CO2/4"1"	
740	359000-0407	-		1	MARKING CO2/4"7"	
490618-0000						
	90330-0106	-		1	PIPE COUPLING	

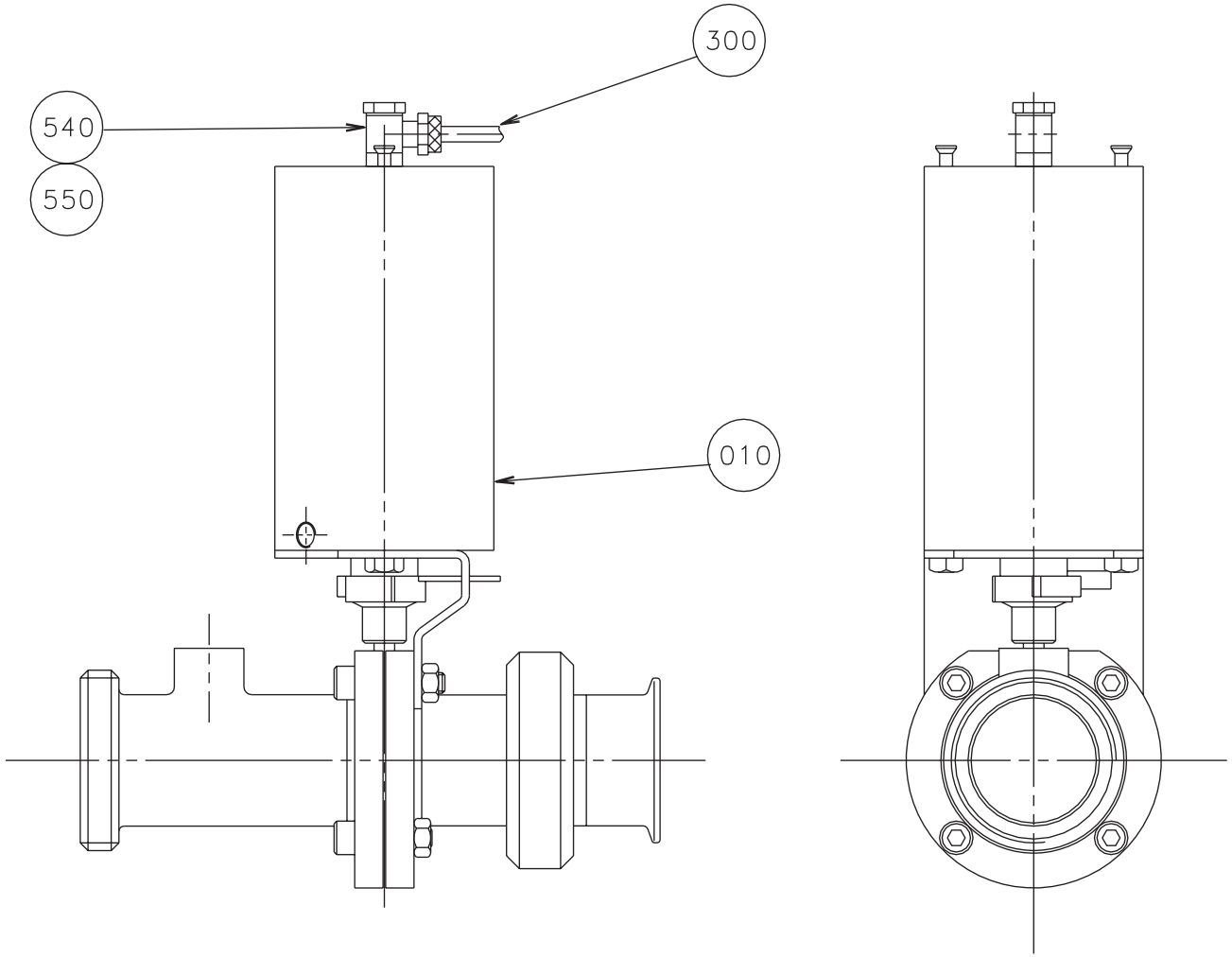

59167901.EPS
591679-1
ECN 70805

Pos	Part No	SP	UN	Qty	Description	Page No
-						
010	272751-0000	D		1	BOTTOM VALVE	
300	90166-0089	-	MM	1100	HOSE	
540	342980-0113	-		1	BANJO CONNSINGEL 6/4-1/8	
550	342980-0303	-		1	BANJO CONN SINGEL 1/8"	

Pos	Part No	SP	UN	Qty	Description	Page No

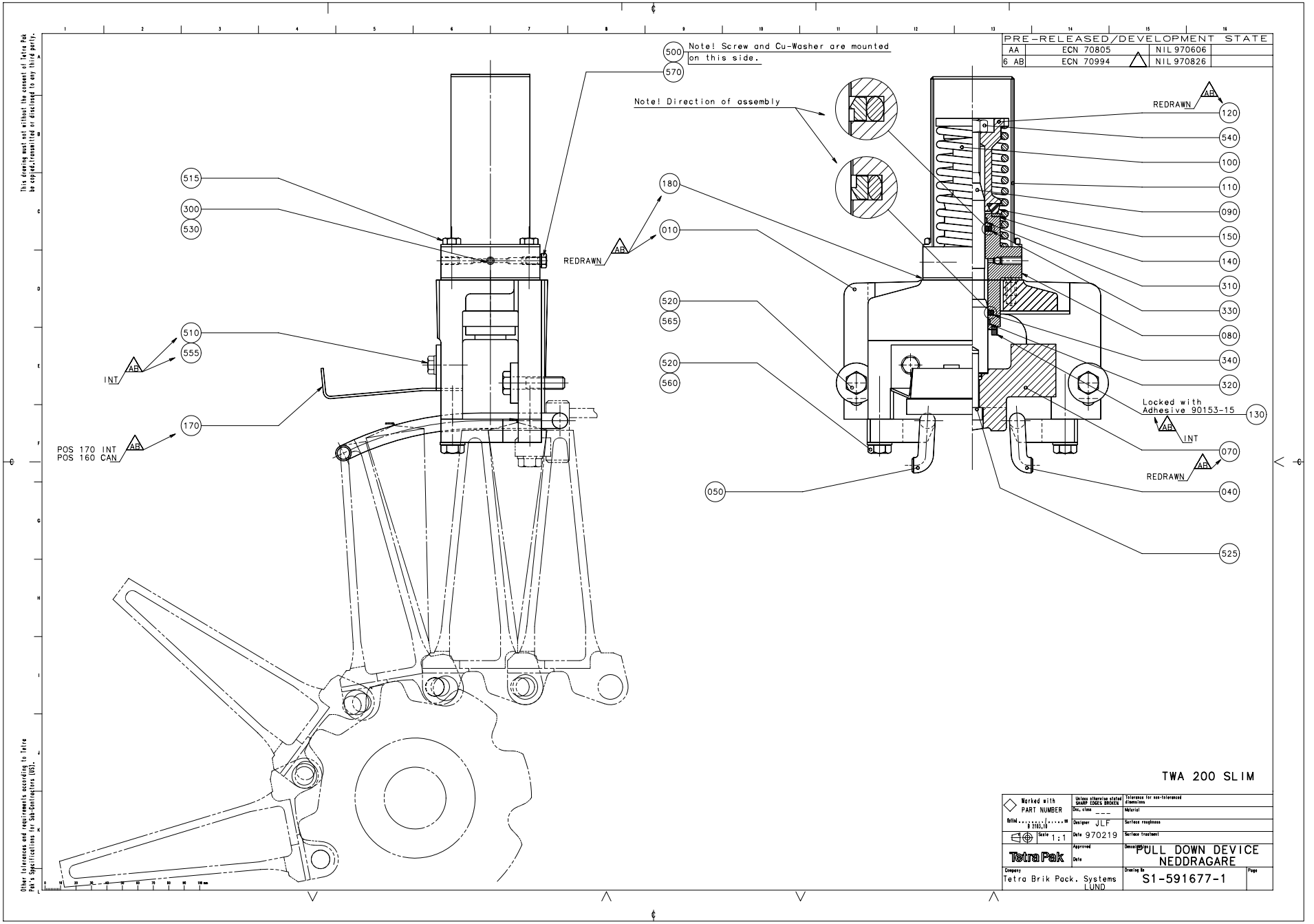
PRE-RELEASED/DEVELOPMENT STATE
AA ECN 70805 NIL 970606
6 AB ECN 70994 NIL 970826
Note! Screw and Cu-Washer are mounted on this side.
Note! Direction of assembly
REDRAWN
INT
POS 170 INT
POS 160 CAN
Locked with Adhesive 90153-15
500
570
515
300
530
180
010
520
565
520
560
510
555
170
050
120
540
100
110
090
150
140
310
330
080
340
320
130
070
040
525
TWA 200 SLIM
Tetra Pak
Tetra Brik Pack. Systems LUND
FULL DOWN DEVICE NEDDRAGARE
S1-591677-1

Pos	Part No	SP	UN	Qty	Description	Page No
-						
010	591525-0000	D		1	BRACKET	
040	591443-0000	D		1	RAIL LEFT	
050	591444-0000	D		1	RAIL RIGHT	
070	591526-0000	D		1	BLOCKING PIECE	
080	490980-0000	-		1	CYLINDER	
090	752083-0000	-		1	PISTON	
100	271731-0000	-		1	COMPRESSION SPRING	
110	751163-0000	-		1	COVER	
120	441894-0000	-		1	SLEEVE	
130	295072-0000	-		1	BUFFER RING	
140	441896-0000	-		1	WASHER	
150	441895-0000	-		1	BUFFER RING	
160	594935-0000	K		1	HEAD	
170	594936-0000	K		1	HOLDER	
180	591652-0000	K		1	SHIM	
300	90090-0013	F		1	STEEL BALL	
310	90091-0162	F		1	GUIDE RING	
320	90091-0163	F		1	GUIDE RING	
330	90091-0160	F		1	SEAL RING	
340	90091-0165	F		1	SEAL RING	
490	312105-0293	-		2	SCREW O4017 M4X16A280	
500	312105-0325	-		1	SCREW M6S5X10 A2 80	
505	312105-0333	-		2	SCREW O4017 M5X25A280	
515	312105-0374	-		4	SCREW O4017 M6X30A280	
520	312105-0455	-		4	SCREW O4017 M8X30A280	
525	312115-0457	-		1	SCREW O4762 M8X35A280	
530	312311-0327	-		1	STOP SCREW T6SS5X12FZB	
535	312605-0314	-		2	NUT M6M5RFR	
535	312605-0318	-		1	NUT M6M8RFR	
540	312605-0320	-		1	NUT M6M10RFR	
545	315105-0136	-		2	WASHER BRB4,3X8RFR	
560	315105-0165	-		3	WASHER BRB8,4X16RFR	
565	315125-0165	-		2	WASHER SB 8,4X26X5 RFR	
570	315234-0101	-		1	SEAL RING M5	

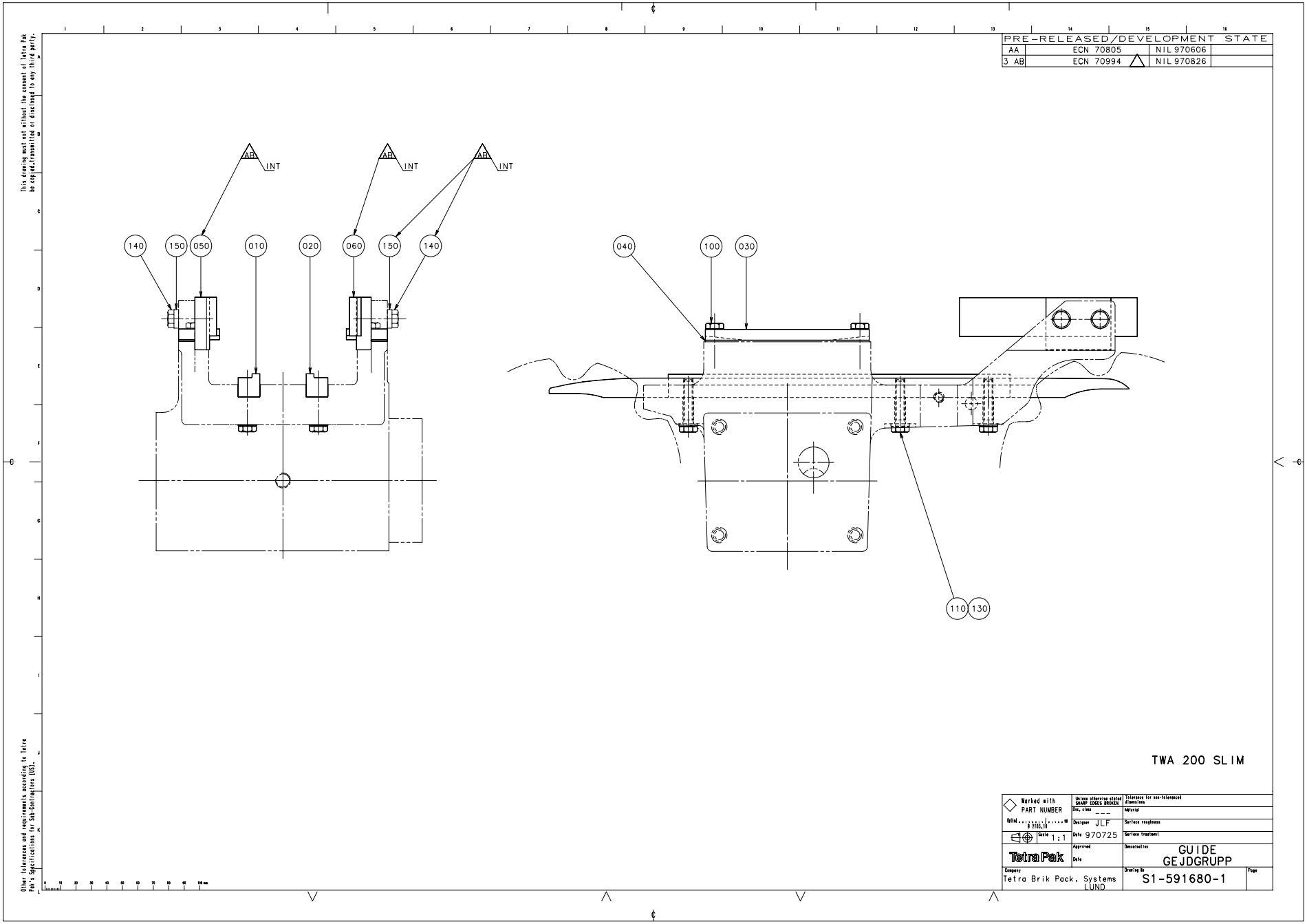
PRE-RELEASED/DEVELOPMENT STATE
AA ECN 70805 NIL 970606
3 AB ECN 70994 NIL 970826
This drawing must not without the consent of Tetra Pak be copied, transmitted or disclosed to any third party.
Other tolerances and requirements according to Tetra Pak's specifications to Sub-Contractors (SS).
AB INT
140 150 050 010 020 060 150 140
040 100 030
110 130
TWA 200 SLIM
Marked with PART NUMBER
Unless otherwise stated SHARP EDGES BROKEN
Tolerance for non-toleranced dimensions
Material
Surface roughness
Surface treatment
Designer JLF
Date 970725
Scale 1:1
Approved
Date
Description
GUIDE
GEJDGRUPP
Tetra Pak
Company
Tetra Brik Pack. Systems
LUND
Drawing No
S1-591680-1
Page

Pos	Part No	SP	UN	Qty	Description	Page No
-						
010	751109-0000	K		1	RAIL RIGHT	
020	751110-0000	K		1	RAIL LEFT	
030	491265-0000	K		2	PLATE	
040	491266-0000	K		4	SHIM	
100	312105-0370	K		4	SCREW O4017 M6X20A280	
110	312105-0374	K		6	SCREW O4017 M6X30A280	
130	315105-0153	K		10	WASHER BRB6,4X12RFR	

Pos	Part No	SP	UN	Qty	Description	Page No

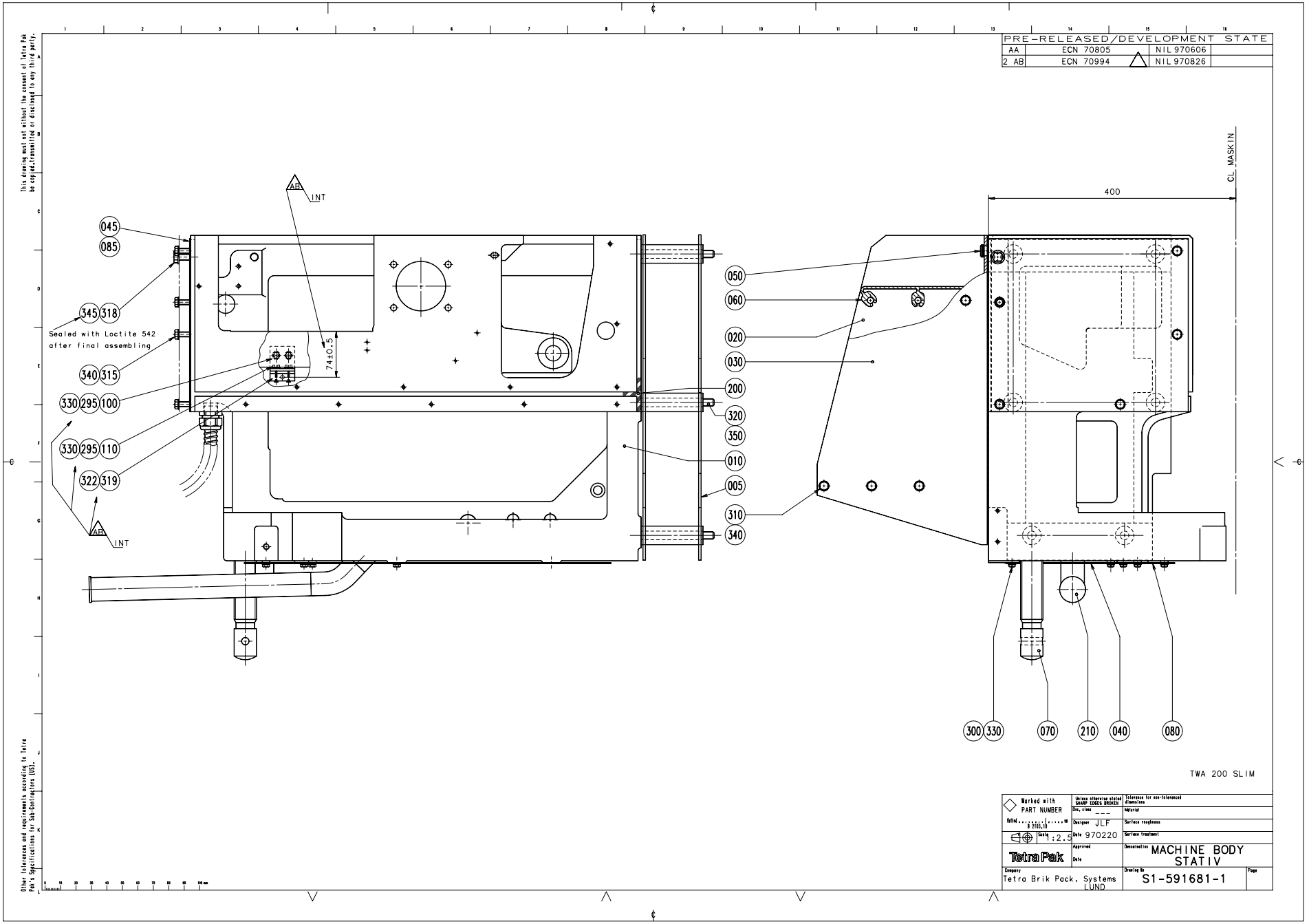
PRE-RELEASED/DEVELOPMENT STATE
AA ECN 70805 NIL 970606
2 AB ECN 70994 NIL 970826
This drawing must not without the consent of Tetra Pak be copied, transmitted or disclosed to any third party.
Other tolerances and requirements according to Tetra Pak's Specifications for Sub-Contractors (US).
CL MASKIN
400
INT
74±0.5
Sealed with Loctite 542 after final assembling
045
085
345 318
340 315
330 295 100
330 295 110
322 319
050
060
020
030
200
320
350
010
005
310
340
300 330
070
210
040
080
TWA 200 SLIM
Marked with PART NUMBER
Unless otherwise stated SHARP EDGES BROKEN
Tolerance for non-tolerenced dimensions
Dec. class ---
Material
Designer JLF
Surface roughness
Date 970220
Surface treatment
Scale 1:2.5
Approved
Date
Tetra Pak
Denomination MACHINE BODY STATIV
Company Tetra Brik Pack. Systems LUND
Drawing No S1-591681-1
Page

Pos	Part No	SP	UN	Qty	Description	Page No
-						
005	591455-0000	D		1	SPACER FRAME	
010	591568-0000	D		1	MACHINE BODY	
020	272659-0000	-		1	SIDE PIECE	
030	272660-0000	-		1	SIDE PIECE	
040	752213-0000	-		1	BOTTOM PANEL	
045	591587-0000	D		1	PLATE	
050	271591-0000	-		2	BUTTON	
060	272661-0000	-		2	STAIR	
070	272673-0000	-		1	LEG	
080	272743-0000	-		1	LID	
085	591569-0000	K		1	SHIM	
200	90143-0028	K	MM	2700	STRIP	
210	90261-0025	-		2	PIPE PLUG	
300	312105-0367	-		7	SCREW M6S6X14RFR	
310	312105-0451	-		12	SCREW SO4017 8X20A280	
315	312105-0455	-		5	SCREW O4017 M8X30A280	
318	312105-0495	-		1	SCREW 4017 M10X30A280	
320	90287-0328	-		6	Screw	
330	315105-0153	-		7	WASHER BRB6,4X12RFR	
340	315105-0165	-		17	WASHER BRB8,4X16RFR	
345	315105-0173	-		1	WASHER BRB10,5X22RFR	
350	315105-0178	-		6	WASHER BRB13X24RFR	

Pos	Part No	SP	UN	Qty	Description	Page No

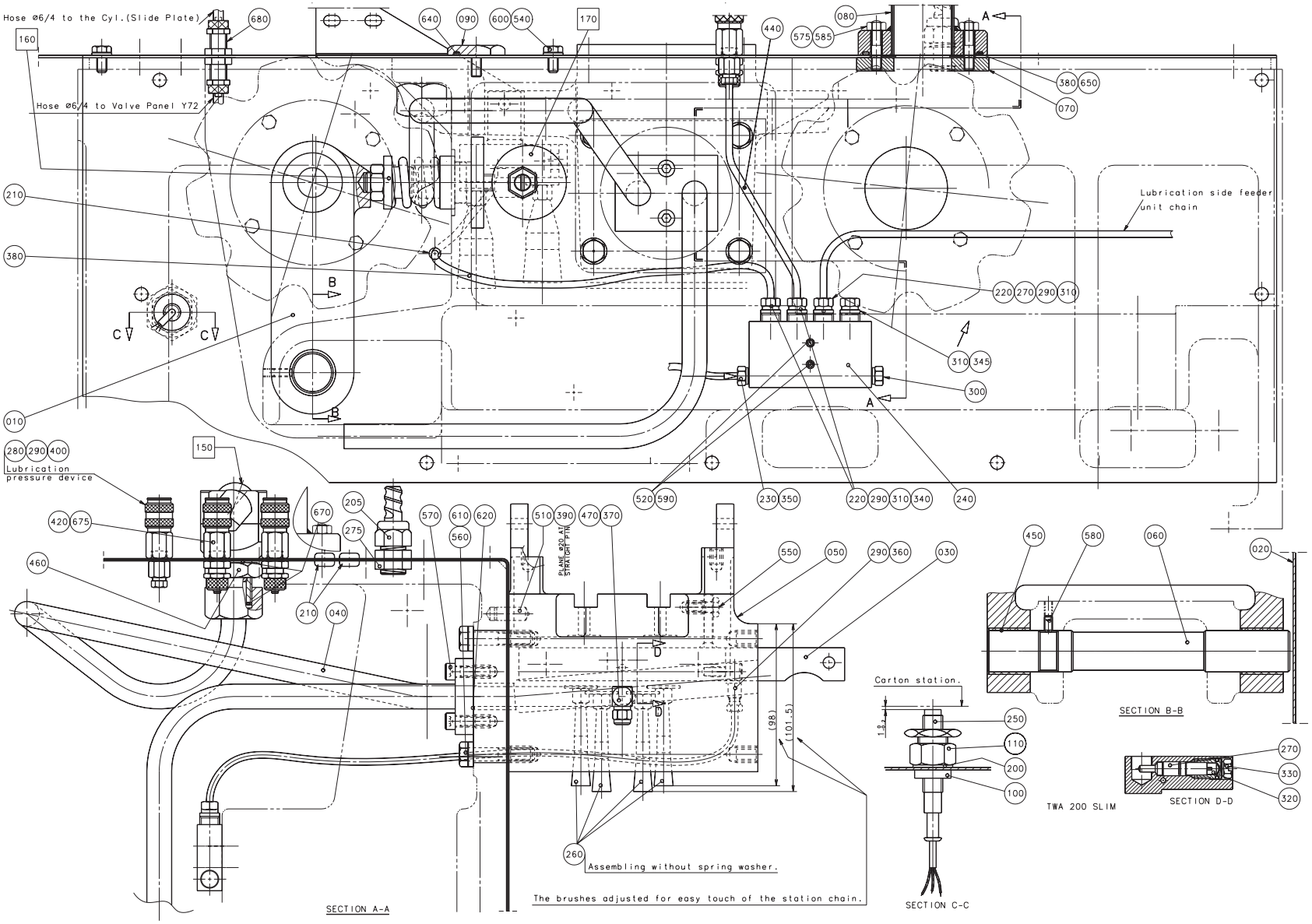

59168201.EPS
591682-1
ECN 70805

Pos	Part No	SP	UN	Qty	Description	Page No
-						
F150	A 441798-0100	-		1	ROTOR	
F160	A 272652-0300	-		1	CHAIN TENSIONER	
F170	A 978048-0100	-		1	CLAMPING ELEMENT	
010	441600-0000	D		1	LINK ARM	
020	591557-0000	D		1	SHIELD PLATE	
030	751070-0000	D		1	DISTRIBUTOR BLOCK	
040	979458-0000	D		1	PIPE CONNECTION	
050	752485-0000	D		1	SUPPORTING ARM	
060	256276-0000	D		1	SHAFT	
070	978190-0000	D		1	WASHER	
080	979459-0000	D		1	LEAD-IN	
090	272997-0000	D		1	STOPPER	
100	490932-0000	D		1	SLEEVE	
110	490933-0000	D		1	NUT	
200	90005-0048	D		1	WASHER	
205	90012-0077	-		1	GLAND FITTING	
210	90015-0028	K		1	LEAD-IN BUSHING	
220	90028-0021	K		3	CONE	
230	90028-0025	K		1	CONE	
240	90032-0039	-		1	BLOCK	
250	90044-0124	K		1	INDUCTIVE SWITCH	
260	90092-0048	K		4	OIL BRUSH	
270	90092-0054	K		5	VALVE	
275	90099-0104	-		1	NUT PR 15,2 (PG9)	
280	90134-0004	K		1	PIPE CONNECTION	
290	90134-0031	K		3	SLEEVE	
300	90087-0019	K		1	PLUG	
310	90134-0040	K		4	BUSHING	
320	90134-0042	K		3	SPACER	
330	90134-0045	K		3	PLUG	
340	90134-0051	K		2	SPACER COLLAR	
345	90134-0052	K		1	PLUG	
350	90134-0055	K		1	BUSHING	
360	90134-0068	K		1	BANJO CONNECTION	
370	90144-0004	-		x	TAPE	
380	90153-0020	-		x	ADHESIVE	
390	90157-0022	-		x	SEALING COMPOUND	
400	90163-0046	K		1	SLEEVE	
420	90163-0062	K		2	SLEEVE	
440	90166-0109	K	MM	2000	HOSE	
450	90240-0055	K		2	RICTION BEARING	
460	90330-0078	D		1	BUSHING	
470	90424-0009	K		1	NOZZLE	
510	311103-0401	D		1	CYLINDRICACP M6 8X20 RFR	
520	312105-0297	K		2	SCREW O4014 M4X25A280	
530	312105-0364	K		2	SCREW M6S6X10RFR	
540	312105-0366	K		15	SCREW O4017 M6X12A280	
550	312105-0368	K		1	SCREW O4017 M6X16A280	
560	312105-0459	K		4	SCREW O4017 M8X40A280	
570	312115-0372	K		2	SCREW O4762 M6X25A280	
575	312303-0374	K		2	STUD SCREWMPS 6X25 RFR	
580	312318-0325	K		1	STOP SCREW SK6SS5X10RFR	
585	312605-0316	K		2	NUT M6M6RFR	
590	315105-0136	K		2	WASHER BRB4,3X8RFR	
600	315105-0153	K		17	WASHER BRB6,4X12RFR	
610	315111-0165	K		4	WASHER TBRB8,4X16FZB	
615	315115-0165	K		1	WASHER TBRB8,4X16RFR	
620	315202-0118	K		2	O-RING 22,1X1,6	
640	315202-0215	K		1	O-RING 19,2X3	
650	315202-0304	K		1	O-RING 64,5X3	
660	315233-0109	K		3	SEAL RING R1/8"	
670	315233-0111	K		2	SEAL RING R3/8"	
675	342921-0113	K		2	PIPE COUPL6/4-1/8"	
680	342960-0112	K		2	BULKHEAD L6/4	

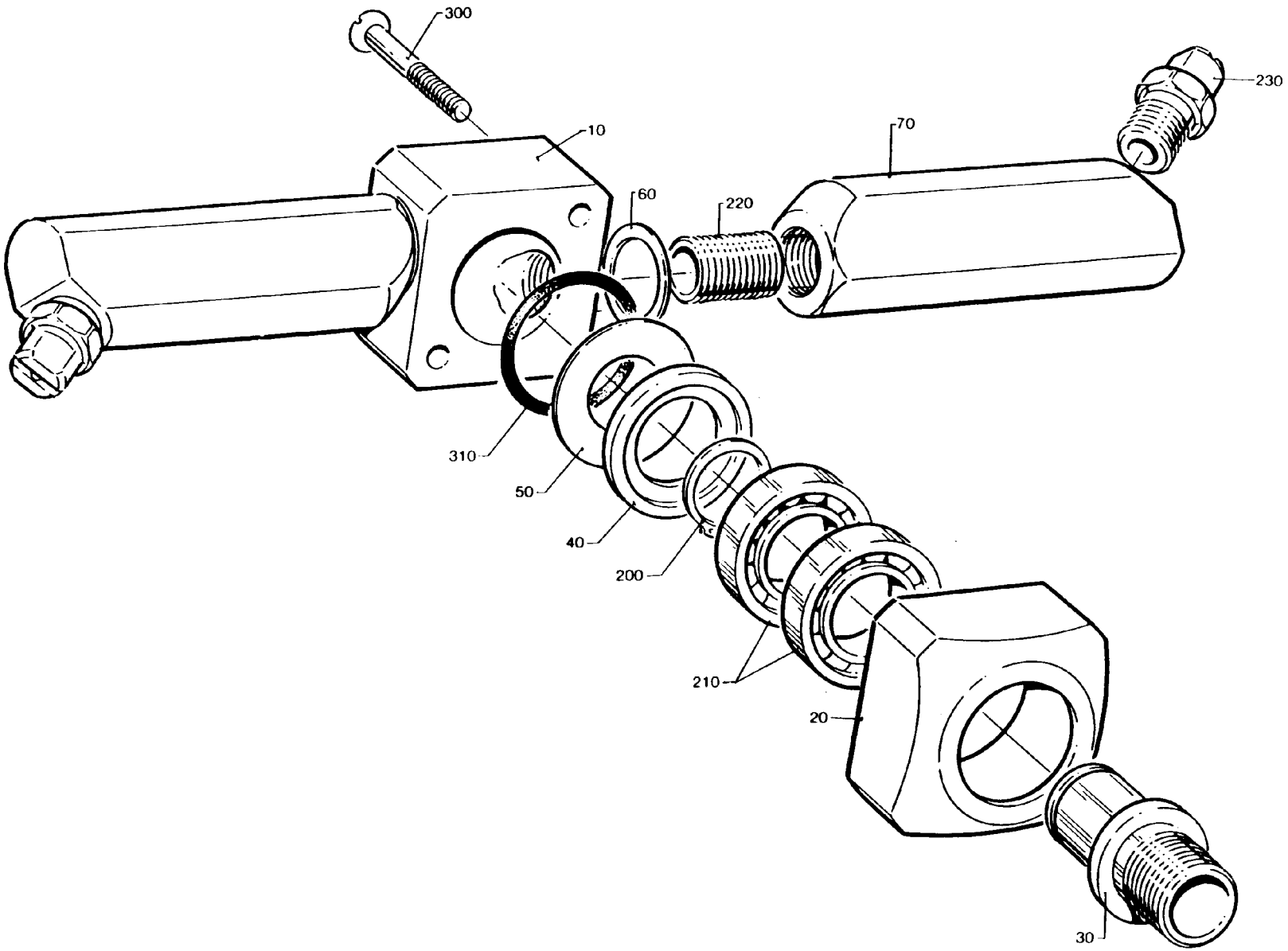

44179801.tif
441798-1
ECN

Pos	Part No	SP	UN	Qty	Description	Page No
-						
010	441792-0000	D		1	HEAD	
020	441793-0000	D		1	BEARING HOUSING	
030	441794-0000	D		1	PIVOT PIN	
040	441795-0000	D		1	WASHER	
050	441796-0000	F		1	SEAL	
060	441797-0000	K		2	SHIM	
070	441799-0000	K		2	ATTACHMENT	
200	90141-0017	K		1	LOCK RING	
210	90214-0092	K		2	BALL BEARING	
220	90330-0101	K		2	NIPPLE	
230	90424-0035	K		2	NOZZLE	
300	312155-0299	-		2	SCREW MF6S 4X30 A4 80	
310	315202-0217	K		1	O-RING 24,2X3	

Pos	Part No	SP	UN	Qty	Description	Page No

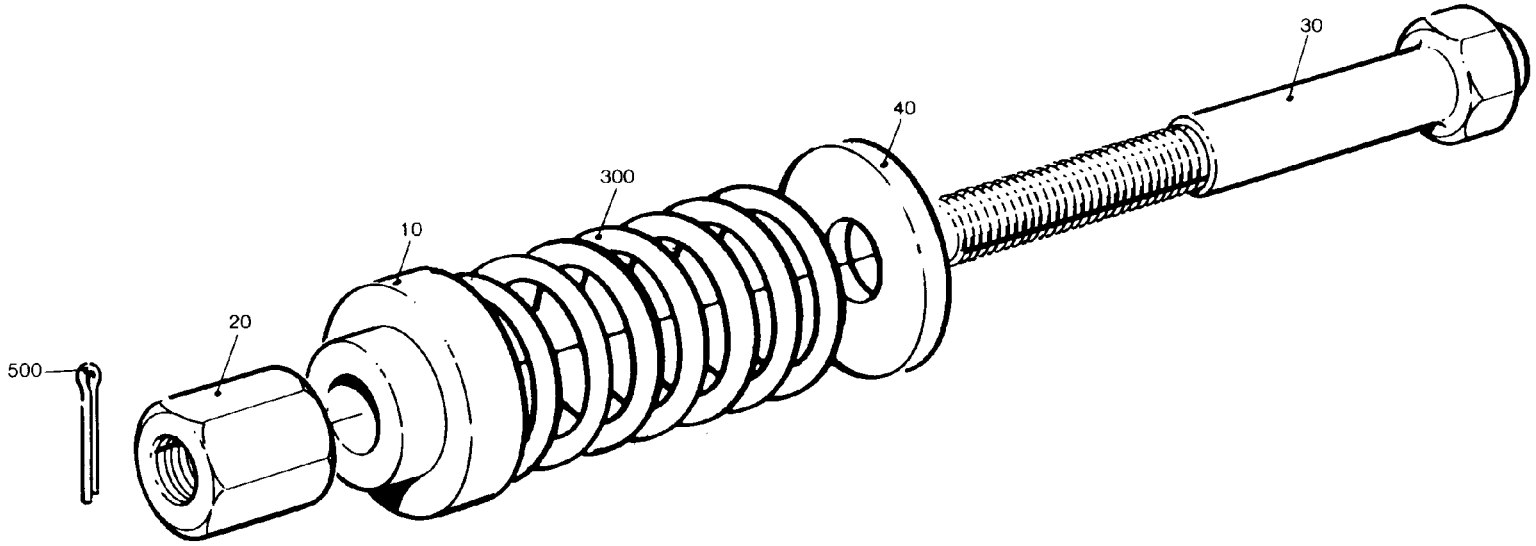

27265203.tif
272652-3
ECN

Pos	Part No	SP	UN	Qty	Description	Page No
-						
010	491731-0000	-		1	WASHER	
020	256190-0000	-		1	NUT	
030	441328-0000	-		1	GUIDE PIN	
040	491732-0000	-		1	WASHER	
300	90335-0096	K		1	SPRING	
500	311411-0152	K		1	SPLIT PIN SP2X16RFR	

Pos	Part No	SP	UN	Qty	Description	Page No

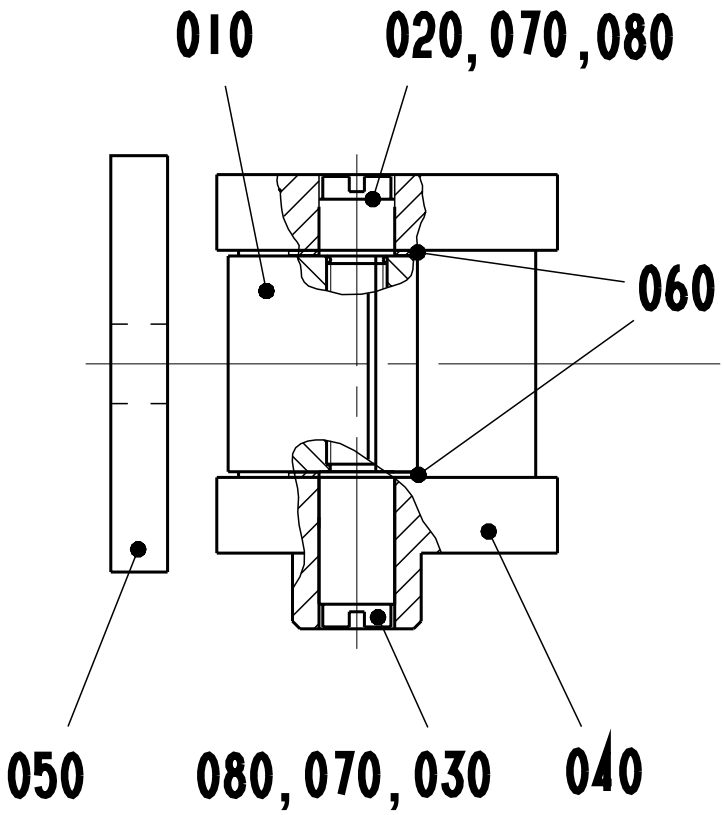
010
020, 070, 080
060
050
080, 070, 030
040

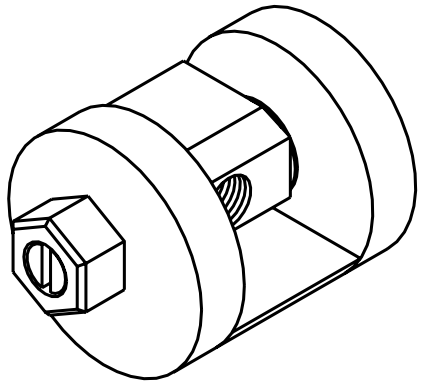

Pos	Part No	SP	UN	Qty	Description	Page No
-						
010	978049-0000	D		1	NUT	
020	978050-0001	D		1	SCREW	
030	978050-0002	D		1	SCREW	
040	978051-0000	D		1	ECCENTRIC	
050	978052-0000	D		1	WASHER	
060	2033-0009	D		2	WASHER	
070	90157-0016	-		x	LOCKING FLUID	
080	90296-0012	-	KG	x	LUBRICANT	

Pos	Part No	SP	UN	Qty	Description	Page No

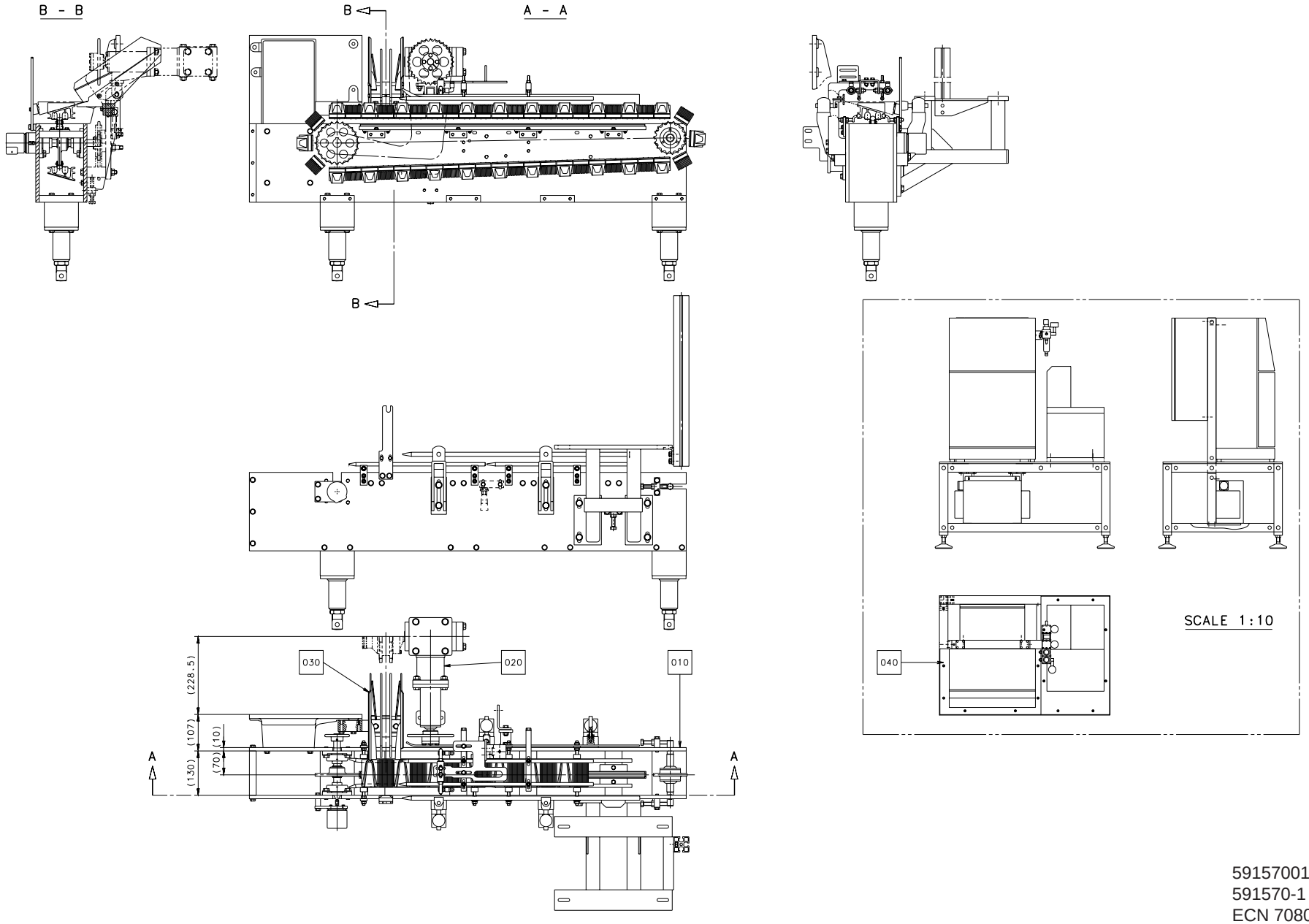

59157001.ECN
591570-1
ECN 70802

Pos	Part No	SP	UN	Qty	Description	Page No
-						
F010	A 591572-0100	-		1	CONVEYING EQUIPMENT	
F020	A 591571-0100	-		1	DRIVE UNIT	
F030	A 591582-0100	-		1	FINGER	
F040	A 591633-0100	-		1	SERVICE TABLE	

Pos	Part No	SP	UN	Qty	Description	Page No

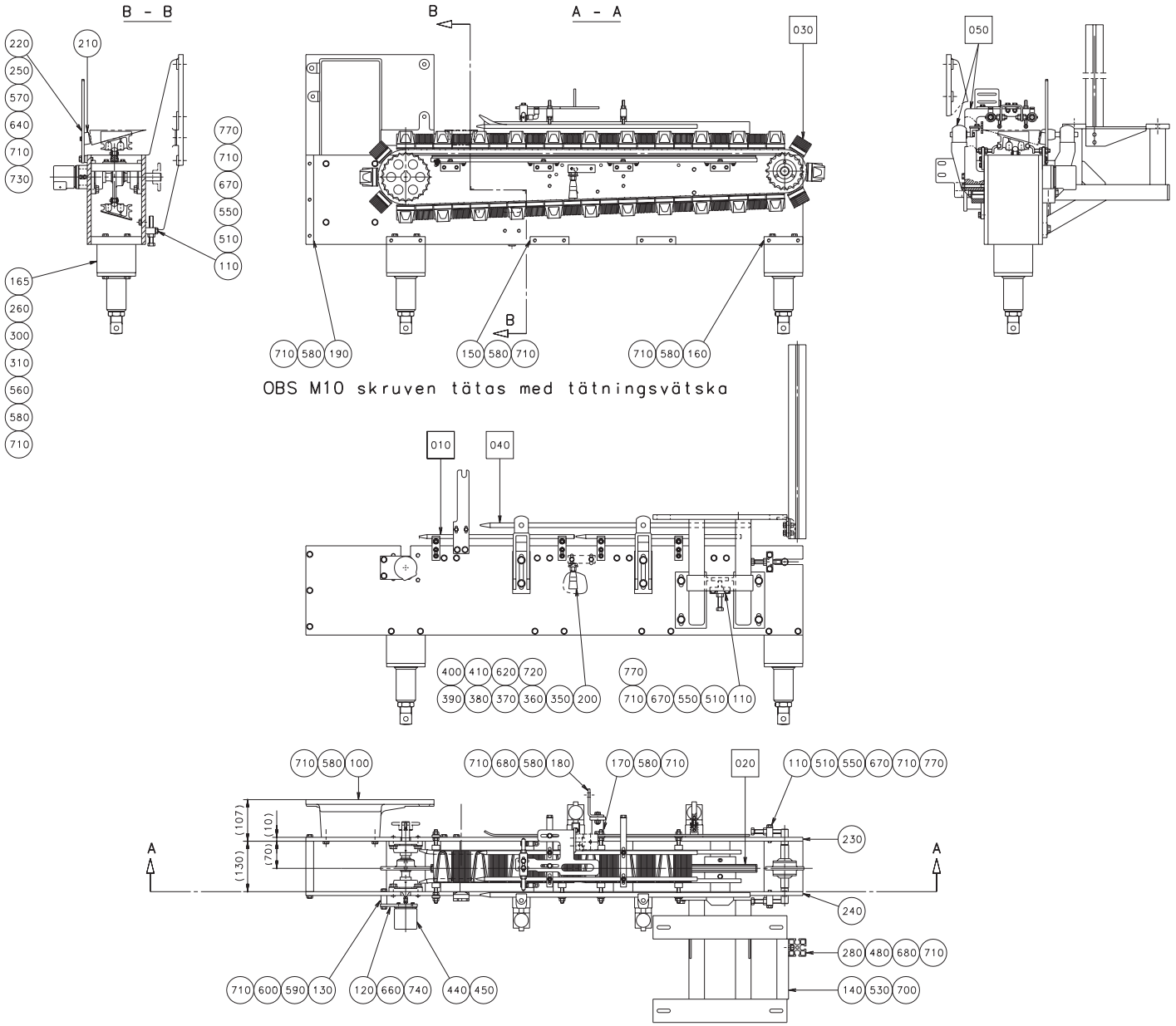
B - B
A - A
B
220
210
250
570
640
710
730
770
710
670
550
510
110
165
260
300
310
560
580
710
030
050
710 580 190
150 580 710
710 580 160
OBS M10 skruven tätas med tätningsvätska
010
040
400 410 620 720
390 380 370 360 350 200
770
710 670 550 510 110
710 580 100
710 680 580 180
170 580 710
020
110 510 550 670 710 770
230
240
280 480 680 710
140 530 700
710 600 590 130
120 660 740
440 450
(107)
(10)
(70)
(130)
A
A

Pos	Part No	SP	UN	Qty	Description	Page No
-						
F010	A 591496-0100	-		1	GUIDE RAIL	
F020	A 591505-0100	-		1	CHAIN GUIDE	
F030	A 594931-0100	-		1	CHAIN FEED CONVEYOR	
F040	A 591574-0100	-		1	SLIDE RAIL	
F050	A 591594-0100	-		1	GUIDE	
100	591466-0000	-		1	CANTILEVER	
110	591477-0000	-		4	LUG	
120	591481-0000	-		1	BRACKET	
130	591482-0000	-		1	SPACER	
140	591515-0000	-		1	CANTILEVER	
150	591516-0000	-		2	SPACER PLATE	
160	591623-0000	-		2	SPACER PLATE	
165	591624-0000	-		2	SPACER PIPE	
170	591628-0000	-		1	STRUT	
180	591629-0000	-		1	HOLDER	
190	591521-0000	-		1	GABLE PART	
200	591522-0000	-		1	PLATE	
210	591527-0000	D		1	BLOCKING PIECE	
220	591638-0000	-		1	HOLDER	
230	591546-0000	-		1	GABLE PLATE RIGHT	
240	591547-0000	-		1	GABLE PLATE LEFT	
250	591558-0000	-		2	SPACER DISC	
260	591625-0000	-		2	NUT	
280	591626-0000	-		1	PROFILE	
300	469095-0000	-		2	HOLDER	
310	469096-0000	-		2	LEG	
350	90092-0048	K		1	OIL BRUSH	
360	90092-0054	K		1	VALVE	
370	90134-0031	K		1	SLEEVE	
380	90134-0042	-		1	SPACER	
390	90134-0054	K		1	CONNECTION	
400	90134-0068	K		1	BANJO CONNECTION	
410	90166-0109	K	M	x	HOSE	
440	90061-0026	K		1	Increment Encoder	
450	90355-0162	F		1	Bellow Coupling	
510	90287-0330	-		4	Screw	
530	312105-0493	-		4	SCREW 4017 M10X25A280	
550	312105-0459	-		8	SCREW O4017 M8X40A280	
560	312105-0457	-		8	SCREW O4017 M8X35A280	
570	312105-0455	-		2	SCREW O4017 M8X30A280	
580	312105-0453	-		46	SCREW O4017 M8X25A280	
590	312105-0451	-		2	SCREW SO4017 8X20A280	
600	312105-0449	-		2	SCREW O4017 M8X16A280	
620	312105-0370	-		2	SCREW O4017 M6X20A280	
640	312105-0329	-		2	SCREW O4017 M5X16A280	
660	312105-0287	-		3	SCREW O4017 M4X8A280	
670	312605-0320	-		4	NUT M6M10RFR	
680	312605-0318	-		4	NUT M6M8RFR	
700	315105-0173	-		4	WASHER BRB10,5X22RFR	
710	315105-0165	-		50	WASHER BRB8,4X16RFR	
720	315105-0153	-		2	WASHER BRB6,4X12RFR	
730	315105-0146	-		2	WASHER BRB5,3X10RFR	
740	315105-0136	-		3	WASHER BRB4,3X8RFR	
770	311112-0262	-		8	SLOTTED TURP 4X32 RFR	

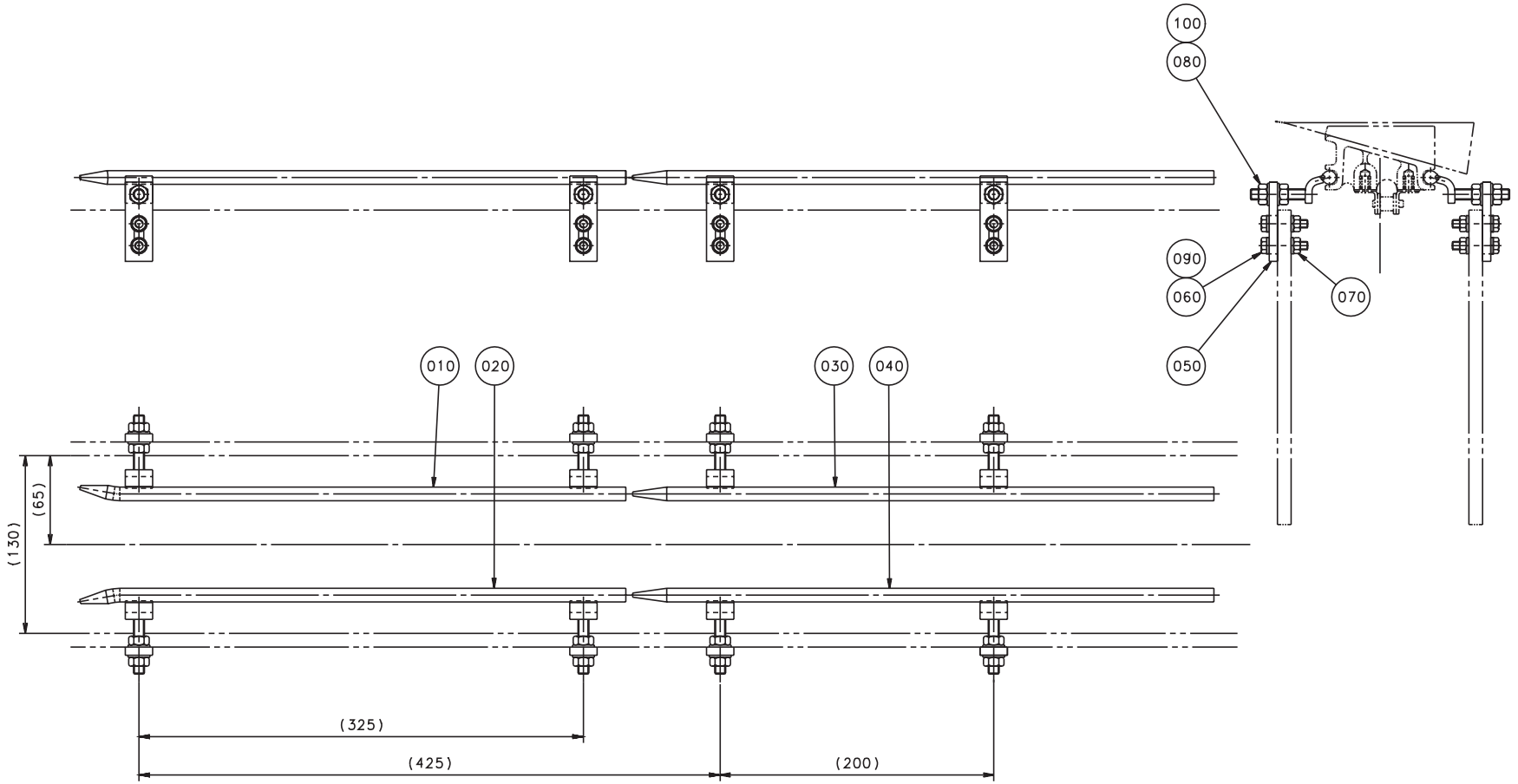
100
080
090
060
050
070
010
020
030
040
(130)
(65)
(325)
(425)
(200)

Pos	Part No	SP	UN	Qty	Description	Page No
-						
010	594924-0000	D		1	GUIDE RIGHT	
020	594925-0000	D		1	GUIDE LEFT	
030	594926-0000	D		1	GUIDE RIGHT	
040	594927-0000	D		1	GUIDE LEFT	
050	594928-0000	-		8	BRACKET	
060	312105-0374	-		16	SCREW O4017 M6X30A280	
070	312605-0316	-		16	NUT M6M6RFR	
080	312605-0318	-		16	NUT M6M8RFR	
090	315105-0153	-		32	WASHER BRB6,4X12RFR	
100	315105-0165	-		16	WASHER BRB8,4X16RFR	

Pos	Part No	SP	UN	Qty	Description	Page No

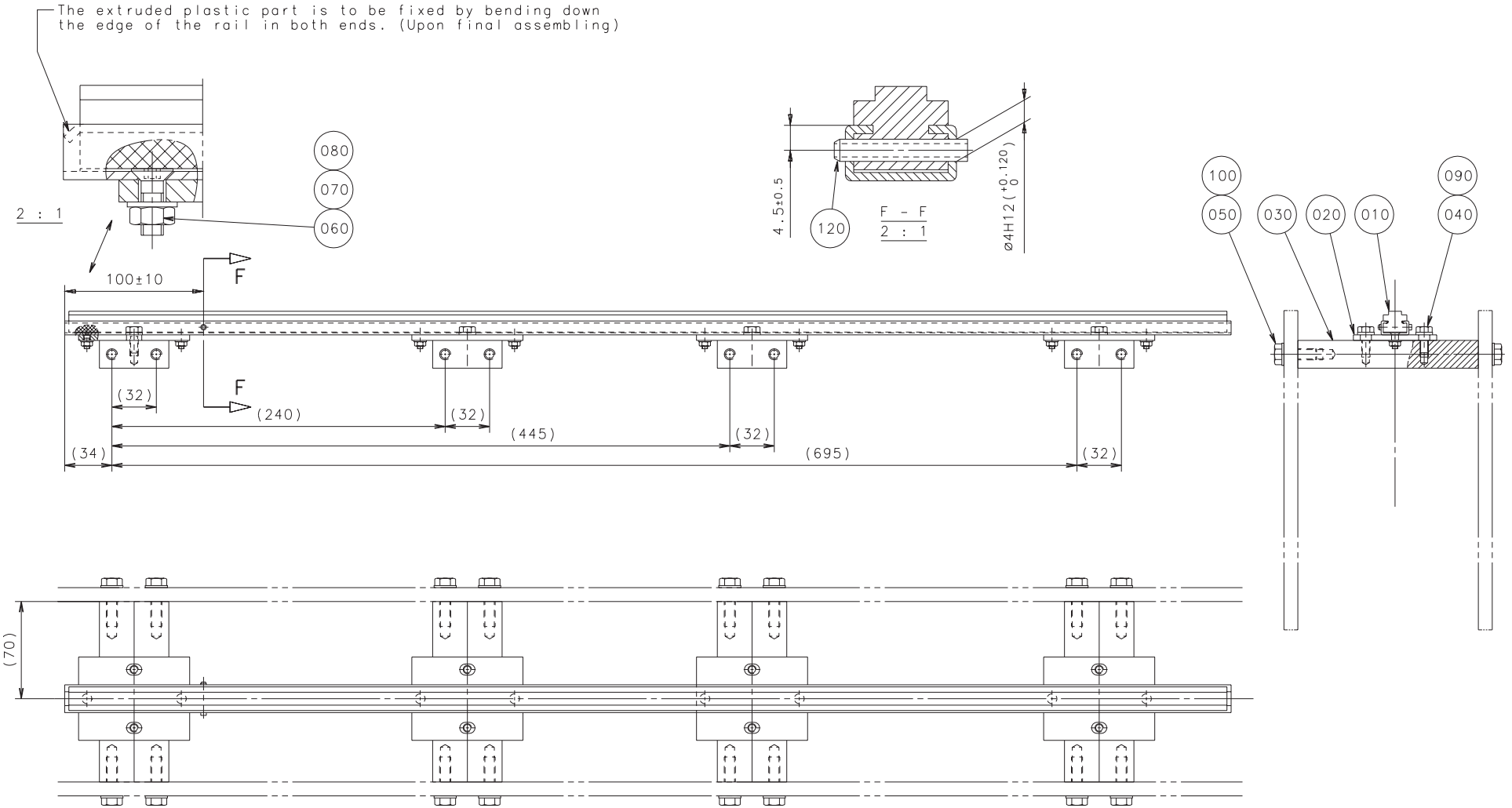

59150501.EPS
591505-1
ECN 70802

Pos	Part No	SP	UN	Qty	Description	Page No
-						
010	591506-0000	K		1	SLIDING STRIP	
020	591507-0000	-		4	FASTENING PLATE	
030	591508-0000	-		4	SPACER PART	
040	312105-0368	-		8	SCREW O4017 M6X16A280	
050	312105-0453	-		16	SCREW O4017 M8X25A280	
060	312155-0291	-		8	SCREW MF6S4X12RFR	
070	312605-0312	-		8	NUT M6M4RFR	
080	315105-0136	-		8	WASHER BRB4,3X8RFR	
090	315105-0153	-		8	WASHER BRB6,4X12RFR	
100	315105-0165	-		16	WASHER BRB8,4X16RFR	
120	311112-0258	-		1	SLOTTED TURP 4X24 RFR	

Pos	Part No	SP	UN	Qty	Description	Page No

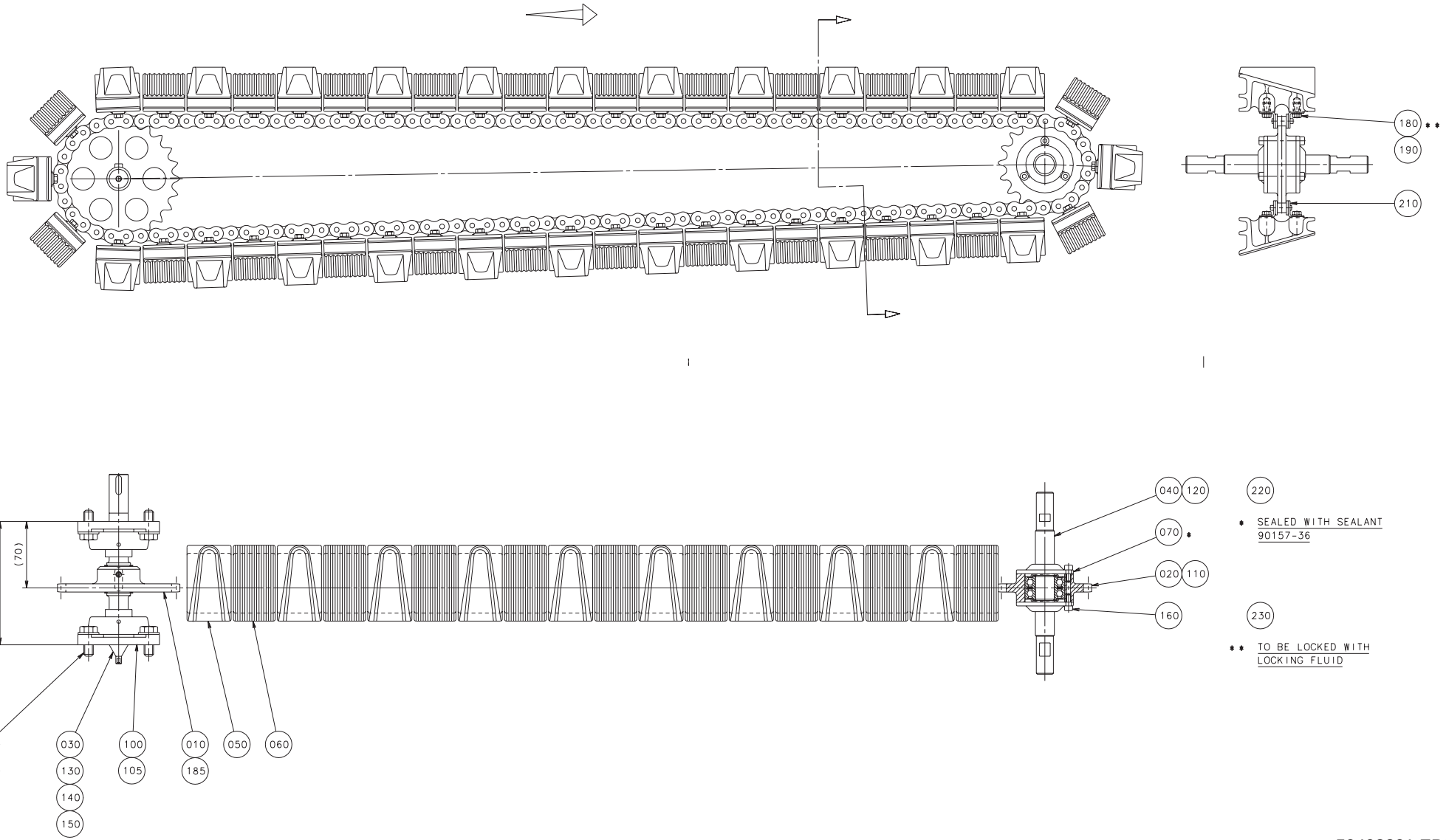

59493201.EPS
594932-1
ECN 70994

Pos	Part No	SP	UN	Qty	Description	Page No
-						
010	591413-0000	K		1	SPROCKET	
020	591414-0000	K		1	SPROCKET	
030	591475-0000	K		1	SHAFT	
040	591476-0000	D		1	SHAFT	
050	591478-0000	K		24	SIDE STEERING	
060	591479-0000	K		24	BOTTOM GUIDE	
070	591470-0000	K		2	SEAL COVER	
100	90345-0013	K		2	BEARING	
110	90214-0095	K		2	BALL BEARING	
120	315751-0116	K		2	CIRCLIP SGA20 RFR	
130	315751-0119	K		2	CIRCLIP SGA25 RFR	
140	315705-0232	-		1	FLAT WEDGE	
150	315705-0265	-		1	FLAT WEDGE	
160	312115-0327	-		6	SCREW O4762 M5X12A280	
170	312105-0493	-		8	SCREW 4017 M10X25A280	
180	312105-0325	-		96	SCREW M6S5X10 A2 80	
185	312318-0362	-		1	STOP SCREW SK6SS6X8RFR	
190	315105-0146	-		96	WASHER BRB5,3X10RFR	
200	315105-0173	-		8	WASHER BRB10,5X22RFR	
210	90288-0085	K		1	Chain	
220	90157-0036	-		1	FLANGE SEALING COMPOUND	
230	90157-0016	-	ML	x	LOCKING FLUID	

Pos	Part No	SP	UN	Qty	Description	Page No

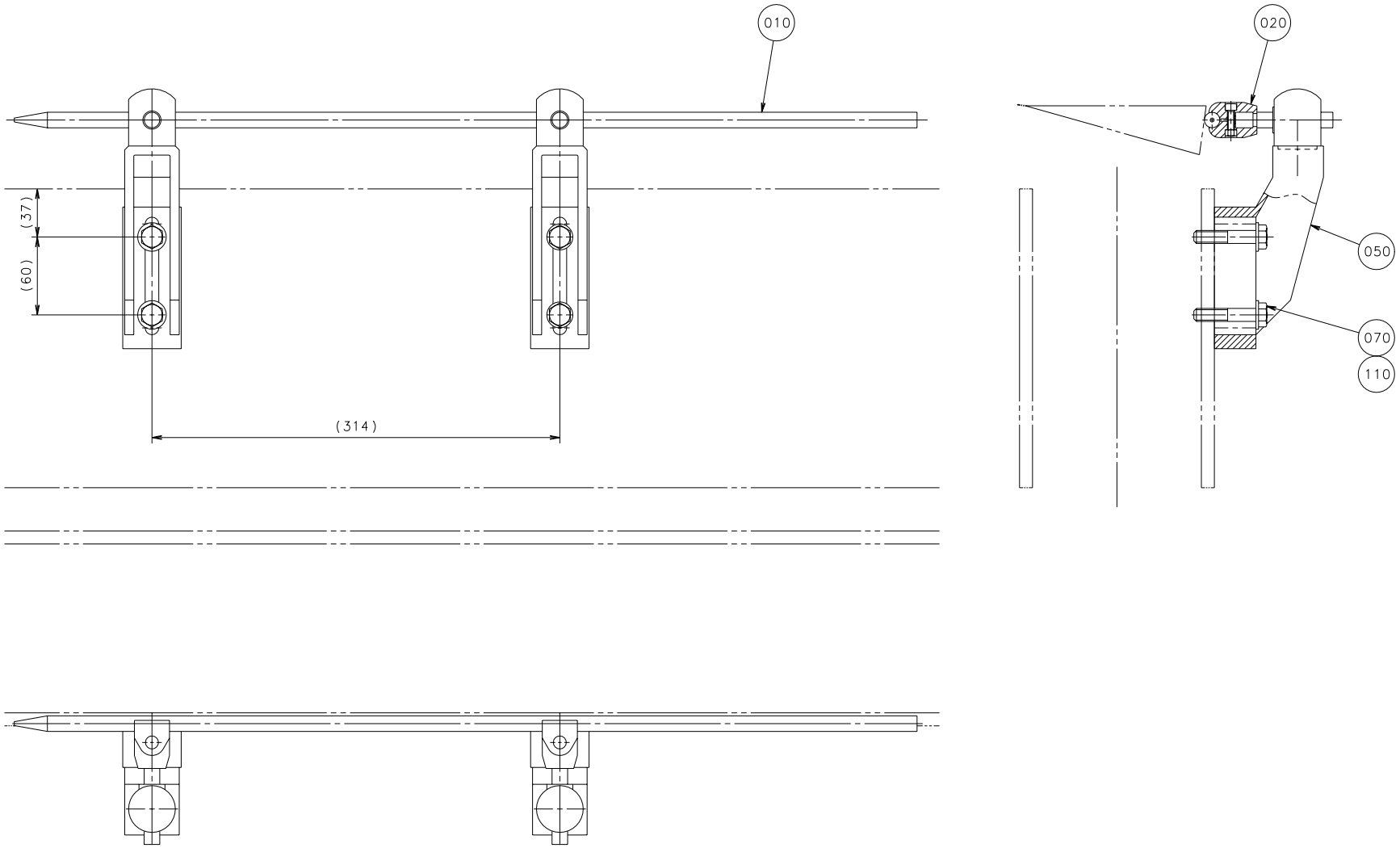

59157401.EPS
591574-1
ECN 70802

Pos	Part No	SP	UN	Qty	Description	Page No
-						
010	591549-0000	D		1	GUIDE ROD	
020	591580-0000	-		2	PIN	
050	90236-0044	D		2	Guide Holder	
070	312105-0501	-		4	SCREW 4017 M10X50A280	
110	315105-0173	-		4	WASHER BRB10,5X22RFR	

Pos	Part No	SP	UN	Qty	Description	Page No

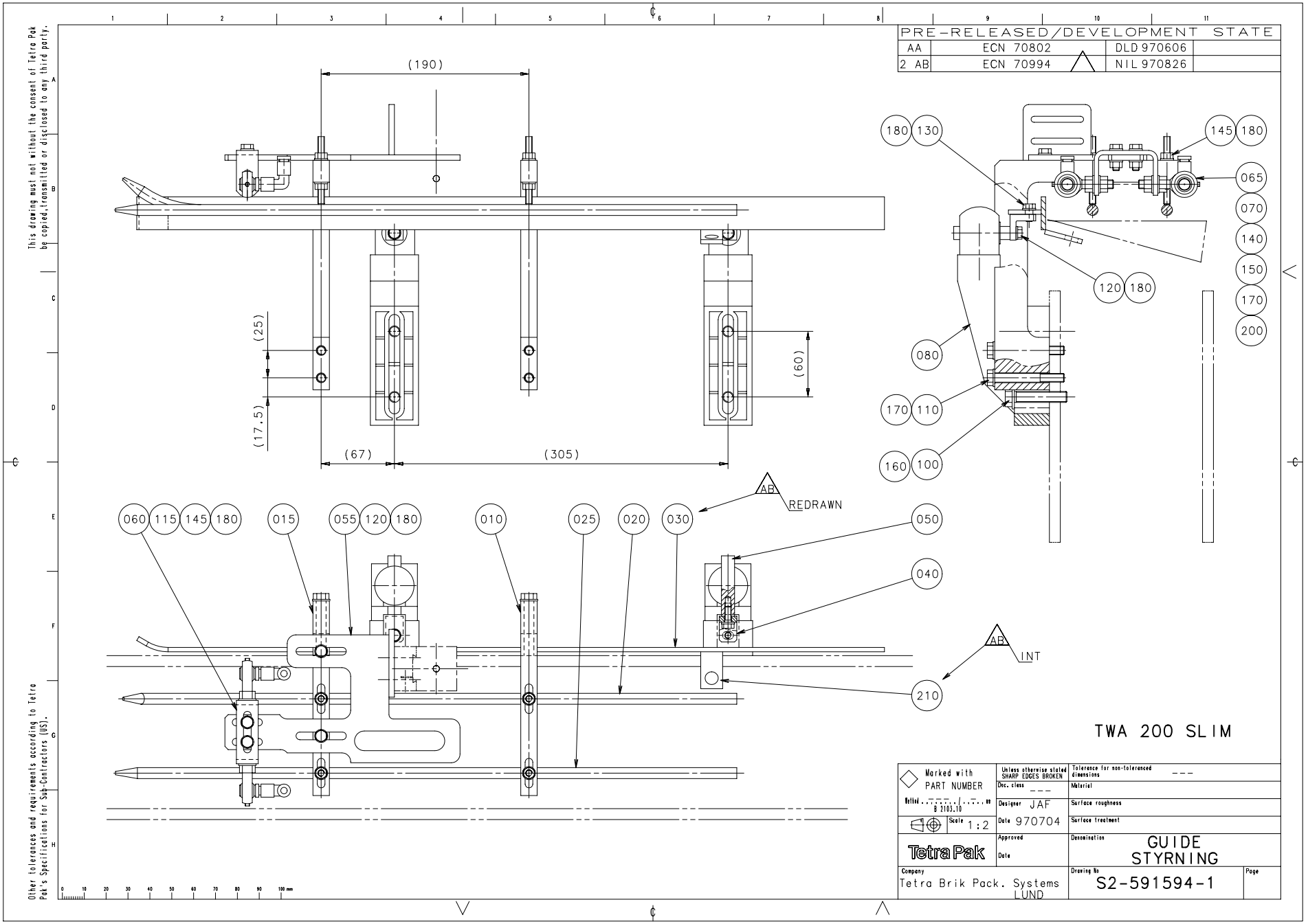
PRE-RELEASED/DEVELOPMENT STATE
AA ECN 70802 DLD 970606
2 AB ECN 70994 NIL 970826
(190)
(25)
(17.5)
(67)
(305)
(60)
180 130
145 180
065
070
140
150
120 180
170
200
080
170 110
160 100
060 115 145 180
015
055 120 180
010
025
020
030
AB REDRAWN
050
040
AB INT
210
TWA 200 SLIM
This drawing must not without the consent of Tetra Pak be copied, transmitted or disclosed to any third party.
Other tolerances and requirements according to Tetra Pak's Specifications for Sub-Contractors (US).
Marked with PART NUMBER
Unless otherwise stated SHARP EDGES BROKEN
Tolerance for non-toleranced dimensions ---
Doc. class ---
Material
Designer JAF
Surface roughness
Date 970704
Surface treatment
Scale 1:2
Approved
Date
Denomination GUIDE STYRNING
Tetra Pak
Company Tetra Brik Pack. Systems LUND
Drawing No S2-591594-1
Page

Pos	Part No	SP	UN	Qty	Description	Page No
-						
010	591589-0000	D		1	ANGLE BRACKET	
015	591613-0000	D		1	ANGLE BRACKET	
020	591590-0000	D		1	GUIDE ROD	
025	591530-0000	D		1	GUIDE ROD	
030	591591-0000	D		1	STEERING RAIL	
040	591592-0000	-		2	BRACKET	
050	591593-0000	-		2	PIN	
055	591614-0000	D		1	HOLDER	
060	591615-0000	-		1	BOW CLAMP	
065	591617-0000	-		2	LINK HEAD	
070	591605-0000	K		2	DOWEL	
080	90236-0044	D		2	Guide Holder	
100	312105-0501	-		4	SCREW 4017 M10X50A280	
110	312105-0464	-		4	SCREW O4014 M8X65A280	
115	312105-0370	-		2	SCREW O4017 M6X20A280	
120	312105-0368	-		4	SCREW O4017 M6X16A280	
130	312105-0366	-		2	SCREW O4017 M6X12A280	
140	312605-0318	-		4	NUT M6M8RFR	
145	312605-0316	-		10	NUT M6M6RFR	
150	312318-0285	-		2	STOP SCREW SK6SS4X6RFR	
160	315105-0173	-		4	WASHER BRB10,5X22RFR	
170	315105-0165	-		8	WASHER BRB8,4X16RFR	
180	315105-0153	-		18	WASHER BRB6,4X12RFR	
200	90055-0113	-		2	ELBOW PIPE JOINT	

Pos	Part No	SP	UN	Qty	Description	Page No

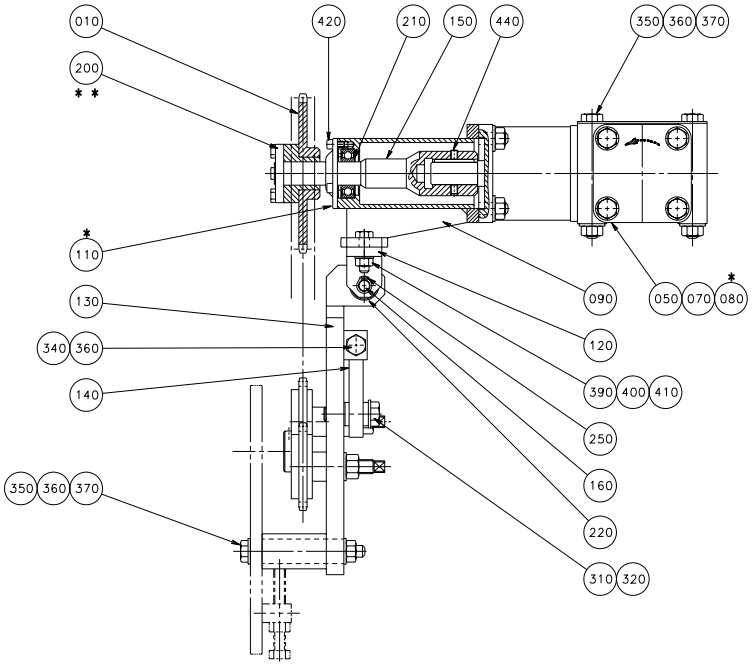

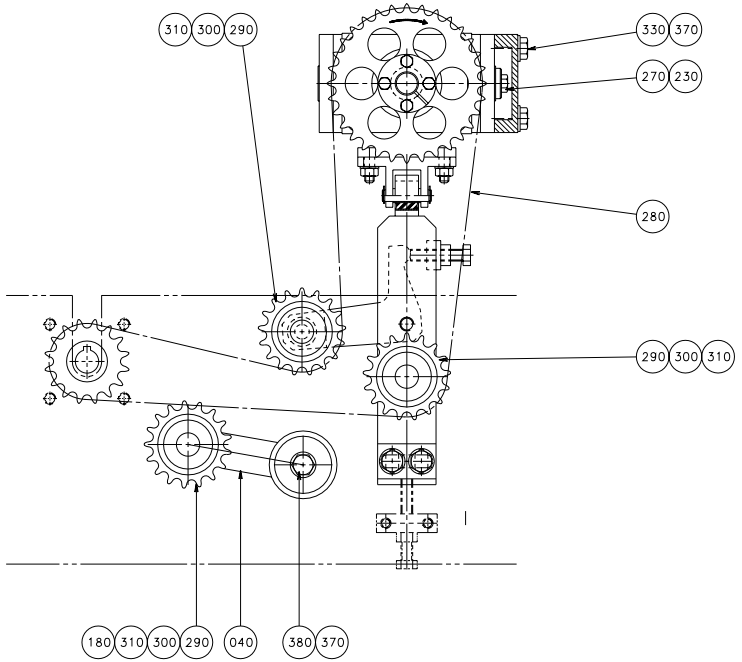

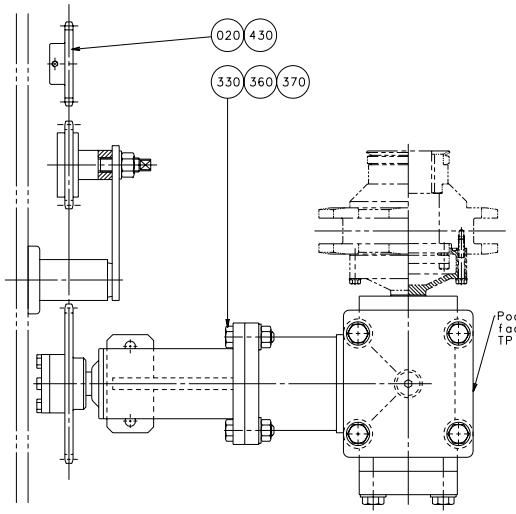

Pockets and irregularities in castings surface, faced to cover plate, filled with silicone TP no. 90157-22 before mounting of cover plate

460

* SEALED WITH SEALANT 90157-36

** TIGHTENED UPON FINAL ASSEMBLY

59157101.EPS
591571-1
ECN 70802

Pos	Part No	SP	UN	Qty	Description	Page No
-						
010	591411-0000	K		1	SPROCKET	
020	591412-0000	K		1	SPROCKET	
040	591416-0000	D		1	CLAMPING ELEMENT	
050	591447-0000	K		1	BEVEL GEAR	
070	591449-0000	-		1	COVER PLATE	
080	591450-0000	-		1	LID	
090	591468-0000	-		1	HOUSE	
110	591470-0000	K		1	SEAL COVER	
120	591471-0000	-		1	FORK	
130	591472-0000	-		1	CANTILEVER	
140	591473-0000	-		1	PIVOT ARM	
150	591531-0000	K		1	SHAFT	
160	591502-0000	-		1	DOWEL	
180	591673-0000	-		1	SLEEVE	
200	90208-0078	D		1	CLAMPING ELEMENT	
210	90214-0095	K		1	BALL BEARING	
220	90347-0012	D		1	DAMPER	
230	315125-0165	-		1	WASHER SB 8,4X26X5 RFR	
250	90141-0016	K		2	LOCK RING	
270	90287-0329	-		1	Screw	
280	90288-0086	F		1	Chain	
290	90344-0077	K		3	Tension Sprocket	
300	312605-0322	-		3	NUT M6M12RFR	
310	315105-0178	-		4	WASHER BRB13X24RFR	
320	312105-0540	-		1	SCREW 4017 M12X40A280	
330	312105-0497	-		8	SCREW 4017 M10X35A280	
340	312105-0500	-		1	SCREW 4017 M10X45A280	
350	312105-0511	-		6	SCREW 014 M10X100A280	
360	312605-0320	-		11	NUT M6M10RFR	
370	315105-0173	-		17	WASHER BRB10,5X22RFR	
380	312105-0491	-		1	SCREW 4017 M10X20A280	
390	312105-0455	-		2	SCREW O4017 M8X30A280	
400	312605-0318	-		2	NUT M6M8RFR	
410	315105-0165	-		2	WASHER BRB8,4X16RFR	
420	312115-0327	-		3	SCREW O4762 M5X12A280	
430	312318-0323	-		1	STOP SCREW SK6SS5X8RFR	
440	312318-0362	-		2	STOP SCREW SK6SS6X8RFR	
460	90157-0036	-		1	FLANGE SEALING COMPOUND	

Pos	Part No	SP	UN	Qty	Description	Page No

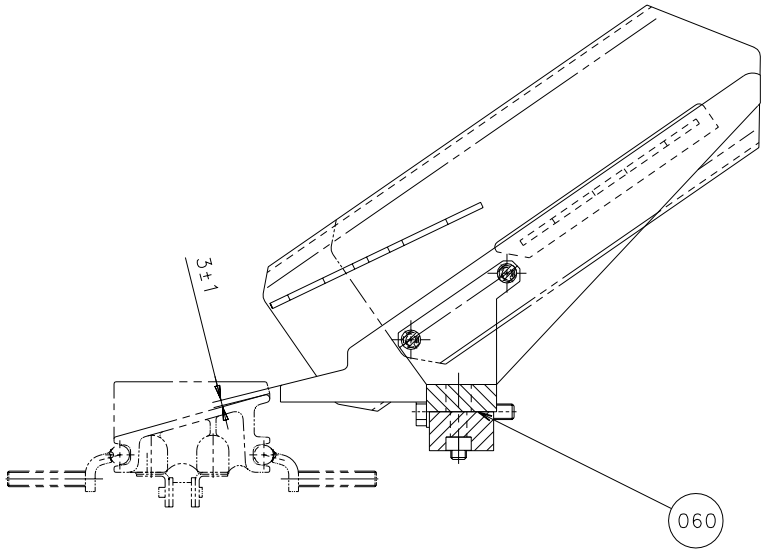
3±1
060

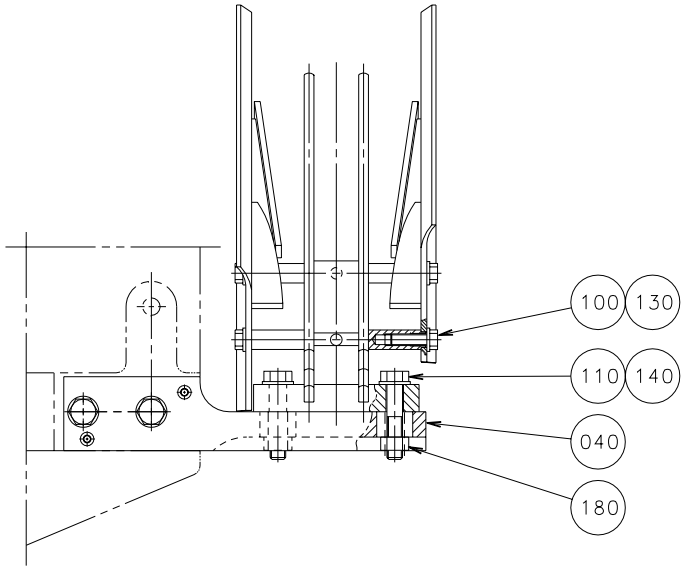
100
130
110
140
040
180

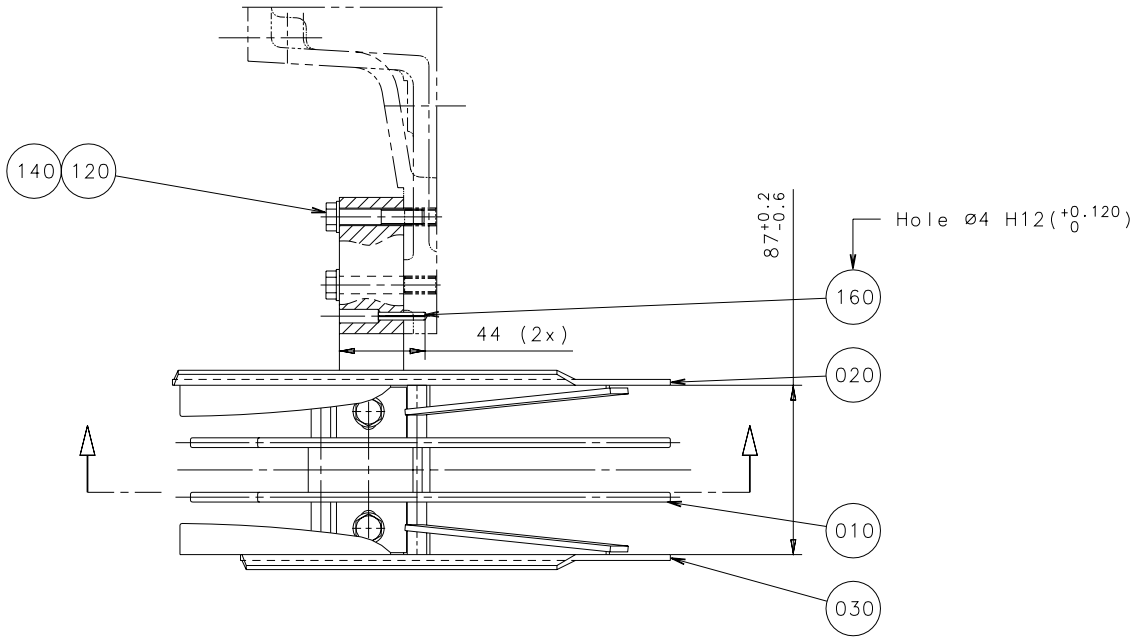
140
120
87+0.2 -0.6
Hole Ø4 H12(+0.120 0)
160
44 (2x)
020
010
030

Pos	Part No	SP	UN	Qty	Description	Page No
-						
010	591583-0000	D		1	FINGER	
020	591584-0000	D		1	SIDE PLATE LEFT	
030	591585-0000	D		1	SIDE PLATE RIGHT	
040	591586-0000	-		1	HOLDER	
060	594933-0000	-		3	SHIM	
100	312105-0370	-		4	SCREW O4017 M6X20A280	
110	312105-0459	-		2	SCREW O4017 M8X40A280	
120	312105-0460	-		2	SCREW O4017 M8X45A280	
130	315105-0153	-		4	WASHER BRB6,4X12RFR	
140	315105-0165	-		4	WASHER BRB8,4X16RFR	
160	311112-0258	-		2	SLOTTED TURP 4X24 RFR	
180	312605-0318	-		2	NUT M6M8RFR	

Pos	Part No	SP	UN	Qty	Description	Page No

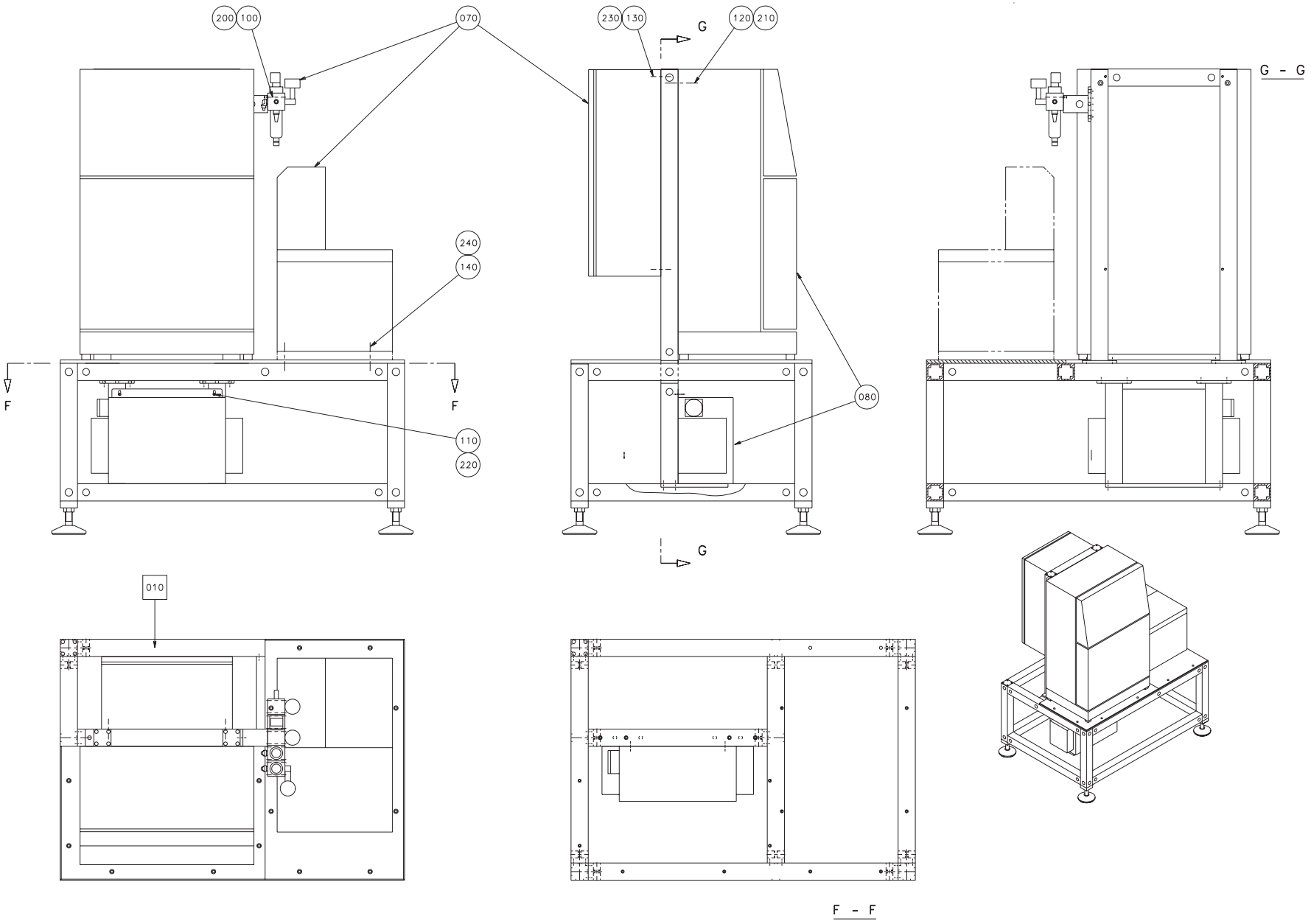

59163301.EPS
591633-1
ECN 70802

Pos	Part No	SP	UN	Qty	Description	Page No
-						
F010	A 594929-0100	-		1	TABLE	
100	312111-0307	-		2	SCREW	
110	312105-0327	-		2	SCREW O4017 M5X12A280	
120	312105-0329	-		2	SCREW O4017 M5X16A280	
130	312115-0370	-		4	SCREW O4762 M6X20A280	
140	312105-0449	-		4	SCREW O4017 M8X16A280	
200	315105-0136	-		2	WASHER BRB4,3X8RFR	
210	315105-0146	-		2	WASHER BRB5,3X10RFR	
220	315105-0146	-		2	WASHER BRB5,3X10RFR	
220	315125-0146	-		2	WASHER	
230	315105-0153	-		4	WASHER BRB6,4X12RFR	

Pos	Part No	SP	UN	Qty	Description	Page No

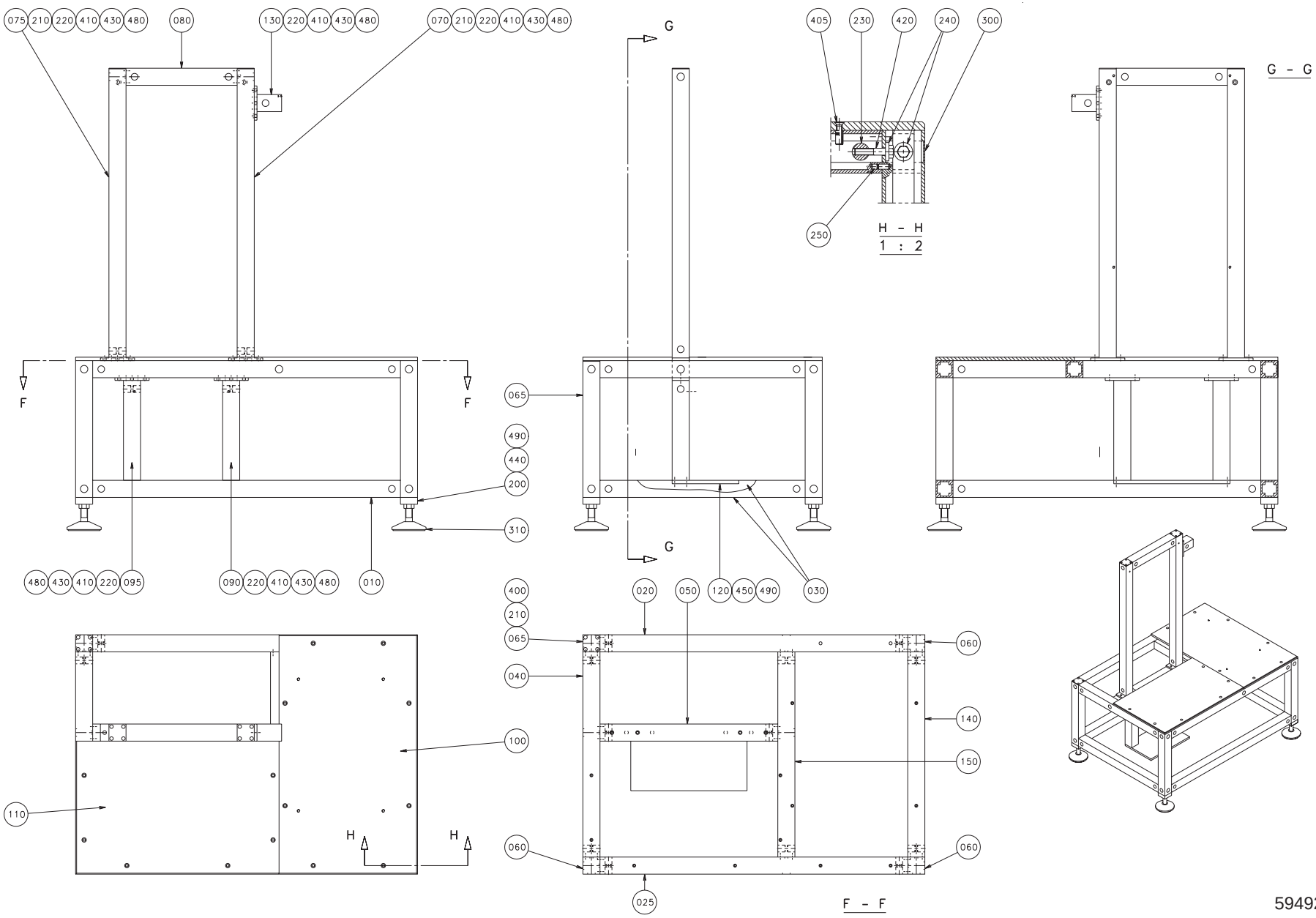

59492901.EPS
594929-1
ECN 70802

Pos	Part No	SP	UN	Qty	Description	Page No
-						
010	594905-0000	-		2	PROFILE	
020	594906-0000	-		1	PROFILE	
025	594907-0000	-		1	PROFILE	
030	594908-0000	-		2	PROFILE	
040	594909-0000	-		1	PROFILE	
050	594910-0000	-		1	PROFILE	
060	594911-0000	-		3	PROFILE	
065	594912-0000	-		1	PROFILE	
070	594913-0000	-		1	PROFILE	
075	594914-0000	-		1	PROFILE	
080	594915-0000	-		1	PROFILE	
090	594916-0000	-		1	PROFILE	
095	594917-0000	-		1	PROFILE	
100	594918-0000	-		1	PLATE	
110	594919-0000	-		1	PLATE	
120	594920-0000	-		1	PLATE	
130	594921-0000	-		1	PROFILE	
140	594922-0000	-		1	PROFILE	
150	594923-0000	-		1	PROFILE	
200	556601-0000	-		4	BRACKET	
210	556604-0000	-		3	COVER PLATE	
220	556624-0000	-		5	FRAME BRACKET	
230	486268-0000	-		27	NUT	
240	548599-0000	-		22	WASHER	
250	1065410-0000	-		108	SLOTTED PIN	
300	90261-0060	-		20	PLASTIC PLUG	
310	90347-0142	-		4	FOOT	
400	312155-0323	-		12	SCREW MF6S5X8RFR	
405	312155-0372	-		14	SCREW MF6S6X25RFR	
410	312155-0459	-		5	SCREW MF6S8X40RFR	
420	312105-0459	-		22	SCREW O4017 M8X40A280	
430	312105-0453	-		10	SCREW O4017 M8X25A280	
440	312105-0376	-		16	SCREW O4017 M6X35A280	
450	312105-0371	-		4	SCREW M6S6X22RFR	
480	315105-0165	-		10	WASHER BRB8,4X16RFR	
490	315105-0153	-		20	WASHER BRB6,4X12RFR	

Pos	Part No	SP	UN	Qty	Description	Page No

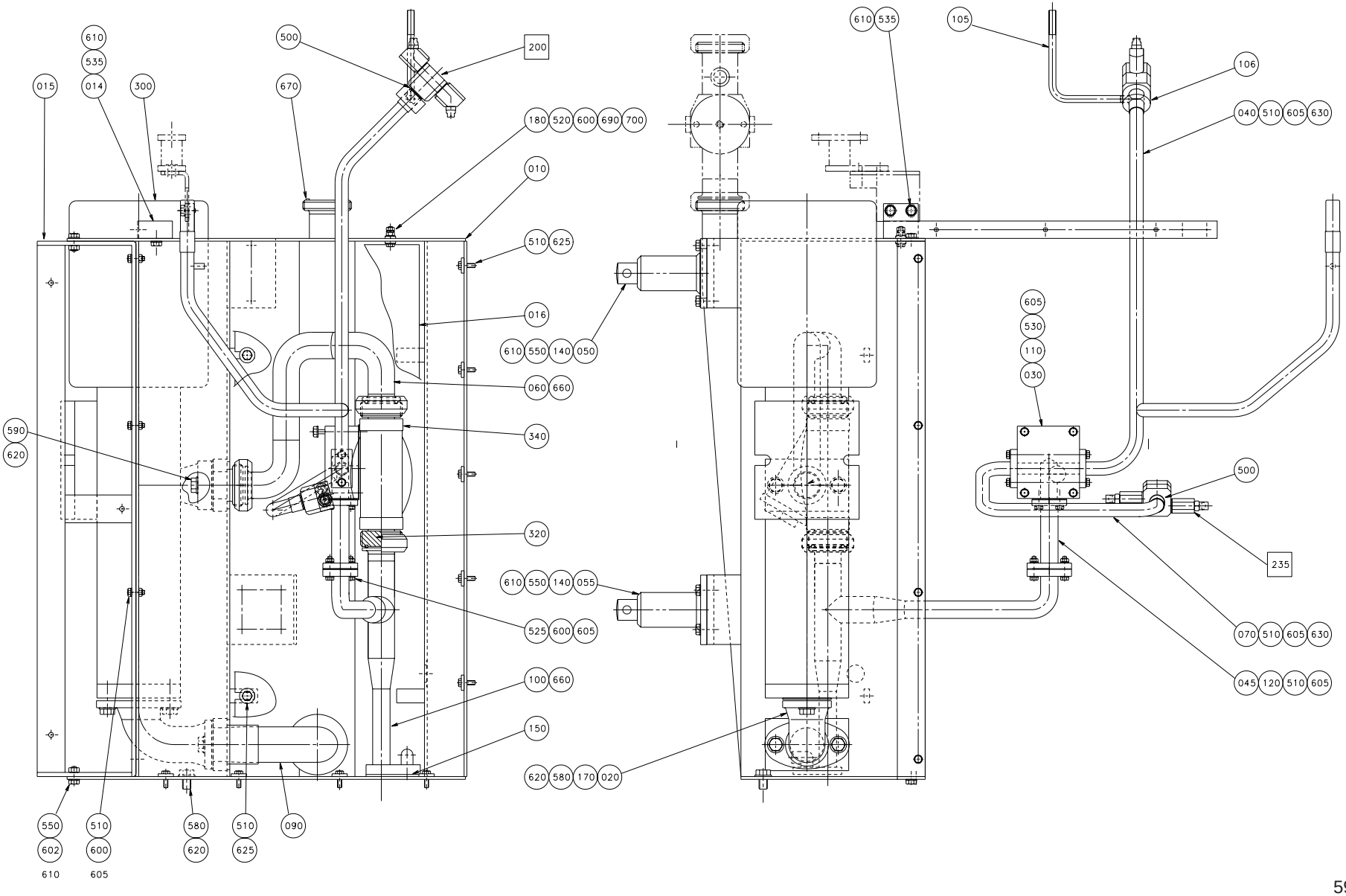
610
535
015
014
300
500
670
200
180 520 600 690 700
010
510 625
016
610 550 140 050
060 660
340
590
620
320
610 550 140 055
525 600 605
100 660
150
620 580 170 020
550 602 610
510 600 605
580 620
510 625
090
610 535
105
106
040 510 605 630
605
530
110
030
500
235
070 510 605 630
045 120 510 605

Pos	Part No	SP	UN	Qty	Description	Page No
-						
F200	A 591674-0100	-		1	ROTOR	
F235	A 441811-0100	-		1	ROTOR	
010	591487-0000	D		1	CLEANING BOX	
014	591492-0000	D		1	PILLAR	
015	591493-0000	D		1	FRAME	
016	591494-0000	D		1	SEPARATION INSERT	
020	751162-0000	-		1	INLET PIPE	
030	591642-0000	D		1	CONNECTION BLOCK	
040	591636-0000	D		1	JUNCTION PIPE	
045	591489-0000	D		1	EXTENSION PIPE	
050	591491-0000	D		1	HOLDER	
055	469095-0000	-		1	HOLDER	
060	591627-0000	D		1	PIPE	
070	591641-0000	D		1	PIPE	
090	591575-0000	D		1	PIPE	
100	456293-0000	-		1	PIPE	
105	591639-0000	D		1	ANGLE BAR	
106	591640-0000	D		1	PIPE HOLDER	
110	456395-0000	K		1	GASKET	
120	456396-0000	K		2	GASKET	
140	469096-0000	-		2	LEG	
150	295417-0000	K		1	GASKET	
170	751017-0000	K		3	GASKET	
180	295434-0000	-		2	BUSHING	
300	B 90321-0015	D		1	PUMP	
320	90217-0041	-		2	NIPPLE	
340	B 90415-0022	-		1	FILTER	
500	315237-0111	-		2	SEAL RING 3/8"	
510	312105-0370	-		20	SCREW O4017 M6X20A280	
520	312105-0372	-		1	SCREW O4017 M6X25A280	
525	312105-0374	-		2	SCREW O4017 M6X30A280	
530	312105-0384	-		4	SCREW O4014 M6X70A280	
535	312105-0449	-		4	SCREW O4017 M8X16A280	
550	312105-0451	-		8	SCREW SO4017 8X20A280	
580	312105-0532	-		5	SCREW 4017 M12X20A280	
590	312105-0538	-		2	SCREW 4017 M12X35A280	
600	312605-0316	-		7	NUT M6M6RFR	
602	312605-0318	-		2	NUT M6M8RFR	
605	315105-0153	-		15	WASHER BRB6,4X12RFR	
610	315105-0165	-		8	WASHER BRB8,4X16RFR	
620	315105-0178	-		7	WASHER BRB13X24RFR	
625	315121-0153	-		11	WASHER TBRSB6,4X22FZB	
630	315202-0215	-		2	O-RING 19,2X3	
660	315250-0103	-		3	GASKET 48/38	
670	315250-0104	-		1	GASKET 61/51	
690	353101-0123	K		1	CABLE SHOE	
700	353101-0126	K		1	CABLE SHOE	
90321-0015						
	90321-0466	K		1	SPARE PART KIT	
90321-0015						
	90321-0481	K		1	GASKET	
90415-0022						
	90415-0320	K		1	FILTER INSERT	

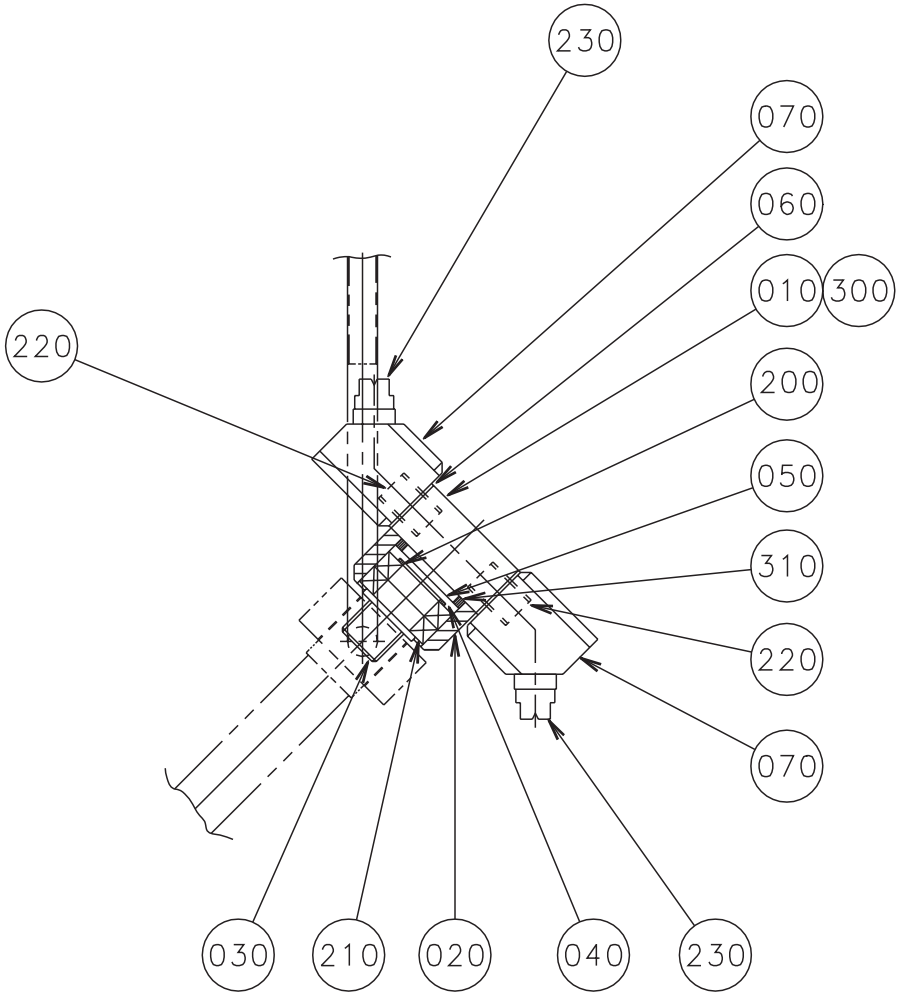

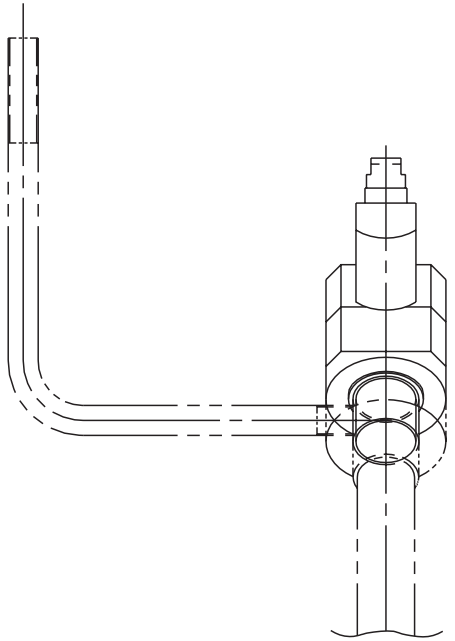

59167401.EPS
591674-1
ECN 70805

Pos	Part No	SP	UN	Qty	Description	Page No
-						
010	441792-0000	D		1	HEAD	
020	441793-0000	D		1	BEARING HOUSING	
030	441794-0000	D		1	PIVOT PIN	
040	441795-0000	D		1	WASHER	
050	441796-0000	F		1	SEAL	
060	441797-0000	K		2	SHIM	
070	591637-0000	K		2	ATTACHMENT	
200	90141-0017	K		1	LOCK RING	
210	90214-0092	K		2	BALL BEARING	
220	90330-0101	K		2	NIPPLE	
230	90424-0035	K		2	NOZZLE	
300	312155-0299	-		2	SCREW MF6S 4X30 A4 80	
310	315202-0217	K		1	O-RING 24,2X3	

Pos	Part No	SP	UN	Qty	Description	Page No

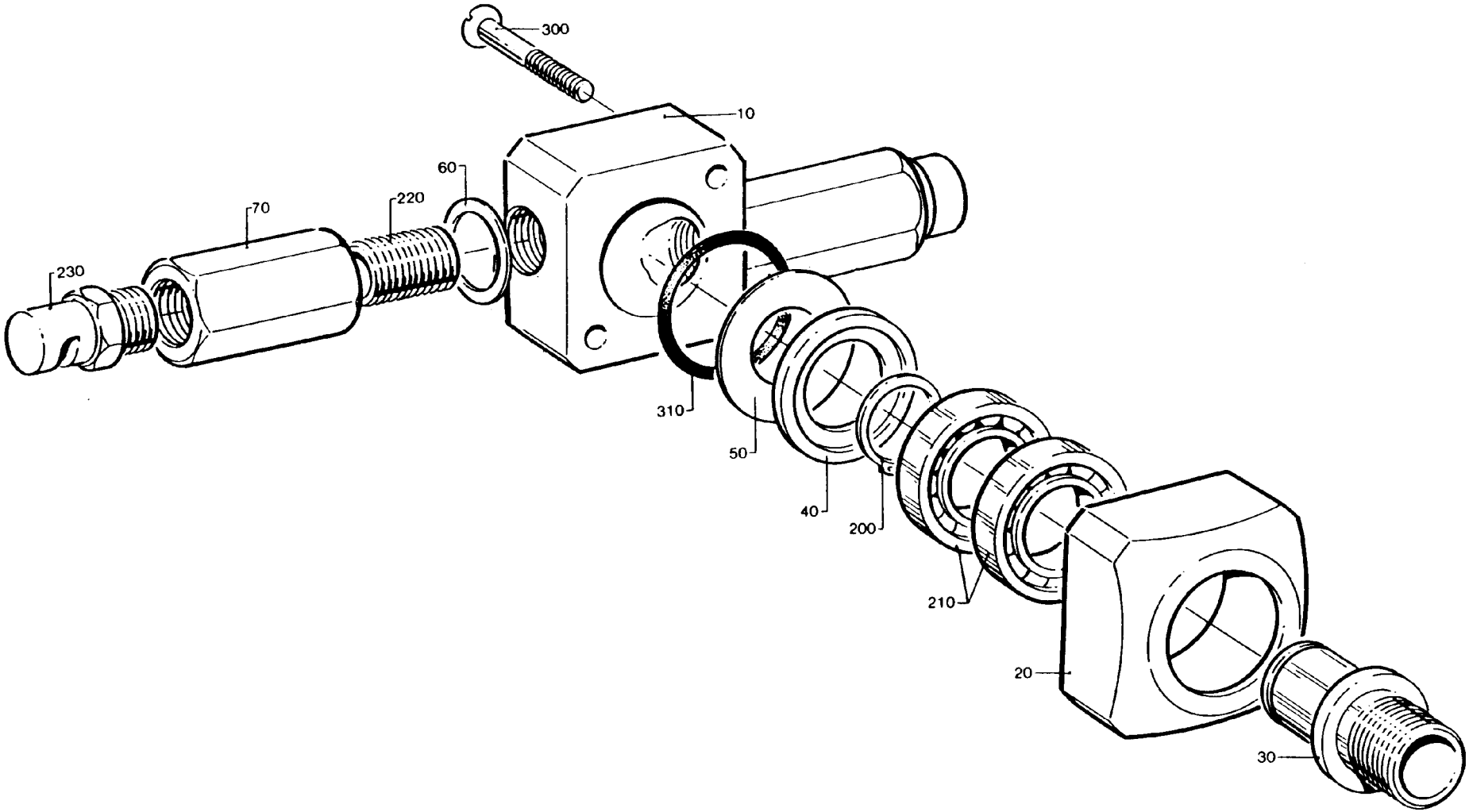

44181101.tif
441811-1
ECN

Pos	Part No	SP	UN	Qty	Description	Page No
-						
010	441792-0000	D		1	HEAD	
020	441793-0000	D		1	BEARING HOUSING	
030	441794-0000	D		1	PIVOT PIN	
040	441795-0000	D		1	WASHER	
050	441796-0000	F		1	SEAL	
060	441797-0000	K		2	SHIM	
070	441800-0000	K		2	STRAIGHT FITTING	
200	90141-0017	K		1	LOCK RING	
210	90214-0092	K		2	BALL BEARING	
220	90330-0101	K		2	NIPPLE	
230	90424-0025	K		2	NOZZLE	
300	312155-0299	-		2	SCREW MF6S 4X30 A4 80	
310	315202-0217	K		1	O-RING 24,2X3	

Pos	Part No	SP	UN	Qty	Description	Page No

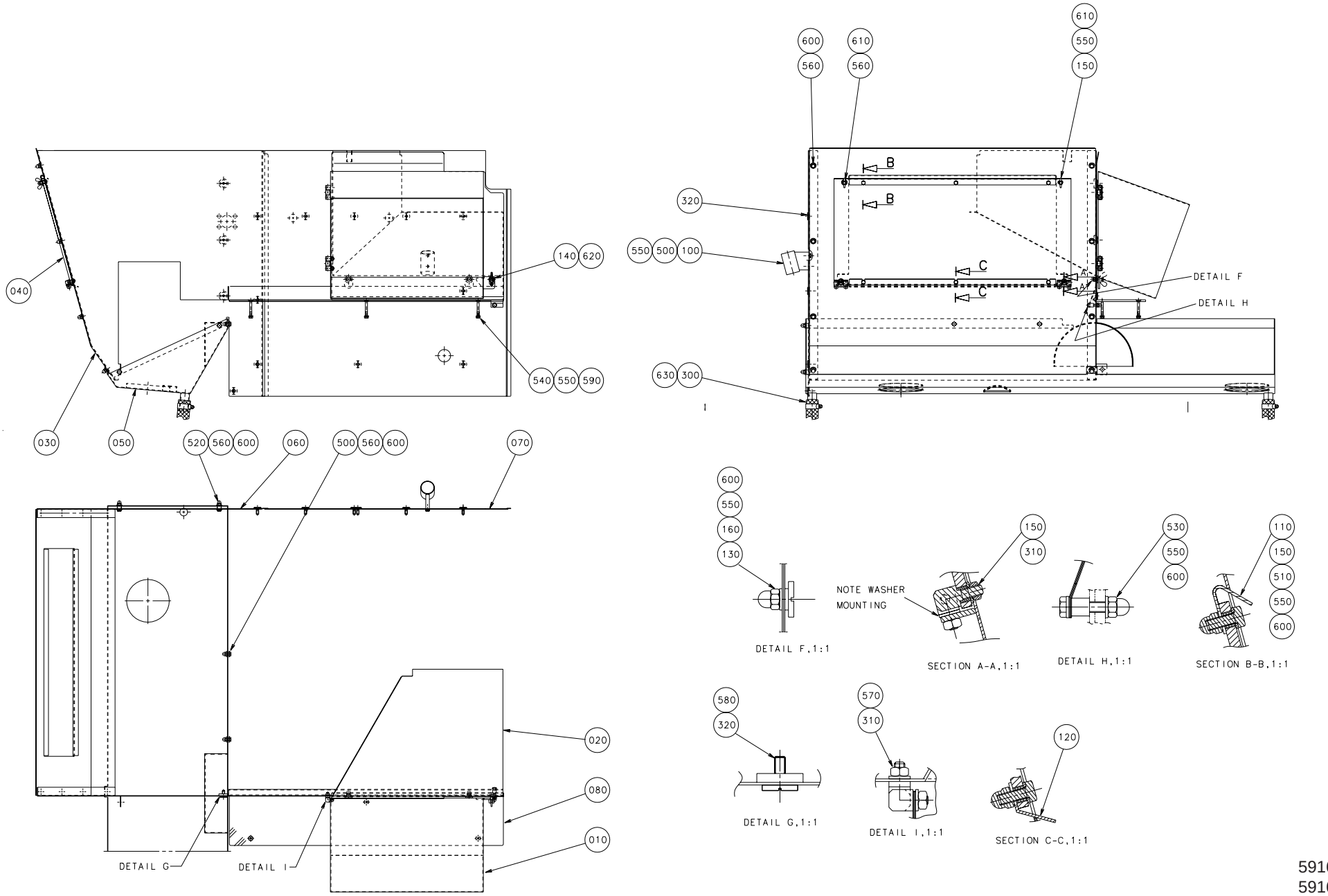

59167101.EPS
591671-1
ECN 70805

Pos	Part No	SP	UN	Qty	Description	Page No
-						
010	591595-0000	D		1	WASTE CHUTE	
020	591596-0000	D		1	SIDE PLATE	
030	591600-0000	D		1	FRONT PLATE	
040	591601-0000	D		1	WINDOW HATCH	
050	591608-0000	D		1	DRIP PLATE	
060	591620-0000	D		1	SIDE PLATE	
070	591619-0000	D		1	SIDE PLATE	
080	591622-0000	D		1	CHECKER PLATE	
100	752093-0000	-		1	HOLDER	
110	591602-0000	D		1	PLATE	
120	591603-0000	D		1	PLATE	
130	271586-0001	-		2	WASHER	
140	591598-0000	D		1	GRUB SCREW	
150	591604-0000	K		8	SPACER	
160	979707-0000	-		2	SCREW	
300	90166-0049	-	M	2	HOSE	
310	90248-0022	-		4	HINGE	
320	90287-0062	-		14	SCREW	
500	312105-0366	-		4	SCREW O4017 M6X12A280	
510	312105-0368	-		6	SCREW O4017 M6X16A280	
520	312105-0370	-		2	SCREW O4017 M6X20A280	
530	312105-0374	-		1	SCREW O4017 M6X30A280	
540	312105-0380	-		3	SCREW O4014 M6X50A280	
550	315105-0153	-		17	WASHER BRB6,4X12RFR	
560	315105-0165	-		17	WASHER BRB8,4X16RFR	
570	315115-0153	-		2	WASHER TBRB6,4X12RFR	
580	315125-0165	-		3	WASHER SB 8,4X26X5 RFR	
590	312605-0316	-		3	NUT M6M6RFR	
600	312705-0316	-		21	CAP NUT MHM 6 A2	
610	312715-0116	-		2	WING NUT MVM-K 6 A2	
620	312715-0118	-		1	WING NUT MVM-K 8 A2	
630	342991-0106	-		2	HOSE CLIP 26-38MMRFR	

Pos	Part No	SP	UN	Qty	Description	Page No

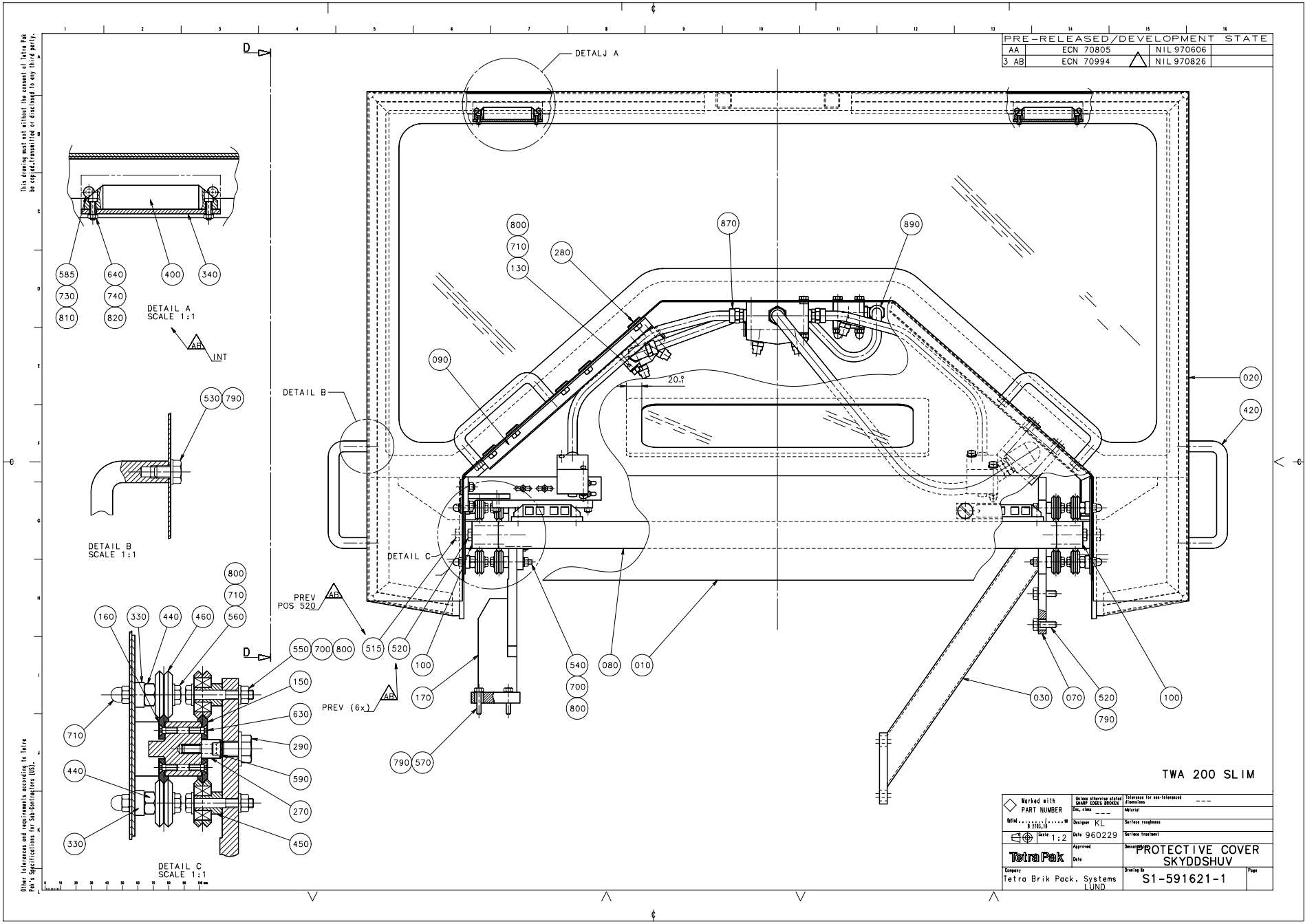
PRE-RELEASED/DEVELOPMENT STATE
AA ECN 70805 NIL 970606
3 AB ECN 70994 NIL 970826
DETALJ A
DETAIL A
SCALE 1:1
DETAIL B
SCALE 1:1
DETAIL C
SCALE 1:1
DETAIL B
DETAIL C
PREV
POS 520
PREV (6x)
INT
TWA 200 SLIM
Marked with PART NUMBER
Scale 1:2
Designer KL
Date 960229
Tetra Pak
PROTECTIVE COVER
SKYDDSHUV
Company
Tetra Brik Pack. Systems
LUND
S1-591621-1

Pos	Part No	SP	UN	Qty	Description	Page No
-						
010	1116150-0000	D		1	COVER	
020	1116148-0000	D		1	COVER	
030	1116280-0000	D		1	BRACKET	
060	1116282-0000	D		1	SWITCH BRACKET	
070	1116277-0000	D		1	BRACKET	
080	1116283-0000	D		1	BEAM	
090	979720-0000	D		1	EDGE PLATE	
100	1116284-0000	D		2	GUIDE HOLDER	
120	979487-0000	-		1	MOUNTING PLATE	
125	979490-0000	-		1	DISTRIBUTOR BLOCK	
130	979491-0000	-		1	BLOCK	
135	979493-0000	-		1	BLOCK	
140	979494-0000	-		2	BLOCK	
150	1116275-0000	D		4	GUIDE	
160	1116276-0000	D		4	GUIDE	
170	1116278-0000	D		1	BRACKET	
180	1116279-0000	D		1	BRACKET	
190	1116281-0000	D		1	SWITCH BRACKET	
200	1116151-0000	K		1	GLASS	
210	1116152-0000	K		1	GLASS	
220	295423-0000	-		1	SEAL	
230	469068-0000	-		1	SLEEVE	
240	979489-0000	-		1	PLATE	
260	1116270-0000	K		2	LOCK COMPONENT	
270	979515-0000	-		3	LOCK COMPONENT	
280	979707-0000	-		10	SCREW	
290	979514-0000	-		1	STOP SCREW	
300	1116271-0000	D		2	BRACKET	
320	1116273-0000	D		2	SPACER	
330	1116274-0000	D		12	SPACER	
390	90044-0146	-		1	SAFETY SWITCH	
400	90237-0071	-		4	LOCK	
410	90143-0049	-	M	8	RUBBERSTRIP 11X21MM	
420	90017-0016	-		4	HANDLE	
440	90363-0301	-		12	BUSHING	
450	90363-0302	-		10	BUSHING	
460	90363-0049	-		20	ROLL	
470	90287-0062	-		10	SCREW	
480	90157-0041	-		x	SEALING COMPOUND	
490	90166-0153	-	M	3	HOSE	
492	90166-0234	-	M	1	HOSE	
495	90424-0070	-		9	SPREADER NOZZLE	
510	312105-0460	-		4	SCREW O4017 M8X45A280	
520	312105-0372	-		6	SCREW O4017 M6X25A280	
530	312105-0447	-		8	SCREW O4017 M8X12A280	
535	312105-0379	-		6	SCREW O4014 M6X45A280	
540	312105-0380	-		3	SCREW O4014 M6X50A280	
550	312105-0378	-		10	SCREW O4017 M6X40A280	
560	312105-0376	-		10	SCREW O4017 M6X35A280	
570	312105-0374	-		16	SCREW O4017 M6X30A280	
580	312105-0368	-		4	SCREW O4017 M6X16A280	
590	312155-0372	-		3	SCREW MF6S6X25RFR	
600	312155-0370	-		1	SCREW MF6S6X20RFR	
610	312115-0333	-		4	SCREW O4762 M5X25A280	
620	312155-0293	-		4	SCREW MF6S4X16RFR	
630	312155-0291	-		56	SCREW MF6S4X12RFR	
640	312125-0226	-		4	SLOTTED HEMCS3X12RFR	
650	312125-0222	-		8	SLOTTED HEMCS3X8RFR	
660	312125-0222	-		4	SLOTTED HEMCS3X8RFR	
660	312132-0287	-		4	SLOTTED HEMSCS4X8MSGFN	
700	312605-0316	-		16	NUT M6M6RFR	
710	312705-0316	-		20	CAP NUT MHM 6 A2	
720	312605-0314	-		4	NUT M6M5RFR	
730	312605-0312	-		4	NUT M6M4RFR	
740	312605-0310	-		4	NUT M6M3RFR	
790	315105-0165	-		8	WASHER BRB8,4X16RFR	
800	315105-0153	-		52	WASHER BRB6,4X12RFR	
810	315105-0136	-		4	WASHER BRB4,3X8RFR	
820	315105-0124	-		4	WASHER BRB3,2X6RFR	
860	342713-0210	-		3	BLIND PLUG	
870	342920-0141	-		4	PIPE COUPL12/10-3/8	
880	342920-0151	-		1	PIPE COUPL15/12,5-1/2	
890	342930-0141	-		2	ELBOW PIPE12/10X3/8	
900	342940-0141	-		1	T-CONNECTI12/10-3/8	

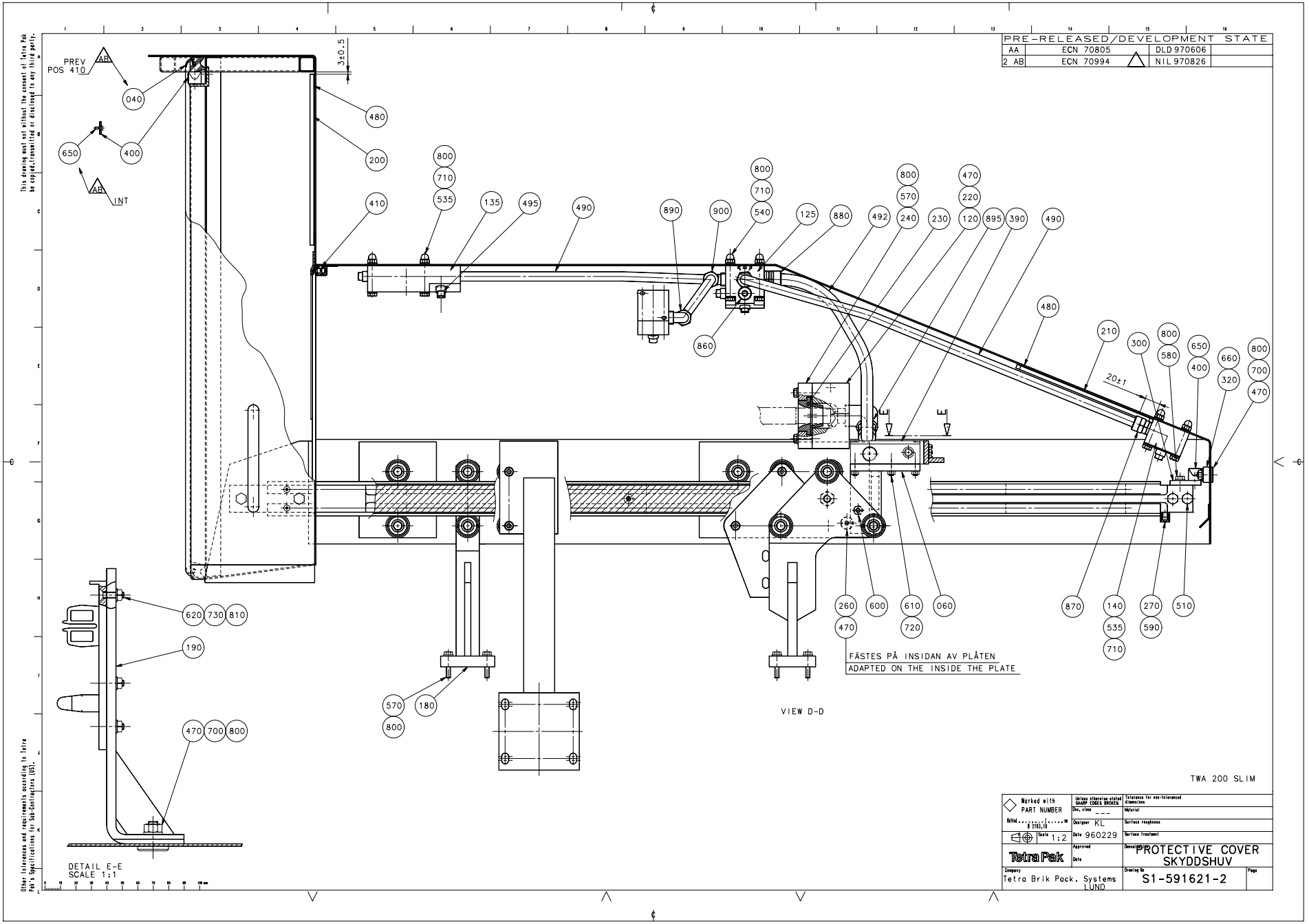
PRE-RELEASED/DEVELOPMENT STATE
AA ECN 70805 DLD 970606
2 AB ECN 70994 NIL 970826
PREV POS 410
VIEW D-D
FÄSTES PÅ INSIDAN AV PLÅTEN
ADAPTED ON THE INSIDE THE PLATE
DETAIL E-E
SCALE 1:1
TWA 200 SLIM
PROTECTIVE COVER
SKYDDSHUV
S1-591621-2
Tetra Brik Pack. Systems
LUND

Pos	Part No	SP	UN	Qty	Description	Page No
-						
010	1116150-0000	D		1	COVER	
020	1116148-0000	D		1	COVER	
030	1116280-0000	D		1	BRACKET	
060	1116282-0000	D		1	SWITCH BRACKET	
070	1116277-0000	D		1	BRACKET	
080	1116283-0000	D		1	BEAM	
090	979720-0000	D		1	EDGE PLATE	
100	1116284-0000	D		2	GUIDE HOLDER	
120	979487-0000	-		1	MOUNTING PLATE	
125	979490-0000	-		1	DISTRIBUTOR BLOCK	
130	979491-0000	-		1	BLOCK	
135	979493-0000	-		1	BLOCK	
140	979494-0000	-		2	BLOCK	
150	1116275-0000	D		4	GUIDE	
160	1116276-0000	D		4	GUIDE	
170	1116278-0000	D		1	BRACKET	
180	1116279-0000	D		1	BRACKET	
190	1116281-0000	D		1	SWITCH BRACKET	
200	1116151-0000	K		1	GLASS	
210	1116152-0000	K		1	GLASS	
220	295423-0000	-		1	SEAL	
230	469068-0000	-		1	SLEEVE	
240	979489-0000	-		1	PLATE	
260	1116270-0000	K		2	LOCK COMPONENT	
270	979515-0000	-		3	LOCK COMPONENT	
280	979707-0000	-		10	SCREW	
290	979514-0000	-		1	STOP SCREW	
300	1116271-0000	D		2	BRACKET	
320	1116273-0000	D		2	SPACER	
330	1116274-0000	D		12	SPACER	
390	90044-0146	-		1	SAFETY SWITCH	
400	90237-0071	-		4	LOCK	
410	90143-0049	-	M	8	RUBBERSTRIP 11X21MM	
420	90017-0016	-		4	HANDLE	
440	90363-0301	-		12	BUSHING	
450	90363-0302	-		10	BUSHING	
460	90363-0049	-		20	ROLL	
470	90287-0062	-		10	SCREW	
480	90157-0041	-		x	SEALING COMPOUND	
490	90166-0153	-	M	3	HOSE	
492	90166-0234	-	M	1	HOSE	
495	90424-0070	-		9	SPREADER NOZZLE	
510	312105-0460	-		4	SCREW O4017 M8X45A280	
520	312105-0372	-		6	SCREW O4017 M6X25A280	
530	312105-0447	-		8	SCREW O4017 M8X12A280	
535	312105-0379	-		6	SCREW O4014 M6X45A280	
540	312105-0380	-		3	SCREW O4014 M6X50A280	
550	312105-0378	-		10	SCREW O4017 M6X40A280	
560	312105-0376	-		10	SCREW O4017 M6X35A280	
570	312105-0374	-		16	SCREW O4017 M6X30A280	
580	312105-0368	-		4	SCREW O4017 M6X16A280	
590	312155-0372	-		3	SCREW MF6S6X25RFR	
600	312155-0370	-		1	SCREW MF6S6X20RFR	
610	312115-0333	-		4	SCREW O4762 M5X25A280	
620	312155-0293	-		4	SCREW MF6S4X16RFR	
630	312155-0291	-		56	SCREW MF6S4X12RFR	
640	312125-0226	-		4	SLOTTED HEMCS3X12RFR	
650	312125-0222	-		8	SLOTTED HEMCS3X8RFR	
660	312125-0222	-		4	SLOTTED HEMCS3X8RFR	
660	312132-0287	-		4	SLOTTED HEMSCS4X8MSGFN	
700	312605-0316	-		16	NUT M6M6RFR	
710	312705-0316	-		20	CAP NUT MHM 6 A2	
720	312605-0314	-		4	NUT M6M5RFR	
730	312605-0312	-		4	NUT M6M4RFR	
740	312605-0310	-		4	NUT M6M3RFR	
790	315105-0165	-		8	WASHER BRB8,4X16RFR	
800	315105-0153	-		52	WASHER BRB6,4X12RFR	
810	315105-0136	-		4	WASHER BRB4,3X8RFR	
820	315105-0124	-		4	WASHER BRB3,2X6RFR	
860	342713-0210	-		3	BLIND PLUG	
870	342920-0141	-		4	PIPE COUPL12/10-3/8	
880	342920-0151	-		1	PIPE COUPL15/12,5-1/2	
890	342930-0141	-		2	ELBOW PIPE12/10X3/8	
900	342940-0141	-		1	T-CONNECTI12/10-3/8	

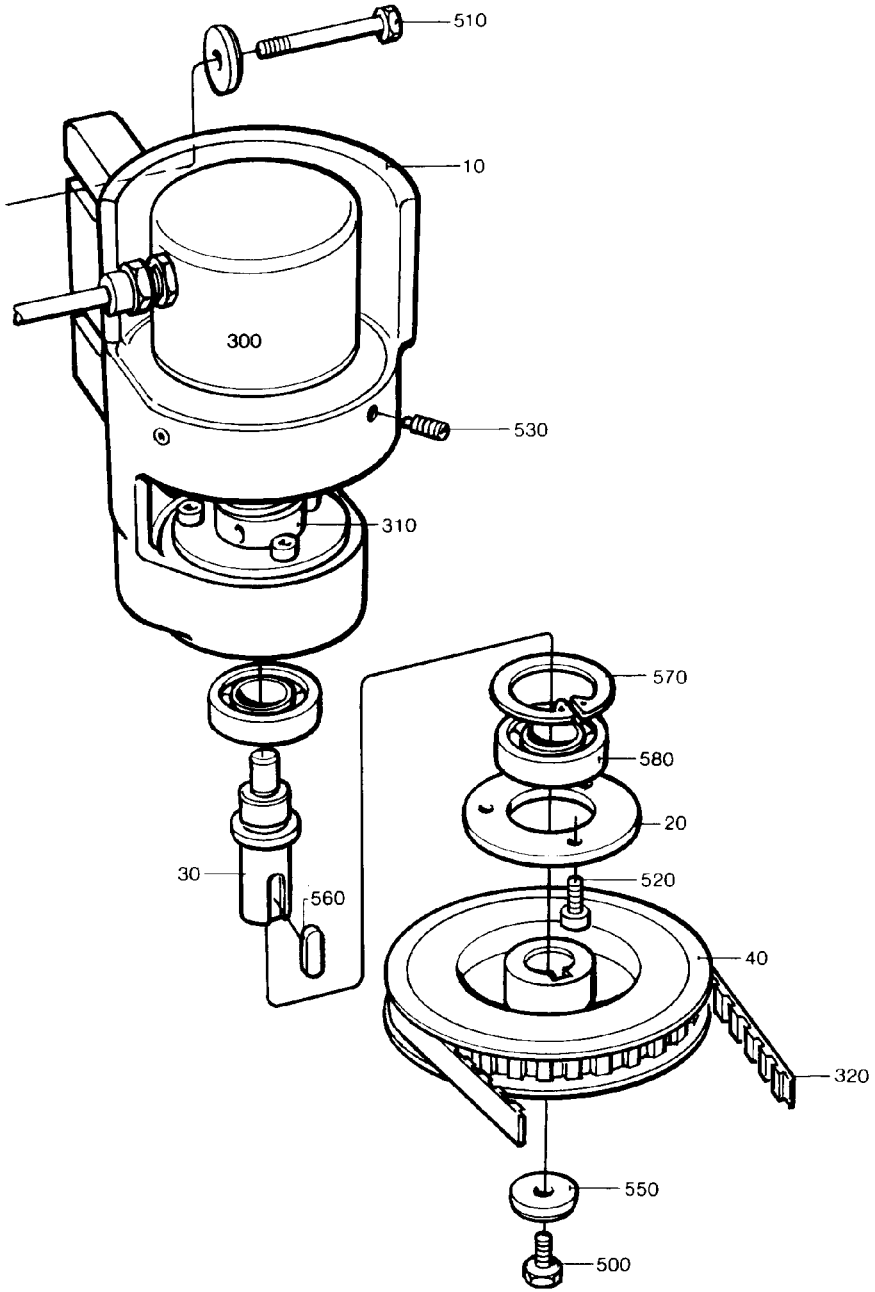

27111603.tif
271116-3
ECN

Pos	Part No	SP	UN	Qty	Description	Page No
-						
010	441597-0000	-		1	BEARING CONSOLE	
020	257133-0000	-		2	LID	
030	272647-0000	-		1	SHAFT	
040	272648-0000	K		1	TIMING BELT PULLEY	
300	90061-0018	K		1	ANGLE ENCODER 8BIT GRAY	
310	90355-0031	K		1	FLEXIBLE COUPLING	
320	90417-0050	K		1	TOOTHED BELT	
500	312101-0366	-		1	SCREW M6S6X12FZB	
510	312105-0376	-		2	SCREW O4017 M6X35A280	
520	312111-0325	-		6	SCREW MC6S5X10FZB	
530	491630-0000	-		2	SCREW	
550	315121-0153	-		3	WASHER TBRSB6,4X22FZB	
560	315701-0199	-		1	FLAT WEDGE5X5X16	
570	315752-0123	-		1	CIRCLIP SGH32	
580	321308-0202	K		2	BALL BEARISKF6002-2RS	

Pos	Part No	SP	UN	Qty	Description	Page No

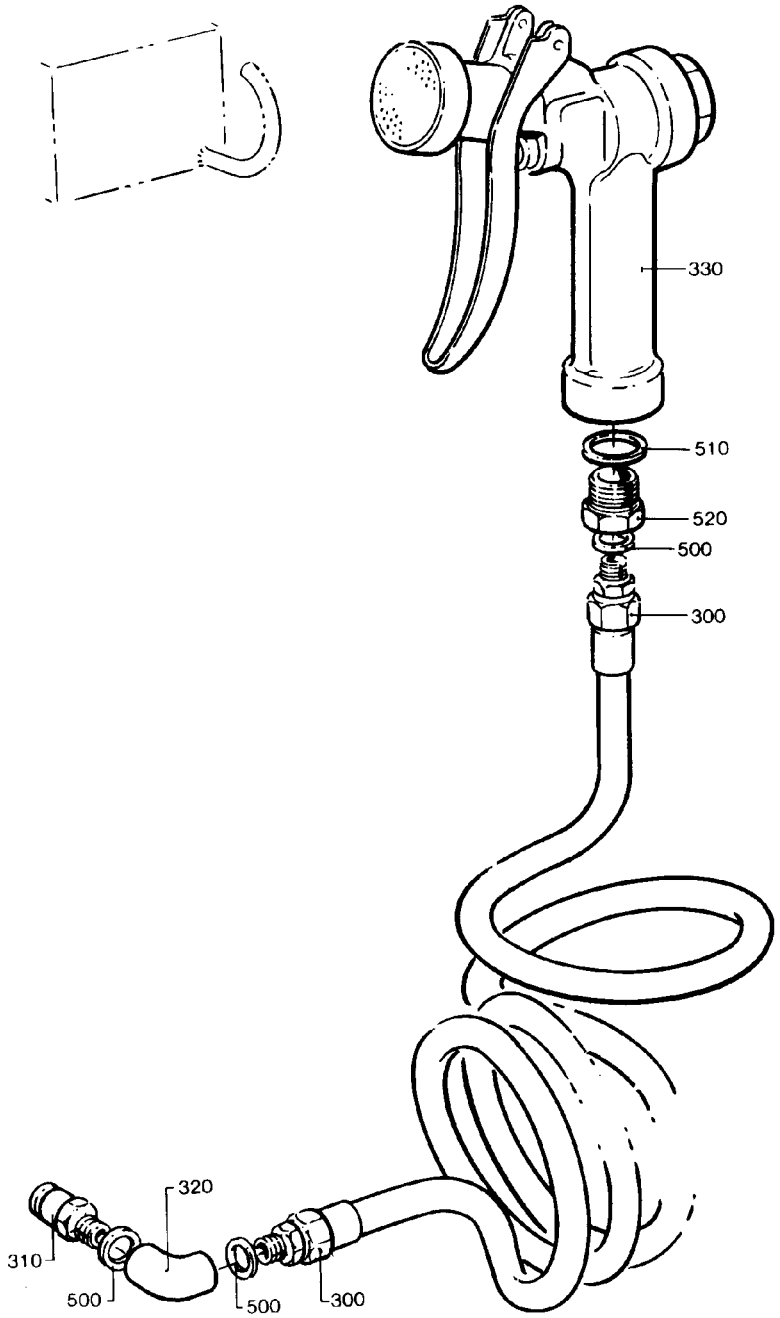

27138702.tif
271387-2
ECN

Pos	Part No	SP	UN	Qty	Description	Page No
-						
300	90152-0017	-		1	HOSE	
310	90163-0014	-		1	NIPPLE	
320	90330-0081	-		1	ELBOW PIPE	
330	90426-0003	K		1	HAND SHOWER	
500	315233-0110	-		3	SEAL RING R1/4"	
510	315233-0113	-		1	SEAL RING R1/2"	
520	342701-0205	-		1	BUSHING RNI1/2"-1/4"	

Pos	Part No	SP	UN	Qty	Description	Page No

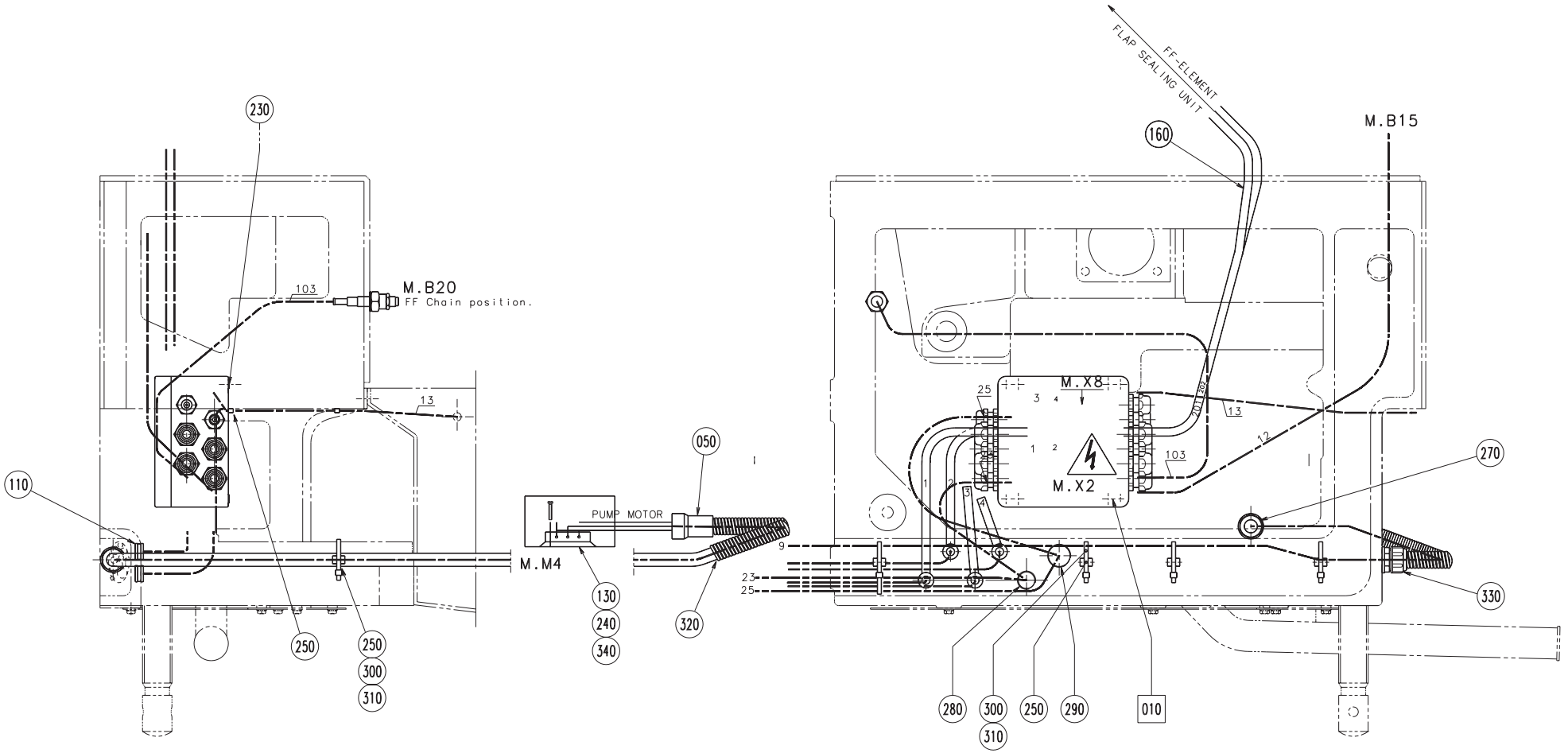

59168301.EPS
591683-1
ECN 70805

Pos	Part No	SP	UN	Qty	Description	Page No
-						
F010	A 591664-0100	-		1	CONNECTION BOX	
050	456249-0000	K		1	PROTECTIVE COVER	
110	90015-0023	-		4	BUSHING	
130	90077-0102	-		2	TERMINAL BK4 KRG 4-POLE	
160	90166-0098	-	MM	1000	SHRINKABLE HOSE	
230	312115-0374	-		2	SCREW O4762 M6X30A280	
240	312125-0230	-		4	SLOTTED HEMCS3X20RFR	
250	312125-0287	-		7	SLOTTED HEMCS4X8RFR	
270	352103-0108	-		1	CABLE GLANR.ST 13	
280	352103-0111	K		1	CABLE GLANR.ST 16	
290	352103-0116	K		1	CABLE GLANR.ST 21	
300	352113-0102	-		5	RIBBON CLAMP	
310	352113-0202	-		5	ANCHOR TM2S8-M "REPBY 352113-205"	
320	90152-0051	-	MM	700	FLEXIBLE CONDUIT	
330	90012-0072	-		1	GLAND FITTING **	
340	353001-0102	-		6	END SLEEVE0,75	

Pos	Part No	SP	UN	Qty	Description	Page No

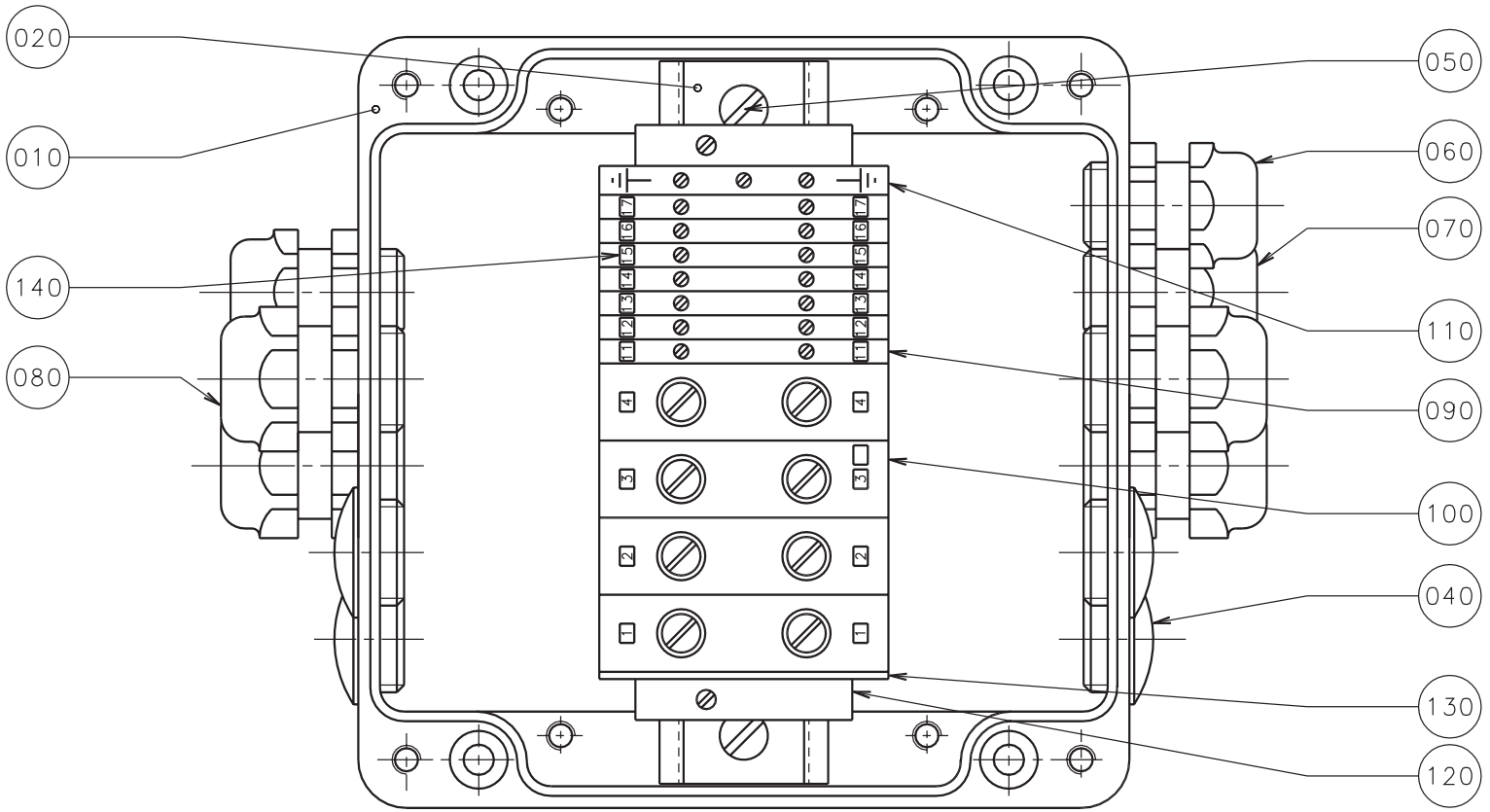

RITAD UTAN LOCK

DRAWN WITHOUT LID

Pos	Part No	SP	UN	Qty	Description	Page No
-						
010	751129-0000	-		1	CONNECTION BOX	
020	751125-0001	-		1	RAIL	
040	90002-0004	-		4	BLANK-OFF PLUG 22,5	
050	312125-0364	-		2	SLOTTED HEMCS6X10RFR	
060	352103-0105	-		1	CABLE GLANR.STR 11	
070	352103-0106	-		2	CABLE GLANR.ST 11	
080	352103-0111	-		4	CABLE GLANR.ST 16	
090	353021-0216	-		7	FEED THROUGH TERMINAL WDU 2,5	
100	353021-0219	-		4	FEED THROUKLÄMMA WDU 35	
110	353024-0204	-		1	EARTH TERMLƒMMA WPE 2,5	
120	353031-0201	-		2	END BRACKE 35	
130	353033-0105	-		1	PARTITION WTW 2,5-10	
140	359011-0807	-		2	MARKING PL5-FW 1-50	

Pos	Part No	SP	UN	Qty	Description	Page No

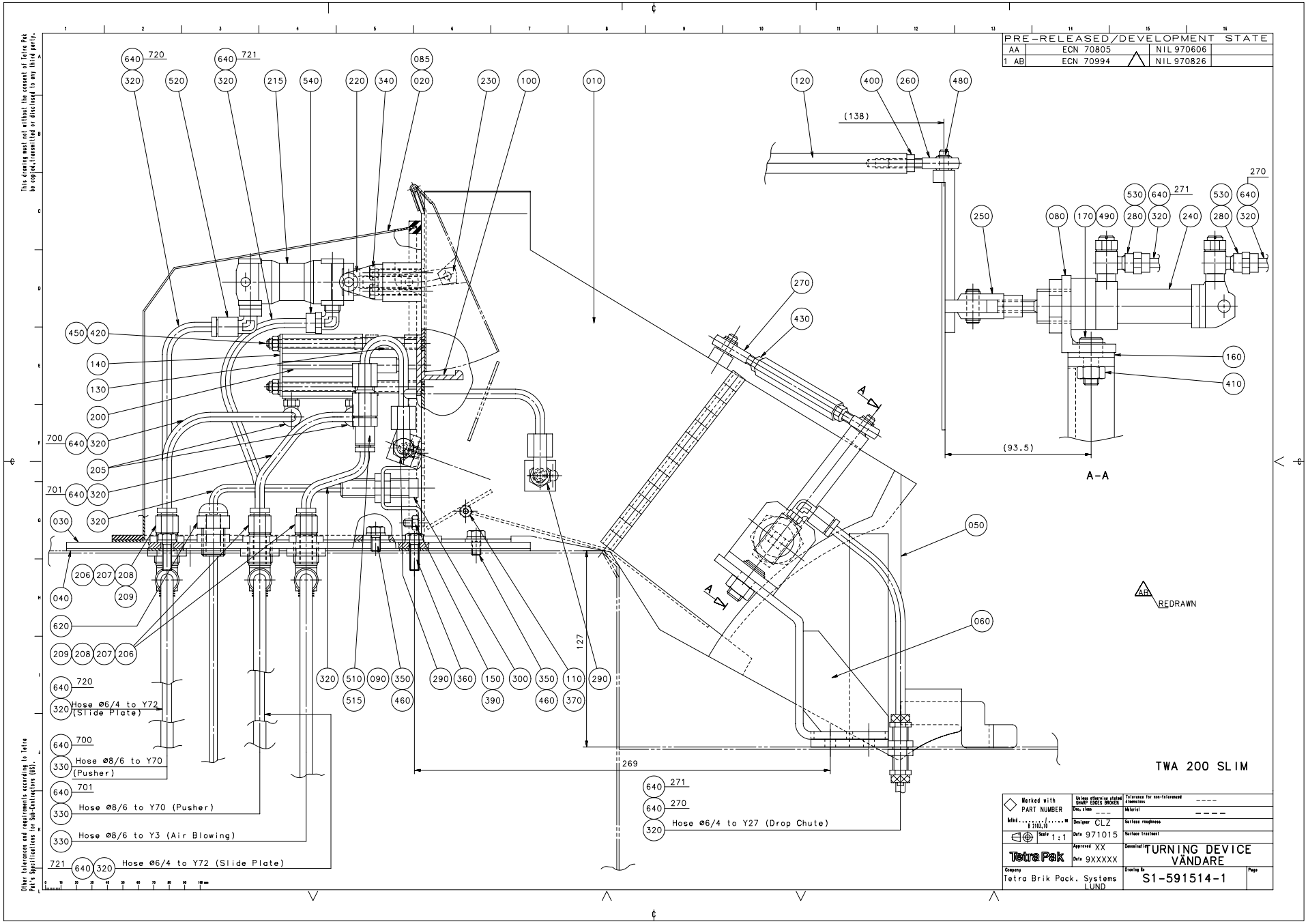
PRE-RELEASED/DEVELOPMENT STATE
AA ECN 70805 NIL 970606
1 AB ECN 70994 NIL 970826
A-A
REDRAWN
TWA 200 SLIM
TURNING DEVICE
VÄNDARE
Tetra Brik Pack. Systems LUND
S1-591514-1
Hose Ø6/4 to Y72 (Slide Plate)
Hose Ø8/6 to Y70 (Pusher)
Hose Ø8/6 to Y70 (Pusher)
Hose Ø8/6 to Y3 (Air Blowing)
Hose Ø6/4 to Y72 (Slide Plate)
Hose Ø6/4 to Y27 (Drop Chute)
This drawing must not without the consent of Tetra Pak be copied,transmitted or disclosed to any third party.
Other tolerances and requirements according to Tetra Pak's Specifications for Sub-Contractors (QS).

Pos	Part No	SP	UN	Qty	Description	Page No
-						
010	591418-0000	D		1	TURNING DEVICE	
030	591453-0000	D		1	COVERING PLATE	
040	591454-0000	K		1	GASKET	
050	591480-0000	D		1	SIDE PLATE	
060	591511-0000	D		1	BRACKET	
080	591509-0000	D		1	BRACKET	
100	591419-0000	D		1	PUSHER	
110	591420-0000	K		1	GUIDE PLATE	
120	591422-0000	D		1	RIGGING SCREW	
130	591451-0000	D		2	SPACER	
140	591452-0000	D		1	MOUNTING PLATE	
150	591457-0000	D		1	BRACKET	
160	591510-0000	D		1	WASHER	
170	591512-0000	D		1	SHAFT	
200	90450-0438	K		1	Cylinder	
210	B 90239-0084	K		1	CYLINDER	
220	90239-0130	D		1	BRACKET	
230	90239-0088	D		1	BRACKET	
240	90239-0847	K		1	CYLINDER	
250	90239-0532	-		1	PISTON ROD HEAD	
260	90115-0009	-		1	LINK HEAD	
270	90115-0010	-		1	LINK HEAD	
300	90044-0124	K		1	INDUCTIVE SWITCH	
310	90055-0207	-		2	ELBOW PIPE JOINT	
320	90166-0081	-	M	10	HOSE	
330	90166-0013	-	M	7	HOSE	
340	312105-0329	-		4	SCREW O4017 M5X16A280	
350	312105-0366	-		2	SCREW O4017 M6X12A280	
360	312105-0370	-		4	SCREW O4017 M6X20A280	
370	312115-0291	-		2	SCREW O4762 M4X12A280	
390	312605-0314	-		2	NUT M6M5RFR	
400	312605-0316	-		1	NUT M6M6RFR	
410	312605-0320	-		1	NUT M6M10RFR	
420	312812-0314	-		2	LOCK NUT A2-M5RFR	
430	312902-0316	-		1	NUT M6M6VRFR	
450	315105-0146	-		2	WASHER BRB5,3X10RFR	
460	315105-0153	-		2	WASHER BRB6,4X12RFR	
480	315751-0103	-		2	CIRCLIP SGA 6 RFR	
490	315751-0112	-		1	CIRCLIP SGA15 RFR	
510	342722-0202	-		2	PIPE COUPLD=6-R1/8"	
520	342732-0102	-		4	ELBOW PIPE D6-R1/8"	
540	342748-0102	-		4	T-CONNECTI D=6	
560	342903-0111	-		2	NUT JƒDER 1723-6/4	
570	342903-0121	-		3	NUT JÄDER 1723-8/6	
590	342960-0112	-		2	BULKHEAD L6/4	
600	342960-0121	-		3	BULKHEAD L8/6-6/4	
620	352103-0100	-		1	CABLE GLANR.STR 9	
640	359000-0400	-		12	MARKING CO2/4"0"	
640	359000-0401	-		8	MARKING CO2/4"1"	
640	359000-0402	-		12	MARKING CO2/4"2"	
640	359000-0407	-		16	MARKING CO2/4"7"	
90239-0084						
	90239-0348	K		1	SEAL KIT	

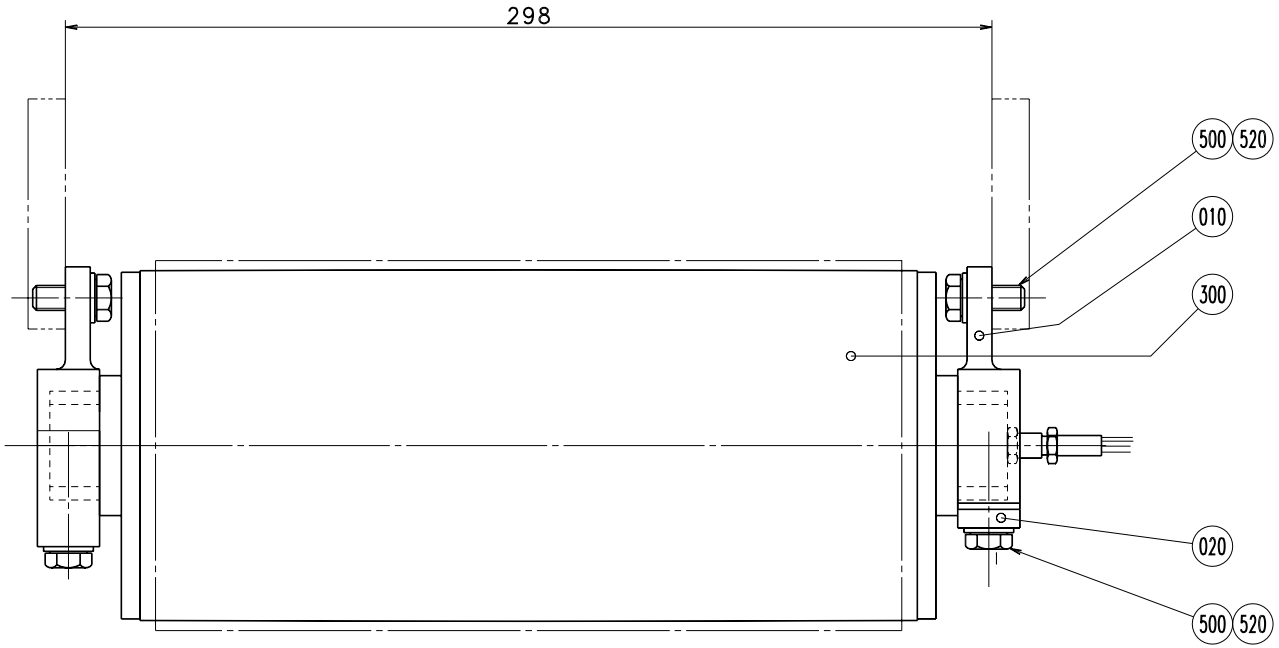

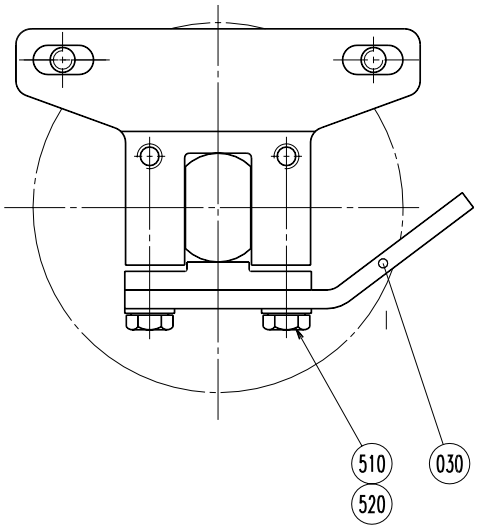

59494601.EPS
594946-1
ECN 70866

Pos	Part No	SP	UN	Qty	Description	Page No
-						
010	570524-0000	-		2	BEARING	
020	570523-0000	-		2	CAP	
030	752057-0000	-		1	STOP	
300	90045-0201	-		1	Motor	
500	312105-0451	-		6	SCREW SO4017 8X20A280	
510	312105-0453	-		2	SCREW O4017 M8X25A280	
520	315105-0165	-		8	WASHER BRB8,4X16RFR	

Pos	Part No	SP	UN	Qty	Description	Page No

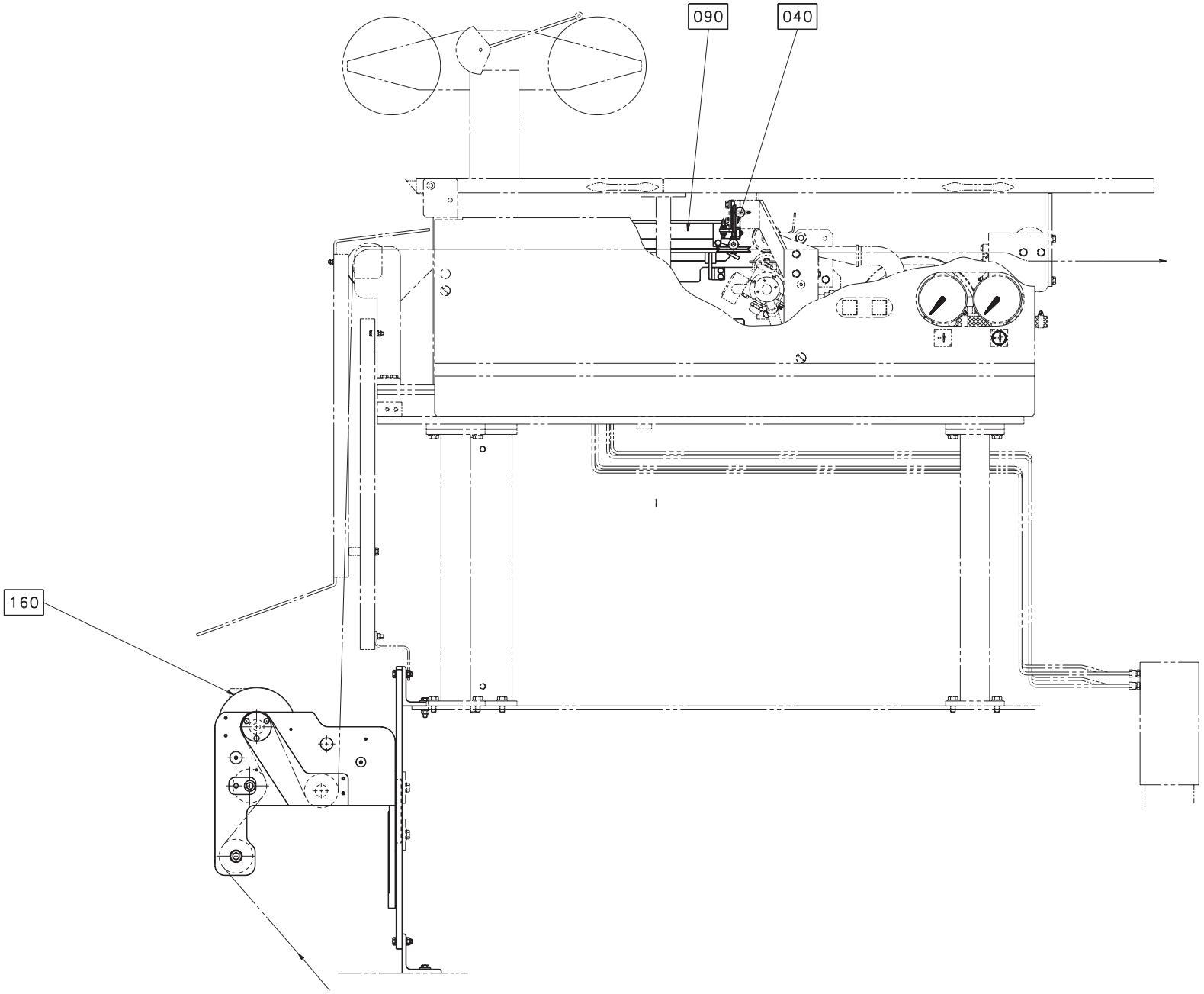
090
040
160

Pos	Part No	SP	UN	Qty	Description	Page No
-						
F040	A 595167-0100	-		1	STRIP GUIDE	
F090	A 595166-0100	-		1	STRIP APPLICATOR	
F160	A 594947-0100	-		1	CREASE UNIT	

Pos	Part No	SP	UN	Qty	Description	Page No

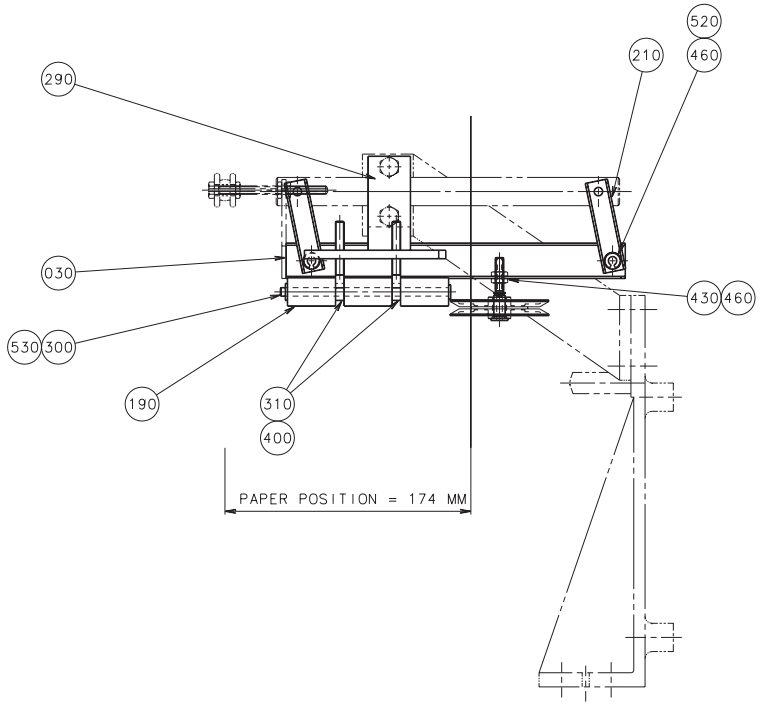
520
210
460
290
030
430
460
530
300
190
310
400
PAPER POSITION = 174 MM

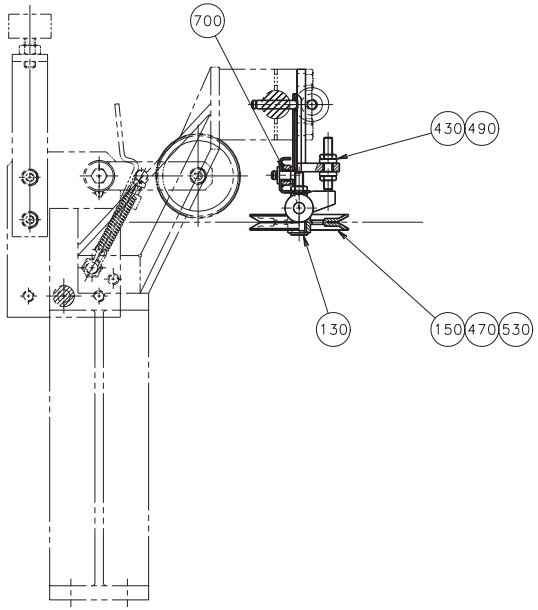
700
430
490
130
150
470
530

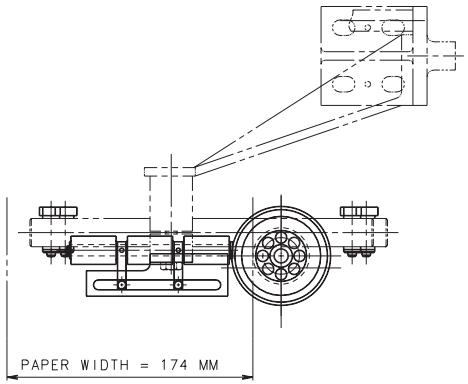
PAPER WIDTH = 174 MM

Pos	Part No	SP	UN	Qty	Description	Page No
-						
030	591616-0000	-		1	LEAD ARM	
130	590328-0000	-		1	SHAFT	
150	590333-0000	-		1	GUIDE WHEEL	
190	590331-0000	-		3	ROLLER	
210	590334-0000	-		2	LINK	
290	590335-0000	-		1	BRACKET	
300	590329-0000	-		1	SHAFT	
310	590336-0000	-		2	HOLDER	
400	312318-0218	-		2	STOP SCREW SK6SS3X4RFR	
430	312605-0316	-		6	NUT M6M6RFR	
460	315105-0153	-		4	WASHER BRB6,4X12RFR	
470	315105-0165	-		1	WASHER BRB8,4X16RFR	
490	315115-0153	-		4	WASHER TBRB6,4X12RFR	
520	315755-0107	-		2	LOCKING WAE 5RFR	
530	315755-0109	-		2	LOCKING WAE 7RFR	
700	321120-0101	-		2	BUSHING 6/8X6	

Pos	Part No	SP	UN	Qty	Description	Page No

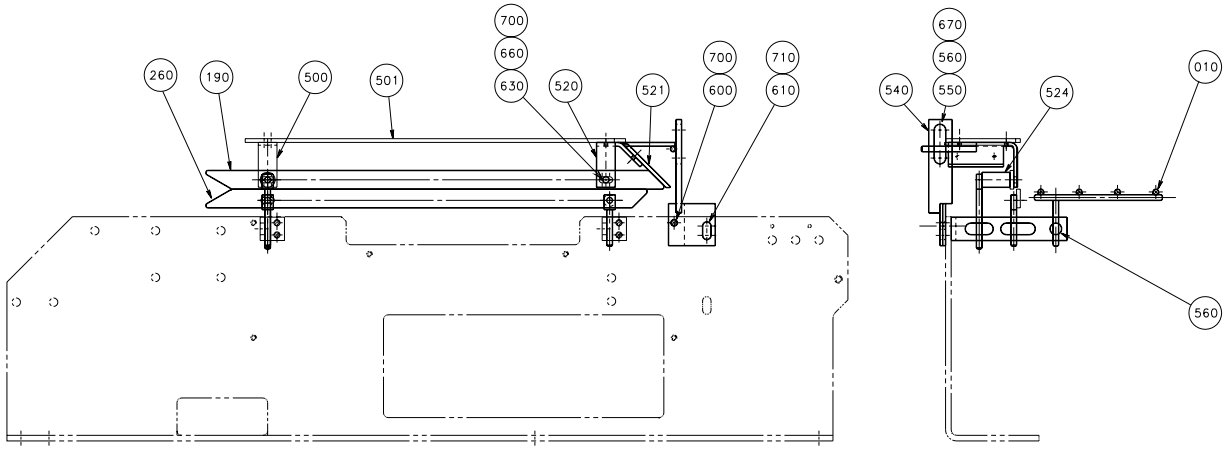
700
660
630
260
190
500
501
520
521
700
600
710
610

670
560
540
550
524
010
560

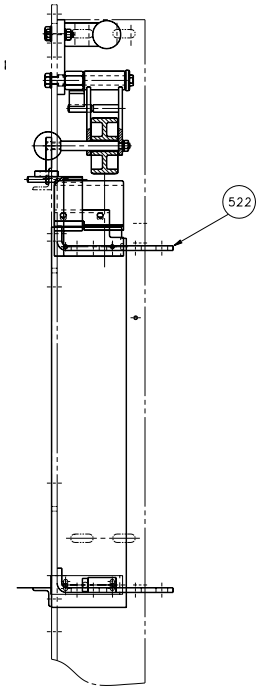
522

Pos	Part No	SP	UN	Qty	Description	Page No
-						
010	1103765-0000	-		1	PAPER SUPPORT	
190	591556-0000	-		1	PAPER SUPPORT	
260	591555-0000	-		1	PAPER SUPPORT	
500	591610-0000	-		1	ANGLE BRACKET	
501	591609-0000	-		1	HEAT GUARD	
520	591612-0000	-		1	ANGLE BRACKET	
521	591611-0000	-		1	HEAT GUARD	
522	591606-0000	-		2	BRACKET	
524	591607-0000	-		1	SPACER	
540	590321-0000	-		1	BRACKET	
550	22559-0000	-		1	GRUB SCREW	
560	28036-0000	-		6	WASHER	
600	312105-0362	-		1	SCREW O4017 M6X8A280	
610	312105-0447	-		1	SCREW O4017 M8X12A280	
630	312155-0368	-		1	SCREW MF6S6X16RFR	
660	312605-0316	-		1	NUT M6M6RFR	
670	312605-0318	-		1	NUT M6M8RFR	
700	315105-0153	-		2	WASHER BRB6,4X12RFR	
710	315105-0165	-		1	WASHER BRB8,4X16RFR	

Pos	Part No	SP	UN	Qty	Description	Page No

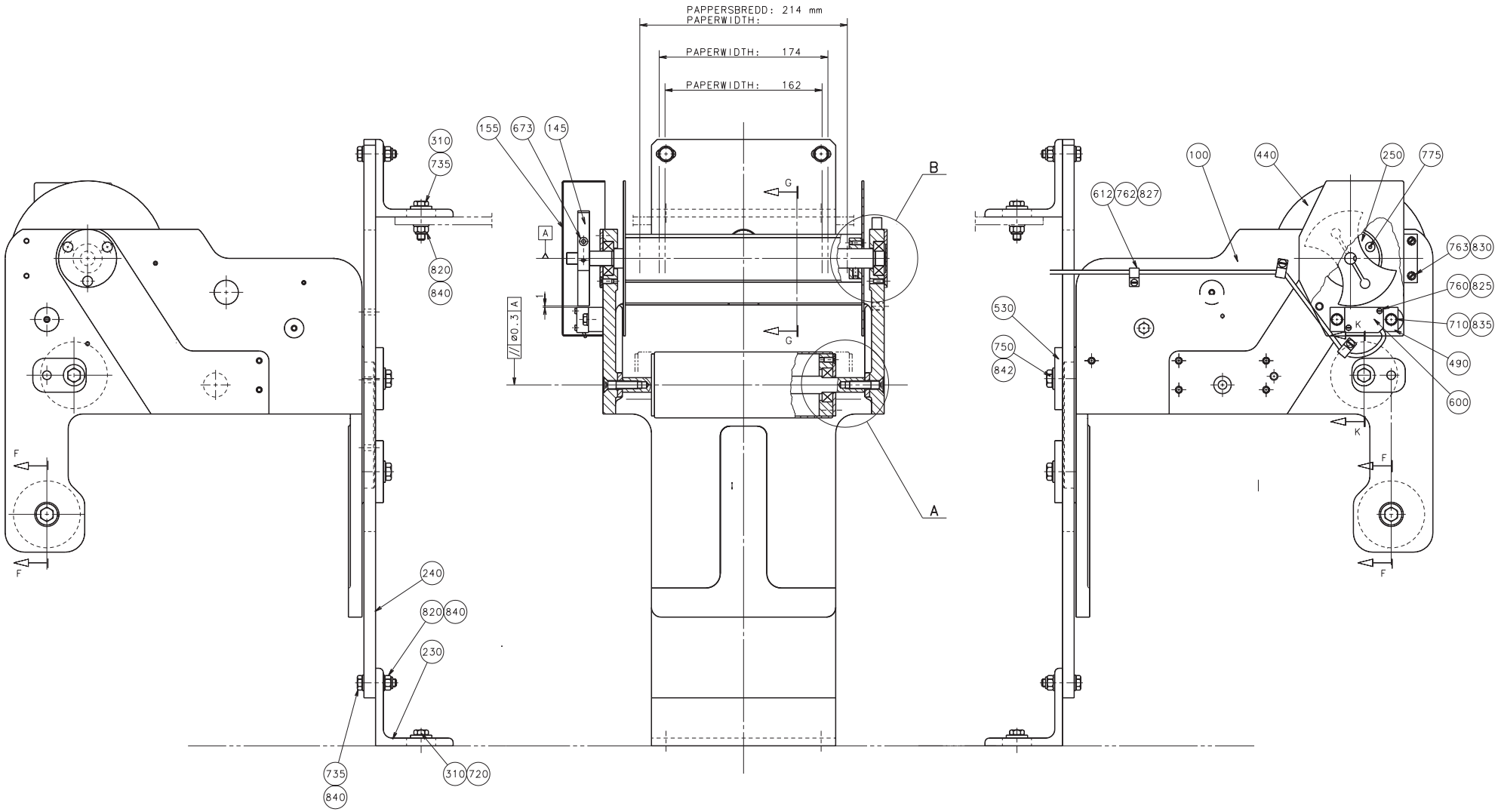

59494701.EPS
594947-1
ECN 70825

Pos	Part No	SP	UN	Qty	Description	Page No
-						
010	752542-0002	-		1	BENDING ROLLER	
020	752543-0002	-		1	SHAFT	
030	591565-0000	-		2	CREASE BAR	
050	591564-0000	-		2	SPACER	
100	752200-0000	-		1	CANTILEVER	
110	591566-0000	-		1	LID	
145	491965-0000	-		1	CAM	
155	556422-0000	-		1	PROTECTION	
230	456331-0000	-		2	ANGLE BRACKET	
240	752539-0000	-		1	PLATE	
250	752240-0000	-		1	LID	
270	752538-0000	-		2	SHAFT	
300	591563-0000	-		1	SHAFT	
306	752537-0000	-		2	BENDING ROLLER	
310	28036-0000	-		4	WASHER	
320	2033-0011	-		6	WASHER	
330	265568-0000	-		4	DUST COVER	
410	256248-0001	-		2	LID	
440	256406-0000	-		2	GABLE PLATE	
460	256409-0000	-		6	WASHER	
470	257141-0000	-		2	RETAINING RING	
490	752534-0000	-		1	PLATE	
530	253107-0000	-		2	WASHER	
540	752544-0001	-		6	SHIM	
550	752544-0002	-		8	SHIM	
560	591567-0000	-		4	LACE	
600	90044-0104	-		1	PROX.SWITCHIFM IN 3002	
612	90165-0056	-		6	CLIP	
615	90214-0098	-		10	BALL BEARING	
620	90287-0331	-		4	Screw	
673	312115-0333	-		2	SCREW O4762 M5X25A280	
705	312105-0370	-		2	SCREW O4017 M6X20A280	
710	312105-0372	-		5	SCREW O4017 M6X25A280	
720	312105-0451	-		2	SCREW SO4017 8X20A280	
735	312105-0457	-		7	SCREW O4017 M8X35A280	
740	312105-0459	-		5	SCREW O4017 M8X40A280	
750	312105-0493	-		2	SCREW 4017 M10X25A280	
760	312125-0230	-		2	SLOTTED HEMCS3X20RFR	
762	312125-0289	-		6	SLOTTED HEMCS4X10RFR	
763	312125-0325	-		2	SLOTTED HEMCS5X10RFR	
770	312155-0291	-		6	SCREW MF6S4X12RFR	
775	312155-0327	-		18	SCREW MF6S5X12RFR	
800	312155-0457	-		2	SCREW MF6S8X35RFR	
807	312318-0362	-		3	STOP SCREW SK6SS6X8RFR	
820	312812-0318	-		6	LOCK NUT A2-M8RFR	
825	315105-0124	-		2	WASHER BRB3,2X6RFR	
827	315105-0136	-		6	WASHER BRB4,3X8RFR	
830	315105-0146	-		2	WASHER BRB5,3X10RFR	
835	315105-0153	-		14	WASHER BRB6,4X12RFR	
840	315105-0165	-		15	WASHER BRB8,4X16RFR	
842	315105-0173	-		2	WASHER BRB10,5X22RFR	

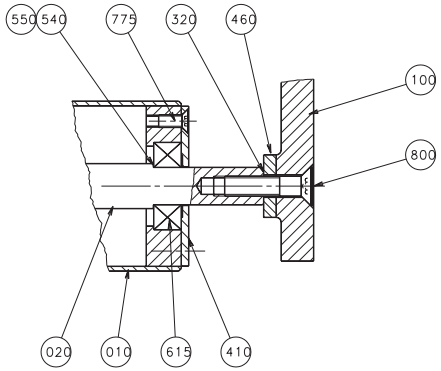

DET.A

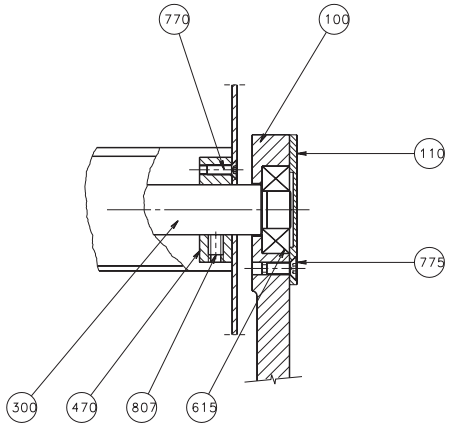

DET.B

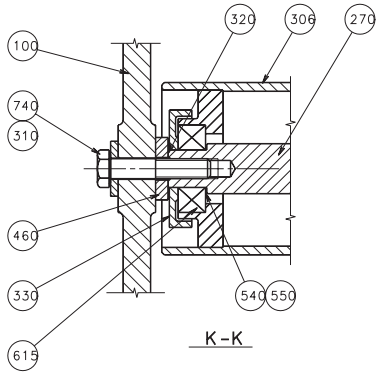

K-K

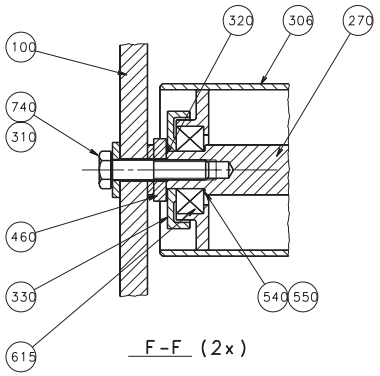

F-F (2x)

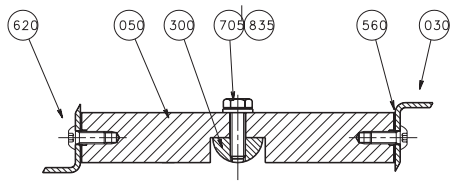

G-G

59494701.EPS
594947-1
ECN 70825

Pos	Part No	SP	UN	Qty	Description	Page No
-						
010	752542-0002	-		1	BENDING ROLLER	
020	752543-0002	-		1	SHAFT	
030	591565-0000	-		2	CREASE BAR	
050	591564-0000	-		2	SPACER	
100	752200-0000	-		1	CANTILEVER	
110	591566-0000	-		1	LID	
145	491965-0000	-		1	CAM	
155	556422-0000	-		1	PROTECTION	
230	456331-0000	-		2	ANGLE BRACKET	
240	752539-0000	-		1	PLATE	
250	752240-0000	-		1	LID	
270	752538-0000	-		2	SHAFT	
300	591563-0000	-		1	SHAFT	
306	752537-0000	-		2	BENDING ROLLER	
310	28036-0000	-		4	WASHER	
320	2033-0011	-		6	WASHER	
330	265568-0000	-		4	DUST COVER	
410	256248-0001	-		2	LID	
440	256406-0000	-		2	GABLE PLATE	
460	256409-0000	-		6	WASHER	
470	257141-0000	-		2	RETAINING RING	
490	752534-0000	-		1	PLATE	
530	253107-0000	-		2	WASHER	
540	752544-0001	-		6	SHIM	
550	752544-0002	-		8	SHIM	
560	591567-0000	-		4	LACE	
600	90044-0104	-		1	PROX.SWITCHIFM IN 3002	
612	90165-0056	-		6	CLIP	
615	90214-0098	-		10	BALL BEARING	
620	90287-0331	-		4	Screw	
673	312115-0333	-		2	SCREW O4762 M5X25A280	
705	312105-0370	-		2	SCREW O4017 M6X20A280	
710	312105-0372	-		5	SCREW O4017 M6X25A280	
720	312105-0451	-		2	SCREW SO4017 8X20A280	
735	312105-0457	-		7	SCREW O4017 M8X35A280	
740	312105-0459	-		5	SCREW O4017 M8X40A280	
750	312105-0493	-		2	SCREW 4017 M10X25A280	
760	312125-0230	-		2	SLOTTED HEMCS3X20RFR	
762	312125-0289	-		6	SLOTTED HEMCS4X10RFR	
763	312125-0325	-		2	SLOTTED HEMCS5X10RFR	
770	312155-0291	-		6	SCREW MF6S4X12RFR	
775	312155-0327	-		18	SCREW MF6S5X12RFR	
800	312155-0457	-		2	SCREW MF6S8X35RFR	
807	312318-0362	-		3	STOP SCREW SK6SS6X8RFR	
820	312812-0318	-		6	LOCK NUT A2-M8RFR	
825	315105-0124	-		2	WASHER BRB3,2X6RFR	
827	315105-0136	-		6	WASHER BRB4,3X8RFR	
830	315105-0146	-		2	WASHER BRB5,3X10RFR	
835	315105-0153	-		14	WASHER BRB6,4X12RFR	
840	315105-0165	-		15	WASHER BRB8,4X16RFR	
842	315105-0173	-		2	WASHER BRB10,5X22RFR	

This page is intentionally left blank

Pos	Part No	SP	UN	Qty	Description	Page No
-						
F005	A 594954-0100	-		1	CONVEYOR FRAME	
F010	A 76500-0100	-		1	LIFTING UNIT	
300	591663-0000	-		1	COVER PLATE	
400	441725-0000	-		1	COVERING PLATE	
500	594955-0000	-		1	AIR DIAGRAM	
560	594945-0000	-		1	PANEL SURVEY	
580	594944-0000	-		1	CIRCUIT DIAG.C-LUB.	
700	591653-0000	-		1	SETTING PLATE	
710	591670-0000	-		1	SETTING PLATE	
910	90347-0079	-		3	DAMPER	

Pos	Part No	SP	UN	Qty	Description	Page No

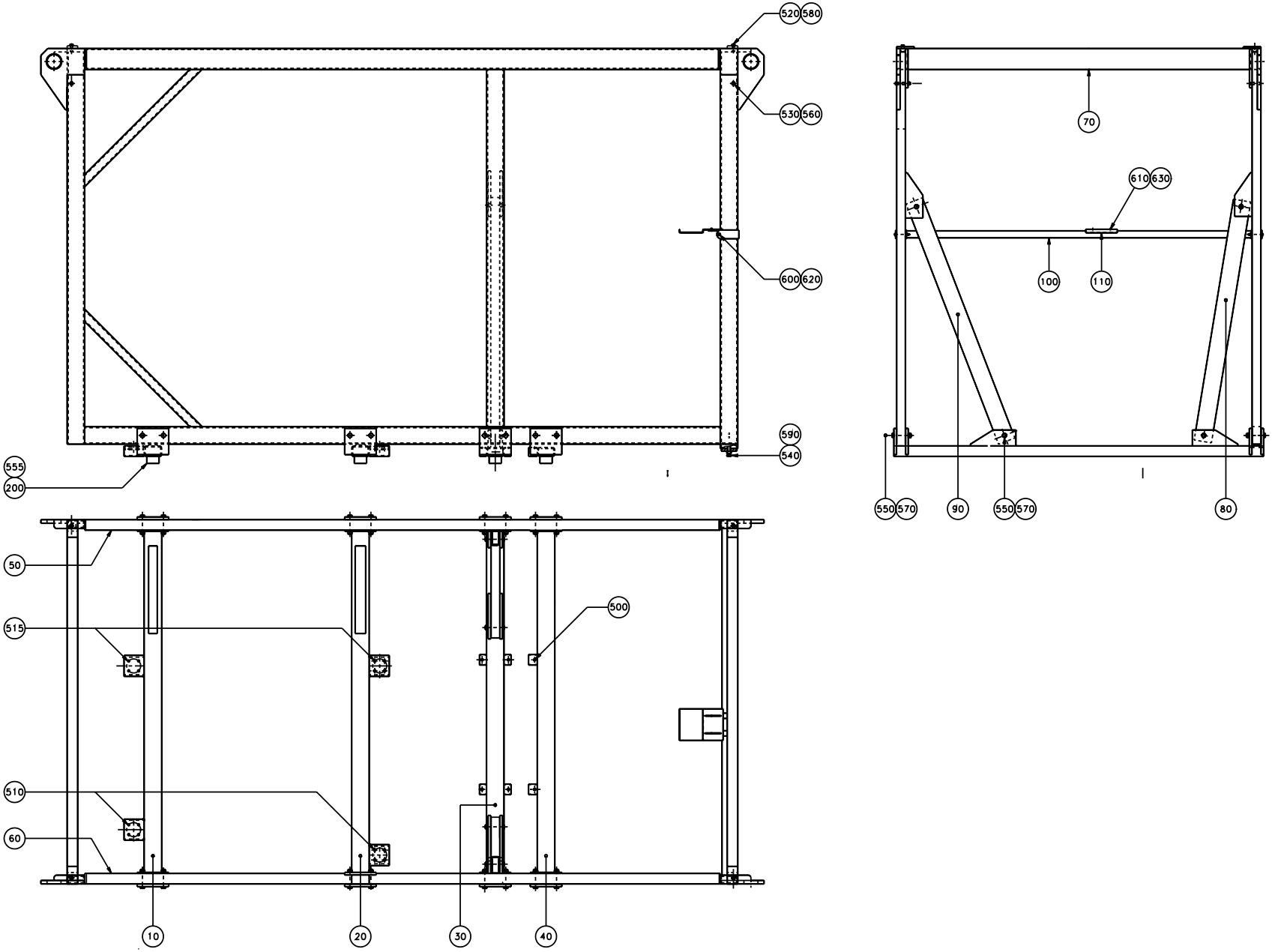

59495401.EPS
594954-1
ECN 70890

Pos	Part No	SP	UN	Qty	Description	Page No
-						
010	563451-0000	-		1	BEAM 1	
020	563452-0000	-		1	BEAM 2	
030	563453-0000	-		1	BEAM 3	
040	563454-0000	-		1	BEAM 4	
050	563455-0000	-		1	GABLE RIGHT	
060	563456-0000	-		1	GABLE LEFT	
070	563457-0000	-		2	CORNER BEAM	
080	563458-0000	-		1	CROSS BAR LEFT	
090	563459-0000	-		1	CROSS BAR	
100	594960-0000	-		1	SUPPORT BEAM	
110	594961-0000	-		1	SUPPORTING SHEET	
200	565570-0000	-		12	SUPPORT	
500	312101-0493	-		6	SCREW M6S10X25FZB	
510	312101-0453	-		8	SCREW M6S8X25FZB	
515	312101-0457	-		8	SCREW M6S8X35FZB	
520	312101-0538	-		4	SCREW M6S12X35FZB	
540	312104-0634	-		2	SCREW M6S16X70H8.8FZB	
550	312101-0640	-		12	SCREW M6S16X100FZB	
555	312111-0451	-		1	SCREW MC6S8X20FZB	
560	312810-0322	-		4	LOCK NUT 12FZB	
570	312810-0324	-		16	LOCK NUT 16FZB	
580	315121-0179	-		4	WASHER BRSB13,5X36FZB	
590	312901-0324	-		2	NUT M6M16VFZB	
600	312101-0384	-		2	SCREW M6S6X70FZB	
610	312101-0368	-		2	SCREW M6S6X16FZB	
620	312810-0318	-		2	LOCK NUT 8FZB	
630	312810-0316	-		2	LOCK NUT 6FZB	

Pos	Part No	SP	UN	Qty	Description	Page No

This page is intentionally left blank

Pos	Part No	SP	UN	Qty	Description	Page No
-						
010	76501-0000	-		2	LIFTING ARM	
020	B 76502-0000	-		1	SHAFT	
030	B 76503-0000	-		1	RETARD PIN	
100	312105-0325	-		1	SCREW M6S5X10 A2 80	

Pos	Part No	SP	UN	Qty	Description	Page No

This page is intentionally left blank

Pos	Part No	SP	UN	Qty	Description	Page No
76502-0000						
	315101-0171	-		1	WASHER BRB10X18FZB	
76503-0000						
	90155-0008	-	M	1	CHAIN	
76503-0000						
	312125-0232	-		1	SLOTTED HEMCS3X25RFR	

Pos	Part No	SP	UN	Qty	Description	Page No

This page is intentionally left blank

Pos	Part No	SP	UN	Qty	Description	Page No
-						
0010	A 558862-0100	-		1	ELECTRIC MATERIALS	
0020	A 558863-0100	-		1	ELECTRICAL DOCUMENT	

Pos	Part No	SP	UN	Qty	Description	Page No

This page is intentionally left blank

Pos	Part No	SP	UN	Qty	Description	Page No
-						
0001	351179-0110	-	M	7	CABLE AWM BLACK 25MM2	
0002	351179-0110	-	M	7	CABLE AWM BLACK 25MM2	
0003	351179-0110	-	M	7	CABLE AWM BLACK 25MM2	
0004	351179-0110	-	M	7	CABLE AWM BLACK 25MM2	
0005	351123-0165	-	M	10	CABLE FKK FKK,4X2,5	
0009	351150-0407	-	M	10	CABLE OLFLEX 12X0,75 MM2	
0012	351150-0405	-	M	10	CABLE OLFLEX 5X0,75 MM2	
0021	351150-0406	-	M	5	CABLE OLFLEX 7X0,75 MM2	
0370	351150-0403	-	M	2	CABLE OLFLEX 3X0,75 MM2	
0371	351150-0403	-	M	2	CABLE OLFLEX 3X0,75 MM2	
0372	351150-0403	-	M	2	CABLE OLFLEX 3X0,75 MM2	
1000	351172-0102	-	M	20	CABLE AWM BLÅ 0,75MM2	

Pos	Part No	SP	UN	Qty	Description	Page No

This page is intentionally left blank

Pos	Part No	SP	UN	Qty	Description	Page No
-						
0102	43756-0000	-	M	x	CIRCUIT DIAGRAM POS.SUMM.	
0103	43756-0000	-	M	x	CIRCUIT DIAGRAM POS.SUMM.	
0106	43756-0000	-	M	x	CIRCUIT DIAGRAM	
0138	43756-0000	-	M	x	CIRCUIT DIAGRAM	
0139	43756-0000	-	M	x	CIRCUIT DIAGRAM	
0150	43756-0000	-	M	x	CIRCUIT DIAGRAM	
0191	43756-0000	-	M	x	TERMINAL SUMMARY	
0199	43756-0000	-	M	x	ALTERATION MESSAGES	
0201	47200-0000	-	M	x	LIST OF PLC-BLOCKS	
0202	47200-0000	-	M	x	LIST OF PLC-ADRESSES	
0205	47200-0000	-	M	x	PLC-PROGRAMME LIST	
0217	47200-0000	-	M	x	PLC-PROGRAMME LIST	
0219	47200-0000	-	M	x	PLC-PROGRAMME LIST	
0316	51495-0000	-	M	x	MOUNTING DRAWING MACHINE	
0405	60733-0000	-	M	x	CONNECTION DIAGRAM	
0417	60733-0000	-	M	x	CONNECTION DIAGRAM	
0418	60733-0000	-	M	x	CONNECTION DIAGRAM	
0425	60733-0000	-	M	x	CONNECTION DIAGRAM	
0501	66400-0000	-	M	x	CHANGE CONN. SCHEDULE	
0601	52807-0000	-	M	x	REBUILDING DESCRIPTION	
0020	A 558862-0100	-		1	ELECTRIC MATERIALS	

Pos	Part No	SP	UN	Qty	Description	Page No

This page is intentionally left blank

Pos	Part No	SP	UN	Qty	Description	Page No
76502-0000						
	315101-0171	-		1	WASHER BRB10X18FZB	
76503-0000						
	90155-0008	-	M	1	CHAIN	
76503-0000						
	312125-0232	-		1	SLOTTED HEMCS3X25RFR	
90042-0074						
	90042-0371	F		1	WEAR & TEAR PARTS KIT	
90042-0074						
	90042-0385	-		1	SEAL KIT	
90239-0084						
	90239-0348	K		1	SEAL KIT	
90239-0779						
	90239-0442	K		1	SEAL KIT	
90321-0015						
	90321-0466	K		1	SPARE PART KIT	
90321-0015						
	90321-0481	K		1	GASKET	
90415-0022						
	90415-0320	K		1	FILTER INSERT	
90416-0021						
	90416-0373	K		1	CAM ROLLER	
90416-0021						
	90416-0374	K		1	PROTECTION RING	
90416-0021						
	90416-0375	K		1	CAM	
271499-0000						
	351121-0110	-	M	1	CABLE RHH 25	
271499-0000						
	353102-0175	-		1	CABLE SHOEYAEV25-M6	
295201-0000						
	312911-0118	-		11	THREADED I M6X1,5D	
295201-0000						
	312911-0126	-		2	THREADED I M8X1,5D	
295307-0000						
	90012-0058	-		1	GLAND	
295307-0000						
	90152-0019	-	M	1	HOSE	
456905-0000						
0010	1282582-0000	-		1	CAST WORKPIECE	
469041-0000						
0010	1282583-0000	-		1	CAST WORKPIECE	
490618-0000						
	90330-0106	-		1	PIPE COUPLING	
491847-0000						
	491289-0000	-		1	TENSION SPROCKET	
574404-0000						
0010	1282582-0000	-		1	CAST WORKPIECE	
574416-0000						
0010	1282583-0000	-		1	CAST WORKPIECE	
751503-0000						
	90166-0179	-	M	1	SHRINKABLE HOSE	
752140-0000						
	90166-0179	-	M	1	SHRINKABLE HOSE	
752155-0000						
	90166-0179	-	M	1	SHRINKABLE HOSE	
	978048-0001	-	M	x		

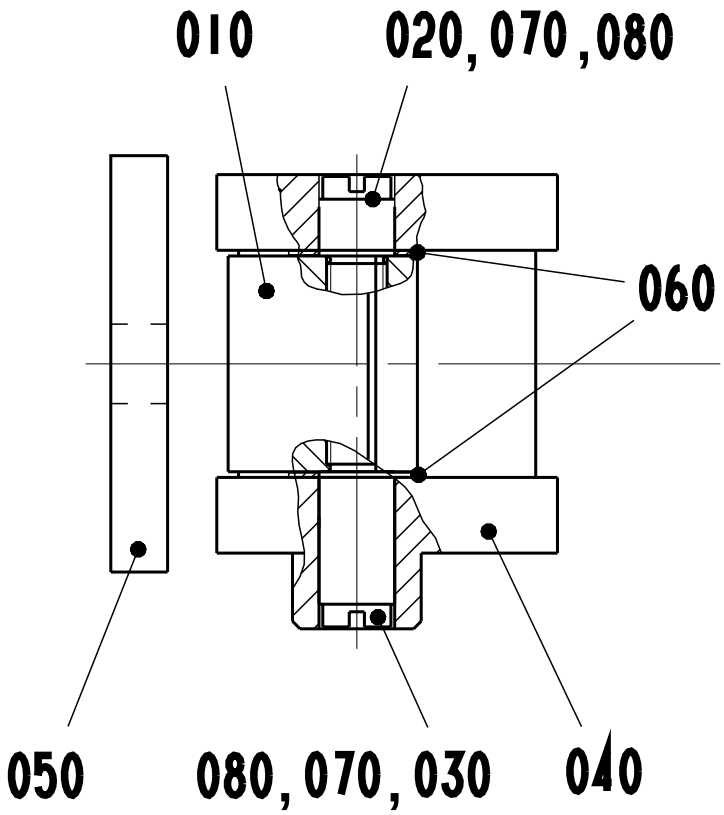
010
020, 070, 080
060
050
080, 070, 030
040

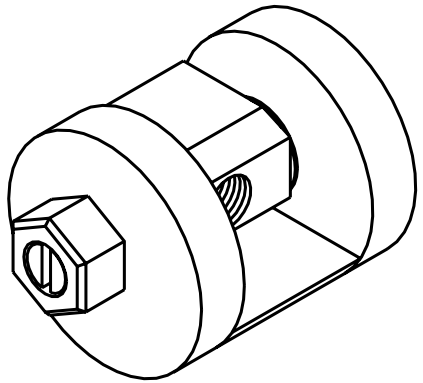

Pos	Part No	SP	UN	Qty	Description	Page No
-						
010	978049-0000	D		1	NUT	
020	978050-0001	D		1	SCREW	
030	978050-0002	D		1	SCREW	
040	978051-0000	D		1	ECCENTRIC	
050	978052-0000	D		1	WASHER	
060	2033-0009	D		2	WASHER	
070	90157-0016	-		x	LOCKING FLUID	
080	90296-0012	-	KG	x	LUBRICANT	
	978763-0001	-	KG	x		

Pos	Part No	SP	UN	Qty	Description	Page No

This page is intentionally left blank

Pos	Part No	SP	UN	Qty	Description	Page No
-						
030	90153-0054	-	L	x	ADHESIVE	
035	90153-0055	-	L	x	ADHESIVE	

Pos	Part No	SP	UN	Qty	Description	Page No

SPC

Spare Parts Catalogue

Part No	Description	Page No
1065410-0000	SLOTTED PIN	115
1103765-0000	PAPER SUPPORT	145
1105373-0000	BOW CLAMP	19
1105375-0000	FASTENING BRACKET	19
1105377-0000	FASTENING BRACKET	19
1105378-0000	BRACKET	19
1105381-0000	GUIDE FINGER	19
1116148-0000	COVER	125, 127
1116150-0000	COVER	125, 127
1116151-0000	GLASS	125, 127
1116152-0000	GLASS	125, 127
1116270-0000	LOCK COMPONENT	125, 127
1116271-0000	BRACKET	125, 127
1116273-0000	SPACER	125, 127
1116274-0000	SPACER	125, 127
1116275-0000	GUIDE	125, 127
1116276-0000	GUIDE	125, 127
1116277-0000	BRACKET	125, 127
1116278-0000	BRACKET	125, 127
1116279-0000	BRACKET	125, 127
1116280-0000	BRACKET	125, 127
1116281-0000	SWITCH BRACKET	125, 127
1116282-0000	SWITCH BRACKET	125, 127
1116283-0000	BEAM	125, 127
1116284-0000	GUIDE HOLDER	125, 127
1279086-0000	LOCKING PLATE	17
1279087-0000	LOCKING PLATE	13, 15
1279088-0000	LOCKING PLATE	15
1279089-0000	LOCKING PLATE	15
1279090-0000	LOCKING PLATE	17
1279091-0000	LOCKING PLATE	13
1279092-0000	LOCKING PLATE	11
1279093-0000	LOCKING PLATE	17
1279094-0000	LOCKING PLATE	17
1279095-0000	LOCKING PLATE	11
1279096-0000	LOCKING PLATE	11
1282424-0000	BEARING HOUSING	29, 31, 33, 35
1282582-0000	CAST WORKPIECE	13, 165
1282583-0000	CAST WORKPIECE	15, 165
1296912-0000	ROLL	13
1296913-0000	ROLL	13
1296914-0000	ROLL	13
1296915-0000	ROLL	13
2033-0009	WASHER	93, 167
2033-0011	WASHER	11, 13, 15, 17, 147, 149
20705-0001	INSULATING PIPE	69
20772-0000	INSULATOR BODY	69
209331-0005	GEAR WHEEL	9
21047-0000	LOCK WASHER	61
22559-0000	GRUB SCREW	145
23582-0000	HOLDER	19
23584-0000	SCREW	19
23771-0000	SPACER RING	69
239440-0000	SHAFT	11
252766-0001	INSULATING PIPE	67
253107-0000	WASHER	147, 149
255969-0000	SHAFT	11
256190-0000	NUT	91
256208-0400	KNIFE HOLDER	27
256248-0001	LID	147, 149
256276-0000	SHAFT	87
256279-0000	ANGLE	15
256280-0000	DOWEL	13, 15
256309-0000	SHAFT	13
256312-0000	WASHER	13
256406-0000	GABLE PLATE	147, 149
256409-0000	WASHER	147, 149
256410-0600	INDEXING UNIT	49
256437-0200	DISC COUPLING	49
256438-0200	WORM GEAR	49
256461-0000	DOWEL	61
256462-0000	SCREW	61
256463-0000	WASHER	61
256859-0000	SCREW	41, 43
256860-0000	ROLL	41, 43
256907-0000	WASHER	77
257042-0000	BRACKET	11
257043-0000	ANGLE BRACKET	11
257044-0000	ROLL	11
257090-0000	SHIFTER HANDLE	13
257133-0000	LID	129
257141-0000	RETAINING RING	147, 149
260427-0000	WASHER	61
26490-0000	WASHER	13
265568-0000	DUST COVER	147, 149
271116-0300	ANGULAR TRANSMITTER	49

Part No	Description	Page No
271387-0300	SPRAY GUN	49
271499-0000	ELECTRICAL CONNECTION	67
271586-0001	WASHER	123
271591-0000	BUTTON	85
271731-0000	COMPRESSION SPRING	61, 81
272191-0000	DISTRIBUTOR	77
272576-0000	BRACKET	61
272640-0002	COUNTER CAM	27
272647-0000	SHAFT	129
272648-0000	TIMING BELT PULLEY	129
272652-0300	CHAIN TENSIONER	87
272659-0000	SIDE PIECE	85
272660-0000	SIDE PIECE	85
272661-0000	STAIR	85
272673-0000	LEG	85
272741-0000	SEAL	77
272743-0000	LID	85
272746-0000	ROD	63
272747-0000	CONNECTION	63
272751-0000	BOTTOM VALVE	79
272753-0000	STEERING	37
272755-0000	NUT	37
272758-0000	TIMING BELT PULLEY	65
272985-0001	ARM	41, 43
272997-0000	STOPPER	87
28036-0000	WASHER	145, 147, 149
28037-0000	WASHER	13
29413-0000	LACE	69
295072-0000	BUFFER RING	61, 81
295201-0000	FRAME	71
295202-0002	SWIVEL	71
295203-0000	LID	71
295204-0001	SHIM	71
295204-0002	SHIM	71
295204-0003	SHIM	71
295205-0000	SPACER SLEEVE	71
295206-0000	FLAP	71
295207-0000	HOLDER	71
295208-0000	SECURING PLATE	71
295306-0000	COVER	67
295307-0000	FLEXIBLE CONDUIT	67
295313-0000	SHAFT	71
295317-0000	WASHER	71

Part No	Description	Page No
295417-0000	GASKET	117
295423-0000	SEAL	125, 127
295431-0000	SCREW	71
295432-0000	SCREW	71
295434-0000	BUSHING	117
30311-0001	HEATING ELEMENT	69
30311-0002	HEATING ELEMENT	69
311103-0238	CYLINDRICACP M6 3X20 RFR	11
311103-0272	CYLINDRICACP M6 4X20 RFR	23, 25
311103-0276	CYLINDRICACP M6 4X30 RFR	61
311103-0280	CYLINDRICACP M6 4X40 RFR	45, 47
311103-0401	CYLINDRICACP M6 8X20 RFR	87
311112-0258	SLOTTED TURP 4X24 RFR	101, 111
311112-0262	SLOTTED TURP 4X32 RFR	97
311411-0140	SPLIT PIN SP1,6X16RFR	11
311411-0150	SPLIT PIN SP2X12RFR	17
311411-0152	SPLIT PIN SP2X16RFR	91
312101-0329	SCREW M6S5X16FZB	65
312101-0366	SCREW M6S6X12FZB	129
312101-0368	SCREW M6S6X16FZB	153
312101-0384	SCREW M6S6X70FZB	153
312101-0453	SCREW M6S8X25FZB	63, 153
312101-0455	SCREW M6S8X30FZB	63
312101-0457	SCREW M6S8X35FZB	153
312101-0459	SCREW M6S8X40FZB	63
312101-0493	SCREW M6S10X25FZB	153
312101-0530	SCREW M6S12X16FZB	55
312101-0538	SCREW M6S12X35FZB	153
312101-0552	SCREW M6S12X100FZB	65
312101-0640	SCREW M6S16X100FZB	153
312104-0634	SCREW M6S16X70H8.8FZB	153
312105-0287	SCREW O4017 M4X8A280	97
312105-0293	SCREW O4017 M4X16A280	81
312105-0297	SCREW O4014 M4X25A280	87
312105-0325	SCREW M6S5X10 A2 80	61, 81, 103, 155
312105-0327	SCREW O4017 M5X12A280	67, 113
312105-0329	SCREW O4017 M5X16A280	17, 97, 113, 137
312105-0331	SCREW O4017 M5X20A280	57
312105-0332	SCREW M6S5X22RFR	13, 17
312105-0333	SCREW O4017 M5X25A280	81
312105-0337	SCREW O4014 M5X35A280	55
312105-0341	SCREW O4014 M5X50A280	67
312105-0362	SCREW O4017 M6X8A280	145

Part No	Description	Page No
312105-0364	SCREW M6S6X10RFR	11, 87
312105-0366	SCREW O4017 M6X12A280	71, 87, 107, 123, 137
312105-0367	SCREW M6S6X14RFR	29, 31, 33, 35, 85
312105-0368	SCREW O4017 M6X16A280	11, 13, 15, 45, 47, 53, 61, 67, 87, 101, 107, 123, 125, 127
312105-0370	SCREW O4017 M6X20A280	53, 67, 71, 83, 97, 107, 111, 117, 123, 137, 147, 149
312105-0371	SCREW M6S6X22RFR	13, 115
312105-0372	SCREW O4017 M6X25A280	11, 61, 77, 117, 125, 127, 147, 149
312105-0374	SCREW O4017 M6X30A280	61, 71, 81, 83, 99, 117, 123, 125, 127
312105-0376	SCREW O4017 M6X35A280	41, 43, 71, 115, 125, 127, 129
312105-0378	SCREW O4017 M6X40A280	67, 77, 125, 127
312105-0379	SCREW O4014 M6X45A280	125, 127
312105-0380	SCREW O4014 M6X50A280	123, 125, 127
312105-0384	SCREW O4014 M6X70A280	117
312105-0447	SCREW O4017 M8X12A280	11, 125, 127, 145
312105-0449	SCREW O4017 M8X16A280	97, 113, 117
312105-0451	SCREW SO4017 8X20A280	11, 13, 15, 85, 97, 117, 139, 147, 149
312105-0453	SCREW O4017 M8X25A280	11, 97, 101, 115, 139
312105-0455	SCREW O4017 M8X30A280	15, 75, 81, 85, 97, 109
312105-0457	SCREW O4017 M8X35A280	15, 97, 147, 149
312105-0459	SCREW O4017 M8X40A280	87, 97, 111, 115, 147, 149
312105-0460	SCREW O4017 M8X45A280	111, 125, 127
312105-0463	SCREW O4014 M8X60A280	77
312105-0464	SCREW O4014 M8X65A280	107
312105-0491	SCREW 4017 M10X20A280	109
312105-0492	SCREW M6S10X22RFR	23, 25
312105-0493	SCREW 4017 M10X25A280	97, 103, 147, 149
312105-0495	SCREW 4017 M10X30A280	17, 85
312105-0497	SCREW 4017 M10X35A280	109
312105-0500	SCREW 4017 M10X45A280	109
312105-0501	SCREW 4017 M10X50A280	105, 107
312105-0511	SCREW 014 M10X100A280	109
312105-0532	SCREW 4017 M12X20A280	117
312105-0536	SCREW 4017 M12X30A280	11, 17
312105-0538	SCREW 4017 M12X35A280	117
312105-0540	SCREW 4017 M12X40A280	71, 109
312105-0547	SCREW M6S12X75RFR	59
312111-0307	SCREW	113
312111-0325	SCREW MC6S5X10FZB	129
312111-0451	SCREW MC6S8X20FZB	153
312115-0291	SCREW O4762 M4X12A280	137
312115-0327	SCREW O4762 M5X12A280	103, 109
312115-0329	SCREW O4762 M5X16A280	29, 31, 33, 35
312115-0331	SCREW O4762 M5X20A280	61
312115-0333	SCREW O4762 M5X25A280	125, 127, 147, 149
312115-0366	SCREW O4762 M6X12A280	19, 23, 25
312115-0368	SCREW O4762 M6X16A280	19
312115-0370	SCREW O4762 M6X20A280	113
312115-0372	SCREW O4762 M6X25A280	19, 87
312115-0374	SCREW O4762 M6X30A280	133
312115-0449	SCREW O4762 M8X16A280	41, 43, 61
312115-0457	SCREW O4762 M8X35A280	81
312125-0222	SLOTTED HEMCS3X8RFR	125, 127
312125-0226	SLOTTED HEMCS3X12RFR	125, 127
312125-0230	SLOTTED HEMCS3X20RFR	133, 147, 149
312125-0232	SLOTTED HEMCS3X25RFR	157, 165
312125-0287	SLOTTED HEMCS4X8RFR	133
312125-0289	SLOTTED HEMCS4X10RFR	147, 149
312125-0325	SLOTTED HEMCS5X10RFR	147, 149
312125-0364	SLOTTED HEMCS6X10RFR	135
312132-0287	SLOTTED HEMSCS4X8MSGFN	125, 127
312145-0291	SLOTTED HEMFS4X12RFR	41, 43
312155-0291	SCREW MF6S4X12RFR	101, 125, 127, 147, 149
312155-0293	SCREW MF6S4X16RFR	125, 127
312155-0295	SCREW MF6S4X20RFR	61
312155-0299	SCREW MF6S 4X30 A4 80	89, 119, 121
312155-0323	SCREW MF6S5X8RFR	115
312155-0327	SCREW MF6S5X12RFR	147, 149
312155-0366	SCREW MF6S6X12RFR	45, 47
312155-0368	SCREW MF6S6X16RFR	145
312155-0370	SCREW MF6S6X20RFR	125, 127
312155-0372	SCREW MF6S6X25RFR	115, 125, 127
312155-0449	SCREW MF6S8X16RFR	61
312155-0453	SCREW MF6S8X25RFR	61
312155-0457	SCREW MF6S8X35RFR	147, 149
312155-0459	SCREW MF6S8X40RFR	115
312303-0374	STUD SCREWMPS 6X25 RFR	87
312303-0548	STUD SCREWMPS 12X70 RFR	59
312311-0327	STOP SCREW T6SS5X12FZB	81
312318-0218	STOP SCREW SK6SS3X4RFR	143
312318-0285	STOP SCREW SK6SS4X6RFR	11, 17, 107
312318-0291	STOP SCREW SK6SS4X12RFR	19
312318-0323	STOP SCREW SK6SS5X8RFR	71, 109
312318-0325	STOP SCREW SK6SS5X10RFR	87
312318-0362	STOP SCREW SK6SS6X8RFR	53, 103, 109, 147, 149

Part No	Description	Page No
312605-0310	NUT M6M3RFR	125, 127
312605-0312	NUT M6M4RFR	101, 125, 127
312605-0314	NUT M6M5RFR	19, 81, 125, 127, 137
312605-0316	NUT M6M6RFR	61, 69, 75, 77, 87, 99, 107, 117, 123, 125, 127, 137, 143, 145
312605-0318	NUT M6M8RFR	15, 53, 81, 97, 99, 107, 109, 111, 117, 145
312605-0320	NUT M6M10RFR	11, 61, 81, 97, 109, 137
312605-0322	NUT M6M12RFR	59, 109
312705-0316	CAP NUT MHM 6 A2	123, 125, 127
312715-0116	WING NUT MVM-K 6 A2	123
312715-0118	WING NUT MVM-K 8 A2	123
312805-0106	ROUND NUT KM6	57
312810-0316	LOCK NUT 6FZB	153
312810-0318	LOCK NUT 8FZB	153
312810-0322	LOCK NUT 12FZB	153
312810-0324	LOCK NUT 16FZB	57, 153
312812-0314	LOCK NUT A2-M5RFR	137
312812-0316	LOCK NUT A2-M6RFR	41, 43
312812-0318	LOCK NUT A2-M8RFR	147, 149
312901-0324	NUT M6M16VFZB	153
312902-0316	NUT M6M6VRFR	137
312911-0118	THREADED I M6X1,5D	73, 165
312911-0126	THREADED I M8X1,5D	73, 165
31390-0110	ELEMENT	67
315101-0171	WASHER BRB10X18FZB	157, 165
315101-0178	WASHER BRB13X24FZB	59, 65
315105-0124	WASHER BRB3,2X6RFR	125, 127, 147, 149
315105-0136	WASHER BRB4,3X8RFR	81, 87, 97, 101, 113, 125, 127, 147, 149
315105-0146	WASHER BRB5,3X10RFR	19, 55, 57, 67, 97, 103, 113, 137, 147, 149
315105-0153	WASHER BRB6,4X12RFR	11, 19, 45, 47, 53, 67, 69, 71, 77, 83, 85, 87, 97, 99, 101, 107, 111, 113, 115, 117, 123, 125, 127, 137, 143, 145, 147, 149
315105-0165	WASHER BRB8,4X16RFR	11, 13, 17, 61, 75, 81, 85, 97, 99, 101, 107, 109, 111, 115, 117, 123, 125, 127, 139, 143, 145, 147, 149
315105-0173	WASHER BRB10,5X22RFR	85, 97, 103, 105, 107, 109, 147, 149
315105-0178	WASHER BRB13X24RFR	71, 85, 109, 117
315111-0165	WASHER TBRB8,4X16FZB	87
315111-0186	WASHER TBRB17X30FZB	57
315115-0153	WASHER TBRB6,4X12RFR	61, 69, 123, 143
315115-0165	WASHER TBRB8,4X16RFR	11, 13, 15, 87
315115-0178	WASHER TBRB13X24RFR	11, 17
315121-0153	WASHER TBRSB6,4X22FZB	65, 117, 129
315121-0179	WASHER BRSB13,5X36FZB	153
315125-0146	WASHER	113
315125-0165	WASHER SB 8,4X26X5 RFR	81, 109, 123
315202-0110	O-RING 12,1X1,6	29, 31, 33, 35
315202-0118	O-RING 22,1X1,6	87
315202-0215	O-RING 19,2X3	87, 117
315202-0217	O-RING 24,2X3	89, 119, 121
315202-0304	O-RING 64,5X3	87
315202-0306	O-RING 74,5X3	55, 57
315204-0305	O-RING 69,5X3	67
315211-0103	SEALING WASHER	29, 31, 33, 35
315220-0210	SEAL RING V-60S	55, 57
315221-0177	SEAL RING CB35X52X7	57
315233-0101	SEAL RING M5	51
315233-0109	SEAL RING R1/8"	77, 87
315233-0110	SEAL RING R1/4"	131
315233-0111	SEAL RING R3/8"	77, 87
315233-0113	SEAL RING R1/2"	77, 131
315234-0101	SEAL RING M5	61, 81
315234-0110	SEAL RING R1/4"	65
315234-0113	SEAL RING R1/2"	65
315237-0111	SEAL RING 3/8"	117
315250-0103	GASKET 48/38	117
315250-0104	GASKET 61/51	117
315410-0106	LOCK WASHESKFMB6	57
31553-0001	WASHER	63
31559-0000	SPRING PLATE	63
315701-0199	FLAT WEDGE5X5X16	129
315701-0263	FLAT WEDGE8X7X20	59
315701-0271	FLAT WEDGE8X7X45	59
315705-0232	FLAT WEDGE	55, 103
315705-0265	FLAT WEDGE	103
315751-0103	CIRCLIP SGA 6 RFR	137
315751-0112	CIRCLIP SGA15 RFR	137
315751-0116	CIRCLIP SGA20 RFR	103
315751-0119	CIRCLIP SGA25 RFR	103
315752-0123	CIRCLIP SGH32	129
315755-0107	LOCKING WAE 5RFR	143
315755-0109	LOCKING WAE 7RFR	143
31653-0002	SHEET	69
321120-0101	BUSHING 6/8X6	143
321308-0202	BALL BEARISKF6002-2RS	129
342701-0205	BUSHING RNI1/2"-1/4"	131
342708-0107	SLEEVE 12X1/MS	77
342713-0210	BLIND PLUG	125, 127
342716-0203	REDUCER 6-8	77

Part No	Description	Page No
342722-0202	PIPE COUPLD=6-R1/8"	137
342728-0103	PIPE COUPLING	77
342732-0102	ELBOW PIPE D6-R1/8"	137
342736-0109	ELBOW PIPE W-12	7
342746-0114	T-CONNECTI T-15	77
342748-0102	T-CONNECTI D=6	77, 137
342797-0121	BANJO CONNSINGEL 6-1/8	11
342903-0111	NUT JƒDER 1723-6/4	137
342903-0121	NUT JÄDER 1723-8/6	137
342920-0114	PIPE COUPL6/4-1/4	59
342920-0122	PIPE COUPL8/6-1/4	67, 77
342920-0141	PIPE COUPL12/10-3/8	125, 127
342920-0151	PIPE COUPL15/12,5-1/2	125, 127
342921-0112	PIPE COUPL6/4-6M	75
342921-0113	PIPE COUPL6/4-1/8"	87
342921-0121	PIPE COUPL8/6-1/8"	77
342930-0141	ELBOW PIPE12/10X3/8	125, 127
342940-0141	T-CONNECTI12/10-3/8	125, 127
342960-0112	BULKHEAD L6/4	77, 87, 137
342960-0121	BULKHEAD L8/6-6/4	21, 77, 137
342960-0122	BULKHEAD L8/6	77
342980-0113	BANJO CONNSINGEL 6/4-1/8	61, 79
342980-0114	BANJO CONNSINGEL 6/4-1/4	21
342980-0122	BANJO CONNSINGEL 8/6-1/4	21
342980-0303	BANJO CONN SINGEL 1/8"	61, 79
342980-0304	BANJO CONN SINGEL 1/4	21
342991-0101	HOSE CLIP 11-17MMRFR	65
342991-0106	HOSE CLIP 26-38MMRFR	77, 123
351121-0110	CABLE RHH 25	67, 165
351123-0165	CABLE FKK FKK,4X2,5	161
351150-0403	CABLE OLFLEX 3X0,75 MM2	161
351150-0405	CABLE OLFLEX 5X0,75 MM2	161
351150-0406	CABLE OLFLEX 7X0,75 MM2	161
351150-0407	CABLE OLFLEX 12X0,75 MM2	161
351172-0102	CABLE AWM BLÅ 0,75MM2	161
351179-0110	CABLE AWM BLACK 25MM2	161
352100-0107	CABLE GLANR.18,6-12	67
352103-0100	CABLE GLANR.STR 9	137
352103-0105	CABLE GLANR.STR 11	135
352103-0106	CABLE GLANR.ST 11	135
352103-0108	CABLE GLANR.ST 13	133
352103-0111	CABLE GLANR.ST 16	133, 135
352103-0116	CABLE GLANR.ST 21	133
352110-0103	CRAMP TK 14-20	65
352113-0102	RIBBON CLAMP	133
352113-0202	ANCHOR TM2S8-M "REPBY 352113-205"	133
353001-0102	END SLEEVE0,75	133
353021-0216	FEED THROUGH TERMINAL WDU 2,5	135
353021-0219	FEED THROUKLÄMMA WDU 35	135
353024-0204	EARTH TERMLƒMMA WPE 2,5	135
353031-0201	END BRACKE 35	135
353033-0105	PARTITION WTW 2,5-10	135
353101-0123	CABLE SHOE	117
353101-0126	CABLE SHOE	117
353102-0175	CABLE SHOEYAEV25-M6	67, 165
359000-0400	MARKING CO2/4"0"	77, 137
359000-0401	MARKING CO2/4"1"	77, 137
359000-0402	MARKING CO2/4"2"	137
359000-0407	MARKING CO2/4"7"	77, 137
359011-0807	MARKING PL5-FW 1-50	135
35918-0000	SHAFT	17
35919-0000	COMPRESSION SPRING	17
36325-0000	KNOB	17
37535-0000	SUPPORTING PART	69
37536-0000	INSULATOR BODY	69
37537-0000	SPACER RING	69
43756-0000	ALTERATION MESSAGES	163
43756-0000	CIRCUIT DIAGRAM	163
43756-0000	CIRCUIT DIAGRAM POS.SUMM.	163
43756-0000	TERMINAL SUMMARY	163
441304-0400	MOVABLE FORMING RING	9
441307-0300	UPPER TUBE SUPPORT	9
441328-0000	GUIDE PIN	91
441483-0000	CYLINDER BRACKET	11
441486-0400	DIVIDED FORMING RING	9
441499-0000	HOLDER	77
441500-0000	HOSE	77
441589-0000	SHIM	57
441597-0000	BEARING CONSOLE	129
441600-0000	LINK ARM	87
441725-0000	COVERING PLATE	151
441726-0000	COMPRESSION SPRING	37
441792-0000	HEAD	89, 119, 121
441793-0000	BEARING HOUSING	89, 119, 121
441794-0000	PIVOT PIN	89, 119, 121
441795-0000	WASHER	89, 119, 121

Part No	Description	Page No
441796-0000	SEAL	89, 119, 121
441797-0000	SHIM	89, 119, 121
441798-0100	ROTOR	87
441799-0000	ATTACHMENT	89
441800-0000	STRAIGHT FITTING	121
441811-0100	ROTOR	117
441894-0000	SLEEVE	61, 81
441895-0000	BUFFER RING	61, 81
441896-0000	WASHER	61, 81
456009-0000	LINK	37
456042-0000	SCREW	13
456182-0000	PLATE	17
456230-0000	ANGLE BRACKET	17
456249-0000	PROTECTIVE COVER	133
456293-0000	PIPE	117
456309-0500	LOWER FORMING RING	9
456331-0000	ANGLE BRACKET	147, 149
456395-0000	GASKET	117
456396-0000	GASKET	117
456854-0001	CRAMP	77
456854-0002	CRAMP	77
456872-0000	LOCK PLATE	17
456905-0000	FASTENING PLATE	13
456907-0000	LOCK PLATE	13
469041-0000	HOLDER	15
469047-0000	ANGLE	15
469068-0000	SLEEVE	125, 127
469078-0000	HOLDER	15
469095-0000	HOLDER	97, 117
469096-0000	LEG	97, 117
469745-0000	BRACKET	17
47200-0000	LIST OF PLC-ADRESSES	163
47200-0000	LIST OF PLC-BLOCKS	163
47200-0000	PLC-PROGRAMME LIST	163
486268-0000	NUT	115
490618-0000	BRANCH	77
490932-0000	SLEEVE	87
490933-0000	NUT	87
490942-0000	COMPRESSION SPRING	61
490980-0000	CYLINDER	61, 81
491022-0000	CYLINDER BRACKET	11
491153-0000	COMPRESSION GLAND	13
491227-0000	SLIDER	51
491228-0001	SHAFT	51
491228-0002	SHAFT	51
491229-0000	BUSHING	51
491230-0000	GRUB SCREW	51
491231-0000	BUSHING	51
491265-0000	PLATE	83
491266-0000	SHIM	83
491289-0000	TENSION SPROCKET	57, 165
491291-0000	LID	57
491630-0000	SCREW	129
491731-0000	WASHER	91
491732-0000	WASHER	91
491771-0000	BRACKET	61
491772-0001	SPINDLE	61
491802-0000	WASHER	61
491803-0000	HOUSE	61
491807-0000	PIPE	77
491846-0200	TENSION SPROCKET	49
491848-0000	SHAFT	57
491965-0000	CAM	147, 149
51495-0000	MOUNTING DRAWING MACHINE	163
525233-0000	GASKET	69
52807-0000	REBUILDING DESCRIPTION	163
548599-0000	WASHER	115
556422-0000	PROTECTION	147, 149
556601-0000	BRACKET	115
556604-0000	COVER PLATE	115
556624-0000	FRAME BRACKET	115
558862-0100	ELECTRIC MATERIALS	159, 163
558863-0100	ELECTRICAL DOCUMENT	159
563451-0000	BEAM 1	153
563452-0000	BEAM 2	153
563453-0000	BEAM 3	153
563454-0000	BEAM 4	153
563455-0000	GABLE RIGHT	153
563456-0000	GABLE LEFT	153
563457-0000	CORNER BEAM	153
563458-0000	CROSS BAR LEFT	153
563459-0000	CROSS BAR	153
565462-0100	LOCK PLATE	15
565570-0000	SUPPORT	153
566404-0002	TIMING BELT	23, 25
570523-0000	CAP	139

Part No	Description	Page No
570524-0000	BEARING	139
571103-0000	NOZZLE	9
571534-0000	PLATE	13
571535-0000	CANTILEVER	13
571536-0000	CANTILEVER	13
574404-0000	BRACKET	13
574416-0000	BRACKET	15
574417-0000	ROLL	15
574418-0000	ROLL	15
574479-0000	ROLL	13
574480-0000	ROLL	13
574481-0000	ROLL	13
578628-0000	BEARING HOUSING	27
579974-0000	GEAR WHEEL	9
590321-0000	BRACKET	145
590328-0000	SHAFT	143
590329-0000	SHAFT	143
590331-0000	ROLLER	143
590333-0000	GUIDE WHEEL	143
590334-0000	LINK	143
590335-0000	BRACKET	143
590336-0000	HOLDER	143
591411-0000	SPROCKET	109
591412-0000	SPROCKET	109
591413-0000	SPROCKET	103
591414-0000	SPROCKET	103
591416-0000	CLAMPING ELEMENT	109
591417-0000	CARTON STATION	51
591418-0000	TURNING DEVICE	137
591419-0000	PUSHER	137
591420-0000	GUIDE PLATE	137
591422-0000	RIGGING SCREW	137
591423-0100	SHOCK ABSORBER	27
591424-0100	SHOCK ABSORBER	27
591425-0100	VOLUME FLAP	27
591426-0100	VOLUME FLAP	27
591427-0000	STOPPER	45
591428-0000	STOPPER	47
591429-0000	SPRING	45
591430-0000	SPRING	47
591431-0000	LINK	45, 47
591432-0000	SPACER	45, 47
591433-0000	SLEEVE	45, 47
591434-0000	WASHER	45, 47
591435-0000	CARRIER	41, 43
591436-0000	SHAFT	41, 43
591437-0000	DOWEL	41, 43
591438-0000	SHAFT	41, 43
591439-0000	VOLUME FLAP	41, 43
591440-0000	SHAFT	23, 25
591441-0000	MACHINE PLATE	7
591443-0000	RAIL LEFT	81
591444-0000	RAIL RIGHT	81
591445-0000	FOLDING FLAP RIGHT	29, 31, 33, 35
591446-0000	FOLDING FLAP LEFT	29, 31, 33, 35
591447-0000	BEVEL GEAR	109
591449-0000	COVER PLATE	109
591450-0000	LID	109
591451-0000	SPACER	137
591452-0000	MOUNTING PLATE	137
591453-0000	COVERING PLATE	137
591454-0000	GASKET	137
591455-0000	SPACER FRAME	85
591456-0000	CANTILEVER	71
591457-0000	BRACKET	137
591466-0000	CANTILEVER	97
591467-0000	COVER HOUSING	55
591468-0000	HOUSE	109
591470-0000	SEAL COVER	103, 109
591471-0000	FORK	109
591472-0000	CANTILEVER	109
591473-0000	PIVOT ARM	109
591475-0000	SHAFT	103
591476-0000	SHAFT	103
591477-0000	LUG	97
591478-0000	SIDE STEERING	103
591479-0000	BOTTOM GUIDE	103
591480-0000	SIDE PLATE	137
591481-0000	BRACKET	97
591482-0000	SPACER	97
591483-0000	CURVE SEGMENT	23, 25
591484-0000	CURVE SEGMENT	23, 25
591485-0000	CURVE	23, 25
591486-0000	CURVE	23, 25
591487-0000	CLEANING BOX	117
591489-0000	EXTENSION PIPE	117

Part No	Description	Page No
591491-0000	HOLDER	117
591492-0000	PILLAR	117
591493-0000	FRAME	117
591494-0000	SEPARATION INSERT	117
591496-0100	GUIDE RAIL	97
591502-0000	DOWEL	109
591503-0100	DRIVE WHEEL	49
591504-0000	DRIVE WHEEL	55
591505-0100	CHAIN GUIDE	97
591506-0000	SLIDING STRIP	101
591507-0000	FASTENING PLATE	101
591508-0000	SPACER PART	101
591509-0000	BRACKET	137
591510-0000	WASHER	137
591511-0000	BRACKET	137
591512-0000	SHAFT	137
591514-0100	TURNING DEVICE	49
591515-0000	CANTILEVER	97
591516-0000	SPACER PLATE	97
591521-0000	GABLE PART	97
591522-0000	PLATE	97
591525-0000	BRACKET	81
591526-0000	BLOCKING PIECE	81
591527-0000	BLOCKING PIECE	97
591529-0000	BLOCK	61
591530-0000	GUIDE ROD	107
591531-0000	SHAFT	109
591542-0000	SHAFT	53
591545-0000	SUPPORT	71
591546-0000	GABLE PLATE RIGHT	97
591547-0000	GABLE PLATE LEFT	97
591549-0000	GUIDE ROD	105
591550-0000	HEATING CHAMBER	67
591551-0000	SPACER PIECE	67
591552-0000	LID	67
591553-0000	FLANGE SEAL	67
591554-0000	STOP PLATE	67
591555-0000	PAPER SUPPORT	145
591556-0000	PAPER SUPPORT	145
591557-0000	SHIELD PLATE	87
591558-0000	SPACER DISC	97
591559-0000	VOLUME BULGE	41, 43
591560-0000	VOLUME SHIM	41, 43
591563-0000	SHAFT	147, 149
591564-0000	SPACER	147, 149
591565-0000	CREASE BAR	147, 149
591566-0000	LID	147, 149
591567-0000	LACE	147, 149
591568-0000	MACHINE BODY	85
591569-0000	SHIM	85
591570-0100	DISCHARGE UNIT	49
591571-0100	DRIVE UNIT	95
591572-0100	CONVEYING EQUIPMENT	95
591574-0100	SLIDE RAIL	97
591575-0000	PIPE	117
591576-0000	PIPE	77
591577-0000	PIPE	77
591578-0000	PIPE	77
591579-0000	PIPE	77
591580-0000	PIN	105
591582-0100	FINGER	95
591583-0000	FINGER	111
591584-0000	SIDE PLATE LEFT	111
591585-0000	SIDE PLATE RIGHT	111
591586-0000	HOLDER	111
591587-0000	PLATE	85
591588-0000	SHIM	71
591589-0000	ANGLE BRACKET	107
591590-0000	GUIDE ROD	107
591591-0000	STEERING RAIL	107
591592-0000	BRACKET	107
591593-0000	PIN	107
591594-0100	GUIDE	97
591595-0000	WASTE CHUTE	123
591596-0000	SIDE PLATE	123
591598-0000	GRUB SCREW	123
591600-0000	FRONT PLATE	123
591601-0000	WINDOW HATCH	123
591602-0000	PLATE	123
591603-0000	PLATE	123
591604-0000	SPACER	123
591605-0000	DOWEL	107
591606-0000	BRACKET	145
591607-0000	SPACER	145
591608-0000	DRIP PLATE	123
591609-0000	HEAT GUARD	145

Part No	Description	Page No
591610-0000	ANGLE BRACKET	145
591611-0000	HEAT GUARD	145
591612-0000	ANGLE BRACKET	145
591613-0000	ANGLE BRACKET	107
591614-0000	HOLDER	107
591615-0000	BOW CLAMP	107
591616-0000	LEAD ARM	143
591617-0000	LINK HEAD	107
591618-0100	PAPER GUIDE	9
591619-0000	SIDE PLATE	123
591620-0000	SIDE PLATE	123
591621-0100	PROTECTIVE COVER	49
591622-0000	CHECKER PLATE	123
591623-0000	SPACER PLATE	97
591624-0000	SPACER PIPE	97
591625-0000	NUT	97
591626-0000	PROFILE	97
591627-0000	PIPE	117
591628-0000	STRUT	97
591629-0000	HOLDER	97
591630-0000	DISTRIBUTOR	77
591633-0100	SERVICE TABLE	95
591634-0100	STATION CHAIN	49
591635-0100	GUIDE RAIL	49
591636-0000	JUNCTION PIPE	117
591637-0000	ATTACHMENT	119
591638-0000	HOLDER	97
591639-0000	ANGLE BAR	117
591640-0000	PIPE HOLDER	117
591641-0000	PIPE	117
591642-0000	CONNECTION BLOCK	117
591643-0100	PRESSURE DEVICE	49
591648-0000	ANGLE BRACKET	53
591649-0000	SHAFT	53
591650-0000	GUIDE RAIL RUGHT	53
591651-0000	GUIDE RAIL LEFT	53
591652-0000	SHIM	81
591653-0000	SETTING PLATE	151
591657-0000	HOLDER PRESSURE BLOCK	61
591659-0000	YOKE	61
591661-0000	AIR NOZZLE	67
591662-0000	NUT	67
591663-0000	COVER PLATE	151
591664-0100	CONNECTION BOX	133
591666-0000	FOLDING BAR	75
591667-0000	BLOCKING PIECE	61
591670-0000	SETTING PLATE	151
591671-0100	COVERING PANEL	49
591672-0100	CLEANING SYSTEM	49
591673-0000	SLEEVE	109
591674-0100	ROTOR	117
591675-0100	PIVOTING FRAME	49
591676-0100	TUBE ASSEMBLY	49
591677-0100	PULL DOWN DEVICE	49
591678-0100	FOLDING BAR	49
591679-0100	BOTTOM VALVE	49
591680-0100	GUIDE	49
591681-0100	MACHINE BODY	49
591682-0100	CANTILEVER	49
591683-0100	CABLE ASSEMBLY	49
591688-0000	HANDLE	67
591689-0000	PLATE	77
594905-0000	PROFILE	115
594906-0000	PROFILE	115
594907-0000	PROFILE	115
594908-0000	PROFILE	115
594909-0000	PROFILE	115
594910-0000	PROFILE	115
594911-0000	PROFILE	115
594912-0000	PROFILE	115
594913-0000	PROFILE	115
594914-0000	PROFILE	115
594915-0000	PROFILE	115
594916-0000	PROFILE	115
594917-0000	PROFILE	115
594918-0000	PLATE	115
594919-0000	PLATE	115
594920-0000	PLATE	115
594921-0000	PROFILE	115
594922-0000	PROFILE	115
594923-0000	PROFILE	115
594924-0000	GUIDE RIGHT	99
594925-0000	GUIDE LEFT	99
594926-0000	GUIDE RIGHT	99
594927-0000	GUIDE LEFT	99
594928-0000	BRACKET	99

Part No	Description	Page No
594929-0100	TABLE	113
594931-0100	CHAIN FEED CONVEYOR	97
594932-0100	FLAP SEALING UNIT	49
594933-0000	SHIM	111
594935-0000	HEAD	81
594936-0000	HOLDER	81
594937-0000	GUIDE	53
594938-0000	FASTENING PLATE	9
594939-0000	CARRIER RIGHT	29, 31
594940-0000	CARRIER LEFT	33, 35
594941-0000	VOLUME CAM RIGHT	27
594942-0000	VOLUME CAM LEFT	27
594944-0000	CIRCUIT DIAG.C-LUB.	151
594945-0000	PANEL SURVEY	151
594946-0100	BENDING ROLLER	7
594947-0100	CREASE UNIT	141
594948-0000	CARRIER RIGHT	27
594949-0000	CARRIER LEFT	27
594954-0100	CONVEYOR FRAME	151
594955-0000	AIR DIAGRAM	151
594958-0000	PIPE WATER	7
594959-0000	PIPE WATER	7
594960-0000	SUPPORT BEAM	153
594961-0000	SUPPORTING SHEET	153
595159-0100	CUTTING JAW RIGHT	27
595160-0100	CUTTING JAW LEFT	27
595161-0100	DRIVE UNIT	7
595162-0100	STRIP APPLICATOR	7
595163-0100	JAW SYSTEM	7
595164-0100	VALVE PANEL FRONT	7
595165-0100	SUPERSTRUCTURE	7
595166-0100	STRIP APPLICATOR	141
595167-0100	STRIP GUIDE	141
595170-0100	REGULAR ACCESSORIES	7
60733-0000	CONNECTION DIAGRAM	163
6278-0000	WASHER	75
648112-0100	FINAL FOLDER	7
66400-0000	CHANGE CONN. SCHEDULE	163
751017-0000	GASKET	117
751070-0000	DISTRIBUTOR BLOCK	87
751109-0000	RAIL RIGHT	83
751110-0000	RAIL LEFT	83
751125-0001	RAIL	135
751129-0000	CONNECTION BOX	135
751162-0000	INLET PIPE	117
751163-0000	COVER	61, 81
751267-0000	CANTILEVER	15
751283-0000	ROLL	15
751284-0000	ROLL	15
751287-0000	PLATE	15
751288-0000	PLATE	15
751318-0000	SHAFT	17
751333-0000	SETTING PLATE	13
751334-0000	SPACER	13
751491-0000	ROLL	13
751492-0000	ROLL	13
751494-0000	ROLL	13
751552-0000	ARM	61
751553-0000	ARM	61
751554-0001	SHAFT	61
751554-0002	SHAFT	61
751555-0000	BUSHING	61
751557-0000	SLEEVE	61
751579-0000	ADJUSTING SCREW	29, 31, 33, 35
751580-0000	SHIM	29, 31, 33, 35
752009-0000	RULERPART R	29, 31
752010-0000	RULERPART R	29, 31
752011-0000	RULERPART L	33, 35
752012-0000	RULERPART L	33, 35
752038-0000	SHIM	11
752057-0000	STOP	139
752083-0000	PISTON	61, 81
752093-0000	HOLDER	123
752115-0000	PLUNGER	29, 31, 33, 35
752126-0000	FORMING ROLLER	13
752127-0000	FORMING ROLLER	13
752128-0000	FORMING ROLLER	13
752129-0000	FORMING ROLLER	15
752130-0000	FORMING ROLLER	15
752131-0000	FORMING ROLLER	17
752132-0000	FORMING ROLLER	17
752133-0000	FORMING ROLLER	17
752134-0000	FORMING ROLLER	17
752135-0000	FORMING ROLLER	17
752136-0000	FORMING ROLLER	17
752137-0000	FORMING ROLLER	17

Part No	Description	Page No
752141-0000	FORMING ROLLER	13
752142-0000	FORMING ROLLER	13
752143-0000	FORMING ROLLER	13
752144-0000	FORMING ROLLER	15
752145-0000	FORMING ROLLER	15
752146-0000	FORMING ROLLER	17
752147-0000	FORMING ROLLER	17
752148-0000	FORMING ROLLER	17
752149-0000	FORMING ROLLER	17
752150-0000	FORMING ROLLER	17
752151-0000	FORMING ROLLER	17
752152-0000	FORMING ROLLER	17
752156-0000	FLANGE BUSHING	13, 17
752185-0000	SHAFT	17
752186-0001	SHAFT	15
752186-0002	SHAFT	13
752186-0003	SHAFT	17
752186-0004	SHAFT	15
752186-0005	SHAFT	13
752186-0006	SHAFT	13, 17
752186-0008	SHAFT	13
752186-0009	SHAFT	13
752186-0010	SHAFT	15
752186-0011	SHAFT	15
752186-0012	SHAFT	15
752187-0000	SHAFT	13
752200-0000	CANTILEVER	147, 149
752213-0000	BOTTOM PANEL	85
752240-0000	LID	147, 149
752288-0000	SLEEVE	29, 31, 33, 35
752476-0000	SCREW	29, 31, 33, 35
752485-0000	SUPPORTING ARM	87
752534-0000	PLATE	147, 149
752537-0000	BENDING ROLLER	147, 149
752538-0000	SHAFT	147, 149
752539-0000	PLATE	147, 149
752542-0002	BENDING ROLLER	147, 149
752543-0002	SHAFT	147, 149
752544-0001	SHIM	147, 149
752544-0002	SHIM	147, 149
752615-0000	SPACER	41, 43
752774-0000	PLUNGER	23, 25
76500-0100	LIFTING UNIT	151
76501-0000	LIFTING ARM	155
76502-0000	SHAFT	155
76503-0000	RETARD PIN	155
90002-0004	BLANK-OFF PLUG 22,5	135
90005-0007	WASHER	77
90005-0048	WASHER	87
90005-0056	WASHER	61
90005-0060	WASHER	45, 47
90012-0058	GLAND	67, 165
90012-0072	GLAND FITTING **	133
90012-0077	GLAND FITTING	87
90015-0023	BUSHING	133
90015-0028	LEAD-IN BUSHING	87
90017-0016	HANDLE	125, 127
90028-0020	CONE	61
90028-0021	CONE	61, 87
90028-0025	CONE	87
90030-0052	PIPE CONNECTION	73
90030-0067	GROMMET	77
90030-0091	PIPE CONNECTION	77
90030-0151	CONNECTION	77
90030-0185	PIPE CONNECTION	77
90032-0039	BLOCK	87
90032-0040	BLOCK	61
90042-0074	SOLENOID VALVE	21
90042-0326	COIL	21
90042-0366	CONTACT	21
90042-0371	WEAR & TEAR PARTS KIT	21, 165
90042-0385	SEAL KIT	21, 165
90044-0104	PROX.SWITCHIFM IN 3002	147, 149
90044-0124	INDUCTIVE SWITCH	87, 137
90044-0146	SAFETY SWITCH	125, 127
90045-0201	Motor	139
90055-0113	ELBOW PIPE JOINT	107
90055-0207	ELBOW PIPE JOINT	137
90056-0071	WORM GEAR	65
90061-0018	ANGLE ENCODER 8BIT GRAY	129
90061-0026	Increment Encoder	97
90077-0102	TERMINAL BK4 KRG 4-POLE	133
90087-0019	PLUG	61, 87
90090-0013	STEEL BALL	61, 81
90091-0136	SEAL RING	71
90091-0160	SEAL RING	61, 81

Part No	Description	Page No
90091-0162	GUIDE RING	61, 81
90091-0163	GUIDE RING	61, 81
90091-0165	SEAL RING	61, 81
90092-0048	OIL BRUSH	87, 97
90092-0054	VALVE	61, 87, 97
90099-0104	NUT PR 15,2 (PG9)	87
90115-0009	LINK HEAD	137
90115-0010	LINK HEAD	137
90134-0004	PIPE CONNECTION	61, 87
90134-0031	SLEEVE	61, 87, 97
90134-0038	BUSHING	61
90134-0039	BUSHING	61
90134-0040	BUSHING	87
90134-0042	SPACER	87, 97
90134-0045	PLUG	87
90134-0051	SPACER COLLAR	87
90134-0052	PLUG	87
90134-0054	CONNECTION	97
90134-0055	BUSHING	87
90134-0058	BANJO CONNECTION	61
90134-0068	BANJO CONNECTION	87, 97
90141-0016	LOCK RING	109
90141-0017	LOCK RING	89, 119, 121
90143-0028	STRIP	85
90143-0049	RUBBERSTRIP 11X21MM	125, 127
90144-0004	TAPE	87
90152-0017	HOSE	131
90152-0019	HOSE	67, 165
90152-0051	FLEXIBLE CONDUIT	133
90153-0015	ADHESIVE	29, 31, 33, 35
90153-0020	ADHESIVE	87
90153-0054	ADHESIVE	39, 169
90153-0055	ADHESIVE	39, 169
90155-0008	CHAIN	157, 165
90157-0016	LOCKING FLUID	45, 47, 93, 103, 167
90157-0022	SEALING COMPOUND	87
90157-0034	SEALING COMPOUND	77
90157-0036	FLANGE SEALING COMPOUND	103, 109
90157-0041	SEALING COMPOUND	125, 127
90163-0014	NIPPLE	131
90163-0028	SLEEVE	77
90163-0046	SLEEVE	87
90163-0048	NIPPLE	61
90163-0052	NIPPLE	65
90163-0062	SLEEVE	77, 87
90163-0063	NIPPLE	61
90163-0080	NIPPLE	67
90165-0056	CLIP	147, 149
90166-0011	HOSE	59
90166-0013	HOSE	137
90166-0049	HOSE	123
90166-0081	HOSE	137
90166-0089	HOSE	79
90166-0098	SHRINKABLE HOSE	133
90166-0109	HOSE	61, 87, 97
90166-0113	HOSE	65
90166-0117	HOSE	61, 77
90166-0132	HOSE	77
90166-0133	HOSE	67, 77
90166-0143	HOSE	61
90166-0153	HOSE	125, 127
90166-0159	RUBBER HOSE	41, 43
90166-0179	SHRINKABLE HOSE	11, 165
90166-0234	HOSE	125, 127
90208-0031	BUSHING "REPBY 90208-125"	55
90208-0052	CLAMPING ELEMENT	23, 25
90208-0078	CLAMPING ELEMENT	109
90208-0091	CLAMPING ELEMENT	23, 25
90214-0092	BALL BEARING	89, 119, 121
90214-0095	BALL BEARING	103, 109
90214-0098	BALL BEARING	147, 149
90214-0122	BALL BEARING	57
90214-0138	BALL BEARING	19
90217-0041	NIPPLE	117
90224-0186	NIPPLE	77
90235-0274	VALVE	11
90236-0044	Guide Holder	105, 107
90237-0071	LOCK	125, 127
90239-0084	CYLINDER	137
90239-0088	BRACKET	137
90239-0130	BRACKET	137
90239-0348	SEAL KIT	137, 165
90239-0442	SEAL KIT	11, 165
90239-0453	BRACKET	11
90239-0516	PISTON ROD HEAD	11
90239-0532	PISTON ROD HEAD	137

Part No	Description	Page No
90239-0779	CYLINDER	11
90239-0847	CYLINDER	137
90240-0055	RICTION BEARING	87
90240-0094	PLAIN BEARING	71
90240-0172	FLANGE BUSHING	11, 13, 15, 17
90248-0022	HINGE	123
90257-0002	FILTER PLUG	65
90261-0018	PIPE PLUG	65
90261-0025	PIPE PLUG	85
90261-0060	PLASTIC PLUG	115
90287-0062	SCREW	123, 125, 127
90287-0119	STOPSCREW M5X12 STAINLESS	61
90287-0328	Screw	85
90287-0329	Screw	109
90287-0330	Screw	97
90287-0331	Screw	147, 149
90288-0085	Chain	103
90288-0086	Chain	109
90296-0012	LUBRICANT	93, 167
90296-0028	OIL (QTY OF STOCK REFLECTS LITERS)	59
90296-0070	GREASE	57
90296-0076	OIL	65
90321-0015	PUMP	117
90321-0466	SPARE PART KIT	117, 165
90321-0481	GASKET	117, 165
90330-0078	BUSHING	87
90330-0081	ELBOW PIPE	131
90330-0085	BUSHING	65
90330-0101	NIPPLE	89, 119, 121
90330-0106	PIPE COUPLING	77, 165
90335-0008	SPRING	13
90335-0096	SPRING	91
90344-0077	Tension Sprocket	109
90345-0013	BEARING	103
90347-0012	DAMPER	109
90347-0079	DAMPER	151
90347-0142	FOOT	115
90348-0007	FREE WHEEL COUPLING	9
90355-0031	FLEXIBLE COUPLING	129
90355-0162	Bellow Coupling	97
90363-0049	ROLL	125, 127
90363-0301	BUSHING	125, 127
90363-0302	BUSHING	125, 127
90415-0022	FILTER	117
90415-0320	FILTER INSERT	117, 165
90416-0021	INDEXING DEVICE	59
90416-0373	CAM ROLLER	59, 165
90416-0374	PROTECTION RING	59, 165
90416-0375	CAM	59, 165
90417-0050	TOOTHED BELT	129
90424-0009	NOZZLE	77, 87
90424-0016	NOZZLE	77
90424-0025	NOZZLE	121
90424-0035	NOZZLE	89, 119
90424-0070	SPREADER NOZZLE	125, 127
90426-0003	HAND SHOWER	131
90450-0438	Cylinder	137
978048-0001		165
978048-0100	CLAMPING ELEMENT	87
978049-0000	NUT	93, 167
978050-0001	SCREW	93, 167
978050-0002	SCREW	93, 167
978051-0000	ECCENTRIC	93, 167
978052-0000	WASHER	93, 167
978190-0000	WASHER	87
978262-0000	GUIDE PIN	23, 25
978527-0000	GASKET	67
978573-0000	BUSHING	59
978609-0000	ALIGNMENT TEMPLATE	23, 25
978745-0000	CATCH	29, 31, 33, 35
978746-0000	CATCH	27
978749-0000	INDUCTOR 200SLIM	27
978760-0000	ROLLER TBA200SL	27
978763-0001		167
978763-0100	CUTTING UNIT	37
978791-0000	HOLDER	15
978792-0000	PLATE	13
979458-0000	PIPE CONNECTION	87
979459-0000	LEAD-IN	87
979487-0000	MOUNTING PLATE	125, 127
979489-0000	PLATE	125, 127
979490-0000	DISTRIBUTOR BLOCK	125, 127
979491-0000	BLOCK	125, 127
979493-0000	BLOCK	125, 127
979494-0000	BLOCK	125, 127
979514-0000	STOP SCREW	125, 127

Part No	Description	Page No
979515-0000	LOCK COMPONENT	125, 127
979707-0000	SCREW	123, 125, 127
979720-0000	EDGE PLATE	125, 127

Part No	Description	Page No

SPC binder labels. 40 mm Full width *Note! This page is generated **automaticall***
*using the **variable definitions** made in the **front page** file!!*

TBA/9 Wedge
595156-0100

Issue: 9712 Doc No: SPC-80270-0101

TBA/9 Wedge
595156-0100

Issue: 9712 Doc No: SPC-80270-0101

TBA/9 Wedge
595156-0100

Issue: 9712 Doc No: SPC-80270-0101

TBA/9 Wedge
595156-0100

Issue: 9712 Doc No: SPC-80270-0101

TBA/9 Wedge
595156-0100

Issue: 9712 Doc No: SPC-80270-0101

TBA/9 Wedge
595156-0100

Issue: 9712 Doc No: SPC-80270-0101

TBA/9 Wedge
595156-0100

Issue: 9712 Doc No: SPC-80270-0101

TBA/9 Wedge
595156-0100

Issue: 9712 Doc No: SPC-80270-0101

TBA/9 Wedge
595156-0100

Issue: 9712 Doc No: SPC-80270-0101

TBA/9 Wedge
595156-0100

Issue: 9712 Doc No: SPC-80270-0101

TBA/9 Wedge
595156-0100

Issue: 9712 Doc No: SPC-80270-0101

*SPC binder labels. 30 mm Half width Note! This page is generated **automaticall** using the **variable definitions** made in the **front page** file!!*

TBA/9 Wedge
595156-0100

Issue: 9712 Doc No: SPC-80270-0101

TBA/9 Wedge
595156-0100

Issue: 9712 Doc No: SPC-80270-0101

TBA/9 Wedge
595156-0100

Issue: 9712 Doc No: SPC-80270-0101

TBA/9 Wedge
595156-0100

Issue: 9712 Doc No: SPC-80270-0101

TBA/9 Wedge
595156-0100

Issue: 9712 Doc No: SPC-80270-0101

TBA/9 Wedge
595156-0100

Issue: 9712 Doc No: SPC-80270-0101

TBA/9 Wedge
595156-0100

Issue: 9712 Doc No: SPC-80270-0101

TBA/9 Wedge
595156-0100

Issue: 9712 Doc No: SPC-80270-0101

TBA/9 Wedge
595156-0100

Issue: 9712 Doc No: SPC-80270-0101

TBA/9 Wedge
595156-0100

Issue: 9712 Doc No: SPC-80270-0101

TBA/9 Wedge
595156-0100

Issue: 9712 Doc No: SPC-80270-0101

TBA/9 Wedge
595156-0100

Issue: 9712 Doc No: SPC-80270-0101

TBA/9 Wedge
595156-0100

Issue: 9712 Doc No: SPC-80270-0101

This page intentionally left blank