MM binder labels. Full width

TBA/9 100V

Doc No SPC–87268–1

TBA/9 100V

Doc No SPC–87268–1

TBA/9 100V

Doc No SPC–87268–1

TBA/9 100V

Doc No SPC–87268–1

TBA/9 100V

Doc No SPC–87268–1

TBA/9 100V

Doc No SPC–87268–1

TBA/9 100V

Doc No SPC–87268–1

TBA/9 100V

Doc No SPC–87268–1

TBA/9 100V

Doc No SPC–87268–1

TBA/9 100V

Doc No SPC–87268–1

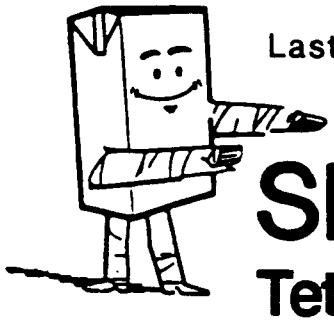

Last updating: 8710

SPC 648152-100V
Tetra Brik Aseptic TBA/9

model 85

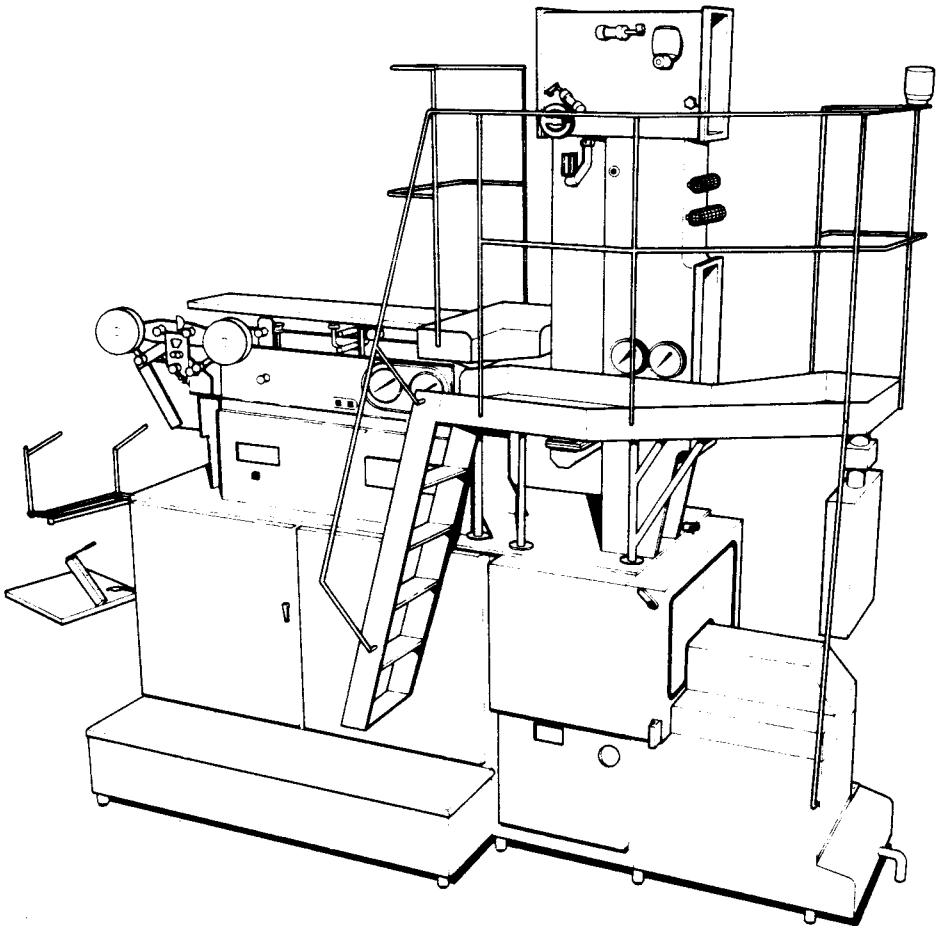

TETRA PAK SERVICE

Technical Information Group
Lund, Sweden

Superstructure
648111- 10(

Machine Body
648102- 20(

Drive Unit
648103- 30(

Jaw System
648104- 40(

Final Folder
648105- 50(

Service Unit
648106- 60(

Strip Applicator
648107- 70.

Standard Equipment
Extra Equipment
648109-/648119- 90(

Electrical Equipment
10(

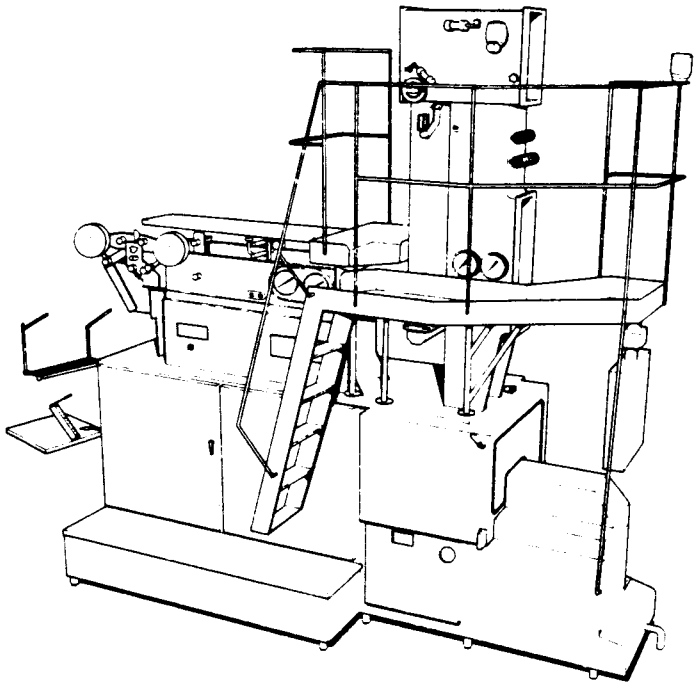

Last updating: 8710

SPC 648152
Tetra Brik Aseptic TBA/9

Machine specification		83				85		
		648152-020V	648152-030V	648152-040V	648152-050V	648152-100V	648152-110V	648152-120V
Serial number Italy		-	-	20064	20055	20059	20079	20088
Serial number Sweden		11975	11977	12164	12222	12270	12463	12562
SUPERSTRUCTURE	648111-0_0V	2	2	2	3	6	7	8
MACHINE BODY	648102-0_0V	2	3	3	3	6	7	8
DRIVE UNIT	648103-0_0V	2	2	3	3	6	6	7
JAW SYSTEM	648104-0_0V	2	2	2	3	6	7	8
FINAL FOLDER	648105-0_0V	2	2	3	4	6	7	8
SERVICE UNIT	648106-0_0V	2	2	2	2	6	7	8
STRIP APPLICATOR	648107-0_0V	2	2	2	2	6	7	8
OPENING DEVICE	648108-0_0V	1	1	1	1	-	-	-
OPENING DEVICE	648118-0_0V	-				6	6	7
ACCESSORIES	648109-0_0V	2	2	2	3	6	7	8
EXTRA EQUIPMENT	648119-0_0V	2	2	2	2	6	7	8

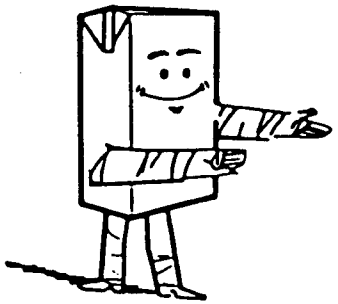

SPC 6481-52
SUPERSTRUCTURE

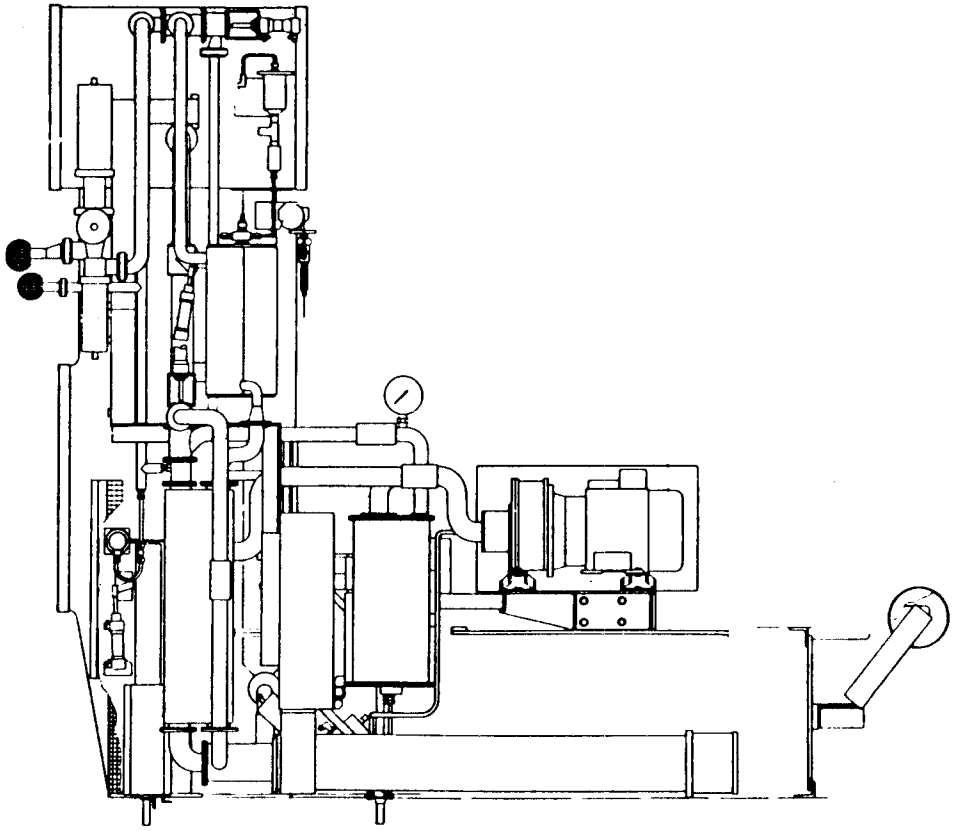

B-648111-

TETRA PAK SERVICE

LAST ALTERATION: AM 8083 85-07-10
648152-100V
AM 6890
84-06-07

GROUP	PULL-TAB VERSION	VOLUME	VOLUME	VOLUME	VOLUME
-0601	MPTAB	V0250	V0236	V0200	V0180
-0602	UPTAB	V0250	V0236	V0200	V0180
-0603	MPTAB	V0125	200ML SLIM	-	-
-0604	UPTAB	V0125	200ML SLIM	-	-

POS	VAR	PART NUMBER	SP	EH	QTY	DESCRIPTION
	-0601	S- 648111-SHEET		-8		===ASSEMBLY DRAWING===
	-0602			-8		
	-0603			-8		
	-0604			-8		
F010	-0601	C- 257166-0301	-		1	PAPER GUIDE
	-0602				1	
F020	ALL	C- 271181-0201	-		1	AIR SUPER-HEATER
F030	ALL	C- 272004-020V	-		1	BENDING ROLLER
F040	ALL	C- 272028-030V	-		1	BENDING ROLLER
F050	ALL	C- 255921-030V	S		1	LOWER FILLING TUBE
F060	ALL	C- 272014-030V	-		1	CREASE WHEEL
F070	ALL	C- 456309-020V	-		1	LOWER FORMING RING
F080	ALL	C- 469091-010V	-		1	UPPER FILLING TUBE
F090	ALL	C- 272024-0201	-		1	SQUEE-GEE ROLLER
F110	ALL	C- 256014-030V	-		1	BATH
F115	-0601	C- 441649-0101	-		1	BRAKE
	-0603				1	
F120	ALL	C- 272025-020V	-		1	AIR KNIFE
F130	ALL	C- 257075-0251	-		1	DOOR
F140	-0601	C- 271485-0301	-		1	BLOW-OFF NOZZLE
	-0602				1	
F140	-0603	C- 469501-0101	-		1	BLOW-OFF NOZZLE
	-0604				1	
F150	ALL	C- 256055-030V	-		1	HOT AIR ELEMENT
F160	ALL	C- 272337-0201	-		1	VALVE
F170	ALL	C- 256084-0201	-		1	REVERSING VALVE
F180	ALL	C- 469452-010V	-		1	COMPRESSOR AGGREGAT
F190	ALL	C- 456976-020V	-		1	LINE PIPE
F200	ALL	C- 456555-0101	-		1	SUCTION PIPE
F210	ALL	C- 456556-0101	-		1	PEROXIDE PIPE
F220	ALL	C- 272623-0301	-		1	SPRAY SYSTEM
F230	ALL	C- 272021-030V	-		1	ASEPTIC CHAMBER
F240	ALL	C- 272560-0301	-		1	VALVE
F245	ALL	C- 440630-0101	C		1	VALVE
		SP- 499255-0101	UP		1	* SEAL KIT
		SP- 499255-0102	P		1	* SEAL KIT
		SP- 499255-0103	P		1	* SEAL KIT
F250	ALL	C- 441304-020V	-		1	MOVABLE FORMING RING
F260	ALL	C- 256095-0201	-		1	HOT AIR ELEMENT
F270	ALL	C- 441307-020V	-		1	UPPER FORMING CLAMP

POS	VAR	PART NUMBER	SP	EH	QTY	DESCRIPTION
F300	ALL	C- 441486-020V	-		1	DIVIDED FORMING RING
F310	ALL	C- 271169-0201	-		1	VALVE
F320	ALL	C- 295470-0301	-		1	CONNECTION BOX
F330	ALL	C- 271851-0201	-		2	DOOR
F340	ALL	C- 469781-010V	-		1	TUBE FLUSHING DEVICE
F350	ALL	C- 272407-0201	-		1	GENERATOR
F360	ALL	C- 469074-0101	-		1	SPLICING GUARD
F370	ALL	C- 295045-030V	-		1	TUBE ASSEMBLY-PNEUMATIC
F380	ALL	C- 469374-0101	-		1	CABLE DUCT
F390	ALL	C- 456836-020V	-		1	CLEANING SYSTEM
F400	ALL	C- 491083-010V	-		1	MANOMETER GROUP
F500	ALL	C- 295778-020V	-		1	START UP KIT

TETRA PAK

1/8501

S-648111-8

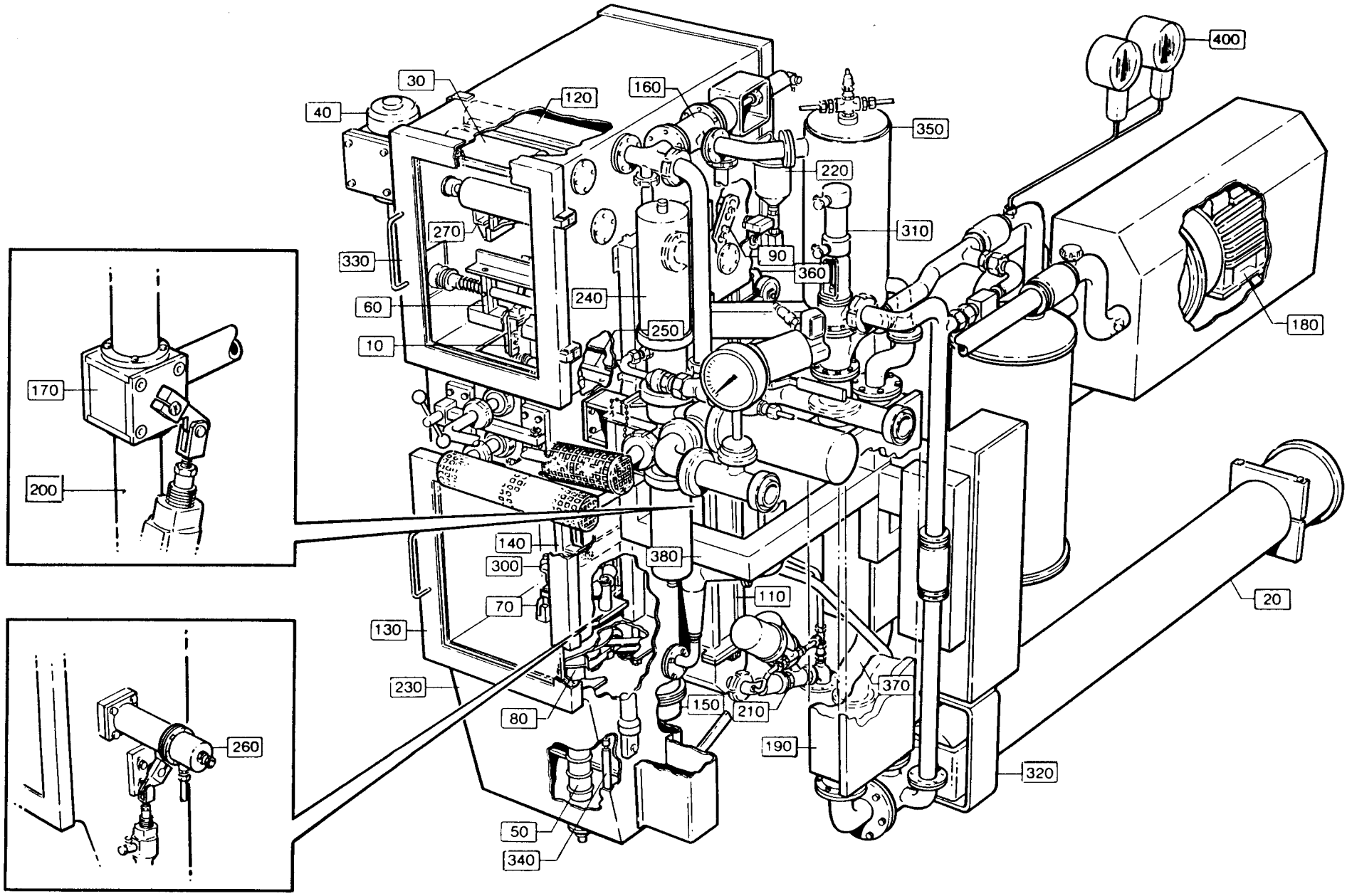

LAST ALTERATION: AM 8465 85-12-18
648152-110V

GROUP	PULL-TAB VERSION	VOLUME	VOLUME	VOLUME	VOLUME
-0701	WITH PTAB	V0250	V0236	V0200	V0180
-0702	WITHOUT PTAB	V0250	V0236	V0200	V0180
-0703	WITH PTAB	V0125	200ML SLIM	-	-
-0704	WITHOUT PTAB	V0125	200ML SLIM	-	-

POS	VAR	PART NUMBER	SP	EH	QTY	DESCRIPTION
	-0701	S- 648111-SHEET	-8			===ASSEMBLY DRAWING===
	-0702		-8			
	-0703		-8			
	-0704		-8			
F010	-0701	C- 257166-0301	-		1	PAPER GUIDE
	-0702				1	
F020	ALL	C- 271181-0201	-		1	AIR SUPER-HEATER
F030	ALL	C- 272004-020V	-		1	BENDING ROLLER
F040	ALL	C- 272028-030V	-		1	BENDING ROLLER
F050	ALL	C- 255921-040V	S		1	LOWER FILLING TUBE
F060	ALL	C- 272014-030V	-		1	CREASE WHEEL
F070	ALL	C- 456309-020V	-		1	LOWER FORMING RING
F080	ALL	C- 469091-010V	-		1	UPPER FILLING TUBE
F090	ALL	C- 272024-0201	-		1	SQUEE-GEE ROLLER
F110	ALL	C- 256014-030V	-		1	BATH
		C- 441649-0101				. BRAKE
F120	ALL	C- 272025-020V	-		1	AIR KNIFE
F130	ALL	C- 257075-0251	-		1	DOOR
F140	ALL	C- 469501-020V	-		1	BLOW-OFF NOZZLE
F150	ALL	C- 256055-0401	-		1	HOT AIR ELEMENT
F160	ALL	C- 272337-0201	-		1	VALVE
F170	ALL	C- 256084-0201	-		1	REVERSING VALVE
F180	ALL	C- 469452-010V	-		1	COMPRESSOR AGGREGAT
F190	ALL	C- 456976-020V	-		1	LINE PIPE
F200	ALL	C- 456555-0101	-		1	SUCTION PIPE
F210	ALL	C- 456556-0101	-		1	PEROXIDE PIPE
F220	ALL	C- 272623-0301	-		1	SPRAY SYSTEM
F230	ALL	C- 272021-030V	-		1	ASEPTIC CHAMBER
F240	ALL	C- 272560-0301	-		1	VALVE
		C- 440630-0101				. VALVE
F250	ALL	C- 441304-020V	-		1	MOVABLE FORMING RING
F260	ALL	C- 256095-0201	-		1	HOT AIR ELEMENT
F270	ALL	C- 441307-020V	-		1	UPPER FORMING CLAMP
F300	ALL	C- 441486-020V	-		1	DIVIDED FORMING RING
F310	ALL	C- 271169-0201	-		1	VALVE
F320	ALL	C- 295470-0301	-		1	CONNECTION BOX
F330	ALL	C- 271851-0201	-		2	DOOR
F340	ALL	C- 469781-010V	-		1	TUBE FLUSHING DEVICE
F350	ALL	C- 272407-0201	-		1	GENERATOR
F360	ALL	C- 469074-0101	-		1	SPLICING GUARD

POS	VAR	PART NUMBER	SP	EH	QTY	DESCRIPTION
F370	ALL	C- 295045-040V	-		1	TUBE ASSEMBLY-PNEUMATIC
F380	ALL	C- 469374-0101	-		1	CABLE DUCT
F390	ALL	C- 456836-020V	-		1	CLEANING SYSTEM
F400	ALL	C- 491083-010V	-		1	MANOMETER GROUP
F500	ALL	C- 295778-030V	-		1	START UP KIT
		SP- 499255-0101				. SEAL KIT

TETRA PAK

1/8501

S-648111-8

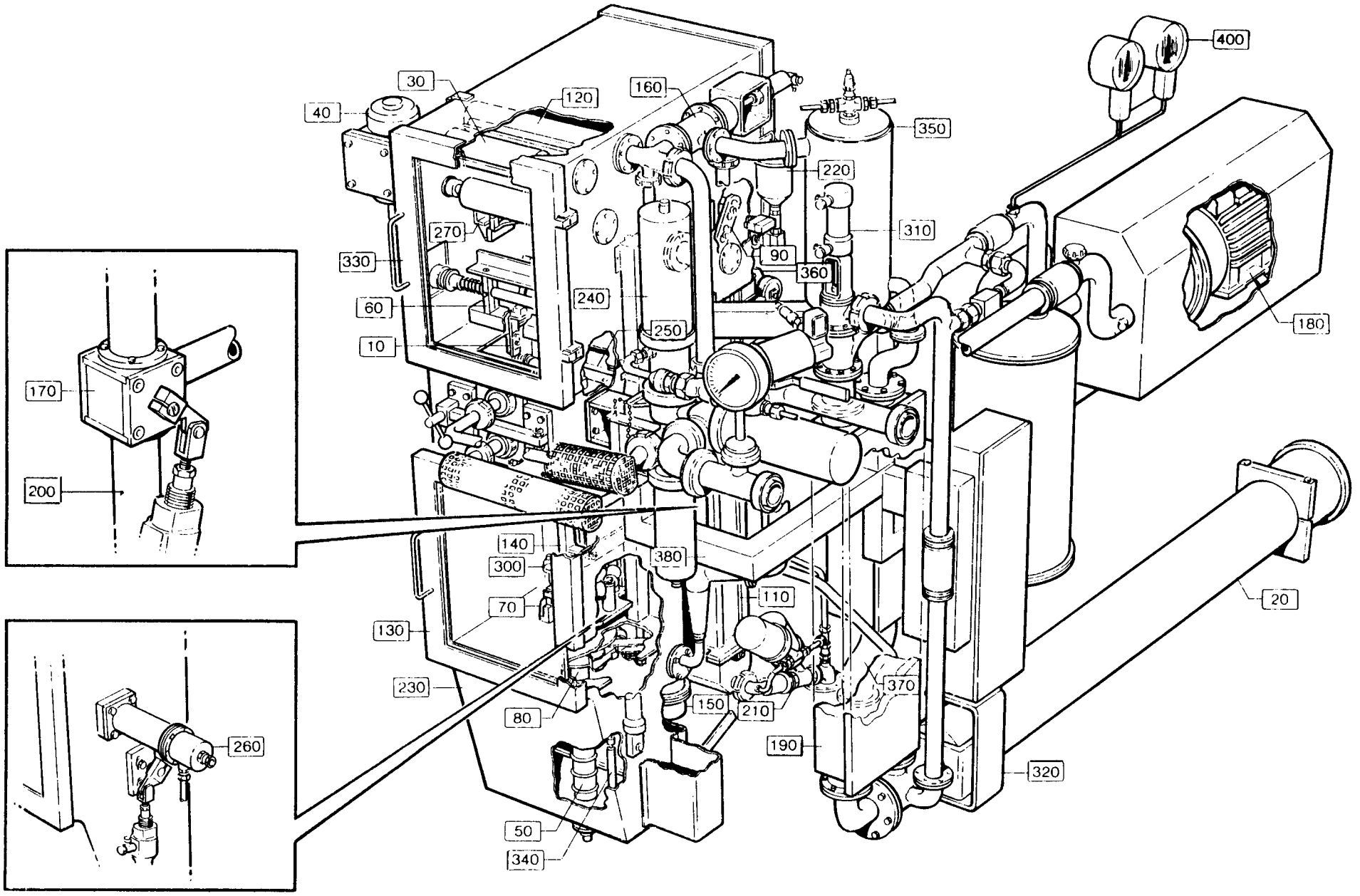

LAST ALTERATION: AM 7210 84-10-19
648111-060V

POS	VAR	PART NUMBER	SP	EH	QTY	DESCRIPTION
	-0301	S- 257166-SHEET	-4			===ASSEMBLY DRAWING===
010	-0301	23582	-		1	SPRING
020	-0301	23583	S		1	GUIDE
030	-0301	23584	S		2	SCREW
040	-0301	24351	-		1	CLAMP
060	-0301	24355	S		2	PIN
070	-0301	24356	S		4	BLOCK
080	-0301	111543	S		2	CONE
300	-0301	90214-0035	P		2	BALL BEARING
510	-0301	312115-0366	-		1	SCREW 6X12 A4 80
520	-0301	312318-0283	P		4	GRUB SCREW SK6SS4X4RFR
530	-0301	312318-0285	S		2	GRUB SCREW SK6SS4X6RFR
540	-0301	312318-0291	S		2	GRUB SCREW SK6SS4X12RFR
550	-0301	312605-0312	-		2	NUT M6M4RFR

TETRA PAK

3/8601 **S-257166-4**

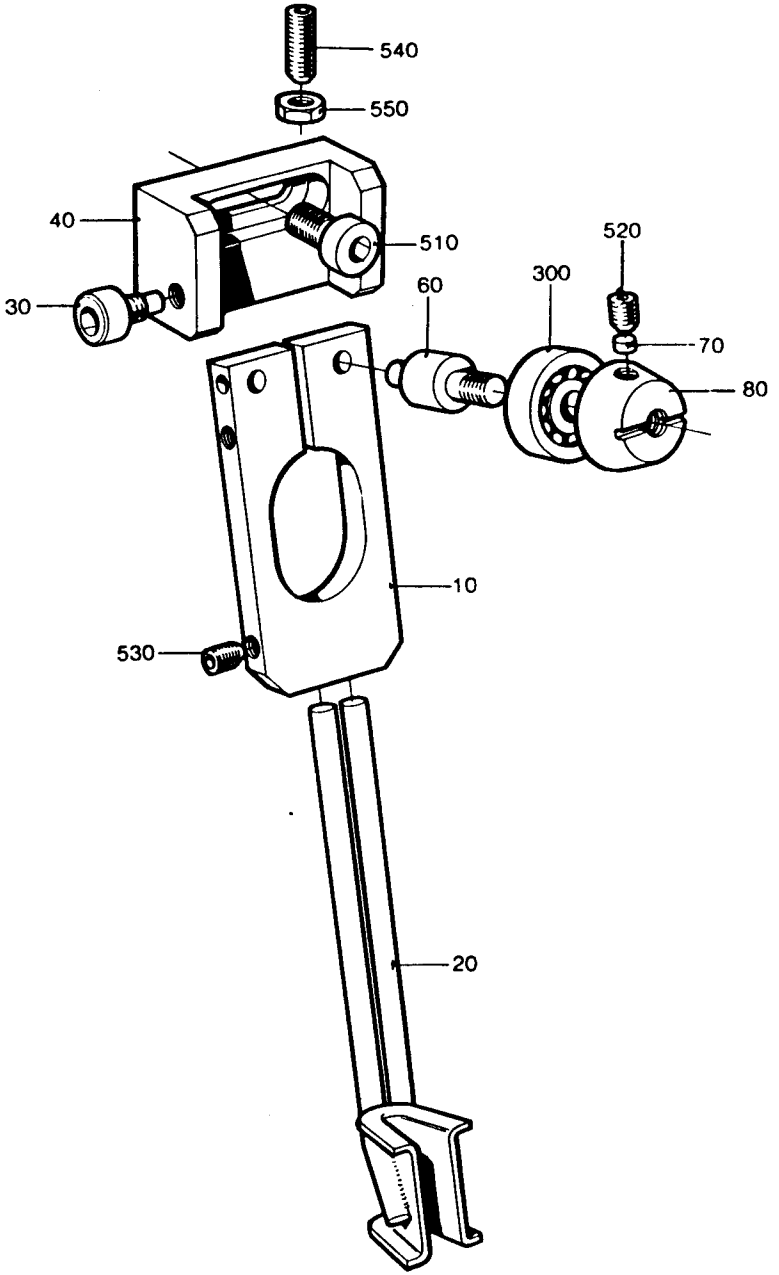

6636

LAST ALTERATION: AM 9415 86-10-17
648111-020V
AM 5191
82-03-11

POS	VAR	PART NUMBER	SP	EH	QTY	DESCRIPTION
	-0201	S- 271181-SHEET	-2			===ASSEMBLY DRAWING===
010	-0201	272792	C		1	HEATING PIPE
030	-0201	271183	-		1	PIPE
035	-0201	449939-0001	S		1	HEATING ELEMENT 15KW
		449938-0001	S		2	* HEATING PIPE
		449938-0002	S		2	* HEATING PIPE
		449938-0003	S		2	* HEATING PIPE
036	-0201	451430	-		1	CONNECTION BOX
040	-0201	29876	-		1	LID
050	-0201	271184	-		1	DISCHARGE TRAY
060	-0201	271185	-		1	DISCHARGE TRAY
070	-0201	272793	-		1	SUPPORT
075	-0201	272794	-		1	SUPPORT
076	-0201	456123	-		1	SUPPORT
080	-0201	531731	S		1	GASKET
090	-0201	751009	S		1	INSULATION
100	-0201	30298	S		1	INSULATION
120	-0201	469070	-		1	CIRCUIT DIAGRAM
130	-0201	751016	-		1	GASKET
140	-0201	456124	-		1	ANGLE BRACKET
150	-0201	456125	-		1	PLATE
310	-0201	90153-0020	S	ML	X	ADHESIVE
320	-0201	90195-0028	S		1	TERMINAL BLOCK
330	-0201	90195-0029	S		3	COUPLING STRIP
360	-0201	90326-0012	P		1	PROTECTIVE COVER
370	-0201	90326-0020	P		1	SOCKET
380	-0201	90326-0051	P		1	THERMO COUPLE
390	-0201	90411-0005	S	MM	1100	INSULATOR
490	-0201	312105-0325	-		12	SCREW M6S5X10 A4 80
500	-0201	312105-0368	-		6	SCREW M6S6X16RFR
502	-0201	312105-0374	-		2	SCREW M6S6X30RFR
505	-0201	312105-0455	-		2	SCREW M6S8X30RFR
510	-0201	312105-0453	-		8	SCREW M6S8X25RFR
515	-0201	312125-0285	-		4	SLOTTED HEMCS4X6RFR
520	-0201	312125-0323	-		1	SLOTTED HEMCS5X8RFR
530	-0201	312125-0331	-		2	SLOTTED HEMCS5X20RFR
535	-0201	312125-0366	-		4	SLOTTED HEMCS6X12RFR
540	-0201	315105-0146	-		2	WASHER BRB5,3X10RFR
545	-0201	315115-0165	-		4	WASHER TBRB8,4X16RFR
550	-0201	352100-0121	-		1	CABLE GLANR. 37-23,5

TETRA PAK

5/8608

S-271181-2

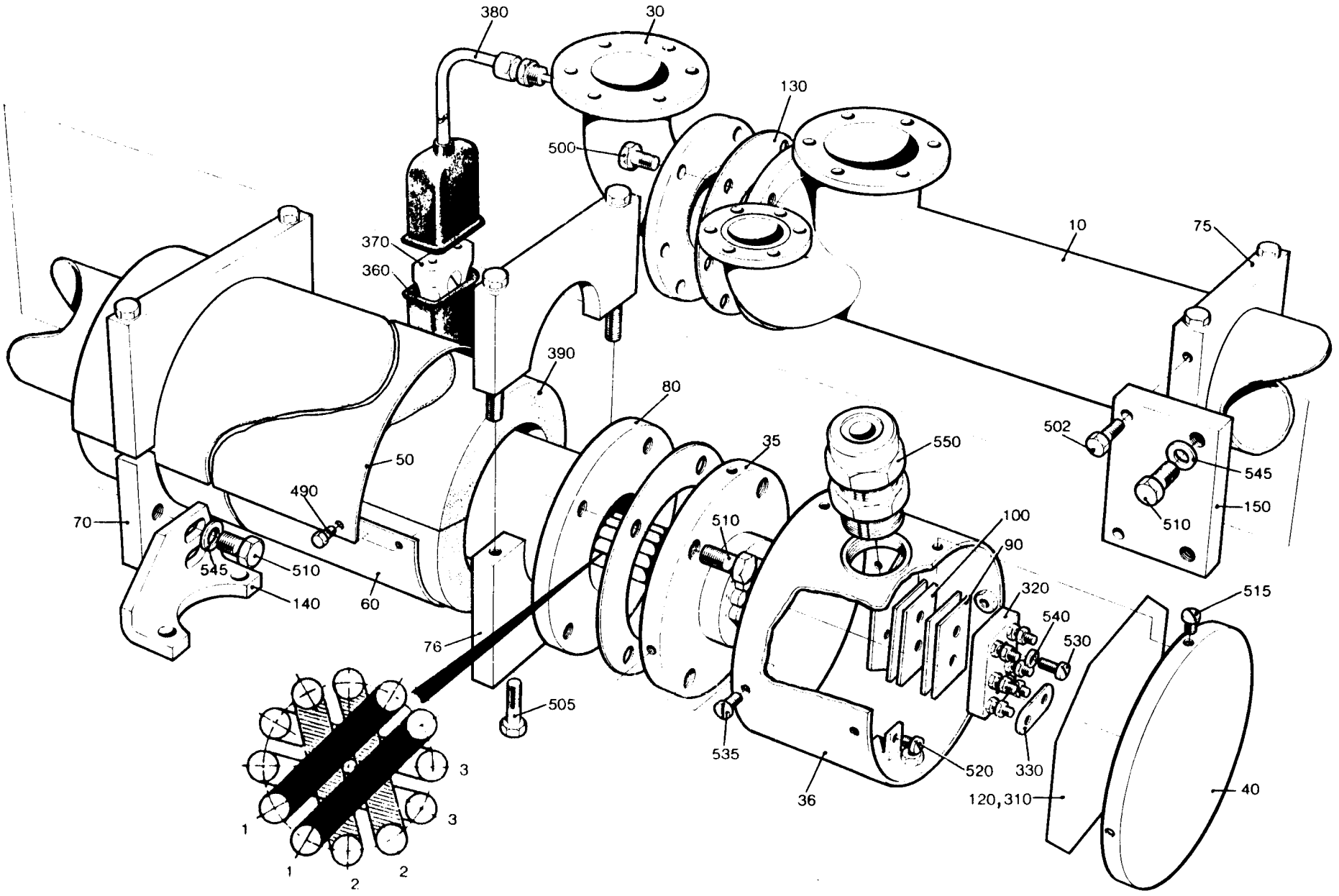

LAST ALTERATION: AM 8271 85-10-14
648111-020V
AM 5285
82-05-06

GROUP	VOLUME	VOLUME	VOLUME	VOLUME	VOLUME
-0201	V0125	V0100	-	-	-
-0202	V0284	V0250	V0236	V0200	V0187
	V0180	200ML SLIM	-	-	-

POS	VAR	PART NUMBER	SP	EH	QTY	DESCRIPTION
	-0201	S- 272004-SHEET		-1		===ASSEMBLY DRAWING===
	-0202			-2		
020	-0202	272005	S		1	BENDING ROLLER
030	-0201	271744	S		1	BENDING ROLLER
010	ALL	255989	S		1	SHAFT
040	ALL	247170	-		2	COVER
050	ALL	272017	-		1	AXLE SUPPORT
060	ALL	272018	-		1	AXLE SUPPORT
300	ALL	90214-0098	S		2	BALL BEARING
310	ALL	90214-0303	S		2	RING
500	ALL	312105-0366	-		8	SCREW M6S6X12RFR
510	ALL	312105-0370	-		1	SCREW M6S6X20RFR

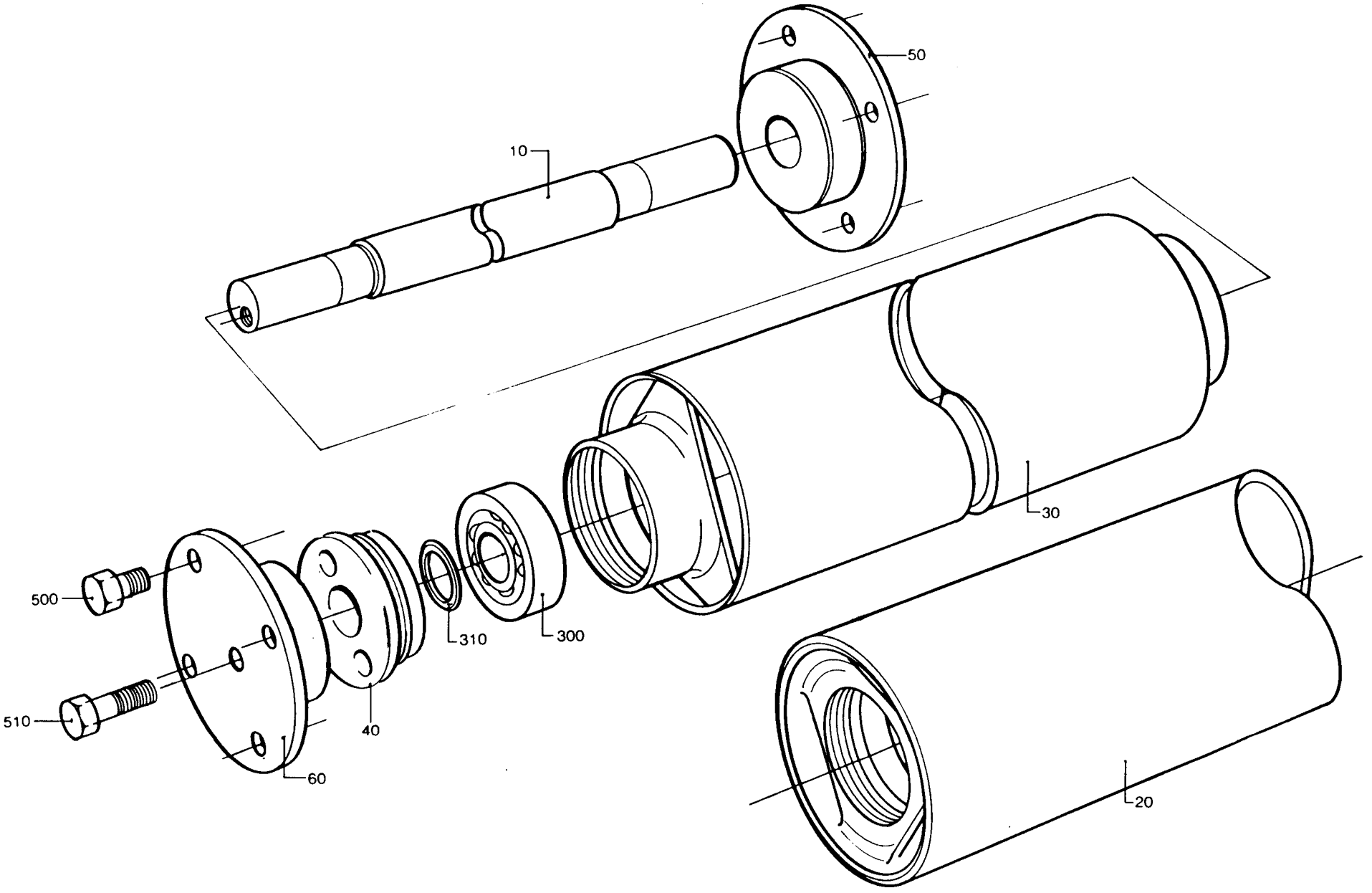
50
10
30
500
310
300
510
40
60
20

LAST ALTERATION: AM 10200 87-02-20
648111-060V
AM 6605
84-02-17

GROUP	VOLUME	PULL-TAB VERSION
-0301	V0250	WITH PTAB
-0302	V0236	WITH PTAB
-0303	V0200	WITH PTAB
-0304	V0180	WITH PTAB
-0305	V0125	WITH PTAB
-0306	200ML SLIM	WITH PTAB
-0307	V0250	WITHOUT PTAB
-0308	V0236	WITHOUT PTAB
-0309	V0200	WITHOUT PTAB
-0310	V0180	WITHOUT PTAB
-0311	V0125	WITHOUT PTAB
-0312	200ML SLIM	WITHOUT PTAB

POS	VAR	PART	NUMBER	SP	EH	QTY	DESCRIPTION
	-0301	S-	272028-SHEET	-3			===ASSEMBLY DRAWING===
	-0302			-3			
	-0303			-3			
	-0304			-3			
	-0305			-3			
	-0306			-3			
	-0307			-3			
	-0308			-3			
	-0309			-3			
	-0310			-3			
	-0311			-3			
	-0312			-3			
040	-0301		255897-0004	S		1	GEAR WHEEL
	-0309					1	
040	-0302		255897-0005	S		1	GEAR WHEEL
	-0310					1	
	-0311					1	
040	-0303		255897-0006	S		1	GEAR WHEEL
040	-0304		255897-0001	S		1	GEAR WHEEL
	-0305					1	
040	-0306		255897-0003	S		1	GEAR WHEEL
040	-0307		255897-0007	S		1	GEAR WHEEL
	-0308					1	
040	-0312		255897-0008	S		1	GEAR WHEEL
045	-0301		441546	S		1	BENDING ROLLER
	-0302					1	
	-0303					1	
	-0304					1	
	-0307					1	
	-0308					1	

POS	VAR	PART	NUMBER	SP	EH	QTY	DESCRIPTION
	-0309					1	
	-0310					1	
045	-0305		441547	S		1	BENDING ROLLER
	-0311					1	
045	-0306		456527	S		1	BENDING ROLLER
	-0312					1	
070	-0301		456515	S		1	SHAFT
	-0302					1	
	-0303					1	
	-0304					1	
	-0305					1	
	-0307					1	
	-0308					1	
	-0309					1	
	-0310					1	
	-0311					1	
100	-0301		209331-0011	S		1	GEAR WHEEL
	-0309					1	
100	-0302		209331-0006	S		1	GEAR WHEEL
	-0310					1	
	-0311					1	
100	-0303		209331-0004	S		1	GEAR WHEEL
100	-0304		209331-0002	S		1	GEAR WHEEL
	-0305					1	
100	-0306		209331-0008	S		1	GEAR WHEEL
100	-0307		209331-0001	S		1	GEAR WHEEL
	-0308					1	
100	-0312		209331-0009	S		1	GEAR WHEEL
555	-0301		312115-0451	-		2	SCREW 8X20 A4 80
	-0302					2	
	-0303					2	
	-0304					2	
	-0305					2	
	-0307					2	
	-0308					2	
	-0309					2	
	-0310					2	
	-0311					2	
010	ALL		271883	-		1	MOTOR PLATE
060	ALL		271884	-		1	PLATE
075	ALL		456818	-		1	COVER
076	ALL		491448	-		1	GUARD
120	ALL		247172	-		1	SPACER RING
130	ALL		247173	C		2	BEARING SEAT
140	ALL		250590	-		1	BEARING COVER
150	ALL		250592	-		1	WASHER
160	ALL		255898	-		1	HUB
170	ALL		255899	-		1	HUB
200	ALL		456516	-		1	BEARING COVER

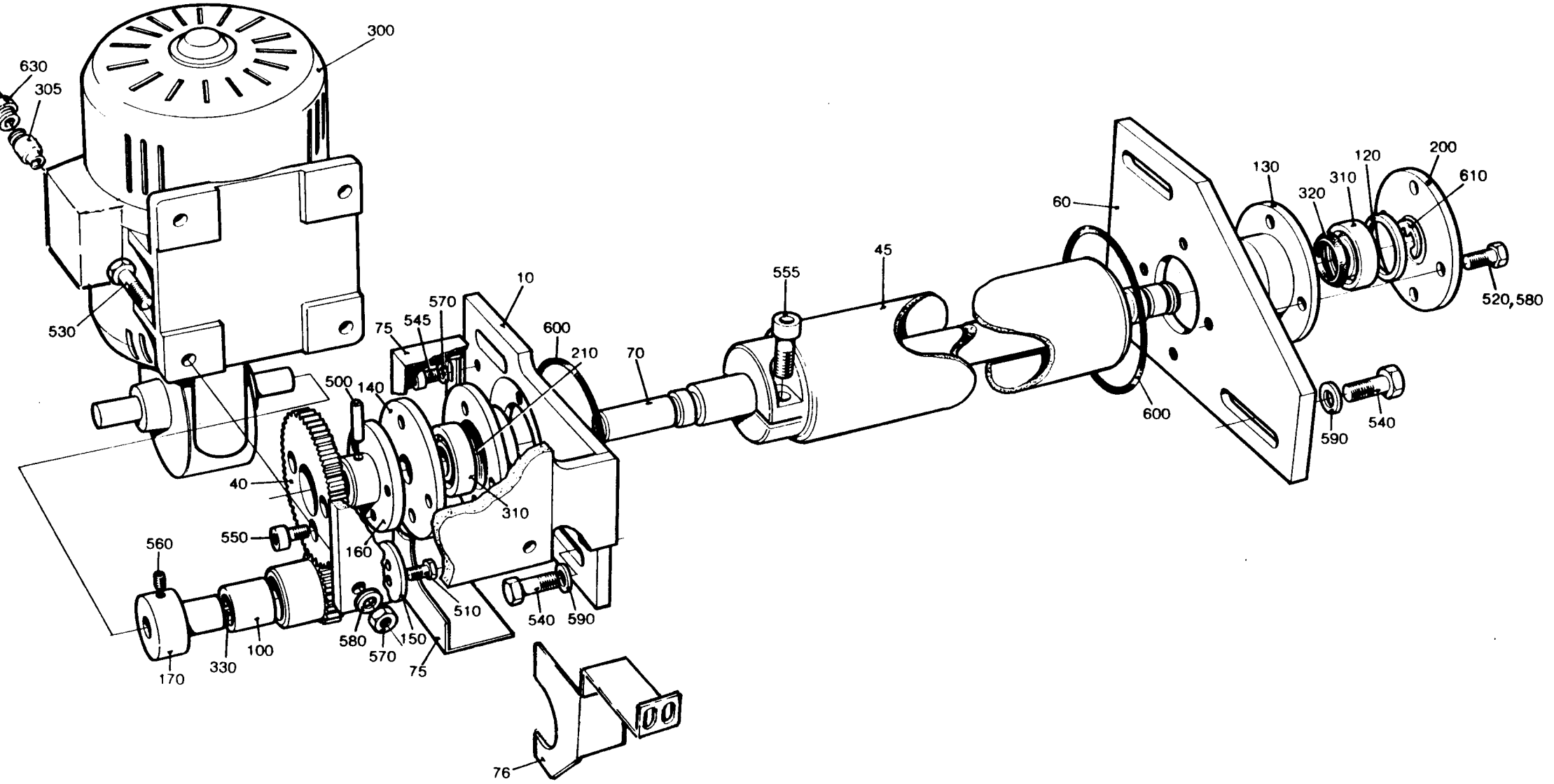
300
630
305
530
10
570
545
75
600
210
70
555
45
60
130
120
310
320
200
610
520,580
600
590
540
500
140
40
310
560
550
160
510
540
590
580
570
150
75
330
100
170
76
00

POS	VAR	PART NUMBER	SP	EH	QTY	DESCRIPTION
210	ALL	491333	S		2	SPACER RING
300	ALL	90069-0099	S		1	WORM GEAR MOTOR
305	ALL	90089-0017	-		1	TRANSITIONAL MUFF
310	ALL	90214-0098	S		2	BALL BEARING
320	ALL	90214-0303	S		2	RING
325	ALL	90296-0009	-	ML	X	GREASE
330	ALL	90348-0007	S		1	FREE WHEEL COUPLING
500	ALL	311103-0310	-		1	CYLINDRICACPR5M6X20RFR
510	ALL	312105-0287	-		2	SCREW M6S4X8 A4 80
520	ALL	312105-0368	-		8	SCREW M6S6X16RFR
530	ALL	312105-0372	-		4	SCREW M6S6X25RFR
540	ALL	312105-0451	-		4	SCREW M6S8X20RFR
545	ALL	312115-0323	-		4	SCREW 5X8 A4 80
550	ALL	312115-0327	-		3	SCREW MC6S5X12 A4 80
560	ALL	312318-0364	-		1	GRUB SCREW SK6SS6X10RFR
570	ALL	312605-0316	-		4	NUT M6M6RFR
575	ALL	315105-0146	-		4	WASHER BRB5,3X10RFR
580	ALL	315105-0153	-		12	WASHER BRB6,4X12RFR
590	ALL	315115-0165	-		4	WASHER TBRB8,4X16RFR
610	ALL	315755-0112	-		1	CIRCLIP E 12 RFR
630	ALL	352103-0111	-		1	CABLE GLANR.PR22,5/10-14

S-272028-3

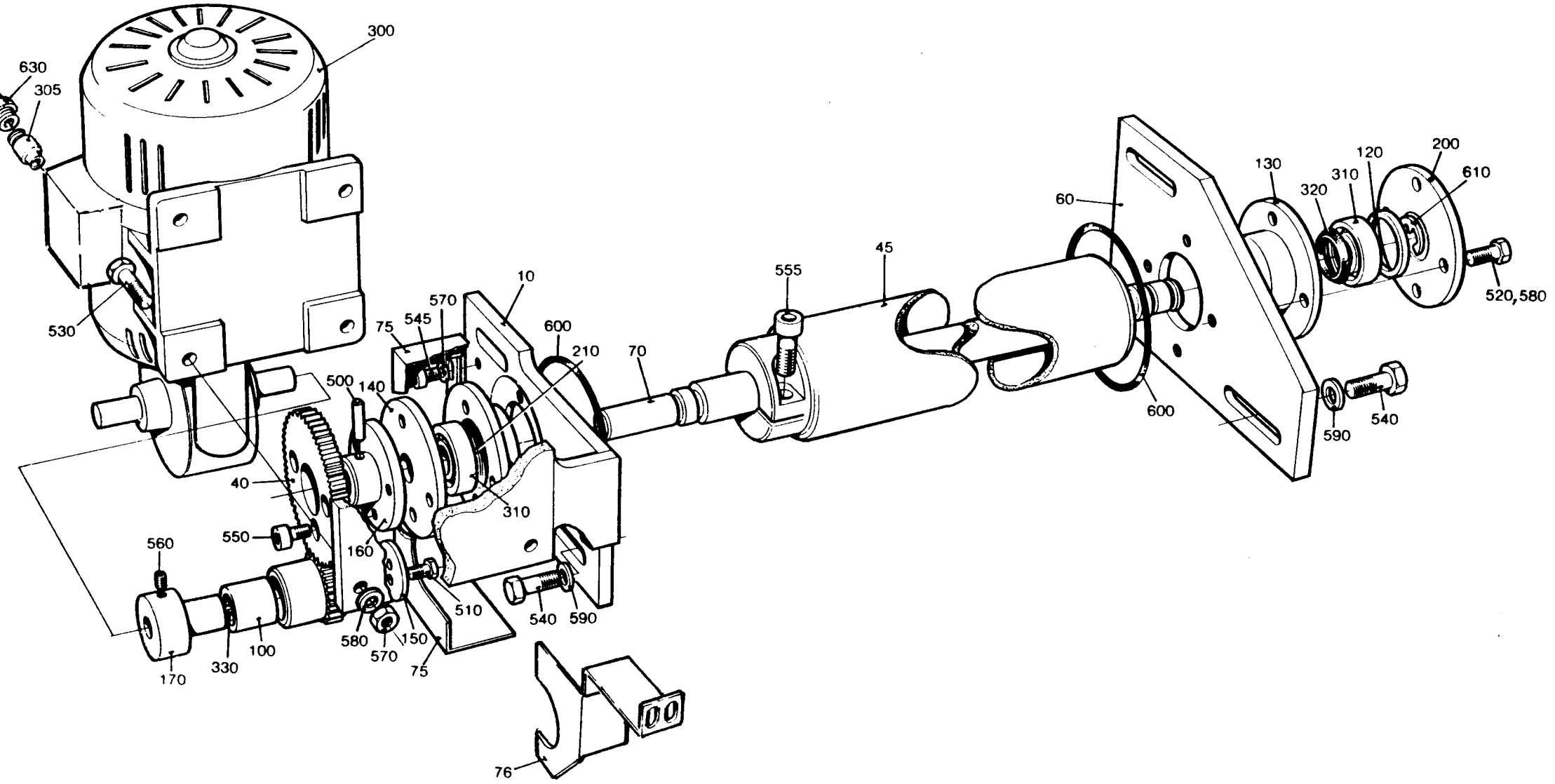

AM 10002

LAST ALTERATION: AM 9284 86-07-02
648111-060V
AM 7066
84-08-31

GROUP	VOLUME	VOLUME
-0301	V0125	-
-0302	V0200	V0180
-0303	V0250	V0236
-0304	200ML SLIM	-

POS	VAR	PART NUMBER	SP	EH	QTY	DESCRIPTION
	-0301	S- 255921-SHEET				===ASSEMBLY DRAWING===
	-0302		-3			
	-0303		-3			
	-0304					
010	-0301	469549	S		1	FILLING TUBE
010	-0302	441074-0001	S		1	FILLING TUBE
010	-0303	441074-0002	S		1	FILLING TUBE
010	-0304	491139	S		1	FILLING TUBE
020	-0301	257097	S		1	FLANGE
020	-0302	295252	S		1	FLANGE
	-0303				1	
020	-0304	491140	S		1	FLANGE
030	-0301	272056	S		1	FLOAT
030	-0302	259580	S		1	FLOAT
	-0303				1	
030	-0304	491142	S		1	FLOAT
100	-0302	36816	S		1	LINK
	-0303				1	
110	-0302	36817	S		1	CLAMPING ELEMENT
	-0303				1	
120	-0302	36821-0002	P		1	BREAKPIN
	-0303				1	
130	-0302	37296	S		1	ARM
	-0303				1	
140	-0302	38535-0001	P		1	PIN
	-0303				1	
210	-0301	257101	P		1	LOCK
	-0304				1	
220	-0301	271347	S		1	ARM
	-0304				1	
230	-0301	271348	S		1	LINK
	-0304				1	
240	-0301	491458	S		1	LINK
240	-0304	271349	S		1	LINK
250	-0301	271350	P		1	THROTTLE
250	-0302	295987	P		1	THROTTLE
	-0303				1	
250	-0304	491141	S		1	THROTTLE
260	-0301	271351	P		1	BREAKPIN

POS	VAR	PART NUMBER	SP	EH	QTY	DESCRIPTION
	-0304				1	
150	ALL	38535-0002	P		1	PIN

TETRA PAK

2/8608

S-255921-3

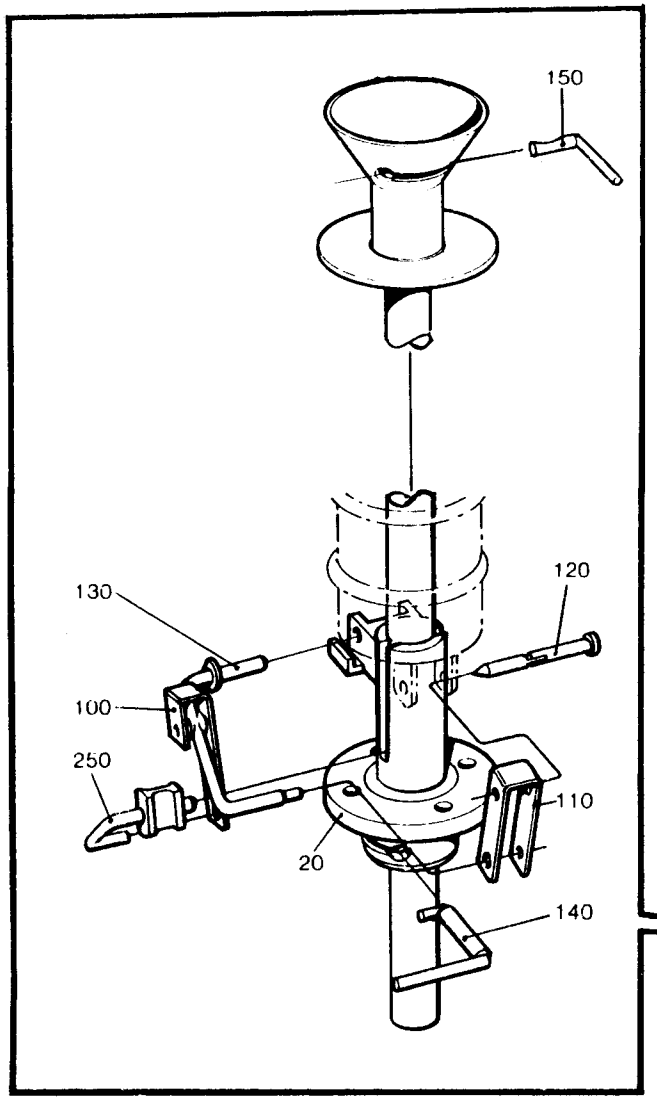

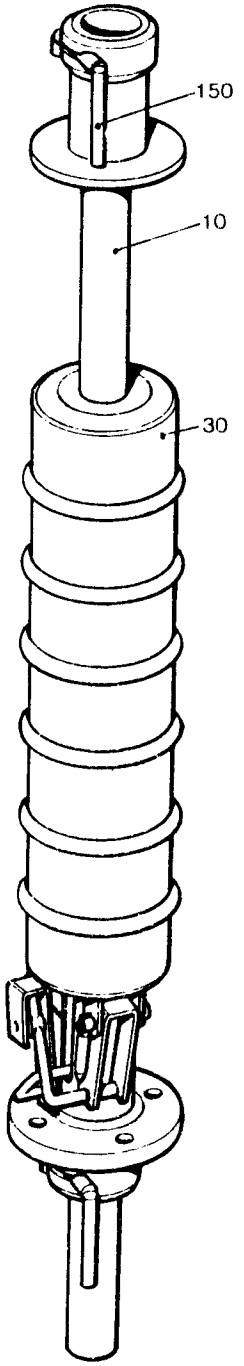

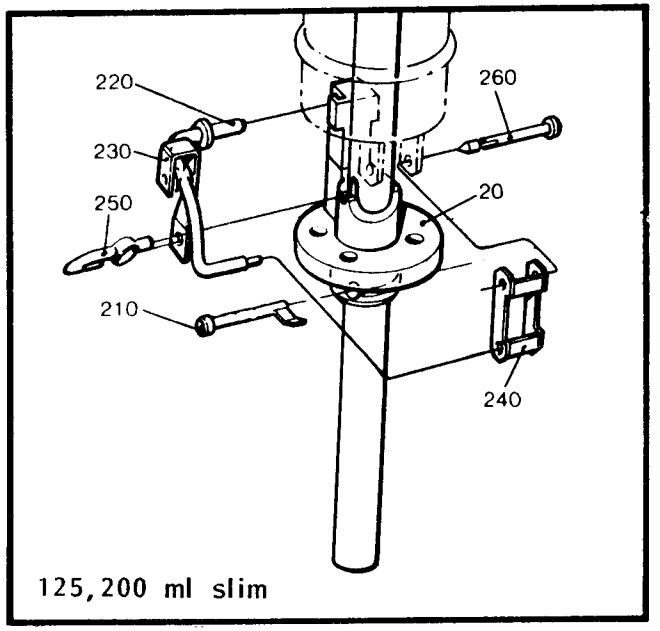

125,200 ml slim

AMRW1 (-3 4)

LAST ALTERATION: AM 10002 87-01-12
648111-060V
AM 6605
84-02-17

GROUP VOLUME

-0301 V0125
-0302 V0200
-0303 V0236
-0304 V0250
-0305 V0180
-0306 200ML SLIM

POS	VAR	PART NUMBER	SP	EH	QTY	DESCRIPTION
	-0301	S- 272014-SHEET	-2			===ASSEMBLY DRAWING===
	-0302		-2			
	-0303		-2			
	-0304		-2			
	-0305		-2			
	-0306		-2			
075	-0301	441551	S		2	CREASE BAR
075	-0302	441552	S		2	CREASE BAR
	-0303				2	
	-0304				2	
	-0305				2	
075	-0306	441554	S		2	CREASE BAR
185	-0301	441556-0007	S		2	SPACER
185	-0302	441556-0004	S		2	SPACER
185	-0303	441556-0003	S		2	SPACER
185	-0304	441556-0002	S		2	SPACER
185	-0305	441556-0006	S		2	SPACER
185	-0306	441556-0009	S		2	SPACER
010	ALL	295469	-		1	PLATE
015	ALL	441566	-		1	PLATE
030	ALL	255916	C		1	CAM
100	ALL	271834	C		1	SHAFT
110	ALL	271835	C		1	BRACKET
120	ALL	456012	S		1	BEARING SEAT
130	ALL	441555	C		1	SHAFT
135	ALL	490892	-		1	COVER
140	ALL	490893	-		1	COVER
150	ALL	15529	-		2	WASHER
170	ALL	247172	S		2	SPACER RING
220	ALL	271423-0002	S		1	SHAFT
230	ALL	271656	S		2	WASHER
235	ALL	271837	C		1	BRACKET
240	ALL	456013	S		1	BEARING COVER
260	ALL	271840	C		1	BEARING COVER
270	ALL	271841	C		1	BEARING SEAT
280	ALL	271844	C		1	WASHER
300	ALL	272001	S		1	COMPRESSION SPRING

POS	VAR	PART NUMBER	SP	EH	QTY	DESCRIPTION
340	ALL	295010	S		1	SLEEVE
380	ALL	441564	-		1	PLATE
390	ALL	441565	-		1	PLATE
395	ALL	456817-0001	C		8	SHIM
396	ALL	456817-0002	C		4	SHIM
400	ALL	90044-0104	P		1	PROXIMITY SWITCH
410	ALL	90051-0045	C		1	HANDLE
420	ALL	90141-0011	S		2	RING
430	ALL	90214-0098	S		4	BALL BEARING
440	ALL	90214-0303	P		2	RING
445	ALL	90296-0009	-	ML	X	GREASE
600	ALL	311103-0234	S		1	CYLINDRICACPR3M6X12RFR
610	ALL	311103-0238	S		1	CYLINDRICACPR3M6X20RFR
635	ALL	312105-0327	-		2	SCREW M6S5X12 A4 80
640	ALL	312105-0364	-		4	SCREW M6S6X10RFR
650	ALL	312105-0366	-		8	SCREW M6S6X12RFR
665	ALL	312105-0370	-		6	SCREW M6S6X20RFR
670	ALL	312105-0374	-		2	SCREW M6S6X30RFR
680	ALL	312105-0451	-		4	SCREW M6S8X20RFR
700	ALL	312115-0372	-		2	SCREW MC6S6X25 A4 80
705	ALL	312125-0228	-		2	SLOTTED HEMCS3X16RFR
710	ALL	312125-0291	-		2	SLOTTED HEMCS4X12RFR
715	ALL	312125-0364	-		4	SLOTTED HEMCS6X10RFR
720	ALL	312145-0287	-		1	SLOTTED HEMFS4X8RFR
725	ALL	312318-0364	-		1	GRUB SCREW SK6SS6X10RFR
735	ALL	315105-0146	-		2	WASHER BRB5,3X10RFR
740	ALL	315105-0153	-		4	WASHER BRB6,4X12RFR
750	ALL	315115-0165	-		4	WASHER TBRB8,4X16RFR
760	ALL	321127-0100	S		2	BUSHING 10/13X10
785	ALL	312155-0291	-		4	SCREW MF6S4X12RFR

S-272014-2

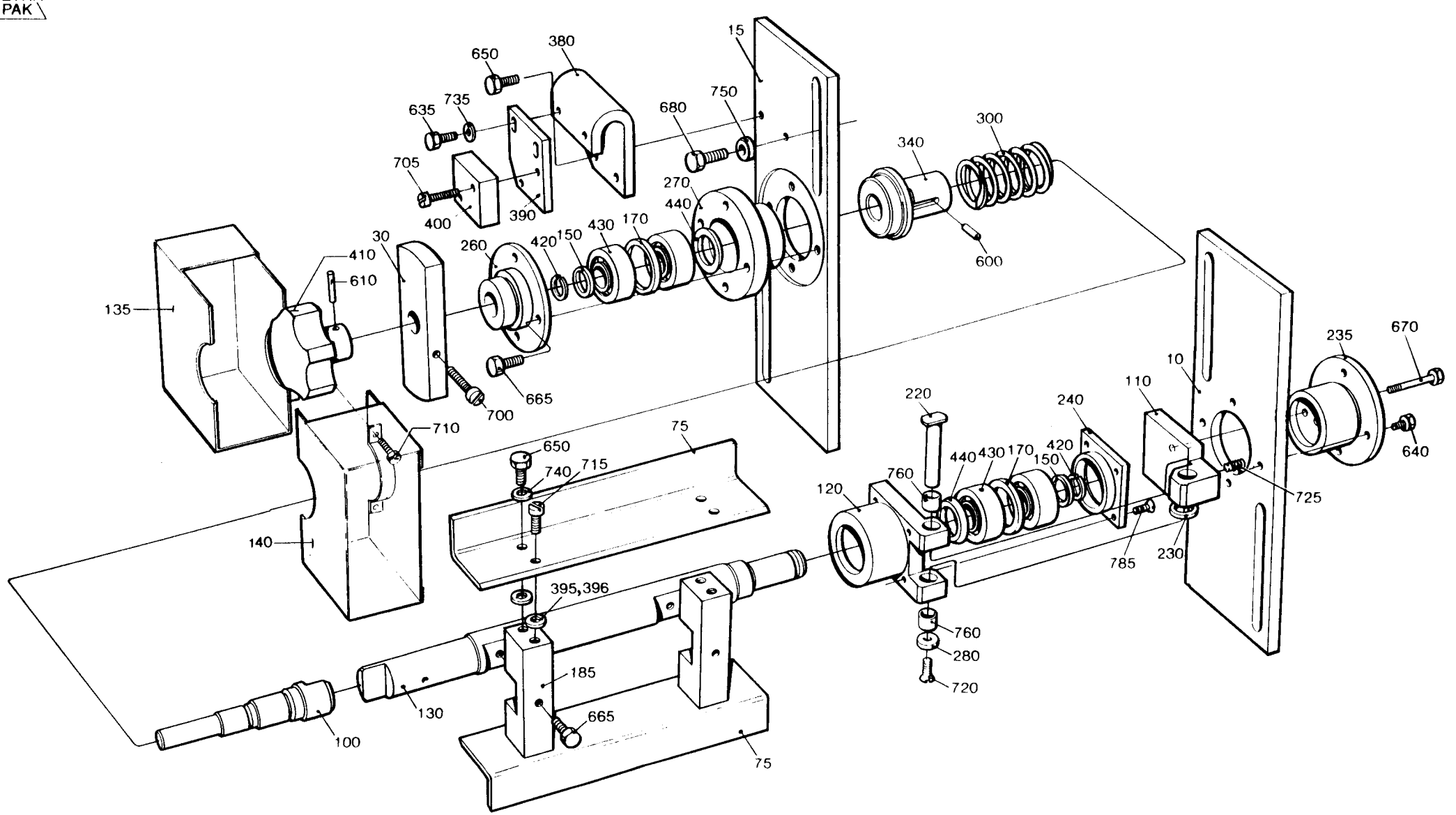
650
380
15
635
735
680
750
705
340
300
270
440
400
390
30
410
260
420
150
430
170
610
135
600
665
700
710
75
650
740
715
220
240
760
440
430
170
420
150
120
110
10
235
670
640
725
140
785
230
395,396
760
280
720
185
130
665
100
75

LAST ALTERATION: AM 9215 86-05-29
648111-060V
AM 7355
84-12-06

GROUP	VOLUME	VOLUME	VOLUME	VOLUME	VOLUME
-0201	V0284	V0250	V0236	V0200	V0187
	V0180	-	-	-	-
-0202	V0125	-	-	-	-
-0203	200ML SLIM	-	-	-	-

POS	VAR	PART NUMBER	SP	EH	QTY	DESCRIPTION
	-0201	S- 456309-SHEET		-1		===ASSEMBLY DRAWING===
	-0202			~~-1~~		
	-0203			~~-1~~		
010	-0201	456093	-		1	HOLDER
010	-0202	456837	-		1	HOLDER
	-0203				1	
020	-0201	456132	-		1	LOCK BOARD
020	-0202	456840	-		1	LOCK BOARD
	-0203				1	
030	-0201	456131	-		1	LOCK BOARD
030	-0202	456839	-		1	LOCK BOARD
	-0203				1	
050	-0201	257040	-		1	FORK
050	-0202	257041	-		1	FORK
	-0203				1	
055	-0201	456130	-		4	LOCK BOARD
055	-0202	456838	-		4	LOCK BOARD
	-0203				4	
070	-0201	263655-0006	S		6	SHAFT
070	-0202	2873	S		6	SHAFT
	-0203				6	
110	-0201	456090	S		5	ROLLER
110	-0202	441876	P		5	ROLLER
110	-0203	456996	P		5	ROLLER
250	-0201	38630-0003	P		1	COUNTER ROLLER
250	-0202	491376	P		1	COUNTER ROLLER
250	-0203	491222	P		1	COUNTER ROLLER
280	-0201	271421	-		1	HOLDER
280	-0202	491587	-		1	HOLDER
	-0203				1	
600	-0202	312318-0368	-		2	GRUB SCREW SK6SS6X16RFR
	-0203				2	
610	-0201	312318-0451	-		2	GRUB SCREW SK6SS8X20RFR
630	-0202	312605-0316	-		2	NUT M6M6RFR
	-0203				2	
640	-0201	312605-0318	-		2	NUT M6M8RFR
040	ALL	256258	-		1	CYLINDER BRACKET
060	ALL	2033-0011	P		24	WASHER
080	ALL	239440	P		1	SHAFT

POS	VAR	PART NUMBER	SP	EH	QTY	DESCRIPTION
090	ALL	441828	P		10	PLAIN BEARING
130	ALL	255969	S		1	SHAFT
140	ALL	255970	S		2	BUSHING
150	ALL	255971	S		1	BUSHING
160	ALL	255972	-		1	BEARING PLATE
180	ALL	255974	-		1	BRACKET
200	ALL	257042	-		1	BRACKET
210	ALL	257043	-		1	ANGLE BRACKET
220	ALL	257044	P		1	ROLLER
230	ALL	257050	P		1	SHAFT
240	ALL	268059	P		1	ROLLER
260	ALL	271419	-		1	FORK
270	ALL	271420	-		1	BRACKET
290	ALL	271422	S		2	SPRING
300	ALL	271423-0001	S		1	SHAFT
310	ALL	271844	S		1	WASHER
320	ALL	90090-0003	P		1	STEEL BALL
330	ALL	90235-0275	S		2	VALVE
340	ALL	90239-0127	S		1	BRACKET
350	ALL	90239-0166	S		1	CYLINDER
		90285-0094	S		0	* SEAL
490	ALL	311103-0233	-		2	CYLINDRICACPR3M6X10RFR
500	ALL	311103-0238	-		2	CYLINDRICACPR3M6X20RFR
510	ALL	311411-0140	-		1	SPLIT PIN SP1,6X16RFR
512	ALL	312105-0331	-		2	SCREW M6S5X20 A4 80
515	ALL	312105-0337	-		2	SCREW M6S5X35RFR
520	ALL	312105-0364	-		1	SCREW M6S6X10RFR
525	ALL	312105-0366	-		1	SCREW M6S6X12RFR
530	ALL	312105-0368	-		2	SCREW M6S6X16RFR
540	ALL	312105-0370	-		4	SCREW M6S6X20RFR
550	ALL	312105-0449	-		3	SCREW M6S8X16RFR
560	ALL	312105-0451	-		4	SCREW M6S8X20RFR
580	ALL	312105-0536	-		1	SCREW M6S12X30RFR
585	ALL	312145-0285	-		1	SLOTTED HEMFS4X6RFR
590	ALL	312318-0285	-		1	GRUB SCREW SK6SS4X6RFR
620	ALL	312605-0310	-		1	NUT M6M3RFR
650	ALL	312605-0320	-		1	NUT M6M10RFR
660	ALL	315105-0153	-		4	WASHER BRB6,4X12RFR
665	ALL	315105-0165	-		2	WASHER BRB8,4X16RFR
670	ALL	315115-0165	-		6	WASHER TBRB8,4X16RFR
680	ALL	315115-0178	-		1	WASHER TBRB13X24RFR
700	ALL	321127-0100	-		1	BUSHING 10/13X10
710	ALL	342797-0122	S		2	BANJO CONNSINGEL 6-1/4

TETRA PAK

2/8501

S-456309-1

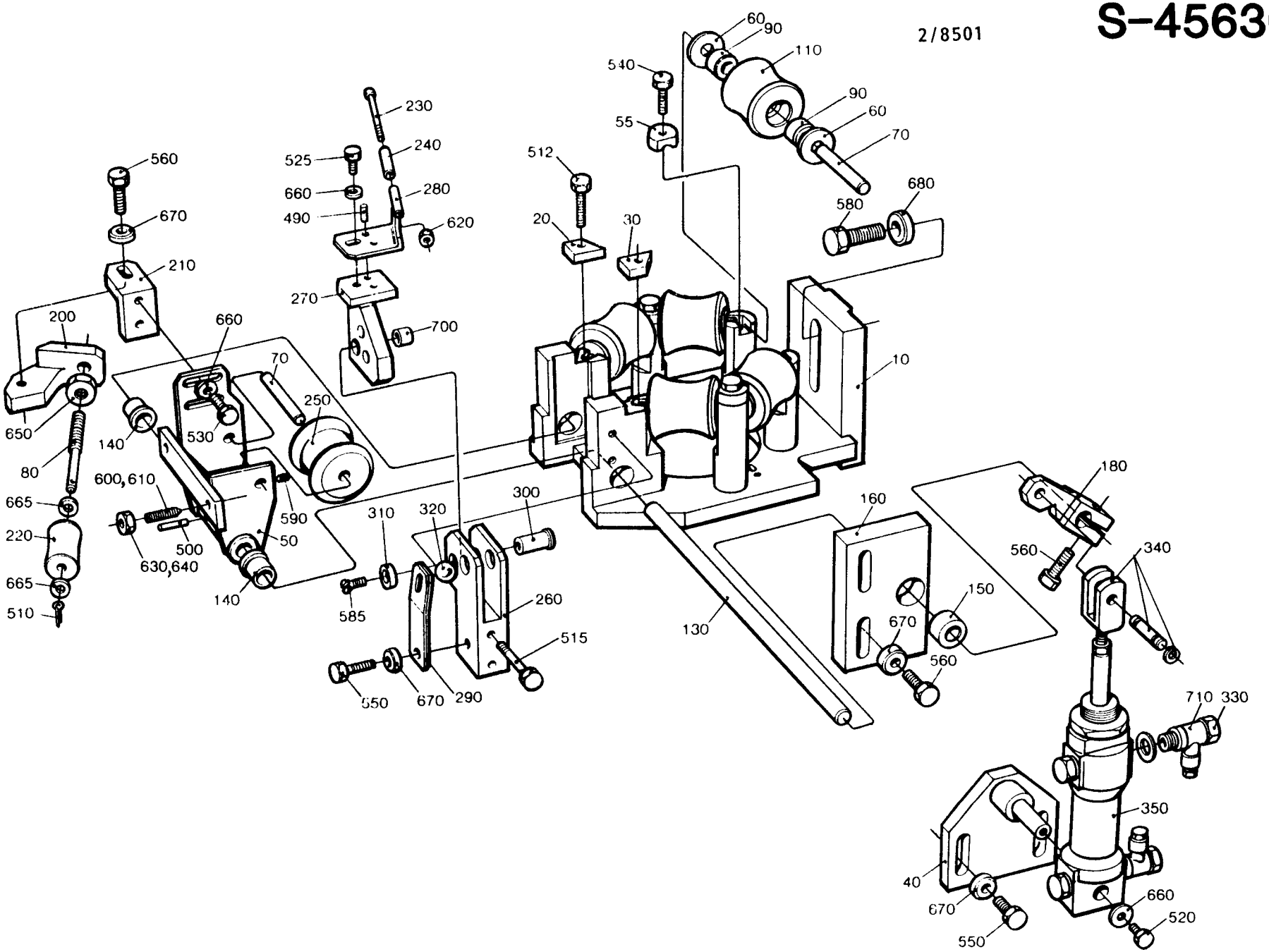

LAST ALTERATION: AM 8376 85-10-18
648111-960V
AM 6800
84-05-11

GROUP	VOLUME	VOLUME	VOLUME	VOLUME
-0101	V0250	V0236	V0200	V0180
-0102	200ML SLIM	-	-	-
-0103	V0125	-	-	-

POS	VAR	PART NUMBER	SP	EH	QTY	DESCRIPTION
	-0101	S- 469091-SHEET	-1			===ASSEMBLY DRAWING===
	-0102		-1			
	-0103		-1			
010	-0101	295374	S		1	FILLING TUBE
010	-0102	469140	S		1	FILLING TUBE
	-0103				1	
040	-0101	295376	P		1	SHAFT
040	-0102	255977	-		1	SHAFT
	-0103				1	
050	-0101	295375	P		1	FORK
050	-0102	255978	P		1	FORK
	-0103				1	
070	-0101	257330	PU		1	PRESSURE ROLLER
070	-0102	272479	PU		1	PRESSURE ROLLER
	-0103				1	
090	-0101	295377-0002	P		1	COVER
090	-0102	295377-0001	P		1	COVER
090	-0103	491441	P		1	COVER
100	-0101	6689	P		1	SPRING
100	-0102	272180	P		1	SPRING
	-0103				1	
020	ALL	295152	S		1	PLATE
025	ALL	295273	-		1	PLATE
027	ALL	295984	-		1	DRIP GUARD
030	ALL	12242-0001	P		2	GASKET
060	ALL	255981	-		4	NUT
080	ALL	315125-0153	-		4	WASHER SB 6,4X22X4 RFR
510	ALL	315204-0214	PU		1	O-RING 17,3X2,4VITON
515	ALL	312105-0364	-		2	SCREW M6S6X10RFR
520	ALL	312105-0372	-		4	SCREW M6S6X25RFR
530	ALL	312115-0455	-		4	SCREW 8X30 A4 80
540	ALL	312605-0318	-		4	NUT M6M8RFR

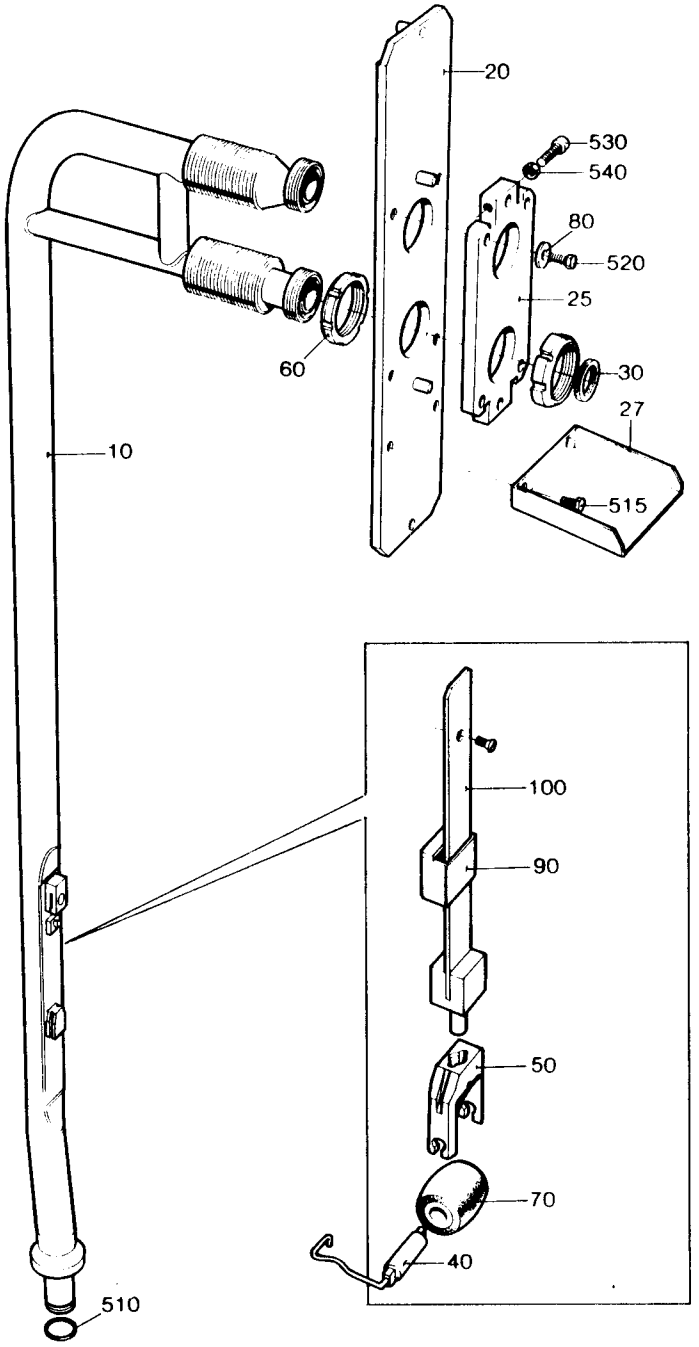
20
530
540
80
520
25
30
27
515
60
10
100
90
50
70
40
510

LAST ALTERATION: AM 8595 85-12-09
648111-020V
AM 5254
82-04-08

POS	VAR	PART NUMBER	SP	EH	QTY	DESCRIPTION
	-0201	S- 272024-SHEET	-2			===ASSEMBLY DRAWING===
010	-0201	G- 272926	-		1	FORK
030	-0201	491396	S		1	SQUEE-GEE ROLLER
040	-0201	255989	S		1	SHAFT
050	-0201	491397	S		1	SQUEE-GEE ROLLER
060	-0201	271893	S		1	SHAFT
070	-0201	272927	-		1	PRESSURE ARM
090	-0201	247170	C		4	COVER
100	-0201	271269	S		2	BUSHING
110	-0201	271895	-		2	BRACKET
120	-0201	271896	C		1	SHAFT
130	-0201	271898	C		1	SCREW
140	-0201	271899	C		4	SCREW
150	-0201	272017	-		1	AXLE SUPPORT
160	-0201	272018	-		1	AXLE SUPPORT
170	-0201	272033	-		1	BRACKET
180	-0201	272369	-		2	SPACER
190	-0201	272928	-		1	ARM
200	-0201	272929	-		1	BRACKET
300	-0201	90044-0104	P		1	INDUCTIVE TRANSMITTER
310	-0201	90214-0098	S		4	BALL BEARING
320	-0201	90214-0040	P		4	BALL BEARING
330	-0201	90214-0303	P		4	RING
340	-0201	90235-0275	-		2	VALVE
350	-0201	90239-0189	S		1	CYLINDER
		90285-0094	S		0	* SEAL
360	-0201	90239-0320	S		1	BRACKET
500	-0201	312105-0364	-		11	SCREW M6S6X10RFR
510	-0201	312105-0370	-		1	SCREW M6S6X20RFR
520	-0201	312105-0449	-		1	SCREW M6S8X16RFR
530	-0201	312105-0453	-		2	SCREW M6S8X25RFR
540	-0201	312105-0455	-		2	SCREW M6S8X30RFR
550	-0201	312105-0536	-		2	SCREW M6S12X30RFR
560	-0201	312115-0457	-		2	SCREW A4 80
570	-0201	312125-0228	-		2	SLOTTED HEMCS3X16RFR
580	-0201	312318-0327	-		2	GRUB SCREW SK6SS5X12RFR
585	-0201	312318-0362	-		4	GRUB SCREW SK6SS6X8RFR
590	-0201	315105-0153	-		1	WASHER BRB6,4X12RFR
600	-0201	315742-0112	-		2	RETAINING 16SMS199RFR
610	-0201	342797-0122	-		2	BANJO CONNSINGEL 6-1/4

TETRA PAK

4/8601

S-272024-2

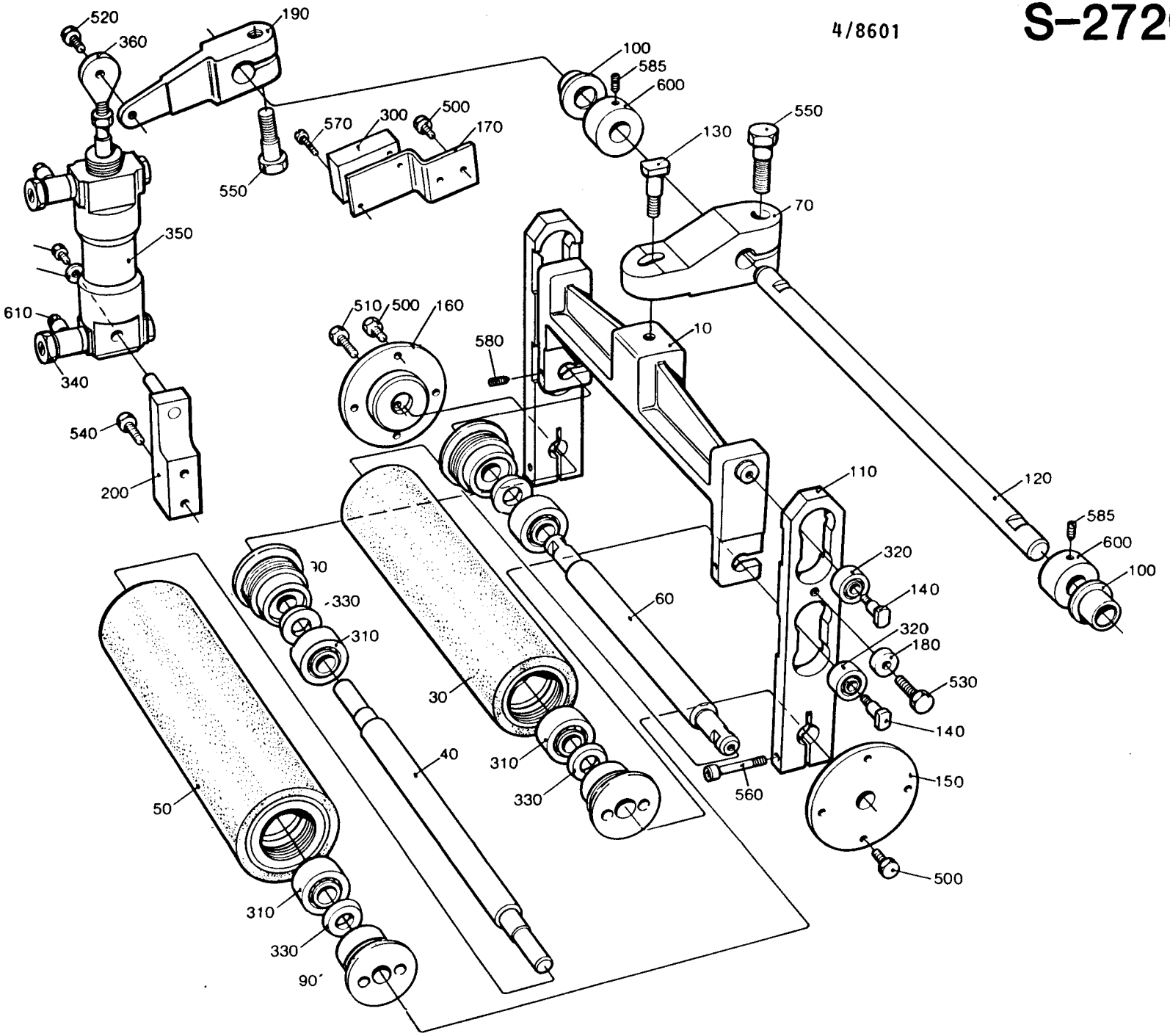

LAST ALTERATION: AM 8465 85-12-18
648111-070V

GROUP	VOLUME	VOLUME
-0401	V0125	-
-0402	V0200	V0180
-0403	V0250	V0236
-0404	200ML SLIM	-

POS	VAR	PART NUMBER	SP	EH	QTY	DESCRIPTION
	-0401	S- 255921-SHEET	~~0~~			===ASSEMBLY DRAWING===
	-0402		-5			
	-0403		-5			
	-0404		~~7~~			
010	-0401	490869	S		1	FILLING TUBE LOWER
010	-0402	469972-0001	S		1	FILLING TUBE LOWER
010	-0403	469972-0002	S		1	FILLING TUBE LOWER
010	-0404	491270	S		1	FILLING TUBE LOWER
020	-0401	490850	S		1	FLANGE
020	-0402	469973	S		1	FLANGE
	-0403				1	
020	-0404	491271	S		1	FLANGE
030	-0401	272056	S		1	FLOAT
030	-0402	259580	S		1	FLOAT
	-0403				1	
030	-0404	491142	S		1	FLOAT
100	-0402	36816	S		1	LINK
	-0403				1	
110	-0402	36817	S		1	CLAMPING ELEMENT
	-0403				1	
120	-0402	36821-0002	P		1	BREAKPIN
	-0403				1	
130	-0402	37296	S		1	ARM
	-0403				1	
140	-0402	445503	P		1	LOCKING PIN LOWER
	-0403				1	
150	-0402	445505	P		1	LOCKING PIN UPPER
	-0403				1	
160	-0401	490871	P		1	LOCKING PIN UPPER
	-0404				1	
170	-0401	490872	P		1	LOCKING PIN LOWER
180	-0404	491272	P		1	LOCKING PIN LOWER
220	-0401	271347	S		1	ARM
	-0404				1	
230	-0401	491458	S		1	LINK
230	-0404	271348	S		1	LINK
240	-0401	271349	S		1	LINK
	-0404				1	
250	-0401	271350	P		1	THROTTLE
250	-0402	295987	P		1	THROTTLE
	-0403				1	

POS	VAR	PART NUMBER	SP	EH	QTY	DESCRIPTION
250	-0404	491141	S		1	THROTTLE
260	-0401	271351	P		1	BREAKPIN
	-0404				1	

TETRA PAK

1/8608

S-255921-5

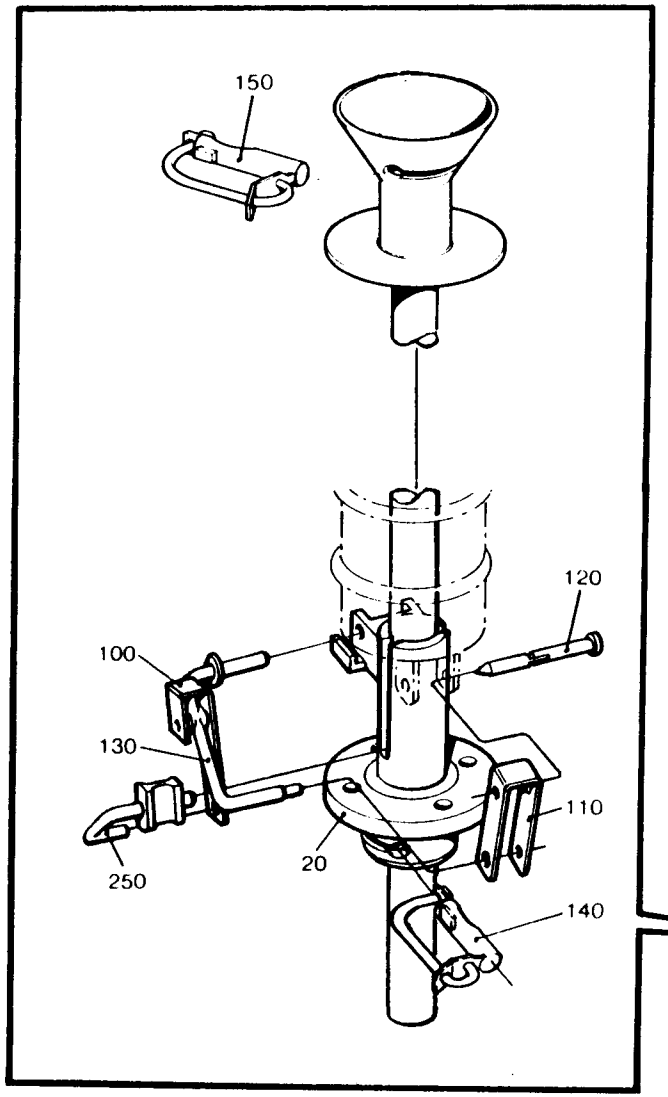

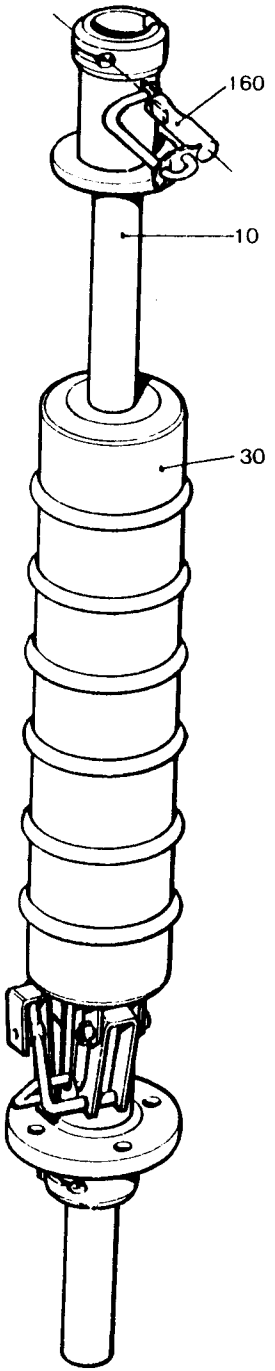

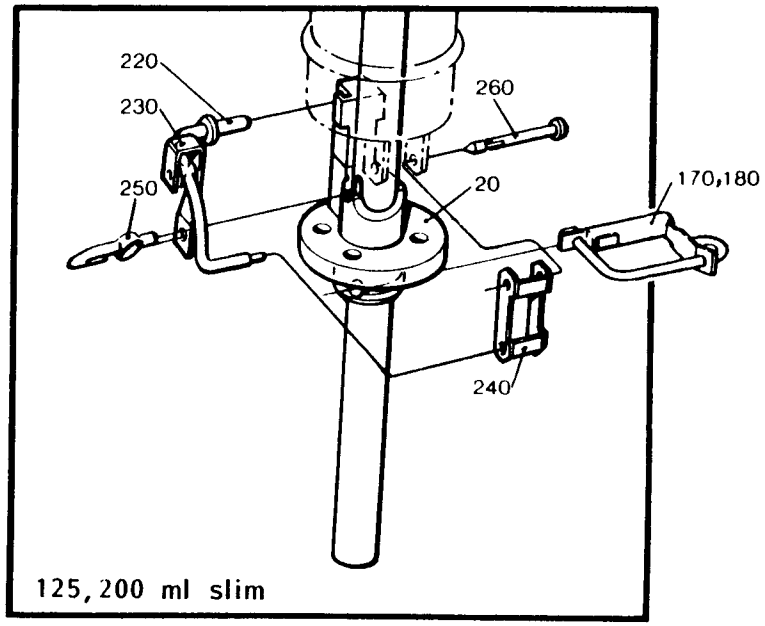

LAST ALTERATION: AM 10002 87-01-12
648111-060V
AM 6746
84-05-07

GROUP PULL-TAB
VERSION

-0301 WITH PTAB
-0302 WITHOUT PTAB

POS	VAR	PART NUMBER	SP	EH	QTY	DESCRIPTION
	-0301	S- 256014-SHEET	-11			===ASSEMBLY DRAWING===
	-0301		-12			
	-0301		-13			
	-0302		-13			
	-0302		-14			
	-0302		-15			
F115	-0301	C- 441649-0101	-		1	BRAKE
100	-0302	456994	S		1	BENDING ROLLER
130	-0301	247172	S		2	SPACER RING
	-0302				4	
140	-0302	247173	C		2	BEARING SEAT
260	-0302	271036	-		2	BRACKET
420	-0301	456516	C		2	BEARING COVER
	-0302				4	
575	-0301	484190	S		4	BALL BEARING
	-0302				6	
576	-0301	90214-0303	P		6	RING
	-0302				8	
750	-0301	311103-0270	-		8	CYLINDRICACPR4M6X16RFR
	-0302				12	
835	-0301	315105-0153	-		13	WASHER BRB6,4X12RFR
	-0302				17	
860	-0301	315751-0112	S		1	LOCK RING SGA15 RFR
	-0302				2	
010	ALL	456992	-		1	BATH
015	ALL	469962	-		1	BOX
040	ALL	456993	-		1	COVER
045	ALL	273954	P		1	SEAL
047	ALL	491125	-		1	LID
050	ALL	256001	-		2	BRACKET
060	ALL	295111	S		1	BENDING ROLLER
070	ALL	441624	S		1	BENDING ROLLER
110	ALL	456995	S		1	CARRIER
115	ALL	456784	-		1	LID
120	ALL	12242-0003	PU		2	GASKET
150	ALL	247239	S		2	WHEEL
160	ALL	247248	-		2	PIN
170	ALL	255987	S		2	BEARING COVER
180	ALL	256005	S		1	GASKET
190	ALL	256006	-		1	AXLE SUPPORT

POS	VAR	PART NUMBER	SP	EH	QTY	DESCRIPTION
200	ALL	256007	-		1	AXLE SUPPORT
210	ALL	256008	S		1	SHAFT
220	ALL	256010	S		4	NUT
230	ALL	256011	C		4	PIN
240	ALL	256012	C		4	SHAFT
270	ALL	271280	-		1	PIPE
340	ALL	295388	PU		1	GASKET
350	ALL	441474	-		2	SHIM
360	ALL	441635	C		2	BEARING SEAT
400	ALL	456472	-		2	BRACKET
410	ALL	456474	-		2	PLATE
425	ALL	458962-0006	S		1	ELECTRODE
430	ALL	469786	-		1	NIPPLE
440	ALL	273937	P		1	DIAPHRAGM
450	ALL	469982	-		1	WASHER
520	ALL	90030-0109	S		2	PIPE CONNECTION
530	ALL	90044-0084	P		2	MICRO SWITCH
533	ALL	90051-0053	-		4	HANDLE
535	ALL	90153-0016	-	ML	X	ADHESIVE
538	ALL	90157-0022	P		1	SEALING COMPOUND
540	ALL	90187-0029	S		1	VALVE
550	ALL	90199-0010	S		1	LEVEL GLASS
560	ALL	90206-0326	-		1	CONNECTION BOX
570	ALL	90206-0070	PU		1	HEATING ELEMENT
580	ALL	90217-0035	-		1	NUT
590	ALL	90224-0078	-		1	CONNECTION
600	ALL	491130	S		2	ROLLER CHAIN
		484204	P		0	* LINK
610	ALL	90326-0019	P		1	THERMOELEMENT
620	ALL	90326-0020	P		2	SOCKET
630	ALL	90326-0012	P		2	PROTECTIVE COVER
640	ALL	90326-0017	P		1	GLAND
650	ALL	90326-0052	P		1	THERMO ELEMENT
660	ALL	90330-0026	-		2	PLUG
745	ALL	311103-0308	-		2	CYLINDRICACPR5M6X16RFR
760	ALL	312105-0325	-		9	SCREW M6S5X10 A4 80
770	ALL	312105-0332	-		6	SCREW M6S5X22RFR
780	ALL	312105-0366	-		16	SCREW M6S6X12RFR
790	ALL	312105-0368	-		15	SCREW M6S6X16RFR
795	ALL	312105-0372	-		4	SCREW M6S6X25RFR
800	ALL	312105-0449	-		10	SCREW M6S8X16RFR
805	ALL	312109-0463	-		2	SCREW M6S8X60H A4 80
808	ALL	312115-0366	-		6	SCREW 6X12 A4 80
810	ALL	312125-0285	-		1	SLOTTED HEMCS4X6RFR
812	ALL	312125-0331	-		2	SLOTTED HEMCS5X20RFR
815	ALL	312115-0329	-		4	SCREW 5X16 A4 80
818	ALL	312304-0378	-		4	STUD BOLT PS6X40RFR
820	ALL	312605-0312	-		2	NUT M6M4RFR
822	ALL	312605-0316	-		4	NUT M6M6RFR

S-256014-11

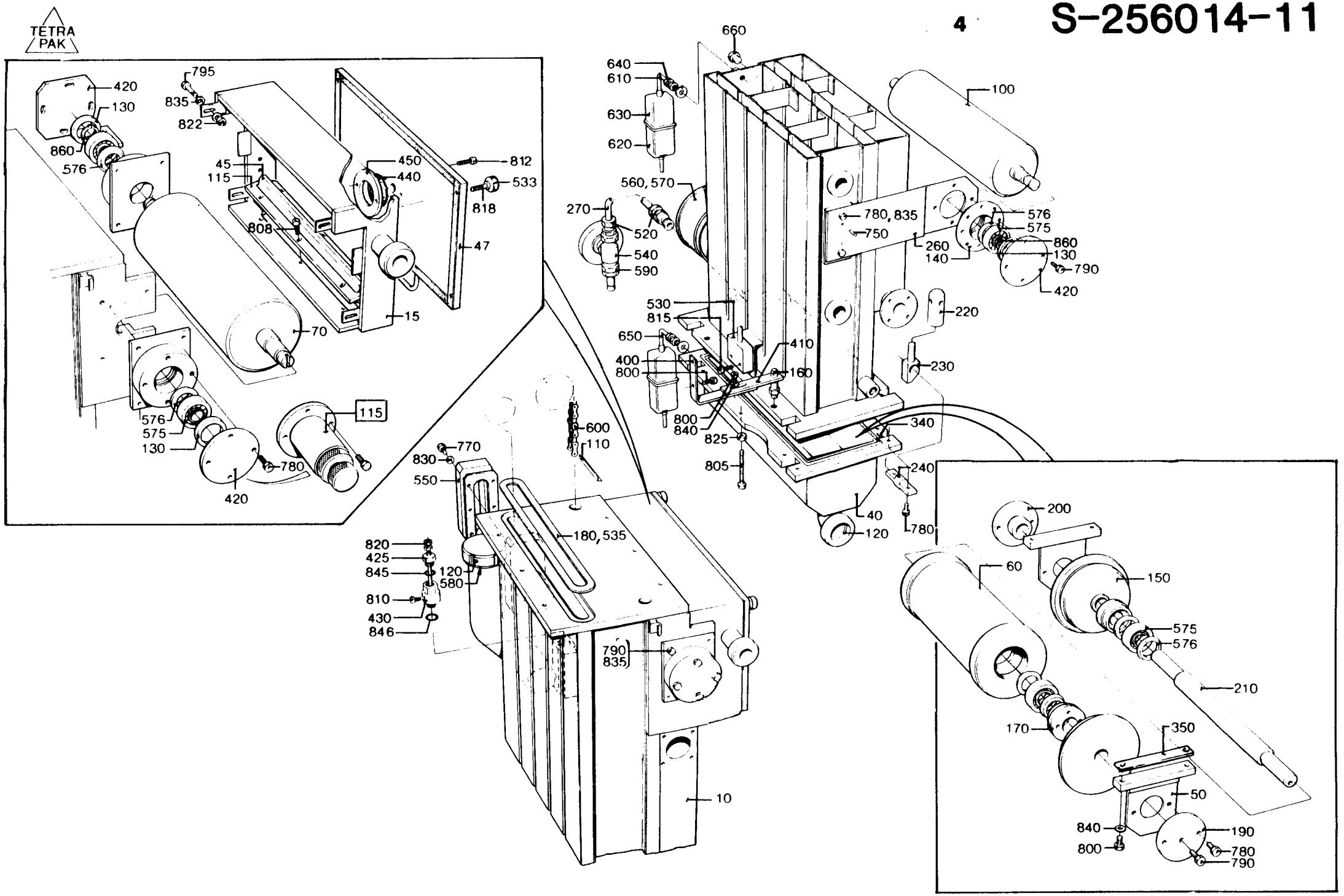

10002

POS	VAR	PART NUMBER	SP	EH	QTY	DESCRIPTION	
825	ALL	312605-0318	-		2	NUT	M6M8RFR
830	ALL	315105-0146	-		6	WASHER	BRB5,3X10RFR
840	ALL	315105-0165	-		6	WASHER	BRB8,4X16RFR
845	ALL	315204-0213	P		1	O-RING	15,3X2,4VITON
846	ALL	315204-0215	P		1	O-RING	19,2X3VITON

S-256014-11

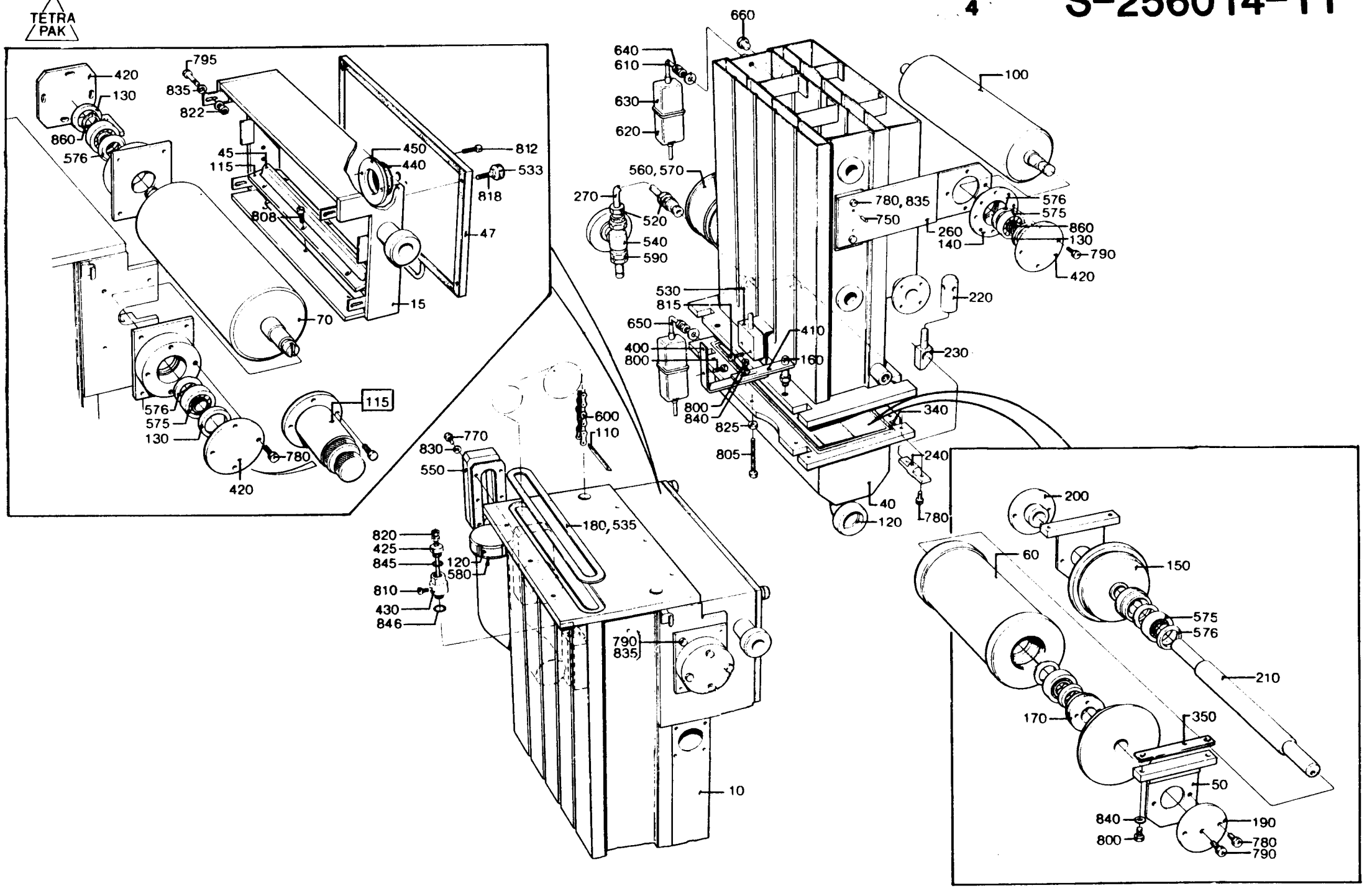

10002

LAST ALTERATION: AM 6781 84-04-11
648111-060V
AM 6170
83-09-29

POS	VAR	PART NUMBER	SP	EH	QTY	DESCRIPTION
	-0101	S- 441649-SHEET -1				===ASSEMBLY DRAWING===
005	-0101	441477	P		1	COMPRESSION SPRING
010	-0101	441623	C		1	HOUSE
020	-0101	441630	C		1	KNOB
030	-0101	441631	S		1	CHECK NUT
040	-0101	441632	P		1	FRICTION BLOCK
050	-0101	441633	S		1	SPINDLE
060	-0101	469075	S		1	BRAKE DISC
700	-0101	311103-0267	-		1	CYLINDRICACPR4M6X10RFR
750	-0101	312115-0289	-		1	SCREW S4X10 A4 80

TETRA PAK

S-441649-1

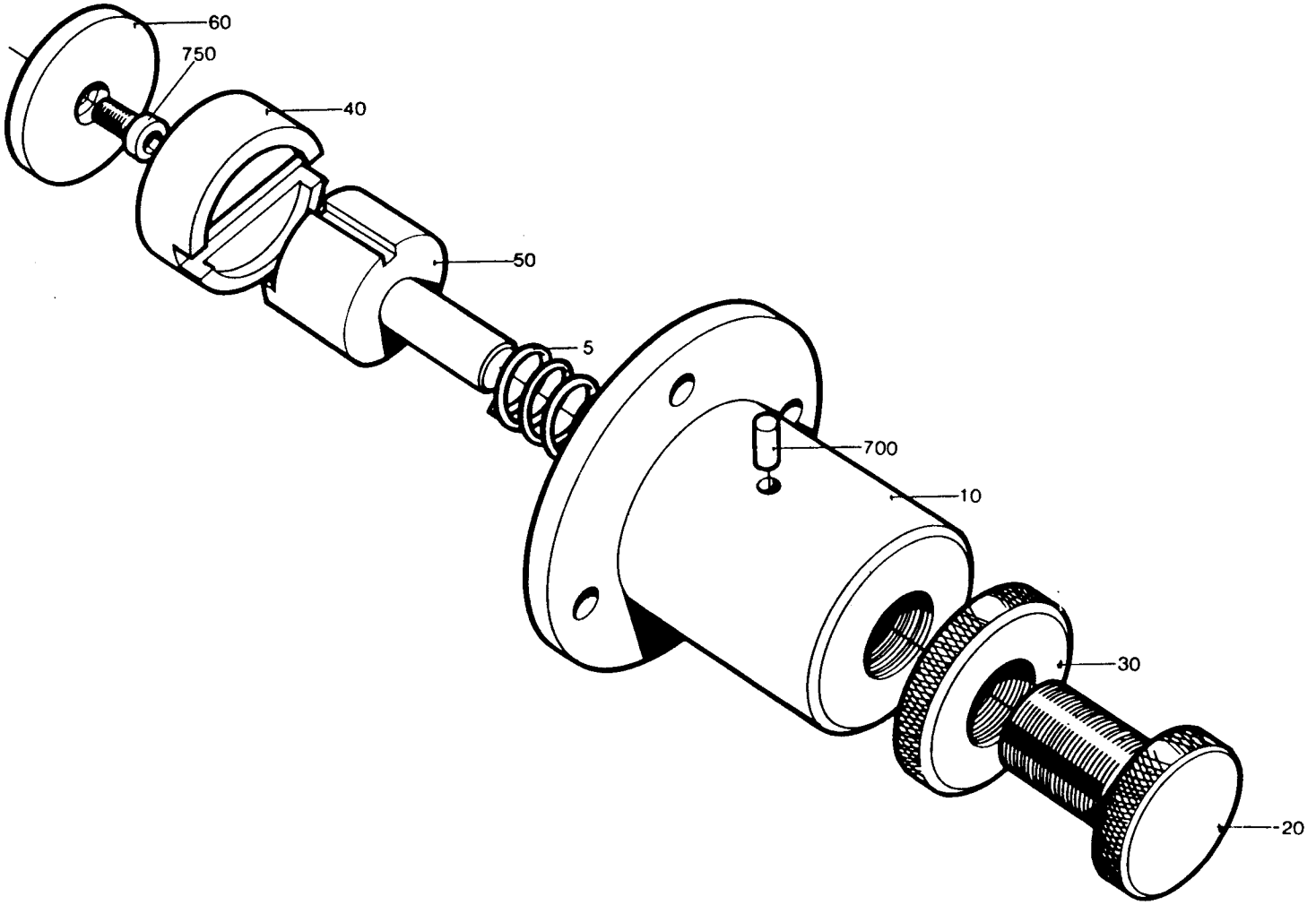

LAST ALTERATION: AM 8595 85-12-09
648111-020V
AM 5393
82-07-12

GROUP	VOLUME	VOLUME	VOLUME	VOLUME
-0201	V0125	-	-	-
-0202	V0250	V0236	V0200	V0180
-0203	200ML SLIM	-	-	-

POS	VAR	PART NUMBER	SP	EH	QTY	DESCRIPTION
	-0201	S- 272025-SHEET	~~-1~~			===ASSEMBLY DRAWING===
	-0202		-2			
	-0203		-2			
010	-0201	271824	-		1	AIR KNIFE, MOVABLE
020	-0201	271825	-		1	FIXED AIR KNIFE
030	-0201	271941-0001	-		1	FRAME
030	-0202	271941-0002	-		1	FRAME
	-0203				1	
040	-0201	271942-0001	-		1	AIR GUIDE
040	-0202	271942-0002	-		1	AIR GUIDE
	-0203				1	
050	-0202	272022	-		1	AIR KNIFE, MOVABLE
	-0203				1	
060	-0202	272023	-		1	FIXED AIR KNIFE
	-0203				1	
070	-0201	272026-0001	-		1	AIR DISTRIBUTOR
070	-0202	272026-0002	-		1	AIR DISTRIBUTOR
	-0203				1	
080	-0201	271820-0001	-		1	GUIDE RAIL
080	-0202	469991	-		1	RAIL
080	-0203	271820-0002	-		1	GUIDE RAIL
100	-0201	272140-0001	-		1	GUIDE PLATE
100	-0202	272140-0002	-		1	GUIDE PLATE
	-0203				1	
160	-0201	271827-0001	-		1	GUIDE PLATE
160	-0202	271827-0002	-		1	GUIDE PLATE
	-0203				1	
190	-0201	272027-0001	S		1	GLASS PANE
190	-0202	272027-0002	S		1	GLASS PANE
	-0203				1	
210	-0201	272141-0001	S		1	FILTER
210	-0202	272141-0002	S		1	FILTER
	-0203				1	
220	-0201	272329-0001	S		2	INSERT
220	-0202	272329-0002	S		2	INSERT
	-0203				2	
090	ALL	271858	-		1	FLANGE
105	ALL	272464	-		1	ANGLE BRACKET
110	ALL	255984-0001	S		1	CYLINDER BRACKET
120	ALL	255995	S		1	SCREW

POS	VAR	PART NUMBER	SP	EH	QTY	DESCRIPTION
130	ALL	256021	S		1	BUSHING
140	ALL	256022	S		1	BUSHING
150	ALL	263311	C		4	WASHER
170	ALL	271859	C		1	ARM
180	ALL	271865	C		1	SLEEVE
200	ALL	469810	C		1	BRACKET
230	ALL	295103	-		1	SPACER
300	ALL	90044-0104	P		1	INDUCTIVE TRANSMITTER
310	ALL	90235-0275	S		2	VALVE
320	ALL	90239-0127	S		1	BRACKET
330	ALL	90239-0189	S		1	CYLINDER
		90285-0094	S		0	* SEAL
490	ALL	311103-0233	-		2	CYLINDRICACPR3M6X10RFR
500	ALL	312105-0293	-		4	SCREW M6S4X16 A4 80
510	ALL	312105-0331	-		2	SCREW M6S5X20 A4 80
520	ALL	312105-0364	-		6	SCREW M6S6X10RFR
530	ALL	312105-0366	-		1	SCREW M6S6X12RFR
540	ALL	312105-0368	-		4	SCREW M6S6X16RFR
550	ALL	312105-0370	-		4	SCREW M6S6X20RFR
560	ALL	312105-0461	-		2	SCREW M6S8X50RFR
570	ALL	312115-0325	-		4	SCREW 5X10 A4 80
575	ALL	312115-0366	-		2	SCREW 6X12 A4 80
580	ALL	312125-0228	-		2	SLOTTED HEMCS3X16RFR
590	ALL	312605-0314	-		4	NUT M6M5RFR
600	ALL	312605-0320	-		1	NUT M6M10RFR
610	ALL	315105-0146	-		2	WASHER BRB5,3X10RFR
620	ALL	315105-0153	-		5	WASHER BRB6,4X12RFR
625	ALL	315105-0173	-		1	WASHER BRB10,5X22RFR
630	ALL	342797-0122	-		2	BANJO CONNSINGEL 6-1/4

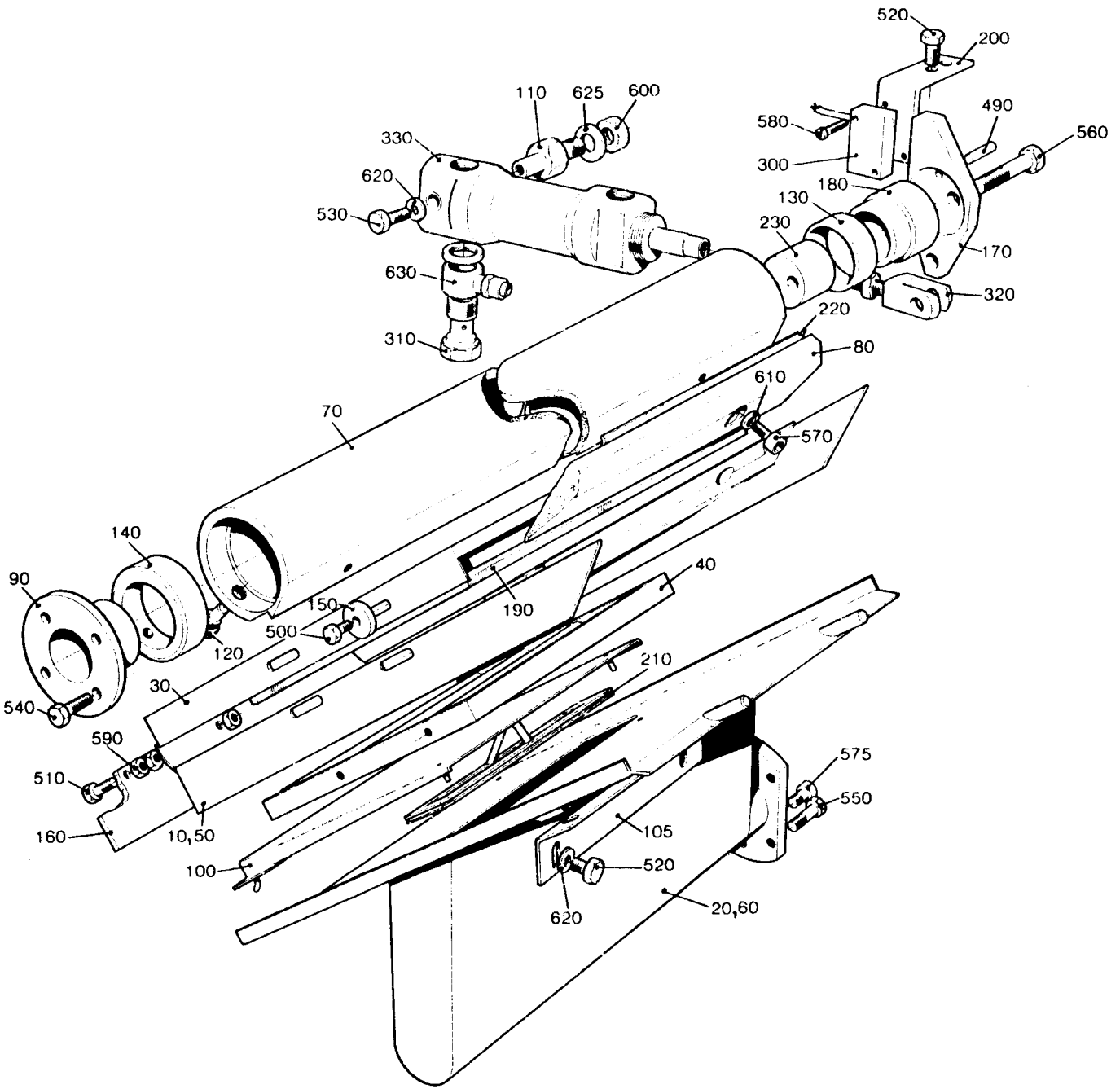
520
200
110
625
600
490
580
560
330
300
620
180
130
530
230
170
630
320
310
220
80
610
70
570
140
90
40
150
190
500
120
210
30
540
590
575
510
550
105
160
10,50
520
100
620
20,60

LAST ALTERATION: AM 8477 85-11-25
648111-000V
AM 7210
84-10-19

POS	VAR	PART	NUMBER	SP	EH	QTY	DESCRIPTION
	-0101	S-	469501-SHEET		-1		===ASSEMBLY DRAWING===
010	-0101		469416	C		1	CONNECTION
020	-0101		469418	S		1	BLOW-OFF NOZZLE
030	-0101		469792	C		1	PIPE LINE
040	-0101		469420	C		1	BLOW-OFF NOZZLE
050	-0101		491983	S		1	GASKET
060	-0101		6161	P		3	ROLLER
065	-0101		28036	-		4	WASHER
070	-0101		751010	P		1	GASKET
080	-0101		256899	S		2	SHAFT
090	-0101		272095	S		3	SHAFT
100	-0101		469458	-		2	BRACKET
110	-0101		469459	-		2	BRACKET
120	-0101		469460	-		1	BRACKET
125	-0101		491143	-		1	BRACKET
130	-0101		469461	P		2	ROLLER
140	-0101		469463	S		1	SHAFT
150	-0101		469464	P		1	ROLLER
160	-0101		491178	-		1	BRACKET
170	-0101		469466	-		1	PLATE
180	-0101		469467	-		1	PLATE
190	-0101		751024	P		1	GASKET
295	-0101		311103-0234	-		2	CYLINDRICACPR3M6X12RFR
300	-0101		312105-0287	-		3	SCREW M6S4X8 A4 80
310	-0101		312105-0325	-		4	SCREW M6S5X10 A4 80
315	-0101		312105-0333	-		5	SCREW M6S5X25 A4 80
320	-0101		312105-0366	-		6	SCREW M6S6X12RFR
330	-0101		312105-0449	-		2	SCREW M6S8X16RFR
360	-0101		312605-0312	-		1	NUT M6M4RFR
370	-0101		312605-0318	-		3	NUT M6M8RFR
400	-0101		315105-0153	-		6	WASHER BRB6,4X12RFR
440	-0101		315115-0165	-		2	WASHER TBRB8,4X16RFR

TETRA PAK

3/8608

S-469501-1

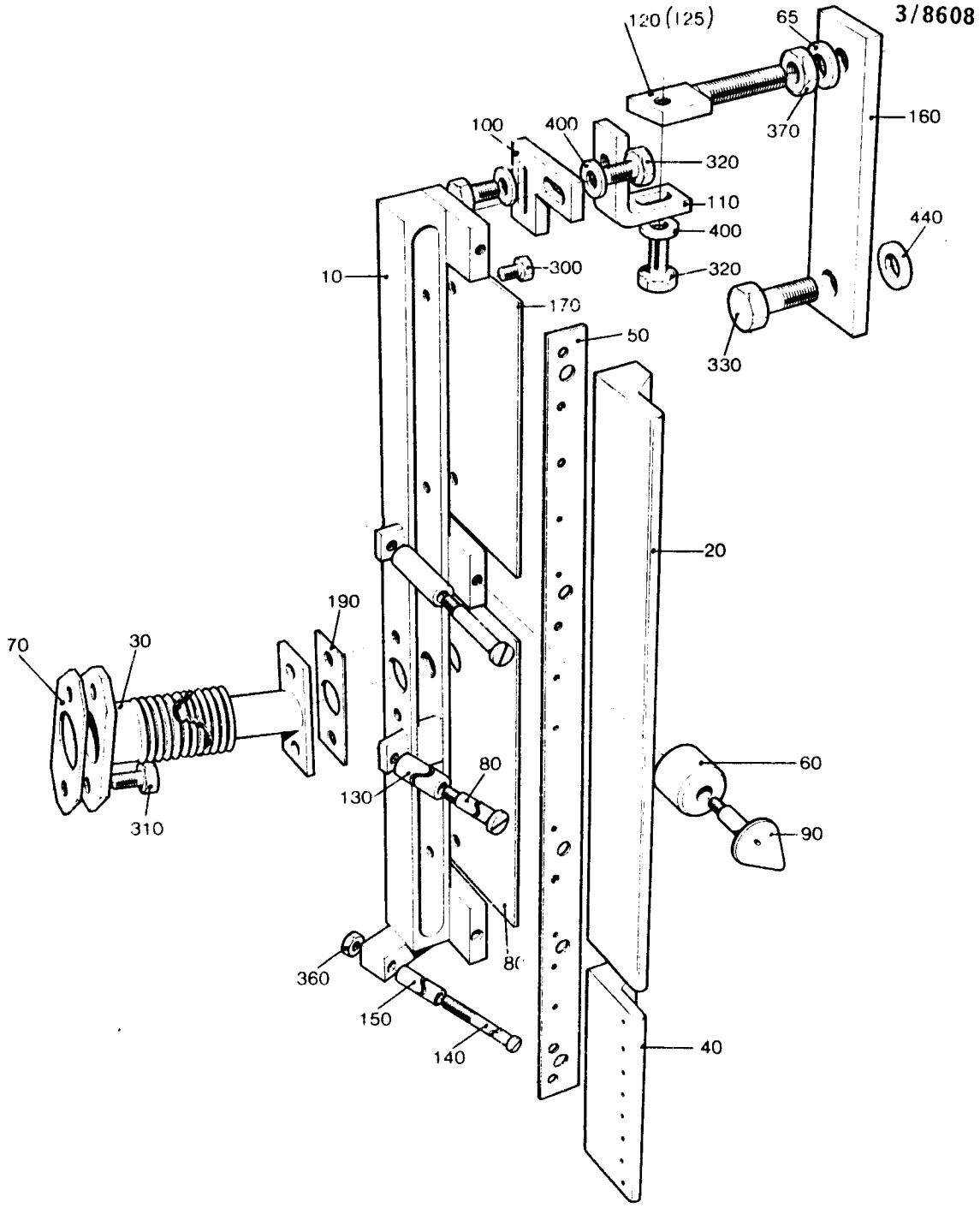

AM 7210

LAST ALTERATION: AM 7532 85-02-14
648111-060V
AM 7210
84-10-19

POS	VAR	PART NUMBER	SP	EH	QTY	DESCRIPTION
	-0301	S- 271485-SHEET	-4			===ASSEMBLY DRAWING===
010	-0301	295846	S		1	BLOW-OFF NOZZLE
020	-0301	271416	C		1	CONNECTION
030	-0301	441545	S		1	GASKET
035	-0301	295847	C		1	PLATE
036	-0301	295848	P		1	PLATE
037	-0301	6161	P		2	ROLLER
038	-0301	441949	C		1	GUIDE PLATE
040	-0301	315125-0165	-		4	WASHER SB 8,4X26X5 RFR
085	-0301	315115-0153	-		2	WASHER TBRB6,4X12RFR
090	-0301	271594-0001	C		1	BRACKET
100	-0301	271594-0002	C		1	BRACKET
110	-0301	271595	C		2	ANGLE BRACKET
130	-0301	272095	S		2	SHAFT
490	-0301	311103-0234	-		4	CYLINDRICACPR3M6X12RFR
500	-0301	312105-0366	-		2	SCREW M6S6X12RFR
505	-0301	312105-0368	-		2	SCREW M6S6X16RFR
507	-0301	312105-0323	-		3	SCREW M6S5X8 A4 80
520	-0301	312105-0376	-		3	SCREW M6S6X35RFR
525	-0301	312145-0287	-		3	SLOTTED HEMFS4X8RFR
540	-0301	312605-0312	-		3	NUT M6M4RFR
550	-0301	312605-0318	-		4	NUT M6M8RFR

TETRA PAK

2/8608

S-271485-4

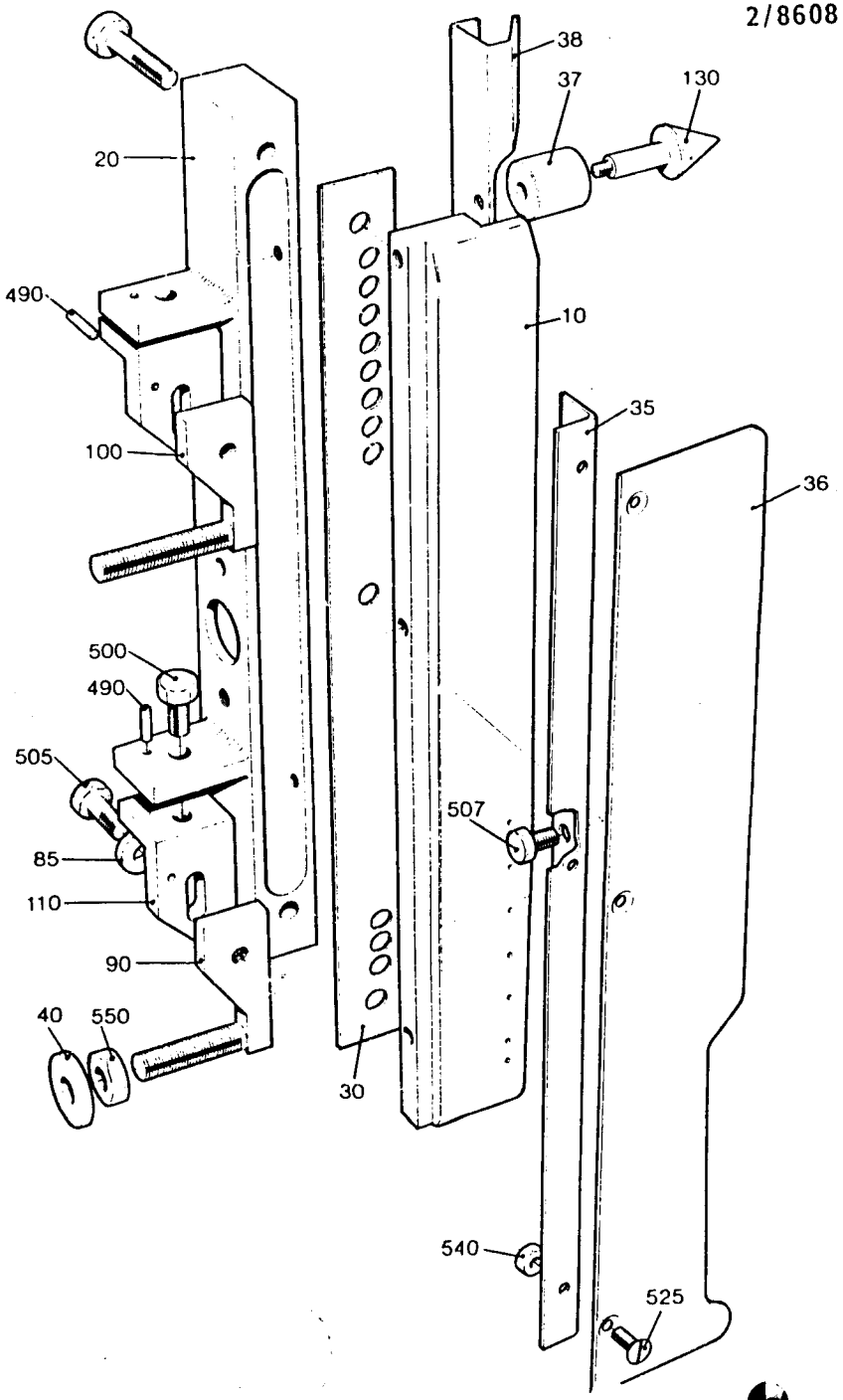

A-M 7533

LAST ALTERATION: AM 6669 84-03-21
648111-060V

POS	VAR	PART NUMBER	SP	EH	QTY	DESCRIPTION
	-0251	S- 257075-SHEET	-3			===ASSEMBLY DRAWING===
010	-0251	272779	-		1	FRAME
020	-0251	272780	-		2	COVER STRIP
030	-0251	272785	S		1	RUBBER STRIP
040	-0251	256031	S		2	SHAFT
050	-0251	271860	S		2	BLOCK
070	-0251	272782	-		2	COVER STRIP
080	-0251	272783-0003	S		1	GLASS PANE
090	-0251	272786	S		2	HINGE
100	-0251	272787	S		2	WASHER
110	-0251	441718	C		18	SPACER
310	-0251	312105-0366	-		4	SCREW M6S6X12RFR
320	-0251	312105-0376	-		4	SCREW M6S6X35RFR
330	-0251	312318-0360	-		2	GRUB SCREW SK6SS6X6RFR
340	-0251	312605-0314	-		18	NUT M6M5RFR

TETRA PAK

3/8601

S-257075-3

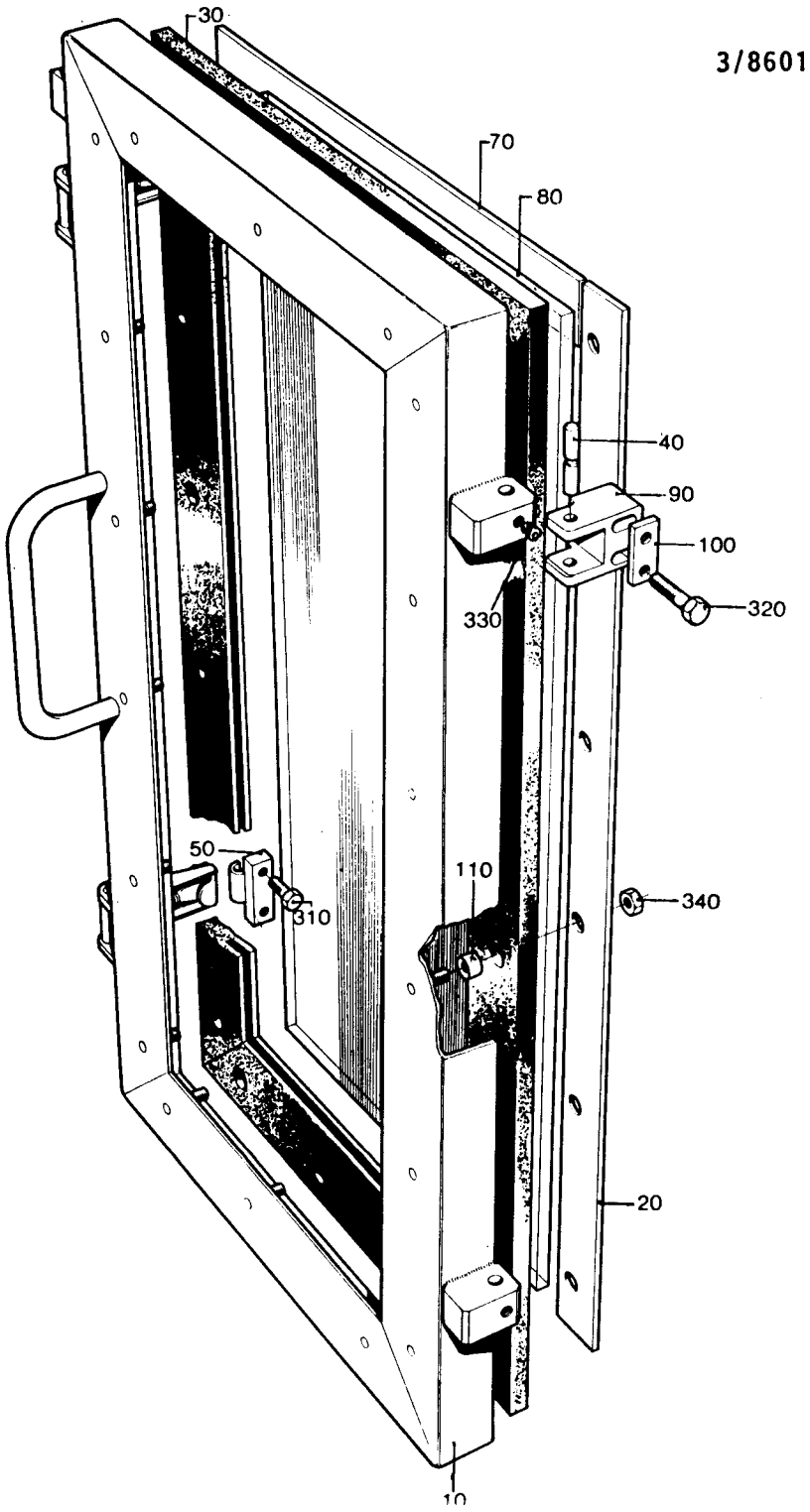

LAST ALTERATION: AM 7596 85-02-26
648111
AM 7210
84-10-19

GROUP	VOLUME	VOLUME	VOLUME	VOLUME
-0301	V0250	V0236	V0200	V0180
-0302	V0125	200ML SLIM	-	-

POS	VAR	PART NUMBER	SP	EH	QTY	DESCRIPTION
	-0301	S- 256055-SHEET	-1			===ASSEMBLY DRAWING===
	-0302					
040	-0301	256058	C		1	CABLE
100	-0301	256066	P		2	GASKET
510	-0301	312105-0325	-		4	SCREW M6S5X10RFR
010	ALL	256056	C		1	ROCKING LEVER
020	ALL	272284	C		1	HEATING PIPE
030	ALL	272114	-		1	HEAT GUARD
050	ALL	256059	C		1	COVER
060	ALL	267494	PU		1	COIL HEATER
070	ALL	315125-0165	-		2	WASHER SB 8,4X26X5 RFR
080	ALL	256061	C		1	LID
090	ALL	256063	C		1	CYLINDER BRACKET
110	ALL	256069	P		1	GASKET
120	ALL	256070	P		1	GASKET
130	ALL	256073	-		1	SCREW
140	ALL	295909	P		1	BUSHING
150	ALL	271269	P		1	BUSHING
160	ALL	271345	C		1	BRACKET
170	ALL	271346	C		1	FORK
180	ALL	271423-0005	S		1	AXLE
185	ALL	271844	S		2	WASHER
190	ALL	272105	C		1	CONNECTION BOX
200	ALL	272145	S		1	CONNECTION PLATE
210	ALL	272146	P		2	COUPLING STRIP
230	ALL	272286	-		1	AXLE SUPPORT
240	ALL	272292-0002	P		8	WASHER
250	ALL	273429	S		2	WASHER
260	ALL	279799	P		1	GASKET
270	ALL	295936	S		1	BUSHING
280	ALL	295937	P		2	GASKET
290	ALL	90006-0008	P		2	BUSHING
295	ALL	90006-0009	P		2	BUSHING
300	ALL	90030-0184	-		1	PIPE CONNECTION
310	ALL	90030-0187	-		1	PIPE CONNECTION
330	ALL	90235-0275	S		2	VALVE
350	ALL	90239-0127	S		1	BRACKET
360	ALL	90239-0189	S		1	CYLINDER
		90285-0094	S		0	* SEAL
370	ALL	90326-0012	P		1	PROTECTIVE COVER
375	ALL	90326-0017	P		1	GLAND
380	ALL	90326-0020	P		1	SOCKET
385	ALL	90326-0048	P		1	THERMOELEMENT

POS	VAR	PART NUMBER	SP	EH	QTY	DESCRIPTION
		90326-0304	R		0	* LEAD IN
390	ALL	90326-0304	S		1	LEAD IN
400	ALL	90330-0078	S		1	BUSHING
520	ALL	312105-0364	-		6	SCREW M6S6X10RFR
530	ALL	312105-0366	-		2	SCREW M6S6X12RFR
535	ALL	312105-0368	-		10	SCREW M6S6X16RFR
540	ALL	312105-0453	-		5	SCREW M6S8X25RFR
560	ALL	312105-0462	-		2	SCREW M6S8X55RFR
570	ALL	312115-0366	-		6	SCREW MC6S6X12RFR
580	ALL	312125-0222	-		3	SLOTTED HEMCS3X8RFR
590	ALL	312125-0291	-		1	SLOTTED HEMCS4X12RFR
600	ALL	312125-0299	-		2	SLOTTED HEMCS4X30RFR
610	ALL	312145-0287	-		2	SLOTTED HEMFS4X8RFR
620	ALL	312605-0312	-		10	NUT M6M4RFR
630	ALL	312605-0316	-		7	NUT M6M6RFR
640	ALL	312605-0318	-		1	NUT M6M8RFR
650	ALL	315105-0136	-		8	WASHER BRB4,3X8RFR
660	ALL	315105-0165	-		4	WASHER BRB8,4X16RFR
670	ALL	315234-0109	-		1	SEAL RING R1/8"
690	ALL	321127-0100	-		2	BUSHING 10/13X10
700	ALL	342980-0114	-		2	BANJO CONNSINGEL 6/4-1/4
710	ALL	352100-0106	-		1	CABLE GLANR.18,6-10,5
720	ALL	353104-0130	P		3	CABLE SHOEYAV 14 M 43

TETRA PAK

3/8704

S-256055-1

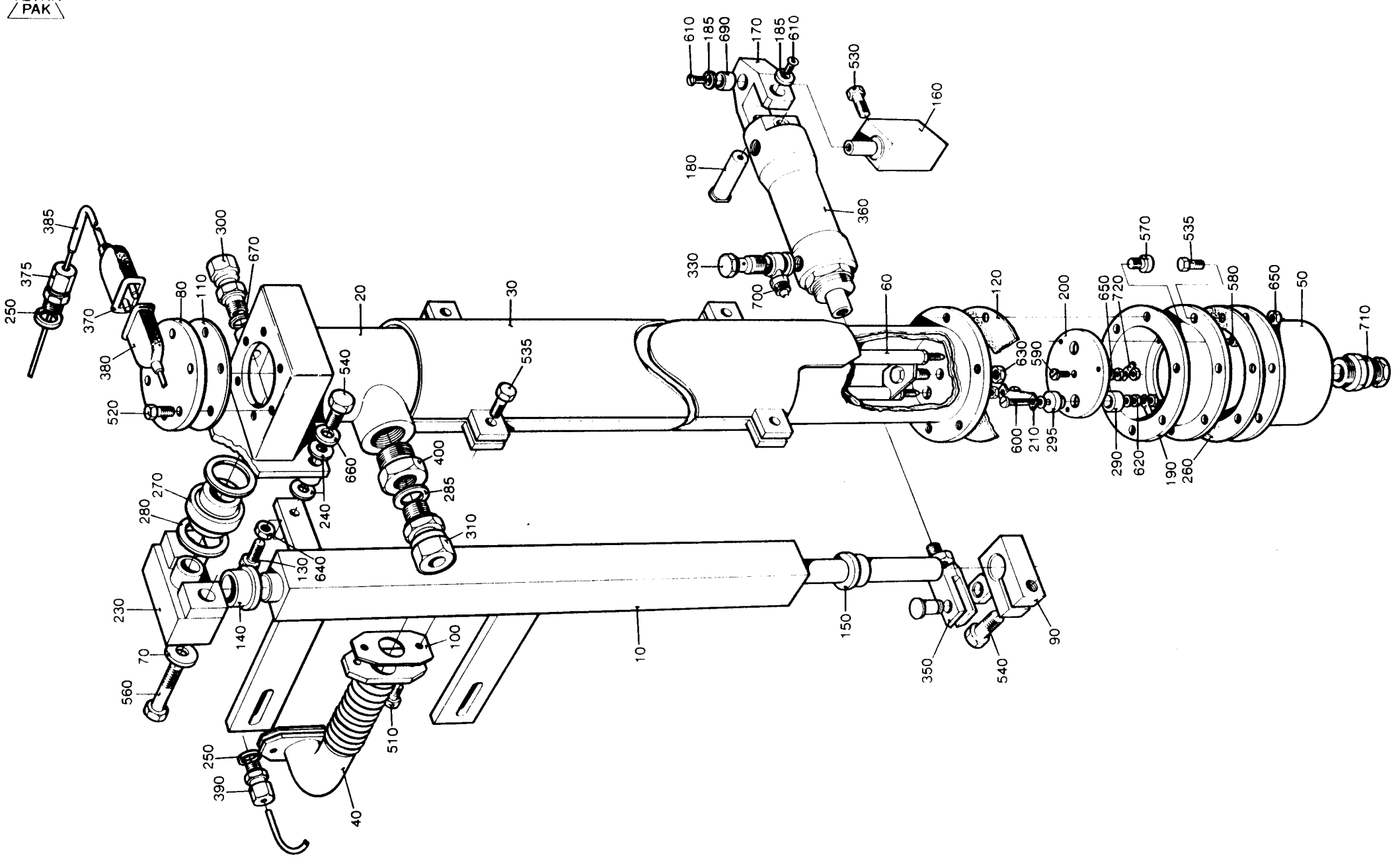

AM 7596

LAST ALTERATION: AM 9415 86-10-17
648111-070V
AM 8465
85-12-18

POS	VAR	PART NUMBER	SP	EH	QTY	DESCRIPTION
	-0401	S- 256055-SHEET -3				===ASSEMBLY DRAWING===
010	-0401	256056	C		1	ROCKING LEVER
020	-0401	491643	C		1	HEATING PIPE
030	-0401	272114	-		1	HEAT GUARD
040	-0401	441804	PU		1	COIL HEATER
050	-0401	491170	C		1	COVER
090	-0401	256063	C		1	CYLINDER BRACKET
140	-0401	295909	P		1	BUSHING
150	-0401	271269	P		1	BUSHING
160	-0401	271345	C		1	BRACKET
170	-0401	271346	C		1	FORK
180	-0401	271423-0005	S		1	SHAFT
185	-0401	271844	S		2	WASHER
230	-0401	272286	-		1	AXLE SUPPORT
240	-0401	751019	P		8	WASHER
250	-0401	273429	S		2	WASHER
260	-0401	751020	P		2	GASKET
270	-0401	295936	S		1	BUSHING
280	-0401	751023	P		2	GASKET
300	-0401	90030-0184	-		1	PIPE CONNECTION
310	-0401	90030-0187	-		1	PIPE CONNECTION
330	-0401	90235-0275	S		2	VALVE
350	-0401	90239-0127	S		1	BRACKET
360	-0401	90239-0189	S		1	CYLINDER
		90285-0094	S		0	* SEAL
370	-0401	90326-0012	P		1	PROTECTIVE COVER
375	-0401	90326-0017	P		1	GLAND
380	-0401	90326-0020	P		1	SOCKET
385	-0401	90326-0048	P		1	THERMOELEMENT
390	-0401	90326-0304	S		1	LEAD IN
500	-0401	312105-0327	-		2	SCREW M6S5X12 A4 80
510	-0401	312105-0366	-		2	SCREW M6S6X12RFR
520	-0401	312105-0368	-		4	SCREW M6S6X16RFR
530	-0401	312105-0370	-		6	SCREW M6S6X20RFR
540	-0401	312105-0453	-		5	SCREW M6S8X25RFR
560	-0401	312105-0462	-		2	SCREW M6S8X55RFR
570	-0401	312109-0457	-		1	SCREW 8X35 H A4 80
580	-0401	312125-0226	-		3	SLOTTED HEMCS3X12RFR
590	-0401	312125-0323	-		1	SLOTTED HEMCS5X8RFR
610	-0401	312145-0287	-		2	SLOTTED HEMFS4X8RFR
640	-0401	312605-0318	-		1	NUT M6M8RFR
660	-0401	315105-0165	-		4	WASHER BRB8,4X16RFR
670	-0401	315125-0165	-		2	WASHER SB 8,4X26X5 RFR

POS	VAR	PART NUMBER	SP	EH	QTY	DESCRIPTION
690	-0401	321127-0100	-		2	BUSHING 10/13X10
700	-0401	342980-0114	-		2	BANJO CONNSINGEL 6/4-1/4
710	-0401	352100-0106	-		1	CABLE GLANR.18,6-10,5
720	-0401	353101-0132	P		1	CABLE SHOEYAE 14 M 53

TETRA PAK

2/8704

S-256055-3

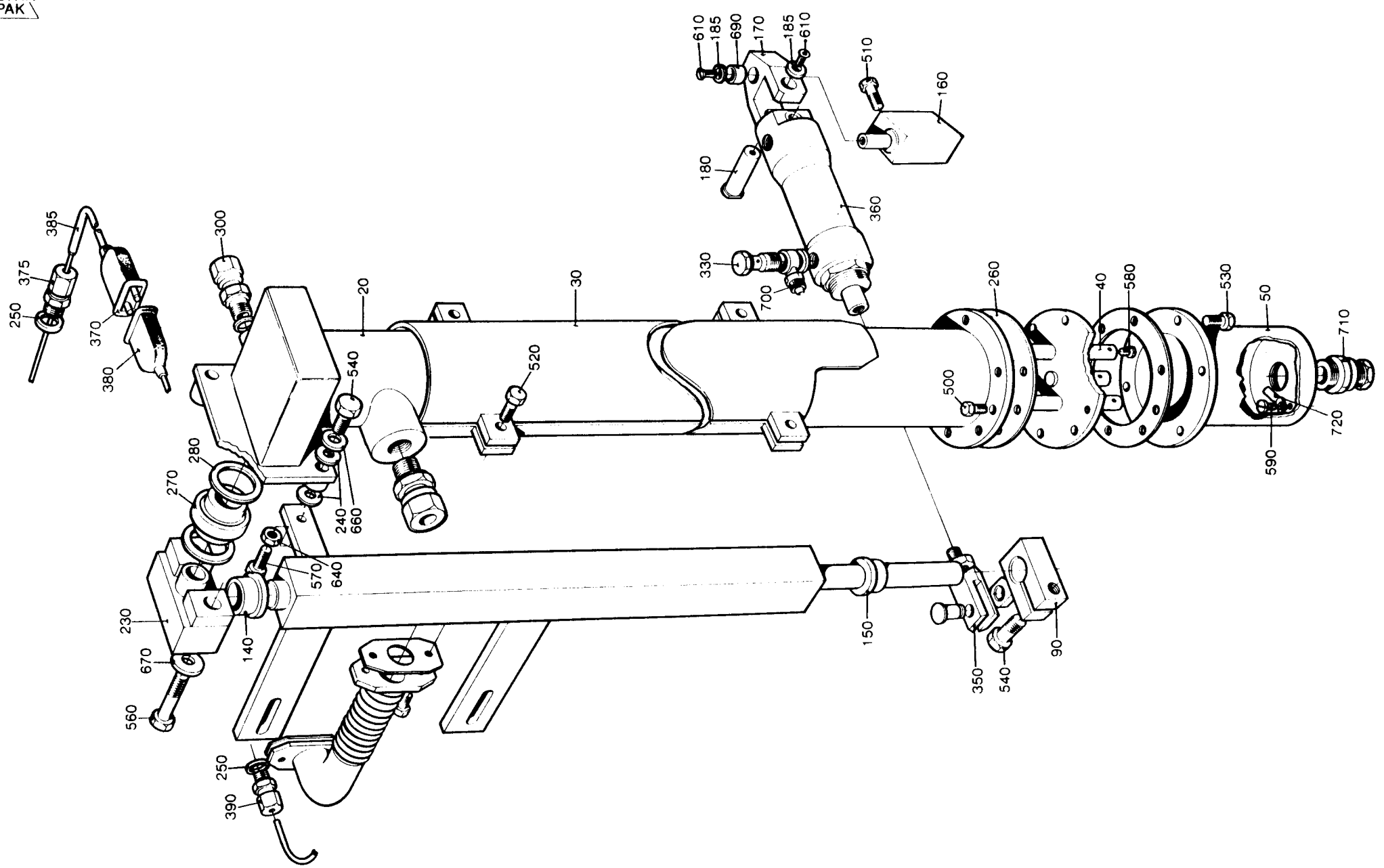

AM 9415

LAST ALTERATION. AM 9284 86-07-02
646111-020V
AM 5254
82-04-08

POS	VAR	PART NUMBER	SP	EH	QTY	DESCRIPTION
	-0201	S- 272337-SHEET	-2			===ASSEMBLY DRAWING===
010	-0201	271167	C		1	VALVE BODY
020	-0201	271890	-		1	BRANCH PIPE
030	-0201	269401	C		1	HOUSE
040	-0201	90091-0180	P		1	GASKET
050	-0201	90091-0182	P		2	GASKET
060	-0201	37638	S		1	PENDULUM SUSPENSION
070	-0201	266389	S		1	PISTON ROD
080	-0201	266390	S		1	NUT
090	-0201	266391	S		1	RING
100	-0201	295160	S		2	GASKET
110	-0201	266394	C		1	BRACKET
120	-0201	531742	P		1	GASKET
130	-0201	272341	S		1	SPINDLE GUIDE
140	-0201	456886	-		1	WASHER
300	-0201	90207-0368	P		2	SEAL RING
310	-0201	90235-0275	-		2	VALVE
320	-0201	90239-0166	S		1	CYLINDER
		90285-0094	S		0	* SEAL
330	-0201	90326-0012	S		1	PROTECTIVE COVER
340	-0201	90326-0020	S		1	SOCKET
350	-0201	90326-0051	P		1	THERMO COUPLE
500	-0201	312105-0366	-		18	SCREW M6S6X12RFR
510	-0201	312105-0449	-		2	SCREW M6S8X16RFR
520	-0201	315204-0223	-		1	O-RING 39,2X3VITON
540	-0201	342797-0122	-		2	BANJO CONNSINGEL 6-1/4

S-272337-2

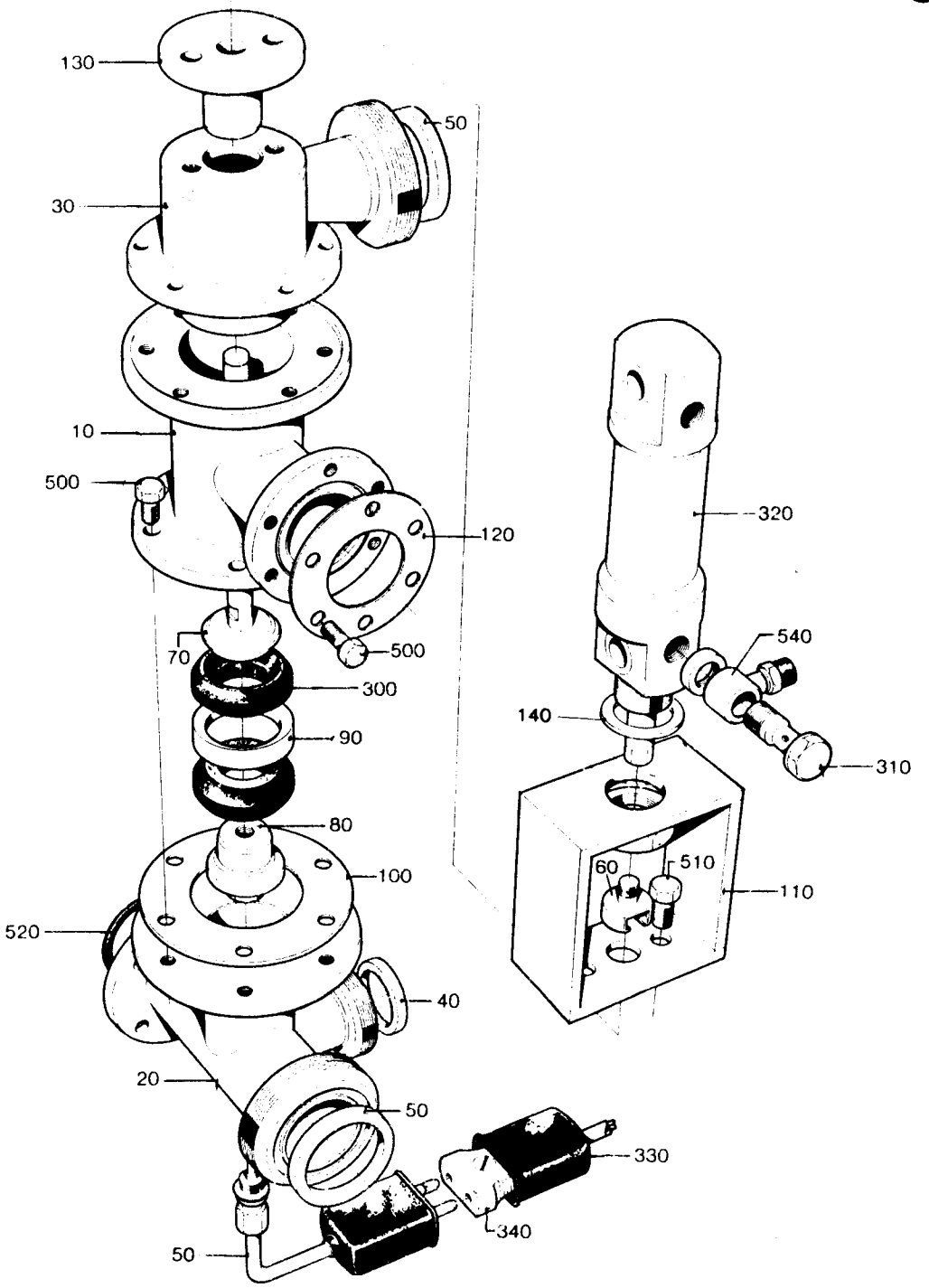
130
50
30
10
500
120
500
70
300
90
80
100
520
40
20
50
330
340
50
320
540
140
310
60
510
110

LAST ALTERATION: AM 7047 84-08-29
648111-020V
AM 5254
82-04-08

POS	VAR	PART NUMBER	SP	EH	QTY	DESCRIPTION
	-0201	S- 256084-SHEET	-2			===ASSEMBLY DRAWING===
010	-0201	255870	C		1	VALVE BODY
020	-0201	255871	S		1	BLOCK
030	-0201	255872	S		1	BRACKET
040	-0201	21521	S		2	COMPRESSION SPRING
050	-0201	255874	S		2	COVER
060	-0201	255875	S		2	BUSHING
070	-0201	256876	C		1	CYLINDER BRACKET
310	-0201	90235-0275	S		2	VALVE
320	-0201	90239-0127	S		1	BRACKET
330	-0201	90239-0166	S		1	CYLINDER
		90285-0094	S		0	* SEAL
510	-0201	312105-0366	-		1	SCREW M6S6X12RFR
520	-0201	312105-0370	-		1	SCREW M6S6X20RFR
540	-0201	312155-0364	-		8	SCREW MF6S6X10RFR
550	-0201	315105-0153	-		1	WASHER BRB6,4X12RFR
560	-0201	315204-0302	S		2	O-RING 54,5X3VITON
570	-0201	342797-0122	S		2	BANJO CONNSINGEL 6-1/4

TETRA PAK

3/8601

S-256084-2

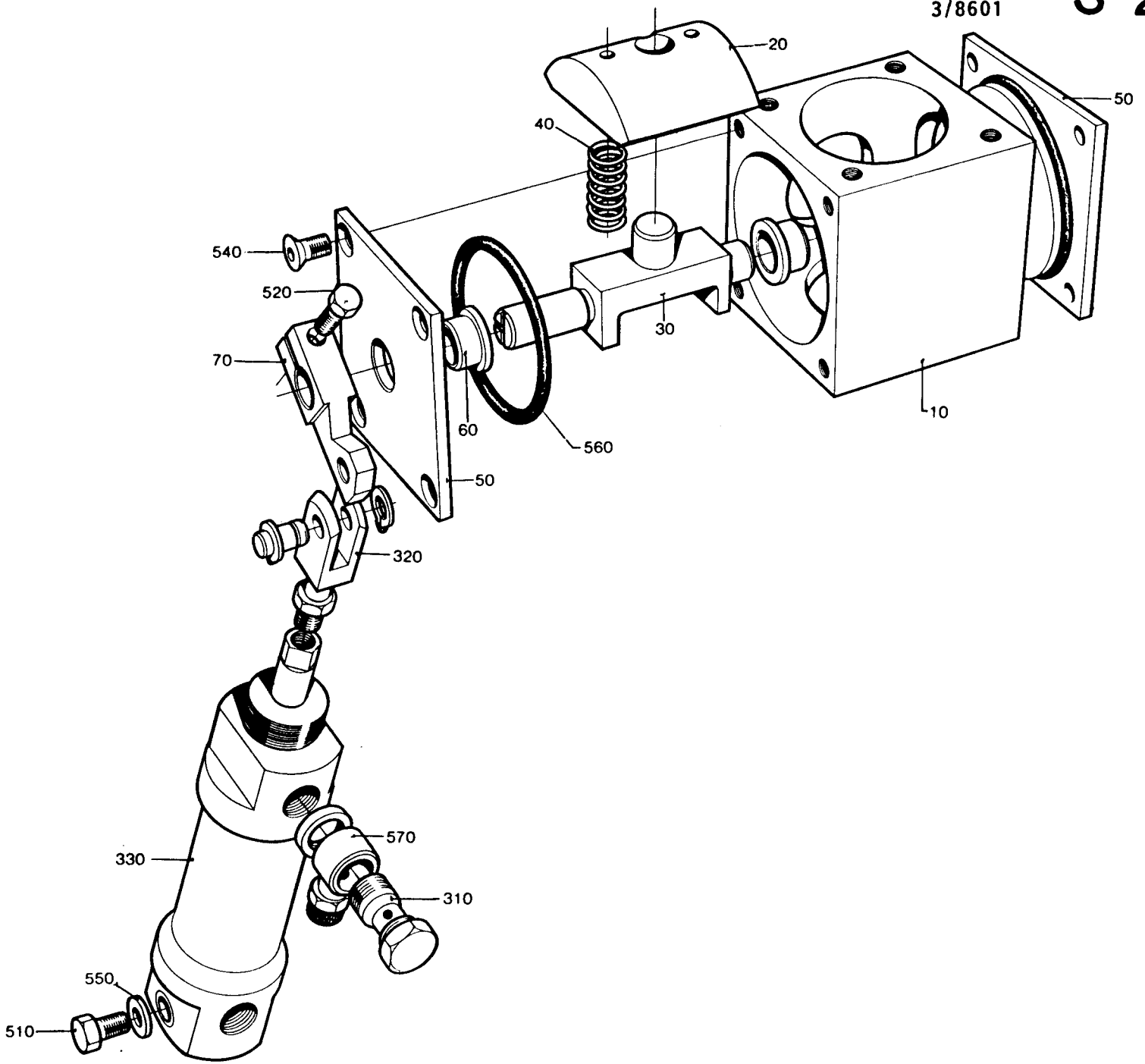

LAST ALTERATION: AM 10002 87-01-12
648111-060V
AM 6890
84-06-07

GROUP FREQUENCY

-0101 HZ-50
-0102 HZ-60

POS	VAR	PART NUMBER	SP	EH	QTY	DESCRIPTION
	-0101	S- 469452-SHEET	-1			===ASSEMBLY DRAWING===
	-0101		~~-2~~			
	-0102		-1			
	-0102		~~-2~~			
050	-0102	469152	-		1	PIPE
430	-0101	442236	C		1	SCREW
	-0102				2	
450	-0101	442237	C		1	NUT
	-0102				2	
635	-0101	90217-0026	-		2	NUT
970	-0101	315202-0119	P		1	O-RING 25,1X1,6
	-0102				2	
010	ALL	469148	-		1	BRACKET
020	ALL	469149	-		1	PIPE
030	ALL	469150	-		1	COVER
040	ALL	469151	-		1	PIPE
110	ALL	271640	C		2	LID
120	ALL	469153	-		1	PIPE
130	ALL	469154	-		1	PIPE
140	ALL	469155	-		1	SUPPORT
145	ALL	469511	C		2	BOTTOM
150	ALL	490862	-		1	PIPE
200	ALL	269443	C		2	BRACKET
210	ALL	269461	C		2	CONTAINER
220	ALL	456189	-		1	PIPE
230	ALL	469156	-		1	PIPE
240	ALL	469157	-		1	PIPE
250	ALL	469158	-		1	PIPE
270	ALL	12242-0001	P		3	GASKET
280	ALL	12242-0003	P		1	GASKET
310	ALL	179595	C		2	SHUTTER
320	ALL	179596	C		2	FLOAT
330	ALL	230551	PU		4	GASKET
350	ALL	531742	P		1	GASKET
365	ALL	269859	-		4	BRACKET
370	ALL	271461	PU		2	GASKET
470	ALL	456269	-		1	PIPE
480	ALL	456270	-		1	PIPE
490	ALL	456271	-		2	PIPE
500	ALL	469160	S		8	VIBRATION DAMPER
510	ALL	458962-0001	S		2	ELECTRODE

POS	VAR	PART NUMBER	SP	EH	QTY	DESCRIPTION
600	ALL	90005-0006	-		2	SEAL RING
610	ALL	90030-0058	-		2	CONNECTION
615	ALL	90030-0106	-		1	PIPE CONNECTION
620	ALL	90030-0109	-		2	PIPE CONNECTION
630	ALL	90030-0187	-		6	PIPE CONNECTION
670	ALL	90242-0084	PU		4	O-RING
680	ALL	90270-0011	-		2	COMPRESSOR
		90270-0348	R		1	* MOTOR
690	ALL	90270-0347	C		2	VALVE
695	ALL	90330-0029	-		2	PLUG
790	ALL	311103-0310	-		2	CYLINDRICACPR5M6X20RFR
800	ALL	311103-0361	-		2	CYLINDRICACPR6M6X40RFR
810	ALL	312105-0287	-		4	SCREW M6S4X8 A4 80
820	ALL	312105-0366	-		58	SCREW M6S6X12RFR
830	ALL	312105-0447	-		8	SCREW M6S8X12RFR
840	ALL	312105-0451	-		4	SCREW M6S8X20RFR
860	ALL	312105-0491	-		20	SCREW M6S10X20RFR
870	ALL	312105-0495	-		14	SCREW M6S10X30RFR
880	ALL	312115-0368	-		4	SCREW 6X16 A4 80
890	ALL	312125-0285	-		2	SLOTTED HEMCS4X6RFR
900	ALL	312318-0323	-		2	GRUB SCREW SK6SS5X8RFR
910	ALL	312605-0312	-		4	NUT M6M4RFR
920	ALL	312605-0320	-		8	NUT M6M10RFR
930	ALL	315105-0153	-		5	WASHER BRB6,4X12RFR
940	ALL	315105-0165	-		8	WASHER BRB8,4X16RFR
950	ALL	315105-0173	-		12	WASHER BRB10,5X22RFR
955	ALL	315115-0173	-		14	WASHER B 10,5X22 RFR
960	ALL	315125-0165	-		4	WASHER SB 8,4X26X5 RFR
980	ALL	315204-0103	P		4	O-RING 5,1X1,6VITON
985	ALL	315204-0213	P		2	O-RING 15,3X2,4VITON
990	ALL	315204-0217	P		2	O-RING 24,2X3VITON

S-469452-1

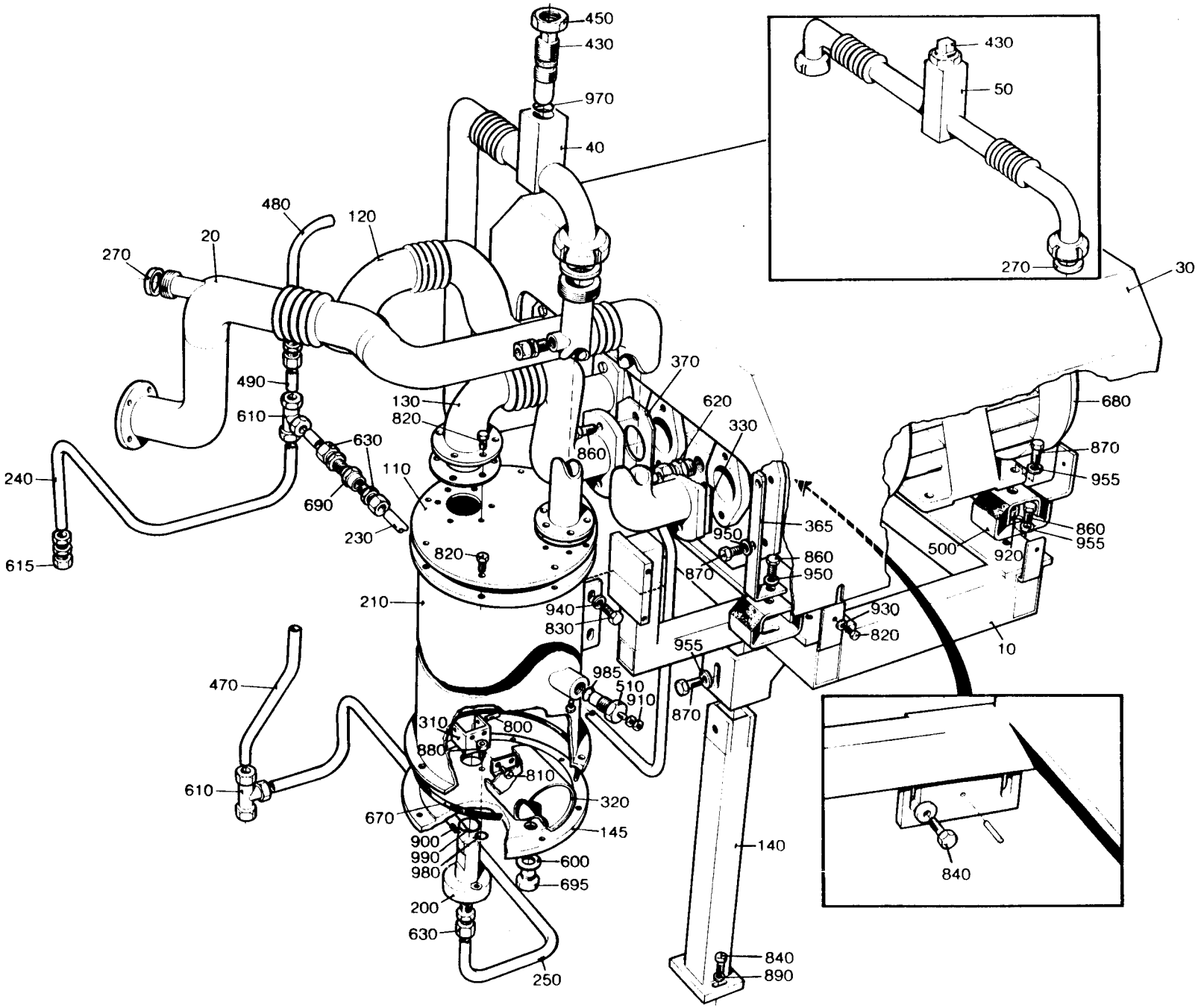

AM9415

LAST ALTERATION: AM 9415 86-10-17
648111-060V
AM 6717
84-04-14

GROUP	VOLUME	VOLUME	VOLUME	VOLUME	VOLUME
-0201	V0125	-	-	-	-
-0202	V0250	V0236	V0200	200ML SLIM	V0180

POS	VAR	PART NUMBER	SP	EH	QTY	DESCRIPTION
	-0201	S- 456976-SHEET	-4			===ASSEMBLY DRAWING===
	-0201		~~-5~~			
	-0202		-4			
	-0202		~~-5~~			
130	-0202	456591-0002	-		1	PIPE
140	-0202	456592-0002	-		1	PIPE
156	-0201	491644	-		1	PIPE
330	-0201	272347	-		1	PIPE
330	-0202	272440	-		1	PIPE
357	-0202	456904	-		1	PIPE
360	-0201	491646	-		1	ELBOW PIPE
010	ALL	272308-0003	-		1	PIPE
020	ALL	272356	-		1	PIPE
030	ALL	295870	C		1	HEAT EXCHANGER
032	ALL	272557-0001	-		1	TOUCH GUARD
034	ALL	272586	-		1	TOUCH GUARD
037	ALL	456912	-		1	TOUCH GUARD
038	ALL	456913	-		1	TOUCH GUARD
070	ALL	469969	-		1	PIPE
090	ALL	272312	-		1	PIPE
110	ALL	272556-0001	-		1	TOUCH GUARD
145	ALL	469385	-		1	PIPE
150	ALL	469386	-		1	PIPE
155	ALL	469387	-		1	PIPE
160	ALL	256840-0002	-		1	PIPE
170	ALL	271251	-		1	GRAPH PAPER
180	ALL	12242-0001	P		1	GASKET
190	ALL	12242-0003	P		1	GASKET
210	ALL	531737	P		5	GASKET
220	ALL	209145	-		2	SCREW
230	ALL	209146	-		2	LOCKING NUT
250	ALL	315125-0153	-		1	WASHER SB 6,4X22X4 RFR
270	ALL	531742	PU		4	GASKET
300	ALL	272349-0001	-		1	PIPE
340	ALL	272808	-		1	BRACKET
350	ALL	279589	-		2	NUT
351	ALL	295549	-		1	CLIP
352	ALL	295878	S		1	SCREW
353	ALL	295879	S		1	NUT
355	ALL	441444	-		1	PIPE
356	ALL	441445	-		1	PIPE

POS	VAR	PART NUMBER	SP	EH	QTY	DESCRIPTION
358	ALL	441721	PU		2	GASKET
359	ALL	441735	-		1	BRACKET
365	ALL	90030-0058	-		2	CONNECTION
370	ALL	90030-0187	-		2	PIPE CONNECTION
390	ALL	90326-0012	P		1	PROTECTIVE COVER
400	ALL	90326-0020	P		1	SOCKET
405	ALL	90326-0051	P		1	THERMO COUPLE
490	ALL	312105-0364	-		3	SCREW M6S6X10RFR
500	ALL	312105-0367	-		42	SCREW M6S6X14RFR
510	ALL	312105-0370	-		24	SCREW M6S6X20RFR
513	ALL	312105-0372	-		2	SCREW M6S6X25RFR
515	ALL	312115-0329	-		4	SCREW 5X16 A4 80
520	ALL	312605-0316	-		29	NUT M6M6RFR
530	ALL	315105-0153	-		30	WASHER BRB6,4X12RFR

TETRA PAK

3/8608 **S-456976-4**

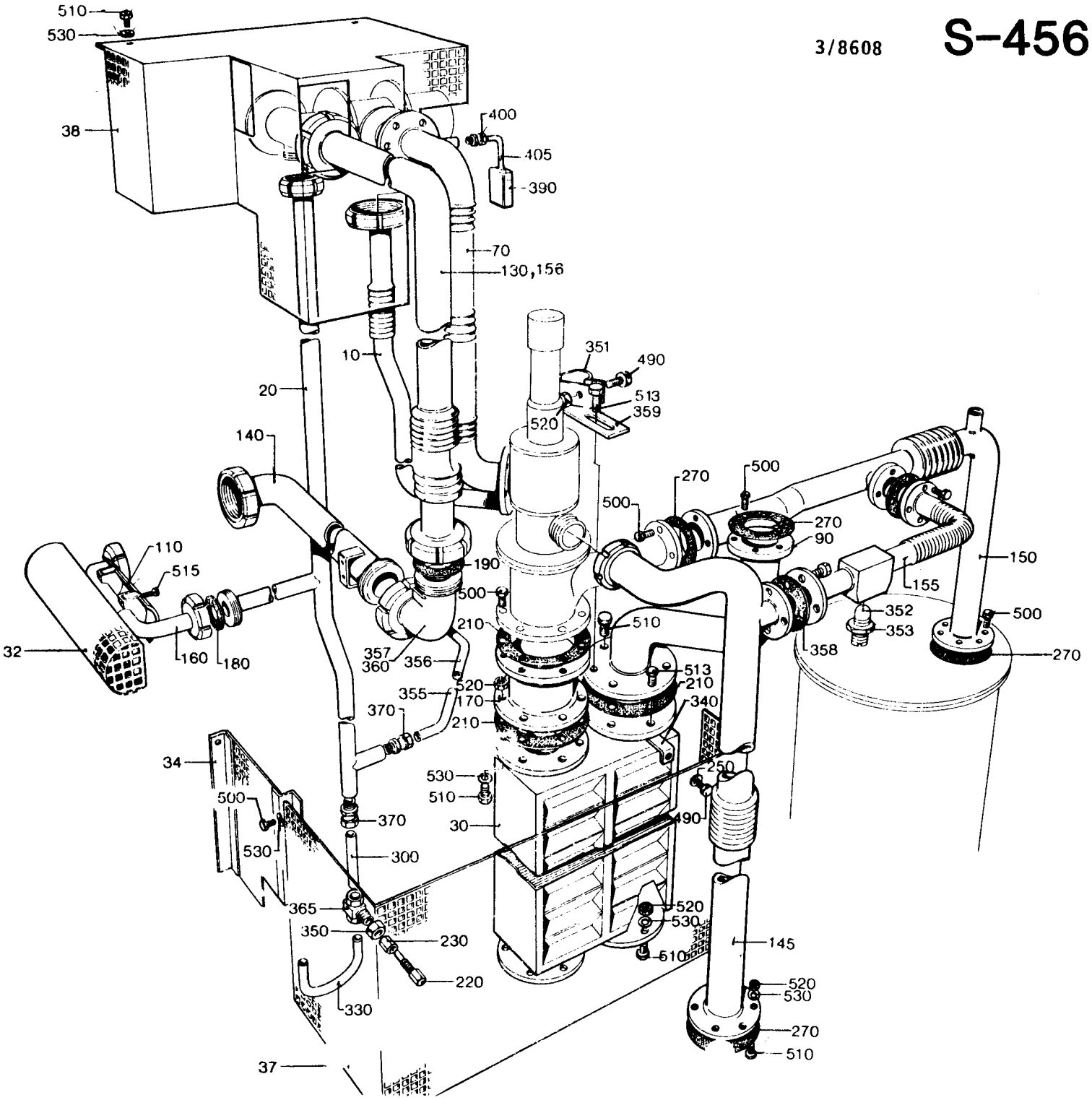

LAST ALTERATION: AM 8271 85-10-14
648111-060V
AM 6605
84-02-17

POS	VAR	PART NUMBER	SP	EH	QTY	DESCRIPTION	
	-0101	S- 456555-SHEET	-2			===ASSEMBLY DRAWING===	
010	-0101	469985	C		1	PIPE	
020	-0101	491360	C		1	PIPE	
030	-0101	469992	C		1	PIPE	
040	-0101	255879	C		1	PIPE	
050	-0101	255905	C		1	PIPE	
060	-0101	490967	-		1	BRACKET	
070	-0101	12242-0001	S		3	GASKET	
080	-0101	456496	-		1	STRUT	
090	-0101	490906	S		1	SCREW	
100	-0101	490907	S		1	NUT	
300	-0101	90101-0004	-		1	HOLDER	
500	-0101	312105-0366	-		21	SCREW	M6S6X12RFR
510	-0101	312105-0368	-		2	SCREW	M6S6X16RFR
520	-0101	315204-0223	S		1	O-RING	39,2X3VITON
530	-0101	315204-0301	S		5	O-RING	49,5X3VITON

TETRA PAK

2/8601

S-456555-1

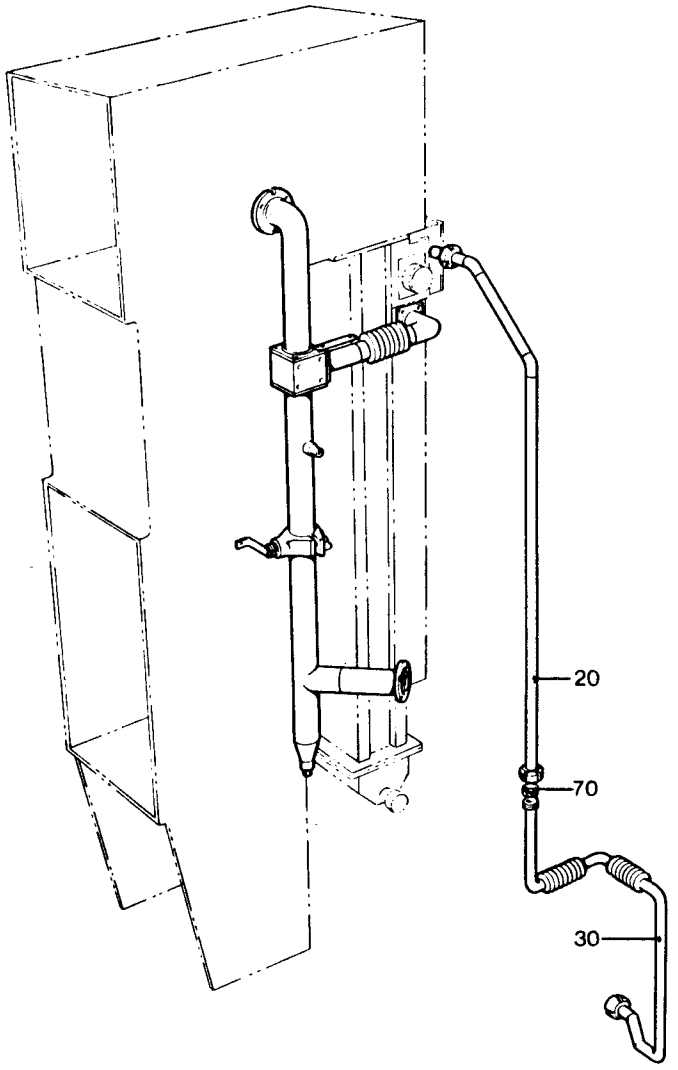

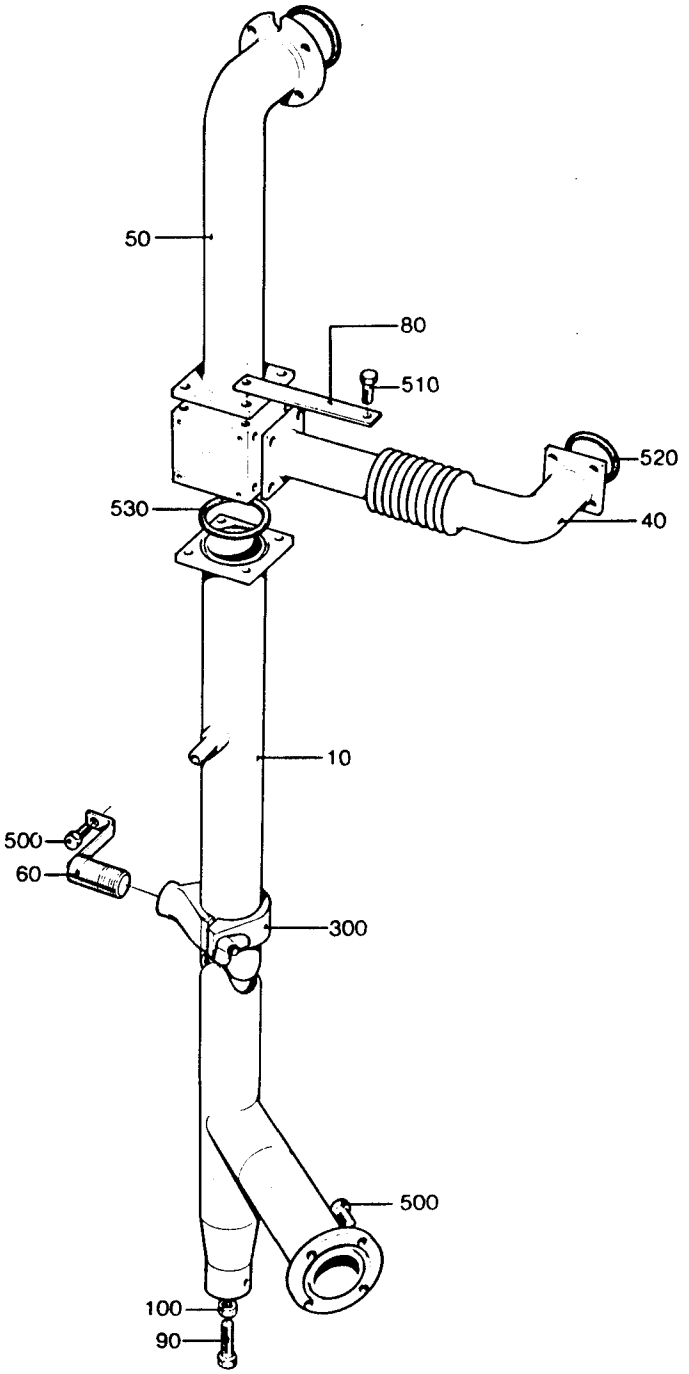

AM8271

LAST ALTERATION: AM 8023 85-06-12
648111-060V
AM 6605
84-02-17

POS	VAR	PART NUMBER	SP	EH	QTY	DESCRIPTION
	-0101	S- 456556-SHEET	-1			===ASSEMBLY DRAWING===
010	-0101	456530	-		1	PIPE
030	-0101	295150-0003	-		1	PIPE
040	-0101	456143	-		1	PIPE
060	-0101	295078-0001	-		1	PIPE
080	-0101	295196-0002	-		1	PIPE
090	-0101	490991	C		1	HOSE
100	-0101	469378	-		1	PIPE
120	-0101	295081	-		1	PIPE
140	-0101	295083	-		1	PIPE
290	-0101	90015-0024	P		1	BUSHING
300	-0101	90030-0184	-		2	PIPE CONNECTION
310	-0101	90030-0188	-		5	PIPE CONNECTION
320	-0101	90030-0152	-		1	CONNECTION
350	-0101	484538	S		1	VALVE
360	-0101	484192	S		1	VALVE
500	-0101	312105-0366	-		20	SCREW M6S6X12RFR
510	-0101	315204-0218	PU		3	O-RING 26,2X3VITON
525	-0101	315204-0223	PU		2	O-RING 39,2X3VITON
530	-0101	342797-0122	-		2	BANJO CONNSINGEL 6-1/4
540	-0101	342980-0304	-		2	BANJO CONN SINGEL 1/4

TETRA PAK

2/8601

S-456556-1

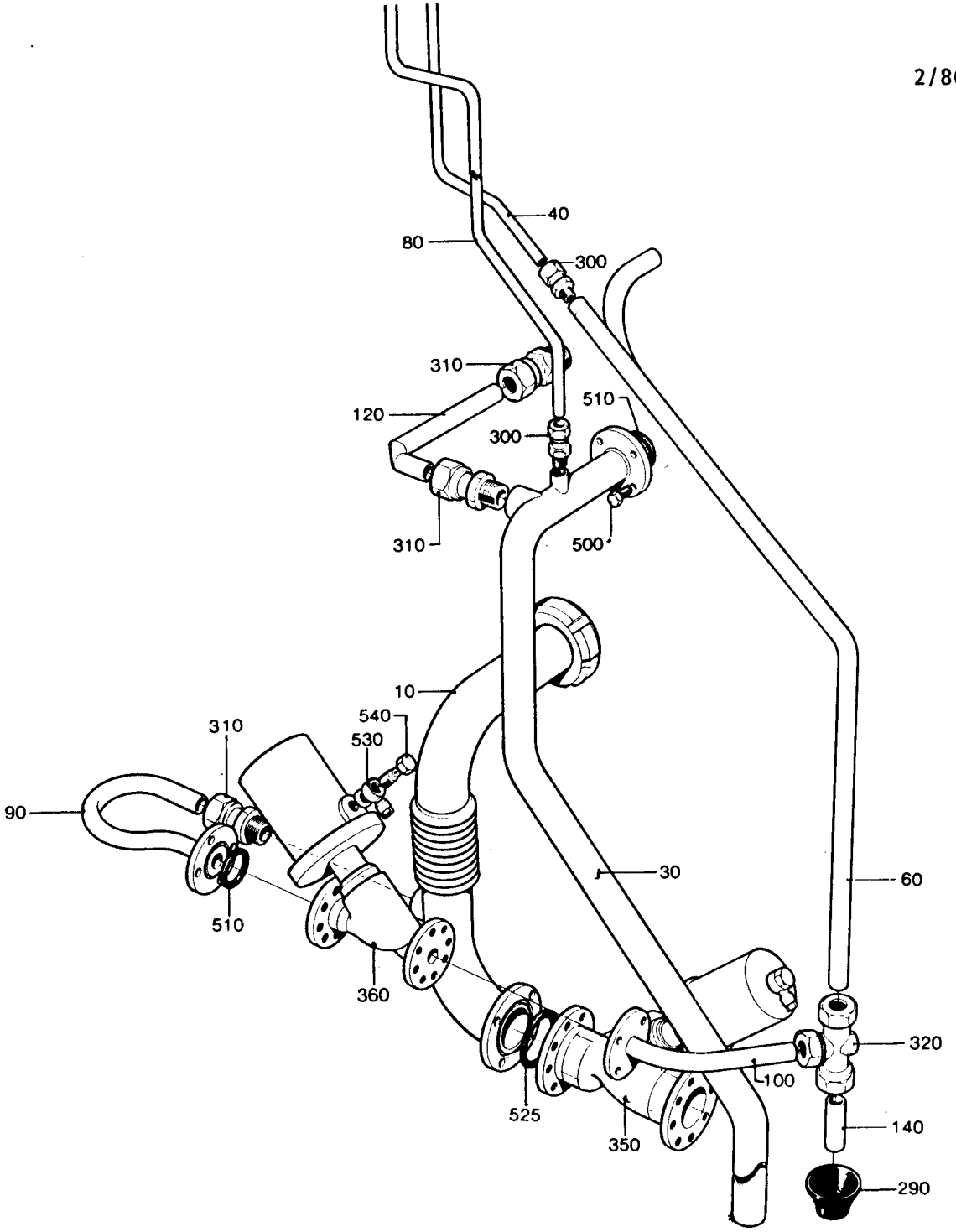

LAST ALTERATION: AM 8097 85-07-08
648111-060V
AM 6746
84-05-07

POS	VAR	PART NUMBER	SP	EH	QTY	DESCRIPTION	
	-0301	S- 272623-SHEET	-3			===ASSEMBLY DRAWING===	
010	-0301	272157	C		1	CONTAINER	
060	-0301	272844	-		1	BRACKET	
065	-0301	456897	-		1	PIPE	
067	-0301	469515	-		1	PIPE	
120	-0301	272627	-		1	PIPE	
185	-0301	450833	P		1	FILTER	
187	-0301	450837	-		1	LID	
190	-0301	458962-0004	S		1	ELECTRODE	
200	-0301	458962-0005	S		1	ELECTRODE	
210	-0301	456899	-		1	PIPE	
220	-0301	456900	-		1	PIPE	
300	-0301	90030-0184	-		3	PIPE CONNECTION	
310	-0301	90030-0076	-		1	CONNECTION	
315	-0301	90030-0202	-		3	PIPE CONNECTION	
325	-0301	90030-0203	-		2	PIPE CONNECTION	Y
330	-0301	484188	S		2	SOLENOID VALVE	
340	-0301	90042-0085	S		1	SOLENOID VALVE	
350	-0301	90330-0024	-		1	T-PIECE	
370	-0301	90330-0043	-		3	NIPPLE	
390	-0301	484196	S		1	FILTER	
		484197	PU		0	* FILTER	
510	-0301	312105-0366	-		10	SCREW M6S6X12RFR	
515	-0301	312125-0285	-		1	SLOTTED HEMCS4X6RFR	
530	-0301	312605-0312	-		4	NUT M6M4RFR	
550	-0301	315105-0153	-		4	WASHER BRB6,4X12RFR	
560	-0301	315204-0213	P		3	O-RING 15,3X2,4VITON	
580	-0301	315204-0305	P		1	O-RING 69,5X3	

TETRA PAK

1/8501 **S-272623-3**

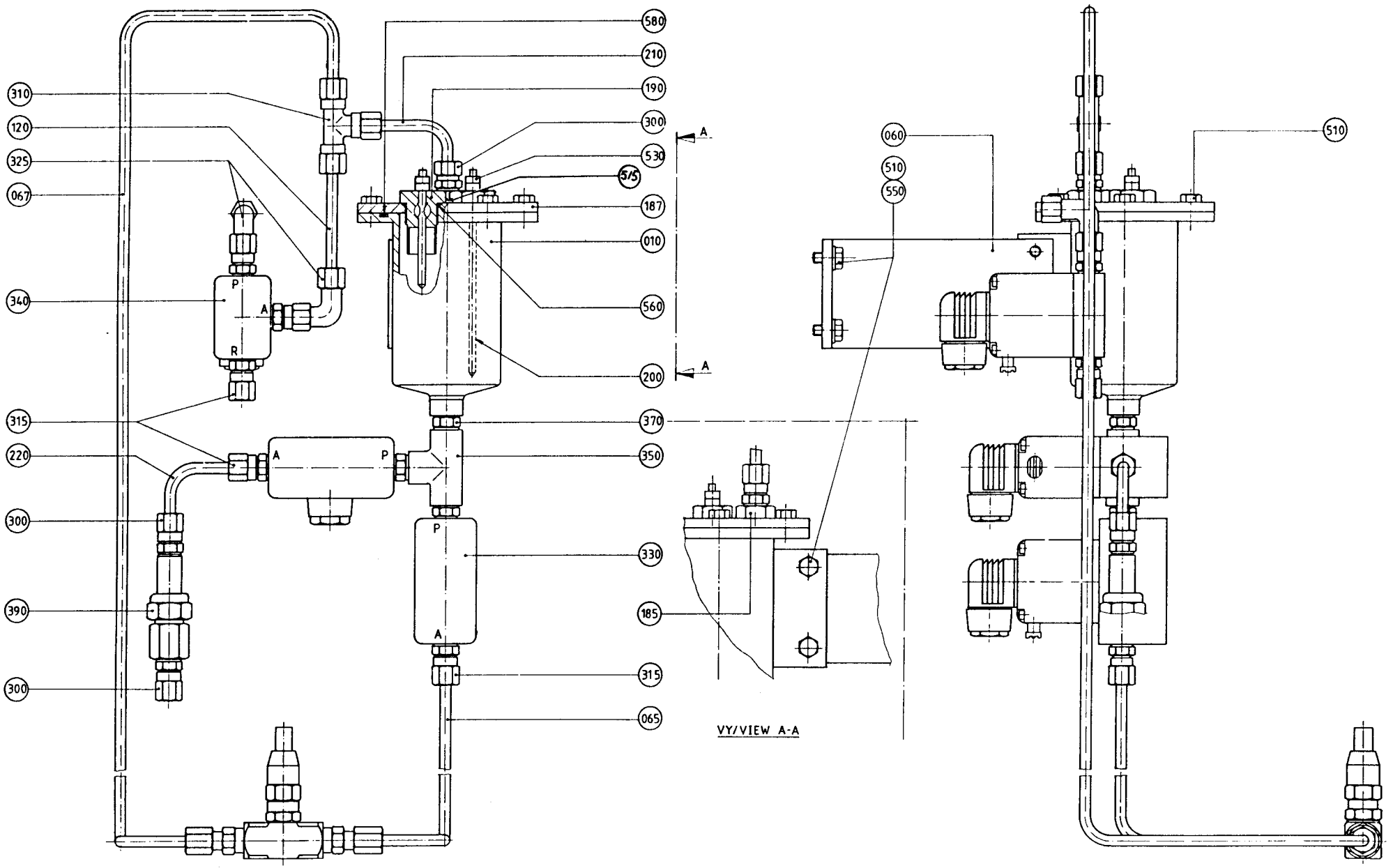

LAST ALTERATION: AM 9199 86-05-27
648111-060V
AM 6800
84-05-11

GROUP	VOLUME	VOLUME	VOLUME	VOLUME
-0301	V0125	-	-	-
-0302	V0250	V0236	V0200	V0180
-0303	200ML SLIM	-	-	-

POS	VAR	PART NUMBER	SP	EH	QTY	DESCRIPTION
	-0301	S- 272021-SHEET	-10			===ASSEMBLY DRAWING===
	-0301		~~-12~~			
	-0302		-10			
	-0302		~~-12~~			
	-0303		-10			
	-0303		~~-12~~			
010	-0301	469507	-		1	COLUMN
010	-0302	469048	-		1	COLUMN
010	-0303	469508	-		1	COLUMN
020	-0301	469548	-		1	HOUSE
	-0303				1	
020	-0302	456888	-		1	HOUSE
030	-0301	490900	P		1	SEAL RING
030	-0302	273953	P		1	SEAL
030	-0303	490901	P		1	SEAL RING
070	-0301	490899	-		1	RING
	-0303				1	
070	-0302	456794	-		1	RING
240	-0301	490903	P		2	SHAFT
	-0303				2	
240	-0302	263655-0006	P		2	SHAFT
350	-0301	441828	P		4	PLAIN BEARING
	-0303				4	
360	-0301	441876	P		2	ROLLER
360	-0302	456796	P		2	ROLLER
360	-0303	456996	P		2	ROLLER
370	-0301	490902	-		4	AXLE SUPPORT
	-0303				4	
370	-0302	456797	-		4	AXLE SUPPORT
390	-0301	490904	-		1	ARM
	-0303				1	
390	-0302	456801	-		1	ARM
040	ALL	295426	-		1	CLAMP
050	ALL	295427	-		1	LOCK
060	ALL	295428	-		1	HINGE
095	ALL	456889	C		2	COVER
100	ALL	456890	-		2	COVER PLATE
110	ALL	469092	-		2	SHIM
130	ALL	2033-0007	-		8	WASHER
140	ALL	247349	P		2	GUIDE

POS	VAR	PART NUMBER	SP	EH	QTY	DESCRIPTION
150	ALL	247350	-		2	GASKET HOLDER
170	ALL	247355	-		1	LOCK WASHER
180	ALL	247358	C		1	KNOB
190	ALL	255986	S		2	WHEEL
200	ALL	256163	S		1	SHAFT
210	ALL	256165	S		2	SPROCKET
220	ALL	256166	S		1	SHAFT
230	ALL	256170	-		2	DRIP PLATE
250	ALL	267033	-		2	WASHER
260	ALL	271863	S		2	SHAFT
270	ALL	271864	-		2	WASHER
280	ALL	272002	-		1	PROTECTIVE COVER LEFT
290	ALL	272003	-		1	PROTECTIVE COVER RIGHT
300	ALL	279008	S		2	BUSHING
310	ALL	279010	-		1	BEARING PLATE
320	ALL	295429	C		1	HANDLE
330	ALL	295789	-		2	BRACKET
340	ALL	295790	-		1	BRACKET
380	ALL	456798	-		2	PIN
400	ALL	456802	-		1	CLAMP RING
410	ALL	456803	C		1	PIVOT PIN
420	ALL	469159	-		2	PIN
430	ALL	469521	-		1	BEARING PLATE
450	ALL	491314	-		8	SCREW
460	ALL	491128	P		2	GASKET
600	ALL	90044-0084	P		3	MICRO SWITCH
610	ALL	90044-0104	-		1	INDUCTIVE TRANSMITTER
700	ALL	311103-0272	-		1	CYLINDRICACPR4M6X20RFR
710	ALL	311103-0276	-		3	CYLINDRICACPR4M6X30RFR
720	ALL	311103-0310	-		2	CYLINDRICACPR5M6X20RFR
730	ALL	311103-0351	-		2	CYLINDRICACPR6M6X16RFR
750	ALL	312105-0327	-		6	SCREW M6S5X12 A4 80
760	ALL	312105-0364	-		20	SCREW M6S6X10RFR
770	ALL	312105-0368	-		6	SCREW M6S6X16RFR
780	ALL	312105-0372	-		4	SCREW M6S6X25RFR
790	ALL	312105-0378	-		4	SCREW M6S6X40RFR
800	ALL	312105-0384	-		1	SCREW M6S6X70RFR
810	ALL	312105-0451	-		24	SCREW M6S8X20RFR
820	ALL	312105-0499	-		7	SCREW M6S10X40RFR
830	ALL	312115-0329	-		6	SCREW 5X16 A4 80
840	ALL	312115-0370	-		2	SCREW 6X20 A4 80
850	ALL	312125-0230	-		2	SLOTTED HEMCS3X20RFR
870	ALL	312605-0316	-		8	NUT M6M6RFR
880	ALL	315105-0124	-		2	WASHER BRB3,2X6RFR
890	ALL	315105-0153	-		1	WASHER BRB6,4X12RFR
900	ALL	315115-0153	-		6	WASHER TBRB6,4X12RFR
910	ALL	315115-0165	-		16	WASHER TBRB8,4X16RFR
920	ALL	315115-0173	-		7	WASHER B 10,5X22 RFR
930	ALL	315125-0153	-		2	WASHER SB 6,4X22X4 RFR

S-272021-10

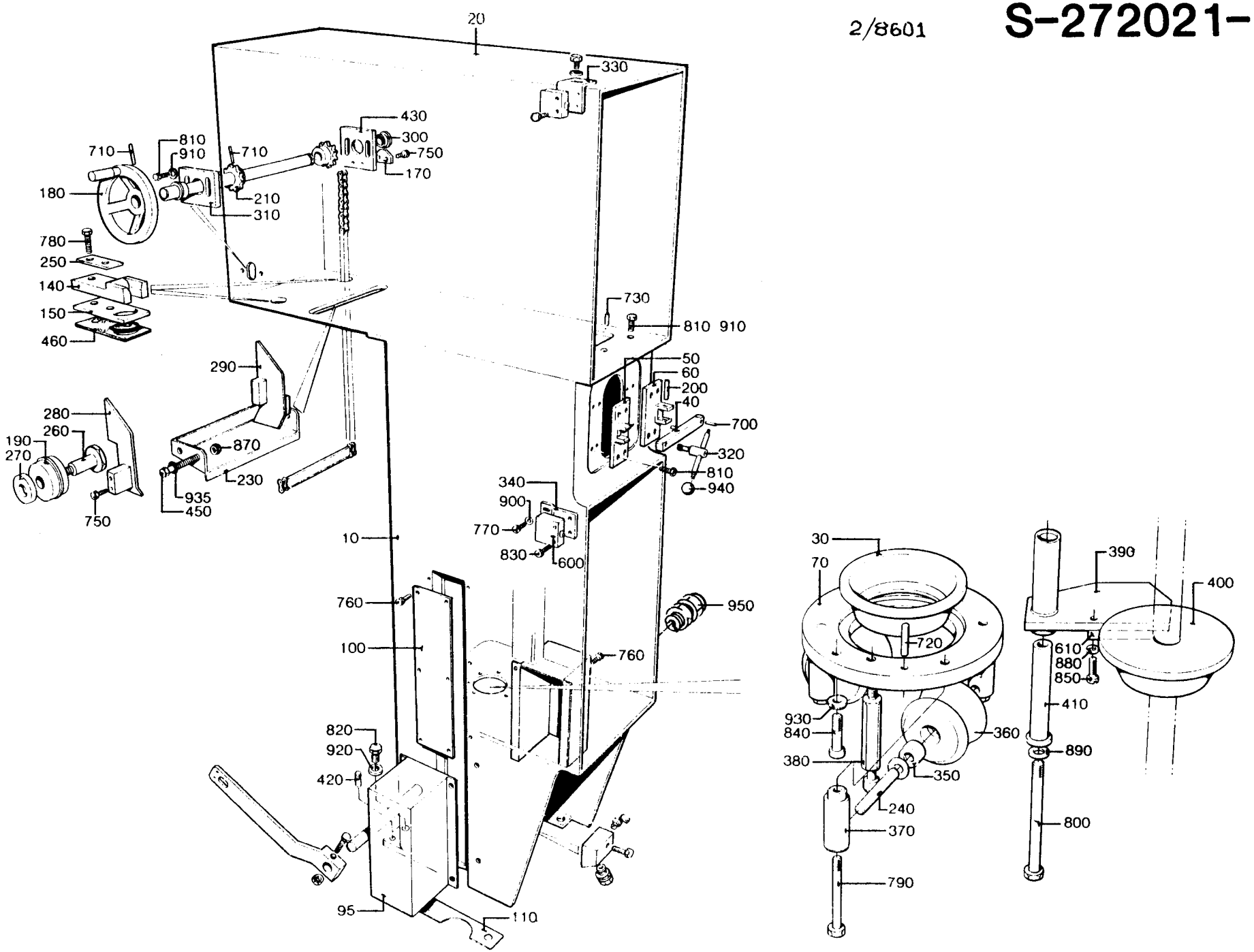
20
330
430
300
750
170
710
810
910
710
210
310
180
780
250
140
150
460
730
810 910
50
60
200
40
700
320
810
940
290
280
260
190
270
870
230
935
450
750
340
900
770
830
600
10
760
950
100
760
820
920
420
95
110
30
70
720
930
840
380
360
350
240
370
790
390
400
610
880
850
410
890
800

POS	VAR	PART NUMBER	SP	EH	QTY	DESCRIPTION
935	ALL	315204-0208	P		8	O-RING 9,3X2,4VITON
940	ALL	318800-0103	S		2	KNOB LA D.25-M6
950	ALL	352103-0101	-		1	CABLE GLANR.15,2/4-8

TETRA PAK

2/8601

S-272021-10

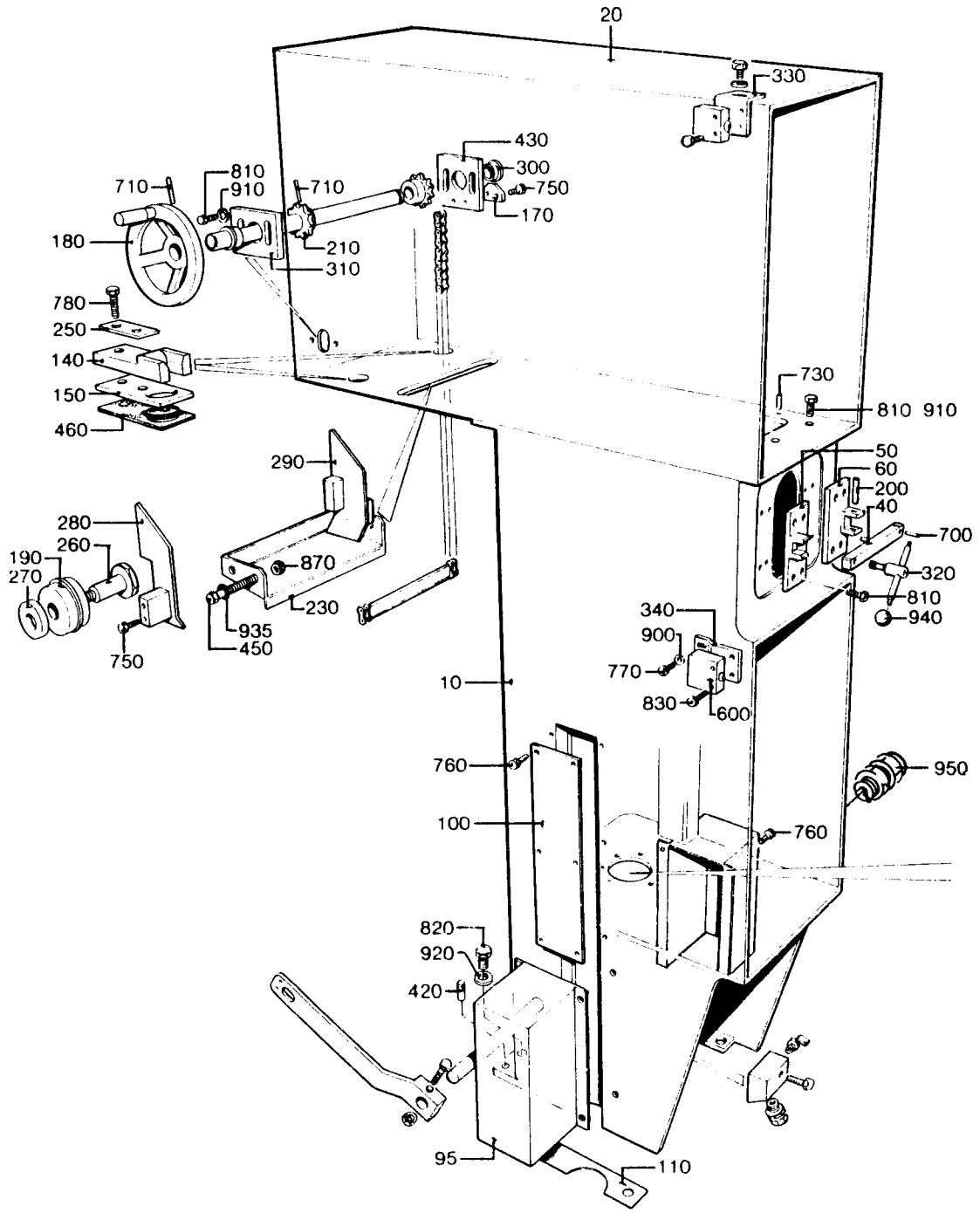

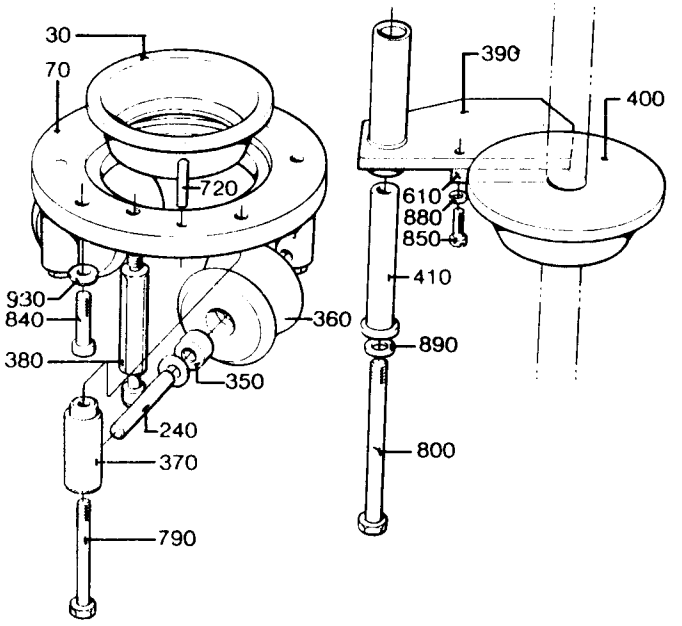

AM 8605

LAST ALTERATION: AM 9437 86-09-05
648111-030V
AM 6500
84-01-18

POS	VAR	PART NUMBER	SP	EH	QTY	DESCRIPTION
	-0301	S- 272560-SHEET	-2			===ASSEMBLY DRAWING===
F245	-0301	C- 440630-0101	-		1	VALVE
		SP- 499255-0101	UP		1	* SEAL KIT
		SP- 499255-0102	P		1	* SEAL KIT
		SP- 499255-0103	P		1	* SEAL KIT
010	-0301	272555	-		1	TOUCH GUARD
020	-0301	256355	-		1	BRACKET
030	-0301	272352	C		1	PIPE
040	-0301	272554	-		1	TOUCH GUARD
050	-0301	237871	C		1	CATCH
055	-0301	440978	-		1	ELBOW PIPE
060	-0301	12242-0003	P		3	GASKET
070	-0301	12242-0005	P		5	GASKET
085	-0301	28036	S		4	WASHER
090	-0301	449193	C		1	PRESSURE GAUGE TUBE
100	-0301	37768	P		1	THERMOCOUPLE
110	-0301	237873	S		1	SHAFT
120	-0301	271747	S		1	SPLINT
130	-0301	271748	C		1	BEARING BLOCK
160	-0301	295250	S		1	PIPE
170	-0301	295730	C		2	SPACER PLATE
180	-0301	469503	-		1	ELBOW PIPE
250	-0301	90030-0109	-		1	PIPE CONNECTION
260	-0301	90030-0114	-		2	NIPPLE
270	-0301	90235-0267	S		1	VALVE
280	-0301	90042-0094	S		1	SOLENOID VALVE
290	-0301	90042-0383	S		1	PLATE
300	-0301	90043-0050	S		1	PRESSURE GAUGE
310	-0301	90044-0104	P		2	INDUCTIVE TRANSMITTER
320	-0301	90163-0057	C		3	NIPPLE
330	-0301	90163-0062	C		4	SLEEVE
335	-0301	90163-0074	C		1	NIPPLE
340	-0301	90187-0050	S		1	VALVE
365	-0301	90224-0307	C		4	CONNECTION
370	-0301	90235-0259	S		1	VALVE
380	-0301	90326-0012	P		1	PROTECTIVE COVER
390	-0301	90326-0020	P		1	SOCKET
400	-0301	90328-0003	S		4	SILENCER
405	-0301	90330-0013	S		1	REDUCTION NIPPLE
410	-0301	90330-0019	S		2	REDUCTION NIPPLE
420	-0301	90330-0032	S		1	NIPPLE
425	-0301	90330-0048	-		1	BUSHING
430	-0301	90330-0062	S		1	COUPLING

POS	VAR	PART NUMBER	SP	EH	QTY	DESCRIPTION
500	-0301	311411-0181	-		1	SPLIT PIN SP3,2X20RFR
510	-0301	312105-0333	-		2	SCREW M6S5X25 A4 80
520	-0301	312105-0451	-		4	SCREW M6S8X20RFR
530	-0301	312105-0453	-		4	SCREW M6S8X25RFR
540	-0301	312115-0228	-		4	SCREW 3X16 A4 80
545	-0301	312115-0329	-		4	SCREW 5X16 A4 80
560	-0301	315105-0124	-		4	WASHER BRB3,2X6RFR
570	-0301	342803-0104	-		2	NUT 51
580	-0301	342812-0104	-		2	SLEEVE ANSL.51

TETRA PAK

4/8609

S-272560-2

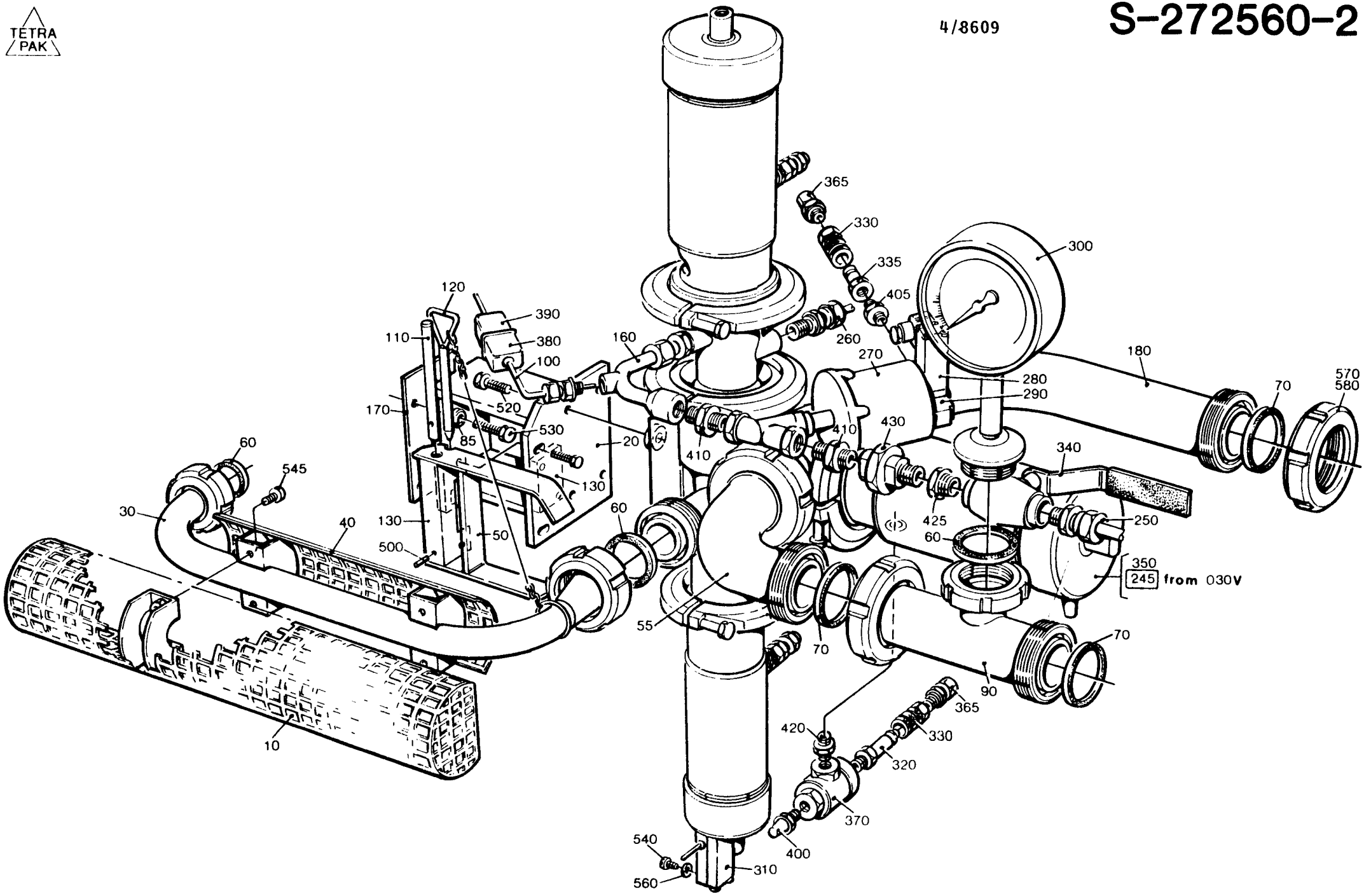

LAST ALTERATION: AM 7904 85-06-15
246893-040V 633202-150V 633302-150V 633502-170V 642011-220V
642031-010V 648011-030V 648111-030V
AM 6395
83-12-15

GROUP	PRODUCT VALVE	FILLMACHINE	FILLMACHINE	FILLMACHINE
-0101	2"	AB8	AB9	-
-0102	3"	AB8	-	-
-0103	2"	AB3	AB3 RENOV	-
-0104	2"	AT500	AT300	AT150

POS	VAR	PART NUMBER	SP	EH	QTY	DESCRIPTION
	-0101	S- 440630-SHEET	-1			===ASSEMBLY DRAWING===
	-0102		-1			
	-0103		-2			
	-0104		-1			
010	-0101	440631	-		1	VALVE BODY 51
010	-0103	484997	-		1	VALVE BODY 51
	-0104				1	
090	-0101	440639	-		2	GABLE
	-0102				2	
	-0103				1	
	-0104				2	
095	-0103	484998	-		1	GABLE
120	-0101	440642	-		1	BRACKET
	-0103				1	
	-0104				1	
170	-0101	440647	-		1	SLEEVE
	-0102				1	
	-0103				2	
	-0104				1	
390	-0101	440669	-		1	CONE
	-0103				1	
	-0104				1	
420	-0101	440731	-		1	PLATE
	-0102				1	
	-0103				2	
	-0104				1	
430	-0102	449678	-		1	VALVE BODY 76
440	-0102	449679	-		1	BRACKET
450	-0102	449680	-		1	CONE
520	-0101	312115-0304	-		2	SCREW S-A4 4X45
	-0102				2	
	-0103				4	
	-0104				2	
540	-0101	312155-0532	-		1	SCREW MF6S12X20RFR
	-0102				1	
	-0103				2	
	-0104				1	
560	-0101	315105-0136	-		2	WASHER BRB4,3X8RFR
	-0102				2	

POS	VAR	PART NUMBER	SP	EH	QTY	DESCRIPTION
	-0103				4	
	-0104				2	
020	ALL	440632	-		2	CYLINDER HOUSING
030	ALL	440633	-		1	CYLINDER HOUSING
040	ALL	440634	-		1	HOUSE
050	ALL	440635	-		1	PISTON ROD
060	ALL	440636	-		1	PISTON ROD
070	ALL	440637	-		1	PISTON ROD
080	ALL	440638	-		2	PISTON
100	ALL	440640	-		4	SEAL RING
110	ALL	440641	-		1	BRACKET
130	ALL	440694	-		3	CLAMPING RING
140	ALL	440695	-		1	GABLE
150	ALL	440645	-		1	SEAL RING
160	ALL	440646	-		1	PISTON
180	ALL	440648	-		1	SEAL WASHER
190	ALL	440649	-		1	SEAL WASHER
200	ALL	440650	-		1	WASHER
210	ALL	440651	-		2	WASHER
220	ALL	440652	-		2	WASHER
230	ALL	440653	-		1	WASHER
240	ALL	440654	-		1	DISTANCE SLEEVE
250	ALL	440655	-		1	RING
260	ALL	440656	-		2	WASHER
270	ALL	440657	-		1	WASHER
280	ALL	440658	-		1	WASHER
290	ALL	440659	-		1	CYLINDRICAL PIN
300	ALL	440660	-		1	COMPRESSION SPRING
310	ALL	440661	-		1	COMPRESSION SPRING
320	ALL	440662	-		1	COMPRESSION SPRING
330	ALL	440663	-		2	COMPRESSION SPRING
340	ALL	440664	-		1	SEAL WASHER
350	ALL	440665	-		1	DIAPHRAGM
360	ALL	440666	-		1	RING
370	ALL	440667	-		1	CONE
380	ALL	440668	-		1	CONE
400	ALL	440729	-		1	CLAMPING RING
410	ALL	440730	-		8	BOLT
460	ALL	90020-0027	-		2	SLEEVE
470	ALL	90020-0028	-		2	SLEEVE
480	ALL	90207-0363	-		1	GASKET
490	ALL	90207-0365	-		1	GASKET
500	ALL	90207-0367	-		1	GASKET
510	ALL	312115-0291	-		4	SCREW MC6S4X12RFR
530	ALL	312155-0323	-		3	SCREW MF6S5X8RFR
570	ALL	315202-0304	-		1	O-RING 64,5X3
580	ALL	315204-0215	-		9	O-RING 19,2X3VITON
590	ALL	315402-0136	-		4	WASHER FBB4,1RFR
600	ALL	315754-0113	-		6	CIRCLIP E 15
610	ALL	497933	-		6	BUSHING
620	ALL	315202-0301	-		1	O-RING 49,5X3
630	ALL	315202-0308	-		2	O-RING 84,5X3

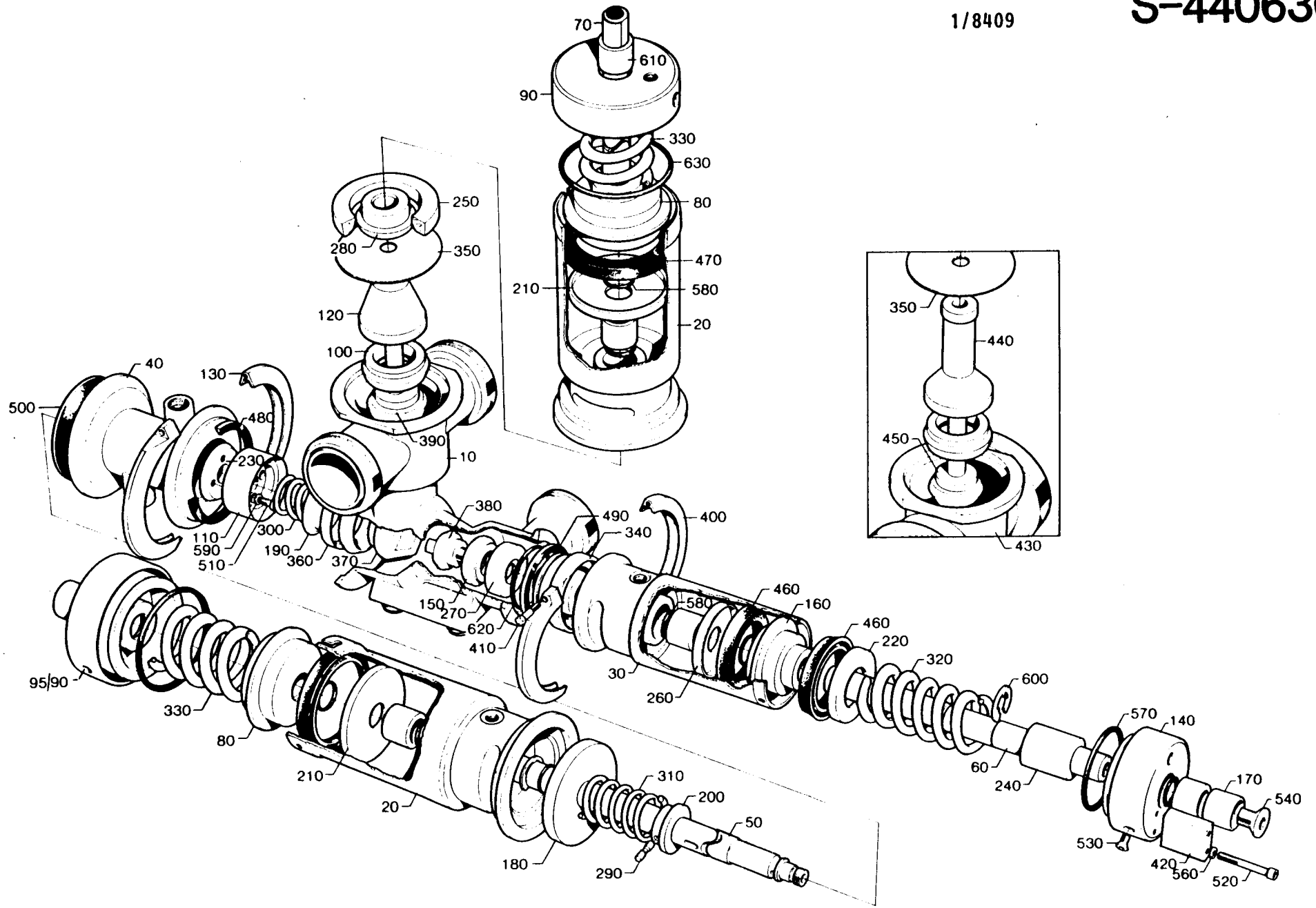
70
610
90
330
630
80
250
280
350
470
210
580
20
120
100
350
440
40
130
500
480
450
390
10
230
380
490
400
340
110
590
510
300
190
360
370
430
150
270
620
410
460
160
580
460
220
320
600
30
260
95/90
330
80
210
20
310
200
50
180
290
570
140
60
240
170
540
530
420
560
520

LAST ALTERATION: AM 9415 86-10-17
648101-070V 649111-070V
AM 8465
85-12-18

GROUP	VOLUME	VOLUME	VOLUME	VOLUME
-0201	V0125	200ML SLIM	-	-
-0202	V0250	V0236	V0200	V0180

POS	VAR	PART NUMBER	SP	EH	QTY	DESCRIPTION
	-0201	S- 469501-SHEET		-2-1		===ASSEMBLY DRAWING===
	-0202			-2		
080	-0201	256899	S		2	SHAFT
	-0202				1	
130	-0201	469461	P		2	ROLLER
	-0202				1	
010	ALL	469416	C		1	CONNECTION
020	ALL	469418	S		1	BLOW-OFF NOZZLE
030	ALL	469792	C		1	PIPE LINE
040	ALL	469420	C		1	BLOW-OFF NOZZLE
050	ALL	491983	S		1	GASKET
060	ALL	6161	P		3	ROLLER
065	ALL	28036	-		4	WASHER
070	ALL	751010	P		1	GASKET
090	ALL	272095	S		3	SHAFT
100	ALL	469458	-		2	BRACKET
110	ALL	469459	-		2	BRACKET
120	ALL	469460	-		1	BRACKET
125	ALL	491143	-		1	BRACKET
140	ALL	469463	S		1	SHAFT
150	ALL	469464	P		1	ROLLER
160	ALL	491178	-		1	BRACKET
170	ALL	469466	-		1	PLATE
180	ALL	469467	-		1	PLATE
190	ALL	751024	P		1	GASKET
295	ALL	311103-0234	-		2	CYLINDRICACPR3M6X12RFR
300	ALL	312105-0287	-		3	SCREW M6S4X8 A4 80
310	ALL	312105-0325	-		4	SCREW M6S5X10 A4 80
315	ALL	312105-0333	-		5	SCREW M6S5X25 A4 80
320	ALL	312105-0366	-		6	SCREW M6S6X12RFR
330	ALL	312105-0449	-		2	SCREW M6S8X16RFR
360	ALL	312605-0312	-		1	NUT M6M4RFR
370	ALL	312605-0318	-		3	NUT M6M8RFR
400	ALL	315105-0153	-		6	WASHER BRB6,4X12RFR
440	ALL	315115-0165	-		2	WASHER TBRB8,4X16RFR

TETRA PAK

3/8608

S-469501-1

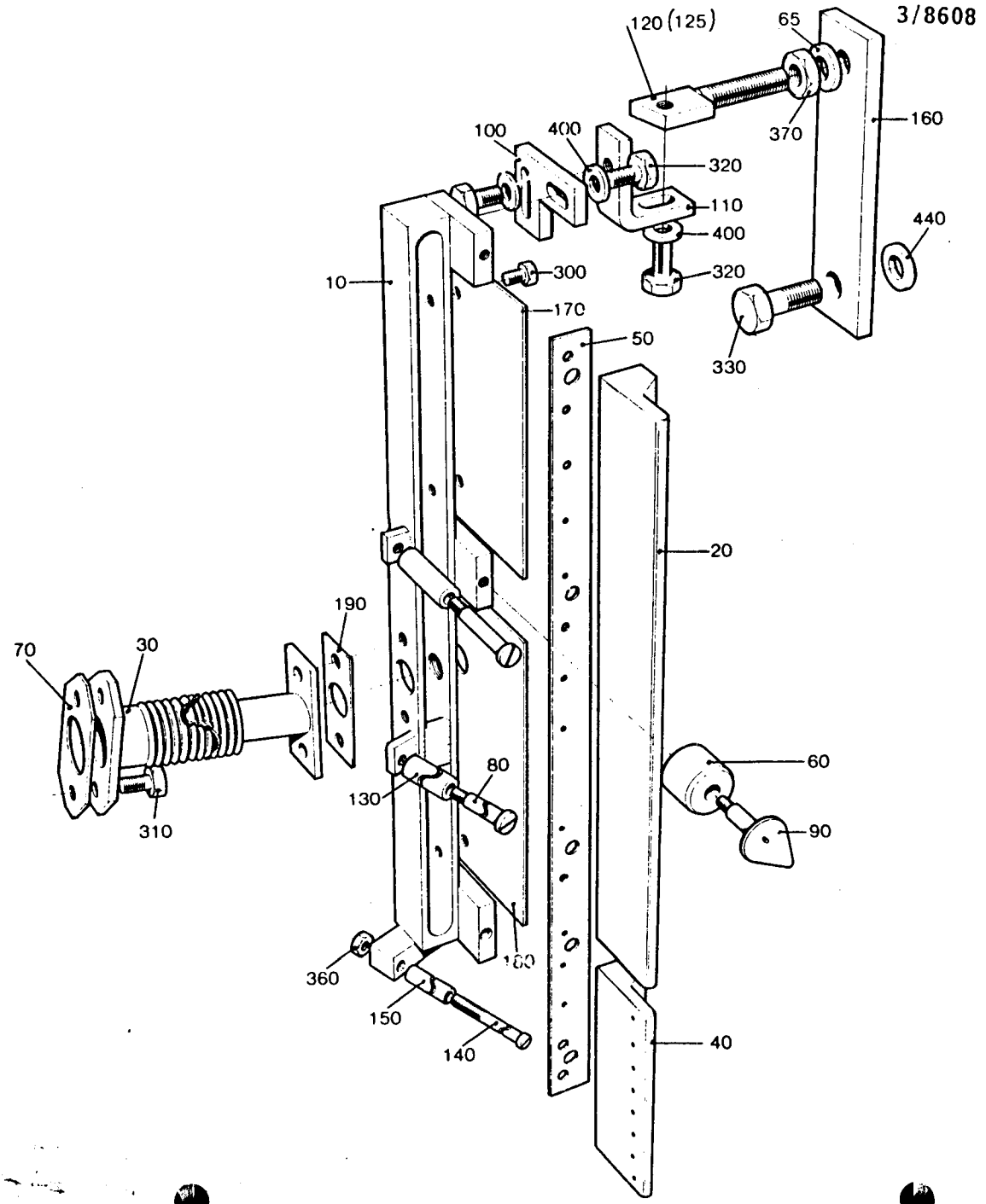

LAST ALTERATION: AM 7937 85-06-03
295778-010V

GROUP

-0101 SEALING KIT , VALVE.
CHANGE EVERY 1000 -1200 H SERVICE.
-0102 SEALING KIT , AIR CYLINDER "A" AND "C".
NOTE! THE KIT CONTENTS SEALINGS FOR ONE AIR CYLINDER.
-0103 SEALING KIT , AIR CYLINDER "B".

POS	VAR	PART NUMBER	SP	EH	QTY	DESCRIPTION	
010	-0101	440640	-		4	SEAL RING	
020	-0101	440645	-		1	SEAL RING	
030	-0101	440665	-		1	DIAPHRAGM	
040	-0103	90020-0027	-		2	SLEEVE	
050	-0102	90020-0028	-		2	SLEEVE	
060	-0101	90207-0363	-		1	GASKET	
070	-0101	90207-0365	-		1	GASKET	
080	-0101	90207-0367	-		1	GASKET	
090	-0103	315202-0304	-		1	O-RING	64,5X3
100	-0101	315204-0215	-		3	O-RING	19,2X3VITON
	-0102				3		
	-0103				1		
110	-0101	315202-0301	-		1	O-RING	49,5X3
120	-0102	315202-0308	-		2	O-RING	84,5X3

LAST ALTERATION: AM 10156 87-02-06
648111-060V
AM 7355
84-12-06

GROUP	VOLUME	VOLUME	VOLUME	VOLUME	VOLUME
-0201	V0284	V0250	V0236	V0200	V0187
	V0180	-	-	-	-
-0202	V0125	-	-	-	-
-0203	200ML SLIM	-	-	-	-

POS	VAR	PART NUMBER	SP	EH	QTY	DESCRIPTION
	-0201	S- 441304-SHEET	-1			===ASSEMBLY DRAWING===
	-0202		-1			
	-0203					
010	-0201	456138	-		1	PLATE
010	-0202	456905	-		1	PLATE
	-0203				1	
030	-0201	456035	-		1	BRACKET
	-0203				1	
030	-0202	469921	-		1	BRACKET
050	-0201	456078	S		1	ROLLER
050	-0202	469088	-		1	ROLLER
050	-0203	456908	-		1	ROLLER
060	-0201	456079	S		2	ROLLER
060	-0202	469089	-		2	ROLLER
060	-0203	456909	-		2	ROLLER
070	-0201	456080	S		1	ROLLER
070	-0202	469090	-		2	ROLLER
070	-0203	456910	-		2	ROLLER
080	-0201	456081	S		1	ROLLER
090	-0201	263655-0005	S		2	SHAFT
090	-0202	263655-0002	-		2	SHAFT
	-0203				2	
100	-0201	456140	S		1	SHAFT
100	-0202	263655-0019	-		1	SHAFT
	-0203				1	
110	-0201	456141	S		1	SHAFT
110	-0202	263655-0011	-		2	SHAFT
	-0203				2	
140	-0202	456907	-		2	LOCK BOARD
	-0203				2	
150	-0201	456139	-		4	LOCK BOARD
150	-0202	456906	-		4	LOCK BOARD
	-0203				4	
270	-0201	257175	-		1	WASHER
280	-0201	456449	-		1	ANGLE BRACKET
290	-0201	456450	-		1	SPACER
500	-0202	312105-0332	-		6	SCREW M6S5X22RFR
	-0203				6	
500	-0201	312105-0368	-		3	SCREW M6S6X16RFR

POS	VAR	PART NUMBER	SP	EH	QTY	DESCRIPTION
525	-0201	312105-0376	-		1	SCREW M6S6X35RFR
020	ALL	456034	-		1	BRACKET
040	ALL	256309	S		1	SHAFT
160	ALL	256312	-		1	WASHER
170	ALL	2033-0011	P		20	WASHER
180	ALL	26490	-		2	WASHER
190	ALL	256280	S		2	PIN
200	ALL	257089	-		1	PLATE
210	ALL	257090	-		1	KNOB
220	ALL	271717	S		3	SPACER
230	ALL	271718	S		3	WASHER
240	ALL	272797	S		3	ROLLER
250	ALL	751230	P		10	PLAIN BEARING
260	ALL	456042	S		1	SCREW
265	ALL	28037	-		2	WASHER
295	ALL	491153	P		1	GLAND
300	ALL	90335-0008	S		1	SPRING
520	ALL	312105-0372	-		3	SCREW M6S6X25RFR
530	ALL	312105-0451	-		6	SCREW M6S8X20RFR
540	ALL	315105-0165	-		2	WASHER BRB8,4X16RFR
550	ALL	315115-0165	-		4	WASHER TBRB8,4X16RFR

S-441304-1

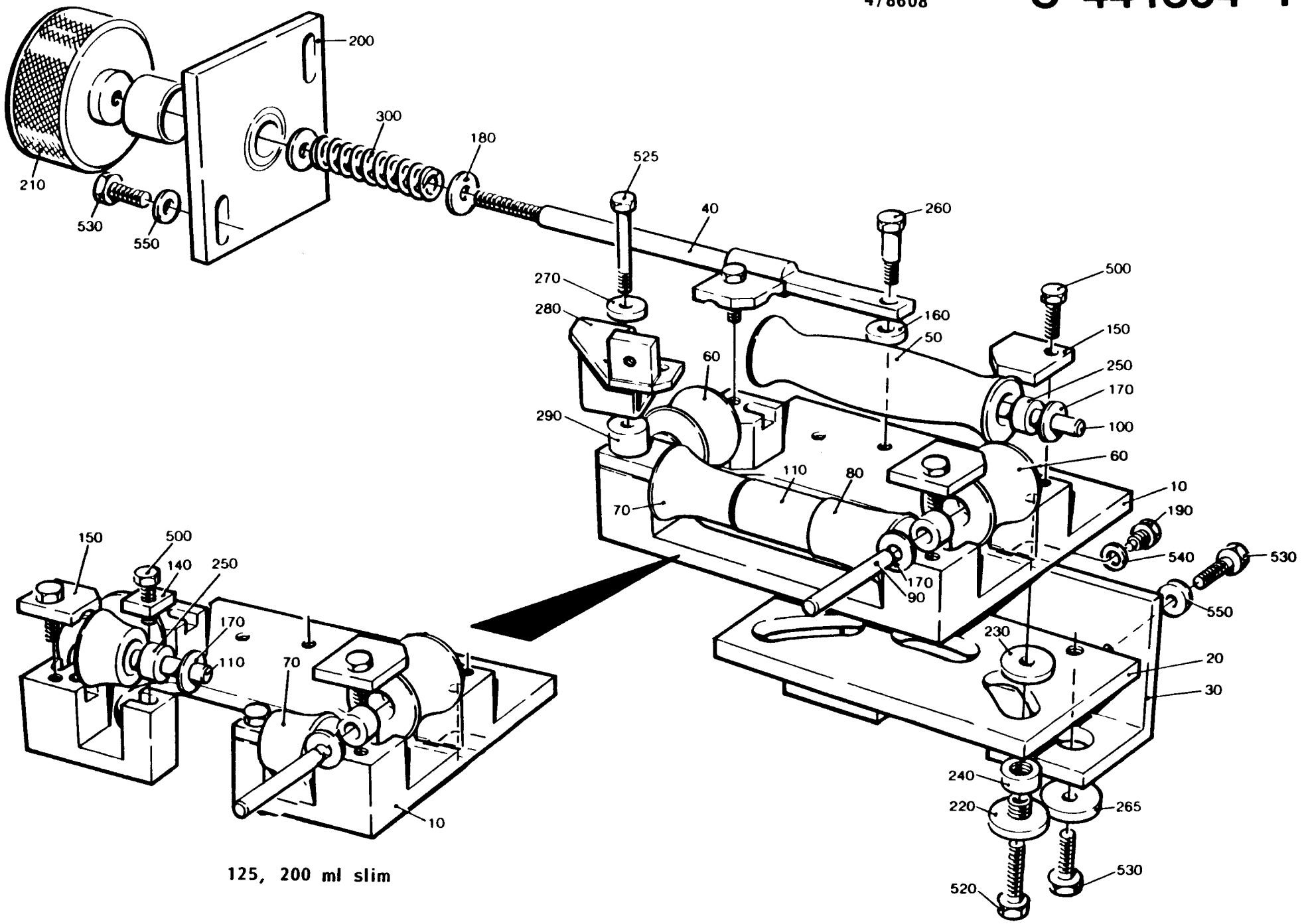

125, 200 ml slim

LAST ALTERATION: AM 9415 86-10-17
648111-020V
AM 5328
82-05-24

POS	VAR	PART NUMBER	SP	EH	QTY	DESCRIPTION
	-0201	S- 256095-SHEET	-1			===ASSEMBLY DRAWING===
020	-0201	272285	C		1	HEATING PIPE
040	-0201	256112	C		1	BRACKET
050	-0201	256689	S		1	BLOW-OFF NOZZLE
060	-0201	272948-0002	S		1	SHAFT
100	-0201	315125-0165	-		2	WASHER SB 8,4X26X5 RFR
110	-0201	491097	S		1	HEAT GUARD
140	-0201	256117	C		1	BRACKET
170	-0201	751015	P		1	GASKET
180	-0201	266739	P		3	CABLE GLAND
190	-0201	266740-0003	C		3	SPACER
210	-0201	271269	S		1	BUSHING
220	-0201	271316	-		1	BRACKET
230	-0201	272083	C		1	COVER
240	-0201	295936	S		1	BUSHING
250	-0201	272287	-		1	AXLE SUPPORT
260	-0201	751018	P		8	WASHER
265	-0201	295910	S		1	BUSHING
270	-0201	751023	P		2	GASKET
300	-0201	90030-0184	-		1	PIPE CONNECTION
310	-0201	90030-0187	-		1	PIPE CONNECTION
330	-0201	90125-0020	S		1	PLATE
340	-0201	90206-0031	PU		1	HEATING ELEMENT
350	-0201	90206-0322	P		1	GASKET
360	-0201	90235-0274	S		2	VALVE
380	-0201	90239-0073	S		1	CYLINDER
		90285-0087	P		0	* SEAL
390	-0201	90239-0088	S		1	BRACKET
400	-0201	90239-0099	S		1	BRACKET
510	-0201	312105-0287	-		2	SCREW M6S4X8 A4 80
520	-0201	312105-0327	-		4	SCREW M6S5X12 A4 80
530	-0201	312105-0364	-		2	SCREW M6S6X10RFR
550	-0201	312105-0368	-		4	SCREW M6S6X16RFR
560	-0201	312105-0370	-		1	SCREW M6S6X20RFR
562	-0201	312105-0372	-		4	SCREW M6S6X25RFR
565	-0201	312105-0455	-		2	SCREW M6S8X30RFR
570	-0201	312125-0220	-		3	SLOTTED HEMCS3X6RFR
580	-0201	312125-0291	-		4	SLOTTED HEMCS4X12RFR
590	-0201	312145-0238	-		3	SLOTTED HEMFS3X40RFR
600	-0201	315105-0124	-		2	WASHER BRB3,2X6RFR
610	-0201	315105-0153	-		6	WASHER BRB6,4X12RFR
620	-0201	315234-0109	S		1	SEAL RING R1/8"
630	-0201	342980-0113	-		2	BANJO CONNSINGEL 6/4-1/8

POS	VAR	PART NUMBER	SP	EH	QTY	DESCRIPTION
640	-0201	352100-0106	-		1	CABLE GLANR.18,6-10,5
650	-0201	353104-0130	P		1	CABLE SHOEYAV 14 M 43

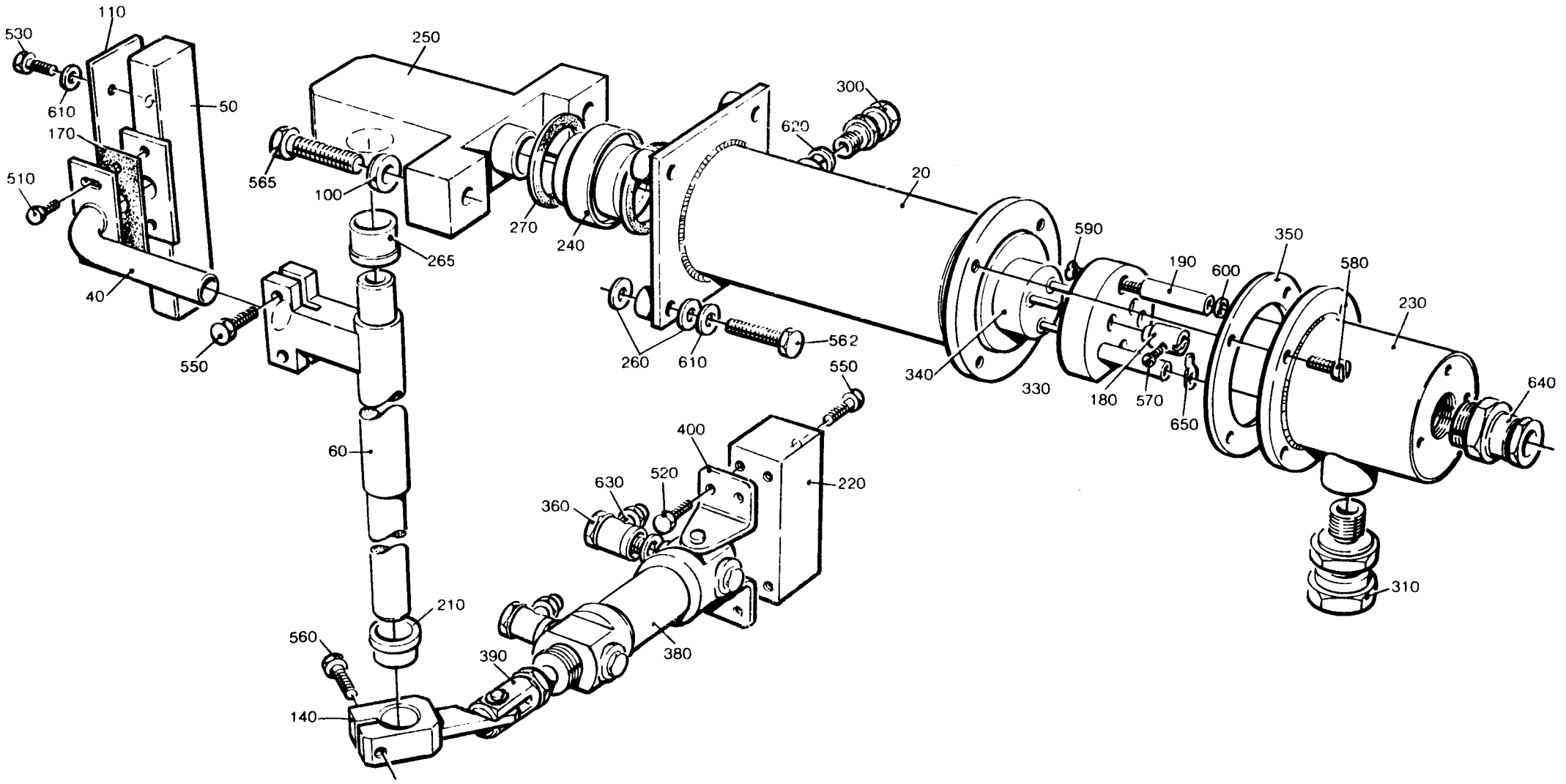
110
530
250
610
50
170
300
620
565
100
20
510
270
240
590
350
265
190
600
580
40
260
610
562
230
550
340
330
180
570
650
640
550
400
60
630
520
220
360
210
560
390
380
310
140

LAST ALTERATION: AM 10156 87-02-06
648111-060V
AM 7355
84-12-06

GROUP	VOLUME	VOLUME	VOLUME	VOLUME	VOLUME
-0201	V0284	V0250	V0236	V0200	V0187
	V0180	-	-	-	-
-0202	V0125	-	-	-	-
-0203	200ML SLIM	-	-	-	-

POS	VAR	PART NUMBER	SP	EH	QTY	DESCRIPTION
	-0201	S- 441307-SHEET	-1			===ASSEMBLY DRAWING===
	-0202		-2			
	-0203		-3			
010	-0201	456153	-		1	HOLDER
010	-0203	469041	-		1	HOLDER
010	-0202	469078	-		1	HOLDER
050	-0201	256279	-		2	BRACKET
	-0202				2	
050	-0203	469047	-		2	BRACKET
080	-0201	456156	S		1	SHAFT
080	-0202	263655-0016	-		1	SHAFT
	-0203				1	
090	-0201	263655-0003	S		2	SHAFT
090	-0203	263655-0004	-		2	SHAFT
090	-0202	263655-0021	-		2	SHAFT
100	-0201	456077	S		2	ROLLER
100	-0203	469046	-		2	ROLLER
100	-0202	469083	-		2	ROLLER
110	-0201	456076	S		1	ROLLER
110	-0203	469045	-		1	ROLLER
110	-0202	469082	-		1	ROLLER
150	-0201	456154	-		2	LOCK BOARD
150	-0203	469044	-		2	LOCK BOARD
150	-0202	469081	-		2	LOCK BOARD
160	-0201	456155	-		2	LOCK BOARD
160	-0203	469042	-		1	LOCK BOARD
160	-0202	469079	-		1	LOCK BOARD
170	-0203	469043	-		1	LOCK BOARD
170	-0202	469080	-		1	LOCK BOARD
290	-0202	312105-0368	-		4	SCREW M6S6X16RFR
300	-0201	312105-0370	-		4	SCREW M6S6X20RFR
	-0203				4	
340	-0201	312105-0455	-		2	SCREW M6S8X30RFR
	-0203				2	
345	-0202	312105-0457	-		2	SCREW M6S8X35RFR
020	ALL	2033-0011	P		12	WASHER
060	ALL	256280	S		4	PIN
140	ALL	751230	P		6	PLAIN BEARING
330	ALL	312105-0451	-		4	SCREW M6S8X20RFR

POS	VAR	PART NUMBER	SP	EH	QTY	DESCRIPTION
350	ALL	312605-0318	-		2	NUT M6M8RFR
400	ALL	315115-0165	-		8	WASHER TBRB8,4X16RFR

TETRA PAK

2/8608

S-441307-1

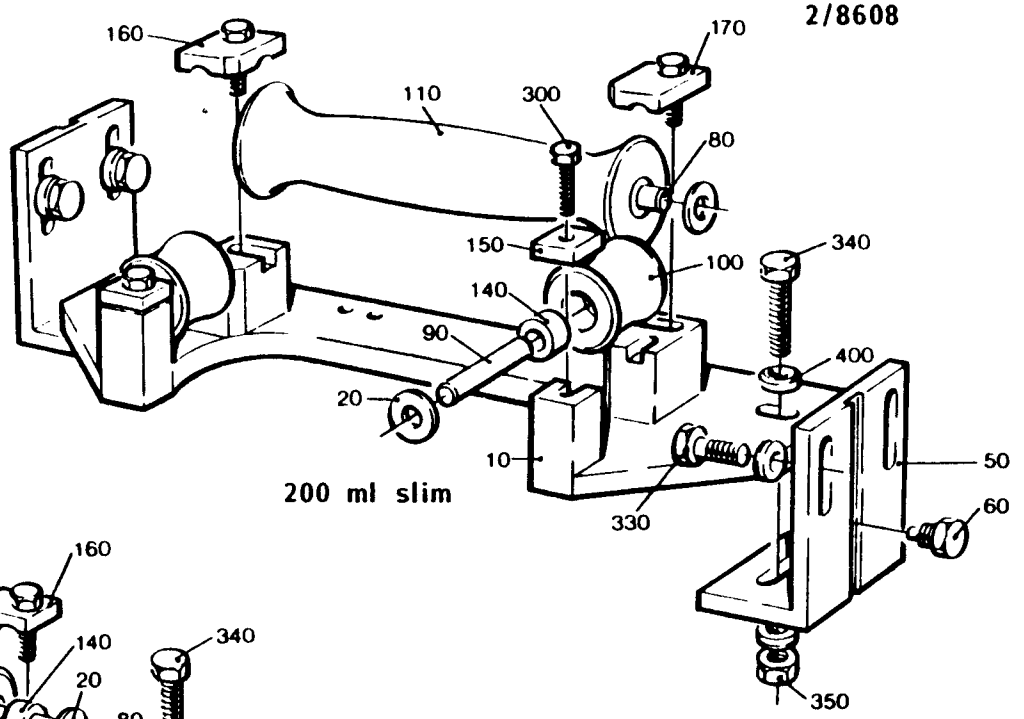

200 ml slim

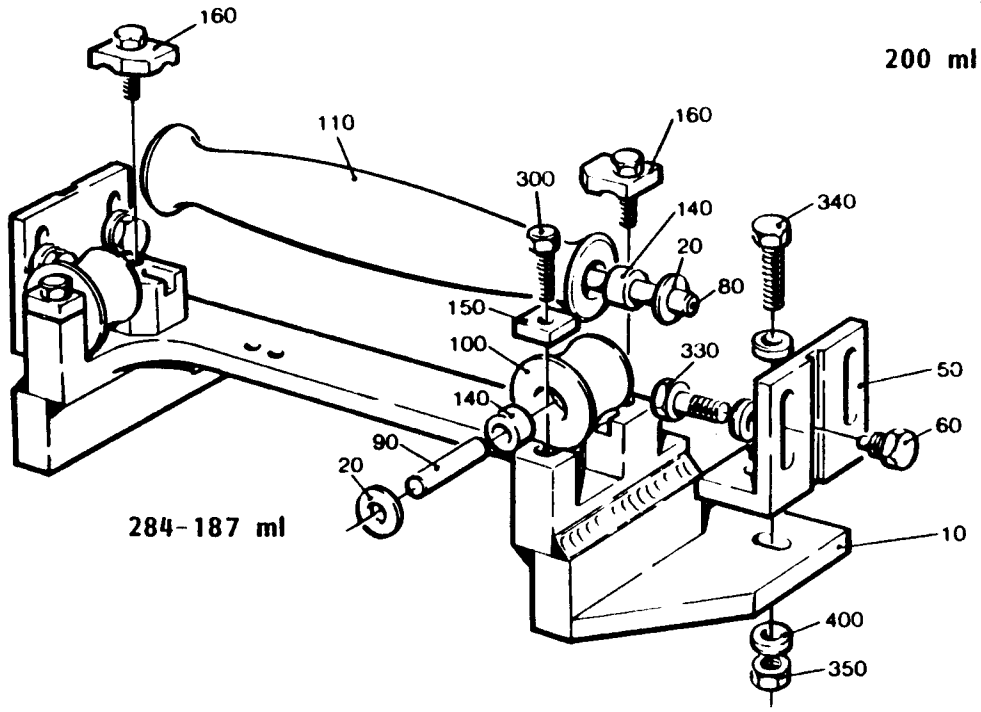

284-187 ml

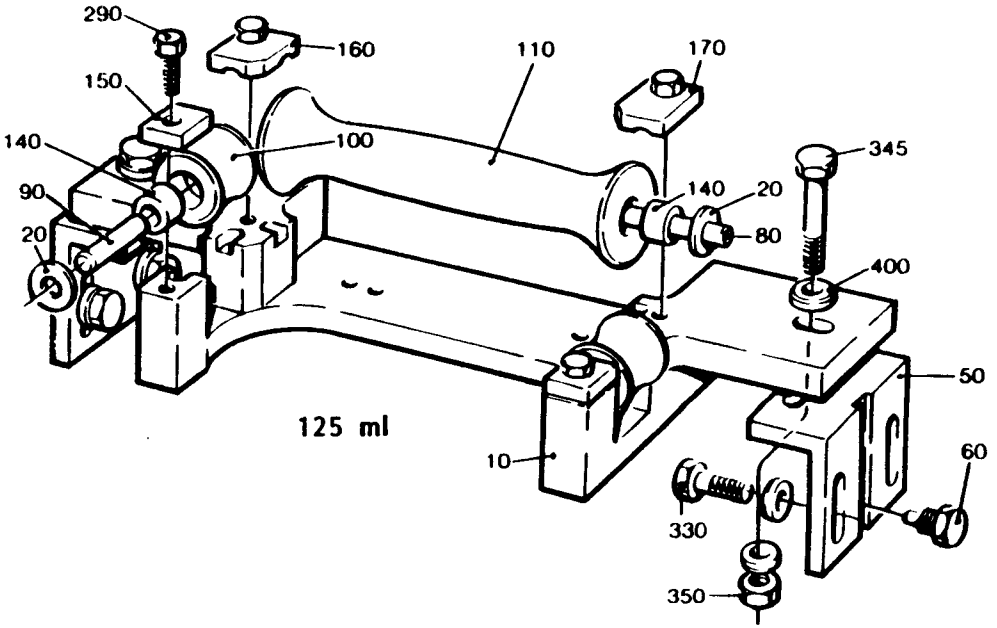

125 ml

LAST ALTERATION: AM 10411 87-04-23
648111-060V
AM 7355
84-12-06

GROUP	VOLUME	VOLUME	VOLUME	VOLUME	VOLUME
-0201	V0284	V0250	V0236	V0200	V0187
	V0180	-	-	-	-
-0202	V0125	-	-	-	-
-0203	200ML SLIM	-	-	-	-

POS	VAR	PART NUMBER	SP	EH	QTY	DESCRIPTION
	-0201	S- 441486-SHEET		-1		===ASSEMBLY DRAWING===
	-0202			-2		
	-0203			-3		
010	-0201	469524	-		1	BRACKET
010	-0202	469745	-		1	BRACKET
	-0203				1	
040	-0201	2033-0008	P		3	WASHER
050	-0201	2033-0011	P		24	WASHER
	-0202				28	
	-0203				28	
090	-0201	257175	-		4	WASHER
100	-0201	263655-0004	S		2	SHAFT
110	-0201	263655-0006	S		2	SHAFT
110	-0202	263655-0018	S		4	SHAFT
	-0203				4	
120	-0201	263655-0009	S		2	SHAFT
120	-0202	263655-0007	S		1	SHAFT
	-0203				1	
125	-0202	456881	S		1	SHAFT
	-0203				1	
130	-0201	751230	P		14	PLAIN BEARING
	-0202				12	
	-0203				12	
140	-0201	441918	-		1	BRACKET
150	-0201	451117	S		1	ROLLER
160	-0201	451148	-		1	BRACKET
170	-0201	451149	S		1	SHAFT
180	-0201	456082	S		1	ROLLER
180	-0202	469126	S		2	ROLLER
180	-0203	490549	S		2	ROLLER
190	-0201	456085	S		2	ROLLER
190	-0202	469125	S		1	ROLLER
190	-0203	490548	S		1	ROLLER
195	-0202	469127	S		1	ROLLER
195	-0203	490550	S		1	ROLLER
200	-0201	456086	S		1	ROLLER
200	-0202	469128	S		1	ROLLER
200	-0203	490551	S		1	ROLLER
210	-0201	456181	-		2	SPACER

POS	VAR	PART NUMBER	SP	EH	QTY	DESCRIPTION
230	-0201	456183	-		1	LOCK BOARD
230	-0202	456869	-		1	LOCK BOARD
	-0203				1	
240	-0201	456184	-		1	LOCK BOARD
240	-0202	456871	-		1	LOCK BOARD
	-0203				1	
250	-0201	456185	-		1	LOCK BOARD
250	-0202	456873	-		2	LOCK BOARD
	-0203				2	
260	-0201	456186	-		1	LOCK BOARD
260	-0202	456874	-		2	LOCK BOARD
	-0203				2	
270	-0201	456187	-		1	LOCK BOARD
280	-0201	456188	-		1	LOCK BOARD
290	-0201	456198	-		1	LOCK BOARD
290	-0202	456870	-		1	LOCK BOARD
	-0203				1	
300	-0201	456199	-		1	LOCK BOARD
300	-0202	456872	-		1	LOCK BOARD
	-0203				1	
320	-0201	456304	S		1	ROLLER
320	-0202	469124	S		1	ROLLER
320	-0203	490547	S		1	ROLLER
330	-0201	456305	S		1	ROLLER
330	-0202	469136	S		1	ROLLER
330	-0203	490552	S		1	ROLLER
340	-0201	456306	S		1	ROLLER
350	-0202	751231	P		1	PLAIN BEARING
	-0203				1	
500	-0201	311103-0312	-		1	CYLINDRICACPR5M6X25RFR
520	-0201	311411-0165	-		1	SPLIT PIN SP2,5X16RFR
530	-0201	312105-0325	-		1	SCREW M6S5X10 A4 80
535	-0202	312105-0329	-		4	SCREW M6S5X16 A4 80
	-0203				4	
536	-0202	312105-0332	-		4	SCREW M6S5X22RFR
	-0203				4	
540	-0201	312105-0368	-		4	SCREW M6S6X16RFR
545	-0201	312105-0370	-		2	SCREW M6S6X20RFR
550	-0201	312105-0381	-		2	SCREW M6S6X55RFR
590	-0201	315105-0136	-		1	WASHER BRB4,3X8RFR
600	-0201	315105-0165	-		3	WASHER BRB8,4X16RFR
	-0202				2	
	-0203				2	
030	ALL	G- 456230	-		1	ANGLE BRACKET
060	ALL	35918	S		1	SHAFT
070	ALL	35919	S		1	COMPRESSION SPRING
080	ALL	36325	S		1	KNOB
220	ALL	456182	-		1	PLATE
310	ALL	751318	-		1	SHAFT

S-441486-1

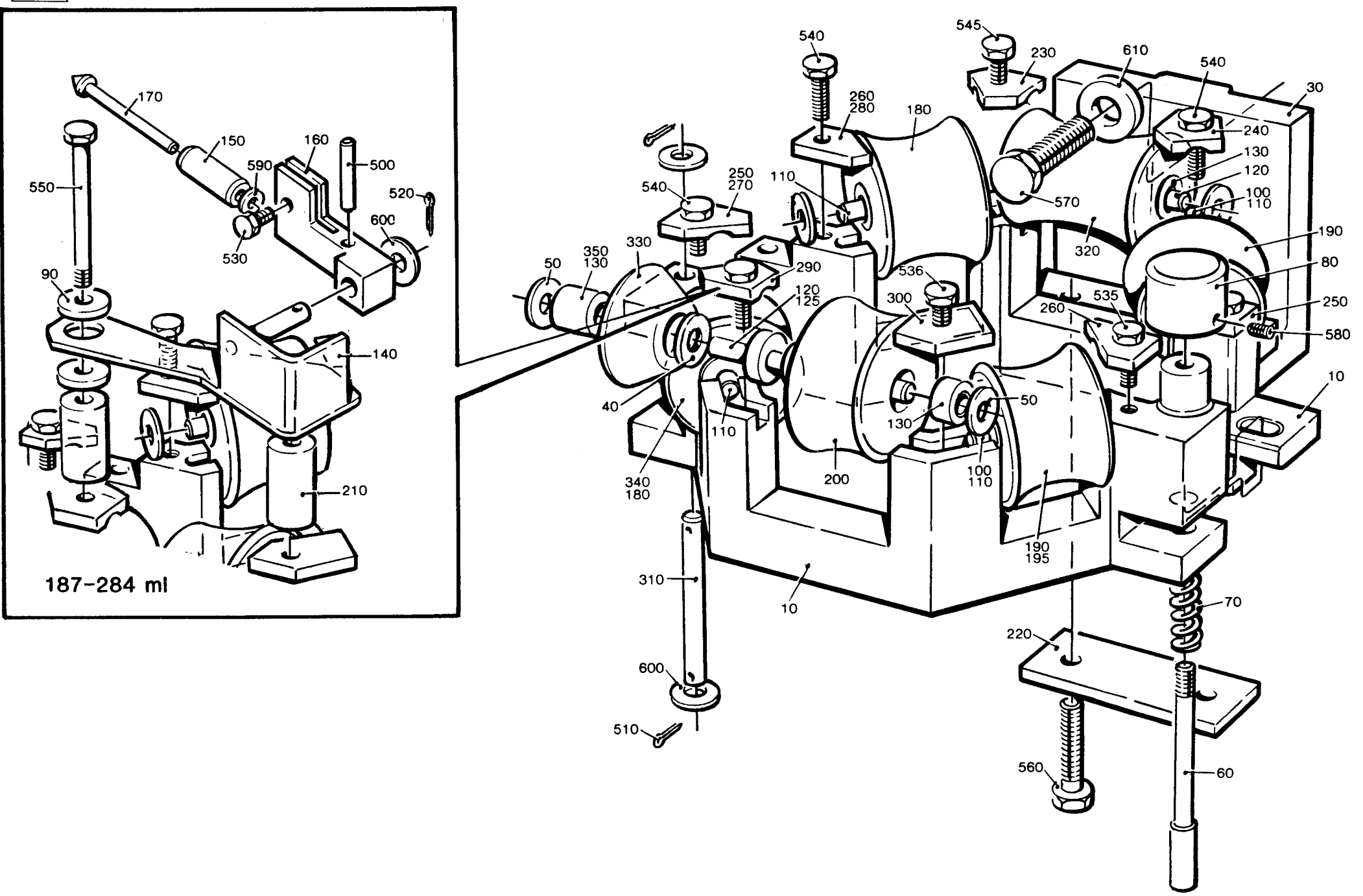
187-284 ml
170
150
160
590
500
520
550
600
530
90
140
210
540
545
230
610
540
30
260
280
180
240
130
120
100
110
250
270
110
540
570
190
320
80
330
350
130
50
290
536
120
125
300
535
260
250
580
40
110
50
130
10
340
180
200
100
110
190
195
310
10
70
220
600
510
560
60

POS	VAR	PART NUMBER	SP	EH	QTY	DESCRIPTION
510	ALL	311411-0150	-		2	SPLIT PIN SP2X12RFR
560	ALL	312105-0495	-		2	SCREW M6S10X30RFR
570	ALL	312105-0536	-		1	SCREW M6S12X30RFR
580	ALL	312318-0285	-		1	GRUB SCREW SK6SS4X6RFR
610	ALL	315115-0178	-		1	WASHER TBRB13X24RFR

1 DIVIDED FORMING RING

S-441486-1

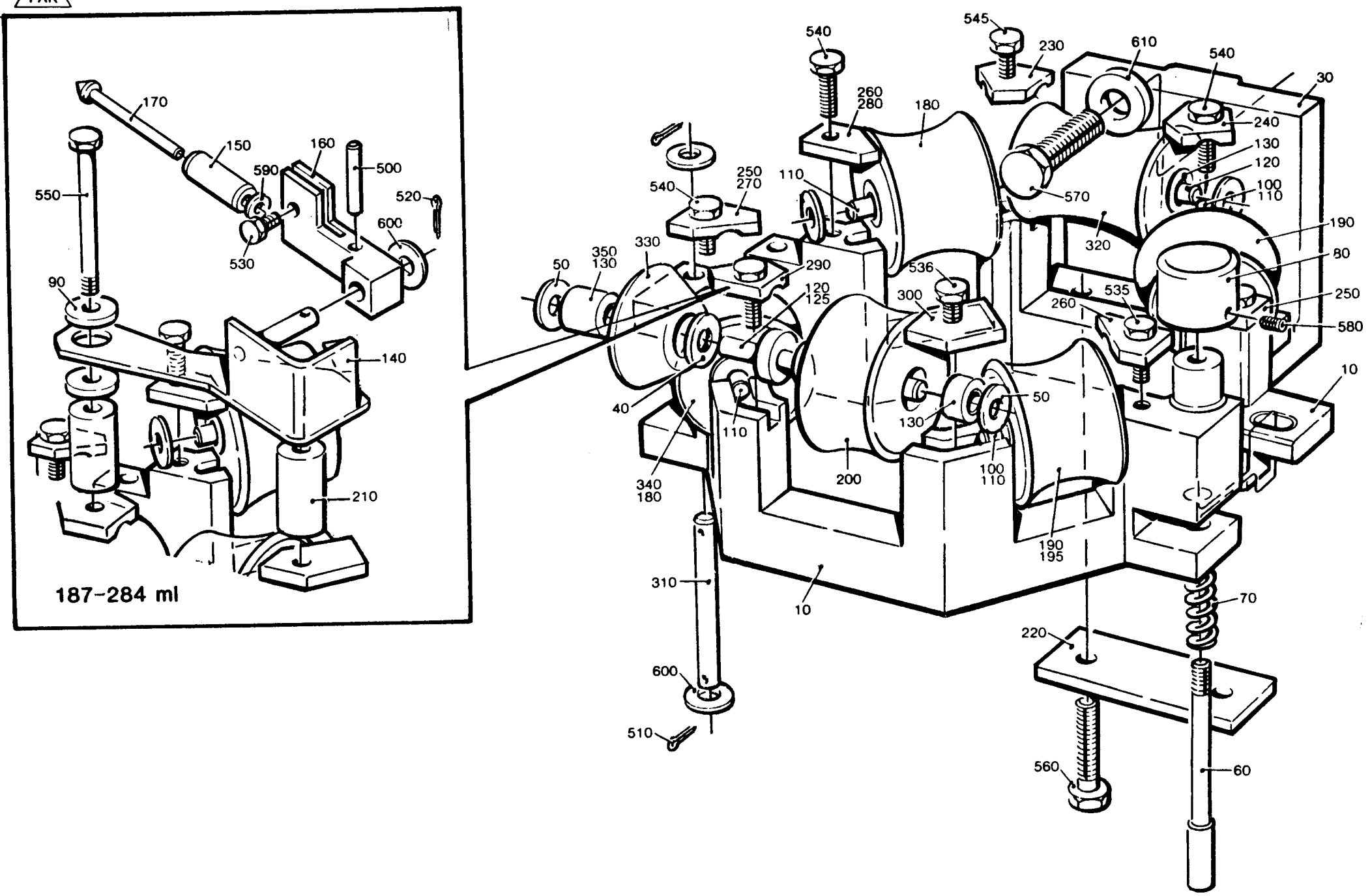
187-284 ml
170
150
160
590
500
520
550
600
530
90
140
210
545
540
230
610
540
30
260
280
180
240
130
120
100
110
250
270
110
540
570
190
320
80
350
130
330
50
290
536
250
120
125
300
535
260
580
40
110
50
130
10
340
180
200
100
110
190
195
310
70
10
220
600
510
560
60

LAST ALTERATION: AM 9284 86-07-02
648111-020V
AM 5254
82-04-08

POS	VAR	PART NUMBER	SP	EH	QTY	DESCRIPTION
	-0201	S- 271169-SHEET	-2			===ASSEMBLY DRAWING===
010	-0201	269400	C		1	VALVE BODY
020	-0201	269401	C		1	HOUSE
030	-0201	90091-0182	P		1	GASKET
040	-0201	37638	S		1	PENDULUM SUSPENSION
050	-0201	266389	S		1	PISTON ROD
060	-0201	266390	S		1	NUT
070	-0201	266391	S		1	RING
090	-0201	295160	S		1	GASKET
100	-0201	266394	-		1	BRACKET
110	-0201	272341	S		1	SPINDLE GUIDE
120	-0201	456886	-		1	WASHER
300	-0201	90207-0368	P		2	SEAL RING
310	-0201	90235-0275	S		2	VALVE
320	-0201	90239-0166	S		1	CYLINDER
		90285-0094	S		0	* SEAL
500	-0201	312105-0366	-		6	SCREW M6S6X12RFR
510	-0201	312105-0449	-		2	SCREW M6S8X16RFR
520	-0201	342797-0122	S		2	BANJO CONNSINGEL 6-1/4

TETRA PAK

3/8609

S-271169-2

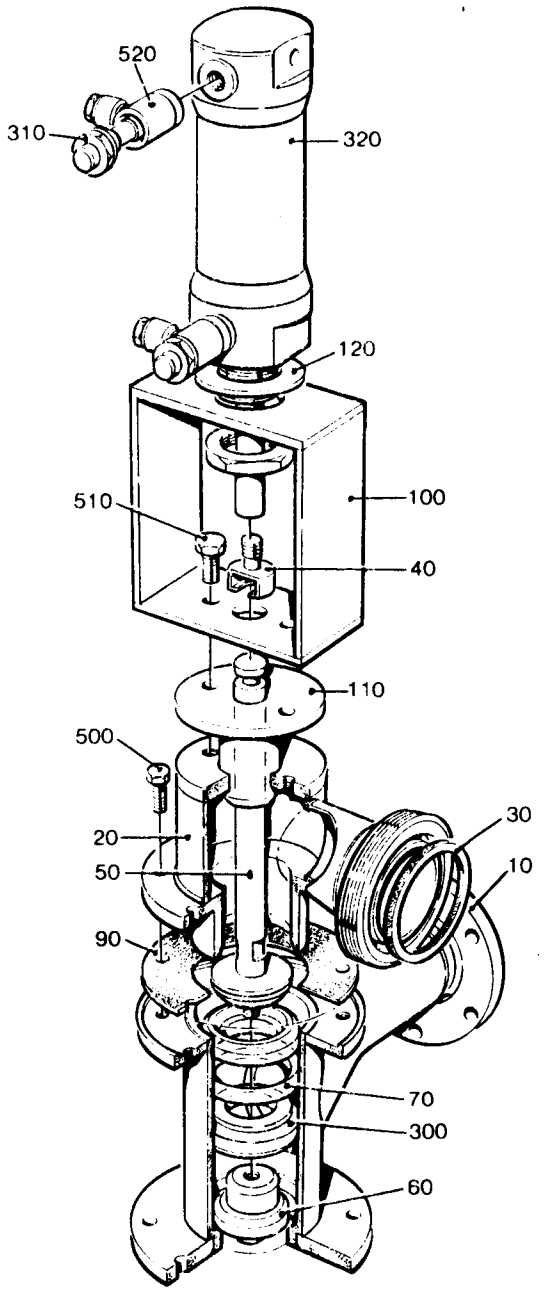

AM 9284

LAST ALTERATION: AM 6669 84-03-21
648111

POS	VAR	PART NUMBER	SP	EH	QTY	DESCRIPTION
	-0301	S- 295470-SHEET	-2			===ASSEMBLY DRAWING===
010	-0301	456596	-		1	BOX
020	-0301	295624	-		1	LID
030	-0301	456554	-		1	BRACKET
040	-0301	10793-0083	-		1	RAIL
100	-0301	90002-0013	-		1	BLANK-OFF PLUG
110	-0301	90077-0092	P		55	TERMINAL BLOCK
130	-0301	90094-0004	P		1	END SUPPORT
140	-0301	90135-0008	P		1	EARTHING CLIP
150	-0301	90135-0021	P		14	EARTHING CLIP
160	-0301	90194-0040	-		1	SIGN
300	-0301	312105-0366	-		8	SCREW M6S6X12RFR
310	-0301	312105-0449	-		4	SCREW M6S8X16RFR
320	-0301	312105-0451	-		4	SCREW M6S8X20RFR
330	-0301	312125-0364	-		2	SLOTTED HEMCS6X10RFR
400	-0301	352103-0101	-		28	CABLE GLANR.15,2/4-8
410	-0301	352103-0121	-		1	CABLE GLANR.37,0/18-25
420	-0301	359011-0202	-		26	LABEL (JORD)
430	-0301	359011-0800	-		2	LABEL BSFW 0-99

TETRA PAK

1/8501 **S-295470-2**

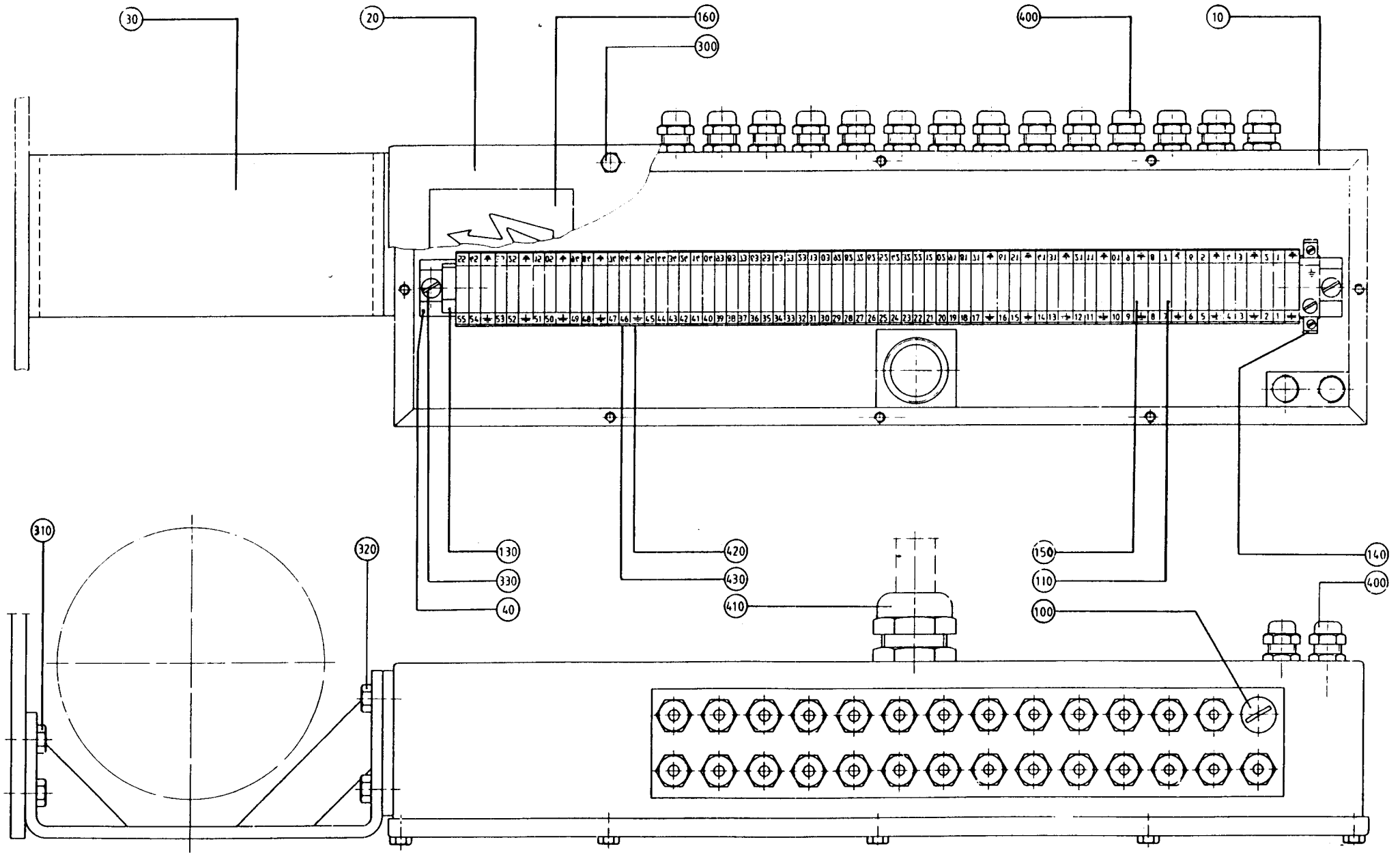

LAST ALTERATION: AM 7047 84-08-29
648111-020V
AM 5191
82-03-11

POS	VAR	PART	NUMBER	SP	EH	QTY	DESCRIPTION
	-0201	S-	271851-SHEET	-2			===ASSEMBLY DRAWING===
010	-0201		272777	-		1	FRAME
020	-0201		272784-0002	S		1	RUBBER STRIP
030	-0201		256031	S		2	SHAFT
040	-0201		271860	S		1	BLOCK
050	-0201		272781-0002	-		2	COVER STRIP
060	-0201		272782	-		2	COVER STRIP
070	-0201		272783-0002	S		1	GLASS PANE
080	-0201		272786	S		2	HINGE
090	-0201		272787	S		2	WASHER
110	-0201		441718	C		14	SPACER
310	-0201		312105-0366	-		2	SCREW M6S6X12RFR
320	-0201		312105-0376	-		4	SCREW M6S6X35RFR
330	-0201		312318-0360	-		2	GRUB SCREW SK6SS6X6RFR
340	-0201		312605-0314	-		14	NUT M6M5RFR

S-271851-2

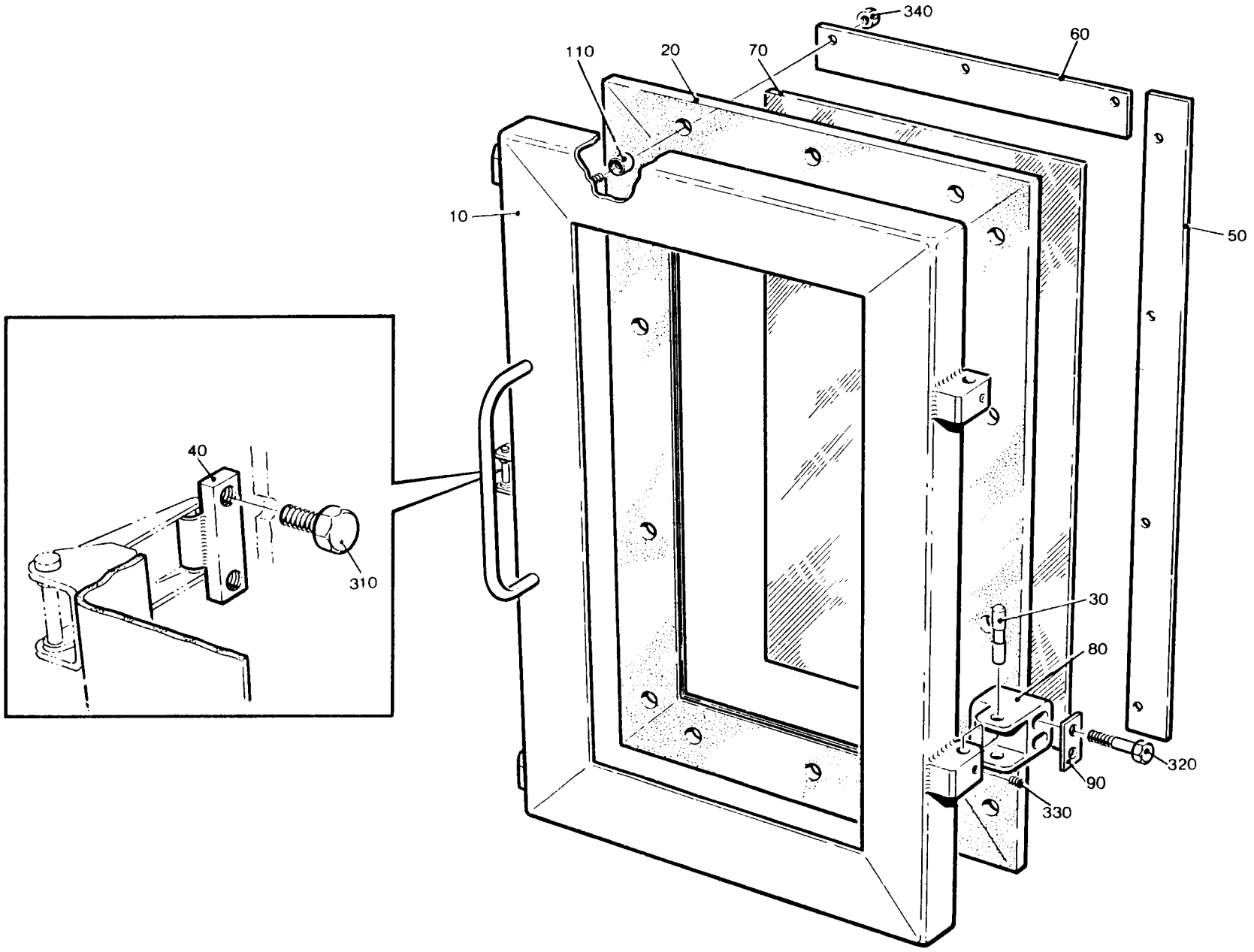

LAST ALTERATION: AM 8271 85-10-14
648111-060V
AM 7139
84-09-27

GROUP	VOLUME	VOLUME	VOLUME	VOLUME	PULL-TAB VERSION
-0101	V0250	V0236	V0200	V0180	WITHOUT PTAB
-0102	V0125	-	-	-	WITHOUT PTAB
-0103	200ML SLIM	-	-	-	WITHOUT PTAB
-0104	V0250	V0236	V0200	V0180	WITH PTAB
-0105	V0125	-	-	-	WITH PTAB
-0106	200ML SLIM	-	-	-	WITH PTAB

POS	VAR	PART NUMBER	SP	EH	QTY	DESCRIPTION
	-0101	S- 469781-SHEET	-1			===ASSEMBLY DRAWING===
	-0102		-1			
	-0103		-1			
	-0104		-2			
	-0105		-2			
	-0106		-2			
020	-0101	469774	C		1	FLUSH PIPE
020	-0102	469758	C		1	FLUSH PIPE
020	-0103	469759	C		1	FLUSH PIPE
020	-0104	469499	C		1	FLUSH PIPE
020	-0105	469778	C		1	FLUSH PIPE
020	-0106	469522	C		1	FLUSH PIPE
050	-0101	469767	S		1	PROTECTIVE GLAS
	-0104				1	
060	-0102	469768	S		1	PROTECTIVE GLAS
	-0103				1	
	-0105				1	
	-0106				1	
310	-0104	90166-0124	-	MM	250	HOSE
	-0105				250	
	-0106				250	
330	-0101	90235-0280	-		1	VALVE
	-0102				1	
	-0103				1	
	-0104				2	
	-0105				2	
	-0106				2	
530	-0104	315105-0153	-		1	WASHER BRB6,4X12RFR
	-0105				1	
	-0106				1	
540	-0101	342921-0113	-		2	PIPE CONNE6/4-1/8"
	-0102				2	
	-0103				2	
	-0104				1	
	-0105				1	
	-0106				1	

POS	VAR	PART NUMBER	SP	EH	QTY	DESCRIPTION
550	-0101	342980-0113	S		1	BANJO CONNSINGEL 6/4-1/8
	-0102				1	
	-0103				1	
	-0104				3	
	-0105				3	
	-0106				3	
555	-0104	342980-0303	-		1	BANJO CONN SINGEL 1/8"
	-0105				1	
	-0106				1	
560	-0104	359000-0401	-		2	MARKING CO2/4"1"
	-0105				2	
	-0106				2	
570	-0104	359000-0402	-		1	MARKING CO2/4"2"
	-0105				1	
	-0106				1	
040	ALL	295395	-		1	BRACKET
070	ALL	271509	-		1	JUNCTION BLOCK
080	ALL	295025	-		2	BRACKET
090	ALL	295397	-		1	HINGE
100	ALL	295398	-		1	HINGE
300	ALL	90166-0119	P	MM	250	HOSE
500	ALL	312105-0366	-		1	SCREW M6S6X12RFR
510	ALL	312105-0378	-		2	SCREW M6S6X40RFR
520	ALL	312145-0289	-		4	SLOTTED HEMFS4X10RFR
545	ALL	359000-0400	-		1	MARKING CO2/4"0"
580	ALL	359000-0403	-		1	MARKING CO2/4"3"
590	ALL	359000-0409	-		1	MARKING CO2/4"9"
600	ALL	359000-0771	-		1	MARKING CO2/4"V"

S-469781-1

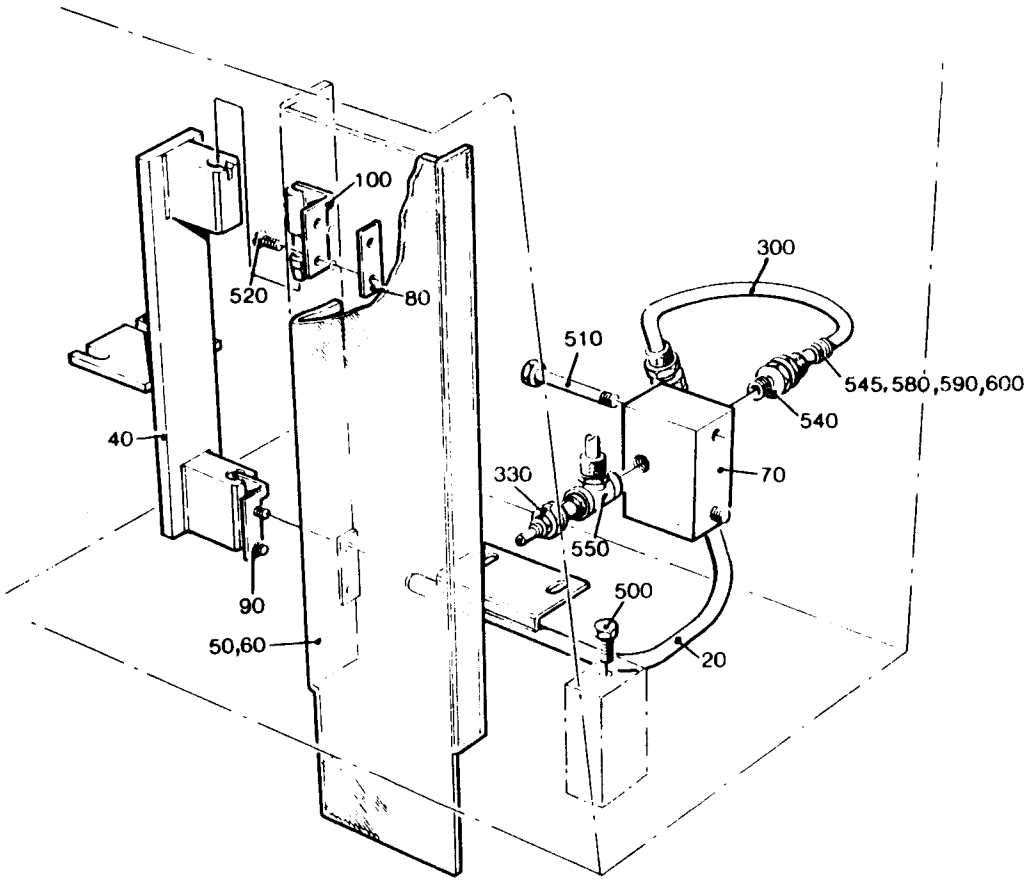

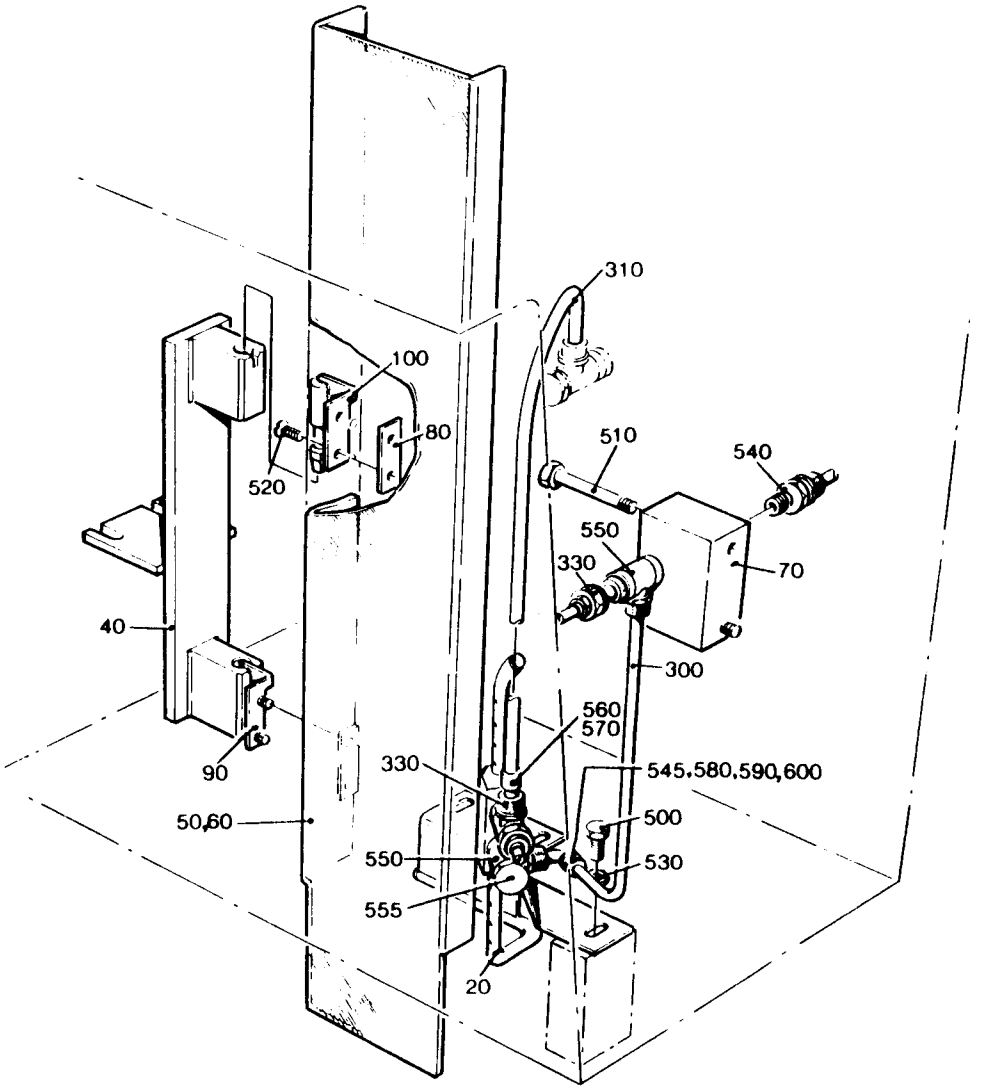

Pulltab version

LAST ALTERATION. AM 9415 85-10-17
648111-020V
AM 5254
82-04-08

POS	VAR	PART NUMBER	SP	EH	QTY	DESCRIPTION
	-0201	S- 272407-SHEET	-1			===ASSEMBLY DRAWING===
010	-0201	272274	C		1	CONTAINER
030	-0201	272319	-		1	DISCHARGE TRAY
040	-0201	272320	-		1	DISCHARGE TRAY
050	-0201	272325	C		1	SPIRAL
070	-0201	272275	C		1	LID
080	-0201	272276	C		1	BOTTOM
090	-0201	272277	S		2	GASKET
110	-0201	12242-0001	S		1	GASKET
120	-0201	531742	S		1	GASKET
130	-0201	441501	S		1	INSULATION
140	-0201	295993	C		1	GASKET HOLDER
300	-0201	90030-0062	S		2	CONNECTION
310	-0201	90424-0017	S		1	NOZZLE
		90424-0301	S		0	* SLEEVE
		90424-0302	S		0	* GASKET
		90424-0303	S		0	* GASKET
		90424-0304	PU		0	* GASKET
500	-0201	311103-0236	-		1	CYLINDRICACPR3M6X16RFR
520	-0201	312105-0325	-		14	SCREW M6S5X10 A4 80
530	-0201	312105-0368	-		30	SCREW M6S6X16RFR
550	-0201	312605-0314	-		1	NUT M6M5RFR
570	-0201	315105-0146	-		1	WASHER BRB5,3X10RFR

TETRA PAK

2/8609

S-272407-1

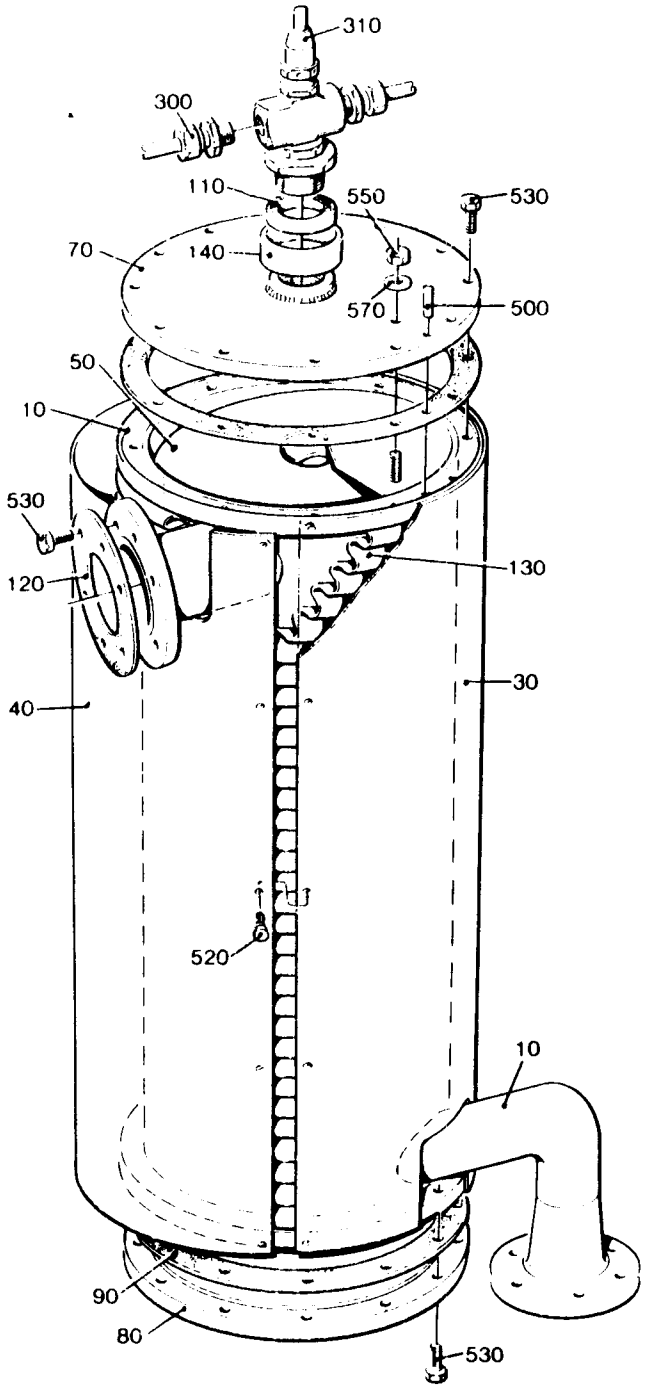

LAST ALTERATION: AM 8271 85-10-14
648111-060V
AM 6746
84-05-07

GROUP PULL-TAB
VERSION

-0301 WITH PTAB
-0302 WITHOUT PTAB

POS	VAR	PART NUMBER	SP	EH	QTY	DESCRIPTION
	-0301	S- 295045-SHEET -6				===ASSEMBLY DRAWING===
	-0302					
250	-0301	456575	-		1	PIPE
575	-0301	90224-0003	S		1	NIPPLE
580	-0301	90224-0307	S		25	CONNECTION
	-0302				28	
620	-0301	90330-0066	-		5	PLUG
	-0302				4	
710	-0301	342797-0121	-		6	BANJO CONNSINGEL 6-1/8
	-0302				5	
730	-0301	342980-0113	-		14	BANJO CONNSINGEL 6/4-1/8
	-0302				13	
740	-0301	342980-0303	-		12	BANJO CONN SINGEL 1/8"
	-0302				10	
035	ALL	295557	-		1	PIPE
040	ALL	295734	-		1	PIPE
045	ALL	295735	-		1	PIPE
050	ALL	295560	-		1	PIPE
055	ALL	295736	-		1	PIPE
060	ALL	295737	-		1	PIPE
065	ALL	295738	-		1	PIPE
070	ALL	295739	-		1	PIPE
075	ALL	456570	-		1	CONNECTION BOX
130	ALL	295568	-		1	PIPE
140	ALL	295570	-		1	PIPE
145	ALL	295571	-		1	PIPE
165	ALL	295575	-		1	PIPE
175	ALL	295577	-		1	PIPE
195	ALL	295581	-		1	PIPE
205	ALL	295583	-		1	PIPE
215	ALL	295585	-		1	PIPE
225	ALL	295587	-		1	PIPE
230	ALL	295588	-		1	PIPE
235	ALL	295589	-		1	PIPE
240	ALL	295590	-		1	PIPE
245	ALL	456411	-		1	LID
335	ALL	295591	-		1	PIPE
350	ALL	295594	-		1	PIPE
366	ALL	295740	-		1	PIPE
367	ALL	295741	-		1	PIPE

POS	VAR	PART NUMBER	SP	EH	QTY	DESCRIPTION
368	ALL	295742	-		1	PIPE
369	ALL	295743	-		1	PIPE
370	ALL	295775	-		1	PIPE
371	ALL	295776	-		1	PIPE
372	ALL	441441	-		1	PIPE
373	ALL	469497	-		1	PIPE
374	ALL	469498	-		1	PIPE
400	ALL	33577	-		1	BRACKET
440	ALL	295600	-		1	PIPE
445	ALL	295601	-		1	PIPE
450	ALL	295602	-		1	PIPE
455	ALL	295603	-		1	PIPE
460	ALL	295604	-		3	CLIP
465	ALL	295605	-		3	BRACKET
470	ALL	464173	-		2	SIGN HOLDER
471	ALL	464174	-		1	SIGN
472	ALL	464175	-		1	SIGN
490	ALL	90030-0075	S		7	PIPE CONNECTION
500	ALL	90030-0092	S		2	PIPE CONNECTION
510	ALL	90043-0034	S		2	PRESSURE GAUGE
520	ALL	90043-0302	S		2	SCREW
560	ALL	90166-0119	P	MM	2100	HOSE
570	ALL	90166-0132	P	M	1	HOSE
590	ALL	90224-0310	S		2	CONNECTION
600	ALL	90330-0025	S		37	BUSHING
610	ALL	90330-0105	S		2	NUT
650	ALL	312105-0366	-		20	SCREW M6S6X12RFR
655	ALL	312502-0120	-		4	DRIVE SCREKDS0X5FNB
720	ALL	342921-0113	-		25	PIPE CONNE6/4-1/8"
725	ALL	342921-0121	S		1	PIPE CONNE8/6-1/8"
745	ALL	342980-0313	-		4	BANJO CONN DUBBEL 1/8
780	ALL	359000-0400	-		53	MARKING CO2/4"0"
780	ALL	359000-0401	-		51	MARKING CO2/4"1"
780	ALL	359000-0402	-		44	MARKING CO2/4"2"
780	ALL	359000-0403	-		12	MARKING CO2/4"3"
780	ALL	359000-0404	-		12	MARKING CO2/4"4"
780	ALL	359000-0405	-		4	MARKING CO2/4"5"
780	ALL	359000-0406	-		6	MARKING CO2/4"6"
780	ALL	359000-0407	-		4	MARKING CO2/4"7"
780	ALL	359000-0408	-		4	MARKING CO2/4"8"
780	ALL	359000-0771	-		4	MARKING CO2/4"V"
780	ALL	359000-0409	-		14	MARKING CO2/4"9"

TETRA PAK

2/8609

S-295045-6

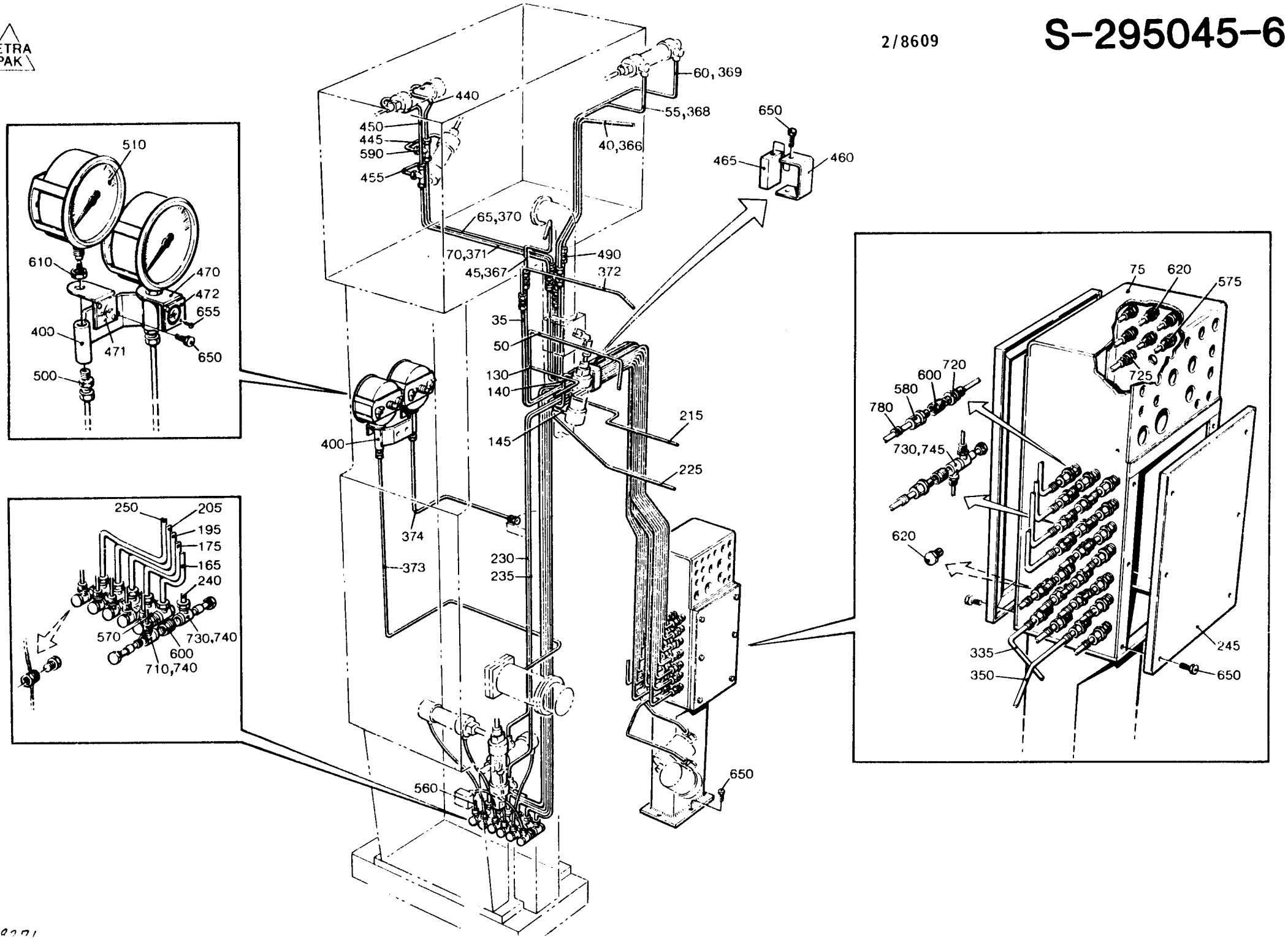

LAST ALTERATION: AM 8465 85-12-18
648111-070V

GROUP PULL-TAB
VERSION

-0401 WITH PTAB
-0402 WITHOUT PTAB

POS	VAR	PART NUMBER	SP	EH	QTY	DESCRIPTION
	-0401	S- 295045-SHEET -8				===ASSEMBLY DRAWING===
	-0402					
250	-0401	456575	-		1	PIPE
575	-0401	90224-0003	S		1	NIPPLE
580	-0401	90224-0307	S		25	CONNECTION
	-0402				28	
620	-0401	90330-0066	-		5	PLUG
	-0402				4	
710	-0401	342797-0121	-		6	BANJO CONNSINGEL 6-1/8
	-0402				5	
730	-0401	342980-0113	-		14	BANJO CONNSINGEL 6/4-1/8
	-0402				13	
740	-0401	342980-0303	-		12	BANJO CONN SINGEL 1/8"
	-0402				10	
035	ALL	295557	-		1	PIPE
040	ALL	295734	-		1	PIPE
045	ALL	295735	-		1	PIPE
050	ALL	295560	-		1	PIPE
055	ALL	295736	-		1	PIPE
060	ALL	295737	-		1	PIPE
065	ALL	295738	-		1	PIPE
070	ALL	295739	-		1	PIPE
075	ALL	491422	-		1	CONNECTION BOX
130	ALL	295568	-		1	PIPE
140	ALL	295570	-		1	PIPE
145	ALL	295571	-		1	PIPE
165	ALL	295575	-		1	PIPE
175	ALL	295577	-		1	PIPE
195	ALL	295581	-		1	PIPE
205	ALL	295583	-		1	PIPE
215	ALL	295585	-		1	PIPE
225	ALL	295587	-		1	PIPE
230	ALL	295588	-		1	PIPE
235	ALL	295589	-		1	PIPE
240	ALL	295590	-		1	PIPE
245	ALL	456411	-		1	LID
246	ALL	491423	-		1	LID
335	ALL	295591	-		1	PIPE
350	ALL	295594	-		1	PIPE
366	ALL	295740	-		1	PIPE
367	ALL	295741	-		1	PIPE
368	ALL	295742	-		1	PIPE

POS	VAR	PART NUMBER	SP	EH	QTY	DESCRIPTION
369	ALL	295743	-		1	PIPE
370	ALL	295775	-		1	PIPE
371	ALL	295776	-		1	PIPE
372	ALL	441441	-		1	PIPE
373	ALL	469497	-		1	PIPE
374	ALL	469498	-		1	PIPE
400	ALL	33577	-		1	BRACKET
440	ALL	295600	-		1	PIPE
445	ALL	295601	-		1	PIPE
450	ALL	295602	-		1	PIPE
455	ALL	295603	-		1	PIPE
460	ALL	295604	-		3	CLIP
465	ALL	295605	-		3	BRACKET
470	ALL	464173	-		2	SIGN HOLDER
471	ALL	464174	-		1	SIGN
472	ALL	464175	-		1	SIGN
490	ALL	90030-0075	S		7	PIPE CONNECTION
500	ALL	90030-0092	S		2	PIPE CONNECTION
510	ALL	90043-0034	S		2	PRESSURE GAUGE
520	ALL	90043-0302	S		2	SCREW
560	ALL	90166-0119	P	MM	2100	HOSE
570	ALL	90166-0132	P	M	1	HOSE
590	ALL	90224-0310	S		2	CONNECTION
600	ALL	90330-0025	S		37	BUSHING
610	ALL	90330-0105	S		2	NUT
650	ALL	312105-0366	-		27	SCREW M6S6X12RFR
655	ALL	312502-0120	-		4	DRIVE SCREKDS0X5FNB
720	ALL	342921-0113	-		25	PIPE CONNE6/4-1/8"
725	ALL	342921-0121	S		1	PIPE CONNE8/6-1/8"
745	ALL	342980-0313	-		4	BANJO CONN DUBBEL 1/8
780	ALL	359000-0400	-		53	MARKING CO2/4"0"
780	ALL	359000-0401	-		51	MARKING CO2/4"1"
780	ALL	359000-0402	-		44	MARKING CO2/4"2"
780	ALL	359000-0403	-		12	MARKING CO2/4"3"
780	ALL	359000-0404	-		12	MARKING CO2/4"4"
780	ALL	359000-0405	-		4	MARKING CO2/4"5"
780	ALL	359000-0406	-		6	MARKING CO2/4"6"
780	ALL	359000-0407	-		4	MARKING CO2/4"7"
780	ALL	359000-0408	-		4	MARKING CO2/4"8"
780	ALL	359000-0771	-		4	MARKING CO2/4"V"
780	ALL	359000-0409	-		14	MARKING CO2/4"9"

TETRA PAK

1/8609

S-295045-8

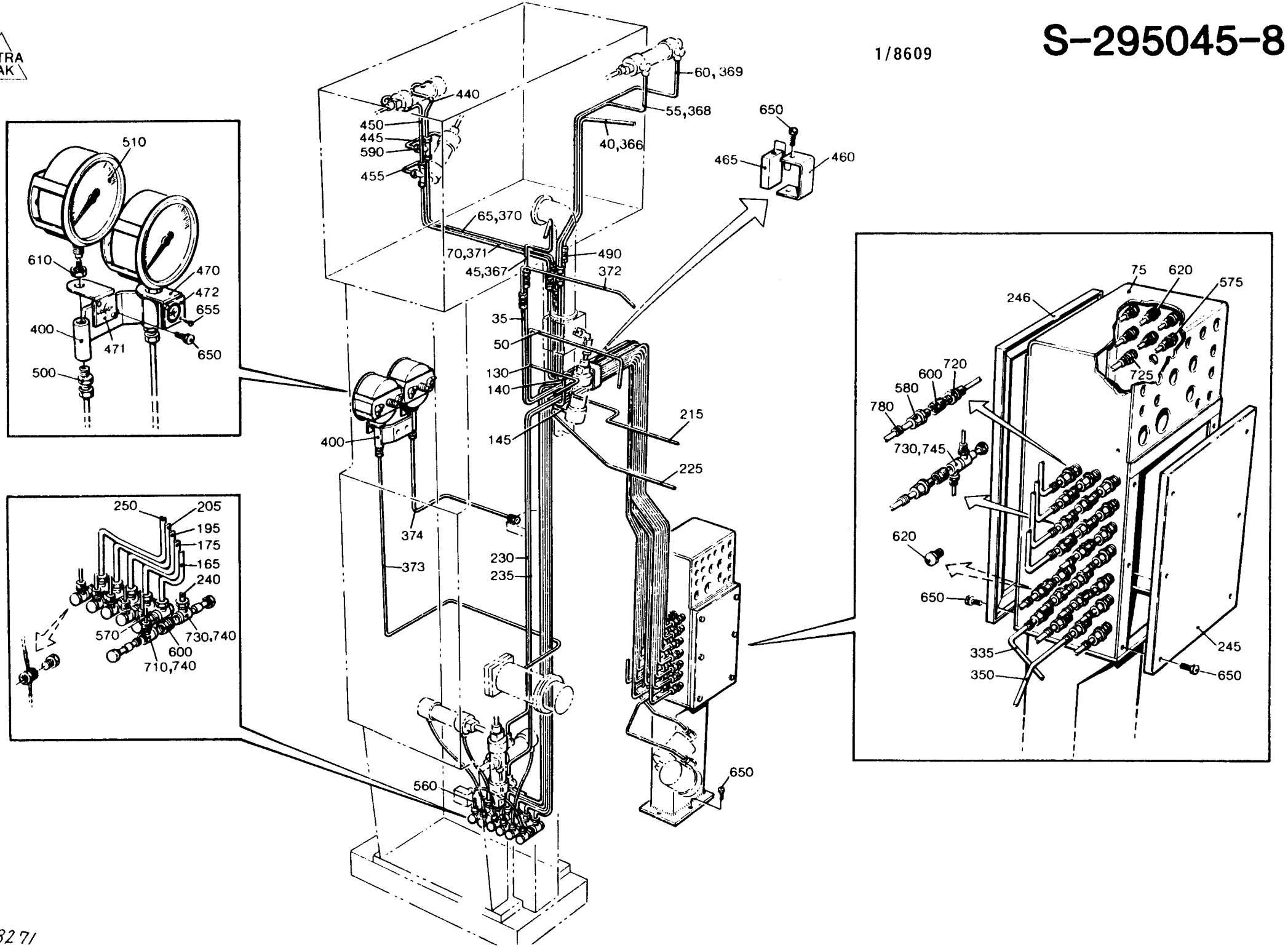

AM 8271

LAST ALTERATION: AM 8116 85-08-21
648111-060V
AM 6746
84-05-07

POS	VAR	PART NUMBER	SP	EH	QTY	DESCRIPTION
	-0101	S- 469074-SHEET	-1			===ASSEMBLY DRAWING===
010	-0101	469979	-		1	HOLDER
014	-0101	491127	-		1	BRACKET
015	-0101	491148	-		1	BRACKET
020	-0101	23580	-		1	KNOB
030	-0101	23582	-		1	SPRING
040	-0101	23583	S		1	GUIDE
050	-0101	23584	S		2	SCREW
070	-0101	24354	-		2	WASHER
080	-0101	24355	S		2	PIN
090	-0101	24356	S		5	BLOCK
100	-0101	111543	S		2	CONE
110	-0101	245210	-		1	BODY
120	-0101	271211	-		2	WASHER
130	-0101	271654	-		1	RETAINING RING
170	-0101	272467	-		1	CLAMP
180	-0101	456119	-		1	SHAFT
190	-0101	469981	-		1	BRACKET
200	-0101	456121	-		1	ARM
220	-0101	491149	S		1	SPRING
300	-0101	90044-0104	P		1	INDUCTIVE TRANSMITTER
310	-0101	90214-0035	P		3	BALL BEARING
320	-0101	90287-0009	S		1	SPRINGLOADED SCREW
500	-0101	311103-0350	-		1	CYLINDRICACPR6M6X14RFR
520	-0101	312105-0331	-		1	SCREW M6S5X20 A4 80
530	-0101	312105-0368	-		2	SCREW M6S6X16RFR
540	-0101	312105-0370	-		1	SCREW M6S6X20RFR
550	-0101	312115-0228	-		2	SCREW 3X16 A4 80
560	-0101	312115-0366	-		5	SCREW 6X12 A4 80
570	-0101	312318-0283	-		5	GRUB SCREW SK6SS4X4RFR
580	-0101	312318-0285	-		2	GRUB SCREW SK6SS4X6RFR
590	-0101	312318-0291	-		2	GRUB SCREW SK6SS4X12RFR
600	-0101	312605-0312	-		2	NUT M6M4RFR
610	-0101	312605-0314	-		1	NUT M6M5RFR
615	-0101	312605-0326	-		1	NUT M6M20RFR
620	-0101	315105-0153	-		3	WASHER BRB6,4X12RFR
630	-0101	321127-0100	-		2	BUSHING 10/13X10

TETRA PAK

3/8609

S-469074-1

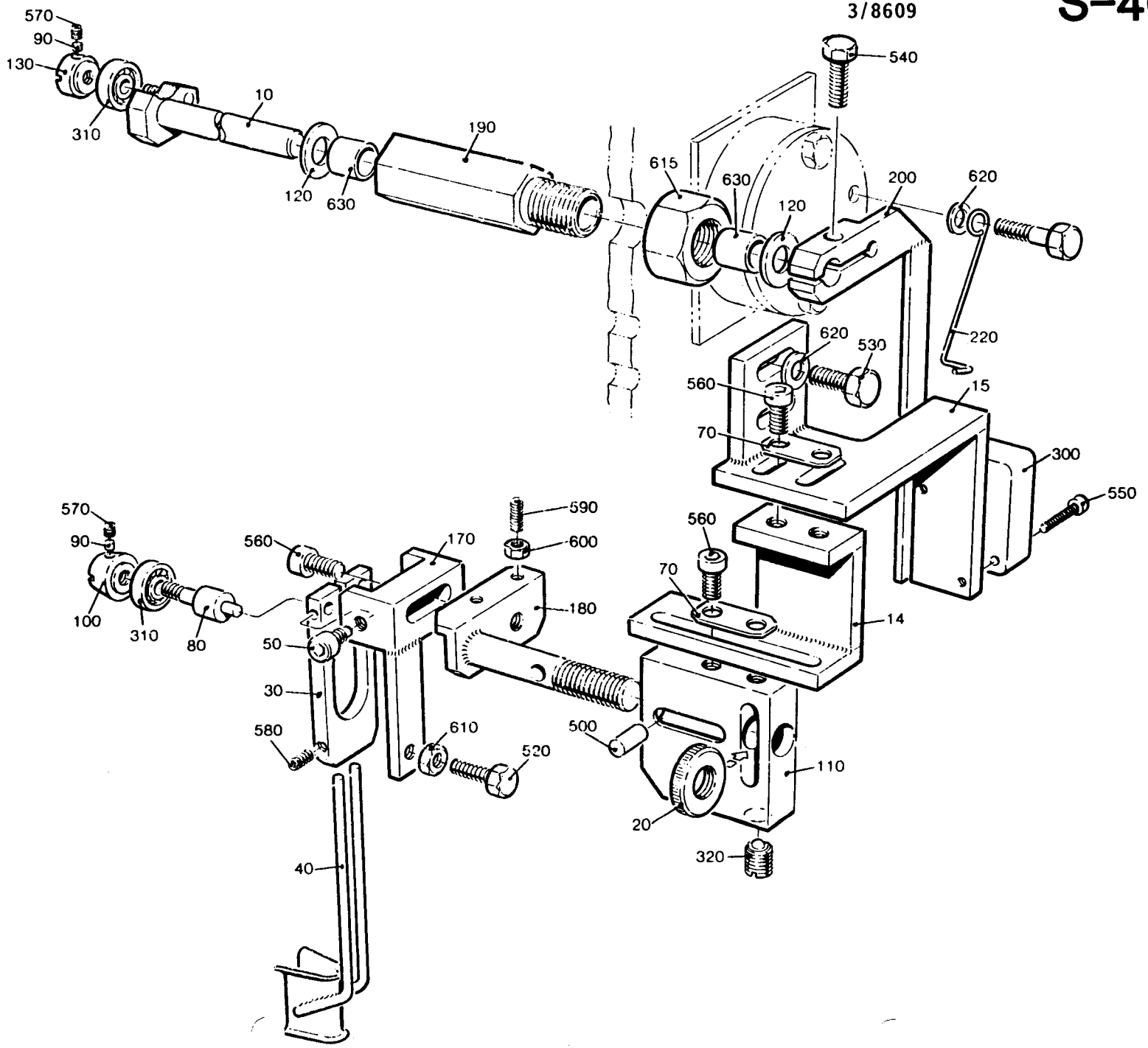

LAST ALTERATION: AM 7937 85-06-03
648111-060V
AM 6800
84-05-11

GROUP	VOLUME	VOLUME	VOLUME	VOLUME
-0201	V0125	-	-	-
-0202	V0250	V0236	V0200	V0180
-0203	200ML SLIM	-	-	-

POS	VAR	PART NUMBER	SP	EH	QTY	DESCRIPTION
F010	ALL	SP- 499255-0101	-		1	SEAL KIT
070	-0202	257330	-		1	PRESSURE ROLLER
120	-0201	272479	-		1	PRESSURE ROLLER
	-0203				1	
020	ALL	267494	-		1	COIL HEATER
050	ALL	12242-0003	-		2	GASKET
060	ALL	230551	-		2	GASKET
080	ALL	266610	-		2	GASKET
110	ALL	271461	-		1	GASKET
150	ALL	295388	-		1	GASKET
153	ALL	441721	-		1	GASKET
160	ALL	90206-0031	-		1	HEATING ELEMENT
180	ALL	90206-0070	-		1	HEATING ELEMENT
		90206-0326	R		0	* CONNECTION BOX
200	ALL	315204-0214	-		1	O-RING 17,3X2,4VITON
210	ALL	90242-0084	-		2	O-RING
220	ALL	90415-0316	-		1	FILTER
230	ALL	90424-0304	-		1	GASKET
240	ALL	315204-0218	-		1	O-RING 26,2X3VITON
260	ALL	315204-0223	-		2	O-RING 39,2X3VITON

LAST ALTERATION: AM 9199 86-05-27
648111-060V
AM 6879
84-06-06

POS	VAR	PART NUMBER	SP	EH	QTY	DESCRIPTION
	-0101	S- 469374-SHEET	-1			===ASSEMBLY DRAWING===
	-0101					
010	-0101	295463	-		1	CABLE DUCT
020	-0101	469343	-		1	CABLE DUCT
030	-0101	469344	-		1	CABLE DUCT
040	-0101	469345	-		1	CABLE DUCT
050	-0101	469346	-		1	CABLE DUCT
060	-0101	469347	-		1	LID
070	-0101	295465-0002	-		1	LID
080	-0101	295782	-		1	CABLE DUCT
090	-0101	295783	-		1	LID
100	-0101	469348	-		1	COVER
110	-0101	469349	-		1	CABLE DUCT
120	-0101	469350	-		1	LID
130	-0101	469351	-		1	LID
140	-0101	441309	-		1	CONDUIT
150	-0101	441310	-		1	CONDUIT
160	-0101	441311	-		1	CONDUIT
170	-0101	441312	-		1	CONDUIT
180	-0101	469352	-		1	LID
190	-0101	469353	-		1	LID
200	-0101	469354	-		1	LID
210	-0101	271508	-		1	BRACKET
220	-0101	272945	-		7	LOCK
230	-0101	295466	-		15	LOCK
240	-0101	295819-0003	-		1	LID
250	-0101	469355	-		1	LID
300	-0101	90002-0009	-		2	BLANK-OFF PLUG
310	-0101	90002-0013	-		2	BLANK-OFF PLUG
320	-0101	90015-0020	-		21	BUSHING
330	-0101	90015-0021	-		2	BUSHING
340	-0101	90015-0023	-		1	BUSHING
350	-0101	90015-0024	-		1	BUSHING
360	-0101	90064-0052	-		1	PUSH BUTTON
370	-0101	90066-0013	-		1	PUSH BUTTON BOX
380	-0101	90089-0003	-		1	SLEEVE
390	-0101	90099-0011	-		1	NUT
500	-0101	312105-0362	-		6	SCREW M6S6X8RFR
510	-0101	312105-0364	-		10	SCREW M6S6X10RFR
520	-0101	312105-0366	-		21	SCREW M6S6X12RFR
530	-0101	312125-0323	-		2	SLOTTED HEMCS5X8RFR
540	-0101	312605-0316	-		23	NUT M6M6RFR
550	-0101	312705-0316	-		25	SCREW CAP MHM 6 A2

POS	VAR	PART NUMBER	SP	EH	QTY	DESCRIPTION
560	-0101	315105-0153	-		1	WASHER BRB6,4X12RFR
565	-0101	352100-0112	-		1	CABLE GLANR.22,5-15
570	-0101	352101-0107	-		1	LEAD-IN G 37
580	-0101	352103-0101	-		8	CABLE GLANR.15,2/4-8
590	-0101	352103-0106	-		3	CABLE GLANR.18,6/5-10
600	-0101	352103-0111	-		2	CABLE GLANR.PR22,5/10-14
610	-0101	352103-0116	-		1	CABLE GLANR.28,3/13-18
620	-0101	352103-0121	-		1	CABLE GLANR.37,0/18-25

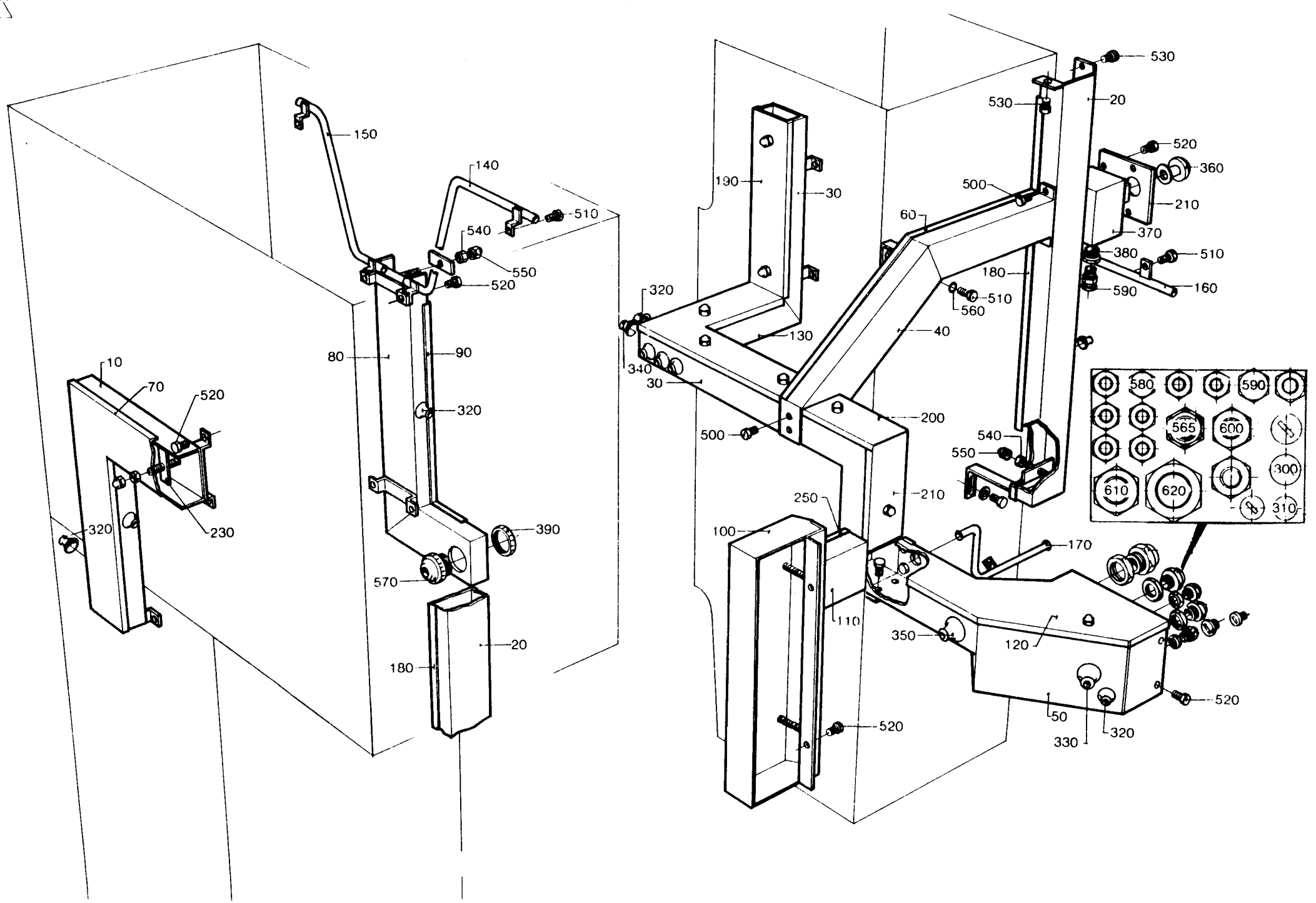
150
140
510
540
550
520
80
90
320
10
70
520
320
230
390
570
20
180
530
530
20
520
360
190
30
500
210
60
370
380
510
180
590
160
320
560
510
130
40
340
30
580
590
565
600
200
500
540
550
300
610
620
310
250
210
100
170
110
350
120
520
50
330
320
520

LAST ALTERATION: AM 10157 87-02-07
648111-060V
AM 6746
84-05-07

GROUP	VOLUME	VOLUME	VOLUME	VOLUME
-0201	V0125	-	-	-
-0202	V0250	V0236	V0200	V0180
-0203	200ML SLIM	-	-	-

POS	VAR	PART NUMBER	SP	EH	QTY	DESCRIPTION
	-0201	S- 456836-SHEET	-4			===ASSEMBLY DRAWING===
	-0202		-4			
	-0203		-4			
040	-0201	490896	-		1	CONTAINER
	-0203				1	
040	-0202	469987	-		1	CONTAINER
120	-0201	295300	-		1	FLUSH PIPE
	-0203				1	
120	-0202	295301	-		1	FLUSH PIPE
160	-0201	491645	-		1	PIPE
560	-0201	315204-0224	P		1	O-RING 2X3 VITON
	-0203				1	
560	-0202	315204-0303	P		1	O-RING 5X3 VITON
010	ALL	456901	-		1	CLEANING PIPE
020	ALL	456858	-		1	PIPE
030	ALL	456859-0002	-		1	PIPE
060	ALL	456860	-		1	PIPE
070	ALL	12242-0001	P		2	GASKET
080	ALL	12242-0002	P		1	GASKET
090	ALL	12242-0003	P		4	GASKET
100	ALL	209181	-		1	LID
110	ALL	209183	-		1	RING
140	ALL	456857	-		1	BRACKET
150	ALL	456902	-		1	PIPE
200	ALL	90044-0104	-		1	PROXIMITY SWITCH
210	ALL	90155-0008	-	MM	200	CHAIN
220	ALL	90187-0051	-		1	VALVE
230	ALL	90330-0028	-		1	NIPPLE
500	ALL	312105-0364	-		3	SCREW M6S6X10RFR
520	ALL	312105-0455	-		2	SCREW M6S8X30RFR
530	ALL	312125-0228	-		2	SLOTTED HEMCS3X16RFR
540	ALL	315105-0153	-		1	WASHER BRB6,4X12RFR
550	ALL	315105-0165	-		2	WASHER BRB8,4X16RFR
580	ALL	342803-0103	-		2	NUT 38
590	ALL	342812-0103	-		2	SLEEVE ANSL.38

S-456836-4

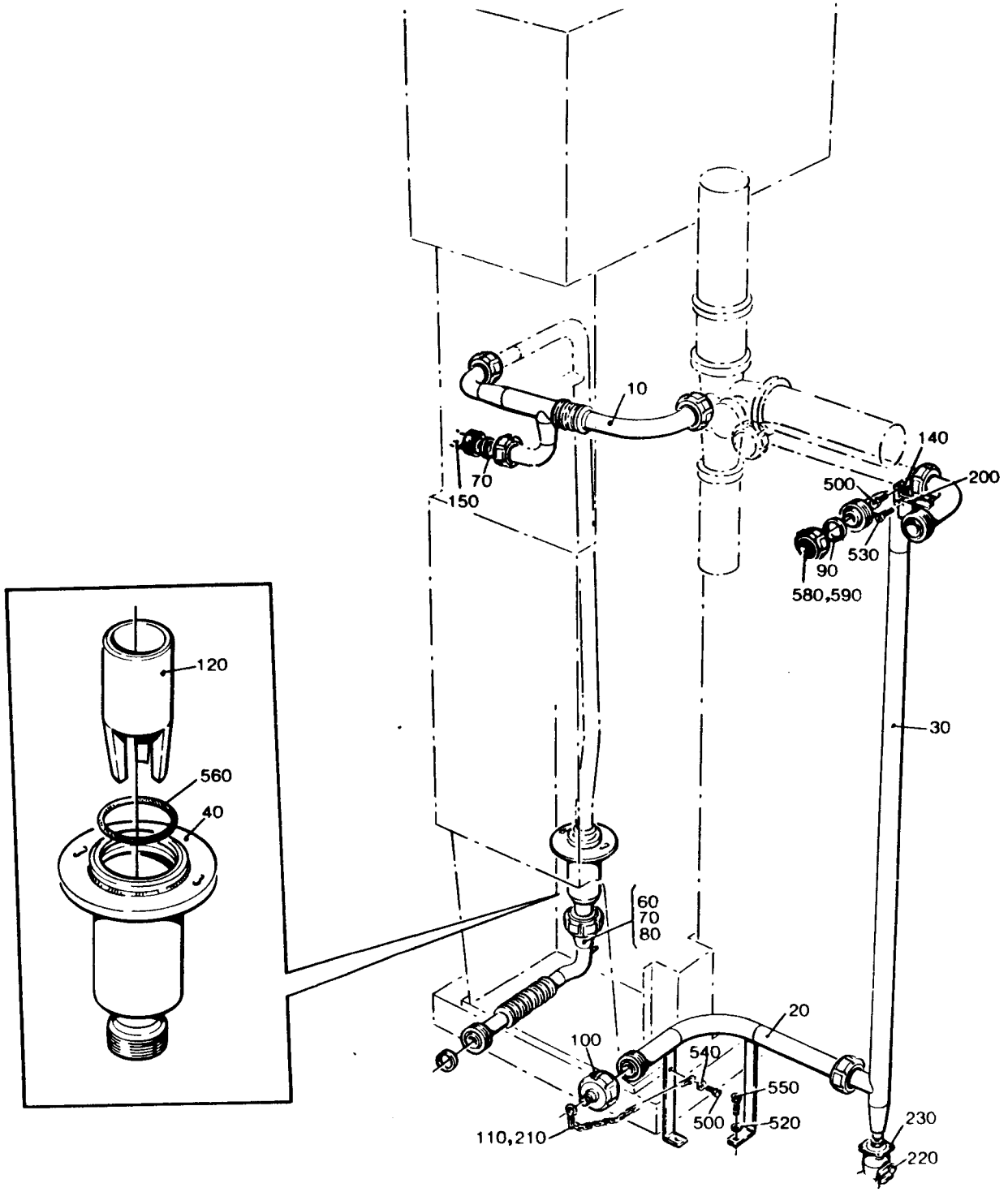
10
70
150
140
500
200
530
90
580,590
120
560
40
30
60
70
80
20
100
540
550
500
520
110,210
230
220

LAST ALTERATION: AM 8167 85-09-04
648111-060V
AM 7939
85-05-13

GROUP PULL-TAB
VERSION

-0101 MPTAB
-0102 UPTAB

POS	VAR	PART NUMBER	SP	EH	QTY	DESCRIPTION
	-0101	S- 491083-SHEET		-1		===ASSEMBLY DRAWING===
	-0102			-1		
010	-0102	491019	-		1	PIPE
020	-0101	491086	-		1	BRACKET
030	-0102	491020	-		1	PIPE
040	-0101	491087	-		1	PIPE
050	-0101	491088	-		1	PIPE
060	ALL	33577	-		1	BRACKET
300	ALL	90005-0019	-		2	WASHER
310	ALL	90043-0067	S		2	PRESSURE GAUGE
320	ALL	90330-0105	-		2	NUT
330	ALL	90330-0042	-		2	BUSHING
500	ALL	312105-0366	-		2	SCREW M6S6X12RFR
510	ALL	312105-0449	-		2	SCREW M6S8X16RFR
520	ALL	342797-0122	-		4	BANJO CONNSINGEL 6-1/4
530	ALL	342980-0304	-		4	BANJO CONN SINGEL 1/4

TETRA PAK

1/8506 **S-491083 -1**

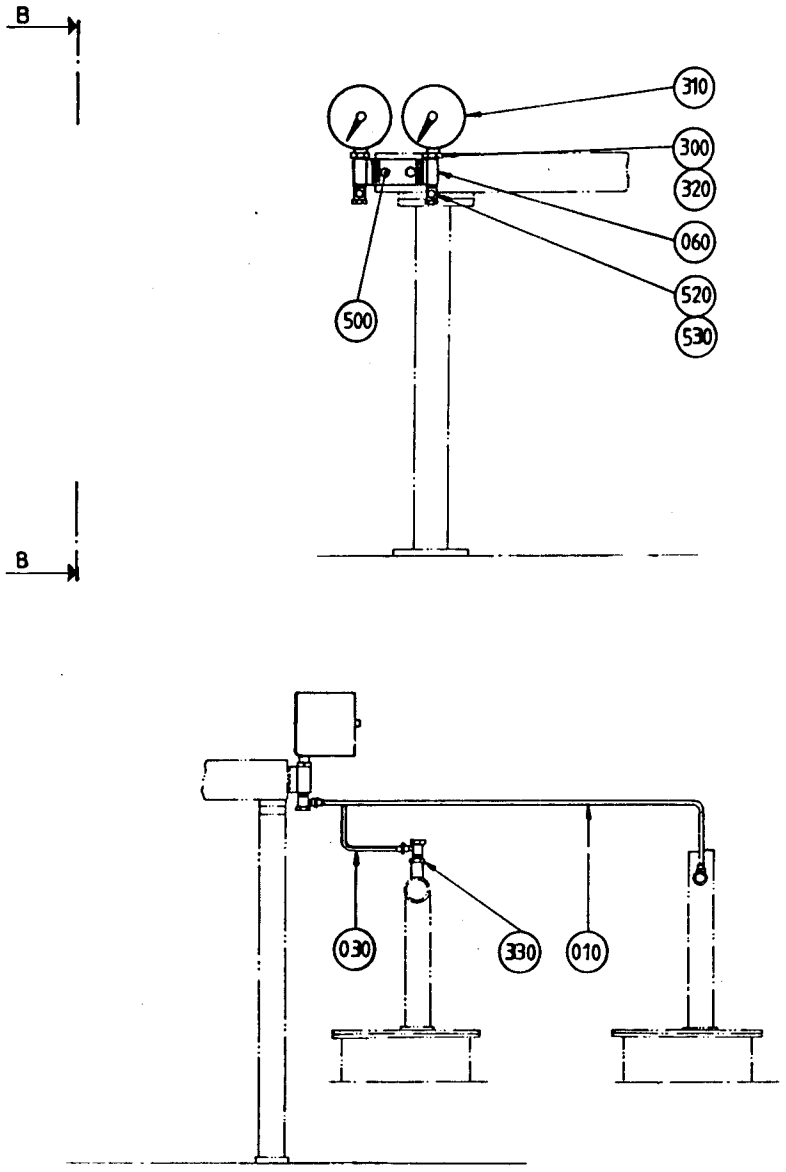

VY B-B
VIEW

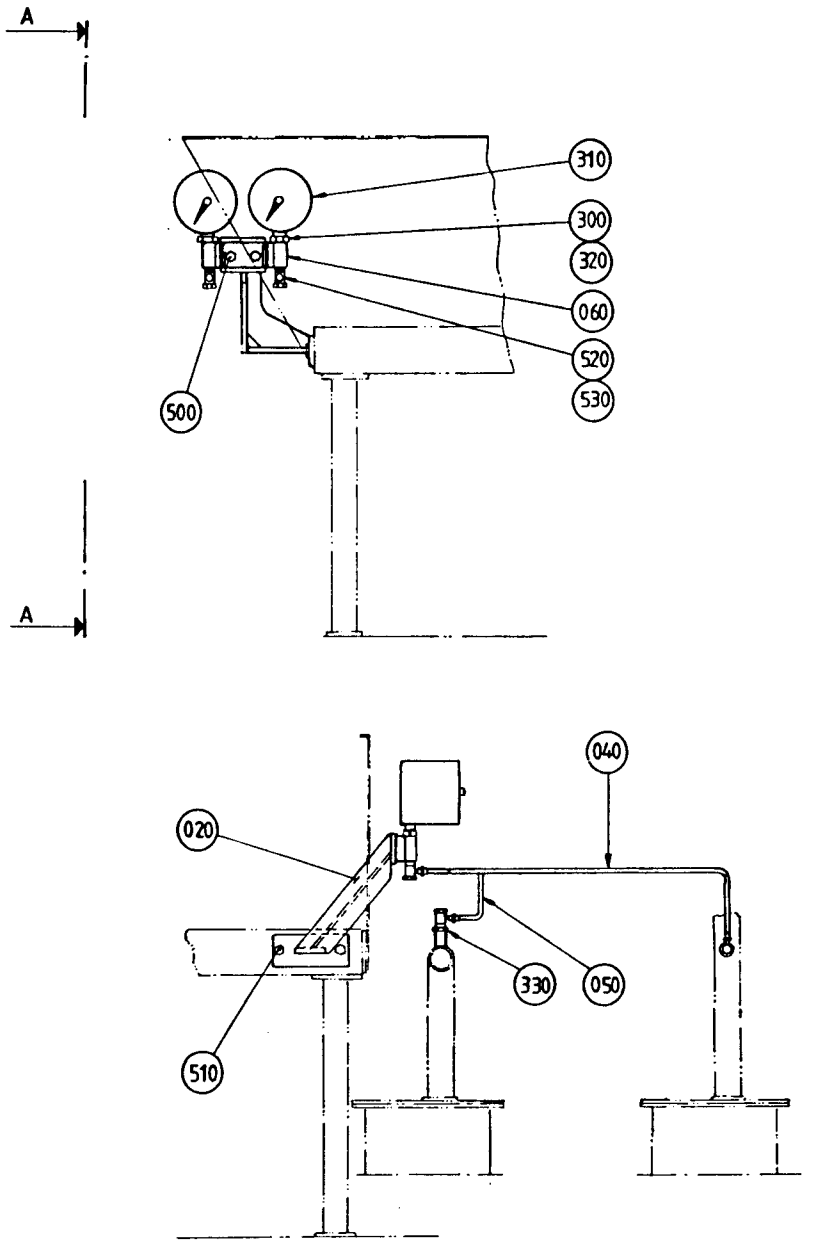

VY A-A
VIEW

LAST ALTERATION: AM 9415 86-10-17
648111-070V
AM 8465
85-12-18

GROUP	VOLUME	VOLUME	VOLUME	VOLUME
-0301	V0125	-	-	-
-0302	V0250	V0236	V0200	V0180
-0303	200ML SLIM	-	-	-

POS	VAR	PART NUMBER	SP	EH	QTY	DESCRIPTION
F010	ALL	SP- 499255-0101	-		1	SEAL KIT
070	-0302	257330	-		1	PRESSURE ROLLER
120	-0301	272479	-		1	PRESSURE ROLLER
	-0303				1	
020	ALL	441804	-		1	COIL HEATER
050	ALL	12242-0003	-		2	GASKET
060	ALL	230551	-		2	GASKET
080	ALL	531742	-		2	GASKET
110	ALL	271461	-		1	GASKET
150	ALL	295388	-		1	GASKET
153	ALL	441721	-		1	GASKET
160	ALL	90206-0031	-		1	HEATING ELEMENT
180	ALL	90206-0070	-		1	HEATING ELEMENT
200	ALL	315204-0214	-		1	O-RING 17,3X2,4VITON
210	ALL	90242-0084	-		2	O-RING
220	ALL	90415-0316	-		1	FILTER
230	ALL	90424-0304	-		1	GASKET
240	ALL	315204-0218	-		1	O-RING 26,2X3VITON
260	ALL	315204-0223	-		2	O-RING 39,2X3VITON

1 START UP KIT

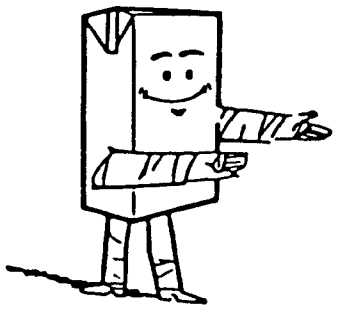

SPC 6481-51/52
MACHINE BODY

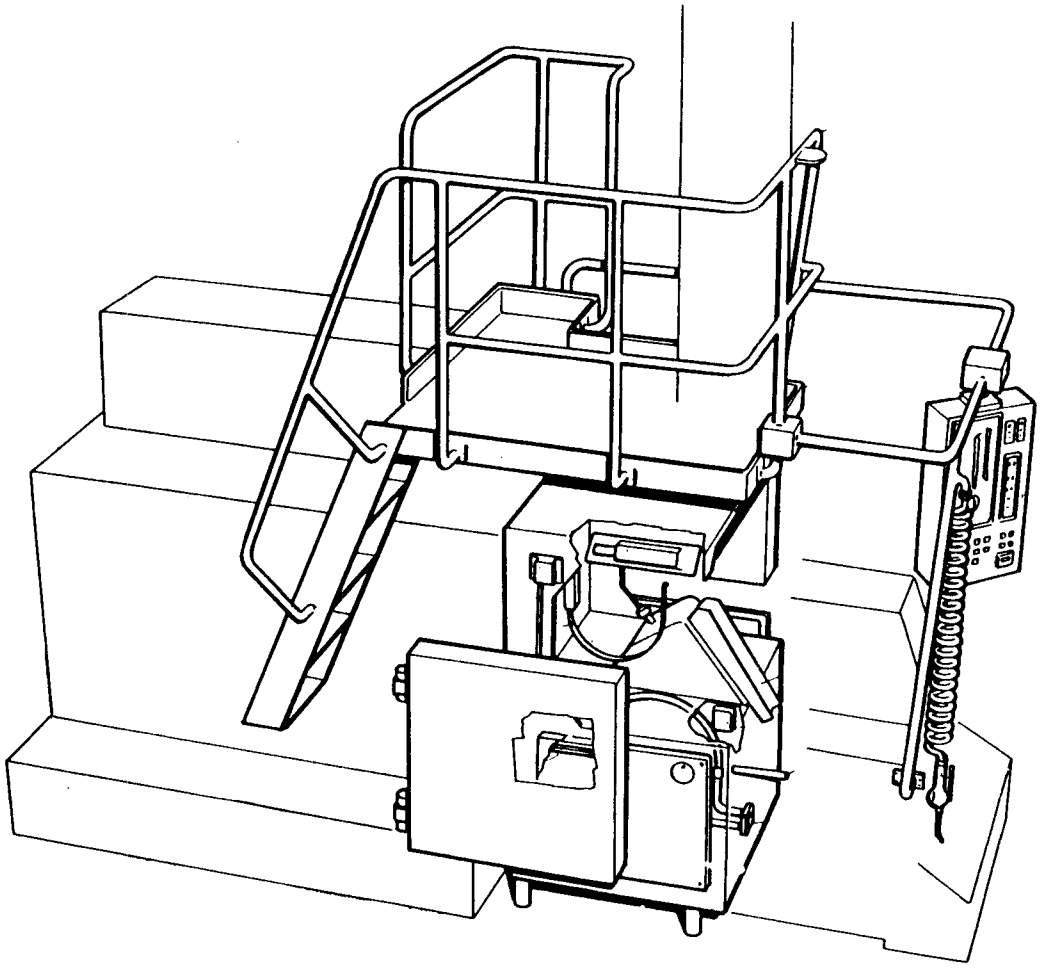

B-648102-

TETRA PAK
SERVICE

LAST ALTERATION: AM 6929 84-10-08
648151 648152
AM 6944
84-07-05

GROUP FILLMACHINE

-0601 B9
-0602 AB9

POS	VAR	PART NUMBER	SP	EH	QTY	DESCRIPTION
	-0601	S- 648102-SHEET		-6		===ASSEMBLY DRAWING===
	-0601			-7		
	-0602			-8		
	-0602			-9		
F010	ALL	C- 456100-010V	-		1	MACHINE BODY
F020	ALL	C- 441534-0101	-		2	LIGHT FIXTURE
F030	ALL	C- 456827-0101	-		1	CONNECTION BOX
F040	ALL	C- 456180-010V	-		1	DROP
F050	ALL	C- 256973-030V	-		2	TRANSMISSION
F060	ALL	C- 271562-040V	-		1	TUBE ASSEMBLY
F070	ALL	C- 271261-040V	-		1	CLEANING SYSTEM
F080	ALL	C- 271533-030V	-		1	JUNCTION BLOCK
F090	ALL	C- 271442-0301	-		1	DOOR
F100	ALL	C- 271443-0301	-		1	DOOR
F110	ALL	C- 256665-0201	-		1	COVER
F120	ALL	C- 256665-0202	-		1	COVER
F130	ALL	C- 271414-0201	-		1	AIR JET PISTOL
F140	ALL	C- 295026-020V	-		1	CONTROL PANEL
F150	-0601	C- 456457-010V	-		1	PLATFORM
F160	-0602	C- 456458-010V	-		1	PLATFORM
F170	-0602	C- 441535-0102	-		1	LIGHT FIXTURE
F180	-0601	C- 456459-010V	-		1	RAILING
F190	-0602	C- 456460-010V	-		1	RAILING
F200	-0602	C- 469496-0101	-		1	COVER PLATE
F210	-0602	C- 469762-0101	-		1	LADDER

S-648102-6

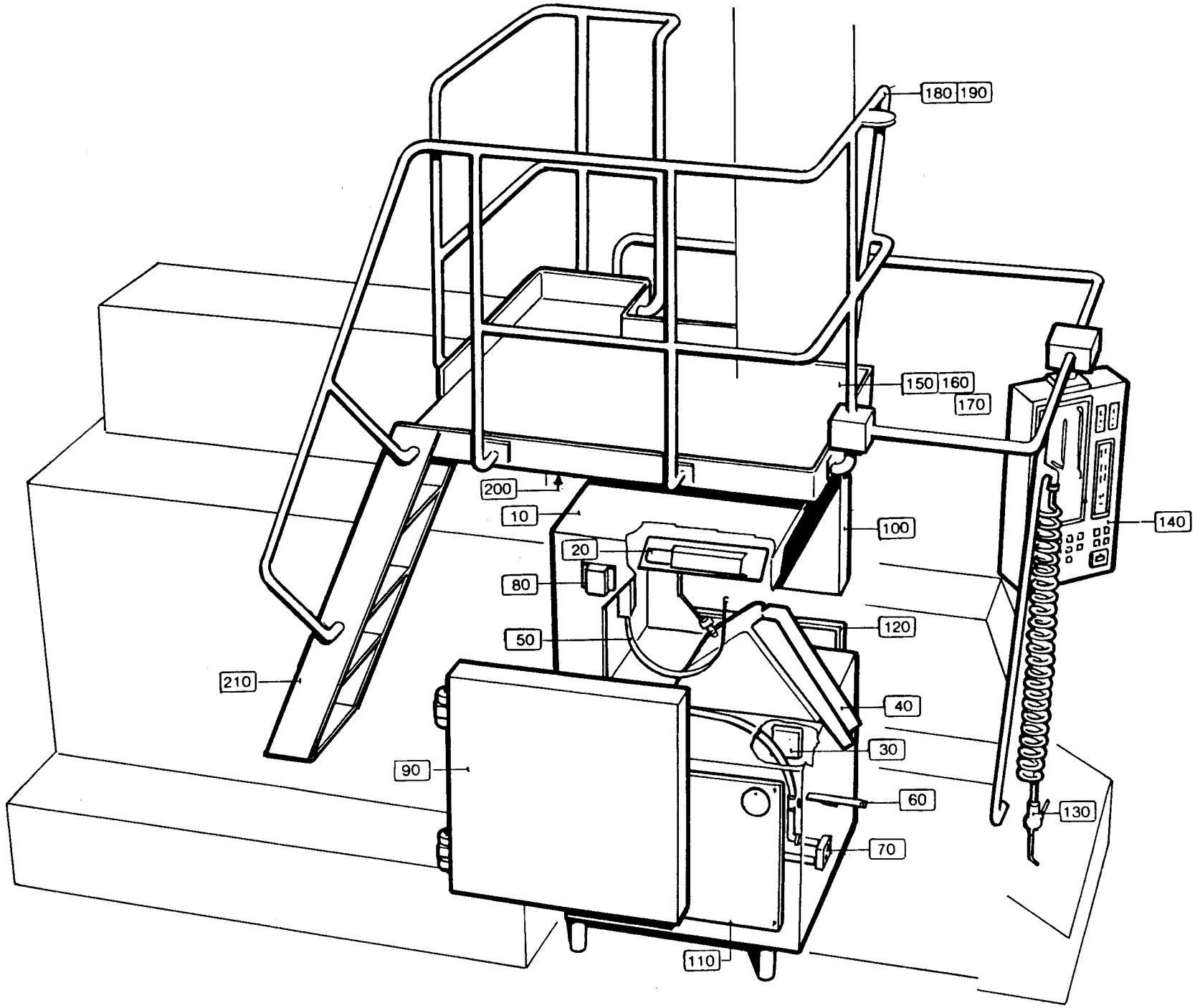
180
190
150
160
170
200
10
100
140
20
80
120
50
210
40
30
90
60
130
70
110

LAST ALTERATION: AM 8636 86-01-21
648151-110V 648152-110V

GROUP FILLMACHINE

-0701 B9
-0702 AB9

POS	VAR	PART NUMBER	SP	EH	QTY	DESCRIPTION
	-0701	S- 648102-SHEET		-6		===ASSEMBLY DRAWING===
	-0701			~~-7~~		
	-0702			~~-8~~		
	-0702			~~-9~~		
F010	ALL	C- 456100-020V	-		1	MACHINE BODY
		C- 441534-0101				. LIGHT FIXTURE
		C- 456827-0101				. CONNECTION BOX
F040	ALL	C- 456180-010V	-		1	DROP CHUTE
F050	ALL	C- 256973-030V	-		2	TRANSMISSION
F060	ALL	C- 271562-050V	-		1	PIPE WORK
		C- 271261-040V				. CLEANING SYSTEM
		C- 491650-0101				. DISTRIBUTOR BLOCK
F090	ALL	C- 271442-0301	-		1	SIDE DOOR LEFT
F100	ALL	C- 271443-0301	-		1	SIDE DOOR RIGHT
F110	ALL	C- 256665-0201	-		1	COVER
F120	ALL	C- 256665-0202	-		1	COVER
F130	ALL	C- 271414-0201	-		1	AIR JET PISTOL
F140	ALL	C- 295026-020V	-		1	CONTROL PANEL
		C- 67062-010V				. POTENTIOMETER
		~~C- 67054-0201~~				~~. . COMPONENT LIST~~
F150	-0701	C- 456457-010V	-		1	PLATFORM
F160	-0702	C- 456458-010V	-		1	PLATFORM
		C- 441535-0102				. LIGHT FIXTURE
F180	-0701	C- 456459-010V	-		1	RAILING
F190	-0702	C- 456460-010V	-		1	RAILING
F200	-0702	C- 469496-0101	-		1	COVER PLATE
F210	-0702	C- 469762-0101	-		1	LADDER

TETRA PAK

1/8501

S-648102-6

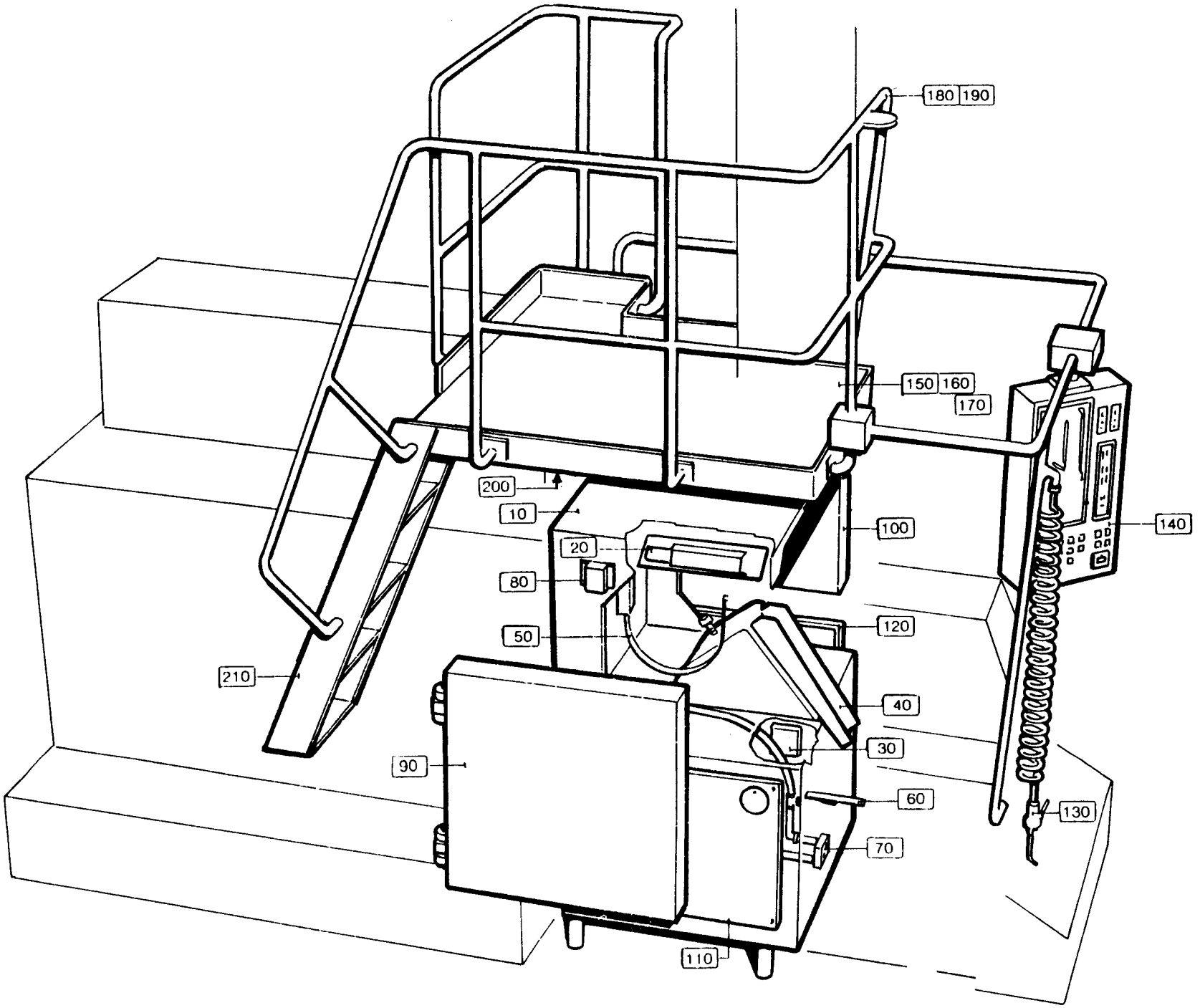

LAST ALTERATION: AM 7944 85-05-14
648102-060V
AM 6747
84-05-04

GROUP SEALING SYSTEM

-0301 TPC
-0302 IH

POS	VAR	PART NUMBER	SP	EH	QTY	DESCRIPTION
	-0301 -0302	S- 256973-SHEET	-5 -8			===ASSEMBLY DRAWING===
050	-0301	32079	P		1	WASHER
080	-0301	256976	S		2	PLATE
090	-0301	256977-0001	S		2	WASHER
100	-0301	256977-0002	S		1	WASHER
120	-0301	256977-0003	S		1	WASHER
510	-0301	312105-0370	-		2	SCREW M6S6X20RFR
550	-0301	353102-0182	-		2	CABLE SHOEYAEV 2CL-M64
010	ALL	256975	-		1	GUARD
020	ALL	491085	P		1	CABLE
030	ALL	456845	S		1	BRACKET
035	ALL	6427	S		2	WASHER
040	ALL	28509	P		1	WASHER
130	ALL	271846	P		1	INSULATION NUT
140	ALL	271848	P		1	SCREW
150	ALL	456846	S		1	CLIP
160	ALL	295056	P		1	WASHER
490	ALL	312105-0295	-		2	SCREW M6S4X20 A4 80
500	ALL	312105-0364	-		2	SCREW M6S6X10RFR
520	ALL	312115-0368	-		3	SCREW 6X16 A4 80
540	ALL	315105-0153	-		5	WASHER BRB6,4X12RFR

TETRA PAK

2/8608

S-256973-5

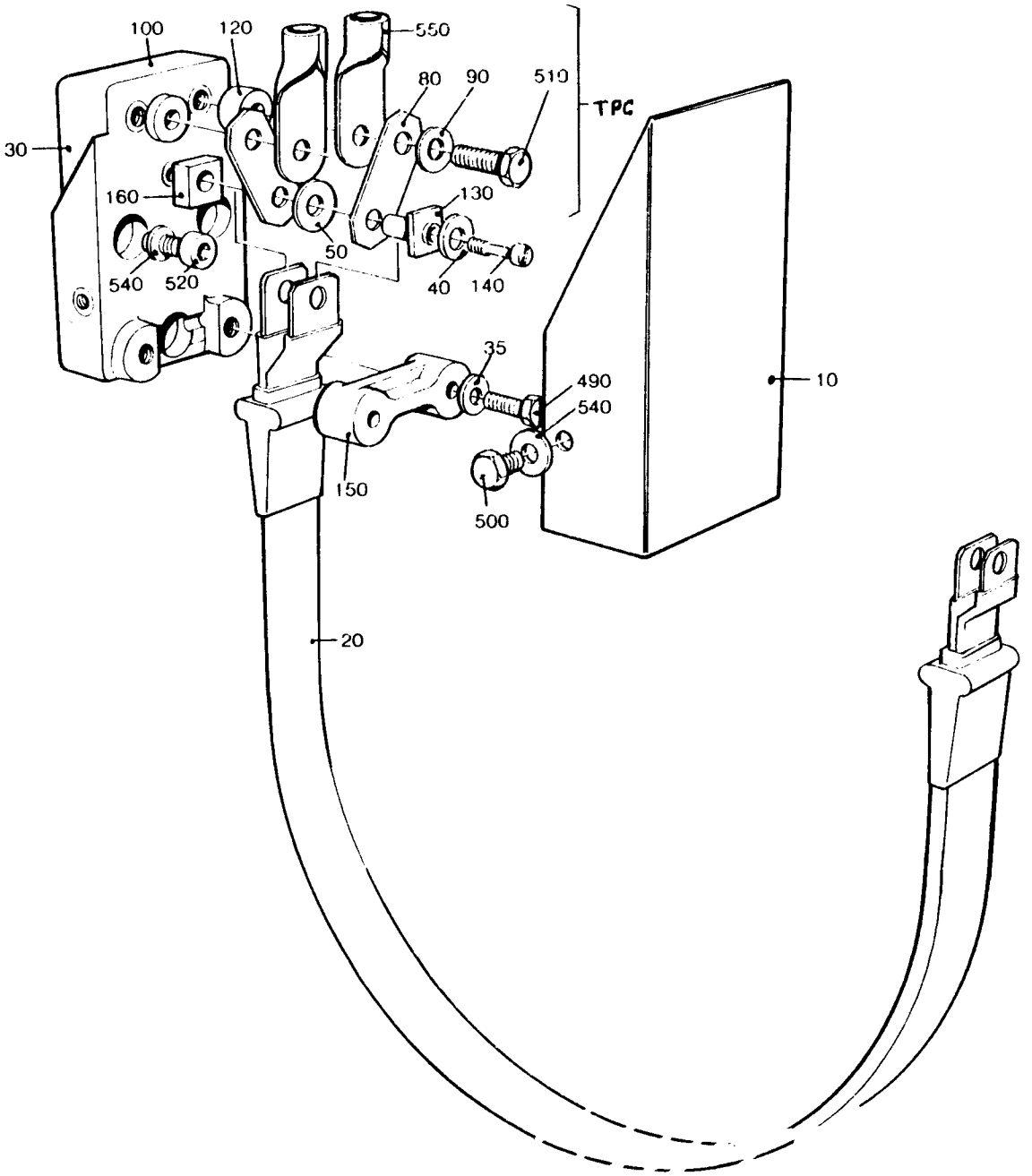

AM 79-14

LAST ALTERATION: AM 9367 86-06-11
648102-060V
AM 6742
84-05-10

GROUP FILLMACHINE

-0401 B9
-0402 AB9

POS	VAR	PART NUMBER	SP	EH	QTY	DESCRIPTION
	-0401	S- 271562-SHEET	~~-15~~			===ASSEMBLY DRAWING===
	-0401		-14			
	-0401		~~-15~~			
	-0401		~~-16~~			
	-0402		~~-13~~			
	-0402		-14			
	-0402		~~-15~~			
	-0402		~~-16~~			
F070	ALL	C- 271261-040V	-		1	CLEANING SYSTEM
F080	ALL	C- 271533-0301	-		1	JUNCTION BLOCK
630	-0401	90166-0118	-	M	12	HOSE
	-0402				11	
010	ALL	469086	-		1	PIPE
020	ALL	469087	-		1	PIPE
030	ALL	271742	-		1	PIPE
040	ALL	271743	-		1	PIPE
050	ALL	272346	-		1	PIPE
060	ALL	469133	-		1	PIPE
070	ALL	469132	-		1	PIPE
075	ALL	469131	-		2	INSERT
080	ALL	271621	-		1	INSERT
090	ALL	271622	-		1	INSERT
100	ALL	271623	-		1	INSERT
120	ALL	295986	-		1	HOLDER
130	ALL	456407	-		1	INSERT
310	ALL	90028-0001	S		5	CONE
320	ALL	90028-0020	S		23	CONE
330	ALL	90028-0021	S		6	CONE
340	ALL	90030-0051	S		1	PIPE CONNECTION
345	ALL	90030-0098	S		10	CONE
350	ALL	90030-0162	S		4	CONNECTION
352	ALL	90030-0172	S		10	NUT
355	ALL	90030-0200	-		2	PIPE JOINT
360	ALL	90032-0014	-		1	JUNCTION BLOCK
370	ALL	90032-0026	-		1	JUNCTION BLOCK
390	ALL	90032-0030	-		1	JUNCTION BLOCK
391	ALL	90032-0031	-		1	JUNCTION BLOCK
400	ALL	90032-0038	-		2	BLOCK
410	ALL	90032-0039	-		5	BLOCK
420	ALL	90090-0008	S		2	STEEL BALL
430	ALL	90092-0052	S		10	VALVE

POS	VAR	PART NUMBER	SP	EH	QTY	DESCRIPTION
440	ALL	90092-0053	S		13	VALVE
450	ALL	90134-0003	S		5	BUSHING
470	ALL	90134-0030	S		4	SLEEVE
480	ALL	90134-0031	S		7	SLEEVE
490	ALL	90134-0034	S		11	NIPPLE
500	ALL	90134-0038	S		9	BUSHING
510	ALL	90134-0039	S		24	BUSHING
520	ALL	90134-0052	S		1	PLUG
530	ALL	90136-0002	S		1	PLUG
534	ALL	90148-0037	S		2	HOSE
536	ALL	90148-0038	S		2	HOSE
540	ALL	90151-0001	-	M	2,2	PIPE
550	ALL	90266-0019	-	MM	7000	PIPE
560	ALL	90165-0002	-		2	CLIP
580	ALL	90165-0007	-		2	CLIP
590	ALL	90165-0022	-		8	CLIP
600	ALL	90165-0023	-		6	CLIP
610	ALL	90166-0108	-	MM	3300	HOSE
620	ALL	90166-0109	-	MM	7000	HOSE
640	ALL	90166-0132	-	M	4	HOSE
641	ALL	90166-0133	-	M	11	HOSE
650	ALL	90266-0006	-	MM	3800	TUBE
790	ALL	312105-0289	-		2	SCREW M6S4X10 A4 80
800	ALL	312105-0295	-		8	SCREW M6S4X20 A4 80
810	ALL	312105-0297	-		12	SCREW M6S4X25 A4 80
820	ALL	312105-0372	-		2	SCREW M6S6X25RFR
830	ALL	312115-0289	-		2	SCREW S4X10 A4 80
840	ALL	312125-0287	-		16	SLOTTED HEMCS4X8RFR
850	ALL	312165-0325	-		2	SLOTTED HEMKFS5X10RFR
857	ALL	315105-0136	-		4	WASHER BRB4,3X8RFR
860	ALL	315234-0109	S		1	SEAL RING R1/8"
865	ALL	342727-0102	-		1	PIPE CONNEG6-LFZB
867	ALL	342736-0109	-		1	ELBOW COUP W-12
870	ALL	342767-0100	S		1	GROMMET R1/8
880	ALL	342797-0121	S		1	BANJO CONNSINGEL 6-1/8
890	ALL	342980-0303	S		1	BANJO CONN SINGEL 1/8"
900	ALL	352113-0101	-		4	RIBBON CLAR
910	ALL	359000-0400	-		22	MARKING CO2/4"0"
920	ALL	359000-0401	-		20	MARKING CO2/4"1"
930	ALL	359000-0402	-		14	MARKING CO2/4"2"
940	ALL	359000-0403	-		8	MARKING CO2/4"3"
950	ALL	359000-0404	-		2	MARKING CO2/4"4"
951	ALL	359000-0405	-		4	MARKING CO2/4"5"
952	ALL	359000-0406	-		4	MARKING CO2/4"6"
965	ALL	359000-0407	-		8	MARKING CO2/4"7"
990	ALL	359000-0771	-		16	MARKING CO2/4"V"

TETRA PAK

2/8608

S-271562-14

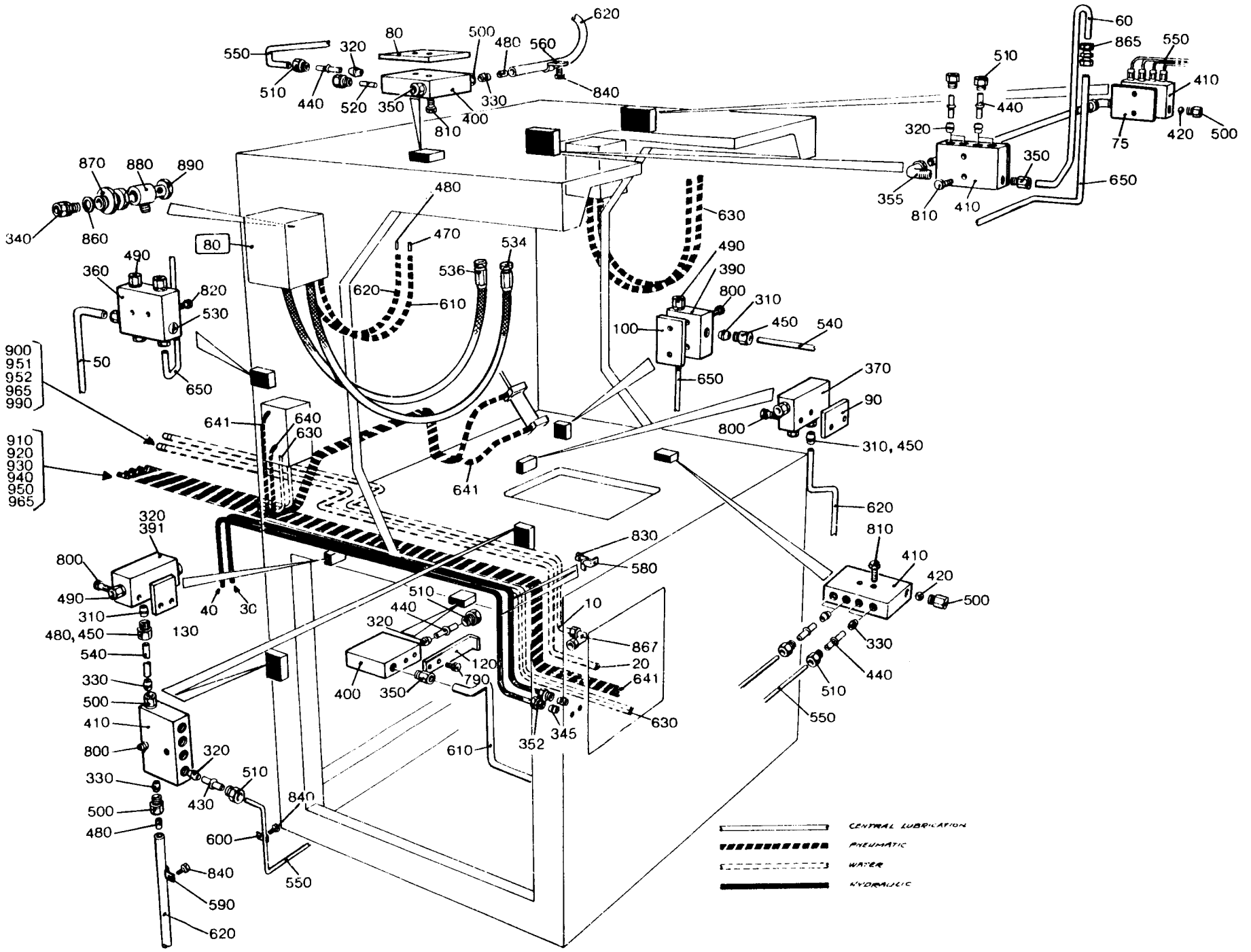

AM 8527

LAST ALTERATION: AM 9085 86-05-18
456100-010V
AM 6635
84-02-29

POS	VAR	PART NUMBER	SP	EH	QTY	DESCRIPTION
	-0101	S- 456827-SHEET	-1			===ASSEMBLY DRAWING===
010	-0101	456750	-		1	APPLIANCE BOX
020	-0101	456751	-		1	BRACKET
040	-0101	456753	-		1	SPACER
300	-0101	90094-0004	-		1	EN SUPPORT
310	-0101	90135-0021	-		6	EARTHING CLAMP
320	-0101	90194-0040	-		1	FLASH SIGN
500	-0101	312101-0368	-		2	SCREW M6S6X16FZB
520	-0101	312111-0372	-		2	SCREW MC6S6X25FZB
530	-0101	312111-0385	-		1	SCREW MC6S6X75FZB
533	-0101	312125-0364	-		2	SLOTTED HEMCS6X10RFR
535	-0101	315101-0153	-		2	WASHER BRB6,4X12FZB
540	-0101	352101-0102	-		4	LEAD-IN G 15,2
550	-0101	352103-0100	-		7	CABLE GLANR.15,2/2-6
555	-0101	352103-0101	-		4	CABLE GLANR.15,2/4-8
560	-0101	352103-0115	-		1	CABLE GLANR.PR28,3/7-16
570	-0101	353021-0110	-		37	CLAMP LÄMMA SAK 4PA
580	-0101	353032-0104	-		1	END PLATE AP 4 PA
590	-0101	353042-0002	-	MM	340	RAIL
600	-0101	359011-0202	-		12	LABEL (JORD)
610	-0101	359011-0801	-		2	LABEL BSFW 0-49

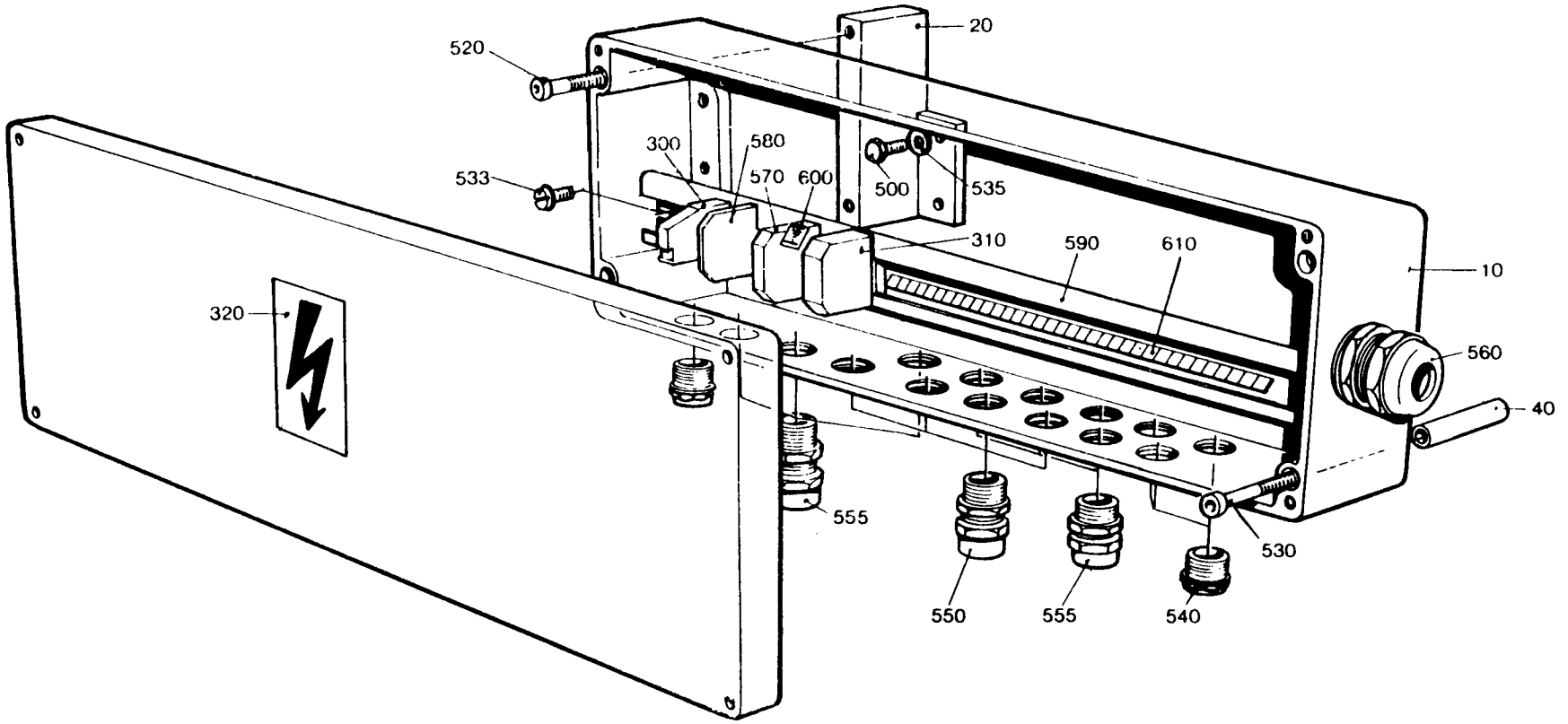
20
520
300
580
533
570
600
500
535
310
590
610
10
320
560
40
555
530
550
555
540

LAST ALTERATION: AM 6787 84-05-16
271562-040V
AM 6387
83-12-19

GROUP	FILLMACHINE	VOLUME	VOLUME	VOLUME	VOLUME
-0401	B9	V0284	V0250	V0236	V0200
	B9	V0187	V0180	-	-
-0402	B9	200ML SLIM	-	-	-
-0403	AB9	V0284	V0250	V0236	V0200
	AB9	V0187	V0180	-	-
-0404	AB9	V0125	V0100	-	-
-0405	AB9	200ML SLIM	-	-	-

POS	VAR	PART NUMBER	SP	EH	QTY	DESCRIPTION
	-0401	S- 271261-SHEET	-5			===ASSEMBLY DRAWING===
	-0402		-5			
	-0403		-5			
	-0404		-5			
	-0405		-5			
010	-0402	295985	-		1	FLUSH PIPE
	-0405				1	
010	-0401	271121	-		1	FLUSH PIPE
	-0403				1	
	-0404				1	
020	-0404	456129-0001	-		1	FLUSH PIPE
020	-0401	456129-0002	-		1	FLUSH PIPE
	-0402				1	
	-0403				1	
	-0405				1	
030	ALL	18542	S		2	WASHER
040	ALL	257190	-		2	JUNCTION BLOCK
050	ALL	272679	-		1	PIPE
060	ALL	295417	-		1	GASKET
070	ALL	295785	-		1	FLUSH PIPE
080	ALL	295978	-		1	PIPE
090	ALL	441664	-		1	BRANCH PIPE
100	ALL	441665	-		1	FLUSH PIPE
110	ALL	469146	-		1	HOSE
120	ALL	456128	-		1	FLUSH PIPE
130	ALL	469134	-		1	BRACKET
140	ALL	469135	-		1	HOLDER
300	ALL	90030-0151	S		3	CONNECTION
310	ALL	90330-0097	-		2	NIPPLE
320	ALL	90330-0099	-		2	ELBOW PIPE
330	ALL	90424-0032	S		2	NOZZLE
340	ALL	90424-0033	S		4	NOZZLE
350	ALL	90424-0035	S		4	NOZZLE
490	ALL	312105-0327	-		4	SCREW M6S5X12 A4 80
500	ALL	312105-0364	-		1	SCREW M6S6X10RFR
510	ALL	312105-0378	-		2	SCREW M6S6X40RFR

POS	VAR	PART NUMBER	SP	EH	QTY	DESCRIPTION
520	ALL	312105-0459	-		2	SCREW M6S8X40RFR
530	ALL	312115-0364	-		1	SCREW 6X10 A4 80
535	ALL	312605-0314	-		2	NUT M6M5RFR
538	ALL	315105-0146	-		6	WASHER BRB5,3X10RFR
540	ALL	315105-0153	-		4	WASHER BRB6,4X12RFR
550	ALL	315233-0113	S		6	SEAL RING R1/2"
560	ALL	342710-0115	S		1	REDUCER RBM16/8
570	ALL	342720-0114	S		3	PIPE CONNEGA-15-1/2"
580	ALL	342726-0109	S		1	PIPE CONNEG-12
590	ALL	342736-0114	S		1	ELBOW COUP W-15
600	ALL	342746-0114	S		1	T-PIECE T-15

TETRA PAK

2/8608

S-271261-5

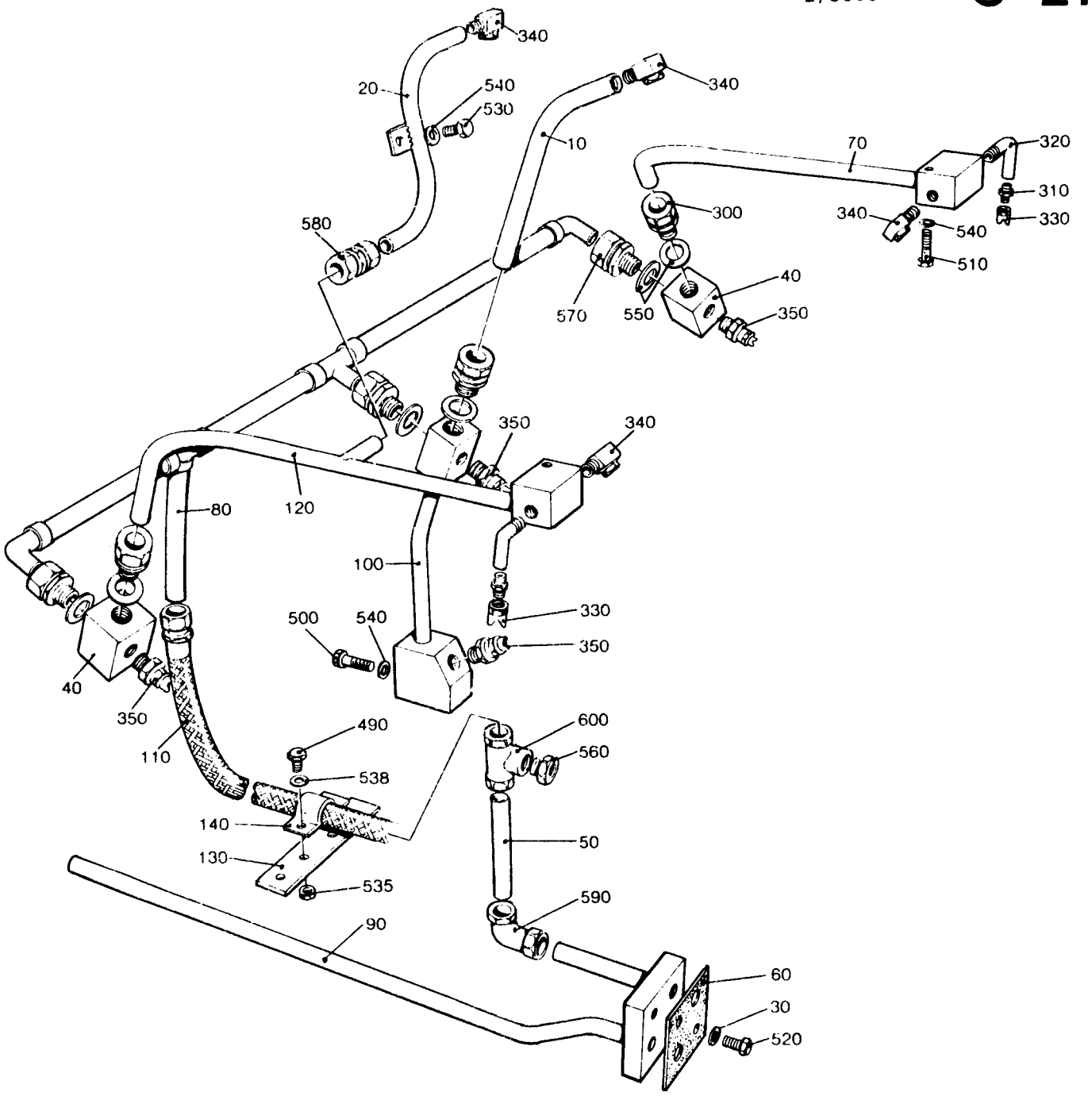

AM6787

LAST ALTERATION: AM 7345 85-01-24
271562-040V
AM 6742
84-05-10

POS	VAR	PART NUMBER	SP	EH	QTY	DESCRIPTION
	-0301	S- 271533-SHEET	-2			===ASSEMBLY DRAWING===
010	-0301	469077	-		1	DISTRIBUTOR BLOCK LEFT
020	-0301	271425	-		1	DISTRIBUTOR BLOCK RIGHT
030	-0301	271088	-		2	SPACER
040	-0301	271323	-		1	HOLDER
050	-0301	469001	-		1	HOLDER
060	-0301	469000	-		1	HOLDER
070	-0301	271343	-		2	HOLDER
080	-0301	271344	-		2	HOLDER
090	-0301	456561	-		1	BRACKET
100	-0301	469071	-		2	SPACER
300	-0301	90005-0005	S		6	WASHER
310	-0301	90005-0009	S		3	WASHER
315	-0301	90005-0045	-		2	WASHER
320	-0301	90028-0021	P		2	CONE
330	-0301	90030-0051	S		3	PIPE CONNECTION
340	-0301	90030-0052	S		2	PIPE CONNECTION
350	-0301	90030-0065	S		4	PIPE CONNECTION
352	-0301	90030-0075	S		1	PIPE CONNECTION
355	-0301	90134-0019	S		2	GLAND
360	-0301	90134-0031	S		2	SLEEVE
365	-0301	90134-0034	S		1	NIPPLE
370	-0301	90134-0038	-		2	BUSHING
490	-0301	312101-0372	-		2	SCREW M6S6X25FZB
500	-0301	312101-0385	-		2	SCREW M6S6X75FZB
510	-0301	312101-0388	-		3	SCREW M6S6X90FZB
520	-0301	312105-0453	-		8	SCREW M6S8X25RFR
530	-0301	312111-0471	-		2	SCREW MC6S8X100FZB
540	-0301	315101-0153	-		7	WASHER BRB6,4X12FZB
550	-0301	315105-0165	-		8	WASHER BRB8,4X16RFR
560	-0301	315237-0109	S		8	SEAL RING 1/8"
570	-0301	342921-0113	S		4	PIPE CONNE6/4-1/8"
580	-0301	342921-0121	S		4	PIPE CONNE8/6-1/8"
590	-0301	342980-0113	S		5	BANJO CONNSINGEL 6/4-1/8
600	-0301	342980-0122	S		5	BANJO CONNSINGEL 8/6-1/4
610	-0301	342980-0303	S		5	BANJO CONN SINGEL 1/8"
620	-0301	342980-0304	S		3	BANJO CONN SINGEL 1/4
630	-0301	342980-0314	-		2	BANJO CONN DUBBEL 1/4

TETRA PAK

2/8608

S-271533-2

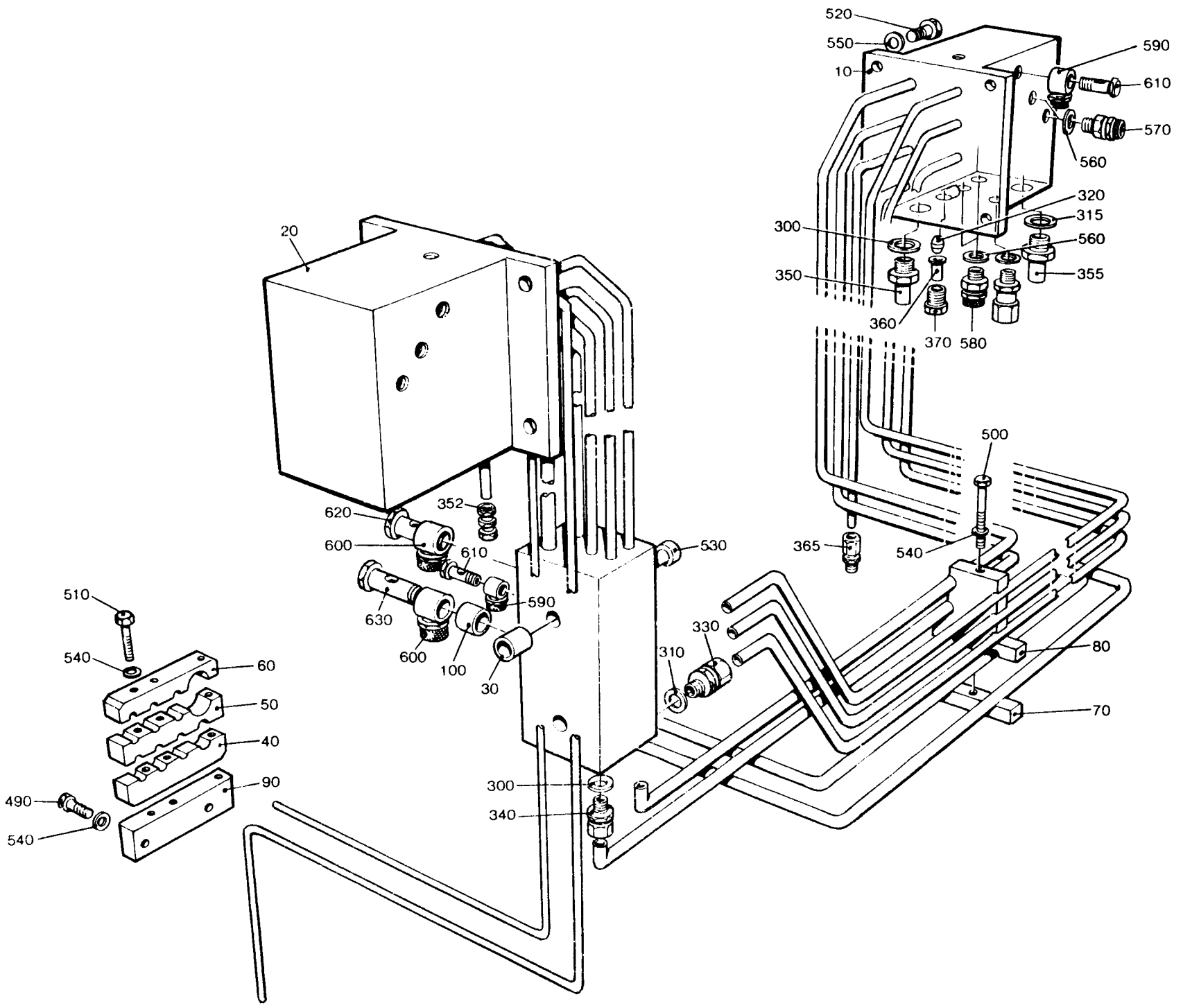

LAST ALTERATION: AM 10505 87-06-22
648102-060V
AM 6326
83-11-24

POS	VAR	PART NUMBER	SP	UN	QTY	DESCRIPTION
	-0301	S- 271443-SHEET	-3			===ASSEMBLY DRAWING===
010	-0301	441669	-		1	DOOR
020	-0301	271219	C		2	HINGE
030	-0301	C- 271220	C		2	HINGE
040	-0301	271221	C		2	PIN
050	-0301	441691	-		1	PLATE
060	-0301	441692	-		1	HOLDER
070	-0301	491233	-		1	LUG
080	-0301	456829	-		2	SHIM
090	-0301	469492	-		1	SPACER
100	-0301	491235	-		2	WASHER
300	-0301	90143-0049	-	MM	1500	STRIP
310	-0301	90237-0071	S		1	LOCK
500	-0301	312105-0329	-		16	SCREW M6S5X16 A4 80
510	-0301	312145-0222	-		2	SLOTTED HEMFS3X8RFR
515	-0301	312145-0291	-		2	SLOTTED HEMFS4X12RFR
520	-0301	312155-0329	-		2	SCREW MF6S5X16RFR
530	-0301	312605-0314	-		2	NUT M6M5RFR
540	-0301	315105-0146	-		18	WASHER BRB5,3X10RFR
550	-0301	321111-0096	S		4	BUSHING 8E7X8

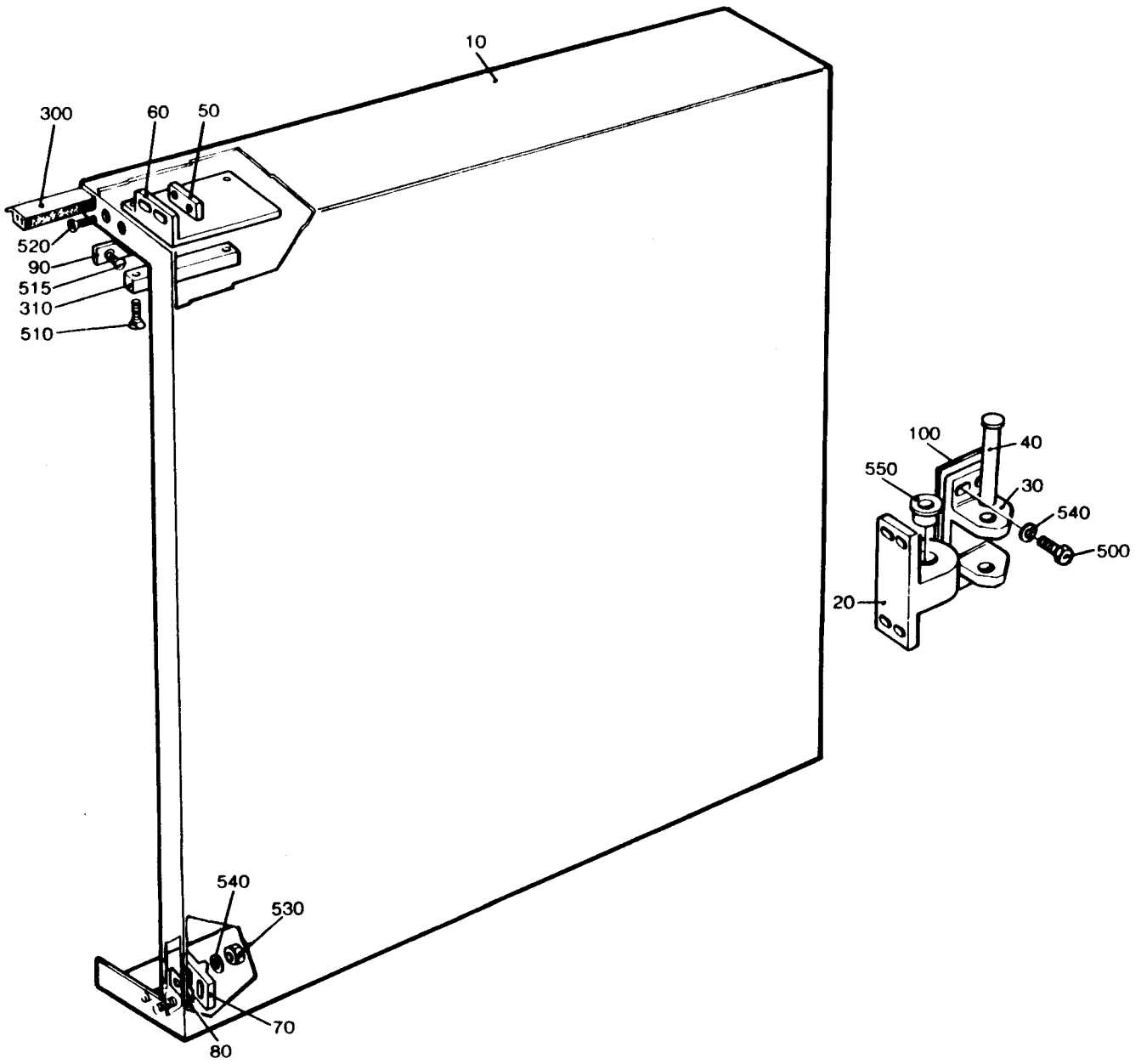
10
300
60
50
520
90
515
310
510
100
40
550
30
540
500
20
540
530
70
80

LAST ALTERATION: AM 10505 87-06-22
648102-020V
AM 5162
82-02-18

GROUP

-0201 VÄNSTERUTFÖRANDE
-0202 HÖGERUTFÖRANDE

POS	VAR	PART NUMBER	SP	UN	QTY	DESCRIPTION
	-0201 -0202	S- 256665-SHEET	-4 -5			===ASSEMBLY DRAWING===
010	-0201	295197	-		1	COVER
020	-0202	295198	-		1	COVER
030	-0201	469964	-		1	LID
520	-0201	312125-0368	-		1	SLOTTED HEMCS6X16RFR
540	-0201	312810-0314	-		1	LOCK NUT 5FZB
550	-0201	315105-0146	-		3	WASHER BRB5,3X10RFR
040	ALL	257231	C		1	WINDOW
300	ALL	90143-0049	S	MM	2200	STRIP
320	ALL	90157-0022	S	G	X	SEALING COMPOUND
500	ALL	312115-0463	-		4	SCREW 8X60 A4 80
510	ALL	312125-0291	-		6	SLOTTED HEMCS4X12RFR
530	ALL	312605-0312	-		6	NUT M6M4RFR
560	ALL	315105-0165	-		4	WASHER BRB8,4X16RFR

S-256665-4

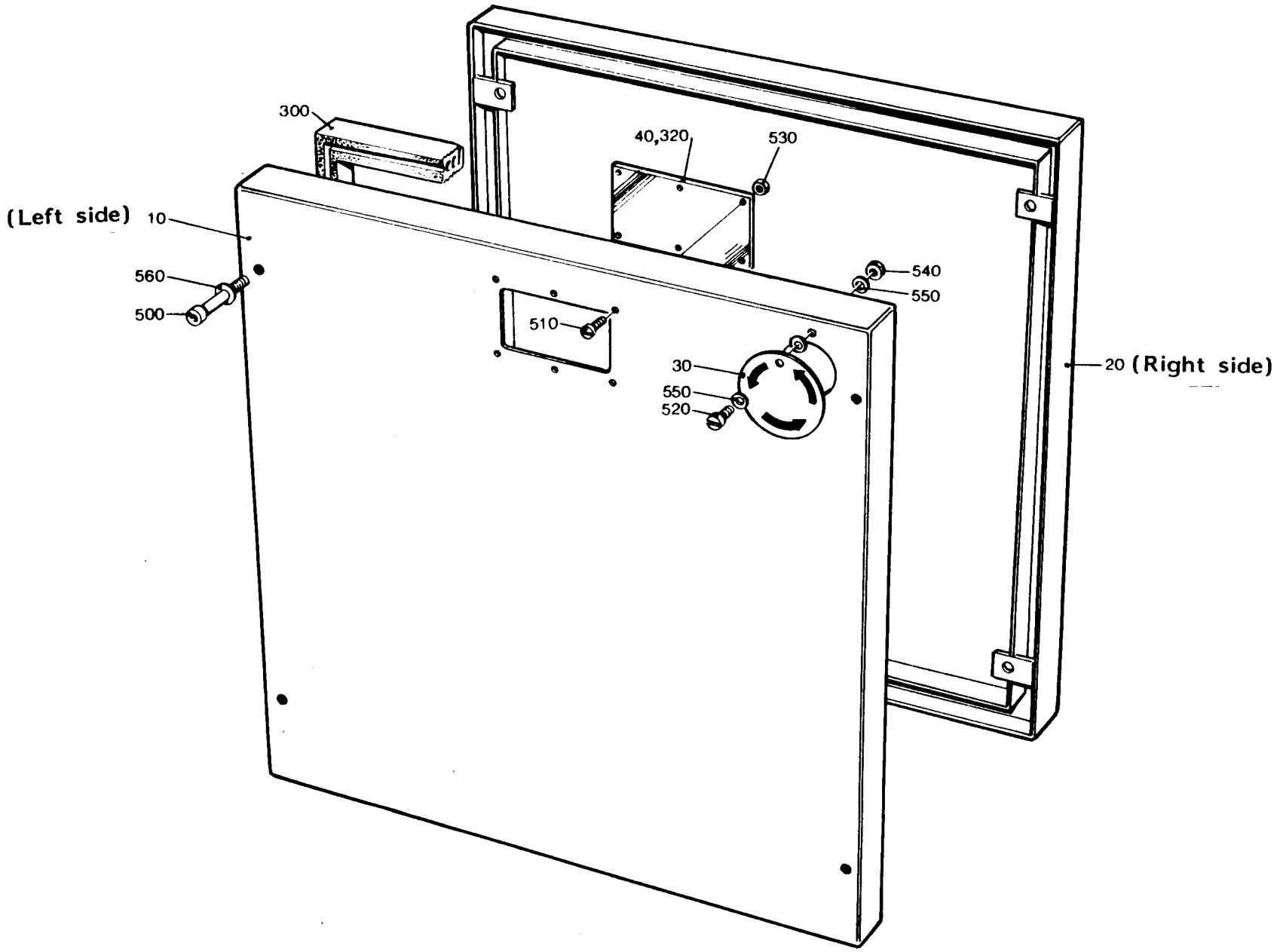

AM8824 (-4,5)

LAST ALTERATION: AM 6317 83-11-03
648102
AM 5199
82-03-26

POS	VAR	PART NUMBER	SP	EH	QTY	DESCRIPTION
	-0201	S- 271414-SHEET	-1			===ASSEMBLY DRAWING===
010	-0201	90152-0016	S		1	HOSE
020	-0201	90243-0061	S		1	AIR JET PISTOL

S-271414-1

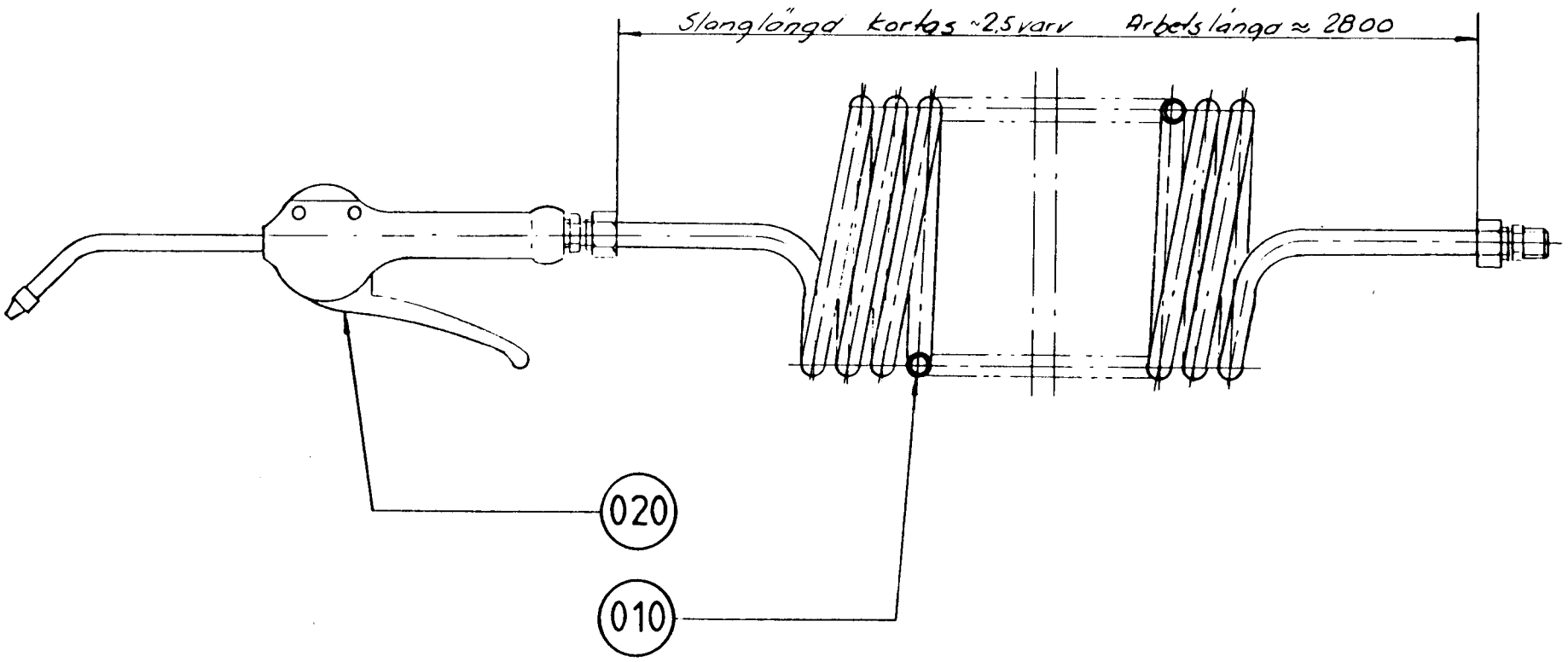

LAST ALTERATION: AM 9646 86-10-28
648102-060V
AM 6944
84-07-05

GROUP	FILLMACHINE	PULL-TAB VERSION
-0201	B9	WITHOUT PTAB
-0202	B9	WITH PTAB
-0203	AB9	WITHOUT PTAB
-0204	AB9	WITH PTAB

POS	VAR	PART NUMBER	SP	EH	QTY	DESCRIPTION
	-0201	S- 295026-SHEET	-3			===ASSEMBLY DRAWING===
	-0202		-3			
	-0203		-4			
	-0204		-4			
F280	ALL	C- 67062-010V	-		1	POTENTIOMETER
		C- 67054-0201				. COMPONENT LIST
010	-0201	469111	C		1	CIRCUIT BOARD
010	-0202	469110	C		1	CIRCUIT BOARD
010	-0203	469113	C		1	CIRCUIT BOARD
010	-0204	469112	C		1	CIRCUIT BOARD
020	-0201	469436	-		1	CONTROL CABINET
	-0202				1	
020	-0203	469435	-		1	CONTROL CABINET
	-0204				1	
030	-0201	35210	C		1	BRACKET
	-0202				1	
030	-0203	265553	C		1	BRACKET
	-0204				1	
050	-0201	35214	C		1	LID
	-0202				1	
050	-0203	265554	C		1	LID
	-0204				1	
060	-0201	35213	-		1	FRAME
	-0202				1	
060	-0203	265555	-		1	FRAME
	-0204				1	
070	-0201	263569	-		1	LADDER
	-0202				1	
070	-0203	265556	-		1	LADDER
	-0204				1	
090	-0201	469115	-		1	MACHINE DISPLAY B9 UPTAB
090	-0202	469114	-		1	MACHINE DISPLAY B9 MPTAB
090	-0203	469117	-		1	MACHINE DISPLAY AB9 UPTAB
090	-0204	469116	-		1	MACHINE DISPLAY AB9 MPTAB
100	-0201	35212-0002	S		1	GLASS PANE
	-0202				1	
120	-0203	35212-0005	S		1	GLASS PANE
	-0204				1	

POS	VAR	PART NUMBER	SP	EH	QTY	DESCRIPTION
190	-0201	35215	C		6	PLATE
	-0202				6	
	-0203				10	
	-0204				10	
300	-0201	90036-0044	P		20	BULB
	-0202				20	
	-0203				32	
	-0204				32	
350	-0201	90064-0084	P		3	PUSH BUTTON YELLOW
	-0202				3	
	-0203				2	
	-0204				2	
		90064-0315	R		0	* TOOL
		90064-0316	R		0	* WASHER
		90064-0317	R		0	* TOUCH GUARD
361	-0201	90064-0088	-		1	PUSH BUTTON YELLOW
	-0202				1	
		90064-0315	R		0	* TOOL
		90064-0316	R		0	* WASHER
		90064-0317	R		0	* TOUCH GUARD
390	-0201	90124-0027	P		20	LAMP HOLDER
	-0202				20	
	-0203				32	
	-0204				32	
460	-0201	90430-0304	-		2	PILOT UNIT
	-0202				2	
580	-0201	312605-0310	-		14	NUT M6M3RFR
	-0202				14	
	-0203				16	
	-0204				16	
610	-0201	315105-0124	-		14	WASHER BRB3,2X6RFR
	-0202				14	
	-0203				16	
	-0204				16	
730	-0201	359301-0160	S		1	SIGN T
	-0202				1	
750	-0201	359301-0215	S		1	SIGN T
	-0202				1	
040	ALL	263568	-		1	FRAME
080	ALL	469437	-		1	BACK PIECE
110	ALL	35212-0004	S		1	GLASS PANE
130	ALL	254566	-		2	CABLE
140	ALL	272827	-		2	TERMINAL HOLDER
150	ALL	295030	-		1	HOLDER
160	ALL	295031	-		1	HOLDER
170	ALL	469341	-		1	LEAD-IN
180	ALL	490530	-		1	BRACKET
200	ALL	35216	-		12	WASHER
210	ALL	295071	-		6	SPACER

TETRA PAK

2/8608

S-295026-3

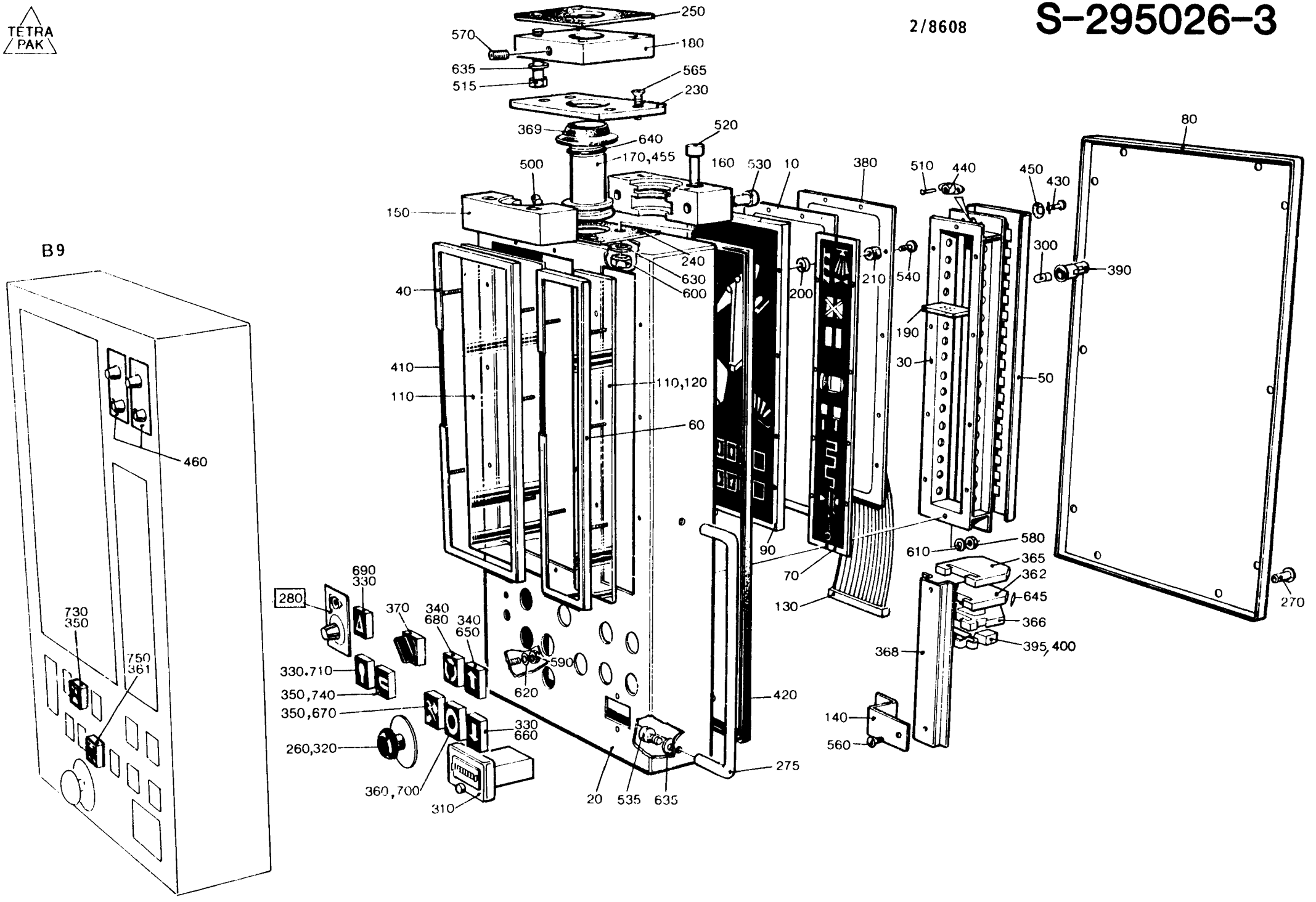

AM7345

POS	VAR	PART NUMBER	SP	EH	QTY	DESCRIPTION
230	ALL	295894	-		1	PLATE
240	ALL	441448	S		1	GASKET
250	ALL	490500	S		1	GASKET
260	ALL	486826-0001	-		1	SIGN
270	ALL	469454	-		10	NUT
275	ALL	90017-0015	-		2	HANDLE F
310	ALL	90053-0018	S		1	COUNTER
		90053-0306	R		0	* FRAME
320	ALL	90064-0092	S		1	EMERGENCY PUSH BUTTON
330	ALL	90064-0082	S		3	PUSH BUTTON WHITE
		90064-0315	R		0	* TOOL
		90064-0316	R		0	* WASHER
		90064-0317	R		0	* TOUCH GUARD
340	ALL	90064-0093	S		2	PUSH BUTTON
		90064-0315	R		0	* TOOL
		90064-0316	R		0	* WASHER
		90064-0317	R		0	* TOUCH GUARD
360	ALL	90064-0085	S		1	PUSH BUTTON RED
		90064-0315	R		0	* TOOL
		90064-0316	R		0	* WASHER
		90064-0317	R		0	* TOUCH GUARD
362	ALL	90077-0079	-		40	TERMINAL BLOCK
365	ALL	90077-0307	-		1	EN PLATE
366	ALL	90077-0308	-		1	END SUPPORT
368	ALL	90077-0328	-	MM	210	RAIL
369	ALL	90091-0139	-		1	SEAL RING
370	ALL	90111-0120	S		1	SWITCH
380	ALL	90119-0046	C		1	CIRCUIT CARD
395	ALL	90135-0003	-		1	EARHING CLIP
400	ALL	90135-0026	-		1	EARTHING CLAMP
410	ALL	90143-0051	-	MM	4600	STRIP
420	ALL	90143-0059	-	MM	1900	STRIP
430	ALL	90237-0064	C		2	LOCK
440	ALL	90237-0307	C		2	BASE
450	ALL	90237-0308	-		2	WASHER
455	ALL	90296-0051	-		1	PASTE
500	ALL	311103-0399	-		1	CYLINDRICACPR8M6X16RFR
510	ALL	311520-0329	-		4	BLANK RIVE2,4X7,4
515	ALL	312105-0453	-		4	SCREW M6S8X25RFR
520	ALL	312115-0376	-		4	SCREW 6X35 A4 80
530	ALL	312115-0378	-		2	SCREW 6X40 A4 80
535	ALL	312115-0447	-		4	SCREW 8X12 A4 80
540	ALL	312121-0222	-		6	SLOTTED HEMCS3X8FZB
560	ALL	312145-0285	-		6	SLOTTED HEMFS4X6RFR
565	ALL	312155-0325	-		4	SCREW MF6S5X10RFR
570	ALL	312318-0364	-		1	GRUB SCREW SK6SS6X10RFR
590	ALL	312605-0312	-		1	NUT M6M4RFR
600	ALL	312605-0316	-		4	NUT M6M6RFR
620	ALL	315105-0136	-		1	WASHER BRB4,3X8RFR

POS	VAR	PART NUMBER	SP	EH	QTY	DESCRIPTION
630	ALL	315105-0153	-		4	WASHER BRB6,4X12RFR
635	ALL	315105-0165	-		8	WASHER BRB8,4X16RFR
640	ALL	315202-0301	-		1	O-RING 49,5X3
645	ALL	359011-0801	-		2	LABEL BSFW 0-49
650	ALL	359301-0001	S		1	SIGN
660	ALL	359301-0005	S		1	SIGN
670	ALL	359301-0050	S		1	SIGN T
680	ALL	359301-0090	S		1	SIGN
690	ALL	359301-0105	S		1	SIGN T
700	ALL	359301-0110	S		1	SIGN T
710	ALL	359301-0130	S		1	SIGN T
740	ALL	359301-0170	S		1	SIGN T

TETRA PAK

2/8608

S-295026-3

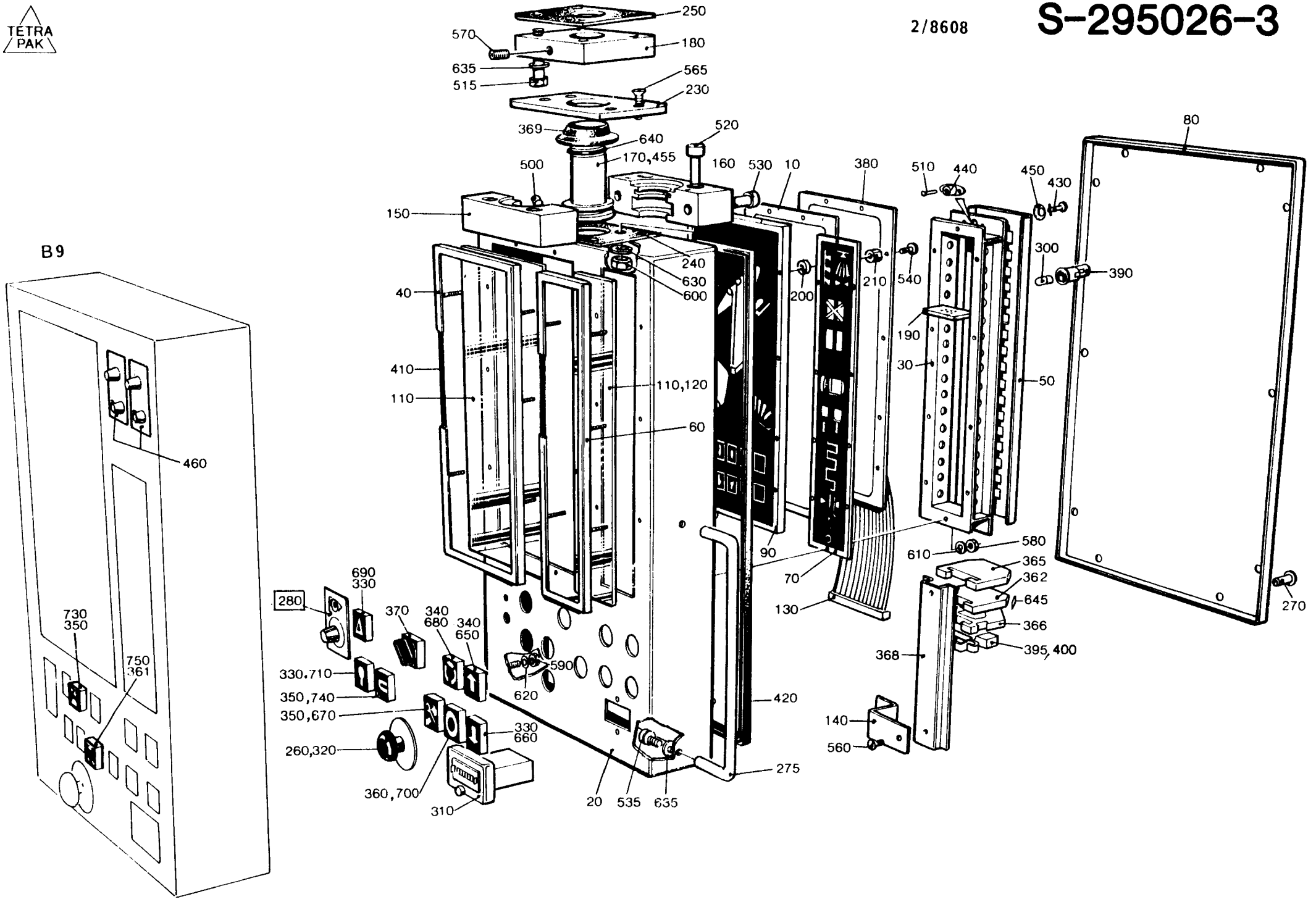

AM7345

LAST ALTERATION: AM 9646 86-10-28
648102-060V
AM 6705
84-04-18

GROUP PULL-TAB
VERSION

-0101 WITH PTAB
-0102 WITHOUT PTAB

POS	VAR	PART NUMBER	SP	EH	QTY	DESCRIPTION
	-0101	S- 456457-SHEET		-1		===ASSEMBLY DRAWING===
	-0102			-1		
010	-0101	441672	-		1	PLATFORM
010	-0102	456980	-		1	PLATFORM
020	-0101	456981	-		1	PLATFORM
020	-0102	456982	-		1	PLATFORM
030	-0101	456983	-		1	PLATFORM
030	-0102	456984	-		1	PLATFORM
040	-0102	456985	-		2	LEG
050	-0101	441679	C		5	STEP
050	-0102	456986	C		4	STEP
060	-0101	441673	-		2	SIDE PIECE
070	-0102	456987	-		1	SIDE PIECE
080	-0102	456988	-		1	SIDE PIECE
090	-0101	441674	-		1	RAIL
100	-0101	441675	-		1	RAIL
110	-0101	441905	-		2	PIN
330	-0101	90347-0004	-		2	VIBRATION DAMPER
500	-0101	312105-0449	-		14	SCREW M6S8X16RFR
	-0102				17	
510	-0101	312105-0453	-		7	SCREW M6S8X25RFR
	-0102				15	
520	-0101	312105-0459	-		20	SCREW M6S8X40RFR
540	-0101	312155-0449	-		12	SCREW MF6S8X16RFR
	-0102				30	
550	-0101	315105-0165	-		45	WASHER BRB8,4X16RFR
	-0102				32	
120	ALL	295287	-		1	MACHINE BODY
130	ALL	295295	-		1	MACHINE BODY
300	ALL	90143-0016	-	MM	1900	STRIP
310	ALL	90153-0017	-	G	100	ADHESIVE
320	ALL	90157-0022	-	G	X	SEALING COMPOUND

TETRA PAK

2/8608

S-456457-1

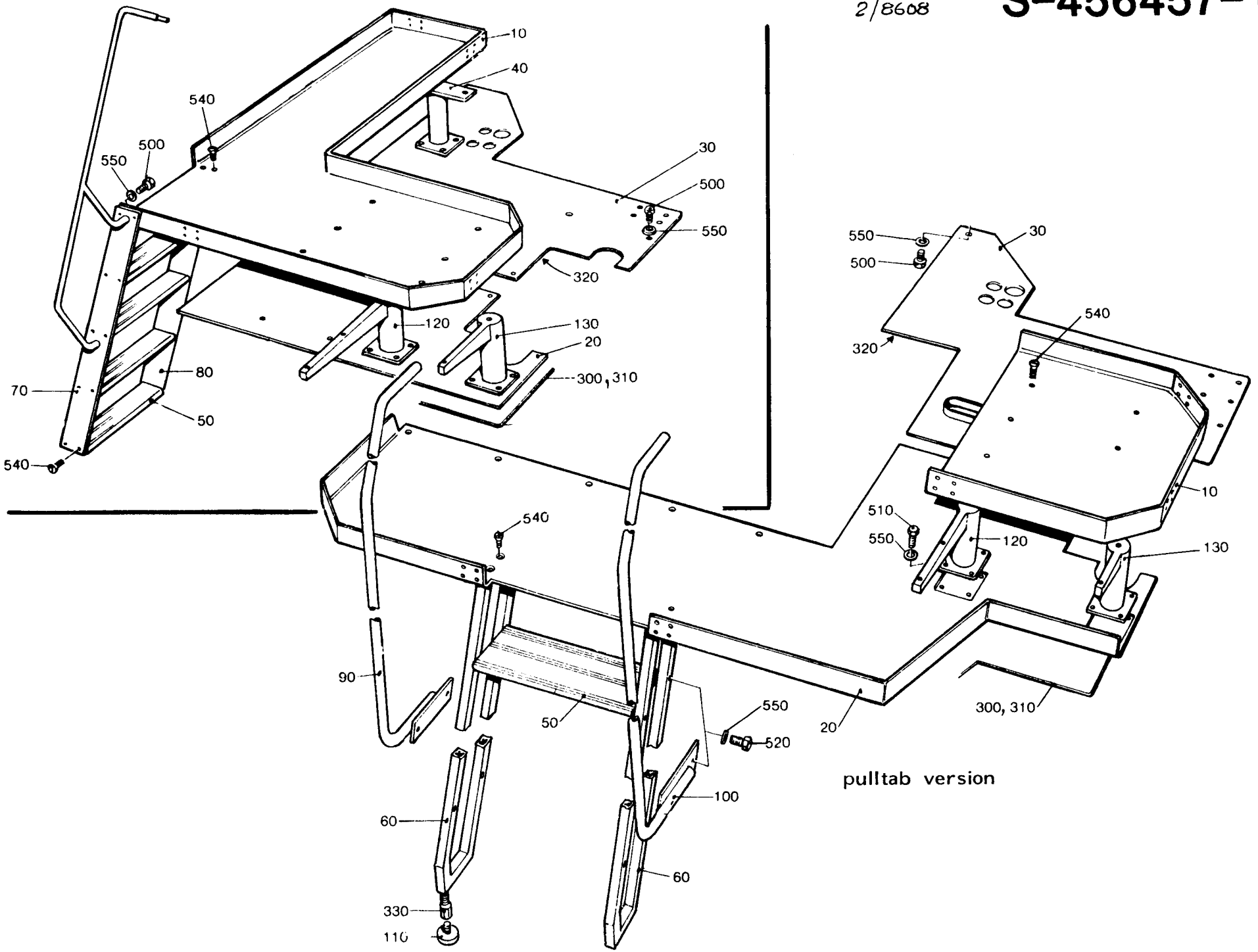

pulltab version

AM 7196

LAST ALTERATION: AM 8824 86-02-19
648102-060V
AM 6705
84-04-18

GROUP PULL-TAB
VERSION

-0101 WITH PTAB
-0102 WITHOUT PTAB

POS	VAR	PART NUMBER	SP	EH	QTY	DESCRIPTION
	-0101	S- 456458-SHEET	~~-0~~			===ASSEMBLY DRAWING===
	-0101		~~-1~~			
	-0102		-1			
	-0102		~~-2~~			
F170	ALL	C- 441535-0102	-		1	LIGHT FIXTURE
010	-0102	469004	-		1	PLATFORM
015	-0101	469772	-		1	PLATFORM
140	-0102	469017	-		1	PLATE
143	-0102	469010	-		1	PLATE
147	-0101	469773	-		1	PLATE
150	-0102	469018	-		1	PLATFORM
190	-0102	469022	-		1	FRAME
200	-0102	295881	-		1	BRACKET
210	-0102	295882	-		1	BRACKET
510	-0102	312105-0370	-		6	SCREW M6S6X20RFR
520	-0101	312105-0449	-		33	SCREW M6S8X16RFR
	-0102				41	
560	-0102	312115-0220	-		1	SCREW 3X6 A4 80
570	-0101	312155-0449	-		31	SCREW MF6S8X16RFR
	-0102				43	
590	-0102	312605-0316	-		6	NUT M6M6RFR
600	-0102	315105-0136	-		1	WASHER BRB4,3X8RFR
610	-0102	315105-0153	-		12	WASHER BRB6,4X12RFR
620	-0101	315105-0165	-		56	WASHER BRB8,4X16RFR
	-0102				64	
020	ALL	469005	-		1	PLATFORM
030	ALL	469006	-		1	FRAME
040	ALL	469007	-		1	FRAME
060	ALL	469009	-		1	PLATE
100	ALL	469013	-		1	CABLE DUCT
110	ALL	469014	-		1	LID
120	ALL	469015	-		1	PLATE
130	ALL	469016	-		1	FRAME
160	ALL	469019	-		1	LEG
170	ALL	469020	-		1	LEG
180	ALL	469021	-		2	LEG
230	ALL	491016	-		2	HOLDER
240	ALL	469027	-		1	SPACER
250	ALL	469445	-		3	SPACER
260	ALL	90015-0020	-		2	BUSHING

POS	VAR	PART NUMBER	SP	EH	QTY	DESCRIPTION
300	ALL	90143-0012	-	MM	1900	STRIP
310	ALL	90153-0017	-	G	50	ADHESIVE
320	ALL	90157-0022	-	G	X	SEALING COMPOUND
530	ALL	312105-0453	-		13	SCREW M6S8X25RFR
565	ALL	312125-0323	-		2	SLOTTED HEMCS5X8RFR
580	ALL	312155-0453	-		4	SCREW MF6S8X25RFR
595	ALL	312705-0314	-		3	SCREW CAP MHM 5 A2

TETRA PAK

2/8608

S-456458-1

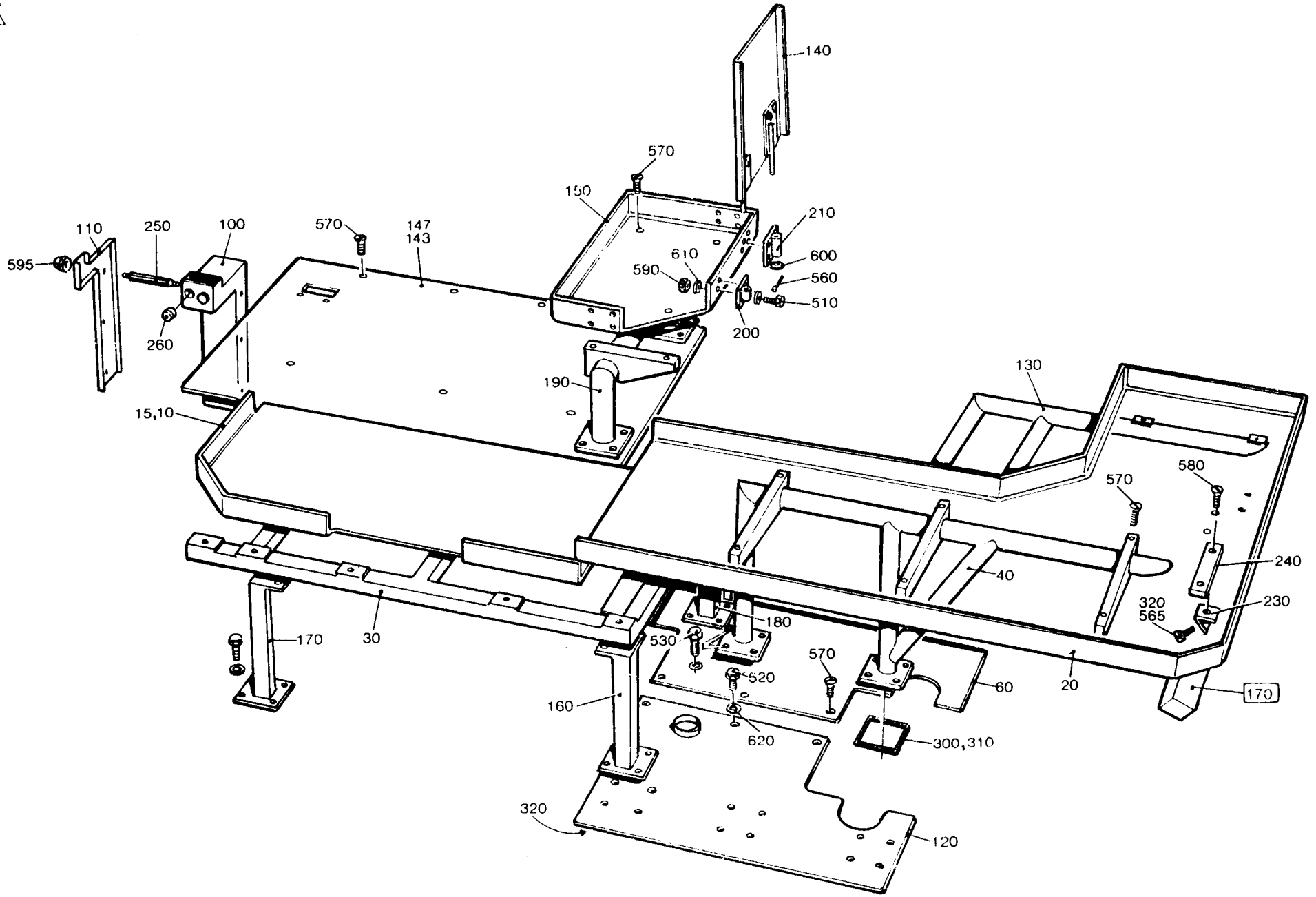

AM 8824

LAST ALTERATION: AM 6867 84-06-12
456456-010V 650415-010V

GROUP

-0101 CABLE ENTRANCE OF ELCABLE.
-0102 BOTTOM ENTRANCE OF ELCABLE.

POS	VAR	PART NUMBER	SP	EH	QTY	DESCRIPTION
	-0101	S- 441535-SHEET	-1			===ASSEMBLY DRAWING===
	-0102		-2			
010	-0101	456259	S		1	COVER
010	-0102	456260	S		1	COVER
020	-0101	456261	-		1	PLATE
020	-0102	456262	-		1	PLATE
350	-0101	312605-0314	-		2	NUT M6M5RFR
380	-0101	315105-0146	-		2	WASHER BRB5,3X10RFR
030	ALL	441536	S		1	GASKET
100	ALL	90099-0087	-		1	NUT
110	ALL	90164-0301	S		1	LAMPHOLDER
120	ALL	90195-0020	-		1	TERMINAL BLOCK
130	ALL	90297-0007	P		1	FLUORESCENT LAMP
300	ALL	312125-0220	-		2	SLOTTED HEMCS3X6RFR
310	ALL	312125-0230	-		1	SLOTTED HEMCS3X20RFR
320	ALL	312125-0327	-		2	SLOTTED HEMCS5X12RFR
360	ALL	312705-0314	-		8	SCREW CAP MHM 5 A2
370	ALL	315105-0124	-		2	WASHER BRB3,2X6RFR
400	ALL	352103-0108	-		1	CABLE GLANR.PR 20,4/6-12
410	ALL	353101-0129	-		1	CABLE SHOEYAE 14 M 37

S-441535-1

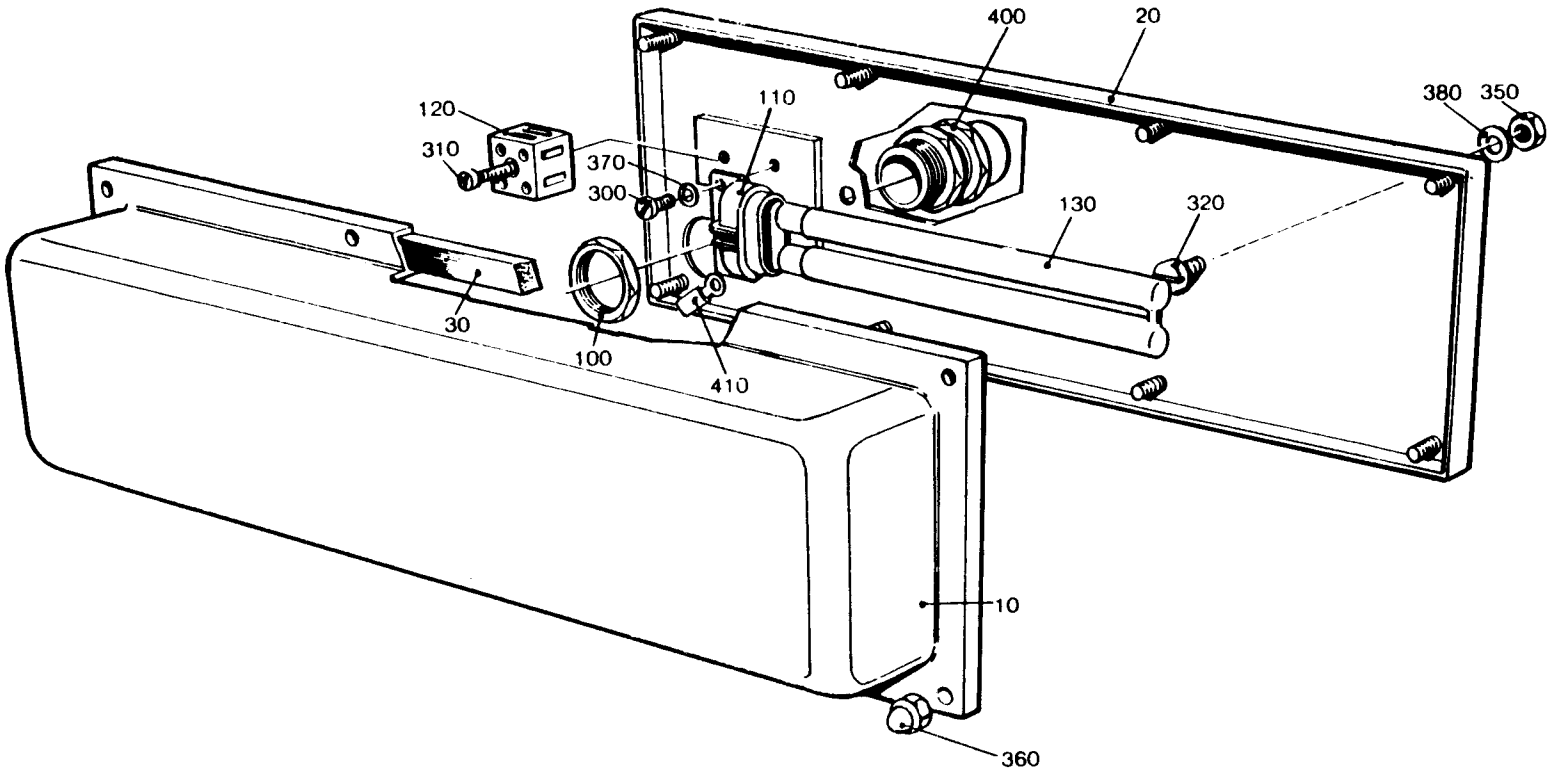

AM 6867

LAST ALTERATION: AM 6705 84-04-18
648102-060V

GROUP PULL-TAB
VERSION

-0101 WITH PTAB
-0102 WITHOUT PTAB

POS	VAR	PART NUMBER	SP	EH	QTY	DESCRIPTION
	-0101	S- 456459-SHEET	-1			===ASSEMBLY DRAWING===
	-0102		~~-2~~			
010	-0101	441681	-		1	RAILING
010	-0102	441685	-		1	RAILING
020	-0101	441683	-		1	RAILING
020	-0102	456989	-		1	RAILING
500	-0101	311103-0356	-		2	CYLINDRICACPR6M6X28RFR
510	-0101	312105-0449	-		36	SCREW M6S8X16RFR
	-0102				40	
520	-0101	312105-0453	-		4	SCREW M6S8X25RFR
540	-0101	312115-0453	-		3	SCREW 8X25 A4 80
	-0102				2	
560	-0101	312605-0318	-		3	NUT M6M8RFR
	-0102				2	
570	-0101	315105-0165	-		47	WASHER BRB8,4X16RFR
	-0102				46	
030	ALL	441687	-		1	STRUT
040	ALL	441676	-		1	HOLDER
050	ALL	456979-0001	-		1	CONDUIT
060	ALL	469002	-		1	SUPPORT
070	ALL	469003	-		1	PLATE
080	ALL	469028	-		1	GASKET
300	ALL	90002-0016	-		1	PLUG
310	ALL	90036-0038	P		1	BULB
320	ALL	90224-0234	S		1	BRACKET
330	ALL	90419-0005	S		1	ALARM LAMP
		90036-0052	S		1	* BULB
		90419-0302	S		0	* LENS
530	ALL	312105-0455	-		4	SCREW M6S8X30RFR
580	ALL	315202-0215	S		1	O-RING 19,2X3
590	ALL	352101-0102	-		1	LEAD-IN G 15,2

TETRA PAK

2/8608

S-456459-1

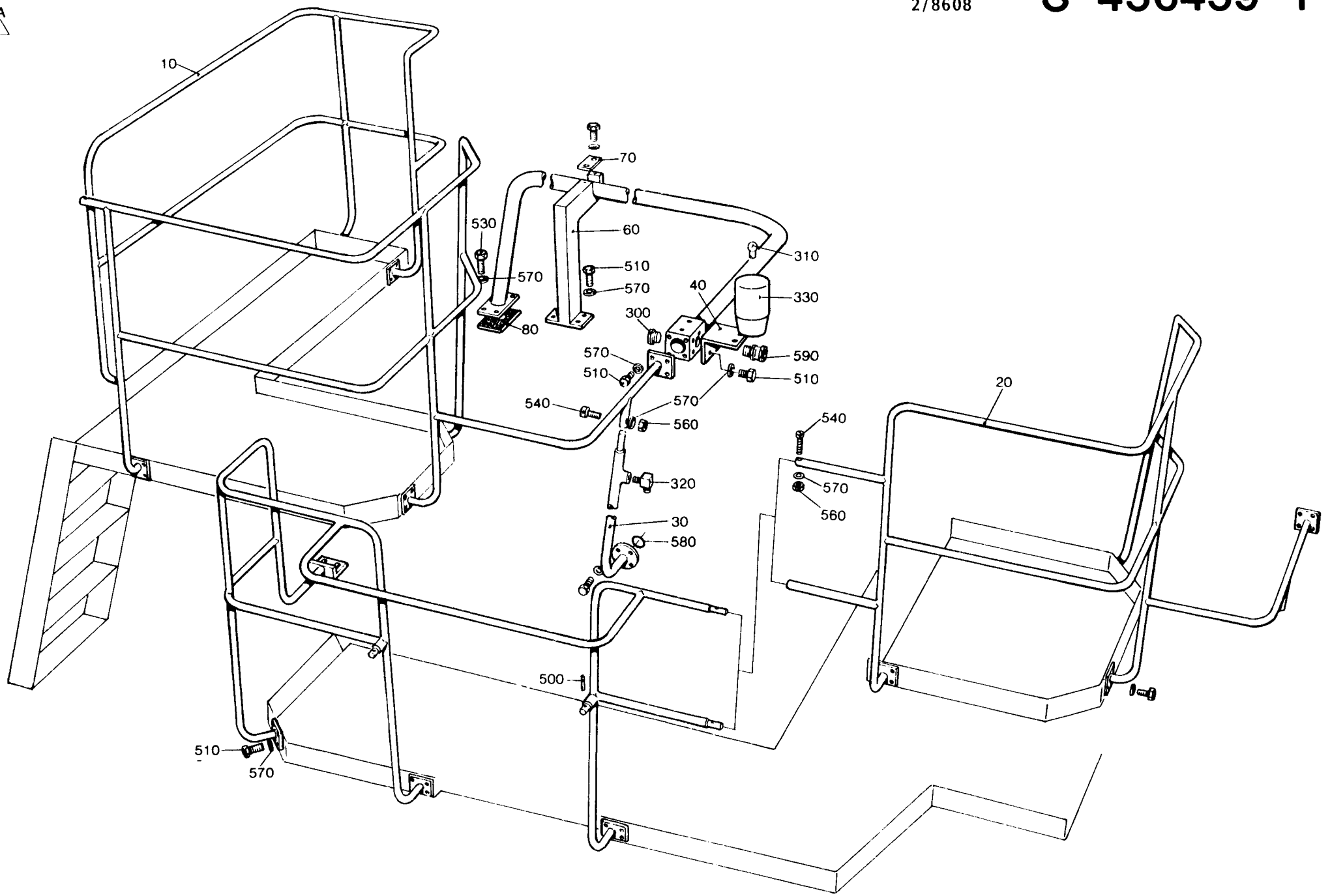

AM 6705

LAST ALTERATION: AM 8034 85-06-26
646102-060V
AM 6705
84-04-18

GROUP PULL-TAB
VERSION

-0101 WITH PTAB
-0102 WITHOUT PTAB

POS	VAR	PART NUMBER	SP	EH	QTY	DESCRIPTION	
	-0101	S- 456460-SHEET		~~-3~~		===ASSEMBLY DRAWING===	
	-0101			~~-4~~			
	-0102			-1			
	-0102			~~-2~~			
020	-0102	469023	-		1	RAILING	
025	-0101	469775	-		1	RAILING	
040	-0102	469025	-		1	RAILING	
090	-0102	491138	-		1	STRUT	
510	-0101	312105-0449	-		30	SCREW	M6S8X16RFR
	-0102				44		
515	-0101	312105-0451	-		2	SCREW	M6S8X20RFR
520	-0101	312105-0453	-		4	SCREW	M6S8X25RFR
535	-0102	312115-0457	-		2	SCREW	A4 80
560	-0101	312605-0318	-		4	NUT	M6M8RFR
570	-0101	315105-0165	-		47	WASHER	BRB8,4X16RFR
	-0102				60		
010	ALL	456979-0002	-		1	CONDUIT	
013	ALL	469489	-		1	RAIL	
017	ALL	469490	-		1	RAIL	
030	ALL	469024	-		1	RAILING	
050	ALL	469026	-		1	DISTANCE PIECE	
060	ALL	469028	-		1	GASKET	
070	ALL	441512	-		1	STRUT END	
080	ALL	441687	-		1	STRUT	
300	ALL	90036-0038	P		1	BULB	
310	ALL	90099-0002	-		1	NUT	
320	ALL	90224-0234	S		1	BRACKET	
330	ALL	90419-0005	S		1	ALARM LAMP	
		90036-0052	S		1	* BULB	
		90419-0302	S		0	* LENS	
500	ALL	311103-0356	-		2	CYLINDRICACPR6M6X28RFR	
525	ALL	312105-0459	-		4	SCREW	M6S8X40RFR
530	ALL	312115-0453	-		3	SCREW	8X25 A4 80
550	ALL	312155-0455	-		4	SCREW	MF6S8X30RFR
590	ALL	315202-0215	S		1	O-RING	19,2X3
600	ALL	352103-0108	-		1	CABLE GLANR.PR 20,4/6-12	

TETRA PAK

3/8608

S-456460-1

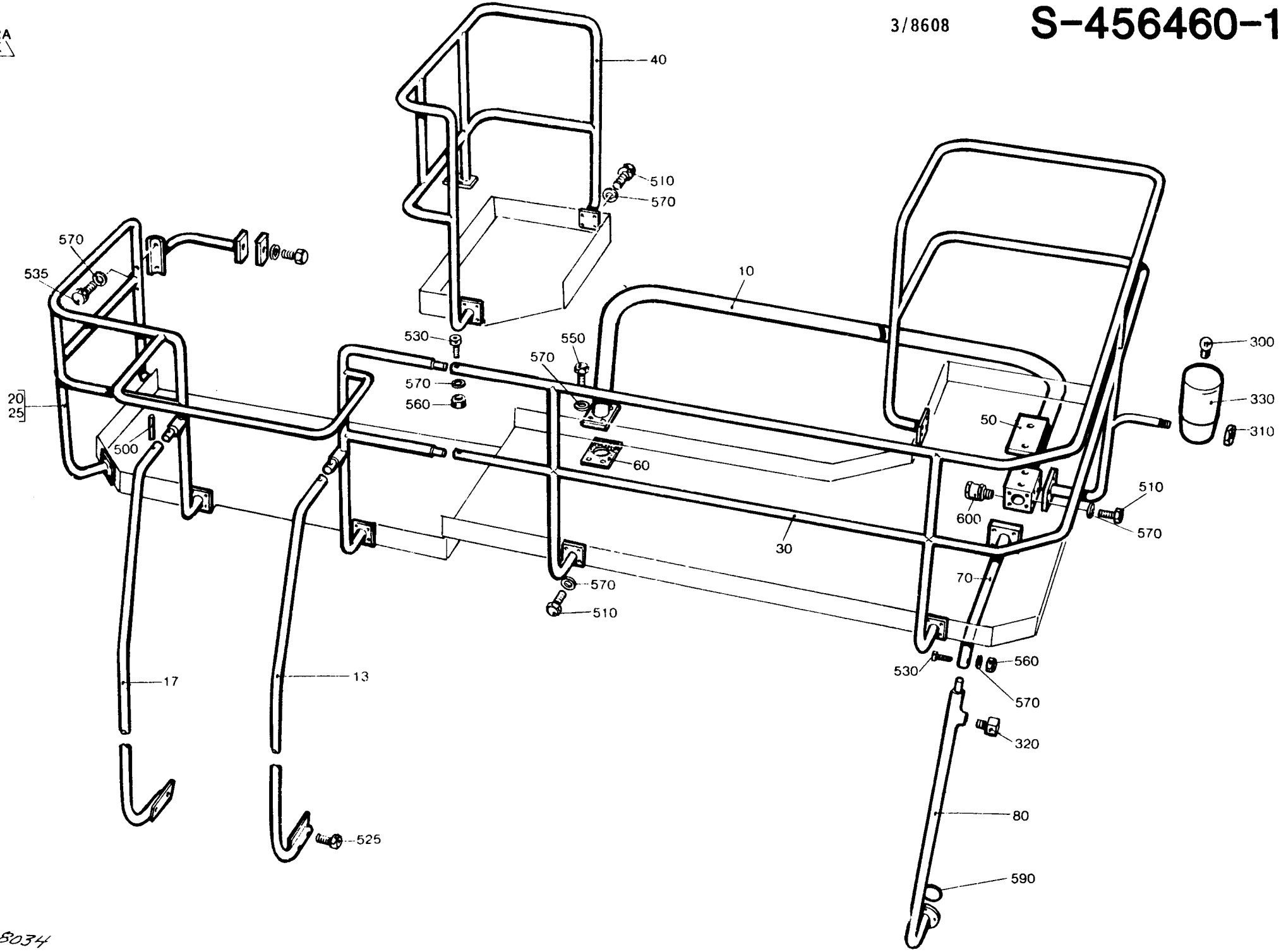

AM 8034

LAST ALTERATION: AM 6944 84-07-05
648102

POS	VAR	PART NUMBER	SP	EH	QTY	DESCRIPTION
	-0101	S- 469496-SHEET	-1			===ASSEMBLY DRAWING===
010	-0101	469453	-		1	COVER PLATE
020	-0101	312105-0459	-		8	SCREW M6S8X40RFR
030	-0101	315105-0165	-		8	WASHER BRB8,4X16RFR

TETRA PAK

1/8501 **S-469496-1**

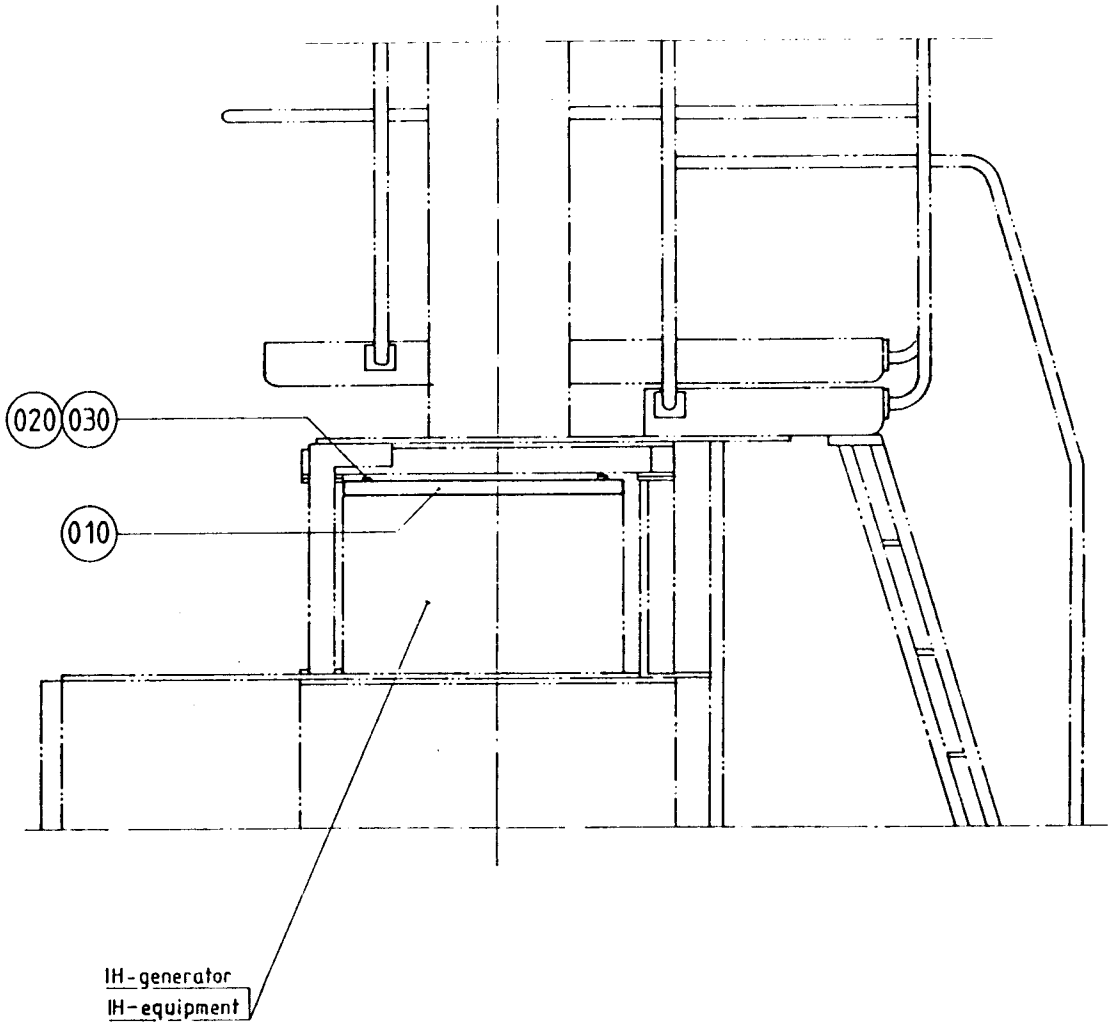

LAST ALTERATION: AM 6929 84-10-08
469760 648102 648110

POS	VAR	PART NUMBER	SP	EH	QTY	DESCRIPTION
	-0101	S- 469762-SHEET	-1			===ASSEMBLY DRAWING===
010	-0101	469008	-		2	SIDE PIECE
020	-0101	441679	-		7	STEP
030	-0101	441905	-		2	PIN
100	-0101	90347-0004	-		2	RUBBER DAMPER
200	-0101	312105-0459	-		28	SCREW M6S8X40RFR
210	-0101	312155-0449	-		4	SCREW MF6S8X16RFR
220	-0101	312605-0322	-		2	NUT M6M12RFR
230	-0101	315105-0165	-		28	WASHER BRB8,4X16RFR

TETRA PAK

1/8501 **S-469762-1**

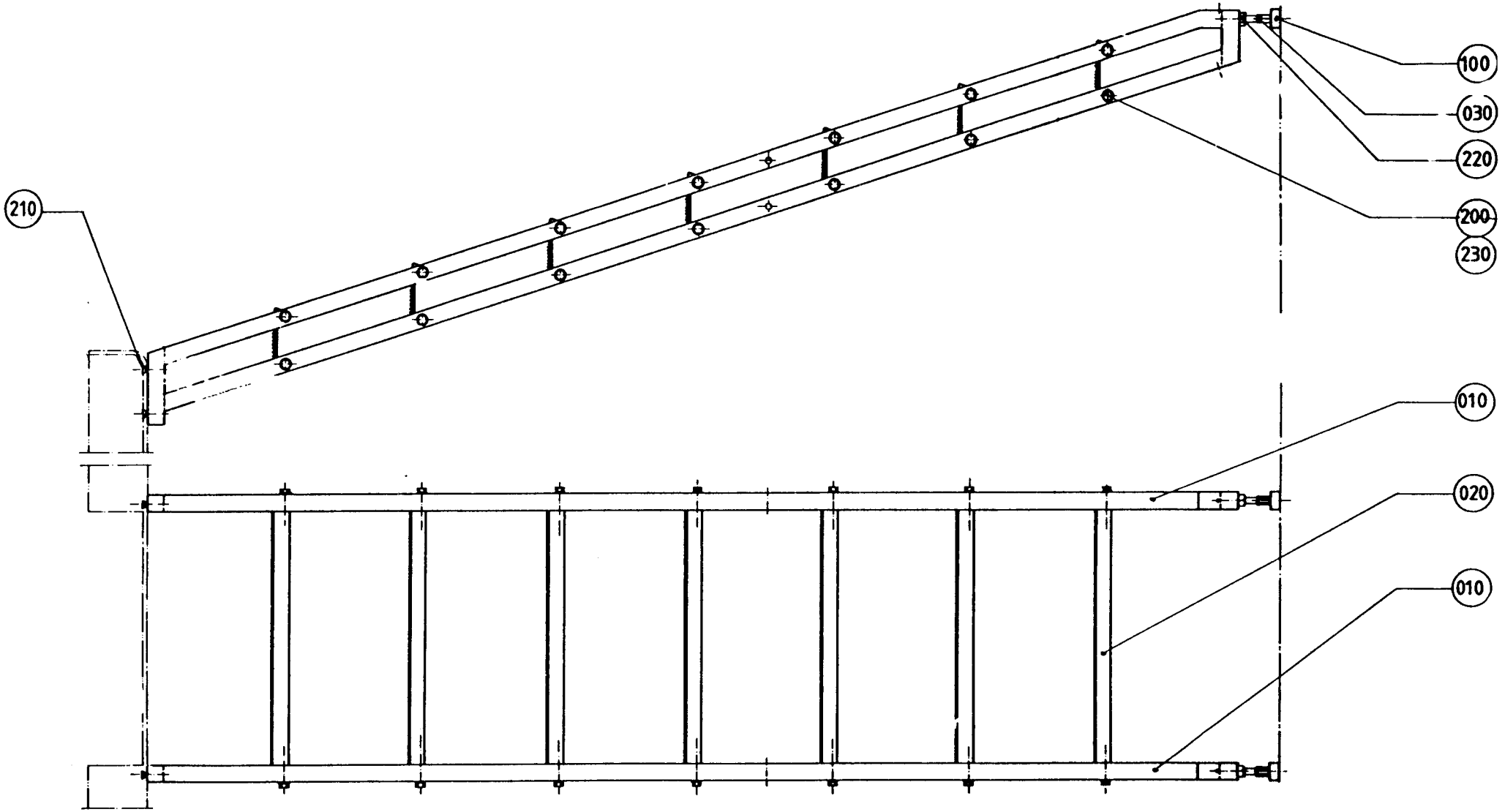

Am 6929

LAST ALTERATION: AM 8456 85-11-26
648102-060V
AM 6635
84-02-29

GROUP	FILLMACHINE	VOLUME
-0101	B9	V0284
	EJ KOMPLETT.	
-0102	B9	V0250
-0103	B9	V0236
-0104	B9	V0200
-0105	B9	V0187
	EJ KOMPLETT.	
-0106	B9	V0180
-0107	B9	200ML SLIM
-0108	AB8	V0284
	EJ KOMPLETT.	
-0109	AB9	V0250
-0110	AB9	V0236
-0111	AB9	V0200
-0112	AB9	V0187
	EJ KOMPLETT.	
-0113	AB9	V0180
-0114	AB9	V0125
-0115	AB9	V0100
	EJ KOMPLETT.	
-0116	AB9	200ML SLIM

POS	VAR	PART NUMBER	SP	EH	QTY	DESCRIPTION
	-0102	S- 456100-SHEET	-1			===ASSEMBLY DRAWING===
	-0103		-1			
	-0104		-1			
	-0106		-1			
	-0107		-1			
	-0109		-1			
	-0110		-1			
	-0111		-1			
	-0113		-1			
	-0114		-1			
	-0116		-1			
F020	ALL	C- 441534-0101	-		2	LIGHT FIXTURE
F030	ALL	C- 456827-0101	-		1	CONNECTION BOX
010	-0103	469831-0003	-		1	COVER
	-0110				1	
010	-0104	469831-0004	-		1	COVER
	-0111				1	
010	-0106	469831-0006	-		1	COVER
	-0113				1	
010	-0114	469831-0007	-		1	COVER
010	-0107	469832-0001	-		1	COVER
	-0116				1	

POS	VAR	PART NUMBER	SP	EH	QTY	DESCRIPTION
010	-0102	469832-0002	-		1	COVER
	-0109				1	
020	-0103	441077	-		1	BRACKET
	-0104				1	
	-0106				1	
	-0110				1	
	-0111				1	
	-0113				1	
	-0114				1	
200	-0101	441659	-		1	FRONT PLATE
	-0102				1	
	-0103				1	
	-0104				1	
	-0105				1	
	-0106				1	
	-0107				1	
200	-0108	456573	-		1	FRONT PLATE
	-0109				1	
	-0110				1	
	-0111				1	
	-0112				1	
	-0113				1	
	-0114				1	
	-0115				1	
	-0116				1	
030	ALL	469095	C		4	HOLDER
040	ALL	469096	C		4	LEG
050	ALL	272058	-		2	LID
070	ALL	272670	-		1	CHUTE
080	ALL	272671	-		1	CHUTE
090	ALL	295191	-		2	ANGLE BRACKET
100	ALL	295302	-		1	COVER
110	ALL	441162	-		1	PROTECTION PLATE
120	ALL	441212	C		1	HOLDER
130	ALL	441217	S		4	BUSHING
140	ALL	441218	S		4	BUSHING
150	ALL	441219	-		32	SCREW
160	ALL	441221	-		8	WASHER
170	ALL	G- 456475	-		1	MACHINE BODY
180	ALL	441593	-		8	GASKET
190	ALL	441658	-		1	FRONT PLATE
210	ALL	441660	-		1	FRONT PLATE
220	ALL	441661	-		2	PIN
230	ALL	441662	S		2	PIN
240	ALL	441663	-		2	PLATE
250	ALL	469937	-		4	PIPE
260	ALL	441677	-		1	FRONT PLATE
270	ALL	G- 441806	-		1	COLLAR
280	ALL	441809	-		1	FRONT PLATE

TETRA PAK

3/8608

S-456100-1

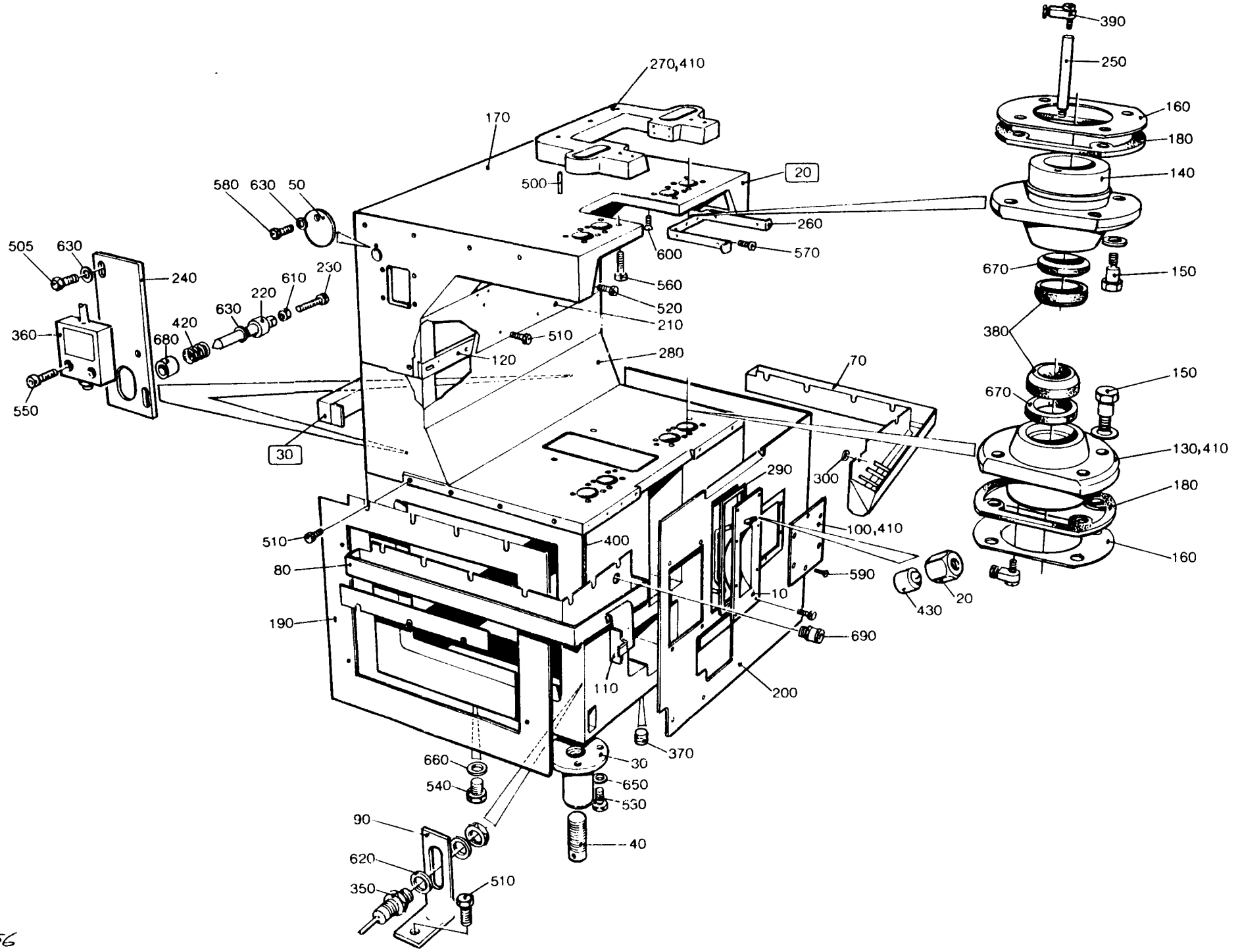

AM 8456

POS	VAR	PART NUMBER	SP	EH	QTY	DESCRIPTION
290	ALL	441810	C		1	GASKET
295	ALL	490986	-		1	PLATE
300	ALL	6278	S		1	WASHER
350	ALL	90044-0085	P		2	SENSOR
360	ALL	90044-0101	S		2	LIMIT SWITCH
370	ALL	90087-0002	-		3	PIPE PLUG
380	ALL	90091-0106	S		8	SEALED RING
390	ALL	90137-0010	-		8	PIPE JOINT
400	ALL	90143-0010	-	MM	260	STRIP
410	ALL	90157-0022	-	C	X	SEALING COMPOUND
420	ALL	90335-0036	S		2	SPRING
430	ALL	90424-0027	S		1	NOZZLE
500	ALL	311103-0415	-		3	CYLINDRICACPR8M6X55RFR
505	ALL	312105-0327	-		4	SCREW M6S5X12 A4 80
510	ALL	312105-0366	-		34	SCREW M6S6X12RFR
520	ALL	312105-0370	-		2	SCREW M6S6X20RFR
530	ALL	312105-0451	-		16	SCREW M6S8X20RFR
540	ALL	312105-0489	-		8	SCREW M6S10X16RFR
550	ALL	312111-0328	-		4	SCREW MC6S5X14FZB
560	ALL	312115-0503	-		10	SCREW 10X60 A4 80
570	ALL	312125-0323	-		7	SLOTTED HEMCS5X8RFR
580	ALL	312125-0329	-		2	SLOTTED HEMCS5X16RFR
590	ALL	312155-0325	-		6	SCREW MF6S5X10RFR
600	ALL	312155-0366	-		9	SCREW MF6S6X12RFR
610	ALL	312605-0314	-		2	NUT M6M5RFR
620	ALL	315101-0176	-		4	WASHER BRB12X22FZB
630	ALL	315105-0146	-		10	WASHER BRB5,3X10RFR
650	ALL	315105-0165	-		16	WASHER BRB8,4X16RFR
660	ALL	315233-0109	S		8	SEAL RING R1/8"
670	ALL	315259-0102	S		8	FELT SEAL SKFF1190
680	ALL	321116-0135	S		4	BUSHING 10E7/16X10
690	ALL	352103-0100	-		1	CABLE GLANR.15,2/2-6

TETRA PAK

3/8608

S-456100-1

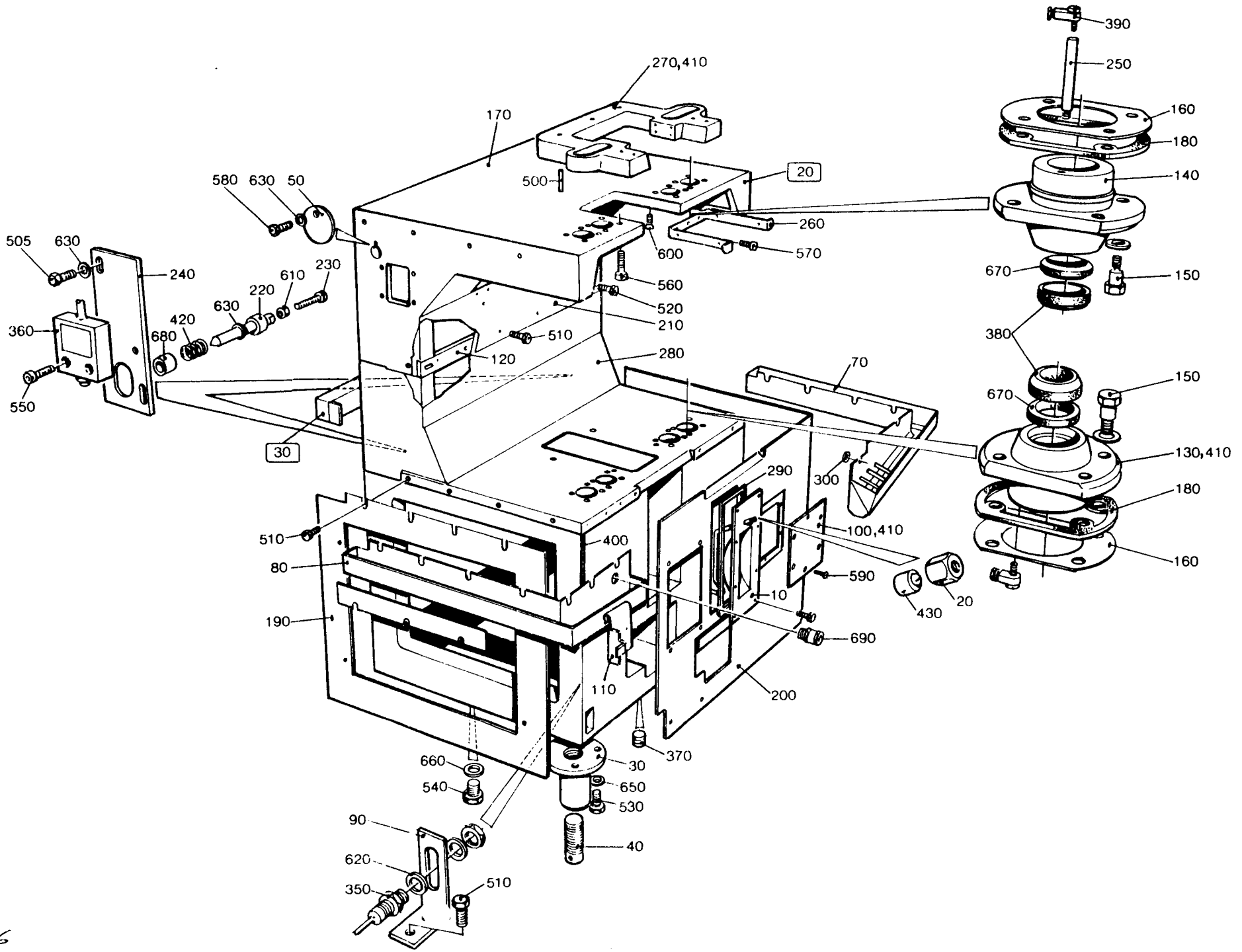

AM 8456

LAST ALTERATION: AM 10505 87-06-22
648102-070V
AM 8636
86-01-21

GROUP	FILLMACHINE	VOLUME
-0201	B9	V0284
	NOT COMPLETE	
-0202	B9	V0250
-0203	B9	V0236
-0204	B9	V0200
-0205	B9	V0187
	NOT COMPLETE	
-0206	B9	V0180
-0207	B9	200ML SLIM
-0208	AB8	V0284
	NOT COMPLETE	
-0209	AB9	V0250
-0210	AB9	V0236
-0211	AB9	V0200
-0212	AB9	V0187
	NOT COMPLETE	
-0213	AB9	V0180
-0214	AB9	V0125
-0215	AB9	V0100
	NOT COMPLETE	
-0216	AB9	200ML SLIM

POS	VAR	PART NUMBER	SP UN	QTY	DESCRIPTION
	-0202	S- 456100-SHEET	-2		===ASSEMBLY DRAWING===
	-0203		-2		
	-0204		-2		
	-0206		-2		
	-0207		-2		
	-0209		-2		
	-0210		-2		
	-0211		-2		
	-0213		-2		
	-0214		-2		
	-0216		-2		
F020	ALL	C- 441534-0101	-	2	LIGHT FIXTURE
F030	ALL	C- 456827-0101	-	1	CONNECTION BOX
010	-0202	469832-0002	-	1	COVER
	-0209			1	
010	-0203	469831-0003	-	1	COVER
	-0210			1	
010	-0204	469831-0004	-	1	COVER
	-0211			1	
010	-0206	469831-0006	-	1	COVER
	-0213			1	
010	-0207	469832-0001	-	1	COVER

POS	VAR	PART NUMBER	SP UN	QTY	DESCRIPTION
	-0216			1	
010	-0214	469831-0007	-	1	COVER
020	-0203	441077	-	1	BRACKET
	-0204			1	
	-0206			1	
	-0210			1	
	-0211			1	
	-0213			1	
	-0214			1	
200	-0201	441659	-	1	FRONT PLATE
	-0202			1	
	-0203			1	
	-0204			1	
	-0205			1	
	-0206			1	
	-0207			1	
200	-0208	456573	-	1	FRONT PLATE
	-0209			1	
	-0210			1	
	-0211			1	
	-0212			1	
	-0213			1	
	-0214			1	
	-0215			1	
	-0216			1	
030	ALL	469095	C	4	HOLDER
040	ALL	469096	C	4	LEG
050	ALL	272058	-	2	LID
060	ALL	751085	-	32	BUSHING
070	ALL	272670	-	1	CHUTE
080	ALL	272671	-	1	CHUTE
090	ALL	295191	-	2	BRACKET
100	ALL	295302	-	1	COVER
110	ALL	441162	-	1	PROTECTION PLATE
120	ALL	441212	C	1	HOLDER
130	ALL	G- 441217	S	4	BUSHING LOWER
140	ALL	G- 441218	S	4	BUSHING UPPER
160	ALL	441221	-	8	WASHER
170	ALL	G- 456475	-	1	MACHINE BODY
180	ALL	441593	-	8	GASKET
190	ALL	441658	-	1	FRONT PLATE
210	ALL	751124	-	1	FRONT PLATE
220	ALL	490891	C	2	PIN
230	ALL	272158	S	2	PIN
235	ALL	490890	-	2	PLATE
240	ALL	490910	-	1	PLATE
245	ALL	490911	-	1	PLATE
250	ALL	469937	-	4	PIPE
260	ALL	441677	-	1	FRONT PLATE

S-456100-2

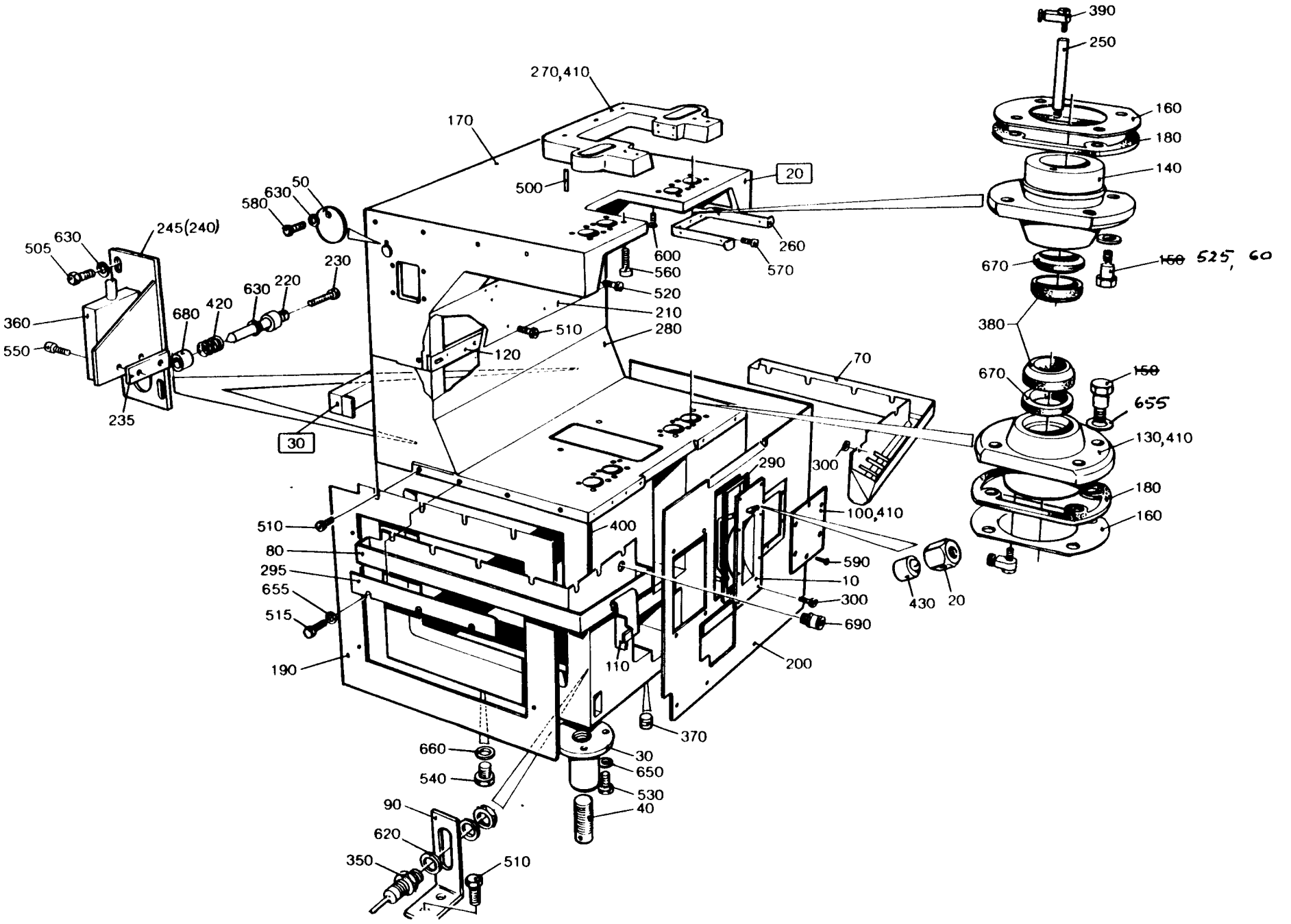
390
250
270,410
170
160
180
140
500
20
580
630
50
260
600
570
560
520
210
280
510
120
505
630
245(240)
230
220
630
420
680
360
550
235
30
70
670
150
655
130,410
180
160
380
670
150
525, 60
300
290
100,410
590
10
300
690
430
20
510
80
295
655
515
190
400
110
200
370
660
540
30
650
530
40
90
620
350
510

POS	VAR	PART NUMBER	SP	UN	QTY	DESCRIPTION
270	ALL	G- 441806	-		1	COLLAR
280	ALL	441809	-		1	FRONT PLATE
290	ALL	441810	C		1	GASKET
295	ALL	490986	-		1	PLATE
300	ALL	6278	S		1	WASHER
350	ALL	90044-0085	P		2	SENSOR
360	ALL	90044-0101	S		2	LIMIT SWITCH
370	ALL	90087-0002	-		3	PIPE PLUG
380	ALL	90091-0106	S		8	SEALED RING
390	ALL	90137-0010	-		8	PIPE JOINT
400	ALL	90143-0010	-	MM	260	STRIP
405	ALL	90157-0016	-	ML	X	LOCKING FLUID
410	ALL	90157-0022	-	G	X	SEALING COMPOUND
420	ALL	90335-0036	S		2	SPRING
430	ALL	90424-0027	S		1	NOZZLE
500	ALL	311103-0415	-		3	CYLINDRICACPR8M6X55RFR
505	ALL	312105-0327	-		4	SCREW M6S5X12 A4 80
510	ALL	312105-0366	-		31	SCREW M6S6X12RFR
515	ALL	312105-0368	-		3	SCREW M6S6X16RFR
520	ALL	312105-0370	-		2	SCREW M6S6X20RFR
525	ALL	312105-0374	-		32	SCREW M6S6X30RFR
530	ALL	312105-0451	-		16	SCREW M6S8X20RFR
540	ALL	312105-0489	-		8	SCREW M6S10X16RFR
550	ALL	312111-0331	-		4	SCREW MC6S5X20FZB
560	ALL	312115-0503	-		10	SCREW 10X60 A4 80
570	ALL	312125-0323	-		7	SLOTTED HEMCS5X8RFR
580	ALL	312125-0329	-		2	SLOTTED HEMCS5X16RFR
590	ALL	312155-0325	-		6	SCREW MF6S5X10RFR
600	ALL	312155-0366	-		9	SCREW MF6S6X12RFR
620	ALL	315101-0176	-		4	WASHER BRB12X22FZB
630	ALL	315105-0146	-		6	WASHER BRB5,3X10RFR
650	ALL	315105-0165	-		16	WASHER BRB8,4X16RFR
655	ALL	315105-0153	-		35	WASHER BRB6,4X12RFR
660	ALL	315233-0109	S		8	SEAL RING R1/8"
670	ALL	315259-0102	S		8	FELT SEAL SKFF1190
680	ALL	321116-0135	S		4	BUSHING 10E7/16X10
690	ALL	352103-0100	-		1	CABLE GLANR.15,2/2-6

S-456100-2

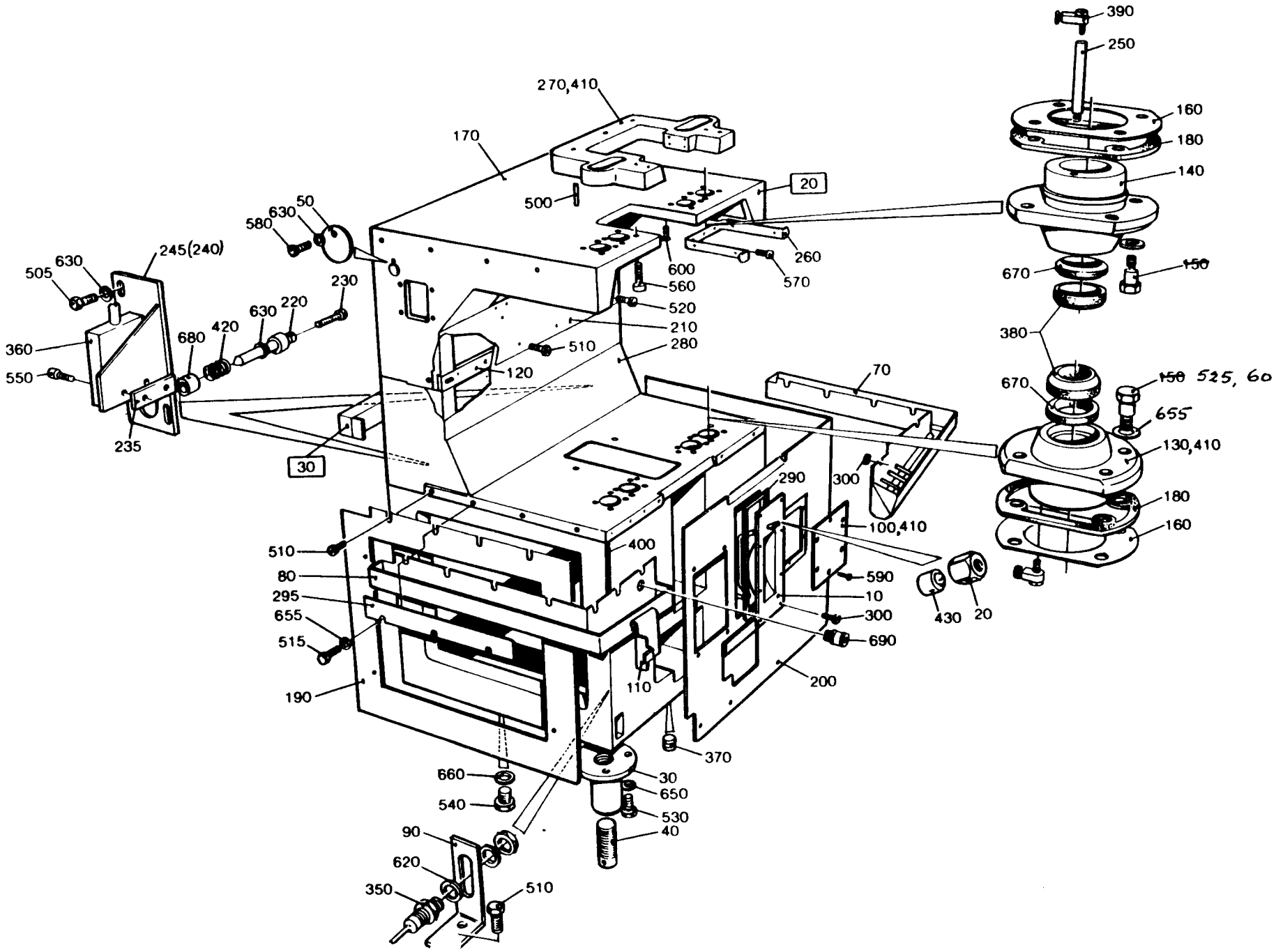
390
250
270,410
160
180
170
140
20
500
630
50
580
260
570
600
560
520
210
280
510
120
245(240)
505
630
230
630
220
680
420
360
550
235
30
670
150
380
150 525, 60
655
130,410
70
300
290
180
160
100,410
400
590
10
300
690
430
20
510
80
295
655
515
190
110
200
370
660
540
30
650
530
40
90
620
350
510

LAST ALTERATION: AM 9085 86-05-18
456100-010V
AM 6867
84-06-12

POS	VAR	PART NUMBER	SP	EH	QTY	DESCRIPTION
	-0101	S- 441534-SHEET	-1			===ASSEMBLY DRAWING===
010	-0101	441536	S		2	GASKET
020	-0101	456263	-		1	PLATE
030	-0101	456264	S		1	GLASS
040	-0101	469336	S		1	COVER
050	-0101	469337	-		1	REFLECTOR
100	-0101	90099-0002	-		1	NUT
110	-0101	90164-0301	S		1	LAMPHOLDER
120	-0101	90195-0020	-		1	TERMINAL BLOCK
130	-0101	90297-0006	P		1	FLUORESCENT LAMP
280	-0101	312105-0325	-		2	SCREW M6S5X10 A4 80
290	-0101	312115-0331	-		8	SCREW 5X20 A4 80
300	-0101	312125-0220	-		2	SLOTTED HEMCS3X6RFR
310	-0101	312125-0230	-		1	SLOTTED HEMCS3X20RFR
370	-0101	315105-0124	-		2	WASHER BRB3,2X6RFR
380	-0101	315105-0146	-		2	WASHER BRB5,3X10RFR
400	-0101	352103-0106	-		1	CABLE GLANR.18,6/5-10

TETRA PAK

2/8608 **S-441534-1**

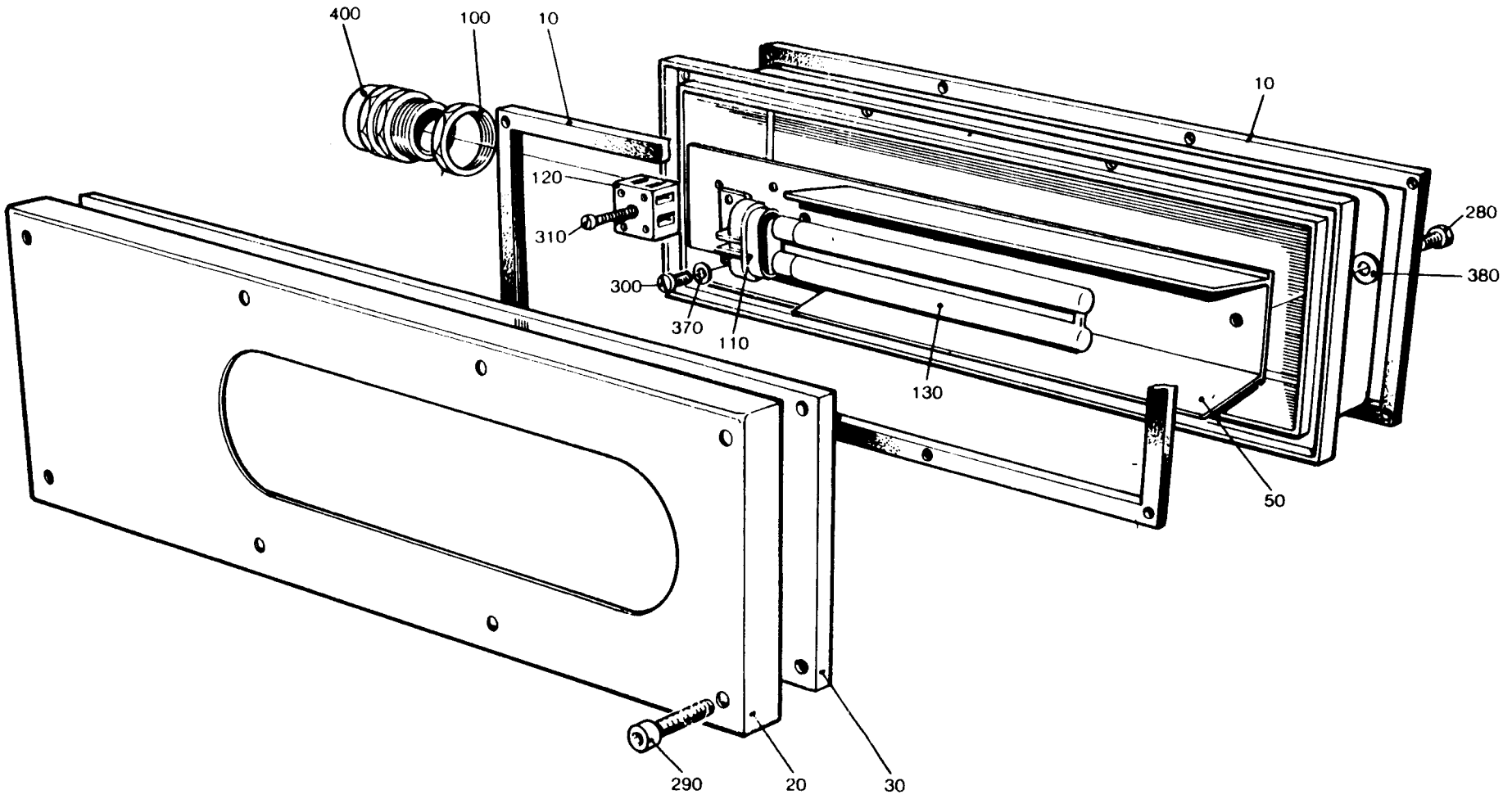

AM 80-34

LAST ALTERATION: AM 9109 86-05-18
648102-060V
AM 6387
83-12-19

GROUP	FILLMACHINE	VOLUME
-0101	B9	V0284
	NOT COMPLETE	
-0102	B9	V0250
-0103	B9	V0236
-0104	B9	V0200
-0105	B9	V0187
	NOT COMPLETE	
-0106	B9	V0180
-0107	B9	200ML SLIM
-0108	AB9	V0284
	NOT COMPLETE	
-0109	AB9	V0250
-0110	AB9	V0236
-0111	AB9	V0200
-0112	AB9	V0187
	NOT COMPLETE	
-0113	AB9	V0180
-0114	AB9	V0125
-0115	AB9	V0100
	NOT COMPLETE	
-0116	AB9	200ML SLIM

POS	VAR	PART NUMBER	SP	EH	QTY	DESCRIPTION
	-0101	S- 456180-SHEET	-1			===ASSEMBLY DRAWING===
	-0101		~~-2~~			
	-0102		-1			
	-0102		~~-2~~			
	-0103		-1			
	-0103		~~-2~~			
	-0104		-1			
	-0104		~~-2~~			
	-0105		-1			
	-0105		~~-2~~			
	-0106		-1			
	-0106		~~-2~~			
	-0107		-1			
	-0107		~~-2~~			
	-0108		-1			
	-0108		~~-2~~			
	-0109		-1			
	-0109		~~-2~~			
	-0110		-1			
	-0110		~~-2~~			
	-0111		-1			
	-0111		~~-2~~			
	-0112		-1			

POS	VAR	PART NUMBER	SP	EH	QTY	DESCRIPTION
	-0112	S- 456180-SHEET	~~-2~~			===ASSEMBLY DRAWING===
	-0113		-1			
	-0113		~~-2~~			
	-0114		-1			
	-0114		~~-2~~			
	-0115		-1			
	-0115		~~-2~~			
	-0116		-1			
	-0116		~~-2~~			
010	-0102	456157-0002	-		1	DROP CHUTE
010	-0103	456157-0003	-		1	DROP CHUTE
010	-0104	456157-0004	-		1	DROP CHUTE
010	-0106	456157-0006	-		1	DROP CHUTE
010	-0107	456158	-		1	DROP CHUTE
010	-0109	456144-0002	-		1	DROP CHUTE
010	-0110	456144-0003	-		1	DROP CHUTE
010	-0111	456144-0004	-		1	DROP CHUTE
010	-0113	456144-0006	-		1	DROP CHUTE
010	-0114	456145	-		1	DROP CHUTE
010	-0116	456146	-		1	DROP CHUTE
020	-0102	456159	-		1	GUIDE PLATE
020	-0103	456160	-		1	GUIDE PLATE
020	-0104	456161	-		1	GUIDE PLATE
020	-0106	456162	-		1	GUIDE PLATE
020	-0107	456163	-		1	GUIDE PLATE
020	-0109	456147	-		1	GUIDE PLATE
020	-0110	456148	-		1	GUIDE PLATE
020	-0111	456149	-		1	GUIDE PLATE
020	-0113	456150	-		1	GUIDE PLATE
020	-0114	456151	-		1	GUIDE PLATE
020	-0116	456152	-		1	GUIDE PLATE
030	-0102	491881-0001	-		1	ROCKING LEVER
	-0103				1	
	-0104				1	
	-0106				1	
	-0107				1	
	-0109				1	
	-0110				1	
	-0111				1	
	-0113				1	
	-0116				1	
030	-0114	491881-0002	-		1	ROCKING LEVER
040	-0102	295097	S		1	SLIDER
	-0103				1	
	-0104				1	
	-0106				1	
	-0109				1	
	-0110				1	

TETRA PAK

3/8608

S-456180-1

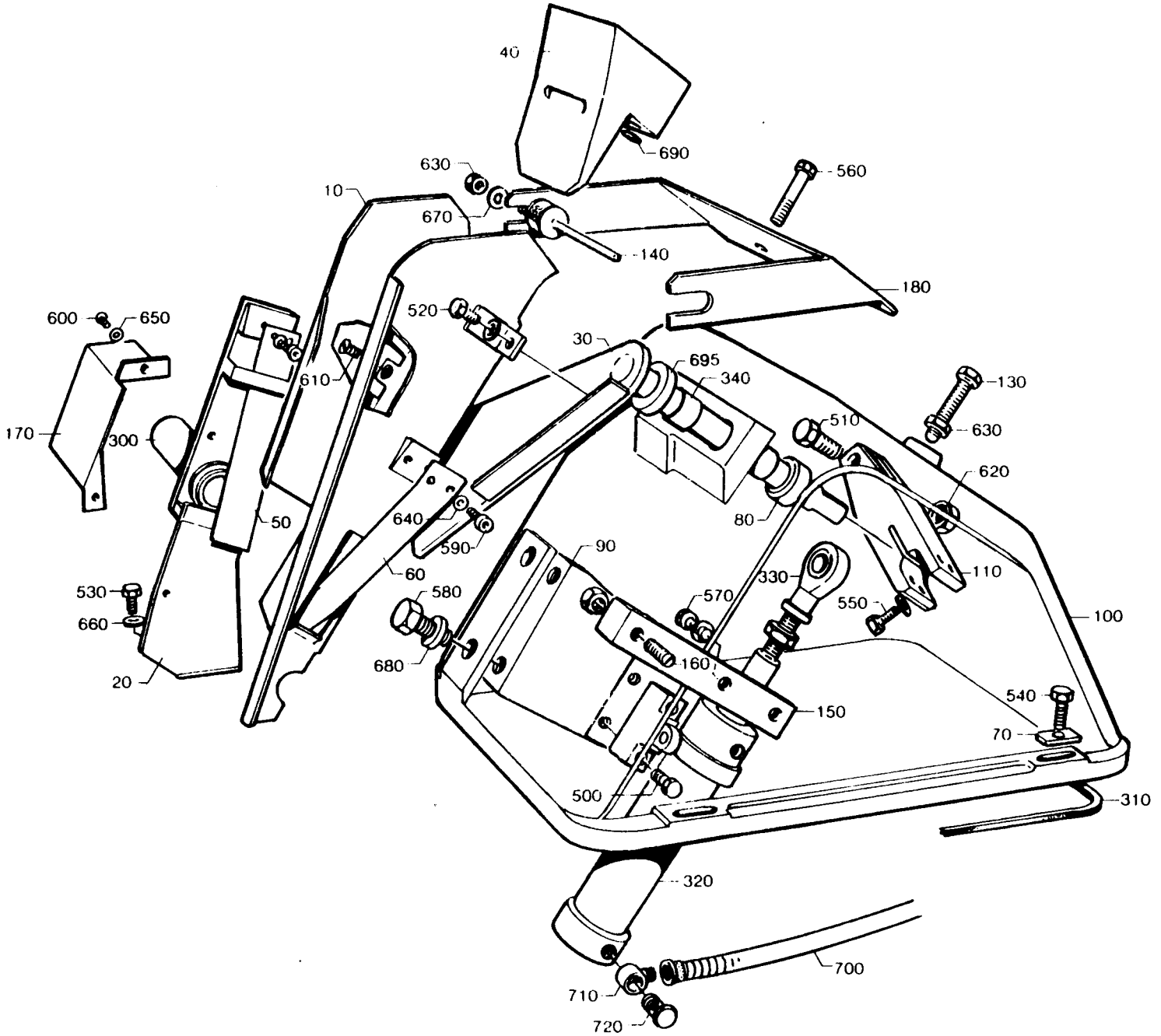

POS	VAR	PART NUMBER	SP	EH	QTY	DESCRIPTION
	-0111				1	
	-0113				1	
040	-0107	255942	S		1	SLIDER
	-0114				1	
040	-0116	469502	S		1	SLIDER
050	-0102	456165	S		1	PLATE SPRING
	-0103				1	
	-0104				1	
	-0106				1	
	-0109				1	
	-0110				1	
	-0111				1	
	-0113				1	
050	-0107	456164	S		1	PLATE SPRING
	-0114				1	
	-0116				1	
060	-0102	456167	S		1	PLATE SPRING
	-0103				1	
	-0104				1	
	-0106				1	
	-0109				1	
	-0110				1	
	-0111				1	
	-0113				1	
060	-0107	456166	S		1	PLATE SPRING
	-0114				1	
	-0116				1	
070	ALL	255939	-		4	WASHER
080	ALL	255940	-		1	SPACER
090	ALL	255943	-		1	HOLDER
100	ALL	271163	C		1	BRACKET
110	ALL	272600	-		1	ARM
130	ALL	272602	-		1	SCREW
140	ALL	272742	S		1	FINGER
150	ALL	272852	-		1	HOLDER
160	ALL	272853	-		1	SCREW
170	ALL	295075	-		1	GUARD
180	ALL	295399	C		1	HOLDER
300	ALL	90044-0095	P		1	PROXIMITY SWITCH
310	ALL	90161-0001	S	MM	1500	STRIP
320	ALL	90239-0298	S		1	CYLINDER
		90239-0349	S		1	* SEAL KIT
330	ALL	90239-0405	S		1	BRACKET
340	ALL	90240-0073	S		2	RICTION BEARING
500	ALL	312101-0331	-		4	SCREW M6S5X20FZB
510	ALL	312101-0499	-		1	SCREW M6S10X40FZB
520	ALL	312105-0364	-		1	SCREW M6S6X10RFR
530	ALL	312105-0368	-		2	SCREW M6S6X16RFR
540	ALL	312105-0372	-		4	SCREW M6S6X25RFR

POS	VAR	PART NUMBER	SP	EH	QTY	DESCRIPTION
550	ALL	312105-0376	-		2	SCREW M6S6X35RFR
560	ALL	312105-0380	-		2	SCREW M6S6X50RFR
570	ALL	312105-0451	-		2	SCREW M6S8X20RFR
580	ALL	312105-0455	-		2	SCREW M6S8X30RFR
590	ALL	312115-0285	-		4	SCREW S 4X6 A4 80
600	ALL	312125-0323	-		2	SLOTTED HEMCS5X8RFR
610	ALL	312155-0364	-		1	SCREW MF6S6X10RFR
620	ALL	312601-0320	-		1	NUT M6M10FZB
630	ALL	312605-0318	-		4	NUT M6M8RFR
640	ALL	315105-0136	-		4	WASHER BRB4,3X8RFR
650	ALL	315105-0146	-		2	WASHER BRB5,3X10RFR
660	ALL	315105-0153	-		5	WASHER BRB6,4X12RFR
670	ALL	315105-0165	-		2	WASHER BRB8,4X16RFR
680	ALL	315115-0165	-		4	WASHER TBRB8,4X16RFR
690	ALL	315202-0206	S		1	O-RING 7,3X2,4
695	ALL	315233-0111	-		1	SEAL RING R3/8"
700	ALL	342903-0121	S		3	NUT JÄDER 1723-8/6
710	ALL	342980-0121	S		3	BANJO CONNINGEL 8/6-1/8"
720	ALL	342980-0303	S		3	BANJO CONN SINGEL 1/8"

TETRA PAK

3/8608

S-456180-1

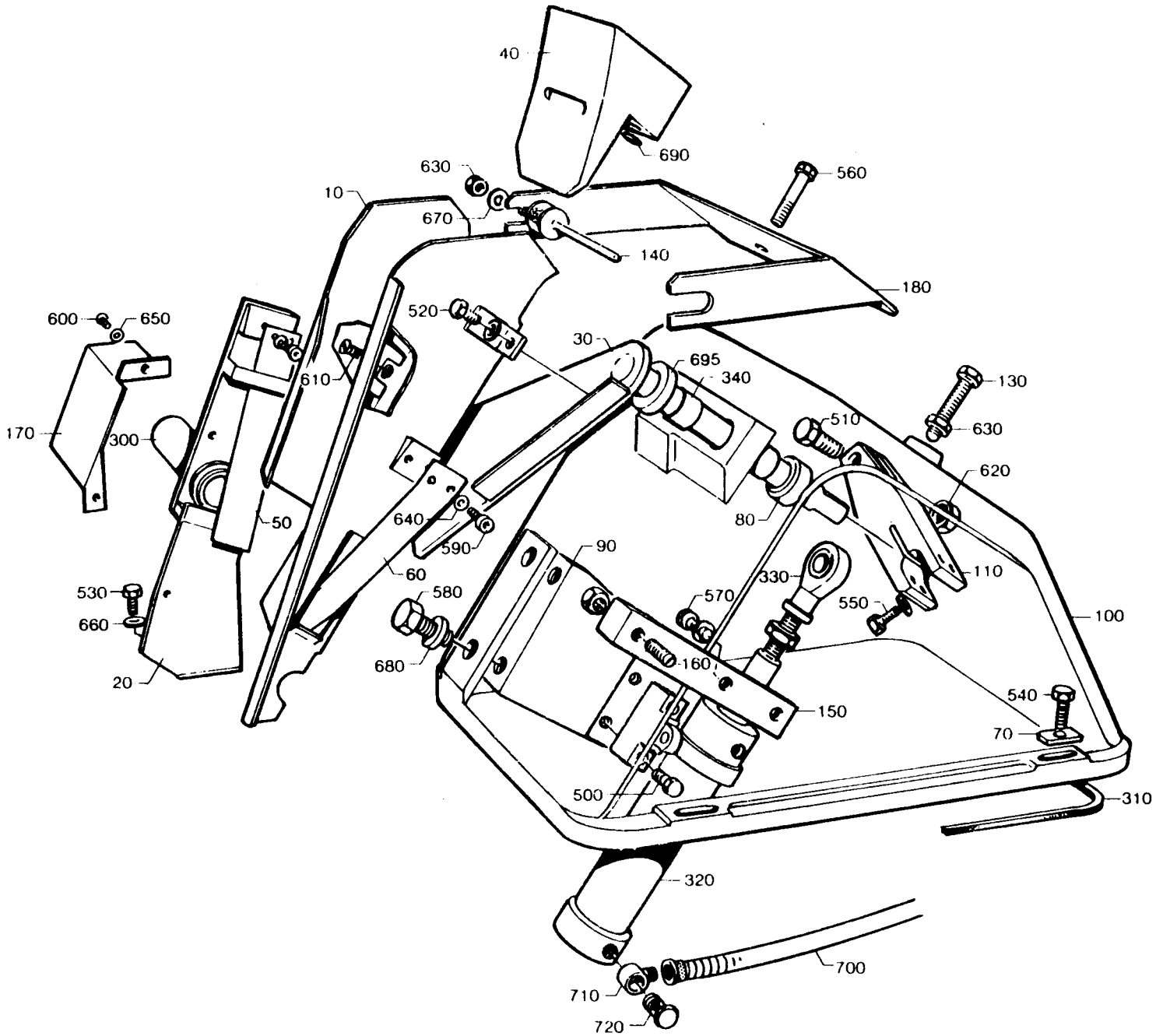

LAST ALTERATION: AM 8636 86-01-21
648102-070V

GROUP FILLMACHINE

-0501 B9
-0502 AB9

POS	VAR	PART NUMBER	SP	EH	QTY	DESCRIPTION
	-0501	S- 271562-SHEET	~~-15~~			===ASSEMBLY DRAWING===
	-0501		~~-15~~			
	-0501		~~-16~~			
	-0501		-17			
	-0502		~~-15~~			
	-0502		~~-15~~			
	-0502		~~-16~~			
	-0502		-17			
F070	ALL	C- 271261-040V	-		1	CLEANING SYSTEM
F080	ALL	C- 491650-0101	-		1	DISTRIBUTOR BLOCK
630	-0501	90166-0118	-	M	12	HOSE
	-0502				11	
010	ALL	469086	-		1	PIPE
020	ALL	469087	-		1	PIPE
030	ALL	271742	-		1	PIPE
040	ALL	271743	-		1	PIPE
050	ALL	272346	-		1	PIPE
060	ALL	469133	-		1	PIPE
070	ALL	469132	-		1	PIPE
075	ALL	469131	-		2	INSERT
080	ALL	271621	-		1	INSERT
090	ALL	271622	-		1	INSERT
100	ALL	271623	-		1	INSERT
120	ALL	295986	-		1	HOLDER
130	ALL	456407	-		1	INSERT
140	ALL	491390	-		1	PIPE CENTRAL LUBRICATION
310	ALL	90028-0001	S		5	CONE
320	ALL	90028-0020	S		23	CONE
330	ALL	90028-0021	S		6	CONE
340	ALL	90030-0051	S		1	PIPE CONNECTION
345	ALL	90030-0098	S		10	CONE
350	ALL	90030-0162	S		4	CONNECTION
352	ALL	90030-0172	S		10	NUT
355	ALL	90030-0200	-		2	PIPE JOINT
360	ALL	90032-0014	-		1	JUNCTION BLOCK
370	ALL	90032-0026	-		1	JUNCTION BLOCK
390	ALL	90032-0030	-		1	JUNCTION BLOCK
391	ALL	90032-0031	-		1	JUNCTION BLOCK
400	ALL	90032-0038	-		2	BLOCK
410	ALL	90032-0039	-		5	BLOCK
420	ALL	90090-0008	S		2	STEEL BALL
430	ALL	90092-0052	S		10	VALVE
440	ALL	90092-0053	S		13	VALVE

POS	VAR	PART NUMBER	SP	EH	QTY	DESCRIPTION
450	ALL	90134-0003	S		5	BUSHING
470	ALL	90134-0030	S		4	SLEEVE
480	ALL	90134-0031	S		7	SLEEVE
490	ALL	90134-0034	S		10	NIPPLE
500	ALL	90134-0038	S		9	BUSHING
510	ALL	90134-0039	S		24	BUSHING
520	ALL	90134-0052	S		1	PLUG
534	ALL	90148-0037	S		2	HOSE
536	ALL	90148-0038	S		2	HOSE
540	ALL	90151-0001	-	M	2,2	PIPE
550	ALL	90266-0019	-	MM	7000	PIPE
560	ALL	90165-0002	-		2	CLIP
580	ALL	90165-0007	-		2	CLIP
590	ALL	90165-0022	-		8	CLIP
600	ALL	90165-0023	-		6	CLIP
610	ALL	90166-0108	-	MM	3300	HOSE
620	ALL	90166-0109	-	MM	7000	HOSE
640	ALL	90166-0132	-	M	4	HOSE
641	ALL	90166-0133	-	M	11	HOSE
650	ALL	90266-0006	-	MM	3800	TUBE
790	ALL	312105-0289	-		2	SCREW M6S4X10 A4 80
800	ALL	312105-0295	-		8	SCREW M6S4X20 A4 80
810	ALL	312105-0297	-		12	SCREW M6S4X25 A4 80
820	ALL	312105-0372	-		2	SCREW M6S6X25RFR
830	ALL	312115-0289	-		2	SCREW S4X10 A4 80
840	ALL	312125-0287	-		16	SLOTTED HEMCS4X8RFR
850	ALL	312165-0325	-		2	SLOTTED HEMKFS5X10RFR
857	ALL	315105-0136	-		4	WASHER BRB4,3X8RFR
860	ALL	315234-0109	S		1	SEAL RING R1/8"
865	ALL	342727-0102	-		1	PIPE CONNEG6-LFZB
867	ALL	342736-0109	-		1	ELBOW COUP W-12
870	ALL	342767-0100	S		1	GROMMET R1/8
880	ALL	342797-0121	S		1	BANJO CONNSINGEL 6-1/8
890	ALL	342980-0303	S		1	BANJO CONN SINGEL 1/8"
900	ALL	352113-0101	-		4	RIBBON CLAR
910	ALL	359000-0400	-		22	MARKING CO2/4"0"
920	ALL	359000-0401	-		20	MARKING CO2/4"1"
930	ALL	359000-0402	-		14	MARKING CO2/4"2"
940	ALL	359000-0403	-		8	MARKING CO2/4"3"
950	ALL	359000-0404	-		2	MARKING CO2/4"4"
951	ALL	359000-0405	-		4	MARKING CO2/4"5"
952	ALL	359000-0406	-		4	MARKING CO2/4"6"
965	ALL	359000-0407	-		8	MARKING CO2/4"7"
990	ALL	359000-0771	-		16	MARKING CO2/4"V"

TETRA PAK

1/8608

S-271562-17

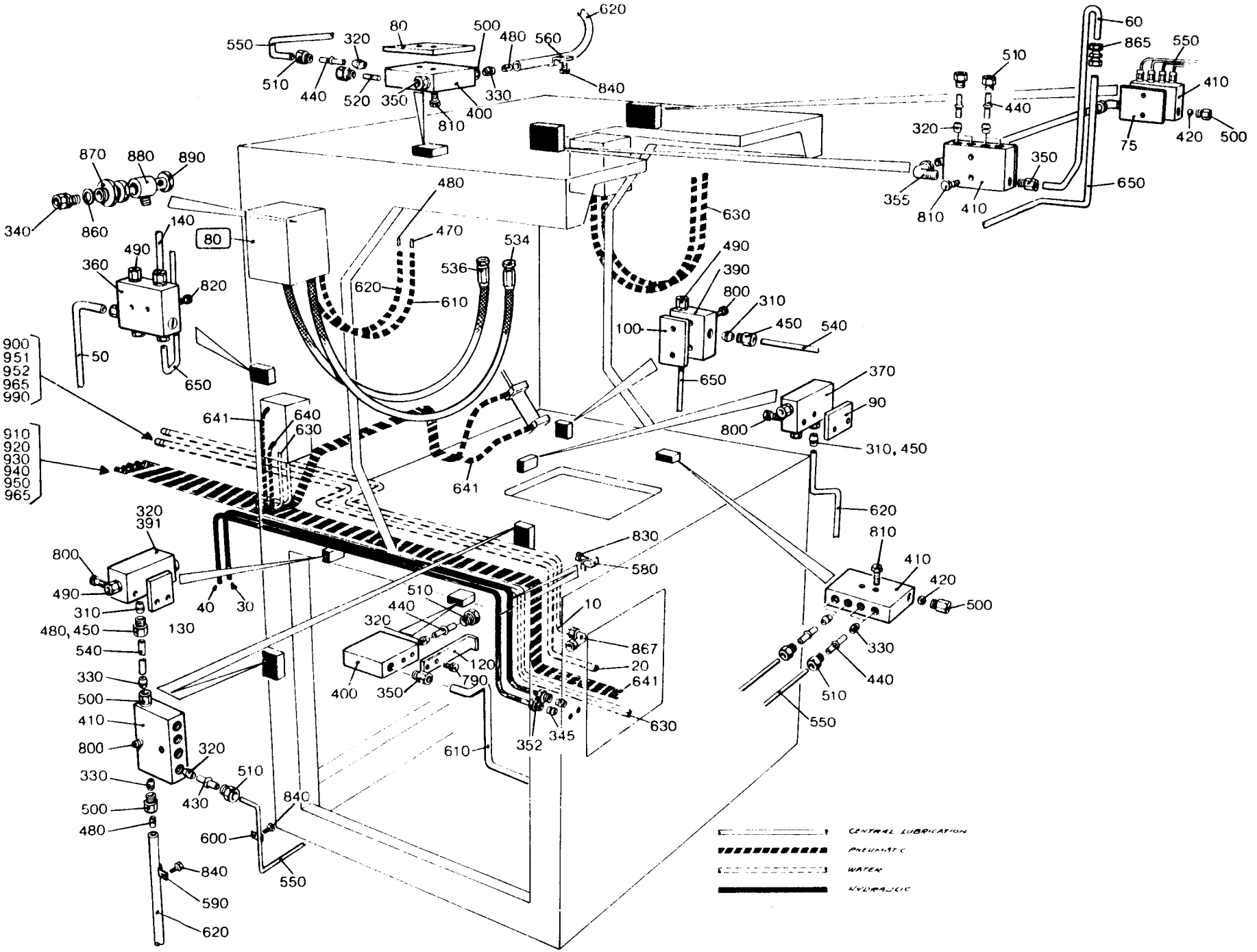

NM 8636

LAST ALTERATION: AM 8099 85-06-26
259605-040V 295026-020V

POS	VAR	PART NUMBER	SP	EH	QTY	DESCRIPTION
~~F010~~	~~-0101~~	~~C 67054-0201~~			~~1~~	~~COMPONENT LIST~~
D	1 -0101	49739-01:00	-		X	CIRCUIT DIAGRAM
D	2 -0101	49740-01:00	-		X	COMPONENT LAYOUT
D	3 -0101	49743-01:00	-		X	ASSEMBLY INSTRUCTION
D	4 -0101	49744-01:00	-		X	TEST INSTRUCTION
020	-0101	479870	-		1	PRINTED CIRCUIT BOARD
030	-0101	479871	-		1	POTENTIOMETER
040	-0101	479872	-		1	SPACER PLATE
050	-0101	479873	-		1	COVER PLATE
060	-0101	479876	-		1	SIGN
070	-0101	479881	-		1	TAPE
080	-0101	479882	-		1	SHIM

LAST ALTERATION: AM 9365 86-07-03
271562-050V
AM 8636
86-01-21

POS	VAR	PART NUMBER	SP	EH	QTY	DESCRIPTION
	-0101	S- 491650-SHEET	-1			===ASSEMBLY DRAWING===
	-0101					
010	-0101	491255	-		1	DISTRIBUTOR BLOCK LEFT
020	-0101	491254	-		1	DISTRIBUTOR BLOCK RIGHT
030	-0101	491256	-		1	DISTRIBUTOR BLOCK LEFT
040	-0101	491244	-		1	PIPE WATER
050	-0101	491245	-		1	PIPE CENTRAL LUBRICATION
060	-0101	491246	-		1	PIPE CENTRAL LUBRICATION
070	-0101	491247	-		1	PIPE WATER
080	-0101	491248	-		1	PIPE WATER
090	-0101	491249	-		1	PIPE HYDRAULIC
100	-0101	491250	-		1	PIPE HYDRAULIC
110	-0101	491251	-		1	PIPE WATER
120	-0101	491252	-		1	PIPE HYDRAULIC
130	-0101	491253	-		1	PIPE HYDRAULIC
140	-0101	271088	-		2	SPACER
150	-0101	271323	-		1	HOLDER
160	-0101	271343	-		2	HOLDER
170	-0101	271344	-		2	HOLDER
180	-0101	456561	-		1	BRACKET
190	-0101	469000	-		1	HOLDER
200	-0101	469001	-		1	HOLDER
210	-0101	469071	-		2	SPACER
300	-0101	90005-0005	S		2	WASHER
310	-0101	90005-0045	-		2	WASHER
320	-0101	90028-0021	P		2	CONE
330	-0101	90030-0065	S		4	PIPE CONNECTION
340	-0101	90030-0171	S		2	CONNECTION
350	-0101	90030-0185	S		8	PIPE CONNECTION
360	-0101	90134-0019	S		2	GLAND
370	-0101	90134-0031	S		2	SLEEVE
380	-0101	90134-0034	S		2	NIPPLE
390	-0101	90134-0038	-		2	BUSHING
400	-0101	90166-0132	-	M	5	HOSE
500	-0101	312101-0372	-		2	SCREW M6S6X25FZB
510	-0101	312101-0385	-		2	SCREW M6S6X75FZB
520	-0101	312101-0388	-		3	SCREW M6S6X90FZB
530	-0101	312105-0453	-		8	SCREW M6S8X25RFR
540	-0101	312111-0471	-		2	SCREW MC6S8X100FZB
550	-0101	315101-0153	-		7	WASHER BRB6,4X12FZB
560	-0101	315105-0165	-		8	WASHER BRB8,4X16RFR
570	-0101	315237-0109	S		16	SEAL RING 1/8"
580	-0101	315237-0110	S		4	SEAL RING 1/4 "

POS	VAR	PART NUMBER	SP	EH	QTY	DESCRIPTION
590	-0101	342738-0208	S		4	ELBOW COUPY
600	-0101	342921-0113	S		10	PIPE CONNE6/4-1/8"
610	-0101	342921-0121	S		4	PIPE CONNE8/6-1/8"
620	-0101	342980-0113	S		11	BANJO CONNSINGEL 6/4-1/8
630	-0101	342980-0122	S		5	BANJO CONNSINGEL 8/6-1/4
640	-0101	342980-0303	S		11	BANJO CONN SINGEL 1/8"
650	-0101	342980-0304	S		3	BANJO CONN SINGEL 1/4
660	-0101	342980-0314	S		2	BANJO CONN DUBBEL 1/4

TETRA PAK

1/8609

S-491650-1

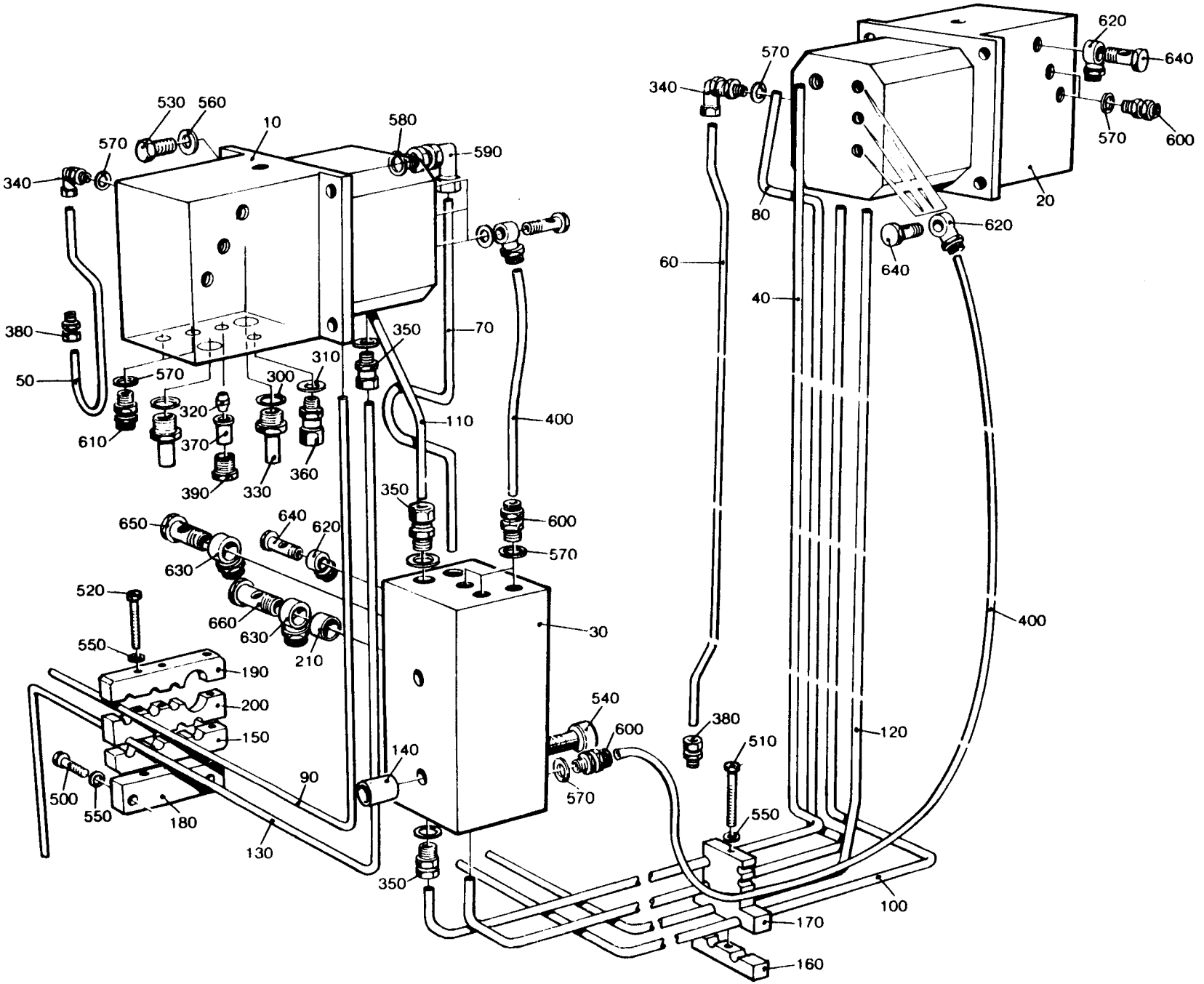

AM 9365

LAST ALTERATION: AM 9108 86-05-18

GROUP	VOLUME	VOLUME	VOLUME	VOLUME	VOLUME
-0101	V0250	V0236	V0200	V0180	200ML SLIM
-0102	V0125	-	-	-	-

POS	VAR	PART NUMBER	SP	EH	QTY	DESCRIPTION
040	-0101	491881-0001	-		1	ROCKING LEVER
040	-0102	491881-0002	-		1	ROCKING LEVER
041	ALL	315233-0111	-		1	SEAL RING R3/8"

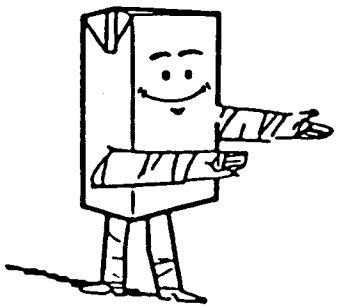

SPC 6481-51/52
DRIVE UNIT

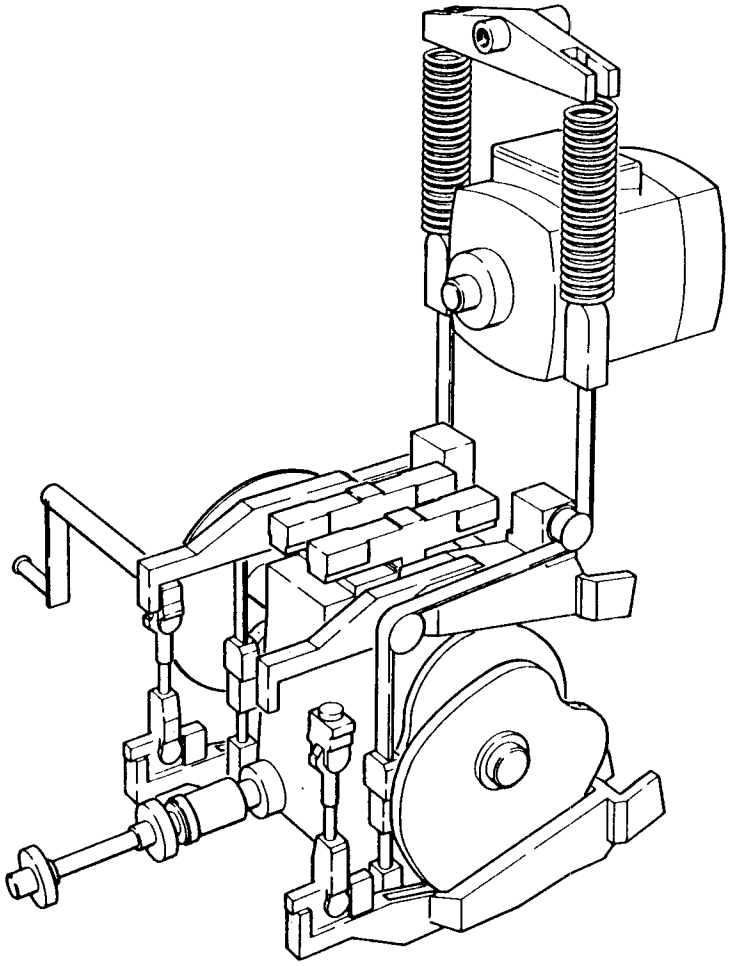

B-648103-

TETRA PAK
SERVICE

LAST ALTERATION: AM 6604 84-02-22
648151 648152
AM 6207
83-11-10

GROUP SEALING
SYSTEM

-0601 TPC
-0602 IH

POS	VAR	PART NUMBER	SP	EH	QTY	DESCRIPTION
	-0601	S- 648103-SHEET	-3			===ASSEMBLY DRAWING===
	-0601		-X			
	-0602		-3			
	-0602		-X			
F010	ALL	C- 256173-020V	-		1	WORM GEAR
F020	ALL	C- 271128-030V	-		1	MOTOR
F030	ALL	C- 256197-0301	-		1	ARM
F040	ALL	C- 256197-0302	-		1	ARM
F050	ALL	C- 256198-0301	-		1	LINK
F060	ALL	C- 256198-0302	-		1	LINK
F070	ALL	C- 256199-0201	-		1	BELT TENSIONER
F080	ALL	C- 256200-0301	-		1	DISTANCE SHAFT
F090	-0601	C- 256201-020V	-		1	CAM PACKAGE
F100	-0602	C- 256202-020V	-		1	CAM PACKAGE
F110	ALL	C- 256203-0301	-		1	DOLLY
F120	ALL	C- 256806-0301	-		1	CRANK

TETRA PAK

2/8501

S-648103-3

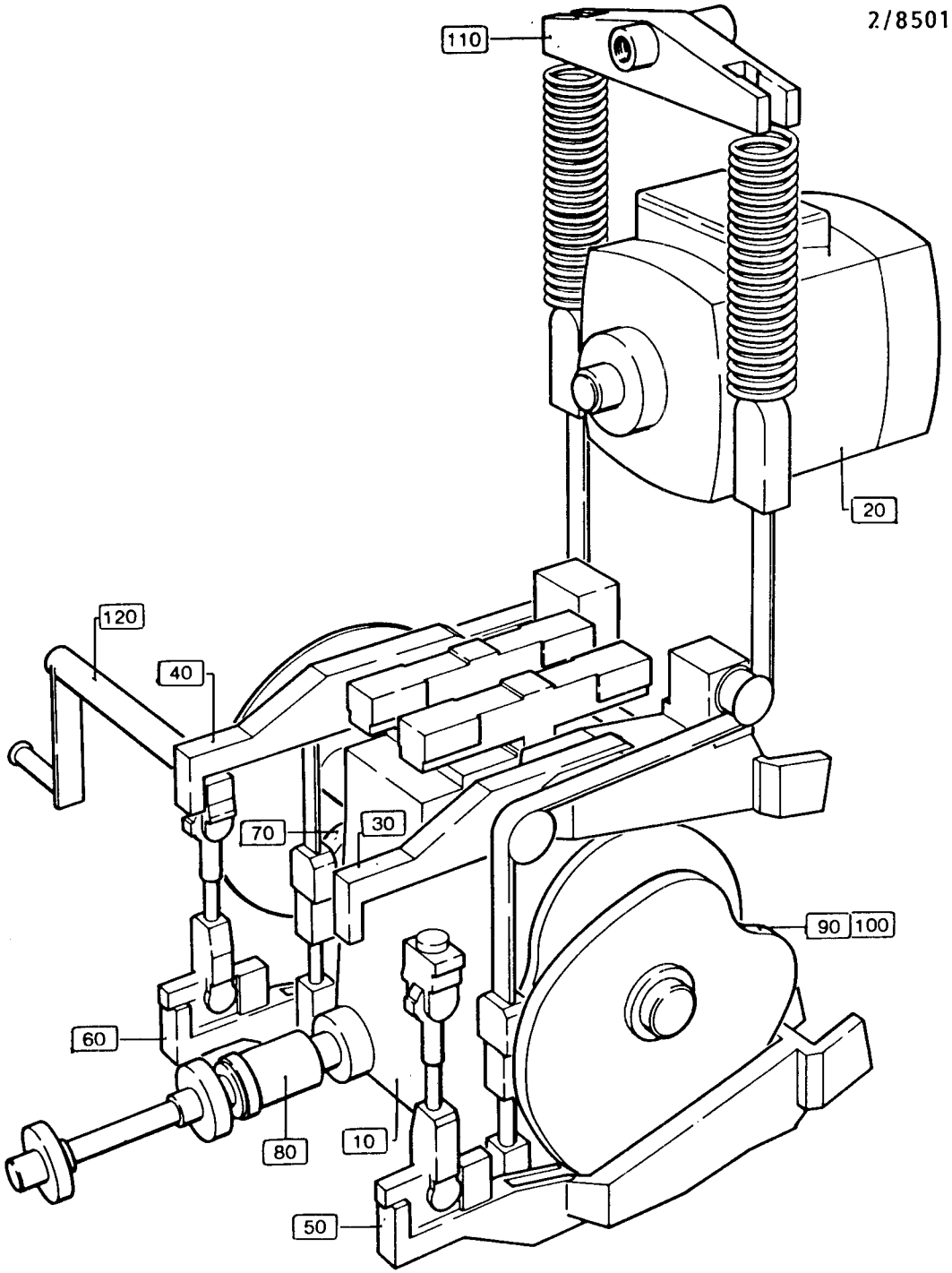

LAST ALTERATION: AM 10059 87-01-14
648151-120V 648152-120V
AM 8485
86-11-03

GROUP SEALING SYSTEM

-0701 TPC
-0702 IH

POS	VAR	PART NUMBER	SP	EH	QTY	DESCRIPTION
	-0701	S- 648103-SHEET	~~-B~~	4		===ASSEMBLY DRAWING===
	-0701		~~-B~~			
	-0702		~~-B~~			
	-0702		~~-B~~			
F010	ALL	C- 256173-030V	-		1	WORM GEAR
F020	ALL	C- 271128-030V	-		1	MOTOR
F030	ALL	C- 256197-0301	-		1	ARM
F040	ALL	C- 256197-0302	-		1	ARM
F050	ALL	C- 491814-0101	-		1	SLEWING BRACKET RIGHT
F060	ALL	C- 491815-0101	-		1	SLEWING BRACKET LEFT
F070	ALL	C- 256199-0201	-		1	BELT TENSIONER
F080	ALL	C- 256200-0301	-		1	INTERMEDIARY SHAFT
F090	-0701	C- 256201-030V	-		1	CAM PACKAGE TPC
F100	-0702	C- 256202-030V	-		1	CAM PACKAGE IH
F110	ALL	C- 256203-030V	-		1	DOLLY
F120	ALL	C- 256806-0301	-		1	CRANK
F130	ALL	C- 491787-0101	-		1	DISCONNECTION LINK RIGHT
F140	ALL	C- 491788-0101	-		1	DISCONNECTION LINK LEFT

S-648103-4

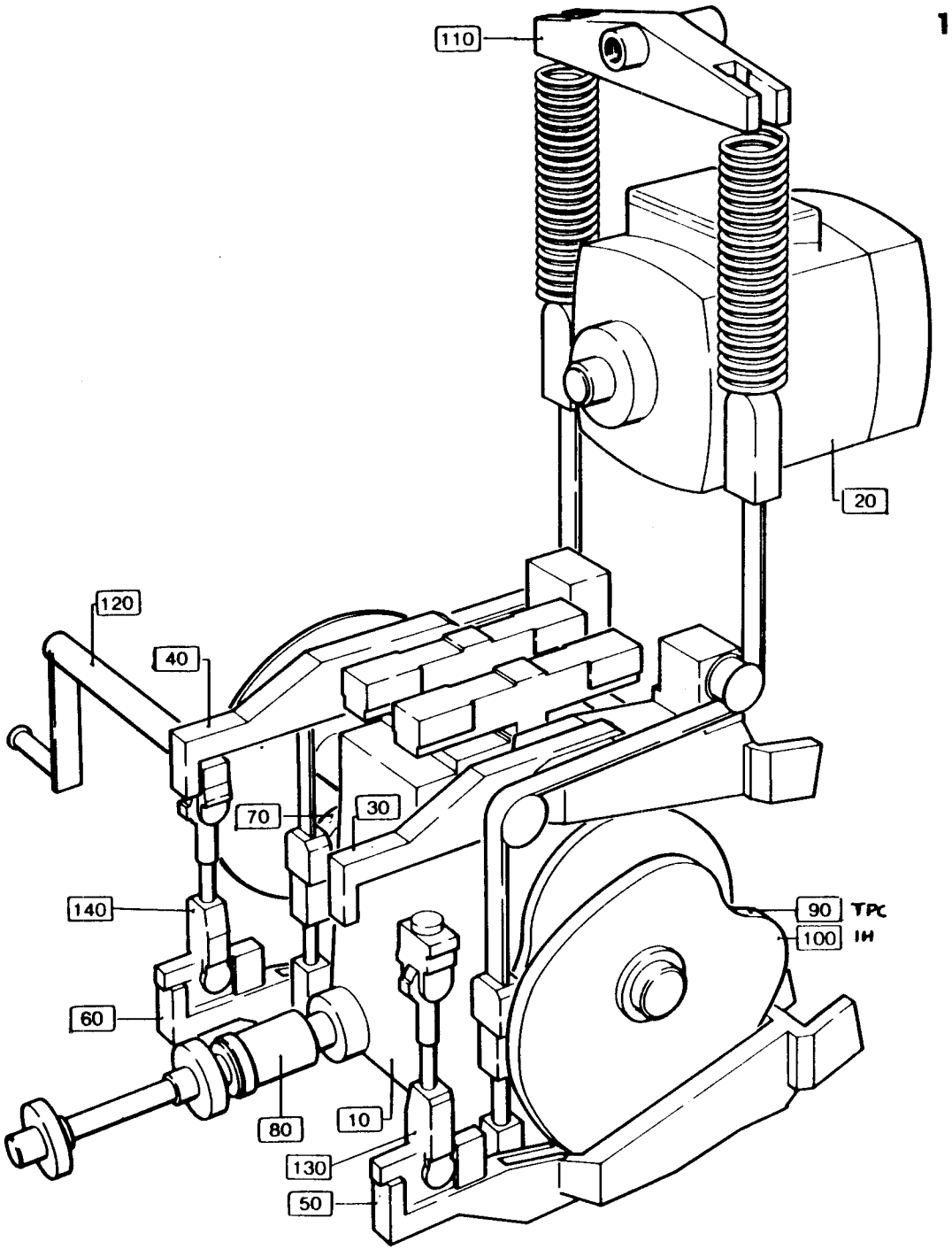

LAST ALTERATION: AM 7236 84-10-25
WORM GEAR C- 256173-020V
648103
AM 5106
82-01-27

GROUP	SEALING SYSTEM	FREQUENCY	PULL-TAB VERSION
-0201	TPC	HZ-50	-
	IH	HZ-50	-
	IH	HZ-60	WITHOUT
-0202	TPC	HZ-60	-
	IH	HZ-60	WITH

POS	VAR	PART NUMBER	SP	EH	QTY	DESCRIPTION
	-0201	S1- 256173-SHEET			-4	===ASSEMBLY DRAWING===
	-0202				-4	
010	-0201	3- 256174-0002	C		1	PULLEY
010	-0202	3- 256174-0003	C		1	PULLEY
020	ALL	2- 441356	C		2	BRACKET
030	ALL	3- 256175	S		1	GEAR
040	ALL	3- 256176	S		1	GEAR
050	ALL	3- 256177	S		1	AXLE
060	ALL	3- 256178	S		1	RING
070	ALL	3- 272372	S		1	HOUSE
080	ALL	4- 256179	-		2	DISTANCE SLEEVE
090	ALL	4- 256180	-		1	DISTANCE
100	ALL	4- 256181	-		1	DISTANCE TUBE
110	ALL	4- 257174	S		1	SEAL WASHER
113	ALL	4- 257179	-		1	GEAR
116	ALL	4- 257214	-		1	WASHER
120	ALL	4- 271689	-		1	WASHER
140	ALL	4- 272374	S		1	CARRIER
160	ALL	4- 272376	-		1	PLUG
170	ALL	4- 272377-0001	-		1	CLIP
180	ALL	4- 272377-0002	-		1	CLIP
190	ALL	4- 272388	-		1	CLIP
200	ALL	4- 295140	S		2	PIN
210	ALL	4- 295766	S		1	SCREW
220	ALL	4- 295767	S		1	SEAL WASHER
230	ALL	4- 441024	S		1	INSERT
240	ALL	4- 441360	-		1	PLATE
250	ALL	4- 441738	S		1	INSERT
260	ALL	4- 456934	S		1	SEAL WASHER
290	ALL	90016-0010	S		2	DISC SPRING
292	ALL	4- 469867	-		1	HOSE HOLDER
300	ALL	90056-0072	S		1	WORM GEAR
310	ALL	90074-0026	-		1	CLIP
312	ALL	90134-0058	-		2	BANJO CONNECTION
315	ALL	90142-0005	-	MM	1500	INSULATING TUBE
316	ALL	90144-0004	-	MM	X	TAPE
317	ALL	90157-0016	-	ML	X	LOCKING FLUID
320	ALL	90166-0060	S	MM	530	HOSE
325	ALL	90166-0133	-	MM	500	HOSE

POS	VAR	PART NUMBER	SP	EH	QTY	DESCRIPTION
330	ALL	90287-0081	-		7	SCREW
334	ALL	90296-0068	-	G	X	GREASE
336	ALL	90296-0075	-	L	4	OIL
340	ALL	90355-0038	S		1	CONNECTION
350	ALL	90361-0011	S		1	BUSHING
360	ALL	90417-0076	S		1	TOOTHED BELT
370	ALL	90432-0005	S		1	BRAKE
500	ALL	312101-0329	-		2	SCREW M6S5X16FZB
510	ALL	312101-0366	-		3	SCREW M6S6X12FZB
520	ALL	312101-0368	-		6	SCREW M6S6X16FZB
525	ALL	312101-0370	-		2	SCREW M6S6X20FZB
530	ALL	312101-0488	-		1	SCREW M6S10X14FZB
540	ALL	312101-0504	-		8	SCREW M6S10X65FZB
550	ALL	312101-0550	-		6	SCREW M6S12X90FZB
570	ALL	312111-0380	-		3	SCREW MC6S6X50FZB
580	ALL	312121-0323	-		5	SLOTTED HEMCS5X8FZB
590	ALL	312155-0447	-		1	SCREW MF6S8X12RFR
600	ALL	315101-0153	-		6	WASHER BRB6,4X12FZB
610	ALL	315111-0173	-		9	WASHER TBRB10,5X22FZB
620	ALL	315111-0178	-		4	WASHER TBRB13X24FZB
640	ALL	315121-0153	-		2	WASHER TBRSB6,4X22FZB
650	ALL	315121-0178	-		2	WASHER TBRSB13X36FZB
660	ALL	315221-0169	S		2	SEAL RING CB30X47X7
670	ALL	315701-0239	S		1	FLAT WEDGE6X6X40
680	ALL	318108-0111	P		2	V-BELT 3V450
690	ALL	321308-0207	S		2	BALL BEARISKF6007-2RS
700	ALL	321313-0105	S		2	BALL BEARISKF6205-2RS
710	ALL	321600-0114	S		2	OIL SEAL LL3052
712	ALL	342701-0208	-		1	BUSHING RNI3/4"-1/4"
714	ALL	342930-0122	-		1	PIPE JOINT8/6-1/4
716	ALL	342980-0122	-		1	BANJO CONNSINGEL 8/6-1/4
718	ALL	342980-0304	-		1	BANJO CONN SINGEL 1/4
720	ALL	342991-0104	-		2	HOSE CLIP 19-28MMRFR

TETRA PAK

3/8506

S-256173-4

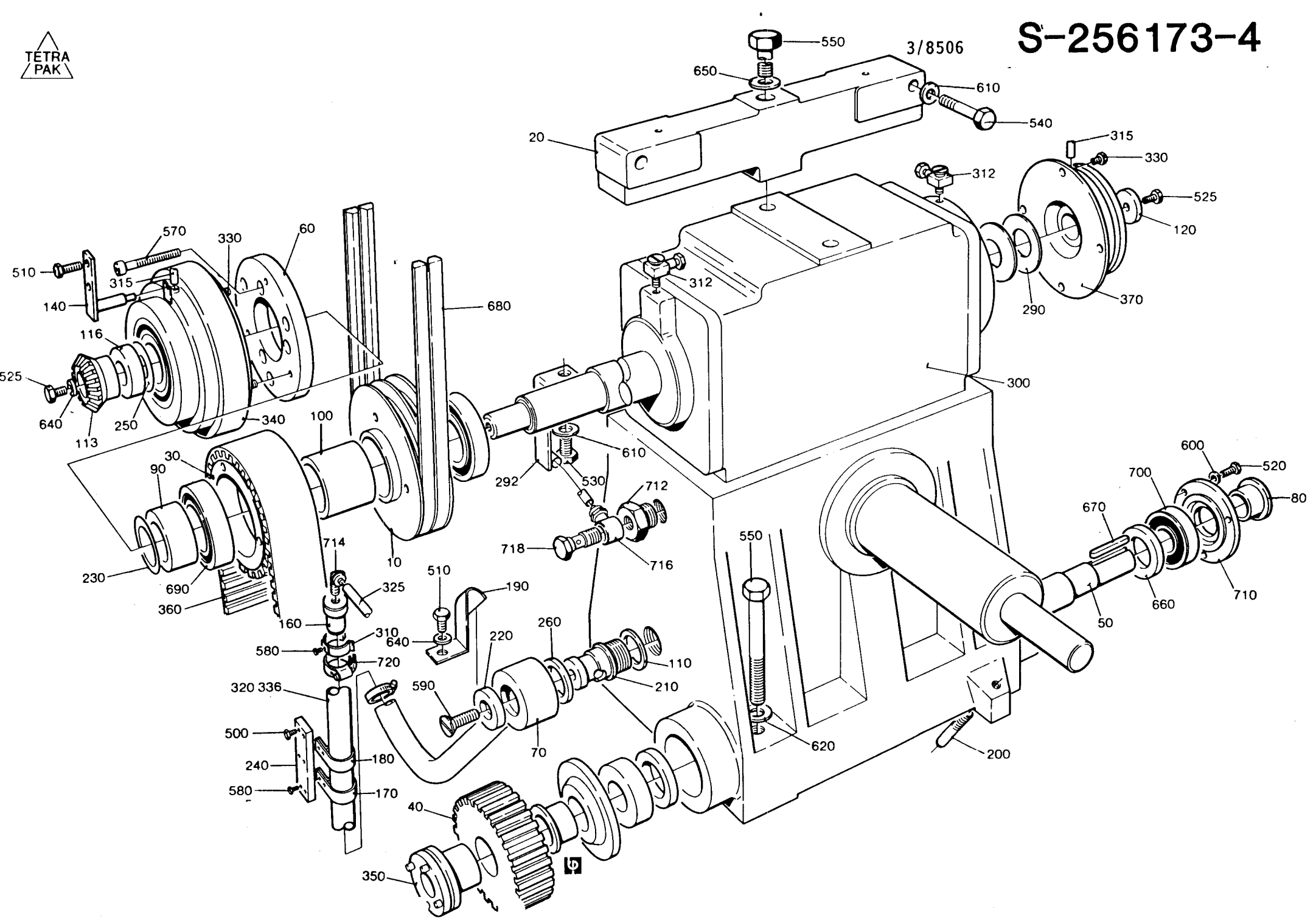

LAST ALTERATION: AM 8671 86-01-15
648103-070V

GROUP	FREQUENCY	MACHINE SPEED
-0301	HZ-50	-
	HZ-60	6000
-0302	HZ-60	5000

POS	VAR	PART NUMBER	SP	EH	QTY	DESCRIPTION
	-0301	S- 256173-SHEET	-5			===ASSEMBLY DRAWING===
	-0302		-5			
010	-0301	256174-0002	C		1	PULLEY
010	-0302	256174-0003	C		1	PULLEY
020	ALL	441356	C		2	BRACKET
030	ALL	256175	S		1	GEAR
040	ALL	256176	S		1	GEAR
050	ALL	256177	S		1	SHAFT
060	ALL	256178	S		1	RING FASTENER
070	ALL	272372	S		1	HOUSE
080	ALL	256179	-		2	DISTANCE SLEEVE
090	ALL	256180	-		1	SPACER
100	ALL	256181	-		1	DISTANCE TUBE
110	ALL	257174	S		1	SEAL WASHER
113	ALL	257179	-		1	GEAR
116	ALL	491409	-		1	WASHER
120	ALL	271689	-		1	WASHER
140	ALL	272374	S		1	CARRIER
160	ALL	272376	-		1	PLUG
170	ALL	272377-0001	-		1	CLIP
180	ALL	272377-0002	-		1	CLIP
190	ALL	272388	-		1	CLIP
200	ALL	295140	S		2	PIN
210	ALL	295766	S		1	SCREW
220	ALL	295767	S		1	SEAL WASHER
230	ALL	441024	S		1	INSERT
240	ALL	441360	-		1	PLATE
250	ALL	491410	S		1	INSERT
260	ALL	456934	S		1	SEAL WASHER
265	ALL	469999	-		1	FLANGE
270	ALL	G- 491274	-		1	HUB
290	ALL	90016-0010	S		2	DISC SPRING
292	ALL	469867	-		1	HOSE HOLDER
300	ALL	90056-0072	S		1	WORM GEAR
310	ALL	90074-0026	-		1	CLIP
312	ALL	90134-0058	-		2	BANJO CONNECTION
315	ALL	90142-0005	-	MM	1500	HOSE
316	ALL	90144-0004	-	MM	X	TAPE
317	ALL	90157-0016	-	ML	X	LOCKING FLUID
320	ALL	90166-0060	S	MM	530	HOSE
325	ALL	90166-0133	-	MM	500	HOSE

POS	VAR	PART NUMBER	SP	EH	QTY	DESCRIPTION
327	ALL	90214-0312	S		1	SEALING RING
330	ALL	90287-0081	-		11	SCREW
331	ALL	90287-0149	-		6	SCREW
334	ALL	90296-0068	-	G	X	GREASE
336	ALL	90296-0075	-	L	4	OIL
340	ALL	90355-0038	S		1	SHAFT COUPLING
		90214-0113	S		1	* BALL BEARING
350	ALL	90361-0011	S		1	BUSHING
360	ALL	90417-0076	S		1	TIMING BELT
370	ALL	90432-0008	S		1	BRAKE
500	ALL	312101-0329	-		2	SCREW M6S5X16FZB
510	ALL	312101-0366	-		3	SCREW M6S6X12FZB
520	ALL	312101-0368	-		6	SCREW M6S6X16FZB
525	ALL	312101-0370	-		1	SCREW M6S6X20FZB
527	ALL	312101-0376	-		1	SCREW M6S6X35FZB
530	ALL	312101-0488	-		1	SCREW M6S10X14FZB
540	ALL	312101-0504	-		8	SCREW M6S10X65FZB
550	ALL	312101-0550	-		6	SCREW M6S12X90FZB
570	ALL	312111-0380	-		3	SCREW MC6S6X50FZB
580	ALL	312121-0323	-		5	SLOTTED HEMCS5X8FZB
590	ALL	312155-0447	-		1	SCREW MF6S8X12RFR
600	ALL	315101-0153	-		6	WASHER BRB6,4X12FZB
610	ALL	315111-0173	-		9	WASHER TBRB10,5X22FZB
620	ALL	315111-0178	-		4	WASHER TBRB13X24FZB
640	ALL	315121-0153	-		2	WASHER TBRSB6,4X22FZB
650	ALL	315121-0178	-		2	WASHER TBRSB13X36FZB
660	ALL	315221-0169	S		2	SEAL RING CB30X47X7
670	ALL	315701-0239	S		1	FLAT WEDGE6X6X40
675	ALL	315701-0268	-		1	FLAT WEDGE8X7X32
680	ALL	318108-0111	P		2	V-BELT SPZ 1137
690	ALL	321308-0207	S		2	BALL BEARISKF6007-2RS
700	ALL	321313-0105	S		2	BALL BEARISKF6205-2RS
710	ALL	321600-0114	S		2	OIL SEAL LL3052
712	ALL	342701-0208	-		1	BUSHING RN13/4"-1/4"
714	ALL	342930-0122	-		1	ELBOW COUP8/6-1/4
716	ALL	342980-0122	-		1	BANJO CONNSINGEL 8/6-1/4
718	ALL	342980-0304	-		1	BANJO CONN SINGEL 1/4
720	ALL	342991-0104	-		2	HOSE CLIP 19-28MMRFR

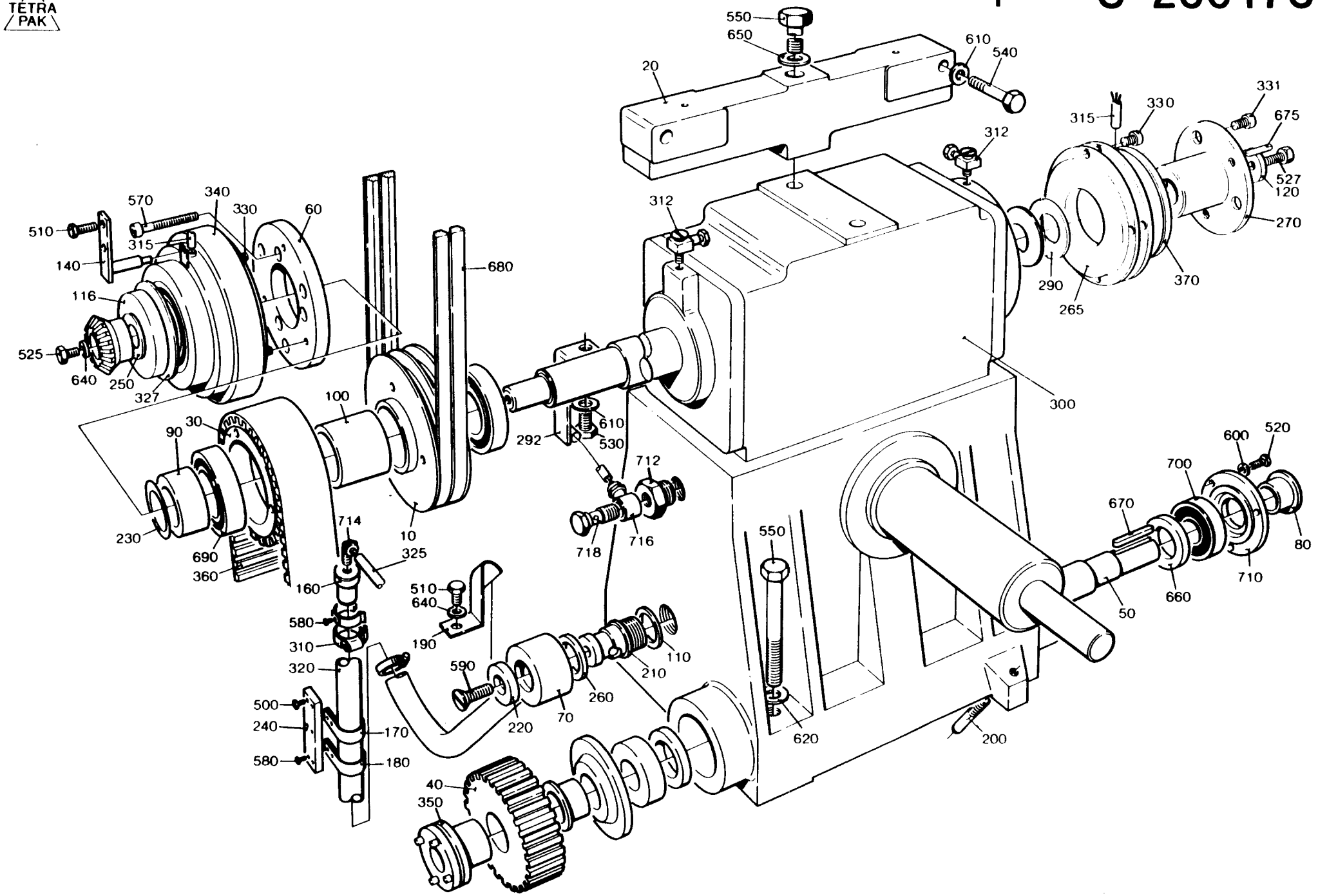
550
650
610
540
20
331
315
330
675
312
527
120
312
270
570
340
330
60
510
315
680
140
116
290
370
265
525
640
250
327
300
100
610
292
530
712
90
30
600
520
700
714
670
325
10
718
716
80
230
690
360
160
550
660
710
50
510
640
580
190
310
110
320
590
210
260
500
240
70
220
170
620
200
580
180
40
350

LAST ALTERATION: AM 6938 84-08-07
MOTOR C- 271128-030V
648103
AM 6026
83-07-08

GROUP	SEALING SYSTEM	FREQUENCY	PULL-TAB VERSION
-0301	TPC	HZ-50	-
	IH	HZ-50	WITH
-0302	IH	HZ-50	WITHOUT
-0303	TPC	HZ-60	-
	IH	HZ-60	WITH
-0304	IH	HZ-60	WITHOUT

POS	VAR	PART NUMBER	SP	EH	QTY	DESCRIPTION
	-0301	S1- 271128-SHEET	S		-2	===ASSEMBLY DRAWING===
	-0302				-2	
	-0303				-2	
	-0304				-2	
010	-0301	3- 456589-0002	S		1	V-BELT PULLEY
010	-0302	3- 456589-0004	S		1	V-BELT PULLEY
010	-0303	3- 456589-0001	S		1	V-BELT PULLEY
010	-0304	3- 456589-0003	S		1	V-BELT PULLEY
020	ALL	2- 272431	C		1	BRACKET
030	ALL	2- 441387	-		1	BRACKET
040	ALL	4- 272434	S		1	AXLE
060	ALL	90002-0012	-		1	BLANK-OFF PLUG
070	ALL	90045-0096	-		1	MOTOR
100	ALL	312101-0457	-		4	SCREW M6S8X35FZB
110	ALL	312101-0499	-		4	SCREW M6S10X40FZB
120	ALL	312104-0505	-		1	SCREW M6S10X70HFZB
130	ALL	312311-0366	-		2	GRUB SCREW T6SS6X12FZB
150	ALL	312601-0320	-		1	NUT M6M10FZB
170	ALL	315111-0165	-		4	WASHER TBRB8,4X16FZB
180	ALL	315111-0173	-		4	WASHER TBRB10,5X22FZB
200	ALL	352103-0116	-		1	CABLE GLANR.28,3/13-18

TETRA PAK

2/8403 **S-271128-2**

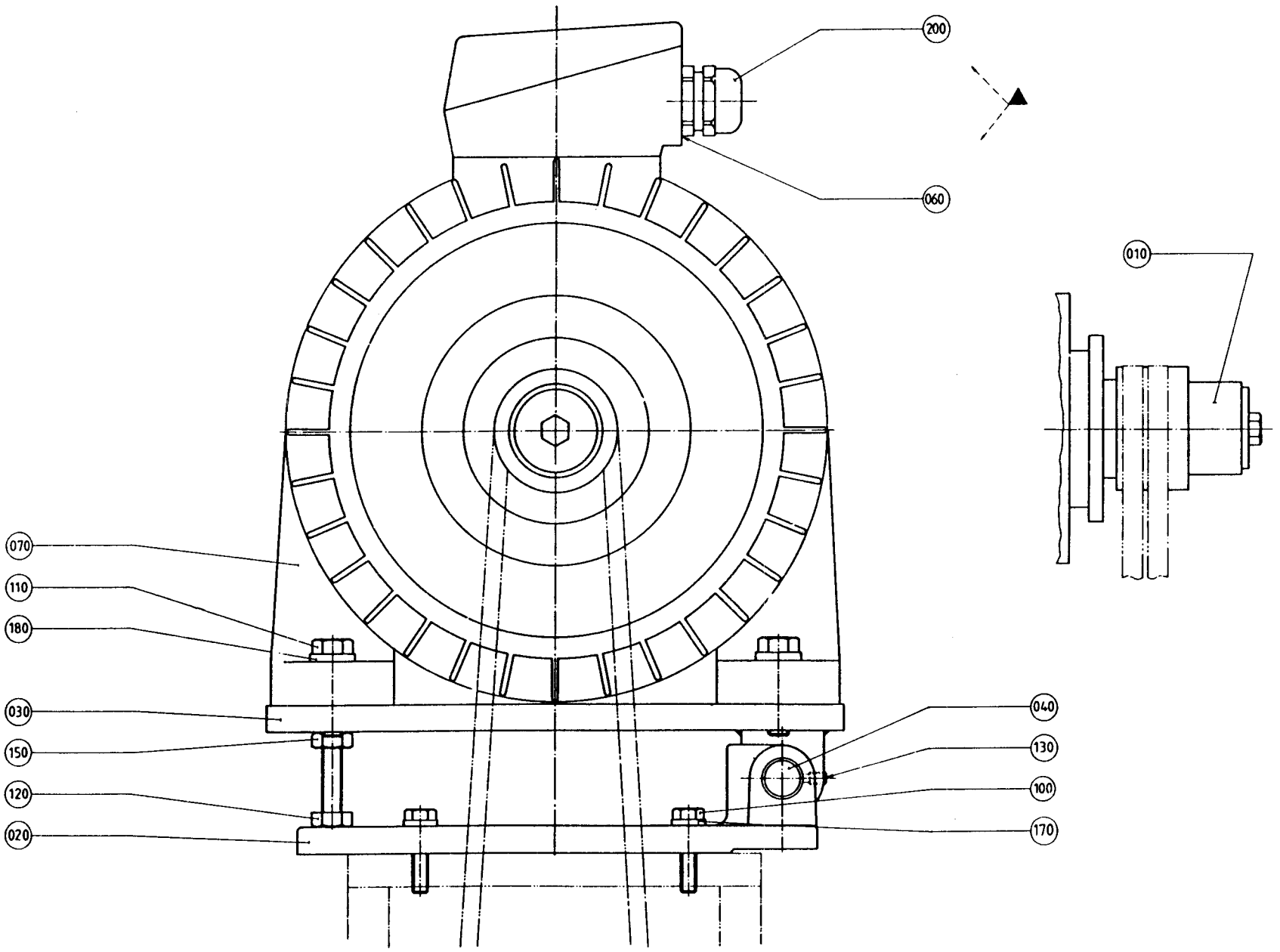

LAST ALTERATION: AM 7890 85-05-15
648103-060V
AM 6207
83-11-10

GROUP

-0301 MONTERINGSUTFÖRANDE HÖGER
-0302 MONTERINGSUTFÖRANDE VÄNSTER

POS	VAR		PART NUMBER	SP	EH	QTY	DESCRIPTION
	-0301	S-	256197-SHEET	-9			===ASSEMBLY DRAWING===
	-0301			-10			
	-0302			-11			
	-0302			-12			
030	-0301		272459	S		1	WASHER
040	-0302		272460	S		1	WASHER
080	ALL		272212	C		1	ARM
085	ALL	G-	272442	C		1	BRACKET
090	ALL		256415	C		1	HOLDER
100	ALL		272455	-		1	BRACKET
110	ALL		272456	S		1	LINK
120	ALL		272457	S		2	CLAMP
130	ALL		295770	S		1	AXLE BOLT
140	ALL		256421	S		1	PULLEY
150	ALL		256422	S		2	WASHER
160	ALL		256426-0001	S		1	WASHER
170	ALL		256426-0002	S		2	WASHER
180	ALL		256427	S		1	AXLE
190	ALL		490916	S		2	AXLE PIN
200	ALL		256472	S		1	WASHER
210	ALL		257306	S		1	ROLLER
220	ALL		257308	S		1	SCREW
230	ALL		257309	S		1	AXLE
240	ALL		257310	S		1	NUT
250	ALL		257311	S		4	CLAMP
280	ALL		272116	S		1	CLAMP
290	ALL		272458	S		1	ECCENTRIC SHAFT
300	ALL		272461	S		1	WASHER
310	ALL		441745	-		1	INDICATOR
400	ALL		90028-0021	P		1	CONE
410	ALL		90028-0020	P		5	CONE
420	ALL		90032-0040	-		1	BLOCK
430	ALL		90035-0005	-		1	COVER
440	ALL		321531-0248	-		4	NEEDLE SLEHK2016
450	ALL		90087-0019	-		1	PLUG
458	ALL		90092-0052	S		4	VALVE
460	ALL		90092-0053	S		1	VALVE
480	ALL		90134-0031	-		1	SLEEVE
500	ALL		90134-0038	-		1	BUSHING
510	ALL		90134-0039	-		6	BUSHING
520	ALL		90134-0052	-		1	PLUG
530	ALL		90134-0058	-		7	BANJO CONNECTION
540	ALL		90266-0019	-	MM	550	PIPE

POS	VAR	PART NUMBER	SP	EH	QTY	DESCRIPTION
550	ALL	90165-0002	-		3	CLIP
560	ALL	90165-0022	-		2	CLIP
570	ALL	90166-0143	-	MM	1100	HOSE
580	ALL	90240-0048	S		2	BEARING
590	ALL	90240-0050	S		2	BEARING
670	ALL	311101-0267	-		1	CYLINDRICACP4H6X10
680	ALL	311303-0234	S		1	SLOTTED PIRPB3X12FZB
700	ALL	312101-0297	-		2	SCREW M6S4X25FZB
710	ALL	312101-0362	-		3	SCREW M6S6X8FZB
720	ALL	312101-0364	-		2	SCREW M6S6X10FZB
725	ALL	312101-0368	-		1	SCREW M6S6X16FZB
730	ALL	312101-0453	-		4	SCREW M6S8X25FZB
740	ALL	312101-0497	-		1	SCREW M6S10X35FZB
750	ALL	312101-0504	-		1	SCREW M6S10X65FZB
760	ALL	312101-0507	-		2	SCREW M6S10X80FZB
770	ALL	312111-0376	-		6	SCREW MC6S6X35FZB
790	ALL	312121-0287	-		5	SLOTTED HEMCS4X8FZB
800	ALL	312151-0287	-		12	SCREW MF6S4X8FZB
810	ALL	312151-0364	-		8	SCREW MF6S6X10FZB
820	ALL	312601-0318	-		2	NUT M6M8FZB
830	ALL	312811-0322	S		2	CHECK NUT M12RFR
840	ALL	312811-0324	S		2	CHECK NUT M16RFR
850	ALL	312811-0326	S		1	CHECK NUT M20RFR
870	ALL	315101-0136	-		2	WASHER BRB4,3X8FZB
880	ALL	315101-0153	-		4	WASHER BRB6,4X12FZB
890	ALL	315101-0165	-		4	WASHER BRB8,4X16FZB
900	ALL	315101-0173	-		2	WASHER BRB10,5X22FZB
910	ALL	315101-0186	-		2	WASHER BRB17X30FZB
920	ALL	315111-0173	-		2	WASHER TBRB10,5X22FZB
930	ALL	315701-0335	-		1	FLAT WEDGE12X8X56
940	ALL	321129-0137	S		4	WASHER 22/38X1,5
950	ALL	321576-0260	S		1	ROLLER NUTR20

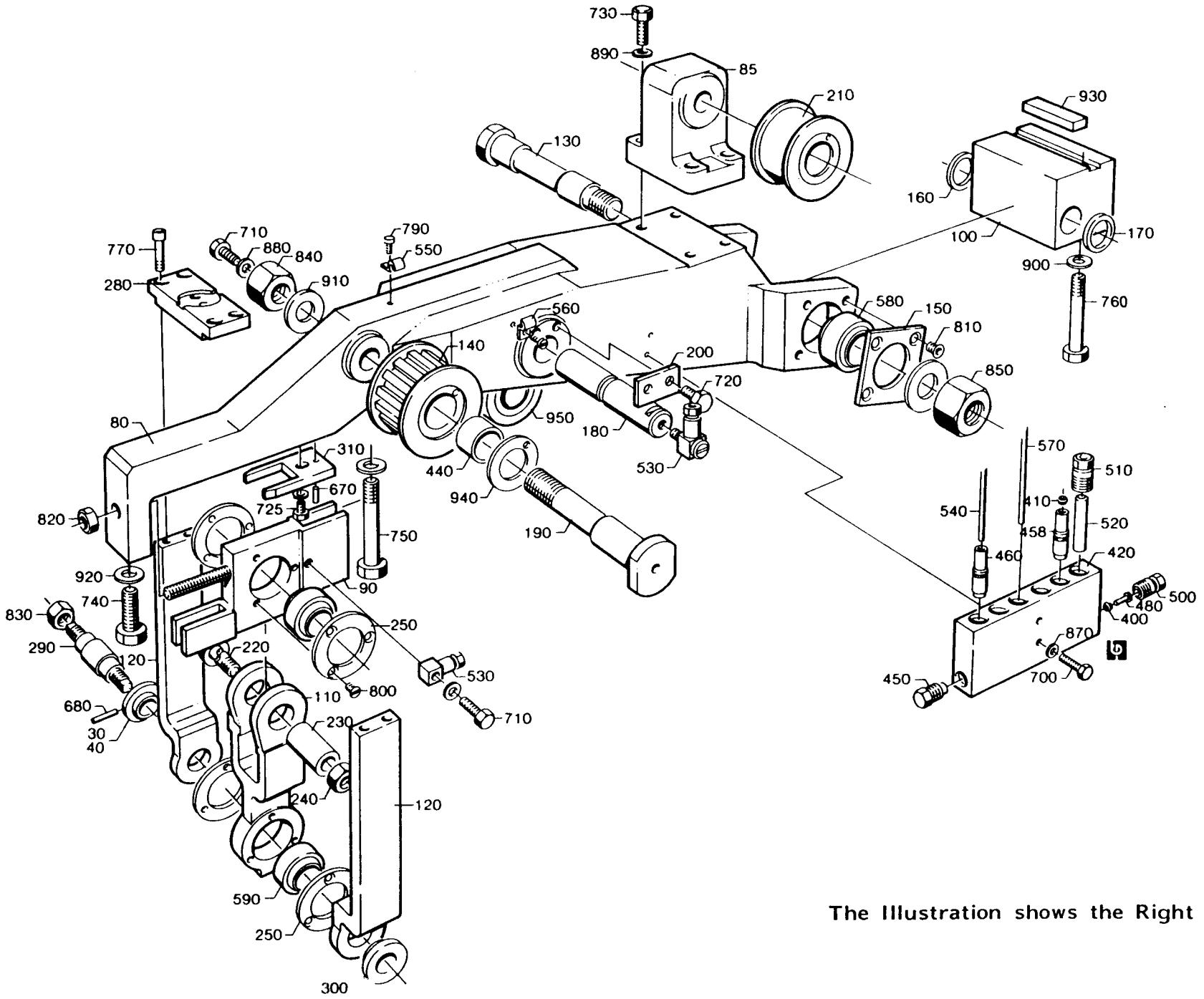

The Illustration shows the Right hand version.

LAST ALTERATION: AM 7890 85-05-15
648103-060V
AM 6207
83-11-10

GROUP

-0301 MONTERINGSUTFÖRANDE HÖGER
-0302 MONTERINGSUTFÖRANDE VÄNSTER

POS	VAR	PART NUMBER	SP	EH	QTY	DESCRIPTION
	-0301	S- 256198-SHEET	-9			===ASSEMBLY DRAWING===
	-0301		-10			
	-0302		-11			
	-0302		-12			
015	-0302	272480	C		1	BRACKET
030	-0301	256418	C		1	BRACKET
010	ALL	272212	C		1	ARM
020	ALL	256415	C		1	HOLDER
035	ALL	256515	S		1	END PIECE
040	ALL	272462	S		1	AXLE BOLT
050	ALL	272470	S		1	JOINT
060	ALL	272471	S		1	LINK
070	ALL	272472	S		1	END PIECE
075	ALL	272607	C		1	BELT HOLDER
080	ALL	256422	S		2	WASHER
090	ALL	256426-0001	S		1	WASHER
100	ALL	256426-0002	S		2	WASHER
110	ALL	256427	C		1	AXLE
120	ALL	490916	S		1	AXLE PIN
130	ALL	256472	S		1	WASHER
140	ALL	257309	S		2	AXLE
143	ALL	256516	C		1	CLAMP
147	ALL	256517	C		1	SCREW
150	ALL	257310	S		2	NUT
160	ALL	257311	S		4	CLAMP
170	ALL	257314	S		1	SCREW
180	ALL	441745	-		1	INDICATOR
310	ALL	90028-0020	P		4	CONE
320	ALL	90028-0021	P		2	CONE
330	ALL	90032-0039	-		1	BLOCK
335	ALL	321531-0248	S		2	NEEDLE SLEHK2016
340	ALL	90083-0016	S		2	PLATE
348	ALL	90092-0052	S		3	VALVE
350	ALL	90092-0053	S		1	VALVE
390	ALL	90134-0038	S		2	BUSHING
400	ALL	90134-0039	S		4	BUSHING
410	ALL	90134-0068	-		1	BANJO CONNECTION
420	ALL	90134-0058	-		6	BANJO CONNECTION
430	ALL	90266-0019	-	MM	350	PIPE
440	ALL	90165-0002	-		5	CLIP
450	ALL	90165-0022	-		2	CLIP
460	ALL	90166-0143	-	MM	1100	HOSE
470	ALL	90166-0109	P	MM	700	HOSE

POS	VAR	PART NUMBER	SP	EH	QTY	DESCRIPTION
480	ALL	90240-0048	S		2	BEARING
490	ALL	90240-0050	S		2	BEARING
495	ALL	311101-0267	-		1	CYLINDRICACP4H6X10
500	ALL	312101-0297	-		2	SCREW M6S4X25FZB
505	ALL	312101-0333	-		4	SCREW M6S5X25FZB
510	ALL	312101-0362	-		2	SCREW M6S6X8FZB
520	ALL	312101-0364	-		2	SCREW M6S6X10FZB
525	ALL	312101-0368	-		1	SCREW M6S6X16FZB
530	ALL	312101-0376	-		2	SCREW M6S6X35FZB
540	ALL	312101-0497	-		1	SCREW M6S10X35FZB
550	ALL	312101-0502	-		2	SCREW M6S10X55FZB
560	ALL	312101-0504	-		1	SCREW M6S10X65FZB
570	ALL	312101-0515	-		2	SCREW M6S10X120FZB
580	ALL	312121-0287	S		7	SLOTTED HEMCS4X8FZB
590	ALL	312151-0287	-		12	SCREW MF6S4X8FZB
600	ALL	312151-0364	-		8	SCREW MF6S6X10FZB
610	ALL	312601-0318	-		2	NUT M6M8FZB
620	ALL	312601-0322	-		1	NUT M6M12FZB
630	ALL	312601-0324	-		2	NUT M6M16FZB
640	ALL	312811-0324	S		1	CHECK NUT M16RFR
650	ALL	312811-0326	S		1	CHECK NUT M20RFR
655	ALL	312901-0324	-		1	NUT M6M16VFZB
660	ALL	315101-0136	-		2	WASHER BRB4,3X8FZB
665	ALL	315101-0146	-		4	WASHER BRB5,3X10FZB
670	ALL	315101-0153	-		5	WASHER BRB6,4X12FZB
680	ALL	315101-0173	-		2	WASHER BRB10,5X22FZB
690	ALL	315101-0186	-		1	WASHER BRB17X30FZB
700	ALL	315111-0173	-		2	WASHER TBRB10,5X22FZB
710	ALL	315121-0173	-		2	WASHER BRSB10,5X28FZB
720	ALL	315701-0335	-		1	FLAT WEDGE12X8X56
730	ALL	321576-0260	S		1	ROLLER NUTR20

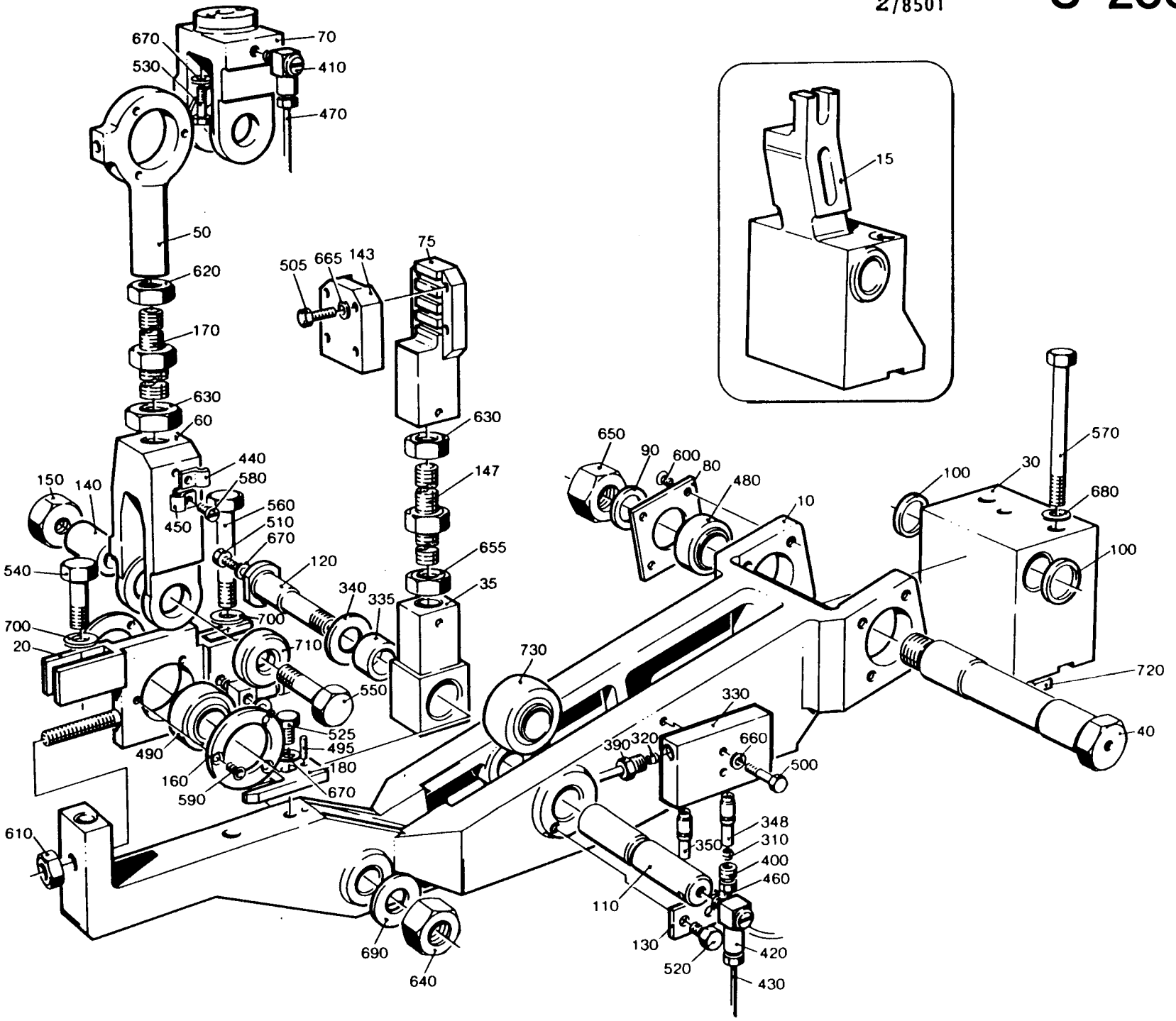
670
530
70
410
470
50
620
170
630
60
440
580
560
510
670
450
150
140
540
700
20
120
340
335
700
710
550
525
495
180
670
490
160
590
610
690
640
505
665
143
75
630
147
655
35
730
650
90
600
80
480
10
100
30
570
680
100
720
40
330
660
500
390
320
348
350
310
400
460
110
130
520
420
430
15

LAST ALTERATION: AM 10858 87-11-11
648103-070V

POS	VAR	PART NUMBER	SP UN	QTY	DESCRIPTION
	-0301	S- 256199-SHEET	-3		===ASSEMBLY DRAWING===
010	-0301	G- 272565	C	1	ARM
040	-0301	256912	S	1	PIN
050	-0301	751254	S	1	ROLLER
060	-0301	256914	S	2	SPACER RING
070	-0301	256915	S	1	SPACER RING
080	-0301	256916	S	1	STRUT
090	-0301	256918	S	1	WASHER
100	-0301	272566	S	1	AXLE PIN
110	-0301	272567	C	1	ROLLER
300	-0301	312101-0546	-	1	SCREW M6S12X70FZB
310	-0301	312811-0318	S	1	LOCK NUT M8RFR
320	-0301	312811-0320	S	4	LOCK NUT M10RFR
330	-0301	315111-0165	-	1	WASHER TBRB8,4X16FZB
340	-0301	315111-0173	-	2	WASHER TBRB10,5X22FZB
350	-0301	315121-0173	-	1	WASHER BRSB10,5X28FZB
360	-0301	315121-0178	-	1	WASHER TBRSB13X36FZB
370	-0301	315752-0123	S	4	LOCK RING SGH32
380	-0301	321308-0202	S	4	BALL BEARI SKF6002-2RS

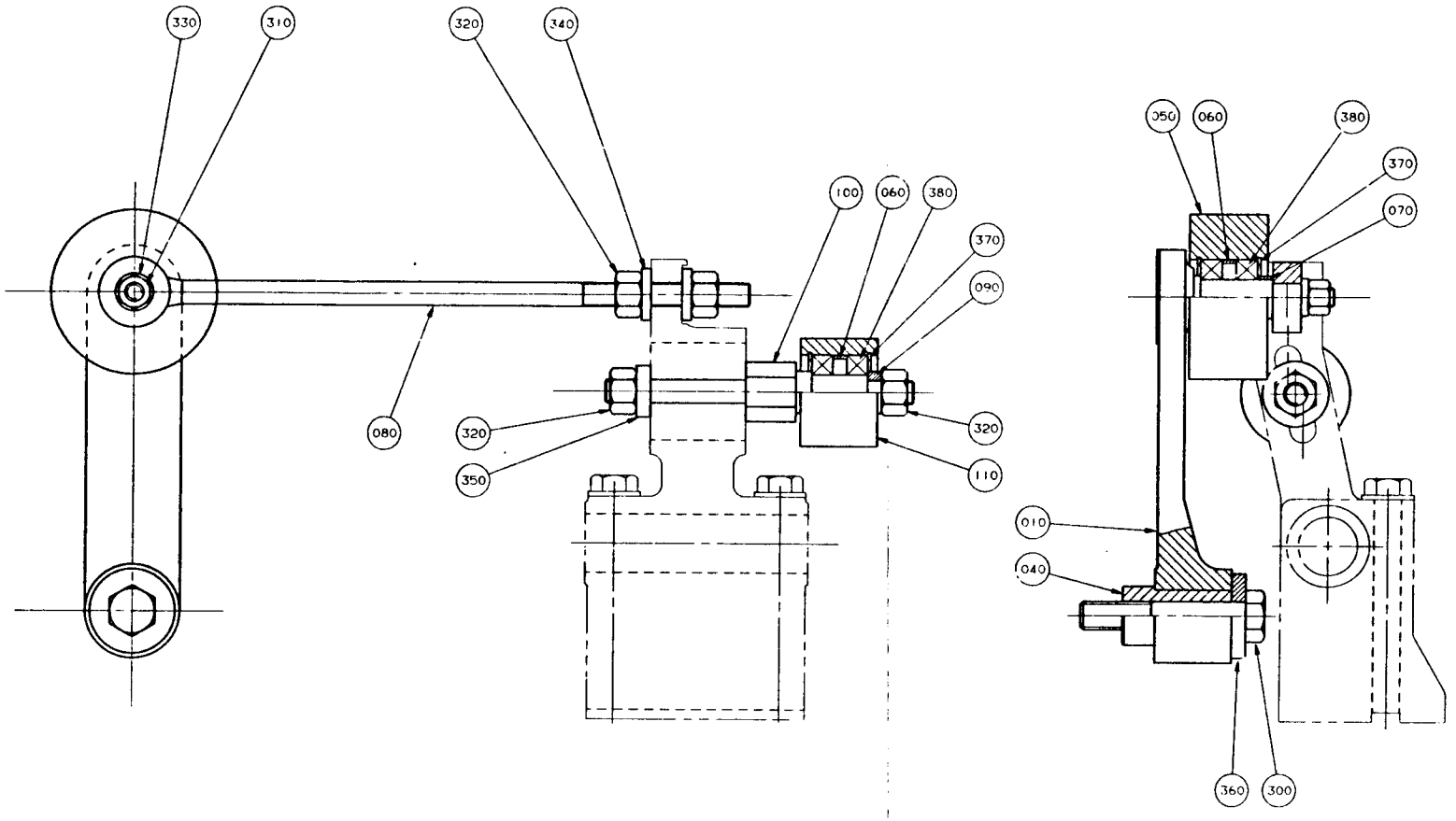

1987 -11- 12

TETRA PAK	REMSTRÄCKARE BELT TENSIONER	SI-256199-3

LAST ALTERATION: AM 6317 83-11-03
648103
AM 5137
82-02-04

POS	VAR	PART NUMBER	SP	EH	QTY	DESCRIPTION
	-0201	S- 256199-SHEET -2				===ASSEMBLY DRAWING===
010	-0201	272565	C		1	ARM
040	-0201	256912	S		1	PIN
050	-0201	256913	S		1	ROLLER
060	-0201	256914	S		2	SPACER RING
070	-0201	256915	S		1	SPACER RING
080	-0201	256916	S		1	STRUT
090	-0201	256918	S		1	WASHER
100	-0201	272566	S		1	AXLE PIN
110	-0201	272567	C		1	ROLLER
300	-0201	312101-0546	-		1	SCREW M6S12X70FZB
310	-0201	312811-0318	S		1	LOCK NUT M8RFR
320	-0201	312811-0320	S		4	LOCK NUT M10RFR
330	-0201	315111-0165	-		1	WASHER TBRB8,4X16FZB
340	-0201	315111-0173	-		2	WASHER TBRB10,5X22FZB
350	-0201	315121-0173	-		1	WASHER BRSB10,5X28FZB
360	-0201	315121-0178	-		1	WASHER TBRSB13X36FZB
370	-0201	315752-0123	S		4	LOCK RING SGH32
380	-0201	321308-0202	S		4	BALL BEARISKF6002-2RS

S-256199-2

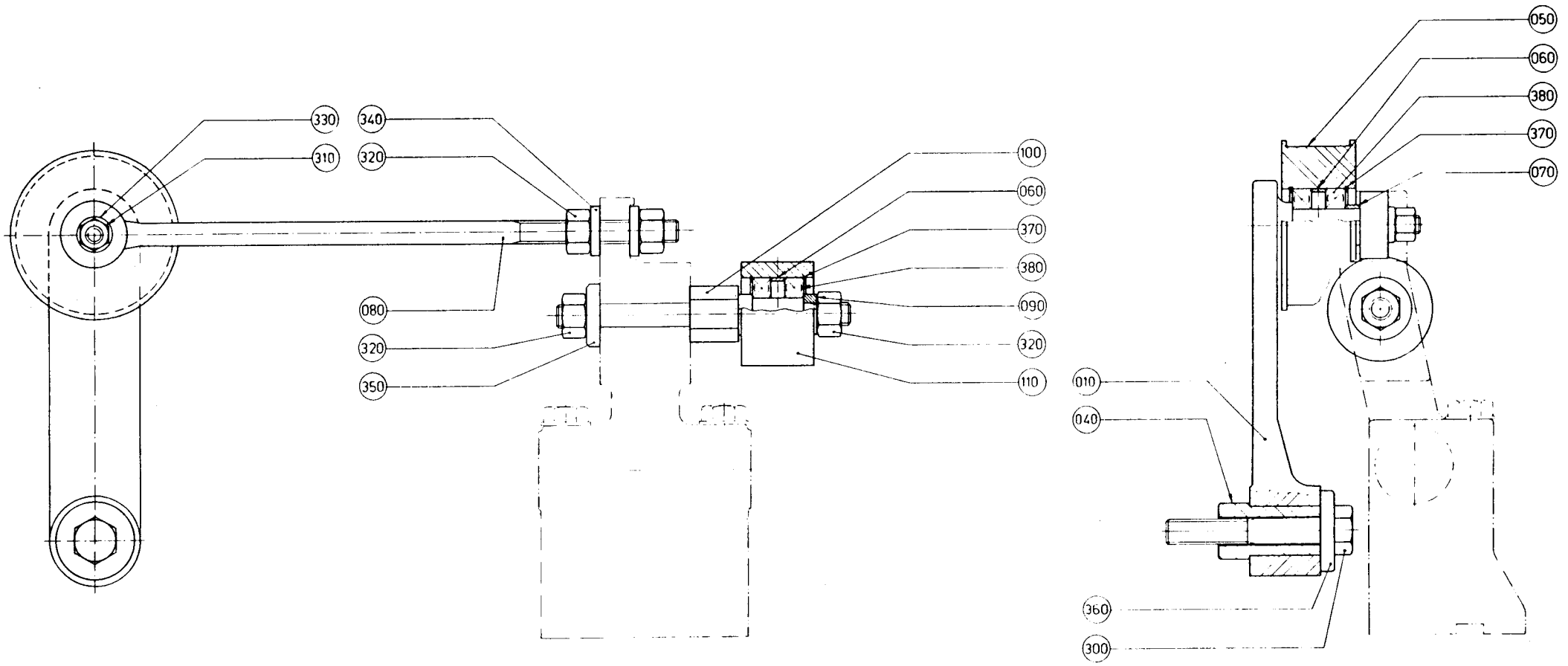
330
340
310
320
080
320
350
100
060
370
380
090
320
110
050
060
380
370
070
010
040
360
300

LAST ALTERATION: AM 6317 83-11-03
648103
AM 6147
83-09-29

POS	VAR	PART NUMBER	SP	EH	QTY	DESCRIPTION
	-0301	S- 256200-SHEET	-4			===ASSEMBLY DRAWING===
010	-0301	272857	S		1	RING
020	-0301	295983	-		1	CONNECTION
030	-0301	441339	S		2	AXLE
040	-0301	441720	S		1	DISTANCE
300	-0301	90355-0048	S		2	CONNECTION
500	-0301	312111-0368	-		8	SCREW MC6S6X16FZB
510	-0301	315701-0235	S		3	FLAT WEDGE6X6X28
520	-0301	315701-0239	S		1	FLAT WEDGE6X6X40

TETRA PAK

1/8401 **S-256200-4**

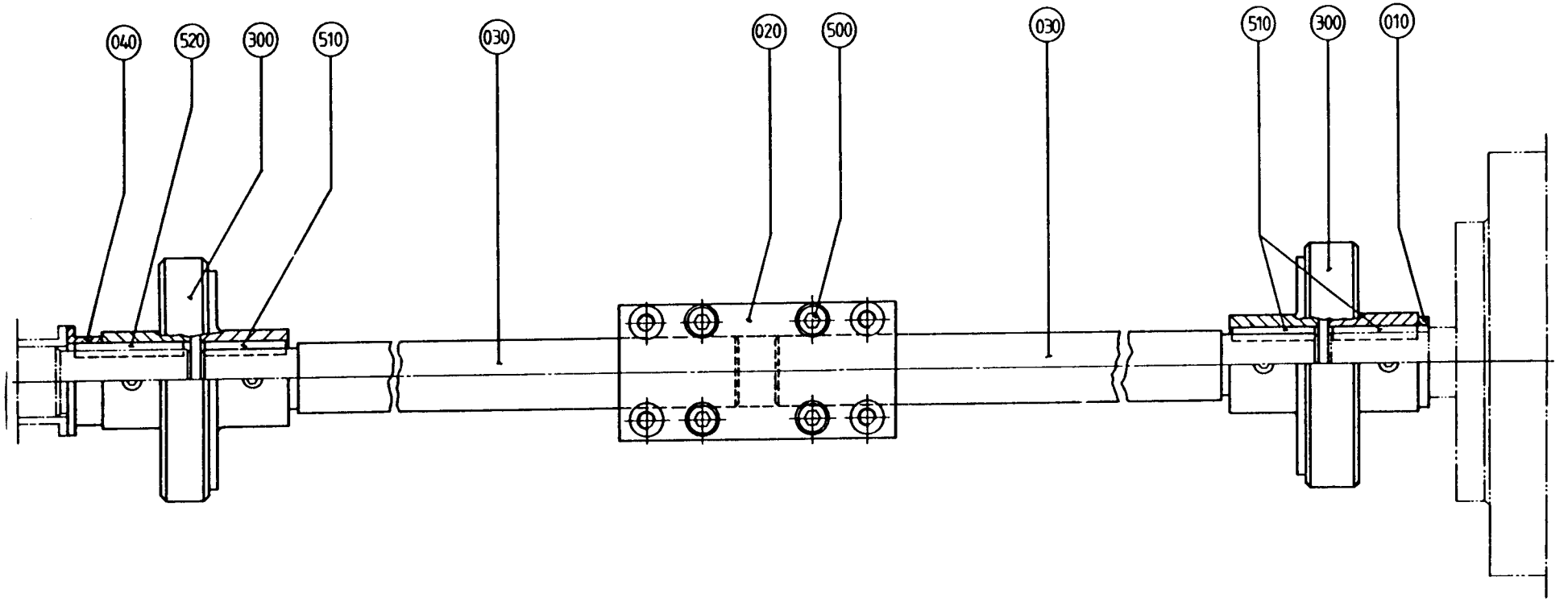

LAST ALTERATIC AM 7595 -02-26
648104
AM 5296
82-05-10

GROUP	VOLUME	VOLUME	VOLUME	VOLUME
-0201	V0250	V0236	V0200	200ML SLIM
-0202	V0180	-	-	-
-0203	V0125	-	-	-

POS	VAR	PART NUMBER	SP	EH	QTY	DESCRIPTION	
	-0201	S- 256845-SHEET	-2			===ASSEMBLY DRAWING===	
	-0202		-2				
	-0203		-2				
010	-0201	256856	S		1	STOP	
010	-0202	272750	S		1	STOP	
010	-0203	256854	S		1	STOP	
020	ALL	256858	-		1	HOUSE	
030	ALL	256866	S		1	AXLE	
040	ALL	272495	S		1	ARM	
300	ALL	90296-0009	P	G	15	GREASE	
310	ALL	90335-0007	P		1	SPRING	
500	ALL	312105-0368	-		1	SCREW	M6S6X16RFR
510	ALL	312105-0371	-		2	SCREW	M6S6X22RFR
520	ALL	315105-0153	-		1	WASHER	BRB6,4X12RFR
530	ALL	315115-0153	-		2	WASHER	TBRB6,4X12RFR
540	ALL	315755-0108	P		1	CIRCLIP	E 6RFR
550	ALL	321111-0095	S		1	BUSHING	8E7X6

S-256845-2

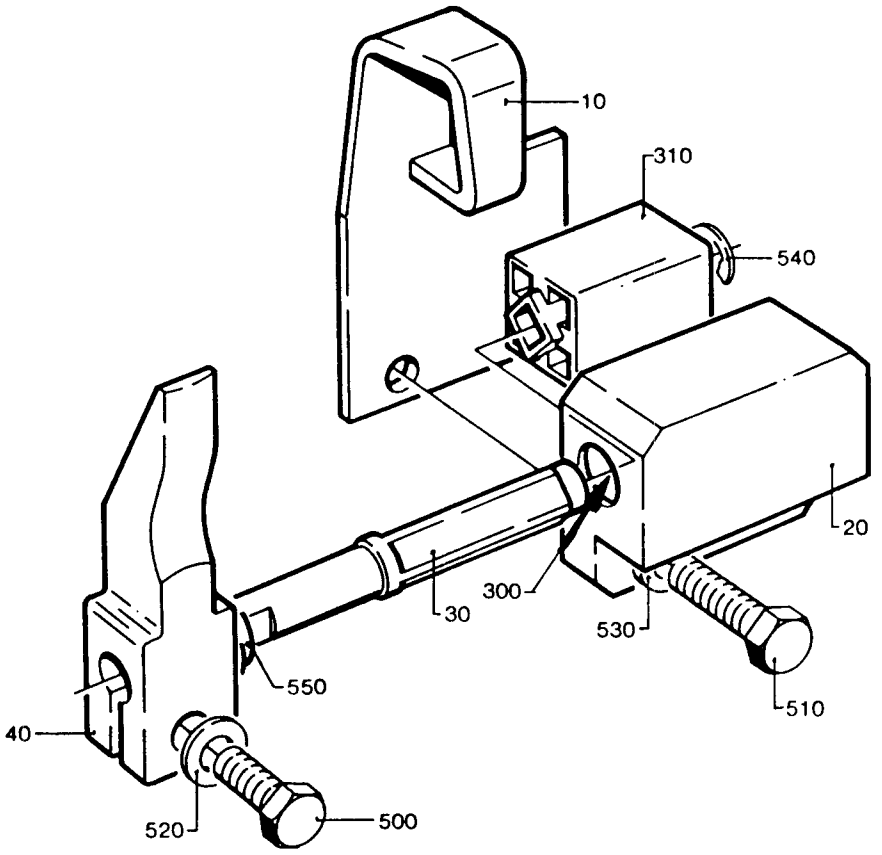

LAST ALTERATION: AM 6300 84-01-09
648104

POS	VAR	PART NUMBER	SP	EH	QTY	DESCRIPTION
	-0301	S- 256951-SHEET -3				===ASSEMBLY DRAWING===
010	-0301	255609	S		1	ARM
020	-0301	256834	S		1	YOKE
030	-0301	256869	S		1	ARM
040	-0301	256953	S		1	BLOCK
045	-0301	272492	C		1	ARM
050	-0301	272454	S		4	PIVOT PIN
060	-0301	256082	S		1	CLAMP
070	-0301	256829	S		6	SCREW
080	-0301	256870	S		1	BRACKET
090	-0301	257341	S		1	GUIDE
095	-0301	272496	C		1	BRACKET
100	-0301	20239	S		2	COMPRESSION SPRING
102	-0301	22475	S		2	ROLLER
104	-0301	255653	S		2	BUSHING
106	-0301	256628	S		1	BLOCK
108	-0301	256629-0001	S		1	AXLE PIN
110	-0301	256629-0003	S		1	AXLE PIN
112	-0301	256704	S		2	WASHER
114	-0301	256710	S		1	AXLE
118	-0301	256831-0001	S		2	DISTANCE
120	-0301	256831-0002	S		4	DISTANCE
130	-0301	256831-0003	S		4	DISTANCE
140	-0301	256889	S		2	PLUNGER
150	-0301	256890	-		2	INSERT
160	-0301	256891	-		6	INSERT
170	-0301	257213	S		4	BUSHING
180	-0301	257317	-		1	INSERT
185	-0301	271100	S		1	PIN
190	-0301	272415	S		2	ARM
200	-0301	441706	S		1	WASHER
310	-0301	90092-0052	S		6	VALVE
360	-0301	90134-0058	-		4	BANJO CONNECTION
370	-0301	90134-0068	-		1	CONNECTION
500	-0301	312105-0368	-		16	SCREW M6S6X16RFR
510	-0301	312105-0376	-		6	SCREW M6S6X35RFR
520	-0301	312105-0380	-		4	SCREW M6S6X50RFR
530	-0301	312105-0453	-		6	SCREW M6S8X25RFR
540	-0301	312105-0455	-		6	SCREW M6S8X30RFR
544	-0301	312318-0368	-		1	GRUB SCREW SK6SS6X16RFR
546	-0301	312811-0318	-		3	LOCK NUT M8RFR
548	-0301	315105-0165	-		3	WASHER BRB8,4X16RFR
550	-0301	315115-0153	-		10	WASHER TBRB6,4X12RFR
560	-0301	315202-0206	S		5	O-RING 7,3X2,4
570	-0301	315202-0207	S		6	O-RING 8,3X2,4
580	-0301	315202-0219	S		8	O-RING 29,2X3

S-256951-3

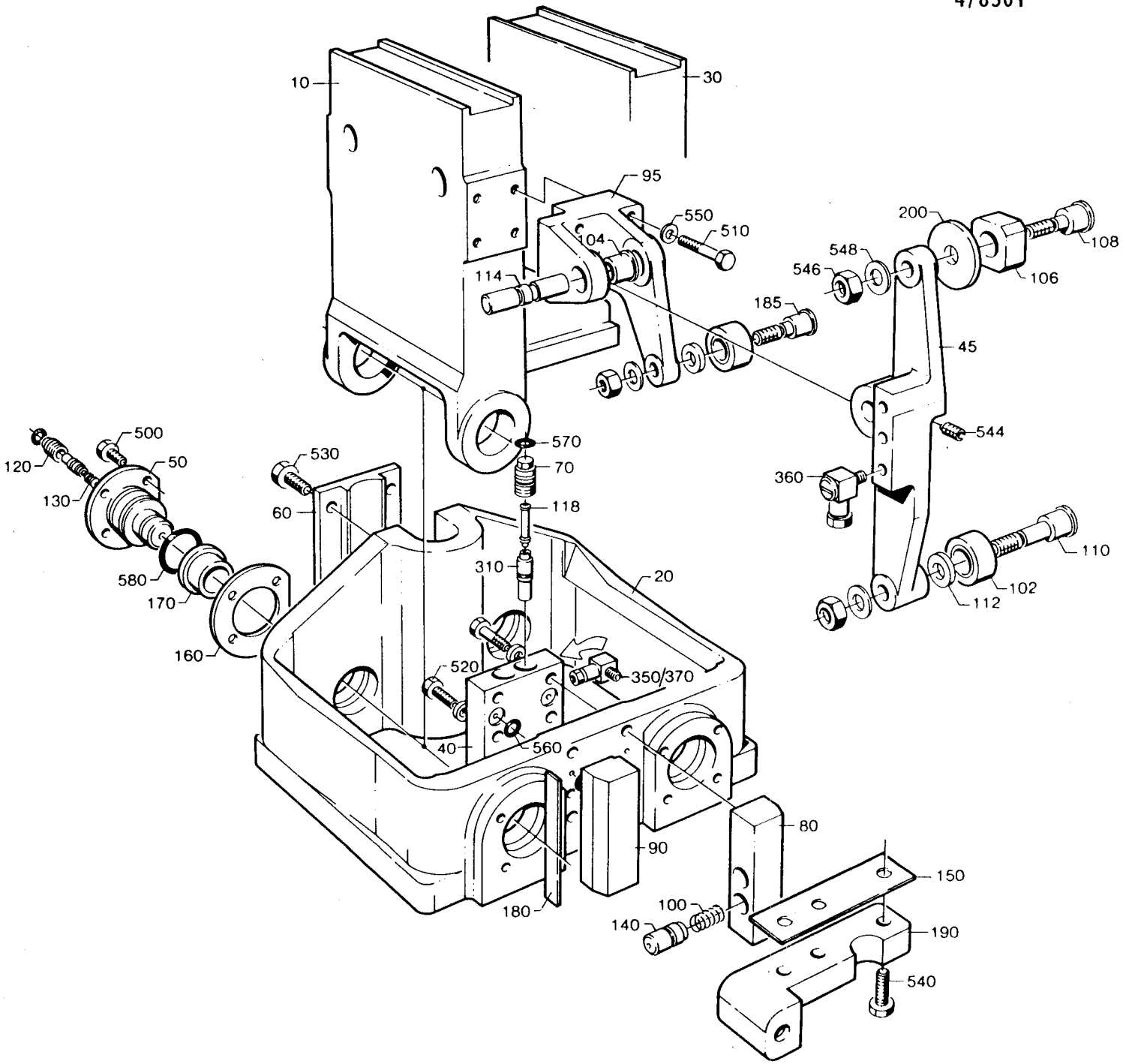
10
30
95
550
510
104
114
185
200
548
546
108
106
45
544
360
110
102
112
570
70
118
530
60
500
50
120
130
580
170
160
310
20
520
350/370
40
560
80
90
150
100
140
190
180
540

LAST ALTERATION: AM 6300 84-01-09
648104

POS	VAR	PART NUMBER	SP	EH	QTY	DESCRIPTION
	-0301	S- 256952-SHEET -3				===ASSEMBLY DRAWING===
010	-0301	255609	S		1	ARM
020	-0301	256834	S		1	YOKE
030	-0301	256869	S		1	ARM
040	-0301	256954	S		1	BLOCK
045	-0301	272493	C		1	ARM
050	-0301	272454	S		4	PIVOT PIN
060	-0301	256082	S		1	CLAMP
070	-0301	256829	S		6	SCREW
080	-0301	256870	S		1	BRACKET
090	-0301	257341	S		1	GUIDE
095	-0301	272497	C		1	BRACKET
100	-0301	20239	S		2	COMPRESSION SPRING
102	-0301	22475	S		2	ROLLER
104	-0301	255653	S		2	BUSHING
106	-0301	256628	S		1	BLOCK
108	-0301	256629-0001	S		1	AXLE PIN
110	-0301	256629-0003	S		1	AXLE PIN
112	-0301	256704	S		2	WASHER
114	-0301	256710	S		1	AXLE
118	-0301	256831-0001	S		2	DISTANCE
120	-0301	256831-0002	S		4	DISTANCE
130	-0301	256831-0003	S		4	DISTANCE
140	-0301	256889	S		2	PLUNGER
150	-0301	256890	-		2	INSERT
160	-0301	256891	-		6	INSERT
170	-0301	257213	S		4	BUSHING
180	-0301	257317	-		1	INSERT
185	-0301	271100	S		1	PIN
190	-0301	272415	S		2	ARM
200	-0301	441706	S		1	WASHER
310	-0301	90092-0052	S		6	VALVE
360	-0301	90134-0058	-		4	BANJO CONNECTION
370	-0301	90134-0068	-		1	CONNECTION
500	-0301	312105-0368	-		16	SCREW M6S6X16RFR
510	-0301	312105-0376	-		6	SCREW M6S6X35RFR
520	-0301	312105-0380	-		4	SCREW M6S6X50RFR
530	-0301	312105-0453	-		6	SCREW M6S8X25RFR
540	-0301	312105-0455	-		6	SCREW M6S8X30RFR
544	-0301	312318-0368	-		1	GRUB SCREW SK6SS6X16RFR
546	-0301	312811-0318	-		3	LOCK NUT M8RFR
548	-0301	315105-0165	-		3	WASHER BRB8,4X16RFR
550	-0301	315115-0153	-		10	WASHER TBRB6,4X12RFR
560	-0301	315202-0206	S		5	O-RING 7,3X2,4
570	-0301	315202-0207	S		6	O-RING 8,3X2,4
580	-0301	315202-0219	S		8	O-RING 29,2X3

TETRA PAK

4/8501

S-256952-3

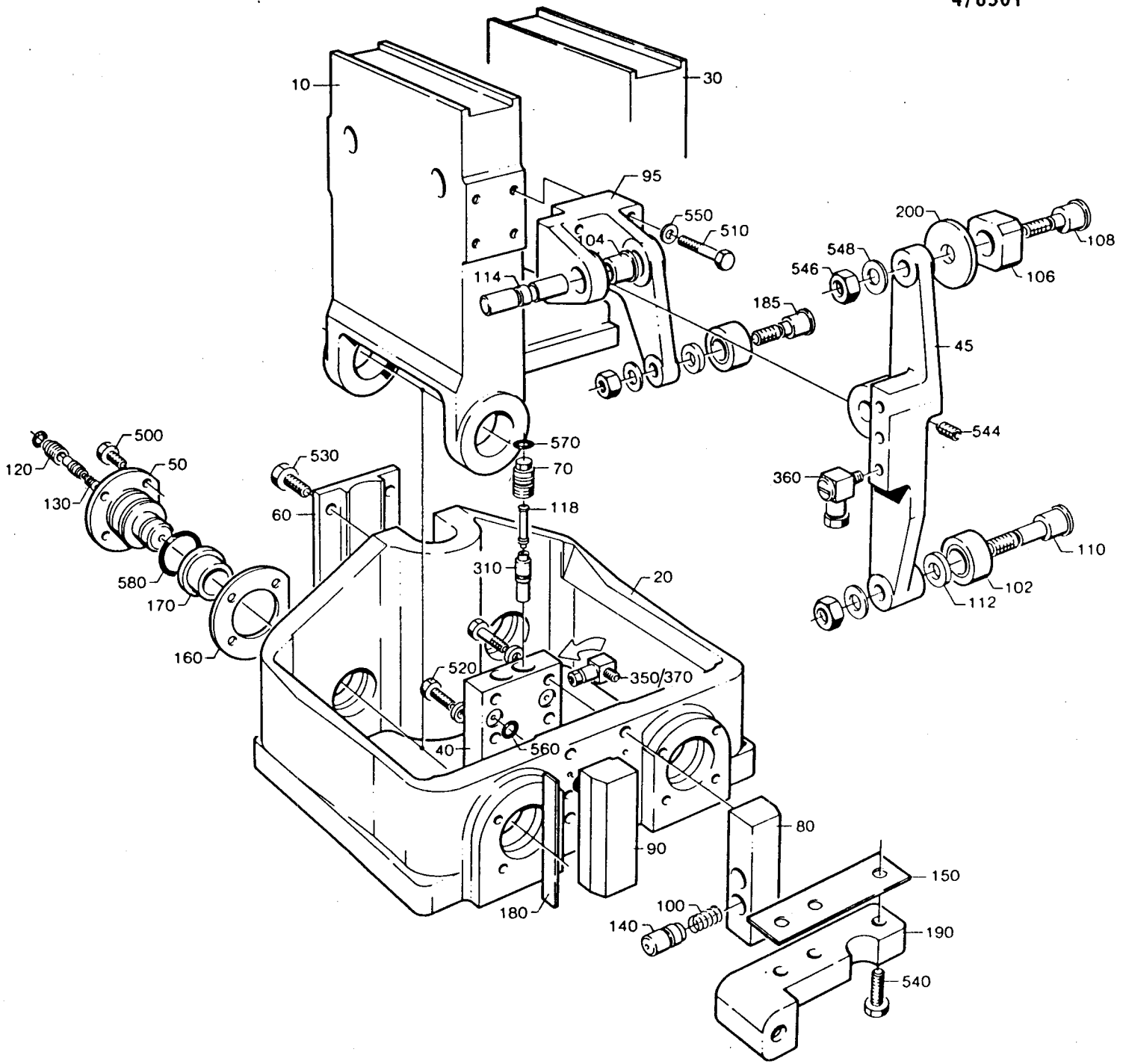

LAST ALTERATION: AM 6300 84-01-09
648104

POS	VAR	PART NUMBER	SP	EH	QTY	DESCRIPTION
	-0301	S- 257381-SHEET -3				===ASSEMBLY DRAWING===
010	-0301	456017	S		1	HOSE HOLDER
030	-0301	257379	-		1	PIPE
040	-0301	257000	S		1	NIPPLE
050	-0301	441355	-		1	SCREW
290	-0301	90005-0003	-		1	WASHER
300	-0301	90005-0005	P		1	SEAL WASHER
305	-0301	90005-0007	-		1	WASHER
325	-0301	90028-0020	P		5	CONE
335	-0301	90030-0184	-		3	PIPE CONNECTION
340	-0301	90030-0065	-		1	NIPPLE
345	-0301	90092-0052	P		4	VALVE
350	-0301	90092-0053	-		1	VALVE
370	-0301	90134-0039	P		5	BUSHING
378	-0301	90134-0066	-		1	CONNECTION
380	-0301	90134-0068	-		1	CONNECTION
385	-0301	90266-0019	-	MM	270	PIPE
390	-0301	90166-0109	P	MM	240	HOSE
395	-0301	90166-0143	-	MM	640	HOSE
500	-0301	312105-0376	-		2	SCREW M6S6X35RFR
510	-0301	315115-0153	-		2	WASHER TBRB6,4X12RFR
540	-0301	342980-0121	-		2	BANJO CONNINGEL 8/6-1/8"
550	-0301	342980-0303	-		2	BANJO CONN SINGEL 1/8"

TETRA PAK

1/8501

S-257381-3

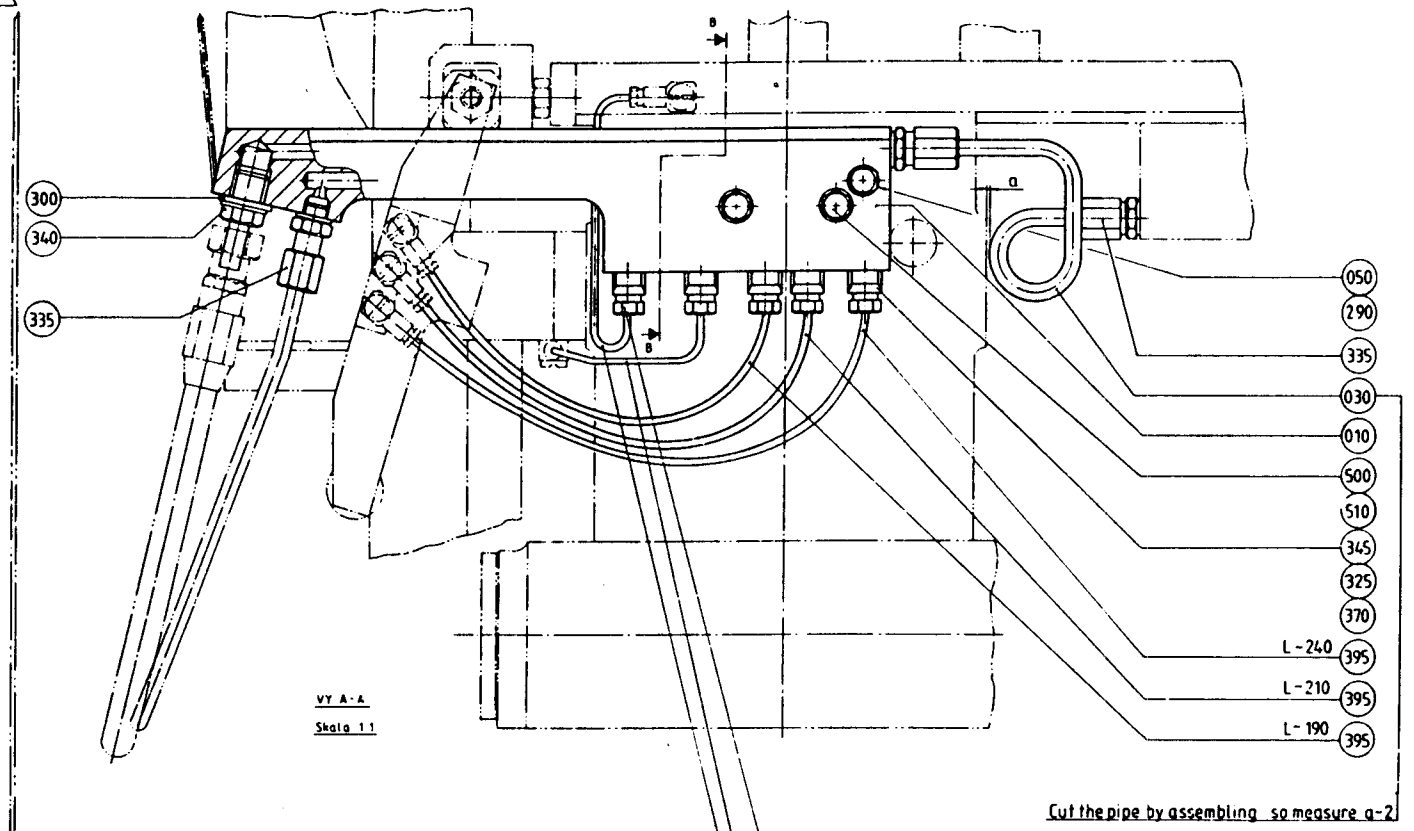

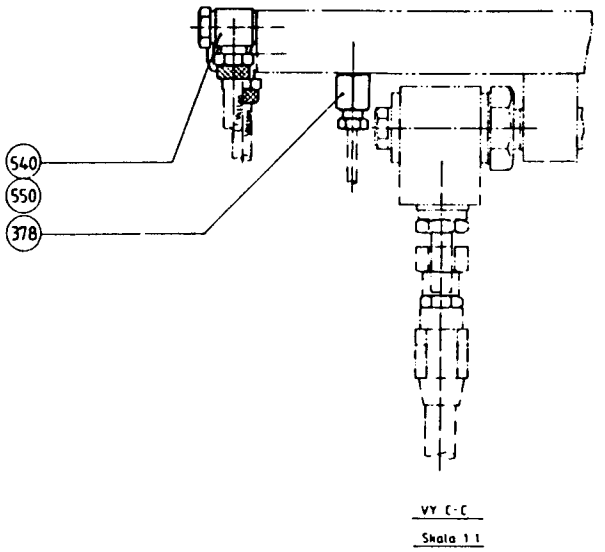

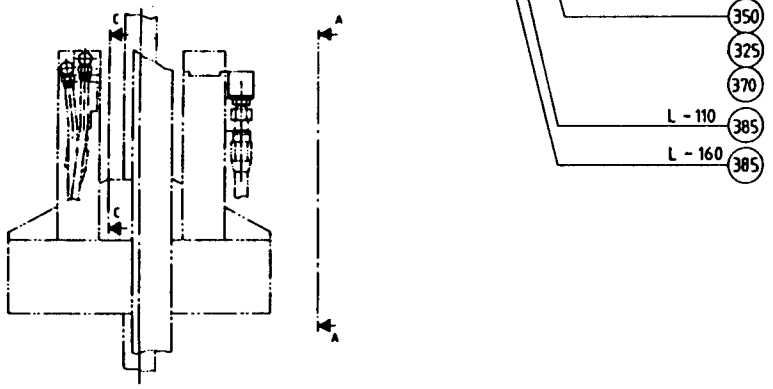

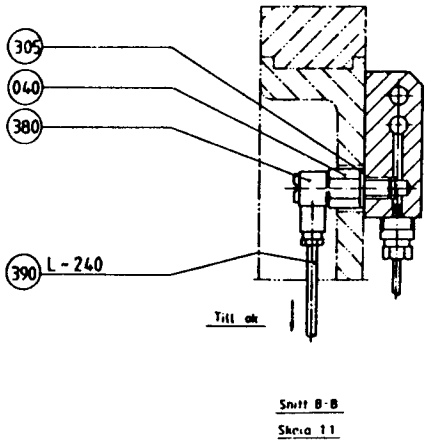

LAST ALTERATION: AM 6300 84-01-09
648104

POS	VAR	PART NUMBER	SP	EH	QTY	DESCRIPTION
	-0301	S- 257382-SHEET -3				===ASSEMBLY DRAWING===
010	-0301	456018	S		1	HOSE HOLDER
030	-0301	257380	-		1	PIPE
040	-0301	257000	S		1	NIPPLE
050	-0301	441355	-		1	SCREW
290	-0301	90005-0003	-		1	WASHER
300	-0301	90005-0005	P		1	SEAL WASHER
305	-0301	90005-0007	-		1	WASHER
325	-0301	90028-0020	P		5	CONE
335	-0301	90030-0184	-		3	PIPE CONNECTION
340	-0301	90030-0065	-		1	NIPPLE
345	-0301	90092-0052	P		4	VALVE
350	-0301	90092-0053	-		1	VALVE
370	-0301	90134-0039	P		5	BUSHING
378	-0301	90134-0066	-		1	CONNECTION
380	-0301	90134-0068	-		1	CONNECTION
385	-0301	90266-0019	-	MM	270	PIPE
390	-0301	90166-0109	P	MM	240	HOSE
395	-0301	90166-0143	-	MM	640	HOSE
500	-0301	312105-0376	-		2	SCREW M6S6X35RFR
510	-0301	315115-0153	-		2	WASHER TBRB6,4X12RFR
540	-0301	342980-0121	-		2	BANJO CONNINGEL 8/6-1/8"
550	-0301	342980-0303	-		2	BANJO CONN SINGEL 1/8"

TETRA PAK

1/8501

S-257382-3

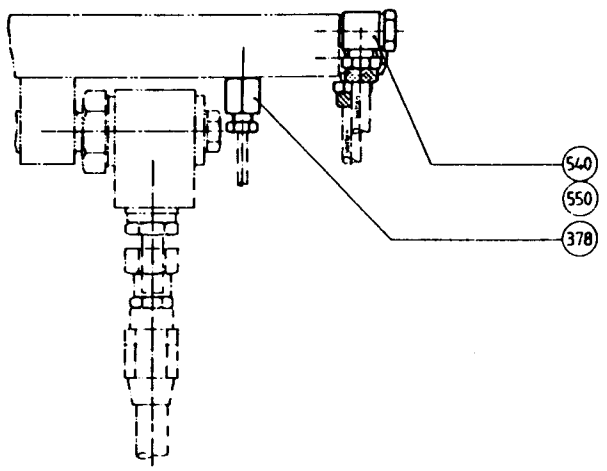

VY C - C
Skala 1 1

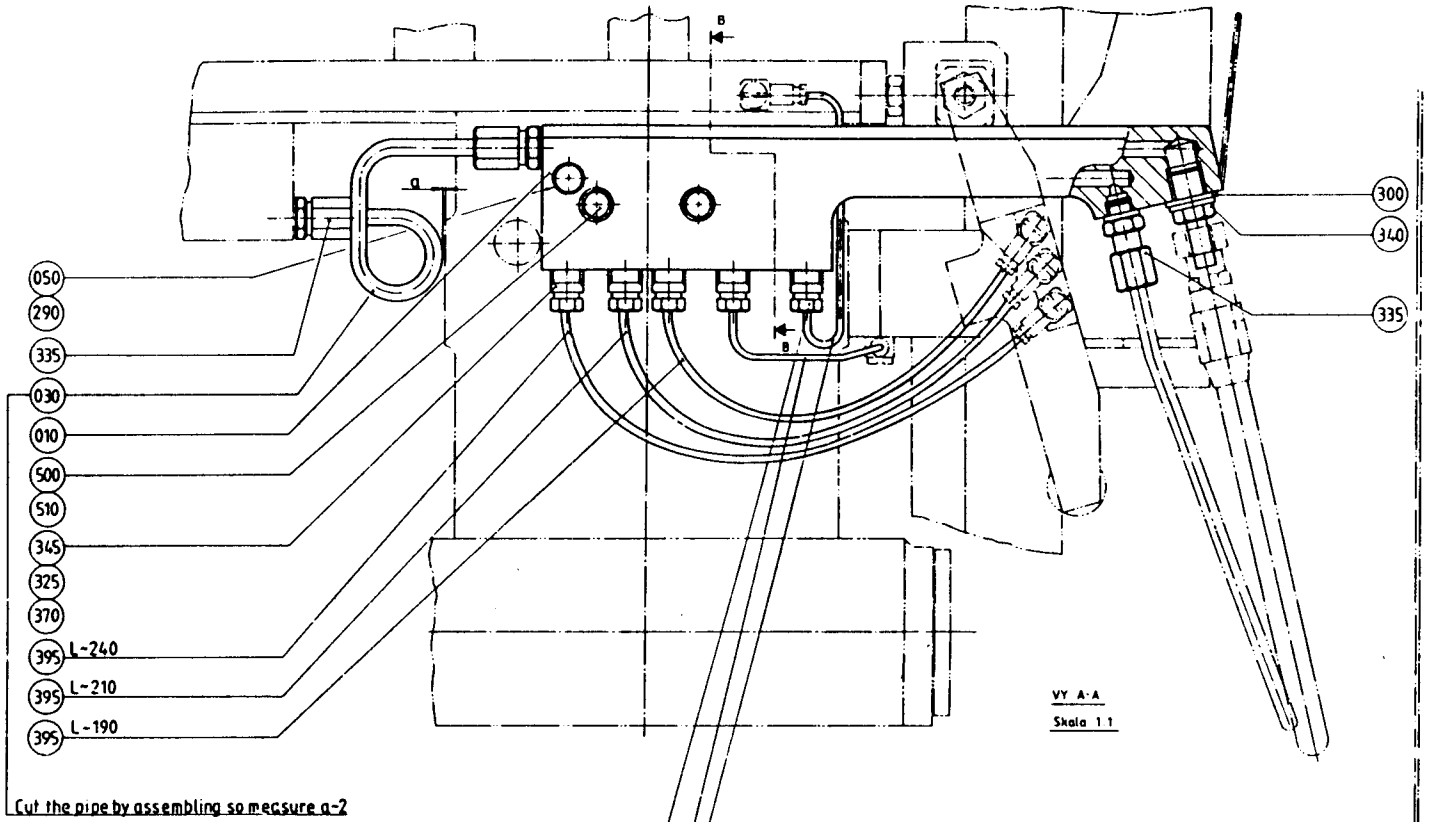

Cut the pipe by assembling so mecsure a-2

VY A-A
Skala 1 1

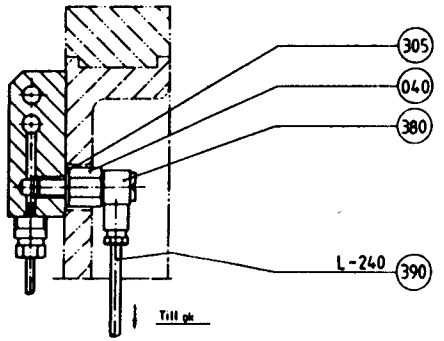

Snitt B - B
Skala 1 1

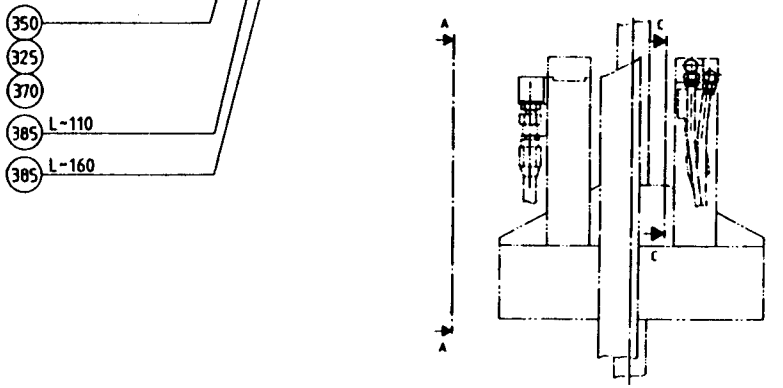

LAST ALTERATION: AM 7116 84-10-02
648104
AM 6615
84-03-08

GROUP	SEALING SYSTEM	VOLUME	VOLUME	VOLUME	VOLUME
-0301	TPC	V0284	V0250	V0236	V0200
	TPC	V0187	V0180	200ML SLIM	-
-0302	IH	V0284	V0250	V0236	V0200
	IH	V0187	V0180	200ML SLIM	-
-0303	IH	V0125	V0100	-	-

POS	VAR	PART NUMBER	SP	EH	QTY	DESCRIPTION
010	-0302	456948-0003	-		2	INDUCTOR
020	-0303	456947-0003	-		2	INDUCTOR
030	-0301	441733	-		2	TPC-BAR
040	-0303	295005	-		4	DOLLY
050	-0302	295758	-		4	DOLLY
060	-0301	271738	-		4	KNIFE
	-0302				4	
070	-0303	272762	-		4	KNIFE
080	ALL	456011	-		6	PIN

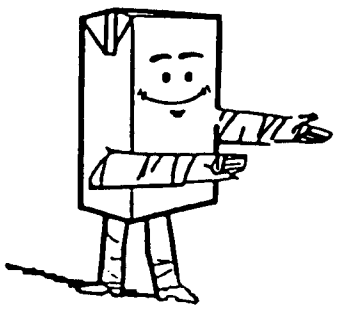

SPC 6481-51/52
FINAL FOLDER

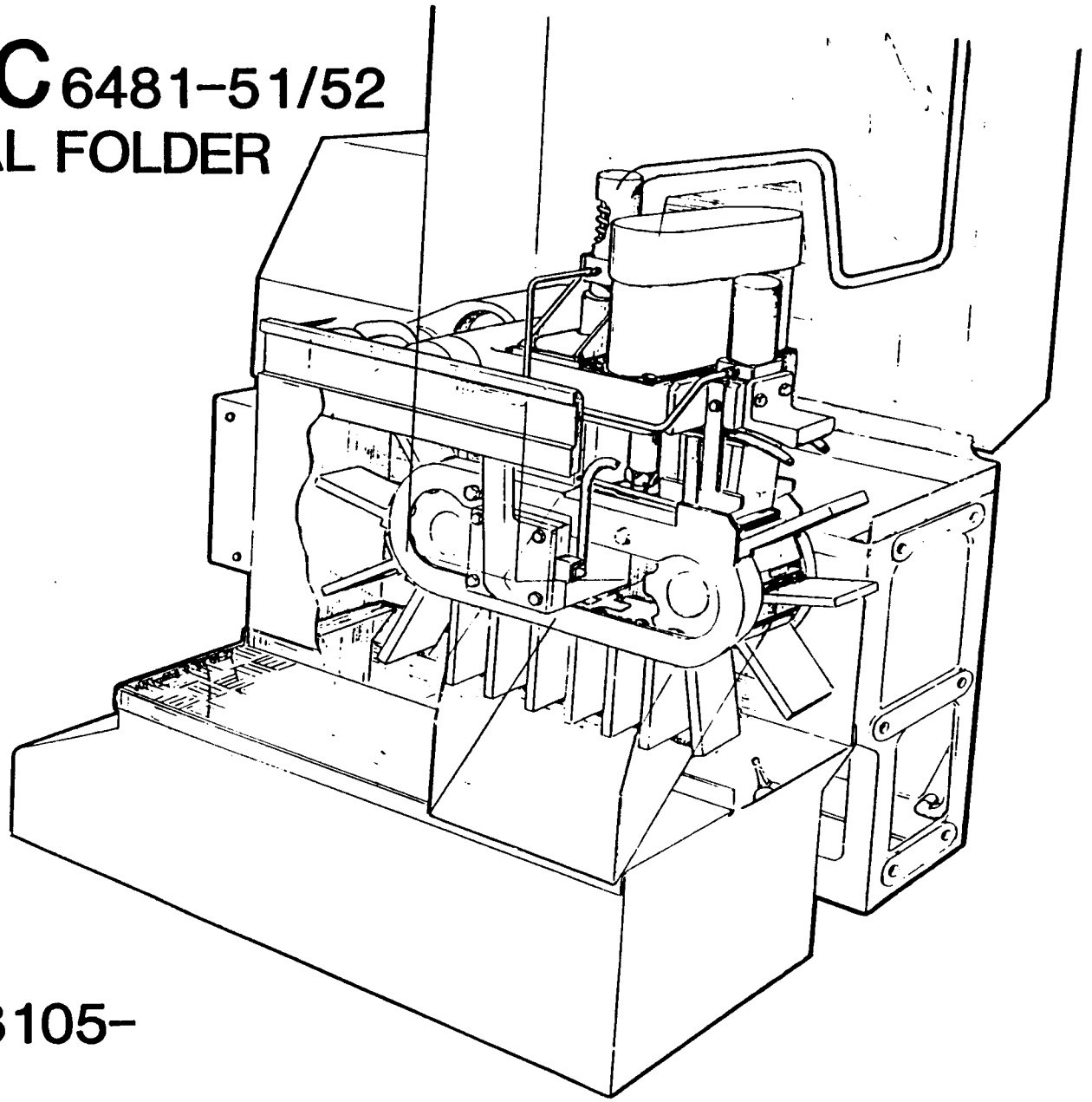

B-648105-

TETRA PAK SERVICE

LAST ALTERATION: AM 9627 86-10-17
648105-060V
AM 6591
84-02-20

GROUP	VOLUME
-0301	V0250
-0302	V0236
-0303	V0200
-0304	V0180
-0305	V0125
-0306	200ML SLIM

POS	VAR	PART NUMBER	SP	EH	QTY	DESCRIPTION
	-0301	S- 256547-SHEET	-3			===ASSEMBLY DRAWING===
	-0302		-3			
	-0303		-3			
	-0304		-3			
	-0305		-3			
	-0306		-3			
F100	ALL	CR- 31390-0102	S		2	ELEMENT
F110	ALL	CR- 31390-011V	S		1	ELEMENT
030	-0301	295617-0001	S		1	BLOW-OFF NOZZLE
	-0302				1	
	-0303				1	
	-0304				1	
030	-0305	295617-0002	S		1	BLOW-OFF NOZZLE
030	-0306	295617-0003	S		1	BLOW-OFF NOZZLE
040	-0301	295618-0001	S		1	BLOW-OFF NOZZLE
	-0302				1	
	-0303				1	
	-0304				1	
040	-0305	295618-0002	S		1	BLOW-OFF NOZZLE
040	-0306	295618-0003	S		1	BLOW-OFF NOZZLE
050	-0301	247227-0001	S		1	BLOW-OFF NOZZLE
	-0302				1	
	-0303				1	
	-0304				1	
050	-0305	295621	S		1	BLOW-OFF NOZZLE
050	-0306	295622	S		1	BLOW-OFF NOZZLE
120	-0304	23763-0001	C		1	DISTANCE TUBE
120	-0303	23763-0002	C		1	DISTANCE TUBE
120	-0302	23763-0005	C		1	DISTANCE TUBE
120	-0301	23763-0006	C		1	DISTANCE TUBE
120	-0306	23763-0007	C		1	DISTANCE TUBE
120	-0305	23763-0009	C		1	DISTANCE TUBE
140	-0303	23765-0003	S		1	INSULATING TUBE
	-0304				1	
150	-0305	23765-0004	SC		1	INSULATING TUBE
160	-0301	23765-0005	S		1	INSULATING TUBE
	-0302				1	

POS	VAR	PART NUMBER	SP	EH	QTY	DESCRIPTION
180	-0301	252766-0001	P		3	INSULATING TUBE
	-0302				2	
	-0303				2	
	-0304				2	
	-0305				3	
	-0306				3	
190	-0302	252766-0002	P		1	INSULATING TUBE
	-0303				1	
	-0304				1	
220	-0301	263673	P		6	GASKET
	-0302				8	
	-0303				6	
	-0304				6	
	-0305				8	
	-0306				8	
010	ALL	256548	-		1	HEATING CHAMBER
020	ALL	441143	-		1	DISTANCE PIECE
060	ALL	531730	P		3	FLANGE PACKING
070	ALL	23769	S		1	STOP PLATE
080	ALL	295306	-		1	COVER
090	ALL	271191	-		1	LID
095	ALL	295307	-		1	FLEXIBLE CONDUIT
096	ALL	441693	-		1	HANDLE
100	ALL	20702	-		1	COVER PLATE
110	ALL	23762-0002	-		2	SIDE PIPE
130	ALL	23765-0002	S		2	INSULATING TUBE
200	ALL	259807	S		2	WASHER
210	ALL	469977	S		1	ELECTRICAL CONNECTION
240	ALL	271499	S		4	ELECTRICAL CONNECTION
310	ALL	90166-0133	P	MM	1200	HOSE
500	ALL	312105-0327	-		24	SCREW M6S5X12 A4 80
510	ALL	312105-0341	-		2	SCREW M6S5X50 A4 80
520	ALL	312105-0368	-		2	SCREW M6S6X16RFR
524	ALL	312105-0372	-		2	SCREW M6S6X25RFR
530	ALL	315105-0146	-		2	WASHER BRB5,3X10RFR
540	ALL	315105-0153	-		2	WASHER BRB6,4X12RFR
550	ALL	315204-0305	S		1	O-RING 69,5X3
560	ALL	342920-0122	-		1	PIPE CONNE8/6-1/4
590	ALL	352100-0107	-		4	CABLE GLANR.18,6-12

TETRA PAK

1/8501 **S-256547-3**

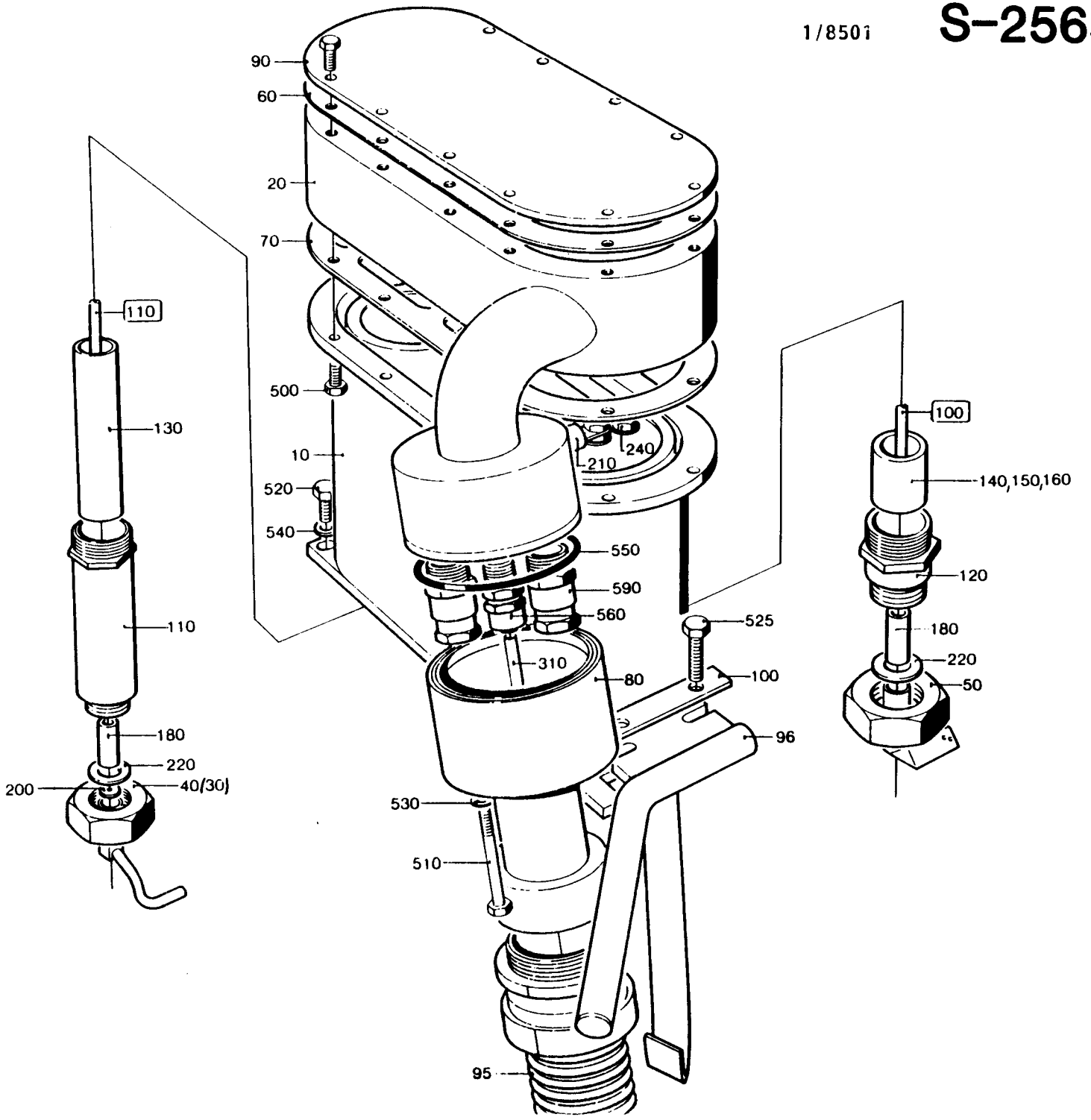

LAST ALTERATION: AM 7344 85-02-12
648105-020V
AM 5214
82-03-11

POS	VAR	PART NUMBER	SP	EH	QTY	DESCRIPTION
	-0201	S- 256674-SHEET	-3			===ASSEMBLY DRAWING===
010	-0201	272751	C		1	BOTTOM VALVE
300	-0201	90166-0089	-	MM	1100	HOSE
310	-0201	90166-0089	-	MM	420	HOSE
510	-0201	315250-0104	-		1	GASKET 61/51
530	-0201	342807-0104	-		1	ELBOW PIPE51
540	-0201	342980-0213	-		1	BANJO CONNDUBBEL 6/4-1/8
550	-0201	342980-0303	-		1	BANJO CONN SINGEL 1/8"

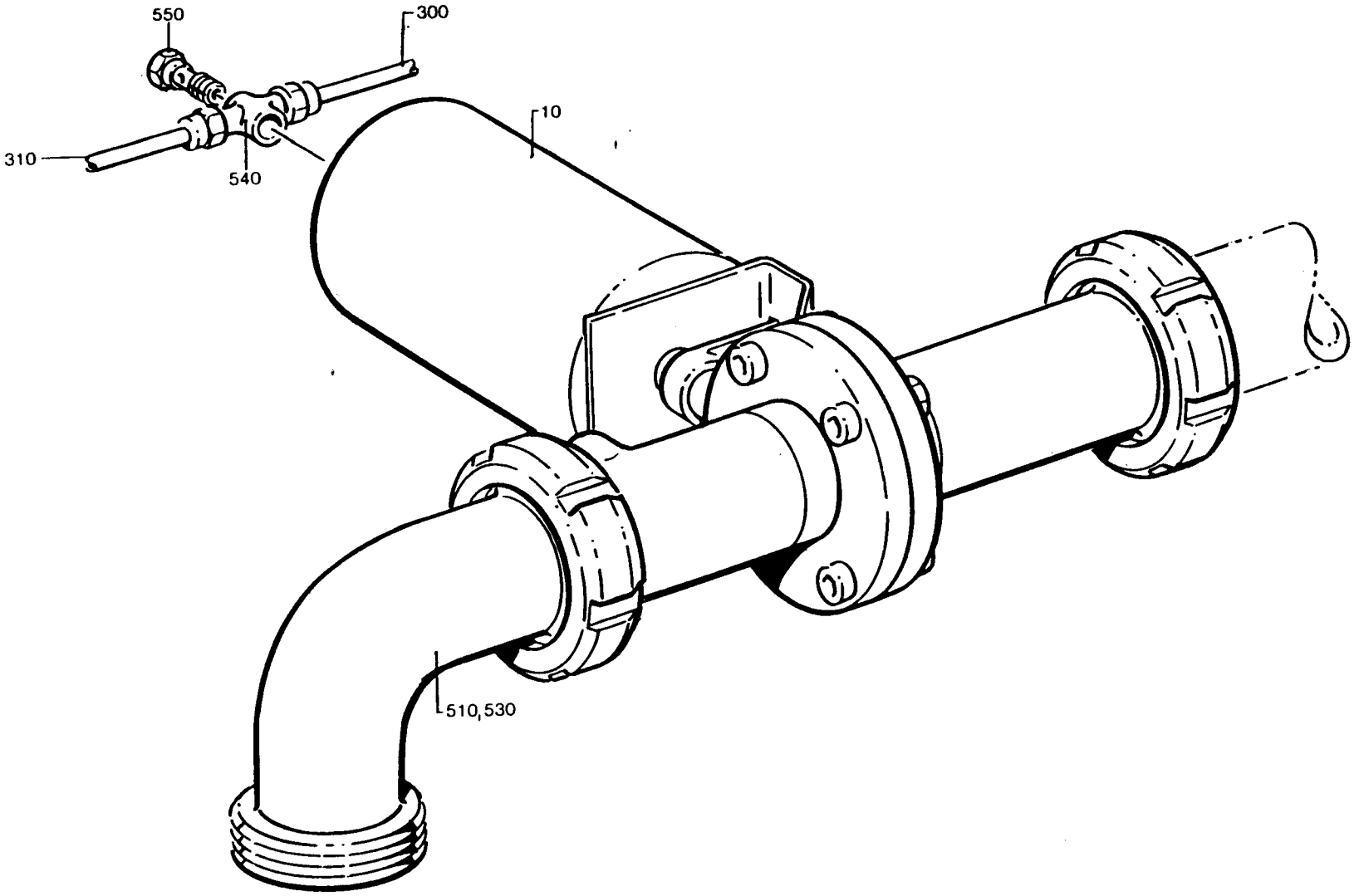
550
300
10
310
540
510,530

LAST ALTERATION: AM 8057 85-06-27
648105-020V
AM 5289
82-04-29

GROUP VOLUME

-0201 V0250
-0202 V0236
-0203 V0200
-0204 V0180
-0205 V0125
-0206 200ML SLIM

POS	VAR	PART	NUMBER	SP	EH	QTY	DESCRIPTION
	-0201	S-	256712-SHEET	-4			===ASSEMBLY DRAWING===
	-0202			-4			
	-0203			-4			
	-0204			-4			
	-0205			-5			
	-0206			-6			
010	-0201		295843-0001	S		1	BRACKET
010	-0202		295843-0002	S		1	BRACKET
010	-0203		295843-0003	S		1	BRACKET
010	-0204		295843-0004	S		1	BRACKET
010	-0205		295843-0005	S		1	BRACKET
010	-0206		295843-0006	S		1	BRACKET
020	-0201	G-	272905-0001	S		1	ARM
020	-0202	G-	272905-0002	S		1	ARM
020	-0203	G-	272905-0003	S		1	ARM
020	-0204	G-	272905-0004	S		1	ARM
020	-0205	G-	272905-0005	S		1	ARM
020	-0206	G-	272905-0006	S		1	ARM
030	-0201	G-	272906-0001	S		1	ARM
030	-0202	G-	272906-0002	S		1	ARM
030	-0203	G-	272906-0003	S		1	ARM
030	-0204	G-	272906-0004	S		1	ARM
030	-0205	G-	272906-0005	S		1	ARM
030	-0206	G-	272906-0006	S		1	ARM
040	-0201		295057-0001	C		1	RAIL
	-0202					1	
040	-0203		295057-0002	C		1	RAIL
040	-0204		295057-0003	C		1	RAIL
040	-0205		295059	C		1	RAIL
040	-0206		295061	C		1	RAIL
050	-0201		295058-0001	C		1	RAIL
	-0202					1	
050	-0203		295058-0002	C		1	RAIL
050	-0204		295058-0003	C		1	RAIL
050	-0205		295060	C		1	RAIL
050	-0206		295062	C		1	RAIL
060	-0201		272045-0002	S		1	PLATE
	-0202					1	
060	-0203		272045-0003	S		1	PLATE

POS	VAR	PART	NUMBER	SP	EH	QTY	DESCRIPTION
060	-0204		272045-0004	S		1	PLATE
060	-0205		271939-0001	S		1	PLATE
060	-0206		272045-0001	S		1	PLATE
070	-0201	G-	272902	S		1	BLOCK
	-0202					1	
	-0203					1	
	-0204					1	
070	-0205	G-	272903	S		1	BLOCK
070	-0206	G-	272904	S		1	BLOCK
080	ALL	G-	272609	C		1	CYLINDER
090	ALL		272610	S		1	PISTON
100	ALL		271731	P		1	COMPRESSION SPRING
110	ALL		256727	-		1	COVER
120	ALL		272611	S		1	SLEEVE
130	ALL		295072	S		1	BUFFER RING
140	ALL		441896	-		1	WASHER
150	ALL		441897	S		1	STOP WASHER
300	ALL		90091-0089	P		1	SEAL RING
310	ALL		90091-0129	P		1	SEAL RING
330	ALL		90090-0013	P		1	STEEL BALL
500	ALL		312105-0455	-		4	SCREW M6S8X30RFR
510	ALL		312105-0453	-		2	SCREW M6S8X25RFR
515	ALL		312105-0327	-		1	SCREW M6S5X12 A4 80
520	ALL		312105-0374	-		4	SCREW M6S6X30RFR
530	ALL		312105-0368	-		2	SCREW M6S6X16RFR
540	ALL		312115-0374	-		1	SCREW 6X30 A4 80
550	ALL		312605-0320	-		1	NUT M6M10RFR
560	ALL		315115-0165	-		2	WASHER TBRB8,4X16RFR
565	ALL		315234-0101	-		1	SEAL RING M5
570	ALL		312311-0327	-		1	GRUB SCREW T6SS5X12FZB
580	ALL		315105-0153	-		2	WASHER BRB6,4X12RFR

TETRA PAK

4/8601 **S-256712-4**

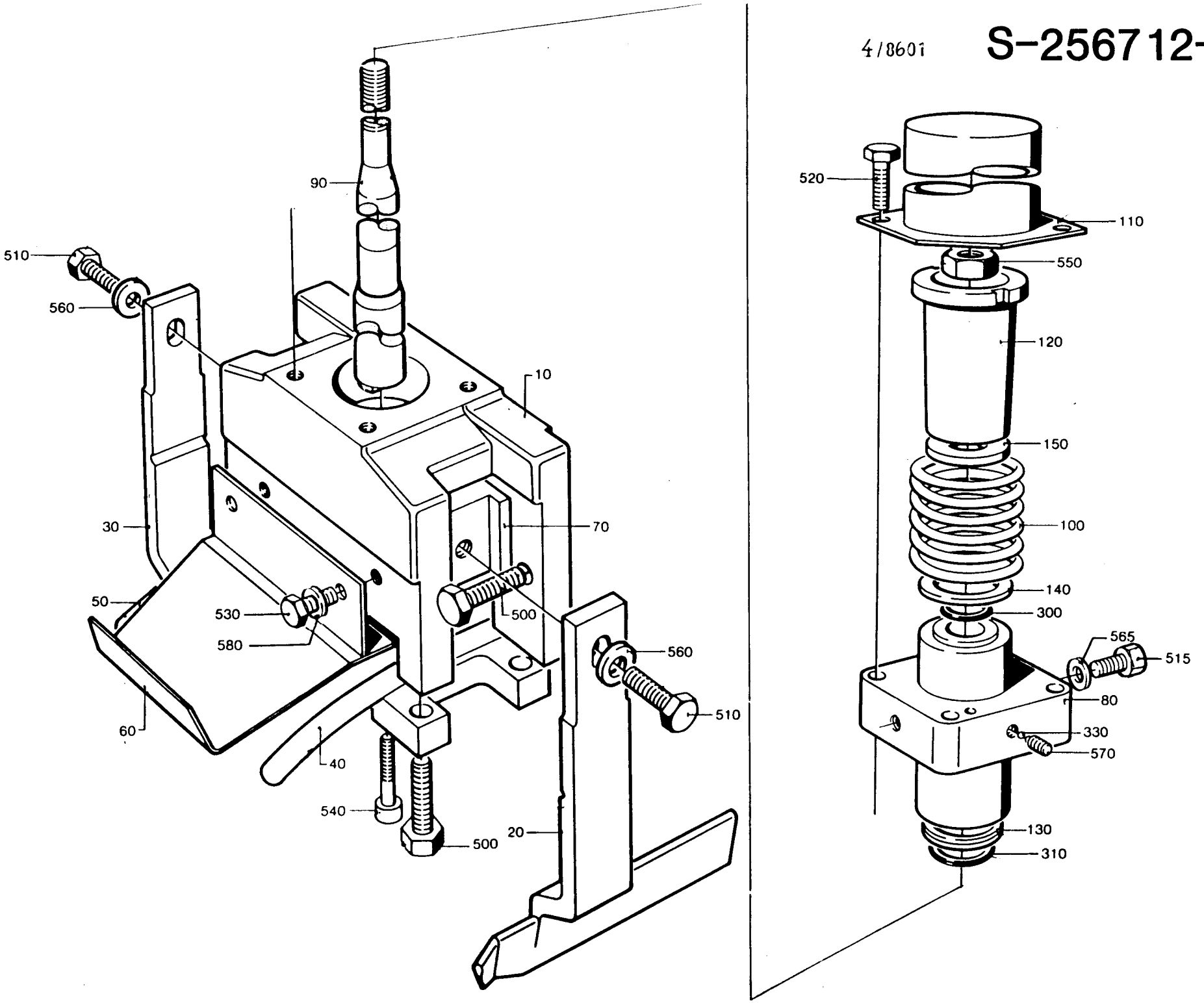

LAST ALTERATION: AM 7069 84-08-31
648103
AM 5216
82-03-19

GROUP	VOLUME
-0201	V0250
-0202	V0236
-0203	V0200
-0204	V0180
-0205	V0125
-0206	200ML SLIM
-0207	V0284
	~~EJ KOMPLETT~~
-0208	V0187
	~~EJ KOMPLETT~~
-0209	V0100
	~~EJ KOMPLETT~~

(NOT COMPLETED)

POS	VAR	PART NUMBER	SP	EH	QTY	DESCRIPTION	
	-0201	S- 256202-SHEET	-2			===ASSEMBLY DRAWING===	
	-0202		-2				
	-0203		-2				
	-0204		-2				
	-0205		-2				
010	-0201	271759	C		2	CAM	
010	-0202	272118	C		2	CAM	
010	-0203	456373	C		2	CAM	
010	-0204	469369	C		2	CAM	
010	-0205	271317	C		2	CAM	
010	-0206	441411	C		2	CAM	
020	-0201	271760	C		2	CAM	
020	-0202	272119	C		2	CAM	
020	-0203	456374	C		2	CAM	
020	-0204	469370	C		2	CAM	
020	-0205	271318	C		2	CAM	
020	-0206	441412	C		2	CAM	
030	ALL	456744	S		2	HUB	
040	ALL	272820	C		1	PULLEY	
050	ALL	272821	C		1	PROTRACTOR	
060	ALL	256653	-		2	DISTANCE	
070	ALL	271007	C		1	INDICATOR	
080	ALL	295140	S		4	PIN	
100	ALL	90208-0038	S		1	BUSHING	
110	ALL	90208-0039	S		2	BUSHING	
200	ALL	312101-0325	-		6	SCREW	M6S5X10FZB
210	ALL	312101-0500	-		24	SCREW	M6S10X45FZB
220	ALL	315101-0146	-		6	WASHER	BRB5,3X10FZB
230	ALL	315101-0173	-		24	WASHER	BRB10,5X22FZB

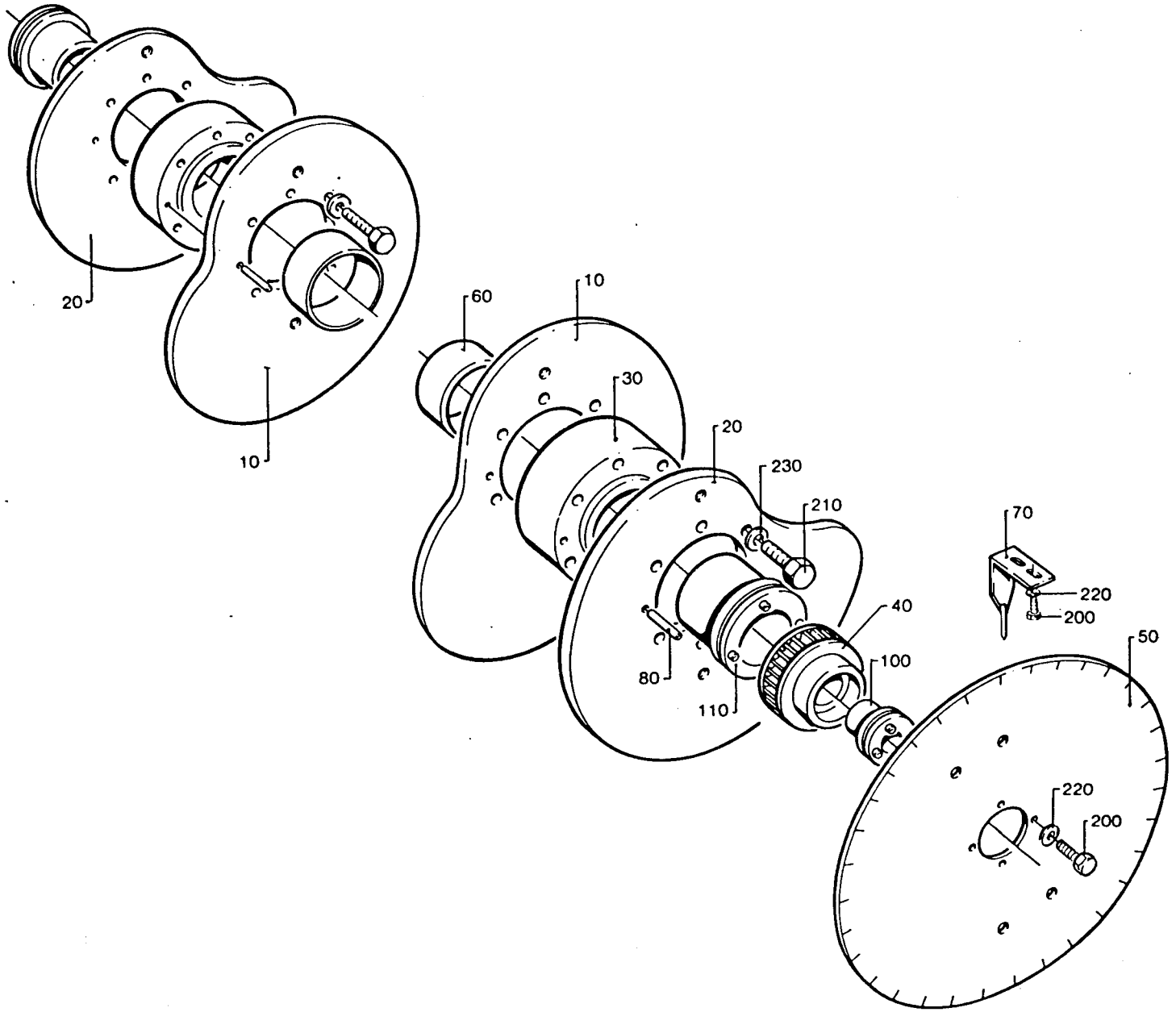
20
10
60
10
30
20
230
210
70
220
200
40
100
50
80
110
220
200

LAST ALTERATION: AM 9648 86-10-30
648103-070V

GROUP	VOLUME
-0301	V0250
-0302	V0236
-0303	V0200
-0304	V0180
-0305	V0125
-0306	200ML SLIM

POS	VAR	PART NUMBER	SP	EH	QTY	DESCRIPTION
	-0301	S- 256202-SHEET	-3			===ASSEMBLY DRAWING===
	-0302		-3			
	-0303		-3			
	-0304		-3			
	-0305		-3			
	-0306		-3			
010	-0301	271759	C		2	CAM
010	-0302	272118	C		2	CAM
010	-0303	456373	C		2	CAM
010	-0304	469369	C		2	CAM
010	-0305	271317	C		2	CAM
010	-0306	441411	C		2	CAM
020	-0301	271760	C		2	CAM
020	-0302	272119	C		2	CAM
020	-0303	456374	C		2	CAM
020	-0304	469370	C		2	CAM
020	-0305	271318	C		2	CAM
020	-0306	441412	C		2	CAM
025	-0301	491459	S		1	CAM SEGMENT
025	-0302	491916	S		1	CAM SEGMENT
025	-0303	491345	S		1	CAM SEGMENT
025	-0304	491918	S		1	CAM SEGMENT
025	-0305	491920	S		1	CAM SEGMENT
025	-0306	491461	S		1	CAM SEGMENT
026	-0301	491460	S		1	CAM SEGMENT
026	-0302	491917	S		1	CAM SEGMENT
026	-0303	491346	S		1	CAM SEGMENT
026	-0304	491919	S		1	CAM SEGMENT
026	-0305	491921	S		1	CAM SEGMENT
026	-0306	491462	S		1	CAM SEGMENT
030	ALL	456744	S		2	HUB
040	ALL	272820	C		1	PULLEY
050	ALL	272821	C		1	PROTRACTOR
060	ALL	256653	-		2	SPACER
070	ALL	271007	C		1	INDICATOR
080	ALL	295140	S		4	PIN
100	ALL	90208-0038	S		1	BUSHING
110	ALL	90208-0039	S		2	BUSHING
115	ALL	90287-0145	-		4	SCREW

POS	VAR	PART NUMBER	SP	EH	QTY	DESCRIPTION
190	ALL	311103-0272	-		4	CYLINDRICACPR4M6X20RFR
200	ALL	312101-0325	-		6	SCREW M6S5X10FZB
210	ALL	312101-0500	-		24	SCREW M6S10X45FZB
220	ALL	315101-0146	-		6	WASHER BRB5,3X10FZB
230	ALL	315101-0173	-		24	WASHER BRB10,5X22FZB

S-256202-3

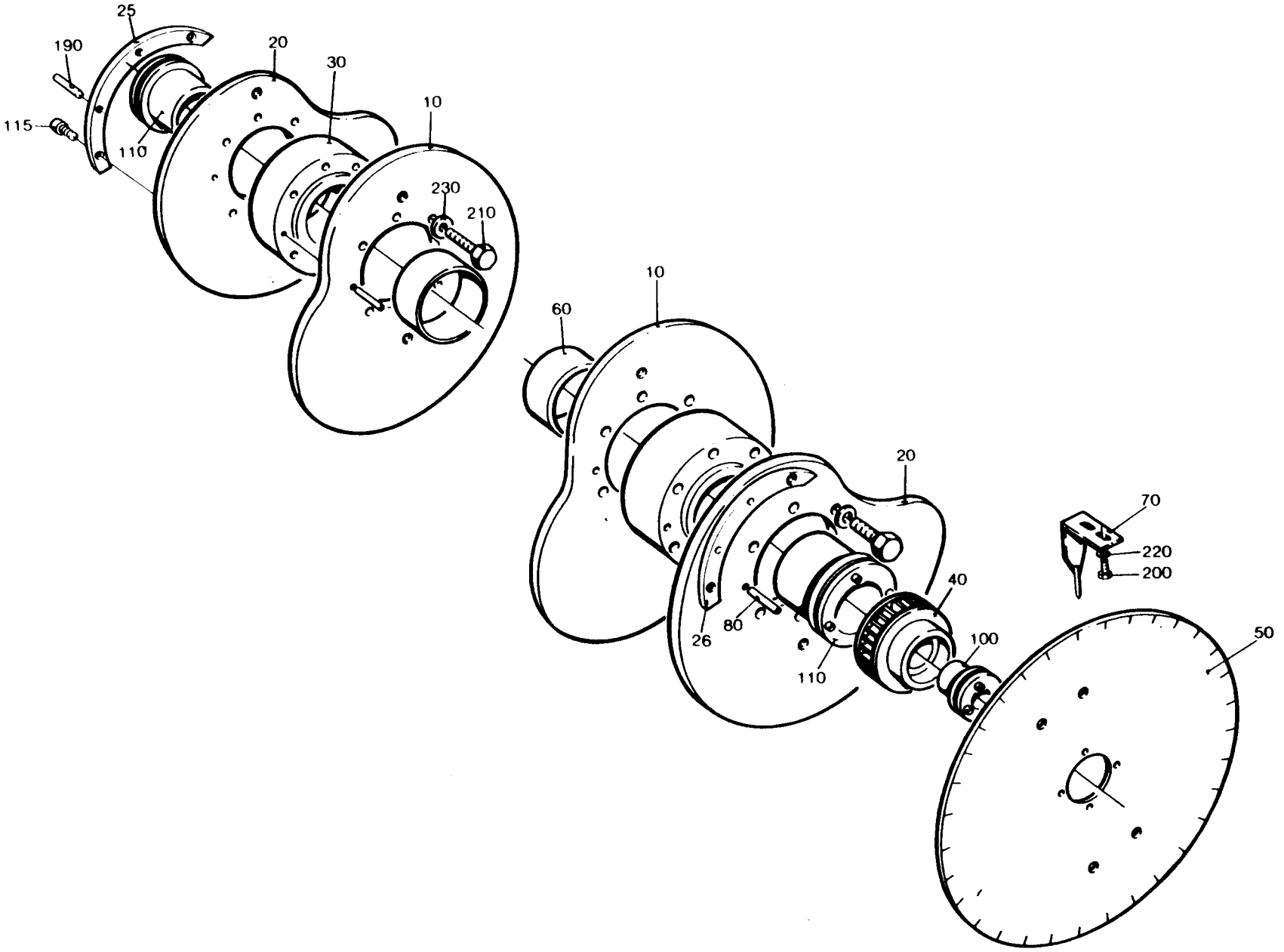
25
190
20
30
10
115
110
230
210
10
60
20
70
220
200
40
80
26
110
100
50

LAST ALTERATION: AM 7499 83-02-11
648103
AM 6207
83-11-10

GROUP	SEALING SYSTEM	VOLUME	VOLUME	VOLUME	VOLUME
-0301	TPC	V0200	V0180	-	-
	IH	V0236	V0200	V0180	V0125
-0302	TPC	V0250	-	-	-
	IH	V0250	200ML SLIM	-	-
-0303	TPC	200ML SLIM	-	-	-

POS	VAR	PART NUMBER	SP	EH	QTY	DESCRIPTION
	-0301	S- 256203-SHEET	-3			===ASSEMBLY DRAWING===
	-0302		-3			
	-0303		-3			
420	-0301	490566-0001	S		2	TOOTHED BELT
420	-0302	490566-0002	S		2	TOOTHED BELT
420	-0303	490566-0003	S		2	TOOTHED BELT
010	ALL	272606	-		1	CRADLE
020	ALL	256514	C		1	AXLE
050	ALL	272608	C		2	BELT HOLDER
060	ALL	256472	-		1	WASHER
070	ALL	256516	-		2	CLAMP
090	ALL	256518	C		2	AXLE
100	ALL	256519	C		2	SPRING HOLDER
110	ALL	441353	S		2	TENSION SPRING
300	ALL	90028-0020	-		2	CONE
310	ALL	90028-0021	-		1	CONE
320	ALL	90032-0038	-		1	BLOCK
330	ALL	321531-0248	S		2	NEEDLE SLEHK2016
340	ALL	90083-0016	S		4	PLATE
350	ALL	90087-0019	-		1	PLUG
360	ALL	90092-0052	S		2	VALVE
370	ALL	90134-0031	-		1	SLEEVE
380	ALL	90134-0038	-		1	BUSHING
390	ALL	90134-0039	-		2	BUSHING
400	ALL	90134-0058	-		3	BANJO CONNECTION
405	ALL	90266-0019	-	MM	500	PIPE
410	ALL	90165-0022	-		1	CLIP
490	ALL	312101-0297	-		2	SCREW M6S4X25FZB
500	ALL	312101-0333	-		8	SCREW M6S5X25FZB
510	ALL	312101-0364	-		2	SCREW M6S6X10FZB
520	ALL	312101-0457	-		2	SCREW M6S8X35FZB
530	ALL	312121-0287	-		1	SLOTTED HEMCS4X8FZB
555	ALL	315101-0136	-		2	WASHER BRB4,3X8FZB
560	ALL	315101-0146	-		8	WASHER BRB5,3X10FZB
570	ALL	315101-0165	-		2	WASHER BRB8,4X16FZB
580	ALL	321101-0233	S		2	BUSHING 20F7X20

TETRA PAK

2/8501 **S-256203-3**

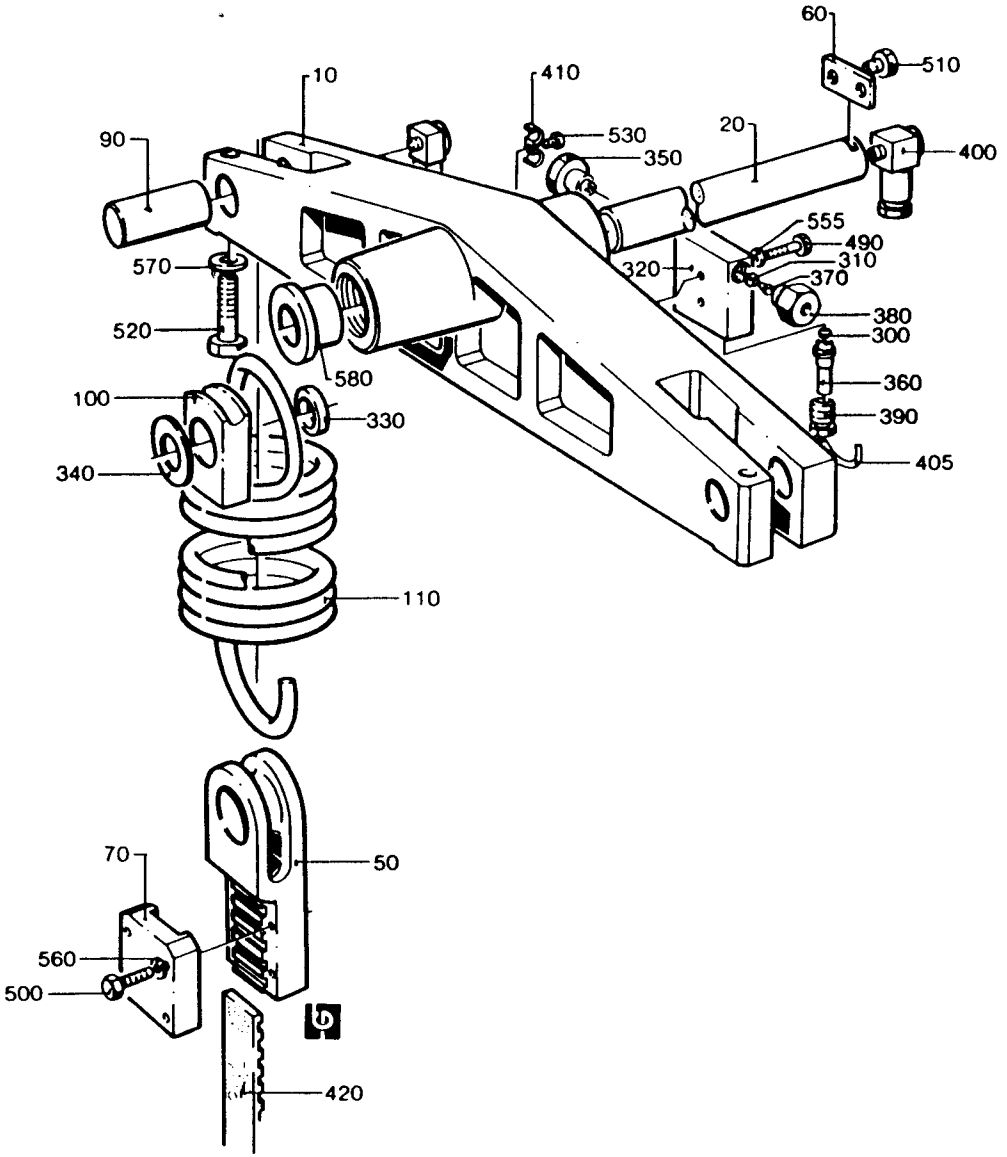

8m6948

LAST ALTERATION: AM 7499 85-02-11
648103
AM 6604
84-02-22

POS	VAR	PART NUMBER	SP	EH	QTY	DESCRIPTION
	-0301	S- 256806-SHEET -5				===ASSEMBLY DRAWING===
010	-0301	257326	C		1	CRANK
020	-0301	272664	C		1	BRACKET
030	-0301	272690	-		1	COVER
040	-0301	456343	S		1	AXLE
050	-0301	272736	C		1	BRACKET
060	-0301	272737	C		1	BRACKET
070	-0301	272772	C		1	ARM
100	-0301	12228	S		1	COMPRESSION SPRING
110	-0301	256812	S		1	AXLE
120	-0301	256814	-		1	WASHER
130	-0301	456344	-		1	SLEEVE
140	-0301	256816	-		1	PIPE
150	-0301	456345	-		1	BRACKET
160	-0301	256828	S		1	SPRING
170	-0301	257179	S		1	GEAR
190	-0301	257327	S		1	SLIDER
200	-0301	257328	S		1	END PIECE
210	-0301	272691	S		1	BRACKET
220	-0301	272692	S		1	LID
230	-0301	272693	S		1	RING
240	-0301	272694	-		1	CATCH
250	-0301	295773	-		1	DISTANCE
300	-0301	90044-0084	S		1	MICRO SWITCH
310	-0301	90240-0093	S		1	PLAIN BEARING
320	-0301	90344-0022	S		2	SPROCKET
400	-0301	311103-0355	-		2	CYLINDRICACPR6M6X25RFR
410	-0301	311103-0361	-		1	CYLINDRICACPR6M6X40RFR
420	-0301	311103-0470	-		1	CYLINDRICACPR10M6X60RFR
425	-0301	311305-0274	-		1	SLOTTED PIRPC4X25FZB
430	-0301	311307-0275	-		1	SLOTTED PIRPD4X28FZB
440	-0301	312101-0453	-		4	SCREW M6S8X25FZB
450	-0301	312104-0499	-		1	SCREW M6S10X40HFZB
460	-0301	312105-0293	-		3	SCREW M6S4X16RFR
470	-0301	312105-0366	-		4	SCREW M6S6X12RFR
480	-0301	312105-0368	-		1	SCREW M6S6X16RFR
485	-0301	312105-0370	-		3	SCREW M6S6X20RFR
490	-0301	312105-0374	-		1	SCREW M6S6X30RFR
500	-0301	312105-0382	-		2	SCREW M6S6X60RFR
505	-0301	312115-0331	-		2	SCREW MC6S5X20RFR
510	-0301	312151-0366	-		1	SCREW MF6S6X12FZB
520	-0301	312318-0287	-		2	GRUB SCREW SK6SS4X8RFR
530	-0301	312318-0362	-		3	GRUB SCREW SK6SS6X8RFR
535	-0301	312605-0314	-		2	NUT M6M5RFR
540	-0301	312605-0320	-		1	NUT M6M10RFR
600	-0301	315101-0165	-		4	WASHER BRB8,4X16FZB
605	-0301	315105-0146	-		2	WASHER BRB5,3X10RFR
610	-0301	315105-0153	-		10	WASHER BRB6,4X12RFR
620	-0301	315121-0153	-		1	WASHER TBRSB6,4X22FZB

POS	VAR	PART NUMBER	SP	EH	QTY	DESCRIPTION
630	-0301	315701-0232	-		3	FLAT WEDGE6X6X20
640	-0301	315740-0116	-		1	RETAINING 20SMS199
700	-0301	318201-0150	S		1	ROLLER CHA3/8"
705	-0301	90051-0082	-		1	KNOB
710	-0301	321120-0138	S		4	BUSHING 20/23X20
720	-0301	321129-0131	S		4	WASHER 20/36X1,5

S-256806-5

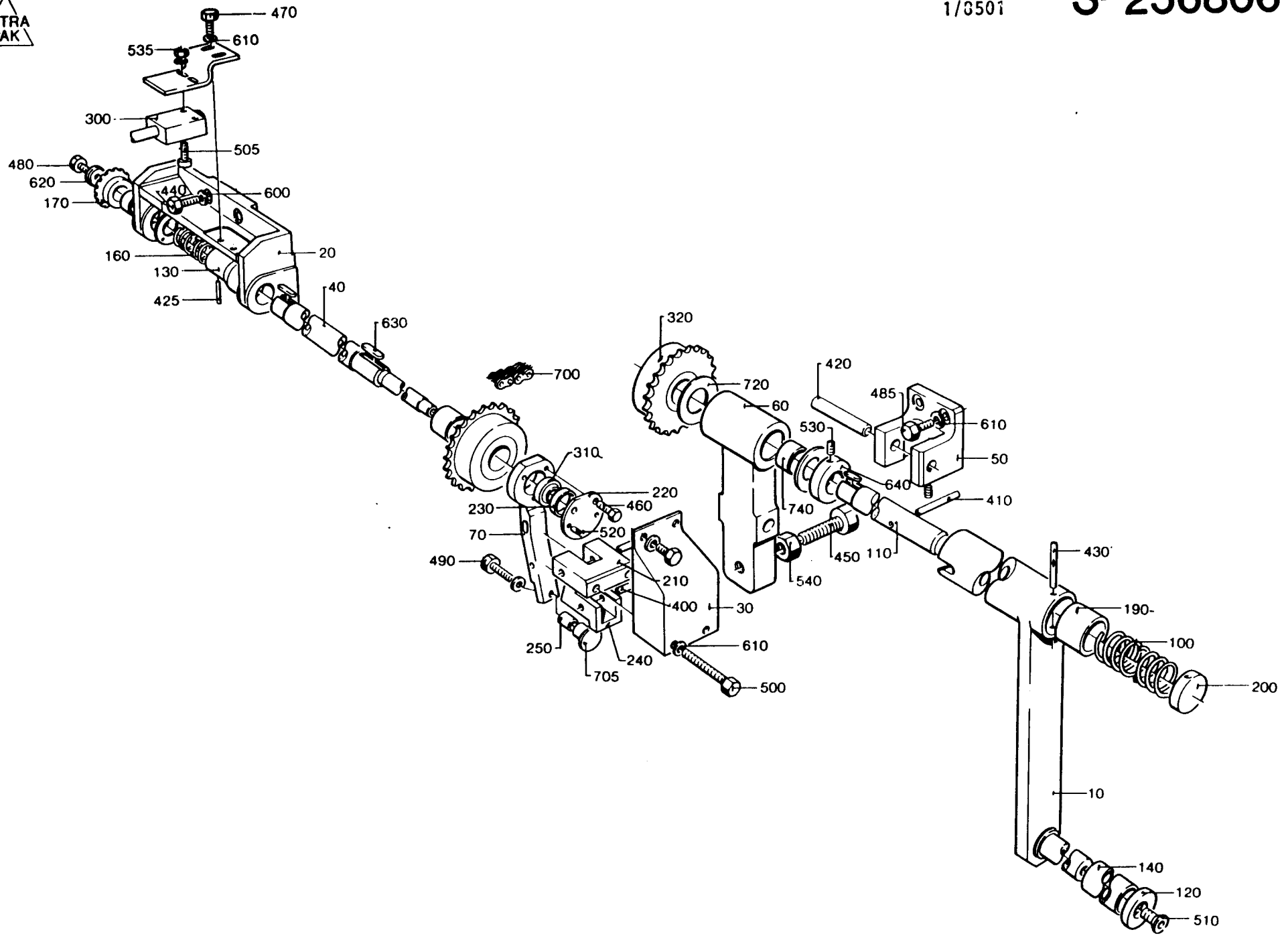
470
610
535
300
505
480
620
170
440
600
160
130
425
20
40
630
700
320
720
60
420
485
610
530
50
640
410
740
310
220
460
230
70
520
490
210
400
30
540
450
110
430
190
100
200
10
140
120
510
250
240
705
500

LAST ALTERATION: AM 9648 86-10-30
648103-070V

POS	VAR	PART NUMBER	SP	EH	QTY	DESCRIPTION
	-0101	S- 491814-SHEET	-1			===ASSEMBLY DRAWING===
	-0101		-2			
010	-0101	G- 272212	C		1	ARM
020	-0101	256415	C		1	BEARING HOLDER
030	-0101	256418	C		1	PILLOW BEARING
035	-0101	256515	S		1	END PIECE
040	-0101	272462	S		1	AXLE BOLT
075	-0101	272607	C		1	BELT HOLDER
080	-0101	256422	S		2	WASHER
090	-0101	256426-0001	S		1	WASHER
100	-0101	256426-0002	S		2	WASHER
110	-0101	256427	C		1	SHAFT
120	-0101	490916	S		1	AXLE PIN
130	-0101	256472	S		1	WASHER
143	-0101	256516	C		1	CLAMP
147	-0101	256517	C		1	SCREW
160	-0101	257311	S		2	CLAMP
180	-0101	441745	-		1	INDICATOR
182	-0101	491165	S		1	ROLLER
183	-0101	491166	S		1	SHAFT
187	-0101	751078	S		1	BRACKET RIGHT
188	-0101	491319	S		2	INSERT
190	-0101	491472	S		1	BRACKET
310	-0101	90028-0020	P		4	CONE
320	-0101	90028-0021	P		2	CONE
330	-0101	90032-0039	-		1	BLOCK
335	-0101	321531-0248	S		2	NEEDLE SLEHK2016
340	-0101	90083-0016	S		2	PLATE
348	-0101	90092-0052	S		3	VALVE
350	-0101	90092-0053	S		1	VALVE
390	-0101	90134-0038	S		2	BUSHING
400	-0101	90134-0039	S		4	BUSHING
420	-0101	90134-0058	-		5	BANJO CONNECTION
430	-0101	90266-0019	-	MM	350	PIPE
440	-0101	90165-0002	-		4	CLIP
450	-0101	90165-0022	-		1	CLIP
452	-0101	90165-0065	-		3	CLIP
460	-0101	90166-0143	-	MM	1100	HOSE
470	-0101	90166-0109	P	MM	700	HOSE
480	-0101	90240-0048	S		2	BEARING
490	-0101	90240-0050	S		1	BEARING
492	-0101	90287-0014	-		1	SCREW
493	-0101	90287-0144	-		1	SCREW
495	-0101	311101-0267	-		1	CYLINDRICACP4H6X10
500	-0101	312101-0297	-		2	SCREW M6S4X25FZB

POS	VAR	PART NUMBER	SP	EH	QTY	DESCRIPTION
503	-0101	312101-0327	-		2	SCREW M6S5X12FZB
505	-0101	312101-0333	-		4	SCREW M6S5X25FZB
510	-0101	312101-0362	-		2	SCREW M6S6X8FZB
520	-0101	312101-0364	-		2	SCREW M6S6X10FZB
525	-0101	312101-0368	-		1	SCREW M6S6X16FZB
540	-0101	312101-0497	-		1	SCREW M6S10X35FZB
560	-0101	312101-0504	-		1	SCREW M6S10X65FZB
570	-0101	312101-0515	-		2	SCREW M6S10X120FZB
580	-0101	312121-0287	S		5	SLOTTED HEMCS4X8FZB
581	-0101	312121-0289	-		1	SLOTTED HEMCS4X10FZB
590	-0101	312151-0287	-		6	SCREW MF6S4X8FZB
600	-0101	312151-0364	-		8	SCREW MF6S6X10FZB
605	-0101	312311-0321	-		1	GRUB SCREW T6SS5X6FZB
610	-0101	312601-0318	-		2	NUT M6M8FZB
630	-0101	312601-0324	-		1	NUT M6M16FZB
640	-0101	312811-0324	S		1	CHECK NUT M16RFR
650	-0101	312811-0326	S		1	CHECK NUT M20RFR
655	-0101	312901-0324	-		1	NUT M6M16VFZB
660	-0101	315101-0136	-		2	WASHER BRB4,3X8FZB
665	-0101	315101-0146	-		4	WASHER BRB5,3X10FZB
670	-0101	315101-0153	-		3	WASHER BRB6,4X12FZB
680	-0101	315101-0173	-		2	WASHER BRB10,5X22FZB
690	-0101	315101-0186	-		1	WASHER BRB17X30FZB
700	-0101	315111-0173	-		2	WASHER TBRB10,5X22FZB
720	-0101	315701-0335	-		1	FLAT WEDGE12X8X56
730	-0101	321576-0260	S		1	SUPPORT RONUTR20

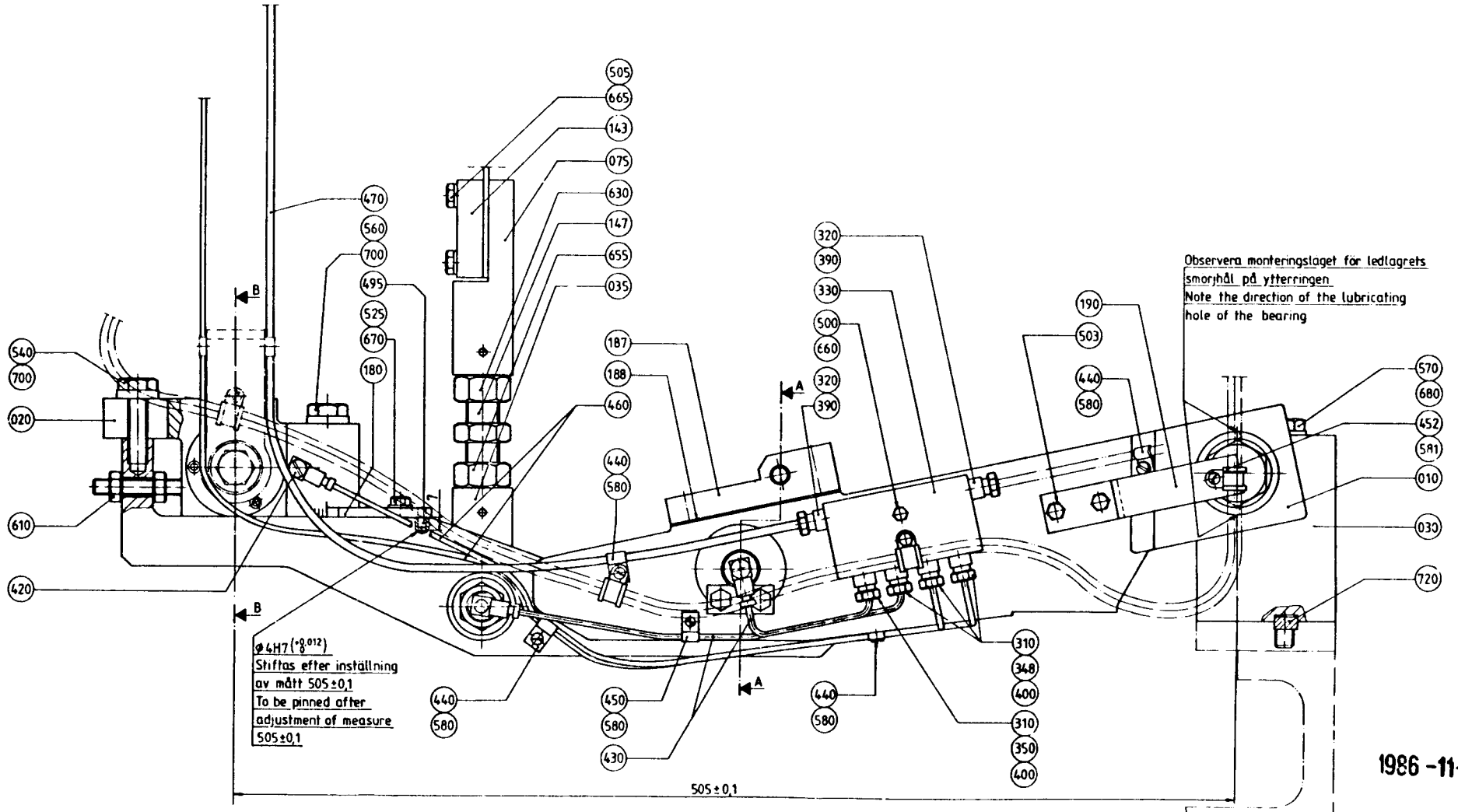

1986 -11- 14

GM/MHq 860218	Marked with PART NUMBER	648101	
11			
TETRA PAK	LÄNKARM HÖGER LINK RIGHT	S1-491814-1	

LAST ALTERATION: AM 9648 86-10-30
648103-070V

POS	VAR	PART NUMBER	SP	EH	QTY	DESCRIPTION
	-0101	S- 491814-SHEET	-1			===ASSEMBLY DRAWING===
	-0101		-2			
010	-0101	G- 272212	C		1	ARM
020	-0101	256415	C		1	BEARING HOLDER
030	-0101	256418	C		1	PILLOW BEARING
035	-0101	256515	S		1	END PIECE
040	-0101	272462	S		1	AXLE BOLT
075	-0101	272607	C		1	BELT HOLDER
080	-0101	256422	S		2	WASHER
090	-0101	256426-0001	S		1	WASHER
100	-0101	256426-0002	S		2	WASHER
110	-0101	256427	C		1	SHAFT
120	-0101	490916	S		1	AXLE PIN
130	-0101	256472	S		1	WASHER
143	-0101	256516	C		1	CLAMP
147	-0101	256517	C		1	SCREW
160	-0101	257311	S		2	CLAMP
180	-0101	441745	-		1	INDICATOR
182	-0101	491165	S		1	ROLLER
183	-0101	491166	S		1	SHAFT
187	-0101	751078	S		1	BRACKET RIGHT
188	-0101	491319	S		2	INSERT
190	-0101	491472	S		1	BRACKET
310	-0101	90028-0020	P		4	CONE
320	-0101	90028-0021	P		2	CONE
330	-0101	90032-0039	-		1	BLOCK
335	-0101	321531-0248	S		2	NEEDLE SLEHK2016
340	-0101	90083-0016	S		2	PLATE
348	-0101	90092-0052	S		3	VALVE
350	-0101	90092-0053	S		1	VALVE
390	-0101	90134-0038	S		2	BUSHING
400	-0101	90134-0039	S		4	BUSHING
420	-0101	90134-0058	-		5	BANJO CONNECTION
430	-0101	90266-0019	-	MM	350	PIPE
440	-0101	90165-0002	-		4	CLIP
450	-0101	90165-0022	-		1	CLIP
452	-0101	90165-0065	-		3	CLIP
460	-0101	90166-0143	-	MM	1100	HOSE
470	-0101	90166-0109	P	MM	700	HOSE
480	-0101	90240-0048	S		2	BEARING
490	-0101	90240-0050	S		1	BEARING
492	-0101	90287-0014	-		1	SCREW
493	-0101	90287-0144	-		1	SCREW
495	-0101	311101-0267	-		1	CYLINDRICACP4H6X10
500	-0101	312101-0297	-		2	SCREW M6S4X25FZB

POS	VAR	PART NUMBER	SP	EH	QTY	DESCRIPTION
503	-0101	312101-0327	-		2	SCREW M6S5X12FZB
505	-0101	312101-0333	-		4	SCREW M6S5X25FZB
510	-0101	312101-0362	-		2	SCREW M6S6X8FZB
520	-0101	312101-0364	-		2	SCREW M6S6X10FZB
525	-0101	312101-0368	-		1	SCREW M6S6X16FZB
540	-0101	312101-0497	-		1	SCREW M6S10X35FZB
560	-0101	312101-0504	-		1	SCREW M6S10X65FZB
570	-0101	312101-0515	-		2	SCREW M6S10X120FZB
580	-0101	312121-0287	S		5	SLOTTED HEMCS4X8FZB
581	-0101	312121-0289	-		1	SLOTTED HEMCS4X10FZB
590	-0101	312151-0287	-		6	SCREW MF6S4X8FZB
600	-0101	312151-0364	-		8	SCREW MF6S6X10FZB
605	-0101	312311-0321	-		1	GRUB SCREW T6SS5X6FZB
610	-0101	312601-0318	-		2	NUT M6M8FZB
630	-0101	312601-0324	-		1	NUT M6M16FZB
640	-0101	312811-0324	S		1	CHECK NUT M16RFR
650	-0101	312811-0326	S		1	CHECK NUT M20RFR
655	-0101	312901-0324	-		1	NUT M6M16VFZB
660	-0101	315101-0136	-		2	WASHER BRB4,3X8FZB
665	-0101	315101-0146	-		4	WASHER BRB5,3X10FZB
670	-0101	315101-0153	-		3	WASHER BRB6,4X12FZB
680	-0101	315101-0173	-		2	WASHER BRB10,5X22FZB
690	-0101	315101-0186	-		1	WASHER BRB17X30FZB
700	-0101	315111-0173	-		2	WASHER TBRB10,5X22FZB
720	-0101	315701-0335	-		1	FLAT WEDGE12X8X56
730	-0101	321576-0260	S		1	SUPPORT RONUTR20

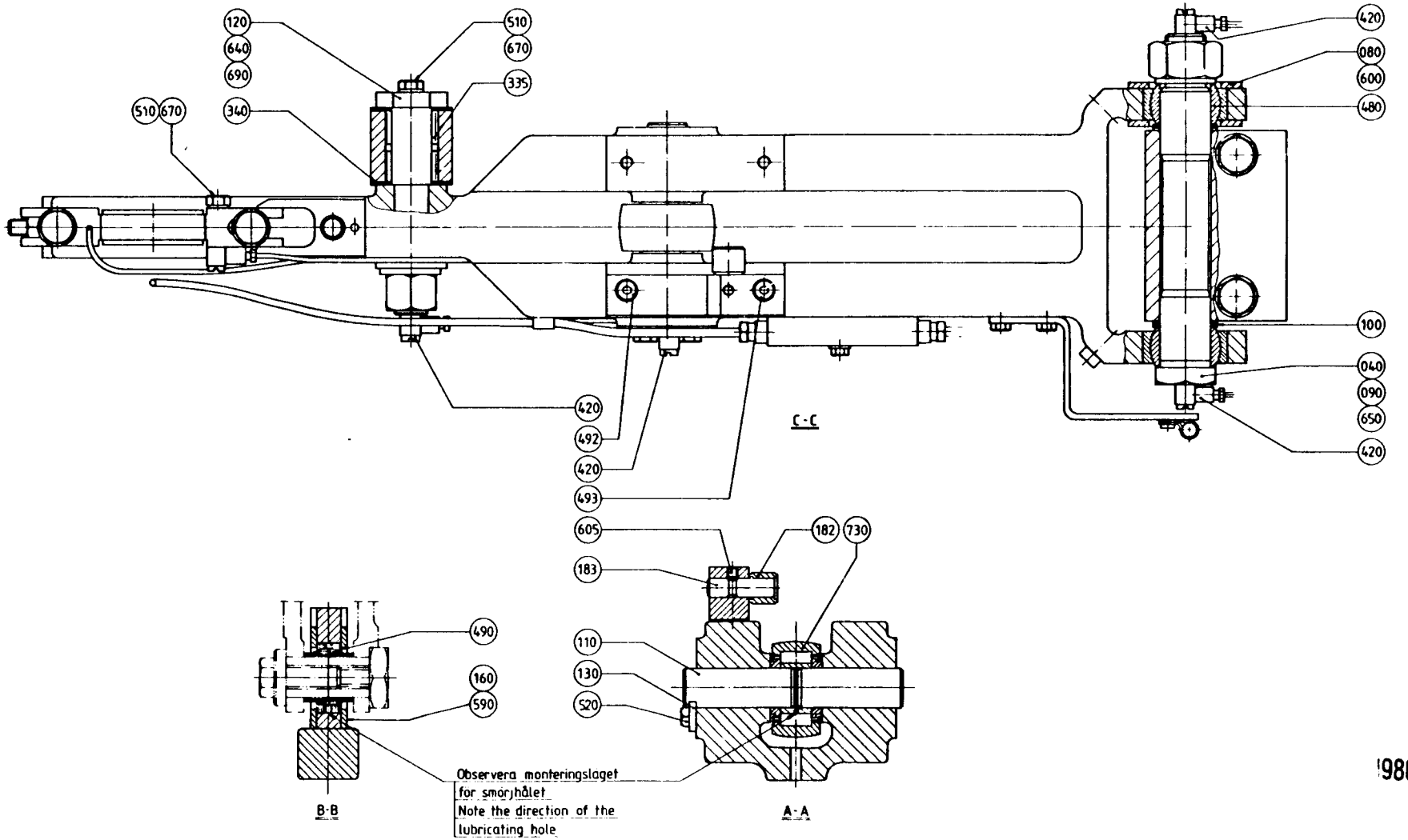

Inf Ån 9648

1986-11-14

GM/Mbg 860226	Marked with PART NUMBER	648103	
1:1			
TETRA PAK	LANKARM HÖGER LINK RIGHT	S1-491814-2	

LAST ALTERATION: AM 9648 86-10-30
648103-070V

POS	VAR	PART NUMBER	SP	EH	QTY	DESCRIPTION
	-0101	S- 491815-SHEET	-1			===ASSEMBLY DRAWING===
	-0101		-2			
010	-0101	G- 272212	C		1	ARM
015	-0101	272480	C		1	PILLOW BEARING
020	-0101	256415	C		1	BEARING HOLDER
035	-0101	256515	S		1	END PIECE
040	-0101	272462	S		1	AXLE BOLT
075	-0101	272607	C		1	BELT HOLDER
080	-0101	256422	S		2	WASHER
090	-0101	256426-0001	S		1	WASHER
100	-0101	256426-0002	S		2	WASHER
110	-0101	256427	C		1	SHAFT
120	-0101	490916	S		1	AXLE PIN
130	-0101	256472	S		1	WASHER
143	-0101	256516	C		1	CLAMP
147	-0101	256517	C		1	SCREW
160	-0101	257311	S		2	CLAMP
180	-0101	441745	-		1	INDICATOR
182	-0101	491165	S		1	ROLLER
183	-0101	491166	S		1	SHAFT
187	-0101	751079	S		1	BRACKET LEFT
188	-0101	491319	S		2	INSERT
190	-0101	491472	S		1	BRACKET
310	-0101	90028-0020	P		4	CONE
320	-0101	90028-0021	P		2	CONE
330	-0101	90032-0039	-		1	BLOCK
335	-0101	321531-0248	S		2	NEEDLE SLEHK2016
340	-0101	90083-0016	S		2	PLATE
348	-0101	90092-0052	S		3	VALVE
350	-0101	90092-0053	S		1	VALVE
390	-0101	90134-0038	S		2	BUSHING
400	-0101	90134-0039	S		4	BUSHING
420	-0101	90134-0058	-		5	BANJO CONNECTION
430	-0101	90266-0019	-	MM	350	PIPE
440	-0101	90165-0002	-		4	CLIP
450	-0101	90165-0022	-		1	CLIP
452	-0101	90165-0065	-		3	CLIP
460	-0101	90166-0143	-	MM	1100	HOSE
470	-0101	90166-0109	P	MM	700	HOSE
480	-0101	90240-0048	S		2	BEARING
490	-0101	90240-0050	S		1	BEARING
492	-0101	90287-0014	-		1	SCREW
493	-0101	90287-0144	-		1	SCREW
495	-0101	311101-0267	-		1	CYLINDRICACP4H6X10
500	-0101	312101-0297	-		2	SCREW M6S4X25FZB

POS	VAR	PART NUMBER	SP	EH	QTY	DESCRIPTION
503	-0101	312101-0327	-		2	SCREW M6S5X12FZB
505	-0101	312101-0333	-		4	SCREW M6S5X25FZB
510	-0101	312101-0362	-		2	SCREW M6S6X8FZB
520	-0101	312101-0364	-		2	SCREW M6S6X10FZB
525	-0101	312101-0368	-		1	SCREW M6S6X16FZB
540	-0101	312101-0497	-		1	SCREW M6S10X35FZB
560	-0101	312101-0504	-		1	SCREW M6S10X65FZB
570	-0101	312101-0515	-		2	SCREW M6S10X120FZB
580	-0101	312121-0287	S		5	SLOTTED HEMCS4X8FZB
581	-0101	312121-0289	-		1	SLOTTED HEMCS4X10FZB
590	-0101	312151-0287	-		6	SCREW MF6S4X8FZB
600	-0101	312151-0364	-		8	SCREW MF6S6X10FZB
605	-0101	312311-0321	-		1	GRUB SCREW T6SS5X6FZB
610	-0101	312601-0318	-		2	NUT M6M8FZB
630	-0101	312601-0324	-		1	NUT M6M16FZB
640	-0101	312811-0324	S		1	CHECK NUT M16RFR
650	-0101	312811-0326	S		1	CHECK NUT M20RFR
655	-0101	312901-0324	-		1	NUT M6M16VFZB
660	-0101	315101-0136	-		2	WASHER BRB4,3X8FZB
665	-0101	315101-0146	-		4	WASHER BRB5,3X10FZB
670	-0101	315101-0153	-		3	WASHER BRB6,4X12FZB
680	-0101	315101-0173	-		2	WASHER BRB10,5X22FZB
690	-0101	315101-0186	-		1	WASHER BRB17X30FZB
700	-0101	315111-0173	-		2	WASHER TBRB10,5X22FZB
720	-0101	315701-0335	-		1	FLAT WEDGE12X8X56
730	-0101	321576-0260	S		1	SUPPORT RONUTR20

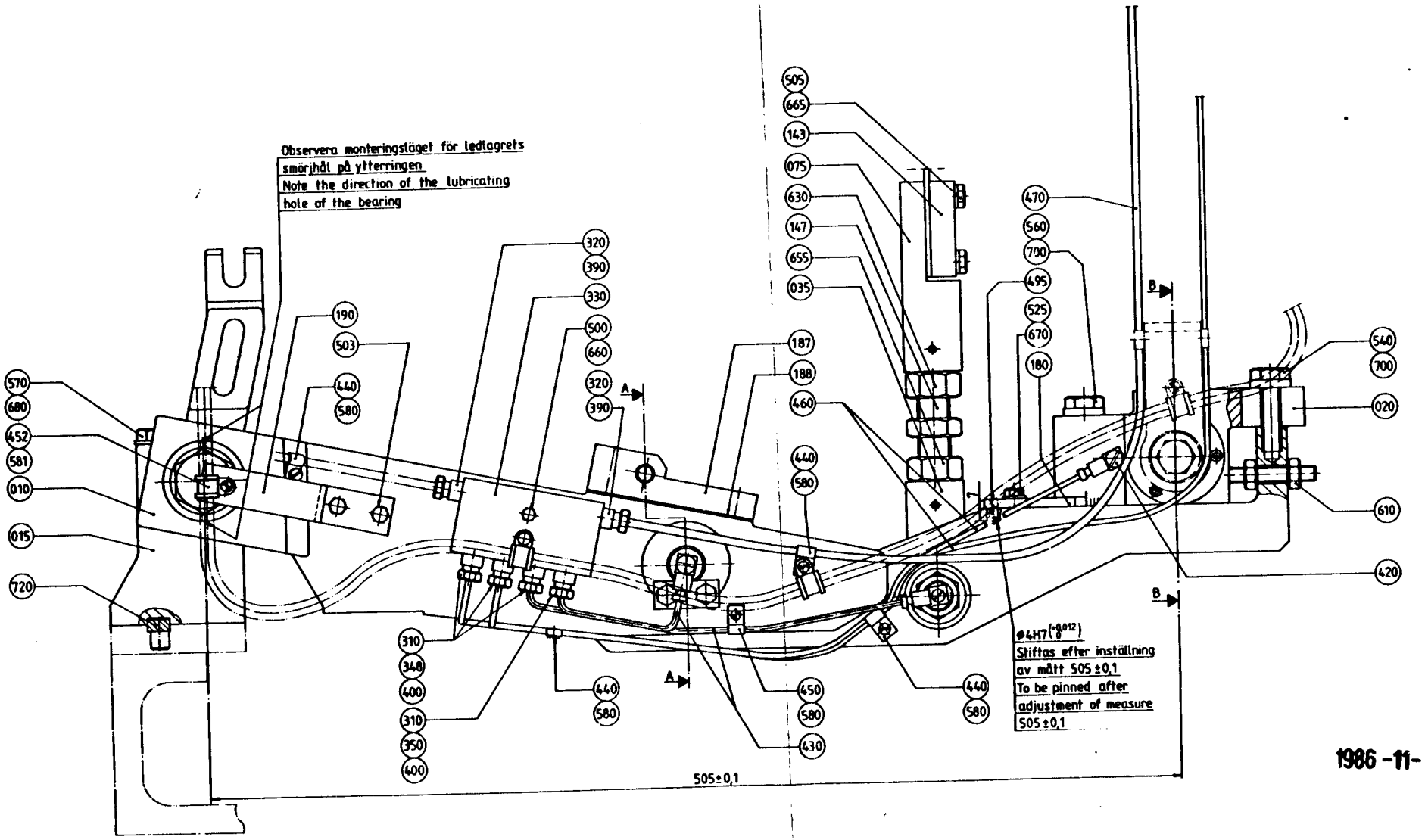
Observera monteringsläget för ledlagrets smörjhål på ytterringen
Note the direction of the lubricating hole of the bearing
505
665
143
075
630
147
655
035
470
560
700
495
525
670
180
540
700
020
610
420
320
390
330
500
660
320
390
190
503
440
580
187
188
460
440
580
570
680
452
581
010
015
720
310
348
400
310
350
400
440
580
450
580
430
440
580
A
A
B
B
ϕ4H7(+0,012 0)
Stiftas efter inställning av mått 505 ±0,1
To be pinned after adjustment of measure 505 ±0,1
505±0,1
1986 -11- 14
TETRA PAK
LANKARM VÄNSTER
LINK LEFT
S1-491815-1
644103
860219

LAST ALTERATION: AM 9648 86-10-30
648103-070V

POS	VAR	PART NUMBER	SP	EH	QTY	DESCRIPTION
	-0101	S- 491815-SHEET	-1			===ASSEMBLY DRAWING===
	-0101		-2			
010	-0101	G- 272212	C		1	ARM
015	-0101	272480	C		1	PILLOW BEARING
020	-0101	256415	C		1	BEARING HOLDER
035	-0101	256515	S		1	END PIECE
040	-0101	272462	S		1	AXLE BOLT
075	-0101	272607	C		1	BELT HOLDER
080	-0101	256422	S		2	WASHER
090	-0101	256426-0001	S		1	WASHER
100	-0101	256426-0002	S		2	WASHER
110	-0101	256427	C		1	SHAFT
120	-0101	490916	S		1	AXLE PIN
130	-0101	256472	S		1	WASHER
143	-0101	256516	C		1	CLAMP
147	-0101	256517	C		1	SCREW
160	-0101	257311	S		2	CLAMP
180	-0101	441745	-		1	INDICATOR
182	-0101	491165	S		1	ROLLER
183	-0101	491166	S		1	SHAFT
187	-0101	751079	S		1	BRACKET LEFT
188	-0101	491319	S		2	INSERT
190	-0101	491472	S		1	BRACKET
310	-0101	90028-0020	P		4	CONE
320	-0101	90028-0021	P		2	CONE
330	-0101	90032-0039	-		1	BLOCK
335	-0101	321531-0248	S		2	NEEDLE SLEHK2016
340	-0101	90083-0016	S		2	PLATE
348	-0101	90092-0052	S		3	VALVE
350	-0101	90092-0053	S		1	VALVE
390	-0101	90134-0038	S		2	BUSHING
400	-0101	90134-0039	S		4	BUSHING
420	-0101	90134-0058	-		5	BANJO CONNECTION
430	-0101	90266-0019	-	MM	350	PIPE
440	-0101	90165-0002	-		4	CLIP
450	-0101	90165-0022	-		1	CLIP
452	-0101	90165-0065	-		3	CLIP
460	-0101	90166-0143	-	MM	1100	HOSE
470	-0101	90166-0109	P	MM	700	HOSE
480	-0101	90240-0048	S		2	BEARING
490	-0101	90240-0050	S		1	BEARING
492	-0101	90287-0014	-		1	SCREW
493	-0101	90287-0144	-		1	SCREW
495	-0101	311101-0267	-		1	CYLINDRICACP4H6X10
500	-0101	312101-0297	-		2	SCREW M6S4X25FZB

POS	VAR	PART NUMBER	SP	EH	QTY	DESCRIPTION
503	-0101	312101-0327	-		2	SCREW M6S5X12FZB
505	-0101	312101-0333	-		4	SCREW M6S5X25FZB
510	-0101	312101-0362	-		2	SCREW M6S6X8FZB
520	-0101	312101-0364	-		2	SCREW M6S6X10FZB
525	-0101	312101-0368	-		1	SCREW M6S6X16FZB
540	-0101	312101-0497	-		1	SCREW M6S10X35FZB
560	-0101	312101-0504	-		1	SCREW M6S10X65FZB
570	-0101	312101-0515	-		2	SCREW M6S10X120FZB
580	-0101	312121-0287	S		5	SLOTTED HEMCS4X8FZB
581	-0101	312121-0289	-		1	SLOTTED HEMCS4X10FZB
590	-0101	312151-0287	-		6	SCREW MF6S4X8FZB
600	-0101	312151-0364	-		8	SCREW MF6S6X10FZB
605	-0101	312311-0321	-		1	GRUB SCREW T6SS5X6FZB
610	-0101	312601-0318	-		2	NUT M6M8FZB
630	-0101	312601-0324	-		1	NUT M6M16FZB
640	-0101	312811-0324	S		1	CHECK NUT M16RFR
650	-0101	312811-0326	S		1	CHECK NUT M20RFR
655	-0101	312901-0324	-		1	NUT M6M16VFZB
660	-0101	315101-0136	-		2	WASHER BRB4,3X8FZB
665	-0101	315101-0146	-		4	WASHER BRB5,3X10FZB
670	-0101	315101-0153	-		3	WASHER BRB6,4X12FZB
680	-0101	315101-0173	-		2	WASHER BRB10,5X22FZB
690	-0101	315101-0186	-		1	WASHER BRB17X30FZB
700	-0101	315111-0173	-		2	WASHER TBRB10,5X22FZB
720	-0101	315701-0335	-		1	FLAT WEDGE12X8X56
730	-0101	321576-0260	S		1	SUPPORT RONUTR20

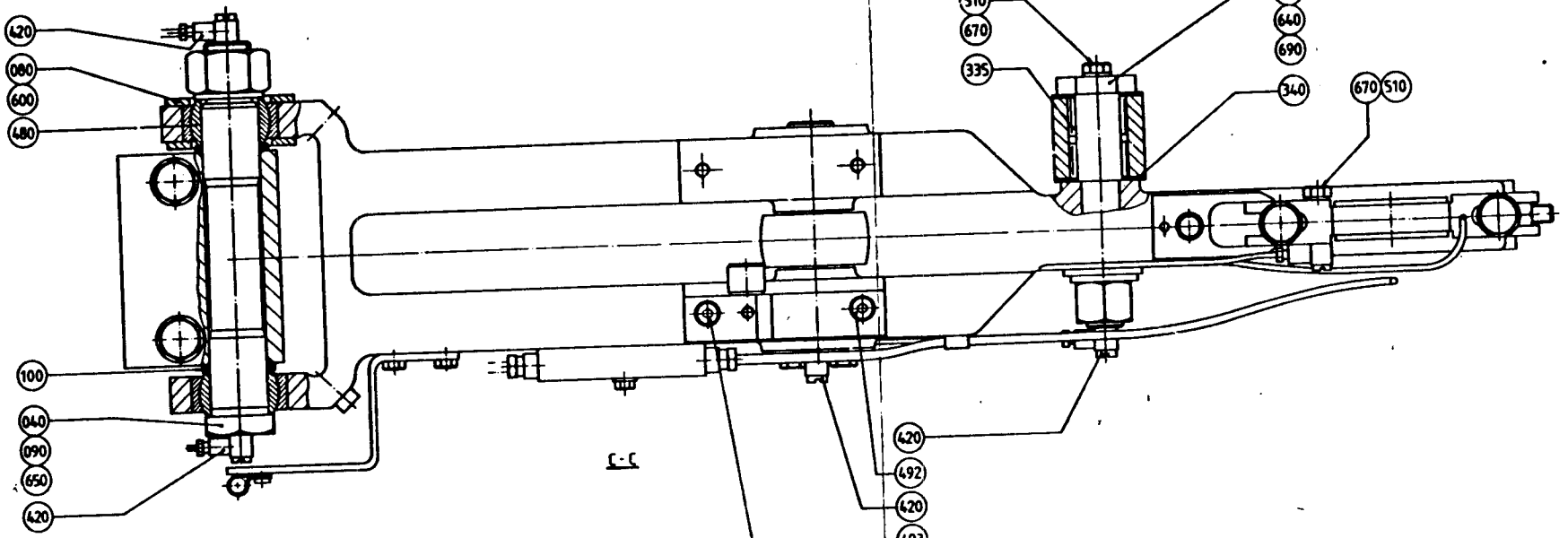

Observera monteringsläget för smörjhålet
Note the direction of the lubricating hole

1986 -11- 14

TETRA PAK	LÄNKARM VÄNSTER LINK LEFT	S1-491815-2	

LAST ALTERATION: AM 11018 87-10-28
648103-070V
AM 9648
86-10-30

POS	VAR	PART NUMBER	SP UN	QTY	DESCRIPTION
	-0101	S- 491787-SHEET	-1		===ASSEMBLY DRAWING===
010	-0101	G- 491194	C	1	ROD END
015	-0101	272472	-	1	END PIECE
020	-0101	491195	S	1	SLIDER
030	-0101	G- 491196	S	1	LINK
035	-0101	257309	S	2	SHAFT
036	-0101	257310	S	2	NUT
037	-0101	257311	S	2	CLAMP
040	-0101	751659	S	1	ADJUSTING SCREW
050	-0101	491198	S	1	PISTON
060	-0101	491199	-	1	BACK PIECE
070	-0101	491200	S	1	CARRIER
080	-0101	491456	-	1	PLATE
090	-0101	491375	-	1	CROSS PIECE
200	-0101	90044-0084	S	1	MICRO SWITCH
201	-0101	90134-0058	-	1	BANJO CONNECTION
202	-0101	90134-0068	-	1	BANJO CONNECTION
203	-0101	90165-0002	-	1	CLIP
204	-0101	90165-0022	-	1	CLIP
205	-0101	90165-0065	-	1	CLIP
207	-0101	90240-0050	-	1	BEARING
210	-0101	90296-0012	-	X	LUBRICANT
220	-0101	90335-0086	S	1	SPRING
300	-0101	312101-0329	-	2	SCREW M6S5X16FZB
310	-0101	312101-0337	-	1	SCREW M6S5X35FZB
320	-0101	312101-0368	-	2	SCREW M6S6X16FZB
330	-0101	312101-0370	-	2	SCREW M6S6X20FZB
332	-0101	312101-0376	-	2	SCREW M6S6X35FZB
339	-0101	312101-0502	-	2	SCREW M6S10X55FZB
340	-0101	312111-0329	-	2	SCREW MC6S5X16FZB
344	-0101	312121-0287	-	2	SLOTTED HEMCS4X8FZB
345	-0101	312121-0289	-	1	SLOTTED HEMCS4X10FZB
347	-0101	312151-0287	-	6	SCREW MF6S4X8FZB
350	-0101	312621-0322	-	1	NUT ML6M12FZB
360	-0101	312621-0324	-	1	NUT ML6M16FZB
370	-0101	315101-0146	-	4	WASHER BRB5,3X10FZB
380	-0101	315101-0153	-	2	WASHER BRB6,4X12FZB
400	-0101	315121-0173	-	2	WASHER BRSB10,5X28FZB

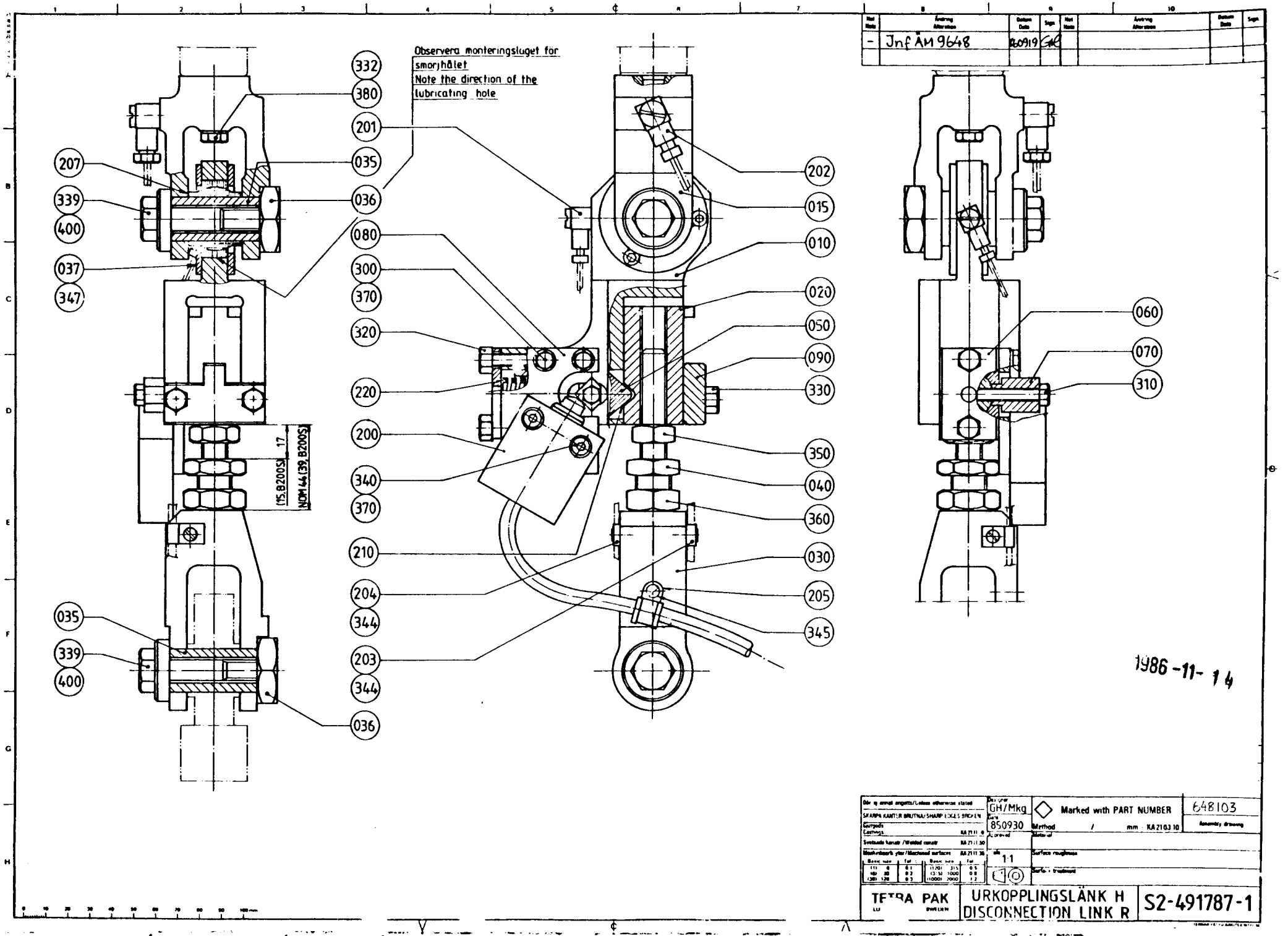

Ref. Mark	Ändring / Alteration	Datum / Date	Sign	Ref. Mark	Ändring / Alteration	Datum / Date	Sign
-	Jnf ÄM 9648	860919					

1986 -11- 14

Dim. ej angivna / Unless otherwise stated SKARPA KANTER BRUTNA / SHARP EDGES BROKEN	Ritad / Drawn GH/Mkg	◇ Marked with PART NUMBER	648103
Gjutgods / Castings KA 7111 0	Godk. / Approved 850930	Material / Method / mm KA 2103 10	Assembly drawing
Svetsade konstr. / Welded constr. KA 7111 30	Skala / Scale 1:1	Material no.	
Bearbetade ytor / Machined surfaces KA 7111 35		Surface roughness	
Basmått / Basic mm: 1-11 ±0,1; 12-49 ±0,2; 50-120 ±0,3; 121-1000 ±0,5; 1001-2000 ±1,2		Surface treatment	
TETRA PAK	URKOPPLINGSLÄNK H / DISCONNECTION LINK R		S2-491787-1

Other tolerances and requirements according to Tetra Pak Specifications for Sub-Contractors (US).

LAST ALTERATION: AM 11018 87-10-28
648103-070V
AM 9648
86-10-30

POS	VAR	PART NUMBER	SP UN	QTY	DESCRIPTION
	-0101	S- 491788-SHEET	-1		===ASSEMBLY DRAWING===
010	-0101	G- 491194	C	1	ROD END
015	-0101	272472	-	1	END PIECE
020	-0101	491195	S	1	SLIDER
030	-0101	G- 491196	S	1	LINK
035	-0101	257309	S	2	SHAFT
036	-0101	257310	S	2	NUT
037	-0101	257311	S	2	CLAMP
040	-0101	751659	S	1	ADJUSTING SCREW
050	-0101	491198	S	1	PISTON
060	-0101	491199	-	1	BACK PIECE
070	-0101	491200	S	1	CARRIER
080	-0101	491456	-	1	PLATE
090	-0101	491375	-	1	CROSS PIECE
200	-0101	90044-0084	S	1	MICRO SWITCH
201	-0101	90134-0058	-	1	BANJO CONNECTION
202	-0101	90134-0068	-	1	BANJO CONNECTION
203	-0101	90165-0002	-	1	CLIP
204	-0101	90165-0022	-	1	CLIP
205	-0101	90165-0065	-	1	CLIP
207	-0101	90240-0050	-	1	BEARING
210	-0101	90296-0012	-	X	LUBRICANT
220	-0101	90335-0086	S	1	SPRING
300	-0101	312101-0329	-	2	SCREW M6S5X16FZB
310	-0101	312101-0337	-	1	SCREW M6S5X35FZB
320	-0101	312101-0368	-	2	SCREW M6S6X16FZB
330	-0101	312101-0370	-	2	SCREW M6S6X20FZB
332	-0101	312101-0376	-	2	SCREW M6S6X35FZB
339	-0101	312101-0502	-	2	SCREW M6S10X55FZB
340	-0101	312111-0329	-	2	SCREW MC6S5X16FZB
344	-0101	312121-0287	-	2	SLOTTED HEMCS4X8FZB
345	-0101	312121-0289	-	1	SLOTTED HEMCS4X10FZB
347	-0101	312151-0287	-	6	SCREW MF6S4X8FZB
350	-0101	312621-0322	-	1	NUT ML6M12FZB
360	-0101	312621-0324	-	1	NUT ML6M16FZB
370	-0101	315101-0146	-	4	WASHER BRB5,3X10FZB
380	-0101	315101-0153	-	2	WASHER BRB6,4X12FZB
400	-0101	315121-0173	-	2	WASHER BRSB10,5X28FZB

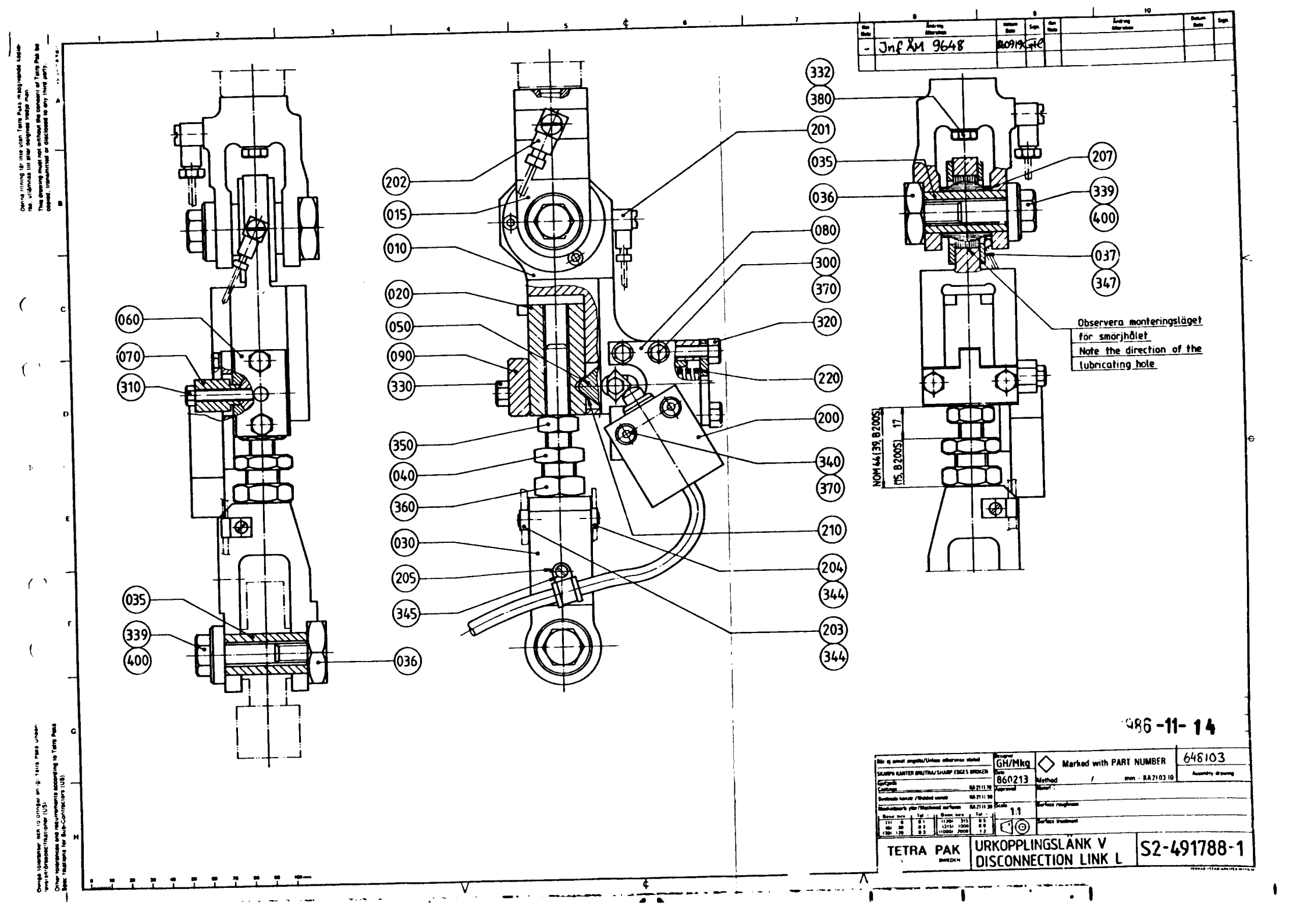
Jnf ÄM 9648
332
380
201
035
036
207
339
400
037
347
080
300
370
320
220
200
340
370
210
204
344
203
344
202
015
010
020
050
090
330
350
040
360
030
205
345
060
070
310
035
339
400
036
Observera monteringsläget för smörjhålet
Note the direction of the lubricating hole
NOM 44 (39, B200S)
17
(15, B200S)
GH/Mkg
860213
1:1
Marked with PART NUMBER
648103
TETRA PAK
URKOPPLINGSLÄNK V
DISCONNECTION LINK L
S2-491788-1

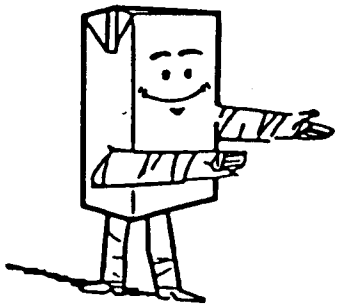

SPC 6481-51/52
JAW SYSTEM

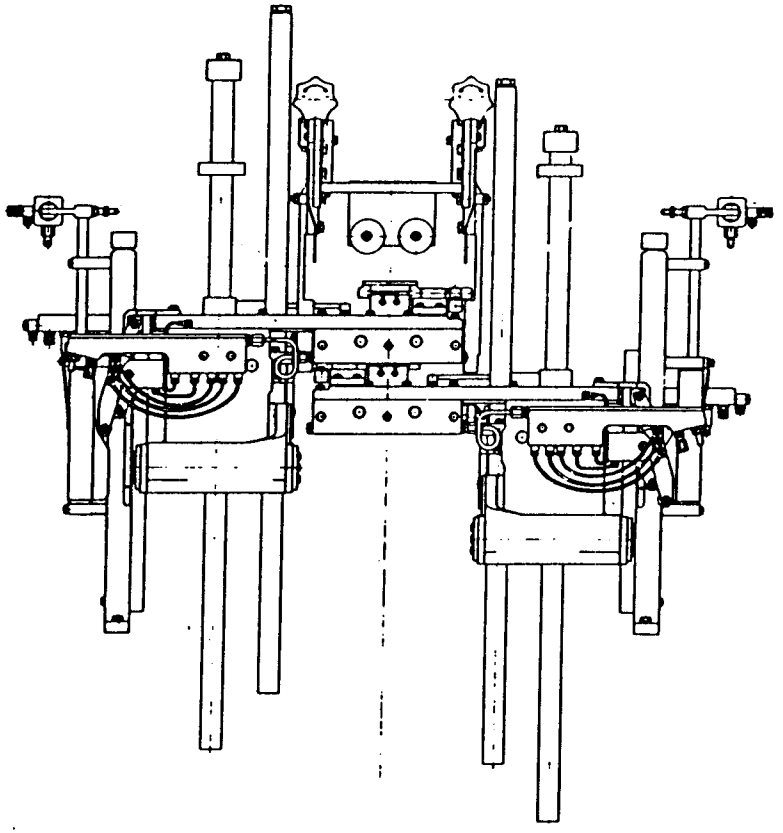

B-648104-

TETRA PAK SERVICE

LAST ALTERATION: AM 6748 84-05-04
648151-100V 648152-100V
AM 6615
84-03-08

GROUP SEALING SYSTEM

-0601 TPC
-0602 IH

POS	VAR	PART NUMBER	SP	EH	QTY	DESCRIPTION
	-0601 -0602	S- 648104-SHEET		-4 ~~-8~~		===ASSEMBLY DRAWING===
F010	ALL	CR- 256204-030V	-		1	CUTTING JAW
F020	ALL	CR- 256205-030V	-		1	CUTTING JAW
F030	ALL	C- 256206-020V	-		1	INTERMITTENT FEED DEVICE
F040	ALL	C- 256207-020V	-		1	INTERMITTENT FEED DEVICE
F050	ALL	CR- 256208-030V	-		2	KNIFE HOLDER
F060	ALL	CR- 256209-020V	-		2	VOLUME FLAP
F070	ALL	CR- 256210-020V	-		2	VOLUME FLAP
F080	ALL	CR- 256844-020V	-		2	SHOCK ABSORBER
F090	ALL	CR- 256845-020V	-		2	SHOCK ABSORBER
F100	ALL	CR- 256212-030V	-		1	PRESSURE JAW
F110	ALL	CR- 256213-030V	-		1	PRESSURE JAW
F120	-0602	CR- 256214-020V	P		2	PRESSURE RAIL
F130	-0601	CR- 256215-020V	P		2	PRESSURE RAIL
F140	ALL	C- 256951-0301	-		1	YOKE
F150	ALL	C- 256952-0301	-		1	YOKE
F160	ALL	C- 256217-0401	-		1	GUIDE
F190	ALL	C- 256219-030V	-		1	TRANSMISSION RIGHT
F200	ALL	C- 256220-030V	-		1	TRANSMISSION LEFT
F210	-0601	C- 256221-020V	-		1	VOLUM CURVE PIECE
F220	-0602	C- 256222-020V	-		1	VOLUME CAM PIECE, IH
F230	ALL	C- 256223-020V	-		1	ROLLER
F240	ALL	C- 257381-0301	-		1	CONNECTION BLOCK
F250	ALL	C- 257382-0301	-		1	CONNECTION BLOCK
F300	ALL	C- 295523-030V	-		1	START UP KIT

TETRA PAK

2/8601 **S-648104-4**

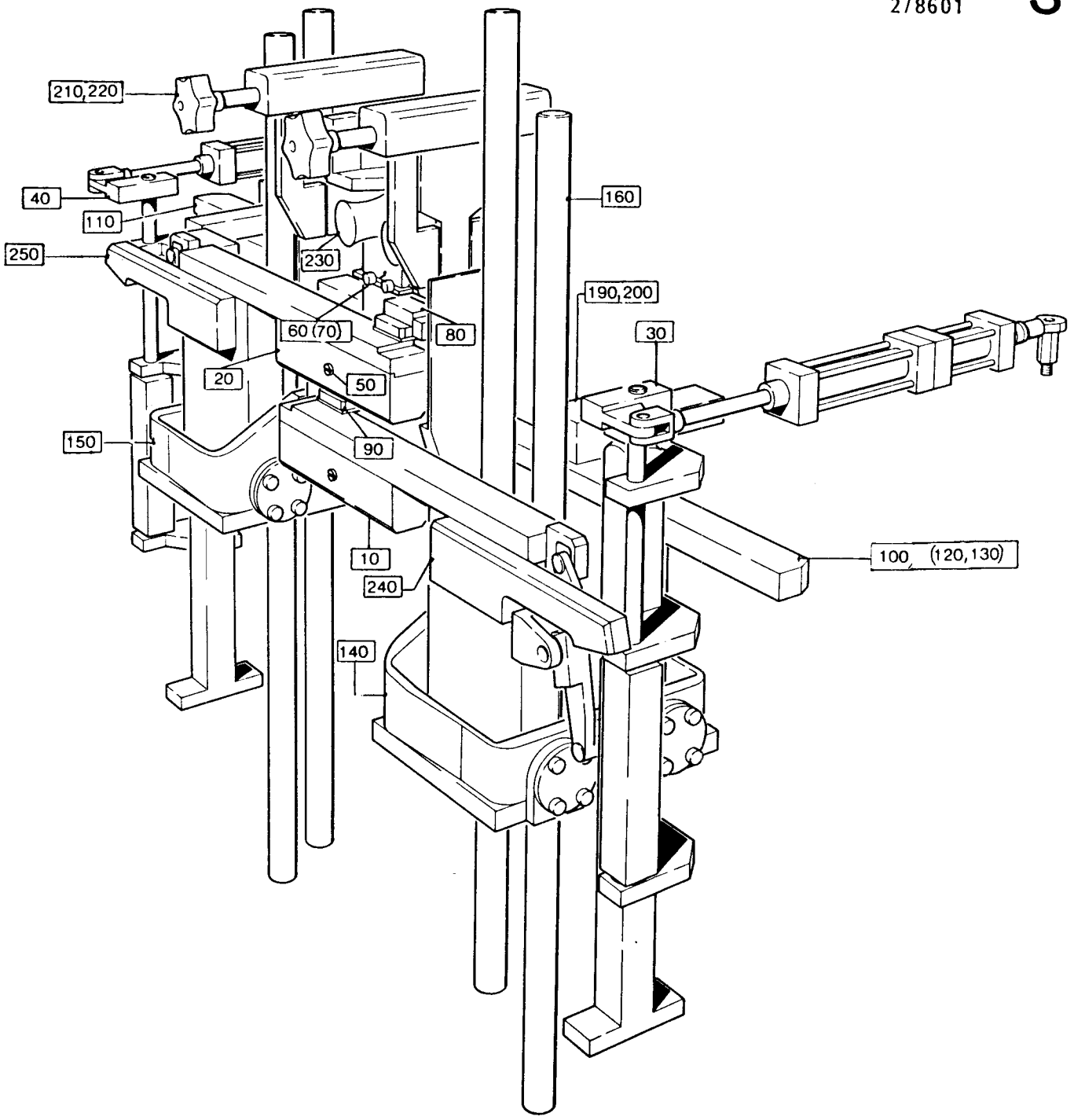

LAST ALTERATION: AM 8633 86-01-14
648151-110V 648152-110V

GROUP SEALING SYSTEM

-0701 TPC
-0702 IH

POS	VAR	PART NUMBER	SP	EH	QTY	DESCRIPTION
	-0701 -0702	S- 648104-SHEET		-4 ~~-8~~		===ASSEMBLY DRAWING===
F010	ALL	CR- 256204-040V	-		1	CUTTING JAW RIGHT
F020	ALL	CR- 256205-040V	-		1	CUTTING JAW LEFT
F030	ALL	C- 256206-020V	-		1	INTERMITTENT FEED DEVICE
F040	ALL	C- 256207-020V	-		1	INTERMITTENT FEED DEVICE
F050	ALL	CR- 256208-030V	-		2	KNIFE HOLDER
F060	ALL	CR- 256209-020V	-		2	VOLUME FLAP
F070	ALL	CR- 256210-020V	-		2	VOLUME FLAP
F080	ALL	CR- 256844-020V	-		2	SHOCK ABSORBER
F090	ALL	CR- 256845-020V	-		2	SHOCK ABSORBER
F100	ALL	CR- 256212-040V	-		1	PRESSURE JAW RIGHT
F110	ALL	CR- 256213-040V	-		1	PRESSURE JAW LEFT
F120	-0702	CR- 256214-020V	P		2	PRESSURE RAIL
F130	-0701	CR- 256215-020V	P		2	PRESSURE RAIL
F140	ALL	C- 256951-0301	-		1	YOKE
F150	ALL	C- 256952-0301	-		1	YOKE
F160	ALL	C- 256217-0401	-		1	GUIDE
F190	ALL	C- 256219-030V	-		1	TRANSMISSION RIGHT
F200	ALL	C- 256220-030V	-		1	TRANSMISSION LEFT
F210	-0701	C- 256221-020V	-		1	VOLUM CURVE PIECE
F220	-0702	C- 256222-020V	-		1	VOLUME CAM PIECE, IH
F230	ALL	C- 256223-020V	-		1	ROLLER
F240	ALL	C- 257381-0301	-		1	CONNECTION BLOCK
F250	ALL	C- 257382-0301	-		1	CONNECTION BLOCK
F300	ALL	C- 295523-030V	-		1	START UP KIT

S-648104-4

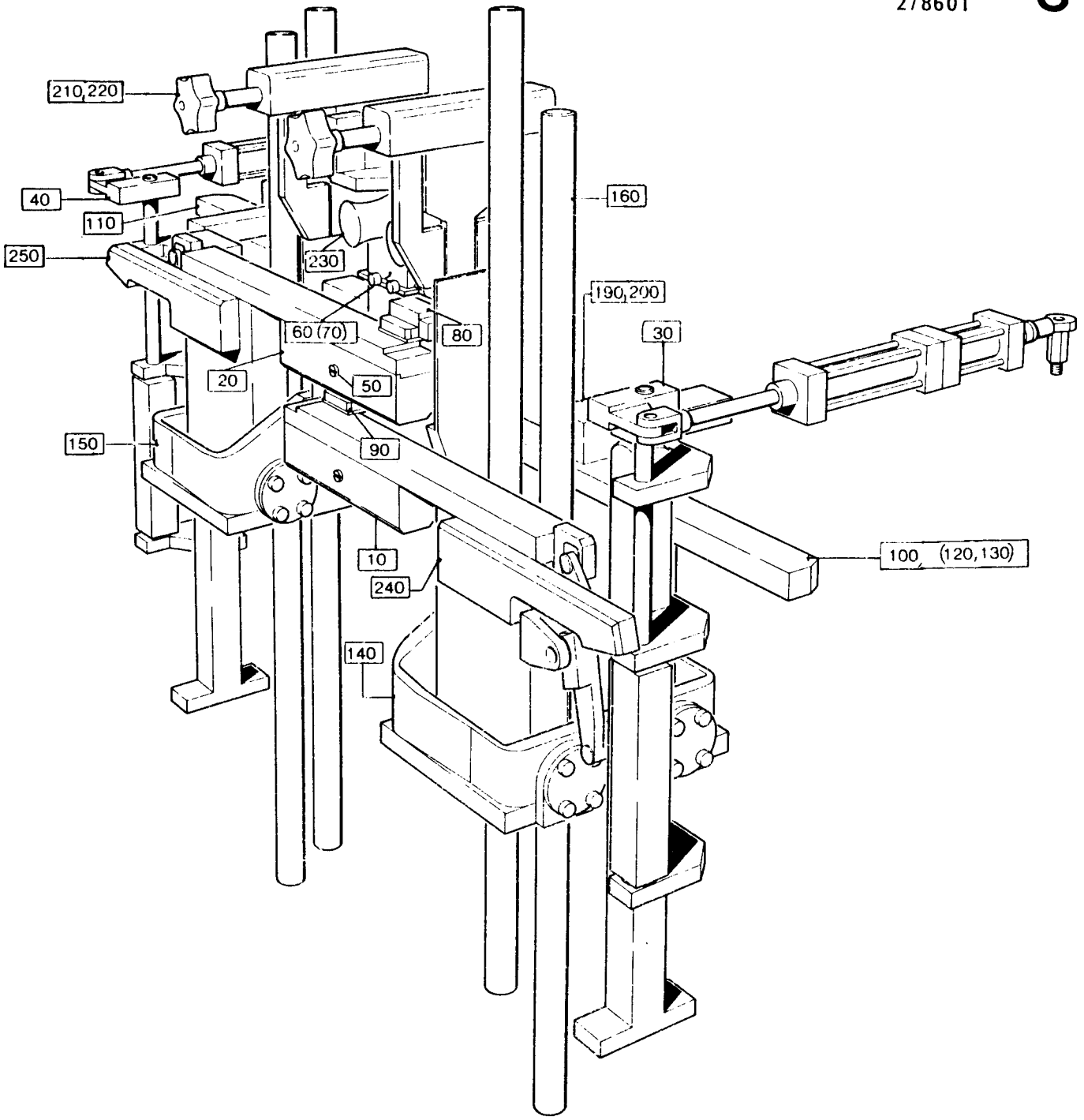
210,220
40
110
250
230
160
190,200
30
60 (70)
80
20
50
150
90
10
240
140
100, (120,130)

LAST ALTERATION: AM 7595 85-02-26
648104-060V
AM 6300
84-01-09

GROUP	SEALING SYSTEM	VOLUME	VOLUME	VOLUME	VOLUME
-0301	TPC	V0284	V0250	V0236	V0200
	TPC	V0187	V0180	-	-
-0302	TPC	200ML SLIM	-	-	-
-0303	IH	V0284	V0250	V0236	V0200
	IH	V0187	V0180	-	-
-0304	IH	V0125	V0100	-	-
-0305	IH	200ML SLIM	-	-	-

POS	VAR	PART NUMBER	SP	EH	QTY	DESCRIPTION
	-0301	S- 256204-SHEET	-8			===ASSEMBLY DRAWING===
	-0301		-12			
	-0302		-9			
	-0302		-12			
	-0303		-10			
	-0303		-12			
	-0304		-11			
	-0304		-12			
	-0305		-12			
	-0305		-13			
010	-0304	256487	S		1	CUTTING JAW
010	-0303	256769	S		1	CUTTING JAW
010	-0305	441727	S		1	CUTTING JAW
020	-0301	271728	S		1	CUTTING JAW
020	-0302	272264	S		1	CUTTING JAW
030	-0301	256770	S		1	BEARING HOUSING
	-0303				1	
030	-0304	256784	S		1	BEARING HOUSING
030	-0302	272263	S		1	BEARING HOUSING
	-0305				1	
040	-0302	272487	S		1	CARRIER RULER
	-0305				1	
040	-0304	272483	S		1	CARRIER RULER
040	-0301	272485	S		1	CARRIER RULER
	-0303				1	
050	-0304	295004	P		2	CUTTING RAIL
050	-0303	295757	P		2	CUTTING RAIL
	-0305				2	
060	-0304	272420	S		1	FOLDING FLAP
060	-0301	272422	S		1	FOLDING FLAP
	-0303				1	
060	-0302	272424	S		1	FOLDING FLAP
	-0305				1	
070	-0304	272421	S		1	FOLDING FLAP
070	-0301	272423	S		1	FOLDING FLAP
	-0303				1	
070	-0302	272425	S		1	FOLDING FLAP

POS	VAR	PART NUMBER	SP	EH	QTY	DESCRIPTION
	-0305				1	
080	-0301	456819	S		1	CUTTING JAW OUTER
080	-0302	456820	S		1	CUTTING JAW OUTER
090	-0303	491018	S		2	BRACKET
	-0305				2	
110	-0304	272416	S		1	CARRIER
120	-0304	272417	S		1	CARRIER
130	-0301	272419	S		2	CARRIER
	-0302				2	
	-0303				2	
	-0305				2	
160	-0304	295005	UP		2	DOLLY
160	-0303	295758	UP		2	DOLLY
	-0305				2	
170	-0304	295260	P		4	END PIECE
190	-0302	255697-0001	-		1	CONNECTION PIPE
	-0304				1	
	-0305				1	
190	-0301	255697-0002	-		1	CONNECTION PIPE
	-0303				1	
220	-0304	272427	S		2	BRACKET
520	-0304	312105-0374	-		2	SCREW M6S6X30RFR
540	-0301	312115-0370	-		2	SCREW 6X20 A4 80
	-0302				2	
	-0303				2	
550	-0304	312145-0289	-		2	SLOTTED HEMFS4X10RFR
560	-0303	312145-0291	-		2	SLOTTED HEMFS4X12RFR
	-0305				2	
570	-0301	312155-0327	-		2	SCREW MF6S5X12RFR
	-0302				2	
	-0305				2	
093	ALL	256693	S		1	CARRIER
096	ALL	256659	S		1	ROD
100	ALL	257349	S		2	CLUTCH
140	ALL	22463	S		2	ROLLER
150	ALL	33408	S		4	BEARING
180	ALL	255653	S		2	BUSHING
193	ALL	255742	P		1	COMPRESSION SPRING
196	ALL	255801	S		1	RETAINING RING
200	ALL	256607	S		2	AXLE PIN
204	ALL	256626	S		1	EAR
206	ALL	256706	S		1	PLATE
208	ALL	257362	S		2	INSERT
210	ALL	271745	S		2	PLUNGER
230	ALL	441355	-		2	BLEEDING SCREW
305	ALL	90005-0003	-		2	WASHER
310	ALL	90005-0009	P		3	WASHER
320	ALL	90090-0005	P		2	STEEL BALL
330	ALL	90091-0082	P		2	SEAL
333	ALL	90091-0091	P		1	SEAL RING
336	ALL	90134-0058	-		1	BANJO CONNECTION

S-256204-8

TETRA PAK

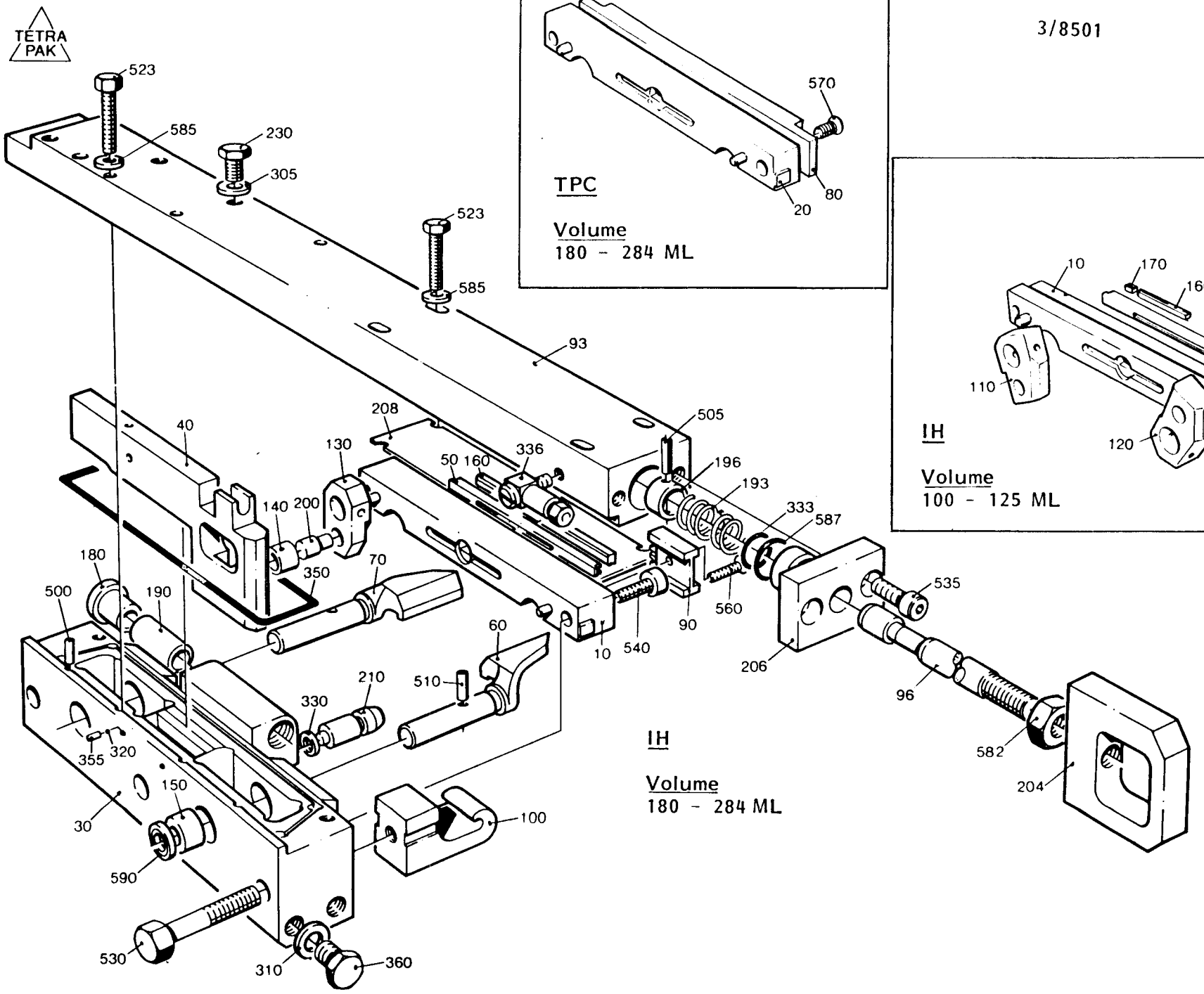

IH

Volume
180 - 284 ML

TPC

Volume
180 - 284 ML

IH

Volume
100 - 125 ML

POS	VAR	PART NUMBER	SP	EH	QTY	DESCRIPTION
340	ALL	90153-0015	-	ML	X	ADHESIVE
350	ALL	90242-0093	P	MM	450	O-RING
355	ALL	90287-0128	-		2	GRUB SCREW
360	ALL	90330-0066	-		3	PLUG
500	ALL	311103-0312	-		1	CYLINDRICACPR5M6X25RFR
505	ALL	311111-0207	S		1	HOLLOW PINFRP3X14
510	ALL	311111-0308	S		2	HOLLOW PINFRP5X20
523	ALL	312105-0376	-		8	SCREW M6S6X35RFR
530	ALL	312105-0462	-		2	SCREW M6S8X55RFR
535	ALL	312115-0366	-		2	SCREW 6X12 A4 80
582	ALL	312605-0318	-		1	NUT M6M8RFR
585	ALL	315115-0153	-		8	WASHER TBRB6,4X12RFR
587	ALL	315202-0265	S		1	O-RING 12,3X2,4
590	ALL	315230-0157	P		4	SEAL RING G12X16X3

S-256204-8

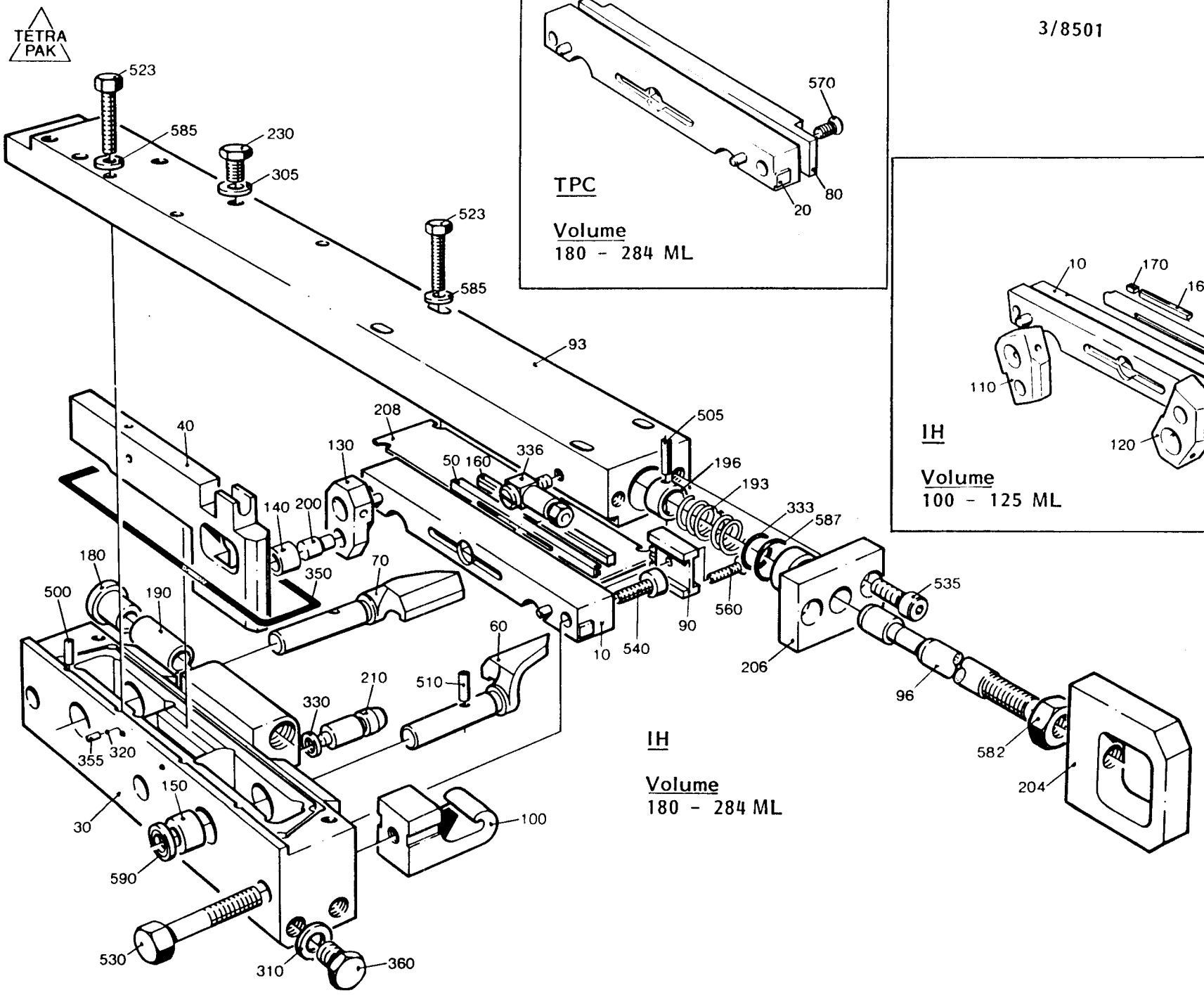

IH

Volume
180 - 284 ML

TPC

Volume
180 - 284 ML

IH

Volume
100 - 125 ML

LAST ALTERATION: AM 8633 86-01-14
648104-070V

GROUP	SEALING SYSTEM	VOLUME	VOLUME	VOLUME	VOLUME
-0401	TPC	V0250	V0236	V0200	V0180
-0402	TPC	200ML SLIM	-	-	-
-0403	IH	V0250	V0236	V0200	V0180
-0404	IH	V0125	-	-	-
-0405	IH	200ML SLIM	-	-	-

POS	VAR	PART NUMBER	SP	EH	QTY	DESCRIPTION
	-0401	S- 256204-SHEET	~~-12~~			===ASSEMBLY DRAWING===
	-0401		-14			
	-0402		~~-12~~			
	-0402		-14			
	-0403		~~-12~~			
	-0403		~~-13~~			
	-0404		~~-12~~			
	-0404		~~-13~~			
	-0405		~~-12~~			
	-0405		~~-15~~			
010	-0403	256769	S		1	CUTTING JAW
010	-0404	256487	S		1	CUTTING JAW
010	-0405	441727	S		1	CUTTING JAW
020	-0401	271728	S		1	CUTTING JAW
020	-0402	272264	S		1	CUTTING JAW
030	-0401	256770	S		1	BEARING HOUSING
	-0403				1	
030	-0402	272263	S		1	BEARING HOUSING
	-0405				1	
030	-0404	256784	S		1	BEARING HOUSING
040	-0401	G- 272485	S		1	CARRIER RULER
	-0403				1	
040	-0402	272487	S		1	CARRIER RULER
	-0405				1	
040	-0404	272483	S		1	CARRIER RULER
050	-0403	295757	P		2	CUTTING RAIL
	-0405				2	
050	-0404	295004	P		2	CUTTING RAIL
060	-0401	272422	S		1	FOLDING FLAP
	-0403				1	
060	-0402	272424	S		1	FOLDING FLAP
	-0405				1	
060	-0404	272420	S		1	FOLDING FLAP
070	-0401	272423	S		1	FOLDING FLAP
	-0403				1	
070	-0402	272425	S		1	FOLDING FLAP
	-0405				1	
070	-0404	272421	S		1	FOLDING FLAP
080	-0401	456819	S		1	CUTTING JAW OUTER

POS	VAR	PART NUMBER	SP	EH	QTY	DESCRIPTION
080	-0402	456820	S		1	CUTTING JAW OUTER
090	-0403	491018	S		2	BRACKET
	-0405				2	
090	-0404	272427	S		2	BRACKET
110	-0404	272416	S		1	CARRIER
120	-0404	272417	S		1	CARRIER
130	-0401	272419	S		2	CARRIER
	-0402				2	
	-0403				2	
	-0405				2	
160	-0403	295758	UP		2	DOLLY
	-0405				2	
160	-0404	295005	UP		2	DOLLY
170	-0404	295260	P		4	END PIECE
540	-0401	312115-0370	-		2	SCREW 6X20 A4 80
	-0402				2	
	-0403				2	
	-0405				2	
540	-0404	312105-0374	-		2	SCREW M6S6X30RFR
560	-0403	312145-0291	-		2	SLOTTED HEMFS4X12RFR
	-0405				2	
560	-0404	312145-0289	-		2	SLOTTED HEMFS4X10RFR
570	-0401	312155-0327	-		2	SCREW MF6S5X12RFR
	-0402				2	
093	ALL	256693	S		1	CARRIER
096	ALL	256659	S		1	ROD
100	ALL	491280	S		2	CATCH
140	ALL	22463	S		2	ROLLER
150	ALL	33408	S		4	BEARING
180	ALL	255653	S		2	BUSHING
193	ALL	255742	P		1	COMPRESSION SPRING
196	ALL	255801	S		1	RETAINING RING
200	ALL	256607	S		2	AXLE PIN
204	ALL	256626	S		1	EAR
206	ALL	256706	S		1	BEARING PLATE
208	ALL	257362	S		2	INSERT
210	ALL	490944	S		2	PLUNGER
230	ALL	441355	-		2	BLEEDING SCREW
305	ALL	315237-0106	-		2	GASKET
310	ALL	315237-0109	P		3	SEAL RING 1/8"
320	ALL	90090-0005	P		2	STEEL BALL
330	ALL	90091-0166	P		2	SEAL RING
333	ALL	90091-0091	P		1	SEAL RING
335	ALL	90091-0169	P		4	RING
336	ALL	90134-0058	-		1	BANJO CONNECTION
340	ALL	90153-0015	-	ML	X	ADHESIVE
350	ALL	90242-0093	P	MM	450	O-RING
355	ALL	90287-0128	-		2	GRUB SCREW
360	ALL	90330-0066	-		3	PLUG

TETRA PAK

1/8608

S-256204-14

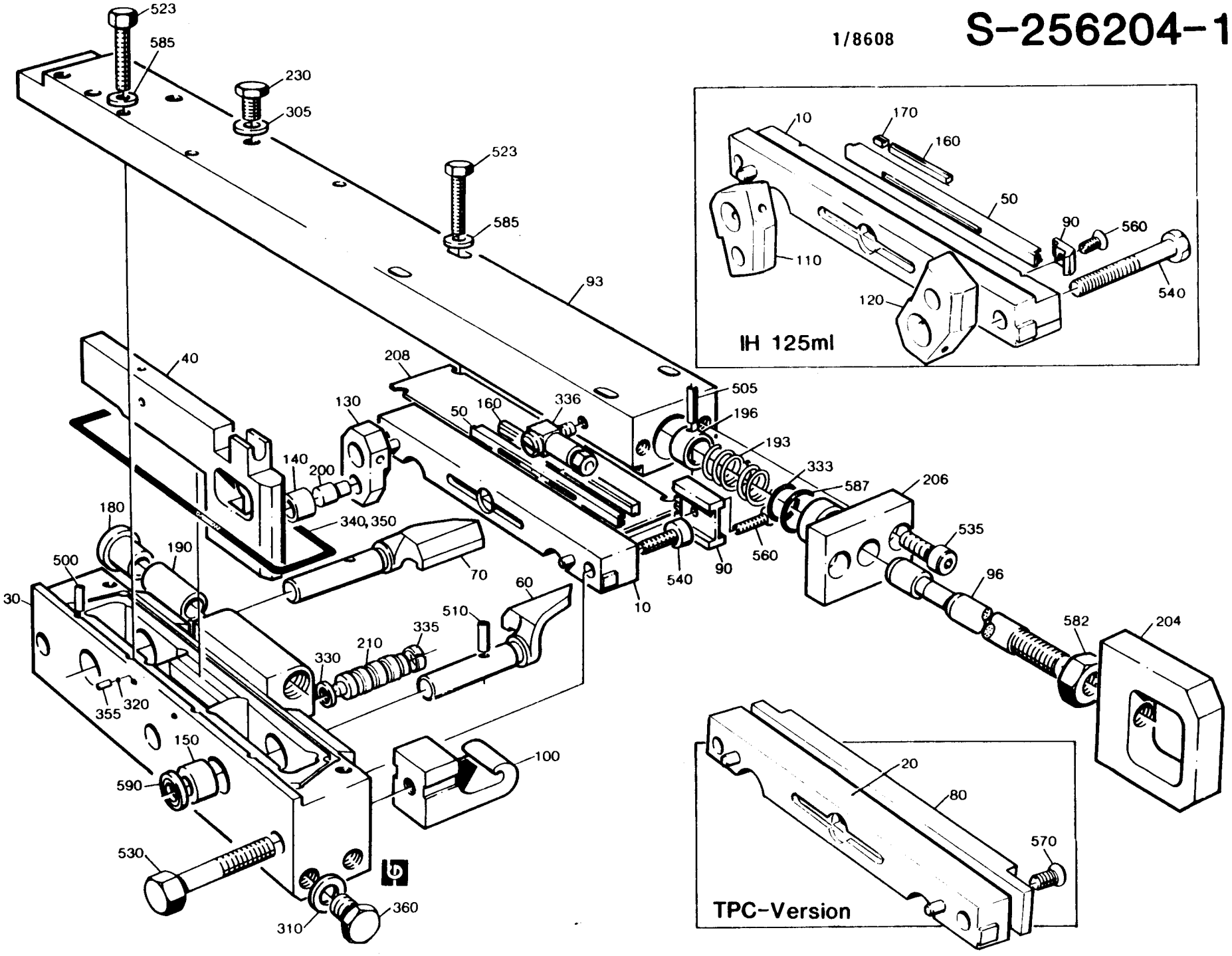

POS	VAR	PART NUMBER	SP	EH	QTY	DESCRIPTION
500	ALL	311103-0312	-		1	CYLINDRICACPR5M6X25RFR
505	ALL	311111-0207	S		1	HOLLOW PINFRP3X14
510	ALL	311111-0308	S		2	HOLLOW PINFRP5X20
523	ALL	312105-0376	-		8	SCREW M6S6X35RFR
530	ALL	312105-0462	-		2	SCREW M6S8X55RFR
535	ALL	312115-0366	-		2	SCREW 6X12 A4 80
582	ALL	312605-0318	-		1	NUT M6M8RFR
585	ALL	315115-0153	-		8	WASHER TBRB6,4X12RFR
587	ALL	315202-0265	S		1	O-RING 12,3X2,4
590	ALL	315230-0157	P		4	SEAL RING G12X16X3

TETRA PAK

1/8608

S-256204-14

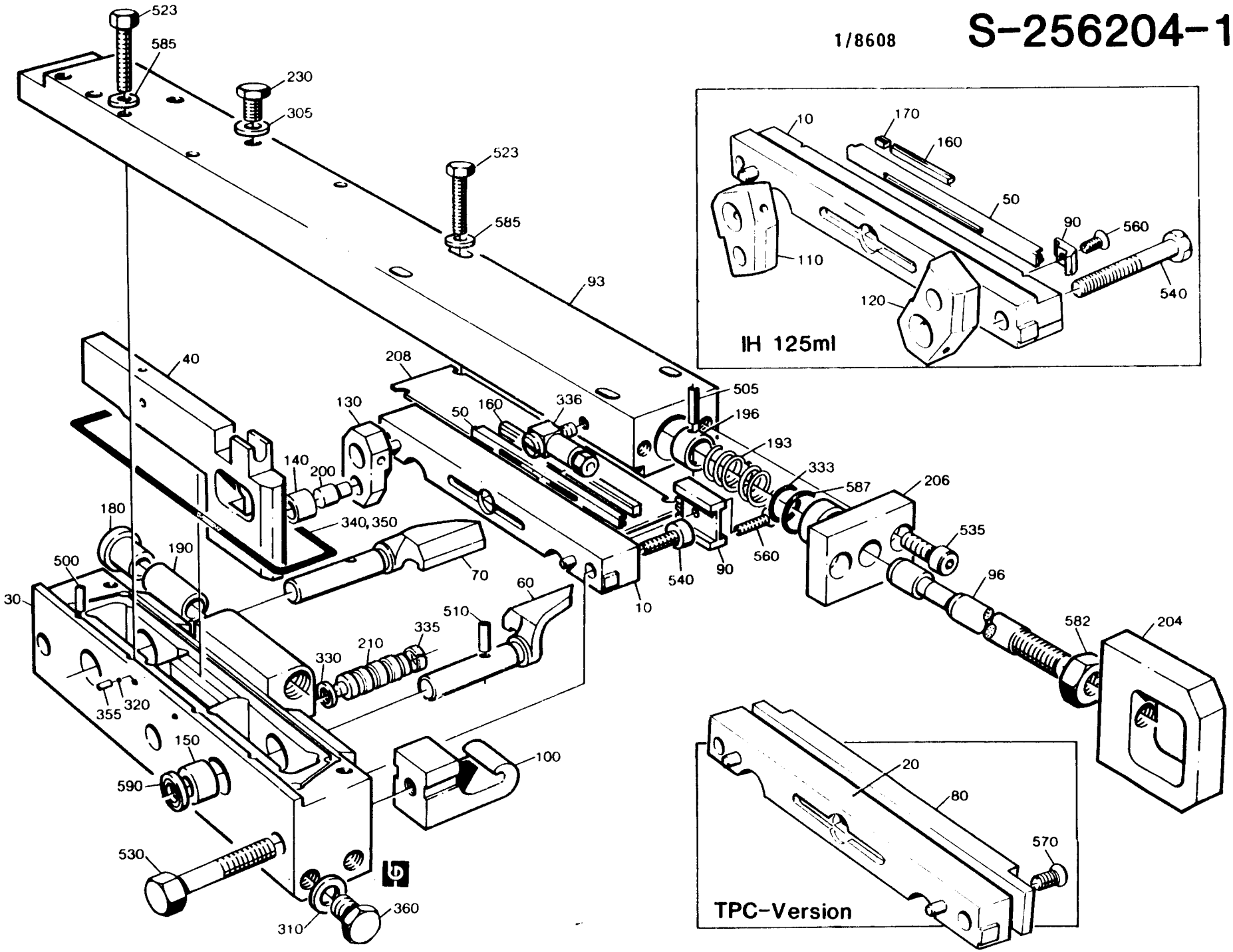

LAST ALTERATION: AM 7595 85-02-26
648104-060V
AM 6300
84-01-09

GROUP	SEALING SYSTEM	VOLUME	VOLUME	VOLUME	VOLUME
-0301	TPC	V0284	V0250	V0236	V0200
	TPC	V0187	V0180	-	-
-0302	TPC	200ML SLIM	-	-	-
-0303	IH	V0284	V0250	V0236	V0200
	IH	V0187	V0180	-	-
-0304	IH	V0125	V0100	-	-
-0305	IH	200ML SLIM	-	-	-

POS	VAR	PART NUMBER	SP	EH	QTY	DESCRIPTION
	-0301	S- 256205-SHEET	-8			===ASSEMBLY DRAWING===
	-0301		-12			
	-0302		-9			
	-0302		-12			
	-0303		-10			
	-0303		-12			
	-0304		-11			
	-0304		-12			
	-0305		-12			
	-0305		-13			
010	-0304	256487	S		1	CUTTING JAW
010	-0303	256769	S		1	CUTTING JAW
010	-0305	441727	S		1	CUTTING JAW
020	-0301	271728	S		1	CUTTING JAW
020	-0302	272264	S		1	CUTTING JAW
030	-0301	256770	S		1	BEARING HOUSING
	-0303				1	
030	-0304	256784	S		1	BEARING HOUSING
030	-0302	272263	S		1	BEARING HOUSING
	-0305				1	
040	-0302	272486	S		1	CARRIER RULER
	-0305				1	
040	-0304	272482	S		1	CARRIER RULER
040	-0301	272484	S		1	CARRIER RULER
	-0303				1	
050	-0304	295004	P		2	CUTTING RAIL
050	-0303	295757	P		2	CUTTING RAIL
	-0305				2	
060	-0304	272420	S		1	FOLDING FLAP
060	-0301	272422	S		1	FOLDING FLAP
	-0303				1	
060	-0302	272424	S		1	FOLDING FLAP
	-0305				1	
070	-0304	272421	S		1	FOLDING FLAP
070	-0301	272423	S		1	FOLDING FLAP
	-0303				1	
070	-0302	272425	S		1	FOLDING FLAP

POS	VAR	PART NUMBER	SP	EH	QTY	DESCRIPTION
	-0305				1	
080	-0301	456819	S		1	CUTTING JAW OUTER
080	-0302	456820	S		1	CUTTING JAW OUTER
090	-0303	491018	S		2	BRACKET
	-0305				2	
110	-0304	272416	S		1	CARRIER
120	-0304	272417	S		1	CARRIER
130	-0301	272419	S		2	CARRIER
	-0302				2	
	-0303				2	
	-0305				2	
160	-0304	295005	UP		2	DOLLY
160	-0303	295758	UP		2	DOLLY
	-0305				2	
170	-0304	295260	P		4	END PIECE
190	-0302	255697-0001	-		1	CONNECTION PIPE
	-0304				1	
	-0305				1	
190	-0301	255697-0002	-		1	CONNECTION PIPE
	-0303				1	
220	-0304	272427	S		2	BRACKET
520	-0304	312105-0374	-		2	SCREW M6S6X30RFR
540	-0301	312115-0370	-		2	SCREW 6X20 A4 80
	-0302				2	
	-0303				2	
550	-0304	312145-0289	-		2	SLOTTED HEMFS4X10RFR
560	-0303	312145-0291	-		2	SLOTTED HEMFS4X12RFR
	-0305				2	
570	-0301	312155-0327	-		2	SCREW MF6S5X12RFR
	-0302				2	
	-0305				2	
093	ALL	256692	S		1	CARRIER
096	ALL	256659	S		1	ROD
100	ALL	257349	S		2	CLUTCH
140	ALL	22463	S		2	ROLLER
150	ALL	33408	S		4	BEARING
180	ALL	255653	S		2	BUSHING
193	ALL	255742	P		1	COMPRESSION SPRING
196	ALL	255801	S		1	RETAINING RING
200	ALL	256607	S		2	AXLE PIN
204	ALL	256626	S		1	EAR
206	ALL	256706	S		1	PLATE
208	ALL	257362	S		2	INSERT
210	ALL	271745	S		2	PLUNGER
230	ALL	441355	-		2	BLEEDING SCREW
305	ALL	90005-0003	-		2	WASHER
310	ALL	90005-0009	P		3	WASHER
320	ALL	90090-0005	P		2	STEEL BALL
330	ALL	90091-0082	P		2	SEAL
333	ALL	90091-0091	P		1	SEAL RING
336	ALL	90134-0058	-		1	BANJO CONNECTION

TETRA PAK

3/8501

S-256205-8

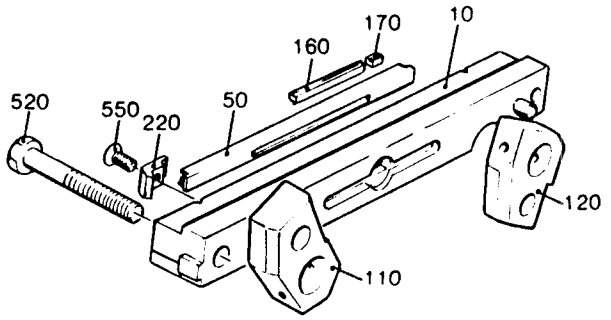

IH

Volume
100 - 125 ML

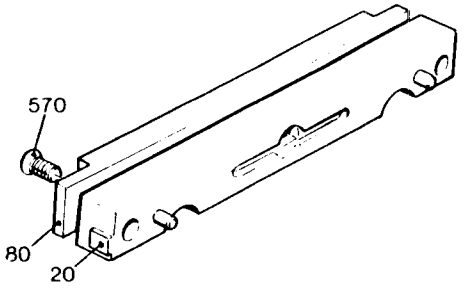

TPC

Volume
180 - 284 ML

IH

Volume
180 - 284 ML

POS	VAR	PART NUMBER	SP	EH	QTY	DESCRIPTION
340	ALL	90153-0015	-	ML	X	ADHESIVE
350	ALL	90242-0093	P	MM	450	O-RING
355	ALL	90287-0128	-		2	GRUB SCREW
360	ALL	90330-0066	-		3	PLUG
500	ALL	311103-0312	-		1	CYLINDRICACPR5M6X25RFR
505	ALL	311111-0207	S		1	HOLLOW PINFRP3X14
510	ALL	311111-0308	S		2	HOLLOW PINFRP5X20
523	ALL	312105-0376	-		8	SCREW M6S6X35RFR
530	ALL	312105-0462	-		2	SCREW M6S8X55RFR
535	ALL	312115-0366	-		2	SCREW 6X12 A4 80
582	ALL	312605-0318	-		1	NUT M6M8RFR
585	ALL	315115-0153	-		8	WASHER TBRB6,4X12RFR
587	ALL	315202-0265	S		1	O-RING 12,3X2,4
590	ALL	315230-0157	P		4	SEAL RING G12X16X3

TETRA PAK

3/8501

S-256205-8

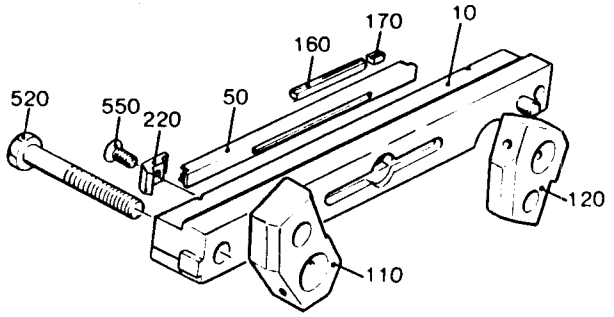

IH

Volume
100 - 125 ML

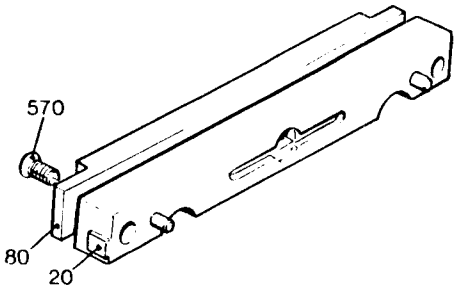

TPC

Volume
180 - 284 ML

IH

Volume
180 - 284 ML

LAST ALTERATION: AM 8633 86-01-14
648104-070V

GROUP	SEALING SYSTEM	VOLUME	VOLUME	VOLUME	VOLUME
-0401	TPC	V0250	V0236	V0200	V0180
-0402	TPC	200ML SLIM	-	-	-
-0403	IH	V0250	V0236	V0200	V0180
-0404	IH	V0125	-	-	-
-0405	IH	200ML SLIM	-	-	-

POS	VAR	PART NUMBER	SP	EH	QTY	DESCRIPTION
	-0401	S- 256205-SHEET	~~-12~~			===ASSEMBLY DRAWING===
	-0401		-14			
	-0402		~~-12~~			
	-0402		-14			
	-0403		~~-12~~			
	-0403		~~-15~~			
	-0404		~~-12~~			
	-0404		~~-15~~			
	-0405		~~-12~~			
	-0405		~~-15~~			
010	-0403	256769	S		1	CUTTING JAW
010	-0404	256487	S		1	CUTTING JAW
010	-0405	441727	S		1	CUTTING JAW
020	-0401	271728	S		1	CUTTING JAW
020	-0402	272264	S		1	CUTTING JAW
030	-0401	256770	S		1	BEARING HOUSING
	-0403				1	
030	-0402	272263	S		1	BEARING HOUSING
	-0405				1	
030	-0404	256784	S		1	BEARING HOUSING
040	-0401	G- 272484	S		1	CARRIER RULER
	-0403				1	
040	-0402	272486	S		1	CARRIER RULER
	-0405				1	
040	-0404	272482	S		1	CARRIER RULER
050	-0403	295757	P		2	CUTTING RAIL
	-0405				2	
050	-0404	295004	P		2	CUTTING RAIL
060	-0401	272422	S		1	FOLDING FLAP
	-0403				1	
060	-0402	272424	S		1	FOLDING FLAP
	-0405				1	
060	-0404	272420	S		1	FOLDING FLAP
070	-0401	272423	S		1	FOLDING FLAP
	-0403				1	
070	-0402	272425	S		1	FOLDING FLAP
	-0405				1	
070	-0404	272421	S		1	FOLDING FLAP
080	-0401	456819	S		1	CUTTING JAW OUTER

POS	VAR	PART NUMBER	SP	EH	QTY	DESCRIPTION
080	-0402	456820	S		1	CUTTING JAW OUTER
090	-0403	491018	S		2	BRACKET
	-0405				2	
090	-0404	272427	S		2	BRACKET
110	-0404	272416	S		1	CARRIER
120	-0404	272417	S		1	CARRIER
130	-0401	272419	S		2	CARRIER
	-0402				2	
	-0403				2	
	-0405				2	
160	-0403	295758	UP		2	DOLLY
	-0405				2	
160	-0404	295005	UP		2	DOLLY
170	-0404	295260	P		4	END PIECE
540	-0401	312115-0370	-		2	SCREW 6X20 A4 80
	-0402				2	
	-0403				2	
	-0405				2	
540	-0404	312105-0374	-		2	SCREW M6S6X30RFR
560	-0403	312145-0291	-		2	SLOTTED HEMFS4X12RFR
	-0405				2	
560	-0404	312145-0289	-		2	SLOTTED HEMFS4X10RFR
570	-0401	312155-0327	-		2	SCREW MF6S5X12RFR
	-0402				2	
093	ALL	256692	S		1	CARRIER
096	ALL	256659	S		1	ROD
100	ALL	491280	S		2	CATCH
140	ALL	22463	S		2	ROLLER
150	ALL	33408	S		4	BEARING
180	ALL	255653	S		2	BUSHING
193	ALL	255742	P		1	COMPRESSION SPRING
196	ALL	255801	S		1	RETAINING RING
200	ALL	256607	S		2	AXLE PIN
204	ALL	256626	S		1	EAR
206	ALL	256706	S		1	BEARING PLATE
208	ALL	257362	S		2	INSERT
210	ALL	490944	S		2	PLUNGER
230	ALL	441355	-		2	BLEEDING SCREW
305	ALL	315237-0106	-		2	GASKET
310	ALL	315237-0109	P		3	SEAL RING 1/8"
320	ALL	90090-0005	P		2	STEEL BALL
330	ALL	90091-0166	P		2	SEAL RING
333	ALL	90091-0091	P		1	SEAL RING
335	ALL	90091-0169	P		4	RING
336	ALL	90134-0058	-		1	BANJO CONNECTION
340	ALL	90153-0015	-	ML	X	ADHESIVE
350	ALL	90242-0093	P	MM	450	O-RING
355	ALL	90287-0128	-		2	GRUB SCREW
360	ALL	90330-0066	-		3	PLUG

S-256205-14

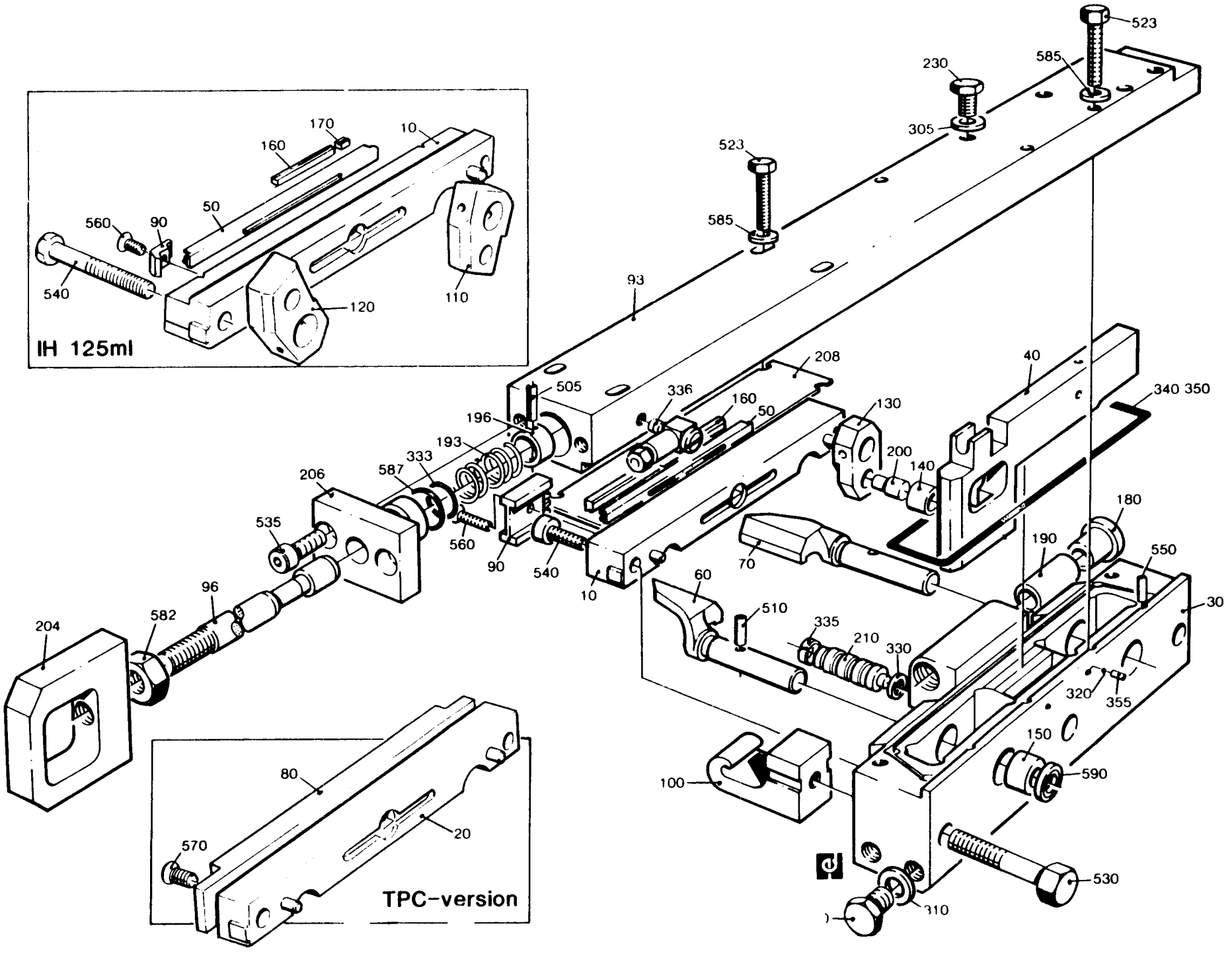

AM 8633

POS	VAR	PART NUMBER	SP	EH	QTY	DESCRIPTION
500	ALL	311103-0312	-		1	CYLINDRICACPR5M6X25RFR
505	ALL	311111-0207	S		1	HOLLOW PINFRP3X14
510	ALL	311111-0308	S		2	HOLLOW PINFRP5X20
523	ALL	312105-0376	-		8	SCREW M6S6X35RFR
530	ALL	312105-0462	-		2	SCREW M6S8X55RFR
535	ALL	312115-0366	-		2	SCREW 6X12 A4 80
582	ALL	312605-0318	-		1	NUT M6M8RFR
585	ALL	315115-0153	-		8	WASHER TBRB6,4X12RFR
587	ALL	315202-0265	S		1	O-RING 12,3X2,4
590	ALL	315230-0157	P		4	SEAL RING G12X16X3

TETRA PAK

1/8608

S-256205-14

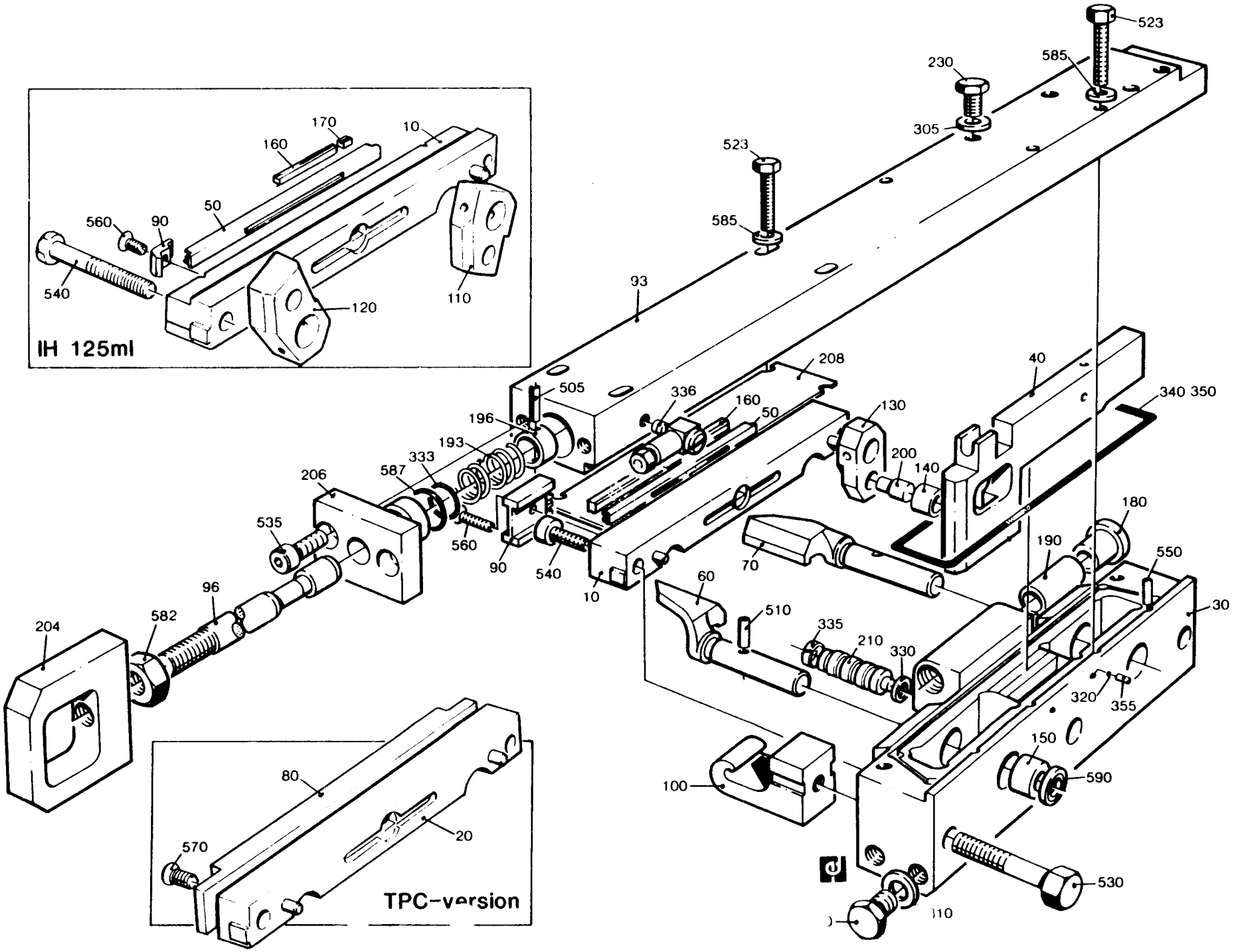

DM 8633

LAST ALTERATION: AM 9476 86-09-12
648104-020V
AM 5178
82-03-16

GROUP	SEALING SYSTEM	VOLUME
-0201	TPC	V0250
-0202	IH	V0250
-0203	IH	V0236
-0204	TPC	V0200
-0205	IH	V0200
-0206	TPC	V0180
-0207	IH	V0180
-0208	TPC	200ML SLIM
-0209	IH	200ML SLIM
-0210	IH	V0125

POS	VAR	PART	NUMBER	SP	EH	QTY	DESCRIPTION
	-0201	S-	256206-SHEET	-5			===ASSEMBLY DRAWING===
	-0201			~~-6~~			
	-0202			-5			
	-0202			~~-6~~			
	-0203			-5			
	-0203			~~-6~~			
	-0204			-5			
	-0204			~~-6~~			
	-0205			-5			
	-0205			~~-6~~			
	-0206			-5			
	-0206			~~-6~~			
	-0207			-5			
	-0207			~~-6~~			
	-0208			-5			
	-0208			~~-6~~			
	-0209			-5			
	-0209			~~-6~~			
	-0210			-5			
	-0210			~~-6~~			
010	-0201		456760-0001	S		1	FOLDING FLAP CAM
010	-0202		456760-0003	S		1	FOLDING FLAP CAM
010	-0203		456760-0011	S		1	FOLDING FLAP CAM
010	-0204		456760-0004	S		1	FOLDING FLAP CAM
010	-0205		456760-0007	S		1	FOLDING FLAP CAM
	-0210					1	
010	-0206		456760-0006	S		1	FOLDING FLAP CAM
010	-0207		456760-0010	S		1	FOLDING FLAP CAM
010	-0208		456760-0008	S		1	FOLDING FLAP CAM
010	-0209		456760-0002	S		1	FOLDING FLAP CAM
020	-0201		272640-0001	S		1	CURVE
020	-0202		272640-0002	S		1	CURVE

POS	VAR	PART	NUMBER	SP	EH	QTY	DESCRIPTION
020	-0203		272640-0003	S		1	CURVE
020	-0204		272640-0004	S		1	CURVE
020	-0205		272640-0005	S		1	CURVE
	-0210					1	
020	-0206		272640-0006	S		1	CURVE
020	-0207		272640-0007	S		1	CURVE
020	-0208		272640-0008	S		1	CURVE
020	-0209		272640-0009	S		1	CURVE
040	-0201		256707	-		1	BRACKET
	-0202					1	
	-0203					1	
	-0204					1	
	-0205					1	
	-0206					1	
	-0207					1	
	-0209					1	
	-0210					1	
040	-0208		295774	-		1	BRACKET
045	-0201		311103-0316	S		2	CYLINDRICACPR5M6X35RFR
	-0202					2	
	-0203					2	
	-0204					2	
	-0205					2	
	-0206					2	
	-0207					2	
	-0209					2	
	-0210					2	
045	-0208		311103-0310	S		2	CYLINDRICACPR5M6X20RFR
047	-0201		312105-0459	-		2	SCREW M6S8X40RFR
	-0202					2	
	-0203					2	
	-0204					2	
	-0205					2	
	-0206					2	
	-0207					2	
	-0209					2	
	-0210					2	
047	-0208		312105-0453	-		2	SCREW M6S8X25RFR
050	ALL		272641	-		1	COLUMN
070	ALL		272654	S		1	ECCENTRIC SHAFT
080	ALL		272429	S		1	ARM
090	ALL	G-	272491	-		3	BRACKET
110	ALL		272645	S		1	RAIL
160	ALL		256621	S		2	WASHER
225	ALL		256705	S		6	INSERT
255	ALL		257334	S		3	PLATE SPRING
270	ALL		271132	-		1	SPACER
280	ALL		271284	-		1	BLOCK
315	ALL		90166-0132	P	MM	890	HOSE

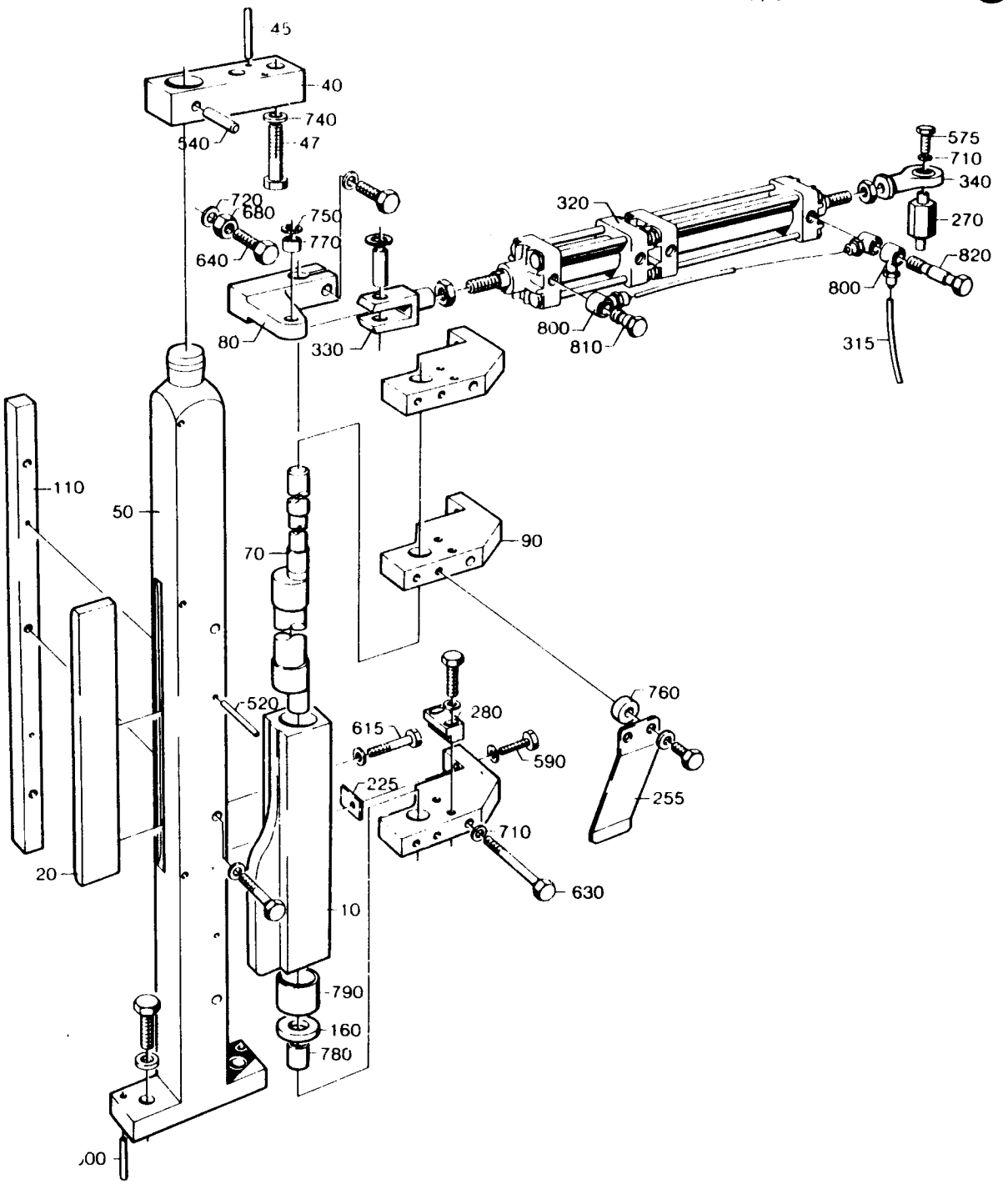
45
40
740
47
540
720
680
750
770
640
80
330
320
575
710
340
270
820
800
800
810
315
110
50
70
90
760
520
615
280
590
225
255
710
630
20
10
790
160
780
00

LAST ALTERATION: AM 9476 86-09-12
648104-020V
AM 5178
82-03-16

GROUP	SEALING SYSTEM	VOLUME
-0201	TPC	V0250
-0202	IH	V0250
-0203	IH	V0236
-0204	TPC	V0200
-0205	IH	V0200
-0206	TPC	V0180
-0207	IH	V0180
-0208	TPC	200ML SLIM
-0209	IH	200ML SLIM
-0210	IH	V0125

POS	VAR	PART	NUMBER	SP	EH	QTY	DESCRIPTION
	-0201	S-	256207-SHEET	-5			===ASSEMBLY DRAWING===
	-0201			~~-6~~			
	-0202			-5			
	-0202			~~-6~~			
	-0203			-5			
	-0203			~~-6~~			
	-0204			-5			
	-0204			~~-6~~			
	-0205			-5			
	-0205			~~-6~~			
	-0206			-5			
	-0206			~~-6~~			
	-0207			-5			
	-0207			~~-6~~			
	-0208			-5			
	-0208			~~-6~~			
	-0209			-5			
	-0209			~~-6~~			
	-0210			-5			
	-0210			~~-6~~			
010	-0201		456760-0001	S		1	FOLDING FLAP CAM
010	-0202		456760-0003	S		1	FOLDING FLAP CAM
010	-0203		456760-0011	S		1	FOLDING FLAP CAM
010	-0204		456760-0004	S		1	FOLDING FLAP CAM
010	-0205		456760-0007	S		1	FOLDING FLAP CAM
	-0210					1	
010	-0206		456760-0006	S		1	FOLDING FLAP CAM
010	-0207		456760-0010	S		1	FOLDING FLAP CAM
010	-0208		456760-0008	S		1	FOLDING FLAP CAM
010	-0209		456760-0002	S		1	FOLDING FLAP CAM
020	-0201		272640-0001	S		1	CURVE
020	-0202		272640-0002	S		1	CURVE

POS	VAR	PART	NUMBER	SP	EH	QTY	DESCRIPTION
020	-0203		272640-0003	S		1	CURVE
020	-0204		272640-0004	S		1	CURVE
020	-0205		272640-0005	S		1	CURVE
	-0210					1	
020	-0206		272640-0006	S		1	CURVE
020	-0207		272640-0007	S		1	CURVE
020	-0208		272640-0008	S		1	CURVE
020	-0209		272640-0009	S		1	CURVE
040	-0201		256707	-		1	BRACKET
	-0202					1	
	-0203					1	
	-0204					1	
	-0205					1	
	-0206					1	
	-0207					1	
	-0209					1	
	-0210					1	
040	-0208		295774	-		1	BRACKET
045	-0201		311103-0316	S		2	CYLINDRICACPR5M6X35RFR
	-0202					2	
	-0203					2	
	-0204					2	
	-0205					2	
	-0206					2	
	-0207					2	
	-0209					2	
	-0210					2	
045	-0208		311103-0310	S		2	CYLINDRICACPR5M6X20RFR
047	-0201		312105-0459	-		2	SCREW M6S8X40RFR
	-0202					2	
	-0203					2	
	-0204					2	
	-0205					2	
	-0206					2	
	-0207					2	
	-0209					2	
	-0210					2	
047	-0208		312105-0453	-		2	SCREW M6S8X25RFR
050	ALL		272642	-		1	COLUMN
070	ALL		272654	S		1	ECCENTRIC SHAFT
080	ALL		272429	S		1	ARM
090	ALL	G-	272491	-		3	BRACKET
110	ALL		272645	S		1	RAIL
160	ALL		256621	S		2	WASHER
225	ALL		256705	S		6	INSERT
255	ALL		257334	S		3	PLATE SPRING
270	ALL		271132	-		1	SPACER
280	ALL		271284	-		1	BLOCK
315	ALL		90166-0132	P	MM	890	HOSE

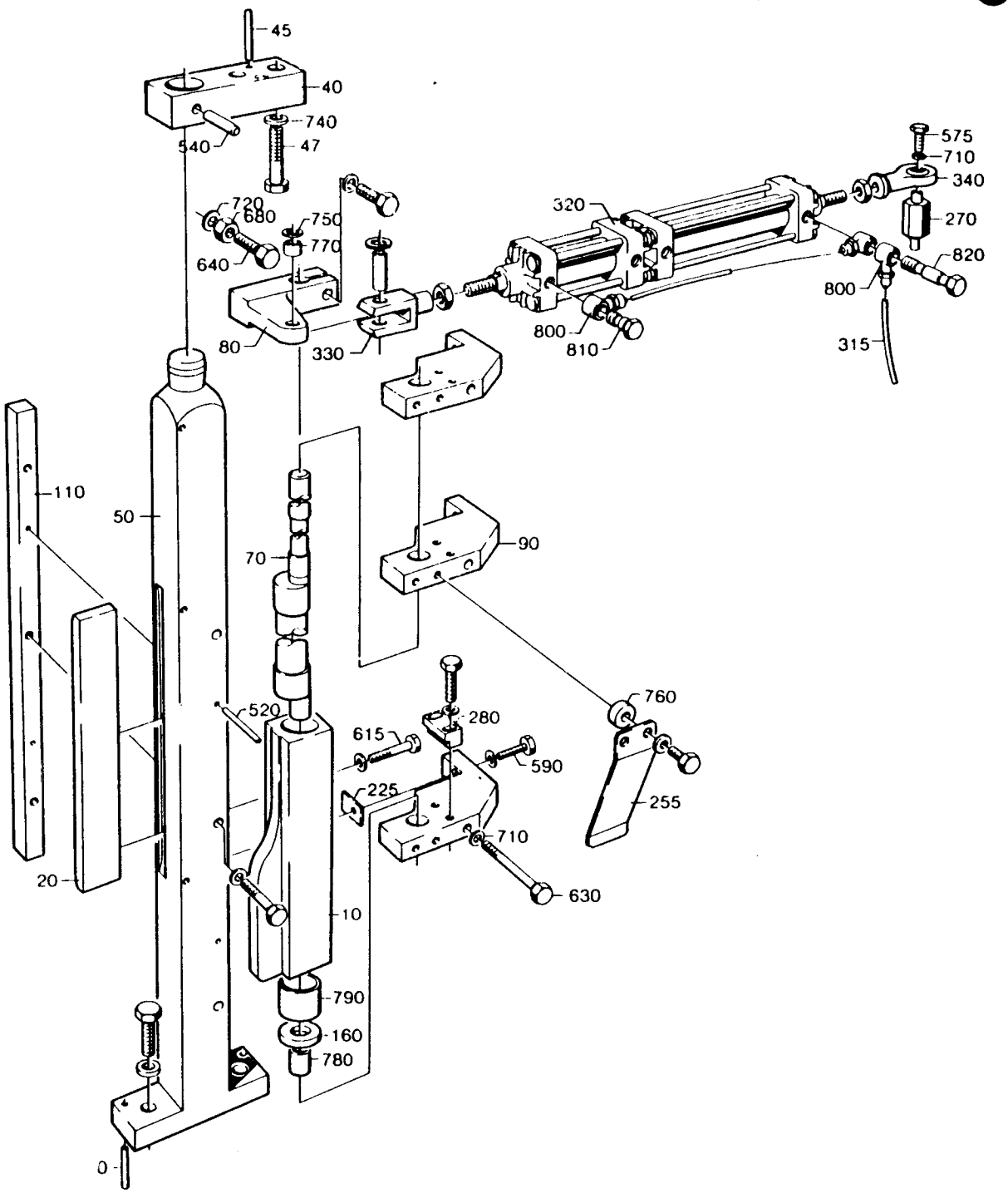
45
40
740
47
540
720
680
750
770
640
80
330
320
575
710
340
270
820
800
800
810
315
110
50
70
90
760
520
280
615
590
225
255
710
630
20
10
790
160
780
0

POS	VAR	PART NUMBER	SP	EH	QTY	DESCRIPTION
320	ALL	90202-0011	S		1	CYLINDER
330	ALL	90239-0357	S		1	BRACKET
340	ALL	90239-0405	S		1	BRACKET
500	ALL	311103-0314	-		2	CYLINDRICACPR5M6X30RFR
520	ALL	311103-0320	-		2	CYLINDRICACPR5M6X45RFR
540	ALL	311103-0409	-		1	CYLINDRICACPR8M6X40RFR
575	ALL	312105-0368	-		3	SCREW M6S6X16RFR
590	ALL	312105-0372	-		5	SCREW M6S6X25RFR
615	ALL	312105-0379	-		5	SCREW M6S6X45RFR
630	ALL	312105-0384	-		3	SCREW M6S6X70RFR
640	ALL	312105-0455	-		4	SCREW M6S8X30RFR
680	ALL	312605-0318	-		1	NUT M6M8RFR
710	ALL	315105-0153	-		16	WASHER BRB6,4X12RFR
720	ALL	315105-0165	-		3	WASHER BRB8,4X16RFR
740	ALL	315115-0165	-		4	WASHER TBRB8,4X16RFR
750	ALL	315233-0109	S		1	SEAL RING R1/8"
760	ALL	315742-0102	-		2	RETAINING 6SMS199RFR
770	ALL	321120-0098	S		1	BUSHING 10/12,0X8
780	ALL	321120-0118	S		3	BUSHING 14/16X15
790	ALL	321120-0153	S		2	BUSHING 24/27X20
800	ALL	342980-0113	S		5	BANJO CONNSINGEL 6/4-1/8
810	ALL	342980-0303	S		3	BANJO CONN SINGEL 1/8"
820	ALL	342980-0313	S		1	BANJO CONN DUBBEL 1/8

S-256207-5

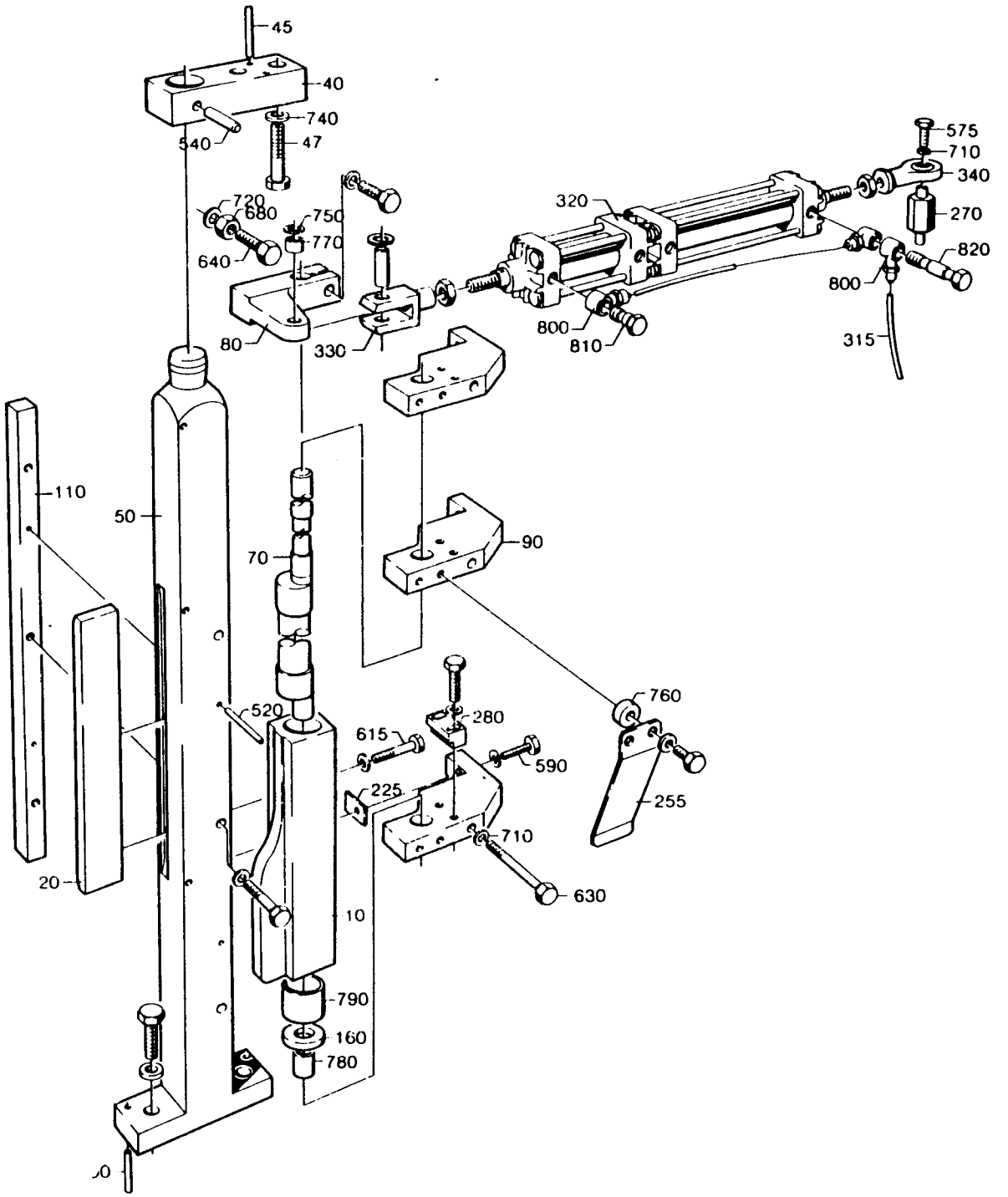
45
40
740
47
540
720
680
750
770
640
80
330
320
575
710
340
270
820
800
810
315
110
50
70
90
760
520
280
615
590
225
255
710
630
20
10
790
160
780

LAST ALTERATION: AM 6615 84-03-08
648104

GROUP	VOLUME	VOLUME	VOLUME	VOLUME	VOLUME
-0301	V0284	V0250	V0236	V0200	V0187
	V0180	-	-	-	-
-0302	V0125	V0100	-	-	-
-0303	200ML SLIM	-	-	-	-

POS	VAR	PART NUMBER	SP	EH	QTY	DESCRIPTION
	-0301	S- 256208-SHEET	-9			===ASSEMBLY DRAWING===
	-0302		-~~10~~			
	-0303		-~~11~~			
010	-0301	456006	P		1	KNIFE HOLDER
010	-0302	456007	P		1	KNIFE HOLDER
010	-0303	456008	P		1	KNIFE HOLDER
020	-0301	271738	UP		1	KNIFE
	-0303				1	
020	-0302	272762	UP		1	KNIFE
030	ALL	456011	UP		2	PIN
040	ALL	441726	P		1	COMPRESSION SPRING
050	ALL	272753	P		1	GUIDE
060	ALL	456009	P		1	LINK
070	ALL	272755	P		1	NUT

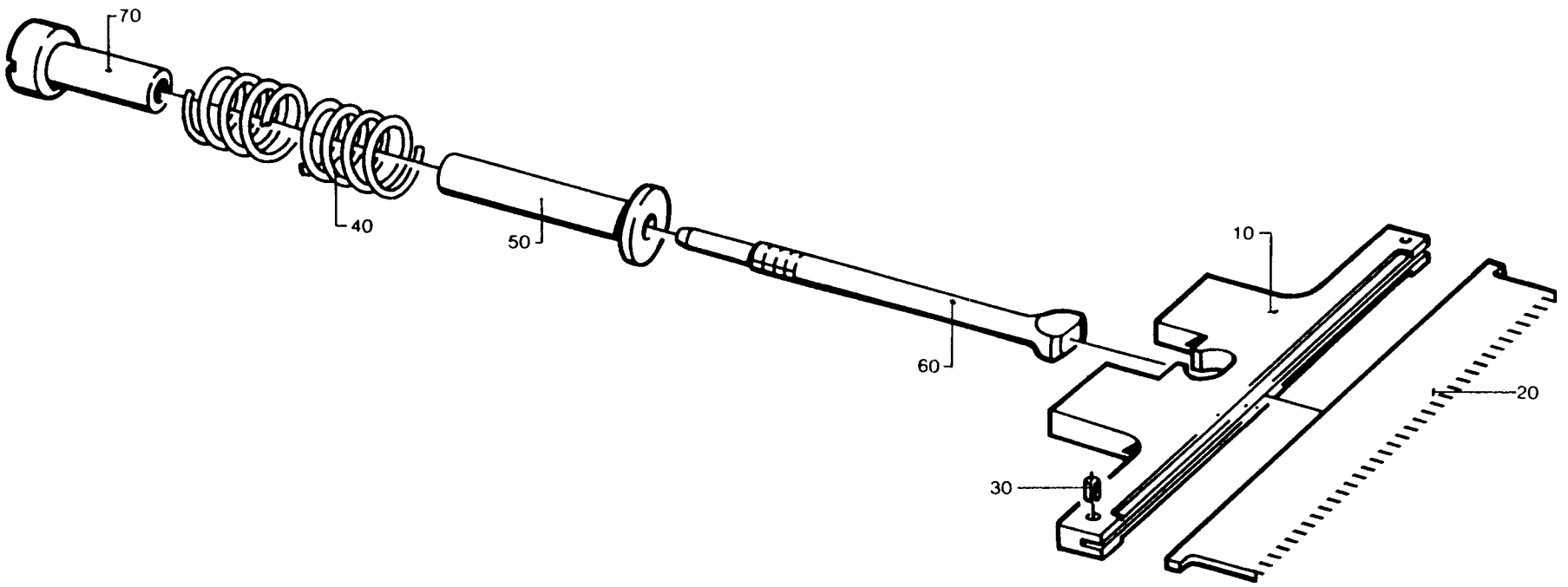
70
40
50
60
10
20
30

LAST ALTERATION: AM 9678 86-10-20
648104-020V
AM 5178
82-03-16

GROUP VOLUME

-0201 V0250
-0202 V0236
-0203 V0200
-0204 V0180
-0205 V0125
-0206 200ML SLIM

POS	VAR	PART NUMBER	SP	EH	QTY	DESCRIPTION
	-0201	S- 256209-SHEET	-5			===ASSEMBLY DRAWING===
	-0202		-5			
	-0203		-5			
	-0204		-5			
	-0205		-8			
	-0206		-1			
010	-0201	272055	S		1	VOLUME FLAP
010	-0202	272498	S		1	VOLUME FLAP
010	-0203	G- 256850	S		1	VOLUME FLAP
010	-0204	272499	S		1	VOLUME FLAP
010	-0205	G- 256849	S		1	VOLUME FLAP
010	-0206	G- 272248	S		1	VOLUME FLAP
020	-0201	G- 272494-0001	S		1	CARRIER
	-0202				1	
	-0203				1	
	-0205				1	
	-0206				1	
020	-0204	G- 272494-0002	S		1	CARRIER
025	-0201	272985-0001	S		1	ARM
	-0202				1	
	-0203				1	
	-0205				1	
	-0206				1	
025	-0204	272985-0002	S		1	ARM
030	-0201	272986-0001	S		3	VOLUME SHIM
030	-0202	272986-0002	S		3	VOLUME SHIM
030	-0203	272986-0003	S		3	VOLUME SHIM
030	-0204	272986-0004	S		3	VOLUME SHIM
030	-0205	272987	S		3	VOLUME SHIM
030	-0206	272991	S		3	VOLUME SHIM
040	-0201	456005-0001	S		1	VOLUME FLAP BLOCK
040	-0202	272988-0002	S		1	VOLUME FLAP BLOCK
040	-0203	456005-0003	S		1	VOLUME FLAP BLOCK
040	-0204	272988-0004	S		1	VOLUME FLAP BLOCK
040	-0205	491868	S		1	VOLUME FLAP BLOCK
040	-0206	272990	S		1	VOLUME FLAP BLOCK
050	ALL	256852	S		1	SHAFT

POS	VAR	PART NUMBER	SP	EH	QTY	DESCRIPTION
060	ALL	256859	S		1	SCREW
070	ALL	256860	S		2	ROLLER
200	ALL	90166-0159	P	MM	21	RUBBER HOSE
300	ALL	312145-0291	P		2	SLOTTED HEMFS4X12RFR
310	ALL	312105-0376	-		1	SCREW M6S6X35RFR
320	ALL	312115-0449	-		1	SCREW 8X16 A4 80

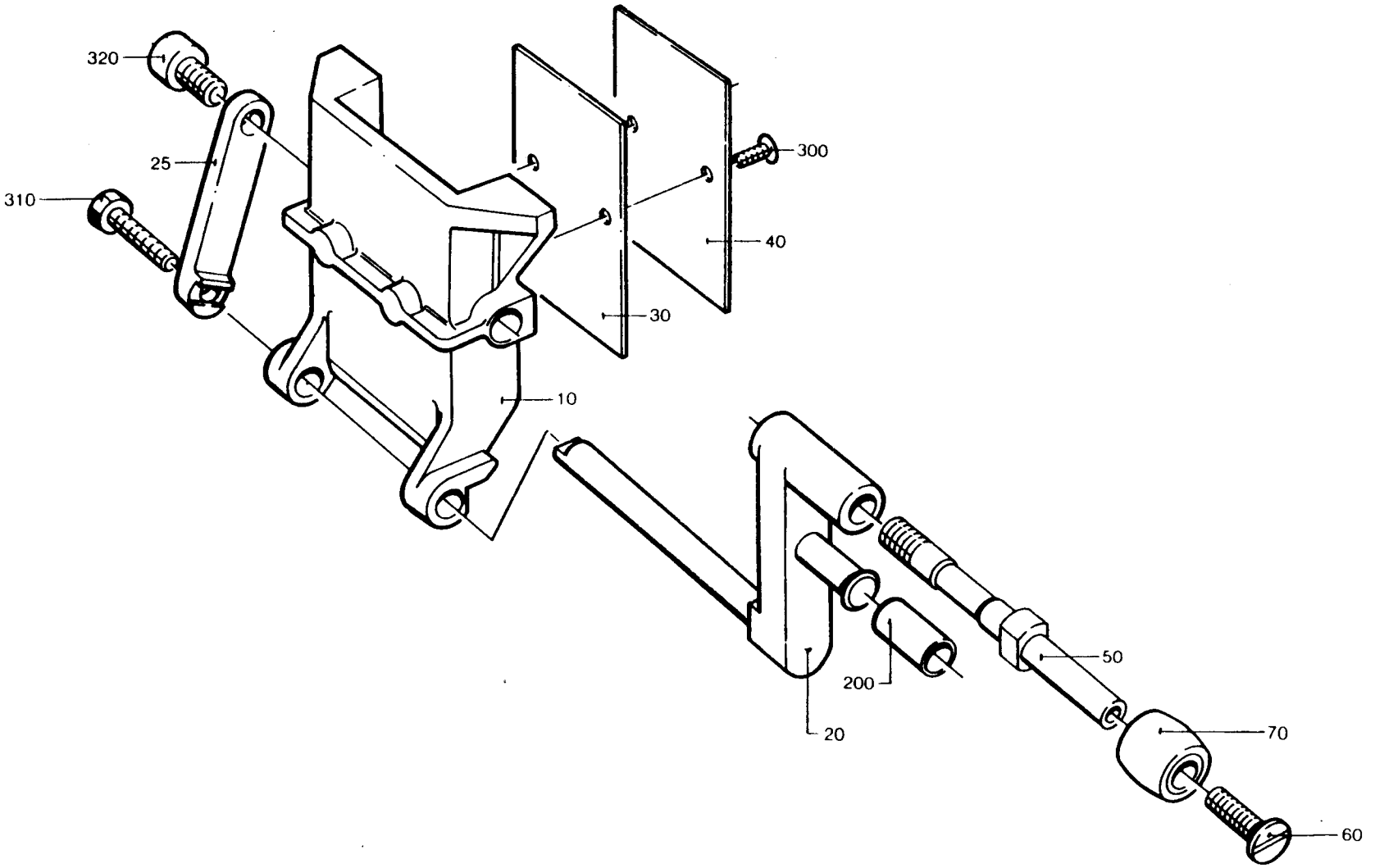
320
25
310
300
40
30
10
50
200
20
70
60

LAST ALTERATION: AM 9678 86-10-20
648104-020V
AM 5178
82-03-16

GROUP	VOLUME
-0201	V0250
-0202	V0236
-0203	V0200
-0204	V0180
-0205	V0125
-0206	200ML SLIM

POS	VAR	PART NUMBER	SP	EH	QTY	DESCRIPTION
	-0201	S- 256210-SHEET	-5			===ASSEMBLY DRAWING===
	-0202		-5			
	-0203		-5			
	-0204		-5			
	-0205		~~-6~~			
	-0206		~~-7~~			
010	-0201	272055	S		1	VOLUME FLAP
010	-0202	272498	S		1	VOLUME FLAP
010	-0203	G- 256850	S		1	VOLUME FLAP
010	-0204	272499	S		1	VOLUME FLAP
010	-0205	G- 256849	S		1	VOLUME FLAP
010	-0206	G- 272248	S		1	VOLUME FLAP
020	-0201	G- 272494-0001	S		1	CARRIER
	-0202				1	
	-0203				1	
	-0205				1	
	-0206				1	
020	-0204	G- 272494-0002	S		1	CARRIER
025	-0201	272985-0001	S		1	ARM
	-0202				1	
	-0203				1	
	-0205				1	
	-0206				1	
025	-0204	272985-0002	S		1	ARM
030	-0201	272986-0001	S		3	VOLUME SHIM
030	-0202	272986-0002	S		3	VOLUME SHIM
030	-0203	272986-0003	S		3	VOLUME SHIM
030	-0204	272986-0004	S		3	VOLUME SHIM
030	-0205	272987	S		3	VOLUME SHIM
030	-0206	272991	S		3	VOLUME SHIM
040	-0201	456005-0001	S		1	VOLUME FLAP BLOCK
040	-0202	272988-0002	S		1	VOLUME FLAP BLOCK
040	-0203	456005-0003	S		1	VOLUME FLAP BLOCK
040	-0204	272988-0004	S		1	VOLUME FLAP BLOCK
040	-0205	491868	S		1	VOLUME FLAP BLOCK
040	-0206	272990	S		1	VOLUME FLAP BLOCK
050	ALL	256852	S		1	SHAFT

POS	VAR	PART NUMBER	SP	EH	QTY	DESCRIPTION
060	ALL	256859	S		1	SCREW
070	ALL	256860	S		2	ROLLER
200	ALL	90166-0159	P	MM	21	RUBBER HOSE
300	ALL	312145-0291	P		2	SLOTTED HEMFS4X12RFR
310	ALL	312105-0376	-		1	SCREW M6S6X35RFR
320	ALL	312115-0449	-		1	SCREW 8X16 A4 80

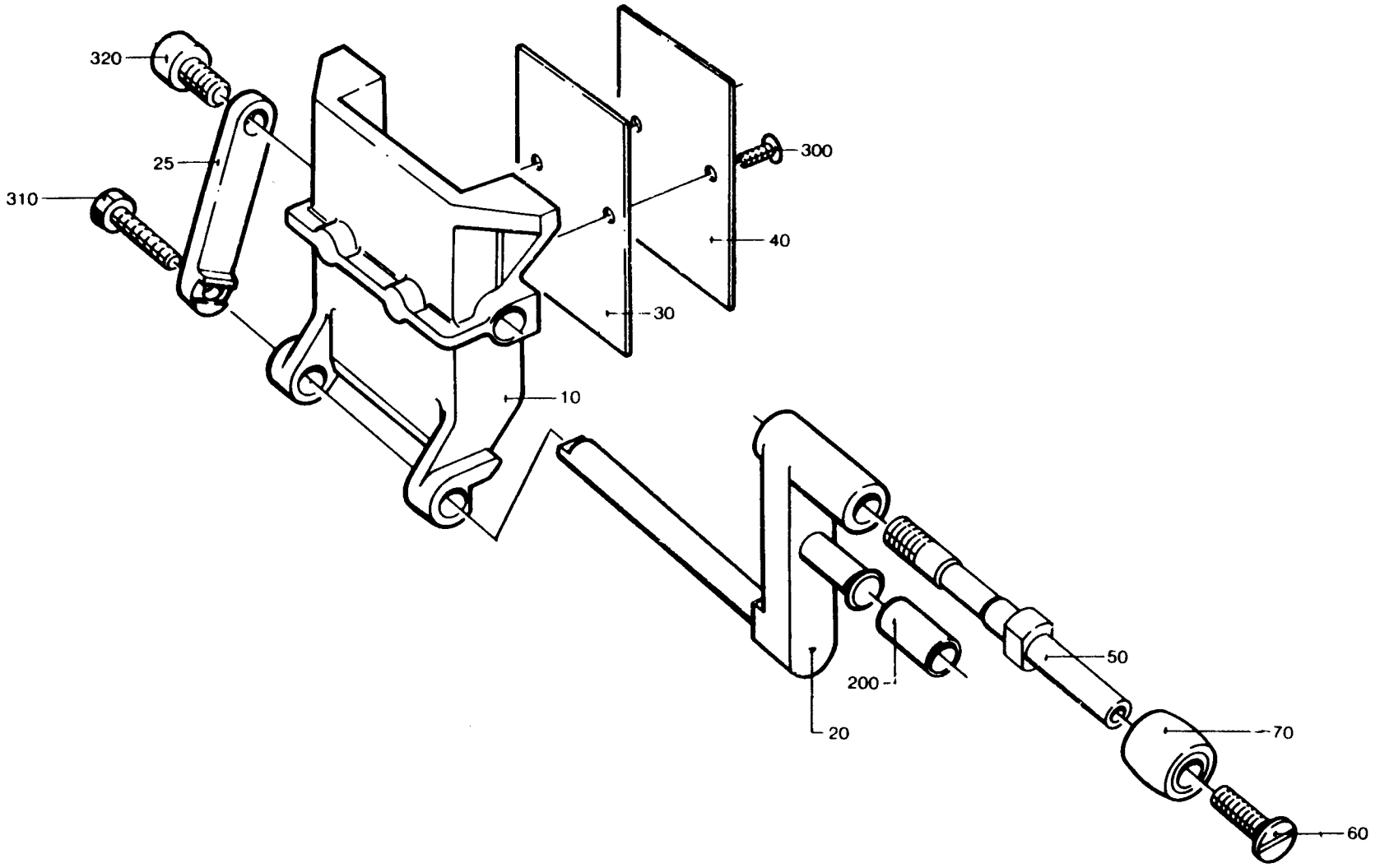
320
25
310
300
40
30
10
50
200
20
70
60

LAST ALTERATION: AM 7892 85-05-02
648104-060V
AM 6300
84-01-09

GROUP	VOLUME	VOLUME	VOLUME	VOLUME	VOLUME
-0301	V0284	V0250	V0236	V0200	V0187
	V0180	-	-	-	-
-0302	V0125	V0100	-	-	-
-0303	200ML SLIM	-	-	-	-

POS	VAR	PART NUMBER	SP	EH	QTY	DESCRIPTION
	-0301	S- 256212-SHEET	-9			===ASSEMBLY DRAWING===
	-0302		-10			
	-0303		-11			
010	-0301	441710	C		1	HOUSING
010	-0302	441711	C		1	HOUSING
010	-0303	441712	C		1	HOUSING
020	-0301	255697-0002	S		1	CONNECTION PIPE
020	-0302	255697-0001	S		1	CONNECTION PIPE
	-0303				1	
030	ALL	441349	S		1	CARRIER RIGHT
040	ALL	441709	C		1	CYLINDER
050	ALL	257248	S		2	CLUTCH
060	ALL	272500	S		1	AXLE
080	ALL	255653	S		2	BUSHING
090	ALL	256557-0001	S		2	WASHER
100	ALL	256557-0002	S		1	WASHER
110	ALL	256557-0003	S		1	WASHER
120	ALL	441762	S		1	CONNECTION RIGHT
130	ALL	441385	S		1	HUB
140	ALL	256576	P		1	ROLLER
150	ALL	441764	S		1	AXLE
160	ALL	257249	S		2	SCREW
170	ALL	257250	-		2	LID
190	ALL	490974	S		2	COMPRESSION SPRING
200	ALL	490975	S		2	COMPRESSION SPRING
210	ALL	272488	-		1	CLAMP
220	ALL	272501	S		1	BRACKET
230	ALL	272503	-		1	CLAMP
240	ALL	456311	S		1	TORSION SPRING
250	ALL	272506	-		2	INSERT
260	ALL	272644	S		2	PISTON
270	ALL	441355	-		1	SCREW
280	ALL	456320	S		1	SLEEVE
300	ALL	90005-0007	S		1	WASHER
301	ALL	315237-0110	S		1	SEAL RING 1/4
306	ALL	90005-0003	-		1	WASHER
308	ALL	90030-0065	S		1	PIPE CONNECTION
310	ALL	90090-0005	P		4	STEEL BALL
320	ALL	90091-0089	P		4	SEAL RING
330	ALL	90091-0107	P		2	SEAL RING
331	ALL	90092-0052	-		1	VALVE

POS	VAR	PART NUMBER	SP	EH	QTY	DESCRIPTION
332	ALL	90092-0053	-		1	VALVE
334	ALL	90134-0042	-		2	SPACER
335	ALL	90134-0045	-		1	PLUG
336	ALL	90134-0047	-		1	CONNECTION
337	ALL	90134-0058	-		1	BANJO CONNECTION
339	ALL	90166-0143	-	MM	160	HOSE
340	ALL	90296-0068	-	G	25	GREASE
500	ALL	311103-0240	S		2	CYLINDRICACPR3M6X25RFR
510	ALL	311103-0312	S		1	CYLINDRICACPR5M6X25RFR
520	ALL	312105-0370	-		11	SCREW M6S6X20RFR
530	ALL	312105-0374	-		2	SCREW M6S6X30RFR
540	ALL	312105-0376	-		6	SCREW M6S6X35RFR
550	ALL	312105-0447	-		1	SCREW M6S8X12RFR
560	ALL	312105-0453	-		1	SCREW M6S8X25RFR
570	ALL	312105-0455	-		1	SCREW M6S8X30RFR
580	ALL	312115-0371	-		2	SCREW MC6S6X22RFR
590	ALL	90287-0128	-		4	GRUB SCREW
600	ALL	315105-0153	-		5	WASHER BRB6,4X12RFR
605	ALL	315105-0165	-		1	WASHER BRB8,4X16RFR
610	ALL	315115-0153	-		6	WASHER TBRB6,4X12RFR
620	ALL	315202-0102	P		8	O-RING 4,1X1,6
630	ALL	315202-0106	P		2	O-RING 8,1X1,6
640	ALL	315202-0108	P		2	O-RING 10,1X1,6
650	ALL	321120-0132	S		1	BUSHING 18/20X20

S-256212-9

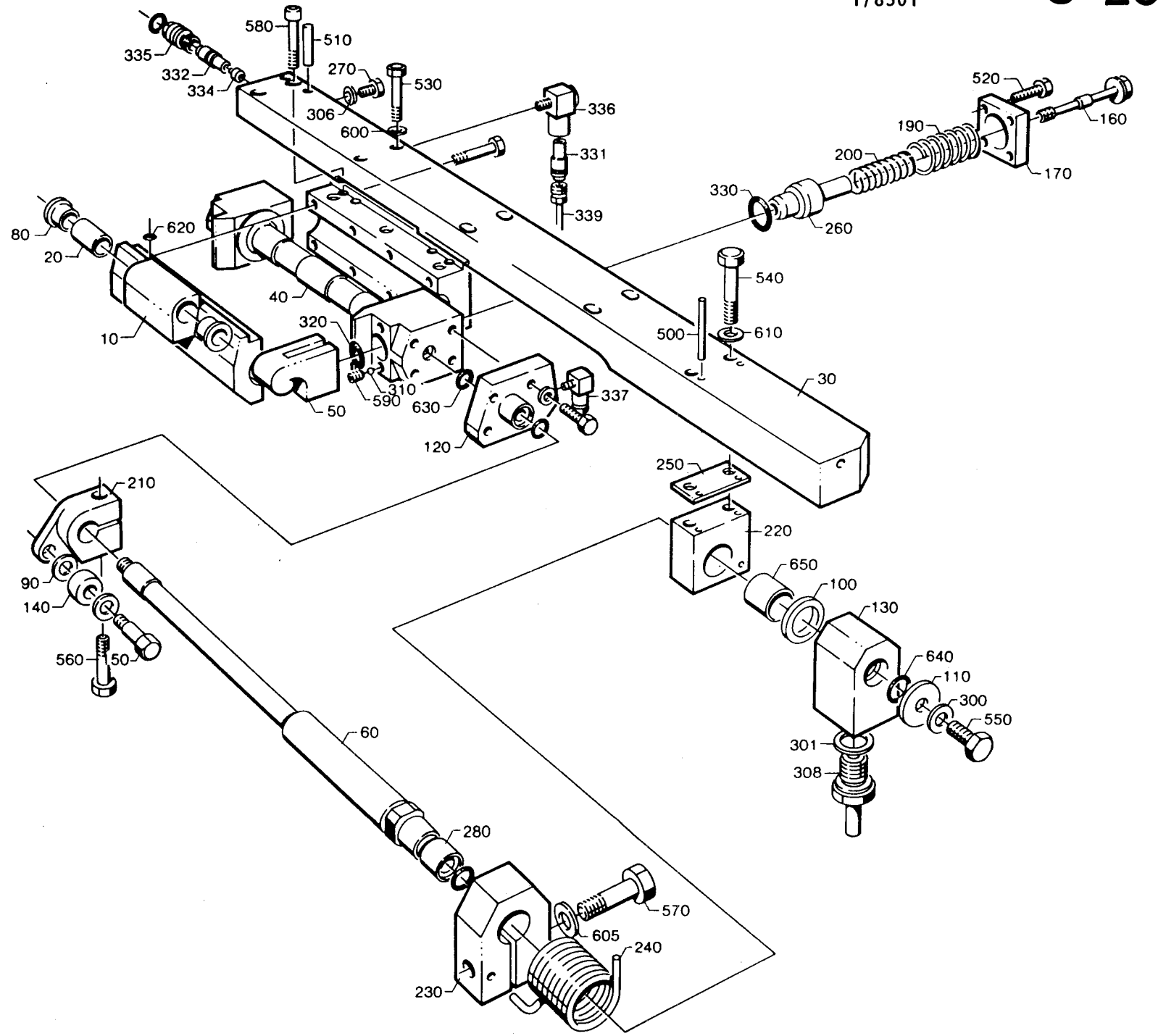
580
510
335
332
334
270
530
306
600
336
331
339
520
160
190
200
170
330
260
80
20
620
40
10
320
310
590
50
630
337
120
540
500
610
30
250
210
220
650
100
130
90
140
560
50
640
110
300
550
301
308
60
280
570
605
240
230

LAST ALTERATION: AM 9476 86-09-12
648104-070V
AM 8633
86-01-14

GROUP	VOLUME	VOLUME	VOLUME	VOLUME
-0401	V0250	V0236	V0200	V0180
-0402	V0125	-	-	-
-0403	200ML SLIM	-	-	-

POS	VAR	PART NUMBER	SP	EH	QTY	DESCRIPTION
	-0401	S- 256212-SHEET	-12			===ASSEMBLY DRAWING===
	-0402		-12			
	-0403		-12			
010	-0401	441710	C		1	BEARING HOUSING
010	-0402	441711	C		1	BEARING HOUSING
010	-0403	441712	C		1	BEARING HOUSING
030	ALL	491297	S		1	CARRIER RIGHT
040	ALL	490940	C		1	CYLINDER
050	ALL	491554	S		2	CATCH
060	ALL	272500	S		1	SHAFT
080	ALL	255653	S		2	BUSHING
090	ALL	256557-0001	S		2	WASHER
100	ALL	256557-0002	S		1	WASHER
110	ALL	256557-0003	S		1	WASHER
120	ALL	441762	S		1	CONNECTION RIGHT
130	ALL	441385	S		1	HUB
140	ALL	256576	P		1	ROLLER
150	ALL	441764	S		1	SHAFT
160	ALL	257249	S		2	SCREW
170	ALL	G- 257250	-		2	LID
190	ALL	490942	S		2	COMPRESSION SPRING
200	ALL	490943	S		2	COMPRESSION SPRING
210	ALL	272488	-		1	CLAMP RIGHT
220	ALL	272501	S		1	BRACKET RIGHT
230	ALL	272503	-		1	CLAMP
240	ALL	456311	S		1	TORSION SPRING RIGHT
250	ALL	272506	-		2	INSERT
260	ALL	490941	S		2	PISTON
270	ALL	441355	-		2	BLEEDING SCREW
280	ALL	491421	S		2	SLEEVE
300	ALL	315237-0107	S		1	GASKET
301	ALL	315237-0110	S		1	SEAL RING 1/4 "
306	ALL	315237-0106	-		2	GASKET
308	ALL	90030-0065	S		1	PIPE CONNECTION
310	ALL	90090-0005	P		4	STEEL BALL
315	ALL	90091-0089	P		2	SEAL RING
320	ALL	90091-0167	P		2	SEAL RING
321	ALL	90091-0162	P		2	RING
322	ALL	90091-0170	P		2	RING
330	ALL	90091-0168	P		2	SEAL RING

POS	VAR	PART NUMBER	SP	EH	QTY	DESCRIPTION
331	ALL	90092-0052	-		1	VALVE
332	ALL	90092-0053	-		1	VALVE
334	ALL	90134-0042	-		2	SPACER
335	ALL	90134-0045	-		1	PLUG
336	ALL	90134-0047	-		1	CONNECTION
337	ALL	90134-0058	-		1	BANJO CONNECTION
339	ALL	90166-0143	-	MM	160	HOSE
340	ALL	90296-0068	-	G	25	GREASE
500	ALL	311103-0240	S		2	CYLINDRICACPR3M6X25RFR
510	ALL	311103-0312	S		1	CYLINDRICACPR5M6X25RFR
520	ALL	312105-0370	-		11	SCREW M6S6X20RFR
530	ALL	312105-0374	-		2	SCREW M6S6X30RFR
540	ALL	312105-0376	-		6	SCREW M6S6X35RFR
550	ALL	312105-0447	-		1	SCREW M6S8X12RFR
560	ALL	312105-0453	-		1	SCREW M6S8X25RFR
570	ALL	312105-0455	-		1	SCREW M6S8X30RFR
580	ALL	312115-0371	-		2	SCREW 6X22 A4 80
590	ALL	491555	S		4	SCREW
600	ALL	315105-0153	-		5	WASHER BRB6,4X12RFR
605	ALL	315105-0165	-		1	WASHER BRB8,4X16RFR
610	ALL	315115-0153	-		6	WASHER TBRB6,4X12RFR
620	ALL	315202-0102	P		8	O-RING 4,1X1,6
630	ALL	315202-0106	P		2	O-RING 8,1X1,6
640	ALL	315202-0108	P		2	O-RING 10,1X1,6
650	ALL	321120-0132	S		1	BUSHING 18/20X20
660	ALL	342713-0209	-		2	BLANK-OFF

TETRA PAK

1/8609

S-256212-12

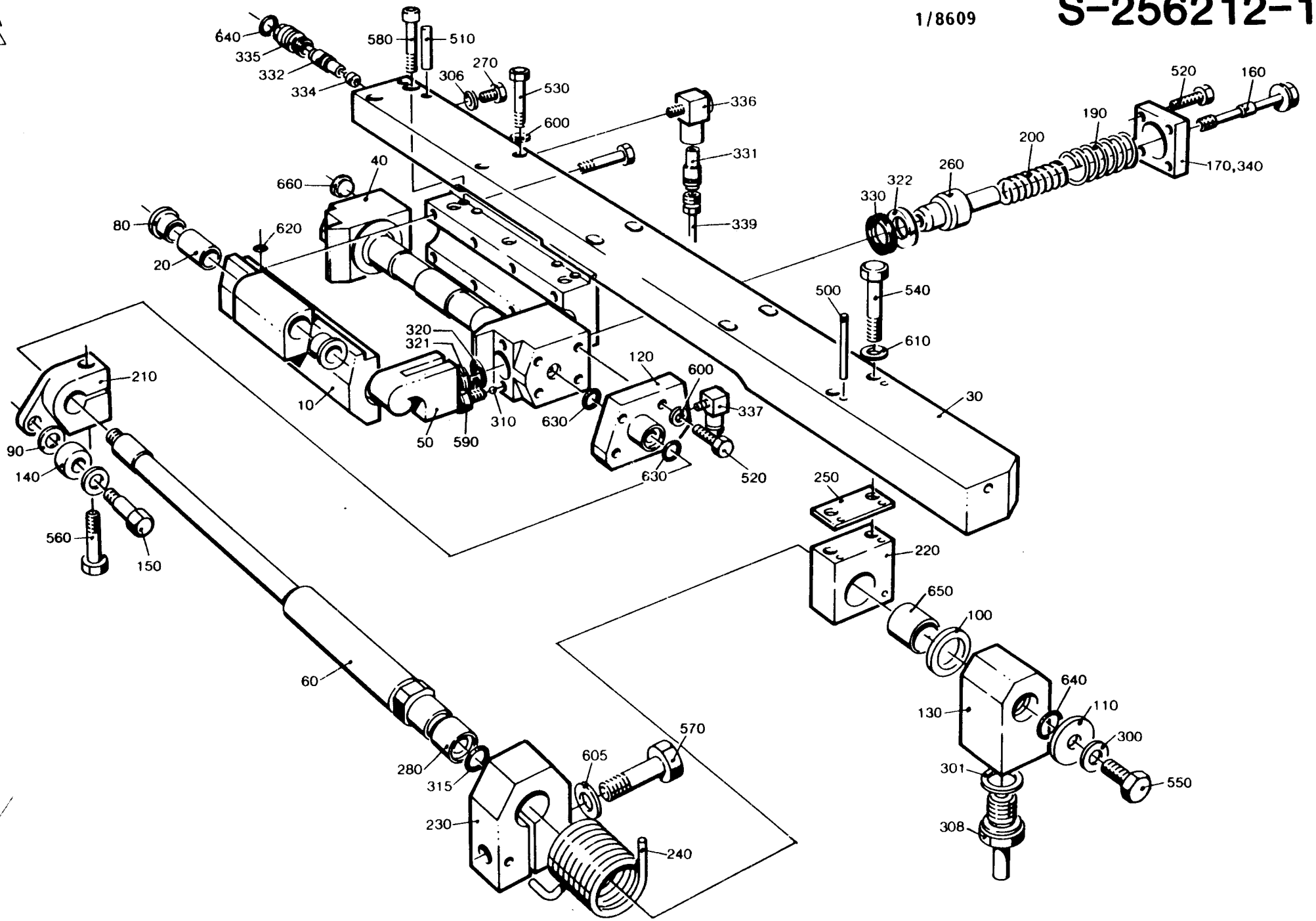

DM 8622

LAST ALTERATION: AM 7892 85-05-02
648104-060V
AM 6300
84-01-09

GROUP	VOLUME	VOLUME	VOLUME	VOLUME	VOLUME
-0301	V0284	V0250	V0236	V0200	V0187
	V0180	-	-	-	-
-0302	V0125	V0100	-	-	-
-0303	200ML SLIM	-	-	-	-

POS	VAR	PART NUMBER	SP	EH	QTY	DESCRIPTION
	-0301	S- 256213-SHEET	-9			===ASSEMBLY DRAWING===
	-0302		~~-10~~			
	-0303		~~-19~~			
010	-0301	441710	C		1	HOUSING
010	-0302	441711	C		1	HOUSING
010	-0303	441712	C		1	HOUSING
020	-0301	255697-0002	S		1	CONNECTION PIPE
020	-0302	255697-0001	S		1	CONNECTION PIPE
	-0303				1	
030	ALL	441350	S		1	CARRIER LEFT
040	ALL	441709	C		1	CYLINDER
050	ALL	257248	S		2	CLUTCH
060	ALL	272500	S		1	AXLE
080	ALL	255653	S		2	BUSHING
090	ALL	256557-0001	S		2	WASHER
100	ALL	256557-0002	S		1	WASHER
110	ALL	256557-0003	S		1	WASHER
120	ALL	441763	S		1	CONNECTION LEFT
130	ALL	441385	S		1	HUB
140	ALL	256576	P		1	ROLLER
150	ALL	441764	S		1	AXLE
160	ALL	257249	S		2	SCREW
170	ALL	257250	-		2	LID
190	ALL	490974	S		2	COMPRESSION SPRING
200	ALL	490975	S		2	COMPRESSION SPRING
210	ALL	272489	-		1	CLAMP
220	ALL	272502	S		1	BRACKET
230	ALL	272503	-		1	CLAMP
240	ALL	456312	S		1	TORSION SPRING
250	ALL	272506	-		2	INSERT
260	ALL	272644	S		2	PISTON
270	ALL	441355	-		1	SCREW
280	ALL	456320	S		1	SLEEVE
300	ALL	90005-0007	S		1	WASHER
301	ALL	315237-0110	S		1	SEAL RING 1/4
306	ALL	90005-0003	-		1	WASHER
308	ALL	90030-0065	S		1	PIPE CONNECTION
310	ALL	90090-0005	P		4	STEEL BALL
320	ALL	90091-0089	P		4	SEAL RING
330	ALL	90091-0107	P		2	SEAL RING
331	ALL	90092-0052	-		1	VALVE

POS	VAR	PART NUMBER	SP	EH	QTY	DESCRIPTION
332	ALL	90092-0053	-		1	VALVE
334	ALL	90134-0042	-		2	SPACER
335	ALL	90134-0045	-		1	PLUG
336	ALL	90134-0047	-		1	CONNECTION
337	ALL	90134-0058	-		1	BANJO CONNECTION
339	ALL	90166-0143	-	MM	160	HOSE
340	ALL	90296-0068	-	G	25	GREASE
500	ALL	311103-0240	S		2	CYLINDRICACPR3M6X25RFR
510	ALL	311103-0312	S		1	CYLINDRICACPR5M6X25RFR
520	ALL	312105-0370	-		11	SCREW M6S6X20RFR
530	ALL	312105-0374	-		2	SCREW M6S6X30RFR
540	ALL	312105-0376	-		6	SCREW M6S6X35RFR
550	ALL	312105-0447	-		1	SCREW M6S8X12RFR
560	ALL	312105-0453	-		1	SCREW M6S8X25RFR
570	ALL	312105-0455	-		1	SCREW M6S8X30RFR
580	ALL	312115-0371	-		2	SCREW MC6S6X22RFR
590	ALL	90287-0128	-		4	GRUB SCREW
600	ALL	315105-0153	-		5	WASHER BRB6,4X12RFR
605	ALL	315105-0165	-		1	WASHER BRB8,4X16RFR
610	ALL	315115-0153	-		6	WASHER TBRB6,4X12RFR
620	ALL	315202-0102	P		8	O-RING 4,1X1,6
630	ALL	315202-0106	P		2	O-RING 8,1X1,6
640	ALL	315202-0108	P		2	O-RING 10,1X1,6
650	ALL	321120-0132	S		1	BUSHING 18/20X20

TETRA PAK

1/8501

S-256213-9

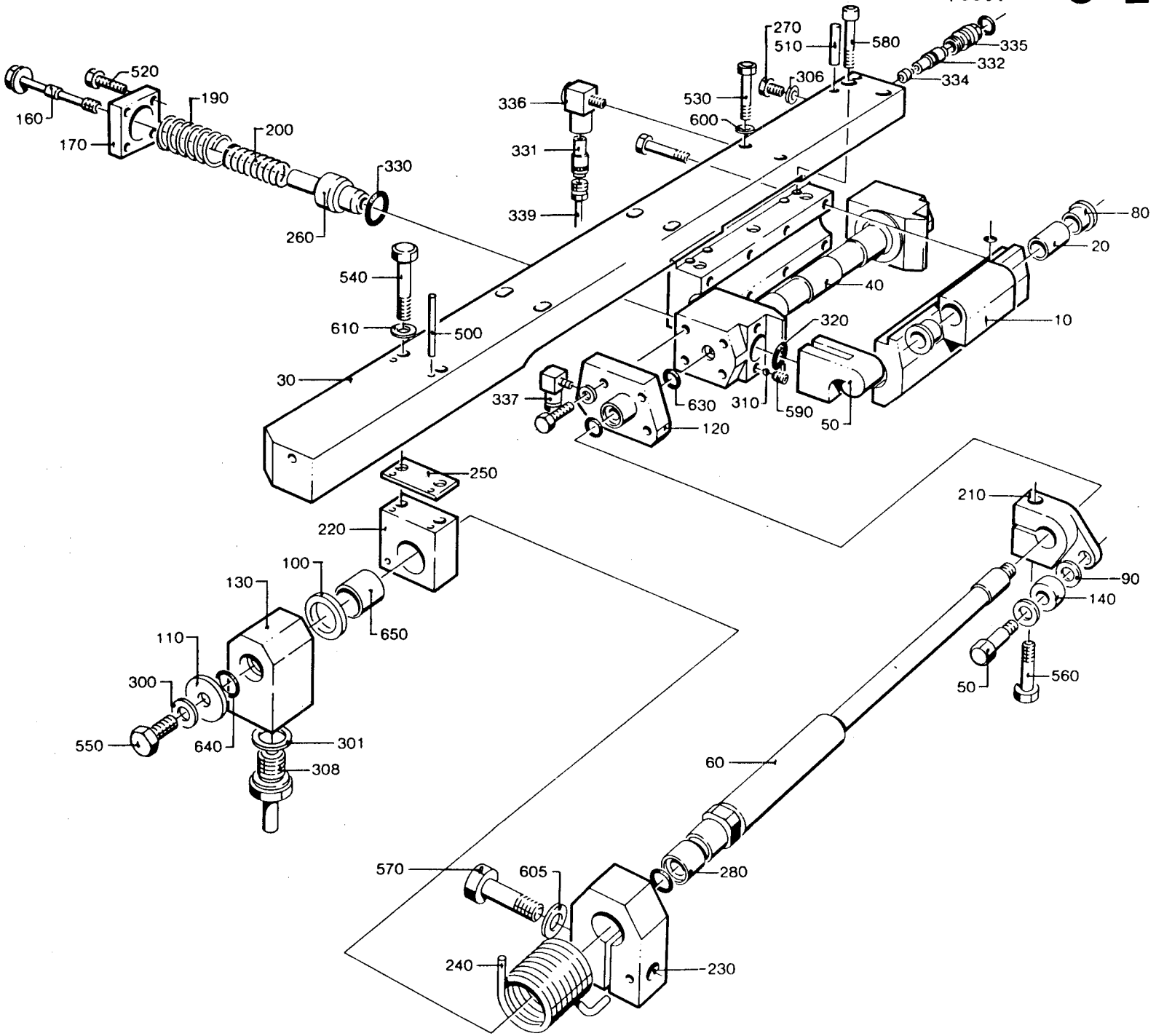

LAST ALTERATION: AM 9476 86-09-12
648104-070V
AM 8633
86-01-14

GROUP	VOLUME	VOLUME	VOLUME	VOLUME
-0401	V0250	V0236	V0200	V0180
-0402	V0125	-	-	-
-0403	200ML SLIM	-	-	-

POS	VAR	PART NUMBER	SP	EH	QTY	DESCRIPTION
	-0401	S- 256213-SHEET	-12			===ASSEMBLY DRAWING===
	-0402		-12			
	-0403		-12			
010	-0401	441710	C		1	BEARING HOUSING
010	-0402	441711	C		1	BEARING HOUSING
010	-0403	441712	C		1	BEARING HOUSING
030	ALL	491298	S		1	CARRIER LEFT
040	ALL	490940	C		1	CYLINDER
050	ALL	491554	S		2	CATCH
060	ALL	272500	S		1	SHAFT
080	ALL	255653	S		2	BUSHING
090	ALL	256557-0001	S		2	WASHER
100	ALL	256557-0002	S		1	WASHER
110	ALL	256557-0003	S		1	WASHER
120	ALL	441763	S		1	CONNECTION LEFT
130	ALL	441385	S		1	HUB
140	ALL	256576	P		1	ROLLER
150	ALL	441764	S		1	SHAFT
160	ALL	257249	S		2	SCREW
170	ALL	G- 257250	-		2	LID
190	ALL	490942	S		2	COMPRESSION SPRING
200	ALL	490943	S		2	COMPRESSION SPRING
210	ALL	272489	-		1	CLAMP LEFT
220	ALL	272502	S		1	BRACKET LEFT
230	ALL	272503	-		1	CLAMP
240	ALL	456312	S		1	TORSION SPRING LEFT
250	ALL	272506	-		2	INSERT
260	ALL	490941	S		2	PISTON
270	ALL	441355	-		2	BLEEDING SCREW
280	ALL	491421	S		2	SLEEVE
300	ALL	315237-0107	S		1	GASKET
301	ALL	315237-0110	S		1	SEAL RING 1/4 "
306	ALL	315237-0106	-		2	GASKET
308	ALL	90030-0065	S		1	PIPE CONNECTION
310	ALL	90090-0005	P		4	STEEL BALL
315	ALL	90091-0089	P		2	SEAL RING
320	ALL	90091-0167	P		2	SEAL RING
321	ALL	90091-0162	P		2	RING
322	ALL	90091-0170	P		2	RING
330	ALL	90091-0168	P		2	SEAL RING

POS	VAR	PART NUMBER	SP	EH	QTY	DESCRIPTION
331	ALL	90092-0052	-		1	VALVE
332	ALL	90092-0053	-		1	VALVE
334	ALL	90134-0042	-		2	SPACER
335	ALL	90134-0045	-		1	PLUG
336	ALL	90134-0047	-		1	CONNECTION
337	ALL	90134-0058	-		1	BANJO CONNECTION
339	ALL	90166-0143	-	MM	160	HOSE
340	ALL	90296-0068	-	G	25	GREASE
500	ALL	311103-0240	S		2	CYLINDRICACPR3M6X25RFR
510	ALL	311103-0312	S		1	CYLINDRICACPR5M6X25RFR
520	ALL	312105-0370	-		11	SCREW M6S6X20RFR
530	ALL	312105-0374	-		2	SCREW M6S6X30RFR
540	ALL	312105-0376	-		6	SCREW M6S6X35RFR
550	ALL	312105-0447	-		1	SCREW M6S8X12RFR
560	ALL	312105-0453	-		1	SCREW M6S8X25RFR
570	ALL	312105-0455	-		1	SCREW M6S8X30RFR
580	ALL	312115-0371	-		2	SCREW 6X22 A4 80
590	ALL	491555	S		4	SCREW
600	ALL	315105-0153	-		5	WASHER BRB6,4X12RFR
605	ALL	315105-0165	-		1	WASHER BRB8,4X16RFR
610	ALL	315115-0153	-		6	WASHER TBRB6,4X12RFR
620	ALL	315202-0102	P		8	O-RING 4,1X1,6
630	ALL	315202-0106	P		2	O-RING 8,1X1,6
640	ALL	315202-0108	P		2	O-RING 10,1X1,6
650	ALL	321120-0132	S		1	BUSHING 18/20X20
660	ALL	342713-0209	-		2	BLANK-OFF

TETRA PAK

1/8608

S-256213-12

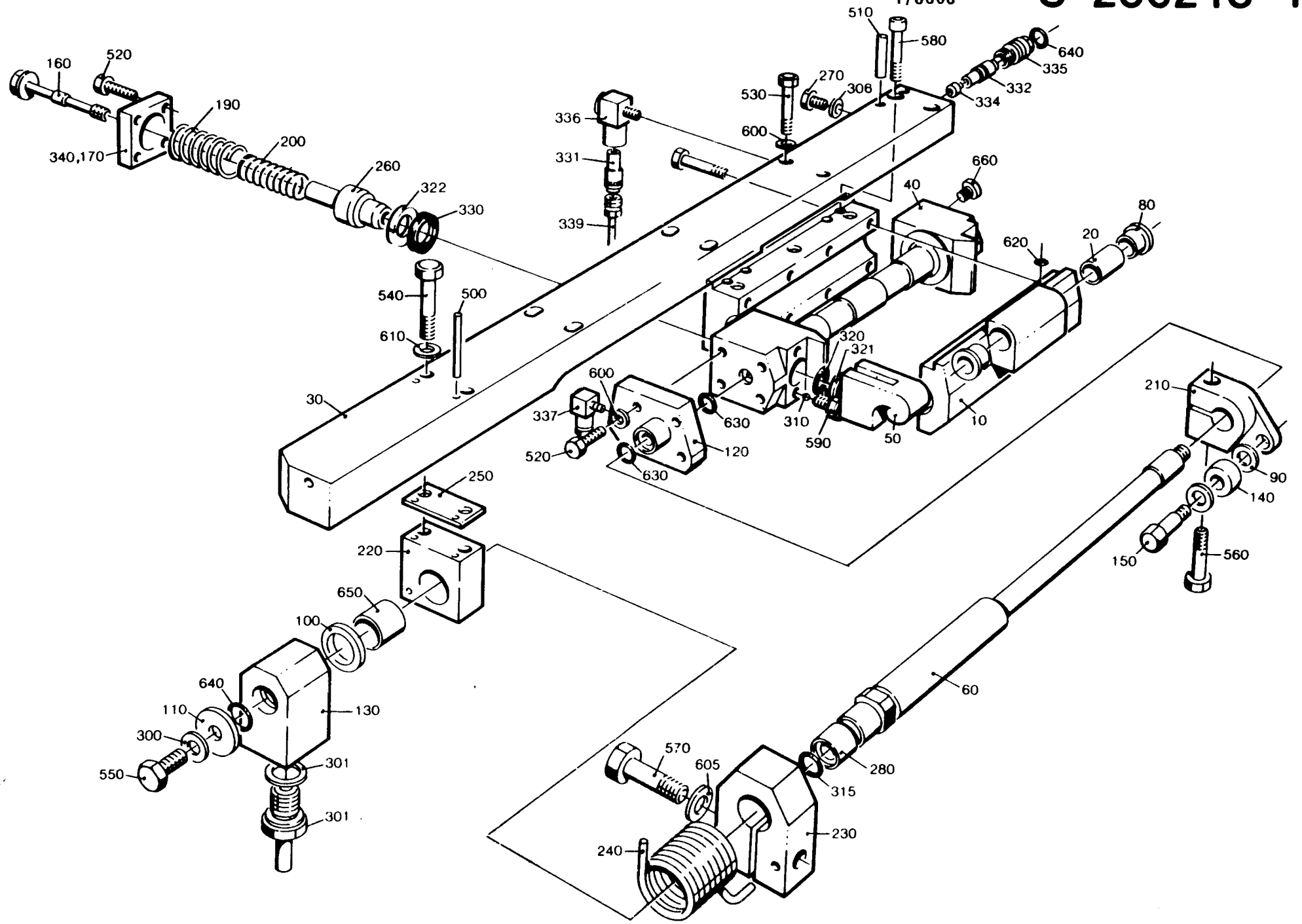

LAST ALTERATION: AM 7595 85-02-26
646104-020V
AM 5296
82-05-10

GROUP	VOLUME	VOLUME	VOLUME	VOLUME	VOLUME
-0201	V0284	V0250	V0236	V0200	V0187
	V0180	-	-	-	-
-0202	V0125	V0100	-	-	-
-0203	200ML SLIM	-	-	-	-

POS	VAR	PART NUMBER	SP	EH	QTY	DESCRIPTION
	-0201	S- 256214-SHEET	-3			===ASSEMBLY DRAWING===
	-0202					
	-0203					
010	-0201	456948-0003	UP		1	INDUCTOR
	-0203				1	
020	-0202	456947-0003	UP		1	INDUCTOR
030	-0202	272980	S		1	RAIL
040	-0201	272981	S		1	RAIL
040	-0203	441732	S		1	RAIL
210	-0202	312105-0331	-		2	SCREW M6S5X20 A4 80
220	-0201	312115-0293	-		3	SCREW 4 X 16 A4 80
	-0202				3	
	-0203				2	
230	-0201	312115-0331	-		2	SCREW 5X20 A4 80
	-0203				2	
240	-0201	315105-0136	-		3	WASHER BRB4,3X8RFR
	-0202				3	
	-0203				2	
260	-0201	315202-0102	P		2	O-RING 4,1X1,6
	-0203				2	
270	-0202	315202-0104	P		1	O-RING 6,1X1,6
280	-0201	315202-0106	P		1	O-RING 8,1X1,6
	-0203				1	
100	ALL	32644	P		1	WASHER
110	ALL	256882	S		1	WASHER
120	ALL	271846	P		1	INSULATION NUT
130	ALL	271848	P		1	SCREW
200	ALL	311103-0270	-		2	CYLINDRICACPR4M6X16RFR
250	ALL	315105-0146	-		2	WASHER BRB5,3X10RFR

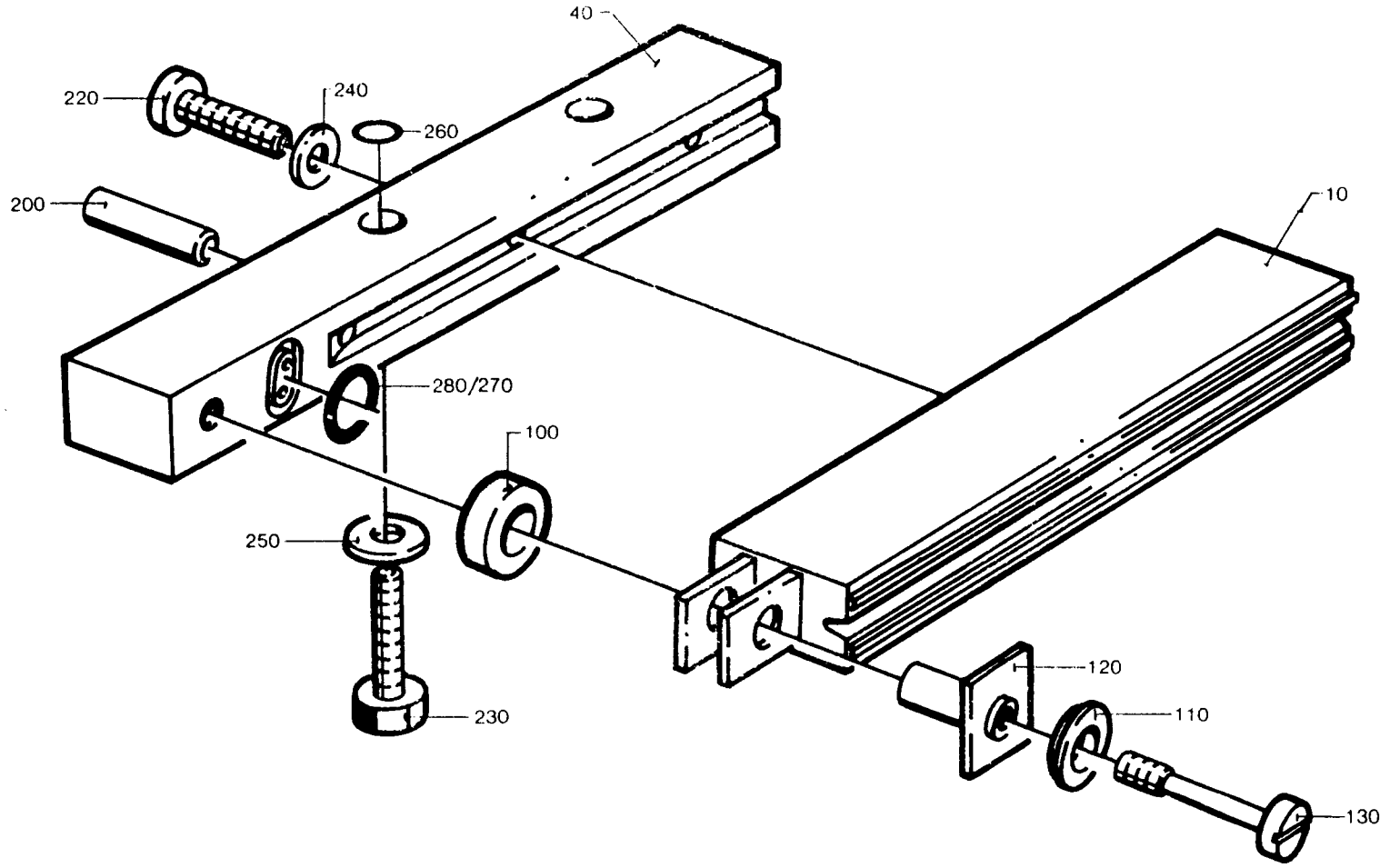
40
220
240
260
200
10
280/270
100
250
120
110
230
130

LAST ALTERATIO. AM 7595 ..-02-26
648104
AM 5296
82-05-10

GROUP	VOLUME	VOLUME	VOLUME
-0201	V0250	V0200	V0180
-0202	200ML SLIM	-	-

POS	VAR	PART NUMBER	SP	EH	QTY	DESCRIPTION
	-0201 -0202	S- 256215-SHEET		-3		===ASSEMBLY DRAWING===
010	-0201	272759	S		1	RAIL
010	-0202	272760	S		1	RAIL
020	ALL	441733	UP		1	TPC-BAR
030	ALL	271845	P		1	BRACKET
040	ALL	271846	P		1	INSULATION NUT
050	ALL	271847	P		1	INSULATION
060	ALL	271848	P		1	SCREW
070	ALL	256882	P		1	WASHER
500	ALL	311103-0269	P		3	CYLINDRICACPR4M6X14RFR
510	ALL	311103-0270	P		2	CYLINDRICACPR4M6X16RFR
520	ALL	312115-0295	-		2	SCREW MC6S4X20RFR
530	ALL	312115-0331	-		2	SCREW MC6S5X20RFR
540	ALL	312145-0285	-		1	SLOTTED HEMFS4X6RFR
550	ALL	315105-0136	-		2	WASHER BRB4,3X8RFR
560	ALL	315105-0146	-		2	WASHER BRB5,3X10RFR
570	ALL	315202-0106	P		1	O-RING 8,1X1,6

S-256215-3

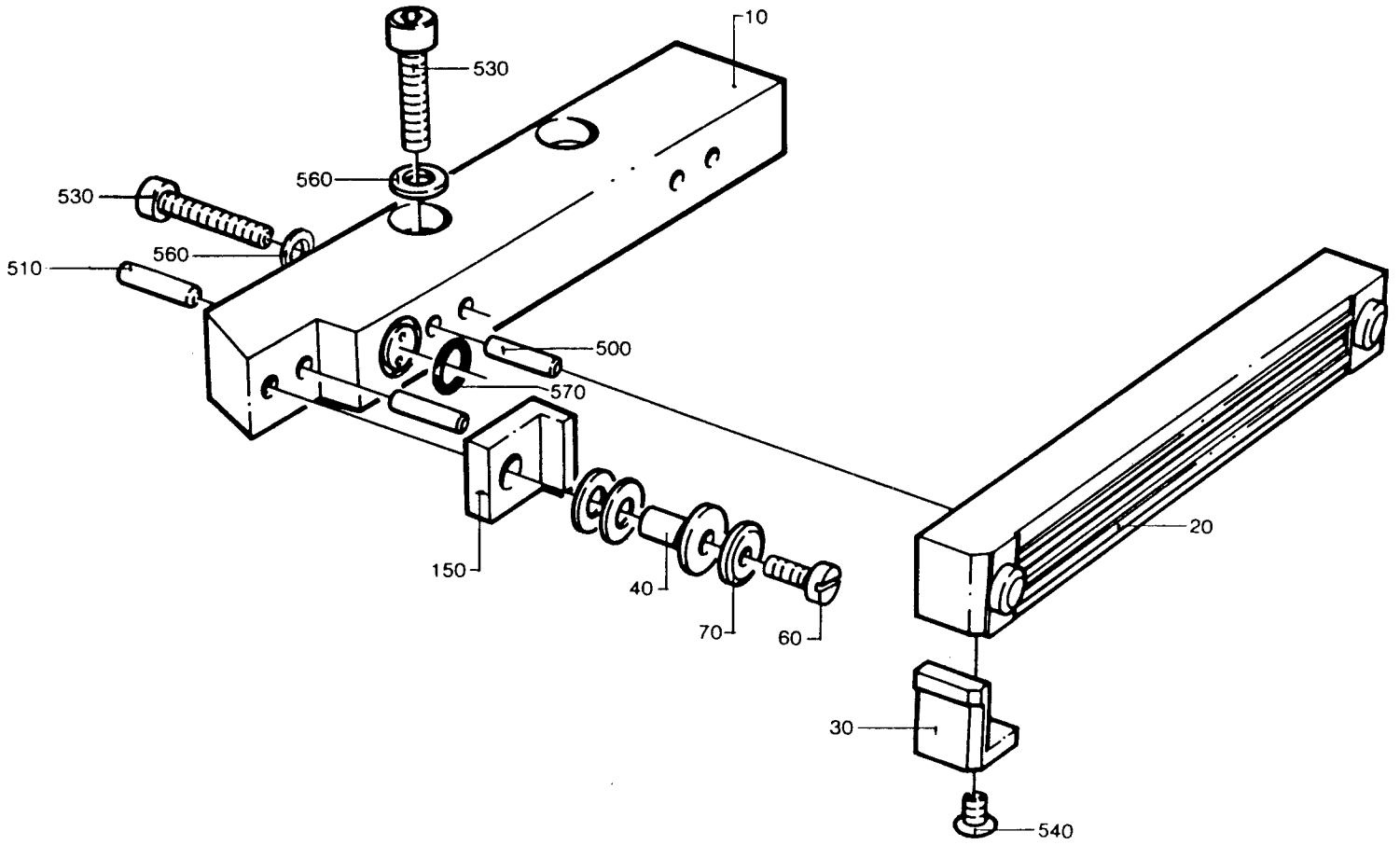

LAST ALTERATION: AM 7033 84-08-08
648104
AM 6300
84-01-09

POS	VAR	PART NUMBER	SP	EH	QTY	DESCRIPTION
	-0401	S- 256217-SHEET	-4			===ASSEMBLY DRAWING===
010	-0401	272689	C		2	BRACKET
020	-0401	441749	S		2	CAM
030	-0401	456002	S		2	BEARING
050	-0401	441031	S		4	BEARING
060	-0401	256829	S		4	SCREW
070	-0401	272490	C		2	SLEEVE
080	-0401	441269	C		2	GUIDE
090	-0401	441268	C		2	GUIDE
095	-0401	441750	S		2	YOKE
100	-0401	256738	S		16	WASHER
110	-0401	256739	S		8	SCREW
120	-0401	256831-0003	S		2	DISTANCE
130	-0401	256831-0004	S		2	DISTANCE
140	-0401	272840	-		2	ROD
150	-0401	441355	-		2	SCREW
160	-0401	441751	S		4	INSERT
170	-0401	456004	-		2	DISTANCE
300	-0401	90005-0003	S		2	WASHER
310	-0401	90005-0014	S		4	SEAL WASHER
320	-0401	90028-0020	P		8	CONE
330	-0401	90092-0052	S		10	VALVE
350	-0401	90134-0039	-		8	BUSHING
360	-0401	90134-0058	-		8	BANJO CONNECTION
370	-0401	90166-0143	-	MM	1240	HOSE
390	-0401	90330-0037	-		4	PLUG
600	-0401	311103-0401	-		4	CYLINDRICACPR8M6X20RFR
620	-0401	312105-0372	-		6	SCREW M6S6X25RFR
630	-0401	312105-0374	-		4	SCREW M6S6X30RFR
640	-0401	312105-0452	-		4	SCREW M6S8X22RFR
650	-0401	312105-0455	-		4	SCREW M6S8X30RFR
655	-0401	312115-0372	-		4	SCREW MC6S6X25RFR
660	-0401	315105-0153	-		10	WASHER BRB6,4X12RFR
670	-0401	315105-0165	-		8	WASHER BRB8,4X16RFR
680	-0401	315202-0106	S		6	O-RING 8,1X1,6
690	-0401	315202-0204	S		2	O-RING 5,3X2,4
700	-0401	315202-0207	S		4	O-RING 8,3X2,4
710	-0401	315202-0219	S		4	O-RING 29,2X3

S-256217-4

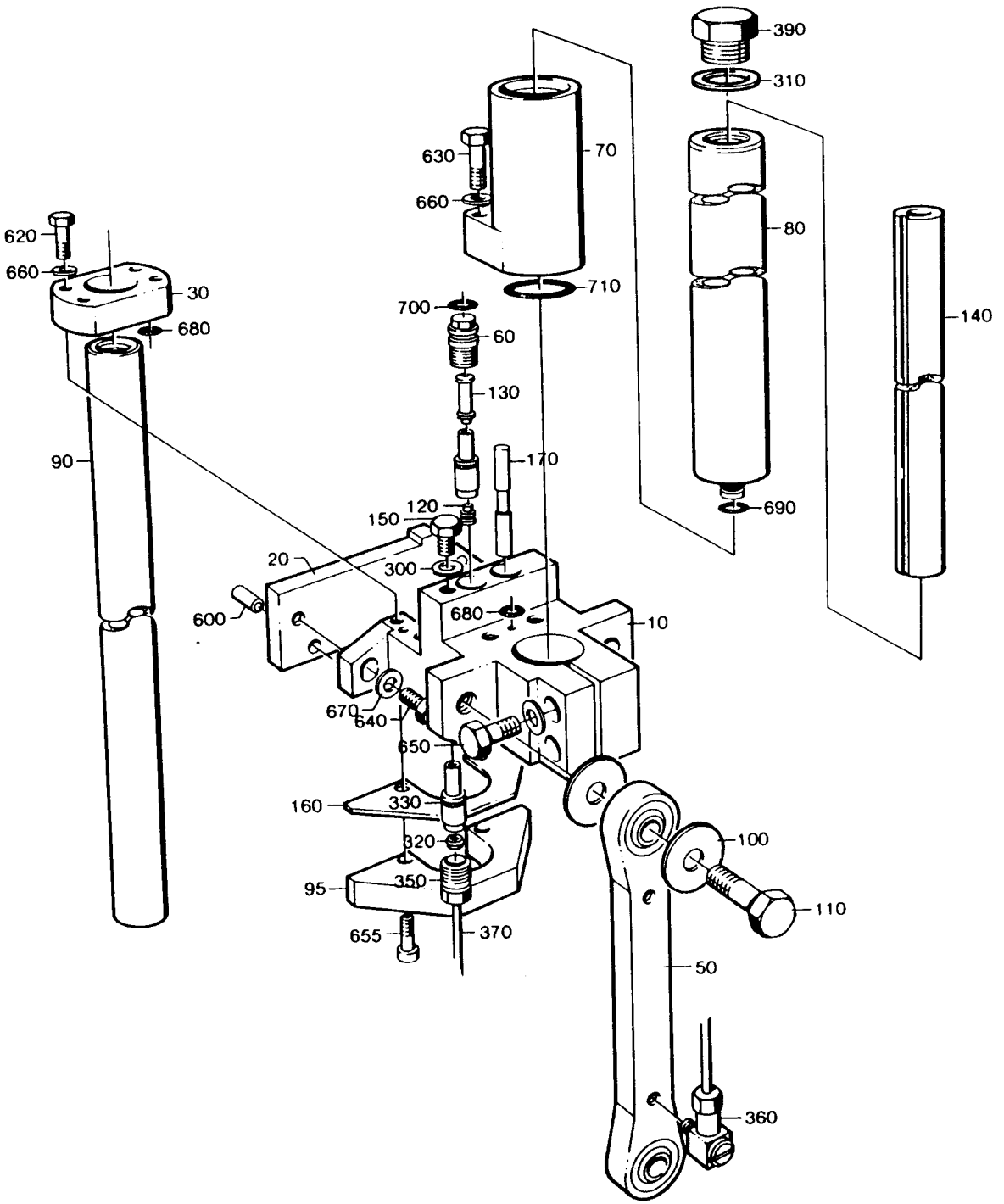
390
310
630
70
660
620
660
30
710
700
80
680
60
140
130
90
170
120
150
690
20
300
600
680
10
670
640
650
160
330
100
320
95
350
110
655
370
50
360

LAST ALTERATION: AM 8446 85-11-27
648104-060V
AM 6748
84-05-04

GROUP	VOLUME	VOLUME	VOLUME	VOLUME	VOLUME
-0301	V0250	V0236	V0200	V0180	200ML SLIM
-0302	V0125	-	-	-	-

POS	VAR	PART NUMBER	SP	EH	QTY	DESCRIPTION	
	-0301	S- 256219-SHEET	-2			===ASSEMBLY DRAWING===	
	-0302		-2				
010	-0301	271849-0001	S		1	BUSBAR RIGHT	
010	-0302	271849-0002	S		1	BUSBAR RIGHT	
020	ALL	255843	C		1	GUARD RIGHT	
030	ALL	456847	S		1	PLATE	
035	ALL	6427	P		2	WASHER	
040	ALL	28509	P		1	WASHER	
050	ALL	271846	P		1	INSULATION NUT	
060	ALL	271848	P		1	SCREW	
070	ALL	456846	S		1	CLIP	
080	ALL	295056	P		1	WASHER	
200	ALL	312105-0295	-		2	SCREW	M6S4X20 A4 80
210	ALL	312105-0364	-		4	SCREW	M6S6X10RFR
220	ALL	312105-0374	-		2	SCREW	M6S6X30RFR
230	ALL	315105-0153	-		6	WASHER	BRB6,4X12RFR

S-256219-2

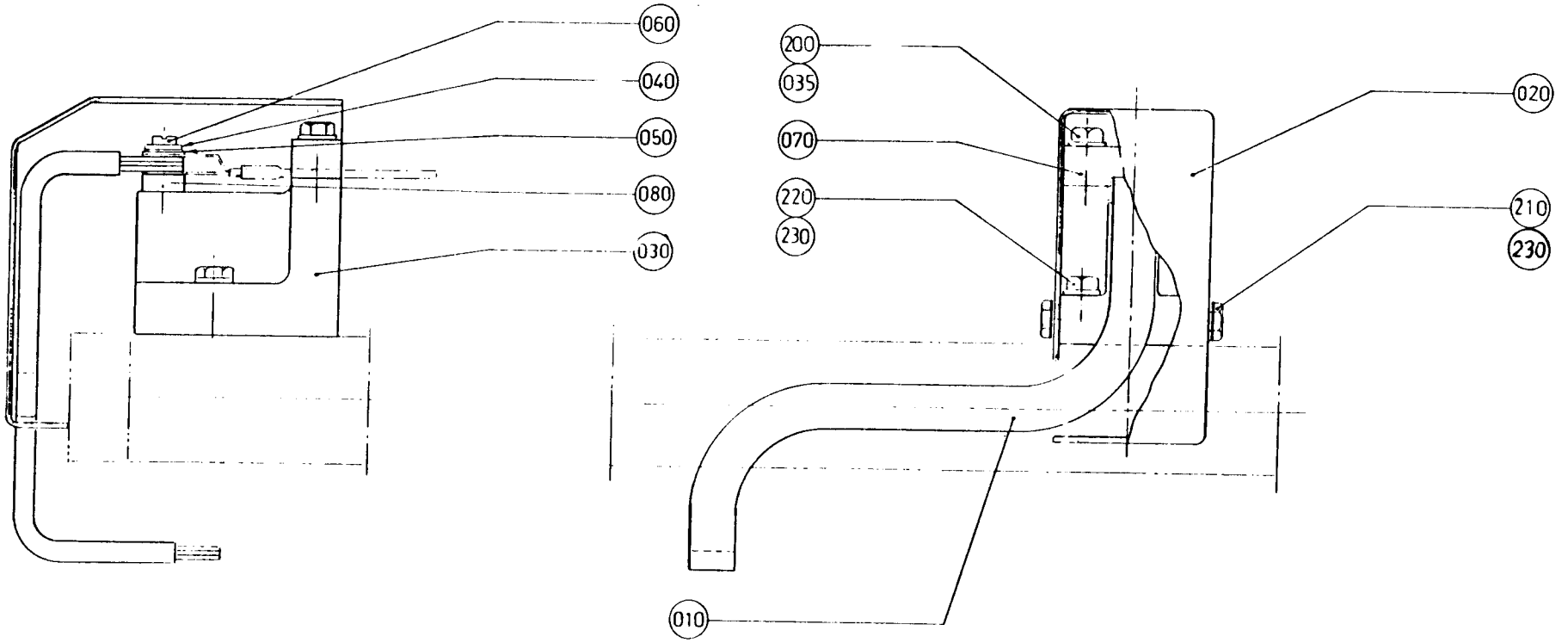

LAST ALTERATION: AM 8446 85-11-27
648104-060V
AM 6748
84-05-04

GROUP	VOLUME	VOLUME	VOLUME	VOLUME	VOLUME
-0301	V0250	V0236	V0200	V0180	200ML SLIM
-0302	V0125	-	-	-	-

POS	VAR	PART NUMBER	SP	EH	QTY	DESCRIPTION	
	-0301	S- 256220-SHEET		-2		===ASSEMBLY DRAWING===	
	-0302			-2			
010	-0301	271850-0001	S		1	BUSBAR LEFT	
010	-0302	271850-0002	S		1	BUSBAR LEFT	
020	ALL	255844	C		1	GUARD LEFT	
030	ALL	456847	S		1	PLATE	
035	ALL	6427	P		2	WASHER	
040	ALL	28509	P		1	WASHER	
050	ALL	271846	P		1	INSULATION NUT	
060	ALL	271848	P		1	SCREW	
070	ALL	456846	S		1	CLIP	
080	ALL	295056	P		1	WASHER	
200	ALL	312105-0295	-		2	SCREW	M6S4X20 A4 80
210	ALL	312105-0364	-		4	SCREW	M6S6X10RFR
220	ALL	312105-0374	-		2	SCREW	M6S6X30RFR
230	ALL	315105-0153	-		6	WASHER	BRB6,4X12RFR

TETRA PAK

4/8601 S-256220-2

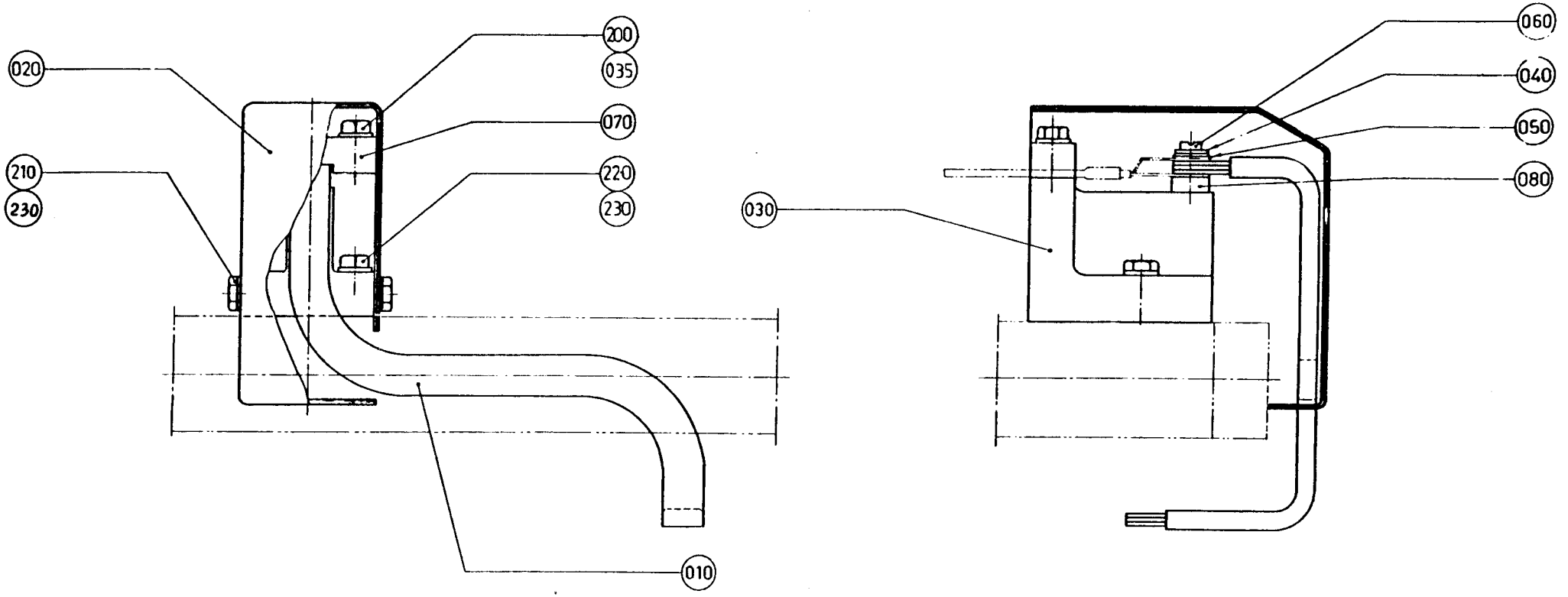

LAST ALTERATION: AM 9678 86-10-20
648104-020V
AM 5327
82-05-24

GROUP	VOLUME
-0201	V0250
-0202	V0200
-0203	V0180
-0204	200ML SLIM

POS	VAR	PART NUMBER	SP	EH	QTY	DESCRIPTION
	-0201	S- 256221-SHEET	-3			===ASSEMBLY DRAWING===
	-0202		-3			
	-0203		-3			
	-0204		-3			
010	-0201	272949	S		2	VOLUME CAM
010	-0202	272950	S		2	VOLUME CAM
010	-0203	272951	S		2	VOLUME CAM
010	-0204	272952	S		2	VOLUME CAM
020	-0201	272957	S		2	VOLUME CAM
020	-0202	272958	S		2	VOLUME CAM
020	-0203	272959	S		2	VOLUME CAM
020	-0204	272960	S		2	VOLUME CAM
060	ALL	272969	-		2	BRACKET
070	ALL	272761	S		4	FORK
080	ALL	272970	-		2	ARM LEFT
090	ALL	272971	-		2	ARM RIGHT
100	ALL	441758	S		2	PIPE RIGHT
110	ALL	441759	S		2	PIPE LEFT
130	ALL	272978	S		2	SPINDLE
140	ALL	240797	-		2	HANDLE
150	ALL	257393-0001	S		2	NUT
160	ALL	257393-0002	S		2	NUT
170	ALL	257395	-		2	WASHER
180	ALL	272972	-		4	RULER
190	ALL	272973	S		4	PIN
300	ALL	90090-0014	S		2	STEEL BALL
305	ALL	90157-0021	-		X	LOCKING FLUID
310	ALL	90335-0011	S		2	SPRING
500	ALL	311103-0238	-		2	CYLINDRICACPR3M6X20RFR
510	ALL	311103-0234	-		4	CYLINDRICACPR3M6X12RFR
520	ALL	311103-0355	-		4	CYLINDRICACPR6M6X25RFR
530	ALL	312105-0325	-		2	SCREW M6S5X10 A4 80
531	ALL	312105-0328	-		2	SCREW M6S5X14 A4 80
540	ALL	312105-0366	-		2	SCREW M6S6X12RFR
550	ALL	312105-0370	-		8	SCREW M6S6X20RFR
560	ALL	312105-0451	-		4	SCREW M6S8X20RFR
570	ALL	312105-0457	-		8	SCREW M6S8X35RFR
580	ALL	312109-0459	-		4	SCREW M6S8X40H A4 80
590	ALL	312605-0318	-		4	NUT M6M8RFR

POS	VAR	PART NUMBER	SP	EH	QTY	DESCRIPTION
600	ALL	315105-0153	-		10	WASHER BRB6,4X12RFR
610	ALL	315105-0165	-		12	WASHER BRB8,4X16RFR

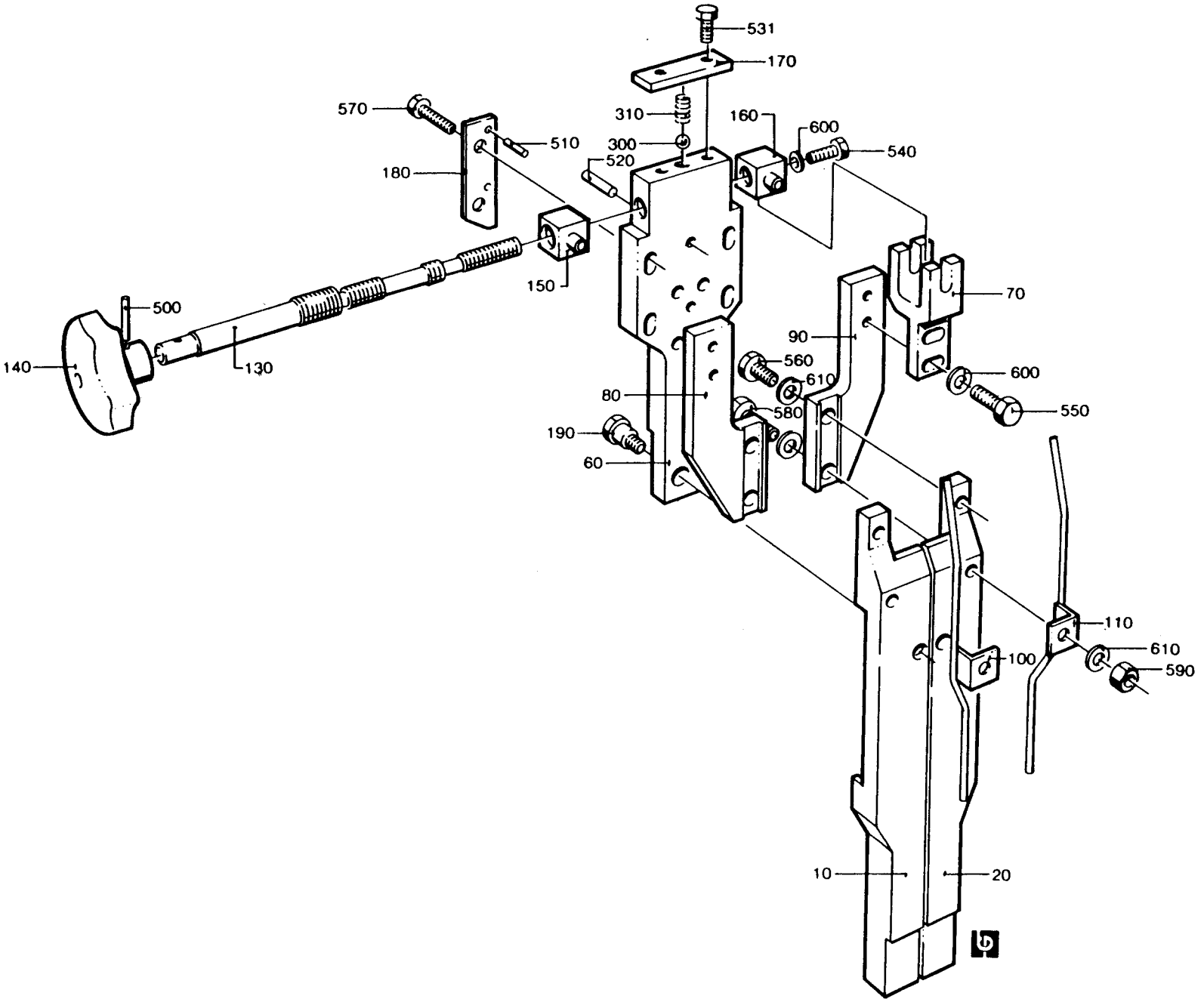
531
170
570
310
160
600
510
300
540
520
180
150
500
70
90
140
130
560
610
600
80
580
550
190
60
110
610
100
590
10
20

LAST ALTERATION: AM 9678 86-10-20
648104-020V
AM 5327
82-05-24

GROUP	VOLUME
-0201	V0250
-0202	V0236
-0203	V0200
-0204	V0180
-0205	V0125
-0206	200ML SLIM

POS	VAR	PART NUMBER	SP	EH	QTY	DESCRIPTION
	-0201	S- 256222-SHEET	-3			===ASSEMBLY DRAWING===
	-0202		-3			
	-0203		-3			
	-0204		-3			
	-0205		-3			
	-0206		-3			
010	-0201	272953	S		2	VOLUME CAM LEFT
010	-0202	272954	S		2	VOLUME CAM LEFT
010	-0203	272955	S		2	VOLUME CAM LEFT
	-0205				1	
010	-0204	272956	S		1	VOLUME CAM LEFT
010	-0206	491436	S		1	VOLUME CAM LEFT
020	-0201	272961	S		2	VOLUME CAM RIGHT
020	-0202	272962	S		2	VOLUME CAM RIGHT
020	-0203	272963	S		2	VOLUME CAM RIGHT
	-0205				1	
020	-0204	272964	S		1	VOLUME CAM RIGHT
020	-0206	491434	S		1	VOLUME CAM RIGHT
030	-0204	272965	S		1	VOLUME CAM LEFT, WIDE
030	-0205	272966	S		1	VOLUME CAM LEFT, WIDE
030	-0206	491433	S		1	VOLUME CAM LEFT, WIDE
040	-0204	272967	S		1	VOLUME CAM RIGHT, WIDE
040	-0205	272968	S		1	VOLUME CAM RIGHT, WIDE
040	-0206	491435	S		1	VOLUME CAM RIGHT, WIDE
060	ALL	272969	-		2	BRACKET
070	ALL	272761	S		4	FORK
080	ALL	272970	-		2	ARM LEFT
090	ALL	272971	-		2	ARM RIGHT
100	ALL	441758	S		2	PIPE RIGHT
110	ALL	441759	S		2	PIPE LEFT
130	ALL	272978	S		2	SPINDLE
140	ALL	240797	-		2	HANDLE
150	ALL	257393-0001	S		2	NUT
160	ALL	257393-0002	S		2	NUT
170	ALL	257395	-		2	WASHER
180	ALL	272972	-		4	RULER
190	ALL	272973	S		4	PIN

POS	VAR	PART NUMBER	SP	EH	QTY	DESCRIPTION
300	ALL	90090-0014	S		2	STEEL BALL
305	ALL	90157-0021	-		X	LOCKING FLUID
310	ALL	90335-0011	S		2	SPRING
500	ALL	311103-0238	-		2	CYLINDRICACPR3M6X20RFR
510	ALL	311103-0234	-		4	CYLINDRICACPR3M6X12RFR
520	ALL	311103-0355	-		4	CYLINDRICACPR6M6X25RFR
530	ALL	312105-0325	-		2	SCREW M6S5X10 A4 80
531	ALL	312105-0328	-		2	SCREW M6S5X14 A4 80
540	ALL	312105-0366	-		2	SCREW M6S6X12RFR
550	ALL	312105-0370	-		8	SCREW M6S6X20RFR
560	ALL	312105-0451	-		4	SCREW M6S8X20RFR
570	ALL	312105-0457	-		8	SCREW M6S8X35RFR
580	ALL	312109-0459	-		4	SCREW M6S8X40H A4 80
590	ALL	312605-0318	-		4	NUT M6M8RFR
600	ALL	315105-0153	-		10	WASHER BRB6,4X12RFR
610	ALL	315105-0165	-		12	WASHER BRB8,4X16RFR

TETRA PAK

5/8601 **S-256222-3**

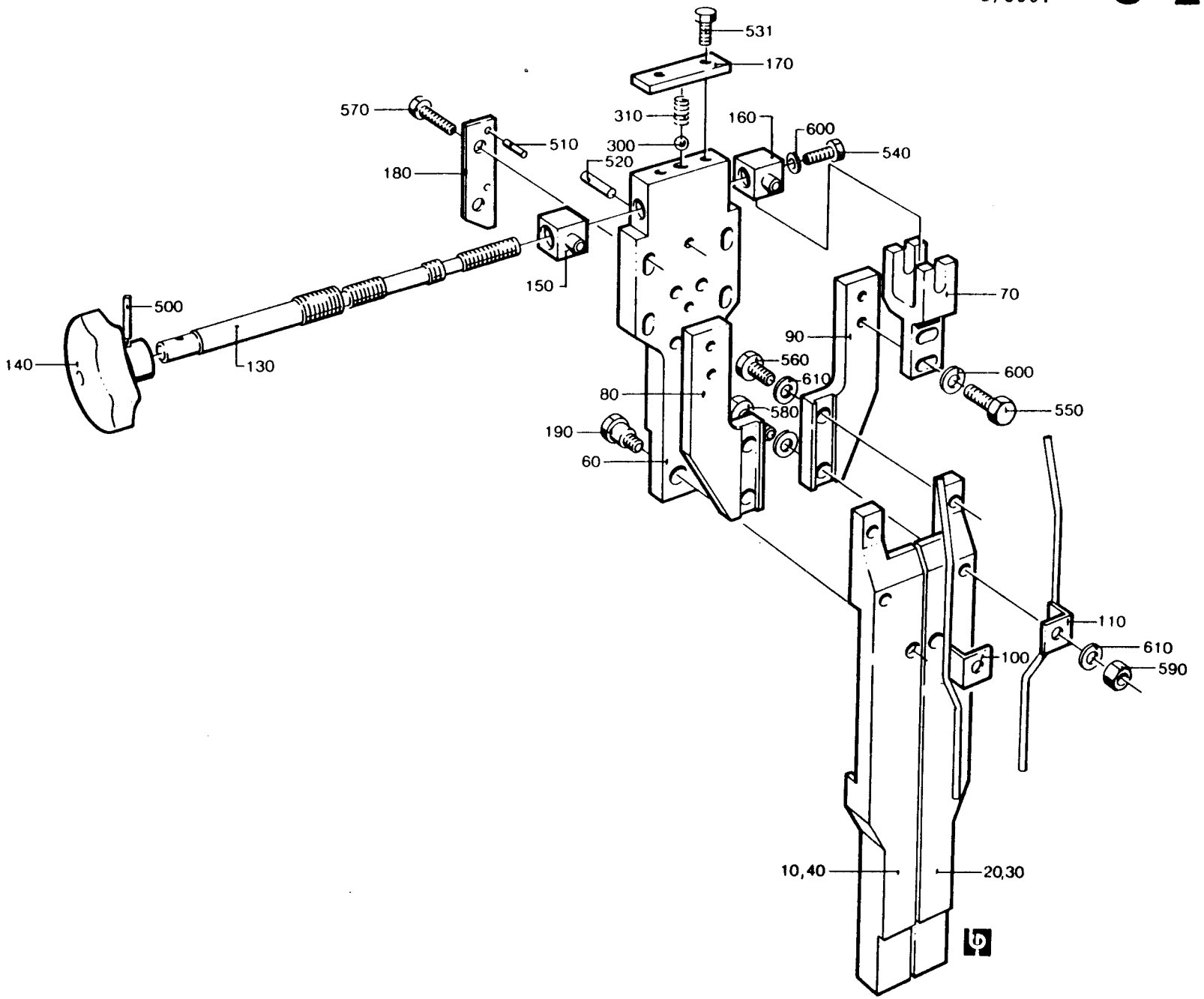

LAST ALTERATION: AM 9409 86-07-04
648104-020V
AM 5327
82-05-24

GROUP	VOLUME	VOLUME	VOLUME	VOLUME	SEALING SYSTEM
-0201	V0250	V0236	V0200	V0180	-
-0202	V0125	-	-	-	-
-0203	200ML SLIM	-	-	-	TPC
-0204	200ML SLIM	-	-	-	IH

POS	VAR	PART NUMBER	SP	EH	QTY	DESCRIPTION
	-0201	S- 256223-SHEET	-4			===ASSEMBLY DRAWING===
	-0202		~~-8~~			
	-0203		~~-6~~			
	-0204		~~-8~~			
010	-0201	751032	S		2	ROLLER
010	-0202	751033	S		2	ROLLER
010	-0203	751034	S		2	ROLLER
010	-0204	751035	S		2	ROLLER
020	-0201	272974-0001	-		2	BRACKET
	-0203				2	
	-0204				2	
020	-0202	272974-0002	-		2	BRACKET
030	-0201	295748-0001	-		1	BACK PIECE
030	-0202	295748-0002	-		1	BACK PIECE
030	-0203	295748-0003	-		1	BACK PIECE
	-0204				1	
040	ALL	295747	-		1	BRACKET
050	ALL	2033-0009	P		16	WASHER
055	ALL	2033-0014	P		6	WASHER
060	ALL	27815	S		2	WASHER
070	ALL	257004	-		2	PIN
080	ALL	295744	C		1	SCREW
090	ALL	295749	-		1	ADJUSTING BLOCK
100	ALL	295750-0001	-		1	GUIDE RAIL
110	ALL	295750-0002	-		1	GUIDE RAIL
500	ALL	312105-0333	-		2	SCREW M6S5X25 A4 80
501	ALL	312105-0366	-		2	SCREW M6S6X12RFR
504	ALL	311103-0405	-		1	CYLINDRICACPR8M6X30RFR
506	ALL	312105-0370	-		4	SCREW M6S6X20RFR
510	ALL	312105-0457	-		4	SCREW M6S8X35RFR
520	ALL	312105-0459	-		2	SCREW M6S8X40RFR
522	ALL	312115-0453	-		1	SCREW 8X25 A4 80
524	ALL	312318-0321	-		1	GRUB SCREW SK6SS5X6RFR
526	ALL	312625-0316	-		2	NUT M 6
530	ALL	312811-0320	-		2	CHECK NUT M10RFR
534	ALL	315105-0153	-		8	WASHER BRB6,4X12RFR
540	ALL	315105-0165	-		3	WASHER BRB8,4X16RFR
550	ALL	315105-0173	-		2	WASHER BRB10,5X22RFR

POS	VAR	PART NUMBER	SP	EH	QTY	DESCRIPTION
560	ALL	315115-0165	-		4	WASHER TBRB8,4X16RFR

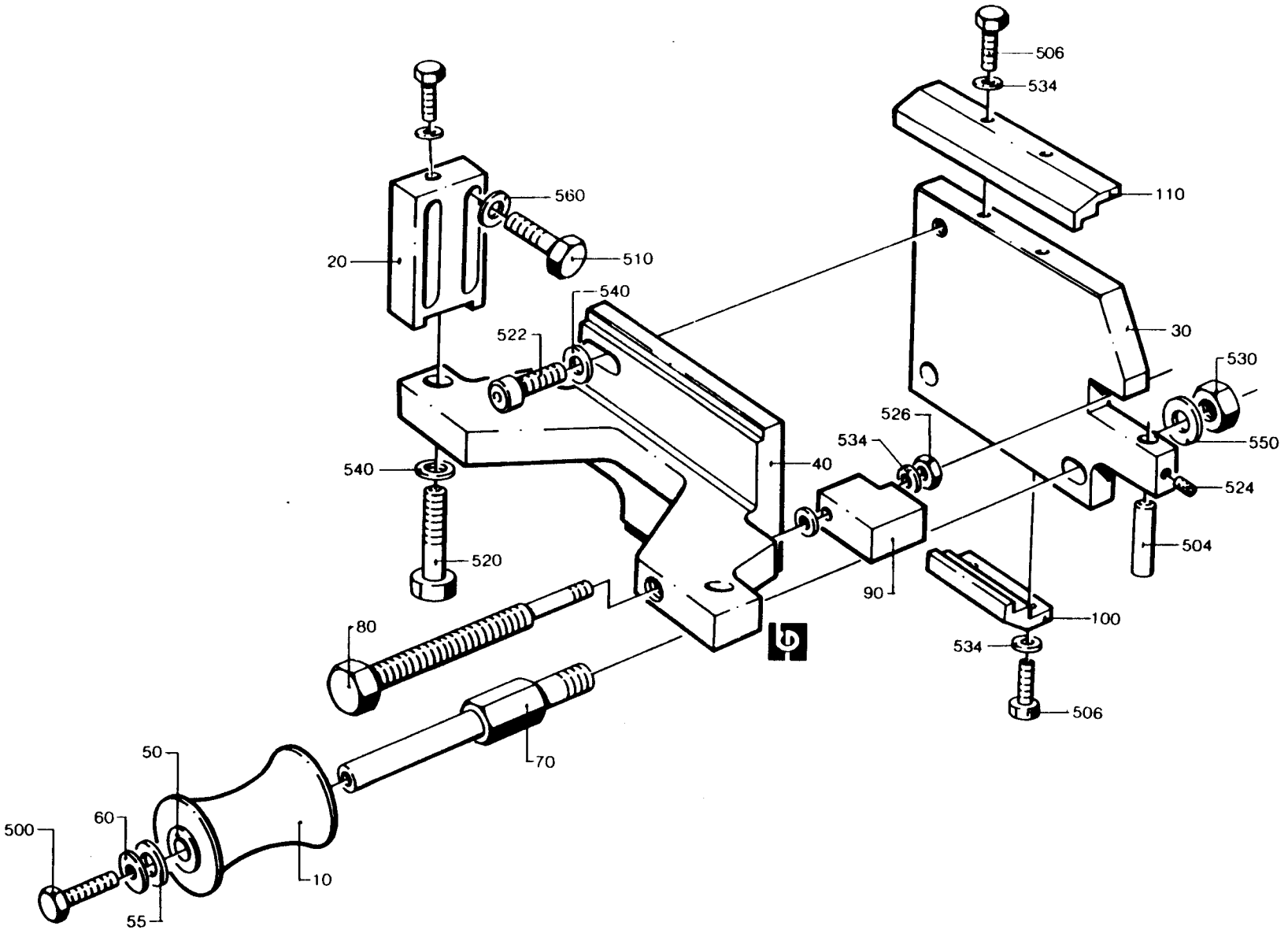
506
534
110
560
20
510
540
522
30
530
526
534
550
540
40
524
504
520
90
100
534
506
80
70
50
500
60
10
55

LAST ALTERATION. AM 7595 85-02-26
648104
AM 5296
82-05-10

GROUP	VOLUME	VOLUME	VOLUME	VOLUME
-0201	V0250	V0236	V0200	200ML SLIM
-0202	V0180	-	-	-
-0203	V0125	-	-	-

POS	VAR	PART NUMBER	SP	EH	QTY	DESCRIPTION	
	-0201	S- 256844-SHEET	-2			===ASSEMBLY DRAWING===	
	-0202		-2				
	-0203		-2				
010	-0201	256855	S		1	STOP	
010	-0202	272749	S		1	STOP	
010	-0203	256853	S		1	STOP	
020	ALL	256857	-		1	HOUSE	
030	ALL	256866	S		1	AXLE	
040	ALL	272495	S		1	ARM	
300	ALL	90296-0009	P	G	15	GREASE	
310	ALL	90335-0007	P		1	SPRING	
500	ALL	312105-0368	-		1	SCREW	M6S6X16RFR
510	ALL	312105-0371	-		2	SCREW	M6S6X22RFR
520	ALL	315105-0153	-		1	WASHER	BRB6,4X12RFR
530	ALL	315115-0153	-		2	WASHER	TBRB6,4X12RFR
540	ALL	315755-0108	P		1	CIRCLIP	E 6RFR
550	ALL	321111-0095	S		1	BUSHING	8E7X6

S-256844-2

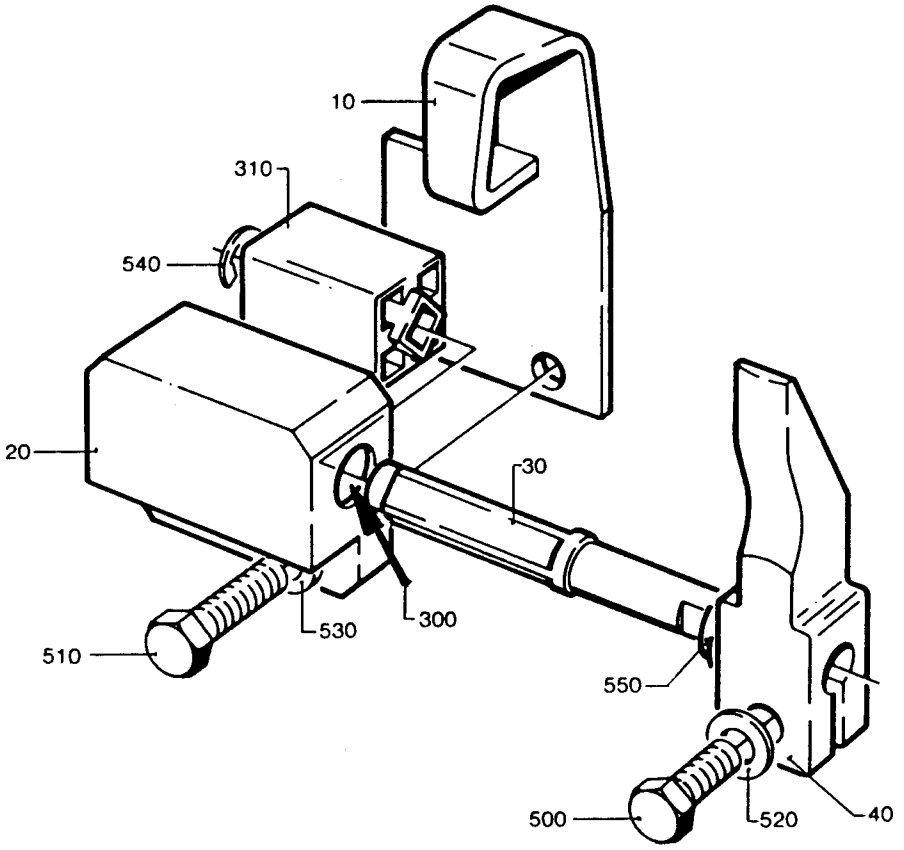

LAST ALTERATION: AM 7344 85-02-12
648105-060V
AM 6443
84-01-11

POS	VAR	PART NUMBER	SP	EH	QTY	DESCRIPTION	
	-0301	S- 271114-SHEET	-3			===ASSEMBLY DRAWING===	
010	-0301	295332	-		1	RAIL	
020	-0301	295333	-		1	CHECKER PLATE	
030	-0301	295334	-		1	SIDE PLATE	
040	-0301	456284	-		1	PLATE	
050	-0301	295336	-		1	BOTTOM PLATE	
060	-0301	456285	-		1	COVER	
070	-0301	456286	-		1	SIDE PLATE	
080	-0301	456289	-		1	BLOCK	
090	-0301	271584	C		1	CHUTE	
100	-0301	456287	-		1	COLUMN	
110	-0301	295340	-		1	SIDE PLATE	
115	-0301	456290	-		1	GUSSET PLATE	
120	-0301	38087	-		1	WASHER	
130	-0301	271585	-		1	WASHER	
140	-0301	271586-0001	-		2	WASHER	
150	-0301	271586-0002	-		2	WASHER	
160	-0301	271587	-		6	WASHER	
170	-0301	295341	-		1	SPACER	
180	-0301	295342	-		1	CLIP	
190	-0301	469795	-		1	BRACKET	
300	-0301	90287-0062	-		34	SCREW	
310	-0301	90347-0035	S		1	DAMPER	
500	-0301	312105-0366	-		4	SCREW	M6S6X12RFR
510	-0301	312105-0368	-		2	SCREW	M6S6X16RFR
520	-0301	312105-0382	-		1	SCREW	M6S6X60RFR
530	-0301	312105-0449	-		2	SCREW	M6S8X16RFR
540	-0301	312105-0451	-		3	SCREW	M6S8X20RFR
545	-0301	312105-0457	-		1	SCREW	M6S8X35RFR
550	-0301	312105-0459	-		1	SCREW	M6S8X40RFR
560	-0301	312155-0461	-		1	SCREW	MF6S8X50RFR
570	-0301	312605-0316	-		3	NUT	M6M6RFR
580	-0301	312705-0316	-		2	SCREW CAP	MHM 6 RFR
590	-0301	312705-0318	-		1	SCREW CAP	MHM 8 RFR
595	-0301	315105-0153	-		3	WASHER	BRB6,4X12RFR
600	-0301	315105-0165	-		5	WASHER	BRB8,4X16RFR

S-271114-3

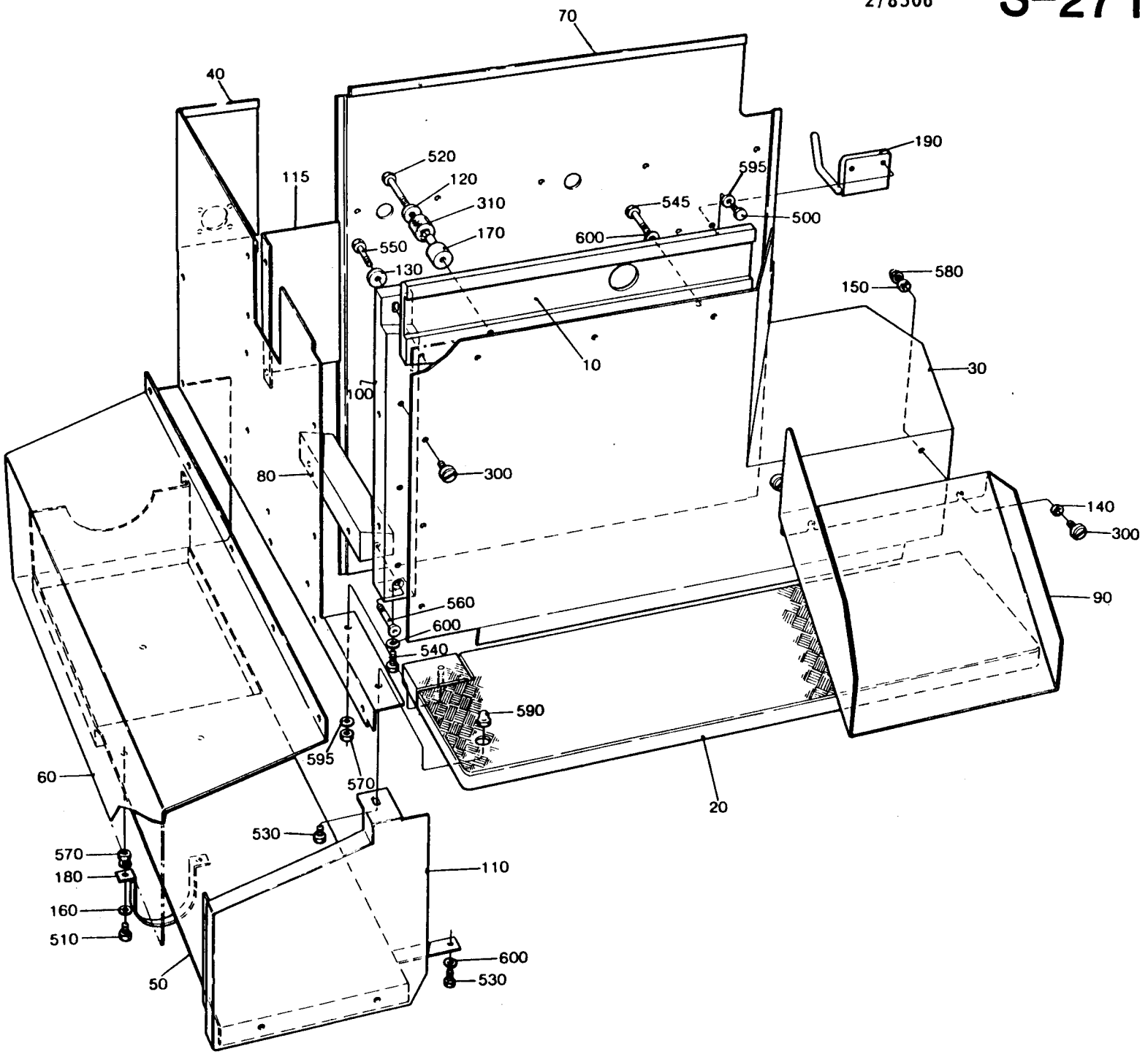
70
40
115
520
120
310
170
550
130
545
595
500
600
190
580
150
30
10
100
80
300
140
300
90
560
600
540
590
595
570
60
530
570
180
160
510
110
600
530
50
20

LAST ALTERATION: AM 7648 85-03-06
648105
AM 6740
84-04-18

GROUP

-0301 **** THIS C-LIST CONTAINS SUBGROUPS, SEE B-LIST ****

POS	VAR	PART NUMBER	SP	EH	QTY	DESCRIPTION
	-0301	S- 271115-SHEET	-4			===ASSEMBLY DRAWING===
	-0301		75			
010	-0301	469050	-		1	GUARD
020	-0301	469051	-		1	COVER
030	-0301	441829	-		1	PIPE
040	-0301	295347	-		1	BRACKET
045	-0301	469052	S		1	LID
050	-0301	295348	S		1	GLASS
060	-0301	295349	-		1	BRACKET
070	-0301	469053	-		1	CHECKER PLATE
075	-0301	469054	-		1	PLATE
085	-0301	469056	-		1	CHECKER PLATE
090	-0301	469057	-		1	CHECKER PLATE
095	-0301	469058	C		2	HANDLE
100	-0301	295353	-		1	RAIL
115	-0301	271608	S		2	SCREW
120	-0301	441359	S		2	GUIDE
130	-0301	469061	-		1	PLATE
140	-0301	271708	-		1	RAIL
150	-0301	271784	S		1	KNOB
160	-0301	295354	-		1	LID
170	-0301	295355	-		1	BRACKET
180	-0301	295356	-		1	HOUSING
190	-0301	295357	S		1	ROD
200	-0301	295358	C		1	RULER
203	-0301	469811	-		1	AXLE
204	-0301	469812	S		2	BEARING
205	-0301	469813	C		2	CLAMP
206	-0301	469814	C		2	LINK
207	-0301	469815	-		2	END PIECE
208	-0301	469816	C		2	CLAMP
209	-0301	469817	S		2	PIN
210	-0301	469818	C		2	ROD
211	-0301	469819	S		2	PEEL OFF SHIM
212	-0301	469820	-		2	BRACKET
220	-0301	295423	S		1	SEAL
230	-0301	469063	-		2	HEAD
260	-0301	469066	-		2	AXLE
270	-0301	469067	-		2	HANGER
275	-0301	469068	S		1	SLEEVE
280	-0301	469069	-		1	PLATE
290	-0301	469968	-		1	STRIP
298	-0301	90143-0016	-	MM	300	STRIP
300	-0301	90143-0039	-	MM	3400	STRIP

POS	VAR	PART NUMBER	SP	EH	QTY	DESCRIPTION
310	-0301	90143-0049	-	MM	2600	STRIP
320	-0301	90157-0022	-	G	200	SEALING COMPOUND
330	-0301	90189-0019	S		2	BALL BUSHING
332	-0301	90208-0047	-		2	COLLAR
336	-0301	90240-0052	-		4	RICTION BEARING
338	-0301	90240-0076	S		2	RICTION BEARING
340	-0301	90240-0083	S		2	RICTION BEARING
348	-0301	312155-0289	-		5	SCREW MF6S4X10RFR
350	-0301	90287-0062	-		9	SCREW
360	-0301	90335-0024	S		1	SPRING
363	-0301	90335-0055	C		2	SPRING
368	-0301	90424-0035	-		2	NOZZLE
370	-0301	90424-0036	-		5	NOZZLE
470	-0301	311103-0214	-		2	CYLINDRICACPR2,5M6X25RFR
480	-0301	311103-0407	-		2	CYLINDRICACPR8M6X35RFR
490	-0301	312105-0323	-		4	SCREW M6S5X8RFR
500	-0301	312105-0327	-		7	SCREW M6S5X12RFR
510	-0301	312105-0329	-		2	SCREW M6S5X16RFR
515	-0301	312105-0332	-		2	SCREW M6S5X22RFR
520	-0301	312105-0362	-		1	SCREW M6S6X8RFR
530	-0301	312105-0455	-		2	SCREW M6S8X30RFR
550	-0301	312105-0378	-		12	SCREW M6S6X40RFR
560	-0301	312105-0492	-		2	SCREW M6S10X22RFR
565	-0301	312115-0374	-		2	SCREW MC6S6X30RFR
570	-0301	312155-0368	-		10	SCREW MF6S6X16RFR
580	-0301	312155-0372	-		8	SCREW MF6S6X25RFR
583	-0301	312155-0378	-		2	SCREW MF6S6X40RFR
586	-0301	312155-0455	-		2	SCREW MF6S8X30RFR
590	-0301	312605-0316	-		2	NUT M6M6RFR
600	-0301	312812-0316	-		10	CHECK NUT A4-M6RFR
610	-0301	315105-0146	-		13	WASHER BRB5,3X10RFR
620	-0301	315105-0153	-		13	WASHER BRB6,4X12RFR
630	-0301	315105-0173	-		2	WASHER BRB10,5X22RFR
640	-0301	315115-0153	-		4	WASHER TBRB6,4X12RFR
650	-0301	315233-0110	-		2	SEAL RING R1/4"
660	-0301	315233-0111	-		2	SEAL RING R3/8"

TETRA PAK

1/8501

S-271115-4

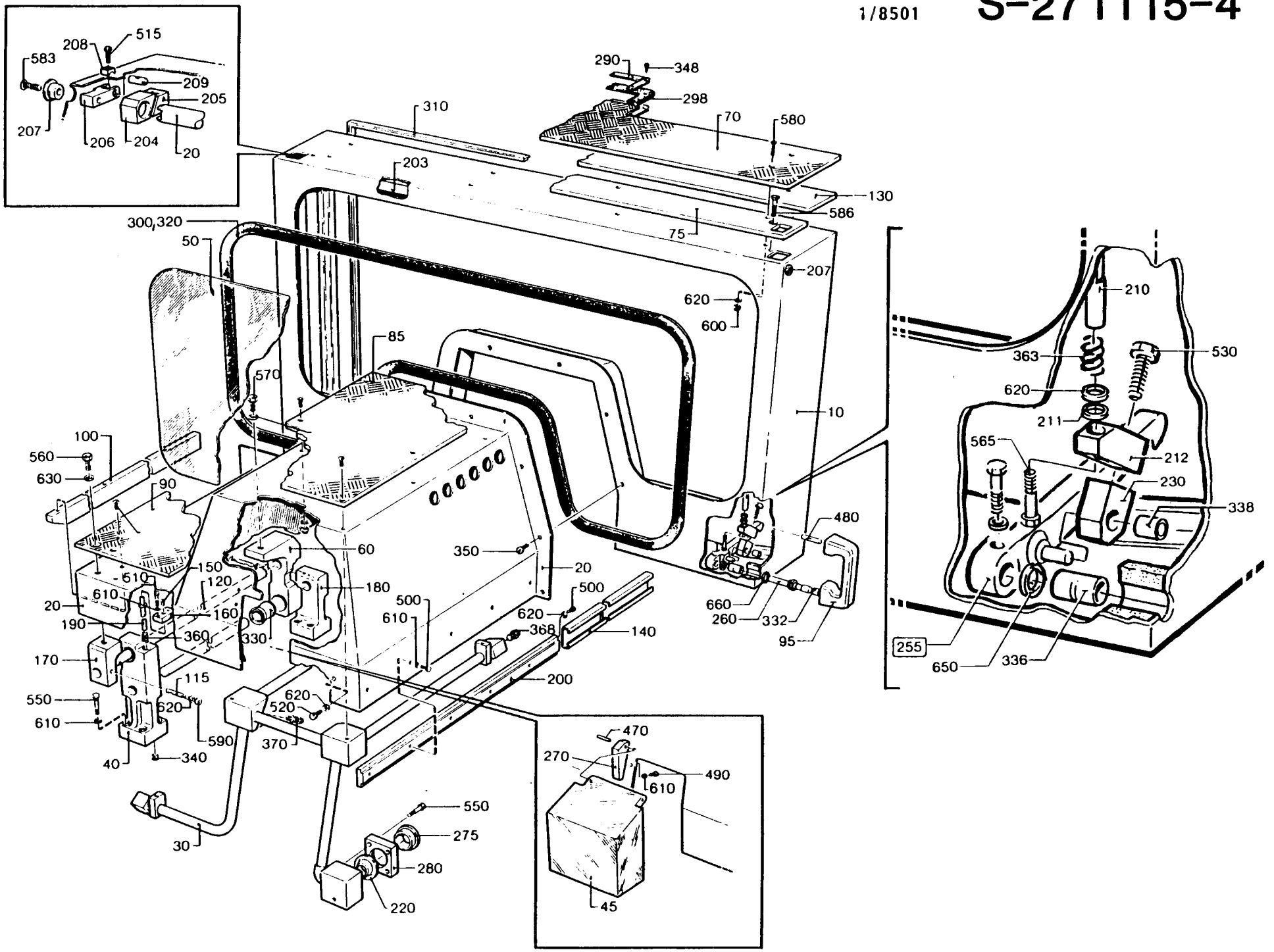

LAST ALTERATION: AM 8530 85-12-10
648105-060V
AM 6591
84-02-20

POS	VAR	PART NUMBER	SP	EH	QTY	DESCRIPTION
	-0301	S- 271116-SHEET	-3			===ASSEMBLY DRAWING===
010	-0301	G- 441597	-		1	BRACKET
020	-0301	257133	-		2	LID
030	-0301	272647	-		1	SHAFT
040	-0301	272648	S		1	PULLEY
300	-0301	90061-0018	S		1	ANGULAR TRANSMITTER
310	-0301	90355-0031	S		1	FLEXIBLE COUPLING
320	-0301	90417-0050	S		1	TOOTHED BELT
500	-0301	312101-0366	-		1	SCREW M6S6X12FZB
510	-0301	312105-0376	-		2	SCREW M6S6X35RFR
520	-0301	312111-0325	-		6	SCREW MC6S5X10FZB
530	-0301	491630	-		2	SCREW
550	-0301	315121-0153	-		2	WASHER TBRSB6,4X22FZB
560	-0301	315701-0199	-		1	FLAT WEDGE5X5X16
570	-0301	315752-0123	-		1	LOCK RING SGH32
580	-0301	321308-0202	S		2	BALL BEARISKF6002-2RS

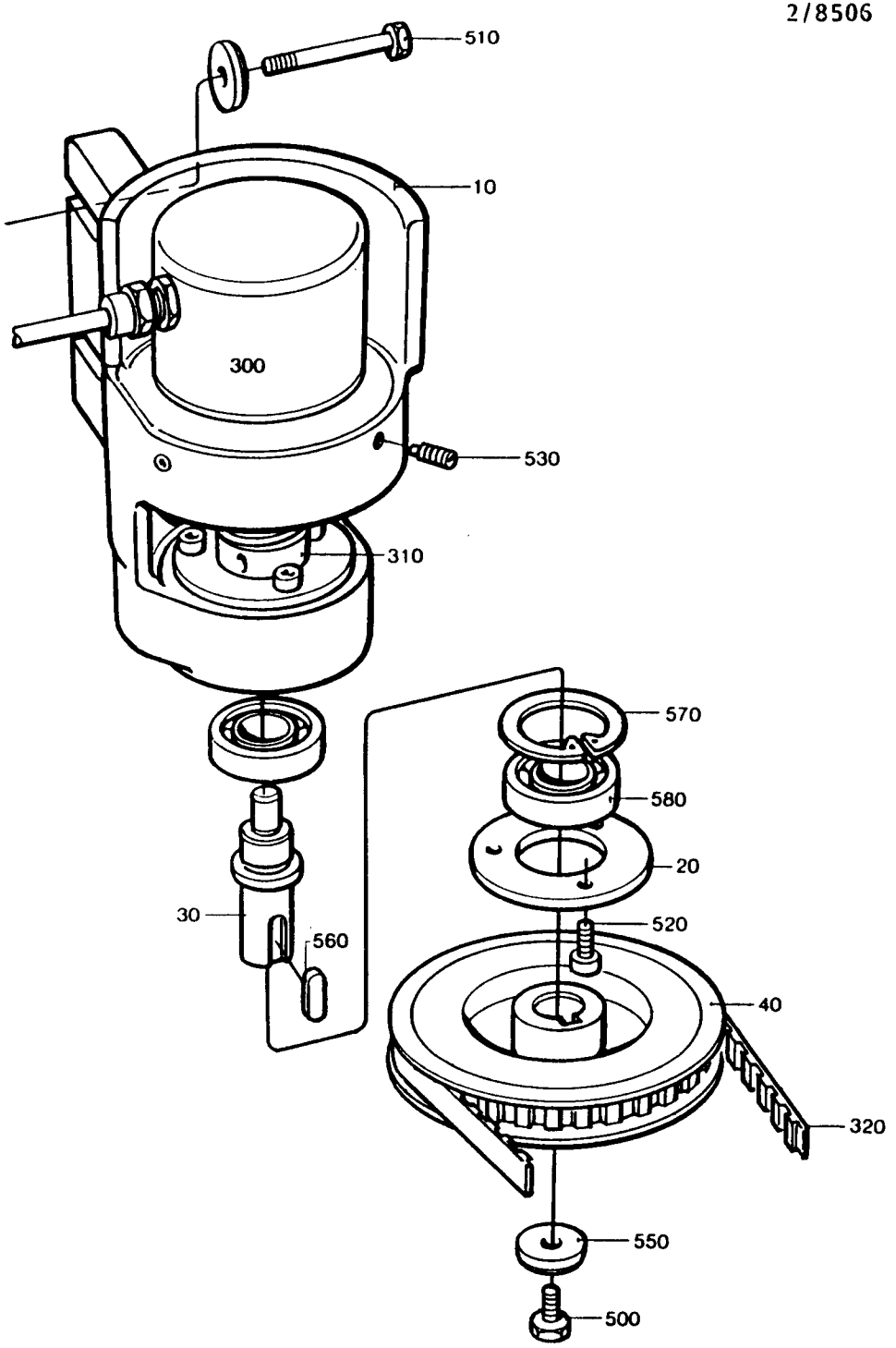
510
10
300
530
310
570
580
20
520
30
560
40
320
550
500

LAST ALTERATION: AM 7122 84-10-31
648105-060V

POS	VAR	PART NUMBER	SP	EH	QTY	DESCRIPTION
	-0301	S- 271387-SHEET		-2		===ASSEMBLY DRAWING===
300	-0301	90152-0017	-		1	HOSE
310	-0301	90163-0014	-		1	NIPPLE
320	-0301	90330-0081	-		1	ELBOW PIPE
330	-0301	90426-0003	S		1	HAND SHOWER
500	-0301	315233-0110	-		3	SEAL RING R1/4"
510	-0301	315233-0113	-		1	SEAL RING R1/2"
520	-0301	342701-0205	-		1	BUSHING RN11/2"-1/4"

TETRA PAK

2/8506

S-271387-2

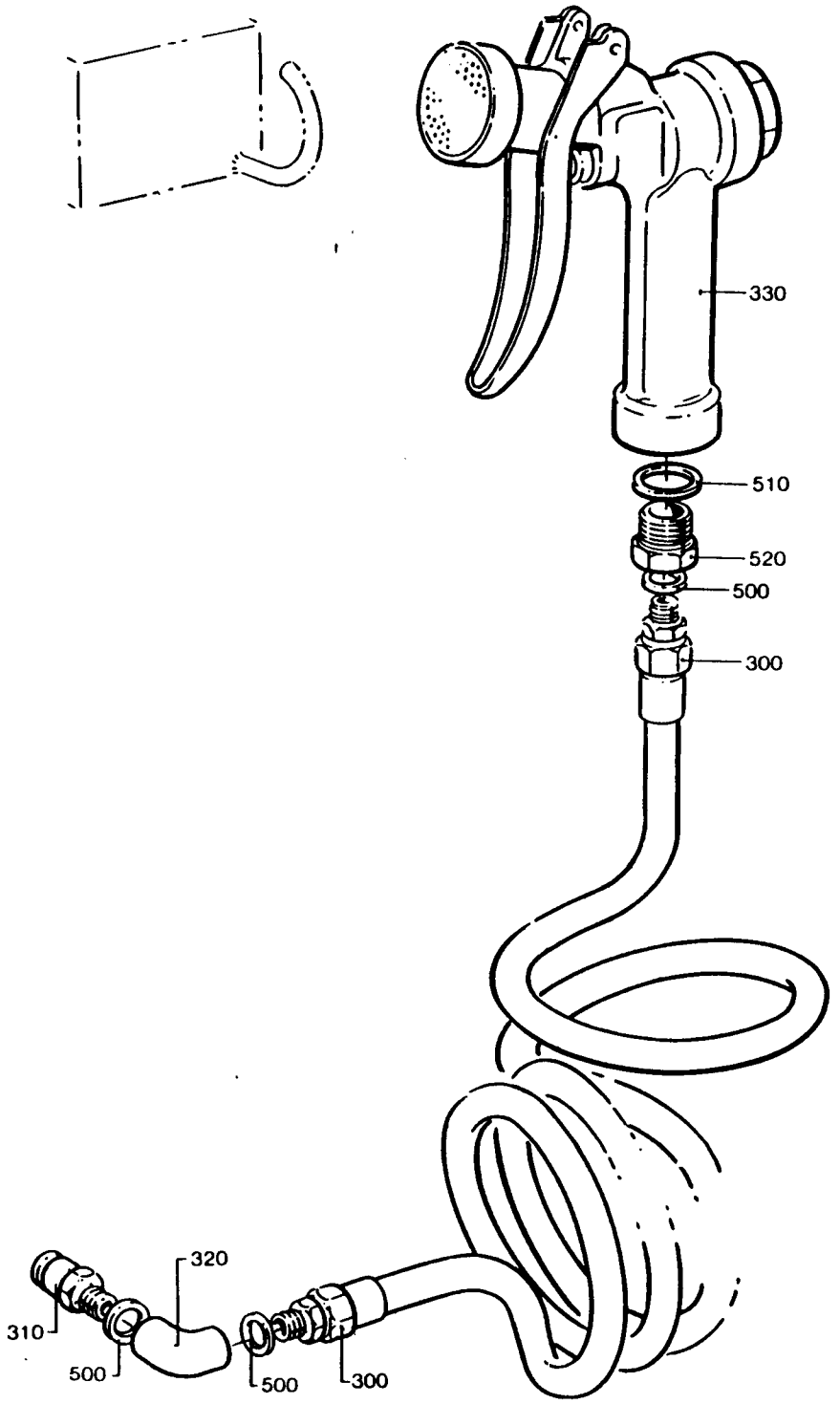

LAST ALTERATION: AM 6153 83-11-15
648105-060V

POS	VAR	PART NUMBER	SP	EH	QTY	DESCRIPTION
	-0201	S- 272652-SHEET		-2		===ASSEMBLY DRAWING===
010	-0201	441327	-		1	PLATE
020	-0201	256190	-		1	NUT
030	-0201	441328	-		1	PIN
040	-0201	272651	-		1	WASHER
300	-0201	90347-0027	S		1	DAMPER
500	-0201	311411-0152	S		1	SPLIT PIN SP2X16RFR

TETRA PAK

2/8506 **S-272652-2**

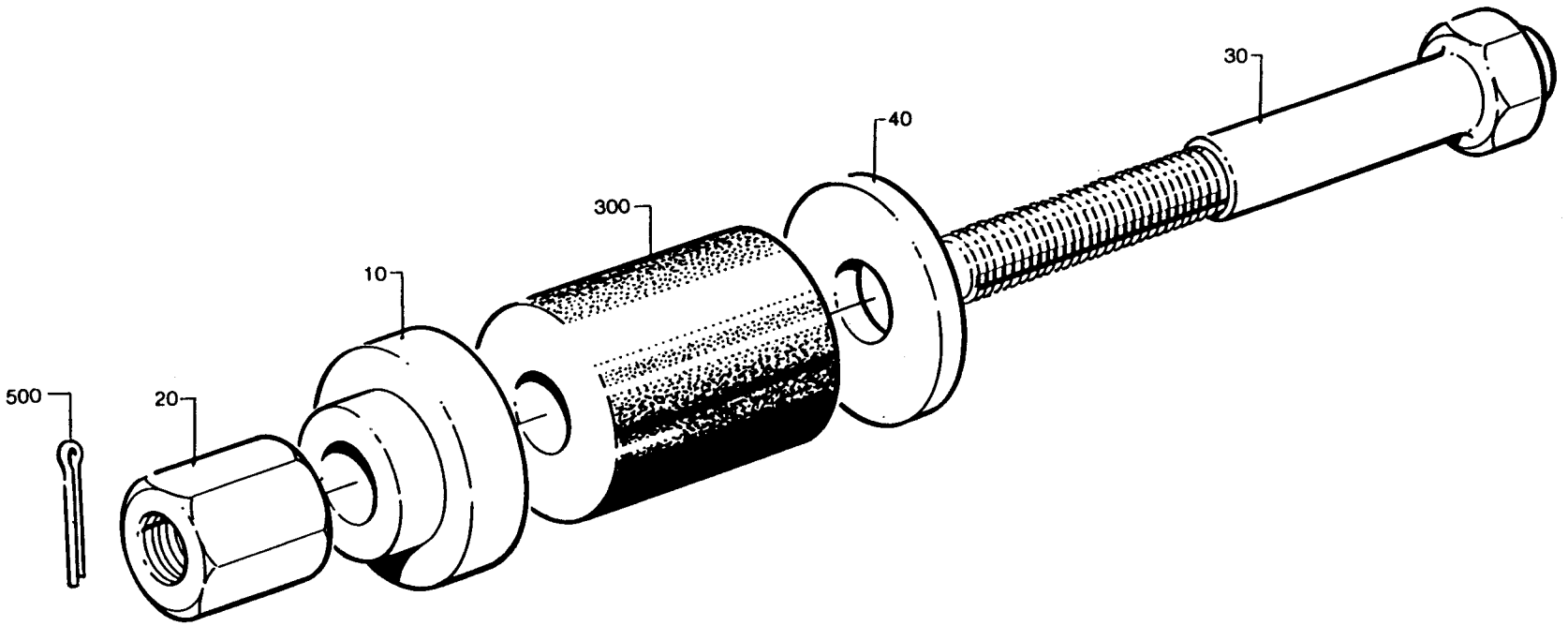

LAST ALTERATION: AM 8667 86-02-17
272765-040V

POS	VAR	PART NUMBER	SP	EH	QTY	DESCRIPTION
	-0301	S- 272652-SHEET		-3		===ASSEMBLY DRAWING===
010	-0301	491731	-		1	WASHER
020	-0301	256190	-		1	NUT
030	-0301	441328	-		1	PIN
040	-0301	491732	-		1	WASHER
300	-0301	90335-0096	S		1	SPRING
500	-0301	311411-0152	S		1	SPLIT PIN SP2X16RFR

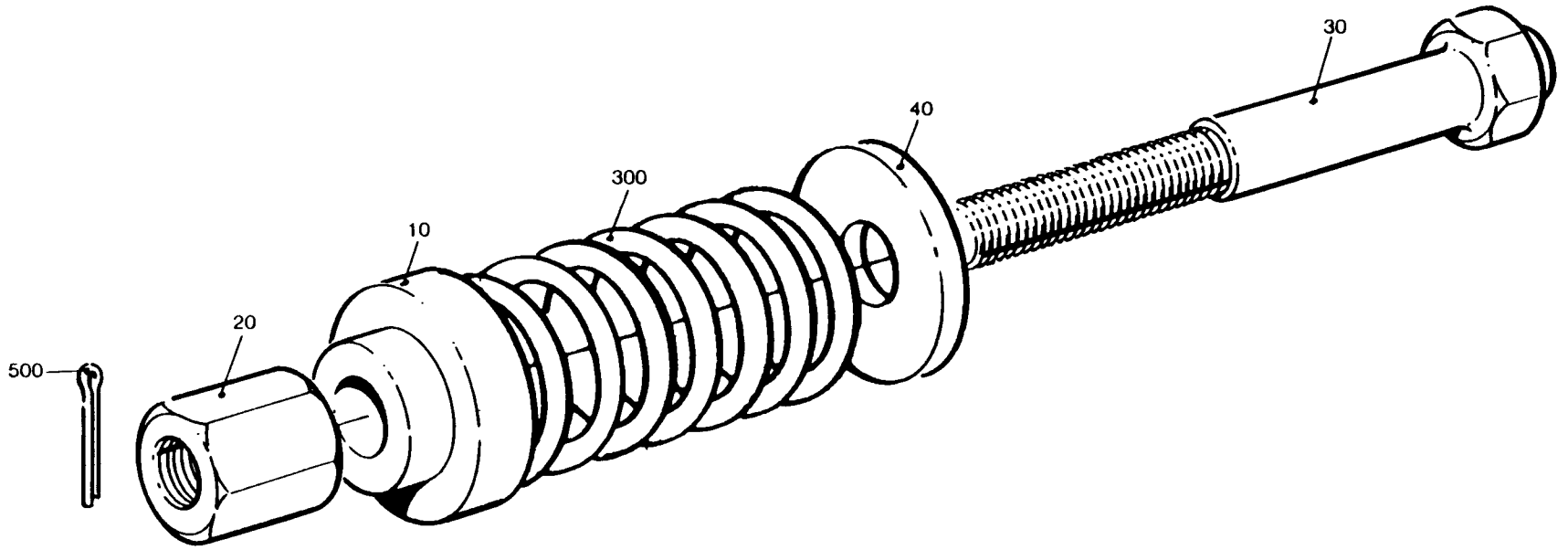
30
40
300
10
20
500

LAST ALTERATION: AM 10017 87-01-12
648105-060V
AM 6153
83-11-15

POS	VAR	PART NUMBER	SP	EH	QTY	DESCRIPTION
	-0301	S- 272765-SHEET	-2			===ASSEMBLY DRAWING===
F205	-0301	C- 441798-0101	-		1	ROTOR
F210	-0301	C- 272652-0201	C		1	CHAIN TENSIONER
010	-0301	G- 441599	C		1	BED
020	-0301	G- 441600	C		1	LINK ARM
030	-0301	441774	-		1	PLATE
040	-0301	441775	-		1	PIPE CONNECTION
050	-0301	G- 441598	C		1	SUPPORTING ARM
060	-0301	256276	C		1	SHAFT
070	-0301	469143	-		1	LEAD-IN
075	-0301	491485	-		1	DISTRIBUTOR BLOCK
080	-0301	272997	-		1	STOP
150	-0301	490932	-		1	SLEEVE
160	-0301	490933	-		1	NUT
310	-0301	90005-0048	-		1	WASHER
315	-0301	90015-0028	-		1	BUSHING
320	-0301	90028-0021	-		2	CONE
330	-0301	90028-0025	-		1	CONE
340	-0301	90032-0038	-		1	BLOCK
345	-0301	90092-0048	S		4	OIL BRUSH
350	-0301	90092-0054	S		4	VALVE
360	-0301	90134-0038	S		1	BUSHING
370	-0301	90134-0040	-		2	BUSHING
372	-0301	90134-0042	-		8	SPACER
375	-0301	90134-0045	-		4	PLUG
377	-0301	90134-0052	-		1	PLUG
380	-0301	90134-0055	-		1	BUSHING
390	-0301	90134-0068	-		1	BANJO CONNECTION
400	-0301	90144-0004	-	M	1	TAPE
410	-0301	90166-0109	-	MM	1000	HOSE
420	-0301	90240-0055	S		2	RICTION BEARING
430	-0301	90044-0085	S		1	SENSOR
440	-0301	90424-0009	-		1	NOZZLE
450	-0301	90330-0078	-		1	BUSHING
510	-0301	312101-0297	-		2	SCREW M6S4X25FZB
520	-0301	312101-0552	-		4	SCREW M6S12X100FZB
530	-0301	312105-0364	-		2	SCREW M6S6X10RFR
540	-0301	312105-0366	-		15	SCREW M6S6X12RFR
550	-0301	312105-0459	-		4	SCREW M6S8X40RFR
555	-0301	312105-0466	-		1	SCREW M6S8X75RFR
570	-0301	312115-0372	-		2	SCREW MC6S6X25 A4 80
580	-0301	312318-0325	-		1	GRUB SCREW SK6SS5X10RFR
610	-0301	315101-0136	-		2	WASHER BRB4,3X8FZB

POS	VAR	PART NUMBER	SP	EH	QTY	DESCRIPTION
620	-0301	315105-0153	-		17	WASHER BRB6,4X12RFR
630	-0301	315111-0165	-		4	WASHER TBRB8,4X16FZB
640	-0301	315111-0178	-		4	WASHER TBRB13X24FZB
650	-0301	315115-0165	-		1	WASHER TBRB8,4X16RFR
670	-0301	315202-0115	S		1	O-RING 17,1X1,6
680	-0301	315202-0116	S		1	O-RING 18,1X1,6
700	-0301	315202-0215	S		1	O-RING 19,2X3
710	-0301	315202-0304	S		1	O-RING 64,5X3
738	-0301	315233-0109	S		2	SEAL RING R1/8"
750	-0301	315233-0111	S		2	SEAL RING R3/8"
800	-0301	342960-0112	-		2	GROMMET 6/4

TETRA PAK

3/8601

S-272765-2

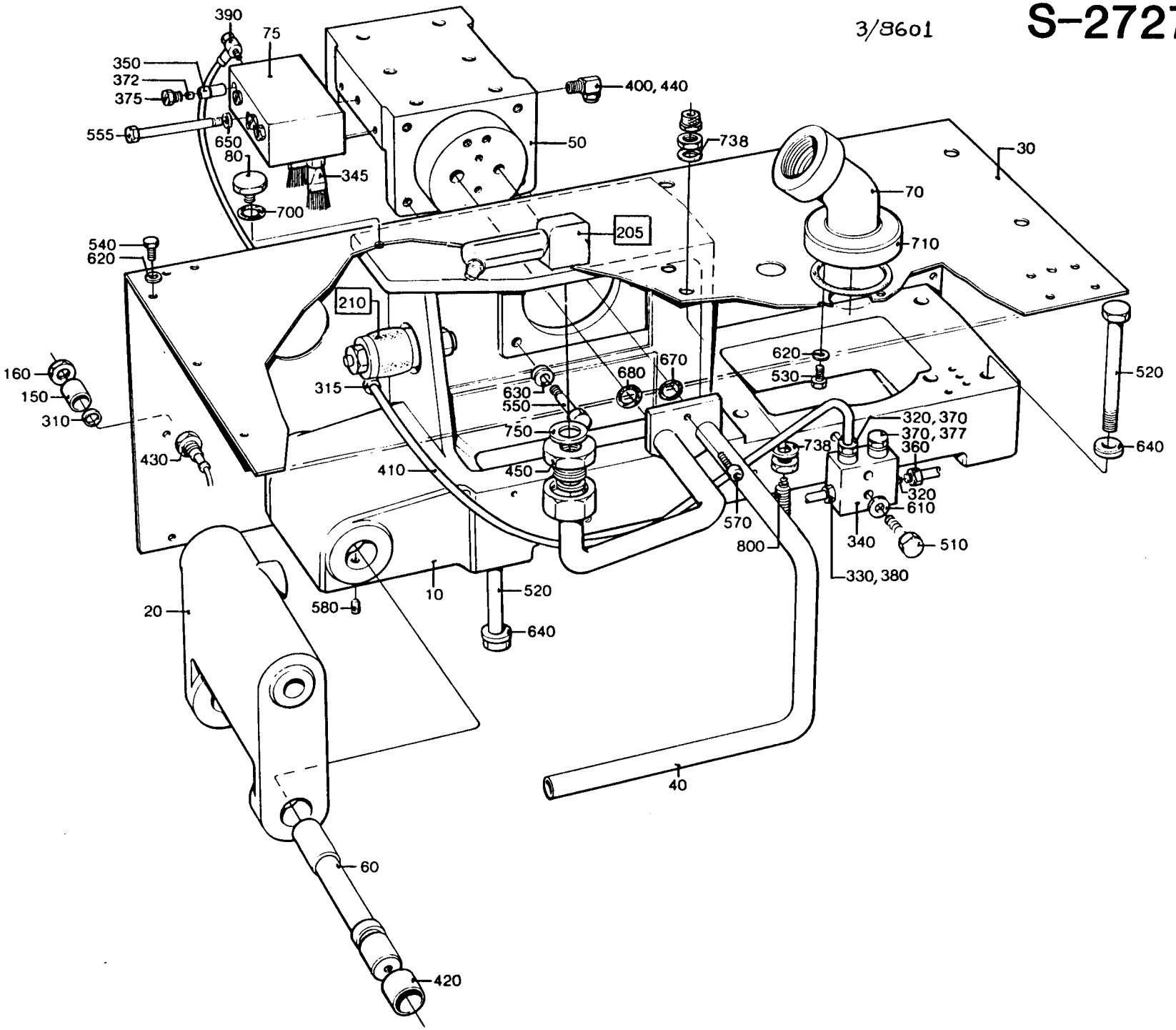

9M 8434

LAST ALTERATION: AM 10017 87-01-12
648105-070V
AM 8667
86-02-17

POS	VAR	PART NUMBER	SP	EH	QTY	DESCRIPTION
	-0401	S- 272765-SHEET	-3			===ASSEMBLY DRAWING===
F205	-0401	C- 441798-0101	-		1	ROTOR
F210	-0401	C- 272652-0301	C		1	CHAIN TENSIONER
010	-0401	C- 441599	C		1	BED
020	-0401	C- 441600	C		1	LINK ARM
030	-0401	441774	-		1	PLATE
040	-0401	441775	-		1	PIPE CONNECTION
050	-0401	C- 441598	C		1	SUPPORTING ARM
060	-0401	256276	C		1	SHAFT
070	-0401	469143	-		1	LEAD-IN
075	-0401	491485	-		1	DISTRIBUTOR BLOCK
080	-0401	272997	-		1	STOP
150	-0401	490932	-		1	SLEEVE
160	-0401	490933	-		1	NUT
310	-0401	90005-0048	-		1	WASHER
315	-0401	90015-0028	-		1	BUSHING
320	-0401	90028-0021	S		3	CONE
330	-0401	90028-0025	S		1	CONE
340	-0401	90032-0038	-		1	BLOCK
345	-0401	90092-0048	S		4	OIL BRUSH
350	-0401	90092-0054	S		5	VALVE
360	-0401	90134-0038	S		1	BUSHING
370	-0401	90134-0040	S		2	BUSHING
372	-0401	90134-0042	-		8	SPACER
375	-0401	90134-0045	-		4	PLUG
377	-0401	90134-0051	S		1	SPACER COLLOR
380	-0401	90134-0055	S		1	BUSHING
390	-0401	90134-0068	S		1	BANJO CONNECTION
400	-0401	90144-0004	-	M	1	TAPE
410	-0401	90166-0109	-	MM	1600	HOSE
420	-0401	90240-0055	S		2	RICTION BEARING
430	-0401	90044-0085	S		1	SENSOR
440	-0401	90424-0009	-		1	NOZZLE
450	-0401	90330-0078	-		1	BUSHING
510	-0401	312101-0297	-		2	SCREW M6S4X25FZB
520	-0401	312101-0552	-		4	SCREW M6S12X100FZB
530	-0401	312105-0364	-		2	SCREW M6S6X10RFR
540	-0401	312105-0366	-		15	SCREW M6S6X12RFR
550	-0401	312105-0459	-		4	SCREW M6S8X40RFR
555	-0401	312105-0466	-		1	SCREW M6S8X75RFR
570	-0401	312115-0372	-		2	SCREW MC6S6X25 A4 80
580	-0401	312318-0325	-		1	GRUB SCREW SK6SS5X10RFR
610	-0401	315101-0136	-		2	WASHER BRB4,3X8FZB

POS	VAR	PART NUMBER	SP	EH	QTY	DESCRIPTION
620	-0401	315105-0153	-		17	WASHER BRB6,4X12RFR
630	-0401	315111-0165	-		4	WASHER TBRB8,4X16FZB
640	-0401	315111-0178	-		4	WASHER TBRB13X24FZB
650	-0401	315115-0165	-		1	WASHER TBRB8,4X16RFR
670	-0401	315202-0115	S		1	O-RING 17,1X1,6
680	-0401	315202-0116	S		1	O-RING 18,1X1,6
700	-0401	315202-0215	S		1	O-RING 19,2X3
710	-0401	315202-0304	S		1	O-RING 64,5X3
738	-0401	315233-0109	S		2	SEAL RING R1/8"
750	-0401	315233-0111	S		2	SEAL RING R3/8"
780	-0401	342706-0114	S		6	SLEEVE SH04
800	-0401	342960-0112	-		2	GROMMET 6/4

TETRA PAK

1/8608

S-272765-3

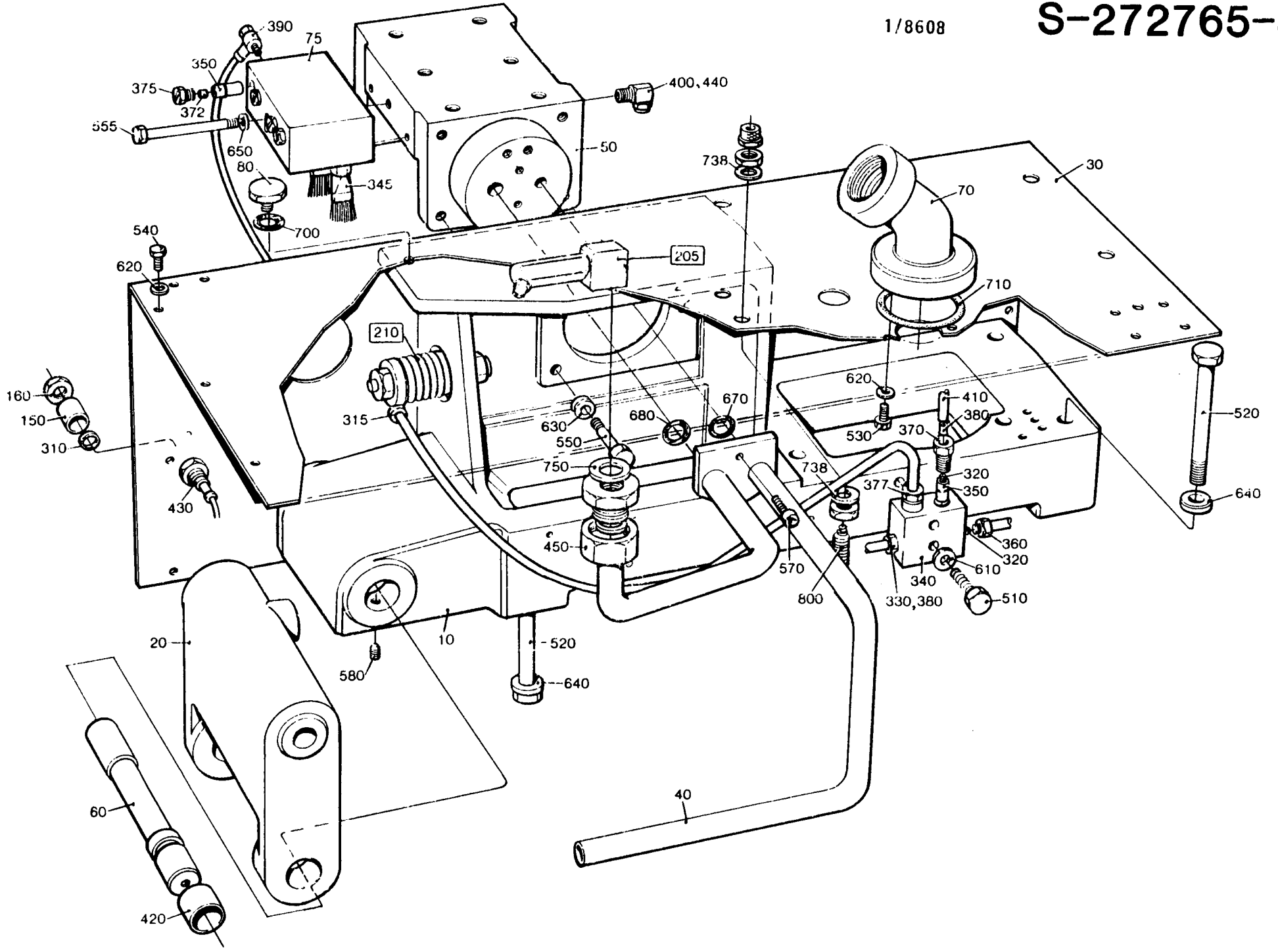

LAST ALTERATION: AM 6991 84-08-29
648105-020V
AM 5334
82-05-18

GROUP	VOLUME	VOLUME	VOLUME	VOLUME
-0101	V0250	200ML SLIM	-	-
-0102	V0236	V0200	V0180	V0125

POS	VAR	PART NUMBER	SP	EH	QTY	DESCRIPTION
	-0101	S- 295211-SHEET	-1			===ASSEMBLY DRAWING===
	-0102		-1			
010	-0101	295202-0001	C		1	SWIVEL
010	-0102	295202-0002	C		1	SWIVEL
020	ALL	295201	C		1	FRAME
030	ALL	295203	C		1	LID
040	ALL	295204-0001	S		2	SHIM
050	ALL	295204-0002	S		2	SHIM
060	ALL	295204-0003	S		2	SHIM
070	ALL	295205	-		1	DISTANCE SLEEVE
080	ALL	295206	-		1	FLAP
090	ALL	295207	-		1	BRACKET
100	ALL	295208	-		1	SECURING PLATE
110	ALL	295430	-		1	SUPPORT
120	ALL	295431	-		1	SCREW
130	ALL	295432	-		1	SCREW
140	ALL	469527	-		1	BRACKET
300	ALL	90091-0136	S		3	SEAL RING
310	ALL	90240-0094	S		2	PLAIN BEARING
500	ALL	312105-0366	-		1	SCREW M6S6X12RFR
510	ALL	312105-0370	-		4	SCREW M6S6X20RFR
520	ALL	312105-0374	-		1	SCREW M6S6X30RFR
530	ALL	312105-0376	-		1	SCREW M6S6X35RFR
535	ALL	312318-0323	-		2	GRUB SCREW SK6SS5X8RFR
540	ALL	315105-0153	-		4	WASHER BRB6,4X12RFR

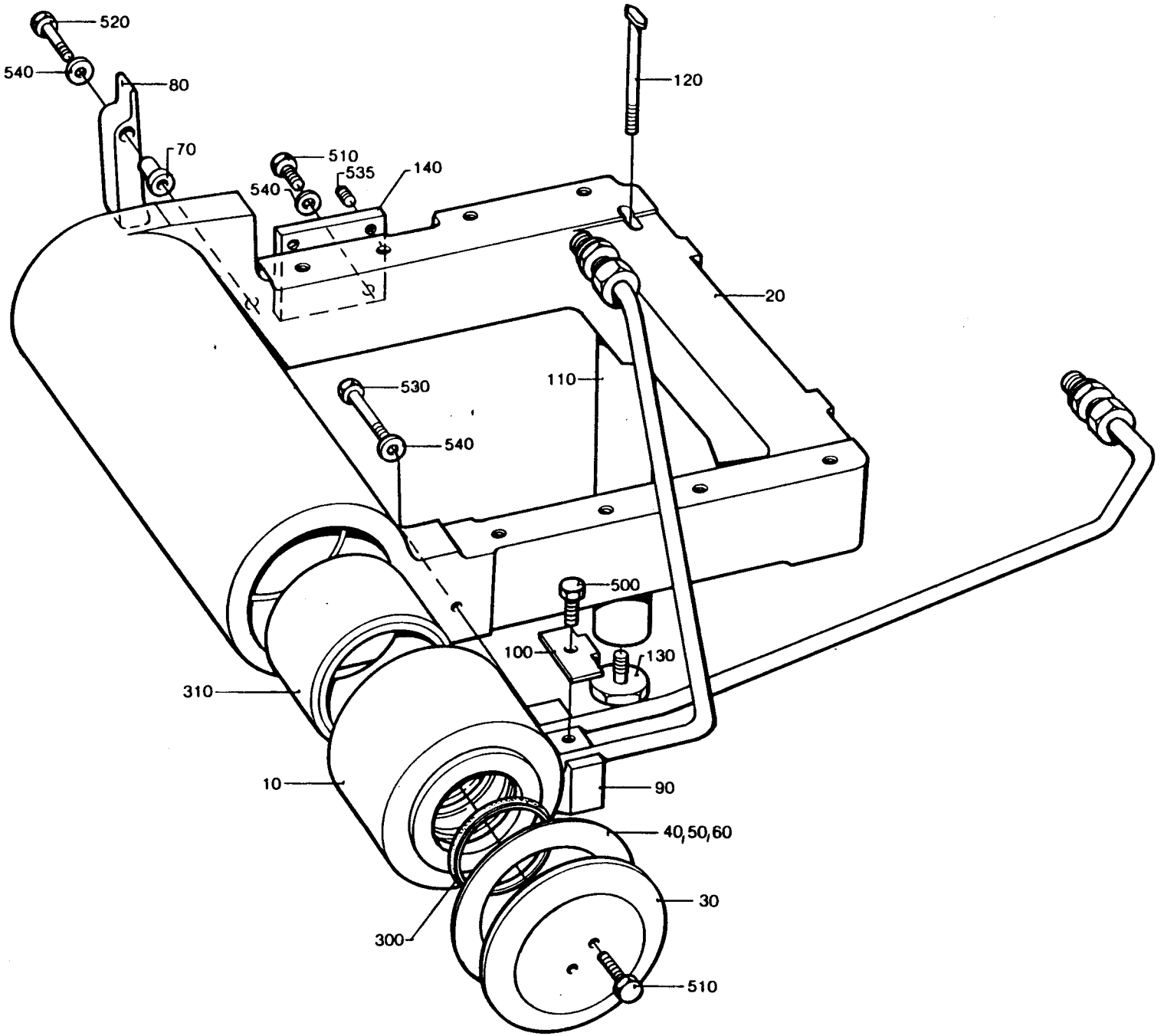
520
540
80
70
510
535
540
140
120
20
530
540
110
500
100
130
310
10
90
40,50,60
30
300
510

LAST ALTERATION: AM 7911 85-06-11
648105-020V
AM 5366
82-06-02

GROUP	VOLUME
-0101	V0250
-0102	V0236
-0103	V0200
-0104	V0180
-0105	V0125
-0106	200ML SLIM

POS	VAR	PART NUMBER	SP	EH	QTY	DESCRIPTION
	-0101	S- 295218-SHEET	-4			===ASSEMBLY DRAWING===
	-0102		-4			
	-0103		-4			
	-0104		-4			
	-0105		-4			
	-0106		-4			
010	-0101	295862-0001	S		1	FOLDING BAR
010	-0102	295862-0002	S		1	FOLDING BAR
010	-0103	295862-0003	S		1	FOLDING BAR
010	-0104	295862-0004	S		1	FOLDING BAR
010	-0105	295863	S		1	FOLDING BAR
010	-0106	295864	S		1	FOLDING BAR
020	-0101	295871-0002	C		1	BRACKET
020	-0102	295871-0003	C		1	BRACKET
020	-0103	295871-0004	C		1	BRACKET
020	-0104	295871-0005	C		1	BRACKET
020	-0105	295871-0006	C		1	BRACKET
020	-0106	295871-0001	C		1	BRACKET
030	ALL	271587	-		2	WASHER
300	ALL	90005-0056	-		2	WASHER
500	ALL	312105-0364	-		2	SCREW M6S6X10RFR
510	ALL	312105-0368	-		2	SCREW M6S6X16RFR
520	ALL	312105-0372	-		4	SCREW M6S6X25RFR
530	ALL	312105-0457	-		2	SCREW M6S8X35RFR
540	ALL	315105-0153	-		2	WASHER BRB6,4X12RFR
550	ALL	315105-0165	-		2	WASHER BRB8,4X16RFR
560	ALL	342921-0112	S		2	PIPE CONNE6/4-6M

S-295218-4

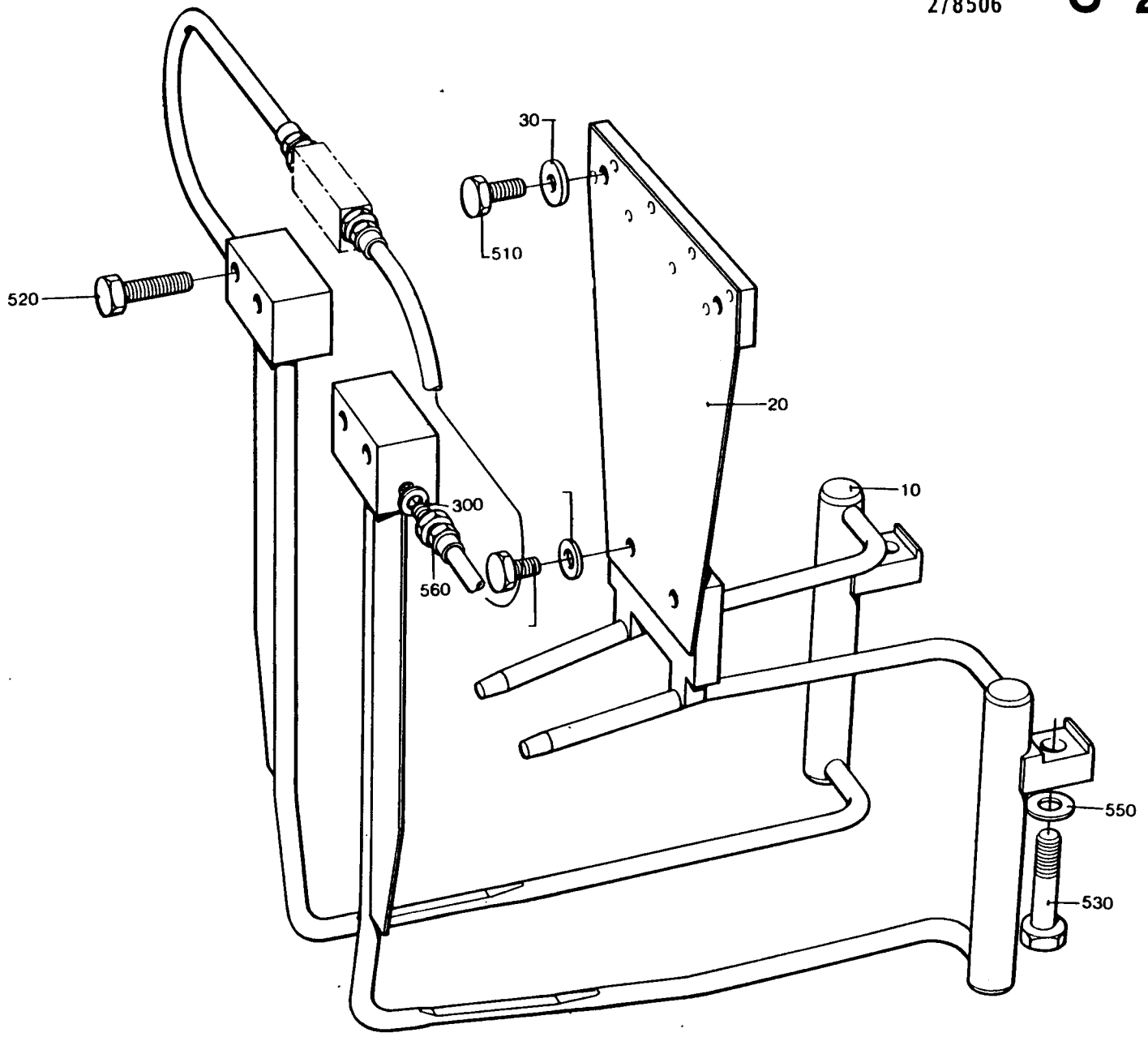

LAST ALTERATION: AM 8161 85-08-27
648105-060V
AM 6862
84-06-29

GROUP	VOLUME	VOLUME	VOLUME	VOLUME
-0301	V0250	V0236	V0200	V0180
-0302	V0125	-	-	-
-0303	200ML SLIM	-	-	-

POS	VAR	PART NUMBER	SP	EH	QTY	DESCRIPTION
	-0301	S- 295310-SHEET	-3			===ASSEMBLY DRAWING===
	-0302		-3			
	-0303		-3			
010	-0301	456451	S		1	ROLLER
		315202-0306	S		2	* O-RING 74,5X3
010	-0302	469433	S		1	ROLLER
		315202-0311	S		2	* O-RING 99,5X3
010	-0303	469434	S		1	ROLLER
		315202-0306	S		2	* O-RING 74,5X3
020	ALL	295311	-		1	HOUSE
030	ALL	456175	C		1	LID
040	ALL	295313	-		1	SHAFT
042	ALL	456176	S		1	GASKET
046	ALL	272068	S		1	CARRIER CHAIN
048	ALL	272517	S		1	SPROCKET
050	ALL	295314	S		1	SPROCKET
060	ALL	295315	S		1	SHAFT
070	ALL	295316	S		1	STRIP
080	ALL	295092	-		1	BEARING HOUSING
090	ALL	441978	C		1	BEARING
095	ALL	491193	-		1	BRACKET
100	ALL	271975	S		1	SHAFT
110	ALL	271978	S		1	NUT
120	ALL	272534	S		2	WASHER
130	ALL	272742	P		1	FINGER
140	ALL	295842	-		1	WASHER
150	ALL	295093	-		2	LID
160	ALL	295094	S		1	SHAFT
170	ALL	441979	S		1	SHAFT
180	ALL	295116	S		1	SPROCKET
190	ALL	469393	-		1	BRACKET
200	ALL	441980	S		1	GEAR
210	ALL	295162	-		1	WASHER
220	ALL	295163	-		1	SHOULDER RING
230	ALL	295164	S		1	GEAR
240	ALL	295165	S		1	GEAR
250	ALL	295166	C		1	SHAFT
260	ALL	295167	-		1	SHOULDER RING
270	ALL	295168	-		1	LID
280	ALL	295169	S		1	SPACER RING
290	ALL	295170	S		1	PLUG
300	ALL	295171	S		1	SPROCKET

POS	VAR	PART NUMBER	SP	EH	QTY	DESCRIPTION
310	ALL	295299	S		1	GEAR DRIVE
320	ALL	295308	S		1	INSERT
330	ALL	295309	S		1	INSERT
340	ALL	295317	-		1	WASHER
350	ALL	295318	-		1	GREASE NIPPLE
360	ALL	295319	S		1	SPROCKET
370	ALL	295320	S		1	PLATE
380	ALL	295321	S		1	STRIP
390	ALL	441970	C		1	CARRIER
400	ALL	441971	S		1	HUB
410	ALL	441972	P		1	BREAKPIN
420	ALL	295323	-		1	WASHER
430	ALL	469376	-		1	COVER PLATE
440	ALL	456064	-		1	SPACER
450	ALL	295326	-		1	RETAINING RING
455	ALL	90028-0021	P		1	CONE
460	ALL	90092-0052	P		1	VALVE
465	ALL	90134-0040	P		1	BUSHING
467	ALL	90141-0018	-		1	LOCK RING
470	ALL	90208-0050	S		1	COLLAR
475	ALL	90208-0047	S		3	COLLAR
480	ALL	90240-0090	S		2	RICTION BEARING
485	ALL	90240-0091	S		1	RICTION BEARING
490	ALL	90240-0092	S		3	RICTION BEARING
492	ALL	90288-0036	S		1	ROLLER CHAIN
496	ALL	90296-0068	-	G	100	GREASE
500	ALL	321308-0204	S		1	BALL BEARISKF6004-2RS
505	ALL	321308-0208	S		1	BALL BEARISKF6008-2RS
510	ALL	321313-0102	S		3	BALL BEARISKF6202-2RS
520	ALL	315410-0102	S		1	LOCK WASHESKFMB2
525	ALL	315410-0103	S		1	LOCK WASHESKFMB3
530	ALL	312805-0102	-		1	NUT KM2
535	ALL	312805-0103	-		1	NUT KM3
540	ALL	315750-0112	S		2	LOCK RING SGA15
550	ALL	315750-0127	S		1	LOCK RING SGA40
560	ALL	315752-0124	S		1	LOCK RING SGH35
580	ALL	315701-0170	-		1	FLAT WEDGE4X4X20
590	ALL	315701-0199	-		4	FLAT WEDGE5X5X16
600	ALL	315701-0207	-		1	FLAT WEDGE5X5X36
610	ALL	315220-0121	S		1	SEAL RING V-14S
620	ALL	315220-0236	S		1	SEAL RING V-100S
630	ALL	312145-0331	-		4	SLOTTED HEMFS5X20RFR
640	ALL	312145-0329	-		1	SLOTTED HEMFS5X16RFR
650	ALL	312115-0287	-		2	SCREW 4X8 A4 80
660	ALL	312105-0374	-		4	SCREW M6S6X30RFR
670	ALL	312105-0370	-		2	SCREW M6S6X20RFR
680	ALL	312105-0329	-		6	SCREW M6S5X16 A4 80
685	ALL	312105-0333	-		1	SCREW M6S5X25 A4 80
690	ALL	312105-0331	-		4	SCREW M6S5X20 A4 80
700	ALL	312101-0546	-		4	SCREW M6S12X70FZB
710	ALL	312318-0321	-		2	GRUB SCREW SK6SS5X6RFR

TETRA PAK

2/8601

S-295310-3

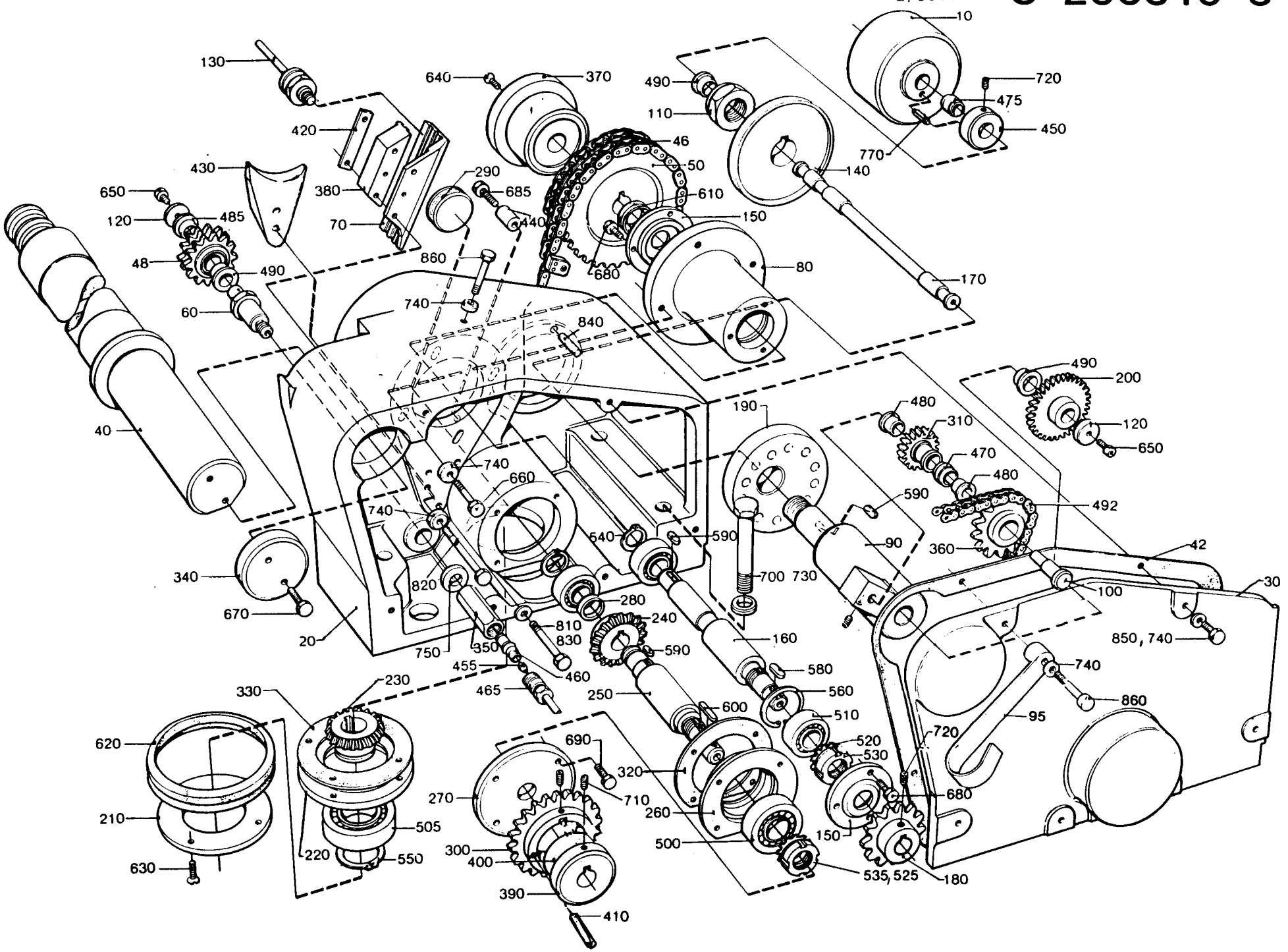

POS	VAR	PART NUMBER	SP	EH	QTY	DESCRIPTION
720	ALL	312318-0362	-		3	GRUB SCREW SK6SS6X8RFR
730	ALL	315115-0178	-		4	WASHER TBRB13X24RFR
740	ALL	315115-0153	-		13	WASHER TBRB6,4X12RFR
750	ALL	315105-0173	-		1	WASHER BRB10,5X22RFR
770	ALL	311305-0312	-		1	SLOTTED PIRPC5X25FZB
810	ALL	312105-0382	-		2	SCREW M6S6X60RFR
820	ALL	312105-0384	-		2	SCREW M6S6X70RFR
830	ALL	315105-0153	-		2	WASHER BRB6,4X12RFR
840	ALL	311103-0235	-		2	CYLINDRICACPR3M6X14RFR
850	ALL	312105-0372	-		5	SCREW M6S6X25RFR
860	ALL	312105-0378	-		2	SCREW M6S6X40RFR

TETRA PAK

2/8601

S-295310-3

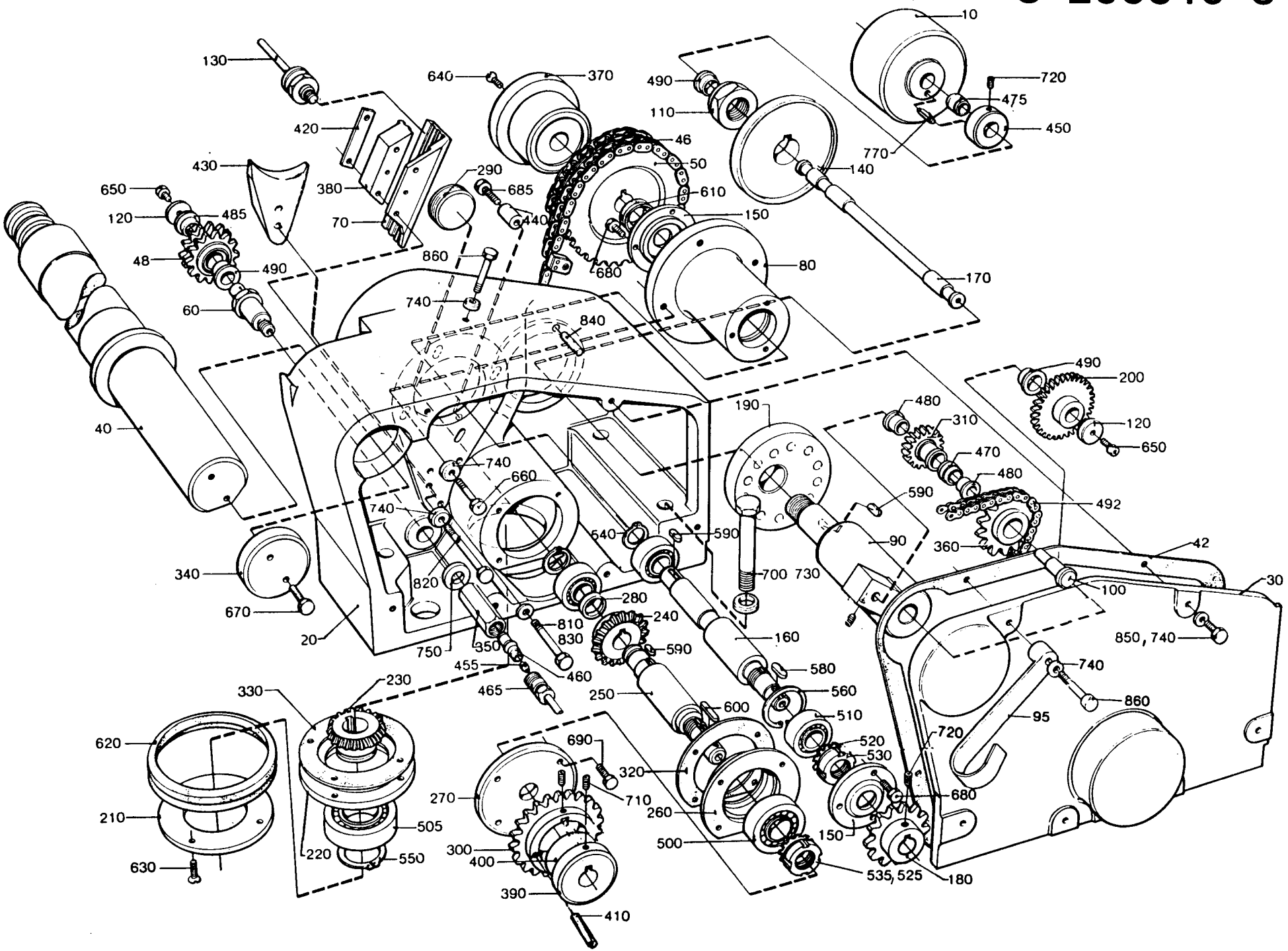

LAST ALTERATION: AM 8482 86-01-08
648105-070V

GROUP	VOLUME
-0301	V0250
-0302	V0236
-0303	V0200
-0304	V0180
-0305	V0125
-0306	200ML SLIM

POS	VAR	PART	NUMBER	SP	EH	QTY	DESCRIPTION
	-0301	S-	256712-SHEET	-7			===ASSEMBLY DRAWING===
	-0302			-7			
	-0303			-7			
	-0304			-7			
	-0305			-8			
	-0306			-8			
010	-0301		295843-0001	S		1	BRACKET
010	-0302		295843-0002	S		1	BRACKET
010	-0303		295843-0003	S		1	BRACKET
010	-0304		295843-0004	S		1	BRACKET
010	-0305		295843-0005	S		1	BRACKET
010	-0306		295843-0006	S		1	BRACKET
020	-0301	G-	272905-0001	S		1	ARM
020	-0302	G-	272905-0002	S		1	ARM
020	-0303	G-	272905-0003	S		1	ARM
020	-0304	G-	272905-0004	S		1	ARM
020	-0305	G-	272905-0005	S		1	ARM
020	-0306	G-	272905-0006	S		1	ARM
030	-0301	G-	272906-0001	S		1	ARM
030	-0302	G-	272906-0002	S		1	ARM
030	-0303	G-	272906-0003	S		1	ARM
030	-0304	G-	272906-0004	S		1	ARM
030	-0305	G-	272906-0005	S		1	ARM
030	-0306	G-	272906-0006	S		1	ARM
040	-0301		295057-0001	C		1	RAIL
	-0302					1	
040	-0303		295057-0002	C		1	RAIL
040	-0304		295057-0003	C		1	RAIL
040	-0305		295059	C		1	RAIL
040	-0306		295061	C		1	RAIL
050	-0301		295058-0001	C		1	RAIL
	-0302					1	
050	-0303		295058-0002	C		1	RAIL
050	-0304		295058-0003	C		1	RAIL
050	-0305		295060	C		1	RAIL
050	-0306		295062	C		1	RAIL
060	-0301		272045-0002	S		1	PLATE
	-0302					1	
060	-0303		272045-0003	S		1	PLATE

POS	VAR	PART	NUMBER	SP	EH	QTY	DESCRIPTION
060	-0304		272045-0004	S		1	PLATE
060	-0305		271939-0001	S		1	PLATE
060	-0306		272045-0001	S		1	PLATE
070	-0301	G-	272902	S		1	BLOCK
	-0302					1	
	-0303					1	
	-0304					1	
070	-0305	G-	272903	S		1	BLOCK
070	-0306	G-	272904	S		1	BLOCK
080	ALL	G-	490980	S		1	CYLINDER
090	ALL		272610	S		1	PISTON
100	ALL		271731	P		1	COMPRESSION SPRING
110	ALL		256727	-		1	COVER
120	ALL		272611	S		1	SLEEVE
130	ALL		295072	S		1	BUFFER RING
140	ALL		441896	-		1	WASHER
150	ALL		441897	S		1	STOP WASHER
300	ALL		90091-0160	P		1	SEAL RING
310	ALL		90091-0165	P		1	SEAL RING
315	ALL		90091-0162	P		1	RING
320	ALL		90091-0163	P		1	RING
330	ALL		90090-0013	P		1	STEEL BALL
500	ALL		312105-0455	-		4	SCREW M6S8X30RFR
510	ALL		312105-0453	-		2	SCREW M6S8X25RFR
515	ALL		312105-0327	-		1	SCREW M6S5X12 A4 80
520	ALL		312105-0374	-		4	SCREW M6S6X30RFR
530	ALL		312105-0368	-		2	SCREW M6S6X16RFR
540	ALL		312115-0374	-		1	SCREW 6X30 A4 80
550	ALL		312605-0320	-		1	NUT M6M10RFR
560	ALL		315115-0165	-		2	WASHER TBRB8,4X16RFR
565	ALL		315234-0101	-		1	SEAL RING M5
570	ALL		312311-0327	-		1	GRUB SCREW T6SS5X12FZB
580	ALL		315105-0153	-		2	WASHER BRB6,4X12RFR

S-256712-7

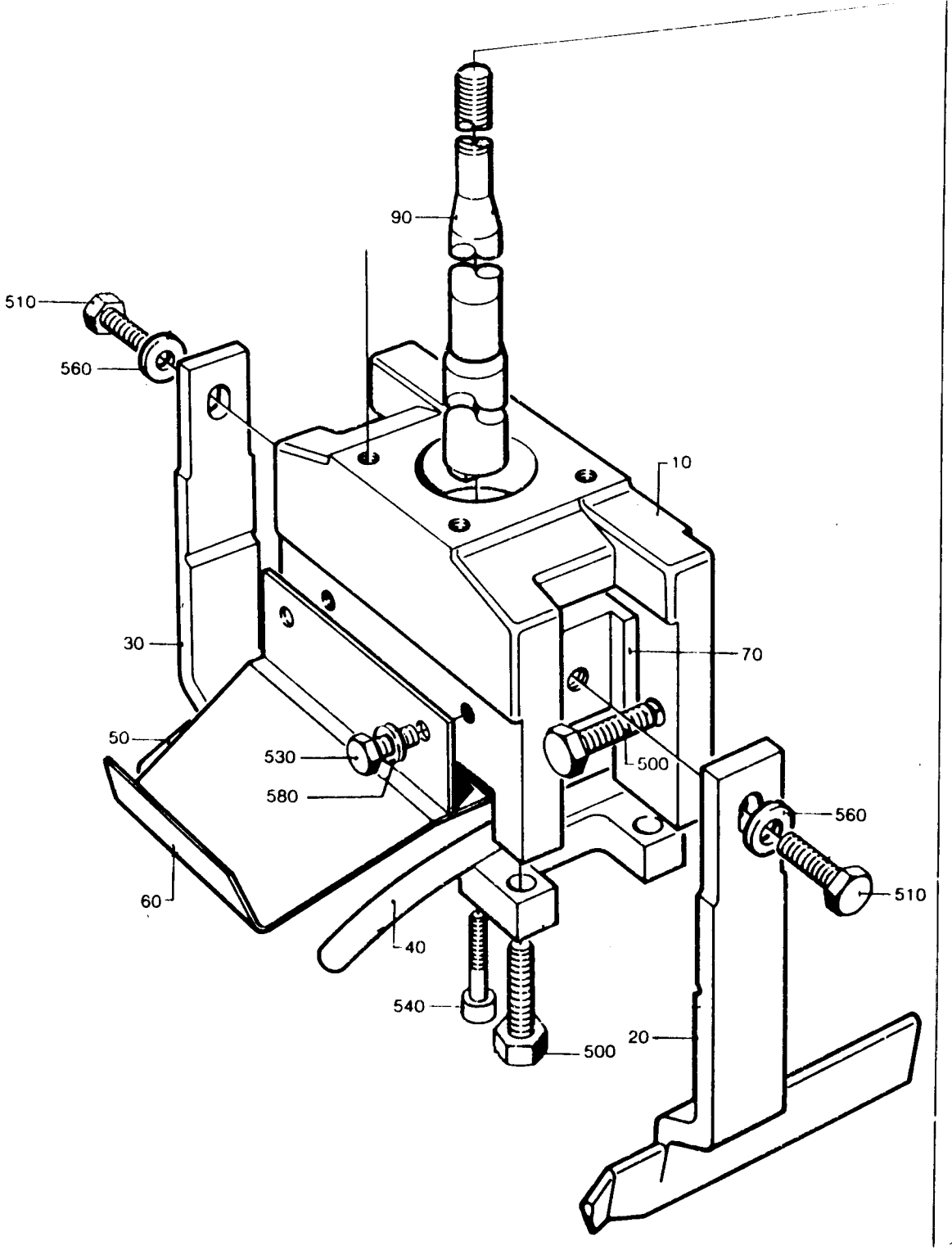
90
510
560
10
30
70
50
530
580
500
560
510
60
40
540
500
20

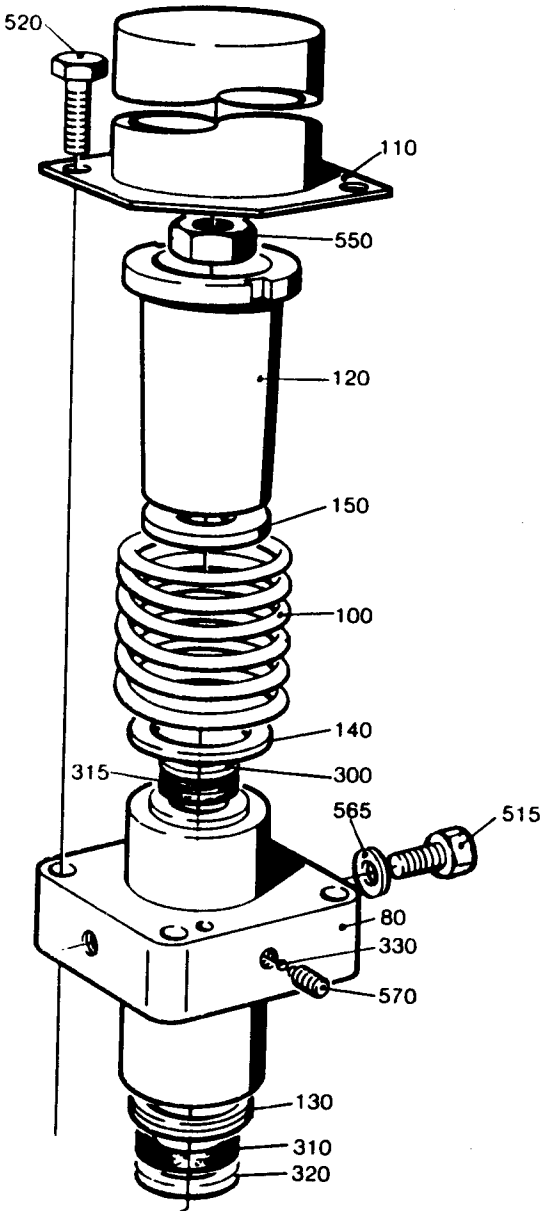
520
110
550
120
150
100
140
315
300
565
515
80
330
570
130
310
320

LAST ALTERATION: AM 8241 85-09-20
648105-060V
AM 6153
83-11-15

GROUP	VOLUME	VOLUME	VOLUME	VOLUME	VOLUME
-0301	V0284	V0250	V0236	V0200	V0187
	V0180	-	-	-	-
-0302	V0125	V0100	-	-	-
-0303	200ML SLIM	-	-	-	-

POS	VAR	PART	NUMBER	SP	EH	QTY	DESCRIPTION	
	-0301	S-	271089-SHEET		-3		===ASSEMBLY DRAWING===	
	-0302				-3			
	-0303				-3			
010	-0301		295719	S		1	RAIL	
010	-0302		295720	S		1	RAIL	
010	-0303		295721	S		1	RAIL	
020	-0301		295722	S		1	RAIL	
020	-0302		295723	S		1	RAIL	
020	-0303		295724	S		1	RAIL	
030	-0301		295725	S		1	PLATE	
030	-0302		295726-0001	S		1	PLATE	
030	-0303		295726-0002	S		1	PLATE	
040	-0301		295727	S		1	PLATE	
040	-0302		295728-0001	S		1	PLATE	
040	-0303		295728-0002	S		1	PLATE	
300	-0301		312105-0371	-		4	SCREW	M6S6X22RFR
300	-0302		312105-0374	-		4	SCREW	M6S6X30RFR
	-0303					4		
050	ALL		441490	S		1	GUIDE PLATE	
060	ALL	G-	441491	S		1	GUIDE SIDE LEFT	
070	ALL	G-	441492	S		1	GUIDE SIDE RIGHT	
080	ALL		295331	S		2	PLATE	
090	ALL		491313	S		2	GUIDE STRIP	
100	ALL		272998	S		4	INSERT	
110	ALL		441494	-		2	WASHER	
120	ALL		490883	-		2	SCREW	
310	ALL		312105-0517	-		2	SCREW	M6S-10X130RFR
320	ALL		312115-0493	-		2	SCREW	10X25 A4 80
330	ALL		312115-0501	-		4	SCREW	10X50 A4 80
340	ALL		312155-0453	-		4	SCREW	MF6S8X25RFR
350	ALL		315105-0173	-		2	WASHER	BRB10,5X22RFR

TETRA PAK

2/8506

S-271089-3

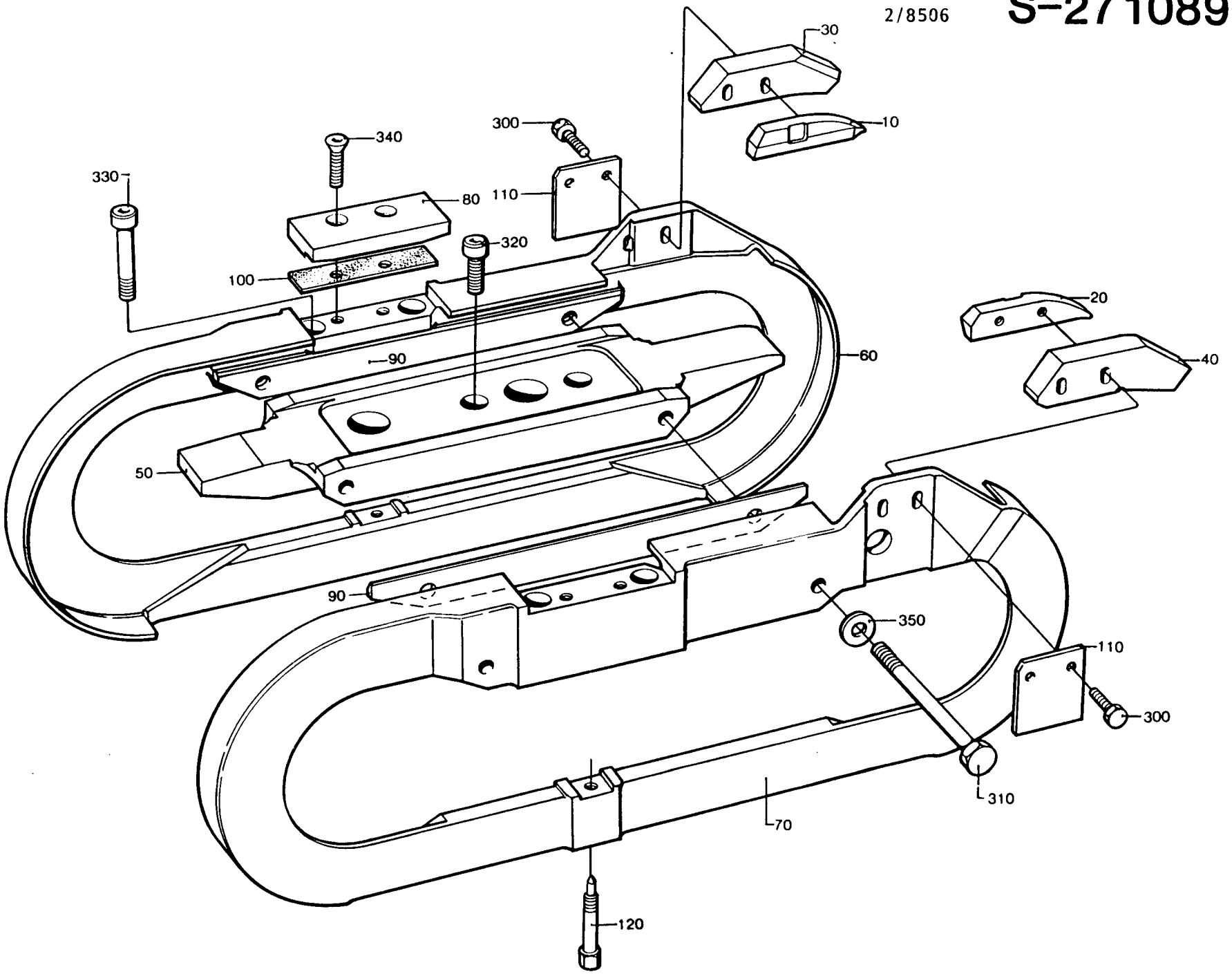

LAST ALTERATION: AM 7069 84-08-31
648103
AM 5216
82-03-19

GROUP VOLUME

-0201 V0250
-0202 V0200
-0203 V0180
-0204 200ML SLIM

POS	VAR	PART NUMBER	SP	EH	QTY	DESCRIPTION	
	-0201	S- 256201-SHEET	-2			===ASSEMBLY DRAWING===	
	-0202		-2				
	-0203		-2				
	-0204		-2				
010	-0201	272587	C		2	CAM	
010	-0202	272589	C		2	CAM	
010	-0203	272591	C		2	CAM	
010	-0204	272593	C		2	CAM	
020	-0201	272588	C		2	CAM	
020	-0202	272590	C		2	CAM	
020	-0203	272592	C		2	CAM	
020	-0204	272594	C		2	CAM	
030	ALL	456744	S		2	HUB	
040	ALL	272820	C		1	PULLEY	
050	ALL	272821	C		1	PROTRACTOR	
060	ALL	256653	-		2	DISTANCE	
070	ALL	271007	C		1	INDICATOR	
080	ALL	295140	S		4	PIN	
100	ALL	90208-0038	S		1	BUSHING	
110	ALL	90208-0039	S		2	BUSHING	
200	ALL	312101-0325	-		6	SCREW	M6S5X10FZB
210	ALL	312101-0500	-		24	SCREW	M6S10X45FZB
220	ALL	315101-0146	-		6	WASHER	BRB5,3X10FZB
230	ALL	315101-0173	-		24	WASHER	BRB10,5X22FZB

S-256201-2

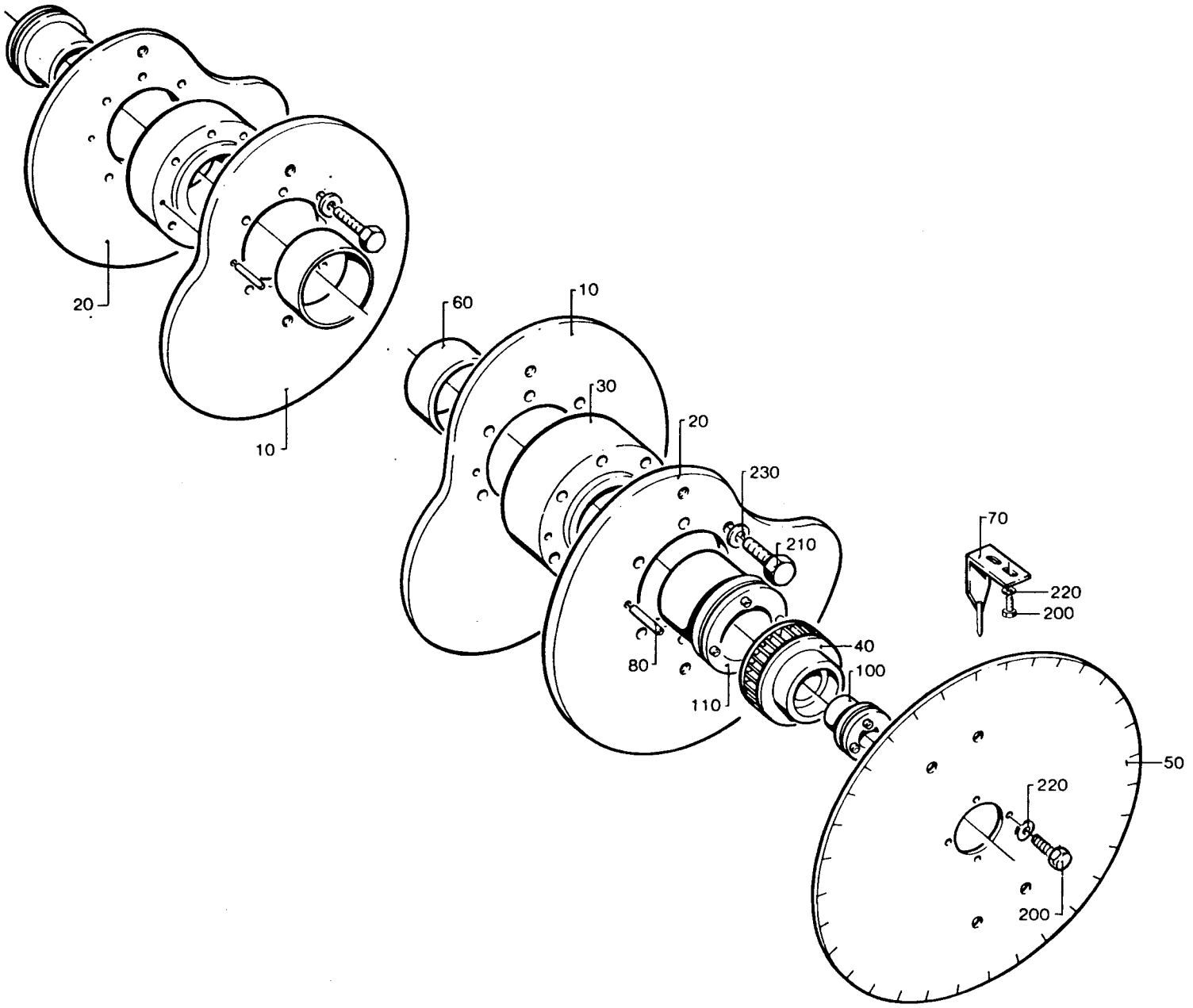

LAST ALTERATION: AM 9648 86-10-30
648103-070V

GROUP	VOLUME
-0301	V0250
-0302	V0200
-0303	V0180
-0304	200ML SLIM

POS	VAR	PART NUMBER	SP	EH	QTY	DESCRIPTION
	-0301	S- 256201-SHEET	-3			===ASSEMBLY DRAWING===
	-0302		-3			
	-0303		-3			
	-0304		-3			
010	-0301	272587	C		2	CAM
010	-0302	272589	C		2	CAM
010	-0303	272591	C		2	CAM
010	-0304	272593	C		2	CAM
020	-0301	272588	C		2	CAM
020	-0302	272590	C		2	CAM
020	-0303	272592	C		2	CAM
020	-0304	272594	C		2	CAM
025	-0301	491908	S		1	CAM SEGMENT
025	-0302	491910	S		1	CAM SEGMENT
025	-0303	491912	S		1	CAM SEGMENT
025	-0304	491914	S		1	CAM SEGMENT
026	-0301	491909	S		1	CAM SEGMENT
026	-0302	491911	S		1	CAM SEGMENT
026	-0303	491913	S		1	CAM SEGMENT
026	-0304	491915	S		1	CAM SEGMENT
030	ALL	456744	S		2	HUB
040	ALL	272820	C		1	PULLEY
050	ALL	272821	C		1	PROTRACTOR
060	ALL	256653	-		2	SPACER
070	ALL	271007	C		1	INDICATOR
080	ALL	295140	S		4	PIN
100	ALL	90208-0038	S		1	BUSHING
110	ALL	90208-0039	S		2	BUSHING
115	ALL	90287-0145	-		4	SCREW
190	ALL	311103-0272	-		4	CYLINDRICACPR4M6X20RFR
200	ALL	312101-0325	-		6	SCREW M6S5X10FZB
210	ALL	312101-0500	-		24	SCREW M6S10X45FZB
220	ALL	315101-0146	-		6	WASHER BRB5,3X10FZB
230	ALL	315101-0173	-		24	WASHER BRB10,5X22FZB

S-256201-3

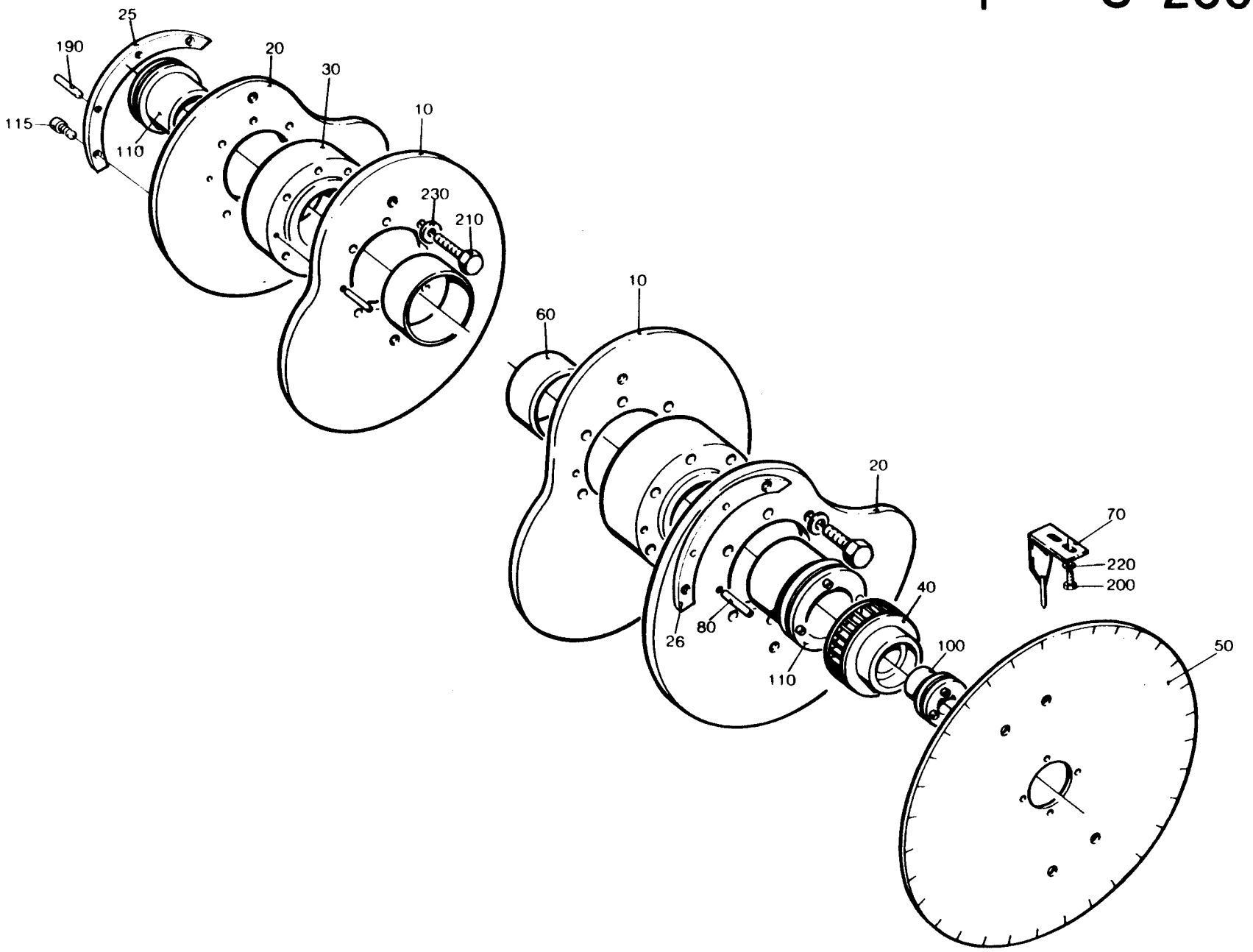
25
190
20
30
115
10
110
230
210
10
60
20
70
220
200
40
80
26
110
100
50

LAST ALTERATION: AM 9585 86-09-11
648105-070V
AM 8667
86-02-17

GROUP	VOLUME	VOLUME	VOLUME	VOLUME
-0401	V0250	V0236	V0200	V0180
-0402	V0125	-	-	-
-0403	200ML SLIM	-	-	-

POS	VAR	PART	NUMBER	SP	EH	QTY	DESCRIPTION
	-0401	S-	295310-SHEET	-4			===ASSEMBLY DRAWING===
	-0402			-4			
	-0403			-4			
010	-0401		456451	S		1	ROLLER
			315202-0306	S		2	* O-RING 74,5X3
010	-0402		469433	S		1	ROLLER
			315202-0311	S		2	* O-RING 99,5X3
010	-0403		469434	S		1	ROLLER
			315202-0306	S		2	* O-RING 74,5X3
020	ALL	G-	295311	-		1	DISCHARGE HOUSE
030	ALL		456175	C		1	LID
040	ALL		295313	-		1	SHAFT
042	ALL		456176	S		1	GASKET
046	ALL		272068	S		1	CARRIER CHAIN
048	ALL		272517	S		1	SPROCKET
050	ALL		295314	S		1	SPROCKET
060	ALL		295315	S		1	SHAFT
070	ALL		295316	S		1	STRIP
080	ALL		295092	-		1	BEARING HOUSING
090	ALL		441978	C		1	BEARING
095	ALL		491193	-		1	HOLDER
100	ALL		271975	S		1	SHAFT
110	ALL		271978	S		1	NUT
120	ALL		272534	S		2	WASHER
130	ALL		272742	P		1	FINGER
140	ALL		295842	-		1	WASHER
150	ALL		295093	-		2	LID
160	ALL		295094	S		1	SHAFT
170	ALL		441979	S		1	SHAFT
180	ALL		295116	S		1	SPROCKET
190	ALL		469393	-		1	BRACKET
200	ALL		441980	S		1	GEAR
210	ALL		491746	-		1	WASHER
220	ALL		295163	-		1	SHOULDER RING
230	ALL		295164	S		1	GEAR
240	ALL		295165	S		1	GEAR
250	ALL		295166	C		1	SHAFT
260	ALL		491733	-		1	SHOULDER RING
270	ALL		295168	-		1	LID
280	ALL		295169	S		1	SPACER RING

POS	VAR	PART	NUMBER	SP	EH	QTY	DESCRIPTION
290	ALL		295170	S		1	PLUG
300	ALL		491751	S		1	SPROCKET
310	ALL		295299	S		1	GEAR DRIVE
320	ALL		295308	S		1	INSERT
330	ALL		295309	S		1	INSERT
340	ALL		295317	-		1	WASHER
350	ALL		295318	-		1	GREASE NIPPLE
360	ALL		295319	S		1	SPROCKET
370	ALL		295320	S		1	PLATE
380	ALL		295321	S		1	STRIP
390	ALL		491753	C		1	WASHER
400	ALL		491752	S		1	HUB
410	ALL		491754	P		1	BREAKPIN
420	ALL		295323	-		1	WASHER
430	ALL		469376	-		1	COVER PLATE
440	ALL		456064	-		1	SPACER
445	ALL		491215	-		1	SLEEVE
450	ALL		295326	-		1	RETAINING RING
452	ALL		751061	-		1	LID
455	ALL		90028-0021	P		1	CONE
460	ALL		90092-0052	P		1	VALVE
465	ALL		90134-0040	P		1	BUSHING
466	ALL		90134-0068	S		2	BANJO CONNECTION
467	ALL		90141-0018	-		1	LOCK RING
470	ALL		90208-0050	S		1	COLLAR
475	ALL		90208-0047	S		3	COLLAR
480	ALL		90240-0090	S		2	RICTION BEARING
485	ALL		90240-0091	S		1	RICTION BEARING
490	ALL		90240-0092	S		3	RICTION BEARING
491	ALL		90266-0165	S	MM	100	PIPE
492	ALL		90288-0036	S		1	ROLLER CHAIN
496	ALL		90296-0068	-	G	100	GREASE
500	ALL		321308-0204	S		1	BALL BEARISKF6004-2RS
505	ALL		321308-0208	S		1	BALL BEARISKF6008-2RS
510	ALL		321313-0102	S		3	BALL BEARISKF6202-2RS
520	ALL		315410-0102	S		1	LOCK WASHESKFMB2
525	ALL		315410-0103	S		1	LOCK WASHESKFMB3
530	ALL		312805-0102	-		1	NUT KM2
535	ALL		312805-0103	-		1	NUT KM3
540	ALL		315750-0112	S		2	LOCK RING SGA15
550	ALL		315750-0127	S		1	LOCK RING SGA40
560	ALL		315752-0124	S		1	LOCK RING SGH35
580	ALL		315701-0170	-		1	FLAT WEDGE4X4X20
600	ALL		315701-0207	-		1	FLAT WEDGE5X5X36
610	ALL		315220-0121	S		1	SEAL RING V-14S
630	ALL		312145-0331	-		4	SLOTTED HEMFS5X20RFR
640	ALL		312145-0329	-		1	SLOTTED HEMFS5X16RFR
650	ALL		312115-0287	-		2	SCREW 4X8 A4 80
660	ALL		312105-0374	-		4	SCREW M6S6X30RFR

S-295310-4

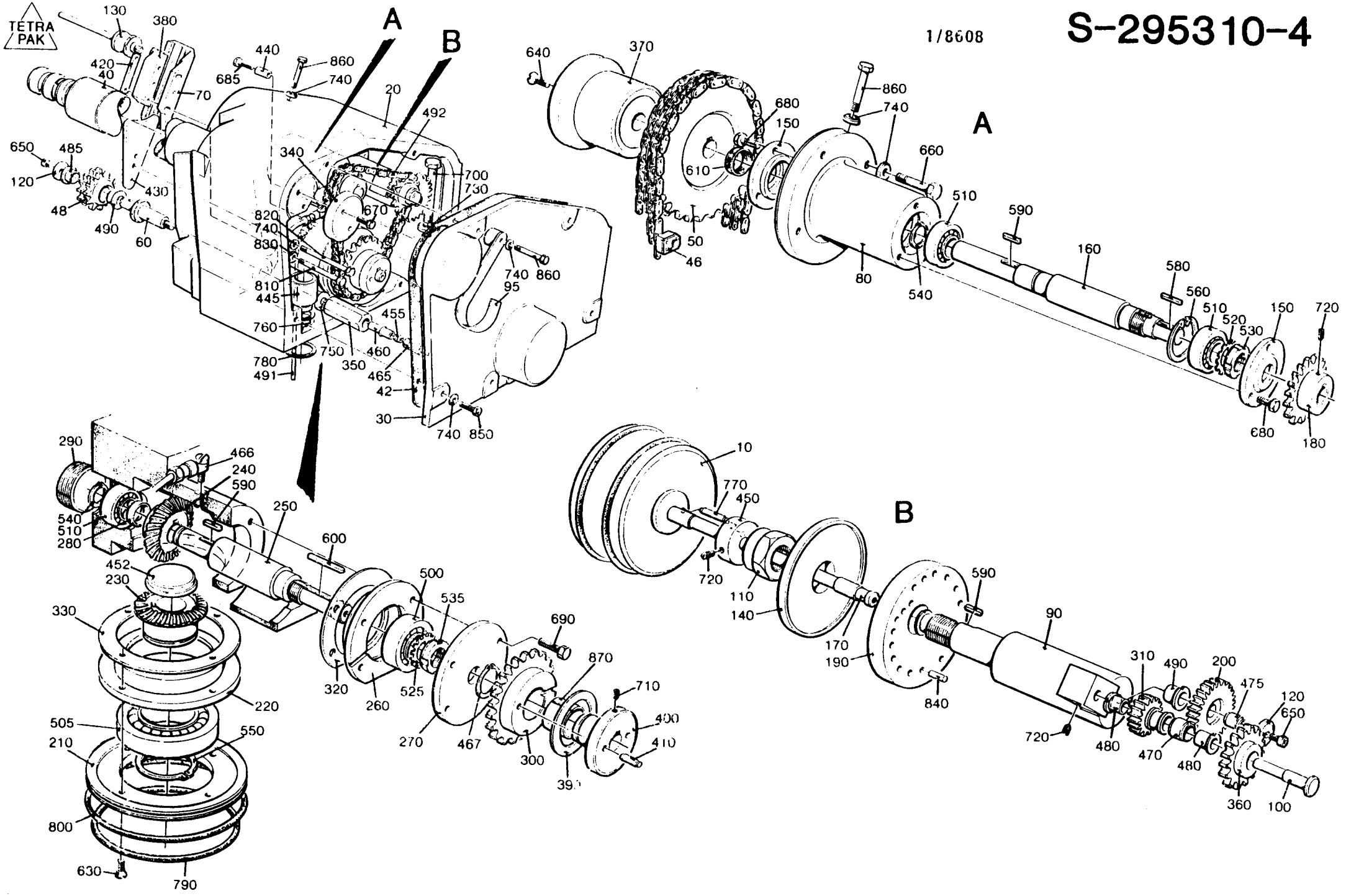
TETRA PAK
A
B
130
380
420
40
70
440
685
860
740
20
492
650
485
120
48
490
60
430
340
700
730
820
740
830
670
810
445
760
780
491
750
350
460
455
465
42
30
740
850
740
860
95
640
370
680
150
610
50
46
860
740
660
510
590
160
580
560
510
520
530
150
720
680
180
80
540
290
466
240
590
540
510
280
250
600
452
230
330
220
505
550
210
800
630
790
320
260
500
535
525
270
467
690
870
710
400
410
300
390
10
770
450
720
110
140
170
190
840
590
90
310
490
200
475
120
650
720
480
470
480
360
100

POS	VAR	PART NUMBER	SP	EH	QTY	DESCRIPTION
670	ALL	312105-0370	-		2	SCREW M6S6X20RFR
680	ALL	312105-0329	-		6	SCREW M6S5X16 A4 80
685	ALL	312105-0333	-		1	SCREW M6S5X25 A4 80
690	ALL	312105-0331	-		4	SCREW M6S5X20 A4 80
700	ALL	312101-0546	-		4	SCREW M6S12X70FZB
710	ALL	312318-0321	-		2	GRUB SCREW SK6SS5X6RFR
720	ALL	312318-0362	-		3	GRUB SCREW SK6SS6X8RFR
730	ALL	315115-0178	-		4	WASHER TBRB13X24RFR
740	ALL	315115-0153	-		13	WASHER TBRB6,4X12RFR
750	ALL	315105-0173	-		1	WASHER BRB10,5X22RFR
760	ALL	315202-0119	S		1	O-RING 25,1X1,6
770	ALL	311305-0312	-		1	SLOTTED PIRPC5X25FZB
780	ALL	315202-0220	S		1	O-RING 32,2X3
790	ALL	315202-0312	S		1	O-RING 104,5X3
800	ALL	315202-0314	S		1	O-RING 114,5X3
810	ALL	312105-0382	-		2	SCREW M6S6X60RFR
820	ALL	312105-0384	-		2	SCREW M6S6X70RFR
830	ALL	315105-0153	-		2	WASHER BRB6,4X12RFR
840	ALL	311103-0235	-		2	CYLINDRICACPR3M6X14RFR
850	ALL	312105-0372	-		5	SCREW M6S6X25RFR
860	ALL	312105-0378	-		2	SCREW M6S6X40RFR
870	ALL	321120-0153	S		1	BUSHING 24/27X20

S-295310-4

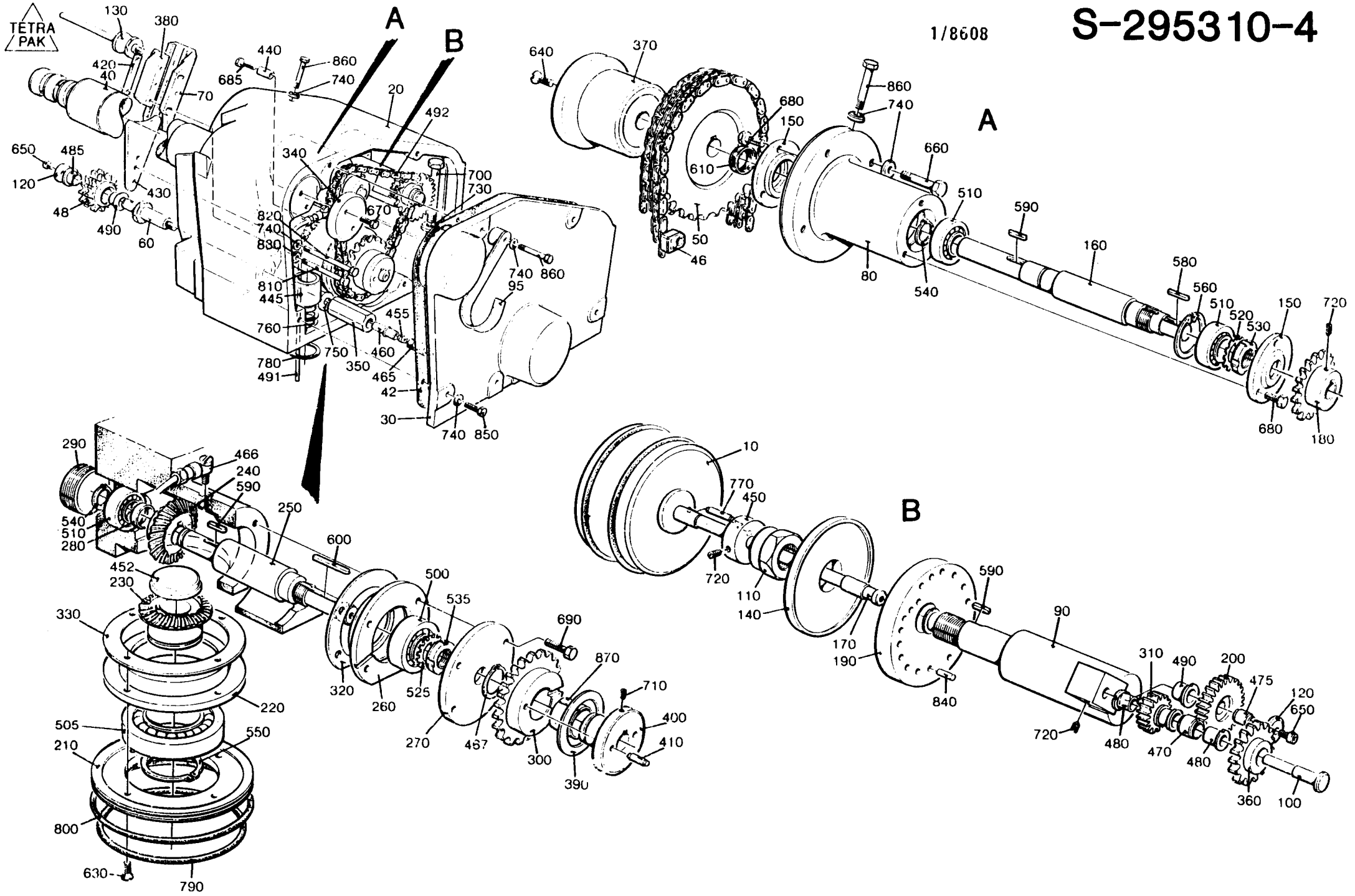
TETRA PAK
A
B
130
380
420
40
70
440
685
860
740
20
492
340
700
730
650
485
120
48
490
60
430
670
820
740
830
810
445
760
780
491
750
350
455
460
465
42
30
740
850
740
860
95
640
370
680
150
610
50
46
860
740
660
510
590
160
580
560
510
520
530
150
720
680
180
80
540
290
466
240
590
540
510
280
250
600
452
230
330
220
505
550
210
800
630
790
500
535
320
260
525
690
870
710
400
410
270
467
300
390
10
770
450
720
110
140
170
190
590
90
840
720
310
490
200
475
120
650
480
470
480
360
100

LAST ALTERATION: AM 8241 85-09-20
648105-060V
AM 6153
83-11-15

POS	VAR	PART NUMBER	SP	EH	QTY	DESCRIPTION
	-0101	S- 441271-SHEET	-1			===ASSEMBLY DRAWING===
010	-0101	G- 441602	S		1	SPROCKET
020	-0101	441784	C		1	SLEEVE
030	-0101	441785	S		1	RING
040	-0101	441786	C		1	AXLE PIN
050	-0101	441787	C		1	CARRIER
060	-0101	491311	S		1	GUIDE FLANGE LEFT
070	-0101	491310	S		1	GUIDING FLANGE RIGHT
080	-0101	441276	C		1	RING
090	-0101	441789	-		1	WASHER
100	-0101	441790	-		1	WASHER
110	-0101	441845	-		1	SPACER RING
120	-0101	469383	S		1	SHIM
300	-0101	90296-0070	-	G	40	GREASE
310	-0101	90016-0054	S		7	SPRING WASHER
320	-0101	90016-0053	-		11	DISC SPRING
330	-0101	90014-0011	S		4	ROLLER
340	-0101	90240-0109	S		1	PLAIN BEARING
350	-0101	90157-0016	-	ML	10	LOCKING FLUID
510	-0101	312155-0368	-		11	SCREW MF6S6X16RFR
520	-0101	312805-0109	-		1	NUT KM9
530	-0101	312811-0318	-		1	CHECK NUT M8RFR
540	-0101	315202-0309	S		1	O-RING 89,5X3
550	-0101	315220-0198	S		1	SEAL RING V-50S
560	-0101	315410-0109	-		1	LOCK WASHESKFMB9
570	-0101	321308-0110	S		1	BALL BEARISKF6010RS
580	-0101	344502-0021	-		1	NIPPLE L AHM6

TETRA PAK

2/8506 **S-441271-1**

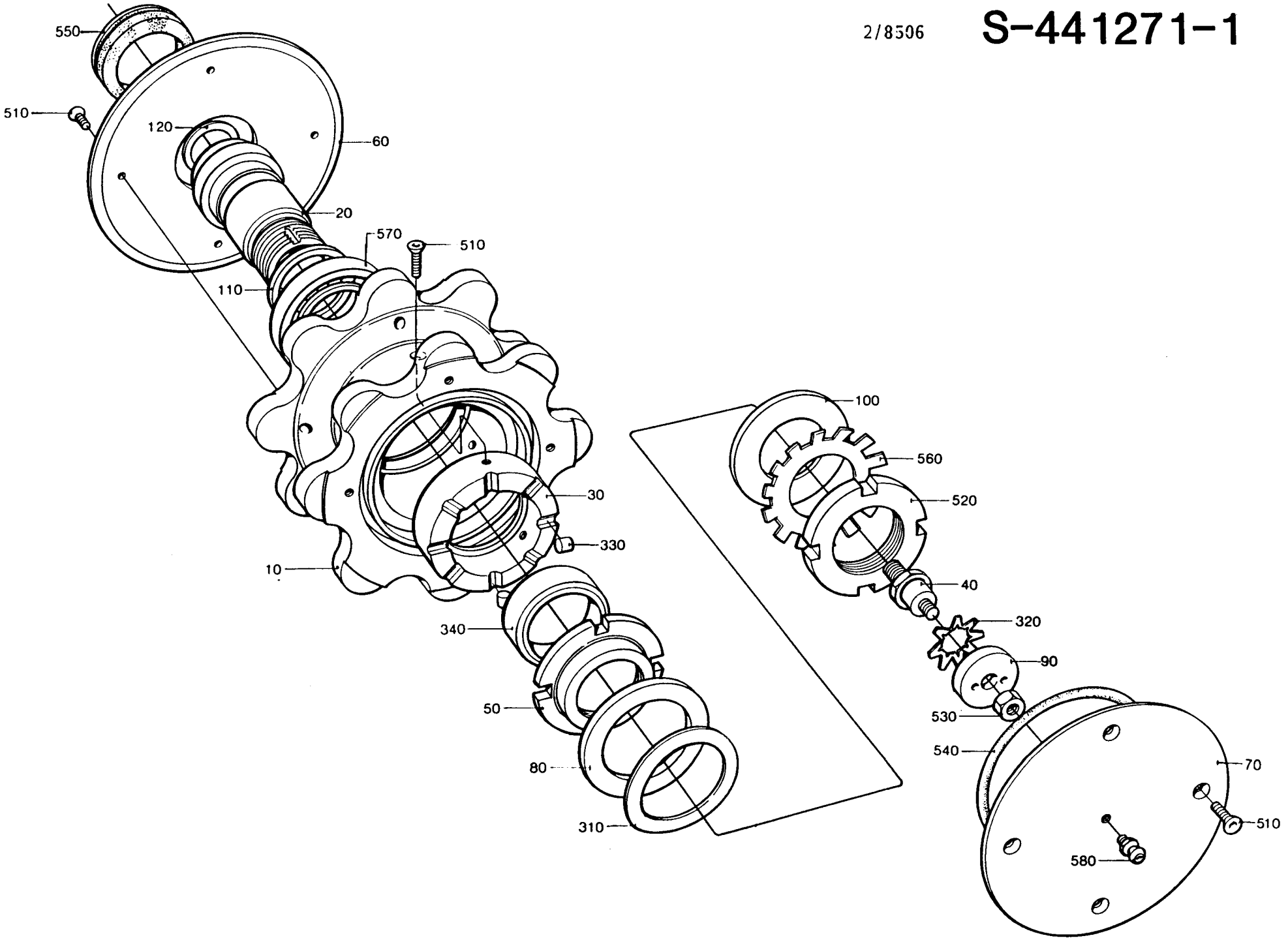

LAST ALTERATION: AM 8667 86-02-17
648105-070V

POS	VAR	PART NUMBER	SP	EH	QTY	DESCRIPTION
	-0201	S- 441271-SHEET	-2			===ASSEMBLY DRAWING===
010	-0201	G- 441602	S		1	SPROCKET
020	-0201	441784	C		1	BEARING SLEEVE
030	-0201	491727	S		1	RING
050	-0201	491728	S		1	CARRIER
060	-0201	491311	S		1	GUIDE FLANGE LEFT
070	-0201	491310	S		1	GUIDING FLANGE RIGHT
080	-0201	491729	C		1	PRESSURE PLATE
100	-0201	441790	-		1	WASHER
110	-0201	441845	-		1	SPACER RING
120	-0201	491730	S		1	PEEL-OFF SHIMS
130	-0201	469504	C		1	WASHER
300	-0201	90296-0070	-	G	40	GREASE
310	-0201	90016-0054	S		7	SPRING WASHER
330	-0201	90014-0011	S		4	ROLLER
340	-0201	90240-0109	S		1	PLAIN BEARING
350	-0201	90157-0016	-	ML	10	LOCKING FLUID
360	-0201	312105-0541	-		1	SCREW M6S12X45RFR
510	-0201	312155-0368	-		11	SCREW MF6S6X16RFR
520	-0201	312805-0109	-		1	NUT KM9
530	-0201	315105-0178	-		1	WASHER BRB13X24RFR
540	-0201	315202-0309	S		2	O-RING 89,5X3
550	-0201	315220-0198	S		1	SEAL RING V-50S
555	-0201	315220-0204	S		1	SEAL RING V-55S
560	-0201	315410-0109	-		1	LOCK WASHESKFMB9
570	-0201	321308-0110	S		1	BALL BEARISKF6010RS
580	-0201	344502-0021	-		1	NIPPLE L AHM6

TETRA PAK

1/8608

S-441271-2

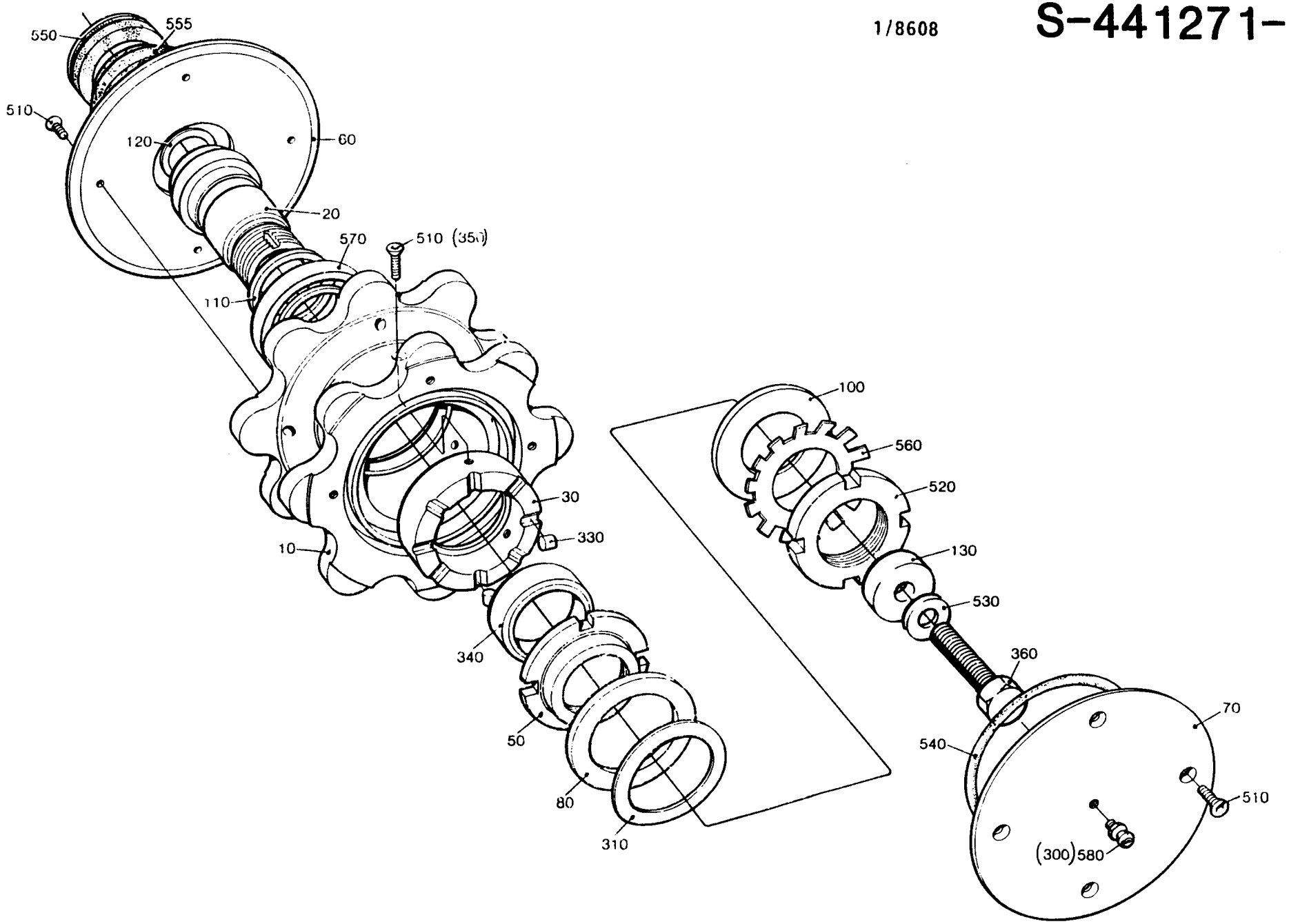

LAST ALTERATION: AM 8241 85-09-20
648105-060V
AM 6153
83-11-15

POS	VAR	PART NUMBER	SP	EH	QTY	DESCRIPTION
	-0101	S- 441594-SHEET	-1			===ASSEMBLY DRAWING===
010	-0101	441583	C		1	SHAFT
020	-0101	441584	C		1	TENSIONER SPROCKET
030	-0101	491312	S		1	GUIDE FLANGE LEFT
040	-0101	491310	S		1	GUIDING FLANGE RIGHT
050	-0101	441587	C		1	WASHER
060	-0101	441588	C		1	SPACER
070	-0101	441589	S		1	SHIM
300	-0101	90296-0070	-	G	40	GREASE
500	-0101	312155-0368	-		8	SCREW MF6S6X16RFR
510	-0101	312151-0460	-		1	SCREW MF6S8X45FZB
520	-0101	312810-0324	-		1	CHECK NUT 16FZB
530	-0101	315111-0186	-		1	WASHER TBRB17X30FZB
540	-0101	315202-0309	S		2	O-RING 89,5X3
550	-0101	315220-0210	S		1	SEAL RING V-60S
560	-0101	321306-0105	S		2	BALL BEARI SKF6005
570	-0101	344502-0021	-		1	NIPPLE L AHM6

TETRA PAK

3/8601 **S-441594-1**

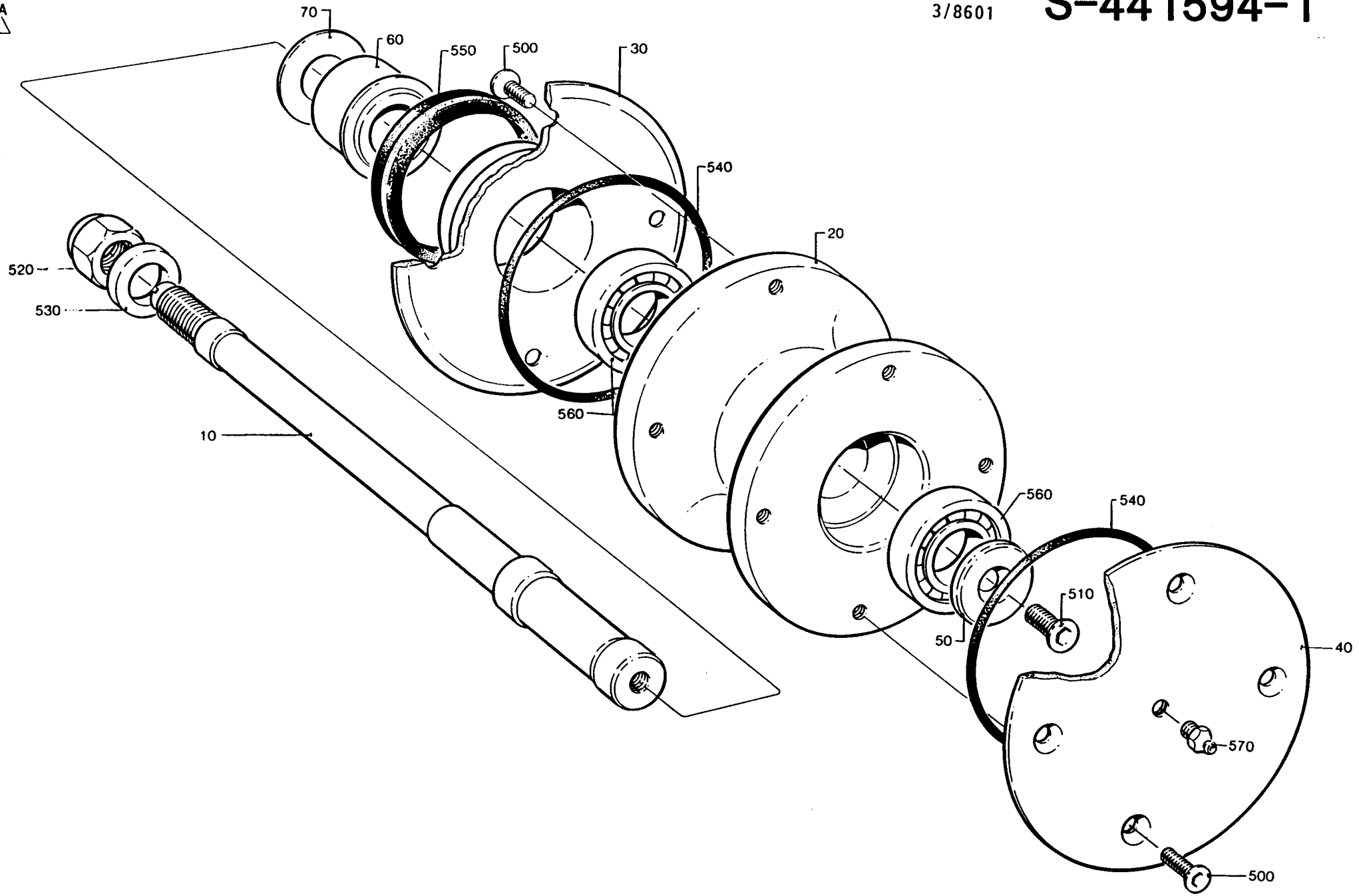

LAST ALTERATION: AM 6591 84-02-20
648105-060V

POS	VAR	PART	NUMBER	SP	EH	QTY	DESCRIPTION	
	-0101	S-	441695-SHEET	-1			===ASSEMBLY DRAWING===	
010	-0101	G-	441595	-		1	MACHINE BODY	
020	-0101		441596	-		1	BRACKET	
040	-0101		272659	-		1	SIDE PIECE	
050	-0101		272660	-		1	SIDE PIECE	
060	-0101		272745	-		1	COVER	
070	-0101		272743	-		1	LID	
080	-0101		271591	-		2	BUTTON	
090	-0101		272661	-		2	STEP	
110	-0101		272673	-		1	LEG	
190	-0101		90143-0056	S	MM	2700	STRIP	
290	-0101		312105-0370	-		5	SCREW	M6S6X20RFR
310	-0101		312105-0451	-		12	SCREW	M6S8X20RFR
320	-0101		312105-0544	-		6	SCREW	M6S12X60RFR
330	-0101		312115-0491	-		2	SCREW	MC6S10X20RFR
350	-0101		315105-0153	-		8	WASHER	BRB6,4X12RFR
360	-0101		315105-0165	-		12	WASHER	BRB8,4X16RFR
370	-0101		315105-0178	-		6	WASHER	BRB13X24RFR

TETRA PAK

2/8506

S-441695-1

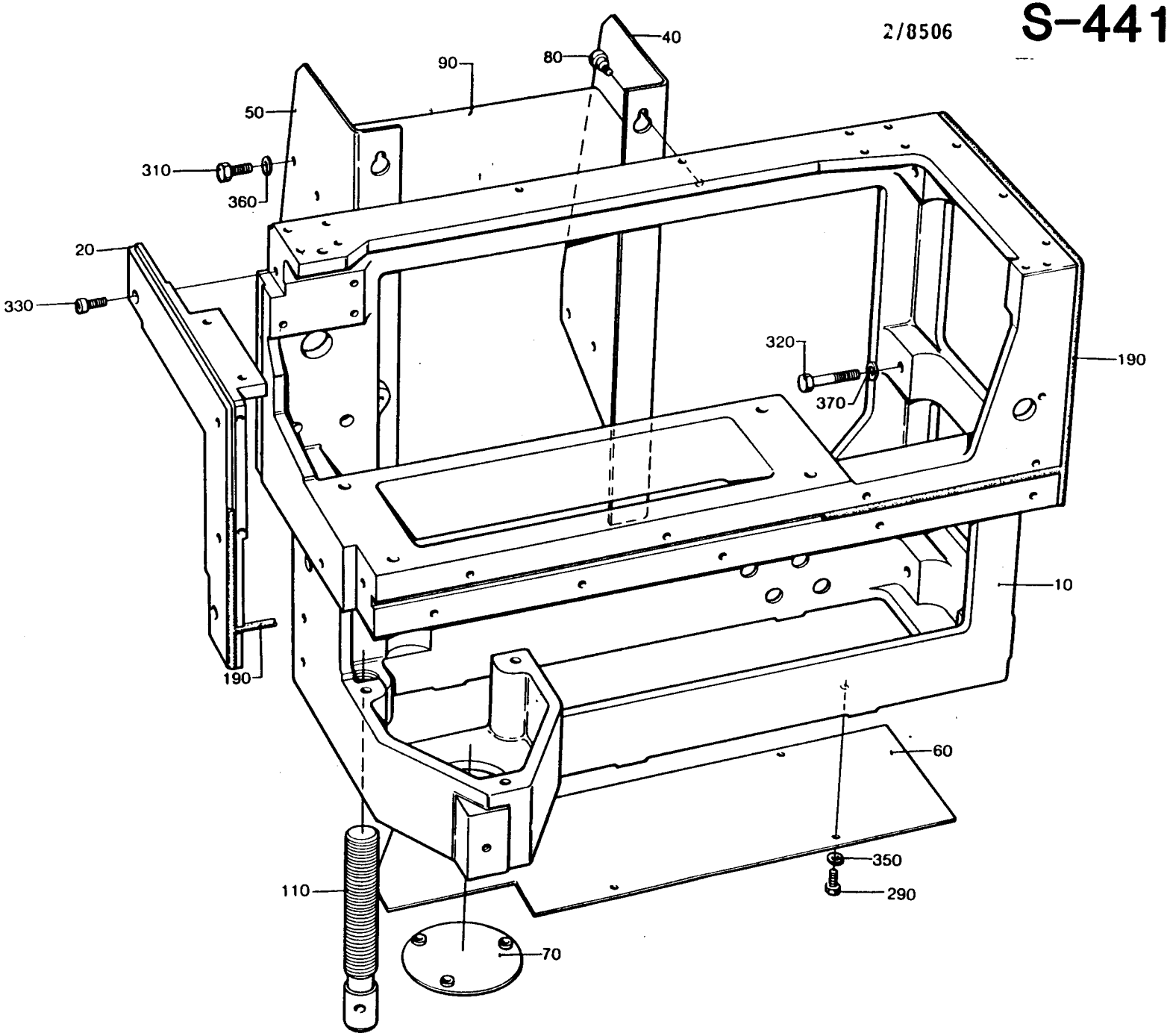

LAST ALTERATION: AM 6626 84-03-20
648105-060V

POS	VAR	PART NUMBER	SP	EH	QTY	DESCRIPTION
	-0101	S- 441798-SHEET	-1			===ASSEMBLY DRAWING===
010	-0101	441792	C		1	HEAD
020	-0101	441793	C		1	HOUSING
030	-0101	441794	C		1	PIVOT PIN
040	-0101	441795	C		1	WASHER
050	-0101	441796	P		1	SEAL
060	-0101	441797	S		2	SHIM
070	-0101	441799	S		2	CONNECTION
200	-0101	90141-0017	S		1	LOCK RING
210	-0101	90214-0092	S		2	BALL BEARING
220	-0101	90330-0101	S		2	NIPPLE
230	-0101	90424-0035	S		2	NOZZLE
300	-0101	312155-0299	-		2	SCREW MF6S4X30RFR
310	-0101	315202-0217	S		1	O-RING 24,2X3

S-441798-1

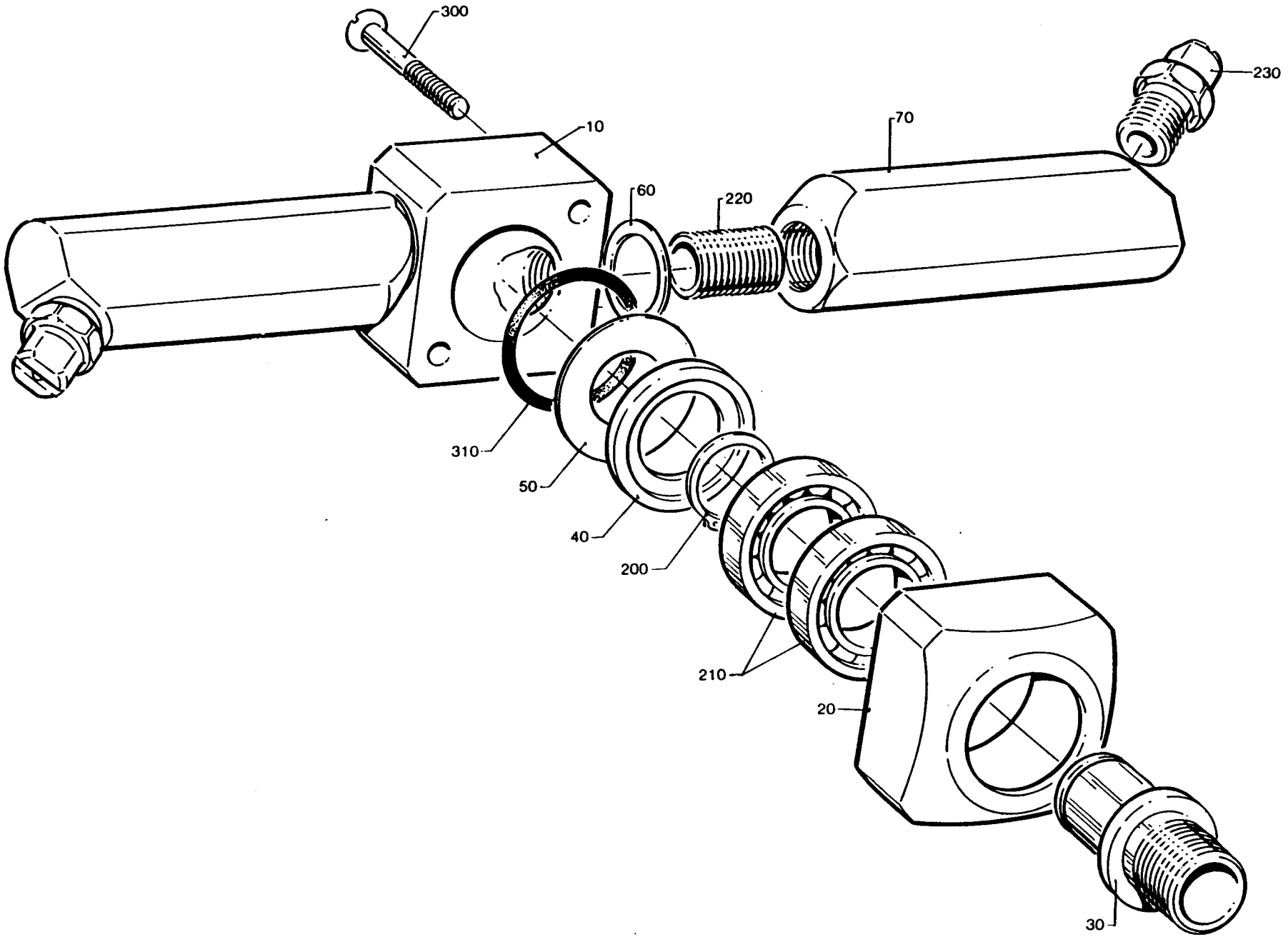

LAST ALTERATION: AM 6626 84-03-20
648105-060V

POS	VAR	PART NUMBER	SP	EH	QTY	DESCRIPTION
	-0101	S- 441811-SHEET	-1			===ASSEMBLY DRAWING===
010	-0101	441792	C		1	HEAD
020	-0101	441793	C		1	HOUSING
030	-0101	441794	C		1	PIVOT PIN
040	-0101	441795	C		1	WASHER
050	-0101	441796	P		1	SEAL
060	-0101	441797	S		2	SHIM
070	-0101	441800	S		2	FITTING
200	-0101	90141-0017	S		1	LOCK RING
210	-0101	90214-0092	S		2	BALL BEARING
220	-0101	90330-0101	S		2	NIPPLE
230	-0101	90424-0025	S		2	NOZZLE
300	-0101	312155-0299	-		2	SCREW MF6S4X30RFR
310	-0101	315202-0217	S		1	O-RING 24,2X3

S-441811-1

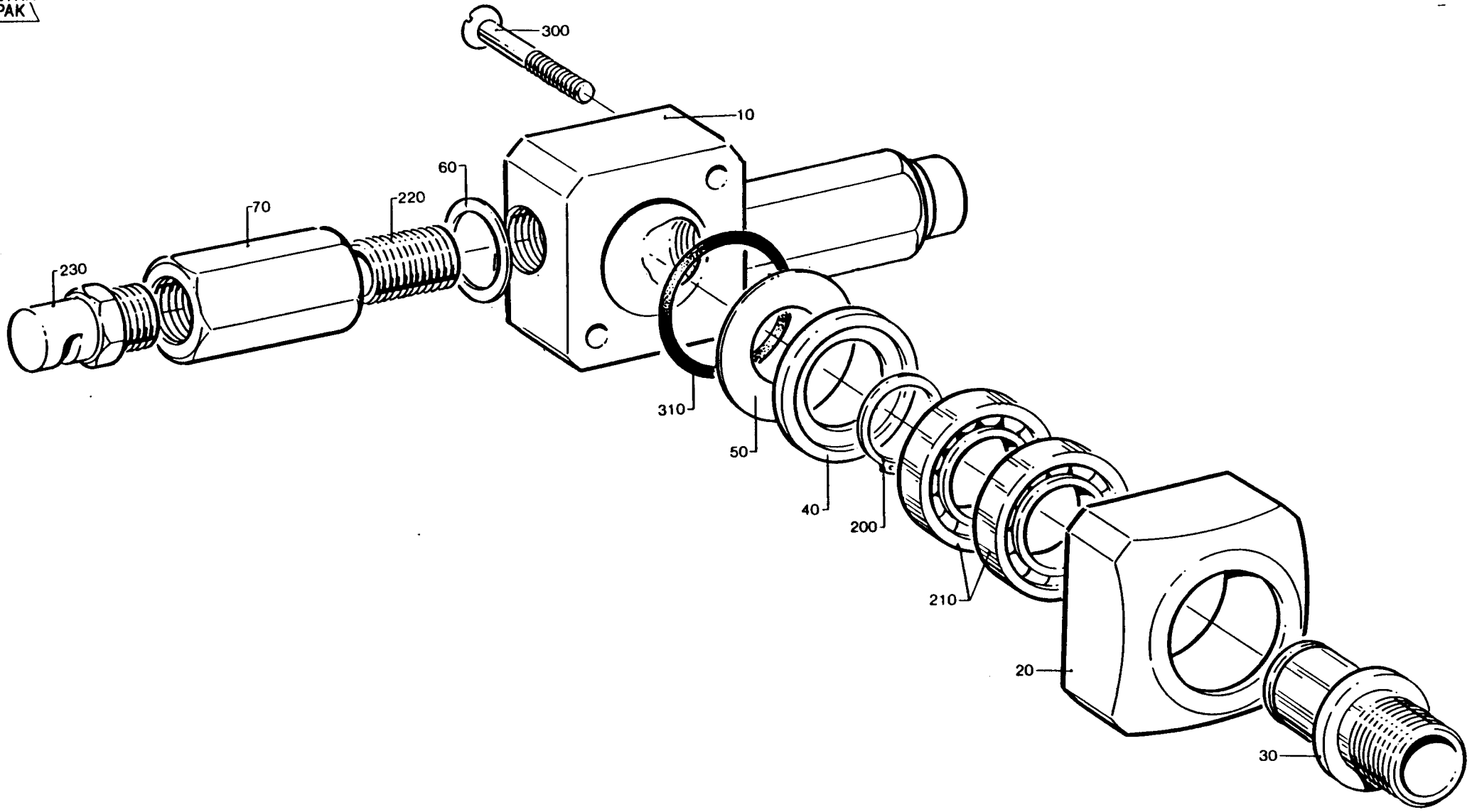

LAST ALTERATION: AM 7911 85-06-11
648105-060V
AM 6740
84-04-18

GROUP

-0101 .

**** THIS C-LIST CONTAINS SUBGROUPS, SEE B-LIST ****

POS	VAR	PART	NUMBER	SP	EH	QTY	DESCRIPTION
	-0101	S-	441850-SHEET	-1			===ASSEMBLY DRAWING===
010	-0101		441601	-		1	SHELF
020	-0101		456245	S		1	PROTECTIVE COVER
030	-0101		456249	S		1	PROTECTIVE COVER
040	-0101		456256	S		1	PROTECTIVE COVER
050	-0101		456862	-		1	PLATE
060	-0101		456863	-		1	BRACKET
100	-0101		90015-0016	-		1	BUSHING
110	-0101		90015-0023	-		4	BUSHING
120	-0101		90044-0101	-		1	LIMIT SWITCH
125	-0101		90077-0102	-		2	TERMINAL BLOCK
130	-0101		90195-0037	-		2	CONNECTION BOX
210	-0101		312105-0455	-		2	SCREW M6S8X30RFR
220	-0101		312115-0331	-		2	SCREW MC6S5X20RFR
230	-0101		312115-0372	-		3	SCREW MC6S6X25RFR
240	-0101		312115-0376	-		2	SCREW MC6S6X35RFR
250	-0101		312125-0287	-		10	SLOTTED HEMCS4X8RFR
255	-0101		312125-0230	-		4	SLOTTED HEMCS3X20RFR
260	-0101		312125-0293	-		4	SLOTTED HEMCS4X16RFR
270	-0101		312155-0333	-		2	SCREW MF6S5X25RFR
290	-0101		312605-0314	-		2	NUT M6M5RFR
320	-0101		315115-0153	-		3	WASHER TBRB6,4X12RFR
330	-0101		315115-0165	-		2	WASHER TBRB8,4X16RFR
350	-0101		352103-0105	-		4	CABLE GLANR.PR18,6/3-7
360	-0101		352103-0108	-		1	CABLE GLANR.PR 20,4/6-12
380	-0101		352113-0102	-		8	RIBBON CLAR STA-SST 2S
390	-0101		352113-0202	-		8	ARMATURE -TM2-S8
400	-0101		352135-0102	-	MM	70	HOSE .010
410	-0101		352135-0106	-	MM	350	HOSE .016
420	-0101		352103-0106	-		3	CABLE GLANR.18,6/5-10
430	-0101		352136-0129	-		1	GLAND
440	-0101		353001-0102	-		6	END SLEEVE0,75

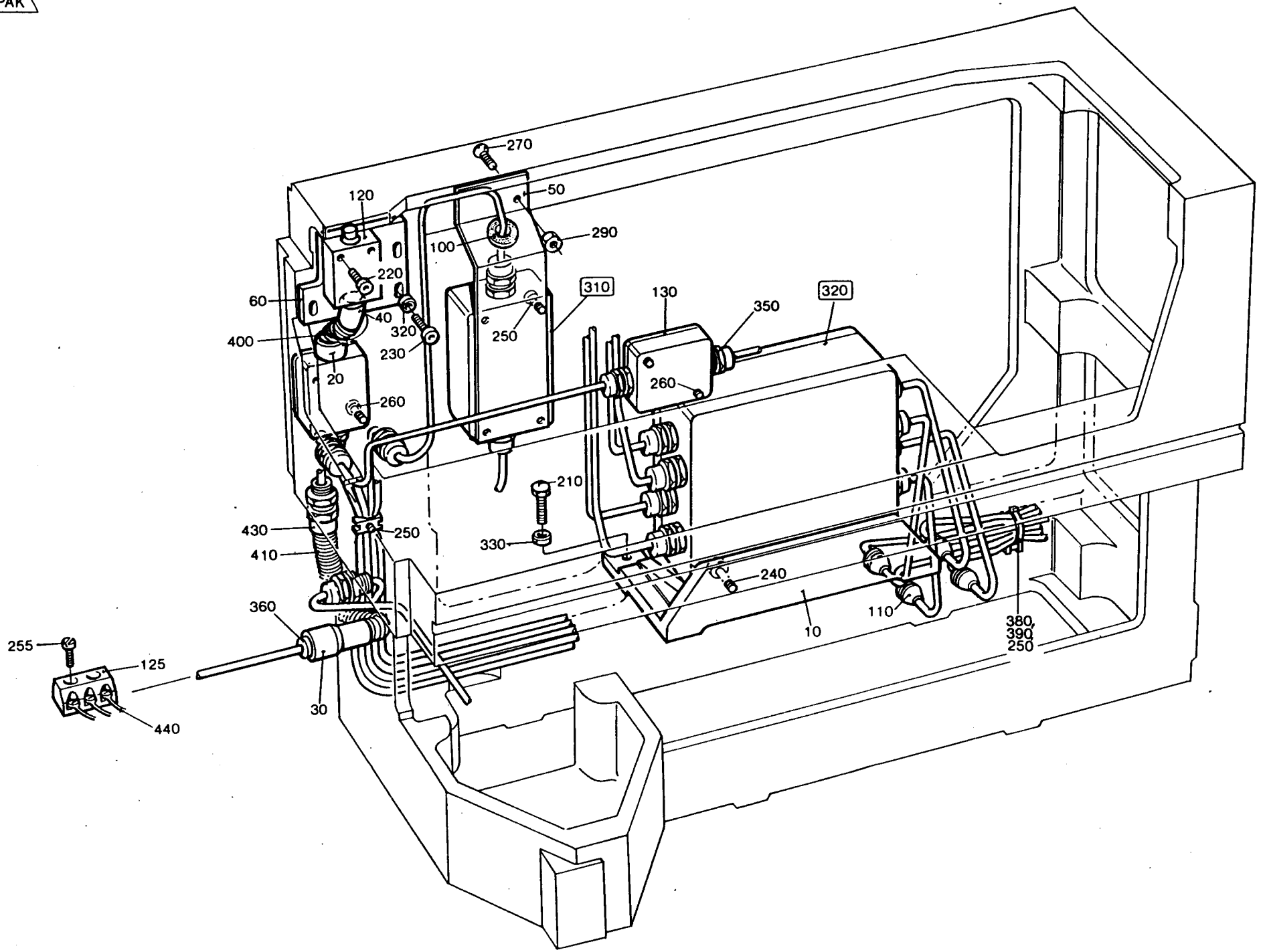
270
120
50
290
100
220
60
310
130
320
350
40
320
400
250
230
20
260
260
210
430
250
330
410
240
360
110
380,
390
250
10
255
125
30
440

LAST ALTERATION: AM 7344 85-02-12
624008 625008 648012 648105 648106
AM 6043
83-11-28

GROUP	FILLMACHINE	FILLMACHINE
-0101	B9	AB9
-0102	B8	AB8
-0103	KING	

POS	VAR	PART NUMBER	SP	EH	QTY	DESCRIPTION
	-0101	S- 451348-SHEET	-1			===ASSEMBLY DRAWING===
	-0102		-1			
	-0103		-1			
010	-0103	451409	-		1	CONNECTION BOX
010	-0101	464297	-		1	CONNECTION BOX
	-0102				1	
040	-0102	90110-0078	-		1	CONTACT
050	-0103	352103-0101	-		1	CABLE GLANR.15,2/4-8
050	-0101	352103-0106	-		2	CABLE GLANR.18,6/5-10
	-0102				1	
055	-0102	352135-0107	-	MM	1200	HOSE .019
060	-0102	352136-0127	-		1	GLAND
060	-0103	352103-0115	-		1	CABLE GLANR.PR28,3/7-16
020	ALL	451423	-		1	CIRCUIT BOARD
110	ALL	312125-0220	-		4	SLOTTED HEMCS3X6RFR
120	ALL	312125-0291	-		4	SLOTTED HEMCS4X12RFR

TETRA PAK

2/8501

S-451348-1

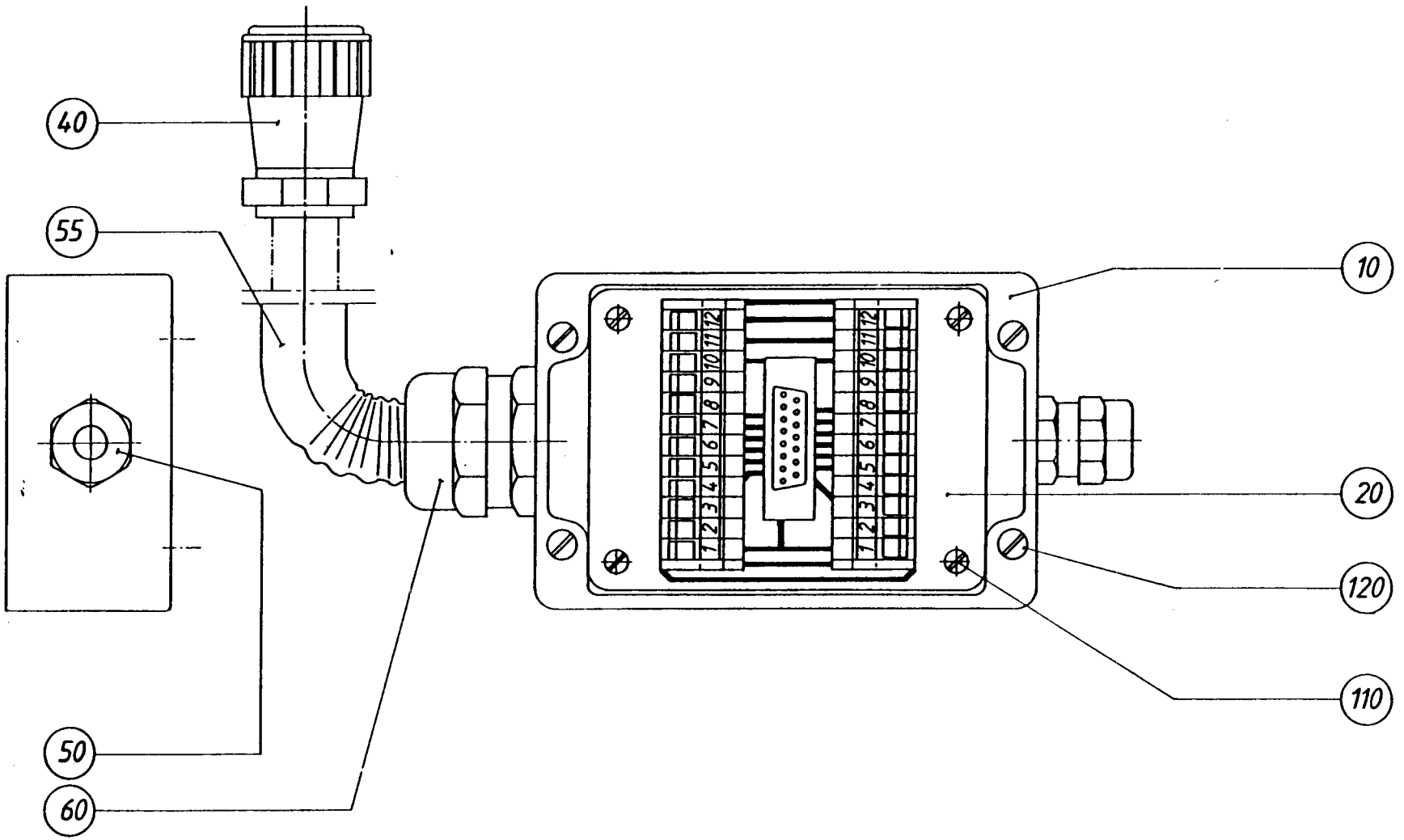

LAST ALTERATION: AM 9039 87-04-27
648105-060V
AM 6443
84-01-11

GROUP	MACHINE SPEED	BOTTOM-SIZE	PACKAGE OUTFEED
-0101	5000	41X63	RIGHT-FEED
-0102	5000	41X63	LEFT-FEED
-0107	6000	41X63	RIGHT-FEED
-0108	6000	41X63	LEFT-FEED
-0109	6000	32X47	RIGHT-FEED
	5000	32X47	RIGHT-FEED
-0110	6000	32X47	LEFT-FEED
	5000	32X47	LEFT-FEED
-0111	6000	38X47	RIGHT-FEED
	5000	38X47	RIGHT-FEED
-0112	6000	38X47	LEFT-FEED
	5000	38X47	LEFT-FEED

POS	VAR	PART	NUMBER	SP	EH	QTY	DESCRIPTION
	-0101	S-	456103-SHEET	-1			===ASSEMBLY DRAWING===
	-0102			-1			
	-0107			-1			
	-0108			-1			
	-0109			-1			
	-0110			-1			
	-0111			-1			
	-0112			-1			
010	-0101		441808	-		1	PLATE
	-0102					1	
010	-0107	G-	441791	-		1	PLATE
	-0108					1	
	-0109					1	
	-0110					1	
	-0111					1	
	-0112					1	
020	-0101		456105	-		1	GUARD
	-0102					1	
	-0107					1	
	-0108					1	
020	-0109		491478	-		1	PLATE
	-0110					1	
	-0111					1	
	-0112					1	
025	-0109		491482	-		1	PLATE
	-0110					1	
	-0111					1	
	-0112					1	
030	-0101		456109	-		1	GUIDE RAIL
	-0102					1	

POS	VAR	PART	NUMBER	SP	EH	QTY	DESCRIPTION
	-0107					1	
	-0108					1	
030	-0109		490855	-		1	GUIDE RAIL
	-0110					1	
030	-0111		469886	-		1	GUIDE RAIL
	-0112					1	
040	-0101		441782	-		1	PLATE
	-0102					1	
	-0107					1	
	-0108					1	
040	-0109		469887	-		1	PLATE
	-0110					1	
040	-0111		491629	-		1	PLATE
	-0112					1	
050	-0101		441783	-		1	LOCATING PIECE
	-0102					1	
	-0107					1	
	-0108					1	
050	-0109		490856	-		1	LOCATING PIECE
	-0110					1	
050	-0111		469888	-		1	LOCATING PIECE
	-0112					1	
060	-0101		295475-0001	-		1	GUIDE
	-0102					1	
060	-0107		295475-0002	-		1	GUIDE
	-0108					1	
060	-0109		490857	-		1	GUIDE
	-0110					1	
060	-0111		469890	-		1	GUIDE
	-0112					1	
065	-0109		441139	-		1	NUT
	-0110					1	
	-0111					1	
	-0112					1	
070	-0101		456106	-		1	SIDE PLATE
	-0102					1	
	-0107					1	
	-0108					1	
070	-0109		456107	-		1	SIDE PLATE
	-0110					1	
	-0111					1	
	-0112					1	
110	-0101		456112	-		1	BRACKET
	-0102					1	
	-0107					1	
	-0108					1	
110	-0109		456113	-		1	BRACKET
	-0110					1	
	-0111					1	

TETRA PAK

2/8506 **S-456103-1**

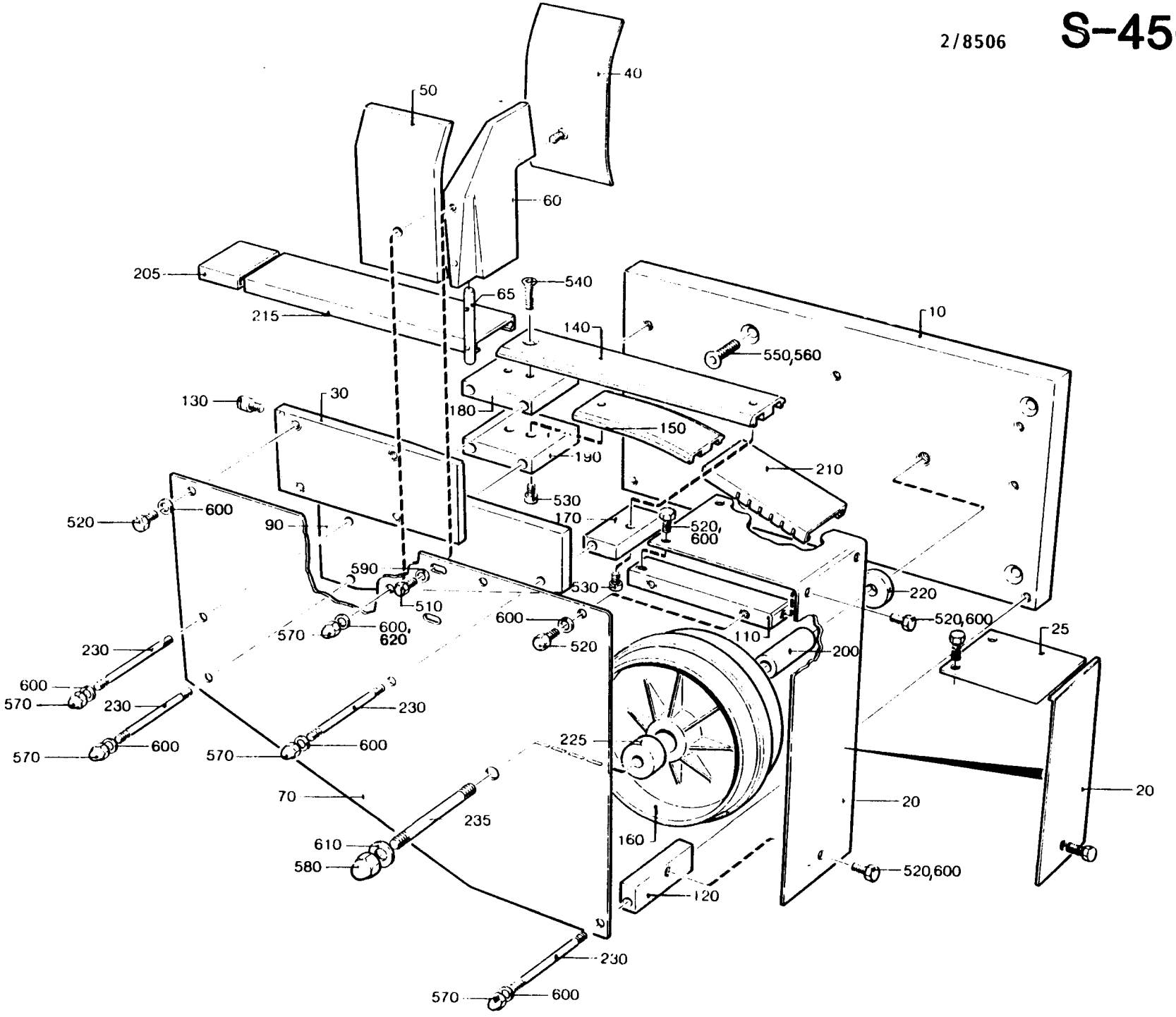

POS	VAR	PART NUMBER	SP	EH	QTY	DESCRIPTION	
	-0112				1		
120	-0101	295479	-		1	BLOCK	
	-0102				1		
	-0107				1		
	-0108				1		
120	-0109	491586	-		1	BLOCK	
	-0110				1		
	-0111				1		
	-0112				1		
550	-0101	312155-0457	-		4	SCREW	MF6S8X35RFR
	-0102				4		
560	-0107	312145-0463	-		4	SCREW	MFS8X60RFR
	-0108				4		
	-0109				4		
	-0110				4		
	-0111				4		
	-0112				4		
620	-0111	315115-0153	-		1	WASHER	TBRB6,4X12RFR
	-0112				1		
090	ALL	456108	-		1	SHIM	
130	ALL	295480	-		2	PIN	
140	ALL	441807	-		1	SUPPORT BAR	
150	ALL	239399	-		1	SUPPORT BAR	
160	ALL	245039	-		1	GUIDE ROLLER	
170	ALL	228844	-		1	BLOCK	
180	ALL	228845	-		1	BLOCK	
190	ALL	229202	-		1	BLOCK	
200	ALL	229207	-		1	BEARING SLEEVE	
205	ALL	230706	-		1	SLIDE RAIL	
210	ALL	239403	-		1	SLIDE RAIL	
215	ALL	228850-0018	-		1	SLIDE RAIL	
220	ALL	229201-0001	-		1	SPACER	
225	ALL	229201-0025	-		1	SPACER	
230	ALL	229508-0033	-		4	STUD BOLT	
235	ALL	229760-0014	-		1	STUD BOLT	
510	ALL	312105-0327	-		2	SCREW	M6S5X12 A4 80
520	ALL	312105-0367	-		10	SCREW	M6S6X14RFR
530	ALL	312115-0366	-		2	SCREW	6X12 A4 80
540	ALL	312155-0370	-		2	SCREW	MF6S6X20RFR
570	ALL	312705-0316	-		4	CAP NUT	MHM 6 A2
580	ALL	312705-0320	-		1	CAP NUT	MHM 10 A2
590	ALL	315105-0146	-		2	WASHER	BRB5,3X10RFR
600	ALL	315105-0153	-		14	WASHER	BRB6,4X12RFR
610	ALL	315105-0173	-		1	WASHER	BRB10,5X22RFR

TETRA PAK

2/8506 **S-456103-1**

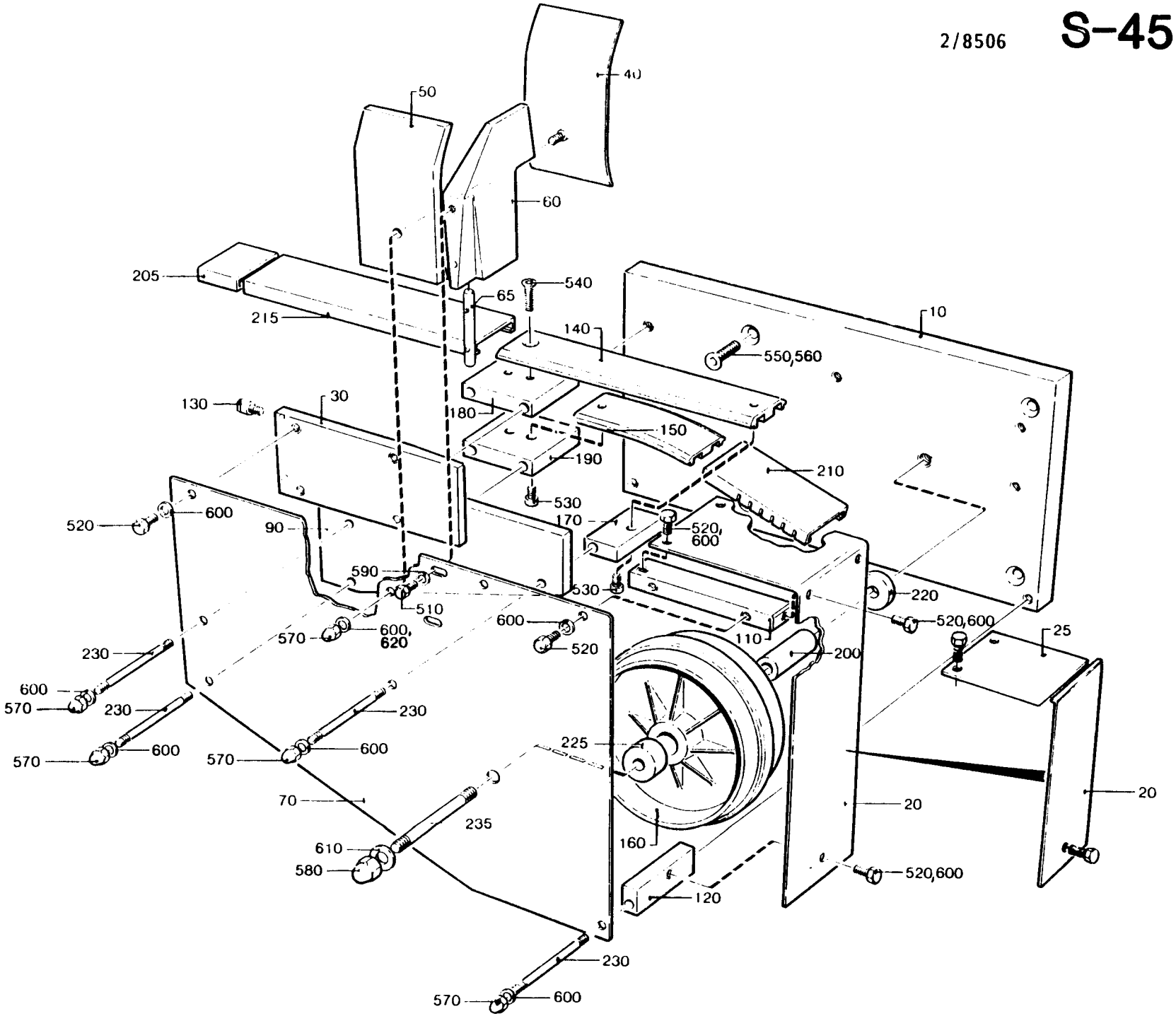

LAST ALTERATION: AM 6740 84-04-18
648105

POS	VAR	PART NUMBER	SP	EH	QTY	DESCRIPTION
	-0101	S- 456435-SHEET	-1			===ASSEMBLY DRAWING===
010	-0101	456434	-		1	CONNECTION BOX
020	-0101	10793-0087	-		1	RAIL
050	-0101	90077-0048	-		4	CLAMP
060	-0101	90093-0012	-		1	END PLATE
070	-0101	90094-0004	-		2	END SUPPORT
110	-0101	312125-0364	-		2	SLOTTED HEMCS6X10RFR
120	-0101	312115-0374	-		2	SCREW MC6S6X30RFR
150	-0101	352103-0111	-		8	CABLE GLANR.PR22,5/10-14

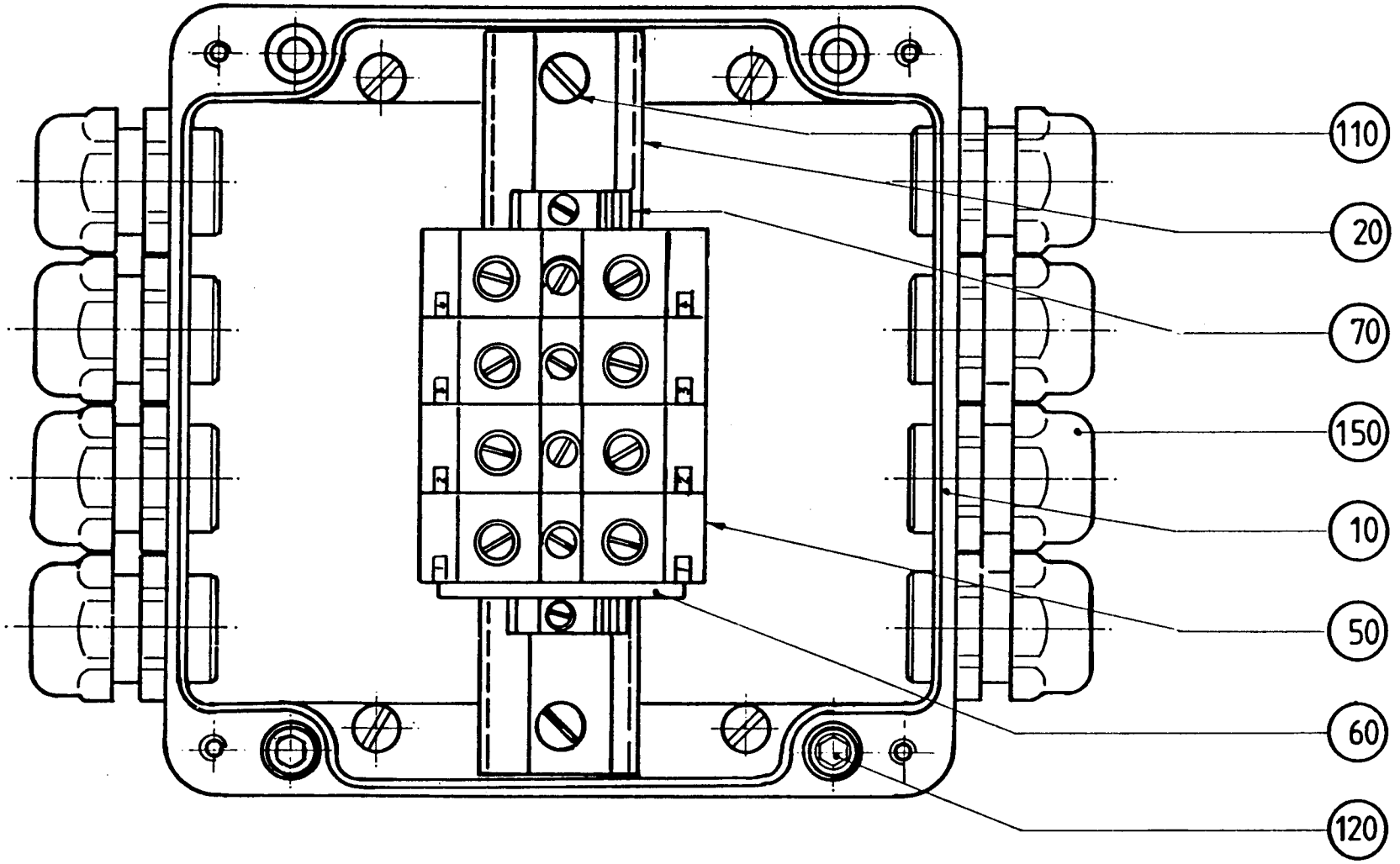

SHOWN WITHOUT LID

LAST ALTERATION: AM 8267 85-10-14
648105-060V
AM 6740
84-04-18

POS	VAR	PART NUMBER	SP	EH	QTY	DESCRIPTION
	-0101	S- 456455-SHEET	-1			===ASSEMBLY DRAWING===
010	-0101	295471	-		1	PIPE
020	-0101	295472	-		1	PIPE
030	-0101	441499	-		1	BRACKET
040	-0101	456852	-		1	DISTRIBUTOR
045	-0101	490618	-		1	BRANCHING
050	-0101	441500	-		1	HOSE
060	-0101	456853-0001	-		1	CLAMP
062	-0101	456853-0002	-		1	CLAMP
063	-0101	456853-0003	-		1	CLAMP
065	-0101	490619	-		1	HOSE
070	-0101	256907	-		2	WASHER
080	-0101	271478	-		1	PLATE
090	-0101	272191	-		1	DISTRIBUTOR
100	-0101	272741	S		1	SEAL
110	-0101	456854-0001	-		1	CLIP
112	-0101	456854-0002	-		1	CLIP
120	-0101	456855	-		1	PIPE
210	-0101	90005-0007	S		1	WASHER
220	-0101	90030-0091	-		2	PIPE CONNECTION
230	-0101	90030-0151	-		2	CONNECTION
240	-0101	90030-0185	-		2	PIPE CONNECTION
250	-0101	90163-0013	-		1	SLEEVE
		90163-0301	R		0	* GASKET
260	-0101	90166-0117	P	MM	1640	HOSE
270	-0101	90166-0132	P	MM	1800	HOSE
280	-0101	90166-0133	P	MM	520	HOSE
290	-0101	90224-0186	-		1	NIPPLE
300	-0101	90330-0081	-		1	ELBOW PIPE
310	-0101	90424-0009	S		1	NOZZLE
320	-0101	90424-0016	S		1	NOZZLE
510	-0101	312105-0372	-		4	SCREW M6S6X25RFR
515	-0101	312105-0374	-		1	SCREW M6S6X30RFR
520	-0101	312105-0378	-		3	SCREW M6S6X40RFR
530	-0101	312105-0380	-		2	SCREW M6S6X50RFR
560	-0101	312105-0463	-		1	SCREW M6S8X60RFR
600	-0101	312605-0316	-		6	NUT M6M6RFR
620	-0101	315105-0153	-		12	WASHER BRB6,4X12RFR
640	-0101	315233-0110	S		3	SEAL RING R1/4"
650	-0101	315233-0113	-		2	SEAL RING R1/2"
670	-0101	342746-0114	-		1	T-PIECE T-15
680	-0101	342920-0122	-		1	PIPE CONNE8/6-1/4
690	-0101	342960-0112	-		1	GROMMET 6/4
700	-0101	342960-0121	-		2	GROMMET 8/6-6/4
710	-0101	342960-0122	-		2	GROMMET 8/6

POS	VAR	PART NUMBER	SP	EH	QTY	DESCRIPTION
720	-0101	342991-0106	-		7	HOSE CLIP 26-38MMRFR

TETRA PAK

3/8601 **S-456455-1**

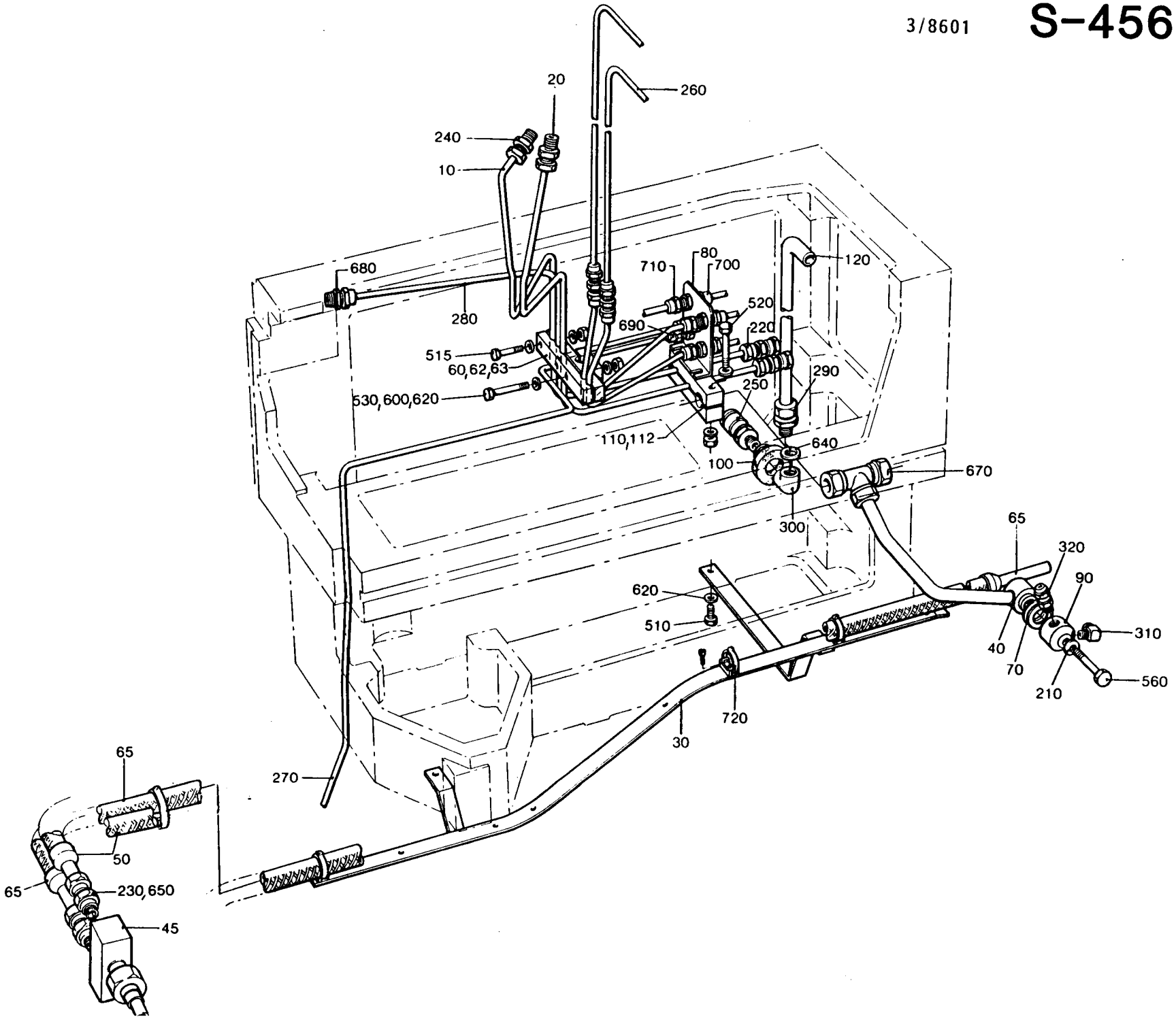

LAST ALTERATION: AM 9039 87-04-27
648105-060V
AM 6626
84-03-20

GROUP	MACHINE SPEED	VOLUME	VOLUME	VOLUME
-0101	5000	V0284	-	-
-0102	5000	V0250	V0236	V0200
-0105	6000	V0284	V0250	V0236
-0106	6000	V0200	V0187	V0180
-0107	5000	V0187	V0180	-
-0108	6000	200ML SLIM	-	-
	5000	200ML SLIM	-	-
-0109	6000	V0125	-	-
	5000	V0125	-	-

POS	VAR	PART NUMBER	SP	EH	QTY	DESCRIPTION
	-0101	S- 456560-SHEET	-1			===ASSEMBLY DRAWING===
	-0102		-1			
	-0105		~~-1~~			
	-0106		~~-1~~			
	-0107		-1			
	-0108		~~-1~~			
	-0109		~~-1~~			
010	-0101	469333	-		1	RAIL
	-0102				1	
	-0107				1	
010	-0105	469335	-		1	RAIL
	-0106				1	
010	-0108	469891	-		1	RAIL
	-0109				1	
020	-0101	G- 456503	-		1	SIDE GUIDE LEFT
	-0105				1	
020	-0102	G- 456504	-		1	SIDE GUIDE LEFT
	-0106				1	
020	-0107	G- 469422	-		1	SIDE GUIDE LEFT
020	-0108	G- 456505	-		1	SIDE GUIDE LEFT
020	-0109	G- 490854-0001	-		1	SIDE GUIDE LEFT
030	-0101	G- 456506	-		1	SIDE GUIDE RIGHT
	-0105				1	
030	-0102	G- 456507	-		1	SIDE GUIDE RIGHT
	-0106				1	
030	-0107	G- 469423	-		1	SIDE GUIDE RIGHT
030	-0108	G- 456508	-		1	SIDE GUIDE RIGHT
030	-0109	G- 490854-0002	-		1	SIDE GUIDE RIGHT
040	-0101	295493	-		1	HOLDER
	-0102				1	
	-0107				1	
040	-0105	295498	-		2	HOLDER
	-0106				2	

POS	VAR	PART NUMBER	SP	EH	QTY	DESCRIPTION
040	-0108	295495	-		2	HOLDER
	-0109				2	
050	-0101	295494	-		1	HOLDER
	-0102				1	
	-0107				1	
060	-0101	469446	-		1	CHUTE
	-0102				1	
060	-0105	469449	-		1	CHUTE
	-0106				1	
060	-0107	469450	-		1	CHUTE
060	-0108	491565	-		1	CHUTE
	-0109				1	
070	-0101	456512	-		1	LINKPIECE OUTER
	-0102				1	
070	-0105	456513	-		1	LINKPIECE OUTER
	-0106				1	
070	-0107	469451	-		1	LINKPIECE OUTER
070	-0108	491564	-		1	LINKPIECE OUTER
	-0109				1	
080	-0105	456514	-		1	KEY
090	-0101	295511-0004	-		1	STOP LUG
	-0102				1	
	-0105				1	
	-0106				1	
	-0107				1	
090	-0108	295511-0003	-		1	STOP LUG
	-0109				1	
100	-0101	295512	S		1	TENSION SPRING
	-0102				1	
	-0105				1	
	-0106				1	
	-0107				1	
100	-0108	295513	S		1	TENSION SPRING
	-0109				1	
140	-0108	491479	-		1	HOLDER
	-0109				1	
150	-0108	491480	-		1	LOCATING PIECE
150	-0109	491628	-		1	LOCATING PIECE
300	-0101	311103-0421	-		2	CYLINDRICACPR8M6X75RFR
	-0102				2	
	-0105				2	
	-0106				2	
	-0107				2	
300	-0108	311103-0420	-		2	CYLINDRICACPR8M6X70RFR
	-0109				2	
310	-0105	312105-0328	-		1	SCREW M6S5X14 A4 80
320	-0101	312105-0368	-		2	SCREW M6S6X16RFR
	-0102				2	
	-0105				4	

TETRA PAK

3/8609

S-456560-1

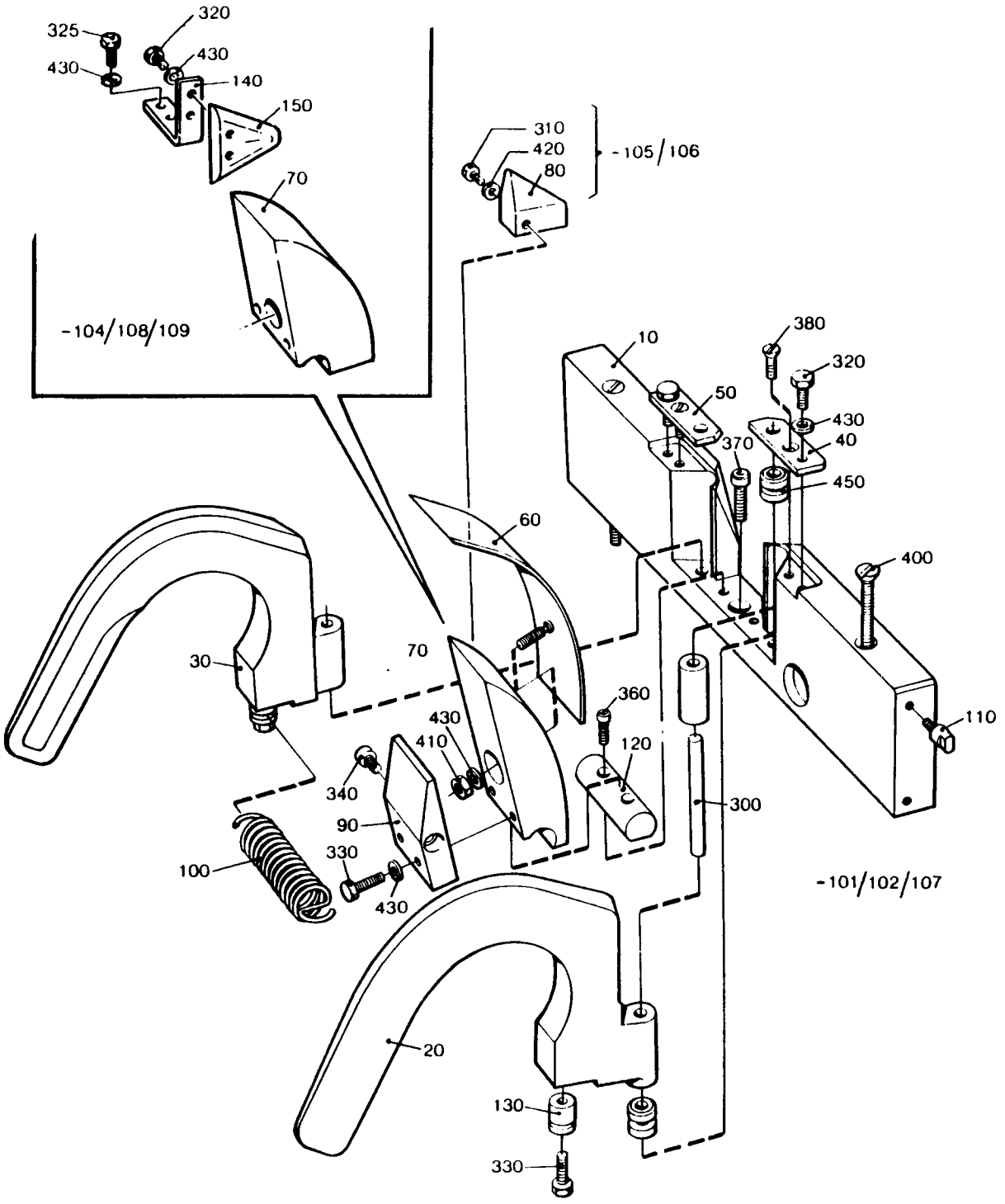

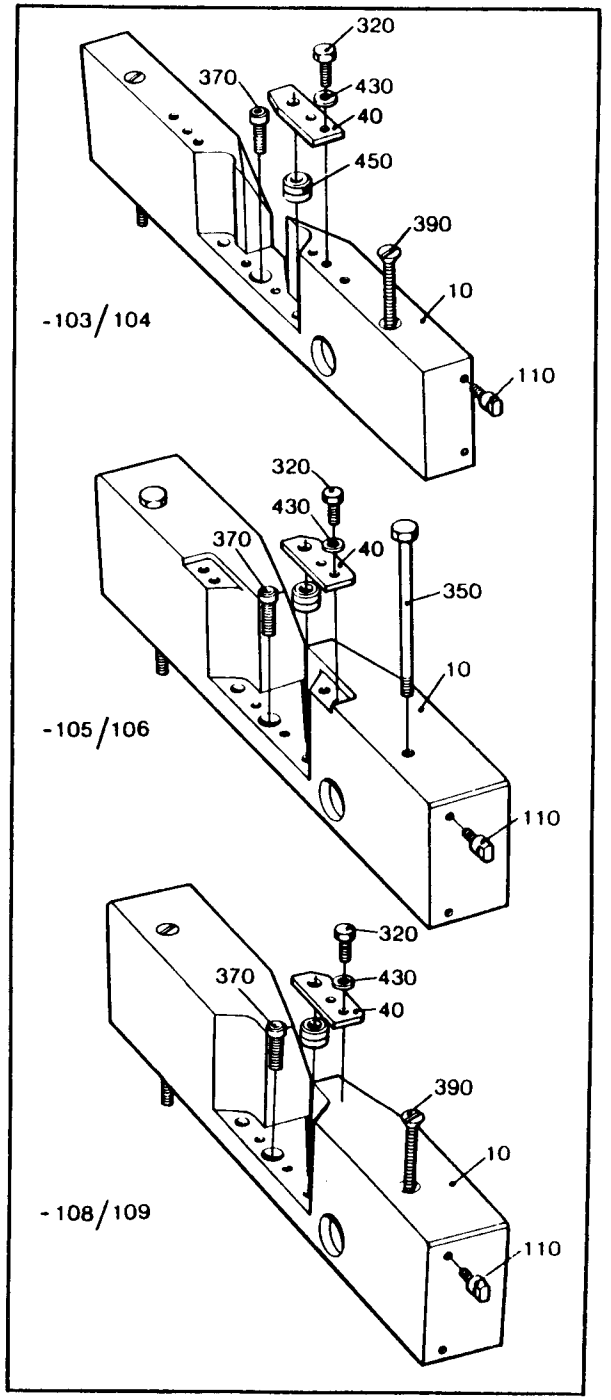

POS	VAR	PART NUMBER	SP	EH	QTY	DESCRIPTION
	-0106				4	
	-0107				2	
	-0108				4	
	-0109				4	
325	-0108	312105-0370	-		2	SCREW M6S6X20RFR
	-0109				2	
350	-0105	312105-0471	-		2	SCREW M6S8X100RFR
	-0106				2	
380	-0101	312145-0368	-		2	SLOTTED HEMFS6X16RFR
	-0102				2	
	-0107				2	
390	-0108	312145-0467	-		2	SCREW MFS8X80RFR
	-0109				2	
400	-0101	312145-0471	-		2	SCREW MFS8X100 A480
	-0102				2	
	-0107				2	
420	-0105	315105-0146	-		1	WASHER BRB5,3X10RFR
430	-0101	315105-0153	-		5	WASHER BRB6,4X12RFR
	-0102				5	
	-0105				7	
	-0106				7	
	-0107				5	
	-0108				9	
	-0109				9	
440	-0105	315105-0165	-		2	WASHER BRB8,4X16RFR
	-0106				2	
110	ALL	295480	-		2	PIN
120	ALL	469338	-		1	LINKPIECE INNER
130	ALL	295515	-		2	SPRING HOLDER
330	ALL	312105-0372	-		4	SCREW M6S6X25RFR
340	ALL	312115-0366	-		2	SCREW 6X12 A4 80
360	ALL	312115-0368	-		2	SCREW 6X16 A4 80
370	ALL	312115-0452	-		1	SCREW 8X22 A4 80
410	ALL	312605-0316	-		1	NUT M6M6RFR
450	ALL	315115-0165	-		8	WASHER TBRB8,4X16RFR

TETRA PAK

3/8609

S-456560-1

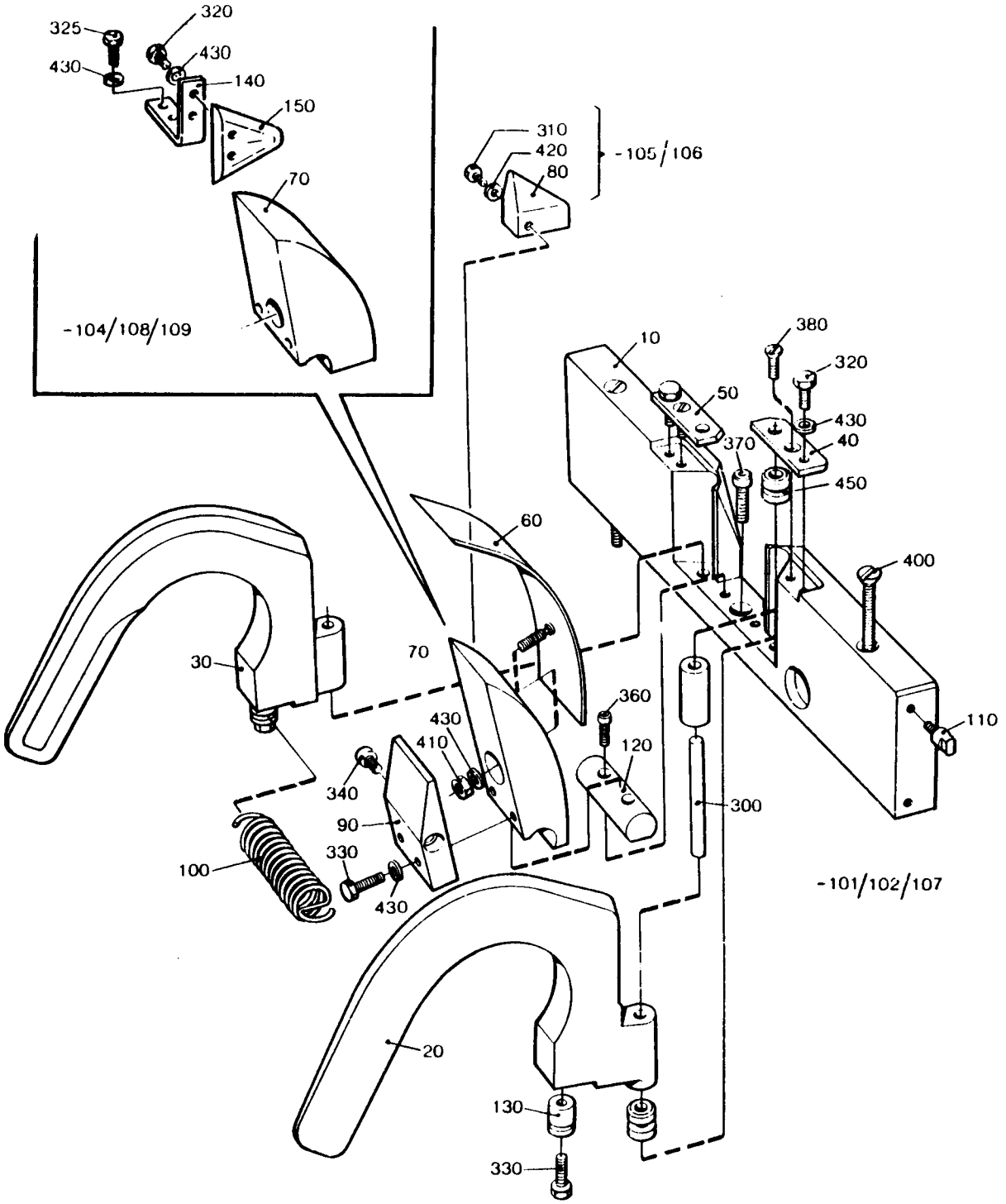

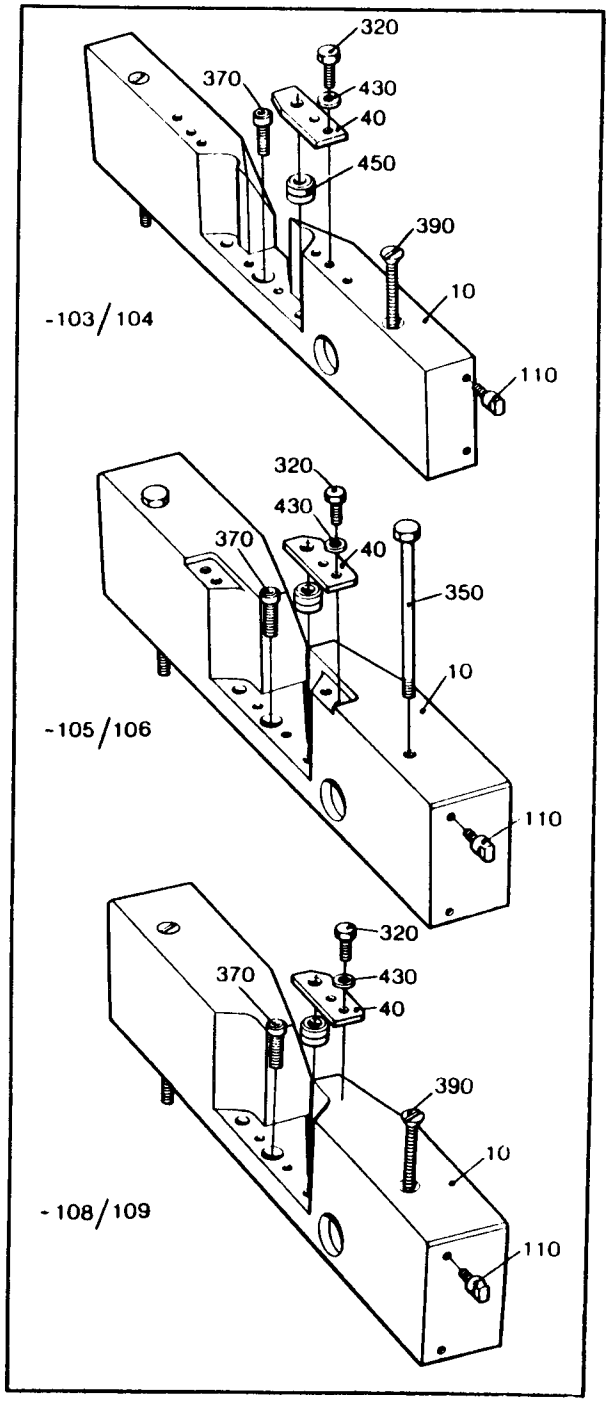

LAST ALTERATION: AM 6626 84-03-20
648105-060V

POS	VAR	PART NUMBER	SP	EH	QTY	DESCRIPTION
	-0101	S- 456567-SHEET	-1			===ASSEMBLY DRAWING===
010	-0101	456568	-		1	PLATE
020	-0101	456569	-		2	BRACKET
030	-0101	90287-0134	-		4	SCREW

TETRA PAK

2/8506 **S-456567-1**

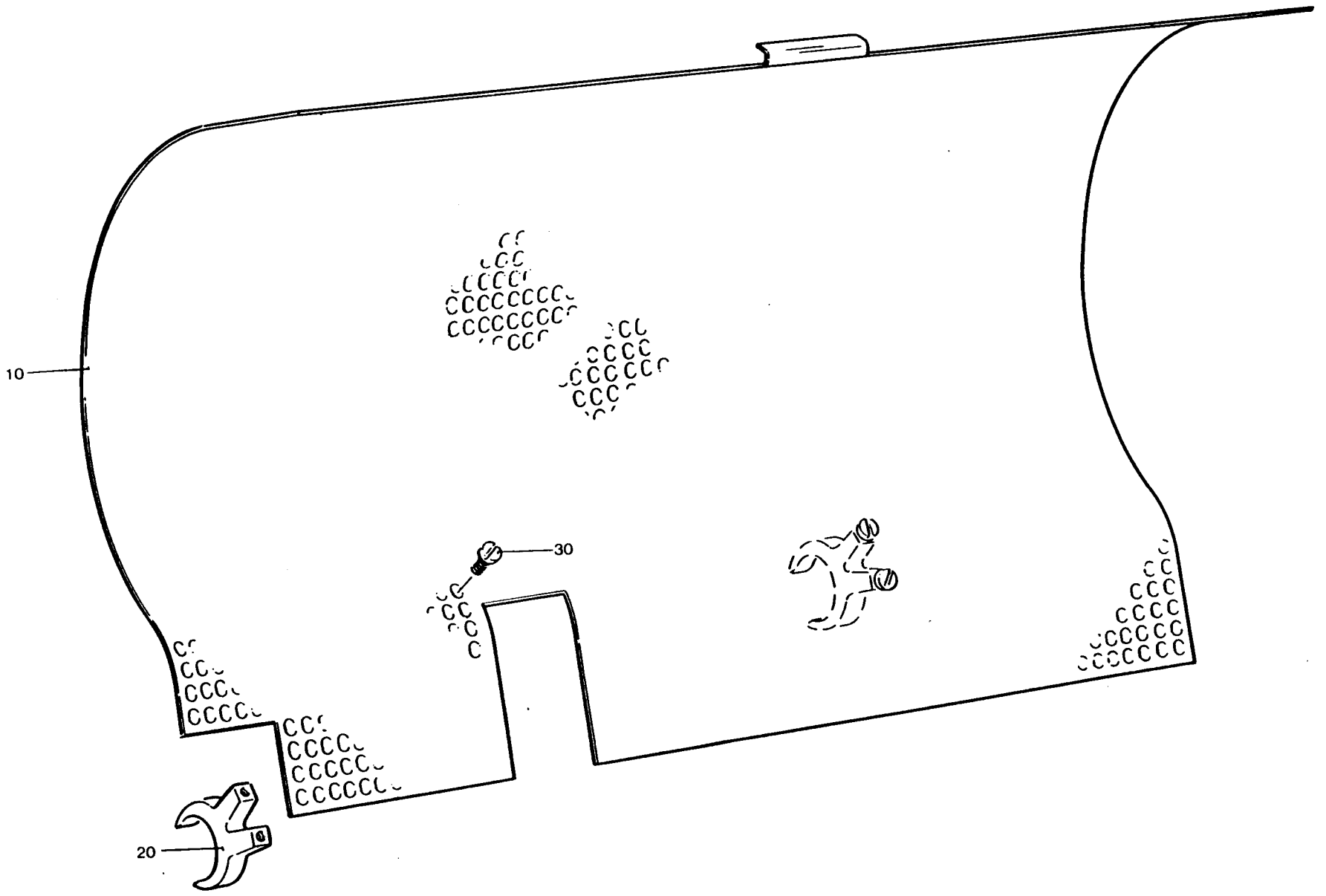

LAST ALTERATION: AM 9627 86-10-17
648105-060V
AM 6626
84-03-20

GROUP	FREQUENCY
-0101	HZ-50
-0102	HZ-60

POS	VAR	PART NUMBER	SP	EH	QTY	DESCRIPTION
	-0101	S- 456588-SHEET	-1			===ASSEMBLY DRAWING===
	-0102		-1			
F235	ALL	C- 441811-0101	-		1	ROTOR
300	-0101	90321-0015	C		1	PUMP
300	-0102	90321-0034	C		1	PUMP
010	ALL	456423	-		1	CLEANING BASIN
020	ALL	272730	-		1	DRINKING STRAW
030	ALL	G- 441603	-		1	BRACKET
040	ALL	441839	C		1	PIPE
050	ALL	256640	-		1	HOLDER
060	ALL	271433	-		1	PIPE
070	ALL	456393	-		1	PIPE
080	ALL	441401	-		1	BRACKET
090	ALL	295412	-		1	PIPE
100	ALL	456293	-		1	PIPE
110	ALL	456395	S		1	GASKET
120	ALL	456396	S		1	GASKET
130	ALL	456394	S		1	SEAL WASHER
140	ALL	256641	-		1	LEG
150	ALL	295417	S		1	GASKET
160	ALL	271435	-		1	WASHER
170	ALL	751017	S		1	GASKET
180	ALL	295434	-		1	BUSHING
190	ALL	295435	-		1	WASHER
310	ALL	90005-0067	-		1	WASHER
320	ALL	90217-0041	-		2	NIPPLE
330	ALL	90330-0029	-		1	PLUG
340	ALL	90415-0022	-		1	FILTER
		90415-0320	S		0	* FILTER INSERT
500	ALL	312105-0368	-		7	SCREW M6S6X16RFR
510	ALL	312105-0370	-		4	SCREW M6S6X20RFR
520	ALL	312105-0372	-		1	SCREW M6S6X25RFR
530	ALL	312105-0384	-		2	SCREW M6S6X70RFR
540	ALL	312105-0447	-		2	SCREW M6S8X12RFR
550	ALL	312105-0451	-		4	SCREW M6S8X20RFR
560	ALL	312105-0464	-		4	SCREW M6S8X65RFR
570	ALL	312105-0491	-		1	SCREW M6S10X20RFR
580	ALL	312105-0532	-		5	SCREW M6S12X20RFR
590	ALL	312105-0538	-		2	SCREW M6S12X35RFR
600	ALL	312605-0316	-		2	NUT M6M6RFR
610	ALL	315105-0165	-		4	WASHER BRB8,4X16RFR

POS	VAR	PART NUMBER	SP	EH	QTY	DESCRIPTION
620	ALL	315105-0178	-		2	WASHER BRB13X24RFR
630	ALL	315202-0215	-		2	O-RING 19,2X3
640	ALL	315233-0110	-		1	SEAL RING R1/4"
650	ALL	315233-0111	-		1	SEAL RING R3/8"
660	ALL	315250-0103	-		3	GASKET 48/36
670	ALL	315250-0104	-		1	GASKET 61/51
680	ALL	342803-0103	-		2	NUT 38

TETRA PAK

3/8601 **S-456588-1**

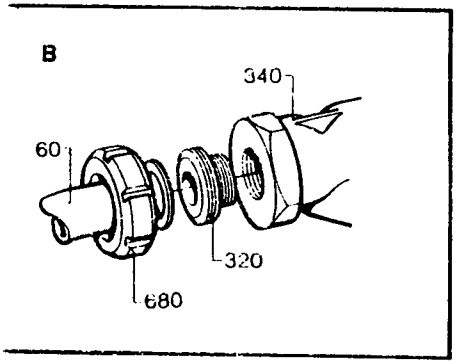

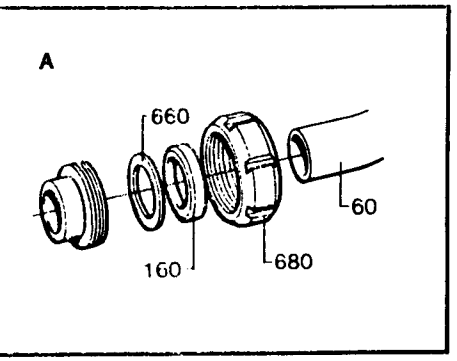

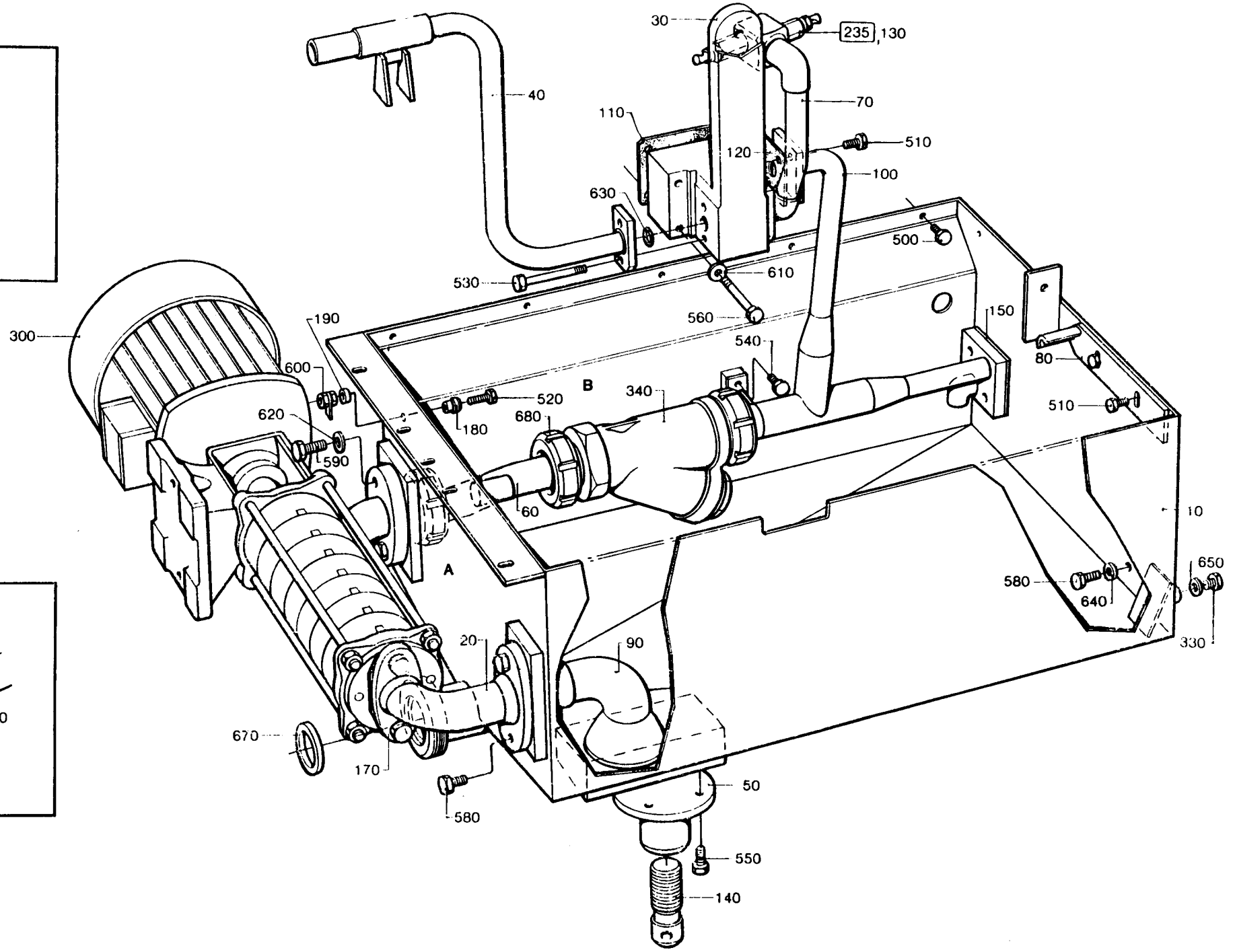

LAST ALTERATION: AM 7648 85-03-06
648105

POS	VAR	PART NUMBER	SP	EH	QTY	DESCRIPTION	
	-0101	S- 490912-SHEET	-1			===ASSEMBLY DRAWING===	
010	-0101	469821	C		1	CLUTCH	
020	-0101	469822	C		1	AXLE PIN	
030	-0101	312105-0372	-		1	SCREW	M6S6X25RFR
040	-0101	315105-0153	-		1	WASHER	BRB6,4X12RFR

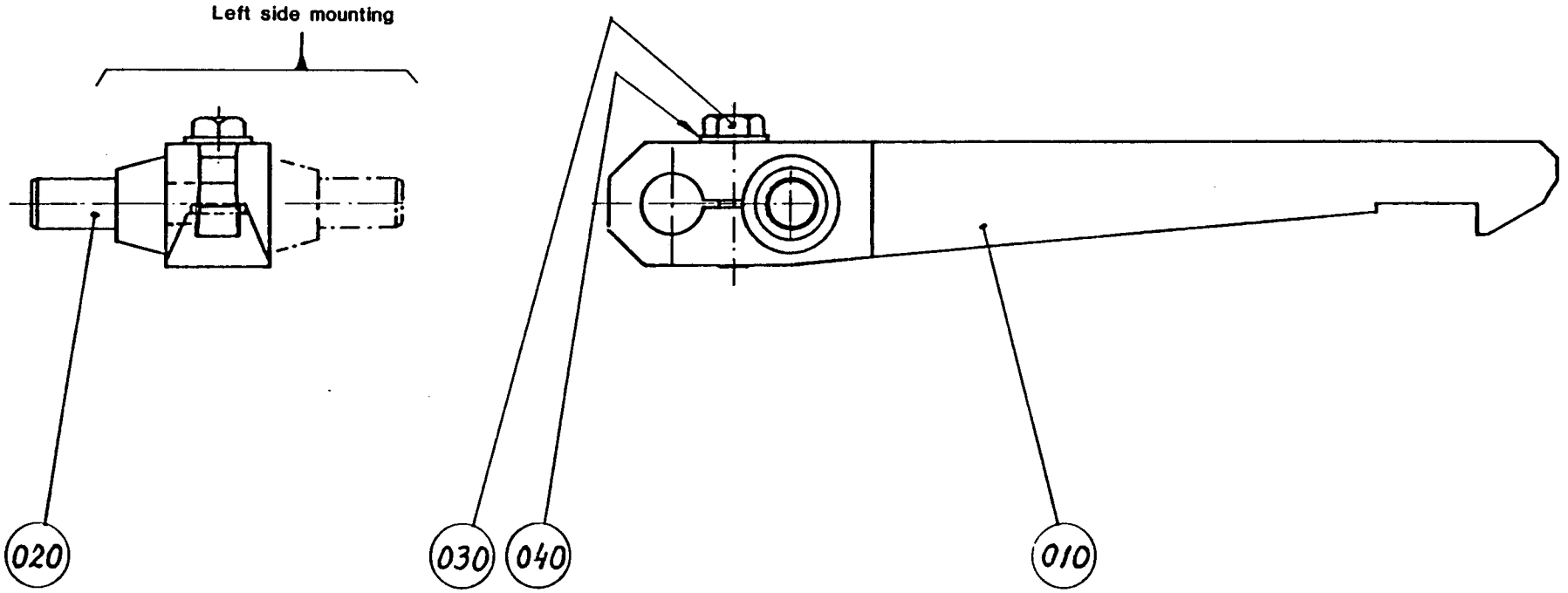
Left side mounting
020
030
040
010

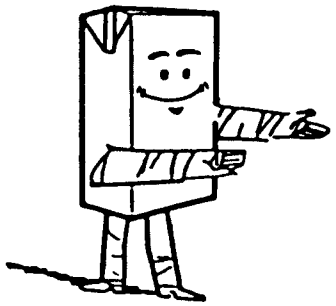

SPC 6481-51/52
SERVICE UNIT

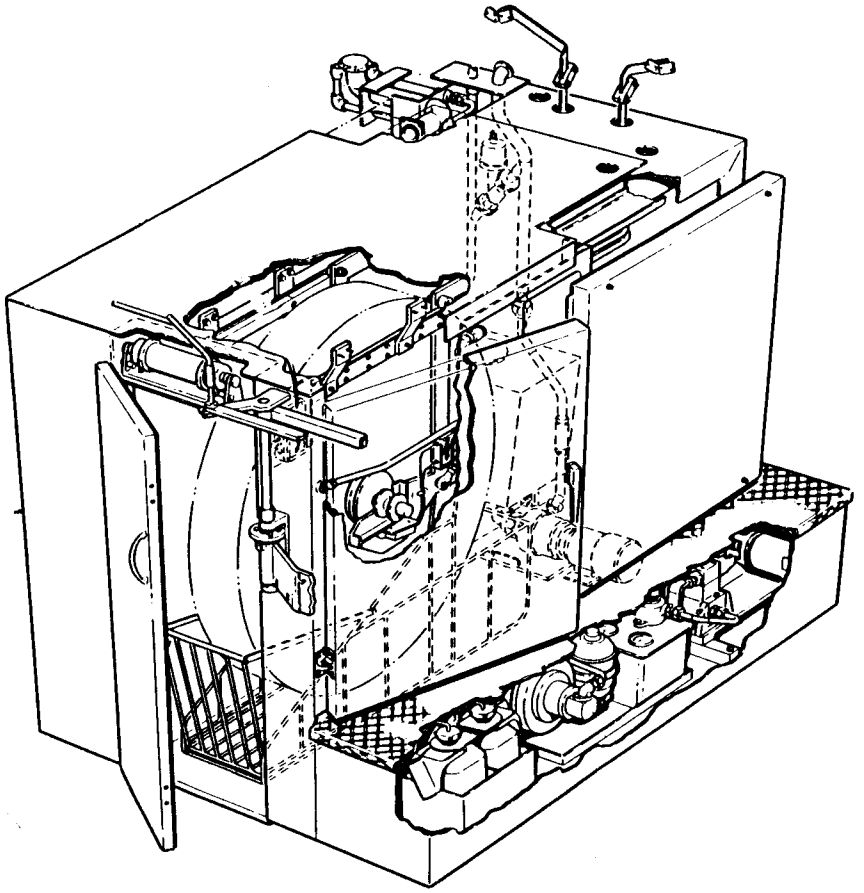

B-648106-

TETRA PAK SERVICE

LAST ALTERATION: AM 9286 86-06-11
648151-110V 648152-110V
AM 8101
86-01-16

GROUP	FILLMACHINE	SEALING SYSTEM
-0701	B9	TPC
-0702	AB9	IH

POS	VAR	PART NUMBER	SP	EH	QTY	DESCRIPTION
	-0701	S- 648106-SHEET	-3			===ASSEMBLY DRAWING===
	-0701		-4			
	-0702		-3			
	-0702		-4			
F010	ALL	C- 272359-0201	-		1	BENDING ROLLER
F020	ALL	C- 272404-0401	-		1	CARRIAGE
		C- 271017-0201				. BENDING ROLLER
		C- 271454-0201				. CATCH HANDLE
		C- 271934-0201				. PAPER GUIDE PLATE
		C- 272084-0201				. STRETCHER
		C- 272231-0301				. PAPER GUIDE
		C- 272473-0101				. BENDING ROLLER
		C- 272788-0101				. CARRIAGE
		C- 295839-0101				. CONNECTION BOX
		C- 458383-010V				. PAPER REEL HOLDER
		C- 458384-010V				. PAPER REEL HOLDER
F090	ALL	C- 257146-0201	-		1	LID
F100	ALL	C- 256873-0201	-		1	DOOR
F110	ALL	C- 256875-0201	-		1	COVER
F120	ALL	C- 469535-0101	-		1	DOOR
F130	ALL	C- 271513-030V	-		1	COVER PLATE
F140	ALL	C- 271699-030V	-		1	SPLICING DEVICE
		C- 37877-0301				. HEATING ELEMENT
		C- 37894-0101				. COUNTER RAIL
		C- 271626-0301				. SUSPENSION ARM
		C- 271641-0301				. TABLE
		C- 450101-0101				. TEARING DEVICE
		C- 271641-0302				. TABLE
		C- 271641-0303				. TABLE
F150	ALL	C- 271992-0201	-		1	PAPER HOLDER
F160	ALL	C- 271569-0301	-		1	CABLE TRACK
F170	ALL	C- 271452-0201	-		1	PUMP
F180	ALL	C- 271909-030V	-		1	VALVE PANEL
		C- 295441-020V				. CONNECTION BOX
		C- 456757-0101				. AIR INJECTOR
		C- 456882-0101				. PUSH BUTTON BOX
		C- 469118-0101				. FLOW METER
		C- 469121-0101				. JUNCTION BLOCK
		C- 469144-010V				. CONNECTION
~~F230~~	~~ALL~~	~~C- 256843-030V~~			~~1~~	~~MACHINE BODY~~

POS	VAR	PART NUMBER	SP	EH	QTY	DESCRIPTION
		~~C- 295803-020V~~				~~. DISTANCE PIECE~~
F240	ALL	C- 295382-020V	-		1	CONNECTION BOX
F250	-0702	C- 272381-0301	-		1	PEROXIDE TANK
F280	ALL	C- 451348-010V	-		1	CONNECTION BOX
F290	ALL	C- 456546-010V	-		1	IMPULSE TRANSMITTER
		C- 271168-0201				. BLOCK
F320	ALL	C- 271468-0201	-		1	GUIDE
F330	ALL	C- 271469-0201	-		1	GUIDE
F350	ALL	C- 271453-0301	-		1	LUBRICANT CONTAINER
F360	ALL	C- 271507-0201	-		1	HYDRAULIC SYSTEM
F370	ALL	C- 271866-030V	-		1	PIPE WORK SERVICE UNIT
F380	-0702	C- 271790-0301	-		1	TRANSMISSION
F390	-0702	C- 271791-0301	-		1	TRANSMISSION
F600	ALL	C- 469384-0101	-		1	START UP KIT

TETRA PAK

1/8501

S-648106-3

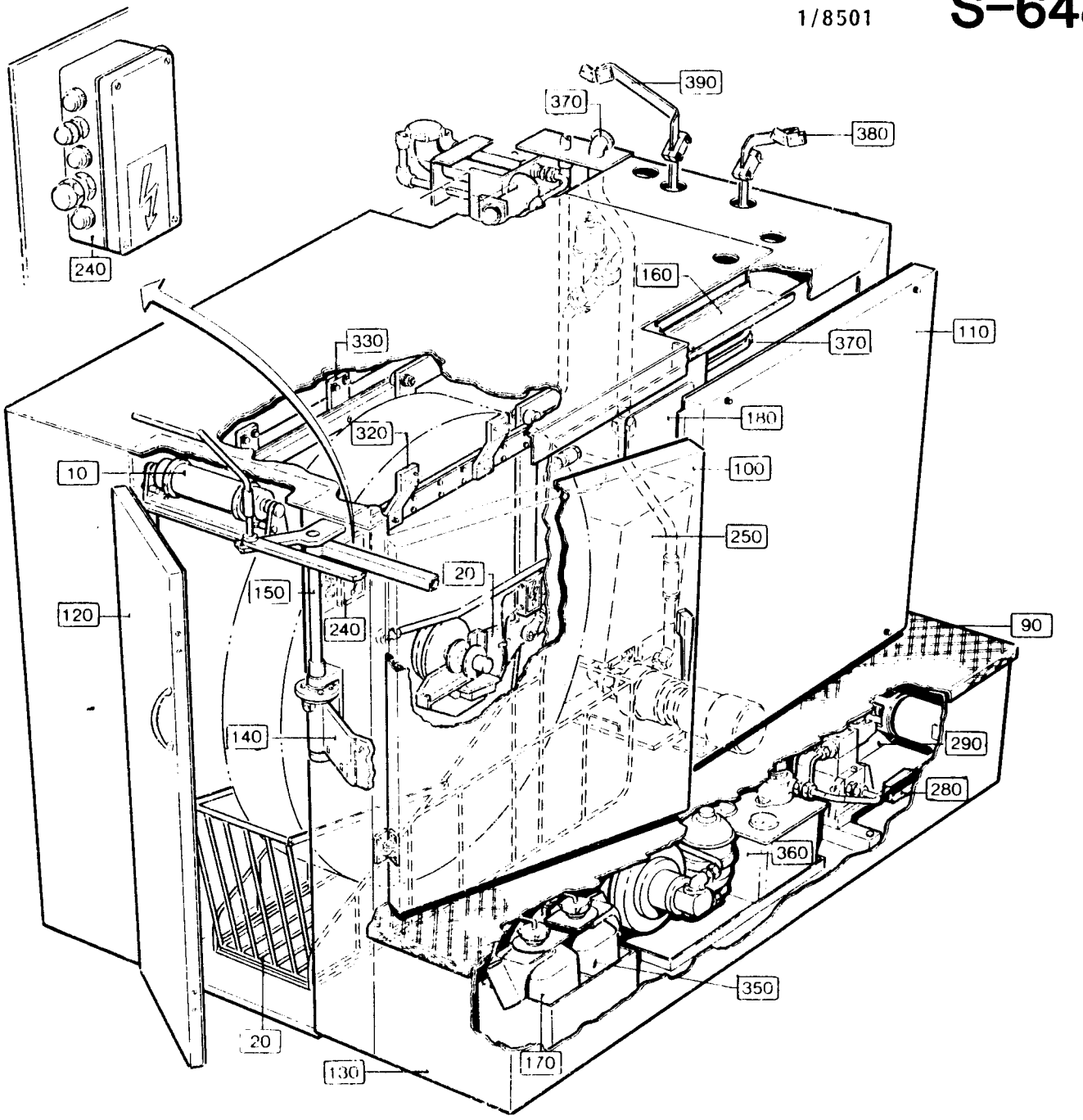

LAST ALTERATION: AM 7326 84-12-17
648151 648152
AM 6882
84-06-07

GROUP	FILLMACHINE	SEALING SYSTEM
-0601	B9	TPC
-0602	AB9	IH

POS	VAR	PART NUMBER	SP	EH	QTY	DESCRIPTION
	-0601	S- 648106-SHEET	-3			===ASSEMBLY DRAWING===
	-0601		~~-4~~			
	-0602		-3			
	-0602		~~-4~~			
F010	ALL	C- 272359-0201	-		1	BENDING ROLLER
F020	ALL	C- 272404-0301	-		1	CARRIAGE
F025	ALL	C- 272788-0101	-		1	CARRIAGE
F030	ALL	C- 272473-0101	-		1	BENDING ROLLER
F040	ALL	C- 272084-0201	-		1	STRETCHER
F050	ALL	C- 271017-0201	-		1	BENDING ROLLER
F052	ALL	C- 271934-0201	-		1	PAPER GUIDE PLATE
F054	ALL	C- 272231-0201	-		1	PAPER GUIDE
F060	ALL	C- 458383-010V	-		2	PAPER REEL HOLDER
F060	ALL	C- 458384-010V	-		2	PAPER REEL HOLDER
F070	ALL	C- 271454-0201	-		1	CATCH HANDLE
F080	ALL	C- 295839-0101	-		1	CONNECTION BOX
F090	ALL	C- 257146-0201	-		1	LID
F100	ALL	C- 256873-0201	-		1	DOOR
F110	ALL	C- 256875-0201	-		1	COVER
F120	ALL	C- 469535-0101	-		1	DOOR
F130	ALL	C- 271513-030V	-		1	COVER PLATE
F140	ALL	C- 271699-030V	-		1	SPLICING DEVICE
F140	ALL	C- 37877-0301	-		X	HEATING ELEMENT
F140	ALL	C- 37894-0101	-		X	COUNTER RAIL
F140	ALL	C- 450101-0101	-		X	TEARING DEVICE
F140	ALL	C- 271626-0301	-		X	SUSPENSION ARM
F140	ALL	C- 271641-030V	-		X	TABLE
F150	ALL	C- 271992-0201	-		1	PAPER HOLDER
F160	ALL	C- 271569-0301	-		1	CABLE TRACK
F170	ALL	C- 271452-0201	-		1	PUMP
F180	ALL	C- 271909-030V	-		1	VALVE PANEL
F190	ALL	C- 295441-020V	-		1	CONNECTION BOX
F200	ALL	C- 456757-0101	-		1	AIR INJECTOR
F210	ALL	C- 456882-0101	-		1	PUSH BUTTON BOX
F215	ALL	C- 469118-0101	-		1	FLOW METER
F220	ALL	C- 469121-0101	-		1	JUNCTION BLOCK
F225	ALL	C- 469144-010V	-		1	CONNECTION
~~F230~~	~~ALL~~	~~C- 256843-030V~~	~~-~~		~~1~~	~~MACHINE BODY~~
~~F235~~	~~ALL~~	~~C- 295883-020V~~	~~-~~		~~1~~	~~DISTANCE PIECE~~
F240	ALL	C- 295382-020V	-		1	CONNECTION BOX
F250	-0602	C- 272381-0301	-		1	PEROXIDE TANK
F280	ALL	C- 451348-010V	-		1	CONNECTION BOX

POS	VAR	PART NUMBER	SP	EH	QTY	DESCRIPTION
F290	ALL	C- 456546-010V	-		1	IMPULSE TRANSMITTER
F300	ALL	C- 271168-0201	-		1	BLOCK
F320	ALL	C- 271468-0201	-		1	GUIDE
F330	ALL	C- 271469-0201	-		1	GUIDE
F350	ALL	C- 271453-0201	-		1	CONTAINER
F360	ALL	C- 271507-0201	-		1	HYDRAULIC SYSTEM
F370	ALL	C- 271866-030V	-		1	TUBE ASSEMBLY
F380	-0602	C- 271790-0301	-		1	TRANSMISSION
F390	-0602	C- 271791-0301	-		1	TRANSMISSION
F600	ALL	C- 469384-0101	-		1	START UP KIT

S-648106-3

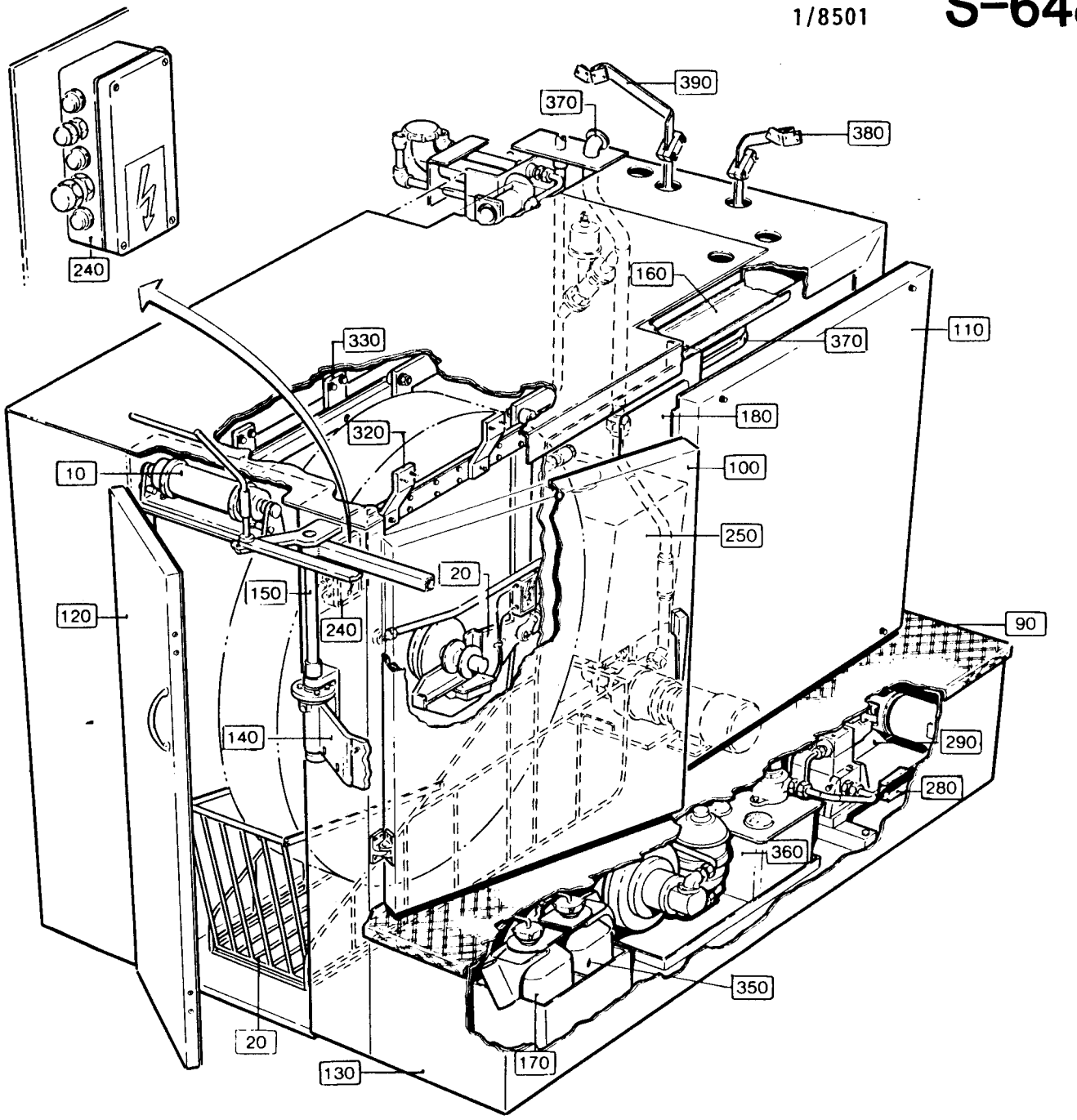
390
370
380
240
160
110
370
330
180
320
100
10
250
20
150
240
120
90
140
290
280
360
350
20
170
130

LAST ALTERATION: AM 8054 85-08-22
648151-100V 648152-100V
AM 7279
84-11-06

GROUP	FILLMACHINE	STAMP LOCATION
-0601	B9	ST-R
-0602	B9	ST-ER
-0603	AB9	ST-R
-0604	AB9	ST-ER

POS	VAR	PART NUMBER	SP	EH	QTY	DESCRIPTION
	-0601	S- 648107-SHEET	-6			===ASSEMBLY DRAWING===
	-0601		-~~7~~			
	-0602		-6			
	-0602		-~~7~~			
	-0603		-~~8~~			
	-0603		-~~9~~			
	-0603		-~~10~~			
	-0604		-~~8~~			
	-0604		-~~9~~			
	-0604		-~~10~~			
F010	ALL	C- 246388-0201	-		1	PRESSURE ROLLER
F020	ALL	C- 256966-020V	-		1	BENDING ROLLER BRACKET
F030	ALL	C- 256967-0201	-		1	BENDING ROLLER
F040	ALL	C- 456032-010V	-		1	STRIP GUIDE
F050	-0601	C- 441000-0301	-		1	STRIP HOLDER
	-0602				1	
F060	-0601	C- 7003-0101	-		2	BOBBIN
	-0602				2	
F050	-0603	C- 441000-0302	-		1	STRIP HOLDER
	-0604				1	
F060	-0603	C- 7003-0101	-		2	BOBBIN
	-0604				2	
F080	ALL	C- 267315-0101	-		1	PAPER GUIDE
F090	ALL	C- 295891-020V	-		1	STRIP APPLICATOR
F110	ALL	C- 272343-030V	-		1	PRESSURE ROLLER
F120	-0601	C- 272408-0301	-		1	PLATE
	-0602				1	
F120	-0603	C- 272408-0302	-		1	PLATE
	-0604				1	
F130	-0601	C- 490947-0101	-		1	PAPER GUARD
	-0602				1	
F130	-0603	C- 490947-0102	-		1	PAPER GUARD
	-0604				1	
F160	-0601	C- 456348-010V	-		1	DATING UNIT
F170	-0601	C- 293685-0102	-		2	DATING WHEEL
F180	-0601	C- 434774-0201	-		1	INK UNIT
F160	-0602	C- 456349-010V	-		1	DATING UNIT
F170	-0602	C- 293684-0106	-		2	DATING WHEEL
F180	-0602	C- 434074-0201	-		1	INK UNIT
F160	-0603	C- 456321-010V	-		1	DATING UNIT

POS	VAR	PART NUMBER	SP	EH	QTY	DESCRIPTION
F170	-0603	C- 293685-0102	-		2	DATING WHEEL
F180	-0603	C- 434774-0202	-		1	INK UNIT
F160	-0604	C- 456322-010V	-		1	DATING UNIT
F170	-0604	C- 293684-0106	-		2	DATING WHEEL
F180	-0604	C- 434074-0202	-		1	INK UNIT
F350	-0603	C- 456919-0101	-		1	BENDING ROLLER
	-0604				1	
F400	-0603	C- 456923-0101	-		1	MACHINE BODY
	-0604				1	
F450	-0601	C- 456739-010V	-		1	PIPE WORK
	-0602				1	
F450	-0603	C- 456935-010V	-		1	PIPE WORK
	-0604				1	
F500	ALL	C- 295668-0301	-		1	START UP KIT

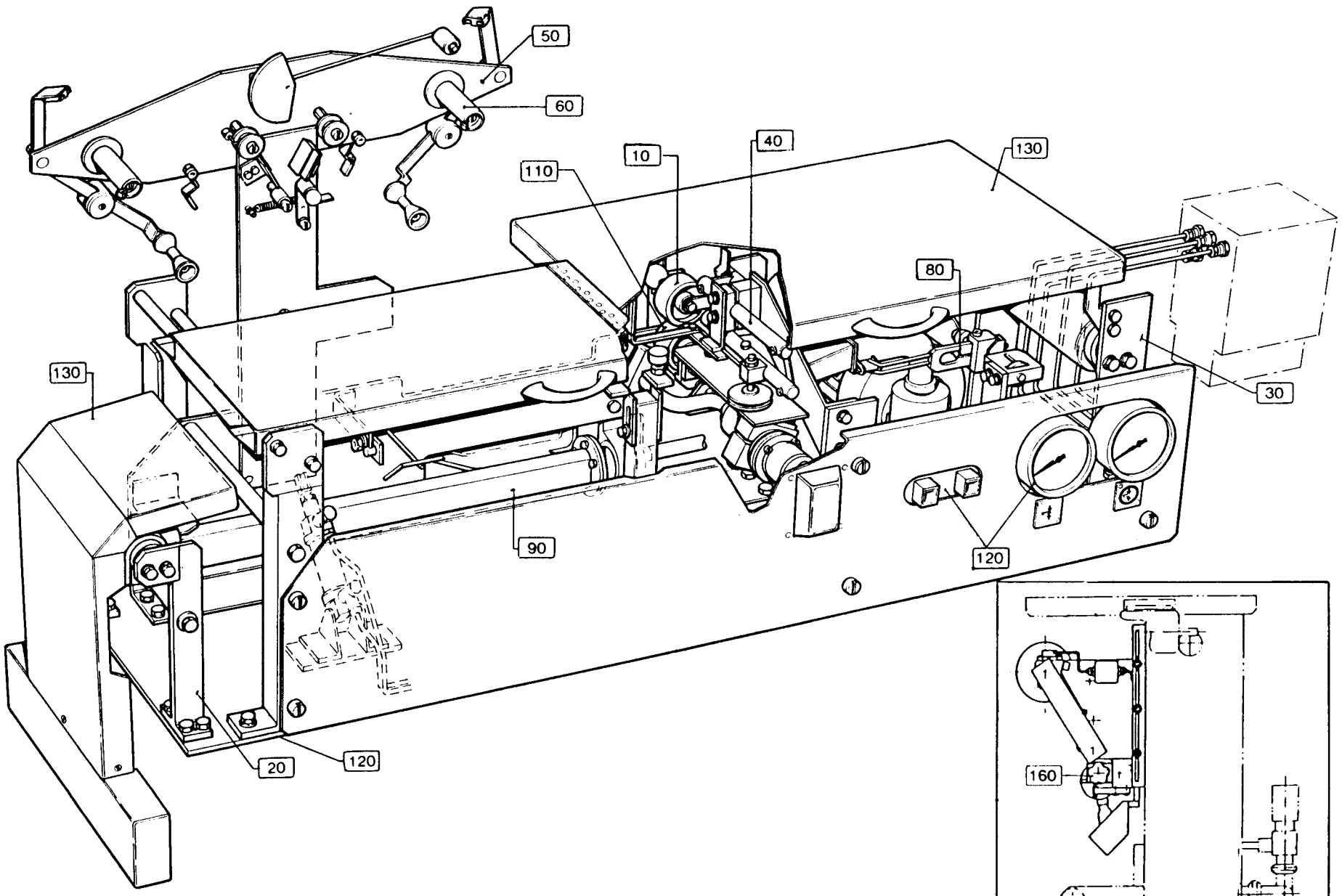

Superstructure 648101-

LAST ALTERATION: AM 8054 85-08-22
648151-100V 648152-100V
AM 7279
84-11-06

GROUP	FILLMACHINE	STAMP LOCATION
-0601	B9	ST-R
-0602	B9	ST-ER
-0603	AB9	ST-R
-0604	AB9	ST-ER

POS	VAR	PART NUMBER	SP	EH	QTY	DESCRIPTION
	-0601	S- 648107-SHEET	~~-8~~			===ASSEMBLY DRAWING===
	-0601		~~-7~~			
	-0602		~~-8~~			
	-0602		~~-7~~			
	-0603		-8			
	-0603		~~-9~~			
	-0603		~~-10~~			
	-0604		-8			
	-0604		~~-9~~			
	-0604		~~-10~~			
F010	ALL	C- 246388-0201	-		1	PRESSURE ROLLER
F020	ALL	C- 256966-020V	-		1	BENDING ROLLER BRACKET
F030	ALL	C- 256967-0201	-		1	BENDING ROLLER
F040	ALL	C- 456032-010V	-		1	STRIP GUIDE
F050	-0601	C- 441000-0301	-		1	STRIP HOLDER
	-0602				1	
F060	-0601	C- 7003-0101	-		2	BOBBIN
	-0602				2	
F050	-0603	C- 441000-0302	-		1	STRIP HOLDER
	-0604				1	
F060	-0603	C- 7003-0101	-		2	BOBBIN
	-0604				2	
F080	ALL	C- 267315-0101	-		1	PAPER GUIDE
F090	ALL	C- 295891-020V	-		1	STRIP APPLICATOR
F110	ALL	C- 272343-030V	-		1	PRESSURE ROLLER
F120	-0601	C- 272408-0301	-		1	PLATE
	-0602				1	
F120	-0603	C- 272408-0302	-		1	PLATE
	-0604				1	
F130	-0601	C- 490947-0101	-		1	PAPER GUARD
	-0602				1	
F130	-0603	C- 490947-0102	-		1	PAPER GUARD
	-0604				1	
F160	-0601	C- 456348-010V	-		1	DATING UNIT
F170	-0601	C- 293685-0102	-		2	DATING WHEEL
F180	-0601	C- 434774-0201	-		1	INK UNIT
F160	-0602	C- 456349-010V	-		1	DATING UNIT
F170	-0602	C- 293684-0106	-		2	DATING WHEEL
F180	-0602	C- 434074-0201	-		1	INK UNIT
F160	-0603	C- 456321-010V	-		1	DATING UNIT

POS	VAR	PART NUMBER	SP	EH	QTY	DESCRIPTION
F170	-0603	C- 293685-0102	-		2	DATING WHEEL
F180	-0603	C- 434774-0202	-		1	INK UNIT
F160	-0604	C- 456322-010V	-		1	DATING UNIT
F170	-0604	C- 293684-0106	-		2	DATING WHEEL
F180	-0604	C- 434074-0202	-		1	INK UNIT
F350	-0603	C- 456919-0101	-		1	BENDING ROLLER
	-0604				1	
F400	-0603	C- 456923-0101	-		1	MACHINE BODY
	-0604				1	
F450	-0601	C- 456739-010V	-		1	PIPE WORK
	-0602				1	
F450	-0603	C- 456935-010V	-		1	PIPE WORK
	-0604				1	
F500	ALL	C- 295668-0301	-		1	START UP KIT

TETRA PAK

2/8601 S-648107-8

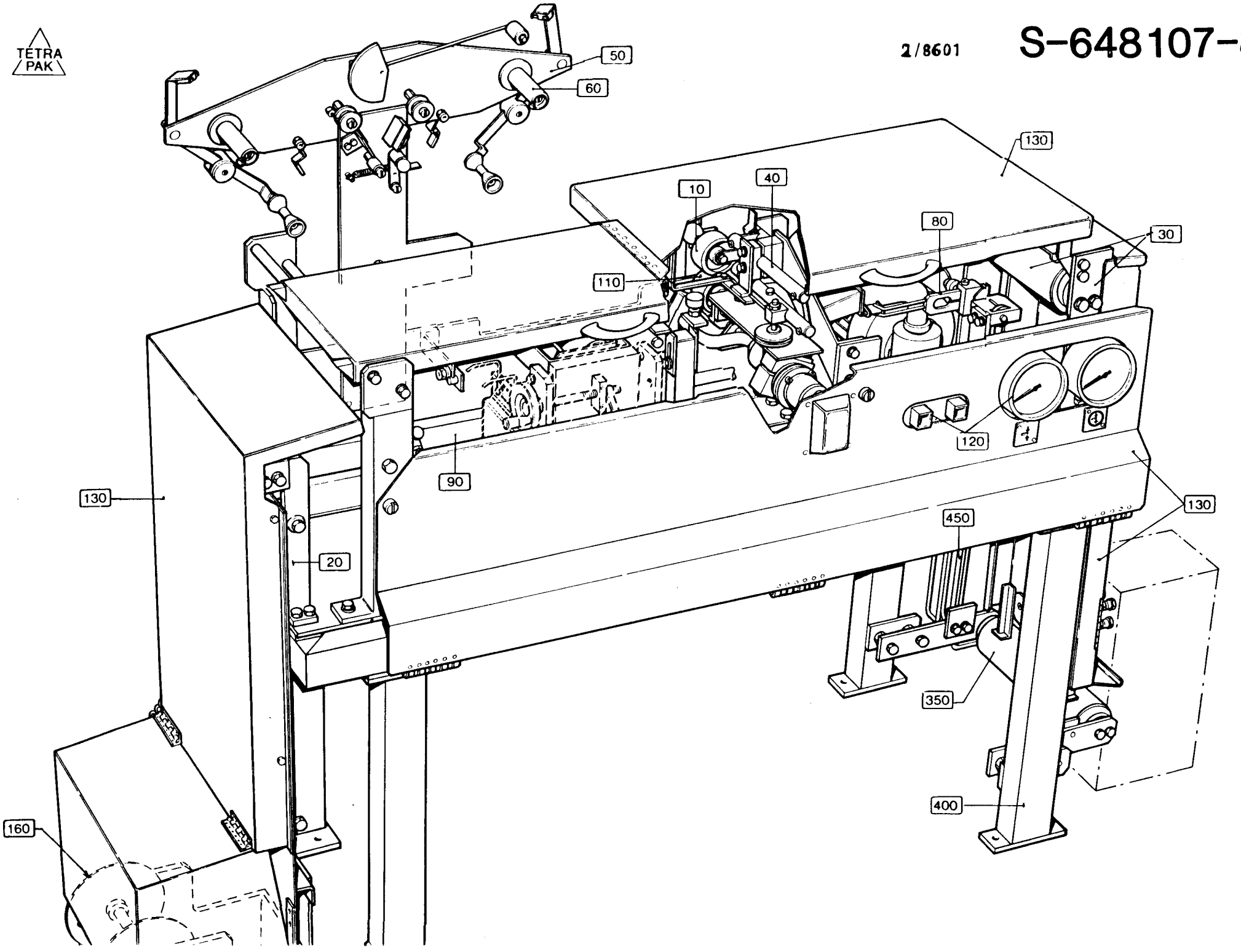

LAST ALTERATION: AM 8699 86-01-18
648151-110V 648152-110V

GROUP	FILLMACHINE	STAMP LOCATION
-0701	B9	STRIP SIDE
-0702	B9	NOSTRIP SIDE
-0703	AB9	STRIP SIDE
-0704	AB9	NOSTRIP SIDE

POS	VAR	PART NUMBER	SP	EH	QTY	DESCRIPTION
	-0701	S- 648107-SHEET	-6			===ASSEMBLY DRAWING===
	-0701		~~-7~~			
	-0702		-6			
	-0702		~~-7~~			
	-0703		-8			
	-0703		~~-9~~			
	-0703		~~-10~~			
	-0704		-8			
	-0704		~~-9~~			
	-0704		~~-10~~			
F010	ALL	C- 246388-0201	-		1	PRESSURE ROLLER
F020	ALL	C- 256966-020V	-		1	BENDING ROLLER BRACKET
F030	ALL	C- 256967-0201	-		1	BENDING ROLLER
F040	ALL	C- 456032-010V	-		1	STRIP GUIDE
F050	-0701	C- 441000-0301	-		1	STRIP HOLDER
	-0702				1	
		C- 7003-0101				. BOBBIN
F050	-0703	C- 441000-0302	-		1	STRIP HOLDER
	-0704				1	
		C- 7003-0101				. BOBBIN
F080	ALL	C- 267315-0101	-		1	PAPER GUIDE
F090	ALL	C- 295891-020V	-		1	STRIP APPLICATOR
F110	ALL	C- 272343-030V	-		1	PRESSURE ROLLER
F120	-0701	C- 272408-0301	-		1	PLATE
	-0702				1	
F120	-0703	C- 272408-0302	-		1	PLATE
	-0704				1	
F130	-0701	C- 490947-0101	-		1	PAPER GUARD
	-0702				1	
F130	-0703	C- 490947-0102	-		1	PAPER GUARD
	-0704				1	
F160	-0701	C- 456348-020V	-		1	DATING UNIT
		C- 293685-0201				. DATING WHEEL
		C- 434774-0301				. INK UNIT
F160	-0702	C- 456349-020V	-		1	DATING UNIT
		C- 293684-0204				. DATING WHEEL ST-ER
		C- 434074-0301				. INK UNIT
F160	-0703	C- 456321-020V	-		1	DATING UNIT AB9 ST-R
		C- 293685-0201				. DATING WHEEL
		C- 434774-0302				. INK UNIT

POS	VAR	PART NUMBER	SP	EH	QTY	DESCRIPTION
F160	-0704	C- 456322-020V	-		1	DATING UNIT
		C- 293684-0204				. DATING WHEEL ST-ER
		C- 434074-0302				. INK UNIT
F350	-0703	C- 456919-0101	-		1	BENDING ROLLER
	-0704				1	
F400	-0703	C- 456923-0101	-		1	MACHINE BODY
	-0704				1	
F450	-0701	C- 456739-010V	-		1	PIPE WORK
	-0702				1	
F450	-0703	C- 456935-010V	-		1	PIPE WORK
	-0704				1	
F500	ALL	C- 295668-0301	-		1	START UP KIT

S-648107-6

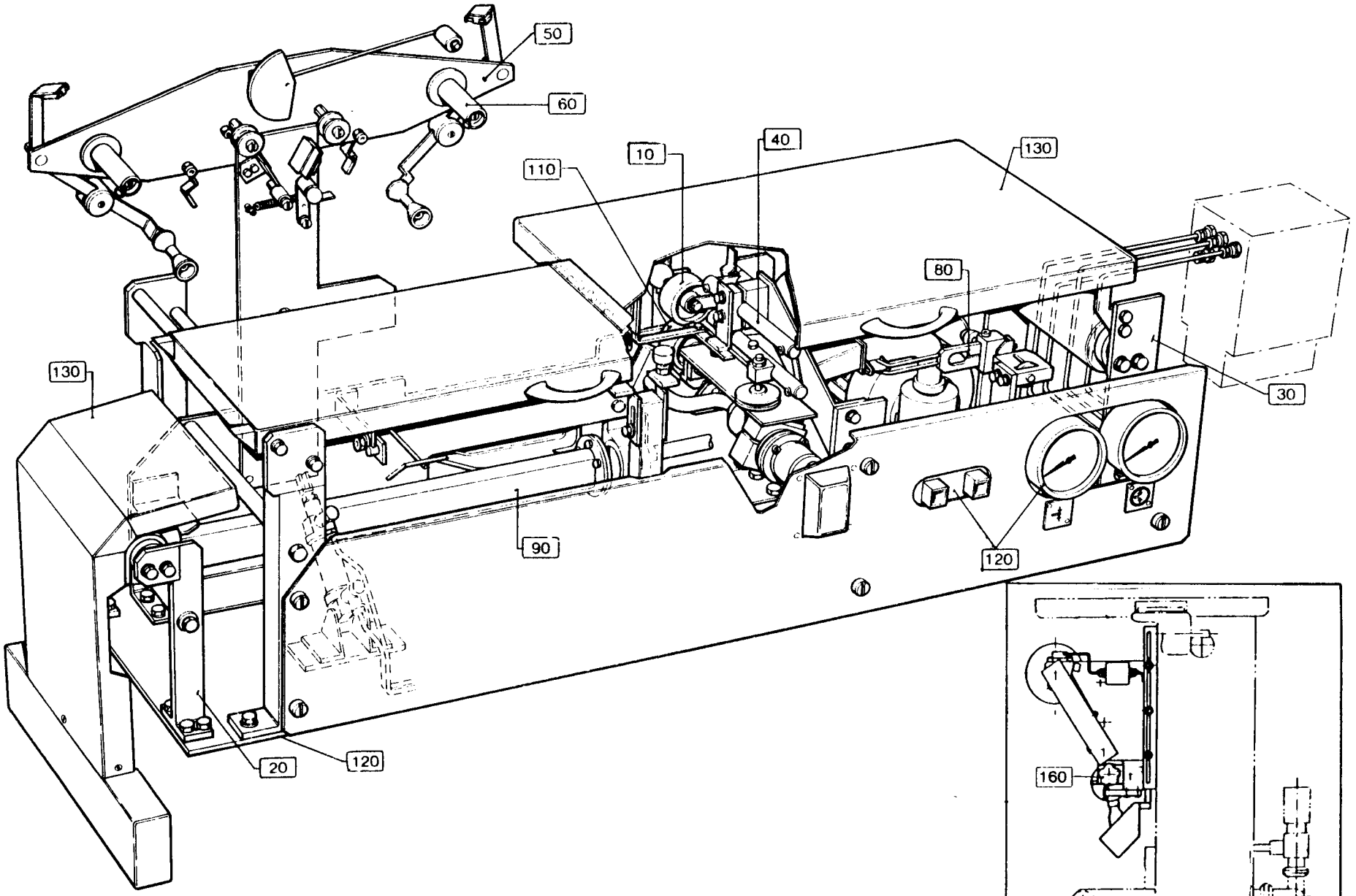

Superstructure 648101-

LAST ALTERATION: AM 8699 86-01-18
648151-110V 648152-110V

GROUP	FILLMACHINE	STAMP LOCATION
-0701	B9	STRIP SIDE
-0702	B9	NOSTRIP SIDE
-0703	AB9	STRIP SIDE
-0704	AB9	NOSTRIP SIDE

POS	VAR	PART NUMBER	SP	EH	QTY	DESCRIPTION
	-0701	S- 648107-SHEET		-6		===ASSEMBLY DRAWING===
	-0701			~~-7~~		
	-0702			-6		
	-0702			~~-7~~		
	-0703			-8		
	-0703			~~-9~~		
	-0703			~~-10~~		
	-0704			-8		
	-0704			~~-9~~		
	-0704			~~-10~~		
F010	ALL	C- 246388-0201	-		1	PRESSURE ROLLER
F020	ALL	C- 256966-020V	-		1	BENDING ROLLER BRACKET
F030	ALL	C- 256967-0201	-		1	BENDING ROLLER
F040	ALL	C- 456032-010V	-		1	STRIP GUIDE
F050	-0701	C- 441000-0301	-		1	STRIP HOLDER
	-0702				1	
		C- 7003-0101				. BOBBIN
F050	-0703	C- 441000-0302	-		1	STRIP HOLDER
	-0704				1	
		C- 7003-0101				. BOBBIN
F080	ALL	C- 267315-0101	-		1	PAPER GUIDE
F090	ALL	C- 295891-020V	-		1	STRIP APPLICATOR
F110	ALL	C- 272343-030V	-		1	PRESSURE ROLLER
F120	-0701	C- 272408-0301	-		1	PLATE
	-0702				1	
F120	-0703	C- 272408-0302	-		1	PLATE
	-0704				1	
F130	-0701	C- 490947-0101	-		1	PAPER GUARD
	-0702				1	
F130	-0703	C- 490947-0102	-		1	PAPER GUARD
	-0704				1	
F160	-0701	C- 456348-020V	-		1	DATING UNIT
		C- 293685-0201				. DATING WHEEL
		C- 434774-0301				. INK UNIT
F160	-0702	C- 456349-020V	-		1	DATING UNIT
		C- 293684-0204				. DATING WHEEL ST-ER
		C- 434074-0301				. INK UNIT
F160	-0703	C- 456321-020V	-		1	DATING UNIT AB9 ST-R
		C- 293685-0201				. DATING WHEEL
		C- 434774-0302				. INK UNIT

POS	VAR	PART NUMBER	SP	EH	QTY	DESCRIPTION
F160	-0704	C- 456322-020V	-		1	DATING UNIT
		C- 293684-0204				. DATING WHEEL ST-ER
		C- 434074-0302				. INK UNIT
F350	-0703	C- 456919-0101	-		1	BENDING ROLLER
	-0704				1	
F400	-0703	C- 456923-0101	-		1	MACHINE BODY
	-0704				1	
F450	-0701	C- 456739-010V	-		1	PIPE WORK
	-0702				1	
F450	-0703	C- 456935-010V	-		1	PIPE WORK
	-0704				1	
F500	ALL	C- 295668-0301	-		1	START UP KIT

TETRA PAK

2/8601

S-648107-8

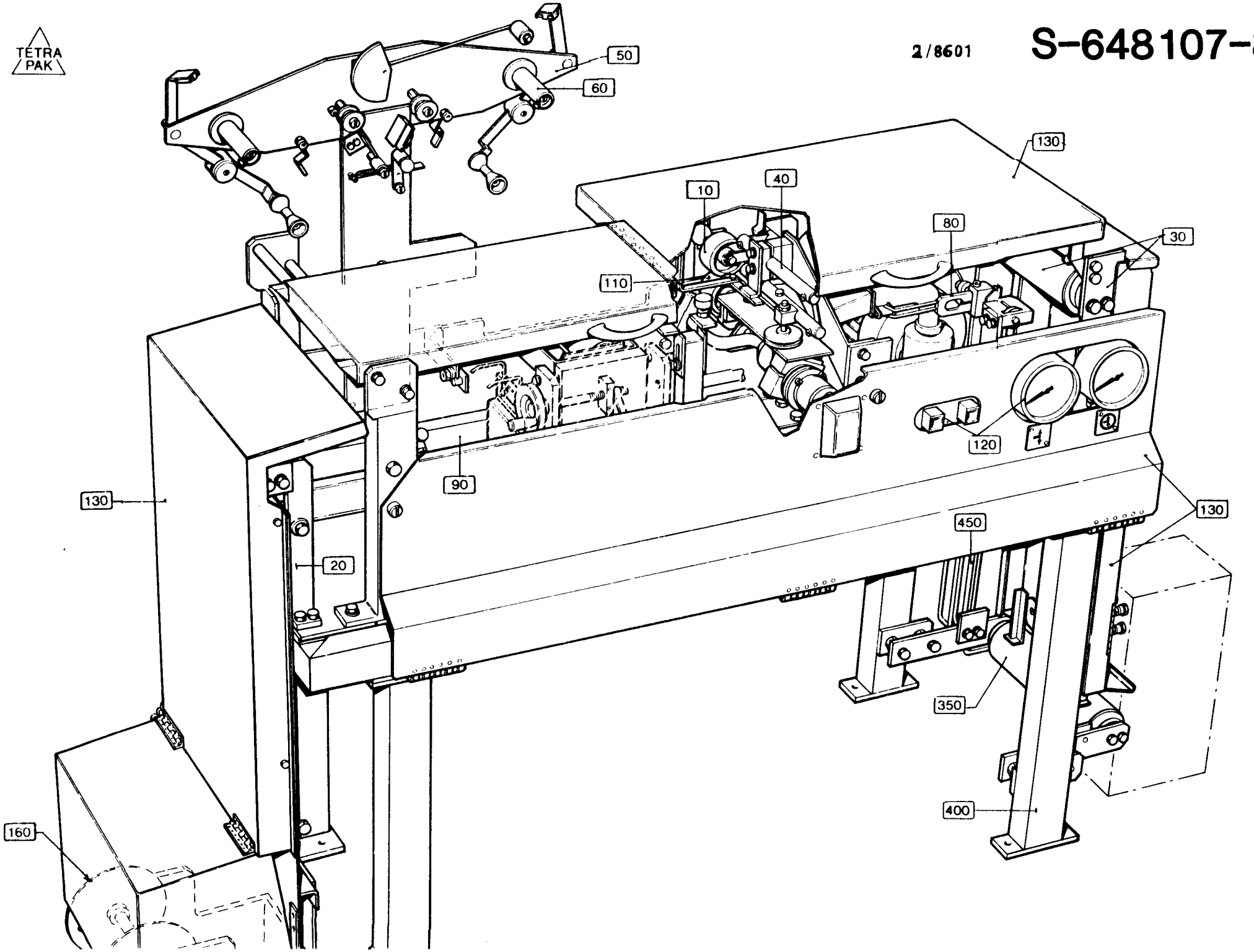

LAST ALTERATION: AM 10574 87-10-07
37876-030V 243963-010V 271699-010V 529304-010V 531366-010V
648019-050V
AM 4074
78-06-06

POS	VAR	PART NUMBER	SP	UN	QTY	DESCRIPTION
	-0301	S- 37877-SHEET	-2			===ASSEMBLY DRAWING===
010	-0301	255301	-		1	HEATING RAIL
015	-0301	37879	-		1	LOCKING ARM
020	-0301	37880	-		1	HINGE
025	-0301	243132	-		1	PROTECTION PLATE
030	-0301	31017	S		1	KNIFE
035	-0301	31723	P		1	TEFLON STRIP
040	-0301	31724	-		1	LOCK BAR
045	-0301	37882	-		1	PROTECTION PLATE
050	-0301	37883	-		1	LOCK BAR
055	-0301	37884	S		1	SHAFT
060	-0301	37885	S		2	TENSION SPRING
065	-0301	37886	S		1	INSULATING DISK
070	-0301	37888	S		1	ROLLER
075	-0301	37889	S		2	SHAFT
080	-0301	37890	S		4	FLANGE ROLLER
085	-0301	37892	-		1	CONNECTION BOX
090	-0301	37893	-		1	LID
095	-0301	208173	S		1	SHAFT
100	-0301	229775	-		6	SPACER
105	-0301	243133	-		1	PLATE
110	-0301	245221	-		1	STOP
120	-0301	90017-0001	S		1	HANDLE
125	-0301	90059-0001	S		1	THERMOSTAT
130	-0301	90099-0002	-		1	NUT
135	-0301	90077-0102	-		1	TERMINAL BLOCK
140	-0301	90206-0053	S		1	HEATING ELEMENT
150	-0301	312101-0297	-		2	SCREW M6S4X25FZB
155	-0301	312101-0304	-		2	SCREW M6S4X45FZB
157	-0301	312101-0323	-		2	SCREW M6S5X8FZB
160	-0301	312105-0364	-		4	SCREW M6S6X10RFR
165	-0301	312105-0449	-		2	SCREW M6S8X16RFR
170	-0301	312115-0380	-		4	SCREW 6X50 A4 80
175	-0301	312125-0230	-		2	SLOTTED HEMCS3X20RFR
180	-0301	312125-0287	-		19	SLOTTED HEMCS4X8RFR
190	-0301	312316-0287	S		2	GRUB SCREW SK6SS4X8FZB
195	-0301	312605-0310	-		2	NUT M6M3RFR
200	-0301	315105-0136	-		5	WASHER BRB4,3X8RFR
205	-0301	315105-0153	-		8	WASHER BRB6,4X12RFR
210	-0301	321101-0173	S		2	BUSHING 12F7X12
213	-0301	351127-0144	-	MM	1800	CABLE RDO-S, 3X1,5
215	-0301	352103-0106	-		1	CABLE GLANR.18,6/5-10

S-37877-2

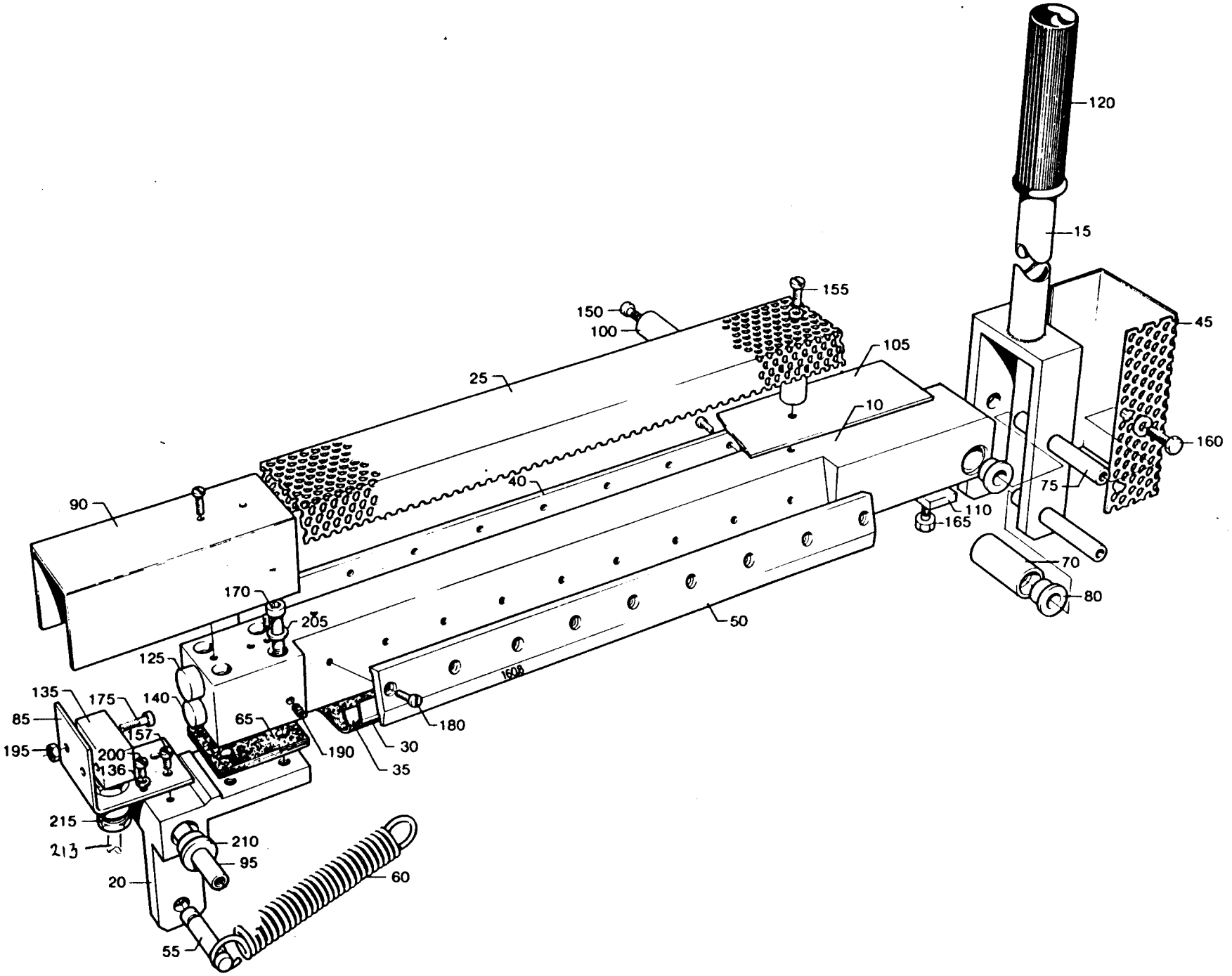
120
15
155
150
100
105
25
10
45
160
40
90
75
110
165
70
80
170
205
50
125
135
175
140
85
157
65
180
195
200
136
190
30
35
215
213
210
95
20
60
55

LAST ALTERATION: AM 5061 81-11-06
271699 640002 644309 644502 644602 648002 648012 648019
AM 3647
74-04-25

POS	VAR	PART NUMBER	SP	EH	QTY	DESCRIPTION
	-0101	S- 37894-SHEET	-1			===ASSEMBLY DRAWING===
105	-0101	37895	-		1	RAIL
108	-0601	37896	-		1	PIN
109	-0601	37897	-		1	WASHER
112	-0601	90144-0030	P	MM	360	TEFLON TAPE
115	-0601	312601-0324	-		1	NUT M6M16FZB

S-37894-1

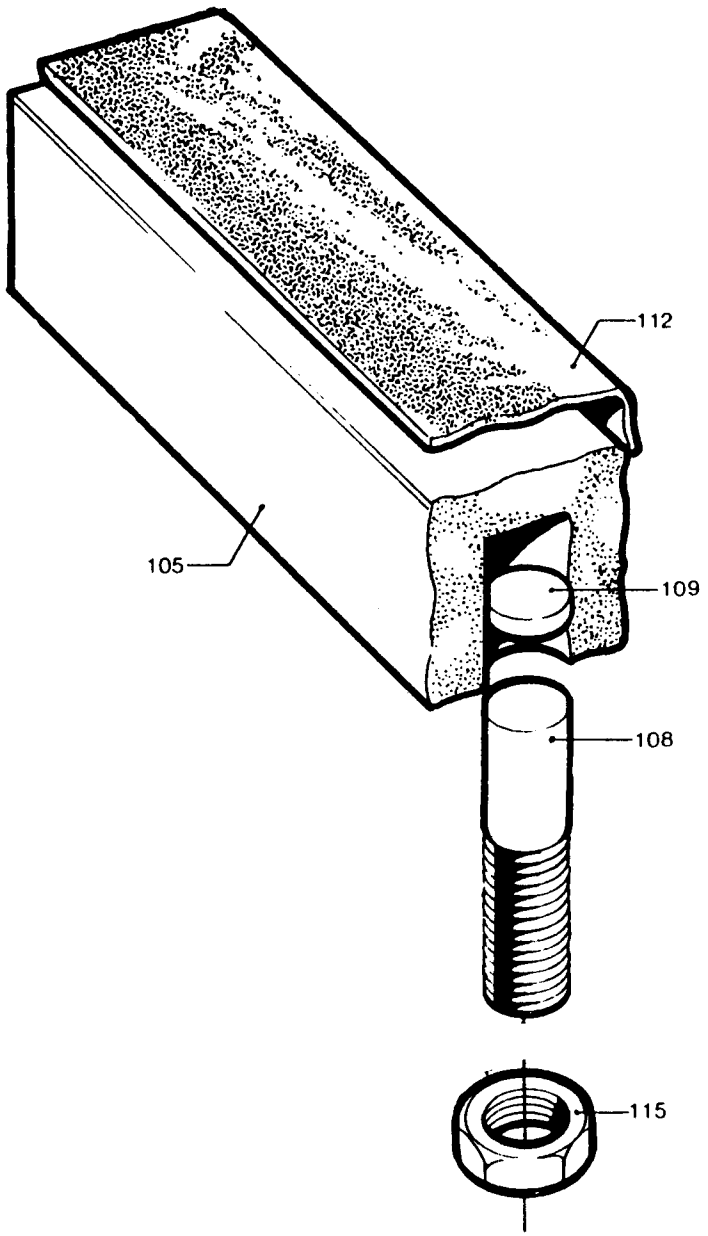

LAST ALTERATION: AM 8101 86-01-16
648106-020V
AM 5112
82-02-02

POS	/AR	PART NUMBER	SP	EH	QTY	DESCRIPTION
	-0201	S- 256873-SHEET	-2			===ASSEMBLY DRAWING===
010	-0201	295158	-		1	DOOR
020	-0201	295246	-		1	HOLDER
030	-0201	295247	-		1	PLATE SPRING
100	-0201	90143-0049	-	MM	3700	STRIP
110	-0201	90157-0016	-	ML	X	LOCKING FLUID
120	-0201	90237-0044	-		1	DOOR HANDLE
		90237-0310	R		0	* LOWER SECTION
		90237-0311	R		0	* CAM PART
130	-0201	90248-0013	-		2	HINGE
140	-0201	312105-0327	-		8	SCREW M6S5X12 A4 80
150	-0201	312165-0329	-		8	SLOTTED HEMKFS5X16RFR
155	-0201	312503-0410	-		4	DRIVE SCRERXKB10X13FZB
160	-0201	315105-0146	-		12	WASHER BRB5,3X10RFR

TETRA PAK

3/8608

S-256873-2

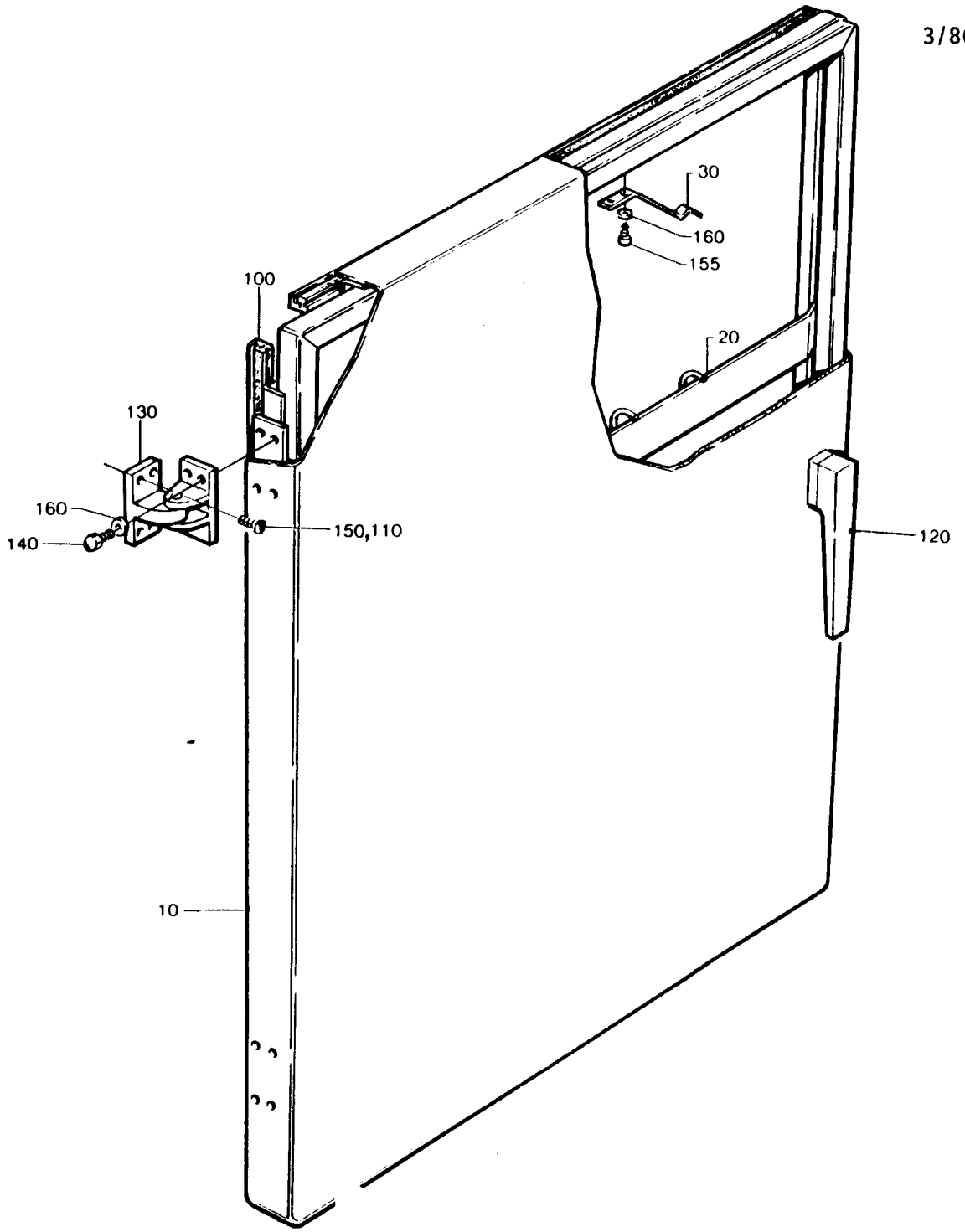

AM 8101

LAST ALTERATION: AM 561. 82-12-15
648106-020V
AM 5112
82-02-02

POS	VAR	PART NUMBER	SP	EH	QTY	DESCRIPTION	
	-0201	S- 256875-SHEET	-2			===ASSEMBLY DRAWING===	
010	-0201	295159	-		1	COVER	
100	-0201	90143-0049	-	MM	2300	STRIP	
120	-0201	312115-0467	-		4	SCREW	MC6S8X80RFR
130	-0201	315105-0165	-		4	WASHER	BRB8,4X16RFR
140	-0201	315202-0104	-		4	O-RING	6,1X1,6

TETRA PAK

2/8601 **S-256875-2**

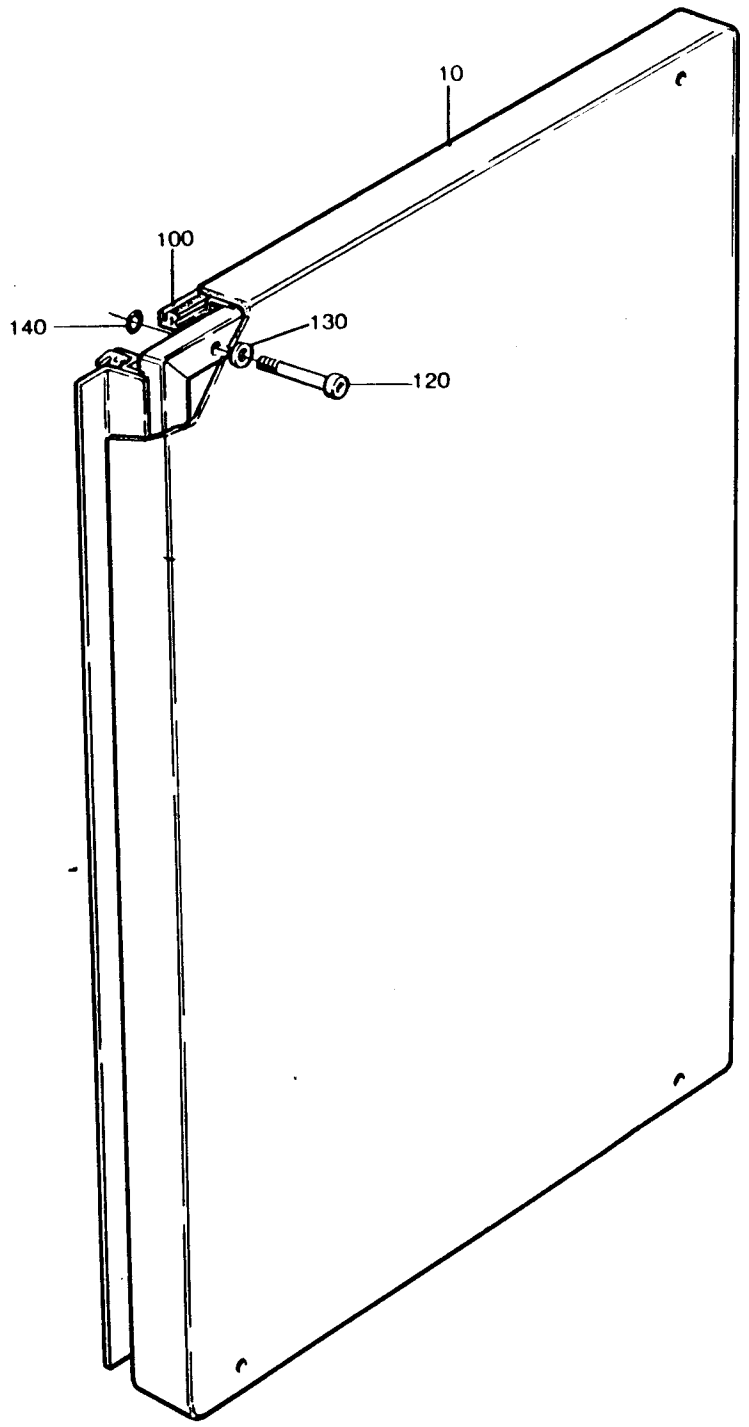

5614

LAST ALTERATION: AM 5385 82-07-08
648106-020V
AM 5112
82-02-02

POS	VAR	PART	NUMBER	SP	EH	QTY	DESCRIPTION
	-0201	S-	257146-SHEET	-2			===ASSEMBLY DRAWING===
010	-0201		295156	-		1	LID
020	-0201		295157	-		1	ARM
030	-0201		256148	-		2	HOLDER
040	-0201		256150	-		4	SCREW
050	-0201		272552	-		2	BRACKET
100	-0201		312105-0449	-		4	SCREW M6S8X16RFR
110	-0201		312145-0453	-		4	SLOTTED HEMFS8X25RFR
120	-0201		312605-0318	-		4	NUT M6M8RFR
130	-0201		315105-0165	-		8	WASHER BRB8,4X16RFR
140	-0201		315105-0178	-		8	WASHER BRB13X24RFR

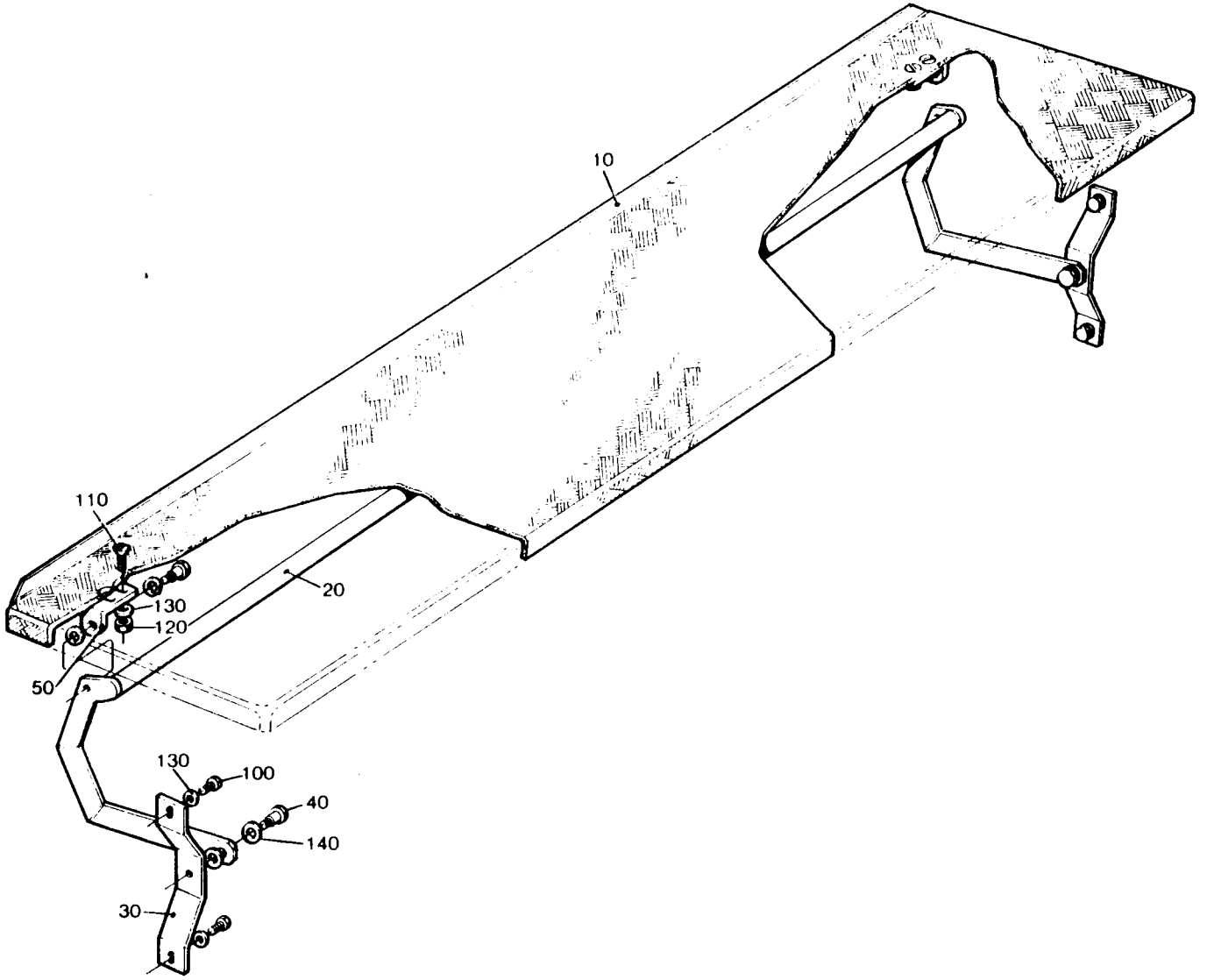
10
110
20
130
120
50
130
100
40
140
30

LAST ALTERATION: AM 8360 85-10-15
648106-020V
AM 5145
82-02-12

POS	VAR	PART NUMBER	SP	EH	QTY	DESCRIPTION	
	-0201	S- 271017-SHEET	-2			===ASSEMBLY DRAWING===	
010	-0201	272584	S		2	BEARING	
020	-0201	257224	S		2	CLAMP	
300	-0201	90045-0102	S		1	MOTOR	
500	-0201	312105-0451	-		8	SCREW	M6S8X20RFR
510	-0201	315105-0165	-		4	WASHER	BRB8,4X16RFR

TETRA PAK

2/8601 **S-271017-2**

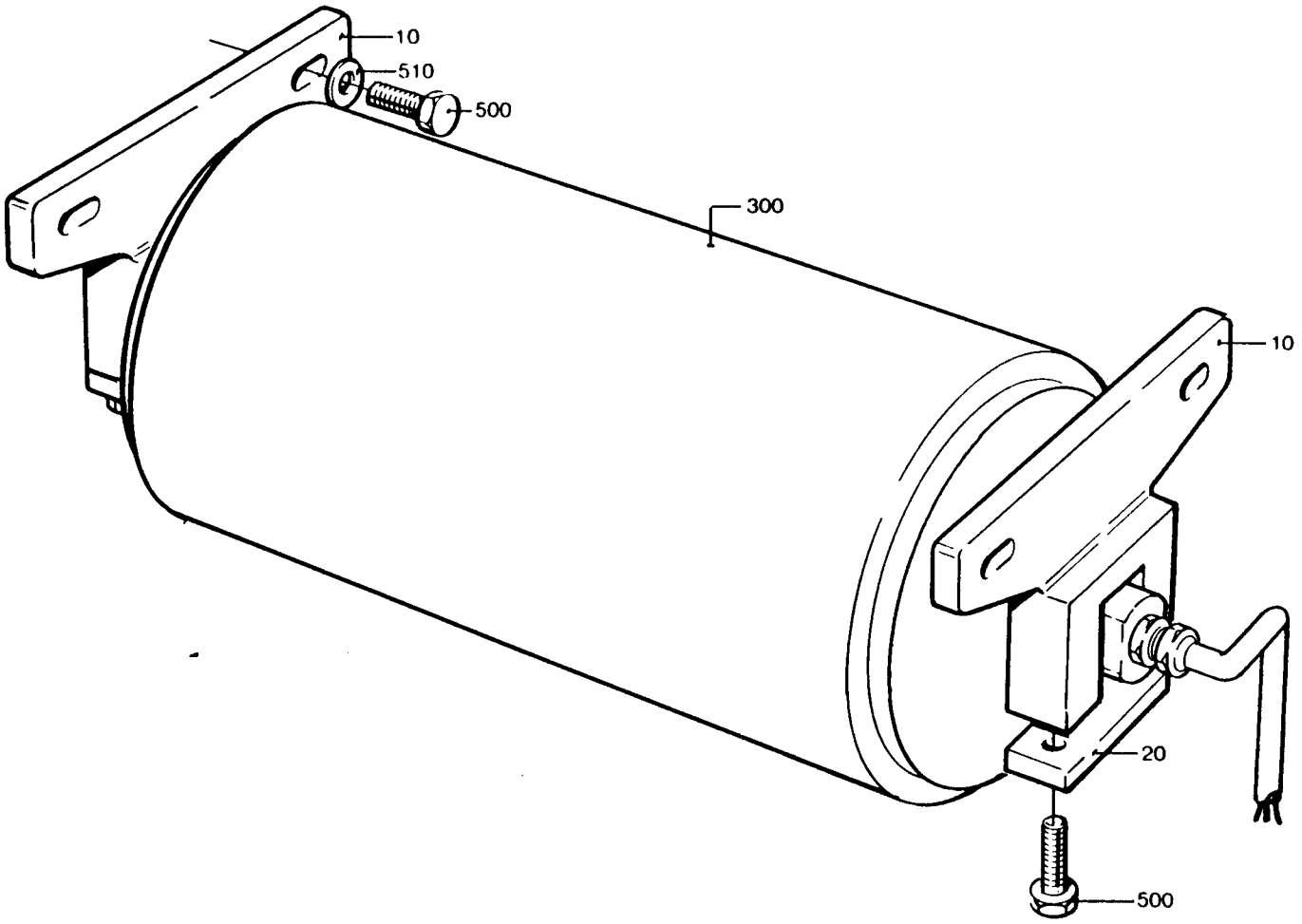

AM 8360

LAST ALTERATION: AM 7766 85-04-30
256965-020V 456546-010V
AM 5385
82-07-08

POS	VAR	PART NUMBER	SP	EH	QTY	DESCRIPTION
	-0201	S- 271168-SHEET	-2			===ASSEMBLY DRAWING===
020	-0201	295391-0002	S		4	SCREW
030	-0201	295391-0003	S		2	SCREW
300	-0201	90201-0010	S		6	VALVE
		90201-0300	R		0	* PLATE
		90201-0301	R		0	* SPRING
		90201-0302	R		0	* WASHER
		90201-0303	R		0	* SPARE PARTS KIT
305	-0201	90201-0016	S		4	VALVE
		90020-0031	S		1	* SLEEVE
		90201-0312	R		0	* COIL
		90201-0314	S		1	* CYLINDER
		90201-0315	S		1	* PLUNGER
		90201-0316	S		1	* SPRING
310	-0201	90201-0017	S		2	VALVE
		90201-0312	C		1	* COIL
315	-0201	90110-0095	S		2	CONTAKT
320	-0201	90201-0303	-		6	SPARE PARTS KIT
330	-0201	90201-0306	-		1	BLOCK
500	-0201	342713-0310	-		3	BLANK-OFF BPS14
510	-0201	342713-0313	-		1	BLANK-OFF BPS12
520	-0201	342721-0103	-		8	PIPE CONNEGA8-LRFZB
530	-0201	342721-0114	-		1	PIPE CONNEGA15-LRFZB

TETRA PAK

4/8609

S-271168-2

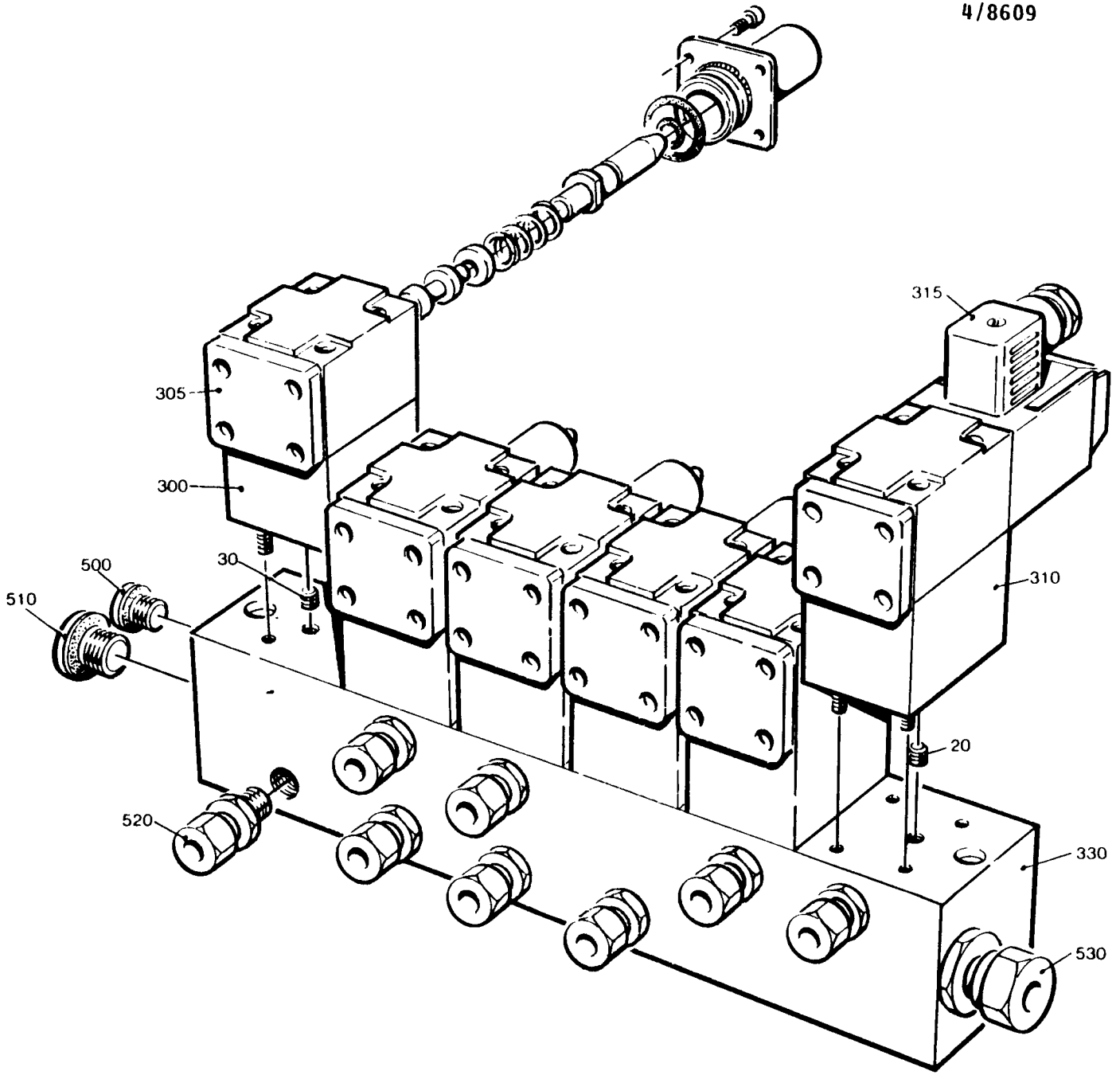

LAST ALTERATION: AM 9017 86-03-13
648106-020V
AM 5385
82-07-08

POS	VAR	PART NUMBER	SP	EH	QTY	DESCRIPTION
	-0201	S- 271452-SHEET	-2			===ASSEMBLY DRAWING===
010	-0201	271229	-		1	BOX
020	-0201	271451	-		1	BRACKET
030	-0201	295384	C		1	SUCTION PIPE
040	-0201	295387	S		1	LABEL
050	-0201	35962	S		1	LID
060	-0201	295390	S		1	SIGN
310	-0201	90050-0011	S		1	BOTTLE
320	-0201	90099-0003	-		1	NUT
325	-0201	90224-0094	-		1	NIPPLE
330	-0201	90157-0021	-	G	X	LOCKING FLUID
340	-0201	90166-0008	P	MM	2000	HOSE
345	-0201	90195-0020	-		1	TERMINAL BLOCK
350	-0201	90321-0017	S		1	PUMP
		90321-0380	S		0	* DIAPHRAGM
		90321-0396	S		0	* FILTER
500	-0201	311520-0329	-		1	BLANK RIVE2,4X7,4
510	-0201	312101-0370	-		4	SCREW M6S6X20FZB
520	-0201	312125-0285	-		4	SLOTTED HEMCS4X6RFR
530	-0201	312601-0316	-		4	NUT M6M6FZB
540	-0201	315101-0153	-		4	WASHER BRB6,4X12FZB
550	-0201	315202-0109	S		1	O-RING 11,1X1,6
555	-0201	352103-0110	-		1	CABLE GLANR.22,5/4-13
560	-0201	352110-0102	-		4	CLIP TK 10-14
570	-0201	352113-0101	-		2	RIBBON CLAR

S-271452-2

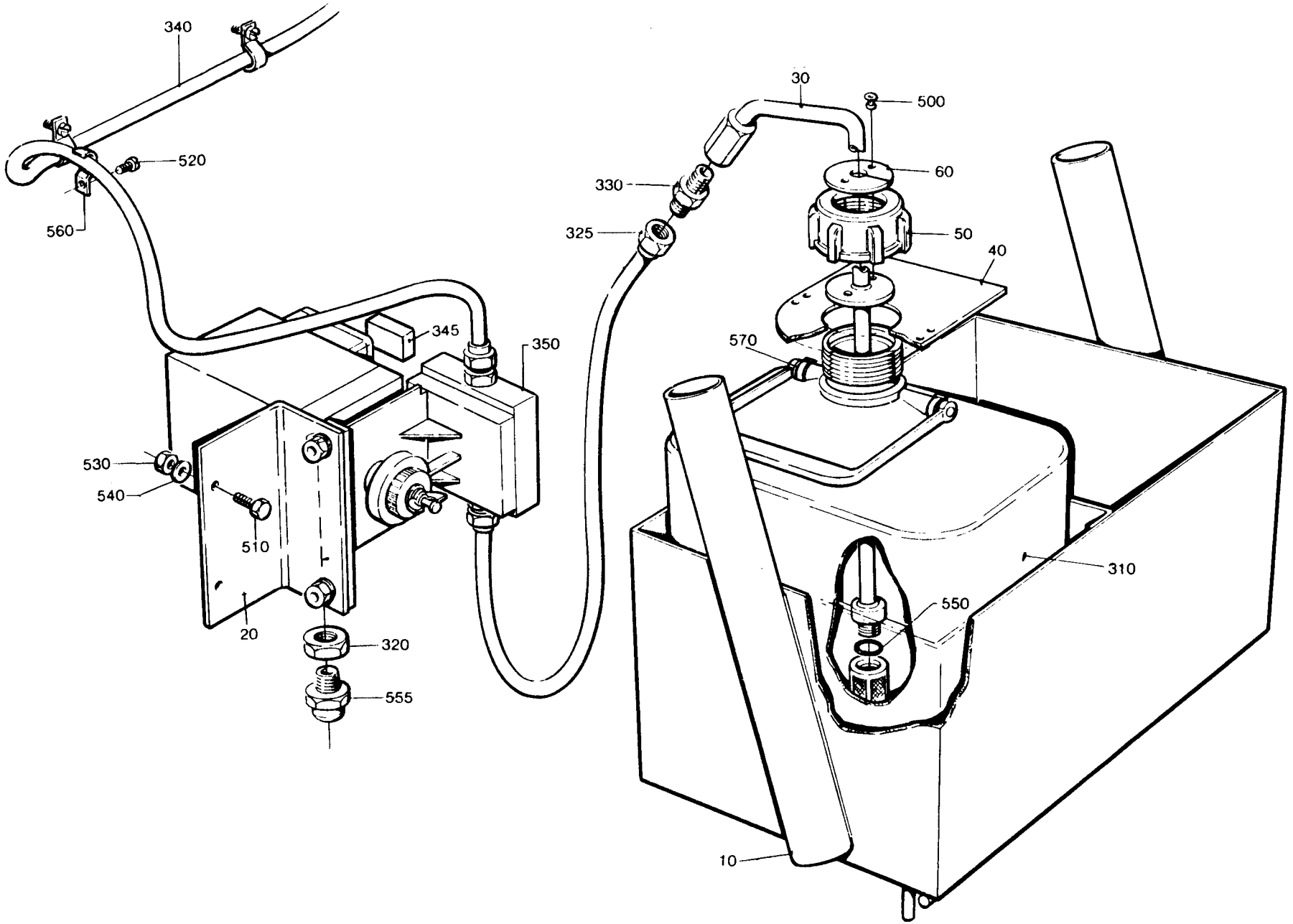
340
520
560
30
500
60
330
325
50
40
570
345
350
530
540
510
20
320
555
310
550
10

LAST ALTERATION: AM 9017 86-03-13
648106-020V
AM 5385
82-07-08

POS	VAR	PART NUMBER	SP	EH	QTY	DESCRIPTION
	-0201	S- 271453-SHEET	-2			===ASSEMBLY DRAWING===
005	-0201	456378	S		1	HOSE
010	-0201	295384	C		1	SUCTION PIPE
030	-0201	295386	S		1	LABEL
040	-0201	35962	P		1	LID
045	-0201	456272	-		1	PLATE
050	-0201	295389	S		1	SIGN
200	-0201	90015-0021	S		1	BUSHING
220	-0201	90030-0185	S		1	PIPE CONNECTION
240	-0201	90165-0044	-		4	CLIP
250	-0201	90166-0109	-	MM	2200	HOSE
300	-0201	90050-0011	S		1	BOTTLE
320	-0201	90321-0396	S		1	FILTER
500	-0201	311520-0329	-		1	BLANK RIVE2,4X7,4
501	-0201	312105-0366	-		2	SCREW M6S6X12RFR
502	-0201	312125-0287	-		4	SLOTTED HEMCS4X8RFR
508	-0201	315105-0153	-		2	WASHER BRB6,4X12RFR
510	-0201	315202-0109	S		1	O-RING 11,1X1,6
520	-0201	342706-0114	S		1	SLEEVE SH04
530	-0201	342706-0148	S		2	SLEEVE SH08
580	-0201	352113-0101	-		8	RIBBON CLAR

TETRA PAK

3/8609

S-271453-2

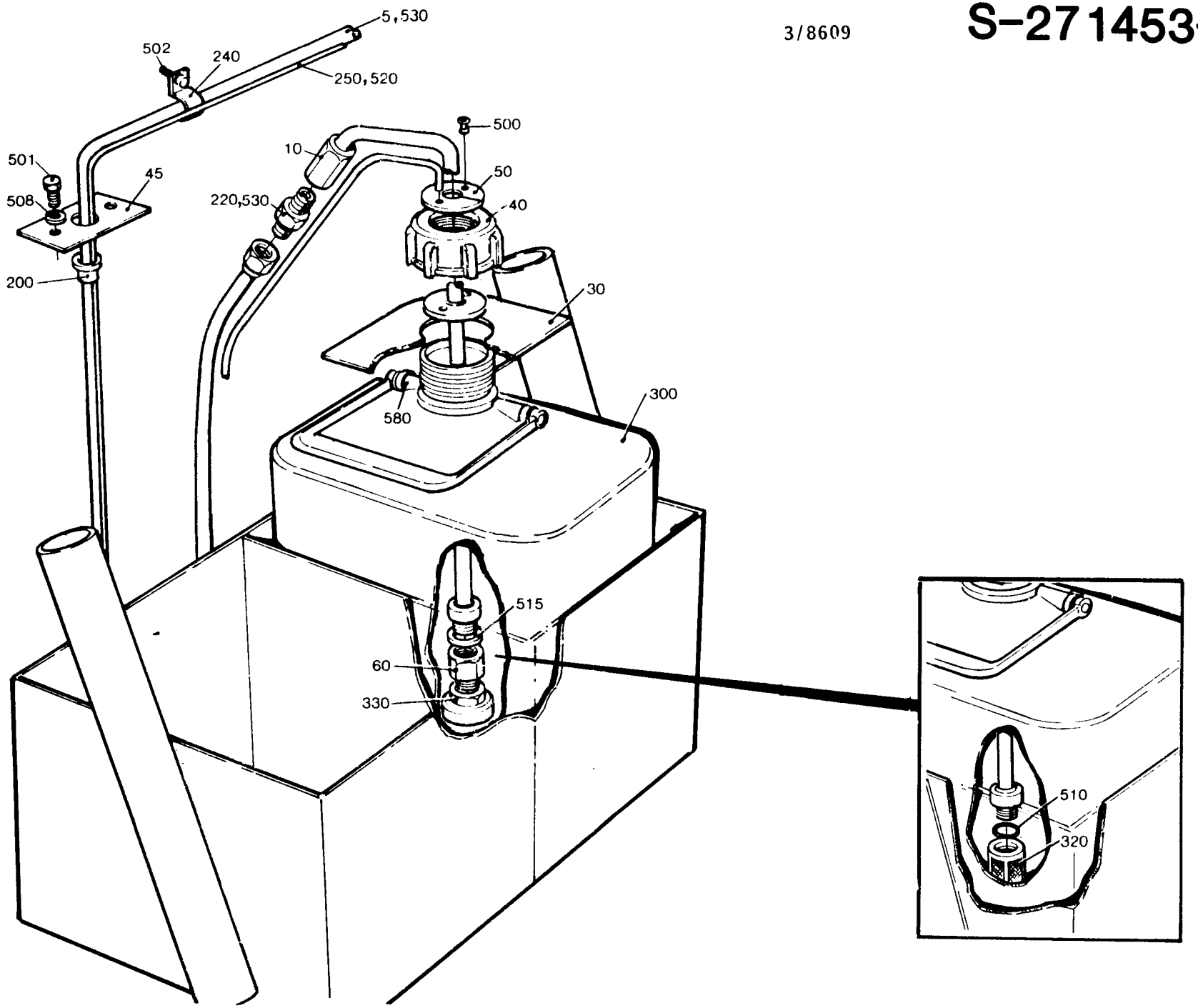

YM 9286

LAST ALTERATION: AM 9286 86-06-11
648106-070V

POS	VAR	PART NUMBER	SP	EH	QTY	DESCRIPTION
	-0301	S- 271453-SHEET	-2			===ASSEMBLY DRAWING===
005	-0301	456378	S		1	HOSE
010	-0301	295384	C		1	SUCTION PIPE
030	-0301	295386	S		1	LABEL
040	-0301	35962	P		1	LID
045	-0301	456272	-		1	PLATE
050	-0301	295389	S		1	SIGN
060	-0301	491981	S		1	NIPPLE
200	-0301	90015-0021	S		1	BUSHING
220	-0301	90030-0185	S		1	PIPE CONNECTION
240	-0301	90165-0044	-		4	CLIP
250	-0301	90166-0109	-	MM	2200	HOSE
300	-0301	90050-0011	S		1	BOTTLE
330	-0301	90415-0034	S		1	SUCTION FILTER
500	-0301	311520-0329	-		1	BLANK RIVE2,4X7,4
501	-0301	312105-0366	-		2	SCREW M6S6X12RFR
502	-0301	312125-0287	-		4	SLOTTED HEMCS4X8RFR
508	-0301	315105-0153	-		2	WASHER BRB6,4X12RFR
515	-0301	315233-0110	S		1	SEAL RING R1/4"
520	-0301	342706-0114	S		1	SLEEVE SH04
530	-0301	342706-0148	S		2	SLEEVE SH08
580	-0301	352113-0101	-		8	RIBBON CLAR

TETRA PAK

3/8609

S-271453-2

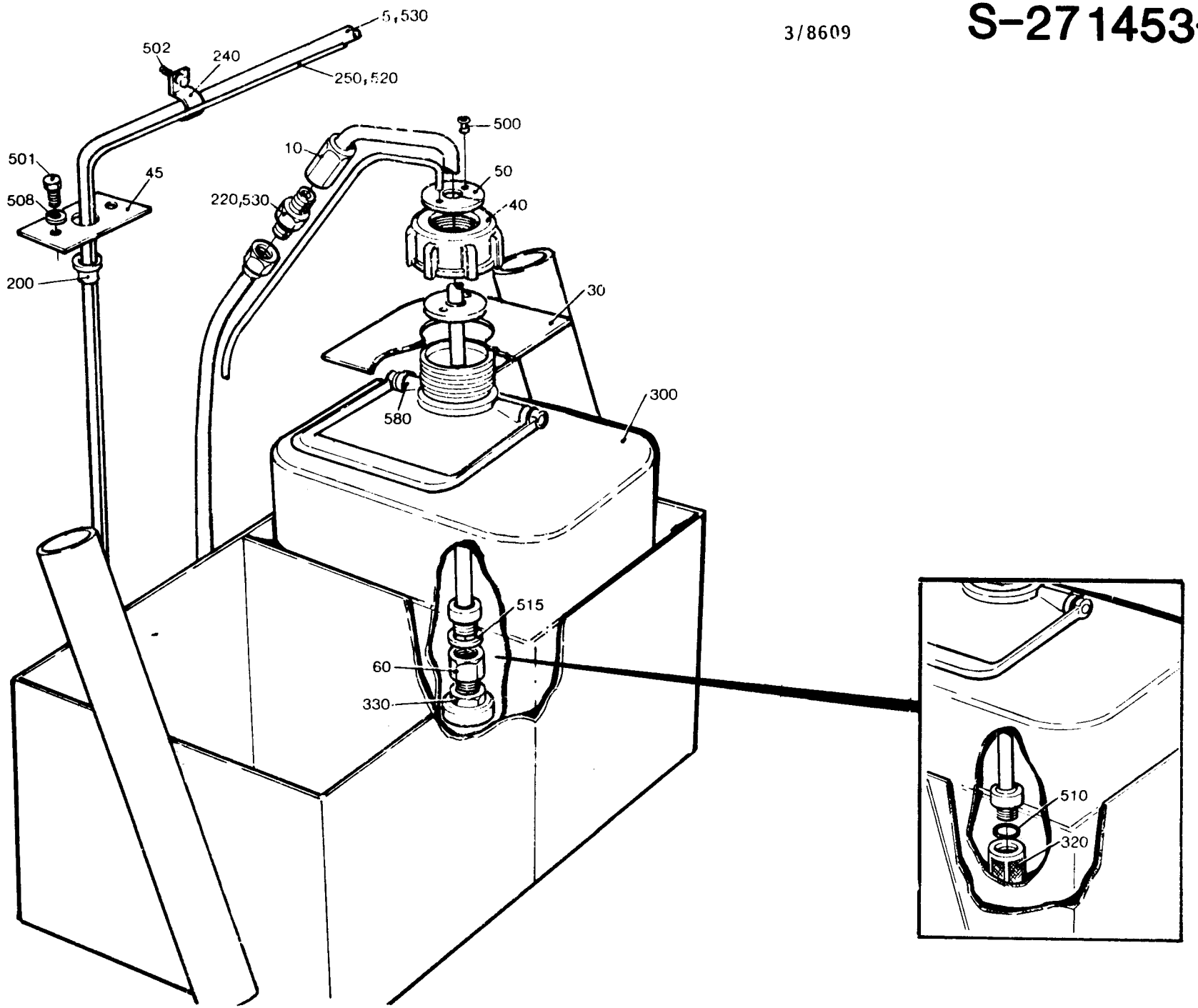

AM 9286

LAST ALTERATION: AM 631, 83-11-03
648106-020V
AM 5145
82-02-12

POS	VAR	PART NUMBER	SP	EH	QTY	DESCRIPTION	
	-0201	S- 271454-SHEET		-2		===ASSEMBLY DRAWING===	
010	-0201	272569	-		1	CATCH HANDLE	
040	-0201	272603	-		1	STOP LUG	
050	-0201	272604	-		1	LUG	
300	-0201	90017-0001	-		1	HANDLE	
310	-0201	90347-0012	S		1	DAMPER	
500	-0201	312105-0366	-		4	SCREW	M6S6X12RFR
510	-0201	312105-0370	-		1	SCREW	M6S6X20RFR
520	-0201	312105-0500	-		1	SCREW	M6S10X45RFR
540	-0201	312605-0320	-		1	NUT	M6M10RFR

TETRA PAK

3/8601

S-271454-2

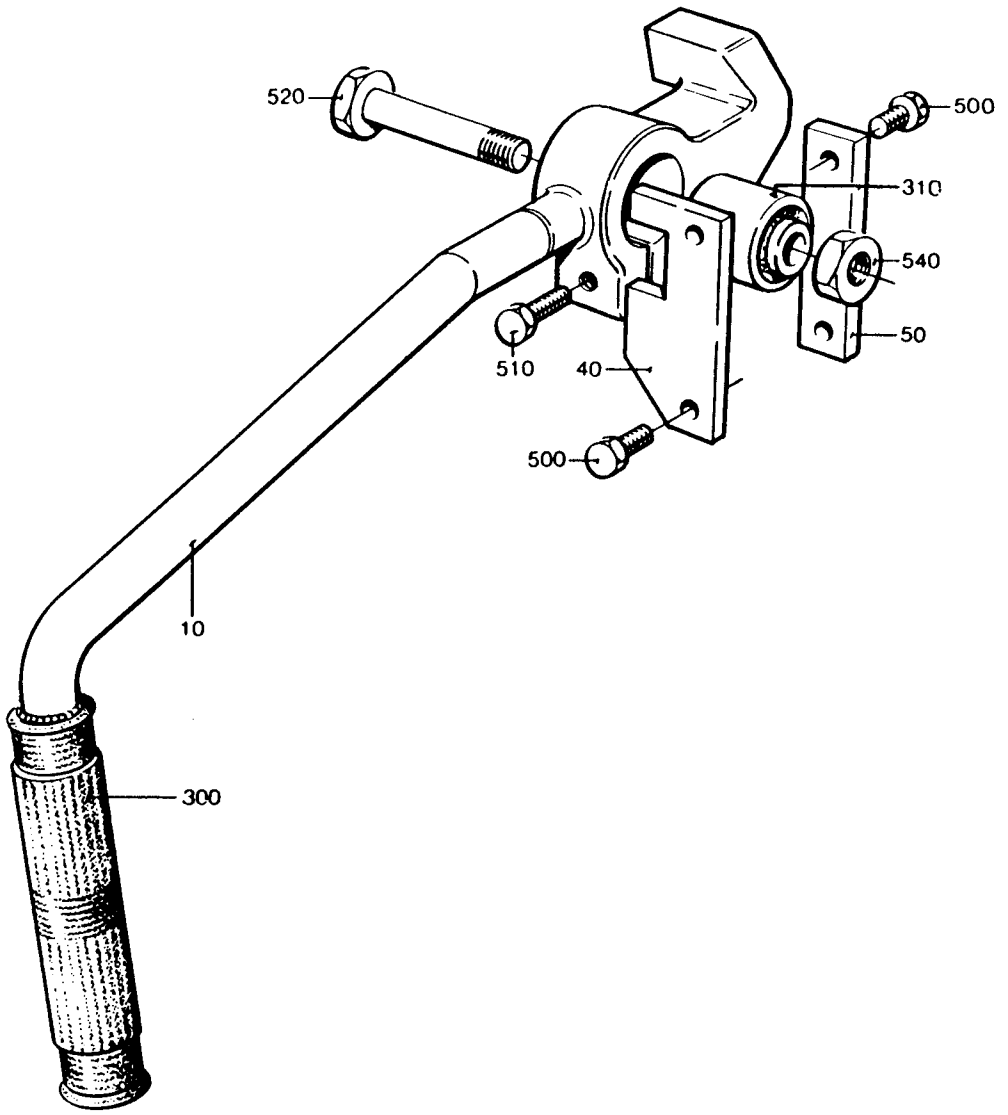

AM6317

LAST ALTERATION: AM 6317 83-11-03
648106
AM 5145
82-02-12

POS	VAR	PART NUMBER	SP	EH	QTY	DESCRIPTION
	-0201	S- 271468-SHEET	-2			===ASSEMBLY DRAWING===
010	-0201	272620	S		1	GUIDE
020	-0201	271472	-		4	BRACKET
030	-0201	271959	-		1	BRACKET
040	-0201	272621	S		1	RAIL
050	-0201	272630	S		1	CATCH
060	-0201	272631	S		1	BRACKET
070	-0201	271961	S		1	SCREW
300	-0201	90347-0011	P		1	RUBBER DAMPER
500	-0201	312105-0366	-		24	SCREW M6S6X12RFR
510	-0201	312105-0495	-		8	SCREW M6S10X30RFR
520	-0201	312115-0453	-		5	SCREW MC6S8X25RFR
530	-0201	312115-0497	-		2	SCREW MC6S10X35RFR
540	-0201	312155-0366	-		1	SCREW MF6S6X12RFR
550	-0201	315105-0173	-		8	WASHER BRB10,5X22RFR
580	-0201	321120-0112	S		1	BUSHING 12/14X20

TETRA PAK

2/8402 **S-271468-2**

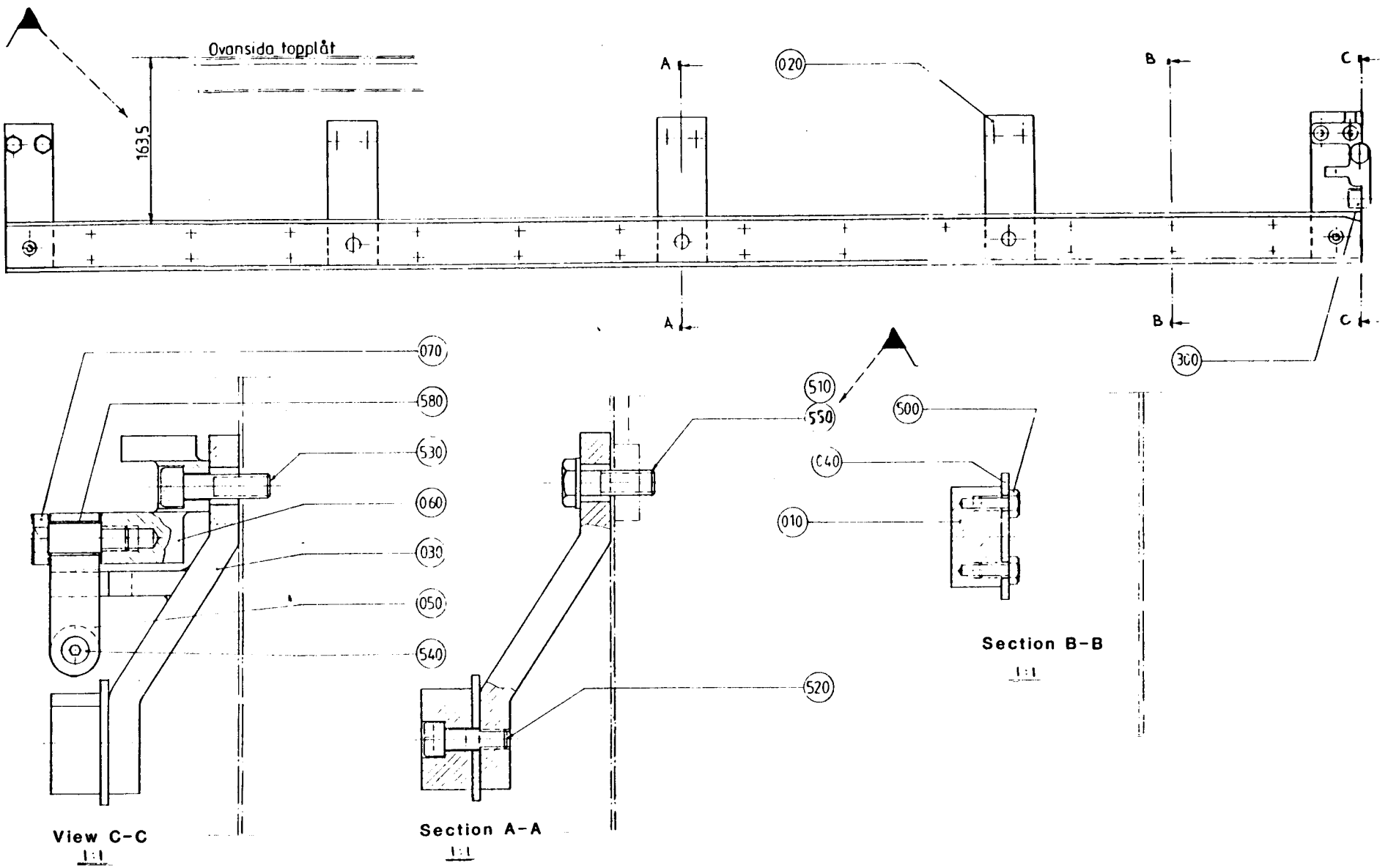

LAST ALTERATION: AM 6317 83-11-03
648106
AM 5145
82-02-12

POS	VAR	PART NUMBER	SP	EH	QTY	DESCRIPTION
	-0201	S- 271469-SHEET	-1			===ASSEMBLY DRAWING===
010	-0201	272596	S		1	GUIDE
020	-0201	272597	-		1	RAIL
030	-0201	257151	-		5	BRACKET
040	-0201	257271	S		1	STOP
050	-0201	271456	S		1	CATCH
060	-0201	271457	S		1	CATCH
300	-0201	90347-0011	P		1	RUBBER DAMPER
500	-0201	312105-0366	-		20	SCREW M6S6X12RFR
510	-0201	312105-0493	-		10	SCREW M6S10X25RFR
520	-0201	312115-0453	-		5	SCREW MC6S8X25RFR
530	-0201	312155-0366	-		1	SCREW MF6S6X12RFR
535	-0201	312155-0374	-		8	SCREW MF6S6X30RFR
540	-0201	312155-0449	-		2	SCREW MF6S8X16RFR
550	-0201	315105-0173	-		10	WASHER BRB10,5X22RFR

TETRA PAK

2/8402 **S-271469-1**

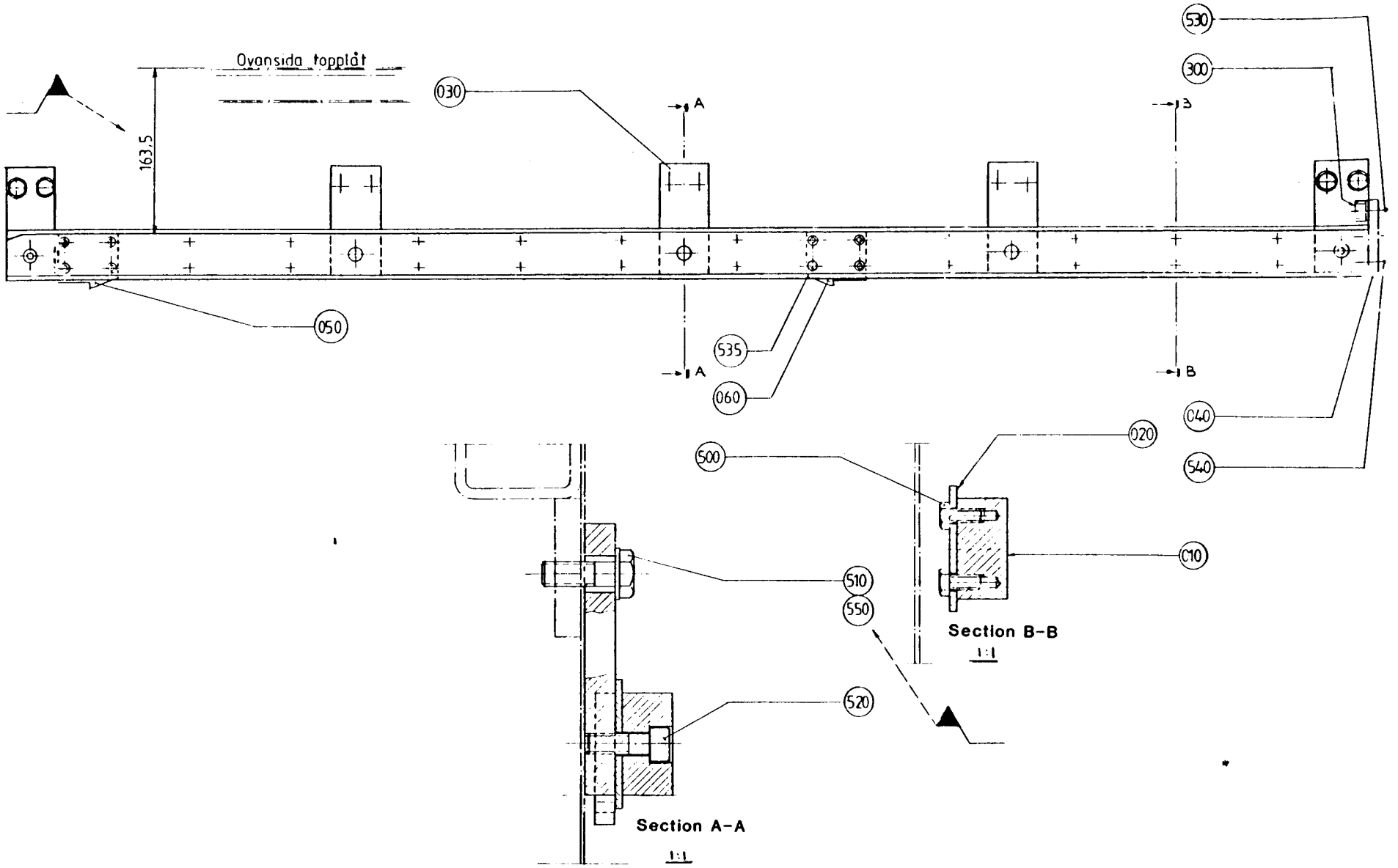

LAST ALTERATION: AM 8140 85-08-29
648106-020V
AM 5385
82-07-08

POS	VAR	PART NUMBER	SP	EH	QTY	DESCRIPTION
	-0201	S- 271507-SHEET	-2			===ASSEMBLY DRAWING===
010	-0201	247385	-		1	SIGN
020	-0201	247386	-		1	SIGN
300	-0201	90043-0062	S		2	MANOMETER
310	-0201	90045-0079	S		1	MOTOR
315	-0201	90091-0159	S		1	GASKET
320	-0201	90113-0044	S		1	PRESSURE REGULATOR
330	-0201	90201-0014	S		1	VALVE
340	-0201	90201-0307	-		1	PLATE
350	-0201	90201-0308	-		1	PLATE
360	-0201	90230-0017	S		1	NON RETURN VALVE
370	-0201	90321-0018	S		1	PUMP
380	-0201	90321-0381	S		1	ACCUMULATOR
390	-0201	90321-0384	-		1	DISTANCE PIECE
400	-0201	90321-0385	S		1	COUPLING
410	-0201	90415-0014	S		1	FILTER
		90415-0312	P		1	* FILTERINSERT
430	-0201	90422-0008	S		1	COOLER
		315202-0612	P		1	* O-RING 75,80X3,53
500	-0201	312101-0459	-		4	SCREW M6S8X40FZB
510	-0201	312111-0333	-		4	SCREW MC6S5X25FZB
520	-0201	312111-0343	-		4	SCREW MC6S5X60FZB
530	-0201	315101-0165	-		4	WASHER BRB8,4X16FZB
540	-0201	342701-0208	S		2	BUSHING RN13/4"-1/4"
550	-0201	342732-0104	-		1	ELBOW COUP D8-R1/4"
560	-0201	342980-0122	S		2	BANJO CONNSINGEL 8/6-1/4
570	-0201	342980-0304	S		2	BANJO CONN SINGEL 1/4
600	-0201	352103-0110	-		1	CABLE GLANR.22,5/4-13

S-271507-2

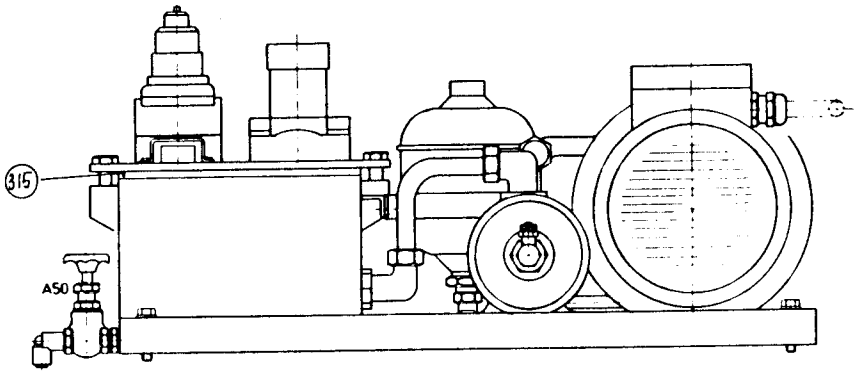
315
A50

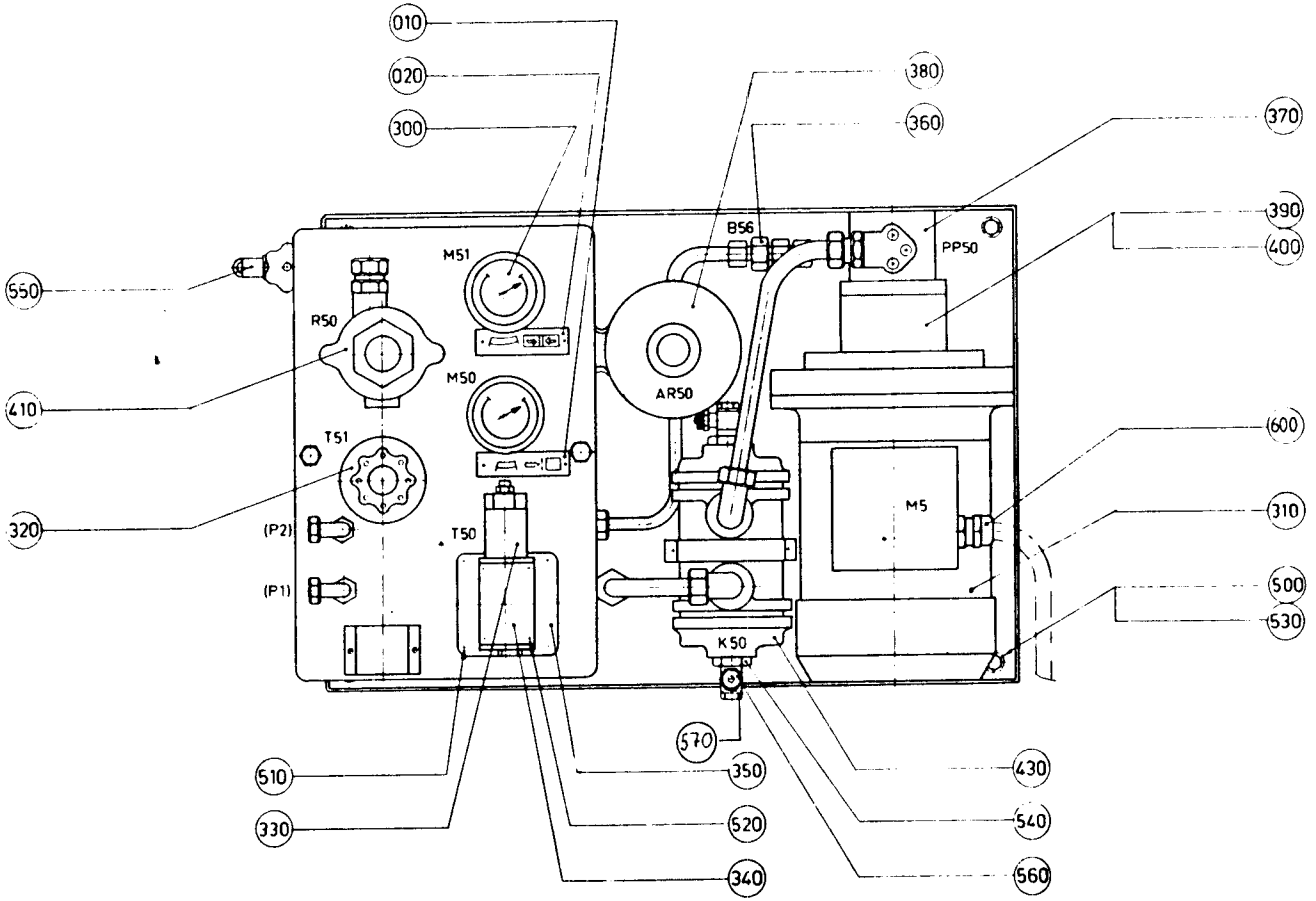
010
020
300
380
360
370
390
400
550
410
320
510
330
350
520
340
430
540
560
570
600
310
500
530
M51
M50
T51
T50
R50
B56
PP50
AR50
M5
K50
(P2)
(P1)

LAST ALTERATION: AM 9017 86-03-13
648106-060V
AM 6730
84-05-10

GROUP	FILLMACHINE	VOLUME	VOLUME	VOLUME	PULL-TAB VERSION
-0301	AB9	-	-	-	WITH PTAB
-0302	AB9	-	-	-	WITHOUT PTAB
-0303	B9	V0250	V0200	V0180	WITHOUT PTAB
-0304	B9	200ML SLIM	-	-	WITH PTAB

POS	VAR	PART NUMBER	SP	EH	QTY	DESCRIPTION
	-0301	S- 271513-SHEET	-3			===ASSEMBLY DRAWING===
	-0302		-3			
	-0303		-3			
	-0304		-3			
010	-0301	469029	-		1	COVER PLATE
010	-0302	469030	-		1	COVER PLATE
010	-0303	469031	-		1	COVER PLATE
010	-0304	469032	-		1	COVER PLATE
070	-0301	469036	-		1	COVER PLATE
	-0302				1	
070	-0303	469037	-		1	COVER PLATE
	-0304				1	
185	-0301	441421	-		1	PROTECTIVE COVER
	-0302				1	
225	-0301	491186	-		1	COVER STRIP
	-0302				1	
260	-0301	295897	-		1	FRAME
	-0302				1	
485	-0301	312105-0463	-		2	SCREW M6S8X60RFR
	-0302				2	
490	-0301	312105-0464	-		2	SCREW M6S8X65RFR
	-0302				2	
500	-0301	312125-0325	-		122	SLOTTED HEMCS5X10RFR
	-0302				122	
	-0303				123	
	-0304				123	
505	-0301	312145-0323	-		89	SLOTTED HEMFS5X8RFR
	-0302				89	
	-0303				89	
	-0304				85	
540	-0301	312923-0122	-		81	NUT FO M5X11,6 RFR
	-0302				81	
	-0303				77	
	-0304				77	
560	-0301	315105-0165	-		4	WASHER BRB8,4X16RFR
	-0302				4	
020	ALL	469033	-		1	COVER PLATE
030	ALL	295639	-		1	BOTTOM PLATE

POS	VAR	PART NUMBER	SP	EH	QTY	DESCRIPTION
040	ALL	441067	-		1	SIDE COVER LEFT
050	ALL	469516	-		1	SIDE PLATE RIGHT
060	ALL	469034	-		1	GUSSET PLATE
080	ALL	295645	-		1	COVER, UPPER
090	ALL	295646	-		1	COVER, LOWER
100	ALL	295647	-		1	STRIP
110	ALL	295648	-		1	STRIP
120	ALL	469035	-		1	GUSSET PLATE
130	ALL	295650	-		1	COVER PLATE
140	ALL	295651	-		1	COVER PLATE
150	ALL	295652	-		1	COVER PLATE
160	ALL	295653	-		1	COVER PLATE
170	ALL	295654	-		1	COVER PLATE
180	ALL	441068	-		1	SIDE PLATE
188	ALL	272698	-		1	BRACKET
190	ALL	469038	-		1	COVER PLATE
200	ALL	469039	-		1	COVER PLATE
210	ALL	295658	-		2	COVER STRIP
220	ALL	295659	-		1	COVER STRIP
230	ALL	441069-0001	-		1	BRACKET
235	ALL	441069-0002	-		1	BRACKET
240	ALL	491286	-		1	REFLECTOR
250	ALL	272696	-		1	HOLDER
400	ALL	90157-0022	-	G	X	SEALING COMPOUND
410	ALL	90298-0012	-		X	INHIBITOR
530	ALL	312605-0314	-		8	NUT M6M5RFR
550	ALL	315105-0146	-		8	WASHER BRB5,3X10RFR
570	ALL	352103-0101	-		1	CABLE GLANR.15,2/4-8
580	ALL	352103-0106	-		1	CABLE GLANR.18,6/5-10

TETRA PAK

3/8608

S-271513-3

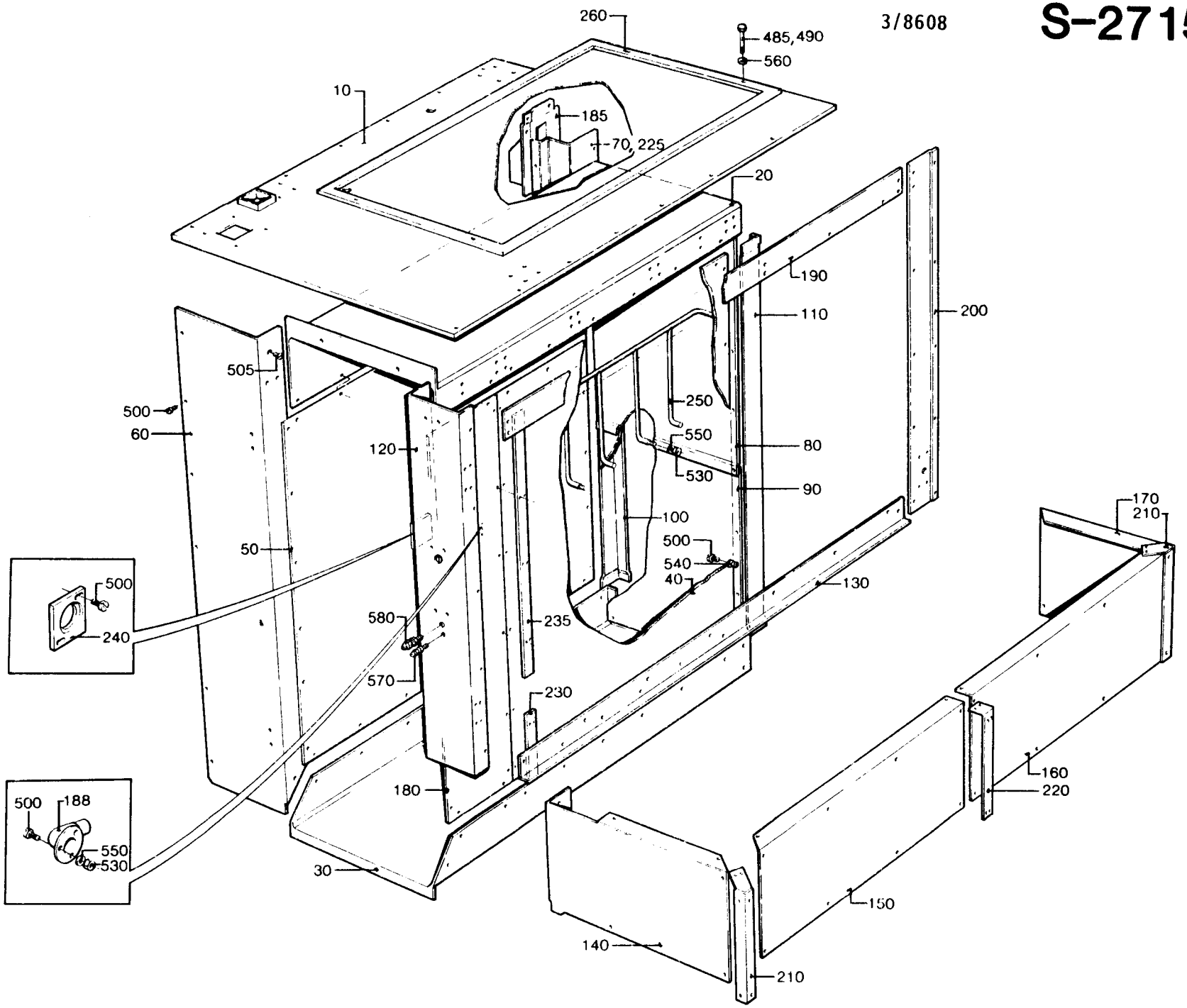

Art 9017

LAST ALTERATION: AM 7078 84-09-13
648106-060V

POS	VAR	PART NUMBER	SP	EH	QTY	DESCRIPTION
	-0301	S- 271569-SHEET	-3			===ASSEMBLY DRAWING===
020	-0301	295615	-		2	BRACKET
030	-0301	272559	-		1	CABLE TRACK
040	-0301	295296	-		1	CABLE TRACK
050	-0301	295616	-		5	CABLE DUCT
060	-0301	469431	-		2	BRACKET
070	-0301	469432	-		1	CABLE DUCT
300	-0301	312101-0364	-		28	SCREW M6S6X10FZB

TETRA PAK

2/8601

S-271569-3

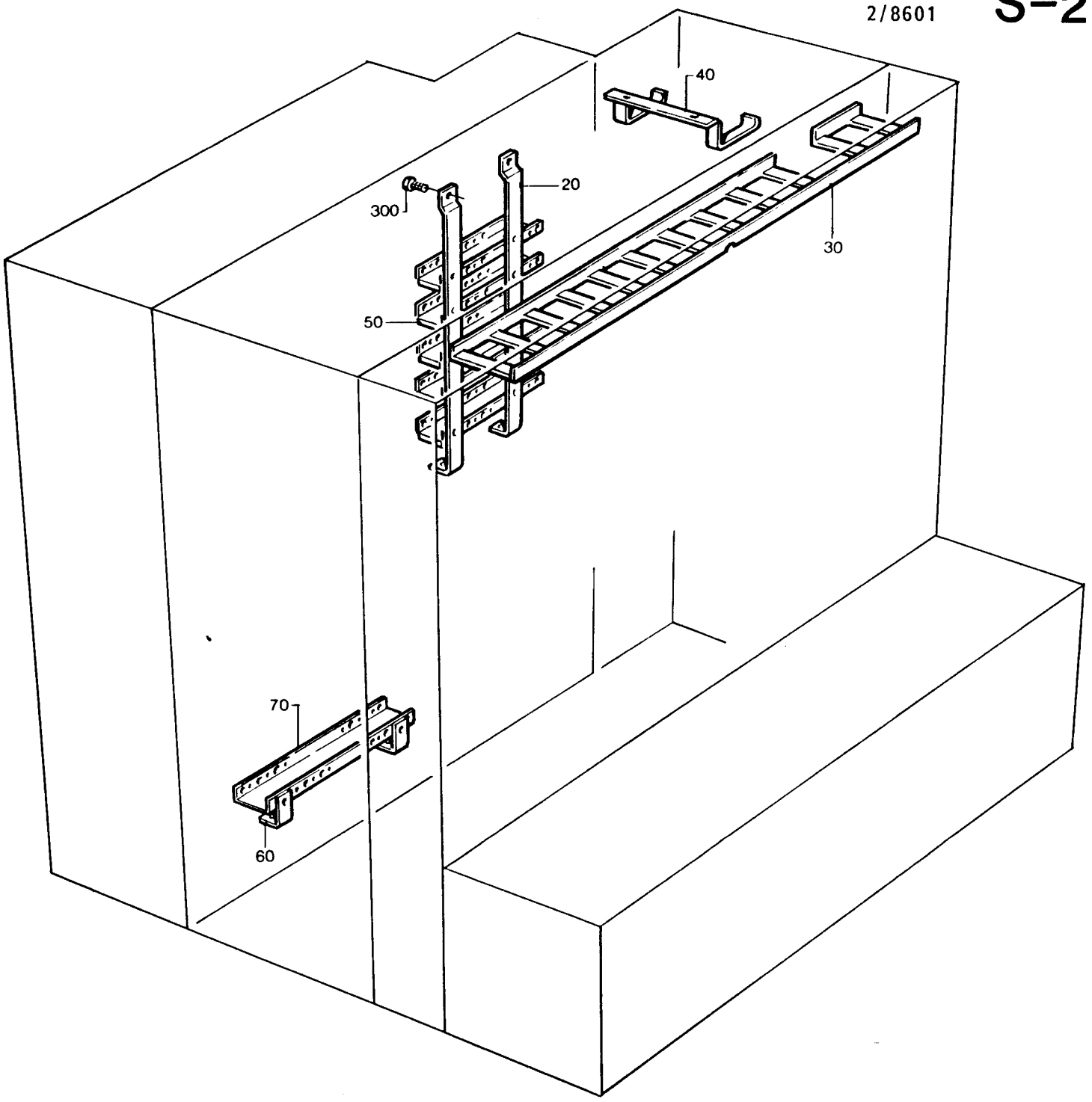

LAST ALTERATION: AM 6793 84-05-03
271699-030V

POS	VAR	PART NUMBER	SP	EH	QTY	DESCRIPTION
	-0301	S- 271626-SHEET	-3			===ASSEMBLY DRAWING===
010	-0301	469076	-		1	ARM
020	-0301	272864	-		1	BRACKET
030	-0301	272865	-		1	SHAFT
040	-0301	272866	S		1	LOCKING FLANGE
045	-0301	458380	-		1	CLAMP
050	-0301	271632	S		1	COVER
060	-0301	272862	C		1	HOLDER
070	-0301	272867	S		1	SPRING HOUSING
080	-0301	272868	S		1	STOPPER
090	-0301	272869-0001	S		1	FLAP
090	-0301	272869-0002	S		1	FLAP
300	-0301	37927	S		1	COMPRESSION SPRING
490	-0301	312105-0364	-		2	SCREW M6S6X10RFR
500	-0301	312105-0451	-		8	SCREW M6S8X20RFR
510	-0301	312105-0459	-		1	SCREW M6S8X40RFR
515	-0301	312125-0291	-		6	SLOTTED HEMCS4X12RFR
520	-0301	312115-0491	-		4	SCREW 10X20 A4 80
530	-0301	312115-0495	-		1	SCREW 10X30 A4 80
535	-0301	315105-0136	-		6	WASHER BRB4,3X8RFR
540	-0301	315105-0165	-		5	WASHER BRB8,4X16RFR
560	-0301	321101-0233	S		2	BUSHING 20F7X20
570	-0301	321111-0134	S		1	BUSHING 10E7X8
580	-0301	321116-0151	-		1	BUSHING 12E7/16X12
590	-0301	352110-0100	-		2	CLIP TK 5-7
600	-0301	352110-0102	-		4	CLIP TK 10-14

TETRA PAK

2/8609 **S-271626-3**

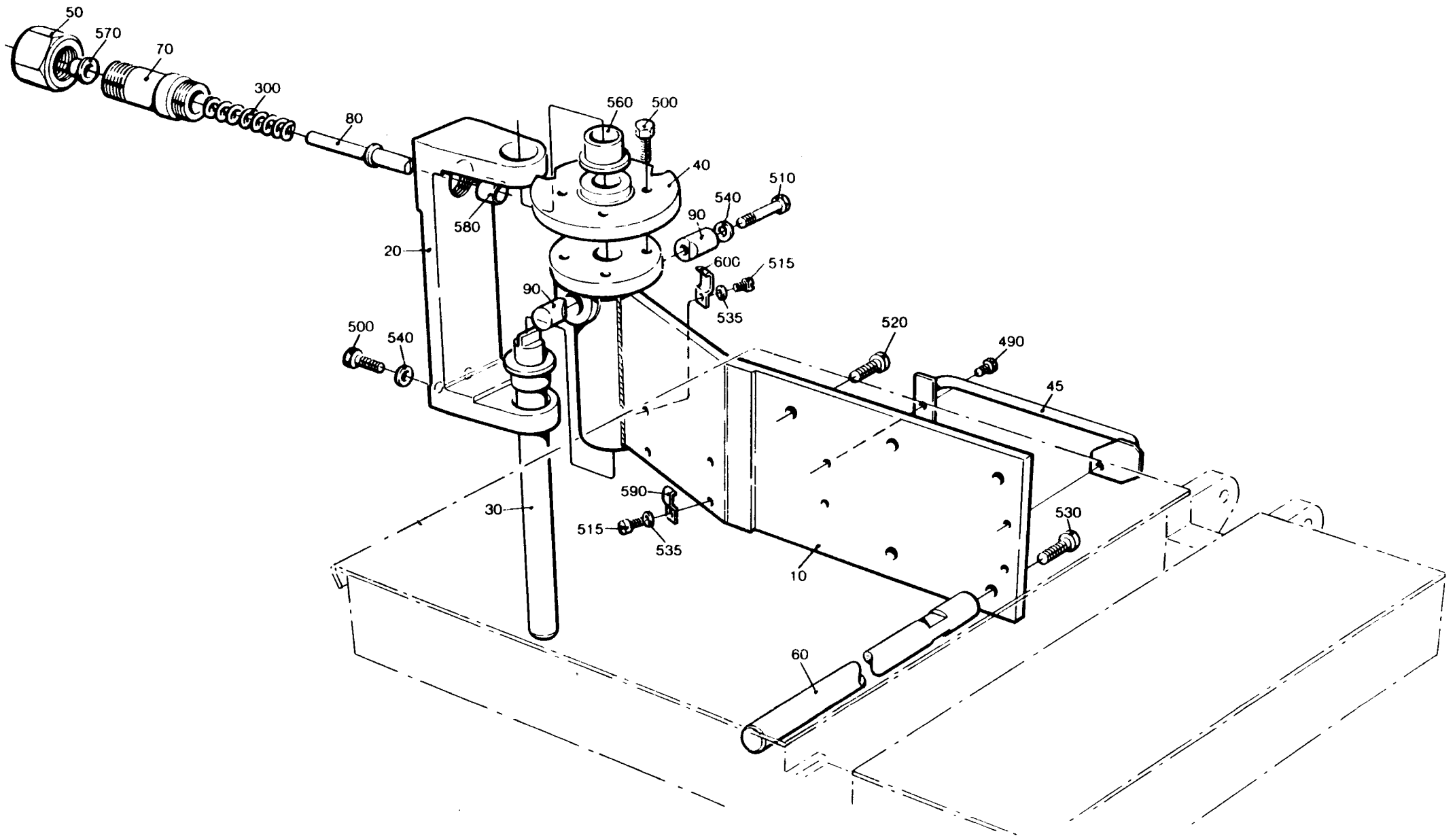

AM 6793

LAST ALTERATION: AM 6793 84-05-03
271699-030V

GROUP	VOLUME	VOLUME	VOLUME	VOLUME
-0301	V0250	V0236	V0200	V0180
-0302	V0125	-	-	-
-0303	200ML SLIM	-	-	-

POS	VAR	PART NUMBER	SP	EH	QTY	DESCRIPTION
	-0301	S- 271641-SHEET	-3			===ASSEMBLY DRAWING===
	-0302		-3			
	-0303		-3			
010	-0301	37913	-		1	RULER
010	-0302	271642	-		1	RULER
010	-0303	272886	-		1	RULER
020	-0301	450278	-		1	RULER
020	-0302	469084	-		1	RULER
020	-0303	469085	-		1	RULER
030	-0301	37917	-		1	RULER
030	-0302	271644	-		1	RULER
030	-0303	272888	-		1	RULER
060	ALL	458379	-		1	FRAME
090	ALL	450098	-		1	PLATE
100	ALL	450099	-		1	PLATE
130	ALL	37774	-		1	PROTECTIVE COVER
140	ALL	37775	-		1	LAMP HOLDER
150	ALL	37908	-		1	PLATE
170	ALL	37910	-		1	LOCK
180	ALL	37911	S		1	INSERT
190	ALL	37912	-		1	LOCK BOARD
200	ALL	450100	S		1	SPRING
300	ALL	90036-0009	P		1	BULB
310	ALL	90037-0001	-		1	LAMPHOLDER
320	ALL	90086-0001	-		1	NIPPLE
330	ALL	90152-0001	-	MM	200	HOSE
500	ALL	312105-0325	-		2	SCREW M6S5X10 A4 80
510	ALL	312105-0362	-		6	SCREW M6S6X8RFR
520	ALL	312105-0491	-		1	SCREW M6S10X20RFR
530	ALL	312115-0323	-		2	SCREW 5X8 A4 80
540	ALL	312145-0220	-		23	SLOTTED HEMFS3X6RFR
550	ALL	312318-0362	-		2	GRUB SCREW SK6SS6X8RFR
560	ALL	315105-0146	-		2	WASHER BRB5,3X10RFR
570	ALL	352101-0102	-		1	LEAD-IN G 15,2

TETRA PAK

2/8609 **S-271641-3**

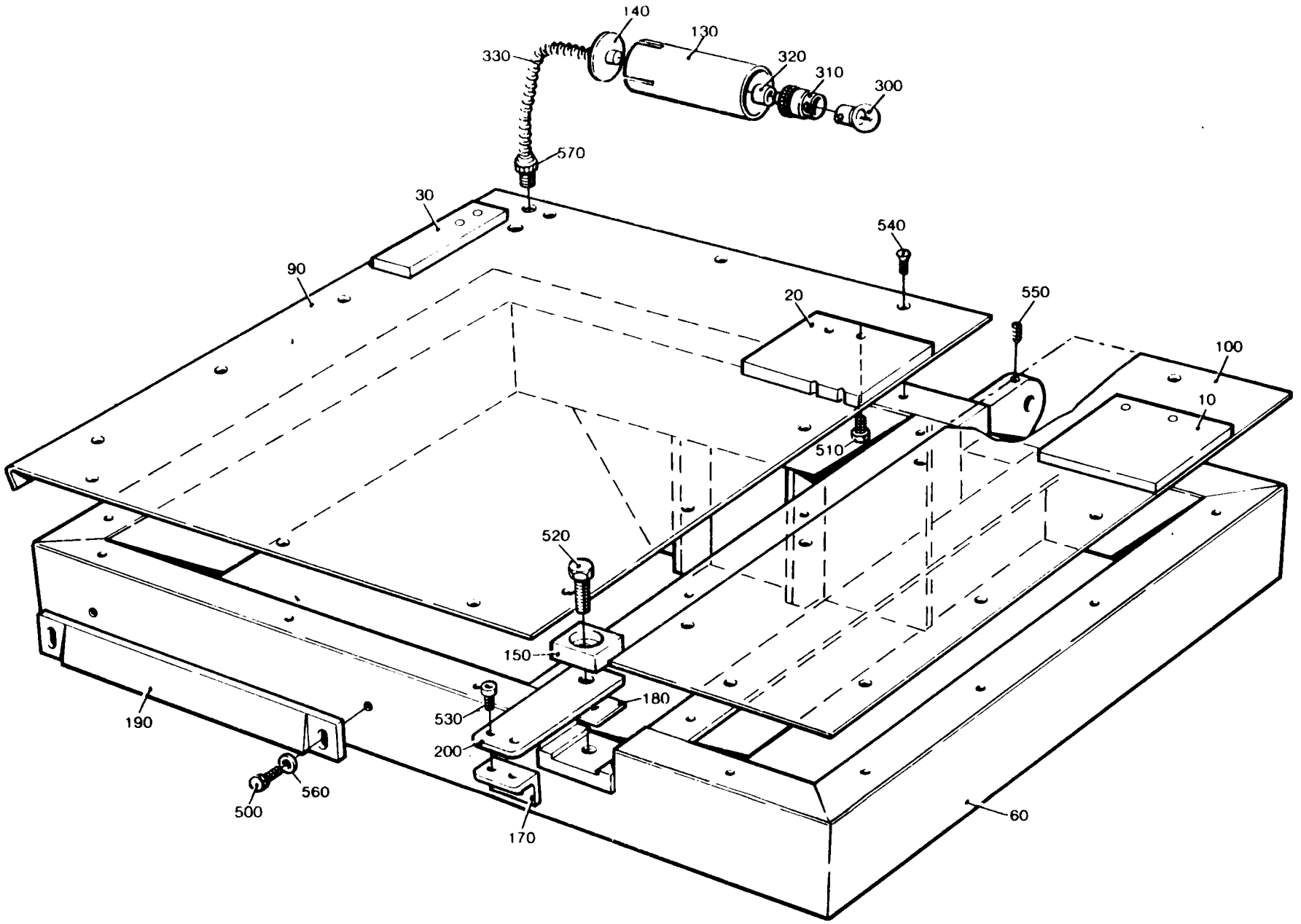

AM6793

LAST ALTERATION: AM 6793 84-05-03
648106-060V

GROUP	VOLUME	VOLUME	VOLUME	VOLUME
-0301	V0250	V0236	V0200	V0180
-0302	V0125	-	-	-
-0303	200ML SLIM	-	-	-

POS	VAR	PART NUMBER	SP	EH	QTY	DESCRIPTION
	-0301	S- 271699-SHEET		-3		===ASSEMBLY DRAWING===
	-0302			-3		
	-0303			-3		
F010	ALL	C- 37877-0301	-		1	HEATING ELEMENT
F020	ALL	C- 37894-0101	-		1	COUNTER RAIL
F030	ALL	C- 450101-0101	-		1	TEARING DEVICE
F040	ALL	C- 271626-0301	-		1	SUSPENSION ARM
F050	-0301	C- 271641-0301	-		1	TABLE
F050	-0302	C- 271641-0302	-		1	TABLE
F050	-0303	C- 271641-0303	-		1	TABLE

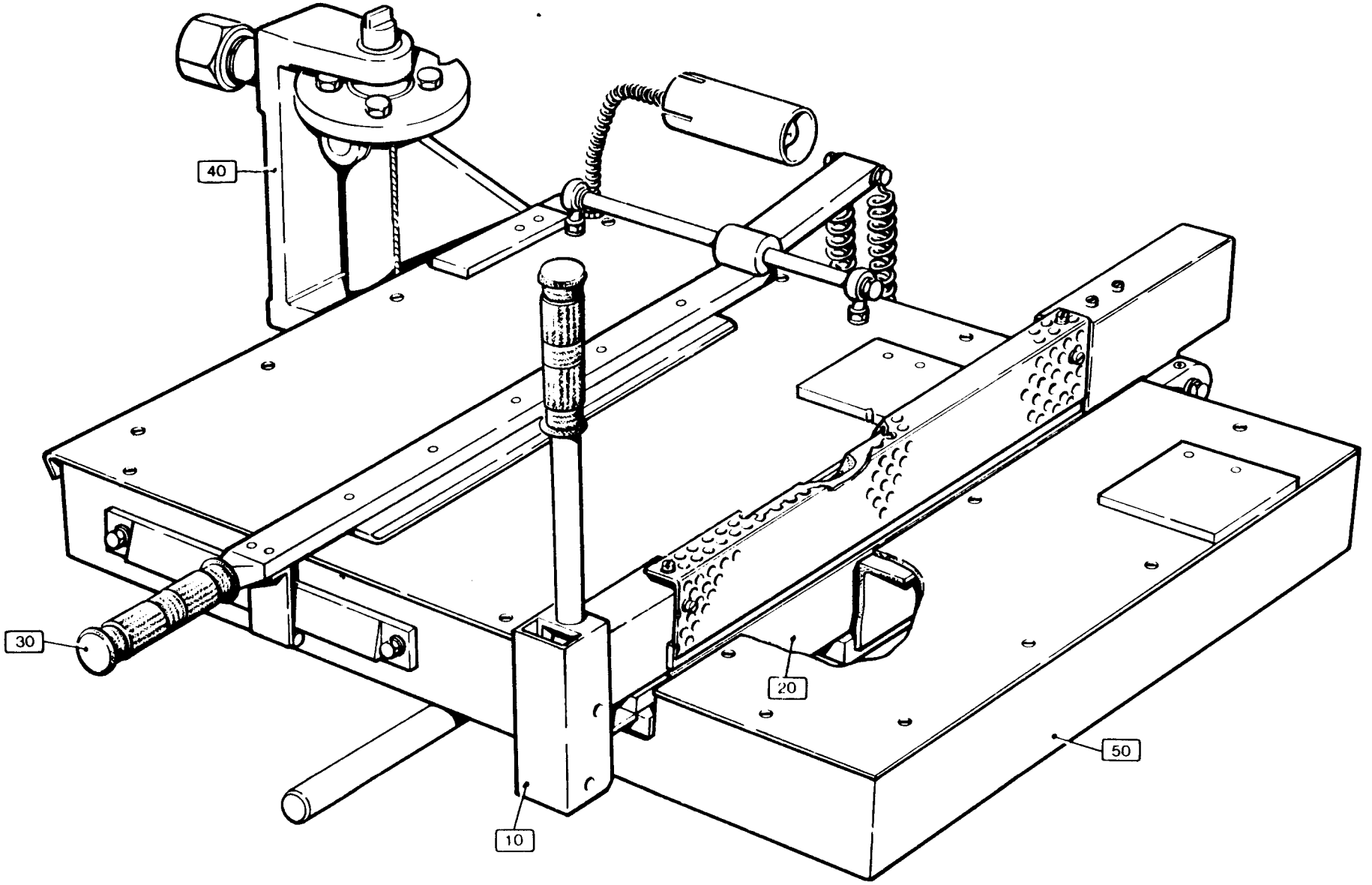
40
30
20
50
10

LAST ALTERATION: AM 6610 04-02-23
648106

POS	VAR	PART NUMBER	SP	EH	QTY	DESCRIPTION	
	-0301	S- 271790-SHEET	-1			===ASSEMBLY DRAWING===	
010	-0301	456557	S		1	BUSBAR	
020	-0301	271787	S		1	CONNECTION	
030	-0301	271789	S		2	CLAMP	
500	-0301	312105-0380	-		4	SCREW	M6S6X50RFR
510	-0301	312605-0316	-		4	NUT	M6M6RFR
520	-0301	315115-0153	-		8	WASHER	TBRB6,4X12RFR

TETRA PAK

1/8302

S-271790-1

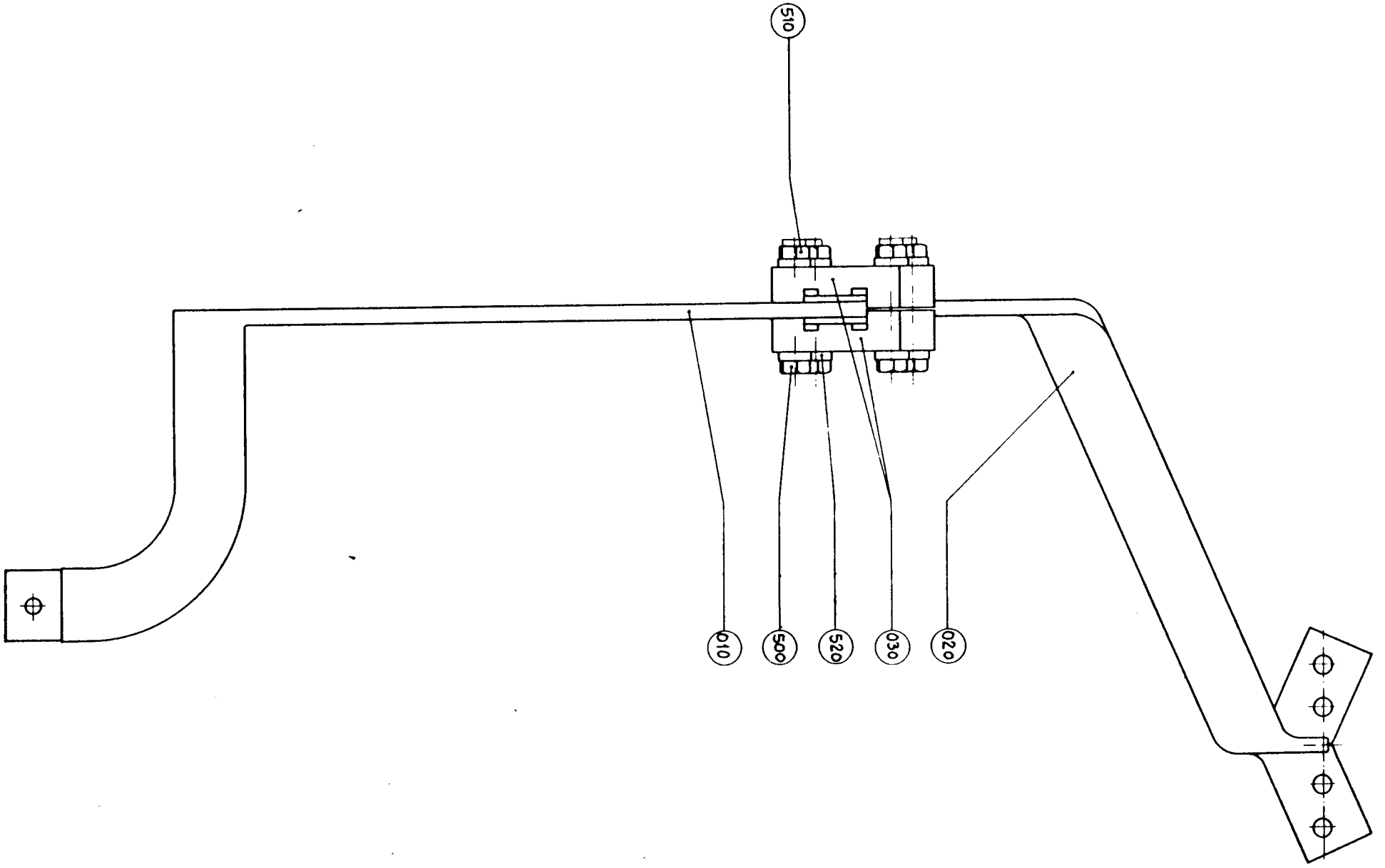

LAST ALTERATION: AM 6610 84-02-23
648106

POS	VAR	PART NUMBER	SP	EH	QTY	DESCRIPTION	
	-0301	S- 271791-SHEET	-1			===ASSEMBLY DRAWING===	
010	-0301	456558	S		1	BUSBAR	
020	-0301	271788	S		1	CONNECTION	
030	-0301	271789	S		2	CLAMP	
500	-0301	312105-0380	-		4	SCREW	M6S6X50RFR
510	-0301	312605-0316	-		4	NUT	M6M6RFR
520	-0301	315115-0153	-		8	WASHER	TBRB6,4X12RFR

S-271791-1

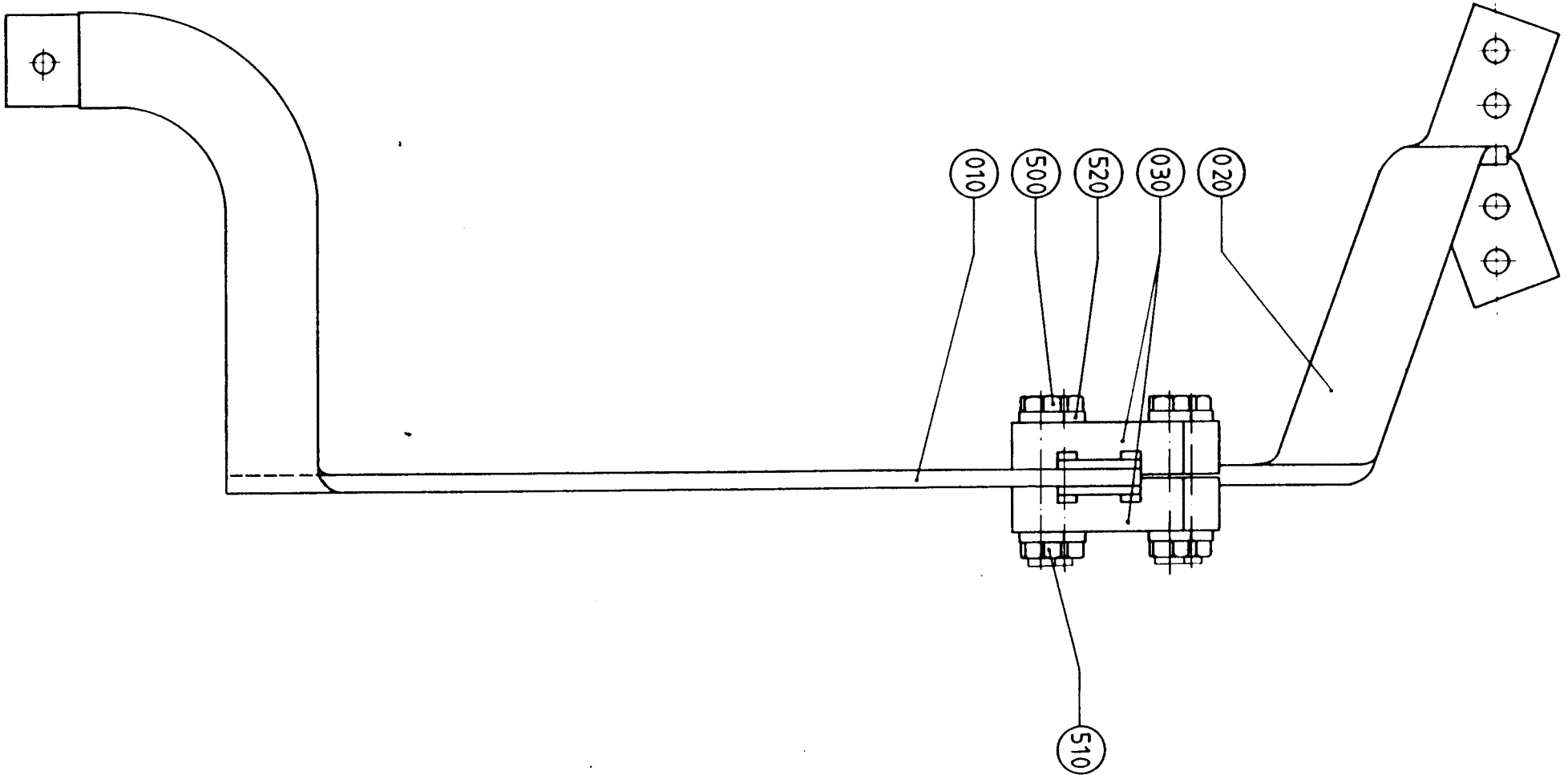

LAST ALTERATION: AM 10111 87-02-06
648106-060V
AM 6728
84-04-17

GROUP	FILLMACHINE	PULL-TAB VERSION
-0301	AB9	WITHOUT PTAB
-0302	B9	WITH PTAB
-0303	AB9	WITH PTAB
-0304	B9	WITHOUT PTAB

POS	VAR	PART NUMBER	SP	EH	QTY	DESCRIPTION	
	-0301	S- 271866-SHEET	-7			===ASSEMBLY DRAWING===	
	-0301		-8				
	-0301		-11				
	-0302		-9				
	-0302		-10				
	-0302		-11				
	-0303		-7				
	-0303		-8				
	-0303		-11				
	-0304		-9				
	-0304		-10				
	-0304		-11				
120	-0302	469040	-		1	PIPE	
	-0304				1		
120	-0301	295533	-		1	PIPE	
	-0303				1		
130	-0301	456599	-		1	PIPE	
	-0303				1		
140	-0302	456822	-		1	PIPE	
	-0304				1		
145	-0301	441450	-		1	PIPE	
	-0303				1		
170	-0301	456823	-		1	PIPE	
	-0303				1		
180	-0301	456824	-		1	PIPE	
	-0303				1		
245	-0302	295945	-		1	GUARD	
	-0304				1		
250	-0301	315125-0153	S		2	WASHER	SB 6,4X22X4 RFR
	-0303				2		
282	-0302	271949	-		1	NUT	
	-0304				1		
290	-0301	295540	-		1	PLATE	
	-0303				1		
320	-0301	469339	-		1	SHIM	
	-0303				1		
330	-0301	469340	-		1	CLIP	
	-0303				1		

POS	VAR	PART NUMBER	SP	EH	QTY	DESCRIPTION
340	-0301	295549	-		3	CLIP
	-0303				3	
345	-0302	295970	-		1	RING
	-0304				1	
350	-0301	441449-0003	-		1	PIPE
	-0303				1	
355	-0301	441449-0002	-		1	PIPE
	-0303				1	
360	-0301	490716	-		1	BRACKET
	-0303				1	
365	-0301	441502	-		1	HOLDER
	-0303				1	
368	-0301	469550	-		2	SLEEVE
	-0303				2	
380	-0301	90015-0021	-		1	BUSHING
	-0303				1	
385	-0301	90015-0022	-		2	BUSHING
	-0303				2	
390	-0301	90030-0030	-		1	PIPE CONNECTION
	-0303				1	
410	-0301	90030-0106	-		3	PIPE CONNECTION
	-0303				3	
415	-0301	90030-0114	-		1	NIPPLE
	-0303				1	
425	-0301	90030-0180	-		2	PIPE CONNECTION
	-0303				2	
426	-0302	90030-0181	-		1	PIPE CONNECTION
	-0304				1	
427	-0302	90030-0182	-		1	NIPPLE
	-0304				1	
429	-0302	90140-0020	-		1	ELBOW PIPE
	-0304				1	
435	-0301	90166-0132	-	M	60	HOSE
	-0302				22	
	-0303				60	
	-0304				22	
440	-0302	90187-0069	-		1	VALVE
	-0304				1	
		90187-0311	R		0	* HOLDER
450	-0302	90187-0311	-		1	HOLDER
	-0304				1	
475	-0302	90270-0347	-		1	VALVE
	-0304				1	
480	-0302	90330-0003	-		1	NUT
	-0304				1	
496	-0302	90330-0046	-		1	PLUG
	-0304				1	
520	-0301	90360-0004	S		1	STEAM TRAP
	-0303				1	

TETRA PAK

3/8601

S-271866-7

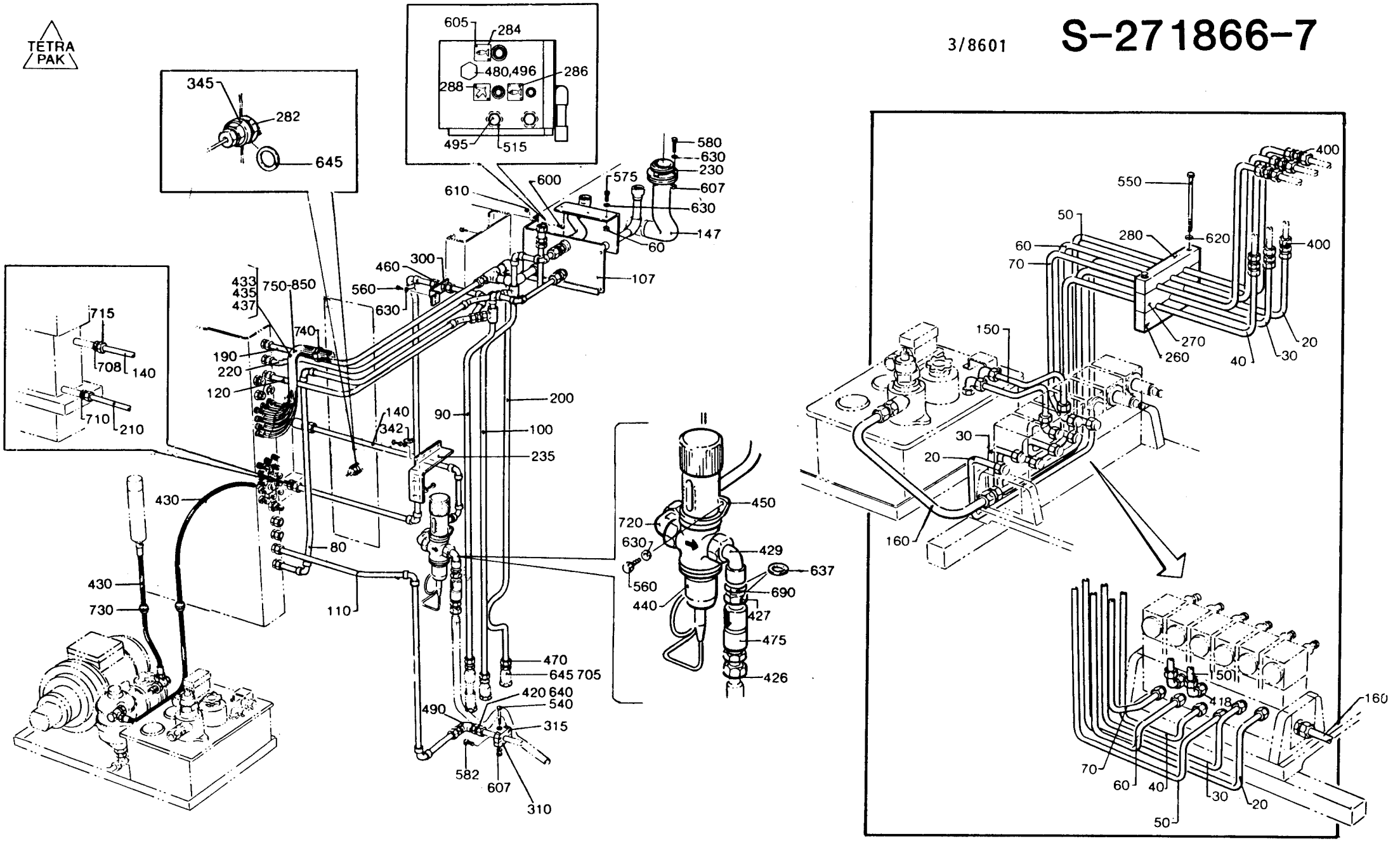

8143

POS	VAR	PART NUMBER	SP	EH	QTY	DESCRIPTION
560	-0301	312105-0364	-		15	SCREW M6S6X10RFR
	-0302				10	
	-0303				15	
	-0304				10	
570	-0301	312105-0368	-		4	SCREW M6S6X16RFR
	-0303				4	
607	-0301	312605-0316	-		11	NUT M6M6RFR
	-0302				7	
	-0303				11	
	-0304				7	
630	-0301	315105-0153	-		31	WASHER BRB6,4X12RFR
	-0302				23	
	-0303				31	
	-0304				23	
637	-0302	315233-0111	-		2	SEAL RING R3/8"
	-0304				2	
645	-0301	315233-0115	S		3	SEAL RING R3/4"
	-0302				4	
	-0303				3	
	-0304				4	
690	-0302	342700-0111	-		1	NIPPLE RNA3/8"-3/8"
	-0304				1	
700	-0302	342710-0205	-		1	REDUCER RBM16/12
	-0304				1	
708	-0301	342714-0110	-		1	REDUCER KOR 15/12-L/SY
	-0303				1	
710	-0301	342723-0114	-		1	PIPE CONNEGI-15-1/2"
	-0302				2	
	-0303				1	
	-0304				2	
715	-0301	342725-0114	-		1	PIPE COUPLGI 15LR/RO RFR
	-0303				1	
720	-0302	342730-0109	-		1	ELBOW COUP WA-12-3/8"
	-0304				1	
750	-0301	359000-0400	-		48	MARKING CO2/4"0"
	-0302				26	
	-0303				48	
	-0304				26	
760	-0301	359000-0401	-		34	MARKING CO2/4"1"
	-0302				14	
	-0303				34	
	-0304				14	
770	-0301	359000-0402	-		38	MARKING CO2/4"2"
	-0302				22	
	-0303				38	
	-0304				22	
780	-0301	359000-0403	-		8	MARKING CO2/4"3"
	-0302				4	
	-0303				8	

POS	VAR	PART NUMBER	SP	EH	QTY	DESCRIPTION
	-0304				4	
790	-0301	359000-0404	-		16	MARKING CO2/4"4"
	-0302				14	
	-0303				16	
	-0304				14	
800	-0301	359000-0405	-		8	MARKING CO2/4"5"
	-0302				2	
	-0303				8	
	-0304				2	
810	-0301	359000-0406	-		6	MARKING CO2/4"6"
	-0302				4	
	-0303				6	
	-0304				4	
820	-0301	359000-0407	-		6	MARKING CO2/4"7"
	-0302				4	
	-0303				6	
	-0304				4	
830	-0301	359000-0408	-		4	MARKING CO2/4"8"
	-0302				2	
	-0303				4	
	-0304				2	
840	-0301	359000-0409	-		8	MARKING CO2/4"9"
	-0302				4	
	-0303				8	
	-0304				4	
010	ALL	456597	-		1	CONNECTION PIPE
020	ALL	271867	-		1	PIPE
030	ALL	271868	-		1	PIPE
040	ALL	271869	-		1	PIPE
050	ALL	271870	-		1	PIPE
060	ALL	271871	-		1	PIPE
070	ALL	271872	-		1	PIPE
080	ALL	295529	-		1	PIPE
090	ALL	295530	-		1	PIPE
100	ALL	295531	-		1	PIPE
110	ALL	295532	-		1	PIPE
147	ALL	456598	-		1	CABLE CONDUIT
150	ALL	469424	-		2	PIPE
160	ALL	271874	-		1	PIPE
190	ALL	295536	-		1	PIPE
200	ALL	456978	-		1	PIPE
210	ALL	456821	-		1	PIPE
220	ALL	295539	-		1	PIPE
230	ALL	456758	-		1	CONNECTION
235	ALL	456825	-		1	BRACKET
260	ALL	271320	-		1	HOLDER
270	ALL	271321	-		1	HOLDER
280	ALL	271322	-		1	HOLDER
284	ALL	273455	-		1	SIGN

S-271866-9

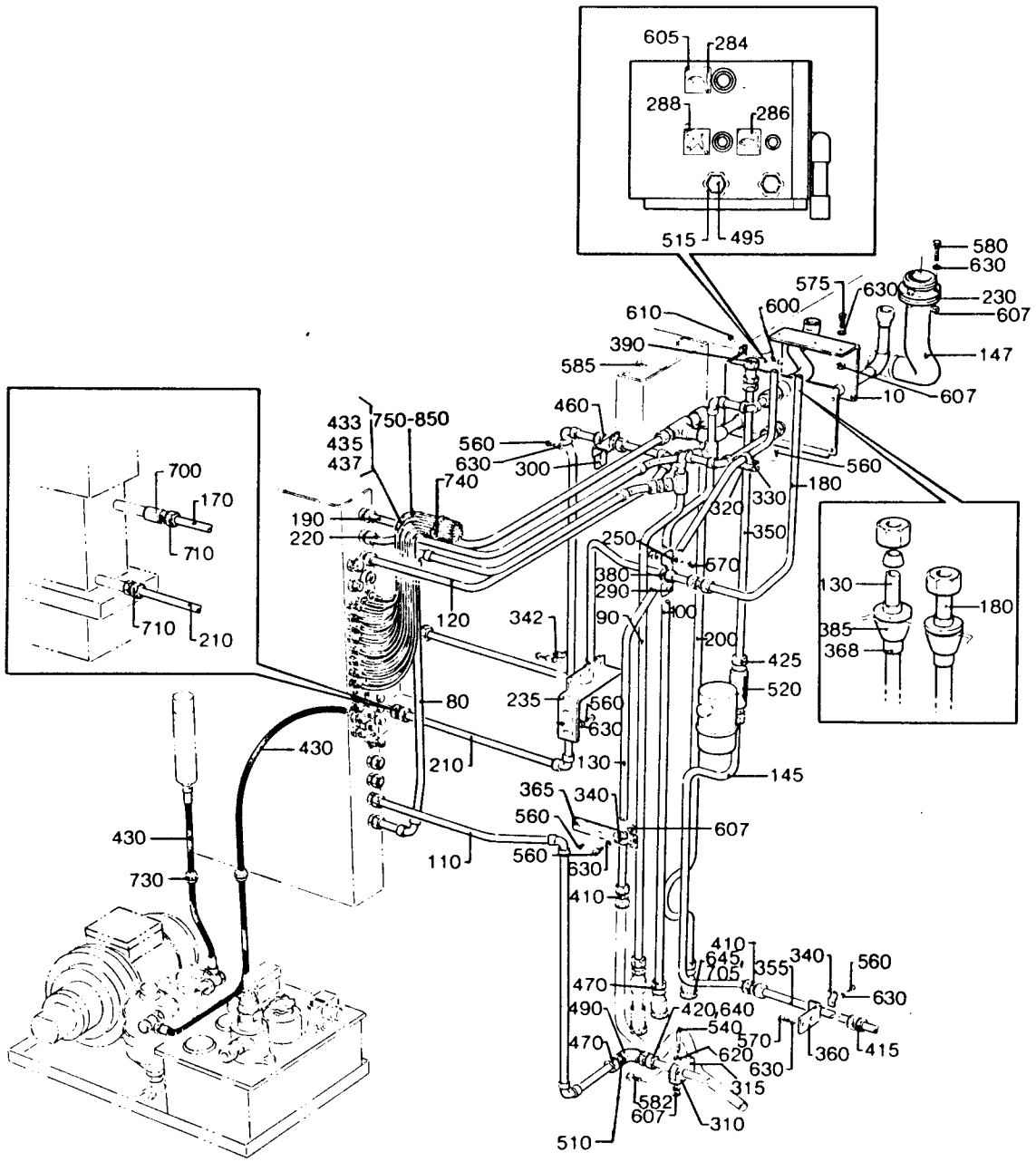
605
284
288
286
515
495
580
630
575
630
230
607
610
600
147
390
585
10
607
460
433
435
437
750-850
560
630
300
740
560
180
320
330
350
190
220
250
670
380
290
90
300
200
425
520
342
120
80
235
560
630
130
145
210
365
340
560
607
110
560
630
410
430
730
410
645
705
355
340
560
630
470
490
420
640
540
570
620
630
360
415
470
315
582
607
310
510
700
170
710
710
210

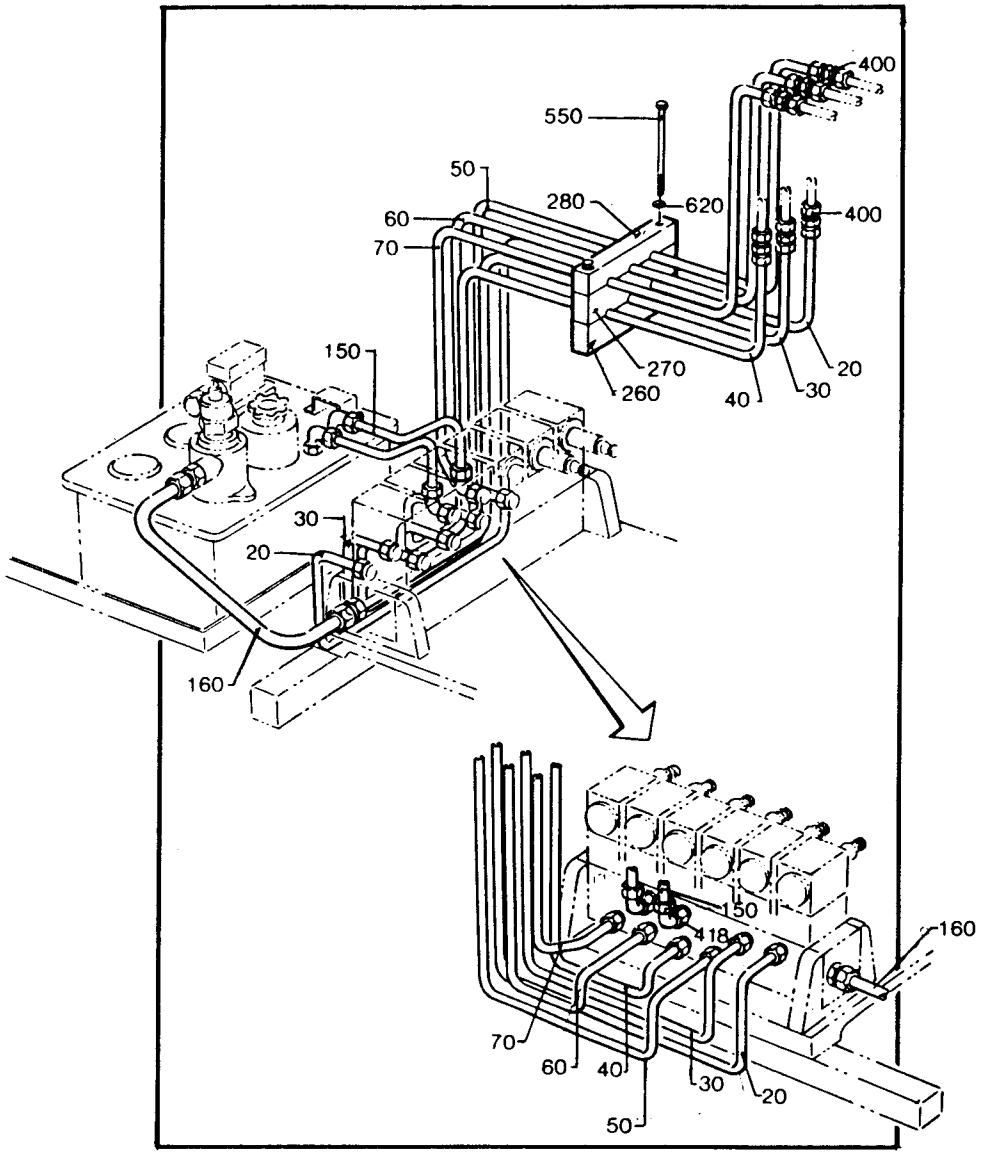
400
550
50
280
620
400
60
70
150
270
260
40
30
20
30
20
160
150
418
160
70
60
40
30
20
50

POS	VAR	PART NUMBER	SP	EH	QTY	DESCRIPTION
286	ALL	273456	-		1	SIGN
288	ALL	273458	-		1	SIGN
300	ALL	295541	-		1	BRACKET
310	ALL	441295	-		1	HOLDER
315	ALL	441296	-		1	HOLDER
342	ALL	456826	-		1	PIPE CLAMP
400	ALL	90030-0091	-		6	PIPE CONNECTION
418	ALL	90030-0140	-		2	PIPE CONNECTION
420	ALL	90030-0151	-		1	CONNECTION
430	ALL	90166-0118	-	MM	1700	HOSE
433	ALL	90166-0119	-	M	8	HOSE
437	ALL	90166-0133	-	M	3	HOSE
460	ALL	90224-0296	-		1	GROMMET
470	ALL	90224-0305	-		10	PIPE CONNECTION
490	ALL	90330-0020	-		1	ELBOW PIPE
495	ALL	90330-0037	-		2	PLUG
515	ALL	90330-0093	-		2	NUT
540	ALL	312101-0378	-		2	SCREW M6S6X40FZB
550	ALL	312101-0388	-		2	SCREW M6S6X90FZB
575	ALL	312105-0371	-		2	SCREW M6S6X22RFR
580	ALL	312105-0374	-		3	SCREW M6S6X30RFR
582	ALL	312195-0453	-		2	SCREW M6S8X25RFR
590	ALL	312125-0325	-		2	SLOTTED HEMCS5X10RFR
600	ALL	312125-0329	-		2	SLOTTED HEMCS5X16RFR
605	ALL	312502-0120	-		6	DRIVE SCREKDS0X5FNB
610	ALL	312605-0314	-		2	NUT M6M5RFR
620	ALL	315101-0153	-		6	WASHER BRB6,4X12FZB
640	ALL	315233-0113	S		1	SEAL RING R1/2"
705	ALL	342713-0215	-		3	BLANK-OFF
730	ALL	352101-0105	-		2	LEAD-IN G 22,5
740	ALL	352113-0102	-		12	RIBBON CLAR
850	ALL	359000-0771	-		10	MARKING CO2/4"V"

LAST ALTERATION: AM 9286 86-06-11
648106-060V
AM 6850
84-05-18

GROUP FILLMACHINE

-0301 B9
-0302 AB9

POS	VAR	PART NUMBER	SP	EH	QTY	DESCRIPTION
	-0301	S- 271909-SHEET	~~-13~~			===ASSEMBLY DRAWING===
	-0301		~~-14~~			
	-0301		~~-15~~			
	-0302		-16			
	-0302		~~-17~~			
	-0302		~~-18~~			
F190	ALL	C- 295441-020V	-		1	CONNECTION BOX
F200	ALL	C- 456757-0101	-		1	AIR INJECTOR
F210	ALL	C- 456882-0101	-		1	PUSH BUTTON BOX
F215	ALL	C- 469118-0101	-		1	FLOW METER
F220	ALL	C- 469121-0101	-		1	JUNCTION BLOCK
F225	ALL	C- 469144-010V	-		1	CONNECTION
010	-0301	456433	-		1	PLATE
020	-0302	456991	-		1	PLATE
060	-0302	295448	-		1	PIPE
070	-0301	469162	-		1	PIPE
080	-0302	469163	-		1	PIPE
090	-0301	469164	-		1	PIPE
110	-0301	271950	-		16	SCREW
	-0302				18	
150	-0302	295453	-		1	PIPE
180	-0301	469328	-		16	BANJO CONNECTION
	-0302				18	
200	-0301	456436	-		1	PLATE
280	-0301	271949	-		16	NUT
	-0302				18	
320	-0302	491649	-		1	BRACKET
330	ALL	273449	-		1	SIGN
340	-0302	273450	-		1	SIGN
350	-0302	273452	-		1	SIGN
360	ALL	273454	-		1	SIGN
370	ALL	273455	-		1	SIGN
380	ALL	273456	-		1	SIGN
390	ALL	273458	-		1	SIGN
400	ALL	295424	-		1	SIGN
410	ALL	295425	-		1	SIGN
450	-0302	295497	-		1	CONNECTION
510	-0301	90005-0061	-		16	WASHER
	-0302				18	
540	-0301	90030-0166	-		13	REDUCER
	-0302				25	

POS	VAR	PART NUMBER	SP	EH	QTY	DESCRIPTION
560	-0301	90042-0052	S		6	SOLENOID VALVE
	-0302				10	
570	-0301	90042-0060	S		4	SOLENOID VALVE
	-0302				5	
		90042-0326	P		0	* COIL
		90042-0362	P		0	* WEAR & TEAR PARTS KIT
580	-0301	90042-0074	S		4	SOLENOID VALVE
	-0302				8	
		90042-0371	P		0	* WEAR & TEAR PARTS KIT
590	-0301	90042-0079	S		3	SOLENOID VALVE
	-0302				4	
		90042-0373	P		0	* COIL
610	-0301	90042-0326	-		4	COIL
	-0302				8	
645	-0301	90042-0361	-		1	ASSEMBLY UNIT
650	-0301	90042-0364	-		1	PLATE
660	-0301	90042-0366	P		4	CONTACT
	-0302				8	
670	-0301	90042-0367	-		4	PLATE
	-0302				10	
680	-0301	90042-0368	-		1	CONNECTION
	-0302				2	
690	-0301	90042-0369	-		1	END PIECE
	-0302				2	
695	-0302	90042-0370	-		2	PLATE
710	-0301	90043-0068	S		1	PRESSURE GAUGE
	-0302				2	
720	-0301	90043-0069	S		2	PRESSURE GAUGE
	-0302				3	
770	-0301	90113-0021	S		3	REGULATOR
	-0302				5	
870	-0301	90166-0132	P	M	40	HOSE
	-0302				80	
940	-0301	90224-0296	-		6	GROMMET
	-0302				7	
1000	-0302	90235-0151	S		1	NON-RETURN VALVE
1010	-0301	90235-0281	S		2	VALVE
	-0302				3	
1030	-0302	90042-0332	-		1	ASSEBLY UNIT
1060	-0302	90277-0323	S		1	FILTER HOUSING
1070	-0302	90277-0324	P		1	FILTER CARTRIDGE
1090	-0301	90328-0018	P		6	SILENCER
	-0302				10	
1210	-0302	312101-0329	-		2	SCREW M6S5X16FZB
1220	-0301	312101-0367	-		10	SCREW M6S6X14FZB
	-0302				6	
1260	-0301	312101-0378	-		4	SCREW M6S6X40FZB
	-0302				8	
1280	-0301	312101-0380	-		3	SCREW M6S6X50FZB

TETRA PAK

3/8608

S-271909-16

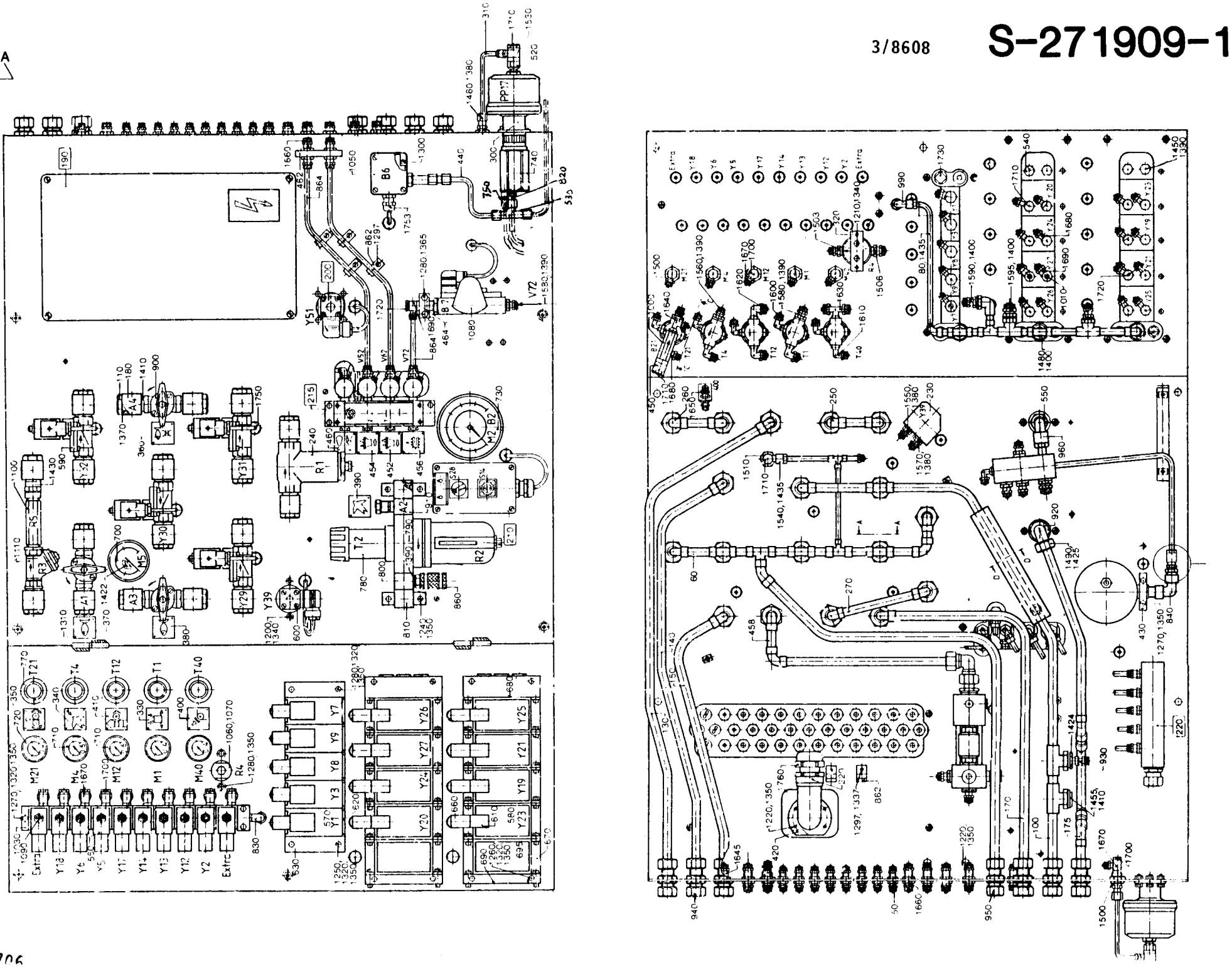

POS	VAR	PART NUMBER	SP	EH	QTY	DESCRIPTION
	-0302				5	
1310	-0301	312502-0120	-		22	DRIVE SCREKDS0X5FNB
	-0302				26	
1340	-0301	315101-0146	-		5	WASHER BRB5,3X10FZB
	-0302				7	
1350	-0301	315101-0153	-		32	WASHER BRB6,4X12FZB
	-0302				34	
1370	-0301	315202-0710	P		16	O-RING 25,12X1,78
	-0302				18	
1390	-0301	315233-0110	P		4	SEAL RING R1/4"
	-0302				9	
1400	-0301	315233-0111	S		4	SEAL RING R3/8"
	-0302				6	
1420	-0301	315233-0115	P		32	SEAL RING R3/4"
	-0302				36	
1440	-0301	342708-0109	-		1	SLEEVE 15X1/MS
1450	-0301	342713-0210	-		1	BLANK-OFF
	-0302				4	
1480	-0301	342720-0109	-		2	PIPE CONNEGA-12-3/8"
	-0302				3	
1485	-0301	342720-0114	-		2	PIPE CONNEGA-15-1/2"
1500	-0301	342767-0100	-		4	GROMMET R1/8
	-0302				6	
1503	-0302	342920-0114	-		1	PIPE CONNE6/4-1/4
1506	-0302	342920-0122	-		1	PIPE CONNE8/6-1/4
1520	-0301	342767-0114	-		1	GROMMET R1/2
1560	-0302	342921-0114	-		2	PIPE CONNE6/4-1/4"
1570	-0302	342921-0121	-		1	PIPE CONNE8/6-1/8"
1590	-0301	342921-0123	-		1	PIPE CONNE8/6-3/8"
	-0302				2	
1600	-0301	342930-0113	-		3	ELBOW COUP6/4-1/8
	-0302				5	
1610	-0301	342930-0114	-		1	ELBOW COUP6/4-1/4
	-0302				2	
1640	-0302	342950-0114	-		1	L-CONNECTI6/4-1/4
1650	-0301	342960-0112	S		19	GROMMET 6/4
	-0302				31	
1670	-0301	342980-0113	S		10	BANJO CONNSINGEL 6/4-1/8
	-0302				16	
1680	-0301	342980-0114	S		8	BANJO CONNSINGEL 6/4-1/4
	-0302				19	
1700	-0301	342980-0303	S		10	BANJO CONN SINGEL 1/8"
	-0302				16	
1710	-0301	342980-0304	S		12	BANJO CONN SINGEL 1/4
	-0302				20	
1720	-0301	342980-0314	S		1	BANJO CONN DUBBEL 1/4
	-0302				3	
1730	-0301	346800-0111	S		4	SILENCER FILTER R3/8"
	-0302				6	

POS	VAR	PART NUMBER	SP	EH	QTY	DESCRIPTION
1750	-0301	352101-0103	-		29	LEAD-IN G 18,6
	-0302				44	
1800	-0301	359000-0400	-		65	MARKING CO2/4"0"
	-0302				100	
1800	-0301	359000-0401	-		40	MARKING CO2/4"1"
	-0302				70	
1800	-0301	359000-0402	-		35	MARKING CO2/4"2"
	-0302				60	
1800	-0301	359000-0403	-		15	MARKING CO2/4"3"
	-0302				20	
1800	ALL	359000-0404	-		20	MARKING CO2/4"4"
1800	-0301	359000-0405	-		15	MARKING CO2/4"5"
	-0302				20	
1800	-0301	359000-0406	-		10	MARKING CO2/4"6"
	-0302				15	
1800	ALL	359000-0407	-		15	MARKING CO2/4"7"
1800	-0301	359000-0408	-		5	MARKING CO2/4"8"
	-0302				10	
1800	-0301	359000-0409	-		5	MARKING CO2/4"9"
	-0302				10	
1800	ALL	359000-0771	-		35	MARKING CO2/4"V"
100	ALL	469165	-		1	PIPE
130	ALL	295451	-		1	PIPE
140	ALL	295452	-		1	PIPE
170	ALL	295455	-		1	PIPE
175	ALL	469166	-		1	PIPE
220	ALL	295460	-		1	BRACKET
230	ALL	295496	-		1	BLOCK
240	ALL	271823	P		1	FILTER
		90415-0314	P		0	* FILTERINSERT
		90415-0325	P		0	* GASKET
250	ALL	271907-0001	-		1	PIPE
260	ALL	271907-0002	-		1	PIPE
270	ALL	271907-0003	-		1	PIPE
290	ALL	272129	-		1	BRACKET
300	ALL	272130	-		1	SPACER
310	ALL	272340	-		1	PIPE
420	ALL	295461	-		1	RUBBER GASKET
430	ALL	295462	-		1	HOLDER
440	ALL	295473	-		1	PIPE
452	ALL	445533	-		1	SIGN
454	ALL	445534	-		1	SIGN
456	ALL	445535	-		1	SIGN
458	ALL	469329	-		1	PIPE
460	ALL	469330	-		1	SIGN
462	ALL	469331	-		1	HOLDER
464	ALL	469332	-		1	CONNECTION
466	ALL	456884	-		1	THROTTLE NIPPLE
470	ALL	456137	-		1	HOSE

TETRA PAK

3/8608

S-271909-16

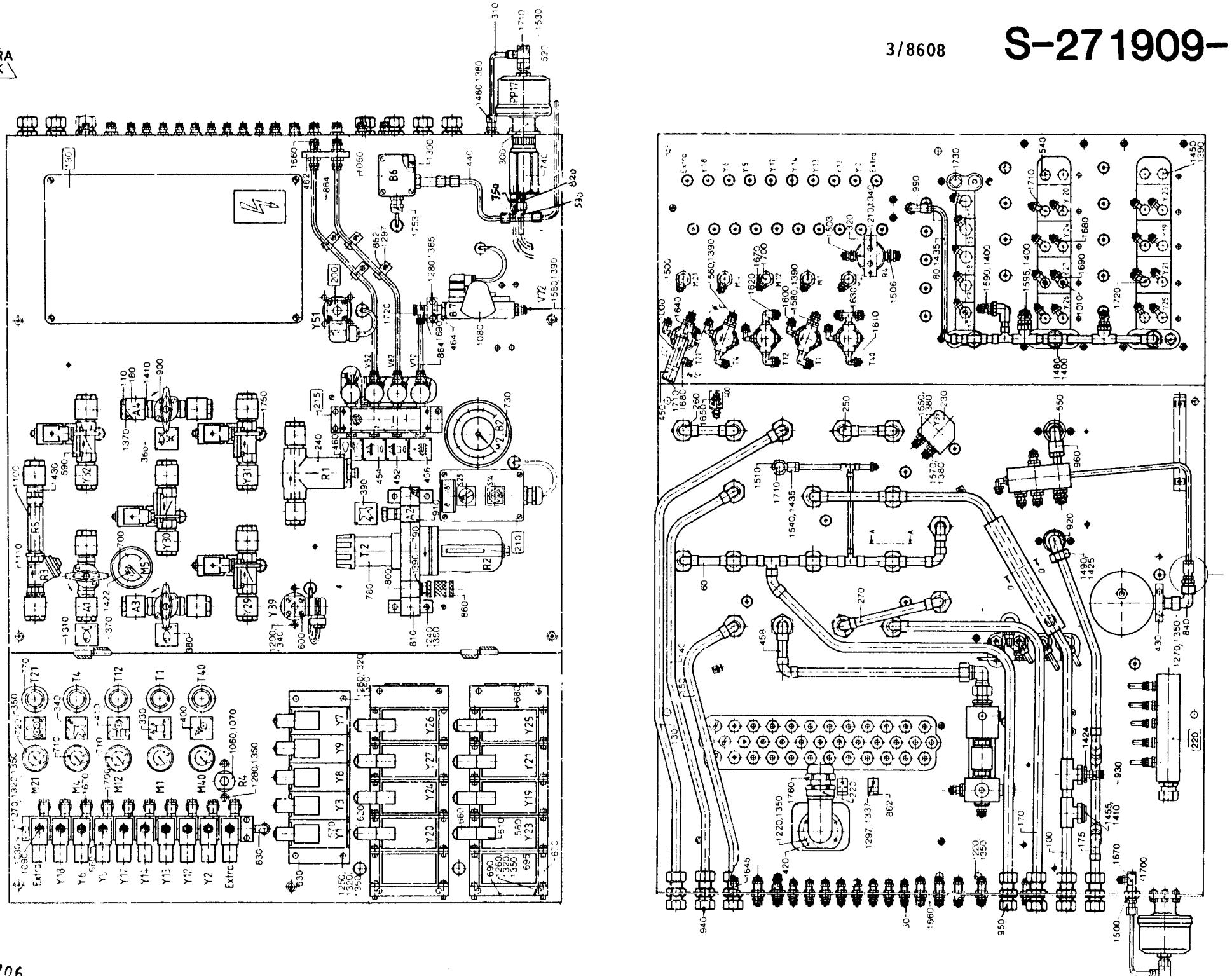

POS	VAR	PART NUMBER	SP	EH	QTY	DESCRIPTION
500	ALL	90005-0045	-		1	WASHER
520	ALL	90030-0116	-		1	REDUCER
530	ALL	90030-0127	-		1	PIPE CONNECITON
550	ALL	90030-0168	-		2	REDUCER
600	ALL	90042-0089	S		1	SOLENOID VALVE
620	ALL	90042-0347	-		5	PLATE
630	ALL	90042-0348	-		1	ASSEMBLY UNIT
700	ALL	90043-0006	S		1	PRESSURE GAUGE
730	ALL	90043-0070	S		1	PRESSURE GAUGE
740	ALL	90048-0018	S		1	OIL PUMP
		90048-0443	R		0	* CONTAINER
		90048-0444	R		0	* PIPE
		90048-0450	P		0	* SPARE PARTS KIT
750	ALL	90048-0453	S		1	OVERFLOW TRAP
780	ALL	90113-0047	S		1	REGULATOR
		90277-0314	P		0	* FILTER
790	ALL	90113-0338	-		1	YOKE
800	ALL	90113-0342	-		1	JUNCTION BLOCK
810	ALL	90113-0356	-		1	BRACKET
820	ALL	90134-0019	-		1	GLAND
830	ALL	90140-0013	-		1	ELBOW PIPE
840	ALL	90140-0014	-		1	ELBOW PIPE
850	ALL	90153-0035	-		X	ADHESIVE
860	ALL	90163-0016	-		1	SLEEVE
862	ALL	90165-0044	-		7	CLIP
864	ALL	90166-0118	-	MM	2000	HOSE
866	ALL	90166-0119	-	MM	1500	HOSE
880	ALL	90166-0133	-	M	20	HOSE
890	ALL	90166-0134	-	MM	1180	HOSE
900	ALL	90187-0029	S		3	VALVE
910	ALL	90187-0047	S		1	VALVE
920	ALL	90224-0078	-		1	CONNECTION
930	ALL	90224-0094	-		1	NIPPLE
950	ALL	90224-0297	-		1	REDUCER
960	ALL	90224-0298	-		1	CONNECTION
990	ALL	90224-0303	-		1	CONNECTION
995	ALL	90224-0324	-		1	CONNECTION
1050	ALL	90274-0027	S		1	GUARD
1080	ALL	90274-0039	S		1	GUARD
1100	ALL	90415-0018	S		1	FILTER
1110	ALL	90415-0019	S		1	FILTER
1200	ALL	312101-0327	-		2	SCREW M6S5X12FZB
1230	ALL	312101-0368	-		3	SCREW M6S6X16FZB
1240	ALL	312101-0372	-		4	SCREW M6S6X25FZB
1250	ALL	312101-0376	-		3	SCREW M6S6X35FZB
1270	ALL	312101-0379	-		5	SCREW M6S6X45FZB
1290	ALL	312101-0451	-		6	SCREW M6S8X20FZB
1293	ALL	312121-0285	-		2	SLOTTED HEMCS4X6FZB
1297	ALL	312121-0287	-		6	SLOTTED HEMCS4X8FZB

POS	VAR	PART NUMBER	SP	EH	QTY	DESCRIPTION
1300	ALL	312121-0291	-		3	SLOTTED HEMCS4X12FZB
1305	ALL	312125-0335	-		1	SLOTTED HEMCS5X30RFR
1315	ALL	312601-0312	-		1	NUT M6M4FZB
1320	ALL	312601-0316	-		16	NUT M6M6FZB
1330	ALL	312601-0318	-		6	NUT M6M8FZB
1332	ALL	312605-0314	-		2	NUT M6M5RFR
1333	ALL	312705-0312	-		2	SCREW CAP MHM 4 A2
1337	ALL	315101-0136	-		5	WASHER BRB4,3X8FZB
1360	ALL	315101-0165	-		6	WASHER BRB8,4X16FZB
1365	ALL	315115-0153	-		2	WASHER TBRB6,4X12RFR
1380	ALL	315233-0109	P		4	SEAL RING R1/8"
1410	ALL	315233-0113	P		19	SEAL RING R1/2"
1422	ALL	342701-0201	-		1	BUSHING RNI1/4"-1/8"
1423	ALL	342701-0202	-		1	BUSHING RNI3/8"-1/8"
1424	ALL	342701-0205	-		1	BUSHING RNI1/2"-1/4"
1425	ALL	342704-0115	-		1	CUTTING RIR-16MSG
1430	ALL	342707-0113	-		1	SLEEVE
1435	ALL	342708-0103	-		2	SLEEVE 8X1/MS
1455	ALL	342713-0213	-		1	BLANK-OFF
1460	ALL	342720-0102	-		1	PIPE CONNEGA-6-1/8"
1490	ALL	342736-0114	-		1	ELBOW COUP W-15
1510	ALL	342767-0104	-		1	GROMMET R1/4
1530	ALL	342797-0122	-		1	BANJO CONNSINGEL 6-1/4
1540	ALL	342797-0132	-		1	BANJO CONNSINGEL 8-1/4
1550	ALL	342921-0113	-		1	PIPE CONNE6/4-1/8"
1580	ALL	342921-0122	-		2	PIPE CONNE8/6-1/4"
1595	ALL	342921-0141	-		1	PIPE CONNE12/10-3/8
1620	ALL	342930-0122	-		3	ELBOW COUP8/6-1/4
1630	ALL	342940-0122	-		1	T-PIECE 8/6-1/4
1645	ALL	342960-0121	-		1	GROMMET 8/6-6/4
1660	ALL	342960-0122	-		14	GROMMET 8/6
1690	ALL	342980-0122	-		5	BANJO CONNSINGEL 8/6-1/4
1753	ALL	352103-0106	-		1	CABLE GLANR.18,6/5-10
1760	ALL	352103-0121	-		1	CABLE GLANR.37,0/18-25
1770	ALL	352112-0101	-	MM	500	BUNDLING SGSBAND TUB 12
1780	ALL	352113-0101	-		30	RIBBON CLAR
1790	ALL	352113-0102	-		25	RIBBON CLAR
1900	ALL	352113-0202	-		4	ARMATURE -TM2-S8

TETRA PAK

3/8608

S-271909-16

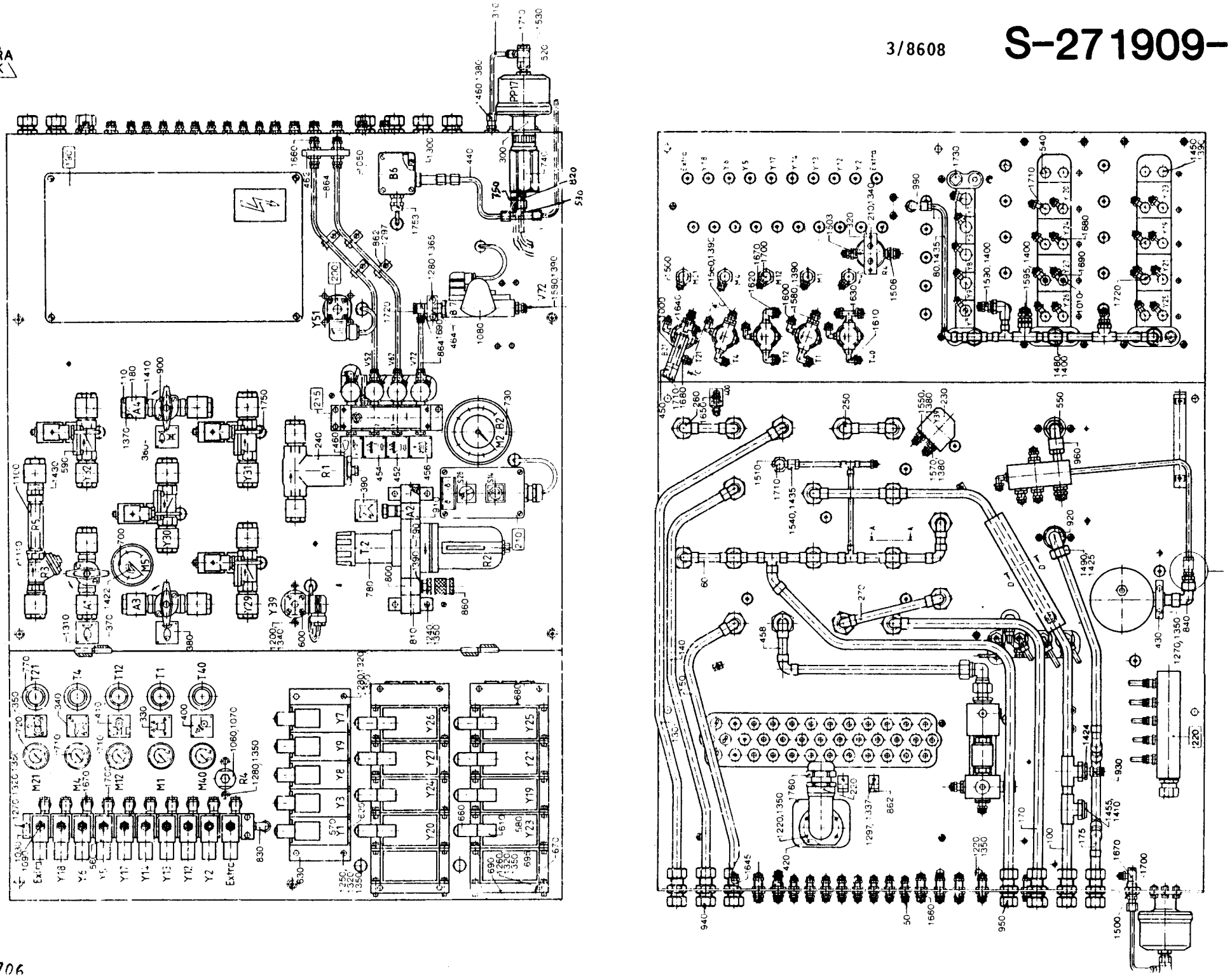

LAST ALTERA JN: AM 6[illegible] 83-11-03
648106-020V
AM 5266
82-04-19

POS	VAR	PART NUMBER	SP	EH	QTY	DESCRIPTION
	-0201	S- 271934-SHEET	-2			===ASSEMBLY DRAWING===
010	-0201	295716	C		1	CLAMP
040	-0201	295717	C		1	BRACKET
070	-0201	263150	C		1	BRACKET
080	-0201	271911	C		1	SHAFT
110	-0201	295873	C		1	BRACKET
120	-0201	263152	S		1	SHAFT
130	-0201	263153	S		1	NUT
140	-0201	266710	S		1	WHEEL
150	-0201	271912	S		1	SHAFT
300	-0201	90239-0750	C		1	CYLINDER
500	-0201	312105-0368	-		3	SCREW M6S6X16RFR
510	-0201	312105-0451	-		2	SCREW M6S8X20RFR
520	-0201	312115-0327	-		4	SCREW MC6S5X12 A4 80
530	-0201	312155-0368	-		4	SCREW MF6S6X16RFR
560	-0201	312318-0323	-		2	GRUB SCREW SK6SS5X8RFR
590	-0201	312605-0316	-		1	NUT M6M6RFR
620	-0201	315105-0153	-		2	WASHER BRB6,4X12RFR
630	-0201	315105-0165	-		2	WASHER BRB8,4X16RFR
660	-0201	315750-0112	P		1	LOCK RING SGA15
690	-0201	321101-0202	S		2	BUSHING 16F7X12
700	-0201	321308-0202	S		4	BALL BEARISKF6002-2RS
730	-0201	342980-0113	-		1	BANJO CONNSINGEL 6/4-1/8
740	-0201	342980-0303	-		1	BANJO CONN SINGEL 1/8"

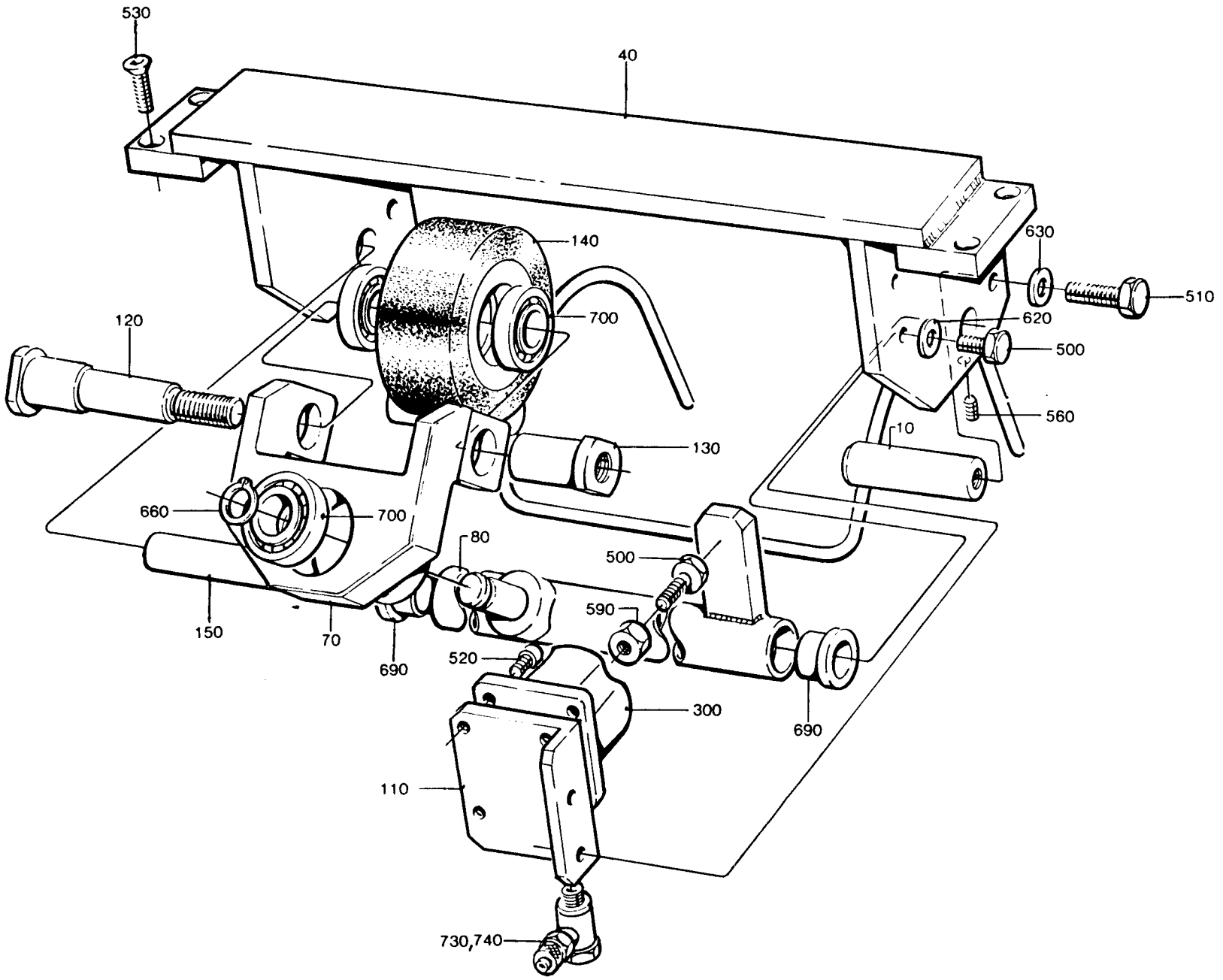
530
40
140
630
510
120
700
620
500
560
10
130
660
700
80
500
590
150
70
690
520
300
690
110
730,740

LAST ALTERATION: AM 6806 84-05-10
648106
AM 5507
82-10-13

POS	VAR	PART NUMBER	SP	EH	QTY	DESCRIPTION
	-0201	S- 271992-SHEET	-2			===ASSEMBLY DRAWING===
010	-0201	271380	-		1	LINK
020	-0201	271381	-		1	STRUT
030	-0201	271428	-		1	HOLDER
040	-0201	271993	-		1	BEARING
050	-0201	295408	-		1	ARM
060	-0201	295409	-		1	AXLE
070	-0201	469141	-		1	HOLDER
080	-0201	271995	-		1	SLEEVE
090	-0201	295661	-		1	AXLE
300	-0201	90347-0005	S		1	RUBBER BUFFER
400	-0201	311103-0267	S		1	CYLINDRICACPR4M6X10RFR
500	-0201	312105-0451	-		2	SCREW M6S8X20RFR
510	-0201	312105-0455	-		2	SCREW M6S8X30RFR
520	-0201	312105-0459	-		1	SCREW M6S8X40RFR
530	-0201	312125-0291	-		1	SLOTTED HEMCS4X12RFR
540	-0201	312318-0362	-		3	GRUB SCREW SK6SS6X8RFR
560	-0201	315105-0165	-		5	WASHER BRB8,4X16RFR
590	-0201	315742-0112	-		3	RETAINING 16SMS199RFR
620	-0201	321101-0202	S		4	BUSHING 16F7X12
630	-0201	321101-0233	S		1	BUSHING 20F7X20
650	-0201	321129-0117	S		2	WASHER 16/30X1,5

TETRA PAK

3/8601

S-271992-2

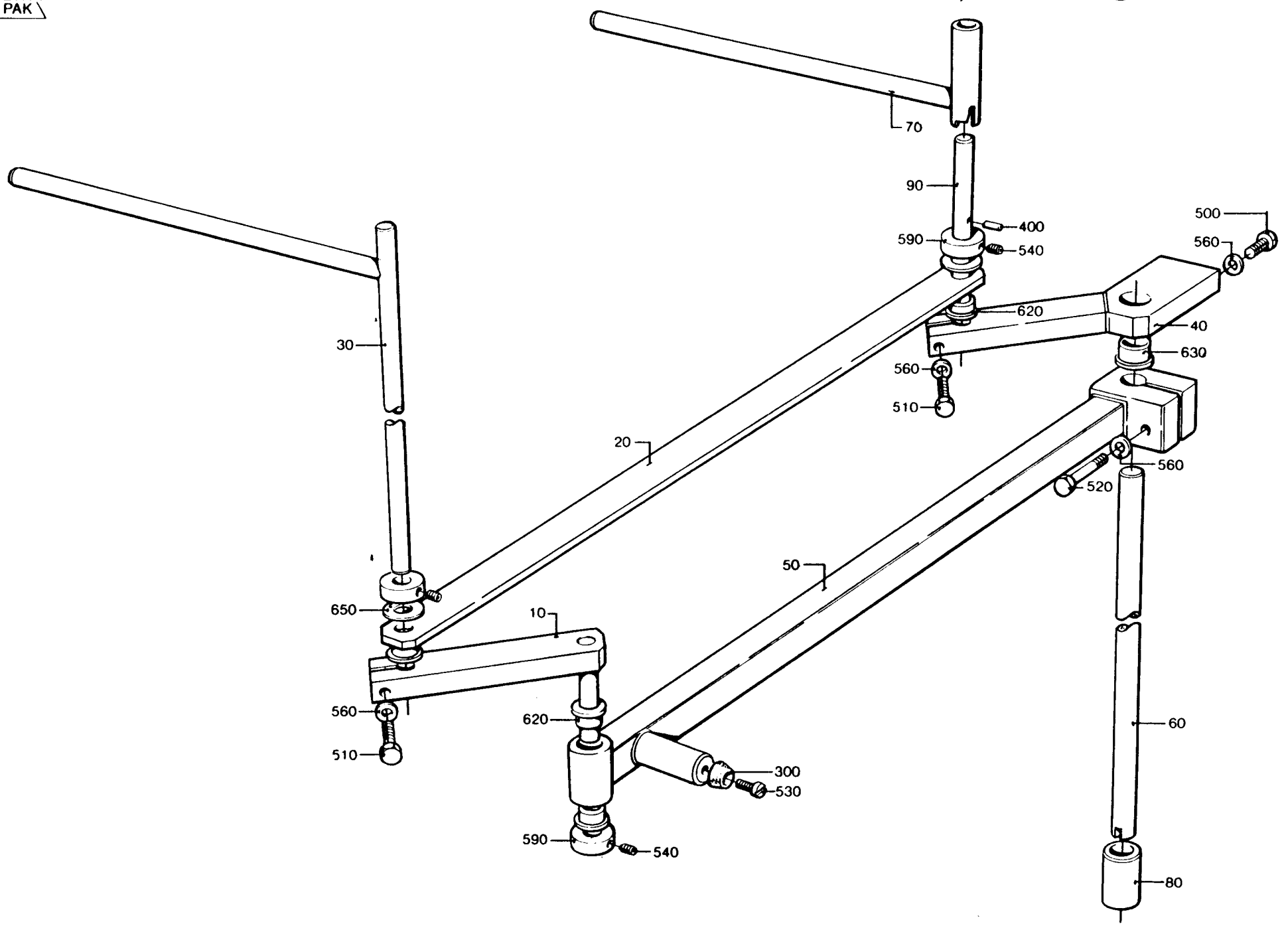

AM 6808

LAST ALTERATION: AM 7766 85-04-30
648106-020V
AM 5145
82-02-12

POS	VAR	PART NUMBER	SP	EH	QTY	DESCRIPTION
	-0201	S- 272084-SHEET	-2			===ASSEMBLY DRAWING===
010	-0201	272085	C		1	PENDULUM
020	-0201	469518	C		1	PENDULUM
030	-0201	272087	-		1	BRACKET
040	-0201	272088	-		1	GUIDE
050	-0201	272089	S		1	RAIL
060	-0201	272090	S		1	RAIL
070	-0201	272476	S		1	SHAFT
080	-0201	272477	C		1	BRACKET
090	-0201	456544	S		1	BENDING ROLLER
095	-0201	295110	-		1	SPACER
100	-0201	272091	-		2	BRACKET
110	-0201	230918	-		2	WASHER
200	-0201	90044-0104	P		2	INDUCTIVE TRANSMITTER
210	-0201	90115-0006	S		2	JOINT
280	-0201	312105-0287	-		4	SCREW M6S4X8 A4 80
290	-0201	312105-0291	-		2	SCREW M6S4X12RFR
305	-0201	312105-0452	-		2	SCREW M6S8X22RFR
310	-0201	312105-0536	-		2	SCREW M6S12X30RFR
320	-0201	312125-0228	-		4	SLOTTED HEMCS3X16RFR
340	-0201	312145-0287	-		6	SLOTTED HEMFS4X8RFR
350	-0201	312155-0368	-		4	SCREW MF6S6X16RFR
355	-0201	312155-0449	-		2	SCREW MF6S8X16RFR
360	-0201	312318-0360	-		2	GRUB SCREW SK6SS6X6RFR
370	-0201	312605-0322	-		2	NUT M6M12RFR
380	-0201	315105-0124	-		4	WASHER BRB3,2X6RFR
390	-0201	315105-0136	-		6	WASHER BRB4,3X8RFR
400	-0201	315105-0165	-		2	WASHER BRB8,4X16RFR
410	-0201	315105-0178	-		4	WASHER BRB13X24RFR
420	-0201	315742-0111	-		2	RETAINING 15SMS199RFR
430	-0201	321308-0202	S		2	BALL BEARISKF6002-2RS

TETRA PAK

5/8601

S-272084-2

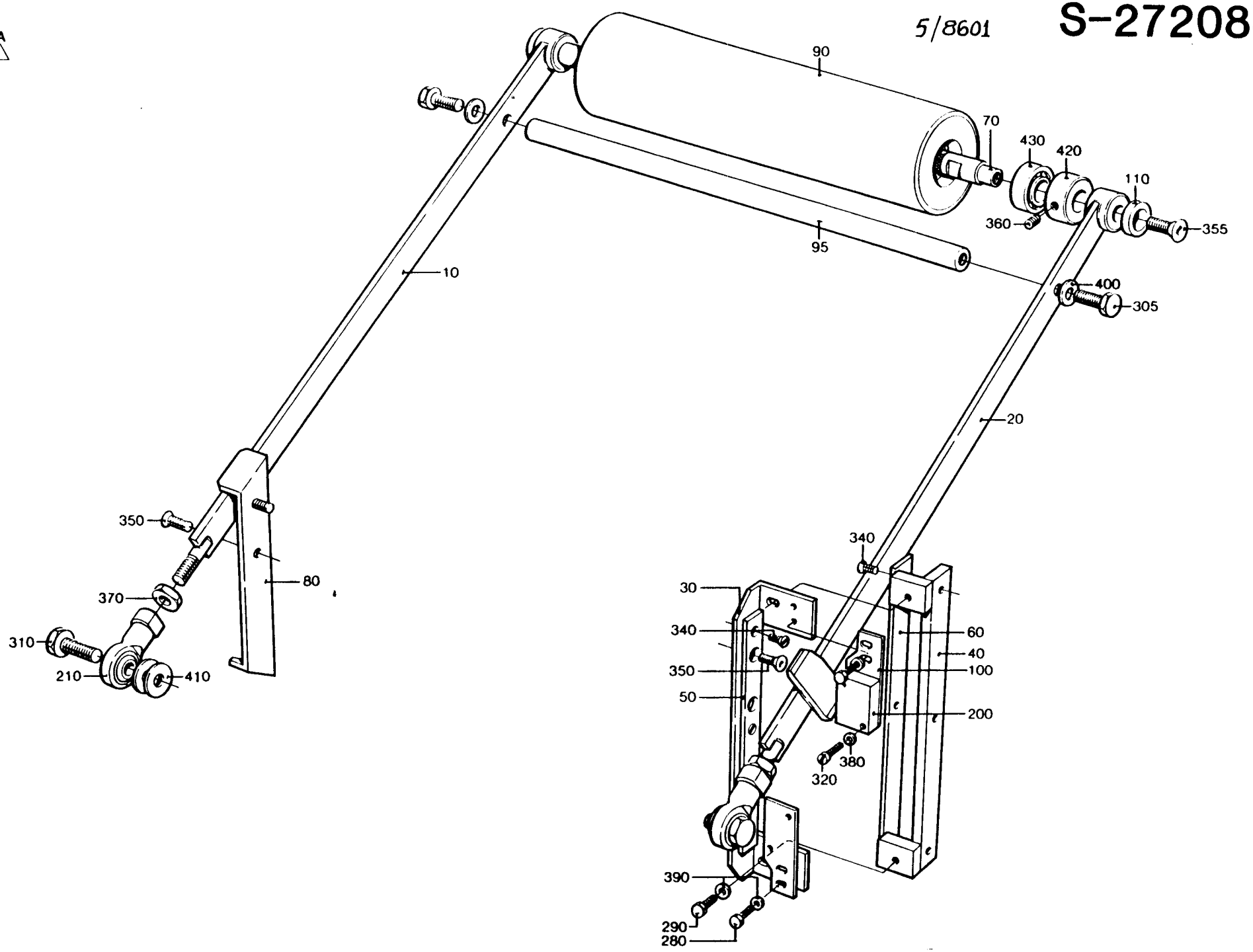

AM 7766

LAST ALTERATION: AM 6694 84-04-04
648106-020V
AM 5266
82-04-19

POS	VAR	PART NUMBER	SP	EH	QTY	DESCRIPTION
	-0201	S- 272231-SHEET	-1			===ASSEMBLY DRAWING===
030	-0201	456866	-		1	CLAMP
060	-0201	441847	-		1	GUIDING ARBOR
070	-0201	295015	-		1	BRACKET
080	-0201	295016	-		1	BRACKET
110	-0201	272236	S		2	DISTANCE SLEEVE
300	-0201	90115-0068	S		2	JOINT
500	-0201	312105-0368	-		4	SCREW M6S6X16RFR
510	-0201	312105-0372	-		2	SCREW M6S6X25RFR
520	-0201	312105-0378	-		2	SCREW M6S6X40RFR
530	-0201	312605-0316	-		4	NUT M6M6RFR
560	-0201	315105-0153	-		8	WASHER BRB6,4X12RFR

TETRA PAK

3/8601 **S-272231-1**

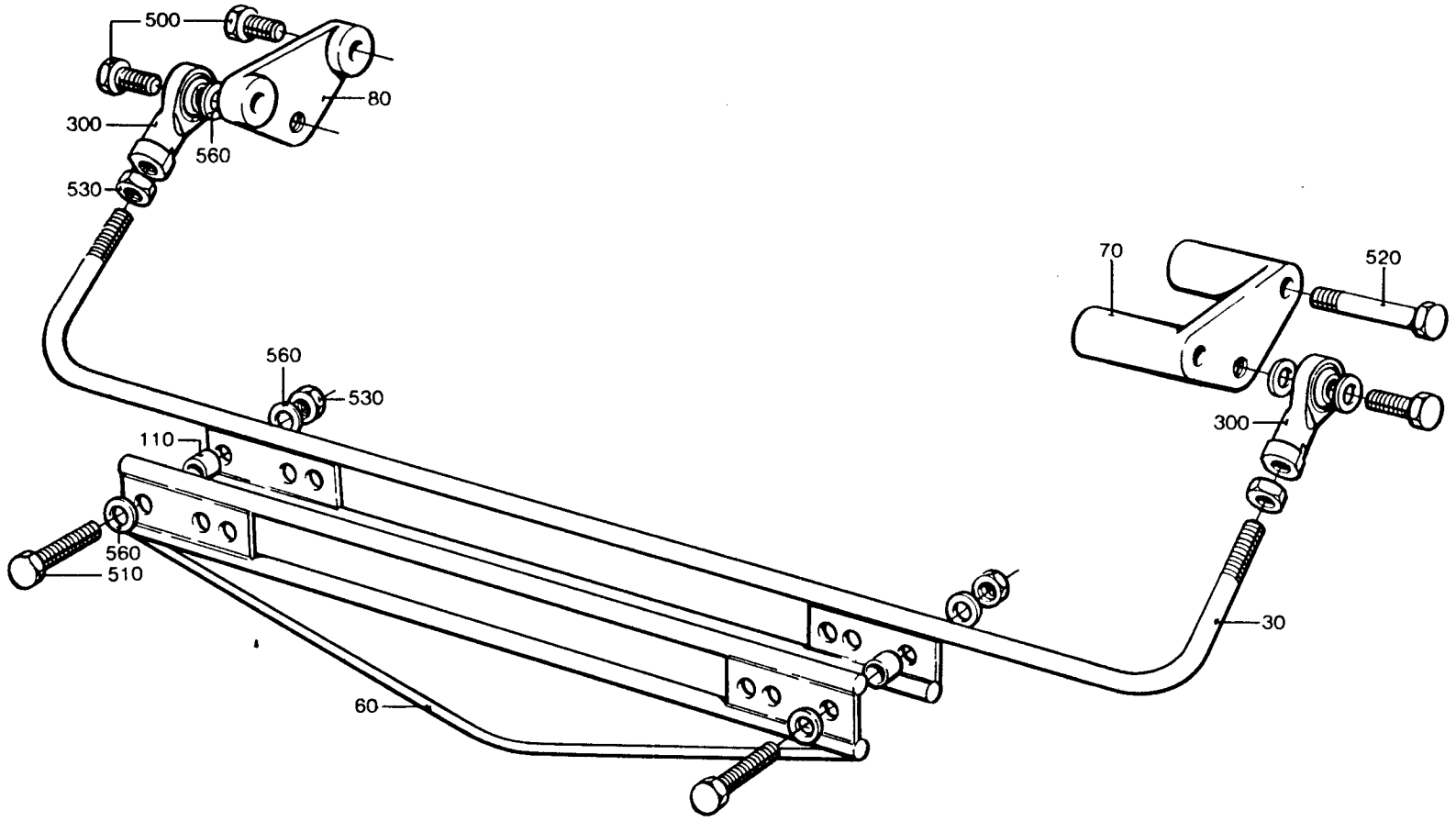

AM 6694

LAST ALTERATION: AM 8101 86-01-16
272404-040V

POS	VAR	PART NUMBER	SP	EH	QTY	DESCRIPTION	
	-0301	S- 272231-SHEET	-2			===ASSEMBLY DRAWING===	
030	-0301	490759	-		1	CLAMP	
060	-0301	490760	-		1	GUIDING ARBOR	
070	-0301	295015	-		1	BRACKET	
080	-0301	295016	-		1	BRACKET	
110	-0301	272236	S		2	DISTANCE SLEEVE	
300	-0301	90115-0068	S		2	JOINT	
500	-0301	312105-0368	-		4	SCREW	M6S6X16RFR
510	-0301	312105-0372	-		2	SCREW	M6S6X25RFR
520	-0301	312105-0378	-		2	SCREW	M6S6X40RFR
530	-0301	312605-0316	-		4	NUT	M6M6RFR
560	-0301	315105-0153	-		8	WASHER	BRB6,4X12RFR

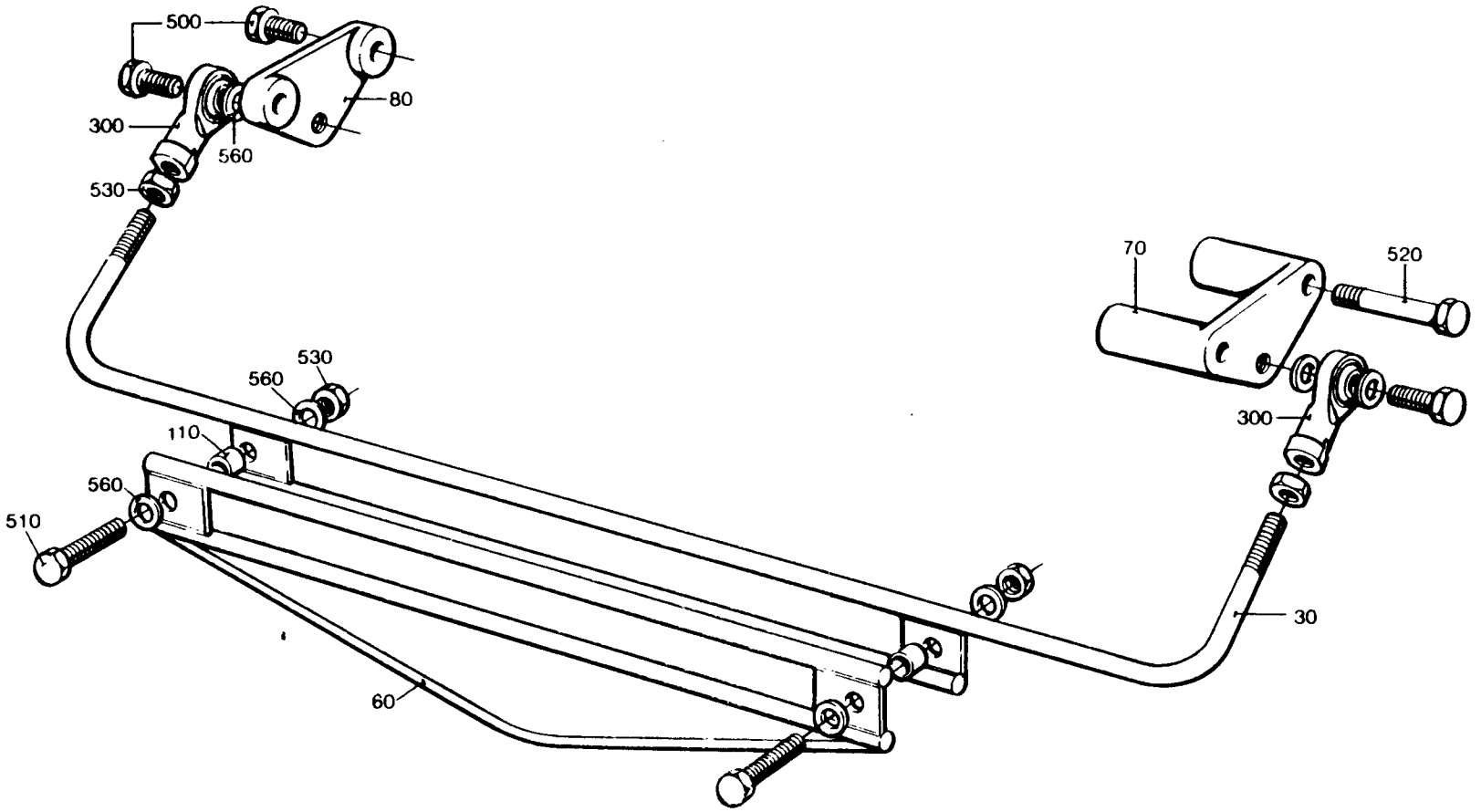
500
80
300
560
530
70
520
530
560
110
300
560
510
30
60

LAST ALTERATION: AM 7397 85-01-10
648106-020V
AM 5112
82-02-02

POS	VAR	PART NUMBER	SP	EH	QTY	DESCRIPTION
	-0201	S- 272359-SHEET	-2			===ASSEMBLY DRAWING===
010	-0201	272360	-		1	BRACKET
020	-0201	272361	C		1	CLAMP
030	-0201	271753	S		1	SHAFT
040	-0201	456544	S		1	BENDING ROLLER
050	-0201	456545	-		2	FLANGE
060	-0201	272362	S		2	BEARING
100	-0201	311103-0351	-		2	CYLINDRICACPR6M6X16RFR
110	-0201	312105-0449	-		2	SCREW M6S8X16RFR
120	-0201	312105-0451	-		2	SCREW M6S8X20RFR
130	-0201	312318-0321	-		4	GRUB SCREW SK6SS5X6RFR
140	-0201	312318-0323	-		4	GRUB SCREW SK6SS5X8RFR
150	-0201	312318-0360	-		2	GRUB SCREW SK6SS6X6RFR
160	-0201	315105-0165	-		4	WASHER BRB8,4X16RFR
170	-0201	315742-0111	-		2	RETAINING 15SMS199RFR
180	-0201	321308-0202	S		2	BALL BEARISKF6002-2RS

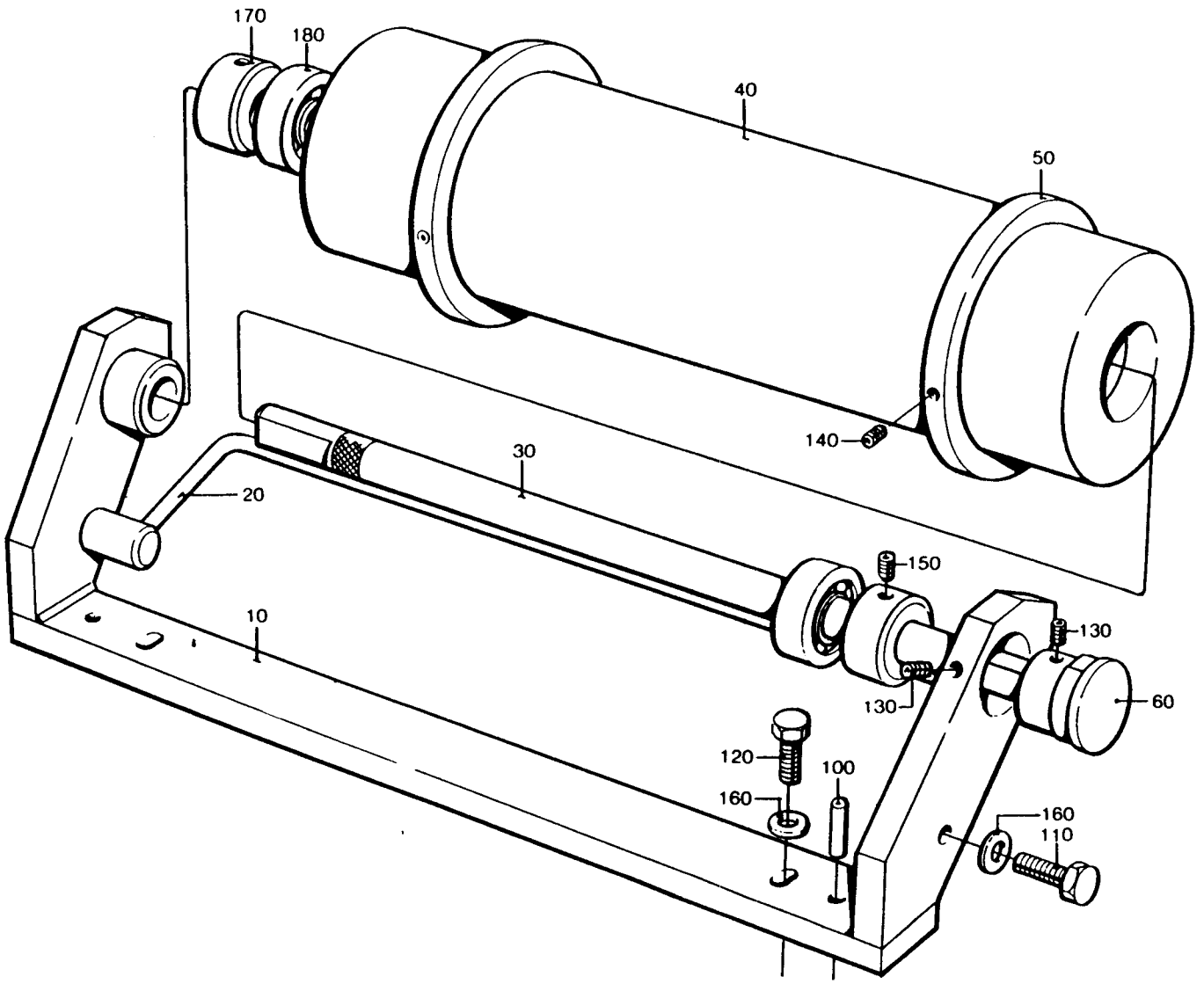
170
180
40
50
140
30
20
150
10
130
130
60
120
100
160
160
110

LAST ALTERATION: AM 8730 86-01-27
648106-060V
AM 6882
84-06-07

POS	VAR	PART NUMBER	SP	EH	QTY	DESCRIPTION
	-0301	S- 272381-SHEET	-5			===ASSEMBLY DRAWING===
010	-0301	295709	-		1	TANK
020	-0301	456833	-		1	PIPE
035	-0301	456834	-		1	PUMP PIPE
036	-0301	456835	-		1	RETURN PIPE
045	-0301	469989	-		1	FILLING TUBE
060	-0301	272392	-		1	PROTECTION PIPE
090	-0301	272700	-		1	WASTE CHUTE
095	-0301	272818	P		1	GASKET
097	-0301	456805	-		1	LID
098	-0301	469829	-		1	CAP
100	-0301	315115-0165	-		4	WASHER TBRB8,4X16RFR
110	-0301	490970	-		1	HOLDER
120	-0301	490987	-		1	STRAINER
121	-0301	469993	-		1	HOSE COUPLING
122	-0301	469994	-		1	CONNECTION
125	-0301	257200	-		2	WASHER
130	-0301	257201	-		1	WASHER
200	-0301	295708	-		1	BRACKET
210	-0301	315125-0153	-		4	WASHER SB 6,4X22X4 RFR
212	-0301	490989	-		1	LID
220	-0301	456762	-		1	ELBOW PIPE
225	-0301	456763	-		1	PLATE
227	-0301	456764	-		1	CONNECTION
230	-0301	456765	-		1	FLANGE
231	-0301	456791	-		1	CONNECTION
235	-0301	456848	-		1	HOSE COUPLING
240	-0301	469107	P		1	LEVEL INDICATOR TUBE
250	-0301	257199	-		2	STRUT
260	-0301	490973	-		1	STRAINER
270	-0301	490988	-		1	STRUT
275	-0301	499504	-		1	WASHER
280	-0301	491367	S		1	GASKET
290	-0301	90166-0156	S	MM	300	HOSE
305	-0301	499501	S		1	VALVE
307	-0301	90157-0022	P		X	SEALING COMPOUND
308	-0301	90166-0158	-	M	1	HOSE
310	-0301	90187-0059	S		1	VALVE
320	-0301	90242-0039	P		3	O-RING
330	-0301	90242-0065	P		2	O-RING
340	-0301	90321-0045	S		1	PUMP
		90321-0418	S		0	* BUSHING
		90321-0419	S		0	* BUSHING

POS	VAR	PART NUMBER	SP	EH	QTY	DESCRIPTION
		90321-0420	S		0	* O-RING
		90321-0449	S		0	* PUMP HOUSING
		90321-0450	S		0	* ROTOR
		90321-0451	S		0	* SPARE PART KIT
		90321-0452	S		1	* BEARING
345	-0301	90330-0054	-		1	SLEEVE
350	-0301	90330-0080	C		1	REDUCTION NIPPLE
360	-0301	90330-0100	-		1	NIPPLE TUBE
400	-0301	312105-0366	-		28	SCREW M6S6X12RFR
401	-0301	312105-0368	-		11	SCREW M6S6X16RFR
405	-0301	312105-0374	-		4	SCREW M6S6X30RFR
410	-0301	312105-0449	-		4	SCREW M6S8X16RFR
430	-0301	312605-0314	-		4	NUT M6M5RFR
450	-0301	315115-0153	-		4	WASHER TBRB6,4X12RFR
455	-0301	315204-0206	P		1	O-RING 7,3X2,4VITON
460	-0301	315204-0221	P		2	O-RING 34,2X3VITON
470	-0301	315204-0223	P		2	O-RING 39,2X3VITON
475	-0301	315204-0302	P		1	O-RING 54,5X3VITON
480	-0301	315204-0304	P		1	O-RING 64,5X3 VITON
483	-0301	315204-0307	P		1	O-RING 79,5X3 VITON
486	-0301	315204-0313	P		1	O-RING 109,5X3VITON
488	-0301	342991-0106	S		2	HOSE CLIP 26-38MMRFR
490	-0301	342930-0114	S		1	ELBOW COUP6/4-1/4
500	-0301	342991-0107	-		6	HOSE CLIP 32-44MMRFR
510	-0301	352113-0102	-		1	RIBBON CLAR

TETRA PAK

4/8609

S-272381-5

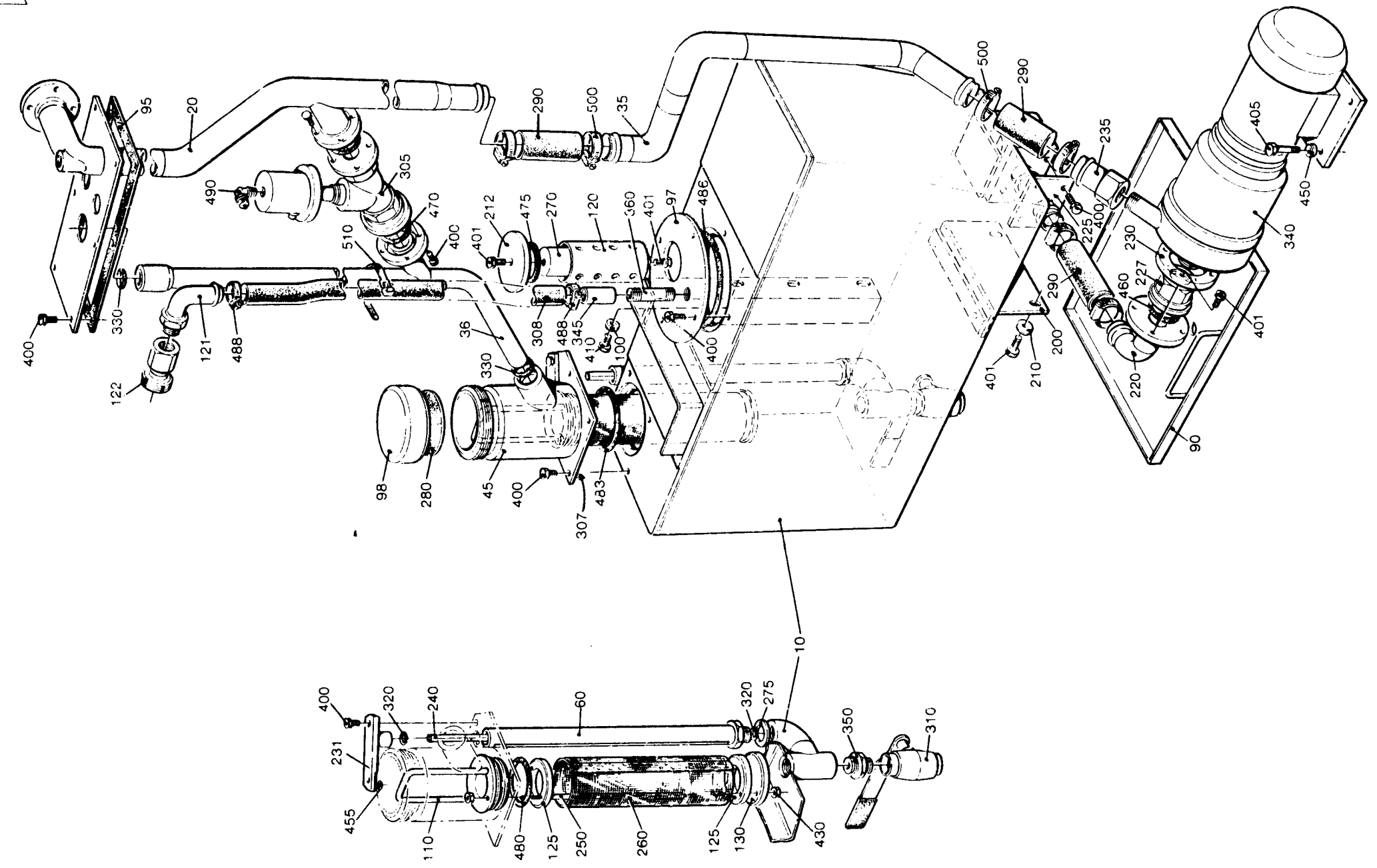

LAST ALTERATION: AM 7397 85-01-10
648106-060V
AM 7031
84-08-23

POS	VAR	PART NUMBER	SP	EH	QTY	DESCRIPTION
	-0301	S- 272404-SHEET	-3			===ASSEMBLY DRAWING===
F025	-0301	C- 272788-0101	-		1	CARRIAGE
F030	-0301	C- 272473-0101	-		1	BENDING ROLLER
F040	-0301	C- 272084-0201	-		1	STRETCHER
F050	-0301	C- 271017-0201	-		1	BENDING ROLLER
F052	-0301	C- 271934-0201	-		1	PAPER GUIDE PLATE
F054	-0301	C- 272231-0201	-		1	PAPER GUIDE
F060	-0301	C- 458383-010V	-		2	PAPER REEL HOLDER
F060	-0301	C- 458384-010V	-		2	PAPER REEL HOLDER
F070	-0301	C- 271454-0201	-		1	CATCH HANDLE
F080	-0301	C- 295839-0101	-		1	CONNECTION BOX
020	-0301	271546	C		1	BASKET
030	-0301	441907	-		1	GUIDE
060	-0301	271547	C		1	DOOR
070	-0301	271548	C		2	LINK
080	-0301	271558	C		1	BRACKET
090	-0301	272562	C		1	HOLDER
100	-0301	272563	C		1	HOLDER
110	-0301	272697	C		1	BRACKET
120	-0301	441908	-		2	CLAMP
140	-0301	272564	-		2	BEARING
150	-0301	456072	S		24	WASHER
290	-0301	90166-0060	S	MM	1350	HOSE
295	-0301	90166-0132	-	M	3	HOSE
300	-0301	90232-0039	-		1	PHOTOCELL
500	-0301	312105-0364	-		2	SCREW M6S6X10RFR
510	-0301	312105-0368	-		10	SCREW M6S6X16RFR
520	-0301	312105-0491	-		4	SCREW M6S10X20RFR
530	-0301	312115-0449	-		4	SCREW 8X16 A4 80
534	-0301	312115-0368	-		4	SCREW 6X16 A4 80
536	-0301	312125-0287	-		3	SLOTTED HEMCS4X8RFR
538	-0301	312125-0291	-		5	SLOTTED HEMCS4X12RFR
540	-0301	312125-0297	-		2	SLOTTED HEMCS4X25RFR
560	-0301	312605-0312	-		2	NUT M6M4RFR
570	-0301	312631-0324	-		8	NUT M6M16X1,5FZB
580	-0301	315105-0153	-		10	WASHER BRB6,4X12RFR
590	-0301	315105-0186	-		8	WASHER BRB17X30RFR
600	-0301	321582-0212	S		8	ROLLER NUKR35
610	-0301	342991-0105	-		2	HOSE CLIP 22-32MMRFR
620	-0301	352110-0100	-		6	CLIP TK 5-7
630	-0301	352110-0101	-		3	CLIP TK 7-10
650	-0301	359000-0400	-		4	MARKING CO2/4"0"
660	-0301	359000-0404	-		2	MARKING CO2/4"4"

TETRA PAK

S-272404-3

2/8608

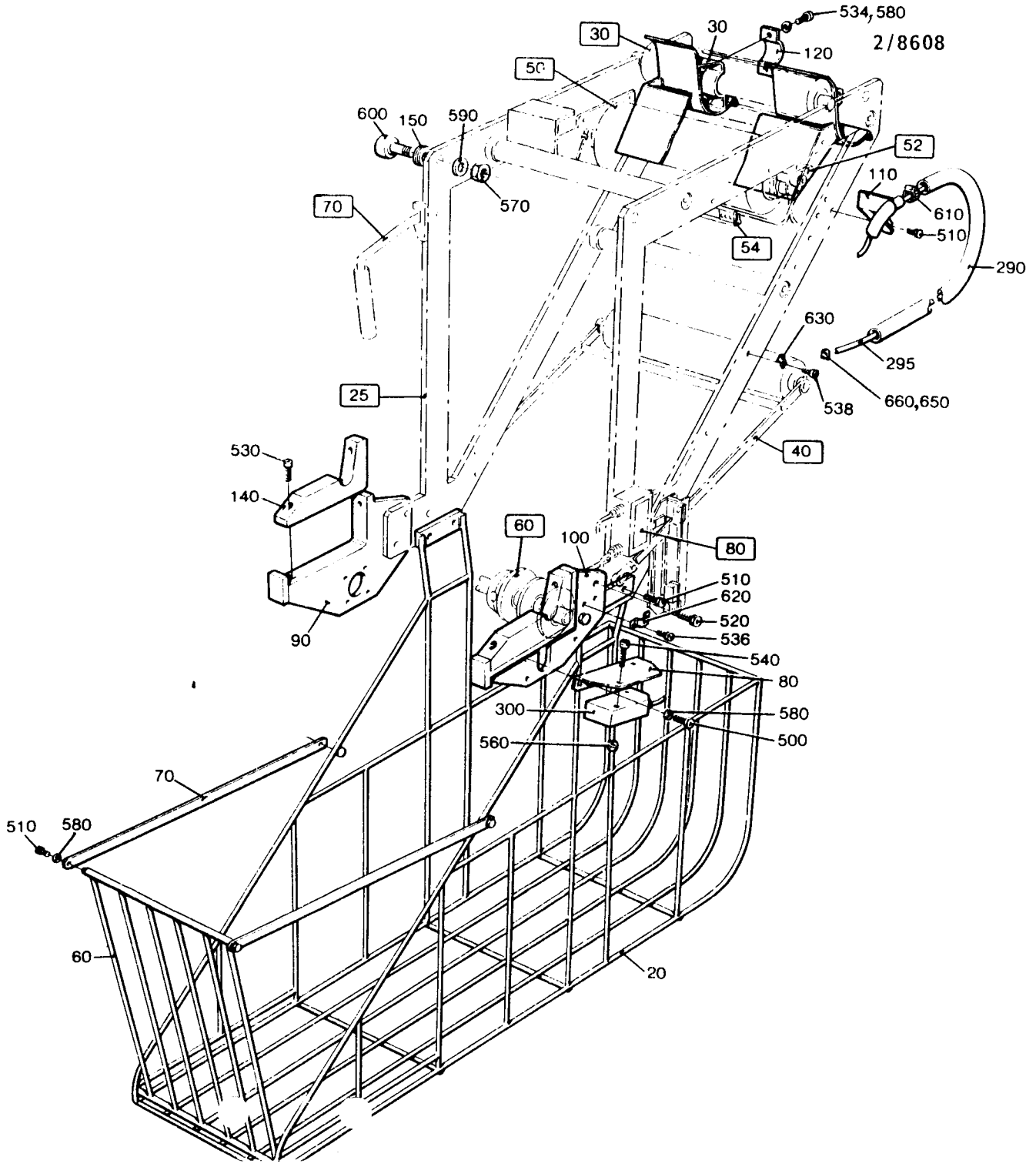

DH 7397

LAST ALTERATION: AM 8101 86-01-16
648106-070V

POS	VAR	PART NUMBER	SP	EH	QTY	DESCRIPTION
	-0401	S- 272404-SHEET	-4			===ASSEMBLY DRAWING===
F025	-0401	C- 272788-0101	-		1	CARRIAGE
F030	-0401	C- 272473-0101	-		1	BENDING ROLLER
F040	-0401	C- 272084-0201	-		1	STRETCHER
F050	-0401	C- 271017-0201	-		1	BENDING ROLLER
F052	-0401	C- 271934-0201	-		1	PAPER GUIDE PLATE
F054	-0401	C- 272231-0301	-		1	PAPER GUIDE
F060	-0401	C- 458383-010V	-		2	PAPER REEL HOLDER
F060	-0401	C- 458384-010V	-		2	PAPER REEL HOLDER
F070	-0401	C- 271454-0201	-		1	CATCH HANDLE
F080	-0401	C- 295839-0101	-		1	CONNECTION BOX
020	-0401	271546	C		1	BASKET
030	-0401	441907	-		1	GUIDE
060	-0401	271547	C		1	DOOR
070	-0401	271548	C		2	LINK
080	-0401	271558	C		1	BRACKET
090	-0401	G- 490779	C		1	BRACKET LEFT
100	-0401	G- 490780	C		1	BRACKET RIGHT
110	-0401	272697	C		1	BRACKET
120	-0401	441908	-		2	CLAMP
140	-0401	272564	-		2	BEARING
150	-0401	456072	S		24	WASHER
300	-0401	90166-0060	S	MM	1350	HOSE
310	-0401	90166-0132	-	M	3	HOSE
320	-0401	90232-0039	-		1	PHOTOCELL
490	-0401	311112-0255	-		4	HOLLOW PINRP 4X18 RFR
500	-0401	312105-0364	-		2	SCREW M6S6X10RFR
510	-0401	312105-0368	-		10	SCREW M6S6X16RFR
520	-0401	312105-0491	-		4	SCREW M6S10X20RFR
530	-0401	312115-0368	-		4	SCREW 6X16 A4 80
540	-0401	312115-0449	-		4	SCREW 8X16 A4 80
550	-0401	312125-0287	-		4	SLOTTED HEMCS4X8RFR
560	-0401	312125-0291	-		5	SLOTTED HEMCS4X12RFR
570	-0401	312125-0297	-		2	SLOTTED HEMCS4X25RFR
580	-0401	312605-0312	-		2	NUT M6M4RFR
590	-0401	312631-0324	-		8	NUT M6M16X1,5FZB
600	-0401	315105-0153	-		10	WASHER BRB6,4X12RFR
620	-0401	315105-0186	-		8	WASHER BRB17X30RFR
630	-0401	321582-0212	S		8	ROLLER NUKR35
640	-0401	342991-0105	-		2	HOSE CLIP 22-32MMRFR
650	-0401	352110-0100	-		7	CLIP TK 5-7
660	-0401	352110-0101	-		3	CLIP TK 7-10
670	-0401	359000-0400	-		4	MARKING CO2/4"0"
680	-0401	359000-0404	-		2	MARKING CO2/4"4"

TETRA PAK

S-272404-4

1/8608

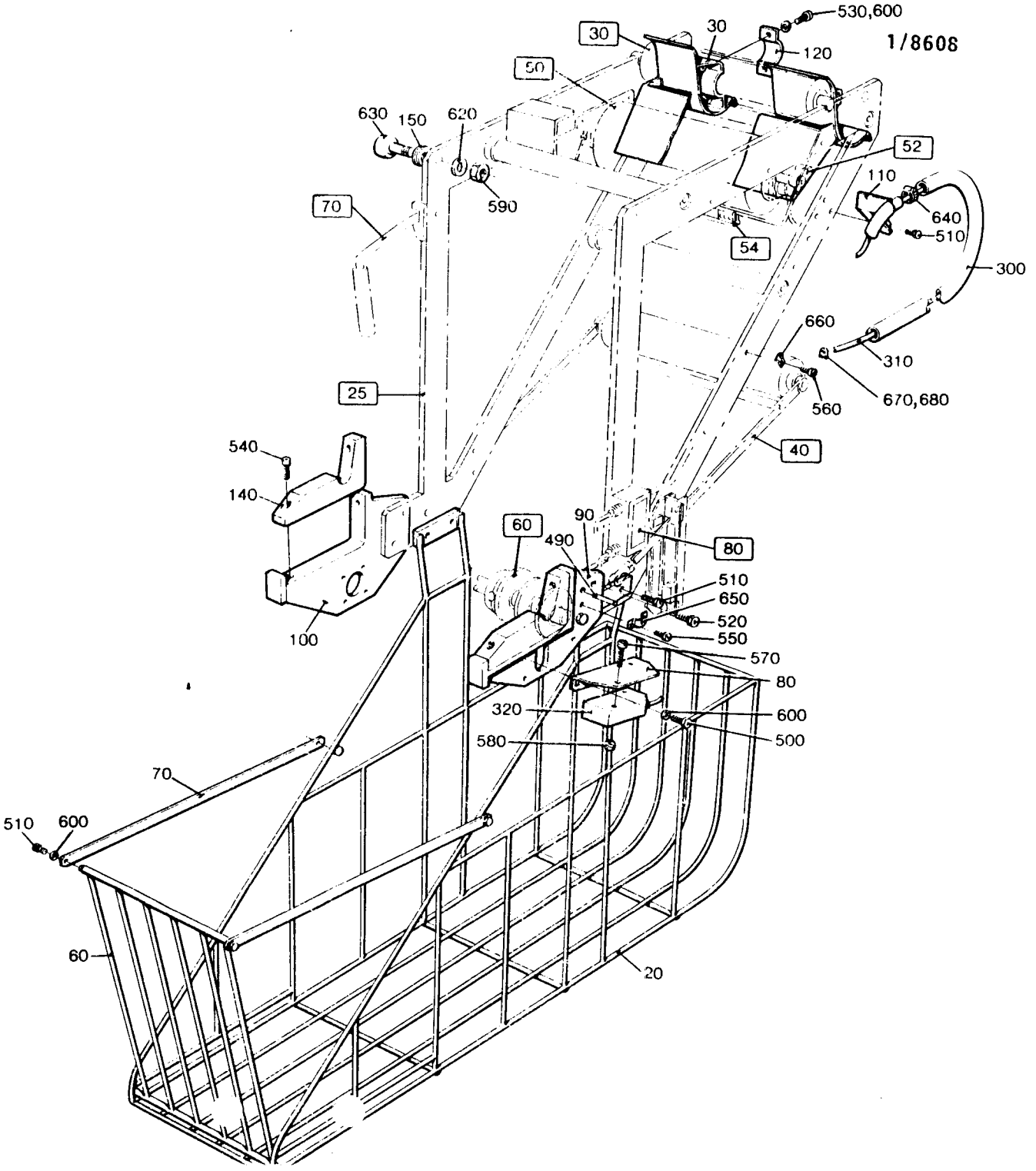

BM 8101

LAST ALTERATION: AM 6904 84-06-29
648106-020V
AM 5145
82-02-12

POS	VAR	PART NUMBER	SP	EH	QTY	DESCRIPTION
	-0101	S- 272473-SHEET	-1			===ASSEMBLY DRAWING===
010	-0101	272474	S		1	SHAFT
020	-0101	456544	S		1	BENDING ROLLER
030	-0101	272475	-		2	CLAMP
100	-0101	312155-0366	-		4	SCREW MF6S6X12RFR
110	-0101	312318-0360	-		4	GRUB SCREW SK6SS6X6RFR
120	-0101	315742-0111	-		2	RETAINING 15SMS199RFR
130	-0101	321308-0202	S		2	BALL BEARISKF6002-2RS

TETRA PAK

2/8601

S-272473-1

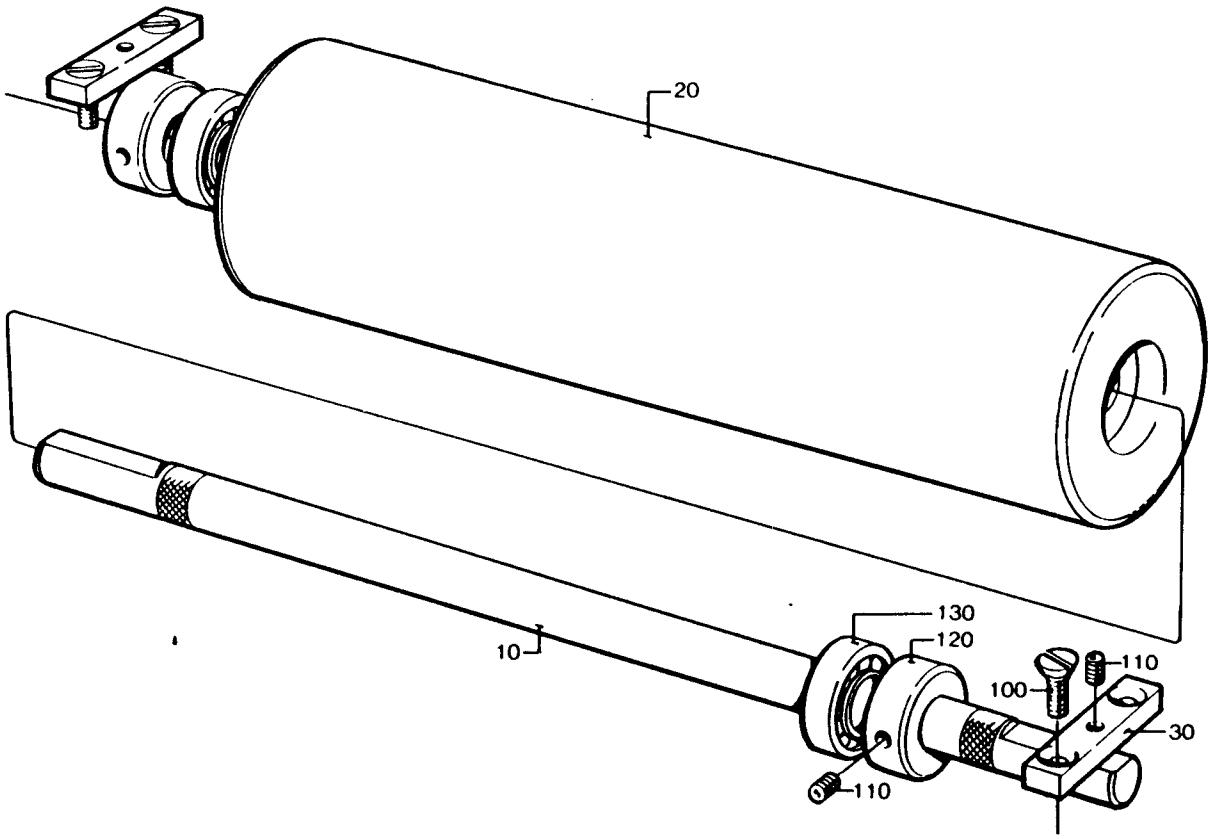

AM6904

LAST ALTERATION: AM 6317 83-11-03
272404-020V
AM 5204
82-03-08

POS	VAR	PART NUMBER	SP	EH	QTY	DESCRIPTION
	-0101	S- 272788-SHEET	-1			===ASSEMBLY DRAWING===
010	-0101	272789	-		1	SIDE PIECE
020	-0101	272790	-		1	SIDE PIECE
030	-0101	272791	C		3	DISTANCE TUBE
300	-0101	312115-0540	-		6	SCREW 12X40 A4 80

TETRA PAK

2/8609

S-272788-1

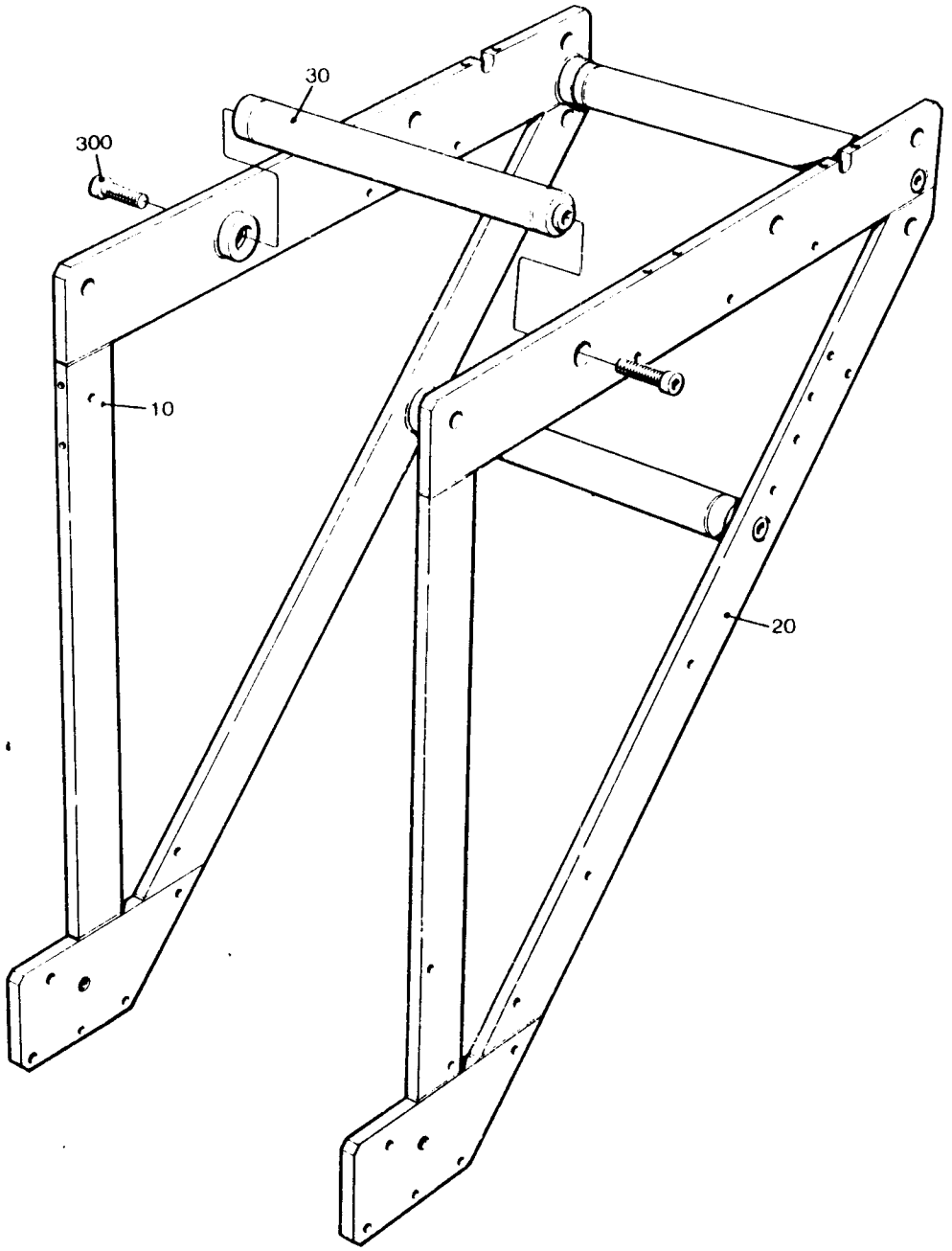

AM 6317

LAST ALTERATION: AM 5769 83-03-22
CONNECTION BOX C- 295382-020V
648106
AM 5507
82-10-13

GROUP	FILLMACHINE	PULL-TAB VERSION	PULL-TAB VERSION
-0201	B9	-	WITHOUT
	AB9	WITH	WITHOUT
-0202	B9	WITH	-

POS	VAR	PART NUMBER	SP	EH	QTY	DESCRIPTION
	-0201	S3- 295382-SHEET	-		-2	===ASSEMBLY DRAWING===
	-0202				-2	
320	-0201	352101-0102	-		3	LEAD-IN G 15,2
	-0202				2	
330	-0202	352101-0105	-		1	LEAD-IN G 22,5
340	-0201	352103-0101	-		2	CABLE GLANR.15,2/4-8
	-0202				3	
350	-0201	352103-0110	-		5	CABLE GLANR.22,5/4-13
	-0202				4	
010	ALL	3- 295913	-		1	CONNECTION BOX
100	ALL	90077-0079	-		18	TERMINAL BLOCK
110	ALL	90077-0328	-	MM	156	RAIL
120	ALL	90135-0026	-		3	TERMINAL
130	ALL	90194-0040	-		1	SIGN
300	ALL	312121-0285	-		2	SLOTTED HEMCS4X6FZB
310	ALL	312121-0293	-		2	SLOTTED HEMCS4X16FZB
370	ALL	359011-0202	-		6	LABEL (JORD)
380	ALL	359011-0802	-		1	LABEL BSFW 1-25

TETRA PAK

1/8302

S-295382-2

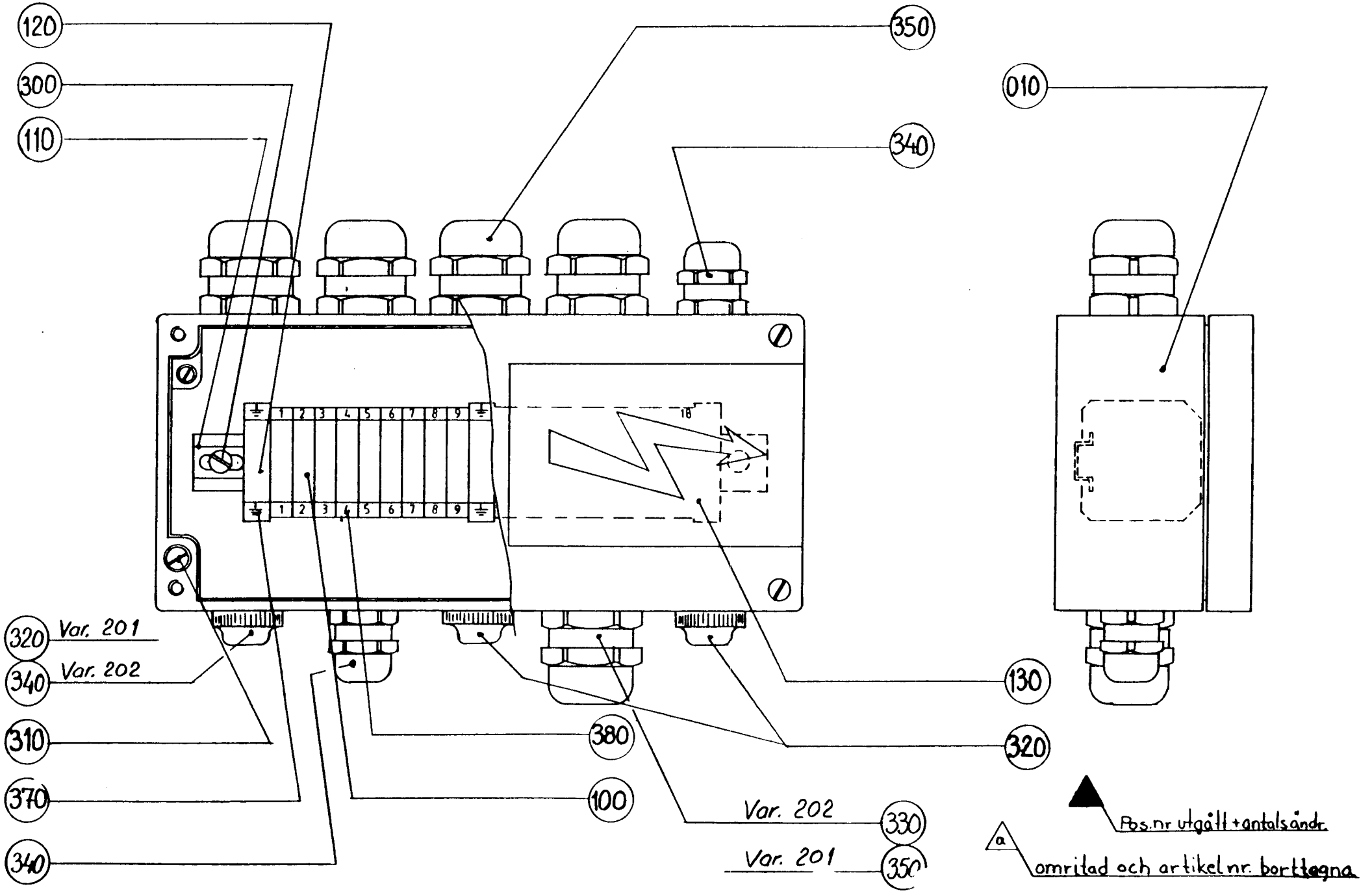

Pos.nr utgått + antalsändr.

a omritad och artikelnr. borttagna

LAST ALTERATION: AM 6850 84-05-18
648106

GROUP FILLMACHINE

-0201 B9
-0202 AB9

POS	VAR	PART NUMBER	SP	EH	QTY	DESCRIPTION
	-0201	S- 295441-SHEET	-3			===ASSEMBLY DRAWING===
	-0202		-4			
010	-0201	295442	-		1	CONNECTION BOX
010	-0202	456841	-		1	CONNECTION BOX
200	-0201	90002-0013	-		7	BLANK-OFF PLUG
	-0202				5	
570	-0201	352103-0101	-		23	CABLE GLANR.15,2/4-8
	-0202				32	
600	-0201	353021-0201	-		30	CLAMP LÄMMA DKI T4 PA
	-0202				40	
640	-0201	353033-0103	-		3	WALL
	-0202				4	
660	-0201	353041-0001	-	MM	170	RAIL 10X3MS
660	-0202	353041-0001	-	MM	235	RAIL 10X3MS
670	-0201	353041-0104	-		4	RAIL K
	-0202				5	
680	-0201	359011-0202	-		30	LABEL (JORD)
	-0202				40	
020	ALL	295444	-		2	DISTANCE
210	ALL	90077-0302	-	MM	324	RAIL
220	ALL	90194-0040	-		1	SIGN
500	ALL	312121-0291	-		2	SLOTTED HEMCS4X12FZB
510	ALL	312121-0372	-		2	SLOTTED HEMCS6X25FZB
520	ALL	312121-0378	-		4	SLOTTED HEMCS6X40FZB
525	ALL	312601-0316	-		4	NUT M6M6FZB
530	ALL	315101-0136	-		2	WASHER BRB4,3X8FZB
535	ALL	315101-0153	-		4	WASHER BRB6,4X12FZB
610	ALL	353024-0201	-		1	EARTHING CLÄMMA EK4/35 PA
620	ALL	353031-0201	-		1	END PLATE EW35
630	ALL	353032-0201	-		1	END PLATE AP PA
650	ALL	353041-0001	-	MM	60	RAIL 10X3MS
690	ALL	359011-0800	-		2	LABEL BSFW 0-99

TETRA PAK

1/8501

S-295441-3

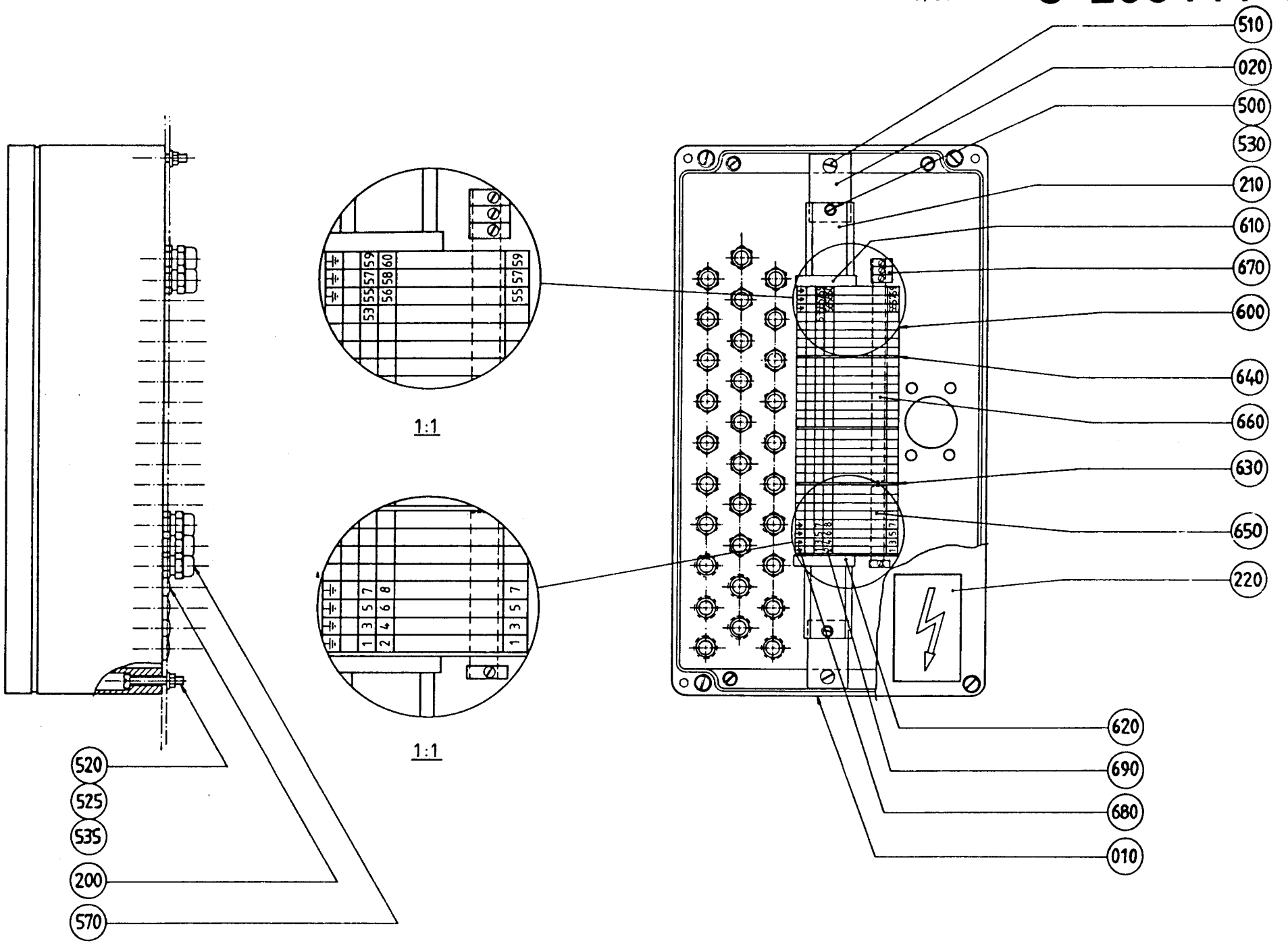

LAST ALTERATION: AM 5561 82-11-30
648106-020V

POS	VAR	PART NUMBER	SP	EH	QTY	DESCRIPTION
	-0101	S- 295839-SHEET	-1			===ASSEMBLY DRAWING===
010	-0101	295840	-		1	CONNECTION BOX
100	-0101	90194-0040	-		1	LABEL
200	-0101	312125-0295	-		2	SLOTTED HEMCS4X20RFR
210	-0101	352103-0101	-		3	CABLE GLANR.15,2/4-8
220	-0101	352103-0106	-		1	CABLE GLANR.18,6/5-10

TETRA PAK

2/8601

S-295839-1

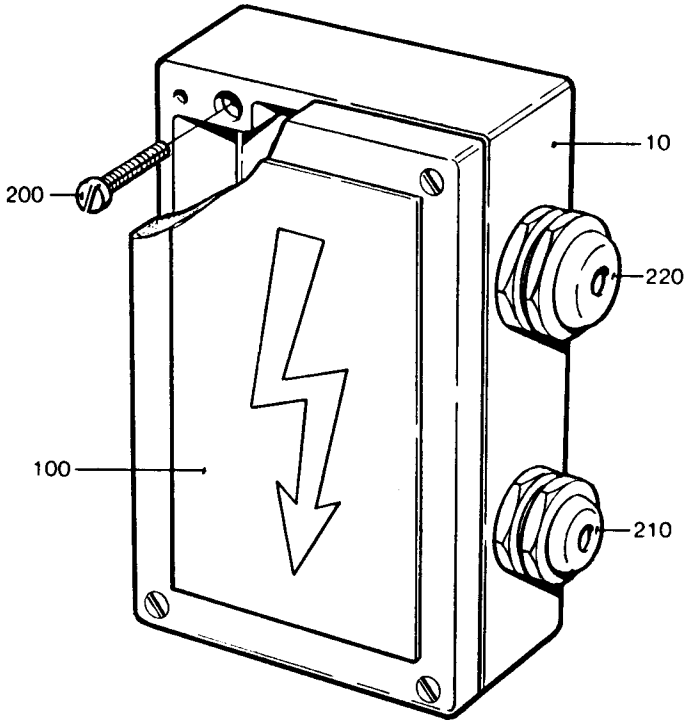

AM 5561

LAST ALTERATION: AM 6886 84-06-04
271699 458960 648010 648106
AM 6554
84-03-06

POS	VAR	PART NUMBER	SP	EH	QTY	DESCRIPTION
	-0101	S- 450101-SHEET	-1			===ASSEMBLY DRAWING===
010	-0101	450102	-		1	ARM
040	-0101	450103	-		1	KNIFE
070	-0101	37901	-		1	AXLE
080	-0101	206913	-		1	LOCKING CLAMP
130	-0101	90017-0001	-		1	HANDLE
140	-0101	90115-0054	-		2	JOINT
150	-0101	90335-0004	S		2	TENSION SPRING
180	-0101	312101-0327	-		2	SCREW M6S5X12FZB
190	-0101	312101-0329	-		2	SCREW M6S5X16FZB
200	-0101	312105-0455	-		2	SCREW M6S8X30RFR
210	-0101	312145-0291	-		5	SLOTTED HEMFS4X12RFR
220	-0101	312316-0321	-		2	GRUB SCREW SK6SS5X6FZB
260	-0101	312605-0318	-		4	NUT M6M8RFR
290	-0101	315101-0146	-		2	WASHER BRB5,3X10FZB
300	-0101	315105-0165	-		6	WASHER BRB8,4X16RFR

S-450101-1

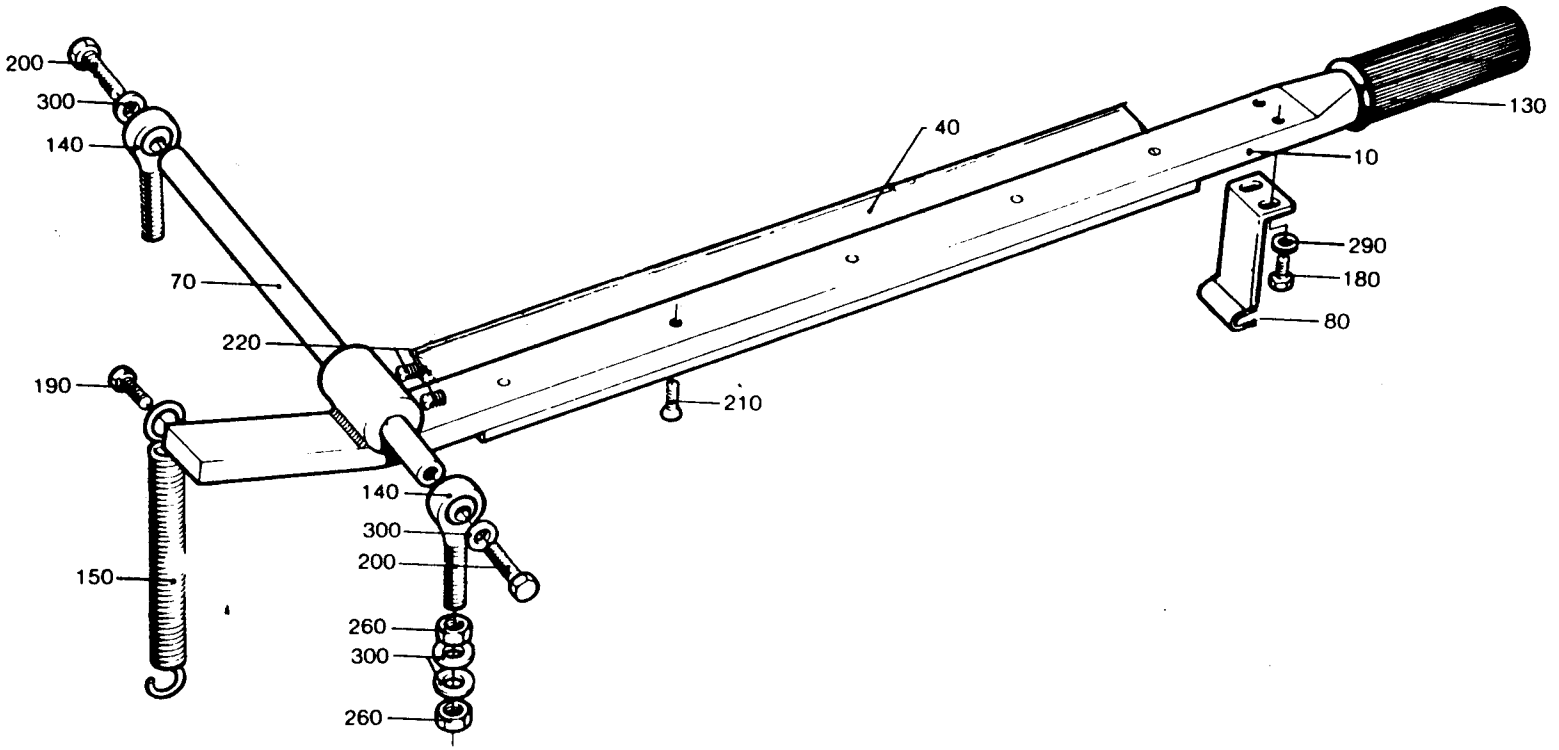
200
300
140
70
220
190
150
140
300
200
260
300
260
40
210
130
10
290
180
80

LAST ALTERATION: AM 7344 85-02-12
624008 625008 648012 648105 648106
AM 6043
83-11-28

GROUP FILLMACHINE FILLMACHINE

-0101 B9 AB9
-0102 B8 AB8
-0103 KING

POS	VAR	PART NUMBER	SP	EH	QTY	DESCRIPTION
	-0101	S- 451348-SHEET	-1			===ASSEMBLY DRAWING===
	-0102		-1			
	-0103		-1			
010	-0103	451409	-		1	CONNECTION BOX
010	-0101	464297	-		1	CONNECTION BOX
	-0102				1	
040	-0102	90110-0078	-		1	CONTACT
050	-0103	352103-0101	-		1	CABLE GLANR.15,2/4-8
050	-0101	352103-0106	-		2	CABLE GLANR.18,6/5-10
	-0102				1	
055	-0102	352135-0107	-	MM	1200	HOSE .019
060	-0102	352136-0127	-		1	GLAND
060	-0103	352103-0115	-		1	CABLE GLANR.PR28,3/7-16
020	ALL	451423	-		1	CIRCUIT BOARD
110	ALL	312125-0220	-		4	SLOTTED HEMCS3X6RFR
120	ALL	312125-0291	-		4	SLOTTED HEMCS4X12RFR

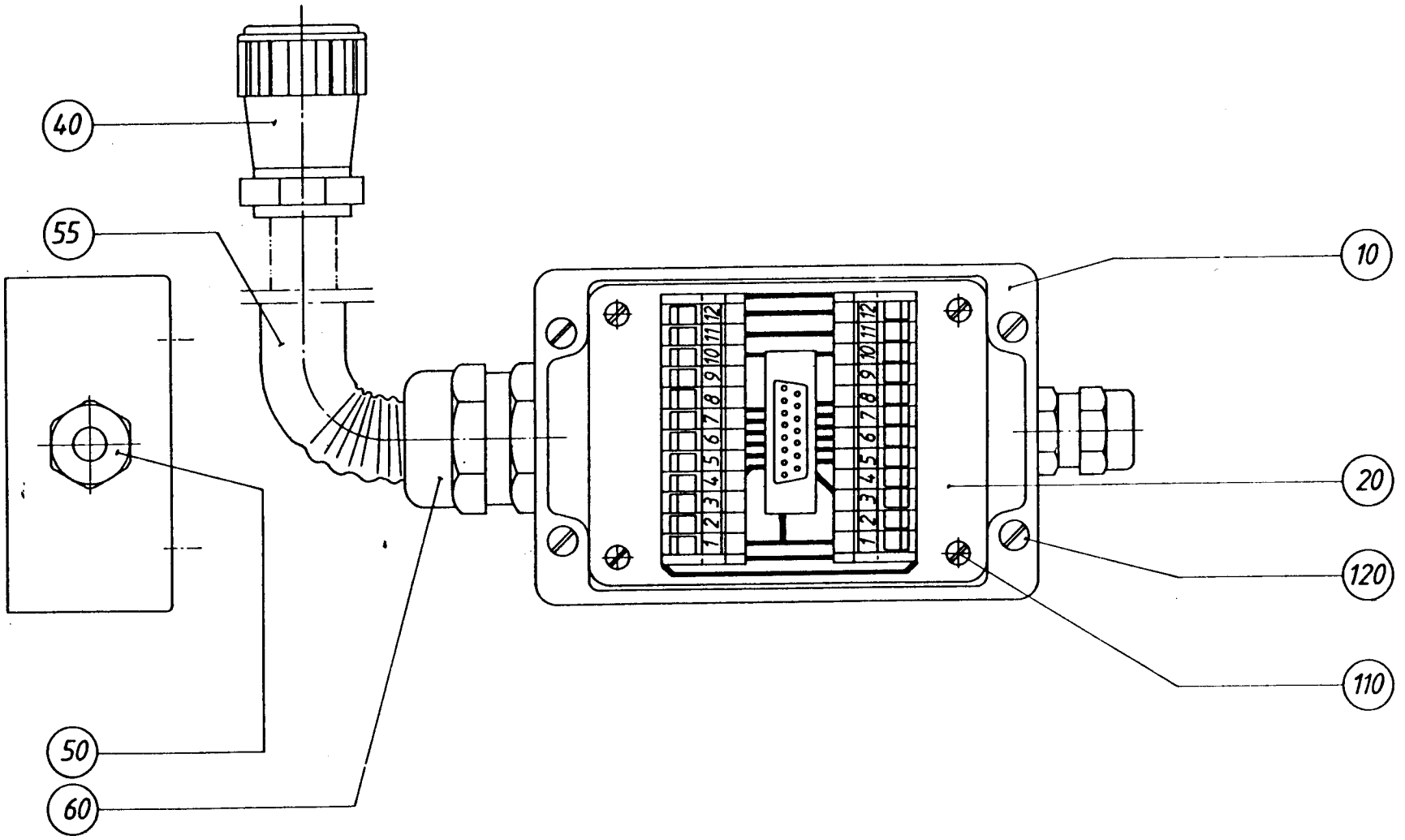
40
55
10
20
120
110
50
60
1 2 3 4 5 6 7 8 9 10 11 12
1 2 3 4 5 6 7 8 9 10 11 12

LAST ALTERATION: AM 9211 86-07-03
648106-060V
AM 6610
84-02-23

GROUP SEALING SYSTEM

-0101 TPC
-0102 IH

POS	VAR	PART NUMBER	SP	EH	QTY	DESCRIPTION
	-0101	S- 456546-SHEET	-1			===ASSEMBLY DRAWING===
	-0102		-1			
F005	ALL	C- 271168-0201	-		1	BLOCK
040	-0102	295927	C		2	CAM
040	-0101	295928	C		2	CAM
010	ALL	G- 456528	C		1	PILLOW BEARING
020	ALL	G- 272573	C		1	HUB
030	ALL	G- 272574	C		1	HUB
050	ALL	295929	C		2	CAM
070	ALL	246501	S		4	ARM
080	ALL	255862	S		1	PULLEY
090	ALL	256983	S		1	SHAFT
100	ALL	272575	-		2	BRACKET
120	ALL	246502	S		4	SHAFT
130	ALL	490778	S		4	SCREW
140	ALL	255783	S		1	SPACER RING
150	ALL	256987	S		1	SECURING PLATE
160	ALL	257024	S		1	SHAFT
170	ALL	456529	S		3	HOLDER
300	ALL	90061-0018	C		1	ANGULAR TRANSMITTER
320	ALL	90208-0038	S		1	BUSHING
340	ALL	90355-0031	S		1	FLEXIBLE COUPLING
350	ALL	90417-0088	S		1	TIMING BELT
500	ALL	312101-0327	-		2	SCREW M6S5X12FZB
505	ALL	312101-0368	-		3	SCREW M6S6X16FZB
510	ALL	312101-0370	-		12	SCREW M6S6X20FZB
520	ALL	312101-0459	-		4	SCREW M6S8X40FZB
530	ALL	312101-0462	-		4	SCREW M6S8X55FZB
540	ALL	312104-0457	-		2	SCREW M6S8X35H8.8FZB
545	ALL	312111-0465	-		2	SCREW MC6S8X70FZB
550	ALL	312316-0323	-		4	GRUB SCREW SK6SS5X8FZB
560	ALL	312601-0322	-		1	NUT M6M12FZB
570	ALL	312621-0318	-		4	NUT ML6M8FZB
580	ALL	315101-0153	-		15	WASHER BRB6,4X12FZB
590	ALL	315101-0165	-		8	WASHER BRB8,4X16FZB
600	ALL	315101-0178	-		1	WASHER BRB13X24FZB
610	ALL	321123-0107	S		8	BUSHING .16/20X16
620	ALL	321308-0205	S		2	BALL BEARI SKF6005-2RS
630	ALL	321570-0182	S		4	ROLLER NA2200-2RS

S-456546-1

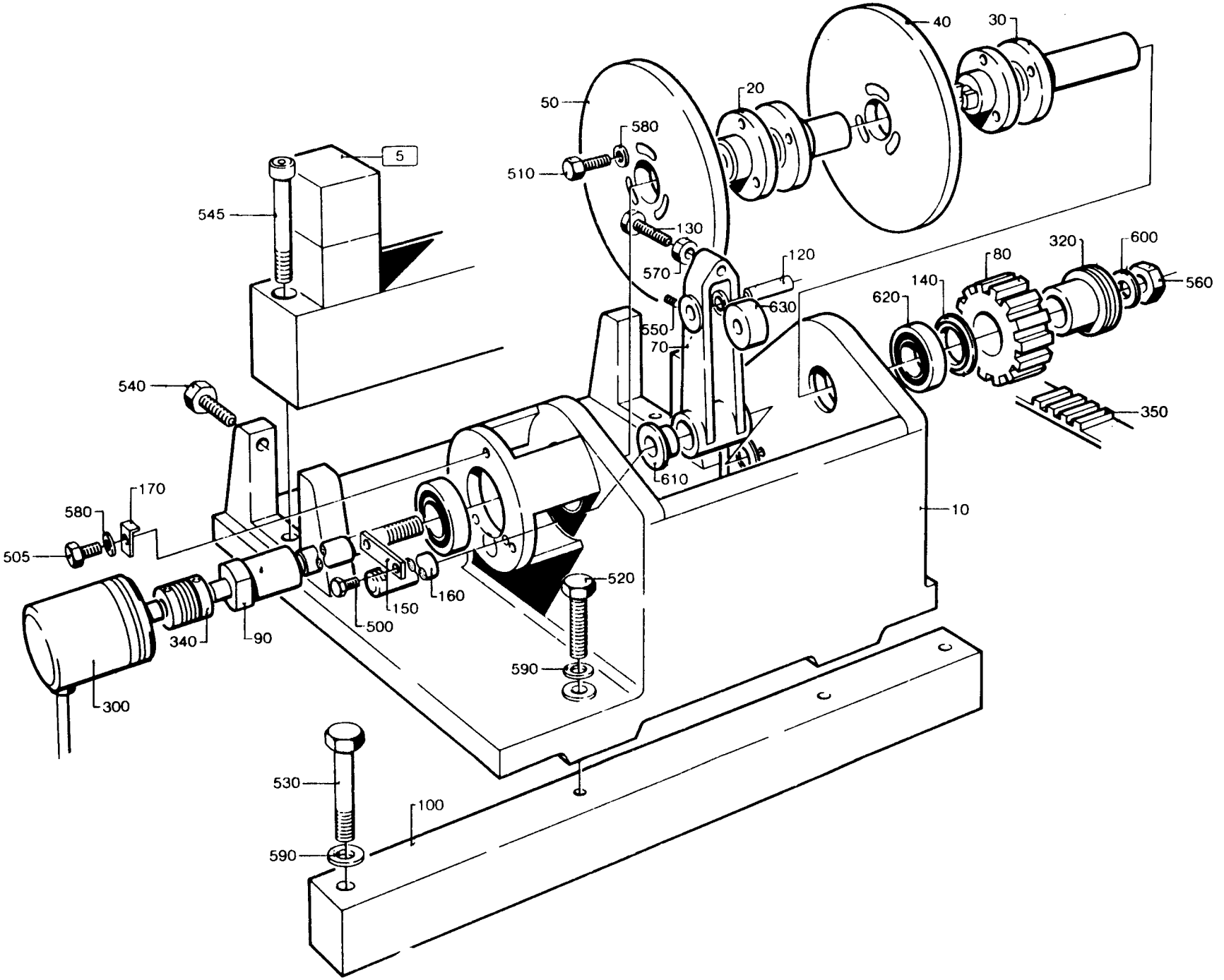
40
30
50
20
580
510
5
545
130
120
570
320
600
80
140
620
560
630
550
70
540
350
610
170
580
10
505
520
150
160
500
340
90
590
300
530
100
590

LAST ALTERATION: AM 9513 86-11-03
271909-030V
AM 6850
84-05-18

POS	VAR	PART NUMBER	SP	EH	QTY	DESCRIPTION
	-0101	S- 456757-SHEET	-1			===ASSEMBLY DRAWING===
F005	-0101	C- 491536-0101	-		1	NONRETURN VALVE
050	-0101	456756	-		1	BLOCK
100	-0101	456755	-		1	BLOCK
350	-0101	90042-0089	S		1	SOLENOID VALVE
400	-0101	90224-0078	-		1	CONNECTION
520	-0101	312101-0327	-		4	SCREW M6S5X12FZB
540	-0101	312111-0471	-		2	SCREW MC6S8X100FZB
560	-0101	315101-0146	-		4	WASHER BRB5,3X10FZB
580	-0101	315233-0109	S		1	SEAL RING R1/8"
600	-0101	315233-0110	S		3	SEAL RING R1/4"
620	-0101	315233-0111	S		7	SEAL RING R3/8"
640	-0101	315233-0113	S		1	SEAL RING R1/2"
660	-0101	342704-0114	-		1	CUTTING RIR-15/2165MSG
680	-0101	342713-0209	-		1	BLANK-OFF
700	-0101	342713-0210	-		1	BLANK-OFF
720	-0101	342713-0211	-		1	BLANK-OFF
760	-0101	342736-0115	-		1	ELBOW COUPW16
780	-0101	342921-0122	-		2	PIPE CONNE8/6-1/4"
800	-0101	342921-0123	-		2	PIPE CONNE8/6-3/8"
850	-0101	342980-0122	-		1	BANJO CONNSINGEL 8/6-1/4
900	-0101	342980-0304	S		1	BANJO CONN SINGEL 1/4

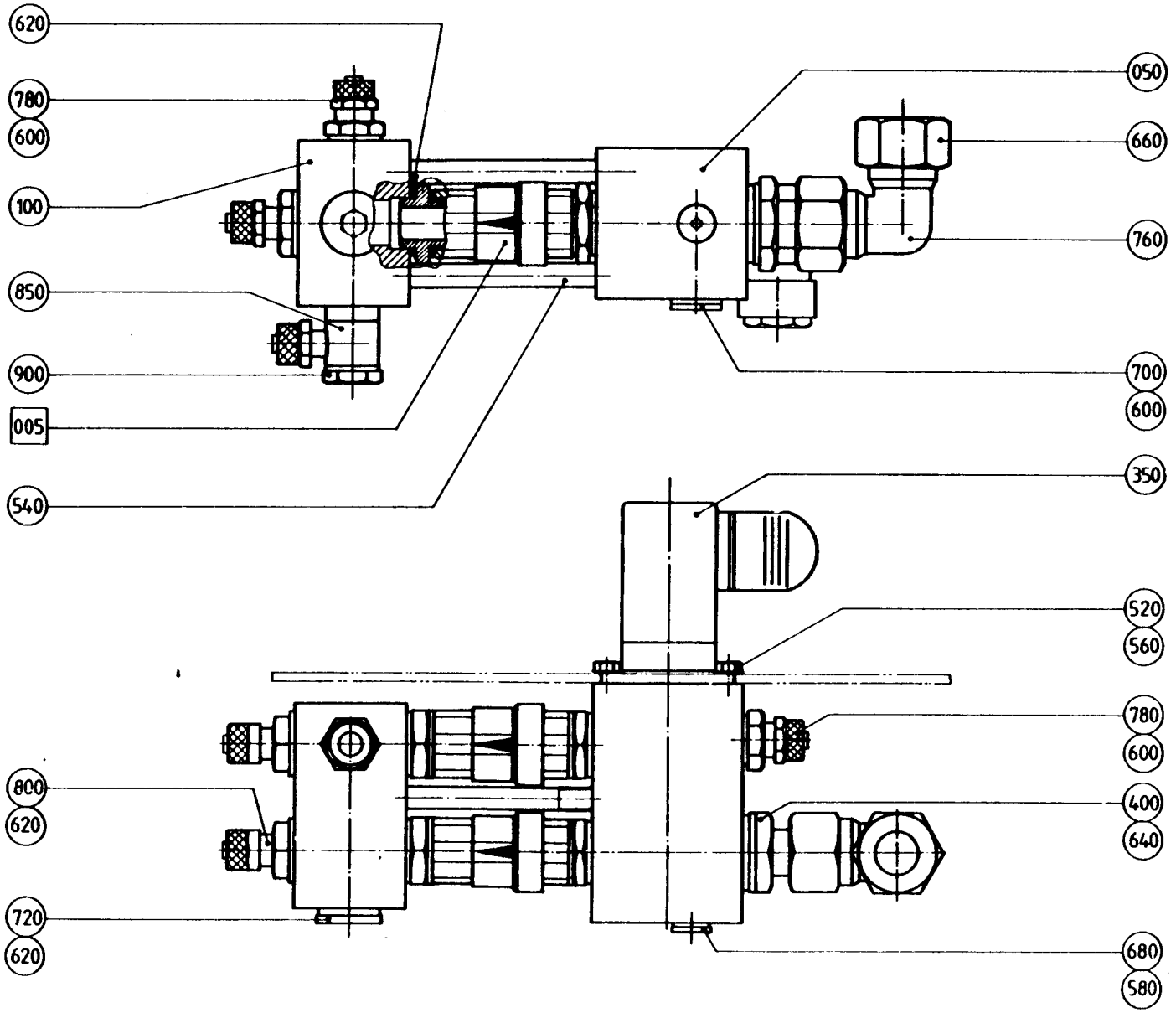
620
780
600
100
850
900
005
540
050
660
760
700
600
350
520
560
780
600
400
640
800
620
720
620
680
580

LAST ALTERATION: AM 6850 84-05-18
648106

POS	VAR	PART NUMBER	SP	EH	QTY	DESCRIPTION
	-0101	S- 456882-SHEET -1				===ASSEMBLY DRAWING===
200	-0101	456883	-		1	PUSH BUTTON BOX
350	-0101	90064-0084	S		1	PUSH BUTTON
450	-0101	90111-0120	S		1	SWITCH
500	-0101	311520-0329	-		2	BLANK RIVE2,4X7,4
550	-0101	312121-0333	-		2	SLOTTED HEMCS5X25FZB
600	-0101	315101-0146	-		2	WASHER BRB5,3X10FZB
650	-0101	352103-0101	-		1	CABLE GLANR.15,2/4-8
700	-0101	352103-0110	-		1	CABLE GLANR.22,5/4-13
750	-0101	359240-0100	-		1	LABEL HOLD
800	-0101	359241-0140	-		1	SIGN KYLT
850	-0101	359301-0125	-		1	SIGN T

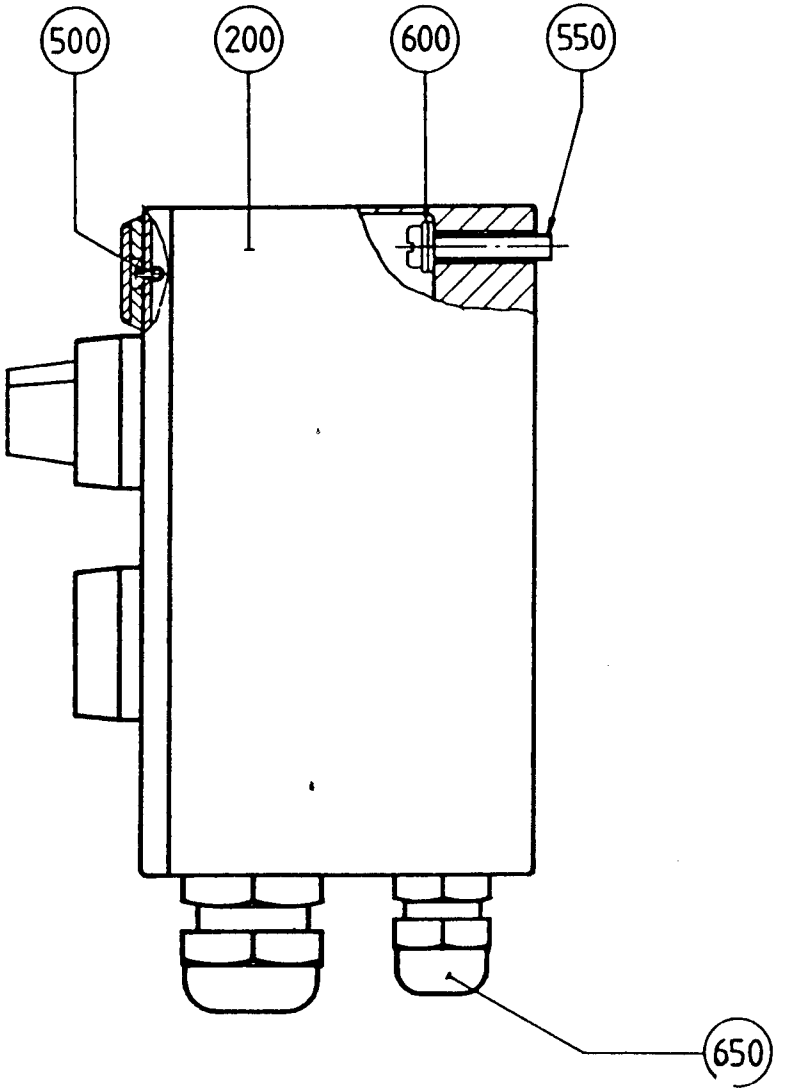
500
200
600
550
650

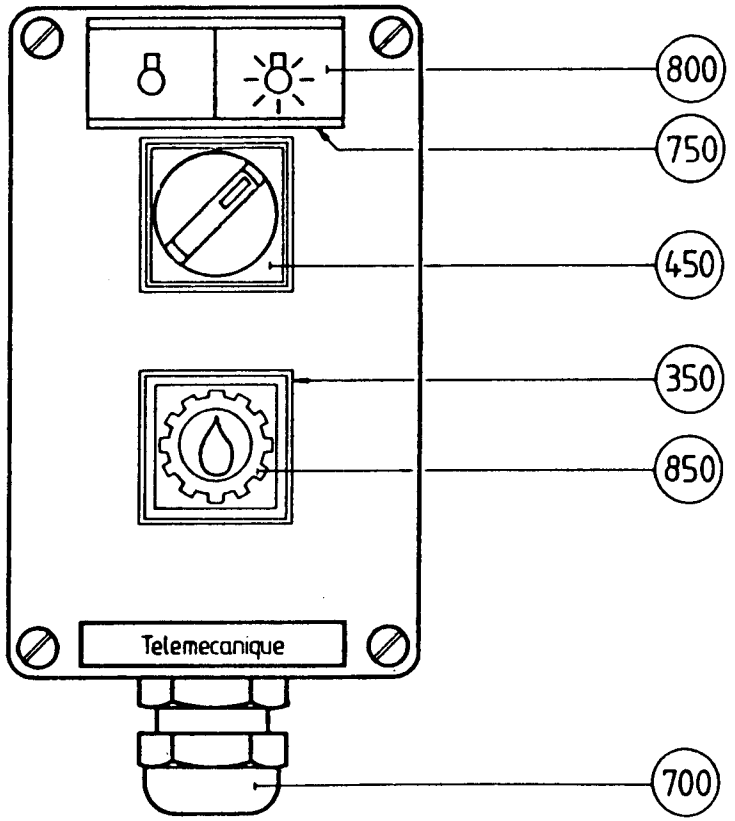
800
750
450
350
850
Telemecanique
700

LAST ALTERA, .N: AM 64, . 83-12-29
648106-020V

GROUP	VOLUME	VOLUME	VOLUME	VOLUME
-0101	V0250	V0236	V0200	V0180
-0102	V0125	-	-	-
-0103	200ML SLIM	-	-	-

POS	VAR	PART NUMBER	SP	EH	QTY	DESCRIPTION
	-0101	S- 458383-SHEET		-1		===ASSEMBLY DRAWING===
	-0102			-1		
	-0103			-1		
020	-0101	G- 272815-0001	S		1	SLEEVE
020	-0102	G- 272815-0002	S		1	SLEEVE
020	-0103	G- 272815-0003	S		1	SLEEVE
050	-0101	272816-0001	S		1	SHAFT
050	-0102	272816-0002	S		1	SHAFT
050	-0103	272816-0003	S		1	SHAFT
010	ALL	G- 272814	S		1	SLEEVE
030	ALL	272811	S		1	PLUNGER RIGHT
040	ALL	272812	S		1	PLUNGER LEFT
070	ALL	272728	S		1	CATCH
300	ALL	90335-0025	S		3	SPRING
500	ALL	311103-0274	S		2	CYLINDRICACPR4M6X25RFR
510	ALL	312101-0381	-		2	SCREW M6S6X55FZB
520	ALL	312812-0316	-		2	CHECK NUT A4-M6RFR
530	ALL	315101-0153	-		2	WASHER BRB6,4X12FZB

TETRA PAK

2/8601

S-458383-1

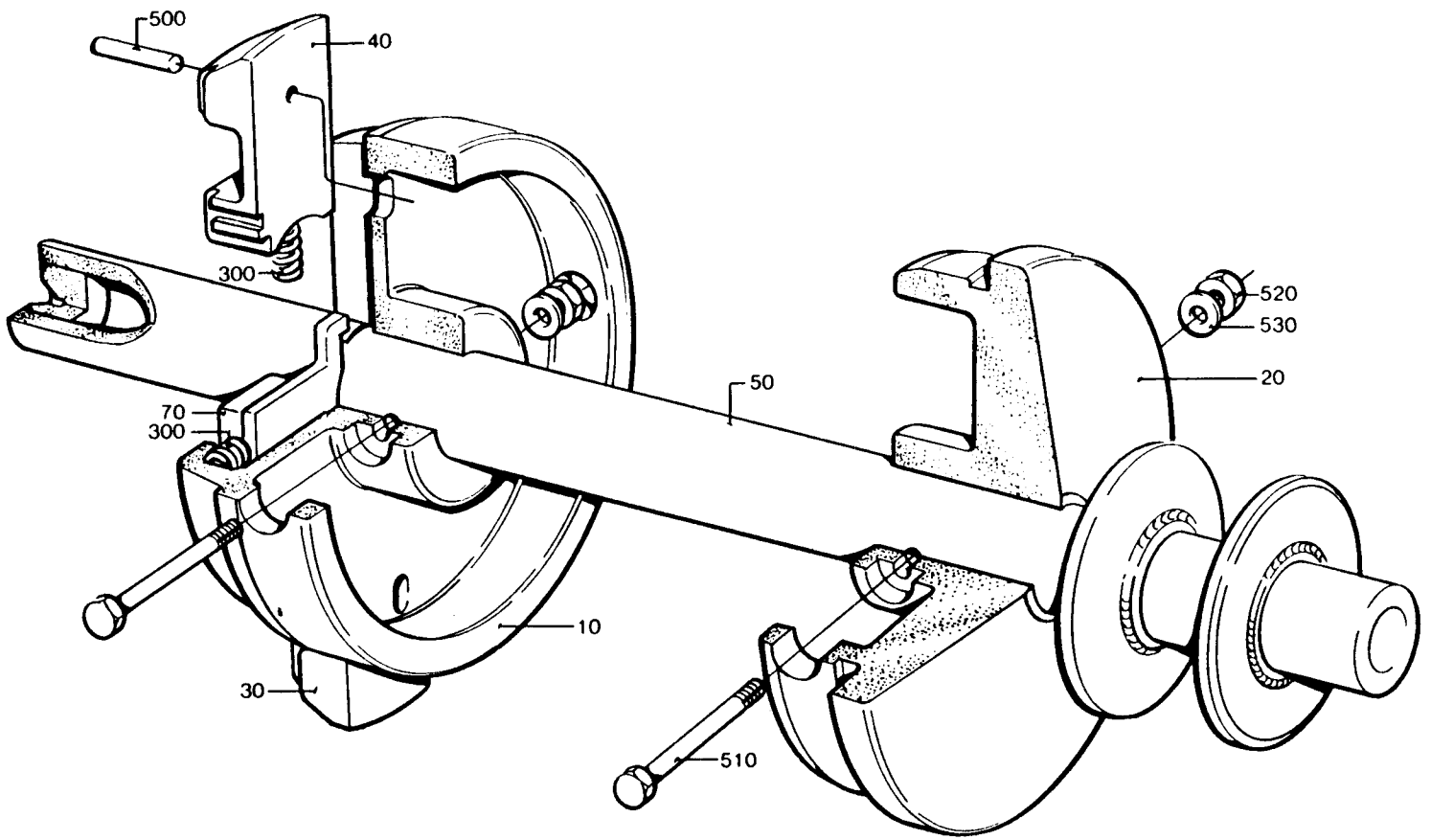

AM 6474

LAST ALTERATION: AM 6474 83-12-29
648106-020V

GROUP	VOLUME	VOLUME	VOLUME	VOLUME
-0101	V0250	V0236	V0200	V0180
-0102	V0125	-	-	-
-0103	200ML SLIM	-	-	-

POS	VAR	PART NUMBER	SP	EH	QTY	DESCRIPTION	
	-0101	S- 458384-SHEET		-1		===ASSEMBLY DRAWING===	
	-0102			-1			
	-0103			-1			
020	-0101	272810-0001	S		1	SLEEVE	
020	-0102	272810-0002	S		1	SLEEVE	
020	-0103	272810-0003	S		1	SLEEVE	
050	-0101	272816-0001	S		1	SHAFT	
050	-0102	272816-0002	S		1	SHAFT	
050	-0103	272816-0003	S		1	SHAFT	
010	ALL	271239	S		1	SLEEVE	
040	ALL	272813	S		2	PLUNGER	
060	ALL	271241	S		2	SCREW	
300	ALL	90335-0025	S		2	SPRING	
510	ALL	312101-0381	-		2	SCREW	M6S6X55FZB
520	ALL	312812-0316	-		2	CHECK NUT	A4-M6RFR
530	ALL	315101-0153	-		2	WASHER	BRB6,4X12FZB

TETRA PAK

2/8601

S-458384-1

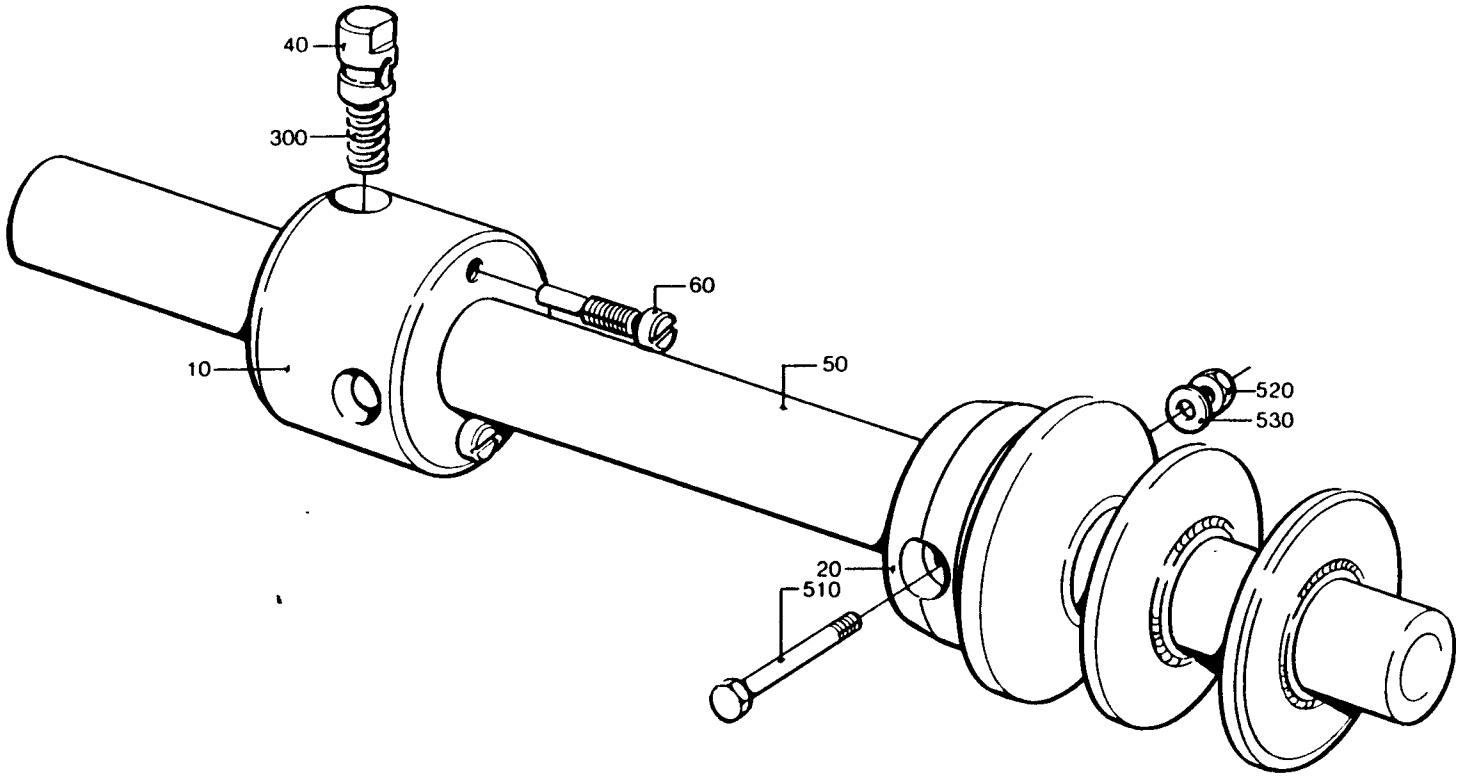

AM6474

LAST ALTERATION: AM 6850 84-05-18
648106

POS	VAR	PART NUMBER	SP	EH	QTY	DESCRIPTION
	-0101	S- 469118-SHEET -1				===ASSEMBLY DRAWING===
040	-0101	469119	-		1	BLOCK
060	-0101	469120	-		1	HOLDER
080	-0101	456011	S		6	PIN
300	-0101	90030-0166	-		1	REDUCER
320	-0101	90166-0118	-	MM	1250	HOSE
360	-0101	90166-0119	-	MM	750	HOSE
400	-0101	90230-0018	S		1	NONRETURN VALVE
440	-0101	90235-0064	S		4	VALVE
480	-0101	90243-0134	S		1	FLOW METER
520	-0101	312105-0341	-		4	SCREW M6S5X50RFR
540	-0101	312105-0380	-		4	SCREW M6S6X50RFR
560	-0101	315202-0116	-		2	O-RING 18,1X1,6
580	-0101	315105-0146	-		4	WASHER BRB5,3X10RFR
600	-0101	315115-0153	-		3	WASHER TBRB6,4X12RFR
620	-0101	315233-0109	S		3	SEAL RING R1/8"
630	-0101	315233-0110	S		1	SEAL RING R1/4"
640	-0101	315233-0111	S		1	SEAL RING R3/8"
660	-0101	342713-0211	-		1	BLANK-OFF BPM38
680	-0101	342921-0121	S		3	PIPE CONNE8/6-1/8"
700	-0101	342930-0113	S		1	PIPE JOINT6/4-1/8
720	-0101	342930-0121	-		4	PIPE JOINT8/6-1/8
740	-0101	342980-0122	-		1	BANJO CONNSINGEL 8/6-1/4
780	-0101	342980-0313	S		8	BANJO CONN DUBBEL 1/8

TETRA PAK

1/8501 **S-469118-1**

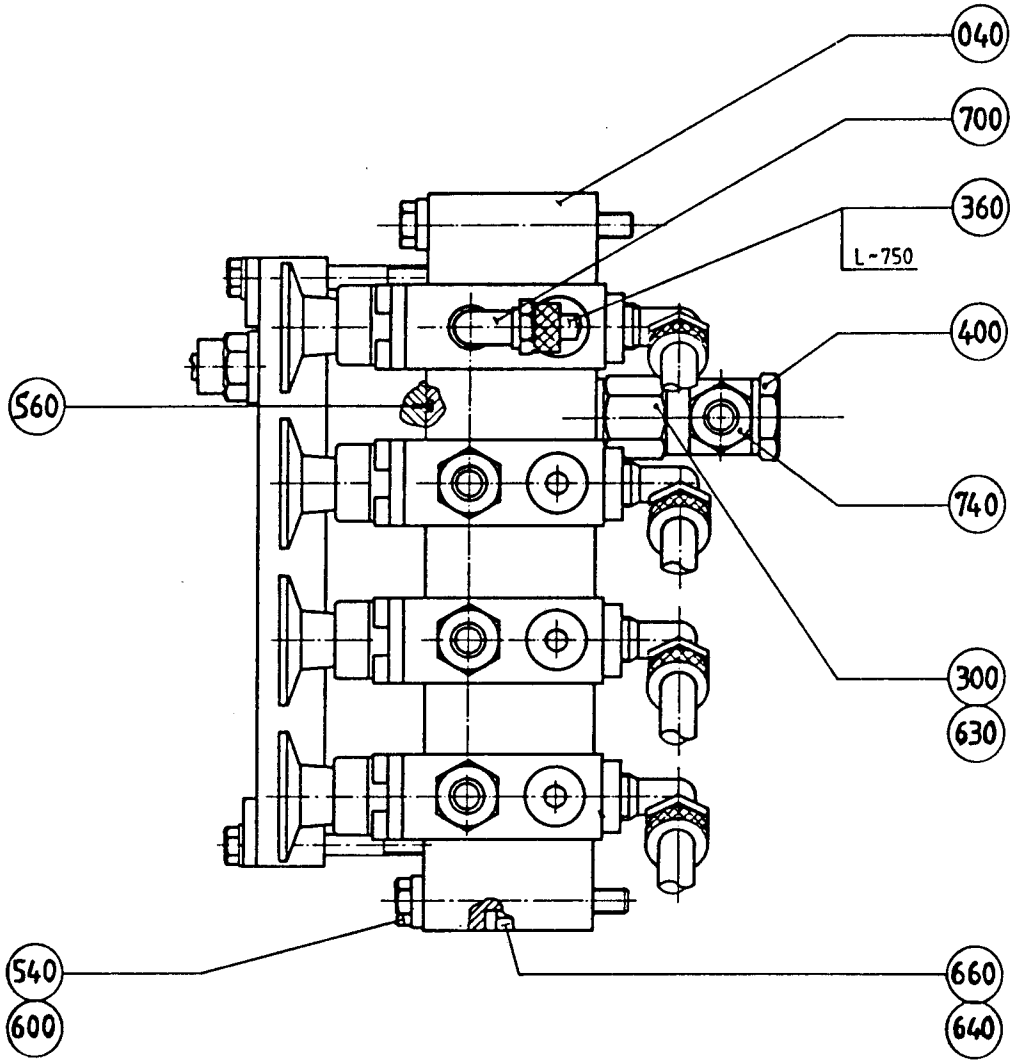

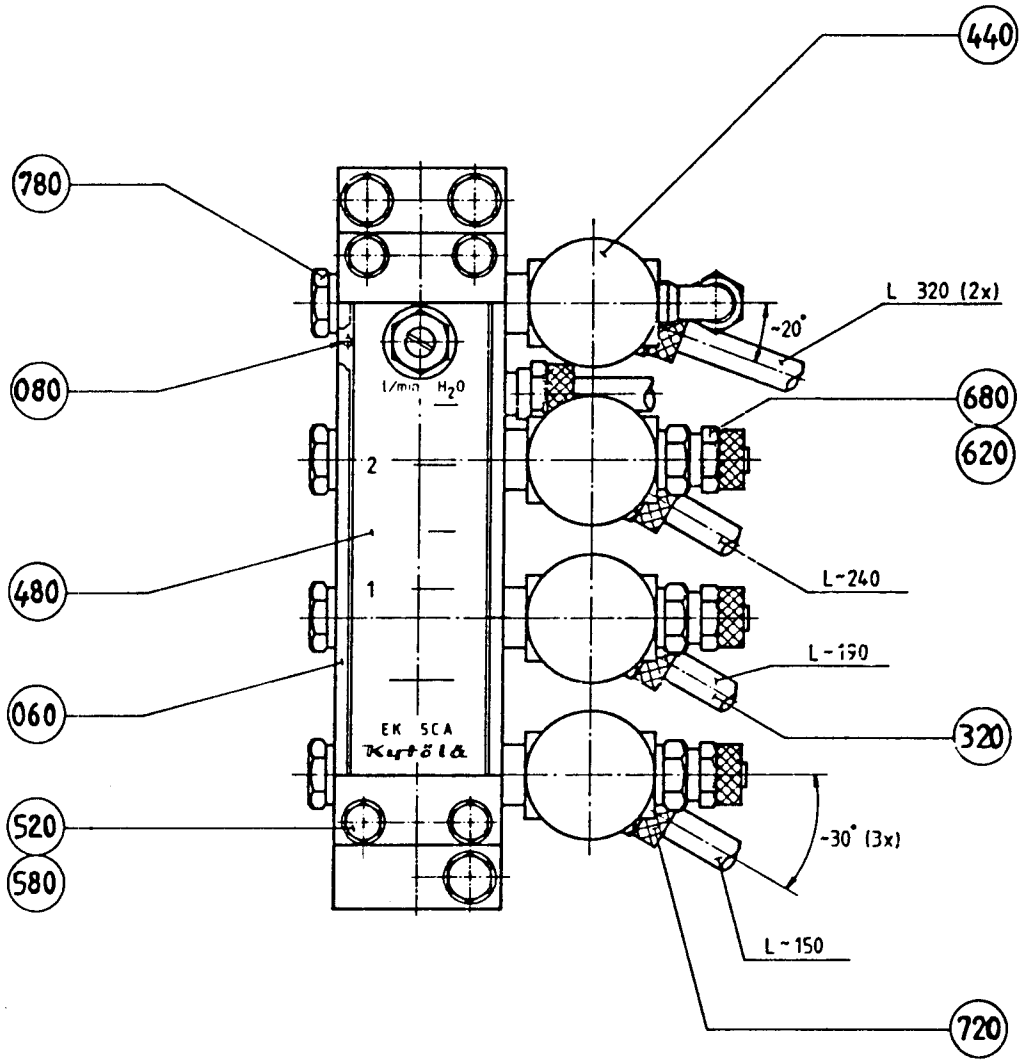

LAST ALTERA. ON: AM 81.. 85-08-20
648106-060V
AM 6850
84-05-18

POS	VAR	PART NUMBER	SP	EH	QTY	DESCRIPTION
	-0101	S- 469121-SHEET	-1			===ASSEMBLY DRAWING===
050	-0101	469122	-		1	BLOCK
300	-0101	90030-0188	-		1	PIPE CONNECTION
520	-0101	312105-0368	-		4	SCREW M6S6X16RFR
540	-0101	315105-0153	-		4	WASHER BRB6,4X12RFR
560	-0101	315233-0109	S		5	SEAL RING R1/8"
580	-0101	315233-0113	S		1	SEAL RING R1/2"
600	-0101	342713-0213	-		1	BLANK-OFF
640	-0101	342921-0121	-		5	PIPE CONNE8/6-1/8"

TETRA PAK

2/8601 **S-469121-1**

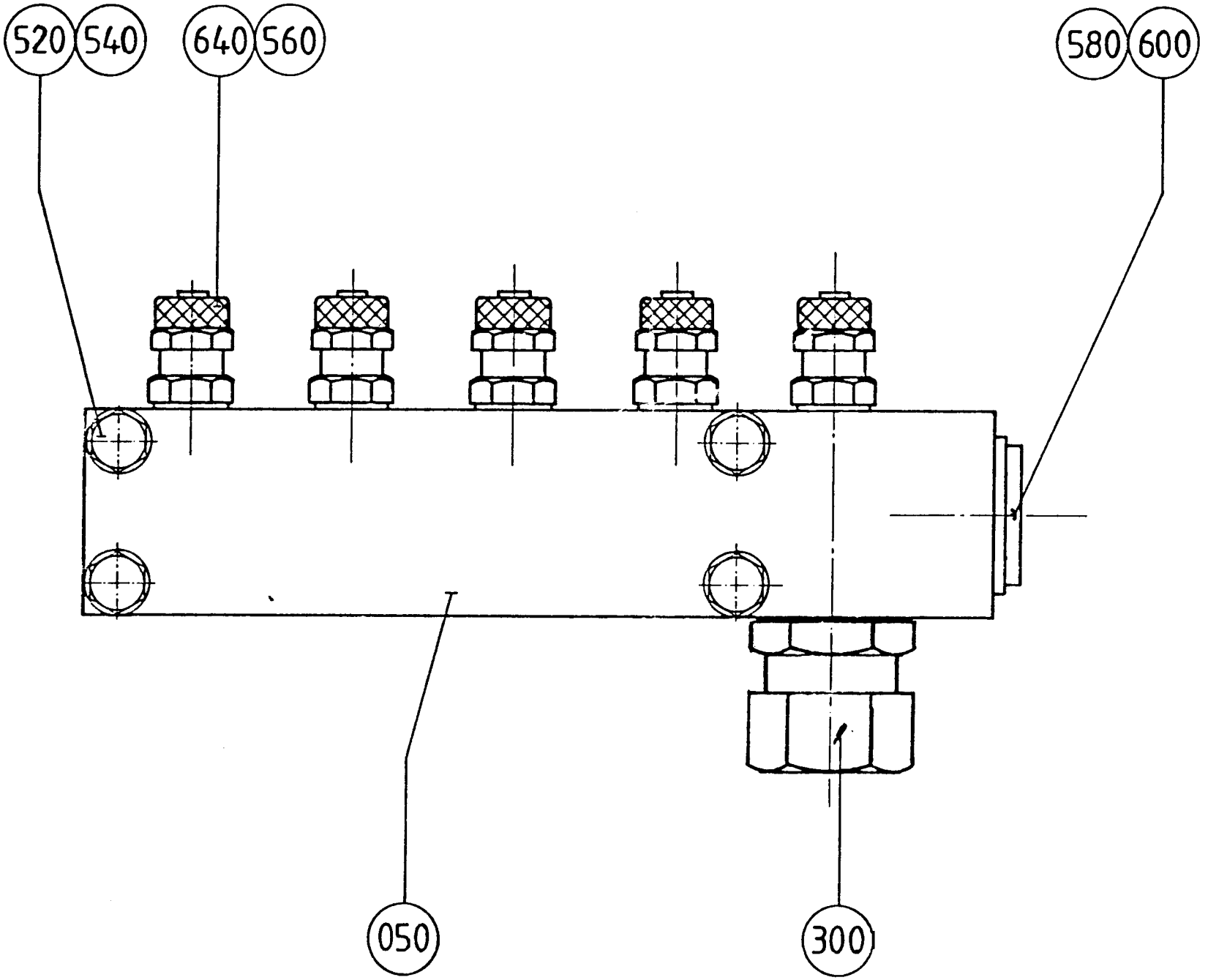

E119

LAST ALTERATION: AM 6850 84-05-18
648106

GROUP FILLMACHINE

-0101 B9
-0102 AB9

POS	VAR	PART NUMBER	SP	EH	QTY	DESCRIPTION
	-0101	S- 469144-SHEET		-1		===ASSEMBLY DRAWING===
	-0102			-2		
350	-0101	315233-0110	S		4	SEAL RING R1/4"
	-0102				3	
450	-0101	342713-0210	-		1	BLANK-OFF BPM14
600	-0102	342930-0114	-		1	PIPE JOINT6/4-1/4
050	ALL	469161	-		1	JUNCTION BLOCK
400	ALL	315233-0111	S		1	SEAL RING R3/8"
500	ALL	342921-0122	-		3	PIPE CONNE8/6-1/4"
550	ALL	342921-0141	-		1	PIPE CONNE12/10-3/8

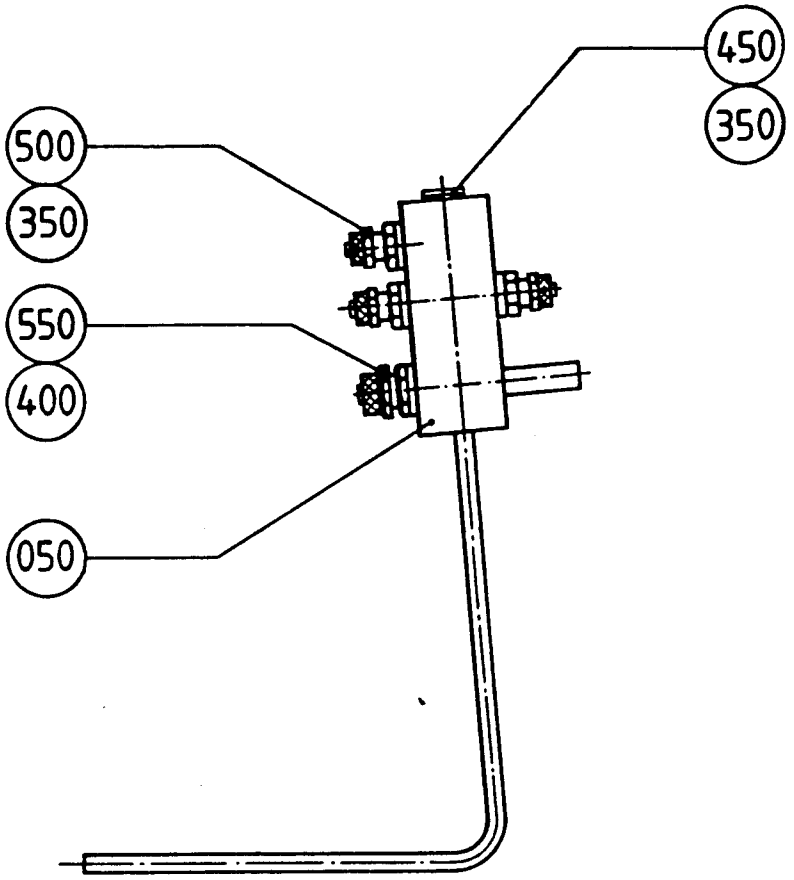

B9

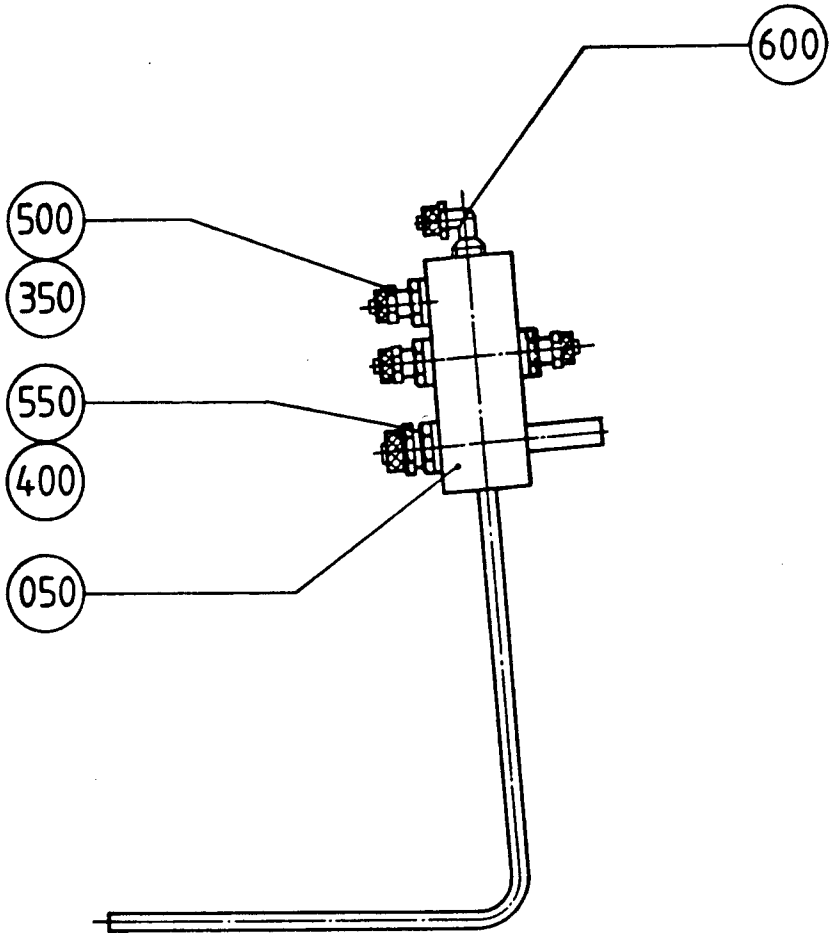

AB9

LAST ALTERATION: AM 6882 84-06-07
648106

POS	VAR	PART NUMBER	SP	EH	QTY	DESCRIPTION
010	-0101	90296-0053	-	L	10	LUBRICANT
020	-0101	90296-0075	-	ML	2500	LUBRICANT
030	-0101	90298-0019	-		1	DETERGENT
040	-0101	90144-0003	-		1	TAPE

LAST ALTERATION: AM 8101 86-01-16
648106-060V
AM 7031
84-08-23

POS	VAR	PART NUMBER	SP	EH	QTY	DESCRIPTION
	-0101	S- 469535-SHEET	-1			===ASSEMBLY DRAWING===
010	-0101	469526	-		1	DOOR
020	-0101	7309	-		1	HANDLE
030	-0101	257397	-		2	PIN
040	-0101	271011	-		4	WASHER
050	-0101	272453	-		2	SPACER
060	-0101	272510	-		2	HINGE
070	-0101	272511	-		2	HINGE
100	-0101	90143-0047	-	MM	3500	STRIP
105	-0101	90157-0016	-	ML	X	LOCKING FLUID
110	-0101	90243-0133	-		1	CONTAINER
120	-0101	90256-0001	S		1	TAPE HOLDER
		90144-0003	P		0	* TAPE
130	-0101	90339-0004	-		2	MAGNETIC LOCK
200	-0101	312105-0364	-		2	SCREW M6S6X10RFR
210	-0101	312125-0222	-		8	SLOTTED HEMCS3X8RFR
220	-0101	312125-0291	-		8	SLOTTED HEMCS4X12RFR
230	-0101	312145-0291	-		4	SLOTTED HEMFS4X12RFR
250	-0101	312605-0312	-		7	NUT M6M4RFR
260	-0101	312605-0314	-		2	NUT M6M5RFR
270	-0101	315105-0124	-		8	WASHER BRB3,2X6RFR
280	-0101	315105-0136	-		15	WASHER BRB4,3X8RFR
290	-0101	315105-0153	-		2	WASHER BRB6,4X12RFR
300	-0101	315115-0153	-		2	WASHER TBRB6,4X12RFR

S-469535-1

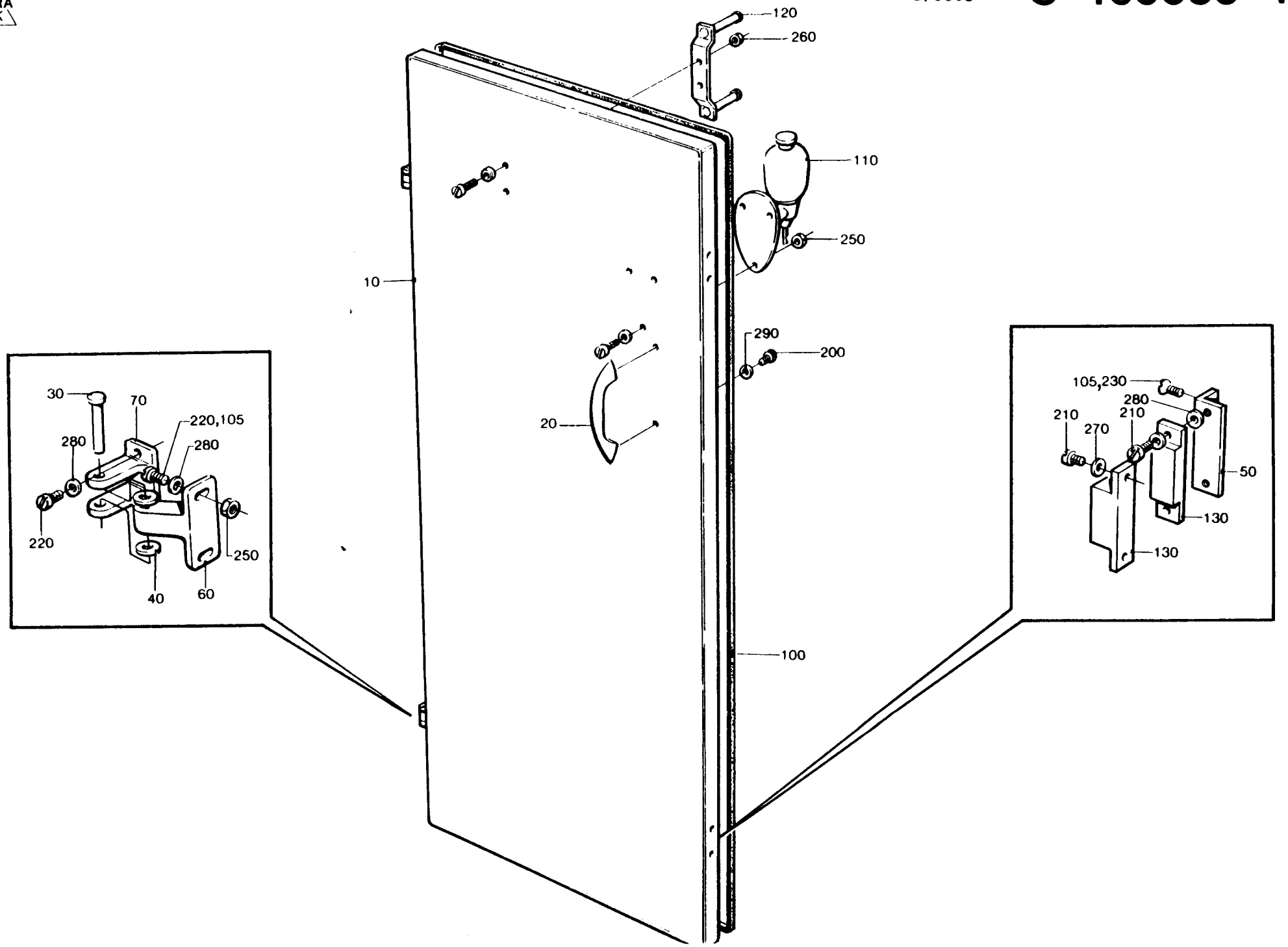
120
260
110
250
10
290
200
20
100
30
70
220,105
280
280
220
250
40
60
105,230
280
210
210
270
50
130
130

LAST ALTERATION: AM 10210 87-01-28
491590-020V 648106-080V
AM 9019
87-01-20

POS	VAR	PART	NUMBER	SP	EH	QTY	DESCRIPTION
	-0201	S-	491243-SHEET	-2			===ASSEMBLY DRAWING===
F005	-0201	C-	491323-0101	-		1	PEROXIDE PUMP
010	-0201		490790	-		1	TANK
020	-0201		491442	-		1	PIPE COIL
030	-0201		491992	-		1	INSULATING PLATE
035	-0201		491994	-		1	INSULATING PLATE
040	-0201		491995	-		1	INSULATING PLATE
045	-0201		491996	-		1	INSULATING PLATE
050	-0201		491997	-		1	INSULATING PLATE
055	-0201		491998	-		1	INSULATING PLATE
060	-0201		490789	-		1	FILLING PIPE
070	-0201		491188	-		1	HOLDER
085	-0201		484535	-		1	HOSE NIPPLE
090	-0201		490792	-		1	CONNECTION
100	-0201		490799	-		1	CONNECTION PIPE
110	-0201		490987	-		1	STRAINER
120	-0201		499500	-		1	BRACKET
130	-0201		499502	-		1	LEVEL TUBE
140	-0201		499503	-		1	PROTECTION PIPE
150	-0201		257202	-		1	STRAINER
160	-0201		469829	-		1	FILLER CAP
170	-0201		490988	-		1	STRUT
180	-0201		490989	-		1	LID
190	-0201		491203	-		2	STRUT
200	-0201		491303	-		1	WASHER
210	-0201		491304	-		2	WASHER
220	-0201		491367	S		1	GASKET
230	-0201		499504	P		1	WASHER
290	-0201		90144-0004	-	MM	X	TAPE
300	-0201		90187-0059	S		1	VALVE
310	-0201		90330-0054	-		1	SLEEVE
320	-0201		90330-0080	-		1	REDUCTION NIPPLE
330	-0201		90330-0100	-		1	NIPPLE TUBE
480	-0201		311521-0142	-		34	BLANK RIVE2X6,7 RFR
490	-0201		312105-0362	-		2	SCREW M6S6X8RFR
500	-0201		312105-0366	-		4	SCREW M6S6X12RFR
510	-0201		312105-0368	-		10	SCREW M6S6X16RFR
520	-0201		312105-0451	-		5	SCREW M6S8X20RFR
560	-0201		312605-0314	-		2	NUT M6M5RFR
570	-0201		315105-0153	-		6	WASHER BRB6,4X12RFR
580	-0201		315115-0165	-		3	WASHER TBRB8,4X16RFR
590	-0201		315125-0153	-		4	WASHER SB 6,4X22X4 RFR
600	-0201		315204-0206	P		1	O-RING 7,3X2,4VITON

POS	VAR	PART	NUMBER	SP	EH	QTY	DESCRIPTION
610	-0201		315204-0210	P		3	O-RING 11,3X2,4VITON
620	-0201		315204-0221	P		2	O-RING 34,2X3VITON
630	-0201		315204-0302	P		1	O-RING 54,5X3VITON
640	-0201		315204-0307	P		1	O-RING 79,5X3 VITON
650	-0201		315204-0313	P		1	O-RING 109,5X3VITON
660	-0201		315204-0320	P		1	O-RING ,5X3

TETRA PAK

1/8704

S-491243-2

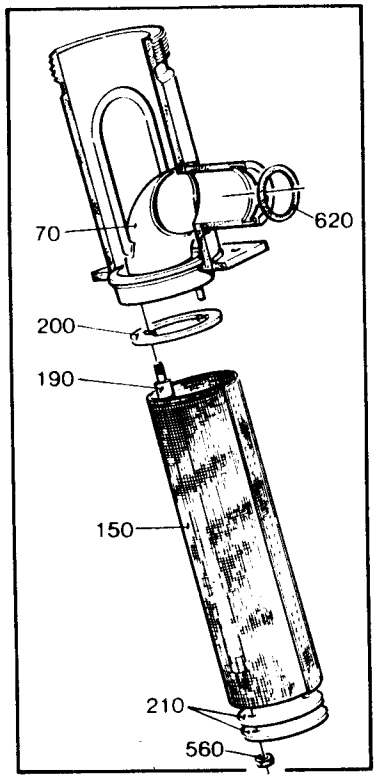

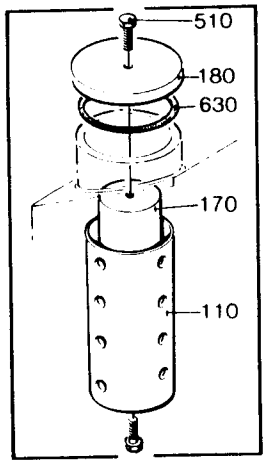

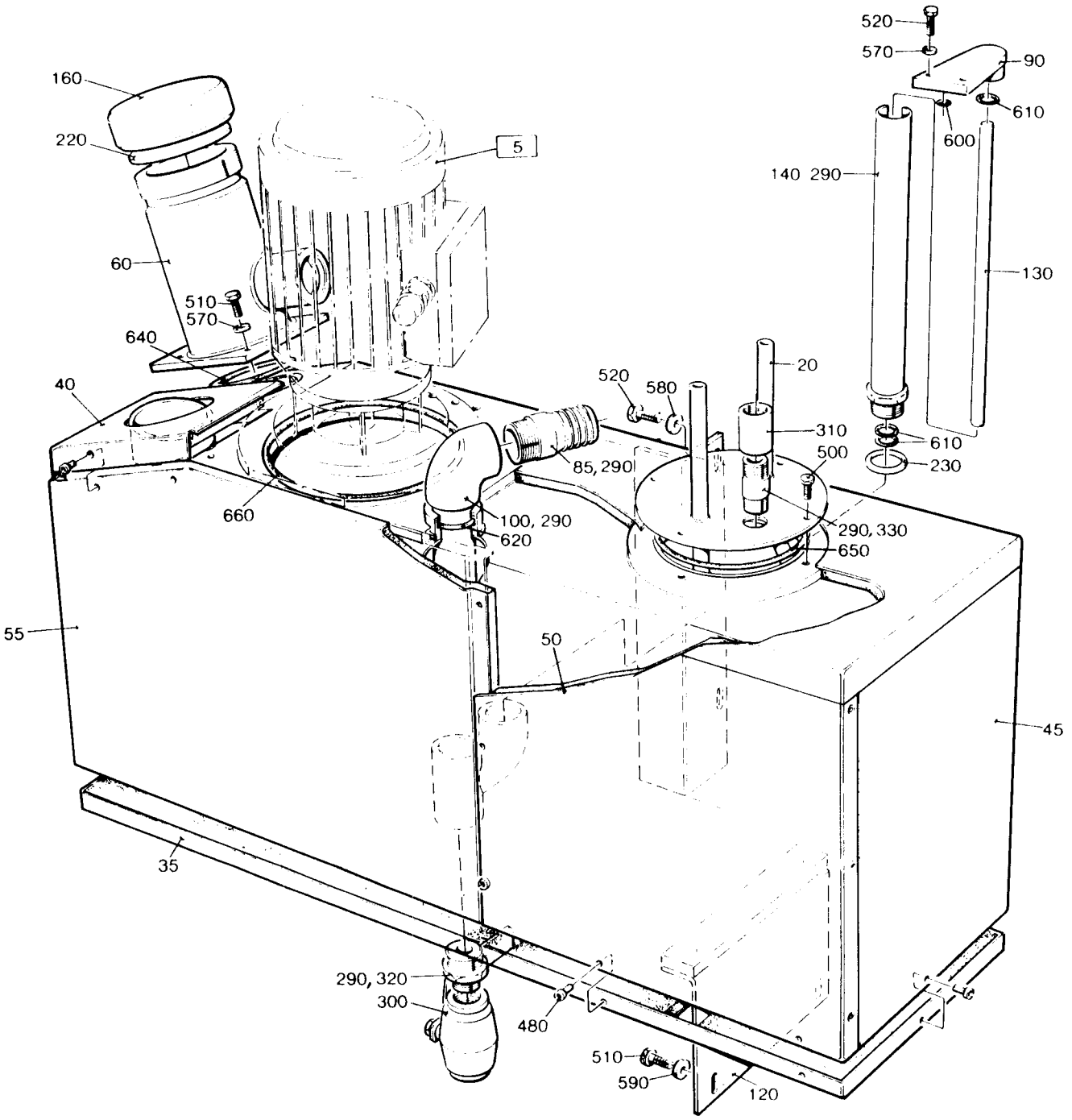

AM 10210

LAST ALTERATION: AM 9649 86-10-27
491243-010V 491591-010V
AM 8740
86-02-13

POS	VAR	PART NUMBER	SP	EH	QTY	DESCRIPTION
	-0101	S- 491323-SHEET	-1			===ASSEMBLY DRAWING===
010	-0101	490798	-		1	EXTENSION PIPE
020	-0101	292449	-		1	PUMP HOUSING
030	-0101	292456	-		1	BEARING COVER
040	-0101	292464	-		1	FLANGE
050	-0101	484540	-		1	BRACKET
060	-0101	491676	S		1	SHAFT
070	-0101	491770	S		1	BUSHING
075	-0101	315705-0196	S		1	FLAT WEDGE
080	-0101	90287-0159	-		2	GRUB SCREW
090	-0101	G- 491929	-		1	IMPELLER
300	-0101	90045-0087	S		1	MOTOR
310	-0101	90091-0137	I		1	SEAL RING
315	-0101	90144-0004		MM	X	TAPE
320	-0101	90321-0411	P		1	GASKET
500	-0101	311112-0256	-		1	HOLLOW PINRP 4X20 RFR
503	-0101	311411-0169	P		1	SPLIT PIN SP2,5X25RFR
505	-0101	312105-0370	-		9	SCREW M6S6X20RFR
510	-0101	312105-0382	-		5	SCREW M6S6X60RFR
520	-0101	312115-0368	-		4	SCREW 6X16 A4 80
540	-0101	312605-0316	-		7	NUT M6M6RFR
550	-0101	312605-0320	-		1	NUT M6M10RFR
560	-0101	315105-0153	-		19	WASHER BRB6,4X12RFR
570	-0101	315105-0173	-		1	WASHER BRB10,5X22RFR
600	-0101	352103-0110	-		1	CABLE GLANR.22,5/4-13

TETRA PAK

1/8704

S-491323-1

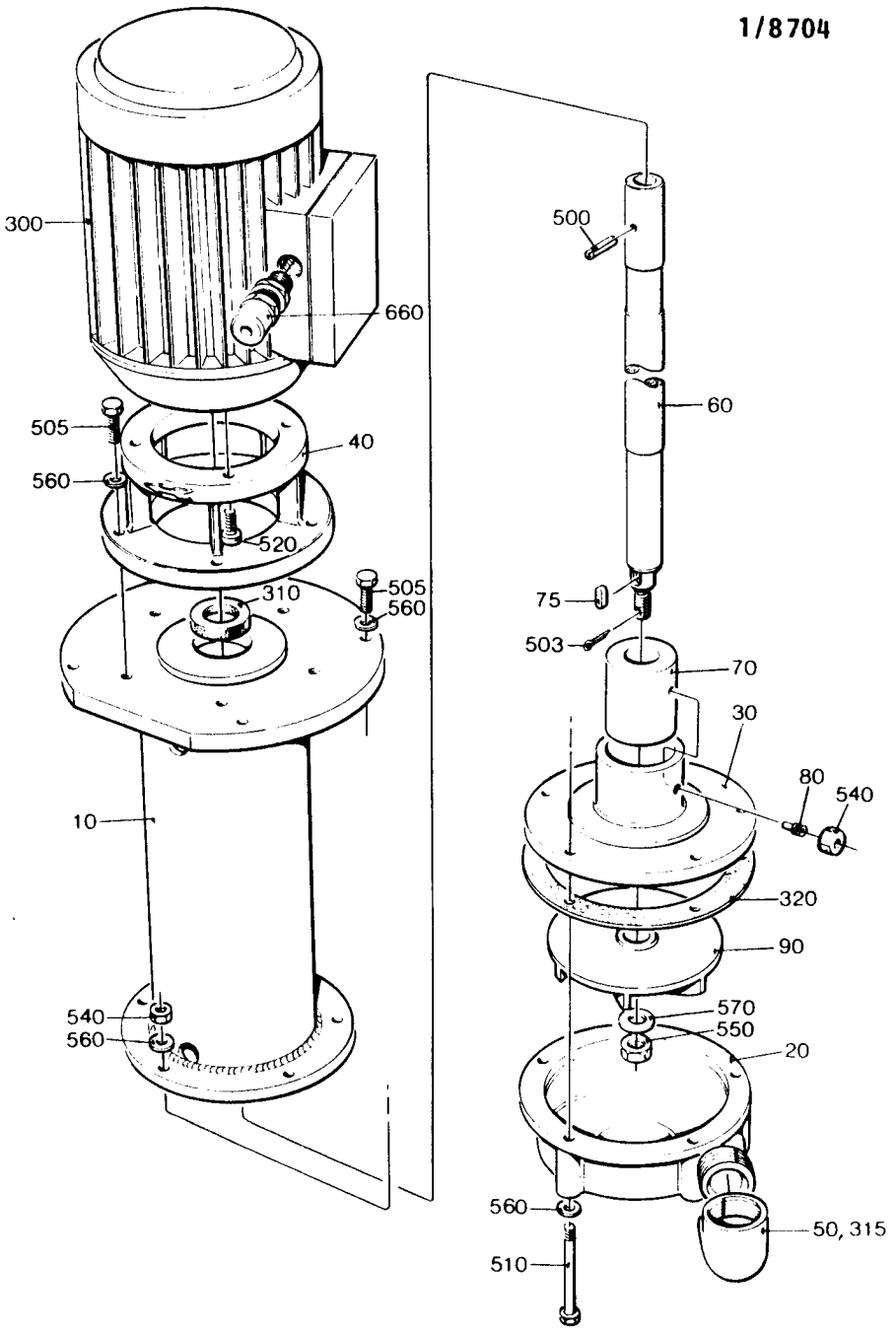

AM 9649

LAST ALTERATION: AM 9513 86-11-03
456757-010V

POS	VAR	PART NUMBER	SP	EH	QTY	DESCRIPTION
	-0101	S- 491536-SHEET		-1		===ASSEMBLY DRAWING===
010	-0101	751086	-		2	NIPPLE
020	-0101	90230-0028	S		2	NONRETURN VALVE
030	-0101	315233-0111	P		2	SEAL RING R3/8"

S-491536-1

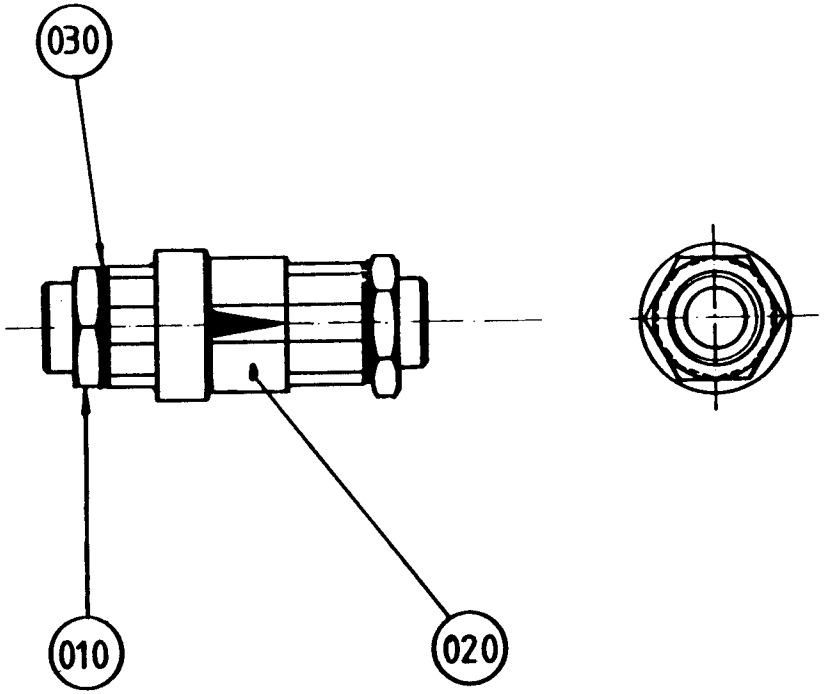

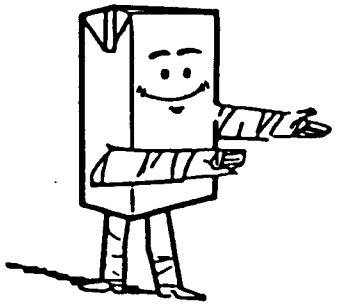

SPC 6481-51/52
STRIP APPLICATOR

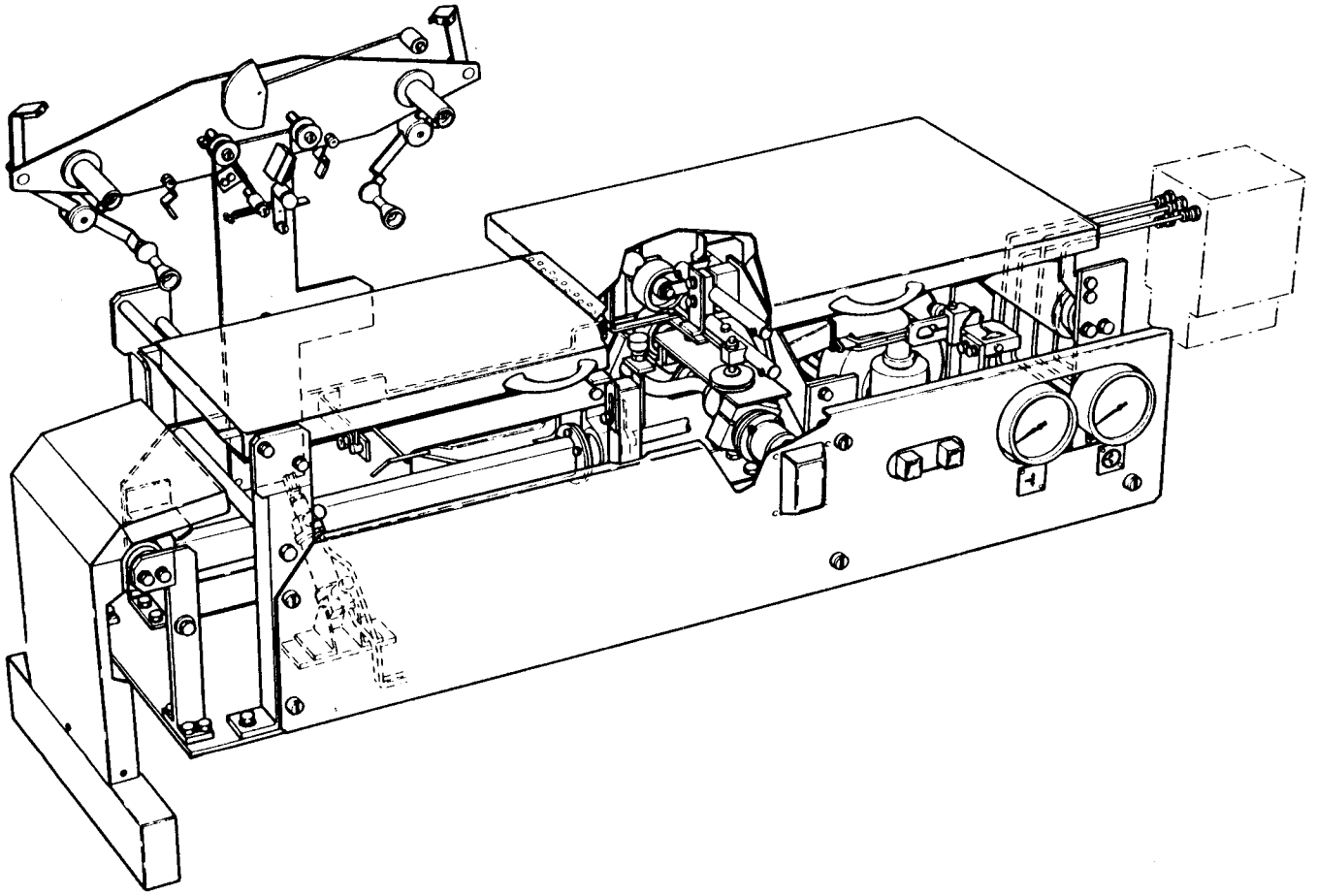

B-648107-

TETRA PAK SERVICE

LAST ALTERATIO AM 6317 -11-03
648107 640001 642001 642011 644309 644501 644601 648001
AM 1481
66-01-28

POS	VAR	PART NUMBER	SP	EH	QTY	DESCRIPTION	
	-0101	S- 7003-SHEET	-1			===ASSEMBLY DRAWING===	
106	-0101	5486	S		1	BEARING	
107	-0101	6157	-		1	BOBBIN	
108	-0101	6158	S		1	SPRING	
109	-0101	6159	S		1	BEARING	
110	-0101	6160	-		1	AXLE	
120	-0101	312701-0318	-		1	CAP NUT	MHM8FKRB
124	-0101	315402-0165	-		1	WASHER	FBB8,2RFR
127	-0101	311506-0278	S		1	RIVET	KN2,6X6KPR

TETRA PAK

S-7003-1

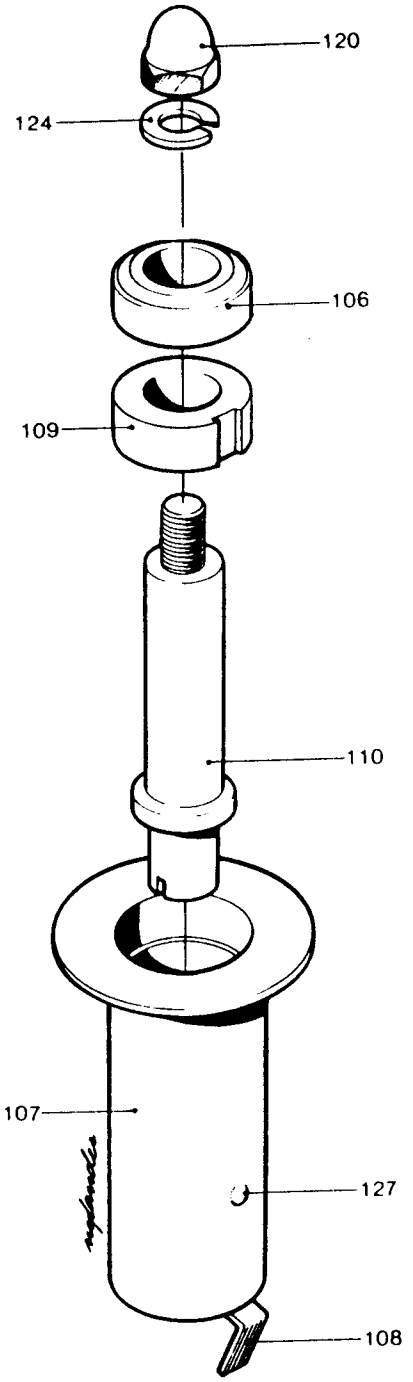

LAST ALTERATION: AM 4745 81-01-16
648001 648107
AM 4489
80-02-28

POS	VAR	PART NUMBER	SP	EH	QTY	DESCRIPTION
	-0201	S- 246388-SHEET	-2			===ASSEMBLY DRAWING===
020	-0201	2033-0009	-		2	WASHER
030	-0201	21903	R		1	ROLLER
040	-0201	251493	-		1	FORK
050	-0201	251494	-		1	AXLE
060	-0201	251495	-		1	AXLE
070	-0201	251496	-		1	AXLE
080	-0201	251498	-		1	CATCH
095	-0201	266752	-		1	PLATE
096	-0201	279074	-		1	TENSION SPRING
100	-0201	312105-0368	-		1	SCREW M6S6X16RFR
110	-0201	312105-0449	-		2	SCREW M6S8X16RFR
120	-0201	312125-0329	-		1	SLOTTED HEMCS5X16RFR
130	-0201	312318-0285	-		1	GRUB SCREW SK6SS4X6RFR
140	-0201	312605-0316	-		1	NUT M6M6RFR
150	-0201	315105-0153	-		1	WASHER BRB6,4X12RFR
160	-0201	315105-0165	-		2	WASHER BRB8,4X16RFR
170	-0201	315121-0153	-		1	WASHER TBRSB6,4X22FZB
180	-0201	315750-0105	-		1	LOCK RING SGA8
190	-0201	318800-0104	-		1	KNOB LA D.30-M8
200	-0201	321120-0104	-		2	BUSHING 10/12X10

TETRA PAK

1/8501 **S-246388-2**

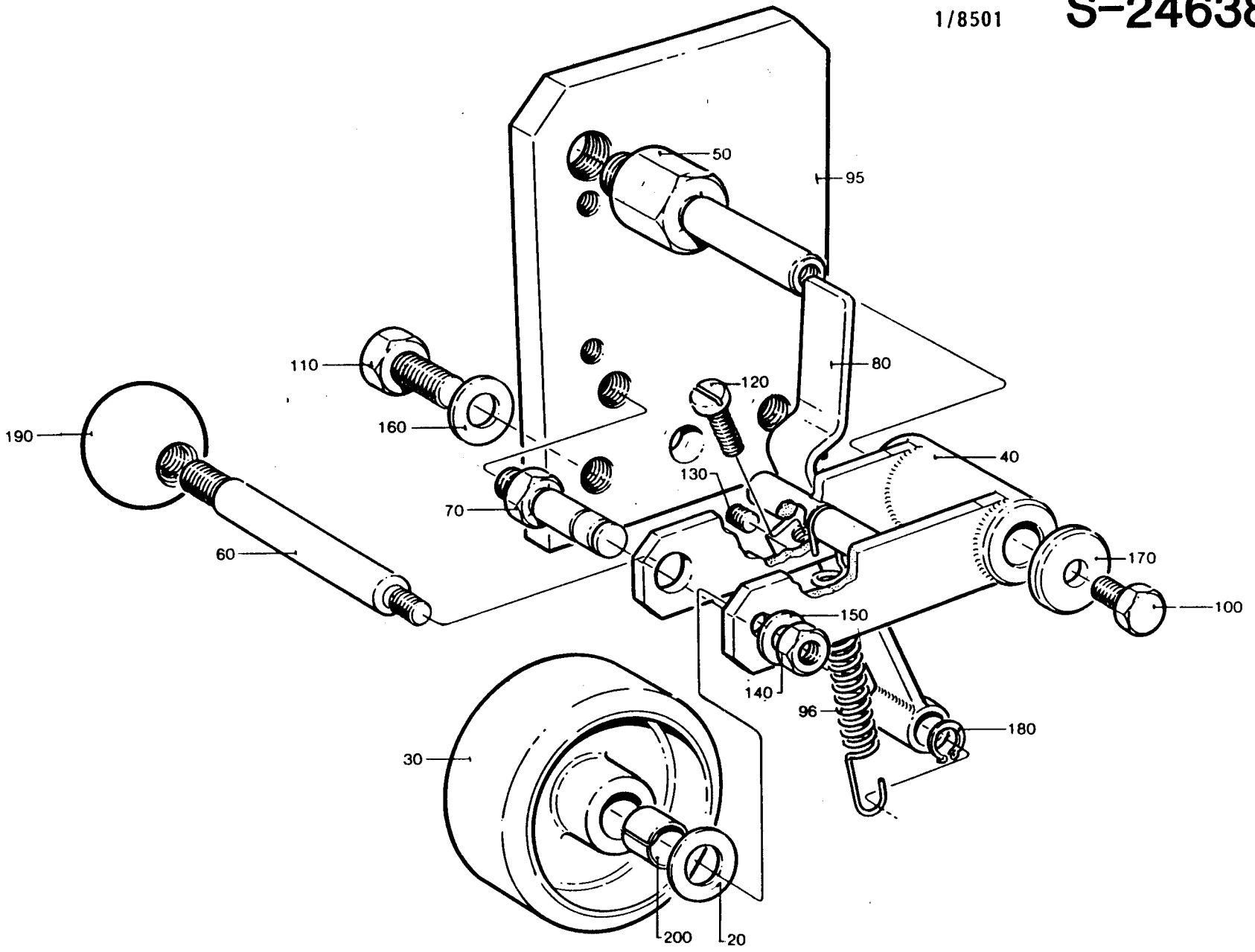

LAST ALTERATION: AM 9596 86-09-05
648107-020V
AM 5279
82-05-05

GROUP	VOLUME	VOLUME	VOLUME	STAMP LOCATION
-0201	V0284	V0250	V0236	STRIP SIDE
	V0200	V0187	V0180	STRIP SIDE
-0202	V0125	V0100	-	STRIP SIDE
-0203	200ML SLIM	-	-	STRIP SIDE
-0204	V0284	V0250	V0236	NOSTRIP SIDE
	V0200	V0187	V0180	NOSTRIP SIDE
-0205	V0125	V0100	-	NOSTRIP SIDE
-0206	200ML SLIM	-	-	NOSTRIP SIDE

POS	VAR	PART NUMBER	SP	EH	QTY	DESCRIPTION
	-0201	S- 256966-SHEET	-1			===ASSEMBLY DRAWING===
	-0201		-2			
	-0202		-3			
	-0203		-4			
	-0204		-1			
	-0204		-2			
	-0205		-3			
	-0206		-4			
010	-0201	295869	C		1	BENDING ROLLER
	-0204				1	
010	-0202	456318	C		1	BENDING ROLLER
	-0205				1	
010	-0203	456319	C		1	BENDING ROLLER
	-0206				1	
020	ALL	265563	-		2	BRACKET
030	ALL	250588	C		2	FLANGE
040	ALL	256985	S		1	SHAFT
050	ALL	256986-0001	-		1	STRUT
060	ALL	265567	C		2	BEARING
070	ALL	265568	-		2	DUST COVER
080	ALL	751048	-		1	SUPPORT
200	ALL	90214-0098	S		2	BALL BEARING
300	ALL	312105-0370	-		2	SCREW M6S6X20RFR
305	ALL	312105-0376	-		2	SCREW M6S6X35RFR
310	ALL	312105-0451	-		10	SCREW M6S8X20RFR
320	ALL	312318-0325	S		4	GRUB SCREW SK6SS5X10RFR
330	ALL	312318-0364	S		4	GRUB SCREW SK6SS6X10RFR
340	ALL	315105-0153	-		2	WASHER BRB6,4X12RFR
350	ALL	315125-0153	-		2	WASHER SB 6,4X22X4 RFR

TETRA PAK

3/8609 **S-256966-1**

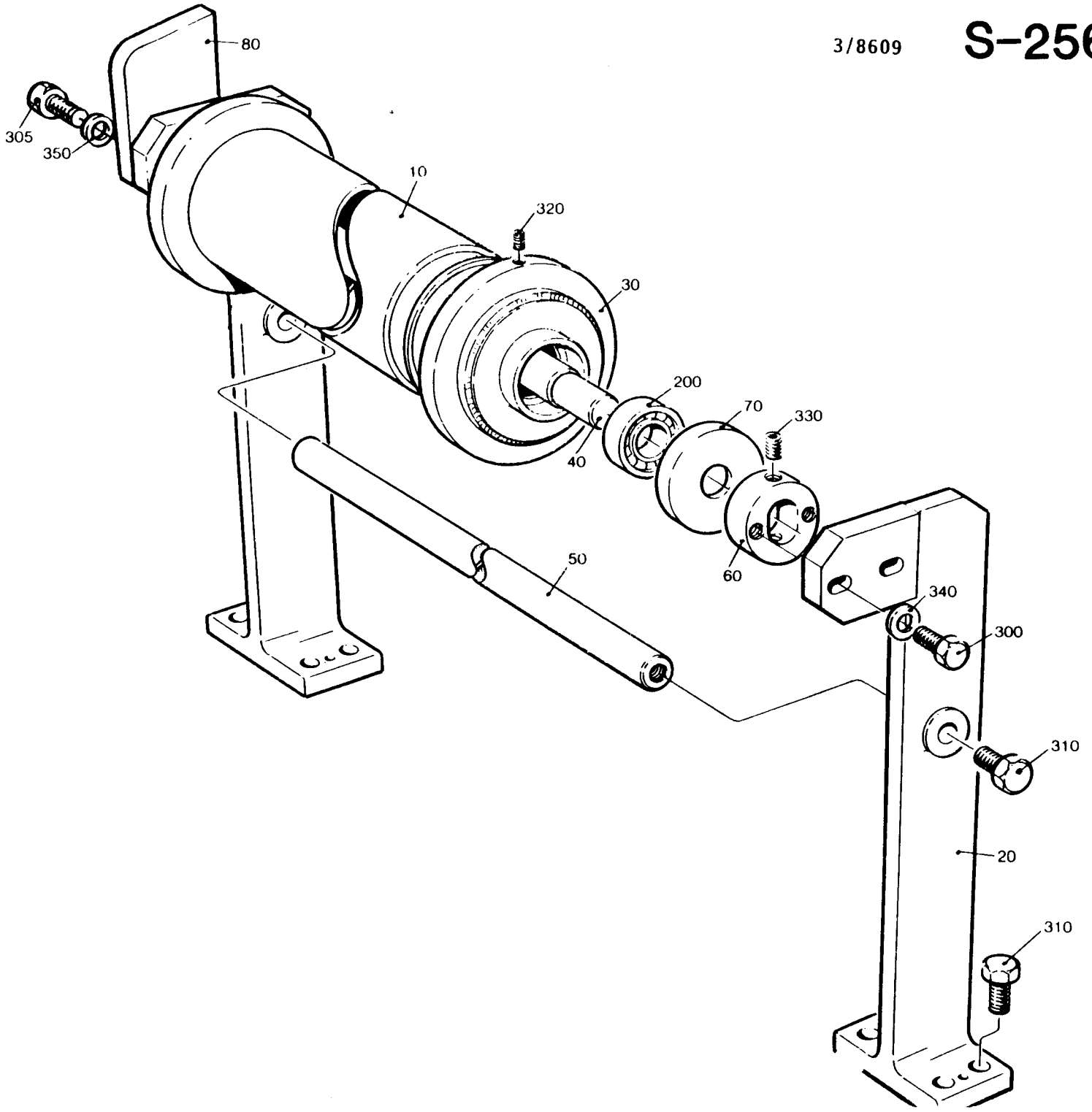

LAST ALTERATION. AM 6317 8?-11-03
648107
AM 5279
82-05-05

POS	VAR	PART NUMBER	SP	EH	QTY	DESCRIPTION
	-0201	S- 256967-SHEET	-1			===ASSEMBLY DRAWING===
010	-0201	256984	C		1	BENDING ROLLER
020	-0201	256992	-		1	BRACKET
030	-0201	256993	-		1	BRACKET
040	-0201	256985	S		1	AXLE
050	-0201	265567	C		2	BEARING
060	-0201	265568	-		2	DUST COVER
200	-0201	90214-0028	S		2	BALL BEARING
300	-0201	312105-0370	-		4	SCREW M6S6X20RFR
310	-0201	312105-0451	-		8	SCREW M6S8X20RFR
320	-0201	312318-0364	S		4	GRUB SCREW SK6SS6X10RFR
330	-0201	315105-0153	-		4	WASHER BRB6,4X12RFR

TETRA PAK

1/8501 **S-256967-1**

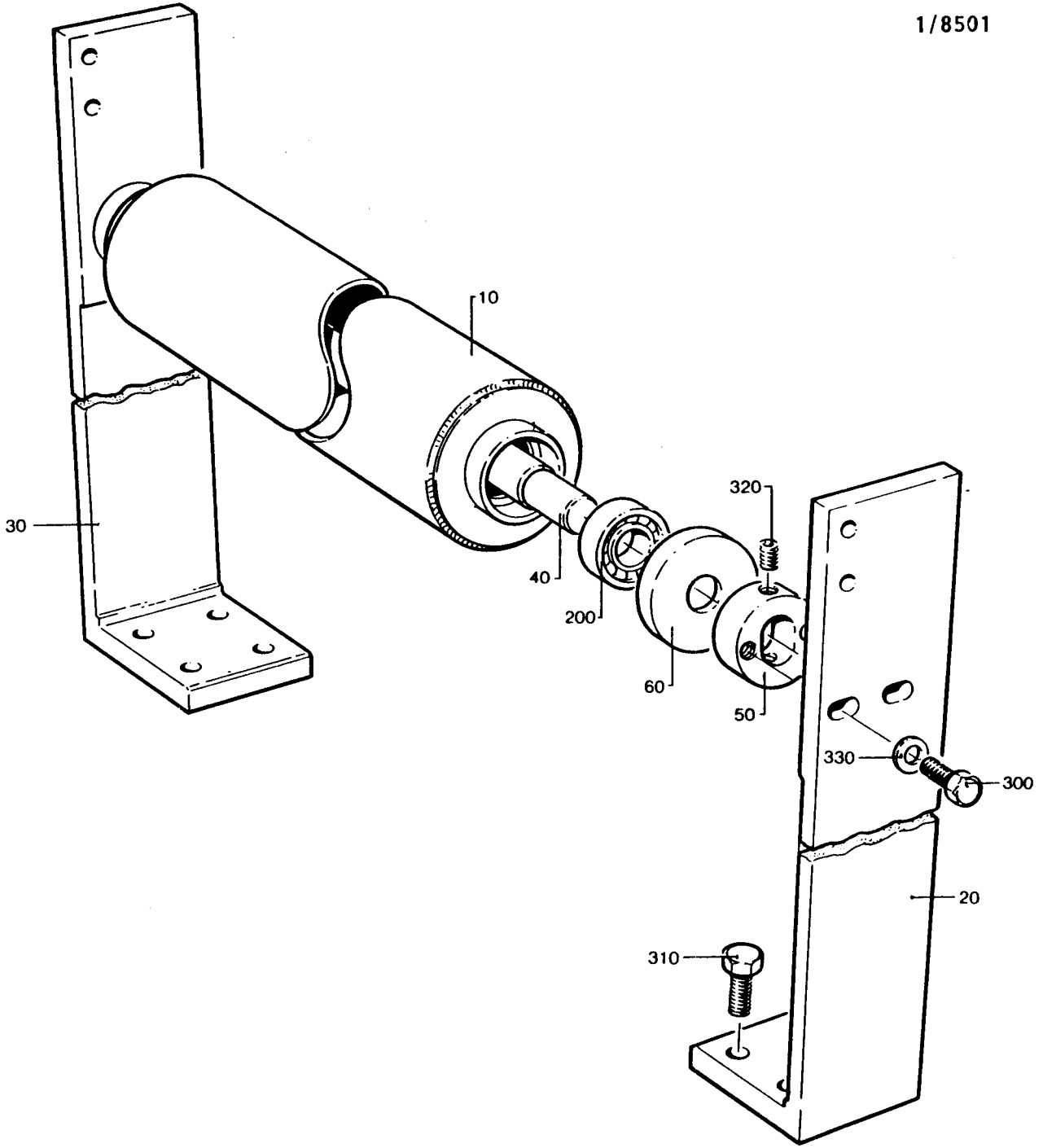

nm/317

LAST ALTERATION: AM 6317 83-11-03
648001 648107
AM 4489
80-02-28

POS	VAR	PART NUMBER	SP	EH	QTY	DESCRIPTION
	-0101	S- 267315-SHEET	-1			===ASSEMBLY DRAWING===
010	-0101	267316	-		1	BRACKET
020	-0101	23580	-		1	KNOB
030	-0101	23582	C		1	SPRING
040	-0101	23583	S		1	GUIDE
050	-0101	23584	-		2	SCREW
060	-0101	24351	-		1	CLAMP
070	-0101	24352	-		1	AXLE
080	-0101	24355	-		2	PIN
090	-0101	24356	-		4	BLOCK
100	-0101	111543	S		2	CONE
110	-0101	245210	-		1	BODY
200	-0101	90214-0035	P		2	BALL BEARING
210	-0101	90287-0009	-		1	SCREW
300	-0101	311103-0350	-		1	CYLINDRICACPR6M6X14RFR
400	-0101	312105-0368	-		4	SCREW M6S6X16RFR
410	-0101	312115-0366	-		1	SCREW MC6S6X12RFR
430	-0101	312316-0283	P		4	GRUB SCREW SK6SS4X4FZB
440	-0101	312316-0291	S		2	GRUB SCREW SK6SS4X12FZB
450	-0101	312318-0285	S		2	GRUB SCREW SK6SS4X6RFR
470	-0101	312605-0312	-		2	NUT M6M4RFR
490	-0101	315105-0146	-		2	WASHER BRB5,3X10RFR
500	-0101	315105-0153	-		4	WASHER BRB6,4X12RFR

TETRA PAK

2/8501 S-267315-1

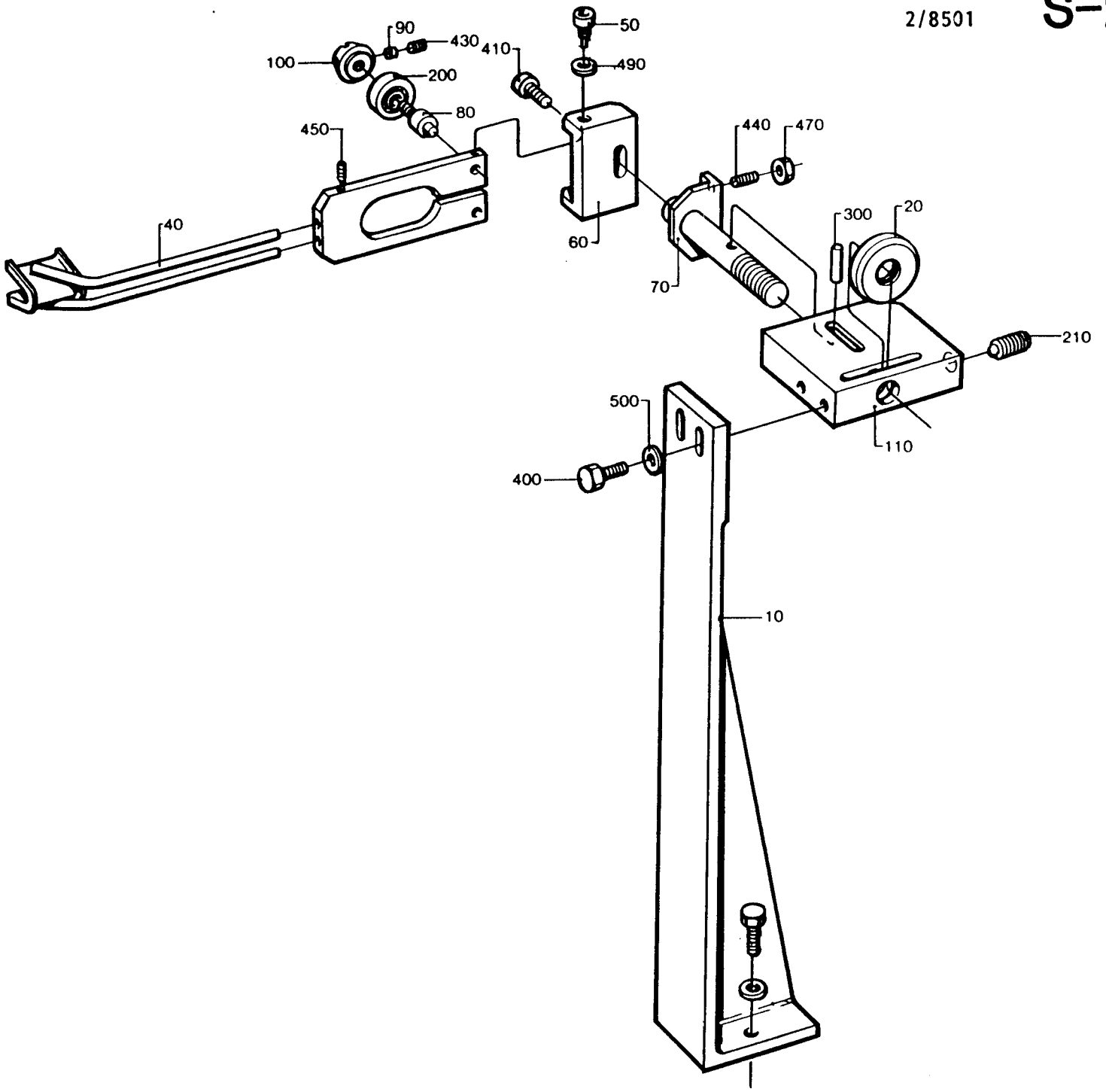

LAST ALTERATION: AM 6743 84-04-18
648107

GROUP	VOLUME	VOLUME	VOLUME
-0301	V0284	V0250	V0236
	V0200	V0187	V0180
-0302	V0125	V0100	200ML SLIM

POS	VAR	PART NUMBER	SP	EH	QTY	DESCRIPTION
	-0301	S- 272343-SHEET	-2			===ASSEMBLY DRAWING===
	-0302		-2			
140	-0301	441354	-		1	HEAT GUARD
140	-0302	456917	-		1	HEAT GUARD
010	ALL	266727	C		1	BLOW-OFF NOZZLE
020	ALL	266728	-		1	BRACKET
030	ALL	456914	-		1	ROCKERARM
040	ALL	266730	-		1	HOLDER
050	ALL	2033-0009	P		2	WASHER
060	ALL	21903	PU		1	ROLLER
070	ALL	456916	C		1	CYLINDER BRACKET
080	ALL	255416	S		1	PLATE
090	ALL	255417	S		1	WASHER
100	ALL	266731	C		1	AXLE
110	ALL	266732	C		1	AXLE
120	ALL	266733	-		1	BLOCK
130	ALL	266734	-		1	CLAMP
150	ALL	266737	S		2	WASHER
160	ALL	266739	-		3	CABLE GLAND
170	ALL	266740-0003	-		3	DISTANCE
180	ALL	456915	-		1	COVER
300	ALL	90125-0020	S		1	BASE TABLE
310	ALL	90166-0087	P	MM	300	PLASTIC HOSE
320	ALL	90206-0031	S		1	HEATING ELEMENT
330	ALL	90206-0322	S		1	GASKET
340	ALL	90235-0274	-		2	VALVE
360	ALL	90239-0084	S		1	CYLINDER
		90239-0348	S		0	* SPARE PARTS KIT
370	ALL	90239-0088	S		1	PISTON ROD COUPLING
500	ALL	312105-0370	-		2	SCREW M6S6X20RFR
510	ALL	312105-0451	-		6	SCREW M6S8X20RFR
520	ALL	312105-0459	-		2	SCREW M6S8X40RFR
530	ALL	312125-0291	-		4	SLOTTED HEMCS4X12RFR
540	ALL	312125-0220	-		3	SLOTTED HEMCS3X6RFR
550	ALL	312145-0238	-		3	SLOTTED HEMFS3X40RFR
560	ALL	312318-0291	P		1	GRUB SCREW SK6SS4X12RFR
590	ALL	312605-0314	-		2	NUT M6M5RFR
591	ALL	312605-0316	-		2	NUT M6M6RFR
592	ALL	315105-0124	-		2	WASHER BRB3,2X6RFR
595	ALL	315105-0153	-		2	WASHER BRB6,4X12RFR
600	ALL	315105-0165	-		2	WASHER BRB8,4X16RFR
605	ALL	315121-0153	-		2	WASHER TBRSB6,4X22FZB
610	ALL	315750-0107	P		2	LOCK RING SGA10
620	ALL	321120-0104	S		2	BUSHING 10/12X10

POS	VAR	PART NUMBER	SP	EH	QTY	DESCRIPTION
630	ALL	321120-0110	S		2	BUSHING 12/14X12
634	ALL	342797-0121	-		2	BANJO CONNSINGEL 6-1/8
640	ALL	342980-0113	S		1	BANJO CONNSINGEL 6/4-1/8
650	ALL	342980-0303	S		1	BANJO CONN SINGEL 1/8"
660	ALL	342991-0103	-		2	HOSE CLIP 15-24MMRFR
670	ALL	352103-0106	-		1	CABLE GLANR.18,6/5-10
680	ALL	353104-0130	S		1	CABLE SHOEYAV 14 M 43

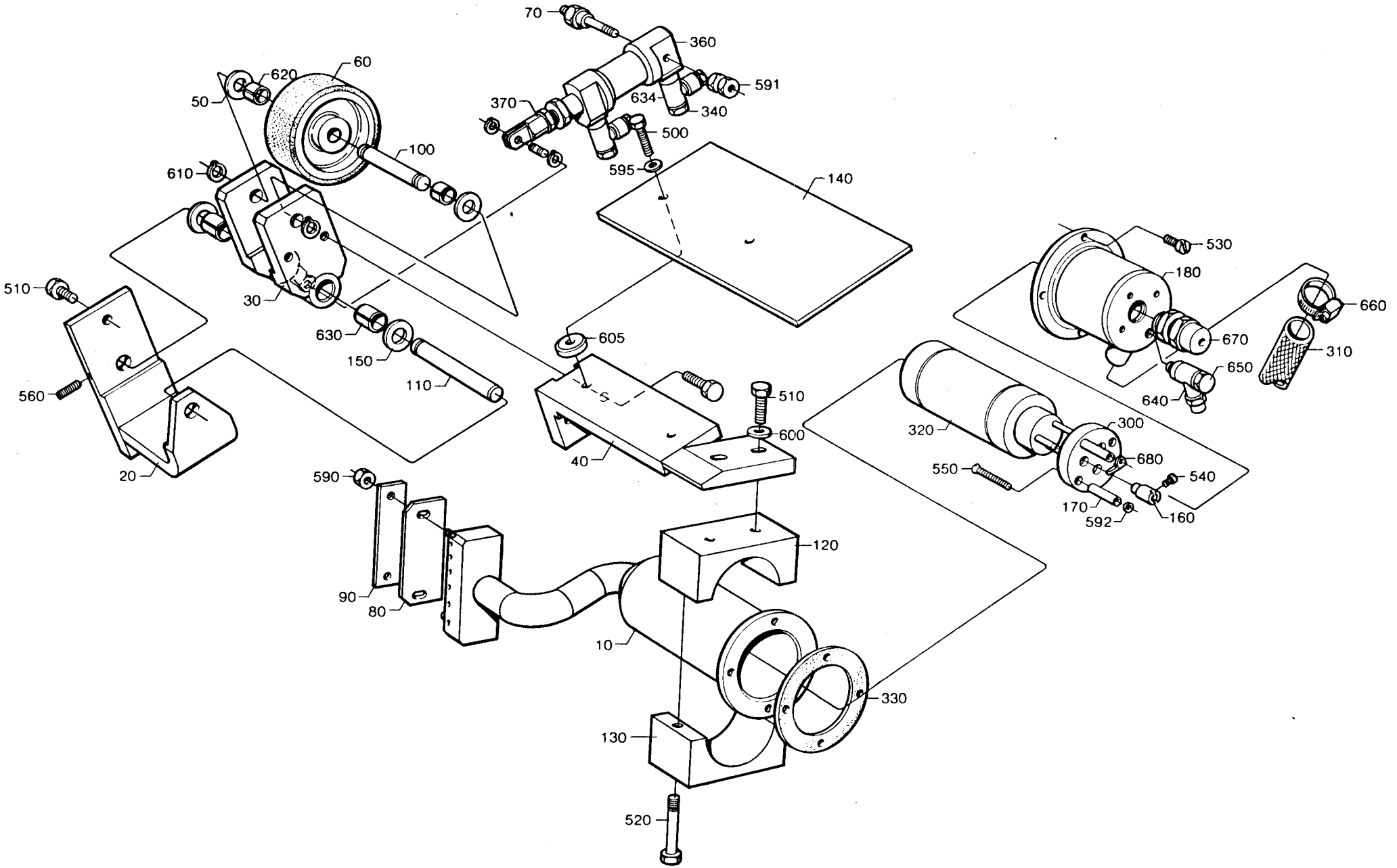
70
360
591
634
340
370
500
595
140
60
620
50
100
610
30
630
150
110
605
510
600
40
510
560
20
590
90
80
120
10
330
130
520
530
180
660
670
310
650
640
320
300
680
540
550
170
592
160

LAST ALTERATION: AM 9415 86-10-17
648107-060V
AM 6724
84-06-14

GROUP FILLMACHINE

-0301 B9
-0302 AB9

POS	VAR	PART	NUMBER	SP	EH	QTY	DESCRIPTION
	-0301	S-	272408-SHEET	-5			===ASSEMBLY DRAWING===
	-0302			~~-6~~			
040	-0302		272186	-		1	CONNECTION
050	-0301		272187	-		1	CONNECTION
090	-0301		456974	-		1	CABLE DUCT
260	-0301		456000	-		1	SUPPORT
400	-0301		90143-0054	-	MM	170	STRIP
410	-0301		90166-0107	-	MM	700	HOSE
560	-0301		312105-0453	-		3	SCREW M6S8X25RFR
	-0302					4	
570	-0301		312105-0455	-		1	SCREW M6S8X30RFR
600	-0301		315105-0165	-		7	WASHER BRB8,4X16RFR
	-0302					6	
630	-0301		342991-0108	-		3	HOSE CLIP 38-50MMRFR
	-0302					1	
010	ALL		441018	-		1	PLATE
020	ALL		272184	-		1	COVER
060	ALL		272622	-		1	DRINKING STRAW
100	ALL		456973	-		1	BRACKET
120	ALL		28036	-		4	WASHER
130	ALL		531732	P		2	GASKET
160	ALL		33577	-		1	BRACKET
170	ALL		209145	-		2	SCREW
180	ALL		209146	-		2	LOCKING NUT
190	ALL		267311	-		1	PLATE
200	ALL		272188	-		1	BRACKET
210	ALL		272189	-		1	LID
220	ALL		272190	-		2	INSERT
230	ALL		272632	S		1	SILENCER
240	ALL		279589	-		2	NUT
250	ALL		279590	-		2	REDUCTION
350	ALL		90043-0034	S		2	PRESSURE GAUGE
360	ALL		90043-0302	-		2	SCREW
370	ALL		90064-0085	-		1	PUSH BUTTON RED
380	ALL		90064-0084	-		1	PUSH BUTTON YELLOW
390	ALL		90066-0020	-		1	PUSCH BUTTON BOX
420	ALL		90264-0005	C		1	FAN
			90264-0306	SU		0	* SILENCER
430	ALL		90330-0038	-		2	NUT
440	ALL		90030-0058	-		2	CONNECTION
460	ALL		311305-0308	-		2	SLOTTED PIRPC5X16FZB

TETRA PAK

1/8501

S-272408-5

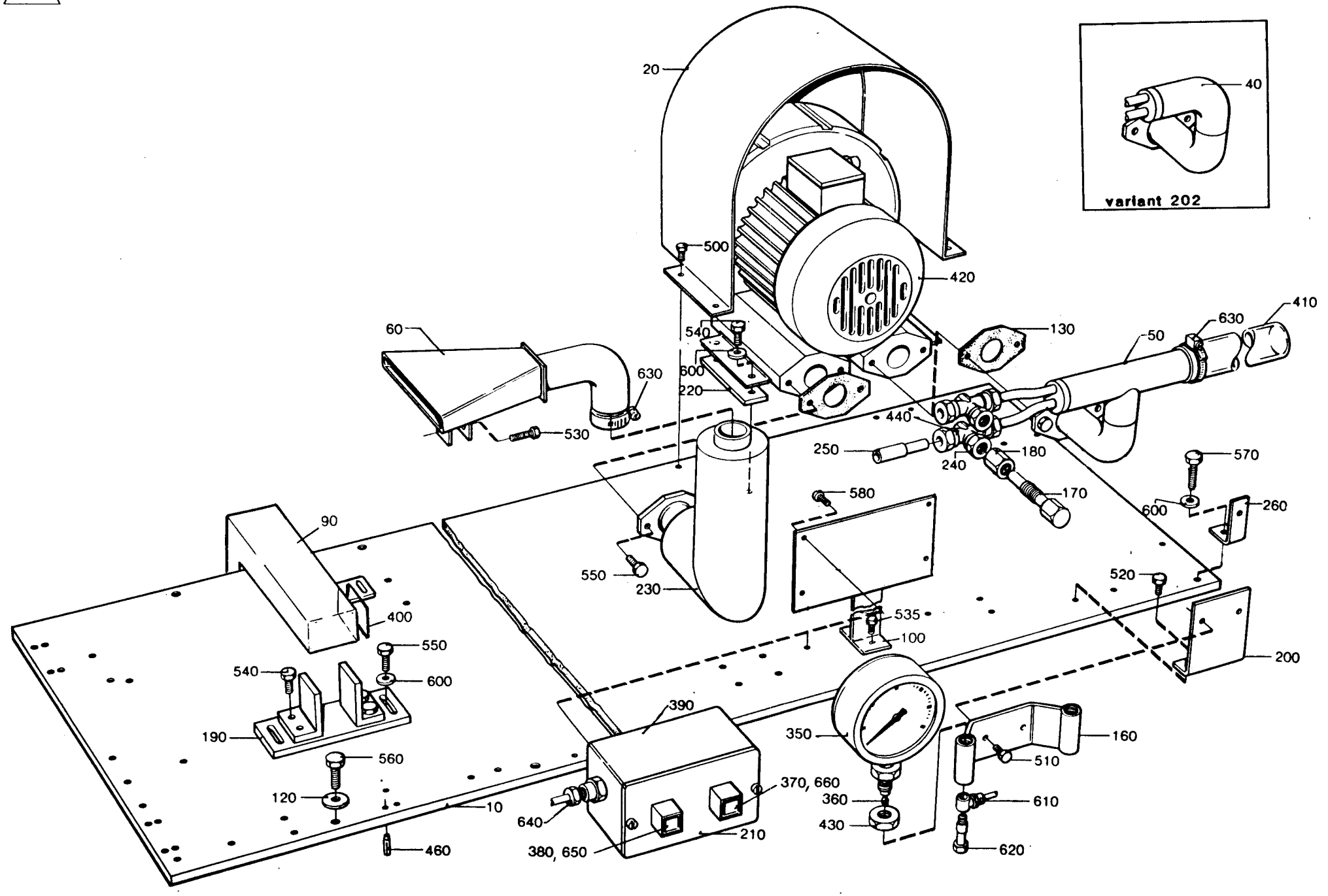

POS	VAR	PART NUMBER	SP	EH	QTY	DESCRIPTION
500	ALL	312105-0325	-		4	SCREW M6S5X10 A4 80
510	ALL	312105-0364	-		2	SCREW M6S6X10RFR
520	ALL	312105-0366	-		2	SCREW M6S6X12RFR
530	ALL	312105-0372	-		1	SCREW M6S6X25RFR
535	ALL	312105-0448	-		2	SCREW M6S8X14RFR
540	ALL	312105-0449	-		8	SCREW M6S8X16RFR
550	ALL	312105-0451	-		6	SCREW M6S8X20RFR
580	ALL	312125-0325	-		4	SLOTTED HEMCS5X10RFR
610	ALL	342797-0122	S		2	BANJO CONNSINGEL 6-1/4
620	ALL	342980-0304	S		2	BANJO CONN SINGEL 1/4
640	ALL	352103-0110	-		1	CABLE GLANR.22,5/4-13
650	ALL	359301-0100	-		1	SIGN T
660	ALL	359301-0110	-		1	SIGN T

TETRA PAK

1/8501 **S-272408-5**

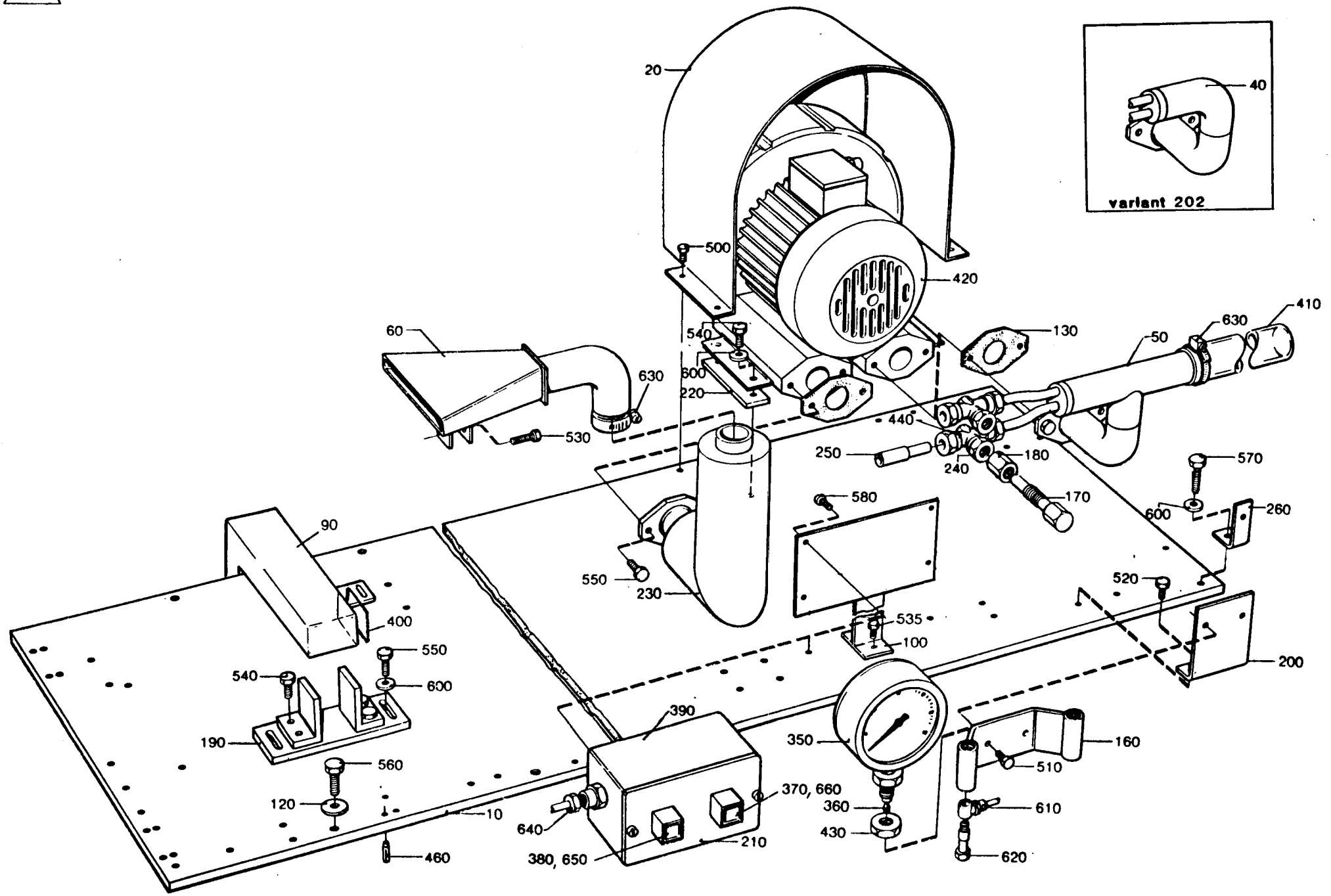

LAST ALTERATION: AM 7024 84-10-15
MLT =SMALL TYPE HOLDER
MST =LARGE TYPE HOLDER
ST-ER =STAMP LOCATION NOT STRIP SIDE
640013 648001 648013 648019 648107
AM 5062
82-07-02

GROUP	TYPE HOLDER	VOLUME	VOLUME	VOLUME	OPENING FIN
-0101	MLT	V1000	-	-	LOFIN
	MLT	V0750	-	-	-
-0102	MST	V1000	-	-	LOFIN
	MST	V0750	-	-	-
-0103	MLT	V0568	V0500	-	-
-0104	MST	V0568	V0500	-	-
-0105	MLT	V0300	V0284	V0250	-
	MLT	V0236	V0200	V0189	-
	MLT	V0180	-	-	-
-0106	MST	V0300	V0284	V0250	-
	MST	V0236	V0200	V0189	-
	MST	V0180	-	-	-
-0107	MLT	V1000	-	-	HIFIN
-0108	MST	V1000	-	-	HIFIN
-0109	MLT	500ML SLIM	V0375	-	-
-0110	MST	500ML SLIM	V0375	-	-

POS	VAR	PART NUMBER	SP	EH	QTY	DESCRIPTION
	-0101	S1- 293684-SHEET -			-1	===ASSEMBLY DRAWING===
	-0102				-1	
	-0103				-1	
	-0104				-1	
	-0105				-2	
	-0106				-2	
	-0107				-1	
	-0108	S1- 293684-SHEET -			-1	===ASSEMBLY DRAWING===
	-0109				-2	
	-0110				-2	
100	-0102	2- 293395-0003	P		1	TYPE HOLDER
	-0104				2	
	-0108				1	
105	-0101	2- 293395-0002	P		1	TYPE HOLDER
	-0103				2	
	-0106				2	
	-0107				1	
	-0110				1	

POS	VAR	PART NUMBER	SP	EH	QTY	DESCRIPTION
110	-0101	2- 293395-0001	P		1	TYPE HOLDER
	-0102				1	
	-0103				2	
	-0104				2	
	-0105				4	
	-0106				2	
	-0107				1	
	-0108				1	
	-0109				2	
	-0110				1	
115	-0101	4- 292409	C		2	GABLE
	-0102				2	
115	-0107	4- 293690	C		2	GABLE
	-0108				2	
115	-0103	4- 434787	C		1	GABLE
	-0104				1	
120	-0103	4- 292410	C		1	GABLE
	-0104				1	
120	-0101	4- 442072	C		1	CARRIER
	-0102				1	
120	-0107	4- 442431	C		1	CARRIER
	-0108				1	
125	-0101	4- 292411	C		1	CARRIER
	-0102				1	
125	-0107	4- 293688	C		1	CARRIER
	-0108				1	
125	-0109	4- 479237	C		1	CARRIER
125	-0110	4- 479237	C		1	CARRIER
130	-0105	4- 292412	C		1	GABLE
	-0106				1	
135	-0105	4- 292413	C		1	GABLE
	-0106				1	
140	-0109	4- 479236	C		2	GABLE
	-0110				2	
145	-0105	4- 293659	C		1	CARRIER
	-0106				1	
145	-0109	4- 479238	C		1	CARRIER
	-0110				1	
150	-0101	4- 293671	C		1	DISTANCE
	-0102				1	
	-0107				1	
	-0108				1	
	-0109				1	
	-0110				1	
155	-0103	4- 293676	C		1	CARRIER
	-0104				1	
200	-0101	90413-0048	P		1	TYPE SET
	-0102				1	
	-0103				1	

S-293684-1

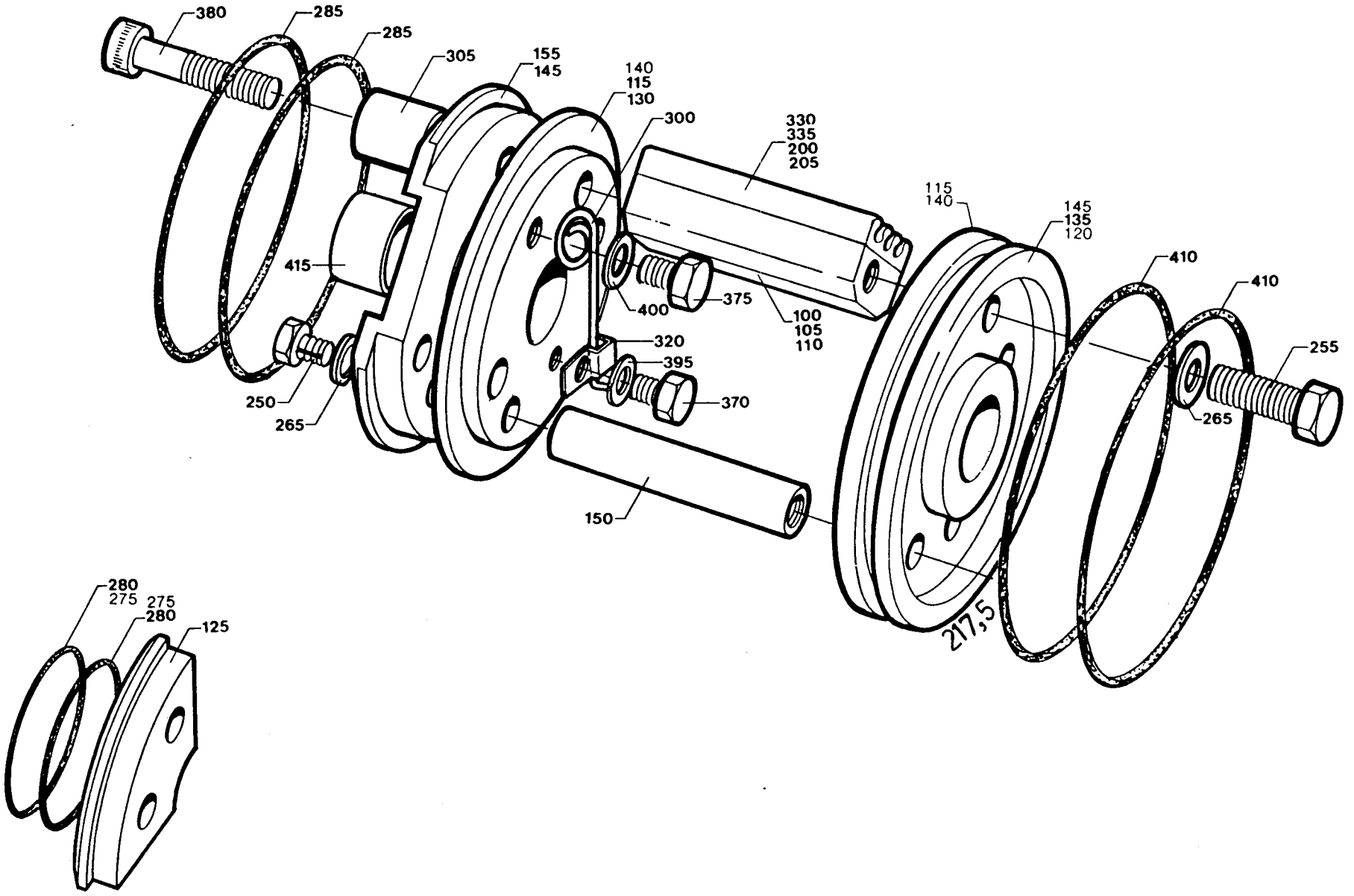
380
285
285
305
155
145
140
115
130
300
330
335
200
205
115
140
145
135
120
410
410
255
265
415
400
375
100
105
110
320
395
370
250
265
150
217,5
280
275
275
280
125

POS	VAR	PART NUMBER	SP	EH	QTY	DESCRIPTION	
	-0104				1		
	-0107				1		
	-0108				1		
205	-0101	90413-0049	P		1	SET OF NUMERALS	
	-0102				1		
	-0103				1		
	-0104				1		
	-0107				1		
	-0108				1		
250	-0101	312101-0329	-		2	SCREW	M6S5X16FZB
	-0102				2		
	-0107				2		
	-0108				2		
	-0109				2		
	-0110				2		
255	-0101	312101-0331	-		3	SCREW	M6S5X20FZB
	-0102				3		
	-0103				7		
255	-0104	312101-0331	-		7	SCREW	M6S5X20FZB
	-0105				7		
	-0106				7		
	-0107				3		
	-0108				3		
	-0109				3		
	-0110				3		
265	-0101	315101-0146	-		5	WASHER	BRB5,3X10FZB
	-0102				5		
	-0103				7		
	-0104				7		
	-0105				7		
	-0106				7		
	-0107				5		
	-0108				5		
	-0109				5		
	-0110				5		
275	-0109	315202-0224	P		4	O-RING	42,2X3
	-0110				4		
280	-0101	315202-0301	P		4	O-RING	49,5X3
	-0102				4		
	-0107				4		
	-0108				4		
285	-0103	315202-0304	P		2	O-RING	64,5X3
	-0104				2		
	-0105				2		
	-0106				2		
410	-0103	315202-0305	P		2	O-RING	69,5X3
	-0104				2		
	-0105				2		
	-0106				2		

POS	VAR	PART NUMBER	SP	EH	QTY	DESCRIPTION	
300	ALL	4- 32691	P		1	LOCKING SPRING	
305	ALL	4- 33011	S		1	SLEEVE	
320	ALL	90165-0010	-		1	CLAMP	
330	ALL	90413-0033	P		1	CODE INSERT SET	
330	ALL	90413-0043	P		1	CODE INSERT SET	
335	ALL	90413-0047	P		1	TYPE SET	
335	ALL	90413-0044	P		1	CODE INSERT SET	
370	ALL	312101-0287	-		1	SCREW	M6S4X8FZB
375	ALL	312101-0364	-		1	SCREW	M6S6X10FZB
380	ALL	312111-0335	-		1	SCREW	MC6S5X30FZB
395	ALL	315101-0136	-		1	WASHER	BRB4,3X8FZB
400	ALL	315111-0153	-		1	WASHER	TBRB6,4X12FZB
415	ALL	321120-0122	S		2	BUSHING	15/17X15

S-293684-1

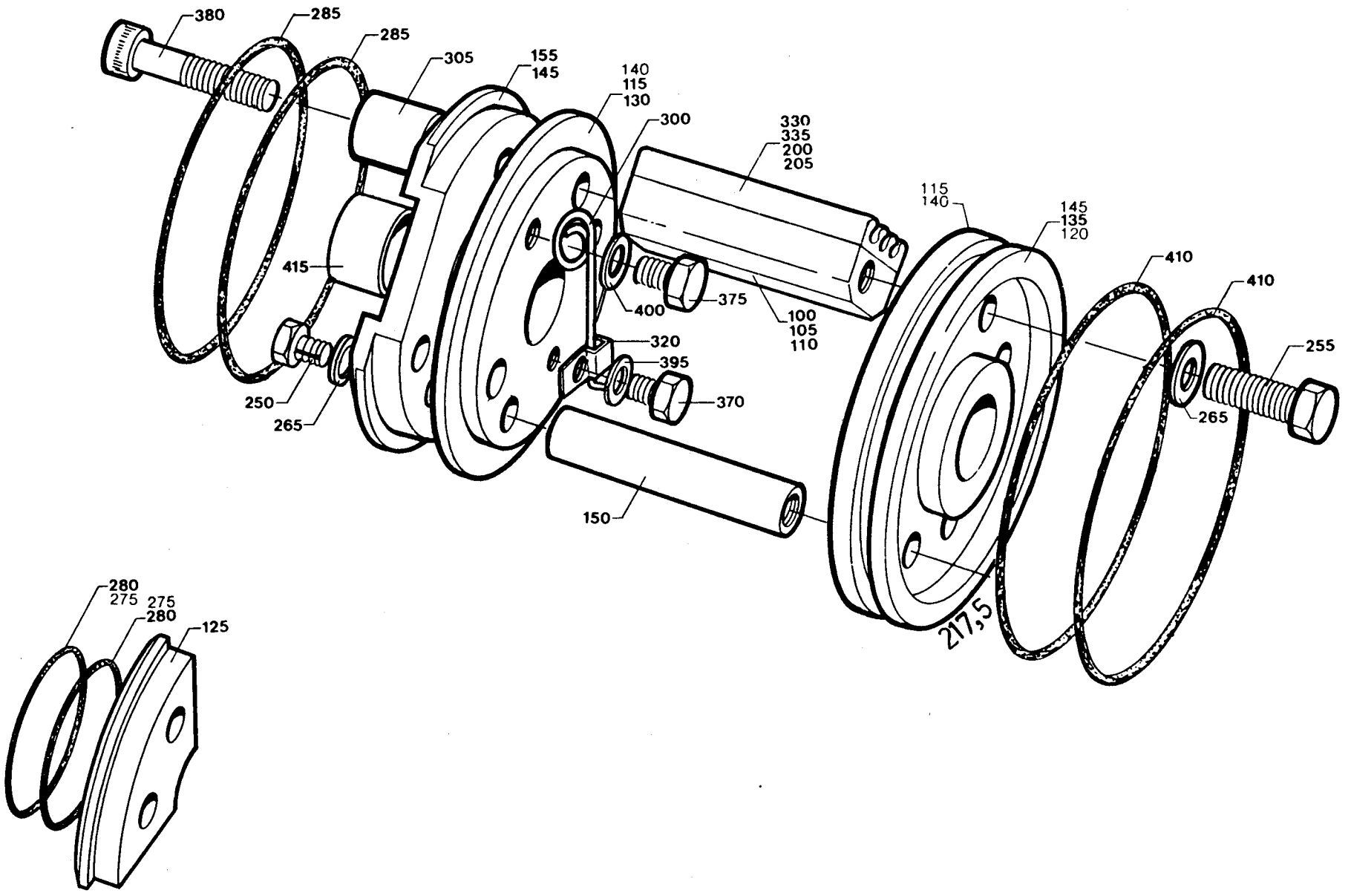
380
285
285
305
155
145
140
115
130
300
330
335
200
205
115
140
145
135
120
410
410
255
265
415
400
375
100
105
110
320
395
370
250
265
150
217,5
280
275
275
280
125

LAST ALTERATION: AM 9541 86-10-01
293680-020V 440267-020V 456322-020V 456349-020V 479044-010V
AM 6941
84-10-19

GROUP	VOLUME	VOLUME	VOLUME	VOLUME	OPENING FIN
-0201	V1000	-	-	-	LOFIN
	V1055H	V0750	-	-	-
-0202	V0568	V0500	-	-	-
-0203	500ML SLIM	V0375	V0355	-	-
-0204	V0300	V0284	V0250	V0236	-
	V0200	V0189	V0180	-	-
-0205	V1000	-	-	-	HIFIN

POS	VAR	PART NUMBER	SP	EH	QTY	DESCRIPTION
	-0201	S- 293684-SHEET	-3			===ASSEMBLY DRAWING===
	-0202		-3			
	-0203		~~-4~~			
	-0204		~~-4~~			
	-0205		-3			
100	-0201	293395-0003	P		1	TYPE HOLDER
	-0202				2	
	-0205				1	
105	-0203	293395-0002	P		1	TYPE HOLDER
	-0204				2	
110	-0201	293395-0001	P		1	TYPE HOLDER
	-0202				2	
	-0203				1	
	-0204				2	
	-0205				1	
115	-0201	292409	C		2	GABLE
115	-0202	434787	C		1	GABLE
115	-0205	293690	C		2	GABLE
120	-0201	442072	C		1	CARRIER
120	-0202	292410	C		1	GABLE
120	-0205	442431	C		1	CARRIER
125	-0201	292411	C		1	CARRIER
125	-0203	479237	C		1	CARRIER
125	-0205	293688	C		1	CARRIER
130	-0204	292412	C		1	GABLE
135	-0204	292413	C		1	GABLE
140	-0203	479236	C		2	GABLE
145	-0203	479238	C		1	CARRIER
145	-0204	293659	C		1	CARRIER
150	-0201	293671	C		1	SPACER
	-0203				1	
	-0205				1	
155	-0202	293676	C		1	CARRIER
200	-0201	90413-0048	P		1	CODE INSERT SET
	-0202				1	
	-0205				1	

POS	VAR	PART NUMBER	SP	EH	QTY	DESCRIPTION
205	-0201	90413-0049	P		1	CODE INSERT SET
	-0202				1	
	-0205				1	
250	-0201	312101-0329	-		2	SCREW M6S5X16FZB
	-0203				2	
	-0205				2	
255	-0201	312101-0331	-		3	SCREW M6S5X20FZB
	-0202				7	
	-0203				3	
	-0204				7	
	-0205				3	
265	-0201	315101-0146	-		5	WASHER BRB5,3X10FZB
	-0202				7	
	-0203				5	
	-0204				7	
	-0205				5	
275	-0203	315202-0224	P		4	O-RING 42,2X3
280	-0201	315202-0301	P		4	O-RING 49,5X3
	-0205				4	
285	-0202	315202-0304	P		2	O-RING 64,5X3
	-0204				2	
410	-0202	315202-0305	P		2	O-RING 69,5X3
	-0204				2	
300	ALL	32691	P		1	LOCKING SPRING
305	ALL	33011	S		1	SLEEVE
320	ALL	90165-0010	-		1	CLIP
330	ALL	90413-0033	P		1	CODE INSERT SET
330	ALL	90413-0043	P		1	CODE INSERT SET
335	ALL	90413-0047	P		1	CODE INSERT SET
335	ALL	90413-0044	P		1	CODE INSERT SET
370	ALL	312101-0287	-		1	SCREW M6S4X8FZB
375	ALL	312101-0364	-		1	SCREW M6S6X10FZB
380	ALL	312111-0335	-		1	SCREW MC6S5X30FZB
395	ALL	315101-0136	-		1	WASHER BRB4,3X8FZB
400	ALL	315111-0153	-		1	WASHER TBRB6,4X12FZB
415	ALL	321120-0122	S		2	BUSHING 15/17X15

S-293684-3

1000ml-750ml

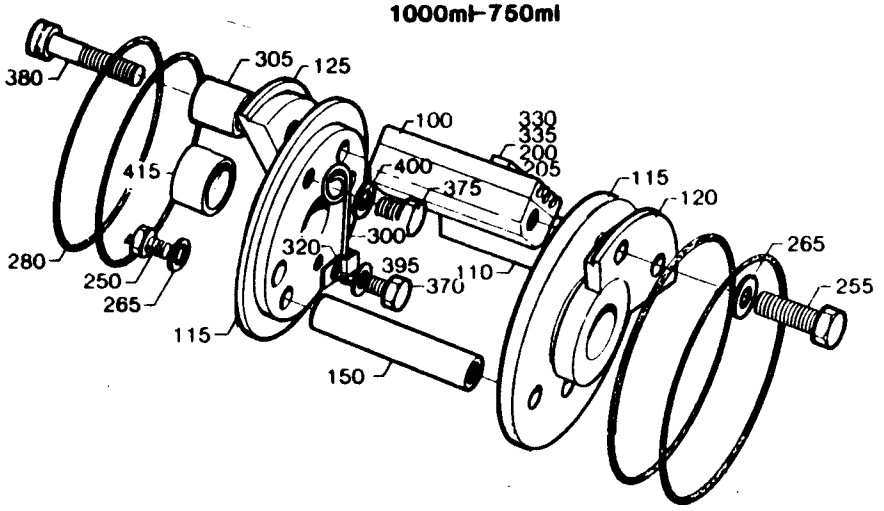

500ml slim-375ml

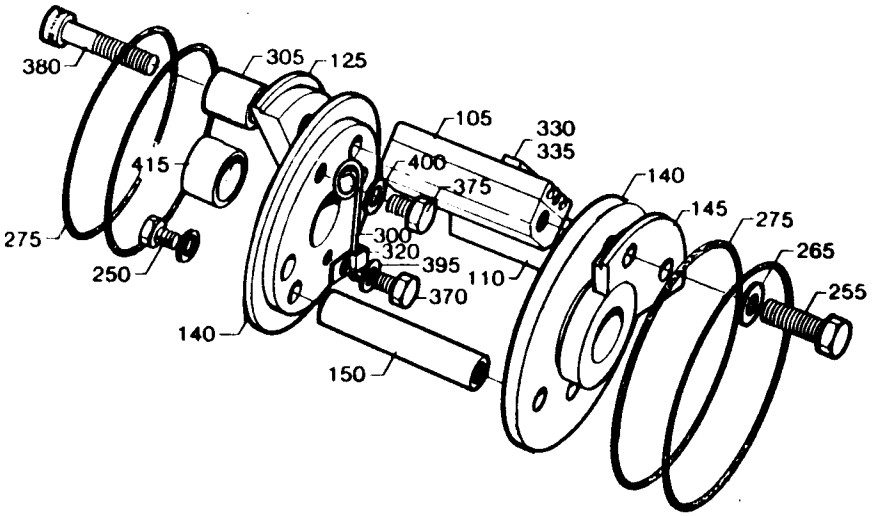

500ml-568ml

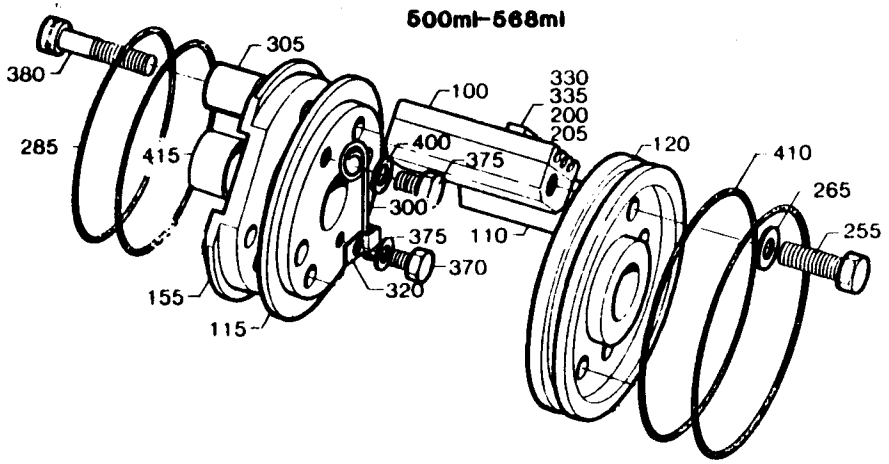

180ml-300ml

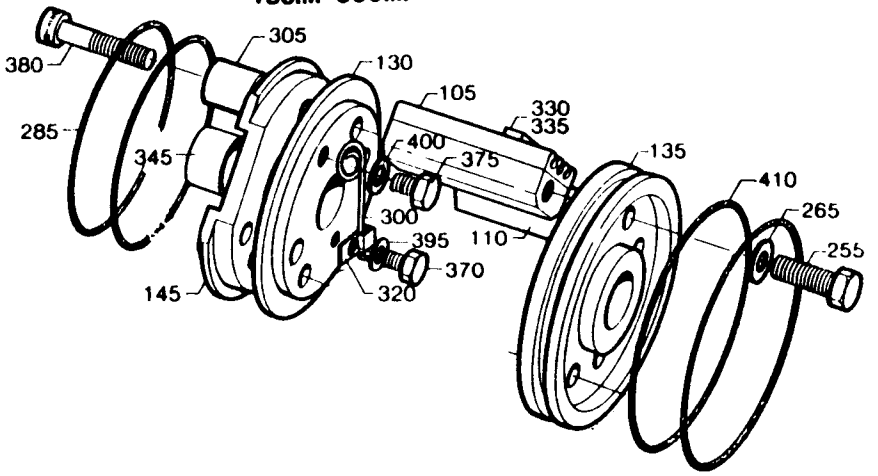

LAST ALTERATION: AM 7024 84-10-15
MLT = SMALL TYPE HOLDER
MST = LARGE TYPE HOLDER
ST-R= STAMP LOCATION STRIP SIDE
640013 648001 648013 648019 648107
AM 5062
82-07-02

GROUP	TYPE HOLDER	VOLUME	VOLUME	VOLUME	VOLUME
-0101	MLT	V0300	V0284	V0250	V0236
	MLT	V0200	V0189	V0180	-
-0102	MST	V0300	V0284	V0250	V0236
	MST	V0200	V0189	V0180	-
-0103	MLT	V0375	-	-	-
-0104	MST	V0375	-	-	-

POS	VAR	PART NUMBER	SP	EH	QTY	DESCRIPTION	
	-0101	S1- 293685-SHEET	S		-1	===ASSEMBLY DRAWING===	
	-0102				-1		
	-0103				-1		
	-0104				-1		
105	-0102	2- 293395-0002	P		2	TYPE HOLDER	
	-0104				1		
110	-0101	2- 293395-0001	P		4	TYPE HOLDER	
	-0102				2		
	-0103				2		
	-0104				1		
130	-0101	4- 292412	C		1	GABLE	
	-0102				1		
130	-0103	4- 479236	C		2	GABLE	
	-0104				2		
135	-0101	4- 292413	C		1	GABLE	
	-0102				1		
140	-0101	4- 292414	C		1	CARRIER	
140	-0102	4- 292414	C		1	CARRIER	
140	-0103	4- 479239	C		1	CARRIER	
	-0104				1		
145	-0103	4- 479240	C		1	CARRIER	
	-0104				1		
150	-0103	4- 293671	C		1	DISTANCE	
	-0104				1		
250	-0103	312101-0329	-		2	SCREW	M6S5X16FZB
	-0104				2		
373	-0101	312101-0331	-		7	SCREW	M6S5X20FZB
	-0102				7		
	-0103				3		
	-0104				3		
397	-0101	315101-0146	-		7	WASHER	BRB5,3X10FZB

POS	VAR	PART NUMBER	SP	EH	QTY	DESCRIPTION	
	-0102				7		
	-0103				5		
	-0104				5		
403	-0103	315202-0224	P		4	O-RING	42,2X3
	-0104				4		
405	-0101	315202-0304	P		2	O-RING	64,5X3
	-0102				2		
410	-0101	315202-0305	P		2	O-RING	69,5X3
	-0102				2		
120	ALL	4- 32691	P		1	LOCKING SPRING	
125	ALL	4- 33011	S		1	SLEEVE	
320	ALL	90165-0010	-		1	CLAMP	
330	ALL	90413-0033	P		1	CODE INSERT SET	
330	ALL	90413-0043	P		1	CODE INSERT SET	
335	ALL	90413-0044	P		1	CODE INSERT SET	
335	ALL	90413-0047	P		1	TYPE SET	
370	ALL	312101-0287	-		1	SCREW	M6S4X8FZB
375	ALL	312101-0364	-		1	SCREW	M6S6X10FZB
380	ALL	312111-0335	-		1	SCREW	MC6S5X30FZB
395	ALL	315101-0136	-		1	WASHER	BRB4,3X8FZB
400	ALL	315111-0153	-		1	WASHER	TBRB6,4X12FZB
415	ALL	321120-0122	S		2	BUSHING	15/17X15

S-293685-1

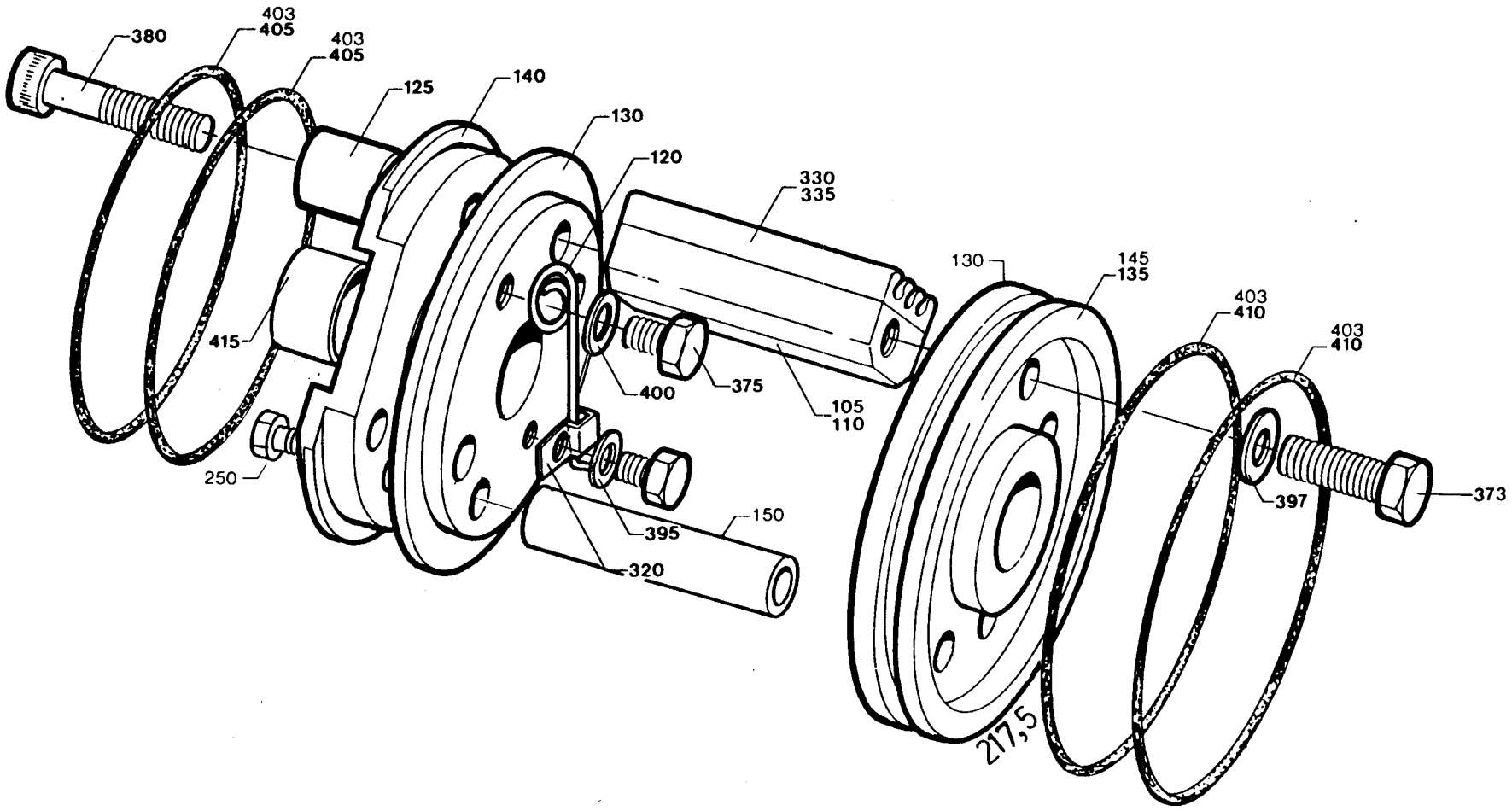
380
403
405
403
405
125
140
130
120
330
335
130
145
135
403
410
403
410
415
400
375
105
110
250
150
395
320
397
373
217,5

LAST ALTERATION: AM 6941 84-10-19
293681-020V 456321-020V 456348-020V 458191-020V 479045-010V

GROUP	VOLUME	VOLUME	VOLUME	VOLUME	VOLUME
-0201	V0300	V0284	V0250	V0236	V0200
	V0189	V0180	-	-	-
-0202	V0375	-	-	-	-

POS	VAR	PART NUMBER	SP	EH	QTY	DESCRIPTION	
	-0201	S- 293685-SHEET	-2			===ASSEMBLY DRAWING===	
	-0202		-2				
105	-0201	293395-0002	P		2	TYPE HOLDER	
	-0202				1		
110	-0201	293395-0001	P		2	TYPE HOLDER	
	-0202				1		
130	-0201	292412	C		1	GABLE	
130	-0202	479236	C		2	GABLE	
135	-0201	292413	C		1	GABLE	
140	-0201	292414	C		1	CARRIER	
140	-0202	479239	C		1	CARRIER	
145	-0202	479240	C		1	CARRIER	
150	-0202	293671	C		1	SPACER	
250	-0202	312101-0329	-		2	SCREW	M6S5X16FZB
373	-0201	312101-0331	-		7	SCREW	M6S5X20FZB
	-0202				3		
397	-0201	315101-0146	-		7	WASHER	BRB5,3X10FZB
	-0202				5		
403	-0202	315202-0224	P		4	O-RING	42,2X3
405	-0201	315202-0304	P		2	O-RING	64,5X3
410	-0201	315202-0305	P		2	O-RING	69,5X3
120	ALL	32691	P		1	LOCKING SPRING	
125	ALL	33011	S		1	SLEEVE	
320	ALL	90165-0010	-		1	CLIP	
330	ALL	90413-0033	P		1	CODE INSERT SET	
330	ALL	90413-0043	P		1	CODE INSERT SET	
335	ALL	90413-0044	P		1	CODE INSERT SET	
335	ALL	90413-0047	P		1	CODE INSERT SET	
370	ALL	312101-0287	-		1	SCREW	M6S4X8FZB
375	ALL	312101-0364	-		1	SCREW	M6S6X10FZB
380	ALL	312111-0335	-		1	SCREW	MC6S5X30FZB
395	ALL	315101-0136	-		1	WASHER	BRB4,3X8FZB
400	ALL	315111-0153	-		1	WASHER	TBRB6,4X12FZB
415	ALL	321120-0122	S		2	BUSHING	15/17X15

S-293685-2

375ml

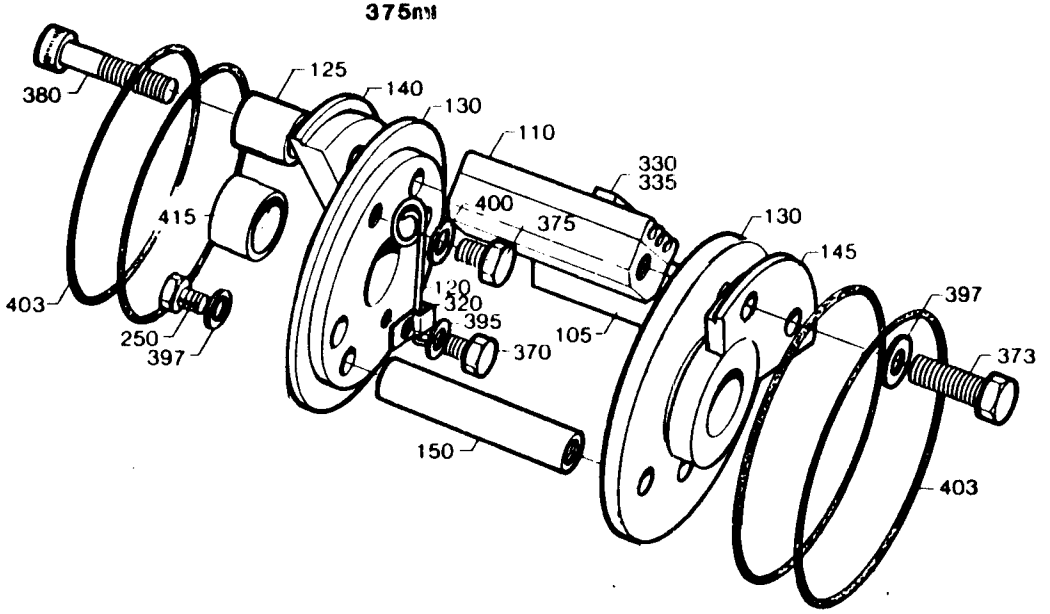

180ml–300ml

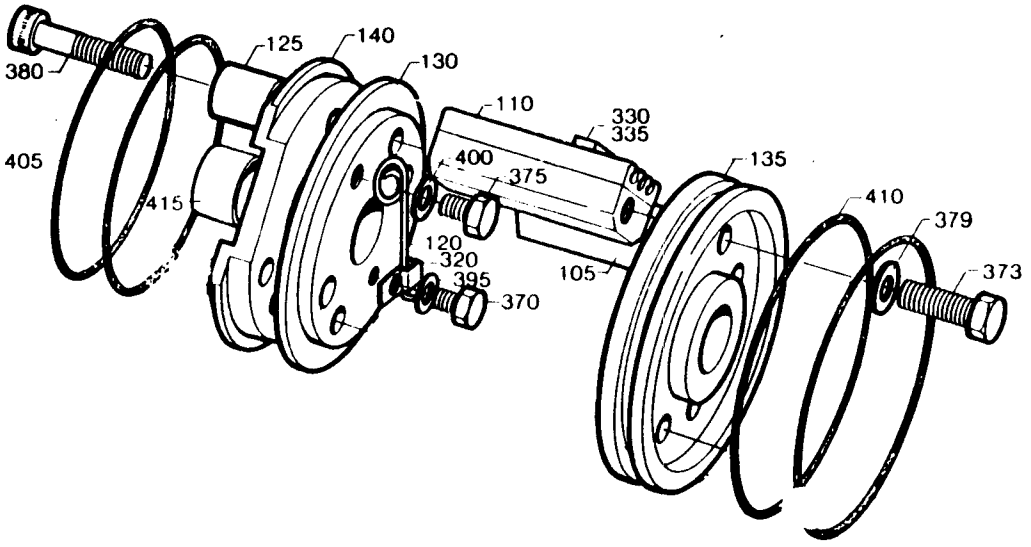

LAST ALTERATION: AM 9628 86-10-16
648107-060V
AM 7279
84-11-06

POS	VAR	PART NUMBER	SP	EH	QTY	DESCRIPTION
010	-0301	251279	-		1	COIL HEATER
020	-0301	21903	-		1	ROLLER
030	-0301	531733	-		1	GASKET
040	-0301	531734	-		2	GASKET
050	-0301	531735	-		1	GASKET
060	-0301	531736	-		1	GASKET
070	-0301	90206-0031	-		1	HEATING ELEMENT

LAST ALTERATION: AM 9628 86-10-16
648107-060V
AM 6724
84-06-14

GROUP	VOLUME	VOLUME	VOLUME	VOLUME	VOLUME
-0201	V0284	V0250	V0236	V0200	V0187
	V0180	-	-	-	-
-0202	200ML SLIM	-	-	-	-
-0205	V0125	-	-	-	-

POS	VAR	PART NUMBER	SP	EH	QTY	DESCRIPTION
	-0201	S- 295891-SHEET	-2			===ASSEMBLY DRAWING===
	-0202		-2			
	-0205		-2			
010	-0201	36316	S		1	PAPER SUPPORT
010	-0202	456918	S		1	PAPER SUPPORT
	-0205				1	
526	-0201	256986-0005	-		1	STRUT
526	-0202	256986-0006	-		1	STRUT
526	-0205	256986-0007	-		1	STRUT
050	ALL	456308	-		1	PLATE
080	ALL	32668	-		1	ARM
100	ALL	36749	-		1	MANTLE
110	ALL	267306	-		1	TOUCH GUARD
120	ALL	283361	S		1	BLOW-OFF NOZZLE
150	ALL	32451	C		1	AIR DUCT
160	ALL	32453	-		1	MANTLE
170	ALL	32474	-		1	CONNECTION
180	ALL	245189-0001	-		1	CONNECTION
190	ALL	246342	-		1	PAPER SUPPORT
200	ALL	251279	PU		1	COIL HEATER
210	ALL	251490	C		1	ANGLE BRACKET
240	ALL	267309	C		1	BRACKET
250	ALL	283172	-		1	BEARING HOUSING
260	ALL	441348	-		1	PAPER SUPPORT
310	ALL	22559	P		5	LOCATING SCREW
320	ALL	32213	-		2	WASHER
330	ALL	32215	C		2	HOLDER
340	ALL	531733	PU		1	GASKET
350	ALL	32217	-		1	BOTTOM SECTION
360	ALL	32219	-		1	WASHER
370	ALL	32223	S		1	BEARING
380	ALL	32400	-		2	HOLDER
390	ALL	531734	PU		2	GASKET
400	ALL	531735	PU		1	GASKET
410	ALL	531736	PU		1	GASKET
430	ALL	37768	P		1	THERMOCOUPLE
470	ALL	230107	P		1	WASHER
500	ALL	246343	-		1	ANGLE BRACKET
501	ALL	246344	-		1	HEAT GUARD

POS	VAR	PART NUMBER	SP	EH	QTY	DESCRIPTION
520	ALL	251501	-		1	ANGLE BRACKET
521	ALL	251502	-		1	HEAT GUARD
522	ALL	251503	-		2	HOLDER
523	ALL	251504	-		1	HOLDER
524	ALL	251505	-		1	SPACER
530	ALL	279672	-		1	CONNECTION
620	ALL	90166-0087	-	MM	300	HOSE
625	ALL	90235-0275	P		2	VALVE
630	ALL	90239-0127	S		1	BRACKET
640	ALL	90239-0153	S		1	BRACKET
650	ALL	90239-0166	S		1	CYLINDER
		90285-0094	S		0	* SEAL
660	ALL	90326-0012	P		1	PROTECTIVE COVER
670	ALL	90326-0020	P		1	SOCKET
700	ALL	311103-0232	-		1	CYLINDRICACPR3M6X8RFR
720	ALL	311103-0267	-		10	CYLINDRICACPR4M6X10RFR
730	ALL	311305-0308	-		2	SLOTTED PIRPC5X16FZB
750	ALL	312105-0325	-		2	SCREW M6S5X10 A4 80
760	ALL	312105-0366	-		16	SCREW M6S6X12RFR
770	ALL	312105-0368	-		12	SCREW M6S6X16RFR
780	ALL	312105-0378	-		2	SCREW M6S6X40RFR
790	ALL	312105-0451	-		6	SCREW M6S8X20RFR
800	ALL	312105-0489	-		6	SCREW M6S10X16RFR
810	ALL	312109-0381	-		2	SCREW M6S6X55HA480
820	ALL	312115-0368	-		4	SCREW 6X16 A4 80
825	ALL	312125-0285	-		1	SLOTTED HEMCS4X6RFR
830	ALL	312125-0287	-		6	SLOTTED HEMCS4X8RFR
860	ALL	312605-0316	-		14	NUT M6M6RFR
870	ALL	312605-0318	-		9	NUT M6M8RFR
880	ALL	312605-0320	-		4	NUT M6M10RFR
900	ALL	315105-0136	-		7	WASHER BRB4,3X8RFR
901	ALL	315105-0146	-		2	WASHER BRB5,3X10RFR
902	ALL	315105-0153	-		21	WASHER BRB6,4X12RFR
903	ALL	315105-0165	-		4	WASHER BRB8,4X16RFR
904	ALL	315105-0173	-		6	WASHER BRB10,5X22RFR
905	ALL	315121-0165	-		5	WASHER TBRSB8,4X26FZB
910	ALL	321101-0173	P		1	BUSHING 12F7X12
930	ALL	342797-0122	-		3	BANJO CONNSINGEL 6-1/4
940	ALL	342980-0304	-		1	BANJO CONN SINGEL 1/4
945	ALL	342991-0103	-		2	HOSE CLIP 15-24MMRFR
950	ALL	352103-0106	-		1	CABLE GLANR.18,6/5-10
960	ALL	353101-0134	-		1	CABLE SHOE
970	ALL	353104-0130	-		2	CABLE SHOEYAV 14 M 43

S-295891-2

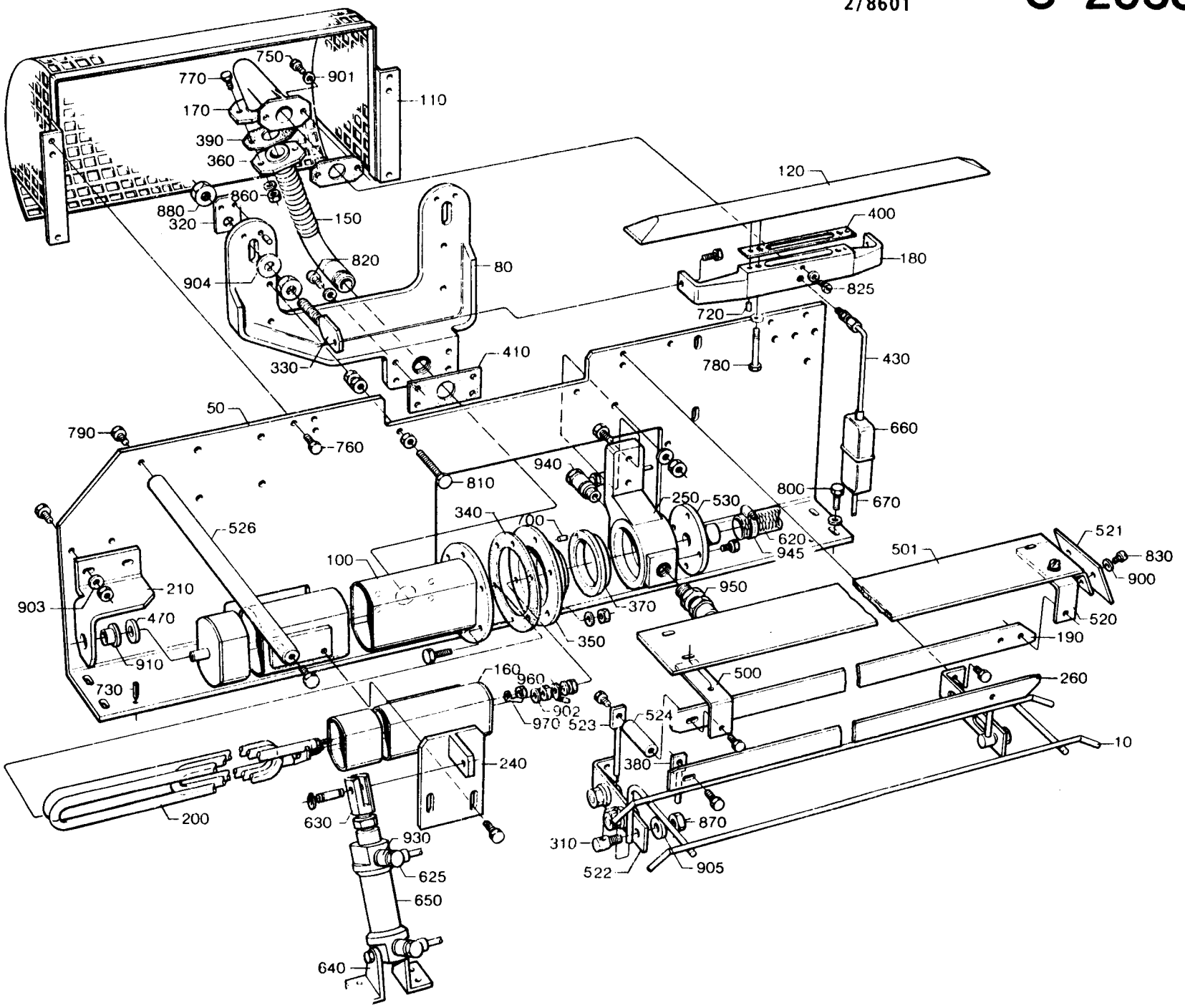
750
770
901
110
170
390
360
860
880
320
150
820
904
80
330
410
120
400
180
825
720
780
430
660
790
760
50
810
940
800
670
250
530
340
700
620
945
526
100
950
370
350
903
210
470
910
730
160
960
902
970
523
524
500
521
501
830
900
520
190
260
10
240
200
630
930
625
650
640
380
870
310
522
905

LAST ALTERATION: AM 6724 84-06-14
648019 648107

GROUP	FILLMACHINE	FILLMACHINE
-0201	B8	B9
-0202	AB9	-

POS	VAR	PART NUMBER	SP	EH	QTY	DESCRIPTION
	-0201	S- 434074-SHEET	-2			===ASSEMBLY DRAWING===
	-0202		-2			
230	-0201	90050-0008	P		1	PLASTIC BOTTLE
230	-0202	90050-0012	P		1	BOTTLE
010	ALL	297988	-		1	COVER
030	ALL	297211	-		1	INK WELL
040	ALL	456771	C		1	HOLDER
060	ALL	445542	P		1	RUBBER GASKET
065	ALL	450355	S		1	INK ROLLER
070	ALL	33010	-		1	SCREW
080	ALL	35547	S		1	SPRING
100	ALL	292044	P		1	AXLE
110	ALL	293667	S		1	PIN
120	ALL	436927	C		1	NUT
130	ALL	293669-0001	P		4	WASHER
130	ALL	293669-0002	P		2	WASHER
130	ALL	293669-0003	P		2	WASHER
130	ALL	293669-0004	P		2	WASHER
140	ALL	293670	P		1	AXLE
150	ALL	293675	P		1	ROLLER
160	ALL	293697	S		1	SIDE PLATE
180	ALL	297308	S		1	CANNULAR TUBE
190	ALL	456773	C		1	BRACKET
200	ALL	434747	S		1	CLAMP
210	ALL	434773	P		1	LOCK SPRING
250	ALL	90051-0077	S		1	HANDLE
260	ALL	90143-0029	S	MM	295	STRIP
270	ALL	90166-0138	P	MM	100	HOSE
280	ALL	90299-0013	P		10	INK
300	ALL	311103-0236	-		2	CYLINDRICACPR3M6X16RFR
310	ALL	311103-0238	-		1	CYLINDRICACPR3M6X20RFR
320	ALL	311103-0270	-		1	CYLINDRICACPR4M6X16RFR
330	ALL	312105-0291	-		3	SCREW M6S4X12RFR
340	ALL	312105-0327	-		2	SCREW M6S5X12RFR
345	ALL	312105-0329	-		1	SCREW M6S5X16RFR
350	ALL	312605-0314	-		2	NUT M6M5RFR
360	ALL	312605-0318	-		3	NUT M6M8RFR
370	ALL	315105-0146	-		3	WASHER BRB5,3X10RFR
380	ALL	315105-0165	-		2	WASHER BRB8,4X16RFR
390	ALL	315202-0218	P		1	O-RING 26,2X3
400	ALL	315202-0309	P		1	O-RING 89,5X3
410	ALL	315750-0105	P		1	LOCK RING SGA8
420	ALL	321120-0100	S		4	BUSHING 8/10X12
425	ALL	321120-0109	S		2	BUSHING 12/14X10
430	ALL	352113-0101	P		2	RIBBON CLAR STA-SST 1M

TETRA PAK

1/8501

S-434074-2

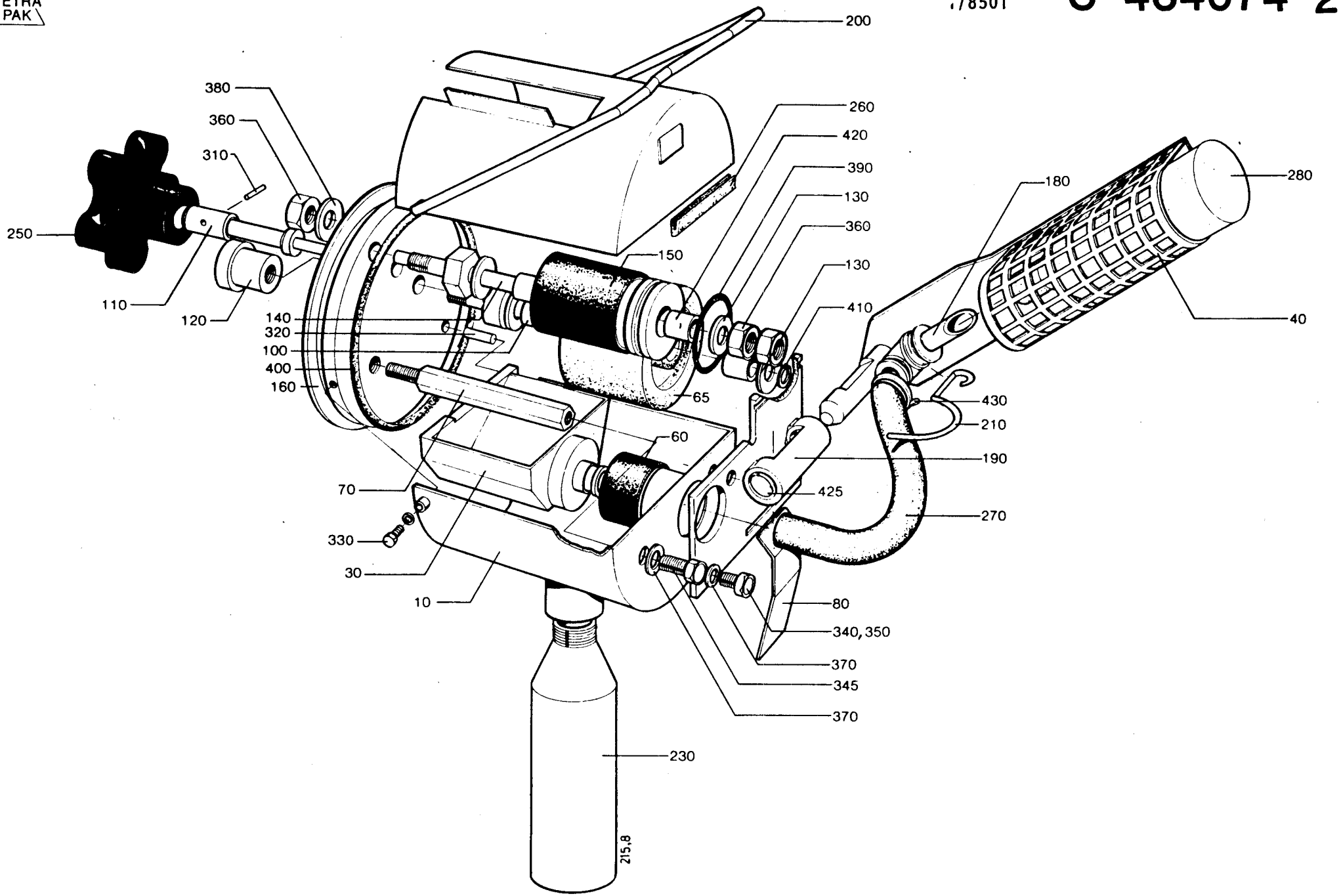

LAST ALTERATION: AM 9239 86-05-12
293680-030V 456322-020V 456349-020V 479044-010V
AM 8174
85-09-20

GROUP	FILLMACHINE	FILLMACHINE	FILLMACHINE	FILLMACHINE
-0301	AB3	AB3R	B8	B9
-0302	AB9	-	-	-

POS	VAR	PART NUMBER	SP	EH	QTY	DESCRIPTION
	-0301	S- 434074-SHEET		-3		===ASSEMBLY DRAWING===
	-0302			-3		
230	-0301	90050-0008	P		1	BOTTLE
230	-0302	90050-0012	P		1	BOTTLE
010	ALL	297988	-		1	COVER
030	ALL	297211	-		1	INK WELL
040	ALL	476356	C		1	HOLDER FOR INK BOTTLE
060	ALL	445542	P		1	RUBBER GASKET
065	ALL	450355	S		1	INK ROLLER
070	ALL	33010	-		1	SCREW
080	ALL	35547	S		1	SPRING
100	ALL	292044	P		1	SHAFT
110	ALL	293667	S		1	PIN
120	ALL	436927	C		1	NUT
130	ALL	293669-0001	P		4	WASHER
130	ALL	293669-0002	P		2	WASHER
130	ALL	293669-0003	P		2	WASHER
130	ALL	293669-0004	P		2	WASHER
140	ALL	293670	P		1	SHAFT
150	ALL	293675	P		1	ROLLER
160	ALL	293697	S		1	GABLE
180	ALL	476354	S		1	CANNULAR TUBE
190	ALL	456773	C		1	BRACKET
200	ALL	434747	S		1	CLAMP
250	ALL	90051-0077	S		1	HANDLE
260	ALL	90143-0029	S	MM	295	STRIP
270	ALL	90166-0138	P	MM	100	HOSE
280	ALL	90299-0013	P		X	INK
		90299-0300	R		0	* COVER
300	ALL	311103-0236	-		2	CYLINDRICACPR3M6X16RFR
310	ALL	311103-0238	-		1	CYLINDRICACPR3M6X20RFR
320	ALL	311103-0270	-		1	CYLINDRICACPR4M6X16RFR
330	ALL	312105-0291	-		3	SCREW M6S4X12RFR
340	ALL	312105-0327	-		2	SCREW M6S5X12 A4 80
345	ALL	312105-0329	-		1	SCREW M6S5X16 A4 80
347	ALL	312115-0287	-		2	SCREW 4X8 A4 80
350	ALL	312605-0314	-		2	NUT M6M5RFR
360	ALL	312605-0318	-		3	NUT M6M8RFR
370	ALL	315105-0146	-		3	WASHER BRB5,3X10RFR
380	ALL	315105-0165	-		2	WASHER BRB8,4X16RFR
390	ALL	315202-0218	P		1	O-RING 26,2X3

POS	VAR	PART NUMBER	SP	EH	QTY	DESCRIPTION
400	ALL	315202-0309	P		1	O-RING 89,5X3
410	ALL	315750-0105	P		1	LOCK RING SGA8
420	ALL	321120-0100	S		4	BUSHING 8/10X12
425	ALL	321120-0109	S		2	BUSHING 12/14X10
430	ALL	352113-0101	P		1	RIBBON CLAR

TETRA PAK

1/8608 **S-434074-3**

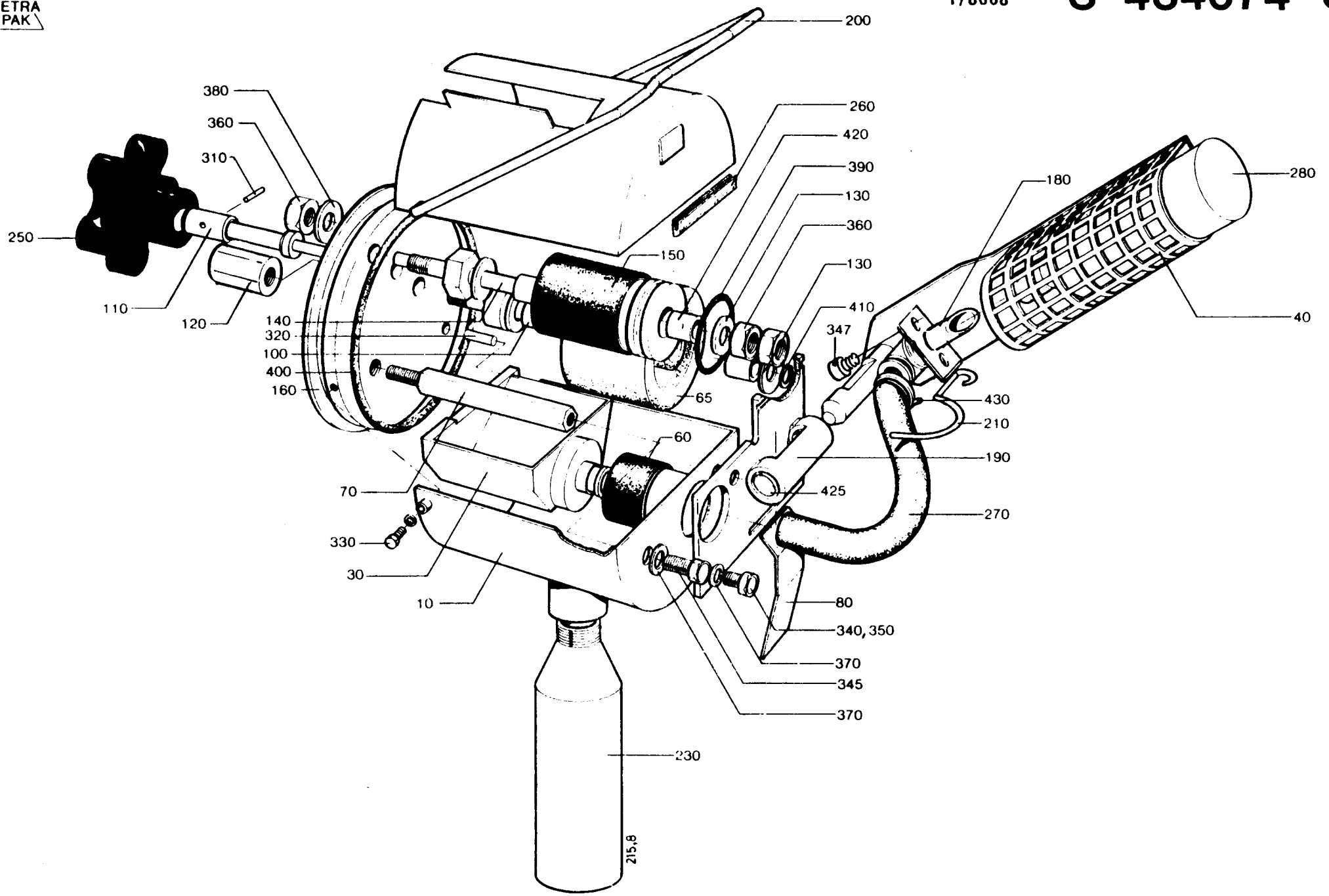

LAST ALTERATION: AM 6724 84-06-14
648019 648107

GROUP	FILLMACHINE	FILLMACHINE
-0201	B8	B9
-0202	AB9	-

POS	VAR	PART NUMBER	SP	EH	QTY	DESCRIPTION
	-0201	S- 434774-SHEET	-2			===ASSEMBLY DRAWING===
	-0202		-2			
230	-0201	90050-0008	P		1	PLASTIC BOTTLE
230	-0202	90050-0012	P		1	BOTTLE
010	ALL	297989	-		1	COVER
030	ALL	297210	-		1	INK WELL
040	ALL	456771	C		1	HOLDER
060	ALL	445542	P		1	RUBBER GASKET
065	ALL	450355	S		1	INK ROLLER
070	ALL	33010	-		1	SCREW
080	ALL	35547	S		1	SPRING
100	ALL	292044	P		1	AXLE
110	ALL	293667	S		1	PIN
120	ALL	436927	C		1	NUT
130	ALL	293669-0001	P		4	WASHER
130	ALL	293669-0002	P		2	WASHER
130	ALL	293669-0003	P		2	WASHER
130	ALL	293669-0004	P		2	WASHER
140	ALL	293670	P		1	AXLE
150	ALL	293675	P		1	ROLLER
160	ALL	297213	S		1	SIDE PLATE
180	ALL	297307	S		1	CANNULAR TUBE
190	ALL	456772	C		1	BRACKET
200	ALL	434747	S		1	CLAMP
210	ALL	434773	P		1	LOCK SPRING
250	ALL	90051-0077	S		1	HANDLE
260	ALL	90143-0029	S	MM	295	STRIP
270	ALL	90166-0138	P	MM	100	HOSE
280	ALL	90299-0013	P		10	INK
300	ALL	311103-0236	-		2	CYLINDRICACPR3M6X16RFR
310	ALL	311103-0238	-		1	CYLINDRICACPR3M6X20RFR
320	ALL	311103-0270	-		1	CYLINDRICACPR4M6X16RFR
330	ALL	312105-0291	-		3	SCREW M6S4X12RFR
340	ALL	312105-0327	-		2	SCREW M6S5X12RFR
345	ALL	312105-0329	-		1	SCREW M6S5X16RFR
350	ALL	312605-0314	-		2	NUT M6M5RFR
360	ALL	312605-0318	-		3	NUT M6M8RFR
370	ALL	315105-0146	-		3	WASHER BRB5,3X10RFR
380	ALL	315105-0165	-		2	WASHER BRB8,4X16RFR
390	ALL	315202-0218	P		1	O-RING 26,2X3
400	ALL	315202-0309	P		1	O-RING 89,5X3
410	ALL	315750-0105	P		1	LOCK RING SGA8
420	ALL	321120-0100	S		4	BUSHING 8/10X12
425	ALL	321120-0109	S		2	BUSHING 12/14X10
430	ALL	352113-0101	P		2	RIBBON CLAR STA-SST 1M

TETRA PAK

1/8501 **S-434774-2**

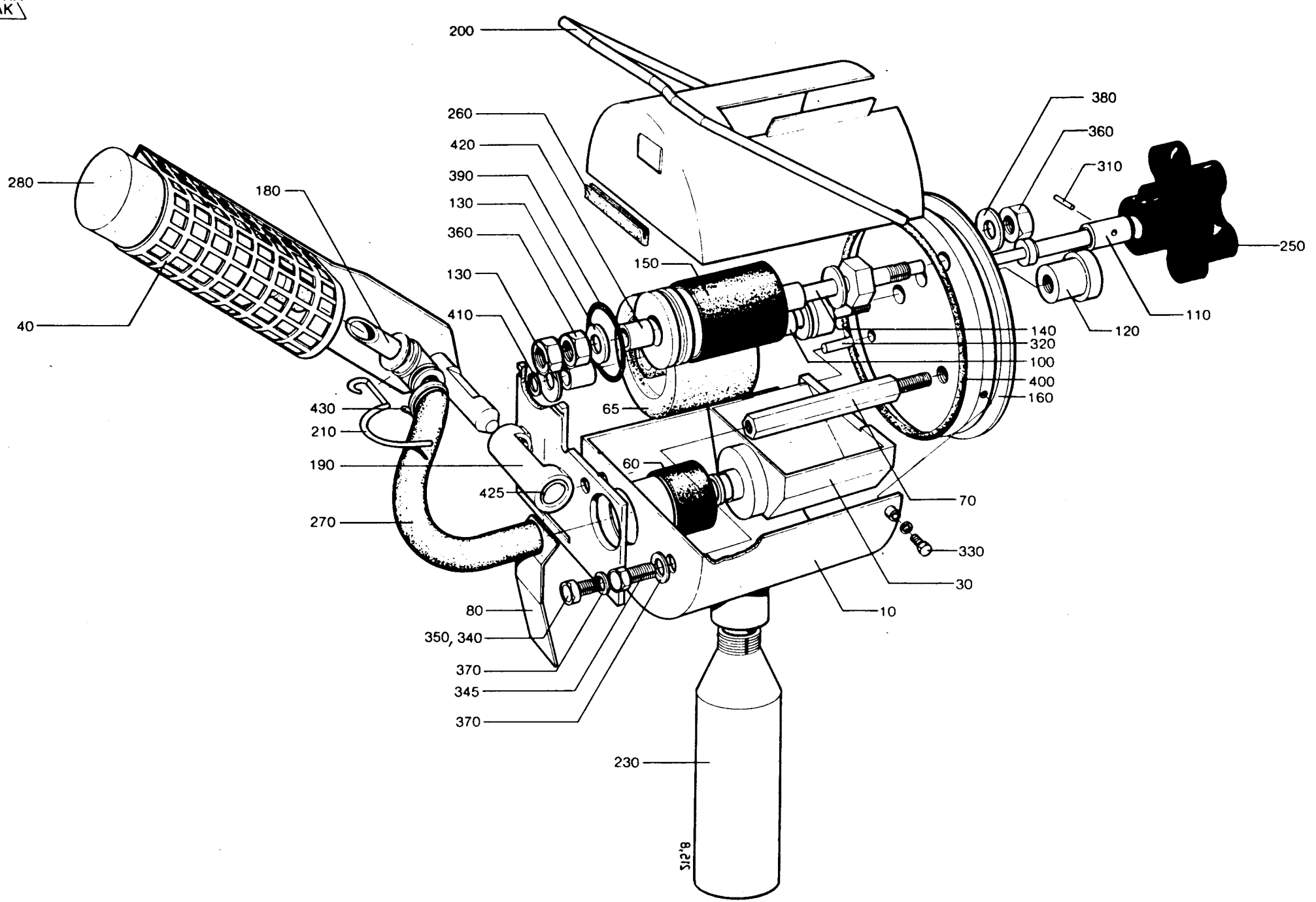

LAST ALTERATION: AM 9239 86-05-12
293681-030V 456321-020V 456348-020V 479045-010V
AM 8174
85-09-20

GROUP	FILLMACHINE	FILLMACHINE	FILLMACHINE	FILLMACHINE
-0301	AB3	AB3R	B8	B9
-0302	AB9	-	-	-

POS	VAR	PART NUMBER	SP	EH	QTY	DESCRIPTION
	-0301	S- 434774-SHEET	-3			===ASSEMBLY DRAWING===
	-0302		-3			
230	-0301	90050-0008	P		1	BOTTLE
230	-0302	90050-0012	P		1	BOTTLE
010	ALL	297989	-		1	COVER
030	ALL	297210	-		1	INK WELL
040	ALL	476356	C		1	HOLDER FOR INK BOTTLE
060	ALL	445542	P		1	RUBBER GASKET
065	ALL	450355	S		1	INK ROLLER
070	ALL	33010	-		1	SCREW
080	ALL	35547	S		1	SPRING
100	ALL	292044	P		1	SHAFT
110	ALL	293667	S		1	PIN
120	ALL	436927	C		1	NUT
130	ALL	293669-0001	P		4	WASHER
130	ALL	293669-0002	P		2	WASHER
130	ALL	293669-0003	P		2	WASHER
130	ALL	293669-0004	P		2	WASHER
140	ALL	293670	P		1	SHAFT
150	ALL	293675	P		1	ROLLER
160	ALL	297213	S		1	GABLE
180	ALL	476355	S		1	CANNULAR TUBE
190	ALL	456772	C		1	BRACKET
200	ALL	434747	S		1	CLAMP
250	ALL	90051-0077	S		1	HANDLE
260	ALL	90143-0029	S	MM	295	STRIP
270	ALL	90166-0138	P	MM	100	HOSE
280	ALL	90299-0013	P		X	INK
		90299-0300	R		0	* COVER
300	ALL	311103-0236	-		2	CYLINDRICACPR3M6X16RFR
310	ALL	311103-0238	-		1	CYLINDRICACPR3M6X20RFR
320	ALL	311103-0270	-		1	CYLINDRICACPR4M6X16RFR
330	ALL	312105-0291	-		3	SCREW M6S4X12RFR
340	ALL	312105-0327	-		2	SCREW M6S5X12 A4 80
345	ALL	312105-0329	-		1	SCREW M6S5X16 A4 80
347	ALL	312115-0287	-		2	SCREW 4X8 A4 80
350	ALL	312605-0314	-		2	NUT M6M5RFR
360	ALL	312605-0318	-		3	NUT M6M8RFR
370	ALL	315105-0146	-		3	WASHER BRB5,3X10RFR
380	ALL	315105-0165	-		2	WASHER BRB8,4X16RFR
390	ALL	315202-0218	P		1	O-RING 26,2X3

POS	VAR	PART NUMBER	SP	EH	QTY	DESCRIPTION
400	ALL	315202-0309	P		1	O-RING 89,5X3
410	ALL	315750-0105	P		1	LOCK RING SGA8
420	ALL	321120-0100	S		4	BUSHING 8/10X12
425	ALL	321120-0109	S		2	BUSHING 12/14X10
430	ALL	352113-0101	P		1	RIBBON CLAR

S-434774-3

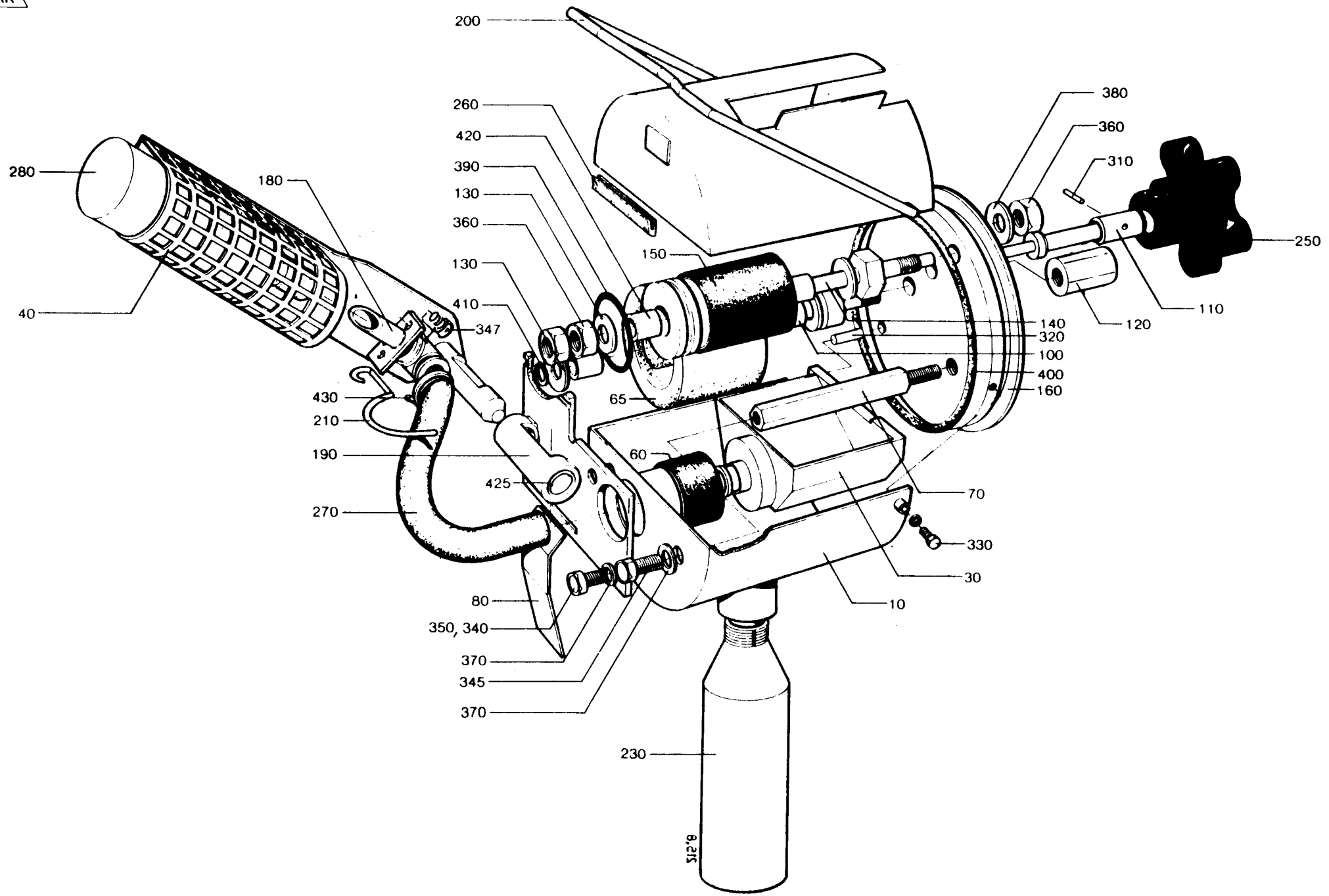
200
260
420
390
130
360
130
410
347
430
210
190
425
270
80
350, 340
370
345
370
230
280
180
40
150
65
60
425
380
360
310
250
110
120
140
320
100
400
160
70
330
30
10

LAST ALTERATION: AM 8009 85-06-24
648107-060V
AM 7279
84-11-06

GROUP FILLMACHINE

-0301 B9
-0302 AB9
**** THIS C-LIST CONTAINS SUBGROUPS, SEE B-LIST ****

POS	VAR	PART NUMBER	SP	EH	QTY	DESCRIPTION
	-0301	S- 441000-SHEET	-5			===ASSEMBLY DRAWING===
	-0301		~~-6~~			
	-0302		-5			
	-0302		~~-6~~			
020	-0301	469872	-		1	BRACKET
020	-0302	469873	-		1	BRACKET
920	-0301	352103-0106	-		3	CABLE GLANR.18,6/5-10
	-0302				5	
010	ALL	441005	C		1	PLATE
040	ALL	19452	-		1	BOBBIN BRAKE
050	ALL	229494	-		1	BOBBIN BRAKE
070	ALL	441034	-		1	ARM
090	ALL	6695	P		4	ROLLER
100	ALL	7814	-		X	BOBBIN
110	ALL	14846	S		2	CATCH
120	ALL	14966	P		1	ROLLER
130	ALL	15810	P		2	BRAKE BLOCK
140	ALL	18880	S		2	AXLE PIN
150	ALL	19453	S		2	SHAFT
160	ALL	19455	P		2	ROLLER
170	ALL	19515	S		2	EYELET
180	ALL	19893	C		2	WEIGHT
190	ALL	232979	P		2	PRESSURE ROLLER
200	ALL	249298	P		1	ROLLER
220	ALL	269053-0001	S		1	SHAFT
230	ALL	456734	-		1	SHAFT
240	ALL	269053-0003	S		1	SHAFT
250	ALL	269054	S		1	ARM
260	ALL	269056	-		1	CLUTCH
270	ALL	269057	S		1	TENSION SPRING
290	ALL	295760	-		1	ANGLE BRACKET
300	ALL	456733	-		1	ARM
310	ALL	441010	S		1	SHAFT
320	ALL	441011	S		1	AXLE PIN
331	ALL	456735	-		1	PIN
332	ALL	456736	-		1	PLATE
340	ALL	469874	-		1	GUIDE RAIL
341	ALL	469875	-		1	GUIDE RAIL
400	ALL	90044-0104	P		2	INDUCTIVE TRANSMITTER
420	ALL	90165-0024	-		5	CLIP
430	ALL	90194-0040	-		1	LABEL
440	ALL	90265-0056	-		1	CONNECTION BOX

POS	VAR	PART NUMBER	SP	EH	QTY	DESCRIPTION
500	ALL	311411-0137	P		2	SPLIT PIN SP1,6X10RFR
510	ALL	312105-0325	-		6	SCREW M6S5X10 A4 80
515	ALL	312105-0331	-		2	SCREW M6S5X20 A4 80
530	ALL	312105-0368	-		3	SCREW M6S6X16RFR
540	ALL	312105-0447	-		2	SCREW M6S8X12RFR
550	ALL	312105-0453	-		4	SCREW M6S8X25RFR
570	ALL	312125-0230	-		2	SLOTTED HEMCS3X20RFR
572	ALL	312125-0228	-		2	SLOTTED HEMCS3X16RFR
580	ALL	312125-0285	-		12	SLOTTED HEMCS4X6RFR
590	ALL	312125-0293	-		2	SLOTTED HEMCS4X16RFR
592	ALL	312125-0297	-		1	SLOTTED HEMCS4X25RFR
600	ALL	312125-0374	-		1	SLOTTED HEMCS6X30RFR
610	ALL	312318-0360	-		2	GRUB SCREW SK6SS6X6RFR
650	ALL	312605-0310	-		2	NUT M6M3RFR
660	ALL	312605-0312	-		3	NUT M6M4RFR
670	ALL	312605-0316	-		8	NUT M6M6RFR
680	ALL	312811-0316	-		2	CHECK NUT M6RFR
690	ALL	312811-0318	-		2	CHECK NUT M8RFR
720	ALL	315105-0124	-		6	WASHER BRB3,2X6RFR
730	ALL	315105-0136	-		17	WASHER BRB4,3X8RFR
740	ALL	315105-0146	-		11	WASHER BRB5,3X10RFR
750	ALL	315105-0153	-		9	WASHER BRB6,4X12RFR
760	ALL	315105-0165	-		6	WASHER BRB8,4X16RFR
770	ALL	315105-0178	-		2	WASHER BRB13X24RFR
780	ALL	315402-0156	-		8	WASHER FBB6,5RFR
800	ALL	315750-0101	P		2	LOCK RING SGA4
820	ALL	318800-0102	-		1	KNOB LA D.20-M5
840	ALL	321120-0101	S		2	BUSHING 6/8X6
860	ALL	321120-0111	S		2	BUSHING 12/14X15

TETRA PAK

2/8601

S-441000-5

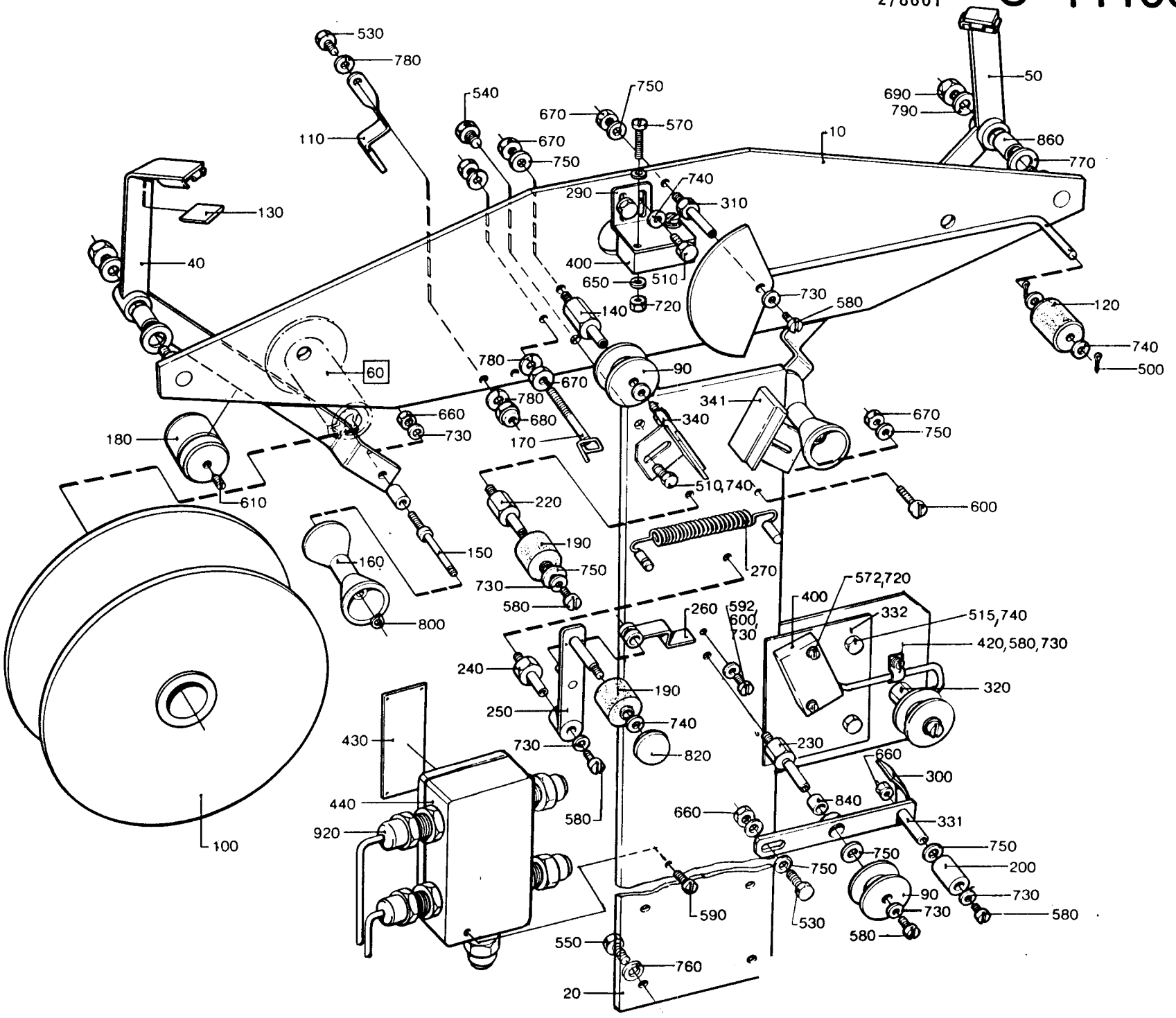

LAST ALTERATION: AM 8655 86-01-11
648107-060V
AM 6350
83-12-20

GROUP	VOLUME	VOLUME	VOLUME	VOLUME
-0101	V0250	V0236	V0200	V0180
-0102	200ML SLIM	-	-	-
-0103	V0125	-	-	-

POS	VAR	PART NUMBER	SP	EH	QTY	DESCRIPTION
	-0101	S- 456032-SHEET	-1			===ASSEMBLY DRAWING===
	-0101		~~2~~			
	-0102		-1			
	-0102		~~2~~			
	-0103		-1			
	-0103		~~2~~			
170	-0101	256986-0002	-		1	STRUT
170	-0102	256986-0003	-		1	STRUT
170	-0103	256986-0004	-		1	STRUT
190	-0101	266049	-		1	SUPPORT
	-0102				1	
190	-0103	491654	-		1	SUPPORT
010	ALL	243218	-		1	BRACKET
020	ALL	272173	-		1	BRACKET
030	ALL	243151	C		1	SHAFT
050	ALL	456027	C		1	HOLDER
060	ALL	456028	C		1	JOINT
070	ALL	456029	C		1	JOINT
080	ALL	456030	-		1	ANGLE BRACKET
090	ALL	456031	-		1	BRACKET
130	ALL	31418	S		1	SHAFT
140	ALL	31423	-		1	LUG
150	ALL	31425	S		1	GUIDE ROLLER
160	ALL	255064	P		8	BUSHING
180	ALL	257923	S		1	GUIDE ROLLER
210	ALL	272177	S		2	LINK
220	ALL	272178	-		1	LUG
250	ALL	456022	S		1	SLEEVE
260	ALL	456023	-		1	JOINT
270	ALL	456024	C		1	GUIDE SHAFT
280	ALL	456025	C		2	HOLDER
290	ALL	456026	-		1	BRACKET
400	ALL	90258-0031	P		2	HOLLOW PIN
500	ALL	311305-0308	-		2	SLOTTED PIRPC5X16FZB
530	ALL	312105-0368	-		1	SCREW M6S6X16RFR
540	ALL	312105-0451	-		6	SCREW M6S8X20RFR
550	ALL	312105-0453	-		3	SCREW M6S8X25RFR
560	ALL	312105-0459	-		2	SCREW M6S8X40RFR
570	ALL	312105-0491	-		4	SCREW M6S10X20RFR
580	ALL	312109-0386	-		1	SCREW M6S6X80RFR

POS	VAR	PART NUMBER	SP	EH	QTY	DESCRIPTION
590	ALL	312318-0362	-		2	GRUB SCREW SK6SS6X8RFR
600	ALL	312605-0316	-		7	NUT M6M6RFR
610	ALL	312605-0318	-		3	NUT M6M8RFR
620	ALL	315105-0146	-		2	WASHER BRB5,3X10RFR
630	ALL	315105-0153	-		2	WASHER BRB6,4X12RFR
640	ALL	315105-0165	-		9	WASHER BRB8,4X16RFR
650	ALL	315105-0173	-		5	WASHER BRB10,5X22RFR
660	ALL	315115-0165	-		2	WASHER TBRB8,4X16RFR
680	ALL	315754-0107	P		4	CIRCLIP E 5
690	ALL	315754-0110	P		1	CIRCLIP E 9

S-456032-1

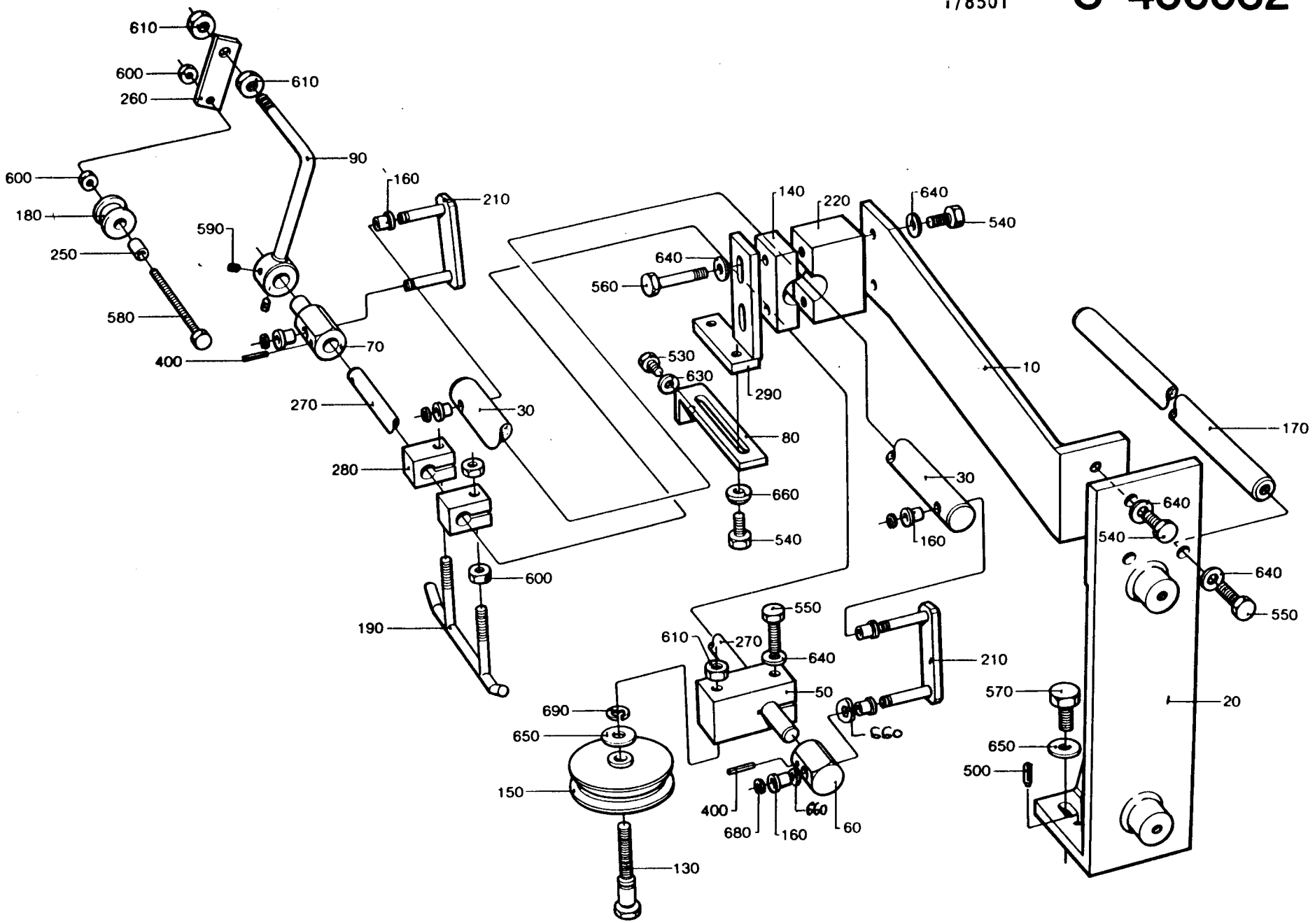
610
600
260
610
90
600
180
250
590
160
210
580
400
70
270
30
280
600
190
140
220
640
540
640
560
530
630
290
80
660
540
10
170
30
160
640
540
640
550
550
610
270
640
210
690
650
50
570
20
650
500
150
400
680
160
660
60
130

POS	VAR	PART NUMBER	SP	EH	QTY	DESCRIPTION
420	ALL	256398	C		4	LID
430	ALL	256403	C		2	TOOTHED WHEEL
440	ALL	256406	-		1	SIDE PLATE
450	ALL	256408-0001	-		1	SPACER
460	ALL	256409	-		5	WASHER
470	ALL	257141	-		2	RETAINING RING
480	ALL	271441	-		1	BRACKET
490	ALL	441753	-		1	PLATE
500	ALL	441754	-		2	SPACER
510	ALL	456336	-		1	BRACKET
520	ALL	456337	-		1	BRACKET
530	ALL	456776	C		2	MANTLE
540	ALL	456777	C		4	SLEEVE
550	ALL	456778	C		2	SHAFT
560	ALL	456817-0001	S		8	SHIM
600	ALL	90044-0104	P		1	INDUCTIVE TRANSMITTER
605	ALL	90090-0001	S		1	STEEL BALL
610	ALL	90141-0020	C		4	LOCK RING
612	ALL	90165-0024	-		3	CLIP
615	ALL	90214-0098	P		10	BALL BEARING
620	ALL	90417-0081	P		1	TOOTHED BELT
650	ALL	311103-0240	-		1	CYLINDRICACPR3M6X25RFR
655	ALL	311103-0312	-		6	CYLINDRICACPR5M6X25RFR
660	ALL	311103-0314	-		1	CYLINDRICACPR5M6X30RFR
665	ALL	311103-0318	-		2	CYLINDRICACPR5M6X40RFR
670	ALL	311103-0357	-		1	CYLINDRICACPR6M6X30RFR
675	ALL	312101-0466	-		1	SCREW M6S8X75FZB
680	ALL	312105-0327	-		2	SCREW M6S5X12 A4 80
685	ALL	312105-0332	-		2	SCREW M6S5X22RFR
690	ALL	312105-0364	-		5	SCREW M6S6X10RFR
700	ALL	312105-0366	-		6	SCREW M6S6X12RFR
705	ALL	312105-0368	-		2	SCREW M6S6X16RFR
710	ALL	312105-0374	-		3	SCREW M6S6X30RFR
715	ALL	312105-0378	-		4	SCREW M6S6X40RFR
720	ALL	312105-0451	-		4	SCREW M6S8X20RFR
725	ALL	312105-0453	-		5	SCREW M6S8X25RFR
730	ALL	312105-0455	-		10	SCREW M6S8X30RFR
735	ALL	312105-0457	-		2	SCREW M6S8X35RFR
740	ALL	312105-0459	-		5	SCREW M6S8X40RFR
745	ALL	312105-0465	-		2	SCREW M6S8X70RFR
750	ALL	312109-0376	-		1	SCREW 6X35 H RFR
755	ALL	312115-0370	-		1	SCREW 6X20 A4 80
760	ALL	312125-0230	-		2	SLOTTED HEMCS3X20RFR
762	ALL	312125-0289	-		3	SLOTTED HEMCS4X10RFR
765	ALL	312125-0366	-		4	SLOTTED HEMCS6X12RFR
770	ALL	312155-0291	-		6	SCREW MF6S4X12RFR
775	ALL	312155-0327	-		18	SCREW MF6S5X12RFR
800	ALL	312155-0376	-		1	SCREW MF6X35RFR
805	ALL	312318-0362	-		3	GRUB SCREW SK6SS6X8RFR

POS	VAR	PART NUMBER	SP	EH	QTY	DESCRIPTION
810	ALL	312605-0310	-		2	NUT M6M3RFR
815	ALL	312605-0316	-		1	NUT M6M6RFR
820	ALL	312812-0318	-		2	CHECK NUT A4-M8RFR
825	ALL	315105-0124	-		4	WASHER BRB3,2X6RFR
827	ALL	315105-0136	-		3	WASHER BRB4,3X8RFR
830	ALL	315105-0146	-		2	WASHER BRB5,3X10RFR
835	ALL	315105-0153	-		15	WASHER BRB6,4X12RFR
840	ALL	315105-0165	-		16	WASHER BRB8,4X16RFR
845	ALL	315701-0170	-		2	FLAT WEDGE4X4X20
850	ALL	321120-0147	-		2	BUSHING 22/25X25

TETRA PAK

2/8608 **S-456322-1**

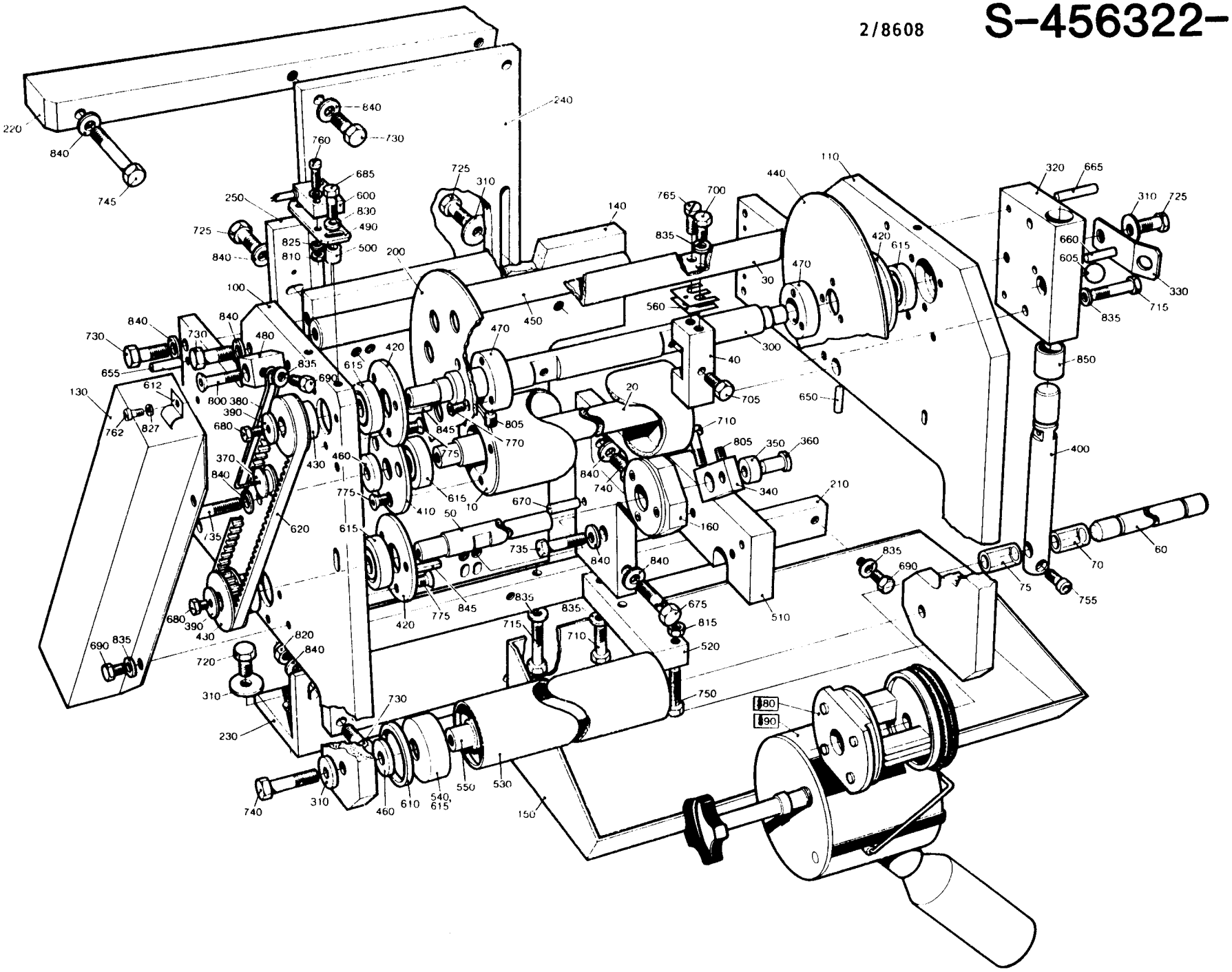

LAST ALTERATION: AM 7211 84-10-17
648107-060V
AM 6625
84-04-09

GROUP	VOLUME
-0101	V0250
-0102	V0236
-0103	V0200
-0104	V0180
-0105	200ML SLIM

**** THIS C-LIST CONTAINS SUBGROUPS, SEE B-LIST ****

POS	VAR	PART NUMBER	SP	EH	QTY	DESCRIPTION
	-0101	S- 456348-SHEET	-1			===ASSEMBLY DRAWING===
	-0101		-2			
	-0102		-1			
	-0102		-2			
	-0103		-1			
	-0103		-2			
	-0104		-1			
	-0104		-2			
	-0105		-1			
	-0105		-2			
010	-0101	256391-0001	C		1	BENDING ROLLER
	-0102				1	
	-0103				1	
	-0104				1	
010	-0105	456328	C		1	BENDING ROLLER
015	-0101	256392-0001	C		1	AXLE
	-0102				1	
	-0103				1	
	-0104				1	
015	-0105	256392-0003	C		1	AXLE
020	-0105	441554	C		2	CREASE BAR
020	-0101	456767	C		2	CREASE BAR
	-0102				2	
	-0103				2	
	-0104				2	
025	-0101	441556-0002	C		2	SPACER
025	-0102	441556-0003	C		2	SPACER
025	-0103	441556-0004	C		2	SPACER
025	-0104	441556-0006	C		2	SPACER
025	-0105	441556-0009	C		2	SPACER
030	-0101	256399-0001	C		1	AXLE
	-0102				1	
	-0103				1	
	-0104				1	
030	-0105	456811	C		1	AXLE
035	-0101	256400	C		1	AXLE
	-0102				1	
	-0103				1	

POS	VAR	PART NUMBER	SP	EH	QTY	DESCRIPTION
	-0104				1	
035	-0105	456334	C		1	AXLE
040	-0101	90166-0059	P	MM	28	HOSE
	-0102				28	
	-0103				28	
	-0104				28	
	-0105				41	
045	-0101	90166-0059	P	MM	28	HOSE
	-0102				28	
	-0103				28	
	-0104				28	
	-0105				41	
100	ALL	456061	-		1	PLATE
105	ALL	256388-0002	-		1	GABLE
110	ALL	256389-0002	-		1	GABLE
115	ALL	456062	-		1	RAIL
120	ALL	456326-0001	C		1	BRACKET
125	ALL	456350	-		1	PLATE
200	ALL	255916	C		1	CAM
205	ALL	456768	C		1	AXLE
210	ALL	256395	-		1	COVER
215	ALL	271614	-		1	GUARD
220	ALL	441540	-		1	CONDUIT
225	ALL	441752	-		1	SIDE PLATE
230	ALL	456063	-		1	BRACKET
235	ALL	456303	-		1	BRACKET
240	ALL	456352	-		1	SPLASH PLATE
300	ALL	28036	-		6	WASHER
305	ALL	32919	C		1	BLOCK
310	ALL	32923	S		7	SPRING
315	ALL	32925	C		1	CARRIER
320	ALL	32926	C		1	ROLLER
325	ALL	32927	C		1	AXLE
330	ALL	33182	S		1	ROLLER
335	ALL	33183	S		1	SPRING
340	ALL	106758	-		2	WASHER
345	ALL	228652	C		1	STOPPER
350	ALL	256248-0001	C		2	LID
355	ALL	256398	C		4	LID
360	ALL	256403	C		2	TOOTHED WHEEL
365	ALL	256406	-		1	SIDE PLATE
370	ALL	256408-0001	-		1	SPACER
375	ALL	256409	-		1	WASHER
380	ALL	257141	-		2	RETAINING RING
390	ALL	271441	-		1	BRACKET
395	ALL	456817-0001	C		8	SHIM
405	ALL	295765	-		1	PLATE
410	ALL	441753	-		1	PLATE
415	ALL	441754	-		2	SPACER
420	ALL	456335	-		1	BRACKET
425	ALL	456337	-		1	BRACKET

TETRA PAK

2/8506

S-456348-1

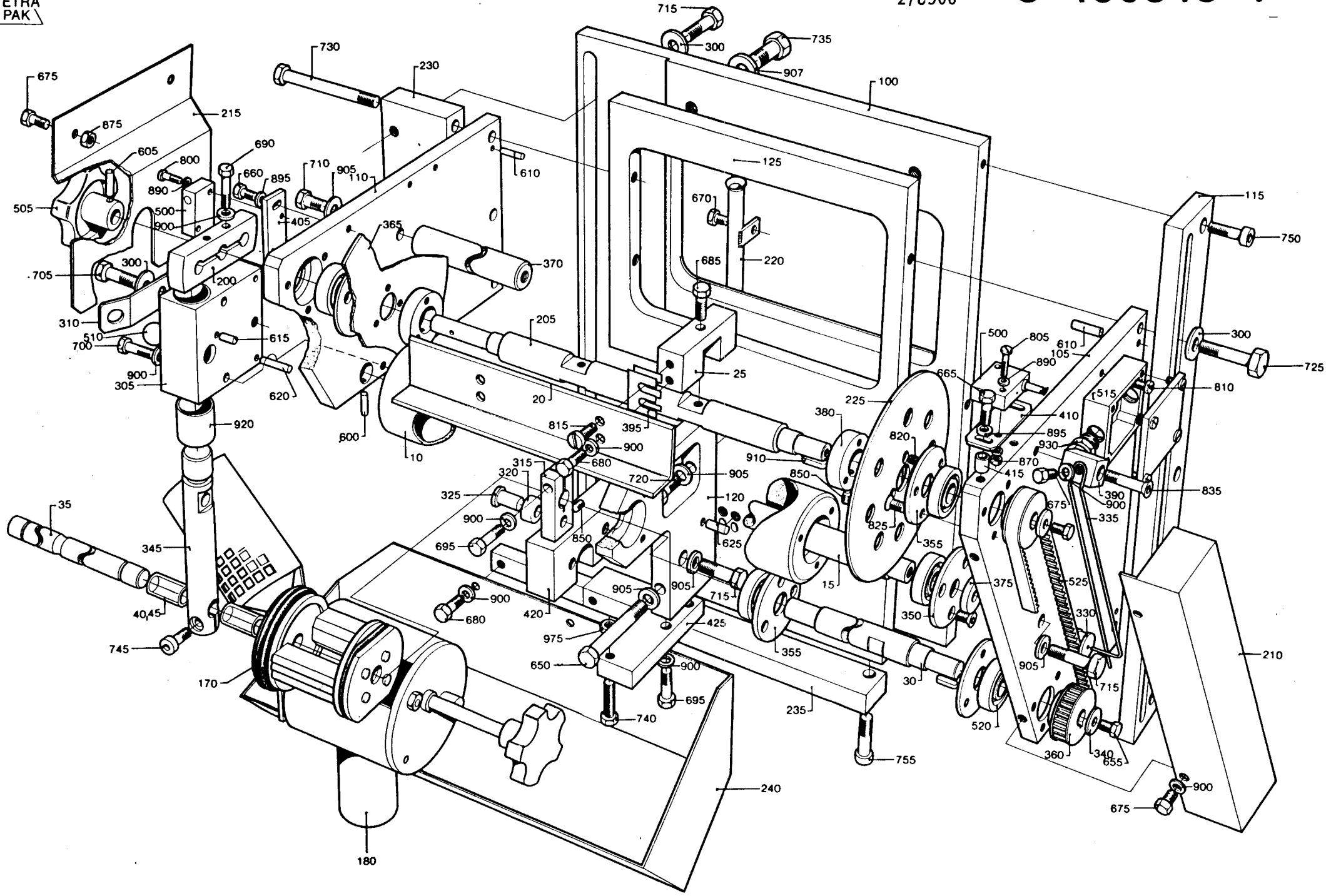

POS	VAR	PART NUMBER	SP	EH	QTY	DESCRIPTION
500	ALL	90044-0104	P		2	INDUCTIVE TRANSMITTER
505	ALL	90051-0045	S		1	HANDLE
510	ALL	90090-0001	S		1	STEEL BALL
515	ALL	90195-0037	-		2	CONNECTION BOX
520	ALL	90214-0028	P		6	BALL BEARING
525	ALL	90417-0081	P		1	TOOTHED BELT
600	ALL	311103-0240	-		1	CYLINDRICACPR3M6X25RFR
605	ALL	311103-0272	-		1	CYLINDRICACPR4M6X20RFR
610	ALL	311103-0312	-		4	CYLINDRICACPR5M6X25RFR
615	ALL	311103-0314	-		1	CYLINDRICACPR5M6X30RFR
620	ALL	311103-0318	-		2	CYLINDRICACPR5M6X40RFR
625	ALL	311103-0357	-		1	CYLINDRICACPR6M6X30RFR
650	ALL	312101-0466	-		1	SCREW M6S8X75FZB
655	ALL	312105-0327	-		2	SCREW M6S5X12RFR
660	ALL	312105-0331	-		2	SCREW M6S5X20RFR
665	ALL	312105-0332	-		2	SCREW M6S5X22RFR
670	ALL	312105-0362	-		2	SCREW M6S6X8RFR
675	ALL	312105-0364	-		5	SCREW M6S6X10RFR
680	ALL	312105-0366	-		7	SCREW M6S6X12RFR
685	ALL	312105-0368	-		4	SCREW M6S6X16RFR
690	ALL	312105-0372	-		2	SCREW M6S6X25RFR
695	ALL	312105-0374	-		3	SCREW M6S6X30RFR
700	ALL	312105-0378	-		2	SCREW M6S6X40RFR
705	ALL	312105-0453	-		1	SCREW M6S8X25RFR
710	ALL	312105-0455	-		2	SCREW M6S8X30RFR
715	ALL	312105-0457	-		4	SCREW M6S8X35RFR
720	ALL	312105-0459	-		1	SCREW M6S8X40RFR
725	ALL	312105-0461	-		3	SCREW M6S8X50RFR
730	ALL	312105-0469	-		3	SCREW M6S8X90RFR
735	ALL	312105-0492	-		4	SCREW M6S10X22RFR
740	ALL	312109-0376	-		1	SCREW 6X35 H RFR
745	ALL	312115-0370	-		1	SCREW MC6S6X20RFR
750	ALL	312115-0374	-		3	SCREW MC6S6X30RFR
755	ALL	312115-0457	-		2	SCREW MC6S8X35RFR
800	ALL	312125-0228	-		2	SLOTTED HEMCS3X16RFR
805	ALL	312125-0230	-		2	SLOTTED HEMCS3X20RFR
810	ALL	312125-0291	-		4	SLOTTED HEMCS4X12RFR
815	ALL	312125-0366	-		4	SLOTTED HEMCS6X12RFR
820	ALL	312155-0291	-		6	SCREW MF6S4X12RFR
825	ALL	312155-0327	-		18	SCREW MF6S5X12RFR
835	ALL	312155-0376	-		1	SCREW MF6X35RFR
850	ALL	312318-0362	-		3	GRUB SCREW SK6SS6X8RFR
870	ALL	312605-0310	-		2	NUT M6M3RFR
875	ALL	312605-0316	-		3	NUT M6M6RFR
890	ALL	315105-0124	-		6	WASHER BRB3,2X6RFR
895	ALL	315105-0146	-		4	WASHER BRB5,3X10RFR
900	ALL	315105-0153	-		17	WASHER BRB6,4X12RFR
905	ALL	315105-0165	-		6	WASHER BRB8,4X16RFR
907	ALL	315115-0173	-		4	WASHER B 10,5X22 RFR
910	ALL	315701-0170	-		2	FLAT WEDGE4X4X20
920	ALL	321120-0147	-		2	BUSHING 22/25X25
930	ALL	352103-0106	-		4	CABLE GLANR.18,6/5-10

TETRA PAK

2/8506

S-456348-1

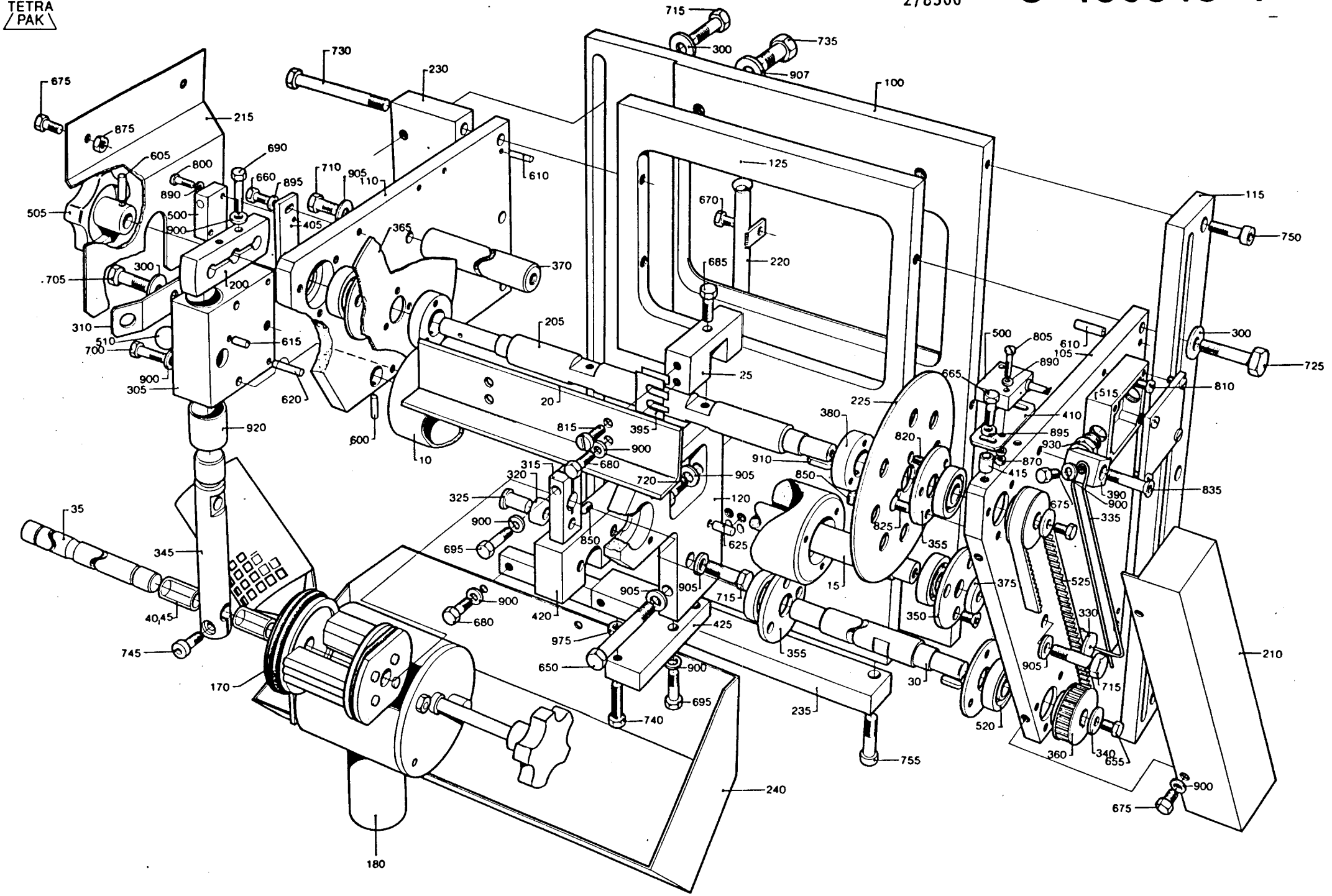

GROUP	VOLUME
-0201	V0250
-0202	V0236
-0203	V0200
-0204	V0180
-0205	200ML SLIM

POS	VAR	PART NUMBER	SP	EH	QTY	DESCRIPTION
	-0201	S- 456348-SHEET	-1			===ASSEMBLY DRAWING===
	-0201		-2			
	-0202		-1			
	-0202		-2			
	-0203		-1			
	-0203		-2			
	-0204		-1			
	-0204		-2			
	-0205		-1			
	-0205		-2			
F170	ALL	C- 293685-0201	-		2	DATING WHEEL
F180	ALL	C- 434774-0301	-		1	INK UNIT
010	-0201	256391-0001	C		1	BENDING ROLLER
	-0202				1	
	-0203				1	
	-0204				1	
010	-0205	456328	C		1	BENDING ROLLER
015	-0201	256392-0001	C		1	SHAFT
	-0202				1	
	-0203				1	
	-0204				1	
015	-0205	256392-0003	C		1	SHAFT
020	-0205	441554	C		2	CREASE BAR
020	-0201	456767	C		2	CREASE BAR
	-0202				2	
	-0203				2	
	-0204				2	
025	-0201	441556-0002	C		2	SPACER
025	-0202	441556-0003	C		2	SPACER
025	-0203	441556-0004	C		2	SPACER
025	-0204	441556-0006	C		2	SPACER
025	-0205	441556-0009	C		2	SPACER
030	-0201	256399-0001	C		1	SHAFT
	-0202				1	
	-0203				1	
	-0204				1	
030	-0205	456811	C		1	SHAFT
035	-0201	256400	C		1	SHAFT
	-0202				1	
	-0203				1	

POS	VAR	PART NUMBER	SP	EH	QTY	DESCRIPTION
	-0204				1	
035	-0205	456334	C		1	SHAFT
040	-0201	90166-0059	P	MM	28	HOSE
	-0202				28	
	-0203				28	
	-0204				28	
	-0205				41	
045	-0201	90166-0059	P	MM	28	HOSE
	-0202				28	
	-0203				28	
	-0204				28	
	-0205				41	
100	ALL	456061	-		1	PLATE
105	ALL	256388-0002	-		1	GABLE
110	ALL	256389-0002	-		1	GABLE
115	ALL	456062	-		1	RAIL
120	ALL	456326-0001	C		1	BEARING BRACKET
125	ALL	456350	-		1	PLATE
200	ALL	255916	C		1	CAM
205	ALL	456768	C		1	SHAFT
210	ALL	256395	-		1	COVER
215	ALL	271614	-		1	GUARD
220	ALL	441540	-		1	CONDUIT
225	ALL	441752	-		1	SIDE PLATE
230	ALL	456063	-		1	BRACKET
235	ALL	456303	-		1	BRACKET
240	ALL	456352	-		1	SPLASH PLATE
300	ALL	28036	-		6	WASHER
305	ALL	32919	C		1	BEARING BLOCK
310	ALL	32923	S		7	SPRING
315	ALL	32925	C		1	CARRIER
320	ALL	32926	C		1	ROLLER
325	ALL	32927	C		1	SHAFT
330	ALL	33182	S		1	ROLLER
335	ALL	33183	S		1	SPRING
340	ALL	106758	-		2	WASHER
345	ALL	228652	C		1	STOPPER
350	ALL	256248-0001	C		2	LID
355	ALL	256398	C		4	LID
360	ALL	256403	C		2	TOOTHED WHEEL
365	ALL	256406	-		1	SIDE PLATE
370	ALL	256408-0001	-		1	SPACER
375	ALL	256409	-		1	WASHER
380	ALL	257141	-		2	RETAINING RING
390	ALL	271441	-		1	BRACKET
395	ALL	456817-0001	C		8	SHIM
405	ALL	295765	-		1	PLATE
410	ALL	441753	-		1	PLATE
415	ALL	441754	-		2	SPACER

TETRA PAK

2/8506

S-456348-1

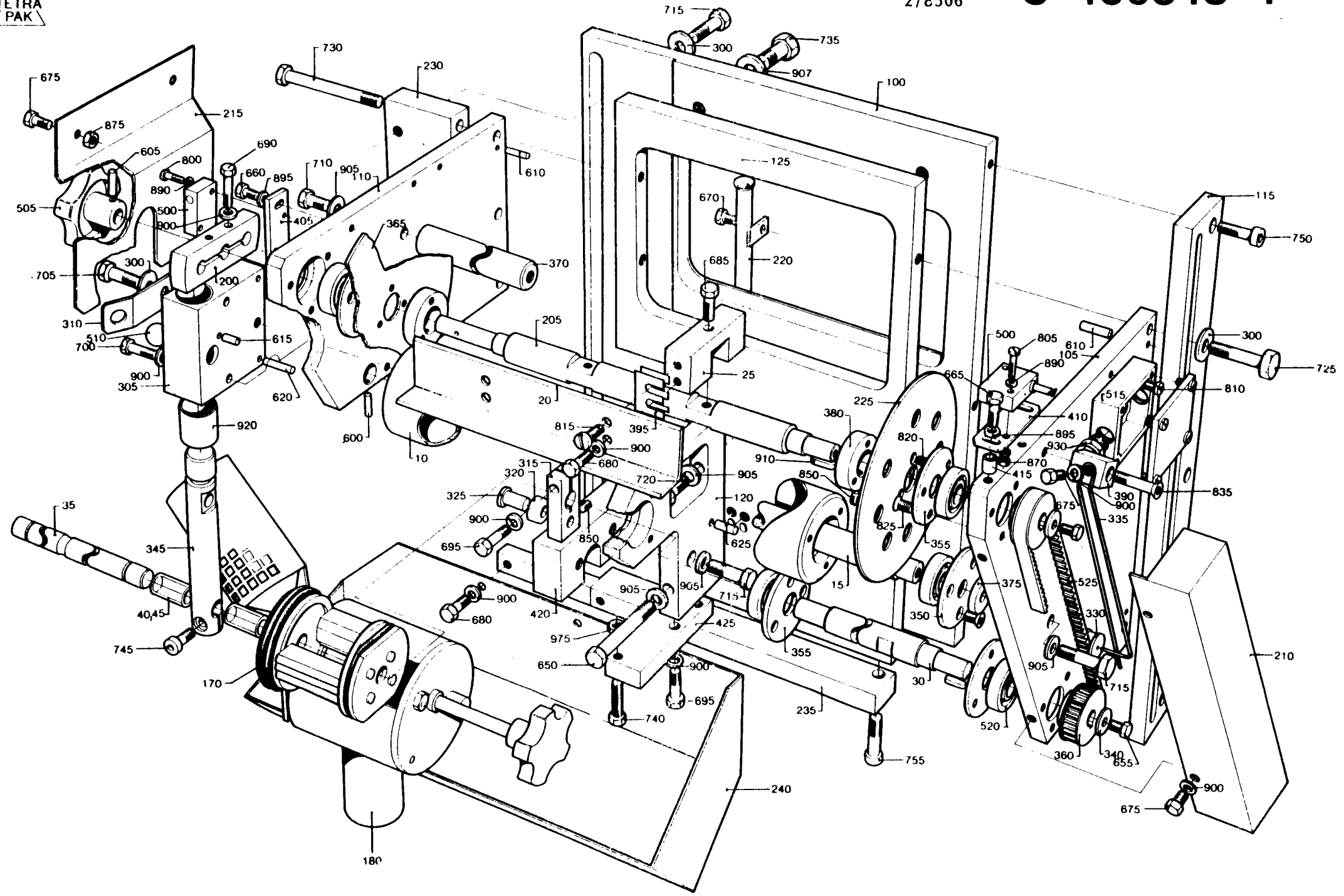

POS	VAR	PART NUMBER	SP	EH	QTY	DESCRIPTION
420	ALL	456335	-		1	BRACKET
425	ALL	456337	-		1	BRACKET
500	ALL	90044-0104	P		2	INDUCTIVE TRANSMITTER
505	ALL	90051-0045	S		1	HANDLE
510	ALL	90090-0001	S		1	STEEL BALL
515	ALL	90195-0037	-		2	CONNECTION BOX
520	ALL	90214-0098	P		6	BALL BEARING
525	ALL	90417-0081	P		1	TOOTHED BELT
600	ALL	311103-0240	-		1	CYLINDRICACPR3M6X25RFR
605	ALL	311103-0272	-		1	CYLINDRICACPR4M6X20RFR
610	ALL	311103-0312	-		4	CYLINDRICACPR5M6X25RFR
615	ALL	311103-0314	-		1	CYLINDRICACPR5M6X30RFR
620	ALL	311103-0318	-		2	CYLINDRICACPR5M6X40RFR
625	ALL	311103-0357	-		1	CYLINDRICACPR6M6X30RFR
650	ALL	312101-0466	-		1	SCREW M6S8X75FZB
655	ALL	312105-0327	-		2	SCREW M6S5X12 A4 80
660	ALL	312105-0331	-		2	SCREW M6S5X20 A4 80
665	ALL	312105-0332	-		2	SCREW M6S5X22RFR
670	ALL	312105-0362	-		2	SCREW M6S6X8RFR
675	ALL	312105-0364	-		5	SCREW M6S6X10RFR
680	ALL	312105-0366	-		7	SCREW M6S6X12RFR
685	ALL	312105-0368	-		4	SCREW M6S6X16RFR
690	ALL	312105-0372	-		2	SCREW M6S6X25RFR
695	ALL	312105-0374	-		3	SCREW M6S6X30RFR
700	ALL	312105-0378	-		2	SCREW M6S6X40RFR
705	ALL	312105-0453	-		1	SCREW M6S8X25RFR
710	ALL	312105-0455	-		2	SCREW M6S8X30RFR
715	ALL	312105-0457	-		4	SCREW M6S8X35RFR
720	ALL	312105-0459	-		1	SCREW M6S8X40RFR
725	ALL	312105-0461	-		3	SCREW M6S8X50RFR
730	ALL	312105-0469	-		3	SCREW M6S8X90RFR
735	ALL	312105-0492	-		4	SCREW M6S10X22RFR
740	ALL	312109-0376	-		1	SCREW 6X35 H RFR
745	ALL	312115-0370	-		1	SCREW 6X20 A4 80
750	ALL	312115-0374	-		3	SCREW 6X30 A4 80
755	ALL	312115-0457	-		2	SCREW A4 80
800	ALL	312125-0228	-		2	SLOTTED HEMCS3X16RFR
805	ALL	312125-0230	-		2	SLOTTED HEMCS3X20RFR
810	ALL	312125-0291	-		4	SLOTTED HEMCS4X12RFR
815	ALL	312125-0366	-		4	SLOTTED HEMCS6X12RFR
820	ALL	312155-0291	-		6	SCREW MF6S4X12RFR
825	ALL	312155-0327	-		18	SCREW MF6S5X12RFR
835	ALL	312155-0376	-		1	SCREW MF6X35RFR
850	ALL	312318-0362	-		3	GRUB SCREW SK6SS6X8RFR
870	ALL	312605-0310	-		2	NUT M6M3RFR
875	ALL	312605-0316	-		3	NUT M6M6RFR
890	ALL	315105-0124	-		6	WASHER BRB3,2X6RFR
895	ALL	315105-0146	-		4	WASHER BRB5,3X10RFR
900	ALL	315105-0153	-		17	WASHER BRB6,4X12RFR

POS	VAR	PART NUMBER	SP	EH	QTY	DESCRIPTION
905	ALL	315105-0165	-		6	WASHER BRB8,4X16RFR
907	ALL	315115-0173	-		4	WASHER B 10,5X22 RFR
910	ALL	315701-0170	-		2	FLAT WEDGE4X4X20
920	ALL	321120-0147	-		2	BUSHING 22/25X25
930	ALL	352103-0106	-		4	CABLE GLANR.18,6/5-10

TETRA PAK

2/8506

S-456348-1

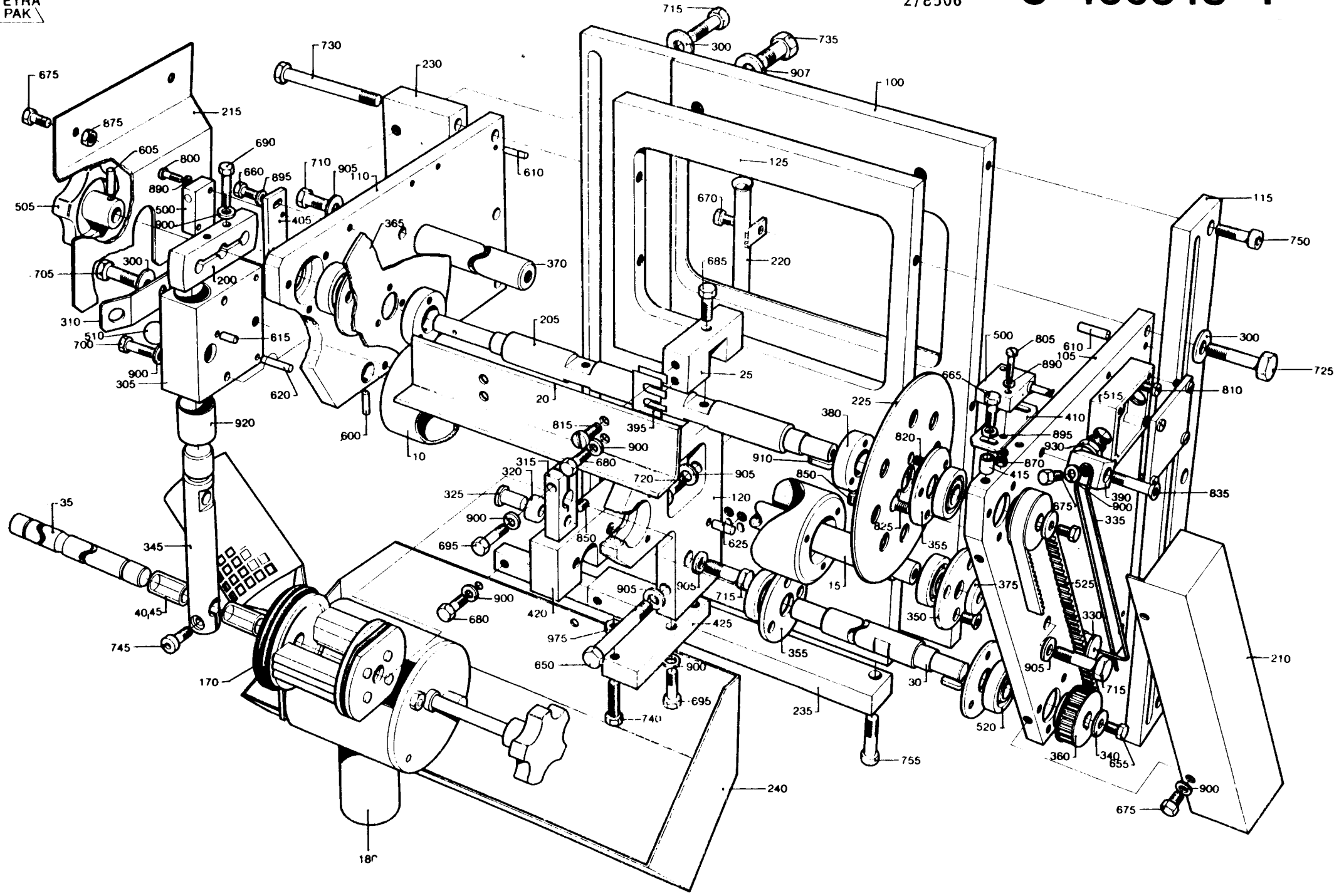

LAST ALTERATION: AM 7211 84-10-17
648107-060V
AM 6625
84-04-09

GROUP	VOLUME
-0101	V0250
-0102	V0236
-0103	V0200
-0104	V0180
-0105	200ML SLIM

**** THIS C-LIST CONTAINS SUBGROUPS, SEE B-LIST ****

POS	VAR	PART NUMBER	SP	EH	QTY	DESCRIPTION
	-0101	S- 456349-SHEET	-1			===ASSEMBLY DRAWING===
	-0101		-2			
	-0102		-1			
	-0102		-2			
	-0103		-1			
	-0103		-2			
	-0104		-1			
	-0104		-2			
	-0105		-1			
	-0105		-2			
010	-0101	256391-0001	C		1	BENDING ROLLER
	-0102				1	
	-0103				1	
	-0104				1	
010	-0105	456328	C		1	BENDING ROLLER
015	-0101	256392-0001	C		1	AXLE
	-0102				1	
	-0103				1	
	-0104				1	
015	-0105	256392-0003	C		1	AXLE
020	-0105	441554	C		2	CREASE BAR
020	-0101	456767	C		2	CREASE BAR
	-0102				2	
	-0103				2	
	-0104				2	
025	-0101	441556-0002	C		2	SPACER
025	-0102	441556-0003	C		2	SPACER
025	-0103	441556-0004	C		2	SPACER
025	-0104	441556-0006	C		2	SPACER
025	-0105	441556-0009	C		2	SPACER
030	-0101	256399-0001	C		1	AXLE
	-0102				1	
	-0103				1	
	-0104				1	
030	-0105	456811	C		1	AXLE
035	-0101	256400	C		1	AXLE
	-0102				1	
	-0103				1	

POS	VAR	PART NUMBER	SP	EH	QTY	DESCRIPTION
	-0104				1	
035	-0105	456334	C		1	AXLE
040	-0101	90166-0059	P	MM	28	HOSE
	-0102				28	
	-0103				28	
	-0104				28	
	-0105				41	
045	-0101	90166-0059	P	MM	28	HOSE
	-0102				28	
	-0103				28	
	-0104				28	
	-0105				41	
100	ALL	456061	-		1	PLATE
105	ALL	256388-0001	-		1	GABLE
110	ALL	256389-0001	-		1	GABLE
115	ALL	456062	-		1	RAIL
120	ALL	456326-0002	C		1	BRACKET
125	ALL	456350	-		1	PLATE
200	ALL	255916	C		1	CAM
205	ALL	456768	C		1	AXLE
210	ALL	256395	-		1	COVER
215	ALL	271614	-		1	GUARD
220	ALL	441540	-		1	CONDUIT
225	ALL	441752	-		1	SIDE PLATE
230	ALL	456063	-		1	BRACKET
235	ALL	456303	-		1	BRACKET
240	ALL	456353	-		1	SPLASH PLATE
300	ALL	28036	-		6	WASHER
305	ALL	32919	C		1	BLOCK
310	ALL	32923	S		7	SPRING
315	ALL	32925	C		1	CARRIER
320	ALL	32926	C		1	ROLLER
325	ALL	32927	C		1	AXLE
330	ALL	33182	S		1	ROLLER
335	ALL	33183	S		1	SPRING
340	ALL	106758	-		2	WASHER
345	ALL	228652	C		1	STOPPER
350	ALL	256248-0001	C		2	LID
355	ALL	256398	C		4	LID
360	ALL	256403	C		2	TOOTHED WHEEL
365	ALL	256406	-		1	SIDE PLATE
370	ALL	256408-0001	-		1	SPACER
375	ALL	256409	-		1	WASHER
380	ALL	257141	-		2	RETAINING RING
390	ALL	271441	-		1	BRACKET
395	ALL	456817-0001	C		8	SHIM
405	ALL	295765	-		1	PLATE
410	ALL	441753	-		1	PLATE
415	ALL	441754	-		2	SPACER
420	ALL	456336	-		1	BRACKET
425	ALL	456337	-		1	BRACKET

TETRA PAK

2/8506 **S-456349-1**

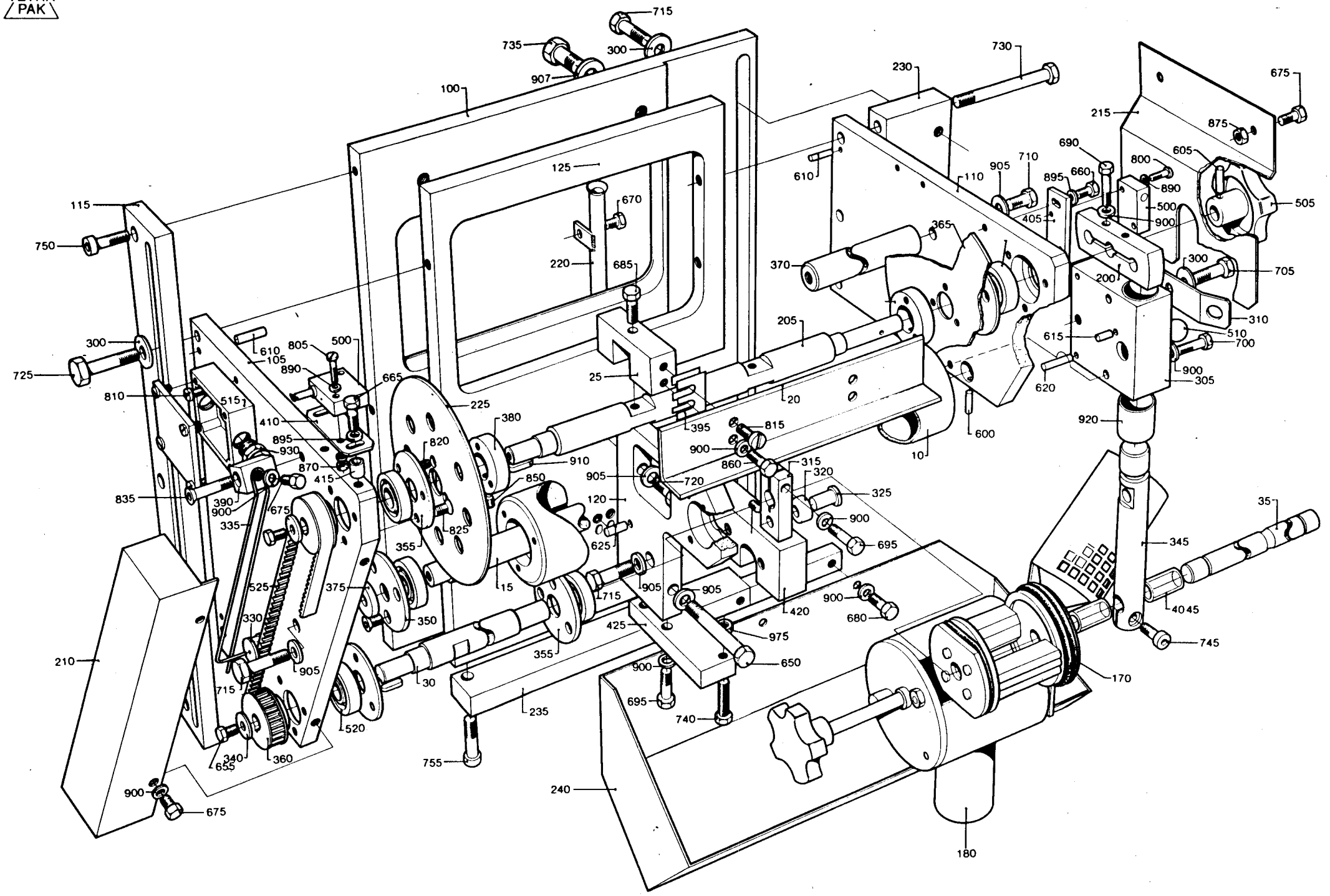

POS	VAR	PART NUMBER	SP	EH	QTY	DESCRIPTION
500	ALL	90044-0104	P		2	INDUCTIVE TRANSMITTER
505	ALL	90051-0045	S		1	HANDLE
510	ALL	90090-0001	S		1	STEEL BALL
515	ALL	90195-0037	-		2	CONNECTION BOX
520	ALL	90214-0028	P		6	BALL BEARING
525	ALL	90417-0081	P		1	TOOTHED BELT
600	ALL	311103-0240	-		1	CYLINDRICACPR3M6X25RFR
605	ALL	311103-0272	-		1	CYLINDRICACPR4M6X20RFR
610	ALL	311103-0312	-		4	CYLINDRICACPR5M6X25RFR
615	ALL	311103-0314	-		1	CYLINDRICACPR5M6X30RFR
620	ALL	311103-0318	-		2	CYLINDRICACPR5M6X40RFR
625	ALL	311103-0357	-		1	CYLINDRICACPR6M6X30RFR
650	ALL	312101-0466	-		1	SCREW M6S8X75FZB
655	ALL	312105-0327	-		2	SCREW M6S5X12RFR
660	ALL	312105-0331	-		2	SCREW M6S5X20RFR
665	ALL	312105-0332	-		2	SCREW M6S5X22RFR
670	ALL	312105-0362	-		2	SCREW M6S6X8RFR
675	ALL	312105-0364	-		5	SCREW M6S6X10RFR
680	ALL	312105-0366	-		7	SCREW M6S6X12RFR
685	ALL	312105-0368	-		4	SCREW M6S6X16RFR
690	ALL	312105-0372	-		2	SCREW M6S6X25RFR
695	ALL	312105-0374	-		3	SCREW M6S6X30RFR
700	ALL	312105-0378	-		2	SCREW M6S6X40RFR
705	ALL	312105-0453	-		1	SCREW M6S8X25RFR
710	ALL	312105-0455	-		2	SCREW M6S8X30RFR
715	ALL	312105-0457	-		4	SCREW M6S8X35RFR
720	ALL	312105-0459	-		1	SCREW M6S8X40RFR
725	ALL	312105-0461	-		3	SCREW M6S8X50RFR
730	ALL	312105-0469	-		2	SCREW M6S8X90RFR
735	ALL	312105-0492	-		4	SCREW M6S10X22RFR
740	ALL	312109-0376	-		1	SCREW 6X35 H RFR
745	ALL	312115-0370	-		1	SCREW MC6S6X20RFR
750	ALL	312115-0374	-		3	SCREW MC6S6X30RFR
755	ALL	312115-0457	-		2	SCREW MC6S8X35RFR
800	ALL	312125-0228	-		2	SLOTTED HEMCS3X16RFR
805	ALL	312125-0230	-		2	SLOTTED HEMCS3X20RFR
810	ALL	312125-0291	-		4	SLOTTED HEMCS4X12RFR
815	ALL	312125-0366	-		4	SLOTTED HEMCS6X12RFR
820	ALL	312155-0291	-		6	SCREW MF6S4X12RFR
825	ALL	312155-0327	-		18	SCREW MF6S5X12RFR
830	ALL	312155-0364	-		4	SCREW MF6S6X10RFR
835	ALL	312155-0376	-		1	SCREW MF6X35RFR
850	ALL	312318-0362	-		3	GRUB SCREW SK6SS6X8RFR
870	ALL	312605-0310	-		2	NUT M6M3RFR
875	ALL	312605-0316	-		3	NUT M6M6RFR
890	ALL	315105-0124	-		6	WASHER BRB3,2X6RFR
895	ALL	315105-0146	-		4	WASHER BRB5,3X10RFR
900	ALL	315105-0153	-		17	WASHER BRB6,4X12RFR
905	ALL	315105-0165	-		6	WASHER BRB8,4X16RFR
907	ALL	315115-0173	-		4	WASHER B 10,5X22 RFR
910	ALL	315701-0170	-		2	FLAT WEDGE4X4X20

POS	VAR	PART NUMBER	SP	EH	QTY	DESCRIPTION
920	ALL	321120-0147	-		2	BUSHING 22/25X25
930	ALL	352103-0106	-		4	CABLE GLANR.18,6/5-10

TETRA PAK

2/8506 **S-456349-1**

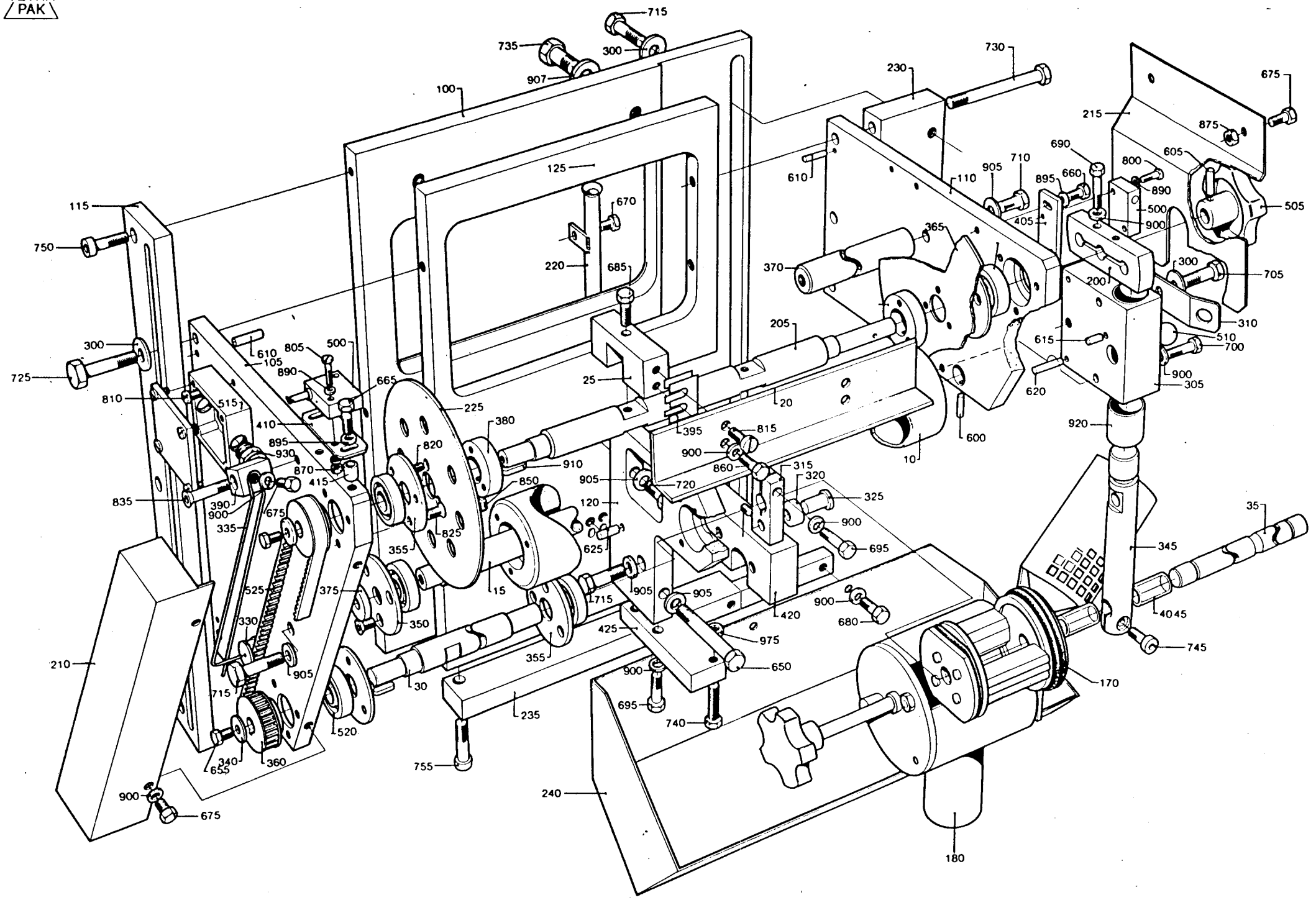

GROUP	VOLUME
-0201	V0250
-0202	V0236
-0203	V0200
-0204	V0180
-0205	200ML SLIM

POS	VAR	PART NUMBER	SP	EH	QTY	DESCRIPTION
	-0201	S- 456349-SHEET	-1			===ASSEMBLY DRAWING===
	-0201		-1			
	-0202		-1			
	-0202		-1			
	-0203		-1			
	-0203		-1			
	-0204		-1			
	-0204		-1			
	-0205		-1			
	-0205		-1			
F170	ALL	C- 293684-0204	-		2	DATING WHEEL ST-ER
F180	ALL	C- 434074-0301	-		1	INK UNIT
010	-0201	256391-0001	C		1	BENDING ROLLER
	-0202				1	
	-0203				1	
	-0204				1	
010	-0205	456328	C		1	BENDING ROLLER
015	-0201	256392-0001	C		1	SHAFT
	-0202				1	
	-0203				1	
	-0204				1	
015	-0205	256392-0003	C		1	SHAFT
020	-0205	441554	C		2	CREASE BAR
020	-0201	456767	C		2	CREASE BAR
	-0202				2	
	-0203				2	
	-0204				2	
025	-0201	441556-0002	C		2	SPACER
025	-0202	441556-0003	C		2	SPACER
025	-0203	441556-0004	C		2	SPACER
025	-0204	441556-0006	C		2	SPACER
025	-0205	441556-0009	C		2	SPACER
030	-0201	256399-0001	C		1	SHAFT
	-0202				1	
	-0203				1	
	-0204				1	
030	-0205	456811	C		1	SHAFT
035	-0201	256400	C		1	SHAFT
	-0202				1	
	-0203				1	

POS	VAR	PART NUMBER	SP	EH	QTY	DESCRIPTION
	-0204				1	
035	-0205	456334	C		1	SHAFT
040	-0201	90166-0059	P	MM	28	HOSE
	-0202				28	
	-0203				28	
	-0204				28	
	-0205				41	
045	-0201	90166-0059	P	MM	28	HOSE
	-0202				28	
	-0203				28	
	-0204				28	
	-0205				41	
100	ALL	456061	-		1	PLATE
105	ALL	256388-0001	-		1	GABLE
110	ALL	256389-0001	-		1	GABLE
115	ALL	456062	-		1	RAIL
120	ALL	456326-0002	C		1	BEARING BRACKET
125	ALL	456350	-		1	PLATE
200	ALL	255916	C		1	CAM
205	ALL	456768	C		1	SHAFT
210	ALL	256395	-		1	COVER
215	ALL	271614	-		1	GUARD
220	ALL	441540	-		1	CONDUIT
225	ALL	441752	-		1	SIDE PLATE
230	ALL	456063	-		1	BRACKET
235	ALL	456303	-		1	BRACKET
240	ALL	456353	-		1	SPLASH PLATE
300	ALL	28036	-		6	WASHER
305	ALL	32919	C		1	BEARING BLOCK
310	ALL	32923	S		7	SPRING
315	ALL	32925	C		1	CARRIER
320	ALL	32926	C		1	ROLLER
325	ALL	32927	C		1	SHAFT
330	ALL	33182	S		1	ROLLER
335	ALL	33183	S		1	SPRING
340	ALL	106758	-		2	WASHER
345	ALL	228652	C		1	STOPPER
350	ALL	256248-0001	C		2	LID
355	ALL	256398	C		4	LID
360	ALL	256403	C		2	TOOTHED WHEEL
365	ALL	256406	-		1	SIDE PLATE
370	ALL	256408-0001	-		1	SPACER
375	ALL	256409	-		1	WASHER
380	ALL	257141	-		2	RETAINING RING
390	ALL	271441	-		1	BRACKET
395	ALL	456817-0001	C		8	SHIM
405	ALL	295765	-		1	PLATE
410	ALL	441753	-		1	PLATE
415	ALL	441754	-		2	SPACER

TETRA PAK

2/8506 **S-456349-1**

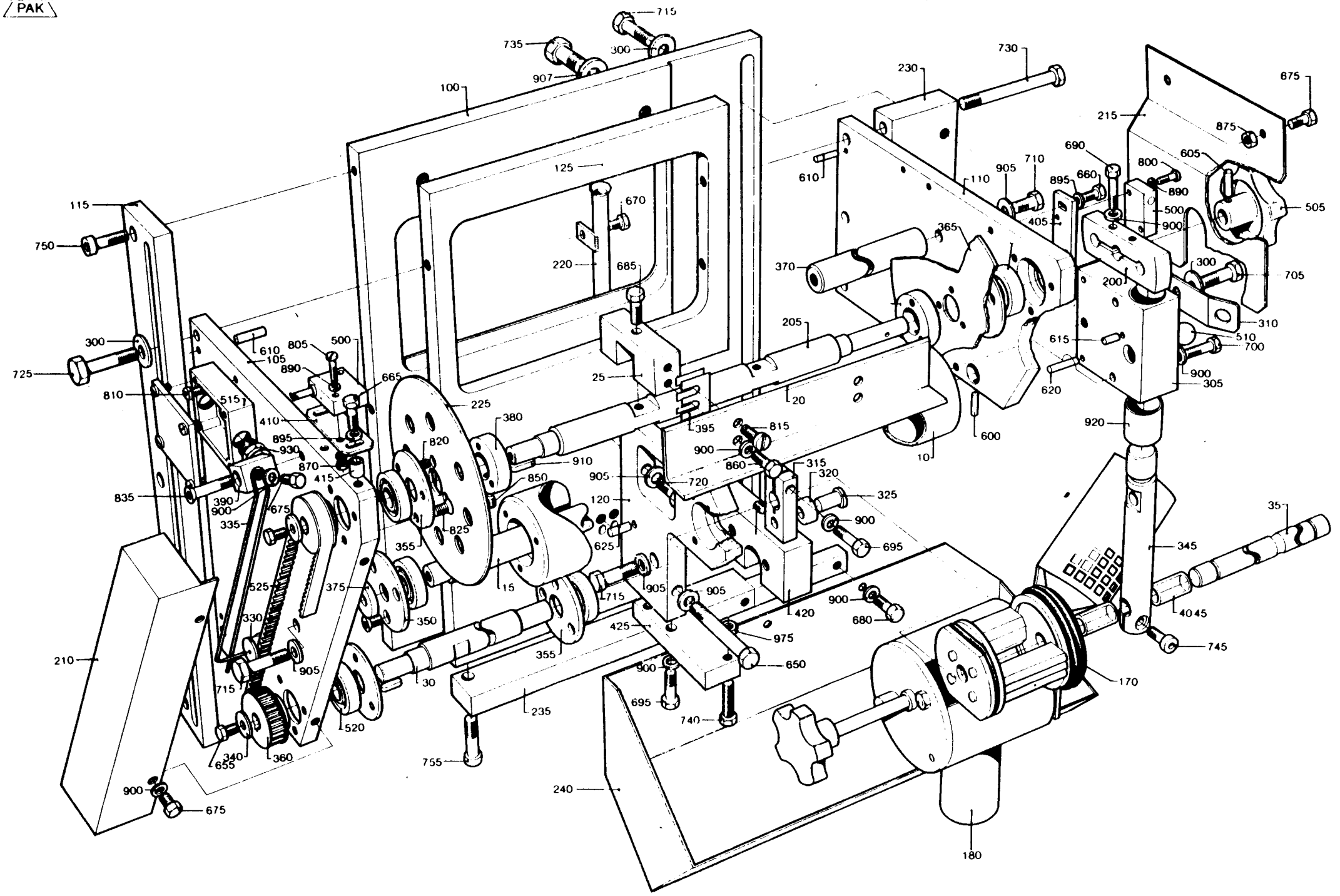

POS	VAR	PART NUMBER	SP	EH	QTY	DESCRIPTION
420	ALL	456336	-		1	BRACKET
425	ALL	456337	-		1	BRACKET
500	ALL	90044-0104	P		2	INDUCTIVE TRANSMITTER
505	ALL	90051-0045	S		1	HANDLE
510	ALL	90090-0001	S		1	STEEL BALL
515	ALL	90195-0037	-		2	CONNECTION BOX
520	ALL	90214-0098	P		6	BALL BEARING
525	ALL	90417-0081	P		1	TOOTHED BELT
600	ALL	311103-0240	-		1	CYLINDRICACPR3M6X25RFR
605	ALL	311103-0272	-		1	CYLINDRICACPR4M6X20RFR
610	ALL	311103-0312	-		4	CYLINDRICACPR5M6X25RFR
615	ALL	311103-0314	-		1	CYLINDRICACPR5M6X30RFR
620	ALL	311103-0318	-		2	CYLINDRICACPR5M6X40RFR
625	ALL	311103-0357	-		1	CYLINDRICACPR6M6X30RFR
650	ALL	312101-0466	-		1	SCREW M6S8X75FZB
655	ALL	312105-0327	-		2	SCREW M6S5X12 A4 80
660	ALL	312105-0331	-		2	SCREW M6S5X20 A4 80
665	ALL	312105-0332	-		2	SCREW M6S5X22RFR
670	ALL	312105-0362	-		2	SCREW M6S6X8RFR
675	ALL	312105-0364	-		5	SCREW M6S6X10RFR
680	ALL	312105-0366	-		7	SCREW M6S6X12RFR
685	ALL	312105-0368	-		4	SCREW M6S6X16RFR
690	ALL	312105-0372	-		2	SCREW M6S6X25RFR
695	ALL	312105-0374	-		3	SCREW M6S6X30RFR
700	ALL	312105-0378	-		2	SCREW M6S6X40RFR
705	ALL	312105-0453	-		1	SCREW M6S8X25RFR
710	ALL	312105-0455	-		2	SCREW M6S8X30RFR
715	ALL	312105-0457	-		4	SCREW M6S8X35RFR
720	ALL	312105-0459	-		1	SCREW M6S8X40RFR
725	ALL	312105-0461	-		3	SCREW M6S8X50RFR
730	ALL	312105-0469	-		2	SCREW M6S8X90RFR
735	ALL	312105-0492	-		4	SCREW M6S10X22RFR
740	ALL	312109-0376	-		1	SCREW 6X35 H RFR
745	ALL	312115-0370	-		1	SCREW 6X20 A4 80
750	ALL	312115-0374	-		3	SCREW 6X30 A4 80
755	ALL	312115-0457	-		2	SCREW A4 80
800	ALL	312125-0228	-		2	SLOTTED HEMCS3X16RFR
805	ALL	312125-0230	-		2	SLOTTED HEMCS3X20RFR
810	ALL	312125-0291	-		4	SLOTTED HEMCS4X12RFR
815	ALL	312125-0366	-		4	SLOTTED HEMCS6X12RFR
820	ALL	312155-0291	-		6	SCREW MF6S4X12RFR
825	ALL	312155-0327	-		18	SCREW MF6S5X12RFR
830	ALL	312155-0364	-		4	SCREW MF6S6X10RFR
835	ALL	312155-0376	-		1	SCREW MF6X35RFR
850	ALL	312318-0362	-		3	GRUB SCREW SK6SS6X8RFR
870	ALL	312605-0310	-		2	NUT M6M3RFR
875	ALL	312605-0316	-		3	NUT M6M6RFR
890	ALL	315105-0124	-		6	WASHER BRB3,2X6RFR
895	ALL	315105-0146	-		4	WASHER BRB5,3X10RFR

POS	VAR	PART NUMBER	SP	EH	QTY	DESCRIPTION
900	ALL	315105-0153	-		17	WASHER BRB6,4X12RFR
905	ALL	315105-0165	-		6	WASHER BRB8,4X16RFR
907	ALL	315115-0173	-		4	WASHER B 10,5X22 RFR
910	ALL	315701-0170	-		2	FLAT WEDGE4X4X20
920	ALL	321120-0147	-		2	BUSHING 22/25X25
930	ALL	352103-0106	-		4	CABLE GLANR.18,6/5-10

TETRA PAK

2/8506 **S-456349-1**

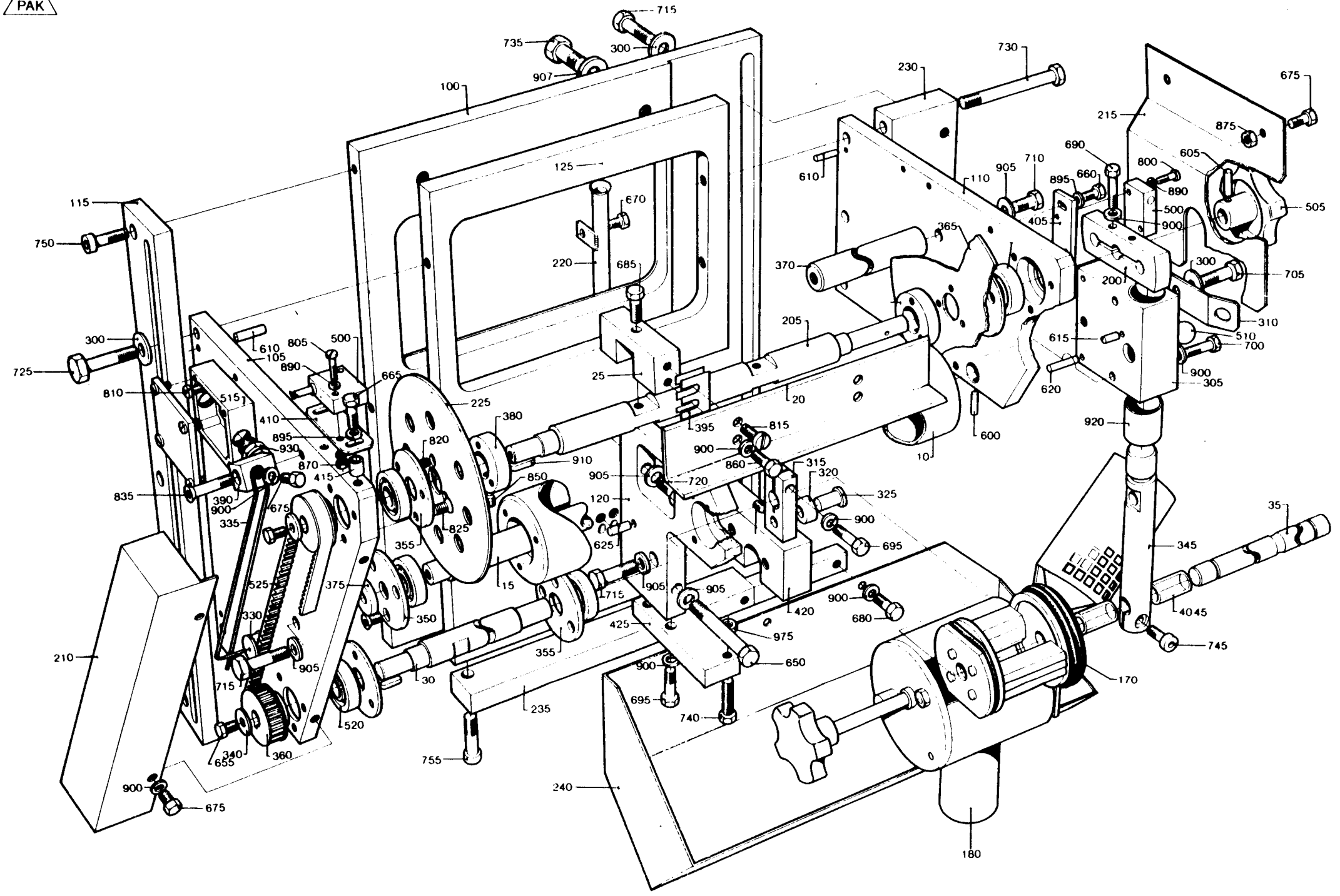

LAST ALTERATION: AM 7065 84-09-12
648107

GROUP	VOLUME	VOLUME	VOLUME	VOLUME
-0101	V0250	V0236	V0200	V0180
-0102	200ML SLIM	-	-	-

POS	VAR	PART NUMBER	SP	EH	QTY	DESCRIPTION
	-0101	S- 456739-SHEET	-1			===ASSEMBLY DRAWING===
	-0102		-1			
010	-0101	456731-0001	-		1	PIPE
010	-0102	456731-0002	-		1	PIPE
020	-0101	456740-0001	-		1	PIPE
020	-0102	456740-0002	-		1	PIPE
030	-0101	456741-0001	-		1	PIPE
030	-0102	456741-0002	-		1	PIPE
040	-0101	456742-0001	-		1	PIPE
040	-0102	456742-0002	-		1	PIPE
050	-0101	456743-0001	-		1	PIPE
050	-0102	456743-0002	-		1	PIPE
100	ALL	456732	-		1	PIPE
200	ALL	90030-0075	-		1	PIPE CONNECTION
210	ALL	90165-0005	-		1	CLIP
220	ALL	90165-0006	-		2	CLAMP
230	ALL	90165-0027	-		2	CLIP
240	ALL	90166-0132	-	MM	350	HOSE
300	ALL	312125-0285	-		7	SLOTTED HEMCS4X6RFR
310	ALL	315105-0136	-		7	WASHER BRB4,3X8RFR
320	ALL	342708-0101	-		1	SLEEVE 6X1/MS
330	ALL	359000-0064	-		16	MARKING CO2/4 OMÄRKT
340	ALL	359000-0400	-		8	MARKING CO2/4"0"
350	ALL	359000-0401	-		4	MARKING CO2/4"1"
360	ALL	359000-0402	-		8	MARKING CO2/4"2"
370	ALL	359000-0404	-		4	MARKING CO2/4"4"

TETRA PAK

1/8501 **S-456739-1**

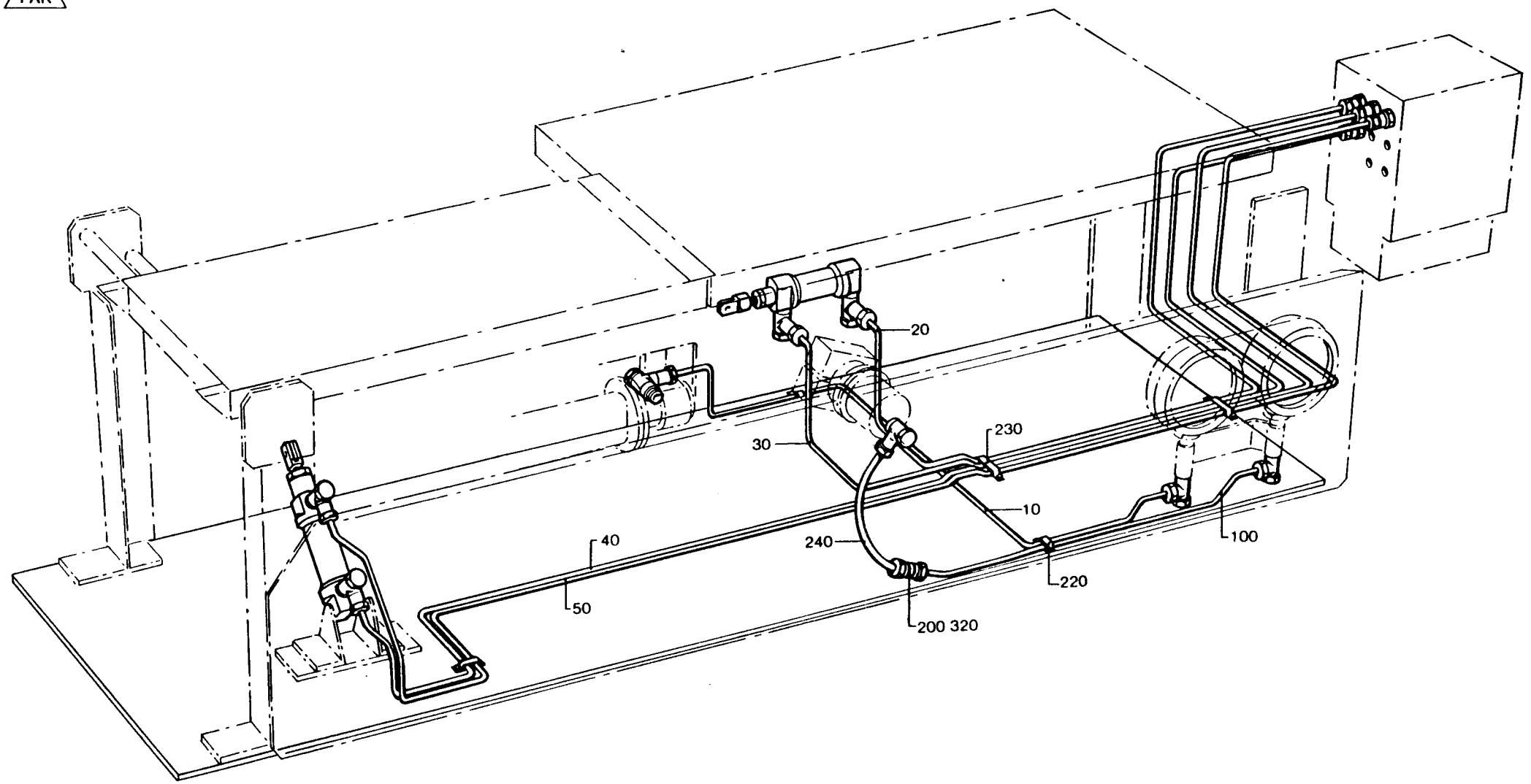

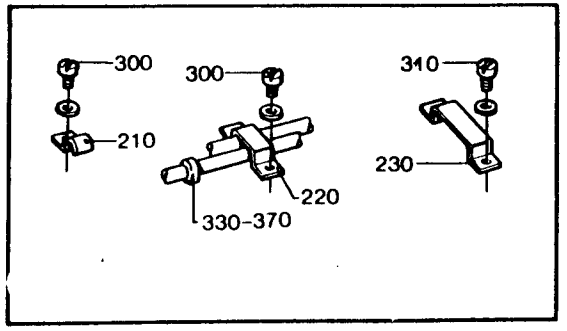

LAST ALTERATION: AM 7065 84-09-12
648107

POS	VAR	PART NUMBER	SP	EH	QTY	DESCRIPTION
	-0101	S- 456919-SHEET -1				===ASSEMBLY DRAWING===
010	-0101	256984	C		1	BENDING ROLLER
020	-0101	456920	-		2	BRACKET
030	-0101	256985	S		1	AXLE
040	-0101	265567	C		2	BEARING
050	-0101	265568	-		2	DUST COVER
060	-0101	456921	-		2	STOP
070	-0101	456922-0001	-		2	STRUT
080	-0101	456922-0002	-		2	STRUT
200	-0101	90214-0028	P		2	BALL BEARING
300	-0101	312105-0368	-		4	SCREW M6S6X16RFR
310	-0101	312105-0370	-		4	SCREW M6S6X20RFR
320	-0101	312105-0453	-		4	SCREW M6S8X25RFR
330	-0101	312318-0364	-		4	GRUB SCREW SK6SS6X10RFR
340	-0101	315105-0153	-		8	WASHER BRB6,4X12RFR
350	-0101	315105-0165	-		4	WASHER BRB8,4X16RFR

S-456919-1

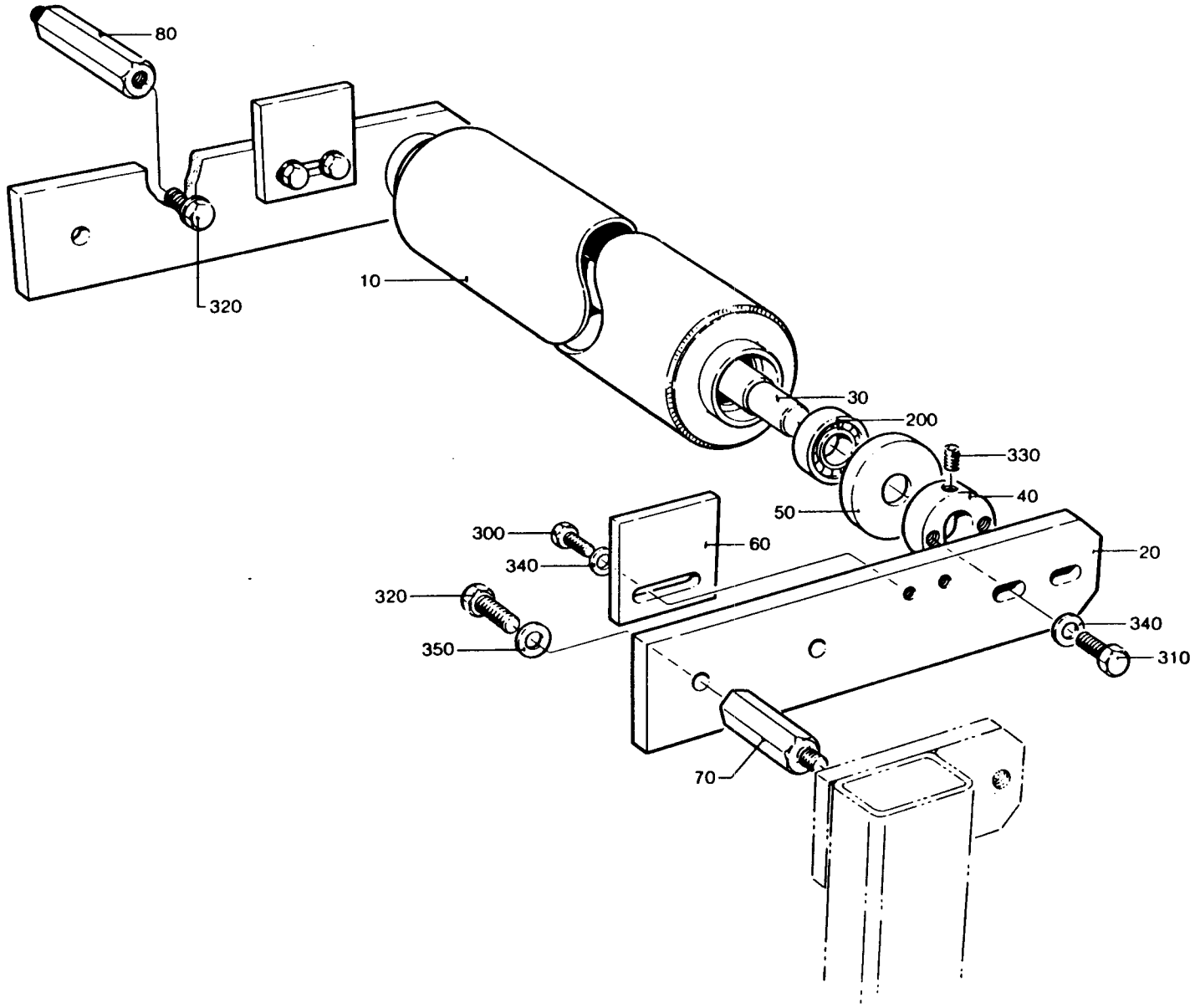

LAST ALTERATION: AM 8036 85-06-24
648107-060V
AM 6922
84-06-14

POS	VAR	PART NUMBER	SP	EH	QTY	DESCRIPTION	
	-0101	S- 456923-SHEET	-1			===ASSEMBLY DRAWING===	
	-0101		-2				
010	-0101	456924	-		1	FRAME	
020	-0101	456925	-		1	LEG	
030	-0101	456926	-		1	LEG	
040	-0101	456927	-		1	LEG	
050	-0101	456928	-		1	LEG	
060	-0101	456929	-		4	LID	
070	-0101	456930	-		2	LID	
080	-0101	456931	-		2	LID	
090	-0101	456932	-		2	LID	
100	-0101	456933	-		1	LID	
200	-0101	90015-0020	-		4	BUSHING	
210	-0101	90015-0021	-		1	BUSHING	
220	-0101	90015-0023	-		3	BUSHING	
300	-0101	312105-0366	-		22	SCREW	M6S6X12RFR
350	-0101	312105-0493	-		16	SCREW	M6S10X25RFR
400	-0101	315105-0153	-		22	WASHER	BRB6,4X12RFR
420	-0101	315105-0173	-		16	WASHER	BRB10,5X22RFR

TETRA PAK

2/8601 **S-456923-1**

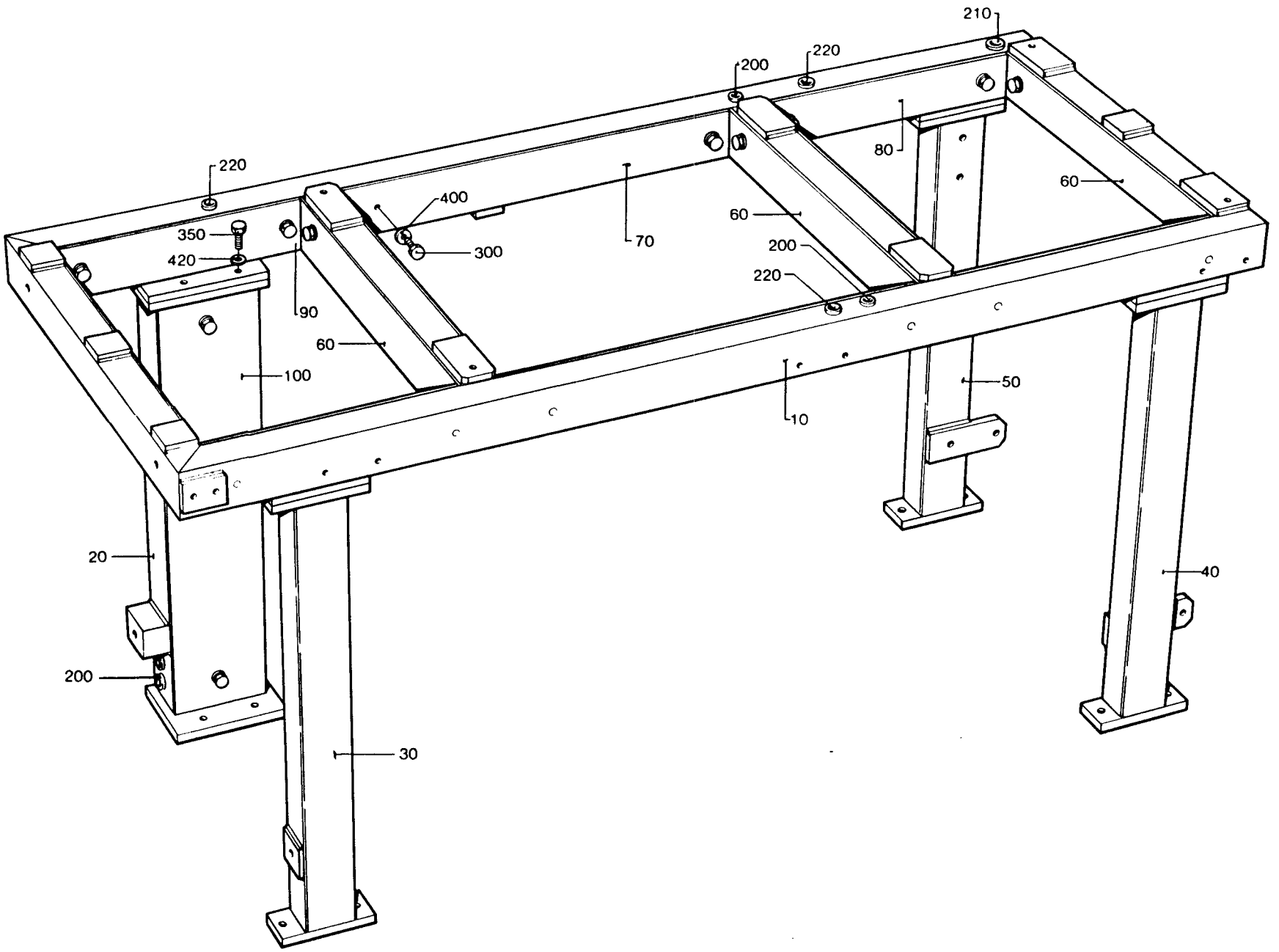

LAST ALTERATION: AM 7065 84-09-12
648107

GROUP	VOLUME	VOLUME	VOLUME	VOLUME
-0101	V0250	V0236	V0200	V0180
-0102	200ML SLIM	-	-	-
-0103	V0125	-	-	-

POS	VAR	PART NUMBER	SP	EH	QTY	DESCRIPTION
	-0101	S- 456935-SHEET	-1			===ASSEMBLY DRAWING===
	-0102		-1			
	-0103		-1			
010	-0101	456731-0001	-		1	PIPE
010	-0102	456731-0002	-		1	PIPE
010	-0103	456731-0003	-		1	PIPE
020	-0101	456737-0001	-		1	PIPE
020	-0102	456737-0002	-		1	PIPE
	-0103				1	
030	-0101	456738-0001	-		1	PIPE
030	-0102	456738-0002	-		1	PIPE
	-0103				1	
100	-0101	456730-0001	-		1	PIPE
100	-0102	456730-0003	-		1	PIPE
100	-0103	456730-0005	-		1	PIPE
110	-0101	456730-0002	-		1	PIPE
110	-0102	456730-0004	-		1	PIPE
110	-0103	456730-0006	-		1	PIPE
120	ALL	456938	-		1	PIPE
130	ALL	456939	-		1	PIPE
140	ALL	456940	-		1	PIPE
150	ALL	456941	-		1	PIPE
160	ALL	456942	-		1	PIPE
170	ALL	456943	-		1	PIPE
180	ALL	456732	-		1	PIPE
200	ALL	456936	-		1	BRACKET
210	ALL	456937	-		2	CLIP
300	ALL	90030-0075	-		7	PIPE CONNECTION
310	ALL	90165-0005	-		1	CLIP
320	ALL	90165-0006	-		3	CLAMP
330	ALL	90166-0132	-	MM	350	HOSE
340	ALL	90166-0132	-	MM	350	HOSE
350	ALL	90166-0132	-	MM	350	HOSE
400	ALL	312105-0364	-		4	SCREW M6S6X10RFR
410	ALL	312105-0451	-		1	SCREW M6S8X20RFR
420	ALL	312125-0285	-		7	SLOTTED HEMCS4X6RFR
430	ALL	315105-0136	-		7	WASHER BRB4,3X8RFR
440	ALL	315105-0165	-		1	WASHER BRB8,4X16RFR
450	ALL	342708-0101	-		3	SLEEVE 6X1/MS
460	ALL	359000-0064	-		60	MARKING CO2/4 OMÄRKT
470	ALL	359000-0400	-		20	MARKING CO2/4"0"
480	ALL	359000-0401	-		10	MARKING CO2/4"1"
490	ALL	359000-0402	-		20	MARKING CO2/4"2"
500	ALL	359000-0404	-		25	MARKING CO2/4"4"

POS	VAR	PART NUMBER	SP	EH	QTY	DESCRIPTION
510	ALL	359000-0405	-		5	MARKING CO2/4"5"
520	ALL	359000-0771	-		10	MARKING CO2/4"V"

TETRA PAK

1/8501 **S-456935-1**

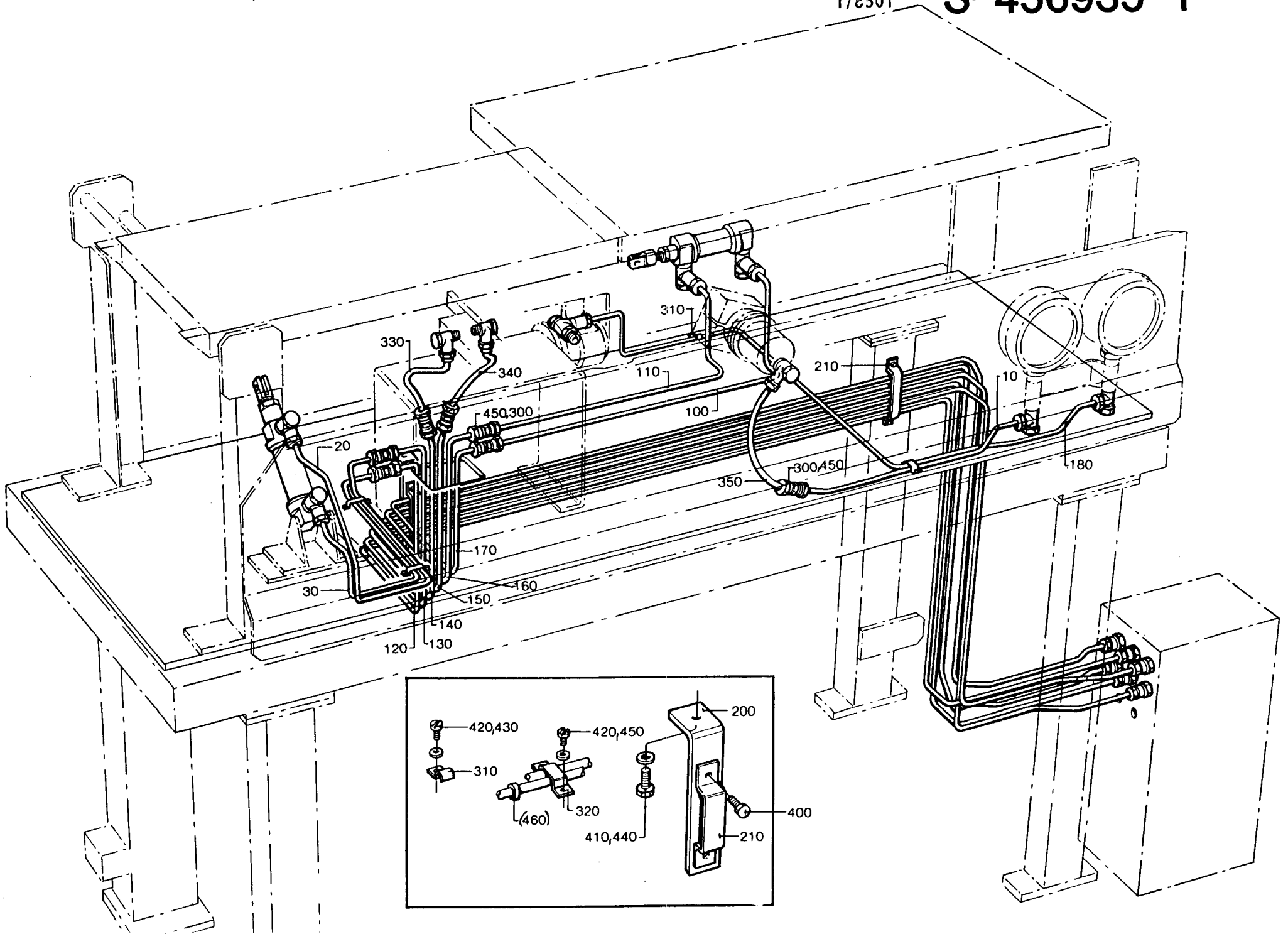

LAST ALTERATION: AM 9596 86-09-05
648107-060V
AM 7720
85-04-30

GROUP	FILLMACHINE	VOLUME	VOLUME	VOLUME	VOLUME
-0101	B9	V0250	V0236	V0200	V0180
-0102	AB9	V0250	V0236	V0200	V0180
-0103	B9	V0125	200ML SLIM	-	-
-0104	AB9	V0125	200ML SLIM	-	-

POS	VAR	PART NUMBER	SP	EH	QTY	DESCRIPTION
	-0101	S- 490947-SHEET	-1			===ASSEMBLY DRAWING===
	-0102		-2			
	-0102		~~-3~~			
	-0102		~~-4~~			
	-0103		-1			
	-0104		-2			
	-0104		~~-3~~			
	-0104		~~-4~~			
010	-0102	456972	-		1	PROTECTION PLATE
	-0104				1	
020	-0101	469855	-		1	PROTECTION PLATE
	-0103				1	
030	-0102	490948	-		1	COVER
	-0104				1	
040	-0102	490949	-		1	PLATE
	-0104				1	
050	-0102	490955	-		1	BACK PLATE
	-0104				1	
080	-0101	272837	-		1	PAPER GUARD
	-0103				1	
090	-0101	272838	-		1	COVER
	-0103				1	
100	-0102	456956	-		1	PLATE
	-0104				1	
110	-0102	490950	-		1	HINGE
	-0104				1	
120	-0102	490956	-		1	HINGE
	-0104				1	
130	-0102	490957	-		1	LID
	-0104				1	
145	-0102	456964	-		2	HOLDER
	-0104				2	
150	-0102	456965	-		2	CLAMP
	-0104				2	
160	-0102	490958	-		1	BRACKET
	-0104				1	
170	-0102	490965	-		1	BRACKET
	-0104				1	
210	-0102	90237-0071	-		2	LOCK

POS	VAR	PART NUMBER	SP	EH	QTY	DESCRIPTION
	-0104				2	
220	-0101	90287-0062	-		5	SCREW
	-0102				2	
	-0103				5	
	-0104				2	
250	-0102	312155-0291	-		8	SCREW MF6S4X12RFR
	-0104				8	
260	-0102	312105-0327	-		16	SCREW M6S5X12 A4 80
	-0104				16	
270	-0101	312105-0366	-		4	SCREW M6S6X12RFR
	-0102				10	
	-0103				4	
	-0104				10	
290	-0101	312105-0451	-		8	SCREW M6S8X20RFR
	-0102				10	
	-0103				8	
	-0104				10	
300	-0102	312105-0459	-		4	SCREW M6S8X40RFR
	-0104				4	
320	-0102	312125-0323	-		6	SLOTTED HEMCS5X8RFR
	-0104				6	
340	-0101	312165-0325	-		3	SLOTTED HEMKFS5X10RFR
	-0103				3	
370	-0101	312605-0318	-		3	NUT M6M8RFR
	-0102				5	
	-0103				3	
	-0104				5	
380	-0102	312812-0312	-		8	CHECK NUT A4-M4RFR
	-0104				8	
390	-0102	312812-0314	-		11	CHECK NUT A4-M5RFR
	-0104				11	
400	-0102	315105-0136	-		8	WASHER BRB4,3X8RFR
	-0104				8	
405	-0102	315105-0146	-		27	WASHER BRB5,3X10RFR
	-0104				27	
410	-0101	315105-0153	-		10	WASHER BRB6,4X12RFR
	-0102				14	
	-0103				10	
	-0104				14	
420	-0101	315105-0165	-		4	WASHER BRB8,4X16RFR
	-0102				12	
	-0103				4	
	-0104				12	
510	-0101	469840	-		1	LID
	-0102				1	
510	-0103	751047	-		1	LID
	-0104				1	
560	-0101	7309	-		2	HANDLE
	-0102				3	

S-490947-1

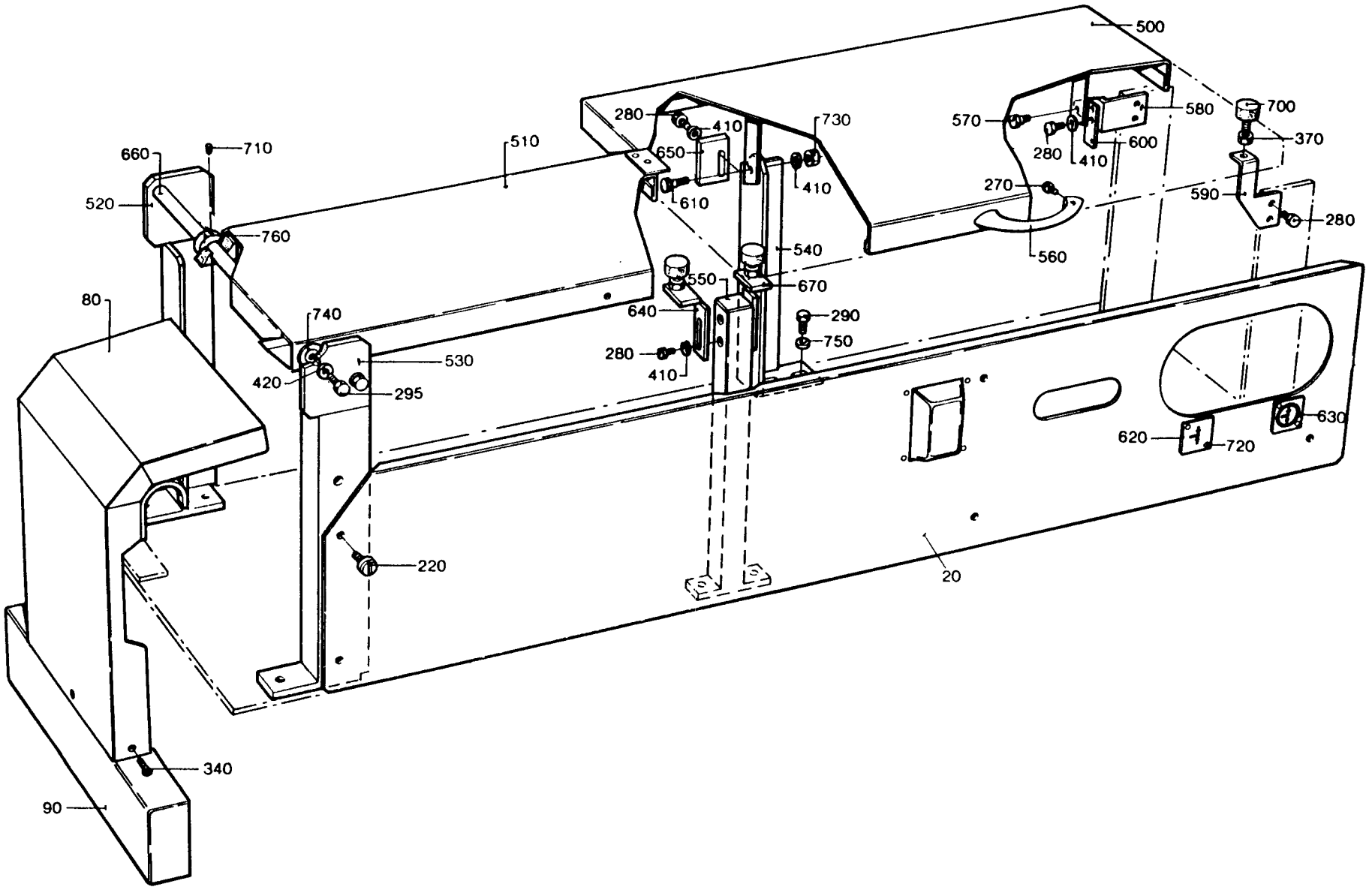
500
280
410
730
570
580
700
660
710
510
650
600
370
280
410
270
590
520
760
610
410
280
540
560
550
670
80
740
640
290
750
280
530
410
420
295
630
620
720
220
20
340
90

POS	VAR	PART NUMBER	SP	EH	QTY	DESCRIPTION
	-0103				2	
	-0104				3	
280	ALL	312105-0368	-		12	SCREW M6S6X16RFR
295	ALL	312105-0453	-		3	SCREW M6S8X25RFR
500	ALL	469839	-		1	LID
520	ALL	469841	-		1	LEG
530	ALL	469842	-		1	LEG
540	ALL	469843	-		1	LEG
550	ALL	469844	-		1	SUPPORT
570	ALL	252972	-		1	SHOULDER SCREW
580	ALL	272636	-		1	BRACKET
590	ALL	441027	-		1	BRACKET
600	ALL	456001	-		1	STOP
610	ALL	456967	-		1	SHOULDER SCREW
620	ALL	464176	-		1	SIGN
630	ALL	464177	-		1	SIGN
640	ALL	469845	-		1	BRACKET
650	ALL	469846	-		1	STOP LUG
660	ALL	469847	-		1	SHAFT
670	ALL	469865	-		1	BRACKET
700	ALL	90347-0004	-		3	VIBRATION DAMPER
710	ALL	312318-0362	-		1	GRUB SCREW SK6SS6X8RFR
720	ALL	312502-0120	-		4	DRIVE SCREKDS0X5FNB
730	ALL	312812-0316	-		1	CHECK NUT A4-M6RFR
735	ALL	312812-0318	-		1	CHECK NUT A4-M8RFR
740	ALL	315105-0186	-		1	WASHER BRB17X30RFR
750	ALL	315115-0165	-		9	WASHER TBRB8,4X16RFR
760	ALL	315742-0112	-		1	RETAINING 16SMS199RFR

TETRA PAK

1/8506 **S-490947-2**

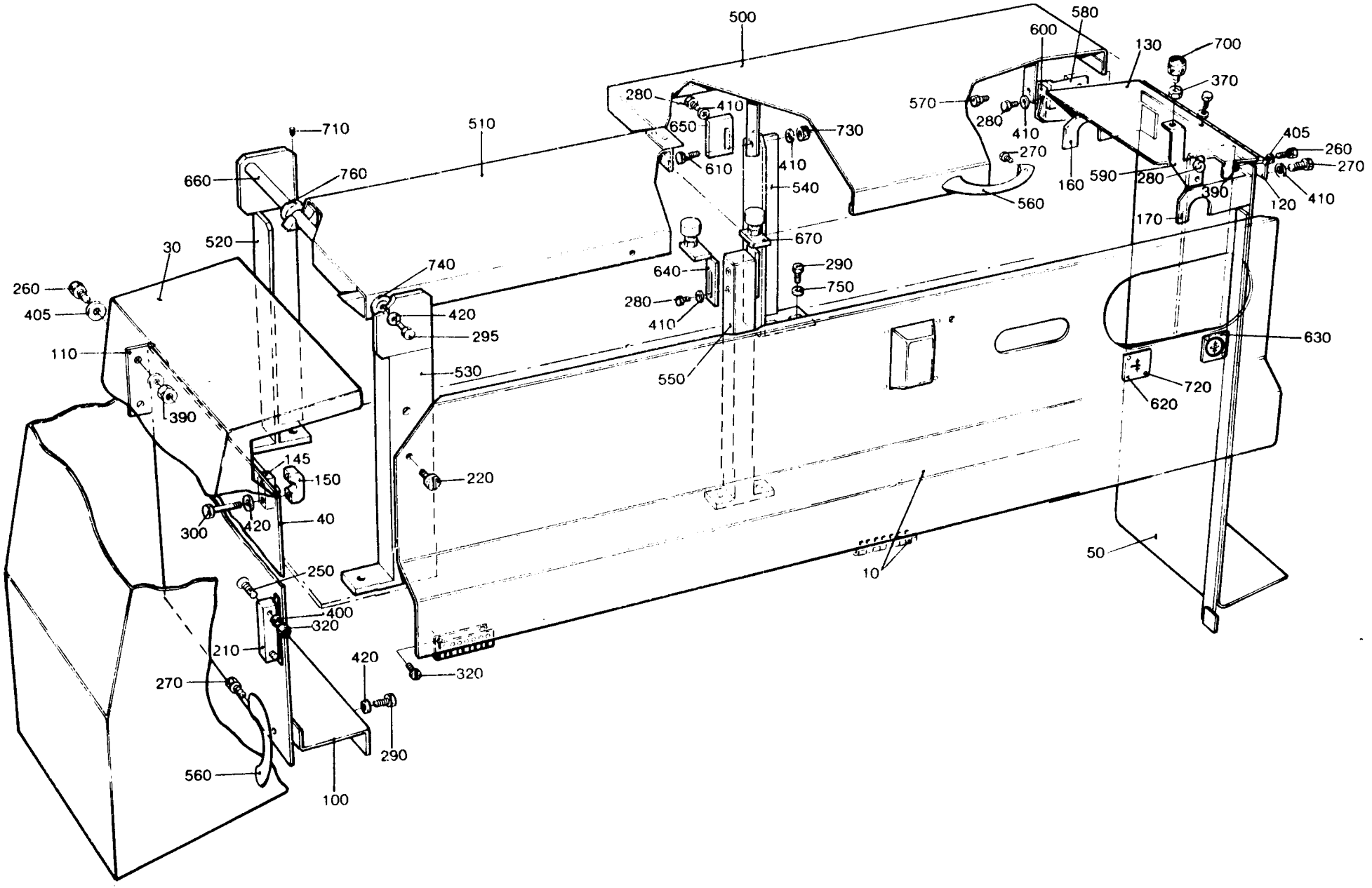

LAST ALTERATION: AM 8739 86-05-24
648107-060V
AM 6718
84-03-29

GROUP	VOLUME
-0101	V0250
-0102	V0236
-0103	V0200
-0104	V0180
-0105	V0125
-0106	200ML SLIM

POS	VAR	PART NUMBER	SP	EH	QTY	DESCRIPTION
	-0101	S- 456321-SHEET	-1			===ASSEMBLY DRAWING===
	-0101		-2			
	-0102		-1			
	-0102		-2			
	-0103		-1			
	-0103		-2			
	-0104		-1			
	-0104		-2			
	-0105		-1			
	-0105		-2			
	-0106		-1			
	-0106		-2			
F170	ALL	C- 293685-0102	-		2	DATING WHEEL
F180	ALL	C- 434774-0202	-		1	INK UNIT
010	-0101	256391-0001	C		1	BENDING ROLLER
	-0102				1	
	-0103				1	
	-0104				1	
010	-0105	456328	C		1	BENDING ROLLER
	-0106				1	
020	-0101	256392-0001	C		1	SHAFT
	-0102				1	
	-0103				1	
	-0104				1	
020	-0105	256392-0003	C		1	SHAFT
	-0106				1	
030	-0101	456767	C		2	CREASE BAR
	-0102				2	
	-0103				2	
	-0104				2	
030	-0105	456327	C		2	CREASE BAR
030	-0106	441554	C		2	CREASE BAR
040	-0101	441556-0002	C		2	SPACER
040	-0102	441556-0003	C		2	SPACER
040	-0103	441556-0004	C		2	SPACER
040	-0104	441556-0006	C		2	SPACER
040	-0105	441556-0007	C		2	SPACER

POS	VAR	PART NUMBER	SP	EH	QTY	DESCRIPTION
040	-0106	441556-0009	C		2	SPACER
050	-0101	256399-0001	C		1	SHAFT
	-0102				1	
	-0103				1	
	-0104				1	
050	-0105	456811	C		1	SHAFT
	-0106				1	
060	-0101	256400	C		1	SHAFT
	-0102				1	
	-0103				1	
	-0104				1	
060	-0105	456334	C		1	SHAFT
	-0106				1	
070	-0101	90166-0059	P	MM	28	HOSE
	-0102				28	
	-0103				28	
	-0104				28	
	-0105				41	
	-0106				41	
075	-0101	90166-0059	P	MM	28	HOSE
	-0102				28	
	-0103				28	
	-0104				28	
	-0105				41	
	-0106				41	
100	ALL	456774-0001	-		1	GABLE
110	ALL	456775-0001	-		1	GABLE
130	ALL	441572	-		1	COVER
140	ALL	456323	-		1	PLATE
150	ALL	456324	-		1	SPLASH PLATE
160	ALL	456326-0001	C		1	BEARING BRACKET
200	ALL	441752	-		1	SIDE PLATE
210	ALL	456329	-		1	BAR
220	ALL	456330	-		1	BRACKET
230	ALL	456331	-		1	ANGLE BRACKET
240	ALL	456332	-		1	PLATE
250	ALL	456333	-		1	RAIL
300	ALL	456813	C		1	SHAFT
310	ALL	28036	-		13	WASHER
320	ALL	32919	C		1	BEARING BLOCK
330	ALL	32923	S		7	SPRING
340	ALL	32925	C		1	CARRIER
350	ALL	32926	C		1	ROLLER
360	ALL	32927	C		1	SHAFT
370	ALL	33182	S		1	ROLLER
380	ALL	33183	S		1	SPRING
390	ALL	106758	-		2	WASHER
400	ALL	228652	C		1	STOPPER
410	ALL	256248-0001	C		2	LID

S-456321-1

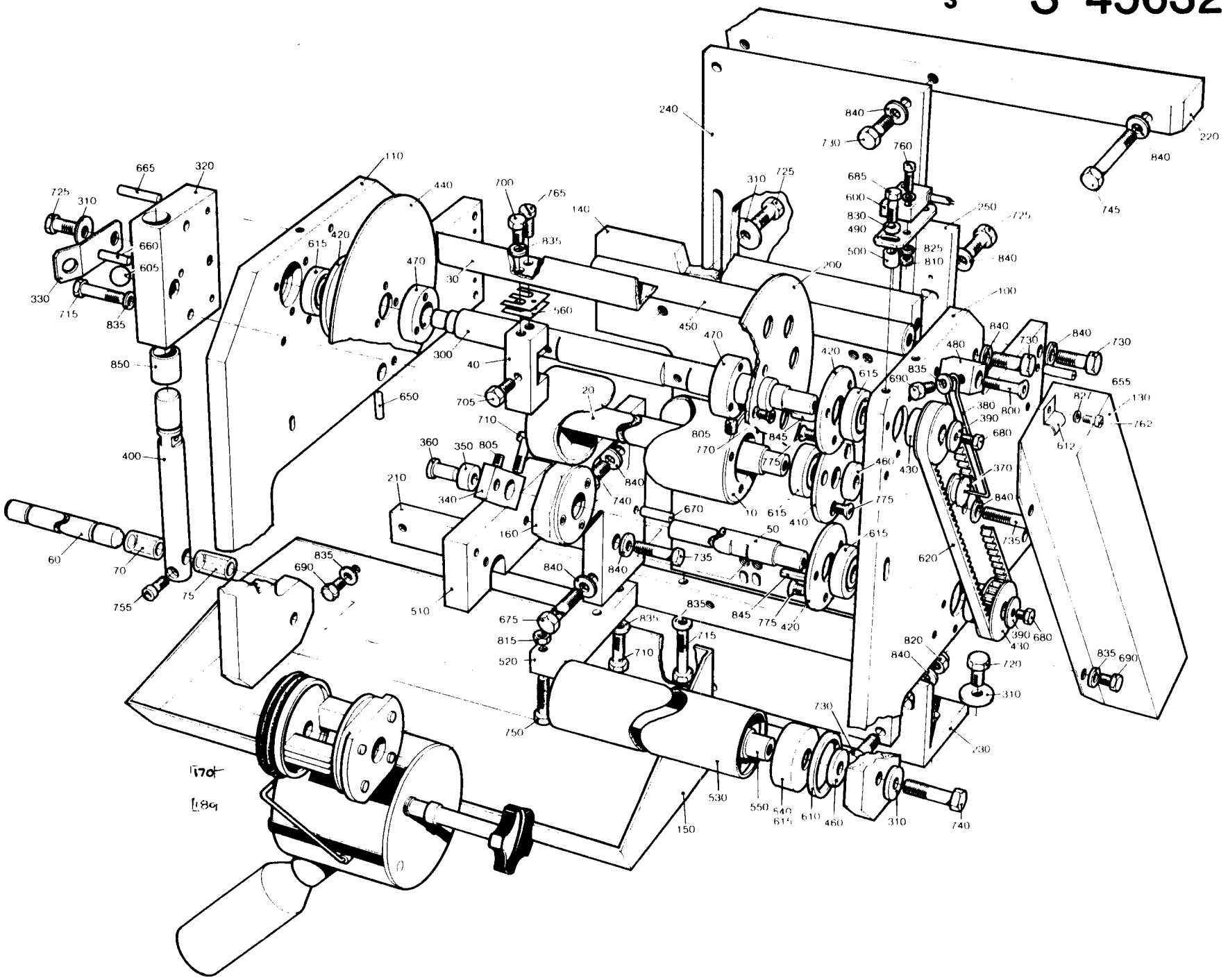
240
840
730
760
220
745
665
320
725
310
110
440
700
765
140
685
600
830
490
500
825
810
250
725
840
660
605
615
420
470
30
835
330
715
835
850
300
40
560
200
450
470
100
840
730
480
690
655
827
130
762
612
705
650
20
710
805
770
845
775
460
430
380
390
680
370
840
400
360
350
805
210
340
840
740
670
160
10
615
410
50
735
620
60
70
75
755
690
510
675
815
520
750
840
835
715
710
420
730
720
310
230
820
840
680
430
390
150
530
550
540
615
610
460
310
740

POS	VAR	PART NUMBER	SP	EH	QTY	DESCRIPTION
420	ALL	256398	C		4	LID
430	ALL	256403	C		2	TOOTHED WHEEL
440	ALL	256406	-		1	SIDE PLATE
450	ALL	256408-0001	-		1	SPACER
460	ALL	256409	-		5	WASHER
470	ALL	257141	-		2	RETAINING RING
480	ALL	271441	-		1	BRACKET
490	ALL	441753	-		1	PLATE
500	ALL	441754	-		2	SPACER
510	ALL	456335	-		1	BRACKET
520	ALL	456337	-		1	BRACKET
530	ALL	456776	C		2	MANTLE
540	ALL	456777	C		4	SLEEVE
550	ALL	456778	C		2	SHAFT
560	ALL	456817-0001	S		8	SHIM
600	ALL	90044-0104	P		1	INDUCTIVE TRANSMITTER
605	ALL	90090-0001	S		1	STEEL BALL
610	ALL	90141-0020	C		4	LOCK RING
612	ALL	90165-0024	-		3	CLIP
615	ALL	90214-0098	P		10	BALL BEARING
620	ALL	90417-0081	P		1	TOOTHED BELT
650	ALL	311103-0240	-		1	CYLINDRICACPR3M6X25RFR
655	ALL	311103-0312	-		6	CYLINDRICACPR5M6X25RFR
660	ALL	311103-0314	-		1	CYLINDRICACPR5M6X30RFR
665	ALL	311103-0318	-		2	CYLINDRICACPR5M6X40RFR
670	ALL	311103-0357	-		1	CYLINDRICACPR6M6X30RFR
675	ALL	312101-0466	-		1	SCREW M6S8X75FZB
680	ALL	312105-0327	-		2	SCREW M6S5X12 A4 80
685	ALL	312105-0332	-		2	SCREW M6S5X22RFR
690	ALL	312105-0364	-		5	SCREW M6S6X10RFR
700	ALL	312105-0366	-		6	SCREW M6S6X12RFR
705	ALL	312105-0368	-		2	SCREW M6S6X16RFR
710	ALL	312105-0374	-		3	SCREW M6S6X30RFR
715	ALL	312105-0378	-		4	SCREW M6S6X40RFR
720	ALL	312105-0451	-		4	SCREW M6S8X20RFR
725	ALL	312105-0453	-		5	SCREW M6S8X25RFR
730	ALL	312105-0455	-		10	SCREW M6S8X30RFR
735	ALL	312105-0457	-		2	SCREW M6S8X35RFR
740	ALL	312105-0459	-		5	SCREW M6S8X40RFR
745	ALL	312105-0465	-		2	SCREW M6S8X70RFR
750	ALL	312109-0376	-		1	SCREW 6X35 H RFR
755	ALL	312115-0370	-		1	SCREW 6X20 A4 80
760	ALL	312125-0230	-		2	SLOTTED HEMCS3X20RFR
762	ALL	312125-0289	-		3	SLOTTED HEMCS4X10RFR
765	ALL	312125-0366	-		4	SLOTTED HEMCS6X12RFR
770	ALL	312155-0291	-		6	SCREW MF6S4X12RFR
775	ALL	312155-0327	-		18	SCREW MF6S5X12RFR
800	ALL	312155-0376	-		1	SCREW MF6X35RFR
805	ALL	312318-0362	-		3	GRUB SCREW SK6SS6X8RFR

POS	VAR	PART NUMBER	SP	EH	QTY	DESCRIPTION
810	ALL	312605-0310	-		2	NUT M6M3RFR
815	ALL	312605-0316	-		1	NUT M6M6RFR
820	ALL	312812-0318	-		2	CHECK NUT A4-M8RFR
825	ALL	315105-0124	-		4	WASHER BRB3,2X6RFR
827	ALL	315105-0136	-		3	WASHER BRB4,3X8RFR
830	ALL	315105-0146	-		2	WASHER BRB5,3X10RFR
835	ALL	315105-0153	-		15	WASHER BRB6,4X12RFR
840	ALL	315105-0165	-		16	WASHER BRB8,4X16RFR
845	ALL	315701-0170	-		2	FLAT WEDGE 4X4X20
850	ALL	321120-0147	-		2	BUSHING 22/25X25

S-456321-1

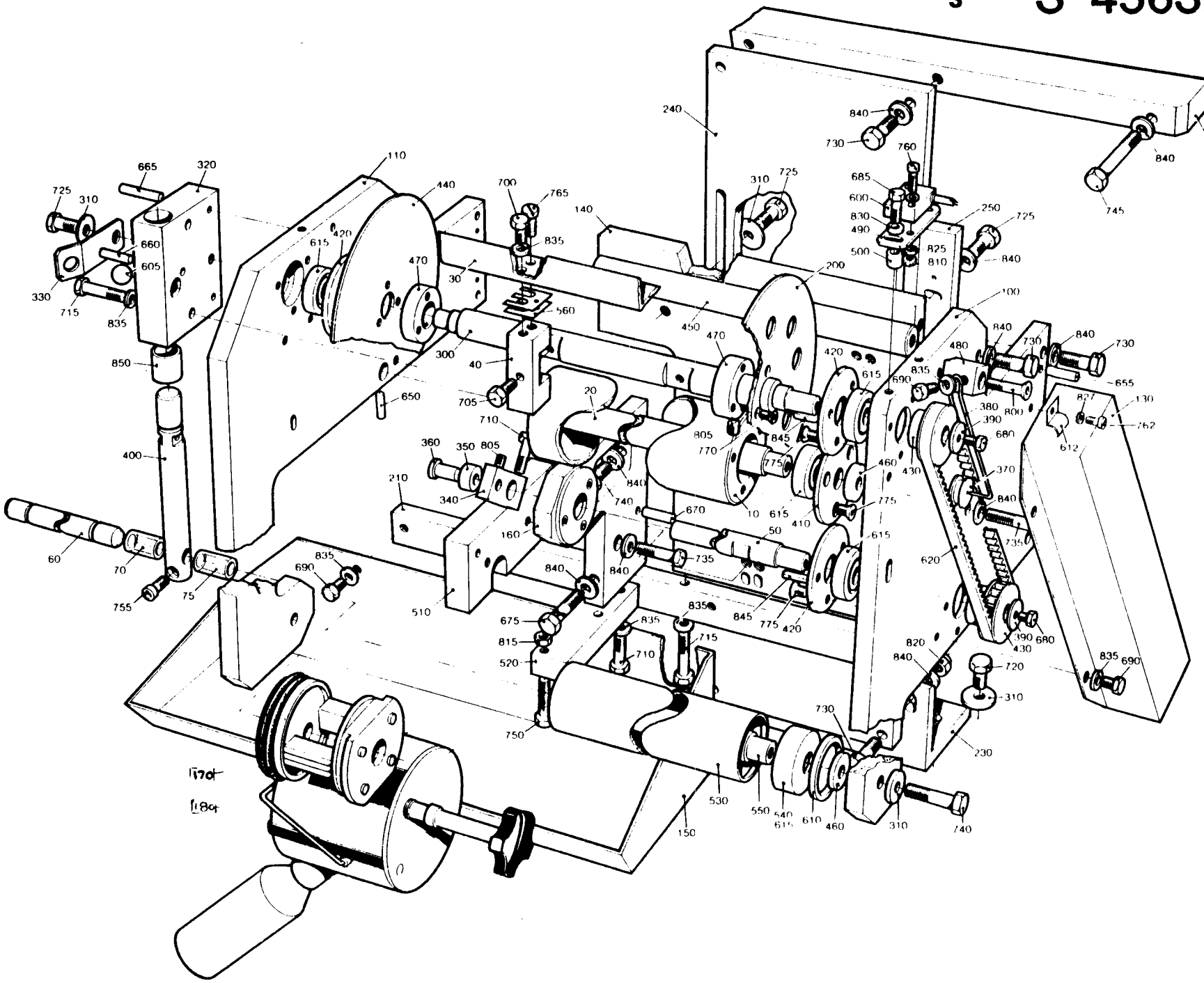
240
840
730
760
220
840
745
665
320
110
725
310
440
700
765
140
310
725
685
600
830
490
500
250
725
840
825
810
660
605
330
715
835
615
420
470
30
835
560
200
100
450
470
300
40
705
650
20
710
480
840
730
840
730
655
420
615
690
835
380
390
680
800
827
130
762
612
805
770
845
775
360
350
805
400
210
340
840
740
460
430
370
840
735
775
670
10
615
410
50
615
620
160
60
70
75
755
835
690
840
840
510
675
815
520
835
715
710
835
845
775
420
390
430
680
820
840
720
310
835
690
750
730
230
530
550
540
610
460
310
740
150

LAST ALTERATION: AM 8739 86-05-24
648107-070V
AM 8314
86-01-14

GROUP	VOLUME
-0201	V0250
-0202	V0236
-0203	V0200
-0204	V0180
-0205	V0125
-0206	200ML SLIM

POS	VAR	PART NUMBER	SP	EH	QTY	DESCRIPTION
	-0201	S- 456321-SHEET	-1			===ASSEMBLY DRAWING===
	-0201		~~-2~~			
	-0202		-1			
	-0202		~~-2~~			
	-0203		-1			
	-0203		~~-2~~			
	-0204		-1			
	-0204		~~-2~~			
	-0205		-1			
	-0205		~~-2~~			
	-0206		-1			
	-0206		~~-2~~			
F170	ALL	C- 293685-0201	-		2	DATING WHEEL
F180	ALL	C- 434774-0302	-		1	INK UNIT
010	-0201	256391-0001	C		1	BENDING ROLLER
	-0202				1	
	-0203				1	
	-0204				1	
010	-0205	456328	C		1	BENDING ROLLER
	-0206				1	
020	-0201	256392-0001	C		1	SHAFT
	-0202				1	
	-0203				1	
	-0204				1	
020	-0205	256392-0003	C		1	SHAFT
	-0206				1	
030	-0206	441554	C		2	CREASE BAR
030	-0205	456327	C		2	CREASE BAR
030	-0201	456767	C		2	CREASE BAR
	-0202				2	
	-0203				2	
	-0204				2	
040	-0201	441556-0002	C		2	SPACER
040	-0202	441556-0003	C		2	SPACER
040	-0203	441556-0004	C		2	SPACER
040	-0204	441556-0006	C		2	SPACER
040	-0205	441556-0007	C		2	SPACER

POS	VAR	PART NUMBER	SP	EH	QTY	DESCRIPTION
040	-0206	441556-0009	C		2	SPACER
050	-0201	256399-0001	C		1	SHAFT
	-0202				1	
	-0203				1	
	-0204				1	
050	-0205	456811	C		1	SHAFT
	-0206				1	
060	-0201	256400	C		1	SHAFT
	-0202				1	
	-0203				1	
	-0204				1	
060	-0205	456334	C		1	SHAFT
	-0206				1	
070	-0201	90166-0059	P	MM	28	HOSE
	-0202				28	
	-0203				28	
	-0204				28	
	-0205				41	
	-0206				41	
075	-0201	90166-0059	P	MM	28	HOSE
	-0202				28	
	-0203				28	
	-0204				28	
	-0205				41	
	-0206				41	
100	ALL	456774-0001	-		1	GABLE
110	ALL	456775-0001	-		1	GABLE
130	ALL	441572	-		1	COVER
140	ALL	456323	-		1	PLATE
150	ALL	456324	-		1	SPLASH PLATE
160	ALL	456326-0001	C		1	BEARING BRACKET
200	ALL	441752	-		1	SIDE PLATE
210	ALL	456329	-		1	BAR
220	ALL	456330	-		1	BRACKET
230	ALL	456331	-		1	ANGLE BRACKET
240	ALL	456332	-		1	PLATE
250	ALL	456333	-		1	RAIL
300	ALL	456813	C		1	SHAFT
310	ALL	28036	-		13	WASHER
320	ALL	32919	C		1	BEARING BLOCK
330	ALL	32923	S		7	SPRING
340	ALL	32925	C		1	CARRIER
350	ALL	32926	C		1	ROLLER
360	ALL	32927	C		1	SHAFT
370	ALL	33182	S		1	ROLLER
380	ALL	33183	S		1	SPRING
390	ALL	106758	-		2	WASHER
400	ALL	228652	C		1	STOPPER
410	ALL	256248-0001	C		2	LID

S-456321-1

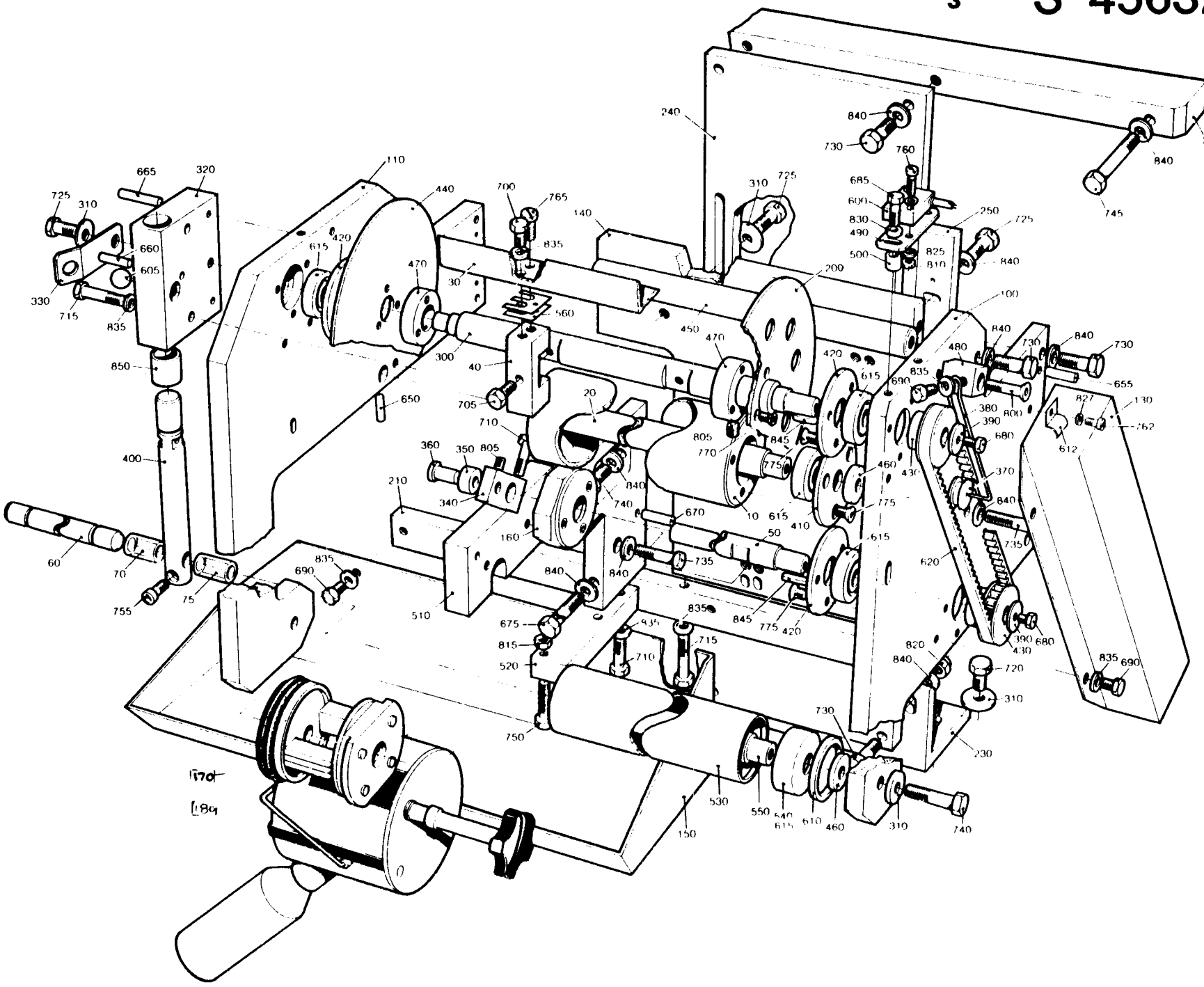
240
840
730
760
220
840
745
685
600
830
490
500
725
250
840
825
810
200
100
665
320
725
310
660
605
330
715
835
110
440
700
765
835
140
310
725
615
420
470
30
560
300
40
705
650
850
400
60
70
755
75
20
710
360
350
805
210
340
840
740
160
510
805
770
845
775
460
430
370
840
410
10
615
670
50
735
620
690
835
840
675
815
520
750
845
775
420
715
710
530
550
540
615
610
460
310
740
150
230
720
310
820
840
730
480
840
730
840
730
655
827
130
762
612
380
390
800
680
390
430
680
835
690
170
184

POS	VAR	PART NUMBER	SP	EH	QTY	DESCRIPTION
420	ALL	256398	C		4	LID
430	ALL	256403	C		2	TOOTHED WHEEL
440	ALL	256406	-		1	SIDE PLATE
450	ALL	256408-0001	-		1	SPACER
460	ALL	256409	-		5	WASHER
470	ALL	257141	-		2	RETAINING RING
480	ALL	271441	-		1	BRACKET
490	ALL	441753	-		1	PLATE
500	ALL	441754	-		2	SPACER
510	ALL	456335	-		1	BRACKET
520	ALL	456337	-		1	BRACKET
530	ALL	456776	C		2	MANTLE
540	ALL	456777	C		4	SLEEVE
550	ALL	456778	C		2	SHAFT
560	ALL	456817-0001	S		8	SHIM
600	ALL	90044-0104	P		1	INDUCTIVE TRANSMITTER
605	ALL	90090-0001	S		1	STEEL BALL
610	ALL	90141-0020	C		4	LOCK RING
612	ALL	90165-0024	-		3	CLIP
615	ALL	90214-0098	P		10	BALL BEARING
620	ALL	90417-0081	P		1	TOOTHED BELT
650	ALL	311103-0240	-		1	CYLINDRICACPR3M6X25RFR
655	ALL	311103-0312	-		6	CYLINDRICACPR5M6X25RFR
660	ALL	311103-0314	-		1	CYLINDRICACPR5M6X30RFR
665	ALL	311103-0318	-		2	CYLINDRICACPR5M6X40RFR
670	ALL	311103-0357	-		1	CYLINDRICACPR6M6X30RFR
675	ALL	312101-0466	-		1	SCREW M6S8X75FZB
680	ALL	312105-0327	-		2	SCREW M6S5X12 A4 80
685	ALL	312105-0332	-		2	SCREW M6S5X22RFR
690	ALL	312105-0364	-		5	SCREW M6S6X10RFR
700	ALL	312105-0366	-		6	SCREW M6S6X12RFR
705	ALL	312105-0368	-		2	SCREW M6S6X16RFR
710	ALL	312105-0374	-		3	SCREW M6S6X30RFR
715	ALL	312105-0378	-		4	SCREW M6S6X40RFR
720	ALL	312105-0451	-		4	SCREW M6S8X20RFR
725	ALL	312105-0453	-		5	SCREW M6S8X25RFR
730	ALL	312105-0455	-		10	SCREW M6S8X30RFR
735	ALL	312105-0457	-		2	SCREW M6S8X35RFR
740	ALL	312105-0459	-		5	SCREW M6S8X40RFR
745	ALL	312105-0465	-		2	SCREW M6S8X70RFR
750	ALL	312109-0376	-		1	SCREW 6X35 H RFR
755	ALL	312115-0370	-		1	SCREW 6X20 A4 80
760	ALL	312125-0230	-		2	SLOTTED HEMCS3X20RFR
762	ALL	312125-0289	-		3	SLOTTED HEMCS4X10RFR
765	ALL	312125-0366	-		4	SLOTTED HEMCS6X12RFR
770	ALL	312155-0291	-		6	SCREW MF6S4X12RFR
775	ALL	312155-0327	-		18	SCREW MF6S5X12RFR
800	ALL	312155-0376	-		1	SCREW MF6X35RFR
805	ALL	312318-0362	-		3	GRUB SCREW SK6SS6X8RFR

POS	VAR	PART NUMBER	SP	EH	QTY	DESCRIPTION
810	ALL	312605-0310	-		2	NUT M6M3RFR
815	ALL	312605-0316	-		1	NUT M6M6RFR
820	ALL	312812-0318	-		2	CHECK NUT A4-M8RFR
825	ALL	315105-0124	-		4	WASHER BRB3,2X6RFR
827	ALL	315105-0136	-		3	WASHER BRB4,3X8RFR
830	ALL	315105-0146	-		2	WASHER BRB5,3X10RFR
835	ALL	315105-0153	-		15	WASHER BRB6,4X12RFR
840	ALL	315105-0165	-		16	WASHER BRB8,4X16RFR
845	ALL	315701-0170	-		2	FLAT WEDGE4X4X20
850	ALL	321120-0147	-		2	BUSHING 22/25X25

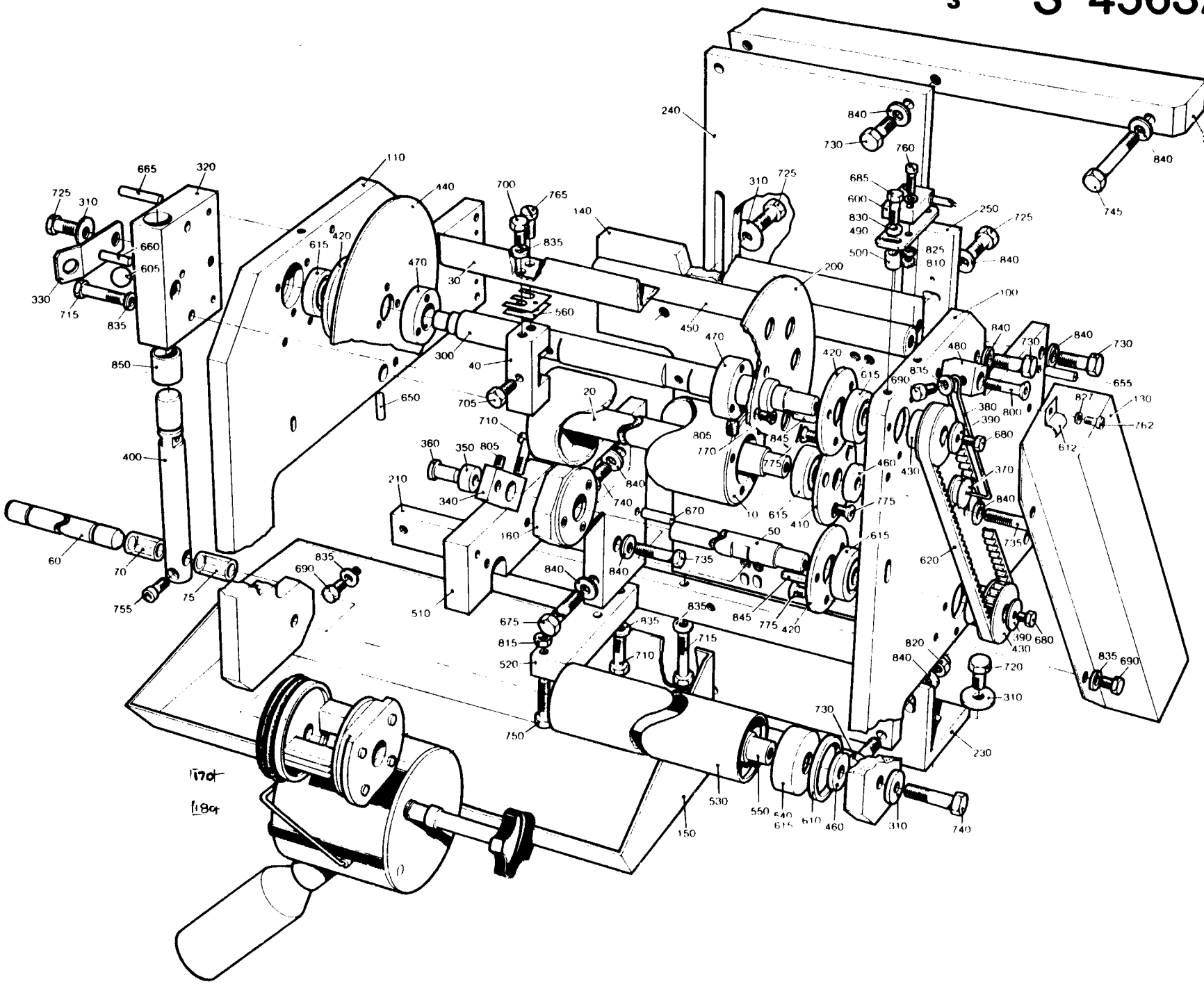
240
840
730
760
220
840
745
665
320
110
725
310
440
700
765
140
310
725
685
600
830
490
500
250
725
840
825
810
200
100
660
605
330
715
835
615
420
470
30
835
560
450
470
300
40
705
650
20
480
840
730
840
730
655
827
130
762
612
380
390
800
690
835
420
615
805
845
770
775
680
370
840
735
360
350
805
400
210
340
840
740
670
10
615
410
460
430
775
50
615
620
60
70
755
75
835
690
840
840
510
675
815
520
835
715
710
750
845
775
420
390
430
680
820
840
720
310
835
690
730
230
530
550
540
615
610
460
310
740
150

LAST ALTERATION: AM 8698 86-02-17
648107-060V
AM 6718
84-03-29

GROUP	VOLUME
-0101	V0250
-0102	V0236
-0103	V0200
-0104	V0180
-0105	V0125
-0106	200ML SLIM

POS	VAR	PART NUMBER	SP	EH	QTY	DESCRIPTION
	-0101	S- 456322-SHEET	-1			===ASSEMBLY DRAWING===
	-0101		-2			
	-0102		-1			
	-0102		-2			
	-0103		-1			
	-0103		-2			
	-0104		-1			
	-0104		-2			
	-0105		-1			
	-0105		-2			
	-0106		-1			
	-0106		-2			
F170	ALL	C- 293684-0106	-		2	DATING WHEEL
F180	ALL	C- 434074-0202	-		1	INK UNIT
010	-0101	256391-0001	C		1	BENDING ROLLER
	-0102				1	
	-0103				1	
	-0104				1	
010	-0105	456328	C		1	BENDING ROLLER
	-0106				1	
020	-0101	256392-0001	C		1	SHAFT
	-0102				1	
	-0103				1	
	-0104				1	
020	-0105	256392-0003	C		1	SHAFT
	-0106				1	
030	-0101	456767	C		2	CREASE BAR
	-0102				2	
	-0103				2	
	-0104				2	
030	-0105	456327	C		2	CREASE BAR
030	-0106	441554	C		2	CREASE BAR
040	-0101	441556-0002	C		2	SPACER
040	-0102	441556-0003	C		2	SPACER
040	-0103	441556-0004	C		2	SPACER
040	-0104	441556-0006	C		2	SPACER
040	-0105	441556-0007	C		2	SPACER

POS	VAR	PART NUMBER	SP	EH	QTY	DESCRIPTION
040	-0106	441556-0009	C		2	SPACER
050	-0101	256399-0001	C		1	SHAFT
	-0102				1	
	-0103				1	
	-0104				1	
050	-0105	456811	C		1	SHAFT
	-0106				1	
060	-0101	256400	C		1	SHAFT
	-0102				1	
	-0103				1	
	-0104				1	
060	-0105	456334	C		1	SHAFT
	-0106				1	
070	-0101	90166-0059	P	MM	28	HOSE
	-0102				28	
	-0103				28	
	-0104				28	
	-0105				41	
	-0106				41	
075	-0101	90166-0059	P	MM	28	HOSE
	-0102				28	
	-0103				28	
	-0104				28	
	-0105				41	
	-0106				41	
100	ALL	456774-0002	-		1	GABLE
110	ALL	456775-0002	-		1	GABLE
130	ALL	441572	-		1	COVER
140	ALL	456323	-		1	PLATE
150	ALL	456325	-		1	SPLASH PLATE
160	ALL	456326-0002	C		1	BEARING BRACKET
200	ALL	441752	-		1	SIDE PLATE
210	ALL	456329	-		1	BAR
220	ALL	456330	-		1	BRACKET
230	ALL	456331	-		1	ANGLE BRACKET
240	ALL	456332	-		1	PLATE
250	ALL	456333	-		1	RAIL
300	ALL	456813	C		1	SHAFT
310	ALL	28036	-		13	WASHER
320	ALL	32919	C		1	BEARING BLOCK
330	ALL	32923	S		7	SPRING
340	ALL	32925	C		1	CARRIER
350	ALL	32926	C		1	ROLLER
360	ALL	32927	C		1	SHAFT
370	ALL	33182	S		1	ROLLER
380	ALL	33183	S		1	SPRING
390	ALL	106758	-		2	WASHER
400	ALL	228652	C		1	STOPPER
410	ALL	256248-0001	C		2	LID

TETRA PAK

2/8608 **S-456322-1**

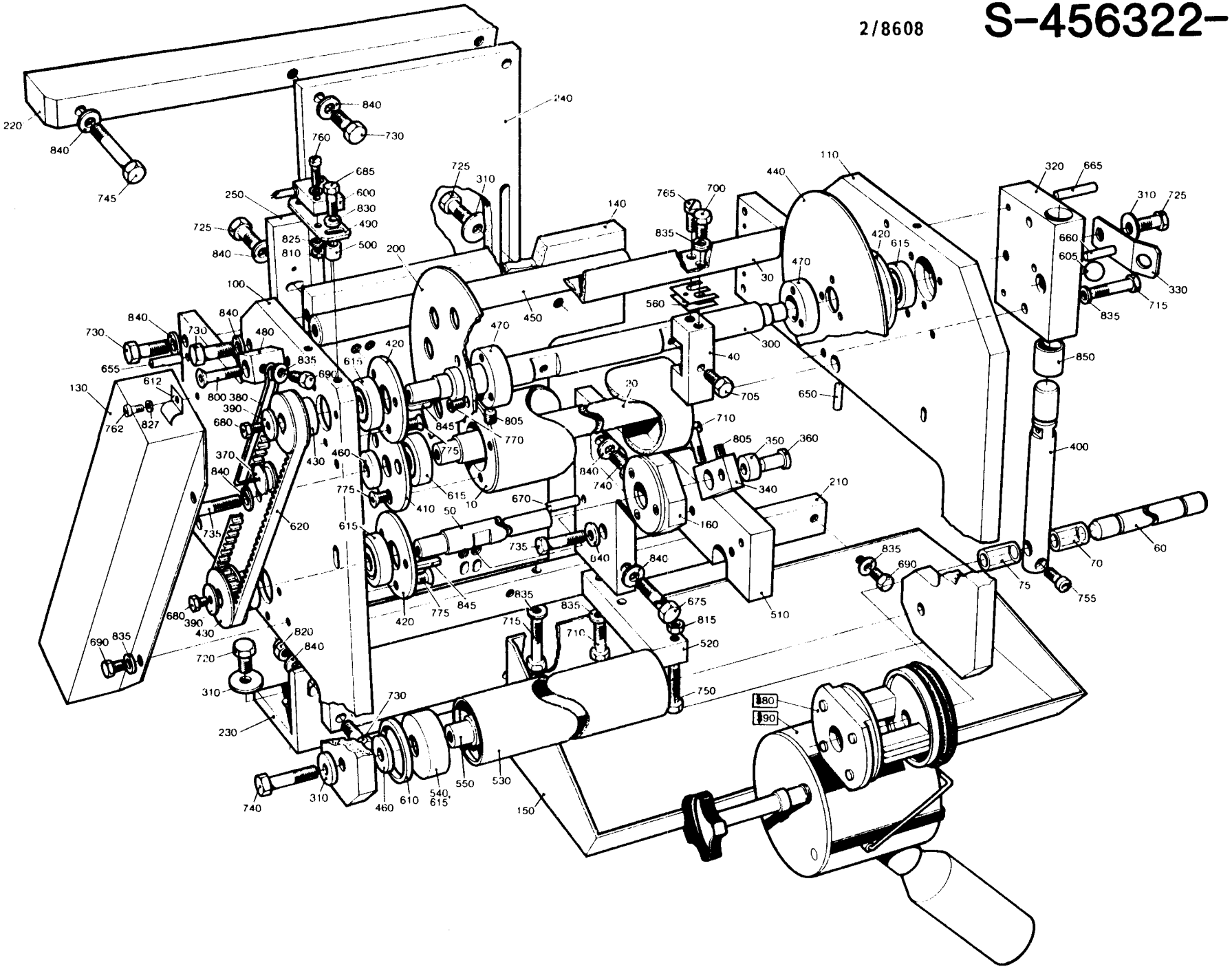

POS	VAR	PART NUMBER	SP	EH	QTY	DESCRIPTION
420	ALL	256398	C		4	LID
430	ALL	256403	C		2	TOOTHED WHEEL
440	ALL	256406	-		1	SIDE PLATE
450	ALL	256408-0001	-		1	SPACER
460	ALL	256409	-		5	WASHER
470	ALL	257141	-		2	RETAINING RING
480	ALL	271441	-		1	BRACKET
490	ALL	441753	-		1	PLATE
500	ALL	441754	-		2	SPACER
510	ALL	456336	-		1	BRACKET
520	ALL	456337	-		1	BRACKET
530	ALL	456776	C		2	MANTLE
540	ALL	456777	C		4	SLEEVE
550	ALL	456778	C		2	SHAFT
560	ALL	456817-0001	S		8	SHIM
600	ALL	90044-0104	P		1	INDUCTIVE TRANSMITTER
605	ALL	90090-0001	S		1	STEEL BALL
610	ALL	90141-0020	C		4	LOCK RING
612	ALL	90165-0024	-		3	CLIP
615	ALL	90214-0098	P		10	BALL BEARING
620	ALL	90417-0081	P		1	TOOTHED BELT
650	ALL	311103-0240	-		1	CYLINDRICACPR3M6X25RFR
655	ALL	311103-0312	-		6	CYLINDRICACPR5M6X25RFR
660	ALL	311103-0314	-		1	CYLINDRICACPR5M6X30RFR
665	ALL	311103-0318	-		2	CYLINDRICACPR5M6X40RFR
670	ALL	311103-0357	-		1	CYLINDRICACPR6M6X30RFR
675	ALL	312101-0466	-		1	SCREW M6S8X75FZB
680	ALL	312105-0327	-		2	SCREW M6S5X12 A4 80
685	ALL	312105-0332	-		2	SCREW M6S5X22RFR
690	ALL	312105-0364	-		5	SCREW M6S6X10RFR
700	ALL	312105-0366	-		6	SCREW M6S6X12RFR
705	ALL	312105-0368	-		2	SCREW M6S6X16RFR
710	ALL	312105-0374	-		3	SCREW M6S6X30RFR
715	ALL	312105-0378	-		4	SCREW M6S6X40RFR
720	ALL	312105-0451	-		4	SCREW M6S8X20RFR
725	ALL	312105-0453	-		5	SCREW M6S8X25RFR
730	ALL	312105-0455	-		10	SCREW M6S8X30RFR
735	ALL	312105-0457	-		2	SCREW M6S8X35RFR
740	ALL	312105-0459	-		5	SCREW M6S8X40RFR
745	ALL	312105-0465	-		2	SCREW M6S8X70RFR
750	ALL	312109-0376	-		1	SCREW 6X35 H RFR
755	ALL	312115-0370	-		1	SCREW 6X20 A4 80
760	ALL	312125-0230	-		2	SLOTTED HEMCS3X20RFR
762	ALL	312125-0289	-		3	SLOTTED HEMCS4X10RFR
765	ALL	312125-0366	-		4	SLOTTED HEMCS6X12RFR
770	ALL	312155-0291	-		6	SCREW MF6S4X12RFR
775	ALL	312155-0327	-		18	SCREW MF6S5X12RFR
800	ALL	312155-0376	-		1	SCREW MF6X35RFR
805	ALL	312318-0362	-		3	GRUB SCREW SK6SS6X8RFR

POS	VAR	PART NUMBER	SP	EH	QTY	DESCRIPTION
810	ALL	312605-0310	-		2	NUT M6M3RFR
815	ALL	312605-0316	-		1	NUT M6M6RFR
820	ALL	312812-0318	-		2	CHECK NUT A4-M8RFR
825	ALL	315105-0124	-		4	WASHER BRB3,2X6RFR
827	ALL	315105-0136	-		3	WASHER BRB4,3X8RFR
830	ALL	315105-0146	-		2	WASHER BRB5,3X10RFR
835	ALL	315105-0153	-		15	WASHER BRB6,4X12RFR
840	ALL	315105-0165	-		16	WASHER BRB8,4X16RFR
845	ALL	315701-0170	-		2	FLAT WEDGE4X4X20
850	ALL	321120-0147	-		2	BUSHING 22/25X25

TETRA PAK

2/8608

S-456322-1

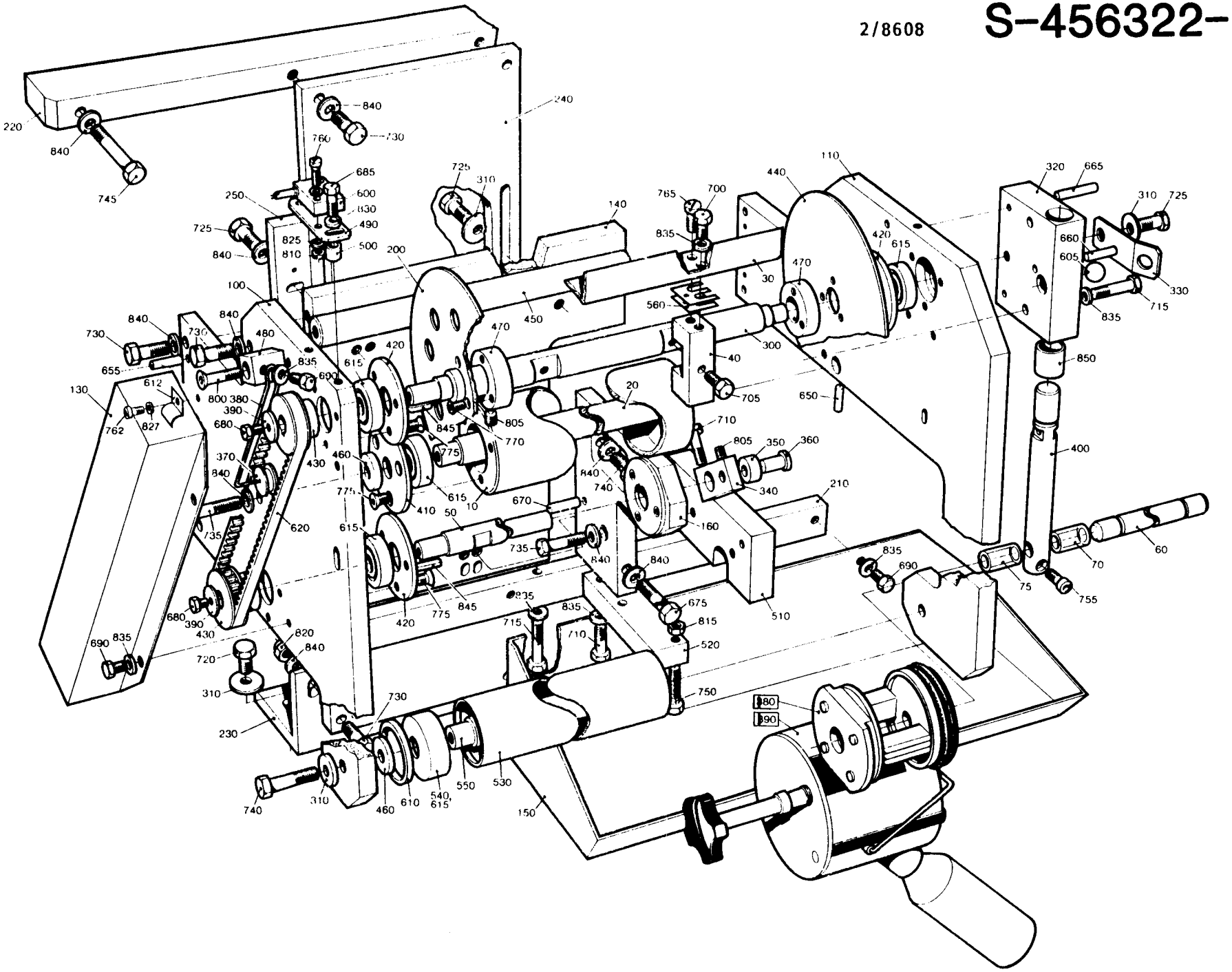

LAST ALTERATION: AM 8739 86-05-24
648107-070V
AM 8699
86-01-18

GROUP	VOLUME
-0201	V0250
-0202	V0236
-0203	V0200
-0204	V0180
-0205	V0125
-0206	200ML SLIM

POS	VAR	PART NUMBER	SP	EH	QTY	DESCRIPTION
	-0201	S- 456322-SHEET	-1			===ASSEMBLY DRAWING===
	-0201		~~-2~~			
	-0202		-1			
	-0202		~~-2~~			
	-0203		-1			
	-0203		~~-2~~			
	-0204		-1			
	-0204		~~-2~~			
	-0205		-1			
	-0205		~~-2~~			
	-0206		-1			
	-0206		~~-2~~			
F170	ALL	C- 293684-0204	-		2	DATING WHEEL ST-ER
F180	ALL	C- 434074-0302	-		1	INK UNIT
010	-0201	256391-0001	C		1	BENDING ROLLER
	-0202				1	
	-0203				1	
	-0204				1	
010	-0205	456328	C		1	BENDING ROLLER
	-0206				1	
020	-0201	256392-0001	C		1	SHAFT
	-0202				1	
	-0203				1	
	-0204				1	
020	-0205	256392-0003	C		1	SHAFT
	-0206				1	
030	-0206	441554	C		2	CREASE BAR
030	-0205	456327	C		2	CREASE BAR
030	-0201	456767	C		2	CREASE BAR
	-0202				2	
	-0203				2	
	-0204				2	
040	-0201	441556-0002	C		2	SPACER
040	-0202	441556-0003	C		2	SPACER
040	-0203	441556-0004	C		2	SPACER
040	-0204	441556-0006	C		2	SPACER
040	-0205	441556-0007	C		2	SPACER

POS	VAR	PART NUMBER	SP	EH	QTY	DESCRIPTION
040	-0206	441556-0009	C		2	SPACER
050	-0201	256399-0001	C		1	SHAFT
	-0202				1	
	-0203				1	
	-0204				1	
050	-0205	456811	C		1	SHAFT
	-0206				1	
060	-0201	256400	C		1	SHAFT
	-0202				1	
	-0203				1	
	-0204				1	
060	-0205	456334	C		1	SHAFT
	-0206				1	
070	-0201	90166-0059	P	MM	28	HOSE
	-0202				28	
	-0203				28	
	-0204				28	
	-0205				41	
	-0206				41	
075	-0201	90166-0059	P	MM	28	HOSE
	-0202				28	
	-0203				28	
	-0204				28	
	-0205				41	
	-0206				41	
100	ALL	456774-0002	-		1	GABLE
110	ALL	456775-0002	-		1	GABLE
130	ALL	441572	-		1	COVER
140	ALL	456323	-		1	PLATE
150	ALL	456325	-		1	SPLASH PLATE
160	ALL	456326-0002	C		1	BEARING BRACKET
200	ALL	441752	-		1	SIDE PLATE
210	ALL	456329	-		1	BAR
220	ALL	456330	-		1	BRACKET
230	ALL	456331	-		1	ANGLE BRACKET
240	ALL	456332	-		1	PLATE
250	ALL	456333	-		1	RAIL
300	ALL	456813	C		1	SHAFT
310	ALL	28036	-		13	WASHER
320	ALL	32919	C		1	BEARING BLOCK
330	ALL	32923	S		7	SPRING
340	ALL	32925	C		1	CARRIER
350	ALL	32926	C		1	ROLLER
360	ALL	32927	C		1	SHAFT
370	ALL	33182	S		1	ROLLER
380	ALL	33183	S		1	SPRING
390	ALL	106758	-		2	WASHER
400	ALL	228652	C		1	STOPPER
410	ALL	256248-0001	C		2	LID

TETRA PAK

2/8608

S-456322-1

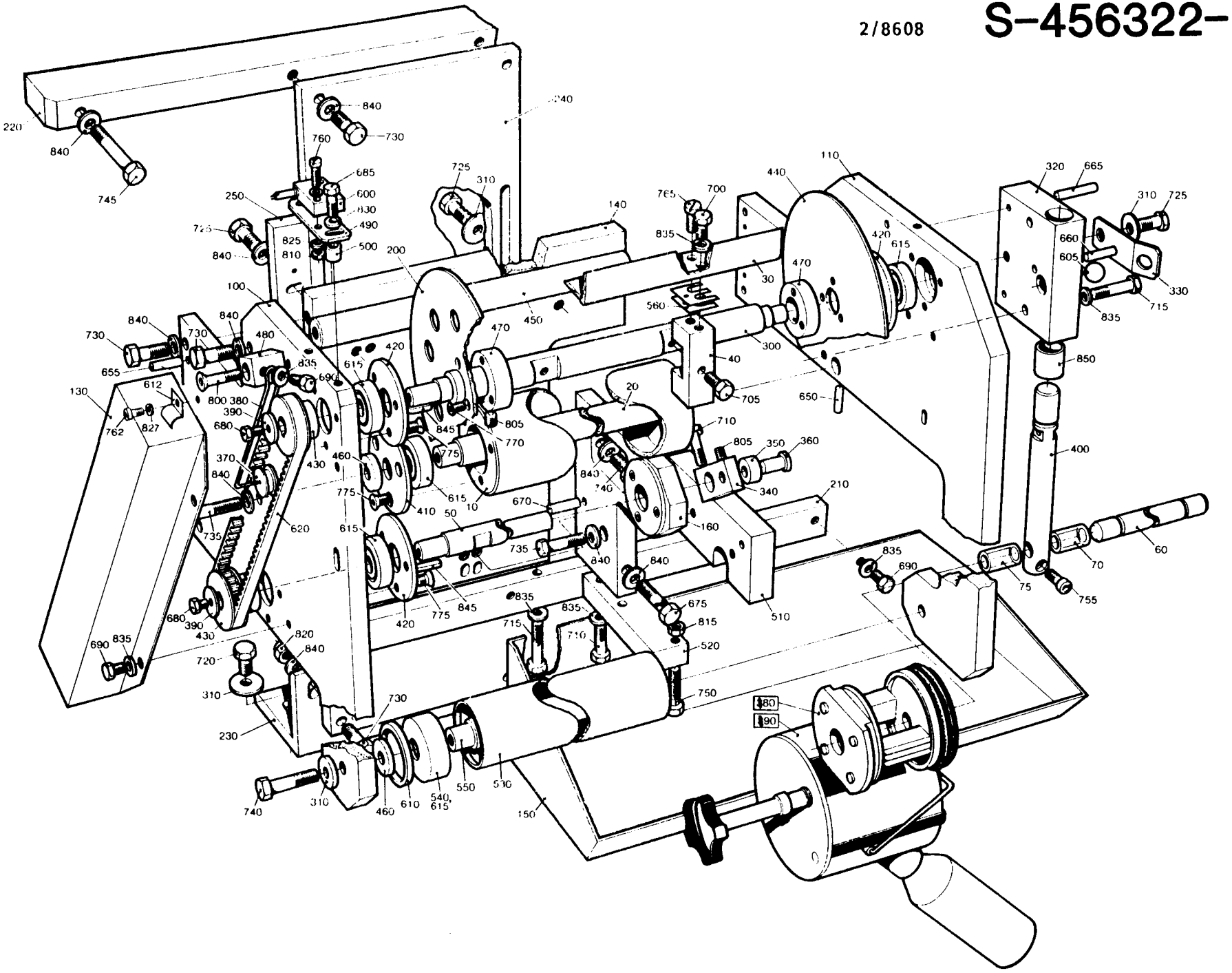

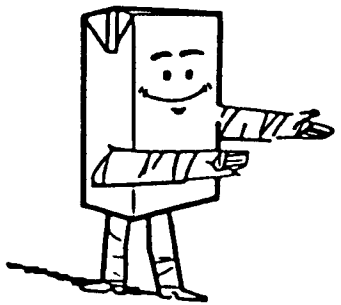

SPC 6481-51/52
STANDARD EQUIPMENT
EXTRA EQUIPMENT

B-648109-
B-648119-

TETRA PAK
SERVICE

LAST ALTERATION: AM 8260 85-09-20
648151-100V 648152-100V
AM 6962
84-07-03

GROUP	FILLMACHINE	PULL-TAB VERSION
-0601	B9	MPTAB
-0602	B9	UPTAB
-0603	AB9	MPTAB
-0604	AB9	UPTAB

POS	VAR	PART NUMBER	SP	EH	QTY	DESCRIPTION
	-0604	469389-SHEET	-1			INSTALLATION DRAWING
	-0604		-2			
	-0603	469390-SHEET	-1			INSTALLATION DRAWING
	-0602	469391-SHEET	-1			INSTALLATION DRAWING
	-0601	469392-SHEET	-1			INSTALLATION DRAWING
F005	ALL	C- 490590-010V	-		1	TRANSPORT FRAME
F010	ALL	C- 456975-0101	-		1	CABINET
F020	-0601	C- 295262-0401	-		1	CLEANING PIPE
	-0602				1	
F030	-0603	C- 284953-010V	-		1	HOSE
	-0604				1	
F040	ALL	C- 295971-0101	-		1	PAPER REEL TROLLEY
F050	ALL	C- 295904-010V	-		1	CLAMP
F080	-0601	C- 469294-0101	-		1	TYPE EXTRACTOR
	-0603				1	
300	ALL	491092	-		1	COVER PLATE
500	-0604	456047	-		1	CIRCUIT DIAGRAM
510	-0603	456048	-		1	CIRCUIT DIAGRAM
520	-0602	456049	-		1	CIRCUIT DIAGRAM
530	-0601	456050	-		1	CIRCUIT DIAGRAM
540	-0603	456051	-		1	WATER DIAGRAM
	-0604				1	
550	-0601	456052	-		1	WATER DIAGRAM
	-0602				1	
560	-0603	456053	-		1	PANEL SURVEY
	-0604				1	
570	-0601	456054	-		1	PANEL SURVEY
	-0602				1	
580	ALL	456055	-		1	DIAGRAM CENTRAL LUBRIC.
585	-0603	456056	-		1	CIRCUIT DIAGRAM
	-0604				1	
590	ALL	295887	-		1	CIRCUIT DIAGRAM
600	-0601	457916	-		1	WIRING DIAGRAM PNEUM. O.D
	-0603				1	
610	-0603	469723	-		1	TIME SCHEDULE 250ML O.D
620	-0601	469724	-		1	TIME SCHEDULE 250ML O.D
650	-0603	469727	-		1	TIME SCHEDULE 200ML O.D
690	-0603	469731	-		1	TIME SCHEDULE 125ML O.D
700	-0601	469732	-		1	TIME SCHEDULE 125ML O.D
710	-0603	469733	-		1	TIME SCHEDULE 200S O.D

POS	VAR	PART NUMBER	SP	EH	QTY	DESCRIPTION
720	-0601	469734	-		1	TIME SCHEDULE 200S O.D
910	ALL	90347-0001	-		10	DAMPER
920	-0601	318301-0122	-		4	EYE BOLT LTM12FZB
	-0603				4	

LAST ALTERATION: AM 9391 86-07-21
648151-110V 648152-110V
AM 9342
86-07-21

GROUP	FILLMACHINE	PULL-TAB VERSION
-0701	B9	WITH PTAB
-0702	B9	WITHOUT PTAB
-0703	AB9	WITH PTAB
-0704	AB9	WITHOUT PTAB

POS	VAR	PART	NUMBER	SP	EH	QTY	DESCRIPTION
	-0704		469389-SHEET	-1			INSTALLATION DRAWING
	-0704			-2			
	-0703		469390-SHEET	-1			INSTALLATION DRAWING
	-0702		469391-SHEET	-1			INSTALLATION DRAWING
	-0701		469392-SHEET	-1			INSTALLATION DRAWING
005	ALL		490590-010V	-		1	TRANSPORT FRAME
F020	-0701	C-	295262-0401	-		1	CLEANING PIPE
	-0702					1	
F030	-0703	C-	284953-010V	-		1	HOSE
	-0704					1	
F040	ALL	C-	491942-0101	-		1	PAPER REEL TROLLEY
F050	ALL	C-	295904-010V	-		1	CLAMP
F080	-0701	C-	469294-0101	-		1	TYPE EXTRACTOR
	-0703					1	
F090	ALL	C-	531345-0101	-		1	PERSONAL PROTECT. EQ H2O2
F100	ALL	C-	77099-0101	-		1	TOOL KIT
300	ALL		491092	-		1	COVER PLATE
500	-0704		456047	-		1	CIRCUIT DIAGRAM
510	-0703		456048	-		1	CIRCUIT DIAGRAM
520	-0702		456049	-		1	CIRCUIT DIAGRAM
530	-0701		456050	-		1	CIRCUIT DIAGRAM
540	-0703		456051	-		1	WATER DIAGRAM
	-0704					1	
550	-0701		456052	-		1	WATER DIAGRAM
	-0702					1	
560	-0703		456053	-		1	PANEL SURVEY
	-0704					1	
570	-0701		456054	-		1	PANEL SURVEY
	-0702					1	
580	ALL		456055	-		1	DIAGRAM CENTRAL LUBRIC.
585	-0703		456056	-		1	CIRCUIT DIAGRAM
	-0704					1	
590	ALL		295887	-		1	CIRCUIT DIAGRAM
600	-0701		457916	-		1	WIRING DIAGRAM PNEUM. O.D
	-0703					1	
610	-0703		469723	-		1	TIME SCHEDULE 250ML O.D
620	-0701		469724	-		1	TIME SCHEDULE 250ML O.D
650	-0703		469727	-		1	TIME SCHEDULE 200ML O.D

POS	VAR	PART	NUMBER	SP	EH	QTY	DESCRIPTION
690	-0703		469731	-		1	TIME SCHEDULE 125ML O.D
700	-0701		469732	-		1	TIME SCHEDULE 125ML O.D
710	-0703		469733	-		1	TIME SCHEDULE 200S O.D
720	-0701		469734	-		1	TIME SCHEDULE 200S O.D
910	ALL		90347-0001	-		10	DAMPER
920	-0701		318301-0122	-		4	EYE BOLT LTM12FZB
	-0703					4	

LAST ALTERATION: AM 9342 86-07-21
648109-070V

POS	VAR	PART NUMBER	SP	EH	QTY	DESCRIPTION
010	-0101	75665	-		1	ASSEMBLY TOOL
020	-0101	72947	-		1	HOOK SPANNER
030	-0101	76167	-		1	LOCKING CLAMP
040	-0101	76138	-		1	LOCKING CLAMP
050	-0101	434841	-		1	GAUGE
060	-0101	76131	-		1	ASSEMBLY CONE
070	-0101	76132	-		1	ASSEMBLY TOOL
080	-0101	76153	-		1	SETTING TOOL
210	-0101	777120-0215	-		2	SPANNER
220	-0101	777120-0220	-		2	SPANNER
230	-0101	777120-0232	-		2	SPANNER
240	-0101	777122-0137	-		1	SPANNER V=36
250	-0101	777122-0142	-		1	SPANNER V=46
260	-0101	777150-0801	-		2	KEY SET ,SEXKANT
270	-0101	777200-0101	-		1	PIPE WRENCEL

LAST ALTERATION: AM 9391 86-07-21
648109-070V

GROUP

-0101 PAPER REEL TROLLEY.
-0102 SPAREPARTS PAPER REEL TROLLEY.

POS	VAR	PART NUMBER	SP	EH	QTY	DESCRIPTION
	-0101	S- 491942-SHEET	-1			===ASSEMBLY DRAWING===
	-0102		~~-1~~			
	-0102		~~-1~~			
010	-0101	295106	-		1	GUARD
020	-0101	491189	-		2	SIGN
030	-0101	3675	-		1	TETRA MARK PLAT
040	-0101	90067-0010	-		1	CARRIAGE
		90067-0300	S		0	* SPARE PARTS KIT
		90067-0301	S		0	* BRAKE WIRE
		90067-0302	S		0	* TORSION SPRING
		90067-0317	R		0	* BRAKE LINING
050	-0101	312105-0364	-		5	SCREW M6S6X10RFR
060	-0101	312121-0224	-		3	SLOTTED HEMCS3X10FZB
110	-0102	90067-0300	S		1	SPARE PARTS KIT
120	-0102	90067-0301	S		1	BRAKE WIRE
130	-0102	90067-0302	S		2	TORSION SPRING
140	-0102	90067-0317	S		2	BRAKE LINING
150	-0102	90067-0322	S		1	REPAIR KIT
160	-0102	90067-0323	S		1	BEARING KIT
170	-0102	90067-0324	S		1	REPAIR KIT
180	-0102	90067-0325	S		1	PUMP PISTON
190	-0102	90067-0326	S		1	REPAIR KIT
200	-0102	90067-0327	S		1	RETURN SPRING
210	-0102	90067-0328	S		1	VALVE
220	-0102	90067-0329	S		2	COPPER WASHER
230	-0102	90067-0330	S		1	VALVE ARM
240	-0102	90067-0331	S		1	TOP BEARING KIT
250	-0102	90067-0332	S		1	LIFT PISTON
260	-0102	90067-0333	S		1	VALVE
270	-0102	90067-0334	S		1	AXIAL BEARING KIT
280	-0102	90067-0335	S		1	YOKE UNIT
290	-0102	90067-0336	S		1	GUIDE SHAFT UNIT
300	-0102	90067-0337	S		2	BRAKE DRUM
310	-0102	90067-0338	S		2	GUIDE ROLLER
320	-0102	90067-0339	S		2	WHEEL
330	-0102	90067-0340	S		4	SLEEVE
340	-0102	90067-0341	S		2	SHAFT
350	-0102	90067-0342	S		4	TENSION SPRING
500	-0102	311303-0271	S		2	SLOTTED PIRPB4X18FZB
510	-0102	315204-0108	S		2	O-RING 10,1X1,6VITON
520	-0102	315750-0119	S		4	LOCK RING SGA25

TETRA PAK

1/8608

S-491942-1

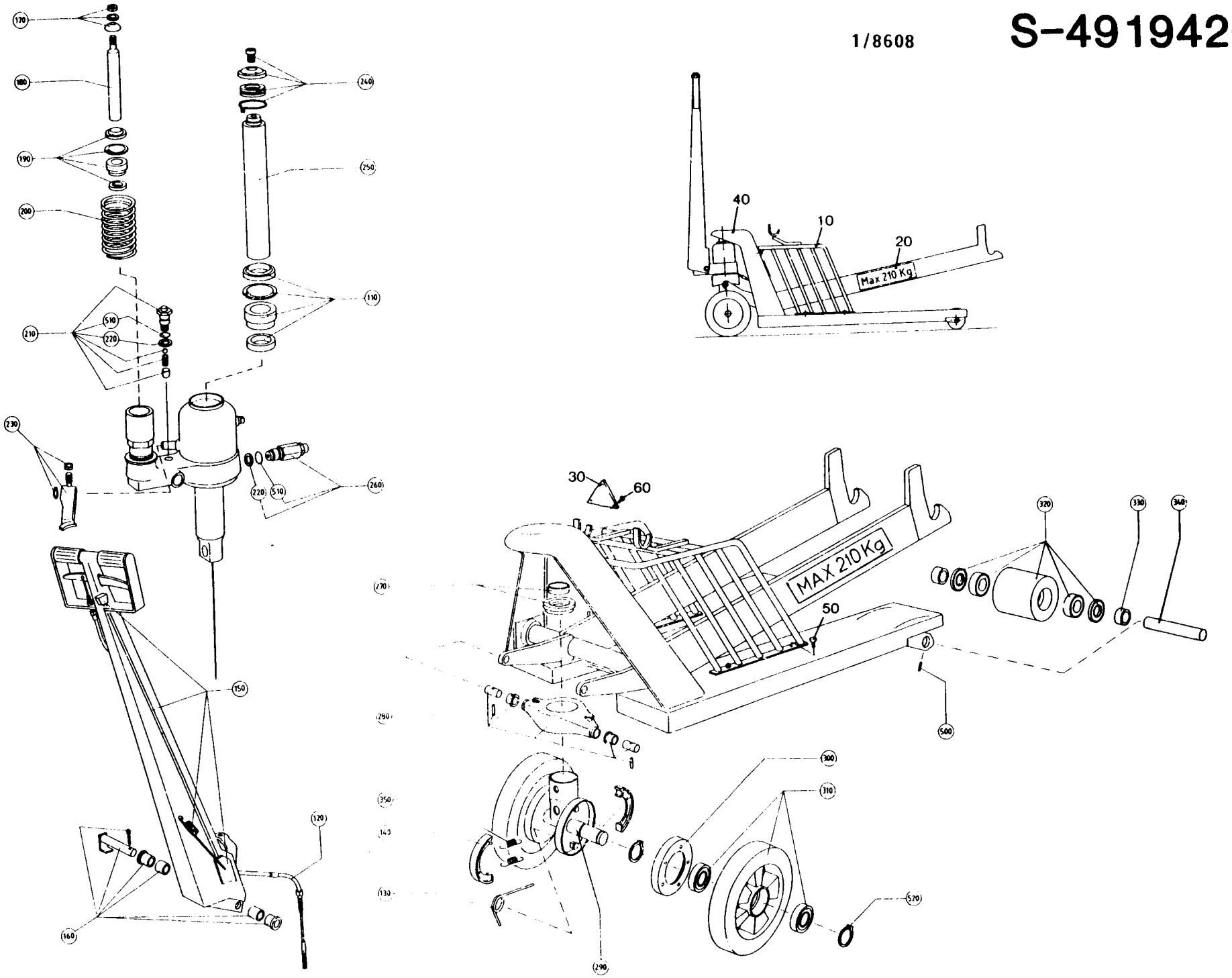

LAST ALTERATION: AM 8893 86-03-18
640009-780V 648009-060V 648109-070V

POS	VAR	PART NUMBER	SP	EH	QTY	DESCRIPTION
010	-0101	90303-0004	-		1	GLOVES
020	-0101	90303-0005	-		1	PROTECTIVE EQUIPMENT
030	-0101	779130-0102	-		1	PROTECTIVEÖGON

LAST ALTERATION: AM 8433 85-12-12
648151-100V 648152-100V
AM 6961
84-06-29

GROUP	FILLMACHINE	PULL-TAB VERSION	VOLUME	VOLUME	VOLUME
-0601	B9	MPTAB	V0250	V0200	V0180
-0602	B9	UPTAB	V0250	V0200	V0180
-0603	B9	MPTAB	200ML SLIM	-	-
-0604	B9	UPTAB	200ML SLIM	-	-
-0605	AB9	MPTAB	V0250	V0236	V0200
	AB9	MPTAB	V0180	-	-
-0606	AB9	UPTAB	V0250	V0236	V0200
	AB9	UPTAB	V0180	-	-
-0607	AB9	MPTAB	200ML SLIM	-	-
-0608	AB9	UPTAB	200ML SLIM	-	-
-0609	AB9	MPTAB	V0125	-	-
-0610	AB9	UPTAB	V0125	-	-

POS	VAR	PART NUMBER	SP	EH	QTY	DESCRIPTION
F010	-0606	C- 456953-010V	-		1	PERFORATION HEATER
	-0608				1	
F010	-0606	491150	-		X	DOCUMENT FOLDER
	-0608				X	
F010	-0606	AE- 649280-0101	-		X	ELECTRICAL CONVERSION
	-0608				X	
F010	-0606	C- 450125-0102	-		X	HEATER
	-0608				X	
F010	-0606	C- 456951-010V	-		X	INDUCTER UNIT
	-0608				X	
F010	-0606	C- 491273-0101	-		X	START UP KIT
	-0608				X	
F220	ALL	C- 75542-0101	-		1	LIFTING UNIT
F231	-0605	76500-0101	-		1	LIFTING UNIT
	-0606				1	
	-0607				1	
	-0608				1	
	-0609				1	
	-0610				1	
F232	-0601	76504-0101	-		1	LIFTING UNIT
	-0602				1	
	-0603				1	
	-0604				1	
240	-0601	456759	-		1	TPC-BAR
	-0602				1	
	-0603				1	
	-0604				1	
250	-0602	90413-0187	-		1	CODE INSERT SET
	-0604				1	
	-0606				1	
	-0608				1	
	-0610				1	

POS	VAR	PART NUMBER	SP	EH	QTY	DESCRIPTION
251	-0602	90413-0188	-		1	CODE INSERT SET
	-0604				1	
	-0606				1	
	-0608				1	
	-0610				1	
252	-0602	90413-0189	-		1	CODE INSERT SET
	-0604				1	
	-0606				1	
	-0608				1	
	-0610				1	
253	-0602	90413-0190	-		1	CODE INSERT SET
	-0604				1	
	-0606				1	
	-0608				1	
	-0610				1	
254	-0602	90413-0195	-		1	CODE INSERT SET
	-0604				1	
	-0606				1	
	-0608				1	
	-0610				1	
255	-0602	90413-0196	-		1	CODE INSERT SET
	-0604				1	
	-0606				1	
	-0608				1	
	-0610				1	
256	-0602	90413-0197	-		1	CODE INSERT SET
	-0604				1	
	-0606				1	
	-0608				1	
	-0610				1	
F310	ALL	74767-0102	-		1	DYNAMOMETER
F320	ALL	75466-0201	-		1	SETTING TOOL
F330	ALL	75467-0201	-		1	SETTING TOOL CURVES
F350	ALL	76600-0101	-		1	SETTING TOOL
F350	ALL	76591-0101	-		X	BAG
F350	ALL	C- 76335-010V	-		X	SETTING TOOL JAW SYSTEM
F350	ALL	75469-0201	-		X	SETTING TOOL
F350	ALL	76291-0101	-		X	YOKE
F350	ALL	76301-0101	-		X	TEMPLATE
F350	ALL	76304-0101	-		X	COMPRESSION SPRING
F350	-0601	76468-0101	-		X	TEMPLATE
	-0602				X	
F350	-0609	76592-0101	-		X	TEMPLATE TUBE FORMING
	-0610				X	
F350	-0607	76598-0101	-		X	TEMPLATE TUBE FORMING
	-0608				X	
F350	-0605	76333-0101	-		X	TEMPLATE
	-0606				X	
F350	-0605	76407-0101	-		X	TEMPLATE
	-0606				X	
F350	-0605	76409-0101	-		X	TEMPLATE

POS	VAR	PART NUMBER	SP	EH	QTY	DESCRIPTION
	-0606				X	
F350	ALL	76402-0101	-		X	TEMPLATE
F370	ALL	C- 76350-0101	-		1	SETTING TOOL
F370	ALL	76470-0101	-		X	BAG
F370	ALL	C- 76594-0101	-		X	SETTING TOOL
F370	ALL	442080-0101	-		X	LASER
F370	ALL	442089-0101	-		X	HOUSE
F370	ALL	442094-0101	-		X	DISPLAY
F500	ALL	C- 75525-020V	-		1	TEMPLATE
F510	ALL	76416-0101	-		1	CLAMP
F520	-0605	76344-0101	-		1	TEMPLATE
	-0606				1	
F520	-0605	76595-0101	-		1	TEMPLATE LS-ELEMENT
	-0606				1	
F530	ALL	76175-0101	-		1	PULLER
595	ALL	76130	-		1	SETTING TOOL
600	ALL	76406	-		1	TEMPLATE-COLUMN
605	-0605	76398	-		1	TEMPLATE
	-0606				1	
615	-0601	76467	-		1	TEMPLATE
	-0602				1	
	-0605				1	
	-0606				1	
620	ALL	76129	-		1	CLAMPING RING
625	ALL	76128	-		1	TEMPLATE
635	ALL	456590	-		1	SETTING TOOL
750	-0601	28837	-		3	TRIMMING ROLLER PLUS
	-0602				3	
755	-0601	28838	-		3	TRIMMING ROLLER MINUS
	-0602				3	
760	-0603	441154	-		3	TRIMMING ROLLER PLUS
	-0604				3	
765	-0603	441155	-		3	TRIMMING ROLLER MINUS
	-0604				3	
770	-0605	456091	-		3	TRIMMING ROLLER PLUS
	-0606				3	
775	-0605	456092	-		3	TRIMMING ROLLER MINUS
	-0606				3	
780	-0607	456999	-		3	TRIMMING ROLLER PLUS
	-0608				3	
785	-0607	456998	-		3	TRIMMING ROLLER MINUS
	-0608				3	
790	-0609	441879	-		3	TRIMMING ROLLER PLUS
	-0610				3	
795	-0609	441878	-		3	TRIMMING ROLLER MINUS
	-0610				3	
F905	-0605	76200-0101	-		1	TRANSPORTER
	-0606				1	
	-0607				1	
	-0608				1	
	-0609				1	

POS	VAR	PART NUMBER	SP	EH	QTY	DESCRIPTION
	-0610				1	
F910	-0602	76492-010V	-		1	ASSEMBLY JIG
	-0604				1	
	-0606				1	
	-0608				1	
	-0610				1	
F920	ALL	76411-0101	-		1	SETTING TOOL
F930	-0605	76447-0101	-		1	SETTING TOOL
	-0606				1	
	-0607				1	
	-0608				1	
	-0609				1	
	-0610				1	
F932	-0601	76580-0101	-		1	SETTING TOOL
	-0602				1	
	-0605				1	
	-0606				1	
F935	ALL	76460-0101	-		1	SETTING TOOL
F937	-0605	436467-0101	-		1	JIG
	-0606				1	
	-0607				1	
	-0608				1	
	-0609				1	
	-0610				1	
F940	-0605	449969-0101	-		1	TOOL
	-0606				1	
	-0607				1	
	-0608				1	
	-0609				1	
	-0610				1	
F945	-0601	469586-0101	-		1	TEMPLATE
	-0603				1	
	-0605				1	
	-0607				1	
	-0609				1	
950	ALL	76165	-		1	SETTING TOOL
965	-0602	76604	-		1	SHAFT
	-0604				1	
	-0606				1	
	-0608				1	
	-0610				1	
970	ALL	75514	-		1	PLIERS

POS	VAR	PART NUMBER	SP	EH	QTY	DESCRIPTION
F010		C- 77091-010V	-		1	ACCESSORIES PARTS
F020		C- 77092-010V	-		1	SERVICE PARTS
F030		C- 77093-010V	-		1	TRIMMING PARTS

LAST ALTERATION: AM 9341 86-07-21
648119-070V
AM 8741
86-06-16

POS	VAR	PART NUMBER	SP	EH	QTY	DESCRIPTION
F005		C- 456975-0201	-		1	CABINET
F020		C- 490504-0101	-		1	CIRCULATING COOLING WATER (AB9)
F030		C- 75542-0101	-		1	LIFTING UNIT
200		456759	-		1	TPC-BAR (B9)
240		90048-0022	-		1	OIL PUMP
		90048-0448	R		0	* REPAIR KIT
260		90243-0137	-		1	MEASURING INSTRUMENT (AB9)
For Machines without Pulltab						
F010		C- 456953-010V	-		1	PERFORATION HEATER (only AB9)
250		90413-0187	-		1	CODE INSERT SET 8 mm Letters
251		90413-0188	-		1	CODE INSERT SET 8 mm Figures
252		90413-0189	-		1	CODE INSERT SET 4 mm Figures
253		90413-0190	-		1	CODE INSERT SET 4 mm Letters
254		90413-0195	-		1	CODE INSERT SET 1 - 31
255		90413-0196	-		1	CODE INSERT SET 1 - 12
256		90413-0197	-		1	CODE INSERT SET 83 - 88

F020

LAST ALTERATION: AM 9933 87-02-07
648119-080V
AM 9617
86-12-11

GROUP	FILLMACHINE	PULL-TAB VERSION	VOLUME	VOLUME	VOLUME
-0201	B9	WITH PTAB	V0250	V0200	V0180
-0202	B9	WITHOUT PTAB	V0250	V0200	V0180
-0203	B9	WITH PTAB	200ML SLIM	-	-
-0204	B9	WITHOUT PTAB	200ML SLIM	-	-
-0205	AB9	WITH PTAB	V0250	V0236	V0200
	AB9	WITH PTAB	V0180	-	-
-0206	AB9	WITHOUT PTAB	V0250	V0236	V0200
	AB9	WITHOUT PTAB	V0180	-	-
-0207	AB9	WITH PTAB	200ML SLIM	-	-
-0208	AB9	WITHOUT PTAB	200ML SLIM	-	-
-0209	AB9	WITH PTAB	V0125	-	-
-0210	AB9	WITHOUT PTAB	V0125	-	-

POS	VAR	PART NUMBER	SP	EH	QTY	DESCRIPTION
F005	ALL	C- 456975-0201	-		1	CABINET
F010	-0206	C- 456953-010V	-		1	PERFORATION HEATER
	-0208				1	
		C- 450125-0102				. HEATING DEVICE
		C- 456951-010V				. INDUCTOR UNIT
		C- 491273-0101				. START-UP KIT
		AE- 649280-0101				. ELECTRICAL CONVERSION
F020	-0205	C- 491767-0101	-		1	CIRCULATING COOLING WATER
	-0206				1	
	-0207				1	
	-0208				1	
	-0209				1	
	-0210				1	
F030	ALL	C- 75542-0101	-		1	LIFTING UNIT
F040	ALL	C- 271635-0301	-		1	TRANSPORTER
F050	-0205	C- 76500-0101	-		1	LIFTING UNIT
	-0206				1	
	-0207				1	
	-0208				1	
	-0209				1	
	-0210				1	
F060	-0201	C- 76504-0101	-		1	LIFTING UNIT
	-0202				1	
	-0203				1	
	-0204				1	
F070	-0205	C- 533014-0101	-		1	LEAK FINDING EQUIPMENT
	-0206				1	
	-0207				1	
	-0208				1	
	-0209				1	
	-0210				1	

POS	VAR	PART NUMBER	SP	EH	QTY	DESCRIPTION
		C- 533905-0101				. BAG
200	-0201	456759	-		1	TPC BAR
	-0202				1	
	-0203				1	
	-0204				1	
240	ALL	90048-0022	-		1	OIL PUMP
		90048-0448	R		0	* REPAIR KIT
250	-0202	90413-0187	-		1	CODE INSERT SET
	-0204				1	
	-0206				1	
	-0208				1	
	-0210				1	
251	-0202	90413-0188	-		1	CODE INSERT SET
	-0204				1	
	-0206				1	
	-0208				1	
	-0210				1	
252	-0202	90413-0189	-		1	CODE INSERT SET
	-0204				1	
	-0206				1	
	-0208				1	
	-0210				1	
253	-0202	90413-0190	-		1	CODE INSERT SET
	-0204				1	
	-0206				1	
	-0208				1	
	-0210				1	
254	-0202	90413-0195	-		1	CODE INSERT SET
	-0204				1	
	-0206				1	
	-0208				1	
	-0210				1	
255	-0202	90413-0196	-		1	CODE INSERT SET
	-0204				1	
	-0206				1	
	-0208				1	
	-0210				1	
256	-0202	90413-0197	-		1	CODE INSERT SET
	-0204				1	
	-0206				1	
	-0208				1	
	-0210				1	

LAST ALTERATION: AM 5688 83-01-14
648119

POS	VAR	PART NUMBER	SP	EH	QTY	DESCRIPTION	
	-0101	S- 75542-SHEET	-1			===ASSEMBLY DRAWING===	
010	-0101	75543	-		1	HOLDER	
020	-0101	75544	-		2	BRACKET	
100	-0101	312101-0495	-		2	SCREW	M6S10X30FZB
110	-0101	312401-0451	-		2	SCREW	VS8X20FZB
120	-0101	312711-0120	-		2	WING NUT	VM10FZB

TETRA PAK

2/8405 **S-75542-1**

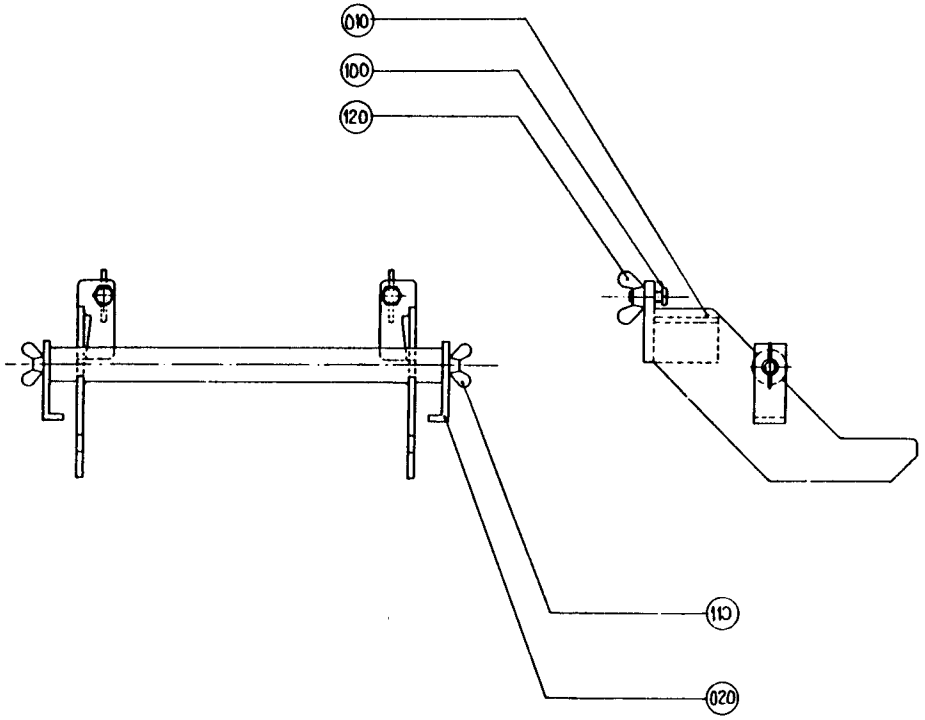

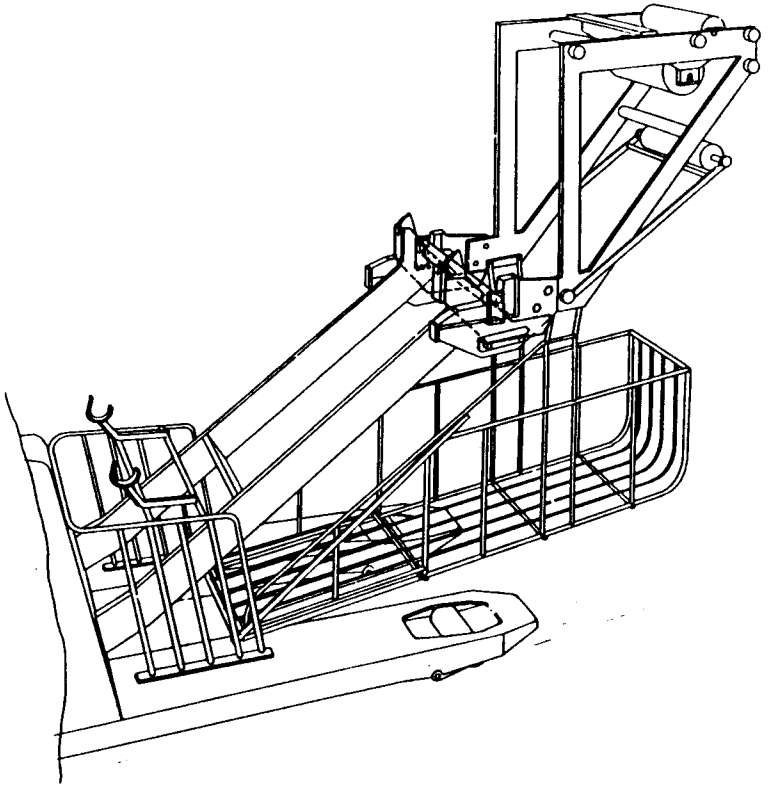

LAST ALTERATION: AM 9341 86-07-21
77091-010V

POS	VAR	PART NUMBER	SP	EH	QTY	DESCRIPTION
035	-0201	36489	-		1	ASSEMBLY TOOL
080	-0201	90226-0004	-		1	CABINET
100	-0201	90278-0001	-		1	PUMP
110	-0201	90279-0001	-		1	OIL CAN
115	-0201	90243-0136	-		1	SPIRIT LEVEL
125	-0201	315202-0224	-		1	O-RING 42,2X3
150	-0201	776422-0101	-		2	BRASS BRUSSTE
160	-0201	777100-0113	-		1	SCREW DRIVL
170	-0201	777100-0184	-		1	SCREW DRIVL
330	-0201	777510-0101	-		1	SCISSORS
400	-0201	772220-0100	-		1	ASSEMBLY T VOMO 6-L
410	-0201	772220-0101	-		1	ASSEMBLY T VOMO 8-L
420	-0201	772220-0103	-		1	ASSEMBLY T VOMO 12-L
430	-0201	772220-0104	-		1	ASSEMBLY T VOMO 15-L

LAST ALTERATION: AM 8673 86-02-17
77091-010V 648119-060V

POS	VAR	PART NUMBER	SP	EH	QTY	DESCRIPTION
	-0101	S- 490504-SHEET	-1			===ASSEMBLY DRAWING===
	-0101	490505-SHEET	-1			DRG SHOWING BORE LOCATION
000	-0101	490720	-		1	DOCUMENT
010	-0101	490506	-		1	HOSE
020	-0101	490507	-		1	HOSE
030	-0101	490508	-		1	GUARD
040	-0101	490608	-		1	SIGN
050	-0101	271762	-		1	NUT
060	-0101	490509	-		2	SPACER
070	-0101	490510	-		1	SECURING PLATE
080	-0101	490511	-		1	HOLDER
090	-0101	490512	-		1	HOLDER
100	-0101	490513	-		1	HOLDER
110	-0101	490514	-		1	HOLDER
120	-0101	490609	-		1	SEAL WASHER
150	-0101	490800	-		1	WATER DIAGRAM
190	-0101	90005-0061	-		2	WASHER
200	-0101	90030-0159	-		2	GROMMET
210	-0101	90030-0188	-		1	PIPE CONNECTION
220	-0101	90074-0005	-		4	CLIP
390	-0101	312105-0287	-		4	SCREW M6S4X8 A4 80
400	-0101	312105-0366	-		2	SCREW M6S6X12RFR
410	-0101	312105-0379	-		2	SCREW M6S6X45RFR
430	-0101	312502-0120	-		2	DRIVE SCREKDS0X5FNB
440	-0101	315105-0136	-		4	WASHER BRB4,3X8RFR
450	-0101	315105-0153	-		4	WASHER BRB6,4X12RFR
490	-0101	342738-0221	-		1	ELBOW COUPSY

TETRA PAK

1/8608

S-490504-1

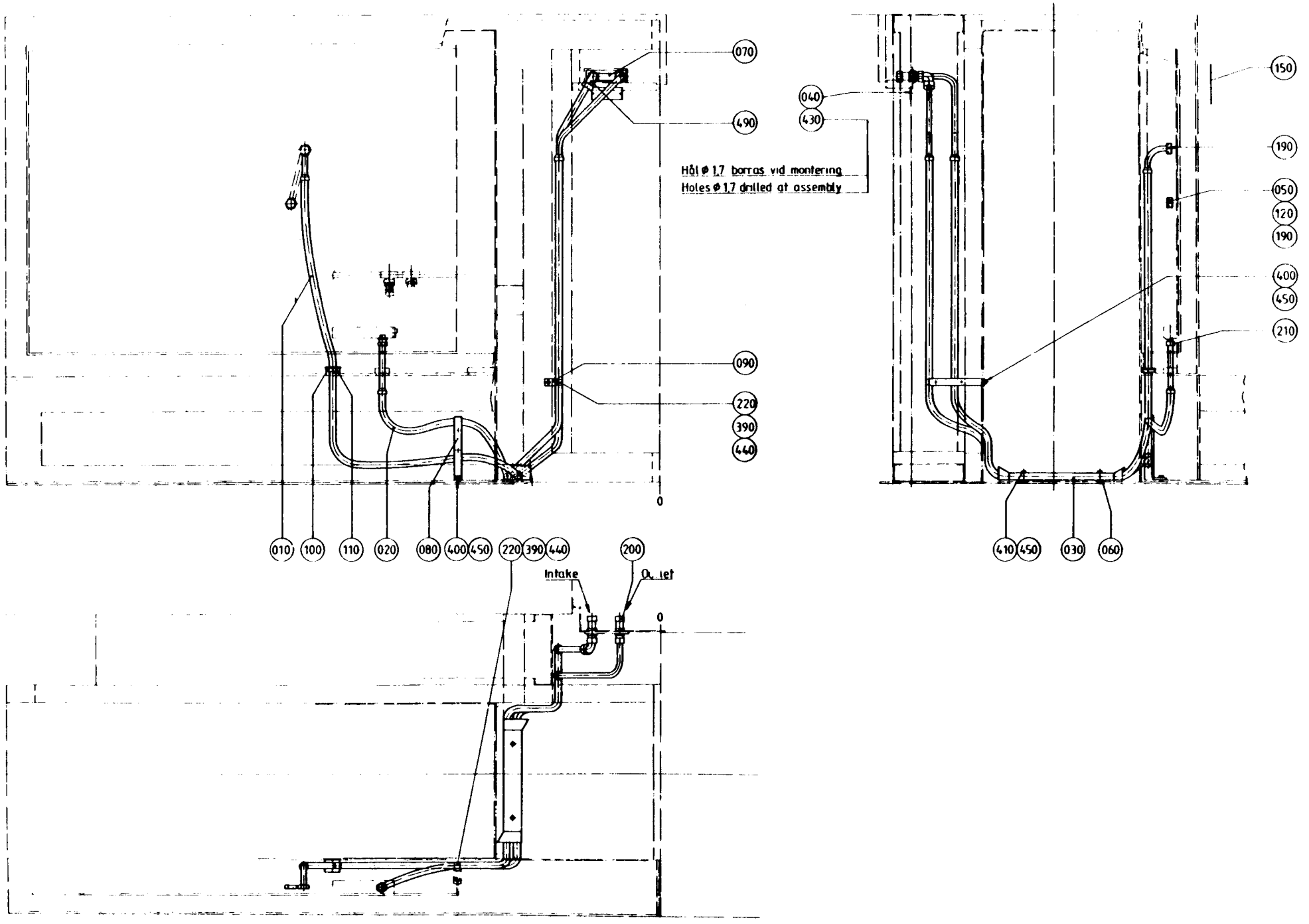

AM 8673

LAST ALTERATION: AM 8054 85-08-22
77091-010V 648119-060V
AM 6751
84-04-18

GROUP	STAMP LOCATION	PART NUMBER	SP	EH	QTY	DESCRIPTION
		S- 456953-SHEET	-1			===ASSEMBLY DRAWING===
F000	ALL	AE- 649280-0101	-		1	ELECTRICAL CONVERSION
F005	ALL	C- 450125-0102	-		1	HEATER
F006	ALL	C- 456951-010V	-		1	INDUCTOR UNIT
F009	ALL	C- 491273-0101	-		1	START UP KIT
000	ALL	491150	-		1	DOCUMENT FOLDER
010	-0101	441744	-		1	COVER
010	-0102	456949	-		1	COVER
020	ALL	456339	-		1	GUARD
040	ALL	456340	S		1	BUSBAR
050	ALL	255916	-		1	CAM
060	ALL	294800	-		1	BRACKET
070	ALL	294801	-		1	BRACKET
080	ALL	441743	-		1	BRACKET
090	ALL	456341	P		1	CABLE
096	ALL	469894	-		2	BRACKET
097	ALL	469895	-		1	HEAT GUARD
100	ALL	32134	S		2	INSERT
110	ALL	32136	S		2	INSERT
120	ALL	32544	P		3	INSULATION NUT
130	ALL	32644	P		4	WASHER
140	ALL	276182	-		2	CABLE CLAMP
150	ALL	294802	-		1	BRACKET
160	ALL	295765	-		1	PLATE
300	ALL	90044-0104	P		1	INDUCTIVE TRANSMITTER
310	ALL	90165-0024	-		4	CLIP
500	ALL	312105-0327	-		9	SCREW M6S5X12 A4 80
510	ALL	312105-0331	-		2	SCREW M6S5X20 A4 80
520	ALL	312105-0335	-		4	SCREW M6S5X30 A4 80
530	ALL	312105-0372	-		2	SCREW M6S6X25RFR
540	ALL	312105-0449	-		4	SCREW M6S8X16RFR
550	ALL	312115-0325	-		1	SCREW 5X10 A4 80
560	ALL	312122-0295	-		3	SLOTTED HEMCS4X20MSGFN
570	ALL	312125-0228	-		2	SLOTTED HEMCS3X16RFR
580	ALL	312125-0285	-		4	SLOTTED HEMCS4X6RFR
590	ALL	312125-0335	-		4	SLOTTED HEMCS5X30RFR
600	ALL	312605-0312	-		2	NUT M6M4RFR
610	ALL	312605-0314	-		6	NUT M6M5RFR
620	ALL	315105-0136	-		6	WASHER BRB4,3X8RFR
630	ALL	315105-0146	-		26	WASHER BRB5,3X10RFR
640	ALL	315105-0153	-		2	WASHER BRB6,4X12RFR
650	ALL	315105-0165	-		4	WASHER BRB8,4X16RFR
700	ALL	342980-0113	-		2	BANJO CONNSINGEL 6/4-1/8
710	ALL	342980-0303	-		2	BANJO CONN SINGEL 1/8"
720	ALL	352103-0106	-		1	CABLE CLANR.18,6/5-10

TETRA PAK

2/8601 **S-456953-1**

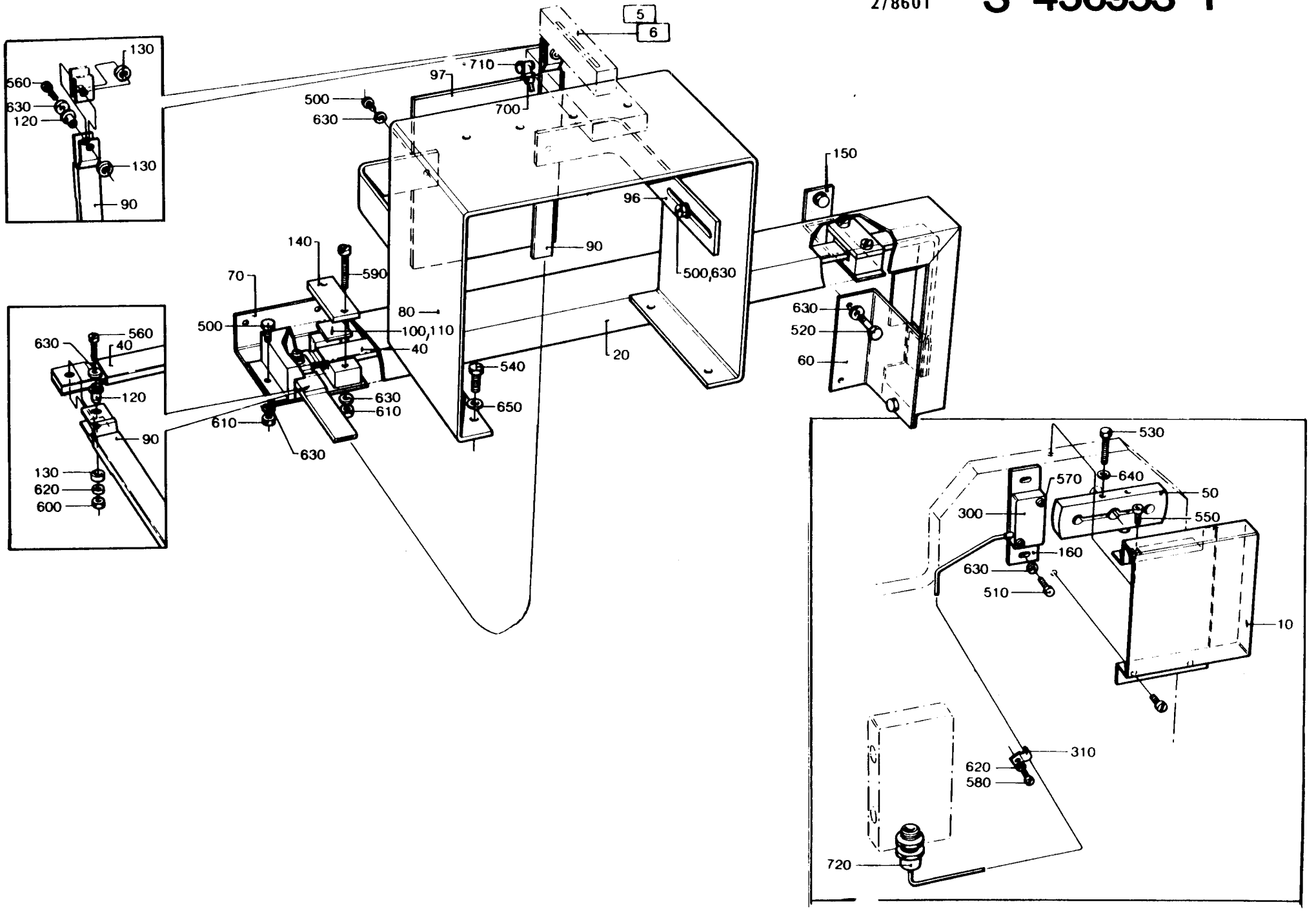

LAST ALTERATION: AM 6751 84-04-18
282642-020V 441736-010V 456953-010V 464036-010V
AM 6183
83-10-11

GROUP FILLMACHINE

-0101 AB8
-0102 AB9

POS	VAR	PART NUMBER	SP	EH	QTY	DESCRIPTION
		S- 450125-SHEET -1				===ASSEMBLY DRAWING===
180	-0102	456950	C		2	HOLDER
180	-0101	450848	C		2	HOLDER
120	ALL	445645	-		1	FRAME
130	ALL	445646	-		1	SUPPORTING FRAME
140	ALL	445647	C		1	BEARING HOUSING
160	ALL	450015	C		1	HOUSE
170	ALL	450124	-		2	BRACKET
210	ALL	4623	C		1	SPRING
220	ALL	243073	-		1	CHECK NUT
230	ALL	243075	-		1	KNOB
240	ALL	243076	C		1	SCREW
260	ALL	243077	-		1	SCREW
270	ALL	243078	-		2	GUIDE SHAFT
280	ALL	243081	-		2	SECURING PLATE
290	ALL	243084	-		2	DISTANCE SLEEVE
310	ALL	445638	-		1	BOTTOM PLATE
320	ALL	445639	C		1	SHAFT
330	ALL	445640	C		1	SHAFT
340	ALL	445641	PU		1	ROLLER
350	ALL	450016	C		1	NUT
360	ALL	450123	-		2	BRACKET
440	ALL	311103-0238	-		1	CYLINDRICACPR3M6X20RFR
450	ALL	312105-0366	-		16	SCREW M6S6X12RFR
460	ALL	312105-0455	-		2	SCREW M6S8X30RFR
470	ALL	312115-0368	-		2	SCREW 6X16 A4 80
480	ALL	312115-0376	-		2	SCREW 6X35 A4 80
490	ALL	312125-0285	-		2	SLOTTED HEMCS4X6RFR
500	ALL	312125-0380	-		1	SLOTTED HEMCS6X50RFR
510	ALL	312155-0372	-		4	SCREW MF6S6X25RFR
520	ALL	312605-0318	-		3	NUT M6M8RFR
525	ALL	312605-0316	-		1	NUT M6M6RFR
530	ALL	315105-0156	-		8	WASHER BRB6,7X14RFR
540	ALL	315105-0165	-		4	WASHER BRB8,4X16RFR
560	ALL	315750-0107	-		1	LOCK RING SGA10
570	ALL	321110-0143	-		2	BUSHING 8E7X8
580	ALL	321110-0163	-		2	BUSHING 10E7X10
590	ALL	321110-0183	-		4	BUSHING 14E7X12
600	ALL	321308-0200	-		2	BALL BEARISKF6000-2RS

S-450125-1

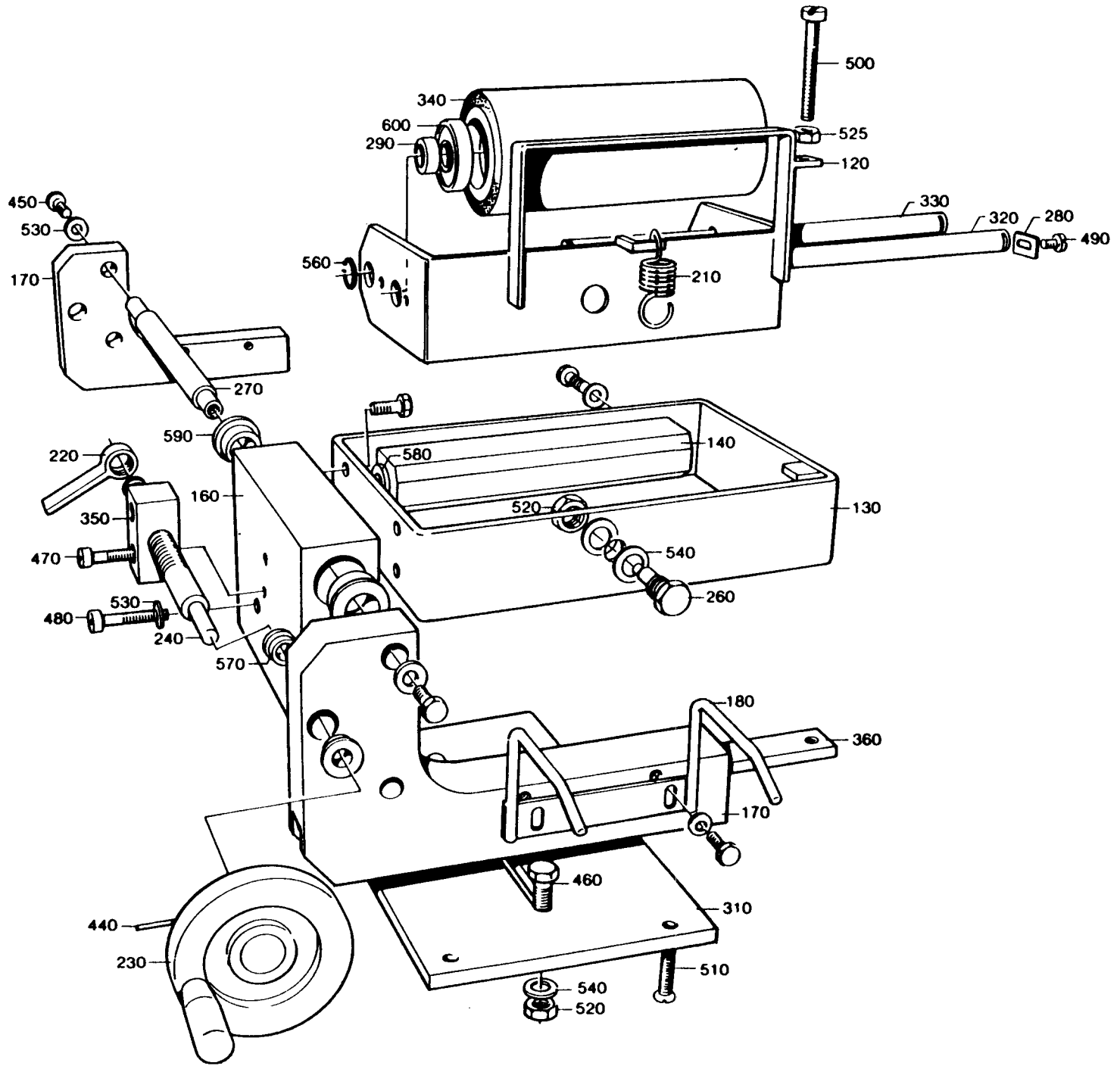
500
340
600
290
525
120
330
320
280
490
450
530
560
210
170
270
590
140
580
220
160
520
130
350
540
470
260
530
480
240
570
180
360
170
460
310
440
230
510
540
520

LAST ALTERATION: AM 8296 85-10-09
456953-010V
AM 6751
84-04-18

GROUP	VOLUME	VOLUME	VOLUME	VOLUME
-0101	V0250	V0236	V0200	V0180
-0102	200ML SLIM	V0125	-	-

POS	VAR	PART NUMBER	SP	EH	QTY	DESCRIPTION	
		S- 456951-SHEET	-1			===ASSEMBLY DRAWING===	
010	-0101	450065-0002	C		1	BRACKET	
010	-0102	450065-0003	C		1	BRACKET	
030	ALL	450061-0002	PU		1	INDUCTOR	
040	ALL	312105-0295	-		2	SCREW	M6S4X20 A4 80
050	ALL	315105-0136	-		2	WASHER	BRB4,3X8RFR
060	ALL	315202-0101	-		2	O-RING	3,1X1,6

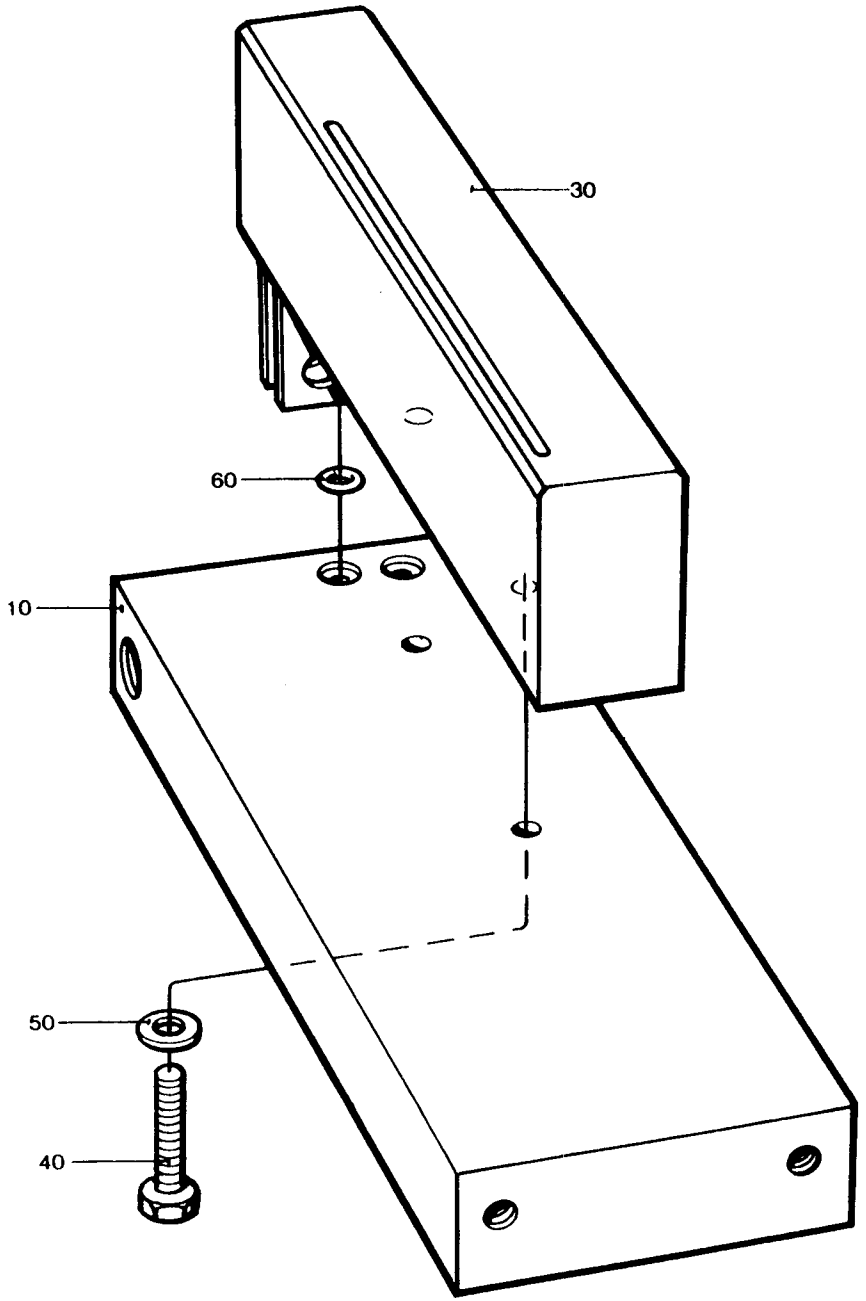
30
60
10
50
40

LAST ALTERATION: AM 8296 85-10-09
456953-010V
AM 8054
85-08-22

POS	VAR	PART NUMBER	SP	EH	QTY	DESCRIPTION
010		445641	-		1	ROLLER
020		450061-0002	-		1	INDUCTOR

LAST ALTERATION: AM ~~9341-86-07-21~~
648119-070V 9937 87-02-07
AM 8741
86-06-16

POS	VAR	PART NUMBER	SP	EH	QTY	DESCRIPTION
F010		C- 76600-0101	-		1	SETTING TOOL
F020		C- 76350-0101	-		1	SETTING TOOL
F030		C- 75525-020V	-		1	TEMPLATE
040		74767-0102	-		1	DYNAMOMETER
050		75466-0201	-		1	SETTING TOOL
060		75467-0201	-		1	SETTING TOOL CURVES
070		76416-0101	-		1	CLAMP
080		76595-0101	-		1	TEMPLATE LS-ELEMENT 250-180(AB9
081		76133-0101	-		1	TEMPLATE LS-ELEMENT 125 (AB9)
082		76606-0101	-		1	TEMPLATE LS-ELEMENT 200S (AB9)
090		76175-0101	-		1	PULLER (AB9)
210		76130	-		1	SETTING TOOL
220		76406	-		1	TEMPLATE-COLUMN
230		76398	-		1	TEMPLATE 180-250 (AB9)
240	-0101	76467	-		1	TEMPLATE 180-250
250	ALL	76129	-		1	CLAMPING RING
260	ALL	76128	-		1	TEMPLATE
270	ALL	77100	-		1	SETTING TOOL

TETRA PAK

1/8608

S-77092-1

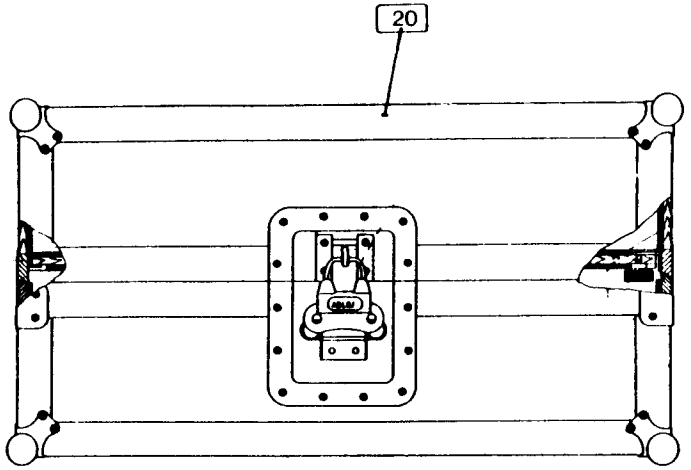

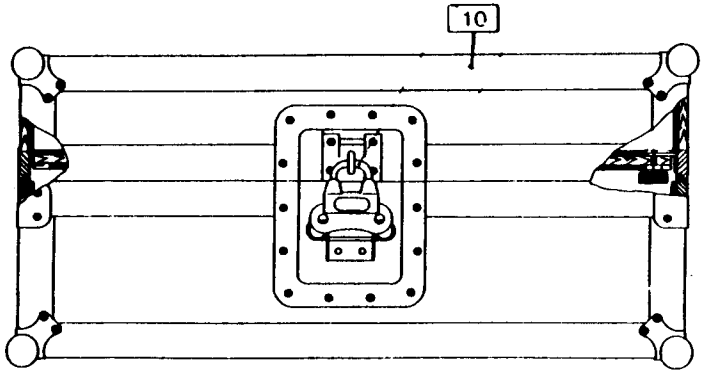

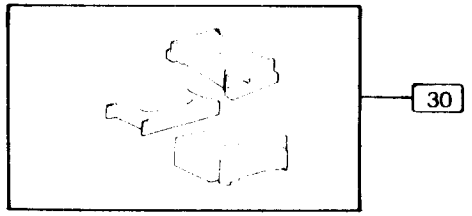

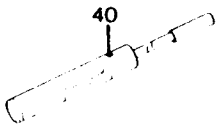

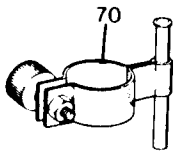

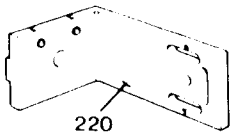

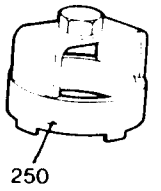

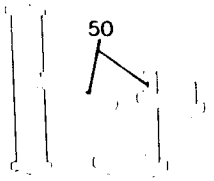

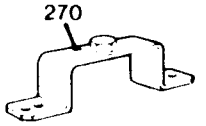

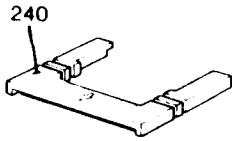

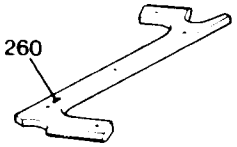

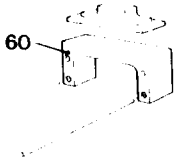

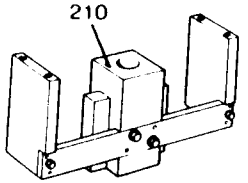

AB 9 only

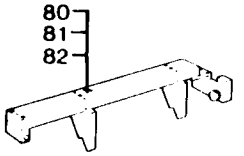

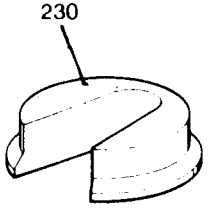

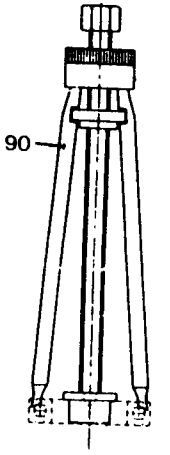

LAST ALTERATION: AM 8433 85-12-12
77092-010V 648119-020V
AM 5504
82-09-17

POS	VAR	PART NUMBER	SP	EH	QTY	DESCRIPTION
		S- 75525-SHEET	-2			===ASSEMBLY DRAWING===
		75525-0201	-		x	TEMPLATE KIT 250 ml
		75525-0202	-		x	TEMPLATE KIT 236 ml
		75525-0203	-		x	TEMPLATE KIT 200 ml
		75525-0204	-		x	TEMPLATE KIT 180 ml
		75525-0205	-		x	TEMPLATE KIT 125 ml
		75525-0206	-		x	TEMPLATE KIT 200 ml SLIM
010		75531-0001	-		1	TEMPLATE 250 - 180 ml
010		75531-0002	-		1	TEMPLATE 125 ml
010		76348	-		1	TEMPLATE 200 ml SLIM
030		76307-0001	-		1	TEMPLATE 250
030		76307-0002	-		1	TEMPLATE 236
030		76307-0003	-		1	TEMPLATE 200
030		76307-0004	-		1	TEMPLATE 180
030		76307-0005	-		1	TEMPLATE 125
030		76307-0006	-		1	TEMPLATE 200 ml SLIM
050		76308	-		1	TEMPLATE 250 - 180 ml
050		75545	-		1	TEMPLATE 125, 200 ml SLIM

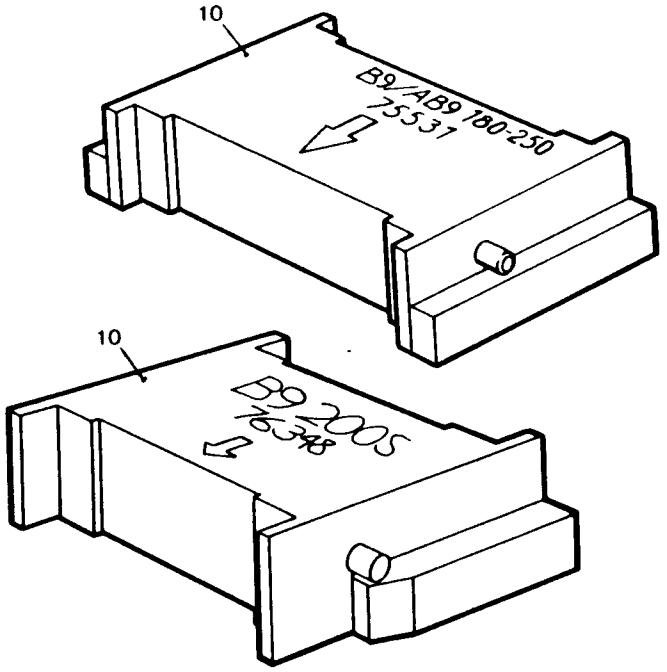
10
B9/AB9 180-250
75531
10
B9 2005
76348

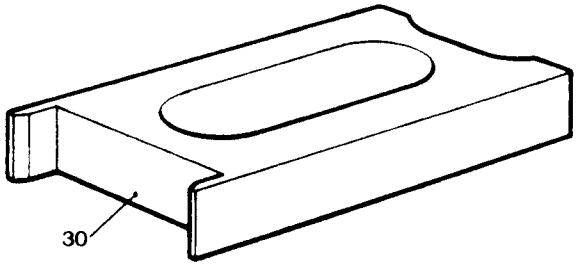
30

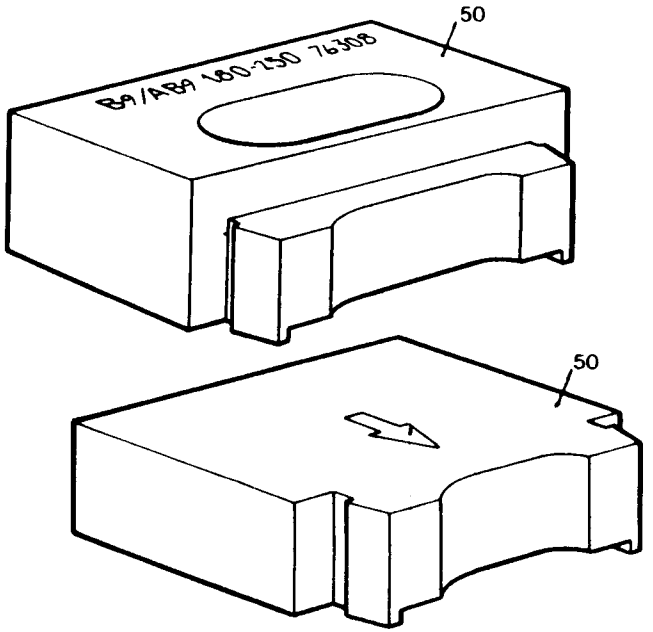
50
B9/AB9 180-250 76308
50

LAST ALTERATION: AM 8433 85-12-12
76600-010V
AM 6457
84-01-09

POS	VAR	PART NUMBER	SP	EH	QTY	DESCRIPTION
	S-	76335-SHEET	-1			===ASSEMBLY DRAWING===
		75335-0101			X	COMPLETE KIT
010		75469-0201	-		1	SETTING TOOL
020		76291-0101	-		1	YOKE
030		76301-0101	-		1	TEMPLATE
040		76304-0101	-		1	COMPRESSION SPRING
110		75931-0001	-		1	TEMPLATE B9 250 ml
110		75931-0002	-		1	TEMPLATE B9 200 ml
110		75931-0003	-		1	TEMPLATE B9 180 ml
110		75931-0005	-		1	TEMPLATE AB9 250 ml
110		75931-0006	-		1	TEMPLATE AB9 236 ml
110		75931-0011	-		1	TEMPLATE AB9 200 ml
110		75931-0008	-		1	TEMPLATE AB9 180 ml
110		75931-0010	-		1	TEMPLATE AB9 200 ml SLIM
120		75936	-		1	TEMPLATE 180 -250 ml
130		75939	-		1	TEMPLATE 100, 125 ml
140		75945	-		1	CAM TEMPLATE
150		76298	-		1	RULER
160		76299	-		1	TEMPLATE SUPPORT ROLLERS
170		76349	-		1	CAM TEMPLATE
210		90051-0059	-		1	HANDLE
Complementary tools for AB9 125 ml						
110		75931-0009	-		1	TEMPLATE
120		75937	-		1	TEMPLATE
130		75943	-		1	TEMPLATE
Complementary tools fot B9 200 ml SLIM						
110		75931-0004	-		1	TEMPLATE
120		75938	-		1	TEMPLATE
130		75944	-		1	TEMPLATE
Complementary tools for AB9 200 ml SLIM						
120		76176	-		1	TEMPLATE

TETRA PAK

2/8608

S-76335-1

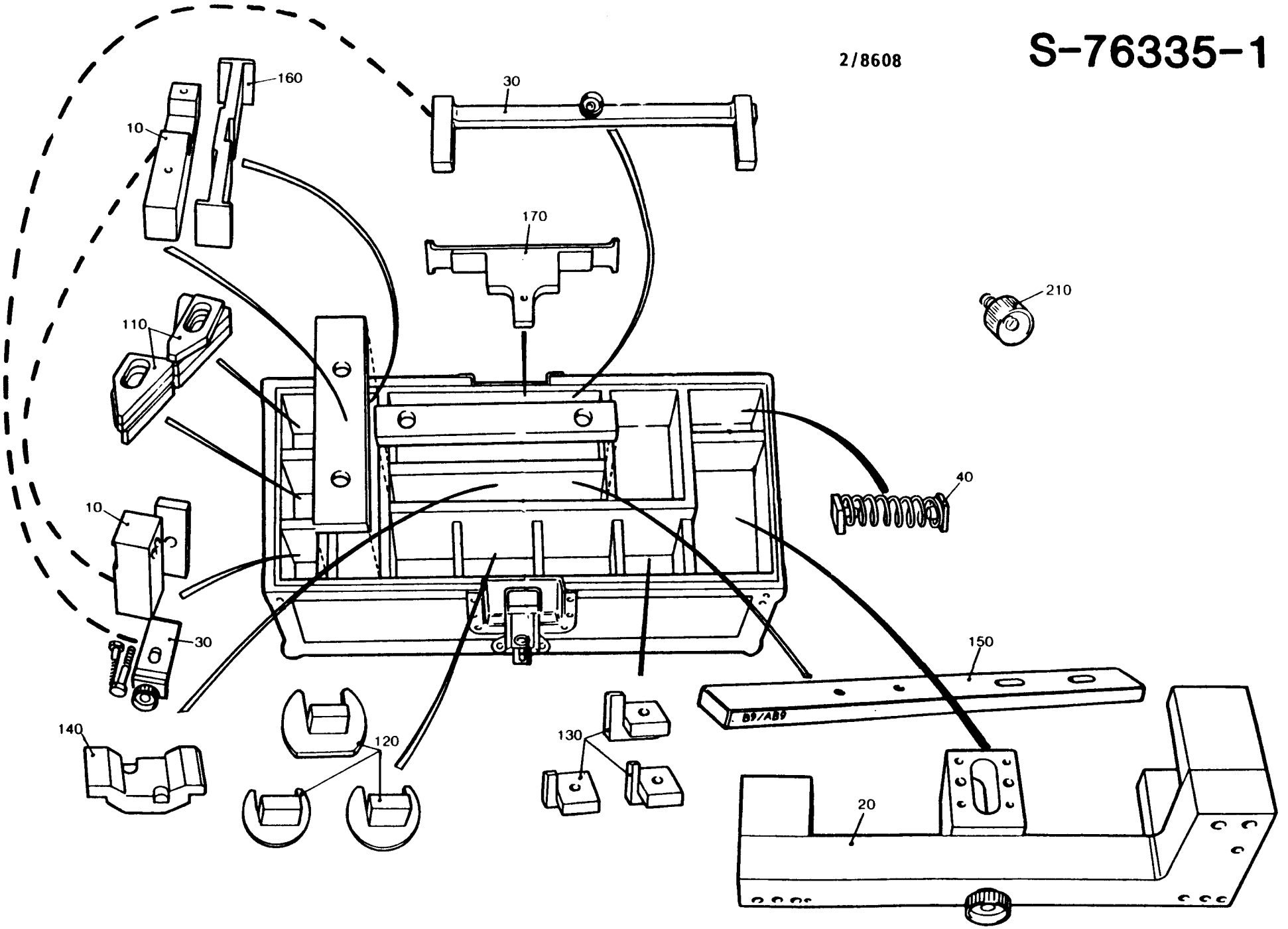

LAST ALTERATION: AM 7560 85-02-19
77092-010V 648119-020V
AM 6514
84-03-22

POS	VAR	PART NUMBER	SP	EH	QTY	DESCRIPTION
		S- 76350-SHEET	-1			===ASSEMBLY DRAWING===
005		76470-0101	-		1	BAG
F010		C- 76594-0101	-		1	SETTING TOOL

TETRA PAK

2/8608

S-76350-1

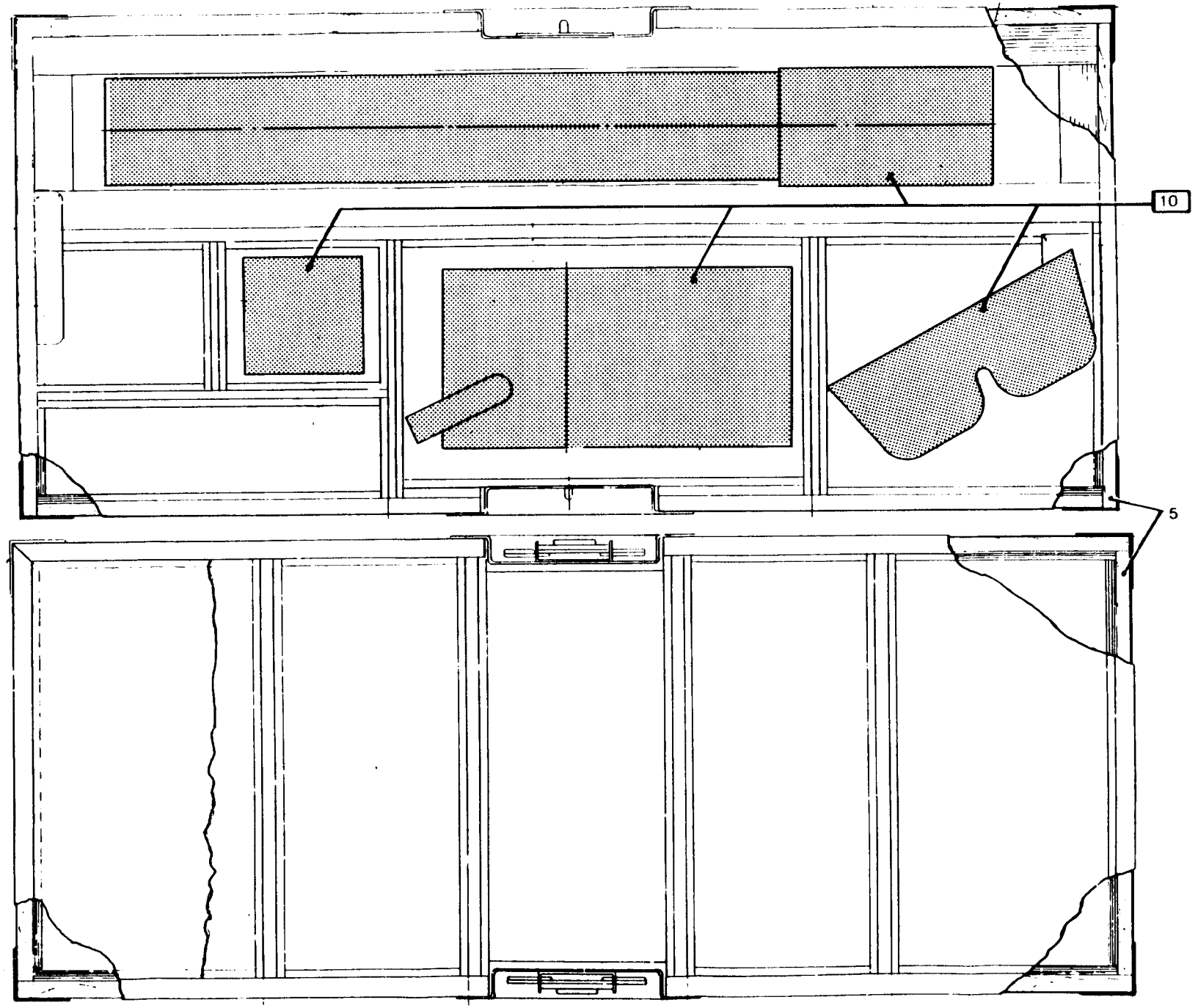

LAST ALTERATION: AM 7560 85-02-19
76350-010V 499200-010V
AM 7383
85-01-22

POS	VAR	PART NUMBER	SP	EH	QTY	DESCRIPTION
		S- 76594-SHEET	-1			===ASSEMBLY DRAWING===
010		442080-0101	-		1	LASER
020		442089-0101	-		1	HOUSE
030		442094-0101	-		1	DISPLAY
050		90243-0126	-		1	PROTECTIVE GOGGLES

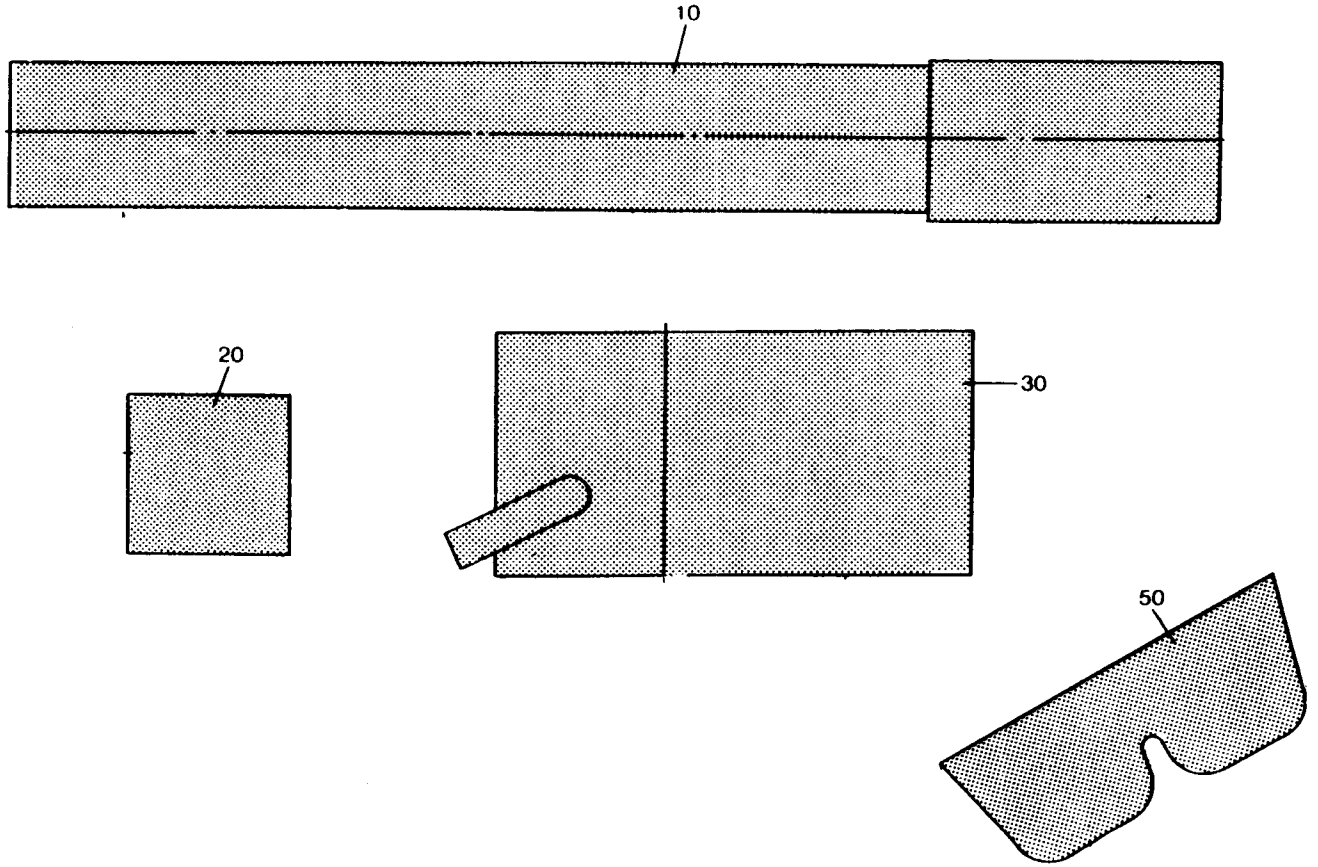
10
20
30
50

LAST ALTERATION: AM 8741 86-06-16
77092-010V 648119-020V
AM 7383
85-01-22

POS	VAR	PART NUMBER	SP	EH	QTY	DESCRIPTION
005		76591-0101	-		1	BAG
F010		C- 76335-010V	-		1	SETTING TOOL JAW SYSTEM
015		76468-0101	-		1	TEMPLATE TUBE FORMING
016		76592-0101	-		1	TEMPLATE TUBE FORMING
017		76598-0101	-		1	TEMPLATE TUBE FORMING
020		76333-0101	-		1	TEMPLATE UPPER FORMING RING
030		76407-0101	-		1	TEMPLATE DIVIDED FORMING RING
040		76409-0101	-		1	TEMPLATE MOVABLE FORMING RING
050		76402-0101	-		1	TEMPLATE BENDING ROLLER
060		76182-0101	-		1	TEMPLATE TUBE FORMING

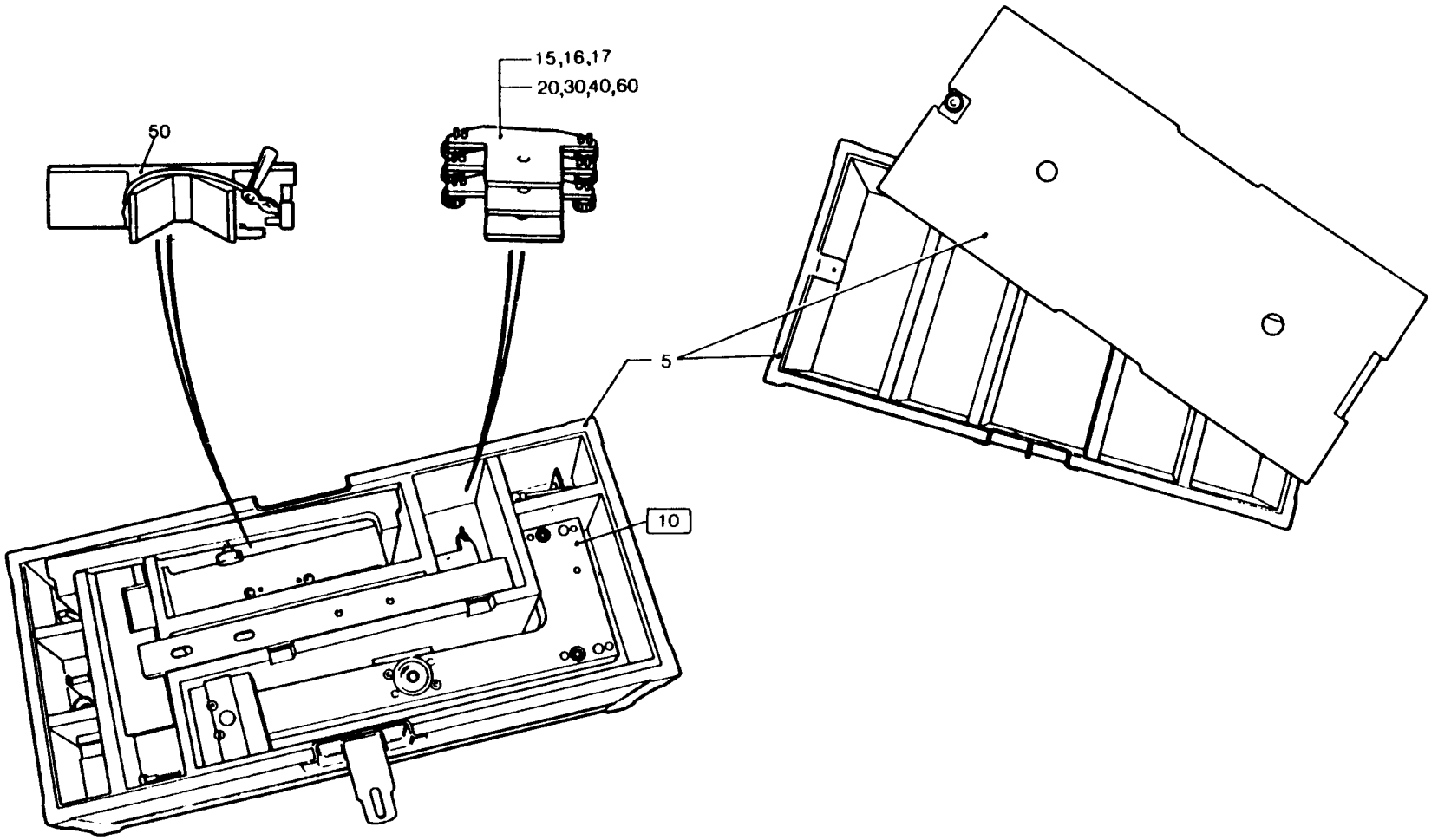
15,16,17
20,30,40,60
50
5
10

POS	VAR	PART NUMBER	SP	EH	QTY	DESCRIPTION
For B9 Machines						
100		28837	-		3	TRIMMING ROLLER PLUS 180-284 m
110		28838	-		3	TRIMMING ROLLER MINUS 180-284 m
120		491968	-		3	TRIMMING ROLLER PLUS 200 ml SLI
130		491969	-		3	TRIMMING ROLLER MINUS 200ml SLI
For AB9 Machines						
140		456091	-		3	TRIMMING ROLLER PLUS 180-250 ml
150		456092	-		3	TRIMMING ROLLER MINUS 180-250 m
160		456999	-		3	TRIMMING ROLLER PLUS 200 ml SLI
170		456998	-		3	TRIMMING ROLLER MINUS 200ml SLI
180		441879	-		3	TRIMMING ROLLER PLUS 125 ml
190		441878	-		3	TRIMMING ROLLER MINUS 125 ml

Part Number Index
648151/52
TB, TBA/9

Date Printed: 900228

PART NO	LAST AM	DESCRIPTION	GROUP NO
4- 1863-0004		WASHER	RK- 547782-010V
			C- 449368-010V
4- 1863-0005		WASHER	RK- 544475-010V
			RK- 547782-010V
			C- 449368-010V
4- 1863-0006		WASHER	RK- 544475-010V
4- 1863-0007		WASHER	RK- 544475-010V
4- 1863-0008		WASHER	RK- 547782-010V
			C- 449368-010V
4- 2033-0005		WASHER	C- 294888-010V
			C- 457866-010V
			C- 457868-010V
			C- 457866-010V
			C- 457868-010V
			C- 457866-010V
			C- 497534-020V
4- 2033-0007		WASHER	C- 272021-030V
			C- 272021-040V
			C- 272021-050V
4- 2033-0008		WASHER	C- 441486-010V
			C- 441486-020V
			C- 441486-030V
			C- 441486-040V
4- 2033-0009		WASHER	C- 400865-010V
			C- 256223-020V
			C- 256223-030V
			C- 246368-020V
			C- 272343-020V
			C- 246368-020V
			C- 272343-030V
			C- 246368-020V
			C- 272343-030V
			C- 246368-020V
			C- 272343-040V
			C- 246368-020V
			C- 272343-050V
4- 2033-0011		WASHER	C- 256238-020V
			C- 441088-010V
			C- 441092-010V
			C- 441102-010V
			C- 256238-020V
			C- 441088-010V
			C- 441092-010V
			C- 441102-010V
			C- 256238-030V
			C- 441088-010V
			C- 441092-010V
			C- 441102-010V
			C- 256238-040V
			C- 441088-010V
			C- 441092-010V
			C- 441102-010V
			C- 752845-010V
			C- 752846-010V
			C- 752913-010V
4- 2033-0011		WASHER	C- 752914-010V
			C- 255957-020V
			C- 272030-020V
			C- 272031-020V
			C- 441304-010V
			C- 441307-010V
			C- 441486-010V
			C- 456309-010V
			C- 255957-020V
			C- 272030-020V
			C- 272031-020V
			C- 441304-010V
			C- 441307-010V
			C- 441486-010V
			C- 456309-010V
			C- 441304-020V
			C- 441307-020V
			C- 441486-020V

PART NO	LAST AM	DESCRIPTION	GROUP NO
			C- 456309-020V
			C- 441304-020V
			C- 441307-020V
			C- 441486-020V
			C- 456309-020V
			C- 441304-020V
			C- 441307-020V
			C- 441486-030V
			C- 456309-030V
			C- 441304-030V
			C- 441307-030V
			C- 441486-040V
			C- 456309-040V
4- 2033-0012		WASHER	C- 272021-020V
4- 2033-0013		WASHER	C- 469736-020V
			RK- 544470-010V
			RK- 544471-010V
			RK- 544474-010V
			RK- 547751-030V
			RK- 547752-010V
			RK- 550134-020V
			RK- 547751-020V
			RK- 547752-020V
			RK- 550134-010V
			C- 272014-020V
4- 2033-0014		WASHER	C- 400865-010V
			C- 256223-020V
			C- 256223-030V
4- 2873		SHAFT	C- 76133-010V
			C- 76133-020V
			C- 76808-010V
			C- 76808-020V
			C- 76133-030V
			C- 76808-030V
			C- 255957-020V
			C- 456309-020V
			C- 456309-030V
			C- 76133-010V
			C- 76808-010V
4- 3675		TETRA PAK NAME PLATE	C- 271442-020V
			C- 295871-010V
4- 3676		TETRA PAK NAME PLATE	C- 491942-010V
4- 4623		SPRING	C- 450125-010V
4- 5486		BEARING	C- 7003-010V
4- 6157		BOBBIN	C- 7003-010V
4- 6158		SPRING	C- 7003-010V
4- 6159		BEARING	C- 7003-010V
4- 6160		SHAFT	C- 7003-010V
4- 6161		ROLLER	C- 295256-020V
			C- 295867-020V
			C- 295256-020V
			C- 295867-020V
			C- 295867-030V
			C- 469501-020V
			C- 295867-030V
			C- 469501-030V
			C- 295867-030V
			C- 469501-030V
			C- 271485-020V
			C- 271485-030V
			C- 469501-010V
			C- 469501-020V
			C- 469501-030V
			RK- 751462-010V
			RK- 751487-010V
4- 6183		SPRING	C- 256808-020V
4- 6278		WASHER	RK- 456799-010V
			RK- 469984-010V
			C- 456100-010V
			C- 456100-020V
4- 6427		WASHER	C- 256973-020V
			C- 256973-030V
			C- 256219-020V
			C- 256220-020V
			C- 256219-020V
			C- 256220-020V
			C- 256219-030V

PART NO	LAST AM	DESCRIPTION	GROUP NO
			C- 256220-030V
			C- 256219-030V
			C- 256220-030V
			C- 256219-030V
			C- 256220-030V
			C- 256219-030V
			C- 256220-030V
4- 6689		SPRING	CR- 283608-010V
			C- 529933-010V
			C- 295867-020V
			C- 295867-030V
			C- 255982-020V
			C- 469091-010V
4- 6695		ROLLER	C- 529933-010V
			C- 441000-020V
			C- 441000-030V
			C- 441000-040V
C- 7003-0101	6317 83-11-03	BOBBIN	C- 400865-010V
			C- 441000-020V
			C- 441000-030V
			C- 441000-040V
			C- 441000-050V
4- 7309		HANDLE	C- 547756-010V
			C- 401207-010V
			C- 271804-020V
			C- 271804-030V
			C- 271804-040V
			C- 272508-010V
			C- 469535-010V
			C- 272839-020V
			C- 490947-010V
			C- 490947-020V
			C- 752244-010V
			C- 268656-010V
			C- 294785-010V
			C- 553657-010V
4- 7814		BOBBIN	C- 752042-010V
			C- 441000-020V
			C- 441000-030V
			C- 441000-040V
			C- 441000-050V
4- 8408		SPRING	C- 268656-010V
			C- 268665-010V
4- 10793-0009		RAIL	C- 283633-010V
4- 10793-0014		RAIL	C- 246357-010V
4- 10793-0083		RAIL	C- 295470-020V
			C- 295470-030V
4- 10793-0087		RAIL	C- 456435-010V
4- 12228		COMPRESSION SPRING	C- 256808-030V
4- 12241		GASKET	C- 256973-020V
			C- 256219-020V
			C- 256220-020V
			C- 256219-020V
			C- 256220-020V
4- 12242-0001		GASKET	C- 456274-010V
			RK- 469988-010V
			RK- 520071-010V
			RK- 520167-010V
			RK- 520095-010V
			RK- 520167-010V
			RK- 520095-010V
			RK- 520167-010V
			RK- 520071-010V
			RK- 520167-010V
			RK- 520071-010V
			RK- 520167-010V
			C- 529933-010V
			C- 529940-010V
			C- 735222-010V
			C- 736600-010V
			C- 295262-020V
			C- 295262-030V
			C- 456274-010V
			C- 255982-020V
			C- 256089-020V
			C- 271274-020V
			C- 272342-020V

PART NO	LAST AM	DESCRIPTION	GROUP NO
			C- 272407-020V
			C- 255982-020V
			C- 256089-020V
			C- 271274-020V
			C- 272407-020V
4- 12242-0001		GASKET	C- 456976-010V
			C- 272407-020V
			C- 456555-010V
			C- 456836-020V
			C- 456976-020V
			C- 469091-010V
			C- 469452-010V
			C- 272407-020V
			C- 456555-010V
			C- 456836-020V
			C- 456976-020V
			C- 469091-010V
			C- 469452-010V
			C- 272407-020V
			C- 456555-020V
			C- 456836-030V
			C- 456976-030V
			C- 469091-020V
			C- 469452-020V
			C- 751800-010V
			C- 272407-020V
			C- 456555-030V
			C- 456836-040V
			C- 456976-040V
			C- 469091-020V
			C- 469452-030V
			C- 751800-020V
			C- 456274-010V
			C- 529933-010V
			C- 735222-010V
			C- 735285-010V
			C- 736600-010V
			C- 529933-010V
			C- 735222-010V
			C- 735285-010V
			C- 736600-010V
			C- 529933-010V
			C- 735222-010V
			C- 735285-010V
			C- 736600-010V
4- 12242-0002		GASKET	C- 752495-010V
			C- 295262-020V
			C- 295262-030V
			C- 256014-020V
			C- 295778-010V
			C- 256014-020V
			C- 295778-010V
			C- 456836-020V
			C- 456836-030V
4- 12242-0003		GASKET	C- 456274-010V
			RK- 520071-010V
			RK- 520167-010V
			RK- 520095-010V
			RK- 520167-010V
			RK- 520095-010V
			RK- 520167-010V
			RK- 520071-010V
			RK- 520167-010V
			RK- 520071-010V
4- 12242-0003		GASKET	RK- 520167-010V
			C- 736600-010V
			C- 456274-010V
			C- 256014-020V
			C- 272342-020V
			C- 272580-020V
			C- 295778-010V
			C- 256014-020V
			C- 272580-030V
			C- 295778-010V
			C- 456836-010V
			C- 456976-010V
			C- 256014-030V

PART NO	LAST AM	DESCRIPTION	GROUP NO
			C- 272560-030V
			C- 295778-020V
			C- 456836-020V
			C- 456976-020V
			C- 469452-010V
			C- 256014-030V
			C- 272560-030V
			C- 295778-030V
			C- 456836-020V
			C- 456976-020V
			C- 469452-010V
			C- 256014-040V
			C- 272560-040V
			C- 295778-030V
			C- 456836-030V
			C- 456976-030V
			C- 469452-020V
			C- 751800-010V
			C- 256014-050V
			C- 272560-050V
			C- 295778-040V
			C- 456836-040V
			C- 456976-040V
			C- 469452-030V
			C- 751800-020V
			C- 456274-010V
			C- 736800-010V
4- 12242-0006		GASKET	C- 272560-020V
			C- 272560-030V
			C- 272560-040V
			C- 272560-050V
4- 14944		BRACKET	C- 283600-010V
4- 14946		CATCH	C- 441000-020V
			C- 441000-030V
			C- 441000-040V
			C- 441000-050V
			C- 283600-010V
4- 14996		ROLLER	C- 441000-020V
			C- 441000-030V
			C- 441000-040V
			C- 441000-050V
4- 15629		WASHER	RK- 491744-010V
			C- 272014-020V
			C- 272014-030V
			C- 751088-010V
			C- 751088-020V
4- 15810		BRAKE SHOE	C- 469738-010V
			C- 441000-020V
			C- 441000-030V
			C- 283600-010V
			C- 469316-010V
			C- 486955-010V
			C- 469316-010V
			C- 486955-010V
4- 18092-0003		RUBBER GASKET	C- 256358-010V
4- 18135		WASHER	C- 283604-010V
			C- 283624-010V
			C- 283604-020V
			C- 533903-010V
			RK- 547726-010V
			C- 752755-010V
			C- 283602-010V
			C- 283604-010V
			C- 283617-010V
			C- 294659-010V
			RK- 547300-010V
			C- 283602-010V
			C- 283617-010V
			C- 283621-010V
			CR- 283605-010V
			C- 449323-010V
			C- 456612-010V
			C- 456696-010V
			CR- 283605-010V
			C- 456696-020V
			C- 533944-010V
			C- 533903-010V

PART NO	LAST AM	DESCRIPTION	GROUP NO
4- 18542		WASHER	C- 271281-020V
			C- 271281-030V
			C- 271281-040V
			C- 271281-050V
4- 18660		AXLE PIN	C- 441000-020V
			C- 441000-030V
			C- 441000-040V
			C- 441000-050V
4- 19135		LOCK WASHER	C- 283618-010V
			CR- 283618-020V
4- 19262		WASHER	C- 256086-020V
			C- 286685-010V
3- 19452		BOBBIN BRAKE	C- 441000-020V
			C- 441000-030V
4- 19483		SHAFT	C- 441000-020V
			C- 441000-030V
			C- 441000-040V
			C- 441000-050V
4- 19456		ROLLER	C- 441000-020V
			C- 441000-030V
			C- 441000-040V
4- 19515		EYELET	C- 256086-020V
			C- 441000-020V
			C- 441000-030V
			C- 441000-040V
4- 19693		WEIGHT	C- 469736-010V
			C- 441000-020V
			C- 441000-030V
4- 19693		WEIGHT	C- 441000-040V
			C- 441000-050V
			C- 283600-010V
4- 19997		ADJUSTING SCREW	C- 286685-010V
			C- 283611-010V
			RK- 547782-010V
			C- 283611-010V
			C- 449388-010V
4- 20039		RUBBER STRIP	C- 283602-010V
4- 20073		ADJUSTING SCREW	C- 256228-020V
4- 20239		COMPRESSION SPRING	C- 256051-020V
			C- 256052-020V
			C- 256051-020V
			C- 256052-020V
			C- 256051-030V
			C- 256052-030V
			C- 256051-030V
			C- 256052-030V
			C- 256051-040V
			C- 256052-040V
			C- 256051-040V
			C- 256052-040V
4- 20702		COVER PLATE	CR- 256547-020V
			CR- 256547-030V
4- 20706-0001		INSULATING TUBE	CR- 31390-010V
			CR- 31390-011V
			CR- 31390-010V
			CR- 31390-011V
4- 20772		INSULATOR BODY	CR- 31390-010V
			CR- 31390-011V
			CR- 31390-010V
			CR- 31390-011V
4- 20990		TIE ROD	C- 250610-010V
4- 21047		LOCK WASHER	CR- 256436-020V
			CR- 256436-030V
			CR- 256436-040V
			CR- 256436-050V
4- 21521		COMPRESSION SPRING	C- 256084-020V
			C- 256084-030V
			C- 256084-040V
4- 21903		ROLLER	C- 246388-020V
			C- 272343-020V
			C- 295668-020V
			C- 246388-020V
			C- 272343-030V
			C- 295668-030V
			C- 246388-020V
			C- 272343-030V
			C- 295668-030V

PART NO	LAST AM	DESCRIPTION	GROUP NO
			C- 246388-020V
			C- 272343-040V
			C- 295668-030V
			C- 246388-020V
			C- 272343-050V
			C- 295668-030V
4- 21944		PLATE	C- 256228-020V
4- 22314		SPACER SLEEVE	C- 268665-010V
4- 22463		ROLLER	CR- 256204-020V
			CR- 256205-020V
4- 22463		ROLLER	CR- 256204-020V
			CR- 256205-020V
			CR- 256204-030V
			CR- 256205-030V
			CR- 256204-040V
			CR- 256205-040V
			CR- 256204-040V
			CR- 256205-040V
			CR- 256204-050V
			CR- 256205-050V
4- 22475		CAM ROLLER	C- 256951-020V
			C- 256952-020V
			C- 256951-020V
			C- 256952-020V
			C- 256951-030V
			C- 256952-030V
			C- 256951-030V
			C- 256952-030V
			C- 256951-040V
			C- 256952-040V
			C- 256951-040V
			C- 256952-040V
4- 22559		GRUB SCREW	C- 295891-010V
			C- 295891-020V
3- 23108		MATCHING TRANSFORMER	C- 295891-030V
			CE- 67720-010V
			CE- 68133-010V
			CE- 68307-010V
			CE- 68133-010V
3- 23113		MATCHING TRANSFORMER	CE- 68307-010V
			CE- 67720-010V
			CE- 68133-010V
			CE- 68307-010V
			CE- 68133-010V
3- 23118		TRANSFORMER	CE- 68307-010V
			CE- 67716-010V
			CE- 68128-010V
			CE- 68304-010V
			CE- 68128-010V
			CE- 67716-010V
3- 23124		TRANSFORMER	CE- 68304-010V
			CE- 67716-010V
			CE- 68128-010V
			CE- 68304-010V
			CE- 68128-010V
			CE- 67716-010V
3- 23132		TRANSFORMER	CE- 68304-010V
3- 23139		TRANSFORMER	CE- 68128-010V
			CE- 67716-010V
			CE- 68128-010V
			CE- 68304-010V
			CE- 68128-010V
			CE- 67716-010V
4- 23680		KNOB	CE- 68304-010V
			C- 271649-020V
			C- 287315-010V
			C- 271649-020V
			C- 272014-020V
4- 23680		KNOB	C- 271649-020V
			C- 272014-020V
			C- 469074-010V
4- 23682		HOLDER	C- 469074-020V
			C- 256229-020V
			C- 271649-020V
			C- 256229-020V
			C- 271649-020V
			C- 256229-020V

PART NO	LAST AM	DESCRIPTION	GROUP NO
			C- 271649-020V
			C- 256229-020V
			C- 271649-020V
			C- 256229-020V
			C- 287315-010V
			C- 257166-020V
			C- 271649-020V
			C- 257166-020V
			C- 271649-020V
			C- 257166-030V
			C- 469074-010V
			C- 257166-030V
			C- 469074-010V
4- 23583		GUIDE	C- 469074-020V
			C- 256229-020V
			C- 271649-020V
			C- 256229-020V
			C- 271649-020V
			C- 256229-020V
			C- 271649-020V
			C- 256229-020V
			C- 271649-020V
			C- 256229-020V
			C- 287315-010V
			C- 257166-020V
			C- 271649-020V
			C- 257166-020V
			C- 271649-020V
			C- 257166-030V
			C- 469074-010V
			C- 257166-030V
			C- 469074-010V
			C- 469074-020V
4- 23584		SCREW	C- 256229-020V
			C- 271649-020V
			C- 256229-020V
			C- 271649-020V
			C- 256229-020V
			C- 271649-020V
			C- 256229-020V
			C- 271649-020V
			C- 256229-020V
			C- 287315-010V
			C- 257166-020V
			C- 271649-020V
			C- 257166-020V
			C- 271649-020V
			C- 257166-030V
			C- 469074-010V
			C- 257166-030V
4- 23584		SCREW	C- 469074-010V
4- 23762-0002		SIDE PIPE	C- 469074-020V
			CR- 256547-020V
4- 23763-0001		SPACER PIPE	CR- 256547-030V
			CR- 256547-020V
4- 23763-0002		SPACER PIPE	CR- 256547-030V
			CR- 256547-020V
4- 23763-0005		SPACER PIPE	CR- 256547-030V
			CR- 256547-020V
4- 23763-0006		SPACER PIPE	CR- 256547-030V
			CR- 256547-020V
4- 23763-0007		SPACER PIPE	CR- 256547-030V
			CR- 256547-020V
4- 23763-0009		SPACER PIPE	CR- 256547-030V
			CR- 256547-020V
4- 23765-0002		INSULATING TUBE	CR- 256547-030V
			CR- 256547-020V
4- 23765-0003		INSULATING TUBE	CR- 256547-030V
			CR- 256547-020V
4- 23765-0004		INSULATING TUBE	CR- 256547-030V
			CR- 256547-020V
4- 23765-0005		INSULATING TUBE	CR- 256547-030V
			CR- 256547-020V
3- 23768		FLANGE SEAL	CR- 256547-030V
3- 23769		STOP PLATE	CR- 256547-020V
			CR- 256547-020V
			CR- 256547-030V

PART NO	LAST AM	DESCRIPTION	GROUP NO
4- 23771		SPACER RING	CR- 31390-010V
			CR- 31390-011V
			CR- 31390-010V
			CR- 31390-011V
4- 24237		NUT	C- 256228-020V
4- 24351		CLAMP	C- 267315-010V
			C- 257166-020V
			C- 257166-030V
4- 24352		SHAFT	C- 271649-020V
			C- 267315-010V
			C- 271649-020V
4- 24354		WASHER	C- 256229-020V
			C- 271649-020V
			C- 256229-020V
			C- 271649-020V
			C- 256229-020V
			C- 271649-020V
			C- 256229-020V
			C- 271649-020V
			C- 257166-020V
			C- 271649-020V
			C- 257166-020V
			C- 271649-020V
			C- 469074-010V
			C- 469074-020V
4- 24355		PIN	C- 271649-020V
			C- 267315-010V
			C- 257166-020V
			C- 271649-020V
			C- 257166-020V
			C- 271649-020V
			C- 257166-030V
4- 24356		PIN	C- 469074-010V
			C- 257166-030V
			C- 469074-010V
			C- 469074-020V
4- 24358		BLOCK	C- 752957-010V
			C- 256229-020V
			C- 271649-020V
			C- 256229-020V
			C- 271649-020V
			C- 256229-020V
			C- 271649-020V
			C- 256229-020V
			C- 271649-020V
			C- 256229-020V
			C- 271649-030V
			C- 267315-010V
			C- 752828-010V
			C- 257166-020V
			C- 271649-020V
			C- 257166-020V
			C- 271649-020V
			C- 257166-030V
			C- 469074-010V
			C- 257166-030V
			C- 469074-010V
			C- 469074-020V
4- 24755		CLAMP	CR- 283805-010V
4- 26490		WASHER	C- 456274-010V
			C- 256233-020V
			C- 456274-010V
			C- 271274-020V
			C- 272021-020V
			C- 272030-020V
			C- 441304-010V
			C- 271274-020V
			C- 272021-020V
			C- 272030-020V
			C- 441304-010V
			C- 441304-020V
			C- 441304-030V
			C- 456274-010V
4- 27815		WASHER	C- 256223-020V
			C- 256223-030V
			C- 256014-040V

PART NO	LAST AM	DESCRIPTION	GROUP NO
			C- 256014-050V
4- 27906		WASHER	C- 441088-010V
			C- 441092-010V
			C- 441088-010V
			C- 441092-010V
			C- 441088-010V
			C- 441092-010V
			C- 441088-010V
			C- 441092-010V
4- 27929-0003		GASKET	C- 272560-020V
4- 28036		WASHER	C- 256238-020V
			C- 469501-020V
			C- 469501-030V
4- 28036		WASHER	C- 272381-020V
			C- 751691-010V
			C- 272408-020V
			C- 272408-030V
			C- 456321-010V
			C- 456322-010V
			C- 456348-010V
			C- 456349-010V
			C- 272408-030V
			C- 456321-020V
			C- 456322-020V
			C- 456348-020V
			C- 456349-020V
			C- 272408-040V
			C- 456321-030V
			C- 456322-030V
			C- 456348-020V
			C- 456349-020V
			C- 272408-050V
			C- 752845-010V
			C- 752846-010V
			C- 752913-010V
			C- 752914-010V
			C- 256957-020V
			C- 256055-020V
			C- 271274-020V
			C- 271485-020V
			C- 272445-020V
			C- 272560-020V
			C- 256957-020V
			C- 256055-020V
			C- 271274-020V
			C- 271485-020V
			C- 272445-020V
			C- 272560-030V
			C- 469501-010V
			C- 272560-030V
			C- 469501-020V
			C- 469501-030V
			C- 751800-010V
			C- 272021-050V
			C- 469501-030V
			C- 751800-020V
			C- 283831-010V
			C- 456679-010V
			RK- 751462-010V
4- 28037		WASHER	RK- 751305-010V
			RK- 751307-010V
			RK- 751305-010V
			RK- 751307-010V
			C- 272030-020V
			C- 441304-010V
			C- 272030-020V
			C- 441304-010V
			C- 441304-020V
			C- 441486-030V
			C- 441304-030V
4- 28325		COUNTER ROLLER	C- 256238-020V
			C- 295667-020V
4- 28325		JNTER ROLLER	C- 256238-020V
			C- 295667-020V
			C- 256238-030V

PART NO	LAST AM	DESCRIPTION	GROUP NO
4- 28326		ROLLER	C- 295667-030V
			C- 256238-020V
			C- 295667-020V
			C- 256238-030V
			C- 295667-030V
			C- 256238-040V
			C- 295667-030V
			C- 256238-040V
			C- 295667-030V
4- 28508		SCREW	C- 457866-010V
4- 28509		WASHER	C- 256973-020V
			C- 256973-030V
			C- 256219-020V
			C- 256220-020V
			C- 256219-020V
			C- 256220-020V
			C- 256219-030V
			C- 256220-030V
			C- 256219-030V
			C- 256220-030V
			C- 256219-030V
			C- 256220-030V
			C- 457866-010V
			C- 271880-020V
			C- 457866-010V
			C- 469634-010V
			C- 457866-010V
4- 28510		INSULATION NUT	C- 469634-010V
			C- 457866-010V
			C- 469634-010V
			C- 457866-010V
4- 28637		TRIMMING ROLLER PLUS	C- 469634-010V
			C- 77093-010V
			C- 77093-020V
			B- 648119-020V
			B- 648119-060V
			B- 648119-020V
			B- 648119-060V
4- 28638		TRIMMING ROLLER MINUS	C- 77093-010V
			C- 77093-020V
			B- 648119-020V
			B- 648119-060V
			B- 648119-020V
			B- 648119-060V
4- 29411		SPACER PIPE	CR- 31390-010V
4- 29413		SHIM	CR- 31390-010V
			CR- 31390-011V
			CR- 31390-010V
			CR- 31390-011V
3- 29676		LID	C- 271181-020V
			C- 271181-030V
			C- 271181-040V
4- 30298		INSULATION	C- 271181-020V
			C- 271181-030V
			C- 271181-040V
2- 30310-0002		HEATING COIL	CR- 31390-010V
2- 30311-0001		HEATING COIL	CR- 31390-011V
2- 30311-0002		HEATING COIL	CR- 31390-011V
4- 31017		KNIFE	C- 37877-030V
CR- 31390-0102	13601 89-11-09	ELEMENT	CR- 256547-020V
			CR- 256547-030V
CR- 31390-011V	12952 89-08-14	ELEMENT	CR- 256547-020V
			CR- 256547-030V
4- 31418		SHAFT	C- 256968-020V
			C- 456032-010V
4- 31420		WASHER	C- 256968-020V
4- 31423		LUG	C- 256968-020V
			C- 456032-010V
4- 31424		ROLLER BRACKET	C- 256968-020V
4- 31425		GUIDE ROLLER	C- 256968-020V
			C- 456032-010V
4- 31553-0001		WASHER	C- 256437-020V
3- 31559		SPRING PLATE	C- 256437-020V

PART NO	LAST AM	DESCRIPTION	GROUP NO
4- 31653-0001		PLATE	CR- 31390-010V
4- 31653-0002		PLATE	CR- 31390-011V
4- 31723		TEFLON STRIP	C- 37877-030V
4- 31724		LOCK BAR	C- 37877-030V
4- 32079		WASHER	C- 256973-020V
			C- 256973-030V
			C- 469634-010V
			C- 441736-010V
4- 32134		SHIM	C- 456953-010V
			C- 294880-010V
			C- 441736-010V
			C- 456953-010V
4- 32136		SHIM	C- 456953-010V
			C- 294880-010V
			C- 469634-010V
			C- 441736-010V
			C- 456953-010V
4- 32208		GASKET	C- 256237-020V
			C- 256237-030V
			C- 272408-020V
4- 32213		WASHER	C- 295891-010V
			C- 295891-020V
			C- 295891-030V
4- 32215		HOLDER	C- 295891-010V
			C- 295891-020V
			C- 295891-030V
4- 32216		GASKET	C- 295888-020V
			C- 295891-010V
4- 32217		BOTTOM SECTION	C- 295891-010V
			C- 295891-020V
			C- 295891-030V
4- 32219		WASHER	C- 295891-010V
			C- 295891-020V
			C- 295891-030V
4- 32223		BEARING	C- 295891-010V
			C- 295891-020V
			C- 295891-030V
4- 32400		HOLDER	C- 295891-010V
4- 32400		HOLDER	C- 295891-020V
			C- 295891-030V
4- 32438		GASKET	C- 295888-020V
			C- 295891-010V
4- 32439		GASKET	C- 295888-020V
			C- 295891-010V
4- 32440		GASKET	C- 295888-020V
			C- 295891-010V
3- 32451		AIR DUCT	C- 295891-010V
			C- 295891-020V
			C- 295891-030V
3- 32453		MANTLE	C- 295891-010V
			C- 295891-020V
			C- 295891-030V
3- 32474		CONNECTION	C- 295891-010V
			C- 295891-020V
			C- 295891-030V
4- 32544		INSULATION NUT	C- 456953-010V
			C- 457866-010V
			C- 469634-010V
			C- 457866-010V
			C- 469634-010V
			C- 441736-010V
			C- 456953-010V
4- 32844		WASHER	C- 456953-010V
			CR- 256214-020V
			CR- 256214-030V
			C- 457866-010V
			C- 441736-010V
			C- 456953-010V
2- 32866		ARM	C- 295891-010V
			C- 295891-020V
			C- 295891-030V
4- 32891		LOCKING SPRING	C- 228779-010V
			C- 293685-010V
			C- 293685-020V
			C- 293684-010V
			C- 293684-020V
			C- 293685-010V

PART NO	LAST AM	DESCRIPTION	GROUP NO
			C- 293686-020V
			C- 293684-010V
			C- 293684-020V
			C- 293685-020V
			C- 293684-020V
			C- 293685-020V
			C- 293684-020V
4- 32892		PIN	C- 228779-010V
4- 32919		BEARING BLOCK	C- 256236-020V
			C- 456321-010V
			C- 456322-010V
			C- 456348-010V
			C- 456349-010V
			C- 456321-020V
			C- 456322-020V
			C- 456348-020V
			C- 456349-020V
			C- 456321-030V
			C- 456322-030V
			C- 456348-020V
4- 32919		BEARING BLOCK	C- 456349-020V
			C- 272445-020V
4- 32921		INK ROLLER	C- 256358-010V
4- 32922		ROLLER	C- 256358-010V
4- 32923		SPRING	C- 256236-020V
			C- 456321-010V
			C- 456322-010V
			C- 456348-010V
			C- 456349-010V
			C- 456321-020V
			C- 456322-020V
			C- 456348-020V
			C- 456349-020V
			C- 456321-030V
			C- 456322-030V
			C- 456348-020V
			C- 456349-020V
			C- 272445-020V
4- 32925		CARRIER	C- 256236-020V
			C- 456321-010V
			C- 456322-010V
			C- 456348-010V
			C- 456349-010V
			C- 456321-020V
			C- 456322-020V
			C- 456348-020V
			C- 456349-020V
			C- 456321-030V
			C- 456322-030V
			C- 456348-020V
			C- 456349-020V
			C- 752845-010V
			C- 752846-010V
			C- 752913-010V
			C- 752914-010V
			C- 272445-020V
4- 32926		ROLLER	C- 256236-020V
			C- 456321-010V
			C- 456322-010V
			C- 456348-010V
			C- 456349-010V
			C- 456321-020V
			C- 456322-020V
			C- 456348-020V
			C- 456349-020V
			C- 456348-020V
			C- 456349-020V
			C- 752845-010V
			C- 752846-010V
			C- 752913-010V
			C- 752914-010V
			C- 272445-020V
4- 32927		SHAFT	C- 256236-020V
			C- 456321-010V
			C- 456322-010V
			C- 456348-010V
			C- 456349-010V

PART NO	LAST AM	DESCRIPTION	GROUP NO
			C- 456321-020V
			C- 456322-020V
4- 32927		SHAFT	C- 456348-020V
			C- 456349-020V
			C- 456321-030V
			C- 456322-030V
			C- 456348-020V
			C- 456349-020V
			C- 752845-010V
			C- 752846-010V
			C- 752913-010V
			C- 752914-010V
			C- 272445-020V
4- 32929		GABLE	C- 228779-010V
4- 32930		GABLE	C- 228779-010V
4- 32931		TYPE HOLDER	C- 228779-010V
4- 32932		TYPE HOLDER	C- 228779-010V
4- 32933		CARRIER	C- 228779-010V
4- 32934		CARRIER	C- 228779-010V
3- 32996		INK WELL	C- 256358-010V
3- 33007		COVER	C- 256358-010V
4- 33010		SCREW	C- 256358-010V
			C- 434774-020V
			C- 434774-030V
			C- 434074-020V
			C- 434074-030V
			C- 434774-020V
			C- 434774-030V
			C- 434074-020V
			C- 434074-030V
			C- 434774-030V
			C- 434074-030V
			C- 434774-030V
			C- 434074-030V
4- 33011		SLEEVE	C- 228779-010V
			C- 293685-010V
			C- 293685-020V
			C- 293684-010V
			C- 293684-020V
			C- 293685-010V
			C- 293685-020V
			C- 293684-010V
			C- 293684-020V
			C- 293685-020V
			C- 293684-020V
			C- 293685-020V
			C- 293684-020V
4- 33052-0001		SPACER	C- 228779-010V
4- 33052-0002		SPACER	C- 228779-010V
4- 33052-0003		SPACER	C- 228779-010V
4- 33052-0004		SPACER	C- 228779-010V
4- 33052-0005		SPACER	C- 228779-010V
4- 33182		ROLLER	C- 256236-020V
			C- 456321-010V
			C- 456322-010V
			C- 456348-010V
			C- 456349-010V
			C- 456321-020V
			C- 456322-020V
			C- 456348-020V
			C- 456349-020V
4- 33182		ROLLER	C- 456321-030V
			C- 456322-030V
			C- 456348-020V
			C- 456349-020V
			C- 752845-010V
			C- 752846-010V
			C- 752913-010V
			C- 752914-010V
			C- 272445-020V
4- 33183		SPRING	C- 256236-020V
			C- 456321-010V
			C- 456322-010V
			C- 456348-010V
			C- 456349-010V
			C- 456321-020V
			C- 456322-020V

PART NO	LAST AM	DESCRIPTION
CE- 41577-010V	12799 89-04-26	ELECTRICAL DOCUMENT
RK- 41578-0101	9358 89-08-10	ELECTRICAL DOCUMENT
RK- 43879-0101	10566 89-08-08	ELECTRICAL DOCUMENT
RK- 43880-0101	10084 89-08-08	ELECTRICAL DOCUMENT
C- 67025-0201	8344 85-10-30	DESIGN CORRECTION LOGIC
C- 67027-0102	8010 85-06-26	DATACABLE
C- 67051-0102	8345 85-10-28	COMPONENT LIST
C- 67054-0101	8344 85-10-30	COMPONENT LIST
C- 67054-0201	8099 85-06-26	COMPONENT LIST
C- 67058-0201	8998 86-07-11	CIRCUIT BOARD
C- 67062-010V	8099 85-06-26	POTENTIOMETER
C- 67062-0201	8997 86-07-11	POTENTIOMETER
C- 67347-0101	9248 88-03-17	BRAKE
CE- 67716-010V	13583 89-09-01	EL-CABINET AB9-050V
CE- 67716-0101	13583 89-09-01	EL-CABINET AB9-050V
CE- 67718-010V	9822 88-04-07	MACHINE AB9-050V
CE- 67718-0101	9822 88-04-07	MACHINE AB9-050V
CE- 67719-010V	9822 88-04-07	EQUIPMENT AB9-050V
CE- 67719-0101	9822 88-04-07	EQUIPMENT AB9-050V
CE- 67720-010V	9822 88-04-07	EXTRA EQUIPMENT AB9-050V
CE- 67720-0101	9822 88-04-07	EXTRA EQUIPMENT AB9-050V
CE- 67721-0101	9822 88-04-07	ELECTRICAL DOCUMENT
CE- 67722-010V	9822 88-04-07	SPARE PARTS KIT AB9-050V
CE- 67722-0101	9822 88-04-07	SPARE PARTS KIT AB9-050V
CE- 68128-010V	10860 88-10-18	ELECTRICAL CABINET
CE- 68128-0101	10860 88-10-18	ELECTRICAL CABINET
CE- 68129-010V	10860 88-10-18	SPARE PART KIT TB/9-050V
CE- 68129-0101	10860 88-10-18	SPARE PART KIT TB/9-050V
CE- 68131-010V	10860 88-10-18	MACHINE TB/9-050V
CE- 68131-0101	10860 88-10-18	MACHINE TB/9-050V
CE- 68132-010V	10860 88-10-18	EQUIPMENT TB/9-050V
CE- 68132-0101	10860 88-10-18	EQUIPMENT TB/9-050V
CE- 68133-010V	10860 88-10-18	EXTRA EQUIPMENT TB/9-050V
CE- 68134-0101	10860 88-10-18	EL-DOCUMENT TB/9-050V
RK- 68178-0101	14287 89-12-18	"L.L.F. HEAD SPACE KIT"
RK- 68179-010V	10822 89-07-04	ELECTRICAL DOCUMENT
RK- 68180-010V	10822 89-07-04	ELECTRIC MATERIALS
RK- 68181-0101	14288 89-12-18	"L.L.F. HEAD SPACE KIT"
RK- 68182-010V	10823 89-07-04	ELECTRICAL DOCUMENT
RK- 68183-010V	10823 89-07-04	ELECTRIC MATERIALS
CE- 68304-010V	11919 89-05-10	EL-CABINET TBA/9-070V
CE- 68304-0101	11919 89-05-10	EL-CABINET TBA/9-070V
CE- 68305-010V	11919 89-05-10	SPARE PARTS TBA/9-070V
CE- 68305-0101	11919 89-05-10	SPARE PARTS TBA/9-070V
CE- 68306-010V	11919 89-05-10	EQUIPMENT TBA/9-070V
CE- 68306-0101	11919 89-05-10	EQUIPMENT TBA/9-070V
CE- 68307-010V	11919 89-05-10	EXTRA EQUIPMENT TBA/9-070V
CE- 68308-0101	11919 89-05-10	EL-DOCUMENT TBA/9-070V
CE- 68379-010V	11919 89-05-10	CONTROL PANEL TBA/9-070V
CE- 68379-0101	11919 89-05-10	CONTROL PANEL TBA/9-070V
RK- 68721-0101	13838 90-02-09	"HEADSPACE BY INJECTION"
RK- 68722-010V	13838 90-02-09	ELECTRIC MATERIALS
RK- 68723-010V	13838 90-02-09	ELECTRICAL DOCUMENT
RK- 68724-0101	13837 90-02-09	"HEADSPACE BY INJECTION"
RK- 68725-010V	13837 90-02-09	ELECTRIC MATERIALS
RK- 68725-0101	13837 90-02-09	ELECTRIC MATERIALS
RK- 68726-0101	13837 90-02-09	ELECTRICAL DOCUMENT
CE- 68780-010V	11919 89-05-10	MACHINE TBA/9-070V
CE- 68780-0101	11919 89-05-10	MACHINE TBA/9-070V
RK- 68864-0101	12255 89-07-06	"HEAT REDUCTION"
RK- 68865-010V	12255 89-07-06	EL-MATERIAL
RK- 68866-010V	12255 89-07-06	EL-DOCUMENT
RK- 68873-0101	12260 89-10-11	"BA TO PTS 3"
RK- 68874-010V	12260 89-10-11	MATERIAL
RK- 68875-010V	12260 89-10-11	DOCUMENT

GROUP NO	PART NO	LAST AM	DESCRIPTION
RK- 649402-010V	RK- 68904-0101	12321 89-05-22	"JUMBO REEL"
RK- 649308-010V	RK- 68905-010V	12321 89-05-22	EL-EQUIPMENT
RK- 649340-010V	RK- 68905-0101	12321 89-05-22	EL-EQUIPMENT
RK- 649324-010V	RK- 68906-0101	12321 89-05-22	EL-DOCUMENT
CE- 67716-010V	RK- 68907-0101	12322 89-05-22	"LS STRIP SPLICER"
CE- 68128-010V	RK- 68908-010V	13599 89-08-29	ELECTRIC MATERIALS
CE- 68304-010V	RK- 68908-0101	13599 89-08-29	ELECTRIC MATERIALS
CE- 68128-010V	RK- 68909-0101	12322 89-05-22	EL-DOCUMENT
C- 67027-010V	C- 68917-0101	10472 89-01-25	ANGLE INDICATOR
C- 67025-020V	RK- 69217-0101	12789 89-07-06	"HEAT REDUCTION"
C- 67062-010V	RK- 69218-010V	12789 89-07-06	ELECTRIC MATERIALS
CE- 67716-010V			
CE- 68128-010V	RK- 69219-010V	12789 89-07-06	ELECTRICAL DOCUMENT
CE- 68304-010V	RK- 69261-0101	14290 89-12-18	"HOT FOIL DATE UNIT"
C- 295026-020V	RK- 69262-010V	14290 89-12-18	ELECTRIC MATERIALS
CE- 68379-010V			
C- 295026-030V	RK- 69263-010V	12838 89-07-06	ELECTRICAL DOCUMENT
RK- 68874-010V	RK- 69268-0101	14452 90-02-13	QUICK RESTART
CE- 67721-010V	RK- 69289-010V	12858 89-08-22	ELECTRIC MATERIALS
BE- 649206-050V			
CE- 67721-010V	RK- 69290-010V	14452 90-02-13	ELECTRICAL DOCUMENT
BE- 649205-050V	RK- 69345-0101	12907 89-07-06	HOT FOIL DATE UNIT
CE- 67721-010V	RK- 69346-010V	12907 89-07-06	ELECTRIC MATERIALS
BE- 649205-050V			
CE- 67721-010V	RK- 69347-010V	12907 89-07-06	ELECTRICAL DOCUMENT
BE- 649205-050V	RK- 69392-0101	12961 89-07-06	HOT FOIL DATE UNIT
BE- 649205-050V	RK- 69393-010V	12961 89-07-06	EL MATERIAL
CE- 67721-010V			
BE- 649205-050V	RK- 69394-010V	12961 89-07-06	EL DOCUMENT
CE- 68134-010V	RK- 69395-0101	14289 89-12-18	"HOT FOIL DATE UNIT"
BE- 649204-050V	RK- 69396-010V	14289 89-12-18	ELECTRICAL MATERIEL
CE- 68134-010V			
BE- 649204-050V	RK- 69397-010V	12962 89-07-07	ELECTRICAL DOCUMENT
CE- 68134-010V	RK- 69458-0101	14254 89-12-07	ELECTRIC EQUIPMENT
BE- 649204-050V	RK- 69459-010V	13133 89-08-28	ELECTRICAL DOCUMENT
CE- 68134-010V	RK- 69460-0101	13134 89-08-14	CONSTANT SPRAY VOLUME
BE- 649204-050V	RK- 69461-010V	13134 89-08-14	ELECTRICAL DOCUMENT
CE- 68134-010V	RK- 69462-0101	13135 89-08-14	CONSTANT SPRAY VOLUME
BE- 649204-050V	RK- 69463-010V	13135 89-08-14	ELECTRICAL DOCUMENT
BE- 649204-050V	RK- 69464-0101	13136 89-08-14	CONSTANT SPRAY VOLUME
C- 752669-010V	RK- 69465-010V	13136 89-08-14	ELECTRICAL DOCUMENT
RK- 68178-010V	RK- 69466-0101	13137 89-08-14	CONSTANT SPRAY VOLUME
RK- 68178-010V	RK- 69467-010V	13137 89-08-14	ELECTRICAL DOCUMENT
RK- 68179-010V	RK- 69500-0101	13196 89-08-22	QUICK RESTART
C- 752985-010V	RK- 69501-010V	13196 89-08-22	ELECTRIC MATERIALS
RK- 68181-010V			
RK- 68181-010V	RK- 69502-010V	14166 89-11-14	ELECTRICAL DOCUMENT
RK- 68182-010V	RK- 69503-0101	13197 89-08-22	QUICK RESTART
CE- 68308-010V	RK- 69504-010V	13197 89-08-22	ELECTRIC MATERIALS
BE- 649205-070V			
CE- 68308-010V	RK- 69505-010V	14167 89-11-14	ELECTRICAL DOCUMENT
BE- 649205-070V	RK- 69506-0101	13198 89-08-22	QUICK RESTART
CE- 68308-010V	RK- 69507-010V	13198 89-08-22	ELECTRIC MATERIALS
BE- 649205-070V			
CE- 68308-010V	RK- 69508-010V	14168 89-11-14	ELECTRICAL DOCUMENT
BE- 649205-070V	RK- 69509-0101	13199 89-11-14	QUICK RESTART
BE- 649205-070V	RK- 69510-010V	13199 89-11-14	ELECTRIC MATERIALS
CE- 68308-010V			
BE- 649205-070V	RK- 69511-010V	13199 89-11-14	ELECTRICAL DOCUMENT
RK- 520096-010V	RK- 69522-0101	13220 89-08-14	CONSTANT SPRAY VOLUME
RK- 68721-010V	RK- 69523-010V	13220 89-08-14	ELECTRICAL DOCUMENT
RK- 68723-010V	RK- 69561-0101	14279 89-12-18	QUICK RESTART
RK- 68721-010V	RK- 69562-010V	13243 89-11-14	ELECTRIC MATERIALS
RK- 520094-010V			
RK- 68726-010V	RK- 69563-010V	13243 89-11-14	ELECTRICAL DOCUMENT
RK- 68724-010V	RK- 69564-010V	11773 89-07-06	EL-DOCUMENT
RK- 68724-010V	RK- 69565-010V	11774 89-07-06	EL-DOCUMENT
CE- 68308-010V	RK- 69566-010V	11772 89-07-06	EL-DOCUMENT
BE- 649205-070V	4- 72947		HOOK SPANNER
RK- 553820-010V			
RK- 68864-010V			
RK- 68866-010V	4- 74387		HOOK SPANNER
RK- 68864-010V	C- 74767-0102	8017 85-07-02	DYNAMOMETER
RK- 547998-010V			
RK- 68873-010V			
RK- 68875-010V			
RK- 68873-010V	4- 74788		SLEEVE

GROUP NO
C- 751788-010V
RK- 68906-010V
RK- 68904-010V
RK- 68904-010V
C- 540028-010V
RK- 68909-010V
RK- 68907-010V
RK- 68907-010V
C- 451348-020V
RK- 553820-010V
RK- 69217-010V
RK- 69219-010V
RK- 69217-010V
RK- 544391-010V
RK- 69261-010V
RK- 69263-010V
RK- 69261-010V
RK- 553180-010V
RK- 69268-010V
RK- 69290-010V
RK- 69288-010V
RK- 544391-010V
RK- 69345-010V
RK- 69347-010V
RK- 69345-010V
RK- 544391-010V
RK- 69392-010V
RK- 69394-010V
RK- 69392-010V
RK- 544391-010V
RK- 69395-010V
RK- 69397-010V
RK- 69395-010V
RK- 752702-010V
RK- 69456-010V
RK- 752702-010V
RK- 69460-010V
RK- 752702-010V
RK- 69462-010V
RK- 752702-010V
RK- 69464-010V
RK- 752702-010V
RK- 69466-010V
RK- 553180-010V
RK- 69500-010V
RK- 69502-010V
RK- 69500-010V
RK- 553180-010V
RK- 69503-010V
RK- 69505-010V
RK- 69503-010V
RK- 553180-010V
RK- 69508-010V
RK- 69508-010V
RK- 69506-010V
RK- 553180-010V
RK- 69509-010V
RK- 69511-010V
RK- 69509-010V
RK- 752702-010V
RK- 69522-010V
RK- 553180-010V
RK- 69561-010V
RK- 69563-010V
RK- 69561-010V
RK- 649370-010V
RK- 649371-010V
RK- 649369-010V
C- 250610-010V
C- 458975-010V
C- 77099-010V
C- 250610-010V
C- 77092-010V
C- 77092-020V
B- 648119-020V
B- 648119-060V
C- 74767-010V

PART NO	LAST AM	DESCRIPTION	GROUP NO
4- 74769		SLEEVE	C- 74767-010V
4- 74770		ROD	C- 74767-010V
4- 74771		GUIDE	C- 74767-010V
4- 74772		DIAL	C- 74767-010V
4- 74912		PIN	C- 74767-010V
4- 75451		PIN	C- 75467-020V
			C- 76460-010V
			C- 75467-020V
			C- 76460-010V
			C- 75467-020V
			C- 76460-010V
2- 75453		HOLDER	C- 75466-020V
4- 75454		ROD	C- 75466-020V
C- 75466-0201	5374 82-06-11	SETTING TOOL	C- 77092-010V
			C- 77092-020V
			B- 648119-020V
			B- 648119-060V
C- 75467-0201	8298 86-10-09	SETTING TOOL CURVES	C- 77092-010V
			C- 77092-020V
			B- 648119-020V
			B- 648119-060V
C- 75469-0201	5504 82-09-17	SETTING TOOL	C- 76335-010V
4- 75470		TEMPLATE	C- 75469-020V
4- 75471		BRACKET	C- 75469-020V
4- 75472		CLAMP	C- 75469-020V
4- 75514		PLIERS	C- 77094-010V
			B- 648119-020V
			B- 648119-060V
			B- 648119-020V
2- 75515		TEMPLATE	B- 648119-060V
C- 75525-020V	8433 86-12-12	TEMPLATE	C- 75466-020V
			C- 77092-010V
			C- 77092-020V
			B- 648119-020V
			B- 648119-060V
3- 75531-0001		TEMPLATE	C- 75525-020V
3- 75531-0002		TEMPLATE	C- 75525-020V
C- 75542-0101	5688 83-01-14	LIFTING UNIT	C- 77091-010V
			C- 77091-020V
			C- 77091-030V
			B- 648119-020V
			B- 648119-060V
1- 75543		HOLDER	C- 75542-010V
4- 75544		BRACKET	C- 75542-010V
4- 75545		TEMPLATE	C- 75525-020V
4- 75665		ASSEMBLING TOOL	C- 456975-010V
			C- 77099-010V
			B- 648109-020V
			B- 648109-030V
			B- 648109-020V
			B- 648109-030V
4- 75931-0001		TEMPLATE	C- 76335-010V
4- 75931-0002		TEMPLATE	C- 76335-010V
4- 75931-0003		TEMPLATE	C- 76335-010V
4- 75931-0004		TEMPLATE	C- 76335-010V
4- 75931-0005		TEMPLATE	C- 76335-010V
4- 75931-0006		TEMPLATE	C- 76335-010V
4- 75931-0008		TEMPLATE	C- 76335-010V
4- 75931-0009		TEMPLATE	C- 76335-010V
4- 75931-0010		TEMPLATE	C- 76335-010V
4- 75931-0011		TEMPLATE	C- 76335-010V
4- 75936		TEMPLATE	C- 76335-010V
4- 75937		TEMPLATE	C- 76335-010V
4- 75938		TEMPLATE	C- 76335-010V
4- 75939		TEMPLATE	C- 76335-010V
4- 75943		TEMPLATE	C- 76335-010V
4- 75944		TEMPLATE	C- 76335-010V
4- 75945		CAM TEMPLATE	C- 76335-010V
RK- 76123-0101	7193 84-10-29	DRILLING JIG	RK- 76613-010V
4- 76124		BUSHING	RK- 76123-010V
4- 76125		BUSHING	RK- 76123-010V
3- 76126		DRILLING JIG	RK- 76123-010V
2- 76128		TEMPLATE	C- 77092-010V
			C- 77092-020V
			B- 648119-020V
			B- 648119-060V
			B- 648119-020V

PART NO	LAST AM	DESCRIPTION	GROUP NO
			B- 648119-060V
4- 76129		CLAMPING RING	RK- 76613-010V
			C- 77092-010V
			C- 77092-020V
			B- 648119-020V
			B- 648119-060V
			B- 648119-020V
			B- 648119-060V
2- 76130		SETTING TOOL	C- 77092-010V
			C- 77092-020V
			B- 648119-020V
			B- 648119-060V
			B- 648119-020V
			B- 648119-060V
4- 76131		ASSEMBLY CONE	C- 456975-010V
			C- 77099-010V
			RK- 456715-010V
4- 76132		ASSEMBLING TOOL	C- 456975-010V
			C- 77099-010V
			RK- 456715-010V
C- 76133-0101	9341 86-07-21	TEMPLATE LS-ELEMENT	C- 77092-010V
			RK- 751461-010V
C- 76133-0201	13140 89-06-13	TEMPLATE LS-ELEMENT	C- 77092-010V
C- 76133-0301	12856 90-01-29	TEMPLATE LS-ELEMENT	C- 77092-020V
2- 76134		RULER	C- 76133-010V
			C- 76133-020V
			C- 76133-030V
			C- 76133-010V
1- 76137		PLATFORM TRANSPORT	C- 76200-010V
3- 76138		LOCKING CLAMP	C- 250610-010V
			C- 456975-010V
			C- 77099-010V
4- 76139		STOP	C- 76595-010V
			C- 76595-020V
			C- 76595-030V
4- 76139		STOP	C- 76595-010V
4- 76153		SETTING TOOL	C- 456975-010V
			C- 77099-010V
			RK- 456715-010V
3- 76156		STOP 200ML SLIM	C- 76492-010V
3- 76157		STOP 125ML	C- 76492-010V
2- 76158		STOP 200ML SLIM	C- 76492-010V
2- 76159		STOP 125ML	C- 76492-010V
4- 76163		BRACKET	C- 76595-010V
			C- 76595-030V
			C- 76595-010V
4- 76164		BRACKET	C- 76595-010V
			C- 76595-020V
			C- 76595-030V
			C- 76595-010V
3- 76165		SETTING TOOL	C- 77094-010V
			B- 648119-060V
4- 76166		GUIDE PLATE	C- 76175-010V
3- 76167		LOCKING CLAMP	C- 456975-010V
			C- 77099-010V
3- 76168		DRILLING JIG	RK- 456713-010V
3- 76169		DRILLING JIG	RK- 456713-010V
2- 76174-0001		DRILLING JIG	RK- 456713-010V
2- 76174-0002		DRILLING JIG	RK- 456713-010V
2- 76174-0003		DRILLING JIG	RK- 456713-010V
2- 76174-0004		DRILLING JIG	RK- 456713-010V
2- 76174-0005		DRILLING JIG	RK- 456713-010V
2- 76174-0006		DRILLING JIG	RK- 456713-010V
2- 76174-0007		DRILLING JIG	RK- 456713-010V
2- 76174-0009		DRILLING JIG	RK- 456713-010V
2- 76174-0010		DRILLING JIG	RK- 456713-010V
C- 76175-0101	8298 86-10-09	PULLER	C- 77092-010V
			C- 77092-020V
			B- 648119-060V
4- 76176		TEMPLATE	C- 76335-010V
4- 76178		STOP	C- 76133-010V
			C- 76133-020V
			C- 76133-030V
			C- 76133-010V
4- 76179		JIG	C- 76133-010V
4- 76180		TEMPLATE	C- 77094-010V
4- 76181		TEMPLATE	C- 77094-010V

PART NO	LAST AM	DESCRIPTION	GROUP NO
4- 76184		BRACKET	C- 76606-010V
			C- 76606-030V
			C- 76606-010V
4- 76185		STOP	C- 76606-010V
			C- 76606-020V
			C- 76606-030V
			C- 76606-010V
4- 76186		STOP	C- 76606-010V
4- 76187		TEMPLATE FILLING TUBE	C- 77092-010V
			C- 77092-020V
4- 76188		TEMPLATE FILLING TUBE	C- 77092-010V
			C- 77092-020V
1- 76195		LIFTING UNIT	C- 77094-010V
1- 76196		FRAME	C- 76197-010V
C- 76197-0101	9341 88-07-21	JIG	C- 77094-010V
C- 76200-0101	7948 85-05-24	TRANSPORTER	C- 77094-010V
			B- 648119-080V
1- 76201		BOTTOM PLATE	C- 76200-010V
1- 76202		FRAME	C- 76200-010V
3- 76203		SUPPORT LEG	C- 76200-010V
4- 76204		ARM	C- 76200-010V
4- 76205		ARM	C- 76200-010V
4- 76206		ARM	C- 76200-010V
4- 76207		STOP	C- 76200-010V
4- 76208		SHIM	C- 76200-010V
4- 76209		SUPPORT	C- 76200-010V
4- 76210		BRACKET	C- 76200-010V
4- 76211		SUPPORT	C- 76200-010V
4- 76212		SHAFT	C- 76200-010V
4- 76213		SUPPORT	C- 76200-010V
4- 76214		ARM	C- 76200-010V
4- 76215		WASHER	C- 76200-010V
4- 76216		STRUT	C- 76200-010V
4- 76217		SUPPORT	C- 76200-010V
4- 76276		SCREW	C- 76490-010V
4- 76290		SPACER	C- 76595-010V
			C- 76595-020V
			C- 76595-030V
			C- 76344-010V
			C- 76595-010V
C- 76291-0101	6457 84-01-09	YOKE	C- 76335-010V
1- 76292		YOKE	C- 76291-010V
3- 76293		BRACKET	C- 76291-010V
3- 76294		LOCATING PIECE	C- 76291-010V
3- 76295		SPACER	C- 76291-010V
4- 76296		HOOK	C- 76291-010V
4- 76297		SCREW	C- 76291-010V
2- 76298		RULER	C- 76335-010V
2- 76299		TEMPLATE SUPPORT ROLLERS	C- 76335-010V
C- 76301-0101	6847 84-05-11	TEMPLATE	C- 76335-010V
2- 76302		BRACKET	C- 76301-010V
C- 76304-0101	6457 84-01-09	COMPRESSION SPRING	C- 76335-010V
4- 76305		BRACKET	C- 76304-010V
4- 76307-0001		TEMPLATE	C- 75525-020V
4- 76307-0002		TEMPLATE	C- 75525-020V
4- 76307-0003		TEMPLATE	C- 75525-020V
4- 76307-0004		TEMPLATE	C- 75525-020V
4- 76307-0005		TEMPLATE	C- 75525-020V
4- 76307-0006		TEMPLATE	C- 75525-020V
4- 76308		TEMPLATE	C- 75525-020V
C- 76335-010V	8433 86-12-12	SETTING TOOL JAW SYSTEM	C- 76600-010V
1- 76337		BAG	C- 76591-010V
2- 76338		SETTING TOOL	C- 75467-020V
C- 76344-0101	7059 84-08-29	TEMPLATE	B- 648119-020V
			B- 648119-080V
2- 76345		RULER	C- 76344-010V
4- 76346		BRACKET	C- 76344-010V
4- 76347		BRACKET	C- 76344-010V
3- 76348		TEMPLATE	C- 75525-020V
3- 76349		CAM TEMPLATE	C- 76335-010V
C- 76350-0101	7560 85-02-19	SETTING TOOL	C- 77092-010V
			C- 77092-020V
			B- 648119-020V
			B- 648119-080V
1- 76394		BRACKET	C- 76485-010V
3- 76396		BRACKET	RK- 636739-010V
3- 76398		BRACKET	C- 76485-010V

PART NO	LAST AM	DESCRIPTION	GROUP NO
4- 76398		TEMPLATE	C- 77092-010V
			C- 77092-020V
			B- 648119-020V
			B- 648119-080V
			B- 648119-020V
			B- 648119-080V
C- 76402-0101	12784 89-05-30	TEMPLATE	C- 76600-010V
2- 76403		V-BLOCK	C- 76402-010V
3- 76404		SHAFT	C- 76402-010V
2- 76406		TEMPLATE COLUMN	C- 77092-010V
			C- 77092-020V
			B- 648119-020V
			B- 648119-080V
			B- 648119-020V
			B- 648119-080V
C- 76411-0101	6847 84-05-11	SETTING TOOL	C- 77094-010V
			B- 648119-020V
			B- 648119-080V
1- 76412		RULER	C- 76411-010V
1- 76413		RULER	C- 76411-010V
3- 76414		ARM	C- 76411-010V
4- 76415		LOCK BOARD	C- 76411-010V
C- 76416-0101	7278 84-12-14	CLAMP	C- 77092-010V
			C- 77092-020V
			B- 648119-020V
			B- 648119-080V
4- 76417		CLAMP	C- 76416-010V
4- 76418		CLAMP	C- 76416-010V
C- 76447-0101	6847 84-05-11	SETTING TOOL	C- 77094-010V
			B- 648119-020V
			B- 648119-080V
2- 76448		PLATE	C- 76447-010V
3- 76449		BLOCK	C- 76447-010V
3- 76450		BLOCK	C- 76447-010V
4- 76451-0001		SPACER	C- 76447-010V
4- 76451-0002		SPACER	C- 76447-010V
4- 76451-0003		SPACER	C- 76447-010V
4- 76451-0004		SPACER	C- 76447-010V
4- 76452		SUPPORT	C- 76447-010V
4- 76453		CLAW	C- 76447-010V
4- 76454		SPACER	C- 76447-010V
4- 76455		BRACKET	C- 76447-010V
4- 76456		HOOK	C- 76447-010V
4- 76457		SHAFT	C- 76447-010V
C- 76460-0101	7204 84-10-20	SETTING TOOL	C- 77094-010V
			B- 648119-020V
			B- 648119-080V
1- 76461		SUPPORT ARM	C- 76460-010V
2- 76462		TEMPLATE	C- 76460-010V
4- 76463		BUSHING	C- 76460-010V
4- 76464		BRACKET	C- 76301-010V
4- 76465		SCREW	C- 76301-010V
4- 76466		SHAFT	C- 76416-010V
4- 76467		TEMPLATE	C- 77092-010V
			C- 77092-020V
			B- 648119-020V
			B- 648119-080V
			B- 648119-020V
4- 76467		TEMPLATE	B- 648119-080V
C- 76468-0101	12333 89-12-15	TEMPLATE	C- 76600-010V
3- 76469		BRACKET	C- 76468-010V
C- 76470-0101	7383 85-01-22	BAG	C- 76350-010V
1- 76471		BAG	C- 76470-010V
1- 76484		LID	C- 76470-010V
			C- 76591-010V
C- 76485-0101	7613 85-03-26	SETTING TOOL	B- 648119-020V
1- 76486		RULER	C- 76485-010V
2- 76487-0001		ARM	C- 76485-010V
2- 76487-0002		ARM	C- 76485-010V
2- 76487-0003		ARM	C- 76485-010V
4- 76488		TEMPLATE	C- 76485-010V
4- 76489		TEMPLATE	C- 76485-010V
C- 76490-0101	7622 85-02-20	TEMPLATE TUBE FORMING	B- 648119-020V
3- 76491		BRACKET	C- 76490-010V
C- 76492-010V	8381 85-11-25	ASSEMBLY JIG	B- 648119-020V
			B- 648119-080V
C- 76492-0101	8381 85-11-25	ASSEMBLY JIG	C- 77094-010V

PART NO	LAST AM	DESCRIPTION	GROUP NO
1- 76493		PLATE	C- 76492-010V
3- 76494		STOP	C- 76492-010V
3- 76495		BLOCK	C- 76492-010V
4- 76496		HOOK	C- 76492-010V
4- 76497		STOP	C- 76344-010V
4- 76498		STOP	C- 76344-010V
4- 76499		TEMPLATE	C- 77094-010V
C- 76500-0101	7186 84-10-16	LIFTING UNIT	C- 77091-010V
			C- 77091-020V
			C- 77091-030V
			B- 648119-060V
2- 76501		CAM	C- 76500-010V
3- 76502		SHAFT	C- 76500-010V
4- 76503		PIN	C- 76500-010V
C- 76504-0101	12095 89-07-01	LIFTING UNIT	C- 77091-010V
			C- 77091-020V
			C- 77091-030V
			B- 648119-060V
2- 76505		ROD	C- 76504-010V
C- 76560-0101	7204 84-10-20	SETTING TOOL	C- 77094-010V
			B- 648119-020V
			B- 648119-060V
3- 76561		COLUMN	C- 76560-010V
3- 76562		BLOCK	C- 76560-010V
3- 76563		BLOCK	C- 76560-010V
2- 76564		STOP	C- 76492-010V
3- 76565		STOP	C- 76492-010V
4- 76566		PIN	C- 76492-010V
4- 76567		SLEEVE	C- 76492-010V
4- 76568		HOOK	C- 76492-010V
1- 76569		BAG	C- 76470-010V
1- 76590		BAG	C- 76591-010V
C- 76591-0101	7383 86-01-22	BAG	C- 76600-010V
C- 76594-0101	10349 87-06-30	SETTING TOOL	C- 76350-010V
C- 76595-0101	8433 85-12-12	TEMPLATE LS-ELEMENT	C- 77092-010V
			B- 648119-060V
C- 76595-0201	13140 89-06-13	TEMPLATE LS-ELEMENT	RK- 751461-010V
C- 76595-0301	12856 90-01-29	TEMPLATE LS-ELEMENT	C- 77092-010V
4- 76597		STOP	C- 77092-020V
C- 76600-0101	13991 89-11-16	SETTING TOOL	C- 76595-010V
			C- 76595-020V
			C- 76595-030V
2- 76601		RULER	C- 76595-010V
			C- 77092-010V
3- 76602		GAUGE	C- 77092-020V
			B- 648119-020V
2- 76603		BRACKET	C- 76485-010V
3- 76604		SHAFT	C- 77094-010V
4- 76605		BRACKET	B- 648119-060V
			C- 76133-010V
			C- 76133-020V
			C- 76606-010V
			C- 76606-020V
			C- 76133-030V
			C- 76606-030V
			C- 76133-010V
			C- 76606-010V
C- 76606-0101	9341 88-07-21	TEMPLATE LS-ELEMENT	C- 77092-010V
			RK- 751461-010V
C- 76606-0201	13140 89-06-13	TEMPLATE LS-ELEMENT	C- 77092-010V
C- 76606-0301	12856 90-01-29	TEMPLATE LS-ELEMENT	C- 77092-020V
2- 76607		RULER	C- 76606-010V
			C- 76606-020V
			C- 76606-030V
4- 76610		BRACKET	C- 76606-010V
			C- 76133-010V
			C- 76133-030V
			C- 76133-010V
RK- 76613-0101	7193 84-10-29	TOOL	RK- 479279-010V
C- 77091-010V	12930 89-10-15	ACCESSORIES PARTS	B- 648119-070V
C- 77091-020V	12383 90-02-10	ACCESSORIES PARTS	B- 648119-060V
C- 77091-030V	12856 90-01-29	ACCESSORIES PARTS	B- 648119-060V

PART NO	LAST AM	DESCRIPTION	GROUP NO
C- 77092-010V	13140 89-06-13	SERVICE PARTS	B- 648119-070V
			B- 648119-060V
C- 77092-020V	12856 90-01-29	SERVICE PARTS	B- 648119-090V
C- 77093-010V	8741 86-06-16	TRIMMING PARTS	B- 648119-070V
			B- 648119-060V
C- 77093-020V	12856 90-01-29	TRIMMING PARTS	B- 648119-090V
C- 77094-010V	12333 88-12-15	PRODUCTION PARTS	B- 648119-070V
			B- 648119-060V
			B- 648119-090V
C- 77099-0101	13627 89-08-14	TOOL KIT	B- 648109-070V
			B- 648109-060V
			B- 648109-090V
3- 77100		SETTING TOOL	C- 77092-010V
			C- 77092-020V
4- 77163		SLEEVE	C- 77165-010V
4- 77164		STUD BOLT	C- 77165-010V
C- 77165-0101	9933 87-02-07	EXTRACTOR	C- 77092-010V
			C- 77092-020V
			RK- 456716-010V
			RK- 456717-010V
			RK- 752408-010V
			RK- 752410-010V
C- 77165-0101		EXTRACTOR	RK- 752412-010V
			RK- 752414-010V
4- 77221		TIGHTENING TOOL	C- 456975-020V
2- 77223		DRILLING TEMPLATE	RK- 456713-010V
4- 77240		PROTECTION PLATE	C- 77092-010V
			C- 77092-020V
4- 77241		STOP	C- 76595-020V
			C- 76595-030V
4- 77242		STOP	C- 76606-020V
			C- 76606-030V
4- 77243		STOP	C- 76133-020V
			C- 76133-030V
4- 77244		BRACKET	C- 76595-020V
4- 77245		BRACKET	C- 76606-020V
4- 77246		BRACKET	C- 76133-020V
4- 77247		ASSEMBLY PIN	C- 77099-010V
90001-0023		BOX	CE- 67716-010V
90001-0025		WALL SOCKET	CE- 68128-010V
			CE- 68304-010V
			CE- 68128-010V
			CE- 68304-010V
90002-0004		PLUG	C- 456435-030V
			C- 469366-010V
			C- 469366-020V
90002-0009		BLANK-OFF PLUG	C- 295611-020V
			C- 456435-030V
			RK- 548058-010V
			C- 441000-060V
			C- 295777-010V
			C- 469374-010V
			C- 469374-020V
90002-0012		BLANK-OFF PLUG	C- 271128-030V
			C- 271128-040V
90002-0013		BLANK-OFF PLUG	C- 295441-010V
			C- 295441-020V
			C- 295441-030V
			C- 456435-030V
			C- 469366-010V
			C- 283633-010V
			C- 295470-020V
			C- 295470-030V
			C- 469374-010V
			C- 295470-030V
			C- 469374-010V
			C- 295470-030V
			C- 469374-020V
			C- 295470-040V
			C- 283633-010V
90002-0014		BLANK-OFF PLUG	CE- 67716-010V
90002-0016		PLUG	C- 456456-010V
			C- 456459-020V
90006-0003		WASHER	CR- 256204-020V
			CR- 256205-020V
			C- 256217-020V
			C- 257381-020V

PART NO	LAST AM	DESCRIPTION	GROUP NO
			C- 257382-020V
			CR- 256204-020V
			CR- 256205-020V
90005-0003		WASHER	C- 256217-030V
			C- 257381-020V
			C- 257382-020V
			CR- 256204-030V
			CR- 256205-030V
			CR- 256212-030V
			CR- 256213-030V
			C- 256217-040V
			C- 257381-030V
			C- 257382-030V
			C- 256217-040V
			C- 257381-030V
			C- 257382-030V
			C- 256217-040V
			C- 257381-030V
			C- 257382-030V
			C- 256217-040V
			C- 257381-030V
			C- 257382-030V
			C- 272765-020V
90005-0005		WASHER	RK- 456712-010V
			C- 271533-020V
			C- 271533-030V
			C- 751069-010V
			RK- 491780-010V
			RK- 751488-010V
			RK- 491780-010V
			RK- 751488-010V
			RK- 491780-010V
			RK- 751488-010V
			RK- 491780-010V
			RK- 751488-010V
			C- 257381-020V
			C- 257382-020V
			C- 257381-020V
			C- 257382-020V
			C- 257381-030V
			C- 257382-030V
			C- 257381-030V
			C- 257382-030V
			C- 257381-030V
			C- 257382-030V
			C- 257381-030V
			C- 257382-030V
			RK- 491641-010V
			RK- 491447-010V
			RK- 491780-010V
			RK- 751488-010V
			RK- 491780-010V
			RK- 751488-010V
			RK- 491780-010V
			RK- 751488-010V
90005-0006		SEAL RING	C- 469452-010V
			C- 469452-020V
			C- 751800-010V
			C- 469452-030V
			C- 751800-020V
90005-0007		WASHER	CR- 256212-020V
			CR- 256213-020V
90005-0007		WASHER	C- 257381-020V
			C- 257382-020V
			CR- 256212-020V
			CR- 256213-020V
			C- 257381-020V
			C- 257382-020V
			CR- 256212-030V
			CR- 256213-030V
			C- 257381-030V
			C- 257382-030V
			C- 257381-030V
			C- 257382-030V
			C- 257381-030V
			C- 257382-030V
			C- 257381-030V

PART NO	LAST AM	DESCRIPTION	GROUP NO
			C- 257382-030V
			C- 256802-020V
			C- 456456-010V
			C- 456456-020V
90005-0009		WASHER	C- 271833-020V
			C- 271833-030V
			CR- 256204-020V
			CR- 256205-020V
			C- 257381-020V
			C- 257382-020V
			CR- 256204-020V
			CR- 256205-020V
			C- 257381-020V
			C- 257382-020V
			CR- 256204-030V
			CR- 256205-030V
90005-0013		WASHER	C- 271113-020V
90005-0014		WASHER	C- 256217-020V
			C- 256217-030V
			C- 256217-040V
90005-0015		WASHER	C- 271113-020V
90005-0016		WASHER	C- 271886-040V
			C- 271886-050V
90005-0019		WASHER	C- 456274-010V
			C- 256055-020V
			C- 272342-020V
			C- 256055-020V
			C- 456976-010V
			C- 491083-010V
			C- 491083-020V
			C- 456274-010V
90005-0020		WASHER	RK- 469536-010V
			RK- 491568-010V
90005-0034		WASHER	C- 256358-010V
90005-0040		WASHER	C- 271274-020V
90005-0044		WASHER	C- 529621-010V
			C- 735268-010V
			C- 491890-010V
			C- 529621-010V
			C- 735271-010V
			C- 529621-010V
			C- 735271-010V
			C- 529621-010V
			C- 735271-010V
90005-0045		WASHER	C- 271533-020V
90005-0045		WASHER	C- 271533-030V
			C- 491650-010V
			C- 257381-020V
			C- 257382-020V
			C- 257381-020V
			C- 257382-020V
			C- 271909-020V
			C- 271909-030V
			C- 271909-040V
90005-0048		WASHER	C- 271909-050V
			C- 272765-030V
			C- 272765-040V
			C- 272765-050V
			C- 272765-060V
90005-0056		WASHER	RK- 751298-010V
			C- 296218-010V
			CR- 256436-050V
90005-0060		WASHER	C- 296218-010V
			C- 752671-010V
			C- 752672-010V
			C- 271115-020V
			C- 441881-010V
			C- 271115-020V
			C- 441881-010V
			C- 271115-020V
90005-0061		WASHER	C- 441881-010V
			C- 490504-010V
			C- 491767-010V
			C- 271909-020V
			C- 271909-030V
			C- 271909-040V
			C- 271909-050V

PART NO	LAST AM	DESCRIPTION	GROUP NO
			C- 490804-010V
90006-0067		WASHER	C- 456588-010V
			C- 456588-020V
			C- 456588-030V
90006-0068		BUSHING	C- 256237-020V
			C- 256237-030V
			C- 256055-020V
			C- 256055-030V
90006-0069		BUSHING	C- 256237-020V
			C- 256237-030V
			C- 256055-020V
			C- 256055-030V
90007-0063		FUSE H.MANN 1P 10A 2	CE- 67716-010V
			CE- 68128-010V
			CE- 68304-010V
			CE- 68128-010V
			CE- 67716-010V
			CE- 68304-010V
90007-0066		FUSE H.MANN 1P 15A P	CE- 67716-010V
			CE- 68128-010V
			CE- 68304-010V
			CE- 68128-010V
			CE- 67716-010V
			CE- 68304-010V
90007-0092		FUSE H.MANN 3P 15A 10	CE- 67716-010V
			CE- 68128-010V
			CE- 68304-010V
90007-0092		FUSE H.MANN 3P 15A 10	CE- 68128-010V
			CE- 67716-010V
			CE- 68304-010V
90007-0093		FUSE H.MANN 3P 20A 10	CE- 68128-010V
90007-0094		FUSE H.MANN 3P 25A 10	CE- 67716-010V
			CE- 68304-010V
			CE- 67716-010V
			CE- 68304-010V
90007-0098		FUSE H.MANN 3P 25A P	CE- 67716-010V
			CE- 68304-010V
			CE- 67716-010V
			CE- 68304-010V
90007-0103		FUSE H.MANN 3P 6A 10	CE- 67716-010V
			CE- 68128-010V
			CE- 68304-010V
			CE- 68128-010V
			CE- 67716-010V
			CE- 68304-010V
90007-0104		FUSE H.MANN 1P 10A P	CE- 68128-010V
90007-0106		FUSE H.MANN 2P 60A 10	CE- 68128-010V
90007-0108		FUSE H.MANN 1P 6A 2	CE- 67716-010V
			CE- 68128-010V
			CE- 68304-010V
			CE- 68128-010V
			CE- 67716-010V
			CE- 68304-010V
90007-0110		FUSE H.MANN 3P 2A 253	CE- 67716-010V
			CE- 68128-010V
			CE- 68304-010V
			CE- 68128-010V
			CE- 67716-010V
			CE- 68304-010V
90007-0111		FUSE H.MANN 1P 10A 253	CE- 67716-010V
			CE- 68128-010V
			CE- 68304-010V
			CE- 68128-010V
			CE- 67716-010V
			CE- 68304-010V
90007-0112		FUSE H.MANN 1P 15A 253	CE- 67716-010V
			CE- 68128-010V
			CE- 68304-010V
			CE- 68128-010V
			CE- 67716-010V
			CE- 68304-010V
90007-0113		FUSE H.MANN 1P 10A DC2	CE- 67716-010V
			CE- 68128-010V
			CE- 68304-010V
			CE- 68128-010V
			CE- 67716-010V
			CE- 68304-010V

PART NO	LAST AM	DESCRIPTION	GROUP NO
90007-0115		FUSE H.MANN 2P 80A 2	CE- 67716-010V
			CE- 68128-010V
			CE- 68304-010V
			CE- 68128-010V
			CE- 67716-010V
			CE- 68304-010V
90007-0116		FUSE H.MANN 3P 15A P	CE- 67716-010V
			CE- 68304-010V
			CE- 67716-010V
90007-0116		FUSE H.MANN 3P 15A P	CE- 68304-010V
90012-0049		GLAND	C- 256656-020V
			C- 256656-030V
90012-0059		GLAND	RK- 68908-010V
			RK- 520068-010V
90012-0060		GLAND	RK- 520068-010V
90012-0062		GLAND	C- 457924-010V
			C- 457924-020V
90012-0063		GLAND	C- 490801-010V
			C- 490800-010V
			C- 490800-020V
			C- 735183-010V
			C- 735259-010V
			C- 735031-010V
			C- 735183-010V
90012-0064		GLAND	C- 529821-010V
			C- 735259-010V
			C- 529821-010V
			C- 735031-010V
			C- 529821-010V
90014-0011		ROLLER	C- 441821-010V
			C- 441271-010V
			C- 441271-020V
			RK- 491663-010V
90015-0016		BUSHING	C- 441850-010V
			C- 441850-020V
			C- 441850-030V
90015-0020		BUSHING	RK- 520129-010V
			RK- 520130-010V
			RK- 520094-010V
			RK- 520068-010V
			C- 752980-010V
			C- 752971-010V
			RK- 520068-010V
			RK- 520071-010V
			RK- 520068-010V
			RK- 520095-010V
			RK- 520068-010V
			RK- 520095-010V
			RK- 520068-010V
			RK- 520071-010V
			RK- 520068-010V
			RK- 520071-010V
			C- 735258-010V
			C- 256233-020V
			C- 469366-010V
			C- 469366-020V
			C- 469366-030V
			C- 456458-010V
			C- 456458-020V
			C- 456457-030V
			C- 456458-030V
			C- 272765-010V
			C- 272765-020V
			C- 456923-010V
			C- 456923-020V
			C- 456923-030V
			C- 268656-010V
			RK- 491404-010V
90015-0020		BUSHING	RK- 535608-010V
			C- 295777-010V
			C- 469374-010V
			C- 469374-020V
			C- 469374-030V
			C- 457857-010V
			C- 457857-010V
			C- 457881-010V
			C- 490800-010V

PART NO	LAST AM	DESCRIPTION	GROUP NO
			C- 457857-020V
			C- 457857-010V
			C- 457881-020V
			C- 490600-020V
			C- 497534-020V
			RK- 520067-010V
			RK- 520129-010V
			RK- 520130-010V
90015-0021		BUSHING	C- 295883-030V
			C- 295883-040V
			RK- 469472-010V
			C- 271453-020V
			C- 271866-020V
			C- 271453-020V
			C- 271866-030V
			C- 271453-030V
			C- 271866-030V
			C- 271866-040V
			C- 491890-010V
			C- 271866-050V
			C- 491890-010V
			C- 456923-010V
			C- 456923-020V
			C- 456923-030V
			C- 271274-020V
			C- 295777-010V
			C- 271274-020V
			C- 295777-010V
			C- 469374-010V
			C- 469374-020V
			C- 469374-030V
90015-0022		BUSHING	C- 271866-030V
			C- 271866-040V
			C- 271866-050V
			C- 295777-010V
90015-0023		BUSHING	C- 256233-020V
			C- 469366-010V
			C- 469366-020V
			C- 469366-030V
			C- 441850-010V
			C- 441850-020V
			C- 441850-030V
			C- 456923-010V
			C- 272408-040V
			C- 456923-020V
			C- 272408-050V
			C- 456923-030V
			RK- 535606-010V
			C- 295777-010V
			C- 469374-010V
90015-0023		BUSHING	C- 469374-020V
			C- 469374-030V
			C- 457857-020V
			C- 497534-020V
90015-0024		BUSHING	C- 295883-020V
			C- 295883-030V
			C- 295883-040V
			RK- 469472-010V
			C- 272241-020V
			C- 456556-010V
			C- 469374-010V
			C- 456556-010V
			C- 469374-010V
			C- 456556-020V
			C- 469374-020V
			C- 456556-020V
			C- 469374-030V
			C- 457857-010V
90015-0026		BUSHING	C- 272765-030V
			C- 272765-040V
			C- 272765-050V
			C- 272765-060V
			RK- 491512-010V
90016-0010		DISC SPRING	C- 256173-020V
			C- 256173-030V
			C- 256173-040V
90016-0012		DISC SPRING	C- 283600-010V

PART NO	LAST AM	DESCRIPTION	GROUP NO
90016-0035		DISC SPRING	C- 283600-010V
90016-0040		DISC SPRING	C- 232781-040V
90016-0042		DISC SPRING	C- 283610-010V
			CR- 449276-010V
90016-0052		DISC SPRING	C- 469737-010V
			C- 283622-010V
			C- 469173-010V
90016-0053		DISC SPRING	C- 441821-010V
			C- 441271-010V
90016-0054		SPRING WASHER	C- 441821-010V
			C- 441271-010V
			C- 441271-020V
			RK- 491883-010V
90016-0056		DISC SPRING	C- 491787-010V
			C- 491788-010V
			C- 491787-020V
			C- 491788-020V
90017-0001		HANDLE	C- 37877-030V
			C- 37898-010V
			C- 37877-030V
			C- 450101-010V
			C- 271454-020V
			C- 37877-030V
			C- 450101-010V
90017-0012		HANDLE	C- 484858-010V
			C- 484858-020V
			RK- 548056-010V
			C- 547756-010V
			C- 283600-010V
			C- 283620-010V
			C- 294725-010V
			C- 294780-010V
90017-0012		HANDLE	C- 457853-010V
			C- 457853-020V
90017-0014		HANDLE	C- 283631-010V
			C- 456679-010V
90017-0015		HANDLE	C- 295028-020V
			C- 295028-030V
90020-0027		SLEEVE	C- 440830-010V
			C- 539211-010V
90020-0028		SLEEVE	C- 440830-010V
			C- 539209-010V
			C- 539210-010V
90020-0031		SLEEVE	RK- 752170-010V
90023-0039		CABLE	CE- 67716-010V
90023-0041		END PIECE	CE- 67716-010V
			CE- 68128-010V
			CE- 67716-010V
90023-0047		VOLTAGE UNIT	CE- 67716-010V
			CE- 68128-010V
			CE- 67716-010V
90023-0048		MODULE	RK- 41567-010V
			RK- 41461-010V
			RK- 41377-010V
			CE- 67716-010V
			CE- 68128-010V
			RK- 68160-010V
			RK- 68183-010V
			RK- 68722-010V
			RK- 68725-010V
			RK- 68874-010V
			RK- 69289-010V
			RK- 69346-010V
			RK- 69383-010V
			RK- 69501-010V
			RK- 69504-010V
			RK- 69507-010V
			RK- 69510-010V
			CE- 68128-010V
			CE- 67716-010V
			RK- 41567-010V
			RK- 41377-010V
90023-0051		MODULE	RK- 41461-010V
			RK- 41567-010V
			RK- 41461-010V
			RK- 41377-010V
			CE- 67716-010V

PART NO	LAST AM	DESCRIPTION	GROUP NO
			CE- 68128-010V
			RK- 68180-010V
			RK- 68183-010V
			RK- 68722-010V
			RK- 68725-010V
			RK- 69510-010V
			CE- 68128-010V
			CE- 67716-010V
			RK- 41567-010V
			RK- 41377-010V
			RK- 41461-010V
90023-0069		MODULE	CE- 67716-010V
			CE- 68128-010V
			CE- 67716-010V
90023-0062		MEMORY SEGMENT	CE- 67716-010V
			CE- 68128-010V
			CE- 67716-010V
90023-0065		CABLE	CE- 67716-010V
			CE- 68128-010V
			CE- 67716-010V
90023-0068		MODULE	CE- 67716-010V
			CE- 68128-010V
			CE- 67716-010V
90023-0070		SWITCH UNIT	CE- 67716-010V
			CE- 68128-010V
			CE- 68304-010V
			CE- 68128-010V
			CE- 67716-010V
			CE- 68304-010V
90023-0071		TAPE	RK- 68180-010V
			RK- 68183-010V
90023-0073		BATTERY	CE- 67716-010V
			CE- 68128-010V
			CE- 67716-010V
90023-0080		PROCESSOR	CE- 67716-010V
			CE- 68128-010V
			CE- 67716-010V
90023-0081		MODULE	CE- 67716-010V
			CE- 68128-010V
			CE- 67716-010V
90023-0089		RACK	CE- 67716-010V
			CE- 68128-010V
			CE- 67716-010V
90023-0304		RELAY	CE- 67716-010V
90023-0318		ARM	CE- 67716-010V
			CE- 68128-010V
			RK- 69289-010V
			RK- 69346-010V
			RK- 69393-010V
			RK- 69501-010V
			RK- 69504-010V
			RK- 69507-010V
			RK- 69510-010V
			CE- 68128-010V
			CE- 67716-010V
90023-0323		ARM	CE- 67716-010V
			CE- 68128-010V
			CE- 67716-010V
90023-0324		CABLE	CE- 67716-010V
			CE- 68128-010V
			CE- 67716-010V
90023-0501		POTENTIOMETER	C- 295026-010V
90023-0502		PLATE	CE- 68379-010V
			C- 295026-010V
			CE- 68379-010V
90024-0027		INTERFER.PROTECTION	CE- 67716-010V
			CE- 68128-010V
			CE- 68304-010V
			CE- 68128-010V
			CE- 67716-010V
			CE- 68304-010V
90025-0011		RACK	CE- 68304-010V
90025-0012		POWER SUPPLY UNIT	CE- 68304-010V
90025-0014		RACK	CE- 68304-010V
90025-0015		PANELINTERFACE	CE- 68379-010V
90025-0016		ENCODER MODULE	CE- 68304-010V
90025-0017		INPUT MODULE	CE- 68304-010V

PART NO	LAST AM	DESCRIPTION	GROUP NO
90025-0022		RACK	CE- 68304-010V
90025-0023		TERMINAL BLOCK	CE- 68304-010V
90025-0024		TERMINAL BLOCK	CE- 68304-010V
90025-0025		TERMINAL BLOCK	CE- 68304-010V
90025-0029		TERMINAL BLOCK	CE- 68379-010V
90025-0030		TERMINAL BLOCK	CE- 68379-010V
90025-0031		TERMINAL BLOCK	CE- 68379-010V
90025-0037		OUTPUT MODULE	CE- 68304-010V
90025-0045		CENTRAL UNIT	CE- 68304-010V
90028-0001		CONE	C- 271562-020V
			C- 271562-030V
			C- 271562-040V
			C- 271562-050V
			C- 271562-060V
			C- 271562-070V
			C- 256951-020V
			C- 256952-020V
			C- 257381-020V
			C- 257382-020V
			C- 256951-020V
			C- 256952-020V
			C- 257381-020V
			C- 257382-020V
90028-0017		SEALING CONE	RK- 489538-010V
			RK- 491568-010V
			RK- 490865-010V
			RK- 491795-010V
90028-0020		CONE	C- 271562-020V
			C- 271562-030V
			C- 271562-040V
			C- 271562-050V
			C- 271562-060V
			C- 271562-070V
			C- 256197-020V
			C- 256198-020V
			C- 256203-020V
			C- 256197-020V
			C- 256198-020V
			C- 256203-020V
			C- 256197-030V
			C- 256198-030V
			C- 256203-030V
			C- 256197-030V
			C- 256203-030V
			C- 491814-010V
			C- 491815-010V
			C- 256197-040V
			C- 256203-040V
			C- 491814-010V
			C- 491815-010V
			C- 256217-020V
			C- 257381-020V
			C- 257382-020V
			C- 256217-030V
			C- 257381-020V
90028-0020		CONE	C- 257382-020V
			C- 256217-040V
			C- 257381-030V
			C- 257382-030V
			C- 256217-040V
			C- 257381-030V
			C- 257382-030V
			C- 256217-040V
			C- 257381-030V
			C- 257382-030V
			CR- 256438-050V
			C- 271866-050V
			RK- 456716-010V
			RK- 752408-010V
			RK- 752410-010V
			RK- 456717-010V
			RK- 752412-010V
			RK- 752414-010V
			RK- 456717-010V

PART NO	LAST AM	DESCRIPTION	GROUP NO
90030-0075		PIPE CONNECTION	C- 752898-010V C- 295045-020V C- 295045-030V C- 295045-040V C- 735271-010V C- 736594-010V C- 735271-010V C- 736594-010V C- 735271-010V C- 736594-010V
90030-0076		CONNECTION	C- 271866-050V C- 272623-020V C- 272623-030V C- 272623-040V C- 272623-050V
90030-0088		PIPE CONNECTION	C- 272560-050V C- 735183-010V
90030-0091		PIPE CONNECTION	C- 271109-020V C- 456455-010V C- 456455-020V C- 271866-020V C- 271866-030V C- 271866-040V C- 271866-050V
90030-0092		PIPE CONNECTION	C- 256233-020V C- 256233-030V C- 256233-040V C- 256233-050V C- 295045-020V C- 295045-030V C- 295045-040V C- 295045-050V C- 295045-060V
90030-0096		PIPE CONNECTION	C- 491207-020V
90030-0097		CONE	RK- 520129-010V RK- 520130-010V RK- 520094-010V RK- 520096-010V RK- 469536-010V RK- 491568-010V RK- 490865-010V RK- 752702-010V RK- 491795-010V RK- 752702-010V RK- 491795-010V RK- 752702-010V RK- 520087-010V RK- 520129-010V RK- 520130-010V
90030-0098		CONE	C- 271562-040V C- 271562-050V C- 271562-060V C- 271562-070V RK- 491641-010V RK- 491447-010V
90030-0106		PIPE CONNECTION	RK- 469536-010V RK- 491568-010V C- 271866-020V C- 271866-030V C- 271866-040V
90030-0108		PIPE CONNECTION	C- 491207-010V C- 271866-050V C- 271274-020V C- 469452-010V C- 491207-020V
90030-0109		PIPE CONNECTION	RK- 469536-010V C- 456274-010V RK- 491568-010V C- 456274-010V C- 256014-020V C- 272560-020V C- 256014-020V C- 272560-030V C- 256014-030V C- 272560-030V C- 469452-010V C- 256014-030V

PART NO	LAST AM	DESCRIPTION	GROUP NO
			C- 272560-030V C- 469452-010V C- 256014-040V C- 272560-040V C- 469452-020V C- 751800-010V C- 256014-050V C- 272560-050V C- 469452-030V C- 751800-020V C- 456274-010V
90030-0110		CONE	C- 491207-020V
90030-0114		NIPPLE	C- 456274-010V C- 256233-020V C- 256237-020V C- 256239-020V C- 256233-030V C- 256237-030V C- 256239-020V C- 256233-030V C- 256239-020V C- 256233-040V C- 271866-020V C- 271866-030V C- 456274-010V C- 271274-020V C- 272021-020V C- 272342-020V C- 272560-020V C- 271274-020V C- 272021-020V C- 272560-030V C- 456976-010V C- 272560-030V C- 456274-010V
90030-0116		REDUCER	C- 271909-020V C- 271909-030V C- 271909-040V C- 271909-050V RK- 491994-010V
90030-0127		PIPE CONNECITON	C- 271909-020V C- 271909-030V
90030-0127		PIPE CONNECITON	C- 271909-040V C- 271909-050V
90030-0132		PLUG	RK- 553180-010V
90030-0133		NUT	RK- 490865-010V RK- 491795-010V
90030-0137		CONNECTION	C- 256233-020V C- 272623-020V
90030-0140		PIPE CONNECTION	C- 271866-030V
90030-0151		CONNECTION	C- 271281-020V C- 271281-030V C- 271281-040V C- 271281-050V C- 271109-020V C- 456455-010V C- 456455-020V C- 271866-020V C- 271866-030V C- 272241-020V
90030-0152		CONNECTION	C- 272241-020V C- 456556-010V
90030-0159		GROMMET	C- 490504-010V C- 491767-010V C- 490504-010V
90030-0162		CONNECTION	C- 271562-020V C- 271562-030V C- 271562-040V C- 271562-050V C- 271562-060V C- 271562-070V
90030-0166		REDUCER	C- 469118-010V C- 469118-020V C- 271909-020V C- 271909-030V C- 271909-040V C- 271909-050V

PART NO	LAST AM	DESCRIPTION	GROUP NO
			RK- 752412-010V
			RK- 752414-010V
90028-0021		CONE	C- 271533-020V
			C- 271533-030V
			C- 491650-010V
			C- 271562-020V
			C- 271562-030V
			C- 271562-040V
			C- 271562-050V
			C- 271562-060V
			C- 271562-070V
			C- 256197-020V
			C- 256198-020V
			C- 256203-020V
			C- 256197-020V
			C- 256198-020V
			C- 256203-020V
			C- 256197-030V
			C- 256198-030V
			C- 256203-030V
			C- 256197-030V
			C- 256203-030V
			C- 491814-010V
			C- 491815-010V
			C- 256197-040V
			C- 256203-040V
			C- 491814-010V
			C- 491815-010V
			C- 257381-020V
			C- 257382-020V
			C- 257381-020V
			C- 257382-020V
			C- 272765-010V
			C- 295310-010V
			C- 272765-020V
			C- 295310-010V
			C- 272765-020V
90028-0021		CONE	C- 295310-020V
			C- 272765-030V
			C- 295310-030V
			C- 272765-040V
			C- 295310-040V
			C- 272765-050V
			C- 295310-050V
			CR- 256436-050V
			C- 272765-060V
			C- 295310-060V
			RK- 491512-010V
90028-0022		CONE	C- 271866-050V
90028-0024		CONE	RK- 491131-010V
90028-0025		CONE	C- 272765-030V
			C- 272765-040V
			C- 272765-050V
			C- 272765-060V
90030-0030		PIPE CONNECTION	RK- 469536-010V
			RK- 491568-010V
			C- 271866-020V
			C- 271866-030V
			C- 271866-040V
			C- 271866-050V
90030-0051		PIPE CONNECTION	C- 271533-020V
			C- 271533-030V
			C- 256237-020V
			C- 256239-020V
			C- 256237-030V
			C- 256239-020V
			C- 271562-020V
			C- 271562-030V
			C- 271562-040V
			C- 271562-050V
			C- 271562-060V
			C- 271562-070V
			C- 257381-020V
			C- 257382-020V
			C- 257381-020V
			C- 257382-020V
			RK- 491641-010V

PART NO	LAST AM	DESCRIPTION	GROUP NO
			RK- 491447-010V
			C- 272241-020V
			C- 272823-020V
			C- 272241-020V
			C- 272823-020V
90030-0062		PIPE CONNECTION	C- 271533-020V
			C- 271533-030V
90030-0058		CONNECTION	RK- 469536-010V
			C- 456274-010V
			RK- 491568-010V
			C- 256237-020V
			C- 256237-030V
			C- 256237-040V
			C- 256237-050V
			C- 256237-060V
			C- 271866-040V
			C- 271866-050V
			C- 272408-020V
			C- 272408-030V
90030-0056		CONNECTION	C- 272408-040V
			C- 272408-050V
			C- 456274-010V
			C- 272342-020V
			C- 456976-010V
			C- 456976-020V
			C- 469452-010V
			C- 456976-020V
			C- 469452-010V
			C- 456976-030V
			C- 469452-020V
			C- 751800-010V
			C- 456976-040V
			C- 469452-030V
			C- 751800-020V
			C- 456274-010V
			C- 491207-020V
90030-0062		CONNECTION	C- 272407-020V
90030-0065		PIPE CONNECTION	C- 271533-020V
			C- 271533-030V
			C- 491650-010V
			CR- 256212-020V
			CR- 256213-020V
			C- 257381-020V
			C- 257382-020V
			CR- 256212-020V
			CR- 256213-020V
			C- 257381-020V
			C- 257382-020V
			CR- 256212-030V
			CR- 256213-030V
			C- 257381-030V
			C- 257382-030V
			CR- 256212-040V
			CR- 256213-040V
			C- 257381-030V
			C- 257382-030V
			CR- 256212-040V
			CR- 256213-040V
			C- 257381-030V
			C- 257382-030V
			CR- 256212-050V
			CR- 256213-050V
			C- 257381-030V
			C- 257382-030V
			RK- 456712-010V
90030-0067		GROMMET	C- 736248-010V
			C- 736288-010V
90030-0071		PIPE CONNECTION	C- 735183-010V
90030-0075		PIPE CONNECTION	C- 271533-020V
			C- 271533-030V
			C- 736288-010V
			C- 736594-010V
			C- 456738-010V
			C- 456935-010V
			C- 456738-010V
			C- 456935-010V
			C- 456739-010V

PART NO	LAST AM	DESCRIPTION	GROUP NO
90030-0168		REDUCER	C- 271909-020V C- 271909-030V C- 271909-040V C- 271909-050V
90030-0169		NIPPLE	C- 735183-010V
90030-0171		CONNECTION	C- 491650-010V RK- 491641-010V RK- 491447-010V
90030-0172		NUT	C- 751410-010V C- 271562-040V C- 271562-050V C- 271562-060V C- 271562-070V
90030-0180		PIPE CONNECTION	C- 735248-010V C- 735268-010V C- 271866-020V C- 271866-030V C- 271274-020V C- 272560-050V C- 735014-010V C- 735271-010V C- 735014-010V C- 735271-010V C- 735014-010V
90030-0180		PIPE CONNECTION	C- 735271-010V
90030-0181		PIPE CONNECTION	C- 456274-010V C- 271866-020V C- 271866-030V C- 271866-040V C- 271866-050V C- 456274-010V C- 491207-020V
90030-0182		NIPPLE	C- 271866-020V C- 271866-030V C- 271866-040V C- 271866-050V
90030-0184		PIPE CONNECTION	RK- 469536-010V RK- 491568-010V C- 256237-040V C- 256232-030V C- 256237-050V C- 256239-030V C- 256232-030V C- 256237-060V C- 256239-040V C- 257381-030V C- 257382-030V C- 257381-030V C- 257382-030V C- 257381-030V C- 257382-030V C- 257381-030V C- 257382-030V C- 752898-010V C- 256055-020V C- 256095-020V C- 256055-020V C- 256095-020V C- 256055-030V C- 256095-020V C- 272623-030V C- 456556-010V C- 256055-040V C- 256095-020V C- 272623-030V C- 456556-010V C- 256095-030V C- 272623-040V C- 456556-020V C- 256095-040V C- 272623-050V C- 456556-020V
90030-0185		PIPE CONNECTION	C- 751393-010V C- 491650-010V C- 271109-020V C- 456455-010V C- 456455-020V

PART NO	LAST AM	DESCRIPTION	GROUP NO
			C- 271483-020V C- 271866-020V C- 271453-020V C- 271453-030V C- 271166-040V
90030-0187		PIPE CONNECTION	RK- 469536-010V
90030-0187		PIPE CONNECTION	RK- 491568-010V RK- 752035-010V C- 256237-040V C- 256237-050V C- 256239-030V C- 256233-050V C- 256237-060V C- 256239-040V C- 271866-040V C- 491207-010V C- 271866-050V RK- 553180-010V C- 256055-020V C- 256095-020V C- 256055-020V C- 256095-020V C- 256055-030V C- 256095-020V C- 456976-020V C- 469452-010V C- 256055-040V C- 256095-020V C- 456976-020V C- 469452-010V C- 256014-040V C- 256055-050V C- 256095-030V C- 272560-040V C- 456976-030V C- 469452-020V C- 751800-010V C- 256014-050V C- 256055-060V C- 256094-040V C- 256095-040V C- 272560-050V C- 456976-040V C- 469452-030V C- 751800-020V C- 491207-020V
90030-0186		PIPE CONNECTION	C- 490504-010V C- 491767-010V C- 469121-010V C- 271866-040V C- 271866-050V C- 456556-010V C- 456556-020V C- 490504-010V C- 271166-040V
90030-0194		CONNECTION	C- 271866-020V
90030-0200		PIPE JOINT	C- 271562-040V C- 271562-050V C- 271562-060V C- 271562-070V
90030-0202		PIPE CONNECTION	C- 272623-030V C- 272623-040V C- 272623-050V
90030-0203		PIPE CONNECTION	C- 272623-030V C- 272623-040V C- 272623-050V
90030-0209		PIPE CONNECTION REDUCER	RK- 469536-010V RK- 491568-010V C- 491207-010V C- 491207-020V
90030-0221		GROMMET	C- 491207-010V C- 491207-020V
90030-0223		NIPPLE	C- 533014-010V
90030-0224		NIPPLE	C- 533014-010V
90030-0225		REDUCTION NIPPEL	C- 533014-010V
90030-0230		BULKHEAD UNION	RK- 520068-010V
90030-0231		UNION	RK- 520129-010V

PART NO	LAST AM	DESCRIPTION	GROUP NO
			RK- 520130-010V
			RK- 520094-010V
			RK- 520098-010V
			RK- 520067-010V
			RK- 520129-010V
90030-0233		MALE CONNECTOR	RK- 520130-010V
90030-0234		MALE CONNECTOR	RK- 520068-010V
			RK- 520129-010V
			RK- 520130-010V
			RK- 520094-010V
			RK- 520098-010V
			RK- 520068-010V
			RK- 520067-010V
			RK- 520129-010V
			RK- 520130-010V
90030-0245		MALE ELBOW	RK- 520070-010V
90030-0253		PIPE CONNECTION	C- 491207-020V
90030-0265		SCREW	C- 491976-020V
90030-0266		SCREW	C- 491976-020V
90032-0014		JUNCTION BLOCK	C- 271562-020V
			C- 271562-030V
			C- 271562-040V
			C- 271562-050V
			C- 271562-060V
			C- 271562-070V
90032-0026		JUNCTION BLOCK	C- 271562-020V
			C- 271562-030V
			C- 271562-040V
			C- 271562-050V
			C- 271562-060V
			C- 271562-070V
90032-0030		JUNCTION BLOCK	C- 271562-020V
			C- 271562-030V
			C- 271562-040V
			C- 271562-050V
			C- 271562-060V
			C- 271562-070V
90032-0031		JUNCTION BLOCK	C- 271562-030V
			C- 271562-040V
			C- 271562-050V
			C- 271562-060V
			C- 271562-070V
90032-0038		BLOCK	C- 271562-020V
			C- 271562-030V
			C- 271562-040V
			C- 271562-050V
			C- 271562-060V
90032-0036		BLOCK	C- 271562-070V
			C- 256203-020V
			C- 256203-030V
			C- 256203-040V
			C- 272765-030V
			C- 272765-040V
			C- 272765-050V
90032-0039		BLOCK	C- 271562-020V
			C- 271562-030V
			C- 271562-040V
			C- 271562-050V
			C- 271562-060V
			C- 271562-070V
			C- 256198-020V
			C- 256198-030V
			C- 491814-010V
			C- 491815-010V
			C- 491814-010V
			C- 491815-010V
			C- 272765-060V
90032-0040		BLOCK	C- 256197-020V
			C- 256197-030V
			C- 256197-040V
			CR- 256438-050V
			C- 271866-050V
90032-0043		JUNKTION BLOCK	RK- 491131-010V
90036-0002		COVER	CE- 67716-010V
			CE- 68128-010V
			CE- 68304-010V
			CE- 68128-010V

PART NO	LAST AM	DESCRIPTION	GROUP NO
			CE- 67716-010V
			CE- 68304-010V
90035-0005		COVER	C- 256197-020V
			C- 256197-030V
			C- 256197-040V
90036-0009		BULB	C- 271641-020V
			C- 271641-030V
			C- 232781-040V
			C- 271641-030V
90036-0035		BULB	C- 229400-060V
90036-0038		BULB	C- 752980-010V
			C- 752971-010V
			C- 272833-010V
			C- 272882-010V
			C- 295186-010V
			C- 272833-010V
			C- 272882-010V
			C- 295186-010V
			C- 456459-010V
			C- 456460-010V
			C- 456459-010V
			C- 456460-010V
			C- 456459-020V
			C- 456460-020V
			C- 751900-010V
			C- 456459-030V
			C- 456460-030V
			C- 751900-010V
90036-0044		BULB	CE- 67722-010V
90036-0044		BULB	CE- 68129-010V
			CE- 68305-010V
			CE- 68379-010V
			C- 295026-010V
			C- 295026-020V
			C- 295026-030V
			CE- 68129-010V
			CE- 67722-010V
			CE- 68305-010V
			CE- 68379-010V
90036-0063		BULB	RK- 520068-010V
90037-0001		LAMPHOLDER	C- 271641-020V
			C- 271641-030V
90038-0021		DIODE	RK- 69269-010V
			RK- 69501-010V
			RK- 69504-010V
			RK- 69507-010V
			RK- 69510-010V
90038-0024		RECTIFIER	CE- 67716-010V
			CE- 68128-010V
			CE- 68304-010V
			CE- 68128-010V
			CE- 67716-010V
			CE- 68304-010V
90038-0030		RECTIFIER	C- 294888-010V
			C- 294887-010V
			C- 469316-010V
			C- 469855-010V
			C- 469316-010V
			C- 469855-010V
P- 90042-0042		SOLENOID VALVE	C- 294658-010V
90042-0062		SOLENOID VALVE	C- 271909-020V
			C- 271909-030V
			C- 271909-040V
			C- 294658-010V
			C- 283631-010V
			C- 457924-010V
			C- 457924-020V
			C- 735183-010V
90042-0060		SOLENOID VALVE	C- 271909-020V
			C- 271909-030V
			C- 271909-040V
P- 90042-0067		SOLENOID VALVE	C- 272623-020V
P- 90042-0074		SOLENOID VALVE	C- 469736-020V
			C- 271909-020V
			C- 271909-030V
			C- 271909-040V
			C- 294658-010V

PART NO	LAST AM	DESCRIPTION	GROUP NO
			C- 283631-010V
			C- 294763-010V
			C- 457924-010V
			C- 457924-020V
			C- 735183-010V
P- 90042-0079		SOLENOID VALVE	C- 271909-020V
			C- 271909-030V
			C- 271909-040V
90042-0085		SOLENOID VALVE	RK- 520068-010V
			C- 272623-020V
			C- 272623-030V
90042-0086		SOLENOID VALVE	C- 272623-040V
90042-0089		SOLENOID VALVE	C- 456757-010V
			C- 271909-020V
			C- 271909-030V
			C- 271909-040V
90042-0094		SOLENOID VALVE	C- 272560-020V
			C- 272560-030V
			C- 272560-040V
P- 90042-0108		SOLENOID VALVE	C- 271909-050V
90042-0109		SOLENOID VALVE	C- 751478-010V
			RK- 751345-010V
90042-0162		SOLENOID VALVE	C- 751410-010V
90042-0162		SOLENOID VALVE	C- 401207-010V
			C- 400695-010V
90042-0167		SOLENOID VALVE	RK- 547751-030V
			RK- 547751-020V
90042-0171		SOLENOID VALVE	C- 272623-050V
P- 90042-0172		SOLENOID VALVE	C- 271909-050V
90042-0173		SOLENOID VALVE	C- 456757-020V
			C- 271909-050V
P- 90042-0184		SOLENOID VALVE	C- 271868-040V
			C- 271868-050V
90042-0326		COIL	C- 751478-010V
			C- 469736-020V
			RK- 547751-030V
			RK- 547751-020V
			RK- 550136-010V
			C- 271909-020V
			C- 271909-030V
			C- 271909-040V
			C- 294658-010V
			C- 294868-010V
			C- 283631-010V
			C- 294763-010V
			C- 294867-010V
			C- 457924-010V
			C- 457924-020V
			C- 735183-010V
			RK- 751345-010V
90042-0332		ASSEBLY UNIT	C- 271909-020V
			C- 271909-030V
			C- 271909-040V
			C- 271909-050V
90042-0333		COIL	C- 469736-020V
			C- 294868-010V
90042-0345		COIL	C- 271909-050V
90042-0347		PLATE	C- 271909-020V
			C- 271909-030V
			C- 271909-040V
90042-0348		ASSEMBLY UNIT	C- 271909-020V
			C- 271909-030V
			C- 271909-040V
90042-0351		SEAL KIT	C- 271909-020V
90042-0353		COIL	C- 751410-010V
90042-0360		PLATE	C- 469736-020V
			C- 294658-010V
			C- 283631-010V
			C- 294763-010V
			C- 457924-010V
90042-0360		PLATE	C- 457924-020V
90042-0361		ASSEMBLY UNIT	C- 271909-020V
			C- 271909-030V
			C- 271909-040V
90042-0364		PLATE	C- 271909-020V
			C- 271909-030V
			C- 271909-040V

PART NO	LAST AM	DESCRIPTION	GROUP NO
90042-0366		CONTACT	C- 751478-010V
			C- 469736-020V
			RK- 547751-030V
			RK- 547751-020V
			C- 271909-020V
			C- 271909-030V
			C- 271909-040V
			C- 294658-010V
			C- 283631-010V
			C- 457924-010V
			C- 457924-020V
			C- 735183-010V
			RK- 751345-010V
90042-0367		PLATE	C- 271909-020V
			C- 271909-030V
			C- 271909-040V
			C- 457924-010V
			C- 457924-020V
			C- 735183-010V
90042-0368		CONNECTION	C- 271909-020V
			C- 271909-030V
			C- 271909-040V
			C- 271909-050V
			C- 457924-010V
			C- 457924-020V
			C- 735183-010V
90042-0369		END PIECE	C- 271909-020V
			C- 271909-030V
			C- 271909-040V
			C- 271909-050V
			C- 457924-010V
			C- 457924-020V
			C- 735183-010V
90042-0370		PLATE	C- 271909-030V
			C- 271909-040V
			C- 735183-010V
90042-0374		SEAL KIT	C- 457924-010V
			C- 457924-020V
90042-0383		PLATE	C- 272560-020V
			C- 272560-030V
			C- 272560-040V
90042-0392		CONTACT	C- 271909-050V
90042-0404		PLATE	C- 271909-050V
90042-0431		PLATE	C- 271909-050V
90042-0438		CONNECTION RAMP	C- 751478-010V
			RK- 751345-010V
90042-0461		BASE PLATE	C- 401207-010V
			C- 400695-010V
90043-0004		PRESSURE GAUGE	C- 751410-010V
90043-0008		PRESSURE GAUGE	C- 271909-020V
			C- 271909-030V
			C- 271909-040V
90043-0008		PRESSURE GAUGE	C- 271909-050V
90043-0021		PRESSURE GAUGE	C- 533014-010V
90043-0034		PRESSURE GAUGE	C- 256233-020V
			C- 256233-030V
			C- 256233-040V
			C- 256233-050V
			C- 272408-020V
			C- 272408-030V
			C- 272408-040V
			C- 272408-050V
			C- 295045-020V
			C- 295045-030V
			C- 295045-040V
			C- 295045-050V
			C- 295045-060V
90043-0043		PRESSURE GAUGE	C- 533014-010V
90043-0060		PRESSURE GAUGE	C- 256232-020V
			C- 256232-030V
			C- 272560-020V
			C- 272560-030V
			C- 272560-040V
			C- 272560-050V
90043-0082		GAUGE	C- 271507-020V
90043-0085		PRESSURE GAUGE	RK- 520068-010V
			C- 294715-010V

PART NO	LAST AM	DESCRIPTION	GROUP NO
			C- 283631-010V
			C- 283632-010V
			C- 457159-010V
			C- 457159-020V
90043-0067		PRESSURE GAUGE	C- 456274-010V
			C- 272342-020V
			C- 456976-010V
			C- 491083-010V
			C- 491083-020V
			C- 456274-010V
90043-0068		PRESSURE GAUGE	C- 271909-020V
			C- 271909-030V
			C- 271909-040V
			C- 271909-050V
90043-0069		PRESSURE GAUGE	C- 271909-020V
			C- 271909-030V
			C- 271909-040V
			C- 271909-050V
90043-0070		PRESSURE GAUGE	C- 271909-020V
			C- 271909-030V
			C- 271909-040V
			C- 271909-050V
90043-0076		MANOMETER	C- 457159-010V
			C- 457924-020V
90043-0078		PRESSURE GAUGE	C- 751089-010V
			RK- 491780-010V
			C- 735163-010V
			RK- 491780-010V
90043-0302		SCREW	C- 256233-020V
			C- 256233-030V
			C- 256233-040V
			C- 256233-050V
			C- 272408-020V
			C- 272408-030V
90043-0302		SCREW	C- 272408-040V
			C- 272408-050V
			C- 295045-020V
			C- 295045-030V
			C- 295045-040V
			C- 295045-050V
			C- 295045-060V
P- 90044-0009		MICRO SWITCH	C- 229400-060V
90044-0007		MICRO SWITCH	CE- 67716-010V
			CE- 68128-010V
			CE- 68304-010V
			CE- 68128-010V
			CE- 67716-010V
			CE- 68304-010V
90044-0019		MICRO SWITCH	C- 256806-020V
90044-0051		MICRO SWITCH	C- 256200-020V
90044-0060		GIVER	C- 294868-010V
			C- 294867-010V
90044-0064		MICRO SWITCH	RK- 491368-010V
			C- 529924-010V
			C- 256806-030V
			C- 491787-010V
			C- 491788-010V
			C- 256806-030V
			C- 491787-020V
			C- 491788-020V
			C- 256014-020V
			C- 272021-020V
			C- 256014-020V
			C- 272021-020V
			C- 256014-030V
			C- 272021-030V
			C- 256014-030V
			C- 272021-030V
			C- 256014-040V
			C- 272021-040V
			C- 256014-050V
			C- 272021-050V
			C- 529924-010V
			RK- 491368-010V
			C- 529924-010V
90044-0085		SENSOR	RK- 479278-010V
			C- 469736-010V

PART NO	LAST AM	DESCRIPTION	GROUP NO
			C- 469736-020V
			RK- 547751-030V
			RK- 547752-010V
			RK- 547751-020V
			RK- 547752-020V
			RK- 550136-010V
			C- 256555-020V
			C- 256555-030V
			C- 456100-010V
			C- 456100-020V
			C- 272765-020V
			C- 272765-030V
			C- 272765-040V
			C- 272765-050V
			C- 272765-060V
			C- 283600-010V
90044-0085		SENSOR	C- 283628-010V
			C- 294868-010V
			C- 283600-010V
			C- 283628-010V
			C- 294867-010V
			C- 283635-010V
			C- 469316-010V
			C- 469955-010V
			C- 283635-010V
			C- 469316-010V
			C- 469955-010V
90044-0087		INDUCTIVE EMITTER	C- 272084-020V
			C- 256238-020V
			C- 441000-020V
			C- 456348-010V
			C- 456348-010V
			C- 456348-020V
			C- 456349-020V
			C- 456348-020V
			C- 456349-020V
			C- 256858-010V
			C- 256865-010V
			C- 283600-010V
			C- 294858-010V
			C- 294868-010V
			C- 272014-020V
			C- 272445-020V
			C- 272560-020V
			C- 272014-020V
			C- 272445-020V
			C- 283600-010V
			C- 283620-010V
			C- 294867-010V
			C- 441738-010V
P- 90044-0090		LIMIT SWITCH	C- 256555-020V
			C- 256555-030V
			C- 271109-020V
			C- 294765-010V
			C- 294780-010V
90044-0094		LIMIT SWITCH	C- 457853-010V
			C- 457937-010V
			C- 457853-020V
			C- 457937-010V
90044-0095		PROXIMITY SWITCH	C- 256907-020V
			C- 456180-010V
90044-0101		LIMIT SWITCH	C- 456100-010V
			C- 456100-020V
			C- 441850-010V
			C- 441850-020V
			C- 441850-030V
90044-0104		PROXIMITY SWITCH	C- 456953-010V
			C- 752957-010V
			C- 272084-030V
			C- 469736-010V
			C- 469736-020V
			RK- 520069-010V
			RK- 520070-010V
			RK- 520071-010V
			RK- 520069-010V
90044-0104		ROXIMITY SWITCH	RK- 520070-010V
			RK- 520095-010V

PART NO	LAST AM	DESCRIPTION	GROUP NO
90044-0104		PROXIMITY SWITCH	RK- 520069-010V RK- 520070-010V RK- 520095-010V RK- 520069-010V RK- 520070-010V RK- 520071-010V RK- 520069-010V RK- 520070-010V RK- 520071-010V C- 735258-010V C- 736529-010V RK- 536318-010V C- 401207-010V C- 400695-010V C- 256233-020V C- 271649-020V C- 295112-020V C- 256233-030V C- 271649-020V C- 295112-020V C- 256233-030V C- 271649-020V C- 295112-020V C- 256233-040V C- 271649-020V C- 295112-020V C- 256233-050V C- 271649-030V C- 441000-030V C- 456321-010V C- 456322-010V C- 441000-030V C- 456321-020V C- 456322-020V C- 441000-040V C- 456321-030V C- 456322-030V C- 441000-050V C- 752628-010V C- 752645-010V C- 752646-010V C- 752913-010V C- 752914-010V RK- 547300-010V C- 271649-020V C- 272021-020V C- 272024-020V C- 272025-020V C- 271649-020V C- 272021-020V C- 272024-020V C- 272025-020V C- 272560-030V C- 272014-030V C- 272021-030V C- 272024-020V C- 272025-020V C- 272560-030V C- 456836-020V C- 469074-010V C- 272014-030V C- 272021-030V C- 272024-020V C- 272025-020V C- 272560-030V C- 456836-020V C- 469074-010V C- 272021-040V C- 272024-030V C- 272025-030V C- 272560-040V C- 456836-030V C- 469074-020V C- 751088-010V C- 256014-050V C- 256084-040V C- 272021-050V
90044-0107		INDUCTIVE TRANSMITTER	C- 272024-030V C- 272025-030V C- 272337-040V C- 272560-050V C- 456836-040V C- 283631-010V C- 457867-010V C- 469247-010V C- 469316-010V C- 469955-010V C- 457867-010V C- 469247-020V C- 469316-010V C- 469955-010V C- 456953-010V C- 736529-010V C- 752765-010V
90044-0112		PROXIMITY SWITCH	C- 529821-010V
90045-0079		MOTOR	C- 271507-020V
90045-0084		MOTOR	C- 271128-020V
90045-0087		MOTOR	C- 491323-020V C- 751393-010V
90045-0096		MOTOR	C- 271128-020V C- 271128-030V C- 271128-040V
90045-0102		MOTOR	C- 271017-020V
90045-0124		MOTOR	C- 271017-030V
P- 90048-0018		OIL PUMP	C- 271909-020V C- 271909-030V C- 271909-040V C- 271909-050V
P- 90048-0022		OIL PUMP	C- 77091-010V C- 77091-020V C- 77091-030V
90048-0440		GASKET	C- 491890-010V
90048-0453		OVERFLOW TRAP	C- 271909-030V C- 271909-040V C- 271909-050V RK- 491984-010V
90050-0008		BOTTLE	C- 256358-010V C- 434774-020V C- 434774-030V C- 434074-020V C- 434074-030V
90050-0011		BOTTLE	C- 271452-020V C- 271453-020V C- 271452-020V C- 271453-020V C- 271452-020V C- 271453-030V
90050-0012		BOTTLE	C- 490761-010V C- 434774-020V C- 434774-030V C- 434074-020V C- 434074-030V C- 434774-030V C- 434074-030V C- 434774-030V C- 434074-030V
90051-0025		HANDLE	C- 256233-020V C- 256233-030V C- 256233-040V
90051-0036		HANDLE	C- 76133-010V C- 76133-020V C- 76595-010V C- 76595-020V C- 76133-030V C- 76595-030V C- 256358-010V C- 76344-010V C- 76595-010V C- 76133-010V C- 76595-010V C- 76291-010V C- 76411-010V C- 76447-010V C- 76492-010V
90051-0040		HANDLE	

PART NO	LAST AM	DESCRIPTION	GROUP NO
			C- 76411-010V
			C- 76447-010V
			C- 76492-010V
			C- 76411-010V
			C- 76447-010V
			C- 76492-010V
90051-0045		HANDLE	C- 256236-020V
			C- 295112-020V
			C- 456348-010V
			C- 456349-010V
			C- 456348-020V
			C- 456349-020V
			C- 456348-020V
			C- 456349-020V
			C- 272014-020V
			C- 272014-030V
			C- 751088-010V
90051-0046		HANDLE	C- 283902-010V
90051-0053		HANDLE	C- 76301-010V
			C- 76606-010V
			C- 76606-020V
90051-0053		HANDLE	C- 76606-030V
			RK- 456793-010V
			RK- 469981-010V
			C- 256014-030V
			C- 76606-010V
90051-0059		HANDLE	C- 76335-010V
			C- 76402-010V
			C- 256358-010V
90051-0064		HANDLE	CR- 449275-010V
90051-0076		WHEEL	C- 283624-010V
			RK- 536470-010V
			RK- 536450-010V
			RK- 547726-010V
			C- 269589-010V
			C- 283618-010V
			CR- 283618-020V
			C- 456612-010V
			CR- 283618-020V
			C- 533844-010V
90051-0077		HANDLE	C- 434774-020V
			C- 434774-030V
			C- 434074-020V
			C- 434074-030V
			C- 434774-020V
			C- 434774-030V
			C- 434074-020V
			C- 434074-030V
			C- 434774-030V
			C- 434074-030V
			C- 434774-030V
			C- 434074-030V
90051-0082		KNOB	C- 256806-020V
			C- 256806-030V
90051-0083		HANDLE	C- 76301-010V
			C- 76416-010V
			C- 76447-010V
			C- 76416-010V
			C- 76447-010V
			C- 76485-010V
			C- 76416-010V
			C- 76447-010V
90051-0084		HANDLE	RK- 536739-010V
			C- 76485-010V
90051-0089		KNOB	C- 543143-010V
90053-0018		COUNTER	C- 295026-010V
			C- 295026-020V
			C- 295026-030V
P- 90053-0024		COUNTER	CE- 68379-010V
90053-0026		COUNTER	CE- 67716-010V
			CE- 68304-010V
			CE- 67716-010V
			CE- 68304-010V
90053-0306		FRAME	CE- 68379-010V
90056-0071		WORM GEAR	C- 256436-020V
P- 90056-0072		WORM GEAR	C- 256173-020V
			C- 256173-030V

PART NO	LAST AM	DESCRIPTION	GROUP NO
			C- 256173-040V
90059-0001		THERMOSTAT	C- 37877-030V
90059-0014		THERMOSTAT	RK- 752270-010V
90060-0068		TIME RELAY	CE- 67716-010V
			CE- 68304-010V
			CE- 67716-010V
			CE- 68304-010V
90061-0015		GIVER	C- 256555-020V
			C- 256555-030V
			C- 256985-020V
90061-0018		ANGLE ENCODER	C- 271116-030V
			C- 456546-010V
			C- 456546-020V
			C- 751689-010V
P- 90064-0041		PUSH BUTTON	C- 232781-040V
P- 90064-0045		PUSH BUTTON	C- 232781-040V
90064-0052		PUSH BUTTON	C- 295276-020V
			C- 256233-050V
			C- 295026-010V
			C- 295777-010V
			C- 469374-010V
			C- 469374-020V
			C- 469374-030V
			C- 232781-040V
P- 90064-0054		PUSH BUTTON	C- 232781-040V
90064-0067		PUSH BUTTON	C- 271909-020V
P- 90064-0072		PUSH BUTTON	C- 272408-020V
			C- 294715-010V
			C- 283632-010V
90064-0073		PUSH BUTTON	C- 272408-020V
			C- 294715-010V
			C- 283632-010V
90064-0082		PUSH BUTTON WHITE	CE- 68379-010V
			C- 295026-010V
			C- 295026-020V
			C- 295026-030V
			CE- 68379-010V
90064-0083		PUSH BUTTON GREEN	RK- 68674-010V
			C- 295026-010V
90064-0084		PUSH BUTTON YELLOW	CE- 67722-010V
			CE- 68129-010V
			CE- 68305-010V
			CE- 68379-010V
			C- 456882-010V
			C- 484984-010V
			C- 295026-010V
			C- 295026-020V
			C- 295026-030V
			C- 272408-030V
			C- 272408-040V
			C- 272408-050V
			C- 457159-010V
			C- 457159-020V
			CE- 68129-010V
			CE- 67722-010V
			CE- 68305-010V
			CE- 68379-010V
90064-0085		PUSH BUTTON RED	CE- 67716-010V
			CE- 68129-010V
			CE- 68379-010V
			C- 295026-010V
			C- 295026-020V
90064-0086		PUSH BUTTON RED	C- 295026-030V
			C- 751685-010V
			C- 271513-050V
			C- 751685-020V
			C- 272408-030V
			C- 272408-040V
			C- 272408-050V
			C- 457159-010V
			C- 457159-020V
			CE- 68128-010V
			CE- 67716-010V
			CE- 68379-010V
90064-0087		PUSH BUTTON GREEN	RK- 520068-010V
90064-0088		PUSH BUTTON YELLOW	C- 295026-010V
			C- 295026-020V

PART NO	LAST AM	DESCRIPTION	GROUP NO
90084-0092		EMERGENCY PUSH BUTTON	C- 295026-030V CE- 67716-010V CE- 68128-010V CE- 68379-010V C- 295026-020V C- 295026-030V C- 751885-010V C- 271513-050V C- 751885-020V CE- 68128-010V CE- 67716-010V CE- 68379-010V
90084-0093		PUSH BUTTON	CE- 68379-010V C- 295026-020V C- 295026-030V
90084-0315		TOOL	CE- 68379-010V CE- 67722-010V CE- 68129-010V CE- 68305-010V CE- 68129-010V CE- 67722-010V CE- 68305-010V
90084-0317		TOUCH GUARD	CE- 67716-010V CE- 68128-010V RK- 68874-010V
90086-0013		PUSH BUTTON BOX	CE- 68128-010V CE- 67716-010V C- 295276-020V C- 256233-050V C- 271909-020V C- 295777-010V C- 469374-010V C- 469374-020V C- 469374-030V
90086-0018		PUSH BUTTON BOX	C- 232781-040V
90086-0020		PUSCH BUTTON BOX	C- 751885-010V C- 271513-050V C- 751885-020V C- 272408-020V C- 272408-030V C- 272408-040V C- 272408-050V C- 294715-010V C- 283632-010V C- 295971-010V C- 491942-010V
P- 90087-0010		CARRIAGE	
90089-0089		WORM GEAR MOTOR	C- 229400-060V
90089-0098		WORM GEAR MOTOR	C- 229400-060V C- 752029-010V
P- 90089-0099		WORM GEAR MOTOR	C- 256234-020V C- 256234-030V C- 256234-040V C- 272028-020V C- 272028-030V C- 272028-040V C- 272028-050V
P- 90089-0100		VARIATOR	C- 294522-010V
90071-0027		V-BELT	C- 256173-040V
90073-0003		CLIP	C- 256233-020V
90074-0001		CLIP	C- 469366-010V C- 491976-010V C- 491976-020V C- 491976-010V C- 491976-020V
90074-0003		CLIP	C- 271886-020V C- 272408-040V
90074-0005		CLIP	C- 490504-010V C- 491787-010V C- 490504-010V
90074-0007		CLIP	C- 272408-040V
90074-0026		CLIP	RK- 469808-010V C- 401207-010V C- 256173-020V C- 256173-030V C- 256173-040V
90074-0027		CLAMP	RK- 469808-010V RK- 469808-010V

PART NO	LAST AM	DESCRIPTION	GROUP NO
90076-0109		CONTACTOR	CE- 67716-010V CE- 67722-010V CE- 68128-010V CE- 68129-010V CE- 68304-010V CE- 68305-010V CE- 68128-010V CE- 68129-010V CE- 67716-010V CE- 67722-010V CE- 68304-010V CE- 68305-010V
90076-0110		CONTACTOR	CE- 67716-010V CE- 67722-010V CE- 68128-010V CE- 68129-010V CE- 68304-010V CE- 68305-010V CE- 68128-010V CE- 68129-010V CE- 67716-010V CE- 67722-010V CE- 68304-010V CE- 68305-010V
90077-0030		TERMINAL STRIP	C- 544381-010V
90077-0048		TERMINAL BLOCK	C- 246357-010V
90077-0048		TERMINAL BLOCK	C- 456436-010V
90077-0079		TERMINAL BLOCK	RK- 520068-010V C- 295026-010V C- 295026-020V C- 295026-030V C- 295382-020V
90077-0080		TERMINAL BLOCK	C- 735259-010V C- 735031-010V
90077-0092		TERMINAL BLOCK	C- 283633-010V C- 295470-020V C- 295470-030V C- 283633-010V
90077-0102		TERMINAL BLOCK	CE- 67716-010V CE- 68304-010V C- 37877-030V C- 544381-010V C- 441850-010V C- 441850-020V C- 441850-030V
90077-0106		STRIP	CE- 67716-010V CE- 68304-010V C- 232781-040V C- 37877-030V CE- 67716-010V CE- 68304-010V C- 401207-010V C- 400885-010V CE- 67716-010V CE- 68304-010V
90077-0115		TERMINAL BLOCK	RK- 69562-010V
90077-0302		RAIL	C- 295441-010V C- 295441-020V C- 295441-030V
90077-0307		EN PLATE	C- 295026-010V C- 295026-020V C- 295026-030V
90077-0308		END SUPPORT	RK- 520068-010V C- 295026-010V C- 295026-020V C- 295026-030V
90077-0309		END PLATE	C- 736259-010V C- 735031-010V C- 283633-010V
90077-0314		END PLATE	C- 736259-010V
90077-0316		BRIDGE	C- 735031-010V
90077-0328		RAIL	C- 295026-010V C- 295026-020V C- 295026-030V C- 295382-020V
90081-0026		MAGNET	C- 476189-010V
90081-0027		MAGNET DISC	C- 476189-010V

PART NO	LAST AM	DESCRIPTION	GROUP NO
90083-0014		ROLLER	C- 283610-010V
			CR- 449275-010V
90083-0015		BUSHING	C- 256197-020V
			C- 256198-020V
			C- 256203-020V
			C- 256197-020V
			C- 256198-020V
			C- 256203-020V
90083-0016		PLATE	C- 256198-020V
			C- 256203-020V
			C- 256198-020V
			C- 256203-020V
			C- 256198-030V
			C- 256203-030V
			C- 491814-010V
			C- 491815-010V
			C- 256203-040V
			C- 491814-010V
			C- 491815-010V
90086-0001		NIPPLE	C- 271641-020V
			C- 271641-030V
90087-0002		PIPE PLUG	C- 256555-020V
			C- 256555-030V
			C- 456100-010V
			C- 456100-020V
90087-0019		PLUG	C- 256197-020V
			C- 256203-020V
			C- 256197-020V
			C- 256203-020V
			C- 256197-030V
			C- 256203-030V
			C- 256197-030V
			C- 256203-030V
			C- 256197-040V
			C- 256203-040V
			CR- 256436-050V
			C- 271666-050V
90087-0031		COVER	C- 456935-020V
90088-0003		SLEEVE	C- 295276-020V
			C- 256233-050V
			C- 295777-010V
			C- 469374-010V
			C- 469374-020V
			C- 469374-030V
90088-0006		SLEEVE	C- 229400-060V
90088-0007		SLEEVE	C- 469299-010V
90088-0013		SLEEVE	C- 271109-020V
90088-0017		TRANSITIONAL MUFF	C- 256234-030V
			C- 256234-040V
			C- 491207-010V
			C- 272028-030V
			C- 272028-040V
			C- 272028-050V
			C- 491207-020V
90088-0018		TRANSITIONAL NIPPLE	C- 491207-020V
90090-0001		STEEL BALL	C- 256236-020V
			C- 456321-010V
			C- 456322-010V
			C- 456348-010V
			C- 456349-010V
			C- 456321-020V
			C- 456322-020V
			C- 456348-020V
			C- 456349-020V
			C- 456321-030V
			C- 456322-030V
			C- 456348-020V
90090-0001		STEEL BALL	C- 456349-020V
			C- 272445-020V
90090-0003		STEEL BALL	C- 256238-040V
			C- 255957-020V
			C- 456309-010V
			C- 255957-020V
			C- 456309-010V
			C- 456309-020V
			C- 456309-030V
			C- 456309-040V

PART NO	LAST AM	DESCRIPTION	GROUP NO
90090-0005		STEEL BALL	CR- 256204-020V
			CR- 256205-020V
			CR- 256212-020V
			CR- 256213-020V
			CR- 256204-020V
			CR- 256205-020V
			CR- 256212-020V
			CR- 256213-020V
			CR- 256204-030V
			CR- 256205-030V
			CR- 256212-030V
			CR- 256213-030V
			CR- 256204-040V
			CR- 256205-040V
			CR- 256212-040V
			CR- 256213-040V
			CR- 256204-040V
			CR- 256205-040V
			CR- 256212-040V
			CR- 256213-040V
			CR- 256204-050V
			CR- 256205-050V
			CR- 256212-050V
			CR- 256213-050V
			RK- 456712-010V
			RK- 456715-010V
90090-0008		STEEL BALL	C- 271662-020V
			C- 271662-030V
			C- 271662-040V
			C- 271662-050V
			C- 271662-060V
			C- 271662-070V
90090-0012		STEEL BALL	C- 232781-040V
90090-0013		STEEL BALL	CR- 256436-020V
			CR- 256712-020V
			CR- 256436-020V
			CR- 256712-020V
			CR- 256436-020V
			CR- 256712-020V
			CR- 256436-020V
			CR- 256712-020V
			CR- 256436-030V
			CR- 256712-030V
			CR- 256436-040V
			CR- 256712-040V
			CR- 256436-050V
			CR- 256712-050V
			RK- 751157-010V
90090-0014		STEEL BALL	C- 256221-020V
90090-0014		STEEL BALL	C- 256222-020V
			C- 256221-020V
			C- 256222-020V
			C- 256221-020V
			C- 256222-020V
			C- 256221-020V
			C- 256222-020V
			C- 256221-020V
			C- 256222-020V
			C- 256221-020V
			C- 256222-020V
			C- 256221-020V
			C- 256222-020V
90090-0016		BALL	RK- 491539-010V
			RK- 490877-010V
			C- 491897-010V
			C- 736885-010V
			C- 491897-010V
			C- 491976-010V
			C- 491976-020V
			C- 491976-010V
			C- 491976-020V
			C- 736885-010V
			C- 491897-010V
			RK- 751570-010V
			RK- 491539-010V
90091-0079		SEAL	C- 735269-010V
			C- 736600-010V
			C- 735271-010V
			C- 736600-010V

PART NO	LAST AM	DESCRIPTION	GROUP NO
			C- 736271-010V
			C- 736600-010V
			C- 736271-010V
			C- 736600-010V
90091-0082		SEAL	CR- 256204-020V
			CR- 256205-020V
			CR- 256204-020V
			CR- 256205-020V
			CR- 256204-030V
90091-0089		SEAL RING	CR- 256205-030V
			CR- 256212-020V
			CR- 256213-020V
			CR- 256212-020V
			CR- 256213-020V
			CR- 256212-030V
			CR- 256213-030V
			CR- 256212-040V
			CR- 256213-040V
			CR- 256212-040V
			CR- 256213-040V
			CR- 256212-050V
			CR- 256213-050V
			CR- 256436-020V
			CR- 256712-020V
			CR- 256436-020V
			CR- 256712-020V
			CR- 256436-020V
			CR- 256712-020V
			CR- 256436-020V
			CR- 256712-020V
90091-0091		SEAL RING	RK- 456712-010V
			CR- 256204-020V
			CR- 256205-020V
			CR- 256204-020V
			CR- 256205-020V
			CR- 256204-030V
			CR- 256205-030V
			CR- 256204-040V
			CR- 256205-040V
			CR- 256204-040V
			CR- 256205-040V
			CR- 256204-050V
			CR- 256205-050V
90091-0106		SEALED RING	C- 256555-020V
			C- 256555-030V
			C- 456100-010V
			C- 456100-020V
90091-0107		SEAL RING	CR- 256212-020V
			CR- 256213-020V
			CR- 256212-020V
			CR- 256213-020V
			CR- 256212-030V
			CR- 256213-030V
90091-0129		SEAL RING	CR- 256436-020V
			CR- 256712-020V
			CR- 256436-020V
			CR- 256712-020V
			CR- 256436-020V
			CR- 256712-020V
			CR- 256436-020V
			CR- 256712-020V
90091-0136		SEAL RING	C- 295211-010V
90091-0137		SEAL RING	C- 491323-020V
			C- 751393-010V
90091-0139		SEAL RING	C- 295026-010V
			C- 295026-020V
90091-0159		GASKET	C- 271507-020V
90091-0160		SEAL RING	CR- 256436-030V
			CR- 256712-030V
90091-0162		RING	CR- 256212-040V
			CR- 256213-040V
			CR- 256212-040V
			CR- 256213-040V
			CR- 256212-050V
			CR- 256213-050V
			CR- 256436-030V
			CR- 256712-030V

PART NO	LAST AM	DESCRIPTION	GROUP NO
			CR- 256436-040V
			CR- 256712-040V
			CR- 256436-050V
			CR- 256712-050V
			RK- 456712-010V
			RK- 456715-010V
			RK- 751157-010V
			RK- 456715-010V
90091-0163		RING	RK- 751157-010V
			CR- 256436-030V
			CR- 256712-030V
			CR- 256436-040V
			CR- 256712-040V
90091-0163		RING	CR- 256436-050V
			CR- 256712-050V
			RK- 751157-010V
90091-0165		SEAL RING	CR- 256436-030V
			CR- 256712-030V
90091-0166		SEAL RING	RK- 456715-010V
90091-0167		SEAL RING	RK- 456712-010V
			RK- 456715-010V
90091-0168		SEAL RING	RK- 456712-010V
			RK- 456715-010V
90091-0169		RING	CR- 256204-040V
			CR- 256205-040V
			CR- 256204-040V
			CR- 256205-040V
			CR- 256204-050V
			CR- 256205-050V
			RK- 456715-010V
90091-0170		RING	CR- 256212-040V
			CR- 256213-040V
			CR- 256212-040V
			CR- 256213-040V
			CR- 256212-050V
			CR- 256213-050V
			RK- 456712-010V
			RK- 456715-010V
90091-0180		GASKET	C- 272337-020V
			C- 272337-030V
			C- 456555-020V
			C- 271169-040V
90091-0182		GASKET	C- 272337-040V
			C- 271169-020V
			C- 272337-020V
			C- 271169-020V
			C- 272337-020V
			C- 271169-020V
			C- 272337-020V
			C- 271169-020V
			C- 272337-020V
			C- 271169-030V
			C- 272337-030V
			C- 272337-040V
			C- 456555-030V
90091-0214		SEAL RING	CR- 256212-040V
			CR- 256213-040V
			CR- 256212-040V
			CR- 256213-040V
			CR- 256212-050V
			CR- 256213-050V
90091-0215		SEAL RING	CR- 256212-040V
			CR- 256213-040V
			CR- 256212-040V
			CR- 256213-040V
			CR- 256212-050V
			CR- 256213-050V
90091-0216		SEAL RING	CR- 256204-040V
			CR- 256205-040V
			CR- 256204-040V
			CR- 256205-040V
			CR- 256204-050V
90091-0216		SEAL RING	CR- 256205-050V
90091-0220		SEAL RING	CR- 256436-040V
			CR- 256712-040V
			CR- 256436-050V
			CR- 256712-050V

PART NO	LAST AM	DESCRIPTION	GROUP NO
90091-0221		SEAL RING	RK- 751157-010V
			CR- 256436-040V
			CR- 256712-040V
			CR- 256436-050V
			CR- 256712-050V
			RK- 751157-010V
90092-0048		OIL BRUSH	C- 272765-030V
			C- 272765-040V
			C- 272765-050V
			C- 272765-060V
			RK- 491131-010V
			RK- 491512-010V
90092-0052		VALVE	C- 271562-020V
			C- 271562-030V
			C- 271562-040V
			C- 271562-050V
			C- 271562-060V
			C- 271562-070V
			C- 256197-020V
			C- 256198-020V
			C- 256203-020V
			C- 256197-020V
			C- 256198-020V
			C- 256203-020V
			C- 256197-030V
			C- 256198-030V
			C- 256203-030V
			C- 256197-030V
			C- 256203-030V
			C- 491814-010V
			C- 491815-010V
			C- 256197-040V
			C- 256203-040V
			C- 491814-010V
			C- 491815-010V
			C- 256217-020V
			C- 256951-020V
			C- 256952-020V
			C- 257381-020V
			C- 257382-020V
			C- 256217-030V
			C- 256951-020V
			C- 256952-020V
			C- 257381-020V
			C- 257382-020V
			CR- 256212-030V
			CR- 256213-030V
			C- 256217-040V
			C- 256951-030V
90092-0062		VALVE	C- 256952-030V
			C- 257381-030V
			C- 257382-030V
			CR- 256212-040V
			CR- 256213-040V
			C- 256217-040V
			C- 256951-030V
			C- 256952-030V
			C- 257381-030V
			C- 257382-030V
			CR- 256212-040V
			CR- 256213-040V
			C- 256217-040V
			C- 256951-040V
			C- 256952-040V
			C- 257381-030V
			C- 257382-030V
			CR- 256212-050V
			CR- 256213-050V
			C- 256217-040V
			C- 256951-040V
			C- 256952-040V
			C- 257381-030V
			C- 257382-030V
			C- 272765-010V
			C- 295310-010V
			C- 272766-020V
			C- 295310-010V

PART NO	LAST AM	DESCRIPTION	GROUP NO
			C- 272766-020V
			C- 295310-020V
			C- 295310-030V
			C- 295310-040V
			C- 295310-050V
			C- 295310-060V
			C- 271886-060V
			RK- 456712-010V
90092-0053		VALVE	C- 271562-020V
			C- 271562-030V
			C- 271562-040V
			C- 271562-050V
			C- 271562-060V
			C- 271562-070V
			C- 256197-020V
			C- 256198-020V
			C- 256197-020V
			C- 256198-020V
			C- 256197-030V
			C- 256198-030V
			C- 256197-030V
			C- 491814-010V
			C- 491815-010V
			C- 256197-040V
			C- 491814-010V
			C- 491815-010V
			C- 257381-020V
			C- 257382-020V
			C- 256217-030V
			C- 257381-020V
			C- 257382-020V
			CR- 256212-030V
			CR- 256213-030V
			C- 257381-030V
			C- 257382-030V
			CR- 256212-040V
90092-0063		VALVE	CR- 256213-040V
			C- 257381-030V
			C- 257382-030V
			CR- 256212-040V
			CR- 256213-040V
			C- 257381-030V
			C- 257382-030V
			CR- 256212-050V
			CR- 256213-050V
			C- 257381-030V
			C- 257382-030V
			RK- 456711-010V
			RK- 456712-010V
90092-0064		VALVE	C- 272766-030V
			C- 272766-040V
			C- 272766-050V
			CR- 256436-050V
			C- 272766-060V
			RK- 491131-010V
			RK- 491512-010V
90093-0012		END PLATE	C- 246357-010V
			C- 456435-010V
90094-0004		END SUPPORT	C- 246357-010V
			C- 456435-010V
			C- 456827-010V
			C- 283833-010V
			C- 295470-020V
			C- 295470-030V
			C- 283833-010V
90099-0001		NUT	C- 295883-010V
			C- 295883-020V
			C- 295883-030V
			C- 295883-040V
			C- 738885-010V
			C- 283833-010V
			RK- 491543-010V
			RK- 491744-010V
			RK- 751636-010V
			RK- 491789-010V
			RK- 491902-010V
			RK- 751561-010V

PART NO	LAST AM	DESCRIPTION	GROUP NO
			RK- 751569-010V
			RK- 491769-010V
			RK- 751561-010V
			RK- 751569-010V
			C- 283633-010V
			C- 294867-010V
			C- 457159-010V
			C- 457159-020V
			C- 735259-010V
			C- 736865-010V
			C- 735031-010V
			C- 736865-010V
90099-0002		NUT	C- 752980-010V
			C- 752971-010V
			C- 37877-030V
			C- 441534-010V
			C- 456460-010V
90099-0002		NUT	C- 456460-020V
			C- 751900-010V
			C- 456459-030V
			C- 456460-030V
			C- 751900-010V
90099-0003		NUT	C- 37877-030V
			C- 295883-010V
			C- 295883-020V
			C- 295883-030V
			C- 295883-040V
			C- 271462-020V
			C- 490761-010V
			RK- 490965-010V
			RK- 491795-010V
			C- 294867-010V
			C- 457159-010V
			C- 457159-020V
90099-0004		NUT	RK- 68180-010V
			RK- 68183-010V
			C- 295883-010V
			C- 295883-020V
			C- 295883-030V
			C- 295883-040V
			C- 283633-010V
90099-0011		NUT	RK- 68874-010V
			C- 295883-010V
			C- 295883-020V
			C- 295883-030V
			C- 295883-040V
			C- 295777-010V
			C- 469374-010V
			C- 469374-020V
			C- 469374-030V
90099-0015		NUT	C- 751688-010V
90099-0033		NUT	C- 294763-010V
90099-0048		NUT	C- 449313-010V
90099-0057		NUT	C- 752828-010V
90099-0075		NUT	C- 279809-010V
90099-0087		NUT	C- 283632-010V
90101-0003		HOLDER	C- 441536-010V
			C- 256232-020V
			C- 256237-040V
			C- 256232-030V
			C- 256237-050V
90101-0004		HOLDER	C- 256232-030V
			RK- 469968-010V
			C- 256237-040V
			C- 256237-050V
			C- 456555-010V
			C- 456555-020V
90110-0028		CONTACT UNIT	C- 456555-030V
			CE- 67716-010V
			CE- 68128-010V
			CE- 68304-010V
			CE- 68128-010V
			CE- 67716-010V
90110-0029		CONTACT UNIT	CE- 68304-010V
			CE- 67716-010V
			CE- 68128-010V
			CE- 68304-010V

PART NO	LAST AM	DESCRIPTION	GROUP NO
90110-0029		CONTACT UNIT	CE- 68128-010V
			CE- 67716-010V
			CE- 68304-010V
90110-0035		CABLE CONNECTION	C- 283617-010V
			C- 283613-010V
			C- 283617-010V
90110-0036		CABLE CONNECTION	C- 283617-010V
			C- 283613-010V
			C- 283617-010V
90110-0051		CONTACT UNIT	C- 256966-020V
90110-0078		CONTACT	C- 451348-010V
90110-0080		CONTACT UNIT	C- 294763-010V
90110-0081		CONTACT UNIT	C- 294767-010V
90110-0095		CONTAKT	C- 271168-020V
			C- 457924-010V
			C- 457924-020V
			C- 751410-010V
			C- 271168-040V
90110-0097		CONTACT UNIT	C- 456808-010V
90110-0098		CONTACT UNIT	C- 456800-010V
90111-0104		SWITCH	C- 232781-040V
90111-0120		SWITCH	CE- 68379-010V
			RK- 69262-010V
			RK- 69348-010V
			RK- 69393-010V
			RK- 69398-010V
			C- 456882-010V
			C- 295028-010V
			C- 295028-020V
			C- 295028-030V
			CE- 68379-010V
90111-0121		SWITCH	RK- 68180-010V
			RK- 68183-010V
90111-0122		SWITCH	CE- 67716-010V
			CE- 68304-010V
			CE- 67716-010V
			CE- 68304-010V
90111-0124		SWITCH	CE- 67716-010V
			CE- 68304-010V
			CE- 67716-010V
			CE- 68304-010V
90111-0134		SWITCH	CE- 68128-010V
90111-0135		SWITCH	CE- 67716-010V
			CE- 68304-010V
			CE- 67716-010V
			CE- 68304-010V
90111-0137		SWITCH	C- 457159-010V
			C- 457159-020V
90113-0021		REGULATOR	C- 271909-020V
			C- 271909-030V
			C- 271909-040V
			C- 271909-050V
			C- 279809-010V
			C- 294715-010V
			C- 283631-010V
			C- 283632-010V
			C- 457159-010V
			C- 457159-020V
90113-0022		NUT	C- 279809-010V
90113-0022		NUT	C- 294715-010V
			C- 283632-010V
90113-0044		PRESSURE REGULATOR	C- 271507-020V
P- 90113-0047		REGULATOR	C- 271909-020V
			C- 271909-030V
			C- 271909-040V
			C- 271909-050V
90113-0054		REGULATOR	RK- 520068-010V
90113-0056		REGULATOR	C- 751089-010V
			RK- 491780-010V
			C- 735183-010V
			C- 751410-010V
90113-0069		REGULATOR	RK- 491780-010V
90113-0338		YOKE	C- 533014-010V
			C- 271909-020V
			C- 271909-030V
			C- 271909-040V
			C- 271909-050V

PART NO	LAST AM	DESCRIPTION	GROUP NO
90113-0342		JUNCTION BLOCK	C- 271908-020V
			C- 271909-030V
			C- 271909-040V
			C- 271909-050V
90113-0368		BRACKET	C- 271908-020V
			C- 271909-030V
			C- 271909-040V
			C- 271909-050V
90115-0006		JOINT	C- 272084-020V
90115-0020		ROD END	C- 294906-010V
			C- 457853-020V
90115-0021		ROD END	C- 294906-010V
90115-0022		ROD END	C- 294785-010V
90115-0054		JOINT	C- 37898-010V
			C- 450101-010V
90115-0068		JOINT	C- 272231-020V
			C- 272231-030V
			C- 751988-010V
90115-0080		ROD END	C- 294780-010V
			C- 457853-010V
90115-0082		JOINT	C- 283602-010V
			C- 283618-010V
			C- 283602-010V
			C- 283618-010V
			CR- 283618-020V
90115-0120		JOINT	C- 283602-010V
90115-0133		JOINT	C- 272084-030V
90117-0001		HANDLE	RK- 548056-010V
90117-0003		HANDLE	RK- 548056-010V
90117-0008		HANDLE	RK- 547759-010V
			RK- 547759-020V
			C- 283602-010V
90119-0006		RELAY	RK- 68908-010V
90119-0045		RELAY	CE- 67716-010V
			CE- 68304-010V
			CE- 67716-010V
			CE- 68304-010V
90119-0046		CIRCUIT CARD	C- 295026-010V
			C- 295026-020V
			C- 295026-030V
90119-0062		RELAY	RK- 41567-010V
90119-0052		RELAY	RK- 41461-010V
			RK- 41377-010V
			CE- 67716-010V
			CE- 67722-010V
			CE- 68128-010V
			CE- 68129-010V
			CE- 68304-010V
			CE- 68305-010V
			RK- 68722-010V
			RK- 68725-010V
			RK- 68908-010V
			CE- 68128-010V
			CE- 68129-010V
			CE- 67716-010V
			CE- 67722-010V
			CE- 68304-010V
			CE- 68305-010V
			RK- 41567-010V
			RK- 41377-010V
			RK- 41461-010V
90119-0064		RELAY	CE- 67716-010V
			CE- 67722-010V
			CE- 68128-010V
			CE- 68129-010V
			CE- 68304-010V
			CE- 68128-010V
			CE- 68129-010V
			CE- 67716-010V
			CE- 67722-010V
			CE- 68304-010V
90119-0063		OPTO-RELAY	RK- 69510-010V
90119-0067		RELAY	CE- 68305-010V
90121-0096		RESISTANCE	CE- 67716-010V
			CE- 68128-010V
			CE- 68304-010V
			CE- 68128-010V

PART NO	LAST AM	DESCRIPTION	GROUP NO
			CE- 67716-010V
			CE- 68304-010V
90121-0099		RESISTANCE	C- 442080-010V
90124-0027		LAMP HOLDER	CE- 68379-010V
			C- 295026-010V
			C- 295026-020V
			C- 295026-030V
			CE- 68379-010V
P- 90125-0020		PLATE	C- 256239-020V
			C- 256239-030V
			C- 256239-040V
			C- 272343-020V
			C- 272343-030V
			C- 272343-040V
			C- 272343-050V
			C- 256095-020V
			C- 256095-030V
			C- 256095-040V
90129-0006		BASE	RK- 41567-010V
			RK- 41461-010V
			RK- 41377-010V
			CE- 67716-010V
			CE- 68128-010V
90129-0006		BASE	CE- 68304-010V
			RK- 68722-010V
			RK- 68725-010V
			CE- 68128-010V
			CE- 67716-010V
			CE- 68304-010V
			RK- 41567-010V
			RK- 41377-010V
			RK- 41461-010V
90129-0008		HOLDER	CE- 67716-010V
			CE- 68128-010V
			CE- 68304-010V
			CE- 68128-010V
			CE- 67716-010V
			CE- 68304-010V
90131-0003		HOSE COUPLING	C- 256232-020V
			C- 256232-030V
90132-0021		HOSE CLIP	C- 751088-010V
			RK- 491780-010V
			C- 751406-010V
			RK- 491780-010V
90132-0023		HOSE CLIP	C- 751406-010V
90134-0003		BUSHING	C- 271562-020V
			C- 271562-030V
			C- 271562-040V
			C- 271562-050V
			C- 271562-060V
			C- 271562-070V
			C- 256951-020V
			C- 256952-020V
			C- 257381-020V
			C- 257382-020V
			C- 256951-020V
			C- 256952-020V
			C- 257381-020V
			C- 257382-020V
90134-0019		GLAND	C- 271533-020V
			C- 271533-030V
			C- 491650-010V
			C- 257381-020V
			C- 257382-020V
			C- 257381-020V
			C- 257382-020V
			C- 271908-020V
			C- 271908-030V
			C- 271908-040V
			C- 271908-050V
90134-0030		SLEEVE	C- 271562-020V
			C- 271562-030V
			C- 271562-040V
			C- 271562-050V
			C- 271562-060V
			C- 271562-070V
90134-0031		SLEEVE	C- 271533-020V

PART NO	LAST AM	DESCRIPTION	GROUP NO
90134-0031		SLEEVE	C- 271533-030V C- 491650-010V C- 271562-020V C- 271562-030V C- 271562-040V C- 271562-050V C- 271562-060V C- 271562-070V C- 256197-020V C- 256203-020V C- 256197-020V C- 256203-020V C- 256197-030V C- 256203-030V C- 256197-030V C- 256203-030V C- 256197-040V C- 256203-040V C- 256951-020V C- 256952-020V C- 257381-020V C- 257382-020V C- 256951-020V C- 256952-020V C- 257381-020V C- 257382-020V C- 272765-010V C- 272765-020V C- 272765-050V CR- 256436-050V
90134-0034		NIPPLE	C- 272765-060V C- 271533-020V C- 271533-030V C- 491650-010V C- 271562-020V C- 271562-030V C- 271562-040V C- 271562-050V C- 271562-060V C- 271562-070V RK- 491641-010V RK- 491447-010V
90134-0038		BUSHING	C- 271533-020V C- 271533-030V C- 491650-010V C- 271562-020V C- 271562-030V C- 271562-040V C- 271562-050V C- 271562-060V C- 271562-070V C- 256197-020V C- 256198-020V C- 256203-020V C- 256197-020V C- 256198-020V C- 256203-020V C- 256197-030V C- 256198-030V C- 256203-030V C- 256197-030V C- 256203-030V C- 491814-010V C- 491815-010V C- 256197-040V C- 256203-040V C- 491814-010V C- 491815-010V C- 272765-010V C- 272765-020V C- 272765-030V C- 272765-040V C- 272765-050V CR- 256436-050V C- 272765-060V RK- 491131-010V C- 271562-020V
90134-0039		BUSHING	
90134-0040		BUSHING	
90134-0040		BUSHING	
90134-0042		SPACER	
90134-0045		PLUG	

PART NO	LAST AM	DESCRIPTION	GROUP NO
			C- 271562-030V C- 271562-040V C- 271562-050V C- 271562-060V C- 271562-070V C- 256197-020V C- 256198-020V C- 256203-020V C- 256197-020V C- 256198-020V C- 256203-020V C- 256197-030V C- 256198-030V C- 256203-030V C- 256197-030V C- 256203-030V C- 491814-010V C- 491815-010V C- 256197-040V C- 256203-040V C- 491814-010V C- 491815-010V C- 256217-020V C- 257381-020V C- 257382-020V C- 256217-030V C- 257381-020V C- 257382-020V C- 256217-040V C- 257381-030V C- 257382-030V C- 256217-040V C- 257381-030V C- 257382-030V C- 256217-040V C- 257381-030V C- 257382-030V CR- 256436-050V C- 271866-050V C- 257381-020V C- 257382-020V C- 257381-020V C- 257382-020V C- 296310-010V C- 296310-020V C- 272765-030V C- 296310-030V C- 272765-040V C- 296310-040V C- 272765-060V C- 296310-050V C- 272765-060V C- 296310-060V RK- 491512-010V CR- 256212-030V CR- 256213-030V CR- 256212-040V CR- 256213-040V CR- 256212-040V CR- 256213-040V CR- 256212-050V CR- 256213-050V C- 272765-010V C- 272765-020V C- 272765-030V C- 272765-040V C- 272765-050V C- 272765-060V RK- 456712-010V RK- 491131-010V RK- 491512-010V CR- 256212-030V CR- 256213-030V CR- 256212-040V

PART NO	LAST AM	DESCRIPTION	GROUP NO
			CR- 256213-040V
			CR- 256212-040V
			CR- 256213-040V
			CR- 256212-050V
			CR- 256213-050V
			C- 272765-010V
			C- 272765-020V
			C- 272765-030V
			C- 272765-040V
			C- 272765-050V
			C- 272765-060V
			RK- 456712-010V
			RK- 491131-010V
			RK- 491512-010V
90134-0047		CONNECTION	CR- 256212-030V
			CR- 256213-030V
			CR- 256212-040V
			CR- 256213-040V
			CR- 256212-040V
			CR- 256213-040V
			CR- 256212-050V
			CR- 256213-050V
			RK- 456712-010V
90134-0061		SPACER COLLOR	C- 272765-040V
			C- 272765-050V
			C- 272765-060V
			RK- 491512-010V
90134-0062		PLUG	C- 271562-020V
90134-0052		PLUG	C- 271562-030V
			C- 271562-040V
			C- 271562-050V
			C- 271562-060V
			C- 271562-070V
			C- 256197-020V
			C- 256197-030V
			C- 256197-040V
			C- 272765-030V
			RK- 491512-010V
90134-0055		BUSHING	C- 272765-030V
			C- 272765-040V
			C- 272765-050V
			C- 272765-060V
			C- 271866-050V
90134-0058		BANJO CONNECTION	C- 256173-020V
			C- 256197-030V
			C- 256198-030V
			C- 256203-030V
			C- 256173-030V
			C- 256197-030V
			C- 256203-030V
			C- 491787-010V
			C- 491788-010V
			C- 491814-010V
			C- 491815-010V
			C- 256173-040V
			C- 256197-040V
			C- 256203-040V
			C- 491787-020V
			C- 491788-020V
			C- 491814-010V
			C- 491815-010V
			CR- 256204-030V
			CR- 256205-030V
			CR- 256212-030V
			CR- 256213-030V
			C- 256217-040V
			C- 256951-030V
			C- 256952-030V
			CR- 256204-040V
			CR- 256205-040V
			CR- 256212-040V
			CR- 256213-040V
			C- 256217-040V
			C- 256951-030V
			C- 256952-030V
			CR- 256204-040V
			CR- 256205-040V

PART NO	LAST AM	DESCRIPTION	GROUP NO
			CR- 256212-040V
			CR- 256213-040V
			C- 256217-040V
			C- 256951-040V
			C- 256952-040V
			CR- 256204-050V
			CR- 256205-050V
			CR- 256212-050V
			CR- 256213-050V
			C- 256217-040V
90134-0056		BANJO CONNECTION	C- 256951-040V
			C- 256952-040V
			CR- 256438-050V
			C- 271866-050V
			RK- 456712-010V
90134-0065		CONNECTION	C- 271866-050V
90134-0066		CONNECTION	C- 257381-030V
			C- 257382-030V
			C- 257381-030V
			C- 257382-030V
			C- 257381-030V
			C- 257382-030V
			C- 257381-030V
			C- 257382-030V
			RK- 456712-010V
90134-0068		BANJO CONNECTION	C- 256198-020V
			C- 256198-030V
			C- 491787-010V
			C- 491788-010V
			C- 491787-020V
			C- 491788-020V
			C- 256951-030V
			C- 256952-030V
			C- 257381-030V
			C- 257382-030V
			C- 256951-030V
			C- 256952-030V
			C- 257381-030V
			C- 257382-030V
			C- 256951-040V
			C- 256952-040V
			C- 257381-030V
			C- 257382-030V
			C- 272765-030V
			C- 272765-040V
			C- 295310-040V
			C- 272765-050V
			C- 295310-050V
			C- 272765-060V
			C- 295310-060V
			RK- 491131-010V
			RK- 491512-010V
90135-0003		EARHING CLIP	RK- 520068-010V
			C- 295026-010V
			C- 295026-020V
			C- 295026-030V
90135-0008		EARTHING CLIP	C- 283633-010V
			C- 295470-020V
			C- 295470-030V
			C- 283633-010V
90135-0021		EARTHING CLAMP	C- 456627-010V
			C- 283633-010V
			C- 295470-020V
			C- 295470-030V
			C- 283633-010V
90135-0022		EARTHING CLAMP	C- 735259-010V
			C- 735031-010V
90135-0026		EARTHING CLAMP	RK- 520068-010V
			C- 295026-020V
			C- 295026-030V
			C- 295382-020V
90136-0002		LUG	C- 271562-020V
			C- 271562-030V

PART NO	LAST AM	DESCRIPTION	GROUP NO
90136-0003		PLUG	C- 271582-040V
			C- 283604-010V
			C- 283604-020V
			C- 283604-010V
			C- 283612-010V
			C- 283617-010V
			C- 283612-010V
			C- 283617-010V
			CR- 449275-010V
			CR- 283605-010V
			C- 283612-010V
			CR- 449275-010V
			CR- 283605-010V
			C- 283612-010V
			CR- 449275-010V
90137-0005		PIPE JOINT	C- 256951-020V
			C- 256952-020V
			C- 257381-020V
			C- 257382-020V
			C- 256951-020V
			C- 256952-020V
			C- 257381-020V
90137-0010		PIPE JOINT	C- 257382-020V
			C- 256555-020V
			C- 256556-030V
			C- 456100-010V
			C- 456100-020V
			C- 256197-020V
			C- 256198-020V
			C- 256203-020V
			C- 256197-020V
			C- 256198-020V
			C- 256203-020V
			CR- 256204-020V
			CR- 256205-020V
			C- 256217-020V
			C- 256951-020V
			C- 256952-020V
			CR- 256204-020V
			CR- 256205-020V
			C- 256217-030V
			C- 256951-020V
			C- 256952-020V
			RK- 456716-010V
			RK- 752408-010V
			RK- 752410-010V
			RK- 456717-010V
			RK- 752412-010V
			RK- 752414-010V
			RK- 456717-010V
90137-0010		PIPE JOINT	RK- 752412-010V
90140-0013		ELBOW PIPE	RK- 752414-010V
			C- 271909-020V
			C- 271909-030V
90140-0014		ELBOW PIPE	C- 271909-040V
			C- 271909-020V
			C- 271909-030V
			C- 271909-040V
			C- 271909-050V
90140-0015		T-PIECE	C- 533014-010V
90140-0018		T-PIECE	RK- 820068-010V
			C- 751089-010V
90140-0019		BRACKET	RK- 491780-010V
90140-0020		ELBOW PIPE	C- 735183-010V
			C- 271866-020V
			C- 271866-030V
			C- 271866-040V
90140-0023		T-PIECE	C- 271866-050V
90140-0032		SCREW CAP G 1/8 ISO	RK- 491416-010V
90141-0005		RING	C- 735183-010V
90141-0011		RING	C- 283617-010V
			RK- 491744-010V
			C- 272014-020V
			C- 272014-030V
			C- 751088-010V
90141-0015		LOCK RING	C- 751088-020V
			C- 400872-010V

PART NO	LAST AM	DESCRIPTION	GROUP NO
			C- 484668-010V
			C- 401207-010V
			C- 400866-010V
90141-0016		LOCK RING	C- 400866-010V
			C- 400872-010V
			C- 400866-010V
			C- 400872-010V
			C- 256055-060V
90141-0017		LOCK RING	C- 256055-060V
			C- 441798-010V
90141-0018		LOCK RING	C- 441811-010V
			C- 296310-010V
			C- 296310-020V
			C- 296310-030V
			C- 296310-040V
			C- 296310-050V
90141-0020		LOCK RING	C- 296310-060V
			C- 533803-010V
			RK- 536470-010V
			RK- 536480-010V
			RK- 547728-010V
			C- 456321-010V
			C- 456322-010V
			C- 456321-020V
			C- 456322-020V
			C- 456321-030V
			C- 456322-030V
			RK- 547300-010V
			C- 533844-010V
			C- 533803-010V
90141-0022		RING	C- 271169-030V
			C- 272337-030V
90141-0022		RING	C- 271169-040V
			C- 272337-040V
90142-0005		HOSE	C- 256173-020V
			C- 256173-030V
			C- 256173-040V
			C- 283617-010V
			C- 283613-010V
			C- 283617-010V
90143-0010		STRIP	C- 456100-010V
			C- 456100-020V
90143-0012		STRIP	C- 456458-010V
			C- 456458-020V
			C- 751880-010V
			C- 456458-030V
			C- 751880-010V
90143-0016		STRIP	C- 752980-010V
			C- 752971-010V
			C- 272802-010V
			C- 272825-010V
			C- 296305-010V
			C- 272802-010V
			C- 272825-010V
			C- 296305-010V
			C- 456457-010V
			C- 456457-020V
			C- 456457-030V
			C- 271115-030V
			C- 271115-040V
90143-0020		STRIP	RK- 498783-010V
			C- 483882-010V
90143-0026		STRIP	C- 441696-020V
90143-0029		STRIP	C- 434774-020V
			C- 434774-030V
			C- 434074-020V
			C- 434074-030V
			C- 434774-020V
			C- 434774-030V
			C- 434074-020V
			C- 434074-030V
			C- 434774-030V
			C- 434074-030V
			C- 434774-030V
			C- 434074-030V
90143-0039		STRIP	C- 271115-020V
			C- 271115-030V

PART NO	LAST AM	DESCRIPTION	GROUP NO
			C- 271115-040V
90143-0041		STRIP	C- 272765-010V
			C- 272765-020V
90143-0043		STRIP	C- 295026-010V
90143-0044		STRIP	C- 295026-010V
90143-0047		STRIP	C- 272508-010V
			C- 469535-010V
			C- 553657-010V
			C- 752042-010V
90143-0048		STRIP	C- 294785-010V
90143-0049		STRIP	C- 256665-020V
			C- 271442-020V
			C- 271443-020V
			C- 256665-020V
			C- 271442-020V
90143-0049		STRIP	C- 271443-020V
			C- 256665-020V
			C- 271442-030V
			C- 271443-030V
			C- 256665-020V
			C- 271442-030V
			C- 271443-030V
			C- 256665-020V
			C- 271442-030V
			C- 271443-030V
			C- 256665-020V
			C- 271442-030V
			C- 271443-030V
			C- 271115-020V
			C- 271115-030V
			C- 271115-040V
			C- 256873-020V
			C- 256875-020V
			C- 256873-020V
			C- 256875-020V
			C- 256873-020V
			C- 256875-020V
			C- 256873-020V
			C- 256875-020V
			C- 256873-040V
			C- 256875-020V
90143-0051		STRIP	C- 295026-020V
			C- 295026-030V
90143-0054		STRIP	C- 272408-020V
			C- 272408-030V
			C- 272408-040V
			C- 272408-050V
90143-0056		STRIP	C- 441695-010V
90143-0059		STRIP	RK- 520068-010V
			C- 295026-020V
			C- 295026-030V
90143-0060		STRIP	C- 271513-050V
90144-0003		TAPE	C- 469394-010V
90144-0004		TAPE	C- 751317-010V
			RK- 491591-030V
			C- 491243-030V
			C- 751317-010V
			C- 735268-010V
			C- 256173-020V
			C- 256173-030V
			C- 256173-040V
			C- 272765-010V
			C- 272765-020V
			C- 272765-030V
			C- 272765-040V
			C- 272765-050V
			C- 272765-060V
			C- 491243-030V
			RK- 491416-010V
			RK- 491589-030V
			C- 272823-040V
			C- 469452-030V
			C- 751800-020V
			C- 735271-010V
90144-0004		TAPE	C- 751373-010V
			C- 751393-010V
			C- 735271-010V

PART NO	LAST AM	DESCRIPTION	GROUP NO
90144-0030		TAPE	C- 37884-010V
90144-0044		TAPE	RK- 520068-010V
90145-0005		WIRE	CR- 31390-010V
90148-0037		HOSE	C- 271582-040V
			C- 271582-050V
			C- 271582-060V
			C- 271582-070V
90148-0038		HOSE	C- 271582-040V
			C- 271582-050V
			C- 271582-060V
			C- 271582-070V
90151-0001		PIPE	C- 271582-020V
			C- 271582-030V
			C- 271582-040V
			C- 271582-050V
			C- 271582-060V
			C- 271582-070V
90151-0004		PIPE	C- 271582-020V
			C- 271582-030V
			C- 256197-020V
			C- 256198-020V
			C- 256203-020V
			C- 256197-020V
			C- 256198-020V
			C- 256203-020V
			C- 257381-020V
			C- 257382-020V
			C- 257381-020V
			C- 257382-020V
90152-0001		HOSE	C- 271841-020V
			C- 271841-030V
90152-0014		HOSE	C- 294887-010V
90152-0016		HOSE	C- 271414-020V
90152-0017		HOSE	C- 271387-020V
			C- 271387-030V
90152-0029		HOSE	RK- 69808-010V
			RK- 520068-010V
90152-0031		HOSE	C- 457924-010V
			C- 457924-020V
90152-0033		HOSE	RK- 69180-010V
			RK- 69183-010V
			C- 490800-010V
			C- 490800-020V
			C- 735183-010V
90153-0008		ADHESIVE	C- 256233-020V
			C- 295045-020V
90153-0015		ADHESIVE	CR- 256204-020V
			CR- 256205-020V
			CR- 256204-020V
			CR- 256205-020V
			CR- 256204-030V
			CR- 256205-030V
			CR- 256204-040V
			CR- 256205-040V
			CR- 256204-040V
			CR- 256205-040V
90153-0015		ADHESIVE	CR- 256204-050V
			CR- 256205-050V
90153-0016		ADHESIVE	C- 256014-030V
			C- 256014-040V
			C- 256014-050V
90153-0017		ADHESIVE	C- 752980-010V
			C- 752971-010V
			C- 272802-010V
			C- 272825-010V
			C- 295305-010V
			C- 272802-010V
			C- 272825-010V
			C- 295305-010V
			C- 456457-010V
			C- 456458-010V
			C- 456457-010V
			C- 456458-010V
			C- 456457-020V
			C- 456458-020V
			C- 751880-010V
			C- 456457-030V

PART NO	LAST AM	DESCRIPTION	GROUP NO
90153-0020		ADHESIVE	C- 486459-030V C- 751860-010V C- 271181-020V C- 271181-030V C- 271181-040V
90153-0023		ADHESIVE	C- 752173-010V
90153-0035		ADHESIVE	C- 271909-020V C- 271909-030V C- 271909-040V C- 271909-050V
90155-0008		CHAIN	C- 256233-020V C- 256233-030V C- 256233-040V C- 256233-050V
90157-0016		LOCKING FLUID	C- 456836-010V C- 456836-020V C- 456836-030V C- 456836-040V RK- 456714-010V RK- 469472-010V C- 441821-010V RK- 536450-010V C- 491976-020V C- 456100-020V C- 256173-020V C- 256173-030V C- 256173-040V C- 271113-020V C- 441821-010V C- 271113-020V C- 441821-010V C- 441271-010V C- 441271-020V C- 256873-020V C- 469535-010V C- 256873-020V C- 469536-010V C- 256873-020V C- 271513-040V C- 469535-010V C- 751885-010V C- 271513-050V C- 469536-010V C- 751885-020V C- 491976-020V RK- 491983-010V C- 553657-010V C- 752042-010V RK- 456714-010V C- 256221-020V C- 256222-020V C- 256221-020V C- 256222-020V C- 256221-020V C- 256222-020V C- 256221-020V C- 256222-020V C- 256221-020V C- 256222-020V C- 256221-020V C- 271452-020V C- 490761-010V C- 752247-010V C- 752627-010V C- 752628-010V C- 752960-010V C- 752971-010V RK- 469472-010V RK- 456793-010V RK- 456804-010V C- 456274-010V RK- 469988-010V C- 256555-020V C- 256885-020V C- 272802-010V C- 272825-010V
90157-0016		LOCKING FLUID	
90157-0021		LOCKING FLUID	
90157-0022		SEALING COMPOUND	

PART NO	LAST AM	DESCRIPTION	GROUP NO
90157-0022		SEALING COMPOUND	C- 295305-010V C- 256555-030V C- 256885-020V C- 272802-010V C- 272825-010V C- 295305-010V C- 256885-020V C- 456100-010V C- 456457-010V C- 456458-010V C- 256885-020V C- 456100-020V C- 456457-010V C- 456458-010V C- 256885-020V C- 456100-020V C- 456457-020V C- 456458-020V C- 751860-010V C- 256885-020V C- 456100-020V C- 456457-030V C- 456458-030V C- 751860-010V C- 271115-020V C- 272765-010V C- 271115-020V C- 272765-020V C- 271115-020V C- 272765-020V C- 271115-030V C- 271114-040V C- 271115-040V C- 271513-020V C- 271513-030V C- 272381-030V C- 271513-030V C- 272381-030V C- 271513-040V C- 271513-050V C- 456274-010V C- 271274-020V C- 256014-030V C- 457881-010V C- 457881-020V C- 441738-010V C- 456274-010V C- 456455-020V C- 255907-020V C- 456160-010V C- 256856-010V C- 256232-020V C- 256232-030V RK- 529345-010V C- 271109-020V C- 456455-010V C- 271387-020V C- 271387-030V C- 271909-020V C- 271909-030V C- 271909-040V C- 271909-050V C- 456455-020V C- 400872-010V C- 491890-010V C- 256436-020V C- 491890-010V C- 533014-010V C- 284953-010V C- 533014-010V C- 272560-020V C- 272560-030V C- 272560-040V C- 272560-050V C- 272560-020V C- 272560-030V C- 272560-040V
90157-0034		SEALING COMPOUND	
90161-0001		STRIP	
90161-0006		STRIP	
P- 90163-0001		CONNECTION	
90163-0007		CONNECTION	
P- 90163-0013		SLEEVE	
90163-0014		NIPPLE	
90163-0016		SLEEVE	
90163-0028		SLEEVE	
90163-0042		NIPPLE	
90163-0050		NIPPLE	
90163-0052		NIPPLE	
90163-0056		SLEEVE	
90163-0057		NIPPLE	
90163-0062		SLEEVE	

PART NO	LAST AM	DESCRIPTION	GROUP NO
			C- 272560-060V
90163-0063		NIPPLE	C- 284953-010V
90163-0066		NIPPLE	C- 491890-010V
90163-0074		NIPPLE	C- 272560-020V
			C- 272560-030V
			C- 272560-040V
90163-0087		NIPPLE	C- 533014-010V
P- 90164-0003		LIGHT FIXTURE	C- 272825-010V
			C- 294785-010V
			C- 294780-010V
			C- 489299-010V
90164-0301		LAMPHOLDER	C- 295861-010V
			C- 441534-010V
			C- 441535-010V
90165-0002		CLIP	C- 271562-020V
			C- 271562-030V
			C- 271562-040V
			C- 271562-050V
			C- 271562-060V
			C- 271562-070V
			C- 256197-020V
			C- 256198-020V
			C- 256197-020V
			C- 256198-020V
			C- 256197-030V
			C- 256198-030V
			C- 256197-030V
			C- 256198-030V
			C- 256197-030V
			C- 491787-010V
			C- 491788-010V
			C- 491814-010V
			C- 491815-010V
			C- 256197-040V
			C- 491787-020V
			C- 491788-020V
			C- 491814-010V
			C- 491815-010V
			C- 491890-010V
90165-0006		CLIP	C- 271562-020V
			C- 456739-010V
			C- 456935-010V
			C- 456739-010V
			C- 456935-010V
			C- 456739-010V
			C- 456935-020V
			C- 752898-010V
90165-0008		CLIP	C- 456739-010V
			C- 456935-010V
			C- 456739-010V
			C- 456935-010V
			C- 456739-010V
			C- 456935-020V
			C- 752898-010V
90165-0007		CLIP	C- 271562-020V
			C- 271562-030V
			C- 271562-040V
			C- 271562-050V
			C- 271562-060V
			C- 271562-070V
90165-0009		CLIP	C- 271866-040V
			C- 271866-050V
90165-0010		CLIP	C- 228779-010V
90165-0010		CLIP	C- 293685-010V
			C- 293685-020V
			C- 293684-010V
			C- 293684-020V
			C- 293685-010V
			C- 293685-020V
			C- 293684-010V
			C- 293684-020V
			C- 293685-020V
			C- 293684-020V
			C- 293685-020V
			C- 293684-020V
90165-0019		CLIP	C- 751089-010V
90165-0022		CLIP	RK- 491780-010V
			RK- 520070-010V
			C- 271562-020V

PART NO	LAST AM	DESCRIPTION	GROUP NO
			C- 271562-030V
			C- 271562-040V
			C- 271562-050V
			C- 271562-060V
			C- 271562-070V
			C- 256197-020V
			C- 256198-020V
			C- 256203-020V
			C- 256197-020V
			C- 256198-020V
			C- 256203-020V
			C- 256197-030V
			C- 256198-030V
			C- 256203-030V
			C- 256197-030V
			C- 256203-030V
			C- 491787-010V
			C- 491788-010V
			C- 491814-010V
			C- 491815-010V
			C- 256197-040V
			C- 256203-040V
			C- 491787-020V
			C- 491788-020V
			C- 491814-010V
			C- 491815-010V
90165-0023		CLIP	C- 271562-020V
			C- 271562-030V
			C- 271562-040V
			C- 271562-050V
			C- 271562-060V
			C- 271562-070V
90165-0024		CLIP	C- 456953-010V
			C- 441000-020V
			C- 441000-030V
			C- 456321-010V
			C- 456322-010V
			C- 441000-030V
			C- 456321-020V
			C- 456322-020V
			C- 441000-040V
			C- 456321-030V
			C- 456322-030V
90165-0024		CLIP	C- 441000-050V
			C- 752845-010V
			C- 752846-010V
			C- 441736-010V
			C- 456953-010V
90165-0027		CLIP	C- 456739-010V
90165-0039		CLIP	C- 271562-060V
			C- 271562-070V
90165-0043		HOLDER	C- 751900-010V
90165-0044		CLIP	C- 271453-020V
			C- 271909-030V
			C- 271453-030V
			C- 271909-030V
			C- 271909-040V
			C- 491890-010V
			C- 271909-050V
			C- 491890-010V
90165-0051		CLIP	C- 271866-060V
90165-0056		CLIP	C- 752913-010V
			C- 752914-010V
90165-0057		CLIP	C- 283612-010V
			RK- 535606-010V
			C- 283612-010V
			C- 531657-010V
			C- 283612-010V
			C- 497534-020V
			C- 531657-010V
90165-0065		CLIP	RK- 491398-010V
			C- 491787-010V
			C- 491788-010V
			C- 491814-010V
			C- 491815-010V
			C- 491787-020V
			C- 491788-020V

PART NO	LAST AM	DESCRIPTION	GROUP NO
			C- 491814-010V
			C- 491815-010V
			RK- 491366-010V
90166-0006		CLIP	C- 544536-010V
90166-0007		HOSE	C- 256356-010V
90166-0008		HOSE	C- 271452-020V
			C- 490761-010V
			C- 491890-010V
			C- 490761-010V
90166-0011		HOSE	C- 491890-010V
90166-0045		HOSE	C- 491890-010V
90166-0048		HOSE	RK- 529345-010V
			C- 256197-020V
			C- 256198-020V
			C- 256197-020V
			C- 256198-020V
90166-0049		HOSE	C- 256217-020V
90166-0050		HOSE	C- 256217-030V
90166-0059		HOSE	C- 751398-010V
			C- 256436-020V
			C- 256236-020V
			C- 456321-010V
			C- 456322-010V
90166-0069		HOSE	C- 456348-010V
			C- 456349-010V
			C- 456321-020V
			C- 456322-020V
			C- 456348-020V
			C- 456349-020V
			C- 456321-030V
			C- 456322-030V
			C- 456348-020V
			C- 456349-020V
			C- 752645-010V
			C- 752646-010V
			C- 752913-010V
			C- 752914-010V
90166-0080		HOSE	C- 272445-020V
			RK- 456804-010V
			C- 256173-020V
			C- 256173-030V
			C- 256173-040V
			C- 272404-020V
			C- 272404-030V
			C- 272404-040V
			C- 272404-050V
90166-0081		HOSE	C- 272404-060V
90166-0087		HOSE	C- 232781-040V
			C- 256843-020V
			C- 256843-030V
			C- 256843-040V
			C- 256843-050V
			C- 272343-020V
			C- 295891-010V
			C- 272343-030V
			C- 295891-020V
			C- 272343-030V
			C- 295891-020V
			C- 272343-040V
			C- 295891-030V
			C- 272343-050V
			C- 272408-050V
90166-0089		HOSE	C- 295891-030V
			C- 256874-020V
			C- 441881-010V
			C- 256874-020V
			C- 441881-010V
			C- 256874-020V
			C- 441881-010V
			C- 256874-020V
90166-0090		HOSE	C- 256874-030V
			C- 401439-010V
90166-0101		HOSE	C- 401419-010V
90166-0105		HOSE	C- 751406-010V
			C- 401207-010V
90166-0107		HOSE	C- 400885-010V
			C- 256237-020V

PART NO	LAST AM	DESCRIPTION	GROUP NO
			C- 256237-030V
			C- 256237-040V
			C- 256237-050V
			C- 256237-060V
			C- 272408-020V
			C- 272408-030V
			C- 272408-040V
90166-0108		HOSE	C- 271562-020V
			C- 271562-030V
			C- 271562-040V
			C- 271562-050V
			C- 271562-060V
			C- 271562-070V
90166-0109		HOSE	C- 271562-020V
			C- 271562-030V
			C- 271562-040V
			C- 271562-050V
			C- 271562-060V
			C- 271562-070V
			C- 256198-020V
			C- 256198-030V
			C- 491814-010V
			C- 491815-010V
			C- 491814-010V
			C- 491815-010V
			C- 257381-020V
			C- 257382-020V
			C- 257381-020V
			C- 257382-020V
			C- 257381-030V
			C- 257382-030V
			C- 257381-030V
			C- 257382-030V
			C- 257381-030V
			C- 257382-030V
			C- 257381-030V
			C- 257382-030V
			C- 272765-010V
			C- 272765-020V
			C- 272765-030V
			C- 272765-040V
			C- 272765-050V
			CR- 256436-050V
			C- 272765-060V
			C- 271453-020V
			C- 271453-030V
			RK- 491131-010V
			RK- 491984-010V
			RK- 491512-010V
90166-0113		HOSE	RK- 491984-010V
			RK- 529345-010V
90166-0114		HOSE	C- 491890-010V
			C- 257381-020V
			C- 257382-020V
			C- 257381-020V
90166-0117		HOSE	C- 257382-020V
			CR- 256436-020V
			C- 271109-020V
			CR- 256436-020V
			C- 271109-020V
			CR- 256436-020V
			C- 271109-020V
			CR- 256436-020V
			C- 456455-010V
			CR- 256436-030V
90166-0117		HOSE	C- 456455-010V
			CR- 256436-040V
			C- 456455-020V
			CR- 256436-050V
90166-0118		HOSE	C- 456455-020V
			C- 469118-010V
			C- 469118-020V
			C- 271562-020V
			C- 271562-030V
			C- 271562-040V
			C- 271562-050V
			C- 271562-060V

PART NO	LAST AM	DESCRIPTION	GROUP NO
			C- 271862-070V
			C- 271866-020V
			C- 271866-030V
			C- 271909-030V
			C- 271866-030V
			C- 271909-030V
			C- 271866-040V
			C- 271909-040V
			C- 271866-050V
			C- 271909-050V
90166-0119		HOSE	C- 469118-010V
			C- 469118-020V
			RK- 469472-010V
			RK- 469766-010V
			C- 736865-010V
			C- 256233-020V
			C- 456265-010V
			C- 469366-010V
			C- 469804-010V
			C- 469366-010V
			C- 469804-010V
			C- 469366-020V
			C- 469804-010V
			C- 469366-030V
			C- 469804-010V
			C- 271866-030V
			C- 271909-030V
			C- 271866-030V
			C- 271909-030V
			C- 271866-040V
			C- 271909-040V
			C- 271866-050V
			C- 271909-050V
			RK- 491543-010V
			RK- 751638-010V
			RK- 751569-010V
			C- 271860-020V
			C- 295045-020V
			C- 271860-020V
			C- 295045-020V
			C- 295045-030V
			C- 469781-010V
			C- 295045-040V
			C- 469781-010V
			C- 295045-050V
			C- 469781-020V
			C- 295045-060V
			C- 469781-020V
90166-0119		HOSE	C- 294763-010V
			C- 469598-010V
			C- 469598-020V
			C- 736865-010V
90166-0122		HOSE	C- 751069-010V
			RK- 491780-010V
			C- 279809-010V
			C- 294715-010V
			C- 283832-010V
			RK- 491780-010V
90166-0124		HOSE	C- 533014-010V
			RK- 469766-010V
			RK- 491780-010V
			RK- 538415-010V
			C- 491976-010V
			C- 491976-020V
			C- 279809-010V
			C- 283800-010V
			C- 294715-010V
			C- 284953-010V
			C- 271860-020V
			C- 469781-010V
			C- 469781-020V
			C- 491976-010V
			C- 469781-020V
			C- 491976-020V
			C- 283800-010V
			C- 283632-010V
			RK- 491780-010V

PART NO	LAST AM	DESCRIPTION	GROUP NO
90166-0132		HOSE	C- 469863-010V
			RK- 520129-010V
			RK- 520130-010V
			C- 456863-010V
			RK- 520094-010V
			RK- 520096-010V
			C- 491650-010V
			C- 751478-010V
			RK- 520068-010V
			C- 736865-010V
			RK- 548056-010V
			RK- 547754-010V
			C- 256233-020V
			C- 469366-010V
			C- 469366-020V
			C- 469366-030V
			C- 271862-020V
			C- 271862-030V
			C- 271862-040V
			C- 271862-050V
			C- 271862-060V
			C- 271862-070V
			C- 256206-020V
			C- 256207-020V
			C- 256206-020V
			C- 256207-020V
			C- 256206-020V
			C- 256207-020V
			C- 256206-020V
			C- 256207-020V
90166-0132		HOSE	C- 256206-020V
			C- 256207-020V
			C- 256206-020V
			C- 256207-020V
			C- 456455-010V
			C- 456455-020V
			C- 271866-020V
			C- 271909-020V
			C- 272404-020V
			C- 271866-030V
			C- 271909-030V
			C- 272404-030V
			C- 271866-030V
			C- 271909-030V
			C- 272404-040V
			C- 271866-040V
			C- 271909-040V
			C- 272404-050V
			C- 271866-050V
			C- 271909-050V
			C- 272404-060V
			C- 272343-020V
			C- 295691-010V
			C- 456739-010V
			C- 456935-010V
			C- 456739-010V
			C- 456935-010V
			C- 456739-010V
			C- 456935-020V
			C- 752898-010V
			RK- 491416-010V
			RK- 491641-010V
			RK- 491447-010V
			C- 295045-020V
			C- 295045-030V
			C- 295045-040V
			C- 295045-050V
			C- 295045-060V
			C- 457189-010V
			C- 457924-010V
			C- 469598-010V
			C- 490600-010V
			C- 457189-020V
			C- 457924-020V
			C- 469598-020V
			C- 490600-020V
			C- 441736-010V

PART NO	LAST AM	DESCRIPTION	GROUP NO
			RK- 520087-010V
			C- 456963-010V
			RK- 520129-010V
			RK- 520130-010V
			C- 736865-010V
			C- 751410-010V
			RK- 751345-010V
			C- 752030-010V
90166-0133		HOSE	C- 736865-010V
			C- 735248-010V
			C- 469366-020V
90166-0133		HOSE	C- 271562-020V
			C- 271562-030V
			C- 271562-040V
			C- 271562-050V
			C- 271562-060V
			C- 271562-070V
			C- 256173-020V
			C- 256173-030V
			C- 256173-040V
			CR- 256547-020V
			CR- 256547-030V
			C- 456455-010V
			CR- 256547-030V
			C- 456455-010V
			CR- 256547-030V
			C- 456455-020V
			CR- 256547-030V
			C- 456455-020V
			C- 271909-020V
			C- 271866-030V
			C- 271909-030V
			C- 271866-030V
			C- 271909-030V
			C- 271866-040V
			C- 271909-040V
			C- 271866-050V
			C- 271909-050V
			RK- 491416-010V
			C- 457924-010V
			C- 469598-010V
			C- 457924-020V
			C- 469598-020V
			C- 735183-010V
			C- 735014-010V
			C- 735183-010V
90166-0134		HOSE	C- 735014-010V
			C- 271909-020V
			C- 271909-030V
			C- 271909-040V
90166-0138		HOSE	C- 271909-050V
			C- 434774-020V
			C- 434774-030V
			C- 434074-020V
			C- 434074-030V
			C- 434774-020V
			C- 434774-030V
			C- 434074-020V
			C- 434074-030V
			C- 751408-010V
			C- 434774-030V
			C- 434074-030V
			C- 434774-030V
			C- 434074-030V
90166-0141		HOSE	RK- 469472-010V
90166-0143		HOSE	C- 256197-030V
			C- 256198-030V
			C- 256197-030V
			C- 491814-010V
			C- 491815-010V
90166-0143		HOSE	C- 256197-040V
			C- 491814-010V
			C- 491815-010V
			CR- 256212-030V
			CR- 256213-030V
			C- 256217-040V
			C- 257381-030V

PART NO	LAST AM	DESCRIPTION	GROUP NO
			C- 257382-030V
			CR- 256212-040V
			CR- 256213-040V
			C- 256217-040V
			C- 257381-030V
			C- 257382-030V
			CR- 256212-040V
			CR- 256213-040V
			C- 256217-040V
			C- 257381-030V
			C- 257382-030V
			CR- 256212-050V
			CR- 256213-050V
			C- 256217-040V
			C- 257381-030V
			C- 257382-030V
			CR- 256438-050V
			RK- 456712-010V
			RK- 456716-010V
			RK- 752408-010V
			RK- 752410-010V
			RK- 456717-010V
			RK- 752412-010V
			RK- 752414-010V
			RK- 456717-010V
			RK- 752412-010V
			RK- 752414-010V
90166-0151		HOSE	C- 491207-020V
90166-0156		HOSE	C- 456812-010V
			C- 272381-030V
			C- 491207-010V
			RK- 469764-010V
			RK- 491589-030V
			RK- 491590-030V
90166-0158		HOSE	C- 491207-020V
			C- 272381-030V
90166-0159		RUBBER HOSE	C- 491207-010V
			CR- 256209-020V
			CR- 256210-020V
			CR- 256209-020V
			CR- 256210-020V
			CR- 256209-020V
			CR- 256210-020V
			CR- 256209-020V
			CR- 256210-020V
			CR- 256209-020V
			CR- 256210-020V
			CR- 256209-030V
90166-0005		ELECTRONIC VALVE	CR- 256210-030V
90171-0380		ALARM PANEL	C- 442080-010V
90178-0006		HOUR METER	RK- 520088-010V
			CE- 67716-010V
90178-0006		HOUR METER	CE- 68128-010V
			CE- 68304-010V
			CE- 68128-010V
			CE- 67716-010V
90182-0005		STRAP	CE- 68304-010V
			C- 491814-010V
			C- 491815-010V
			C- 491814-010V
			C- 491815-010V
90184-0001		LOCK	C- 736804-010V
			C- 271804-020V
			C- 271804-030V
			C- 271804-040V
90187-0029		VALVE	C- 229400-060V
			C- 271909-020V
			C- 271909-030V
			C- 271909-040V
			C- 271909-050V
			C- 256014-020V
			C- 256014-030V
			C- 256014-040V
90187-0045		/ALVE	C- 256014-050V
90187-0047		VALVE	RK- 529345-010V
			C- 271909-020V
			C- 271909-030V

PART NO	LAST AM	DESCRIPTION	GROUP NO
			C- 271909-040V
			C- 271909-050V
90187-0050		VALVE	C- 272560-020V
			C- 272560-030V
90187-0051		VALVE	C- 256233-020V
			C- 256233-030V
			C- 256233-040V
			C- 256233-050V
			C- 456836-010V
			C- 456836-020V
			C- 456836-030V
			C- 456836-040V
90187-0059		VALVE	RK- 491591-030V
			C- 272381-020V
			C- 272381-030V
			C- 272560-040V
			C- 272560-050V
			C- 751373-010V
			C- 751398-010V
90187-0066		VALVE	C- 736865-010V
90187-0069		VALVE	C- 271866-020V
			C- 271866-030V
			C- 271866-040V
			C- 271866-050V
90187-0311		HOLDER	C- 271866-020V
			C- 271866-030V
			C- 271866-040V
			C- 271866-050V
90189-0019		BALL BUSHING	C- 271115-020V
			C- 271115-030V
			C- 271115-040V
90189-0021		BALL BUSHING	CR- 294695-010V
90189-0024		SEAL RING	CR- 294695-010V
90189-0030		BALL BUSHING	C- 484984-010V
90189-0031		AXLE	C- 484984-010V
90191-0025		WHEEL	RK- 532210-010V
90191-0027		WHEEL	C- 271635-030V
			C- 271635-020V
			C- 271635-030V
90191-0047		WHEEL	RK- 532210-010V
90194-0015		SIGN	CE- 67716-010V
			CE- 68128-010V
			CE- 68304-010V
			CE- 68128-010V
			CE- 67716-010V
			CE- 68304-010V
90194-0016		SIGN	C- 456827-010V
			C- 441000-050V
			C- 295470-040V
			C- 735259-010V
			C- 735031-010V
90194-0038		SIGN	CE- 67716-010V
			CE- 68304-010V
			CE- 67716-010V
			CE- 68304-010V
90194-0040		FLASH SIGN	C- 295611-020V
			C- 295441-010V
			C- 295441-020V
			C- 295441-030V
			C- 295839-010V
			C- 295839-020V
			C- 256555-020V
			C- 256555-030V
			C- 295382-020V
			C- 441000-020V
			C- 441000-030V
			C- 441000-040V
			C- 283633-010V
			C- 295470-020V
			C- 295470-030V
			C- 283633-010V
			C- 457858-010V
			RK- 751345-010V
90194-0075		SIGN	C- 752244-010V
90194-0302		MOUNTING KIT F.CONVEF	RK- 41544-010V
			RK- 41548-010V
			RK- 41548-010V

PART NO	LAST AM	DESCRIPTION	GROUP NO
			CE- 41572-010V
			CE- 41574-010V
			CE- 41576-010V
			RK- 69874-010V
			RK- 69262-010V
			RK- 69289-010V
			RK- 69346-010V
			RK- 69393-010V
			RK- 69396-010V
			RK- 69501-010V
			RK- 69504-010V
			RK- 69507-010V
			RK- 69510-010V
			RK- 69562-010V
			RK- 41544-010V
			RK- 41546-010V
			RK- 41548-010V
90194-0302		MOUNTING KIT F.CONVERTING	CE- 41572-010V
			CE- 41574-010V
			CE- 41576-010V
90195-0010		TERMINAL BLOCK	CE- 67716-010V
			CE- 68128-010V
			CE- 68304-010V
			CE- 68128-010V
			CE- 67716-010V
			CE- 68304-010V
90195-0020		TERMINAL BLOCK	CE- 68128-010V
			C- 295681-010V
			C- 441634-010V
			C- 441635-010V
			C- 271452-030V
			C- 490761-010V
			CE- 68128-010V
			C- 441635-010V
90195-0028		TERMINAL BLOCK	C- 271181-020V
			C- 271181-030V
			C- 271181-040V
90195-0029		COUPLING STRIP	C- 271181-020V
			C- 271181-030V
			C- 271181-040V
90195-0037		CONNECTION BOX	RK- 479278-010V
			C- 256233-020V
			C- 256236-020V
			C- 295112-020V
			C- 295276-020V
			C- 295112-020V
			C- 295276-020V
			C- 490366-010V
			C- 295112-020V
			C- 295276-020V
			C- 490366-010V
			C- 295112-020V
			C- 295276-020V
			C- 490366-020V
			C- 490366-030V
			C- 752755-010V
			C- 256556-020V
			C- 256555-030V
			C- 272765-020V
			C- 441850-010V
			C- 456348-010V
			C- 456349-010V
			C- 456348-020V
			C- 456349-020V
			C- 456348-020V
			C- 456349-020V
90199-0010		LEVEL GLASS	C- 256014-020V
			C- 256014-030V
			C- 256014-040V
			C- 256014-050V
P- 90201-0010		VALVE	C- 271168-020V
			C- 271168-040V
90201-0014		VALVE	C- 271607-020V
P- 90201-0016		VALVE	C- 271168-020V
P- 90201-0017		VALVE	C- 271168-020V
90201-0057		VALVE	C- 271168-040V
P- 90201-0058		SOLENOID VALVE	C- 271168-040V

PART NO	LAST AM	DESCRIPTION	GROUP NO
90201-0303		SPARE PARTS KIT	C- 271168-020V
			C- 271168-040V
90201-0306		BLOCK	C- 271168-020V
			C- 271168-040V
90201-0307		PLATE	C- 271507-020V
90201-0308		PLATE	C- 271507-020V
90201-0315		PLUNGER	RK- 752170-010V
P- 90202-0011		CYLINDER	C- 256208-020V
			C- 256207-020V
			C- 256208-020V
			C- 256207-020V
			C- 256208-020V
			C- 256207-020V
			C- 256208-020V
			C- 256207-020V
			C- 256208-020V
			C- 256207-020V
			C- 256208-020V
			C- 256207-020V
90206-0031		HEATING ELEMENT	C- 256239-020V
			C- 295867-020V
			C- 256239-020V
			C- 295867-020V
			C- 256239-020V
			C- 295867-030V
			C- 256239-030V
			C- 295867-030V
			C- 272343-020V
			C- 295868-020V
			C- 272343-030V
			C- 295868-030V
			C- 272343-030V
			C- 295868-030V
			C- 272343-040V
			C- 295868-030V
			C- 272343-050V
			C- 295868-030V
			C- 256095-020V
			C- 295778-010V
			C- 256095-020V
			C- 295778-010V
			C- 256095-020V
			C- 295778-020V
			C- 256095-020V
			C- 295778-030V
			C- 256095-030V
			C- 295778-030V
			C- 256095-040V
90206-0036		HEATING ELEMENT	C- 295778-040V
90206-0053		HEATING ELEMENT	C- 294888-010V
P- 90206-0056		HEATING ELEMENT	C- 37877-030V
			C- 256014-020V
			C- 295778-010V
			C- 256014-020V
90206-0057		HEATING ELEMENT	C- 295778-010V
90206-0068		HEATING ELEMENT	C- 294887-010V
			C- 283613-010V
90206-0070		HEATING ELEMENT	C- 294887-010V
			C- 256014-020V
			C- 295778-010V
			C- 256014-020V
			C- 295778-010V
			C- 256014-030V
			C- 295778-020V
			C- 256014-030V
			C- 295778-030V
			C- 256014-040V
			C- 295778-030V
			C- 256014-050V
90206-0072		HEATING ELEMENT	C- 295778-040V
			C- 283617-010V
			C- 294888-010V
			C- 283617-010V
90206-0078			C- 294887-010V
90206-0079		HEATING ELEMENT	C- 294787-010V
90206-0083		HEATING ELEMENT	C- 456808-010V
		HEATING CARTRIDGE	CR- 283808-010V

PART NO	LAST AM	DESCRIPTION	GROUP NO
			C- 469316-010V
			C- 469955-010V
			CR- 283608-010V
			C- 469316-010V
			C- 469955-010V
90206-0086		HEATING CARTRIDGE	C- 256239-040V
90206-0322		GASKET	C- 256239-020V
			C- 256239-030V
			C- 256239-040V
			C- 272343-020V
			C- 272343-030V
			C- 272343-040V
			C- 272343-050V
			C- 256095-020V
			C- 256095-030V
			C- 256095-040V
90206-0326		CONNECTION BOX	C- 256014-020V
			C- 256014-030V
			C- 256014-040V
			C- 256014-050V
P- 90207-0040		VALVE	C- 272560-020V
90207-0363		GASKET	C- 440630-010V
			C- 440630-020V
			SP- 499255-010V
			SP- 499255-020V
			RK- 536502-010V
90207-0364		O-RING	RK- 536708-010V
90207-0365		GASKET	RK- 536502-010V
			C- 440630-010V
			C- 440630-020V
			SP- 499255-010V
			SP- 499255-020V
			RK- 536502-010V
90207-0367		GASKET	RK- 536708-010V
			C- 440630-010V
			SP- 499255-010V
			RK- 536502-010V
90207-0368		SEAL RING	RK- 536708-010V
			C- 271169-020V
90207-0368		SEAL RING	C- 272337-020V
			C- 271169-020V
			C- 272337-020V
			C- 271169-020V
			C- 272337-020V
			C- 271169-020V
90207-0416		SPRING	C- 272337-020V
			RK- 536502-010V
90207-0461		CLAMP	RK- 536708-010V
90206-0031		BUSHING	C- 456976-040V
			C- 256185-020V
			C- 491850-010V
			C- 294522-010V
90206-0032		BUSHING	C- 283626-010V
90206-0038		BUSHING	C- 469737-010V
			C- 256201-020V
			C- 256202-020V
			C- 256201-020V
			C- 256202-020V
			C- 256201-020V
			C- 256202-020V
			C- 256201-030V
			C- 256202-030V
			C- 256201-040V
			C- 256202-040V
			C- 256986-020V
			C- 456546-010V
			C- 456546-020V
			C- 294522-010V
90206-0039		BUSHING	C- 283626-010V
			C- 256201-020V
			C- 256202-020V
			C- 256201-020V
			C- 256202-020V
			C- 256201-020V
			C- 256202-020V
			C- 256201-030V
			C- 256202-030V

PART NO	LAST AM	DESCRIPTION	GROUP NO
			C- 256201-040V
			C- 256202-040V
90203-0047		COLLAR	C- 295310-010V
			C- 295310-020V
			C- 271115-030V
			C- 295310-030V
			C- 271115-030V
			C- 295310-040V
			C- 271115-030V
			C- 295310-050V
			C- 271115-040V
			C- 295310-060V
90209-0060		COLLAR	C- 295310-010V
			C- 295310-020V
			C- 295310-030V
			C- 295310-040V
			C- 295310-050V
			C- 295310-060V
90208-0051		CLAMPING ELEMENT	C- 283622-010V
			C- 469173-010V
90208-0052		CLAMPING ELEMENT	C- 283623-010V
			C- 456688-010V
90208-0052		CLAMPING ELEMENT	C- 283623-010V
			C- 283626-020V
			C- 283626-030V
90208-0053		CLAMPING ELEMENT	C- 456674-010V
			C- 476349-020V
90208-0054		CLAMPING ELEMENT	C- 283626-020V
			C- 283626-030V
90208-0060		CLAMPING ELEMENT	C- 751689-010V
90214-0028		BALL BEARING	C- 256234-020V
			C- 256236-020V
			C- 295112-020V
			C- 295276-020V
			C- 441146-010V
			C- 295112-020V
			C- 295276-020V
			C- 441146-010V
			C- 295112-020V
			C- 295276-020V
			C- 441146-010V
			C- 295112-020V
			C- 295276-020V
			C- 441146-010V
			C- 256966-020V
			C- 256967-020V
			C- 256966-020V
			C- 256967-020V
			C- 456321-010V
			C- 456322-010V
			C- 456348-010V
			C- 456349-010V
			C- 456919-010V
			C- 256966-020V
			C- 256967-020V
			C- 456321-020V
			C- 456322-020V
			C- 456348-020V
			C- 456349-020V
			C- 456919-010V
			C- 256966-020V
			C- 256967-020V
			C- 456321-030V
			C- 456348-020V
			C- 456349-020V
			C- 456919-010V
			C- 272014-020V
			C- 272445-020V
			C- 272014-020V
			C- 272445-020V
90214-0035		BALL BEARING	C- 256229-020V
			C- 257166-020V
			C- 257166-030V
			C- 469074-010V
			C- 257166-030V
			C- 469074-010V
			C- 469074-020V

PART NO	I AM	DESCRIPTION	GROUP NO
90214-0040		BALL BEARING	C- 272024-020V
			C- 272024-030V
90214-0068		BEARING	C- 283612-010V
			C- 283617-010V
90214-0068		BEARING	C- 283612-010V
			C- 283617-010V
			CR- 283605-010V
			C- 283612-010V
			CR- 283605-010V
			C- 283612-010V
90214-0092		BALL BEARING	C- 441798-010V
			C- 441811-010V
90214-0098		BALL BEARING	C- 256234-030V
			C- 256234-040V
			C- 456322-030V
			C- 752247-010V
			C- 752627-010V
			C- 752628-010V
			C- 752645-010V
			C- 752646-010V
			C- 752913-010V
			C- 752914-010V
			RK- 491744-010V
			C- 256014-020V
			C- 272004-020V
			C- 272024-020V
			C- 272028-020V
			C- 256014-020V
			C- 272004-020V
			C- 272024-020V
			C- 272028-020V
			C- 272004-020V
			C- 272014-030V
			C- 272024-020V
			C- 272028-030V
			C- 272004-020V
			C- 272014-030V
			C- 272024-020V
			C- 272028-030V
			C- 272004-030V
			C- 272024-030V
			C- 272028-040V
			C- 751088-010V
			C- 272004-040V
			C- 272024-030V
			C- 272028-050V
			C- 751088-020V
90214-0122		BALL BEARING	C- 491846-010V
			C- 491846-020V
			C- 491846-010V
			RK- 491302-010V
90214-0138		BALL BEARING	C- 752957-010V
			C- 271849-020V
			C- 271849-030V
			C- 267315-010V
			C- 752628-010V
			C- 271849-020V
90214-0303		RING	C- 441146-010V
			RK- 491744-010V
			C- 256014-020V
			C- 272004-020V
			C- 272014-020V
			C- 272024-020V
90214-0303		RING	C- 272028-020V
			C- 272445-020V
			C- 256014-020V
			C- 272004-020V
			C- 272014-020V
			C- 272024-020V
			C- 272028-020V
			C- 272445-020V
			C- 256014-030V
			C- 272004-020V
			C- 272014-030V
			C- 272024-020V
			C- 272028-030V
			C- 256014-030V

PART NO	LAST AM	DESCRIPTION	GROUP NO
			C- 272004-020V
			C- 272014-030V
			C- 272024-020V
			C- 272028-030V
			C- 256014-040V
			C- 272004-030V
			C- 272024-030V
			C- 272028-040V
			C- 751088-010V
			C- 256014-050V
			C- 272004-040V
			C- 272024-030V
			C- 272028-050V
			C- 751088-020V
90214-0312		SEAL RING	C- 256173-030V
90217-0026		NUT	C- 256173-040V
			C- 456274-010V
			RK- 520071-010V
			RK- 520095-010V
			RK- 520071-010V
			C- 456274-010V
			C- 256089-020V
			C- 271274-020V
			C- 256089-020V
			C- 271274-020V
			C- 469452-010V
			C- 469452-020V
			C- 751800-010V
			C- 469452-030V
			C- 751800-020V
			C- 456274-010V
90217-0036		NUT	C- 256014-020V
			C- 256014-030V
			C- 256014-040V
			C- 256014-050V
90217-0041		NIPPLE	C- 271113-020V
			C- 456588-010V
			C- 456588-020V
			C- 456588-030V
90217-0044		NIPPLE	C- 271113-020V
90217-0047		NUT	C- 271888-020V
90220-0036		CABLE	CE- 68780-010V
90220-0057		CABLE	C- 442080-010V
90220-0058		CABLE	C- 442094-010V
90220-0059		CABLE	RK- 41567-010V
90220-0059		CABLE	RK- 41461-010V
			RK- 41377-010V
			CE- 67718-010V
			CE- 68131-010V
			CE- 68780-010V
			RK- 68722-010V
			RK- 68725-010V
			RK- 68885-010V
			RK- 68874-010V
			RK- 69218-010V
			RK- 69289-010V
			RK- 69501-010V
			RK- 69504-010V
			RK- 69507-010V
			RK- 69510-010V
			RK- 69562-010V
			RK- 41511-010V
			RK- 41512-010V
			RK- 41510-010V
			CE- 68131-010V
			CE- 67718-010V
			CE- 68780-010V
			RK- 41567-010V
			RK- 41377-010V
			RK- 41461-010V
			RK- 41510-010V
			RK- 41511-010V
			RK- 41512-010V
90220-0069		CABLE	RK- 520068-010V
90220-0071		CABLE	CE- 68780-010V
90224-0003		NIPPLE	C- 469366-010V
			C- 469366-020V

PART NO	LAST AM	DESCRIPTION	GROUP NO
			C- 296045-030V
			C- 296045-040V
90224-0078		CONNECTION	C- 456757-010V
			C- 456757-020V
			C- 271909-020V
			C- 271909-030V
			C- 271888-040V
			C- 271909-040V
			C- 271888-050V
			C- 271909-050V
			C- 256014-020V
			C- 256014-030V
			C- 256014-040V
			C- 256014-050V
90224-0090		SLEEVE	C- 256232-030V
90224-0094		NIPPLE	C- 271452-020V
			C- 271909-020V
			C- 271452-020V
			C- 271909-030V
			C- 271452-020V
			C- 271909-030V
			C- 271909-040V
			C- 490761-010V
			C- 271909-050V
			C- 490761-010V
90224-0097		NIPPLE	C- 256232-020V
90224-0154		SLEEVE	C- 457924-020V
90224-0176		GLAND	C- 271888-040V
			C- 271888-050V
90224-0186		NIPPLE	C- 271109-020V
			C- 456455-010V
			C- 456455-020V
90224-0228		CONNECTION	RK- 491416-010V
90224-0234		BRACKET	C- 752960-010V
			C- 752971-010V
			C- 272833-010V
			C- 272882-010V
			C- 295188-010V
			C- 272833-010V
			C- 272882-010V
			C- 295188-010V
			C- 456459-010V
			C- 456460-010V
			C- 456459-010V
			C- 456460-010V
			C- 456459-020V
			C- 456460-020V
			C- 751900-010V
			C- 456459-030V
			C- 456460-030V
90224-0270		PLATE	C- 751900-010V
			C- 294715-010V
			C- 283632-010V
			C- 457159-010V
90224-0296		GROMMET	C- 457159-020V
			C- 271888-020V
			C- 271909-020V
			C- 271888-030V
			C- 271909-030V
			C- 271888-030V
			C- 271909-030V
			C- 271888-040V
			C- 271909-040V
			C- 271888-050V
			C- 271909-050V
			RK- 456716-010V
			RK- 752408-010V
			RK- 752410-010V
90224-0297		REDUCER	C- 271909-020V
			C- 271909-030V
			C- 271909-040V
			C- 271909-050V
90224-0298		CONNECTION	C- 271909-020V
			C- 271909-030V
			C- 271909-040V
			C- 271909-050V
90224-0302		CONNECTION	C- 271909-020V

PART NO	LAST AM	DESCRIPTION	GROUP NO
90224-0303		CONNECTION	C- 533014-010V
			C- 271909-020V
			C- 271909-030V
			C- 271909-040V
90224-0304		CONNECTION	C- 456935-020V
			C- 295045-050V
			C- 295045-060V
90224-0306		PIPE CONNECTION	C- 271866-020V
			C- 271866-030V
90224-0305		PIPE CONNECTION	C- 271866-040V
			C- 271866-050V
90224-0307		CONNECTION	C- 441510-010V
			RK- 536415-010V
			C- 469366-010V
			C- 469366-020V
			C- 469366-030V
			RK- 536439-010V
			RK- 547966-010V
			C- 272560-020V
			C- 295045-020V
			C- 272560-030V
			C- 295045-020V
			C- 272560-030V
			C- 295045-030V
			C- 272560-030V
			C- 295045-040V
			C- 272560-040V
			C- 295045-050V
			C- 272560-050V
			C- 295045-060V
			CR- 449275-010V
			C- 469598-020V
90224-0308		BANJO CONNECTION	C- 272560-040V
			C- 272560-050V
90224-0310		CONNECTION	C- 295045-020V
			C- 295045-030V
			C- 295045-040V
			C- 295045-050V
			C- 295045-060V
90224-0312		GROMMET	RK- 491131-010V
90224-0324		CONNECTION	C- 271909-030V
			C- 271909-040V
			C- 271909-050V
			RK- 536439-010V
			RK- 547966-010V
			C- 295045-060V
			C- 295045-060V
			C- 469598-020V
90224-0329		ELBOW COUPLING	C- 271909-050V
90224-0356		GROMMET	C- 272765-060V
90226-0004		CABINET	C- 456975-020V
			C- 250610-010V
			C- 456975-010V
90230-0011		NON RETURN VALVE	C- 271866-050V
90230-0017		NON RETURN VALVE	C- 271507-020V
90230-0018		NON RETURN VALVE	C- 469118-010V
			C- 469118-020V
90230-0028		NON-RETURN VALVE	C- 491536-010V
			RK- 491416-010V
P- 90232-0033		PHOTOCELL	C- 232761-040V
90232-0038		PHOTOCELL	C- 294658-010V
			C- 457867-010V
90232-0039		PHOTOCELL	C- 272404-020V
			C- 272404-030V
			C- 272404-040V
			C- 272404-050V
			C- 272404-060V
90232-0058		PHOTOCELL	RK- 491539-010V
90232-0055		PHOTOCELL	RK- 490877-010V
			C- 491897-010V
			C- 491976-010V
			C- 491976-020V
			C- 491976-010V
			C- 491976-020V
			C- 491897-010V
			RK- 751570-010V
			RK- 491539-010V

PART NO	LAST AM	DESCRIPTION	GROUP NO
90232-0066		PHOTOCELL	C- 400896-010V
90232-0307		REFLECTOR	C- 232761-040V
90232-0308		REFLECTOR MIRROR	C- 272404-020V
90233-0009		TUBE FUSE	CE- 67716-010V
			CE- 67722-010V
			CE- 68128-010V
			CE- 68129-010V
			CE- 68304-010V
			CE- 68305-010V
			CE- 68128-010V
			CE- 68129-010V
			CE- 67716-010V
			CE- 67722-010V
			CE- 68304-010V
			CE- 68305-010V
90233-0019		TUBE FUSE	CE- 67722-010V
			CE- 68129-010V
			CE- 68305-010V
			CE- 68129-010V
			CE- 67722-010V
			CE- 68305-010V
90233-0020		TUBE FUSE	CE- 67722-010V
			CE- 68129-010V
			CE- 68305-010V
			CE- 68129-010V
			CE- 67722-010V
			CE- 68305-010V
90235-0032		VALVE	C- 457824-010V
			C- 457824-020V
P- 90235-0035		VALVE	C- 283600-010V
P- 90235-0036		VALVE	C- 294763-010V
P- 90235-0041		VALVE	C- 469738-010V
			C- 469738-020V
P- 90235-0084		VALVE	C- 469118-010V
			C- 469118-020V
90235-0151		NON-RETURN VALVE	C- 271909-020V
			C- 271909-030V
			C- 271909-040V
			C- 271909-050V
P- 90235-0204		VALVE	C- 457824-010V
			C- 457824-020V
90235-0208		VALVE	C- 279809-010V
			C- 294715-010V
			C- 283632-010V
			C- 457159-010V
			C- 457159-020V
90235-0241		VALVE	C- 401207-010V
			C- 400896-010V
90235-0246		VALVE	C- 272343-020V
90235-0247		VALVE	C- 256237-020V
90235-0247		VALVE	C- 256238-020V
90235-0251		VALVE	C- 279809-010V
			C- 283600-010V
			C- 283632-010V
90235-0259		VALVE	C- 272560-020V
			C- 272560-030V
			C- 272560-040V
			C- 272560-050V
90235-0260		VALVE	C- 272241-020V
90235-0261		VALVE	C- 272241-020V
90235-0262		VALVE	C- 272381-020V
90235-0263		VALVE	C- 456285-010V
			C- 441881-010V
90235-0266		VALVE	C- 272241-020V
90235-0267		VALVE	C- 272560-020V
			C- 272560-030V
			C- 272560-040V
90235-0271		VALVE	RK- 469769-010V
90235-0274		VALVE	RK- 520069-010V
			C- 256239-020V
			C- 256238-040V
			C- 272343-030V
			C- 272343-040V
			C- 295891-030V
			C- 272343-050V
			C- 295891-030V
			C- 256095-020V

PART NO	LAST AM	DESCRIPTION	GROUP NO
90236-0275		VALVE	C- 272560-040V C- 272560-050V C- 256237-030V C- 256237-040V C- 256238-030V C- 295891-010V C- 295891-020V C- 255957-020V C- 256055-020V C- 256084-020V C- 271169-020V C- 272024-020V C- 272025-020V C- 272337-020V C- 456309-010V C- 255957-020V C- 256055-020V C- 256084-020V C- 271169-020V C- 272024-020V C- 272025-020V C- 272337-020V C- 456309-010V C- 256055-030V C- 256084-020V C- 271169-020V C- 272024-020V C- 272025-020V C- 272337-020V C- 456309-020V C- 256055-040V C- 256084-020V C- 271169-020V C- 272024-020V C- 272025-020V C- 272337-020V C- 456309-020V C- 457924-010V C- 457924-020V C- 271868-020V RK- 469788-010V C- 736865-010V RK- 539415-010V C- 469804-010V C- 271880-020V C- 469781-010V C- 469781-020V C- 736865-010V C- 271909-020V C- 271909-030V C- 271909-040V C- 271909-050V C- 256237-050V C- 256239-030V C- 256237-060V C- 256239-040V C- 256055-050V C- 256095-030V C- 272024-030V C- 272025-030V C- 456309-030V C- 256055-060V C- 256095-040V C- 272024-030V C- 272025-030V C- 456309-040V C- 400872-010V C- 401207-010V C- 400895-010V C- 490600-010V C- 490600-020V C- 490600-010V C- 490600-020V RK- 491416-010V C- 400872-010V C- 400865-010V RK- 520068-010V
90236-0275		VALVE	
90236-0276		VALVE	
90236-0278		VALVE	
90235-0280		VALVE	
90236-0281		VALVE	
90236-0282		VALVE	
90236-0289		VALVE	
90236-0290		VALVE	
90236-0292		THROTTLE CHECK VALVE	
90236-0700		VALVE	
90236-0723		THROTTLE VALVE	
90235-0732		THROTTLE CHECK VALVE	
90236-0012		BRACKET	

PART NO	LAST AM	DESCRIPTION	GROUP NO
90236-0020		BRACKET	C- 469738-010V C- 533014-010V C- 271909-020V C- 256873-020V C- 256873-040V RK- 520068-010V C- 295026-010V C- 295026-020V C- 295026-030V C- 271442-030V C- 271443-030V C- 271442-030V C- 271443-030V C- 271442-030V C- 271443-030V C- 271442-030V C- 271443-030V C- 490947-010V C- 490947-020V C- 295026-010V C- 295026-020V C- 295026-030V C- 295026-010V C- 295026-020V C- 295026-030V C- 256239-020V C- 256095-020V C- 283602-010V C- 283618-010V C- 283602-010V C- 283618-010V C- 272343-020V C- 272343-030V C- 256239-020V C- 272343-020V C- 272343-030V C- 272343-040V C- 272343-050V C- 256095-020V C- 256239-020V C- 256095-020V C- 283631-010V C- 283617-010V CR- 283605-010V C- 256237-020V C- 256238-020V C- 256237-030V C- 256238-020V C- 256237-040V C- 256238-030V C- 295891-010V C- 295891-020V C- 255957-020V C- 256055-020V C- 256084-020V C- 272014-020V C- 272025-020V C- 456309-010V C- 255957-020V C- 256055-020V C- 256084-020V C- 272014-020V C- 272025-020V C- 456309-010V C- 256055-030V C- 256084-020V C- 272025-020V C- 456309-020V C- 256055-040V C- 256084-020V C- 272025-020V C- 456309-020V C- 229400-060V C- 295891-010V C- 295891-020V C- 256238-020V C- 256238-030V
90236-0028		BRACKET	
90236-0303		SCREW	
P- 90237-0044		DOOR HANDLE	
90237-0053		GRUB SCREW	
90237-0064		LOCK	
90237-0071		LOCK	
90237-0071		LOCK	
90237-0307		BASE	
90237-0308		WASHER	
P- 90239-0073		CYLINDER	
P- 90239-0075		CYLINDER	
P- 90239-0084		CYLINDER	
90239-0088		BRACKET	
90239-0099		BRACKET	
90239-0126		BRACKET	
90239-0127		BRACKET	
90239-0153		BRACKET	
P- 90239-0166		CYLINDER	

PART NO	LAST AM	DESCRIPTION	GROUP NO
			C- 295891-010V
			C- 295891-020V
			C- 255957-020V
			C- 256084-020V
			C- 271169-020V
			C- 272337-020V
			C- 456309-010V
			C- 255957-020V
			C- 256084-020V
			C- 271169-020V
			C- 272337-020V
			C- 456309-010V
			C- 256084-020V
			C- 271169-020V
			C- 272337-020V
			C- 456309-020V
			C- 256084-020V
			C- 271169-020V
			C- 272337-020V
			C- 456309-020V
			C- 294763-010V
90239-0181		CONNECTION	C- 232781-040V
90239-0186		CYLINDER	C- 283612-010V
P- 90239-0189		CYLINDER	C- 529924-010V
			C- 256237-020V
			C- 256237-030V
			C- 256237-040V
			C- 283617-010V
			C- 256055-020V
			C- 272024-020V
			C- 272025-020V
			C- 256055-020V
			C- 272024-020V
			C- 272025-020V
			C- 256055-030V
			C- 272024-020V
			C- 272025-020V
			C- 256055-040V
			C- 272024-020V
			C- 272025-020V
			C- 283617-010V
			CR- 283605-010V
			C- 529924-010V
			C- 229400-060V
			C- 232781-040V
			C- 529924-010V
P- 90239-0298		CYLINDER	C- 255907-020V
			C- 456180-010V
90239-0299		CYLINDER	C- 294658-010V
			C- 283631-010V
			C- 457867-010V
90239-0320		BRACKET	C- 283617-010V
			C- 272024-020V
			C- 283617-010V
			CR- 283605-010V
90239-0321		BRACKET	C- 283612-010V
90239-0357		BRACKET	C- 533903-010V
			C- 256208-020V
			C- 256207-020V
			C- 256208-020V
			C- 256207-020V
			C- 256208-020V
			C- 256207-020V
			C- 256208-020V
			C- 256207-020V
			C- 256208-020V
			C- 256207-020V
			RK- 547300-010V
			C- 533903-010V
90239-0384		BRACKET	C- 283612-010V
90239-0405		ROD END	C- 449314-010V
			C- 255907-020V
			C- 456180-010V
			C- 256208-020V
			C- 256207-020V

PART NO	LAST AM	DESCRIPTION	GROUP NO
			C- 256208-020V
			C- 256207-020V
			C- 256208-020V
			C- 256207-020V
			C- 256208-020V
			C- 256207-020V
			C- 256208-020V
			C- 256207-020V
			C- 256208-020V
			C- 256207-020V
			C- 272024-030V
90239-0453		BRACKET	C- 256237-050V
			C- 256238-040V
			C- 256237-060V
			C- 256238-040V
			C- 256084-030V
			C- 272024-030V
			C- 272025-030V
			C- 456309-030V
			C- 256084-040V
			C- 272024-030V
			C- 272025-030V
			C- 456309-040V
90239-0460		BRACKET	C- 256055-050V
			C- 256055-060V
90239-0479		BRACKET	C- 469738-010V
90239-0486		BRACKET	C- 484984-010V
90239-0487		BRACKET	C- 256239-030V
			C- 256239-040V
			C- 256095-030V
			C- 256095-040V
			CR- 283618-020V
			C- 449323-010V
			CR- 283618-020V
90239-0488		BRACKET	C- 449314-010V
			C- 295891-030V
90239-0489		BRACKET	C- 484984-010V
90239-0490		BRACKET	C- 449323-010V
90239-0491		BRACKET	C- 400872-010V
90239-0492		BRACKET	C- 401207-010V
			C- 400895-010V
90239-0516		PISTON ROD HEAD	C- 256237-050V
			C- 256238-040V
			C- 256237-060V
			C- 256238-040V
			C- 295891-030V
			C- 256055-050V
			C- 256084-030V
			C- 272025-030V
			C- 456309-030V
			C- 256055-060V
			C- 256084-040V
			C- 272025-030V
			C- 456309-040V
90239-0532			C- 256237-050V
			C- 256238-030V
			C- 256237-060V
			C- 256238-040V
			C- 256055-050V
			C- 256095-030V
			C- 256055-060V
			C- 256095-040V
90239-0732		CYLINDER	C- 283617-010V
			CR- 283607-010V
90239-0734		CYLINDER	C- 457868-010V
			C- 283614-010V
			C- 457868-010V
			C- 283614-010V
			C- 497534-020V
90239-0760		CYLINDER	C- 271934-020V
			C- 271934-030V
			C- 449314-010V
			RK- 491324-010V
			C- 752030-010V
P- 90239-0773		LINDER	C- 272024-030V
			C- 272025-030V
			C- 272024-030V

PART NO	LAST AM	DESCRIPTION	GROUP NO
P- 90239-0779		CYLINDER	C- 272025-030V C- 256237-050V C- 256238-040V C- 256237-080V C- 256238-040V C- 256055-050V C- 256084-030V C- 271169-030V C- 272337-030V C- 456309-030V C- 256055-080V C- 256084-040V C- 271169-040V C- 272337-040V C- 456309-040V
P- 90239-0813		CYLINDER	C- 449313-010V
90239-0814		CYLINDER	C- 449314-010V
90239-0816		CYLINDER	C- 484984-010V
90239-0819		CYLINDER	C- 401207-010V
90239-0819		CYLINDER	C- 400695-010V
90239-0820		CYLINDER	CR- 283618-020V
90239-0821		CYLINDER	CR- 283618-020V C- 449323-010V CR- 283618-020V
90239-0824		CYLINDER	C- 401207-010V C- 400695-010V
90239-0846		CYLINDER	C- 272343-040V C- 272343-050V
90239-0847		CYLINDER	C- 256239-030V C- 256239-040V C- 256095-030V C- 256095-040V
90239-0858		CYLINDER	C- 295891-030V
90239-0863		CYLINDER	C- 441881-010V
P- 90239-0910		CYLINDER	C- 469736-010V C- 484984-010V
90239-0983		CYLINDER	C- 751478-010V RK- 751345-010V
90239-0984		CYLINDER	C- 400672-010V
90239-0998		CYLINDER	C- 400695-010V
90240-0048		BEARING	C- 256197-020V C- 256198-020V C- 256197-020V C- 256198-020V C- 256197-030V C- 256198-030V C- 256197-030V C- 491814-010V C- 491815-010V C- 256197-040V C- 491814-010V C- 491815-010V
90240-0060		BEARING	C- 256197-020V C- 256198-020V C- 256197-020V C- 256198-020V C- 256197-030V C- 256198-030V C- 256197-030V C- 491787-010V C- 491788-010V C- 491814-010V C- 491815-010V C- 256197-040V C- 491787-020V C- 491788-020V C- 491814-010V C- 491815-010V
90240-0062		RICTION BEARING	CR- 256436-020V C- 271115-030V CR- 256436-030V C- 271115-030V CR- 256436-040V C- 271115-030V C- 271115-040V
90240-0055		RICTION BEARING	C- 256272-020V C- 272785-030V

PART NO	LAST AM	DESCRIPTION	GROUP NO
90240-0065		RICTION BEARING	C- 272785-040V C- 272785-050V C- 272785-080V
90240-0073		RICTION BEARING	C- 255907-020V C- 456180-010V
90240-0076		RICTION BEARING	C- 271115-030V C- 271115-040V
90240-0083		RICTION BEARING	C- 271115-020V C- 271115-030V
90240-0090		RICTION BEARING	C- 271115-040V C- 295310-010V C- 295310-020V C- 295310-030V C- 295310-040V C- 295310-050V C- 295310-080V
90240-0091		RICTION BEARING	C- 295310-010V C- 295310-020V C- 295310-030V C- 295310-040V C- 295310-050V C- 295310-080V
90240-0092		RICTION BEARING	C- 295310-010V C- 295310-020V C- 295310-030V C- 295310-040V C- 295310-050V C- 295310-080V
90240-0093		PLAIN BEARING	C- 283604-010V C- 283604-020V C- 256808-020V C- 256808-030V C- 283604-010V
90240-0094		PLAIN BEARING	C- 295211-010V
90240-0109		PLAIN BEARING	C- 441821-010V C- 441271-010V C- 441271-020V RK- 491883-010V
90240-0110		PLAIN BEARING	C- 441881-010V
90240-0118		PLAIN BEARING	RK- 76123-010V
90240-0146		BUSHING	RK- 491373-010V C- 256014-040V C- 256014-050V
90240-0172		BUSHING	C- 441304-030V C- 441307-030V C- 441468-040V C- 456309-040V
90242-0033		O-RING	RK- 820070-010V RK- 820167-010V RK- 820070-010V RK- 820167-010V RK- 820070-010V RK- 820167-010V RK- 820070-010V RK- 820167-010V RK- 820070-010V RK- 820167-010V
90242-0039		O-RING	RK- 456804-010V
90242-0064		O-RING	C- 272381-020V C- 272381-030V C- 529933-010V C- 295402-020V C- 295667-020V C- 295402-020V C- 295667-020V C- 295402-020V C- 295667-030V C- 295402-020V C- 295667-030V C- 295402-020V C- 295667-030V C- 529933-010V
90242-0065		O-RING	RK- 456804-010V C- 256232-020V C- 295667-020V C- 256232-020V C- 295667-020V

PART NO	LAST AM	DESCRIPTION	GROUP NO
			C- 256232-020V
			C- 295667-030V
			C- 256232-030V
			C- 295667-030V
			C- 256232-030V
			C- 295667-030V
			C- 272381-020V
			C- 272381-030V
			C- 491207-010V
			C- 491207-020V
90242-0084		O-RING	C- 456274-010V
			C- 271274-020V
			C- 295778-010V
			C- 271274-020V
			C- 295778-010V
			C- 295778-020V
			C- 469452-010V
			C- 295778-030V
			C- 469452-010V
			C- 295778-030V
			C- 469452-020V
			C- 751800-010V
			C- 295778-040V
			C- 469452-030V
			C- 751800-020V
			C- 456274-010V
90242-0093		O-RING	CR- 256204-020V
			CR- 256205-020V
			CR- 256204-020V
			CR- 256205-020V
			CR- 256204-030V
			CR- 256205-030V
			CR- 256204-040V
			CR- 256205-040V
			CR- 256204-040V
			CR- 256205-040V
			CR- 256204-050V
			CR- 256205-050V
90242-0169		O-RING	C- 751393-010V
90243-0061		FAN NOZZLE	C- 271414-020V
90243-0118		TOOL BAG	C- 533905-010V
90243-0125		SPIRIT LEVEL	C- 76402-010V
90243-0126		PROTECTIVE GOGGLES	C- 76594-010V
90243-0133		CONTAINER	C- 469535-010V
90243-0134		FLOW METER	C- 469118-010V
			C- 469118-020V
90243-0136		SPIRIT LEVEL	C- 456975-020V
			C- 456975-010V
90243-0137		MEASURING INSTRUMENT	C- 533014-010V
			C- 77091-010V
90243-0147		FLOW METER	C- 533014-010V
P- 90243-0155		FLOW METER	RK- 520068-010V
90243-0164		HOOK SPANNER ADJUST.DIA.4	C- 735268-010V
			C- 735271-010V
90243-0165		SPIRIT LEVEL	C- 735268-010V
			C- 735271-010V
90243-0173		PARTING TOOL 30,5 MM	C- 735268-010V
			C- 735271-010V
90243-0188		PUNCH	RK- 520098-010V
90248-0005		POWER SUPPLY	C- 442080-010V
90248-0013		HINGE	C- 256873-020V
			C- 256873-040V
90248-0022		HINGE	C- 271114-040V
90252-0034		DRIVE BELT	RK- 547757-030V
			RK- 550136-010V
90256-0001		TAPE HOLDER	C- 272508-010V
			C- 469535-010V
90257-0001		FILTER PLUG	RK- 547751-030V
			RK- 547751-020V
			C- 294656-010V
			C- 283631-010V
90257-0002		FILTER PLUG	C- 256438-020V
90257-0003		FILTER PLUG	C- 469737-010V
			C- 279809-010V
			C- 283602-010V
			C- 283618-010V
			C- 283622-010V

PART NO	LAST AM	DESCRIPTION	GROUP NO
			C- 294716-010V
			C- 283602-010V
			C- 283618-010V
			C- 283632-010V
			CR- 283618-020V
			C- 449323-010V
			C- 457159-010V
			C- 457924-010V
			C- 469173-010V
			CR- 283618-020V
			C- 457159-020V
			C- 457924-020V
			C- 469173-010V
90257-0006		FILTER PLUG	C- 735183-010V
90258-0001		HOLLOW PIN	C- 469736-020V
			RK- 540009-010V
90258-0002		HOLLOW PIN	C- 469173-010V
90258-0007		TAPER PIN	C- 283621-010V
			C- 456696-020V
90258-0031		HOLLOW PIN	C- 456032-010V
90259-0017		OVERLOAD PROTECTION	CE- 67716-010V
			CE- 68128-010V
			CE- 68304-010V
			CE- 68128-010V
90259-0017		OVERLOAD PROTECTION	CE- 67716-010V
			CE- 68304-010V
90259-0021		OVERLOAD PROTECTION	CE- 67716-010V
			CE- 68128-010V
			CE- 68304-010V
			CE- 68128-010V
			CE- 67716-010V
			CE- 68304-010V
90259-0022		OVERLOAD PROTECTION	CE- 67716-010V
			CE- 68128-010V
			CE- 68304-010V
			CE- 68128-010V
			CE- 67716-010V
			CE- 68304-010V
90259-0024		OVERLOAD PROTECTION	CE- 67716-010V
			CE- 68128-010V
			CE- 68304-010V
			CE- 68128-010V
			CE- 67716-010V
			CE- 68304-010V
90259-0026		OVERLOAD PROTECTION	CE- 67716-010V
			CE- 68128-010V
			CE- 68304-010V
			CE- 68128-010V
			CE- 67716-010V
			CE- 68304-010V
90259-0306		AUXILIARY CONTACT	CE- 67716-010V
			CE- 68128-010V
			CE- 68304-010V
			CE- 68128-010V
			CE- 67716-010V
			CE- 68304-010V
90261-0001		PIPE PLUG	C- 271513-050V
90261-0003		PIPE PLUG	RK- 491131-010V
90261-0008		PIPE PLUG	C- 256843-020V
			C- 256843-030V
			C- 256843-040V
			C- 256843-050V
90261-0018		PIPE PLUG	C- 256438-020V
90261-0025		PIPE PLUG	C- 441695-020V
90261-0033		PLUG	C- 456588-030V
90261-0041		PLASTIC PLUG	RK- 520068-010V
90264-0005		FAN	C- 256237-020V
			C- 256237-030V
			C- 256237-040V
			C- 272408-020V
			C- 272408-030V
90264-0026		FAN	CE- 67716-010V
			CE- 68128-010V
			CE- 68304-010V
			CE- 68128-010V
			CE- 67716-010V
			CE- 68304-010V

PART NO	LAST AM	DESCRIPTION	GROUP NO
90264-0042		FAN	C- 256237-060V
			C- 256237-060V
			C- 272408-040V
			C- 272408-060V
90264-0308		SILENCER	C- 256237-020V
			C- 256237-030V
90264-0308		SILENCER	C- 256237-060V
90264-0317		GRILL	C- 294785-010V
90264-0319		FLANGE	C- 256237-020V
			C- 256237-030V
			C- 256237-040V
			C- 256237-050V
			C- 256237-060V
90265-0020		CONNECTION BOX	C- 295611-020V
			C- 271569-040V
			C- 271569-050V
90265-0041		APPLIANCE BOX	C- 401207-010V
			C- 400895-010V
90265-0054		ACCESSORY BOX	C- 457856-010V
90265-0056		CONNECTION BOX	C- 441000-020V
			C- 441000-030V
			C- 441000-040V
			C- 441000-050V
90265-0308		BLANK-OFF FLANGE	CE- 67716-010V
			CE- 68128-010V
			CE- 68304-010V
			CE- 68128-010V
			CE- 67716-010V
			CE- 68304-010V
90265-0320		PLATE	C- 457856-010V
90266-0006		TUBE	C- 271562-020V
			C- 271562-030V
			C- 271562-040V
			C- 271562-050V
			C- 271562-060V
			C- 271562-070V
90266-0019		PIPE	C- 271562-040V
			C- 271562-050V
			C- 271562-060V
			C- 271562-070V
			C- 256197-030V
			C- 256198-030V
			C- 256203-030V
			C- 256197-030V
			C- 256203-030V
			C- 491814-010V
			C- 491815-010V
			C- 256197-040V
			C- 256203-040V
			C- 491814-010V
			C- 491815-010V
			C- 257381-030V
			C- 257382-030V
			C- 257381-030V
			C- 257382-030V
			C- 257381-030V
			C- 257382-030V
			C- 257381-030V
			C- 257382-030V
90266-0022		DAIRY PIPE	C- 237776-040V
90266-0165		PIPE	C- 295310-040V
			C- 295310-060V
			C- 295310-060V
P- 90270-0008		COMPRESSOR	C- 271274-020V
P- 90270-0010		COMPRESSOR	C- 271274-020V
P- 90270-0011		COMPRESSOR	C- 456274-010V
			C- 469452-010V
			C- 469452-020V
			C- 751800-010V
			C- 469452-030V
			C- 751800-020V
			C- 456274-010V
90270-0344		VALVE	C- 271274-020V
90270-0347		VALVE	C- 456274-010V
			C- 271866-020V
			C- 271866-030V
			C- 271866-040V

PART NO	LAST AM	DESCRIPTION	GROUP NO
			C- 271866-060V
			C- 456274-010V
			C- 469452-010V
			C- 469452-020V
			C- 751800-010V
			C- 469452-030V
			C- 751800-020V
			C- 456274-010V
			C- 491207-020V
P- 90274-0003		PRESSURE GUARD	C- 735183-010V
90274-0027		GUARD	C- 271909-020V
			C- 271909-030V
			C- 271909-040V
			C- 271909-050V
90274-0029		GUARD	C- 491890-010V
90274-0039		GUARD	C- 271909-020V
			C- 271909-030V
90274-0040		GUARD	C- 294658-010V
			C- 283831-010V
90274-0044		GUARD	C- 457824-010V
			C- 457824-020V
90274-0056		PRESSURE GUARD	C- 271909-040V
			C- 271909-050V
90274-0065		PRESSURE GUARD	C- 491207-020V
90274-0066		PRESSURE GUARD	RK- 520068-010V
90277-0035		AIR-PRESSURE FILTER	C- 283610-010V
			C- 283617-010V
			C- 469598-010V
			C- 469598-020V
P- 90277-0040		FILTER	RK- 520068-010V
90277-0045		FILTER	C- 751089-010V
			RK- 491780-010V
			RK- 751488-010V
			RK- 491780-010V
			RK- 751488-010V
			RK- 491780-010V
			RK- 751488-010V
			RK- 491780-010V
			RK- 751488-010V
			RK- 491780-010V
			RK- 751488-010V
			RK- 491780-010V
			RK- 751488-010V
90277-0046		FILTER	C- 751089-010V
			RK- 491780-010V
90277-0046		FILTER	RK- 751488-010V
			RK- 491780-010V
			RK- 751488-010V
			RK- 491780-010V
			RK- 751488-010V
			RK- 491780-010V
			RK- 751488-010V
			RK- 491780-010V
			RK- 751488-010V
			RK- 491780-010V
90277-0052		. FILTER	RK- 520070-010V
			RK- 520167-010V
			RK- 520070-010V
			RK- 520167-010V
			RK- 520070-010V
			RK- 520167-010V
			RK- 520070-010V
			RK- 520167-010V
			RK- 520070-010V
			RK- 520167-010V
90277-0323		FILTER HOUSING	RK- 520068-010V
			C- 271909-020V
			C- 271909-030V
			C- 271909-040V
			C- 271909-050V
90277-0324		FILTER CARTRIDGE	RK- 520068-010V
			C- 271909-020V

PART NO	LAST AM	DESCRIPTION	GROUP NO
			C- 271909-030V
			C- 271909-040V
			C- 271909-050V
90277-0331		FILTER	C- 529940-010V
			C- 735268-010V
			C- 735265-010V
			C- 735271-010V
			C- 735265-010V
			C- 735271-010V
			C- 735265-010V
			C- 735271-010V
90277-0333		O-RING	C- 735268-010V
			C- 735271-010V
90278-0001		PUMP	C- 456975-020V
			C- 250610-010V
			C- 456975-010V
90279-0001		OIL CAN	C- 456975-020V
			C- 250610-010V
			C- 456975-010V
90286-0006		SEAL	C- 283618-010V
90287-0009		SPRINGLOADED SCREW	C- 271649-020V
			C- 287315-010V
			C- 271649-020V
			C- 469074-010V
			C- 469074-020V
90287-0014		SCREW	RK- 456713-010V
90287-0062		SCREW	C- 271114-020V
			C- 271115-020V
			C- 271114-020V
90287-0062		SCREW	C- 271115-020V
			C- 271114-020V
			C- 271115-020V
			C- 271114-030V
			C- 271115-030V
			C- 271114-030V
			C- 271115-030V
			C- 271114-030V
			C- 271115-030V
			C- 271114-040V
			C- 271115-040V
			C- 272839-020V
			C- 490947-010V
			C- 490947-020V
			C- 752244-010V
			C- 294725-010V
			C- 294780-010V
			C- 457853-010V
			C- 469635-010V
			C- 457853-020V
			C- 469635-010V
90287-0076		SCREW	C- 751932-010V
			C- 752958-010V
			C- 752959-010V
			C- 751885-010V
			C- 271513-050V
			C- 751885-020V
90287-0081		SCREW	RK- 456714-010V
			C- 256173-020V
			C- 256173-030V
			C- 256173-040V
			RK- 456714-010V
90287-0082		SCREW	C- 249850-010V
90287-0105		EXPANSION BOLT	C- 229400-060V
90287-0106		SPRINGLOADED SCREW	RK- 546337-010V
			RK- 546489-010V
			RK- 546255-010V
			C- 256014-050V
			C- 469247-010V
			C- 469247-020V
90287-0112		SPRINGLOADED SCREW	RK- 547765-010V
			RK- 547765-020V
90287-0117		EXPANSIONSBOLT	C- 232781-040V
			C- 479821-010V
90287-0119		SCREW	CR- 256436-020V
			CR- 256436-030V
			CR- 256436-040V
			CR- 256436-060V

PART NO	LAST AM	DESCRIPTION	GROUP NO
			RK- 751157-010V
90287-0128		GRUB SCREW	CR- 256204-020V
			CR- 256205-020V
			CR- 256212-020V
			CR- 256213-020V
			CR- 256204-020V
			CR- 256205-020V
			CR- 256212-020V
			CR- 256213-020V
			CR- 256204-030V
			CR- 256205-030V
90287-0128		GRUB SCREW	CR- 256212-030V
			CR- 256213-030V
			CR- 256204-040V
			CR- 256205-040V
			CR- 256204-040V
			CR- 256205-040V
			RK- 456715-010V
90287-0133		SCREW	RK- 76123-010V
90287-0134		SCREW	C- 456667-010V
90287-0143		SCREW	C- 491814-010V
			C- 491815-010V
			C- 491814-010V
			C- 491815-010V
90287-0144		SCREW	RK- 456713-010V
			C- 491814-010V
			C- 491815-010V
			C- 491814-010V
			C- 491815-010V
			RK- 456713-010V
90287-0145		SCREW	RK- 456713-010V
			C- 256201-030V
			C- 256202-030V
			C- 256201-040V
			C- 256202-040V
			RK- 456713-010V
90287-0147		EXPANDING PLUG	C- 229400-060V
90287-0149		SCREW	RK- 456714-010V
			C- 256173-030V
			C- 256173-040V
			RK- 456714-010V
90287-0159		GRUB SCREW	C- 491323-020V
			C- 751393-010V
90287-0167		SPRINGLOADED SCREW	C- 543143-010V
90287-0170		DISTANCE SCREW	C- 442089-010V
P- 90288-0027		ROLLER CHAIN	C- 272021-020V
90288-0036		ROLLER CHAIN	C- 295310-010V
			C- 295310-020V
			C- 295310-030V
			C- 295310-040V
			C- 295310-050V
			C- 295310-060V
90296-0009		GREASE	CR- 256844-020V
			CR- 256845-020V
			CR- 256844-020V
			CR- 256845-020V
			CR- 256844-020V
			CR- 256845-020V
			CR- 256844-020V
			CR- 256845-020V
			C- 272014-030V
			C- 272028-030V
			C- 272014-030V
			C- 272028-030V
			C- 272024-030V
			C- 272028-040V
			C- 751088-010V
			C- 272024-030V
			C- 272028-050V
			C- 751088-020V
90296-0012		LUBRICANT	RK- 491368-010V
			C- 491787-010V
			C- 491788-010V
			C- 491787-020V
			C- 491788-020V
			RK- 491368-010V
90296-0028		OIL	C- 256410-020V

PART NO	LAST AM	DESCRIPTION	GROUP NO
			C- 256410-030V
			C- 256410-040V
			C- 256410-050V
90296-0051		PASTE	RK- 520071-010V
			RK- 520095-010V
			RK- 520071-010V
			C- 295026-010V
			C- 295026-020V
			RK- 535606-010V
			CR- 283606-010V
			C- 469316-010V
			C- 486955-010V
			CR- 283606-010V
			C- 469316-010V
			C- 486955-010V
90296-0053		OIL	C- 497534-020V
90296-0068		GREASE	C- 469384-010V
			C- 441821-010V
			C- 256173-020V
			C- 256173-030V
			C- 256173-040V
			CR- 256212-020V
			CR- 256213-020V
			CR- 256212-020V
			CR- 256213-020V
			CR- 256212-030V
			CR- 256213-030V
			CR- 256212-040V
			CR- 256213-040V
			CR- 256212-040V
			CR- 256213-040V
			CR- 256844-030V
			CR- 256845-030V
			CR- 256212-050V
			CR- 256213-050V
			C- 256410-020V
			C- 295310-010V
			C- 256410-020V
			C- 295310-010V
			C- 441821-010V
			C- 256410-020V
			C- 295310-020V
			C- 441821-010V
			C- 295310-030V
			C- 295310-040V
			C- 295310-050V
			C- 295310-060V
			C- 752628-010V
			C- 283610-010V
			C- 283612-010V
			C- 283617-010V
			CR- 256844-030V
90296-0068		GREASE	CR- 256845-030V
			RK- 456712-010V
			CR- 256844-030V
			CR- 256845-030V
			CR- 256844-030V
			CR- 256845-030V
			C- 283612-010V
			C- 283617-010V
			CR- 449275-010V
			CR- 283605-010V
			C- 283612-010V
			CR- 449275-010V
			CR- 283605-010V
			C- 283612-010V
90296-0070		GREASE	CR- 449275-010V
			C- 441271-010V
			C- 441594-010V
			C- 441271-020V
			C- 441594-010V
			C- 491846-010V
			C- 491846-020V
			C- 491846-010V
			RK- 491863-010V
			RK- 491302-010V
			RK- 491863-010V

PART NO	LAST AM	DESCRIPTION	GROUP NO
90296-0075		OIL	C- 256173-020V
			C- 256173-030V
			C- 256173-040V
90296-0076		OIL	C- 469384-010V
			C- 256438-020V
			C- 294522-010V
			C- 283626-010V
			C- 283626-020V
			C- 283626-030V
90297-0006		FLUORESCENT LAMP	C- 295861-010V
			C- 441534-010V
90297-0007		FLUORESCENT LAMP	CE- 68128-010V
			C- 441535-010V
			CE- 68128-010V
			C- 441535-010V
90297-0300		BALLAST COIL FOR 50 HZ	CE- 67716-010V
			CE- 68128-010V
			CE- 68304-010V
			C- 294785-010V
			CE- 68128-010V
			CE- 67716-010V
			CE- 68304-010V
90297-0301		COIL	CE- 67720-010V
			CE- 68133-010V
			CE- 68307-010V
			CE- 68133-010V
			CE- 68307-010V
90297-0306		BALLAST COIL	CE- 67716-010V
			CE- 68128-010V
			CE- 68304-010V
			CE- 68128-010V
			CE- 67716-010V
			CE- 68304-010V
90297-0307		BALLAST COIL	CE- 67720-010V
90297-0307		BALLAST COIL	CE- 68133-010V
			CE- 68307-010V
			CE- 68133-010V
			CE- 68307-010V
90298-0012		INHIBITOR	C- 271513-020V
			C- 271513-030V
			C- 271513-040V
			C- 751885-010V
			C- 271513-050V
			C- 751885-020V
90298-0019		DETERGENT	C- 469384-010V
90298-0022		ZERUST CAPSULE	CE- 67716-010V
			CE- 68128-010V
			CE- 68304-010V
			CE- 68128-010V
			CE- 67716-010V
			CE- 68304-010V
90298-0033		WATLUBE HEAT LIQUID	RK- 563145-010V
P- 90299-0013		INK	C- 256359-010V
			C- 434774-020V
			C- 434774-030V
			C- 434074-020V
			C- 434074-030V
			C- 434774-020V
			C- 434774-030V
			C- 434074-020V
			C- 434074-030V
			C- 434774-030V
			C- 434074-030V
			C- 434774-030V
			C- 434074-030V
90303-0004		GLOVES	C- 531345-010V
90303-0005		PROTECTIVE EQUIPMENT	C- 531345-010V
90304-0013		CONTAINER	C- 491890-010V
90304-0301		PIPE	C- 491890-010V
90304-0303		COVER	C- 491890-010V
90304-0305		PIPE	C- 491890-010V
90304-0306		VENTILATING PIPE	C- 491890-010V
90314-0021		LEVEL REGULATOR	RK- 41567-010V
			RK- 41461-010V
			RK- 41377-010V
			CE- 67716-010V
			CE- 68128-010V

PART NO	LAST AM	DESCRIPTION	GROUP NO
			CE- 66304-010V
			RK- 66722-010V
			RK- 66725-010V
			CE- 66128-010V
			CE- 67716-010V
			CE- 66304-010V
			RK- 41567-010V
			RK- 41377-010V
			RK- 41461-010V
P- 90321-0015		PUMP	C- 271113-020V
			C- 456588-010V
			C- 456588-020V
			C- 456588-030V
P- 90321-0017		PUMP	C- 271452-020V
90321-0018		PUMP	C- 271507-020V
P- 90321-0034		PUMP	C- 271113-020V
P- 90321-0034		PUMP	C- 456588-010V
			C- 456588-020V
			C- 456588-030V
P- 90321-0036		PUMP	C- 272381-020V
P- 90321-0037		UMP	C- 490761-010V
P- 90321-0039		PUMP	RK- 469536-010V
			RK- 491568-010V
			C- 491207-010V
			C- 491207-020V
P- 90321-0045		PUMP	C- 272381-030V
90321-0361		ACCUMULATOR	C- 271507-020V
90321-0364		DISTANCE PIECE	C- 271507-020V
90321-0385		COUPLING	C- 271507-020V
90321-0396		FILTER	C- 271453-020V
90321-0411		GASKET	C- 491323-020V
			C- 751393-010V
90326-0012		PROTECTIVE COVER	RK- 520071-010V
			RK- 520095-010V
			RK- 520071-010V
			RK- 752035-010V
			C- 256237-020V
			C- 256237-030V
			C- 256237-040V
			C- 256237-050V
			C- 256237-060V
			C- 295891-010V
			C- 295891-020V
			C- 295891-030V
			C- 283617-010V
			C- 256014-020V
			C- 256055-020V
			C- 271181-020V
			C- 272337-020V
			C- 272342-020V
			C- 272560-020V
			C- 256014-020V
			C- 256055-020V
			C- 271181-020V
			C- 272337-020V
			C- 272560-030V
			C- 456976-010V
			C- 256014-030V
			C- 256055-030V
			C- 271181-020V
			C- 272337-020V
			C- 272560-030V
			C- 456976-020V
			C- 256014-030V
			C- 256055-040V
			C- 271181-020V
			C- 272337-020V
			C- 272560-030V
			C- 456976-020V
			C- 256014-040V
			C- 256055-050V
			C- 271181-030V
			C- 272337-030V
			C- 272560-040V
			C- 456976-030V
90326-0012		PROTECTIVE COVER	C- 256014-050V
			C- 256055-060V

PART NO	LAST AM	DESCRIPTION	GROUP NO
			C- 271181-060V
			C- 272337-040V
			C- 272560-050V
			C- 456976-040V
			C- 283613-010V
			C- 283617-010V
90326-0017		GLAND	C- 256014-020V
			C- 256055-020V
			C- 256014-020V
			C- 256055-020V
			C- 256014-030V
			C- 256055-030V
			C- 256014-030V
			C- 256055-040V
			C- 256014-040V
			C- 256055-050V
			C- 256014-050V
			C- 256055-060V
90326-0019		THERMOELEMENT	C- 256014-020V
			C- 256014-030V
			C- 256014-040V
			C- 256014-050V
90326-0020		SOCKET	RK- 520071-010V
			RK- 520095-010V
			RK- 520071-010V
			RK- 752035-010V
			C- 256237-020V
			C- 256237-030V
			C- 256237-040V
			C- 256237-050V
			C- 256237-060V
			C- 295891-010V
			C- 295891-020V
			C- 295891-030V
			C- 283617-010V
			C- 256014-020V
			C- 256055-020V
			C- 271181-020V
			C- 272337-020V
			C- 272560-030V
			C- 456976-010V
			C- 256014-030V
			C- 256055-030V
			C- 271181-020V
			C- 272337-020V
			C- 272560-030V
			C- 456976-020V
			C- 256014-040V
			C- 256055-050V
			C- 271181-030V
			C- 272337-030V
			C- 272560-040V
			C- 456976-030V
			C- 256014-050V
			C- 256055-060V
			C- 271181-040V
			C- 272337-040V
			C- 272560-050V
			C- 456976-040V
			C- 283613-010V
			C- 283617-010V
90326-0022		'G	C- 283617-010V
			C- 283613-010V
			C- 283617-010V
90326-0044		THERMOELEMENT	C- 294888-010V

PART NO	LAST AM	DESCRIPTION	GROUP NO
			C- 272408-040V
			C- 272408-050V
			C- 456274-010V
90330-0038		NUT	C- 272342-020V
			C- 295045-020V
			C- 456976-010V
			C- 456274-010V
90330-0042		BUSHING	C- 491083-010V
			C- 735183-010V
90330-0043		NIPPLE	RK- 520068-010V
			C- 272623-020V
			C- 272623-030V
90330-0044		NIPPLE	RK- 491599-030V
90330-0046		PLUG	RK- 456804-010V
			C- 271866-030V
			C- 271866-040V
			C- 491243-030V
			C- 751373-010V
90330-0048		BUSHING	RK- 456793-010V
			C- 272560-020V
			C- 272560-030V
			C- 272560-040V
90330-0054		SLEEVE	RK- 491591-030V
			C- 491243-030V
			C- 271866-020V
			C- 272381-030V
			C- 491243-030V
90330-0059		NIPPLE	RK- 456793-010V
			RK- 456804-010V
90330-0061		COUPLING	C- 271866-020V
			C- 271866-040V
90330-0062		COUPLING	C- 272560-020V
			C- 272560-030V
			C- 272560-040V
90330-0066		PLUG	C- 469366-010V
			C- 469366-020V
			CR- 256204-020V
			CR- 256205-020V
			CR- 256204-030V
			CR- 256205-020V
			CR- 256204-030V
			CR- 256205-030V
			CR- 256204-040V
			CR- 256205-040V
			CR- 256204-040V
			CR- 256205-040V
			CR- 256204-050V
			CR- 256205-050V
			RK- 539439-010V
			RK- 547986-010V
			C- 272560-020V
			C- 295045-030V
			C- 295045-040V
			C- 295045-050V
			C- 295045-060V
90330-0073		CONNECTION	C- 256233-020V
			C- 256233-030V
			C- 256233-040V
			C- 256233-050V
90330-0076		CONNECTION	C- 256233-020V
			C- 272021-020V
90330-0078		BUSHING	C- 272765-030V
90330-0078		BUSHING	C- 272765-040V
			C- 272765-050V
			C- 272765-060V
			C- 256055-020V
90330-0080		REDUCTION NIPPLE	C- 256055-030V
			RK- 491591-030V
			C- 491243-030V
			C- 272381-020V
			C- 272381-030V
			C- 491243-030V
90330-0081		ELBOW PIPE	C- 751373-010V
			RK- 520068-010V
			C- 271109-020V
			C- 271387-020V
			C- 271109-020V

PART NO	LAST AM	DESCRIPTION	GROUP NO
			C- 271387-020V
			C- 271109-020V
			C- 271387-020V
			C- 271387-030V
			C- 456455-010V
			C- 271387-030V
			C- 456455-010V
			C- 271387-030V
90330-0083		NIPPLE	RK- 520068-010V
90330-0085		BUSHING	C- 256436-020V
90330-0092		COUPLING	C- 272381-020V
90330-0093		NUT	C- 271866-030V
			C- 271866-040V
			C- 271866-060V
90330-0095		T-PIECE	RK- 520129-010V
			RK- 520130-010V
			RK- 520094-010V
			RK- 520096-010V
			RK- 520067-010V
			RK- 520129-010V
			RK- 520130-010V
90330-0096		CONNECTION	C- 272342-020V
			C- 456976-010V
90330-0097		NIPPLE	C- 271281-040V
			C- 271281-060V
90330-0099		ELBOW PIPE	C- 271281-040V
			C- 271281-060V
90330-0100		NIPPLE TUBE	RK- 491591-030V
			C- 491243-030V
			C- 272381-030V
			C- 491243-030V
90330-0101		NIPPLE	C- 441798-010V
			C- 441811-010V
90330-0105		NUT	C- 256233-030V
			C- 256233-040V
			C- 256233-050V
			C- 295045-030V
			C- 491083-010V
			C- 295045-040V
			C- 491083-010V
			C- 295045-050V
			C- 491083-020V
			C- 295045-060V
			C- 491083-020V
90330-0106		PIPE CONNECTION	C- 272560-060V
90332-0007		RECORDER	CE- 67716-010V
			CE- 68128-010V
			CE- 68304-010V
			CE- 68128-010V
			CE- 67716-010V
			CE- 68304-010V
90332-0008		RECORDER	CE- 67720-010V
			CE- 68133-010V
			CE- 68307-010V
			CE- 68133-010V
			CE- 68307-010V
P- 90332-0012		RECORDER	CE- 67720-010V
			CE- 68307-010V
90333-0004		GRAPH PAPER	CE- 67722-010V
			CE- 68128-010V
			CE- 68128-010V
			CE- 68305-010V
			CE- 68128-010V
			CE- 68128-010V
			CE- 67722-010V
			CE- 68305-010V
90335-0004		SPRING	C- 450101-010V
			RK- 469412-010V
			C- 450101-010V
90335-0005		SPRING	C- 464994-010V
			C- 283610-010V
			CR- 449275-010V
90335-0007		SPRING	CR- 256844-020V
			CR- 256845-020V
			CR- 256844-020V
			CR- 256845-020V
			CR- 256844-020V

PART NO	LAST AM	DESCRIPTION	GROUP NO
90328-0047		THERMOELEMENT	C- 294767-010V
			C- 294887-010V
90328-0048		THERMOELEMENT	C- 256055-020V
			C- 256055-030V
			C- 256055-040V
			C- 256055-050V
			C- 256055-060V
90328-0051		THERMO COUPLE	C- 271181-020V
			C- 272337-020V
			C- 272342-020V
			C- 271181-020V
			C- 272337-020V
			C- 456976-010V
			C- 271181-020V
			C- 272337-020V
			C- 456976-020V
			C- 271181-020V
			C- 272337-020V
			C- 456976-020V
			C- 271181-030V
			C- 272337-030V
			C- 456976-030V
			C- 271181-040V
			C- 272337-040V
			C- 456976-040V
90328-0052		THERMO ELEMENT	RK- 520071-010V
			RK- 520095-010V
			RK- 520071-010V
			RK- 752035-010V
			C- 256014-020V
			C- 256014-030V
			C- 256014-040V
			C- 256014-050V
90328-0057		THERMOELEMENT	C- 256056-060V
90328-0060		THERMOCOUPLE	C- 484984-010V
			RK- 535606-010V
			CR- 283606-010V
			C- 469316-010V
			C- 486956-010V
90328-0060		THERMOCOUPLE	C- 531657-010V
			CR- 283606-010V
			C- 469316-010V
			C- 486956-010V
			C- 497534-020V
			C- 531657-010V
90328-0304		LEAD IN	RK- 751461-010V
			C- 256055-020V
			C- 256055-030V
			C- 256055-040V
			C- 256055-050V
			C- 256055-060V
90328-0003		SILENCER	C- 272560-020V
			C- 272560-030V
			C- 272560-040V
			C- 272560-050V
			C- 490600-010V
			C- 490600-020V
90328-0018		SILENCER	C- 271909-020V
			C- 271909-030V
			C- 271909-040V
90328-0020		SILENCER	C- 751478-010V
90328-0025		SILENCER	RK- 751345-010V
90330-0003		NUT	RK- 529345-010V
			C- 271866-030V
			C- 271866-040V
90330-0013		REDUCTION NIPPLE	RK- 520129-010V
			RK- 520130-010V
			RK- 520094-010V
			RK- 520096-010V
			C- 272560-020V
			C- 272560-030V
			C- 272560-040V
			RK- 520067-010V
			RK- 520129-010V
			RK- 520130-010V
90330-0019		REDUCTION NIPPLE	C- 271866-040V
			C- 271866-050V

PART NO	LAST AM	DESCRIPTION	GROUP NO
			C- 272560-020V
			C- 272560-030V
			C- 272560-040V
90330-0020		ELBOW PIPE	RK- 456793-010V
			C- 271866-020V
			C- 271866-030V
			C- 491243-030V
90330-0021		NIPPLE	C- 491243-030V
			C- 272560-050V
90330-0024		T-PIECE	C- 272623-020V
			C- 272623-030V
90330-0025		BUSHING	RK- 520068-010V
			C- 256233-020V
			C- 456265-010V
			C- 469366-010V
			C- 469804-010V
			C- 469366-010V
			C- 469804-010V
			C- 469366-020V
			C- 469804-010V
			C- 469366-030V
90330-0026		BUSHING	C- 469804-010V
			C- 272623-020V
			C- 295045-020V
			C- 272623-020V
			C- 295045-020V
			C- 295045-030V
			C- 295045-040V
			C- 295045-050V
			C- 295045-060V
90330-0026		PLUG	RK- 520068-010V
			C- 491243-030V
			C- 256014-020V
			C- 256014-030V
90330-0028		NIPPLE	C- 256233-020V
			C- 256233-030V
			C- 256233-040V
			C- 256233-050V
			C- 456636-010V
			C- 456636-020V
			C- 456636-030V
			C- 456636-040V
90330-0029		PLUG	C- 533014-010V
			C- 271113-020V
			C- 456636-010V
			C- 469452-010V
			C- 469452-020V
			C- 751800-010V
			C- 469452-030V
			C- 751800-020V
90330-0032		NIPPLE	RK- 520129-010V
			RK- 520130-010V
			RK- 520094-010V
			RK- 520096-010V
			C- 272560-020V
			C- 272560-030V
			C- 272560-040V
			C- 272560-050V
			RK- 520067-010V
			RK- 520129-010V
			RK- 520130-010V
90330-0037		PLUG	RK- 469636-010V
			RK- 491568-010V
			C- 735288-010V
			C- 256217-020V
			C- 256217-030V
			C- 256217-040V
			C- 271866-030V
			C- 271866-040V
			C- 271866-050V
			C- 271274-020V
			C- 735271-010V
90330-0036		NUT	C- 456274-010V
			C- 256233-020V
			C- 271113-020V
			C- 272408-020V
			C- 272408-030V

PART NO	LAST AM	DESCRIPTION	GROUP NO
P- 90422-0008		COOLER	C- 229400-060V
P- 90424-0006		SPRAY GUN	C- 271507-020V
90424-0009		NOZZLE	C- 271387-020V
			C- 271261-020V
			C- 271261-030V
			C- 256802-020V
			C- 272765-010V
			C- 256802-020V
			C- 272765-020V
			C- 256802-020V
			C- 272765-020V
			C- 272765-030V
			C- 456455-010V
			C- 272765-040V
			C- 456455-010V
			C- 272765-050V
			C- 456455-020V
			C- 272765-060V
90424-0011		NOZZLE	C- 456455-020V
			C- 271261-020V
90424-0016		NOZZLE	C- 271261-030V
			C- 256802-020V
			C- 271115-020V
			C- 256802-020V
			C- 271115-020V
			C- 256802-020V
			C- 271115-020V
			C- 456455-010V
P- 90424-0017		NOZZLE	C- 456455-020V
90424-0018		NOZZLE	C- 272407-020V
			C- 256233-020V
90424-0025		NOZZLE	C- 272021-020V
90424-0027		NOZZLE	C- 441811-010V
			C- 256555-020V
			C- 256555-030V
90424-0027		NOZZLE	C- 456100-010V
90424-0032		NOZZLE	C- 456100-020V
			C- 271261-040V
			C- 271261-050V
90424-0033		NOZZLE	C- 736865-010V
			C- 271261-040V
90424-0035		NOZZLE	C- 271261-050V
			C- 271261-040V
			C- 271261-050V
			C- 441798-010V
			C- 271115-030V
90424-0036		NOZZLE	C- 271115-040V
			C- 271115-030V
90424-0300		CONNECTION	C- 271115-040V
90424-0304		GASKET	C- 271387-020V
			C- 295778-010V
			C- 295778-020V
			C- 295778-030V
			C- 295778-040V
90425-0016		EJECTOR	RK- 529345-010V
90426-0003		HAND SHOWER	C- 271387-030V
P- 90427-0002		DATING UNIT	C- 268665-010V
P- 90427-0005		DATING UNIT	RK- 548056-010V
P- 90427-0006		DATING UNIT	RK- 548056-010V
90427-0322		RIBBON	C- 268665-010V
90427-0327		ACCESSORIES-FITTINGS	C- 294767-010V
			C- 456807-010V
			C- 268665-010V
90427-0329		PLATE	C- 268665-010V
90427-0330		DATE INDICATOR SET	C- 268665-010V
90427-0331		DATE INDICATOR SET	C- 268665-010V
90427-0332		DATE INDICATOR SET	C- 268665-010V
90427-0333		DATE INDICATOR SET	C- 268665-010V
90427-0343		HANDLE	C- 249650-010V
90427-0506		TYPE HOLDER	RK- 548056-010V
P- 90427-0507		DOLLY	RK- 548056-010V
90430-0013		THYRISTOR UNIT	CE- 68128-010V
90430-0015		CIRCUIT BOARD	CE- 67716-010V
			CE- 68128-010V
			CE- 68304-010V
			CE- 68128-010V
			CE- 67716-010V

PART NO	LAST AM	DESCRIPTION	GROUP NO
90430-0303		HOLDER	CE- 68304-010V
			CE- 67716-010V
			CE- 68128-010V
			CE- 68304-010V
			CE- 68128-010V
			CE- 67716-010V
			CE- 68304-010V
90430-0304		PILOT UNIT	C- 295026-010V
			C- 295026-020V
			C- 295026-030V
90430-0308		BALLAST COIL	CE- 67716-010V
			CE- 68128-010V
			CE- 68304-010V
			CE- 68128-010V
			CE- 67716-010V
			CE- 68304-010V
90430-0310		CIRCUIT CARD	CE- 68128-010V
90432-0005		BRAKE	C- 256173-020V
90432-0008		BRAKE	RK- 456714-010V
			C- 256173-030V
			C- 256173-040V
			RK- 456714-010V
90432-0012		BRAKE	C- 533603-010V
			RK- 547300-010V
			C- 533603-010V
92300-0015		OFFICE REQUISITES	CE- 68134-010V
			CE- 67721-010V
			CE- 68306-010V
4- 106758		WASHER	C- 256236-020V
			C- 441881-010V
			C- 456321-010V
			C- 456322-010V
			C- 456348-010V
			C- 456349-010V
			C- 456321-020V
			C- 456322-020V
			C- 456348-020V
			C- 456349-020V
			C- 456321-030V
			C- 456322-030V
			C- 456348-020V
			C- 456349-020V
			C- 272445-020V
			C- 294725-010V
4- 107000		SPRING	C- 74767-010V
4- 107010		SPACER SLEEVE	C- 268665-010V
4- 110222		CLAMP	C- 256228-020V
4- 110223		PIN	C- 256228-020V
4- 110224		LINK	C- 256228-020V
4- 110225		STUD BOLT	C- 256228-020V
4- 110226		SHAFT	C- 256228-020V
4- 110227		SHAFT	C- 256228-020V
4- 111032		SHAFT	C- 256228-020V
4- 111426		COMPRESSION SPRING	C- 232781-040V
4- 111543		CONE	C- 256229-020V
			C- 271649-020V
			C- 256229-020V
			C- 271649-020V
			C- 256229-020V
			C- 271649-020V
			C- 256229-020V
			C- 271649-020V
			C- 256229-020V
			C- 267315-010V
			C- 257166-020V
			C- 271649-020V
			C- 257166-020V
			C- 271649-020V
			C- 257166-030V
			C- 469074-010V
			C- 257166-030V
			C- 469074-010V
			C- 469074-020V
4- 118344		WASHER	C- 752628-010V
4- 118582		COMPRESSION SPRING	C- 491871-010V
4- 120902		SUCTION CUP	C- 469737-010V
			C- 283622-010V

PART NO	LAST AM	DESCRIPTION	GROUP NO
			C- 293686-010V
			C- 293685-020V
			C- 293684-010V
			C- 293684-020V
			C- 293685-010V
			C- 293685-020V
			C- 293684-010V
			C- 293684-020V
			C- 293685-020V
			C- 293684-020V
			C- 293685-020V
			C- 293684-020V
90413-0048		CODE INSERT SET	C- 228779-010V
90413-0049		CODE INSERT SET	C- 228779-010V
90413-0183		SET OF NUMERALS 22 X 4 MM	C- 294767-010V
			C- 456607-010V
90413-0184		SET OF LETTERS 28 X 4 MM	C- 294767-010V
			C- 456607-010V
90413-0185		SET OF NUMERALS 10 X 4 MM	C- 294767-010V
			C- 456607-010V
90413-0186		SET OF SPACERS 8 X 4 MM	C- 294767-010V
			C- 456607-010V
90413-0187		CODE INSERT SET	C- 77091-010V
			C- 77091-020V
			C- 77091-030V
			B- 648119-020V
			B- 648119-060V
			B- 648119-020V
			B- 648119-060V
90413-0188		CODE INSERT SET	C- 77091-010V
			C- 77091-020V
			C- 77091-030V
			B- 648119-020V
			B- 648119-060V
			B- 648119-020V
			B- 648119-060V
90413-0189		CODE INSERT SET	C- 77091-010V
			C- 77091-020V
			C- 77091-030V
			B- 648119-020V
			B- 648119-060V
			B- 648119-020V
			B- 648119-060V
90413-0190		CODE INSERT SET	C- 77091-010V
			C- 77091-020V
			C- 77091-030V
			B- 648119-020V
			B- 648119-060V
			B- 648119-020V
			B- 648119-060V
90413-0195		CODE INSERT SET	C- 77091-010V
			C- 77091-020V
			C- 77091-030V
			B- 648119-020V
			B- 648119-060V
			B- 648119-020V
			B- 648119-060V
90413-0196		CODE INSERT SET	C- 77091-010V
			C- 77091-020V
			C- 77091-030V
			B- 648119-020V
			B- 648119-060V
			B- 648119-020V
			B- 648119-060V
90413-0197		CODE INSERT SET	C- 77091-010V
			C- 77091-020V
			B- 648119-020V
			B- 648119-060V
			B- 648119-020V
			B- 648119-060V
90413-0804		CODE INSERT SET	RK- 548056-010V
P- 90415-0014		FILTER	C- 271507-020V
90415-0018		FILTER	C- 271909-020V
			C- 271909-030V
			C- 271909-040V
			C- 271909-050V
90415-0019		FILTER	C- 271909-020V

PART NO	LAST AM	DESCRIPTION	GROUP NO
			C- 271909-030V
			C- 271909-040V
			C- 271909-060V
P- 90415-0022		FILTER	C- 271113-020V
			C- 456586-010V
			C- 456586-020V
			C- 456586-030V
P- 90415-0027		FILTER	C- 272623-020V
P- 90415-0033		OIL FILTER	C- 491880-010V
90415-0034		SUCTION FILTER	C- 271453-030V
			RK- 491984-010V
90415-0316		FILTER	C- 295778-010V
			C- 295778-020V
			C- 295778-030V
			C- 295778-040V
90416-0011		INDEXING DEVICE	C- 294522-010V
			C- 283626-010V
			C- 283626-020V
			C- 283626-030V
90416-0014		INDEXERING DEVICE	C- 256410-020V
			C- 256410-030V
90416-0021		INDEXING DEVICE	C- 256410-040V
			C- 256410-050V
90417-0050		TOOTHED BELT	C- 271116-030V
90417-0067		TOOTHED BELT	C- 294658-010V
90417-0073		TOOTHED BELT	C- 283618-010V
			CR- 283618-020V
90417-0074		TIMING BELT	C- 294522-010V
90417-0075		TIMING BELT	C- 294522-010V
90417-0076		TIMING BELT	C- 256173-020V
			C- 256173-030V
			C- 256173-040V
90417-0077		TIMING BELT	C- 256203-020V
90417-0081		TOOTHED BELT	C- 256236-020V
			C- 456321-010V
			C- 456322-010V
			C- 456348-010V
			C- 456349-010V
			C- 456321-020V
			C- 456322-020V
			C- 456348-020V
			C- 456349-020V
			C- 456321-030V
			C- 456322-030V
			C- 456348-020V
			C- 456349-020V
			C- 272445-020V
90417-0088		TIMING BELT	C- 256095-020V
			C- 456546-010V
			C- 456546-020V
90417-0118		TOOTHED BELT	C- 283631-010V
90417-0120		TOOTHED BELT	C- 283626-010V
			C- 283626-020V
			C- 283626-030V
90417-0131		TOOTHED BELT	C- 271116-020V
90417-0139		TOOTHED BELT	C- 751691-010V
90417-0144		TOOTHED BELT	C- 457887-010V
90417-0145		TOOTHED BELT	C- 457887-010V
90417-0146		TOOTHED BELT	C- 457887-010V
P- 90419-0005		ALARM LAMP	C- 752980-010V
			C- 752971-010V
			C- 272833-010V
			C- 272882-010V
			C- 295186-010V
			C- 272833-010V
			C- 272882-010V
			C- 295186-010V
			C- 456459-010V
			C- 456460-010V
			C- 456459-010V
			C- 456460-010V
			C- 456459-020V
			C- 456460-020V
			C- 751900-010V
			C- 456459-030V
			C- 456460-030V
			C- 751900-010V

PART NO	LAST AM	DESCRIPTION	GROUP NO
3- 251279		COIL HEATER	C- 295666-020V
			C- 295891-010V
			C- 295668-030V
			C- 295891-020V
			C- 295668-030V
			C- 295891-020V
			C- 295668-030V
			C- 295891-030V
			C- 295668-030V
			C- 295891-030V
4- 251358		FLANGE	C- 229400-060V
			C- 237776-040V
1- 251440		FRAME	C- 229400-060V
1- 251449		COVER	C- 229400-060V
3- 251490		BRACKET	C- 295891-010V
			C- 295891-020V
			C- 295891-030V
4- 251493		FORK	C- 246388-020V
4- 251494		SHAFT	C- 246388-020V
4- 251495		SHAFT	C- 246388-020V
4- 251496		SHAFT	C- 246388-020V
4- 251498		CATCH	C- 246388-020V
4- 251501		BRACKET	C- 295891-010V
			C- 295891-020V
			C- 295891-030V
4- 251502		HEAT GUARD	C- 295891-010V
			C- 295891-020V
			C- 295891-030V
4- 251503		HOLDER	C- 295891-010V
			C- 295891-020V
			C- 295891-030V
4- 251504		HOLDER	C- 295891-010V
			C- 295891-020V
			C- 295891-030V
4- 251505		SPACER	C- 295891-010V
			C- 295891-020V
			C- 295891-030V
1- 251839		HOLDER	C- 232781-040V
4- 252766-0001		INSULATING TUBE	CR- 256547-020V
			CR- 256547-030V
4- 252766-0002		INSULATING TUBE	CR- 256547-020V
			CR- 256547-030V
4- 252926		COMPRESSION SPRING	C- 469737-010V
			C- 283622-010V
			C- 469173-010V
4- 252972		SHOULDER SCREW	C- 272839-020V
			C- 490947-010V
			C- 490947-020V
4- 253107		WASHER	C- 752845-010V
			C- 752846-010V
			C- 752913-010V
			C- 752914-010V
3- 254566		CABLE	C- 295028-010V
			C- 295028-020V
			C- 295028-030V
4- 256084		BUSHING	C- 256966-020V
			C- 456032-010V
1- 256301		HEATING RAIL	C- 37877-030V
4- 255310		CYLINDER BRACKET	C- 272343-020V
4- 255416		PLATE	C- 272343-020V
			C- 272343-030V
			C- 272343-040V
			C- 272343-050V
4- 255417		WASHER	C- 272343-020V
			C- 272343-030V
			C- 272343-040V
			C- 272343-050V
4- 255420		BENDING ROLLER	C- 229400-060V
			C- 237776-040V
1- 255510		ARM	C- 283610-010V
3- 255513		SHAFT	C- 283610-010V
			CR- 449275-010V
4- 255515		LID	C- 283610-010V
			CR- 449275-010V
4- 255516		BRACKET	C- 283610-010V
			CR- 449275-010V
4- 255519		RING	C- 283610-010V

PART NO	LAST AM	DESCRIPTION	GROUP NO
			CR- 449275-010V
4- 255520		RING	C- 283610-010V
			CR- 449275-010V
4- 255593		SHAFT	C- 283612-010V
G1- 255609		ARM CUTTING JAW	C- 256951-020V
			C- 256952-020V
			C- 256951-020V
			C- 256952-020V
			C- 256951-030V
			C- 256952-030V
			C- 256951-030V
			C- 256952-030V
			C- 256951-040V
			C- 256952-040V
			C- 256951-040V
			C- 256952-040V
4- 255653		BUSHING	CR- 256204-020V
			CR- 256205-020V
			CR- 256212-020V
			CR- 256213-020V
			C- 256951-020V
			C- 256952-020V
			CR- 256204-020V
			CR- 256205-020V
			CR- 256212-020V
			CR- 256213-020V
			C- 256951-020V
			C- 256952-020V
			CR- 256204-030V
			CR- 256205-030V
			CR- 256212-030V
			CR- 256213-030V
			C- 256951-030V
			C- 256952-030V
			CR- 256204-040V
			CR- 256205-040V
			CR- 256212-040V
			CR- 256213-040V
			C- 256951-030V
			C- 256952-030V
			CR- 256204-040V
			CR- 256205-040V
			CR- 256212-040V
			CR- 256213-040V
			C- 256951-040V
			C- 256952-040V
			CR- 256204-060V
			CR- 256205-060V
			CR- 256212-060V
			CR- 256213-060V
			C- 256951-040V
4- 255653		BUSHING	C- 256952-040V
			RK- 456712-010V
4- 255695		ROLLER	C- 441000-020V
4- 255697-0001		CONNECTION PIPE	CR- 256204-020V
			CR- 256205-020V
			CR- 256212-020V
			CR- 256213-020V
			CR- 256204-020V
			CR- 256205-020V
			CR- 256212-020V
			CR- 256213-020V
			CR- 256204-030V
			CR- 256205-030V
			CR- 256212-030V
			CR- 256213-030V
4- 255697-0002		CONNECTION PIPE	CR- 256204-020V
			CR- 256205-020V
			CR- 256212-020V
			CR- 256213-020V
			CR- 256204-020V
			CR- 256205-020V
			CR- 256212-020V
			CR- 256213-020V
			CR- 256204-030V
			CR- 256205-030V
			CR- 256212-030V

PART NO	LAST AM	DESCRIPTION	GROUP NO
4- 243077		SCREW	C- 450125-010V
4- 243078		GUIDE SHAFT	C- 450125-010V
4- 243081		SECURING PLATE	C- 450125-010V
4- 243084		SPACER SLEEVE	C- 450125-010V
3- 243085		BUSBAR	C- 243068-010V
3- 243086		RAIL	C- 243068-010V
3- 243132		PROTECTION PLATE	C- 37877-030V
4- 243133		PLATE	C- 37877-030V
3- 243151		SHAFT	C- 256968-020V
			C- 456032-010V
1- 243218		BRACKET	C- 256968-020V
			C- 456032-010V
2- 243234		FRAME	C- 232781-040V
3- 245039		GUIDE ROLLER	C- 295359-010V
			C- 456103-010V
4- 245165		ASSEMBLING TOOL	C- 250610-010V
3- 245189-0001		CONNECTION	C- 295891-010V
			C- 295891-020V
			C- 295891-030V
4- 245210		BODY	C- 271649-020V
			C- 287315-010V
			C- 271649-020V
			C- 469074-010V
			C- 469074-020V
4- 245221		STOP	C- 37877-030V
3- 246342		PAPER SUPPORT	C- 295891-010V
			C- 295891-020V
			C- 295891-030V
4- 246343		BRACKET	C- 295891-010V
			C- 295891-020V
			C- 295891-030V
4- 246344		HEAT GUARD	C- 295891-010V
			C- 295891-020V
			C- 295891-030V
C- 246357-0101	6317 83-11-03	TERMINAL BLOCK	C- 272765-010V
			C- 272765-020V
C- 246366-0201	4745 81-01-16	PRESSURE ROLLER	B- 648107-020V
			B- 648107-060V
			B- 648107-070V
			B- 648107-080V
			B- 648107-090V
G3- 246501		ARM	C- 256965-020V
			C- 456546-010V
4- 246502		SHAFT	C- 256965-020V
			C- 456546-010V
			C- 456546-020V
4- 247170		BEARING COVER	C- 272004-020V
			C- 272024-020V
			C- 272004-020V
			C- 272024-020V
			C- 272004-020V
			C- 272024-020V
			C- 272004-020V
			C- 272024-020V
			C- 272004-030V
			C- 272024-030V
			C- 272004-040V
			C- 272024-030V
4- 247171		BEARING COVER	C- 256014-020V
			C- 272028-020V
			C- 256014-020V
			C- 272028-020V
4- 247172		SPACER RING	RK- 491744-010V
			C- 256014-020V
			C- 272014-020V
			C- 272028-020V
			C- 256014-020V
			C- 272014-020V
			C- 272028-020V
			C- 256014-030V
			C- 272014-030V
			C- 272028-030V
			C- 256014-030V
			C- 272014-030V
			C- 272028-030V
			C- 256014-040V
			C- 272028-040V

PART NO	LAST AM	DESCRIPTION	GROUP NO
			C- 751088-010V
			C- 256014-050V
			C- 272028-050V
			C- 751088-020V
4- 247173		BEARING SEAT	C- 256014-020V
			C- 272028-020V
			C- 256014-020V
			C- 272028-020V
			C- 256014-030V
			C- 272028-030V
			C- 256014-030V
			C- 272028-030V
			C- 256014-040V
			C- 272028-040V
			C- 272028-050V
2- 247227-0001		AIR NOZZLE	CR- 256547-020V
			CR- 256547-030V
4- 247239		WHEEL	C- 256014-020V
			C- 256014-030V
			C- 256014-040V
			C- 256014-050V
4- 247248		PIN	C- 256014-020V
			C- 256014-030V
			C- 256014-040V
			C- 256014-050V
4- 247349		GUIDE	C- 272021-020V
			C- 272021-030V
			C- 272021-040V
4- 247349		GUIDE	C- 272021-050V
4- 247350		GASKET HOLDER	C- 272021-020V
			C- 272021-030V
4- 247351		GASKET	C- 272021-020V
4- 247355		LOCK WASHER	C- 272021-020V
			C- 272021-030V
			C- 272021-040V
			C- 272021-050V
4- 247357		SPROCKET	C- 272021-040V
			C- 272021-050V
4- 247358		KNOB	C- 272021-020V
			C- 272021-030V
			C- 272021-040V
			C- 272021-050V
4- 247386		SIGN	C- 271607-020V
4- 247386		SIGN	C- 271607-020V
4- 249268		COMPRESSION SPRING	C- 283611-010V
4- 249298		ROLLER	C- 441000-020V
			C- 441000-030V
4- 249312		NUT	C- 283611-010V
4- 249323		SHIM	C- 256965-010V
2- 249328		BEARING	C- 294763-010V
4- 249336		BOLT	C- 294763-010V
4- 249342		GUIDE PLATE	C- 294763-010V
4- 249352		BOLT	C- 294763-010V
4- 249607		ROLLER	C- 256965-010V
4- 249608		SHAFT	C- 256965-010V
4- 249631		SHAFT	C- 294658-010V
4- 249634		WASHER	C- 256965-010V
C- 249650-0101	4676 80-11-10	TYPE HOLDER	C- 256965-010V
4- 249771		TYPE HOLDER	C- 249650-010V
4- 249772		PLATE	C- 249650-010V
4- 249774		PRESSURE PLATE	C- 155083-010V
4- 249776		TEFLON TAPE	C- 155083-010V
			C- 294868-010V
			C- 294887-010V
4- 250588		FLANGE	C- 256966-020V
			C- 752247-010V
			C- 752827-010V
4- 250590		BEARING COVER	C- 272028-020V
			C- 272028-030V
			C- 272028-040V
			C- 272028-050V
4- 250592		WASHER	C- 272028-020V
			C- 272028-030V
			C- 272028-040V
			C- 272028-050V
C- 250610-0101	8187 85-09-17	CABINET	B- 648109-020V
			B- 648109-030V

PART NO	LAST AM	DESCRIPTION	GROUP NO
			C- 456321-030V
			C- 456322-030V
			C- 456348-020V
			C- 456349-020V
C- 228779-010V	6317 83-11-03	PRINTING WHEEL	C- 272445-020V
			C- 256236-020V
4- 228944		BLOCK	C- 272445-020V
			C- 295359-010V
4- 228945		BLOCK	C- 456103-010V
			C- 295359-010V
3- 228950-0018		SLIDE RAIL	C- 456103-010V
3- 228950-0025		SLIDE RAIL	C- 456103-010V
4- 228943		THROTTLE	C- 295359-010V
			C- 256230-020V
4- 229201-0001		SPACER	C- 256230-030V
			C- 295359-010V
4- 229201-0025		SPACER	C- 456103-010V
			C- 295359-010V
4- 229202		BLOCK	C- 456103-010V
			C- 295359-010V
4- 229207		BEARING SLEEVE	C- 456103-010V
			C- 295359-010V
C- 229400-060V	13242 89-10-12	UNREELING DEVICE	C- 456103-010V
3- 229402		ROLLER	C- 751798-010V
3- 229403		ARM	C- 229400-060V
3- 229404		CLAMP	C- 229400-060V
4- 229405		BEARING BRACKET	C- 229400-060V
4- 229406		PRESSURE ROLLER	C- 229400-060V
4- 229408		ROD	C- 229400-060V
4- 229409		BEARING	C- 229400-060V
4- 229410		CATCH	C- 229400-060V
4- 229411		SHAFT	C- 229400-060V
4- 229412		SHAFT	C- 229400-060V
4- 229413		SHAFT	C- 229400-060V
4- 229414		WEIGHT	C- 229400-060V
3- 229494		BOBBIN BRAKE	C- 441000-020V
			C- 441000-030V
4- 229606-0033		STUD BOLT	C- 295359-010V
			C- 456103-010V
4- 229760-0014		STUD BOLT	C- 295359-010V
			C- 456103-010V
4- 229775		SPACER	C- 37877-030V
4- 230007		SLEEVE	C- 736183-010V
4- 230107		WASHER	C- 295891-010V
			C- 295891-020V
			C- 295891-030V
4- 230551		GASKET	C- 456274-010V
			C- 256089-020V
			C- 271274-020V
			C- 256089-020V
			C- 271274-020V
			C- 295778-020V
			C- 469452-010V
			C- 295778-030V
			C- 469452-010V
			C- 295778-030V
			C- 469452-020V
			C- 751800-010V
			C- 295778-040V
			C- 469452-030V
			C- 751800-020V
			C- 456274-010V
4- 230706		SLIDE RAIL	C- 295359-010V
			C- 456103-010V
4- 230918		WASHER	C- 752980-010V
			C- 752971-010V
			C- 272084-020V
			C- 272084-030V
			C- 751880-010V
			C- 456457-030V
			C- 751880-010V
4- 230929-0002		SHAFT	C- 256358-010V
4- 230930		BRACKET	C- 256358-010V
4- 232117		SPRING HOLDER	C- 400865-010V
3- 232772		BRACKET	C- 229400-060V
C- 232781-040V	11776 88-06-14	REVOLVING HEAD	C- 751798-010V

PART NO	LAST AM	DESCRIPTION	GROUP NO
1- 232784		BEARING HOUSING	C- 232781-040V
3- 232786		FLANGE	C- 232781-040V
3- 232787		AXLE PIN	C- 232781-040V
4- 232788		LID	C- 232781-040V
4- 232789		SPRING HOUSING	C- 232781-040V
4- 232790		SPACER PIPE	C- 232781-040V
4- 232791		SPACER RING	C- 232781-040V
4- 232792		CYLINDER BRACKET	C- 232781-040V
4- 232793		COVER PLATE	C- 232781-040V
4- 232794		CONE	C- 232781-040V
4- 232856		BRACKET	C- 256358-010V
4- 232979		PRESSURE ROLLER	C- 441000-020V
			C- 441000-030V
			C- 441000-040V
			C- 441000-050V
			C- 283611-010V
4- 234421		WASHER	C- 283618-010V
4- 234517		PIN	C- 283610-010V
			CR- 449275-010V
4- 234591		SPRING	C- 283618-010V
4- 234628		AXLE PIN	C- 256885-010V
4- 234844		WHEEL	C- 469738-010V
			C- 469738-020V
			C- 256856-010V
			C- 283600-010V
			C- 283620-010V
3- 236628		BRACKET	C- 237776-040V
3- 236629		WALL BRACKET	C- 237776-040V
3- 236631		HANDLE	C- 237776-040V
4- 236633		HANDLE	C- 237776-040V
4- 236634		SHAFT	C- 237776-040V
4- 236901		REDUCER	C- 271387-020V
3- 237461		SUPPORT BAR	C- 295359-010V
C- 237776-040V	12422 89-05-23	PAPER GUARD	C- 751798-010V
4- 237810		PLATE	C- 229400-060V
4- 237812		PLATE	C- 229400-060V
3- 237825		BEARING	C- 232781-040V
3- 237826		BEARING	C- 232781-040V
3- 237827-0001		SHAFT	C- 232781-040V
3- 237827-0002		SHAFT	C- 232781-040V
3- 237871		CATCH	C- 272580-020V
			C- 272580-030V
4- 237873		SHAFT	C- 272580-020V
			C- 272580-030V
4- 238987		SHAFT	C- 256358-010V
3- 239399		SUPPORT BAR	C- 295359-010V
			C- 456103-010V
4- 239403		SLIDE RAIL	C- 295359-010V
			C- 456103-010V
4- 239440		SHAFT	C- 256238-020V
			C- 256238-030V
			C- 256238-040V
			C- 256857-020V
			C- 456309-010V
			C- 256857-020V
			C- 456309-010V
			C- 456309-020V
			C- 456309-030V
			C- 456309-040V
4- 240797		HANDLE	C- 256221-020V
			C- 256222-020V
			C- 256221-020V
			C- 256222-020V
			C- 256221-020V
4- 240797		HANDLE	C- 256222-020V
			C- 256221-020V
			C- 256222-020V
			C- 256221-020V
			C- 256222-020V
			C- 256221-020V
			C- 256222-020V
4- 240813		COMPRESSION SPRING	C- 294763-010V
C- 243088-0101	5054 82-02-18	INDUCTOR	C- 441742-010V
4- 243072		PLATE	C- 243088-010V
4- 243073		LOCK NUT	C- 450125-010V
4- 243075		KNOB	C- 450125-010V
4- 243076		SCREW	C- 450125-010V

PART NO	LAST AM	DESCRIPTION	GROUP NO
4- 120902		SUCTION CUP	C- 294686-010V
			C- 294687-010V
			C- 469173-010V
			C- 469316-010V
			C- 486955-010V
			C- 469173-010V
			C- 469316-010V
			C- 486955-010V
4- 120904		BUSHING	C- 469737-010V
			C- 283622-010V
			C- 469173-010V
C- 155083-0101	7329 84-11-15	PRESSURE PLATE	C- 294763-010V
C- 155091-0101	4721 90-12-31	HANDLE	C- 294763-010V
4- 179595		SHUTTER	C- 456274-010V
			C- 271274-020V
			C- 469452-010V
			C- 469452-020V
			C- 751800-010V
			C- 469452-030V
			C- 751800-020V
			C- 456274-010V
4- 179696		FLOAT	C- 456274-010V
			C- 271274-020V
			C- 469452-010V
			C- 469452-020V
			C- 751800-010V
			C- 469452-030V
			C- 751800-020V
			C- 456274-010V
4- 206703		GASKET	C- 272342-020V
			C- 456976-010V
4- 206913		LOCKING CLAMP	C- 37898-010V
			C- 450101-010V
4- 207018		SUPPORT	C- 256234-020V
			C- 256234-030V
			C- 256234-040V
4- 208144-0001		TYPE HOLDER	C- 228779-010V
4- 208144-0002		TYPE HOLDER	C- 228779-010V
4- 208173		SHAFT	C- 37877-030V
3- 208361-0001		STEP	C- 272802-010V
			C- 272825-010V
			C- 295305-010V
			C- 272802-010V
			C- 272825-010V
			C- 295305-010V
4- 209145		SCREW	C- 256237-020V
			C- 256237-030V
			C- 256237-040V
			C- 256237-050V
			C- 256237-060V
			C- 272408-020V
			C- 272408-030V
			C- 272408-040V
			C- 272408-050V
			C- 272342-020V
			C- 456976-010V
			C- 456976-020V
			C- 456976-030V
			C- 456976-040V
4- 209146		LOCK NUT	C- 256237-020V
			C- 256237-030V
			C- 256237-040V
			C- 256237-050V
			C- 256237-060V
			C- 272408-020V
			C- 272408-030V
			C- 272408-040V
			C- 272408-050V
			C- 272342-020V
			C- 456976-010V
			C- 456976-020V
			C- 456976-030V
			C- 456976-040V
4- 209181		LID	C- 256233-020V
			C- 256233-030V
			C- 256233-040V
			C- 256233-050V

PART NO	LAST AM	DESCRIPTION	GROUP NO
			C- 456836-010V
			C- 456836-020V
			C- 456836-030V
			C- 456836-040V
4- 209183		RING	C- 256233-020V
			C- 256233-030V
			C- 256233-040V
			C- 256233-050V
			C- 456836-010V
			C- 456836-020V
			C- 456836-030V
			C- 456836-040V
4- 209184		BRACKET	C- 256233-020V
			C- 256233-030V
			C- 256233-040V
			C- 256233-050V
4- 209331-0001		GEAR WHEEL	RK- 548369-010V
			C- 272028-020V
			C- 272028-030V
			C- 272028-040V
			C- 272028-050V
4- 209331-0002		GEAR WHEEL	RK- 538413-010V
			C- 272028-020V
			C- 272028-030V
			C- 272028-040V
4- 209331-0004		GEAR WHEEL	RK- 538413-010V
			RK- 469760-010V
			C- 272028-030V
			C- 272028-040V
4- 209331-0006		GEAR WHEEL	RK- 538413-010V
			RK- 548369-010V
			C- 256234-020V
			C- 256234-030V
			C- 256234-040V
			C- 272028-020V
			C- 272028-030V
			C- 272028-040V
			C- 272028-050V
4- 209331-0008		GEAR WHEEL	RK- 538413-010V
			C- 272028-030V
			C- 272028-040V
4- 209331-0009		GEAR WHEEL	RK- 548369-010V
			C- 256234-020V
			C- 256234-030V
			C- 256234-040V
			C- 272028-030V
			C- 272028-040V
			C- 272028-050V
4- 209331-0010		GEAR WHEEL	C- 256234-020V
			C- 256234-030V
			C- 256234-040V
4- 209331-0011		GEAR WHEEL	RK- 538413-010V
			RK- 548369-010V
			C- 256234-020V
			C- 256234-030V
			C- 256234-040V
			RK- 469760-010V
			C- 272028-020V
			C- 272028-030V
			C- 272028-040V
			C- 272028-050V
4- 209332		BEARING HOLDER	C- 256234-020V
			C- 256234-030V
			C- 256234-040V
4- 209334		WASHER	C- 256234-020V
			C- 256234-030V
			C- 256234-040V
4- 227696		WASHER	C- 294763-010V
4- 228652		STOPPER	C- 256236-020V
			C- 456321-010V
			C- 456322-010V
			C- 456348-010V
			C- 456349-010V
			C- 456321-020V
			C- 456322-020V
			C- 456348-020V
			C- 456349-020V

PART NO	LAST AM	DESCRIPTION	GROUP NO
			C- 256238-030V
			C- 256238-040V
			C- 255957-020V
			C- 456309-010V
			C- 255957-020V
			C- 456309-010V
			C- 456309-020V
			C- 456309-030V
			C- 456309-040V
4- 256970		BUSHING	C- 256238-020V
			C- 256238-030V
			C- 256238-040V
			C- 255957-020V
			C- 456309-010V
			C- 255957-020V
			C- 456309-010V
			C- 456309-020V
			C- 456309-030V
			C- 456309-040V
4- 256971		BUSHING	C- 256238-020V
			C- 256238-030V
			C- 255957-020V
			C- 456309-010V
			C- 255957-020V
			C- 456309-010V
			C- 456309-020V
4- 256972		BEARING PLATE	C- 256238-020V
			C- 256238-030V
			C- 255957-020V
			C- 456309-010V
			C- 255957-020V
			C- 456309-010V
			C- 456309-020V
4- 256974		BRACKET	C- 256238-020V
			C- 256238-030V
			C- 255957-020V
			C- 456309-010V
			C- 255957-020V
			C- 456309-010V
			C- 456309-020V
4- 256977		SHAFT	C- 295402-020V
			C- 255982-020V
			C- 469091-010V
			C- 469091-020V
4- 256978		FORK	C- 295402-020V
			C- 255982-020V
			C- 469091-010V
			C- 469091-020V
4- 256981		NUT	C- 529933-010V
			C- 255982-020V
			C- 469091-010V
			C- 469091-020V
			C- 529933-010V
C- 256982-020V	7769 86-04-03	FILLING PIPE	B- 648111-020V
			B- 648111-030V
4- 256984-0001		CYLINDER BRACKET	C- 272025-020V
4- 255986		WHEEL	C- 272021-020V
			C- 272021-030V
			C- 272021-040V
			C- 272021-050V
4- 255987		BEARING COVER	C- 256014-020V
			C- 256014-030V
3- 255989		SHAFT	C- 272004-020V
			C- 272024-020V
			C- 272004-020V
			C- 272024-020V
			C- 272004-020V
			C- 272024-020V
			C- 272004-020V
			C- 272024-020V
4- 255995		SCREW	C- 272025-020V
			C- 272025-030V
3- 255998		BENDING ROLLER	C- 256014-020V
3- 256001		BRACKET	C- 256014-020V
			C- 256014-030V
4- 256005		GASKET	C- 256014-020V
			C- 256014-030V

PART NO	LAST AM	DESCRIPTION	GROUP NO
			C- 256014-040V
			C- 256014-050V
4- 256008		AXLE SUPPORT	C- 256014-020V
			C- 256014-030V
			C- 256014-040V
			C- 256014-050V
4- 256007		AXLE SUPPORT	C- 256014-020V
			C- 256014-030V
			C- 256014-040V
			C- 256014-050V
4- 256008		SHAFT	C- 256014-020V
			C- 256014-030V
4- 256010		NUT	C- 256014-020V
			C- 256014-030V
			C- 256014-040V
			C- 256014-050V
4- 256011		PIN	C- 256014-020V
			C- 256014-030V
4- 256012		SHAFT	C- 256014-020V
			C- 256014-030V
C- 256014-020V	7091 84-08-13	BATH	B- 648111-020V
			B- 648111-030V
C- 256014-030V	10002 87-01-12	BATH	B- 648111-060V
			B- 648111-070V
C- 256014-040V	12844 89-08-13	BATH	B- 648111-060V
C- 256014-050V	13604 89-11-24	BATH	B- 648111-090V
4- 256021		BUSHING	C- 272025-020V
4- 256022		BUSHING	C- 272025-020V
			C- 272025-030V
4- 256031		SHAFT	C- 257075-020V
			C- 271851-020V
			C- 257075-020V
			C- 271851-020V
			C- 257075-025V
			C- 271851-020V
			C- 257075-025V
			C- 271851-020V
C- 256055-0201	7066 84-08-31	HOT AIR ELEMENT	B- 648111-020V
C- 256055-0201		HOT AIR ELEMENT	B- 648111-030V
C- 256055-030V	7596 85-02-26	HOT AIR ELEMENT	B- 648111-060V
C- 256055-0401	9415 86-10-17	HOT AIR ELEMENT	B- 648111-070V
C- 256055-050V	9523 86-11-13	HOT AIR ELEMENT	B- 648111-060V
C- 256055-060V	12181 89-11-22	HOT AIR ELEMENT	B- 648111-090V
1- 256056		PIVOT ARM	C- 256237-020V
			C- 256237-030V
			C- 256237-040V
			C- 256055-020V
			C- 256055-030V
			C- 256055-040V
1- 256057		HEATING PIPE	C- 256237-020V
			C- 256237-030V
3- 256058		CABLE	C- 256237-020V
			C- 256237-030V
			C- 256055-020V
			C- 256055-030V
3- 256059		COVER	C- 256237-020V
			C- 256237-030V
			C- 256055-020V
			C- 256055-030V
4- 256061		LID	C- 256237-020V
			C- 256237-030V
			C- 256055-020V
			C- 256055-030V
4- 256063		CYLINDER BRACKET	C- 256055-020V
			C- 256055-030V
			C- 256055-040V
4- 256066		GASKET	C- 256237-020V
			C- 256237-030V
			C- 256055-020V
			C- 256055-030V
			C- 469501-010V
4- 256067		GASKET	C- 256237-020V
			C- 256237-030V
			C- 256237-040V
4- 256069		ASKET	C- 256237-020V
			C- 256237-030V
			C- 256056-020V

PART NO	LAST AM	DESCRIPTION	GROUP NO
4- 256742		COMPRESSION SPRING	CR- 256213-030V CR- 256204-020V CR- 256205-020V CR- 256204-020V CR- 256205-020V CR- 256204-030V CR- 256205-030V CR- 256204-040V CR- 256205-040V CR- 256204-040V CR- 256205-040V CR- 256204-050V CR- 256205-060V
4- 256783		SPACER RING	C- 256965-020V C- 456546-010V
4- 256801		RETAINING RING	C- 456546-020V CR- 256204-020V CR- 256205-020V CR- 256204-020V CR- 256205-020V CR- 256204-030V CR- 256205-030V CR- 256204-040V CR- 256205-040V CR- 256204-040V CR- 256205-040V CR- 256204-050V CR- 256205-050V
3- 256830		HOLDER	C- 256843-020V
4- 256831		LEG	C- 256843-020V
3- 256843		GUARD RIGHT	C- 256219-020V C- 256219-030V
3- 256844		GUARD LEFT	C- 256220-020V
3- 256844		GUARD LEFT	C- 256220-030V
3- 256862		PULLEY	C- 256965-020V C- 456546-010V C- 456546-020V
2- 256870		VALVE HOUSING	C- 256084-020V C- 256084-030V C- 256084-040V
3- 256871		BLOCK	C- 256084-020V C- 256084-030V C- 256084-040V
3- 256872		BRACKET	C- 256084-020V
4- 256874		BEARING COVER	C- 256084-030V C- 256084-020V C- 256084-030V
4- 256875		BUSHING	RK- 752035-010V C- 256084-020V C- 256084-030V C- 256084-040V
3- 256879		PIPE	C- 256089-020V C- 456555-010V C- 456555-020V C- 456555-030V
3- 256897-0001		GEAR WHEEL	RK- 536413-010V C- 272028-020V C- 272028-030V C- 272028-040V
3- 256897-0003		GEAR WHEEL	RK- 536413-010V C- 272028-030V C- 272028-040V
3- 256897-0004		GEAR WHEEL	RK- 536413-010V RK- 548369-010V RK- 469760-010V C- 272028-020V C- 272028-030V C- 272028-040V C- 272028-050V
3- 256897-0005		GEAR WHEEL	RK- 536413-010V RK- 548369-010V C- 272028-020V C- 272028-030V C- 272028-040V C- 272028-050V
3- 256897-0006		GEAR WHEEL	RK- 536413-010V RK- 469760-010V

PART NO	LAST AM	DESCRIPTION	GROUP NO
			C- 272028-050V
			C- 272028-040V
3- 256897-0007		GEAR WHEEL	RK- 548369-010V C- 272028-020V C- 272028-030V C- 272028-040V C- 272028-050V
3- 256897-0008		GEAR WHEEL	RK- 548369-010V C- 272028-030V C- 272028-040V C- 272028-050V
4- 256898		HUB	C- 272028-020V C- 272028-030V C- 272028-040V C- 272028-050V
4- 256899		HUB	C- 272028-020V C- 272028-030V C- 272028-040V C- 272028-050V
3- 256905		PIPE	C- 256089-020V C- 456555-010V C- 456555-020V C- 456555-030V
C- 256907-020V	6311 83-11-16	CHUTE	B- 648102-020V B- 648102-030V
3- 256910		PLATE	C- 272014-020V
3- 256911		PLATE	C- 272014-020V
3- 256916		CAM	C- 456953-010V C- 256236-020V C- 295112-020V C- 456348-010V C- 456349-010V C- 456348-020V C- 456349-020V C- 456348-020V C- 456349-020V C- 272014-020V C- 272014-030V C- 751088-010V C- 441736-010V C- 456953-010V
C- 256921-020V	6317 83-11-09	FILLING PIPE	B- 648111-020V B- 648111-030V
C- 256921-030V	9284 86-07-02	FILLING PIPE	B- 648111-060V
C- 256921-040V	13673 89-09-11	LOWER FILLING TUBE	B- 648111-070V B- 648111-080V B- 648111-090V
4- 256924		LOCK	C- 256921-020V
CR- 256933-020V	7595 85-02-28	STATION CHAIN	B- 648105-020V B- 648105-030V B- 648105-040V
CR- 256933-030V	9584 86-09-08	STATION CHAIN	B- 648105-060V B- 648105-070V
4- 256935		SHAFT	CR- 256933-020V
4- 256936		BUSHING	CR- 256933-020V
4- 256937		ROLLER	CR- 256933-020V
4- 256938		CAM ROLLER	CR- 256933-020V
4- 256939		WASHER	C- 256907-020V C- 456180-010V
4- 256940		SPACER	C- 256907-020V C- 456180-010V
3- 256942		SLIDER	C- 256907-020V C- 456180-010V
3- 256943		HOLDER	C- 256907-020V C- 456180-010V
4- 256952-0001		SPACER	C- 272014-020V
4- 256952-0002		SPACER	C- 272014-020V
4- 256952-0003		SPACER	C- 272014-020V
4- 256952-0004		SPACER	C- 272014-020V
4- 256952-0007		SPACER	C- 272014-020V
C- 256957-020V	6445 84-01-10	LOWER FORMING RING	B- 648111-020V B- 648111-030V
2- 256958		FORMING RING	C- 256957-020V
3- 256959		BEARING HOLDER	C- 256957-020V
3- 256960		BEARING HOLDER	C- 256957-020V
3- 256962		CYLINDER BRACKET	C- 256957-020V
4- 256969		SHAFT	C- 256238-020V

PART NO	LAST AM	DESCRIPTION	GROUP NO
			C- 256055-030V
			C- 256237-020V
			C- 256237-030V
			C- 256055-020V
			C- 256055-030V
4- 256070		GASKET	C- 256237-020V
			C- 256237-030V
			C- 256055-020V
			C- 256055-030V
4- 256073		SCREW	C- 256951-020V
			C- 256952-020V
			C- 256951-020V
			C- 256952-020V
			C- 256951-030V
			C- 256952-030V
3- 256082		CLAMP	C- 256951-030V
			C- 256952-030V
			C- 256951-040V
			C- 256952-040V
			C- 256951-040V
3- 256082		CLAMP	C- 256952-040V
C- 256084-0201	7047 84-08-29	CHANGE-OVER VALVE	B- 648111-020V
			B- 648111-030V
			B- 648111-060V
C- 256084-0301	12412 89-12-06	CHANGE-OVER VALVE	B- 648111-070V
C- 256084-040V	12181 89-11-22	CHANGE-OVER VALVE	B- 648111-080V
C- 256089-020V	6476 84-02-22	CONDUIT	B- 648111-090V
			B- 648111-020V
C- 256095-0201	9415 86-10-17	HOT AIR ELEMENT	B- 648111-030V
			B- 648111-020V
			B- 648111-030V
			B- 648111-060V
C- 256095-0301	9623 86-11-13	HOT AIR ELEMENT	B- 648111-070V
C- 256095-0401	12181 89-11-22	HOT AIR ELEMENT	B- 648111-080V
2- 256109		HEATING PIPE	B- 648111-090V
			C- 256239-020V
			C- 256239-030V
			C- 256239-040V
3- 256112		BRACKET	C- 256239-020V
			C- 256239-030V
			C- 256239-040V
			C- 256095-020V
			C- 256095-030V
			C- 256095-040V
4- 256117		BRACKET	C- 256239-020V
			C- 256095-020V
3- 256148		HOLDER	C- 257146-020V
4- 256150		SCREW	C- 257146-020V
3- 256155-0001		ARM	C- 272021-020V
3- 256155-0002		ARM	C- 272021-020V
4- 256160		COVER PLATE	C- 256233-020V
			C- 272021-020V
4- 256161		PIN	C- 256014-020V
4- 256163		SHAFT	C- 272021-020V
			C- 272021-030V
			C- 272021-040V
			C- 272021-050V
4- 256164		SHAFT	C- 272021-020V
4- 256165		SPROCKET	C- 272021-020V
			C- 272021-030V
4- 256166		SHAFT	C- 272021-020V
			C- 272021-030V
4- 256170		DRIP PLATE	C- 272021-020V
			C- 272021-030V
			C- 272021-040V
			C- 272021-050V
C- 256173-020V	7236 84-10-25	WORM GEAR	B- 648103-020V
			B- 648103-030V
			B- 648103-060V
C- 256173-030V	10868 87-11-11	WORM GEAR	B- 648103-070V
C- 256173-040V	12577 89-12-06	WORM GEAR	B- 648103-080V
3- 256174-0002		PULLEY	RK- 548388-010V
			C- 256173-020V
			C- 256173-030V
3- 256174-0003		PULLEY	RK- 538412-010V
			C- 256173-020V
			C- 256173-030V

PART NO	LAST AM	DESCRIPTION	GROUP NO
			RK- 468780-010V
3- 256175		GEAR WHEEL	C- 256173-020V
3- 256176		GEAR WHEEL	C- 256173-020V
			C- 256173-030V
			C- 256173-040V
3- 256177		SHAFT	C- 256173-020V
			C- 256173-030V
			C- 256173-040V
3- 256178		RING FASTENER	C- 256173-020V
			C- 256173-030V
			C- 256173-040V
4- 256179		SPACER SLEEVE	C- 256173-020V
			C- 256173-030V
			C- 256173-040V
4- 256180		SPACER	C- 256173-020V
			C- 256173-030V
			C- 256173-040V
4- 256181		SPACER PIPE	C- 256173-020V
			C- 256173-030V
			C- 256173-040V
C- 256185-0201	6317 83-11-03	SPROCKET	B- 648106-020V
			B- 648106-030V
			B- 648106-040V
4- 256186		LID	C- 256185-020V
4- 256189		SLEEVE	C- 272652-010V
4- 256190		NUT	C- 272652-020V
			C- 272652-030V
			C- 272652-010V
C- 256197-0201	6317 83-11-03	ARM	B- 648103-020V
			B- 648103-030V
C- 256197-0202	6317 83-11-03	ARM	B- 648103-020V
			B- 648103-030V
C- 256197-0301	10868 87-11-11	ARM	B- 648103-060V
			B- 648103-070V
C- 256197-0302	10868 87-11-11	ARM	B- 648103-080V
			B- 648103-070V
C- 256197-0401	12577 89-12-06	ARM	B- 648103-080V
C- 256197-0402	12577 89-12-06	ARM	B- 648103-080V
C- 256198-0201	6317 83-11-03	LINK ARM	B- 648103-020V
			B- 648103-030V
C- 256198-0202	6317 83-11-03	LINK ARM	B- 648103-020V
			B- 648103-030V
C- 256198-0301	7880 85-06-15	LINK ARM	B- 648103-060V
C- 256198-0302	7880 85-06-15	LINK ARM	B- 648103-060V
C- 256199-0201	6317 83-11-03	BELT TENSIONER	B- 648103-020V
			B- 648103-030V
			B- 648103-060V
C- 256199-0301	10868 87-11-11	BELT TENSIONER	B- 648103-070V
C- 256199-0401	12577 89-12-06	BELT TENSIONER	B- 648103-080V
C- 256200-0201	6317 83-11-03	INTERMEDIARY SHAFT	B- 648103-020V
C- 256200-0301	6317 83-11-03	INTERMEDIARY SHAFT	B- 648103-030V
			B- 648103-060V
			B- 648103-070V
			B- 648103-080V
C- 256201-020V	7089 84-08-31	CAM PACK	B- 648103-020V
			B- 648103-030V
			B- 648103-060V
C- 256201-030V	12207 88-10-06	CAM PACKAGE TPC	B- 648103-070V
C- 256201-040V	12577 89-12-06	CAM PACKAGE TPC	B- 648103-080V
C- 256202-020V	7089 84-08-31	CAM PACK	B- 648103-020V
			B- 648103-030V
C- 256202-020V		CAM PACK	B- 648103-060V
C- 256202-030V	12207 88-10-06	CAM PACKAGE IH	B- 648103-070V
C- 256202-040V	12577 89-12-06	CAM PACKAGE IH	B- 648103-080V
C- 256203-0201	6317 83-11-03	DOLLY	B- 648103-020V
			B- 648103-030V
C- 256203-030V	7499 85-02-11	DOLLY	B- 648103-060V
			B- 648103-070V
C- 256203-040V	12577 89-12-06	DOLLY	B- 648103-080V
CR- 256204-020V	7595 85-02-26	CUTTING JAW	B- 648104-020V
			B- 648104-030V
CR- 256204-030V	7595 85-02-26	CUTTING JAW	B- 648104-060V
CR- 256204-040V	13230 89-06-20	CUTTING JAW RIGHT	B- 648104-070V
			B- 648104-080V
CR- 256204-050V	12578 89-12-06	CUTTING JAW RIGHT	B- 648104-090V
CR- 256205-020V	7595 85-02-26	CUTTING JAW	B- 648104-020V
			B- 648104-030V

PART NO	LAST AM	DESCRIPTION	GROUP NO
CR- 256205-030V	7595 85-02-26	CUTTING JAW	B- 648104-060V
CR- 256205-040V	13230 89-06-20	CUTTING JAW	B- 648104-070V
			B- 648104-080V
CR- 256205-060V	12578 89-12-06	CUTTING JAW LEFT	B- 648104-090V
C- 256206-020V	12500 88-11-16	INTERMITTENT FEED DEVICE	B- 648104-020V
			B- 648104-030V
			B- 648104-060V
			B- 648104-070V
			B- 648104-080V
			B- 648104-090V
C- 256207-020V	12500 88-11-16	INTERMITTENT FEED DEVICE	B- 648104-020V
			B- 648104-030V
			B- 648104-060V
			B- 648104-070V
			B- 648104-080V
			B- 648104-090V
CR- 256208-020V	7595 85-02-26	KNIFE HOLDER	B- 648104-020V
			B- 648104-030V
CR- 256208-030V	7595 85-02-26	KNIFE HOLDER	B- 648104-060V
			B- 648104-070V
			B- 648104-080V
			B- 648104-090V
CR- 256209-020V	13607 89-09-04	VOLUME FLAP	B- 648104-020V
			B- 648104-030V
			B- 648104-060V
			B- 648104-070V
			B- 648104-080V
CR- 256209-030V	12578 89-12-06	VOLUME FLAP	B- 648104-090V
CR- 256210-020V	13607 89-09-04	VOLUME FLAP	B- 648104-020V
			B- 648104-030V
			B- 648104-060V
			B- 648104-070V
			B- 648104-080V
CR- 256210-030V	12578 89-12-06	VOLUME FLAP	B- 648104-090V
CR- 256212-020V	7595 85-02-26	PRESSURE JAW	B- 648104-020V
			B- 648104-030V
CR- 256212-030V	7892 85-05-02	PRESSURE JAW	B- 648104-060V
CR- 256212-040V	13607 89-09-04	PRESSURE JAW RIGHT	B- 648104-070V
			B- 648104-080V
CR- 256212-060V	12578 89-12-06	PRESSURE JAW RIGHT	B- 648104-090V
CR- 256213-020V	7595 85-02-26	PRESSURE JAW	B- 648104-020V
			B- 648104-030V
CR- 256213-030V	7892 85-05-02	PRESSURE JAW	B- 648104-060V
CR- 256213-040V	13607 89-09-04	PRESSURE JAW LEFT	B- 648104-070V
			B- 648104-080V
CR- 256213-060V	12578 89-12-06	PRESSURE JAW LEFT	B- 648104-090V
CR- 256214-020V	7595 85-02-26	PRESSURE RAIL	B- 648104-020V
			B- 648104-030V
			B- 648104-060V
CR- 256214-030V	14291 89-12-19	PRESSURE RAIL	B- 648104-070V
			B- 648104-080V
CR- 256215-020V	7595 85-02-26	PRESSURE RAIL	B- 648104-090V
			B- 648104-020V
			B- 648104-030V
			B- 648104-060V
CR- 256215-030V	9716 86-10-27	PRESSURE RAIL	B- 648104-070V
			B- 648104-080V
C- 256217-0201	6317 83-11-03	GUIDE	B- 648104-090V
C- 256217-0301	7484 85-01-24	GUIDE	B- 648104-020V
C- 256217-0401	7033 84-08-08	GUIDE	B- 648104-030V
			B- 648104-060V
			B- 648104-070V
			B- 648104-080V
C- 256219-020V	6299 83-11-23	TRANSMISSION	B- 648104-090V
			B- 648104-020V
C- 256219-030V	8446 85-11-27	TRANSMISSION RIGHT	B- 648104-030V
			B- 648104-060V
			B- 648104-070V
			B- 648104-080V
C- 256220-020V	6299 83-11-23	TRANSMISSION	B- 648104-090V
			B- 648104-020V
C- 256220-030V	8446 85-11-27	TRANSMISSION LEFT	B- 648104-030V
			B- 648104-060V
			B- 648104-070V
			B- 648104-080V
C- 256221-020V	13607 89-09-04	VOLUM CURVE PIECE	B- 648104-090V
			B- 648104-020V

PART NO	LAST AM	DESCRIPTION	GROUP NO
			B- 648104-030V
			B- 648104-060V
			B- 648104-070V
			B- 648104-080V
			B- 648104-090V
C- 256222-020V	13607 89-09-04	VOLUME CAM PIECE, IH	B- 648104-020V
			B- 648104-030V
			B- 648104-060V
			B- 648104-070V
			B- 648104-080V
			B- 648104-090V
C- 256223-020V	9409 86-07-04	SUPPORT ROLLER	B- 648104-020V
			B- 648104-030V
			B- 648104-060V
			B- 648104-070V
			B- 648104-080V
C- 256223-030V	12578 89-12-06	SUPPORT ROLLER	B- 648104-090V
C- 256228-0201	6444 84-01-02	BRACKET	B- 648101-020V
			B- 648101-060V
			B- 648101-070V
			B- 648101-080V
			B- 648101-090V
C- 256229-020V	13651 89-11-23	PAPER GUIDE	B- 648101-020V
			B- 648101-060V
			B- 648101-070V
C- 256229-020V		PAPER GUIDE	B- 648101-080V
			B- 648101-090V
C- 256230-020V	6995 84-07-05	FILLING PIPE	B- 648101-020V
			B- 648101-060V
C- 256230-030V	13651 89-11-23	FILLING PIPE	B- 648101-070V
			B- 648101-080V
			B- 648101-090V
C- 256232-0201	5329 82-05-24	VALVE	B- 648101-020V
			B- 648101-060V
			B- 648101-070V
C- 256232-0301	10642 87-06-23	PRODUCT VALVE	B- 648101-080V
			B- 648101-090V
C- 256233-020V	8297 85-10-15	COLUMN	B- 648101-020V
C- 256233-030V	10843 87-11-26	COLUMN	B- 648101-060V
			B- 648101-070V
C- 256233-040V	11614 88-08-01	COLUMN	B- 648101-080V
C- 256233-050V	14454 90-02-05	COLUMN	B- 648101-090V
C- 256234-020V	7318 84-11-09	BENDING ROLLER	B- 648101-020V
C- 256234-030V	12146 88-08-30	BENDING ROLLER	B- 648101-060V
			B- 648101-070V
			B- 648101-080V
C- 256234-040V	13651 89-11-23	BENDING ROLLER	B- 648101-090V
C- 256236-020V	6698 84-06-02	DATING UNIT	B- 648101-020V
C- 256237-020V	6275 83-11-01	HOT AIR ELEMENT	B- 648101-020V
C- 256237-030V	7126 84-09-26	HOT AIR ELEMENT	B- 648101-060V
C- 256237-040V	9436 86-09-09	HOT AIR ELEMENT	B- 648101-070V
C- 256237-050V	12094 88-07-06	HOT AIR ELEMENT LS	B- 648101-080V
C- 256237-060V	13651 89-11-23	HOT AIR ELEMENT LS	B- 648101-090V
C- 256238-020V	9942 87-01-12	LOWER FORMING RING	B- 648101-020V
			B- 648101-060V
C- 256238-030V	9942 87-01-12	LOWER FORMING RING	B- 648101-070V
C- 256238-040V	13651 89-11-23	LOWER FORMING RING	B- 648101-080V
			B- 648101-090V
C- 256239-0201	10003 87-01-12	HOT AIR ELEMENT	B- 648101-020V
			B- 648101-060V
			B- 648101-070V
C- 256239-0301	10642 87-06-23	HOT AIR ELEMENT KS	B- 648101-080V
C- 256239-0401	13651 89-11-23	HOT AIR ELEMENT KS	B- 648101-090V
2- 256241		BRACKET	C- 256234-020V
			C- 256234-030V
			C- 256234-040V
3- 256242-0001		BENDING ROLLER	C- 256234-020V
			C- 256234-030V
3- 256242-0002		BENDING ROLLER	C- 256234-020V
			C- 256234-030V
3- 256243		GUARD	C- 256234-020V
			C- 256234-030V
3- 256244-0001		GEAR WHEEL	C- 256234-020V
			C- 256234-030V
			C- 256234-040V
3- 256245		SHAFT	C- 256234-020V
			C- 256234-030V

PART NO	LAST AM	DESCRIPTION	GROUP NO
			C- 256234-040V
3- 256246		CONNECTION	C- 256234-020V
			C- 256234-030V
			C- 256234-040V
4- 256247		WASHER	C- 256234-020V
			C- 256234-030V
			C- 256234-040V
4- 256248-0001		LID	C- 256236-020V
			C- 295112-020V
			C- 456321-010V
			C- 456322-010V
			C- 456348-010V
			C- 456349-010V
			C- 456321-020V
			C- 456322-020V
			C- 456348-020V
			C- 456349-020V
			C- 456321-030V
			C- 456322-030V
			C- 456348-020V
			C- 456349-020V
			C- 752845-010V
			C- 752846-010V
			C- 752913-010V
			C- 752914-010V
			C- 272445-020V
4- 256248-0002		LID	C- 256234-020V
			C- 256234-030V
			C- 256234-040V
2- 256263		FORMING RING	C- 256236-020V
			C- 256236-030V
			C- 255957-020V
3- 256256		BEARING HOLDER	C- 256236-020V
			C- 256236-030V
			C- 255957-020V
3- 256256		BEARING HOLDER	C- 256236-020V
			C- 256236-030V
4- 256258		CYLINDER BRACKET	C- 256236-020V
			C- 256236-030V
			C- 255957-020V
			C- 456309-010V
			C- 255957-020V
			C- 456309-010V
			C- 456309-020V
3- 256261		PIPE-LINE	C- 256232-020V
			C- 256232-030V
4- 256262		BRACKET	C- 256232-020V
			C- 256232-030V
4- 256263		HOLDER	C- 256232-020V
			C- 256232-030V
2- 256264-0001		FILLING PIPE	C- 256230-020V
4- 256265		AXLE SUPPORT	C- 256239-020V
			C- 256239-030V
			C- 256239-040V
1- 256267		BRACKET	C- 256228-020V
3- 256268		PLATE	C- 256228-020V
4- 256269		SHAFT	C- 256228-020V
4- 256270		PLATE	C- 256228-020V
4- 256271		WASHER	C- 256228-020V
C- 256272-0201	6317 83-11-03	AXLE	B- 648105-020V
			B- 648105-030V
			B- 648105-040V
3- 256274		SHAFT	C- 256272-020V
3- 256276		SHAFT	C- 256272-020V
			C- 272765-030V
			C- 272765-040V
3- 256276		SHAFT	C- 272765-050V
			C- 272765-060V
4- 256279		BRACKET	C- 272031-020V
			C- 441307-010V
			C- 272031-020V
			C- 441307-010V
			C- 441307-020V
			C- 441307-030V
4- 256280		PIN	C- 272030-020V
			C- 272031-020V
			C- 441304-010V

PART NO	LAST AM	DESCRIPTION	GROUP NO
			C- 441307-010V
			C- 272030-020V
			C- 272031-020V
			C- 441304-010V
			C- 441307-010V
			C- 441304-020V
			C- 441307-020V
			C- 441304-020V
			C- 441307-020V
			C- 441304-030V
			C- 441307-030V
4- 256302		WASHER	C- 256272-020V
4- 256303		LID	C- 256272-020V
3- 256305		BRACKET	C- 272030-020V
3- 256306		CLAMP	C- 272030-020V
4- 256309		SHAFT	C- 272030-020V
			C- 441304-010V
			C- 272030-020V
			C- 441304-010V
			C- 441304-020V
			C- 441304-030V
4- 256310		SCREW	C- 272014-020V
			C- 272030-020V
			C- 272014-020V
			C- 272030-020V
4- 256312		WASHER	C- 256233-020V
			C- 441304-010V
			C- 441304-020V
			C- 441304-030V
4- 256325		AXLE SUPPORT	C- 256237-020V
			C- 256237-030V
			C- 256237-040V
4- 256327		CYLINDER BRACKET	C- 256237-020V
			C- 256237-030V
			C- 256237-040V
4- 256329		FORK	C- 256237-020V
			C- 256237-030V
			C- 256237-040V
4- 256330		FORK	C- 256237-020V
			C- 256237-030V
			C- 256237-040V
2- 256355		BRACKET	C- 272560-020V
			C- 272560-030V
4- 256357		PROTECTIVE SLEEVE	C- 256165-020V
C- 256358-010V	6317 83-11-03	INK UNIT	C- 256236-020V
			C- 272445-020V
2- 256368-0001		GABLE	C- 256236-020V
			C- 456349-010V
			C- 456349-020V
2- 256368-0002		GABLE	C- 256236-020V
			C- 456348-010V
			C- 456348-020V
2- 256369-0001		GABLE	C- 256236-020V
			C- 456349-010V
			C- 456349-020V
2- 256369-0002		GABLE	C- 256236-020V
			C- 456348-010V
			C- 456348-020V
3- 256391-0001		BENDING ROLLER	C- 256236-020V
			C- 295112-020V
			C- 456321-010V
			C- 456322-010V
			C- 456348-010V
			C- 456349-010V
			C- 456321-020V
			C- 456322-020V
			C- 456348-020V
			C- 456348-020V
			C- 456321-030V
			C- 456322-030V
			C- 456348-020V
			C- 456349-020V
			C- 272445-020V
3- 256392-0001		SHAFT	C- 256236-020V
			C- 456321-010V

PART NO	LAST AM	DESCRIPTION	GROUP NO
			C- 456322-010V
			C- 456348-010V
			C- 456349-010V
			C- 456321-020V
			C- 456322-020V
			C- 456348-020V
			C- 456349-020V
			C- 456321-030V
			C- 456322-030V
			C- 456348-020V
			C- 456349-020V
			C- 272445-020V
3- 256392-0003		SHAFT	C- 456321-010V
			C- 456322-010V
			C- 456348-010V
			C- 456349-010V
			C- 456321-020V
			C- 456322-020V
			C- 456348-020V
			C- 456349-020V
			C- 456321-030V
			C- 456322-030V
			C- 456348-020V
			C- 456349-020V
3- 256393-0001		SHAFT	C- 256236-020V
3- 256395		COVER	C- 256236-020V
			C- 456348-010V
			C- 456349-010V
			C- 456348-020V
			C- 456349-020V
3- 256396		COVER	C- 456348-020V
			C- 456349-020V
4- 256398		LID	C- 256236-020V
			C- 295112-020V
			C- 295276-020V
			C- 295112-020V
			C- 295276-020V
			C- 295112-020V
			C- 295276-020V
			C- 295112-020V
			C- 295276-020V
			C- 456321-010V
			C- 456322-010V
			C- 456348-010V
			C- 456349-010V
			C- 456321-020V
			C- 456322-020V
			C- 456348-020V
			C- 456349-020V
			C- 456321-030V
			C- 456322-030V
			C- 456348-020V
			C- 456349-020V
			C- 752845-010V
			C- 752846-010V
			C- 752913-010V
			C- 752914-010V
			C- 272445-020V
4- 256399-0001		SHAFT	C- 256236-020V
			C- 456321-010V
			C- 456322-010V
			C- 456348-010V
			C- 456349-010V
			C- 456321-020V
			C- 456322-020V
			C- 456348-020V
			C- 456349-020V
			C- 456321-030V
			C- 456322-030V
			C- 456348-020V
			C- 456349-020V
			C- 272445-020V
4- 256400		SHAFT	C- 256236-020V
			C- 456321-010V
			C- 456322-010V
			C- 456348-010V
			C- 456349-010V

PART NO	LAST AM	DESCRIPTION	GROUP NO
			C- 456321-020V
			C- 456322-020V
			C- 456348-020V
			C- 456349-020V
			C- 456321-030V
			C- 456322-030V
			C- 456348-020V
			C- 456349-020V
			C- 752845-010V
			C- 752846-010V
			C- 752913-010V
			C- 752914-010V
4- 256400		SHAFT	C- 272445-020V
4- 256402		BEARING BRACKET	C- 256236-020V
			C- 272445-020V
4- 256403		TOOTHED WHEEL	C- 256236-020V
			C- 456321-010V
			C- 456322-010V
			C- 456348-010V
			C- 456349-010V
			C- 456321-020V
			C- 456322-020V
			C- 456348-020V
			C- 456349-020V
			C- 456321-030V
			C- 456322-030V
			C- 456348-020V
			C- 456349-020V
			C- 272445-020V
4- 256404		BRACKET	C- 256236-020V
			C- 272445-020V
4- 256405		BRACKET	C- 256236-020V
			C- 272445-020V
4- 256406		SIDE PLATE	RK- 751468-010V
			C- 256236-020V
			C- 295112-020V
			C- 456321-010V
			C- 456322-010V
			C- 456348-010V
			C- 456349-010V
			C- 456321-020V
			C- 456322-020V
			C- 456348-020V
			C- 456349-020V
			C- 456321-030V
			C- 456322-030V
			C- 456348-020V
			C- 456349-020V
			C- 752845-010V
			C- 752846-010V
			C- 752913-010V
			C- 752914-010V
			C- 272445-020V
			RK- 751468-010V
4- 256406-0001		SPACER	C- 256236-020V
			C- 295112-020V
			C- 456321-010V
			C- 456322-010V
			C- 456348-010V
			C- 456349-010V
			C- 456321-020V
			C- 456322-020V
			C- 456348-020V
			C- 456349-020V
			C- 456321-030V
			C- 456322-030V
			C- 456348-020V
			C- 456349-020V
			C- 272445-020V
4- 256409		WASHER	C- 256236-020V
			C- 295112-020V
4- 256409		WASHER	C- 456321-010V
			C- 456322-010V
			C- 456348-010V
			C- 456349-010V
			C- 456321-020V
			C- 456322-020V

PART NO	LAST AM	DESCRIPTION	GROUP NO
			C- 456348-020V
			C- 456349-020V
			C- 456321-030V
			C- 456322-030V
			C- 456348-020V
			C- 456349-020V
			C- 752845-010V
			C- 752846-010V
			C- 752913-010V
			C- 752914-010V
			C- 272445-020V
C- 256410-0201	6940 84-08-15	INDEXING UNIT	B- 648105-020V
			B- 648105-030V
			B- 648105-040V
C- 256410-0301	9585 86-09-11	INDEXING UNIT	B- 648105-060V
			B- 648105-070V
C- 256410-0401	9514 86-11-26	INDEXING UNIT	B- 648105-080V
C- 256410-0501	14278 90-01-05	INDEXING UNIT	B- 648105-090V
4- 256411		SLEEVE	C- 256410-020V
4- 256412		GUIDE PLATE	C- 256410-020V
			C- 256410-030V
			C- 256410-040V
3- 256415		BEARING HOLDER	C- 256197-020V
			C- 256198-020V
			C- 256197-020V
			C- 256198-020V
			C- 256197-030V
			C- 256198-030V
			C- 256197-030V
			C- 491814-010V
			C- 491815-010V
			C- 256197-040V
			C- 491814-010V
			C- 491815-010V
3- 256418		BEARING BRACKET	C- 256198-020V
			C- 256198-030V
			C- 491814-010V
4- 256421		PULLEY	C- 256197-020V
			C- 256197-030V
			C- 256197-040V
4- 256422		WASHER	C- 256197-020V
			C- 256198-020V
			C- 256197-020V
			C- 256198-020V
			C- 256197-030V
			C- 256198-030V
			C- 256197-030V
			C- 491814-010V
			C- 491815-010V
			C- 256197-040V
			C- 491814-010V
			C- 491815-010V
4- 256426-0001		WASHER	C- 256197-020V
4- 256426-0001		WASHER	C- 256198-020V
			C- 256197-020V
			C- 256198-020V
			C- 256197-030V
			C- 256198-030V
			C- 256197-030V
			C- 491814-010V
			C- 491815-010V
			C- 256197-040V
			C- 491814-010V
			C- 491815-010V
4- 256426-0002		WASHER	C- 256197-020V
			C- 256198-020V
			C- 256197-020V
			C- 256198-020V
			C- 256197-030V
			C- 256198-030V
			C- 256197-030V
			C- 491814-010V
			C- 491815-010V
			C- 256197-040V
			C- 491814-010V
			C- 491815-010V
4- 256427		SHAFT	C- 256197-020V

PART NO	LAST AM	DESCRIPTION	GROUP NO
			C- 256198-020V
			C- 256197-020V
			C- 256198-020V
			C- 256197-030V
			C- 256198-030V
			C- 256197-030V
			C- 491814-010V
			C- 491815-010V
			C- 256197-040V
			C- 491814-010V
			C- 491815-010V
3- 256429		ROLLER	C- 295276-020V
3- 256430		BRACKET	C- 295276-020V
4- 256431		SPACER	C- 295276-020V
4- 256433		ROD	C- 295276-020V
CR- 256436-020V	8057 85-06-27	PRESSURE DEVICE	B- 648105-020V
			B- 648105-030V
			B- 648105-040V
			B- 648105-060V
CR- 256436-030V	8462 86-01-08	PRESSURE DEVICE	B- 648105-070V
CR- 256436-040V	13111 89-06-02	PRESSURE DEVICE	B- 648105-080V
CR- 256436-050V	12530 90-01-05	PRESSURE DEVICE	B- 648105-090V
C- 256437-0201	7911 85-06-11	DISC COUPLING	B- 648105-020V
			B- 648105-030V
			B- 648105-040V
			B- 648105-060V
			B- 648105-070V
			B- 648105-080V
			B- 648105-090V
C- 256438-0201	8267 85-10-14	WORM GEAR	B- 648105-020V
			B- 648105-030V
			B- 648105-040V
			B- 648105-060V
			B- 648105-070V
			B- 648105-080V
C- 256438-0201		WORM GEAR	B- 648105-090V
3- 256439-0001		SPINDLE	CR- 256436-020V
			CR- 256436-030V
3- 256439-0002		SPINDLE	CR- 256436-020V
			CR- 256436-030V
3- 256439-0003		SPINDLE	CR- 256436-020V
			CR- 256436-030V
3- 256439-0004		SPINDLE	CR- 256436-020V
			CR- 256436-030V
3- 256439-0006		SPINDLE	CR- 256436-020V
			CR- 256436-030V
3- 256439-0007		SPINDLE	CR- 256436-020V
			CR- 256436-030V
4- 256454		WASHER	C- 271114-020V
			C- 271898-020V
			C- 272381-020V
4- 256455		COMPRESSION SPRING	CR- 256436-020V
			CR- 256436-030V
4- 256457		ARM	CR- 256436-020V
			CR- 256436-030V
			CR- 256436-040V
4- 256458-0001		SHAFT	CR- 256436-020V
			CR- 256436-030V
			CR- 256436-040V
4- 256458-0002		SHAFT	CR- 256436-020V
			CR- 256436-030V
			CR- 256436-040V
4- 256460		SLEEVE	CR- 256436-020V
			CR- 256436-030V
			CR- 256436-040V
4- 256461		PIN	CR- 256436-020V
			CR- 256436-030V
			CR- 256436-040V
			CR- 256436-050V
4- 256462		SCREW	CR- 256436-020V
			CR- 256436-030V
			CR- 256436-040V
			CR- 256436-050V
4- 256463		WASHER	CR- 256436-020V
			CR- 256436-030V
			CR- 256436-040V
			CR- 256436-050V

PART NO	LAST AM	DESCRIPTION	GROUP NO
1- 256471		BEARING HOUSING	CR- 256212-020V
			CR- 256213-020V
			CR- 256212-030V
			CR- 256213-030V
4- 256472		WASHER	C- 256197-020V
			C- 256198-020V
			C- 256203-020V
			C- 256197-030V
			C- 256198-030V
			C- 256203-030V
			C- 256197-040V
			C- 256203-040V
			C- 491814-010V
			C- 491815-010V
4- 256472		WASHER	C- 256197-040V
			C- 491814-010V
			C- 491815-010V
1- 256487		CUTTING JAW	CR- 256204-020V
			CR- 256205-020V
			CR- 256204-030V
			CR- 256205-030V
			CR- 256204-040V
			CR- 256205-040V
			CR- 256204-050V
			CR- 256205-050V
3- 256492		COVER	C- 256233-020V
			C- 272021-020V
3- 256514		SHAFT	C- 256203-020V
			C- 256203-030V
3- 256515		END PIECE	C- 256198-020V
			C- 256198-030V
			C- 491814-010V
			C- 491815-010V
			C- 491814-010V
			C- 491815-010V
4- 256516		CLAMP	C- 256198-020V
			C- 256203-020V
			C- 256198-020V
			C- 256203-020V
			C- 256198-030V
			C- 256203-030V
			C- 491814-010V
			C- 491815-010V
4- 256517		SCREW	C- 256198-020V
			C- 256198-030V
			C- 491814-010V
			C- 491815-010V
			C- 491814-010V
			C- 491815-010V
4- 256518		SHAFT	C- 256203-020V
			C- 256203-030V
			C- 256203-040V
4- 256519		SPRING HOLDER	C- 256203-020V
			C- 256203-030V
			C- 256203-040V
1- 256536		BEARING HOUSING	CR- 256212-020V
			CR- 256213-020V
			CR- 256212-030V
			CR- 256213-030V
4- 256541		PIN	CR- 256208-020V
			C- 295523-020V
			CR- 256208-020V
			C- 295523-020V
CR- 256547-020V	7911 86-08-11	ELEMENT	B- 648105-020V
			B- 648105-030V
			B- 648105-040V
CR- 256547-030V	9627 86-10-17	ELEMENT	B- 648105-050V

PART NO	LAST AM	DESCRIPTION	GROUP NO
			B- 648106-070V
			B- 648106-080V
			B- 648106-090V
1- 256548		HEATING CHAMBER	CR- 256547-020V
			CR- 256547-030V
1- 256549		SPACER PIECE	CR- 256547-020V
C- 256555-020V	5932 83-05-10	MACHINE BODY	B- 648102-020V
C- 256555-030V	6501 84-02-08	MACHINE BODY	B- 648102-030V
4- 256557-0001		WASHER	CR- 256212-020V
			CR- 256213-020V
			CR- 256212-020V
			CR- 256213-020V
			CR- 256212-030V
			CR- 256213-030V
			CR- 256212-040V
			CR- 256213-040V
			CR- 256212-040V
			CR- 256213-040V
			CR- 256212-050V
			CR- 256213-050V
			RK- 456712-010V
4- 256557-0002		WASHER	CR- 256212-020V
			CR- 256213-020V
			CR- 256212-020V
			CR- 256213-020V
			CR- 256212-030V
			CR- 256213-030V
			CR- 256212-040V
			CR- 256213-040V
			CR- 256212-040V
			CR- 256213-040V
			CR- 256212-050V
			CR- 256213-050V
			RK- 456712-010V
4- 256557-0003		WASHER	CR- 256212-020V
			CR- 256213-020V
			CR- 256212-020V
			CR- 256213-020V
			CR- 256212-030V
			CR- 256213-030V
			CR- 256212-040V
			CR- 256213-040V
			CR- 256212-040V
			CR- 256213-040V
			CR- 256212-050V
			CR- 256213-050V
			RK- 456712-010V
4- 256573		CONNECTION	CR- 256212-020V
4- 256574		CONNECTION	CR- 256213-020V
4- 256576		ROLLER	CR- 256212-020V
			CR- 256213-020V
			CR- 256212-020V
			CR- 256213-020V
			CR- 256212-030V
			CR- 256213-030V
			CR- 256212-040V
			CR- 256213-040V
			CR- 256212-040V
4- 256576		ROLLER	CR- 256213-040V
			CR- 256212-050V
			CR- 256213-050V
			RK- 456712-010V
4- 256577		SHAFT	CR- 256212-020V
			CR- 256213-020V
			CR- 256212-020V
			CR- 256213-020V
1- 256594		HOUSE	C- 272021-020V
4- 256607		AXLE PIN	CR- 256204-020V
			CR- 256205-020V
			CR- 256204-020V
			CR- 256205-020V
			CR- 256204-030V
			CR- 256205-030V
			CR- 256204-040V
			CR- 256205-040V
			CR- 256204-040V
			CR- 256205-040V

PART NO	LAST AM	DESCRIPTION	GROUP NO
			CR- 256204-060V
			CR- 256205-060V
4- 256621		WASHER	C- 256206-020V
			C- 256207-020V
			C- 256206-020V
			C- 256207-020V
			C- 256206-020V
			C- 256207-020V
			C- 256206-020V
			C- 256207-020V
			C- 256206-020V
			C- 256207-020V
			C- 256206-020V
			C- 256207-020V
4- 256626		EAR	CR- 256204-020V
			CR- 256205-020V
			CR- 256204-020V
			CR- 256205-020V
			CR- 256204-030V
			CR- 256205-030V
			CR- 256204-040V
			CR- 256205-040V
			CR- 256204-040V
			CR- 256205-040V
			CR- 256204-050V
			CR- 256205-050V
4- 256628		BLOCK	C- 256951-020V
			C- 256952-020V
			C- 256951-020V
			C- 256952-020V
			C- 256951-030V
			C- 256952-030V
			C- 256951-030V
			C- 256952-030V
			C- 256951-040V
			C- 256952-040V
			C- 256951-040V
			C- 256952-040V
4- 256629-0001		AXLE PIN	C- 256951-020V
			C- 256952-020V
4- 256629-0001		AXLE PIN	C- 256951-020V
			C- 256952-020V
			C- 256951-030V
			C- 256952-030V
			C- 256951-030V
			C- 256952-030V
			C- 256951-040V
			C- 256952-040V
			C- 256951-040V
			C- 256952-040V
4- 256629-0003		AXLE PIN	C- 256951-020V
			C- 256952-020V
			C- 256951-020V
			C- 256952-020V
			C- 256951-030V
			C- 256952-030V
			C- 256951-030V
			C- 256952-030V
			C- 256951-040V
			C- 256952-040V
			C- 256951-040V
			C- 256952-040V
3- 256640		HOLDER	C- 271113-020V
			C- 456588-010V
			C- 456588-020V
			C- 456588-030V
4- 256641		LEG	C- 271113-020V
			C- 456588-010V
			C- 456588-020V
			C- 456588-030V
4- 256653		SPACER	C- 256201-020V
			C- 256202-020V
			C- 256201-020V
			C- 256202-020V
			C- 256201-020V
			C- 256202-020V
			C- 256201-020V

PART NO	LAST AM	DESCRIPTION	GROUP NO
			C- 256202-030V
			C- 256201-040V
			C- 256202-040V
3- 256659		ROD	CR- 256204-020V
			CR- 256205-020V
			CR- 256204-020V
			CR- 256205-020V
			CR- 256204-030V
			CR- 256205-030V
			CR- 256204-040V
			CR- 256205-040V
			CR- 256204-040V
			CR- 256205-040V
			CR- 256204-060V
			CR- 256205-060V
C- 256665-0201	10505 87-06-22	COVER	B- 648102-020V
			B- 648102-030V
			B- 648102-060V
			B- 648102-070V
			B- 648102-080V
			B- 648102-090V
C- 256665-0202	10505 87-06-22	COVER	B- 648102-020V
C- 256665-0202		COVER	B- 648102-030V
			B- 648102-060V
			B- 648102-070V
			B- 648102-080V
			B- 648102-090V
C- 256674-0201	7344 85-02-12	BOTTOM VALVE	B- 648105-020V
			B- 648105-030V
			B- 648105-040V
			B- 648105-060V
			B- 648105-070V
			B- 648105-080V
C- 256674-0301	12530 90-01-05	BOTTOM VALVE	B- 648105-090V
3- 256689		AIR NOZZLE	C- 256095-020V
			C- 256095-030V
			C- 256095-040V
1- 256692		CARRIER	CR- 256205-020V
			CR- 256205-030V
			CR- 256205-040V
			CR- 256205-060V
1- 256693		CARRIER	CR- 256204-020V
			CR- 256204-030V
			CR- 256204-040V
			CR- 256204-060V
4- 256704		WASHER	C- 256951-020V
			C- 256952-020V
			C- 256951-020V
			C- 256952-020V
			C- 256951-030V
			C- 256952-030V
			C- 256951-030V
			C- 256952-030V
			C- 256951-040V
			C- 256952-040V
			C- 256951-040V
			C- 256952-040V
4- 256705		SHIM	C- 256208-020V
			C- 256207-020V
			C- 256208-020V
			C- 256207-020V
			C- 256208-020V
			C- 256207-020V
			C- 256208-020V
			C- 256207-020V
			C- 256208-020V
			C- 256207-020V
			C- 256208-020V
			C- 256207-020V
4- 256706		BEARING PLATE	CR- 256204-020V
			CR- 256205-020V
			CR- 256204-020V
			CR- 256205-020V
			CR- 256204-030V
			CR- 256205-030V
			CR- 256204-040V
			CR- 256205-040V

PART NO	LAST AM	DESCRIPTION	GROUP NO
			CR- 256204-040V
			CR- 256205-040V
			CR- 256204-050V
			CR- 256205-050V
4- 256707		BRACKET	C- 256206-020V
			C- 256207-020V
			C- 256208-020V
			C- 256207-020V
			C- 256206-020V
			C- 256207-020V
			C- 256208-020V
			C- 256207-020V
			C- 256206-020V
			C- 256207-020V
			C- 256208-020V
			C- 256207-020V
4- 256710		SHAFT	C- 256951-020V
			C- 256952-020V
			C- 256951-020V
			C- 256952-020V
			C- 256951-030V
			C- 256952-030V
			C- 256951-030V
			C- 256952-030V
			C- 256951-040V
			C- 256952-040V
			C- 256951-040V
			C- 256952-040V
CR- 256712-020V	8057 86-06-27	RETRIEVER	B- 648105-020V
			B- 648105-030V
			B- 648105-040V
			B- 648105-060V
CR- 256712-030V	9482 88-01-08	RETRIEVER	B- 648105-070V
CR- 256712-040V	13111 89-06-02	RETRIEVER	B- 648105-080V
CR- 256712-050V	12530 90-01-05	RETRIEVER	B- 648105-090V
4- 256727		COVER	CR- 256436-020V
			CR- 256712-020V
			CR- 256436-020V
			CR- 256712-020V
			CR- 256436-020V
			CR- 256712-020V
			CR- 256436-020V
			CR- 256712-020V
			CR- 256436-030V
			CR- 256712-030V
4- 256736		WASHER	C- 256217-020V
			C- 256217-030V
			C- 256217-040V
4- 256739		SCREW	C- 256217-020V
			C- 256217-030V
			C- 256217-040V
1- 256769		CUTTING JAW	CR- 256204-020V
			CR- 256205-020V
			CR- 256204-020V
			CR- 256205-020V
			CR- 256204-030V
			CR- 256205-030V
			CR- 256204-040V
			CR- 256205-040V
			CR- 256204-040V
			CR- 256205-040V
			CR- 256204-050V
1- 256770		BEARING HOUSING	CR- 256205-050V
			CR- 256204-020V
			CR- 256205-020V
			CR- 256204-020V
			CR- 256205-020V
			CR- 256204-030V
			CR- 256205-030V
			CR- 256204-040V
			CR- 256205-040V
			CR- 256204-040V
			CR- 256205-040V
3- 256777		BRACKET	CR- 256204-020V
			CR- 256205-020V
			CR- 256204-020V
			CR- 256205-020V

PART NO	LAST AM	DESCRIPTION	GROUP NO
			CR- 256204-030V
			CR- 256205-030V
1- 256784		BEARING HOUSING	CR- 256204-020V
			CR- 256205-020V
			CR- 256204-020V
			CR- 256205-020V
			CR- 256204-030V
			CR- 256205-030V
			CR- 256204-040V
			CR- 256205-040V
			CR- 256204-040V
			CR- 256205-040V
3- 256786		CREASE BAR	C- 272014-020V
3- 256787		CREASE BAR	C- 272014-020V
2- 256796		BUSHING	C- 256555-020V
C- 256802-0201	6940 84-08-15	SPRINKLER	B- 648105-020V
			B- 648105-030V
			B- 648105-040V
C- 256806-0201	6936 84-08-07	CRANK	B- 648103-020V
			B- 648103-030V
C- 256806-0301	7499 85-02-11	CRANK	B- 648103-060V
			B- 648103-070V
			B- 648103-080V
4- 256812		SHAFT	C- 256806-020V
			C- 256806-030V
4- 256814		WASHER	C- 256806-020V
			C- 256806-030V
4- 256815		RING	C- 256806-020V
4- 256816		PIPE	C- 256806-020V
			C- 256806-030V
4- 256828		SPRING	C- 256806-020V
			C- 256806-030V
3- 256829		SCREW	C- 256217-020V
			C- 256951-020V
			C- 256952-020V
			C- 256217-030V
			C- 256951-020V
			C- 256952-020V
			C- 256217-040V
			C- 256951-030V
			C- 256952-030V
			C- 256217-040V
			C- 256951-030V
			C- 256952-030V
			C- 256217-040V
3- 256829		SCREW	C- 256951-040V
			C- 256952-040V
			C- 256217-040V
			C- 256951-040V
			C- 256952-040V
4- 256831-0001		SPACER	C- 256951-020V
			C- 256952-020V
			C- 256951-020V
			C- 256952-020V
			C- 256951-030V
			C- 256952-030V
			C- 256951-030V
			C- 256952-030V
			C- 256951-040V
			C- 256952-040V
			C- 256951-040V
			C- 256952-040V
4- 256831-0002		SPACER	C- 256951-020V
			C- 256952-020V
			C- 256951-020V
			C- 256952-020V
			C- 256951-030V
			C- 256952-030V
			C- 256951-030V
			C- 256952-030V
			C- 256951-040V
			C- 256952-040V
			C- 256951-040V
			C- 256952-040V
4- 256831-0003		ER	C- 256217-020V
			C- 256951-020V
			C- 256952-020V

PART NO	LAST AM	DESCRIPTION	GROUP NO
			C- 256217-030V
			C- 256951-020V
			C- 256952-020V
			C- 256217-040V
			C- 256951-030V
			C- 256952-030V
			C- 256217-040V
			C- 256951-030V
			C- 256952-030V
			C- 256217-040V
			C- 256951-040V
			C- 256952-040V
			C- 256217-020V
4- 256831-0004		SPACER	C- 256217-030V
			C- 256217-040V
G1- 256834		YOKE	C- 256951-020V
			C- 256952-020V
			C- 256951-020V
			C- 256952-020V
			C- 256951-030V
			C- 256952-030V
			C- 256951-030V
			C- 256952-030V
			C- 256951-040V
G1- 256834		YOKE	C- 256952-040V
			C- 256951-040V
			C- 256952-040V
3- 256840-0001		PIPE	C- 272342-020V
			C- 456976-010V
3- 256840-0002		PIPE	C- 272342-020V
			C- 456976-010V
			C- 456976-020V
3- 256840-0003		PIPE	C- 456976-030V
			C- 456976-040V
C- 256843-0201	6602 84-05-02	MACHINE BODY	B- 648106-020V
C- 256843-030V	7326 84-12-17	MACHINE BODY	B- 648106-080V
			B- 648106-070V
C- 256843-040V	12104 88-09-17	MACHINE BODY, SERV. UNIT	B- 648106-080V
C- 256843-050V	13645 90-01-12	MACHINE BODY	B- 648106-090V
CR- 256844-020V	7595 85-02-26	SHOCK ABSORBER	B- 648104-020V
			B- 648104-030V
			B- 648104-080V
			B- 648104-070V
CR- 256844-030V	12158 88-09-06	SHOCK ABSORBER	B- 648104-080V
			B- 648110-010V
			B- 648110-080V
			B- 648110-070V
CR- 256845-020V	7595 85-02-26	SHOCK ABSORBER	B- 648104-020V
			B- 648104-030V
			B- 648104-080V
			B- 648104-070V
CR- 256845-030V	12158 88-09-06	SHOCK ABSORBER	B- 648104-080V
			B- 648110-010V
			B- 648110-080V
			B- 648110-070V
G1- 256849		VOLUMEFLAP 126 CC	CR- 256209-030V
			CR- 256210-020V
			CR- 256209-020V
			CR- 256210-020V
			CR- 256209-020V
			CR- 256210-020V
			CR- 256209-020V
			CR- 256210-020V
			CR- 256209-020V
G1- 256850		VOLUME FLAP 200 ML	CR- 256210-020V
			CR- 256209-020V
			CR- 256210-020V
			CR- 256209-020V
			CR- 256210-020V
			CR- 256209-020V
			CR- 256210-020V
			CR- 256209-020V

PART NO	LAST AM	DESCRIPTION	GROUP NO
			CR- 256210-020V
			CR- 256209-020V
			CR- 256210-020V
3- 256863		STOP	CR- 256844-020V
3- 256854		STOP	CR- 256845-020V
3- 256855		STOP	CR- 256844-020V
3- 256856		STOP	CR- 256845-020V
3- 256857		HOUSE	CR- 256844-020V
3- 256858		HOUSE	CR- 256845-020V
4- 256859		SCREW	CR- 256209-020V
			CR- 256210-020V
			CR- 256209-020V
			CR- 256210-020V
			CR- 256209-020V
			CR- 256210-020V
			CR- 256209-020V
			CR- 256210-020V
			CR- 256209-020V
4- 256860		ROLLER	CR- 256210-020V
			CR- 256209-020V
			CR- 256210-020V
			CR- 256209-020V
			CR- 256210-020V
			CR- 256209-030V
			CR- 256210-030V
4- 256868		SHAFT	CR- 256844-020V
			CR- 256845-020V
			CR- 256844-020V
			CR- 256845-020V
			CR- 256844-020V
			CR- 256845-020V
G1- 256869		ARM PRESSURE JAW	C- 256951-020V
			C- 256952-020V
			C- 256951-020V
			C- 256952-020V
			C- 256951-030V
			C- 256952-030V
			C- 256951-030V
			C- 256952-030V
			C- 256951-040V
			C- 256952-040V
			C- 256951-040V
			C- 256952-040V
3- 256870		BRACKET	C- 256951-020V
			C- 256952-020V
			C- 256951-020V
			C- 256952-020V
			C- 256951-030V
			C- 256952-030V
			C- 256951-030V
			C- 256952-030V
			C- 256951-040V
			C- 256952-040V
			C- 256951-040V
			C- 256952-040V
1- 256871		COLUMN	C- 256233-020V
C- 256873-0201	12427 88-12-08	DOOR	B- 648106-020V
			B- 648106-080V
C- 256873-0201		DOOR	B- 648106-070V
			B- 648106-080V
C- 256873-0401	13606 89-11-22	DOOR	B- 648106-090V
C- 256875-0201	5614 82-12-15	COVER	B- 648106-020V
			B- 648106-080V
			B- 648106-070V
			B- 648106-080V
			B- 648106-090V
4- 256876		CYLINDER BRACKET	C- 256084-020V

PART NO	LAST AM	DESCRIPTION	GROUP NO
4- 256882		WASHER	CR- 256214-020V
			CR- 256215-020V
			CR- 256214-020V
			CR- 256215-020V
			CR- 256214-020V
			CR- 256215-020V
			CR- 256214-020V
			CR- 256215-020V
			CR- 256214-030V
			CR- 256215-030V
			CR- 256214-030V
			CR- 256215-030V
4- 256889		PLUNGER	C- 256951-020V
			C- 256952-020V
			C- 256951-020V
			C- 256952-020V
			C- 256951-030V
			C- 256952-030V
			C- 256951-030V
			C- 256952-030V
			C- 256951-040V
			C- 256952-040V
4- 256890		SHIM	C- 256951-040V
			C- 256952-040V
			C- 256951-020V
			C- 256952-020V
			C- 256951-020V
			C- 256952-020V
			C- 256951-030V
			C- 256952-030V
			C- 256951-030V
			C- 256952-030V
			C- 256951-040V
			C- 256952-040V
			C- 256951-040V
4- 256891		SHIM	C- 256952-040V
			C- 256951-020V
			C- 256952-020V
			C- 256951-020V
			C- 256952-020V
			C- 256951-030V
			C- 256952-030V
			C- 256951-030V
			C- 256952-030V
			C- 256951-040V
			C- 256952-040V
			C- 256951-040V
			C- 256952-040V
4- 256899		SHAFT	C- 469501-020V
			C- 469501-030V
4- 256899		SHAFT	C- 469501-010V
			C- 469501-020V
			C- 469501-030V
			RK- 751462-010V
4- 256907		WASHER	C- 256802-020V
			C- 456455-010V
			C- 456455-020V
4- 256908		WASHER	C- 271113-020V
4- 256912		PIN	C- 256199-020V
			C- 256199-030V
			C- 256199-040V
4- 256913		ROLLER	C- 256199-020V
4- 256914		SPACER RING	C- 256199-020V
			C- 256199-030V
4- 256915		SPACER RING	C- 256199-020V
			C- 256199-030V
			C- 256199-040V
4- 256916		STRUT	C- 256199-020V
			C- 256199-030V
			C- 256199-040V
4- 256918		WASHER	C- 256199-020V
			C- 256199-030V
			C- 256199-040V
3- 256920		ANGLE BRACKET	C- 441088-010V
			C- 441092-010V
			C- 441088-010V
			C- 441092-010V

PART NO	LAST AM	DESCRIPTION	GROUP NO
			C- 441088-010V
			C- 441092-010V
			C- 441088-010V
			C- 441092-010V
			C- 441088-010V
			C- 441092-010V
3- 256948		GASKET	C- 295258-020V
C- 256951-0201	6299 83-11-23	YOKE	B- 648104-020V
			B- 648104-030V
C- 256951-0301	6300 84-01-09	YOKE	B- 648104-060V
			B- 648104-070V
C- 256951-0401	8691 86-02-17	YOKE	B- 648104-080V
			B- 648104-090V
C- 256952-0201	6299 83-11-23	YOKE	B- 648104-020V
			B- 648104-030V
C- 256952-0301	6300 84-01-09	YOKE	B- 648104-060V
			B- 648104-070V
C- 256952-0401	8691 86-02-17	YOKE	B- 648104-080V
			B- 648104-090V
2- 256953		BLOCK RIGHT	C- 256951-020V
			C- 256951-030V
			C- 256951-040V
2- 256954		BLOCK LEFT	C- 256952-020V
			C- 256952-030V
			C- 256952-040V
C- 256965-020V	7887 85-06-20	IMPULSE TRANSMITTER	B- 648106-020V
C- 256966-020V	9596 86-09-05	BENDING ROLLER BRACKET	B- 648107-020V
			B- 648107-060V
			B- 648107-070V
C- 256967-0201	6317 83-11-03	BENDING ROLLER	B- 648107-080V
			B- 648107-020V
C- 256967-0201		BENDING ROLLER	B- 648107-060V
			B- 648107-070V
C- 256968-0201	7720 85-04-30	STRIP GUIDE	B- 648107-080V
C- 256973-020V	6501 84-02-08	TRANSMISSION	B- 648107-020V
			B- 648102-020V
C- 256973-030V	7944 85-05-14	TRANSMISSION	B- 648102-030V
			B- 648102-060V
			B- 648102-070V
			B- 648102-080V
			B- 648102-090V
3- 256975		GUARD	C- 256973-020V
			C- 256973-030V
4- 256976		PLATE	C- 256973-020V
			C- 256973-030V
4- 256977-0001		WASHER	C- 256973-020V
			C- 256973-030V
4- 256977-0002		WASHER	C- 256973-020V
			C- 256973-030V
4- 256977-0003		WASHER	C- 256973-020V
			C- 256973-030V
3- 256983		SHAFT	C- 256965-020V
			C- 456546-010V
			C- 456546-020V
3- 256984		BENDING ROLLER	C- 256967-020V
			C- 456919-010V
			C- 256967-020V
			C- 456919-010V
			C- 256967-020V
			C- 456919-010V
			C- 752247-010V
			C- 752628-010V
4- 256986		SHAFT	C- 256966-020V
			C- 256967-020V
			C- 256966-020V
			C- 256967-020V
			C- 456919-010V
			C- 256966-020V
			C- 256967-020V
			C- 456919-010V
			C- 256966-020V
			C- 256967-020V
			C- 456919-010V
			C- 752247-010V
			C- 752627-010V
4- 256988-0001		STRUT	C- 256966-020V
4- 256988-0002		STRUT	C- 256968-020V

PART NO	LAST AM	DESCRIPTION	GROUP NO
4- 256986-0003		STRUT	C- 456032-010V
4- 256986-0004		STRUT	C- 456032-010V
4- 256986-0005		STRUT	C- 456032-010V
4- 256986-0006		STRUT	C- 295891-020V C- 295891-030V C- 295891-020V C- 295891-030V
4- 256986-0007		STRUT	C- 295891-020V C- 295891-030V
4- 256987		SECURING PLATE	C- 256965-020V C- 456546-010V C- 456546-020V
G3- 256992		BRACKET	C- 256967-020V
G3- 256993		BRACKET	C- 256967-020V
2- 256998		HOSE HOLDER	C- 257382-020V
2- 256999		HOSE HOLDER	C- 257381-020V
4- 257000		NIPPLE	C- 257381-020V C- 257382-020V C- 257381-020V C- 257382-020V C- 257381-030V C- 257382-030V C- 257381-030V C- 257382-030V C- 257381-030V C- 257382-030V C- 257381-030V C- 257382-030V
4- 257004		PIN	C- 256223-020V
4- 257024		SHAFT	C- 256965-020V C- 456546-010V C- 456546-020V
3- 257026		DRIP GUARD	C- 256228-020V
3- 257040		FORK	C- 256238-020V C- 256238-030V C- 256238-040V C- 255957-020V C- 456309-010V C- 255957-020V C- 456309-010V C- 456309-020V C- 456309-030V C- 456309-040V
3- 257041		FORK	C- 255957-020V C- 456309-020V C- 456309-030V C- 456309-040V
4- 257042		BRACKET	C- 256238-020V C- 256238-030V C- 256238-040V C- 255957-020V C- 456309-010V C- 255957-020V C- 456309-010V C- 456309-020V C- 456309-030V C- 456309-040V
4- 257043		ANGLE BRACKET	C- 256238-020V C- 256238-030V C- 256238-040V C- 255957-020V C- 456309-010V C- 255957-020V C- 456309-010V C- 456309-020V C- 456309-030V C- 456309-040V
4- 257044		ROLLER	C- 256238-020V C- 256238-030V C- 256238-040V C- 255957-020V C- 456309-010V C- 255957-020V C- 456309-010V C- 456309-020V C- 456309-030V C- 456309-040V
4- 257044		ROLLER	

PART NO	LAST AM	DESCRIPTION	GROUP NO
4- 257050		SHAFT	C- 256236-020V C- 256236-030V C- 256236-040V C- 255957-020V C- 456309-010V C- 255957-020V C- 456309-010V C- 456309-020V C- 456309-030V C- 456309-040V
3- 257074		BENDING ROLLER	C- 272028-020V
C- 257075-020V	6668 84-03-29	DOOR	B- 648111-020V B- 648111-030V B- 648111-060V B- 648111-070V
C- 257075-0251	6669 84-03-21	DOOR	
4- 257089		PLATE	C- 272030-020V C- 441304-010V C- 272030-020V C- 441304-010V C- 441304-020V C- 441304-030V
4- 257090		KNOB	C- 441102-010V C- 441102-020V C- 272030-020V C- 441304-010V C- 272030-020V C- 441304-010V C- 441304-020V C- 441304-030V
3- 257097		FLANGE	C- 256921-020V C- 256921-030V
4- 257101		LOCK	C- 256230-020V C- 256921-020V C- 256921-030V
3- 257105		CLAMP	C- 272031-020V
4- 257133		LID	C- 271116-020V C- 271116-030V
4- 257141		RETAINING RING	C- 256236-020V C- 295112-020V C- 456321-010V C- 456322-010V C- 456348-010V C- 456349-010V C- 456321-020V C- 456322-020V C- 456348-020V C- 456349-020V C- 456321-030V C- 456322-030V C- 456348-020V C- 456349-020V C- 752845-010V C- 752846-010V C- 752913-010V C- 752914-010V
4- 257141		RETAINING RING	C- 272445-020V
C- 257146-0201	5386 82-07-06	LID	B- 648106-020V B- 648106-060V B- 648106-070V B- 648106-080V B- 648106-090V
4- 257151		BRACKET	C- 271469-020V
C- 257166-020V	7235 84-11-01	PAPER GUIDE	B- 648111-020V B- 648111-030V B- 648111-060V B- 648111-070V
C- 257166-0301	7210 84-10-19	PAPER GUIDE	
4- 257174		SEALING WASHER	C- 256173-020V C- 256173-030V C- 256173-040V
4- 257175		WASHER	C- 255982-020V C- 271274-020V C- 272342-020V C- 441304-010V C- 441486-010V C- 255982-020V C- 271274-020V C- 441304-010V

PART NO	LAST AM	DESCRIPTION	GROUP NO
			C- 441486-010V
			C- 456976-010V
			C- 441486-020V
			C- 441486-030V
			C- 441486-040V
4- 257179		GEAR WHEEL	C- 256173-020V
			C- 256808-020V
			C- 256173-020V
			C- 256808-020V
			C- 256173-020V
			C- 256808-030V
			C- 256173-030V
			C- 256808-030V
			C- 256173-040V
			C- 256808-030V
4- 257190		JUNCTION BLOCK	C- 271261-020V
			C- 271261-030V
			C- 271261-040V
			C- 271261-050V
4- 257199		STRUT	RK- 456804-010V
			C- 272361-020V
			C- 272361-030V
4- 257200		WASHER	RK- 456804-010V
			C- 272361-020V
			C- 272361-030V
4- 257201		WASHER	RK- 456804-010V
			C- 272361-020V
			C- 272361-030V
4- 257202		STRAINER	RK- 491591-030V
			C- 491243-030V
			C- 272361-020V
			C- 491243-030V
			C- 751373-010V
4- 257209		FLANGE	C- 272361-020V
4- 257213		BUSHING	C- 256951-020V
			C- 256952-020V
			C- 256951-020V
257213		BUSHING	C- 256952-020V
			C- 256951-030V
			C- 256952-030V
			C- 256951-030V
			C- 256952-030V
			C- 256951-040V
			C- 256952-040V
			C- 256951-040V
			C- 256952-040V
4- 257214		WASHER	C- 256173-020V
4- 257224		CLAMP	C- 271017-020V
			C- 271017-030V
4- 257231		WINDOW	C- 256865-020V
			C- 271114-040V
3- 257248		CATCH	CR- 256212-020V
			CR- 256213-020V
			CR- 256212-020V
			CR- 256213-020V
			CR- 256212-030V
			CR- 256213-030V
4- 257249		SCREW	CR- 256212-020V
			CR- 256213-020V
			CR- 256212-020V
			CR- 256213-020V
			CR- 256212-030V
			CR- 256213-030V
			CR- 256212-040V
			CR- 256213-040V
			CR- 256212-040V
			CR- 256213-040V
			CR- 256212-050V
			CR- 256213-050V
			RK- 456712-010V
G4- 257250		LID	CR- 256212-020V
			CR- 256213-020V
			CR- 256212-020V
			CR- 256213-020V
			CR- 256212-030V
			CR- 256213-030V
			CR- 256212-040V

PART NO	LAST AM	DESCRIPTION	GROUP NO
			CR- 256213-040V
			CR- 256212-040V
			CR- 256213-040V
			CR- 256212-050V
			CR- 256213-050V
			RK- 456712-010V
4- 257271		STOP	C- 271469-020V
4- 257306		ROLLER	C- 256197-020V
			C- 256197-030V
			C- 256197-040V
4- 257308		SCREW	C- 256197-020V
			C- 256197-030V
			C- 256197-040V
4- 257309		SHAFT	C- 256197-020V
			C- 256198-020V
			C- 256197-020V
			C- 256198-020V
			C- 256197-030V
			C- 256198-030V
4- 257309		SHAFT	C- 256197-030V
			C- 491787-010V
			C- 491788-010V
			C- 256197-040V
			C- 491787-020V
			C- 491788-020V
4- 257310		NUT	C- 256197-020V
			C- 256198-020V
			C- 256197-020V
			C- 256198-020V
			C- 256197-030V
			C- 256198-030V
			C- 256197-030V
			C- 491787-010V
			C- 491788-010V
			C- 256197-040V
			C- 491787-020V
			C- 491788-020V
4- 257311		CLAMP	C- 256197-020V
			C- 256198-020V
			C- 256197-020V
			C- 256198-020V
			C- 256197-030V
			C- 256198-030V
			C- 256197-030V
			C- 491787-010V
			C- 491788-010V
			C- 491814-010V
			C- 491815-010V
			C- 256197-040V
			C- 491787-020V
			C- 491788-020V
			C- 491814-010V
			C- 491815-010V
4- 257314		SCREW	C- 256198-020V
			C- 256198-030V
4- 257316		BRACKET	C- 290276-020V
4- 257317		SHIM	C- 256951-020V
			C- 256952-020V
			C- 256951-020V
			C- 256952-020V
			C- 256951-030V
			C- 256952-030V
			C- 256951-030V
			C- 256952-030V
			C- 256951-040V
			C- 256952-040V
			C- 256951-040V
			C- 256952-040V
2- 257326		CRANK	C- 256806-020V
			C- 256806-030V
4- 257327		SLIDER	C- 256806-020V
			C- 256806-030V
4- 257328		END PIECE	C- 256806-020V
			C- 256806-030V
4- 257330		PRESSURE ROLLER	C- 529933-010V
			C- 295667-020V
			C- 255982-020V

PART NO	LAST AM	DESCRIPTION	GROUP NO
4- 257330		PRESSURE ROLLER	C- 295778-010V C- 255982-020V C- 295778-010V C- 295778-020V C- 469091-010V C- 295778-030V C- 469091-010V C- 295778-030V C- 469091-020V C- 295778-040V C- 469091-020V C- 529933-010V
4- 257334		LEAF SPRING	C- 256206-020V C- 256207-020V C- 256206-020V C- 256207-020V C- 256206-020V C- 256207-020V C- 256206-020V C- 256207-020V C- 256206-020V C- 256207-020V C- 256206-020V C- 256207-020V
3- 257335		PIPE	C- 295045-020V
3- 257336		PIPE	C- 295045-020V
3- 257337		PIPE	C- 295045-020V
3- 257338		PIPE	C- 295045-020V
3- 257341		GUIDE	C- 256951-020V C- 256952-020V C- 256951-020V C- 256952-020V C- 256951-030V C- 256952-030V C- 256951-030V C- 256952-030V
4- 257347		WASHER	C- 256200-020V
3- 257349		CATCH	CR- 256204-020V CR- 256205-020V CR- 256204-020V CR- 256205-020V CR- 256204-030V CR- 256205-030V CR- 256204-040V CR- 256205-040V CR- 256204-040V CR- 256205-040V CR- 256204-050V CR- 256205-050V
1- 257360		CARRIER	CR- 256212-020V CR- 256213-020V
1- 257361		CARRIER	CR- 256204-020V CR- 256205-020V CR- 256204-020V CR- 256205-020V CR- 256204-030V CR- 256205-030V CR- 256204-040V CR- 256205-040V CR- 256204-040V CR- 256205-040V CR- 256204-050V CR- 256205-050V
4- 257362		SHIM	CR- 256212-020V CR- 256213-020V CR- 256212-020V CR- 256213-020V CR- 256212-020V CR- 256213-020V CR- 256212-020V CR- 256213-020V
4- 257363		COMPRESSION SPRING	C- 257361-020V C- 257361-030V C- 257362-020V C- 257362-030V
4- 257363		COMPRESSION SPRING	B- 648104-020V B- 648104-030V B- 648104-060V B- 648104-070V B- 648104-080V B- 648104-090V B- 648104-020V B- 648104-030V
4- 257364		COMPRESSION SPRING	
3- 257379		HYDRAULIC PIPE RIGHT	
3- 257380		HYDRAULIC PIPE LEFT	
C- 257381-0201	6486 84-02-15	CONNECTION BLOCK	
C- 257381-0301	6300 84-01-09	CONNECTION BLOCK	
C- 257382-0201	6486 84-02-15	CONNECTION BLOCK	

PART NO	LAST AM	DESCRIPTION	GROUP NO
C- 257382-0301	6300 84-01-09	CONNECTION BLOCK	B- 648104-060V B- 648104-070V B- 648104-080V B- 648104-090V
4- 257393-0001		NUT	C- 256221-020V C- 256222-020V C- 256221-020V C- 256222-020V C- 256221-020V C- 256222-020V C- 256221-020V C- 256222-020V C- 256221-020V C- 256222-020V C- 256221-020V C- 256222-020V C- 256221-020V C- 256222-020V C- 256221-020V C- 256222-020V C- 256221-020V C- 256222-020V C- 256221-020V C- 256222-020V C- 256221-020V C- 256222-020V C- 256221-020V C- 256222-020V C- 256221-020V C- 256222-020V C- 256221-020V C- 256222-020V C- 256221-020V C- 256222-020V C- 256221-020V C- 256222-020V
4- 257393-0002		NUT	
4- 257395		WASHER	
4- 257397		PIN	RK- 648056-010V
4- 257397		PIN	C- 272508-010V C- 469535-010V C- 553857-010V C- 752042-010V
4- 257690		SHAFT	C- 283618-010V CR- 283618-020V
4- 257696		HUB	C- 283618-010V CR- 283618-020V
4- 257707		BRACKET	C- 283617-010V CR- 283607-010V
4- 257708		PLATE	C- 283617-010V CR- 283607-010V
4- 257710		PIN	C- 283617-010V CR- 283605-010V
4- 257711		BLOCK	C- 283617-010V CR- 283605-010V
4- 257712		SHAFT	C- 283617-010V CR- 283605-010V
4- 257722		SHAFT	C- 256234-020V C- 256234-030V C- 256234-040V
3- 257875		HUB	C- 294522-010V C- 283626-010V C- 283626-020V C- 283626-030V
3- 257876		GEAR WHEEL	C- 294522-010V C- 283626-010V C- 283626-020V C- 283626-030V
4- 257883		PULLEY	C- 294522-010V C- 283626-010V C- 283626-020V C- 283626-030V
4- 257923		GUIDE ROLLER	C- 256988-020V C- 456032-010V
3- 259560		FLOAT	C- 256230-020V

PART NO	LAST AM	DESCRIPTION	GROUP NO
			C- 256921-020V
			C- 255921-030V
4- 259761		TOOTHED PULLY	C- 283618-010V
			CR- 283618-020V
4- 259762		TOOTHED PULLY	C- 283618-010V
			CR- 283618-020V
4- 259763-0001		COUNTER JAW	C- 283611-010V
4- 259763-0003		COUNTER JAW	RK- 547782-010V
			C- 449388-010V
4- 259763-0004		COUNTER JAW	C- 449388-010V
4- 259763-0002		ROLLER	C- 283618-010V
4- 259807		WASHER	CR- 256547-020V
			CR- 256547-030V
4- 259816		ROLLER	C- 283618-010V
			CR- 283618-020V
4- 260427		WASHER	CR- 256436-050V
4- 260966		BRACKET	C- 294763-010V
4- 260969		PRESSURE PLATE	C- 294767-010V
			C- 456807-010V
4- 260991		PRESSURE PLATE	C- 294767-010V
			C- 456807-010V
4- 260992		JIG	C- 294767-010V
			C- 456807-010V
4- 260996		CONNECTION	C- 294763-010V
4- 260997		GUIDE	C- 294763-010V
4- 260998		ROD	C- 294763-010V
3- 260999		LEVER	C- 294763-010V
4- 261001		CONNECTION	C- 294763-010V
4- 261028		BOLT	C- 294763-010V
3- 261224		BRACKET	C- 294763-010V
4- 261226		BRACKET	C- 294763-010V
3- 261237		KNIFE	C- 283618-010V
4- 261691		GUIDE	C- 294767-010V
3- 261692		BRACKET	C- 294767-010V
3- 261693		GUARD	C- 294767-010V
4- 261939		RUBBER	C- 155083-010V
4- 262183		BUSHING	C- 271115-020V
4- 263062		PRESSURE ROLLER	C- 295402-020V
			C- 295867-030V
			C- 295402-020V
			C- 295867-030V
			C- 295402-020V
			C- 295867-030V
3- 263150		BRACKET	C- 271934-020V
			C- 271934-030V
			RK- 491324-010V
			C- 752030-010V
4- 263152		SHAFT	C- 271934-020V
			C- 271934-030V
			RK- 491324-010V
			C- 752030-010V
4- 263153		NUT	C- 271934-020V
			C- 271934-030V
			RK- 491324-010V
			C- 752030-010V
4- 263156		SHAFT	C- 283617-010V
			CR- 283606-010V
4- 263311		WASHER	C- 456274-010V
			C- 256014-020V
			C- 271274-020V
			C- 272025-020V
			C- 272623-020V
			C- 256014-020V
			C- 271274-020V
			C- 272025-020V
			C- 272623-020V
			C- 272025-020V
			C- 272025-030V
			C- 456274-010V
P4- 263401		ELECTRICAL CONNECTION	CR- 256547-020V
4- 263496		GEAR WHEEL	C- 283623-010V
			C- 456688-010V
			C- 283623-010V
4- 263499		SPRING HOLDER	C- 294659-010V
			RK- 547300-010V
			C- 283621-010V
2- 263568		FRAME	C- 295026-010V

PART NO	LAST AM	DESCRIPTION	GROUP NO
			C- 295026-020V
			C- 295026-030V
3- 263569		LADDER	C- 295026-010V
			C- 295026-020V
			C- 295026-030V
4- 263655-0002		SHAFT	C- 441092-010V
4- 263655-0002		SHAFT	C- 441304-020V
4- 263655-0003		SHAFT	C- 441307-010V
			C- 441307-020V
4- 263655-0004		SHAFT	C- 441088-010V
			C- 272030-020V
			C- 272031-020V
			C- 441486-010V
			C- 272030-020V
			C- 272031-020V
			C- 441486-010V
			C- 441307-020V
			C- 441486-020V
			C- 441307-020V
			C- 441486-020V
			C- 441307-020V
			C- 441486-030V
4- 263655-0005		SHAFT	C- 441092-010V
			C- 441304-010V
			C- 441304-020V
4- 263655-0006		SHAFT	C- 76595-010V
			C- 76595-020V
			C- 76595-030V
			RK- 456799-010V
			C- 256238-020V
			C- 256238-030V
			C- 256238-040V
			C- 255957-020V
			C- 272030-020V
			C- 441486-010V
			C- 456309-010V
			C- 255957-020V
			C- 272030-020V
			C- 441486-010V
			C- 456309-010V
			C- 272021-030V
			C- 441486-020V
			C- 456309-020V
			C- 272021-030V
			C- 441486-020V
			C- 456309-020V
			C- 272021-040V
			C- 441486-030V
			C- 456309-030V
			C- 272021-050V
			C- 76595-010V
4- 263655-0007		SHAFT	C- 441486-020V
			C- 441486-030V
4- 263655-0008		SHAFT	C- 441102-010V
			C- 441102-020V
4- 263655-0009		SHAFT	C- 441102-010V
			C- 441102-020V
			C- 441486-010V
			C- 441486-020V
			C- 441486-030V
4- 263655-0011		SHAFT	C- 441102-010V
			C- 441102-020V
			C- 441304-020V
4- 263655-0012		SHAFT	C- 441102-010V
			C- 441102-020V
4- 263655-0013		SHAFT	C- 441092-010V
4- 263655-0014		SHAFT	C- 441088-010V
			C- 272031-020V
4- 263655-0015		SHAFT	C- 441102-010V
			C- 441102-020V
4- 263655-0016		SHAFT	C- 441092-010V
			C- 441307-020V
4- 263655-0017		SHAFT	C- 441088-010V
4- 263655-0018		SHAFT	C- 441486-020V
			C- 441486-030V
4- 263655-0019		SHAFT	C- 441304-020V
4- 263655-0021		SHAFT	C- 441307-020V

PART NO	LAST AM	DESCRIPTION	GROUP NO
4- 263673		GASKET	CR- 256547-020V
			CR- 256547-030V
4- 263700		HOLDER	C- 283618-010V
4- 263701		ROLLER	C- 283618-010V
			CR- 283618-020V
2- 265553		BRACKET	C- 295026-010V
			C- 295026-020V
			C- 295026-030V
2- 265554		LID	C- 295026-010V
			C- 295026-020V
			C- 295026-030V
2- 265555		FRAME	C- 295026-010V
			C- 295026-020V
			C- 295026-030V
2- 265556		LADDER	C- 295026-010V
			C- 295026-020V
			C- 295026-030V
2- 265563		BRACKET	C- 256966-020V
4- 265567		BEARING	C- 256966-020V
			C- 256967-020V
			C- 256966-020V
			C- 256967-020V
			C- 456919-010V
			C- 256966-020V
			C- 256967-020V
			C- 456919-010V
			C- 256966-020V
			C- 256967-020V
			C- 456919-010V
			C- 256966-020V
			C- 256967-020V
			C- 456919-010V
			C- 256966-020V
			C- 256967-020V
			C- 456919-010V
4- 265568		DUST COVER	C- 256966-020V
			C- 256967-020V
			C- 256966-020V
			C- 256967-020V
			C- 456919-010V
			C- 256966-020V
			C- 256967-020V
			C- 456919-010V
			C- 256966-020V
			C- 256967-020V
			C- 456919-010V
			C- 752247-010V
			C- 752627-010V
			C- 752628-010V
			C- 752645-010V
			C- 752646-010V
			C- 752913-010V
			C- 752914-010V
4- 265603		SCREW	C- 469737-010V
			C- 283622-010V
			C- 469173-010V
4- 265913		TOOTHED PULLY	C- 294522-010V
4- 265914		TOOTHED PULLY	C- 294522-010V
			C- 283626-010V
			C- 283626-020V
			C- 283626-030V
4- 265915		TOOTHED PULLY	C- 294522-010V
4- 266049		SUPPORT	C- 256966-020V
			C- 456032-010V
4- 266098-0002		DOLLY	C- 283614-010V
			C- 294667-010V
			C- 283614-010V
4- 266358		BRACKET	C- 283612-010V
4- 266359		BRACKET	C- 283612-010V
4- 266389		PISTON ROD	C- 271169-020V
			C- 272337-020V
			C- 271169-020V
			C- 272337-020V
			C- 271169-020V
			C- 272337-020V
			C- 271169-020V
			C- 272337-020V
			C- 271169-030V
			C- 272337-030V
			C- 271169-040V
			C- 272337-040V
4- 266390		NUT	C- 271169-020V
			C- 272337-020V

PART NO	LAST AM	DESCRIPTION	GROUP NO
			C- 271169-030V
			C- 272337-020V
			C- 271169-020V
			C- 272337-020V
			C- 271169-030V
			C- 272337-030V
			C- 271169-040V
			C- 272337-040V
4- 266391		RING	C- 271169-020V
			C- 272337-020V
			C- 271169-020V
			C- 272337-020V
			C- 271169-020V
			C- 272337-020V
			C- 271169-020V
			C- 272337-020V
			C- 271169-030V
			C- 272337-030V
			C- 271169-040V
			C- 272337-040V
4- 266394		BRACKET	C- 271169-020V
			C- 272337-020V
			C- 271169-020V
			C- 272337-020V
			C- 271169-020V
			C- 272337-020V
			C- 271169-020V
4- 266394		BRACKET	C- 272337-020V
2- 266416		BRACKET	C- 294522-010V
4- 266422		NUT	C- 283618-010V
			CR- 283618-020V
2- 266480		CAM	C- 283627-010V
4- 266506		HUB	C- 283627-010V
			C- 456574-010V
			C- 476349-020V
4- 266507		SHAFT	C- 283612-010V
4- 266610		GASKET	C- 456274-010V
			C- 272342-020V
			C- 295778-010V
			C- 456576-010V
			C- 295778-020V
			C- 456274-010V
4- 266710		WHEEL	C- 271934-020V
			C- 271934-030V
			RK- 491324-010V
			C- 256014-020V
2- 266727		AIR NOZZLE	C- 272343-020V
			C- 272343-030V
			C- 272343-040V
			C- 272343-050V
3- 266728		BRACKET	C- 272343-020V
			C- 272343-030V
			C- 272343-040V
			C- 272343-050V
3- 266729		ROCKER ARM	C- 272343-020V
3- 266730		HOLDER	C- 272343-020V
			C- 272343-030V
			C- 272343-040V
			C- 272343-050V
4- 266731		SHAFT	C- 272343-020V
			C- 272343-030V
			C- 272343-040V
			C- 272343-050V
4- 266732		SHAFT	C- 272343-020V
			C- 272343-030V
			C- 272343-040V
			C- 272343-050V
4- 266733		BLOCK	C- 272343-020V
			C- 272343-030V
			C- 272343-040V
			C- 272343-050V
4- 266734		CLAMP	C- 272343-020V
			C- 272343-030V
			C- 272343-040V
			C- 272343-050V

PART NO	LAST AM	DESCRIPTION	GROUP NO
4- 266737		WASHER	RK- 752036-010V
			C- 272343-020V
			C- 272343-030V
			C- 272343-040V
			C- 272343-050V
4- 266738		CABLE GLAND	C- 256084-040V
			C- 256239-020V
			C- 256239-030V
			C- 256239-040V
			C- 272343-020V
4- 266739		CABLE GLAND	C- 272343-030V
			C- 272343-040V
			C- 272343-050V
			C- 256095-020V
			C- 256095-030V
4- 266740-0003		SPACER	C- 256095-040V
			C- 256239-020V
			C- 272343-020V
			C- 272343-030V
			C- 272343-040V
			C- 272343-050V
4- 266762		PLATE	C- 256095-020V
3- 266822-0001		SHAFT	C- 246366-020V
3- 266822-0002		SHAFT	C- 283627-010V
3- 266822-0005		SHAFT	C- 283627-010V
2- 267001		DOOR	RK- 547300-010V
3- 267002		HOLDER	C- 268656-010V
3- 267004		ARM	C- 268656-010V
4- 267005		HANGER	C- 268656-010V
			C- 283600-010V
4- 267006		HANGER	C- 268656-010V
			C- 283600-010V
4- 267033		WASHER	C- 272021-020V
			C- 272021-030V
			C- 272021-040V
			C- 272021-050V
2- 267308		TOUCH GUARD	C- 295891-010V
			C- 295891-020V
			C- 295891-030V
3- 267309		BRACKET	C- 295891-010V
			C- 295891-020V
4- 267311		PLATE	C- 272408-020V
			C- 272408-030V
C- 267315-0101	14273 90-02-06	PAPER GUIDE	B- 648107-020V
			B- 648107-060V
			B- 648107-070V
			B- 648107-080V
2- 267316		BRACKET	C- 267315-010V
4- 267479		FLANGE	C- 283602-010V
			C- 283630-010V
			C- 283602-010V
			C- 283630-010V
3- 267494		COIL HEATER	C- 256237-020V
			C- 295667-020V
			C- 256237-030V
			C- 295667-020V
			C- 256055-020V
			C- 295778-010V
			C- 256055-020V
			C- 295778-010V
			C- 256055-030V
			C- 295778-020V
3- 267534		HOLDER	C- 283610-010V
			CR- 449275-010V
4- 267641		STUD BOLT	C- 283611-010V
4- 267686		BUSHING	C- 456274-010V
			C- 271274-020V
			C- 272623-020V
			C- 271274-020V
4- 267686		BUSHING	C- 272623-020V
			C- 456274-010V
3- 267732		BRACKET	C- 232781-040V
3- 267733		BRACKET	C- 232781-040V
1- 267795		COVER PLATE	C- 294658-010V
			C- 271274-020V
4- 267944		RING	C- 268656-010V

PART NO	LAST AM	DESCRIPTION	GROUP NO
			C- 283620-010V
4- 267945		SHAFT	C- 469736-010V
			C- 283600-010V
4- 267946		ROLLER	C- 469736-010V
			C- 283600-010V
4- 268056		TOOTHED PULLY	C- 283627-010V
			C- 456674-010V
			C- 476349-020V
4- 268059		ROLLER	C- 256238-020V
			C- 256238-030V
			C- 256238-040V
			C- 256957-020V
			C- 456309-010V
			C- 256957-020V
			C- 456309-010V
			C- 456309-020V
			C- 456309-030V
			C- 456309-040V
4- 268061		TOOTHED PULLY	C- 283618-010V
4- 268289		CAM	C- 283627-010V
			C- 456674-010V
1- 268560		ARM	C- 283617-010V
			CR- 283605-010V
4- 268583		SHAFT	C- 283612-010V
4- 268584		SHAFT	C- 283617-010V
			CR- 283605-010V
4- 268585		LID	C- 283612-010V
			C- 283617-010V
			C- 283612-010V
			C- 283617-010V
			CR- 283605-010V
			C- 283612-010V
			CR- 283605-010V
			C- 283612-010V
4- 268587		BRACKET	C- 283612-010V
			C- 283617-010V
			C- 283612-010V
			C- 283617-010V
			CR- 283605-010V
			C- 283612-010V
			CR- 283605-010V
			C- 283612-010V
4- 268588		WASHER	C- 283612-010V
			C- 283617-010V
			C- 283612-010V
			C- 283617-010V
			CR- 283605-010V
			C- 283612-010V
			CR- 283605-010V
			C- 283612-010V
3- 268640		EXTENSION PIECE	C- 232781-040V
C- 268656-0101	5909 83-05-11	MAGAZINE	B- 648108-010V
C- 268665-0101	5770 83-04-13	DATING UNIT	B- 648108-010V
4- 268691		WASHER	C- 283610-010V
			CR- 449275-010V
4- 268692		PIN	C- 283610-010V
			CR- 449275-010V
4- 268694		SHEET	C- 283617-010V
			CR- 283607-010V
2- 268914		CAM	C- 283627-010V
4- 268915		PROTRACTOR	C- 283627-010V
			C- 456674-010V
			C- 476349-020V
4- 268934		SHAFT	C- 283618-010V
			CR- 283618-020V
4- 268935		ARM	C- 283618-010V
			CR- 283618-020V
4- 269053-0001		SHAFT	C- 441000-020V
			C- 441000-030V
			C- 441000-040V
			C- 441000-050V
4- 269053-0002		SHAFT	C- 441000-020V
4- 269053-0003		SHAFT	C- 441000-020V
			C- 441000-030V
			C- 441000-040V
			C- 441000-050V
4- 269054		ARM	C- 441000-020V

PART NO	LAST AM	DESCRIPTION	GROUP NO
			C- 441000-030V
			C- 441000-040V
			C- 441000-050V
4- 269056		CATCH	C- 441000-020V
			C- 441000-030V
			C- 441000-040V
			C- 441000-050V
4- 269057		TENSION SPRING	C- 441000-020V
			C- 441000-030V
			C- 441000-040V
			C- 441000-050V
G1- 269142		GABLE	C- 283621-010V
4- 269166		BRACKET	C- 237776-040V
2- 269173-0001		SHAFT	C- 283623-010V
2- 269173-0002		SHAFT	C- 283623-010V
2- 269173-0003		SHAFT	C- 456688-010V
4- 269336		LID	C- 272623-020V
3- 269371		GRILL	C- 229400-060V
2- 269400		VALVE HOUSING	C- 271169-020V
3- 269401		HOUSE	C- 271169-020V
			C- 272337-020V
			C- 271169-020V
			C- 272337-020V
			C- 271169-020V
			C- 272337-020V
			C- 271169-020V
			C- 272337-020V
			C- 271169-030V
			C- 271169-040V
4- 269425		PLATE	C- 229400-060V
4- 269436		BENDING ROLLER	C- 269589-010V
1- 269437		LID	C- 269589-010V
4- 269438-0001		SHAFT	C- 269589-010V
4- 269438-0002		SHAFT	C- 283624-010V
4- 269438-0003		SHAFT	C- 456612-010V
3- 269439		PLATE	C- 294658-010V
			C- 283621-010V
			C- 456696-010V
			C- 456696-020V
4- 269440		PLATE	C- 294658-010V
			C- 283621-010V
			C- 456696-010V
			C- 456696-020V
3- 269443		BRACKET	C- 456274-010V
			C- 271274-020V
			C- 469452-010V
			C- 469452-020V
			C- 751800-010V
			C- 469452-030V
			C- 751800-020V
4- 269450		ROLLER	C- 456274-010V
3- 269461		CONTAINER	C- 294658-010V
			C- 456274-010V
			C- 271274-020V
			C- 469452-010V
			C- 469452-020V
			C- 751800-010V
			C- 469452-030V
			C- 751800-020V
4- 269562-0001		SPRING HOLDER	C- 456274-010V
			C- 283604-010V
			C- 469736-020V
			C- 533903-010V
			RK- 540009-010V
			C- 283604-010V
			C- 283611-010V
			RK- 547300-010V
			RK- 547782-010V
			C- 283611-010V
			C- 449366-010V
			C- 533903-010V
C- 269589-0101	5971 83-06-11	BENDING ROLLER	B- 648108-010V
1- 269591		BRACKET	C- 269965-010V
4- 269788		SCREW	C- 294658-010V
			C- 283831-010V
			C- 457867-010V
3- 269795		PLATE	C- 269589-010V

PART NO	LAST AM	DESCRIPTION	GROUP NO
3- 269796		PLATE	C- 269589-010V
3- 269797-0001		SPACER	C- 269589-010V
3- 269798-0001		SHAFT	C- 269589-010V
3- 269798-0002		SHAFT	C- 283624-010V
			RK- 538450-010V
3- 269798-0004		SHAFT	RK- 538470-010V
			RK- 547726-010V
			C- 456612-010V
			C- 533944-010V
3- 269799-0001		SHAFT	C- 269589-010V
3- 269799-0002		SHAFT	C- 283624-010V
			RK- 538450-010V
3- 269799-0005		SHAFT	RK- 538470-010V
			RK- 547726-010V
			C- 456612-010V
			C- 533944-010V
3- 269800		PLATE	C- 269589-010V
3- 269801		PLATE	C- 269589-010V
4- 269802		SCREW	C- 283624-010V
			C- 269589-010V
4- 269803		LOCK NUT	C- 283624-010V
			RK- 538470-010V
			RK- 538450-010V
			RK- 547726-010V
			C- 269589-010V
			C- 456612-010V
			C- 533944-010V
4- 269804-0001		SHAFT	C- 269589-010V
3- 269832		PLATE	C- 269965-010V
4- 269859		BRACKET	C- 456274-010V
			C- 271274-020V
			C- 469452-010V
			C- 469452-020V
			C- 751800-010V
			C- 751800-020V
			C- 456274-010V
4- 269866		CATCH	C- 284873-010V
3- 269957-0001		BOBBIN HOLDER	C- 284873-010V
3- 269961		BRACKET	C- 237776-040V
4- 269962		THROTTLING	C- 237776-040V
4- 271007		INDICATOR	C- 256201-020V
			C- 256202-020V
			C- 256201-020V
			C- 256202-020V
			C- 256201-020V
			C- 256202-020V
			C- 256201-030V
			C- 256202-030V
			C- 256201-040V
			C- 256202-040V
4- 271011		WASHER	RK- 548058-010V
			C- 272508-010V
			C- 469535-010V
			C- 553857-010V
			C- 752042-010V
C- 271017-0201	8360 85-10-15	BENDING ROLLER	C- 272404-020V
			C- 272404-030V
			C- 272404-040V
			C- 272404-050V
C- 271017-0301	11717 89-09-27	BENDING ROLLER	C- 272404-050V
4- 271036		BRACKET	C- 256014-020V
			C- 256014-030V
2- 271040		GUARD	C- 256237-020V
			C- 256237-030V
3- 271051-0002		BLOCK LEFT	CR- 256436-020V
			CR- 256436-030V
			CR- 256436-040V
			CR- 256436-050V
3- 271051-0003		BLOCK LEFT	CR- 256436-020V
			CR- 256436-030V
			CR- 256436-040V
			CR- 256436-050V
3- 271052-0002		BLOCK RIGHT	CR- 256436-020V
			CR- 256436-030V
			CR- 256436-040V
3- 271052-0002		BLOCK RIGHT	CR- 256436-050V
3- 271052-0003		BLOCK RIGHT	CR- 256436-020V

PART NO	LAST AM	DESCRIPTION	GROUP NO
			CR- 256436-030V
			CR- 256436-040V
			CR- 256436-050V
4- 271058		WASHER	C- 256410-020V
4- 271068		SPACER	C- 271533-020V
			C- 271533-030V
			C- 491650-010V
C- 271069-020V	6441 84-01-18	GUIDE	B- 648105-020V
			B- 648105-030V
			B- 648105-040V
C- 271069-030V	8241 86-09-20	GUIDE	B- 648105-060V
			B- 648105-070V
4- 271100		PIN	C- 256951-020V
			C- 256952-020V
			C- 256951-020V
			C- 256952-020V
			C- 256951-030V
			C- 256952-030V
			C- 256951-030V
			C- 256952-030V
			C- 256951-040V
			C- 256952-040V
			C- 256951-040V
			C- 256952-040V
C- 271109-0201	6441 84-01-18	MACHINE BODY	B- 648105-020V
			B- 648105-030V
			B- 648105-040V
3- 271111-0001		CARTON STATION	CR- 255933-030V
3- 271111-0002		CARTON STATION	CR- 255933-020V
			CR- 255933-030V
3- 271111-0003		CARTON STATION	CR- 255933-020V
			CR- 255933-030V
3- 271111-0004		CARTON STATION	CR- 255933-020V
			CR- 255933-030V
3- 271111-0005		CARTON STATION	CR- 255933-030V
3- 271111-0006		CARTON STATION	CR- 255933-020V
			CR- 255933-030V
C- 271113-020V	7911 86-06-11	CLEANING SYSTEM	B- 648105-020V
			B- 648105-030V
			B- 648105-040V
C- 271114-0201	7911 86-06-11	COVERING PANEL	B- 648105-020V
			B- 648105-030V
			B- 648105-040V
C- 271114-0301	13119 89-06-02	COVERING PANEL	B- 648105-060V
			B- 648105-070V
			B- 648105-080V
C- 271114-0401	14278 90-01-05	COVERING PANEL	B- 648105-090V
C- 271115-0201	6317 83-11-03	PROTECTIVE COVER	B- 648105-020V
			B- 648105-030V
			B- 648105-040V
C- 271115-0301	7648 86-03-06	PROTECTIVE COVER	B- 648105-060V
			B- 648105-070V
			B- 648105-080V
C- 271115-0401	14278 90-01-05	PROTECTIVE COVER	B- 648105-090V
C- 271116-0201	6317 83-11-03	ANGLE ENCODER	B- 648105-020V
			B- 648105-030V
			B- 648105-040V
C- 271116-0301	12530 90-01-05	ANGULAR TRANSMITTER	B- 648105-060V
			B- 648105-070V
			B- 648105-080V
			B- 648105-090V
3- 271121		FLUSH PIPE	C- 271281-020V
			C- 271281-030V
			C- 271281-040V
			C- 271281-050V
3- 271125-0001		CARTON STATION	CR- 255933-020V
			CR- 255933-030V
3- 271125-0002		CARTON STATION	CR- 255933-030V
C- 271128-020V	6028 83-07-08	MOTOR	B- 648103-020V
C- 271128-030V	6938 84-08-07	MOTOR	B- 648103-030V
			B- 648103-060V
			B- 648103-070V
C- 271128-040V	12577 89-12-06	MOTOR	B- 648103-080V
4- 271132		SPACER	C- 256206-020V
			C- 256207-020V
			C- 256206-020V
			C- 256207-080V

PART NO	LAST AM	DESCRIPTION	GROUP NO
			C- 256206-020V
			C- 256207-020V
			C- 256206-020V
			C- 256207-020V
			C- 256206-020V
			C- 256207-020V
			C- 256206-020V
			C- 256207-020V
4- 271136		BRACKET	C- 256014-020V
2- 271160		BUSHING	C- 256555-020V
3- 271161		COVER PLATE	C- 256555-020V
			C- 256555-030V
1- 271163		BRACKET	C- 255907-020V
			C- 456180-010V
2- 271167		VALVE HOUSING	C- 272337-020V
			C- 272337-030V
			C- 272337-040V
C- 271168-0201	7766 85-04-30	BLOCK	C- 256985-020V
			C- 456546-010V
			C- 456546-020V
C- 271168-0401	13832 89-11-17	BLOCK	C- 751691-010V
C- 271169-0201	9284 86-07-02	VALVE	B- 648111-020V
			B- 648111-030V
			B- 648111-060V
			B- 648111-070V
C- 271169-0301	12754 89-06-13	VALVE	B- 648111-080V
C- 271169-0401	12366 89-11-22	VALVE	B- 648111-090V
C- 271181-0201	9415 86-10-17	AIR SUPER-HEATER	B- 648111-020V
			B- 648111-030V
			B- 648111-060V
			B- 648111-070V
C- 271181-0301	12366 89-01-02	AIR SUPER-HEATER	B- 648111-080V
C- 271181-0401	12366 89-11-22	AIR SUPER-HEATER	B- 648111-090V
2- 271183		PIPE	C- 271181-020V
			C- 271181-030V
3- 271184		DISCHARGE TRAY	C- 271181-020V
			C- 271181-030V
			C- 271181-040V
3- 271185		DISCHARGE TRAY	C- 271181-020V
3- 271185		DISCHARGE TRAY	C- 271181-030V
			C- 271181-040V
3- 271191		LID	CR- 256547-020V
			CR- 256547-030V
4- 271203		ARM	C- 272014-020V
4- 271204		SHAFT	C- 272014-020V
3- 271205		BODY	C- 272014-020V
4- 271211		WASHER	C- 752957-010V
			RK- 456793-010V
			RK- 469961-010V
			C- 271949-020V
			C- 271949-030V
			C- 752828-010V
			C- 271949-020V
			C- 469074-010V
			C- 469074-020V
3- 271214		COVER	C- 272014-020V
3- 271219		HINGE	C- 271442-020V
			C- 271443-020V
			C- 271442-020V
			C- 271443-020V
			C- 271442-030V
			C- 271443-030V
			C- 271442-030V
			C- 271443-030V
			C- 271442-030V
			C- 271443-030V
			C- 271442-030V
			C- 271443-030V
G3- 271220		HINGE	C- 271442-020V
			C- 271443-020V
			C- 271442-020V
			C- 271443-020V
			C- 271442-030V
			C- 271443-030V
			C- 271442-030V
			C- 271443-030V
			C- 271442-030V

PART NO	LAST AM	DESCRIPTION	GROUP NO
			C- 271443-030V
			C- 271442-030V
			C- 271443-030V
4- 271221		PIN	C- 271442-020V
			C- 271443-020V
			C- 271442-020V
			C- 271443-020V
			C- 271442-030V
			C- 271443-030V
			C- 271442-030V
			C- 271443-030V
			C- 271442-030V
			C- 271443-030V
4- 271222		PIN	C- 256555-020V
4- 271223		PLATE	C- 256555-020V
			C- 256555-030V
2- 271229		BOX	C- 271452-020V
1- 271230		FILLING PIPE	C- 256982-020V
3- 271239		SLEEVE	C- 458384-010V
4- 271241		SCREW	C- 458384-010V
2- 271248		PIPE	C- 272342-020V
			C- 458976-010V
2- 271249		PIPE	C- 272342-020V
			C- 458976-010V
3- 271251		GRAPH PAPER	C- 272342-020V
			C- 458976-010V
			C- 458976-020V
C- 271261-020V	5883 83-04-06	CLEANING SYSTEM	C- 271562-020V
C- 271261-030V	6197 83-10-13	CLEANING SYSTEM	C- 271562-030V
C- 271261-040V	6787 84-05-16	CLEANING SYSTEM	C- 271562-040V
			C- 271562-050V
C- 271261-050V	9099 86-05-13	CLEANING SYSTEM	C- 271562-060V
			C- 271562-070V
4- 271269		BUSHING	C- 256237-050V
			C- 256237-060V
			C- 256055-020V
			C- 256095-020V
			C- 272024-020V
			C- 256055-020V
			C- 256095-020V
			C- 272024-020V
			C- 256055-030V
			C- 256095-020V
			C- 272024-020V
			C- 256055-040V
			C- 256095-020V
			C- 272024-020V
			C- 256055-050V
			C- 256095-030V
			C- 272024-030V
			C- 256055-060V
			C- 256095-040V
			C- 272024-030V
2- 271271		BOTTOM	C- 456274-010V
			C- 271274-020V
			C- 456274-010V
C- 271274-020V	6445 84-01-10	COMPRESSOR	B- 648111-020V
			B- 648111-030V
3- 271275		COVER	C- 271274-020V
4- 271280		PIPE	C- 256014-020V
			C- 256014-030V
4- 271282		VIBRATION DAMPER	C- 456274-010V
			C- 271274-020V
			C- 456274-010V
4- 271284		BLOCK	C- 256206-020V
			C- 256207-020V
			C- 256206-020V
			C- 256207-020V
			C- 256206-020V
			C- 256207-020V
			C- 256206-020V
			C- 256207-020V
			C- 256206-020V
			C- 256207-020V
			C- 256206-020V

PART NO	LAST AM	DESCRIPTION	GROUP NO
			C- 256207-060V
4- 271311		PIPE	C- 272623-020V
4- 271316		BRACKET	C- 256095-020V
1- 271317		CAM	C- 256202-020V
			C- 256202-030V
			C- 256202-040V
1- 271318		CAM	C- 256202-020V
			C- 256202-030V
			C- 256202-040V
4- 271320		HOLDER	C- 271868-020V
			C- 271868-030V
			C- 271868-040V
			C- 271868-050V
4- 271321		HOLDER	C- 271868-020V
			C- 271868-030V
			C- 271868-040V
			C- 271868-050V
4- 271322		HOLDER	C- 271868-020V
			C- 271868-030V
			C- 271868-040V
			C- 271868-050V
4- 271323		HOLDER	C- 271533-020V
			C- 271533-030V
			C- 491650-010V
4- 271324		HOLDER	C- 271533-020V
4- 271325		HOLDER	C- 271533-020V
4- 271343		HOLDER	C- 271533-020V
			C- 271533-030V
			C- 491650-010V
4- 271344		HOLDER	C- 271533-020V
			C- 271533-030V
			C- 491650-010V
4- 271345		BRACKET	C- 256055-020V
			C- 256055-030V
			C- 256055-040V
4- 271346		FORK	C- 256055-020V
			C- 256055-030V
			C- 256055-040V
4- 271347		ARM	C- 256230-020V
			C- 256230-030V
			C- 255921-020V
			C- 255921-030V
			C- 255921-040V
4- 271348		LINK	C- 256230-020V
			C- 256230-030V
			C- 255921-020V
			C- 255921-030V
			C- 255921-040V
4- 271349		LINK	C- 256230-020V
			C- 256230-030V
			C- 255921-020V
			C- 255921-030V
			C- 255921-040V
4- 271360		THROTTLE	C- 255921-020V
			C- 255921-030V
			C- 255921-040V
4- 271361		SHEAR PIN	C- 735192-010V
			C- 256230-020V
			C- 256230-030V
			C- 255921-020V
			C- 255921-030V
			C- 255921-040V
4- 271361		SHEAR PIN	C- 735192-010V
3- 271363		FILLING PIPE	C- 255921-020V
C- 271376-020V	7911 85-08-11	CHUTE	B- 648105-020V
			B- 648105-030V
			B- 648105-040V
3- 271380		LINK	C- 271992-020V
3- 271381		STRUT	C- 271992-020V
C- 271387-0201	7911 85-08-11	SPRAY GUN	B- 648105-020V
			B- 648105-030V
			B- 648105-040V
C- 271387-0301	7122 84-10-31	SPRAY GUN	B- 648105-060V
			B- 648105-070V
			B- 648105-080V
			B- 648105-090V
4- 271403		LID	C- 272381-020V

PART NO	LAST AM	DESCRIPTION	GROUP NO
1- 271405		DISTRIBUTOR BLOCK LEFT	C- 271533-020V
C- 271414-0201	6317 83-11-03	AIR JET GUN	B- 648102-020V
			B- 648102-030V
			B- 648102-060V
			B- 648102-070V
			B- 648102-080V
			B- 648102-090V
2- 271415		CONNECTION	C- 271485-020V
2- 271416		CONNECTION	C- 295256-020V
			C- 271485-020V
			C- 271485-030V
4- 271419		FORK	C- 256236-040V
			C- 255957-020V
			C- 456309-010V
			C- 255957-020V
			C- 456309-010V
			C- 456309-020V
			C- 456309-030V
			C- 456309-040V
4- 271420		BRACKET	C- 256236-040V
			C- 255957-020V
			C- 456309-010V
			C- 255957-020V
			C- 456309-010V
			C- 456309-020V
			C- 456309-030V
4- 271421		HOLDER	C- 456309-040V
			C- 256236-040V
			C- 255957-020V
			C- 456309-010V
			C- 255957-020V
			C- 456309-010V
			C- 456309-020V
			C- 456309-030V
			C- 456309-040V
4- 271422		SPRING	C- 256236-040V
			C- 255957-020V
			C- 456309-010V
			C- 255957-020V
			C- 456309-010V
			C- 456309-020V
			C- 456309-030V
			C- 456309-040V
4- 271423-0001		SHAFT	C- 256236-040V
4- 271423-0001		SHAFT	C- 255957-020V
			C- 456309-010V
			C- 255957-020V
			C- 456309-010V
			C- 456309-020V
			C- 456309-030V
			C- 456309-040V
4- 271423-0002		SHAFT	C- 272014-020V
			C- 272014-030V
4- 271423-0005		SHAFT	C- 256237-020V
			C- 256237-030V
			C- 256237-040V
			C- 256055-020V
			C- 256055-030V
			C- 256055-040V
4- 271424		HOLDER	C- 271443-020V
1- 271425		DISTRIBUTOR BLOCK RIGHT	C- 271533-020V
			C- 271533-030V
3- 271426		HOLDER	C- 271992-020V
3- 271433		PIPE	C- 271113-020V
			C- 456588-010V
			C- 456588-020V
			C- 456588-030V
4- 271435		WASHER	C- 271113-020V
			C- 456588-010V
			C- 456588-020V
			C- 456588-030V
4- 271437		GASKET	C- 271113-020V
4- 271441		BRACKET	C- 256236-020V
			C- 456321-010V
			C- 456322-010V
			C- 456348-010V
			C- 456349-010V

PART NO	LAST AM	DESCRIPTION	GROUP NO
			C- 456321-020V
			C- 456322-020V
			C- 456348-020V
			C- 456349-020V
			C- 456321-030V
			C- 456322-030V
			C- 456348-030V
			C- 456349-020V
			C- 272445-020V
C- 271442-0201	6736 84-05-07	DOOR	B- 648102-020V
			B- 648102-030V
C- 271442-0301	12933 89-04-19	SIDE DOOR LEFT	B- 648102-060V
			B- 648102-070V
			B- 648102-080V
			B- 648102-090V
C- 271443-0201	6736 84-05-07	DOOR	B- 648102-020V
			B- 648102-030V
C- 271443-0301	10505 87-06-22	SIDE DOOR RIGHT	B- 648102-060V
			B- 648102-070V
			B- 648102-080V
			B- 648102-090V
4- 271445		HOLDER	C- 271442-020V
3- 271451		BRACKET	C- 271452-020V
C- 271452-0201	9017 86-03-13	PUMP	B- 648106-020V
			B- 648106-060V
			B- 648106-070V
C- 271453-0201	9017 86-03-13	LUBRICANT CONTAINER	B- 648106-020V
			B- 648106-060V
C- 271453-0301	9286 86-06-11	LUBRICANT CONTAINER	B- 648106-070V
C- 271454-0201	6317 83-11-03	CATCH HANDLE	C- 272404-020V
			C- 272404-030V
			C- 272404-040V
			C- 272404-060V
			C- 272404-080V
4- 271456		CATCH	C- 271469-020V
4- 271457		CATCH	C- 271469-020V
4- 271461		GASKET	C- 456274-010V
			C- 271274-020V
			C- 295778-010V
			C- 271274-020V
			C- 295778-010V
			C- 295778-020V
			C- 469452-010V
			C- 295778-030V
			C- 469452-010V
			C- 295778-030V
			C- 469452-020V
			C- 751800-010V
			C- 295778-040V
			C- 469452-030V
			C- 751800-020V
			C- 456274-010V
C- 271468-0201	6317 83-11-03	GUIDE	B- 648106-020V
			B- 648106-060V
			B- 648106-070V
			B- 648106-080V
C- 271468-0401	13632 89-11-17	GUIDE	B- 648106-090V
C- 271469-0201	6317 83-11-03	GUIDE	B- 648106-020V
			B- 648106-060V
			B- 648106-070V
			B- 648106-080V
			B- 648106-090V
3- 271472		BRACKET	C- 271468-020V
			C- 271469-040V
3- 271473		COVER	C- 272014-020V
4- 271478		PLATE	C- 271109-020V
			C- 456455-010V
			C- 456455-020V
4- 271484		HOLDER	C- 272833-010V
			C- 272882-010V
			C- 295186-010V
			C- 272833-010V
			C- 272882-010V
			C- 295186-010V
C- 271485-020V	83-11-11	JR NOZZLE	B- 648111-020V
			B- 648111-030V
C- 271485-0301	2 85-02-14	AIR NOZZLE	B- 648111-060V

PART NO	LAST AM	DESCRIPTION	GROUP NO
3- 271486		PLATE	C- 272030-020V
3- 271489		PLATE	C- 272031-020V
2- 271497		BRACKET	C- 271274-020V
4- 271498		ELECTRICAL CONNECTION	CR- 256547-020V
4- 271499		ELECTRICAL CONNECTION	CR- 256547-020V
			CR- 256547-030V
2- 271503		CONTAINER	C- 295262-020V
			C- 295262-030V
C- 271507-0201	8140 85-08-29	HYDRAULIC SYSTEM	B- 648106-020V
			B- 648106-060V
			B- 648106-070V
4- 271508		BRACKET	C- 256233-050V
			C- 295777-010V
			C- 469374-010V
			C- 469374-020V
			C- 469374-030V
4- 271509		JUNCTION BLOCK	C- 456265-010V
			C- 469804-010V
			C- 271880-020V
			C- 469781-010V
C- 271513-020V	8916 83-09-01	COVER PLATE	C- 469781-020V
C- 271513-030V	9017 86-09-13	COVER PLATE	B- 648106-020V
			B- 648106-060V
C- 271513-040V	9018 86-05-13	COVER PLATE	B- 648106-070V
C- 271513-050V	13808 89-11-22	COVER PLATE	B- 648106-080V
4- 271530		BUSHING	B- 648106-090V
C- 271533-020V	6617 84-02-29	JUNCTION BLOCK	C- 256014-020V
			C- 271562-020V
			C- 271562-030V
C- 271533-0301	7345 85-01-24	JUNCTION BLOCK	C- 271562-040V
3- 271540		LEG	C- 295305-010V
1- 271546		BASKET	C- 272404-020V
			C- 272404-030V
			C- 272404-040V
			C- 272404-050V
3- 271547		DOOR	C- 272404-060V
			C- 272404-020V
			C- 272404-030V
			C- 272404-040V
			C- 272404-050V
3- 271548		LINK	C- 272404-060V
			C- 272404-020V
			C- 272404-030V
			C- 272404-040V
			C- 272404-050V
3- 271558		BRACKET	C- 272404-060V
			C- 272404-020V
			C- 272404-030V
			C- 272404-040V
			C- 272404-050V
4- 271559		LID	C- 272404-060V
C- 271562-020V	9367 86-08-11	PIPE WORK	C- 272404-020V
C- 271562-030V	9367 86-08-11	PIPE WORK	B- 648102-020V
C- 271562-040V	9367 86-08-11	PIPE WORK	B- 648102-030V
C- 271562-050V	8638 86-01-21	PIPE WORK	B- 648102-060V
C- 271562-060V	12270 88-10-20	PIPE WORK MACHINE BODY	B- 648102-070V
C- 271562-070V	13920 89-11-20	PIPE WORK MACHINE BODY	B- 648102-080V
4- 271565		BRACKET	B- 648102-090V
3- 271566		AIR NOZZLE	C- 256239-020V
			C- 256239-020V
			C- 256239-030V
			C- 256239-040V
C- 271569-0201	5807 82-10-13	CABLE TRACK	B- 648106-020V
C- 271569-0301	7078 84-09-13	CABLE TRACK	B- 648106-060V
			B- 648106-070V
C- 271569-040V	14073 89-11-10	CABLE TRACK	B- 648106-080V
C- 271569-050V	13845 90-01-12	CABLE TRACK	B- 648106-090V
3- 271581		BLOCK	C- 271114-020V
3- 271584		CHUTE	C- 271114-020V
			C- 271114-030V
4- 271585		WASHER	C- 271114-020V
			C- 271114-030V
			C- 271114-040V
4- 271586-0001		WASHER	C- 271114-020V
			C- 271114-030V
			C- 271114-040V
4- 271586-0002		WASHER	C- 271114-030V

PART NO	LAST AM	DESCRIPTION	GROUP NO
			C- 271114-030V
			C- 271114-040V
4- 271587		WASHER	C- 271114-020V
			C- 295218-010V
			C- 271114-020V
			C- 295218-010V
			C- 271114-020V
			C- 295218-010V
			C- 271114-030V
			C- 295218-010V
			C- 271114-030V
			C- 295218-010V
			C- 271114-030V
			C- 295218-010V
			C- 271114-040V
			C- 295218-010V
			C- 271485-020V
4- 271591		BUTTON	C- 271109-020V
			C- 441695-010V
			C- 441695-020V
4- 271594-0001		BRACKET	C- 295256-020V
			C- 271485-020V
			C- 271485-030V
4- 271594-0002		BRACKET	C- 295256-020V
			C- 271485-020V
			C- 271485-030V
4- 271595		ANGLE BRACKET	C- 295256-020V
			C- 271485-020V
			C- 271485-030V
4- 271608		SCREW	C- 271115-020V
			C- 271115-030V
			C- 271115-040V
2- 271613		PAPER GUARD	C- 256233-020V
			C- 256233-030V
			C- 256233-040V
3- 271614		GUARD	C- 256236-020V
			C- 295112-020V
			C- 456348-010V
			C- 456349-010V
			C- 456349-020V
4- 271621		SHIM	C- 271562-020V
			C- 271562-030V
			C- 271562-040V
			C- 271562-050V
			C- 271562-060V
			C- 271562-070V
4- 271622		SHIM	C- 271562-020V
			C- 271562-030V
			C- 271562-040V
4- 271622		SHIM	C- 271562-050V
			C- 271562-060V
			C- 271562-070V
4- 271623		SHIM	C- 271562-020V
			C- 271562-030V
			C- 271562-040V
			C- 271562-050V
			C- 271562-060V
			C- 271562-070V
C- 271626-0201	6317 83-11-03	SUSPENSION ARM	C- 271699-020V
C- 271626-0301	6793 84-05-03	SUSPENSION ARM	C- 271699-030V
4- 271632		COVER	C- 271626-020V
			C- 271626-030V
C- 271635-0201	5374 82-06-11	TRANSPORTER	B- 648119-020V
C- 271635-0301	6661 84-06-29	TRANSPORTER	C- 77091-010V
			C- 77091-020V
			C- 77091-030V
			B- 648119-060V
2- 271636		BEAM	C- 271635-020V
2- 271640		LID	C- 456274-010V
			C- 271274-020V
			C- 469452-010V
			C- 469452-020V
			C- 751800-010V
			C- 469452-030V
			C- 751800-020V
			C- 456274-010V
C- 271641-0201	6317 83-11-03	TABLE	C- 271699-020V

PART NO	LAST AM	DESCRIPTION	GROUP NO
C- 271641-0202	6317 83-11-03	TABLE	C- 271699-020V
C- 271641-0203	6317 83-11-03	TABLE	C- 271699-020V
C- 271641-030V	6793 84-05-03	TABLE	C- 752046-010V
C- 271641-0301	6793 84-05-03	TABLE	C- 271699-030V
C- 271641-0302	6793 84-05-03	TABLE	C- 271699-030V
C- 271641-0303	6793 84-05-03	TABLE	C- 271699-030V
4- 271642		RULER	C- 271641-020V
			C- 271641-030V
4- 271643		RULER	C- 271641-020V
4- 271644		RULER	C- 271641-020V
			C- 271641-030V
C- 271649-020V	12367 88-11-18	GUARD	B- 648101-020V
			B- 648101-060V
			B- 648101-070V
			B- 648101-080V
			B- 648111-020V
			B- 648111-030V
C- 271649-030V	13651 89-11-23	GUARD	B- 648101-090V
3- 271650		BRACKET	C- 271649-020V
4- 271651		ANGLE BRACKET	C- 271649-020V
			C- 271649-030V
			C- 271649-020V
4- 271652		HOLDER	C- 271649-020V
			C- 271649-030V
			C- 271649-020V
4- 271653		ARM	C- 271649-020V
			C- 271649-030V
			C- 271649-020V
4- 271654		RETAINING RING	C- 752957-010V
			C- 271649-020V
			C- 271649-030V
4- 271654		RETAINING RING	C- 752628-010V
			C- 271649-020V
			C- 469074-010V
			C- 469074-020V
4- 271655		HOLDER	C- 271649-020V
			C- 271649-030V
			C- 271649-020V
4- 271656		WASHER	RK- 491744-010V
			C- 272014-020V
			C- 272014-030V
			C- 751088-010V
			C- 751088-020V
2- 271668		MACHINE BODY	C- 272825-010V
4- 271686		HANDLE	C- 271115-020V
4- 271689		WASHER	C- 256173-020V
			C- 256173-030V
			C- 256173-040V
C- 271699-020V	6587 84-02-21	SPLICING DEVICE	B- 648108-020V
C- 271699-030V	6793 84-05-03	SPLICING DEVICE	B- 648108-060V
			B- 648108-070V
			B- 648108-080V
			B- 648108-090V
4- 271708		SLIDE RAIL	C- 271115-020V
			C- 271115-030V
			C- 271115-040V
4- 271717		SPACER	C- 441102-010V
			RK- 751305-010V
			RK- 751307-010V
			RK- 751305-010V
			RK- 751307-010V
			C- 272030-020V
			C- 441304-010V
			C- 272030-020V
			C- 441304-010V
			C- 441304-020V
			C- 441486-030V
4- 271718		WASHER	C- 441102-010V
			RK- 751305-010V
			RK- 751307-010V
			RK- 751305-010V
			RK- 751307-010V
			C- 272030-020V
			C- 441304-010V
			C- 272030-020V
			C- 441304-010V
			C- 441304-020V

PART NO	LAST AM	DESCRIPTION	GROUP NO
			C- 441486-030V
1- 271728		CUTTING JAW	CR- 256204-020V
			CR- 256205-020V
			CR- 256204-020V
			CR- 256205-020V
			CR- 256204-030V
			CR- 256205-030V
			CR- 256204-040V
			CR- 256205-040V
			CR- 256204-040V
			CR- 256205-040V
			CR- 256204-050V
			CR- 256205-050V
4- 271731		COMPRESSION SPRING	CR- 256438-020V
			CR- 256712-020V
			CR- 256438-020V
			CR- 256712-020V
			CR- 256438-020V
			CR- 256712-020V
			CR- 256438-020V
			CR- 256712-020V
			CR- 256438-030V
			CR- 256712-030V
			CR- 256438-040V
			CR- 256712-040V
			CR- 256438-050V
			CR- 256712-050V
3- 271736		KNIFE	CR- 256208-020V
			C- 295523-020V
			CR- 256208-020V
			C- 295523-020V
			CR- 256208-030V
			C- 295523-030V
			CR- 256208-030V
			C- 295523-030V
			CR- 256208-030V
			C- 295523-030V
			CR- 256208-030V
			C- 295523-030V
2- 271742		PIPE	C- 271562-020V
			C- 271562-030V
			C- 271562-040V
			C- 271562-050V
			C- 271562-060V
			C- 271562-070V
2- 271743		PIPE	C- 271562-020V
			C- 271562-030V
			C- 271562-040V
			C- 271562-050V
			C- 271562-060V
			C- 271562-070V
3- 271744		BENDING ROLLER	C- 272004-020V
4- 271745		PLUNGER	CR- 256204-020V
			CR- 256205-020V
			CR- 256204-020V
			CR- 256205-020V
			CR- 256204-030V
			CR- 256205-030V
4- 271747		PIN	C- 272580-020V
			C- 272580-030V
4- 271748		BEARING BLOCK	C- 272580-020V
			C- 272580-030V
3- 271753		SHAFT	C- 272358-020V
			C- 272358-030V
			C- 752030-010V
1- 271759		CAM	C- 256202-020V
			C- 256202-030V
			C- 256202-040V
1- 271760		CAM	C- 256202-020V
			C- 256202-030V
			C- 256202-040V
4- 271762		NUT	C- 490504-010V
4- 271762		NUT	C- 491767-010V
			C- 490504-010V
3- 271772			C- 271109-020V
3- 271775-0002		V-BELT PULLEY	C- 271128-020V
3- 271775-0003		V-BELT PULLEY	C- 271128-020V

PART NO	LAST AM	DESCRIPTION	GROUP NO
3- 271775-0004		V-BELT PULLEY	C- 271128-020V
4- 271777		CLAMP	C- 271635-030V
			C- 271635-020V
4- 271784		KNOB	C- 271635-030V
			C- 271115-020V
			C- 271115-030V
2- 271787		CONNECTION	C- 271115-040V
			C- 271790-020V
2- 271788		CONNECTION	C- 271790-030V
			C- 271791-020V
4- 271789		CLAMP	C- 271791-030V
			C- 271790-020V
			C- 271791-020V
			C- 271790-030V
			C- 271791-030V
			C- 271790-030V
			C- 271791-030V
			C- 271790-030V
			C- 271791-030V
			C- 271790-030V
			C- 271791-030V
C- 271790-0201	5146 82-02-12	TRANSMISSION	B- 648106-020V
C- 271790-0301	6610 84-02-23	TRANSMISSION	B- 648106-060V
			B- 648106-070V
			B- 648106-080V
			B- 648106-090V
C- 271791-0201	6317 83-11-03	TRANSMISSION	B- 648106-020V
C- 271791-0301	6610 84-02-23	TRANSMISSION	B- 648106-060V
			B- 648106-070V
			B- 648106-080V
			B- 648106-090V
1- 271792		BUSBAR	C- 271790-020V
1- 271793		BUSBAR	C- 271791-020V
C- 271804-0201	5329 82-06-24	COVER	B- 648101-020V
C- 271804-0301	6959 84-06-17	COVER	B- 648101-060V
C- 271804-0401	10843 87-11-26	COVER	B- 648101-070V
			B- 648101-080V
			B- 648101-090V
3- 271805		COVER	C- 271804-020V
4- 271806		STRIP	C- 271804-020V
			C- 271804-030V
			C- 271804-040V
4- 271807		STRIP	C- 271804-020V
			C- 271804-030V
			C- 271804-040V
G4- 271808		HINGE FLANGE	C- 271804-020V
			C- 271804-030V
			C- 271804-040V
4- 271809		HINGE	C- 271804-020V
			C- 271804-030V
			C- 271804-040V
4- 271810		SHAFT	C- 271804-020V
			C- 271804-030V
			C- 271804-040V
4- 271811		PLATE	C- 271804-020V
			C- 271804-030V
			C- 271804-040V
4- 271812		PLATE	C- 271804-020V
			C- 271804-030V
			C- 271804-040V
3- 271820-0001		GUIDE RAIL	RK- 491405-010V
			C- 272025-020V
			C- 272025-030V
3- 271820-0002		GUIDE RAIL	RK- 491405-010V
			C- 272025-020V
			C- 272025-030V
1- 271822		HOUSE	C- 272021-020V
P4- 271823		FILTER	C- 271909-020V
			C- 271909-030V
			C- 271909-040V
			C- 271909-050V
1- 271824		AIR KNIFE, MOVABLE	C- 272025-020V
			C- 272025-030V
1- 271825		FIXED AIR KNIFE	C- 272025-020V
			C- 272025-030V
4- 271827-0001		GUIDE PLATE	C- 272025-020V
			C- 272025-030V

PART NO	LAST AM	DESCRIPTION	GROUP NO
4- 271827-0002		GUIDE PLATE	C- 272025-020V
			C- 272025-030V
3- 271833		SHAFT	C- 272014-020V
3- 271834		SHAFT	C- 272014-020V
			C- 272014-030V
			C- 751088-010V
3- 271835		BRACKET	RK- 491744-010V
			C- 272014-020V
			C- 272014-030V
			C- 751088-010V
			C- 751088-020V
4- 271837		BRACKET	C- 272014-020V
			C- 272014-030V
			C- 751088-010V
			C- 751088-020V
4- 271840		BEARING COVER	C- 272014-020V
			C- 272014-030V
			C- 751088-010V
4- 271841		BEARING SEAT	C- 272014-020V
			C- 272014-030V
			C- 751088-010V
			C- 751088-020V
4- 271844		WASHER	C- 256237-020V
			C- 256237-030V
			C- 256237-040V
			C- 256238-040V
			RK- 491744-010V
			C- 256057-020V
			C- 256055-020V
			C- 272014-020V
			C- 456309-010V
			C- 256057-020V
			C- 256055-020V
			C- 272014-020V
			C- 456309-010V
			C- 256055-030V
4- 271844		WASHER	C- 272014-030V
			C- 456309-020V
			C- 256055-040V
			C- 272014-030V
			C- 456309-020V
			C- 456309-030V
			C- 751088-010V
			C- 456309-040V
			C- 751088-020V
3- 271845		BRACKET	CR- 256215-020V
			CR- 256215-030V
4- 271846		INSULATION NUT	C- 256973-020V
			C- 256973-030V
			CR- 256214-020V
			CR- 256215-020V
			C- 256219-020V
			C- 256220-020V
			CR- 256214-020V
			CR- 256215-020V
			C- 256219-020V
			C- 256220-020V
			CR- 256214-020V
			CR- 256215-020V
			C- 256219-030V
			C- 256220-030V
			CR- 256214-020V
			CR- 256215-020V
			C- 256219-030V
			C- 256220-030V
			CR- 256214-030V
			CR- 256215-030V
			C- 256219-030V
			C- 256220-030V
4- 271847		INSULATION	CR- 256215-020V
			CR- 256215-030V
4- 271848		SCREW	C- 256973-020V
			C- 256973-030V

PART NO	LAST AM	DESCRIPTION	GROUP NO
			CR- 256214-020V
			CR- 256215-020V
			C- 256219-020V
			C- 256220-020V
			CR- 256214-020V
			CR- 256215-020V
			C- 256219-020V
			C- 256220-020V
			CR- 256214-020V
			CR- 256215-020V
			C- 256219-030V
			C- 256220-030V
			CR- 256214-020V
			CR- 256215-020V
			C- 256219-030V
			C- 256220-030V
			CR- 256214-030V
			CR- 256215-030V
4- 271848		SCREW	C- 256219-030V
			C- 256220-030V
			CR- 256214-030V
			CR- 256215-030V
			C- 256219-030V
			C- 256220-030V
			CR- 256214-030V
			CR- 256215-030V
			C- 256219-030V
			C- 256220-030V
			CR- 256214-030V
			CR- 256215-030V
2- 271849-0001		BUSBAR RIGHT	C- 256219-030V
			C- 256220-030V
2- 271849-0002		BUSBAR RIGHT	C- 256219-020V
			C- 256219-030V
2- 271850-0001		BUSBAR LEFT	C- 256220-020V
			C- 256220-030V
2- 271850-0002		BUSBAR LEFT	C- 256220-020V
			C- 256220-030V
C- 271851-0201	7047 84-08-29	DOOR	B- 648111-020V
			B- 648111-030V
			B- 648111-060V
			B- 648111-070V
3- 271858		FLANGE	C- 272025-020V
			C- 272025-030V
4- 271859		ARM	C- 272025-020V
4- 271860		BLOCK	C- 257075-020V
			C- 271851-020V
			C- 257075-020V
			C- 271851-020V
			C- 257075-025V
			C- 271851-020V
			C- 257075-025V
			C- 271851-020V
			C- 491570-010V
			C- 491579-010V
			C- 491570-010V
			C- 491579-010V
4- 271863		SHAFT	C- 272021-020V
			C- 272021-030V
			C- 272021-040V
			C- 272021-050V
4- 271864		WASHER	C- 272021-020V
			C- 272021-030V
			C- 272021-040V
4- 271865		SLEEVE	C- 272021-050V
C- 271866-020V	6561 84-02-15	PIPE WORK	C- 272025-020V
C- 271866-030V	10111 87-02-06	PIPE WORK SERVICE UNIT	B- 648106-020V
			B- 648106-060V
			B- 648106-070V
C- 271866-040V	14073 89-11-10	PIPE WORK	B- 648106-060V
C- 271866-050V	13632 89-11-17	PIPE WORK	B- 648106-090V
2- 271867		PIPE	C- 271866-020V
			C- 271866-030V
			C- 271866-040V
2- 271868		PIPE	C- 271866-020V
			C- 271866-030V
			C- 271866-040V
2- 271869		PIPE	C- 271866-020V
			C- 271866-030V
			C- 271866-040V
2- 271870		PIPE	C- 271866-020V
			C- 271866-030V
			C- 271866-040V

PART NO	LAST AM	DESCRIPTION	GROUP NO
2- 271871		PIPE	C- 271866-020V
			C- 271866-030V
			C- 271866-040V
2- 271872		PIPE	C- 271866-020V
			C- 271866-030V
			C- 271866-040V
3- 271873		PIPE	C- 271866-020V
3- 271874		PIPE	C- 271866-020V
			C- 271866-030V
3- 271879		BRACKET	C- 272765-010V
			C- 272765-020V
C- 271880-020V	6745 84-04-25	TUBE FLUSHING DEVICE	B- 648111-020V
			B- 648111-030V
2- 271883		MOTOR PLATE	C- 272028-020V
			C- 272028-030V
3- 271884		PLATE	C- 272028-020V
			C- 272028-030V
3- 271888		BRACKET	C- 271562-020V
			C- 271562-030V
3- 271889		BRACKET	C- 271562-020V
			C- 271562-030V
2- 271890		BRANCH PIPE	C- 272337-020V
3- 271893		SHAFT	C- 272024-020V
			C- 272024-030V
4- 271895		BRACKET	C- 272024-020V
			C- 272024-030V
4- 271896		SHAFT	C- 272024-020V
4- 271898		SCREW	C- 272024-020V
			C- 272024-030V
4- 271899		SCREW	C- 272024-020V
			C- 272024-030V
4- 271907-0001		PIPE	C- 271909-020V
			C- 271909-030V
			C- 271909-040V
			C- 271909-050V
4- 271907-0002		PIPE	C- 271909-020V
			C- 271909-030V
			C- 271909-040V
			C- 271909-050V
4- 271907-0003		PIPE	C- 271909-020V
			C- 271909-030V
			C- 271909-040V
			C- 271909-050V
C- 271909-020V	6994 84-07-06	VALVE PANEL	B- 648106-020V
C- 271909-030V	9286 88-06-11	VALVE PANEL	B- 648106-060V
			B- 648106-070V
C- 271909-040V	9805 88-10-31	VALVE PANEL	B- 648106-060V
C- 271909-050V	14200 90-02-13	VALVE PANEL	B- 648106-090V
3- 271911		SHAFT	C- 271934-020V
			C- 271934-030V
			C- 752030-010V
4- 271912		SHAFT	C- 271934-020V
			C- 271934-030V
			C- 752030-010V
4- 271922		SPACER	C- 256233-020V
			C- 256233-030V
			C- 256233-040V
3- 271928		BEARING HOLDER	C- 256957-020V
4- 271932		FILTER	C- 272021-020V
4- 271933		SHAFT	C- 272021-020V
C- 271934-0201	6317 89-11-03	PAPER GUIDE PLATE	C- 272404-020V
			C- 272404-030V
			C- 272404-040V
C- 271934-0301	10826 87-09-04	PAPER GUIDE PLATE	C- 272404-050V
			C- 272404-060V
3- 271939-0001		SLIDE PLATE	CR- 256712-020V
			CR- 256712-030V
			CR- 256712-040V
			CR- 256712-050V
1- 271941-0001		FRAME	C- 272025-020V
			C- 272025-030V
1- 271941-0002		FRAME	C- 272025-020V
			C- 272025-030V
1- 271942-0001		'R GUIDE	C- 272025-020V
			C- 272025-030V
1- 271942-0002		AIR GUIDE	C- 272025-020V
			C- 272025-030V

PART NO	LAST AM	DESCRIPTION	GROUP NO
4- 271949		NUT	C- 271908-020V C- 271866-030V C- 271909-030V C- 271866-030V C- 271909-030V C- 271866-040V C- 271909-040V C- 271866-050V C- 271909-050V
3- 271950		SCREW	C- 271908-020V C- 271909-030V C- 271909-040V C- 271909-050V
3- 271951		BANJO CONNECTION	C- 271909-020V
3- 271959		BRACKET	C- 271468-020V C- 271468-040V
4- 271961		SCREW	C- 271468-020V C- 271468-040V CR- 255933-020V
4- 271966		SHAFT	C- 295262-020V
3- 271967		CLAMP	C- 295262-030V
4- 271969		STOP	C- 272021-020V
4- 271975		SHAFT	C- 295310-010V C- 295310-020V C- 295310-030V C- 295310-040V C- 295310-050V C- 295310-060V
4- 271978		NUT	C- 295310-010V C- 295310-020V C- 295310-030V C- 295310-040V C- 295310-050V C- 295310-060V
C- 271992-0201	6608 84-05-10	PAPER HOLDER	B- 648106-020V B- 648106-060V B- 648106-070V B- 648106-080V B- 648106-090V
3- 271993		BEARING	C- 271992-020V
4- 271995		SLEEVE	C- 271992-020V
2- 271998		CONTAINER	C- 295262-020V C- 295262-030V
3- 271999		CLAMP	C- 295262-020V C- 295262-030V
4- 272001		COMPRESSION SPRING	C- 751094-010V RK- 491744-010V RK- 491789-010V RK- 491902-010V RK- 751561-010V RK- 491789-010V RK- 751561-010V
4- 272002		PROTECTIVE COVER LEFT	C- 272014-020V C- 272014-030V C- 751089-010V C- 751089-020V C- 272021-020V C- 272021-030V C- 272021-040V C- 272021-050V
4- 272003		PROTECTIVE COVER RIGHT	C- 272021-020V C- 272021-030V C- 272021-040V C- 272021-050V B- 648111-020V B- 648111-030V B- 648111-060V B- 648111-070V
C- 272004-020V	8271 86-10-14	BENDING ROLLER	B- 648111-080V B- 648111-090V C- 272004-020V C- 272004-030V C- 272004-040V
C- 272004-0301	8462 86-12-09	BENDING ROLLER	B- 648111-020V
C- 272004-0401	12648 89-11-14	BENDING ROLLER	B- 648111-030V
3- 272005		BENDING ROLLER	B- 648111-060V B- 648111-070V
C- 272014-020V	6980 84-07-03	WHEEL	B- 648111-020V B- 648111-030V B- 648111-060V B- 648111-070V
C- 272014-030V	10002 87-01-12	CREASE WHEEL	

PART NO	LAST AM	DESCRIPTION	GROUP NO
4- 272017		AXLE SUPPORT	C- 272004-020V C- 272024-020V C- 272004-020V C- 272024-020V C- 272004-020V C- 272024-020V C- 272004-020V C- 272024-020V
4- 272018		AXLE SUPPORT	C- 272004-020V C- 272024-020V C- 272004-020V C- 272024-020V C- 272004-020V C- 272024-020V C- 272004-020V C- 272024-020V C- 272004-020V C- 272024-020V C- 272004-030V C- 272024-030V C- 272004-040V C- 272024-030V
1- 272020		HOUSE	C- 272021-020V
C- 272021-020V	10157 87-02-07	ASEPTIC CHAMBER	B- 648111-020V B- 648111-030V
C- 272021-030V	9199 86-05-27	ASEPTIC CHAMBER	B- 648111-060V B- 648111-070V
C- 272021-040V	13953 89-11-13	ASEPTIC CHAMBER	B- 648111-080V
C- 272021-050V	14315 90-01-10	ASEPTIC CHAMBER	B- 648111-090V
1- 272022		AIR KNIFE, MOVABLE	C- 272025-020V C- 272025-030V
1- 272023		FIXED AIR KNIFE	C- 272025-020V C- 272025-030V
C- 272024-0201	8595 86-12-09	SQUEE-GEE ROLLER	B- 648111-020V B- 648111-030V B- 648111-060V B- 648111-070V
C- 272024-0301	9523 86-11-13	SQUEE-GEE ROLLER	B- 648111-080V B- 648111-090V
C- 272025-020V	8595 86-12-09	AIR KNIFE	B- 648111-020V B- 648111-030V B- 648111-060V B- 648111-070V
C- 272025-030V	12412 89-12-06	AIR KNIFE	B- 648111-080V B- 648111-090V
2- 272026-0001		AIR DISTRIBUTOR	C- 272025-020V C- 272025-030V
2- 272026-0002		AIR DISTRIBUTOR	C- 272025-020V C- 272025-030V
4- 272027-0001		GLASS PANE	C- 272025-020V C- 272025-030V
4- 272027-0002		GLASS PANE	C- 272025-020V C- 272025-030V
C- 272028-020V	7091 84-09-13	BENDING ROLLER	B- 648111-020V B- 648111-030V
C- 272028-030V	10200 87-02-20	BENDING ROLLER	B- 648111-060V B- 648111-070V
C- 272028-040V	13863 89-11-13	BENDING ROLLER	B- 648111-080V
C- 272028-050V	12861 89-12-11	BENDING ROLLER	B- 648111-090V
C- 272030-020V	7235 84-11-01	FORMING RING	B- 648111-020V B- 648111-030V
C- 272031-020V	7235 84-11-01	CLAMP	B- 648111-020V B- 648111-030V
4- 272033		BRACKET	C- 272024-020V C- 272024-030V
3- 272043		COVER	C- 256233-020V C- 272021-020V
3- 272045-0001		SLIDE PLATE	CR- 256712-020V CR- 256712-030V CR- 256712-040V
3- 272045-0002		SLIDE PLATE	CR- 256712-060V CR- 256712-020V CR- 256712-030V CR- 256712-040V
3- 272045-0003		SLIDE PLATE	CR- 256712-060V CR- 256712-020V CR- 256712-030V CR- 256712-040V CR- 256712-060V

PART NO	LAST AM	DESCRIPTION	GROUP NO
3- 272045-0004		SLIDE PLATE	CR- 256712-020V
			CR- 256712-030V
			CR- 256712-040V
			CR- 256712-050V
G1- 272066		VOLUME FLAP 250 ML	CR- 256209-020V
G1- 272055		VOLUME FLAP 250 ML	CR- 256210-020V
			CR- 256209-020V
			CR- 256210-020V
			CR- 256209-020V
			CR- 256210-020V
			CR- 256209-020V
			CR- 256210-020V
			CR- 256209-020V
			CR- 256210-020V
3- 272068		FLOAT	C- 256230-020V
			C- 256230-030V
			C- 255921-020V
			C- 255921-030V
			C- 255921-040V
4- 272068		LID	C- 256555-020V
			C- 256555-030V
			C- 456100-010V
			C- 456100-020V
4- 272085		BRACKET	C- 257166-020V
3- 272066		CARRIER CHAIN	C- 295310-010V
			C- 295310-020V
			C- 295310-030V
			C- 295310-040V
			C- 295310-050V
			C- 295310-060V
4- 272063		COVER	C- 256239-020V
			C- 256095-020V
C- 272084-0201	7766 85-04-30	STRETCHER	C- 272404-020V
			C- 272404-030V
			C- 272404-040V
C- 272084-0301	11717 89-06-27	STRETCHER	C- 272404-050V
2- 272085		PENDULUM ARM	C- 272404-060V
3- 272087		HOLDER	C- 272084-020V
			C- 272084-020V
3- 272088		GUIDE	C- 272084-030V
3- 272089		SLIDE RAIL	C- 272084-020V
			C- 272084-030V
3- 272090		SLIDE RAIL	C- 272084-020V
4- 272091		BRACKET	C- 272084-020V
4- 272095		SHAFT	C- 295256-020V
			C- 469501-020V
			C- 469501-030V
			C- 271485-020V
			C- 271485-030V
			C- 469501-010V
			C- 469501-020V
			C- 469501-030V
			RK- 751462-010V
4- 272100		HOLDER	C- 256014-020V
4- 272101		SHAFT	C- 256014-020V
4- 272102		WASHER	C- 256014-020V
4- 272105		CONNECTION BOX	C- 256237-020V
			C- 256237-030V
			C- 256055-020V
			C- 256055-030V
2- 272114		HEAT GUARD	C- 256056-020V
			C- 256055-030V
			C- 256055-040V
2- 272114		HEAT GUARD	C- 256056-050V
			C- 256055-060V
4- 272116		CLAMP	C- 256197-020V
			C- 256197-030V
			C- 256197-040V
1- 272118		CAM	C- 256202-020V
			C- 256202-030V
			C- 256202-040V
1- 272119		CAM	C- 256202-020V
			C- 256202-030V
			C- 256202-040V
4- 272129		BRACKET	C- 271909-020V
			C- 271909-030V

PART NO	LAST AM	DESCRIPTION	GROUP NO
			C- 271909-040V
			C- 271909-050V
4- 272130		SPACER	C- 271909-020V
			C- 271909-030V
			C- 271909-040V
			C- 271909-050V
2- 272133		CLEANING PIPE	C- 256233-020V
			C- 256233-030V
			C- 256233-040V
			C- 256233-050V
4- 272136		PLATE	C- 256233-020V
			C- 256233-030V
			C- 256233-040V
			C- 256233-050V
3- 272140-0001		GUIDE PLATE	C- 272025-020V
			C- 272025-030V
3- 272140-0002		GUIDE PLATE	C- 272025-020V
			C- 272025-030V
4- 272141-0001		FILTER	C- 272025-020V
			C- 272025-030V
4- 272141-0002		FILTER	C- 272025-020V
			C- 272025-030V
4- 272145		CONNECTION PLATE	C- 256237-020V
			C- 256237-030V
			C- 256055-020V
			C- 256055-030V
4- 272146		COUPLING STRIP	C- 256237-020V
			C- 256237-030V
			C- 256055-020V
			C- 256055-030V
4- 272147		ROLLER	C- 255957-020V
4- 272148		COUNTER ROLLER	C- 255957-020V
4- 272155		SHIM	C- 272014-020V
2- 272157		CONTAINER	C- 272823-020V
			C- 272823-030V
4- 272158		PIN	C- 256555-020V
			C- 456100-020V
4- 272161		ELECTRODE	C- 272823-020V
2- 272172		GUIDE SHAFT	C- 256068-020V
2- 272173		BRACKET	C- 256068-020V
			C- 456032-010V
3- 272174		BRACKET	C- 256068-020V
3- 272175		ARM	C- 256068-020V
4- 272176		BRACKET	C- 256068-020V
4- 272177		LINK	C- 256068-020V
			C- 456032-010V
4- 272178		LUG	C- 256068-020V
			C- 456032-010V
4- 272179		SHAFT	C- 256068-020V
4- 272180		SPRING	C- 295667-020V
			C- 255082-020V
			C- 469091-010V
3- 272182		BRACKET	C- 441000-020V
2- 272184		COVER	C- 256237-020V
			C- 256237-030V
			C- 256237-040V
			C- 256237-050V
			C- 256237-060V
			C- 272408-020V
			C- 272408-030V
			C- 272408-040V
			C- 272408-050V
2- 272186		CONNECTION	C- 272408-020V
			C- 272408-030V
2- 272187		CONNECTION	C- 272408-020V
			C- 272408-030V
4- 272188		BRACKET	C- 272408-020V
			C- 272408-030V
			C- 272408-040V
			C- 272408-050V
4- 272189		LID	C- 272408-020V
			C- 272408-030V
			C- 272408-040V
			C- 272408-050V
4- 272190		RIM	C- 256237-020V
			C- 256237-030V
			C- 256237-040V

PART NO	LAST AM	DESCRIPTION	GROUP NO
			C- 256237-060V
			C- 256237-080V
			C- 272408-020V
			C- 272408-030V
			C- 272408-040V
4- 272191		DISTRIBUTOR	C- 272408-050V
			C- 256802-020V
			C- 456455-010V
4- 272210-0001		WASHER	C- 456455-020V
4- 272210-0002		WASHER	C- 272014-020V
G1- 272212		ARM	C- 272014-020V
			C- 256197-020V
			C- 256198-020V
			C- 256197-020V
			C- 256198-020V
1- 272216		MACHINE BODY	C- 256198-030V
C- 272231-0201	9694 94-04-04	PAPER GUIDE	C- 272825-010V
			C- 272404-020V
C- 272231-0301	9101 93-01-18	PAPER GUIDE	C- 272404-030V
			C- 272404-040V
4- 272236		SPACER SLEEVE	C- 272404-050V
			C- 272231-020V
C- 272241-020V	6475 94-02-22	CONDUIT	C- 272231-030V
			B- 648111-020V
G1- 272248		VOLUME FLAP	B- 648111-030V
			CR- 256209-020V
			CR- 256210-020V
			CR- 256209-020V
G1- 272248		VOLUME FLAP	CR- 256210-020V
			CR- 256209-020V
			CR- 256210-020V
			CR- 256209-020V
			CR- 256210-020V
			CR- 256209-020V
			CR- 256210-020V
3- 272251		CREASE BAR	C- 295112-020V
1- 272253		BEARING HOUSING	CR- 256212-020V
			CR- 256213-020V
			CR- 256212-020V
			CR- 256213-020V
3- 272259		CARTON STATION	CR- 255933-020V
			CR- 255933-030V
3- 272260		FLANGE	C- 256230-020V
1- 272263		BEARING HOUSING	CR- 256204-020V
			CR- 256205-020V
			CR- 256204-020V
			CR- 256205-020V
			CR- 256204-030V
			CR- 256205-030V
			CR- 256204-040V
			CR- 256205-040V
			CR- 256204-040V
			CR- 256205-040V
1- 272264		CUTTING JAW	CR- 256204-020V
			CR- 256205-020V
			CR- 256204-020V
			CR- 256205-020V
			CR- 256204-030V
			CR- 256205-030V
			CR- 256204-040V
			CR- 256205-040V
			CR- 256204-040V
			CR- 256205-040V
			CR- 256204-050V
			CR- 256205-050V
1- 272274		CONTAINER	C- 272407-020V
3- 272275		LID	C- 272407-020V
3- 272276		BOTTOM	C- 272407-020V
3- 272277		GASKET	C- 272407-020V
4- 272281		WASHER	C- 272014-020V
1- 272284		HEATING PIPE	C- 256055-020V
			C- 256055-030V
2- 272285		HEATING PIPE	C- 256095-020V
			C- 256095-030V
4- 272286		AXLE SUPPORT	C- 256055-020V
			C- 256055-030V
			C- 256055-040V

PART NO	LAST AM	DESCRIPTION	GROUP NO
			C- 256095-060V
			C- 256055-060V
4- 272287		AXLE SUPPORT	C- 256095-020V
			C- 256095-030V
			C- 256095-040V
4- 272292-0002		WASHER	C- 256055-020V
			C- 256055-030V
2- 272294		FILLING TUBE LOWER	C- 256230-020V
4- 272301		THROTTLE	C- 256230-020V
			C- 256230-030V
1- 272308-0001		PIPE	C- 272342-020V
			C- 456976-010V
1- 272308-0002		PIPE	C- 272342-020V
			C- 456976-010V
1- 272308-0003		PIPE	C- 456976-020V
2- 272309-0001		PIPE	C- 272342-020V
2- 272309-0002		PIPE	C- 272342-020V
2- 272310		PIPE	C- 272342-020V
			C- 456976-010V
2- 272311		PIPE	C- 272342-020V
			C- 456976-010V
2- 272312		PIPE	C- 272342-020V
			C- 456976-010V
			C- 456976-020V
			C- 456976-030V
2- 272319		DISCHARGE TRAY	C- 272407-020V
2- 272320		DISCHARGE TRAY	C- 272407-020V
2- 272325		SPIRAL	C- 272407-020V
4- 272329-0001		SHIM	RK- 491404-010V
			RK- 491405-010V
			C- 272025-020V
			C- 272025-030V
4- 272329-0002		SHIM	RK- 491404-010V
			RK- 491405-010V
			C- 272025-020V
			C- 272025-030V
C- 272337-0201	9284 88-07-02	VALVE	B- 648111-020V
			B- 648111-030V
			B- 648111-060V
			B- 648111-070V
C- 272337-0301	11468 88-03-09	VALVE	B- 648111-080V
C- 272337-0401	12648 89-11-14	VALVE	B- 648111-090V
4- 272338		COVER	C- 272343-020V
4- 272340		PIPE	C- 271909-020V
			C- 271909-030V
			C- 271909-040V
			C- 271909-050V
4- 272341		SPINDLE GUIDE	C- 271169-020V
			C- 272337-020V
			C- 271169-020V
			C- 272337-020V
			C- 271169-020V
			C- 272337-020V
			C- 271169-020V
			C- 272337-020V
C- 272342-020V	6475 94-02-22	CONDUIT	B- 648111-020V
C- 272343-0201	6317 93-11-03	PRESSURE ROLLER	B- 648107-020V
C- 272343-030V	6743 94-04-18	PRESSURE ROLLER	B- 648107-060V
			B- 648107-070V
C- 272343-040V	11029 87-11-27	PRESSURE ROLLER	B- 648107-080V
C- 272343-050V	13966 89-12-04	PRESSURE ROLLER	B- 648107-090V
2- 272346		PIPE	C- 271562-020V
			C- 271562-030V
			C- 271562-040V
			C- 271562-050V
4- 272347		PIPE	C- 271562-060V
			C- 272342-020V
			C- 456976-010V
4- 272348		PIPE	C- 456976-020V
			C- 272342-020V
4- 272349-0001		PIPE	C- 456976-010V
			C- 272342-020V
			C- 456976-010V
4- 272349-0002		PIPE	C- 456976-020V
			C- 256237-020V
			C- 256237-030V
			C- 256237-040V

PART NO	LAST AM	DESCRIPTION	GROUP NO
4- 272349-0003		PIPE	C- 272342-020V
			C- 456976-010V
4- 272349-0004		PIPE	C- 456976-030V
			C- 456976-040V
2- 272352		PIPE	C- 272560-020V
			C- 272560-030V
2- 272354		PIPE	C- 271274-020V
1- 272355		PIPE	C- 272342-020V
			C- 456976-010V
1- 272356		PIPE	C- 272342-020V
			C- 456976-010V
			C- 456976-020V
4- 272357		PIPE	C- 272342-020V
C- 272359-0201	7397 85-01-10	BENDING ROLLER	B- 648106-020V
			B- 648106-060V
			B- 648106-070V
			B- 648106-080V
C- 272359-030V	11717 89-06-27	BENDING ROLLER	B- 648106-090V
1- 272360		BRACKET	C- 272359-020V
			C- 272359-030V
2- 272361		CLAMP	C- 272359-020V
4- 272362		BEARING	C- 272359-020V
			C- 272359-030V
			C- 752030-010V
4- 272368		SPACER	C- 272024-020V
			C- 272024-030V
3- 272372		HOUSE	C- 256173-020V
			C- 256173-030V
			C- 256173-040V
4- 272374		CARRIER	C- 256173-020V
			C- 256173-030V
			C- 256173-040V
4- 272376		PLUG	C- 256173-020V
			C- 256173-030V
			C- 256173-040V
4- 272377-0001		CLIP	C- 256173-020V
			C- 256173-030V
			C- 256173-040V
4- 272377-0002		CLIP	C- 256173-020V
			C- 256173-030V
			C- 256173-040V
C- 272381-020V	6981 84-08-27	TANK	B- 648106-020V
C- 272381-0301	8730 86-01-27	PEROXIDE TANK	B- 648106-060V
			B- 648106-070V
4- 272388		CLIP	C- 256173-020V
			C- 256173-030V
			C- 256173-040V
3- 272392		PROTECTION PIPE	C- 272381-020V
			C- 272381-030V
3- 272396		ANGLE BRACKET	C- 441102-010V
			C- 441102-020V
C- 272404-0201	6609 84-02-21	CARRIAGE	B- 648106-020V
C- 272404-0301	7397 85-01-10	CARRIAGE	B- 648106-060V
C- 272404-0401	8101 86-01-16	CARRIAGE	B- 648106-070V
C- 272404-0501	10626 87-09-04	CARRIAGE	B- 648106-080V
C- 272404-0601	14200 90-02-13	CARRIAGE	B- 648106-090V
4- 272406		BRACKET	C- 271909-020V
C- 272407-0201	9415 86-10-17	GENERATOR	B- 648111-020V
			B- 648111-030V
			B- 648111-060V
			B- 648111-070V
			B- 648111-080V
			B- 648111-090V
C- 272408-0201	6267 83-11-23	PLATE	B- 648107-020V
C- 272408-0202	6267 83-11-23	PLATE	B- 648107-020V
C- 272408-0301	9415 86-10-17	PLATE	B- 648107-060V
			B- 648107-070V
C- 272408-0302	9415 86-10-17	PLATE	B- 648107-060V
			B- 648107-070V
C- 272408-0401	12062 88-09-09	PLATE	B- 648107-080V
C- 272408-0402	12062 88-09-09	PLATE	B- 648107-080V
C- 272408-0501	14273 90-02-06	PLATE	B- 648107-090V
C- 272408-0502	14273 90-02-06	PLATE	B- 648107-090V
3- 272409		BRACKET	C- 272408-020V
4- 272415		ARM	C- 256951-020V
			C- 256952-020V
			C- 256951-020V

PART NO	LAST AM	DESCRIPTION	GROUP NO
			C- 256952-020V
			C- 256951-030V
			C- 256952-030V
			C- 256951-030V
			C- 256952-030V
			C- 256951-040V
			C- 256952-040V
			C- 256951-040V
			C- 256952-040V
G3- 272416		CARRIER	CR- 256204-020V
			CR- 256205-020V
			CR- 256204-020V
			CR- 256205-020V
			CR- 256204-030V
			CR- 256205-030V
			CR- 256204-040V
			CR- 256205-040V
			CR- 256204-040V
			CR- 256205-040V
			CR- 256204-050V
			CR- 256205-050V
3- 272417		CARRIER	CR- 256204-020V
			CR- 256205-020V
			CR- 256204-020V
			CR- 256205-020V
			CR- 256204-030V
			CR- 256205-030V
			CR- 256204-040V
			CR- 256205-040V
			CR- 256204-040V
			CR- 256205-040V
			CR- 256204-050V
			CR- 256205-050V
3- 272419		CARRIER	CR- 256204-020V
			CR- 256205-020V
			CR- 256204-020V
			CR- 256205-020V
			CR- 256204-030V
			CR- 256205-030V
			CR- 256204-040V
			CR- 256205-040V
			CR- 256204-040V
			CR- 256205-040V
			CR- 256204-050V
			CR- 256205-050V
G2- 272420		FOLDING FLAP	CR- 256204-020V
			CR- 256205-020V
			CR- 256204-020V
			CR- 256205-020V
			CR- 256204-030V
			CR- 256205-030V
			CR- 256204-040V
			CR- 256205-040V
			CR- 256204-040V
			CR- 256205-040V
			CR- 256204-050V
			CR- 256205-050V
G2- 272421		FOLDING FLAP	CR- 256204-020V
			CR- 256205-020V
			CR- 256204-020V
			CR- 256205-020V
			CR- 256204-030V
			CR- 256205-030V
			CR- 256204-040V
			CR- 256205-040V
			CR- 256204-040V
			CR- 256205-040V
			CR- 256204-050V
			CR- 256205-050V
G2- 272422		FOLDING FLAP	CR- 256204-020V
			CR- 256205-020V
			CR- 256204-020V
			CR- 256205-020V
			CR- 256204-030V
			CR- 256205-030V
			CR- 256204-040V
			CR- 256205-040V

PART NO	LAST AM	DESCRIPTION	GROUP NO
			CR- 256204-040V
			CR- 256205-040V
			CR- 256204-050V
			CR- 256205-050V
G2- 272423		FOLDING FLAP	CR- 256204-020V
			CR- 256205-020V
			CR- 256204-020V
			CR- 256205-020V
			CR- 256204-030V
			CR- 256205-030V
			CR- 256204-040V
			CR- 256205-040V
			CR- 256204-040V
			CR- 256205-040V
			CR- 256204-050V
G2- 272423		FOLDING FLAP	CR- 256205-050V
G2- 272424		FOLDING FLAP	CR- 256204-020V
			CR- 256205-020V
			CR- 256204-020V
			CR- 256205-020V
			CR- 256204-030V
			CR- 256205-030V
			CR- 256204-040V
			CR- 256205-040V
			CR- 256204-040V
			CR- 256205-040V
			CR- 256204-050V
G2- 272425		FOLDING FLAP	CR- 256205-050V
			CR- 256204-020V
			CR- 256205-020V
			CR- 256204-020V
			CR- 256205-020V
			CR- 256204-030V
			CR- 256205-030V
			CR- 256204-040V
			CR- 256205-040V
			CR- 256204-040V
4- 272427		BRACKET	CR- 256205-040V
			CR- 256204-050V
			CR- 256205-050V
			CR- 256204-020V
			CR- 256205-020V
			CR- 256204-020V
			CR- 256205-020V
			CR- 256204-030V
			CR- 256205-030V
			CR- 256204-040V
			CR- 256205-040V
			CR- 256204-040V
			CR- 256205-040V
			CR- 256204-050V
			CR- 256205-050V
3- 272429		ARM	C- 256206-020V
			C- 256207-020V
			C- 256206-020V
			C- 256207-020V
			C- 256206-020V
			C- 256207-020V
			C- 256206-020V
			C- 256207-020V
			C- 256206-020V
			C- 256207-020V
			C- 256206-020V
			C- 256207-020V
3- 272430		BRACKET	C- 256014-020V
G2- 272431		BRACKET	C- 271128-020V
			C- 271128-030V
			C- 271128-040V
2- 272433		MOTOR CRADLE	C- 271128-020V
4- 272434		SHAFT	C- 271128-020V
			C- 271128-030V
			C- 271128-040V
4- 272437		TRIMMING ROLLER PLUS	B- 648119-020V
4- 272438		TRIMMING ROLLER MINUS	B- 648119-020V
4- 272440		PIPE	C- 272342-020V
			C- 456976-010V
			C- 456976-020V

PART NO	LAST AM	DESCRIPTION	GROUP NO
G2- 272442		BRACKET	C- 256197-020V
			C- 256197-030V
			C- 256197-040V
C- 272445-020V	6842 84-04-03	DATING UNIT	B- 648111-020V
			B- 648111-030V
2- 272448		PLATE	C- 272445-020V
3- 272450		CREASE BAR	C- 256236-020V
			C- 295112-020V
			C- 272445-020V
3- 272451		PLATE	C- 272445-020V
3- 272452		ANGLE BRACKET	C- 272445-020V
4- 272453		SPACER	C- 272508-010V
			C- 469035-010V
			C- 563657-010V
			C- 752042-010V
2- 272454		PIVOT PIN	C- 256951-020V
			C- 256952-020V
			C- 256951-020V
			C- 256952-020V
			C- 256951-030V
			C- 256952-030V
			C- 256951-030V
			C- 256952-030V
			C- 256951-040V
			C- 256952-040V
			C- 256951-040V
			C- 256952-040V
3- 272455		BEARING BRACKET	C- 256197-020V
			C- 256197-030V
			C- 256197-040V
G3- 272456		LINK	C- 256197-020V
			C- 256197-030V
			C- 256197-040V
G3- 272457		CLAMP	C- 256197-020V
			C- 256197-030V
			C- 256197-040V
4- 272458		ECCENTRIC SHAFT	C- 256197-020V
			C- 256197-030V
			C- 256197-040V
4- 272459		WASHER	C- 256197-020V
			C- 256197-030V
			C- 256197-040V
4- 272460		WASHER	C- 256197-020V
			C- 256197-030V
4- 272461		WASHER	C- 256197-020V
			C- 256197-030V
			C- 256197-040V
3- 272462		AXLE PIN	C- 256198-020V
			C- 256198-030V
			C- 491814-010V
			C- 491815-010V
			C- 491814-010V
			C- 491815-010V
1- 272463		MACHINE BODY	C- 256555-020V
3- 272464		ANGLE BRACKET	C- 272025-020V
			C- 272025-030V
4- 272465		WASHER	C- 271649-020V
			C- 271649-030V
			C- 271649-020V
4- 272466		SPRING	C- 271649-020V
			C- 271649-030V
			C- 271649-020V
4- 272467		CLAMP	C- 271649-020V
			C- 469074-010V
			C- 469074-020V
3- 272470		ROD END	C- 256198-020V
			C- 256198-030V
3- 272471		LINK	C- 256198-020V
			C- 256198-030V
3- 272472		END PIECE	C- 256198-020V
			C- 256198-030V
			C- 491787-010V
			C- 491788-010V
			C- 491787-020V
			C- 491788-020V
C- 272473-0101	6904 84-06-29	BENDING ROLLER	C- 272404-020V
			C- 272404-030V

PART NO	LAST AM	DESCRIPTION	GROUP NO
			C- 272404-040V
			C- 272404-050V
			C- 272404-060V
3- 272474		SHAFT	C- 272473-010V
4- 272475		CLAMP	C- 272473-010V
3- 272476		SHAFT	C- 272084-020V
			C- 272084-030V
3- 272477		HOLDER	C- 272084-020V
3- 272478		BRACKET	C- 271649-020V
			C- 271649-030V
			C- 271649-020V
4- 272479		PRESSURE ROLLER	C- 295402-020V
			C- 295667-020V
			C- 295402-020V
			C- 295667-020V
			C- 295402-020V
			C- 295667-030V
			C- 295402-020V
			C- 295667-030V
			C- 295402-020V
			C- 295667-030V
			C- 255982-020V
			C- 295778-010V
			C- 255982-020V
			C- 295778-010V
			C- 295778-020V
			C- 469091-010V
			C- 295778-030V
			C- 469091-010V
			C- 295778-030V
			C- 469091-020V
			C- 295778-040V
			C- 469091-020V
G2- 272480		BEARING BRACKET	C- 256198-020V
			C- 256198-030V
1- 272481		TOUCH GUARD	C- 272342-020V
2- 272482		CARRIER RULER	CR- 256205-020V
			CR- 256205-030V
2- 272482		CARRIER RULER	CR- 256205-040V
2- 272483		CARRIER RULER	CR- 256204-020V
			CR- 256204-030V
			CR- 256204-040V
G2- 272484		CARRIER RULER	CR- 256205-020V
			CR- 256205-030V
			CR- 256205-040V
G2- 272485		CARRIER RULER	CR- 256204-020V
			CR- 256204-030V
			CR- 256204-040V
1- 272486		CARRIER RULER	CR- 256205-020V
			CR- 256205-030V
			CR- 256205-040V
1- 272487		CARRIER RULER	CR- 256204-020V
			CR- 256204-030V
			CR- 256204-040V
4- 272488		CLAMP RIGHT	CR- 256212-020V
			CR- 256212-030V
			CR- 256212-040V
			RK- 456712-010V
4- 272489		CLAMP LEFT	CR- 256213-020V
			CR- 256213-030V
			CR- 256213-040V
			RK- 456712-010V
G3- 272490		SLEEVE	C- 256217-020V
			C- 256217-030V
			C- 256217-040V
G3- 272491		BRACKET	C- 256208-020V
			C- 256207-020V
			C- 256208-020V
			C- 256207-020V
			C- 256208-020V
			C- 256207-020V
			C- 256208-020V
			C- 256207-020V
			C- 256208-020V
			C- 256207-020V
			C- 256208-020V
			C- 256207-020V

PART NO	LAST AM	DESCRIPTION	GROUP NO
G2- 272492		ARM RIGHT	C- 256951-020V
			C- 256951-030V
			C- 256951-040V
G2- 272493		ARM LEFT	C- 256952-020V
			C- 256952-030V
			C- 256952-040V
4- 272495		ARM	CR- 256844-020V
			CR- 256845-020V
			CR- 256844-020V
			CR- 256845-020V
			CR- 256844-020V
			CR- 256845-020V
			CR- 256844-020V
			CR- 256845-020V
			CR- 256844-030V
			CR- 256845-030V
			CR- 256844-030V
			CR- 256845-030V
			CR- 256844-030V
			CR- 256845-030V
4- 272495		ARM	CR- 256844-030V
			CR- 256845-030V
G3- 272496		BRACKET RIGHT	C- 256951-020V
			C- 256951-030V
			C- 256951-040V
G3- 272497		BRACKET LEFT	C- 256952-020V
			C- 256952-030V
			C- 256952-040V
G1- 272498		VOLUME FLAP 236 CC	CR- 256209-020V
			CR- 256210-020V
			CR- 256209-020V
			CR- 256210-020V
			CR- 256209-020V
			CR- 256210-020V
			CR- 256209-020V
			CR- 256210-020V
			CR- 256209-030V
			CR- 256210-030V
G1- 272499		VOLUME FLAP 180 CC	CR- 256209-020V
			CR- 256210-020V
			CR- 256209-020V
			CR- 256210-020V
			CR- 256209-020V
			CR- 256210-020V
			CR- 256209-020V
			CR- 256210-020V
			CR- 256209-020V
			CR- 256210-020V
3- 272500		SHAFT	CR- 256212-020V
			CR- 256213-020V
			CR- 256212-020V
			CR- 256213-020V
			CR- 256212-030V
			CR- 256213-030V
			CR- 256212-040V
			CR- 256213-040V
			CR- 256212-040V
			CR- 256213-040V
			RK- 456712-010V
4- 272501		BRACKET RIGHT	CR- 256212-020V
			CR- 256212-030V
			CR- 256212-040V
			CR- 256212-060V
			RK- 456712-010V
4- 272502		BRACKET LEFT	CR- 256213-020V
			CR- 256213-030V
			CR- 256213-040V
			CR- 256213-060V
			RK- 456712-010V
4- 272503		CLAMP	CR- 256212-020V
			CR- 256213-020V
			CR- 256212-020V
			CR- 256213-020V
			CR- 256212-030V
			CR- 256213-030V

PART NO	LAST AM	DESCRIPTION	GROUP NO
4- 272503		CLAMP	CR- 256212-040V CR- 256213-040V
4- 272504		TORSION SPRING	CR- 256212-040V CR- 256213-040V
4- 272505		TORSION SPRING	CR- 256212-050V CR- 256213-050V
4- 272506		SHIM	RK- 456712-010V CR- 256212-020V
			CR- 256213-020V CR- 256212-020V
			CR- 256213-020V CR- 256212-020V
			CR- 256213-020V CR- 256212-030V
			CR- 256213-030V CR- 256212-040V
			CR- 256213-040V CR- 256212-040V
			CR- 256213-040V CR- 256212-050V
			CR- 256213-050V RK- 456712-010V
C- 272508-0101	6317 83-11-03	DOOR	B- 648106-020V C- 272508-010V
2- 272509		DOOR	RK- 548058-010V C- 272508-010V
4- 272510		HINGE	C- 489535-010V C- 553657-010V
			C- 752042-010V RK- 548058-010V
4- 272511		HINGE	C- 272508-010V C- 489535-010V
			C- 553657-010V C- 752042-010V
3- 272517		SPROCKET	C- 295310-010V C- 295310-020V
			C- 295310-030V C- 295310-040V
			C- 295310-050V C- 295310-060V
4- 272534		WASHER	C- 295310-010V C- 295310-020V
			C- 295310-030V C- 295310-040V
			C- 295310-050V C- 295310-060V
4- 272546		SLIDER	C- 491871-010V C- 491871-010V
4- 272547		PIN	C- 491871-010V C- 491871-010V
4- 272549		WASHER	C- 257146-020V C- 272560-020V
4- 272550		ADJUSTING SCREW	C- 272560-030V C- 272560-040V
4- 272552		BRACKET	C- 272560-050V C- 272560-020V
2- 272554		TOUCH GUARD	C- 272560-030V C- 272560-040V
			C- 272560-050V C- 272342-020V
1- 272555		TOUCH GUARD	C- 456976-010V C- 456976-020V
			C- 456976-030V C- 456976-040V
2- 272556-0001		TOUCH GUARD	C- 272342-020V C- 456976-010V
2- 272556-0001		TOUCH GUARD	C- 272342-020V C- 456976-010V
2- 272556-0002		TOUCH GUARD	C- 456976-020V C- 456976-030V
1- 272557-0001		TOUCH GUARD	C- 456976-040V C- 272342-020V
			C- 456976-010V C- 271569-020V
1- 272557-0002		TOUCH GUARD	C- 271569-030V C- 271569-040V
3- 272559		CABLE TRACK	C- 271569-050V

PART NO	LAST AM	DESCRIPTION	GROUP NO
C- 272560-0201	6317 83-11-03	VALVE	B- 648111-020V
C- 272560-0301	9437 86-09-05	VALVE	B- 648111-030V B- 648111-060V
			B- 648111-070V
C- 272560-040V	11023 87-12-14	PRODUCT VALVE	B- 648111-080V
C- 272560-050V	11914 89-11-14	PRODUCT VALVE	B- 648111-090V
3- 272562		HOLDER	C- 272404-020V C- 272404-030V
3- 272563		HOLDER	C- 272404-020V C- 272404-030V
4- 272564		BEARING	C- 272404-020V C- 272404-030V
			C- 272404-040V C- 272404-050V
			C- 272404-060V
G3- 272565		ARM	C- 256199-020V C- 256199-030V
			C- 256199-040V
4- 272566		AXLE PIN	C- 256199-020V C- 256199-030V
			C- 256199-040V
4- 272567		ROLLER	C- 256199-020V C- 256199-030V
4- 272568		ELBOW PIPE	C- 272560-020V
G2- 272569		CATCH HANDLE	C- 271454-020V
3- 272570		AXLE SUPPORT	C- 256957-020V
3- 272571		AXLE SUPPORT	C- 256238-020V C- 256238-030V
			C- 256957-020V
1- 272572		BEARING BRACKET	C- 256985-020V
G2- 272573		HUB	C- 256985-020V C- 456546-010V
			C- 456546-020V
G2- 272574		HUB	C- 256985-020V C- 456546-010V
			C- 456546-020V
3- 272575		BEAM	C- 256985-020V C- 456546-010V
			C- 456546-020V
2- 272576		BRACKET	CR- 256436-020V CR- 256436-030V
			CR- 256436-040V
			CR- 256436-060V
3- 272580		HOUSE	CR- 256436-020V CR- 256436-030V
G4- 272583		BRACKET	CR- 256436-020V
			CR- 256436-030V
3- 272584		BEARING	C- 271017-020V C- 271017-030V
1- 272585		TOUCH GUARD	C- 272342-020V
1- 272586		TOUCH GUARD	C- 272342-020V C- 456976-010V
			C- 456976-020V
1- 272587		CAM	C- 256201-020V C- 256201-030V
			C- 256201-040V
1- 272588		CAM	C- 256201-020V C- 256201-030V
			C- 256201-040V
1- 272589		CAM	C- 256201-020V C- 256201-030V
			C- 256201-040V
1- 272590		CAM	C- 256201-020V C- 256201-030V
			C- 256201-040V
1- 272591		CAM	C- 256201-020V C- 256201-030V
			C- 256201-040V
1- 272592		CAM	C- 256201-020V C- 256201-030V
			C- 256201-040V
1- 272593		CAM	C- 256201-020V C- 256201-030V
			C- 256201-040V
1- 272594		CAM	C- 256201-020V C- 256201-030V
			C- 256201-040V

PART NO	LAST AM	DESCRIPTION	GROUP NO
1- 272595		TOUCH GUARD	C- 272343-020V
2- 272596		GUIDE	C- 271469-020V
3- 272597		GUIDE RAIL	C- 271469-020V
2- 272599-0001		PIVOT ARM	C- 255907-020V
2- 272599-0002		PIVOT ARM	C- 255907-020V
3- 272600		ARM	C- 255907-020V
			C- 456180-010V
4- 272601		WASHER	C- 255907-020V
4- 272602		SCREW	C- 255907-020V
			C- 456180-010V
4- 272603		STOP LUG	C- 271454-020V
4- 272604		LUG	C- 271454-020V
3- 272605		BENDING ROLLER	C- 256014-020V
G1- 272606		CRADLE	C- 256203-020V
			C- 256203-030V
			C- 256203-040V
3- 272607		BELT HOLDER	C- 256198-020V
			C- 256198-030V
			C- 491814-010V
			C- 491815-010V
			C- 491814-010V
			C- 491815-010V
3- 272608		BELT HOLDER	C- 256203-020V
			C- 256203-030V
			C- 256203-040V
G2- 272609		CYLINDER	CR- 256436-020V
			CR- 256712-020V
			CR- 256436-020V
			CR- 256712-020V
			CR- 256436-020V
			CR- 256712-020V
			CR- 256436-020V
			CR- 256712-020V
3- 272610		PISTON	CR- 256436-020V
			CR- 256712-020V
			CR- 256436-020V
			CR- 256712-020V
			CR- 256436-020V
			CR- 256712-020V
			CR- 256436-030V
			CR- 256712-030V
			RK- 751157-010V
4- 272611		SLEEVE	CR- 256436-020V
			CR- 256712-020V
			CR- 256436-020V
			CR- 256712-020V
			CR- 256436-020V
			CR- 256712-020V
			CR- 256436-030V
			CR- 256712-030V
2- 272620		GUIDE	C- 271468-020V
			C- 271468-040V
3- 272621		GUIDE RAIL	C- 271468-020V
			C- 271468-040V
2- 272622		DRINKING STRAW	C- 272408-020V
			C- 272408-030V
			C- 272408-040V
			C- 272408-050V
C- 272623-020V	6317 83-11-03	SPRAY SYSTEM	B- 648111-020V
			B- 648111-030V
C- 272623-0301	8097 86-07-08	SPRAY SYSTEM	B- 648111-060V
			B- 648111-070V
C- 272623-0401	8908 86-02-19	SPRAY SYSTEM	B- 648111-080V
C- 272623-0501	12648 89-11-14	SPRAY SYSTEM	B- 648111-090V
2- 272624		PIPE	C- 272623-020V
3- 272625		PIPE	C- 272623-020V
3- 272626		PIPE	C- 272623-020V
4- 272627		PIPE	C- 272623-020V
			C- 272623-030V
			C- 272623-040V
3- 272630		CATCH	C- 271468-020V
			C- 271468-040V
3- 272631		BRACKET	C- 271468-020V

PART NO	LAST AM	DESCRIPTION	GROUP NO
			C- 271469-040V
4- 272632		SILENCER	C- 272408-020V
			C- 272408-030V
			C- 272408-040V
			C- 272408-050V
4- 272636		BRACKET	C- 272639-020V
			C- 490947-010V
4- 272636		BRACKET	C- 490947-020V
4- 272637		BRACKET	C- 272639-020V
1- 272638		ARM	C- 256272-020V
G3- 272639		SPROCKET	C- 256186-020V
4- 272640-0001		CURVE	C- 256206-020V
			C- 256207-020V
			C- 256206-020V
			C- 256207-020V
			C- 256206-020V
			C- 256207-020V
			C- 256206-020V
			C- 256207-020V
			C- 256206-020V
			C- 256207-020V
			C- 256206-020V
			C- 256207-020V
4- 272640-0002		CURVE	C- 256206-020V
			C- 256207-020V
			C- 256206-020V
			C- 256207-020V
			C- 256206-020V
			C- 256207-020V
			C- 256206-020V
			C- 256207-020V
			C- 256206-020V
			C- 256207-020V
			C- 256206-020V
			C- 256207-020V
4- 272640-0003		CURVE	C- 256206-020V
			C- 256207-020V
			C- 256206-020V
			C- 256207-020V
			C- 256206-020V
			C- 256207-020V
			C- 256206-020V
			C- 256207-020V
			C- 256206-020V
			C- 256207-020V
			C- 256206-020V
			C- 256207-020V
4- 272640-0004		CURVE	C- 256206-020V
			C- 256207-020V
			C- 256206-020V
			C- 256207-020V
			C- 256206-020V
			C- 256207-020V
			C- 256206-020V
			C- 256207-020V
			C- 256206-020V
			C- 256207-020V
			C- 256206-020V
			C- 256207-020V
4- 272640-0005		CURVE	C- 256206-020V
			C- 256207-020V
			C- 256206-020V
			C- 256207-020V
			C- 256206-020V
			C- 256207-020V
			C- 256206-020V
4- 272640-0006		CURVE	C- 256207-020V
			C- 256206-020V
			C- 256207-020V
			C- 256206-020V
			C- 256207-020V
			C- 256206-020V
			C- 256207-020V
4- 272640-0006		CURVE	C- 256206-020V
			C- 256207-020V
			C- 256206-020V
			C- 256207-020V
			C- 256206-020V
			C- 256207-020V

PART NO	LAST AM	DESCRIPTION	GROUP NO
2- 283361		AIR NOZZLE	C- 295891-030V C- 295891-010V C- 295891-020V C- 295891-030V
3- 283410		ARM	C- 268665-010V
4- 283411		ARM	C- 268665-010V
4- 283412		HOLDER	C- 268665-010V
4- 283413		PENDULUM	C- 268665-010V
2- 283521		DRIVE ROLLER	C- 456688-010V C- 283623-010V
3- 283527		GUIDE	C- 283611-010V
4- 283528		HOLDER	C- 283611-010V
4- 283529		HOLDER	C- 283611-010V
4- 283531		ARM	C- 283611-010V
4- 283532		ARM	C- 283611-010V
4- 283533-0001		ROLLER	C- 283611-010V
3- 283534		BRACKET	C- 283611-010V
G1- 283535		BRACKET	C- 283612-010V
2- 283538-0001		BOX	C- 268656-010V
2- 283539		HOLDER	C- 268656-010V
3- 283540		BRACKET	C- 268656-010V
3- 283541		BRACKET	C- 268656-010V
1- 283542		BRACKET	C- 283618-010V
3- 283543-0001		CHUTE	C- 283618-010V
3- 283544-0001		GUIDE PLATE	C- 283618-010V
4- 283545		SPRING	C- 283618-010V CR- 283618-020V
4- 283546		SCREW	C- 283618-010V CR- 283618-020V
4- 283547		BLOCK	C- 283618-010V
4- 283548		SHAFT	C- 283618-010V
4- 283549		BRACKET	C- 283618-010V
4- 283550		HOLDER	C- 283618-010V
4- 283551		SCREW	C- 283618-010V CR- 283618-020V
1- 283554		BRACKET	C- 283610-010V
4- 283555		PLATE	C- 283610-010V CR- 449275-010V
G1- 283564		BRACKET	C- 283617-010V CR- 283605-010V
3- 283569		BRAKE DRUM	C- 484858-010V C- 484858-020V
4- 283575		CAM	C- 283600-010V C- 283627-010V C- 456674-010V
2- 283581		CAM	C- 283627-010V
3- 283582		BRACKET	C- 283611-010V
3- 283583		DRIVE ROLLER	C- 283623-010V C- 456688-010V
2- 283587-0001		PRESSURE ROLLER	C- 283604-010V
2- 283587-0002		PRESSURE ROLLER	C- 283604-010V
2- 283587-0003		PRESSURE ROLLER	C- 283604-020V
4- 283588		RAIL	C- 283604-010V C- 283617-010V CR- 283607-010V
4- 283590		KNIFE	C- 283617-010V C- 294888-010V C- 283617-010V C- 294887-010V CR- 283608-010V
			C- 469316-010V C- 486955-010V CR- 283608-010V
			C- 469316-010V C- 486955-010V C- 283624-010V
3- 283591-0002		BENDING ROLLER	C- 456612-010V
3- 283591-0003		BENDING ROLLER	C- 283624-010V
3- 283595		GABLE	C- 456612-010V B- 648108-010V B- 648118-010V B- 648108-010V B- 648118-010V B- 648108-010V C- 283621-010V C- 456698-010V C- 456698-020V
C- 283600-0101	6158 83-09-29	MAGAZINE	
C- 283602-0101	5909 83-05-11	GABLE	
C- 283602-0102	5909 83-05-11	GABLE	
C- 283604-010V	8452 86-02-11	PRESSURE ROLLER	
C- 283604-0103	8452 86-02-11	PRESSURE ROLLER	
C- 283604-0201	8653 86-11-21	PRESSURE ROLLER	

PART NO	LAST AM	DESCRIPTION	GROUP NO
CR- 283605-0101	13824 89-09-28	PULL TAB SEALING UNIT	B- 648118-080V B- 648118-070V
CR- 283606-010V	10736 87-08-21	SEALING JAW PULLTAB	B- 648118-080V B- 648118-070V
CR- 283607-010V	10736 87-08-21	COUNTER JAW	B- 648118-080V B- 648118-070V
C- 283610-0101	8126 85-09-21	PUNCH	B- 648108-010V
C- 283611-0101	5909 83-05-11	STRIP GUIDE	B- 648108-010V B- 648118-010V
C- 283612-0103	13824 89-09-28	STRIP SEALER	B- 648108-010V B- 648118-010V B- 648118-080V B- 648118-070V
C- 283613-0101	5770 83-04-13	SEALING JAW	B- 648118-010V
C- 283614-0101	10637 87-09-02	COUNTER JAW	B- 648118-010V B- 648118-080V B- 648118-070V
C- 283617-0101	6066 83-09-06	SEALING UNIT	B- 648108-010V B- 648118-010V
C- 283618-0101	5971 83-05-11	FEED DEVICE	B- 648108-010V B- 648118-010V
CR- 283618-020V	12939 89-05-19	PULL TAB FEED	B- 648118-080V B- 648118-070V
C- 283619-0101	10736 87-08-21	BELT TENSIONER	C- 283624-010V C- 456612-010V
C- 283620-0101	9023 86-05-23	MAGAZINE	B- 648118-010V
C- 283621-0102	9023 86-05-23	PAPER FEED	B- 648118-010V
C- 283622-0101	8234 86-01-07	REEL	B- 648108-010V
C- 283623-0101	8234 86-01-07	DRIVE ROLLER	B- 648108-010V
C- 283623-0102	8234 86-01-07	DRIVE ROLLER	C- 283621-010V
C- 283624-0101	8452 86-02-11	BENDING ROLLER	C- 283621-010V
C- 283626-0101	6066 83-09-06	UNIT	B- 648118-010V
C- 283626-0201	8234 86-01-07	DRIVE UNIT	B- 648118-080V
C- 283626-030V	14110 90-02-22	DRIVE UNIT	B- 648118-070V
C- 283627-0101	8126 85-09-21	DRIVE SHAFT	B- 648108-010V
C- 283627-0102	8126 85-09-21	DRIVE SHAFT	B- 648118-010V
C- 283628-0101	7877 85-07-15	PAPER MAGAZINE	B- 648118-010V
C- 283628-0102	7877 85-07-15	PAPER MAGAZINE	B- 648108-010V
C- 283629-0101	5909 83-05-11	ROLLER	B- 648108-010V B- 648118-010V
C- 283629-0201	12403 89-01-10	ROLLER	B- 648118-080V B- 648118-070V
C- 283630-0101	5909 83-05-11	ROLLER	B- 648108-010V B- 648118-010V
C- 283630-0201	8363 86-12-04	ROLLER	C- 283635-010V
C- 283631-0101	7753 86-02-06	MACHINE BODY	B- 648118-010V
C- 283632-0101	7753 86-02-06	PANEL	B- 648118-010V
C- 283633-0101	7753 86-02-06	CONNECTION BOX	B- 648108-010V B- 648118-010V
C- 283635-010V	12232 88-09-23	PAPER MAGAZINE	B- 648118-080V B- 648118-070V
4- 283641		ROLLER	C- 283602-010V
4- 283642		SHAFT	C- 283602-010V
4- 283650		CYLINDER BRACKET	C- 283602-010V
1- 283656		BRACKET	C- 283612-010V
G1- 283658		ARM	C- 283612-010V
3- 283660		HEATING JAW	C- 283613-010V
3- 283661		HEATING RAIL	C- 294887-010V
3- 283668		INSULATING PLATE	C- 283613-010V
3- 283669		SHIM	C- 531657-010V C- 457868-010V RK- 535608-010V C- 283613-010V C- 457868-010V C- 531657-010V C- 497534-020V C- 531657-010V
4- 283676-0001		SPRING HOLDER	C- 283612-010V
3- 283677		RAIL	C- 283614-010V
3- 283680		ARM	C- 283619-010V
3- 283681		DRIVE ROLLER	C- 456688-010V
4- 283684		END WASHER	C- 283613-010V C- 531657-010V
3- 283688		CARRIER	C- 469737-010V
3- 283690		RULER	C- 469737-010V
3- 283691		CLAMP	C- 469737-010V
3- 283692-0001		RULER	C- 283622-010V

PART NO	LAST AM	DESCRIPTION	GROUP NO
3- 283682-0002		RULER	C- 469737-010V
			C- 469173-010V
3- 283682-0003		RULER	C- 469173-010V
4- 283693		SPRING	C- 283613-010V
3- 283746		BRACKET	C- 294658-010V
4- 283747		BRACKET	C- 294658-010V
4- 283795		WEIGHT	C- 229400-060V
4- 283813		BRACKET	C- 294785-010V
2- 283847		REEL	C- 283622-010V
3- 283848		SHAFT	C- 283622-010V
3- 283849		CLAMP	C- 283622-010V
3- 283850		RULER	C- 283622-010V
3- 283851		CARRIER	C- 283622-010V
4- 283852		HUB	C- 283622-010V
4- 283853		HUB	C- 469737-010V
			C- 283622-010V
			C- 469173-010V
4- 283854		ROD	C- 283622-010V
4- 283856		ROD	C- 469737-010V
4- 283857		PIN	C- 469737-010V
			C- 283622-010V
3- 283902		HOLDER	C- 294658-010V
2- 284186		WINDOW	C- 294785-010V
4- 284679		WASHER	C- 284873-010V
3- 284698		PLATE	C- 457868-010V
			C- 283614-010V
			C- 457868-010V
			C- 283614-010V
			C- 497534-020V
3- 284699		BRACKET	C- 457868-010V
			C- 283614-010V
			C- 457868-010V
			C- 283614-010V
			C- 497534-020V
4- 284736		SHAFT	C- 283618-010V
4- 284736		SHAFT	C- 283618-010V
4- 284737		SHAFT	C- 283618-010V
4- 284741		SHAFT	C- 283618-010V
3- 284805		BLOCK	C- 469737-010V
			C- 283622-010V
4- 284806		HUB	C- 469737-010V
			C- 469173-010V
4- 284807		FORK	C- 469737-010V
			C- 283622-010V
2- 284824		ROLLER	C- 283602-010V
C- 284873-0101	5909 83-06-11	BOBBIN HOLDER	B- 648108-010V
3- 284948		ROLLER	C- 283630-010V
4- 284949		SHAFT	C- 283630-010V
3- 284950		ROLLER	C- 283629-010V
3- 284951		SHAFT	C- 283602-010V
C- 284953-010V	5053 81-12-16	HOSE	B- 648109-020V
			B- 648109-030V
			B- 648109-060V
			B- 648109-070V
4- 284997		TOOTHED PULLY	C- 283619-010V
4- 284997		TOOTHED PULLY	C- 476080-020V
4- 284998		SHAFT	C- 283619-010V
			C- 476080-020V
4- 292044		SHAFT	C- 434774-020V
			C- 434774-030V
			C- 434074-020V
			C- 434074-030V
			C- 434774-020V
			C- 434774-030V
			C- 434074-020V
			C- 434074-030V
			C- 434774-030V
			C- 434074-030V
			C- 434774-030V
			C- 434074-030V
4- 292062		SHAFT	C- 283602-010V
4- 292063		WASHER	C- 283602-010V
4- 292064		WASHER	C- 283602-010V
4- 292412		GABLE	C- 293685-010V
			C- 293685-020V
			C- 293684-010V
			C- 293684-020V

PART NO	LAST AM	DESCRIPTION	GROUP NO
			C- 293685-010V
			C- 293685-020V
			C- 293684-010V
			C- 293684-020V
			C- 293685-020V
			C- 293684-020V
			C- 293685-020V
			C- 293684-020V
4- 292413		GABLE	C- 293685-010V
			C- 293685-020V
			C- 293684-010V
			C- 293684-020V
			C- 293685-010V
			C- 293685-020V
			C- 293684-010V
			C- 293684-020V
			C- 293685-020V
			C- 293684-020V
			C- 293685-020V
			C- 293684-020V
4- 292414		CARRIER	C- 293685-010V
			C- 293685-020V
			C- 293685-010V
			C- 293685-020V
G2- 292449		PUMP HOUSING	C- 491323-020V
			C- 751393-010V
3- 292456		BEARING COVER	C- 491323-020V
			C- 751393-010V
3- 292464		FLANGE	C- 491323-020V
G1- 292473		BRACKET	C- 751689-010V
4- 292477		SHAFT	C- 751689-010V
4- 292482		WASHER	C- 751689-010V
4- 293363		LOCK NUT	C- 272408-060V
4- 293364		SCREW	C- 272408-060V
2- 293395-0001		TYPE HOLDER	C- 293685-010V
			C- 293685-020V
			C- 293684-010V
2- 293395-0001		TYPE HOLDER	C- 293684-020V
			C- 293685-010V
			C- 293685-020V
			C- 293684-010V
			C- 293684-020V
			C- 293685-020V
			C- 293684-020V
			C- 293685-020V
			C- 293684-020V
2- 293395-0002		TYPE HOLDER	C- 293685-010V
			C- 293685-020V
			C- 293684-010V
			C- 293684-020V
			C- 293685-010V
			C- 293685-020V
			C- 293684-010V
			C- 293684-020V
			C- 293685-020V
			C- 293684-020V
			C- 293685-020V
			C- 293684-020V
4- 293669		CARRIER	C- 293684-010V
			C- 293684-020V
			C- 293684-010V
			C- 293684-020V
4- 293667		PIN	C- 434774-020V
			C- 434774-030V
			C- 434074-020V
			C- 434074-030V
			C- 434774-020V
			C- 434774-030V
			C- 434074-020V
			C- 434074-030V
			C- 434774-030V
			C- 434074-030V
			C- 434774-030V
			C- 434074-030V
4- 293669-0001		ASHER	C- 434774-020V
			C- 434774-030V
			C- 434074-020V

PART NO	LAST AM	DESCRIPTION	GROUP NO
			C- 434074-030V
			C- 434774-020V
			C- 434774-030V
			C- 434074-020V
			C- 434074-030V
			C- 434774-030V
			C- 434074-030V
			C- 434774-030V
			C- 434074-030V
4- 293669-0002		WASHER	C- 434774-020V
			C- 434774-030V
			C- 434074-020V
			C- 434074-030V
			C- 434774-020V
			C- 434774-030V
			C- 434074-020V
			C- 434074-030V
			C- 434774-020V
			C- 434074-030V
4- 293669-0002		WASHER	C- 434774-030V
			C- 434074-030V
4- 293669-0003		WASHER	C- 434774-020V
			C- 434774-030V
			C- 434074-020V
			C- 434074-030V
			C- 434774-020V
			C- 434774-030V
			C- 434074-020V
			C- 434074-030V
			C- 434774-030V
			C- 434074-030V
4- 293669-0004		WASHER	C- 434774-020V
			C- 434774-030V
			C- 434074-020V
			C- 434074-030V
			C- 434774-020V
			C- 434774-030V
			C- 434074-020V
			C- 434074-030V
			C- 434774-030V
			C- 434074-030V
4- 293670		SHAFT	C- 434774-020V
			C- 434774-030V
			C- 434074-020V
			C- 434074-030V
			C- 434774-020V
			C- 434774-030V
			C- 434074-020V
			C- 434074-030V
			C- 434774-030V
			C- 434074-030V
4- 293675		ROLLER	C- 434774-030V
			C- 434774-020V
			C- 434774-030V
			C- 434074-020V
			C- 434074-030V
			C- 434774-020V
			C- 434774-030V
			C- 434074-020V
			C- 434074-030V
			C- 434774-030V
			C- 434074-030V
C- 293684-0108	7024 84-10-15	PRINTING WHEEL	C- 456322-010V
C- 293684-0204	13807 89-10-27	PRINTING WHEEL	C- 456349-010V
			C- 456322-020V
			C- 456322-030V
			C- 456349-020V
			C- 752646-010V
			C- 752914-010V
C- 293685-0102	7024 84-10-15	PRINTING WHEEL	C- 456321-010V

PART NO	LAST AM	DESCRIPTION	GROUP NO
			C- 456348-010V
C- 293685-0201	10572 87-09-17	PRINTING WHEEL	C- 456321-020V
			C- 456321-030V
			C- 456348-020V
			C- 752645-010V
			C- 752913-010V
4- 293697		GABLE	C- 434074-020V
			C- 434074-030V
			C- 434074-020V
			C- 434074-030V
4- 294397		BOBBIN HOLDER	C- 283620-010V
4- 294398		SCREW	C- 283620-010V
4- 294399		SPRING	C- 283600-010V
			C- 283620-010V
4- 294400		BLOCK	C- 283618-010V
4- 294508		ARM	C- 283620-010V
G1- 294513		GABLE	C- 283621-010V
2- 294515-0001		PLATE	C- 294659-010V
2- 294515-0002		PLATE	C- 283621-010V
2- 294519		BRACKET	C- 283626-010V
			C- 283626-020V
			C- 283626-030V
3- 294520		HOLDER	C- 283617-010V
			C- 283613-010V
			C- 283617-010V
C- 294522-0101	6066 83-09-06	UNIT	B- 648108-010V
2- 294523		PLATE	C- 283600-010V
3- 294529		BRACKET	C- 283600-010V
4- 294532		AXLE PIN	C- 283600-010V
3- 294540		INDUCTOR	C- 294888-010V
4- 294543		TOOTHED PULLY	C- 283626-010V
2- 294546		BRACKET	C- 294658-010V
4- 294556		BRACKET	C- 294780-010V
2- 294559		BRACKET	C- 283628-010V
3- 294560		BRACKET	C- 283628-010V
3- 294561		ROD	C- 283628-010V
4- 294562		BLOCK	C- 283628-010V
4- 294563		SHAFT	C- 283629-010V
4- 294571		BRACKET	C- 283628-010V
4- 294572		BRACKET	C- 283628-010V
4- 294573		BLOCK	C- 283628-010V
4- 294574		PLATE	C- 283628-010V
4- 294575		PLATE	C- 283628-010V
G3- 294576		ARM	C- 283617-010V
			CR- 283605-010V
3- 294577		HEATING BLOCK	C- 283617-010V
4- 294578		LOCKING LUG	C- 283617-010V
			CR- 283605-010V
4- 294579		KEY	C- 283617-010V
			CR- 283606-010V
4- 294580		INSULATING PLATE	C- 283617-010V
			CR- 283606-010V
4- 294584		DOLLY	C- 283617-010V
			CR- 283605-010V
2- 294585		SLIDE	C- 283620-010V
3- 294586		GUIDE	C- 283620-010V
3- 294587		PLATE	C- 283620-010V
3- 294588		BRACKET	C- 283620-010V
3- 294589		BRACKET	C- 283620-010V
4- 294590		BRACKET	C- 283620-010V
4- 294591		BLOCK	C- 283620-010V
4- 294594		BRACKET	C- 283617-010V
			CR- 283607-010V
4- 294595		SHAFT	C- 283617-010V
			CR- 283607-010V
4- 294596		ROLLER	C- 283617-010V
			CR- 283607-010V
3- 294601		BOBBIN HOLDER	C- 283600-010V
4- 294602		RING	C- 283600-010V
2- 294617		CAM	C- 283627-010V
1- 294618		MACHINE BODY	C- 283631-010V
4- 294624-0001		ROLLER	C- 268665-010V
			C- 283600-010V
			C- 283611-010V
			C- 283600-010V
			C- 283611-010V
			C- 283620-010V

PART NO.	LAST AM	DESCRIPTION	GROUP NO
4- 294628		SHAFT	CR- 294686-010V
4- 294632		CAM	C- 469737-010V
			C- 283622-010V
P2- 294636		VARIATOR	C- 469173-010V
1- 294645		MACHINE BODY	C- 283626-010V
1- 294646		GABLE	C- 294658-010V
1- 294647		GABLE	C- 283602-010V
1- 294648		SPACER PLATE	C- 283602-010V
2- 294649		BRAKE ARM	C- 283602-010V
4- 294650		PLATE	C- 283602-010V
4- 294651		SCREW	C- 283602-010V
4- 294652		SCREW	C- 283602-010V
C- 294658-0101	6066 83-09-06	MACHINE BODY	B- 648108-010V
C- 294659-0101	5514 82-10-20	FEED DEVICE	B- 648108-010V
4- 294660		BLOCK	C- 283617-010V
			CR- 283605-010V
3- 294663		ARM	C- 294670-010V
4- 294664		ROLLER	C- 294670-010V
			C- 469182-010V
4- 294665		BRACKET	C- 469182-010V
4- 294666		PIN	C- 469182-010V
2- 294667		COVER	C- 294725-010V
2- 294668		GLASS PANE	C- 294725-010V
3- 294669		GLASS PANE	C- 294725-010V
C- 294670-0101	11707 86-03-28	BELT TENSIONER	B- 648118-010V
3- 294672-0001		PAPER GUIDE	C- 294658-010V
3- 294673		BRACKET	C- 294658-010V
G1- 294674		BRACKET	CR- 294695-010V
G2- 294675		GUIDE	CR- 294695-010V
4- 294676		WASHER	CR- 294695-010V
4- 294677		WASHER	CR- 294695-010V
2- 294678		CAM	C- 294522-010V
			C- 283626-010V
4- 294680		ARM	CR- 294695-010V
3- 294688		BRACKET	C- 283620-010V
4- 294690		ROD	C- 283622-010V
CR- 294695-0101	10736 87-08-21	BACK FEEDER	B- 648108-010V
			B- 648118-010V
			B- 648118-060V
1- 294703		BRACKET	B- 648118-070V
3- 294705		ARM	C- 294906-010V
3- 294706		ARM	C- 294906-010V
3- 294707		BRACKET	C- 294906-010V
4- 294708		SHAFT	C- 294906-010V
4- 294709		SHAFT	C- 294906-010V
4- 294710		SCREW	C- 294906-010V
1- 294714		PLATE	C- 283632-010V
C- 294715-0101	5762 83-02-24	PANEL	B- 648108-010V
C- 294725-0101	6066 83-09-06	GLASS	B- 648118-010V
4- 294726		HOLDER	C- 294725-010V
4- 294727		HINGE	C- 294725-010V
4- 294728		HINGE	C- 294725-010V
4- 294729		SHAFT	C- 294725-010V
3- 294731		BRACKET	C- 283632-010V
4- 294734		WASHER	C- 283631-010V
			C- 294725-010V
			C- 294780-010V
			C- 456679-010V
			C- 457853-010V
			C- 456679-010V
4- 294735		SPACER	C- 457853-020V
			C- 294725-010V
			C- 294780-010V
			C- 457853-010V
			C- 457937-010V
			C- 457853-020V
			C- 457937-010V
3- 294736		BRACKET	C- 294725-010V
4- 294737		SHAFT	C- 294725-010V
4- 294738		SHIM	C- 294725-010V
4- 294739		SHIM	C- 294725-010V
3- 294743		PLATE	C- 283620-010V
3- 294744		BLOCK	C- 283620-010V
4- 294748		INDICATOR	C- 283631-010V
			C- 457867-010V

PART NO	LAST AM	DESCRIPTION	GROUP NO
4- 294749		STUD BOLT	C- 279809-010V
			C- 283632-010V
1- 294751		LEG	C- 283631-010V
1- 294752		LEG	C- 283631-010V
1- 294753		LEG	C- 283631-010V
1- 294754		BEAM	C- 283631-010V
2- 294755		BEAM	C- 283631-010V
2- 294756		BEAM	C- 283631-010V
1- 294758		BOX	C- 283633-010V
2- 294759		LID	C- 283633-010V
2- 294761		COVER PLATE	C- 294780-010V
2- 294762		COVER PLATE	C- 294780-010V
C- 294763-0101	6066 83-09-06	DATING UNIT	B- 648118-010V
1- 294764		BRACKET	C- 294763-010V
2- 294765		PLATE	C- 294763-010V
4- 294766		BRACKET	C- 294763-010V
C- 294767-0101	5770 83-04-13	HEATING JAW	C- 294763-010V
2- 294768		HEATING JAW	C- 294767-010V
1- 294769		PANEL	C- 279809-010V
1- 294770		PANEL	C- 294715-010V
3- 294771		BRACKET	C- 283632-010V
2- 294773		BRACKET	C- 294780-010V
1- 294774		COVER	C- 294780-010V
4- 294775		BRACKET	C- 294715-010V
3- 294776		BRACKET	C- 294780-010V
			C- 457853-010V
			C- 457853-020V
2- 294777		GLASS PANE	C- 294780-010V
2- 294778		GLASS PANE	C- 294780-010V
2- 294779		PLATE	C- 294780-010V
C- 294780-0101	6003 83-06-14	COVERING PANEL	B- 648118-010V
4- 294782		SHIM	C- 294725-010V
4- 294783		SCREW	C- 294725-010V
4- 294784		BRACKET	C- 294780-010V
C- 294785-0101	5591 82-11-18	COVER	B- 648108-010V
C- 294786-0101	5841 83-03-15	COVERING PANEL	B- 648108-010V
3- 294787		HANGER	C- 294780-010V
			C- 457853-010V
			C- 457853-020V
1- 294799		GUARD	C- 294880-010V
3- 294800		BRACKET	C- 456953-010V
			C- 294880-010V
			C- 441736-010V
			C- 456953-010V
3- 294801		BRACKET	C- 456953-010V
			C- 294880-010V
			C- 441736-010V
			C- 456953-010V
4- 294802		BRACKET	C- 456953-010V
			C- 294880-010V
			C- 441736-010V
			C- 456953-010V
1- 294803		BOX	C- 294786-010V
1- 294804		COVER PLATE	C- 294786-010V
1- 294805		COVER PLATE	C- 294786-010V
2- 294814		PLATE	C- 294658-010V
3- 294815		BENDING ROLLER	C- 269589-010V
4- 294816		LID	C- 269589-010V
3- 294825		ARM	C- 294906-010V
4- 294826		SHAFT	C- 294780-010V
			C- 457853-010V
			C- 457853-020V
4- 294827		CAM	C- 294780-010V
			C- 457853-010V
			C- 457853-020V
3- 294829-0002		BENDING ROLLER	C- 283624-010V
			RK- 538450-010V
3- 294829-0003		BENDING ROLLER	RK- 538470-010V
			RK- 547726-010V
			C- 456612-010V
			C- 533844-010V
4- 294830		LID	C- 283624-010V
			RK- 538470-010V
			RK- 538450-010V
			RK- 547726-010V
			C- 456612-010V
			C- 533844-010V

PART NO	LAST AM	DESCRIPTION	GROUP NO
1- 294831		SPACER PLATE	C- 283602-010V
4- 294832		SHAFT	C- 533903-010V
			C- 283602-010V
			C- 533903-010V
1- 294837		CABLE DUCT	C- 294867-010V
1- 294838		LID	C- 294867-010V
1- 294839		LID	C- 294867-010V
2- 294840		BRACKET	C- 283600-010V
2- 294841		BRAKE ARM	C- 283600-010V
2- 294842		COVER	C- 283600-010V
2- 294843		PLATE	C- 283600-010V
3- 294844		BRACKET	C- 283600-010V
3- 294845		BOBBIN HOLDER	C- 283600-010V
3- 294846		ARM	C- 283600-010V
3- 294847		ARM	C- 283600-010V
3- 294848		ARM	C- 283600-010V
4- 294849		ROLLER	C- 283600-010V
4- 294851		SHAFT	C- 283600-010V
4- 294852		SCREW	C- 283600-010V
4- 294854		NOZZLE	C- 283600-010V
4- 294855		SCREW	C- 283600-010V
2- 294857		OWERFLOW PIPE	C- 294658-010V
2- 294863		OWERFLOW PIPE	C- 283631-010V
C- 294867-0101	7763 86-02-06	CABLE DUCT	B- 648118-010V
4- 294868		COUNTER RUBBER	C- 283617-010V
			C- 294868-010V
			C- 283617-010V
			C- 294887-010V
			CR- 283607-010V
			C- 469316-010V
			C- 486955-010V
			CR- 283607-010V
			C- 469316-010V
4- 294869		END WASHER	C- 486955-010V
4- 294870		SHIM	C- 283617-010V
			C- 283617-010V
4- 294871		SHIM	CR- 283606-010V
			C- 283617-010V
4- 294872		WASHER	CR- 283605-010V
			C- 283600-010V
			C- 283628-010V
			C- 283600-010V
4- 294873		WASHER	C- 283628-010V
			C- 283600-010V
			C- 283628-010V
			C- 283600-010V
			C- 283628-010V
2- 294874		BUSBAR	C- 294880-010V
3- 294877		SPACER	C- 283631-010V
3- 294878		SPACER	C- 283631-010V
4- 294879		PANEL PLATE	C- 283631-010V
C- 294880-0101	5762 83-02-24	BUSBAR	B- 648108-010V
4- 294881		SCREW	C- 283617-010V
			CR- 283605-010V
C- 294887-0101	6159 83-09-29	SPARE PART KIT	B- 648118-010V
C- 294888-0101	6777 84-07-10	SPARE PART KIT	B- 648108-010V
4- 294901		BRACKET	C- 294658-010V
4- 294904		SPACER	C- 283602-010V
3- 294905		PAPER GUIDE	C- 294658-010V
C- 294906-0101	5971 83-05-11	BRACKET	B- 648108-010V
			B- 648118-010V
4- 294914		SCREW	C- 283602-010V
3- 294918		HEATING RAIL	C- 283613-010V
			C- 531657-010V
3- 294921		OWERFLOW PIPE	CR- 449275-010V
4- 294930-0001		PRESSURE JAW	C- 283611-010V
3- 294935		GABLE	C- 283624-010V
			C- 456612-010V
4- 294936		SHAFT	C- 283624-010V
			RK- 536450-010V
4- 294937		SPACER	C- 283624-010V
			RK- 536450-010V
4- 294938		NUT	C- 283624-010V
			RK- 536470-010V
			RK- 536450-010V
			RK- 547726-010V
			C- 456612-010V

PART NO	LAST AM	DESCRIPTION	GROUP NO
			C- 533944-010V
4- 294939		SHAFT	C- 294780-010V
			C- 457853-010V
4- 294955		BRACKET	C- 294656-010V
2- 294964		DRIVE ROLLER	C- 456668-010V
2- 294966		DRIVE ROLLER	C- 456668-010V
4- 294971		INDICATION	CR- 449275-010V
4- 294973		SHAFT	CR- 449275-010V
4- 294974		BLOCK	CR- 449275-010V
4- 294975		BRACKET	CR- 449275-010V
4- 294976		ROLLER BRACKET	CR- 449275-010V
2- 294977		BRACKET	C- 283628-010V
4- 294986-0001		ROLLER	C- 283600-010V
4- 294987		SPRING	C- 283600-010V
2- 295004		CUTTING RAIL	CR- 256204-020V
			CR- 256205-020V
			CR- 256204-020V
			CR- 256205-020V
			CR- 256204-030V
			CR- 256205-030V
			CR- 256204-040V
			CR- 256205-040V
			CR- 256204-040V
			CR- 256205-040V
			CR- 256204-050V
			CR- 256205-050V
4- 295005		DOLLY	CR- 256204-020V
			CR- 256205-020V
			C- 295523-020V
			CR- 256204-020V
			CR- 256205-020V
			C- 295523-020V
			CR- 256204-030V
			CR- 256205-030V
			C- 295523-030V
			CR- 256204-040V
			CR- 256205-040V
			C- 295523-030V
			CR- 256204-040V
			CR- 256205-040V
			C- 295523-030V
			CR- 256204-050V
			CR- 256205-050V
			C- 295523-030V
4- 295010		SLEEVE	C- 751094-010V
			RK- 491744-010V
			RK- 491769-010V
4- 295010		SLEEVE	RK- 491902-010V
			RK- 751561-010V
			RK- 491769-010V
			RK- 751561-010V
			C- 272014-020V
			C- 272014-030V
			C- 751086-010V
			C- 751086-020V
3- 295011		PIPE	C- 256233-020V
			C- 256233-030V
			C- 256233-040V
3- 295012		PIPE	C- 256233-020V
			C- 256233-030V
			C- 256233-040V
2- 295013		CABLE DUCT	C- 295014-010V
C- 295014-0101	5297 82-05-12	CABLE DUCT	B- 648102-020V
			B- 648102-030V
G3- 295015		BRACKET	C- 272231-020V
			C- 272231-030V
			C- 751988-010V
G3- 295016		BRACKET	C- 272231-020V
			C- 272231-030V
			C- 751988-010V
4- 295017		PIPE	C- 256233-020V
			C- 256233-030V
			C- 256233-040V
4- 295025		BRACKET	C- 256233-050V
			C- 271880-020V
C- 295026-010V	6317 83-11-03	CONTROL PANEL	C- 469781-010V
			B- 648102-020V

PART NO	LAST AM	DESCRIPTION	GROUP NO
			B- 648102-030V
C- 296026-020V	9646 86-10-28	CONTROL PANEL	B- 648102-060V
			B- 648102-070V
C- 296026-030V	10764 88-05-05	CONTROL PANEL	B- 648102-080V
1- 295027		CIRCUIT BOARD	C- 295026-010V
1- 295028		CIRCUIT BOARD	C- 295026-010V
2- 295029		BACK PIECE	C- 295026-010V
3- 295030		HOLDER	C- 295026-010V
			C- 295026-020V
3- 296031		HOLDER	C- 295026-010V
			C- 295026-020V
3- 296032		LEAD-IN	C- 295026-010V
3- 296033		BRACKET	C- 295026-010V
4- 295044		BEARING	C- 256237-020V
			C- 256237-030V
			C- 256237-040V
C- 296045-020V	6445 84-01-10	PIPE WORK-PNEUMATIC	B- 648111-020V
			B- 648111-030V
C- 296045-030V	8271 85-10-14	PIPE WORK-PNEUMATIC	B- 648111-060V
C- 296045-040V	8465 85-12-18	PIPE WORK-PNEUMATIC	B- 648111-070V
C- 296045-050V	13953 89-11-13	PIPE WORK-PNEUMATIC	B- 648111-080V
C- 296045-060V	14315 90-01-10	PIPE WORK-PNEUMATIC	B- 648111-090V
4- 295050		PIPE	C- 271274-020V
2- 295051		GUARD	C- 256239-020V
			C- 256239-030V
			C- 256239-040V
4- 296062		AXLE SUPPORT	C- 256239-020V
			C- 256239-030V
			C- 256239-040V
3- 296064		PLATE	C- 256219-020V
			C- 256220-020V
			C- 256219-020V
			C- 256220-020V
4- 296065		CLIP	C- 256973-020V
			C- 256219-020V
			C- 256220-020V
			C- 256219-020V
			C- 256220-020V
4- 296066		WASHER	C- 256973-020V
			C- 256973-030V
			C- 256219-020V
			C- 256220-020V
			C- 256219-020V
			C- 256220-020V
			C- 256219-030V
			C- 256220-030V
			C- 256219-030V
			C- 256220-030V
			C- 256219-030V
			C- 256220-030V
3- 296067-0001		RAIL	CR- 256712-020V
			CR- 256712-030V
			CR- 256712-040V
			CR- 256712-050V
3- 296067-0002		RAIL	CR- 256712-020V
			CR- 256712-030V
			CR- 256712-040V
			CR- 256712-050V
3- 296067-0003		RAIL	CR- 256712-020V
			CR- 256712-030V
			CR- 256712-040V
			CR- 256712-050V
3- 296068-0001		RAIL	CR- 256712-020V
			CR- 256712-030V
			CR- 256712-040V
			CR- 256712-050V
3- 296068-0002		RAIL	CR- 256712-020V
			CR- 256712-030V
			CR- 256712-040V
			CR- 256712-050V
3- 296068-0003		RAIL	CR- 256712-020V
			CR- 256712-030V
			CR- 256712-040V
			CR- 256712-050V
3- 296069		RAIL LEFT	CR- 256712-020V

PART NO	LAST AM	DESCRIPTION	GROUP NO
			CR- 256712-030V
			CR- 256712-040V
			CR- 256712-050V
3- 295060		RAIL	CR- 256712-020V
			CR- 256712-030V
			CR- 256712-040V
			CR- 256712-050V
3- 295061		RAIL	CR- 256712-020V
			CR- 256712-030V
			CR- 256712-040V
			CR- 256712-050V
3- 295062		RAIL	CR- 256712-020V
			CR- 256712-030V
			CR- 256712-040V
			CR- 256712-050V
1- 295063		CIRCUIT BOARD	C- 295026-010V
1- 295064		CIRCUIT BOARD	C- 295026-010V
1- 295065		CONTROL CABINET	C- 295026-010V
1- 295066		CONTROL CABINET	C- 295026-010V
2- 295067		MACHINE DISPLAY B9 UPTAB	C- 295026-010V
2- 295068		MACHINE DISPLAY B9 MPTAB	C- 295026-010V
2- 295069		MACHINE DISPLAY AB9 UPTAB	C- 295026-010V
2- 295070		MACHINE DISPLAY AB9 MPTAB	C- 295026-010V
4- 295071		SPACER	C- 295026-010V
			C- 295026-020V
			C- 295026-030V
4- 295072		BUFFER RING	CR- 256436-020V
			CR- 256712-020V
			CR- 256436-020V
			CR- 256712-020V
			CR- 256436-020V
			CR- 256712-020V
			CR- 256436-020V
			CR- 256712-020V
			CR- 256436-030V
			CR- 256712-030V
			CR- 256436-040V
			CR- 256712-040V
			CR- 256436-060V
			CR- 256712-060V
			RK- 751157-010V
4- 295073		GASKET	C- 256237-020V
			C- 256237-030V
			C- 256237-040V
2- 295075		GUARD	C- 255907-020V
			C- 456180-010V
2- 295076		GUARD	C- 256239-020V
			C- 256239-030V
			C- 256239-040V
2- 295077		PIPE	C- 272241-020V
3- 295078-0001		PIPE	C- 272241-020V
			C- 456656-010V
4- 295079		PIPE	C- 272241-020V
4- 295080		PIPE	C- 272241-020V
4- 295081		PIPE	C- 272241-020V
			C- 456656-010V
4- 295082		PIPE	C- 272241-020V
4- 295083		PIPE	C- 272241-020V
			C- 456656-010V
2- 295084		INDUCTOR	C- 295523-020V
2- 295085		INDUCTOR	C- 295523-020V
4- 295086		LEAF SPRING	C- 255907-020V
4- 295087		LEAF SPRING	C- 255907-020V
4- 295088		LEAF SPRING	C- 255907-020V
4- 295089		LEAF SPRING	C- 255907-020V
3- 295092		BEARING HOUSING	C- 295310-010V
			C- 295310-020V
			C- 295310-030V
			C- 295310-040V
			C- 295310-050V
3- 295092		BEARING HOUSING	C- 295310-060V
4- 295093		LID	C- 295310-010V
			C- 295310-020V
			C- 295310-030V
			C- 295310-040V
			C- 295310-050V
			C- 295310-060V

PART NO	LAST AM	DESCRIPTION	GROUP NO
4- 295094		SHAFT	C- 295310-010V
			C- 295310-020V
			C- 295310-030V
			C- 295310-040V
			C- 295310-050V
			C- 295310-060V
4- 295095		ELBOW PIPE	C- 256237-020V
			C- 256237-030V
			C- 256237-040V
2- 295096		CONNECTION	C- 256237-020V
2- 295097		SLIDER	C- 255907-020V
			C- 456180-010V
3- 295098		PLATE	C- 256237-020V
4- 295103		SPACER	C- 272025-020V
1- 295106		GUARD	C- 295971-010V
			C- 491942-010V
3- 295110		SPACER	C- 272084-020V
3- 295111		BENDING ROLLER	C- 256014-020V
			C- 256014-030V
			C- 256014-040V
			C- 256014-050V
C- 295112-020V	8297 85-10-15	WHEEL	B- 648101-020V
			B- 648101-060V
			B- 648101-070V
			B- 648101-080V
3- 295114		BEARING	C- 295310-010V
4- 295115		SHAFT	C- 295310-010V
4- 295116		SPROCKET	C- 295310-010V
			C- 295310-020V
			C- 295310-030V
			C- 295310-040V
			C- 295310-050V
			C- 295310-060V
4- 295117		WASHER	C- 295310-010V
4- 295118		GEAR WHEEL	C- 295310-010V
4- 295122		BRACKET	C- 272825-010V
2- 295123		SIDE PIECE	C- 272825-010V
4- 295140		PIN	C- 256233-020V
			C- 256173-020V
			C- 256201-020V
			C- 256202-020V
			C- 256173-020V
			C- 256201-020V
			C- 256202-020V
			C- 256173-020V
			C- 256201-020V
			C- 256202-020V
			C- 256173-030V
			C- 256201-030V
			C- 256202-030V
			C- 256173-040V
4- 295140		PIN	C- 256201-040V
			C- 256202-040V
3- 295141		BRACKET	C- 272021-020V
1- 295142-0002		GUIDE PLATE	C- 256973-020V
1- 295142-0003		GUIDE PLATE	C- 255907-020V
1- 295142-0004		GUIDE PLATE	C- 255907-020V
1- 295143-0001		GUIDE PLATE	C- 255907-020V
1- 295143-0003		GUIDE PLATE	C- 255907-020V
1- 295144-0001		GUIDE PLATE	C- 255907-020V
2- 295150-0001		PIPE	C- 255907-020V
2- 295150-0003		PIPE	C- 272241-020V
3- 295152		PLATE	C- 456556-010V
			C- 255982-020V
1- 295156		LID	C- 469091-010V
2- 295157		ARM	C- 257146-020V
1- 295158		DOOR	C- 257146-020V
			C- 256873-020V
2- 295159		COVER	C- 256873-040V
4- 295160		GASKET	C- 256875-020V
			C- 271169-020V
			C- 272337-020V
			C- 271169-020V
			C- 272337-020V
			C- 271169-020V
			C- 272337-020V
			C- 271169-020V

PART NO	LAST AM	DESCRIPTION	GROUP NO
			C- 272337-020V
			C- 271169-030V
			C- 272337-030V
			C- 271169-040V
			C- 272337-040V
3- 295161		BRACKET	C- 441102-010V
4- 295162		WASHER	C- 295310-010V
			C- 295310-020V
			C- 295310-030V
4- 295163		SHOULDER RING	C- 295310-010V
			C- 295310-020V
			C- 295310-030V
			C- 295310-040V
			C- 295310-050V
			C- 295310-060V
4- 295164		GEAR WHEEL	C- 295310-010V
			C- 295310-020V
			C- 295310-030V
			C- 295310-040V
			C- 295310-050V
			C- 295310-060V
4- 295165		GEAR WHEEL	C- 295310-010V
			C- 295310-020V
			C- 295310-030V
			C- 295310-040V
			C- 295310-050V
			C- 295310-060V
4- 295166		SHAFT	C- 295310-010V
			C- 295310-020V
			C- 295310-030V
			C- 295310-040V
			C- 295310-050V
			C- 295310-060V
4- 295167		SHOULDER RING	C- 295310-010V
4- 295167		SHOULDER RING	C- 295310-020V
			C- 295310-030V
4- 295168		LID	C- 295310-010V
			C- 295310-020V
			C- 295310-030V
			C- 295310-040V
			C- 295310-050V
			C- 295310-060V
4- 295169		SPACER RING	C- 295310-010V
			C- 295310-020V
			C- 295310-030V
			C- 295310-040V
			C- 295310-050V
			C- 295310-060V
4- 295170		PLUG	C- 295310-010V
			C- 295310-020V
			C- 295310-030V
			C- 295310-040V
			C- 295310-050V
			C- 295310-060V
4- 295171		SPROCKET	C- 295310-010V
			C- 295310-020V
			C- 295310-030V
2- 295174		LID	C- 256014-020V
2- 295175		FRONT PLATE	C- 256014-020V
3- 295178		TENSION RAIL	C- 256014-020V
3- 295179		RUBBER SEAL	C- 256014-020V
4- 295180		HOUSE	C- 256014-020V
4- 295181		SEAL	C- 256014-020V
3- 295184		PIPE	C- 271274-020V
2- 295186		PIPE	C- 256089-020V
2- 295187		PIPE	C- 256089-020V
C- 295188-010V	6317 83-11-03	RAILING	B- 648102-020V
			B- 648102-030V
4- 295189		GASKET	C- 272802-010V
			C- 272825-010V
			C- 295305-010V
			C- 272802-010V
			C- 272825-010V
			C- 295305-010V
4- 295191		BRACKET	C- 256555-020V
			C- 256555-030V
			C- 456100-010V

PART NO	LAST AM	DESCRIPTION	GROUP NO
			C- 456100-020V
3- 296192		PIPE	C- 272241-020V
4- 296193		BASE	C- 295026-010V
2- 296195		RAILING	C- 272833-010V
3- 295196-0002		PIPE	C- 272241-020V
			C- 456556-010V
2- 296197		COVER	C- 256665-020V
2- 296198		COVER	C- 256665-020V
G1- 296201		FRAME	C- 295211-010V
2- 295202-0001		SWIVEL	C- 295211-010V
2- 295202-0002		SWIVEL	C- 295211-010V
4- 295203		LID	C- 295211-010V
4- 295204-0001		SHIM	C- 295211-010V
4- 295204-0002		SHIM	C- 295211-010V
4- 295204-0003		SHIM	C- 295211-010V
4- 295205		SPACER SLEEVE	C- 295211-010V
G4- 296206		FLAP	C- 295211-010V
4- 295207		HOLDER	C- 295211-010V
4- 295208		SECURING PLATE	C- 295211-010V
4- 295210		WASHER	C- 256236-020V
C- 295211-010V	6991 84-08-29	FRAME	C- 295112-020V
			B- 648105-020V
			B- 648105-030V
			B- 648105-040V
			B- 648105-060V
			B- 648105-070V
			B- 648105-080V
			B- 648105-090V
3- 296213		PROTECTIVE GLAS	C- 271860-020V
4- 295215		PIPE	C- 256014-020V
C- 295218-010V	7911 85-06-11	FOLDING BAR	B- 648105-020V
			B- 648105-030V
			B- 648105-040V
			B- 648105-060V
			B- 648105-070V
			B- 648105-080V
			B- 648105-090V
1- 296226		CLEANING PIPE	C- 295262-020V
4- 295227		PIPE	C- 295262-020V
2- 295228		GABLE	C- 295112-020V
2- 295229		GABLE	C- 295112-020V
2- 295230		PLATE	C- 295112-020V
3- 295231		SHAFT	C- 295112-020V
4- 295232		SHAFT	C- 295112-020V
3- 295233		PIPE	C- 272241-020V
1- 295234		CIRCUIT DIAGRAM	B- 648109-020V
			B- 648109-030V
			B- 648109-020V
			B- 648109-030V
1- 296235		CIRCUIT DIAGRAM	RK- 469760-010V
			B- 648109-020V
			B- 648109-030V
			B- 648109-020V
			B- 648109-030V
1- 296236		CIRCUIT DIAGRAM	B- 648109-020V
			B- 648109-030V
			B- 648109-020V
			B- 648109-030V
1- 296237		CIRCUIT DIAGRAM	B- 648109-020V
			B- 648109-030V
			B- 648109-020V
			B- 648109-030V
1- 296238		CIRCUIT DIAGRAM	B- 648109-020V
			B- 648109-030V
			B- 648109-020V
			B- 648109-030V
1- 296239		CIRCUIT DIAGRAM	B- 648109-020V
			B- 648109-030V
			B- 648109-020V
			B- 648109-030V
1- 296240		CIRCUIT DIAGRAM	B- 648109-020V
			B- 648109-030V
			B- 648109-020V
			B- 648109-030V
1- 296241		VALVE PANEL	B- 648109-020V
1- 295241		VALVE PANEL	B- 648109-030V
			B- 648109-020V

PART NO	LAST AM	DESCRIPTION	GROUP NO
			B- 648109-030V
1- 296242		VALVE PANEL	B- 648109-020V
			B- 648109-030V
			B- 648109-020V
			B- 648109-030V
2- 296246		HOLDER	C- 256873-020V
3- 295247		LEAF SPRING	C- 256873-020V
			C- 256873-040V
4- 296250		PIPE	C- 272580-020V
			C- 272580-030V
			C- 272580-040V
3- 296252		FLANGE	C- 256230-020V
			C- 255921-020V
			C- 255921-030V
C- 296256-020V	7533 85-02-18	AIR NOZZLE	B- 648101-020V
			B- 648101-060V
3- 296259		HOLDER	C- 256843-020V
			C- 256843-030V
			C- 256843-040V
			C- 256843-050V
4- 296260		END PIECE	CR- 256204-020V
			CR- 256205-020V
			CR- 256204-020V
			CR- 256205-020V
			CR- 256204-030V
			CR- 256205-030V
			CR- 256204-040V
			CR- 256205-040V
			CR- 256204-040V
			CR- 256205-040V
			CR- 256204-060V
			CR- 256205-060V
G3- 296261-0001		CLEANING PIPE	C- 271113-020V
G3- 296261-0002		CLEANING PIPE	C- 271113-020V
G3- 296261-0003		CLEANING PIPE	C- 271113-020V
G3- 296261-0004		CLEANING PIPE	C- 271113-020V
G3- 296261-0005		CLEANING PIPE	C- 271113-020V
G3- 296261-0006		CLEANING PIPE	C- 271113-020V
C- 295262-020V	6867 84-03-28	CLEANING PIPE	B- 648109-020V
C- 295262-030V	6726 84-04-10	CLEANING PIPE	B- 648109-030V
C- 295262-0401	8082 85-07-11	CLEANING PIPE	B- 648109-060V
C- 295262-0501	10843 87-11-26	CLEANING PIPE	B- 648109-070V
			B- 648109-080V
			B- 648109-090V
2- 296263		CLEANING PIPE	C- 295262-020V
			C- 295262-030V
			C- 295262-040V
			C- 295262-050V
2- 296265		CABLE CONDUIT	C- 256233-020V
2- 296266		CABLE CONDUIT	C- 256233-020V
1- 296267		COLUMN	C- 256233-020V
4- 295268		LOCK	C- 256233-020V
2- 295271		BEAM	C- 271635-030V
			C- 271635-020V
			C- 271635-030V
3- 296272		PLATE	C- 256882-020V
3- 296273		PLATE	C- 529933-010V
3- 295273		PLATE	C- 256882-020V
			C- 469091-010V
			C- 529933-010V
C- 296276-020V	12367 88-11-18	BENDING ROLLER	B- 648101-020V
			B- 648101-060V
			B- 648101-070V
			B- 648101-080V
3- 296277		BRACKET	C- 296276-020V
3- 296278		BRACKET	C- 296276-020V
3- 296279		HOLDER	C- 296276-020V
1- 295280		PLATFORM	C- 295305-010V
3- 295281		PLATFORM	C- 295305-010V
2- 295282		PLATFORM LEFT	C- 295305-010V
2- 295283		PLATFORM LEFT	C- 295305-010V
2- 295284		PLATFORM	C- 295305-010V
2- 295285		PLATFORM	C- 295305-010V
2- 295286		DE PIECE	C- 295305-010V
3- 295287		ACHINE BODY	C- 295305-010V
			C- 456457-010V
			C- 456457-020V

PART NO	LAST AM	DESCRIPTION	GROUP NO
3- 295288		SIDE PIECE	C- 295305-010V
1- 295289		RAILING	C- 295188-010V
1- 295290		RAILING	C- 295188-010V
1- 295291		RAILING	C- 295188-010V
1- 295292		RAILING	C- 295188-010V
2- 295293		RAILING	C- 295188-010V
2- 295294		RAILING	C- 295188-010V
3- 295295		MACHINE BODY	C- 295305-010V
			C- 456457-010V
			C- 456457-020V
3- 295298		CABLE TRACK	C- 271569-020V
			C- 271569-030V
			C- 271569-040V
			C- 271569-050V
4- 295299		GEAR WHEEL	C- 295310-010V
			C- 295310-020V
			C- 295310-030V
			C- 295310-040V
			C- 295310-050V
			C- 295310-060V
4- 295300		FLUSH PIPE	C- 295262-020V
			C- 295262-030V
			C- 456836-020V
			C- 456836-030V
4- 295301		FLUSH PIPE	C- 295262-020V
			C- 295262-030V
			C- 456836-020V
			C- 456836-030V
4- 295302		COVER	C- 256555-020V
			C- 256555-030V
			C- 456100-010V
			C- 456100-020V
C- 295306-010V	6736 84-05-07	PLATFORM	B- 648102-020V
			B- 648102-030V
3- 295306		COVER	CR- 256547-020V
			CR- 256547-030V
3- 295307		FLEXIBLE CONDUIT	CR- 256547-020V
			CR- 256547-030V
4- 295308		SHIM	C- 295310-010V
4- 295308		SHIM	C- 295310-020V
			C- 295310-030V
			C- 295310-040V
			C- 295310-050V
			C- 295310-060V
4- 295309		SHIM	C- 295310-010V
			C- 295310-020V
			C- 295310-030V
			C- 295310-040V
			C- 295310-050V
			C- 295310-060V
C- 295310-010V	7911 86-08-11	DELIVERY UNIT	B- 648105-020V
			B- 648105-030V
C- 295310-020V	7911 86-08-11	DELIVERY UNIT	B- 648105-040V
C- 295310-030V	8161 86-08-27	DISCHARGE UNIT	B- 648105-060V
C- 295310-040V	9585 86-09-11	DISCHARGE UNIT	B- 648105-070V
C- 295310-050V	12254 88-10-20	DISCHARGE UNIT	B- 648105-080V
C- 295310-060V	12530 90-01-05	DISCHARGE UNIT	C- 295310-010V
G1- 295311		DISCHARGE HOUSE	C- 295310-020V
			C- 295310-030V
			C- 295310-040V
			C- 295310-050V
			C- 295310-060V
G1- 295312		LID	C- 295310-010V
2- 295313		SHAFT	C- 295310-010V
			C- 295310-020V
			C- 295310-030V
			C- 295310-040V
			C- 295310-050V
3- 295314		SPROCKET	C- 295310-060V
			C- 295310-010V
			C- 295310-020V
			C- 295310-030V
			C- 295310-040V
			C- 295310-050V
			C- 295310-060V
3- 295315		SHAFT	C- 295310-010V

PART NO	LAST AM	DESCRIPTION	GROUP NO
			C- 295310-020V
			C- 295310-030V
			C- 295310-040V
			C- 295310-050V
			C- 295310-060V
3- 295316		STRIP	C- 295310-010V
			C- 295310-020V
			C- 295310-030V
			C- 295310-040V
			C- 295310-050V
			C- 295310-060V
4- 295317		WASHER	C- 295310-010V
			C- 295310-020V
			C- 295310-030V
			C- 295310-040V
			C- 295310-050V
			C- 295310-060V
4- 295318		GREASE NIPPLE	C- 295310-010V
			C- 295310-020V
			C- 295310-030V
			C- 295310-040V
4- 295318		GREASE NIPPLE	C- 295310-050V
			C- 295310-060V
4- 295319		SPROCKET	C- 295310-010V
			C- 295310-020V
			C- 295310-030V
			C- 295310-040V
			C- 295310-050V
			C- 295310-060V
4- 295320		PLATE	C- 295310-010V
			C- 295310-020V
			C- 295310-030V
			C- 295310-040V
			C- 295310-050V
			C- 295310-060V
4- 295321		STRIP	C- 295310-010V
			C- 295310-020V
			C- 295310-030V
			C- 295310-040V
			C- 295310-050V
			C- 295310-060V
4- 295323		WASHER	C- 295310-010V
			C- 295310-020V
			C- 295310-030V
			C- 295310-040V
			C- 295310-050V
			C- 295310-060V
2- 295325		GASKET	C- 295310-010V
4- 295326		RETAINING RING	C- 295310-010V
			C- 295310-020V
			C- 295310-030V
			C- 295310-040V
			C- 295310-060V
			C- 295310-060V
4- 295327-0001		ROLLER	C- 295310-010V
1- 295328		GUIDE PLATE	C- 271089-020V
G1- 295329		SIDE PIECE	C- 271089-020V
G1- 295330		SIDE PIECE	C- 271089-020V
3- 295331		PLATE	C- 271089-020V
			C- 271089-030V
2- 295332		RAIL	C- 271114-020V
			C- 271114-030V
			C- 271114-040V
2- 295333		CHECKER PLATE	C- 271114-020V
			C- 271114-030V
2- 295334		SIDE PLATE	C- 271114-020V
			C- 271114-030V
			C- 271114-040V
2- 295335		FRONT PLATE	C- 271114-020V
2- 295336		BOTTOM PLATE	C- 271114-020V
			C- 271114-030V
			C- 271114-040V
2- 295337		COVER	C- 271114-020V
2- 295338		SIMULATOR	C- 271114-020V
3- 295339		COLUMN	C- 271114-020V
3- 295340		SIDE PLATE	C- 271114-020V
			C- 271114-030V

PART NO	LAST AM	DESCRIPTION	GROUP NO
4- 295341		SPACER	C- 271114-040V
			C- 271114-020V
			C- 271114-030V
4- 295341		SPACER	C- 271114-040V
4- 295342		CLIP	C- 271114-020V
			C- 271114-030V
			C- 271114-040V
G4- 295343		HOLDER	C- 271114-020V
1- 295344		FRONT PLATE	C- 271115-020V
1- 295345		COVER	C- 271115-020V
1- 295346		CLEANING PIPE	C- 271115-020V
G2- 295347		BEARING BRACKET	C- 271115-020V
			C- 271115-030V
			C- 271115-040V
3- 295348		GLASS	C- 271115-020V
			C- 271115-030V
			C- 271115-040V
G3- 295349		BEARING BRACKET	C- 271115-020V
			C- 271115-030V
			C- 271115-040V
3- 295350		CHECKER PLATE	C- 271115-020V
3- 295351		CHECKER PLATE	C- 271115-020V
3- 295352		CHECKER PLATE	C- 271115-020V
3- 295353		RAIL	C- 271115-020V
			C- 271115-030V
			C- 271115-040V
4- 295354		LID	C- 271115-020V
			C- 271115-030V
			C- 271115-040V
4- 295355		BEARING BRACKET	C- 271115-020V
			C- 271115-030V
			C- 271115-040V
G4- 295356		HOUSING	C- 271115-020V
			C- 271115-030V
			C- 271115-040V
4- 295357		ROD	C- 271115-020V
			C- 271115-030V
			C- 271115-040V
4- 295358		RULER	C- 271115-020V
			C- 271115-030V
			C- 271115-040V
C- 293369-010V	6255 83-12-12	STATION	B- 648105-020V
			B- 648105-030V
			B- 648105-040V
1- 295360		PLATE	RK- 460698-010V
1- 295361		PLATE	C- 295359-010V
G1- 295362		PLATE	C- 295359-010V
1- 295363-0001		GUARD	C- 295359-010V
4- 295364		BRACKET	C- 295359-010V
2- 295365		SIDE PLATE	C- 295359-010V
3- 295366		SHIM	C- 295359-010V
4- 295367		GUIDE RAIL	C- 295359-010V
4- 295368		GUIDE RAIL	C- 295359-010V
4- 295370		SLIDE PLATE	C- 295359-010V
2- 295372		COVER	C- 256014-020V
2- 295373		COVER	C- 256014-020V
1- 295374		FILLING PIPE	C- 255982-020V
			C- 460091-010V
			C- 460091-020V
4- 295375		FORK	C- 529933-010V
			C- 295402-020V
4- 295375		FORK	C- 255982-020V
			C- 460091-010V
			C- 460091-020V
4- 295376		SHAFT	C- 529933-010V
			C- 295402-020V
			C- 255982-020V
			C- 460091-010V
			C- 460091-020V
4- 295377-0001		COVER	C- 529933-010V
			C- 295402-020V
			C- 255982-020V
			C- 460091-010V
4- 295377-0002		COVER	C- 460091-020V
			C- 529933-010V

PART NO	LAST AM	DESCRIPTION	GROUP NO
			C- 295402-020V
			C- 255982-020V
			C- 460091-010V
			C- 460091-020V
			C- 529933-010V
1- 295378		BATH	C- 256014-020V
1- 295379		BATH	C- 256014-020V
1- 295381-0001		PIPE	C- 272241-020V
C- 295382-020V	5769 83-03-22	CONNECTION BOX	B- 648106-020V
			B- 648106-030V
			B- 648106-070V
			B- 648106-080V
			B- 648106-090V
3- 295384		SUCTION PIPE	C- 271452-020V
			C- 271453-020V
			C- 271452-020V
			C- 271453-020V
			C- 271452-020V
			C- 271453-030V
			C- 490761-010V
3- 295386		LABEL	C- 271453-020V
			C- 271453-030V
3- 295387		LABEL	C- 271452-020V
			C- 490761-010V
4- 295388		GASKET	C- 256014-020V
			C- 295778-010V
			C- 256014-020V
			C- 295778-010V
			C- 256014-030V
			C- 295778-020V
			C- 256014-030V
			C- 295778-030V
			C- 256014-040V
			C- 295778-030V
			C- 256014-050V
			C- 295778-040V
4- 295389		SIGN	C- 271453-020V
			C- 271453-030V
4- 295390		SIGN	C- 271452-020V
			C- 490761-010V
3- 295391-0002		SCREW	C- 271168-020V
			C- 271168-040V
3- 295391-0003		SCREW	C- 271168-020V
			C- 271168-040V
1- 295392		HOUSE	C- 272021-020V
3- 295393		FLUSH PIPE	C- 271880-020V
3- 295394		FLUSH PIPE	C- 456286-010V
			C- 271880-020V
3- 295395		BRACKET	C- 271880-020V
			C- 490761-010V
3- 295396		PROTECTIVE GLAS	C- 271880-020V
4- 295397		HINGE	C- 271880-020V
			C- 490761-010V
4- 295398		HINGE	C- 271880-020V
			C- 490761-010V
2- 295399		HOLDER	C- 255907-020V
			C- 456180-010V
3- 295401		SIDE PIECE	C- 272825-010V
C- 295402-020V	13651 89-11-23	FILLING PIPE	B- 648101-020V
			B- 648101-080V
			B- 648101-070V
			B- 648101-080V
			B- 648101-090V
1- 295404		RECEPTACLE	C- 271113-020V
1- 295406		FILLING TUBE UPPER	C- 295402-020V
3- 295408		ARM	C- 271992-020V
3- 295409		SHAFT	C- 271992-020V
G2- 295410		BRACKET	C- 271113-020V
2- 295411		PIPE	C- 271113-020V
3- 295412		PIPE	C- 271113-020V
			C- 456588-010V
			C- 456588-020V
			C- 456588-030V
3- 295413		BRANCH PIPE	C- 271113-020V
G3- 295414		JNCTION BLOCK	C- 271113-020V
3- 295415		PIPE	C- 271113-020V
G3- 295416-0001		CLEANING PIPE	C- 271113-020V

PART NO	LAST AM	DESCRIPTION	GROUP NO
G3- 295416-0002		CLEANING PIPE	C- 271113-020V
G3- 295416-0003		CLEANING PIPE	C- 271113-020V
G3- 295416-0004		CLEANING PIPE	C- 271113-020V
G3- 295416-0005		CLEANING PIPE	C- 271113-020V
G3- 295416-0006		CLEANING PIPE	C- 271113-020V
4- 295417		GASKET	C- 271261-040V
			C- 271261-050V
			C- 271113-020V
			C- 456588-010V
			C- 456588-020V
			C- 456588-030V
4- 295418		STUD BOLT	C- 271113-020V
4- 295419		FLANGE	C- 271113-020V
4- 295420		NIPPLE TUBE	C- 271113-020V
4- 295421-0001		SEAL	C- 271113-020V
4- 295421-0002		SEAL	C- 271113-020V
4- 295422		GUIDE	C- 271115-020V
4- 295423		SEAL	C- 271115-020V
			C- 271115-030V
			C- 271115-040V
4- 295424		SIGN	C- 271909-020V
			C- 271909-030V
			C- 271909-040V
			C- 271909-050V
4- 295425		SIGN	C- 271909-020V
			C- 271909-030V
4- 295425		SIGN	C- 271909-040V
			C- 271909-050V
3- 295426		CLAMP	C- 272021-020V
			C- 272021-030V
			C- 272021-040V
			C- 272021-050V
3- 295427		LOCK	C- 272021-020V
			C- 272021-030V
			C- 272021-040V
			C- 272021-050V
3- 295428		HINGE	C- 272021-020V
			C- 272021-030V
			C- 272021-040V
			C- 272021-050V
4- 295429		HANDLE	C- 272021-020V
			C- 272021-030V
			C- 272021-040V
			C- 272021-050V
4- 295430		SUPPORT	C- 295211-010V
4- 295431		SCREW	C- 295211-010V
4- 295432		SCREW	C- 295211-010V
4- 295434		BUSHING	C- 271113-020V
			C- 456588-010V
			C- 456588-020V
			C- 456588-030V
4- 295435		WASHER	C- 271113-020V
			C- 456588-010V
4- 295436		PROTECTION PLATE	C- 272021-020V
4- 295438		HOLDER	C- 256229-020V
1- 295439		BRACKET	C- 271274-020V
2- 295440		CABLE CONDUIT	C- 272408-020V
C- 295441-010V	5438 82-07-16	CONNECTION BOX	C- 271909-020V
C- 295441-020V	6850 84-06-18	CONNECTION BOX	C- 271909-030V
C- 295441-030V	9123 86-07-22	CONNECTION BOX	C- 271909-040V
			C- 271909-050V
2- 295442		CONNECTION BOX	C- 295441-010V
			C- 295441-020V
			C- 295441-030V
2- 295443		CONNECTION BOX	C- 295441-010V
4- 295444		SPACER	C- 295441-010V
			C- 295441-020V
			C- 295441-030V
1- 295445		PLATE	C- 271909-020V
1- 295446		PLATE	C- 271909-020V
2- 295448		PIPE	C- 271909-020V
			C- 271909-030V
			C- 271909-040V
			C- 271909-050V
2- 295449		PIPE	C- 271909-020V
2- 295450		PIPE	C- 271909-020V
3- 295451		PIPE	C- 271909-020V

PART NO	LAST AM	DESCRIPTION	GROUP NO
			C- 271909-030V
			C- 271909-040V
			C- 271909-050V
3- 295452		PIPE	C- 271909-020V
			C- 271909-030V
			C- 271909-040V
			C- 271909-050V
3- 295453		PIPE	C- 271909-020V
3- 295453		PIPE	C- 271909-030V
			C- 271909-040V
			C- 271909-050V
3- 295454		PIPE	C- 271909-020V
3- 295455		PIPE	C- 271909-020V
			C- 271909-030V
			C- 271909-040V
			C- 271909-050V
3- 295456		PIPE	C- 271909-020V
3- 295457		PIPE	C- 271909-020V
3- 295458		PIPE	C- 271909-020V
3- 295459		CONNECTION	C- 271909-020V
3- 295460		BRACKET	C- 271909-020V
			C- 271909-030V
			C- 271909-040V
			C- 271909-050V
4- 295461		RUBBER GASKET	C- 271909-020V
			C- 271909-030V
			C- 271909-040V
			C- 271909-050V
4- 295462		HOLDER	C- 271909-020V
			C- 271909-030V
			C- 271909-040V
			C- 271909-050V
1- 295463		CABLE DUCT	C- 295777-010V
			C- 469374-010V
2- 295464		CABLE DUCT	C- 295777-010V
2- 295465-0001		LID	C- 295777-010V
2- 295465-0002		LID	C- 295777-010V
			C- 469374-010V
4- 295466		LOCK	C- 295777-010V
			C- 469374-010V
			C- 469374-020V
			C- 469374-030V
3- 295468		PLATE	C- 272014-020V
3- 295469		PLATE	C- 272014-020V
			C- 272014-030V
C- 295470-0201	6317 83-11-03	CONNECTION BOX	B- 648111-020V
			B- 648111-030V
C- 295470-0301	7914 85-05-21	CONNECTION BOX	B- 648111-060V
			B- 648111-070V
			B- 648111-080V
C- 295470-040V	12180 89-12-01	CONNECTION BOX	B- 648111-090V
2- 295471		PIPE	C- 271109-020V
			C- 456455-010V
			C- 456455-020V
2- 295472		PIPE	C- 271109-020V
			C- 456455-010V
			C- 456455-020V
4- 295473		PIPE	C- 271909-020V
			C- 271909-030V
			C- 271909-040V
			C- 271909-050V
4- 295474		BLOCK	C- 295359-010V
4- 295475-0001		GUIDE	RK- 469998-010V
			C- 295359-010V
4- 295475-0002		GUIDE	C- 295359-010V
			C- 456103-010V
4- 295477		BRACKET	C- 295359-010V
4- 295478		ROD	C- 295359-010V
4- 295479		BLOCK	C- 295359-010V
			C- 456103-010V
4- 295480		PIN	C- 271376-020V
			C- 295359-010V
			C- 271376-020V
			C- 295359-010V
			C- 271376-020V
			C- 295359-010V
			C- 456103-010V

PART NO	LAST AM	DESCRIPTION	GROUP NO
			C- 456560-010V
			C- 456103-010V
			C- 456560-010V
			C- 456103-010V
			C- 456560-010V
			C- 456103-010V
			C- 456560-010V
2- 295481		SIDE PLATE	C- 295359-010V
2- 295482		RAIL	RK- 469897-010V
			C- 271376-020V
2- 295483		RAIL	C- 271376-020V
2- 295484		RAIL	C- 271376-020V
3- 295486		RAIL	C- 271376-020V
G3- 295487		GUIDE	C- 271376-020V
G3- 295488		GUIDE	C- 271376-020V
G3- 295489		GUIDE	C- 271376-020V
G3- 295490		GUIDE	C- 271376-020V
4- 295493		HOLDER	RK- 469897-010V
			C- 271376-020V
4- 295494		HOLDER	RK- 469897-010V
			C- 271376-020V
4- 295495		HOLDER	C- 271376-020V
			C- 456560-010V
3- 295496		BLOCK	C- 271909-020V
			C- 271909-030V
			C- 271909-040V
			C- 271909-050V
4- 295497		CONNECTION	C- 271909-020V
			C- 271909-030V
			C- 271909-040V
			C- 271909-050V
4- 295498		HOLDER	C- 271376-020V
			C- 456560-010V
4- 295500		CHUTE	RK- 469897-010V
			C- 271376-020V
4- 295506		RAIL	RK- 469897-010V
			C- 271376-020V
4- 295511-0001		STOP LUG	C- 271376-020V
4- 295511-0003		STOP LUG	C- 271376-020V
			C- 456560-010V
4- 295511-0004		STOP LUG	C- 456560-010V
4- 295512		TENSION SPRING	C- 271376-020V
			C- 456560-010V
4- 295513		TENSION SPRING	C- 271376-020V
			C- 456560-010V
4- 295514		RAIL	C- 271376-020V
4- 295515		SPRING HOLDER	C- 271376-020V
			C- 456560-010V
3- 295517		CATCH	C- 271115-020V
3- 295518		REVOLVING AXLE	C- 271115-020V
4- 295519		BRACKET	C- 271115-020V
4- 295520		PLATE	C- 271115-020V
4- 295521		PLATE	C- 271115-020V
4- 295522		BRACKET	C- 271115-020V
C- 295523-020V	6331 83-11-10	SPARE PART KIT	B- 648104-020V
			B- 648104-030V
C- 295523-030V	14291 89-12-19	START-UP KIT	B- 648104-060V
			B- 648104-070V
			B- 648104-080V
			B- 648104-090V
4- 295527		SIGN	C- 271909-020V
1- 295528		CONNECTION PIPE	C- 271866-020V
2- 295529		PIPE	C- 271866-020V
			C- 271866-030V
			C- 271866-040V
2- 295530		PIPE	C- 271866-050V
			C- 271866-020V
			C- 271866-030V
			C- 271866-040V
2- 295531		PIPE	C- 271866-050V
			C- 271866-020V
			C- 271866-030V
			C- 271866-040V
2- 295532		PIPE	C- 271866-050V
			C- 271866-020V
2- 295533		PIPE	C- 271866-030V
			C- 271866-020V

PART NO	LAST AM	DESCRIPTION	GROUP NO
			C- 271866-030V
			C- 271866-040V
			C- 271866-050V
3- 295534		PIPE	C- 271866-020V
3- 295535		PIPE	C- 271866-020V
3- 295536		PIPE	C- 271866-020V
			C- 271866-030V
			C- 271866-040V
			C- 271866-050V
3- 295537		PIPE	C- 271866-020V
3- 295538		PIPE	C- 271866-020V
3- 295539		PIPE	C- 271866-020V
			C- 271866-030V
			C- 271866-040V
			C- 271866-050V
4- 295540		PLATE	C- 271866-020V
			C- 271866-030V
			C- 271866-040V
			C- 271866-050V
4- 295541		BRACKET	C- 271866-020V
			C- 271866-030V
			C- 271866-040V
			C- 271866-050V
2- 295544		PIPE	C- 271866-020V
4- 295547		SHIM	C- 271866-020V
4- 295549		CLIP	C- 271866-020V
			C- 271866-030V
			C- 271866-040V
			C- 271866-050V
			C- 271274-020V
			C- 456976-020V
4- 295549		CLIP	C- 456976-030V
			C- 456976-040V
4- 295550		SCREW	C- 295262-020V
			C- 295262-030V
1- 295552-0002		CABLE DUCT	C- 295777-010V
3- 295553-0001		LID	C- 295777-010V
3- 295553-0002		LID	C- 295777-010V
3- 295554-0002		LID	C- 295777-010V
4- 295555		LID	C- 295777-010V
1- 295556		PIPE	C- 295045-020V
1- 295557		PIPE	C- 295045-020V
			C- 295045-030V
			C- 295045-040V
			C- 295045-050V
1- 295560		PIPE	C- 295045-020V
			C- 295045-030V
			C- 295045-040V
2- 295565		PIPE	C- 295045-020V
2- 295566		PIPE	C- 295045-020V
2- 295567		PIPE	C- 295045-020V
2- 295568		PIPE	C- 295045-020V
			C- 295045-030V
			C- 295045-040V
			C- 295045-050V
2- 295569		PIPE	C- 295045-020V
2- 295570		PIPE	C- 295045-020V
			C- 295045-030V
			C- 295045-040V
2- 295571		PIPE	C- 295045-020V
			C- 295045-030V
			C- 295045-040V
2- 295572		PIPE	C- 295045-020V
2- 295573		PIPE	C- 295045-020V
2- 295574		PIPE	C- 295045-020V
2- 295575		PIPE	C- 295045-020V
			C- 295045-030V
			C- 295045-040V
2- 295576		PIPE	C- 295045-020V
2- 295577		PIPE	C- 295045-020V
			C- 295045-030V
			C- 295045-040V
2- 295578		P[illegible]	C- 295045-020V
2- 295579		[illegible]	C- 295045-020V
2- 295580		P[illegible]	C- 295045-020V
2- 295581		PIPE	C- 295045-020V

PART NO	LAST AM	DESCRIPTION	GROUP NO
			C- 295045-030V
			C- 295045-040V
2- 295582		PIPE	C- 295045-020V
2- 295583		PIPE	C- 295045-020V
			C- 295045-030V
			C- 295045-040V
2- 295584		PIPE	C- 295045-020V
2- 295585		PIPE	C- 295045-020V
			C- 295045-030V
			C- 295045-040V
2- 295586		PIPE	C- 295045-020V
2- 295587		PIPE	C- 295045-020V
			C- 295045-030V
2- 295587		PIPE	C- 295045-040V
2- 295588		PIPE	C- 295045-020V
			C- 295045-030V
			C- 295045-040V
2- 295589		PIPE	C- 295045-020V
			C- 295045-030V
			C- 295045-040V
2- 295590		PIPE	C- 295045-020V
			C- 295045-030V
			C- 295045-040V
			C- 295045-050V
			C- 295045-060V
3- 295591		PIPE	C- 295045-020V
			C- 295045-030V
			C- 295045-040V
			C- 295045-050V
			C- 295045-060V
3- 295592		PIPE	C- 295045-020V
3- 295593		PIPE	C- 295045-020V
3- 295594		PIPE	C- 295045-020V
			C- 295045-030V
			C- 295045-040V
			C- 295045-050V
			C- 295045-060V
3- 295595		PIPE	C- 295045-020V
3- 295596		PIPE	C- 295045-020V
3- 295597		PIPE	C- 295045-020V
4- 295598		PIPE	C- 295045-020V
4- 295599		PIPE	C- 295045-020V
4- 295600		PIPE	C- 295045-020V
			C- 295045-030V
			C- 295045-040V
4- 295601		PIPE	C- 295045-020V
			C- 295045-030V
			C- 295045-040V
4- 295602		PIPE	C- 295045-020V
			C- 295045-030V
			C- 295045-040V
4- 295603		PIPE	C- 295045-020V
			C- 295045-030V
			C- 295045-040V
4- 295604		CLIP	C- 295045-020V
			C- 295045-030V
			C- 295045-040V
			C- 295045-050V
			C- 295045-060V
4- 295608		BRACKET	C- 295045-020V
			C- 295045-030V
			C- 295045-040V
			C- 295045-050V
			C- 295045-060V
3- 295608-0001		HYDRAULIC HOSE	C- 271562-020V
			C- 271562-030V
3- 295608-0002		HYDRAULIC HOSE	C- 271562-020V
			C- 271562-030V
2- 295607		PIPE	C- 271562-020V
			C- 271562-030V
2- 295608		PIPE	C- 271562-020V
			C- 271562-030V
3- 295609		PIPE	C- 271562-020V
			C- 271562-030V
3- 295610		PIPE	C- 271562-020V
			C- 271562-030V
C- 295611-0201	6501 84-02-08	CONNECTION BOX	C- 256555-020V

PART NO	LAST AM	DESCRIPTION	GROUP NO
			C- 256555-030V
3- 295615		BRACKET	C- 271569-020V
			C- 271569-030V
			C- 271569-040V
			C- 271569-050V
4- 295616		CABLE DUCT	C- 271569-020V
			C- 271569-030V
			C- 271569-040V
			C- 271569-050V
2- 295617-0001		AIR NOZZLE	CR- 256547-020V
			CR- 256547-030V
2- 295617-0002		AIR NOZZLE	CR- 256547-020V
			CR- 256547-030V
2- 295617-0003		AIR NOZZLE	CR- 256547-020V
			CR- 256547-030V
2- 295618-0001		AIR NOZZLE	CR- 256547-020V
			CR- 256547-030V
2- 295618-0002		AIR NOZZLE	CR- 256547-020V
			CR- 256547-030V
2- 295618-0003		AIR NOZZLE	CR- 256547-020V
			CR- 256547-030V
2- 295621		AIR NOZZLE	CR- 256547-020V
			CR- 256547-030V
2- 295622		AIR NOZZLE	CR- 256547-020V
			CR- 256547-030V
1- 295623		BOX	C- 295470-020V
2- 295624		LID	C- 295470-020V
			C- 295470-030V
			C- 295470-040V
2- 295625		BRACKET	C- 295470-020V
2- 295630		FRONT PLATE	C- 256555-020V
			C- 256555-030V
2- 295634		COVER PLATE	C- 271513-020V
2- 295635		COVER PLATE	C- 271513-020V
2- 295636		COVER PLATE	C- 271513-020V
2- 295637		COVER PLATE	C- 271513-020V
2- 295638		COVER PLATE	C- 271513-020V
2- 295639		BOTTOM PLATE	C- 271513-020V
			C- 271513-030V
			C- 271513-040V
			C- 751885-010V
			C- 271513-050V
			C- 751885-020V
2- 295641		SIDE PLATE	C- 271513-020V
2- 295642		GUSSET PLATE	C- 271513-020V
3- 295643		COVER PLATE	C- 271513-020V
3- 295644		COVER PLATE	C- 271513-020V
3- 295645		COVER, UPPER	C- 271513-020V
			C- 271513-030V
			C- 271513-040V
			C- 271513-050V
			C- 751885-020V
3- 295646		COVER, LOWER	C- 271513-020V
			C- 271513-030V
3- 295646		COVER, LOWER	C- 271513-040V
			C- 271513-050V
			C- 751885-020V
3- 295647		STRIP	C- 271513-020V
			C- 271513-030V
			C- 271513-040V
			C- 271513-050V
			C- 751885-020V
3- 295648		STRIP	C- 271513-020V
			C- 271513-030V
			C- 271513-040V
			C- 271513-050V
			C- 751885-020V
3- 295649		GUSSET PLATE	C- 271513-020V
3- 295650		COVER PLATE	C- 271513-020V
			C- 271513-030V
			C- 271513-040V
			C- 751885-010V
			C- 271513-050V
			C- 751885-020V
3- 295651		COVER PLATE	C- 271513-020V
			C- 271513-030V
			C- 271513-040V

PART NO	LAST AM	DESCRIPTION	GROUP NO
			C- 271513-060V
			C- 751885-020V
3- 295662		COVER PLATE	C- 271513-020V
			C- 271513-030V
			C- 271513-040V
			C- 751885-010V
			C- 271513-050V
			C- 751885-020V
3- 295663		COVER PLATE	C- 271513-020V
			C- 271513-030V
			C- 271513-040V
			C- 751885-010V
			C- 271513-050V
			C- 751885-020V
3- 295664		COVER PLATE	C- 271513-020V
			C- 271513-030V
			C- 271513-040V
			C- 751885-010V
			C- 271513-050V
			C- 751885-020V
4- 295666		COVER PLATE	C- 271513-020V
4- 295667		COVER PLATE	C- 271513-020V
3- 295668		COVER STRIP	C- 271513-020V
			C- 271513-030V
			C- 271513-040V
			C- 751885-010V
			C- 271513-050V
			C- 751885-020V
3- 295669		COVER STRIP	C- 271513-020V
			C- 271513-030V
			C- 271513-040V
			C- 751885-010V
			C- 271513-050V
			C- 751885-020V
4- 295681		SHAFT	C- 271992-020V
3- 295684		HANDLE	CR- 256547-020V
2- 295685		PIPE	C- 271274-020V
2- 295686		PIPE	C- 271274-020V
C- 295687-020V	7093 84-09-14	START-UP KIT	B- 648101-020V
			B- 648101-060V
C- 295687-030V	13651 89-11-23	START-UP KIT	B- 648101-070V
			B- 648101-080V
			B- 648101-090V
C- 295688-0201	5788 83-03-04	SPARE PART KIT	B- 648107-020V
C- 295688-0301	9628 86-10-16	START-UP KIT	B- 648107-060V
			B- 648107-070V
			B- 648107-080V
			B- 648107-090V
1- 295703		PIPE	C- 272381-020V
1- 295704		PIPE	C- 272381-020V
2- 295705		PIPE	C- 272381-020V
3- 295707		RETURN PIPE	C- 272381-020V
4- 295708		BRACKET	C- 272381-020V
			C- 272381-030V
1- 295709		TANK	C- 272381-020V
			C- 272381-030V
3- 295711		LID	C- 272381-020V
1- 295712		CONNECTION BOX	C- 295045-020V
1- 295713		CONNECTION BOX	C- 295045-020V
1- 295716		CLAMP	C- 271934-020V
			C- 271934-030V
2- 295717		BRACKET	C- 271934-020V
			C- 271934-030V
3- 295719		RAIL	C- 271089-020V
			C- 271089-030V
3- 295720		RAIL, LEFT	C- 271089-020V
			C- 271089-030V
3- 295721		RAIL	C- 271089-020V
			C- 271089-030V
3- 295722		RAIL	C- 271089-020V
			C- 271089-030V
3- 295723		RAIL, RIGHT	C- 271089-020V
			C- 271089-030V
3- 295724		RAIL	C- 271089-020V
			C- 271089-030V
4- 295725		GUIDE PLATE	C- 271089-020V
			C- 271089-030V

PART NO	LAST AM	DESCRIPTION	GROUP NO
4- 295726-0001		GUIDE PLATE	C- 271089-020V
			C- 271089-030V
4- 295726-0002		GUIDE PLATE	C- 271089-020V
			C- 271089-030V
4- 295727		GUIDE PLATE	C- 271089-020V
			C- 271089-030V
4- 295728-0001		GUIDE PLATE	C- 271089-020V
			C- 271089-030V
4- 295728-0002		GUIDE PLATE	C- 271089-020V
			C- 271089-030V
4- 295729		WASHER	C- 271089-020V
			C- 491258-010V
			C- 491258-020V
			C- 491258-010V
			RK- 751168-010V
4- 295730		SPACER PLATE	C- 272580-020V
			C- 272580-030V
1- 295731		FLUSH PIPE	C- 271281-020V
1- 295731		FLUSH PIPE	C- 271281-030V
2- 295732		PIPE	C- 295045-020V
3- 295733		LID	C- 295045-020V
1- 295734		PIPE	C- 295045-020V
			C- 295045-030V
			C- 295045-040V
			C- 295045-050V
			C- 295045-060V
1- 295735		PIPE	C- 295045-020V
			C- 295045-030V
			C- 295045-040V
			C- 295045-050V
			C- 295045-060V
1- 295736		PIPE	C- 295045-020V
			C- 295045-030V
			C- 295045-040V
			C- 295045-050V
			C- 295045-060V
1- 295737		PIPE	C- 295045-020V
			C- 295045-030V
			C- 295045-040V
			C- 295045-050V
			C- 295045-060V
1- 295738		PIPE	C- 295045-020V
			C- 295045-030V
			C- 295045-040V
			C- 295045-050V
			C- 295045-060V
1- 295739		PIPE	C- 295045-020V
			C- 295045-030V
			C- 295045-040V
			C- 295045-050V
			C- 295045-060V
3- 295740		PIPE	C- 295045-020V
			C- 295045-030V
			C- 295045-040V
			C- 295045-050V
			C- 295045-060V
3- 295741		PIPE	C- 295045-020V
			C- 295045-030V
			C- 295045-040V
			C- 295045-050V
			C- 295045-060V
3- 295742		PIPE	C- 295045-020V
			C- 295045-030V
			C- 295045-040V
3- 295743		PIPE	C- 295045-020V
			C- 295045-030V
			C- 295045-040V
4- 295744		SCREW	C- 256223-020V
			C- 256223-030V
2- 295747		BRACKET	C- 256223-020V
3- 295748-0001		BACK PIECE	C- 256223-020V
			C- 256223-030V
3- 295748-0002		BACK PIECE	C- 256223-020V
			C- 256223-030V
3- 295748-0003		ACK PIECE	C- 256223-020V
			C- 256223-030V
4- 295749		ADJUSTING BLOCK	C- 256223-020V

PART NO	LAST AM	DESCRIPTION	GROUP NO
4- 295749		ADJUSTING BLOCK	C- 256223-030V
4- 295750-0001		GUIDE RAIL	C- 256223-020V
4- 295750-0002		GUIDE RAIL	C- 256223-020V
			C- 256223-030V
2- 295757		CUTTING RAIL	CR- 256204-020V
			CR- 256205-020V
			CR- 256204-020V
			CR- 256205-020V
			CR- 256204-030V
			CR- 256205-030V
			CR- 256204-040V
			CR- 256205-040V
			CR- 256204-040V
			CR- 256205-040V
			CR- 256204-050V
			CR- 256205-050V
4- 295768		DOLLY	CR- 256204-020V
			CR- 256205-020V
			C- 295523-020V
			CR- 256204-020V
			CR- 256205-020V
			C- 295523-020V
			CR- 256204-030V
			CR- 256205-030V
			C- 295523-030V
			CR- 256204-040V
			CR- 256205-040V
			C- 295523-030V
			CR- 256204-040V
			CR- 256205-040V
			C- 295523-030V
			CR- 256204-050V
			CR- 256205-050V
			C- 295523-030V
4- 295760		BRACKET	C- 441000-020V
			C- 441000-030V
			C- 441000-040V
			C- 441000-050V
4- 295765		PLATE	C- 456953-010V
			C- 256238-020V
			C- 295112-020V
			C- 456348-010V
			C- 456349-010V
			C- 456348-020V
			C- 456349-020V
			C- 456348-020V
			C- 456349-020V
			C- 441738-010V
			C- 456963-010V
4- 295766		SCREW	C- 256173-020V
			C- 256173-030V
			C- 256173-040V
4- 295767		SEALING WASHER	C- 256173-020V
			C- 256173-030V
			C- 256173-040V
3- 295770		AXLE PIN	C- 256197-020V
			C- 256197-030V
			C- 256197-040V
4- 295771		BRACKET	C- 256200-020V
4- 295772		SHAFT	C- 256200-020V
4- 295773		SPACER	C- 256808-020V
			C- 256808-030V
4- 295774		BRACKET	C- 256206-020V
			C- 256207-020V
			C- 256208-020V
			C- 256207-020V
			C- 256206-020V
			C- 256207-020V
			C- 256208-020V
			C- 256207-020V
			C- 256208-020V
			C- 256207-020V
			C- 256208-020V
			C- 256207-020V
3- 295775		PIPE	C- 295045-020V
			C- 295045-030V
			C- 295045-040V

PART NO	LAST AM	DESCRIPTION	GROUP NO
3- 295776		PIPE	C- 295045-020V
			C- 295045-030V
			C- 295045-040V
C- 295777-010V	5953 83-06-07	CABLE DUCT	B- 648111-020V
			B- 648111-030V
C- 295778-010V	7937 85-06-03	SPARE PART KIT	B- 648111-020V
			B- 648111-030V
C- 295778-020V	7937 85-06-03	START-UP KIT	B- 648111-060V
C- 295778-030V	9415 86-10-17	START-UP KIT	B- 648111-070V
			B- 648111-080V
C- 295778-040V	12861 89-12-11	START-UP KIT	B- 648111-090V
4- 295779		WASHER	C- 271116-020V
2- 295782		CABLE DUCT	C- 295777-010V
			C- 469374-010V
			C- 469374-020V
			C- 469374-030V
2- 295783		LID	C- 295777-010V
			C- 469374-010V
			C- 469374-020V
			C- 469374-030V
2- 295785		FLUSH PIPE	C- 271281-020V
			C- 271281-030V
			C- 271281-040V
			C- 271281-050V
1- 295786		FLUSH PIPE	C- 271281-020V
			C- 271281-030V
4- 295789		BRACKET	C- 272021-020V
			C- 272021-030V
			C- 272021-040V
			C- 272021-050V
4- 295790		BRACKET	C- 272021-020V
			C- 272021-030V
			C- 272021-040V
			C- 272021-050V
3- 295792		REFLECTOR	C- 295881-010V
2- 295795		COVER	C- 295777-010V
2- 295796		CABLE DUCT	C- 295777-010V
4- 295797		LID	C- 295777-010V
2- 295799		CABLE DUCT	C- 295777-010V
2- 295800		LID	C- 295777-010V
4- 295801		BRACKET	C- 256229-020V
1- 295802		CABLE DUCT	C- 295777-010V
1- 295803		CABLE DUCT	C- 295777-010V
3- 295804		PLEXIGLASS	C- 295836-010V
3- 295805		FRAME	C- 295835-010V
3- 295806		GASKET	C- 295835-010V
3- 295807		GASKET	C- 295835-010V
3- 295809		CABLE DUCT	C- 295777-010V
3- 295812		REFLECTOR	C- 295881-010V
1- 295813		FILLING TUBE UPPER	C- 295402-020V
2- 295814		LID	C- 295777-010V
2- 295815		LID	C- 295777-010V
3- 295816		LID	C- 295777-010V
3- 295817		LID	C- 295777-010V
4- 295819-0002		LID	C- 295777-010V
4- 295819-0003		LID	C- 469374-010V
			C- 469374-020V
			C- 469374-030V
4- 295821		LID	C- 295777-010V
4- 295822		LID	C- 295777-010V
3- 295823		ELBOW PIPE	C- 295402-020V
C- 295836-0101	6501 84-02-08	LIGHT FIXTURE	B- 648102-020V
			B- 648102-030V
C- 295839-0101	5561 82-11-30	CONNECTION BOX	C- 272404-020V
			C- 272404-030V
			C- 272404-040V
C- 295839-0201	10626 87-09-04	CONNECTION BOX	C- 272404-050V
			C- 272404-060V
3- 295840		CONNECTION BOX	C- 295839-010V
4- 295842		WASHER	C- 295310-010V
			C- 295310-020V
			C- 295310-030V
			C- 295310-040V
			C- 295310-050V
			C- 295310-060V
G2- 295843-0001		BRACKET	CR- 256712-020V
			CR- 256712-030V

PART NO	LAST AM	DESCRIPTION	GROUP NO
			CR- 256712-040V
			CR- 256712-050V
G2- 295843-0002		BRACKET	CR- 256712-020V
			CR- 256712-030V
			CR- 256712-040V
			CR- 256712-050V
G2- 295843-0003		BRACKET	CR- 256712-020V
			CR- 256712-030V
			CR- 256712-040V
			CR- 256712-050V
G2- 295843-0004		BRACKET	CR- 256712-020V
			CR- 256712-030V
			CR- 256712-040V
			CR- 256712-050V
G2- 295843-0005		BRACKET	CR- 256712-020V
			CR- 256712-030V
			CR- 256712-040V
			CR- 256712-050V
G2- 295843-0006		BRACKET	CR- 256712-020V
			CR- 256712-030V
			CR- 256712-040V
			CR- 256712-050V
2- 295846		AIR NOZZLE	C- 295256-020V
2- 295846		AIR NOZZLE	C- 271485-020V
			C- 271485-030V
3- 295847		PLATE	C- 295256-020V
			C- 271485-020V
			C- 271485-030V
3- 295848		PLATE	C- 295256-020V
			C- 271485-020V
			C- 271485-030V
C- 295861-0101	6317 83-11-03	FITTING	C- 295835-010V
C- 295861-0102	6317 83-11-03	FITTING	C- 295835-010V
1- 295862-0001		FOLDING BAR	C- 295218-010V
1- 295862-0002		FOLDING BAR	C- 295218-010V
1- 295862-0003		FOLDING BAR	C- 295218-010V
1- 295862-0004		FOLDING BAR	C- 295218-010V
1- 295863		FOLDING BAR	C- 295218-010V
1- 295864		FOLDING BAR	C- 295218-010V
3- 295869		BENDING ROLLER	C- 256066-020V
1- 295870		HEAT EXCHANGER	C- 272342-020V
			C- 456976-010V
			C- 456976-020V
4- 295871-0001		BRACKET	C- 295218-010V
4- 295871-0002		BRACKET	C- 295218-010V
4- 295871-0003		BRACKET	C- 295218-010V
4- 295871-0004		BRACKET	C- 295218-010V
4- 295871-0005		BRACKET	C- 295218-010V
4- 295871-0006		BRACKET	C- 295218-010V
2- 295872		PIPE-LINE	C- 272342-020V
			C- 456976-010V
4- 295873		BRACKET	C- 271934-020V
			C- 271934-030V
			C- 752030-010V
4- 295878		SCREW	C- 272342-020V
			C- 456976-010V
			C- 456976-020V
4- 295879		NUT	C- 272342-020V
			C- 456976-010V
			C- 456976-020V
2- 295880		PLATE	C- 272825-010V
3- 295881		BRACKET	C- 272825-010V
			C- 456456-010V
			C- 456456-020V
3- 295882		BRACKET	C- 751860-010V
			C- 272825-010V
			C- 456456-010V
			C- 456456-020V
C- 295883-010V	6602 84-05-02	SPACER PIECE	C- 751860-010V
C- 295883-020V	10111 87-02-06	SPACER PIECE	C- 256843-020V
C- 295883-030V	11823 88-05-19	SPACER PIECE	C- 256843-030V
C- 295883-040V	13808 89-11-22	SPACER PIECE	C- 256843-040V
1- 295884		SPACER PIECE	C- 256843-050V
2- 295885		CABLE LEAD-IN PLATE	C- 295883-010V
2- 295886		CABLE LEAD-IN PLATE	C- 295883-010V
1- 295887		CIRCUIT DIAGRAM	C- 295883-010V
			B- 648109-020V

PART NO	LAST AM	DESCRIPTION	GROUP NO
			B- 648109-030V
			B- 648109-060V
			B- 648109-070V
			B- 648109-020V
			B- 648109-030V
1- 295887		CIRCUIT DIAGRAM	B- 648109-060V
			B- 648109-070V
4- 295889		PLUG	C- 272381-020V
C- 295891-0101	6606 84-04-03	STRIP APPLICATOR	B- 648107-020V
C- 295891-020V	9626 86-10-16	STRIP APPLICATOR	B- 648107-060V
			B- 648107-070V
C- 295891-030V	9785 86-10-23	STRIP APPLICATOR	B- 648107-080V
			B- 648107-090V
4- 295892		LAMP HOLDER	C- 272825-010V
4- 295894		PLATE	C- 295026-010V
			C- 295026-020V
3- 295897		FRAME	C- 271513-020V
			C- 271513-030V
			C- 271513-040V
			C- 751885-010V
			C- 751885-020V
1- 295900		WIRING DIAGRAM ASEPTIC	B- 648109-020V
			B- 648109-030V
			B- 648109-020V
			B- 648109-030V
C- 295904-010V	6113 83-08-08	CLAMP	B- 648109-020V
			B- 648109-030V
			B- 648109-080V
			B- 648109-070V
			B- 648109-080V
			B- 648109-090V
3- 295905-0001		HOLDER	C- 295904-010V
3- 295905-0002		HOLDER	C- 295904-010V
3- 295905-0003		HOLDER	C- 295904-010V
3- 295906		HANDLE	C- 295904-010V
4- 295907		SPRING	C- 295904-010V
4- 295909		BUSHING	C- 256237-060V
			C- 256237-080V
			C- 256056-020V
			C- 256056-030V
			C- 256056-040V
			C- 256056-050V
			C- 256056-080V
4- 295910		BUSHING	C- 256095-020V
			C- 256095-030V
			C- 256095-040V
3- 295913		CONNECTION BOX	C- 295382-020V
2- 295920		AIR NOZZLE	C- 271485-020V
2- 295927		CAM	C- 256085-020V
			C- 456546-010V
			C- 456546-020V
2- 295928		CAM	C- 256085-020V
			C- 456546-010V
			C- 456546-020V
2- 295929		CAM	C- 256085-020V
			C- 456546-010V
			C- 456546-020V
4- 295935		SPACER	C- 271882-020V
4- 295936		BUSHING	C- 256056-020V
			C- 256095-020V
			C- 256056-020V
			C- 256095-020V
			C- 256056-030V
			C- 256095-020V
4- 295936		BUSHING	C- 256056-040V
			C- 256095-020V
			C- 256095-030V
			C- 256095-040V
4- 295937		GASKET	C- 256056-020V
			C- 256055-030V
3- 295945		GUARD	C- 271866-020V
			C- 271866-030V
			C- 271866-040V
			C- 271866-050V
3- 295960		RELEASE NIPPLE	C- 257381-020V
			C- 257382-020V
			C- 257381-020V

PART NO	LAST AM	DESCRIPTION	GROUP NO
4- 295970		RING	C- 257382-020V
			C- 271866-020V
			C- 271866-030V
			C- 271866-040V
C- 295971-0101	8657 88-01-11	PAPER REEL TROLLEY	C- 271866-050V
			B- 648109-020V
			B- 648109-030V
			B- 648109-060V
4- 295972		LINKPIECE OUTER	C- 271376-020V
4- 295973		CHUTE	C- 271376-020V
4- 295975		ROLLER	C- 272021-020V
3- 295977		BRACKET	C- 272021-020V
2- 295978		PIPE	C- 271261-020V
			C- 271261-030V
			C- 271261-040V
			C- 271261-050V
3- 295979		PIPE	C- 271261-020V
3- 295980		PIPE	C- 271261-020V
3- 295981		PIPE	C- 271261-020V
4- 295983		CONNECTION	C- 256200-020V
			C- 256200-030V
3- 295984		DRIP GUARD	C- 529933-010V
			C- 255982-020V
			C- 469091-010V
			C- 469091-020V
			C- 529933-010V
3- 295985		FLUSH PIPE	C- 271261-020V
			C- 271261-030V
			C- 271261-040V
			C- 271261-050V
4- 295986		HOLDER	C- 271562-020V
			C- 271562-030V
			C- 271562-040V
			C- 271562-050V
			C- 271562-060V
			C- 271562-070V
4- 295987		THROTTLE	C- 255921-020V
			C- 255921-030V
			C- 255921-040V
4- 295988-0001		ELECTRODE	C- 272623-020V
4- 295988-0002		ELECTRODE	C- 272623-020V
4- 295989		SPACER	C- 271562-020V
4- 295990		PIPE	C- 256233-020V
4- 295993		GASKET HOLDER	C- 272407-020V
4- 295996		BEARING HOUSING	C- 256233-020V
			C- 256233-030V
4- 295996		BEARING HOUSING	C- 256233-040V
			C- 256233-050V
4- 295997		SHAFT	C- 256233-020V
			C- 256233-030V
			C- 256233-040V
			C- 256233-050V
4- 295998		LID	C- 256233-020V
			C- 256233-030V
			C- 256233-040V
			C- 256233-050V
4- 295999		CLAMP	C- 295262-020V
			C- 295262-030V
			C- 295262-040V
			C- 295262-050V
G3- 297091		ARM	C- 751689-010V
G3- 297092		ARM	C- 751689-010V
4- 297195		SPACER	C- 272560-040V
			C- 272560-050V
3- 297210		INK WELL	C- 434774-020V
			C- 434774-030V
			C- 434774-020V
			C- 434774-030V
3- 297211		INK WELL	C- 434074-020V
			C- 434074-030V
			C- 434074-020V
			C- 434074-030V
4- 297213		GABLE	C- 434774-020V
			C- 434774-030V
			C- 434774-020V
			C- 434774-030V
4- 297307		CANNULAR TUBE	C- 434774-020V

PART NO	LAST AM	DESCRIPTION	GROUP NO
4- 297308		CANNULAR TUBE	C- 434074-020V
4- 297349		BRACKET	C- 229400-060V
			C- 237776-040V
2- 297394		GUIDE PLATE	C- 229400-060V
2- 297395		PAPER GUARD	C- 229400-060V
3- 297959		FLANGE	C- 237776-040V
3- 297960		CONNECTION	C- 237776-040V
2- 297988		COVER	C- 434074-020V
			C- 434074-030V
			C- 434074-020V
			C- 434074-030V
2- 297989		COVER	C- 434774-020V
			C- 434774-030V
			C- 434774-020V
			C- 434774-030V
1- 400634		INDEX PLATE	C- 400895-010V
2- 400645		ARM	C- 400872-010V
1- 400784		MOUNTING BASE	C- 400895-010V
3- 400788		BRACKET	C- 400895-010V
4- 400791		AXLE	C- 401207-010V
			C- 400895-010V
4- 400792		HOLDER	C- 400895-010V
4- 400793		AXLE	C- 400895-010V
4- 400794		SHAFT	C- 400895-010V
3- 400795		ARM	C- 400895-010V
4- 400796		SHAFT	C- 400895-010V
4- 400798		PLUNGER	C- 400895-010V
4- 400799		SLEEVE	C- 400895-010V
4- 400800		SPRING	C- 401207-010V
			C- 400895-010V
4- 400802		BUSHING	C- 400895-010V
4- 400804		SHAFT	C- 400895-010V
4- 400805		ARM	C- 400895-010V
2- 400807		BRAKE ARM	C- 400895-010V
1- 400810		COVER PLATE	C- 400895-010V
3- 400814		HUB	C- 400895-010V
4- 400815		BRAKE	C- 400895-010V
3- 400816		BRACKET	C- 400895-010V
4- 400819		SHAFT	C- 400872-010V
4- 400820		AXLE	C- 400872-010V
2- 400826		BLOCK	C- 400895-010V
4- 400828		SPRING	C- 400872-010V
4- 400833		PLUNGER	C- 400872-010V
4- 400884		BAR	C- 400872-010V
C- 400885-0101	12765 89-06-12	INDEXING UNIT	C- 400895-010V
C- 400885-0102	12765 89-06-12	INDEXING UNIT	C- 401207-010V
4- 400886		HEATING PAD	C- 400895-010V
4- 400887		KEY	C- 400895-010V
C- 400872-0101	11828 88-06-07	ARM ASSEMBLY	C- 400895-010V
			C- 401207-010V
C- 400895-0101	11879 88-06-07	L8-EQUIPMENT	C- 540030-010V
4- 400932		CLAMP	C- 400895-010V
4- 401000		AXLE	C- 400872-010V
4- 401022		ROLLER	C- 400872-010V
			C- 401207-010V
			C- 400895-010V
3- 401023		SHOULDER SCREW	C- 400895-010V
3- 401042-0001		AXLE	C- 400872-010V
3- 401043		HUB	C- 401207-010V
			C- 400895-010V
2- 401100		MOUNTING BRACKET	C- 400895-010V
4- 401105		PIVOT PIN	C- 400895-010V
1- 401128		SPLICE BLOCK	C- 400872-010V
3- 401129		LOCATOR	C- 400872-010V
3- 401130		LOCATING BAR	C- 400895-010V
2- 401139		BLOCK	C- 400872-010V
3- 401140		GUIDE	C- 400872-010V
2- 401148		COVER	C- 400872-010V
4- 401157		SPRING	C- 400895-010V
4- 401165		AXLE	C- 400895-010V
2- 401169		MOUNTING PLATE	C- 400895-010V
1- 401171		MOUNTING BRACKET	C- 401207-010V
2- 401172		ANGLE BRACKET	C- 401207-010V
2- 401174		PLATE	C- 401207-010V
3- 401178		AXLE	C- 401207-010V
3- 401179		AXLE	C- 401207-010V
2- 401181		BRACKET	C- 401207-010V

PART NO	LAST AM	DESCRIPTION	GROUP NO
2- 401182		ARM	C- 401207-010V
3- 401183		GUIDE AXLE	C- 401207-010V
4- 401184		AXLE	C- 401207-010V
3- 401185-0001		SHAFT	C- 401207-010V
			C- 400895-010V
4- 401186		HEX NUT	C- 401207-010V
1- 401200-0001		COVER	C- 401207-010V
1- 401200-0002		COVER	C- 401207-010V
3- 401201		SHAFT	C- 401207-010V
3- 401202		HOLDER	C- 401207-010V
3- 401203		HOLDER	C- 401207-010V
4- 401205		SPACER	C- 400865-010V
C- 401207-0101	11829 88-06-07	LS-EQUIPMENT	C- 540028-010V
C- 401207-0102	11829 88-06-07	LS-EQUIPMENT	C- 540028-010V
4- 401215		BRAKE PAD	C- 400865-010V
3- 401231		BLOCK	C- 400872-010V
3- 401232		BLOCK	C- 400872-010V
3- 401233		BLOCK	C- 400872-010V
3- 401238		SPACER	C- 401207-010V
4- 401240		ROLLER	C- 400865-010V
3- 401241		BRACKET	C- 401207-010V
1- 401251		AIR DIAGRAM LS-STRIP	C- 401207-010V
1- 401252		AIR DIAGRAM LS-STRIP	C- 400895-010V
2- 401256		COVER	C- 400895-010V
3- 401258		PLATE	C- 401207-010V
2- 401266		COVER	C- 401207-010V
3- 401344		HOLDER	C- 401207-010V
3- 401348		FLAG	C- 401207-010V
4- 401370		BUSHING	C- 401207-010V
4- 401371		BUSHING	C- 401207-010V
			C- 400895-010V
4- 401372		BUSHING	C- 401207-010V
3- 401400		BRACKET	C- 401207-010V
C- 401419-0101	10831 87-12-29	PIPING ASSEMBLY LS-STRIP	C- 401207-010V
2- 401424		PLATE	C- 401207-010V
3- 401436		FLAG	C- 400895-010V
3- 401437		BRACKET	C- 400895-010V
C- 401439-0101	10832 87-12-29	PIPE ASSEMBLY TBA/9	C- 400895-010V
3- 401442		BRACKET	C- 400895-010V
4- 401445		SPACER	C- 400895-010V
4- 401448		SPACER	C- 400895-010V
3- 401462		GEAR	RK- 548387-010V
			C- 283626-030V
3- 401463		GEAR	RK- 548387-010V
4- 434003		PLUG	C- 529924-010V
4- 434004		SEAL RING	C- 529924-010V
C- 434074-0201	7730 85-04-24	INK UNIT	C- 456349-010V
C- 434074-0202	7730 85-04-24	INK UNIT	C- 456322-010V
C- 434074-0301	10576 87-10-07	INK UNIT	C- 456349-020V
C- 434074-0302	10576 87-10-07	INK UNIT	C- 456322-020V
			C- 456322-030V
			C- 752846-010V
			C- 752914-010V
G1- 434374		GABLE	C- 294659-010V
G1- 434375		GABLE	C- 294659-010V
4- 434437		GUARD	C- 232781-040V
1- 434453		MACHINE BODY	C- 232781-040V
2- 434454		BRACKET	C- 232781-040V
4- 434747		CLAMP	C- 434774-020V
			C- 434774-030V
			C- 434074-020V
			C- 434074-030V
			C- 434774-020V
			C- 434774-030V
			C- 434074-020V
			C- 434074-030V
			C- 434774-020V
			C- 434774-030V
4- 434747		CLAMP	C- 434074-030V
4- 434773		LOCK SPRING	C- 434774-020V
			C- 434074-020V
			C- 434774-020V
			C- 434074-020V
C- 434774-0201	7730 85-04-24	INK UNIT	C- 456348-010V
C- 434774-0202	7730 85-04-24	INK UNIT	C- 456321-010V
C- 434774-0301	10576 87-10-07	INK UNIT	C- 456348-020V

PART NO	LAST AM	DESCRIPTION	GROUP NO
C- 434774-0302	10576 87-10-07	INK UNIT	C- 456321-020V
			C- 456321-030V
			C- 752845-010V
			C- 752913-010V
4- 434841		GAUGE	C- 250610-010V
			C- 456975-010V
			C- 77099-010V
C- 436467-0101	7363 85-01-22	JIG	B- 648119-060V
3- 436469		CATCH	C- 76197-010V
			C- 436467-010V
3- 436470		CATCH	C- 76197-010V
			C- 436467-010V
1- 436870		FRAME	C- 436467-010V
4- 436920		GROUND TERMINAL	CE- 67716-010V
			CE- 67721-010V
			CE- 68308-010V
4- 436927		NUT	C- 434774-020V
			C- 434774-030V
			C- 434074-020V
			C- 434074-030V
			C- 434774-020V
			C- 434774-030V
			C- 434074-020V
			C- 434074-030V
			C- 434774-030V
			C- 434074-030V
			C- 434774-030V
			C- 434074-030V
3- 439813		PLATE	C- 529933-010V
4- 439818-0002		GASKET	C- 735192-010V
			C- 735288-010V
			C- 735192-010V
			C- 735271-010V
			C- 735192-010V
			C- 735271-010V
			C- 735192-010V
			C- 735271-010V
4- 439864		COMPRESSION SPRING	C- 736600-010V
1- 439963		UPPER FILLING TUBE	C- 529933-010V
P- 440630-0101	12796 89-11-29	VALVE	C- 272580-030V
P- 440630-0201	10455 87-11-11	AP-VALVE	C- 272580-040V
			C- 272580-050V
1- 440631		VALVE BODY 61	C- 440630-010V
			C- 440630-020V
2- 440632		CYLINDER HOUSING	C- 440630-010V
			C- 539209-010V
			C- 539210-010V
2- 440633		CYLINDER HOUSING	C- 440630-010V
			C- 539211-010V
2- 440634		HOUSE	C- 440630-010V
			C- 440630-020V
3- 440635		PISTON ROD	C- 440630-010V
			C- 539210-010V
3- 440636		PISTON ROD	C- 440630-010V
			C- 539211-010V
3- 440637		PISTON ROD	C- 440630-010V
			C- 539209-010V
3- 440638		PISTON	C- 440630-010V
			C- 539209-010V
			C- 539210-010V
3- 440639		GABLE	C- 440630-010V
3- 440640		SEAL RING	C- 440630-010V
			SP- 499255-010V
3- 440641		HOLDER	C- 440630-010V
3- 440642		HOLDER	C- 440630-010V
4- 440645		SEAL RING	C- 440630-010V
			SP- 499255-010V
4- 440646		PISTON	C- 440630-010V
			C- 539211-010V
4- 440647		SLEEVE	C- 272580-040V
			C- 272580-050V
4- 440648		SEALING WASHER	C- 440630-010V
			C- 539210-010V
4- 440649		SEALING WASHER	C- 440630-010V
4- 440650		ASHER	C- 440630-010V
			C- 539210-010V
4- 440651		WASHER	C- 440630-010V

PART NO	LAST AM	DESCRIPTION	GROUP NO
4- 440662		WASHER	C- 539209-010V C- 539210-010V C- 440630-010V C- 539211-010V C- 440630-010V
4- 440663		WASHER	C- 440630-010V
4- 440664		SPACER SLEEVE	C- 539211-010V C- 440630-010V C- 539211-010V C- 440630-010V C- 539209-010V
4- 440665		RING	C- 440630-010V
4- 440666		WASHER	C- 539211-010V C- 440630-010V C- 539210-010V C- 440630-010V C- 539210-010V C- 440630-010V C- 539210-010V C- 440630-010V C- 539211-010V C- 440630-010V C- 539209-010V C- 539210-010V C- 440630-010V C- 539211-010V C- 440630-010V SP- 499255-010V C- 440630-010V C- 440630-010V C- 440630-010V C- 440630-010V C- 272560-040V C- 272560-050V C- 272560-030V C- 272560-040V C- 272560-050V B- 648107-020V B- 648107-060V B- 648107-070V B- 648107-060V B- 648107-070V B- 648107-060V B- 648107-060V B- 648107-060V B- 648107-060V C- 441000-020V C- 441000-030V C- 441000-040V C- 441000-050V C- 441000-020V C- 441000-020V C- 441000-020V C- 441000-020V C- 441000-020V C- 441000-030V C- 441000-040V C- 441000-050V C- 441000-020V C- 441000-030V C- 441000-040V C- 272408-020V C- 272408-030V C- 272839-020V C- 272839-020V C- 256197-020V C- 256198-020V C- 256197-020V C- 256198-020V C- 256173-020V C- 256173-030V C- 256173-040V
4- 440667		WASHER	
4- 440668		WASHER	
4- 440669		CYLINDRICAL PIN	
4- 440680		COMPRESSION SPRING	
4- 440681		COMPRESSION SPRING	
4- 440682		COMPRESSION SPRING	
4- 440683		COMPRESSION SPRING	
4- 440684		SEALING WASHER	
4- 440685		DIAPHRAGM	
4- 440686		RING	
4- 440687		VALVE CONE	
4- 440688		VALVE CONE	
4- 440689		VALVE CONE	
3- 440694		CLAMP RING	
3- 440695		GABLE	
3- 440729		CLAMP RING	
4- 440730		BOLT	
4- 440731		PLATE	
3- 440978		ELBOW PIPE	
C- 441000-0201	6454 84-01-10	STRIP HOLDER	
C- 441000-0301	8009 85-06-24	STRIP HOLDER	
C- 441000-0302	8009 85-06-24	STRIP HOLDER	
C- 441000-0401	10819 87-10-10	STRIP HOLDER	
C- 441000-0402	10819 87-10-10	STRIP HOLDER	
C- 441000-0501	14273 90-02-06	STRIP HOLDER	
C- 441000-0502	14273 90-02-06	STRIP HOLDER	
1- 441005		PLATE	
2- 441006		HOLDER	
2- 441007		HOLDER	
3- 441008		BRACKET	
4- 441009		ARM	
4- 441010		SHAFT	
4- 441011		AXLE PIN	
1- 441018		PLATE	
1- 441019		PROTECTION PLATE	
1- 441020		PROTECTION PLATE	
4- 441023		AXLE PIN	
4- 441024		SHIM	

PART NO	LAST AM	DESCRIPTION	GROUP NO
1- 441025		PAPER GUARD	C- 272839-020V C- 256666-020V C- 272839-020V C- 490947-010V C- 490947-020V C- 271274-020V C- 256217-020V C- 256217-030V C- 256217-040V C- 256089-020V C- 256089-020V C- 456274-010V C- 271274-020V C- 456274-010V C- 441000-020V C- 441000-030V C- 441000-040V C- 441000-050V C- 295282-020V C- 295282-030V C- 295282-040V C- 256233-020V C- 456285-010V C- 469366-010V C- 469804-010V C- 469366-010V C- 469804-010V C- 469366-020V C- 469804-010V C- 272021-020V C- 272021-020V C- 256555-030V C- 271513-020V C- 271513-030V C- 271513-040V C- 271513-050V C- 751885-020V C- 271513-020V C- 271513-030V C- 271513-040V C- 271513-050V C- 751885-020V C- 271513-020V C- 271513-030V C- 271513-040V C- 271513-050V C- 751885-020V C- 272021-020V C- 272021-020V C- 272021-020V C- 272021-020V C- 256555-020V C- 256921-020V C- 256921-030V C- 256921-020V C- 256921-030V C- 256555-020V C- 256555-020V C- 256555-030V C- 456100-010V C- 456100-020V C- 271485-020V C- 271485-020V C- 271485-020V C- 271485-020V C- 271376-020V C- 271376-020V C- 271376-020V C- 295310-010V B- 648101-020V B- 648101-060V B- 648101-070V
4- 441026		BRACKET	
4- 441027		BRACKET	
2- 441030		PIPE-LINE	
3- 441031		LINK BEARING	
1- 441032-0001		PIPE	
1- 441032-0002		PIPE	
2- 441033		PIPE	
3- 441034		ARM	
3- 441034		ARM	
4- 441036		ARM	
4- 441056		SPACER	
4- 441064		SHAFT	
4- 441065		WASHER	
G1- 441066		MACHINE BODY	
2- 441067		SIDE COVER LEFT	
3- 441068		SIDE PLATE	
4- 441069-0001		BRACKET	
4- 441069-0002		BRACKET	
1- 441070		BOX	
1- 441071		BOX	
4- 441072-0001		RING	
4- 441072-0002		RING	
2- 441073		HOLDER	
2- 441074-0001		FILLING PIPE	
2- 441074-0002		FILLING PIPE	
4- 441076		STUD BOLT	
4- 441077		BRACKET	
3- 441078		GASKET	
3- 441079		PLATE	
3- 441080		PLATE	
4- 441081		BAR	
G3- 441082		SIDE GUIDE LEFT	
G3- 441083		SIDE GUIDE RIGHT	
4- 441086		CHUTE	
4- 441087		ROLLER	
C- 441088-010V	6652 84-05-23	UPPER TUBE SUPPORT	

PART NO	LAST AM	DESCRIPTION	GROUP NO
C- 441092-010V	6652 84-05-23	MIDDLE TUPE SUPPORT	B- 648101-080V B- 648101-090V B- 648101-020V B- 648101-060V B- 648101-070V B- 648101-080V
C- 441102-010V	7533 85-02-18	MOVABLE FORMING RING	B- 648101-090V B- 648101-020V B- 648101-060V B- 648101-070V B- 648101-080V
C- 441102-020V	13651 89-11-23	MOVABLE FORMING RING	B- 648101-090V
4- 441137		SHIM	C- 295045-020V
3- 441138		GUIDE	C- 295359-010V
4- 441139		NUT	C- 295359-010V
1- 441140-0001		COVER	C- 456103-010V C- 256555-020V
1- 441140-0002		COVER	C- 256555-030V C- 256555-020V C- 256555-030V
3- 441141		PLATE	C- 295359-010V
4- 441142		PLATE	C- 295359-010V
1- 441143		SPACER PIECE	CR- 256547-030V
2- 441144		AIR NOZZLE	C- 295256-020V
4- 441145		LINKPIECE OUTER	C- 271376-020V
C- 441146-0101	5859 83-04-07	ROD	B- 648101-020V B- 648101-060V B- 648101-070V B- 648101-080V B- 648101-090V
3- 441147		SHAFT	C- 441146-010V C- 272445-020V
3- 441148		BEARING SEAT	C- 441146-010V
3- 441149		BEARING SEAT	C- 441146-010V
4- 441150		BEARING COVER	C- 441146-010V C- 272445-020V C- 256236-020V C- 295667-020V
4- 441152		ROLLER	C- 256236-020V C- 295667-020V C- 295667-030V
4- 441153		COUNTER ROLLER	C- 256236-020V C- 295667-020V C- 256236-020V C- 295667-020V C- 295667-030V
4- 441154		TRIMMING ROLLER PLUS	B- 648119-020V B- 648119-060V B- 648119-020V B- 648119-060V
4- 441155		TRIMMING ROLLER MINUS	B- 648119-020V B- 648119-060V B- 648119-020V B- 648119-060V
3- 441156		CABLE CONDUIT	C- 295276-020V
2- 441157		CONNECTION	C- 295256-020V
3- 441158		PLATE	C- 295256-020V
4- 441159		ROLLER	C- 295310-010V
1- 441160		CABLE DUCT	C- 256233-020V
2- 441161		CABLE CONDUIT	C- 256233-020V
4- 441162		PROTECTION PLATE	C- 256555-020V C- 256555-030V C- 456100-010V C- 456100-020V
1- 441163		COLUMN	C- 256233-020V
4- 441164		CABLE CONDUIT	C- 256233-020V C- 469366-010V C- 469366-020V C- 469366-030V
2- 441209		PIPE	C- 256237-020V
4- 441210		BRACKET	C- 256236-020V C- 256236-030V C- 256236-020V
4- 441211		HOLDER	C- 256236-030V C- 256555-030V C- 456100-010V C- 456100-020V
3- 441212		HOLDER	G3- 441213 G3- 441214
			3- 441216
			G2- 441217
			G2- 441218
			4- 441219
			4- 441221
			1- 441222 2- 441223 2- 441224 3- 441225 3- 441226 4- 441227 2- 441229 1- 441230 1- 441231 4- 441239
			3- 441248 3- 441249 3- 441255 4- 441257 4- 441258 4- 441259 4- 441260 4- 441261 4- 441264 3- 441268
			3- 441269
			C- 441271-0101 8241 85-09-20 C- 441271-0201 8667 86-02-17 4- 441276
			3- 441282 4- 441283 4- 441284 4- 441285 4- 441286
			4- 441287 4- 441288 4- 441289
			4- 441290 4- 441291 4- 441292 4- 441295
			4- 441296
			C- 441304-0101 7??2 84-12-06 C- 441304-020V 89-06-13

GROUP NO
C- 271376-020V C- 271376-020V C- 256233-020V C- 256555-030V C- 456100-010V C- 456100-020V C- 256555-030V C- 456100-010V C- 456100-020V C- 256555-030V C- 456100-010V C- 256555-030V C- 456100-010V C- 456100-020V C- 295777-010V C- 295777-010V C- 295777-010V C- 295777-010V C- 295777-010V C- 295777-010V C- 295777-010V C- 441510-010V C- 441510-010V C- 295883-020V C- 295883-030V C- 295883-040V C- 449314-010V C- 449314-010V C- 449314-010V C- 449314-010V C- 449314-010V C- 449314-010V C- 449314-010V C- 449314-010V C- 256217-020V C- 256217-030V C- 256217-040V C- 256217-020V C- 256217-030V C- 256217-040V B- 648105-060V B- 648105-070V C- 441821-010V C- 441271-010V C- 441881-010V C- 441881-010V C- 441881-010V C- 441881-010V C- 441881-010V C- 271169-030V C- 272337-030V C- 271169-040V C- 272337-040V C- 441881-010V C- 271115-020V C- 271115-020V C- 441881-010V C- 271115-020V C- 441881-010V C- 271115-020V C- 441881-010V C- 271115-020V C- 441881-010V C- 441881-010V C- 441881-010V C- 271866-020V C- 271866-030V C- 271866-040V C- 271866-050V C- 271866-020V C- 271866-030V C- 271866-040V C- 271866-050V B- 648111-020V B- 648111-030V B- 648111-060V B- 648111-070V

PART NO	LAST AM	DESCRIPTION	GROUP NO
C- 441304-030V	12409 89-11-22	MOVABLE FORMING RING	B- 648111-080V
3- 441305		BRACKET	B- 648111-090V
4- 441306		BRACKET	C- 272030-020V
C- 441307-0101	7362 84-12-06	UPPER TUBE SUPPORT	C- 272030-020V
			B- 648111-020V
C- 441307-020V	12844 89-06-13	UPPER TUBE SUPPORT	B- 648111-030V
			B- 648111-080V
			B- 648111-070V
			B- 648111-080V
C- 441307-030V	12409 89-11-22	UPPER TUBE SUPPORT	B- 648111-090V
3- 441309		CABLE CONDUIT	C- 295777-010V
			C- 469374-010V
3- 441310		CABLE CONDUIT	C- 295777-010V
			C- 469374-010V
3- 441311		CABLE CONDUIT	C- 295777-010V
			C- 469374-010V
			C- 469374-020V
			C- 469374-030V
3- 441312		CABLE CONDUIT	C- 295777-010V
			C- 469374-010V
4- 441327		PLATE	C- 272652-020V
4- 441328		PIN	C- 272652-020V
			C- 272652-030V
4- 441339		SHAFT	C- 256200-030V
3- 441341		CABLE CONDUIT	C- 295777-010V
3- 441342		SPLASH PLATE	C- 272445-020V
3- 441343		SPLASH PLATE	C- 272445-020V
3- 441344		CABLE	C- 256973-020V
3- 441348		PAPER SUPPORT	C- 295891-010V
			C- 295891-020V
			C- 295891-030V
1- 441349		CARRIER RIGHT	CR- 256212-030V
1- 441350		CARRIER LEFT	CR- 256213-030V
4- 441353		TENSION SPRING	C- 256203-020V
			C- 256203-030V
			C- 256203-040V
4- 441354		HEAT GUARD	C- 272343-020V
			C- 272343-030V
			C- 272343-040V
			C- 272343-050V
4- 441355		BLEEDING SCREW	CR- 256204-020V
			CR- 256205-020V
			C- 257381-020V
			C- 257382-020V
			CR- 256204-030V
			CR- 256205-030V
			CR- 256212-030V
			CR- 256213-030V
			C- 256217-040V
			C- 257381-030V
			C- 257382-030V
			CR- 256204-040V
			CR- 256205-040V
			CR- 256212-040V
			CR- 256213-040V
			C- 256217-040V
			C- 257381-030V
			C- 257382-030V
			CR- 256204-050V
			CR- 256205-050V
			CR- 256212-050V
			CR- 256213-050V
			C- 256217-040V
			C- 257381-030V
			C- 257382-030V
			RK- 456712-010V

PART NO	LAST AM	DESCRIPTION	GROUP NO
G2- 441356		BRACKET	C- 256173-020V
			C- 256173-030V
G2- 441356		BRACKET	C- 256173-040V
3- 441357		SHIM	C- 256233-020V
			C- 272021-020V
3- 441358		RUBBER SEAL	C- 256014-020V
4- 441359		GUIDE	C- 271115-020V
			C- 271115-030V
			C- 271115-040V
4- 441360		PLATE	C- 256173-020V
			C- 256173-030V
			C- 256173-040V
4- 441383		WASHER	C- 272028-020V
4- 441385		HUB	CR- 256212-020V
			CR- 256213-020V
			CR- 256212-020V
			CR- 256213-020V
			CR- 256212-030V
			CR- 256213-030V
			CR- 256212-040V
			CR- 256213-040V
			CR- 256212-040V
			CR- 256213-040V
			CR- 256212-050V
			CR- 256213-050V
			RK- 456712-010V
3- 441386		CABLE DUCT	C- 272409-020V
2- 441387		MOTOR CRADLE	C- 271128-020V
			C- 271128-030V
			C- 271128-040V
3- 441401		BRACKET	C- 271113-020V
			C- 456588-010V
			C- 456588-020V
4- 441404		LOCK	C- 295777-010V
1- 441411		CAM	C- 256202-020V
			C- 256202-030V
			C- 256202-040V
1- 441412		CAM	C- 256202-020V
			C- 256202-030V
			C- 256202-040V
3- 441421		PROTECTIVE COVER	C- 271513-020V
			C- 271513-030V
3- 441423		BRACKET	C- 295276-020V
3- 441424		BRACKET	C- 295276-020V
3- 441425		CABLE CONDUIT	C- 295276-020V
3- 441441		PIPE	C- 295045-020V
			C- 295045-030V
			C- 295045-040V
			C- 295045-050V
3- 441442		PIPE	C- 272341-020V
4- 441443		SHIM	C- 295045-020V
4- 441444		PIPE	C- 272342-020V
			C- 456976-010V
			C- 456976-020V
4- 441445		PIPE	C- 272342-020V
			C- 456976-010V
			C- 456976-020V
3- 441446		BLOCK	C- 272021-020V
3- 441447		BLOCK	C- 272021-020V
4- 441448		GASKET	C- 761332-010V
			C- 295026-010V
4- 441448		GASKET	C- 295026-020V
			C- 761332-010V
4- 441449-0001		PIPE	C- 271866-020V
			C- 271866-040V
4- 441449-0002		PIPE	C- 271866-020V
			C- 271866-030V
4- 441449-0003		PIPE	C- 271866-030V
2- 441450		PIPE	C- 271866-020V
			C- 271866-030V
4- 441453		GASKET	C- 295026-010V
4- 441467		BRACKET	C- 271866-020V
4- 441474		SHIM	C- 256014-030V
			C- 256014-040V
			C- 256014-050V
4- 441477		COMPRESSION SPRING	C- 441649-010V
4- 441482		GUARD	C- 256237-020V

PART NO	LAST AM	DESCRIPTION	GROUP NO
4- 441483		CYLINDER BRACKET	C- 256238-040V C- 256084-030V C- 456309-030V C- 456309-040V
C- 441486-0101	7382 84-12-06	DIVIDED FORMING RING	B- 648111-020V B- 648111-030V
C- 441486-020V	10411 87-04-23	DIVIDED FORMING RING	B- 648111-060V B- 648111-070V
C- 441486-030V	12844 89-06-13	DIVIDED FORMING RING	B- 648111-080V
C- 441486-040V	12409 89-11-22	DIVIDED FORMING RING	B- 648111-090V
1- 441490		GUIDE PLATE	C- 271089-030V
G1- 441491		GUIDE SIDE LEFT	C- 271089-030V
G1- 441492		GUIDE SIDE RIGHT	C- 271089-030V
4- 441494		WASHER	C- 271089-030V
2- 441499		HOLDER	C- 271109-020V C- 456455-010V C- 456455-020V
3- 441500		HOSE	C- 271109-020V C- 456455-010V C- 456455-020V
4- 441501		INSULATION	C- 272407-020V
4- 441502		HOLDER	C- 271866-020V C- 271866-030V
C- 441510-0101	6130 83-09-21	WASTE PIPE	C- 271562-020V C- 271562-030V
C- 441510-0102	6130 83-09-21	WASTE PIPE	C- 271562-020V C- 271562-030V
3- 441512		STRUT END	C- 456460-010V
C- 441534-0101	9085 86-06-18	LIGHT FIXTURE	C- 456100-010V C- 456100-020V
C- 441535-0102	6867 84-06-12	LIGHT FIXTURE	C- 456457-030V C- 456458-010V C- 456458-020V C- 456458-030V C- 751860-010V C- 752960-010V C- 752971-010V
3- 441536		GASKET	C- 441534-010V C- 441535-010V
1- 441537-0002		DROP CHUTE	C- 255907-020V
1- 441537-0003		DROP CHUTE	C- 255907-020V
1- 441537-0004		DROP CHUTE	C- 255907-020V
1- 441537-0006		DROP CHUTE	C- 255907-020V
1- 441538		DROP CHUTE	C- 255907-020V
1- 441539		DROP CHUTE	C- 255907-020V
3- 441540		CABLE CONDUIT	C- 256236-020V C- 456348-010V C- 456349-010V C- 456348-020V C- 456349-020V C- 456348-020V C- 456349-020V
3- 441545		GASKET	C- 271485-020V C- 271485-030V
2- 441546		BENDING ROLLER	C- 272028-030V C- 272028-040V C- 272028-050V
2- 441547		BENDING ROLLER	C- 272028-030V C- 272028-040V C- 272028-050V
3- 441561		CREASE BAR	C- 751094-010V C- 272014-030V
3- 441562		CREASE BAR	C- 751094-010V C- 272014-030V
3- 441564		CREASE BAR	C- 456321-010V C- 456322-010V C- 456348-010V C- 456349-010V C- 456321-020V C- 456322-020V C- 456348-020V C- 456349-020V C- 456321-030V C- 456322-030V C- 456348-020V C- 456349-020V C- 752845-010V

PART NO	LAST AM	DESCRIPTION	GROUP NO
			C- 752846-010V C- 752913-010V C- 752914-010V C- 751094-010V C- 272014-030V
3- 441565		SHAFT	C- 751094-010V C- 272014-030V
4- 441566-0002		SPACER	C- 456321-010V C- 456322-010V C- 456348-010V C- 456349-010V C- 456321-020V C- 456322-020V C- 456348-020V C- 456349-020V C- 456321-030V C- 456322-030V C- 456348-020V C- 456349-020V C- 752845-010V C- 752846-010V C- 752913-010V C- 752914-010V C- 751094-010V C- 272014-030V
4- 441566-0003		SPACER	C- 456321-010V C- 456322-010V C- 456348-010V C- 456349-010V C- 456321-020V C- 456322-020V C- 456348-020V C- 456349-020V C- 456321-030V C- 456322-030V C- 456348-020V C- 456349-020V C- 752845-010V C- 752846-010V C- 752913-010V C- 752914-010V C- 751094-010V C- 272014-030V
4- 441566-0004		SPACER	C- 456321-010V C- 456322-010V C- 456348-010V C- 456349-010V C- 456321-020V C- 456322-020V C- 456348-020V C- 456349-020V C- 456321-030V C- 456322-030V C- 456348-020V C- 456349-020V C- 752845-010V C- 752846-010V C- 752913-010V C- 752914-010V C- 751094-010V C- 272014-030V
4- 441566-0006		SPACER	C- 456321-010V C- 456322-010V C- 456348-010V C- 456349-010V C- 456321-020V C- 456322-020V C- 456348-020V C- 456349-020V C- 456321-030V C- 456322-030V C- 456348-020V C- 456349-020V C- 752845-010V C- 752846-010V C- 752913-010V C- 752914-010V

PART NO	LAST AM	DESCRIPTION	GROUP NO
4- 441566-0007		SPACER	C- 751094-010V C- 272014-030V C- 456321-010V C- 456322-010V C- 456321-020V C- 456322-020V C- 456321-030V
4- 441566-0007		SPACER	C- 456322-030V C- 752645-010V C- 752646-010V C- 752913-010V C- 752914-010V C- 751094-010V C- 272014-030V
4- 441566-0009		SPACER	C- 456321-010V C- 456322-010V C- 456348-010V C- 456349-010V C- 456321-020V C- 456322-020V C- 456348-020V C- 456349-020V C- 456321-030V C- 456322-030V C- 456348-020V C- 456349-020V C- 752645-010V C- 752646-010V C- 752913-010V C- 752914-010V C- 751094-010V C- 272014-030V C- 272014-030V C- 751088-010V C- 272014-030V C- 751088-010V C- 272014-030V C- 272445-020V C- 272445-020V C- 272445-020V C- 272445-020V C- 456321-010V C- 456322-010V C- 456321-020V C- 456322-020V C- 456321-030V C- 456322-030V C- 272445-020V C- 272025-030V C- 272025-030V C- 272024-030V C- 256237-050V C- 256237-060V C- 441594-010V C- 441594-010V C- 441594-010V C- 441594-010V C- 441594-010V C- 491846-020V C- 256555-030V C- 456100-010V C- 456100-020V B- 648105-060V B- 648105-070V C- 441695-010V C- 441695-010V C- 271116-030V C- 272765-030V C- 272765-040V C- 272765-050V C- 272765-030V C- 272765-040V C- 272765-050V C- 272765-030V C- 272765-040V C- 272765-050V C- 272765-060V
4- 441564		PLATE	
4- 441565		PLATE	
3- 441568		PLATE	
1- 441570-0001		GABLE	
1- 441570-0002		GABLE	
1- 441571-0001		GABLE	
1- 441571-0002		GABLE	
2- 441572		COVER	
4- 441576		SPACER	
3- 441576-0001		CYLINDER BRACKET	
3- 441576-0002		CYLINDER BRACKET	
3- 441576-0003		CYLINDER BRACKET	
3- 441583		SHAFT	
3- 441584		TENSION SPROCKET	
4- 441587		WASHER	
4- 441588		SPACER	
4- 441589		SHIM	
4- 441593		GASKET	
C- 441594-0101	8241 85-09-20	TENSION SPROCKET	
G1- 441595		MACHINE BODY	
3- 441596		BRACKET	
G1- 441597		BEARING BRACKET	
G2- 441598		SUPPORTING ARM	
G1- 441599		BED	
G1- 441600		LINK ARM	

PART NO	LAST AM	DESCRIPTION	GROUP NO
G2- 441601		SHELF	C- 441650-010V
G3- 441602		SPROCKET	C- 441271-010V C- 441271-020V
G2- 441603		BRACKET	C- 456588-010V C- 456588-020V C- 456588-030V
3- 441604		BRACKET	C- 271649-020V
4- 441605		ANGLE BRACKET	C- 271649-020V
3- 441623		HOUSE	C- 441649-010V
3- 441624		BENDING ROLLER	C- 256014-030V
4- 441630		ADJUSTING KNOB	C- 441649-010V
4- 441631		LOCK NUT	C- 441649-010V
4- 441632		FRICTION BLOCK	C- 441649-010V
4- 441633		SPINDLE	C- 441649-010V
4- 441635		BEARING SEAT	C- 256014-030V
4- 441636		SHAFT	C- 256014-040V C- 256014-050V
4- 441637		PIN	C- 256014-040V C- 256014-060V
C- 441649-0101	6781 84-04-11	BRAKE	C- 256014-030V
3- 441658		FRONT PLATE	C- 456100-010V C- 456100-020V
1- 441659		FRONT PLATE	C- 456100-010V C- 456100-020V
2- 441660		FRONT PLATE	C- 456100-010V
4- 441661		PIN	C- 456100-010V
4- 441662		PIN	C- 456100-010V
4- 441663		PLATE	C- 456100-010V
2- 441664		BRANCH PIPE	C- 271261-040V
2- 441665		FLUSH PIPE	C- 271261-040V C- 271261-050V
1- 441667		DOOR	C- 271442-030V
4- 441668		HOLDER	C- 271442-030V
1- 441669		DOOR	C- 271443-030V
3- 441672		PLATFORM	C- 456457-010V
1- 441673		SIDE PIECE	C- 456457-010V C- 456457-020V
2- 441674		RAIL	C- 456457-010V
2- 441675		RAIL	C- 456457-010V
2- 441676		HOLDER	C- 456459-010V C- 456459-020V
4- 441677		FRONT PLATE	C- 456100-010V C- 456100-020V
3- 441679		STEP	C- 751928-010V C- 752980-010V C- 752971-010V C- 469762-010V
3- 441679		STEP	C- 456457-010V C- 469762-010V C- 456457-010V C- 469762-010V C- 456457-020V C- 469762-010V C- 456457-030V C- 469762-010V
1- 441681		RAILING	C- 751924-010V
1- 441683		RAILING	C- 456459-010V
1- 441685		RAILING	C- 456459-010V C- 456459-010V C- 456459-020V
2- 441687		STRUT	C- 456459-010V C- 456460-010V C- 456459-010V
4- 441691		PLATE	C- 456460-010V C- 271442-030V C- 271443-030V C- 271442-030V C- 271443-030V C- 271442-030V C- 271443-030V C- 271442-030V C- 271443-030V
4- 441692		HOLDER	C- 271443-030V
3- 441693		HANDLE	CR- 256547-030V
C- 441695-0101	6581 84-02-20	MACHINE BODY	B- 648105-060V B- 648105-070V B- 648105-060V

PART NO	LAST AM	DESCRIPTION	GROUP NO
C- 441696-0201	14151 89-11-10	MACHINE BODY	B- 648105-060V
4- 441702		BUSHING	CR- 256933-030V
4- 441706		WASHER	C- 256951-020V
			C- 256952-020V
			C- 256951-020V
			C- 256952-020V
			C- 256951-030V
			C- 256952-030V
			C- 256951-030V
			C- 256952-030V
			C- 256951-040V
			C- 256952-040V
			C- 256951-040V
			C- 256952-040V
2- 441709		CYLINDER	CR- 256212-030V
			CR- 256213-030V
1- 441710		BEARING HOUSING	CR- 256212-030V
			CR- 256213-030V
			CR- 256212-040V
			CR- 256213-040V
			CR- 256212-040V
			CR- 256213-040V
			CR- 256212-050V
			CR- 256213-050V
			RK- 456712-010V
1- 441711		BEARING HOUSING	CR- 256212-030V
			CR- 256213-030V
			CR- 256212-040V
			CR- 256213-040V
1- 441711		BEARING HOUSING	CR- 256212-040V
			CR- 256213-040V
			CR- 256212-050V
			CR- 256213-050V
			RK- 456712-010V
1- 441712		BEARING HOUSING	CR- 256212-030V
			CR- 256213-030V
			CR- 256212-040V
			CR- 256213-040V
			CR- 256212-040V
			CR- 256213-040V
			CR- 256212-050V
			CR- 256213-050V
			RK- 456712-010V
2- 441713		FRAME	C- 491579-010V
2- 441715		FRAME	C- 491570-010V
4- 441718		SPACER	C- 257075-020V
			C- 271851-020V
			C- 257075-020V
			C- 271851-020V
			C- 257075-025V
			C- 271851-020V
			C- 257075-025V
			C- 271851-020V
			C- 491570-010V
			C- 491579-010V
			C- 491570-010V
			C- 491579-010V
4- 441720		SPACER	C- 256200-030V
4- 441721		GASKET	C- 295778-020V
			C- 456976-020V
			C- 295778-030V
			C- 456976-020V
			C- 295778-030V
			C- 456976-030V
			C- 295778-040V
			C- 456976-040V
3- 441722		BRACKET	C- 441742-010V
2- 441723		BRACKET	C- 272560-040V
			C- 272560-050V
3- 441725		COVER PLATE	C- 77094-010V
4- 441726		COMPRESSION SPRING	CR- 256208-020V
			CR- 256208-030V
1- 441727		CUTTING JAW	CR- 256204-030V
			CR- 256205-030V
			CR- 256204-040V
			CR- 256205-040V
			CR- 256204-040V

PART NO	LAST AM	DESCRIPTION	GROUP NO
			CR- 256205-040V
			CR- 256204-050V
			CR- 256205-050V
3- 441731		CABLE	C- 441736-010V
3- 441732		RAIL	CR- 256214-020V
3- 441733		TPC BAR	CR- 256215-020V
			C- 295623-020V
			CR- 256215-020V
			C- 295623-020V
			CR- 256215-020V
			C- 295623-030V
			CR- 256215-020V
3- 441733		TPC BAR	C- 295623-030V
			CR- 256215-030V
			C- 295623-030V
			CR- 256215-030V
			C- 295623-030V
4- 441736		BRACKET	C- 271274-020V
			C- 456976-020V
			C- 456976-030V
C- 441736-0101	6806 94-05-04	ZONE HEATER	B- 648119-020V
4- 441737		WASHER	C- 272021-040V
			C- 491570-010V
			C- 491579-010V
			C- 272021-050V
			C- 491570-010V
			C- 491579-010V
4- 441738		SHIM	C- 256173-020V
4- 441739		WASHER	C- 491570-010V
			C- 491579-010V
			C- 491570-010V
			C- 491579-010V
G4- 441740		HINGE FLANGE	C- 491570-010V
			C- 491579-010V
			C- 491570-010V
			C- 491579-010V
G4- 441741		HINGE FLANGE	C- 491570-010V
			C- 491579-010V
			C- 491570-010V
			C- 491579-010V
C- 441742-0101	6313 83-12-01	INDUCTOR UNIT	C- 441736-010V
3- 441743		BRACKET	C- 456953-010V
			C- 441736-010V
			C- 456953-010V
2- 441744		COVER	C- 456953-010V
			C- 441736-010V
			C- 456953-010V
4- 441745		INDICATOR	C- 256197-020V
			C- 256198-020V
			C- 256197-020V
			C- 256198-020V
			C- 256197-030V
			C- 256198-030V
			C- 256197-030V
			C- 491814-010V
			C- 491815-010V
			C- 256197-040V
			C- 491814-010V
			C- 491815-010V
2- 441749		CAM	C- 256217-030V
			C- 256217-040V
			RK- 456711-010V
3- 441750		YOKE	C- 256217-030V
			C- 256217-040V
			RK- 456711-010V
4- 441751		SHIM	C- 256217-030V
			C- 256217-040V
			RK- 456711-010V
3- 441752		SIDE PLATE	C- 256238-020V
			C- 295112-020V
			C- 456321-010V
3- 441752		SIDE PLATE	C- 456322-010V
			C- 456348-010V
			C- 456349-010V
			C- 456321-020V
			C- 456322-020V
			C- 456348-020V

PART NO	LAST AM	DESCRIPTION	GROUP NO
			C- 456349-020V
			C- 456321-030V
			C- 456322-030V
			C- 456348-020V
			C- 456349-020V
			C- 752913-010V
			C- 752914-010V
			C- 272445-020V
4- 441753		PLATE	C- 256236-020V
			C- 295112-020V
			C- 752755-010V
			C- 456321-010V
			C- 456322-010V
			C- 456348-010V
			C- 456349-010V
			C- 456321-020V
			C- 456322-020V
			C- 456348-020V
			C- 456349-020V
			C- 456321-030V
			C- 456322-030V
			C- 456348-020V
			C- 456349-020V
			C- 752913-010V
			C- 752914-010V
			C- 272445-020V
4- 441754		SPACER	C- 256236-020V
			C- 295112-020V
			C- 752755-010V
			C- 456321-010V
			C- 456322-010V
			C- 456348-010V
			C- 456349-010V
			C- 456321-020V
			C- 456322-020V
			C- 456348-020V
			C- 456349-020V
			C- 456321-030V
			C- 456322-030V
			C- 456348-020V
			C- 456349-020V
			C- 752913-010V
			C- 752914-010V
			C- 272445-020V
1- 441755		GUARD	C- 441736-010V
2- 441756		BUSBAR	C- 441736-010V
3- 441758		PIPE RIGHT	C- 256221-020V
			C- 256222-020V
			C- 256221-020V
			C- 256222-020V
			C- 256221-020V
			C- 256222-020V
3- 441758		PIPE RIGHT	C- 256221-020V
			C- 256222-020V
			C- 256221-020V
			C- 256222-020V
			C- 256221-020V
3- 441759		PIPE LEFT	C- 256222-020V
			C- 256221-020V
			C- 256222-020V
			C- 256221-020V
			C- 256222-020V
			C- 256221-020V
			C- 256222-020V
			C- 256221-020V
			C- 256222-020V
			C- 256221-020V
			C- 256222-020V
			C- 256221-020V
			C- 256222-020V
4- 441761		TORSION SPRING	C- 441000-020V
3- 441762		CONNECTION RIGHT	CR- 256212-030V
			CR- 256212-040V
			RK- 456712-010V
3- 441763		CONNECTION LEFT	CR- 256213-030V
			CR- 256213-040V
			RK- 456712-010V

PART NO	LAST AM	DESCRIPTION	GROUP NO
4- 441764		SHAFT	CR- 256212-030V
			CR- 256213-030V
			CR- 256212-040V
			CR- 256213-040V
			CR- 256212-040V
			CR- 256213-040V
			CR- 256212-050V
			CR- 256213-050V
			RK- 456712-010V
C- 441765-0101	6329 93-12-06	PLATFORM	B- 648119-020V
1- 441766		FRAME	C- 441765-010V
1- 441774		PLATE	C- 272765-030V
			C- 272765-040V
			C- 272765-050V
			C- 272765-060V
1- 441775		PIPE CONNECTION	C- 272765-030V
			C- 272765-040V
4- 441782		SLIDE PLATE	C- 295359-010V
			C- 456103-010V
4- 441783		LOCATING PIECE	C- 295359-010V
			C- 456103-010V
3- 441784		BEARING SLEEVE	C- 441821-010V
			C- 441271-010V
			C- 441271-020V
			RK- 491883-010V
3- 441785		RING	C- 441821-010V
			C- 441271-010V
4- 441786		AXLE PIN	C- 441821-010V
			C- 441271-010V
4- 441787		CARRIER	C- 441821-010V
			C- 441271-010V
4- 441789		WASHER	C- 441821-010V
			C- 441271-010V
4- 441790		WASHER	C- 441821-010V
			C- 441271-010V
4- 441790		WASHER	C- 441271-020V
			RK- 491883-010V
G1- 441791		PLATE	C- 456103-010V
3- 441792		HEAD	C- 441798-010V
			C- 441811-010V
4- 441793		BEARING HOUSING	C- 441798-010V
			C- 441811-010V
4- 441794		PIVOT PIN	C- 441798-010V
			C- 441811-010V
4- 441795		WASHER	C- 441798-010V
			C- 441811-010V
4- 441796		SEAL	C- 441798-010V
			C- 441811-010V
4- 441797		SHIM	C- 441798-010V
			C- 441811-010V
			RK- 490951-010V
C- 441798-0101	6626 94-03-20	ROTOR	C- 272765-030V
			C- 272765-040V
			C- 272765-050V
			C- 272765-060V
4- 441799		CONNECTION	C- 441798-010V
4- 441800		FITTING	C- 441811-010V
2- 441804		COIL HEATER	C- 256237-040V
			C- 295667-030V
			C- 256237-050V
			C- 295667-030V
			C- 256237-060V
			C- 295667-030V
			RK- 751303-010V
			RK- 751311-010V
			RK- 751303-010V
			RK- 751311-010V
			C- 256055-040V
			C- 295778-030V
			C- 256055-050V
			C- 295778-030V
			C- 256055-060V
			C- 295778-040V
3- 441805		HOSE	C- 271281-030V
G1- 441806		COLLAR	C- 456100-010V
			C- 456100-020V
3- 441807		SUPPORT BAR	C- 456103-010V

PART NO	LAST AM	DESCRIPTION	GROUP NO
2- 441809		FRONT PLATE	C- 456100-010V
			C- 456100-020V
3- 441810		GASKET	C- 456100-010V
			C- 456100-020V
C- 441811-0101	6628 84-03-20	ROTOR	C- 456588-010V
			C- 456588-020V
			C- 456588-030V
2- 441819		FRONT PLATE	C- 256014-020V
2- 441820		PIPE	C- 271866-020V
C- 441821-0101	7911 85-06-11	SAFETY SPROCK	RK- 479279-010V
			B- 648105-030V
			B- 648105-040V
G3- 441822		SPROCKET	C- 441821-010V
4- 441823		LID	C- 441821-010V
4- 441824		RING	C- 441821-010V
			RK- 491863-010V
4- 441827		SHAFT	C- 272030-020V
4- 441828		PLAIN BEARING	RK- 469984-010V
			C- 272030-020V
			C- 272031-020V
			C- 441304-010V
			C- 441307-010V
			C- 441486-010V
			C- 456309-010V
			C- 272030-020V
			C- 272031-020V
			C- 441304-010V
			C- 441307-010V
			C- 441486-010V
			C- 456309-010V
			C- 272021-030V
			C- 456309-020V
			C- 272021-030V
			C- 456309-020V
1- 441829		PIPE	C- 271115-030V
			C- 271115-040V
2- 441839		PIPE	C- 456588-010V
			C- 456588-020V
			C- 456588-030V
3- 441843		BRACKET	C- 271169-030V
			C- 272337-030V
			C- 271169-040V
4- 441845		SPACER RING	C- 441271-010V
			C- 441271-020V
3- 441847		GUIDING ARBOR	C- 272231-020V
C- 441850-0101	7911 85-06-11	CABLE	B- 648105-060V
			B- 648105-070V
C- 441850-0201	10781 88-06-04	CABLE ASSEMBLY	B- 648105-060V
C- 441850-0301	12530 90-01-05	CABLE ASSEMBLY	B- 648105-060V
4- 441871		PENDULUM SUSPENSION	C- 271169-030V
			C- 272337-030V
			C- 271169-040V
4- 441876		ROLLER	RK- 469984-010V
			C- 272021-030V
			C- 456309-020V
			C- 272021-030V
			C- 456309-020V
			C- 272021-040V
			C- 456309-030V
			C- 272021-050V
4- 441878		TRIMMING ROLLER MINUS	C- 77093-010V
			B- 648119-060V
4- 441879		TRIMMING ROLLER PLUS	C- 77093-010V
			B- 648119-060V
4- 441880		BRACKET	C- 257166-020V
C- 441881-0101	6202 83-10-11	LOCK	B- 648105-020V
			B- 648105-030V
			B- 648105-040V
4- 441884		PIN	C- 256555-030V
4- 441885		PIN	C- 256555-030V
4- 441886		NUT	C- 256555-030V
4- 441894		SLEEVE	CR- 256436-040V
			CR- 256712-040V
			CR- 256436-050V
			CR- 256712-050V
4- 441896		BUFFER RING	CR- 256436-040V
4- 441895		BUFFER RING	CR- 256712-040V

PART NO	LAST AM	DESCRIPTION	GROUP NO
			CR- 256436-050V
			CR- 256712-050V
4- 441898		WASHER	CR- 256436-020V
			CR- 256712-020V
			CR- 256436-020V
			CR- 256712-020V
			CR- 256436-020V
			CR- 256712-020V
			CR- 256436-020V
			CR- 256712-020V
			CR- 256436-020V
			CR- 256712-020V
			CR- 256436-030V
			CR- 256712-030V
			CR- 256436-040V
			CR- 256712-040V
			CR- 256436-050V
			CR- 256712-050V
4- 441897		STOP WASHER	RK- 751157-010V
			CR- 256436-020V
			CR- 256712-020V
			CR- 256436-020V
			CR- 256712-020V
			CR- 256436-020V
			CR- 256712-020V
			CR- 256436-020V
			CR- 256712-020V
			CR- 256436-030V
			CR- 256712-030V
			RK- 751157-010V
4- 441898		PLATE	C- 441102-010V
			C- 441102-020V
4- 441900		WASHER	C- 441102-010V
			C- 441102-020V
4- 441901		SHAFT	C- 441102-010V
			C- 441102-020V
4- 441903		ARM	C- 272025-030V
G4- 441904		ARM	C- 272024-030V
3- 441905		PIN	C- 751928-010V
			C- 752980-010V
			C- 752971-010V
			C- 469762-010V
			C- 456457-010V
			C- 469762-010V
			C- 456457-010V
			C- 469762-010V
			C- 456457-020V
			C- 469762-010V
			C- 456457-030V
			C- 469762-010V
			C- 441766-010V
			C- 751924-010V
4- 441906-0002		BRACKET	C- 295310-020V
4- 441906-0003		BRACKET	C- 295310-020V
4- 441906-0005		BRACKET	C- 295310-020V
4- 441906-0007		BRACKET	C- 295310-020V
4- 441906-0009		BRACKET	C- 295310-020V
1- 441907		GUIDE	C- 272404-020V
			C- 272404-030V
			C- 272404-040V
1- 441907		GUIDE	C- 272404-050V
			C- 272404-060V
3- 441908		CLAMP	C- 272404-020V
			C- 272404-030V
			C- 272404-040V
			C- 272404-050V
			C- 272404-060V
4- 441918		BRACKET	C- 441486-010V
			C- 441486-020V
			C- 441486-030V
			C- 441486-040V
3- 441949		GUIDE PLATE	C- 295256-020V
			C- 271485-020V
			C- 271485-030V
4- 441952		SPACER	C- 271376-020V
4- 441957		BEARING COVER	C- 256084-030V
			C- 256084-040V
4- 441962		KEY	C- 271376-020V
4- 441967		RAIL	C- 271376-020V

PART NO	LAST AM	DESCRIPTION	GROUP NO
4- 441968		CHUTE	C- 271376-020V
4- 441970		CARRIER	C- 295310-010V
			C- 295310-020V
			C- 295310-030V
4- 441971		HUB	C- 295310-010V
			C- 295310-020V
			C- 295310-030V
4- 441972		SHEAR PIN	C- 295310-010V
			C- 295310-020V
			C- 295310-030V
G3- 441973		ARM	CR- 256436-020V
			CR- 256436-030V
			CR- 256436-040V
3- 441978		BEARING	C- 295310-020V
			C- 295310-030V
			C- 295310-040V
			C- 295310-050V
			C- 295310-060V
4- 441979		SHAFT	C- 295310-020V
			C- 295310-030V
			C- 295310-040V
			C- 295310-050V
			C- 295310-060V
4- 441980		GEAR WHEEL	C- 295310-020V
			C- 295310-030V
			C- 295310-040V
			C- 295310-050V
			C- 295310-060V
1- 441981		BRACKET	C- 456274-010V
1- 441982		PLATFORM	C- 456274-010V
1- 441983		PIPE	C- 456274-010V
2- 441984		RAIL	C- 441765-010V
2- 441985		CARRIAGE	C- 441765-010V
2- 441986		RAILING	C- 441765-010V
2- 441987		PLATFORM	C- 441765-010V
3- 441988		STEP	C- 441765-010V
3- 441989		SLIDE RAIL	C- 441765-010V
3- 441990		BRACKET	C- 441765-010V
4- 441991		GABLE	C- 441765-010V
4- 441992		SHAFT	C- 441765-010V
4- 441993		SHAFT	C- 441765-010V
4- 441994		SHAFT	C- 441765-010V
4- 441995		WHEEL	C- 441765-010V
C- 442080-0101	6018 83-08-13	LASER	C- 76594-010V
2- 442081		HOUSE	C- 442080-010V
2- 442082		HEAD	C- 442080-010V
3- 442083		GABLE	C- 442080-010V
3- 442084		RING	C- 442080-010V
3- 442085		JET DIVERTER	C- 442080-010V
3- 442086		REFLECTOR	C- 442080-010V
3- 442087		SCREW	C- 442080-010V
C- 442089-0101	10395 87-08-30	HOUSE	C- 76594-010V
2- 442090		HOUSE	C- 442089-010V
3- 442091		CIRCUIT BOARD	C- 442089-010V
3- 442092		CIRCUIT BOARD	C- 442089-010V
C- 442094-0101	6018 83-08-13	DISPLAY	C- 76594-010V
2- 442095		DISPLAY	C- 442094-010V
3- 442096		CIRCUIT BOARD	C- 442094-010V
3- 442097		CIRCUIT BOARD	C- 442094-010V
3- 442113		STOP	C- 76402-010V
4- 442173		GAUGE BLOCK	C- 260610-010V
4- 442236		SCREW	C- 456274-010V
			C- 271274-020V
			C- 469452-010V
4- 442237		NUT	C- 456274-010V
			C- 456274-010V
			C- 271274-020V
			C- 469452-010V
			C- 456976-030V
			C- 469452-020V
			C- 751800-010V
			C- 456976-040V
			C- 469452-030V
			C- 751800-020V
3- 445503		LOCKING PIN LOWER	C- 456274-010V
			C- 256230-030V
			C- 255921-040V

PART NO	LAST AM	DESCRIPTION	GROUP NO
3- 445505		LOCKING PIN UPPER	C- 256230-030V
			C- 255921-040V
4- 445533		SIGN	C- 271909-030V
			C- 271909-040V
			C- 271909-050V
4- 445534		SIGN	C- 271909-030V
			C- 271909-040V
			C- 271909-050V
4- 445535		SIGN	C- 271909-030V
			C- 271909-040V
			C- 271909-050V
4- 445542		RUBBER GASKET	C- 434774-020V
			C- 434774-030V
			C- 434074-020V
			C- 434074-030V
			C- 434774-020V
			C- 434774-030V
			C- 434074-020V
			C- 434074-030V
			C- 434774-030V
			C- 434074-030V
			C- 434774-030V
4- 445542		RUBBER GASKET	C- 434074-030V
4- 445638		BOTTOM PLATE	C- 450125-010V
4- 445639		SHAFT	C- 450125-010V
4- 445640		SHAFT	C- 450125-010V
4- 445641		ROLLER	C- 450125-010V
			C- 491273-010V
3- 445645		FRAME	C- 450125-010V
3- 445646		SUPPORTING FRAME	C- 450125-010V
3- 445647		BEARING HOUSING	C- 450125-010V
3- 449193		PRESSURE GAUGE TUBE	C- 272560-030V
			C- 272560-040V
			C- 272560-050V
2- 449200-0001		HOLDER	C- 283604-020V
			C- 283604-010V
2- 449200-0002		HOLDER	C- 283604-010V
2- 449200-0003		HOLDER	C- 283604-010V
3- 449201		ARM	C- 283604-010V
			C- 283604-020V
			C- 283604-010V
3- 449202-0001		SHAFT	C- 283604-020V
			C- 283604-010V
3- 449202-0002		SHAFT	C- 283604-010V
3- 449202-0003		SHAFT	C- 283604-010V
3- 449203-0001		SHAFT	C- 283604-020V
			C- 283604-010V
3- 449203-0002		SHAFT	C- 283604-010V
3- 449203-0003		SHAFT	C- 283604-010V
4- 449204		HUB	C- 283604-010V
			C- 283604-020V
			C- 283604-010V
4- 449205		HOLDER	C- 283604-010V
			C- 283604-020V
			C- 283604-010V
4- 449206		SHAFT	C- 283604-010V
			C- 283604-020V
			C- 283604-010V
4- 449228		ARM	RK- 547782-010V
			C- 449386-010V
4- 449230		ROLLER	C- 449386-010V
4- 449231-0001		PRESSURE JAW	RK- 547782-010V
			C- 449386-010V
4- 449231-0002		PRESSURE JAW	C- 449386-010V
2- 449242		DRIVE ROLLER	C- 456686-010V
4- 449243		SHIM	C- 449313-010V
4- 449244-0001		ADJUSTING SCREW	C- 449313-010V
4- 449244-0002		ADJUSTING SCREW	C- 449313-010V
3- 449245		CYLINDER BRACKET	C- 449313-010V
4- 449246		LID	C- 449313-010V
4- 449249		ROD	C- 449313-010V
2- 449250		GABLE	C- 449313-010V
2- 449253		PLATE	C- 449313-010V
2- 449270		PLATE	C- 449315-010V
CR- 449275-010V	10805 87-09-28	PUNCH	B- 648118-060V
			B- 648118-070V
CR- 449275-0102	10805 87-09-28	PUNCH	B- 648118-010V

PART NO	LAST AM	DESCRIPTION	GROUP NO
G1- 449276		BRACKET	CR- 449275-010V
G1- 449277		ARM	CR- 449275-010V
G1- 449279		BRACKET	C- 449314-010V
4- 449281		SCREW	RK- 536470-010V
4- 449281		SCREW	RK- 536450-010V
			RK- 547726-010V
			C- 456612-010V
			C- 533944-010V
3- 449282-0001		HEATING RAIL	C- 283617-010V
			C- 294868-010V
			C- 283617-010V
			C- 294867-010V
4- 449284		REAMED BOLT	C- 533903-010V
			C- 449323-010V
			C- 533903-010V
4- 449286		BRACKET	C- 449323-010V
3- 449288		PLATE	C- 533903-010V
			C- 449323-010V
			C- 533903-010V
3- 449289		GABLE	C- 449323-010V
3- 449290		GABLE	C- 449323-010V
3- 449294		ROLLER	C- 283630-020V
3- 449295		ROLLER	C- 283629-020V
4- 449296		SHAFT	C- 283629-020V
4- 449297		FLANGE	C- 283630-020V
4- 449298		ADAPTER	C- 449313-010V
1- 449306		MACHINE BODY V0125	C- 457867-010V
1- 449307		MACHINE BODY V0180	C- 457867-010V
1- 449308		MACHINE BODY V0200	C- 457867-010V
1- 449309		MACHINE BODY V0236	C- 457867-010V
1- 449310		MACHINE BODY V0250	C- 457867-010V
1- 449311		MACHINE BODY V0284	C- 457867-010V
1- 449312		MACHINE BODY 200ML SLIM	C- 457867-010V
C- 449313-010V	9314 86-09-17	BRACKET FOR DATING UNIT	B- 648118-060V
			B- 648118-070V
C- 449314-0101	10407 87-06-10	DATING UNIT	C- 449313-010V
C- 449315-0101	6292 84-04-25	PRESSURE PLATE	C- 449314-010V
2- 449317		PLATE	C- 449315-010V
G2- 449318		ARM	C- 449314-010V
4- 449320		RUBBER	C- 449315-010V
4- 449321		TEFLON TAPE	C- 449315-010V
C- 449323-010V	13946 89-09-26	BENDING ROLLER, BACK	B- 648118-060V
4- 449329		HOLDER	C- 457867-010V
2- 449330		SHAFT	C- 456674-010V
3- 449332		SUPPORT	C- 283635-010V
3- 449334		SUPPORT	C- 283635-010V
4- 449336		BRACKET	C- 283635-010V
4- 449337		HOLDER	C- 457867-010V
3- 449339		HOLDER	C- 457867-010V
3- 449340		HOLDER	C- 457867-010V
4- 449341		HOLDER	C- 457867-010V
3- 449343		HOLDER	C- 457867-010V
3- 449344		HOLDER	C- 457867-010V
P2- 449346		VARIATOR UNIT	C- 283626-020V
			C- 283626-030V
4- 449347		SPACER	C- 456674-010V
			C- 476349-020V
4- 449359		SHAFT	C- 469736-010V
4- 449360		ROLLER	C- 469736-010V
2- 449360		PLATE	RK- 547782-010V
			C- 449368-010V
4- 449361-0001		SPACER	C- 449368-010V
4- 449361-0004		SPACER	RK- 547782-010V
4- 449362		PIN	RK- 547782-010V
			C- 449368-010V
4- 449363		BLOCK	RK- 547782-010V
			C- 449368-010V
4- 449364-0001		SHAFT	RK- 547782-010V
			C- 449368-010V
4- 449364-0002		SHAFT	RK- 547782-010V
			C- 449368-010V
4- 449365		FORK	RK- 547782-010V
			C- 449368-010V
4- 449366		PIN	RK- 547782-010V
			C- 449368-010V
4- 449367		BRACKET	RK- 547782-010V
			C- 449368-010V

PART NO	LAST AM	DESCRIPTION	GROUP NO
C- 449368-010V	7913 85-06-06	STRIP GUIDE	B- 648118-060V
			B- 648118-070V
3- 449391		HOLDER	C- 456679-010V
3- 449392		RAIL	C- 456679-010V
3- 449393		RAIL	C- 456679-010V
2- 449398		OWERFLOW PIPE	CR- 449275-010V
2- 449399		INDUCTOR BRACKET	C- 457866-010V
3- 449414		BRACKET	C- 529924-010V
P1- 449939-0001		HEATING ELEMENT 15KW	C- 271181-020V
			C- 271181-030V
			C- 271181-040V
C- 449969-0101	6514 84-03-22	TOOL	C- 77092-010V
			C- 77092-020V
			C- 77094-010V
			B- 648119-020V
			B- 648119-060V
3- 449970		HOLDER	C- 449969-010V
4- 449971		SPINDLE	C- 449969-010V
3- 450015		HOUSE	C- 450125-010V
4- 450016		NUT	C- 450125-010V
3- 450061-0002		INDUCTOR	C- 456951-010V
			C- 491273-010V
3- 450065-0002		BRACKET	C- 456951-010V
3- 450065-0003		BRACKET	C- 456951-010V
3- 450098		PLATE	C- 271641-030V
			RK- 469414-010V
			C- 271641-030V
3- 450099		PLATE	C- 271641-030V
			RK- 469414-010V
			C- 271641-030V
4- 450100		SPRING	C- 271641-030V
			RK- 469414-010V
			C- 271641-030V
C- 450101-0101	6966 84-06-04	TEARING DEVICE	C- 271699-030V
			C- 752046-010V
2- 450102		PRESSURE ARM	C- 450101-010V
			RK- 469412-010V
			C- 450101-010V
3- 450103		KNIFE	C- 450101-010V
			RK- 469412-010V
			C- 450101-010V
4- 450123		BRACKET	C- 450125-010V
3- 450124		BRACKET	C- 450125-010V
C- 450125-0102	6751 84-04-18	HEATING DEVICE	C- 441736-010V
			C- 456953-010V
4- 450278		RULER	C- 271641-030V
			RK- 469414-010V
			C- 271641-030V
4- 450366		INK ROLLER	C- 434774-020V
			C- 434774-030V
			C- 434074-020V
			C- 434074-030V
			C- 434774-020V
			C- 434774-030V
			C- 434074-020V
			C- 434074-030V
			C- 434774-030V
			C- 434074-030V
			C- 434774-030V
			C- 434074-030V
4- 450497		SHAFT	C- 751718-010V
4- 450500		PIN	C- 751718-010V
4- 450628		GUIDE	RK- 491539-010V
			RK- 490877-010V
			C- 491897-010V
			C- 491976-010V
			C- 491976-020V
			C- 491976-010V
			C- 491976-020V
			C- 491897-010V
			RK- 751570-010V
			RK- 491539-010V
4- 450833		FILTER	C- 272623-030V
			C- 272623-040V
			C- 272623-050V
4- 450837		LID	C- 272623-030V
			C- 272623-040V

PART NO	LAST AM	DESCRIPTION	GROUP NO
4- 451117		ROLLER	C- 272823-060V C- 441486-010V C- 441486-020V C- 441486-030V C- 441486-040V
3- 451140		FLOAT	RK- 520129-010V RK- 520130-010V RK- 520094-010V RK- 520096-010V RK- 520087-010V RK- 520129-010V RK- 520130-010V
4- 451148		BRACKET	C- 441486-010V C- 441486-020V C- 441486-030V C- 441486-040V
4- 451149		SHAFT	C- 441486-010V C- 441486-020V C- 441486-030V C- 441486-040V B- 648106-060V B- 648106-070V B- 648106-080V
C- 451348-010V	9440 86-10-01	CONNECTION BOX	C- 441850-010V C- 441850-020V C- 441850-030V C- 752784-010V C- 451348-010V
C- 451348-0101	9440 86-10-01	CONNECTION BOX	C- 451348-010V C- 451348-020V C- 451348-010V C- 451348-020V
C- 451348-0201	12530 90-01-05	CONNECTION BOX	C- 271181-020V C- 271181-030V C- 271181-040V C- 272408-020V C- 272408-030V C- 272408-040V C- 272408-050V C- 272839-020V C- 490947-010V C- 256217-040V C- 256217-040V
4- 451409		CONNECTION BOX	
4- 451423		CIRCUIT BOARD	
2- 451430		CONNECTION BOX	
4- 456000		SUPPORT	
4- 456001		STOP	
2- 456002		BEARING	
4- 456004		SPACER	
4- 456005-0001		VOLUME BULGE	CR- 256209-020V CR- 256210-020V CR- 256209-020V CR- 256210-020V CR- 256209-020V CR- 256210-020V CR- 256209-020V CR- 256210-020V CR- 256209-020V CR- 256210-020V CR- 256209-020V CR- 256210-020V CR- 256209-030V CR- 256210-030V CR- 256209-020V CR- 256210-020V CR- 256209-020V CR- 256210-020V CR- 256209-020V CR- 256210-020V CR- 256209-020V CR- 256210-020V CR- 256209-030V CR- 256210-030V CR- 256208-030V CR- 256208-030V CR- 256208-030V CR- 256208-030V C- 272030-020V C- 469118-010V C- 469118-020V CR- 256208-030V C- 295523-030V CR- 256209-030V
4- 456006-0003		VOLUME BULGE	
3- 456006		KNIFE HOLDER	
3- 456007		KNIFE HOLDER	
3- 456008		KNIFE HOLDER	
4- 456009		LINK	
4- 456010		SPACER PLATE	
4- 456011		PIN	

PART NO	LAST AM	DESCRIPTION	GROUP NO
			C- 295523-030V CR- 256209-030V C- 295523-030V CR- 256209-030V C- 295523-030V
3- 456012		BEARING SEAT	RK- 491744-010V C- 272014-020V C- 272014-030V C- 751099-010V C- 751099-020V RK- 491744-010V
3- 456012		BEARING SEAT	C- 272014-020V C- 272014-030V C- 751099-010V C- 751099-020V
4- 456013		BEARING COVER	C- 272445-020V C- 257381-030V C- 257382-030V C- 456032-010V C- 456032-010V C- 456032-010V C- 456032-010V C- 456032-010V C- 456032-010V C- 456032-010V C- 456032-010V C- 456032-010V C- 456032-010V
3- 456016		RAIL	B- 648107-060V B- 648107-070V B- 648107-080V B- 648107-090V
2- 456017		HOSE HOLDER RIGHT	C- 272241-020V
2- 456018		HOSE HOLDER LEFT	C- 441304-010V
4- 456022		SLEEVE	C- 441304-020V
4- 456023		JOINT	C- 441304-010V
4- 456024		GUIDE SHAFT	C- 441304-020V
4- 456025		HOLDER	C- 441304-030V
4- 456026		BRACKET	C- 272445-020V
3- 456027		HOLDER	C- 441102-010V
3- 456028		JOINT	C- 441102-020V
3- 456029		JOINT	C- 441304-010V
3- 456030		BRACKET	C- 441304-020V
3- 456031		BRACKET	C- 441304-030V
C- 456032-010V	8655 86-01-11	STRIP GUIDE	B- 648109-060V B- 648109-070V B- 648109-080V B- 648109-070V RK- 536439-010V B- 648109-060V B- 648109-070V B- 648109-080V B- 648109-070V B- 648109-060V B- 648109-070V B- 648109-060V B- 648109-070V B- 648109-060V B- 648109-070V B- 648109-060V B- 648109-070V B- 648109-060V B- 648109-070V B- 648109-060V B- 648109-070V B- 648109-060V B- 648109-070V B- 648109-060V B- 648109-070V B- 648109-060V B- 648109-070V
3- 456033		SPACER	
3- 456034		BRACKET	
3- 456035		BRACKET	
3- 456036		SHAFT	
4- 456042		SCREW	
1- 456047		CIRCUIT DIAGRAM	
1- 456048		CIRCUIT DIAGRAM	
1- 456049		CIRCUIT DIAGRAM	
1- 456050		CIRCUIT DIAGRAM	
1- 456051		WATER DIAGRAM	
1- 456052		WATER DIAGRAM	
1- 456052		WATER DIAGRAM	
1- 456053		PANEL SURVEY	
1- 456054		PANEL SURVEY	

PART NO	LAST AM	DESCRIPTION	GROUP NO
1- 456055		DIAGRAM CENTRAL LUBRIC.	RK- 491984-010V
			RK- 491512-010V
			RK- 491984-010V
			B- 648109-060V
			B- 648109-070V
			B- 648109-080V
			B- 648109-070V
1- 456056		CIRCUIT DIAGRAM	B- 648109-080V
			B- 648109-070V
			B- 648109-080V
			B- 648109-070V
3- 456058		SHIM	C- 456274-010V
2- 456059		SUPPORT	C- 456274-010V
2- 456060		SUPPORT	C- 456274-010V
1- 456061		PLATE	C- 456348-010V
			C- 456349-010V
			C- 456348-020V
			C- 456349-020V
			C- 456348-020V
			C- 456349-020V
2- 456062		RAIL	C- 456348-010V
			C- 456349-010V
			C- 456348-020V
			C- 456349-020V
			C- 456348-020V
			C- 456349-020V
3- 456063		BRACKET	C- 256236-020V
			C- 456348-010V
			C- 456349-010V
			C- 456348-020V
			C- 456349-020V
			C- 456348-020V
			C- 456349-020V
4- 456064		SPACER	C- 295310-010V
			C- 295310-020V
			C- 295310-030V
			C- 295310-040V
			C- 295310-050V
			C- 295310-060V
2- 456071		COVER	C- 456274-010V
4- 456072		WASHER	C- 272404-020V
			C- 272404-030V
			C- 272404-040V
			C- 272404-050V
			C- 272404-060V
2- 456074		PIPE	C- 271909-020V
2- 456075		PIPE	C- 271909-020V
4- 456076		ROLLER	C- 441307-010V
			C- 441307-020V
4- 456077		ROLLER	C- 441307-010V
4- 456077		ROLLER	C- 441307-020V
4- 456078		ROLLER	C- 441304-010V
			C- 441304-020V
4- 456079		ROLLER	C- 441304-010V
			C- 441304-020V
4- 456080		ROLLER	C- 441304-010V
			C- 441304-020V
4- 456081		ROLLER	C- 441304-010V
			C- 441304-020V
4- 456082		ROLLER	C- 441486-010V
			C- 441486-020V
			C- 441486-030V
4- 456085		ROLLER	C- 441486-010V
			C- 441486-020V
			C- 441486-030V
4- 456086		ROLLER	C- 441486-010V
			C- 441486-020V
			C- 441486-030V
4- 456090		ROLLER	C- 456309-010V
			C- 456309-020V
			C- 456309-030V
4- 456091		TRIMMING ROLLER PLUS	C- 77093-010V
			B- 648119-020V
			B- 648119-060V
			B- 648119-020V
			B- 648119-060V
4- 456092		TRIMMING ROLLER MINUS	C- 77093-010V

PART NO	LAST AM	DESCRIPTION	GROUP NO
			B- 648119-020V
			B- 648119-060V
			B- 648119-020V
			B- 648119-060V
1- 456093		HOLDER	C- 456309-010V
			C- 456309-020V
2- 456094		JUNCTION BLOCK	C- 271909-020V
C- 456100-010V	8456 85-11-26	MACHINE BODY	B- 648102-060V
C- 456100-020V	10505 87-06-22	MACHINE BODY	B- 648102-070V
			B- 648102-080V
			B- 648102-060V
C- 456103-010V	10299 86-05-24	SIDE FEEDER	B- 648105-060V
			B- 648105-070V
			B- 648105-080V
			B- 648105-060V
2- 456105		GUARD	C- 456103-010V
2- 456106		SIDE PLATE	C- 456103-010V
2- 456107		SIDE PLATE	C- 456103-010V
3- 456108		SHIM	C- 456103-010V
3- 456109		GUIDE RAIL	C- 456103-010V
4- 456112		BRACKET	C- 456103-010V
4- 456113		BRACKET	C- 456103-010V
4- 456119		SHAFT	C- 469074-010V
			C- 469074-020V
4- 456121		ARM	C- 752957-010V
			C- 469074-010V
			C- 469074-020V
3- 456123		SUPPORT	C- 271181-020V
			C- 271181-030V
			C- 271181-040V
4- 456124		ANGLE BRACKET	C- 271181-020V
4- 456125		PLATE	C- 271181-020V
4- 456125		PLATE	C- 271181-030V
			C- 271181-040V
1- 456126		FLUSH PIPE	C- 271281-040V
			C- 271281-060V
2- 456129-0001		FLUSH PIPE	C- 271281-040V
			C- 271281-060V
2- 456129-0002		FLUSH PIPE	C- 271281-040V
			C- 271281-060V
4- 456130		LOCK BOARD	C- 456309-010V
			C- 456309-020V
4- 456131		LOCK BOARD	C- 456309-010V
			C- 456309-020V
4- 456132		LOCK BOARD	C- 456309-010V
			C- 456309-020V
3- 456137		HOSE	C- 271909-020V
			C- 271909-030V
			C- 271909-040V
			C- 271909-060V
2- 456138		PLATE	C- 441304-010V
			C- 441304-020V
			C- 441304-030V
4- 456139		LOCK BOARD	C- 441304-010V
			C- 441304-020V
			C- 441304-030V
4- 456140		SHAFT	C- 441304-010V
			C- 441304-020V
4- 456141		SHAFT	C- 441304-010V
			C- 441304-020V
3- 456142		PIPE	C- 272241-020V
3- 456143		PIPE	C- 272241-020V
			C- 456656-010V
1- 456144-0002		DROP CHUTE	C- 456180-010V
1- 456144-0003		DROP CHUTE	C- 456180-010V
1- 456144-0004		DROP CHUTE	C- 456180-010V
1- 456144-0006		DROP CHUTE	C- 456180-010V
1- 456145		DROP CHUTE	C- 456180-010V
1- 456146		DROP CHUTE	C- 456180-010V
1- 456147		GUIDE PLATE	C- 456180-010V
1- 456148		GUIDE PLATE	C- 456180-010V
1- 456149		GUIDE PLATE	C- 456180-010V
1- 456150		GUIDE PLATE	C- 456180-010V
1- 456151		IIDE PLATE	C- 456180-010V
1- 456152		/IDE PLATE	C- 456180-010V
2- 456153		HOLDER	C- 441307-010V
			C- 441307-020V

PART NO	LAST AM	DESCRIPTION	GROUP NO
4- 456154		LOCK BOARD	C- 441307-010V
			C- 441307-020V
4- 456155		LOCK BOARD	C- 441307-010V
			C- 441307-020V
4- 456156		SHAFT	C- 441307-010V
			C- 441307-020V
1- 456157-0002		DROP CHUTE	C- 456160-010V
1- 456157-0003		DROP CHUTE	C- 456160-010V
1- 456157-0004		DROP CHUTE	C- 456160-010V
1- 456157-0006		DROP CHUTE	C- 456160-010V
1- 456158		DROP CHUTE	C- 456160-010V
1- 456159		GUIDE PLATE	C- 456160-010V
1- 456160		GUIDE PLATE	C- 456160-010V
1- 456161		GUIDE PLATE	C- 456160-010V
1- 456162		GUIDE PLATE	C- 456160-010V
1- 456163		GUIDE PLATE	C- 456160-010V
4- 456164		LEAF SPRING	C- 456160-010V
4- 456165		LEAF SPRING	C- 456160-010V
4- 456166		LEAF SPRING	C- 456160-010V
4- 456167		LEAF SPRING	C- 456160-010V
G1- 456175		LID	C- 295310-020V
			C- 295310-030V
			C- 295310-040V
			C- 295310-050V
2- 456176		GASKET	C- 295310-060V
			C- 295310-020V
			C- 295310-030V
			C- 295310-040V
			C- 295310-050V
C- 456160-010V	9109 86-05-18	DROP CHUTE	C- 295310-060V
			B- 648102-060V
			B- 648102-070V
			B- 648102-080V
			B- 648102-090V
4- 456181		SPACER	C- 441486-010V
			C- 441486-020V
			C- 441486-030V
			C- 441486-040V
4- 456182		PLATE	C- 441486-010V
			C- 441486-020V
			C- 441486-040V
4- 456183		LOCK BOARD	C- 441486-010V
			C- 441486-020V
			C- 441486-030V
			C- 441486-040V
4- 456184		LOCK BOARD	C- 441486-010V
			C- 441486-020V
			C- 441486-030V
			C- 441486-040V
4- 456185		LOCK BOARD	C- 441486-010V
			C- 441486-020V
			C- 441486-030V
			C- 441486-040V
4- 456186		LOCK BOARD	C- 441486-010V
			C- 441486-020V
			C- 441486-030V
			C- 441486-040V
4- 456187		LOCK BOARD	C- 441486-010V
			C- 441486-020V
			C- 441486-030V
			C- 441486-040V
4- 456188		LOCK BOARD	C- 441486-010V
			C- 441486-020V
			C- 441486-030V
			C- 441486-040V
3- 456189		PIPE	C- 456274-010V
			C- 469452-010V
			C- 456274-010V
4- 456198		LOCK BOARD	C- 441486-010V
			C- 441486-020V
			C- 441486-030V
			C- 441486-040V
4- 456199		LOCK BOARD	C- 441486-010V
4- 456199		LOCK BOARD	C- 441486-020V
			C- 441486-030V
			C- 441486-040V
G3- 456230		ANGLE BRACKET	C- 441486-010V

PART NO	LAST AM	DESCRIPTION	GROUP NO
			C- 441486-020V
			C- 441486-040V
4- 456231		SHAFT	C- 441486-010V
4- 456235		PIPE	C- 456274-010V
4- 456244		PROTECTIVE COVER	C- 449314-010V
			RK- 547754-010V
			C- 457824-010V
			C- 457824-020V
4- 456245		PROTECTIVE COVER	C- 441850-010V
			C- 441850-020V
4- 456249		PROTECTIVE COVER	RK- 69808-010V
			C- 449314-010V
			C- 441850-010V
			C- 441850-020V
			C- 441850-030V
			C- 457867-010V
			C- 469299-010V
			C- 490800-010V
			C- 457867-010V
			C- 469299-010V
			C- 490800-020V
4- 456256		PROTECTIVE COVER	C- 441850-010V
			C- 441850-020V
2- 456260		COVER	C- 441535-010V
2- 456262		PLATE	C- 441535-010V
2- 456263		PLATE	C- 441534-010V
3- 456264		GLASS	C- 441534-010V
C- 456265-0101	6444 84-01-02	TUBE FLUSHING DEVICE	B- 648101-020V
3- 456266		PIPE	C- 456274-010V
3- 456267		PIPE	C- 456274-010V
3- 456268		PIPE	C- 456274-010V
4- 456269		PIPE	C- 456274-010V
			C- 469452-010V
			C- 469452-020V
			C- 751800-010V
			C- 751800-020V
			C- 456274-010V
4- 456270		PIPE	C- 456274-010V
			C- 469452-010V
			C- 469452-020V
			C- 469452-030V
			C- 456274-010V
4- 456271		PIPE	C- 456274-010V
			C- 469452-010V
			C- 469452-020V
			C- 469452-030V
			C- 456274-010V
4- 456272		PLATE	C- 271453-020V
			C- 271453-030V
			C- 491890-010V
4- 456273		SHIM	C- 456274-010V
C- 456274-010V	9237 86-05-12	AUXILIARY COMPRESSOR	RK- 491404-010V
			B- 648110-010V
C- 456274-0101	9237 86-05-12	AUXILIARY COMPRESSOR	B- 648119-020V
2- 456284		FRONT PLATE	C- 271114-030V
2- 456284		FRONT PLATE	C- 271114-040V
2- 456285		COVER	C- 271114-030V
			C- 271114-040V
2- 456286		SIDE PLATE	C- 271114-030V
3- 456287		COLUMN	C- 271114-030V
			C- 271114-040V
3- 456289		BLOCK	C- 271114-030V
			C- 271114-040V
4- 456290		GUSSET PLATE	C- 271114-030V
			C- 271114-040V
2- 456293		PIPE	C- 456588-010V
			C- 456588-020V
			C- 456588-030V
3- 456301		SPLASH PLATE	C- 256236-020V
3- 456302		SPLASH PLATE	C- 256236-020V
3- 456303		BRACKET	C- 256236-020V
			C- 456348-010V
			C- 456349-010V
			C- 456348-020V
			C- 456349-020V
			C- 456348-020V
			C- 456349-020V

PART NO	LAST AM	DESCRIPTION	GROUP NO
4- 456304		ROLLER	C- 441486-010V
			C- 441486-020V
			C- 441486-030V
4- 456305		ROLLER	C- 441486-010V
			C- 441486-020V
			C- 441486-030V
4- 456306		ROLLER	C- 441486-010V
			C- 441486-020V
			C- 441486-030V
1- 456308		PLATE	C- 295891-010V
			C- 295891-020V
C- 456309-0101	7362 84-12-06	LOWER FORMING RING	B- 648111-020V
			B- 648111-030V
C- 456309-020V	9215 86-05-29	LOWER FORMING RING	B- 648111-060V
			B- 648111-070V
C- 456309-030V	13953 89-11-13	LOWER FORMING RING	B- 648111-080V
C- 456309-040V	12409 89-11-22	LOWER FORMING RING	B- 648111-090V
4- 456310		BRACKET	C- 256806-020V
4- 456311		TORSION SPRING RIGHT	CR- 256212-030V
			CR- 256212-040V
			CR- 256212-050V
			RK- 456712-010V
4- 456312		TORSION SPRING LEFT	CR- 256213-030V
			CR- 256213-040V
			CR- 256213-050V
			RK- 456712-010V
3- 456318		BENDING ROLLER	C- 256866-020V
3- 456319		BENDING ROLLER	C- 256866-020V
4- 456320		SLEEVE	CR- 256212-020V
			CR- 256213-020V
			CR- 256212-020V
			CR- 256213-020V
			CR- 256212-030V
			CR- 256213-030V
C- 456321-010V	6739 86-05-24	DATING UNIT	B- 648107-060V
C- 456321-020V	6739 86-05-24	DATING UNIT ABB ST-R	B- 648107-070V
C- 456321-030V	13921 89-10-31	DATING UNIT TBA/9	B- 648107-080V
C- 456322-010V	8698 86-02-17	DATING UNIT	B- 648107-060V
C- 456322-020V	6739 86-05-24	DATING UNIT	B- 648107-070V
C- 456322-030V	13921 89-10-31	DATING UNIT TBA/9	B- 648107-080V
2- 456323		PLATE	C- 456321-010V
			C- 456322-010V
			C- 456321-020V
2- 456324		SPLASH PLATE	C- 456322-020V
			C- 456321-010V
2- 456325		SPLASH PLATE	C- 456321-020V
			C- 456322-010V
			C- 456322-020V
2- 456326-0001		BEARING BRACKET	C- 456321-010V
			C- 456348-010V
			C- 456321-020V
			C- 456348-020V
2- 456326-0002		BEARING BRACKET	C- 456322-010V
			C- 456349-010V
			C- 456322-020V
			C- 456349-020V
3- 456327		CREASE BAR	C- 456321-010V
			C- 456322-010V
			C- 456321-020V
			C- 456322-020V
			C- 456321-030V
			C- 456322-030V
			C- 752845-010V
			C- 752846-010V
			C- 752913-010V
			C- 752914-010V
3- 456328		BENDING ROLLER	C- 456321-010V
			C- 456322-010V
			C- 456348-010V
			C- 456349-010V
			C- 456321-020V
			C- 456322-020V
			C- 456348-020V
			C- 456349-020V
			C- 456321-030V
			C- 456322-030V
			C- 456348-020V

PART NO	LAST AM	DESCRIPTION	GROUP NO
			C- 456349-020V
3- 456329		BAR	C- 456321-010V
			C- 456322-010V
			C- 456321-020V
			C- 456322-020V
3- 456330		BRACKET	C- 456321-010V
			C- 456322-010V
			C- 456321-020V
			C- 456322-020V
3- 456331		ANGLE BRACKET	C- 456321-010V
			C- 456322-010V
			C- 456321-020V
			C- 456322-020V
			C- 456321-030V
			C- 456322-030V
			C- 752845-010V
			C- 752846-010V
3- 456332		PLATE	C- 456321-010V
			C- 456322-010V
3- 456332		PLATE	C- 456321-020V
			C- 456322-020V
3- 456333		RAIL	C- 456321-010V
			C- 456322-010V
			C- 456321-020V
			C- 456322-020V
			C- 456321-030V
			C- 456322-030V
4- 456334		SHAFT	C- 456321-010V
			C- 456322-010V
			C- 456348-010V
			C- 456349-010V
			C- 456321-020V
			C- 456322-020V
			C- 456348-020V
			C- 456349-020V
			C- 456321-030V
			C- 456322-030V
			C- 456348-020V
			C- 456349-020V
			C- 752845-010V
			C- 752846-010V
			C- 752913-010V
			C- 752914-010V
4- 456336		BRACKET	C- 456321-010V
			C- 456348-010V
			C- 456321-020V
			C- 456348-020V
			C- 456321-030V
			C- 456348-020V
4- 456336		BRACKET	C- 456322-010V
			C- 456349-010V
			C- 456322-020V
			C- 456349-020V
			C- 456322-030V
			C- 456349-020V
4- 456337		BRACKET	C- 456321-010V
			C- 456322-010V
			C- 456348-010V
			C- 456349-010V
			C- 456321-020V
			C- 456322-020V
			C- 456348-020V
			C- 456349-020V
			C- 456321-030V
			C- 456322-030V
			C- 456348-020V
			C- 456349-020V
1- 456339		GUARD	C- 456953-010V
2- 456340		BUSBAR	C- 456953-010V
3- 456341		CABLE	C- 456953-010V
3- 456343		SHAFT	C- 256806-030V
4- 456344		SLEEVE	C- 256806-030V
4- 456345		BRACKET	C- 256806-030V
C- 456348-010V	72 14-10-17	TING UNIT	B- 648107-060V
C- 456348-020V	13[illegible] 89-10-31	TING UNIT	B- 648107-070V
			B- 648107-080V
C- 456349-010V	7211 84-10-17	DATING UNIT	B- 648107-060V

PART NO	LAST AM	DESCRIPTION	GROUP NO
C- 456349-020V	13921 89-10-31	DATING UNIT	B- 648107-070V
C- 456349-020V		DATING UNIT	B- 648107-080V
2- 456350		PLATE	C- 456348-010V
			C- 456349-010V
			C- 456348-020V
			C- 456349-020V
			C- 456348-020V
3- 456362		SPLASH PLATE	C- 456349-020V
			C- 456348-010V
3- 456363		SPLASH PLATE	C- 456348-020V
			C- 456349-010V
4- 456364		SUPPORT	C- 456349-020V
1- 456373		CAM	C- 272839-020V
			C- 256202-020V
			C- 256202-030V
1- 456374		CAM	C- 256202-040V
			C- 256202-020V
			C- 256202-030V
2- 456378		HOSE	C- 256202-040V
			C- 271453-020V
4- 456379		HOLDER	C- 271453-030V
4- 456380		NET	C- 272021-020V
2- 456382		PLATE	C- 272021-020V
			C- 441102-010V
4- 456383		LOCK BOARD	C- 441102-020V
			C- 441102-010V
4- 456384		LOCK BOARD	C- 441102-020V
			C- 441102-010V
4- 456385		LOCK BOARD	C- 441102-020V
			C- 441102-010V
4- 456386		LOCK BOARD	C- 441102-020V
			C- 441102-010V
4- 456387		ROLLER	C- 441102-020V
			C- 441102-010V
4- 456388		ROLLER	C- 441102-020V
			C- 441102-010V
4- 456389		ROLLER	C- 441102-020V
			C- 441102-010V
4- 456390		ROLLER	C- 441102-020V
			C- 441102-010V
4- 456391		SPACER	C- 441102-020V
			C- 441102-010V
4- 456392		SCREW	C- 441102-020V
			C- 441102-010V
3- 456393		PIPE	C- 441102-020V
			C- 456588-010V
			C- 456588-020V
4- 456394		SEALING WASHER	C- 456588-030V
			C- 456588-010V
			C- 456588-020V
4- 456395		GASKET	C- 456588-030V
			C- 456588-010V
			C- 456588-020V
4- 456396		GASKET	C- 456588-030V
			C- 456588-010V
			C- 456588-020V
2- 456397		PIPE	C- 456588-030V
4- 456407		SHIM	C- 271562-030V
			C- 271562-030V
4- 456407		SHIM	C- 271562-040V
			C- 271562-050V
			C- 271562-060V
2- 456411		LID	C- 271562-070V
			C- 295045-030V
			C- 295045-040V
			C- 295045-050V
2- 456415		PLATE	C- 295045-060V
4- 456416		ROLLER	C- 441092-010V
4- 456417		ROLLER	C- 441092-010V
4- 456418		LOCK BOARD	C- 441092-010V
4- 456419		LOCK BOARD	C- 441092-010V
4- 456420		LOCK BOARD	C- 441092-010V
4- 456421		LOCK BOARD	C- 441092-010V
4- 456422		LOCK BOARD	C- 441092-010V
1- 456423		CLEANING BASIN	C- 441092-010V
2- 456424		PLATE	C- 456588-010V
			C- 441088-010V

PART NO	LAST AM	DESCRIPTION	GROUP NO
4- 456425		LOCK BOARD	C- 441088-010V
4- 456426		LOCK BOARD	C- 441088-010V
4- 456427		LOCK BOARD	C- 441088-010V
4- 456428		ROLLER	C- 441088-010V
4- 456429		ROLLER	C- 441088-010V
1- 456430		PIPE	C- 456274-010V
1- 456431		PIPE	C- 456274-010V
1- 456432		DIAGRAM	B- 648109-020V
			B- 648109-030V
			B- 648109-020V
			B- 648109-030V
1- 456433		PLATE	C- 271909-030V
2- 456434		CONNECTION BOX	C- 456435-010V
C- 456435-0101	6740 84-04-18	CONNECTION BOX	C- 441850-010V
C- 456435-0201	9506 88-11-24	CONNECTION BOX	C- 441850-020V
C- 456435-0301	12530 90-01-05	CONNECTION BOX	C- 441850-030V
3- 456436		PLATE	C- 271909-030V
			C- 271909-040V
4- 456449		ANGLE BRACKET	C- 441304-010V
4- 456450		SPACER	C- 441304-010V
P4- 456451		ROLLER	C- 295310-020V
			C- 295310-030V
			C- 295310-040V
			C- 295310-060V
			C- 295310-080V
C- 456455-0101	8267 85-10-14	PIPE WORK	B- 648105-080V
			B- 648105-070V
C- 456455-020V	12529 89-02-09	PIPE WORK	B- 648105-080V
			B- 648105-090V
C- 456457-010V	9646 88-10-28	PLATFORM	B- 648102-060V
			B- 648102-070V
C- 456457-020V	12933 89-04-19	PLATFORM TB/9	B- 648102-080V
C- 456457-030V	14240 90-01-11	PLATFORM TB/9-SBM	B- 648102-090V
C- 456458-010V	8824 86-02-19	PLATFORM	B- 648102-060V
			B- 648102-070V
C- 456458-020V	14240 90-01-11	PLATFORM	B- 648102-080V
C- 456458-030V	14240 90-01-11	PLATFORM	B- 648102-090V
C- 456459-010V	6705 84-04-18	RAILING	B- 648102-060V
			B- 648102-070V
C- 456459-020V	11782 88-06-02	RAILING TB/9	B- 648102-080V
C- 456459-030V	14240 90-01-11	RAILING TB/9-SBM	B- 648102-090V
C- 456460-010V	8034 85-06-26	RAILING	B- 648102-060V
C- 456460-010V		RAILING	B- 648102-070V
C- 456460-020V	12270 88-10-20	RAILING TBA/9	B- 648102-080V
C- 456460-030V	13780 89-09-05	RAILING TBA/9	B- 648102-090V
2- 456468		BRACKET	C- 256233-020V
2- 456469		BRACKET	C- 256233-030V
2- 456470		BRACKET	C- 256233-040V
4- 456472		BRACKET	C- 256014-020V
			C- 256014-030V
			C- 256014-040V
4- 456473		BRACKET	C- 256014-050V
4- 456474		PLATE	C- 256014-020V
			C- 256014-030V
			C- 256014-040V
			C- 256014-050V
G1- 456475		MACHINE BODY	C- 456100-010V
			C- 456100-020V
4- 456496		STRUT	C- 256089-020V
			C- 456555-010V
			C- 456555-020V
4- 456500		PLATE	RK- 479278-010V
			C- 272765-020V
G3- 456503		SIDE GUIDE LEFT	C- 456560-010V
G3- 456504		SIDE GUIDE LEFT	C- 456560-010V
G3- 456505		SIDE GUIDE LEFT	C- 456560-010V
G3- 456506		SIDE GUIDE RIGHT	C- 456560-010V
G3- 456507		SIDE GUIDE RIGHT	C- 456560-010V
G3- 456508		SIDE GUIDE RIGHT	C- 456560-010V
4- 456513		LINKPIECE OUTER	C- 456560-010V
4- 456514		KEY	C- 456560-010V
3- 456515		SHAFT	C- 272028-030V
			C- 272028-040V
			C- 272028-050V
4- 456516		BEARING COVER	RK- 469981-010V
			C- 256014-030V

PART NO	LAST AM	DESCRIPTION	GROUP NO
			C- 272028-030V
			C- 256014-030V
			C- 272028-030V
			C- 256014-040V
			C- 272028-040V
			C- 256014-050V
			C- 272028-050V
3- 456627		BENDING ROLLER	C- 272028-030V
			C- 272028-040V
			C- 272028-050V
G1- 456628		BEARING BRACKET	C- 456546-010V
			C- 456546-020V
4- 456629		HOLDER	C- 456546-010V
			C- 456546-020V
2- 456630		PIPE	C- 456556-010V
2- 456632		PLATE	C- 441102-010V
			C- 441102-020V
3- 456633		BRACKET	C- 441102-010V
4- 456634		LOCK BOARD	C- 441102-010V
			C- 441102-020V
4- 456635		LOCK BOARD	C- 441102-010V
			C- 441102-020V
4- 456636		LOCK BOARD	C- 441102-010V
			C- 441102-020V
4- 456637		LOCK BOARD	C- 441102-010V
			C- 441102-020V
4- 456638		ROLLER	C- 441102-010V
			C- 441102-020V
4- 456639		ROLLER	C- 441102-010V
			C- 441102-020V
4- 456640		ROLLER	C- 441102-010V
			C- 441102-020V
4- 456641		ROLLER	C- 441102-010V
			C- 441102-020V
4- 456642		ROLLER	C- 441102-010V
			C- 441102-020V
4- 456643		SHAFT	C- 441102-010V
			C- 441102-020V
3- 456644		BENDING ROLLER	C- 272084-020V
			C- 272473-010V
			C- 272084-020V
			C- 272473-010V
			C- 272084-020V
			C- 272473-010V
			C- 272084-020V
			C- 272473-010V
			C- 272084-030V
			C- 272473-010V
			C- 272359-020V
			C- 272359-030V
			C- 449323-010V
			C- 752029-010V
			C- 752030-010V
4- 456645		FLANGE	C- 272359-020V
			C- 449323-010V
			C- 752029-010V
			C- 752030-010V
C- 456646-010V	12171 88-09-14	IMPULSE TRANSMITTER	B- 648108-060V
			B- 648108-070V
C- 456646-020V	12171 88-09-14	IMPULSE TRANSMITTER	B- 648108-080V
2- 456647		PLATE	C- 441092-010V
4- 456648		LOCK BOARD	C- 441092-010V
4- 456649		LOCK BOARD	C- 441092-010V
4- 456650		ROLLER	C- 441092-010V
4- 456651		ROLLER	C- 441092-010V
4- 456653		ROLLER	C- 441092-010V
2- 456654		BRACKET	C- 295470-030V
			C- 295470-040V
C- 456655-0101	8271 85-10-14	SUCTION PIPE	B- 648111-060V
			B- 648111-070V
C- 456655-0201	12754 89-06-19	SUCTION PIPE	B- 648111-080V
C- 456655-0301	12181 89-11-22	SUCTION PIPE	B- 648111-090V
C- 456656-0101	8023 85-08-12	PEROXIDE PIPE	B- 648111-060V
			B- 648111-070V
C- 456656-0201	8462 85-12-09	PEROXIDE PIPE	B- 648111-080V
			B- 648111-090V
1- 456657		BUSBAR	C- 271799-030V

PART NO	LAST AM	DESCRIPTION	GROUP NO
1- 456658		BUSBAR	C- 271791-030V
1- 456659		SPACER PIECE	C- 295883-020V
C- 456660-010V	10299 88-05-24	DISCHARGE CHUTE	B- 648105-060V
			B- 648105-070V
			B- 648105-080V
			B- 648105-090V
4- 456661		BRACKET	C- 271833-020V
			C- 271533-030V
			C- 491650-010V
2- 456662		PLATE	C- 441088-010V
4- 456663		LOCK BOARD	C- 441088-010V
4- 456664		LOCK BOARD	C- 441088-010V
4- 456665		ROLLER	C- 441088-010V
4- 456666		ROLLER	C- 441088-010V
C- 456667-0101	6626 84-03-20	SEPARATION INSERT	B- 648105-060V
			B- 648105-070V
			B- 648105-080V
			B- 648105-090V
1- 456668		PLATE	C- 456667-010V
4- 456669		BRACKET	C- 456667-010V
1- 456670		CONNECTION BOX	C- 295045-030V
2- 456671		HOLDER	C- 295883-020V
			C- 295883-030V
2- 456672		HOLDER	C- 295883-020V
			C- 295883-030V
1- 456673		FRONT PLATE	C- 456100-010V
			C- 456100-020V
2- 456675		PIPE	C- 295045-030V
			C- 295045-040V
4- 456676		PLATE	C- 256233-020V
1- 456682		PLATE	C- 256236-020V
2- 456683		PLATE	C- 256236-020V
3- 456684		RAIL	C- 256236-020V
C- 456688-010V	9627 86-10-17	CLEANING SYSTEM	B- 648105-060V
			B- 648105-070V
C- 456688-020V	12529 89-02-09	CLEANING SYSTEM	B- 648105-080V
C- 456688-030V	14278 90-01-05	CLEANING SYSTEM	B- 648105-090V
3- 456689-0001		V-BELT PULLEY	RK- 539412-010V
			C- 271128-030V
			RK- 469760-010V
3- 456689-0002		V-BELT PULLEY	RK- 539412-010V
			C- 271128-030V
			RK- 469760-010V
3- 456689-0003		V-BELT PULLEY	RK- 548388-010V
			C- 271128-030V
3- 456689-0004		V-BELT PULLEY	RK- 548388-010V
			C- 271128-030V
3- 456690		SETTING TOOL	RK- 78613-010V
			B- 648119-020V
			B- 648119-080V
			B- 648119-020V
			B- 648119-080V
3- 456691-0001		PIPE	C- 456976-010V
2- 456691-0002		PIPE	C- 456976-010V
			C- 456976-020V
2- 456691-0003		PIPE	C- 456976-030V
			C- 456976-040V
2- 456692-0001		PIPE	C- 456976-010V
2- 456692-0002		PIPE	C- 456976-010V
			C- 456976-020V
			C- 456976-030V
			C- 456976-040V
1- 456696		BOX	C- 295470-030V
1- 456697		CONNECTION PIPE	C- 271866-030V
			C- 271866-040V
1- 456697		CONNECTION PIPE	C- 271866-050V
2- 456698		CABLE CONDUIT	C- 271866-030V
			C- 271866-040V
			C- 271866-050V
2- 456699		PIPE	C- 271866-030V
			C- 271866-040V
			C- 271866-050V
C- 456600-0101	6292 84-04-25	CONNECTION BOX	C- 449314-010V
3- 456601		CONNECTION BOX	C- 456600-010V
4- 456605-0003		SPACER	CR- 283618-020V
C- 456607-0101	[illegible] 84-10-24	HEATING BLOCK	C- 449314-010V
C- 456608-0101	6292 84-04-25	ELEMENT	C- 456607-010V

PART NO	LAST AM	DESCRIPTION	GROUP NO
			C- 469316-010V
			C- 456655-010V
4- 456609		SHAFT	CR- 283618-020V
4- 456610		HOLDER	C- 449314-010V
C- 456612-0101	9177 88-07-15	BENDING ROLLER	B- 648118-060V
4- 456613-0001		SHAFT	RK- 536470-010V
			RK- 547726-010V
			C- 456612-010V
			C- 533844-010V
4- 456614-0001		SPACER	RK- 536470-010V
			RK- 547726-010V
			C- 456612-010V
			C- 533844-010V
2- 456615		CABLE DUCT	C- 457924-010V
			C- 457924-020V
2- 456621		SHAFT	C- 469173-010V
3- 456622		TIE ROD	C- 456696-010V
			C- 456696-020V
3- 456623		TIE ROD	C- 456696-010V
			C- 456696-020V
3- 456624		BEARING HOUSING	C- 469173-010V
3- 456625		BEARING HOUSING	C- 469173-010V
4- 456626		ROD	C- 469173-010V
4- 456627		ROD	C- 469173-010V
4- 456628		KNOB	C- 469173-010V
4- 456629		KNOB	C- 469173-010V
4- 456630		LOCK WASHER	C- 469173-010V
4- 456631		SPACER	C- 456696-010V
			C- 456696-020V
3- 456632		BRACKET	C- 283628-010V
4- 456633		BRACKET	C- 283628-010V
4- 456634		PLATE	C- 283628-010V
3- 456635		RULER	C- 469173-010V
3- 456636		RULER	C- 469173-010V
3- 456643		CLAMP	C- 469173-010V
3- 456645		CLAMP	C- 469173-010V
G2- 456646		REEL	C- 469173-010V
G2- 456647		REEL	C- 469173-010V
G2- 456648		REEL	C- 469173-010V
G2- 456649		REEL	C- 469173-010V
G2- 456650		REEL	C- 469173-010V
G2- 456652		REEL	C- 469173-010V
2- 456660		COVER PLATE	C- 457867-010V
P3- 456663		INDUCTOR	RK- 547760-010V
			C- 457866-010V
			C- 469316-010V
			C- 457866-010V
P3- 456663		INDUCTOR	C- 469316-010V
P3- 456665		INDUCTOR	RK- 547760-010V
			C- 457866-010V
			C- 469316-010V
			C- 457866-010V
			C- 469316-010V
1- 456672		LEG	C- 457861-010V
			C- 457861-020V
C- 456674-0101	7394 86-07-18	DRIVE SHAFT	B- 648118-060V
2- 456675		CURVE PT-SEALING	C- 456674-010V
			C- 476349-020V
2- 456676		CAM	C- 456674-010V
			C- 476349-020V
2- 456677		CURVE LS-SEALING	C- 456674-010V
			C- 476349-020V
2- 456678		CAM	C- 456674-010V
			C- 476349-020V
C- 456679-0101	6295 84-04-17	WASTE BOX	B- 648118-060V
			B- 648118-070V
2- 456681		BRACKET	C- 283635-010V
2- 456682		BRACKET	C- 283635-010V
4- 456683		BRACKET	C- 283635-010V
4- 456684		SPRING HOLDER	CR- 294695-010V
4- 456685		WASHER	CR- 294695-010V
3- 456686		BRACKET	C- 283635-010V
4- 456687		TOOTHED PULLY	CR- 283618-020V
C- 456688-010V	9708 88-12-17	DRIVE ROLLER	C- 456696-010V
			C- 456696-020V
4- 456689		ROLLER	RK- 547782-010V
			C- 449368-010V

PART NO	LAST AM	DESCRIPTION	GROUP NO
4- 456695		SPRING	CR- 294695-010V
C- 456696-010V	9177 88-07-15	PAPER FEED	B- 648118-060V
C- 456696-020V	10583 87-06-24	PAPER FEED	B- 648118-070V
RK- 456710-0101	6868 84-06-18	TRANSMISSION	B- 648110-010V
RK- 456711-0101	11981 89-06-15	REB.KIT CATCH LIFTING CAM	B- 648110-010V
RK- 456712-010V	11980 89-06-21	REB.KIT PRESSURE JAW	B- 648110-010V
RK- 456713-0101	12208 89-01-24	CAM SEGMENT ARM CAM	RK- 752408-010V
			RK- 752410-010V
			RK- 752412-010V
RK- 456713-0102	12208 89-01-24	CAM SEGMENT ARM CAM	RK- 456716-010V
			RK- 456717-010V
			RK- 752414-010V
RK- 456713-0103	12208 89-01-24	CAM SEGMENT ARM CAM	RK- 456716-010V
			RK- 456717-010V
			RK- 752414-010V
RK- 456713-0104	12208 89-01-24	CAM SEGMENT ARM CAM	RK- 752408-010V
			RK- 752410-010V
			RK- 752412-010V
RK- 456713-0105	12208 89-01-24	CAM SEGMENT ARM CAM	RK- 456716-010V
			RK- 456717-010V
			RK- 752414-010V
RK- 456713-0106	12208 89-01-24	CAM SEGMENT ARM CAM	RK- 752408-010V
			RK- 752410-010V
			RK- 752412-010V
RK- 456713-0107	12208 89-01-24	CAM SEGMENT ARM CAM	RK- 456716-010V
			RK- 456717-010V
			RK- 752414-010V
RK- 456713-0108	12208 89-01-24	CAM SEGMENT ARM CAM	RK- 752408-010V
			RK- 752410-010V
RK- 456713-0108		CAM SEGMENT ARM CAM	RK- 752412-010V
RK- 456713-0109	12208 89-01-24	CAM SEGMENT ARM CAM	RK- 456716-010V
			RK- 456717-010V
			RK- 752414-010V
RK- 456713-0110	12208 89-01-24	CAM SEGMENT ARM CAM	RK- 456716-010V
			RK- 456717-010V
			RK- 752414-010V
RK- 456714-0101	9509 88-11-28	BRAKE	RK- 456716-010V
			RK- 456717-010V
			RK- 752408-010V
			RK- 752410-010V
			RK- 752412-010V
			RK- 752414-010V
RK- 456715-0101	12867 89-06-27	REB KIT HYDRAULIC SEALING	B- 648110-010V
			B- 648110-060V
RK- 456716-010V	12871 89-11-21	REB KIT OVERL JAW SYSTEM	B- 648110-010V
RK- 456717-010V	12872 89-11-21	REB KIT OVERL JAW SYSTEM	B- 648110-060V
			B- 648110-070V
3- 456730-0001		PIPE	C- 456935-010V
3- 456730-0002		PIPE	C- 456935-010V
3- 456730-0003		PIPE	C- 456935-010V
3- 456730-0004		PIPE	C- 456935-010V
3- 456730-0005		PIPE	C- 456935-010V
3- 456730-0006		PIPE	C- 456935-010V
2- 456731-0001		PIPE	C- 456739-010V
			C- 456935-010V
			C- 456739-010V
			C- 456935-010V
			C- 456739-010V
			C- 456935-020V
			C- 752898-010V
2- 456731-0002		PIPE	C- 456739-010V
			C- 456935-010V
			C- 456739-010V
			C- 456935-010V
			C- 456739-010V
			C- 456935-020V
			C- 752898-010V
2- 456731-0003		PIPE	C- 456935-010V
			C- 456935-020V
			C- 752898-010V
3- 456732		PIPE	C- 456739-010V
			C- 456935-010V
			C- 456739-010V
			C- 456935-010V
			C- 456739-010V
			C- 456935-020V
			C- 752898-010V

PART NO	LAST AM	DESCRIPTION	GROUP NO
3- 456733		ARM	C- 441000-030V
4- 456734		SHAFT	C- 441000-030V
4- 456735		PIN	C- 441000-030V
4- 456736		PLATE	C- 441000-030V
2- 456737-0001		PIPE	C- 456835-010V
2- 456737-0002		PIPE	C- 456835-010V
2- 456738-0001		PIPE	C- 456835-010V
2- 456738-0002		PIPE	C- 456835-010V
C- 456739-010V	12082 88-09-09	PIPE WORK TB/9	B- 648107-060V
			B- 648107-070V
			B- 648107-080V
2- 456740-0001		PIPE 200	C- 456739-010V
2- 456740-0002		PIPE 200	C- 456739-010V
2- 456741-0001		PIPE 201	C- 456739-010V
2- 456741-0002		PIPE 201	C- 456739-010V
2- 456742-0001		PIPE 241	C- 456739-010V
2- 456742-0002		PIPE 241	C- 456739-010V
2- 456743-0001		PIPE 240	C- 456739-010V
2- 456743-0002		PIPE 240	C- 456739-010V
3- 456744		HUB	C- 256201-020V
			C- 256202-020V
			C- 256201-020V
			C- 256202-020V
			C- 256201-020V
			C- 256202-020V
			C- 256201-030V
			C- 256202-030V
			C- 256201-040V
			C- 256202-040V
1- 456750		APPLIANCE BOX	C- 456827-010V
3- 456751		BRACKET	C- 456827-010V
4- 456753		SPACER	C- 456827-010V
2- 456755		BLOCK	C- 456757-010V
			C- 456757-020V
1- 456756		BLOCK	C- 456757-010V
			C- 456757-020V
C- 456757-0101	11934 88-06-10	AIR INJECTOR	C- 271909-030V
			C- 271909-040V
C- 456757-0201	14200 90-02-13	AIR INJECTOR	C- 271909-050V
3- 456758		CONNECTION	C- 271866-030V
			C- 271866-040V
			C- 271866-050V
3- 456759		TPC BAR	C- 77091-010V
			C- 77091-020V
			C- 77091-030V
			B- 648119-020V
			B- 648119-060V
			B- 648119-020V
			B- 648119-060V
3- 456760-0001		FOLDING FLAP CAM	C- 256206-020V
			C- 256207-020V
			C- 256206-020V
			C- 256207-020V
			C- 256206-020V
			C- 256207-020V
			C- 256206-020V
			C- 256207-020V
			C- 256206-020V
3- 456760-0002		FOLDING FLAP CAM	C- 256206-020V
			C- 256207-020V
			C- 256206-020V
			C- 256207-020V
			C- 256206-020V
			C- 256207-020V
			C- 256206-020V
			C- 256207-020V
			C- 256206-020V
3- 456760-0002		FOLDING FLAP CAM	C- 256207-020V
			C- 256206-020V
3- 456760-0003		FOLDING FLAP CAM	C- 256207-020V
			C- 256206-020V
			C- 256207-020V
			C- 256206-020V
			C- 256207-020V

PART NO	LAST AM	DESCRIPTION	GROUP NO
			C- 256206-020V
			C- 256207-020V
			C- 256206-020V
			C- 256207-020V
			C- 256206-020V
			C- 256207-020V
			C- 256206-020V
			C- 256207-020V
3- 456760-0006		FOLDING FLAP CAM	C- 256206-020V
			C- 256207-020V
			C- 256206-020V
			C- 256207-020V
			C- 256206-020V
			C- 256207-020V
			C- 256206-020V
			C- 256207-020V
			C- 256206-020V
3- 456760-0007		FOLDING FLAP CAM	C- 256206-020V
			C- 256207-020V
			C- 256206-020V
			C- 256207-020V
			C- 256206-020V
			C- 256207-020V
			C- 256206-020V
			C- 256207-020V
			C- 256206-020V
3- 456760-0008		FOLDING FLAP CAM	C- 256206-020V
			C- 256207-020V
			C- 256206-020V
			C- 256207-020V
			C- 256206-020V
			C- 256207-020V
			C- 256206-020V
			C- 256207-020V
			C- 256206-020V
3- 456760-0010		FOLDING FLAP CAM	C- 256206-020V
			C- 256207-020V
			C- 256206-020V
			C- 256207-020V
			C- 256206-020V
3- 456760-0010		FOLDING FLAP CAM	C- 256206-020V
			C- 256207-020V
			C- 256206-020V
			C- 256207-020V
			C- 256206-020V
3- 456760-0011		FOLDING FLAP CAM	C- 256206-020V
			C- 256207-020V
			C- 256206-020V
			C- 256207-020V
			C- 256206-020V
			C- 256207-020V
			C- 256206-020V
			C- 256207-020V
			C- 256206-020V
			C- 256207-020V
			C- 256206-020V
			C- 256207-020V
			C- 256206-020V
			C- 256207-020V
			C- 256206-020V
			C- 256207-020V
3- 456762		ELBOW PIPE	C- 456812-010V
			C- 272381-030V
4- 456763		PLATE	C- 456812-010V
			C- 272381-030V
4- 456764		CONNECTION	C- 456812-010V
			C- 272381-030V
4- 456765		HINGE	C- 456812-010V
			C- 272381-030V
3- 456767		CREASE BAR	C- 456321-010V

PART NO	LAST AM	DESCRIPTION	GROUP NO
			C- 456322-010V
			C- 456348-010V
			C- 456349-010V
			C- 456321-020V
			C- 456322-020V
			C- 456348-020V
			C- 456349-020V
			C- 456321-030V
			C- 456322-030V
			C- 456348-020V
			C- 456349-020V
			C- 752645-010V
			C- 752646-010V
			C- 752913-010V
			C- 752914-010V
3- 456766		SHAFT	C- 456348-010V
			C- 456349-010V
			C- 456348-020V
			C- 456349-020V
			C- 456348-020V
			C- 456349-020V
3- 456771		HOLDER FOR INK BOTTLE	C- 434774-020V
			C- 434074-020V
			C- 434774-020V
			C- 434074-020V
4- 456772		BRACKET	C- 434774-020V
			C- 434774-030V
			C- 434774-020V
			C- 434774-030V
4- 456773		BRACKET	C- 434074-020V
			C- 434074-030V
			C- 434074-020V
			C- 434074-030V
1- 456774-0001		GABLE	C- 456321-010V
1- 456774-0001		GABLE	C- 456321-020V
1- 456774-0002		GABLE	C- 456322-010V
			C- 456322-020V
1- 456775-0001		GABLE	C- 456321-010V
			C- 456321-020V
1- 456775-0002		GABLE	C- 456322-010V
			C- 456322-020V
4- 456776		MANTLE	C- 456321-010V
			C- 456322-010V
			C- 456321-020V
			C- 456322-020V
			C- 456321-030V
			C- 456322-030V
4- 456777		SLEEVE	C- 456321-010V
			C- 456322-010V
			C- 456321-020V
			C- 456322-020V
			C- 456321-030V
			C- 456322-030V
4- 456778		SHAFT	C- 456321-010V
			C- 456322-010V
			C- 456321-020V
			C- 456322-020V
			C- 456321-030V
			C- 456322-030V
3- 456781		BRACKET	RK- 456793-010V
3- 456782		BOTTOM	RK- 456793-010V
3- 456783		TOP	RK- 456793-010V
3- 456784		LID	C- 752173-010V
			RK- 456793-010V
			RK- 469981-010V
			C- 256014-030V
			C- 256014-040V
3- 456785		PLATE	RK- 456793-010V
4- 456786		BLOCK	RK- 456793-010V
4- 456788		BRACKET	RK- 456793-010V
4- 456789		HOLDER	RK- 456793-010V
4- 456790		SPRING	RK- 456793-010V
3- 456791		CONNECTION	RK- 456804-010V
			C- 272381-030V
RK- 456793-0101	8079 86-08-19	BATH	RK- 469808-010V
3- 456794		RING	RK- 456799-010V
			C- 272021-030V

PART NO	LAST AM	DESCRIPTION	GROUP NO
			C- 272021-040V
			C- 272021-050V
4- 456795		RING	RK- 456799-010V
4- 456796		ROLLER	RK- 456799-010V
			C- 272021-030V
			C- 272021-040V
			C- 272021-050V
4- 456797		AXLE SUPPORT	RK- 456799-010V
			C- 272021-030V
			C- 272021-040V
			C- 272021-050V
4- 456798		PIN	RK- 456799-010V
			RK- 469984-010V
			C- 272021-030V
			C- 272021-040V
RK- 456799-0101	9988 86-12-05	ASEPTIC CHAMBER	RK- 469808-010V
3- 456800		DRILLING JIG	RK- 469808-010V
4- 456801		ARM	RK- 456799-010V
			C- 272021-030V
			C- 272021-040V
			C- 272021-050V
4- 456802		CLAMP RING	RK- 456799-010V
			RK- 469984-010V
			C- 272021-030V
4- 456803		PIVOT PIN	RK- 456799-010V
			RK- 469984-010V
			C- 272021-030V
			C- 272021-040V
			C- 272021-050V
RK- 456804-0101	8079 85-06-19	TANK	RK- 469808-010V
3- 456805		LID	RK- 456804-010V
			C- 272381-030V
3- 456807		COVER	RK- 469988-010V
3- 456809		SHAFT	RK- 469988-010V
			C- 751702-010V
4- 456811		SHAFT	C- 456321-010V
			C- 456322-010V
			C- 456348-010V
			C- 456349-010V
			C- 456321-020V
			C- 456322-020V
			C- 456348-020V
			C- 456349-020V
			C- 456321-030V
			C- 456322-030V
			C- 456348-020V
			C- 456349-020V
C- 456812-0101	6755 84-04-17	SUCTION PIPE	C- 272381-020V
			RK- 469764-010V
3- 456813		SHAFT	C- 456321-010V
			C- 456322-010V
			C- 456321-020V
			C- 456322-020V
			C- 456321-030V
			C- 456322-030V
4- 456814		SCREW	C- 256236-020V
			C- 295112-020V
			C- 272445-020V
4- 456815-0001		SPACER	C- 256236-020V
			C- 295112-020V
			C- 272445-020V
4- 456815-0002		SPACER	C- 256236-020V
			C- 295112-020V
			C- 272445-020V
4- 456815-0003		SPACER	C- 272445-020V
4- 456815-0004		SPACER	C- 256236-020V
			C- 295112-020V
			C- 272445-020V
4- 456815-0005		SPACER	C- 295112-020V
4- 456816		WASHER	C- 295112-020V
4- 456817-0001		SHIM	C- 456321-010V
			C- 456322-010V
			C- 456348-010V
			C- 456349-010V
			C- 456321-020V
4- 456817-0001		SHIM	C- 456322-020V
			C- 456348-020V

PART NO	LAST AM	DESCRIPTION	GROUP NO
			C- 456349-020V
			C- 456321-030V
			C- 456322-030V
			C- 456348-020V
			C- 456349-020V
			C- 752645-010V
			C- 752646-010V
			C- 752913-010V
			C- 752914-010V
			C- 751094-010V
			C- 272014-030V
4- 456817-0002		SHIM	C- 751094-010V
			C- 272014-030V
3- 456818		COVER	C- 272028-020V
			C- 272028-030V
2- 456819		CUTTING JAW OUTER	CR- 256204-020V
			CR- 256205-020V
			CR- 256204-020V
			CR- 256205-020V
			CR- 256204-030V
			CR- 256205-030V
			CR- 256204-040V
			CR- 256205-040V
			CR- 256204-040V
			CR- 256205-040V
			CR- 256204-050V
			CR- 256205-050V
2- 456820		CUTTING JAW OUTER	CR- 256204-020V
			CR- 256205-020V
			CR- 256204-020V
			CR- 256205-020V
			CR- 256204-030V
			CR- 256205-030V
			CR- 256204-040V
			CR- 256205-040V
			CR- 256204-040V
			CR- 256205-040V
			CR- 256204-050V
			CR- 256205-050V
3- 456821		PIPE	C- 271866-030V
			C- 271866-040V
			C- 271866-050V
3- 456822		PIPE	C- 271866-030V
			C- 271866-040V
3- 456823		PIPE	C- 271866-030V
			C- 271866-040V
			C- 271866-050V
3- 456824		PIPE	C- 271866-030V
			C- 271866-040V
			C- 271866-050V
3- 456825		BRACKET	C- 271866-030V
			C- 271866-040V
			C- 271866-050V
4- 456826		PIPE CLAMP	C- 271866-030V
			C- 271866-040V
			C- 271866-050V
C- 456827-0101	10784 89-05-05	CONNECTION BOX	C- 456100-010V
C- 456827-0101		CONNECTION BOX	C- 456100-020V
4- 456829		SHIM	C- 271442-030V
			C- 271443-030V
			C- 271442-030V
			C- 271443-030V
			C- 271442-030V
			C- 271443-030V
			C- 271442-030V
			C- 271443-030V
3- 456830		PIPE	C- 295282-030V
2- 456831		CABLE LEAD-IN PLATE	C- 295883-020V
2- 456832		CABLE LEAD-IN PLATE	C- 295883-020V
			C- 295883-030V
1- 456833		PIPE	C- 272381-030V
2- 456834		PUMP PIPE	C- 272381-030V
			RK- 469764-010V
2- 456835		RETURN PIPE	C- 272381-030V
C- 456836-010V	6877 84-08-04	CLEANING SYSTEM	B- 648111-030V
C- 456836-020V	10157 87-02-07	CLEANING SYSTEM	B- 648111-060V
			B- 648111-070V

PART NO	LAST AM	DESCRIPTION	GROUP NO
C- 456836-030V	12569 89-02-15	CLEANING SYSTEM	B- 648111-080V
C- 456836-0401	12775 89-12-02	CLEANING SYSTEM	B- 648111-090V
1- 456837		HOLDER	C- 456309-020V
			C- 456309-030V
			C- 456309-040V
4- 456838		LOCK BOARD	C- 456309-020V
			C- 456309-030V
			C- 456309-040V
4- 456839		LOCK BOARD	C- 456309-020V
			C- 456309-030V
			C- 456309-040V
4- 456840		LOCK BOARD	C- 456309-020V
			C- 456309-030V
			C- 456309-040V
2- 456841		CONNECTION BOX	C- 295441-020V
			C- 295441-030V
2- 456845		BRACKET	C- 256973-030V
			RK- 456710-010V
4- 456846		CLIP	C- 256973-030V
			C- 256219-030V
			C- 256220-030V
			C- 256219-030V
			C- 256220-030V
			C- 256219-030V
			C- 256220-030V
			C- 256219-030V
			C- 256220-030V
			RK- 456710-010V
3- 456847		PLATE	C- 256219-030V
			C- 256220-030V
			C- 256219-030V
			C- 256220-030V
			C- 256219-030V
			C- 256220-030V
			C- 256219-030V
			C- 256220-030V
			RK- 456710-010V
4- 456848		HOSE COUPLING	C- 272381-030V
			RK- 469764-010V
2- 456852		DISTRIBUTOR	C- 456455-010V
			C- 456455-020V
3- 456853-0001		PIPE CLAMP	C- 456455-010V
			C- 456455-020V
3- 456853-0002		PIPE CLAMP	C- 456455-010V
			C- 456455-020V
3- 456853-0003		PIPE CLAMP	C- 456455-010V
			C- 456455-020V
4- 456854-0001		CLIP	C- 456455-010V
			C- 456455-020V
4- 456854-0002		CLIP	C- 456455-010V
			C- 456455-020V
4- 456855		PIPE	C- 456455-010V
4- 456857		BRACKET	C- 736259-010V
			C- 456836-020V
			C- 456836-030V
			C- 456836-040V
2- 456858		PIPE	C- 456836-010V
			C- 456836-020V
			C- 456836-030V
			C- 456836-040V
2- 456859-0001		PIPE	C- 456836-010V
2- 456859-0002		PIPE	C- 456836-010V
			C- 456836-020V
			C- 456836-030V
			C- 456836-040V
3- 456860		PIPE	C- 295282-030V
			C- 456836-020V
1- 456861		PIPE	C- 456836-010V
4- 456862		PLATE	C- 441850-010V
			C- 441850-020V
			C- 441850-030V
4- 456863		BRACKET	C- 441850-010V
			C- 441850-020V
4- 456864-0001		LOCK RIGHT	CR- 256436-020V
			CR- 256436-030V
			CR- 256436-040V
			CR- 256436-050V

PART NO	LAST AM	DESCRIPTION	GROUP NO
			C- 256208-020V
			C- 256207-020V
			C- 256208-020V
			C- 256207-020V
			C- 256208-020V
4- 272640-0007		CURVE	C- 256207-020V
			C- 256208-020V
			C- 256207-020V
			C- 256208-020V
			C- 256207-020V
			C- 256208-020V
			C- 256207-020V
			C- 256208-020V
			C- 256207-020V
			C- 256208-020V
			C- 256207-020V
4- 272640-0008		CURVE	C- 256208-020V
			C- 256207-020V
			C- 256208-020V
			C- 256207-020V
			C- 256208-020V
			C- 256207-020V
			C- 256208-020V
			C- 256207-020V
			C- 256208-020V
4- 272640-0009		CURVE	C- 256207-020V
			C- 256208-020V
			C- 256207-020V
			C- 256208-020V
			C- 256207-020V
			C- 256208-020V
			C- 256207-020V
			C- 256208-020V
			C- 256207-020V
2- 272641		COLUMN	C- 256208-020V
2- 272642		COLUMN	C- 256207-020V
2- 272643		CYLINDER	CR- 256212-020V
			CR- 256213-020V
			CR- 256212-020V
4- 272644		PISTON	CR- 256213-020V
			CR- 256212-020V
			CR- 256213-020V
			CR- 256212-020V
			CR- 256213-020V
			CR- 256212-030V
3- 272645		RAIL	CR- 256213-030V
			C- 256208-020V
			C- 256207-020V
			C- 256208-020V
			C- 256207-020V
			C- 256208-020V
			C- 256207-020V
			C- 256208-020V
			C- 256207-020V
			C- 256208-020V
2- 272646		HOLDER	C- 256207-020V
4- 272647		SHAFT	C- 271116-020V
			C- 271116-020V
4- 272648		PULLEY	C- 271116-030V
			C- 271116-020V
4- 272649		SPACER	C- 271116-030V
4- 272650		SHAFT	C- 256272-020V
4- 272651		WASHER	C- 272652-010V
			C- 272652-020V
C- 272652-0101	6317 83-11-03	CHAIN TENSIONER	C- 272652-010V
			B- 648105-020V
			B- 648105-030V

PART NO	LAST AM	DESCRIPTION	GROUP NO
			B- 648106-040V
C- 272652-0201	6153 93-11-15	CHAIN TENSIONER	C- 272765-030V
C- 272652-0301	8667 98-02-17	CHAIN TENSIONER	C- 272765-040V
			C- 272765-050V
			C- 272765-060V
1- 272653		MACHINE BODY	C- 271109-020V
3- 272654		ECCENTRIC SHAFT	C- 256208-020V
			C- 256207-020V
			C- 256208-020V
			C- 256207-020V
			C- 256208-020V
			C- 256207-020V
			C- 256208-020V
			C- 256207-020V
			C- 256208-020V
			C- 256207-020V
			C- 256208-020V
			C- 256207-020V
3- 272656		KNIFE HOLDER	CR- 256208-020V
2- 272657		PIPE	C- 256802-020V
1- 272658		DISTRIBUTOR	C- 256802-020V
2- 272659		SIDE PIECE	C- 271109-020V
			C- 441695-010V
2- 272660		SIDE PIECE	C- 441695-020V
			C- 271109-020V
			C- 441695-010V
4- 272661		STEP	C- 441695-020V
			C- 271109-020V
			C- 441695-010V
4- 272663		HOLDER	C- 441695-020V
2- 272664		BRACKET	C- 271109-020V
			C- 256808-020V
2- 272667		FRONT PLATE	C- 256808-030V
			C- 256555-020V
2- 272668		FRONT PLATE	C- 256555-030V
			C- 256555-020V
2- 272669		FRONT PLATE	C- 256555-030V
			C- 256555-020V
2- 272670		CHUTE	C- 256555-030V
			C- 256555-020V
			C- 256555-030V
			C- 456100-010V
2- 272671		CHUTE	C- 456100-020V
			C- 256555-020V
			C- 256555-030V
			C- 456100-010V
3- 272672		HOLDER	C- 456100-020V
4- 272673		LEG	C- 256555-020V
			C- 256555-020V
			C- 256555-030V
			C- 271109-020V
			C- 441695-010V
1- 272674-0003		COVER	C- 441695-020V
			C- 256555-020V
1- 272674-0004		COVER	C- 256555-030V
			C- 256555-020V
1- 272674-0006		COVER	C- 256555-030V
			C- 256555-020V
1- 272674-0007		COVER	C- 256555-030V
			C- 256555-020V
2- 272677		BRANCH PIPE	C- 256555-030V
			C- 271281-020V
4- 272679		PIPE	C- 271281-030V
			C- 271281-020V
			C- 271281-030V
			C- 271281-040V
3- 272681		SPLASH GUARD	C- 271281-050V
3- 272682		FILLING PIPE	C- 272381-020V
1- 272686		FLUSH PIPE	C- 272381-020V
G1- 272689		BRACKET	C- 256233-020V
			C- 256217-020V
			C- 256217-030V
			C- 256217-040V
3- 272690		COVER	C- 256808-020V
			C- 256808-030V
4- 272691		BRACKET	C- 256808-020V
			C- 256808-030V

PART NO	LAST AM	DESCRIPTION	GROUP NO
4- 272692		LID	C- 256808-020V
			C- 256808-030V
4- 272693		RING	C- 256808-020V
			C- 256808-030V
4- 272694		CATCH	C- 256808-020V
			C- 256808-030V
2- 272696		HOLDER	C- 271513-020V
			C- 271513-030V
			C- 271513-040V
			C- 271513-050V
			C- 751885-020V
3- 272697		BRACKET	C- 272404-020V
3- 272697		BRACKET	C- 272404-030V
			C- 272404-040V
			C- 272404-050V
			C- 272404-060V
4- 272698		BRACKET	C- 271513-020V
			C- 271513-030V
			C- 271513-040V
			C- 271513-050V
			C- 751885-020V
3- 272700		WASTE CHUTE	C- 272381-020V
			C- 272381-030V
1- 272718		MACHINE BODY	C- 256843-020V
G4- 272728		CATCH	C- 458383-010V
			C- 458383-020V
2- 272730		DRINKING STRAW	C- 271113-020V
			C- 456588-010V
4- 272731		FLANGE	C- 272241-020V
3- 272734		SHAFT	C- 256808-020V
2- 272735		PAPER GUARD	C- 272839-020V
3- 272736		BRACKET	C- 256808-020V
			C- 256808-030V
3- 272737		BRACKET	C- 256808-020V
			C- 256808-030V
4- 272741		SEAL	C- 271109-020V
			C- 456455-010V
			C- 456455-020V
4- 272742		FINGER	C- 255907-020V
			C- 456180-010V
			C- 295310-010V
			C- 295310-020V
			C- 295310-030V
			C- 295310-040V
			C- 295310-050V
			C- 295310-060V
4- 272743		LID	C- 271109-020V
			C- 441695-010V
			C- 441695-020V
3- 272745		COVER	C- 271109-020V
			C- 441695-010V
3- 272746		ROD	C- 256437-020V
3- 272747		CONNECTION	C- 256437-020V
3- 272749		STOP	CR- 256844-020V
3- 272750		STOP	CR- 256845-020V
3- 272751		BOTTOM VALVE	C- 256674-020V
			C- 256674-030V
1- 272752		CRADLE	C- 272765-010V
			C- 272765-020V
4- 272753		GUIDE	CR- 256208-020V
			CR- 256208-030V
4- 272754		LINK	CR- 256208-020V
4- 272755		NUT	CR- 256208-020V
			CR- 256208-030V
3- 272756		KNIFE HOLDER	CR- 256208-020V
3- 272757		KNIFE HOLDER	CR- 256208-020V
4- 272758		PULLEY	C- 256438-020V
3- 272759		RAIL	CR- 256215-020V
3- 272760		RAIL	CR- 256215-020V
3- 272761		FORK	C- 256221-020V
			C- 256222-020V
3- 272761		FORK	C- 256221-020V
			C- 256222-020V
			C- 256221-020V
			C- 256222-020V
			C- 256221-020V
			C- 256222-020V

PART NO	LAST AM	DESCRIPTION	GROUP NO
			C- 256221-020V
			C- 256222-020V
			C- 256221-020V
			C- 256222-020V
3- 272762		KNIFE	CR- 256208-020V
			C- 295523-020V
			CR- 256208-020V
			C- 295523-020V
			CR- 256208-030V
			C- 295523-030V
			CR- 256208-030V
			C- 295523-030V
			CR- 256208-030V
			C- 295523-030V
			CR- 256208-030V
			C- 295523-030V
3- 272764		ANGLE FLANGE	C- 256410-020V
C- 272765-0101	6441	84-01-18 BRACKET	B- 648105-020V
C- 272765-0201	7911	85-06-11 BRACKET	B- 648105-030V
			B- 648105-040V
C- 272765-0301	10017	87-01-12 BRACKET	B- 648105-060V
C- 272765-0401	10017	87-01-12 BRACKET	B- 648105-070V
C- 272765-0501	12254	88-10-20 BRACKET	B- 648105-080V
C- 272765-0601	14151	89-11-10 BRACKET	B- 648105-090V
2- 272769		CAM	C- 256217-020V
2- 272770		BEARING	C- 256217-020V
			C- 256217-030V
2- 272771		BEARING	C- 256217-020V
			C- 256217-030V
3- 272772		ARM	C- 256808-020V
			C- 256808-030V
4- 272773		BRACKET	C- 272839-020V
4- 272775		FLANGE	C- 272241-020V
2- 272777		FRAME	C- 271851-020V
2- 272778		FRAME	C- 257075-020V
2- 272779		FRAME	C- 257075-020V
			C- 257075-025V
3- 272780		COVER STRIP	C- 257075-020V
			C- 257075-025V
			C- 491570-010V
4- 272781-0001		COVER STRIP	C- 257075-020V
4- 272781-0002		COVER STRIP	C- 271851-020V
			C- 491579-010V
4- 272782		COVER STRIP	C- 257075-020V
			C- 271851-020V
			C- 257075-020V
			C- 271851-020V
			C- 257075-025V
			C- 271851-020V
			C- 257075-025V
			C- 271851-020V
			C- 491570-010V
			C- 491579-010V
4- 272782		COVER STRIP	C- 491570-010V
			C- 491579-010V
4- 272783-0001		GLASS PANE	C- 257075-020V
4- 272783-0002		GLASS PANE	C- 271851-020V
			C- 491579-010V
4- 272783-0003		GLASS PANE	C- 257075-020V
			C- 257075-025V
			C- 491570-010V
3- 272784-0001		RUBBER STRIP	C- 257075-020V
3- 272784-0002		RUBBER STRIP	C- 271851-020V
			C- 491579-010V
3- 272785		RUBBER STRIP	C- 257075-020V
			C- 257075-025V
			C- 491570-010V
4- 272786		HINGE	C- 257075-020V
			C- 271851-020V
			C- 257075-020V
			C- 271851-020V
			C- 257075-025V
			C- 271851-020V
			C- 257075-025V
			C- 271851-020V
4- 272787		WASHER	C- 257075-020V
			C- 271851-020V

PART NO	LAST AM	DESCRIPTION	GROUP NO
			C- 257075-020V
			C- 271851-020V
			C- 257075-025V
			C- 271851-020V
			C- 257075-025V
			C- 271851-020V
C- 272788-0101	6317 83-11-03	CARRIAGE	C- 272404-020V
			C- 272404-030V
			C- 272404-040V
			C- 272404-050V
			C- 272404-060V
2- 272789		SIDE PIECE	C- 272788-010V
2- 272790		SIDE PIECE	C- 272788-010V
3- 272791		SPACER PIPE	C- 272788-010V
1- 272792		HEATING PIPE	C- 271181-020V
			C- 271181-030V
3- 272793		SUPPORT	C- 271181-020V
3- 272794		SUPPORT	C- 271181-020V
			C- 271181-030V
			C- 271181-040V
1- 272795		DOOR	C- 271442-020V
1- 272796		DOOR	C- 271443-020V
4- 272797		ROLLER	C- 441102-010V
			RK- 751305-010V
			RK- 751307-010V
			RK- 751305-010V
			RK- 751307-010V
			C- 272030-020V
			C- 441304-010V
			C- 272030-020V
			C- 441304-010V
			C- 441304-020V
3- 272798		BRACKET	C- 441486-030V
3- 272799		BRACKET	C- 272030-020V
C- 272802-0101	5749 83-02-14	PLATFORM	C- 272030-020V
			B- 648102-020V
2- 272803		PLATFORM LEFT	B- 648102-030V
2- 272804		PLATFORM	C- 272802-010V
3- 272805		SIDE PIECE	C- 272802-010V
			C- 272802-010V
			C- 295305-010V
			C- 272802-010V
3- 272806		SIDE PIECE	C- 295305-010V
			C- 272802-010V
			C- 295305-010V
			C- 272802-010V
4- 272808		BRACKET	C- 295305-010V
			C- 272342-020V
			C- 456976-010V
			C- 456976-020V
			C- 456976-030V
3- 272810-0001		SLEEVE	C- 458384-010V
3- 272810-0002		SLEEVE	C- 458384-010V
3- 272810-0003		SLEEVE	C- 458384-010V
3- 272811		PLUNGER RIGHT	C- 458383-010V
			C- 458383-020V
3- 272812		PLUNGER LEFT	C- 458383-010V
			C- 458383-020V
3- 272813		PLUNGER	C- 458384-010V
G2- 272814		SLEEVE	C- 458383-010V
			C- 458383-020V
G2- 272815-0001		SLEEVE	C- 458383-010V
			C- 458383-020V
G2- 272815-0002		SLEEVE	C- 458383-010V
			C- 458383-020V
G2- 272815-0003		SLEEVE	C- 458383-010V
			C- 458383-020V
3- 272816-0001		SHAFT	C- 458383-010V
			C- 458384-010V
			C- 458384-010V
			C- 458383-010V
			C- 458384-010V
			C- 458383-010V
			C- 458384-010V
			C- 458383-010V
			C- 458384-010V

PART NO	LAST AM	DESCRIPTION	GROUP NO
3- 272816-0002		SHAFT	C- 458383-010V
			C- 458384-010V
			C- 458383-010V
			C- 458384-010V
			C- 458383-010V
			C- 458384-010V
			C- 458383-010V
			C- 458384-010V
			C- 458383-020V
			C- 458384-010V
3- 272816-0003		SHAFT	C- 458383-010V
			C- 458384-010V
			C- 458383-010V
			C- 458384-010V
			C- 458383-010V
			C- 458384-010V
			C- 458383-010V
3- 272816-0003		SHAFT	C- 458384-010V
			C- 458383-020V
			C- 458384-010V
3- 272818		GASKET	C- 272381-020V
			C- 272381-030V
			C- 491207-010V
			C- 491207-020V
3- 272820		PULLEY	C- 256201-020V
			C- 256202-020V
			C- 256201-020V
			C- 256202-020V
			C- 256201-020V
			C- 256202-020V
			C- 256201-030V
			C- 256202-030V
3- 272821		PROTRACTOR	C- 256201-020V
			C- 256202-020V
			C- 256201-020V
			C- 256202-020V
			C- 256201-020V
			C- 256202-020V
			C- 256201-030V
			C- 256202-030V
			C- 256201-040V
			C- 256202-040V
C- 272825-010V	6736 84-05-07	PLATFORM	B- 648102-020V
			B- 648102-030V
1- 272826		PLATFORM	C- 272825-010V
3- 272827		TERMINAL HOLDER	C- 295026-010V
			C- 295026-020V
			C- 295026-030V
2- 272828-0001		PLATFORM LEFT	C- 272825-010V
2- 272828-0002		PLATFORM LEFT	C- 272825-010V
2- 272829		PLATFORM	C- 272825-010V
2- 272830		MACHINE BODY	C- 272825-010V
3- 272831		PLATFORM	C- 272825-010V
C- 272833-010V	6351 83-12-05	RAILING	B- 648102-020V
			B- 648102-030V
2- 272834		STRUT	C- 272833-010V
1- 272835		RAILING	C- 272833-010V
3- 272837		PAPER GUARD	C- 272839-020V
			C- 490947-010V
			C- 490947-020V
3- 272838		COVER	C- 272839-020V
			C- 490947-010V
			C- 490947-020V
C- 272839-0201	6606 84-04-03	PAPER GUARD	B- 648107-020V
C- 272839-0202	6606 84-04-03	PAPER GUARD	B- 648107-020V
4- 272840		ROD	C- 256217-020V
			C- 256217-030V
			C- 256217-040V
3- 272843		PIPE	C- 272823-020V
3- 272844		BRACKET	C- 272823-020V
			C- 272823-030V
			C- 272823-040V
			C- 272823-050V
4- 272845		PIPE	C- 272823-020V
2- 272849		CABLE CONDUIT	C- 272408-020V
3- 272852		HOLDER	C- 255907-020V
3- 272852		HOLDER	C- 456180-010V

PART NO	LAST AM	DESCRIPTION	GROUP NO
4- 272863		SCREW	C- 256907-020V
			C- 456180-010V
4- 272856		HUB	C- 256200-020V
4- 272856		HUB	C- 256200-020V
4- 272857		RING	C- 256200-020V
			C- 256200-030V
4- 272858		SHAFT	C- 256200-020V
4- 272860		RING	C- 256200-020V
4- 272862		HOLDER	C- 271626-020V
			C- 271626-030V
1- 272863		ARM	C- 271626-020V
2- 272864		BRACKET	C- 271626-020V
			C- 271626-030V
3- 272865		SHAFT	C- 271626-020V
			C- 271626-030V
3- 272866		LOCKING FLANGE	C- 271626-020V
			C- 271626-030V
4- 272867		SPRING HOUSING	C- 271626-020V
			C- 271626-030V
4- 272868		STOPPER	C- 271626-020V
			C- 271626-030V
4- 272869-0001		FLAP	C- 271626-020V
			C- 271626-030V
4- 272869-0002		FLAP	C- 271626-020V
			C- 271626-030V
1- 272879		RAILING	C- 272833-010V
2- 272880		CABLE CONDUIT	C- 272833-010V
2- 272881		CABLE CONDUIT	C- 272833-010V
C- 272882-0101	6351 83-12-05	RAILING	B- 648102-020V
			B- 648102-030V
1- 272883		RAILING	C- 272882-010V
1- 272884		RAILING	C- 272882-010V
2- 272885		STRUT	C- 272882-010V
			C- 295188-010V
			C- 272882-010V
			C- 295188-010V
4- 272886		RULER	C- 271641-020V
			C- 271641-030V
4- 272887		RULER	C- 271641-020V
4- 272888		RULER	C- 271641-020V
			C- 271641-030V
G3- 272902		BLOCK	CR- 256712-020V
			CR- 256712-030V
G3- 272903		BLOCK	CR- 256712-020V
			CR- 256712-030V
G3- 272904		BLOCK	CR- 256712-020V
			CR- 256712-030V
G3- 272905-0001		ARM	CR- 256712-020V
			CR- 256712-030V
			CR- 256712-040V
G3- 272905-0002		ARM	CR- 256712-050V
			CR- 256712-020V
			CR- 256712-030V
G3- 272905-0003		ARM	CR- 256712-040V
			CR- 256712-050V
			CR- 256712-020V
G3- 272905-0003		ARM	CR- 256712-030V
G3- 272905-0004		ARM	CR- 256712-040V
			CR- 256712-050V
			CR- 256712-020V
G3- 272905-0005		ARM	CR- 256712-030V
			CR- 256712-040V
			CR- 256712-050V
G3- 272905-0006		ARM	CR- 256712-020V
			CR- 256712-030V
			CR- 256712-040V
G3- 272906-0001		ARM	CR- 256712-050V
			CR- 256712-020V
			CR- 256712-030V
G3- 272906-0002		ARM	CR- 256712-040V
			CR- 256712-050V
			CR- 256712-020V
			CR- 256712-030V

PART NO	LAST AM	DESCRIPTION	GROUP NO
			CR- 256712-040V
			CR- 256712-050V
G3- 272906-0003		ARM	CR- 256712-020V
			CR- 256712-030V
			CR- 256712-040V
G3- 272906-0004		ARM	CR- 256712-050V
			CR- 256712-020V
			CR- 256712-030V
G3- 272906-0005		ARM	CR- 256712-040V
			CR- 256712-050V
			CR- 256712-020V
G3- 272906-0006		ARM	CR- 256712-030V
			CR- 256712-040V
			CR- 256712-050V
3- 272919		BENDING ROLLER	C- 272028-020V
G2- 272926		FORK	C- 272024-020V
			C- 272024-030V
3- 272927		PRESSURE ARM	C- 272024-020V
			C- 272024-030V
G4- 272928		ARM	C- 272024-020V
4- 272929		BRACKET	C- 272024-020V
G3- 272935		BLOCK RIGHT	CR- 256436-020V
			CR- 256436-030V
			CR- 256436-040V
G3- 272936		BLOCK LEFT	CR- 256436-050V
			CR- 256436-020V
			CR- 256436-030V
			CR- 256436-040V
			CR- 256436-050V
3- 272940		CABLE DUCT	C- 256233-020V
3- 272941		CABLE DUCT	C- 256233-020V
3- 272942		CABLE DUCT	C- 256233-020V
3- 272943		LID	C- 256233-020V
4- 272945		LOCK	C- 256233-020V
			C- 469368-010V
			C- 469368-020V
4- 272945		LOCK	C- 469368-030V
			C- 295777-010V
			C- 469374-010V
			C- 469374-020V
			C- 469374-030V
3- 272948-0001		SHAFT	C- 256239-020V
			C- 256239-030V
			C- 256239-040V
3- 272948-0002		SHAFT	C- 256095-020V
3- 272948-0003		SHAFT	C- 256095-030V
			C- 256095-040V
2- 272949		VOLUME CAM LEFT	C- 256221-020V
2- 272950		VOLUME CAM LEFT	C- 256221-020V
2- 272951		VOLUME CAM LEFT	C- 256221-020V
2- 272952		VOLUME CAM LEFT	C- 256221-020V
2- 272953		VOLUME CAM LEFT	C- 256222-020V
2- 272954		VOLUME CAM LEFT	C- 256222-020V
2- 272955		VOLUME CAM LEFT	C- 256222-020V
2- 272956		VOLUME CAM LEFT	C- 256222-020V
2- 272957		VOLUME CAM RIGHT	C- 256221-020V
2- 272958		VOLUME CAM RIGHT	C- 256221-020V
2- 272959		VOLUME CAM RIGHT	C- 256221-020V
2- 272960		VOLUME CAM RIGHT	C- 256221-020V
2- 272961		VOLUME CAM RIGHT	C- 256222-020V
2- 272962		VOLUME CAM RIGHT	C- 256222-020V
2- 272963		VOLUME CAM RIGHT	C- 256222-020V
2- 272964		VOLUME CAM RIGHT	C- 256222-020V
2- 272965		VOLUME CAM LEFT, WIDE	C- 256222-020V
2- 272966		VOLUME CAM LEFT, WIDE	C- 256222-020V
2- 272967		VOLUME CAM RIGHT, WIDE	C- 256222-020V
2- 272968		VOLUME CAM RIGHT, WIDE	C- 256221-020V
2- 272969		BRACKET	C- 256222-020V
			C- 256221-020V
			C- 256222-020V
			C- 256221-020V
			C- 256222-020V

PART NO	LAST AM	DESCRIPTION	GROUP NO
			C- 256221-020V
			C- 256222-020V
			C- 256221-020V
			C- 256222-020V
			C- 256221-020V
			C- 256222-020V
3- 272970		ARM LEFT	C- 256221-020V
			C- 256222-020V
			C- 256221-020V
			C- 256222-020V
			C- 256221-020V
			C- 256222-020V
			C- 256221-020V
			C- 256222-020V
			C- 256221-020V
			C- 256222-020V
3- 272971		ARM RIGHT	C- 256221-020V
			C- 256222-020V
			C- 256221-020V
			C- 256222-020V
3- 272971		ARM RIGHT	C- 256221-020V
			C- 256222-020V
			C- 256221-020V
			C- 256222-020V
			C- 256221-020V
			C- 256222-020V
			C- 256221-020V
			C- 256222-020V
4- 272972		RULER	C- 256221-020V
			C- 256222-020V
			C- 256221-020V
			C- 256222-020V
			C- 256221-020V
			C- 256222-020V
			C- 256221-020V
			C- 256222-020V
			C- 256221-020V
			C- 256222-020V
4- 272973		PIN	C- 256221-020V
			C- 256222-020V
			C- 256221-020V
			C- 256222-020V
			C- 256221-020V
			C- 256222-020V
			C- 256221-020V
			C- 256222-020V
			C- 256221-020V
			C- 256222-020V
4- 272974-0001		BRACKET	RK- 499788-010V
			C- 256223-020V
			C- 256223-030V
4- 272974-0002		BRACKET	C- 256223-020V
			C- 256223-030V
3- 272978		SPINDLE	C- 256221-020V
			C- 256222-020V
			C- 256221-020V
			C- 256222-020V
			C- 256221-020V
			C- 256222-020V
			C- 256221-020V
			C- 256222-020V
			C- 256221-020V
			C- 256222-020V
			C- 256221-020V
			C- 256222-020V
3- 272980		RAIL	CR- 256214-020V
3- 272981		RAIL	CR- 256214-020V
4- 272985-0001		ARM	CR- 256209-020V
			CR- 256210-020V
			CR- 256209-020V
			CR- 256210-020V

PART NO	LAST AM	DESCRIPTION	GROUP NO
			CR- 256209-020V
			CR- 256210-020V
			CR- 256209-020V
			CR- 256210-020V
4- 272985-0001		ARM	CR- 256209-020V
			CR- 256210-020V
			CR- 256209-030V
			CR- 256210-030V
4- 272985-0002		ARM	CR- 256209-020V
			CR- 256210-020V
			CR- 256209-020V
			CR- 256210-020V
			CR- 256209-020V
			CR- 256210-020V
			CR- 256209-020V
			CR- 256210-020V
			CR- 256209-020V
			CR- 256210-020V
4- 272986-0001		VOLUME SHIM	CR- 256209-020V
			CR- 256210-020V
			CR- 256209-020V
			CR- 256210-020V
			CR- 256209-020V
			CR- 256210-020V
			CR- 256209-020V
			CR- 256210-020V
			CR- 256209-020V
			CR- 256210-020V
4- 272986-0002		VOLUME SHIM	CR- 256209-020V
			CR- 256210-020V
			CR- 256209-020V
			CR- 256210-020V
			CR- 256209-020V
			CR- 256210-020V
			CR- 256209-020V
			CR- 256210-020V
			CR- 256209-020V
			CR- 256210-020V
4- 272986-0003		VOLUME SHIM	CR- 256209-020V
			CR- 256210-020V
			CR- 256209-020V
			CR- 256210-020V
			CR- 256209-020V
			CR- 256210-020V
			CR- 256209-020V
			CR- 256210-020V
			CR- 256209-020V
			CR- 256210-020V
4- 272986-0004		VOLUME SHIM	CR- 256209-030V
			CR- 256210-030V
			CR- 256209-020V
			CR- 256210-020V
			CR- 256209-020V
			CR- 256210-020V
			CR- 256209-020V
			CR- 256210-020V
4- 272986-0004		VOLUME SHIM	CR- 256209-020V
			CR- 256210-020V
			CR- 256209-020V
			CR- 256210-020V
			CR- 256209-030V
			CR- 256210-030V
4- 272987		VOLUME SHIM	CR- 256209-020V
			CR- 256210-020V
			CR- 256209-020V
			CR- 256210-020V
			CR- 256209-020V
			CR- 256210-020V
			CR- 256209-020V

PART NO	LAST AM	DESCRIPTION	GROUP NO
			CR- 256210-020V
			CR- 256209-030V
			CR- 256210-030V
4- 272988-0002		VOLUME BULGE	CR- 256209-020V
			CR- 256210-020V
			CR- 256209-020V
			CR- 256210-020V
			CR- 256209-020V
			CR- 256210-020V
			CR- 256209-020V
			CR- 256210-030V
4- 272988-0004		VOLUME BULGE	CR- 256209-020V
			CR- 256210-020V
			CR- 256209-020V
			CR- 256210-020V
			CR- 256209-020V
			CR- 256210-020V
			CR- 256209-020V
			CR- 256210-020V
			CR- 256209-030V
4- 272990		VOLUME BULGE	CR- 256210-030V
			CR- 256209-020V
			CR- 256210-020V
			CR- 256209-020V
			CR- 256210-020V
			CR- 256209-020V
			CR- 256210-020V
			CR- 256209-020V
			CR- 256210-020V
			CR- 256209-030V
4- 272991		VOLUME SHIM	CR- 256210-030V
			CR- 256209-020V
			CR- 256210-020V
			CR- 256209-020V
			CR- 256210-020V
			CR- 256209-020V
4- 272991		VOLUME SHIM	CR- 256210-020V
			CR- 256209-020V
			CR- 256210-020V
			CR- 256209-020V
			CR- 256210-020V
			CR- 256209-030V
			CR- 256210-030V
2- 272992		PLATE	C- 272765-010V
			C- 272765-020V
2- 272993		COVER PLATE	C- 272765-010V
			C- 272765-020V
2- 272994		DISTRIBUTOR	C- 272765-010V
			C- 272765-020V
3- 272995		PIPE	C- 272765-010V
			C- 272765-020V
4- 272996		PIPE	C- 272765-010V
			C- 272765-020V
4- 272997		STOP	C- 272765-010V
			C- 272765-020V
			C- 272765-030V
			C- 272765-040V
			C- 272765-050V
			C- 272765-060V
4- 272998		SHIM	C- 271089-020V
			C- 271089-030V
4- 273429		WASHER	RK- 751461-010V
			C- 256055-020V
			C- 256055-030V
			C- 256055-040V
			C- 256055-050V
			C- 256055-060V
			RK- 751487-010V
4- 273444-0001		SCREW	C- 283600-010V

PART NO	LAST AM	DESCRIPTION	GROUP NO
			C- 283611-010V
			C- 283600-010V
			C- 283611-010V
4- 273444-0002		SCREW	C- 283600-010V
			C- 283611-010V
			C- 283600-010V
			C- 283611-010V
			C- 283620-010V
4- 273444-0004		SCREW	C- 286665-010V
4- 273445-0001		SCREW	C- 283611-010V
4- 273449		SIGN	C- 271909-020V
			C- 271909-030V
			C- 271909-040V
			C- 271909-050V
4- 273450		SIGN	C- 271909-020V
			C- 271909-030V
			C- 271909-040V
			C- 271909-050V
4- 273452		SIGN	C- 271909-020V
			C- 271909-030V
			C- 271909-040V
			C- 271909-050V
4- 273454		SIGN	C- 271909-020V
			C- 271909-030V
			C- 271909-040V
			C- 271909-050V
4- 273455		SIGN	C- 271866-020V
4- 273455		SIGN	C- 271909-020V
			C- 271866-030V
			C- 271909-030V
			C- 271866-030V
			C- 271909-030V
			C- 271866-040V
			C- 271909-040V
			C- 271866-050V
			C- 271909-050V
4- 273456		SIGN	C- 271866-020V
			C- 271909-020V
			C- 271866-030V
			C- 271909-030V
			C- 271866-030V
			C- 271909-030V
			C- 271866-040V
			C- 271909-040V
			C- 271866-050V
			C- 271909-050V
4- 273458		SIGN	C- 271866-020V
			C- 271909-020V
			C- 271866-030V
			C- 271909-030V
			C- 271866-030V
			C- 271909-030V
			C- 271866-040V
			C- 271909-040V
			C- 271866-050V
			C- 271909-050V
4- 273463-0001		BUSHING	C- 284873-010V
4- 273494-0001		AXLE PIN	C- 284873-010V
4- 273554		BRACKET	C- 272560-020V
3- 273738		PLATE	C- 276253-010V
3- 273739		ARM	C- 276253-010V
4- 273740		SCREW	C- 276253-010V
4- 273741		TOOTHED PULLY	C- 276253-010V
4- 273781		SPRING HOLDER	C- 283610-010V
			CR- 449275-010V
4- 273937		DIAPHRAGM	C- 752173-010V
			RK- 456793-010V
			RK- 469961-010V
			C- 256014-030V
			C- 256014-040V
4- 273938		WASHER	RK- 456793-010V
3- 273953		SEAL	RK- 456799-010V
			C- 272021-030V
			C- 272021-040V
			C- 272021-050V
2- 273954		SEAL	C- 752173-010V
			RK- 456793-010V

PART NO	LAST AM	DESCRIPTION	GROUP NO
			RK- 469981-010V
			C- 256014-030V
			C- 256014-040V
4- 273964		LID	C- 493652-010V
4- 273965-0001		WEIGHT	C- 493652-010V
1- 273976		CONTAINER	C- 527898-010V
4- 273977		NUT	C- 527898-010V
4- 273978		LEVEL GLASS	C- 527898-010V
4- 273979		VALVE	C- 527898-010V
4- 273980		SPRING	C- 527898-010V
4- 273981		GASKET	C- 751406-010V
4- 273982		WEIGHT	C- 751406-010V
4- 273984		AEROMETER	C- 751373-010V
1- 273986		CARRIAGE	RK- 532210-010V
4- 273996		NUT	C- 527898-010V
4- 274177		WASHER	C- 155091-010V
			C- 469294-010V
4- 274178		CLAW	C- 155091-010V
4- 274179		HANDLE	C- 155091-010V
			C- 469294-010V
3- 276089		INTERFERENCE PROTECTION	CE- 67716-010V
			CE- 68128-010V
			CE- 68379-010V
			CE- 68128-010V
			CE- 67716-010V
			CE- 68379-010V
3- 276141		BRACKET	C- 294658-010V
			C- 283631-010V
4- 276142		INDICATOR	C- 294658-010V
4- 276143		KEY	C- 283618-010V
			CR- 283618-020V
4- 276154		SHAFT	C- 294658-010V
4- 276175		HOLDER	C- 294658-010V
4- 276182		CABLE CLAMP	C- 456953-010V
			C- 294880-010V
			C- 469634-010V
			C- 441736-010V
			C- 456953-010V
4- 276194		SPRING HOLDER	C- 283617-010V
			CR- 283605-010V
4- 276203		SHAFT	C- 268656-010V
			C- 283600-010V
4- 276213-0001		ROLLER	C- 268656-010V
4- 276214-0001		SCREW	C- 268656-010V
3- 276248		BRACKET	C- 294658-010V
4- 276251		SHAFT	C- 294658-010V
C- 276253-0101	5828 83-04-28	BELT TENSIONER	B- 648108-010V
4- 276384		PRESSURE ROLLER	RK- 547782-010V
			C- 449388-010V
4- 276684		WASHER	C- 271115-020V
1- 276990		COVER	C- 294785-010V
3- 276993		HANGER	C- 294785-010V
3- 276994		HANGER	C- 294785-010V
4- 276995		SHAFT	C- 294785-010V
			C- 294780-010V
			C- 457853-010V
			C- 457853-020V
4- 279008		BUSHING	C- 272021-020V
			C- 272021-030V
			C- 272021-040V
			C- 272021-050V
4- 279009		BEARING PLATE	C- 272021-020V
4- 279010		BEARING PLATE	C- 272021-020V
			C- 272021-030V
			C- 272021-040V
			C- 272021-050V
4- 279074		TENSION SPRING	C- 246368-020V
4- 279473		GASKET	C- 456274-010V
4- 279473		GASKET	C- 256014-020V
			C- 271274-020V
			C- 272623-020V
			C- 295778-010V
			C- 256014-020V
			C- 271274-020V
			C- 272623-020V
			C- 295778-010V
			C- 456274-010V

PART NO	LAST AM	DESCRIPTION	GROUP NO
4- 279474		GASKET	C- 456274-010V
			C- 256014-020V
			C- 271274-020V
			C- 272623-020V
			C- 295778-010V
			C- 256014-020V
			C- 271274-020V
			C- 272623-020V
			C- 295778-010V
			C- 456274-010V
4- 279475-0002		ELECTRODE	C- 256014-020V
4- 279475-0003		ELECTRODE	C- 456274-010V
			C- 271274-020V
			C- 456274-010V
4- 279476		BUSHING	C- 456274-010V
			C- 256014-020V
			C- 271274-020V
			C- 272623-020V
			C- 256014-020V
			C- 271274-020V
			C- 272623-020V
			C- 456274-010V
4- 279480		GUIDE RAIL	C- 441000-020V
4- 279515		WASHER	C- 456274-010V
			C- 491990-010V
			C- 456274-010V
			C- 256014-020V
			C- 271274-020V
			C- 272623-020V
			C- 256014-020V
			C- 271274-020V
			C- 272623-020V
			C- 456274-010V
4- 279569		NUT	C- 256237-020V
			C- 256237-030V
			C- 256237-040V
			C- 256237-050V
			C- 256237-060V
			C- 272408-020V
			C- 272408-030V
			C- 272408-040V
			C- 272408-050V
			C- 272342-020V
			C- 456976-010V
			C- 456976-020V
			C- 456976-030V
			C- 456976-040V
4- 279590		REDUCTION	C- 272408-020V
			C- 272408-030V
			C- 272408-040V
4- 279590		REDUCTION	C- 272408-050V
4- 279672		CONNECTION	C- 295891-010V
			C- 295891-020V
			C- 295891-030V
4- 279799		GASKET	C- 256237-020V
			C- 256237-030V
			C- 256237-040V
			C- 256056-020V
			C- 256056-030V
4- 279803		ROLLER	C- 294658-010V
C- 279809-0101	5762 83-02-24	PANEL	B- 648108-010V
3- 279876		BRACKET	C- 279809-010V
4- 279970		BRACKET	C- 294658-010V
			C- 283631-010V
3- 282579		PLATE	C- 268656-010V
4- 282580		BLOCK	C- 283602-010V
4- 282581		SHAFT	C- 283602-010V
2- 282760		WINDOW	C- 294785-010V
3- 283011		V-BLOCK	C- 76197-010V
			C- 436467-010V
4- 283020		STOP	C- 76197-010V
			C- 436467-010V
3- 283084		GUIDE SHAFT	C- 250610-010V
3- 283085		EEVE	C- 250610-010V
3- 283103		VER	C- 256358-010V
3- 283172		EARING HOUSING	C- 295891-010V
			C- 295891-020V

PART NO	LAST AM	DESCRIPTION	GROUP NO
4- 456864-0002		BLOCK RIGHT	CR- 256436-020V CR- 256436-030V CR- 256436-040V CR- 256436-050V
4- 456865-0001		BLOCK LEFT	CR- 256436-020V CR- 256436-030V CR- 256436-040V CR- 256436-050V
4- 456865-0002		BLOCK LEFT	CR- 256436-020V CR- 256436-030V CR- 256436-040V CR- 256436-050V
2- 456868		CLAMP	C- 272231-020V
4- 456869		LOCK BOARD	C- 441486-020V C- 441486-030V C- 441486-040V
4- 456870		LOCK BOARD	C- 441486-020V C- 441486-030V C- 441486-040V
4- 456871		LOCK BOARD	C- 441486-020V C- 441486-030V C- 441486-040V
4- 456871		LOCK BOARD	C- 441486-020V
4- 456872		LOCK BOARD	C- 441486-030V C- 441486-040V
4- 456873		LOCK BOARD	C- 441486-020V C- 441486-030V C- 441486-040V
4- 456874		LOCK BOARD	C- 441486-020V C- 441486-030V C- 441486-040V
4- 456881		SHAFT	C- 441486-020V C- 441486-030V C- 271909-030V
C- 456882-0101	6650 84-05-18	PUSH BUTTON BOX	C- 271909-040V C- 271909-050V C- 456882-010V
3- 456883		PUSH BUTTON BOX	C- 271909-030V C- 271909-040V C- 271909-050V
4- 456884		THROTTLE NIPPLE	C- 256843-030V C- 271169-020V C- 272337-020V
1- 456885		MACHINE BODY	C- 271169-020V C- 272337-020V C- 271169-020V
4- 456886		WASHER	C- 272337-020V C- 271169-020V C- 272337-020V
1- 456888		HOUSE	C- 272021-030V C- 256233-030V
3- 456889		COVER	C- 272021-030V C- 256233-030V C- 256233-040V C- 256233-050V
3- 456890		COVER PLATE	C- 272021-030V C- 272021-040V C- 272021-050V
1- 456892		COLUMN	C- 256233-030V
1- 456893		COLUMN	C- 256233-030V
3- 456894		COVER	C- 256233-030V
2- 456895		MOTOR SHELF	C- 256234-030V C- 256234-040V
2- 456896		COVER	C- 271804-030V
3- 456897		PIPE	C- 272623-030V C- 272623-040V C- 272623-050V
4- 456899		PIPE	C- 272623-030V C- 272623-040V
4- 456900		PIPE	C- 272623-030V C- 272623-040V C- 272623-050V
1- 456901		CLEANING PIPE	C- 295262-030V
4- 456902		PIPE	C- 456836-020V C- 295262-030V C- 456836-020V C- 456836-030V

PART NO	LAST AM	DESCRIPTION	GROUP NO
4- 456904		PIPE	C- 456836-040V C- 456976-010V C- 456976-020V
4- 456904		PIPE	C- 456976-030V C- 456976-040V
2- 456905		PLATE	C- 441304-020V C- 441304-030V
4- 456906		LOCK BOARD	C- 441304-020V C- 441304-030V
4- 456907		LOCK BOARD	C- 441304-020V C- 441304-030V
4- 456908		ROLLER	C- 441304-020V
4- 456909		ROLLER	C- 441304-020V
4- 456910		ROLLER	C- 441304-020V
1- 456911		TOUCH GUARD	C- 456976-010V
1- 456912		TOUCH GUARD	C- 456976-010V C- 456976-020V C- 456976-030V
1- 456913		TOUCH GUARD	C- 456976-040V C- 456976-010V C- 456976-020V C- 456976-030V C- 456976-040V
3- 456914		ROCKER ARM	C- 272343-030V C- 272343-040V C- 272343-050V
4- 456915		COVER	C- 272343-030V C- 272343-040V
4- 456916		CYLINDER BRACKET	C- 272343-030V
4- 456917		HEAT GUARD	C- 272343-030V C- 272343-040V C- 272343-050V
3- 456918		PAPER SUPPORT	C- 295691-020V C- 295691-030V
C- 456919-0101	7065 84-09-12	BENDING ROLLER	B- 648107-060V B- 648107-070V B- 648107-080V
3- 456920		BRACKET	C- 456919-010V
4- 456921		STOP	C- 456919-010V
4- 456922-0001		STRUT	C- 456919-010V
4- 456922-0002		STRUT	C- 456919-010V
C- 456923-0101	8036 85-06-24	MACHINE BODY	B- 648107-060V B- 648107-070V B- 648107-080V
C- 456923-0201	8314 86-01-14	MACHINE BODY	B- 648107-080V
C- 456923-0301	14273 90-02-06	MACHINE BODY TB/TBA/9	B- 648107-060V
C- 456923-0302	14273 90-02-06	MACHINE BODY TB/TBA/9	B- 648107-080V
1- 456924		FRAME	C- 456923-010V C- 456923-020V C- 456923-030V
2- 456925		LEG	C- 456923-010V
3- 456926		LEG	C- 456923-010V
3- 456927		LEG	C- 456923-010V C- 456923-020V
3- 456928		LEG	C- 456923-010V C- 456923-020V
3- 456929		LID	C- 456923-010V C- 456923-020V C- 456923-030V
3- 456930		LID	C- 456923-010V C- 456923-020V C- 456923-030V
3- 456931		LID	C- 456923-010V
3- 456931		LID	C- 456923-020V C- 456923-030V
3- 456932		LID	C- 456923-010V C- 456923-020V C- 456923-030V
3- 456933		LID	C- 456923-010V C- 456923-020V C- 456923-030V
4- 456934		SEALING WASHER	C- 256173-020V C- 256173-030V C- 256173-040V
C- 456935-010V	7065 84-09-12	PIPE WORK	B- 648107-060V B- 648107-070V
C- 456935-020V	12153 88-09-12	PIPE WORK	B- 648107-080V B- 648107-090V

PART NO	LAST AM	DESCRIPTION	GROUP NO
4- 456936		BRACKET	C- 456935-010V
			C- 456935-020V
4- 456937		CLIP	C- 456935-010V
			C- 456935-020V
2- 456938		PIPE 241	C- 456935-010V
			C- 456935-020V
2- 456939		PIPE 240	C- 456935-010V
			C- 456935-020V
2- 456940		PIPE V45	C- 456935-010V
			C- 456935-020V
2- 456941		PIPE V44	C- 456935-010V
			C- 456935-020V
2- 456942		PIPE 201	C- 456935-010V
			C- 456935-020V
2- 456943		PIPE 200	C- 456935-010V
			C- 456935-020V
2- 456947-0003		INDUCTOR	CR- 256214-020V
2- 456948-0003		INDUCTOR	CR- 256214-020V
2- 456949		COVER	C- 456953-010V
3- 456950		HOLDER	C- 450125-010V
C- 456951-010V	8298 86-10-09	INDUCTOR UNIT	C- 456953-010V
C- 456953-010V	12153 88-09-12	PERFORATION HEATER TBA/9	C- 77091-010V
			C- 77091-020V
3- 456954		PLATE	B- 648119-060V
3- 456956		PLATE	C- 441736-010V
4- 456964		HOLDER	C- 490947-010V
			C- 490947-020V
4- 456965		CLAMP	C- 490947-010V
			C- 490947-020V
4- 456967		SHOULDER SCREW	C- 490947-010V
			C- 490947-020V
1- 456972		PROTECTION PLATE	C- 490947-010V
			C- 490947-020V
2- 456973		BRACKET	C- 272408-030V
			C- 272408-040V
2- 456974		CABLE DUCT	C- 272408-050V
			C- 272408-030V
			C- 272408-040V
			C- 272408-050V
C- 456975-0101	5731 86-02-11	CABINET	B- 648109-060V
C- 456975-0201	11870 88-05-24	CABINET	C- 77091-010V
			C- 77091-020V
			C- 77091-030V
C- 456976-010V	6725 84-04-10	CONDUIT	B- 648111-030V
C- 456976-020V	9415 86-10-17	CONDUIT	B- 648111-060V
			B- 648111-070V
C- 456976-030V	11932 88-06-15	CONDUIT	B- 648111-080V
C- 456976-040V	14315 90-01-10	CONDUIT	B- 648111-090V
3- 456978		PIPE	C- 271868-030V
			C- 271868-040V
			C- 271868-050V
1- 456979-0001		CABLE CONDUIT	C- 456459-010V
1- 456979-0002		CABLE CONDUIT	C- 456460-010V
1- 456980		PLATFORM	C- 456457-010V
1- 456981		PLATFORM	C- 456457-010V
			C- 456457-020V
2- 456982		PLATFORM	C- 456457-010V
			C- 456457-020V
2- 456983		PLATFORM	C- 456457-010V
			C- 456457-020V
2- 456984		PLATFORM	C- 456457-010V
3- 456985		LEG	C- 456457-010V
			C- 456457-020V
3- 456986		STEP	C- 456457-010V
			C- 456457-020V
1- 456987		SIDE PIECE	C- 456457-010V
3- 456988		SIDE PIECE	C- 456457-010V
			C- 456457-020V
1- 456989		RAILING	C- 456459-010V
1- 456991		PLATE	C- 271909-030V
1- 456992		BATH	C- 256014-030V
2- 456993		COVER	C- 256014-030V
3- 456994		BENDING ROLLER	C- 256014-030V
			C- 256014-040V
3- 456995		CARRIER	C- 272021-020V
			C- 256014-050V

PART NO	LAST AM	DESCRIPTION	GROUP NO
			C- 256014-040V
			C- 256014-050V
4- 456996		ROLLER	C- 272021-030V
			C- 456309-020V
			C- 272021-030V
			C- 456309-020V
			C- 272021-040V
			C- 456309-030V
			C- 272021-050V
4- 456998		TRIMMING ROLLER MINUS	C- 77093-010V
			B- 648119-080V
4- 456999		TRIMMING ROLLER PLUS	C- 77093-010V
			B- 648119-080V
C- 457159-0101	9314 86-09-17	PANEL	B- 648118-080V
C- 457159-0201	9530 86-12-22	PANEL	B- 648118-070V
1- 457160		COLUMN	C- 457159-010V
			C- 457159-020V
2- 457163		CABLE DUCT	C- 457159-010V
			C- 457159-020V
4- 457164		LID	C- 457159-010V
			C- 457159-020V
4- 457165		BRACKET	C- 457159-010V
			C- 457159-020V
4- 457166		SPACER	C- 457159-010V
			C- 457159-020V
4- 457367		SHAFT	RK- 491539-010V
4- 457367		SHAFT	RK- 490877-010V
			C- 491897-010V
			C- 736865-010V
			C- 491897-010V
			C- 491976-010V
			C- 491976-020V
			C- 491976-010V
			C- 491976-020V
			C- 736865-010V
			C- 491897-010V
			RK- 751570-010V
			RK- 491539-010V
4- 457368		SPRING	RK- 491539-010V
			RK- 490877-010V
			C- 491897-010V
			C- 736865-010V
			C- 491897-010V
			C- 491976-010V
			C- 491976-020V
			C- 491976-010V
			C- 491976-020V
			C- 736865-010V
			C- 491897-010V
			RK- 751570-010V
			RK- 491539-010V
3- 457387		TERMINAL CARD X9	RK- 69505-010V
2- 457804		LID	C- 457881-010V
			C- 457881-020V
1- 457805		PROTECTIVE COVER	C- 457857-010V
			C- 457857-020V
2- 457806		LID	C- 457857-010V
			C- 457857-020V
2- 457807		LID	C- 457857-010V
			C- 457857-020V
4- 457808		SPACER	C- 457857-010V
			C- 457857-020V
1- 457809		CABLE DUCT	C- 457857-010V
			C- 457857-020V
2- 457810		LID	C- 457857-010V
4- 457812		BRACKET	C- 457857-010V
1- 457813		CABLE DUCT	C- 457857-010V
			C- 457857-020V
2- 457814		LID	C- 457857-010V
			C- 457857-020V
4- 457815		SPACER	C- 457857-010V
			C- 457857-020V
			C- 457857-010V
2- 457819		AW	C- 457868-010V
4- 457820		GUARD	C- 457866-010V
3- 457821		BRACKET	C- 457856-010V

PART NO	LAST AM	DESCRIPTION	GROUP NO
3- 457822		CABLE DUCT	C- 457858-010V
4- 457824		PUNCH	C- 283610-010V
			CR- 449275-010V
			C- 469316-010V
			C- 486955-010V
			CR- 449275-010V
3- 457825		DIE	C- 469316-010V
			C- 486955-010V
			C- 283610-010V
			CR- 449275-010V
			C- 469316-010V
			C- 486955-010V
4- 457826		PUNCH	CR- 449275-010V
			C- 469316-010V
			C- 486955-010V
3- 457827		DIE	CR- 449275-010V
			C- 469316-010V
			C- 486955-010V
			CR- 449275-010V
			C- 469316-010V
4- 457828		HOLDER	C- 486955-010V
1- 457830		LEFT LEG REAR	C- 457867-010V
			C- 457881-010V
4- 457841-0002		FABRIC	C- 457881-020V
			C- 283614-010V
			C- 486955-010V
			C- 283614-010V
1- 457842		COVER	C- 486955-010V
2- 457843		GLASS PANE	C- 457853-010V
			C- 457853-010V
2- 457844		GLASS PANE	C- 457853-020V
			C- 457853-010V
2- 457845		BRACKET	C- 457853-020V
			C- 457853-010V
4- 457846		PLATE	C- 457853-020V
			C- 457853-010V
4- 457848		SHIM	C- 457853-020V
2- 457850		INDUCTOR BRACKET	C- 469634-010V
2- 457851		JAW	C- 457868-010V
C- 457853-0101	7004 84-11-06	COVER	C- 457868-010V
C- 457853-0201	10407 87-06-10	COVER	B- 648118-060V
4- 457854		BRACKET	B- 648118-070V
3- 457855		BUSBAR	CR- 283618-020V
C- 457856-0101	10407 87-06-10	CONNECTION BOX	C- 457866-010V
			B- 648118-060V
C- 457857-0101	6287 84-03-21	CABLE DUCT	B- 648118-070V
C- 457857-0201	10407 87-06-10	UPPER CABLE DUCT	B- 648118-060V
C- 457857-0202	10407 87-06-10	UPPER CABLE DUCT	B- 648118-070V
C- 457866-010V	12939 89-05-19	SEALING JAW	B- 648118-070V
			B- 648118-060V
C- 457866-0107	12939 89-06-19	SEALING JAW	B- 648118-070V
C- 457867-010V	10407 87-06-10	MACHINE BODY	B- 648108-010V
			B- 648118-060V
C- 457868-010V	8390 86-01-24	COUNTER JAW	B- 648118-070V
C- 457868-0102	8390 86-01-24	COUNTER JAW	B- 648118-060V
4- 457874		SPACER	B- 648108-010V
3- 457875		LID	C- 469300-010V
			C- 457881-010V
2- 457876		CABLE DUCT	C- 457881-020V
3- 457877		LID	C- 469300-010V
2- 457878		HEATING BLOCK	C- 469300-010V
3- 457879		BRACKET	C- 456607-010V
4- 457880		GUIDE	C- 449314-010V
C- 457881-0101	7601 86-07-16	LEG	C- 456607-010V
C- 457881-0201	10638 87-06-22	LEG	B- 648118-060V
C- 457881-0202	10638 87-06-22	LEG	B- 648118-070V
4- 457896		SHAFT	B- 648118-070V
4- 457898		SHAFT	CR- 283618-020V
4- 457899		SHAFT	CR- 283618-020V
4- 457900		SHAFT	CR- 283618-020V
			CR- 283618-020V

PART NO	LAST AM	DESCRIPTION	GROUP NO
3- 457901		BRACKET	C- 457159-010V
			C- 457159-020V
4- 457909		ROLLER	CR- 283618-020V
4- 457910		ROLLER	CR- 283618-020V
4- 457913		BRACKET	CR- 283618-020V
4- 457914		HOLDER	CR- 283618-020V
1- 457916		WIRING DIAGRAM PNEUM. O.D	RK- 469760-010V
			B- 648109-060V
			B- 648109-070V
			B- 648109-060V
			B- 648109-070V
C- 457924-0101	9161 88-06-17	VALVE PANEL	B- 648118-060V
C- 457924-0201	10867 87-11-18	VALVE PANEL	B- 648118-070V
4- 457929		BLOCK	C- 283635-010V
4- 457930		FLAG	C- 283635-010V
C- 457937-010V	8326 86-01-28	SLIDE	B- 648118-060V
			B- 648118-070V
1- 457938		RAIL	C- 457937-010V
1- 457939		SUPPORT UPPER	C- 457937-010V
1- 457941		FLAT STEEL	C- 457937-010V
2- 457943		GLASS PANE	C- 457937-010V
2- 457944		BRACKET	C- 457937-010V
3- 457945		GLASS PANE	C- 457937-010V
3- 457946		GLASS PANE	C- 457937-010V
3- 457948		BRACKET	C- 457937-010V
3- 457949		BRACKET	C- 457937-010V
4- 457950		HANDLE	C- 457937-010V
4- 457951		WASHER	C- 457937-010V
4- 457952		RUBBER WASHER	C- 457937-010V
4- 457953		SPACER	C- 457937-010V
4- 457954		SPACER	C- 457937-010V
G1- 457955		GABLE	C- 456696-010V
			C- 456696-020V
G1- 457956		SIDE PLATE	C- 456696-010V
			C- 456696-020V
1- 457960		FRAME	C- 457857-010V
			C- 457857-020V
3- 457971		BRACKET	C- 449314-010V
1- 457999		BOX	C- 283631-010V
			C- 456679-010V
4- 458054		BUSHING	RK- 491780-010V
			C- 491976-010V
			RK- 491780-010V
4- 458068		BLOCK	C- 294670-010V
4- 458194-0001		WASHER	C- 256236-020V
			C- 295112-020V
			C- 272445-020V
1- 458379		FRAME	C- 271641-030V
			RK- 469414-010V
1- 458379		FRAME	C- 271641-030V
3- 458380		CLAMP	C- 271626-030V
			RK- 469413-010V
C- 458383-010V	6474 83-12-29	PAPER REEL HOLDER	C- 272404-020V
			C- 272404-030V
			C- 272404-040V
			C- 272404-050V
C- 458383-020V	11717 89-06-27	PAPER REEL HOLDER	C- 272404-060V
C- 458384-010V	6474 83-12-29	PAPER REEL HOLDER	C- 272404-020V
			C- 272404-030V
			C- 272404-040V
			C- 272404-050V
			C- 272404-060V
4- 458962-0001		ELECTRODE	C- 469452-010V
			C- 256014-040V
			C- 469452-020V
			C- 751800-010V
			C- 256014-050V
			C- 469452-030V
			C- 751800-020V
4- 458962-0003		ELECTRODE	C- 751373-010V
4- 458962-0004		ELECTRODE	C- 272823-030V
			C- 272823-040V
4- 458962-0005		ELECTRODE	C- 272823-030V
			C- 272823-040V
4- 458962-0006		ELECTRODE	C- 256014-030V
			C- 751373-010V
4- 458962-0007		ELECTRODE	RK- 520068-010V

PART NO	LAST AM	DESCRIPTION	GROUP NO
4- 456662-0009		ELECTRODE	C- 272623-050V
4- 456662-0010		ELECTRODE	C- 272623-050V
3- 464009-0003		BLOCK	C- 751718-010V
4- 464010		ARM	C- 751718-010V
4- 464011		FAUCET	C- 751718-010V
4- 464012		CAM	C- 751718-010V
4- 464146		BRACKET	C- 283621-010V
			C- 456696-010V
4- 464153		TOOTHED PULLY	CR- 283618-020V
4- 464154		PULLEY	C- 283626-030V
4- 464173		SIGN HOLDER	C- 256233-030V
			C- 256233-040V
			C- 256233-050V
			C- 295045-030V
			C- 295045-040V
			C- 295045-050V
			C- 295045-060V
4- 464174		SIGN	C- 256233-030V
			C- 256233-040V
			C- 256233-050V
			C- 295045-030V
			C- 295045-040V
			C- 295045-050V
			C- 295045-060V
4- 464175		SIGN	C- 256233-030V
			C- 256233-040V
			C- 256233-050V
			C- 295045-030V
			C- 295045-040V
			C- 295045-050V
			C- 295045-060V
4- 464176		SIGN	C- 490947-010V
			C- 490947-020V
			C- 752244-010V
4- 464177		SIGN	C- 490947-010V
			C- 490947-020V
			C- 752244-010V
4- 464297		CONNECTION BOX	C- 451348-010V
3- 466310		RAIL	CR- 283607-010V
4- 466312		RUBBER PROFILE	CR- 283607-010V
4- 466325		SHEET	CR- 283607-010V
4- 466430		BUSHING	C- 751718-010V
4- 469000		HOLDER	C- 271533-030V
			C- 491650-010V
4- 469001		HOLDER	C- 271533-030V
			C- 491650-010V
2- 469002		SUPPORT	C- 456459-010V
			C- 456459-020V
4- 469003		PLATE	C- 456459-010V
			C- 456459-020V
1- 469004		PLATFORM	C- 456458-010V
			C- 456458-020V
			C- 456458-030V
1- 469005		PLATFORM	C- 456458-010V
			C- 456458-020V
			C- 456458-030V
1- 469006		FRAME	C- 456458-010V
			C- 456458-020V
			C- 456458-030V
1- 469007		FRAME	C- 456458-010V
			C- 456458-020V
			C- 751860-010V
			C- 456458-030V
			C- 751860-010V
1- 469008		SIDE PIECE	C- 469762-010V
1- 469009		PLATE	C- 456458-010V
2- 469010		PLATE	C- 456458-010V
			C- 456458-020V
2- 469013		CABLE DUCT	C- 456458-010V
			C- 456458-020V
			C- 456458-030V
2- 469014		LID	C- 456458-010V
			C- 456458-020V
			C- 456458-030V
2- 469015		PLATE	C- 456458-010V
			C- 456458-020V
			C- 751860-010V
			C- 456458-030V
			C- 751860-010V
2- 469016		FRAME	C- 752960-010V
			C- 752971-010V
			C- 456458-010V
			C- 456458-020V
			C- 751860-010V
			C- 456457-030V
			C- 456458-030V
			C- 751860-010V
2- 469017		PLATE	C- 456458-010V
			C- 456458-020V
			C- 751860-010V
2- 469018		PLATFORM	C- 456458-010V
			C- 456458-020V
3- 469019		LEG	C- 456458-010V
			C- 456458-020V
			C- 751860-010V
			C- 456458-030V
			C- 751860-010V
3- 469020		LEG	C- 456458-010V
			C- 456458-020V
			C- 751860-010V
			C- 456458-030V
			C- 751860-010V
3- 469021		LEG	C- 456458-010V
			C- 456458-020V
3- 469022		FRAME	C- 456458-010V
			C- 456458-020V
			C- 751860-010V
1- 469023		RAILING	C- 456460-010V
1- 469024		RAILING	C- 456460-010V
2- 469025		RAILING	C- 456460-010V
4- 469026		SPACER	C- 752960-010V
			C- 752971-010V
			C- 456460-010V
			C- 456460-020V
			C- 751900-010V
			C- 456459-030V
			C- 456460-030V
			C- 751900-010V
4- 469027		SPACER	C- 752960-010V
			C- 752971-010V
			C- 456458-010V
			C- 456458-020V
			C- 751860-010V
			C- 456457-030V
			C- 456458-030V
			C- 751860-010V
4- 469028		GASKET	C- 456459-010V
			C- 456460-010V
			C- 456459-010V
			C- 456460-010V
			C- 456459-020V
			C- 456460-020V
			C- 456460-030V
2- 469029		COVER PLATE	C- 271513-030V
			C- 271513-040V
			C- 271513-050V
2- 469030		COVER PLATE	C- 271513-030V
			C- 271513-040V
			C- 271513-050V
2- 469031		COVER PLATE	C- 271513-030V
			C- 271513-040V
2- 469032		COVER PLATE	C- 271513-030V
			C- 271513-040V
2- 469033		COVER PLATE	C- 271513-030V
			C- 271513-040V
			C- 271513-050V
			C- 751885-020V
2- 469034		GUSSET PLATE	C- 271513-030V
			C- 271513-040V
2- 469034		GUSSET PLATE	C- 271513-050V
2- 469035		ISSET PLATE	C- 271513-030V
			C- 271513-040V
			C- 271513-050V
			C- 751885-020V

PART NO	LAST AM	DESCRIPTION	GROUP NO
3- 469036		COVER PLATE	C- 271513-030V
3- 469037		COVER PLATE	C- 271513-030V
			C- 271513-040V
3- 469038		COVER PLATE	C- 271513-030V
			C- 271513-040V
			C- 751885-010V
			C- 271513-050V
			C- 751885-020V
3- 469039		COVER PLATE	C- 271513-030V
			C- 271513-040V
			C- 751885-010V
			C- 271513-050V
			C- 751885-020V
2- 469040		PIPE	C- 271866-030V
			C- 271866-040V
2- 469041		HOLDER	C- 441307-020V
			C- 441307-030V
4- 469042		LOCK BOARD	C- 441307-020V
			C- 441307-030V
4- 469043		LOCK BOARD	C- 441307-020V
			C- 441307-030V
4- 469044		LOCK BOARD	C- 441307-020V
4- 469045		ROLLER	C- 441307-020V
4- 469046		ROLLER	C- 441307-020V
4- 469047		BRACKET	C- 441307-020V
			C- 441307-030V
1- 469048		COLUMN	C- 272021-030V
3- 469049		CABLE	RK- 456710-010V
1- 469050		FRONT GUARD	C- 271115-030V
			C- 271115-040V
1- 469051		COVER	C- 271115-030V
			C- 271115-040V
2- 469052		LID	C- 271115-030V
3- 469053		CHECKER PLATE	C- 271115-030V
			C- 271115-040V
3- 469054		PLATE	C- 271115-030V
			C- 271115-040V
3- 469056		CHECKER PLATE	C- 271115-030V
			C- 271115-040V
3- 469057		CHECKER PLATE	C- 271115-030V
			C- 271115-040V
G3- 469058		HANDLE	C- 271115-030V
			C- 271115-040V
4- 469061		PLATE	C- 271115-030V
			C- 271115-040V
4- 469063		HEAD	C- 271115-030V
			C- 271115-040V
4- 469066		SHAFT	C- 271115-030V
			C- 271115-040V
4- 469067		HANGER	C- 271115-030V
4- 469068		SLEEVE	C- 271115-030V
			C- 271115-040V
4- 469069		PLATE	C- 271115-030V
			C- 271115-040V
4- 469070		CIRCUIT DIAGRAM	C- 271181-020V
4- 469071		SPACER	C- 271533-030V
			C- 491650-010V
C- 469074-0101	8116 85-06-21	SPLICE DETECTOR	B- 648111-060V
			B- 648111-070V
C- 469074-0201	13863 89-11-13	SPLICE DETECTOR	B- 648111-080V
4- 469075		BRAKE DISC	C- 441649-010V
1- 469076		ARM	C- 271628-030V
1- 469077		DISTRIBUTOR BLOCK LEFT	C- 271533-030V
2- 469078		HOLDER	C- 441307-020V
			C- 441307-030V
4- 469079		LOCK BOARD	C- 441307-020V
			C- 441307-030V
4- 469080		LOCK BOARD	C- 441307-020V
			C- 441307-030V
4- 469081		LOCK BOARD	C- 441307-020V
4- 469082		ROLLER	C- 441307-020V
4- 469083		ROLLER	C- 441307-020V
4- 469084		RULER	C- 271641-030V
			RK- 469414-010V
4- 469085		RULER	C- 271641-030V
			C- 271641-030V
			RK- 469414-010V

PART NO	LAST AM	DESCRIPTION	GROUP NO
			C- 271641-030V
2- 469086		PIPE	C- 271562-040V
			C- 271562-050V
2- 469087		PIPE	C- 271562-040V
			C- 271562-050V
4- 469088		ROLLER	C- 441304-020V
4- 469089		ROLLER	C- 441304-020V
4- 469090		ROLLER	C- 441304-020V
C- 469091-010V	8376 85-10-18	UPPER FILLING TUBE	B- 648111-060V
			B- 648111-070V
C- 469091-020V	13673 89-09-11	FILLING PIPE	B- 648111-080V
			B- 648111-090V
3- 469092		SHIM	C- 256233-030V
			C- 256233-040V
			C- 256233-050V
			C- 272021-030V
			C- 272021-040V
			C- 272021-050V
4- 469093		HOLDER	C- 272021-020V
4- 469094		PRESSURE ARM	C- 272021-020V
3- 469095		HOLDER	C- 456100-010V
			C- 456100-020V
			C- 256843-030V
			C- 256843-040V
			C- 256843-050V
4- 469096		LEG	C- 456100-010V
			C- 456100-020V
			C- 256843-030V
			C- 256843-040V
			C- 256843-050V
2- 469097		BEAM	C- 271635-030V
4- 469107		LEVEL TUBE	C- 272381-020V
			C- 272381-030V
1- 469110		CIRCUIT BOARD	C- 295026-020V
1- 469111		CIRCUIT BOARD	C- 295026-020V
1- 469112		CIRCUIT BOARD	C- 295026-020V
1- 469112		CIRCUIT BOARD	RK- 469760-010V
			RK- 536439-010V
1- 469113		CIRCUIT BOARD	C- 295026-020V
2- 469114		MACHINE DISPLAY B9 MPTAB	C- 295026-020V
2- 469115		MACHINE DISPLAY B9 UPTAB	C- 295026-020V
2- 469116		MACHINE DISPLAY AB9 MPTAB	C- 295026-020V
			RK- 469760-010V
			RK- 536439-010V
2- 469117		MACHINE DISPLAY AB9 UPTAB	C- 295026-020V
C- 469118-0101	6650 84-05-18	FLOW METER	C- 271909-030V
C- 469118-0201	9123 86-07-22	FLOW METER	C- 271909-040V
			C- 271909-050V
2- 469119		BLOCK	C- 469118-010V
			C- 469118-020V
3- 469120		HOLDER	C- 469118-010V
			C- 469118-020V
C- 469121-0101	8117 85-08-20	JUNCTION BLOCK	C- 271909-030V
C- 469121-0201	8437 86-02-18	JUNCTION BLOCK	C- 271909-040V
			C- 271909-050V
3- 469122		BLOCK	C- 469121-010V
			C- 469121-020V
4- 469123		PIN	C- 256229-020V
4- 469124		ROLLER	C- 441466-020V
			C- 441466-030V
4- 469125		ROLLER	C- 441466-020V
			C- 441466-030V
4- 469126		ROLLER	C- 441466-020V
			C- 441466-030V
4- 469127		ROLLER	C- 441466-020V
			C- 441466-030V
4- 469128		ROLLER	C- 441466-020V
			C- 441466-030V
4- 469131		SHIM	C- 271562-040V
			C- 271562-050V
			C- 271562-060V
			C- 271562-070V
3- 469132		PIPE	C- 271562-040V
			C- 271562-050V
			C- 271562-060V
			C- 271562-070V
2- 469133		PIPE	C- 271562-040V

PART NO	LAST AM	DESCRIPTION	GROUP NO
			C- 271562-060V
			C- 271562-060V
			C- 271562-070V
4- 469134		BRACKET	C- 271261-040V
			C- 271261-050V
4- 469135		HOLDER	C- 271261-040V
			C- 271261-050V
4- 469136		ROLLER	C- 441486-020V
			C- 441486-030V
3- 469138		BRACKET	C- 256229-020V
4- 469139		HOLDER	C- 256229-020V
1- 469140		FILLING PIPE	C- 469091-010V
			C- 469091-020V
3- 469141		HOLDER	C- 271992-020V
4- 469142		SPACER	C- 271376-020V
3- 469143		LEAD-IN	C- 272765-030V
			C- 272765-040V
3- 469143		LEAD-IN	C- 272765-050V
C- 469144-010V	9660 84-05-18	CONNECTION	C- 272765-060V
C- 469144-020V	9605 86-10-31	CONNECTION	C- 271909-030V
			C- 271909-040V
3- 469146		HOSE	C- 271909-050V
			C- 271261-040V
1- 469148		BRACKET	C- 271261-050V
1- 469149		PIPE	C- 469452-010V
1- 469150		COVER	C- 469452-010V
			C- 469452-010V
1- 469151		PIPE	C- 469452-020V
1- 469152		PIPE	C- 469452-010V
2- 469153		PIPE	C- 469452-010V
			C- 469452-010V
			C- 469452-020V
2- 469154		PIPE	C- 751800-010V
			C- 751800-020V
			C- 469452-010V
2- 469155		SUPPORT	C- 469452-020V
3- 469156		PIPE	C- 751800-010V
			C- 751800-020V
			C- 469452-010V
3- 469157		PIPE	C- 469452-010V
			C- 469452-020V
3- 469158		PIPE	C- 469452-020V
			C- 469452-030V
4- 469159		PIN	C- 469452-010V
			C- 469452-020V
			C- 256233-030V
			C- 256233-040V
			C- 256233-050V
			C- 272021-030V
4- 469160		VIBRATION DAMPER	C- 272021-040V
			C- 272021-050V
			C- 469452-010V
			C- 469452-020V
2- 469161		JUNCTION BLOCK	C- 751800-010V
			C- 751800-020V
2- 469162		PIPE	C- 469144-010V
			C- 469144-020V
2- 469163		PIPE	C- 271909-030V
			C- 271909-040V
2- 469164		PIPE	C- 271909-030V
			C- 271909-040V
2- 469165		PIPE	C- 271909-030V
			C- 271909-040V
			C- 271909-050V
3- 469166		PIPE	C- 271909-030V
			C- 271909-040V
			C- 271909-050V
C- 469173-010V	13624 89-09-28	REEL	B- 648118-060V
			B- 648118-070V
3- 469174		CLAMP	C- 469173-010V
3- 469175		CLAMP	C- 469173-010V
3- 469176		CLAMP	C- 469173-010V
3- 469177		CLAMP	C- 469173-010V

PART NO	LAST AM	DESCRIPTION	GROUP NO
2- 469178		CAM	C- 283626-020V
			C- 283626-030V
4- 469179		TOOTHED PULLY	C- 283626-020V
			C- 283626-030V
4- 469180		PLATE	C- 283626-020V
			C- 283626-030V
4- 469181		KEY	C- 283626-020V
			C- 283626-030V
C- 469182-0101	7341 85-03-12	BELT TENSIONER	B- 648118-060V
			B- 648118-070V
3- 469183		ARM	C- 469182-010V
4- 469205		BRACKET	C- 457853-010V
			C- 457853-020V
4- 469206		COUNTER RUBBER	RK- 544468-010V
			RK- 550136-010V
			CR- 283607-010V
			C- 469316-010V
			C- 469955-010V
			CR- 283607-010V
			C- 469316-010V
			C- 469955-010V
4- 469213		ROD	C- 469737-010V
G2- 469214		REEL	C- 469737-010V
3- 469215		SHAFT	C- 469737-010V
4- 469216-0001		PLATE	C- 449323-010V
4- 469216-0002		PLATE	C- 449323-010V
4- 469217		RUBBER STRIP	C- 449323-010V
2- 469222		SHAFT	C- 449323-010V
3- 469223		SHAFT	C- 449323-010V
2- 469225		PLATE	C- 457159-010V
C- 469247-010V	7858 85-07-15	PULL TAB MAGAZINE	B- 648118-060V
C- 469247-020V	12403 89-01-10	PULL TAB MAGAZINE	B- 648118-070V
1- 469248		MAGAZINE	C- 469247-010V
			C- 469247-020V
1- 469249		FRAME	C- 469247-010V
			C- 469247-020V
2- 469250		BRACKET	C- 469247-010V
			C- 469247-020V
2- 469251		PLATE	C- 469247-010V
			C- 469247-020V
2- 469252		BRACKET	C- 469247-010V
			C- 469247-020V
2- 469253		HOLDER	C- 469247-010V
			C- 469247-020V
3- 469254		ARM	C- 469247-010V
			C- 469247-020V
3- 469256		ROLLER BRACKET	C- 469247-010V
			C- 469247-020V
3- 469257		SLIDE RAIL	C- 469247-010V
			C- 469247-020V
4- 469258		AXLE PIN	C- 469247-010V
			C- 469247-020V
4- 469259		ROLLER	C- 469247-010V
			C- 469247-020V
4- 469260		CLAMP	C- 469247-010V
			C- 469247-020V
4- 469261		SPACER	C- 469247-010V
			C- 469247-020V
4- 469263		ROLLER	C- 469247-010V
4- 469263		ROLLER	C- 469247-020V
4- 469265		AXLE PIN	C- 469247-010V
			C- 469247-020V
4- 469266		STOP	C- 469247-010V
			C- 469247-020V
1- 469268		SUPPORT LOWER	C- 457937-010V
1- 469269		FLAT BAR LOWER	C- 457937-010V
4- 469271		WASHER	C- 469247-010V
			C- 469247-020V
4- 469276		BRACKET	C- 457159-010V
			C- 457159-020V
4- 469277		GUIDE	C- 457159-010V
			C- 457159-020V
2- 469282		GUIDE	C- 469738-010V
			C- 469738-020V
3- 469286		RACKET	C- 484858-010V
			C- 484858-020V
			C- 547756-010V

PART NO	LAST AM	DESCRIPTION	GROUP NO
3- 469287		BRACKET	C- 469736-010V
4- 469288		BLOCK	C- 469736-010V
			C- 469736-020V
3- 469293		CLAW	C- 469294-010V
C- 469294-0101	6771 84-06-25	TYPE EXTRACTOR	RK- 469760-010V
			B- 648109-060V
			B- 648109-070V
			B- 648109-080V
2- 469296		CABLE DUCT	C- 469300-010V
3- 469298		LID	C- 469300-010V
C- 469299-0101	6999 84-10-17	FLUORESCENT LAMP	B- 648118-060V
			B- 648118-070V
C- 469300-0101	10407 87-06-10	LOWER CABLE DUCT	B- 648118-080V
			B- 648118-070V
3- 469301-0001		DOLLY	C- 294888-010V
			C- 457866-010V
			C- 457866-010V
			C- 457866-010V
			C- 457866-010V
			C- 469316-010V
			C- 457866-010V
			C- 469316-010V
			C- 497534-020V
3- 469301-0002		DOLLY	C- 457866-010V
			C- 457866-010V
			C- 469316-010V
			C- 457866-010V
			C- 469316-010V
			C- 497534-020V
3- 469301-0003		DOLLY	C- 497534-020V
3- 469304		RAIL	C- 457856-010V
3- 469314		BRACKET	C- 457867-010V
1- 469315		BUSBAR	RK- 469760-010V
C- 469316-010V	10805 87-09-28	START-UP KIT	B- 648118-060V
			B- 648118-070V
1- 469317		PLATE	C- 457924-010V
4- 469324		ROLLER	C- 469247-010V
			C- 469247-020V
4- 469325		ROLLER	C- 469247-010V
			C- 469247-020V
3- 469326		BANJO CONNECTION	C- 271909-030V
3- 469328		BANJO CONNECTION	C- 271909-040V
			C- 271909-050V
4- 469329		PIPE	C- 271909-030V
			C- 271909-040V
			C- 271909-050V
4- 469330		SIGN	C- 271909-030V
			C- 271909-040V
			C- 271909-050V
4- 469331		HOLDER	C- 271909-030V
			C- 271909-040V
			C- 271909-050V
4- 469332		CONNECTION	C- 271909-030V
			C- 271909-040V
			C- 271909-050V
2- 469336		COVER	C- 441534-010V
3- 469337		REFLECTOR	C- 441534-010V
4- 469338		LINKPIECE INNER	C- 456560-010V
4- 469339		SHIM	C- 271866-030V
4- 469340		CLIP	C- 271866-030V
3- 469341		LEAD-IN	C- 295026-020V
1- 469343		CABLE DUCT	C- 469374-010V
1- 469344		CABLE DUCT	C- 469374-010V
1- 469345		CABLE DUCT	C- 469374-010V
1- 469346		CABLE DUCT	C- 469374-010V
			C- 469374-020V
1- 469347		LID	C- 469374-010V
			C- 469374-020V
			C- 469374-030V
2- 469348		COVER	C- 469374-010V
			C- 469374-020V
2- 469349		CABLE DUCT	C- 469374-010V
			C- 469374-020V
2- 469350		LID	C- 469374-010V
			C- 469374-020V
			C- 469374-030V
2- 469351		LID	C- 469374-010V

PART NO	LAST AM	DESCRIPTION	GROUP NO
			C- 469374-020V
			C- 469374-030V
3- 469352		LID	C- 469374-010V
			C- 469374-020V
			C- 469374-030V
3- 469353		LID	C- 469374-010V
			C- 469374-020V
			C- 469374-030V
3- 469354		LID	C- 469374-010V
			C- 469374-020V
			C- 469374-030V
4- 469355		LID	C- 469374-010V
			C- 469374-020V
			C- 469374-030V
2- 469356		HOLDER	C- 272031-020V
4- 469357		LOCK BOARD	C- 272031-020V
4- 469358		ROLLER	C- 272031-020V
4- 469359		ROLLER	C- 272031-020V
1- 469360		HOLDER	C- 272030-020V
4- 469361		LOCK BOARD	C- 272030-020V
4- 469362		LOCK BOARD	C- 272030-020V
4- 469363		LOCK BOARD	C- 272030-020V
4- 469364		ROLLER	C- 272030-020V
4- 469365		ROLLER	C- 272030-020V
C- 469366-010V	9907 88-12-01	CABLE DUCT	B- 648101-060V
			B- 648101-070V
C- 469366-020V	12788 89-04-25	CABLE DUCT	B- 648101-080V
C- 469366-030V	13651 89-11-23	CABLE DUCT	B- 648101-090V
1- 469369		CAM	C- 256202-020V
			C- 256202-030V
			C- 256202-040V
1- 469370		CAM	C- 256202-020V
			C- 256202-030V
			C- 256202-040V
C- 469374-0101	9199 88-05-27	CABLE DUCT	B- 648111-060V
			B- 648111-070V
C- 469374-0201	13953 89-11-13	CABLE DUCT	B- 648111-080V
C- 469374-0301	12180 89-12-01	CABLE DUCT	B- 648111-090V
4- 469376		COVER PLATE	C- 295310-010V
			C- 295310-020V
			C- 295310-030V
			C- 295310-040V
3- 469378		PIPE	RK- 469769-010V
			C- 456556-010V
4- 469383		SHIM	C- 441271-010V
C- 469384-0101	6662 84-06-07	START-UP KIT	B- 648106-060V
			B- 648106-070V
			B- 648106-080V
			B- 648106-090V
2- 469385		PIPE	C- 456976-020V
			C- 456976-030V
			C- 456976-040V
2- 469386		PIPE	C- 456976-020V
2- 469387		PIPE	C- 456976-020V
4- 469393		BRACKET	C- 295310-030V
			C- 295310-040V
			C- 295310-050V
			C- 295310-060V
4- 469405		BLOCK	CR- 256436-020V
			CR- 256436-030V
			CR- 256436-040V
			CR- 256436-050V
4- 469406		BLOCK	CR- 256436-020V
			CR- 256436-030V
			CR- 256436-040V
			CR- 256436-050V
4- 469409		PLATE	C- 491890-010V
3- 469410		HOSE COUPLING	C- 491890-010V
RK- 469411-0101	7566 85-02-15	SPLICING DEVICE OFFSET	RK- 491404-010V
			B- 648110-010V
RK- 469412-0101	6968 84-06-18	TEARING DEVICE	RK- 469411-010V
RK- 469413-0101	6968 84-06-18	SUSPENSION ARM	RK- 469411-010V
RK- 469414-0101	6968 84-06-18	SPLICING TABLE	RK- 469411-010V
2- 469416		CONNECTION	C- 469501-020V
			C- 469501-010V
			C- 469501-020V
2- 469418		AIR NOZZLE	C- 469501-020V

PART NO	LAST AM	DESCRIPTION	GROUP NO
			C- 469501-010V
			C- 469501-020V
3- 469420		AIR NOZZLE	C- 469501-020V
			C- 469501-010V
			C- 469501-020V
3- 469424		PIPE	C- 271866-030V
2- 469426		CONNECTION	C- 256237-030V
			C- 256237-040V
3- 469430		SPACER FRAME	RK- 469472-010V
4- 469431		BRACKET	RK- 469533-010V
			C- 271569-030V
4- 469432		CABLE DUCT	RK- 469533-010V
			C- 271569-030V
			C- 271569-040V
			C- 271569-050V
P4- 469433		ROLLER	C- 295310-020V
			C- 295310-030V
			C- 295310-040V
			C- 295310-050V
			C- 295310-060V
P4- 469434		ROLLER	C- 295310-020V
			C- 295310-030V
			C- 295310-040V
			C- 295310-050V
			C- 295310-060V
1- 469435		CONTROL CABINET	C- 295026-020V
			C- 295026-030V
1- 469436		CONTROL CABINET	C- 295026-020V
			C- 295026-030V
2- 469437		BACK PIECE	C- 295026-020V
			C- 295026-030V
4- 469445		SPACER	C- 458458-010V
			C- 458458-020V
			C- 458458-030V
4- 469449		CHUTE	C- 458560-010V
C- 469452-010V	10002 87-01-12	COMPRESSOR UNIT	B- 648111-060V
			B- 648111-070V
C- 469452-020V	12844 89-06-13	COMPRESSOR UNIT	B- 648111-080V
C- 469452-030V	8833 89-12-02	COMPRESSOR UNIT	B- 648111-090V
2- 469453		COVER PLATE	RK- 469472-010V
			C- 469496-010V
4- 469454		NUT	C- 295026-020V
			C- 295026-030V
4- 469458		BRACKET	C- 469501-020V
			C- 469501-030V
			C- 469501-010V
			C- 469501-020V
			C- 469501-030V
			RK- 751462-010V
4- 469459		BRACKET	C- 469501-020V
			C- 469501-030V
			C- 469501-010V
			C- 469501-020V
			C- 469501-030V
			RK- 751462-010V
4- 469460		BRACKET	C- 469501-020V
			C- 469501-030V
			C- 469501-010V
			C- 469501-020V
			C- 469501-030V
			RK- 751462-010V
4- 469461		ROLLER	C- 469501-020V
			C- 469501-030V
			C- 469501-010V
4- 469461		ROLLER	C- 469501-020V
			C- 469501-030V
			RK- 751462-010V
4- 469463		SHAFT	C- 469501-020V
			C- 469501-030V
			C- 469501-010V
			C- 469501-020V
			C- 469501-030V
			RK- 751462-010V
4- 469464		ROLLER	C- 469501-020V
			C- 469501-030V
			C- 469501-010V
			C- 469501-020V

PART NO	LAST AM	DESCRIPTION	GROUP NO
			C- 469501-030V
			RK- 751462-010V
			RK- 751467-010V
4- 469466		PLATE	C- 469501-020V
			C- 469501-030V
			C- 469501-010V
			C- 469501-020V
			C- 469501-030V
			RK- 751462-010V
4- 469467		PLATE	C- 469501-020V
			C- 469501-010V
			C- 469501-020V
RK- 469472-0101	8578 86-02-11	SPACER FRAME	RK- 469760-010V
RK- 469472-0102	8578 86-02-11	SPACER FRAME	RK- 469760-010V
1- 469474		BRACKET	RK- 469472-010V
2- 469475		BRACKET	RK- 469472-010V
1- 469476		FRAME	RK- 469472-010V
2- 469477		PLATE	RK- 469472-010V
2- 469478		PLATE	RK- 469472-010V
1- 469479		PLATE	RK- 469472-010V
2- 469480		CABLE DUCT	RK- 469472-010V
2- 469481		LID	RK- 469472-010V
3- 469482		LEG	RK- 469472-010V
3- 469483		LEG	RK- 469472-010V
3- 469484		LEG	RK- 469472-010V
4- 469485		SPACER	RK- 469472-010V
RK- 469486-0101	7079 84-10-15	RAILING / PLATFORM	RK- 469760-010V
1- 469487		PLATFORM	RK- 469486-010V
1- 469488		RAILING	RK- 469486-010V
2- 469489		RAIL	RK- 469486-010V
			C- 458460-010V
2- 469490		RAIL	RK- 469486-010V
			C- 458460-010V
2- 469491		CABLE DUCT	RK- 469472-010V
4- 469492		SPACER	C- 271442-030V
			C- 271443-030V
			C- 271442-030V
			C- 271443-030V
			C- 271442-030V
			C- 271443-030V
			C- 271442-030V
			C- 271443-030V
4- 469495		BRACKET	C- 256229-020V
C- 469496-0101	6944 84-07-05	COVER PLATE	B- 648102-060V
			B- 648102-070V
			B- 648102-080V
C- 469496-0101		COVER PLATE	B- 648102-090V
3- 469497		PIPE	C- 295045-030V
			C- 295045-040V
			C- 295045-050V
			C- 295045-060V
3- 469498		PIPE	C- 295045-030V
			C- 295045-040V
			C- 295045-050V
			C- 295045-060V
2- 469499		FLUSH PIPE	RK- 469788-010V
			RK- 538415-010V
			C- 469781-010V
			C- 469781-020V
C- 469501-0101	8477 86-11-25	AIR NOZZLE	B- 648111-060V
C- 469501-020V	9415 86-10-17	AIR NOZZLE	B- 648101-070V
			B- 648111-070V
C- 469501-030V	13195 89-06-13	AIR NOZZLE	B- 648101-080V
			B- 648101-080V
			B- 648111-080V
			B- 648111-090V
3- 469502		SLIDER	C- 456180-010V
4- 469503		ELBOW PIPE	C- 272560-030V
			C- 272560-040V
			C- 272560-050V
4- 469504		WASHER	C- 441271-020V
			RK- 491883-010V
2- 469505		GUARD	C- 256233-020V
1- 469507		COLUMN	C- 272021-030V
1- 469508		COLUMN	C- 272021-030V
2- 469511		BOTTOM	C- 469452-010V
			C- 469452-020V

PART NO	LAST AM	DESCRIPTION	GROUP NO
			C- 751800-010V
			C- 469452-030V
			C- 751800-020V
3- 469515		PIPE	C- 272823-030V
			C- 272823-040V
2- 469516		SIDE PLATE RIGHT	C- 271513-030V
			C- 271513-040V
			C- 271513-050V
2- 469518		PENDULUM ARM	C- 751885-020V
4- 469519		HOLDER	C- 272084-020V
4- 469521		BEARING PLATE	RK- 469472-010V
			C- 272021-030V
			C- 272021-040V
2- 469522		FLUSH PIPE	C- 272021-050V
			RK- 536415-010V
			C- 469781-010V
4- 469523		SIGN	C- 469781-020V
1- 469524		BRACKET	C- 491890-010V
			C- 441486-010V
			C- 441486-020V
			C- 441486-030V
2- 469526		DOOR	C- 441486-040V
4- 469527		BRACKET	C- 469535-010V
2- 469531		LID	C- 295211-010V
RK- 469533-0101	7079 84-10-15	CABLE DUCT	RK- 469472-010V
C- 469535-010V	12195 88-10-21	DOOR	RK- 469760-010V
			B- 648106-080V
C- 469535-0101	12195 88-10-21	DOOR	B- 648106-090V
			B- 648106-080V
RK- 469536-0101	7624 86-05-07	WATER CIRCULATION	B- 648106-070V
2- 469538		BRACKET	RK- 490865-010V
			RK- 469536-010V
			RK- 491568-010V
2- 469539		PIPE	C- 491207-010V
			RK- 469536-010V
			RK- 491568-010V
2- 469542		PIPE	C- 491207-010V
3- 469543		PIPE	RK- 469536-010V
			RK- 491568-010V
2- 469544		PLATE	RK- 469536-010V
			RK- 491568-010V
1- 469545		CONNECTION	RK- 469536-010V
			RK- 491568-010V
			C- 256237-030V
2- 469546		CONNECTION	C- 256237-040V
			C- 256237-050V
2- 469547		PLATE	C- 256237-030V
			C- 256237-040V
			C- 256237-030V
			C- 256237-040V
			C- 256237-050V
1- 469548		HOUSE	C- 256237-060V
2- 469549		FILLING PIPE	C- 272021-030V
4- 469550		SLEEVE	C- 255921-030V
			C- 271866-030V
			C- 271866-040V
4- 469556		SHAFT	C- 271866-050V
			C- 469247-010V
4- 469561		SHAFT	C- 469247-020V
			C- 469247-010V
			C- 469247-020V
3- 469562		PANEL PLATE	C- 457159-010V
4- 469564		BRACKET	C- 469247-010V
			C- 469247-020V
3- 469565		ARM	C- 469247-010V
			C- 469247-020V
4- 469566		ROLLER	C- 469247-010V
			C- 469247-020V
4- 469567		SHAFT	C- 469247-010V
			C- 469247-020V
4- 469569		BRACKET	C- 469247-010V
			C- 469247-020V
4- 469570		ROLLER	C- 469247-010V
			C- 469247-020V
4- 469571		JIG	C- 469247-010V
3- 469572		TEMPLATE	C- 469586-010V
3- 469573		TEMPLATE	C- 469586-010V

PART NO	LAST AM	DESCRIPTION	GROUP NO
3- 469574		TEMPLATE	C- 469586-010V
3- 469575		TEMPLATE	C- 469586-010V
4- 469576		TEMPLATE	C- 469586-010V
4- 469577		TEMPLATE	C- 469586-010V
4- 469578		TEMPLATE	C- 469586-010V
4- 469579		TEMPLATE	C- 469586-010V
4- 469580		TEMPLATE	C- 469586-010V
4- 469581		TEMPLATE	C- 469586-010V
4- 469582		TEMPLATE	C- 469586-010V
4- 469583		TEMPLATE	C- 469586-010V
4- 469584		TEMPLATE	C- 469586-010V
4- 469585		JIG	C- 469247-010V
C- 469588-0101	7204 84-10-20	TEMPLATE	C- 77094-010V
			B- 648119-080V
2- 469587		CABLE DUCT	RK- 469760-010V
4- 469588		LID	RK- 469760-010V
4- 469591		RUBBER RING	C- 469247-010V
			C- 469247-020V
4- 469592		FLANGE	C- 469247-010V
			C- 469247-020V
4- 469594		BRACKET	C- 457924-010V
			C- 457924-020V
2- 469595		BRACKET	C- 457924-010V
			C- 457924-020V
C- 469598-0101	9161 86-06-17	HOSE INSTALLATION	B- 648118-080V
C- 469598-0201	9530 86-12-22	HOSE INSTALLATION	B- 648118-070V
3- 469599		GUARD	C- 457159-010V
			C- 457159-020V
3- 469600		LID	C- 457159-010V
			C- 457159-020V
3- 469606		LID	C- 457867-010V
4- 469607		LID	C- 457867-010V
3- 469616		HOUSE	C- 469247-010V
			C- 469247-020V
4- 469617		RING	C- 469247-010V
			C- 469247-020V
4- 469619		RING	C- 469247-010V
			C- 469247-020V
1- 469620		LEG	C- 457881-010V
			C- 457881-020V
3- 469622		BRACKET	C- 469634-010V
2- 469623		LID	C- 457867-010V
2- 469624		LID	C- 457867-010V
2- 469625		LID	C- 457867-010V
3- 469626		BOTTOM	C- 457867-010V
3- 469627		BOTTOM	C- 457867-010V
3- 469628		BOTTOM	C- 457867-010V
3- 469629		LID	C- 457867-010V
3- 469630		HOLDER	C- 469634-010V
4- 469631		SHIM	C- 457881-010V
			C- 457881-020V
4- 469632		SHIM	C- 457881-010V
			C- 457881-020V
C- 469634-0101	10407 87-06-10	BUSBAR	B- 648118-080V
			B- 648118-070V
C- 469635-010V	9361 86-10-23	COVER PLATE	B- 648118-080V
			B- 648118-070V
1- 469636		COVER PLATE	C- 469635-010V
1- 469637		COVER PLATE	C- 469635-010V
1- 469638		RIGHT LEG REAR	C- 457881-010V
			C- 457881-020V
2- 469639		BRACKET	C- 469635-010V
4- 469642		LID	C- 283619-010V
			C- 476080-020V
			C- 294670-010V
4- 469643		LID	C- 469182-010V
			C- 283604-010V
			C- 283604-020V
4- 469644		LID	C- 283604-010V
			C- 283621-010V
			C- 456698-010V
			C- 469173-010V
			C- 456698-020V
4- 469645		LID	C- 469173-010V
			C- 283623-010V
			C- 456688-010V
			C- 283622-010V

PART NO	LAST AM	DESCRIPTION	GROUP NO
			C- 283623-010V
			C- 469173-010V
4- 469646		LID	C- 283619-010V
			C- 476080-020V
			C- 294670-010V
			C- 469182-010V
4- 469647		LID	C- 283621-010V
			C- 456696-010V
			C- 456696-020V
C- 469648-010V	7008 84-11-02	PAPER GUIDE	B- 648118-060V
			B- 648118-070V
3- 469650		SUPPORT	C- 469649-010V
3- 469651		SUPPORT	C- 469649-010V
3- 469652		SUPPORT	C- 469649-010V
3- 469653		GUIDE RAIL	C- 469649-010V
3- 469654		GUIDE RAIL	C- 469649-010V
3- 469655		GUIDE RAIL	C- 469649-010V
4- 469659		SHIM	C- 457881-010V
			C- 457881-020V
3- 469668		HOLDER	C- 449323-010V
3- 469669		FLANGE	C- 449323-010V
2- 469675		GUIDE RAIL	C- 283631-010V
P3- 469683		INDUCTOR	RK- 547760-010V
			C- 457868-010V
			C- 469316-010V
			C- 457868-010V
			C- 469316-010V
4- 469688		ROLLER	C- 533903-010V
			C- 449323-010V
			C- 533903-010V
2- 469690		SUPPORT	C- 283631-010V
4- 469691		DOCUMENT	RK- 469411-010V
2- 469693		COVER PLATE	C- 469635-010V
2- 469694		COVER PLATE	C- 469635-010V
1- 469702		PLATE	C- 469736-010V
3- 469703		ARM	C- 469736-010V
			C- 469736-020V
4- 469704		SHAFT	C- 469736-010V
4- 469706		SPACER	C- 469736-010V
4- 469707		KNOB	C- 469736-010V
4- 469708		SCREW	C- 469736-010V
			C- 469736-020V
4- 469709		RING	C- 469736-010V
			C- 469736-020V
4- 469710		BRACKET	C- 469736-010V
2- 469711		BRAKE ARM	C- 469736-010V
2- 469712		HINGE	C- 469736-010V
			C- 469736-020V
4- 469717		SHAFT	C- 469736-010V
4- 469719		ROLLER	C- 469736-010V
			C- 484984-010V
4- 469719		ROLLER	C- 469736-020V
			C- 484984-010V
			C- 490610-010V
			C- 490610-020V
4- 469720		BRACKET	C- 469736-010V
			C- 484950-010V
			C- 484984-010V
			C- 469736-020V
			C- 484950-010V
			C- 484984-010V
2- 469723		TIME SCHEDULE 250ML O.D	RK- 469760-010V
			B- 648109-060V
			B- 648109-070V
			B- 648109-060V
			B- 648109-070V
2- 469724		TIME SCHEDULE 250ML O.D	B- 648109-060V
			B- 648109-070V
			B- 648109-060V
			B- 648109-070V
2- 469727		TIME SCHEDULE 200ML O.D	RK- 469760-010V
			B- 648109-060V
			B- 648109-070V
			B- 648109-060V
2- 469731		TIME SCHEDULE 125ML O.D	B- 648109-070V
			B- 648109-060V
			B- 648109-070V

PART NO	LAST AM	DESCRIPTION	GROUP NO
			B- 648109-060V
			B- 648109-070V
2- 469732		TIME SCHEDULE 125ML O.D	B- 648109-060V
			B- 648109-070V
			B- 648109-060V
			B- 648109-070V
2- 469733		TIME SCHEDULE 200S O.D	B- 648109-060V
			B- 648109-070V
			B- 648109-060V
			B- 648109-070V
2- 469734		TIME SCHEDULE 200S O.D	B- 648109-060V
			B- 648109-070V
			B- 648109-060V
			B- 648109-070V
4- 469735		ROLLER	C- 469736-010V
			C- 484984-010V
			C- 469736-020V
			C- 484984-010V
			C- 490610-010V
			C- 490610-020V
C- 469736-010V	7827 85-07-17	STRIP MAGAZINE	C- 490600-010V
C- 469736-020V	13967 89-10-04	STRIP MAGAZINE	C- 490600-020V
C- 469737-0101	7010 85-03-13	REEL	C- 283621-010V
4- 469738		SHIM	C- 283626-020V
1- 469745		BRACKET	C- 441486-020V
			C- 441486-030V
			C- 441486-040V
1- 469747-0001		CABLE DUCT	C- 469366-010V
			C- 469366-020V
			C- 469366-030V
1- 469748		CABLE DUCT	C- 469366-010V
1- 469749		CABLE DUCT	C- 469366-010V
3- 469752		LID	C- 469366-010V
3- 469752		LID	C- 469366-020V
3- 469753		LID	C- 469366-010V
			C- 469366-020V
			C- 469366-030V
4- 469755		LID	C- 469366-010V
3- 469758		FLUSH PIPE	C- 469804-010V
			C- 469781-010V
			C- 469781-020V
3- 469759		FLUSH PIPE	C- 469804-010V
			C- 469781-010V
			C- 469781-020V
RK- 469760-010V	9237 88-05-12	ADAPTER KIT, OPENING DEV.	B- 648110-010V
4- 469761		HOLDER	C- 491890-010V
C- 469762-0101	6929 84-10-08	LADDER	RK- 469760-010V
			B- 648102-060V
			B- 648102-070V
			B- 648102-080V
			B- 648102-090V
RK- 469764-0101	7083 84-09-04	PIPE CONNECTION	B- 648110-010V
4- 469766		HOSE COUPLING	RK- 469764-010V
3- 469767		PROTECTIVE GLAS	RK- 469766-010V
			C- 469781-010V
3- 469768		PROTECTIVE GLAS	C- 469781-010V
RK- 469769-0101	7084 84-09-04	PEROXIDE PIPE	B- 648110-010V
3- 469770		PIPE	RK- 469769-010V
4- 469771		DOCUMENT	RK- 469760-010V
1- 469772		PLATFORM	C- 456458-010V
			C- 456458-020V
			C- 456458-030V
			RK- 538439-010V
			RK- 547986-010V
2- 469773		PLATE	C- 456458-010V
			C- 456458-020V
			C- 456458-030V
			RK- 538439-010V
			RK- 547986-010V
3- 469774		FLUSH PIPE	C- 469804-010V
			C- 469781-010V
			C- 469781-020V
1- 469775		RAILING	C- 456460-010V
			RK- 538439-010V
2- 469778		LUSH PIPE	RK- 538415-010V
			C- 469781-010V
			C- 469781-020V

PART NO	LAST AM	DESCRIPTION	GROUP NO
C- 469781-010V	8271 86-10-14	TUBE FLUSHING DEVICE	B- 648111-060V
			B- 648111-070V
C- 469781-020V	11456 88-09-09	TUBE FLUSHING DEVICE	B- 648111-080V
			B- 648111-090V
4- 469786		NIPPLE	C- 256014-030V
RK- 469788-010V	7079 84-10-15	TUBE FLUSHING	RK- 469780-010V
2- 469789		HOLDER	C- 256237-030V
4- 469790		BRACKET	C- 256237-030V
4- 469791		GASKET	C- 469501-010V
2- 469792		PIPE-LINE	C- 469501-020V
			C- 469501-010V
			C- 469501-020V
3- 469795		HOLDER	RK- 751462-010V
3- 469796		GASKET	C- 271114-030V
4- 469797		LOCK BOARD	C- 469501-010V
C- 469804-010V	7199 84-10-24	TUBE FLUSHING DEVICE	C- 272031-020V
			B- 648101-060V
			B- 648101-070V
			B- 648101-080V
2- 469805		PIPE	B- 648101-090V
2- 469806		COVER	RK- 469536-010V
			RK- 469538-010V
4- 469807		DOCUMENT	RK- 491568-010V
RK- 469808-010V	11978 89-06-15	REB KIT ENVIRONMENT	RK- 469808-010V
RK- 469808-0101	11978 89-06-15	REB KIT ENVIRONMENT	RK- 491569-030V
			RK- 491404-010V
4- 469810		BRACKET	B- 648110-010V
4- 469811		SHAFT	C- 272025-020V
			C- 271115-030V
4- 469812		BEARING	C- 271115-040V
			C- 271115-030V
4- 469813		CLAMP	C- 271115-040V
			C- 271115-030V
4- 469814		LINK ARM	C- 271115-040V
			C- 271115-030V
4- 469815		END PIECE	C- 271115-040V
			C- 271115-030V
4- 469816		CLAMP	C- 271115-040V
			C- 271115-030V
4- 469817		PIN	C- 271115-040V
			C- 271115-030V
4- 469818		ROD	C- 271115-040V
			C- 271115-030V
4- 469819		PEEL-OFF SHIM	C- 271115-040V
			C- 271115-030V
4- 469820		BRACKET	C- 271115-040V
			C- 490912-010V
3- 469821		CATCH	C- 490912-010V
4- 469822		AXLE PIN	RK- 456804-010V
4- 469829		FILLER CAP	RK- 491591-030V
			C- 491243-030V
			C- 272381-030V
			C- 491243-030V
1- 469831-0003		COVER	C- 456100-010V
			C- 456100-020V
1- 469831-0004		COVER	C- 456100-010V
			C- 456100-020V
1- 469831-0006		COVER	C- 456100-010V
			C- 456100-020V
1- 469831-0007		COVER	C- 456100-010V
			C- 456100-020V
1- 469832-0001		COVER	C- 456100-010V
			C- 456100-020V
1- 469832-0002		COVER	C- 456100-010V
			C- 456100-020V
1- 469839		LID	C- 490947-010V
			C- 490947-020V
2- 469840		LID	C- 490947-010V
			C- 490947-020V
2- 469841		LEG	C- 490947-010V
			C- 490947-020V
			C- 752244-010V
2- 469842		LEG	C- 490947-010V
			C- 490947-020V
			C- 752244-010V

PART NO	LAST AM	DESCRIPTION	GROUP NO
2- 469843		LEG	C- 490947-010V
			C- 490947-020V
2- 469844		SUPPORT	C- 490947-010V
4- 469845		BRACKET	C- 490947-010V
4- 469846		STOP LUG	C- 490947-010V
			C- 490947-020V
4- 469847		SHAFT	C- 490947-010V
			C- 490947-020V
			C- 752244-010V
1- 469855		PROTECTION PLATE	C- 490947-010V
			C- 490947-020V
3- 469861		CROSS BAR	C- 490590-010V
4- 469865		BRACKET	C- 490947-010V
4- 469867		HOSE HOLDER	C- 256173-020V
			C- 256173-030V
			C- 256173-040V
1- 469872		HOLDER	C- 441000-030V
1- 469873		HOLDER	C- 441000-030V
4- 469874		GUIDE RAIL	C- 441000-030V
			C- 441000-040V
			C- 441000-050V
4- 469875		GUIDE RAIL	C- 441000-030V
			C- 441000-040V
			C- 441000-050V
2- 469884		BRACKET	C- 484950-010V
3- 469886		GUIDE RAIL	C- 456103-010V
3- 469887		SLIDE PLATE	C- 456103-010V
4- 469888		LOCATING PIECE	C- 456103-010V
3- 469890		GUIDE	C- 456103-010V
2- 469891		RAIL	C- 456560-010V
3- 469894		BRACKET	C- 456953-010V
3- 469895		HEAT GUARD	C- 456953-010V
RK- 469897-0101	7325 84-12-19	REB. KIT DISCHARGE CHUTE	RK- 469760-010V
RK- 469898-0101	7325 84-12-19	REB. KIT TURNING STATION	RK- 469760-010V
3- 469921		BRACKET	C- 441304-020V
			C- 441304-030V
3- 469922		SPRING	RK- 469898-010V
			C- 751702-010V
4- 469927		STRIP	RK- 469898-010V
			C- 751702-010V
2- 469934		DRILLING JIG	RK- 490898-010V
4- 469937		PIPE	C- 456100-010V
			C- 456100-020V
4- 469946		WASHER	RK- 469536-010V
			RK- 491568-010V
4- 469960		GASKET	RK- 469536-010V
			RK- 491568-010V
RK- 469961-0101	8079 85-06-19	BATH	RK- 469898-010V
RK- 469961-0102	8079 85-06-19	BATH	RK- 469898-010V
1- 469962		BOX	RK- 469961-010V
2- 469963		BRACKET	C- 256014-030V
			C- 256843-030V
			C- 256843-040V
			C- 256843-050V
			RK- 539439-010V
			RK- 547988-010V
4- 469964		LID	C- 256865-020V
1- 469965		RAILING	C- 456460-020V
			C- 456460-030V
1- 469966		RAILING	C- 456459-020V
			C- 456460-020V
			C- 456460-030V
			RK- 547966-010V
1- 469967		RAILING	C- 456460-020V
			C- 456460-030V
3- 469968		STRIP	C- 271115-030V
			C- 271115-040V
2- 469969		PIPE	C- 456976-020V
2- 469972-0001		FILLING TUBE LOWER	C- 256921-040V
2- 469972-0002		FILLING TUBE LOWER	C- 256921-040V
3- 469973		FLANGE	C- 256230-030V
			C- 256921-040V
4- 469977		ELECTRICAL CONNECTION	CR- 256547-030V
2- 469978		LID	RK- 469961-010V
3- 469979		HOLDER	C- 752957-010V
			RK- 469961-010V
			C- 752828-010V

PART NO	LAST AM	DESCRIPTION	GROUP NO
			C- 469074-010V
			C- 469074-020V
3- 469980		BRACKET	RK- 469981-010V
4- 469981		BRACKET	C- 752957-010V
			RK- 469981-010V
			C- 469074-010V
			C- 469074-020V
4- 469982		WASHER	C- 752173-010V
			RK- 469981-010V
			C- 256014-030V
			C- 256014-040V
4- 469983		SPRING	RK- 469981-010V
RK- 469984-0101	13953 89-11-13	ASEPTIC CHAMBER	RK- 469988-010V
1- 469985		PIPE	RK- 469808-010V
			RK- 469988-010V
			RK- 469808-010V
			C- 456555-010V
2- 469987		CONTAINER	RK- 469988-010V
			C- 456836-020V
			C- 456836-030V
RK- 469988-010V	8079 85-06-19	REB KIT ENVIRONMENT	RK- 491590-030V
2- 469989		FILLING PIPE	C- 272361-030V
1- 469990		PIPE	RK- 469988-010V
2- 469991		RAIL	RK- 491404-010V
			RK- 491405-010V
			C- 272025-020V
			C- 272025-030V
2- 469992		PIPE	RK- 469988-010V
			C- 456555-010V
			C- 456555-020V
			C- 456555-030V
3- 469993		HOSE COUPLING	RK- 469988-010V
			C- 272361-030V
			C- 491207-010V
			C- 491207-020V
3- 469994		CONNECTION	RK- 469988-010V
			C- 272361-030V
			C- 491207-010V
3- 469994		CONNECTION	C- 491207-020V
4- 469995		DOCUMENT FOLDER	RK- 469988-010V
3- 469999		FLANGE	RK- 456714-010V
			C- 256173-030V
			C- 256173-040V
			RK- 456714-010V
C- 476080-020V	8663 86-11-21	BELT TENSIONER	C- 533944-010V
G1- 476108		BRACKET	CR- 283618-020V
G2- 476109		BRACKET	CR- 283618-020V
4- 476184		DIAPHRAGM	RK- 536502-010V
			RK- 536706-010V
4- 476185		VALVE CONE	C- 539211-010V
			RK- 536502-010V
			RK- 536706-010V
C- 476189-010V	12503 89-04-14	WALL LEAD-IN	C- 751796-010V
2- 476190		FRAME	C- 476189-010V
2- 476191		FRAME	C- 476189-010V
2- 476192		COVER PLATE	C- 476189-010V
2- 476193		COVER PLATE	C- 476189-010V
2- 476194		COVER PLATE	C- 476189-010V
2- 476195		COVER	C- 476189-010V
3- 476196		RAIL	C- 476189-010V
3- 476197		DROP WING	C- 476189-010V
3- 476198-0001		BRACKET	C- 476189-010V
3- 476198-0002		BRACKET	C- 476189-010V
4- 476199		PLATE	C- 476189-010V
4- 476200		SPACER	C- 476189-010V
4- 476201		SLEEVE	C- 476189-010V
4- 476202		SCREW	C- 476189-010V
3- 476203		GUARD	C- 539209-010V
C- 476349-020V	11388 88-03-21	DRIVE SHAFT	B- 648118-070V
4- 476354		CANNULAR TUBE	C- 434074-030V
4- 476355		CANNULAR TUBE	C- 434774-030V
3- 476356		HOLDER FOR INK BOTTLE	C- 434774-030V
			C- 434074-030V
			C- 434774-030V
			C- 434074-030V
			C- 434074-030V
			C- 434774-030V
			C- 434074-030V

PART NO	LAST AM	DESCRIPTION	GROUP NO
			C- 434774-030V
			C- 434074-030V
4- 476377		SCREW	C- 751718-010V
4- 476397		GLASS	C- 256014-040V
			C- 256014-050V
4- 476398		LID	C- 256014-040V
			C- 256014-050V
4- 476399		GASKET	C- 256014-040V
			C- 256014-050V
4- 476600		PIPE HOLDER	C- 533014-010V
4- 476864		BRACKET	CR- 283618-020V
4- 476930		SPRING HOLDER	C- 533903-010V
			C- 456696-010V
			C- 456696-020V
			C- 533903-010V
3- 479182		PAPER GUIDE PLATE	C- 229400-080V
RK- 479278-0101	7193 84-10-29	PROXIMITY SWITCH	RK- 479279-010V
RK- 479279-010V	7193 84-10-29	SAFETY CLUTCH	B- 648110-010V
4- 479354		SCREW	C- 751689-010V
4- 479773		CABLE	C- 67027-010V
C- 479821-0101	8541 86-04-29	FREE STAND	C- 751798-010V
2- 479822		COLUMN	C- 479821-010V
3- 479823		STRUT	C- 479821-010V
3- 479824		PLATE	C- 479821-010V
4- 479825		CROSS BAR	C- 479821-010V
4- 479826		COVER PLATE	C- 476189-010V
4- 479870		PRINTED CIRCUIT BOARD	C- 67062-010V
4- 479871		POTENTIOMETER	C- 67062-020V
			C- 67062-010V
			C- 67062-020V
4- 479872		SPACER PLATE	C- 67062-020V
			C- 67062-010V
			C- 67062-020V
4- 479873		COVER PLATE	C- 67062-020V
			C- 67062-010V
			C- 67062-020V
4- 479874		PRINTED CIRCUIT BOARD	C- 67025-020V
4- 479875		PROTECTIVE CAP	C- 67025-020V
4- 479876		SIGN	C- 67062-020V
			C- 67062-010V
			C- 67062-020V
4- 479881		TAPE	C- 67062-020V
			C- 67062-010V
			C- 67062-020V
4- 479882		SHIM	C- 67062-020V
			C- 67062-010V
			C- 67062-020V
4- 479909		PRINTED CIRCUIT BOARD	C- 67056-020V
4- 479910		SCREENPRINTING PANEL	C- 67056-020V
4- 479911		DRILLING PATTERN PANEL	C- 67056-020V
4- 479921		CIRCUIT BOARD PROTECTION	C- 67056-020V
4- 479949		PRINTED CIRCUIT BOARD	C- 67062-020V
4- 479957-0001		COMPONENTS WITHOUT TP-NO	C- 67062-020V
4- 479958-0001		COMPONENTS WITHOUT TP-NO	C- 67056-020V
4- 479986		DOCUMENT	RK- 479279-010V
P3- 484186		SOLENOID VALVE	C- 272623-030V
			C- 272623-040V
3- 484190		BALL BEARING	C- 256014-030V
			C- 256014-040V
			C- 256014-050V
3- 484192		VALVE	C- 456656-010V
			C- 456656-020V
P3- 484196		FILTER	C- 272623-030V
			C- 272623-040V
			C- 272623-050V
3- 484535		HOSE NIPPLE	RK- 491589-030V
3- 484536		VALVE	C- 491243-030V
3- 484538		VALVE	C- 456656-010V
			C- 456656-020V
3- 484540		BRACKET	RK- 491589-030V
4- 484602		INSULATING PLATE	RK- 535606-010V
			C- 497534-020V
C- 484858-010V	10738 87-08-21	BOBBIN	C- 490600-010V
C- 484858-020V	1[illegible] 87-11-11	BOBBIN	C- 490600-020V
2- 484859		SLIDE	C- 484858-010V
			C- 484858-020V
3- 484860		BOBBIN HOLDER	C- 484858-010V

PART NO	LAST AM	DESCRIPTION	GROUP NO
3- 484881		BOBBIN HOLDER	C- 484858-010V
4- 484882		SHAFT	C- 484858-010V
4- 484883		SHAFT	C- 484858-010V
1- 484903		PROTECTIVE COVER	C- 484984-010V
2- 484904		PLATE	C- 484984-010V
3- 484905		GABLE	C- 484984-010V
3- 484906		GABLE	C- 484984-010V
3- 484907		HEATING JAW	C- 484984-010V
3- 484908		COUNTER JAW	C- 484984-010V
3- 484909		HINGE	C- 484984-010V
3- 484910		PLATE	C- 484984-010V
3- 484911		SPACER	C- 490600-010V
			C- 490600-020V
3- 484912		TOUCH GUARD	C- 484984-010V
3- 484913		COVER	C- 484984-010V
3- 484914		HEATING ELEMENT	C- 484984-010V
			C- 469316-010V
			C- 486955-010V
			C- 469316-010V
			C- 486955-010V
4- 484915		BRACKET	C- 484984-010V
4- 484916		PLATE	C- 484984-010V
4- 484917		DOLLY	C- 484984-010V
4- 484918		ARM	C- 484984-010V
4- 484919		ARM	C- 484984-010V
4- 484920		ARM	C- 484984-010V
4- 484921		HOLDER	C- 484984-010V
4- 484922		PIN	C- 484984-010V
4- 484923		SPRING HOUSING	C- 484984-010V
4- 484924		SLEEVE	C- 484984-010V
4- 484925		SLEEVE	C- 484984-010V
4- 484926		SCREW	C- 484984-010V
4- 484927		SCREW	C- 484984-010V
4- 484928		REAMED BOLT	C- 484984-010V
4- 484929		FABRIC	C- 484984-010V
			C- 469316-010V
			C- 486955-010V
			C- 469316-010V
			C- 486955-010V
4- 484930		ROLLER	C- 484984-010V
4- 484932		SPACER	C- 484984-010V
4- 484933		SPACER	C- 484984-010V
4- 484934		STOP LUG	C- 484984-010V
4- 484935		CLIP	C- 484984-010V
C- 484950-0101	12403 89-01-10	BRACKET	C- 490600-010V
			C- 490600-020V
1- 484951		PLATE	C- 484950-010V
2- 484952		BAR	C- 484950-010V
2- 484953		PLATE	C- 484950-010V
2- 484954		HANGER	C- 484950-010V
3- 484955		SPACER	C- 484950-010V
4- 484975		WASHER	C- 484950-010V
			C- 539209-010V
C- 484984-010V	10098 87-11-11	SPLICING DEVICE	C- 539210-010V
			C- 490600-010V
2- 484985		PLATE	C- 490600-020V
4- 484986		ROLLER	C- 484984-010V
4- 484988		CAM	C- 484984-010V
			RK- 536318-010V
			RK- 547300-010V
4- 484989		CAM	C- 476349-020V
4- 484990		CAM	C- 476349-020V
2- 484998		GABLE	C- 476349-020V
			C- 539209-010V
4- 486823		DOCUMENT	C- 539210-010V
4- 486826-0001		SIGN	C- 456274-010V
			CE- 67716-010V
			CE- 68128-010V
			CE- 68379-010V
			C- 295026-020V
			C- 295026-030V
			C- 751885-010V
			C- 271513-050V
			C- 751885-020V
			CE- 68128-010V
			CE- 67716-010V
C- 486955-010V	10805 87-09-28	START-UP KIT	CE- 68379-010V
			B- 648118-080V

PART NO	LAST AM	DESCRIPTION	GROUP NO
			B- 648118-070V
4- 486974		GUIDE	C- 533903-010V
			RK- 536470-010V
			RK- 536450-010V
			RK- 547726-010V
			RK- 547300-010V
			C- 533844-010V
			C- 533903-010V
4- 486976		GUIDE	C- 533903-010V
			RK- 536470-010V
			RK- 536450-010V
			RK- 547726-010V
			RK- 547300-010V
			C- 533844-010V
			C- 533903-010V
4- 486979		FLANGE	C- 533903-010V
			RK- 547300-010V
			C- 533903-010V
4- 486980		RING	C- 533903-010V
			RK- 536470-010V
			RK- 536450-010V
			RK- 547726-010V
			RK- 547300-010V
			C- 533844-010V
			C- 533903-010V
2- 490015-0002		PIPE	C- 735265-010V
2- 490015-0003		PIPE	C- 529940-010V
2- 490016-0002		PIPE	C- 529940-010V
			C- 735265-010V
3- 490021		BRACKET	C- 735032-010V
3- 490023		BRACKET	C- 735267-010V
4- 490063		BRACKET	C- 735267-010V
4- 490076-0002		PACKING MEMBRANE	C- 735192-010V
			C- 736266-010V
			C- 735192-010V
			C- 735271-010V
			C- 735192-010V
			C- 735271-010V
			C- 735192-010V
			C- 735271-010V
4- 490252		RAIL	C- 735259-010V
			C- 735031-010V
3- 490336		FLOAT	C- 735192-010V
4- 490500		GASKET	C- 751332-010V
			C- 295026-020V
			C- 751332-010V
C- 490504-0101	8673 88-02-17	CIRCULATING COOLING WATER	C- 77091-010V
			B- 648119-080V
2- 490506		HOSE	C- 490504-010V
			C- 491767-010V
			C- 490504-010V
2- 490507		HOSE	C- 490504-010V
2- 490508		GUARD	C- 490504-010V
			C- 491767-010V
			C- 490504-010V
4- 490509		SPACER	C- 490504-010V
			C- 491767-010V
			C- 490504-010V
4- 490510		SECURING PLATE	C- 490504-010V
			C- 491767-010V
			C- 490504-010V
4- 490511		HOLDER	C- 490504-010V
4- 490512		HOLDER	C- 490504-010V
			C- 491767-010V
			C- 490504-010V
4- 490513		HOLDER	C- 490504-010V
			C- 491767-010V
			C- 490504-010V
4- 490514		HOLDER	C- 490504-010V
			C- 491767-010V
			C- 490504-010V
G1- 490518		HOLDER	C- 256236-040V
			C- 456309-030V
			C- 456309-040V
4- 490523		ROLLER	C- 256966-020V
3- 490529		CABLE	C- 457866-010V
3- 490530		BRACKET	C- 295026-020V

PART NO	LAST AM	DESCRIPTION	GROUP NO
G4- 490638		LOCK BOARD	C- 256238-040V
			C- 456309-030V
			C- 456309-040V
G4- 490639		LOCK BOARD	C- 256238-040V
			C- 456309-030V
			C- 456309-040V
G4- 490640		LOCK BOARD	C- 256238-040V
			C- 456309-030V
			C- 456309-040V
4- 490647		ROLLER	C- 441486-020V
			C- 441486-030V
4- 490648		ROLLER	C- 441486-020V
			C- 441486-030V
4- 490649		ROLLER	C- 441486-020V
			C- 441486-030V
4- 490650		ROLLER	C- 441486-020V
			C- 441486-030V
4- 490651		ROLLER	C- 441486-020V
			C- 441486-030V
4- 490652		ROLLER	C- 441486-020V
			C- 441486-030V
4- 490656-0001		TIMING BELT	C- 256203-030V
			C- 256203-040V
4- 490656-0002		TIMING BELT	C- 256203-030V
			C- 256203-040V
4- 490656-0003		TIMING BELT	C- 256203-030V
			C- 256203-040V
1- 490679		FRAME RIGHT	C- 490590-010V
1- 490680		FRAME LEFT	C- 490590-010V
2- 490683		BEAM, FRONT.	C- 490590-010V
2- 490684		BEAM, MIDDLE.	C- 490590-010V
2- 490685		BEAM, BACK.	C- 490590-010V
3- 490687		CORNER BAR	C- 490590-010V
4- 490689		SPACER BOLT	C- 490590-010V
C- 490590-010V	8622 88-05-05	CONVEYOR FRAME	B- 648109-060V
			B- 648109-070V
			B- 648109-080V
2- 490691		FILLING TUBE LOWER	C- 256230-030V
2- 490694		LID	RK- 456793-010V
4- 490695		GASKET	RK- 456793-010V
C- 490600-0101	9205 88-09-04	STRIP MAGAZINE COMPLETE	B- 648118-060V
C- 490600-0201	10755 87-10-13	STRIP MAGAZINE COMPLETE	B- 648118-070V
C- 490601-0101	7827 85-07-17	CONNECTION BOX	C- 490600-010V
			C- 490600-020V
3- 490602		CONNECTION BOX	C- 490601-010V
4- 490603		BRACKET	C- 490600-010V
			C- 490600-020V
4- 490604		SPACER	C- 490600-010V
			C- 490600-020V
4- 490605		BRACKET	C- 490600-010V
			C- 490600-020V
4- 490606		LIP	C- 490600-010V
			C- 490600-020V
4- 490607		PLATE	C- 490600-010V
			C- 490600-020V
3- 490608		SIGN	C- 490504-010V
			C- 491767-010V
4- 490609		SEALING WASHER	C- 490504-010V
			C- 490504-010V
			C- 491767-010V
			C- 490504-010V
C- 490610-010V	9708 88-12-17	BENDING ROLLERS, LS-STRIP	B- 648118-060V
C- 490610-020V	10584 87-06-16	BENDING ROLLERS, LS-STRIP	B- 648118-070V
2- 490611		BRACKET	C- 490610-010V
3- 490612		BRACKET	C- 490610-010V
			C- 490610-020V
3- 490613		BRACKET	C- 490610-010V
			C- 490610-020V
3- 490614		HOLDER	C- 490610-010V
4- 490615		SHAFT	C- 490610-010V
			C- 490610-020V
4- 490616		SHAFT	C- 490610-010V
			C- 490610-020V
2- 490618		BRANCH	C- 456455-010V
			C- 456455-020V
3- 490619		HOSE	C- 456455-010V
4- 490660		WASHER	C- 469173-010V

PART NO	LAST AM	DESCRIPTION	GROUP NO
3- 490671		DISTRIBUTOR BLOCK	C- 469173-010V
4- 490673		SLIDE RAIL	C- 457937-010V
4- 490674		BEARING HOLDER	C- 457937-010V
4- 490675		HOLDER	C- 457937-010V
4- 490676		HOLDER	C- 457937-010V
4- 490677		SHAFT	C- 457937-010V
4- 490678		PROTECTION PLATE	C- 457937-010V
4- 490711		PROTECTION PLATE	C- 457937-010V
4- 490712		PROTECTION PLATE	C- 457937-010V
3- 490714		CARRIER	C- 469173-010V
4- 490716		BRACKET	C- 271898-030V
4- 490720		DOCUMENT	C- 490604-010V
4- 490727		STOP	C- 457937-010V
4- 490728		STOP	C- 457937-010V
2- 490729		PROTECTIVE COVER	C- 469634-010V
3- 490730		BAR	C- 457937-010V
3- 490735		BRACKET	C- 469634-010V
1- 490741		BUSBAR	C- 469634-010V
1- 490753		PNEUMATIC DIAGRAM	B- 648109-020V
4- 490754		BRACKET	C- 469736-010V
			C- 469736-020V
2- 490759		CLAMP	C- 272231-030V
3- 490760		GUIDING ARBOR	C- 272231-030V
C- 490761-0101	12427 88-12-08	DETERGENT PUMP	B- 648108-080V
			B- 648108-090V
4- 490765		GUARD	C- 469634-010V
2- 490767		SHAFT	C- 449323-010V
2- 490768		BOX	C- 490761-010V
3- 490769		BRACKET	C- 490761-010V
3- 490775		GUIDE PLATE	CR- 283618-020V
3- 490777		BRACKET	C- 491890-010V
4- 490778		SCREW	C- 256985-020V
			C- 456546-010V
			C- 456546-020V
			RK- 752170-010V
G2- 490779		BRACKET LEFT	C- 272404-040V
			C- 272404-050V
			C- 272404-060V
G2- 490780		BRACKET RIGHT	C- 272404-040V
			C- 272404-050V
			C- 272404-060V
2- 490788		RETURN PIPE	RK- 491589-030V
2- 490789		FILLING PIPE	RK- 491591-030V
			C- 491243-030V
1- 490790		TANK	RK- 491591-030V
			C- 491243-030V
3- 490791		CARRIER	C- 469173-010V
3- 490792		CONNECTION	RK- 491591-030V
			C- 491243-030V
1- 490798		EXTENSION PIPE	C- 491323-020V
1- 490800		WATER DIAGRAM	C- 490604-010V
3- 490850		FLANGE	C- 256921-040V
3- 490851		FLANGE	C- 256230-030V
4- 490852		SIGN	RK- 490886-010V
G2- 490854-0001		SIDE GUIDE LEFT	C- 456560-010V
G2- 490854-0002		SIDE GUIDE RIGHT	C- 456560-010V
3- 490855		GUIDE RAIL	C- 456103-010V
4- 490856		LOCATING PIECE	C- 456103-010V
3- 490857		GUIDE	C- 456103-010V
2- 490862		PIPE	C- 469452-010V
			C- 469452-020V
			C- 751800-010V
4- 490864		DOCUMENT FOLDER	RK- 490886-010V
RK- 490865-0101	9881 88-10-17	LOW ACID KIT	B- 648110-010V
4- 490867		BRACKET	C- 272025-030V
2- 490869		FILLING TUBE LOWER	C- 256921-040V
2- 490870		FILLING TUBE LOWER	C- 256230-030V
3- 490871		LOCKING PIN UPPER	C- 256230-030V
			C- 256921-040V
3- 490872		LOCKING PIN LOWER	C- 256230-030V
			C- 256921-040V
3- 490873		HOLDER	RK- 491539-010V
			RK- 490877-010V
			C- 491897-010V
			C- 736885-010V
			C- 491897-010V
			C- 491976-010V

PART NO	LAST AM	DESCRIPTION	GROUP NO
			C- 736865-010V
			C- 491897-010V
			RK- 751570-010V
			RK- 491539-010V
3- 490874		BRACKET	RK- 490877-010V
			C- 491897-010V
			C- 491976-010V
			C- 491897-010V
			RK- 491539-010V
3- 490875		PLATE	RK- 490877-010V
			C- 491897-010V
			C- 491976-010V
			C- 491976-020V
			C- 491976-010V
			C- 491976-020V
			C- 491897-010V
			RK- 491539-010V
3- 490876		BRACKET	RK- 491539-010V
			RK- 490877-010V
			C- 491897-010V
			C- 736865-010V
			C- 491897-010V
			C- 491976-010V
			C- 491976-020V
			C- 491976-010V
			C- 491976-020V
			C- 736865-010V
			C- 491897-010V
			RK- 751570-010V
			RK- 491539-010V
RK- 490877-0101	10648 87-07-02	PHOTOCELL UNIT	RK- 491744-010V
3- 490878		BRACKET	RK- 490951-010V
2- 490882		ROLLER	RK- 491744-010V
			RK- 491789-010V
			RK- 491902-010V
			RK- 751561-010V
			RK- 491789-010V
			RK- 751561-010V
			C- 751088-010V
			C- 751088-020V
4- 490883		SCREW	C- 271089-030V
2- 490884		BRANCH PIPE	C- 272337-030V
			C- 272337-040V
RK- 490889-0101	7942 85-05-13	TOOL	RK- 490988-010V
4- 490890		PLATE	C- 456100-020V
4- 490891		PIN	C- 456100-020V
3- 490892		COVER	C- 272014-030V
			C- 751088-010V
3- 490893		COVER	C- 272014-030V
			C- 751088-010V
1- 490894		OVER HOUSE	C- 272021-040V
			C- 272021-050V
1- 490895		OVER HOUSE	C- 272021-040V
			C- 272021-050V
2- 490896		CONTAINER	RK- 490988-010V
			C- 456836-020V
			C- 456836-030V
3- 490897		DRILLING JIG	RK- 490899-010V
3- 490899		RING	C- 272021-030V
			C- 272021-040V
			C- 272021-050V
3- 490900		SEAL RING	RK- 490984-010V
			C- 272021-030V
			C- 272021-040V
			C- 272021-050V
3- 490901		SEAL RING	C- 272021-030V
			C- 272021-040V
			C- 272021-050V
4- 490902		AXLE SUPPORT	RK- 490984-010V
			C- 272021-030V
			C- 272021-040V
			C- 272021-050V
4- 490903		SHAFT	RK- 490984-010V
			C- 272021-030V
			C- 272021-040V
			C- 272021-050V
4- 490904		ARM	RK- 490984-010V

PART NO	LAST AM	DESCRIPTION	GROUP NO
			C- 272021-030V
			C- 272021-040V
4- 490906		SCREW	RK- 490908-010V
			RK- 490988-010V
			RK- 490908-010V
			C- 456555-010V
			C- 456555-020V
			C- 456555-030V
4- 490907		NUT	RK- 490909-010V
			RK- 490989-010V
			RK- 490909-010V
			C- 456555-010V
			C- 456555-020V
			C- 456555-030V
4- 490909		LID	RK- 490988-010V
3- 490910		PLATE	C- 456100-020V
3- 490911		PLATE	C- 456100-020V
C- 490912-0101	7648 85-03-06	CATCH	C- 271115-030V
			C- 271115-040V
4- 490916		AXLE PIN	C- 256197-030V
			C- 256198-030V
			C- 256197-030V
			C- 491814-010V
			C- 491815-010V
			C- 256197-040V
			C- 491814-010V
			C- 491815-010V
1- 490917		COLUMN	C- 272021-040V
			C- 272021-050V
1- 490918		COLUMN	C- 272021-040V
1- 490918		COLUMN	C- 272021-050V
1- 490919		COLUMN	C- 272021-040V
			C- 272021-050V
4- 490932		SLEEVE	C- 272765-030V
			C- 272765-040V
			C- 272765-050V
			C- 272765-060V
			RK- 751298-010V
4- 490933		NUT	C- 272765-030V
			C- 272765-040V
			C- 272765-050V
			C- 272765-060V
			RK- 751298-010V
2- 490940		CYLINDER	CR- 256212-040V
			CR- 256213-040V
			CR- 256212-040V
			CR- 256213-040V
			CR- 256212-050V
			CR- 256213-050V
			RK- 456712-010V
			RK- 456715-010V
4- 490941		PISTON	RK- 456712-010V
			RK- 456715-010V
4- 490942		COMPRESSION SPRING	CR- 256212-040V
			CR- 256213-040V
			CR- 256212-040V
			CR- 256213-040V
			CR- 256212-050V
			CR- 256213-050V
			CR- 256436-050V
			RK- 456712-010V
			RK- 456715-010V
4- 490943		COMPRESSION SPRING	CR- 256212-040V
			CR- 256213-040V
			CR- 256212-040V
			CR- 256213-040V
			CR- 256212-050V
			CR- 256213-050V
			RK- 456712-010V
			RK- 456715-010V
4- 490944		PLUNGER	CR- 256204-040V
			CR- 256205-040V
			CR- 256204-040V
			CR- 256205-040V
			RK- 456715-010V
C- 490947-0101	9696 86-09-05	PAPER GUARD	B- 648107-060V
			B- 648107-070V

PART NO	LAST AM	DESCRIPTION	GROUP NO
C- 490947-0102	9696 86-09-05	PAPER GUARD	B- 648107-060V
			B- 648107-070V
C- 490947-020V	12196 86-12-02	PAPER GUARD	B- 648107-060V
1- 490948		COVER	C- 490947-010V
			C- 490947-020V
2- 490949		PLATE	C- 490947-010V
			C- 490947-020V
3- 490950		HINGE	C- 490947-010V
			C- 490947-020V
RK- 490951-0101	7663 86-03-15	FIXING OF GUIDESIDES F.F.	B- 648110-060V
4- 490953		DOCUMENT	RK- 490951-010V
2- 490955		BACK PLATE	C- 490947-010V
2- 490955		BACK PLATE	C- 490947-020V
3- 490956		HINGE	C- 490947-010V
			C- 490947-020V
			C- 752474-010V
3- 490957		LID	C- 490947-010V
			C- 490947-020V
			C- 752474-010V
4- 490958		BRACKET	C- 490947-010V
			C- 490947-020V
			C- 752474-010V
3- 490964		COVER	C- 272021-040V
			C- 272021-050V
4- 490965		BRACKET	C- 490947-010V
			C- 490947-020V
			C- 752474-010V
1- 490966		PIPE	C- 456556-020V
3- 490967		BRACKET	RK- 490968-010V
			C- 456555-010V
			C- 456555-020V
			C- 456555-030V
3- 490970		HOLDER	RK- 456804-010V
			C- 272381-030V
4- 490973		STRAINER	RK- 456804-010V
			C- 272381-030V
4- 490974		COMPRESSION SPRING	CR- 256212-030V
			CR- 256213-030V
4- 490975		COMPRESSION SPRING	CR- 256212-030V
			CR- 256213-030V
2- 490976		VALVE HOUSING	C- 271169-030V
1- 490977		PIPE	RK- 490536-010V
2- 490978		PIPE	RK- 490536-010V
4- 490979		PIPE	RK- 490536-010V
			RK- 491568-010V
			C- 456556-020V
G2- 490980		CYLINDER	CR- 256436-030V
			CR- 256712-030V
			CR- 256436-040V
			CR- 256712-040V
			CR- 256436-050V
			CR- 256712-050V
			RK- 751157-010V
3- 490981		PLATE	RK- 491068-010V
4- 490982		CLAMP	RK- 491069-010V
2- 490983		PIPE	C- 272560-040V
			C- 272560-050V
2- 490984		TOUCH GUARD	C- 272560-040V
4- 490985		SPACER PLATE	C- 272560-040V
			C- 272560-050V
3- 490986		PLATE	C- 456100-010V
			C- 456100-020V
3- 490987		STRAINER	RK- 456804-010V
			RK- 491591-030V
			C- 491243-030V
			C- 272381-030V
			C- 491243-030V
4- 490988		STRUT	RK- 456804-010V
			RK- 491591-030V
			C- 491243-030V
			C- 272381-030V
4- 490988		STRUT	C- 491243-030V
4- 490989		LID	RK- 456804-010V
			RK- 491591-030V
			C- 491243-030V
			C- 272381-030V
			C- 491243-030V

PART NO	LAST AM	DESCRIPTION	GROUP NO
3- 490991		HOSE	C- 456556-010V
			C- 456556-020V
2- 490994		PIPE	C- 456556-020V
2- 490996		PIPE	C- 456556-020V
1- 490997		PIPE	C- 469452-020V
4- 490998		SCREW	C- 456976-030V
			C- 469452-020V
			C- 751800-010V
			C- 456976-040V
			C- 469452-030V
			C- 751800-020V
4- 491013		LID	RK- 491863-010V
4- 491016		HOLDER	C- 752960-010V
			C- 752971-010V
			C- 456458-010V
			C- 456458-020V
			C- 751860-010V
			C- 456457-030V
			C- 456458-030V
			C- 751860-010V
3- 491018		BRACKET	CR- 256204-040V
			CR- 256205-040V
			CR- 256204-040V
			CR- 256205-040V
			CR- 256204-050V
			CR- 256205-050V
1- 491019		PIPE	C- 491083-010V
2- 491020		PIPE	C- 491083-010V
			C- 491083-020V
4- 491021		BEARING PLATE	C- 256236-040V
			C- 456309-030V
			C- 456308-040V
3- 491022		CYLINDER BRACKET	C- 256236-040V
			C- 456309-030V
			C- 456308-040V
RK- 491066-0101	6300 86-10-09	REINFORCEMENT	B- 648110-010V
4- 491072		DOCUMENT FOLDER	RK- 491066-010V
RK- 491073-0101	7925 86-05-23	GUIDING OF STATION CHAIN	B- 648110-010V
4- 491075		DOCUMENT FOLDER	RK- 491073-010V
G1- 491076		SIDE GUIDE LEFT	RK- 491073-010V
G1- 491077		SIDE GUIDE RIGHT	RK- 491073-010V
4- 491078		GUIDE FLANGE	RK- 491073-010V
C- 491083-010V	8167 86-09-04	GAUGE GROUP	B- 648111-060V
			B- 648111-070V
C- 491083-020V	13673 89-09-11	GAUGE GROUP	B- 648111-060V
			B- 648111-090V
4- 491084		SPACER	RK- 490981-010V
3- 491085		CABLE	C- 256973-030V
1- 491086		BRACKET	RK- 539438-010V
			C- 491083-010V
			C- 491083-020V
2- 491087		PIPE	RK- 539438-010V
			C- 491083-010V
3- 491088		PIPE	RK- 539438-010V
			C- 491083-010V
			C- 491083-020V
2- 491089		PIPE	C- 456976-030V
			C- 456976-040V
1- 491090		PIPE	C- 469452-020V
			C- 469452-030V
4- 491091		DOCUMENT FOLDER	RK- 456711-010V
1- 491092		COVER PLATE	B- 648109-060V
			B- 648109-070V
			B- 648109-060V
			B- 648109-090V
			B- 648109-060V
			B- 648109-070V
			B- 648109-060V
			B- 648109-090V
4- 491093		DOCUMENT FOLDER	RK- 456712-010V
2- 491094		PIPE	C- 456976-030V
			C- 456976-040V
3- 491095		PIPE	C- 469452-020V
			C- 751800-010V
			C- 469452-030V
			C- 751800-020V
4- 491097		HEAT GUARD	C- 256239-020V

PART NO	LAST AM	DESCRIPTION	GROUP NO
			C- 256239-030V
			C- 256239-040V
			C- 256095-020V
			C- 256095-030V
			C- 256095-040V
2- 491098		BLOCK	CR- 256436-020V
			CR- 256436-030V
2- 491099		BLOCK	CR- 256436-020V
			CR- 256436-030V
2- 491100		BLOCK	CR- 256436-020V
			CR- 256436-030V
3- 491101		HOUSE	C- 272337-030V
			C- 272337-040V
3- 491114		ANGLE BRACKET	RK- 456793-010V
2- 491125		LID	C- 256014-030V
4- 491126		SCREW	C- 752173-010V
			RK- 538439-010V
			RK- 547986-010V
			C- 256014-040V
3- 491127		BRACKET	C- 271649-020V
			C- 469074-010V
			C- 469074-020V
4- 491128		GASKET	RK- 469808-010V
			C- 272021-030V
			C- 272021-040V
			C- 272021-050V
P3- 491130		ROLLER CHAIN	C- 272021-020V
			C- 256014-030V
RK- 491131-010V	11979 89-08-16	LUBRIC. OF STATION CHAIN	B- 648110-010V
4- 491133		DOCUMENT	RK- 491131-010V
2- 491135		DISTRIBUTOR BLOCK	RK- 491131-010V
4- 491137		BRACKET	RK- 491131-010V
3- 491138		STRUT	C- 456460-010V
2- 491139		FILLING PIPE	C- 256921-030V
3- 491140		FLANGE	C- 255921-030V
4- 491141		THROTTLE	C- 255921-030V
			C- 255921-040V
3- 491142		FLOAT	C- 255921-030V
			C- 255921-040V
4- 491143		BRACKET	C- 469501-020V
			C- 469501-030V
			C- 469501-010V
			C- 469501-020V
			C- 469501-030V
			RK- 751462-010V
4- 491147		WASHER	CR- 256436-020V
			CR- 256436-030V
3- 491148		BRACKET	RK- 469961-010V
			C- 469074-010V
4- 491149		SPRING	C- 752957-010V
			RK- 469961-010V
			C- 752628-010V
			C- 469074-010V
			C- 469074-020V
4- 491150		DOCUMENT FOLDER	C- 456953-010V
4- 491153		GLAND	C- 441304-020V
			C- 441304-030V
1- 491154		PIPE	C- 456976-030V
			C- 456976-040V
4- 491165		ROLLER	RK- 456713-010V
			C- 491814-010V
			C- 491815-010V
			C- 491814-010V
			C- 491815-010V
			RK- 456713-010V
4- 491166		SHAFT	RK- 456713-010V
			C- 491814-010V
			C- 491815-010V
			C- 491814-010V
			C- 491815-010V
			RK- 456713-010V
1- 491169		PIVOT ARM	C- 256237-050V
			C- 256237-060V
			C- 256055-050V
			C- 256055-060V
3- 491170		COVER	C- 256237-040V
			C- 256237-050V

PART NO	LAST AM	DESCRIPTION	GROUP NO
			C- 256237-060V
			RK- 751303-010V
			RK- 751311-010V
			RK- 751303-010V
			RK- 751311-010V
			C- 256055-040V
			C- 256055-050V
			C- 256055-060V
3- 491171		BEARING BLOCK	C- 256237-050V
			C- 256237-060V
			C- 256055-050V
			C- 256055-060V
4- 491172		GASKET	C- 256237-050V
			C- 256237-060V
			C- 256055-050V
			C- 256055-060V
4- 491173		BRACKET	C- 256237-050V
4- 491173		BRACKET	C- 256237-060V
			C- 256055-050V
			C- 256055-060V
4- 491174		ARM	C- 256237-050V
			C- 256237-060V
			C- 256055-050V
			C- 256055-060V
4- 491175		LINK	C- 256055-050V
			C- 256055-060V
3- 491176		BRACKET	C- 256055-050V
			C- 256055-060V
4- 491177		ARM	C- 256055-050V
			C- 256055-060V
4- 491178		BRACKET	C- 469501-020V
			C- 469501-010V
			C- 469501-020V
			RK- 751462-010V
2- 491179		PIPE	RK- 469536-010V
			RK- 491568-010V
2- 491180		PIPE	RK- 469536-010V
			RK- 491568-010V
1- 491181		PIPE	C- 491207-010V
			C- 491207-020V
2- 491182		RETURN PIPE	C- 491207-010V
1- 491183		PIPE	C- 271866-040V
			C- 271866-050V
2- 491184		RETURN PIPE	RK- 491590-030V
2- 491185		HOSE	C- 491767-010V
3- 491186		COVER STRIP	C- 271513-030V
1- 491187		PIPE	C- 271866-040V
			C- 271866-050V
2- 491188		HOLDER	RK- 491591-030V
			C- 491243-030V
3- 491189		SIGN	C- 295971-010V
			C- 491942-010V
3- 491190		PIPE	C- 491767-010V
2- 491191		CONTAINER	C- 272823-040V
4- 491192		NUT	C- 272823-040V
3- 491193		HOLDER	C- 295310-030V
			C- 295310-040V
			C- 295310-050V
			C- 295310-060V
G2- 491194		ROD END	RK- 491368-010V
			C- 491767-010V
			C- 491768-010V
			C- 491767-020V
			C- 491768-020V
			RK- 491368-010V
3- 491195		SLIDER	RK- 491368-010V
			C- 491767-010V
			C- 491768-010V
			C- 491767-020V
			C- 491768-020V
			RK- 491368-010V
G3- 491196		LINK	RK- 491368-010V
			C- 491767-010V
			C- 491768-010V
			C- 491767-020V
			C- 491768-020V
G3- 491196		LINK	RK- 491368-010V

PART NO	LAST AM	DESCRIPTION	GROUP NO
3- 491198		PISTON	RK- 491388-010V
			C- 491787-010V
			C- 491788-010V
			C- 491787-020V
			C- 491788-020V
			RK- 491388-010V
4- 491199		BACK PIECE	RK- 491388-010V
			C- 491787-010V
			C- 491788-010V
			RK- 491388-010V
4- 491200		CARRIER	RK- 491388-010V
			C- 491787-010V
			C- 491788-010V
			C- 491787-020V
			C- 491788-020V
			RK- 491388-010V
4- 491203		STRUT	RK- 491591-030V
			C- 491243-030V
			C- 751373-010V
C- 491207-010V	12102 88-09-17	PIPE WORK	B- 648106-080V
C- 491207-020V	13645 90-01-12	PIPE WORK	C- 751352-010V
4- 491209-0001		PIPE	C- 456976-030V
			C- 456976-040V
4- 491209-0002		PIPE	C- 456976-030V
			C- 456976-040V
4- 491215		SLEEVE	C- 295310-040V
			C- 295310-050V
			C- 295310-060V
3- 491218		SUPPORT	C- 271181-030V
			C- 271181-040V
1- 491219		PIPE	C- 456976-030V
			C- 456976-040V
3- 491220		PIPE	C- 456976-030V
			C- 456976-040V
4- 491221		PIPE	C- 456976-030V
			C- 456976-040V
4- 491222		COUNTER ROLLER	C- 456309-020V
			C- 456309-030V
3- 491223		COVER	C- 256239-030V
			C- 256239-040V
			C- 256095-030V
3- 491224		BRACKET	C- 256095-040V
			C- 256239-030V
			C- 256239-040V
			C- 256095-030V
			C- 256095-040V
CR- 491225-010V	9514 86-11-26	STATION CHAIN	B- 648105-080V
			B- 648105-090V
CR- 491225-0101	9514 86-11-26	STATION CHAIN	RK- 751156-010V
			RK- 751298-010V
CR- 491225-0102	9514 86-11-26	STATION CHAIN	RK- 751156-010V
			RK- 751298-010V
CR- 491225-0103	9514 86-11-26	STATION CHAIN	RK- 751156-010V
			RK- 751298-010V
CR- 491225-0104	9514 86-11-26	STATION CHAIN	RK- 751156-010V
			RK- 751298-010V
CR- 491225-0105	9514 86-11-26	STATION CHAIN	RK- 751156-010V
			RK- 751298-010V
CR- 491225-0106	9514 86-11-26	STATION CHAIN	RK- 751156-010V
			RK- 751298-010V
CR- 491225-0107	9514 86-11-26	STATION CHAIN	RK- 751156-010V
			RK- 751298-010V
CR- 491225-0108	9514 86-11-26	STATION CHAIN	RK- 751156-010V
			RK- 751298-010V
2- 491226-0001		CARTON STATION	CR- 491225-010V
2- 491226-0002		CARTON STATION	CR- 491225-010V
2- 491226-0003		CARTON STATION	CR- 491225-010V
2- 491226-0004		CARTON STATION	CR- 491225-010V
2- 491226-0005		CARTON STATION	CR- 491225-010V
2- 491226-0006		CARTON STATION	CR- 491225-010V
4- 491227		SLIDER	CR- 491225-010V
4- 491228-0001		SHAFT	CR- 491225-010V
4- 491228-0002		SHAFT	CR- 491225-010V
4- 491229		BUSHING	CR- 491225-010V
4- 491230		GRUB SCREW	CR- 491225-010V
4- 491231		BUSHING	RK- 550129-010V
			CR- 491225-010V

PART NO	LAST AM	DESCRIPTION	GROUP NO
4- 491233		LUG	C- 271442-030V
			C- 271443-030V
			C- 271442-030V
			C- 271443-030V
			C- 271442-030V
			C- 271443-030V
			C- 271442-030V
			C- 271443-030V
4- 491236		WASHER	C- 271442-030V
			C- 271443-030V
			C- 271442-030V
			C- 271443-030V
			C- 271442-030V
			C- 271443-030V
			C- 271442-030V
			C- 271443-030V
3- 491240		BRACKET	C- 491871-010V
3- 491241		HOLDER	C- 271886-040V
			C- 271886-050V
3- 491242		HOLDER	C- 271886-040V
			C- 271886-050V
C- 491243-030V	13997 89-11-16	PEROXIDE TANK	B- 648106-080V
C- 491243-0301	13997 89-11-16	PEROXIDE TANK	RK- 491590-030V
2- 491244		PIPE WATER	C- 491650-010V
			RK- 491641-010V
			RK- 491447-010V
2- 491245		PIPE CENTRAL LUBRICATION	C- 491650-010V
			RK- 491641-010V
			RK- 491447-010V
2- 491246		PIPE CENTRAL LUBRICATION	C- 491650-010V
			RK- 491641-010V
			RK- 491447-010V
3- 491247		PIPE WATER	C- 491650-010V
			RK- 491641-010V
			RK- 491447-010V
1- 491248		PIPE WATER	C- 491650-010V
			RK- 491641-010V
			RK- 491447-010V
3- 491249		PIPE HYDRAULIC	C- 491650-010V
			RK- 491641-010V
3- 491249		PIPE HYDRAULIC	RK- 491447-010V
1- 491250		PIPE HYDRAULIC	C- 491650-010V
			RK- 491641-010V
			RK- 491447-010V
3- 491251		PIPE WATER	C- 491650-010V
			RK- 491641-010V
			RK- 491447-010V
1- 491252		PIPE HYDRAULIC	C- 491650-010V
			RK- 491641-010V
			RK- 491447-010V
2- 491253		PIPE HYDRAULIC	C- 491650-010V
			RK- 491641-010V
			RK- 491447-010V
1- 491254		DISTRIBUTOR BLOCK RIGHT	C- 491650-010V
			RK- 491641-010V
			RK- 491447-010V
1- 491256		DISTRIBUTOR BLOCK LEFT	C- 491650-010V
			RK- 491641-010V
			RK- 491447-010V
2- 491256		DISTRIBUTOR BLOCK LEFT	C- 491650-010V
			RK- 491447-010V
3- 491257		DRIVE WHEEL	RK- 491883-010V
3- 491258		DRIVE WHEEL	C- 491650-010V
C- 491259-010V	12529 89-02-09	GUIDE	B- 648105-080V
C- 491259-0101	12529 89-02-09	GUIDE	RK- 751156-010V
C- 491259-0102	12529 89-02-09	GUIDE	RK- 751156-010V
C- 491259-0103	12529 89-02-09	GUIDE	RK- 751156-010V
C- 491259-020V	12530 90-01-05	GUIDE	B- 648105-080V
2- 491260		RAIL BRACKET	C- 491259-010V
			RK- 751166-010V
3- 491264		SPACER BLOCK	C- 491259-010V
			RK- 751166-010V
3- 491265		PLATE	C- 491259-010V
			C- 491259-020V
			C- 491259-010V
			RK- 751166-010V
4- 491266		SHIM	C- 491259-010V

PART NO	LAST AM	DESCRIPTION	GROUP NO
			C- 491259-020V
			C- 491259-010V
3- 491270		FILLING TUBE LOWER	RK- 751166-010V
3- 491271		FLANGE	C- 255921-040V
3- 491272		LOCKING PIN LOWER	C- 255921-040V
C- 491273-0101	8296 85-10-09	START-UP KIT	C- 255921-040V
G3- 491274		HUB	C- 456953-010V
			RK- 456714-010V
			C- 256173-030V
4- 491286		REFLECTOR	C- 256173-040V
			RK- 456714-010V
			C- 271513-030V
			C- 271513-040V
2- 491287		PROTECTIVE COVER	C- 271513-050V
			C- 751665-020V
			C- 271513-040V
3- 491289		TENSION SPROCKET	C- 271513-050V
3- 491290		SHAFT	RK- 491590-030V
4- 491291		LID	RK- 491302-010V
			RK- 491302-010V
4- 491291		LID	C- 491846-010V
			C- 491846-020V
4- 491292		CLAMPING RING	C- 491846-010V
4- 491293		WASHER	RK- 491302-010V
4- 491294		SEAL	RK- 491302-010V
2- 491295		COVER PLATE	RK- 491302-010V
3- 491296		COVER PLATE	RK- 491589-030V
1- 491297		CARRIER RIGHT	RK- 491589-030V
			CR- 256212-040V
			CR- 256212-050V
1- 491298		CARRIER LEFT	RK- 456712-010V
			CR- 256213-040V
			CR- 256213-050V
1- 491299		TOUCH GUARD	RK- 456712-010V
			C- 456976-030V
RK- 491302-0101	10355 87-04-07	TENSION SPROCKET	C- 456976-040V
4- 491303		WASHER	RK- 751298-010V
			RK- 491591-030V
			C- 491243-030V
4- 491304		WASHER	C- 751373-010V
			RK- 491591-030V
			C- 491243-030V
4- 491305		CIRCUIT DIAGRAM	C- 751373-010V
			C- 271181-030V
4- 491310		GUIDING FLANGE RIGHT	C- 271181-040V
			C- 441271-010V
			C- 441594-010V
			C- 441271-020V
4- 491311		GUIDE FLANGE LEFT	C- 441594-010V
			C- 441271-010V
3- 491312		GUIDE FLANGE LEFT	C- 441271-020V
3- 491313		GUIDE STRIP	C- 441594-010V
4- 491314		SCREW	C- 271069-030V
			C- 272021-030V
			C- 272021-040V
4- 491317		BRACKET RIGHT	C- 272021-050V
4- 491318		BRACKET LEFT	RK- 456713-010V
4- 491319		SHIM	RK- 456713-010V
			RK- 456713-010V
			C- 491814-010V
			C- 491815-010V
			C- 491814-010V
			C- 491815-010V
3- 491322		WATER DIAGRAM	RK- 456713-010V
			RK- 490865-010V
C- 491323-0201	12060 88-07-04	PEROXIDE PUMP	RK- 491795-010V
			C- 491243-030V
RK- 491324-0101	10113 87-02-06	PAPER BRAKE	RK- 491591-030V
2- 491325		BRACKET	RK- 491404-010V
3- 491326		BRACKET	RK- 491324-010V
3- 491327		SHAFT	RK- 491324-010V
3- 491328		ROLLER	RK- 491324-010V
4- 491329		ARM	RK- 491404-010V
4- 491333		SPACER RING	RK- 491324-010V
			C- 272028-030V
			C- 272028-040V

PART NO	LAST AM	DESCRIPTION	GROUP NO
			C- 272028-050V
4- 491344		PLATE	RK- 491404-010V
3- 491345		CAM SEGMENT	RK- 456713-010V
			C- 256202-030V
3- 491345		CAM SEGMENT	C- 256202-040V
			RK- 456713-010V
3- 491346		CAM SEGMENT	RK- 456713-010V
			C- 256202-030V
			C- 256202-040V
			RK- 456713-010V
3- 491349		BEARING SEAT	C- 256951-040V
			C- 256952-040V
			C- 256951-040V
			C- 256952-040V
4- 491350		SLIDER	C- 256951-040V
			C- 256952-040V
			C- 256951-040V
			C- 256952-040V
			C- 256951-040V
1- 491360		PIPE	C- 256952-040V
			C- 456555-010V
			C- 456555-020V
3- 491362		SHAFT	C- 456555-030V
			RK- 491373-010V
			C- 256014-040V
4- 491363		NUT	C- 256014-050V
			RK- 491373-010V
			C- 256014-040V
4- 491364		BEARING HOLDER	C- 256014-050V
			RK- 491373-010V
			C- 256014-040V
4- 491365		THRUST BEARING	C- 256014-050V
			RK- 491373-010V
			C- 256014-040V
3- 491366		PUMP PIPE	C- 256014-050V
			C- 491207-010V
4- 491367		GASKET	RK- 491590-030V
			RK- 491591-030V
			C- 491243-030V
			C- 272381-030V
RK- 491373-0101	8500 85-12-18	BEARING	C- 491243-030V
4- 491375		CROSS PIECE	RK- 491588-010V
			RK- 491368-010V
			C- 491787-010V
			C- 491788-010V
			C- 491787-020V
			C- 491788-020V
4- 491376		COUNTER ROLLER	RK- 491369-010V
			C- 456309-020V
			C- 456309-030V
4- 491382		DOCUMENT FOLDER	RK- 491588-010V
4- 491383		TORSION SPRING PERF 1	CR- 256844-030V
4- 491384		TORSION SPRING PERF 2	CR- 256845-030V
3- 491386		HOUSE PERF 1	CR- 256844-030V
3- 491387		HOUSE PERF 2	CR- 256845-030V
RK- 491388-0101	12208 89-01-24	DISCONNECTION LINK	RK- 456716-010V
			RK- 456717-010V
RK- 491388-0102	12208 89-01-24	DISCONNECTION LINK	RK- 752414-010V
			RK- 752408-010V
			RK- 752410-010V
2- 491390		PIPE CENTRAL LUBRICATION	RK- 752412-010V
			C- 271562-060V
			C- 271562-060V
			C- 271562-070V
2- 491390		PIPE CENTRAL LUBRICATION	RK- 491641-010V
2- 491391		PLATE	RK- 491447-010V
3- 491392		SHAFT	C- 295112-020V
			C- 272004-030V
			C- 272024-030V
			C- 272004-040V
4- 491393		AXLE SUPPORT	C- 272024-030V
			C- 272004-030V
			C- 272024-030V
			C- 272004-040V
1- 491394		PAPER GUARD	C- 272024-030V
			C- 256233-020V
			C- 256233-030V
1- 491395		CABLE DUCT	C- 256233-040V
			C- 469366-010V

PART NO	LAST AM	DESCRIPTION	GROUP NO
			C- 469366-020V
			C- 469366-030V
3- 491396		SQUEE-GEE ROLLER	RK- 491404-010V
			RK- 491405-010V
			C- 272024-020V
			C- 272024-030V
3- 491397		SQUEE-GEE ROLLER	RK- 491404-010V
			RK- 491405-010V
			C- 272024-020V
			C- 272024-030V
1- 491398		PIPE	C- 456556-020V
2- 491399		PIPE	C- 456556-020V
4- 491402-0001		DOCUMENT FOLDER	RK- 491404-010V
4- 491403		DOCUMENT FOLDER	RK- 491405-010V
RK- 491404-010V	9237 86-05-12	REBUILD,OFFSET KIT AB9-83	B- 648110-010V
RK- 491405-010V	12894 89-11-20	REBUILDING OFFSET KIT	B- 648110-080V
4- 491409		WASHER	C- 256173-030V
			C- 256173-040V
4- 491410		SHIM	C- 256173-030V
			C- 256173-040V
2- 491412		MOTOR PLATE	C- 272028-040V
			C- 272028-050V
3- 491413		PLATE	C- 272028-040V
			C- 272028-050V
2- 491414		PLATE	C- 469091-020V
3- 491415		PLATE	C- 469091-020V
RK- 491416-0101	12866 89-08-01	AIR INJECTOR	B- 648110-010V
4- 491417		DOCUMENT FOLDER	RK- 491416-010V
4- 491418-0001		O-RING	C- 469091-020V
4- 491418-0002		O-RING	C- 272021-040V
			C- 272021-050V
3- 491419		WATER DIAGRAM AIR INJECT.	RK- 491416-010V
4- 491421		SLEEVE	RK- 456712-010V
1- 491422		CONNECTION BOX	C- 295045-040V
			C- 295045-050V
2- 491423		LID	C- 295045-040V
			C- 295045-050V
			C- 295045-060V
2- 491433		VOLUME CAM LEFT, WIDE	C- 256222-020V
2- 491434		VOLUME CAM RIGHT	C- 256222-020V
2- 491435		VOLUME CAM RIGHT, WIDE	C- 256222-020V
2- 491436		VOLUME CAM LEFT	C- 256222-020V
4- 491441		COVER	C- 469091-010V
			C- 469091-020V
1- 491442		PIPE COIL	RK- 491591-030V
1- 491442		PIPE COIL	C- 491243-030V
4- 491445		DOCUMENT FOLDER	RK- 491447-010V
RK- 491447-0101	8397 86-11-27	DISTRIBUTOR BLOCK	B- 648110-080V
3- 491448		GUARD	C- 272028-030V
4- 491453		HOLDER	C- 271866-040V
			C- 271866-050V
2- 491455		PIPE	C- 271866-040V
4- 491456		PLATE	RK- 491366-010V
			C- 491787-010V
			C- 491788-010V
			C- 491787-020V
			C- 491788-020V
3- 491457		HOSE	RK- 491366-010V
			RK- 456716-010V
			RK- 752408-010V
			RK- 752410-010V
			RK- 456717-010V
			RK- 752412-010V
			RK- 752414-010V
			RK- 456717-010V
			RK- 752412-010V
			RK- 752414-010V
4- 491458		LINK	C- 255921-030V
			C- 255921-040V
3- 491459		CAM SEGMENT	RK- 456713-010V
			C- 256202-030V
			C- 256202-040V
			RK- 456713-010V
3- 491460		CAM SEGMENT	RK- 456713-010V
			C- 256202-030V
			C- 256202-040V
			RK- 456713-010V

PART NO	LAST AM	DESCRIPTION	GROUP NO
3- 491461		CAM SEGMENT	RK- 456713-010V
			C- 256202-030V
			C- 256202-040V
			RK- 456713-010V
3- 491462		CAM SEGMENT	RK- 456713-010V
			C- 256202-030V
			C- 256202-040V
			RK- 456713-010V
3- 491463		PIPE	C- 271866-040V
			C- 271866-050V
2- 491465		GIRDER FRONT	C- 490590-010V
2- 491466		GIRDER MIDDLE	C- 490590-010V
2- 491467		GIRDER REAR	C- 490590-010V
2- 491470		COVER PLATE	C- 271513-040V
			C- 271513-050V
			RK- 491590-030V
3- 491478		PLATE	C- 456103-010V
3- 491479		HOLDER	C- 456560-010V
3- 491480		LOCATING PIECE	C- 456560-010V
4- 491482		PLATE	C- 456103-010V
2- 491485		DISTRIBUTOR BLOCK	C- 272765-030V
			C- 272765-040V
			RK- 491512-010V
1- 491486		HEATING PIPE	C- 256055-050V
4- 491487		BUSHING	C- 256055-050V
			C- 256055-060V
3- 491488		PROTECTIVE COVER	C- 271513-040V
3- 491488		PROTECTIVE COVER	C- 271513-050V
			RK- 491589-030V
			RK- 491590-030V
4- 491510		ROLLER	CR- 255933-030V
4- 491511		CAM ROLLER	CR- 255933-030V
RK- 491512-010V	10803 87-06-23	LUBRICATION STATION CHAIN	B- 648110-080V
4- 491513		DOCUMENT	RK- 491512-010V
C- 491536-0101	11934 88-08-10	NON-RETURN VALVE	C- 456757-010V
			C- 456757-020V
RK- 491539-0101	10586 87-10-17	PHOTOCELL UNIT	RK- 491543-010V
RK- 491539-0102	10585 87-10-17	PHOTOCELL UNIT	RK- 751636-010V
2- 491542		BRACKET	RK- 491539-010V
			C- 491897-010V
			C- 491976-010V
			C- 491897-010V
			RK- 751570-010V
RK- 491543-0101	11983 89-08-15	REB.KIT PHOTO CELL UNIT	B- 648110-010V
4- 491544		DOCUMENT FOLDER	RK- 491543-010V
4- 491545		BRACKET	C- 256239-030V
			C- 256239-040V
			C- 256095-030V
			C- 256095-040V
1- 491546		CIRCUIT DIAGRAM ASEPTIC	B- 648109-080V
3- 491547		GUARD	RK- 751158-010V
3- 491548		COVER PLATE	RK- 751158-010V
3- 491552		PLATE	C- 490947-020V
			C- 752244-010V
3- 491554		CATCH	RK- 456712-010V
4- 491555		SCREW	CR- 256212-040V
			CR- 256213-040V
			CR- 256212-040V
			CR- 256213-040V
			RK- 456712-010V
2- 491556		PIPE	RK- 490536-010V
			RK- 491568-010V
4- 491557		SPACER	RK- 491568-010V
2- 491560		PIPE	RK- 491568-010V
4- 491563		SCREW	RK- 491568-010V
3- 491564		LINKPIECE OUTER	C- 456560-010V
3- 491565		CHUTE	C- 456560-010V
RK- 491568-0101	7624 86-06-07	WATER CIRCULATION	RK- 491795-010V
4- 491569		COVER PLATE	RK- 491591-030V
C- 491570-0101	8461 85-12-05	DOOR	B- 648111-080V
			B- 648111-090V
1- 491576		WATER DIAGRAM	C- 491767-010V
3- 491578		BRACKET	C- 752957-010V
			C- 469074-020V
C- 491579-0101	8 85-12-05	DOOR	B- 648111-080V
			B- 648111-090V
1- 491580		PIPE	RK- 491568-010V

PART NO	LAST AM	DESCRIPTION	GROUP NO
4- 491586		BLOCK	C- 456109-010V
4- 491587		HOLDER	C- 456309-020V
			C- 456309-030V
			C- 456309-040V
RK- 491588-0101	9237 86-06-12	REB KIT BEARING IN BATH	B- 648110-010V
			B- 648110-060V
RK- 491589-030V	12869 89-08-15	REBUILDING KIT	B- 648110-070V
RK- 491590-030V	12869 89-09-26	REBUILDING KIT	B- 648110-010V
RK- 491590-030V		REBUILDING KIT	B- 648110-060V
RK- 491591-0301	10591 87-08-23	TANK	B- 648110-070V
1- 491592		BATH	RK- 491589-030V
1- 491593		COVER	C- 256014-040V
			C- 256014-040V
3- 491594		BENDING ROLLER	C- 256014-050V
			C- 256014-040V
2- 491595		LID	C- 256014-050V
			C- 752173-010V
2- 491596		PIPE	C- 256014-040V
2- 491597		PIPE	C- 256014-040V
3- 491598		BEARING SEAT	C- 256014-040V
			C- 256014-040V
3- 491599		BRACKET	C- 256014-050V
3- 491600		BRACKET	C- 256014-040V
			C- 256014-040V
P3- 491601		ROLLER CHAIN	C- 256014-050V
			C- 256014-040V
4- 491602		GASKET HOLDER	C- 256014-050V
			C- 272021-040V
3- 491626		PLATE	C- 272021-050V
			C- 751088-010V
3- 491627		PLATE	C- 751088-020V
3- 491628		LOCATING PIECE	C- 751088-010V
3- 491629		SLIDE PLATE	C- 456580-010V
4- 491630		SCREW	C- 456103-010V
4- 491632		DOCUMENT FOLDER	C- 271116-030V
1- 491637		PIPE	RK- 456715-010V
			C- 456976-030V
1- 491638		PIPE	C- 456976-040V
			C- 456976-030V
4- 491639		DOCUMENT FOLDER	C- 456976-040V
RK- 491641-0101	8635 86-01-10	REB KIT DISTRIBUTOR BLOCK	RK- 491641-010V
2- 491642		DISTRIBUTOR BLOCK	B- 648110-010V
1- 491643		HEATING PIPE	RK- 491641-010V
2- 491644		PIPE	C- 256055-040V
4- 491645		PIPE	C- 456976-020V
4- 491646		ELBOW PIPE	C- 456836-020V
1- 491647		HEATING PIPE	C- 456976-020V
			C- 256237-040V
			C- 256237-050V
4- 491649		BRACKET	C- 256237-060V
			RK- 751311-010V
C- 491650-0101	12270 88-10-20	DISTRIBUTOR BLOCK	C- 271909-030V
			C- 271909-040V
2- 491651		GUARD	C- 271909-050V
			C- 271562-050V
			C- 271562-060V
1- 491653		WATER DIAGRAM	C- 271562-070V
			C- 256237-040V
			C- 256237-050V
4- 491654		SUPPORT	C- 256237-060V
2- 491655		PIPE 190	RK- 751311-010V
			B- 648109-060V
2- 491656		PIPE 191	B- 648109-090V
			B- 648109-060V
1- 491657		PIPE 200	B- 648109-090V
			C- 456032-010V
1- 491658		PIPE 201	C- 295045-050V
			C- 295045-060V
1- 491659		PIPE 212	C- 295045-050V
			C- 295045-060V
			C- 295045-050V
			C- 295045-060V
			RK- 538415-010V
			C- 295045-050V
			C- 295045-060V

PART NO	LAST AM	DESCRIPTION	GROUP NO
1- 491660		PIPE 230	C- 295045-060V
1- 491661		PIPE 231	C- 295045-060V
1- 491662		PIPE 240	C- 295045-060V
1- 491663		PIPE 241	C- 295045-060V
1- 491664		PIPE 250	C- 295045-060V
1- 491665		PIPE 251	C- 295045-060V
1- 491666		PIPE 260	C- 295045-060V
1- 491667		PIPE 261	C- 295045-060V
2- 491668		PIPE 210	C- 295045-060V
2- 491669		PIPE 211	C- 295045-060V
4- 491670		PIPE 210	C- 295045-060V
4- 491671		PIPE 211	C- 295045-060V
4- 491672		PIPE 210 (211)	C- 295045-060V
3- 491673		CABLE CONDUIT	C- 295045-060V
3- 491674		CABLE CONDUIT	C- 469374-020V
3- 491675		CLAMP	C- 469374-030V
2- 491676		SHAFT	C- 469374-020V
1- 491679		WATER DIAGRAM	C- 469374-030V
			C- 751088-010V
3- 491680		SUPPORT	RK- 491780-010V
4- 491681		GASKET	C- 491323-020V
			C- 751393-010V
2- 491722		PLATE	B- 648109-060V
2- 491723		SPLASH PLATE	B- 648109-060V
			B- 648109-060V
2- 491723		SPLASH PLATE	B- 648109-060V
3- 491724		PLATE	C- 490690-010V
2- 491725		LEG	CR- 256214-030V
3- 491726		LEG	CR- 256215-030V
3- 491727		DRIVING RING	CR- 256214-030V
4- 491728		CARRIER	CR- 256215-030V
4- 491729		PRESSURE PLATE	C- 456321-030V
4- 491730		PEEL-OFF SHIMS	C- 456322-030V
4- 491731		WASHER	C- 456321-030V
4- 491732		WASHER	C- 456322-030V
3- 491733		SHOULDER RING	C- 752845-010V
			C- 752846-010V
2- 491734		SUPPORT	C- 752913-010V
3- 491737		SHAFT	C- 752914-010V
			C- 456321-030V
RK- 491744-0101	11986 89-06-29	REB KIT PHOTOCELL UNIT	C- 456322-030V
4- 491745		DOCUMENT FOLDER	C- 456923-020V
4- 491746		WASHER	C- 456923-030V
			C- 456923-020V
			C- 456923-030V
			C- 441271-020V
			RK- 491883-010V
			C- 441271-020V
			RK- 491883-010V
			C- 441271-020V
			RK- 491883-010V
			C- 441271-020V
			RK- 491883-010V
			C- 272852-030V
			C- 272852-030V
			C- 295310-040V
			C- 295310-050V
			C- 295310-060V
			C- 490947-020V
			C- 752244-010V
			C- 256014-040V
			C- 256014-050V
			B- 648110-010V
			RK- 491744-010V
			C- 295310-040V

PART NO	LAST AM	DESCRIPTION	GROUP NO
			C- 295310-060V
			C- 295310-060V
1- 491748		PIPE	C- 469452-020V
1- 491749		BRACKET	C- 469452-020V
2- 491750		SUPPORT	C- 469452-020V
			C- 469452-030V
3- 491751		SPROCKET	C- 295310-040V
			C- 295310-050V
			C- 295310-060V
4- 491752		HUB	C- 295310-040V
			C- 295310-050V
			C- 295310-060V
4- 491753		WASHER	C- 295310-040V
			C- 295310-050V
			C- 295310-060V
4- 491754		SHEAR PIN	C- 295310-040V
			C- 295310-050V
			C- 295310-060V
1- 491755		PIPE	C- 456976-030V
			C- 456976-040V
1- 491760		PIPE	C- 456555-020V
			C- 456555-030V
4- 491762		SHAFT	C- 441000-040V
			C- 441000-050V
			RK- 751202-010V
			RK- 751228-010V
4- 491764		RUBBER SLEEVE	RK- 751202-010V
			RK- 751228-010V
1- 491765		HOLDER	C- 441000-040V
1- 491766		HOLDER	C- 441000-040V
C- 491767-0101	9617 88-12-11	CIRCULATING COOLING WATER	C- 77091-020V
			C- 77091-030V
4- 491768		DOCUMENT FOLDER	C- 491767-010V
4- 491770		BUSHING	C- 491323-020V
			C- 751393-010V
G3- 491771		BRACKET	CR- 256436-040V
			CR- 256436-050V
3- 491772-0001		SPINDLE	CR- 256436-040V
			CR- 256436-050V
3- 491772-0002		SPINDLE	CR- 256436-040V
			CR- 256436-050V
3- 491772-0003		SPINDLE	CR- 256436-040V
			CR- 256436-050V
3- 491772-0004		SPINDLE	CR- 256436-040V
			CR- 256436-050V
3- 491772-0006		SPINDLE	CR- 256436-040V
			CR- 256436-050V
3- 491772-0007		SPINDLE	CR- 256436-040V
			CR- 256436-050V
1- 491776		PIPE	C- 491083-020V
2- 491779		PIPE	C- 491083-020V
RK- 491780-0101	10648 87-07-02	PRESSURE FEED	RK- 491543-010V
			RK- 491744-010V
			RK- 491789-010V
			RK- 491902-010V
			RK- 751561-010V
			RK- 751569-010V
			RK- 751636-010V
C- 491787-010V	13691 89-08-10	DISCONNECTION LINK RIGHT	B- 648103-070V
C- 491787-0201	12577 89-12-08	DISCONNECTION LINK RIGHT	B- 648103-080V
C- 491788-010V	13591 89-08-10	DISCONNECTION LINK LEFT	B- 648103-070V
C- 491788-0201	12577 89-12-08	DISCONNECTION LINK LEFT	B- 648103-080V
RK- 491789-0101	11967 89-06-15	REB KIT PHOTOCELL UNIT	B- 648110-080V
			B- 648110-070V
4- 491790		DOCUMENT FOLDER	RK- 491789-010V
3- 491794		PIPE	RK- 469536-010V
			RK- 491568-010V
RK- 491795-0101	11338 87-12-16	LOW ACID KIT	B- 648110-080V
			B- 648110-070V
4- 491796		DOCUMENT FOLDER	RK- 491795-010V
1- 491797		ASEPTIC DIAGRAM	RK- 490865-010V
			RK- 491795-010V
2- 491798		BLOCK	CR- 256436-040V
			CR- 256436-050V
2- 491799		BLOCK	CR- 256436-040V
			CR- 256436-050V
2- 491800		BLOCK	CR- 256436-040V

PART NO	LAST AM	DESCRIPTION	GROUP NO
			CR- 256436-060V
3- 491801		PISTON	CR- 256436-040V
			CR- 256712-040V
			CR- 256436-050V
			CR- 256712-050V
4- 491802		WASHER	CR- 256436-040V
			CR- 256436-050V
G3- 491803		HOUSE	CR- 256436-040V
			CR- 256436-060V
G3- 491804		BLOCK	CR- 256712-040V
			CR- 256712-050V
G3- 491805		BLOCK	CR- 256712-040V
			CR- 256712-050V
G3- 491806		BLOCK	CR- 256712-040V
G3- 491808		BLOCK	CR- 256712-050V
4- 491807		PIPE	C- 456455-020V
1- 491808		CLEANING EQUIPMENT	C- 456698-020V
			C- 456698-030V
4- 491812		STOP PERF 1	CR- 256844-030V
4- 491813		STOP PERF 2	CR- 256845-030V
C- 491814-0101	12051 88-07-05	SLEWING BRACKET RIGHT	B- 648103-070V
			B- 648103-080V
C- 491815-0101	12051 88-07-05	SLEWING BRACKET LEFT	B- 648103-070V
			B- 648103-080V
4- 491816		DOCUMENT FOLDER	RK- 456716-010V
4- 491817		DOCUMENT FOLDER	RK- 456717-010V
3- 491832		BOBBIN BRAKE	C- 441000-040V
			C- 441000-050V
3- 491833		BOBBIN BRAKE	C- 441000-040V
			C- 441000-050V
4- 491834		BRAKE PLATE	C- 441000-040V
			C- 441000-050V
1- 491836		CABLE DUCT	C- 469374-020V
1- 491837		CABLE DUCT	C- 469374-020V
			C- 469374-030V
3- 491838		CABLE CONDUIT	C- 469374-020V
			C- 469374-030V
3- 491844		HOLDER	C- 491976-010V
3- 491845		BRACKET	C- 491976-010V
C- 491846-0101	9514 88-11-28	TENSION SPROCKET	B- 648105-080V
			RK- 751159-010V
C- 491846-0201	14278 90-01-05	TENSION SPROCKET	B- 648105-090V
3- 491847		TENSION SPROCKET	C- 491846-010V
			C- 491846-020V
			C- 491846-010V
3- 491848		SHAFT	C- 491846-010V
			C- 491846-020V
			C- 491846-010V
4- 491849		SHIM	C- 491846-010V
			RK- 491302-010V
C- 491850-0101	14278 90-01-05	DRIVE WHEEL	B- 648105-080V
			B- 648105-090V
4- 491851		LID	C- 491850-010V
2- 491852-0001		CARTON STATION	CR- 491225-010V
1- 491854		PIPE WATER	C- 271982-060V
			C- 271982-070V
1- 491855		PIPE WATER	C- 271982-060V
			C- 271982-070V
4- 491859		HOLDER	C- 271982-060V
			C- 271982-070V
4- 491860		HOLDER	C- 271982-060V
			C- 271982-070V
4- 491861		HOLDER	C- 271982-060V
			C- 271982-070V
4- 491862		HOLDER	C- 271982-060V
			C- 271982-070V
RK- 491863-0101	10355 87-04-07	SAFETY SPROCK	RK- 751158-010V
			RK- 751206-010V
3- 491864		PIPE	C- 271868-040V
3- 491865		HOSE	C- 271868-040V
1- 491866		PIPE	C- 271868-040V
			C- 271868-050V
4- 491868		VOLUME BULGE	CR- 256209-020V
4- 491868		VOLUME BULGE	CR- 256210-020V
			CR- 256209-020V
			CR- 256210-020V
			CR- 256209-020V

PART NO	LAST AM	DESCRIPTION
2- 491870		BRANCH PIPE
C- 491871-010V	10781 88-05-04	CHAIN TENSIONER
C- 491871-0101	10781 88-05-04	CHAIN TENSIONER
4- 491872		COVER PLATE
3- 491873		BRACKET
3- 491880		PLATE
2- 491881-0001		PIVOT ARM
2- 491881-0002		PIVOT ARM
3- 491886		RAIL
2- 491889		HOLDER
C- 491890-0101	9123 86-07-22	OIL TANK
4- 491891		CLAMP
2- 491892		HOSE
2- 491893		HOSE
C- 491894-0101	9123 86-07-22	HYDRAULIC SYSTEM
C- 491897-010V	11004 87-11-27	PHOTOCELL UNIT
C- 491897-0101	11004 87-11-27	PHOTOCELL UNIT
C- 491897-0102	11004 87-11-27	PHOTOCELL UNIT
RK- 491902-0101	11998 89-06-15	REB.KIT PHOTOCELL UNIT
4- 491903		DOCUMENT FOLDER
G3- 491907		ANGLE BRACKET
3- 491908		CAM SEGMENT
3- 491909		CAM SEGMENT
3- 491910		CAM SEGMENT
3- 491911		CAM SEGMENT
3- 491912		CAM SEGMENT
3- 491912		CAM SEGMENT
3- 491913		CAM SEGMENT
3- 491914		CAM SEGMENT
3- 491915		CAM SEGMENT
3- 491916		CAM SEGMENT
3- 491917		CAM SEGMENT
3- 491918		CAM SEGMENT

GROUP NO
CR- 256210-020V
CR- 256209-020V
CR- 256210-020V
CR- 256209-020V
CR- 256210-020V
CR- 256209-030V
CR- 256210-030V
C- 271261-050V
C- 295310-050V
C- 295310-060V
C- 295310-050V
C- 295310-060V
C- 491976-010V
RK- 491539-010V
C- 491897-010V
C- 491976-010V
C- 491976-020V
C- 491976-010V
C- 491976-020V
C- 491897-010V
RK- 751570-010V
C- 456180-010V
C- 456180-010V
CR- 256214-030V
C- 491890-010V
B- 648106-080V
B- 648106-090V
C- 491890-010V
C- 491890-010V
C- 491890-010V
B- 648106-080V
B- 648106-090V
RK- 491789-010V
B- 648101-070V
RK- 751561-010V
RK- 491902-010V
RK- 751561-010V
B- 648110-080V
RK- 491902-010V
RK- 751307-010V
C- 441486-030V
C- 256201-030V
C- 256201-040V
RK- 456713-010V
C- 256201-030V
C- 256201-040V
RK- 456713-010V
C- 256201-030V
C- 256201-040V
RK- 456713-010V
C- 256201-030V
C- 256201-040V
RK- 456713-010V
C- 256201-030V
C- 256201-040V
RK- 456713-010V
C- 256201-030V
C- 256201-040V
RK- 456713-010V
RK- 456713-010V
C- 256202-030V
C- 256202-040V
RK- 456713-010V
RK- 456713-010V
C- 256202-030V
C- 256202-040V
RK- 456713-010V
RK- 456713-010V
C- 256202-030V
C- 256202-040V
RK- 456713-010V

PART NO	LAST AM	DESCRIPTION
3- 491919		CAM SEGMENT
3- 491920		CAM SEGMENT
3- 491921		CAM SEGMENT
1- 491922		HYDRAULIC DIAGRAM
1- 491923		MACHINE DISPLAY TBA/9-OD
1- 491924		MACHINE DISPLAY TBA/9-SA
3- 491925		MACHINE DISPLAY TB/9-OD
2- 491926		MACHINE DISPLAY TB/9-SA
1- 491927		COLUMN
1- 491928		COLUMN
G3- 491929		IMPELLER
4- 491931		SHAFT
1- 491932		MACHINE BODY
4- 491941		DOCUMENT FOLDER
C- 491942-0101	9391 86-07-21	PAPER REEL TROLLEY
3- 491945		CABLE TRACK
3- 491946		CABLE TRACK
4- 491949		SHAFT
4- 491950		SHAFT
3- 491951		BANJO CONNECTION
3- 491954		RAIL
3- 491961		RAIL
3- 491962		RAIL
3- 491963		RAIL
3- 491965		CAM
4- 491966		ROLLER
4- 491967		COUNTER ROLLER
4- 491968		TRIMMING ROLLER PLUS
4- 491969		TRIMMING ROLLER MINUS
1- 491972		DISTRIBUTOR BLOCK
C- 491976-010V	11713 88-05-06	PHOTOCELL UNIT
C- 491976-020V	13640 89-11-13	PHOTOCELL UNIT
4- 491978		SHAFT
4- 491979		HOLDER
1- 491980		CONNECTION BOX
4- 491981		NIPPLE
3- 491983		GASKET
RK- 491984-0101	9287 86-06-11	PRESSURE RELEASE VALVE
4- 491986		DOCUMENT FOLDER
G3- 491987		ANGLE BRACKET
2- 491992		INSULATING PLATE

GROUP NO
RK- 456713-010V
C- 256202-030V
C- 256202-040V
RK- 456713-010V
RK- 456713-010V
C- 256202-030V
C- 256202-040V
RK- 456713-010V
RK- 456713-010V
C- 256202-030V
C- 256202-040V
RK- 456713-010V
B- 648109-080V
B- 648109-080V
B- 648109-080V
B- 648109-080V
C- 295026-030V
RK- 547966-010V
C- 295026-030V
C- 295026-030V
C- 295026-030V
C- 256233-040V
C- 256233-040V
C- 491323-020V
C- 751393-010V
C- 256237-050V
C- 256237-050V
C- 256055-050V
C- 256055-050V
C- 256843-040V
C- 256843-050V
RK- 491569-030V
B- 648109-070V
B- 648109-080V
B- 648109-090V
C- 271569-040V
C- 271569-050V
C- 271569-040V
C- 271569-050V
CR- 255933-030V
CR- 255933-030V
C- 271909-040V
C- 271909-050V
CR- 256214-030V
CR- 256215-030V
CR- 256214-030V
CR- 256215-030V
C- 752845-010V
C- 752846-010V
C- 256238-030V
C- 256238-040V
C- 256238-030V
C- 256238-040V
C- 77093-010V
C- 77093-020V
C- 77093-010V
C- 77093-020V
RK- 751298-010V
B- 648101-080V
B- 648111-080V
B- 648101-090V
B- 648111-090V
C- 256237-040V
C- 256237-050V
C- 256237-040V
C- 256237-050V
C- 256237-080V
C- 469366-010V
C- 469366-020V
C- 271453-030V
C- 469501-020V
B- 648110-010V
B- 648110-080V
RK- 491984-010V
RK- 751305-010V
C- 441486-030V
RK- 491591-030V

PART NO	LAST AM	DESCRIPTION	GROUP NO
			C- 491243-030V
2- 491994		INSULATING PLATE	RK- 491591-030V
			C- 491243-030V
2- 491995		INSULATING PLATE	RK- 491591-030V
			C- 491243-030V
2- 491996		INSULATING PLATE	RK- 491591-030V
			C- 491243-030V
2- 491997		INSULATING PLATE	C- 491243-030V
2- 491998		INSULATING PLATE	C- 491243-030V
4- 493031		BRACKET	C- 499736-020V
4- 493067		TENSION SPRING	C- 283604-010V
C- 493652-0102	8328 86-10-22	LID	C- 751373-010V
			C- 751398-010V
4- 493736		NIPPLE	C- 533014-010V
4- 493878		SIGN	CE- 67716-010V
			CE- 68128-010V
			CE- 68304-010V
			CE- 68128-010V
			CE- 67716-010V
4- 493878		SIGN	CE- 68304-010V
C- 493967-010V	7522 86-02-20	BRAKE	B- 648119-020V
2- 493968		CLAMP	C- 493967-010V
4- 493969		PLATE	C- 493967-010V
4- 493970		RUBBER STRIP	C- 493967-010V
3- 495201		COOLING ELEMENT	CE- 67716-010V
			CE- 68128-010V
			CE- 68304-010V
			CE- 68128-010V
			CE- 67716-010V
			CE- 68304-010V
2- 495770		GASKET	C- 77094-010V
2- 495780		PLATE	C- 77094-010V
4- 497479-0001		NOZZLE	RK- 520071-010V
			RK- 520095-010V
			RK- 520071-010V
4- 497479-0002		NOZZLE	RK- 520071-010V
			RK- 520095-010V
			RK- 520071-010V
4- 497479-0003		NOZZLE	RK- 520071-010V
			RK- 520095-010V
			RK- 520071-010V
C- 497934-020V	10738 87-08-21	COUNTER JAW	B- 648118-070V
4- 497748		PIN	C- 541163-010V
			C- 541164-010V
4- 497933		BUSHING	C- 440630-010V
			C- 539209-010V
			C- 539210-010V
			C- 539211-010V
4- 497934		HOLDER	C- 283626-030V
4- 497935		BRACKET	C- 283628-030V
4- 499190		NUT	RK- 547765-010V
			RK- 547765-020V
			RK- 547762-010V
			C- 449366-010V
4- 499191		FITTING BOLT	RK- 547765-010V
			RK- 547765-020V
			RK- 547762-010V
			C- 449366-010V
4- 499192		ROLLER	RK- 547762-010V
			C- 449366-010V
SP- 499255-0101	7937 86-06-03	SEAL KIT	C- 295778-010V
			C- 295778-020V
SP- 499255-0201	10455 87-11-11	SEAL KIT	C- 295778-030V
3- 499500		BRACKET	C- 295778-040V
			RK- 491591-030V
3- 499501		VALVE	C- 491243-030V
			C- 272381-030V
			C- 491207-010V
			C- 491207-020V
3- 499502		LEVEL TUBE	RK- 491591-030V
			C- 491243-030V
3- 499503		PROTECTION PIPE	RK- 491591-030V
			C- 491243-030V
4- 499504		WASHER	RK- 491591-030V
			C- 491243-030V
			C- 272381-030V
			C- 491243-030V

PART NO	LAST AM	DESCRIPTION	GROUP NO
2- 499627		BRACKET	C- 499810-080V
3- 499542		CHUTE	CR- 283618-020V
4- 499543		SPRING	CR- 283618-020V
3- 499560		HEATING BLOCK	CR- 283608-010V
4- 499580		SHAFT	CR- 283618-020V
4- 499581		SHAFT	CR- 283618-020V
4- 499589		SHAFT	C- 283630-020V
3- 499632		HEATING RAIL	CR- 283608-010V
			C- 499316-010V
			C- 499655-010V
			CR- 283608-010V
			C- 499316-010V
			C- 499655-010V
3- 499633		HEATING RAIL	CR- 283608-010V
			C- 499316-010V
			C- 499655-010V
			CR- 283608-010V
			C- 499316-010V
			C- 499655-010V
3- 499642		CHUTE	CR- 283618-020V
3- 499646		GUIDE PLATE	CR- 283618-020V
4- 499680		SCREW	C- 283633-010V
4- 499815-0001		SHIM	CR- 283608-010V
4- 499815-0002		SHIM	CR- 283608-010V
4- 499822		SHIM	CR- 283618-020V
1- 520042		HEATING CHAMBER	RK- 520070-010V
1- 520043		HEATING COIL	RK- 520070-010V
2- 520044		RESERVOIR	RK- 520068-010V
3- 520045		T-PIECE	RK- 520071-010V
			RK- 520095-010V
			RK- 520071-010V
3- 520046-0001		PIPE	RK- 520071-010V
3- 520046-0002		PIPE	RK- 520095-010V
1- 520047		CABINET	RK- 520068-010V
1- 520048		DOOR	RK- 520068-010V
2- 520050		WINDOW	RK- 520068-010V
1- 520051-0001		TRANSITION PIPE	RK- 520071-010V
1- 520051-0003		TRANSITION PIPE	RK- 520095-010V
1- 520052		TRANSITION BRACKET	RK- 520071-010V
			RK- 520095-010V
			RK- 520071-010V
3- 520053		PIPE	RK- 520071-010V
			RK- 520095-010V
			RK- 520071-010V
2- 520054		BRACKET	RK- 520068-010V
1- 520055		PLATE	RK- 520068-010V
4- 520057		STOP PLATE	RK- 520068-010V
4- 520058		SPACER	RK- 520068-010V
3- 520059		BRACKET	RK- 520068-010V
2- 520060		RETURN PIPE	RK- 520129-010V
			RK- 520130-010V
			RK- 520067-010V
			RK- 520129-010V
			RK- 520130-010V
2- 520061		SPRAY PIPE	RK- 520129-010V
			RK- 520130-010V
			RK- 520067-010V
			RK- 520129-010V
			RK- 520130-010V
3- 520063		CABLE DUCT	RK- 520068-010V
3- 520064		VALVE HEAD	RK- 520068-010V
3- 520065		HOSE HOLDER	RK- 520068-010V
RK- 520067-0101	12830 89-10-16	HEAD SPACE BY INJECTION	B- 648119-020V
RK- 520068-0101	10974 89-04-11	CONTROL CABINET	RK- 520067-010V
			RK- 520094-010V
			RK- 520096-010V
			RK- 520129-010V
			RK- 520130-010V
RK- 520069-0101	10974 89-04-11	A-VALVE MODIFICATION	RK- 520067-010V
			RK- 520094-010V
			RK- 520096-010V
			RK- 520129-010V
			RK- 520130-010V
RK- 520070-0101	10974 89-04-11	HEAT EXCHANGER	RK- 520067-010V
			RK- 520094-010V
			RK- 520096-010V
			RK- 520129-010V

PART NO	LAST AM	DESCRIPTION	GROUP NO
RK- 520071-0101	10974 89-04-11	TRANSITION PIPE	RK- 520130-010V RK- 520067-010V RK- 520129-010V
4- 520072		LABEL	RK- 520130-010V
4- 520073		LABEL	RK- 520068-010V
4- 520074		EXTENSION PIPE	RK- 520068-010V RK- 520129-010V RK- 520130-010V RK- 520094-010V RK- 520098-010V RK- 520067-010V RK- 520129-010V
2- 520075		COVER	RK- 520130-010V
4- 520091		PROX.SW. BRACKET	RK- 520088-010V
RK- 520094-010V	12930 89-10-15	HEAD SPACE BY INJECTION	RK- 520095-010V
RK- 520095-0101	10974 89-04-11	TRANSITION PIPE	C- 77091-020V
RK- 520098-010V	12930 89-10-15	HEAD SPACE BY INJECTION	RK- 520094-010V RK- 520098-010V
2- 520118		FILL PIPE H2O2	C- 77091-020V RK- 520129-010V RK- 520130-010V
2- 520119		FILL PIPE H2O2	RK- 520067-010V RK- 520129-010V RK- 520130-010V RK- 520129-010V RK- 520130-010V RK- 520067-010V RK- 520129-010V RK- 520130-010V RK- 520129-010V RK- 520130-010V RK- 520067-010V RK- 520129-010V RK- 520130-010V RK- 520068-010V RK- 520068-010V RK- 520068-010V RK- 520068-010V RK- 520068-010V RK- 520068-010V RK- 520068-010V RK- 520068-010V C- 77091-010V B- 648119-060V C- 77091-010V B- 648119-060V RK- 520070-010V RK- 520070-010V RK- 520167-010V RK- 520070-010V RK- 520167-010V RK- 520070-010V RK- 520167

PART NO	LAST AM	DESCRIPTION	GROUP NO
4- 529337		BUFFER RING	C- 761373-010V
RK- 529345-0101	12856 90-01-29	CONTAINER	C- 77091-030V
2- 529348		BACK PIECE, WALL	C- 229400-060V
3- 529351		GRILL UPPER	C- 229400-060V
4- 529362		SPROCKET	C- 543143-010V
3- 529399		KNIFE	CR- 283618-020V
4- 529400-0002		LUG	C- 456896-020V
3- 529620		PANEL	C- 735267-010V
C- 529621-0101	11716 88-09-21	READING DEVICE	C- 529932-010V
			C- 735253-010V
			C- 752669-010V
			C- 752985-010V
4- 529622		SLEEVE	C- 529621-010V
4- 529623		SLEEVE	C- 529621-010V
4- 529657		COMPRESSION SPRING	C- 736600-010V
4- 529659		COMPRESSION SPRING	C- 736600-010V
1- 529682		FILTERS HOUSING	C- 529940-010V
			C- 735265-010V
4- 529695		PIPE	C- 736600-010V
3- 529906		CYLINDER	C- 736600-010V
4- 529908		WASHER	C- 736600-010V
4- 529909		TIE ROD	C- 736600-010V
4- 529910		WASHER	C- 736600-010V
4- 529913		PISTON	C- 736600-010V
4- 529914		KNOB	C- 736600-010V
3- 529916		LATERAL BODY VALVE	C- 736600-010V
4- 529917		SHUTTER	C- 736600-010V
C- 529924-0101	12279 88-10-06	AIR VALVE	C- 529932-010V
			C- 735253-010V
			C- 752669-010V
			C- 752985-010V
3- 529925		VALVE BODY	C- 529924-010V
3- 529926		COVER	C- 529924-010V
4- 529927		PISTON ROD	C- 529924-010V
C- 529932-010V	12363 90-02-10	HEAD SPACE BY LLF	B- 648119-020V
C- 529933-0101	11716 88-09-21	UPPER FILLING TUBE	C- 529932-010V
			C- 735253-010V
			C- 752669-010V
			C- 752985-010V
C- 529935-0101	11716 88-09-21	LOWER FILLING TUBE	C- 529932-010V
			C- 735253-010V
			C- 752669-010V
			C- 752985-010V
4- 529937		CONNECTION PLATE	C- 735183-010V
4- 529938		CONNECTION PLATE	C- 735183-010V
C- 529940-0101	11716 88-09-21	PIPE-LINE	C- 529932-010V
3- 529941		BRACKET	C- 529940-010V
			C- 735265-010V
2- 529943		EQUALIZING PIPE	C- 529940-010V
			C- 735265-010V
4- 529944		SUCTION TUBE	C- 529940-010V
			C- 735265-010V
2- 529945		PIPE	C- 529940-010V
			C- 735265-010V
2- 529946		PIPE	C- 529940-010V
			C- 735265-010V
1- 529947		BOX	C- 735183-010V
3- 529948		BOX	C- 735259-010V
			C- 735031-010V
2- 530518		SPACER	C- 237776-040V
2- 530519		BACK PIECE, FLOOR	C- 229400-060V
3- 530533		HEATING BLOCK	CR- 283608-010V
3- 530534		GABLE, RIGHT	C- 229400-060V
3- 530535		GABLE, LEFT	C- 229400-060V
3- 530542		GRILL UPPER	C- 229400-060V
4- 530551		WASHER	C- 751406-010V
3- 530587		WASHER	C- 539211-010V
			RK- 536502-010V
			RK- 536706-010V
3- 530588		SEAL RING	SP- 499255-020V
			C- 539211-010V
			RK- 536502-010V
			RK- 536706-010V
			C- 271169-030V
			C- 272337-030V
			C- 271169-040V
			C- 272337-040V

PART NO	LAST AM	DESCRIPTION	GROUP NO
3- 530589		SEAL RING	SP- 499255-020V
			C- 539209-010V
			C- 539210-010V
			RK- 520167-010V
			RK- 536502-010V
			RK- 536706-010V
3- 530590		VALVE CONE	C- 539209-010V
			C- 539210-010V
			RK- 536502-010V
			RK- 536706-010V
3- 530591		HOLDER	C- 539210-010V
			RK- 536502-010V
			RK- 536706-010V
3- 530592		SEAL RING HOLDER	C- 539209-010V
			RK- 536706-010V
3- 530594		WASHER	RK- 536706-010V
4- 530597		WASHER	C- 539210-010V
			RK- 536502-010V
			RK- 536706-010V
4- 530598		WASHER	C- 539210-010V
			RK- 536502-010V
			RK- 536706-010V
4- 530599		RING	C- 539210-010V
			RK- 536502-010V
			RK- 536706-010V
2- 530775		END PIECE	C- 237776-040V
3- 530776		PAPER GUARD	C- 237776-040V
3- 530777		GRILL	C- 237776-040V
4- 530784		PIPE CLAMP	C- 237776-040V
3- 530785		PAPER GUARD	C- 237776-040V
2- 531139		BRACKET	C- 229400-060V
			C- 479821-010V
C- 531345-0101	8693 88-03-18	PERSONAL PROTECT. EQ H2O2	B- 648109-070V
			B- 648109-080V
			B- 648109-090V
2- 531638		CAM	RK- 536318-010V
			RK- 547300-010V
			C- 476349-020V
4- 531641		BRAKE SLEEVE	C- 533903-010V
			RK- 547300-010V
			C- 533903-010V
4- 531642		HUB	C- 533903-010V
			RK- 547300-010V
			C- 533903-010V
4- 531643		SHAFT	C- 533903-010V
			RK- 547300-010V
			C- 533903-010V
4- 531644		SPACER	C- 533903-010V
			RK- 547300-010V
			C- 533903-010V
4- 531652		SPACER	C- 457853-020V
2- 531653		GABLE	C- 449313-010V
2- 531654		PLATE	C- 449313-010V
4- 531655		ROD	C- 449313-010V
3- 531656		HEATING ELEMENT	C- 486955-010V
			C- 531657-010V
			C- 486955-010V
			C- 531657-010V
C- 531657-010V	9361 88-10-23	SEALING JAW	B- 648118-080V
			B- 648118-070V
2- 531658		HEATING JAW	C- 531657-010V
1- 531661		COVER PLATE	C- 486935-010V
2- 531662		PANEL PLATE	C- 457159-020V
3- 531663		PANEL PLATE	C- 457159-020V
1- 531664		PLATE	C- 457924-020V
2- 531671		LID	C- 457857-020V
2- 531672		LID	C- 457857-020V
1- 531673		COVER	C- 457853-020V
4- 531684		PRESSURE JAW	RK- 544475-010V
3- 531730		FLANGE SEAL	CR- 256547-030V
4- 531731		GASKET	C- 271181-020V
			C- 271181-030V
			C- 271181-040V
4- 531732		'KET	C- 256237-040V
			C- 256237-050V
			C- 256237-060V
			C- 272408-030V

PART NO	LAST AM	DESCRIPTION	GROUP NO
2- 537667		PLATE	C- 538421-010V
4- 537676		ROLLER	RK- 547765-020V
4- 537669		FABRIC	RK- 547751-020V
			RK- 550136-010V
RK- 538412-0101	11727 88-03-19	DRIVE	RK- 538439-010V
			RK- 547966-010V
RK- 538412-0102	11727 88-03-19	DRIVE	RK- 538439-010V
			RK- 547966-010V
RK- 538413-0101	10326 87-08-13	BENDING ROLLER	RK- 538439-010V
			RK- 547966-010V
RK- 538413-0102	10326 87-08-13	BENDING ROLLER	RK- 538439-010V
			RK- 547966-010V
RK- 538413-0103	10326 87-08-13	BENDING ROLLER	RK- 538439-010V
			RK- 547966-010V
RK- 538413-0104	10326 87-08-13	BENDING ROLLER	RK- 538439-010V
			RK- 547966-010V
RK- 538413-0105	10326 87-08-13	BENDING ROLLER	RK- 538439-010V
			RK- 547966-010V
RK- 538413-0106	10326 87-08-13	BENDING ROLLER	RK- 538439-010V
			RK- 547966-010V
RK- 538415-0101	10326 87-08-13	TUBE FLUSHING	RK- 538439-010V
			RK- 547966-010V
RK- 538415-0102	10326 87-08-13	TUBE FLUSHING	RK- 538439-010V
			RK- 547966-010V
RK- 538415-0103	10326 87-08-13	TUBE FLUSHING	RK- 538439-010V
			RK- 547966-010V
4- 538418-0001		SPACER	C- 538421-010V
4- 538418-0002		SPACER	C- 538421-010V
4- 538418-0003		SPACER	C- 538421-010V
4- 538418-0004		SPACER	C- 538421-010V
4- 538418-0005		SPACER	C- 538421-010V
4- 538418-0006		SPACER	C- 538421-010V
4- 538419		SUPPORT	C- 538421-010V
4- 538420-0001		TEMPLATE	C- 538421-010V
4- 538420-0002		TEMPLATE	C- 538421-010V
C- 538421-010V	10515 89-01-19	MOULD FOR REEL	C- 548467-010V
RK- 538438-0101	10326 87-08-13	GAUGE GROUP	RK- 538439-010V
			RK- 547966-010V
RK- 538439-010V	14328 90-01-15	ADAPTER KIT, OPENING DEV.	B- 648110-060V
			B- 648110-070V
4- 538447		DOCUMENT FOLDER	RK- 538449-010V
RK- 538449-0101	10384 87-06-05	REB KIT BENDING ROLLER	B- 648110-010V
RK- 538450-0101	10384 87-06-05	BENDING ROLLER	RK- 538449-010V
4- 538492		SHAFT	RK- 547300-010V
4- 538493		FLANGE	RK- 547300-010V
3- 538494		GABLE	RK- 547300-010V
4- 538495		BRACKET	RK- 547300-010V
3- 538496		ARM	RK- 547300-010V
3- 538508-0001		SHAFT	RK- 547300-010V
3- 538508-0002		SHAFT	RK- 538470-010V
			RK- 538470-010V
3- 538508-0003		SHAFT	RK- 538450-010V
2- 538672		BRAKE ARM	RK- 538470-010V
			C- 469736-020V
3- 538673		ARM	RK- 540009-010V
			C- 469736-020V
3- 538674		BRACKET	RK- 540009-010V
			C- 469736-020V
4- 538675		SHAFT	RK- 540009-010V
			C- 469736-020V
4- 538676		ROLLER	RK- 540009-010V
			C- 469736-020V
4- 538681		HUB	RK- 540009-010V
			C- 469736-020V
4- 538682		BRACKET	RK- 540009-010V
			C- 469736-020V
4- 538683		SHAFT	RK- 540009-010V
			C- 469736-020V
4- 538684		ARM	RK- 540009-010V
			C- 469736-020V
4- 538686		PLATE	RK- 540009-010V
			C- 469736-020V
3- 538724-0001		BOBBIN HOLDER	RK- 540009-010V
			C- 484858-020V
3- 538724-0002		BOBBIN HOLDER	RK- 540010-010V
3- 538724-0003		BOBBIN HOLDER	RK- 544469-010V
3- 538724-0004		BOBBIN HOLDER	RK- 544469-010V
			C- 484858-020V

PART NO	LAST AM	DESCRIPTION	GROUP NO
4- 538725-0001		SHAFT	RK- 540010-010V
			C- 484858-020V
4- 538725-0002		SHAFT	RK- 540010-010V
4- 538725-0003		SHAFT	RK- 544469-010V
			RK- 544469-010V
4- 538725-0004		SHAFT	RK- 546255-010V
			C- 484858-020V
4- 538726		WASHER	RK- 540010-010V
			C- 484858-020V
			RK- 540010-010V
			RK- 546337-010V
			RK- 546469-010V
RK- 538739-0101	14328 90-01-15	SETTING TOOL	RK- 546255-010V
			RK- 538439-010V
RK- 538739-0102	14328 90-01-15	SETTING TOOL	RK- 547966-010V
			RK- 538439-010V
RK- 538739-0103	14328 90-01-15	SETTING TOOL	RK- 547966-010V
			RK- 538439-010V
4- 538740-0001		SPACER	RK- 547966-010V
			C- 484858-020V
4- 538740-0002		SPACER	RK- 540010-010V
4- 538740-0003		SPACER	RK- 544469-010V
			RK- 544469-010V
			RK- 546337-010V
			RK- 546469-010V
4- 538740-0004		SPACER	RK- 546255-010V
			C- 484858-020V
4- 538741		LIP	RK- 540010-010V
			C- 469736-020V
4- 538972		SHAFT	RK- 540009-010V
			C- 469736-020V
4- 538973		SHAFT	RK- 540009-010V
			C- 484984-010V
1- 538976		COUNTER JAW	RK- 540011-010V
			RK- 535608-010V
1- 538977		COUNTER JAW	C- 497534-020V
			RK- 535608-010V
1- 538978		COUNTER JAW	C- 497534-020V
3- 538988		SETTING TOOL	C- 497534-020V
3- 538989		SETTING TOOL	RK- 538739-010V
3- 538991-0001		SETTING TOOL	RK- 538739-010V
3- 538991-0002		SETTING TOOL	RK- 538739-010V
3- 538991-0003		SETTING TOOL	RK- 538739-010V
2- 539092		SETTING TOOL	RK- 538739-010V
4- 539193		SHAFT	RK- 538739-010V
			C- 469736-020V
4- 539194		SHAFT	RK- 540009-010V
			C- 484984-010V
4- 539195		SHAFT	RK- 540011-010V
			C- 469736-020V
4- 539196		ROLLER	RK- 540009-010V
			C- 469736-020V
4- 539197		SPRING HOLDER	RK- 540009-010V
			C- 469736-020V
C- 539209-0101	10455 87-11-11	A-CYLINDER	RK- 540009-010V
C- 539210-0101	10455 87-11-11	C-CYLINDER	C- 440830-020V
C- 539211-0101	10455 87-11-11	B-CYLINDER	C- 440830-020V
4- 539212		GASKET	C- 440830-020V
			C- 440830-020V
3- 539213		HOLDER	SP- 499256-020V
4- 539303		SCREW	C- 490610-020V
4- 539304		NUT	RK- 538739-010V
4- 539364		DOCUMENT FOLDER	RK- 538739-010V
4- 539365		SETTING TOOL	RK- 538439-010V
4- 539366		SETTING TOOL	RK- 538739-010V
3- 539367		SETTING TOOL	RK- 538739-010V
2- 539368		SETTING TOOL	RK- 538739-010V
C- 539375-0101	10515 89-01-19	TOOL, REEL ADJUSTMENT	RK- 538739-010V
4- 539691		CABLE	C- 548467-010V
4- 539728		BOLT	C- 442089-010V
			C- 533903-010V
4- 539729		BRACKET	RK- 547300-010V
			C- 533903-010V
			C- 533903-010V
4- 539762		DOCUMENT FOLDER	RK- 547300-010V
			C- 533903-010V
			RK- 536502-010V

PART NO	LAST AM	DESCRIPTION	GROUP NO
4- 540008		DOCUMENT FOLDER	RK- 540008-010V
RK- 540008-010V	10823 87-09-10	REB KIT SPLICING DEVICE	B- 648110-080V
RK- 540009-0101	10823 87-09-10	STRIP MAGAZINE	RK- 540008-010V
RK- 540009-0102	10823 87-09-10	STRIP MAGAZINE	RK- 540008-010V
RK- 540010-0101	10823 87-09-10	BOBBIN	RK- 540008-010V
RK- 540010-0102	10823 87-09-10	BOBBIN	RK- 540008-010V
RK- 540011-0101	10823 87-09-10	SPLICING DEVICE	RK- 540008-010V
RK- 540011-0102	10823 87-09-10	SPLICING DEVICE	RK- 540008-010V
1- 540014		CIRCUIT BOARD TBA/9-OD	C- 295026-030V
C- 540028-010V	12422 89-05-23	LS-STRIP A.S.U. TBA/9	RK- 547986-010V
			C- 77091-010V
			C- 77091-020V
			C- 77091-030V
4- 540029		DOCUMENT FOLDER	B- 648119-080V
C- 540030-0101	10832 87-12-29	LS STRIP A.S.U. TBA/9	C- 540028-010V
4- 540031		DOCUMENT FOLDER	B- 648119-020V
4- 540094		DOCUMENT FOLDER	C- 540030-010V
4- 540308-0001		COMPONENTS WITHOUT TP-NO	RK- 536706-010V
4- 540307		PRINTED CIRCUIT BOARD	C- 68917-010V
1- 540342		CIRCUIT BOARD TBA/9-SA	C- 68917-010V
4- 540708		PULLEY	C- 295026-030V
4- 540719		WHEEL	RK- 547757-030V
3- 540867		HOLDER	C- 752030-010V
4- 540892		ROLLER	RK- 544472-010V
4- 541126		COUNTER RUBBER	RK- 544468-010V
			RK- 544466-010V
C- 541163-0101	10455 87-11-11	CLAMP RING	RK- 550136-010V
C- 541164-0101	10455 87-11-11	CLAMP RING	C- 440830-020V
4- 541165		WASHER	C- 440830-020V
			C- 541163-010V
3- 541166		WASHER	C- 541164-010V
4- 541167		SPACER SLEEVE	C- 539209-010V
3- 541256		TERMINAL X3	C- 539209-010V
			CE- 68128-010V
3- 541257		TERMINAL X9	CE- 68134-010V
			CE- 68128-010V
3- 541258		TERMINAL X11	CE- 68134-010V
			CE- 68128-010V
3- 541259		DISTRIBUTION TERMINAL	CE- 68134-010V
			CE- 68128-010V
3- 541260		GROUND TERMINAL PLC	CE- 68134-010V
			CE- 68128-010V
3- 541261		FUSE PANEL LABEL	CE- 68134-010V
			CE- 68128-010V
4- 541262		INDEX EL-MANUAL	CE- 68134-010V
			CE- 68128-010V
4- 541263		SIGN EL-MANUAL	CE- 68134-010V
			C- 469736-020V
1- 541273		PLATE	C- 295026-030V
1- 541717		CIRCUIT BOARD TB/9-SA	C- 295026-030V
1- 541718		CIRCUIT BOARD TB/9-OD	RK- 547765-010V
4- 542044		ROLLER	RK- 547765-020V
			C- 751689-010V
2- 542083		FLANGE	RK- 547765-010V
4- 542084		PRESSURE ROLLER	RK- 547765-020V
			RK- 547765-010V
4- 542085		PIN	RK- 547765-020V
			RK- 547765-010V
4- 542086		FORK	RK- 547765-020V
			C- 533903-010V
4- 542270		BRACKET	RK- 553145-010V
3- 542828		PLATE	RK- 553145-010V
2- 542829		HOLDER	RK- 547765-010V
2- 543085		PLATE	RK- 547765-020V
			RK- 547765-010V
4- 543088		HANDLE	RK- 547765-020V
			RK- 547765-010V
4- 543089		WASHER	RK- 547765-020V
			RK- 547765-010V
4- 543090		BRACKET	RK- 547765-020V
			RK- 547759-010V
4- 543092		ROLLER BRACKET	RK- 547759-020V
			RK- 547765-010V
4- 543094		ROLLER	RK- 547765-020V
			C- 543143-010V
4- 543141		SIGN	

PART NO	LAST AM	DESCRIPTION	GROUP NO
4- 543142		SIGN	C- 543143-010V
C- 543143-0101	10835 88-09-30	ADJUSTMENTMENT DEVICE	C- 752845-010V
			C- 752846-010V
			C- 752913-010V
			C- 752914-010V
3- 543173		PLATE	RK- 547751-030V
			RK- 547751-020V
4- 543174		DOLLY	RK- 547751-030V
			RK- 547751-020V
3- 543176		COUNTER JAW	RK- 547751-030V
			RK- 547751-020V
4- 543178		ROLLER	RK- 544474-010V
			RK- 547751-020V
4- 543180		ROLLER	RK- 544474-010V
			RK- 547751-020V
4- 543181		BRACKET	C- 547758-010V
4- 543182		SHAFT	C- 547758-010V
4- 543185		LOCKING WIRE	RK- 547751-030V
			RK- 547751-020V
4- 543186		ROLLER	RK- 547751-030V
4- 543188		ROLLER	RK- 547751-030V
4- 543191		ROLLER	RK- 547751-030V
3- 543192		GUIDE RAIL	RK- 547751-030V
4- 543193		HOLDER	RK- 547761-010V
4- 543194		PRESSURE JAW	RK- 547765-010V
			RK- 547765-020V
4- 543196		COUNTER JAW	RK- 547765-010V
			RK- 547765-020V
3- 543198		HEATING RAIL	RK- 544467-010V
			RK- 550136-010V
2- 543197		CAM	RK- 547758-010V
4- 543612		SPRING	RK- 544470-010V
			RK- 547752-010V
			RK- 547752-020V
4- 543711		FORK	RK- 547765-010V
			RK- 547765-020V
3- 543733		HEATING RAIL	RK- 544467-010V
			RK- 550136-010V
3- 544370		STRIP	RK- 548068-010V
4- 544371		BRACKET	RK- 548068-010V
4- 544372		BRACKET	RK- 548068-010V
3- 544373		GUARD	RK- 548068-010V
3- 544374		GUARD	RK- 548068-010V
4- 544375		BRACKET	RK- 548068-010V
2- 544376		DOOR	RK- 548068-010V
3- 544377		APPLIANCE BOX	C- 544381-010V
3- 544378		BRACKET	RK- 548068-010V
1- 544379		PNEUMATIC DIAGRAM	RK- 548068-010V
C- 544381-0101	14257 89-12-20	CONNECTION BOX	RK- 548068-010V
4- 544383		DOCUMENT FOLDER	RK- 548068-010V
4- 544385		PLATE	C- 544381-010V
RK- 544391-010V	12925 89-08-14	REB. KIT DATING UNIT	B- 648110-080V
			B- 648110-070V
			B- 648110-080V
4- 544392		ROLLER	C- 456321-030V
			C- 456322-030V
3- 544394		GUARD	C- 456348-020V
4- 544395		SHIM	C- 456348-020V
			C- 456349-020V
			C- 456348-020V
			C- 456349-020V
1- 544399		PNEUMATIC DIAGRAM	RK- 548068-010V
			RK- 547750-020V
			RK- 550132-010V
			RK- 547750-020V
			RK- 550132-010V
			RK- 547760-020V
			RK- 550132-010V
3- 544414		INDUCTOR	RK- 547760-010V
			RK- 547760-020V
			RK- 550136-010V
4- 544448		PIN	RK- 547751-020V
4- 544449		BRACKET	RK- 547754-010V
4- 544450		BRACKET	RK- 547754-010V
4- 544451			RK- 547751-030V
			RK- 547751-020V
4- 544454		BRACKET	RK- 547752-010V

PART NO	LAST AM	DESCRIPTION	GROUP NO
3- 544456		FLANGE	RK- 547752-020V
3- 544457		KNIFE	RK- 547757-030V
3- 544457		KNIFE	RK- 547751-030V
			RK- 547751-020V
4- 544458		ARM	RK- 550136-010V
			RK- 547752-010V
4- 544459		BRACKET	RK- 547752-020V
			RK- 547752-010V
4- 544460		CLAMP	RK- 547752-020V
			RK- 547752-010V
4- 544461		SPRING HOLDER	RK- 547752-020V
			RK- 547752-010V
2- 544463		DRIVE ROLLER	RK- 547752-020V
4- 544464		WASHER	RK- 548387-010V
			RK- 547759-010V
RK- 544465-0101	13101 89-05-25	SEALING JAW	RK- 547759-020V
RK- 544466-010V	13951 89-10-30	COUNTER JAW	RK- 545440-010V
RK- 544466-0101	13951 89-10-30	COUNTER JAW	RK- 550132-010V
RK- 544467-010V	13951 89-10-30	SEALING JAW PULLTAB	RK- 545440-010V
RK- 544467-0101	13951 89-10-30	SEALING JAW PULLTAB	RK- 550132-010V
RK- 544468-0101	13951 89-10-30	PULL TAB FEED	RK- 545440-010V
			RK- 545440-010V
RK- 544469-010V	13951 89-10-30	BOBBIN	RK- 550132-010V
RK- 544469-0101	13951 89-10-30	BOBBIN	RK- 550132-010V
RK- 544470-0101	13101 89-05-25	STRIP MAGAZINE	RK- 545440-010V
RK- 544471-0101	13101 89-05-25	ROLLER	RK- 545440-010V
RK- 544472-0101	11943 89-02-23	BRAKE	RK- 545440-010V
RK- 544473-0101	11943 89-02-23	PUNCH	RK- 545440-010V
RK- 544474-0101	13101 89-05-25	SPLICING DEVICE	RK- 545440-010V
RK- 544475-0101	13101 89-05-25	STRIP GUIDE	RK- 545440-010V
1- 544526		MACHINE PLATE TB	C- 544536-010V
1- 544527		MACHINE PLATE TBA	C- 544536-010V
4- 544533		FASTENER	C- 544536-010V
C- 544536-0101	12860 89-11-09	SET OF SIGNS	C- 456457-020V
			C- 456457-030V
C- 544536-0102	12860 89-11-09	SET OF SIGNS	C- 752960-010V
			C- 752971-010V
3- 544539		HOUSEMARK	C- 456458-020V
C- 544540-0101	12860 89-11-09	HOUSEMARKS SET OF SIGNS	C- 456458-030V
4- 544730		ROLLER	C- 544540-010V
			C- 271442-030V
3- 544781		CHUTE	C- 441000-050V
4- 544782		NUT	RK- 752729-010V
			RK- 547751-030V
4- 544894		SPRING	RK- 547751-030V
			RK- 547751-020V
4- 544906		SOLENOID VALVE	C- 295402-020V
3- 545401		DISTRIBUTION TERMINAL	C- 469091-020V
			C- 272623-050V
3- 545402-0001		TERMINAL BLOCK	CE- 68304-010V
			CE- 68308-010V
3- 545402-0002		TERMINAL BLOCK	CE- 68304-010V
			CE- 68308-010V
3- 545402-0003		TERMINAL BLOCK	CE- 68304-010V
			CE- 68308-010V
3- 545403		NEUTRAL TERMINAL	CE- 68304-010V
			CE- 68308-010V
RK- 545440-0101	13101 89-05-25	REBUILDING KIT, HOLE 11	CE- 68304-010V
			CE- 68308-010V
4- 545441		DOCUMENT FOLDER	C- 77091-010V
4- 545444		ROLLER	C- 77091-020V
4- 545445		ROLLER	RK- 545440-010V
4- 545446		ROLLER	RK- 547751-020V
3- 545450		CHUTE	RK- 547751-020V
3- 545452		GUIDE RAIL	RK- 547751-020V
4- 545453		DOLLY	RK- 547751-020V
3- 545454		PLATE	RK- 547751-020V
2- 545455		SLIDE	RK- 547751-020V
3- 545456		KNIFE	C- 547756-010V
			RK- 547751-020V
4- 545460		ROLLER	RK- 550136-010V
3- 545461		HEATING JAW	RK- 547751-030V
			RK- 547751-030V
4- 545462		CLAMP	RK- 547751-020V
			RK- 547752-010V

PART NO	LAST AM	DESCRIPTION	GROUP NO
4- 545464		ROLLER	RK- 547752-020V
			C- 469736-020V
			RK- 544470-010V
			RK- 544471-010V
			RK- 547752-010V
			RK- 550134-020V
			RK- 547752-020V
4- 545466		ROLLER	RK- 550134-010V
			C- 469736-020V
			RK- 544470-010V
			RK- 544471-010V
			RK- 547752-010V
			RK- 550134-020V
			RK- 547752-020V
4- 545466		SHAFT	RK- 550134-010V
			C- 469736-020V
			RK- 544470-010V
			RK- 547752-010V
4- 545467		SHAFT	RK- 547752-020V
			C- 469736-020V
			RK- 544470-010V
			RK- 547752-010V
4- 545468		SHAFT	RK- 547752-020V
			RK- 544471-010V
			RK- 550134-020V
3- 546126		HOLDER	RK- 550134-010V
1- 546160		MACHINE DISPLAY	CR- 283616-020V
1- 546161		CIRCUIT BOARD	CE- 68379-010V
RK- 546255-0101	12184 88-09-28	REBUILDING KIT BOBBIN	CE- 68379-010V
			B- 648110-060V
3- 546256		BOBBIN HOLDER	B- 648110-070V
			RK- 546337-010V
			RK- 546489-010V
4- 546258		DOCUMENT FOLDER	RK- 546255-010V
4- 546309		BRACKET	RK- 546255-010V
1- 546319		PNEUMATIC DIAGRAM	C- 283636-010V
			RK- 547750-020V
			RK- 550132-010V
			RK- 547750-020V
			RK- 550132-010V
			RK- 547750-020V
			RK- 550132-010V
1- 546320		PNEUMATIC DIAGRAM	B- 648109-090V
1- 546321		MACHINE BODY	RK- 548056-010V
RK- 546337-0101	12186 88-09-28	STRIP MAGAZINE	B- 648110-010V
4- 546338		SHAFT	RK- 546337-010V
4- 546339		DOCUMENT FOLDER	RK- 546337-010V
3- 546391		FUSE PANEL LABEL	CE- 68304-010V
			CE- 68308-010V
RK- 546489-0101	12236 88-10-03	PULL TAB MAGAZINE	B- 648110-010V
4- 546490		AXLE PIN	RK- 546489-010V
4- 546491		DOCUMENT FOLDER	RK- 546489-010V
4- 546913		RETAINING RING	RK- 546489-010V
4- 547298		DOCUMENT FOLDER	RK- 547300-010V
RK- 547300-0101	12261 88-11-25	BRAKE	B- 648110-010V
1- 547301		GABLE	RK- 547300-010V
3- 547302		ARM	RK- 547300-010V
3- 547303		HOLDER	RK- 547300-010V
3- 547304		SHAFT	RK- 547300-010V
4- 547416		INDEX EL-MANUAL	CE- 68308-010V
4- 547417		LABEL EL-MANUAL	CE- 68308-010V
1- 547524		FUNCTION CHART	RK- 547300-010V
3- 547588		FUSE PANEL	RK- 68674-010V
			RK- 68675-010V
RK- 547723-0101	12345 88-11-22	REB.KIT, BENDING ROLLERS	RK- 68674-010V
4- 547724		DOCUMENT FOLDER	B- 648110-010V
RK- 547726-0101	12345 88-11-22	BENDING ROLLERS	RK- 547723-010V
3- 547727		PLATE	RK- 547723-010V
3- 547728		PLATE	RK- 547726-010V
4- 547740		ROLLER	RK- 547726-010V
			RK- 547752-010V
4- 547741		ROLLER	RK- 550134-020V
			RK- 547752-010V
4- 547742		SHAFT	RK- 550134-020V
4- 547743		SHAFT	RK- 547752-010V
4- 547744		SHAFT	RK- 547752-010V
			RK- 550134-020V

PART NO	LAST AM	DESCRIPTION	GROUP NO
4- 547745		ROLLER	RK- 547752-020V
			RK- 550134-010V
4- 547746		ROLLER	RK- 547752-020V
			RK- 550134-010V
4- 547747		SHAFT	RK- 547752-020V
4- 547748		SHAFT	RK- 547752-020V
4- 547749		SHAFT	RK- 550134-010V
RK- 547750-020V	14299 89-12-21	REB.KIT CONV.H.O.T	B- 648110-060V
			B- 648110-070V
			B- 648110-080V
RK- 547751-020V	14299 89-12-21	SPLICING DEVICE	RK- 550132-010V
RK- 547751-030V	14299 89-12-21	SPLICING DEVICE	RK- 547750-020V
RK- 547752-010V	14299 89-12-21	STRIP MAGAZINE	RK- 547750-020V
RK- 547752-020V	14299 89-12-21	STRIP MAGAZINE	RK- 550132-010V
RK- 547753-0101	13677 89-09-20	CONNECTION BOX	RK- 547750-020V
			RK- 550132-010V
RK- 547754-0101	14299 89-12-21	STRIP MAGAZINE	RK- 547750-020V
			RK- 550132-010V
C- 547758-0101	13951 89-10-30	BOBBIN	RK- 547750-020V
			RK- 550132-010V
RK- 547757-0301	14299 89-12-21	BRAKE	RK- 547750-020V
			RK- 550132-010V
RK- 547758-0101	13677 89-09-20	DRIVE SHAFT	RK- 547750-020V
			RK- 550132-010V
RK- 547759-0101	13677 89-09-20	PUNCH	RK- 547750-020V
RK- 547759-020V	13951 89-10-30	PUNCH	RK- 550132-010V
RK- 547760-010V	14062 89-10-20	SEALING JAW	RK- 547750-020V
RK- 547760-020V	13951 89-10-30	SEALING JAW	RK- 550132-010V
RK- 547761-0101	14299 89-12-21	PULL TAB MAGAZINE	RK- 547750-020V
			RK- 550132-010V
RK- 547765-010V	14299 89-12-21	STRIP GUIDE	RK- 547750-020V
RK- 547765-020V	14299 89-12-21	STRIP GUIDE	RK- 550132-010V
RK- 547769-0101	13677 89-09-20	STRIP SEALER	RK- 69908-010V
			B- 648110-010V
3- 547781		FUSE PANEL LABEL	RK- 547782-010V
RK- 547782-0101	12376 88-12-28	STRIP GUIDE	RK- 547782-010V
3- 547783		PLATE	RK- 547765-010V
4- 547784		DOCUMENT FOLDER	RK- 547765-020V
4- 547911		FITTING BOLT	RK- 547765-020V
			B- 648110-080V
4- 547912		ROLLER	RK- 547986-010V
RK- 547986-010V	12376 90-01-19	ADAPTER KIT, OPENING DEV.	RK- 548056-010V
4- 547987		DOCUMENT FOLDER	RK- 548056-010V
2- 548028		PLATE	RK- 548056-010V
3- 548029		BEARING BRACKET	RK- 548056-010V
3- 548030		PLATE	RK- 548056-010V
3- 548041		BRACKET	RK- 548056-010V
3- 548042		PLATE	RK- 548056-010V
4- 548043		CLAMP	RK- 548056-010V
4- 548044		WASHER BEARING	RK- 548056-010V
3- 548046		ROD	RK- 548056-010V
4- 548047		ROD	RK- 548056-010V
4- 548048		ROD	RK- 548056-010V
2- 548049		PLATE	RK- 548056-010V
4- 548051		PLATE	RK- 548056-010V
RK- 548056-0101	14257 89-12-20	DATING UNIT	RK- 544391-010V
RK- 548056-0102	14257 89-12-20	DATING UNIT	RK- 544391-010V
RK- 548056-0103	14257 89-12-20	DATING UNIT	RK- 544391-010V
4- 548336		WASHER	C- 491976-020V
4- 548337		BUSHING	C- 491976-020V
1- 548382		FUNCTION DIAGRAM TBA/9	RK- 547750-020V
			RK- 550132-010V
			RK- 547750-020V
			RK- 550132-010V
			RK- 547750-020V
			RK- 550132-010V
3- 548383		GUIDE RAIL	RK- 550140-010V
4- 548385		FLANGE	RK- 547757-030V
4- 548386		BUSHING	RK- 547757-030V
RK- 548387-0102	12714 89-03-07	DRIVE	RK- 548407-010V
RK- 548387-0104	12714 89-03-07	DRIVE	RK- 548407-010V
RK- 548387-0105	12714 89-03-07	DRIVE	RK- 548407-010V
RK- 548387-0106	12714 89-03-07	DRIVE	RK- 548407-010V
RK- 548387-0107	12714 89-03-07	DRIVE	RK- 548407-010V
RK- 548388-010V	13677 89-09-20	DRIVE UNIT	RK- 550132-010V
RK- 548388-0101	13677 89-09-20	DRIVE UNIT	RK- 547750-020V
RK- 548389-010V	13677 89-09-20	BENDING ROLLER	RK- 550132-010V

PART NO	LAST AM	DESCRIPTION	GROUP NO
RK- 548389-0101	13677 89-09-20	BENDING ROLLER	RK- 547760-020V
4- 548394		SHAFT	RK- 544474-010V
			RK- 547751-020V
4- 548395		SHAFT	RK- 547751-020V
4- 548396		ROLLER	RK- 544474-010V
			RK- 547751-020V
3- 548399		CHUTE	RK- 547751-030V
			RK- 547751-020V
4- 548400		ROLLER	RK- 547751-020V
3- 548403		GUIDE RAIL	RK- 547751-020V
2- 548404		DRIVE ROLLER	RK- 548387-010V
2- 548405		DRIVE ROLLER	RK- 548387-010V
RK- 548407-010V	12714 89-03-07	DRIVE ROLLER	B- 648110-010V
			B- 648110-060V
			B- 648110-070V
			B- 648110-080V
4- 548409		DOCUMENT FOLDER	RK- 548407-010V
C- 548467-0101	10515 89-01-19	SETTING TOOL	B- 648119-060V
			B- 648119-070V
			B- 648119-080V
			B- 648119-090V
2- 549002		HOLDER	RK- 553145-010V
3- 549003		PLATE	RK- 553145-010V
2- 549005		HOLDER	RK- 553145-010V
3- 549016		INDUCTOR	RK- 547760-010V
			RK- 547760-020V
			RK- 550136-010V
3- 549800		PLATE	RK- 548056-010V
4- 549802		SCREW	RK- 548056-010V
3- 550004		PROTECTION PLATE	CR- 283618-020V
4- 550005		DOLLY	CR- 283618-020V
4- 550006		PIN	CR- 283618-020V
2- 550112		DRIVE ROLLER	RK- 548387-010V
2- 550113		DRIVE ROLLER	RK- 548387-010V
4- 550114		SHAFT	RK- 547751-020V
4- 550115		SHAFT	RK- 547751-020V
4- 550116		ROLLER	RK- 547751-020V
3- 550117		HEATING BLOCK	RK- 547751-020V
3- 550118		COUNTER JAW	RK- 547751-020V
4- 550119		FABRIC	RK- 547751-030V
			RK- 547751-020V
			RK- 550136-010V
4- 550120		ARM	RK- 547751-030V
			RK- 547751-020V
3- 550124		GUIDE RAIL	RK- 550140-010V
RK- 550129-010V	13951 89-10-30	STATION CHAIN	RK- 550132-010V
RK- 550129-0101	13951 89-10-30	STATION CHAIN	RK- 545440-010V
4- 550130		DOCUMENT FOLDER	RK- 550132-010V
RK- 550132-010V	14299 89-12-21	REB.KIT CONV. H.O.E.	B- 648110-060V
			B- 648110-070V
			B- 648110-080V
RK- 550134-010V	13951 89-10-30	BENDING ROLLERS, LS-STRIP	RK- 550132-010V
RK- 550134-020V	13677 89-09-20	BENDING ROLLERS, LS-STRIP	RK- 547760-020V
RK- 550136-010V	13951 89-10-30	START-UP KIT	RK- 550132-010V
4- 550138		SHAFT	RK- 547751-030V
4- 550139		SHAFT	RK- 547751-030V
RK- 550140-010V	13677 89-09-20	GUIDE RAIL	RK- 547760-020V
			RK- 550132-010V
3- 550167		KNIFE HOLDER	CR- 283618-020V
4- 550329		TERMINAL	RK- 41567-010V
G1- 550480		BRACKET	C- 752828-010V
3- 550487		FLOAT	C- 256230-030V
			C- 256921-040V
4- 551319		DOCUMENT FOLDER	RK- 752702-010V
2- 552011		DOLLY	RK- 553145-010V
3- 552023		INDUCTOR	RK- 547760-010V
3- 552027		INDUCTOR	RK- 547760-020V
3- 552027		INDUCTOR	RK- 550136-010V
2- 552039		COVER	C- 752869-010V
4- 552042		SCREW	C- 752869-010V
3- 552044		INDUCTOR	RK- 547760-010V
4- 552528		ROLLER	C- 441000-050V
			RK- 752729-010V
2- 552837		BRACKET	C- 491207-020V
2- 552838		PIPE	C- 491207-020V
2- 552839		PIPE	C- 256014-050V
2- 552840		PIPE	C- 256014-050V

PART NO	LAST AM	DESCRIPTION
2- 552841		PIPE
1- 552846		BATH
4- 552847		PLATE
4- 552854		BRACKET
3- 552858		TERMINAL CARD X9
3- 552859		TERMINAL CARD X9
2- 553120		CONNECTION
2- 553122		DOOR
1- 553123		TANK
1- 553126		PEROXIDE TANK
3- 553127		PIPE
1- 553128		PIPE
4- 553130		ROLLER
4- 553131		ROLLER
4- 553132		ROLLER
4- 553133		ROLLER
4- 553134		SHAFT
4- 553135		SHAFT
3- 553140		GUIDE RAIL
RK- 553144-010V	14140 89-11-15	START-UP KIT
RK- 553145-010V	13951 89-10-30	COUNTER JAW
3- 553149		GUIDE RAIL
4- 553178		DOCUMENT FOLDER
RK- 553180-010V	13946 89-12-13	QUICK RESTART
4- 553183		PENDULUM SUSPENSION
2- 553184		BRACKET
4- 553187		PLATE
1- 553215		CABLE DUCT
1- 553216		CABLE DUCT
1- 553217		CABLE DUCT
1- 553218		CABLE DUCT
4- 553586		SPACER
1- 553649		PIPE
2- 553650		PIPE
2- 553651		PIPE
2- 553652		INSULATING PLATE
1- 553653		RETURN PIPE
1- 553654		PLATE
1- 553655		BRACKET
2- 553656		COVER PLATE
C- 553657-0101	13845 90-01-12	DOOR
2- 553658		BRACKET
4- 553808		ARM
4- 553809		PIVOT PIN
RK- 553820-010V	11865 89-09-27	HEAT REDUCTION KIT
4- 553821		DOCUMENT FOLDER
1- 555434		MACHINE BODY
4- 555435		PIPE
1- 555436		PLATE
2- 555473		INDUCTOR 125CC
3- 555832		GABLE
1- 555923		HOLDER
2- 556309		BRANCH PIPE
3- 556314		TUBE LS
2- 556315		TUBE KS
4- 556390		LUG
B- 648101-020V	6662 84-05-23	SUPERSTRUCTURE
B- 648101-060V	7199 84-10-24	SUPERSTRUCTURE
B- 648101-070V	10843 87-11-26	SUPERSTRUCTURE
B- 648101-080V	12368 88-11-18	SUPERSTRUCTURE TB/9
B- 648101-090V	13651 89-11-23	SUPERSTRUCTURE TB/9
B- 648102-020V	6130 83-09-21	MACHINE BODY
B- 648102-0201	6130 83-09-21	MACHINE BODY
B- 648102-030V	6197 83-10-13	MACHINE BODY

GROUP NO
C- 256014-060V
C- 256014-050V
C- 271569-040V
RK- 69908-010V
RK- 69290-010V
RK- 69508-010V
C- 751373-010V
C- 553657-010V
C- 751398-010V
C- 751373-010V
C- 751373-010V
C- 491207-020V
RK- 547751-030V
RK- 547751-030V
RK- 547751-030V
RK- 547751-030V
RK- 547751-030V
RK- 547751-030V
RK- 550140-010V
RK- 547750-020V
RK- 550132-010V
RK- 547751-030V
RK- 553180-010V
B- 648110-010V
B- 648110-060V
B- 648110-070V
B- 648110-080V
C- 272337-040V
C- 272337-040V
C- 272337-040V
C- 469374-030V
C- 469374-030V
C- 469374-030V
C- 469374-030V
C- 752495-010V
C- 491207-020V
C- 491207-020V
C- 491207-020V
C- 751373-010V
C- 491207-020V
C- 751885-020V
C- 751408-010V
C- 751885-020V
C- 751352-010V
C- 491207-020V
C- 272021-050V
C- 272021-050V
B- 648110-070V
B- 648110-080V
RK- 553820-010V
C- 256943-050V
C- 491207-020V
C- 751885-020V
C- 295523-030V
CR- 256214-030V
C- 295523-030V
CR- 256214-030V
C- 295523-030V
C- 533903-010V
C- 441000-050V
C- 272408-050V
C- 256233-050V
C- 256233-050V
C- 752247-010V
A- 648151-020V
A- 648151-030V
A- 648151-040V
A- 648151-050V
A- 648151-100V
A- 648151-110V
A- 648151-120V
A- 648151-130V
A- 648152-020V
A- 648151-020V
A- 648152-030V
A- 648152-040V
A- 648152-050V

PART NO	LAST AM	DESCRIPTION
B- 648102-0301	6197 83-10-13	MACHINE BODY
B- 648102-0801	6929 84-10-08	MACHINE BODY
B- 648102-0802	6929 84-10-08	MACHINE BODY
B- 648102-0701	8636 86-01-21	MACHINE BODY
B- 648102-0702	8636 86-01-21	MACHINE BODY
B- 648102-080V	11733 88-11-23	MACHINE BODY TB/TBA/9
B- 648102-0801	11733 88-11-23	MACHINE BODY TB/TBA/9
B- 648102-090V	14240 90-01-11	MACHINE BODY TB/TBA/9
B- 648102-0901	14240 90-01-11	MACHINE BODY TB/TBA/9
B- 648103-020V	5253 82-04-01	DRIVE
B- 648103-030V	6147 83-09-28	DRIVE
B- 648103-0801	9368 86-06-11	DRIVE
B- 648103-0802	9368 86-06-11	DRIVE
B- 648103-0701	13691 89-06-10	DRIVE B/AB9
B- 648103-0702	13691 89-06-10	DRIVE B/AB9
B- 648103-0801	12577 89-12-06	DRIVE TB/TBA/9
B- 648103-0802	12577 89-12-06	DRIVE TB/TBA/9
B- 648104-020V	6317 83-11-03	JAW SYSTEM
B- 648104-020V		JAW SYSTEM
B- 648104-030V	6447 83-12-27	JAW SYSTEM
B- 648104-0801	6748 84-05-04	JAW SYSTEM
B- 648104-0802	6748 84-05-04	JAW SYSTEM
B- 648104-0701	8633 86-01-14	JAW SYSTEM
B- 648104-0702	8633 86-01-14	JAW SYSTEM
B- 648104-0801	8486 86-11-03	JAW SYSTEM
B- 648104-0802	8486 86-11-03	JAW SYSTEM
B- 648104-0901	12578 89-12-06	JAW SYSTEM
B- 648104-0902	12578 89-12-06	JAW SYSTEM
B- 648105-0201	7911 85-06-11	FINAL FOLDER
B- 648105-0301	7911 85-06-11	FINAL FOLDER
B- 648105-0401	7911 85-06-11	FINAL FOLDER
B- 648105-0501	7911 85-06-11	FINAL FOLDER
B- 648105-0701	8667 86-02-17	FINAL FOLDER
B- 648105-0801	12529 89-02-09	FINAL FOLDER TB/TBA/9
B- 648105-0901	14278 90-01-05	FINAL FOLDER TB/TBA/9
B- 648108-0201	6755 84-04-17	SERVICE UNIT
B- 648108-0202	6755 84-04-17	SERVICE UNIT
B- 648108-0801	7326 84-12-17	SERVICE UNIT
B- 648108-0802	7326 84-12-17	SERVICE UNIT
B- 648108-0701	9266 86-06-11	SERVICE UNIT
B- 648108-0702	9266 86-06-11	SERVICE UNIT
B- 648108-080V	12502 89-01-05	SERVICE UNIT TB/TBA/9
B- 648108-0801	12502 89-01-05	SERVICE UNIT TB/TBA/9
B- 648108-090V	14200 90-02-13	SERVICE UNIT TB/TBA/9
B- 648108-0901	14200 90-02-13	SERVICE UNIT TB/TBA/9
B- 648107-0201	9369 86-06-11	STRIP APPLICATOR

GROUP NO
A- 648151-030V
A- 648151-040V
A- 648151-050V
A- 648151-100V
A- 648152-100V
A- 648151-110V
A- 648152-110V
A- 648152-120V
A- 648151-120V
A- 648152-130V
A- 648151-130V
A- 648151-020V
A- 648151-030V
A- 648152-020V
A- 648152-030V
A- 648151-040V
A- 648151-050V
A- 648152-040V
A- 648152-050V
A- 648151-100V
A- 648151-110V
A- 648152-100V
A- 648152-110V
A- 648151-120V
A- 648152-120V
A- 648151-130V
A- 648152-130V
A- 648151-020V
A- 648151-030V
A- 648151-040V
A- 648152-020V
A- 648152-030V
A- 648151-040V
A- 648152-040V
A- 648151-050V
A- 648152-050V
A- 648151-100V
A- 648152-100V
A- 648151-110V
A- 648152-110V
A- 648151-120V
A- 648152-120V
A- 648151-130V
A- 648152-130V
A- 648151-020V
A- 648151-030V
A- 648151-040V
A- 648151-050V
A- 648152-020V
A- 648152-030V
A- 648152-040V
A- 648152-050V
A- 648151-100V
A- 648152-100V
A- 648151-110V
A- 648152-110V
A- 648152-120V
A- 648151-120V
A- 648152-130V
A- 648151-130V
A- 648151-020V
A- 648151-030V

PART NO	LAST AM	DESCRIPTION	GROUP NO
			A- 648151-040V
			A- 648151-050V
B- 648107-0202	9369 86-08-11	STRIP APPLICATOR	A- 648152-020V
			A- 648152-030V
			A- 648152-040V
			A- 648152-050V
B- 648107-060V	8054 85-08-22	STRIP APPLICATOR	A- 648151-100V
			A- 648152-100V
B- 648107-070V	8699 86-01-18	STRIP APPLICATOR	A- 648151-110V
			A- 648152-110V
B- 648107-080V	12198 88-12-02	STRIP APPLICATOR	A- 648151-120V
			A- 648152-120V
B- 648107-090V	14279 90-02-06	STRIP APPLICATOR	A- 648151-130V
B- 648107-090V		STRIP APPLICATOR	A- 648152-130V
B- 648108-010V	8390 86-01-24	OPENING DEVICE	A- 648152-020V
			A- 648152-030V
			A- 648152-040V
			A- 648152-050V
B- 648108-020V	9616 86-09-11	STANDARD EQUIPMENT	A- 648151-020V
			A- 648151-030V
			A- 648151-040V
			A- 648152-020V
			A- 648152-030V
			A- 648152-040V
B- 648108-030V	6726 84-04-10	STANDARD EQUIPMENT	A- 648151-050V
			A- 648152-050V
B- 648108-060V	10321 87-04-02	ORDINARY ACCESSORIES	A- 648151-100V
			A- 648152-100V
B- 648108-070V	10843 87-11-26	ORDINARY ACCESSORIES	A- 648151-110V
			A- 648152-110V
B- 648108-080V	14111 89-11-16	ORDINARY ACCESSORIES	A- 648151-120V
			A- 648152-120V
B- 648108-090V	14040 90-01-22	ORDINARY ACCESS. TB/TBA/9	A- 648151-130V
			A- 648152-130V
B- 648110-010V	13646 89-12-13	REBUILDING KITS BRIK	A- 648151-020V
			A- 648151-030V
			A- 648151-040V
			A- 648151-050V
			A- 648152-020V
			A- 648152-030V
			A- 648152-040V
B- 648110-060V	14329 90-01-15	REBUILDING KITS BRIK	A- 648152-050V
			A- 648151-100V
B- 648110-070V	14329 90-01-15	REBUILDING KITS BRIK	A- 648152-100V
			A- 648151-110V
B- 648110-080V	12375 90-01-19	REBUILDING KITS TB/TBA/9	A- 648152-110V
			A- 648151-120V
B- 648111-020V	6366 84-01-09	SUPERSTRUCTURE	A- 648152-120V
			A- 648152-020V
			A- 648152-030V
			A- 648152-040V
B- 648111-030V	7937 85-08-03	SUPERSTRUCTURE	A- 648152-050V
B- 648111-060V	8083 85-07-10	SUPERSTRUCTURE	A- 648152-100V
B- 648111-070V	8466 85-12-18	SUPERSTRUCTURE	A- 648152-110V
B- 648111-080V	11731 88-08-18	SUPERSTRUCTURE TBA/9	A- 648152-120V
B- 648111-090V	12861 89-12-11	SUPERSTRUCTURE TBA/9	A- 648152-130V
B- 648118-010V	9023 86-05-23	OPENING DEVICE	A- 648151-020V
			A- 648151-030V
			A- 648151-040V
			A- 648151-050V
B- 648118-0601	9361 86-10-23	OPENING DEVICE	A- 648151-100V
B- 648118-0602	9361 86-10-23	OPENING DEVICE	A- 648152-100V
B- 648118-0701	12232 88-09-23	OPENING DEVICE TB/TBA/9	A- 648151-110V
			A- 648151-120V
B- 648118-0702	12232 88-09-23	OPENING DEVICE TB/TBA/9	A- 648152-110V
			A- 648152-120V
B- 648119-020V	12930 89-10-15	EXTRA EQUIPMENT TB/TBA/9	A- 648151-020V
			A- 648151-030V
			A- 648151-040V
			A- 648151-050V
			A- 648152-020V
			A- 648152-030V
B- 648119-020V		EXTRA EQUIPMENT TB/TBA/9	A- 648152-040V
			A- 648152-050V
B- 648119-060V	12930 89-10-15	EXTRA EQUIPMENT TB/T	A- 648151-100V
			A- 648152-100V
B- 648119-070V	10515 89-01-19	EXTRA EQUIPMENT	A- 648151-110V

PART NO	LAST AM	DESCRIPTION	GROUP NO
			A- 648152-110V
B- 648119-0801	10515 89-01-19	EXTRA EQUIPMENT	A- 648151-120V
			A- 648152-120V
B- 648119-0901	12856 90-01-29	EXTRA EQUIPMENT	A- 648151-130V
			A- 648152-130V
AE- 649204-010V		ELECTRIC EQUIPMENT	A- 648151-020V
			A- 648151-030V
			A- 648151-040V
			A- 648151-050V
AE- 649204-030V		ELECTRIC EQUIPMENT	A- 648151-100V
			A- 648151-110V
BE- 649204-0501	10860 88-10-18	ELECTRIC EQUIPMENT	A- 648151-120V
AE- 649205-010V		ELECTRIC EQUIPMENT	A- 648152-020V
			A- 648152-030V
			A- 648152-040V
			A- 648152-050V
AE- 649205-030V		ELECTRIC EQUIPMENT	A- 648152-100V
			A- 648152-110V
BE- 649205-0501	10600 88-09-19	EL-EQUIPMENT AB9-060V	A- 648152-120V
BE- 649205-0701	11919 89-05-10	EL-EQUIPMENT TBA/9-070V	A- 648152-120V
RK- 649244-0001		ELECTRICAL CONVERSION	RK- 479279-010V
AE- 649257-0001		ELECTRICAL CONVERSION	C- 456274-010V
RK- 649258-0001		ELECTRICAL CONVERSION	RK- 479279-010V
RK- 649262-0001		ELECTRICAL CONVERSION	RK- 479279-010V
RK- 649269-0001		ELECTRICAL CONVERSION	RK- 489760-010V
AE- 649280-0101	8052 85-08-25	ELECTRICAL CONVERSION	C- 456953-010V
AE- 649287-010V	8499 86-11-17	ELECTRIC EQUIPMENT	RK- 491744-010V
AE- 649293-010V	8640 86-11-17	ELECTRIC EQUIPMENT	RK- 491789-010V
			RK- 491902-010V
BE- 649294-0101	10816 87-11-03	ELECTRIC EQUIPMENT	C- 540028-010V
			C- 540030-010V
RK- 649297-010V	9030 87-10-17	EL-CONV. LOW ACID KIT	RK- 491795-010V
RK- 649308-0101	13634 90-02-06	"HEADSPACE BY INJECTION"	RK- 520067-010V
RK- 649324-0101	13635 90-02-06	"HEADSPACE BY INJECTION"	RK- 520130-010V
RK- 649327-010V	10116 87-10-16	ELECTRIC EQUIPMENT	RK- 751202-010V
AE- 649328-010V	10117 87-09-04	ELECTRIC EQUIPMENT	RK- 751228-010V
RK- 649330-010V	10149 87-10-17	CONVERS. BAR CODE READING	RK- 491543-010V
RK- 649331-010V	10159 87-10-17	BAR CODE	RK- 751561-010V
RK- 649335-010V	10372 88-01-12	EL-CONV. SA TO PTS 3	RK- 538439-010V
RK- 649340-0101	13636 90-02-06	"HEADSPACE BY INJECTION"	RK- 520129-010V
RK- 649342-010V	10621 88-02-29	BRAKE SUPPLY MOTOR	RK- 751548-010V
RK- 649343-010V	10624 88-02-29	BRAKE PAPER SUPPLY	RK- 751546-010V
RK- 649344-010V	10625 87-10-16	BRAKE PAPER SUPPLY	RK- 751479-010V
RK- 649350-010V	10676 87-10-17	PAPER SUPPLY MOTOR	RK- 751595-010V
RK- 649352-010V	10678 87-10-17	BRAKE SUPPLY MOTOR	RK- 751589-010V
RK- 649355-010V	10734 87-10-17	BRAKE SUPPLY MOTOR	RK- 751591-010V
BE- 649356-010V	10791 87-11-26	BAR CODE	RK- 751569-010V
RK- 649362-010V	10980 87-11-25	EL-CONVERSION BAR CODE	RK- 751636-010V
RK- 649369-0101	11772 89-07-06	HEAT REDUCTION	RK- 533177-010V
RK- 649370-0101	11773 89-07-06	HEAT REDUCTION	RK- 533177-010V
			RK- 553820-010V
RK- 649371-0101	11774 89-07-06	HEAT REDUCTION	RK- 533177-010V
			RK- 553820-010V
RK- 649389-0101	10108 88-01-23	TEMP. SUPERV.HYDR.OIL(EL)	RK- 752270-010V
RK- 649390-0101	12325 88-12-22	TEMP. SUPERV.HYDR.OIL(EL)	RK- 752270-010V
RK- 649391-0101	12326 88-12-22	TEMP.SUPRV.HYDR.OIL (EL)	RK- 752270-010V
RK- 649400-0101	14162 89-11-14	TEMP.SUPERV.HYDR.OIL	RK- 752270-010V
RK- 649401-0101	12798 89-04-25	TEMP.SUPERV.HYDR.OIL	RK- 752270-010V
RK- 649402-0101	12799 89-04-25	TEMP.SUPERV.HYDR.OIL	RK- 752270-010V
4- 730415-0001		MECHANICAL DOCUMENTATION	CE- 67716-010V
3- 734052		SOCKET	RK- 41567-010V
2- 735005		PIPE	C- 735014-010V
2- 735006		PIPE	C- 735248-010V
			C- 735014-010V
C- 735014-0101	11716 88-09-21	AIR AND INERT GAS SYSTEMS	C- 735253-010V
			C- 752869-010V
			C- 752985-010V
4- 735018		SLEEVE	C- 736592-010V
			C- 736593-010V
4- 735029		PIPE	C- 735183-010V
C- 735031-0102	11715 88-08-07	CONNECTIONS BOX	C- 735270-010V
C- 735032-0101	11716 88-09-21	ASSEMB. OF C. AND P.BOXES	C- 529932-010V
4- 735034		PIPE	C- 735183-010V
4- 735041		CLAMP	C- 529940-010V
			C- 736592-010V
			C- 735265-010V
4- 735050		CLAMP	C- 736593-010V

PART NO	LAST AM	DESCRIPTION	GROUP NO
4- 736062		BRACKET	C- 529921-010V
4- 736063		SLEEVE	C- 735183-010V
4- 736064		WASHER	C- 736600-010V
4- 736065		WASHER	C- 736600-010V
3- 736056		BODY CENTRAL VALVE	C- 736600-010V
3- 736057		TUBE	C- 736594-010V
3- 736058		TUBE	C- 736594-010V
3- 736059		TUBE	C- 736594-010V
3- 736060		TUBE	C- 736594-010V
3- 736074		HOLDER	C- 735192-010V
4- 736150		COMPRESSION SPRING	C- 736600-010V
C- 735183-0101	13990 89-11-13	PNEUMATIC BOX	C- 735032-010V
			C- 735270-010V
3- 736185		LABEL	RK- 68180-010V
			RK- 68183-010V
C- 735192-0101	11716 88-09-21	LOWER FILLING TUBE	C- 529932-010V
			C- 735253-010V
			C- 752669-010V
C- 735192-0102	11716 88-09-21	LOWER FILLING TUBE	C- 752985-010V
			C- 529932-010V
			C- 735253-010V
3- 736193-0001		FILLING TUBE	C- 752669-010V
3- 736193-0002		FILLING TUBE	C- 752985-010V
4- 735210		SPACER	C- 735192-010V
4- 735219		BRACKET	C- 735192-010V
			C- 736529-010V
C- 735222-0101	11716 88-09-21	CLEANING PIPE	C- 735248-010V
			C- 735014-010V
			C- 529932-010V
			C- 735253-010V
			C- 752669-010V
2- 736246		PIPE	C- 752985-010V
4- 735247		HOLDER	C- 735248-010V
C- 735248-0101	11716 88-09-21	AIR AND INERT GAS SYSTEMS	C- 735248-010V
C- 735253-010V	12383 90-02-10	HEAD SPACE BY LLF	C- 529932-010V
C- 735253-010V		HEAD SPACE BY LLF	C- 77091-010V
3- 735254		TUBE	B- 648119-060V
C- 735258-0101	11716 88-09-21	CLEAN.PIPES IN POS.DEVICE	C- 736594-010V
C- 735259-0101	11716 88-09-21	CONNECTIONS BOX	C- 529932-010V
C- 735261-0101	11716 88-09-21	RAILING	C- 735032-010V
			C- 529932-010V
			C- 735253-010V
4- 736263		RAILING	C- 752669-010V
4- 735264		PLUG	C- 752985-010V
C- 735265-0101	12383 90-02-10	PIPE-LINE	C- 735261-010V
C- 735265-0102	12383 90-02-10	PIPE-LINE	C- 735261-010V
			C- 735253-010V
C- 735267-0101	11716 88-09-21	BRACKETS FOR ELECT. EQUIP	C- 752669-010V
C- 735268-0101	12383 90-02-10	START-UP KIT	C- 752985-010V
1- 735269		TOUCH GUARD	C- 529932-010V
			C- 529932-010V
C- 736270-0101	11716 88-09-21	ASSEM. OF C. AND P. BOXES	C- 736268-010V
			C- 736271-010V
			C- 735253-010V
C- 735271-0101	12383 90-02-10	START-UP KIT	C- 752669-010V
			C- 752985-010V
			C- 735253-010V
4- 736279-0001		SPINDLE	C- 752669-010V
4- 736279-0002		SPINDLE	C- 752985-010V
4- 736501		GEAR	C- 736592-010V
			C- 736593-010V
4- 736502		KNOB	C- 736592-010V
			C- 736593-010V
3- 736508-0001		MEMBRANE	C- 736592-010V
			C- 736593-010V
			C- 735268-010V
			C- 736600-010V
			C- 735271-010V
			C- 736600-010V
			C- 735271-010V
			C- 736600-010V
			C- 735271-010V
			C- 736600-010V
			C- 736268-010V
			C- 736600-010V
4- 736514		SHOCK ABSORBER	C- 735271-010V
			C- 736600-010V

PART NO	LAST AM	DESCRIPTION	GROUP NO
			C- 736271-010V
			C- 736600-010V
			C- 735271-010V
			C- 736600-010V
3- 736519		HS BY LLF PNEUM. DIAGRAM	C- 735268-010V
			C- 735271-010V
3- 736525		PNEUMATIC BOX SURVEY	C- 735268-010V
			C- 735271-010V
4- 736526		FLOW METER	C- 735183-010V
C- 736529-0101	14133 90-02-12	VALVE HOLDER	C- 529932-010V
			C- 735253-010V
			C- 752669-010V
3- 736530		VALVE HOLDER	C- 752985-010V
3- 736531		HOLDER	C- 736529-010V
4- 736532		SCREW	C- 736529-010V
1- 736533		TUBE	C- 736529-010V
			C- 529940-010V
3- 736534		CLEANING PIPE	C- 735265-010V
3- 736535		CLEANING PIPE	C- 735222-010V
3- 736552		LOWER FILLING TUBE	C- 735222-010V
3- 736554		PRODUCT PIPE	C- 529935-010V
3- 736555		LATERAL BODY	C- 736600-010V
4- 736557		MEMBRANE	C- 736600-010V
			C- 735268-010V
			C- 736600-010V
			C- 735271-010V
			C- 736600-010V
			C- 735271-010V
			C- 736600-010V
			C- 735271-010V
			C- 736600-010V
3- 736558		DOSING VALVE BODY	C- 736600-010V
3- 736564		VALVE BODY	C- 736600-010V
4- 736565		SHAFT	C- 736600-010V
4- 736568		SCREW	C- 736600-010V
4- 736574		BRACKET	C- 736600-010V
4- 736575		BRACKET	C- 736592-010V
3- 736581		COUPLING BOX	C- 736593-010V
			C- 736592-010V
3- 736582-0001		SHAFT SLIDE GUIDE	C- 736593-010V
			C- 736592-010V
4- 736585		PIN	C- 736593-010V
			C- 736592-010V
4- 736587		SHAFT	C- 736593-010V
			C- 736592-010V
4- 736588-0001		SHAFT	C- 736593-010V
			C- 736592-010V
C- 736592-0101	11716 88-09-21	CFV CONTROL DEVICE	C- 736593-010V
C- 736593-0101	11716 88-09-21	CFV CONTROL DEVICE	C- 529932-010V
			C- 735253-010V
			C- 752669-010V
C- 736594-0101	11716 88-09-21	PNEUMATIC EQUIPMENT	C- 752985-010V
			C- 529932-010V
			C- 735253-010V
			C- 752669-010V
3- 736595		TUBE	C- 752985-010V
4- 736599		DOUBLE CLAMP	C- 736594-010V
			C- 736592-010V
C- 736600-0101	12383 90-02-10	CONSTANT FLOW VALVE	C- 736593-010V
			C- 529932-010V
			C- 735253-010V
			C- 752669-010V
C- 736600-0102	12383 90-02-10	CONSTANT FLOW VALVE	C- 752985-010V
			C- 529932-010V
			C- 735253-010V
			C- 752669-010V
4- 736602		WASHER	C- 752985-010V
C- 736604-0101	11715 88-06-07	ELECTRIC MATERIALS	C- 736600-010V
			C- 735268-010V
4- 736606		DRILL 15 MM	C- 735271-010V
			C- 735268-010V
4- 736608		DOCUMENT DF	C- 735271-010V
			C- 752669-010V
4- 736684		CLAMP	C- 752985-010V
3- 736705		BRACKET	C- 736885-010V
4- 736716		DOSING PISTON	C- 735270-010V
3- 736730-0002		GUIDE PLATE	C- 736600-010V
			C- 736885-010V

PART NO	LAST AM	DESCRIPTION	GROUP NO
3- 736730-0003		GUIDE PLATE	C- 736865-010V
3- 736730-0004		GUIDE PLATE	C- 736865-010V
1- 736748		PIPE	C- 735265-010V
4- 736749		CLAMP	C- 735261-010V
			C- 736592-010V
			C- 735261-010V
			C- 736593-010V
			C- 735261-010V
			C- 736593-010V
			C- 735261-010V
			C- 736593-010V
4- 736784		PENDULUM SUSPENSION	C- 529924-010V
4- 736848		ARM	C- 736865-010V
4- 736850		ARM	C- 736865-010V
4- 736851		HOLDER	C- 736865-010V
C- 736865-0101	12383 90-02-10	TUBE LS COOLING	C- 529932-010V
			C- 735253-010V
			C- 752869-010V
			C- 752985-010V
C- 736865-0102	12383 90-02-10	TUBE LS COOLING	C- 529932-010V
			C- 735253-010V
			C- 752869-010V
			C- 752985-010V
C- 736865-0103	12383 90-02-10	TUBE LS COOLING	C- 529932-010V
			C- 735253-010V
			C- 752869-010V
			C- 752985-010V
C- 736865-0104	12383 90-02-10	TUBE LS COOLING	C- 529932-010V
			C- 735253-010V
C- 736865-0105	12383 90-02-10	TUBE LS COOLING	C- 529932-010V
			C- 735253-010V
C- 736865-0106	12383 90-02-10	TUBE LS COOLING	C- 529932-010V
			C- 735253-010V
4- 736867		BRUSH	C- 736865-010V
4- 736899		BRACKET	C- 736865-010V
1- 751001		CABLE DUCT	C- 469374-020V
1- 751002		PLATE	C- 469452-030V
3- 751008		COVER	C- 256233-040V
			C- 256233-050V
4- 751009		INSULATION	C- 271181-020V
			C- 271181-030V
			C- 271181-040V
4- 751010		GASKET	C- 469501-020V
			C- 469501-030V
			C- 469501-020V
			C- 469501-030V
			RK- 751462-010V
			RK- 751487-010V
4- 751011		GASKET	C- 256237-050V
			C- 256237-060V
			RK- 751311-010V
4- 751014		GASKET	C- 256239-020V
			C- 256239-030V
			C- 256239-040V
4- 751015		GASKET	C- 256239-020V
			C- 256239-030V
			C- 256239-040V
			C- 256095-020V
			C- 256095-030V
4- 751015		GASKET	C- 256095-040V
4- 751016		GASKET	RK- 520070-010V
			C- 271181-020V
			C- 271181-030V
			C- 271181-040V
4- 751017		GASKET	C- 456588-010V
			C- 456588-020V
			C- 456588-030V
4- 751018		WASHER	C- 256095-020V
			C- 256095-030V
			C- 256095-040V
4- 751019		WASHER	C- 256055-040V
			C- 256055-050V
			C- 256055-060V
4- 751020		GASKET	C- 256237-050V
			C- 256237-060V
			RK- 751303-010V
			RK- 751311-010V

PART NO	LAST AM	DESCRIPTION	GROUP NO
			RK- 751303-010V
			RK- 751311-010V
			C- 256055-040V
			C- 256055-050V
			C- 256055-060V
4- 751021		GASKET	C- 256238-020V
			C- 256238-030V
			C- 256238-040V
4- 751022		GASKET	C- 256237-050V
			C- 256237-060V
4- 751023		GASKET	C- 256095-020V
			C- 256055-040V
			C- 256095-020V
			C- 256055-050V
			C- 256095-030V
			C- 256055-060V
			C- 256095-040V
4- 751024		GASKET	C- 469501-020V
			C- 469501-030V
			C- 469501-020V
			C- 469501-030V
			RK- 751462-010V
			RK- 751487-010V
2- 751027		CONNECTION	C- 256237-050V
2- 751028		CONNECTION	C- 256237-050V
3- 751029		ARM	C- 256237-050V
			C- 256237-060V
4- 751030		ELBOW PIPE	C- 256237-050V
1- 751031		PNEUMATIC DIAGRAM	RK- 491902-010V
			B- 648109-060V
4- 751032		SUPPORT ROLLER	C- 256223-020V
			C- 256223-030V
4- 751033		SUPPORT ROLLER	C- 256223-020V
			C- 256223-030V
4- 751034		SUPPORT ROLLER	C- 256223-020V
			C- 256223-030V
4- 751035		SUPPORT ROLLER	C- 256223-020V
			C- 256223-030V
1- 751036		PANEL SURVEY	B- 648109-060V
1- 751037		PANEL SURVEY	B- 648109-060V
G1- 751038		VOLUME FLAP 280 CC	CR- 256209-030V
G1- 751038		VOLUME FLAP 250 CC	CR- 256210-030V
2- 751040		CABLE DUCT	C- 469366-010V
3- 751041		LID	C- 469366-010V
4- 751044		BRACKET	C- 469452-030V
2- 751047		LID	C- 490947-020V
			C- 752244-010V
4- 751048		SUPPORT	C- 256666-020V
2- 751049		RAIL	C- 456460-020V
			C- 456460-030V
2- 751050		RAIL	C- 456460-020V
			C- 456460-030V
1- 751051		RAILING	C- 456460-020V
			C- 456460-030V
1- 751052		RAILING	C- 456460-020V
			C- 456460-030V
1- 751053		RAILING	C- 456460-020V
			C- 456460-030V
1- 751054		SIDE PIECE	C- 456457-020V
2- 751055		STRUT	C- 456459-020V
			C- 456460-020V
			C- 751900-010V
			C- 456460-030V
			C- 751900-010V
3- 751056		STRUT END	C- 752980-010V
			C- 752971-010V
			C- 456460-020V
			C- 751900-010V
			C- 456459-030V
			C- 456460-030V
			C- 751900-010V
2- 751057		RAILING	C- 456460-020V
			C- 456460-030V
4- 751058			RK- 752638-010V
4- 751059		ACKET	C- 271569-040V
			C- 271569-050V
4- 751060		BRACKET	C- 271569-040V

PART NO	LAST AM	DESCRIPTION	GROUP NO
4- 751081		LID	C- 271889-060V
			C- 295310-040V
			C- 295310-050V
			C- 295310-060V
1- 751084		COVER	C- 469452-030V
1- 751086		PIPE	C- 491207-010V
			C- 491207-020V
1- 751087		PIPE	C- 491207-010V
2- 751088		CABLE LEAD-IN PLATE	C- 295863-030V
1- 751070		DISTRIBUTOR BLOCK	C- 272765-050V
			C- 272765-060V
2- 751071		PIPE	RK- 751158-010V
			C- 295045-050V
1- 751072		SPACER PIECE	C- 295045-060V
2- 751073-0001		PIPE 240	C- 295863-030V
			C- 456935-020V
2- 751073-0002		PIPE 240	C- 752898-010V
			C- 456935-020V
2- 751074-0001		PIPE 241	C- 752898-010V
			C- 456935-020V
2- 751074-0002		PIPE 241	C- 752898-010V
			C- 456935-020V
1- 751075-0001		CABLE CONDUIT	C- 752898-010V
1- 751075-0002		CABLE CONDUIT	C- 456459-020V
			C- 456460-020V
1- 751076		CABLE DUCT	C- 456460-030V
2- 751077		LID	C- 469374-020V
			C- 469374-020V
4- 751078		BRACKET RIGHT	C- 469374-030V
4- 751079		BRACKET LEFT	C- 491814-010V
2- 751080-0001		PIPE 200	C- 491815-010V
			C- 456935-020V
2- 751080-0002		PIPE 200	C- 752898-010V
			C- 456935-020V
2- 751080-0003		PIPE 200	C- 752898-010V
			C- 456935-020V
1- 751082		PIPE CONNECTION	C- 752898-010V
			C- 272765-050V
4- 751083		PLATE	C- 272765-060V
			C- 272408-040V
4- 751085		BUSHING	C- 272408-050V
3- 751086		NIPPLE	C- 456100-020V
3- 751087		BRACKET	C- 491536-010V
C- 751088-010V	10609 87-06-22	CREASE ROLLER	C- 295891-030V
C- 751088-0201	13633 89-11-22	CREASE ROLLER	B- 648111-060V
C- 751089-0101	12278 88-11-29	PRESSURE FEED	B- 648111-060V
			C- 271909-040V
1- 751090		PLATE	C- 271909-050V
1- 751091		PLATE	C- 271909-040V
1- 751092		PLATE	C- 271909-040V
			C- 272408-040V
1- 751093		PLATE	C- 272408-050V
C- 751094-010V	9618 86-10-31	CREASE WHEEL	C- 295891-030V
4- 751095		PLUG	B- 648109-060V
4- 751096		CLAMP RING	C- 751332-010V
4- 751097		BRAKE RING	C- 751332-010V
4- 751098		FRICTION DISC	C- 751332-010V
3- 751099		LEAD-IN	C- 751332-010V
3- 751100		BEARING HOUSING	C- 751332-010V
1- 751105		PIPE 90	C- 751332-010V
			C- 751332-010V
3- 751106		PIPE 90	C- 295045-050V
			C- 295045-060V
4- 751107		PIPE	C- 295045-050V
			C- 295045-060V
4- 751108		SECURING PLATE	C- 295045-050V
2- 751109		RAIL RIGHT	C- 295045-060V
			C- 751332-010V
			C- 491259-010V
2- 751110		RAIL LEFT	C- 491259-020V
			C- 491259-010V
			RK- 751166-010V
3- 751117		BRACKET RIGHT	C- 491259-010V
3- 751118		BRACKET LEFT	C- 491259-020V
			C- 491259-010V
			RK- 751166-010V
			RK- 751166-010V
			RK- 751166-010V

PART NO	LAST AM	DESCRIPTION	GROUP NO
3- 751119		BRACKET RIGHT	C- 491259-010V
3- 751120		BRACKET LEFT	C- 491259-010V
1- 751121		CLEANING PIPE	C- 456836-030V
			C- 456836-040V
2- 751124		FRONT PLATE	C- 456100-020V
4- 751125-0001		RAIL	C- 456435-020V
4- 751125-0002		RAIL	C- 456435-030V
4- 751125-0003		RAIL	C- 295470-040V
1- 751126		PNEUMATIC DIAGRAM	RK- 751561-010V
			RK- 547986-010V
1- 751127		PNEUMATIC DIAGRAM	B- 648109-060V
1- 751128		PNEUMATIC DIAGRAM	B- 648109-060V
			RK- 491543-010V
			RK- 751569-010V
2- 751129		CONNECTION BOX	B- 648109-060V
4- 751131		SHAFT	C- 456435-020V
			C- 272021-040V
4- 751132		SHAFT	C- 272021-050V
2- 751133-0001		CARTON STATION	C- 272024-030V
4- 751143		CYLINDER BRACKET	CR- 491225-010V
			C- 272343-040V
2- 751144-0001		PIPE 201	C- 272343-050V
			C- 456935-020V
2- 751144-0002		PIPE 201	C- 752898-010V
			C- 456935-020V
2- 751144-0003		PIPE 201	C- 752898-010V
			C- 456935-020V
1- 751148		CIRCUIT DIAG.CENTRAL-LUB.	C- 752898-010V
			B- 648109-060V
			B- 648109-090V
			B- 648109-060V
2- 751154		RAIL	B- 648109-090V
RK- 751156-010V	12873 89-06-27	REB KIT STATION CHAIN	C- 456560-010V
			B- 648110-060V
RK- 751157-010V	13786 89-09-01	HYDRAULIC SEALINGS	B- 648110-070V
			B- 648110-010V
RK- 751158-0101	10435 87-05-15	REB KIT PAPER GUARD	B- 648110-060V
4- 751159		DOCUMENT FOLDER	B- 648110-060V
G2- 751162		INLET PIPE	RK- 751158-010V
			C- 456588-020V
4- 751163		COVER	C- 456588-030V
			CR- 256436-040V
			CR- 256712-040V
			CR- 256436-060V
4- 751165		BUSHING	CR- 256712-060V
RK- 751166-0101	12529 89-02-09	GUIDE	C- 272025-030V
RK- 751166-0102	12529 89-02-09	GUIDE	RK- 751298-010V
RK- 751166-0103	12529 89-02-09	GUIDE	RK- 751298-010V
1- 751171		CAM	RK- 751298-010V
3- 751176		TOOTHED PULLY	C- 751889-010V
			C- 256201-040V
3- 751177		PULLEY	C- 256202-040V
4- 751180		ROLLER	C- 751889-010V
4- 751182		GASKET	C- 256199-040V
			C- 752980-010V
			C- 752971-010V
			C- 456459-020V
			C- 456460-020V
			C- 751900-010V
			C- 456459-030V
			C- 456460-030V
4- 751183		GASKET	C- 751900-010V
			C- 752980-010V
4- 751183		GASKET	C- 752971-010V
			C- 456459-020V
			C- 456460-020V
			C- 751900-010V
			C- 456459-030V
			C- 456460-030V
4- 751191		STOP LUG	C- 751900-010V
			RK- 491744-010V
			RK- 491789-010V
			RK- 491902-010V
			RK- 751561-010V
			RK- 491789-010V
2- 751195		TUBE 90	RK- 751561-010V
			C- 469366-020V

PART NO	LAST AM	DESCRIPTION	GROUP NO
			C- 469366-030V
2- 751196		TUBE 360	C- 469366-020V
			C- 469366-030V
3- 751197		TUBE 260 (261)	C- 469366-020V
			C- 469366-030V
3- 751198		TUBE 240 (241)	C- 469366-020V
			C- 469366-030V
4- 751199		TUBE 200	C- 469366-020V
4- 751201		TUBE 201	C- 469366-020V
RK- 751202-0101	10857 87-08-27	REB KIT STRIP GUARD	B- 648110-010V
4- 751203		DOCUMENT FOLDER	RK- 751202-010V
4- 751204		TUBE 310	C- 469366-020V
			C- 469366-030V
4- 751209		PLATE	RK- 751305-010V
			RK- 751307-010V
			RK- 751305-010V
			RK- 751307-010V
			C- 441486-030V
G1- 751212		ARM	C- 256197-030V
			C- 491814-010V
			C- 491815-010V
			C- 256197-040V
			C- 491814-010V
			C- 491815-010V
G2- 751213		BEARING BRACKET	C- 491815-010V
2- 751215		PIPE	C- 469452-030V
2- 751216		PIPE	C- 469452-030V
3- 751220		FILLER CAP	C- 751373-010V
3- 751221		PIPE	C- 751373-010V
3- 751222		SPACER	C- 751406-010V
4- 751223		LID	C- 751398-010V
RK- 751228-0101	12892 89-08-15	REB KIT STRIP GUARD	B- 648110-060V
			B- 648110-070V
4- 751229		DOCUMENT FOLDER	RK- 751228-010V
4- 751230		PLAIN BEARING	C- 441304-020V
			C- 441307-020V
			C- 441486-020V
			C- 441304-020V
			C- 441307-020V
			C- 441486-020V
			C- 272021-040V
			C- 441304-020V
			C- 441307-020V
			C- 441486-030V
			C- 456309-030V
			C- 272021-050V
4- 751231		PLAIN BEARING	C- 441486-020V
			C- 441486-030V
1- 751234		HEATING PIPE	RK- 751303-010V
2- 751235		INSULATION	C- 469452-030V
			C- 751600-020V
3- 751236		RAILING	C- 456459-020V
2- 751237		RAILING	C- 456459-020V
1- 751238		RAILING	C- 456459-020V
1- 751239		RAILING	C- 456459-020V
1- 751240		RAILING	C- 456459-020V
1- 751241		PLATFORM	C- 456457-020V
2- 751242		PLATFORM	C- 456457-020V
3- 751243		TOOTHED PULLY	C- 256173-030V
			C- 256173-040V
3- 751245		FLANGE	C- 256173-030V
			C- 256173-040V
3- 751246		HOSE	C- 469452-030V
3- 751247		HOSE	C- 469452-030V
3- 751248		HOSE	C- 469452-030V
1- 751250		PIPE	C- 469452-030V
1- 751251		PIPE	C- 469452-030V
4- 751252		STOP	CR- 256844-030V
4- 751253		STOP	CR- 256845-030V
4- 751254		ROLLER	C- 256199-030V
			C- 256199-040V
4- 751255		LID	RK- 751468-010V
2- 751256		RAIL	C- 456459-020V
2- 751257		RAIL	C- 456459-020V
4- 751258		STOP	CR- 256844-030V
4- 751259		STOP	CR- 256845-030V
1- 751263		PLATE	C- 456458-020V

PART NO	LAST AM	DESCRIPTION	GROUP NO
3- 751264		BRACKET	C- 441304-030V
4- 751265		SCREW	C- 441304-030V
4- 751266		SPACER	C- 441304-030V
3- 751267		BRACKET	C- 441307-030V
4- 751274		COMPRESSION SPRING	CR- 256436-040V
4- 751280		ARM	RK- 751470-010V
			C- 295262-050V
			RK- 751470-010V
2- 751281		AIR NOZZLE	RK- 751462-010V
3- 751282		AIR NOZZLE	C- 469501-030V
			RK- 751462-010V
3- 751283		ROLLER	C- 441307-030V
3- 751284		ROLLER	C- 441307-030V
4- 751287		PLATE	C- 441307-030V
4- 751288		PLATE	C- 441307-030V
4- 751292		BRACKET	RK- 751470-010V
			C- 256233-030V
			C- 256233-040V
			C- 256233-050V
			RK- 751470-010V
3- 751293		GASKET	C- 469501-030V
			RK- 751462-010V
			RK- 751467-010V
1- 751295		HOLDER	C- 441307-030V
RK- 751296-010V	12874 89-07-04	REB KIT STATION CHAIN	B- 648110-010V
4- 751297		DOCUMENT FOLDER	RK- 751296-010V
4- 751299		DOCUMENT FOLDER	RK- 751156-010V
4- 751301		DOCUMENT FOLDER	RK- 751157-010V
RK- 751303-0101	10426 87-04-27	REB KIT HOT AIR ELEMENT	B- 648110-010V
			B- 648110-060V
4- 751304		DOCUMENT FOLDER	RK- 751303-010V
RK- 751305-0101	12875 89-08-29	REB.DIVIDED FORMING RING	B- 648110-010V
			B- 648110-060V
			B- 648110-070V
4- 751306		DOCUMENT FOLDER	RK- 751305-010V
RK- 751307-0101	12876 89-07-04	REB.DIVIDED FORMING RING	B- 648110-060V
			B- 648110-070V
4- 751308		DOCUMENT FOLDER	RK- 751307-010V
2- 751309		RAILING	C- 456460-020V
RK- 751311-0101	10426 87-04-27	REB KIT HOT AIR ELEMENT	B- 648110-010V
			B- 648110-060V
4- 751312		DOCUMENT FOLDER	RK- 751311-010V
2- 751314		CONNECTION PIPE	C- 751317-010V
4- 751315		SPACER	C- 751317-010V
3- 751316		ELBOW PIPE	C- 751317-010V
			C- 751393-010V
C- 751317-010V	12103 88-08-18	CONNECTION PIPE	C- 491243-030V
C- 751317-0101	12103 88-08-18	CONNECTION PIPE	RK- 491591-030V
4- 751318		SHAFT	C- 441486-020V
			C- 441486-030V
			C- 441486-040V
4- 751320		SHIM	RK- 491539-010V
			RK- 751488-010V
			RK- 490877-010V
			RK- 751488-010V
			C- 491897-010V
			RK- 751488-010V
			C- 491897-010V
			RK- 751488-010V
			C- 491897-010V
			RK- 751488-010V
			RK- 751570-010V
			RK- 491539-010V
			RK- 751488-010V
3- 751321		CONNECTION BOX	C- 295639-020V
			RK- 751345-010V
4- 751322		BRACKET	C- 751478-010V
			RK- 751345-010V
4- 751323		BRAKE SHOE	C- 751478-010V
			RK- 751345-010V
4- 751324		HOLDER	C- 751478-010V
			RK- 751345-010V
4- 751325		BRACKET	C- 751478-010V
			RK- 751345-010V
4- 751326		RACKET	C- 751478-010V
			RK- 751345-010V
4- 751329		WASHER	C- 456546-010V

PART NO	LAST AM	DESCRIPTION
3- 751331		GASKET
C- 751332-0101	10058 87-09-08	BRACKET
C- 751332-0101		BRACKET
3- 751333		BRACKET
4- 751334		SPACER
1- 751337		BRACKET
3- 751341		PLATE
3- 751342		PLATE
2- 751343		GABLE
4- 751344		SPACER
RK- 751345-0101	10887 87-09-04	BRAKE
4- 751346		DOCUMENT FOLDER
3- 751350-0001		SHAFT
3- 751350-0002		SHAFT
3- 751350-0003		SHAFT
4- 751351		DOCUMENT FOLDER
C- 751352-010V	13645 90-01-12	PEROXIDE HANDLING
3- 751357		GUARD
2- 751362		RETURN PIPE
2- 751364		PUMP PIPE
3- 751366		PIPE
4- 751372		PIPE
C- 751373-010V	13645 90-01-12	PEROXIDE TANK
1- 751374		PEROXIDE TANK
1- 751375		PIPE COIL
2- 751376		INSULATING PLATE
2- 751377		INSULATING PLATE
2- 751378		INSULATING PLATE
2- 751380		FILLING PIPE
2- 751381		CONNECTION
3- 751382		PROTECTION PIPE
3- 751383		LEVEL TUBE
4- 751384		GASKET
C- 751393-0101	10582 89-11-15	PEROXIDE PUMP
1- 751394		EXTENSION PIPE
G2- 751395		FLANGE
C- 751398-010V	13645 90-01-12	PEROXIDE TANK
1- 751399		TANK
3- 751400		CONNECTION PIPE
4- 751402		WASHER
4- 751403		BRACKET
C- 751406-010V	13645 90-01-12	HOUSING
1- 751407		FRAME
C- 751410-0101	10582 89-11-15	VALVE PANEL
2- 751411		HOLDER
G3- 751456		HOLDER
G3- 751457		BRACKET
2- 751459		AIR NOZZLE
4- 751460		BEARING
RK- 751461-010V	11982 89-11-20	REBUKIT BLOW-OFF NOZZLE
RK- 751462-0101	12569 89-02-15	AIR NOZZLE
RK- 751462-0102	12569 89-02-15	AIR NOZZLE
RK- 751462-0103	12569 89-02-15	AIR NOZZLE
RK- 751462-0104	12569 89-02-15	AIR NOZZLE

GROUP NO
C- 456546-020V
RK- 752170-010V
C- 752173-010V
C- 256014-040V
C- 456459-020V
C- 456459-030V
C- 456460-020V
C- 456460-030V
C- 751900-010V
C- 752960-010V
C- 752971-010V
C- 441304-030V
C- 441102-020V
C- 441304-030V
C- 752030-010V
RK- 751469-010V
C- 271804-040V
RK- 751574-010V
RK- 751469-010V
RK- 751469-010V
C- 271804-040V
RK- 751574-010V
RK- 751469-010V
RK- 751468-010V
RK- 751468-010V
RK- 751479-010V
RK- 751546-010V
RK- 751546-010V
RK- 751569-010V
RK- 751591-010V
RK- 751595-010V
RK- 751479-010V
C- 232781-040V
C- 232781-040V
C- 232781-040V
RK- 491590-030V
B- 648108-080V
C- 751373-010V
C- 491207-020V
C- 491207-020V
C- 491207-020V
C- 751410-010V
C- 751352-010V
C- 751373-010V
C- 751373-010V
C- 751373-010V
C- 751373-010V
C- 751373-010V
C- 751373-010V
C- 751373-010V
C- 751373-010V
C- 751373-010V
C- 751373-010V
C- 751373-010V
C- 751373-010V
C- 751373-010V
C- 751393-010V
C- 751393-010V
C- 751352-010V
C- 751398-010V
C- 751398-010V
C- 751398-010V
C- 751398-010V
C- 751352-010V
C- 751406-010V
C- 751406-010V
C- 751410-010V
C- 491976-020V
C- 491976-020V
C- 469501-030V
RK- 751462-010V
C- 256237-050V
C- 256237-060V
B- 648110-010V
B- 648110-080V
RK- 751461-010V
RK- 751461-010V
RK- 751461-010V
RK- 751461-010V

PART NO	LAST AM	DESCRIPTION
RK- 751462-0105	12569 89-02-15	AIR NOZZLE
4- 751463		DOCUMENT FOLDER
3- 751464		BLOCK
2- 751465		CONNECTION
2- 751466		CONNECTION
4- 751467		SHAFT
RK- 751468-0101	10585 87-10-17	CREASE WHEEL
RK- 751469-0101	11050 87-11-27	COVER
RK- 751470-0101	10961 87-11-25	CLEANING EQUIPMENT
2- 751472		CARTON STATION WITH BEVEL
G2- 751476		BRACKET
4- 751477		PIN
C- 751478-0101	10626 87-09-04	BRAKE
RK- 751479-0101	12879 89-08-15	BRAKE POWER FEED ROLLER
4- 751484		CLAMPING RING
4- 751485		SCREW
RK- 751487-0101	9100 87-06-23	START-UP KIT
RK- 751488-010V	10648 87-07-02	START UP KIT PHOTOCELL
RK- 751488-0101	10648 87-07-02	START UP KIT PHOTOCELL
2- 751490		CARTON STATION WITH BEVEL
3- 751491		ROLLER
3- 751492		ROLLER
3- 751493		ROLLER
3- 751494		ROLLER
3- 751495		ROLLER
3- 751496		ROLLER
3- 751497		ROLLER
3- 751498		ROLLER
3- 751499		ROLLER
3- 751500		ROLLER
3- 751501		ROLLER
3- 751502		ROLLER
3- 751503		COUNTER ROLLER
4- 751504		ROLLER

GROUP NO
RK- 751461-010V
RK- 751461-010V
RK- 491543-010V
RK- 751638-010V
C- 272408-040V
C- 272408-050V
C- 272408-040V
RK- 491744-010V
C- 751088-010V
C- 751088-020V
RK- 491543-010V
RK- 751569-010V
RK- 491543-010V
RK- 751638-010V
RK- 491543-010V
RK- 751569-010V
RK- 751638-010V
RK- 550129-010V
C- 491976-020V
C- 272021-040V
C- 272404-050V
C- 272404-060V
B- 648110-010V
C- 751928-010V
C- 751958-010V
C- 751928-010V
C- 752960-010V
C- 752971-010V
C- 456459-020V
C- 456460-020V
C- 751900-010V
C- 751934-010V
C- 456459-030V
C- 456460-030V
C- 751900-010V
C- 752958-010V
C- 752958-010V
C- 751928-010V
C- 751958-010V
C- 751928-010V
C- 752960-010V
C- 752971-010V
C- 456459-020V
C- 456460-020V
C- 751900-010V
C- 751934-010V
C- 456459-030V
C- 456460-030V
C- 751900-010V
C- 752958-010V
C- 752958-010V
RK- 751461-010V
RK- 491744-010V
RK- 491769-010V
RK- 491902-010V
RK- 491543-010V
RK- 751561-010V
RK- 751569-010V
RK- 751638-010V
RK- 550129-010V
C- 441304-030V
C- 441304-030V
C- 441304-030V
C- 441304-030V
C- 441486-040V
C- 441486-040V
C- 441486-040V
C- 441486-040V
C- 441486-040V
C- 441486-040V
C- 441486-040V
C- 456309-040V
C- 456309-040V
C- 441000-040V
C- 441000-050V
RK- 751202-010V
RK- 751228-010V

PART NO	LAST AM	DESCRIPTION	GROUP NO
4- 751606		SHEET	C- 441000-040V
			C- 441000-050V
			RK- 751202-010V
			RK- 751228-010V
4- 751609		SLIDER	C- 752628-010V
4- 751610		SLIDER	C- 752628-010V
4- 751611		LUG	C- 752628-010V
4- 751614		ADJUSTING SCREW	C- 752628-010V
4- 751615		SHAFT	C- 752628-010V
1- 751618		COVER	C- 752244-010V
4- 751619		SHAFT	C- 752244-010V
4- 751622		PLATE	C- 752628-010V
2- 751625		BRACKET	C- 752244-010V
4- 751627-0001		ADJUSTING SCREW	C- 752247-010V
			C- 752627-010V
4- 751627-0003		ADJUSTING SCREW	C- 752628-010V
			C- 752247-010V
			C- 752627-010V
			C- 752628-010V
RK- 751646-0101	12663 89-08-15	BRAKE POWER FEED ROLLER	B- 648110-060V
			B- 648110-070V
4- 751647		DOCUMENT FOLDER	RK- 751546-010V
RK- 751648-0101	12664 89-08-15	BRAKE POWER FEED ROLLER	B- 648110-060V
			B- 648110-070V
4- 751649		DOCUMENT FOLDER	RK- 751548-010V
G2- 751652		ARM	CR- 256436-050V
3- 751653		ARM	CR- 256436-050V
4- 751654-0001		SHAFT	CR- 256436-050V
4- 751654-0002		SHAFT	CR- 256436-050V
4- 751656		BUSHING	CR- 256436-050V
3- 751656		PNEUMATIC DIAGRAM	RK- 751479-010V
			RK- 751589-010V
			RK- 751591-010V
3- 751658		PNEUMATIC DIAGRAM	RK- 751548-010V
			RK- 751548-010V
			RK- 751595-010V
			RK- 751548-010V
			RK- 751548-010V
			RK- 751595-010V
4- 751657		SLEEVE	CR- 256436-050V
RK- 751561-010V	11989 89-08-15	REB.KIT PHOTOCELL UNIT	B- 648110-060V
			B- 648110-070V
4- 751562		DOCUMENT FOLDER	RK- 751561-010V
RK- 751569-0101	11985 89-08-15	REB.KIT PHOTOCELL UNIT	B- 648110-060V
			B- 648110-070V
RK- 751570-0101	10784 87-11-26	PHOTOCELL UNIT	RK- 751569-010V
G3- 751573		ARM	C- 456546-020V
RK- 751574-0101	10784 87-11-26	COVER	RK- 751569-010V
G2- 751575		RULERPART R	CR- 256204-050V
G2- 751576		RULERPART L	CR- 256205-050V
2- 751577		RULERPART R	CR- 256204-050V
2- 751578		RULERPART L	CR- 256205-050V
4- 751579		ADJUSTING SCREW	CR- 256204-050V
			CR- 256205-050V
4- 751580		SHIM	CR- 256204-050V
			CR- 256205-050V
4- 751581		DOCUMENT FOLDER	RK- 751569-010V
2- 751586		BEARING	C- 272404-060V
RK- 751589-0101	12660 89-08-15	BRAKE POWER FEED ROLLER	B- 648110-010V
4- 751590		DOCUMENT FOLDER	RK- 751589-010V
RK- 751591-0101	12661 89-08-15	BRAKE POWER FEED ROLLER	B- 648110-010V
4- 751592		DOCUMENT FOLDER	RK- 751591-010V
RK- 751595-0101	12662 89-08-15	BRAKE POWER FEED ROLLER	B- 648110-060V
			B- 648110-070V
4- 751596		DOCUMENT FOLDER	RK- 751595-010V
1- 751598		BRACKET	C- 469452-030V
3- 751603		BRACKET	RK- 751307-010V
			C- 441486-030V
4- 751604		SPRING	C- 295402-020V
			C- 295667-030V
			C- 295402-020V
			C- 295667-030V
			C- 295402-020V
			C- 295667-030V
			C- 469091-020V
3- 751605		BRACKET	RK- 751305-010V
			C- 441486-030V

PART NO	LAST AM	DESCRIPTION	GROUP NO
3- 751616		FLOAT	RK- 520129-010V
			RK- 520130-010V
			RK- 520094-010V
			RK- 520095-010V
			RK- 520129-010V
			RK- 520130-010V
4- 751631		CONNECTION BOX	C- 451348-020V
RK- 751636-0101	11984 89-08-15	REB.KIT PHOTOCELL UNIT	B- 648110-010V
4- 751637		DOCUMENT FOLDER	RK- 751636-010V
3- 751638		PNEUMATIC DIAGRAM	RK- 751636-010V
4- 751659		ADJUSTING SCREW	RK- 491366-010V
			C- 491787-010V
			C- 491788-010V
			C- 491787-020V
			C- 491788-020V
4- 751659		ADJUSTING SCREW	RK- 491366-010V
3- 751660		PIPE	C- 271886-050V
3- 751661		PIPE	C- 271886-050V
3- 751662		PIPE	C- 271886-050V
3- 751663		PIPE	C- 271886-050V
3- 751664		PIPE	C- 271886-050V
3- 751665		PIPE	C- 271886-050V
3- 751666		PIPE	C- 271886-050V
2- 751667		TROUGH	C- 751691-010V
1- 751668		PLATE	C- 751691-010V
1- 751669		ARM	C- 751691-010V
2- 751670		BRACKET	C- 751691-010V
3- 751671		SHAFT	C- 751689-010V
3- 751672		SPACER SLEEVE	C- 751689-010V
2- 751673		COVER	C- 271804-040V
2- 751674		COVER	C- 751702-010V
4- 751679		SHAFT	C- 752173-010V
4- 751680		SCREW	C- 752173-010V
3- 751682		SHAFT	C- 751689-010V
4- 751684		STOP LUG	C- 272021-040V
			C- 272021-050V
C- 751689-010V	13632 89-11-17	CAM PACK	C- 751691-010V
C- 751691-0101	13632 89-11-17	IMPULSE TRANSMITTER	B- 648108-060V
2- 751692		TOUCH GUARD	C- 256014-040V
			C- 256014-050V
3- 751696		FOLDING BAR LEFT	C- 491259-010V
			C- 491259-020V
			C- 491259-010V
			RK- 751166-010V
3- 751697		FOLDING BAR RIGHT	C- 491259-010V
			C- 491259-020V
			C- 491259-010V
			RK- 751166-010V
4- 751698		HOLDER	C- 256014-040V
			C- 256014-050V
4- 751699		WASHER	C- 256014-040V
			C- 256014-050V
C- 751702-0101	14256 89-12-09	COVER	B- 648111-060V
3- 751703		SHAFT	C- 751689-010V
3- 751707		FOLDING BAR RIGHT	C- 491259-010V
			C- 491259-020V
			C- 491259-010V
			RK- 751166-010V
3- 751708		FOLDING BAR LEFT	C- 491259-010V
			C- 491259-020V
			C- 491259-010V
			RK- 751166-010V
3- 751709		FOLDING BAR RIGHT	C- 491259-010V
			C- 491259-020V
			C- 491259-010V
			RK- 751166-010V
3- 751710		FOLDING BAR LEFT	C- 491259-010V
			C- 491259-020V
			C- 491259-010V
			RK- 751166-010V
C- 751718-0101	12932 89-06-05	DATING WHEEL HOLDER	RK- 752638-010V
			C- 752645-010V
			C- 752646-010V
			C- 752913-010V
C- 751718-0101		TING WHEEL HOLDER	C- 752914-010V
4- 751719		SPACER	RK- 520070-010V
2- 751722		PIPE-LINE	C- 469501-030V

PART NO	LAST AM	DESCRIPTION	GROUP NO
3- 751724		BLOCK	C- 272404-060V
3- 751725		PLATE	C- 271468-040V
4- 751727		SLIDER	C- 271468-040V
4- 751729		WASHER	C- 271468-040V
4- 751730		CLAMP RING	C- 272021-040V
			C- 272021-050V
3- 751731		BEARING COVER	RK- 752035-010V
			C- 256084-040V
3- 751732		BRACKET	RK- 752035-010V
			C- 256084-040V
3- 751733		HEATING PIPE	RK- 752035-010V
			C- 256095-040V
4- 751734		LID	RK- 752035-010V
4- 751735		GASKET	RK- 752035-010V
2- 751736		PIPE	RK- 752035-010V
			C- 256084-040V
2- 751737-0001		PIPE	RK- 752035-010V
2- 751737-0002		PIPE	RK- 752035-010V
4- 751740		STOP	RK- 752035-010V
			C- 256084-040V
3- 751741-0001		V-BELT PULLEY	C- 271128-040V
3- 751741-0002		V-BELT PULLEY	C- 271128-040V
3- 751741-0003		V-BELT PULLEY	C- 271128-040V
3- 751741-0004		V-BELT PULLEY	C- 271128-040V
3- 751742-0002		V-BELT PULLEY	C- 256173-040V
3- 751742-0003		V-BELT PULLEY	C- 256173-040V
3- 751743		PISTON	CR- 256212-040V
			CR- 256213-040V
			CR- 256212-040V
			CR- 256213-040V
			CR- 256212-050V
1- 751745		CABLE CONDUIT	CR- 256213-050V
			C- 456460-020V
2- 751756		LID	C- 456460-030V
2- 751757		BRACKET	C- 752173-010V
3- 751759		GASKET	C- 752173-010V
4- 751760		CYLINDER BRACKET	C- 752173-010V
			RK- 752035-010V
3- 751761		ARM	C- 256084-040V
4- 751762		SHAFT	C- 256014-050V
4- 751763		BRACKET	C- 256014-050V
4- 751769		SLEEVE	C- 256014-050V
			CR- 256212-040V
			CR- 256213-040V
			CR- 256212-040V
			CR- 256213-040V
			CR- 256212-050V
1- 751770		CABLE CONDUIT	CR- 256213-050V
C- 751796-010V	12422 89-06-23	JUMBO REEL EQUIPMENT	C- 456458-020V
C- 751800-010V	12419 89-01-19	COMPRESSOR UNIT	C- 77091-020V
C- 751800-020V	8833 89-12-02	COMPRESSOR UNIT	B- 648111-080V
1- 751801		BRACKET	B- 648111-090V
			C- 751800-010V
1- 751802		PIPE	C- 751800-020V
			C- 751800-010V
1- 751803		PIPE	C- 751800-020V
			C- 751800-010V
1- 751804		PIPE	C- 751800-020V
			C- 751800-010V
1- 751805		BRACKET	C- 751800-020V
			C- 751800-010V
3- 751806		LEG	C- 751800-020V
1- 751807		FRAME	C- 751860-010V
1- 751808		COVER	C- 751800-010V
			C- 751800-020V
3- 751809		PIPE	C- 751800-010V
			C- 751800-020V
3- 751810		PIPE	C- 751800-010V
			C- 751800-020V
4- 751811		PIPE	C- 751800-010V
			C- 751800-020V
3- 751812		PIPE	C- 751800-010V
			C- 751800-020V
3- 751813		PIPE	C- 751800-010V
			C- 751800-020V
1- 751814		TUBE	C- 491207-010V

PART NO	LAST AM	DESCRIPTION	GROUP NO
1- 751815		TUBE	C- 491207-010V
1- 751816		FRAME	C- 256843-040V
1- 751817		PEROXIDE TANK	C- 491243-030V
2- 751818		CONNECTION TUBE	C- 751317-010V
1- 751819		PLATE	C- 751860-010V
2- 751820		TUBE	C- 491207-010V
1- 751821		RETURN TUBE	C- 491207-010V
1- 751822		TUBE	C- 491207-010V
1- 751823		TUBE	C- 491207-010V
1- 751824		PIPE COIL	C- 491243-030V
3- 751825		CONNECTION	C- 491243-030V
3- 751826		BRACKET	C- 491243-030V
1- 751827		CABLE CONDUIT	C- 751900-010V
1- 751828		CONNECTION PIPE	C- 271866-040V
			C- 271866-050V
2- 751829		PLATE	C- 751860-010V
2- 751830		INSULATING PLATE	C- 491243-030V
2- 751831		INSULATING PLATE	C- 491243-030V
2- 751832		INSULATING PLATE	C- 491243-030V
2- 751833		INSULATING PLATE	C- 491243-030V
2- 751834		INSULATING PLATE	C- 491243-030V
2- 751835		GUSSET PLATE, LEFT	C- 751885-010V
4- 751836		TUBE	C- 271866-040V
2- 751837		TUBE	C- 271866-040V
1- 751838		TUBE	C- 271866-040V
			C- 271866-050V
3- 751839		TUBE	C- 271866-040V
			C- 271866-050V
2- 751840		TUBE	C- 271866-040V
			C- 271866-050V
1- 751841		TUBE	C- 271866-040V
			C- 271866-050V
2- 751842		TUBE	C- 271866-040V
			C- 271866-050V
2- 751843		TUBE	C- 271866-040V
			C- 271866-050V
3- 751844		BRACKET	C- 271866-040V
			C- 271866-050V
2- 751846		BRACKET	C- 491207-010V
1- 751847		MACHINE BODY	C- 256843-040V
			C- 256843-050V
1- 751848		CABLE CONDUIT	C- 751900-010V
2- 751849		DOOR	C- 469535-010V
1- 751850		FRAME	C- 751860-010V
1- 751851		PLATFORM	C- 751860-010V
1- 751852		PLATFORM	C- 751860-010V
1- 751853		PLATFORM	C- 751860-010V
2- 751854		PLATE	C- 752960-010V
			C- 752971-010V
			C- 751860-010V
			C- 751932-010V
			C- 456457-030V
2- 751856		PLATE	C- 751860-010V
			C- 752960-010V
			C- 752971-010V
			C- 751860-010V
			C- 456457-030V
2- 751858		PLATE	C- 751860-010V
			C- 752960-010V
			C- 752971-010V
			C- 751860-010V
1- 751857		PLATFORM	C- 751860-010V
1- 751858		PLATFORM	C- 751860-010V
1- 751859		PLATFORM	C- 751860-010V
C- 751860-010V	12423 89-02-13	PLATFORM-FRONT	B- 648102-080V
			B- 648102-090V
1- 751861		COVER	C- 751885-010V
4- 751862		COLUMN	C- 751860-010V
1- 751863		CABLE DUCT	C- 751860-010V
1- 751864		CABLE DUCT	C- 751860-010V
2- 751865		LID	C- 751860-010V
2- 751866		LID	C- 751860-010V
4- 751867		SPACER	C- 751860-010V
4- 751868		SPACER	C- 752312-010V
3- 751870		GUSSET PLATE UPPER	C- 751885-010V
3- 751871		GUSSET PLATE LOWER	C- 751885-010V
2- 751872		COVER PLATE	C- 751885-010V

PART NO	LAST AM	DESCRIPTION	GROUP NO
2- 751873		COVER PLATE	C- 751885-010V
			C- 271513-050V
2- 751874		COVER PLATE	C- 751885-010V
			C- 271513-050V
2- 751875		COVER PLATE, TOP	C- 751885-010V
			C- 751885-020V
2- 751876		PIPE	C- 491083-020V
4- 751877		CABLE DUCT	C- 271569-040V
			C- 271569-050V
2- 751878		CABLE DUCT	C- 751860-010V
2- 751879		LID	C- 751860-010V
2- 751880		TUBE	C- 271866-040V
			C- 271866-050V
2- 751881		TUBE	C- 271866-040V
			C- 271866-050V
3- 751882		COVER PLATE	C- 751885-010V
3- 751884		COVER PLATE	C- 751885-010V
			C- 271513-050V
			C- 751885-020V
C- 751885-0101	13218 89-06-27	COVER PLATE	B- 648106-080V
C- 751885-0201	14200 90-02-13	COVER PLATES	B- 648106-090V
1- 751886		PIPE	C- 491083-020V
2- 751887		HOLDER	C- 237776-040V
1- 751888		RAILING	C- 752960-010V
			C- 752971-010V
			C- 751900-010V
			C- 456459-030V
1- 751889		RAILING	C- 751900-010V
			C- 752960-010V
			C- 752971-010V
			C- 751900-010V
			C- 456459-030V
			C- 751900-010V
			C- 752959-010V
2- 751890		RAILING	C- 752960-010V
			C- 752971-010V
			C- 751900-010V
			C- 456459-030V
			C- 751900-010V
1- 751891		RAILING	C- 751934-010V
			C- 752958-010V
			C- 752959-010V
2- 751892-0001		RAILING	C- 751934-010V
2- 751892-0002		RAILING	C- 751934-010V
1- 751893		RAILING	C- 752960-010V
			C- 752971-010V
			C- 751900-010V
1- 751894		RAILING	C- 751900-010V
1- 751895		RAILING	C- 751900-010V
			C- 751934-010V
			C- 751900-010V
1- 751896		HOLDER	C- 752960-010V
			C- 752971-010V
			C- 751900-010V
			C- 456459-030V
			C- 751900-010V
1- 751897		RAILING	C- 751934-010V
			C- 752958-010V
			C- 752959-010V
1- 751898		RAIL RIGHT	C- 751959-010V
			C- 751934-010V
			C- 752958-010V
			C- 752959-010V
1- 751899		RAIL LEFT	C- 751959-010V
			C- 751934-010V
			C- 752958-010V
			C- 752959-010V
C- 751900-010V	12106 89-10-26	RAILING, FRONT	B- 648102-080V
			B- 648102-090V
1- 751901		PLATFORM	C- 751860-010V
1- 751902		RAILING	C- 751900-010V
1- 751903		RAILING	C- 751959-010V
			C- 752958-010V
			C- 752959-010V
1- 751904		SIDE PIECE	C- 751923-010V
1- 751905		SIDE PIECE	C- 751924-010V
1- 751906		FRAME	C- 751932-010V

PART NO	LAST AM	DESCRIPTION	GROUP NO
1- 751908		PLATFORM	C- 751932-010V
			C- 752958-010V
1- 751908		PLATFORM	C- 752959-010V
1- 751909		PLATFORM	C- 751959-010V
1- 751910		PLATFORM	C- 751932-010V
1- 751911		PLATFORM	C- 751932-010V
1- 751912		PLATFORM	C- 751932-010V
1- 751913		FRAME	C- 751932-010V
2- 751914		GUARD	C- 490947-020V
1- 751916		FRAME	C- 751932-010V
1- 751917		PLATFORM	C- 751932-010V
2- 751918		BRACKET	C- 271866-040V
			C- 271866-050V
1- 751919		LEG	C- 751932-010V
			C- 752958-010V
			C- 752959-010V
2- 751920		PLATE	C- 751932-010V
3- 751921-0001		STEP	C- 751924-010V
3- 751921-0002		STEP	C- 751923-010V
2- 751922		PLATE	C- 751932-010V
C- 751923-0101	12423 89-02-13	LADDER	C- 751932-010V
			C- 752958-010V
			C- 752959-010V
C- 751924-0101	12423 89-02-13	LADDER	C- 751932-010V
			C- 751959-010V
			C- 752958-010V
			C- 752959-010V
C- 751924-0102	12423 89-02-13	LADDER	C- 751932-010V
			C- 752958-010V
3- 751925		BRACKET	C- 751932-010V
			C- 752958-010V
			C- 752959-010V
2- 751926		BRACKET	C- 751932-010V
			C- 752958-010V
			C- 752959-010V
2- 751927		RAILING	C- 752971-010V
			C- 751900-010V
			C- 752959-010V
C- 751928-010V	12607 89-02-06	PLATFORM	C- 77091-020V
			C- 77091-030V
1- 751929		PLATFORM	C- 751932-010V
1- 751930		PLATFORM	C- 751932-010V
2- 751931		BRACKET	C- 751932-010V
C- 751932-010V	11733 88-11-23	PLATFORM REAR (WALLASSY.)	B- 648102-080V
C- 751934-010V	11733 88-11-23	RAILING REAR (WALLASSY.)	B- 648102-080V
1- 751936		LEG	C- 751928-010V
4- 751937		BRACKET	C- 751928-010V
1- 751938		BEAM	C- 751928-010V
2- 751940		BEAM	C- 751928-010V
3- 751941		BEAM	C- 751928-010V
1- 751942		PLATFORM	C- 751928-010V
2- 751943		PLATFORM	C- 751928-010V
1- 751944		PLATFORM	C- 751928-010V
1- 751945		PLATFORM	C- 751928-010V
2- 751946		PLATFORM	C- 751928-010V
1- 751948		RAILING	C- 751928-010V
			C- 752960-010V
			C- 752971-010V
			C- 751900-010V
			C- 751934-010V
			C- 456459-030V
1- 751948		RAILING	C- 751900-010V
			C- 752958-010V
			C- 752959-010V
3- 751949		RAILING	C- 751928-010V
1- 751950		RAILING	C- 751928-010V
3- 751951		RAILING	C- 751928-010V
			C- 752959-010V
1- 751952		RAILING	C- 751928-010V
			C- 752960-010V
			C- 752971-010V
			C- 751934-010V
			C- 456459-030V
			C- 752958-010V
1- 751953		JLING	C- 751928-010V
1- 751954		HAILING	C- 751928-010V
			C- 752960-010V

PART NO	LAST AM	DESCRIPTION	GROUP NO
1- 751955		RAILING	C- 752971-010V
1- 751956		RAIL	C- 751900-010V
			C- 751928-010V
			C- 751928-010V
			C- 752960-010V
1- 751957		RAIL	C- 752971-010V
			C- 456459-030V
			C- 751928-010V
			C- 752960-010V
			C- 752971-010V
1- 751958		SIDE PIECE	C- 456459-030V
			C- 751928-010V
			C- 752960-010V
			C- 752971-010V
C- 751959-0101	12422 89-05-23	RAILING / PLATFORM	C- 456457-030V
2- 751960		COVER PLATE	C- 77091-020V
3- 751961		LEG	C- 271513-050V
3- 751962		LEG	C- 456458-030V
3- 751964		FLOAT	C- 456458-030V
			RK- 520129-010V
			RK- 520130-010V
			RK- 520094-010V
			RK- 520096-010V
			RK- 520129-010V
			RK- 520130-010V
3- 751965		TUBE SUPPORT	C- 441307-030V
C- 751966-010V	11717 89-06-27	PAPER GUIDE	C- 272404-060V
4- 751972		SPRING HOLDER	C- 751968-010V
2- 751979		RAIL	C- 272084-030V
4- 751980		HOLDER	C- 272084-030V
3- 751981		SLIDE	C- 272084-030V
4- 751982		LINK ARM	C- 272084-030V
3- 751984		STRUT	C- 272084-030V
4- 751986		SPACER RING	C- 752628-010V
2- 751994		PIPE	C- 271866-050V
4- 752001		RING	C- 456363-020V
3- 752002		BRACKET	C- 469452-030V
1- 752003		GUIDE	C- 752030-010V
4- 752004		BRACKET	C- 751928-010V
2- 752005		GABLE	C- 469366-020V
2- 752006		LID	C- 469366-020V
4- 752007		HOLDER	C- 76402-010V
G2- 752009		RULERPART R	CR- 256204-050V
2- 752010		RULERPART R	CR- 256204-050V
G2- 752011		RULERPART L	CR- 256205-050V
2- 752012		RULERPART L	CR- 256205-050V
4- 752013		ELBOW PIPE	C- 256237-050V
G2- 752014		RULERPART R	CR- 256204-050V
2- 752015		RULERPART R	CR- 256204-050V
G2- 752016		RULERPART L	CR- 256205-050V
2- 752017		RULERPART L	CR- 256205-050V
1- 752018		HOLDER	C- 752029-010V
4- 752019		FASTENER	C- 752029-010V
2- 752020		DOOR	C- 752042-010V
3- 752021		SHAFT	C- 752029-010V
4- 752022		SUPPORT	C- 752029-010V
1- 752023		MACHINE BODY	C- 752049-010V
4- 752026		BRACKET	C- 751928-010V
4- 752027		BRACKET	C- 751928-010V
C- 752029-0101	11778 88-06-14	CONV.UNREELD. JUMBO REEL	C- 752046-010V
C- 752030-0101	11776 88-06-14	BRAKE	C- 752046-010V
RK- 752035-0101	11865 89-09-27	CHANGE-OVER VALVE	RK- 533177-010V
			RK- 553620-010V
RK- 752035-0102	11865 89-09-27	CHANGE-OVER VALVE	RK- 533177-010V
			RK- 553620-010V
RK- 752035-0103	11865 89-09-27	CHANGE-OVER VALVE	RK- 553620-010V
RK- 752035-0104	11865 89-09-27	CHANGE-OVER VALVE	RK- 553620-010V
4- 752036		SHIM	C- 456309-040V
C- 752042-0101	11776 88-06-14	DOOR	C- 752046-010V
C- 752046-010V	12422 89-05-23	ROLLER UNIT	C- 751796-010V
4- 752047		BUSHING	C- 256238-040V
			C- 456309-030V
			C- 456309-040V
2- 752048-0002		CARTON STATION	RK- 550129-010V
C- 752049-0101	12764 89-05-30	MACHINE BODY	C- 752046-010V
4- 752051		SPLICING DEVICE	C- 751928-010V
2- 752052		PLATE	C- 456458-030V

PART NO	LAST AM	DESCRIPTION	GROUP NO
2- 752053		PLATE	C- 469459-030V
2- 752056		HOLDER	C- 752784-010V
4- 752057		STOP	C- 271017-030V
4- 752084		SPRING	C- 751968-010V
4- 752085		SPRING	C- 751968-010V
2- 752092		SIDE PLATE	C- 271114-040V
3- 752093		HOLDER	C- 271114-040V
4- 752096		LINK	C- 256237-050V
			C- 256237-060V
1- 752100		CABLE DUCT	C- 469366-020V
1- 752101		CABLE DUCT	C- 469366-020V
3- 752102		LID	C- 469366-020V
3- 752103		LID	C- 469366-020V
			C- 469366-030V
4- 752104		LOCK	C- 469366-020V
4- 752105		COMPRESSION SPRING	RK- 491366-010V
1- 752113		BEARING HOUSING	CR- 256204-050V
			CR- 256205-050V
4- 752115		PLUNGER	CR- 256204-050V
			CR- 256205-050V
3- 752116		CATCH	CR- 256204-040V
			CR- 256205-040V
			CR- 256204-040V
			CR- 256205-040V
			CR- 256204-050V
3- 752116		CATCH	CR- 256205-050V
3- 752117		CATCH	CR- 256212-040V
			CR- 256213-040V
			CR- 256212-040V
			CR- 256213-040V
			CR- 256212-050V
			CR- 256213-050V
2- 752125		CONNECTION BOX	C- 456436-030V
3- 752126		FORMING ROLLER	C- 441304-030V
3- 752127		FORMING ROLLER	C- 441304-030V
3- 752128		FORMING ROLLER	C- 441304-030V
3- 752129		FORMING ROLLER	C- 441307-030V
3- 752130		FORMING ROLLER	C- 441307-030V
3- 752131		FORMING ROLLER	C- 441486-040V
3- 752132		FORMING ROLLER	C- 441486-040V
3- 752133		FORMING ROLLER	C- 441486-040V
3- 752134		FORMING ROLLER	C- 441486-040V
3- 752135		FORMING ROLLER	C- 441486-040V
3- 752136		FORMING ROLLER	C- 441486-040V
3- 752137		FORMING ROLLER	C- 441486-040V
3- 752138		FORMING ROLLER	C- 456309-040V
3- 752140		COUNTER ROLLER	C- 456309-040V
3- 752141		FORMING ROLLER	C- 441304-030V
3- 752142		FORMING ROLLER	C- 441304-030V
3- 752143		FORMING ROLLER	C- 441304-030V
3- 752144		FORMING ROLLER	C- 441307-030V
3- 752145		FORMING ROLLER	C- 441307-030V
3- 752146		FORMING ROLLER	C- 441486-040V
3- 752147		FORMING ROLLER	C- 441486-040V
3- 752148		FORMING ROLLER	C- 441486-040V
3- 752149		FORMING ROLLER	C- 441486-040V
3- 752150		FORMING ROLLER	C- 441486-040V
3- 752151		FORMING ROLLER	C- 441486-040V
3- 752152		FORMING ROLLER	C- 441486-040V
3- 752153		FORMING ROLLER	C- 441486-040V
3- 752155		COUNTER ROLLER	C- 456309-040V
4- 752156		BUSHING	C- 456309-040V
			C- 441304-030V
4- 752169		SHAFT	C- 441486-040V
			CR- 256844-030V
			CR- 256845-030V
			CR- 256844-030V
			CR- 256845-030V
			CR- 256844-030V
			CR- 256845-030V
			CR- 256844-030V
			CR- 256845-030V
RK- 752170-0101	12171 88-09-14	REB. KIT VALVE PLUNGES	B- 648110-010V
			B- 648110-060V
			B- 648110-070V
4- 752171		DOCUMENT FOLDER	RK- 752170-010V
C- 752173-010V	13604 89-11-24	LID	C- 256014-050V
1- 752174		HEATING PIPE	C- 256055-060V

PART NO	LAST AM	DESCRIPTION	GROUP NO
4- 752175		STRUT	RK- 752035-010V
			C- 456555-030V
2- 752176		PROTECTIVE COVER	C- 272560-050V
2- 752178		CLAMP	C- 751968-010V
2- 752179		CLAMP	C- 751968-010V
2- 752180		GUIDING ARBOR	C- 751968-010V
2- 752181		GUIDING ARBOR	C- 751968-010V
2- 752182		GUIDING ARBOR	C- 751968-010V
3- 752183		SPRING HOLDER	C- 751968-010V
3- 752184		SPRING HOLDER	C- 751968-010V
4- 752185		SHAFT	C- 441486-040V
4- 752186-0001		SHAFT	C- 441307-030V
4- 752186-0002		SHAFT	C- 441304-030V
4- 752186-0003		SHAFT	C- 441486-040V
			C- 456309-040V
4- 752186-0004		SHAFT	C- 441307-030V
			C- 441486-040V
4- 752186-0005		SHAFT	C- 441304-030V
			C- 441486-040V
			C- 456309-040V
4- 752186-0006		SHAFT	C- 441304-030V
			C- 441486-040V
4- 752186-0007		SHAFT	C- 441486-040V
4- 752186-0008		SHAFT	C- 441304-030V
4- 752186-0009		SHAFT	C- 441304-030V
4- 752186-0010		SHAFT	C- 441307-030V
4- 752186-0011		SHAFT	C- 441307-030V
4- 752186-0012		SHAFT	C- 456309-040V
4- 752187		SHAFT	C- 441304-030V
4- 752191		ADAPTER	RK- 520068-010V
4- 752192		NUT	RK- 520068-010V
4- 752193		NUT	RK- 520071-010V
			RK- 520095-010V
			RK- 520071-010V
4- 752194		LUG	C- 752627-010V
			C- 752628-010V
4- 752195		LUG	C- 752247-010V
			C- 752627-010V
			C- 752628-010V
4- 752196		CLAMP	C- 752247-010V
			C- 752628-010V
G1- 752197		BRACKET	C- 752627-010V
4- 752199		PLATE	C- 752247-010V
			C- 752627-010V
			C- 752628-010V
G1- 752200		BRACKET	C- 752645-010V
			C- 752646-010V
			C- 752913-010V
			C- 752914-010V
1- 752206		PAPER SUPPORT	C- 272359-030V
1- 752207		PAPER SUPPORT	C- 272359-030V
1- 752208		PAPER SUPPORT	C- 272359-030V
G1- 752211		VOLUME FLAP 200S	CR- 256209-030V
			CR- 256210-030V
G1- 752212		VOLUME FLAP 200 CC	CR- 256209-030V
			CR- 256210-030V
2- 752213		BOTTOM PLATE	C- 441695-020V
G1- 752215		MACHINE BODY	C- 441695-020V
2- 752216		CONNECTION	C- 469501-030V
			RK- 751462-010V
1- 752219		HEAT EXCHANGER	C- 456976-040V
1- 752220		HEATING PIPE	C- 271181-040V
2- 752221		PIPE	C- 271181-040V
2- 752222		VALVE	C- 271169-040V
2- 752223		PIPE	C- 456976-040V
4- 752224		GASKET	C- 456976-040V
1- 752225		BEARING HOUSING	CR- 256204-050V
			CR- 256205-050V
1- 752226		BEARING HOUSING	CR- 256204-050V
			CR- 256205-050V
4- 752237		SPRING	C- 752645-010V
			C- 752646-010V
			C- 752913-010V
			C- 752914-010V
3- 752240		LID	C- 752645-010V
			C- 752646-010V
			C- 752913-010V

PART NO	LAST AM	DESCRIPTION	GROUP NO
			C- 752914-010V
4- 752243		WASHER	C- 752628-010V
C- 752244-010V	13966 89-12-04	PAPER GUARD	B- 648107-060V
4- 752245		SHIM	C- 456923-030V
4- 752246		SHIM	C- 456923-030V
C- 752247-010V	14273 90-02-06	FRAME DATING UNIT	B- 648107-060V
3- 752248		SHAFT	C- 256203-040V
4- 752249		WASHER	C- 256203-040V
3- 752250		BEARING COVER	C- 456321-030V
			C- 456322-030V
3- 752251		BEARING COVER	C- 456321-030V
			C- 456322-030V
3- 752252		BEARING COVER	C- 456321-030V
			C- 456322-030V
1- 752260		PLATE	C- 271909-050V
2- 752261		PIPE	C- 271909-050V
4- 752262		PIPE HOLDER	C- 271909-050V
4- 752263		PIPE HOLDER	C- 271909-050V
2- 752265		CABLE LEAD-IN PLATE	C- 295883-040V
1- 752266		SPACER PIECE	C- 295883-040V
4- 752267		BRACKET	C- 456976-040V
3- 752268		BRACKET	C- 456976-040V
4- 752269		CONNECTION BOX	RK- 752270-010V
RK- 752270-010V	13577 89-09-22	TEMP.GUARD HYDR.OIL	B- 648110-060V
			B- 648110-070V
RK- 752270-0101	13577 89-09-22	TEMP.GUARD HYDR.OIL	B- 648110-010V
4- 752271		DOCUMENT FOLDER	RK- 752270-010V
3- 752282		CONNECTION RIGHT	CR- 256212-050V
3- 752283		CONNECTION LEFT	CR- 256213-050V
3- 752284		SHAFT	CR- 256212-050V
			CR- 256213-050V
1- 752285		CONNECTION BOX	C- 295045-060V
4- 752286		SLEEVE	CR- 256204-050V
			CR- 256205-050V
G4- 752289		CLAMP RIGHT	CR- 256212-050V
G4- 752290		CLAMP LEFT	CR- 256213-050V
G1- 752292		VOLUMEFLAP 160 CC	CR- 256209-030V
			CR- 256210-030V
3- 752297		TUBE SUPPORT	C- 441307-030V
3- 752298		TUBE SUPPORT	C- 441307-030V
1- 752301		PLATFORM	C- 751880-010V
1- 752302		LEG	C- 751932-010V
			C- 752956-010V
			C- 752956-010V
1- 752303		PLATFORM	C- 751932-010V
2- 752304		PLATE	C- 751932-010V
2- 752305		PLATE	C- 751932-010V
1- 752306		RAILING	C- 751934-010V
1- 752307		RAILING	C- 751934-010V
			C- 752956-010V
2- 752308		BRACKET	C- 751932-010V
			C- 752956-010V
4- 752309		LEG	C- 752312-010V
4- 752310		LEG	C- 752312-010V
4- 752311		LEG	C- 752312-010V
C- 752312-0101	12194 88-12-06	MACHINERAISING-KIT	C- 77081-020V
			C- 77081-030V
4- 752313		BRACKET	C- 751800-010V
			C- 751800-020V
3- 752314		PLATE	C- 751885-010V
2- 752407		LOWER FILLING TUBE	RK- 520129-010V
			RK- 520130-010V
			RK- 520129-010V
			RK- 520130-010V
RK- 752408-010V	12208 89-01-24	REB KIT OVERL JAW SYSTEM	B- 648110-010V
4- 752409		DOCUMENT FOLDER	RK- 752408-010V
RK- 752410-010V	12208 89-01-24	REB KIT OVERL JAW SYSTEM	B- 648110-010V
4- 752411		DOCUMENT FOLDER	RK- 752410-010V
RK- 752412-010V	12208 89-01-24	REB KIT OVERL JAW SYSTEM	B- 648110-060V
			B- 648110-070V
4- 752413		DOCUMENT FOLDER	RK- 752412-010V
RK- 752414-010V	12208 89-01-24	REB KIT OVERL JAW SYSTEM	B- 648110-060V
			B- 648110-070V
4- 752415		OCUMENT FOLDER	RK- 752414-010V
2- 752416		WER FILLING TUBE	RK- 520129-010V
			RK- 520130-010V
			RK- 520094-010V

PART NO	LAST AM	DESCRIPTION	GROUP NO
			RK- 520096-010V
			RK- 520129-010V
			RK- 520130-010V
4- 752417		WASHER	C- 752173-010V
3- 752418		LEG	C- 456457-020V
3- 752419		BRACKET	C- 256084-040V
1- 752420		PLATE	C- 271909-050V
4- 752425		LINK	C- 752671-010V
			C- 752672-010V
2- 752426		PLATFORM RIGHT	C- 456457-020V
2- 752428		HOSE	C- 456836-030V
			C- 456836-040V
1- 752432		PNEUMATIC DIAGRAM	B- 648109-090V
1- 752433		PNEUMATIC DIAGRAM	B- 648109-090V
1- 752434		PNEUMATIC DIAGRAM	B- 648109-090V
1- 752435		PNEUMATIC DIAGRAM	B- 648109-090V
1- 752439		COVER	C- 469374-030V
1- 752440		BOX	C- 295470-040V
1- 752441		CABLE DUCT	C- 469374-030V
3- 752462		TRIMMING ROLLER PLUS	C- 77093-020V
3- 752463		TRIMMING ROLLER MINUS	C- 77093-020V
3- 752464		TRIMMING ROLLER PLUS	C- 77093-020V
3- 752465		TRIMMING ROLLER MINUS	C- 77093-020V
3- 752466		TRIMMING ROLLER PLUS	C- 77093-020V
3- 752467		TRIMMING ROLLER MINUS	C- 77093-020V
1- 752469		RAILING	C- 751928-010V
1- 752470		RAILING	C- 751928-010V
2- 752473		PAPER GUARD	C- 752474-010V
C- 752474-0101	12807 89-02-06	PAPER GUARD	C- 751928-010V
4- 752476		SCREW	CR- 256204-060V
4- 752476		SCREW	CR- 256205-060V
			CR- 256212-050V
G1- 752486		SUPPORTING ARM	CR- 256213-050V
2- 752489		INDUCTOR 180-250CC	C- 272765-060V
			C- 295523-030V
			CR- 256214-030V
			C- 295523-030V
			CR- 256214-030V
			C- 295523-030V
2- 752490		TEXT PLATE	RK- 520068-010V
4- 752491		CLAMP	C- 751691-010V
C- 752495-010V	12775 89-12-02	CONNECTION	C- 456836-040V
2- 752496		CLEANING PIPE	C- 752495-010V
3- 752497		NUT	C- 752495-010V
3- 752498		CATCH	C- 752495-010V
3- 752499		RING	C- 752495-010V
4- 752501		SLEEVE	RK- 752702-010V
1- 752502		PROTECTIVE COVER	C- 752567-010V
2- 752503		PROTECTIVE COVER	C- 752567-010V
2- 752504		COVER PLATE	C- 752567-010V
3- 752505		BRACKET	C- 752567-010V
1- 752510		GABLE	C- 456321-030V
			C- 456322-030V
1- 752511		GABLE	C- 456321-030V
			C- 456322-030V
2- 752512		BEARING BRACKET	C- 456321-030V
			C- 456322-030V
2- 752517		CLEANING PIPE	C- 752495-010V
4- 752519-0001		PIN	C- 272021-050V
4- 752519-0002		PIN	C- 272021-050V
3- 752521		CATCH	C- 752495-010V
2- 752526		PLATE	C- 752845-010V
			C- 752846-010V
			C- 752913-010V
2- 752527		BRACKET	C- 752914-010V
			C- 752845-010V
			C- 752846-010V
			C- 752913-010V
2- 752528		COVER	C- 752914-010V
			C- 752845-010V
			C- 752846-010V
			C- 752913-010V
3- 752529		BEARING COVER	C- 752914-010V
			C- 752845-010V
			C- 752846-010V
			C- 752913-010V
			C- 752914-010V

PART NO	LAST AM	DESCRIPTION	GROUP NO
4- 752530		SPROCKET	C- 752845-010V
			C- 752846-010V
			C- 752913-010V
			C- 752914-010V
4- 752531		BRACKET	C- 752845-010V
			C- 752846-010V
			C- 752913-010V
			C- 752914-010V
2- 752533		GUARD	C- 752845-010V
			C- 752846-010V
4- 752534		PLATE	C- 752845-010V
			C- 752846-010V
3- 752535		SHAFT	C- 752845-010V
			C- 752846-010V
			C- 752913-010V
			C- 752914-010V
3- 752536-0001		SHAFT	C- 752845-010V
			C- 752846-010V
			C- 752913-010V
			C- 752914-010V
3- 752536-0002		SHAFT	C- 752845-010V
			C- 752846-010V
			C- 752913-010V
			C- 752914-010V
3- 752537		BENDING ROLLER	C- 752845-010V
			C- 752846-010V
			C- 752913-010V
			C- 752914-010V
3- 752538		SHAFT	C- 752845-010V
			C- 752846-010V
			C- 752913-010V
			C- 752914-010V
3- 752539		PLATE	C- 752845-010V
			C- 752846-010V
4- 752541		BRACKET	C- 752845-010V
			C- 752846-010V
			C- 752913-010V
			C- 752914-010V
3- 752542-0001		BENDING ROLLER	C- 752845-010V
			C- 752846-010V
			C- 752913-010V
			C- 752914-010V
3- 752542-0002		BENDING ROLLER	C- 752845-010V
			C- 752846-010V
			C- 752913-010V
			C- 752914-010V
3- 752543-0001		SHAFT	C- 752845-010V
			C- 752846-010V
			C- 752913-010V
			C- 752914-010V
3- 752543-0002		SHAFT	C- 752845-010V
			C- 752846-010V
			C- 752913-010V
			C- 752914-010V
4- 752544-0001		SHIM	C- 752845-010V
			C- 752846-010V
			C- 752913-010V
			C- 752914-010V
4- 752544-0002		SHIM	C- 752845-010V
			C- 752846-010V
			C- 752913-010V
			C- 752914-010V
4- 752549		SPACER	C- 752244-010V
3- 752560		BRACKET	C- 752244-010V
2- 752562		PENDULUM ARM	C- 272084-030V
3- 752563		HOLDER	C- 272084-030V
4- 752554		SPACER	C- 491976-020V
3- 752555		HOLDER	C- 752049-010V
4- 752556		SPACER	C- 752671-010V
			C- 752672-010V
3- 752559		STOP PERF 1	C- 752671-010V
3- 752560		STOP PERF 2	C- 752672-010V
3- 752561		STOP PERF 1	C- 752671-010V
3- 752562		STOP PERF 2	C- 752672-010V
3- 752563		STOP PERF 1	C- 752671-010V
3- 752564		STOP PERF 2	C- 752672-010V
3- 752565		SPACER	C- 491976-020V

PART NO	LAST AM	DESCRIPTION	GROUP NO
2- 752566		PIPE	C- 491207-020V
C- 752567-010V	13806 89-11-22	PROTECTIVE COVER	C- 271513-050V
3- 752568		GUARD	C- 272028-040V
			C- 272028-050V
3- 752569		COVER	C- 272028-040V
			C- 272028-050V
4- 752571		WASHER	C- 441850-030V
4- 752574		END PIECE	CR- 256204-040V
			CR- 256205-040V
			CR- 256204-040V
			CR- 256205-040V
			CR- 256204-050V
			CR- 256205-050V
4- 752575		DOLLY	C- 295523-030V
			CR- 256204-040V
			CR- 256205-040V
			C- 295523-030V
			CR- 256204-040V
			CR- 256205-040V
			C- 295523-030V
			CR- 256204-050V
			CR- 256205-050V
			C- 295523-030V
2- 752576		CONTAINER	C- 272623-050V
4- 752591		DOCUMENT FOLDER	RK- 520067-010V
4- 752592		DOCUMENT FOLDER	RK- 520129-010V
4- 752593		DOCUMENT FOLDER	RK- 520130-010V
4- 752594		DOCUMENT FOLDER	RK- 520094-010V
4- 752595		DOCUMENT FOLDER	RK- 520096-010V
3- 752596		SHAFT	CR- 256209-020V
			CR- 256210-020V
			CR- 256209-020V
			CR- 256210-020V
			CR- 256209-020V
			CR- 256210-020V
			CR- 256209-020V
			CR- 256210-020V
			CR- 256209-020V
3- 752598		SHAFT	CR- 256209-030V
			CR- 256210-030V
3- 752599		LUBRICATING PIPE	C- 271866-050V
3- 752600		LUBRICATING PIPE	C- 271866-050V
3- 752601		LUBRICATING PIPE	C- 271866-050V
3- 752602		LUBRICATING PIPE	C- 271866-050V
3- 752603		WASHER	C- 751691-010V
3- 752604		PIPE HOLDER	C- 751691-010V
G3- 752612-0001		CARRIER	CR- 256209-020V
			CR- 256210-020V
			CR- 256209-020V
			CR- 256210-020V
			CR- 256209-020V
G3- 752612-0001		CARRIER	CR- 256210-020V
			CR- 256209-020V
			CR- 256210-020V
			CR- 256209-020V
			CR- 256210-020V
			CR- 256209-030V
			CR- 256210-030V
G3- 752612-0002		CARRIER	CR- 256209-020V
			CR- 256210-020V
			CR- 256209-020V
			CR- 256210-020V
			CR- 256209-020V
			CR- 256210-020V
			CR- 256209-020V
			CR- 256210-020V
			CR- 256209-020V
			CR- 256210-020V
			CR- 256209-030V
			CR- 256210-030V
1- 752613		PIPE	C- 491207-020V
2- 752614		HOLDER	C- 751373-010V
4- 752615		SPACER	CR- 256209-030V
			CR- 256210-030V
2- 752621		HOLDER	C- 256873-040V
4- 752622		STOP	C- 751691-010V

PART NO	LAST AM	DESCRIPTION	GROUP NO
4- 752624		DOCUMENT FOLDER	RK- 752638-010V
C- 752627-010V	13248 89-09-08	BENDING ROLLER REAR	B- 648107-090V
C- 752628-010V	13986 89-12-04	BENDING ROLLER FRONT	B- 648107-090V
4- 752630		PLATE	C- 752628-010V
4- 752631		BRACKET	C- 752628-010V
4- 752632		ARM	C- 752628-010V
4- 752633		BRACKET	C- 752628-010V
4- 752634		SLEEVE	C- 752628-010V
4- 752635		STUD BOLT	C- 752628-010V
4- 752636		PLATE	C- 752628-010V
3- 752637-0001		BENDING ROLLER	C- 752247-010V
			C- 752627-010V
3- 752637-0002		BENDING ROLLER	C- 752247-010V
			C- 752627-010V
3- 752637-0003		BENDING ROLLER	C- 752247-010V
			C- 752627-010V
RK- 752638-0101	12932 89-08-05	DATING WHEEL HOLDER	B- 648110-010V
			B- 648110-060V
			B- 648110-070V
			B- 648110-080V
3- 752639		CLAMP	C- 752627-010V
3- 752642		BRACKET	C- 752645-010V
			C- 752646-010V
			C- 752913-010V
			C- 752914-010V
4- 752644		SCREW	C- 752645-010V
			C- 752646-010V
			C- 752913-010V
			C- 752914-010V
C- 752645-010V	14088 89-10-27	DATING UNIT TBA/9	B- 648107-090V
C- 752646-010V	14088 89-10-27	DATING UNIT TBA/9	B- 648107-090V
2- 752648		PLATE	C- 271513-050V
			C- 751886-020V
2- 752649		BRACKET	C- 256223-030V
4- 752650		PIN	C- 256223-030V
4- 752651		GUIDE RAIL	C- 256223-030V
3- 752652		PIPE	C- 271866-050V
2- 752653		CABLE CONDUIT	C- 752049-010V
4- 752654		SPACER	C- 752049-010V
4- 752655		PIN	C- 752684-010V
3- 752656		GUIDE PLATE	C- 752684-010V
3- 752657		SPACER SLEEVE	C- 752684-010V
4- 752658		LUG	C- 752684-010V
4- 752659		PIPE	C- 491207-020V
4- 752660		PIPE	C- 491207-020V
3- 752661		HOSE	C- 491207-020V
3- 752662		LUBRICATING PIPE	C- 271866-050V
3- 752663		LUBRICATING PIPE	C- 271866-050V
C- 752664-0101	12530 90-01-05	GUIDE	CR- 256712-050V
3- 752668		HOLDER	C- 76402-010V
C- 752669-010V	12383 90-02-10	HEAD SPACE BY LLF	C- 77091-020V
4- 752670		DOCUMENT FOLDER	C- 752669-010V
C- 752671-010V	12578 89-12-06	SHOCKABSORBER PERFORM.1	B- 648104-090V
C- 752672-010V	12578 89-12-06	SHOCKABSORBER PERFORM.2	B- 648104-090V
4- 752673		SPACER	C- 752671-010V
			C- 752672-010V
4- 752674-0001		SHIM	C- 491787-010V
			C- 491788-010V
			C- 491787-020V
			C- 491788-020V
4- 752674-0002		SHIM	B- 648109-080V
			B- 648109-090V
			B- 648109-080V
			B- 648109-090V
4- 752674-0003		SHIM	B- 648109-080V
			B- 648109-090V
			B- 648109-080V
			B- 648109-090V
4- 752674-0004		SHIM	B- 648109-090V
4- 752674-0005		SHIM	B- 648109-080V
			B- 648109-090V
			B- 648109-080V
			B- 648109-090V
4- 752674-0006		SHIM	C- 491787-010V
			C- 491788-010V
			C- 491787-020V
			C- 491788-020V

PART NO	LAST AM	DESCRIPTION	GROUP NO
4- 531733		GASKET	C- 272408-040V C- 272408-050V C- 295668-030V C- 295891-020V
4- 531734		GASKET	C- 295668-030V C- 295891-020V C- 295668-030V C- 295891-030V C- 295668-030V C- 295891-030V C- 295668-030V C- 295891-020V
4- 531735		GASKET	C- 295668-030V C- 295891-030V C- 295668-030V C- 295891-020V
4- 531736		GASKET	C- 295668-030V C- 295891-020V C- 295668-030V C- 295891-030V C- 295668-030V C- 295891-030V C- 295668-030V C- 295891-020V
4- 531736		GASKET	C- 295668-030V C- 295891-020V C- 295668-030V C- 295891-030V C- 295668-030V C- 295891-030V RK- 520070-010V C- 456976-020V
4- 531737		GASKET	C- 456976-030V C- 529924-010V C- 272337-020V C- 272407-020V C- 272337-020V C- 272407-020V C- 272337-020V C- 272407-020V C- 456976-020V C- 469452-010V C- 272337-020V C- 272407-020V C- 295778-030V C- 456976-020V C- 469452-010V C- 272337-030V C- 272407-020V C- 295778-030V C- 456976-030V C- 469452-020V C- 751800-010V C- 272337-040V C- 272407-020V C- 295778-040V C- 456976-040V C- 469452-030V C- 751800-020V C- 529924-010V RK- 536318-010V C- 476349-020V C- 533903-010V RK- 547300-010V C- 533903-010V C- 533903-010V C- 533903-010V C- 533903-010V RK- 536318-010V RK- 547300-010V C- 476349-020V C- 533903-010V RK- 547300-010V
4- 531742		GASKET	
3- 531908		SPACER	
4- 531909		GABLE	
4- 531911		ARM	
4- 531974-0001		BRACKET	
4- 531975-0001		ARM	
4- 531976		HUB	
4- 531978		STUD BOLT	

PART NO	LAST AM	DESCRIPTION	GROUP NO
4- 531979		PIN	C- 533903-010V C- 533903-010V RK- 547300-010V C- 533903-010V
4- 532016		SPRING	C- 283604-020V
4- 532095		SPRING HOLDER	C- 283604-020V
G1- 532117		CLAMP RING	C- 541163-010V
G1- 532118		CLAMP RING	C- 541164-010V
4- 532149		BUSHING	C- 456612-010V
3- 532167		SEALING WASHER	RK- 536502-010V
4- 532168		ECCENTRIC	C- 484858-010V
4- 532168		ECCENTRIC	C- 484858-020V
3- 532183-0001		BENDING ROLLER	RK- 536470-010V C- 533844-010V
3- 532183-0002		BENDING ROLLER	RK- 536470-010V RK- 536450-010V
3- 532183-0003		BENDING ROLLER	C- 533844-010V RK- 536470-010V RK- 547726-010V
3- 532184-0001		SHAFT	C- 533844-010V
3- 532184-0002		SHAFT	C- 533844-010V
3- 532185		BRACKET	C- 533844-010V RK- 536470-010V RK- 536450-010V
3- 532186		GABLE	C- 533844-010V RK- 536470-010V RK- 536450-010V RK- 547726-010V
3- 532187		FLANGE	C- 533844-010V RK- 536470-010V RK- 536450-010V RK- 547726-010V
4- 532188		FLANGE	C- 533844-010V RK- 536470-010V RK- 536450-010V RK- 547726-010V
4- 532205		LID	C- 533844-010V
4- 532206		GASKET	C- 751398-010V
3- 532208		SHAFT	C- 751398-010V
3- 532209		PLATE	RK- 532210-010V
RK- 532210-0101	12656 90-01-29	CARRIAGE	RK- 532210-010V
4- 532211		PIN	C- 77091-030V
3- 532222		DIE	RK- 532210-010V
4- 532223		PUNCH	CR- 449275-010V
3- 532231		SHAFT	CR- 449275-010V
4- 532236		FABRIC	RK- 547726-010V C- 533844-010V
4- 532245		BUSHING	C- 484984-010V RK- 536470-010V RK- 536450-010V RK- 547726-010V
3- 532330-0001		ARM	C- 533844-010V
3- 532330-0002		ARM	C- 476080-020V
4- 532348		SPINDLE GUIDE	C- 476080-020V C- 271169-030V C- 272337-030V C- 271169-040V C- 272337-040V
4- 532349		PLAIN BEARING	C- 271169-030V C- 272337-030V C- 271169-040V C- 272337-040V
4- 532443-0001		COMPONENTS WITHOUT TP-NO	C- 67347-010V
3- 532655		CAUTION SIGN	C- 527898-010V
4- 532656		CAP NUT	C- 751410-010V
2- 532676		PLATE	C- 533014-010V
4- 532677		PIPE	C- 533014-010V
4- 532678		PIN	C- 533014-010V
4- 532679		PLATE	C- 533014-010V
3- 532732		HEATING RAIL	CR- 283606-010V
C- 533014-0101	9292 88-09-08	LEAK FINDING EQUIPMENT	C- 77091-020V C- 77091-030V
2- 533015		CIRCUIT DIAGRAM	C- 533014-010V
3- 533169		DIAPHRAGM	SP- 499255-020V
4- 533175		DOCUMENT FOLDER	C- 539209-010V
RK- 533177-010V	11865 89-09-27	HEAT REDUCTION KIT	RK- 533177-010V B- 648110-010V

PART NO	LAST AM	DESCRIPTION	GROUP NO
			B- 648110-080V
3- 533373		BRACKET	CR- 283616-020V
1- 533374		FITMENT BOTTOM	C- 533905-010V
3- 533387		HOLDER	RK- 536502-010V
3- 533388		PISTON ROD	RK- 536502-010V
4- 533391		PISTON ROD	RK- 536502-010V
2- 533396-0001		SHAFT	C- 476349-020V
2- 533396-0002		SHAFT	C- 476349-020V
2- 533396-0004		SHAFT	C- 476349-020V
2- 533396-0007		SHAFT	RK- 536318-010V
			C- 476349-020V
1- 533429		LEFT LEG REAR	C- 457881-020V
1- 533430		RIGHT LEG REAR	C- 457881-020V
1- 533431		LEFT LEG REAR	C- 457881-020V
3- 533611		PUNCH (HOLE 21)	RK- 547759-020V
			RK- 550136-010V
3- 533612		DIE (HOLE 21)	RK- 547759-020V
			RK- 550136-010V
C- 533644-010V	9438 86-12-12	BENDINGROLLERS	B- 648118-070V
C- 533903-010V	14277 90-02-12	BRAKE	RK- 536317-010V
			B- 648118-070V
C- 533905-0101	9292 86-09-08	BAG	C- 533014-010V
1- 533906		FITMENT COVER	C- 533905-010V
3- 534369		FUSE PANEL LABEL	CE- 67716-010V
			CE- 67721-010V
4- 534370		INDEX, EL-MANUAL	CE- 67721-010V
4- 534371		LABEL, EL-MANUAL	CE- 67721-010V
C- 534381-010V	9464 86-12-17	PAPER GUARD	B- 648118-070V
2- 534382		BRACKET	C- 534381-010V
3- 534383		BRACKET	C- 534381-010V
3- 534384		BRACKET	C- 534381-010V
3- 534385		GUARD	C- 534381-010V
3- 534460		TERMINAL CARD X9	CE- 67716-010V
			CE- 67721-010V
4- 534634		PIPE	RK- 529345-010V
4- 534635		VALVE	RK- 529345-010V
4- 534636		LEVEL GLASS	RK- 529345-010V
3- 534637		CONNECTION	RK- 529345-010V
4- 534691		DIAPHRAGM	RK- 529345-010V
1- 534692		FRAME	RK- 529345-010V
2- 534693		PLATE	RK- 529345-010V
3- 534694		SUCTIONPIPE	RK- 529345-010V
4- 534695		WEIGHT	RK- 529345-010V
4- 534696		VALVE	RK- 529345-010V
4- 534697		VALVE HOUSING	RK- 529345-010V
4- 534698		NIPPLE	RK- 529345-010V
1- 534753		PNEUMATIC DIAGRAM	RK- 538439-010V
			RK- 547986-010V
			B- 648118-070V
			B- 648109-080V
			B- 648118-070V
			B- 648109-080V
1- 534760		PNEUMATIC DIAGRAM	B- 648118-070V
3- 534762		HEATING CARTRIDGE	RK- 535606-010V
			C- 497534-020V
4- 534826-0001		JIG	C- 469247-020V
4- 534826-0002		JIG	C- 469247-020V
4- 534827		LOCK HANDLE	C- 469247-020V
4- 534828		BRACKET	C- 469247-020V
4- 534829		TORSION SPRING	C- 469247-020V
4- 534830		CATCH	C- 469247-020V
4- 534831		LOCKING CLAMP	C- 469247-020V
4- 534832		SHAFT	C- 469247-020V
4- 534833		WASHER	C- 469247-020V
4- 534867		LEG	C- 751932-010V
			C- 752958-010V
			C- 752959-010V
4- 534882		SHAFT	C- 237776-040V
4- 534886		BRACKET	RK- 535606-010V
			C- 497534-020V
2- 534890		GUIDE PLATE	C- 533903-010V
1- 534904		TIME SCHEDULE TB/9	B- 648118-070V
			B- 648109-080V
			B- 648118-070V
			B- 648109-080V
			B- 648109-080V
			B- 648109-080V

PART NO	LAST AM	DESCRIPTION	GROUP NO
1- 534905		TIME SCHEDULE TBA/9	RK- 538439-010V
			RK- 547986-010V
			B- 648109-080V
			B- 648109-080V
			B- 648118-070V
			B- 648109-080V
			B- 648118-070V
			B- 648109-080V
3- 535031		HEATING CARTRIDGE	C- 497534-020V
4- 535089		NEUTRAL TERMINAL	CE- 67716-010V
			CE- 67721-010V
3- 535090		DISTRIBUTION TERMINAL	CE- 67716-010V
			CE- 67721-010V
3- 535201		PIPE	C- 469598-020V
3- 535202		PIPE	C- 469598-020V
4- 535203		PIPE	C- 469598-020V
3- 535204		BRACKET	C- 469598-020V
P3- 535528		INDUCTOR	RK- 547760-010V
			C- 457886-010V
			C- 469316-010V
			C- 457886-010V
			C- 469316-010V
P3- 535532		INDUCTOR	C- 457886-010V
			C- 469316-010V
			C- 457886-010V
			C- 469316-010V
RK- 535606-010V	9126 87-06-04	REB KIT COUNTER JAW	B- 648110-080V
4- 535647		DOCUMENT FOLDER	RK- 535606-010V
4- 536315		DOCUMENT FOLDER	RK- 536317-010V
RK- 536317-010V	9956 87-04-28	REB KIT BRAKE	B- 648110-080V
RK- 536318-0101	9955 87-04-28	DRIVE SHAFT	RK- 536317-010V
4- 536374		WASHER	C- 491976-010V
			C- 491976-020V
			C- 491976-010V
4- 536374		WASHER	C- 491976-020V
RK- 536467-010V	10004 87-04-07	REB KIT BENDING ROLLER	B- 648110-080V
4- 536469		DOCUMENT FOLDER	RK- 536467-010V
RK- 536470-0101	10004 87-04-07	BENDING ROLLER	RK- 536467-010V
RK- 536470-0102	10004 87-04-07	BENDING ROLLER	RK- 536467-010V
RK- 536470-0103	10004 87-04-07	BENDING ROLLER	RK- 536467-010V
3- 536485		CHUTE	RK- 544468-010V
3- 536486		GUIDE PLATE	RK- 544468-010V
3- 536487		FITTING RING	RK- 544473-010V
			RK- 547759-020V
3- 536488		DIE	RK- 544473-010V
			RK- 547759-020V
			RK- 550136-010V
4- 536489		PUNCH	RK- 544473-010V
			RK- 547759-020V
			RK- 550136-010V
4- 536497		ROLLER	RK- 544475-010V
			RK- 547765-020V
RK- 536502-0101	10071 87-06-10	REB KIT PRODUCT VALVE APV	B- 648110-010V
RK- 536706-0101	10072 87-06-22	REBUILDING KIT	B- 648110-010V
			B- 648110-080V
			B- 648110-070V
3- 536843		TERMINAL BLOCK	CE- 66379-010V
			CE- 66308-010V
			CE- 66379-010V
4- 536886		BRACKET	C- 457924-020V
3- 536900		INDUCTOR	RK- 544465-010V
			RK- 547760-020V
			RK- 550136-010V
4- 537019		CIRCUIT BOARD PROT. FRONT	C- 67347-010V
4- 537021		CIRCUIT BOARD	C- 67347-010V
4- 537022		COOLING DISTANCE	C- 67347-010V
4- 537023		DRILLING PATTERN PANEL	C- 67347-010V
4- 537308		SPRING	C- 434774-030V
			C- 434074-030V
			C- 434774-030V
			C- 434074-030V
			C- 434774-030V
			C- 434074-030V
			C- 434774-030V
			C- 434074-030V
4- 537565		TEMPLATE	C- 539375-010V
4- 537588		TOOL	C- 539375-010V

PART NO	LAST AM	DESCRIPTION	GROUP NO
4- 752674-0007		SHIM	B- 648109-080V
			B- 648109-090V
			B- 648109-080V
			B- 648109-090V
4- 752675		PIPE	RK- 752702-010V
			C- 272623-050V
4- 752676		PIPE	RK- 752702-010V
			C- 272623-050V
4- 752677		BACK PIECE	C- 491787-010V
			C- 491788-010V
			C- 491787-020V
			C- 491788-020V
4- 752678		SPRING PERF 1	C- 752671-010V
4- 752679		SPRING PERF 2	C- 752672-010V
4- 752680		SLEEVE	C- 752671-010V
			C- 752672-010V
4- 752681		WASHER	C- 752671-010V
4- 752681		WASHER	C- 752672-010V
4- 752685		PIN	C- 491787-010V
			C- 491788-010V
			C- 491787-020V
1- 752690		CAM	C- 491788-020V
2- 752691		PIPE	C- 751689-010V
3- 752692		PIPE	C- 272560-050V
1- 752695		MACHINE BODY	C- 272560-050V
3- 752696		PIPE	C- 295883-040V
1- 752697		PROTECTION PLATE	C- 272623-050V
RK- 752702-010V	12928 89-09-21	CONSTANT SPRAY VOLUME	C- 752244-010V
			B- 648110-080V
			B- 648110-070V
RK- 752702-0101	12928 89-09-21	CONSTANT SPRAY VOLUME	B- 648110-080V
4- 752711		PIPE	B- 648110-010V
2- 752723		PAPER GUIDE PLATE	C- 272560-050V
3- 752726		LUBRICATING PIPE	C- 229400-080V
1- 752727		LUBRICATING PIPE	C- 271562-070V
1- 752728		LUBRICATING PIPE	C- 271562-070V
RK- 752729-0102	13694 89-10-19	IMPROVED STRIP GUIDE	C- 271866-050V
			B- 648110-010V
			B- 648110-080V
4- 752730		DOCUMENT FOLDER	B- 648110-070V
4- 752741		PIPE	B- 648110-080V
2- 752742-0001		PIPE	RK- 752729-010V
2- 752742-0002		PIPE	RK- 553180-010V
3- 752743		PLATE	C- 256084-040V
3- 752744		SHAFT	C- 256084-040V
4- 752745		BEARING COVER	C- 751088-020V
2- 752746		BRACKET	C- 751088-020V
2- 752747		BRACKET	C- 751088-020V
2- 752748		BRACKET	C- 752755-010V
2- 752749		BRACKET	C- 752755-010V
4- 752750		HOLDER	C- 752755-010V
3- 752751		CABLE CONDUIT	C- 752755-010V
4- 752752		SPACER	C- 752755-010V
2- 752753		BENDING ROLLER	C- 752755-010V
2- 752754		BENDING ROLLER	C- 752755-010V
C- 752755-010V	14454 90-02-06	BENDING ROLLER	C- 752755-010V
3- 752756		SIDE PLATE	C- 256234-040V
3- 752757		SHAFT	B- 648101-090V
1- 752758		COLUMN	C- 752755-010V
1- 752759		COLUMN	C- 752755-010V
2- 752760		PAPER GUARD	C- 256233-050V
3- 752761		BRACKET	C- 256233-050V
1- 752762		CABLE DUCT	C- 256233-050V
4- 752765		SPACER RING	C- 271649-030V
1- 752766		PLATE	C- 469366-030V
4- 752767		TEMPLATE	C- 256199-040V
3- 752769		GUARD	C- 456458-030V
3- 752770		GUARD	C- 751689-010V
3- 752775		HOSE	C- 256234-040V
4- 752776		FLANGE	C- 256234-040V
2- 752777		PIPE	C- 271866-050V
2- 752778		PIPE	C- 256234-040V
2- 752779		PIPE	C- 256237-080V
4- 752780		ELBOW PIPE	C- 256237-080V
4- 752781		ELBOW PIPE	C- 256237-080V
			C- 256237-080V

PART NO	LAST AM	DESCRIPTION	GROUP NO
C- 752784-0101	13606 89-11-22	CONNECTION BOX	B- 648108-080V
1- 752785		PIPE	C- 271866-050V
1- 752786		PIPE	C- 271866-050V
1- 752787		PIPE	C- 271866-050V
1- 752788		PIPE	C- 271866-050V
1- 752789		PIPE	C- 271866-050V
1- 752790		PIPE	C- 271866-050V
1- 752791		PIPE	C- 271866-050V
2- 752792		PIPE	C- 271866-050V
2- 752793		PIPE	C- 271866-050V
2- 752794-0001		PIPE	C- 271866-050V
2- 752794-0002		PIPE	C- 271866-050V
2- 752794-0003		PIPE	C- 271866-050V
4- 752795		PIPE	C- 271866-050V
2- 752796		PLATE	C- 271513-050V
2- 752797		PLATE	C- 271513-050V
2- 752798		COVER PLATE	C- 271513-050V
1- 752799		PLATE	C- 752980-010V
			C- 752971-010V
			C- 456457-030V
1- 752800		PLATE	C- 752980-010V
			C- 752971-010V
			C- 456457-030V
2- 752801		PLATE	C- 752980-010V
			C- 752971-010V
			C- 456457-030V
1- 752802		CABLE DUCT	C- 752980-010V
			C- 752971-010V
			C- 456457-030V
1- 752803		LID	C- 752980-010V
			C- 752971-010V
			C- 456457-030V
2- 752804		COVER PLATE	C- 271513-050V
2- 752805		CABLE DUCT	C- 271513-050V
3- 752806		SPACER	C- 271513-050V
3- 752807		SPACER	C- 271513-050V
3- 752808		SPACER	C- 271513-050V
1- 752809		PIPE CONNECTION	C- 271866-050V
2- 752810		METERING DEVICE	C- 751398-010V
3- 752811		PIPE	C- 271866-050V
3- 752812		PIPE	C- 271866-050V
3- 752813		BRACKET	C- 271866-050V
4- 752857		INDICATOR	C- 272004-040V
2- 752861		PIPE	C- 271866-050V
1- 752862		PLATE	C- 752247-010V
3- 752863		BRACKET	C- 271866-050V
3- 752864		HOSE	C- 491207-020V
1- 752865		MACHINE BODY	C- 256843-050V
1- 752866		CABLE LEAD-IN PLATE	C- 295883-040V
G1- 752867		BENDING ROLLER BRACKET	C- 752247-010V
3- 752868		HOLDER	C- 752247-010V
3- 752869		HOLDER	C- 752247-010V
2- 752870		LEG	C- 752247-010V
2- 752871		LEG	C- 752247-010V
G3- 752872		BRACKET	C- 752247-010V
1- 752873		PLATFORM	C- 456457-030V
1- 752874		PLATFORM	C- 752980-010V
			C- 752971-010V
1- 752874		PLATFORM	C- 456457-030V
1- 752875		PLATFORM	C- 456457-030V
3- 752876		SHIM	C- 752980-010V
			C- 752971-010V
			C- 456457-030V
1- 752877		FRAME	C- 752980-010V
			C- 752971-010V
			C- 456457-030V
1- 752878		FRAME	C- 752980-010V
			C- 752971-010V
			C- 456457-030V
2- 752879		BEAM	C- 752980-010V
			C- 752971-010V
			C- 456457-030V
3- 752880		BEAM	C- 752980-010V
			C- 752971-010V
			C- 456457-030V
2- 752881		BEAM	C- 752980-010V
			C- 752971-010V

PART NO	LAST AM	DESCRIPTION	GROUP NO
			C- 456457-030V
3- 752882		COVER	C- 752960-010V
			C- 752971-010V
			C- 456457-030V
3- 752883		COVER	C- 752960-010V
			C- 752971-010V
			C- 456457-030V
3- 752884		COVER	C- 752960-010V
			C- 752971-010V
			C- 456457-030V
2- 752885		RAILING	C- 752960-010V
			C- 752971-010V
			C- 456459-030V
1- 752886		RAILING	C- 752960-010V
			C- 752971-010V
			C- 456459-030V
2- 752887		RAILING	C- 752960-010V
			C- 752971-010V
			C- 456459-030V
1- 752888		RAILING	C- 752960-010V
			C- 752971-010V
			C- 456459-030V
C- 752889-010V	13966 89-12-04	CABLE DUCT	B- 648107-090V
1- 752890		CABLE DUCT	C- 752889-010V
2- 752891		LID	C- 752889-010V
3- 752892		RING	RK- 469984-010V
			C- 272021-040V
			C- 272021-050V
1- 752894		CABLE CONDUIT	C- 752960-010V
			C- 752971-010V
			C- 456459-030V
1- 752895		LEG	C- 456923-030V
3- 752896		LID	C- 456923-030V
2- 752897		STRUT	C- 752960-010V
			C- 752971-010V
			C- 456459-030V
C- 752898-010V	13966 89-12-04	TUBE ASSEMBLING TB/9	B- 648107-090V
2- 752899		PIPE	C- 752898-010V
2- 752900		PIPE	C- 752898-010V
2- 752901		PIPE	C- 752898-010V
2- 752902		PIPE	C- 752898-010V
2- 752903		PIPE	C- 752898-010V
2- 752904		PIPE	C- 752898-010V
2- 752905		PIPE	C- 752898-010V
2- 752906		PIPE	C- 752898-010V
2- 752909		BRACKET	C- 752628-010V
3- 752912		COVER	C- 272343-050V
C- 752913-010V	13966 89-12-04	DATING UNIT TB/9	B- 648107-090V
C- 752914-010V	13966 89-12-04	DATING UNIT TB/9	B- 648107-090V
1- 752915		COVER	C- 752244-010V
2- 752916		COVER	C- 752244-010V
2- 752917		PLATE	C- 752244-010V
1- 752920		FRAME	C- 752958-010V
1- 752921		FRAME	C- 752958-010V
1- 752922		FRAME	C- 752958-010V
1- 752923		PLATFORM	C- 752958-010V
			C- 752959-010V
1- 752924		PLATFORM	C- 752958-010V
			C- 752959-010V
1- 752925		PLATFORM	C- 752958-010V
1- 752926		PLATFORM	C- 752958-010V
1- 752927		PLATFORM	C- 752958-010V
1- 752928		PLATFORM	C- 752958-010V
1- 752929		PLATFORM	C- 752958-010V
			C- 752959-010V
1- 752930		PLATFORM	C- 752959-010V
1- 752931		PLATFORM	C- 752958-010V
			C- 752959-010V
1- 752932		PLATFORM	C- 752958-010V
			C- 752959-010V
1- 752933		PLATFORM	C- 752959-010V
1- 752934		PLATFORM	C- 752959-010V
2- 752937		PLATE	C- 752755-010V
2- 752938		PLATE	C- 752755-010V
3- 752955		BRACKET	C- 441102-020V
3- 752956		BRACKET	C- 441102-020V
C- 752957-0101	13604 89-11-24	SPLICE DETECTOR	C- 256014-080V

PART NO	LAST AM	DESCRIPTION	GROUP NO
C- 752958-010V	14197 90-01-08	RAILING / PLATFORM	B- 648102-090V
C- 752959-010V	14197 90-01-08	PLATFORMS BACK TBA/9-SBM	B- 648102-090V
C- 752960-010V	14199 90-01-08	RAILING PLATFORM	C- 77091-030V
1- 752961		PLATFORM	C- 752960-010V
			C- 752971-010V
1- 752962		PLATFORM	C- 752960-010V
			C- 752971-010V
1- 752963		PLATFORM	C- 752960-010V
			C- 752971-010V
1- 752964		PLATFORM	C- 752960-010V
1- 752965		PLATFORM	C- 752960-010V
1- 752966		PLATFORM	C- 752960-010V
1- 752967		PLATFORM	C- 752960-010V
			C- 752971-010V
1- 752968		RAILING	C- 752960-010V
1- 752969		PLATFORM	C- 752960-010V
1- 752970		BEAM	C- 752960-010V
C- 752971-010V	14199 90-01-08	RAILING PLATFORM	C- 77091-030V
1- 752972		PLATFORM	C- 752971-010V
1- 752973		PLATFORM	C- 752971-010V
1- 752974		PLATFORM	C- 752971-010V
1- 752975		RAILING	C- 752971-010V
1- 752976		PLATFORM	C- 752971-010V
1- 752977		BEAM	C- 752971-010V
2- 752978		RAILING	C- 752959-010V
1- 752979		PLATFORM	C- 752959-010V
1- 752980		PLATFORM	C- 752958-010V
1- 752981		PLATFORM	C- 752958-010V
C- 752985-010V	12383 90-02-10	HEAD SPACE BY LLF	C- 77091-020V
4- 752986		DOCUMENT FOLDER	C- 752985-010V
4- 752987		SHIM	C- 752247-010V
1- 752988		RAILING	C- 752958-010V
			C- 752958-010V
1- 752989		RAILING	C- 752958-010V
1- 752990		RAILING	C- 752958-010V
1- 752991-0001		RAILING	C- 752958-010V
1- 752991-0002		RAILING	C- 752958-010V
1- 752991-0003		RAILING	C- 752959-010V
1- 752991-0004		RAILING	C- 752959-010V
2- 752992		BRACKET	C- 752958-010V
			C- 752959-010V
1- 752998		ASEPTIC DIAGRAM	B- 648109-090V
4- 795689		DOCUMENT FOLDER	C- 529932-010V
4- 795690		DOCUMENT FOLDER	C- 735253-010V
4- 905470		TENSION SPRING	C- 400885-010V
4- 926155		DOCUMENT OS	C- 752889-010V
4- 926156		DOCUMENT OS	C- 752985-010V
1- 978001		PANEL SURVEY	B- 648109-090V
1- 978002		PANEL SURVEY	B- 648109-090V

PART NO	LAST AM	DESCRIPTION	GROUP NO
318108-0111		V-BELT	C- 256173-020V
			C- 256173-030V
318201-0150		ROLLER CHAIN	C- 256808-020V
			C- 256808-030V
318207-0168		ROLLER CHAIN	C- 752645-010V
			C- 752646-010V
			C- 752913-010V
			C- 752914-010V
318301-0122		EYE BOLT	B- 648109-060V
			B- 648109-070V
			B- 648109-080V
			B- 648109-080V
			B- 648109-070V
			B- 648109-080V
318301-0128		EYE BOLT	B- 648109-080V
			B- 648109-090V
			B- 648109-080V
			B- 648109-080V
318301-0130		EYE BOLT	C- 250810-010V
318800-0102		KNOB	C- 283624-010V
			C- 469737-010V
			RK- 536470-010V
			RK- 536450-010V
			RK- 547726-010V
			C- 441000-020V
			C- 441000-030V
			C- 441000-040V
			C- 441000-050V
			C- 269589-010V
			C- 283622-010V
			C- 456612-010V
318800-0103		KNOB	C- 533944-010V
			C- 271115-020V
			C- 294906-010V
			C- 272021-020V
			C- 272021-030V
			C- 272021-040V
			C- 272021-050V
			C- 294906-010V
318800-0104		KNOB	C- 751718-010V
			C- 256228-020V
321101-0143		BUSHING	C- 246368-020V
			RK- 491539-010V
			RK- 751488-010V
			RK- 490877-010V
			RK- 751488-010V
			C- 491897-010V
			RK- 751488-010V
			C- 491897-010V
			RK- 751488-010V
			C- 736885-010V
			C- 491897-010V
			C- 491976-010V
			C- 491976-020V
			C- 283600-010V
			C- 491976-010V
			C- 491976-020V
			C- 283600-010V
321101-0143		BUSHING	C- 457037-010V
			C- 736885-010V
			C- 491897-010V
			RK- 751488-010V
			RK- 751570-010V
			RK- 491539-010V
			RK- 751488-010V
321101-0162		BUSHING	C- 469247-010V
			C- 469247-020V
321101-0163		BUSHING	C- 469173-010V
321101-0173		BUSHING	C- 37877-030V
			C- 295891-010V
			C- 295891-020V
			C- 295891-030V
321101-0202		BUSHING	C- 37877-030V
			C- 271934-020V
			C- 271934-030V
			RK- 491324-010V
			C- 271992-020V

PART NO	LAST AM	DESCRIPTION	GROUP NO
			C- 469247-010V
			C- 469247-020V
			C- 752030-010V
321101-0222		BUSHING	C- 449866-010V
			C- 283619-010V
			C- 476060-020V
			C- 276253-010V
			C- 449866-010V
321101-0233		BUSHING	C- 271626-020V
			C- 271626-030V
			C- 256203-020V
			C- 256203-030V
			C- 256203-040V
			C- 271992-020V
321105-0118		BUSHING	C- 469737-010V
			C- 283622-010V
321105-0163		BUSHING	C- 294763-010V
			C- 237776-040V
321105-0173		BUSHING	C- 283602-010V
			C- 237776-040V
321105-0174		BUSHING	C- 469738-010V
			C- 283600-010V
321105-0183		BUSHING	C- 294763-010V
321105-0253		BUSHING	C- 283623-010V
			C- 456688-010V
			RK- 548367-010V
			C- 283623-010V
321110-0143		BUSHING	C- 450125-010V
321110-0163		BUSHING	C- 450125-010V
321110-0183		BUSHING	C- 450125-010V
321110-0202		BUSHING	C- 229400-080V
321111-0095		BUSHING	CR- 256844-020V
			CR- 256845-020V
			CR- 256844-020V
			CR- 256845-020V
			CR- 256844-020V
			CR- 256845-020V
			CR- 256844-020V
			CR- 256845-020V
			CR- 256844-030V
			CR- 256845-030V
321111-0096		BUSHING	CR- 256844-030V
			CR- 256845-030V
			CR- 256844-030V
			CR- 256845-030V
			CR- 256844-030V
			CR- 256845-030V
321111-0098		BUSHING	C- 484858-010V
			C- 271442-020V
			C- 271443-020V
			C- 271442-020V
			C- 271443-020V
			C- 271442-030V
			C- 271443-030V
			C- 271442-030V
			C- 271443-030V
			C- 271442-030V
			C- 271443-030V
			C- 271442-030V
			C- 271443-030V
			C- 283600-010V
			C- 294906-010V
			C- 283600-010V
			C- 294906-010V
321111-0097		BUSHING	C- 401207-010V
321111-0134		BUSHING	C- 271626-020V
			C- 271626-030V
321111-0135		BUSHING	C- 294659-010V
			C- 400865-010V
			C- 469736-020V
			RK- 540009-010V
			C- 401207-010V
			C- 283617-010V
321111-0136		BUSHING	CR- 283605-010V
321111-0157		BUSHING	C- 400865-010V
			C- 283624-010V
			RK- 536470-010V

PART NO	LAST AM	DESCRIPTION	GROUP NO
			RK- 538450-010V
			RK- 547726-010V
			C- 269589-010V
			C- 283602-010V
			C- 456612-010V
			C- 533844-010V
321111-0159		BUSHING	C- 283624-010V
			RK- 538470-010V
			RK- 538450-010V
			RK- 547726-010V
			C- 269589-010V
			C- 283600-010V
			C- 283602-010V
			C- 283618-010V
			C- 283600-010V
			C- 283618-010V
			C- 283620-010V
			CR- 283618-020V
			C- 456612-010V
			CR- 283618-020V
			C- 533844-010V
321111-0163		BUSHING	C- 469736-020V
			RK- 540009-010V
321111-0185		BUSHING	C- 283612-010V
321111-0212		BUSHING	C- 283604-010V
			C- 283604-020V
			C- 283604-010V
			C- 751718-010V
321111-0240		BUSHING	C- 449314-010V
			C- 269665-010V
			C- 751689-010V
321111-0241		BUSHING	C- 449314-010V
			C- 533903-010V
			C- 256237-020V
			C- 256239-020V
			C- 256237-030V
			C- 256239-020V
			C- 256237-040V
			C- 256239-020V
			C- 256239-030V
			C- 256239-040V
			C- 283602-010V
			RK- 547300-010V
			C- 283602-010V
			C- 449323-010V
			C- 469247-010V
			C- 469247-020V
			C- 533903-010V
321111-0302		BUSHING	C- 256237-020V
			C- 256237-030V
			C- 256237-040V
321111-0306		BUSHING	RK- 538470-010V
			RK- 538450-010V
			RK- 547726-010V
			C- 533844-010V
321111-0307		BUSHING	C- 533903-010V
			RK- 547300-010V
			C- 533903-010V
321111-0384		BUSHING	C- 441765-010V
321116-0127		BUSHING	C- 533903-010V
			RK- 547300-010V
			C- 533903-010V
321116-0135		BUSHING	C- 256555-020V
			C- 256555-030V
			C- 456100-010V
			C- 456100-020V
321116-0151		BUSHING	C- 271626-020V
			C- 271626-030V
			C- 533903-010V
			C- 449323-010V
			C- 533903-010V
321116-0159		BUSHING	C- 283600-010V
			C- 283612-010V
			C- 283600-010V
			C- 283612-010V
321116-0302		BUSHING	RK- 548058-010V
321116-0362		BUSHING	C- 449314-010V

PART NO	LAST AM	DESCRIPTION	GROUP NO
321120-0094		BUSHING	C- 269665-010V
321120-0096		BUSHING	C- 269656-010V
			C- 283600-010V
321120-0098		BUSHING	C- 256208-020V
			C- 256207-020V
321120-0098		BUSHING	C- 256208-020V
			C- 256207-020V
			C- 256208-020V
			C- 256207-020V
			C- 256208-020V
			C- 256207-020V
			C- 256208-020V
			C- 256207-020V
			C- 283620-010V
321120-0099		BUSHING	C- 283617-010V
			C- 283618-010V
			C- 283617-010V
			C- 283618-010V
			CR- 283606-010V
			CR- 283618-020V
			CR- 283606-010V
			CR- 283618-020V
321120-0100		BUSHING	C- 256358-010V
			C- 434774-020V
			C- 434774-030V
			C- 434074-020V
			C- 434074-030V
			C- 434774-020V
			C- 434774-030V
			C- 434074-020V
			C- 434074-030V
			RK- 547765-010V
			RK- 547765-020V
			C- 283618-010V
			C- 294908-010V
			RK- 547782-010V
			C- 283618-010V
			C- 294763-010V
			C- 294908-010V
			CR- 283618-020V
			C- 449388-010V
			CR- 283618-020V
			C- 449388-010V
			C- 434774-030V
			C- 543143-010V
			C- 434074-030V
			C- 543143-010V
			C- 434774-030V
			C- 543143-010V
			C- 434074-030V
			C- 543143-010V
321120-0101		BUSHING	C- 441000-020V
			C- 441000-030V
			C- 283618-010V
			CR- 283618-020V
			C- 543143-010V
321120-0102		BUSHING	C- 283602-010V
			C- 283611-010V
			C- 283618-010V
			C- 283602-010V
			C- 283611-010V
			C- 283618-010V
321120-0102		BUSHING	CR- 283618-020V
321120-0103		BUSHING	C- 269656-010V
321120-0104		BUSHING	C- 246388-020V
			C- 272343-020V
			C- 246388-020V
			C- 272343-030V
			C- 246388-020V
			C- 272343-030V
			C- 246388-020V
			C- 272343-040V
			C- 246388-020V
			C- 272343-050V
			C- 294785-010V

PART NO	LAST AM	DESCRIPTION	GROUP NO
			C- 294780-010V
			C- 457853-010V
			C- 457853-020V
321120-0107		BUSHING	RK- 547765-010V
			RK- 547765-020V
			C- 288656-010V
			C- 283611-010V
			RK- 547782-010V
			C- 283611-010V
			C- 449388-010V
321120-0109		BUSHING	C- 434774-020V
			C- 434774-030V
			C- 434074-020V
			C- 434074-030V
			C- 434774-020V
			C- 434774-030V
			C- 434074-020V
			C- 434074-030V
			C- 434774-030V
			C- 434074-030V
			C- 434774-030V
			C- 434074-030V
321120-0110		BUSHING	C- 272343-020V
			C- 272343-030V
			C- 272343-040V
321120-0111		BUSHING	C- 272343-050V
			C- 441000-020V
			C- 441000-030V
			C- 441000-040V
			C- 441000-050V
321120-0112		BUSHING	C- 271468-020V
321120-0118		BUSHING	C- 271468-040V
			C- 256206-020V
			C- 256207-020V
			C- 256206-020V
			C- 256207-020V
			C- 256206-020V
			C- 256207-020V
			C- 256206-020V
			C- 256207-020V
			C- 256206-020V
			C- 256207-020V
321120-0122		BUSHING	C- 228779-010V
321120-0122		BUSHING	C- 293685-010V
			C- 293685-020V
			C- 293684-010V
			C- 293684-020V
			C- 293685-010V
			C- 293685-020V
			C- 293684-010V
			C- 293684-020V
			C- 293685-020V
			C- 293684-020V
			C- 293685-020V
321120-0123		BUSHING	C- 293684-020V
			C- 283604-010V
			C- 283604-020V
321120-0132		BUSHING	C- 283604-010V
			CR- 256212-020V
			CR- 256213-020V
			CR- 256212-020V
			CR- 256213-020V
			CR- 256212-030V
			CR- 256213-030V
			CR- 256212-040V
			CR- 256213-040V
			CR- 256212-040V
			CR- 256213-040V
			CR- 256212-050V
			CR- 256213-050V
321120-0138		BUSHING	RK- 456712-010V
			C- 256806-020V
321120-0147		BUSHING	C- 256806-030V
			C- 256236-020V
			C- 456321-010V

PART NO	LAST AM	DESCRIPTION	GROUP NO
			C- 456322-010V
			C- 456348-010V
			C- 456349-010V
			C- 456321-020V
			C- 456322-020V
			C- 456348-020V
			C- 456349-020V
			C- 456321-030V
			C- 456322-030V
			C- 456348-020V
			C- 456349-020V
			C- 272445-020V
321120-0153		BUSHING	C- 256206-020V
			C- 256207-020V
			C- 256206-020V
			C- 256207-020V
			C- 256206-020V
			C- 256207-020V
			C- 256206-020V
			C- 256207-020V
			C- 256206-020V
			C- 256207-020V
			C- 256206-020V
			C- 256207-020V
			C- 295310-040V
			C- 295310-050V
			C- 295310-060V
321120-0159		BUSHING	C- 469737-010V
321120-0159		BUSHING	C- 283622-010V
			C- 469173-010V
321123-0107		BUSHING	C- 256985-020V
			C- 456546-010V
			C- 456546-020V
321127-0100		BUSHING	C- 752957-010V
			RK- 456793-010V
			RK- 469961-010V
			C- 256233-020V
			C- 256237-020V
			C- 271649-020V
			C- 256233-030V
			C- 256237-030V
			C- 271649-020V
			C- 256233-030V
			C- 256237-040V
			C- 271649-020V
			C- 256233-040V
			C- 256238-040V
			C- 271649-020V
			C- 256233-050V
			C- 256238-040V
			C- 271649-030V
			C- 752928-010V
			RK- 491744-010V
			C- 256957-020V
			C- 256056-020V
			C- 271649-020V
			C- 272014-020V
			C- 272021-020V
			C- 456309-010V
			C- 256957-020V
			C- 256056-020V
			C- 271649-020V
			C- 272014-020V
			C- 272021-020V
			C- 456309-010V
			C- 256056-030V
			C- 272014-030V
			C- 456309-020V
			C- 469074-010V
			C- 256056-040V
			C- 272014-030V
			C- 456309-020V
			C- 469074-010V
			C- 456309-030V
			C- 469074-020V
			C- 751088-010V
			C- 456309-040V

PART NO	LAST AM	DESCRIPTION	GROUP NO
			C- 751088-020V
321129-0117		WASHER	C- 283604-010V
			C- 283604-020V
			C- 271992-020V
			C- 283604-010V
321129-0131		WASHER	C- 256806-020V
			C- 256806-030V
321129-0137		WASHER	C- 256197-020V
			C- 256197-030V
			C- 256197-040V
321300-0098		BALL BEARING	C- 484858-020V
			RK- 540010-010V
			RK- 546337-010V
			RK- 546489-010V
			RK- 546255-010V
321308-0104		BALL BEARING	RK- 538470-010V
			RK- 538450-010V
			RK- 547726-010V
321308-0106		BALL BEARING	C- 441594-010V
321308-0102		BALL BEARING	C- 752755-010V
			C- 256014-020V
321308-0104		BALL BEARING	C- 533903-010V
			C- 283610-010V
			RK- 547300-010V
			CR- 449275-010V
			C- 533944-010V
			C- 533903-010V
321308-0108		BALL BEARING	RK- 547757-030V
321308-0110		BALL BEARING	C- 441821-010V
			C- 441271-010V
			C- 441271-020V
			RK- 491863-010V
321308-0112		BALL BEARING	C- 232781-040V
321308-0200		BALL BEARING	C- 450125-010V
321308-0202		BALL BEARING	C- 271934-020V
			C- 272084-020V
			C- 272473-010V
			C- 271934-020V
			C- 272084-020V
			C- 272473-010V
			C- 271934-020V
			C- 272084-020V
			C- 272473-010V
			C- 271934-030V
			C- 272084-020V
			C- 272473-010V
			C- 271934-030V
			C- 272084-030V
			C- 272473-010V
			RK- 491324-010V
			C- 533903-010V
			C- 256199-020V
			C- 256199-030V
			C- 256199-040V
			C- 271116-020V
			C- 271116-030V
			C- 272359-020V
			C- 272359-030V
			RK- 547300-010V
			C- 449323-010V
			C- 533903-010V
			C- 229400-060V
			C- 237776-040V
			C- 752029-010V
			C- 752030-010V
321308-0204		BALL BEARING	C- 283604-010V
			C- 283604-020V
			C- 295310-010V
			C- 295310-020V
321308-0204		BALL BEARING	C- 295310-030V
			C- 295310-040V
			C- 295310-050V
			C- 295310-060V
			C- 283602-010V
			C- 283604-010V
			C- 283629-010V
			C- 283602-010V

PART NO	LAST AM	DESCRIPTION	GROUP NO
			C- 283629-010V
			C- 283629-020V
321308-0205		BALL BEARING	C- 256985-020V
			C- 456546-010V
			C- 456546-020V
			C- 751689-010V
321308-0207		BALL BEARING	C- 256173-020V
			C- 256173-030V
			C- 256173-040V
321308-0208		BALL BEARING	C- 256272-020V
			C- 295310-010V
			C- 256272-020V
			C- 295310-010V
			C- 256272-020V
			C- 295310-020V
			C- 295310-030V
			C- 295310-040V
			C- 295310-050V
			C- 295310-060V
321312-0102		BALL BEARING	C- 283619-010V
			C- 476080-020V
			C- 276253-010V
321313-0101		BALL BEARING	C- 283624-010V
			RK- 538470-010V
			RK- 538450-010V
			RK- 547726-010V
			C- 269699-010V
			C- 456612-010V
			C- 533944-010V
321313-0102		BALL BEARING	C- 295310-010V
			C- 295310-020V
			C- 295310-030V
			C- 295310-040V
			C- 295310-050V
			C- 295310-060V
			C- 294670-010V
			C- 469182-010V
321313-0104		BALL BEARING	C- 283623-010V
			C- 469737-010V
			C- 456668-010V
			C- 283622-010V
			C- 283623-010V
			C- 469173-010V
321313-0105		BALL BEARING	C- 256173-020V
			C- 256173-030V
			C- 256173-040V
321314-0104		BALL BEARING	C- 538421-010V
321531-0248		NEEDLE SLEEVE	C- 256197-030V
			C- 256198-030V
			C- 256203-030V
			C- 256197-030V
321531-0248		NEEDLE SLEEVE	C- 256203-030V
			C- 491814-010V
			C- 491815-010V
			C- 256197-040V
			C- 256203-040V
			C- 491814-010V
			C- 491815-010V
321570-0182		SUPPORT ROLLER	C- 256985-020V
			C- 456546-010V
321574-0151		SUPPORT ROLLER	C- 456546-020V
321576-0260		SUPPORT ROLLER	C- 256197-020V
			C- 256198-020V
			C- 256197-020V
			C- 256198-020V
			C- 256197-030V
			C- 256198-030V
			C- 256197-030V
			C- 491814-010V
			C- 491815-010V
			C- 256197-040V
			C- 491814-010V
			C- 491815-010V
321580-0165		M ROLLER	C- 751689-010V
321582-0149		M ROLLER	C- 533903-010V
			C- 294658-010V
			CR- 294695-010V

PART NO	LAST AM	DESCRIPTION	GROUP NO
			RK- 547300-010V
			CR- 294605-010V
			C- 533903-010V
321582-0186		CAM ROLLER	C- 283604-010V
			C- 283604-020V
			C- 283604-030V
321582-0212		CAM ROLLER	C- 272404-020V
			C- 272404-030V
			C- 272404-040V
			C- 272404-050V
			C- 272404-060V
			C- 283612-010V
			C- 283617-010V
			C- 283612-010V
			C- 283617-010V
			CR- 283605-010V
			C- 283612-010V
			CR- 283605-010V
321600-0102		OIL SEAL	C- 283612-010V
321600-0107		OIL SEAL	C- 276253-010V
321600-0109		OIL SEAL	C- 283602-010V
321600-0110		OIL SEAL	C- 294659-010V
321600-0114		OIL SEAL	C- 469737-010V
			C- 256173-020V
321601-0101		OIL SEAL	C- 256173-030V
321601-0108		OIL SEAL	C- 256173-040V
342245-0102		T-PIECE	C- 276253-010V
			C- 294659-010V
342700-0110		NIPPLE	C- 735248-010V
			C- 735014-010V
342700-0111		NIPPLE	C- 751089-010V
342700-0111		NIPPLE	RK- 491780-010V
			C- 271866-020V
			C- 271866-030V
342701-0201		BUSHING	C- 271866-040V
			C- 271866-050V
			RK- 491418-010V
			RK- 820068-010V
			C- 271909-020V
			C- 271909-030V
			C- 271909-040V
			C- 491890-010V
			C- 271909-050V
342701-0202		BUSHING	C- 491890-010V
			C- 271909-030V
			C- 271909-040V
342701-0205		BUSHING	C- 271909-050V
			C- 271367-030V
			C- 271909-030V
			C- 271909-040V
342701-0208		BUSHING	C- 271909-050V
			C- 256173-020V
			C- 256173-030V
			C- 256173-040V
342703-0114		NUT	C- 271507-020V
342703-0204		NUT	C- 271866-050V
342703-0208		NUT	RK- 553180-010V
			RK- 491641-010V
342703-0215		NUT	RK- 491447-010V
342704-0114		CUTTING RING	C- 491207-020V
			C- 456757-010V
			C- 456757-020V
			RK- 456716-010V
			RK- 752408-010V
			RK- 752410-010V
			RK- 456717-010V
			RK- 752412-010V
			RK- 752414-010V
			RK- 456717-010V
			RK- 752412-010V
342704-0116		CUTTING RING	RK- 752414-010V
			C- 271909-020V
			C- 271909-030V
			C- 271909-040V
342706-0114		CUTTING RING	C- 271909-050V
342706-0114		SLEEVE	C- 271866-050V
			C- 272765-040V

PART NO	LAST AM	DESCRIPTION	GROUP NO
			C- 271453-020V
			C- 271453-030V
			RK- 491994-010V
342706-0130		SLEEVE	C- 491890-010V
342706-0148		SLEEVE	C- 271453-020V
			C- 271453-030V
342707-0109		SLEEVE	RK- 520069-010V
342707-0113		SLEEVE	C- 271909-020V
			C- 271909-030V
			C- 271909-040V
342708-0101		SLEEVE	C- 271909-050V
			C- 456953-010V
			C- 456739-010V
			C- 456935-010V
342708-0101		SLEEVE	C- 456739-010V
			C- 456935-010V
			C- 456739-010V
			C- 456935-020V
			C- 752698-010V
342708-0103		SLEEVE	C- 456953-010V
			C- 271909-020V
			C- 271909-030V
			C- 271909-040V
342708-0107		SLEEVE	C- 271909-050V
342708-0109		SLEEVE	C- 456455-020V
			C- 491767-010V
			C- 271909-020V
			C- 271909-030V
			C- 271909-040V
342710-0118		REDUCER	C- 271909-050V
			C- 271281-020V
			C- 271281-030V
			C- 271281-040V
342710-0205		REDUCER	C- 271281-050V
			C- 271866-020V
			C- 271866-030V
			C- 271866-040V
342713-0208		BLANK-OFF PLUG	C- 271866-050V
			C- 401207-010V
			C- 400895-010V
			C- 457866-010V
			C- 457866-010V
			C- 457866-010V
			C- 457866-010V
342713-0209		BLANK-OFF PLUG	C- 457866-010V
			C- 456757-010V
			C- 456757-020V
			RK- 548056-010V
			CR- 256212-040V
			CR- 256213-040V
			CR- 256212-040V
			CR- 256213-040V
			CR- 256212-050V
			CR- 256213-050V
			C- 271909-020V
			RK- 456712-010V
			RK- 456716-010V
342713-0210		BLANK-OFF PLUG	C- 456757-010V
			C- 469144-010V
			C- 456757-010V
			C- 469144-020V
			C- 456757-020V
			C- 469144-020V
			RK- 520068-010V
			C- 271909-020V
			C- 271909-030V
			C- 271909-040V
			C- 271909-050V
			C- 457159-010V
			C- 457924-010V
			C- 457924-020V
342713-0211		BLANK-OFF PLUG	C- 735183-010V
			C- 456757-010V
342713-0211		BLANK-OFF PLUG	C- 469118-010V
			C- 456757-010V
			C- 469118-020V
			C- 456757-020V

PART NO	LAST AM	DESCRIPTION	GROUP NO
			C- 469118-020V
			C- 271909-050V
342713-0213		BLANK-OFF PLUG	C- 491767-010V
			C- 469121-010V
			C- 469121-020V
			C- 271909-030V
			C- 271909-040V
			C- 271909-050V
			C- 294715-010V
			C- 457159-010V
			C- 457159-020V
342713-0215		BLANK-OFF PLUG	C- 271866-020V
			C- 271866-030V
			C- 271866-040V
			C- 271866-050V
342713-0310		BLANK-OFF PLUG	C- 271168-020V
			C- 271168-040V
342713-0313		BLANK-OFF PLUG	C- 271168-020V
			C- 271168-040V
342714-0110		REDUCER	C- 271866-030V
			C- 271866-040V
			C- 271866-050V
342720-0102		PIPE CONNECTION	C- 271909-020V
			C- 271909-030V
			C- 271909-040V
			C- 271909-050V
342720-0104		PIPE CONNECTION	C- 271909-020V
342720-0109		PIPE CONNECTION	C- 271909-020V
			C- 271909-030V
			C- 271909-040V
			C- 271909-050V
			RK- 491416-010V
342720-0114		PIPE CONNECTION	C- 491767-010V
			C- 271261-020V
			C- 271261-030V
			C- 271261-040V
			C- 271261-050V
			C- 469121-020V
			C- 256802-020V
			C- 271909-030V
			C- 271866-040V
			C- 271909-040V
			C- 271866-050V
			C- 271909-050V
342720-0115		PIPE CONNECTION	C- 271866-040V
			C- 271866-050V
342721-0103		PIPE CONNECTION	C- 271168-020V
342721-0114		PIPE CONNECTION	C- 271168-020V
342723-0114		PIPE CONNECTION	CE- 67716-010V
			CE- 68128-010V
			CE- 68304-010V
			C- 271866-020V
			C- 271866-030V
			C- 271866-040V
			C- 271866-050V
			CE- 68128-010V
342723-0114		PIPE CONNECTION	CE- 67716-010V
			CE- 68304-010V
342725-0103		PIPE COUPLING	C- 735014-010V
			C- 735271-010V
			C- 735014-010V
			C- 735271-010V
			C- 735014-010V
			C- 735271-010V
342725-0114		PIPE COUPLING	C- 271866-030V
			C- 271866-040V
			C- 271866-050V
342726-0109		PIPE CONNECTION	C- 271261-040V
			C- 271261-050V
			C- 271562-020V
			C- 271562-030V
			C- 271866-040V
			C- 271866-050V
342726-0114		PIPE CONNECTION	C- 271261-020V
			C- 271562-020V
			C- 271562-030V
			C- 271866-040V

PART NO	LAST AM	DESCRIPTION	GROUP NO
			C- 271866-050V
342727-0102		PIPE CONNECTION	C- 271562-040V
			C- 271562-050V
			C- 271562-060V
			C- 271562-070V
342727-0214		PIPE CONNECTION	C- 491207-020V
342730-0109		ELBOW COUPLING	C- 271866-020V
			C- 271866-030V
			C- 271866-040V
			C- 271866-050V
342731-0221		ELBOW COUPLING	C- 491207-020V
342732-0103		ELBOW COUPLING	C- 229400-060V
			C- 232761-040V
342732-0104		ELBOW COUPLING	C- 271507-020V
342736-0109		ELBOW COUPLING	C- 271562-040V
			C- 271562-050V
			C- 271562-060V
			C- 271562-070V
			C- 271109-020V
342736-0114		ELBOW COUPLING	C- 271261-020V
			C- 271261-030V
			C- 271261-040V
			C- 271261-050V
			C- 271909-020V
			C- 271909-030V
			C- 271909-040V
			C- 271866-050V
			C- 271909-050V
			RK- 456716-010V
			RK- 752408-010V
			RK- 752410-010V
			RK- 456717-010V
			RK- 752412-010V
			RK- 752414-010V
			RK- 456717-010V
			RK- 752412-010V
			RK- 752414-010V
342736-0115		ELBOW COUPLING	C- 456757-010V
342736-0115		ELBOW COUPLING	C- 456757-020V
342737-0204		ELBOW COUPLING	C- 752898-010V
342737-0221		ELBOW COUPLING	C- 491207-020V
342738-0208		ELBOW COUPLING	C- 491660-010V
			RK- 491641-010V
			RK- 491447-010V
342738-0221		ELBOW COUPLING	C- 490604-010V
			C- 491767-010V
			C- 490604-010V
342748-0114		T-PIECE	C- 271261-020V
			C- 271261-030V
			C- 271261-040V
			C- 271261-050V
			C- 256802-020V
			C- 456455-010V
			C- 456455-020V
342751-0204		L-CONNECTION	C- 491660-010V
342752-0103		COUPLING	RK- 491641-010V
			RK- 491447-010V
342757-0114		T-PIECE	C- 271866-050V
342759-0114		L-CONNECTION	C- 271866-050V
342762-0103		GROMMET	C- 491660-010V
342767-0100		GROMMET	C- 271562-020V
			C- 271562-030V
			C- 271562-040V
			C- 271562-050V
			C- 271562-060V
			C- 271562-070V
			C- 271909-020V
			C- 271909-030V
			C- 271909-040V
			C- 271909-050V
342767-0104		GROMMET	C- 271909-020V
			C- 271909-030V
			C- 271909-040V
			C- 271909-050V
342767-0109		GROMMET	C- 271909-020V
342767-0114		GROMMET	C- 271909-030V
			C- 271909-040V

PART NO	LAST AM	DESCRIPTION	GROUP NO
342790-0102		GAUGE CONNECTION	C- 271909-060V
			C- 735183-010V
342797-0121		BANJO CONNECTION	RK- 520069-010V
			C- 735268-010V
			C- 736594-010V
			RK- 538415-010V
			C- 256237-050V
			C- 256239-040V
			C- 256239-030V
			C- 469366-020V
			C- 256237-060V
			C- 256239-040V
			C- 469366-030V
			C- 271562-020V
			C- 271562-030V
			C- 271562-040V
			C- 271562-050V
			C- 271562-060V
			C- 271562-070V
342797-0121		BANJO CONNECTION	C- 272343-030V
			C- 272343-040V
			C- 295891-030V
			C- 272343-050V
			C- 295891-030V
			C- 295045-020V
			C- 295045-030V
			C- 295045-040V
			C- 256055-050V
			C- 256094-030V
			C- 256095-030V
			C- 271169-030V
			C- 272024-030V
			C- 272025-030V
			C- 272337-030V
			C- 295045-050V
			C- 456309-030V
			C- 256055-060V
			C- 256094-040V
			C- 256095-040V
			C- 271169-040V
			C- 272024-030V
			C- 272025-030V
			C- 272337-040V
			C- 295045-060V
			C- 456309-040V
			C- 735183-010V
			C- 735271-010V
			C- 736594-010V
			C- 735183-010V
			C- 735271-010V
			C- 736594-010V
			C- 735271-010V
			C- 736594-010V
342797-0122		BANJO CONNECTION	C- 736268-010V
			C- 736594-010V
			RK- 538438-010V
			C- 271909-020V
			C- 271909-030V
			C- 271909-040V
			C- 271909-050V
			C- 272408-030V
			C- 295891-020V
			C- 272408-030V
			C- 295891-020V
			C- 272408-040V
			C- 295891-030V
			C- 272408-050V
			C- 295891-030V
			C- 255957-020V
			C- 256094-020V
			C- 271169-020V
			C- 272024-020V
			C- 272025-020V
			C- 272241-020V
			C- 272337-020V
			C- 456309-010V
			C- 255957-030V

PART NO	LAST AM	DESCRIPTION	GROUP NO
			C- 256094-030V
			C- 271169-020V
342797-0122		BANJO CONNECTION	C- 272024-020V
			C- 272025-020V
			C- 272241-020V
			C- 272337-020V
			C- 456309-010V
			C- 256094-020V
			C- 271169-020V
			C- 272024-020V
			C- 272025-020V
			C- 272337-020V
			C- 456309-020V
			C- 456556-010V
			C- 491083-010V
			C- 256094-020V
			C- 271169-020V
			C- 272024-020V
			C- 272025-020V
			C- 272337-020V
			C- 456309-020V
			C- 456556-010V
			C- 491083-010V
			C- 456556-020V
			C- 491083-020V
			C- 456556-020V
			C- 491083-020V
			C- 735183-010V
			C- 735271-010V
			C- 736594-010V
			C- 735183-010V
			C- 735271-010V
			C- 736594-010V
			C- 735271-010V
			C- 736594-010V
342797-0132		BANJO CONNECTION	C- 271909-020V
			C- 271909-030V
			C- 271909-040V
			C- 271909-050V
342803-0101		NUT	C- 256232-020V
			C- 256232-030V
342803-0102		NUT	C- 295262-020V
342803-0103		NUT	C- 256232-020V
			C- 256233-020V
			C- 256232-020V
			C- 256233-030V
			C- 256232-020V
			C- 256233-030V
			C- 256232-030V
			C- 256233-040V
			C- 256232-030V
			C- 256233-050V
			C- 271113-020V
			C- 456586-010V
			C- 456586-020V
			C- 456586-030V
			C- 456836-010V
			C- 456836-020V
			C- 456836-030V
			C- 456836-040V
342803-0104		NUT	C- 272560-030V
342803-0104		NUT	C- 272560-040V
			C- 272560-050V
342807-0104		ELBOW PIPE	C- 256674-020V
			C- 256674-030V
			C- 272560-020V
342812-0101		SLEEVE	C- 256232-020V
			C- 256232-030V
342812-0102		SLEEVE	C- 295262-020V
342812-0103		SLEEVE	C- 256232-020V
			C- 256233-020V
			C- 256232-020V
			C- 256233-030V
			C- 256232-020V
			C- 256233-030V
			C- 256232-030V
			C- 256233-040V

PART NO	LAST AM	DESCRIPTION	GROUP NO
			C- 256232-030V
			C- 256233-050V
			C- 456836-010V
			C- 456836-020V
			C- 456836-030V
			C- 456836-040V
342812-0104		SLEEVE	C- 272560-030V
			C- 272560-040V
			C- 272560-050V
342901-0108		HOSE NIPPLE	C- 272408-050V
342903-0111		NUT	C- 751478-010V
			C- 751410-010V
			RK- 751345-010V
342903-0121		NUT	C- 469144-020V
			C- 751089-010V
			C- 469144-020V
			C- 751089-010V
			RK- 491780-010V
			C- 256907-020V
			C- 456180-010V
			C- 271909-040V
			C- 271909-050V
			RK- 491780-010V
342920-0114		PIPE CONNECTION	C- 400895-010V
			RK- 469472-010V
			C- 271866-020V
			C- 271909-020V
			C- 272361-020V
			C- 271909-030V
			C- 271909-040V
			C- 271909-050V
			C- 449313-010V
			C- 751410-010V
342920-0122		PIPE CONNECTION	C- 751089-010V
			RK- 491780-010V
			CR- 256547-020V
			C- 271109-020V
			CR- 256547-020V
			C- 271109-020V
			CR- 256547-020V
			C- 271109-020V
			CR- 256547-030V
			C- 456455-010V
342920-0122		PIPE CONNECTION	CR- 256547-030V
			C- 456455-010V
			CR- 256547-030V
			C- 456455-020V
			CR- 256547-030V
			C- 456455-020V
			C- 271909-020V
			C- 271909-030V
			C- 271909-040V
			C- 271909-050V
			C- 735183-010V
			RK- 491780-010V
342920-0132		PIPE CONNECTION	RK- 469472-010V
342921-0111		PIPE CONNECTION	C- 401207-010V
			C- 400895-010V
			C- 283617-010V
			CR- 283607-010V
342921-0112		PIPE CONNECTION	C- 295218-010V
342921-0113		PIPE CONNECTION	C- 533014-010V
			C- 271533-020V
			C- 271533-030V
			C- 491650-010V
			C- 751478-010V
			RK- 469788-010V
			C- 401207-010V
			C- 400895-010V
			C- 456265-010V
			C- 469366-010V
			C- 469804-010V
			C- 469366-010V
			C- 469804-010V
			C- 469366-020V
			C- 469804-010V
			C- 469366-020V

PART NO	LAST AM	DESCRIPTION	GROUP NO
			C- 469804-010V
			C- 271866-020V
			C- 271909-020V
			C- 271909-030V
			C- 271909-040V
			C- 271909-050V
			C- 283600-010V
			C- 283602-010V
			C- 283618-010V
			C- 457868-010V
			RK- 491641-010V
			RK- 491447-010V
			C- 271880-020V
			C- 295045-020V
			C- 271880-020V
			C- 295045-020V
			C- 295045-030V
			C- 469781-010V
			C- 295045-040V
			C- 469781-010V
			C- 295045-050V
			C- 469781-020V
			C- 295045-050V
			C- 469781-020V
			C- 283600-010V
342921-0113		PIPE CONNECTION	C- 283602-010V
			C- 283618-010V
			C- 283631-010V
			CR- 283607-010V
			C- 457868-010V
			CR- 283607-010V
			RK- 751345-010V
342921-0114		PIPE CONNECTION	C- 533014-010V
			C- 469737-010V
			RK- 520068-010V
			RK- 547751-030V
			RK- 547751-020V
			C- 271909-020V
			C- 271909-030V
			C- 271909-040V
			C- 271909-050V
			C- 283617-010V
			C- 294658-010V
			C- 283617-010V
			C- 283631-010V
			C- 294763-010V
			C- 457867-010V
			C- 441738-010V
			RK- 520067-010V
			C- 751410-010V
342921-0121		PIPE CONNECTION	C- 271533-020V
			C- 271533-030V
			C- 491650-010V
			C- 469118-010V
			C- 469121-010V
			C- 469118-020V
			C- 469121-020V
			C- 469118-020V
			C- 469121-020V
			C- 401439-010V
			C- 401419-010V
			C- 469366-010V
			C- 469366-020V
			C- 257381-020V
			C- 257382-020V
			C- 257381-020V
			C- 257382-020V
			C- 271909-020V
			C- 271909-030V
			C- 271909-040V
			C- 271909-050V
			C- 295045-030V
			C- 295045-040V
			C- 295045-050V
			C- 295045-050V
342921-0122		PIPE CONNECTION	C- 456757-010V
			C- 469144-010V

PART NO	LAST AM	DESCRIPTION	GROUP NO
			C- 456757-010V
			C- 469144-020V
			C- 456757-020V
			C- 469144-020V
			C- 271909-020V
			C- 271909-030V
			C- 271909-040V
342921-0122		PIPE CONNECTION	C- 271909-050V
342921-0123		PIPE CONNECTION	C- 294658-010V
			C- 456757-010V
			C- 456757-020V
			C- 271909-020V
			C- 271909-030V
			C- 271909-040V
			C- 271909-050V
342921-0141		PIPE CONNECTION	RK- 491416-010V
			C- 469144-010V
			C- 469144-020V
			C- 271909-020V
			C- 271909-030V
			C- 271909-040V
			C- 271909-050V
342923-0113		PIPE CONNECTION	RK- 546056-010V
			C- 279809-010V
			C- 294715-010V
			C- 283631-010V
			C- 283632-010V
			CR- 449275-010V
			C- 457159-010V
			CR- 449275-010V
			C- 457159-020V
342923-0114		PIPE CONNECTION	C- 751410-010V
342923-0115		PIPE CONNECTION	C- 457924-010V
			C- 457924-020V
342926-0112		PIPE CONNECTION	RK- 469472-010V
			RK- 469788-010V
342926-0121		PIPE CONNECTION	RK- 491780-010V
342926-0133		PIPE CONNECTION	RK- 469472-010V
342930-0113		ELBOW COUPLING	C- 469118-010V
			C- 469118-020V
			RK- 520068-010V
			C- 736865-010V
			C- 271868-020V
			C- 271909-020V
			C- 271909-030V
			C- 271909-040V
			C- 271909-050V
			C- 490600-010V
			C- 490600-020V
			C- 736865-010V
			C- 751410-010V
			C- 736865-010V
342930-0114		ELBOW COUPLING	C- 469144-010V
			C- 469144-020V
			RK- 520068-010V
			C- 271909-020V
			C- 271909-030V
			C- 272361-030V
			C- 271909-030V
			C- 272361-030V
			C- 271909-040V
			C- 491207-010V
			C- 491207-020V
342930-0121		ELBOW COUPLING	C- 469118-010V
			C- 469118-020V
342930-0122		ELBOW COUPLING	C- 735248-010V
342930-0122		ELBOW COUPLING	C- 735268-010V
			C- 256173-020V
			C- 256173-030V
			C- 256173-040V
			C- 271909-020V
			C- 271909-030V
			C- 271909-040V
			C- 735183-010V
			C- 735014-010V
			C- 735271-010V
			C- 735183-010V

PART NO	LAST AM	DESCRIPTION	GROUP NO
			C- 736014-010V
			C- 735271-010V
			C- 735014-010V
			C- 735271-010V
342931-0113		ELBOW COUPLING	C- 752980-010V
			C- 752971-010V
			C- 456457-030V
342931-0122		ELBOW COUPLING	C- 752980-010V
			C- 752971-010V
			C- 456457-030V
			C- 271909-050V
342933-0113		ELBOW COUPLING	C- 469598-020V
342933-0121		ELBOW COUPLING	C- 469598-020V
342936-0112		ELBOW COUPLING	C- 490600-010V
342940-0114		T-PIECE	RK- 520068-010V
342940-0122		T-PIECE	C- 271909-020V
			C- 271909-030V
			C- 271909-040V
342941-0122		T-PIECE	C- 271909-050V
342946-0112		T-PIECE	C- 736865-010V
			C- 401207-010V
			C- 400865-010V
			RK- 547754-010V
			C- 271868-020V
			C- 272343-020V
			C- 295691-010V
			C- 469598-010V
			C- 490600-010V
			C- 469598-020V
			C- 736865-010V
			C- 751410-010V
			C- 736865-010V
342946-0121		T-PIECE	RK- 520129-010V
			RK- 520130-010V
			RK- 520094-010V
			RK- 520068-010V
			C- 469598-010V
			C- 469598-020V
			RK- 520129-010V
			RK- 520130-010V
342946-0122		T-PIECE	C- 401439-010V
			C- 401419-010V
			RK- 491780-010V
			C- 294658-010V
			RK- 491416-010V
			C- 469598-010V
			C- 469598-020V
			C- 735183-010V
342946-0122		T-PIECE	RK- 491780-010V
342950-0114		L-CONNECTION	RK- 520068-010V
			C- 271909-020V
			C- 271909-030V
			C- 271909-040V
			C- 271909-050V
342960-0123		L-CONNECTION	C- 271909-020V
342960-0112		GROMMET	RK- 520129-010V
			RK- 520130-010V
			RK- 520094-010V
			RK- 520096-010V
			RK- 520068-010V
			C- 736865-010V
			C- 271109-020V
			C- 271113-020V
			C- 271109-020V
			C- 271113-020V
			C- 271109-020V
			C- 271113-020V
			C- 272765-030V
			C- 456455-010V
			C- 272765-040V
			C- 456455-010V
			C- 272765-050V
			C- 456455-020V
			C- 272765-060V
			C- 456455-020V
			C- 271909-020V
			C- 271909-030V

PART NO	LAST AM	DESCRIPTION	GROUP NO
			C- 271909-040V
			C- 271513-050V
			C- 271909-050V
			C- 457924-010V
			C- 457924-020V
			RK- 520087-010V
			RK- 520129-010V
			RK- 520130-010V
			C- 736865-010V
			C- 752030-010V
			C- 736865-010V
342960-0121		GROMMET	C- 271109-020V
			C- 456455-010V
			C- 456455-020V
			C- 271909-030V
			C- 271909-040V
			C- 271909-050V
			C- 283610-010V
			C- 283617-010V
			C- 469598-010V
			C- 469598-020V
342960-0122		GROMMET	C- 735248-010V
			C- 735268-010V
			C- 271109-020V
			C- 456455-010V
			C- 456455-020V
			C- 271909-020V
			C- 271909-030V
			C- 271909-040V
			C- 271909-050V
342960-0122		GROMMET	C- 457924-010V
			C- 457924-020V
			C- 735014-010V
			C- 735271-010V
			C- 735014-010V
			C- 735271-010V
			C- 735014-010V
			C- 735271-010V
342960-0111		BANJO CONNECTION	C- 751478-010V
			C- 283600-010V
			C- 283610-010V
			C- 283617-010V
			C- 283600-010V
			C- 283617-010V
			CR- 449275-010V
			C- 490600-010V
			CR- 449275-010V
			C- 490600-020V
			RK- 751345-010V
342960-0112		BANJO CONNECTION	C- 490600-010V
			C- 490600-020V
342960-0113		BANJO CONNECTION	C- 456953-010V
			C- 271533-020V
			C- 271533-030V
			C- 491650-010V
			C- 271934-020V
			C- 271934-030V
			C- 751478-010V
			C- 271934-030V
			C- 751478-010V
			C- 449314-010V
			C- 449315-010V
			RK- 469788-010V
			RK- 491324-010V
			C- 736268-010V
			C- 736865-010V
			RK- 538415-010V
			C- 256233-020V
			C- 256239-020V
			C- 456265-010V
			C- 256239-020V
			C- 469366-010V
			C- 469804-010V
			C- 256239-020V
			C- 469366-010V
			C- 469804-010V
			C- 469366-030V

PART NO	LAST AM	DESCRIPTION	GROUP NO
			C- 469804-010V
			C- 256239-040V
			C- 469366-030V
			C- 469804-010V
			C- 256206-020V
			C- 256207-020V
			C- 256206-020V
			C- 256207-020V
			C- 256206-020V
			C- 256207-020V
			C- 256206-020V
			C- 256207-020V
342960-0113		BANJO CONNECTION	C- 256206-020V
			C- 256207-020V
			C- 256206-020V
			C- 256207-020V
			CR- 256436-020V
			C- 441881-010V
			CR- 256436-020V
			C- 441881-010V
			CR- 256436-020V
			C- 441881-010V
			CR- 256436-020V
			CR- 256436-030V
			CR- 256436-040V
			CR- 256436-050V
			C- 256674-030V
			C- 271909-020V
			C- 271909-030V
			C- 271909-040V
			C- 271909-050V
			C- 272343-020V
			C- 272343-030V
			C- 272343-040V
			C- 272343-050V
			C- 279809-010V
			C- 283600-010V
			C- 283617-010V
			C- 294658-010V
			C- 294715-010V
			C- 457866-010V
			C- 457866-010V
			RK- 491416-010V
			RK- 491641-010V
			RK- 491447-010V
			C- 256095-020V
			C- 271880-020V
			C- 295045-020V
			C- 256095-020V
			C- 271880-020V
			C- 295045-020V
			C- 256095-020V
			C- 295045-030V
			C- 469781-010V
			C- 256095-020V
			C- 295045-040V
			C- 469781-010V
			C- 295045-050V
			C- 469781-020V
			C- 295045-050V
			C- 469781-020V
			C- 283600-010V
			C- 283614-010V
			C- 283617-010V
			C- 283631-010V
			C- 283632-010V
			C- 283614-010V
			CR- 283618-020V
			C- 449323-010V
			C- 457159-010V
			C- 457866-010V
342960-0113		BANJO CONNECTION	C- 457866-010V
			C- 457924-010V
			C- 490600-010V
			C- 283614-010V
			CR- 283618-020V
			C- 457159-020V

PART NO	LAST AM	DESCRIPTION	GROUP NO
			C- 457888-010V
			C- 457924-020V
			C- 490600-020V
			C- 497534-020V
			C- 441736-010V
			C- 456953-010V
			C- 735271-010V
			C- 736865-010V
			RK- 751345-010V
			C- 752030-010V
			C- 735271-010V
			C- 736865-010V
			C- 735271-010V
			C- 736865-010V
342980-0114		BANJO CONNECTION	C- 533014-010V
			RK- 491780-010V
			C- 736865-010V
			RK- 547751-030V
			RK- 547751-020V
			C- 256237-020V
			C- 256238-020V
			C- 256237-030V
			C- 256238-020V
			C- 256237-040V
			C- 256238-030V
			C- 491976-010V
			C- 491976-020V
			C- 271909-020V
			C- 271909-030V
			C- 271909-040V
			C- 271909-050V
			C- 272408-020V
			C- 295891-010V
			C- 294658-010V
			C- 294715-010V
			RK- 491416-010V
			C- 256055-020V
			C- 256055-030V
			C- 256055-040V
			C- 491976-010V
			C- 491976-020V
			C- 283631-010V
			C- 283632-010V
			C- 294763-010V
			CR- 283605-010V
			C- 457159-010V
			C- 457924-010V
			C- 469173-010V
			CR- 283605-010V
			C- 457159-020V
			C- 457924-020V
			C- 469173-010V
342980-0114		BANJO CONNECTION	C- 736865-010V
			RK- 491780-010V
342980-0115		BANJO CONNECTION	C- 736865-010V
342980-0116		BANJO CONNECTION	C- 283612-010V
			C- 279809-010V
342980-0121		BANJO CONNECTION	C- 283632-010V
			C- 469118-020V
			C- 255907-020V
			C- 456180-010V
			C- 257381-020V
			C- 257382-020V
			C- 257381-020V
			C- 257382-020V
			C- 257381-030V
			C- 257382-030V
			C- 257381-030V
			C- 257382-030V
			C- 257381-030V
			C- 257382-030V
			C- 257381-030V
			C- 257382-030V
			C- 271909-040V
			C- 271909-050V
			C- 279809-010V
			RK- 456712-010V

PART NO	LAST AM	DESCRIPTION	GROUP NO
			C- 736183-010V
342980-0122		BANJO CONNECTION	C- 271533-020V
			C- 271533-030V
			C- 491650-010V
			C- 456757-010V
			C- 469118-010V
			C- 456757-010V
			C- 469118-020V
			C- 469144-020V
			C- 751089-010V
			C- 456757-020V
			C- 469118-020V
			C- 469144-020V
			C- 751089-010V
			RK- 491780-010V
			C- 256173-020V
			C- 256173-030V
			C- 256173-040V
			C- 271507-020V
			C- 271909-020V
			C- 271507-020V
			C- 271909-030V
			C- 271507-020V
			C- 271909-030V
			C- 271909-040V
			C- 271909-050V
			C- 279809-010V
			C- 283622-010V
			C- 294658-010V
			C- 294715-010V
			C- 457924-010V
			C- 457924-020V
			C- 736183-010V
			C- 736014-010V
			C- 736271-010V
342980-0122		BANJO CONNECTION	C- 736183-010V
			RK- 491780-010V
			C- 736014-010V
			C- 736271-010V
			C- 736014-010V
			C- 736271-010V
342980-0123		BANJO CONNECTION	RK- 491416-010V
342980-0124		BANJO CONNECTION	C- 294715-010V
			C- 283632-010V
			C- 457159-010V
			C- 457159-020V
342980-0213		BANJO CONNECTION	C- 736288-010V
			C- 736865-010V
			C- 256674-020V
			C- 457924-010V
			C- 457924-020V
			C- 736271-010V
			C- 736865-010V
			C- 736271-010V
			C- 736865-010V
			C- 736271-010V
			C- 736865-010V
342980-0214		BANJO CONNECTION	C- 283631-010V
			C- 457924-010V
			C- 457924-020V
342980-0216		BANJO CONNECTION	C- 457924-010V
			C- 457924-020V
342980-0221		BANJO CONNECTION	C- 735183-010V
P- 342980-0301		BANJO CONNECTION	C- 751478-010V
			C- 283600-010V
			C- 283610-010V
			C- 283617-010V
			C- 283600-010V
			C- 283617-010V
			CR- 449275-010V
			C- 490600-010V
			CR- 449275-010V
			C- 490600-020V
			RK- 751345-010V
342980-0302		BANJO CONNECTION	C- 469366-020V
			C- 469366-030V
342980-0303		BANJO CONNECTION	C- 456953-010V

PART NO	LAST AM	DESCRIPTION	GROUP NO
			C- 271533-020V
			C- 271533-030V
			C- 491650-010V
			C- 469118-020V
			C- 271934-020V
			C- 751478-010V
			C- 449314-010V
			C- 449315-010V
			RK- 469788-010V
			RK- 491324-010V
			C- 735268-010V
			C- 736594-010V
			C- 736885-010V
			RK- 536415-010V
			C- 256233-020V
			C- 456265-010V
			C- 469366-010V
342980-0303		BANJO CONNECTION	C- 469804-010V
			C- 469366-010V
			C- 469804-010V
			C- 469366-020V
			C- 469804-010V
			C- 469366-030V
			C- 469804-010V
			C- 255907-020V
			C- 271562-020V
			C- 255907-020V
			C- 271562-030V
			C- 271562-040V
			C- 456180-010V
			C- 271562-050V
			C- 456180-010V
			C- 271562-060V
			C- 456180-010V
			C- 271562-070V
			C- 456180-010V
			C- 256206-020V
			C- 256207-020V
			C- 257381-020V
			C- 257382-020V
			C- 256206-020V
			C- 256207-020V
			C- 257381-020V
			C- 257382-020V
			C- 256206-020V
			C- 256207-020V
			C- 257381-030V
			C- 257382-030V
			C- 256206-020V
			C- 256207-020V
			C- 257381-030V
			C- 257382-030V
			C- 256206-020V
			C- 256207-020V
			C- 257381-030V
			C- 257382-030V
			CR- 256436-020V
			C- 256674-020V
			CR- 256436-020V
			C- 256674-020V
			CR- 256436-020V
			C- 256674-020V
			CR- 256436-020V
			C- 256674-020V
			CR- 256436-030V
			C- 256674-020V
			CR- 256436-040V
			C- 256674-020V
			CR- 256436-050V
			C- 256674-030V
			C- 271909-020V
			C- 271909-030V
342980-0303		BANJO CONNECTION	C- 271909-040V

PART NO	LAST AM	DESCRIPTION	GROUP NO
			C- 271909-050V
			C- 272343-020V
			C- 272343-030V
			C- 272343-040V
			C- 272343-050V
			C- 279809-010V
			C- 283600-010V
			C- 283617-010V
			C- 294658-010V
			C- 294715-010V
			C- 457868-010V
			C- 457868-010V
			RK- 456712-010V
			RK- 491416-010V
			RK- 491641-010V
			RK- 491447-010V
			C- 295045-020V
			C- 295045-030V
			C- 469781-010V
			C- 295045-040V
			C- 469781-010V
			C- 256084-030V
			C- 271169-030V
			C- 272337-030V
			C- 295045-050V
			C- 469781-020V
			C- 256084-040V
			C- 271169-040V
			C- 272337-040V
			C- 295045-060V
			C- 469781-020V
			C- 283600-010V
			C- 283614-010V
			C- 283617-010V
			C- 283631-010V
			C- 283632-010V
			C- 283614-010V
			CR- 283618-020V
			C- 449323-010V
			C- 457159-010V
			C- 457868-010V
			C- 457868-010V
			C- 457924-010V
			C- 490600-010V
			C- 283614-010V
			CR- 283618-020V
			C- 457159-020V
			C- 457868-010V
			C- 457924-020V
			C- 490600-020V
			C- 497534-020V
			C- 441738-010V
			C- 456863-010V
			C- 735183-010V
			C- 736271-010V
			C- 736594-010V
			C- 736885-010V
			C- 735183-010V
342980-0303		BANJO CONNECTION	RK- 751345-010V
			C- 752090-010V
			C- 736271-010V
			C- 736594-010V
			C- 736885-010V
			C- 735271-010V
			C- 736594-010V
			C- 736885-010V
342980-0304		BANJO CONNECTION	C- 271533-020V
			C- 271533-030V
			C- 491650-010V
			C- 456757-010V
			C- 751089-010V
			C- 456757-020V
			C- 751089-010V
			RK- 491780-010V
			C- 735268-010V
			C- 736594-010V
			RK- 547751-030V

PART NO	LAST AM	DESCRIPTION	GROUP NO
			RK- 547751-020V
			C- 491976-010V
			C- 256173-020V
			C- 256173-030V
			C- 256173-040V
			C- 271507-020V
			C- 271909-020V
			C- 271507-020V
			C- 271909-030V
			C- 271507-020V
			C- 271909-030V
			C- 271909-040V
			C- 271909-050V
			C- 272408-020V
			C- 295891-010V
			C- 272408-030V
			C- 295891-020V
			C- 272408-030V
			C- 295891-020V
			C- 272408-040V
			C- 295891-030V
			C- 272408-050V
			C- 295891-030V
			C- 279809-010V
			C- 283622-010V
			C- 294656-010V
			C- 294715-010V
			C- 272241-020V
			C- 456556-010V
			C- 491083-010V
			C- 456556-010V
			C- 491083-010V
			C- 456556-020V
			C- 491083-020V
			C- 491976-010V
			C- 456556-020V
			C- 491083-020V
			C- 283631-010V
			C- 283632-010V
342980-0304		BANJO CONNECTION	C- 294763-010V
			C- 457159-010V
			C- 457924-010V
			C- 469173-010V
			C- 457159-020V
			C- 457924-020V
			C- 469173-010V
			C- 735183-010V
			C- 735014-010V
			C- 735271-010V
			C- 736594-010V
			C- 735183-010V
			RK- 491780-010V
			C- 735014-010V
			C- 735271-010V
			C- 736594-010V
			C- 735014-010V
			C- 735271-010V
342980-0305		BANJO CONNECTION	C- 736594-010V
342980-0306		BANJO CONNECTION	RK- 491416-010V
			C- 279809-010V
			C- 294715-010V
			C- 283632-010V
			C- 457159-010V
			C- 457924-010V
			C- 457159-020V
			C- 457924-020V
342980-0313		BANJO CONNECTION	C- 469118-010V
			C- 469118-020V
			C- 271934-030V
			C- 736268-010V
			C- 469368-010V
			C- 469368-020V
			C- 256206-020V
			C- 256207-020V
			C- 256206-020V
			C- 256207-020V
			C- 256206-020V

PART NO	LAST AM	DESCRIPTION	GROUP NO
			C- 256207-020V
			C- 256206-020V
			C- 256207-020V
			C- 256206-020V
			C- 256207-020V
			C- 256206-020V
			C- 256207-020V
			C- 295045-030V
			C- 295045-040V
			C- 295045-050V
			C- 295045-060V
			C- 457924-010V
			C- 457924-020V
			C- 736271-010V
			RK- 751348-010V
342980-0314		BANJO CONNECTION	C- 736271-010V
			C- 533014-010V
			C- 271533-020V
			C- 271533-030V
			C- 491650-010V
			C- 469144-020V
342980-0314		BANJO CONNECTION	C- 736865-010V
			C- 271909-020V
			C- 271909-030V
			C- 271909-040V
			C- 271909-050V
			C- 294656-010V
			C- 294715-010V
			RK- 491416-010V
			C- 283631-010V
			C- 283632-010V
			CR- 283606-010V
			C- 457159-010V
			C- 457924-010V
			CR- 283606-010V
			C- 457924-020V
			C- 736183-010V
			C- 736865-010V
			C- 735183-010V
342980-0315		BANJO CONNECTION	C- 736865-010V
342991-0100		HOSE CLIP	C- 283612-010V
			RK- 529345-010V
342991-0101		HOSE CLIP	C- 491890-010V
			RK- 529345-010V
			C- 256438-020V
342991-0103		HOSE CLIP	C- 491890-010V
			C- 272343-020V
			C- 295891-010V
			C- 272343-030V
			C- 295891-020V
			C- 272343-030V
			C- 295891-020V
			C- 272343-040V
			C- 295891-030V
			C- 272343-050V
			C- 272408-050V
342991-0104		HOSE CLIP	C- 295891-030V
			C- 256173-020V
			C- 256173-030V
			C- 256173-040V
			C- 256843-020V
			C- 256843-030V
			C- 256843-040V
			C- 256843-050V
342991-0105		HOSE CLIP	RK- 456804-010V
			RK- 469988-010V
			C- 272404-020V
			C- 272404-030V
			C- 272404-040V
			C- 272404-050V
342991-0106		HOSE CLIP	C- 272404-060V
			C- 456455-010V
			C- 456455-020V
			C- 272381-030V
			C- 491207-010V
			C- 491207-020V
			C- 751398-010V

PART NO	LAST AM	DESCRIPTION	GROUP NO
342991-0107		HOSE CLIP	C- 456612-010V
			C- 272381-030V
			C- 491207-010V
			RK- 469764-010V
342991-0107		HOSE CLIP	RK- 491589-030V
			RK- 491590-030V
			C- 294867-010V
			C- 491207-020V
342991-0108		HOSE CLIP	C- 256237-020V
			C- 256237-030V
			C- 256237-040V
			C- 256237-050V
			C- 256237-060V
			CR- 256547-020V
			C- 272408-020V
			C- 272408-030V
			C- 272408-040V
			C- 272408-050V
342991-0110		HOSE CLIP	C- 752898-010V
342996-0100		HOSE CLIP	C- 491890-010V
			C- 283617-010V
344502-0021		NIPPLE	C- 283604-010V
			C- 441821-010V
			C- 441271-010V
			C- 441594-010V
			C- 441271-020V
			C- 441594-010V
			C- 283604-010V
			C- 283612-010V
			C- 283617-010V
			C- 283612-010V
			C- 283617-010V
			CR- 283605-010V
			C- 283612-010V
			CR- 283605-010V
			C- 283612-010V
			RK- 491983-010V
344502-0026		NIPPLE	C- 283610-010V
			CR- 449275-010V
344502-0061		NIPPLE	C- 283610-010V
			CR- 449275-010V
344510-0101		GREASE NIPPLE	C- 294868-010V
			CR- 294695-010V
344510-0102		GREASE NIPPLE	C- 283604-020V
346900-0109		SILENCER FILTER	C- 256232-020V
			C- 256232-030V
346900-0110		SILENCER FILTER	C- 469736-020V
			C- 294763-010V
			C- 457924-010V
			C- 457924-020V
346900-0111		SILENCER FILTER	C- 271909-020V
			C- 271909-030V
			C- 271909-040V
			C- 271909-050V
			C- 457924-020V
351120-0145		CABLE	CE- 67718-010V
			CE- 68131-010V
			CE- 68780-010V
			RK- 68874-010V
			CE- 68131-010V
			CE- 67718-010V
			CE- 68780-010V
351120-0165		CABLE	RK- 68874-010V
351120-0167		CABLE	CE- 67718-010V
			CE- 68780-010V
			CE- 67718-010V
351120-0168		CABLE	CE- 68780-010V
			CE- 67718-010V
			CE- 68780-010V
			CE- 67718-010V
			CE- 68780-010V
351123-0144		CABLE	CE- 67718-010V
			CE- 68131-010V
			CE- 68780-010V
			RK- 68874-010V
			CE- 68131-010V
			CE- 67718-010V

PART NO	LAST AM	DESCRIPTION	GROUP NO
351123-0145		CABLE FKK-S 3X2,5	CE- 68780-010V
			CE- 67718-010V
			CE- 68131-010V
			CE- 68780-010V
			RK- 68906-010V
			CE- 68131-010V
			CE- 67718-010V
			CE- 68780-010V
351123-0165		CABLE	CE- 67718-010V
			CE- 68131-010V
			CE- 68780-010V
			RK- 68874-010V
			CE- 68131-010V
			CE- 67718-010V
			CE- 68780-010V
351123-0185		CABLE FKK-S 5X2,5	CE- 67718-010V
			CE- 68131-010V
			CE- 68780-010V
			RK- 68874-010V
			CE- 68131-010V
			CE- 67718-010V
			CE- 68780-010V
351123-0195		CABLE	CE- 67718-010V
			CE- 68131-010V
			CE- 68780-010V
			CE- 68131-010V
			CE- 67718-010V
			CE- 68780-010V
351127-0144		CABLE	C- 37877-030V
351150-0122		CABLE	RK- 41567-010V
			RK- 41461-010V
			RK- 41377-010V
			CE- 67718-010V
			CE- 68131-010V
			CE- 68780-010V
			RK- 68722-010V
			RK- 68725-010V
			RK- 520068-010V
			CE- 68131-010V
			CE- 67718-010V
			CE- 68780-010V
			RK- 41567-010V
			RK- 41377-010V
			RK- 41461-010V
351150-0142		CABLE	RK- 41544-010V
351150-0142		CABLE	RK- 41548-010V
			RK- 41548-010V
			CE- 41572-010V
			CE- 41574-010V
			CE- 41576-010V
			RK- 41567-010V
			RK- 41461-010V
			RK- 41377-010V
			CE- 67718-010V
			CE- 68131-010V
			RK- 68180-010V
			RK- 68183-010V
			CE- 68780-010V
			RK- 68722-010V
			RK- 68725-010V
			RK- 68874-010V
			RK- 520068-010V
			CE- 68131-010V
			CE- 67718-010V
			CE- 68780-010V
			RK- 41567-010V
			RK- 41377-010V
			RK- 41461-010V
			RK- 41544-010V
			RK- 41548-010V
			RK- 41548-010V
			CE- 41572-010V
			CE- 41574-010V
			CE- 41576-010V
351150-0162		ABLE	RK- 41567-010V
			RK- 41461-010V
			RK- 41377-010V

PART NO	LAST AM	DESCRIPTION	GROUP NO
			CE- 67718-010V
			CE- 68131-010V
			CE- 68780-010V
			RK- 68722-010V
			RK- 68725-010V
			CE- 68131-010V
			CE- 67718-010V
			CE- 68780-010V
			RK- 41567-010V
			RK- 41377-010V
			RK- 41461-010V
351150-0182		CABLE	CE- 67718-010V
			CE- 68131-010V
			CE- 68780-010V
			RK- 68874-010V
			CE- 68131-010V
			CE- 67718-010V
351150-0192		CABLE	CE- 68780-010V
			CE- 67718-010V
			CE- 68131-010V
			CE- 68780-010V
			RK- 69282-010V
			RK- 69346-010V
			RK- 69393-010V
			RK- 69396-010V
			CE- 68131-010V
			CE- 67718-010V
351150-0192		CABLE	CE- 68780-010V
351150-0222		CABLE	CE- 67718-010V
			CE- 68131-010V
			CE- 68780-010V
			RK- 68874-010V
			RK- 68908-010V
			CE- 68131-010V
			CE- 67718-010V
351150-0262		CABLE	CE- 68780-010V
			CE- 67718-010V
			CE- 68131-010V
			RK- 68180-010V
			RK- 68183-010V
			CE- 68780-010V
			CE- 68131-010V
			CE- 67718-010V
351150-0312		CABLE	CE- 68780-010V
			RK- 41567-010V
			RK- 41461-010V
			RK- 41377-010V
			CE- 67718-010V
			CE- 68131-010V
			RK- 68722-010V
			RK- 68725-010V
			CE- 68131-010V
			CE- 67718-010V
			RK- 41567-010V
			RK- 41377-010V
351150-0342		CABLE	RK- 41461-010V
			CE- 67718-010V
			CE- 68780-010V
			CE- 67718-010V
			CE- 68780-010V
351150-0402		CABLE	CE- 67718-010V
			CE- 68131-010V
			CE- 68780-010V
			RK- 68874-010V
			CE- 68131-010V
			CE- 67718-010V
			CE- 68780-010V
351172-0102		CABLE AWM DARKBLUE 0.75	RK- 41567-010V
			RK- 41461-010V
			RK- 41377-010V
			RK- 68180-010V
			RK- 68183-010V
			RK- 68722-010V
			RK- 68725-010V
			RK- 68874-010V
			RK- 68906-010V
			RK- 69282-010V

PART NO	LAST AM	DESCRIPTION	GROUP NO
			RK- 69289-010V
			RK- 69346-010V
			RK- 69393-010V
			RK- 69396-010V
			RK- 69501-010V
			RK- 69504-010V
			RK- 69507-010V
			RK- 69510-010V
			RK- 69562-010V
351172-0102		CABLE AWM DARKBLUE 0.75	RK- 41567-010V
			RK- 41377-010V
			RK- 41461-010V
			RK- 41378-010V
351173-0102		CABLE AWM LIGTBLUE 0,75	RK- 41567-010V
			RK- 41461-010V
			RK- 41377-010V
			RK- 68722-010V
			RK- 68725-010V
			RK- 69289-010V
			RK- 69501-010V
			RK- 69504-010V
			RK- 69507-010V
			RK- 69510-010V
			RK- 69562-010V
			RK- 41567-010V
			RK- 41377-010V
			RK- 41461-010V
351173-0105		CABLE AWM LIGHTBLUE 2,5	RK- 68874-010V
351176-0102		CABLE AWM RED 0,75	RK- 41567-010V
			RK- 41461-010V
			RK- 41377-010V
			RK- 68722-010V
			RK- 68725-010V
			RK- 69289-010V
			RK- 69501-010V
			RK- 69504-010V
			RK- 69507-010V
			RK- 69510-010V
			RK- 69562-010V
			RK- 41567-010V
			RK- 41377-010V
			RK- 41461-010V
351179-0105		CABLE AWM BLACK 2,5	RK- 68874-010V
351179-0109		CABLE AWM BLACK 16	CE- 68131-010V
351179-0110		CABLE AWM BLACK 25,0	CE- 67718-010V
			CE- 68131-010V
			CE- 68780-010V
			CE- 68131-010V
			CE- 67718-010V
			CE- 68780-010V
352030-0122		CABLE DUCT	C- 229400-080V
352100-0100		CABLE GLAND	C- 272343-020V
352100-0105		CABLE GLAND	C- 271109-020V
			C- 229400-080V
352100-0106		CABLE GLAND	C- 256237-020V
			C- 256239-020V
			C- 256237-030V
			C- 256239-020V
			C- 256237-040V
			C- 256239-020V
			C- 256237-050V
			C- 256237-080V
			CR- 256547-020V
			C- 295891-010V
			C- 256095-020V
			C- 256055-020V
			C- 256095-020V
352100-0106		CABLE GLAND	C- 256055-030V
			C- 256095-020V
			C- 256055-040V
			C- 256095-020V
			C- 256055-050V
			C- 256055-080V
352100-0107		CABLE GLAND	CR- 256547-020V
			CR- 256547-030V
352109-0112		CABLE GLAND	C- 469374-010V

PART NO	LAST AM	DESCRIPTION	GROUP NO
			C- 469374-020V
352100-0121		CABLE GLAND	C- 271181-020V
			C- 271181-030V
			C- 271181-040V
352100-0125		CABLE GLAND	C- 295883-010V
352101-0102		LEAD-IN	C- 295883-010V
			C- 295883-020V
			C- 295883-030V
			C- 295883-040V
			C- 271641-020V
			C- 271641-030V
			C- 456827-010V
			C- 272833-010V
			C- 272882-010V
			C- 295188-010V
			C- 272833-010V
			C- 272882-010V
			C- 295188-010V
			C- 456459-010V
			C- 456459-020V
			C- 295382-020V
			C- 469374-030V
			C- 457856-010V
			C- 457867-010V
			C- 457856-010V
			C- 457867-010V
			C- 735259-010V
			C- 735031-010V
			C- 229400-060V
			C- 271641-030V
352101-0103		LEAD-IN	C- 271109-020V
			C- 271909-020V
			C- 271909-030V
			C- 271909-040V
			C- 271909-050V
			C- 469374-030V
352101-0105		LEAD-IN	RK- 68874-010V
			C- 295883-010V
			C- 295883-020V
			C- 295883-030V
			C- 295883-040V
			C- 271866-020V
			C- 295382-020V
			C- 271866-030V
			C- 295382-020V
			C- 271866-030V
			C- 295382-020V
			C- 271866-040V
			C- 295382-020V
			C- 490761-010V
352101-0106		LEAD-IN	C- 271866-050V
			C- 295382-020V
			C- 490761-010V
			C- 469374-030V
			C- 457856-010V
352101-0108		LEAD-IN	C- 295883-010V
			C- 295883-020V
			C- 295883-030V
			C- 295883-040V
			C- 469374-030V
352101-0107		LEAD-IN	RK- 68874-010V
			C- 295883-010V
			C- 295883-020V
			C- 295883-030V
			C- 295883-040V
			C- 295777-010V
			C- 469374-010V
			C- 469374-020V
			C- 469374-030V
352103-0096		CABLE GLAND	C- 529621-010V
			C- 544381-010V
			C- 529621-010V
352103-0100		CABLE GLAND	C- 256233-040V
			C- 256233-050V
			C- 256555-020V
			C- 256555-030V
			C- 456100-010V

PART NO	LAST AM	DESCRIPTION	GROUP NO
			C- 456100-020V
			C- 456459-020V
			C- 456460-020V
			C- 456100-020V
			C- 456460-030V
			C- 295470-040V
			C- 490800-010V
			C- 490800-020V
			C- 735259-010V
			C- 232781-040V
352103-0101		CABLE GLAND	RK- 41567-010V
			RK- 41461-010V
			RK- 41377-010V
			RK- 68722-010V
			RK- 68725-010V
			RK- 68874-010V
			C- 442080-010V
			C- 295883-010V
			C- 295883-020V
			C- 295883-030V
			C- 295883-040V
			C- 295441-010V
			C- 295441-020V
			C- 456882-010V
			C- 295441-030V
			C- 456882-010V
			C- 295441-030V
			C- 456882-010V
			C- 295839-010V
			C- 295839-020V
			C- 458435-030V
			C- 456800-010V
352103-0101		CABLE GLAND	C- 456827-010V
			C- 490801-010V
			C- 736886-010V
			RK- 547753-010V
			RK- 547754-010V
			RK- 547753-010V
			RK- 547754-010V
			C- 469366-010V
			C- 469366-020V
			C- 271513-020V
			C- 295382-020V
			C- 271513-030V
			C- 295382-020V
			C- 451348-010V
			C- 271513-030V
			C- 295382-020V
			C- 451348-010V
			C- 271513-040V
			C- 295382-020V
			C- 451348-010V
			C- 271513-050V
			C- 295382-020V
			C- 751886-020V
			C- 283633-010V
			RK- 491543-010V
			RK- 491744-010V
			RK- 751638-010V
			RK- 752270-010V
			RK- 491788-010V
			RK- 491902-010V
			RK- 538439-010V
			RK- 751561-010V
			RK- 751569-010V
			RK- 752270-010V
			RK- 491788-010V
			RK- 538439-010V
			RK- 751561-010V
			RK- 751569-010V
			RK- 752270-010V
			RK- 547988-010V
			C- 272021-020V
			C- 295470-020V
			C- 295777-010V
			C- 272021-020V
			C- 295470-020V

PART NO	LAST AM	DESCRIPTION	GROUP NO
			C- 296777-010V
			C- 272021-030V
			C- 295470-030V
			C- 469374-010V
			C- 272021-030V
			C- 295470-030V
			C- 469374-010V
			C- 272021-040V
			C- 295470-030V
			C- 469374-020V
			C- 272021-050V
			C- 295470-040V
			C- 283633-010V
352103-0101		CABLE GLAND	C- 294867-010V
			C- 457159-010V
			C- 457858-010V
			C- 457924-010V
			C- 490800-010V
			C- 457159-020V
			C- 457858-010V
			C- 457924-020V
			C- 490800-020V
			RK- 41567-010V
			RK- 41377-010V
			RK- 41461-010V
			C- 736259-010V
			C- 736865-010V
			C- 736031-010V
			RK- 751345-010V
352103-0105		CABLE GLAND	C- 736865-010V
			C- 456435-020V
			RK- 479278-010V
			C- 295278-020V
			C- 469366-020V
			C- 469366-030V
			C- 752755-010V
			C- 272765-020V
			C- 441850-010V
			C- 271569-040V
			C- 271569-050V
			C- 441000-050V
352103-0106		CABLE GLAND	RK- 762270-010V
			C- 456953-010V
			C- 295611-020V
			C- 37877-030V
			C- 295839-010V
			C- 295839-020V
			C- 451348-010V
			C- 456435-020V
			C- 451348-020V
			C- 456435-030V
			C- 441534-010V
			C- 490801-010V
			C- 401207-010V
			C- 400895-010V
			C- 544361-010V
			C- 256233-020V
			C- 256238-020V
			C- 295112-020V
			C- 295278-020V
			C- 295112-020V
			C- 295278-020V
			C- 469366-010V
			C- 295112-020V
			C- 295278-020V
			C- 469366-010V
			C- 256239-030V
			C- 295112-020V
			C- 295278-020V
			C- 469366-020V
			C- 256233-050V
			C- 256239-040V
352103-0108		CABLE GLAND	C- 469366-030V
			C- 752755-010V
			C- 256555-020V
			C- 256555-030V
			C- 441850-010V

PART NO	LAST AM	DESCRIPTION	GROUP NO
			C- 441860-020V
			C- 271513-020V
			C- 271909-020V
			C- 271513-030V
			C- 271909-030V
			C- 451348-010V
			C- 271513-030V
			C- 271909-030V
			C- 451348-010V
			C- 271513-040V
			C- 271909-040V
			C- 451348-010V
			C- 271513-050V
			C- 271909-050V
			C- 751885-020V
			C- 441000-020V
			C- 272343-030V
			C- 295891-020V
			C- 441000-030V
			C- 456348-010V
			C- 456349-010V
			C- 272343-030V
			C- 295891-020V
			C- 441000-030V
			C- 456348-020V
			C- 456349-020V
			C- 272343-040V
			C- 295891-030V
			C- 441000-040V
			C- 456348-020V
			C- 456349-020V
			C- 272343-050V
			C- 295891-030V
			C- 441000-050V
			C- 296777-010V
			C- 469374-010V
			C- 256095-030V
			C- 469374-020V
			C- 256095-040V
			C- 490800-010V
			C- 490800-020V
			C- 441736-010V
			C- 456953-010V
			C- 37877-030V
			C- 451348-020V
352103-0108		CABLE GLAND	C- 752980-010V
			C- 752971-010V
			C- 441535-010V
			C- 456460-010V
			C- 456460-020V
			C- 751900-010V
			C- 456459-030V
			C- 456460-030V
			C- 751900-010V
			C- 256808-020V
352103-0108		CABLE GLAND	C- 441850-010V
			C- 441850-020V
			C- 441850-030V
			C- 441535-010V
352103-0110		CABLE GLAND	RK- 69874-010V
			RK- 69806-010V
			RK- 69262-010V
			RK- 69348-010V
			RK- 69393-010V
			RK- 69396-010V
			C- 295883-010V
			C- 295883-020V
			C- 295883-030V
			C- 295883-040V
			C- 456882-010V
			C- 451348-020V
			C- 490801-010V
			C- 491323-020V
			C- 272825-010V
			C- 271452-020V
			C- 271507-020V
			C- 271909-020V

PART NO	LAST AM	DESCRIPTION	GROUP NO
			C- 295382-020V
			C- 271452-020V
			C- 271507-020V
			C- 295382-020V
			C- 271452-020V
			C- 271507-020V
			C- 295382-020V
			C- 490761-010V
			C- 491207-010V
			C- 751885-010V
			C- 271513-060V
			C- 295382-020V
			C- 490761-010V
			C- 751885-020V
			C- 272408-020V
			C- 272408-030V
			C- 272408-040V
			C- 272408-050V
			C- 294715-010V
			RK- 490665-010V
			RK- 491795-010V
			RK- 539439-010V
			RK- 491795-010V
			RK- 539439-010V
			RK- 547986-010V
			C- 469299-010V
			C- 490600-010V
			C- 469299-010V
			C- 490600-020V
			C- 491207-020V
			C- 751393-010V
			C- 451348-020V
352103-0111		CABLE GLAND	C- 295883-020V
			C- 295883-030V
			C- 295883-040V
			C- 456435-010V
			C- 456435-020V
352103-0111		CABLE GLAND	C- 456435-030V
			C- 456600-010V
			C- 256234-030V
			C- 469366-010V
			C- 256234-030V
			C- 469366-010V
			C- 256234-030V
			C- 469366-020V
			C- 256234-040V
			C- 441850-030V
			C- 295777-010V
			C- 272028-030V
			C- 469374-010V
			C- 272028-030V
			C- 469374-010V
			C- 272028-040V
			C- 469374-020V
			C- 469452-020V
			C- 272028-050V
			C- 469452-030V
			C- 751800-020V
			C- 294867-010V
			C- 457159-010V
			C- 457856-010V
			C- 457159-020V
352103-0115		CABLE GLAND	C- 457856-010V
			RK- 41567-010V
			RK- 41461-010V
			RK- 41377-010V
			RK- 68180-010V
			RK- 68183-010V
			RK- 68722-010V
			RK- 68725-010V
			RK- 68874-010V
			C- 295883-010V
			C- 295883-020V
			C- 295883-030V
			C- 295883-040V
			C- 456435-030V
			C- 456827-010V

PART NO	LAST AM	DESCRIPTION	GROUP NO
			C- 441880-030V
			C- 451348-010V
			RK- 539439-010V
			RK- 547986-010V
			RK- 41567-010V
			RK- 41377-010V
			RK- 41461-010V
352103-0116		CABLE GLAND	C- 295883-020V
			C- 295883-030V
			C- 295883-040V
			C- 271128-030V
			C- 271128-040V
			C- 283833-010V
			C- 295470-020V
			C- 295777-010V
			C- 295470-020V
			C- 295777-010V
			C- 469374-010V
			C- 469374-020V
352103-0116		CABLE GLAND	C- 283833-010V
			C- 232781-040V
352103-0120		CABLE GLAND	C- 295883-010V
			C- 295883-020V
			C- 295883-030V
			C- 295883-040V
352103-0121		CABLE GLAND	RK- 68874-010V
			C- 295883-010V
			C- 295883-020V
			C- 295883-030V
			C- 295883-040V
			C- 271909-020V
			C- 271909-030V
			C- 271909-040V
			C- 271909-050V
			RK- 539439-010V
			RK- 547986-010V
			C- 295470-030V
			C- 469374-010V
			C- 295470-030V
			C- 469374-010V
			C- 295470-030V
			C- 469374-020V
			C- 295470-040V
			C- 457856-010V
352110-0099		CLIP	C- 272094-030V
			C- 469736-010V
			C- 469736-020V
352110-0100		CLIP	C- 271628-030V
			C- 751478-010V
			RK- 469413-010V
			RK- 479278-010V
			C- 469736-010V
			C- 469736-020V
			C- 272765-020V
			C- 272404-020V
			C- 272404-030V
			C- 272404-040V
			C- 272404-050V
			C- 272404-060V
			C- 272021-040V
			C- 272021-050V
			RK- 751345-010V
352110-0101		CLIP	C- 295881-010V
			C- 469736-020V
			C- 256233-020V
			C- 469366-010V
			C- 469366-020V
			C- 469366-030V
			C- 272404-020V
			C- 272404-030V
			C- 272404-040V
			C- 272404-050V
			C- 272404-060V
352110-0102		CLIP	C- 271641-020V
			C- 271628-030V
			RK- 469413-010V
			RK- 469472-010V

PART NO	LAST AM	DESCRIPTION	GROUP NO
352110-0102		CLIP	C- 271452-020V C- 490761-010V RK- 535606-010V
352110-0103		CLIP	C- 497534-020V
352111-0100		CLIP	C- 256438-020V
352112-0101		BUNDLING STRIP	C- 271626-020V C- 271909-020V C- 271909-030V C- 271909-040V
352113-0101		RIBBON CLAMP	C- 271909-050V C- 256358-010V C- 434774-020V C- 434774-030V C- 434074-020V C- 434074-030V C- 434774-020V C- 434774-030V C- 434074-020V C- 434074-030V RK- 548056-010V C- 271562-020V C- 271562-030V C- 271562-040V C- 271562-050V C- 271562-060V C- 271562-070V C- 271452-020V C- 271453-020V C- 271909-020V C- 271452-020V C- 271453-020V C- 271909-030V C- 271452-020V C- 271453-030V C- 271909-030V C- 271909-040V C- 490761-010V C- 271909-050V C- 490761-010V RK- 491543-010V RK- 491744-010V RK- 491984-010V RK- 751636-010V RK- 491789-010V RK- 491902-010V RK- 491984-010V RK- 535606-010V RK- 751561-010V RK- 751569-010V RK- 491789-010V RK- 751561-010V RK- 751569-010V C- 497534-020V C- 434774-030V C- 434074-030V C- 434774-030V C- 434074-030V
352113-0102		RIBBON CLAMP	RK- 529345-010V C- 735268-010V
352113-0102		RIBBON CLAMP	C- 469366-020V C- 469366-030V C- 271109-020V C- 441850-010V C- 441850-020V C- 441850-030V C- 271866-020V C- 271909-020V C- 271866-030V C- 271909-030V C- 272381-030V C- 271866-030V C- 271909-030V C- 272381-030V C- 271866-040V C- 271909-040V C- 491207-010V C- 271866-050V
352113-0202		ARMATURE	C- 271909-050V RK- 491543-010V RK- 491744-010V RK- 751636-010V RK- 491789-010V RK- 491902-010V RK- 751561-010V RK- 751569-010V RK- 491789-010V RK- 751561-010V RK- 751569-010V C- 490800-010V C- 490800-020V C- 735271-010V C- 491207-020V C- 735271-010V C- 271109-020V C- 441850-010V C- 441850-020V C- 441850-030V C- 271909-020V C- 271909-030V C- 271569-040V C- 271909-040V C- 271569-050V C- 271909-050V C- 490800-010V C- 490800-020V
352130-0107		FLEXIBLE CONDUIT	C- 237776-040V
352131-0107		SLEEVE	C- 237776-040V
352135-0102		HOSE	C- 449314-010V C- 533903-010V RK- 547754-010V C- 441850-010V C- 441850-020V C- 283635-010V C- 457924-010V C- 469300-010V C- 283635-010V C- 457924-020V C- 469300-010V C- 533903-010V
352135-0106		HOSE	RK- 68180-010V RK- 68183-010V RK- 68908-010V C- 449314-010V C- 544381-010V C- 441850-010V C- 441850-020V C- 441850-030V C- 451348-010V C- 457867-010V C- 469299-010V C- 490800-010V C- 457867-010V C- 469299-010V C- 490800-020V
352135-0109		HOSE	CE- 67716-010V RK- 68674-010V RK- 68908-010V RK- 520068-010V C- 401207-010V C- 400896-010V
352135-0200		CLIP	CE- 67716-010V C- 533903-010V
352136-0107		GLAND	C- 449314-010V C- 533903-010V C- 544381-010V C- 283635-010V C- 457924-010V C- 469300-010V C- 283635-010V C- 457924-020V C- 469300-010V C- 533903-010V
352136-0114		GLAND	C- 735183-010V
352136-0127		GLAND	RK- 68908-010V

PART NO	LAST AM	DESCRIPTION	GROUP NO
			C- 449314-010V
			C- 544381-010V
			C- 451348-010V
			C- 457867-010V
			C- 469299-010V
			C- 490800-010V
			C- 457867-010V
			C- 469299-010V
			C- 490800-020V
352136-0129		GLAND	RK- 68180-010V
			RK- 68183-010V
			C- 735267-010V
			C- 544381-010V
			C- 441850-010V
			C- 441850-020V
			C- 441850-030V
			C- 735259-010V
			C- 735014-010V
			C- 735031-010V
			C- 491207-020V
			C- 735014-010V
352136-0142		GLAND	RK- 68808-010V
			C- 401207-010V
			C- 400895-010V
352136-0143		GLAND	CE- 67716-010V
352137-0142		GLAND	C- 401207-010V
			C- 400895-010V
352137-0143		GLAND	RK- 820068-010V
353001-0102		END SLEEVE	C- 441850-010V
			C- 441850-020V
			C- 441850-030V
353001-0106		END SLEEVE	RK- 491589-030V
			RK- 491590-030V
353021-0110		CLAMP	C- 456627-010V
353021-0201		CLAMP	C- 295441-010V
			C- 295441-020V
			C- 295441-030V
353021-0213		TERMINAL	C- 457856-010V
353021-0216		TERMINAL	RK- 41461-010V
			RK- 41377-010V
			RK- 68722-010V
			RK- 68725-010V
			C- 456435-020V
			C- 456435-030V
			C- 295470-040V
			C- 457856-010V
			RK- 41377-010V
			RK- 41461-010V
353021-0219		TERMINAL	C- 456435-020V
			C- 456435-030V
353021-0302		CLAMP	C- 456435-030V
353023-0101		FUSIBLE TERM.BLOCK	CE- 67716-010V
			CE- 68128-010V
			CE- 68304-010V
			CE- 68128-010V
			CE- 67716-010V
			CE- 68304-010V
353024-0201		EARTH CLIP	C- 295441-010V
			C- 295441-020V
			C- 295441-030V
353024-0204		EARTH CLIP	C- 456435-020V
			C- 456435-030V
			C- 295470-040V
			C- 457856-010V
353024-0206		EARTH CLIP	C- 295470-040V
			C- 457856-010V
353031-0201		END PLATE	C- 295441-010V
			C- 295441-020V
			C- 295441-030V
			C- 456435-020V
			C- 456435-030V
			C- 457856-010V
353032-0002		END PLATE	CE- 67716-010V
			CE- 68128-010V
			CE- 68304-010V
			CE- 68128-010V
			CE- 67716-010V

PART NO	LAST AM	DESCRIPTION	GROUP NO
			CE- 68304-010V
353032-0004		END PLATE	C- 456435-030V
			C- 457856-010V
353032-0005		END PLATE	C- 456435-030V
			C- 457856-010V
353032-0008		END PLATE	C- 456435-020V
353032-0104		END PLATE	C- 456827-010V
353032-0201		END PLATE	C- 295441-010V
			C- 295441-020V
			C- 295441-030V
353033-0103		WALL	C- 295441-010V
			C- 295441-020V
			C- 295441-030V
353041-0001		RAIL	C- 295441-010V
			C- 295441-020V
			C- 295441-030V
353041-0104		RAIL	C- 295441-010V
			C- 295441-020V
			C- 295441-030V
353042-0002		RAIL	C- 456827-010V
353101-0120		CABLE SHOE	C- 442080-010V
353101-0129		CABLE SHOE	C- 441835-010V
353101-0130		CABLE SHOE	C- 400872-010V
353101-0132		CABLE SHOE	C- 256237-040V
			C- 256237-050V
			C- 256237-060V
			RK- 751303-010V
			RK- 751311-010V
			RK- 751303-010V
			RK- 751311-010V
			C- 256055-040V
			C- 256055-050V
			C- 256055-060V
353101-0133		CABLE SHOE	C- 456588-030V
353101-0134		CABLE SHOE	C- 295891-010V
			C- 295891-020V
			C- 295891-030V
353101-0136		CABLE SHOE	C- 456588-030V
353102-0182		CABLE SHOE	C- 256873-020V
			C- 256873-030V
353103-0120		CABLE SHOE	RK- 820167-010V
			C- 736804-010V
353104-0130		CABLE SHOE	C- 256237-020V
			C- 256239-020V
			C- 256237-030V
			C- 256239-020V
			C- 256239-030V
			C- 256239-040V
			C- 272343-020V
			C- 295891-010V
			C- 272343-030V
			C- 295891-020V
			C- 272343-030V
			C- 295891-020V
			C- 272343-040V
			C- 295891-030V
			C- 272343-050V
			C- 295891-030V
			C- 256055-020V
			C- 256095-020V
			C- 256055-020V
			C- 256095-020V
			C- 256055-030V
			C- 256095-020V
			C- 256095-030V
353104-0130		CABLE SHOE	C- 256095-040V
353105-0117		CABLE SHOE	C- 736804-010V
359000-0064		MARKING COLLAR	C- 456739-010V
			C- 456935-010V
			C- 456739-010V
			C- 456935-010V
			C- 456739-010V
			C- 456935-020V
			C- 752898-010V
359000-0300		MARKING COLLAR	C- 736804-010V
359000-0301		MARKING COLLAR	C- 736804-010V
359000-0302		MARKING COLLAR	C- 736804-010V

PART NO	LAST AM	DESCRIPTION	GROUP NO
359000-0303		MARKING COLLAR	C- 736604-010V
359000-0304		MARKING COLLAR	C- 736604-010V
359000-0305		MARKING COLLAR	C- 736604-010V
359000-0306		MARKING COLLAR	C- 736604-010V
359000-0307		MARKING COLLAR	C- 736604-010V
359000-0308		MARKING COLLAR	C- 736604-010V
359000-0309		MARKING COLLAR	C- 736604-010V
359000-0400		MARKING COLLAR	RK- 469472-010V
			RK- 469788-010V
			C- 735248-010V
			C- 735268-010V
			C- 736594-010V
			C- 736865-010V
			C- 256233-020V
			C- 469366-010V
			C- 469366-020V
			C- 469366-030V
			C- 271562-020V
			C- 271562-030V
			C- 271562-040V
			C- 271562-050V
			C- 271562-060V
			C- 271562-070V
			C- 271866-020V
			C- 271909-020V
			C- 271866-030V
			C- 271909-030V
			C- 272404-030V
			C- 271866-030V
			C- 271909-030V
			C- 272404-040V
			C- 271866-040V
			C- 271909-040V
			C- 272404-050V
			C- 271866-050V
			C- 271909-050V
			C- 272404-060V
			C- 272343-020V
			C- 295891-010V
			C- 456739-010V
			C- 456935-010V
			C- 456739-010V
			C- 456935-010V
			C- 456739-010V
			C- 456935-020V
			C- 752898-010V
359000-0400		MARKING COLLAR	C- 295045-020V
			C- 295045-030V
			C- 469781-010V
			C- 295045-040V
			C- 469781-010V
			C- 295045-050V
			C- 469781-020V
			C- 295045-060V
			C- 469781-020V
			C- 457159-010V
			C- 457924-010V
			C- 457159-020V
			C- 457924-020V
			C- 735183-010V
			C- 735014-010V
			C- 735271-010V
			C- 736594-010V
			C- 736865-010V
			C- 735183-010V
			C- 735014-010V
			C- 735271-010V
			C- 736594-010V
			C- 736865-010V
			C- 735014-010V
			C- 735271-010V
			C- 736594-010V
			C- 736865-010V
359000-0401		MARKING COLLAR	RK- 469472-010V
			RK- 469788-010V
			C- 735268-010V
			C- 736594-010V

PART NO	LAST AM	DESCRIPTION	GROUP NO
			C- 736865-010V
			RK- 838415-010V
			C- 256233-020V
			C- 469366-010V
			C- 469366-020V
			C- 469366-030V
			C- 271562-020V
			C- 271562-030V
			C- 271562-040V
			C- 271562-050V
			C- 271562-060V
			C- 271562-070V
			C- 271866-020V
			C- 271909-020V
			C- 271866-030V
			C- 271909-030V
			C- 271866-030V
			C- 271909-030V
			C- 271866-040V
			C- 271909-040V
			C- 271866-050V
			C- 271909-050V
			C- 272343-020V
			C- 295891-010V
			C- 456739-010V
			C- 456935-010V
			C- 456739-010V
			C- 456935-010V
			C- 456739-010V
359000-0401		MARKING COLLAR	C- 456935-020V
			C- 752898-010V
			C- 295045-020V
			C- 295045-030V
			C- 469781-010V
			C- 295045-040V
			C- 469781-010V
			C- 295045-050V
			C- 469781-020V
			C- 295045-060V
			C- 469781-020V
			C- 457159-010V
			C- 457924-010V
			C- 457159-020V
			C- 457924-020V
			C- 735183-010V
			C- 735271-010V
			C- 736594-010V
			C- 736865-010V
			C- 735183-010V
			C- 735271-010V
			C- 736594-010V
			C- 736865-010V
			C- 735271-010V
			C- 736594-010V
			C- 736865-010V
359000-0402		MARKING COLLAR	RK- 469788-010V
			C- 735268-010V
			C- 736865-010V
			RK- 838415-010V
			C- 256233-020V
			C- 469366-010V
			C- 469366-020V
			C- 469366-030V
			C- 271562-020V
			C- 271562-030V
			C- 271562-040V
			C- 271562-050V
			C- 271562-060V
			C- 271562-070V
			C- 271866-020V
			C- 271909-020V
			C- 271866-030V
			C- 271909-030V
			C- 271866-030V
			C- 271909-030V
			C- 271866-040V
			C- 271909-040V

PART NO	LAST AM	DESCRIPTION	GROUP NO
			C- 271866-060V
			C- 271909-050V
			C- 295891-010V
			C- 456739-010V
			C- 456935-010V
			C- 456739-010V
			C- 456935-010V
			C- 456739-010V
			C- 456935-020V
			C- 752998-010V
			C- 295045-020V
368000-0402		MARKING COLLAR	C- 295045-030V
			C- 469781-010V
			C- 295045-040V
			C- 469781-010V
			C- 295045-050V
			C- 469781-020V
			C- 295045-060V
			C- 469781-020V
			C- 457159-010V
			C- 457924-010V
			C- 457159-020V
			C- 457924-020V
			C- 735183-010V
			C- 735271-010V
			C- 736865-010V
			C- 735183-010V
			C- 735271-010V
			C- 736865-010V
			C- 735271-010V
			C- 736865-010V
368000-0403		MARKING COLLAR	RK- 469788-010V
			C- 735268-010V
			C- 736594-010V
			C- 256233-020V
			C- 469366-010V
			C- 469366-020V
			C- 469366-030V
			C- 271562-020V
			C- 271562-030V
			C- 271562-040V
			C- 271562-050V
			C- 271562-060V
			C- 271562-070V
			C- 271866-020V
			C- 271909-020V
			C- 271866-030V
			C- 271909-030V
			C- 271866-030V
			C- 271909-030V
			C- 271866-040V
			C- 271909-040V
			C- 271866-050V
			C- 271909-050V
			C- 295045-020V
			C- 295045-030V
			C- 469781-010V
			C- 295045-040V
			C- 469781-010V
			C- 295045-050V
			C- 469781-020V
			C- 295045-060V
			C- 469781-020V
			C- 457159-010V
			C- 457924-010V
			C- 457159-020V
			C- 457924-020V
			C- 735271-010V
			C- 736594-010V
			C- 735271-010V
368000-0403		MARKING COLLAR	C- 736594-010V
			C- 735271-010V
			C- 736594-010V
368000-0404		MARKING COLLAR	RK- 469472-010V
			C- 735248-010V
			C- 735268-010V
			C- 736594-010V

PART NO	LAST AM	DESCRIPTION	GROUP NO
			C- 256233-020V
			C- 469366-010V
			C- 469366-020V
			C- 469366-030V
			C- 271562-020V
			C- 271562-030V
			C- 271562-040V
			C- 271562-050V
			C- 271562-060V
			C- 271562-070V
			C- 271866-020V
			C- 271909-020V
			C- 271866-030V
			C- 271909-030V
			C- 272404-030V
			C- 271866-030V
			C- 271909-030V
			C- 272404-040V
			C- 271866-040V
			C- 271909-040V
			C- 272404-050V
			C- 271866-050V
			C- 271909-050V
			C- 272404-060V
			C- 272343-020V
			C- 295891-010V
			C- 456739-010V
			C- 456935-010V
			C- 456739-010V
			C- 456935-010V
			C- 456739-010V
			C- 456935-020V
			C- 752998-010V
			C- 295045-020V
			C- 295045-030V
			C- 295045-040V
			C- 295045-050V
			C- 295045-060V
			C- 457159-010V
			C- 457924-010V
			C- 457159-020V
			C- 457924-020V
			C- 736014-010V
			C- 735271-010V
			C- 736594-010V
			C- 736014-010V
			C- 735271-010V
			C- 736594-010V
			C- 736014-010V
			C- 735271-010V
			C- 736594-010V
369000-0405		MARKING COLLAR	RK- 469472-010V
369000-0405		MARKING COLLAR	C- 735248-010V
			C- 735268-010V
			C- 736594-010V
			C- 736865-010V
			C- 469366-010V
			C- 469366-020V
			C- 271562-040V
			C- 271562-050V
			C- 271562-060V
			C- 271562-070V
			C- 271866-020V
			C- 271909-020V
			C- 271866-030V
			C- 271909-030V
			C- 271866-030V
			C- 271909-030V
			C- 271866-040V
			C- 271909-040V
			C- 271866-050V
			C- 271909-050V
			C- 456935-010V
			C- 456935-020V
			C- 295045-020V
			C- 295045-030V
			C- 295045-040V

PART NO	LAST AM	DESCRIPTION	GROUP NO
			C- 295045-060V
			C- 295045-060V
			C- 457924-010V
			C- 457924-020V
			C- 735183-010V
			C- 735014-010V
			C- 735271-010V
			C- 736594-010V
			C- 736865-010V
			C- 735183-010V
			C- 735014-010V
			C- 735271-010V
			C- 736594-010V
			C- 736865-010V
			C- 735014-010V
			C- 735271-010V
			C- 736594-010V
359000-0408		MARKING COLLAR	C- 736865-010V
			C- 735268-010V
			C- 256233-020V
			C- 469366-010V
			C- 469366-020V
			C- 469366-030V
			C- 271562-040V
			C- 271562-050V
			C- 271562-060V
			C- 271562-070V
			C- 271866-020V
			C- 271909-020V
			C- 271866-030V
			C- 271909-030V
			C- 271866-030V
			C- 271909-030V
			C- 271866-040V
359000-0408		MARKING COLLAR	C- 271909-040V
			C- 271866-050V
			C- 271909-050V
			C- 295045-020V
			C- 295045-030V
			C- 295045-040V
			C- 295045-050V
			C- 295045-060V
			C- 457924-010V
			C- 457924-020V
			C- 735183-010V
			C- 735271-010V
			C- 735183-010V
			C- 735271-010V
359000-0407		MARKING COLLAR	C- 271562-020V
			C- 271562-030V
			C- 271562-040V
			C- 271562-050V
			C- 271562-060V
			C- 271562-070V
			C- 271866-020V
			C- 271909-020V
			C- 271866-030V
			C- 271909-030V
			C- 271866-030V
			C- 271909-030V
			C- 271866-040V
			C- 271909-040V
			C- 271866-050V
			C- 271909-050V
			C- 295045-020V
			C- 295045-030V
			C- 295045-040V
			C- 295045-050V
			C- 295045-060V
			C- 457159-010V
			C- 457924-010V
			C- 457159-020V
			C- 457924-020V
359000-0408		MARKING COLLAR	C- 256233-020V
			C- 469366-010V
			C- 469366-020V
			C- 469366-030V

PART NO	LAST AM	DESCRIPTION	GROUP NO
			C- 271866-020V
			C- 271909-020V
			C- 271866-030V
			C- 271909-030V
			C- 271866-030V
			C- 271909-030V
			C- 271866-040V
			C- 271909-040V
			C- 271866-050V
			C- 271909-050V
			C- 295045-020V
			C- 295045-030V
			C- 295045-040V
			C- 295045-050V
			C- 295045-060V
			C- 457159-010V
359000-0408		MARKING COLLAR	C- 457924-010V
			C- 457159-020V
359000-0409		MARKING COLLAR	C- 457924-020V
			RK- 469766-010V
			C- 256233-020V
			C- 469366-010V
			C- 469366-020V
			C- 469366-030V
			C- 271866-020V
			C- 271909-020V
			C- 271866-030V
			C- 271909-030V
			C- 271866-030V
			C- 271909-030V
			C- 271866-040V
			C- 271909-040V
			C- 271866-050V
			C- 271909-050V
			C- 295045-020V
			C- 295045-030V
			C- 469781-010V
			C- 295045-040V
			C- 469781-010V
			C- 295045-050V
			C- 469781-020V
			C- 295045-060V
			C- 469781-020V
			C- 457159-010V
			C- 457924-010V
			C- 457159-020V
			C- 457924-020V
359000-0700		MARKING COLLAR	C- 736804-010V
359000-0701		MARKING COLLAR	C- 736804-010V
359000-0710		MARKING COLLAR	C- 736804-010V
359000-0718		MARKING COLLAR	C- 736804-010V
359000-0750		MARKING COLLAR	C- 457159-010V
			C- 457924-010V
			C- 457159-020V
			C- 457924-020V
359000-0751		MARKING COLLAR	C- 457159-010V
			C- 457924-010V
			C- 457159-020V
			C- 457924-020V
359000-0752		MARKING COLLAR	C- 457159-010V
			C- 457924-010V
			C- 457159-020V
			C- 457924-020V
359000-0753		MARKING COLLAR	C- 457159-010V
			C- 457924-010V
			C- 457159-020V
			C- 457924-020V
359000-0754		MARKING COLLAR	C- 457924-010V
			C- 457924-020V
359000-0755		MARKING COLLAR	C- 457159-010V
			C- 457159-020V
359000-0756		MARKING COLLAR	C- 457159-010V
			C- 457159-020V
359000-0757		MARKING COLLAR	C- 457159-010V
			C- 457924-010V
359000-0757		MARKING COLLAR	C- 457159-020V
			C- 457924-020V

PART NO	LAST AM	DESCRIPTION	GROUP NO
359000-0771		MARKING COLLAR	RK- 469472-010V
			RK- 469788-010V
			C- 469366-020V
			C- 469366-030V
			C- 271562-020V
			C- 271562-030V
			C- 271562-040V
			C- 271562-050V
			C- 271562-060V
			C- 271562-070V
			C- 271866-020V
			C- 271909-020V
			C- 271866-030V
			C- 271909-030V
			C- 271866-030V
			C- 271909-030V
			C- 271866-040V
			C- 271909-040V
			C- 271866-050V
			C- 271909-050V
			C- 456935-010V
			C- 456935-020V
			C- 295045-020V
			C- 295045-030V
			C- 469781-010V
			C- 295045-040V
			C- 469781-010V
			C- 295045-050V
			C- 469781-020V
			C- 295045-060V
			C- 469781-020V
359002-0028		MARKING CO1/3(UNMARKED)	C- 736804-010V
359009-0100		CABLE MARKING	C- 736804-010V
359009-0101		CABLE MARKING	C- 736804-010V
359009-0102		CABLE MARKING	C- 736804-010V
359009-0103		CABLE MARKING	C- 736804-010V
359009-0104		CABLE MARKING	C- 736804-010V
359009-0105		CABLE MARKING	C- 736804-010V
359009-0106		CABLE MARKING	C- 736804-010V
359009-0107		CABLE MARKING	C- 736804-010V
359009-0108		CABLE MARKING	C- 736804-010V
359009-0109		CABLE MARKING	C- 736804-010V
359011-0121		LABEL	RK- 69562-010V
359011-0122		LABEL	RK- 69562-010V
359011-0202		LABEL	C- 295441-010V
			C- 295441-020V
			C- 295441-030V
			C- 456435-030V
			C- 456827-010V
			C- 295382-020V
			C- 295470-020V
			C- 295470-030V
			C- 295470-040V
			C- 457856-010V
			C- 735259-010V
			C- 735031-010V
359011-0600		MARKING PLATE KITS	C- 295441-010V
359011-0600		MARKING PLATE KITS	C- 295441-020V
			C- 295441-030V
			C- 283633-010V
			C- 295470-020V
			C- 295470-030V
			C- 283633-010V
359011-0601		LABEL	C- 456827-010V
			C- 295028-010V
			C- 295028-020V
			C- 295028-030V
			C- 735259-010V
			C- 735031-010V
359011-0602		LABEL	C- 295382-020V
359011-0607		SET OF SIGNS	C- 456435-020V
			C- 456435-030V
			RK- 520088-010V
			C- 295470-040V
			C- 457856-010V
359011-0608		SET OF SIGNS	C- 295470-040V
			C- 457856-010V

PART NO	LAST AM	DESCRIPTION	GROUP NO
359020-0001		SIGN	C- 490600-010V
359020-0002		SIGN	C- 490600-010V
359020-0003		SIGN	C- 490600-010V
359020-0006		SIGN	C- 490600-010V
359020-0010		SIGN	C- 490600-010V
359020-0101		SIGN	C- 490600-010V
359020-0103		SIGN	C- 490600-010V
359020-0104		SIGN	C- 490600-010V
359020-0106		SIGN	C- 490600-010V
359240-0100		SIGN HOLDER	RK- 41567-010V
			CE- 67716-010V
			CE- 68128-010V
			RK- 68180-010V
			RK- 68183-010V
			CE- 68304-010V
			C- 456882-010V
			C- 484984-010V
			C- 256233-020V
			C- 272839-020V
			C- 279809-010V
			C- 294715-010V
			C- 295045-020V
			CE- 68128-010V
			CE- 67716-010V
			CE- 68304-010V
			RK- 41567-010V
			C- 232781-040V
359241-0115		SIGN	CE- 67716-010V
			CE- 68128-010V
			CE- 68304-010V
			CE- 68128-010V
			CE- 67716-010V
			CE- 68304-010V
359241-0120		SIGN	CE- 67716-010V
359241-0121		SIGN	CE- 67716-010V
			CE- 68304-010V
			CE- 67716-010V
			CE- 68304-010V
359241-0122		SIGN	CE- 67716-010V
359241-0122		SIGN	CE- 68304-010V
			CE- 67716-010V
			CE- 68304-010V
359241-0123		SIGN	CE- 67716-010V
			CE- 68304-010V
			CE- 67716-010V
			CE- 68304-010V
359241-0124		SIGN	CE- 67716-010V
			CE- 68128-010V
			CE- 68304-010V
			CE- 68128-010V
			CE- 67716-010V
			CE- 68304-010V
359241-0125		SIGN	CE- 67716-010V
			CE- 68304-010V
			CE- 67716-010V
			CE- 68304-010V
359241-0126		SIGN	CE- 67716-010V
			CE- 68304-010V
			CE- 67716-010V
			CE- 68304-010V
359241-0130		SIGN	CE- 67716-010V
			CE- 68304-010V
			RK- 69269-010V
			RK- 69501-010V
			RK- 69504-010V
			RK- 69507-010V
			RK- 69510-010V
			RK- 69562-010V
			CE- 67716-010V
			CE- 68304-010V
359241-0131		SIGN	CE- 67716-010V
			CE- 68128-010V
			CE- 68304-010V
			CE- 68128-010V
			CE- 67716-010V
			CE- 68304-010V
359241-0132		SIGN	CE- 67716-010V

PART NO	LAST AM	DESCRIPTION	GROUP NO
			CE- 68128-010V
			CE- 68304-010V
			CE- 68128-010V
			CE- 67716-010V
			CE- 68304-010V
359241-0133		SIGN	CE- 67716-010V
			CE- 68304-010V
			CE- 67716-010V
			CE- 68304-010V
359241-0135		SIGN	CE- 67716-010V
			CE- 68304-010V
			CE- 67716-010V
			CE- 68304-010V
359241-0136		SIGN	CE- 67716-010V
			CE- 68304-010V
			CE- 67716-010V
			CE- 68304-010V
359241-0137		SIGN	RK- 68674-010V
359241-0138		SIGN	C- 484984-010V
359241-0140		SIGN	RK- 68674-010V
359241-0141		SIGN	C- 456862-010V
			CE- 67716-010V
			CE- 68304-010V
			CE- 67716-010V
			CE- 68304-010V
359241-0142		SIGN	RK- 68674-010V
359241-0143		SIGN	RK- 68674-010V
359241-0144		SIGN	RK- 68674-010V
359241-0148		SIGN	CE- 67716-010V
			CE- 68304-010V
			CE- 67716-010V
			CE- 68304-010V
359241-0175		SIGN	RK- 68674-010V
359241-0268		SIGN	RK- 41567-010V
			RK- 41461-010V
			RK- 41377-010V
			RK- 68722-010V
			RK- 68725-010V
			RK- 41567-010V
			RK- 41377-010V
			RK- 41461-010V
359241-0275		SIGN	RK- 69262-010V
			RK- 69346-010V
			RK- 69393-010V
			RK- 69396-010V
359301-0001		SIGN	CE- 68379-010V
			C- 295026-010V
			C- 295026-020V
			C- 295026-030V
			CE- 68379-010V
359301-0005		SIGN	CE- 68379-010V
			C- 295026-010V
			C- 295026-020V
			C- 295026-030V
			CE- 68379-010V
359301-0050		SIGN	CE- 68379-010V
			C- 295026-010V
			C- 295026-020V
			C- 295026-030V
			CE- 68379-010V
359301-0051		SIGN	C- 457159-010V
			C- 457159-020V
359301-0060		SIGN	CE- 68379-010V
			C- 295026-010V
			C- 295026-020V
			C- 295026-030V
			CE- 68379-010V
359301-0100		SIGN	C- 272408-020V
			C- 272408-030V
			C- 272408-040V
			C- 272408-050V
359301-0101		SIGN	C- 294715-010V
359301-0105		SIGN	RK- 68674-010V
			CE- 68379-010V
			C- 295026-010V
			C- 295026-020V
			C- 295026-030V

PART NO	LAST AM	DESCRIPTION	GROUP NO
			CE- 68379-010V
359301-0110		SIGN	CE- 67716-010V
			CE- 68128-010V
359301-0110		SIGN	CE- 68379-010V
			C- 295026-010V
			C- 295026-020V
			C- 295026-030V
			C- 751685-010V
			C- 271513-060V
			C- 751685-020V
			C- 272408-020V
			C- 272408-030V
			C- 272408-040V
			C- 272408-050V
			C- 294715-010V
			C- 457159-010V
			C- 457159-020V
			CE- 68128-010V
			CE- 67716-010V
			CE- 68379-010V
359301-0125		SIGN	C- 456862-010V
359301-0130		SIGN	CE- 68379-010V
			C- 295026-010V
			C- 295026-020V
			C- 295026-030V
			CE- 68379-010V
359301-0160		SIGN	C- 295026-010V
			C- 295026-020V
			C- 295026-030V
359301-0170		SIGN	CE- 68379-010V
			C- 295026-010V
			C- 295026-020V
			C- 295026-030V
			CE- 68379-010V
359301-0215		SIGN	C- 295026-010V
			C- 295026-020V
			C- 295026-030V
765100-0163		SPIRAL DRILL	RK- 490869-010V
			RK- 751202-010V
			RK- 491795-010V
			RK- 751228-010V
			RK- 491795-010V
			RK- 751228-010V
765100-0173		SPIRAL DRILL	RK- 491404-010V
			RK- 751158-010V
765100-0177		SPIRAL DRILL	RK- 491543-010V
			RK- 491744-010V
			RK- 751636-010V
			RK- 491789-010V
			RK- 491902-010V
			RK- 751561-010V
			RK- 751569-010V
			RK- 491789-010V
			RK- 751561-010V
765100-0183		SPIRAL DRILL	RK- 751569-010V
			RK- 456716-010V
			RK- 752408-010V
			RK- 752410-010V
			RK- 752838-010V
			RK- 456717-010V
			RK- 752412-010V
			RK- 752414-010V
765100-0183		SPIRAL DRILL	RK- 752838-010V
			RK- 456717-010V
			RK- 752412-010V
			RK- 752414-010V
			RK- 752838-010V
765100-0185		SPIRAL DRILL	RK- 490869-010V
			RK- 491543-010V
			RK- 491744-010V
			RK- 751636-010V
			RK- 491789-010V
			RK- 491902-010V
			RK- 751561-010V
			RK- 751569-010V
			RK- 491789-010V
			RK- 751561-010V

PART NO	LAST AM	DESCRIPTION	GROUP NO
765100-0187		SPIRAL DRILL	RK- 751589-010V RK- 456716-010V RK- 752408-010V RK- 752410-010V RK- 456717-010V RK- 752412-010V RK- 752414-010V RK- 456717-010V RK- 752412-010V RK- 752414-010V RK- 752638-010V RK- 490889-010V RK- 456716-010V RK- 490885-010V RK- 491543-010V RK- 491744-010V RK- 751636-010V RK- 752408-010V RK- 752410-010V RK- 752638-010V RK- 456717-010V RK- 491789-010V RK- 491795-010V RK- 491902-010V RK- 751561-010V RK- 751569-010V RK- 752412-010V RK- 752414-010V RK- 752638-010V RK- 456717-010V RK- 491789-010V RK- 491795-010V RK- 553820-010V RK- 751561-010V RK- 751569-010V RK- 752412-010V RK- 752414-010V RK- 752638-010V RK- 553820-010V RK- 752638-010V
765100-0209		SPIRAL DRILL	RK- 76613-010V
765100-0219		SPIRAL DRILL	RK- 520129-010V RK- 520130-010V RK- 520094-010V
765100-0219		SPIRAL DRILL	RK- 520096-010V RK- 520067-010V RK- 520129-010V RK- 520130-010V
765100-0221		SPIRAL DRILL	RK- 490889-010V RK- 491543-010V RK- 491744-010V RK- 751636-010V RK- 491789-010V RK- 491902-010V RK- 751158-010V RK- 751561-010V RK- 751569-010V RK- 491789-010V RK- 751561-010V RK- 751569-010V
765100-0233		SPIRAL DRILL	RK- 490889-010V RK- 491404-010V
765100-0257		SPIRAL DRILL	RK- 490885-010V RK- 491795-010V
765100-0259		SPIRAL DRILL	RK- 76613-010V
765100-0261		SPIRAL DRILL	RK- 490889-010V
765100-0317		SPIRAL DRILL	RK- 491404-010V
765102-0175		SPIRAL DRILL	RK- 751479-010V RK- 751569-010V RK- 751591-010V RK- 751548-010V RK- 751548-010V RK- 751595-010V RK- 751548-010V RK- 751548-010V RK- 751595-010V
765102-0187		SPIRAL DRILL	RK- 751479-010V

PART NO	LAST AM	DESCRIPTION	GROUP NO
			RK- 751589-010V RK- 751591-010V RK- 751548-010V RK- 751548-010V RK- 751595-010V RK- 751548-010V RK- 751548-010V RK- 751595-010V
765102-0197		SPIRAL DRILL	RK- 548058-010V
765102-0221		SPIRAL DRILL	RK- 548058-010V
765103-0353		SPIRAL DRILL	RK- 490885-010V RK- 491795-010V
765110-0187		SPIRAL DRILL	RK- 491589-030V RK- 491589-030V
765401-0185		REAMER	RK- 456716-010V RK- 752408-010V RK- 752410-010V RK- 752638-010V RK- 456717-010V RK- 752412-010V RK- 752414-010V RK- 752638-010V RK- 456717-010V RK- 752412-010V RK- 752414-010V RK- 752638-010V
765401-0197		REAMER	RK- 752638-010V
767101-0116		HAND TAP	RK- 490889-010V RK- 490885-010V RK- 491795-010V
767101-0118		HAND TAP	RK- 520129-010V RK- 520130-010V RK- 520094-010V RK- 520096-010V RK- 520067-010V RK- 520129-010V RK- 520130-010V
767101-0222		TAP	RK- 76613-010V
767102-0110		TAP	RK- 751202-010V RK- 751228-010V
767102-0112		TAP	RK- 491543-010V RK- 491744-010V RK- 751479-010V RK- 751569-010V RK- 751591-010V RK- 751636-010V RK- 491789-010V RK- 491902-010V RK- 751548-010V RK- 751548-010V RK- 751561-010V RK- 751569-010V RK- 751595-010V RK- 491789-010V RK- 751548-010V RK- 751548-010V RK- 751561-010V RK- 751569-010V RK- 751595-010V
767102-0114		TAP	RK- 456716-010V RK- 491543-010V RK- 491589-030V RK- 491744-010V RK- 751479-010V RK- 751569-010V RK- 751591-010V RK- 751636-010V RK- 752408-010V RK- 752410-010V RK- 456717-010V RK- 491589-030V RK- 491789-010V RK- 491902-010V RK- 751548-010V RK- 751548-010V RK- 751561-010V RK- 751569-010V

PART NO	LAST AM	DESCRIPTION	GROUP NO
			RK- 751595-010V
			RK- 752412-010V
			RK- 752414-010V
			RK- 456717-010V
			RK- 491590-030V
			RK- 491789-010V
			RK- 751546-010V
767102-0114		TAP	RK- 751548-010V
			RK- 751561-010V
			RK- 751569-010V
			RK- 751595-010V
			RK- 752412-010V
767102-0116		TAP	RK- 752414-010V
			RK- 548056-010V
			RK- 456716-010V
			RK- 752408-010V
			RK- 752410-010V
			RK- 752638-010V
			RK- 456717-010V
			RK- 752412-010V
			RK- 752414-010V
			RK- 752638-010V
			RK- 456717-010V
			RK- 553820-010V
			RK- 752412-010V
			RK- 752414-010V
			RK- 752638-010V
			RK- 553820-010V
767102-0118		TAP	RK- 752638-010V
			RK- 548056-010V
			RK- 491543-010V
			RK- 491744-010V
			RK- 491789-010V
			RK- 491902-010V
			RK- 751561-010V
			RK- 751569-010V
			RK- 491789-010V
			RK- 751561-010V
767141-0106		TAP	RK- 751569-010V
767141-0111		HAND TAP	RK- 520096-010V
769211-0116		SAW BLADE	RK- 520129-010V
			RK- 520129-010V
			RK- 520130-010V
			RK- 520094-010V
			RK- 520096-010V
			RK- 491543-010V
			RK- 491744-010V
			RK- 491789-010V
			RK- 491902-010V
			RK- 751561-010V
			RK- 751569-010V
			RK- 491789-010V
			RK- 751561-010V
			RK- 751569-010V
			RK- 520067-010V
			RK- 520129-010V
769211-0119		SAW BLADE	RK- 520130-010V
			RK- 490865-010V
769211-0122		SAW BLADE	RK- 491795-010V
769211-0125		SAW BLADE	C- 735271-010V
769211-0127		SAW BLADE	RK- 548056-010V
			RK- 490869-010V
769211-0129		SAW BLADE	RK- 490808-010V
			RK- 520129-010V
			RK- 520130-010V
			RK- 520094-010V
769211-0129		SAW BLADE	RK- 520096-010V
			RK- 520067-010V
			RK- 520129-010V
			RK- 520130-010V
769211-0132		SAW BLADE	RK- 520129-010V
			RK- 520130-010V
			RK- 520094-010V
			RK- 520096-010V
			RK- 520067-010V
			RK- 520129-010V
			RK- 520130-010V

PART NO	LAST AM	DESCRIPTION	GROUP NO
			RK- 490869-010V
			RK- 548056-010V
			RK- 490865-010V
			RK- 491543-010V
			RK- 491744-010V
			RK- 491789-010V
			RK- 491795-010V
			RK- 491902-010V
			RK- 751561-010V
			RK- 751569-010V
			RK- 491789-010V
			RK- 491795-010V
			RK- 751561-010V
			RK- 751569-010V
769219-0100		HOLDER	C- 735271-010V
			RK- 520129-010V
			RK- 520130-010V
			RK- 520094-010V
			RK- 520096-010V
			RK- 490808-010V
			RK- 520067-010V
			RK- 520129-010V
769219-0101		HOLDER	RK- 520130-010V
			RK- 520129-010V
			RK- 520130-010V
			RK- 520094-010V
			RK- 520096-010V
			RK- 520067-010V
			RK- 520129-010V
769219-0102		HANDLE BRACKET	RK- 520130-010V
			C- 456975-020V
772220-0100		ASSEMBLING TOOL	C- 456975-010V
			C- 456975-020V
772220-0101		ASSEMBLING TOOL	C- 456975-010V
			C- 456975-020V
772220-0103		ASSEMBLING TOOL	C- 456975-010V
			C- 456975-020V
772220-0104		ASSEMBLING TOOL	C- 456975-010V
			C- 456975-020V
776422-0101		BRASS WIRE BRUSH	C- 456975-010V
			C- 456975-020V
			C- 250610-010V
777100-0113		SCREWDRIVER	C- 456975-010V
			C- 456975-020V
			C- 250610-010V
777100-0184		SCREWDRIVER	C- 456975-010V
			C- 456975-020V
			C- 250610-010V
777120-0215		C-SPANNER	C- 456975-010V
			C- 250610-010V
777120-0216		C-SPANNER	C- 456975-010V
777120-0220		C-SPANNER	C- 77099-010V
			C- 250610-010V
			C- 456975-010V
777120-0232		C-SPANNER	C- 77099-010V
			C- 250610-010V
			C- 456975-010V
777121-0137		SPANNER	C- 77099-010V
777121-0142		SPANNER	C- 250610-010V
777122-0137		C-SPANNER	C- 250610-010V
			C- 456975-010V
777122-0142		C-SPANNER	C- 77099-010V
			C- 456975-010V
777150-0100		HEXAGON SPANNER	C- 77099-010V
777150-0101		HEXAGON SPANNER	C- 250610-010V
777150-0104		HEXAGON SPANNER	C- 250610-010V
777150-0106		HEXAGON SPANNER	C- 250610-010V
777150-0108		HEXAGON SPANNER	C- 250610-010V
777150-0110		HEXAGON SPANNER	C- 250610-010V
777150-0112		HEXAGON SPANNER	C- 250610-010V
777150-0114		HEXAGON SPANNER	C- 250610-010V
777150-0199		HEXAGON SPANNER	C- 250610-010V
777150-0491		HEXAGON SPANNER	C- 250610-010V
777150-0601		KEY SET	C- 250610-010V
			C- 456975-010V
777165-0492		ALLEN KEY	C- 77099-010V
777200-0101		PIPE WRENCH	C- 250610-010V
			C- 250610-010V
			C- 456975-010V

PART NO	LAST AM	DESCRIPTION	GROUP NO
777510-0101		SCISSORS	C- 77099-010V C- 456975-020V C- 250610-010V C- 456975-010V
777603-0100		PULLER	C- 76175-010V
777603-0300		PULLER	C- 76175-010V
779130-0102		PROTECTIVE GOGGLES	C- 531345-010V
779911-0101		PADLOCK	C- 76470-010V C- 76591-010V
783901-0108		SPIRIT LEVEL	C- 75467-020V

PART NO	LAST AM	DESCRIPTION	GROUP NO