	1	BE-LIST	CONTROL CABINET
	2	BE-LIST,	PT-IH EQUIPMENT
	3	CE-LIST,	CONTROL CABINET
	4		CONTROL PANEL
	5		MACHINE
	6		EQUIPMENT
	7		EXTRA EQUIPMENT
	8		SPARE PART KIT
4-571522	9		TPIH, PT-IH
	10		ELECTRICAL DOCUMENT
	11	CIRCUIT DIAGRAM,	POSITION SUMMARY
	12		DRAWINGS
	13		GROUND CONNECTION
DATE: 930310 SIGN: HK/UTH	14		LINE SUMMARY
	15		TERMINAL SUMMARY
	16		ALTERATION MESSAGES
	17		PT-IH
	18	PLC,	LIST OF BLOCKS
INDEX FOR TBA/9-1402	19		LIST OF ADDRESSES
	20		VARIANT SETTINGS
	21		SEQUENCE DIAGRAM
	22		FUNCTIONS
	23	MOUNT. DRAWINGS,	CONTROL CABINET
	24		CONTROL PANEL
	25		MACHINE
	26		TPIH, PT-IH
TETRA PAK	27	CONNECTION DIAGRAM	
	28	MAINS CONNECTION	
	29	TERMINALS	
	30	FUSE PANEL LABEL	
	31		

08:13 93.11.25

USED IN ASSEMB. 648152

ECN NUMBER:	EC 17786	EC 17872	EC 17873	EC 19260	EC 19261	EC 19262	EC 19721
DATE DISTRIBUTED	93-01-19	93-01-19	93-01-19	93-03-17	93-03-17	93-03-17	93-04-20

GROUP

VARIANT DESCRIP: -1401 TBA/9-1401 S.A.
-1402 TBA/9-1402 P.T.
-1403 TBA/9-1403 C.

POS	PART TITLE / REMARKS	PART NUMBER	R	SP	UN	1401	1402	1403
0010	CTRL CAB. TBA/9-1401 S.A.	CE- 41723-0101	-		1	1	-	-
0020	CTRL.PAN. TBA/9-1401 S.A.	CE- 41724-0101	-		1	1	-	-
0030	MACHINE TBA/9-1401 S.A.	CE- 41725-0101	-		1	1	-	-
0040	EQUIPMENT TBA/9-1401 S.A.	CE- 41726-0101	-		1	1	-	-
0050	EXTRA EQU TBA/9-1401 S.A.	CE- 41727-0101	-		1	1	-	-
0060	SP. PARTS TBA/9-1401 S.A.	CE- 41728-0101	-		1	1	-	-
0070	EL-DOC. TBA/9-1401 S.A.	CE- 41729-0101	-		1	1	-	-
0080	EL-EQUIPMENT TPIH	CE- 41766-0101	-		1	1	1	1
0090	CTRL CAB. TBA/9-1402 P.T.	CE- 41750-0101	-		1	-	1	-
0100	CTRL.PAN. TBA/9-1402 P.T.	CE- 41751-0101	-		1	-	1	-
0110	MACHINE TBA/9-1402 P.T.	CE- 41752-0101	-		1	-	1	-
0120	EQUIPMENT TBA/9-1402 P.T.	CE- 41753-0101	-		1	-	1	-
0130	EXTRA EQU TBA/9-1402 P.T.	CE- 41754-0101	-		1	-	1	-
0140	SP. PARTS TBA/9-1402 P.T.	CE- 41755-0101	-		1	-	1	-
0150	EL-DOC. TBA/9-1402 P.T.	CE- 41756-0101	-		1	-	1	-
0160	EL-EQUIPMENT IH-GENERATOR	BE- 649411-0101	-		1	-	1	-
0170	ELECTRIC MATERIALS	CE- 69884-0101	-		1	-	1	-
0180	ELECTRICAL DOCUMENT	CE- 69885-0101	-		1	-	1	-
0190	ELECTRIC MATERIALS	CE- 69886-0101	-		1	-	1	-
0200	ELECTRICAL DOCUMENT	CE- 69887-0101	-		1	-	1	-
0210	CTRL CAB. TBA/9-1403 C.	CE- 41757-0101	-		1	-	-	1
0220	CTRL.PAN. TBA/9-1403 C.	CE- 41758-0101	-		1	-	-	1
0230	MACHINE TBA/9-1403 C.	CE- 41759-0101	-		1	-	-	1
0240	EQUIPMENT TBA/9-1403 C.	CE- 41760-0101	-		1	-	-	1
0250	EXTRA EQU TBA/9-1403 C.	CE- 41761-0101	-		1	-	-	1
0260	SP. PARTS TBA/9-1403 C.	CE- 41762-0101	-		1	-	-	1

POS	PART TITLE / REMARKS	PART NUMBER	R	SP	UN	1401	1402	1403
0270	EL-DOC. TBA/9-1403 C.	CE- 41763-0101	-			-	-	1

08:13 93.11.25

GENERAL REMARKS: ELECTRICAL DOCUMENTATION "IH-GENERATOR" BE-649411-010V
INTENDED FOR TBA/9-MACHINES WITH P.T. AND P.H.

USED IN ASSEMB. 69904 69994 69995 557228 649205

	ECN NUMBER:	EC 14293	EC 16141	EC 16722	EC 18019	EC 19083
DATE DISTRIBUTED		90-04-02	91-03-06	91-06-28	92-10-12	92-10-30

GROUP

VARIANT DESCRIP: -0101 GENERATOR WITH ONE OSCILLATOR UNIT 5KW, HEAT-TECH NR S-84.0334-1
INTENDED FOR TBA/9-P.T.
-0102 GENERATOR WITH ONE OSCILLATOR UNIT 3KW, HEAT-TECH NR S-84.342-1
INTENDED FOR TBA/9-P.H.

POS	PART TITLE / REMARKS	PART NUMBER	R	SP	UN	0101	0102
0010	ELECTRIC MATERIALS	CE- 69884-0101	-			1	-
0020	ELECTRIC MATERIALS	CE- 69886-0101	-			-	1
0030	ELECTRICAL DOCUMENT	CE- 69885-010V	-			1	-
0040	ELECTRICAL DOCUMENT	CE- 69887-0101	-			-	1

08:41 93.11.25

POS	PART TITLE / REMARKS	PART NUMBER	R	SP	UN	0101
	CONSISTS OF / SPARE PART			SP	UN	QTY
	3- 90075-0313 AUXILIARY CONTACT					
K105	SOLID-STATE RELAY	3- 90119-0067		UP		1
K106	SOLID-STATE RELAY	3- 90119-0067		UP		1
K108	SOLID-STATE RELAY	3- 90119-0067		UP		1
K110	OPTO SWITCH	3- 90119-0043		UP		1
K111	SOLID-STATE RELAY	3- 90119-0067		UP		1
K112	SOLID-STATE RELAY	3- 90119-0067		UP		1
K113	SOLID-STATE RELAY	3- 90119-0067		UP		1
K114	SOLID-STATE RELAY	3- 90119-0067		UP		1
K201	CONTACTOR 4KW	2- 90075-0124		US		1
	CONSISTS OF / SPARE PART			SP	UN	QTY
	3- 90075-0313 AUXILIARY CONTACT					
K202	SOLID-STATE RELAY	3- 90119-0067		UP		1
K203	SOLID-STATE RELAY	3- 90119-0067		UP		1
K204	SOLID-STATE RELAY	3- 90119-0067		UP		1
K205	SOLID-STATE RELAY	3- 90119-0067		UP		1
K206	SOLID-STATE RELAY	3- 90119-0067		UP		1
K207	SOLID-STATE RELAY	3- 90119-0067		UP		1
K208	SOLID-STATE RELAY	3- 90119-0067		UP		1
K212	CONTACTOR 4KW	2- 90075-0127		US		1
K225	TIME RELAY	90060-0075		S		1
K225:1	SIGN"INT STRIP OPENING"	359241-0137		C		1
L001	BALLAST COIL 50/60HZ	90297-0306		S		1
L002	BALLAST COIL 50/60HZ	90297-0306		S		1
L004	BALLAST COIL 50/60HZ	90297-0306		S		1
L201	BALLAST COIL 60HZ	90297-0301		S		1
M002	FAN	90264-0026		C		1
M002:1	COOLING ELEMENT	3- 495201		C		1
M002:2	PIPE COUPLGI-15-1/2"	342723-0114		C		1
P002	HOUR METER	90178-0007		S		1
P004	COUNTING APPARATUS	90053-0029		S		1
P004:1	SIGN"PACKAGE COUNTER L 1"	359241-0199		C		1
P005	RECORDER 50HZ	90332-0007		C		1

>>>>>> CONTINUES ON NEXT PAGE >>>>>>>

08:13 93.11.25

POS	PART TITLE / REMARKS		PART NUMBER	R	SP	UN	0101
	CONSISTS OF / SPARE PART				SP	UN	QTY
	4- 90332-0308 KEY						
	90333-0004 GRAPH PAPER						
Q001	SWITCH	2-	90111-0135	C			1
Q001:1	SIGN		359241-0124	C			1
Q001:2	SIGN,VOLTAGE/FREQ./CURR.	4-	359241-0297	C			1
Q002	MOTOR SWITCH	2-	90259-0030	S			1
Q002:1	AUXILIARY CONTACT	3-	90259-0306	S			1
Q003	MOTOR SWITCH	3-	90259-0029	C			1
Q003:1	AUXILIARY CONTACT	3-	90259-0306	S			1
Q012	MOTOR SWITCH 1,6-2,4A	3-	90259-0023	S			1
Q027	MOTOR SWITCH	3-	90259-0027	S			1
Q051	MOTOR SWITCH 6-10A	3-	90259-0026	S			1
Q051:1	AUXILIARY CONTACT	3-	90259-0306	S			1
Q077	MOTOR SWITCH	3-	90259-0027	S			1
Q077:1	AUXILIARY CONTACT	3-	90259-0306	S			1
Q081	MOTOR SWITCH 2-4A	3-	90259-0024	S			1
Q081:1	AUXILIARY CONTACT	3-	90259-0306	S			1
Q082	MOTOR SWITCH 1-1,6A	3-	90259-0017	S			1
Q082:1	AUXILIARY CONTACT	3-	90259-0306	S			1
Q087	MOTOR SWITCH 6-10A	3-	90259-0026	S			1
Q087:1	AUXILIARY CONTACT	3-	90259-0306	S			1
Q091	MOTOR SWITCH 6-10A	3-	90259-0026	S			1
Q091:1	AUXILIARY CONTACT	3-	90259-0306	S			1
Q093	MOTOR SWITCH 1-1,6A	3-	90259-0017	S			1
Q094	MOTOR SWITCH	3-	90259-0021	S			1
Q094:1	AUXILIARY CONTACT	3-	90259-0306	S			1
Q098	MOTOR SWITCH 6-10A	3-	90259-0026	S			1
Q098:1	AUXILIARY CONTACT	3-	90259-0306	S			1
Q099	MOTOR SWITCH	3-	90259-0022	S			1
Q099:1	AUXILIARY CONTACT	3-	90259-0306	S			1
Q201	MOTOR SWITCH 1,6-2,4A	3-	90259-0023	S			1
Q201:1	AUXILIARY CONTACT	3-	90259-0306	S			1
R003	POTENTIOMETER		90130-0017	S			1
R003:1	KNOB		90130-0301	C			1
R003:2	SIGN		359241-0261	C			1

08:13 93.11.25

POS	PART TITLE / REMARKS		PART NUMBER	R	SP	UN	0101
R004	POTENTIOMETER		90130-0017	S			1
R004:1	KNOB		90130-0301	C			1
R004:2	SIGN		359241-0260	C			1
S002	SWITCH	3-	90111-0124	S			1
S002:1	SIGN"CL.OF ST.BARRIER SP.		359241-0122	C			1
S003	SWITCH UNIT		90023-0070	S			1
S003:1	SIGN		359320-0002	C			1
S004	KEY SWITCH	3-	90111-0122	S			1
S004:1	SIGN"SERVICE SWITCH"		359241-0133	C			1
S032	EMERGENCY STOP	3-	90064-0105	S			1
S032:1	SIGN	4-	486826-0001	C			1
S034	PUSH BUTTON RED	3-	90064-0085	S			1
S034:1	SIGN"SHORT STOP"		359301-0110	C			1
S034:2	TOUCH GUARD		90064-0317	C			1
S036	PUSH BUTTON GREEN	3-	90064-0083	S			2
S036:1	SIGN T		359301-0101	C			2
S036:2	TOUCH GUARD		90064-0317	S			2
S207	SWITCH	3-	90111-0120	S			1
S207:1	SIGN		359241-0275	C			1
T001	TRANSFORMER	2-	90245-0019	C			1
T002	TRANSFORMER	3-	23118	C			1
T009	TRANSFORMER	3-	23139	C			1
V003	RECTIFIER	3-	90038-0024	S			1
V010	FEED THROUKLAMMA WTRD 2,5	3-	353021-0122	-			-
	* SEE TERMINAL DRWG: 571519						
W406	CABLE		90220-0059	C	MM	5000	
W407	CABLE		90220-0059	C	MM	5000	
W408	CABLE		90220-0059	C	MM	5000	
W409	CABLE		90220-0059	C	MM	5000	
W410	CABLE		90220-0059	C	MM	5000	
W411	CABLE		90220-0059	C	MM	5000	
W412	CABLE		90220-0059	C	MM	5000	
W447	CABLE		90220-0036	C	MM	4000	
W448	CABLE		90220-0036	C	MM	4000	
W450	CABLE		90220-0059	C	MM	5000	
W506	CABLE		90220-0059	C	MM	5000	

08:13 93.11.25

	POS	PART TITLE / REMARKS	PART NUMBER	R	SP	UN	0101
	W507	CABLE	90220-0059	C		MM	5000
	W527	CABLE	90220-0059	C		MM	5000
	W535	CABLE	90220-0059	C		MM	5000
	W540	CABLE	90220-0059	C		MM	5000
	XL01	TERMINAL DRAWING XL1-3	4- 571525	-			1
	XL02	TERMINAL DRAWING XL1-3	4- 571525	-			-
	XL03	TERMINAL DRAWING XL1-3	4- 571525	-			-
	XL10	TERMINAL DRAWING XL, X009	4- 571519	-			1
	XL11	TERMINAL DRAWING XL, X009	4- 571519	-			-
	XL12	TERMINAL DRAWING XL, X009	4- 571519	-			-
	XL20	TERMINAL DRAWING XL, X009	4- 571519	-			-
	XL50	TERMINAL DRAWING XL, X009	4- 571519	-			-
	XL51	TERMINAL DRAWING XL, X009	4- 571519	-			-
	X001:1	TERMINAL DRWG X001, X011	4- 570927-0001	-			1
	X001:2	TERMINAL DRAWING X001	4- 570927-0002	-			1
	X001:3	TERMINAL DRAWING X001	4- 570927-0003	-			1
	X001:4	TERMINAL DRAWING X001	4- 570927-0004	-			1
	X003	TERMINAL DRAWING X003	4- 571518	-			1
	X009	TERMINAL DRAWING XL, X009	4- 571519	-			-
	X010	WALL SOCKET	3- 90001-0028	C			1
	X011	TERMINAL DRWG X001, X011	4- 570927-0001	-			-
	X016	STRIP	90077-0106	-			1
	X017	CONTACT UNIT	90110-0028	C			1
	X019	CONTACT UNIT	90110-0029	C			1
	X021	TERMINAL BLOCK	90195-0010	C			1
	X023	TERMINAL BLOCK	4- 90077-0102	C			1
	X024	TERMINAL BLOCK	4- 90195-0020	C			1
	0020	MACHINE PLATE	4- 27402	-			1
	0030	SIGN HOLDER	2- 359240-0100	-			28
	0040	SIGN"IDENTIF. OF WIRING"	90194-0080	-			1
I	0045	SIGN"WHITE CARD EL.EQ."	90194-0112	-			1
	0050	FUSE PANEL LABEL	4- 571521	-			1
	0060	SIGN, UNENGRAVED	4- 359240-0001	-			10
	0070	CABLE GLANR.ST 36	352103-0122	S			1
	0080	BLANK-OFF PLUG	90002-0014	C			3
	0090	BLANK-OFF PLUG	90002-0009	C			1
	0100	GLAND FITT	352136-0142	C			3

POS	PART TITLE / REMARKS	PART NUMBER	R	SP	UN	0101
0110	HOSE .022	352135-0109	C		MM	1500
0120	SIGN"FLASH SIGN"	90194-0016	C			1
0130	CABLE AWM ORANGE 0,75	351180-0102	C		MM	X
0140	CABLE AWM RED 0,75	351176-0102	C		MM	X
0150	CABLE AWM RED 4,0	351176-0106	C		MM	X
0160	CABLE AWM DARKBLUE 0,75	351172-0102	C		MM	X
0170	CABLE AWM DARKBLUE 4,0	351172-0106	C		MM	X
0180	CABLE AWM BLACK 1,5	351179-0104	C		MM	X
0190	CABLE AWM BLACK 2,5	351179-0105	C		MM	X
0200	CABLE AWM BLACK 6,0	351179-0107	C		MM	X
0210	CABLE AWM BLACK 25,0	351179-0110	C		MM	X
0220	CABLE AWM LIGHTBLUE 1,5	351173-0104	C		MM	X
0230	CABLE AWM LIGHTBLUE 2,5	351173-0105	C		MM	X
0240	CABLE AWM LIGHTBLUE 6,0	351173-0107	C		MM	X
0250	CABLE AWM LIGHTBLUE 25,0	351173-0110	C		MM	X
0260	CABLE AWM YELL/GREEN 0,75	351175-0102	C		MM	X
0270	CABLE AWM YELL/GREEN 1,5	351175-0104	C		MM	X
0280	CABLE AWM YELL/GREEN 2,5	351175-0105	C		MM	X
0290	CABLE AWM YELL/GREEN 4,0	351175-0106	C		MM	X
0300	CABLE AWM YELL/GREEN 6,0	351175-0107	C		MM	X
0310	CABLE AWM YELL/GREEN 16,0	351175-0109	C		MM	X

08:13 93.11.25

USED IN ASSEMB. 41756 649205

ECN NUMBER: EC 17872 EC 19261 EC 19721
DATE DISTRIBUTED 93-01-19 93-03-17 93-04-20

	POS	PART TITLE / REMARKS	PART NUMBER	R	SP	UN	0101
		MOUNTING DRAWING, PANEL	4- 52482-12:01				X
		MOUNTING DRAWING, PANEL	3- 52482-13:01				X
		MOUNTING DRAWING, PANEL	3- 52482-14:01				X
	A016:1	POTENTIOMETER	C- 67062-0201		S	1	
	A220	MULTIPLEXPRINT	C- 68510-0101		S	1	
	A016:2	SIGN	4- 479876		C	1	
	A100	CIRCUIT BOARD	1- 560868		C	1	
I	A100:1	DISPLAY	1- 571013		C	1	
C		* CLICHÉ NO: 251016					
	PL01	TERMINAL PLINTH	3- 90025-0029		S	1	
	PL02	TERMINAL PLINTH	3- 90025-0029		S	1	
	PL03	TERMINAL PLINTH	3- 90025-0029		S	1	
	PL04	TERMINAL PLINTH	3- 90025-0029		S	1	
	PL05	TERMINAL PLINTH	3- 90025-0030		S	1	
	PL06	TERMINAL PLINTH	3- 90025-0031		S	1	
	PX01	TERMINAL BLOCK P.X1, P.X2	4- 571520		-	1	
	PX02	TERMINAL BLOCK P.X1, P.X2	4- 571520		-	-	
	P003	COUNTER	90053-0024		S	1	
	P003:1	FRAME	90053-0305		S	1	
	P100	PROGRAM CARD	1- 90025-0042		S	1	
	S001	EMERGENCY STOP	3- 90064-0105		S	1	
	S001:1	SIGN	4- 486826-0001		S	1	
	S002H	PUSH BUTTON"GREEN"	3- 90064-0093		S	1	
	S002H1	SIGN"INCHING"	359301-0090		S	1	
	S002H2	LIGHT BULB BA9S 28V	90036-0057		P	1	
	S003H	PUSH BUTTON"GREEN"	3- 90064-0093		S	1	
	S003H1	SIGN"UP"	359301-0001		S	1	
	S003H2	LIGHT BULB BA9S 28V	90036-0057		P	1	
	S004H	PUSH BUTTON WHITE	3- 90064-0082		S	1	

>>>>>> CONTINUES ON NEXT PAGE >>>>>>>

08:13 93.11.25

POS	PART TITLE / REMARKS		PART NUMBER	R	SP UN	0101
	CONTAINS PART/SPARE PART				SP UN	QTY
	90036-0057 LIGHT BULB BA9S 28V					
S004H1	SIGN"DOWN"		359301-0005	S		1
S004H2	LIGHT BULB BA9S 28V		90036-0057	P		1
S006H	PUSH BUTTON RED	3-	90064-0085	S		1
S006H1	SIGN"SHORT STOP"		359301-0110	S		1
S006H2	LIGHT BULB BA9S 28V		90036-0057	P		1
S007	SWITCH	3-	90111-0120	S		1
S011H	PUSH BUTTON	3-	90064-0098	S		1
S011H1	SIGN"ALARM STOP"		359301-0105	S		1
S011H2	LIGHT BULB BA9S 28V		90036-0057	P		1
S012	PUSH BUTTON WHITE	3-	90064-0082	S		1
	CONTAINS PART/SPARE PART				SP UN	QTY
	90036-0057 LIGHT BULB BA9S 28V					
S012:1	SIGN"LAMP TEST"		359301-0130	S		1
S019	PUSH BUTTON YELLOW	3-	90064-0084	S		1
S019:1	SIGN		359301-0050	S		1
S020	PUSH BUTTON YELLOW	3-	90064-0084	S		1
S020:1	SIGN		359301-0170	S		1
W017	CABLE OILFLEX 1260,75		351150-0407	C	MM	1000
W108	LED CONNECTION CABLE	3-	563711	C		1
Z001	INTERFERENCE PROTECTION	3-	276069	S		1
Z002	INTERFERENCE PROTECTION	3-	276069	S		1
0040	LAMP HOLDER BA9S		90124-0027	S		20
0050	LIGHT BULB BA9S 28V		90036-0057	S		20
0060	SIGN"FLASH SIGN"		90194-0016	C		1

08:13 93.11.25

GENERAL REMARKS: THE FOLLOWING CABLES ARE PRE-WIRED COMPONENT CABLES: 0010, 0011, 0012,
0015, 0102, 0103, 0104, 0105, 0106, 0107, 0201. 0202, 0203, 0204, 0307,
0313, 0314, 0315, 0332, 0333, 0334, 0353, 0414, 0415, 0419, 0421, 0422,
0423, 0424, 0433, 0435, 0440, 0443, 0447, 0448, 0451, 0454, 0455, 0456,
0502, 0513, 0514, 0515, 0516, 0517, 0518, 0519, 0520, 0521, 0522, 0523,
0525, 0526, 0528, 0532, 0534, 0536, 0538, 0541, 0543, 0544, 0545, 0546,
0547, 0548, 0549, 0550, 0551, 0552, 0554, 0555, 0556, 0557, 0558, 0559
CABLE 0001-0026 BELONG TO BODY.
CABLE 0101-0199 BELONG TO DRIVING UNIT.
CABLE 0201-0299 BELONG TO FINAL FOLDER UNIT.
CABLE 0301-0399 BELONG TO SERVICE UNIT.
CABLE 0401-0499 BELONG TO SUPERSTRUCTURE.
CABLE 0501-0599 BELONG TO PULLTAB.

USED IN ASSEMB. 41756 649205

ECN NUMBER:	EC 19261	EC 20144	EC 20721
DATE DISTRIBUTED	93-03-17	93-09-20	93-12-02

POS	PART TITLE / REMARKS	PART NUMBER	R	SP	UN	0101
0001	CABLE AWM BLACK 25,0	351179-0110	C	MM	5800	
0002	CABLE AWM BLACK 25,0	351179-0110	C	MM	5800	
0003	CABLE AWM BLACK 25,0	351179-0110	C	MM	5800	
0004	CABLE AWM BLACK 25,0	351179-0110	C	MM	5800	
0005	CABLE OILFLEX 4G2,5	351150-0418	C	MM	6600	
0006	CABLE OILFLEX 3G1,5	351150-0412	C	MM	3800	
0007	CABLE OILFLEX 3G1,5	351150-0412	C	MM	3200	
0008	CABLE OILFLEX N2X0,75	351150-0122	C	MM	5500	
0013	CABLE OILFLEX N2X0,75	351150-0122	C	MM	900	
0017	CABLE OILFLEX 16G0,75	351150-0408	C	MM	4700	
0018	DATA CABLE	90220-0073	C	MM	5300	
0019	CABLE OILFLEX 3G1,5	351150-0412	C	MM	4550	
0022	CABLE OILFLEX 4G2,5	351150-0418	C	MM	2600	
0023	CABLE OILFLEX 4G2,5	351150-0418	C	MM	6700	
0025	CABLE OILFLEX 27G0,75	351150-0409	C	MM	6700	
0026	CABLE OILFLEX N2X0,75	351150-0122	C	MM	5450	
0101	CABLE OILFLEX 7G2,5	351150-0420	C	MM	3250	
0108	CABLE OILFLEX 27G0,75	351150-0409	C	MM	3550	

10:28 93.12.10

	POS	PART TITLE / REMARKS	PART NUMBER	R	SP	UN	0101
	0302	CABLE SIHF 3G2,5	351120-0145	C		MM	5000
	0304	CABLE OILFLEX 4G2,5	351150-0418	C		MM	6600
	0305	CABLE OILFLEX 3G2,5	351150-0417	C		MM	5550
	0306	CABLE OILFLEX 4G2,5	351150-0418	C		MM	6550
	0308	CABLE OILFLEX 4G2,5	351150-0418	C		MM	2500
	0309	CABLE OILFLEX 12G0,75	351150-0407	C		MM	4700
	0310	CABLE OILFLEX 7G0,75	351150-0406	C		MM	6550
	0311	CABLE OILFLEX N2X0,75	351150-0122	C		MM	4950
	0316	CABLE OILFLEX 3G0,75	351150-0403	C		MM	4600
	0317	CABLE OILFLEX 3G0,75	351150-0403	C		MM	4700
	0319	CABLE OILFLEX N2X0,75	351150-0122	C		MM	4500
	0320	CABLE OILFLEX N2X0,75	351150-0122	C		MM	4100
	0321	CABLE OILFLEX N2X0,75	351150-0122	C		MM	4300
	0322	CABLE OILFLEX 3G0,75	351150-0403	C		MM	4100
	0325	CABLE OILFLEX N2X0,75	351150-0122	C		MM	4000
	0335	CABLE AWM YELL/GREEN 16,0	351175-0109	C		MM	1000
	0336	CABLE AWM YELL/GREEN 4,0	351175-0106	C		MM	3400
	0342	CABLE OILFLEX N2X0,75	351150-0122	C		MM	4300
	0345	CABLE OILFLEX N2X0,75	351150-0122	C		MM	4100
	0348	CABLE OILFLEX N2X0,75	351150-0122	C		MM	3900
	0351	CABLE OILFLEX 3G1,5	351150-0412	C		MM	5700
	0352	CABLE OILFLEX N2X0,75	351150-0122	C		MM	4200
	0354	CABLE OILFLEX 3G0,75	351150-0403	C		MM	4400
	0355	CABLE OILFLEX 4G0,75	351150-0404	C		MM	5550
	0356	CABLE OILFLEX 4G0,75	351150-0404	C		MM	6000
	0358	CABLE OILFLEX 3G0,75	351150-0403	C		MM	900
	0360	CABLE OILFLEX 4G0,75	351150-0404	C		MM	2750
	0361	CABLE OILFLEX 3G0,75	351150-0403	C		MM	2850
	0370	COAXIAL CABLE L= 2500 MM	4- 551969-0004	-			1
	0371	COAXIAL CABLE L= 2500 MM	4- 551969-0004	-			1
I	0372	COAXIAL CABLE L= 600 MM	4- 548770-0008	-			1
I	0373	COAXIAL CABLE L= 600 MM	4- 548770-0008	-			1
	0401	CABLE SIHF 4G6	351120-0167	C		MM	5250
	0402	CABLE SIHF 3G2,5	351120-0145	C		MM	4700
	0403	CABLE SIHF 3G2,5	351120-0145	C		MM	5400
	0404	CABLE OILFLEX 5G2,5	351150-0419	C		MM	5600
	0405	CABLE OILFLEX 4G2,5	351150-0418	C		MM	4200

10:28 93 12 10

POS	PART TITLE / REMARKS		PART NUMBER	R	SP	UN	0101
0406	CABLE		90220-0059	C	MM	5700	
0407	CABLE		90220-0059	C	MM	5800	
0408	CABLE		90220-0059	C	MM	5000	
0409	CABLE		90220-0059	C	MM	5700	
0410	CABLE		90220-0059	C	MM	4500	
0411	CABLE		90220-0059	C	MM	5350	
0412	CABLE		90220-0059	C	MM	5150	
0413	CABLE	OILFLEX 52G0,75	351150-0411	C	MM	4250	
0416	CABLE	OILFLEX N2X0,75	351150-0122	C	MM	2000	
0417	CABLE	OILFLEX N2X0,75	351150-0122	C	MM	3000	
0418	CABLE	OILFLEX N2X0,75	351150-0122	C	MM	3000	
0425	CABLE	OILFLEX 4G0,75	351150-0404	C	MM	3100	
0427	CABLE	OILFLEX N2X0,75	351150-0122	C	MM	1800	
0428	CABLE	OILFLEX N2X0,75	351150-0122	C	MM	1600	
0430	CABLE	OILFLEX 3G0,75	351150-0403	C	MM	3000	
0431	CABLE	OILFLEX 3G0,75	351150-0403	C	MM	3100	
0432	CABLE	OILFLEX 3G0,75	351150-0403	C	MM	3000	
0434	CABLE	OILFLEX 5G0,75	351150-0405	C	MM	2600	
0442	CABLE	OILFLEX 4G2,5	351150-0418	C	MM	4100	
0444	CABLE	OILFLEX N2X0,75	351150-0122	C	MM	2500	
0450	CABLE		90220-0059	C	MM	4550	
0452	CABLE	SIHF 4G10	351120-0168	C	MM	2500	
0501	CABLE	OILFLEX 4G2,5	351150-0418	C	MM	4000	
0504	CABLE	OILFLEX 5G2,5	351150-0419	C	MM	6200	
0505	CABLE	OILFLEX 3G1,5	351150-0412	C	MM	6600	
0506	CABLE		90220-0059	C	MM	5500	
0507	CABLE		90220-0059	C	MM	4700	
0508	CABLE	OILFLEX 4G2,5	351150-0418	C	MM	3600	
0509	CABLE	OILFLEX 52G0,75	351150-0411	C	MM	6000	
0510	CABLE	OILFLEX 3G0,75	351150-0403	C	MM	2000	
0511	CABLE	OILFLEX 7G0,75	351150-0406	C	MM	6000	
0512	CABLE	OILFLEX 3G0,75	351150-0403	C	MM	2200	
0524	CABLE	OILFLEX 3G0,75	351150-0403	C	MM	1900	
0527	CABLE		90220-0059	C	MM	4700	
0529	CABLE	OILFLEX 3G0,75	351150-0403	C	MM	1900	
0530	CABLE	OILFLEX 7G0,75	351150-0406	C	MM	2500	
0531	CABLE	OILFLEX 5G0,75	351150-0405	C	MM	5000	

10:28 93.12.10

POS	PART TITLE / REMARKS	PART NUMBER	R	SP	UN	0101
0533	CABLE OILFLEX 3G2,5	351150-0417	C		MM	4500
0535	CABLE	90220-0059	C		MM	5200
0537	CABLE OILFLEX 3G0,75	351150-0403	C		MM	1900
0539	CABLE OILFLEX 3G0,75	351150-0403	C		MM	2200
0540	CABLE	90220-0059	C		MM	5400
0553	CABLE OILFLEX 7G0,75	351150-0406	C		MM	5300

10:28 93.12.10

USED IN ASSEMB. 41756 649205

ECN NUMBER: EC 19261
DATE DISTRIBUTED 93-03-17

POS	PART TITLE / REMARKS	PART NUMBER	R	SP	UN	0101
0010	TPMC-DISCETTE	4- 47629-00:01	-			1

08:13 93.11.25

USED IN ASSEMB. 41756 649205

	ECN NUMBER:	EC 19261	EC 20399	EC 20407
	DATE DISTRIBUTED	93-03-17	93-10-01	93-10-18

GROUP

C	VARIANT DESCRIP:	-0101	400/230V, 60 HZ.
C		-0102	ANY MAINVOLTAGE 50HZ. EXCEPT 400/230V.
C		-0103	ANY MAINVOLTAGE 60HZ. EXCEPT 400/230V.
C		-0104	ANY MAINVOLTAGE 60HZ.-USA- EXCEPT 400/230V.

	POS	PART TITLE / REMARKS		PART NUMBER	R	SP	UN	0101	0102	0103	0104
	P005	RECORDER		90332-0008	C			1	-	1	1
		CONSISTS OF / SPARE PART				SP	UN	QTY			
		4-	90332-0308	KEY							
			90333-0004	GRAPH PAPER							
	P016	RECORDER	2-	90332-0015	S			-	-	-	1
		CONSISTS OF / SPARE PART				SP	UN	QTY	ECN		
		4-	90332-0310	WRITING PAPER					17049		
		4-	90332-0311	RIBBON CASSETTE					17049		
	Q001:3	SIGN,VOLTAGE/FREQ./CURR.	4-	359241-0298	C			1	-	1	1
I	Q077	MOTOR SWITCH 6-10A	3-	90259-0026	S			1	-	1	1
	0010	TRANSFORMER	2-	90245-0024	C			-	1	1	1

08:13 93.11.25

USED IN ASSEMB: 41756 649205

ECN NUMBER: EC 19261
DATE DISTRIBUTED 93-03-17

POS	PART TITLE / REMARKS		PART NUMBER	R	SP	UN	0101
0010	LIGHT BULB BA9S 28V		90036-0057	-			10
0020	CONTACTOR 4KW	2-	90075-0127	-			1
0030	CONTACTOR 7,5KW	2-	90075-0128	-			1
0040	AUXILIARY CONTACT	3-	90075-0313	-			1
0050	RELAY		90119-0056	-			1
0060	TOOL		90064-0315	-			1
0070	SOLID-STATE RELAY	3-	90119-0067	-			1
0080	PUSH BUTTON YELLOW	3-	90064-0084	-			1
0090	TUBE FUSE		90233-0009	-			5
0100	TUBE FUSE		90233-0019	-			5
0110	TUBE FUSE		90233-0020	-			5
0120	TUBE FUSE 16A	4-	90233-0027	-			5
0130	TUBE FUSE 10A	4-	90233-0028	-			5
0140	TUBE FUSE	4-	90233-0029	-			5
0150	GRAPH PAPER		90333-0004	-			5
0160	PADLOCK		779910-0101	-			1
0170	EARTH TERMINAL	3-	75994	-			1

08:13 93.11.25

USED IN ASSEMB. 649205

ECN NUMBER: EC 17786
DATE DISTRIBUTED 93-01-19

POS	PART TITLE / REMARKS		PART NUMBER	R	SP	UN	0101
A401	TPIH 2000 GENERATOR	C-	67600-0401	C			1
A402	TPIH 2000 GENERATOR	C-	67600-0401	C			1
A401:1	CONTACT UNIT		90110-0121	C			2
A401:2	COVER		90110-0122	C			2
A401:3	SIGN		359241-0261	C			1
A401:4	SIGN HOLDER	2-	359240-0100	C			1
A402:1	CONTACT UNIT		90110-0121	C			2
A402:2	COVER		90110-0122	C			2
A402:3	SIGN		359241-0261	C			1
A402:4	SIGN HOLDER	2-	359240-0100	C			1
M001	FAN		90264-0025	C			1
X100	TERMINAL DRWG X100, TPIH	4-	571524	-			1
0010	SIGN"FLASH SIGN"		90194-0016	C			1

08:13 93.11.25

GENERAL REMARKS: ELECTRICAL DOCUMENTATION "IH-GENERATOR" BE-649411-010V
INTENDED FOR TBA/9 MACHINES WITH P.T.

USED IN ASSEMB. 69885 649411

EC ORDER : EC 14293
DATE DISTRIBUTED 90-04-02

GROUP

VARIANT DESCRIP: -0101 FLEX PTS (5KW)

POS	PART TITLE / REMARKS	PART NUMBER	R	SP	UN	0101
A011	HOLDER	90110-0089	S		1	
A101	PULSE CARD	90171-0376	S		1	
A102	RECTIFIER CARD	90171-0392	S		1	
A104	COMPONENT CARD	90171-0402	S		1	
	* SPARE PARTS:					
	C101 : 90159-0015					
	V101 : 90366-0005					
	V102 : 90366-0005					
B101	TEMPERATURE MONITOR	90059-0013	S		1	
B501	AUT.GROUNDING DEVICE	90171-0386	S		1	
C102	CAPACITOR	90159-0061	S		1	
C201	CAPACITOR	90159-0014	C		1	
C401	CAPACITOR	90159-0068	C		1	
C402	CAPACITOR	90159-0032	C		1	
C403	CAPACITOR	90159-0032	C		1	
C404	CAPACITOR	90159-0070	C		1	
C405	CAPACITOR	90159-0026	C		1	
C406	CAPACITOR	90159-0059	C		1	
C407	CAPACITOR	90159-0069	C		1	
C408	CAPACITOR	90159-0069	C		1	
C501	CAPACITOR	90159-0033	C		1	
	REPLACED BY					ECO
	90159-0063 CAPACITOR					14600

08:41 93.11.25

POS	PART TITLE / REMARKS	PART NUMBER	R	SP	UN	0101
C502	CAPACITOR	90159-0050	C		1	
E201	INSULATOR	90171-0401	C		1	
E401	INSULATOR	90171-0401	C		1	
E402	INSULATOR	90171-0401	C		1	
E403	INSULATOR	90084-0012	C		1	
E404	FEED-THROUGH CONN.	90171-0412	C		1	
F101	FUSE 315 MA	352551-0120	S		1	
F101:1	ELECTRIC EQUIPMENT	90171-0381	S		1	
K101	PHASE MONITOR	90171-0328	C		1	
L401 .	COIL	90171-0395	C		1	
L402	COIL	90171-0370	C		1	
L501	COIL	90171-0384	C		1	
L502	COIL	90171-0396	C		1	
L503	COIL	90171-0396	C		1	
L504	COIL	90171-0397	C		1	
M101	FAN	90264-0019	C		1	
P101	VOLTMETER	90018-0005	C		1	
P101:1	SIGN	359241-0129	C		1	
P101:2	SIGN HOLDER	359240-0100	-		1	
P102	AMMETER	90000-0028	C		1	
P102:1	SIGN	359241-0128	C		1	
P102:2	SIGN HOLDER	359240-0100	-		1	
Q101.	RELAY	90119-0053	S		1	
Q101:1	SIGN	359241-0128	C		1	
Q101:2	SIGN HOLDER	359240-0100	-		1	
RL40 1	ATTENUATE CIRCUIT	90171-0422	C		1	
R101	VARISTOR	90024-0029	S		1	
R104	RESISTANCE	90121-0102	S		1	
R201	RESISTOR	90121-0054	S		1	
R202	RESISTANCE	90121-0074	S		1	
R203	RESISTOR	90121-0052	C		11	
R204	RESISTANCE	90121-0051	C		1	
R401 .	RESISTANCE	90121-0101	C		1	
R402	RESISTOR	90121-0104	S		1	
R403	RESISTOR	90121-0104	S		1	
S001	SWITCH	90111-0147	C		1	
S001:1	SIGN KYLT	359241-0252	C		1	

POS	PART TITLE / REMARKS	PART NUMBER	R	SP	UN	0101
S001:2	SIGN HOLDER	359240-0100	C		1	
S101	MICRO SWITCH	90044-0007	S		1	
S101:1	COVER	90035-0002	S		1	
S102	MICRO SWITCH	90044-0007	S		1	
S102:1	COVER	90035-0002	S		1	
S103	MICRO SWITCH	90044-0007	S		1	
S103:1	COVER	90035-0002	S		1	
T101	TRANSFORMER	3- 23147	C		1	
T102	TRANSFORMER	3- 23143	S		1	
T104	TRANSFORMER	90245-0015	S		1	
V201	DIODE	90038-0028	S		1	
V202	DIODE	90038-0028	S		1	
V203	DIODE	90038-0028	S		1	
V204	DIODE	90038-0028	S		1	
V205	DIODE	90038-0028	S		1	
V206	DIODE	90038-0028	S		1	
V401	. ELECTRONIC VALVE	90171-0379	C		1	
X001	TERMINAL BLOCK	3- 555777	C		1	
X004	TERMINAL BLOCK	90195-0017	C		1	
X005	TERMINAL BLOCK	90077-0042	C		1	
X006	CONNECTOR	90110-0044	C		1	
Z101	ELEQUIPMENT MAINS FILTER	90171-0346	C		1	
	* SPARE PARTS:					
	C103-108:90159-25					
	L101 :90024-28					
Z102	INTERFERENCE PROTECTION	90024-0020	C		1	

08:41 93.11.25

GENERAL REMARKS: ELECTRICAL DOCUMENTATION "IH-GENERATOR" BE-649411-010V
INTENDED FOR TBA/9-MACHINES WITH P.T.
BE-LIST 649411-010V AND CE-69885-010V ALSO BELONG TO THE
EL-DOCUMENTS AND MUST BE DELIVERED WITH THE BELOW MENTIONED
DOCUMENTS.

USED IN ASSEMB. 649411

EC ORDER : EC 14293
DATE DISTRIBUTED 90-04-02

GROUP

VARIANT DESCRIP: -0101 FLEX PTS (5KW)

POS	PART TITLE / REMARKS	PART NUMBER	R	SP	UN	0101
0010	ELECTRIC MATERIALS	CE- 69884-0101	-			1
0110	CIRCUIT DIAGRAM	3- 43947-05:01	-			1
0120	CIRCUIT DIAGRAM	3- 43947-06:01	-			1
0150	MONTING DRAWING,BASIC UN.	3- 52184-05:01	-			1
0161	MONTING DRAWING,BASIC UN.	3- 52184-06:01	-			1
0180	MOUNTING DRAWING,MOD. A41	3- 52200-05:01	-			1
0200	TERMINAL BLOCK	3- 555777	-			1

08:41 93.11.25

USED IN ASSEMB. 649205

08:13 93.11.25

ECN NUMBER: EC 19261 EC 19721 EC 20144
DATE DISTRIBUTED 93-03-17 93-04-20 93-09-20

POS	PART TITLE / REMARKS	PART NUMBER	R	SP	UN	0101
0010	CTRL CAB. TBA/9-1402 P.T.	CE- 41750-0101	-			1
0020	CTRL.PAN. TBA/9-1402 P.T.	CE- 41751-0101	-			1
0030	MACHINE TBA/9-1402 P.T.	CE- 41752-0101	-			1
0040	EQUIPMENT TBA/9-1402 P.T.	CE- 41753-0101	-			1
0050	EXTRA EQU TBA/9-1402 P.T.	CE- 41754-0101	-			1
0060	SP. PARTS TBA/9-1402 P.T.	CE- 41755-0101	-			1
0070	EL-EQUIPMENT TPIH	CE- 41766-0101	-			1
0080	EL-EQUIPMENT IH-GENERATOR	BE- 649411-010V	-			1
0102	POSITION SUMMARY	4- 44097-02:01	-			1
0105	CIRCUIT DIAGRAM	4- 44097-05:01	-			1
0106	CIRCUIT DIAGRAM	4- 44097-06:01	-			1
0107	CIRCUIT DIAGRAM	4- 44097-07:01	-			1
0108	CIRCUIT DIAGRAM	4- 44097-08:01	-			1
0109	CIRCUIT DIAGRAM	4- 44097-09:01	-			1
0110	CIRCUIT DIAGRAM	4- 44097-10:01	-			1
0111	CIRCUIT DIAGRAM	4- 44097-11:01	-			1
0112	CIRCUIT DIAGRAM	4- 44097-12:01	-			1
0113	CIRCUIT DIAGRAM	4- 44097-13:01	-			1
0114	CIRCUIT DIAGRAM	4- 44097-14:01	-			1
0115	CIRCUIT DIAGRAM	4- 44097-15:01	-			1
0116	CIRCUIT DIAGRAM	4- 44097-16:01	-			1
0117	CIRCUIT DIAGRAM	4- 44097-17:01	-			1
0118	CIRCUIT DIAGRAM	4- 44097-18:01	-			1
0119	CIRCUIT DIAGRAM	4- 44097-19:01	-			1
0120	CIRCUIT DIAGRAM	4- 44097-20:01	-			1
0121	CIRCUIT DIAGRAM	4- 44097-21:01	-			1
0122	CIRCUIT DIAGRAM	4- 44097-22:01	-			1
0123	CIRCUIT DIAGRAM	4- 44097-23:01	-			1
0124	CIRCUIT DIAGRAM	4- 44097-24:01	-			1
0125	CIRCUIT DIAGRAM	4- 44097-25:01	-			1
0126	CIRCUIT DIAGRAM	4- 44097-26:01	-			1

POS	PART TITLE / REMARKS	PART NUMBER	R	SP	UN	0101
0127	CIRCUIT DIAGRAM	4- 44097-27:01	-			1
0129	CIRCUIT DIAGRAM	4- 44097-29:01	-			1
0130	CIRCUIT DIAGRAM	4- 44097-30:01	-			1
0131	CIRCUIT DIAGRAM	4- 44097-31:01	-			1
0132	CIRCUIT DIAGRAM	4- 44097-32:01	-			1
0134	CIRCUIT DIAGRAM	4- 44097-34:01	-			1
0135	CIRCUIT DIAGRAM	4- 44097-35:01	-			1
0136	CIRCUIT DIAGRAM	4- 44097-36:01	-			1
0137	CIRCUIT DIAGRAM	4- 44097-37:01	-			1
0138	CIRCUIT DIAGRAM	4- 44097-38:01	-			1
0139	CIRCUIT DIAGRAM	4- 44097-39:01	-			1
0140	CIRCUIT DIAGRAM	4- 44097-40:01	-			1
0141	CIRCUIT DIAGRAM	4- 44097-41:01	-			1
0142	CIRCUIT DIAGRAM	4- 44097-42:01	-			1
0143	CIRCUIT DIAGRAM	4- 44097-43:01	-			1
0144	CIRCUIT DIAGRAM	4- 44097-44:01	-			1
0145	CIRCUIT DIAGRAM	4- 44097-45:01	-			1
0146	CIRCUIT DIAGRAM	4- 44097-46:01	-			1
0147	CIRCUIT DIAGRAM	4- 44097-47:01	-			1
0148	CIRCUIT DIAGRAM	4- 44097-48:01	-			1
0149	CIRCUIT DIAGRAM	4- 44097-49:01	-			1
0150	CIRCUIT DIAGRAM	4- 44097-50:01	-			1
0157	CIRCUIT DIAGRAM	4- 44097-57:01	-			1
0158	CIRCUIT DIAGRAM	4- 44097-58:01	-			1
0161	CIRCUIT DIAGRAM	4- 44097-61:01	-			1
0162	CIRCUIT DIAGRAM	4- 44097-62:01	-			1
0163	CIRCUIT DIAGRAM	4- 44097-63:01	-			1
0164	CIRCUIT DIAGRAM	4- 44097-64:01	-			1
0165	CIRCUIT DIAGRAM	4- 44097-65:01	-			1
0166	CIRCUIT DIAGRAM	4- 44097-66:01	-			1
0167	CIRCUIT DIAGRAM	4- 44097-67:01	-			1
0168	CIRCUIT DIAGRAM	4- 44097-68:01	-			1
0169	CIRCUIT DIAGRAM	4- 44097-69:01	-			1
0170	CIRCUIT DIAGRAM	4- 44097-70:01	-			1
0171	CIRCUIT DIAGRAM	4- 44097-71:01	-			1
0172	CIRCUIT DIAGRAM	4- 44097-72:01	-			1
0173	CIRCUIT DIAGRAM	4- 44097-73:01	-			1

08:13 93.11.25

POS	PART TITLE / REMARKS	PART NUMBER	R	SP	UN	0101
0174	CIRCUIT DIAGRAM	4- 44097-74:01	-			1
0185	CIRCUIT DIAGRAM	4- 44097-85:01	-			1
0186	CIRCUIT DIAGRAM	4- 44097-86:01	-			1
0187	CIRCUIT DIAGRAM	4- 44097-87:01	-			1
0188	CIRCUIT DIAGRAM	4- 44097-88:01	-			1
0189	EARTH SUMMARY	4- 44097-89:01	-			1
0190	LINE SUMMARY	4- 44097-90:01	-			1
0191	TERMINAL SUMMARY	4- 44097-91:01	-			1
0199	ALTERATION MESSAGES	4- 44097-99:01	-			1
0301	TPMC LIST OF BLOCKS	4- 47629-01:01	-			1
0302	TPMC LIST OF ADDRESSES	4- 47629-02:01	-			1
0303	VOLUME ADAPTION DOCUMENT	4- 47629-03:01	-			1
0304	TPMC SEQUENCE DIAGRAM	4- 47629-04:01	-			1
0305	TPMC PROGRAM LIST	4- 47629-05:01	-			1
0306	TPMC PROGRAM LIST	4- 47629-06:01	-			1
0307	TPMC PROGRAM LIST	4- 47629-07:01	-			1
0308	TPMC PROGRAM LIST	4- 47629-08:01	-			1
0309	TPMC PROGRAM LIST	4- 47629-09:01	-			1
0310	TPMC PROGRAM LIST	4- 47629-10:01	-			1
0311	TPMC PROGRAM LIST	4- 47629-11:01	-			1
0312	TPMC PROGRAM LIST	4- 47629-12:01	-			1
0313	TPMC PROGRAM LIST	4- 47629-13:01	-			1
0314	TPMC PROGRAM LIST	4- 47629-14:01	-			1
0315	TPMC PROGRAM LIST	4- 47629-15:01	-			1
0317	TPMC PROGRAM LIST	4- 47629-17:01	-			1
0318	TPMC PROGRAM LIST	4- 47629-18:01	-			1
0319	TPMC PROGRAM LIST	4- 47629-19:01	-			1
0320	TPMC PROGRAM LIST	4- 47629-20:01	-			1
0323	TPMC PROGRAM LIST	4- 47629-23:01	-			1
0324	TPMC PROGRAM LIST	4- 47629-24:01	-			1
0325	TPMC PROGRAM LIST	4- 47629-25:01	-			1
0326	TPMC PROGRAM LIST	4- 47629-26:01	-			1
0327	TPMC PROGRAM LIST	4- 47629-27:01	-			1
0328	TPMC PROGRAM LIST	4- 47629-28:01	-			1
0329	TPMC PROGRAM LIST	4- 47629-29:01	-			1
0330	TPMC PROGRAM LIST	4- 47629-30:01	-			1
0331	TPMC PROGRAM LIST	4- 47629-31:01	-			1

POS	PART TITLE / REMARKS	PART NUMBER	R	SP	UN	0101
0332	TPMC PROGRAM LIST	4- 47629-32:01	-			1
0333	TPMC PROGRAM LIST	4- 47629-33:01	-			1
0334	TPMC PROGRAM LIST	4- 47629-34:01	-			1
0390	TPMC PROGRAM LIST	4- 47629-90:01	-			1
0399	TPMC PROGRAM LIST	4- 47629-99:01	-			1
0405	MOUNTING DRAWING, CABINET	4- 52482-05:01	-			1
0406	MOUNTING DRAWING, CABINET	4- 52482-06:01	-			1
0407	MOUNTING DRAWING, CABINET	4- 52482-07:01	-			1
0408	MOUNTING DRAWING, CABINET	4- 52482-08:01	-			1
0409	MOUNTING DRAWING, CABINET	4- 52482-09:01	-			1
0410	MOUNTING DRAWING, CABINET	4- 52482-10:01	-			1
0411	MOUNTING DRAWING, RACK	4- 52482-11:01	-			1
0412	MOUNTING DRAWING, PANEL	4- 52482-12:01	-			1
0413	MOUNTING DRAWING, PANEL	3- 52482-13:01	-			1
0414	MOUNTING DRAWING, PANEL	3- 52482-14:01	-			1
0415	MOUNTING DRAWING, MACHINE	4- 52482-15:01	-			1
0416	MOUNTING DRAWING, MACHINE	4- 52482-16:01	-			1
0417	MOUNTING DRAWING, MACHINE	4- 52482-17:01	-			1
0418	MOUNTING DRAWING, MACHINE	4- 52482-18:01	-			1
0420	MOUNTING DRAWING, TPIH	4- 52471-20:01	-			1
0421	MOUNTING DRAWING, TPIH	4- 52471-21:01	-			1
0422	MOUNTING DRAWING, TPIH	4- 52471-22:01	-			1
0423	MOUNTING DRAWING, TPIH	4- 52471-23:01	-			1
0424	MOUNTING DRAWING, TPIH	4- 52471-24:01	-			1
0425	MOUNTING DRAWING, TPIH	4- 52471-25:01	-			1
0605	CONNECTION DIAGRAM	4- 61249-05:01	-			1
0606	CONNECTION DIAGRAM	4- 61249-06:01	-	-		1
0607	CONNECTION DIAGRAM	4- 61249-07:01	-			1
0608	CONNECTION DIAGRAM	4- 61249-08:01	-			1
0609	CONNECTION DIAGRAM	4- 61249-09:01	-			1
0610	CONNECTION DIAGRAM	4- 61249-10:01	-			1
0611	CONNECTION DIAGRAM	4- 61249-11:01	-			1
0612	CONNECTION DIAGRAM	4- 61249-12:01	-			1
0613	CONNECTION DIAGRAM	4- 61249-13:01	-			1
0614	CONNECTION DIAGRAM	4- 61249-14:01	-			1
0615	CONNECTION DIAGRAM	4- 61249-15:01	-			1
0616	CONNECTION DIAGRAM	4- 61249-16:01	-			1

08:13 93.11.25

POS	PART TITLE / REMARKS	PART NUMBER	R	SP	UN	0101
0617	CONNECTION DIAGRAM	4- 61249-17:01	-			1
0618	CONNECTION DIAGRAM	4- 61249-18:01	-			1
0619	CONNECTION DIAGRAM	4- 61249-19:01	-			1
0620	CONNECTION DIAGRAM	4- 61249-20:01	-			1
0621	CONNECTION DIAGRAM	4- 61249-21:01	-			1
0622	CONNECTION DIAGRAM	4- 61249-22:01	-			1
0623	CONNECTION DIAGRAM	4- 61249-23:01	-			1
0624	CONNECTION DIAGRAM	4- 61249-24:01	-			1
0625	CONNECTION DIAGRAM	4- 61249-25:01	-			1
0627	CONNECTION DIAGRAM	4- 61249-27:01	-			1
0628	CONNECTION DIAGRAM	4- 61249-28:01	-			1
0629	CONNECTION DIAGRAM	4- 61249-29:01	-			1
0630	CONNECTION DIAGRAM	4- 61249-30:01	-			1
0631	CONNECTION DIAGRAM	4- 61249-31:01	-			1
0632	CONNECTION DIAGRAM	4- 61249-32:01	-			1
0633	CONNECTION DIAGRAM	4- 61249-33:01	-			1
0634	CONNECTION DIAGRAM	4- 61249-34:01	-			1
0635	CONNECTION DIAGRAM	4- 61249-35:01	-			1
0636	CONNECTION DIAGRAM	4- 61249-36:01	-			1
0637	CONNECTION DIAGRAM	4- 61249-37:01	-			1
0638	CONNECTION DIAGRAM	4- 61249-38:01	-			1
0639	CONNECTION DIAGRAM	4- 61249-39:01	-			1
0640	CONNECTION DIAGRAM	4- 61249-40:01	-			1
0641	CONNECTION DIAGRAM	4- 61249-41:01	-			1
0642	CONNECTION DIAGRAM	4- 61249-42:01	-			1
0643	CONNECTION DIAGRAM	4- 61249-43:01	-			1
0644	CONNECTION DIAGRAM	4- 61249-44:01	-			1
0645	CONNECTION DIAGRAM	4- 61249-45:01	-			1
0646	CONNECTION DIAGRAM	4- 61249-46:01	-			1
0647	CONNECTION DIAGRAM	4- 61249-47:01	-			1
0648	CONNECTION DIAGRAM	4- 61249-48:01	-			1
0649	CONNECTION DIAGRAM	4- 61249-49:01	-			1
0705	MAINS CONNECTION	4- 61253-05:01	-			1
0706	MAINS CONNECTION	4- 61253-06:01	-			1
0800:1	TERMINAL DRWG X001, X011	4- 570927-0001	-			1
0800:2	TERMINAL DRAWING X001	4- 570927-0002	-			1
0800:3	TERMINAL DRAWING X001	4- 570927-0003	-			1

08:13 93.11.25

POS	PART TITLE / REMARKS	PART NUMBER	R	SP	UN	0101
0800:4	TERMINAL DRAWING X001	4- 570927-0004	-			1
0801	TERMINAL DRAWING X003	4- 571518	-			1
0802	TERMINAL DRAWING XL, X009	4- 571519	-			1
0803	LABEL EL-MANUAL	4- 571523	-			1
0804	INDEX EL-MANUAL	4- 571522	-			1
0805	FUSE PANEL LABEL	4- 571521	-			1
0806	TERMINAL BLOCK P.X1, P.X2	4- 571520	-			1
0807	TERMINAL DRWG X100, TPIH	4- 571524	-			1
0808	TERMINAL DRAWING XL1-3	4- 571525	-			1

08:13 93.11.25

Machine: 649205

ECN 19261 '0'
19930317 HK

Position	Sheet	Position	Sheet	Position	Sheet	Position	Sheet	Position	Sheet
A001	11:01	A106	45:01	A401	14:01	M.B037B	19:01	M.B203	49:01
A002	35:01	A106	46:01	A402	14:01	M.B038	18:01	M.B204	49:01
A004	18:01	A107	47:01	A451	27:01	M.B039	19:01	M.B205	49:01
A006	18:01	A107	48:01			M.B040	18:01	M.B206	48:01
A008	19:01	A108	17:01	M.B001	36:01	M.B043	24:01	M.B207	48:01
A010	19:01	A110	49:01	M.B002	38:01	M.B044	39:01	M.B208	49:01
A013	20:01	A110	50:01	M.B004	21:01	M.B045	41:01	M.B209	49:01
A014	20:01	A114	61:01	M.B006	38:01	M.B046	40:01	M.B211	49:01
A015	24:01	A114	62:01	M.B007	38:01	M.B047	40:01	M.B215	37:01
P.A016:1	68:01	A115	63:01	M.B008	39:01	M.B048A	41:01	M.B222	21:01
A016A	34:01	A115	64:01	M.B010	37:01	M.B048B	41:01	M.B223	22:01
A016B	34:01	A116	65:01	M.B011	37:01	M.B050	20:01	M.B224	49:01
A017	24:01	A116	66:01	M.B012	37:01	M.B051	40:01	M.B225	22:01
A018	25:01	A117	67:01	M.B013	24:01	M.B053	40:01	M.B226	23:01
A019	25:01	A117	68:01	M.B014	06:01	M.B054	25:01	M.B227	23:01
A022	26:01	A118	17:01	M.B015	37:01	M.B055	20:01	M.B228	47:01
A023	30:01	A120	69:01	M.B016A	41:01	M.B061	40:01	M.B229	47:01
A024	30:01	A120	70:01	M.B016B	41:01	M.B062	41:01	M.B230	47:01
A025	72:01	A121	71:01	M.B018	41:01	M.B063	40:01	M.B231	47:01
A030	21:01	A121	72:01	M.B020	45:01	M.B064	25:01	M.B232	48:01
F.A100	17:01	A122	73:01	M.B021A	37:01	M.B071	45:01	M.B233	36:01
A101	36:01	A122	74:01	M.B021B	37:01	M.B080A	34:01	M.B235	50:01
A102	37:01	A128	17:01	M.B021C	37:01	M.B080B	34:01	M.B236A	50:01
A102	38:01	A202	21:01	M.B024	39:01	M.B085	41:01	M.B236B	45:01
A103	39:01	A203	22:01	M.B025	39:01	M.B092	45:01	M.B237A	50:01
A103	40:01	A204	22:01	M.B030A	38:01	M.B094	45:01	M.B237B	50:01
A104	41:01	A205	23:01	M.B030B	38:01	M.B095	26:01	M.B237C	50:01
A104	42:01	A206	23:01	M.B034	25:01	M.B104	40:01		
A105	43:01	A211	26:01	M.B035	40:01	M.B201	48:01	C001	06:01
A105	44:01	F.A220	17:01	M.B037A	19:01	M.B202	49:01		

08:13 93.11.25

Position	Sheet	Position	Sheet	Position	Sheet	Position	Sheet	Position	Sheet
	10:11		10:11		10:11		10:11		10:11
D108	17:01	F042B	07:01	P.H0082	87:01	K075	65:01	N206	09:01
		F055A	16:01	P.H0091	87:01	K077	63:01	K207	09:01
M.E001A	06:01	F055B	16:01	P.H0092	87:01	K081	62:01	K208	09:01
M.E001B	06:01	F055C	16:01	P.H0101	87:01	K082	63:01	K212	73:01
M.E001C	06:01	F056A	14:01	P.H0102	87:01	K085	67:01	K225	26:01
E024	32:01	F056B	14:01	P.H0115	88:01	K084	10:11	L002	06:01
M.E011	32:01	F056C	14:01	M.H031	32:01	K087	62:01	L001	06:01
M.E201	04:01	F202	09:01	M.H2015	74:01	K088	65:01	M.L001	14:01
						K091	63:01	L004	06:01
F001	06:01	8100	17:01	P.T	17:01	K092	65:01	M.L002	14:01
F003	32:01			IM-4005	15:01	K093	62:01	L004	06:01
F004	15:01	P.H0011	88:01			K094	62:01	P.L1	57:01
F005	07:01	P.H0012	85:01	K002	65:01	K095	67:01	P.L1	58:01
F008	07:01	P.H0021	85:01	K003	35:01	K096	65:01	L201	06:01
F010	08:01	P.H0022	85:01	K004	22:01	K097	67:01	M.M001	12:01
F017	11:01	P.H0025	88:01	K014	63:01	K098	62:01	P.L3	85:01
F016	16:01	P.H0031	85:01	K021	73:01	K099	65:01	P.L3	84:01
F028A	08:01	P.H0032	85:01	K029	22:01	K105	10:01	P.L4	87:01
F028B	08:01	P.H0034	85:01	K036	32:01	K108	08:01		
F028C	08:01	P.H0041	85:01	K038	32:01	N108	08:01		
F029A	08:01	P.H0042	86:01	K046	66:01	N110	32:01	M.M PLE	13:01
F029B	08:01	P.H0043	88:01	K047	63:01	N111	08:01	M001	14:01
F029C	08:01	P.H0045	88:01	K048	65:01	N112	08:01	M001	14:01
F030	10:01	P.H0051	86:01	K051	63:01	N113	08:01	M002	06:01
F031	10:01	P.H0061	86:01	K053	66:01	N114	08:01	M.M004	11:01
F032	12:01	P.H0062	86:01	K054	67:01	N201	63:01	M.M005	10:01
F033	12:01	P.H0063	86:01	K055	73:01	N202	12:01	M.M006	11:01
F041A	07:01	P.H0071	86:01	K056	73:01	N203	12:01	M.M007	10:01
F041B	07:01	P.H0072	86:01	K057	73:01	N204	10:01	M.M010	09:01
F042A	07:01	P.H0081	86:01	K071	10:01	N205	10:01	M.M013	10:11

Machine: 646205 "A" POSITION SUMMARY Date: 93-11-25

ECN 19261 * 0 *
19930317 HK

Based on ECN: 19261 POSITION SUMMARY 4-44667-02101 Sheet: 3
Count: 4

Position	Sheet	Position	Sheet	Position	Sheet	Position	Sheet	Position	Sheet	Position	Sheet
M.M014	10:01	0094	37:01	S004	38:01	W370	14:01	M.Y012	64:01
M.M019	10:01	0098	10:01	M.S004	25:01	W371	14:01	M.Y013	64:01
M.M017	12:01	0099	10:01	M.S004H	57:01	W405	14:01	M.Y014	64:01
M.M201	12:01	0099	10:01	P.S004H	57:01	W407	18:01	M.Y017	64:01
P.P003	88:01	0201	37:01	P.S012	57:01	W410	16:01	M.Y020	64:01
P004	72:01	0201	37:01	P.S014	28:01	W411	20:01	M.Y021	64:01
P004	72:01	0099	10:01	P.S005	41:01	W408	18:01	M.Y018	64:01
P002	93:01	0201	10:01	H.S005	10:01	W409	16:01	M.Y019	64:01
P005	88:01	R003	10:01	P.S015	58:01	W412	22:01	M.Y022	64:01
0001	05:01	R004	14:01	M.S020	58:01	W447	24:01	M.Y023	64:01
0002	55:01	M.R0058	10:01	M.S020	25:01	W450	24:01	M.Y025	64:01
0003	10:01	M.R0058	10:01	M.S033	50:01	W504	21:01	M.Y026	64:01
0003	37:01	M.R0058	07:01	P.S033	27:01	W507	22:01	M.Y027	64:01
0003	10:01	M.R0058	07:01	S024	37:01	W527	10:01	M.Y029	64:01
0027	15:01	M.R035	10:01	S035	37:01	W535	23:01	M.Y031	64:01
0027	12:01	TJ10	32:01	T001	11:01	W540	23:01	M.Y032	64:01
0077	37:01	M.R202	09:01	T001	14:01	X010	06:01	M.Y035	70:01
0077	12:01	M.R036	10:01	M.S020H	50:01	W540	23:01	M.Y033	70:01
0051	12:01	M.R037	10:01	P.S020	48:01	W540	23:01	M.Y034	70:01
0082	37:01	M.R208	10:01	T009	07:01	Y001	09:01	M.Y041	70:01
0081	37:01	M.R207	10:01	T009	09:01	Y001	09:01	M.Y042	70:01
1800	10:01	M.R203	10:01	T002	09:01	Y003	10:01	M.Y043	70:01
0051	10:01	M.R202	10:01	T001	09:01	Y003	10:01	M.Y044	70:01
0077	37:01	M.R207	10:01	T001	09:01	Y004	10:01	M.Y045	70:01
0027	10:01	M.R208	10:01	T001	09:01	Y005	10:01	M.Y046	70:01
0082	37:01	M.R208	10:01	T001	09:01	Y006	10:01	M.Y047	70:01
0082	37:01	M.R208	10:01	T001	09:01	Y007	10:01	M.Y048	70:01
0087	41:01	P.S001	10:01	T001	09:01	Y008	10:01	M.Y049	70:01
0087	10:01	P.S002	10:01	T001	09:01	Y009	10:01	M.Y050	70:01
1600	10:01	S002	10:01	T001	09:01	Y009	10:01	M.Y051	70:01
0087	10:01	P.S002H	10:01	T001	09:01	Y009	10:01	M.Y052	70:01
0023	13:01	S003	10:01	T001	09:01	Y009	10:01	M.Y053	70:01
4600	10:01	P.S003H	10:01	T001	09:01	Y009	10:01	M.Y102	70:01

Machine: 649205

ECN 19261 'O'
19930317 HK

Position	Sheet	Position	Sheet	Position	Sheet	Position	Sheet	Position	Sheet
M.Y202	74:01								
M.Y204	74:01								
M.Y206	74:01								
M.Y211	74:01								
M.Y217	74:01								
M.Y220	74:01								
M.Y221	74:01								
P.Z001	17:01								
P.Z002	57:01								

08:13 93.11.25

Tetra Pak
LUND SWEDEN

This drawing must not without the consent of Tetra Pak be copied, transmitted or disclosed to any third party.

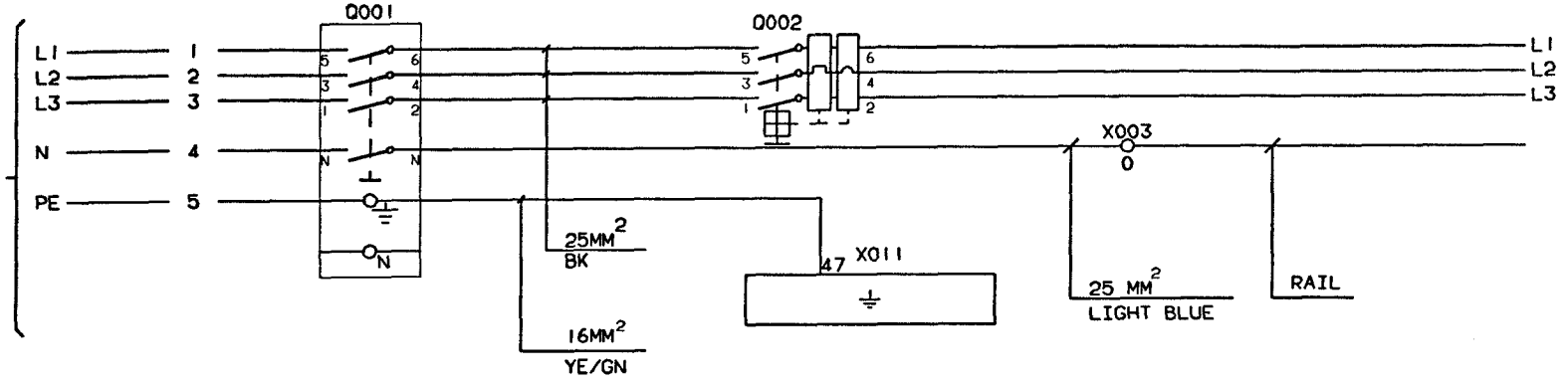

FOR TYPE OF WIRE,WIRING INSTRUCTIONS ETC.
SEE SPECIFICATION FOR SUBSUPPLIERS TPUS 3502.22

WHERE NOTHING ELSE IS SAID: WIRE 0.75 mm² BU
OR LINESUMMARY IS VALID

INTRODUCED WITH AM NO.	19261			DATE: 930310			SIGN. HK/UTH				
ISSUE											
AM NO.											
DATE											
SIGN.											

ALTERATIONS ONLY IN CADAM

DRAWING REMARKS

DESCRIPTION: MAINS CONNECTION

MACHINE: TBA/9-1402 P.T

44097-05:01

08:13 93.11.25

Tetra Pak
LUND SWEDEN

This drawing must not without the consent of Tetra Pak be copied, transmitted or disclosed to any third party.

M.E001A	JAW SYSTEM, LIGHTING LEFT	X010	WALL SOCKET
M.E001B	JAW SYSTEM, LIGHTING RIGHT	P005	TIME RECORDER
M.E001C	JAW SYSTEM, LIGHTING FRONT	X017	SOCKET
M.S028	LIGHT SWITCH	X019	SOCKET
E004	LIGHTING CABINET	M002	FAN MOTOR, COOLING UNIT
L001	CHOKE	M.B014	SPLICER TEMP.
L002	CHOKE	M.R001	SPLICER PAPER
L004	CHOKE	M.E201	P.T LIGHTING
L201	CHOKE		

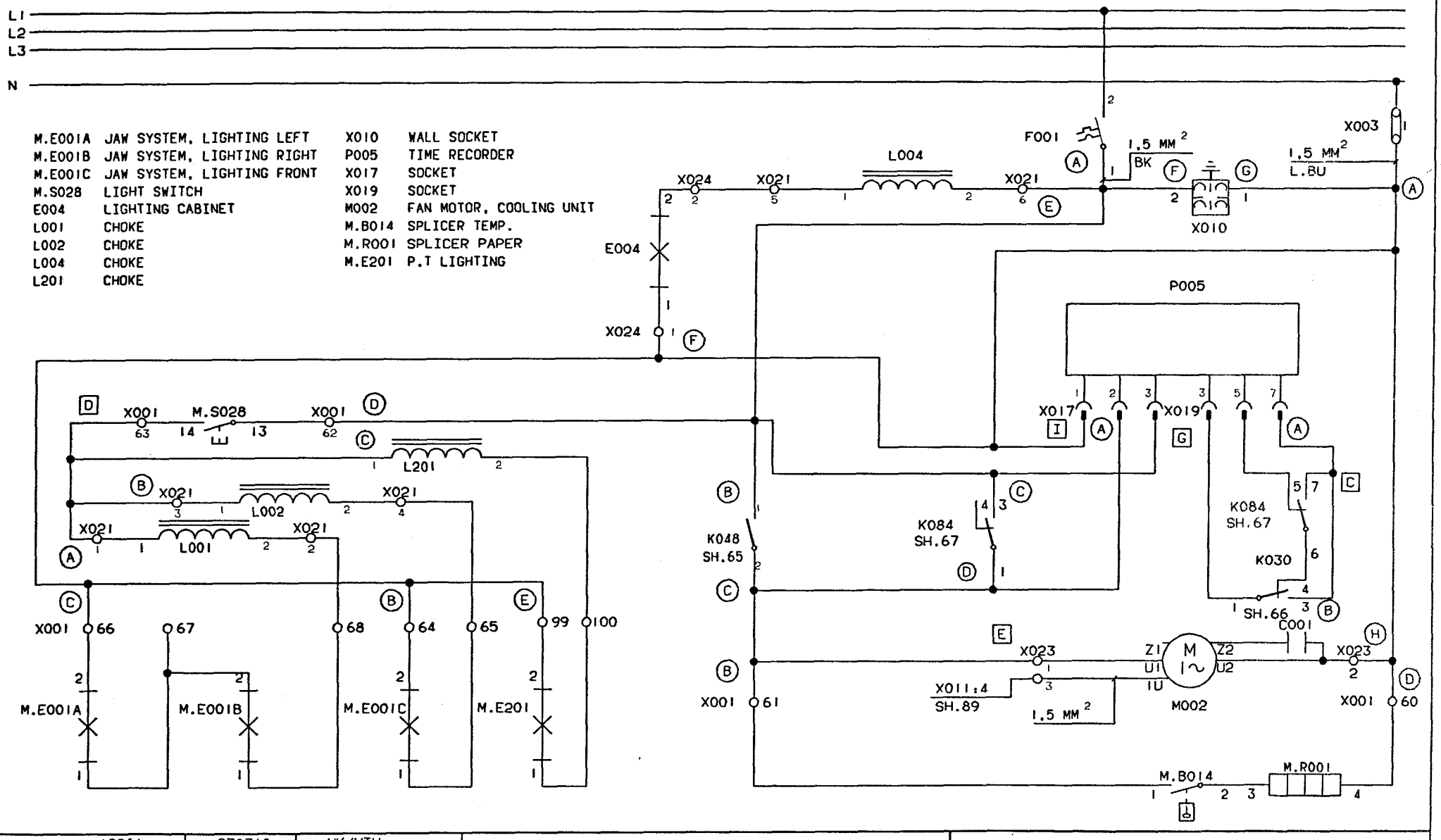

INTRODUCED WITH AM NO.	19261	DATE: 930310	SIGN. HK/UTH	DESCRIPTION:	LIGHT FIXTURES, SPLICER
ISSUE	A				
AM NO.	20144				
DATE	930609			MACHINE: TBA/9-1402 P.T.	44097-06:01
SIGN	HK/PSG				

DRAWING REMARKS

ALTERATIONS ONLY IN CADAM

08:13 93.11.25

Tetra Pak
LUND SWEDEN

This drawing must not without the consent of Tetra Pak be copied, transmitted or disclosed to any third party.

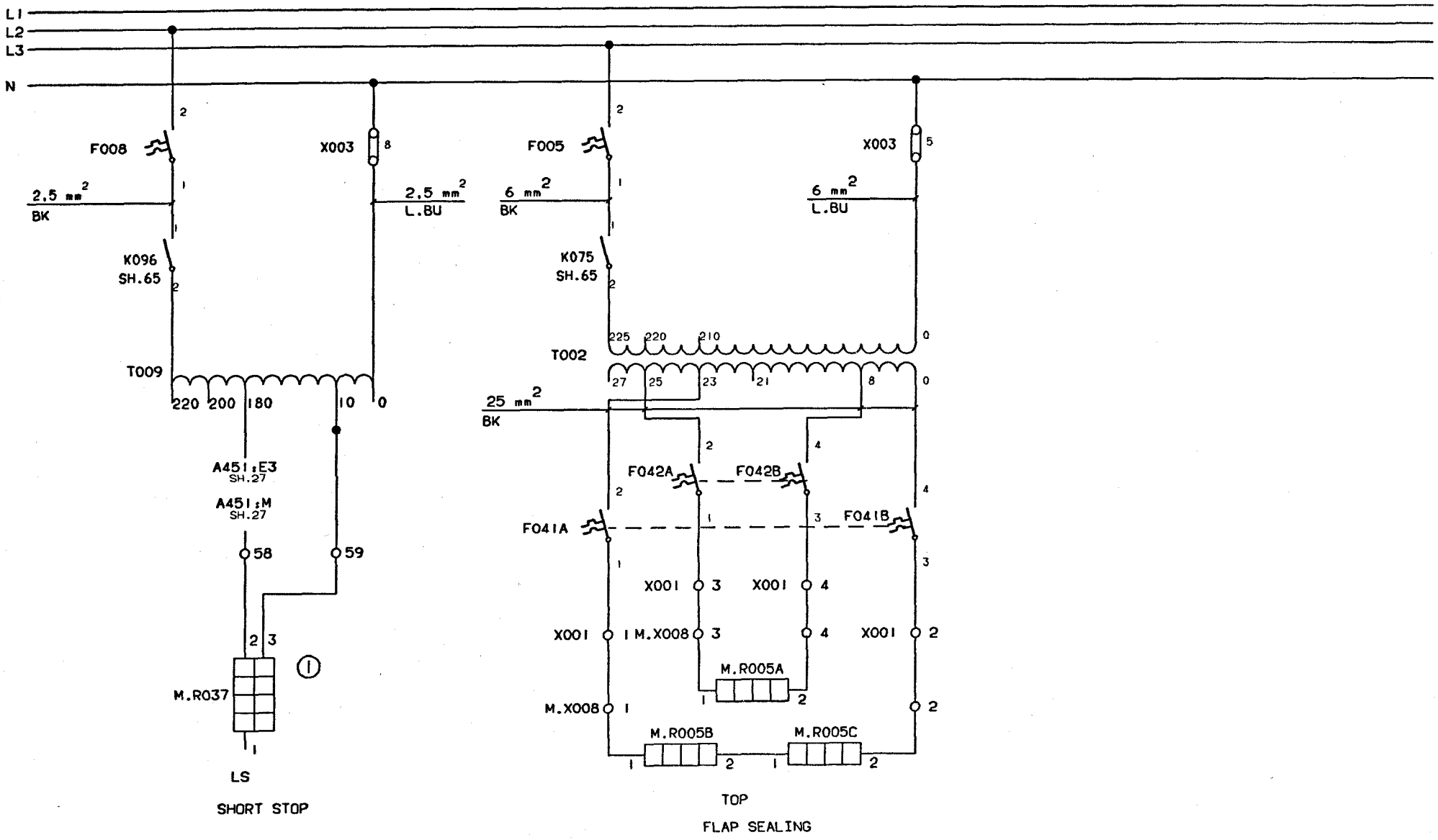

INTRODUCED WITH AM NO. 19261	DATE: 930310	SIGN. HK/UTH	ELEMENT PIN CONFIGURATION	DESCRIPTION: ELEMENTS	
ISSUE			1-2= 1200W		
AM NO.			1-3= 700W	MACHINE: TBA/9-1402 P.T.	44097-07:01
DATE			2-3= 450W		
SIGN.					

ALTERATIONS ONLY IN CADAM

08:13 93.11.25

Tetra Pak
LUND SWEDEN

This drawing must not without the consent of Tetra Pak be copied, transmitted or disclosed to any third party.

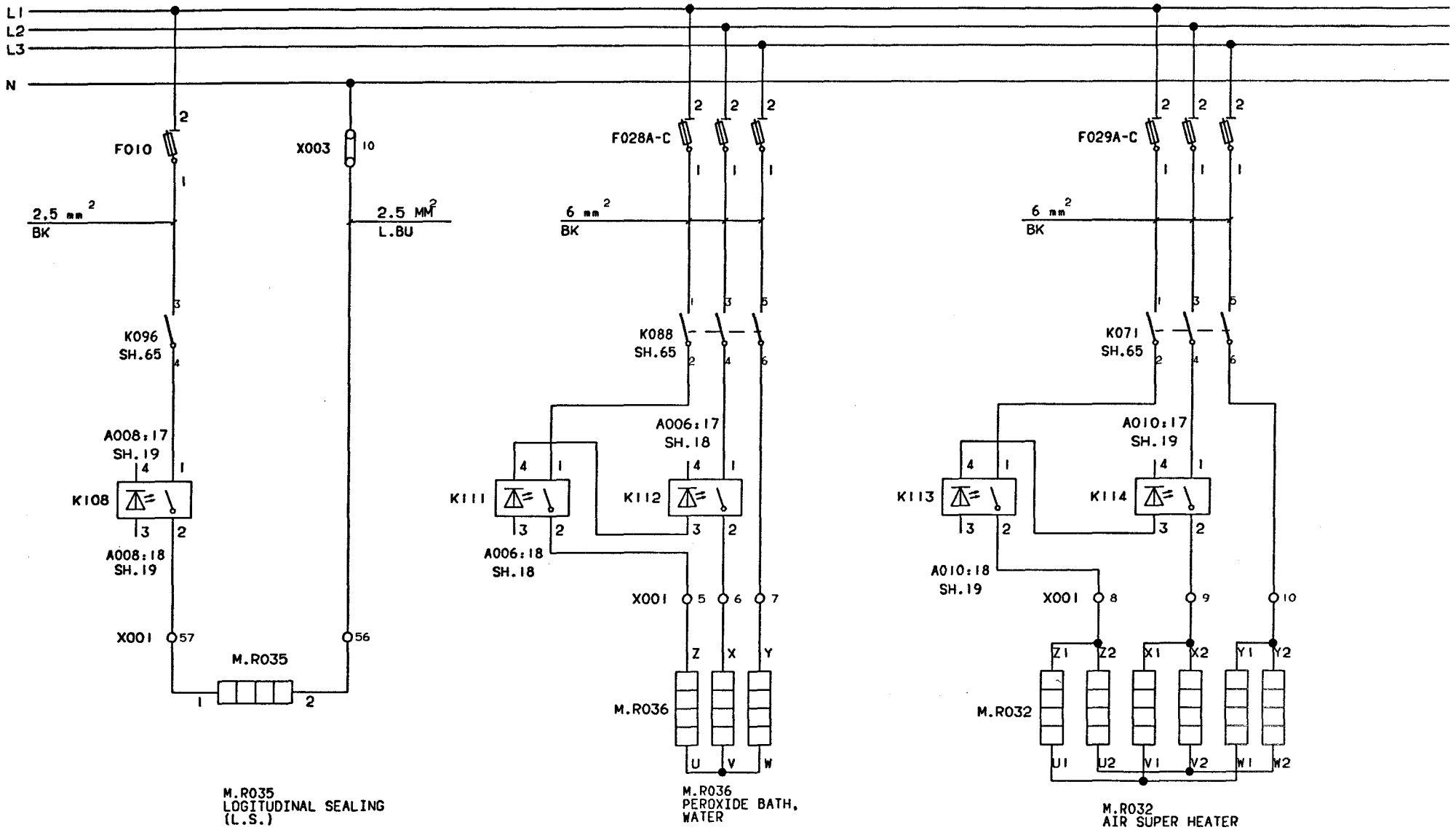

M.R035
LOGITUDINAL SEALING
(L.S.)

M.R036
PEROXIDE BATH,
WATER

M.R032
AIR SUPER HEATER

INTRODUCED WITH AM NO. 19261	DATE: 930310	SIGN. HK/UTH	
ISSUE			
AM NO.			
DATE			
SIGN.			

DRAWING REMARKS

DESCRIPTION: ELEMENTS

MACHINE: TBA/9-1402 P.T

44097-08:01

ALTERATIONS ONLY IN CADAM

08:13 93.11.25

Tetra Pak
LUND SWEDEN

This drawing must not without the consent of Tetra Pak be copied, transmitted or disclosed to any third party.

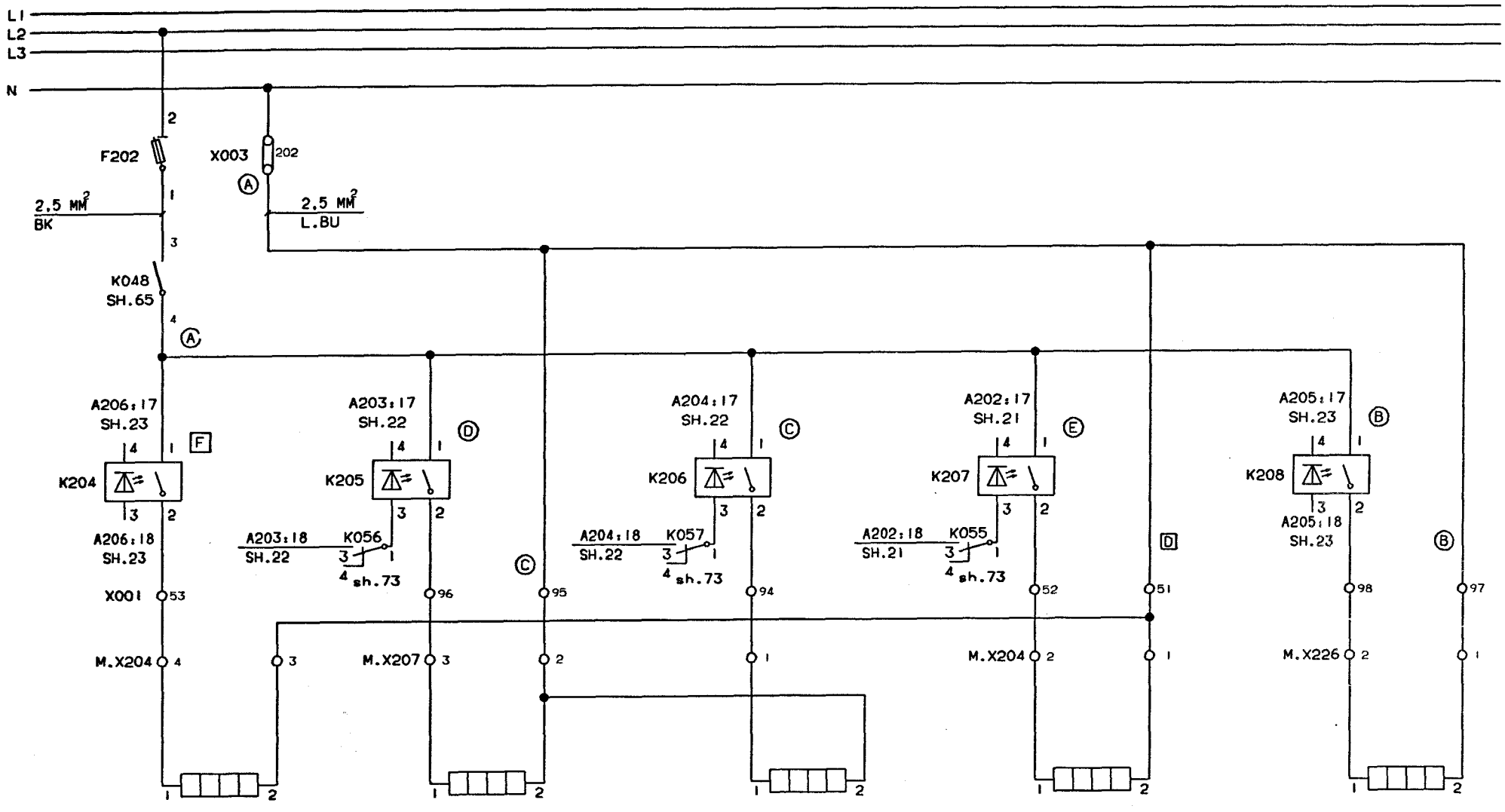

INTRODUCED WITH AM NO.	19261	DATE: 930310	SIGN. HK/UTH
ISSUE			
AM NO.			
DATE			
SIGN.			

DRAWING REMARKS

DESCRIPTION: ELEMENTS

MACHINE: TBA/9-1402 P.T

44097-09:01

ALTERATIONS ONLY IN CADAM

08:13 93.11.25

Tetra Pak
LUND SWEDEN

This drawing must not without the consent of Tetra Pak be copied, transmitted or disclosed to any third party.

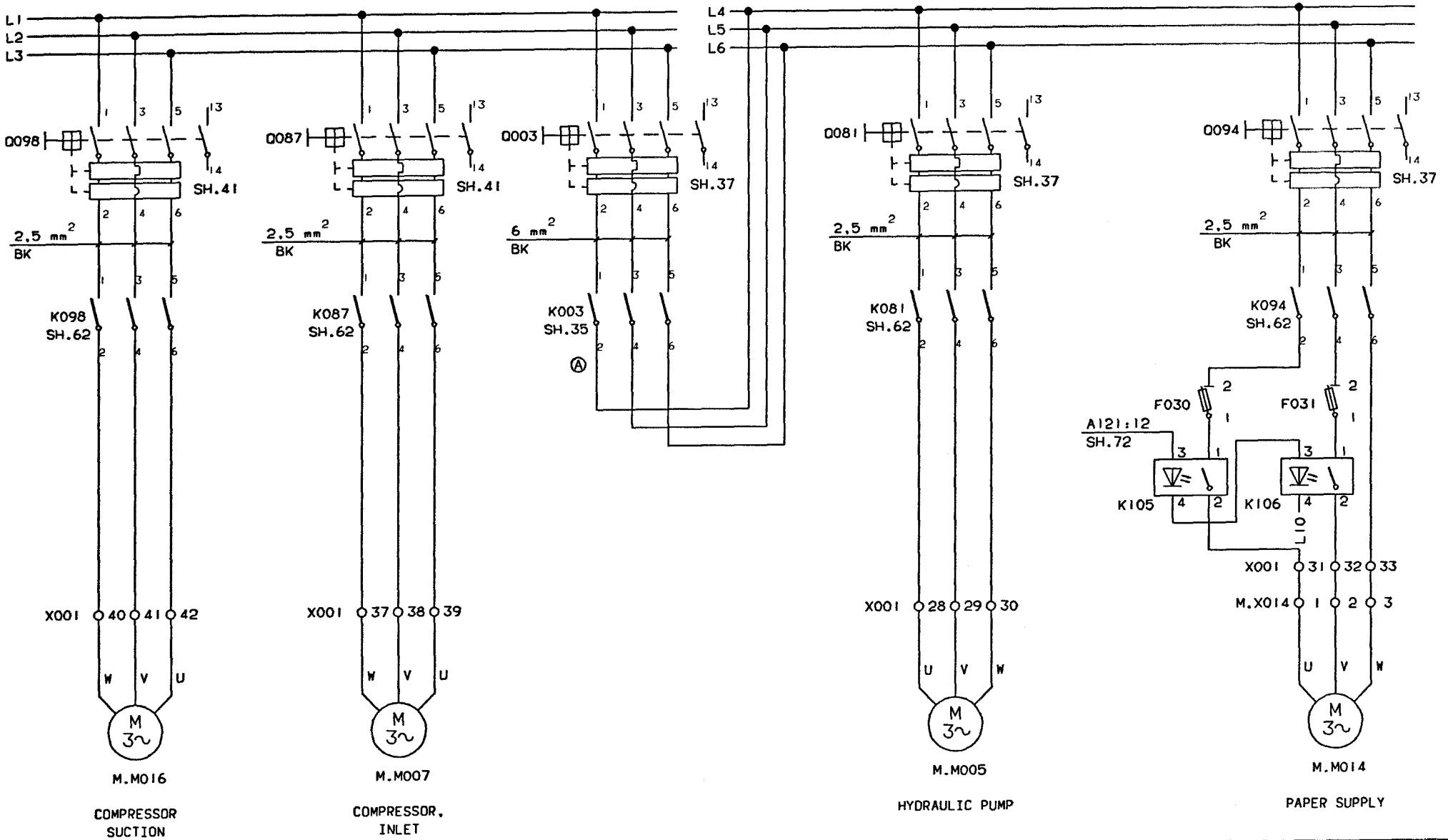

INTRODUCED WITH AM NO.	19261	DATE: 930310	SIGN. HK/UTH			DESCRIPTION: MOTORS	
ISSUE	A						
AM NO.	20144						
DATE	930609					MACHINE: TBA/9-1402 P.T	44097-10:01
SIGN.	HK/PSG				DRAWING REMARKS		

ALTERATIONS ONLY IN CADAM

08:13 93.11.25

Tetra Pak
LUND SWEDEN

This drawing must not without the consent of Tetra Pak be copied, transmitted or disclosed to any third party.

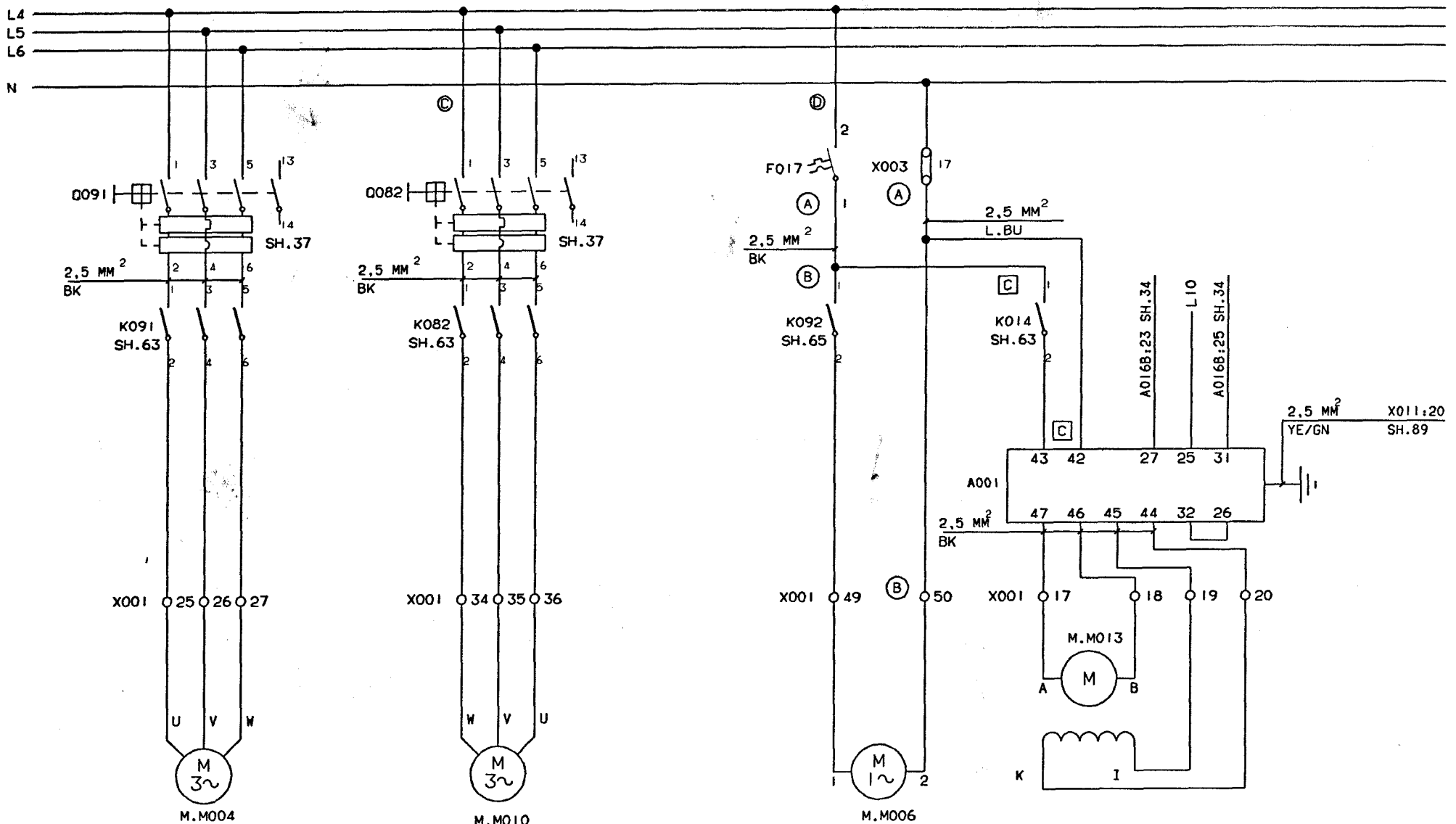

INTRODUCED WITH AM NO. 19261	DATE 930310	SIGN. HK/UTH		DESCRIPTION: MOTORS	
ISSUE A					
AM NO. 20144					
DATE 930609				MACHINE: TBA/9-1402 P.T	44097-11:01
SIGN. HK/PSG			DRAWING REMARKS		

ALTERATIONS ONLY IN CADAM

08:13 93.11.25

Tetra Pak
LUND SWEDEN

This drawing must not without the consent of Tetra Pak be copied, transmitted or disclosed to any third party.

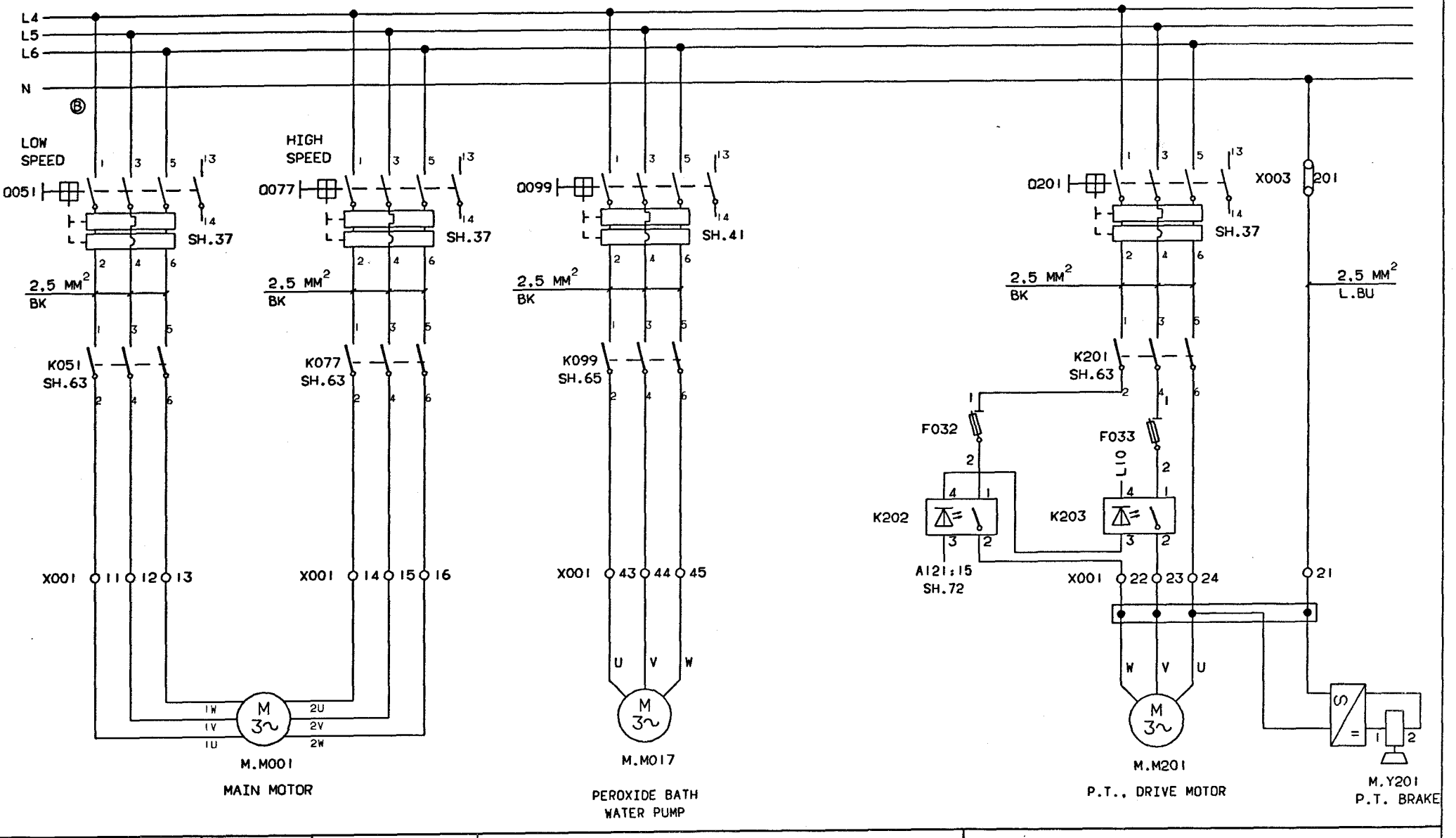

INTRODUCED WITH AM NO. 19261	DATE: 930310	SIGN. HK/UTH		DESCRIPTION: MOTORS	
ISSUE A					
AM NO. 20144					
DATE 930609				MACHINE: TBA/9-1402 P.T	44097-12:01
SIGN. HK/PSG			DRAWING REMARKS		

ALTERATIONS ONLY IN CADAM

08:13 93.11.25

Tetra Pak
LUND SWEDEN

This drawing must not without the consent of Tetra Pak be copied, transmitted or disclosed to any third party.

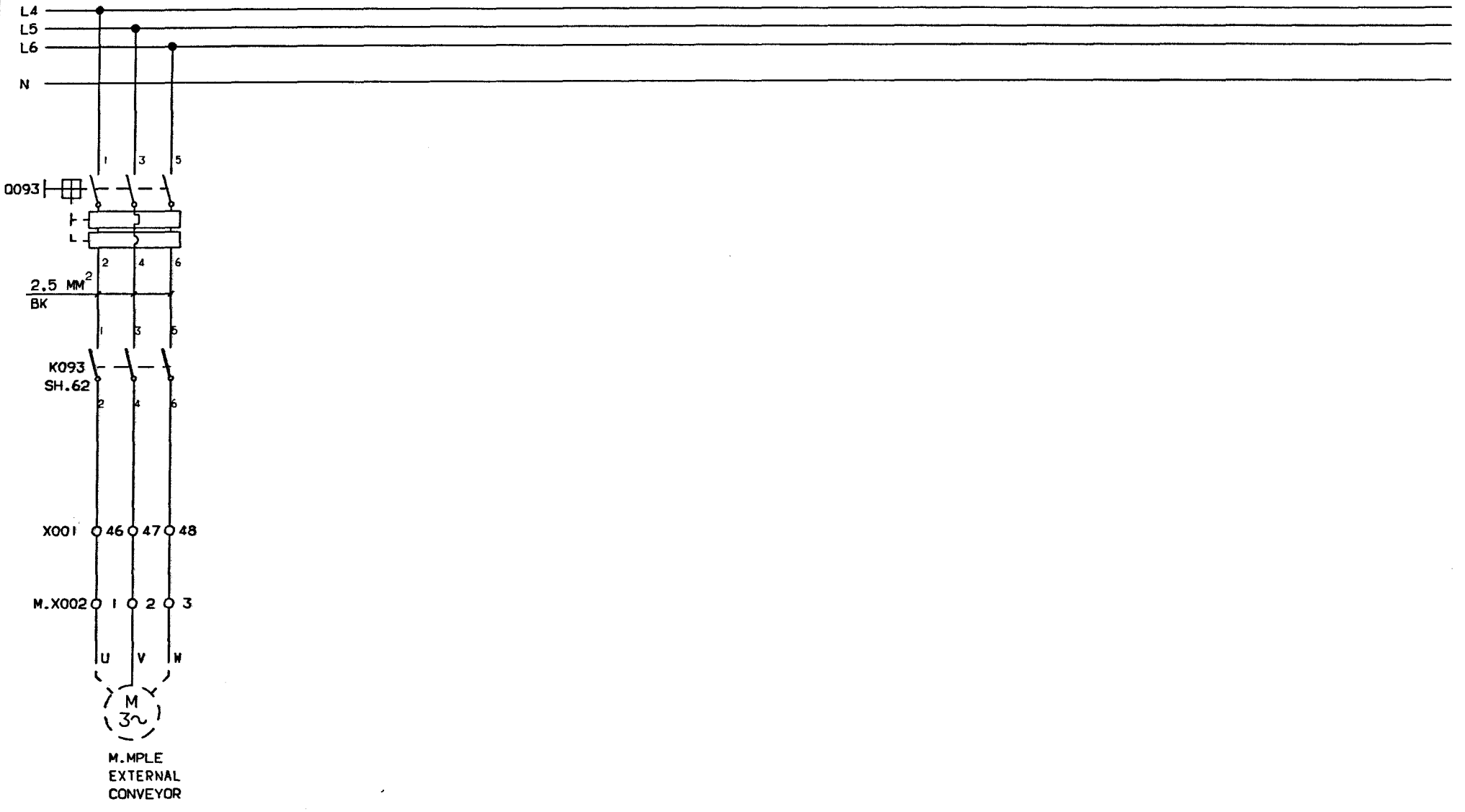

INTRODUCED WITH AM NO.	19261			DATE: 930310		SIGN. HK/UTH				
ISSUE	A									
AM NO.	20144									
DATE	930609									
SIGN.	HK/PSG									

DRAWING REMARKS

DESCRIPTION: MOTORS

MACHINE: TBA/9-1402 P.T

44097-13:01

ALTERATIONS ONLY IN CADAM

08:13 93.11.25

Tetra Pak
LUND SWEDEN

This drawing must not without the consent of Tetra Pak be copied, transmitted or disclosed to any third party.

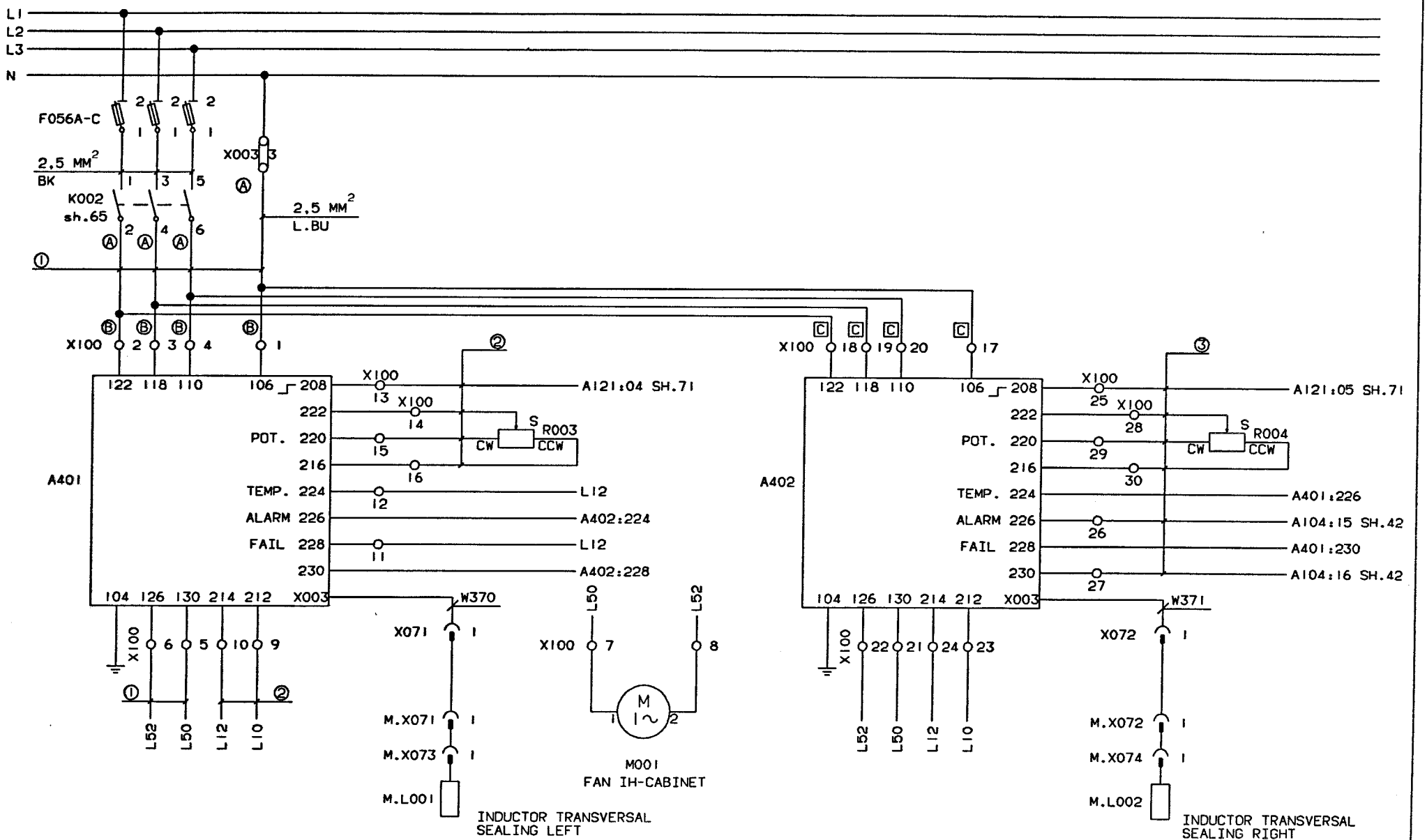

INTRODUCED WITH AM NO. 19261	DATE: 930310	SIGN. HK/UTH	① GOES THROUGH HOSE 1, SEE DRWG 52482-06 AND -25.	DESCRIPTION: IH-GENERATOR	
ISSUE A			② GOES THROUGH HOSE 2, SEE DRWN 52482-06 AND -25.		
AM NO. 20144			③ GOES THROUGH HOSE 3, SEE DRWN 52482-06 AND -25.		
DATE 930609				MACHINE: TBA/9-1402 P.T.	44097-14:01
SIGN. HK/PSG			DRAWING REMARKS		

ALTERATIONS ONLY IN CADAM

08:13 93.11.25

Tetra Pak
LUND SWEDEN

This drawing must not without the consent of Tetra Pak be copied, transmitted or disclosed to any third party.

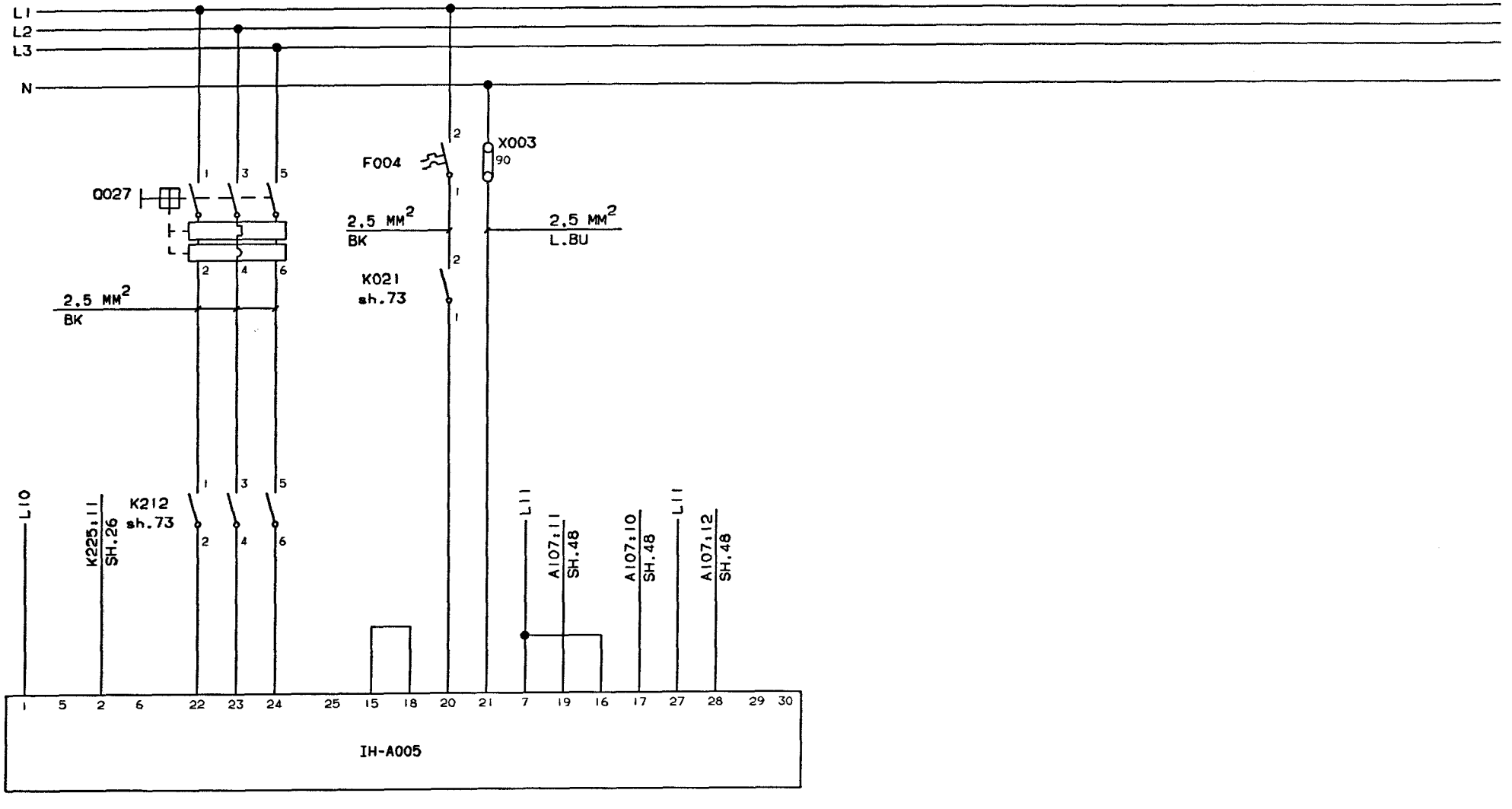

IH-GENERATOR P.T.

INTRODUCED WITH AM NO. 19261	DATE: 930310	SIGN. HK/UTH		DESCRIPTION: IH - GENERATOR	
ISSUE A					
AM NO. 20144					
DATE 930609				MACHINE: TBA/9-1402 P.T	44097-15:01
SIGN. HK/PSG			DRAWING REMARKS		

ALTERATIONS ONLY IN CADAM

08:13 93.11.25

Tetra Pak
LUND SWEDEN

This drawing must not without the consent of Tetra Pak be copied, transmitted or disclosed to any third party.

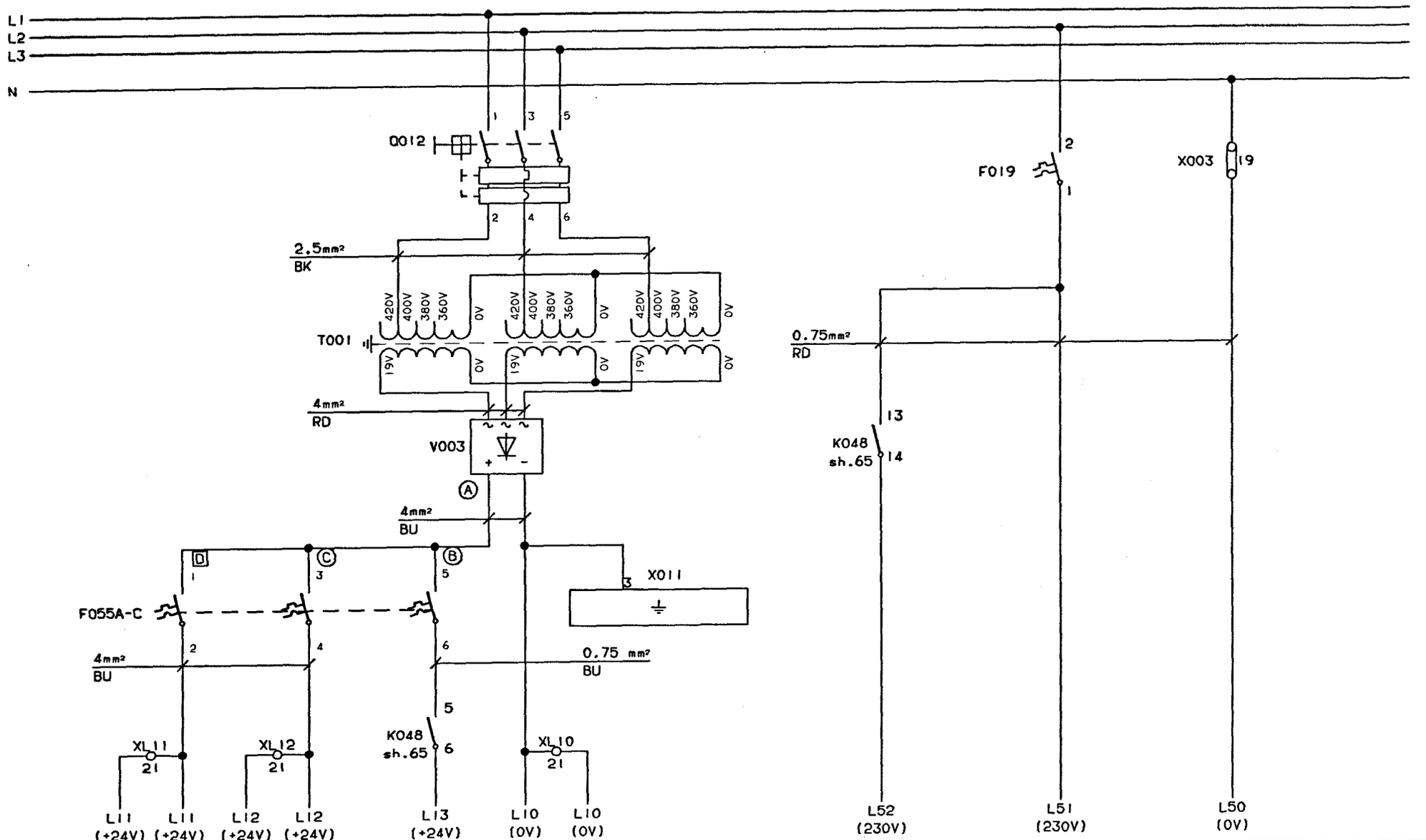

INTRODUCED WITH AM NO. 19261	DATE. 930310	SIGN. HK/UTH		DESCRIPTION: CONTROL VOLTAGE	
ISSUE A					
AM NO. 20144				MACHINE: TBA/9-1402 P.T	44097-16:01
DATE 930609			DRAWING REMARKS		
SIGN. HK/PSG					

ALTERATIONS ONLY IN CADAM

08:13 93.11.25

Tetra Pak
LUND SWEDEN

This drawing must not without the consent of Tetra Pak be copied, transmitted or disclosed to any third party.

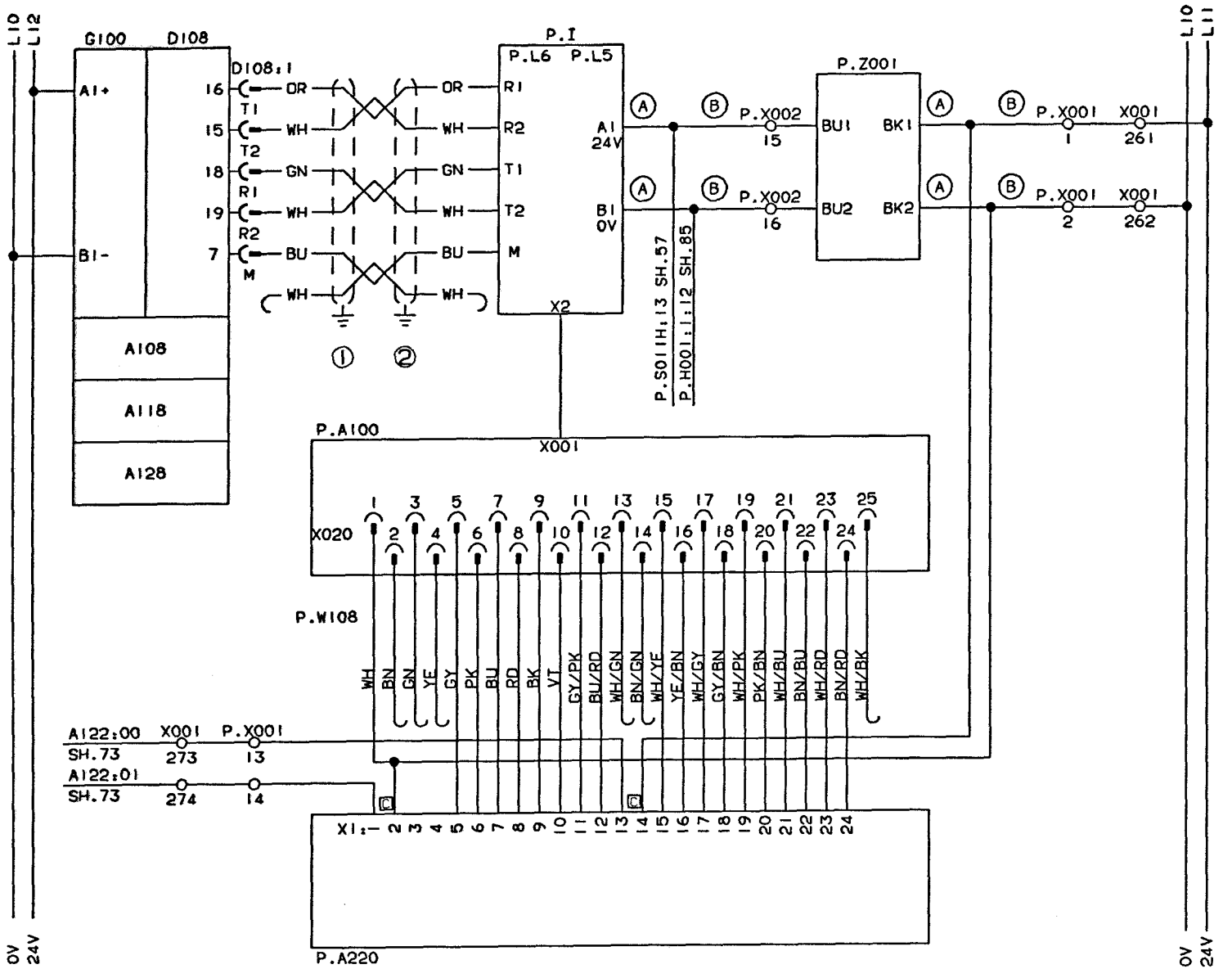

G100	POWER UNIT
D108	CPU
P.I	PANEL INTERFACE
P.Z001	INTERFACE PROTECTION
A108	
A118	RACK
A128	
P.A100	CIRCUIT BOARD
P.A220	INTERFACE EXPANSION CARD

INTRODUCED WITH AM NO.	19261	DATE: 930310	SIGN. HK/UTH	①CONNECTED TO D-SUB COVER	DESCRIPTION: TPMC
ISSUE	A			②CONNECTED TO MOUNTINGPLATE NEAR INTERFERENCE PROT.	
AM NO	20144				MACHINE: TBA/9-1402 P.T
DATE	930609				44097-17:01
SIGN.	HK/PSG			DRAWING REMARKS	

ALTERATIONS ONLY IN CADAM

08:13 93.11.25

Tetra Pak
LUND SWEDEN

This drawing must not without the consent of Tetra Pak be copied, transmitted or disclosed to any third party.

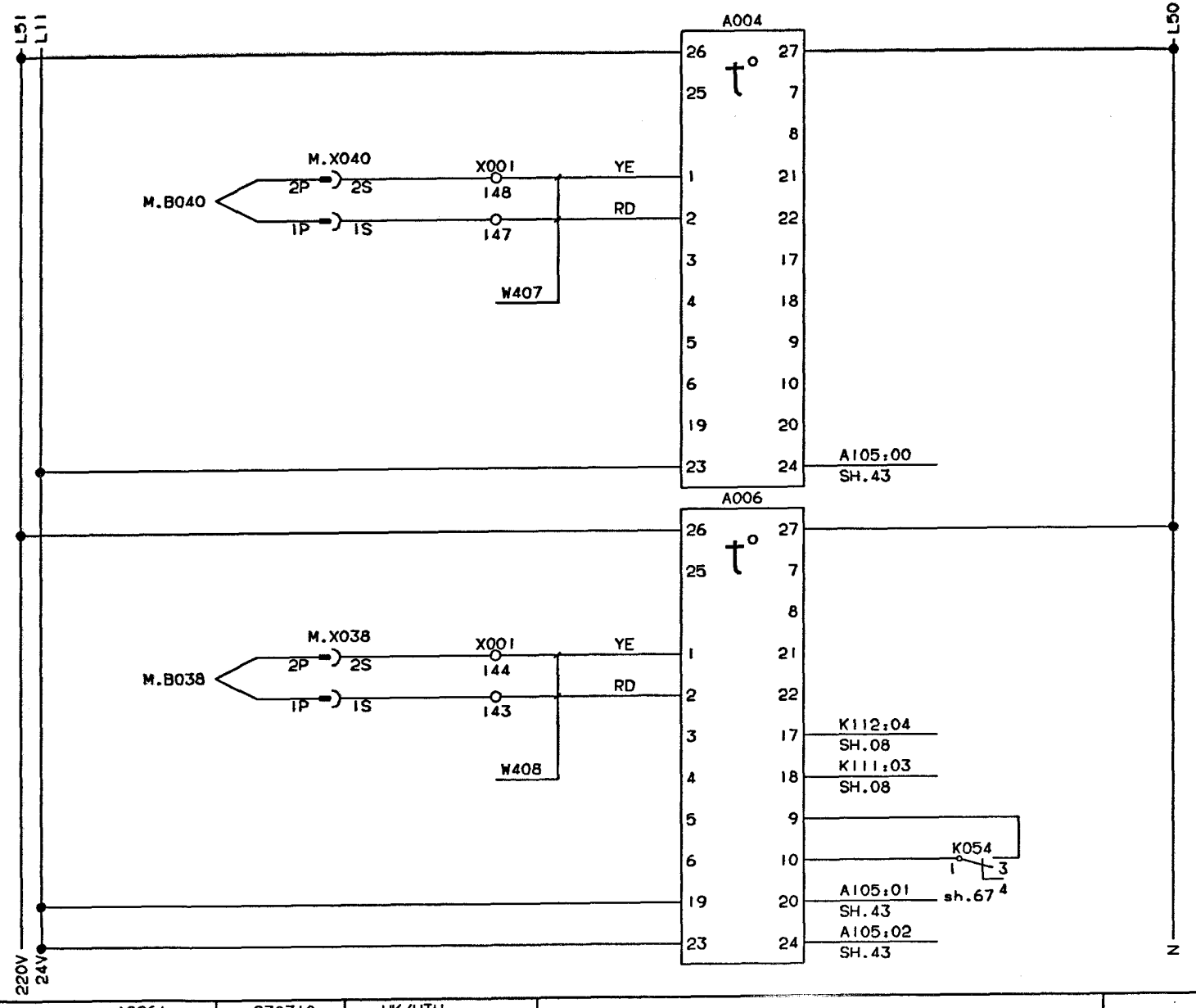

A004 TEMP. MONITOR PRESTER VALVE

M.B040 PRESTERIL. TEMPERATURE

A006 TEMP. REGULATOR PEROXID BATH, WATER

M.B038 PEROXIDE BATH, TEMP.WATER

INTRODUCED WITH AM NO.	19261	DATE: 930310	SIGN. HK/UTH	DESCRIPTION:	REGULATORS
ISSUE				MACHINE:	TBA/9-1402 P.T
AM NO.				DRAWING REMARKS	44097-18:01
DATE					
SIGN.					

ALTERATIONS ONLY IN CADAM

08:13 93.11.25

Tetra Pak
LUND SWEDEN

This drawing must not without the consent of Tetra Pak be copied, transmitted or disclosed to any third party.

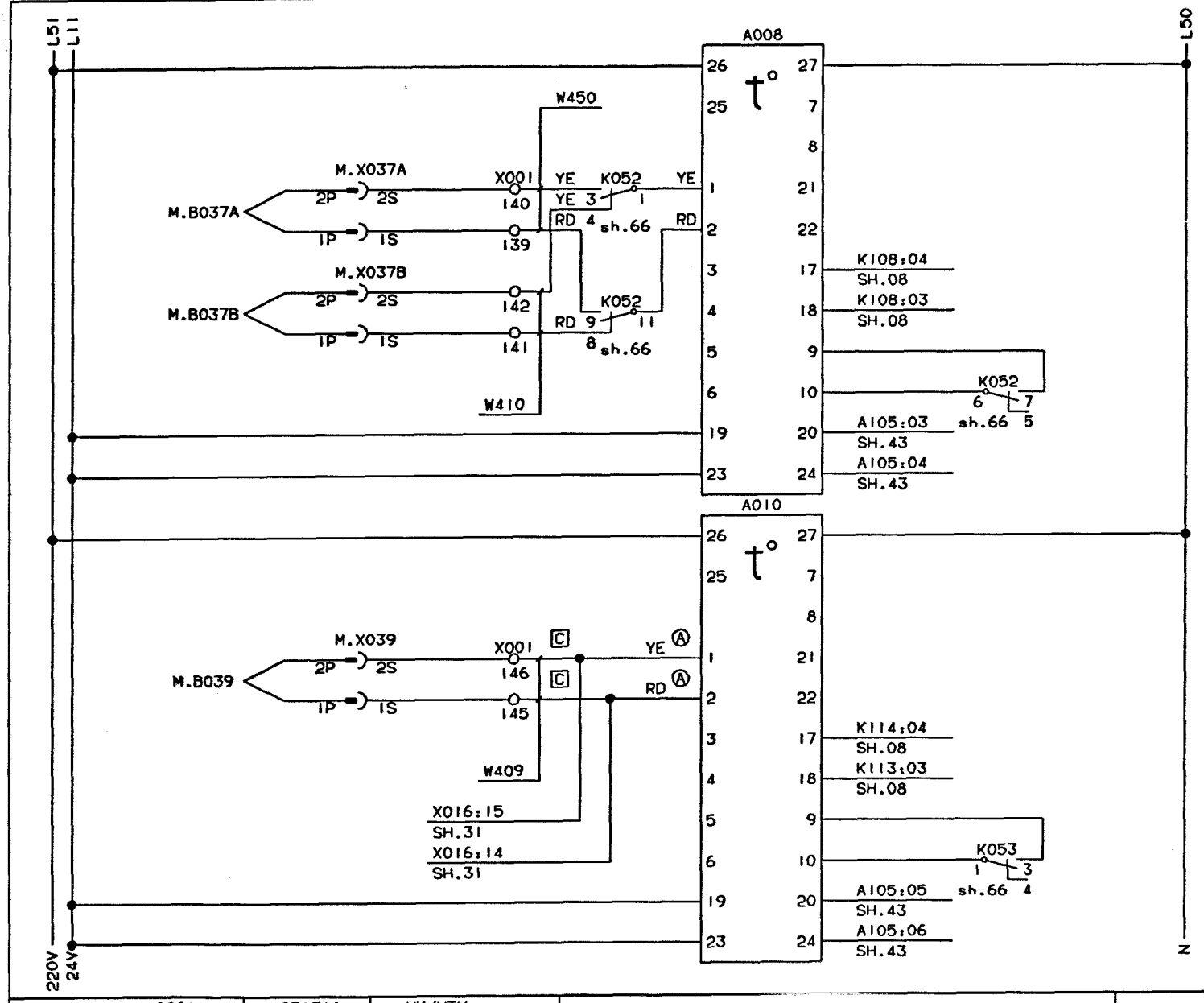

A008 TEMP. REGULATOR LS

M.B037A LS SEALED TUBE, TEMP.

M.B037B LS-ELEMENT, TEMP.

A010 TEMP. REGULATOR AIR SUPERHEATER

M.B039 AIR SUPERHEATER, TEMP.

INTRODUCED WITH AM NO. 19261	DATE: 930310	SIGN. HK/UTH		DESCRIPTION: REGULATORS	
ISSUE					
AM NO.					
DATE				MACHINE: TBA/9-1402 P.T	44097-19:01
SIGN.			DRAWING REMARKS		

ALTERATIONS ONLY IN CADAM

08:13 93.11.25

Tetra Pak
LUND SWEDEN

This drawing must not without the consent of Tetra Pak be copied, transmitted or disclosed to any third party.

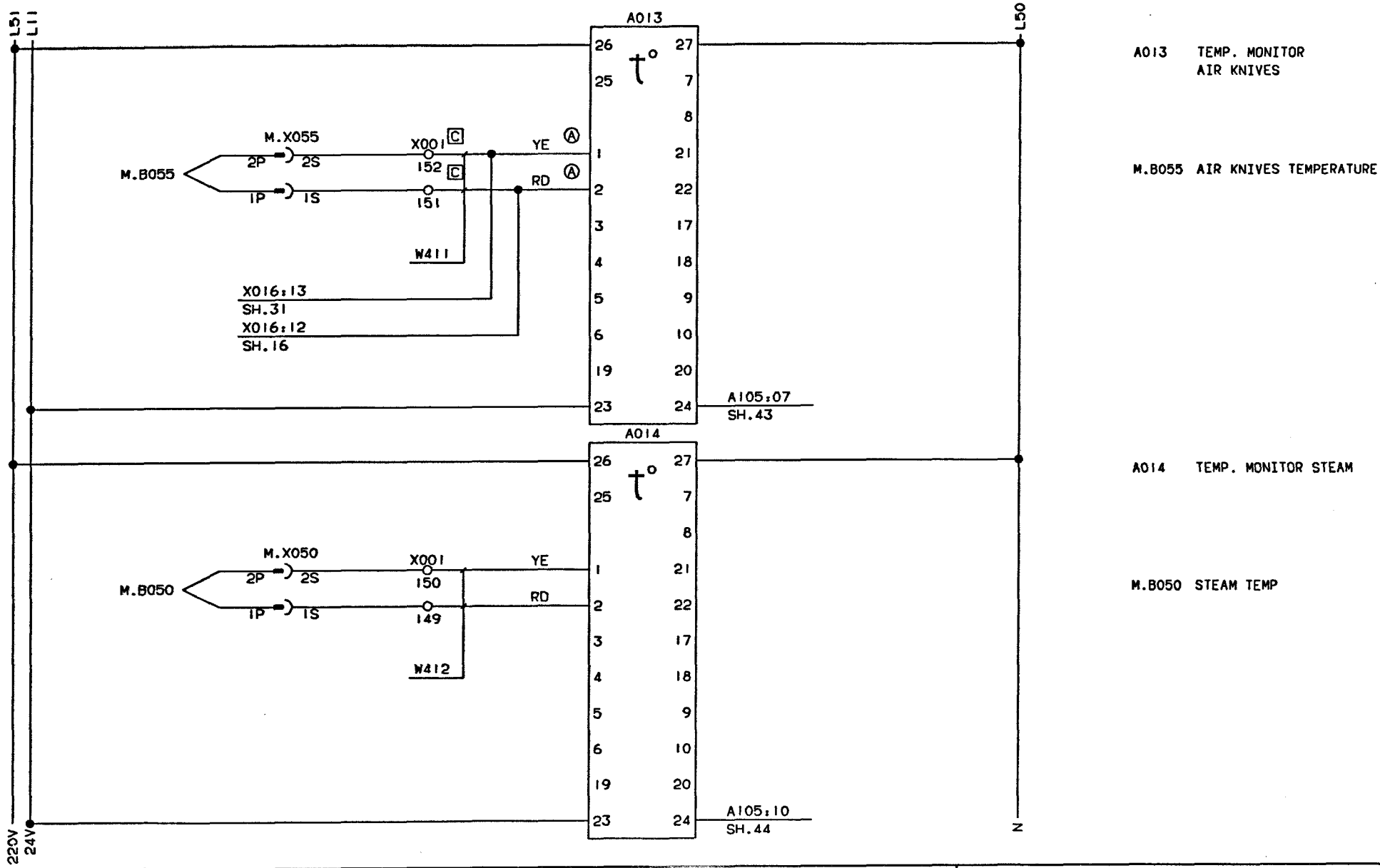

A013 TEMP. MONITOR AIR KNIVES

M.B055 AIR KNIVES TEMPERATURE

A014 TEMP. MONITOR STEAM

M.B050 STEAM TEMP

INTRODUCED WITH AM NO.	19261			DATE: 930310		SIGN. HK/UTH			DESCRIPTION: REGULATORS	
ISSUE										
AM NO.										
DATE									MACHINE: TBA/9-1402 P.T	44097-20:01
SIGN.								DRAWING REMARKS		

ALTERATIONS ONLY IN CADAM

08:13 93.11.25

Tetra Pak
LUND SWEDEN

This drawing must not without the consent of Tetra Pak: be copied, transmitted or disclosed to any third party.

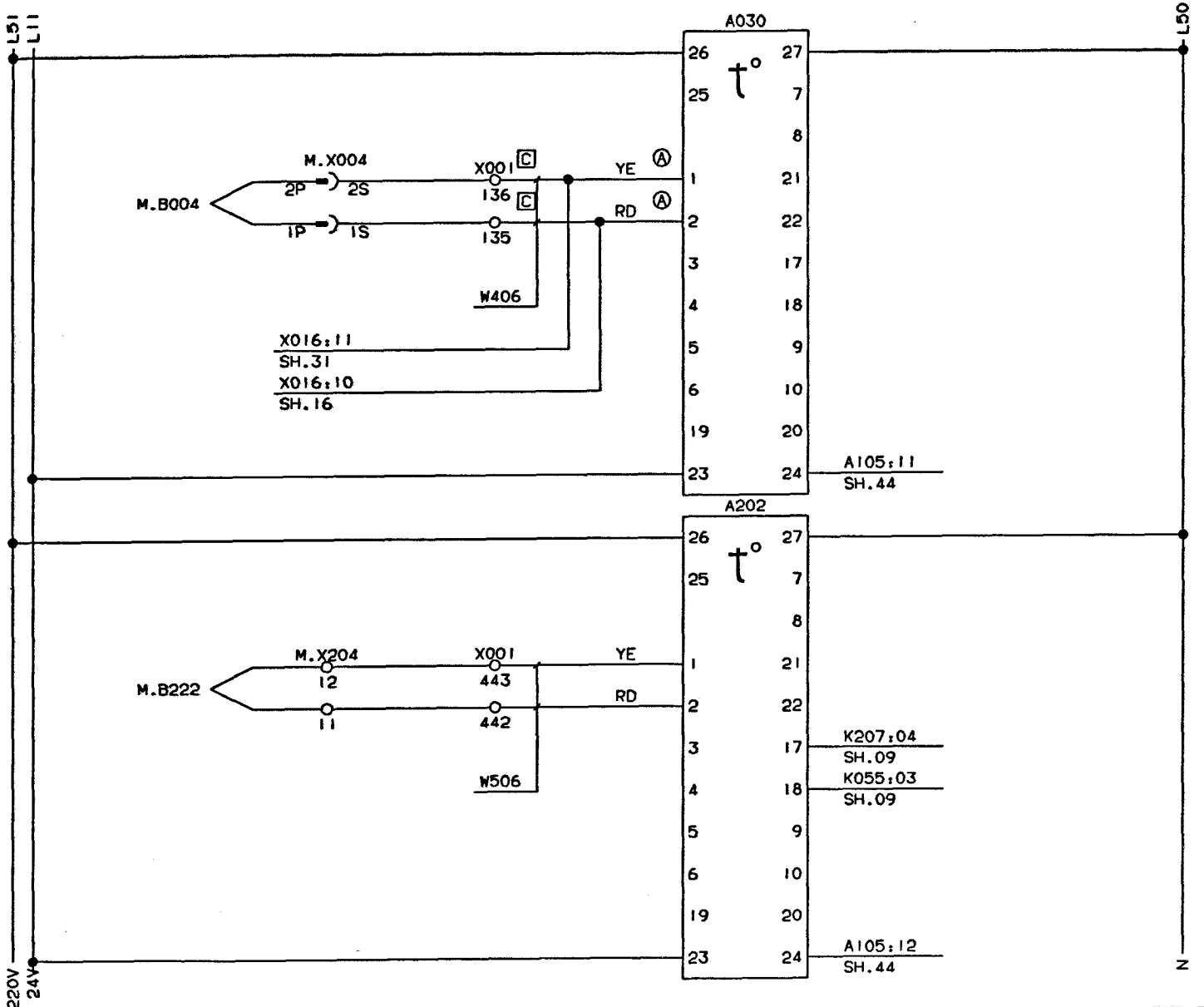

A030 TEMP. MONITOR
PEROXIDE BATH, PEROXIDE

M.B004 PEROXIDE BATH
TEMPERATURE PEROXIDE

A202 TEMP. REGULATOR
SA

M.B222 EXTERNAL STRIP, TEMPERATURE

INTRODUCED WITH AM NO.	19261	DATE: 930310	SIGN. HK/UTH	DESCRIPTION:	REGULATORS
ISSUE					
AM NO.				MACHINE:	TBA/9-1402 P.T
DATE					44097-21:01
SIGN.			DRAWING REMARKS		

ALTERATIONS ONLY IN CADAM

08:13 93.11.25

Tetra Pak
LUND SWEDEN

This drawing must not without the consent of Tetra Pak be copied, transmitted or disclosed to any third party.

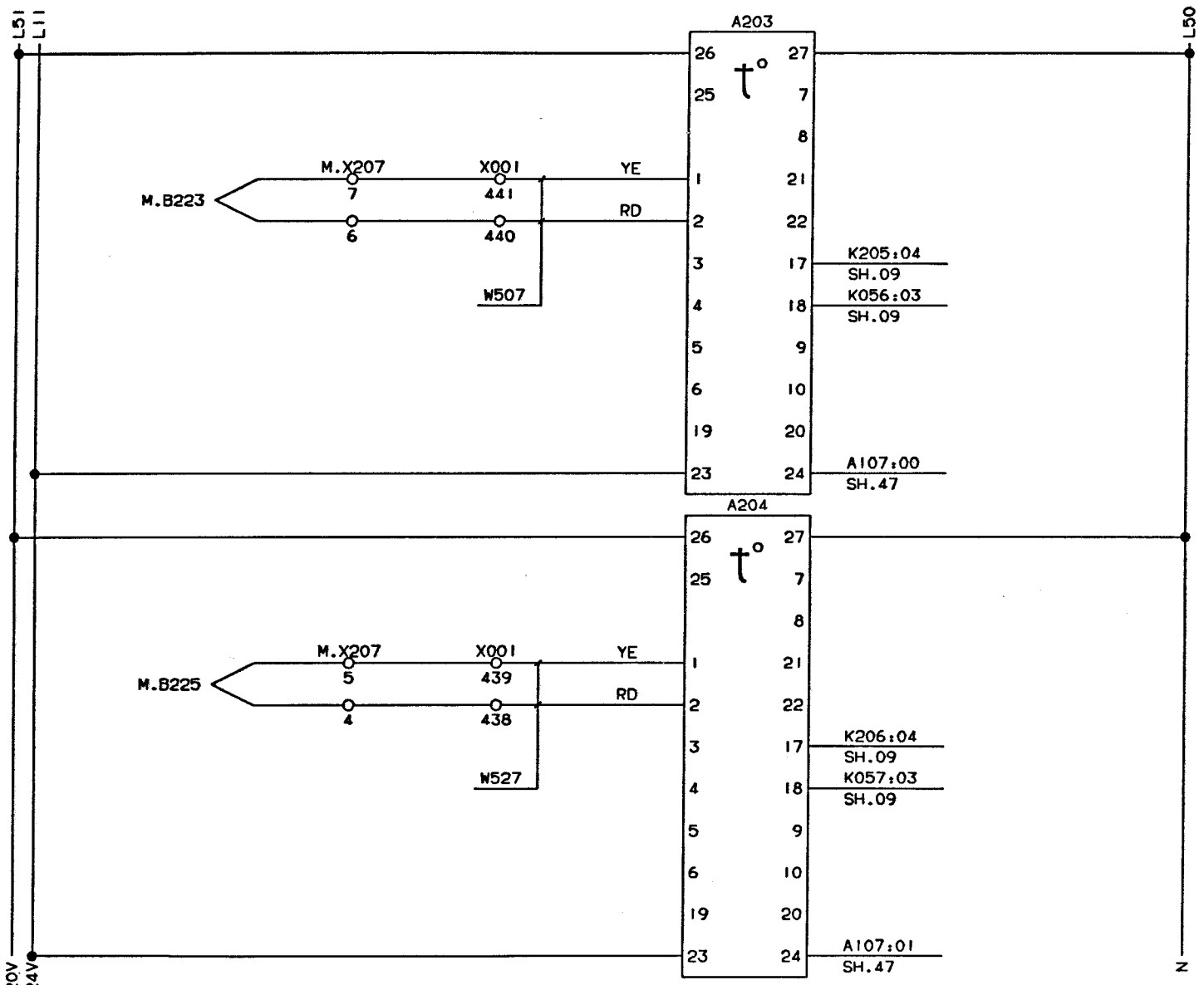

A203 TEMP. REGULATOR
DATE UNIT I

M.B223 DATE UNIT I, TEMPERATURE

A204 TEMP. REGULATOR
DATE UNIT II

M.B225 DATE UNIT II, TEMPERATURE

| | | |

Tetra Pak
LUND SWEDEN

This drawing must not without the consent of Tetra Pak be copied, transmitted or disclosed to any third party.

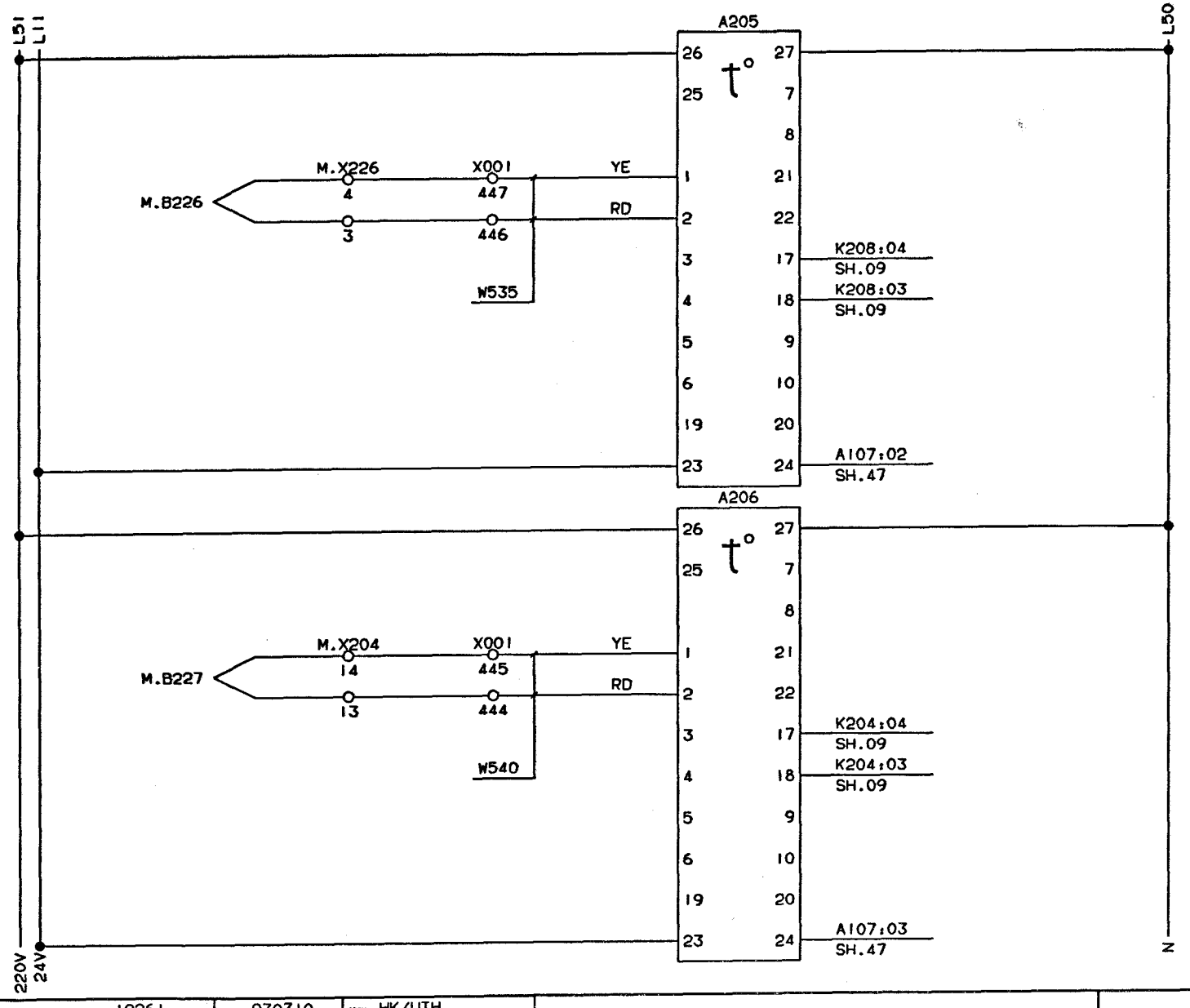

A203 TEMP. REGULATOR STRIP SPLICING

M.B226 STRIP SPLICING, TEMPERATURE

A204 TEMP. REGULATOR COUNTER JAW

M.B227 COUNTER JAW, TEMPERATURE

INTRODUCED WITH AM NO.	19261	DATE: 930310	SIGN. HK/UTH	DESCRIPTION: REGULATORS	
ISSUE				MACHINE: TBA/9-1402 P.T	44097-23:01
AM NO.					
DATE					
SIGN.				DRAWING REMARKS	

ALTERATIONS ONLY IN CADAM

08:13 93.11.25

Tetra Pak
LUND SWEDEN

This drawing must not without the consent of Tetra Pak be copied, transmitted or disclosed to any third party.

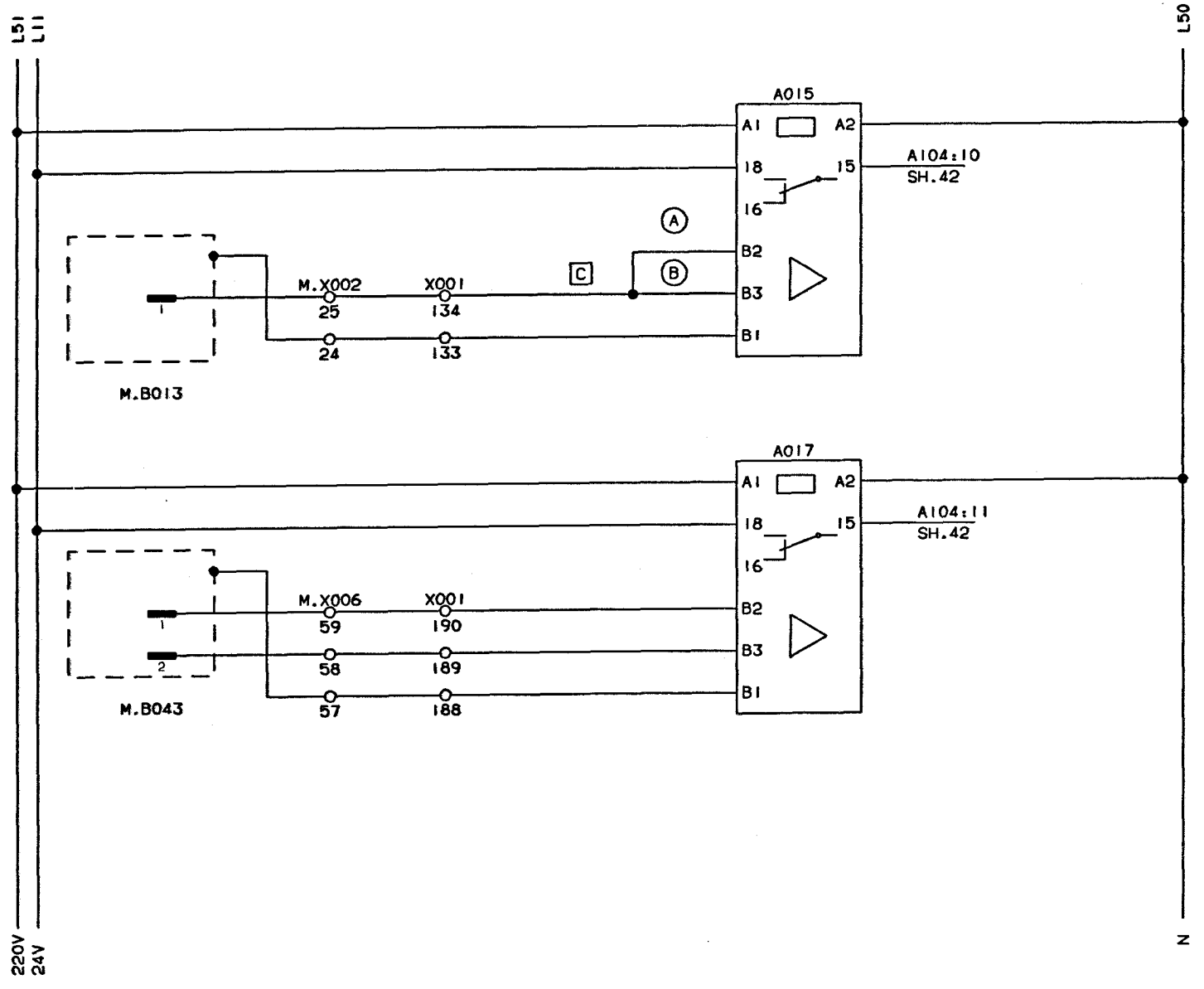

A015 CLEANING TRAY, LEVEL

M.B013 LEVEL SENSOR

A017 SPRAY TANK, LEVEL MAX/MIN

M.B043:1 LEVEL SENSOR MAX
M.B043:2 LEVEL SENSOR MIN

INTRODUCED WITH AM NO. 19261	DATE: 930310	SIGN. HK/UTH	
ISSUE			
AM NO.			DRAWING REMARKS
DATE			
SIGN.			

ALTERATIONS ONLY IN CADAM

DESCRIPTION: LEVEL MONITORS

MACHINE: TBA/9-1402 P.T

44097-24:01

08:13 93.11.25

Tetra Pak
LUND SWEDEN

This drawing must not without the consent of Tetra Pak be copied, transmitted or disclosed to any third party.

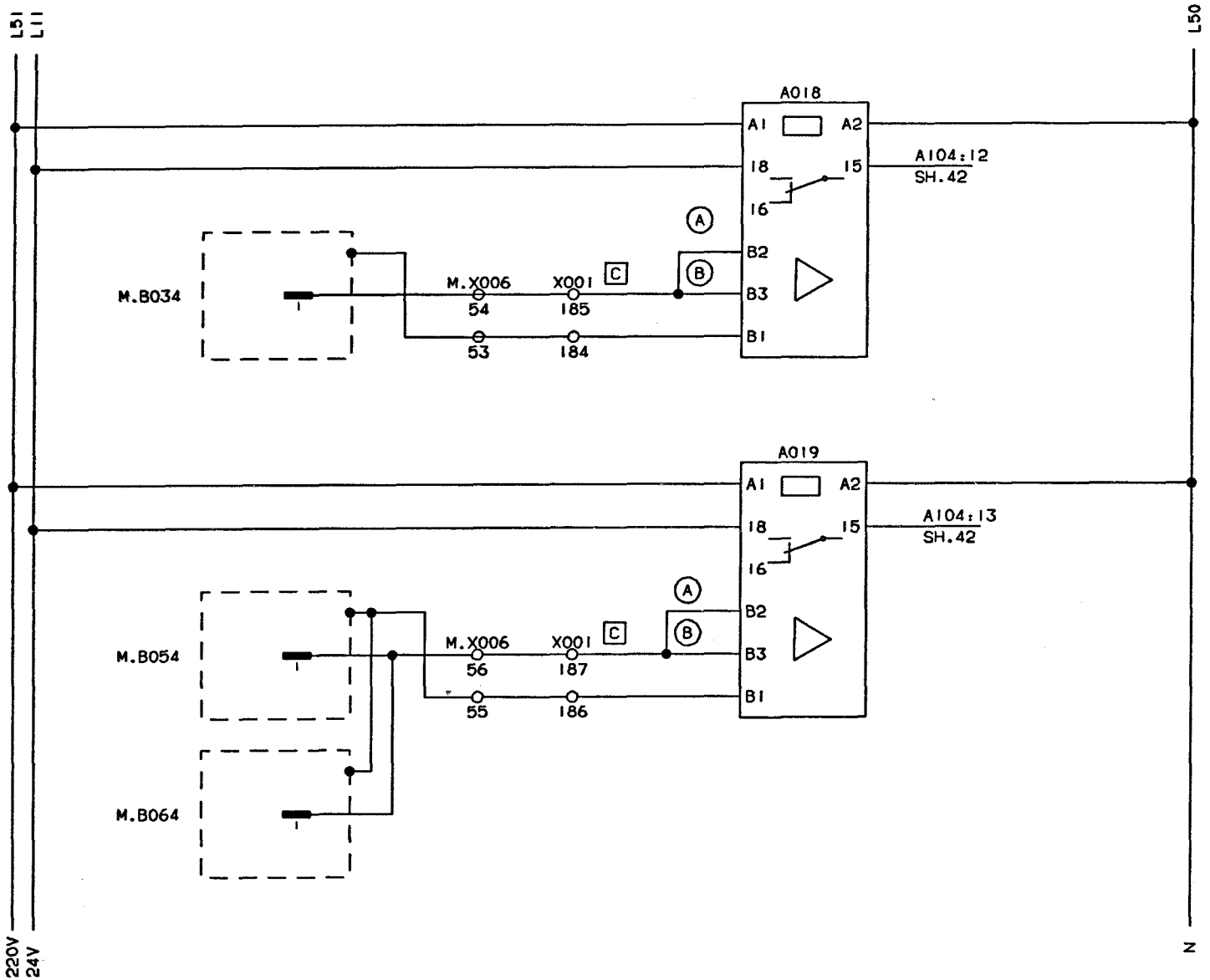

A018 PEROXIDE BATH, LEVEL

M.B034 LEVEL SENSOR

A019 WATER SEPARATOR, LEVEL

M.B054 INLET LEVEL

M.B064 SUCTION LEVEL

| | | |

Tetra Pak
LUND SWEDEN

This drawing must not without the consent of Tetra Pak be copied, transmitted or disclosed to any third party.

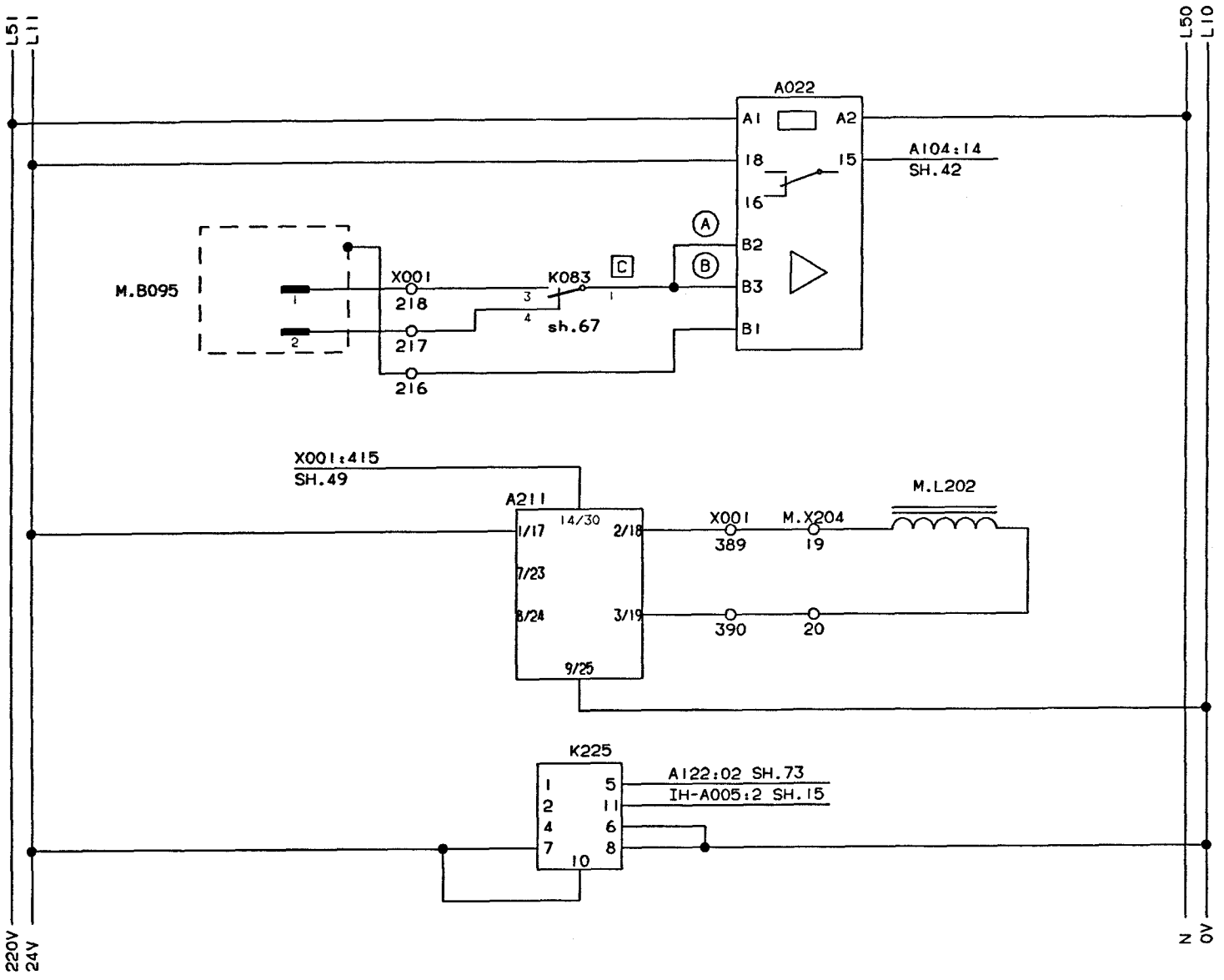

A022 PEROXIDE TANK, LEVEL

M.B095:1 LOW LEVEL (PRODUCTION)
M.B095:2 HIGH LEVEL

A211 BRAKE MOMENT REGULATOR

M.L202 MAGNETIC POWDER BRAKE

K225 TIMER P.T. HEATER

INTRODUCED WITH AM NO. 19261	DATE: 930310	SIGN. HK/UTH		DESCRIPTION: LEVEL MONITORS	
ISSUE A					
AM NO. 20144					
DATE 930609				MACHINE: TBA/9-1402 P.T	44097-26:01
SIGN. HK/PSG			DRAWING REMARKS		

ALTERATIONS ONLY IN CADAM

08:13 93.11.25

Tetra Pak
LUND SWEDEN

This drawing must not without the consent of Tetra Pak be copied, transmitted or disclosed to any third party.

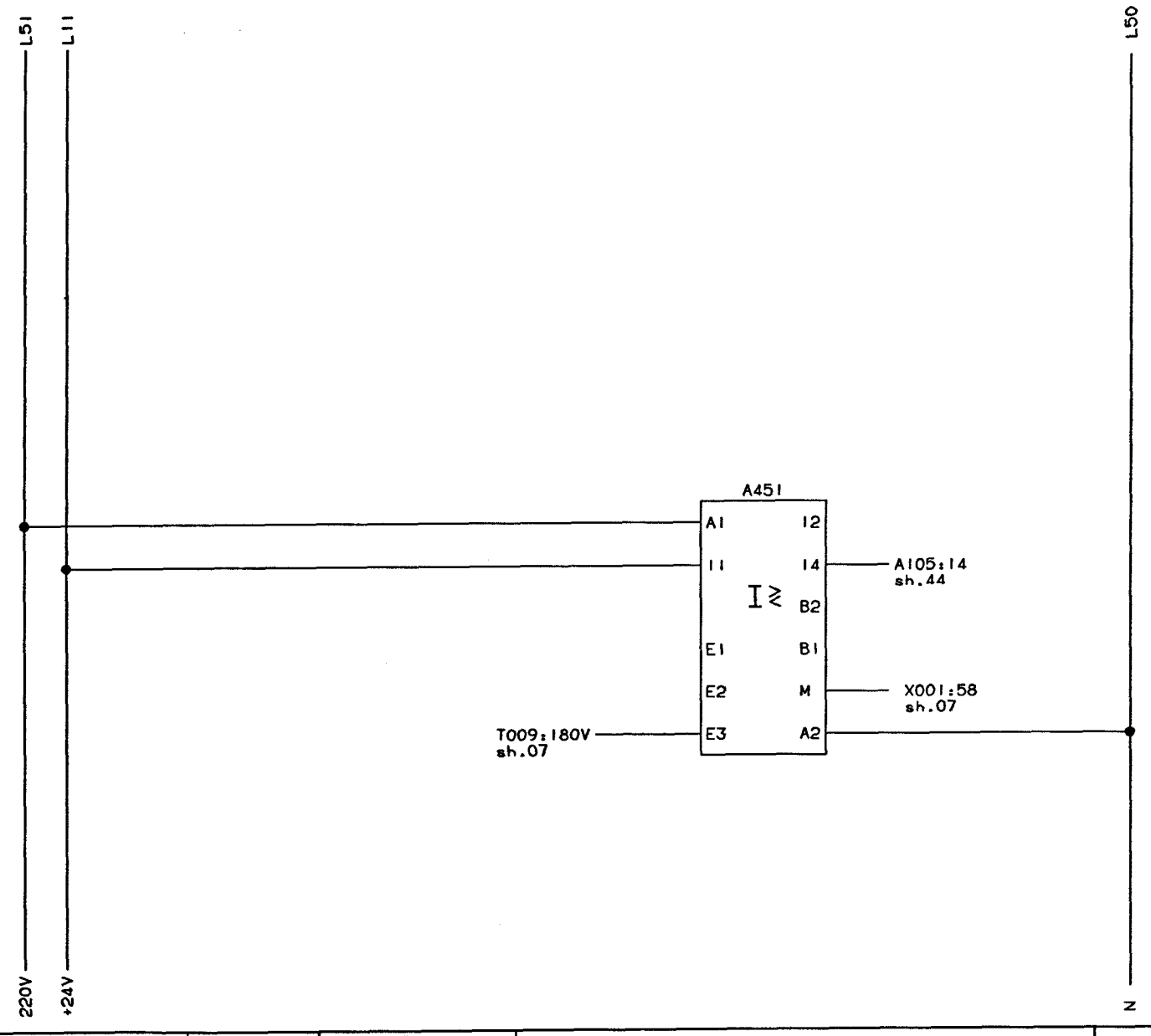

A451 SUPERVISION
LS SHORT STOP ELEMENT

INTRODUCED WITH AM NO.	19261			DATE: 930310		SIGN. HK/UTH					
ISSUE											
AM NO.											
DATE											
SIGN.											

DRAWING REMARKS

DESCRIPTION: CURRENT MONITORS

MACHINE: TBA/9-1402 P.T.

44097-27:01

ALTERATIONS ONLY IN CADAM

08:13 93.11.25

Tetra Pak
LUND SWEDEN

This drawing must not without the consent of Tetra Pak be copied, transmitted or disclosed to any third party.

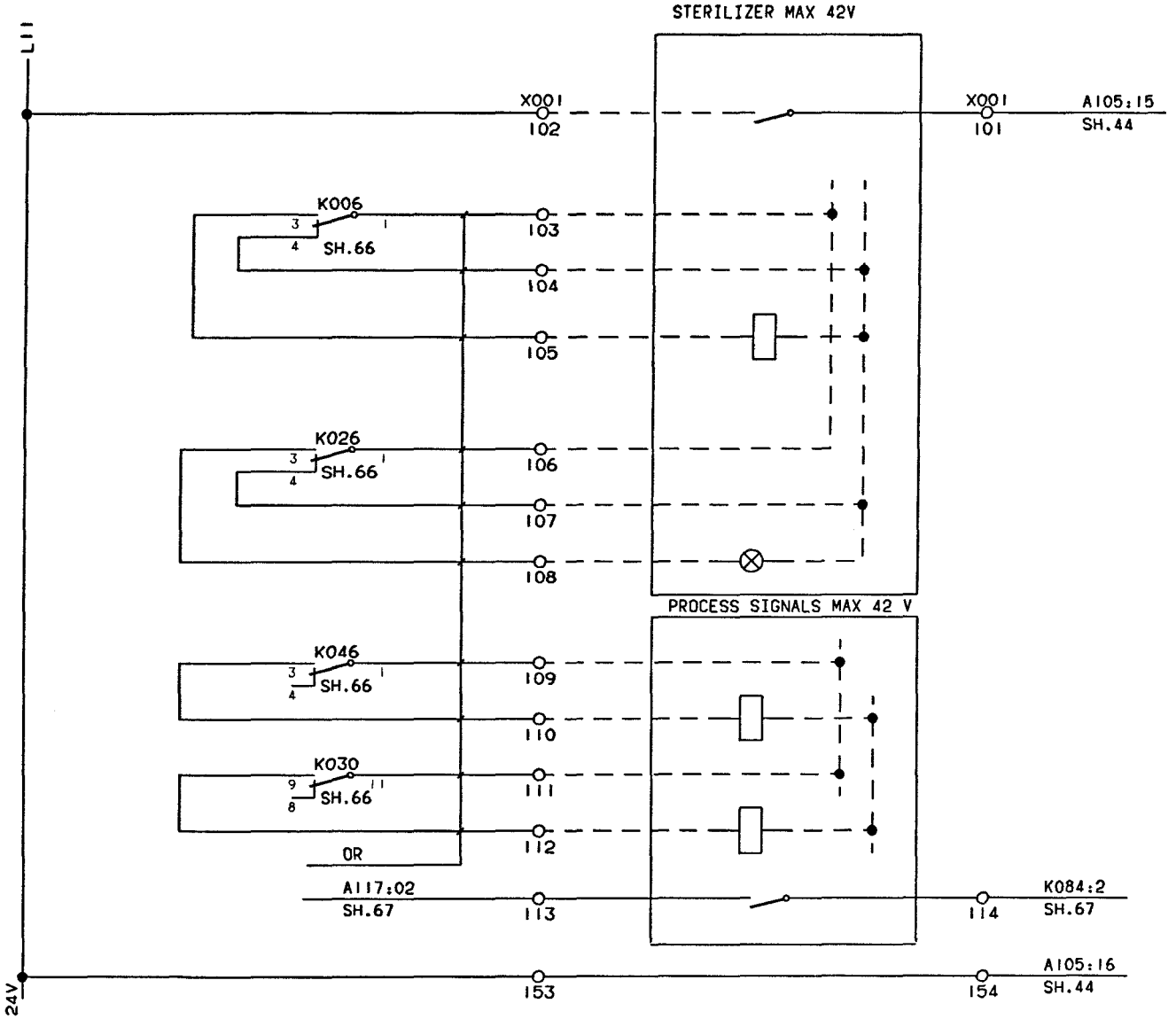

INTRODUCED WITH AM NO.	19261		DATE: 930310		SIGN HK/UTH				
ISSUE	A								
AM NO	20144								
DATE	930609								
SIGN.	HK/PSG								

DRAWING REMARKS

DESCRIPTION: STERILIZER

MACHINE: TBA/9-1402 P.T

44097-29:01

ALTERATIONS ONLY IN CADAM

08:13 93.11.25

Tetra Pak
LUND SWEDEN

This drawing must not without the consent of Tetra Pak be copied, transmitted or disclosed to any third party.

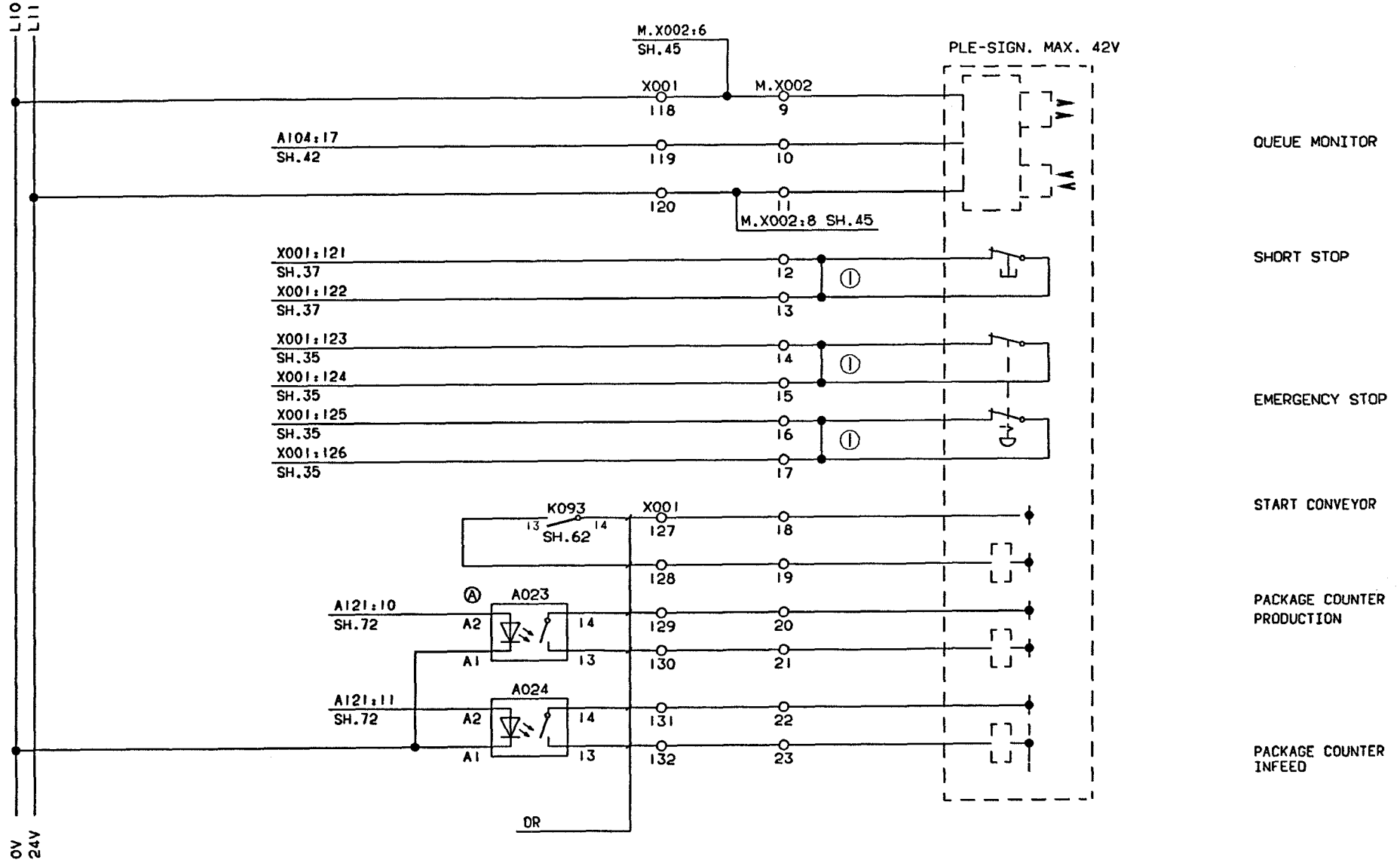

INTRODUCED WITH AM NO.	.9261			DATE 930310		SIGN. HK/UTH					
ISSUE											
AM NO.											
DATE											
SIGN.											

ALTERATIONS ONLY IN CADAM

① REMOVE BRIDGE CONNECTION WHEN PLE-EQUIPMENT IS INSTALLED

DRAWING REMARKS

DESCRIPTION: PLE

MACHINE: TBA/9-1402 P.T

44097-30:01

08:13 93.11.25

Tetra Pak
LUND SWEDEN

This drawing must not without the consent of Tetra Pak be copied, transmitted or disclosed to any third party.

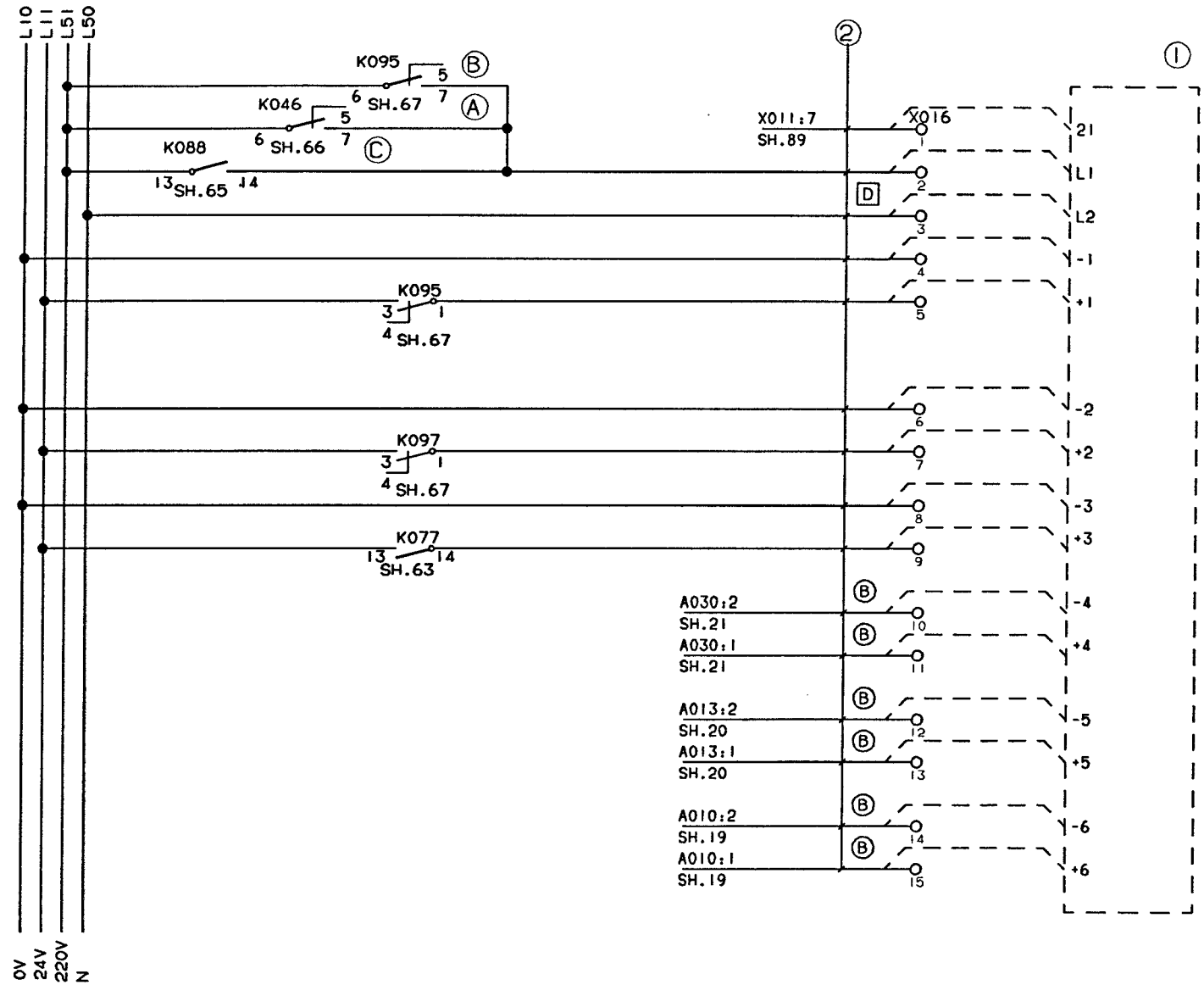

① P16=RECORDER

② MARK WIRES WITH P16 TERMINAL NUMBERS
EACH WIRE HAS 400 mm EXTRA LENGHT, HIDDEN IN CABLE TRAY. TO BE PULLED OUT WHEN CONNECTING RECORDER P16

CHANNEL 1=STERILE PARAMETER

CHANNEL 2= OPERATIONAL PARAMETER

CHANNEL 3= MAIN MOTOR

CHANNEL 4= PEROXIDE BATH TEMP.PEROXIDE

CHANNEL 5= AIR KNIFE, TEMP.

CHANNEL 6= STERILE AIR. TEMP

INTRODUCED WITH AM NO.	19261			DATE: 930310			SIGN. HK/UTH				DESCRIPTION: PROCESS RECORDER		
ISSUE											MACHINE: TBA/9-1402 P.T		44097-31:01
AM NO.													
DATE													
SIGN.													

DRAWING REMARKS

ALTERATIONS ONLY IN CADAM

08:13 93.11.25

Tetra Pak
LUND SWEDEN

This drawing must not without the consent of Tetra Pak be copied, transmitted or disclosed to any third party.

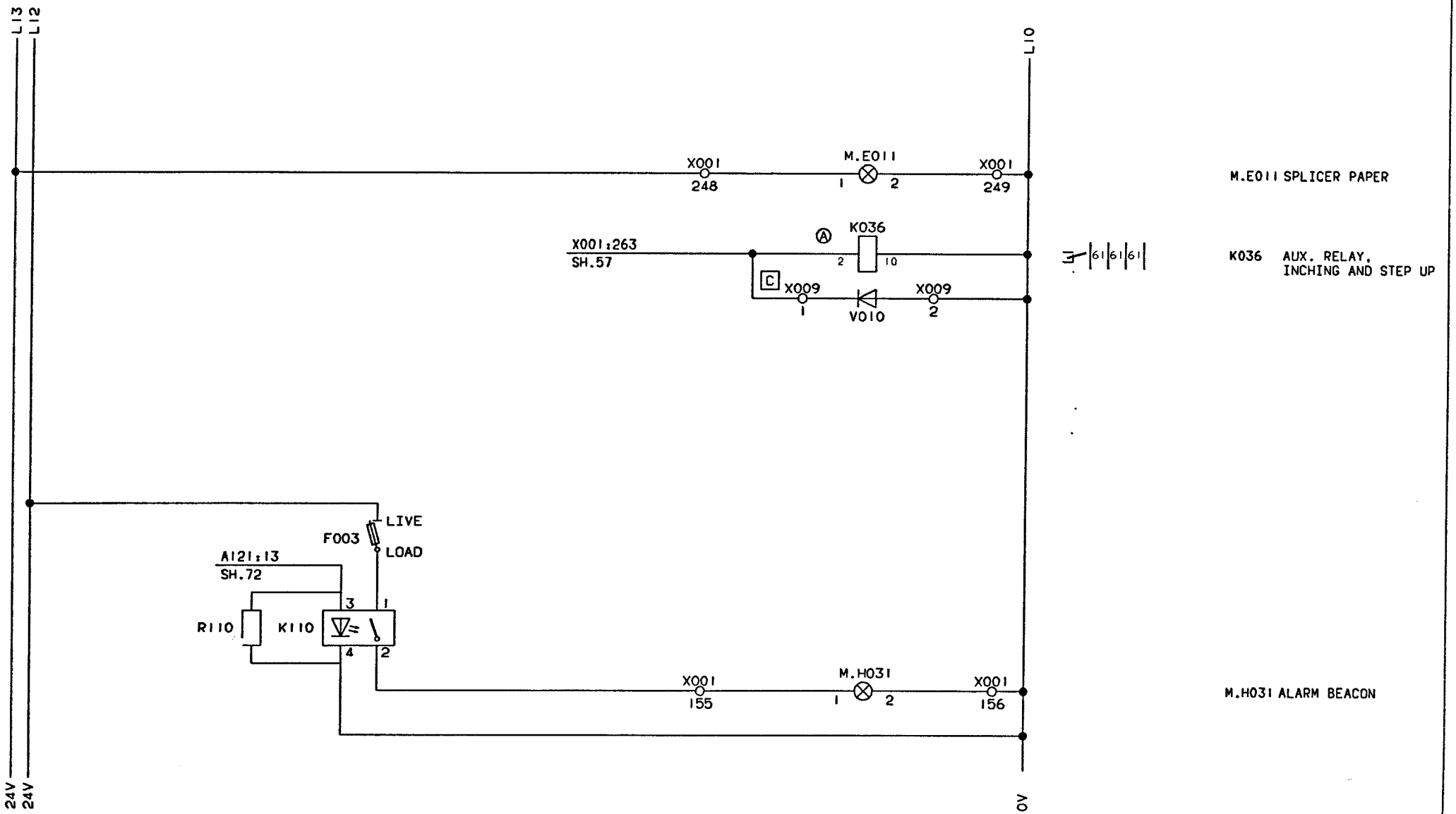

| | | |

Tetra Pak
LUND SWEDEN

This drawing must not without the consent of Tetra Pak, be copied, transmitted or disclosed to any third party.

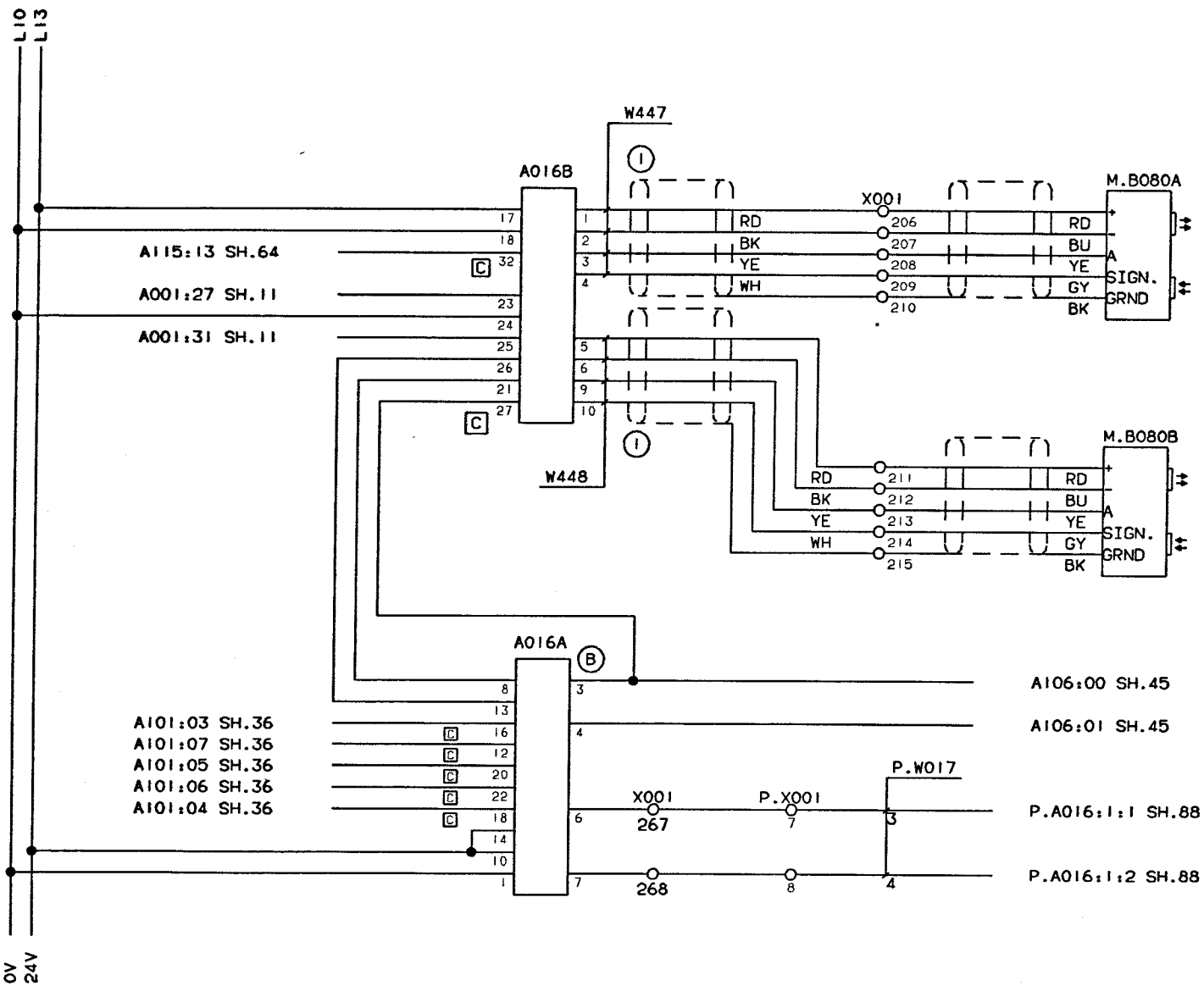

M.B080A DESIGN ADJUSTMENT DATA LEFT

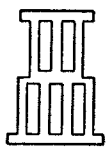

M.B080B DESIGN ADJUSTMENT CLOCK RIGHT

INTRODUCED WITH AM NO. 19261	DATE: 930310	SIGN. HK/UTH	① SHIELD SHALL BE CUT OFF AT A016B	DESCRIPTION: PRINTED DESIGN CORRECTION		
ISSUE A						
AM NO. 20144						
DATE 930805						
SIGN. HK/PSG			DRAWING REMARKS	MACHINE: TBA/9-1402 P.T	44097-34:01	

ALTERATIONS ONLY IN CADAM

08:13 93.11.25

Tetra Pak
LUND SWEDEN

This drawing must not without the consent of Tetra Pak be copied, transmitted or disclosed to any third party.

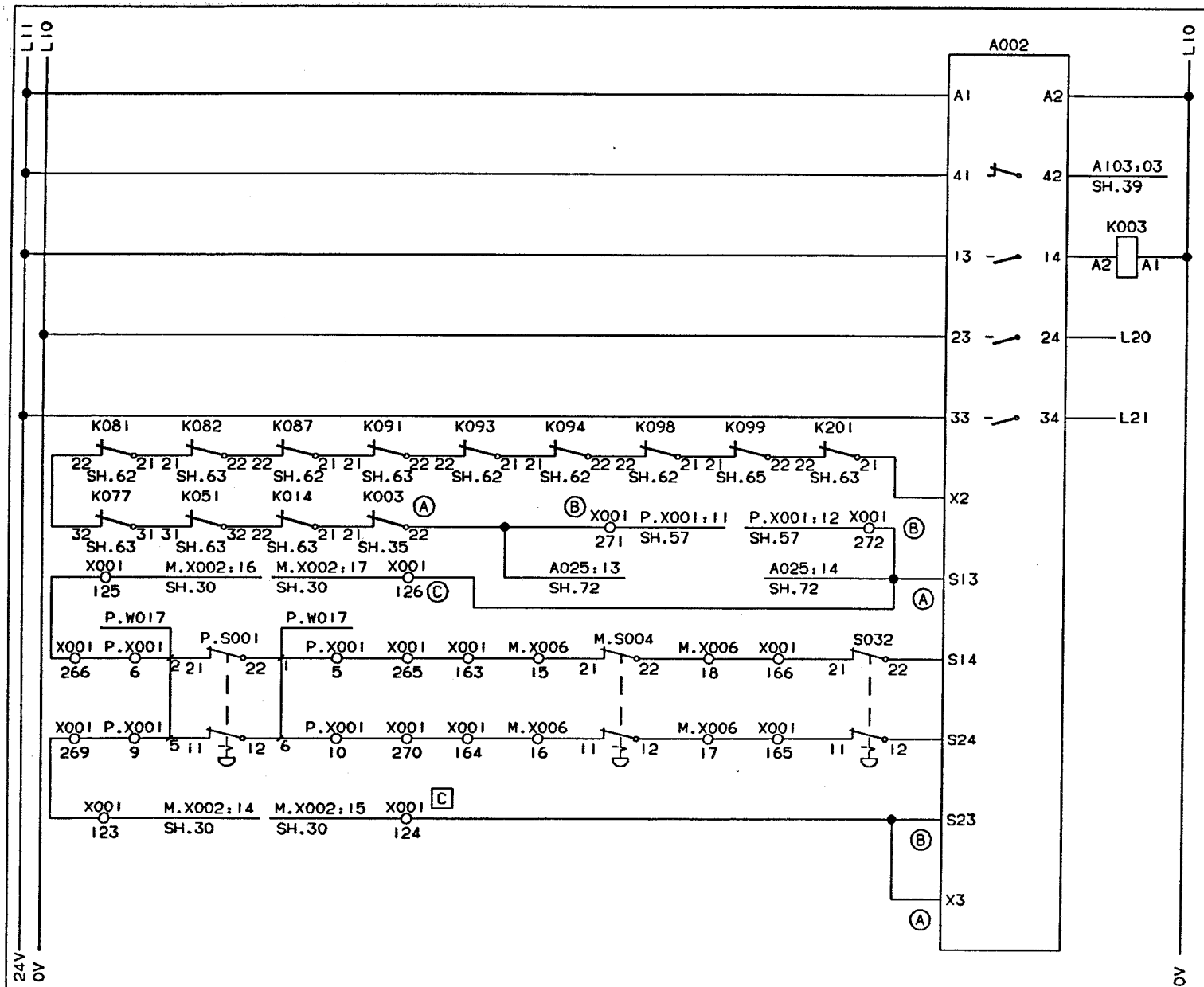

A002 EMERGENCY STOP MODULE

CONTACTOR TO ENSURE REDUNDANCE

K003 – K201 AUXILIARY CONTACTS ON EMERGENCY- AND SAFETY-MODULE CONTACTORS

P.S001
M.S004 EMERGENCY STOP
S032

INTRODUCED WITH AM NO. 19261	DATE: 930310	SIGN. HK/UTH	DESCRIPTION: EMERGENCY STOP FUNCTION	
ISSUE			MACHINE: TBA/9-1402 P.T	44097-35:01
AM NO.				
DATE				
SIGN.		DRAWING REMARKS		

ALTERATIONS ONLY IN CADAM

08:13 93 11 25

Tetra Pak
LUND SWEDEN

This drawing must not without the consent of Tetra Pak be copied, transmitted or disclosed to any third party.

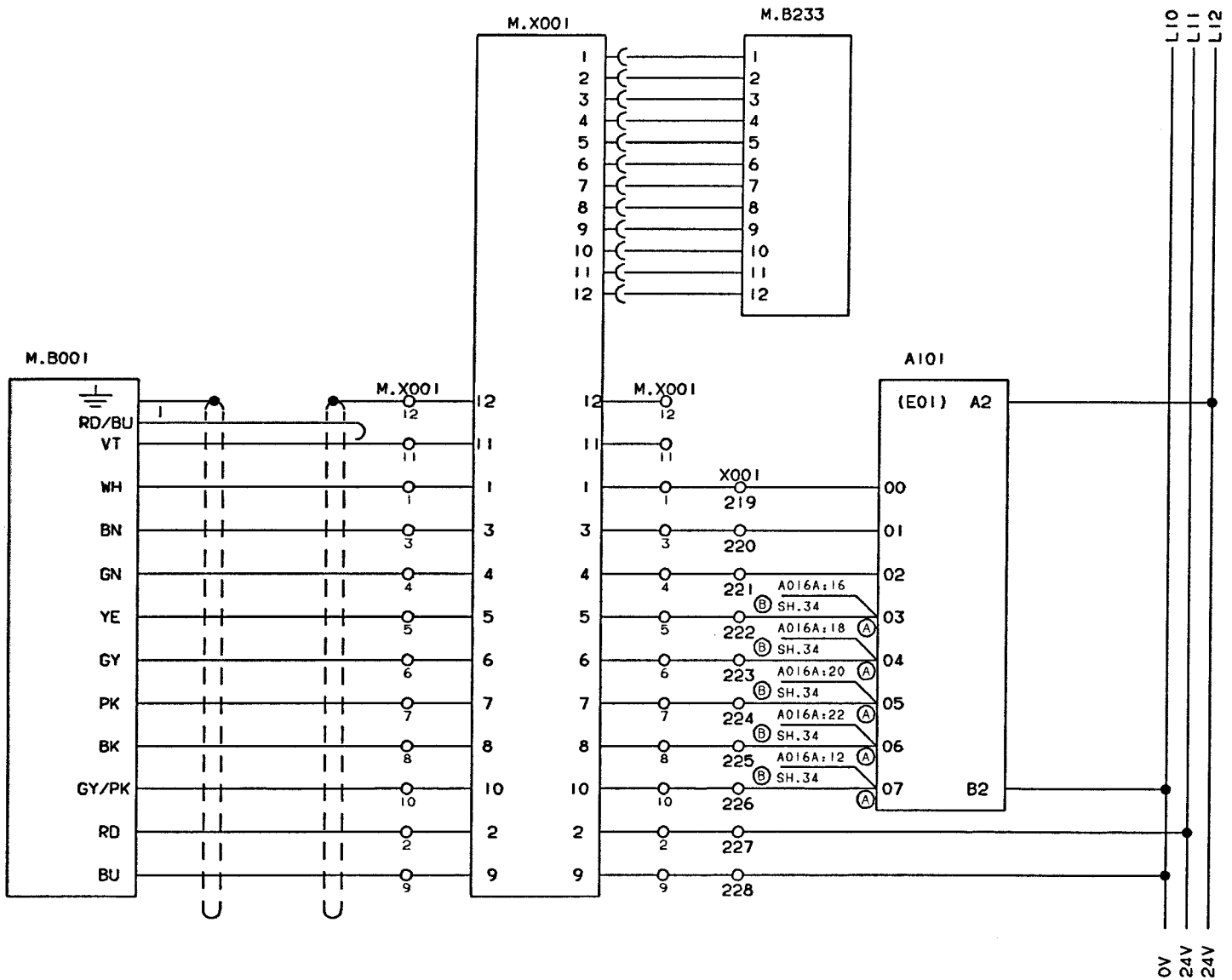

M.X001 TEST SOCKET

M.B233 ANGLE DISPLAY

A101 ENCODER MODULE

M.B001 MAIN MACHINE ANGLE ENCODER

BIT 0 (LS)

BIT 1

BIT 2

BIT 3

BIT 4

BIT 5

BIT 6

BIT 7 (MS)

INTRODUCED WITH AM NO. 19261	DATE: 930310	SIGN. HK/UTH	
ISSUE			
AM NO.			
DATE			
SIGN.			DRAWING REMARKS

DESCRIPTION: ANGLE ENCODER, MAIN MACHINE

MACHINE: TBA/9-1402 P.T

44097-36:01

ALTERATIONS ONLY IN CADAM

08:13 93 11 25

Tetra Pak
MODENA ITALY

This drawing must not without the consent of Tetra Pak, be copied, transmitted or disclosed to any third party.

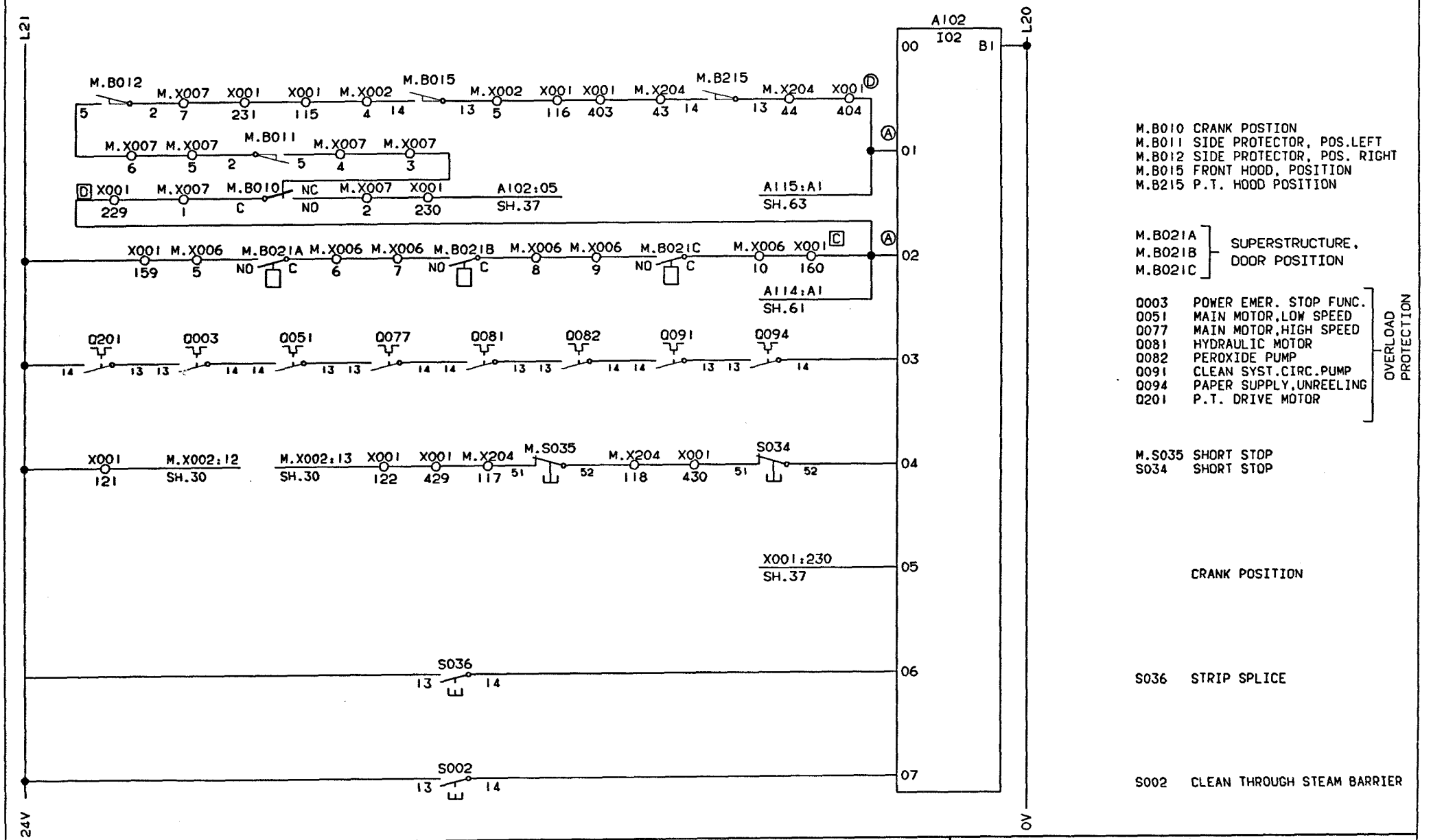

M.B010 CRANK POSTION
M.B011 SIDE PROTECTOR, POS.LEFT
M.B012 SIDE PROTECTOR, POS. RIGHT
M.B015 FRONT HOOD, POSITION
M.B215 P.T. HOOD POSITION

M.B021A, M.B021B, M.B021C — SUPERSTRUCTURE, DOOR POSITION

OVERLOAD PROTECTION
Q003 POWER EMER. STOP FUNC.
Q051 MAIN MOTOR,LOW SPEED
Q077 MAIN MOTOR,HIGH SPEED
Q081 HYDRAULIC MOTOR
Q082 PEROXIDE PUMP
Q091 CLEAN SYST.CIRC.PUMP
Q094 PAPER SUPPLY,UNREELING
Q201 P.T. DRIVE MOTOR

M.S035 SHORT STOP
S034 SHORT STOP

CRANK POSITION

S036 STRIP SPLICE

S002 CLEAN THROUGH STEAM BARRIER

INTRODUCED WITH AM NO.	19261	DATE: 930310	SIGN. HK/UTH		
ISSUE	A				
AM NO.	20144				
DATE	930909				
SIGN.	HK/MRI			DRAWING REMARKS	

DESCRIPTION: PLC-IN, MACHINE CONTROL

MACHINE: TBA/9-1402 P.T | 44097-37:01

ALTERATIONS ONLY IN CADAM

08:13 93.11.25

Tetra Pak
MODENA ITALY

This drawing must not without the consent of Tetra Pak be copied, transmitted or disclosed to any third party.

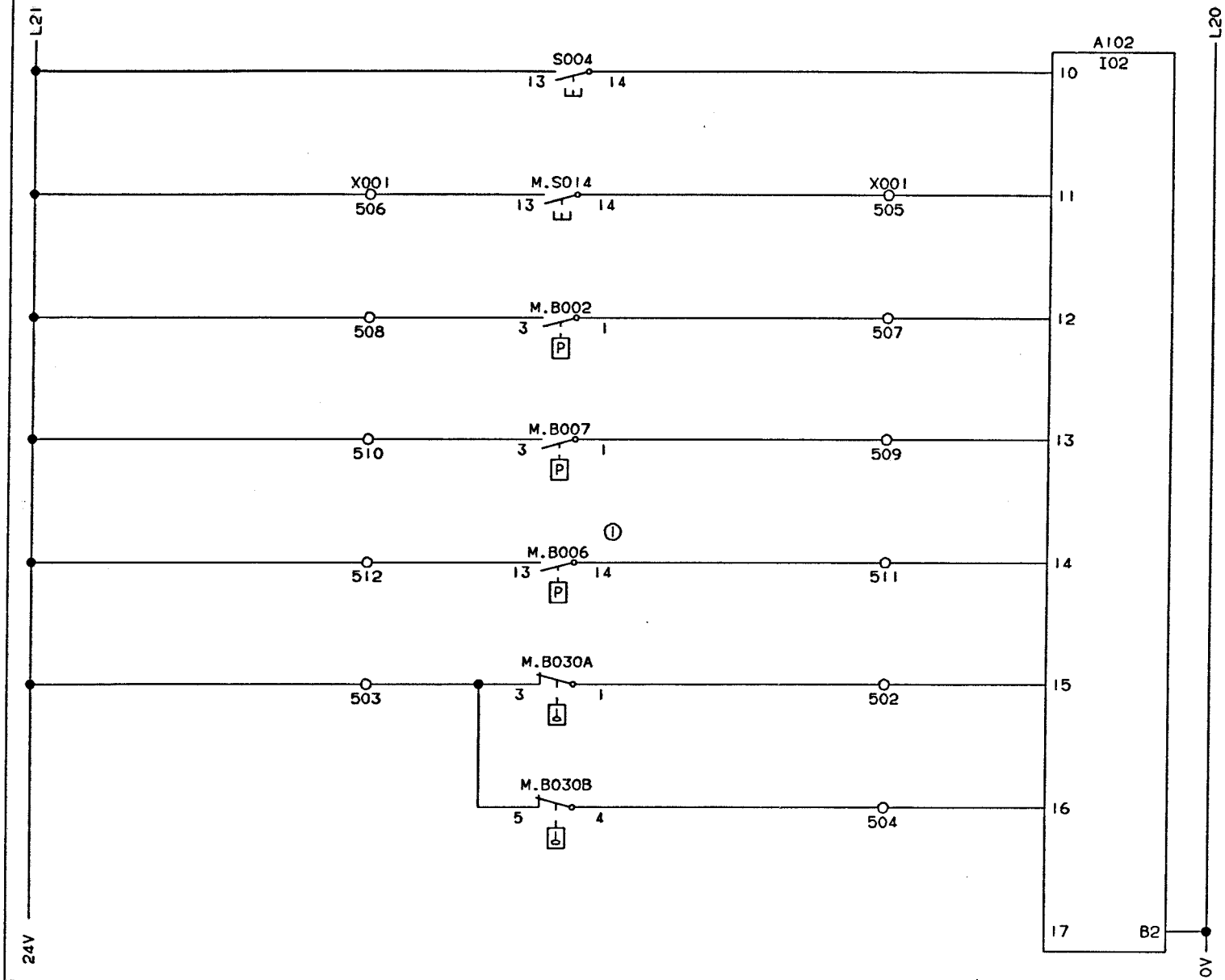

S004	SERVICE SWITCH
M.S014	MANUAL LUBRICATION
M.B002	MAIN AIR. PRESSURE
M.B007	COOL WATER. PRESSURE
M.B006	LUBRICATION OIL PRESSURE
M.B030A	LUBRICATION OIL LOW LEVEL
M.B030B	LUBRICATION OIL HIGH LEVEL

INTRODUCED WITH AM NO. 19261		DATE: 930310	SIGN. HK/UTH	① BEFORE T-ORDER T-13147 AND T-20163 THE CONNECTION IS 1 AND 3 INSTEAD OF 13 AND 14	DESCRIPTION: PLC-IN, OPERATION MONITORS
ISSUE	A B				
AM NO.	20144 20407				
DATE	930609 931015				MACHINE: TBA/9-1402 P.T
SIGN.	HK/PSG HK/MRI			DRAWING REMARKS	44097-38:01

ALTERATIONS ONLY IN CADAM

08:13 93.11.25

Tetra Pak
LUND SWEDEN

This drawing must not without the consent of Tetra Pak be copied, transmitted or disclosed to any third party.

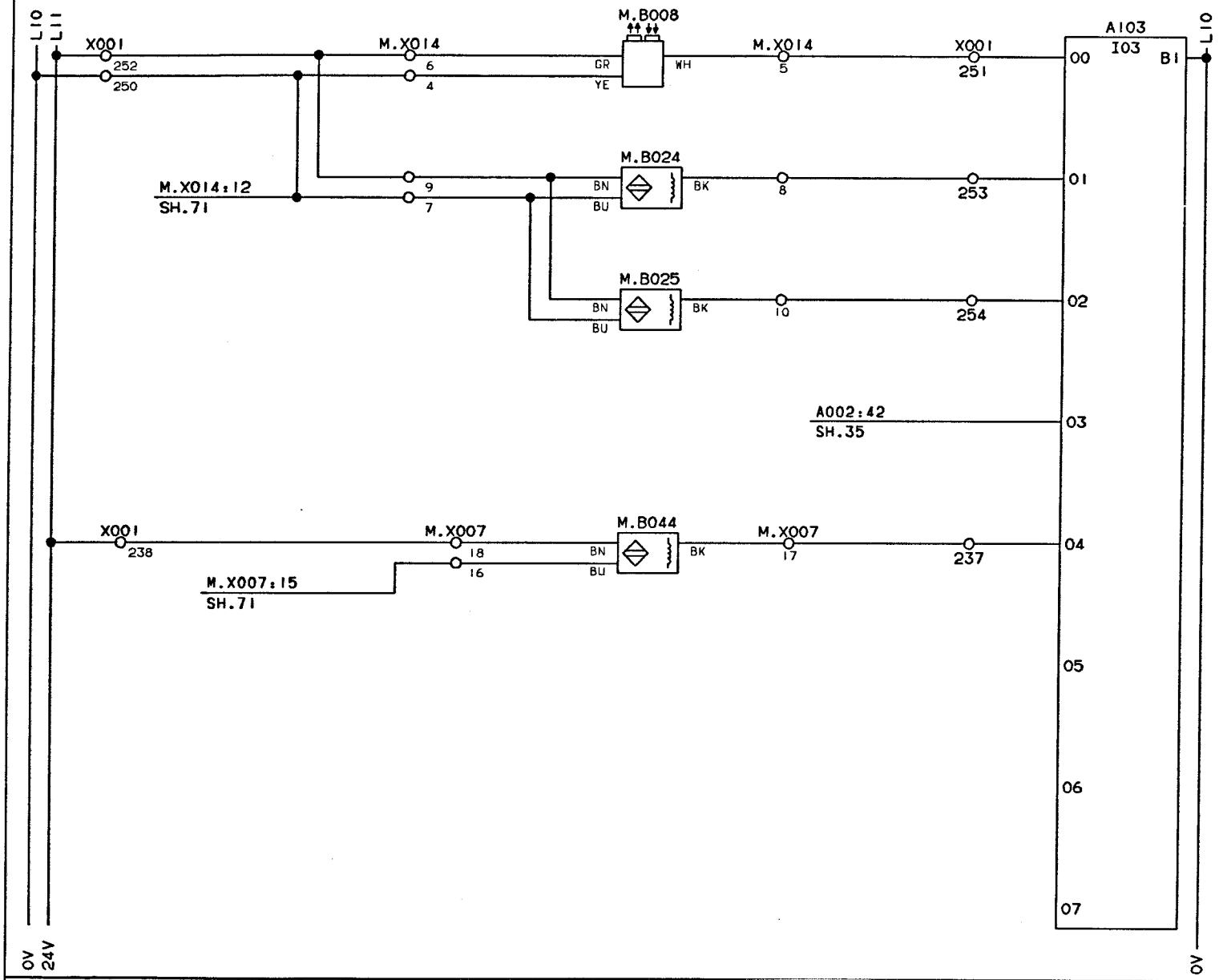

INTRODUCED WITH AM NO.	19261		DATE: 930310		SIGN. HK/UTH				DESCRIPTION: PLC-IN, OPERATION MONITORS	
ISSUE									MACHINE: TBA/9-1402 P.T	44097-39:01
AM NO.										
DATE										
SIGN.								DRAWING REMARKS		

ALTERATIONS ONLY IN CADAM

08:13 93 11 25

Tetra Pak
LUND SWEDEN

This drawing must not without the consent of Tetra Pak be copied, transmitted or disclosed to any third party.

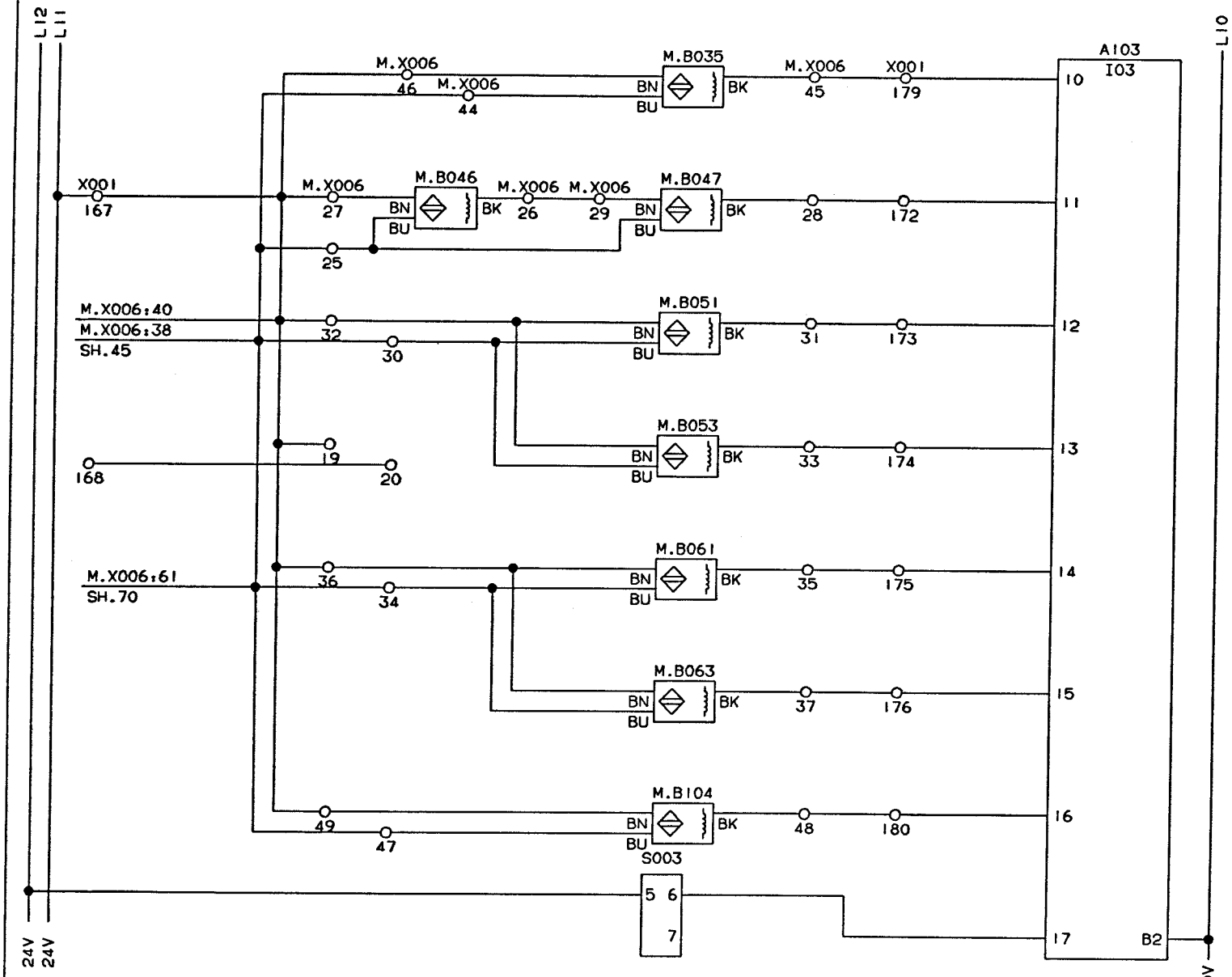

M.B035 PAPER SPLICE

M.B046 SQUEEZER ROLLER, POSITION
M.B047 AIR KNIFE, POSITION

M.B051 PRODUCT PIPE, POSITION

M.B053 STERILE AIR (B) VALVE POSITION

M.B061 CLEANING CUP, POSITION

M.B063 CLEANING PIPE, POSITION

M.B104 STERILE AIR PIPE

S003 SELECTOR, FILL ENTRANCE

INTRODUCED WITH AM NO. 19261	DATE: 930310	SIGN. HK/UTH		DESCRIPTION: PLC-IN, OPERATION MONITORS	
ISSUE A					
AM NO. 20144					
DATE 930805				MACHINE: TBA/9-1402 P.T	44097-40:01
SIGN. HK/PSG			DRAWING REMARKS		

ALTERATIONS ONLY IN CADAM

08:13 93 11 25

Tetra Pak
LUND SWEDEN

This drawing must not without the consent of Tetra Pak be copied, transmitted or disclosed to any third party.

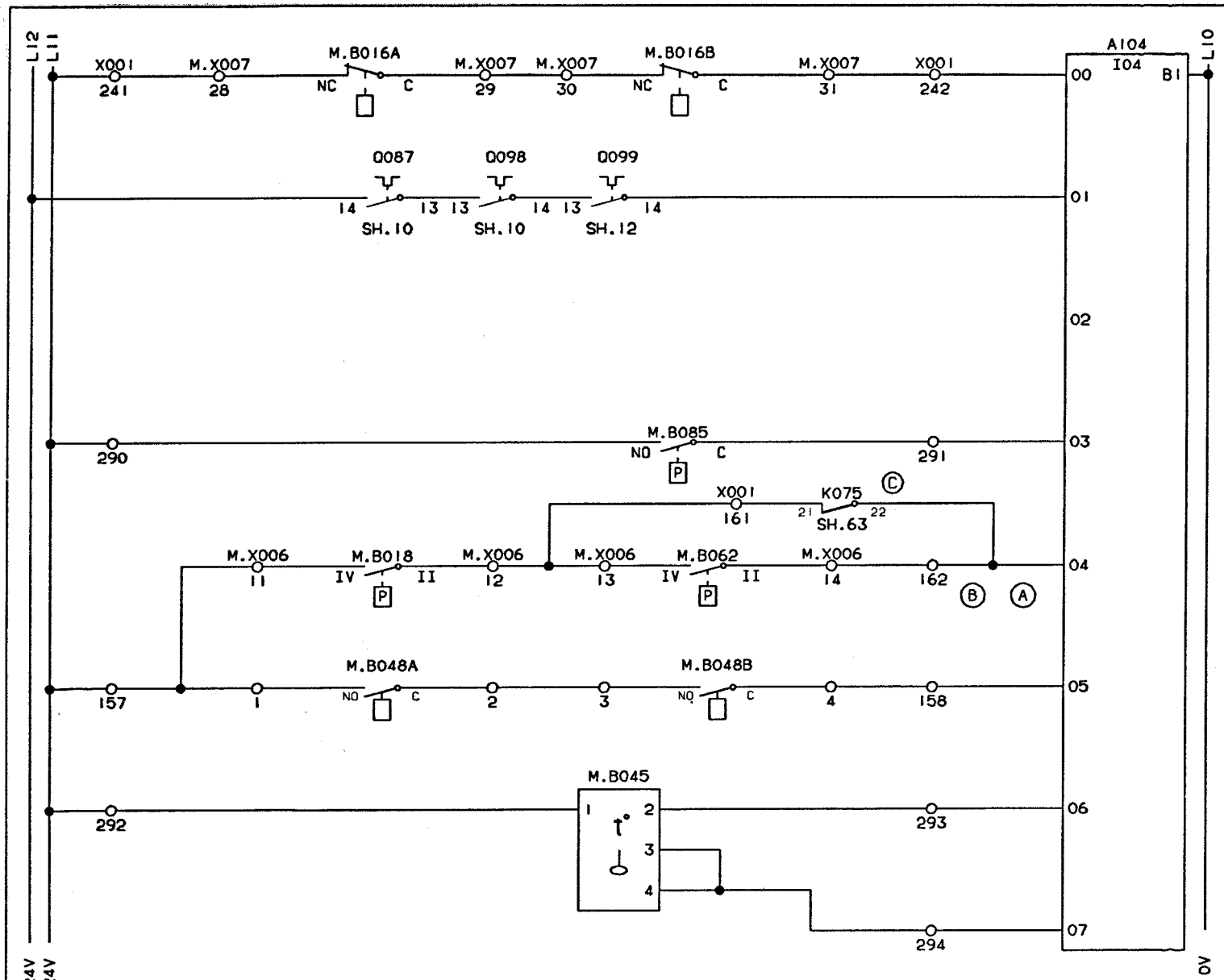

M.B016A JAW SYSTEM OVERLOAD, LEFT
M.B016B JAW SYSTEM OVERLOAD, RIGHT

Q087 OVERLOAD PROTECTION
Q098 COMPRESSOR
Q099 PEROXIDE BATH, WATER PUMP

M.B085 PEROXIDE BATH WATER PRESSURE

M.B018 STERILE AIR PRESSURE, INLET
M.B062 STERILIE AIR PRESSURE, SUCTION

M.B048A, M.B048B PEROXIDE BATH BOTTOM COVER, POSITION

M.B045 HYDRAULIC UNIT TEMPERATURE

LOW LEVEL

INTRODUCED WITH AM NO.	19261			DATE: 930310		SIGN. HK/UTH			
ISSUE									
AM NO.									
DATE									
SIGN.									

DRAWING REMARKS

ALTERATIONS ONLY IN CADAM

DESCRIPTION: PLC-IN, OPERATION MONITORS

MACHINE: TBA/9-1402 P.T

44097-41:01

08:13 93.11.25

Tetra Pak
LUND SWEDEN

This drawing must not without the consent of Tetra Pak be copied, transmitted or disclosed to any third party.

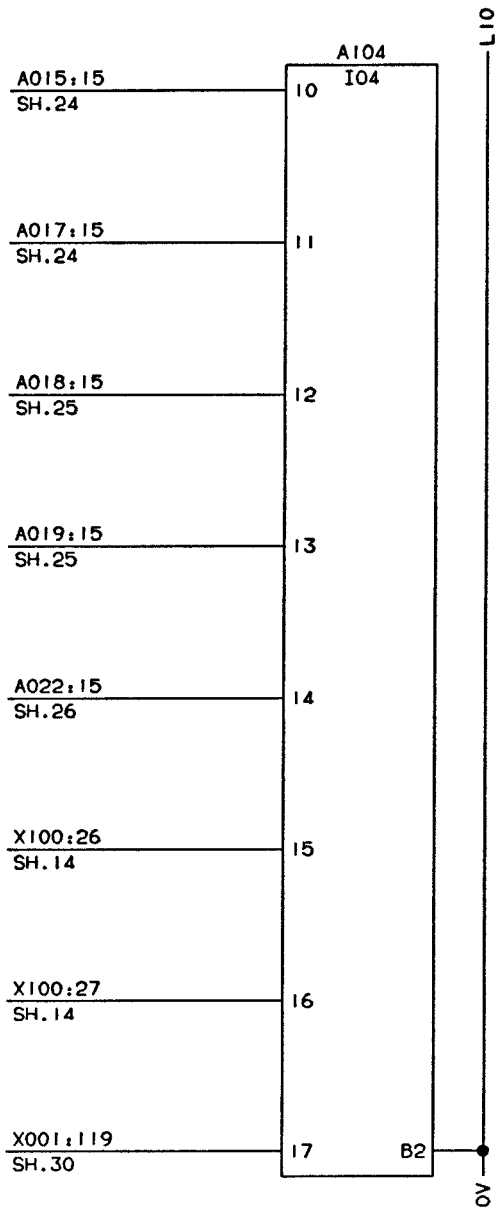

INTRODUCED WITH AM NO.	19261			DATE: 930310		SIGN. HK/UTH					
ISSUE											
AM NO.											
DATE											
SIGN.											

DRAWING REMARKS

DESCRIPTION: PLC-IN

MACHINE: TBA/9-1402 P.T

44097-42:01

ALTERATIONS ONLY IN CADAM

08:13 93.11.25

Tetra Pak
LUND SWEDEN

This drawing must not without the consent of Tetra Pak be copied, transmitted or disclosed to any third party.

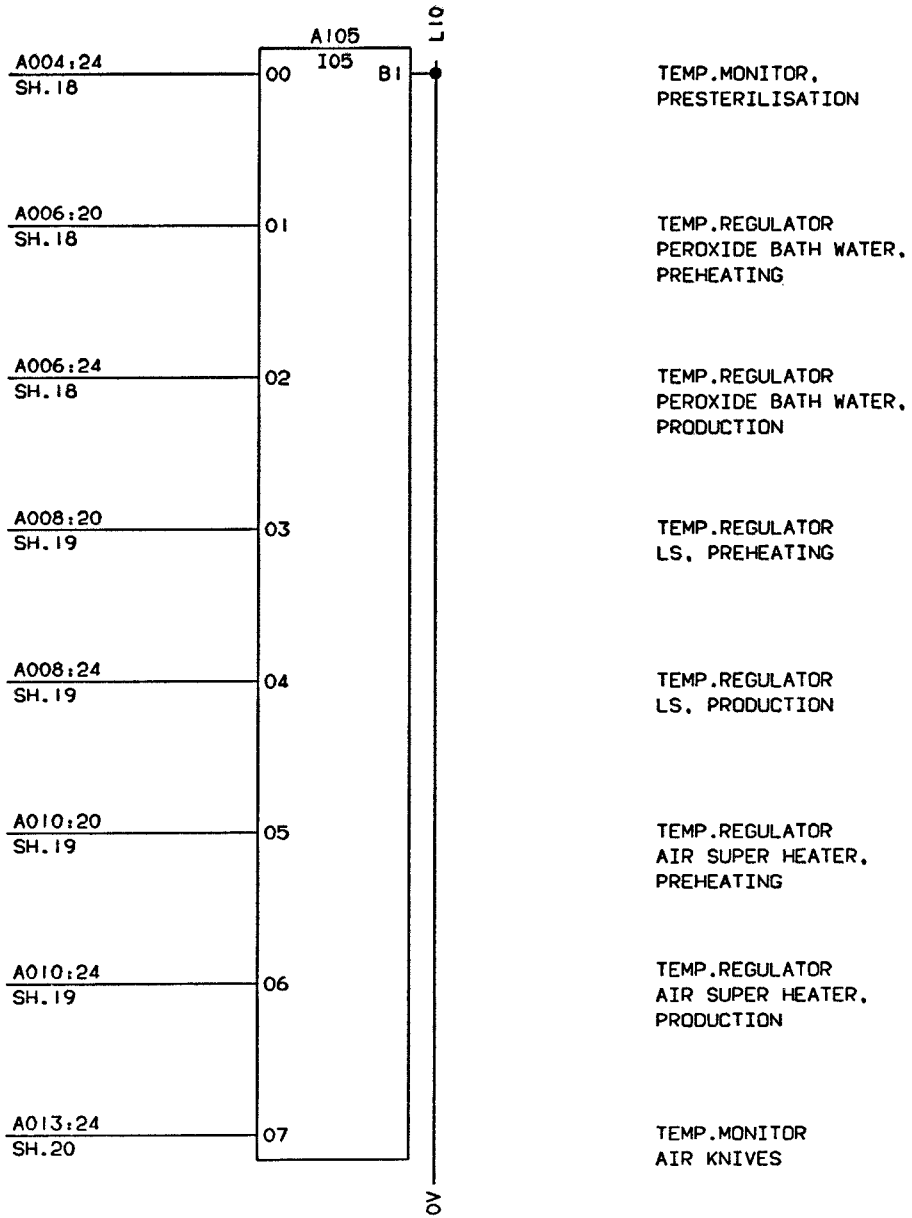

INTRODUCED WITH AM NO.	19261			DATE: 930310		SIGN. HK/UTH				DESCRIPTION: PLC-IN	
ISSUE											
AM NO.											
DATE										MACHINE: TBA/9-1402 P.T	44097-43:01
SIGN.									DRAWING REMARKS		

ALTERATIONS ONLY IN CADAM

08:13 93.11.25

Tetra Pak
LUND SWEDEN

This drawing must not without the consent of Tetra Pak be copied, transmitted or disclosed to any third party.

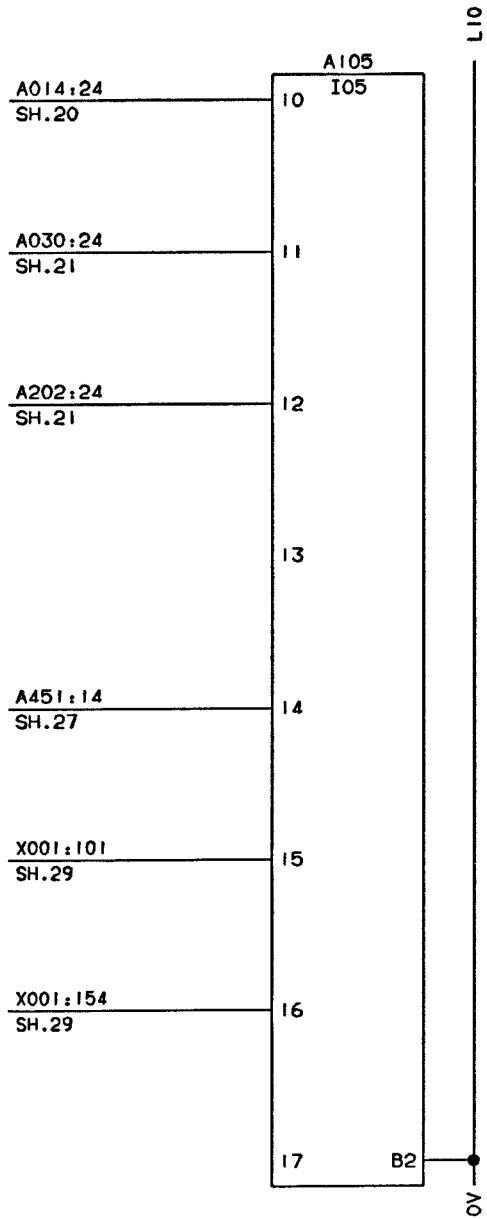

INTRODUCED WITH AM NO.	19261			DATE: 930310		SIGN. HK/UTH				
ISSUE										
AM NO.										
DATE										
SIGN.										

DRAWING REMARKS

DESCRIPTION: PLC-IN

MACHINE: TBA/9-1402 P.T

44097-44:01

ALTERATIONS ONLY IN CADAM

08:13 93.11.25

Tetra Pak
LUND SWEDEN

This drawing must not without the consent of Tetra Pak be copied, transmitted or disclosed to any third party.

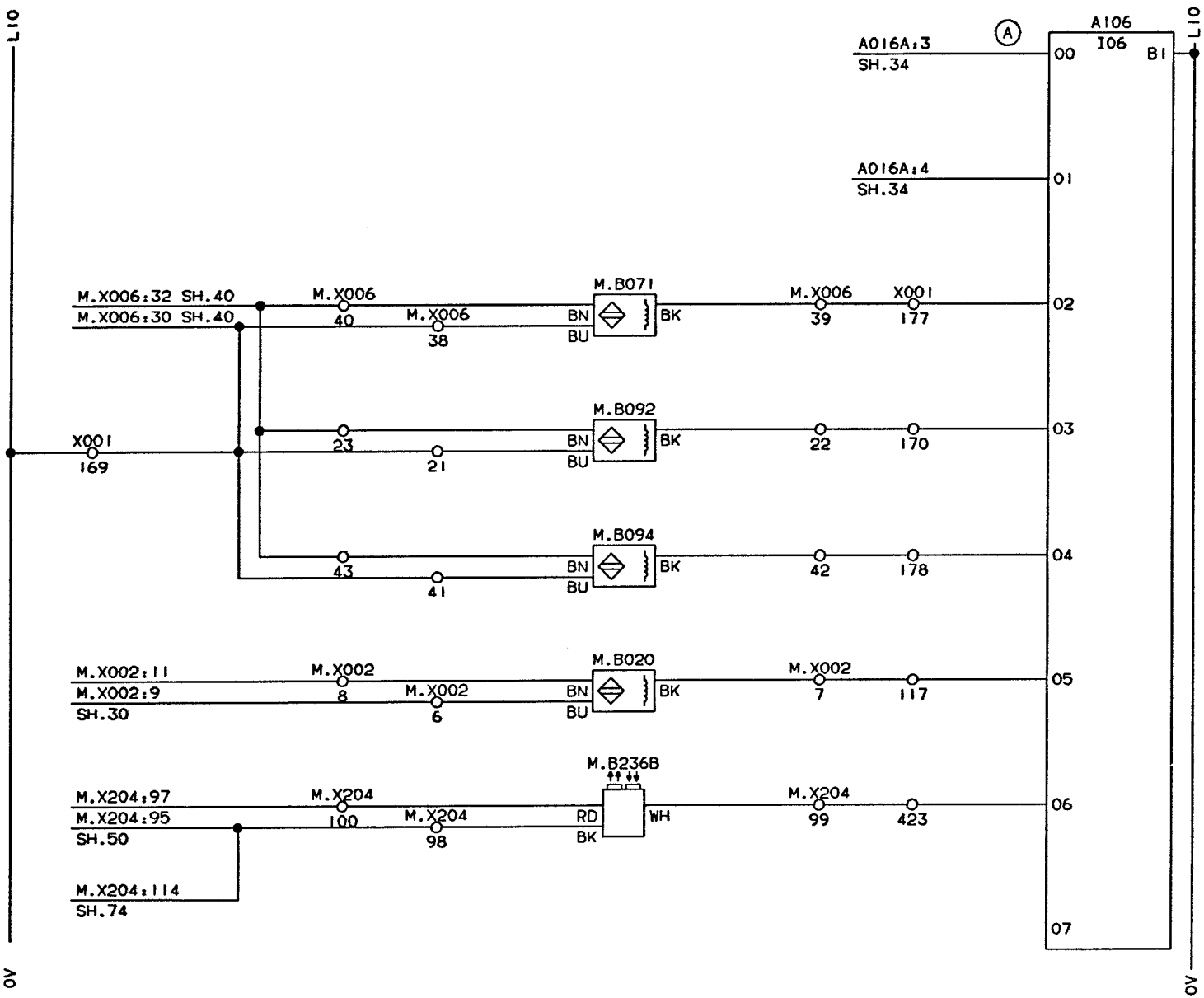

DELAYED DESIGN SIGNAL

STEPPING

M.B071 AIR INLET VALVE POSITION

M.B092 PEROXIDE BATH DRAIN PIPE POSITION

M.B094 SUCTION VALVE POSITION

M.B020 FINAL FOLDER CHAIN POSITION

M.B236B BLACK TAPE DETECTOR EXTERNAL STRIP

INTRODUCED WITH AM NO. 19261	DATE: 930310	SIGN. HK/UTH	
ISSUE			
AM NO.			
DATE			
SIGN.			DRAWING REMARKS

DESCRIPTION: PLC-IN, FAST SCAN

MACHINE: TBA/9-1402 P.T

44097-45:01

ALTERATIONS ONLY IN CADAM

Tetra Pak
LUND SWEDEN

This drawing must not without the consent of Tetra Pak be copied, transmitted or disclosed to any third party.

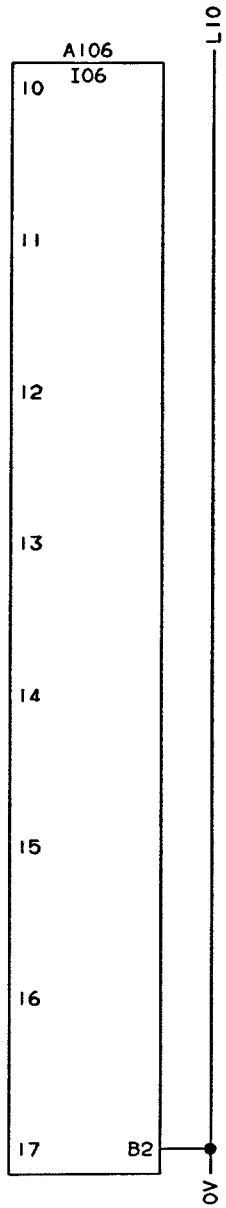

INTRODUCED WITH AM NO.	19261			DATE: 930310		SIGN. HK/UTH				DESCRIPTION: PLC-IN	
ISSUE										MACHINE: TBA/9-1402 P.T	44097-46:01
AM NO.									DRAWING REMARKS		
DATE											
SIGN.											

ALTERATIONS ONLY IN CADAM

08:13 93.11.25

Tetra Pak
LUND SWEDEN

This drawing must not without the consent of Tetra Pak be copied, transmitted or disclosed to any third party.

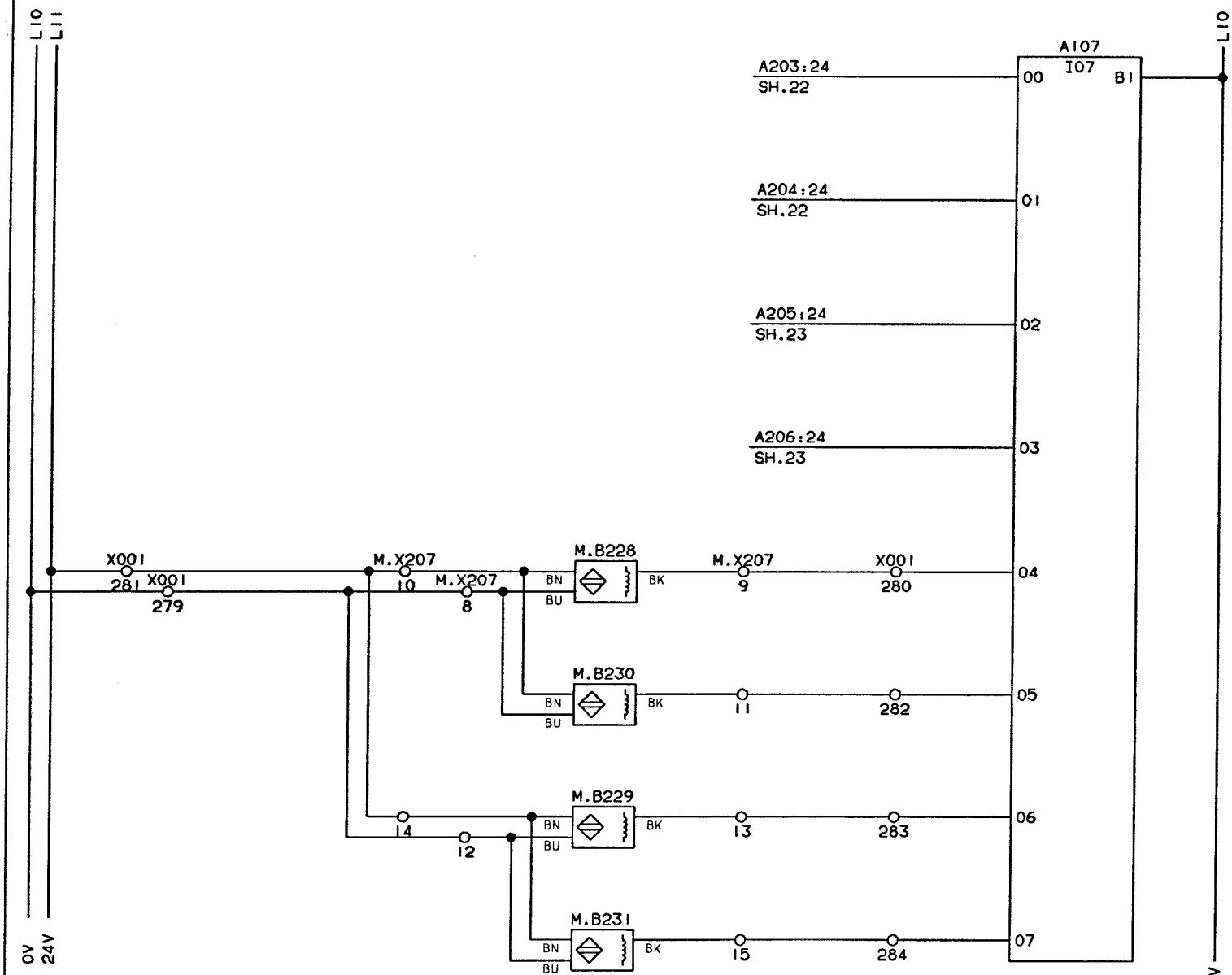

INTRODUCED WITH AM NO. 19261	DATE: 930310	SIGN. HK/UTH		DESCRIPTION: PLC-IN, P.T.	
ISSUE A					
AM NO. 20144					
DATE 930609				MACHINE: TBA/9-1402 P.T	44097-47:01
SIGN. HK/PSG			DRAWING REMARKS		

ALTERATIONS ONLY IN CADAM

08:13 93.11.25

Tetra Pak
LUND SWEDEN

This drawing must not without the consent of Tetra Pak be copied, transmitted or disclosed to any third party.

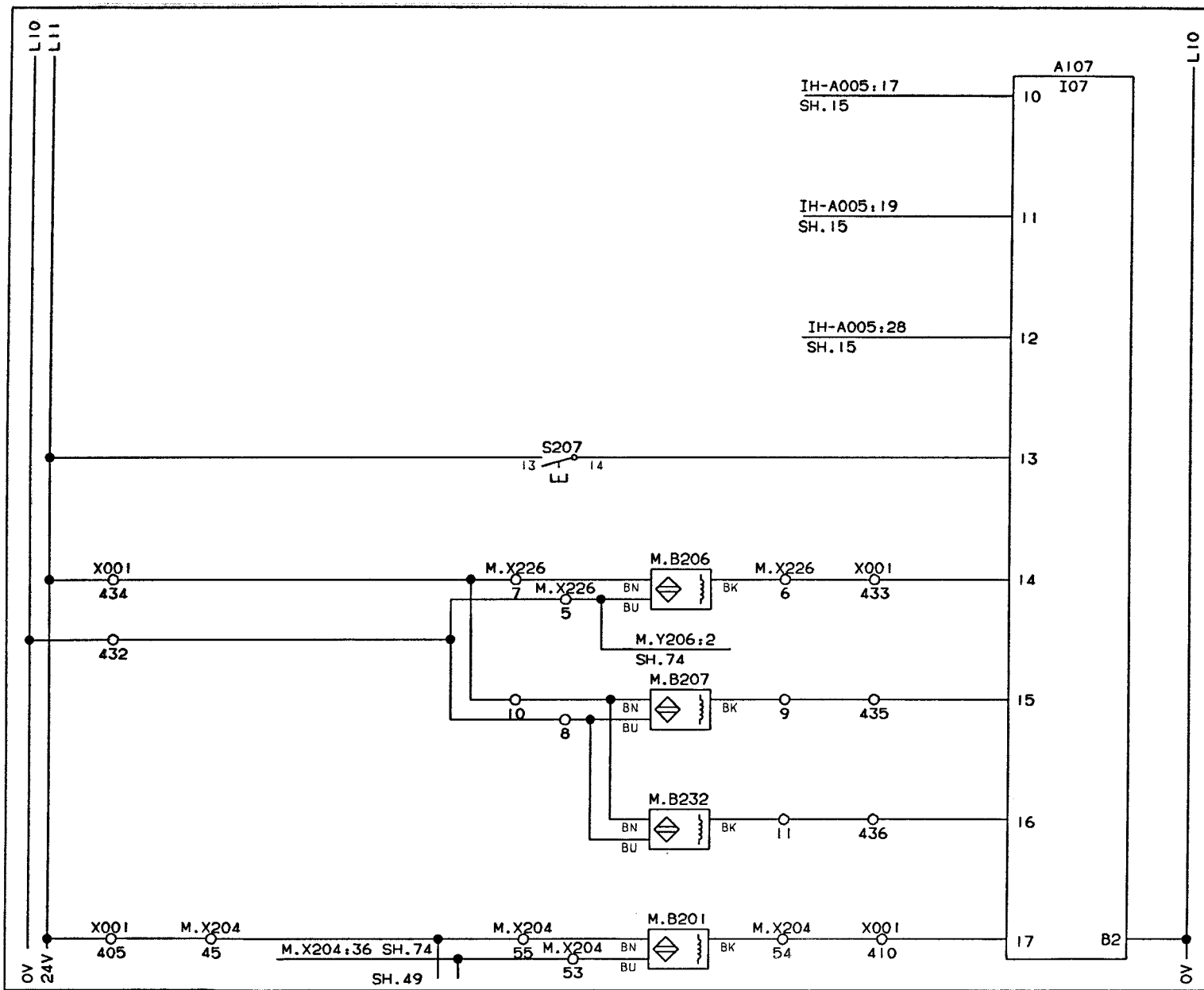

S207 ON = CONTINUES WITH TWO DATE UNITS

M.B206 INTERNAL STRIP, SUPPLY

M.B207 INTERNAL STRIP, BREAK

M.B232 BOBIN INDICATOR

M.B201 DRIVE MOTOR, PAUSE POSITION

INTRODUCED WITH AM NO.	19261			DATE. 930310			SIGN. HK/UTH				
ISSUE	A										
AM NO.	20144										
DATE	930609										
SIGN.	HK/PSG										

DRAWING REMARKS

DESCRIPTION: PLC-IN, P.T.

MACHINE: TBA/9-1402 P.T

44097-48:01

ALTERATIONS ONLY IN CADAM

08:13 93.11.25

Tetra Pak
LUND SWEDEN

This drawing must not without the consent of Tetra Pak be copied, transmitted or disclosed to any third party.

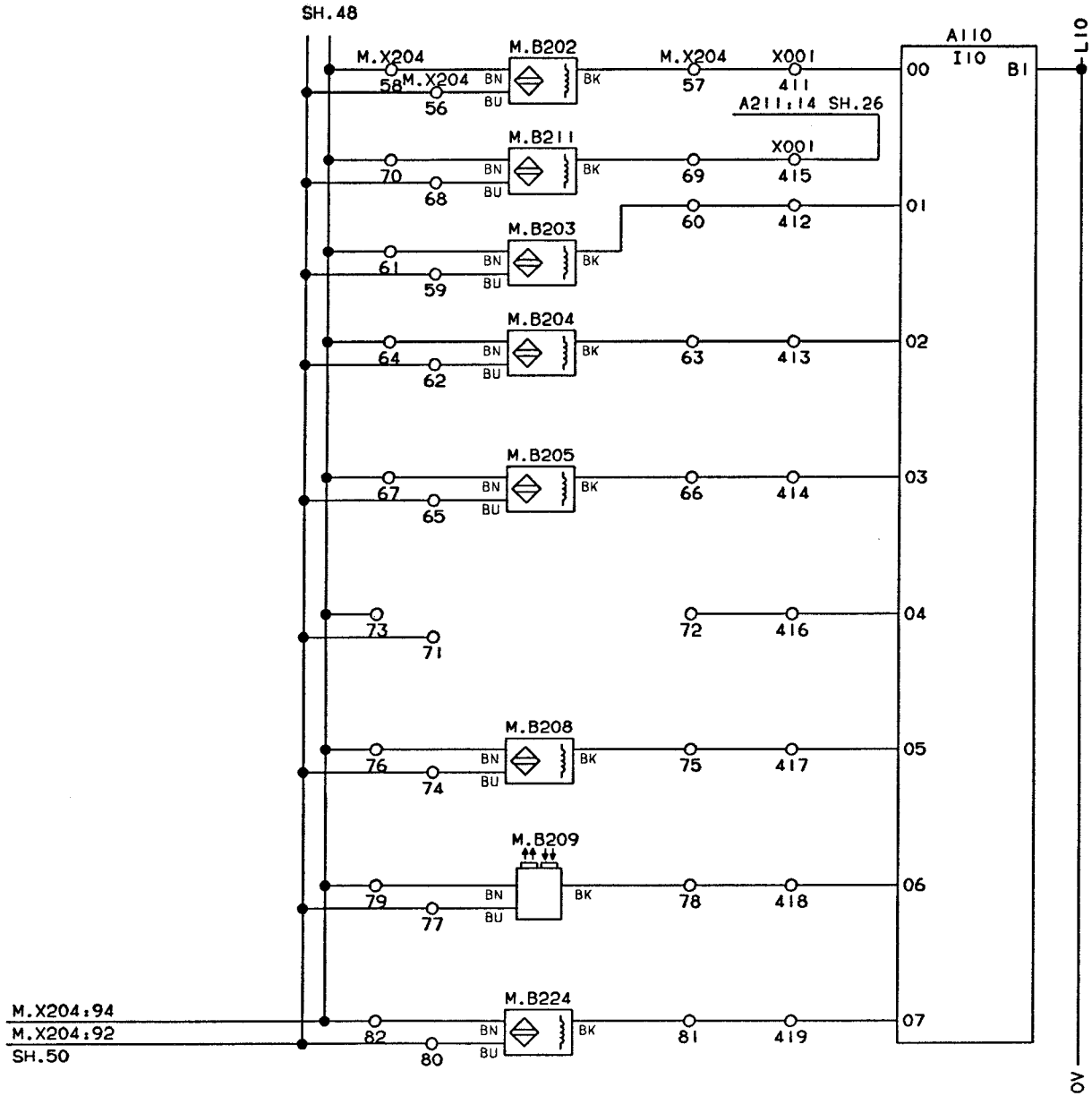

M.B202 DRIVE MOTOR, SYNCHRONIZED STOP

M.B211 MAGNETIC POWDER BRAKE HIGH TORQUE ON

M.B203 IH-SEALING, START

M.B204 DRIVE MOTOR SUPPLY, EMPTY

M.B205 DRIVE MOTOR SUPPLY, FULL

M.B208 EXTERNAL STRIP, SUPPLY

M.B209 EXTERNAL STRIP, BREAK

M.B224 CAP POS/DATE STAMP START

INTRODUCED WITH AM NO.	19261	DATE: 930310	SIGN. HK/UTH				
ISSUE							
AM NO.							
DATE							
SIGN							

DRAWING REMARKS

DESCRIPTION: PLC-IN, P.T.

MACHINE: TBA/9-1402 P.T

44097-49:01

ALTERATIONS ONLY IN CADAM

08:13 93.11.25

Tetra Pak
MODENA ITALY

This drawing must not without the consent of Tetra Pak; be copied, transmitted or disclosed to any third party.

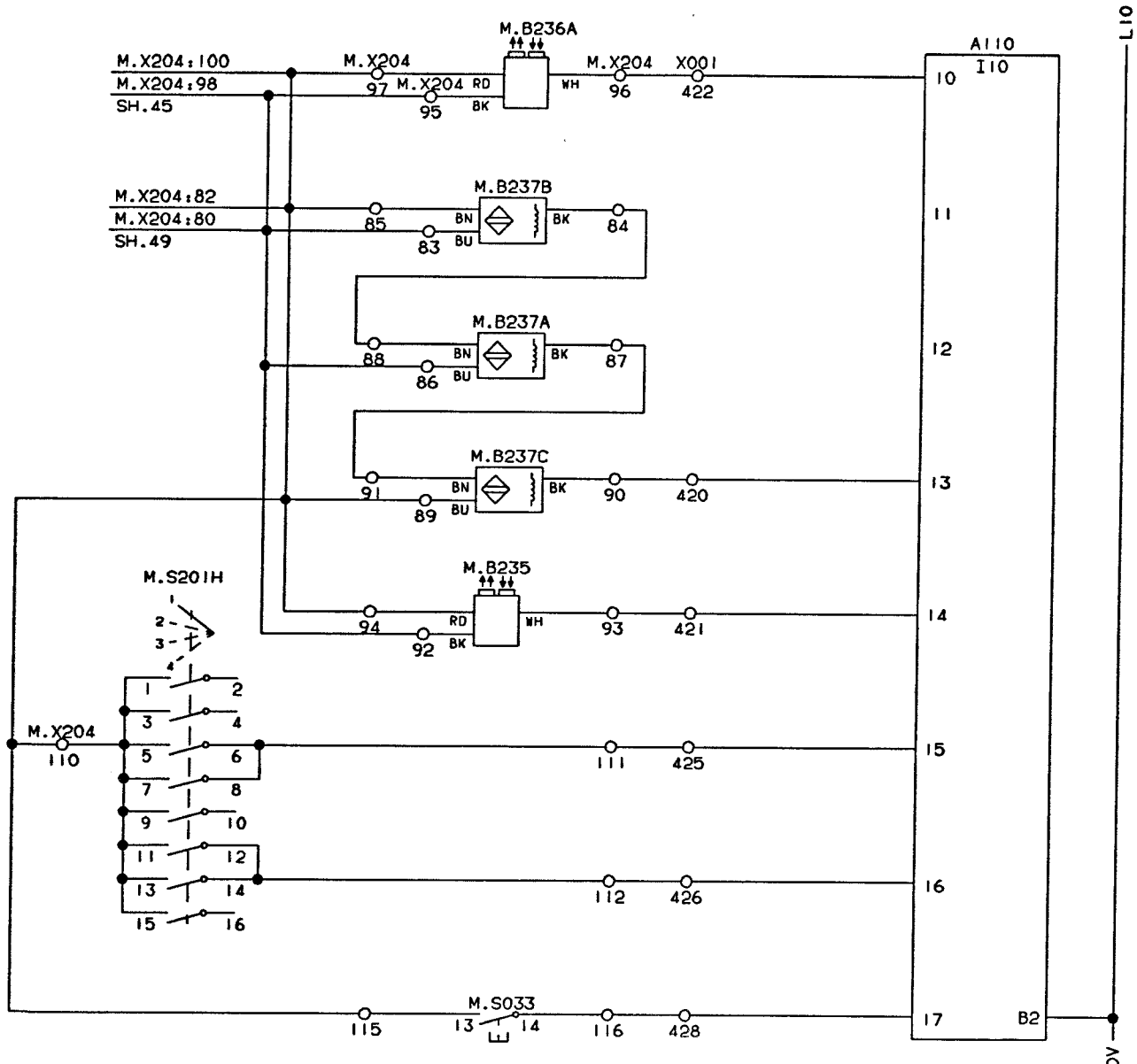

M.B236A BLACK TAPE DETECTOR INTERNAL STRIP

M.B237B DRIVE COUNTER ROLLER

M.B237A BRAKE ROLLER

M.B237C STRIP FEED

M.B235 TWISTED STRIP GUARD

M.S201H DATE UNIT SELECTOR SWITCH

M.S033 STRIP SPLICING, DROP CHUTE

INTRODUCED WITH AM NO.	19261	DATE: 930310	SIGN. HK/UTH						
ISSUE	A								
AM NO.	20407								
DATE	931015								
SIGN.	HK/MRI								

DRAWING REMARKS

ALTERATIONS ONLY IN CADAM

DESCRIPTION: PLC-IN, P.T.

MACHINE: TBA/9-1402 P.T.

44097-50:01

08:13 93 11 25

Tetra Pak
LUND SWEDEN

This drawing must not without the consent of Tetra Pak be copied, transmitted or disclosed to any third party.

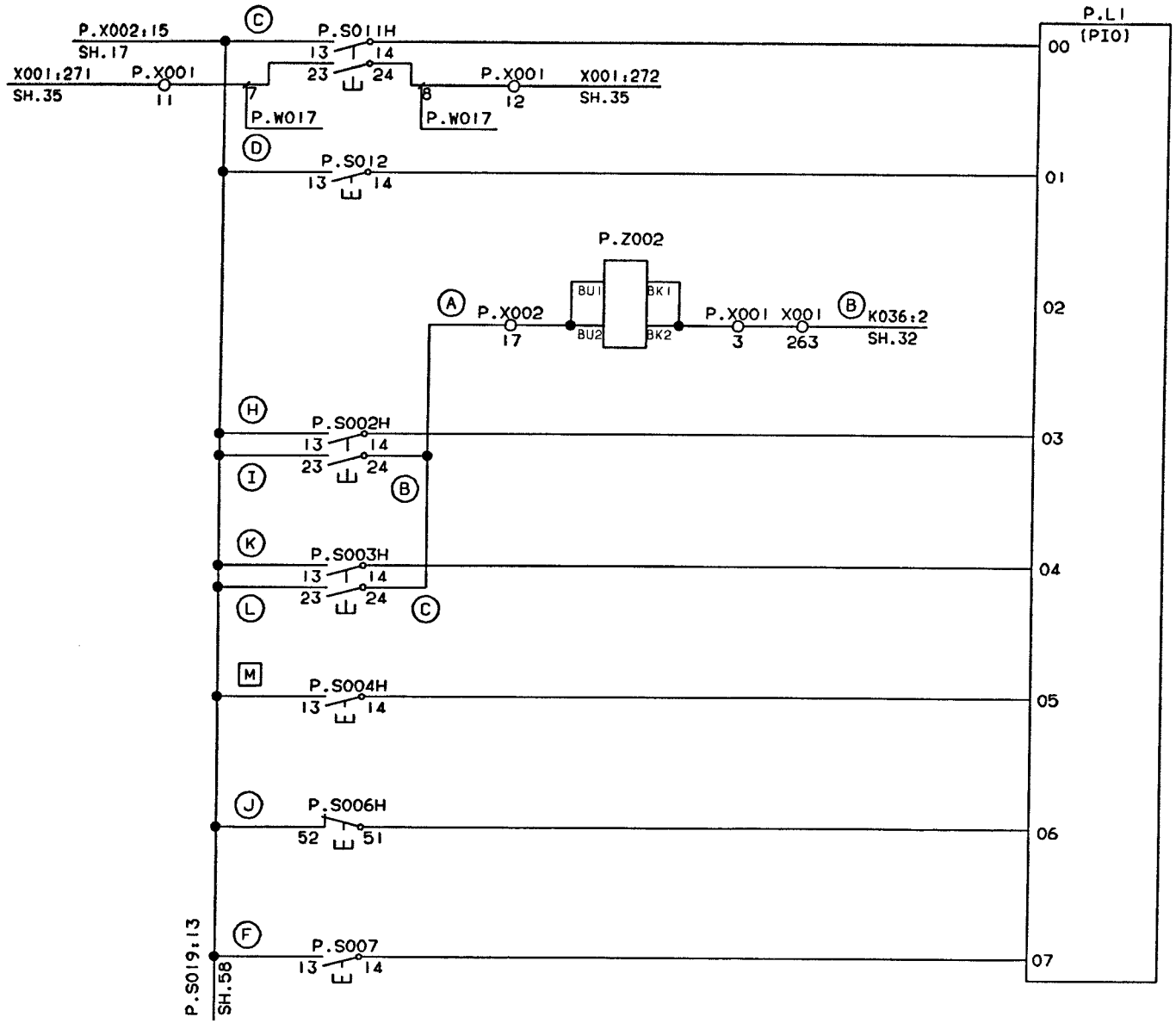

INTRODUCED WITH AM NO.	19261			DATE: 930310		SIGN. HK/UTH					
ISSUE	A										
AM NO.	20144										
DATE	930825										
SIGN.	HK/PSG										

DRAWING REMARKS

DESCRIPTION: PANEL INTERFACE, IN

MACHINE: TBA/9-1402 P.T

44097-57:01

ALTERATIONS ONLY IN CADAM

08:13 93.11.25

Tetra Pak
LUND SWEDEN

This drawing must not without the consent of Tetra Pak be copied, transmitted or disclosed to any third party.

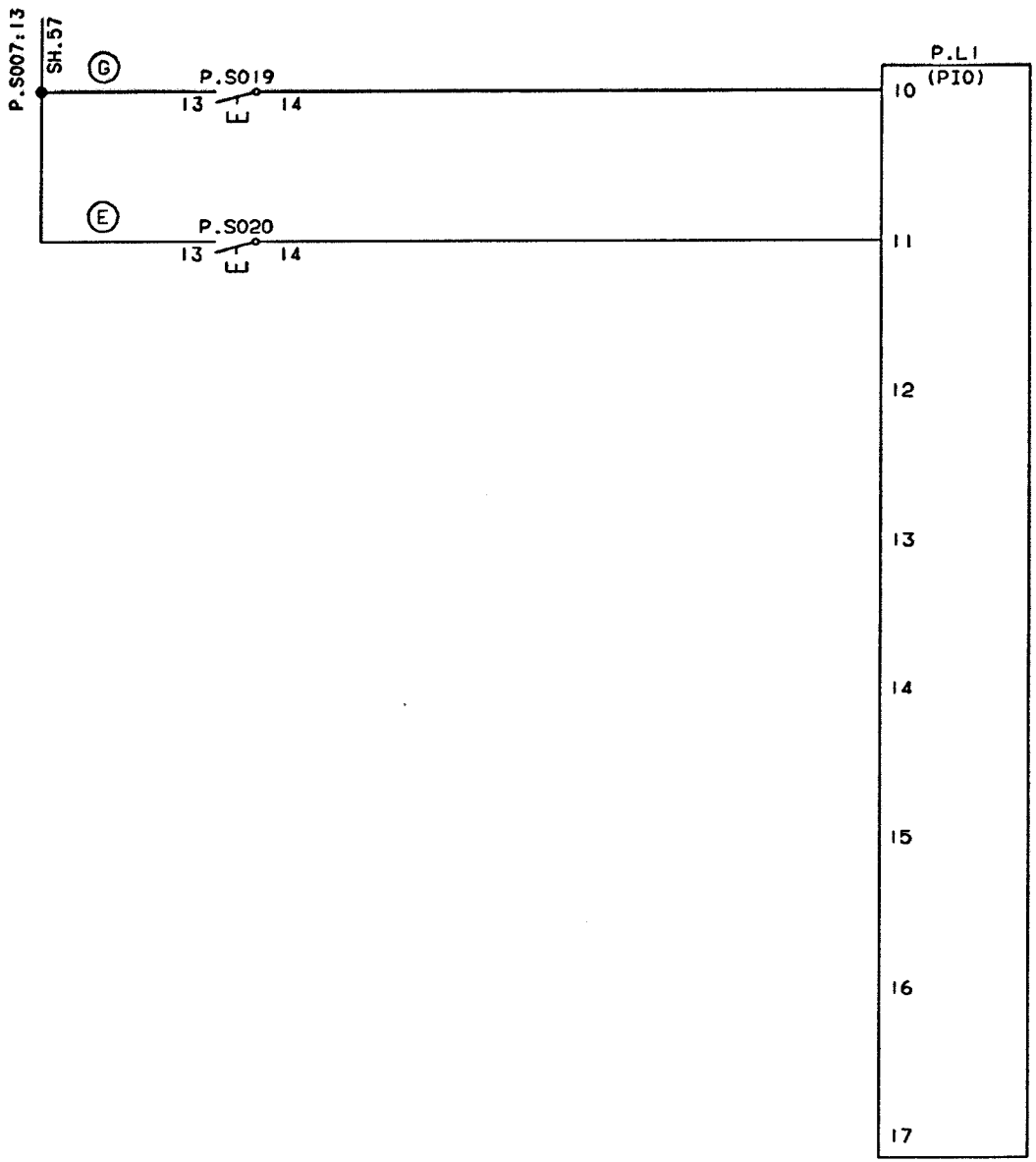

P.S019 DROP CHUTE OFF

P.S020 STATION CHAIN SPRINKLER

INTRODUCED WITH AM NO.	19261			DATE: 930310			SIGN. HK/UTH				
ISSUE											
AM NO.											
DATE											
SIGN											

DRAWING REMARKS

DESCRIPTION: PANEL INTERFACE, IN

MACHINE: TBA/9-1403 P.T

44097-58:01

ALTERATIONS ONLY IN CADAM

08:13 93.11.25

Tetra Pak
LUND SWEDEN

This drawing must not without the consent of Tetra Pak be copied, transmitted or disclosed to any third party.

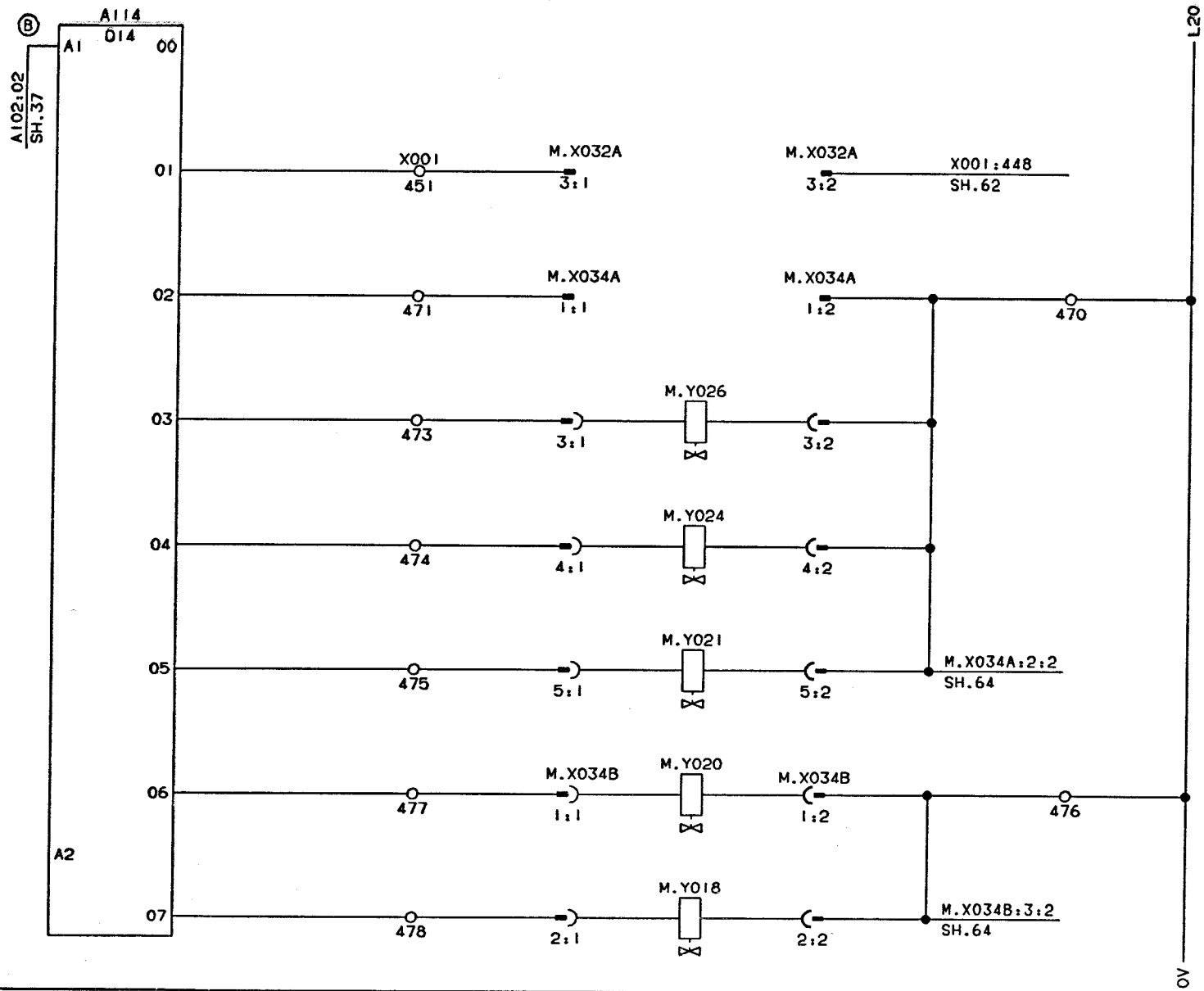

M.Y026 LS COUNTER ROLLER SHORT STOP

M.Y024 LS-ELEMENT, MOVEMENT

M.Y021 AIR KNIFE, SQUEEZER ROLLER

M.Y020 SHORT STOP, ELEMENT, MOVEMENT

M.Y018 PEROXIDE BATH, TOP, FILLING

INTRODUCED WITH AM NO.	19261			DATE: 930310			SIGN. HK/UTH				DESCRIPTION: PLC-OUT, VALVES	
ISSUE												
AM NO.												
DATE												
SIGN										DRAWING REMARKS	MACHINE: TBA/9-1402 P.T	44097-61:01

ALTERATIONS ONLY IN CADAM

08:13 93.11.25

Tetra Pak
LUND SWEDEN

This drawing must not without the consent of Tetra Pak be copied, transmitted or disclosed to any third party.

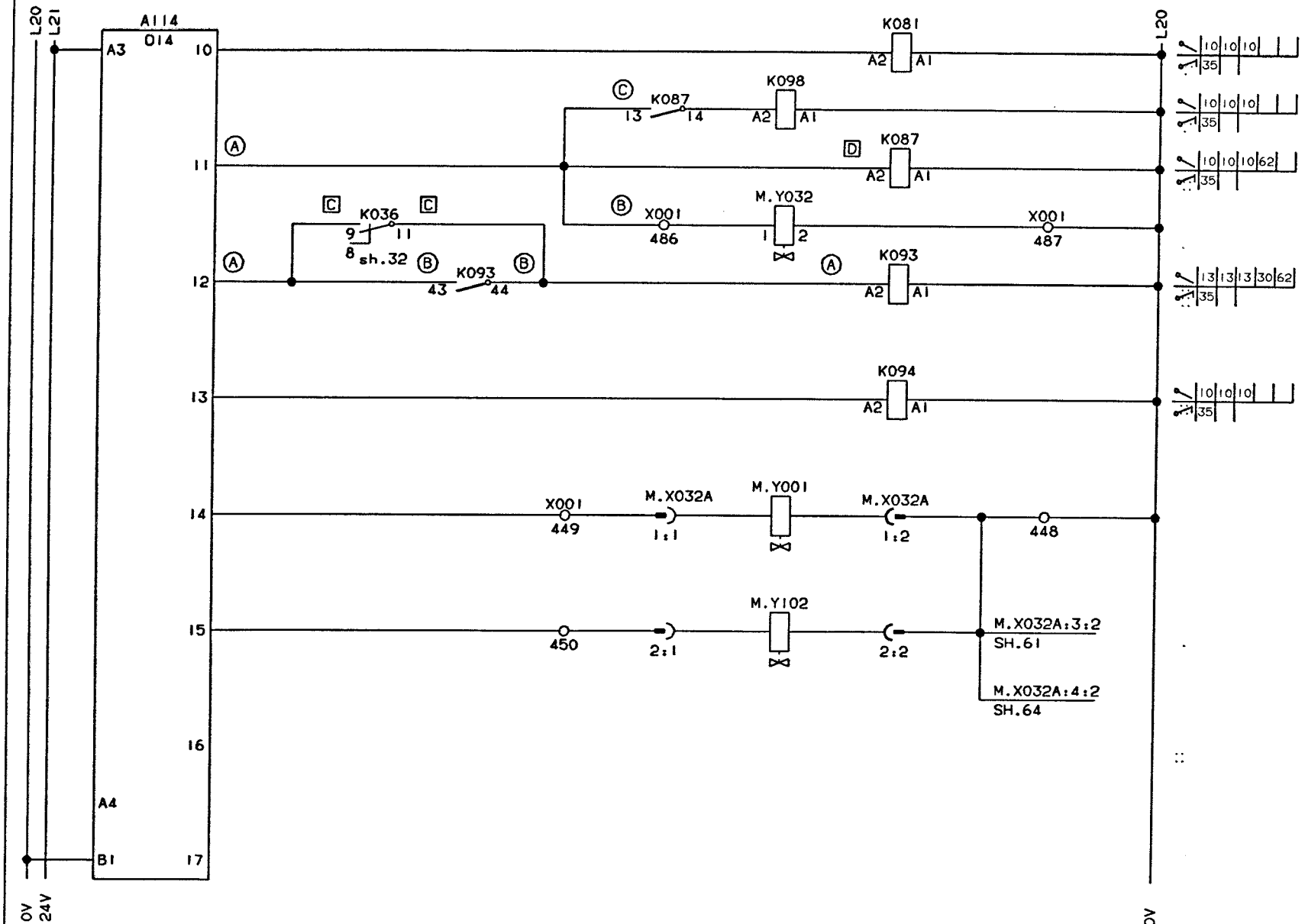

K081 HYDRAULIC PUMP

K098 COMPRESSOR WATER SUCTION

K087 COMPRESSOR WATER INLETY

M.Y032 COMPRESSOR WATER

K093 START CONVEYOR

K094 UNREELING PAPER SUPPLY

M.Y001 FLAP SEALING, AIR

M.Y102 MAIN AIR VALVE

INTRODUCED WITH AM NO.	19261			DATE: 930310		SIGN. HK/UTH				DESCRIPTION: PLC OUT, EMERGENCY MODULE			
ISSUE										MACHINE: TBA/9-1402 P.T			44097-62:01
AM NO.													
DATE													
SIGN.										DRAWING REMARKS			

ALTERATIONS ONLY IN CADAM

08:13 93.11.25

Tetra Pak
LUND SWEDEN

This drawing must not without the consent of Tetra Pak be copied, transmitted or disclosed to any third party.

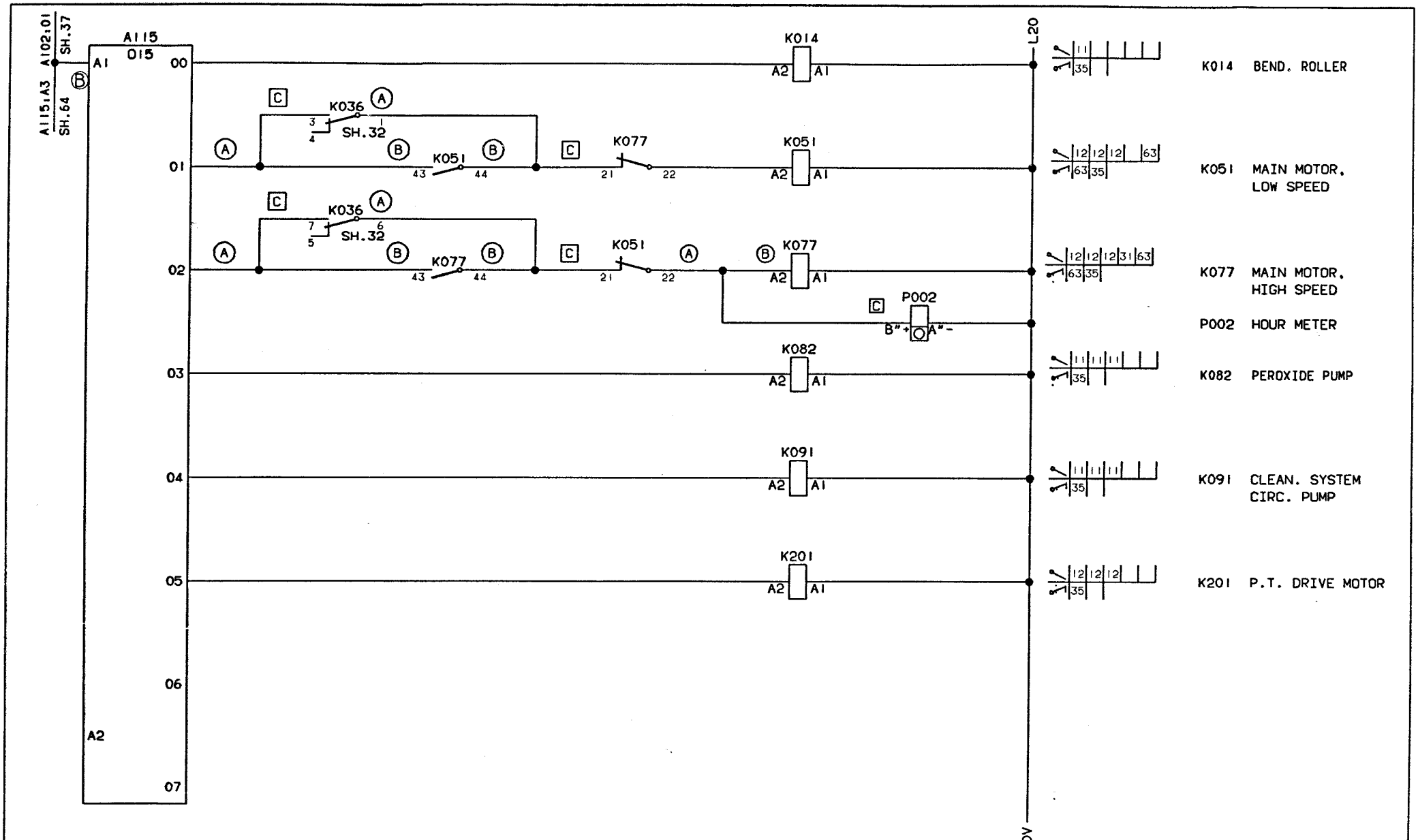

| | | |

Tetra Pak
LUND SWEDEN

This drawing must not without the consent of Tetra Pak be copied, transmitted or disclosed to any third party.

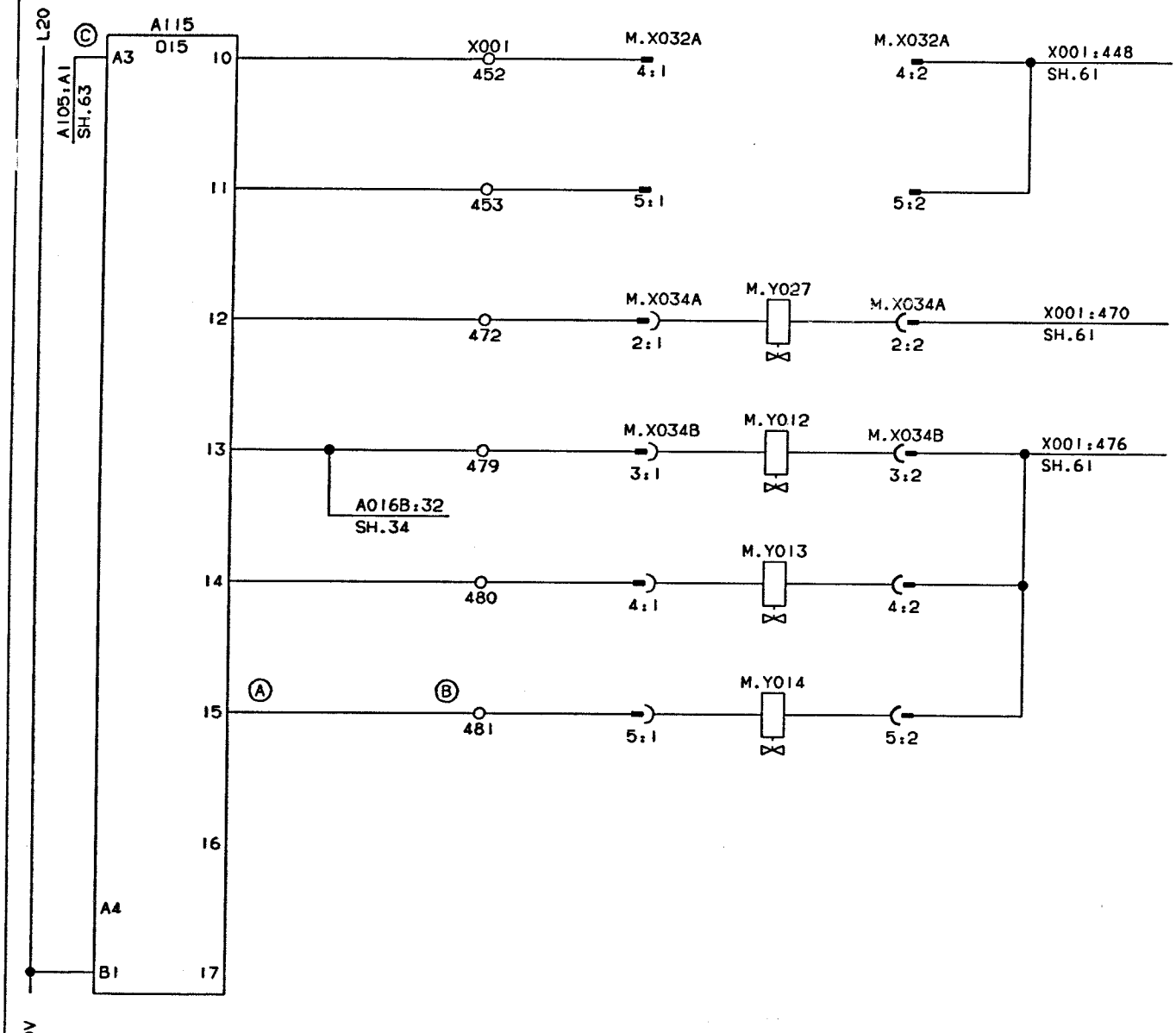

M.Y027 DROP CHUTE

M.Y012 PRE CORRECTION

M.Y013 AUTO CORRECTION LEFT

M.Y014 AUTO CORRECTION RIGHT

INTRODUCED WITH AM NO. 19261	DATE: 930310	SIGN. HK/UTH		DESCRIPTION: PLC-OUT, VALVES	
ISSUE A					
AM NO. 20144					
DATE 930805				MACHINE: TBA/9-1402 P.T	44097-64:01
SIGN. HK/PSG			DRAWING REMARKS		

ALTERATIONS ONLY IN CADAM

08·13 93 11 25

Tetra Pak
LUND SWEDEN

This drawing must not without the consent of Tetra Pak, be copied, transmitted or disclosed to any third party.

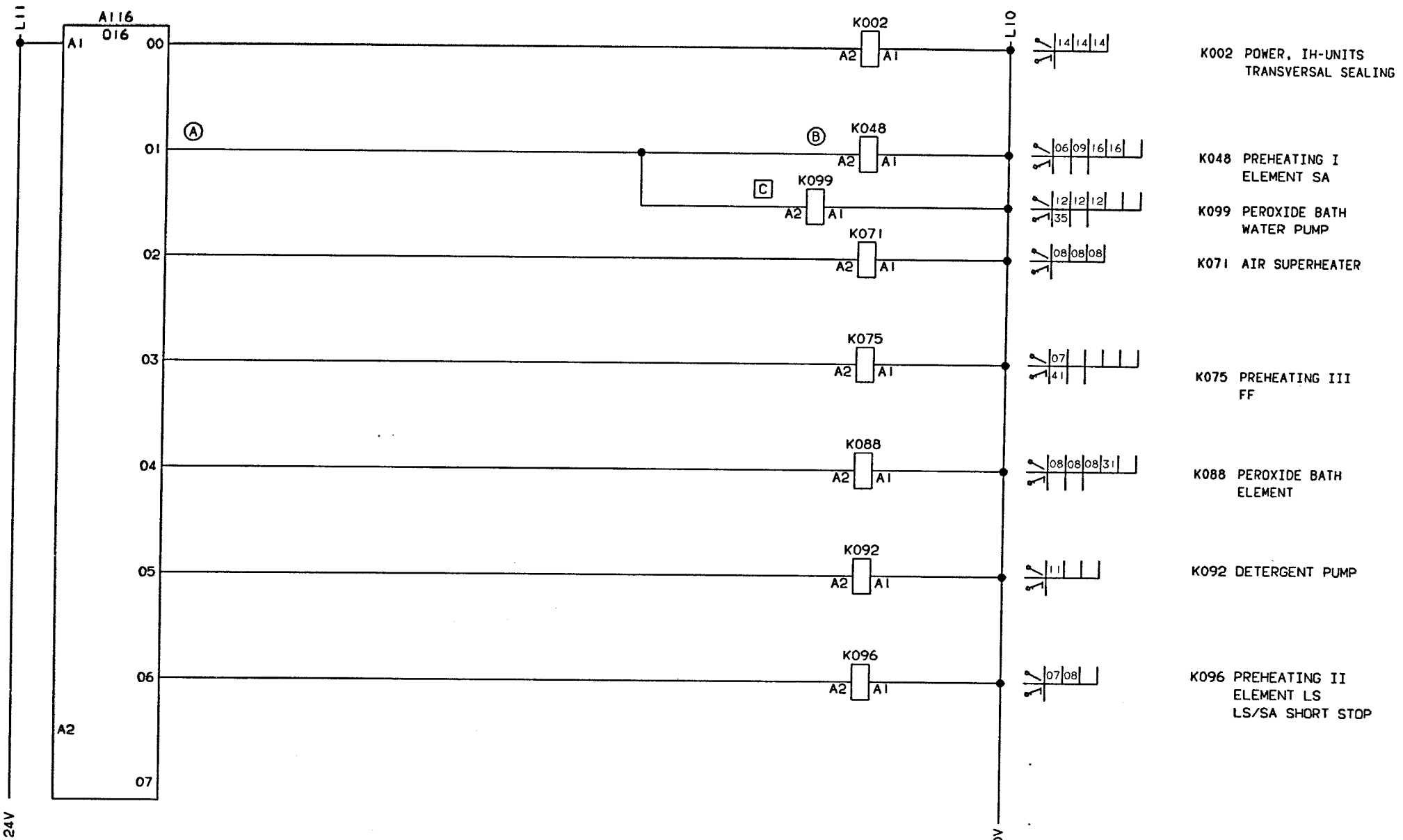

INTRODUCED WITH AM NO. 19261	DATE. 930310	SIGN. HK/UTH			
ISSUE A					
AM NO. 20144					
DATE 930609					
SIGN. HK/PSG					

DRAWING REMARKS

DESCRIPTION: PLC-OUT, CONTACTORS

MACHINE: TBA/9-1402 P.T

44097-65:01

ALTERATIONS ONLY IN CADAM

08:13 93.11.25

Tetra Pak
LUND SWEDEN

This drawing must not without the consent of Tetra Pak be copied, transmitted or disclosed to any third party.

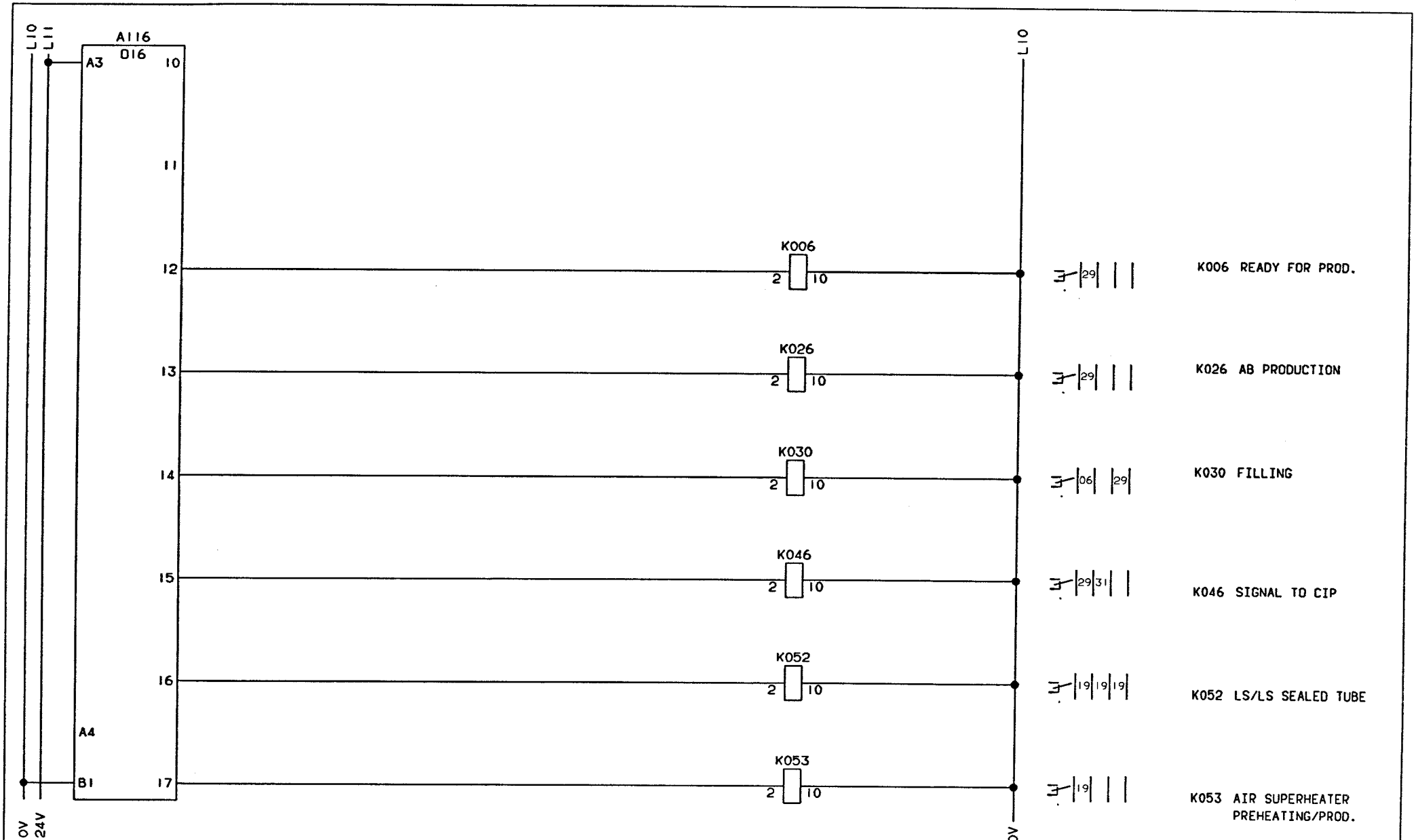

INTRODUCED WITH AM NO. 19261	DATE: 930310	SIGN. HK/UTH	
ISSUE			DRAWING REMARKS
AM NO.			
DATE			
SIGN.			

DESCRIPTION: PLC-OUT, RELAYS

MACHINE: TBA/9-1402 P.T

44097-66:01

ALTERATIONS ONLY IN CADAM

08:13 93.11.25

Tetra Pak
LUND SWEDEN

This drawing must not without the consent of Tetra Pak be copied, transmitted or disclosed to any third party.

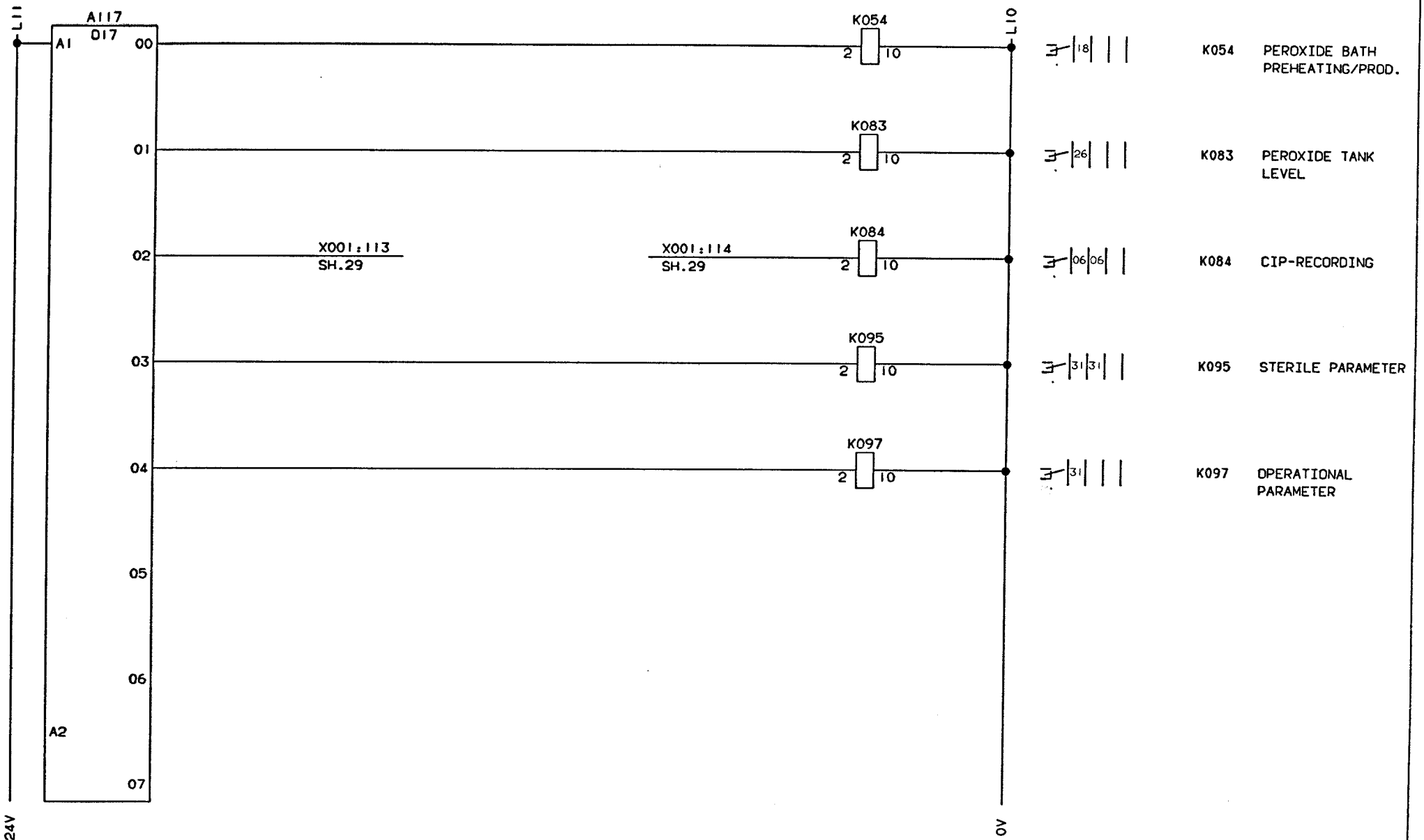

INTRODUCED WITH AM NO. 19261	DATE. 930310	SIGN. HK/UTH	
ISSUE			DESCRIPTION: PLC-OUT. RELAYS
AM NO.			
DATE			MACHINE: TBA/9-1402 P.T
SIGN.		DRAWING REMARKS	44097-67:01

ALTERATIONS ONLY IN CADAM

08:13 93.11.25

Tetra Pak
LUND SWEDEN

This drawing must not without the consent of Tetra Pak be copied, transmitted or disclosed to any third party.

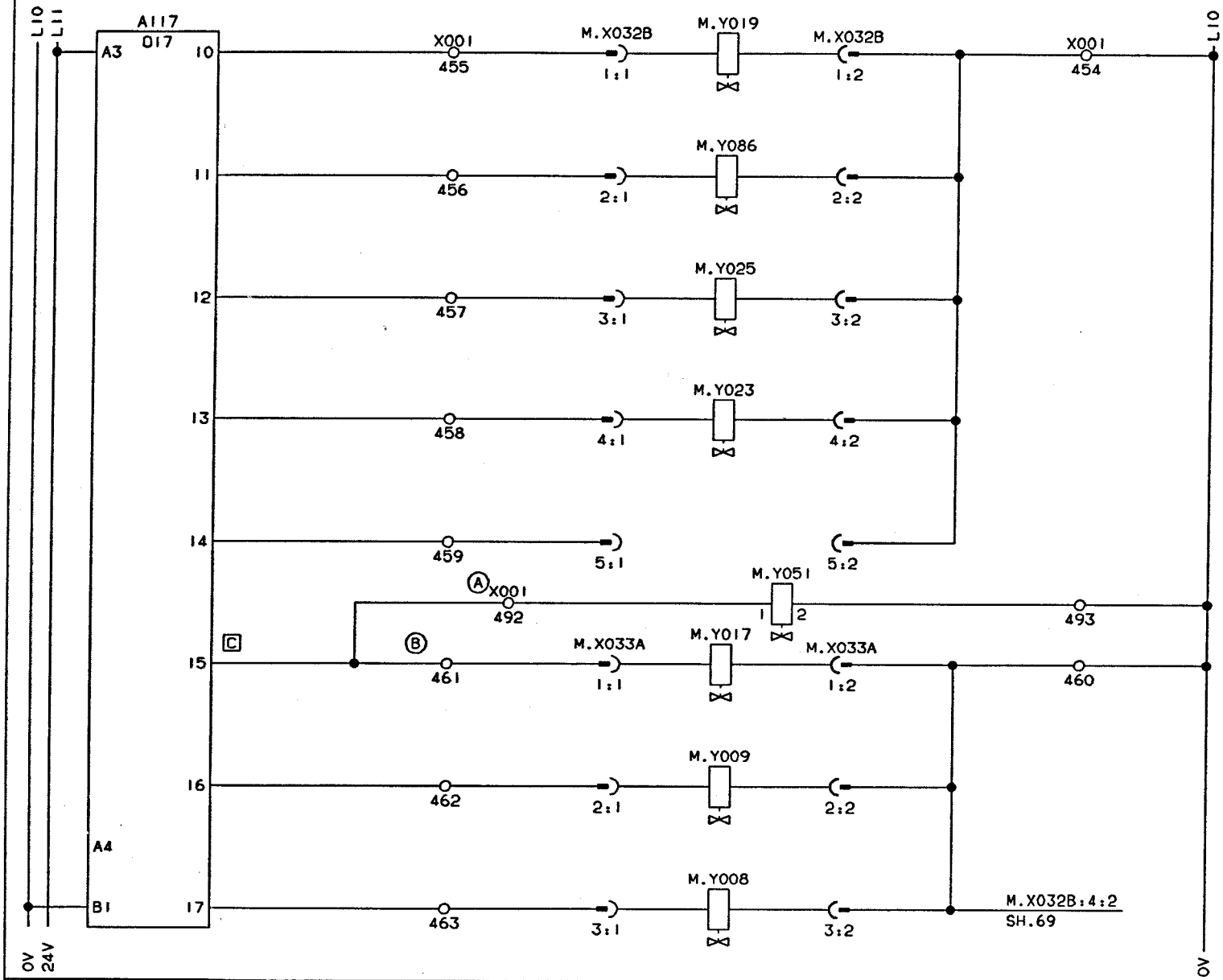

M.Y019 AIR INLET VALVE

M.Y086 VACUUM VALVE

M.Y025 HEAT EXHANGER VALVE

M.Y023 SUCTION VALVE

M.Y051 AIR INJECTION, COOLING WATER

M.Y017 CENTRAL LUBRUCATION, PUMP

M.Y009 PRODUCT, VALVE (A)

M.Y008 STERILE AIR, VALVE (B)

INTRODUCED WITH AM NO. 19261	DATE: 930310	SIGN. HK/UTH		DESCRIPTION: PLC-OUT, VALVES	
ISSUE A					
AM NO. 20144					
DATE 930804					
SIGN. HK/PSG			DRAWING REMARKS	MACHINE: TBA/9-1402 P.T	44097-68:01

ALTERATIONS ONLY IN CADAM

08:13 93.11 25

Tetra Pak
LUND SWEDEN

This drawing must not without the consent of Tetra Pak be copied, transmitted or disclosed to any third party.

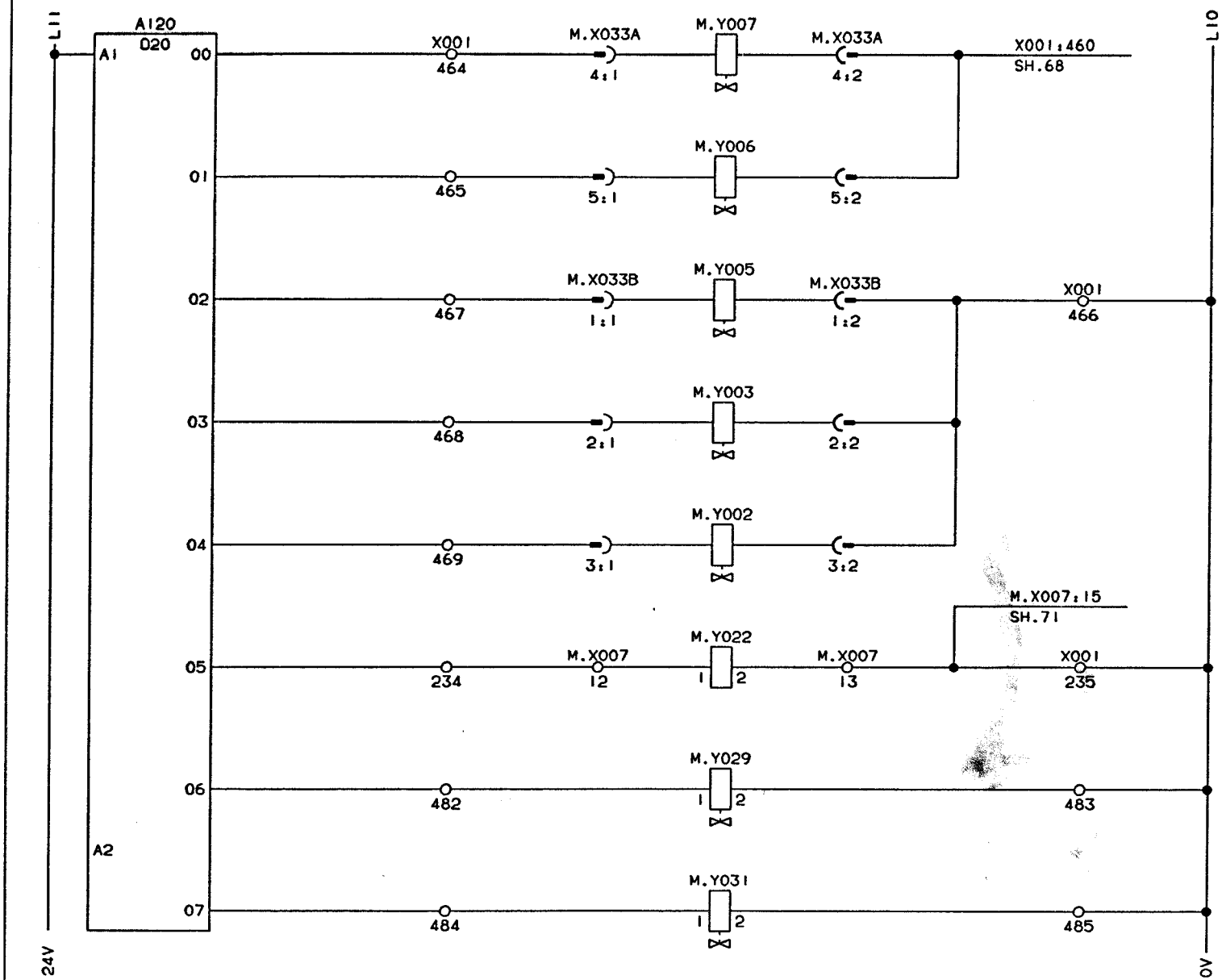

M.Y007 STEAM BARRIER VALVE (C)

M.Y006 PEROXIDE BATH, FILLING, DRAINING

M.Y005 PEROXIDE BATH, DRAINING

M.Y003 WASTE PACKAGES, AIR BLOWING

M.Y002 CLEANING TRAY, DRAINING

M.Y022 MAIN MACHINE CLUTCH

M.Y029 CLEANING SYSTEM HOT WATER

M.Y031 FINAL FOLDER, SPRINKLER

INTRODUCED WITH AM NO.	19261			DATE: 930310		SIGN. HK/UTH				
ISSUE										
AM NO.										
DATE										
SIGN.										

DRAWING REMARKS

DESCRIPTION: PLC-OUT, VALVES

MACHINE: TBA/9-1402 P.T

44097-69:01

ALTERATIONS ONLY IN CADAM

08:13 93.11.25

Tetra Pak
LUND SWEDEN

This drawing must not without the consent of Tetra Pak be copied, transmitted or disclosed to any third party.

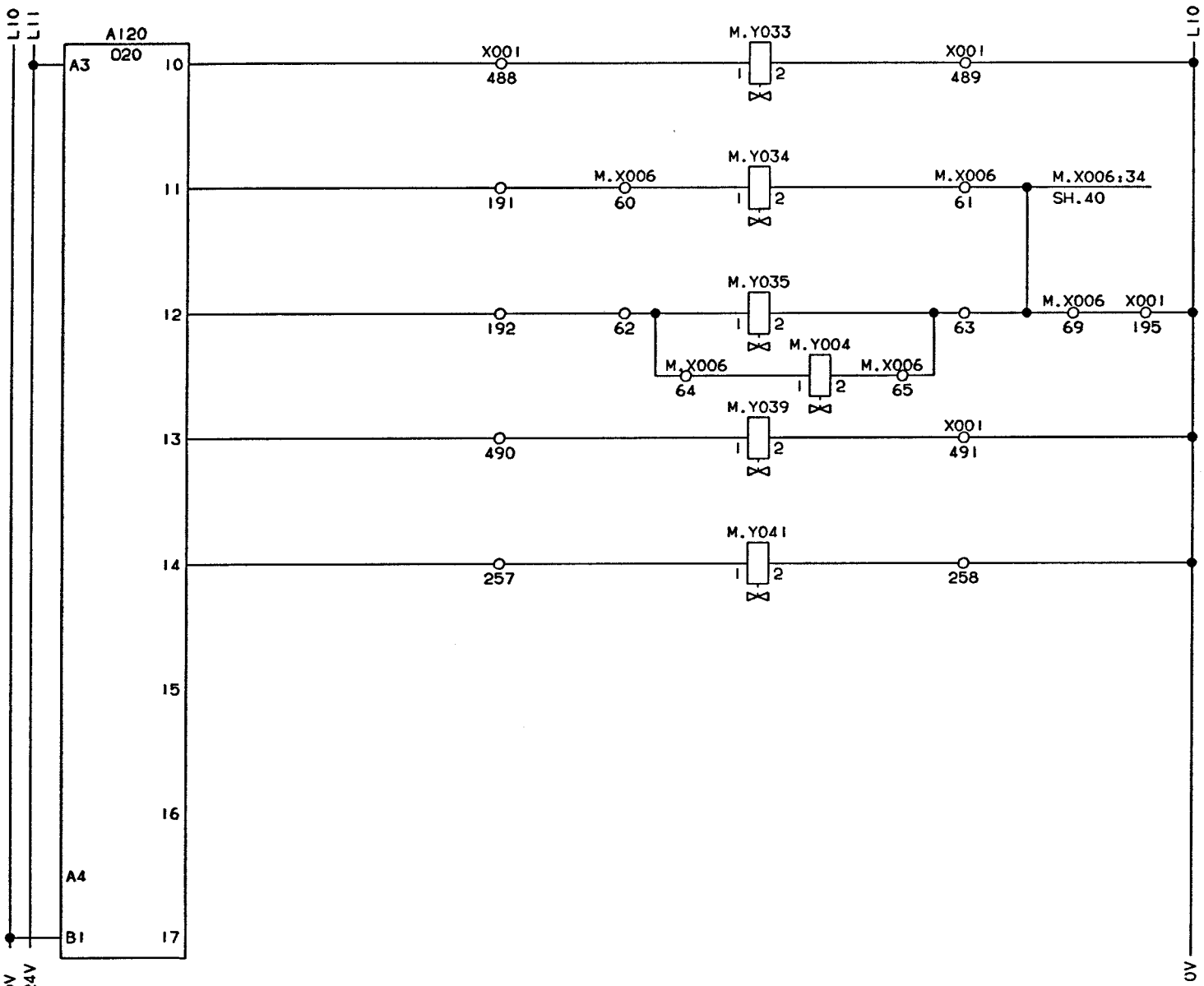

M.Y033 COOLING WATER

M.Y034 SPRAY TANK FILLING

M.Y035 SPRAY TANK, SPRAYING PEROXIDE

M.Y004 SPRAY TANK, AIR

M.Y039 TUBE FLUSHING

M.Y041 PULL DOWN DEVICE

INTRODUCED WITH AM NO. 19261	DATE: 930310	SIGN. HK/UTH	(1) EXTRA EQUIPMENT	DESCRIPTION: PLC-OUT, VALVES	
ISSUE					
AM NO.					
DATE				MACHINE: TBA/9-1402 P.T.	44097-70:01
SIGN.			DRAWING REMARKS		

ALTERATIONS ONLY IN CADAM

08:13 93.11.25

Tetra Pak
LUND SWEDEN

This drawing must not without the consent of Tetra Pak be copied, transmitted or disclosed to any third party.

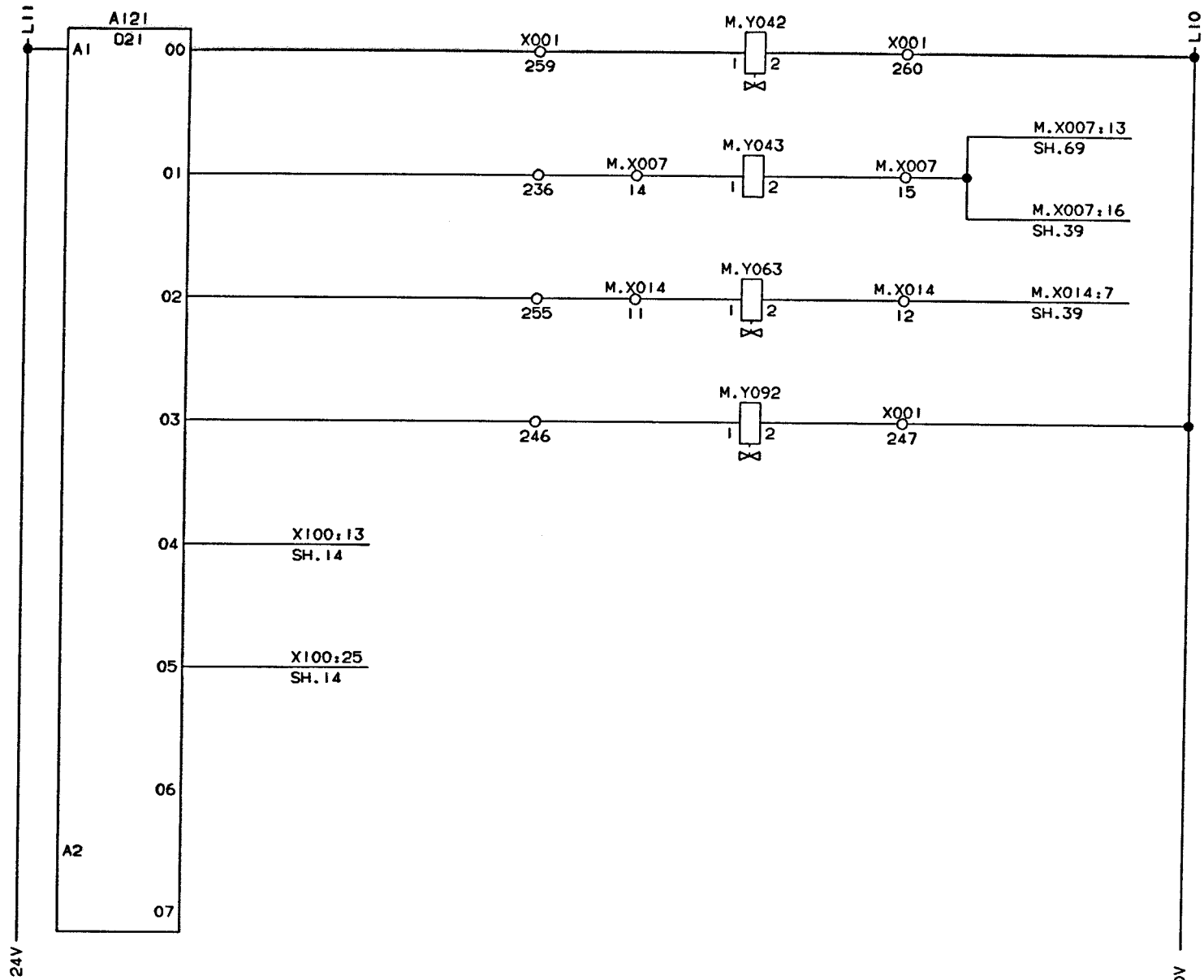

M.Y042 PRESSURE DEVICE

M.Y043 DRIVE UNIT, BRAKE

M.Y063 BRAKE UNREEL., PAPER SUPPLY

M.Y092 PEROXIDE TANK FILLING

SEALING PULSE TS, LEFT

SEALING PULSE TS, RIGHT

INTRODUCED WITH AM NO.	19261			DATE: 930310		SIGN. HK/UTH				DESCRIPTION: PLC-OUT, VALVES	
ISSUE										MACHINE: TBA/9-1402 P.T	44097-71:01
AM NO.											
DATE											
SIGN.											

DRAWING REMARKS

ALTERATIONS ONLY IN CADAM

08:13 93.11.25

Tetra Pak
LUND SWEDEN

This drawing must not without the consent of Tetra Pak be copied, transmitted or disclosed to any third party.

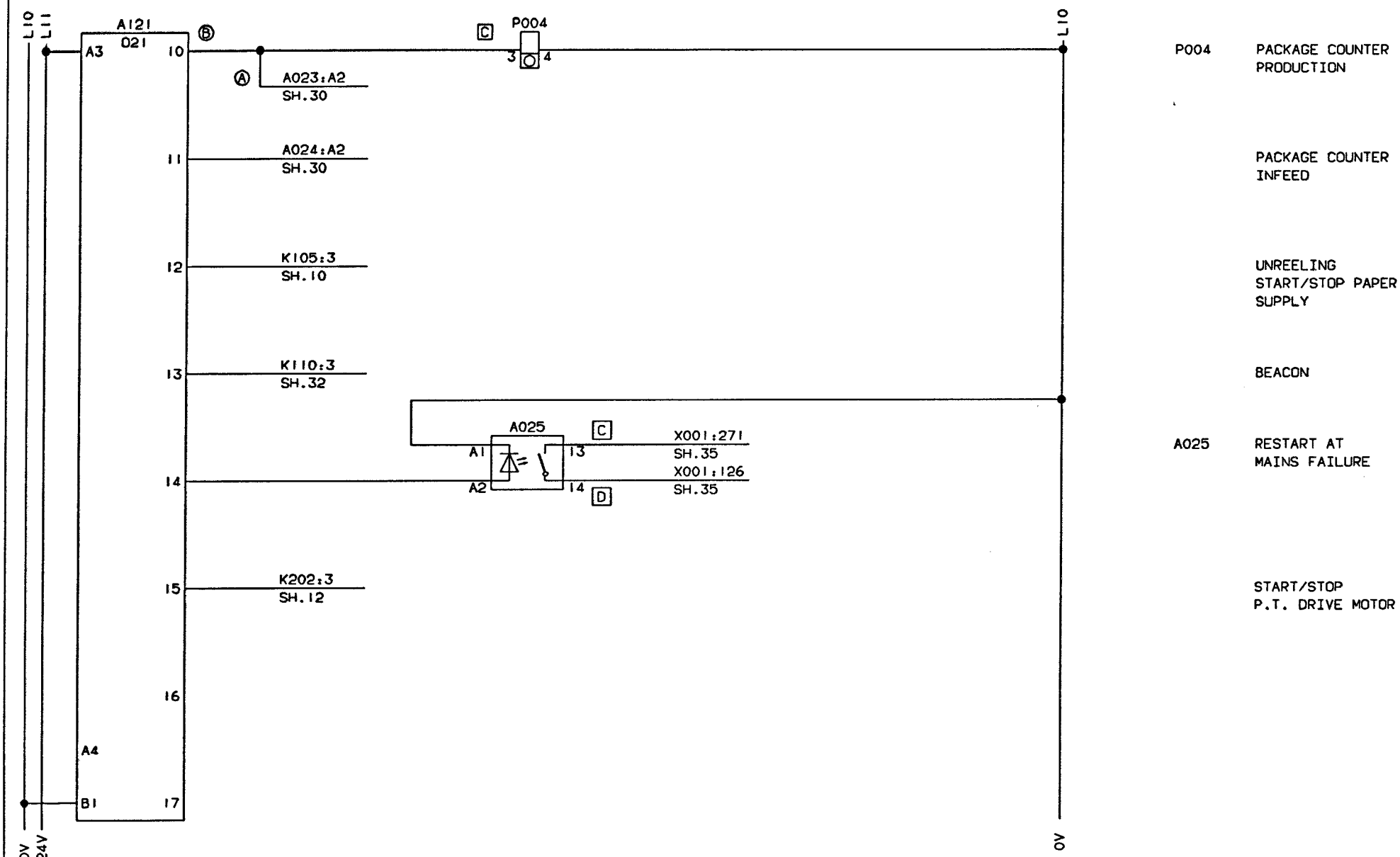

INTRODUCED WITH AM NO.	19261	DATE: 930310	SIGN. HK/UTH				
ISSUE	A						
AM NO.	20144						
DATE	930609						
SIGN.	HK/PSG						

DRAWING REMARKS

DESCRIPTION: PLC-OUT

MACHINE: TBA/9-1402 P.T

44097-72:01

ALTERATIONS ONLY IN CADAM

08:13 93.11.25

Tetra Pak
LUND SWEDEN

This drawing must not without the consent of Tetra Pak be copied, transmitted or disclosed to any third party.

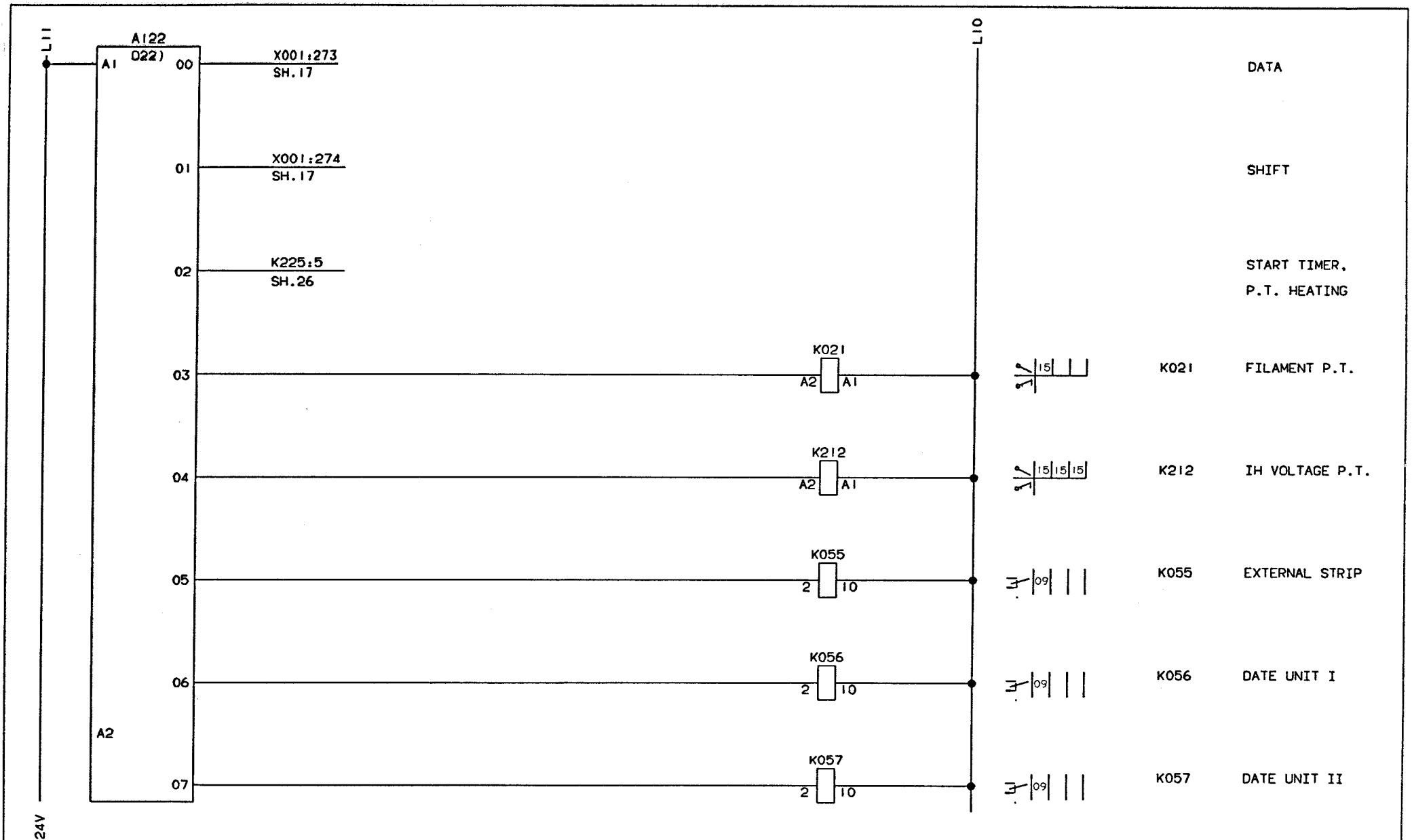

INTRODUCED WITH AM NO.	19261			DATE: 930310		SIGN. HK/UTH					
ISSUE	A										
AM NO.	20144										
DATE	930609										
SIGN.	HK/PSG										

DRAWING REMARKS

DESCRIPTION: PLC-OUT, P.T.

MACHINE: TBA/9-1402 P.T

44097-73:01

ALTERATIONS ONLY IN CADAM

08:13 93.11.25

Tetra Pak
LUND SWEDEN

This drawing must not without the consent of Tetra Pak; be copied, transmitted or disclosed to any third party.

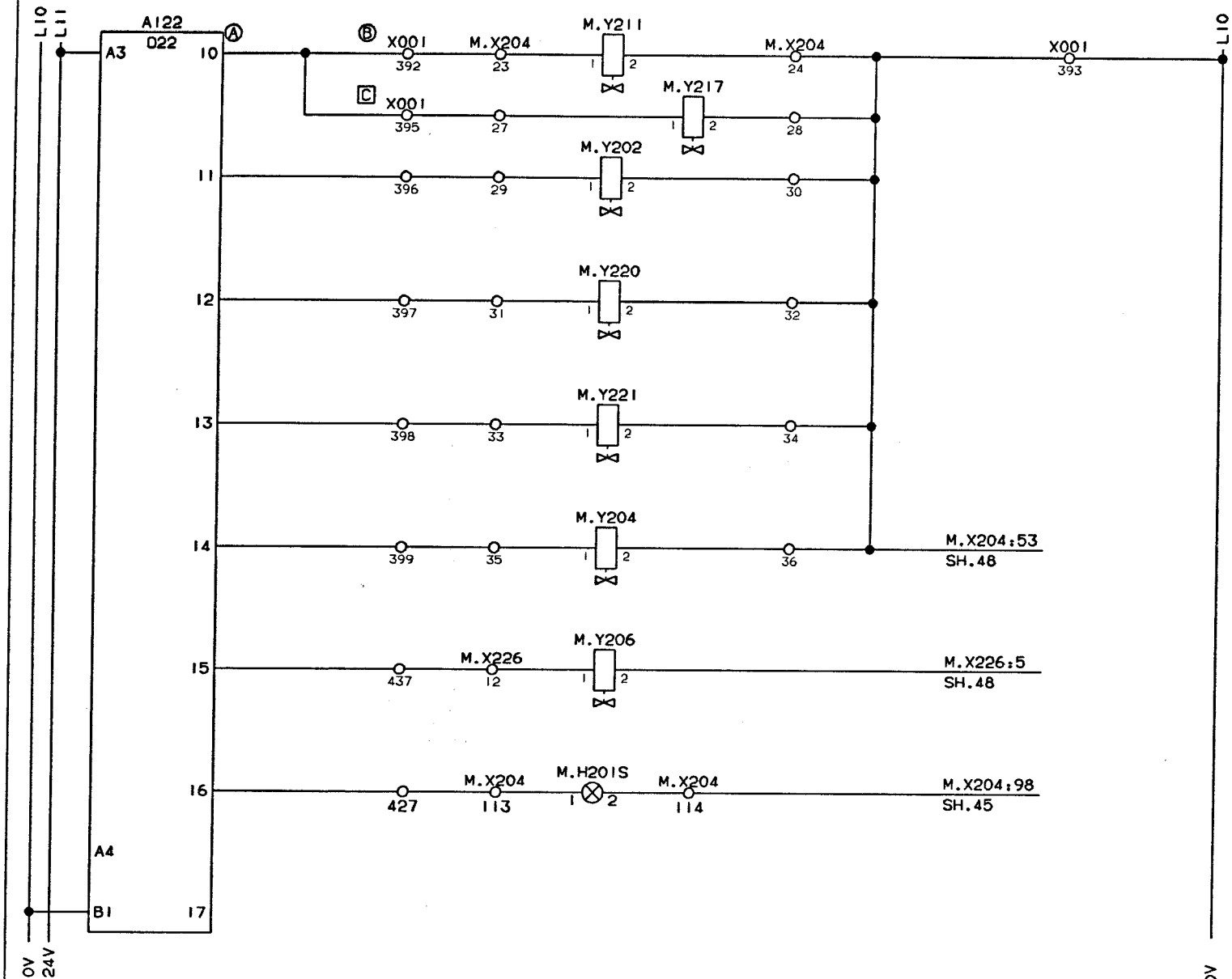

M.Y211 EXTERNAL STRIP KNIFE

M.Y217 WAISTE BLOWING

M.Y202 P.T. HEATING OFF

M.Y220 DATE STAMP I

M.Y221 DATE STAMP II

M.Y204 EXT. STRIP, COUNTER AIR PRESSURE

M.Y206 STRIP SPLICING

M.H201S TEMP. INDICATOR DATE UNIT

INTRODUCED WITH AM NO. 19261	DATE: 930310	SIGN. HK/UTH		DESCRIPTION: PLC-OUT, P.T.	
ISSUE A					
AM NO. 20144					
DATE 930609				MACHINE: TBA/9-1402 P.T	44097-74:01
SIGN HK/PSG			DRAWING REMARKS		

ALTERATIONS ONLY IN CADAM

08.13 93.11.25

Tetra Pak
LUND SWEDEN

This drawing must not without the consent of Tetra Pak be copied, transmitted or disclosed to any third party.

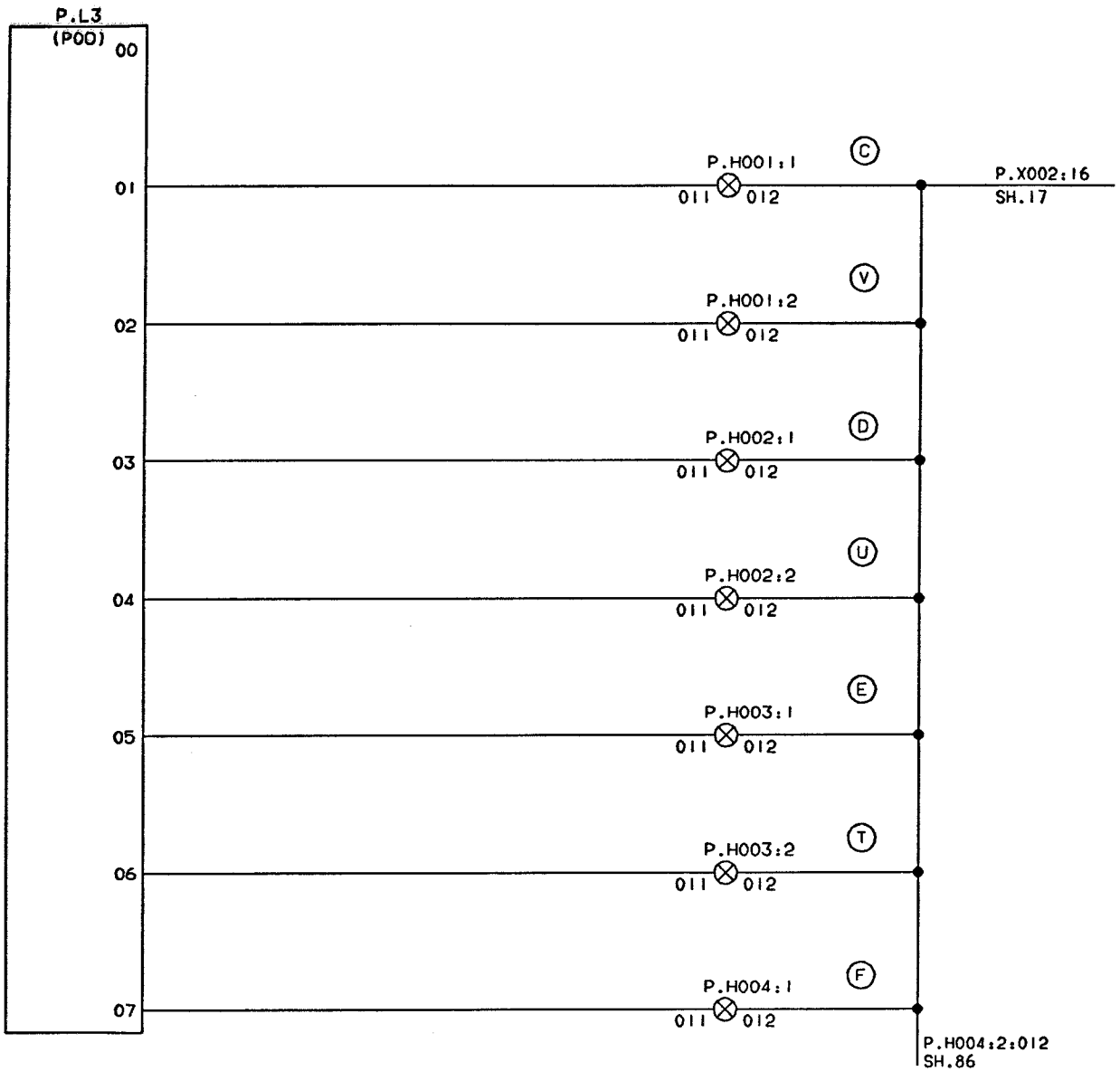

OCCUPIED FOR INTERNAL MEMORY

P.H001:1	PREHEATING I
P.H001:2	PREHEATING II
P.H002:1	TUBE SEALING
P.H002:2	PRESTERILIZING
P.H003:1	SPRAYING
P.H003:2	DRYING
P.H004:1	SIGNAL TO STERILIZER

INTRODUCED WITH AM NO.	19261			DATE: 930310			SIGN. HK/UTH				
ISSUE											
AM NO.											
DATE											
SIGN.											

DRAWING REMARKS

DESCRIPTION: PANEL INTERFACE OUT

MACHINE: TBA/9-1402 P.T

44097-85:01

ALTERATIONS ONLY IN CADAM

08:13 93.11.25

Tetra Pak
LUND SWEDEN

This drawing must not without the consent of Tetra Pak be copied, transmitted or disclosed to any third party.

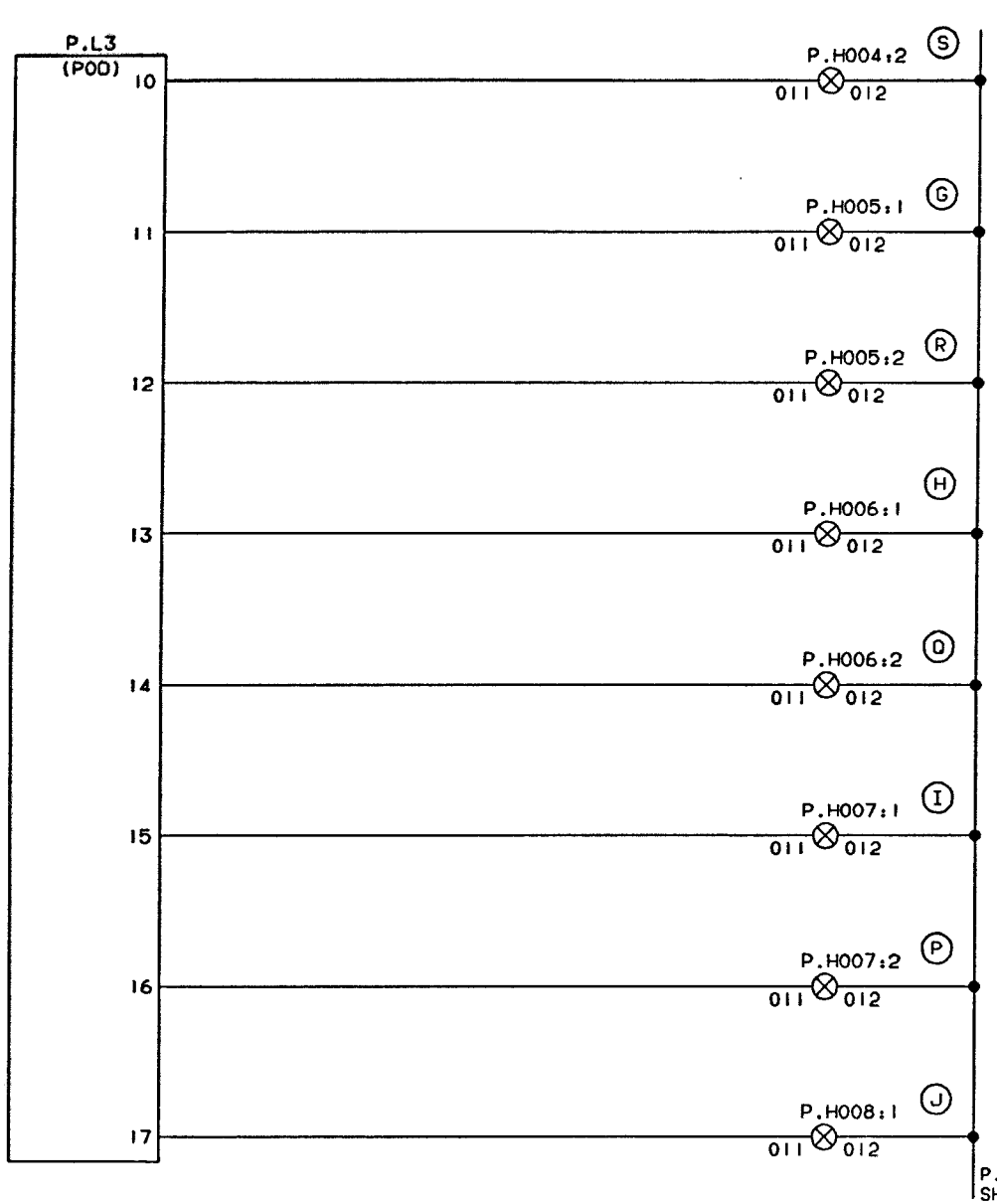

P.H004:2	SIGNAL FROM STERILIZER
P.H005:1	START SEQUENCE
P.H005:2	DRIVE MOTOR ON
P.H006:1	FILLING
P.H006:2	PRODUCTION
P.H007:1	NO PRODUCTION ALLLOWED
P.H007:2	PRODUCTION FINISHED
P.H008:1	WORK ENVIRONMENT ASEPTIC CHAMBER ON

INTRODUCED WITH AM NO. 19261	DATE: 930310	SIGN. HK/UTH	
ISSUE			
AM NO.			
DATE			
SIGN.			DRAWING REMARKS

DESCRIPTION: PANEL INTERFACE OUT

MACHINE: TBA/9-1402 P.T. | 44097-86:01

ALTERATIONS ONLY IN CADAM

08:13 93 11 25

Tetra Pak
LUND SWEDEN

This drawing must not without the consent of Tetra Pak: be copied, transmitted or disclosed to any third party.

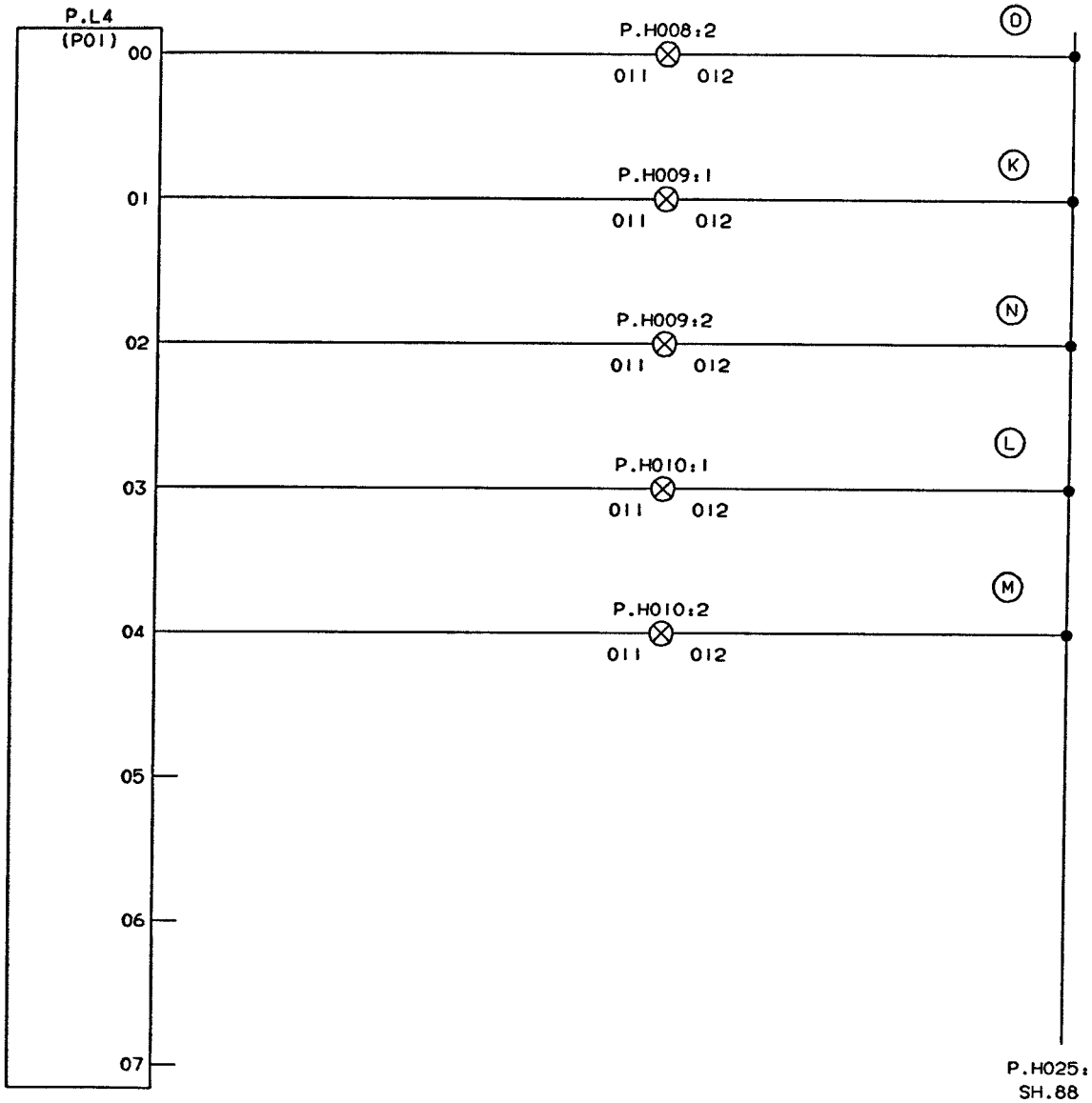

P.H008:2 WEAC READY FOR DOOR OPENING

P.H009:1 PREPARATION FOR MACHINE

P.H009:2 PREPARATION FOR CLEANING OF VALVE

P.H010:1 CLEANING MACHINE

P.H010:2 CLEANING VALVE

INTRODUCED WITH AM NO.	19261			DATE: 930310			SIGN. HK/UTH				
ISSUE											
AM NO.											
DATE											
SIGN.											

DRAWING REMARKS

DESCRIPTION: PANEL INTERFACE OUT

MACHINE: TBA/9-1402 P.T

44097-87:01

ALTERATIONS ONLY IN CADAM

08:13 93 11 25

Tetra Pak
LUND SWEDEN

This drawing must not without the consent of Tetra Pak be copied, transmitted or disclosed to any third party.

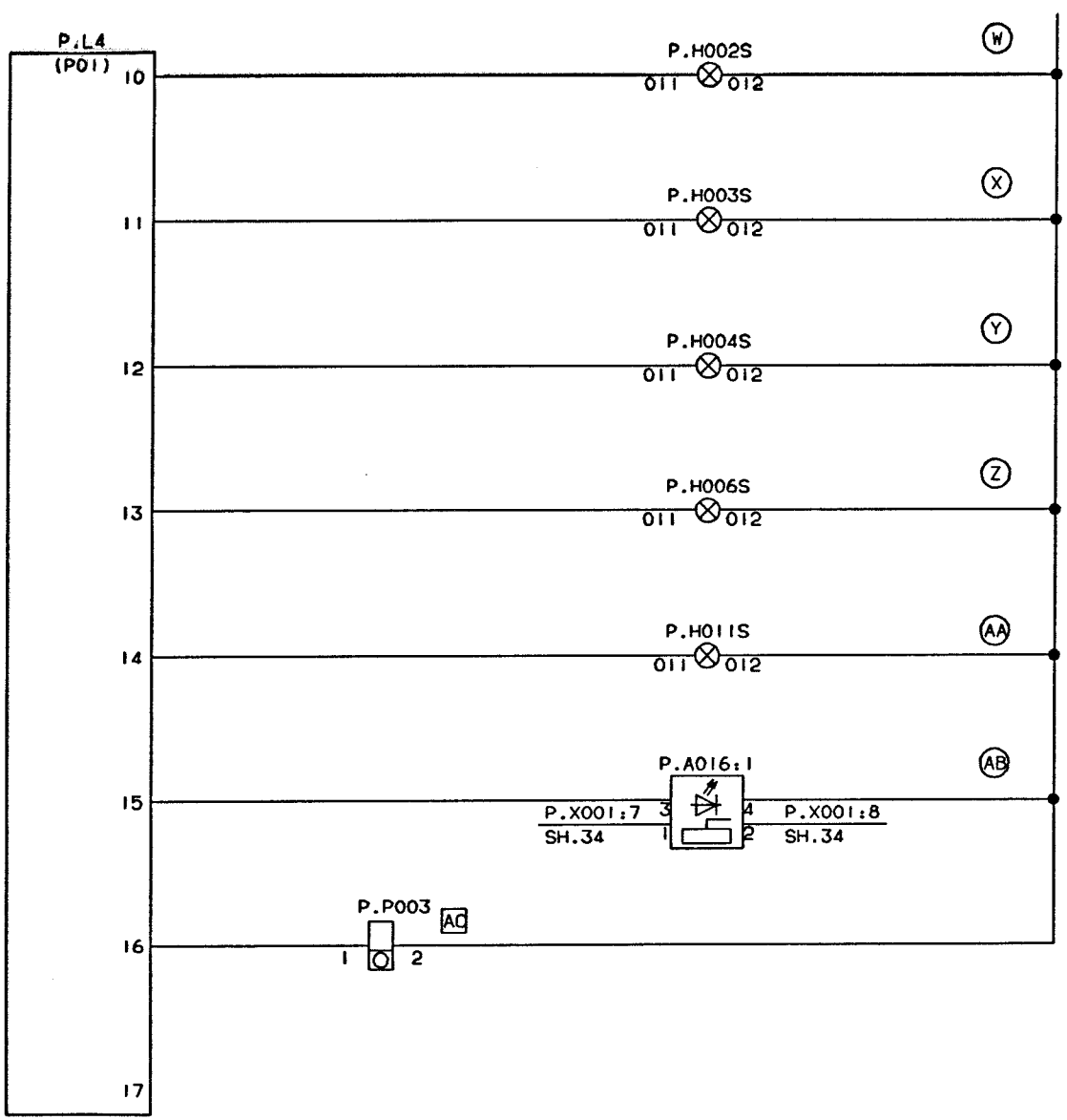

P.H002S	INCHING
P.H003S	STEP UP
P.H004S	STEP DOWN
P.H006S	NO PRODUCTION ALLOWED
P.H011S	ALARM RESET
P.A016:1	DESIGN CORRECTION
P.P003	PACKAGE COUNTER PRODUCTION

INTRODUCED WITH AM NO. 19261	DATE: 930310	SIGN. HK/UTH	
ISSUE A			
AM NO.			
DATE			
SIGN.			DRAWING REMARKS

DESCRIPTION: PANEL INTERFACE OUT

MACHINE: TBA/9-1402 P.T

44097-88:01

ALTERATIONS ONLY IN CADAM

08:13 93 11 25

USED IN ASSEMB. 41756 649205

	ECN NUMBER:	EC 17872	EC 19261	EC 20144	EC 20399	EC 20407
DATE DISTRIBUTED		93-01-19	93-03-17	93-09-20	93-10-01	93-10-18

POS	PART TITLE / REMARKS		PART NUMBER	R	SP	UN	0101
	MOUNTING DRAWING, CABINET	4-	52482-05:01				X
	MOUNTING DRAWING, CABINET	4-	52482-06:01				X
	MOUNTING DRAWING, CABINET	4-	52482-07:01				X
	MOUNTING DRAWING, CABINET	4-	52482-08:01				X
	MOUNTING DRAWING, CABINET	4-	52482-09:01				X
	MOUNTING DRAWING, CABINET	4-	52482-10:01				X
	MOUNTING DRAWING, RACK	4-	52482-11:01				X
A001:1	BACKPLANE FRONT RACK BTE	C-	68262-0101		S		1
A16A	PRINTED DESIGN CORR.LOGIC	C-	68471-0101		S		1
A16A:1	BACKPLANE FRONT RACK BTE	C-	68262-0101		S		1
A16B	CIRCUIT BOARD	C-	67058-0301		S		1
A16B:1	BACKPLANE FRONT RACK BTE	C-	68262-0101		S		1
A16B:2	FRONT PLATE	C-	68445-0106		S		1
A211	BRAKE	C-	67347-0101		C		1
A211:1	BACKPLANE FRONT RACK BTE	C-	68262-0101		S		1
R110	CIRCUIT BOARD	C-	68444-0101		US		1
0010	RACK	C-	67388-0102		C		1
0010:1	FRONT PLATE	C-	68445-0106		S		2
0010:2	FRONT PLATE	C-	68445-0101		S		2
0010:3	FRONT PLATE	C-	68445-0102		S		2
0010:4	FRONT PLATE	C-	68445-0103		S		2
0010:5	FRONT PLATE	C-	68445-0104		S		2
0010:6	FRONT PLATE	C-	68445-0105		S		2
A001	MOTOR DRIVE CONTROL	2-	90430-0037		S		1
A002	SAFETY RELAY	2-	90119-0072		C		1
A004	TEMPERATURE REGULATOR	2-	90410-0044		P		1
A004:1	SIGN"PRESTERILISATION V."		359241-0123		C		1
A006	TEMPERATURE REGULATOR	2-	90410-0044		P		1
A006:1	SIGN"PEROXIDE BATH WATER"		359241-0141		C		1
A008	TEMPERATURE REGULATOR	2-	90410-0044		P		1

09.13 93.11.25

POS	PART TITLE / REMARKS		PART NUMBER	R	SP UN	0101
A008:1	SIGN"LONGITUDINAL SEALING		359241-0131	C		1
A010	TEMPERATURE REGULATOR	2-	90410-0044	P		1
A010:I	SIGN"AIR SUPER HEATER"		359241-0130	C		1
A013	TEMPERATURE REGULATOR	2-	90410-0044	P		1
A013:1	SIGN"TEMP.AIR KNIFE"		359241-0126	C		1
A014	TEMPERATURE REGULATOR	2-	90410-0044	P		1
A014:1	SIGN"STEAM"		359241-0121	C		1
A015	LEVEL REGULATOR	2-	90314-0021	S		1
A017	LEVEL REGULATOR	2-	90314-0021	S		1
A018	LEVEL REGULATOR	2-	90314-0021	S		1
A019	LEVEL REGULATOR	2-	90314-0021	S		1
A022	LEVEL REGULATOR	2-	90314-0021	S		1
A023	OPTO-RELAY	3-	90119-0063	-		-
	* SEE TERMINAL DRWG: 571519					
A024	OPTO-RELAY	3-	90119-0063	-		-
	* SEE TERMINAL DRWG: 571519					
A025	OPTO-RELAY	3-	90119-0063	-		-
	* SEE TERMINAL DRWG: 571519					
A030	TEMPERATURE REGULATOR	2-	90410-0044	P		1
A030:1	SIGN"TEMP.PEROXIDE BATH"		359241-0125	C		1
A101	ENCODER MODULE	2-	90025-0016	S		1
A101:1	TERMINAL BLOCK	3-	90025-0025	C		1
A102	INPUT MODULE	2-	90025-0017	S		1
A102:1	TERMINAL BLOCK	3-	90025-0024	C		1
A103	INPUT MODULE	2-	90025-0017	S		1
A103:1	TERMINAL BLOCK	3-	90025-0024	C		1
A104	INPUT MODULE	2-	90025-0017	S		1
A104:1	TERMINAL BLOCK	3-	90025-0024	C		1
A105	INPUT MODULE	2-	90025-0017	S		1
A105:1	TERMINAL BLOCK	3-	90025-0024	C		1
A106	INPUT MODULE	2-	90025-0017	S		1
A106:1	TERMINAL BLOCK	3-	90025-0024	C		1
A107	INPUT MODULE	2-	90025-0017	S		1
A107:1	TERMINAL BLOCK	3-	90025-0024	C		1

93.11.25

POS	PART TITLE / REMARKS		PART NUMBER	R	SP	UN	0101
A108	RACK	1-	90025-0052	C		1	
A110	INPUT MODULE	2-	90025-0017	S		1	
A110:1	TERMINAL BLOCK	3-	90025-0024	C		1	
A114	OUTPUT MODULE	2-	90025-0053	S		1	
A114:1	TERMINAL PLINTH	3-	90025-0054	C		1	
A115	OUTPUT MODULE	2-	90025-0053	S		1	
A115:1	TERMINAL PLINTH	3-	90025-0054	C		1	
A116	OUTPUT MODULE	2-	90025-0053	S		1	
A116:1	TERMINAL PLINTH	3-	90025-0054	C		1	
A117	OUTPUT MODULE	2-	90025-0053	S		1	
A117:1	TERMINAL PLINTH	3-	90025-0054	C		1	
A118	RACK	1-	90025-0058	C		1	
A120	OUTPUT MODULE	2-	90025-0053	S		1	
A120:1	TERMINAL PLINTH	3-	90025-0054	C		1	
A121	OUTPUT MODULE	2-	90025-0053	S		1	
A121:1	TERMINAL PLINTH	3-	90025-0054	C		1	
A122	OUTPUT MODULE	2-	90025-0053	S		1	
A122:1	TERMINAL PLINTH	3-	90025-0054	C		1	
A128	RACK	1-	90025-0058	C		1	
A202	TEMPERATURE REGULATOR	2-	90410-0044	P		1	
A202:1	SIGN"EXT STRIP OPENING"		359241-0138	C		1	
A203	TEMPERATURE REGULATOR	2-	90410-0044	P		1	
A203:1	SIGN"DATE UNIT 1"		359241-0142	C		1	
A204	TEMPERATURE REGULATOR	2-	90410-0044	P		1	
A204:1	SIGN"DATE UNIT 2"		359241-0143	C		1	
A205	TEMPERATURE REGULATOR	2-	90410-0044	P		1	
A205:1	SIGN"INT STRIP AUTOSPLICE		359241-0144	C		1	
A206	TEMPERATURE REGULATOR	2-	90410-0044	P		1	
A206:1	SIGN"PREHEATED COUNTERJAW		359241-0175	C		1	
A450	RELAY	3-	90119-0070	S		1	
	USE 90119-77						
	NOT A GENERAL REPLACEMENT						
A451	RELAY	3-	90119-0070	S		1	
	USE 90119-77						
	NOT A GENERAL REPLACEMENT						

08:13 93.11.25

POS	PART TITLE / REMARKS		PART NUMBER	R	SP UN	0101
D108	PROCESSOR	1-	90025-0070	C		1
D108:1	ADAPTER	3-	90025-0096	C		1
D108:2	TERMINAL PLINTH	3-	90025-0031	C		1
E004	HOLDING FIXTURE	3-	90164-0301	S		1
E004:1	FLUORESCENT TUBE 11W		90297-0007	P		1
F001	FUSE 1P 10A K	3-	90007-0129	S		1
F003	FINE-WIRE 1,6 A	3-	352550-0133	UP		-
	* SEE TERMINAL DRWG: 571519					
F003:1	FUSE TERMINAL		353023-0102	C		-
	* SEE TERMINAL DRWG: 571519					
F004	FUSE 1P 10A K	3-	90007-0129	S		1
F005	FUSE 1P 16A K	3-	90007-0131	S		1
F008	FUSE 1P 10A K	3-	90007-0129	S		1
F010	TUBE FUSE 16A	4-	90233-0027	UP		1
F010:1	FUSE HOLDER	3-	90077-0112	S		1
F017	FUSE 1P 6A K	3-	90007-0128	UP		1
F019	FUSE 1P 6A K	3-	90007-0128	UP		1
F028	TUBE FUSE 16A	4-	90233-0027	UP		3
F028:1	FUSE HOLDER	3-	90077-0112	S		3
F029	TUBE FUSE	4-	90233-0029	UP		3
F029:1	FUSE HOLDER	3-	90077-0112	S		3
F030	TUBE FUSE 10A	4-	90233-0028	UP		1
F030:1	FUSE HOLDER	3-	90077-0112	S		1
F031	TUBE FUSE 10A	4-	90233-0028	UP		1
F031:1	FUSE HOLDER	3-	90077-0112	S		1
F032	TUBE FUSE 10A	4-	90233-0028	UP		1
F032:1	FUSE HOLDER	3-	90077-0112	S		1
F033	TUBE FUSE 10A	4-	90233-0028	UP		1
F033:1	FUSE HOLDER	3-	90077-0112	S		1
F041	FUSE H.MANN 2P 80A 2		90007-0118	S		1
F042	FUSE H.MANN 2P 80A 2		90007-0118	S		1
F055	FUSE 3P 10A K	3-	90007-0147	S		1
F056	TUBE FUSE 10A	4-	90233-0028	UP		3
F056:1	FUSE HOLDER	3-	90077-0112	S		3
F202	TUBE FUSE 10A	4-	90233-0028	S		1

09.13 93.11.25

POS	PART TITLE / REMARKS	PART NUMBER	R	SP UN	QTY
F202:1	FUSE HOLDER	3- 90077-0112	S		1
G100	POWER SUPPLY UNIT	2- 90025-0055	S		1
K002	CONTACTOR 7,5KW	2- 90075-0128	US		1
K003	CONTACTOR	2- 90075-0126	US		1
	CONSISTS OF / SPARE PART			SP UN	QTY
	3- 90075-0313 AUXILIARY CONTACT				
K006	RELAY	3- 90119-0056	UP		1
K006:1	BASE	3- 90129-0006	S		1
K006:2	CLAMP	90119-0312	S		1
K014	CONTACTOR 4KW	2- 90075-0124	US		1
	CONSISTS OF / SPARE PART			SP UN	QTY
	3- 90075-0313 AUXILIARY CONTACT				
K021	CONTACTOR 4KW	2- 90075-0127	US		1
K026	RELAY	3- 90119-0056	UP		1
K026:1	BASE	3- 90129-0006	S		1
K026:2	CLAMP	90119-0312	S		1
K030	RELAY	3- 90119-0056	UP		1
K030:1	BASE	3- 90129-0006	S		1
K030:2	CLAMP	90119-0312	S		1
K036	RELAY	3- 90119-0056	UP		1
K036:1	BASE	3- 90129-0006	S		1
K036:2	CLAMP	90119-0312	S		1
K046	RELAY	3- 90119-0056	UP		1
K046:1	BASE	3- 90129-0006	S		1
K046:2	CLAMP	90119-0312	S		1
K048	CONTACTOR 4KW	2- 90075-0124	US		1
	CONSISTS OF / SPARE PART			SP UN	QTY
	3- 90075-0313 AUXILIARY CONTACT				
K051	CONTACTOR 4KW	2- 90075-0124	US		1
	CONSISTS OF / SPARE PART			SP UN	QTY
	3- 90075-0313 AUXILIARY CONTACT				
K052	RELAY	3- 90119-0056	UP		1
K052:1	BASE	3- 90129-0006	S		1

08:13 93.11.25

POS	PART TITLE / REMARKS		PART NUMBER	R	SP	UN	0101
K052:2	CLAMP		90119-0312	S			1
K053	RELAY	3-	90119-0056	UP			1
K053:1	BASE	3-	90129-0006	S			1
K053:2	CLAMP		90119-0312	S			1
K054	RELAY	3-	90119-0056	UP			1
K054:1	BASE	3-	90129-0006	S			1
K054:2	CLAMP		90119-0312	S			1
K055	RELAY	3-	90119-0056	UP			1
K055:1	BASE	3-	90129-0006	S			1
K055:2	CLAMP		90119-0312	S			1
K056	RELAY	3-	90119-0056	UP			1
K056:1	BASE	3-	90129-0006	S			1
K056:2	CLAMP		90119-0312	S			1
K057	RELAY	3-	90119-0056	UP			1
K057:1	BASE	3-	90129-0006	S			1
K057:2	CLAMP		90119-0312	S			1
K071	CONTACTOR 7,5KW	2-	90075-0128	US			1
K075	CONTACTOR 7,5KW	2-	90075-0125	US			1
	CONSISTS OF / SPARE PART				SP	UN	QTY
	3- 90075-0313 AUXILIARY CONTACT						
K077	CONTACTOR 7,5KW	2-	90075-0125	US			1
	CONSISTS OF / SPARE PART				SP	UN	QTY
	3- 90075-0313 AUXILIARY CONTACT						
K081	CONTACTOR 4KW	2-	90075-0124	US			1
	CONSISTS OF / SPARE PART				SP	UN	QTY
	3- 90075-0313 AUXILIARY CONTACT						
K082	CONTACTOR 4KW	2-	90075-0124	US			1
	CONSISTS OF / SPARE PART				SP	UN	QTY
	3- 90075-0313 AUXILIARY CONTACT						
K083	RELAY	3-	90119-0056	UP			1
K083:1	BASE	3-	90129-0006	S			1
K083:2	CLAMP		90119-0312	S			1
K084	RELAY	3-	90119-0056	US			1

93.11.25

POS	PART TITLE / REMARKS	PART NUMBER	R	SP UN	0101
K084:1	BASE	3- 90129-0006	S		1
K084:2	CLAMP	90119-0312	S		1
K087	CONTACTOR 7,5KW	2- 90075-0125	US		1
	CONSISTS OF / SPARE PART			SP UN	QTY
	3- 90075-0313 AUXILIARY CONTACT				
K088	CONTACTOR 7,5KW	2- 90075-0125	US		1
	CONSISTS OF / SPARE PART			SP UN	QTY
	3- 90075-0313 AUXILIARY CONTACT				
K091	CONTACTOR 7,5KW	2- 90075-0125	US		1
	CONSISTS OF / SPARE PART			SP UN	QTY
	3- 90075-0313 AUXILIARY CONTACT				
K092	CONTACTOR 4KW	2- 90075-0127	US		1
K093	CONTACTOR 4KW	2- 90075-0124	US		1
	CONSISTS OF / SPARE PART			SP UN	QTY
	3- 90075-0313 AUXILIARY CONTACT				
K094	CONTACTOR 4KW	2- 90075-0124	US		1
	CONSISTS OF / SPARE PART			SP UN	QTY
	3- 90075-0313 AUXILIARY CONTACT				
K095	RELAY	3- 90119-0056	UP		1
K095:1	BASE	3- 90129-0006	S		1
K095:2	CLAMP	90119-0312	S		1
K096	CONTACTOR 7,5KW	2- 90075-0128	US		1
K097	RELAY	3- 90119-0056	UP		1
K097:1	BASE	3- 90129-0006	S		1
K097:2	CLAMP	90119-0312	S		1
K098	CONTACTOR 7,5KW	2- 90075-0125	US		1
	CONSISTS OF / SPARE PART			SP UN	QTY
	3- 90075-0313 AUXILIARY CONTACT				
K099	CONTACTOR 4KW	2- 90075-0124	US		1

>>>>>>> CONTINUES ON NEXT PAGE >>>>>>>

93.11.25

This drawing must not without the consent of Tetra Pak be copied, transmitted or disclosed to any third party.

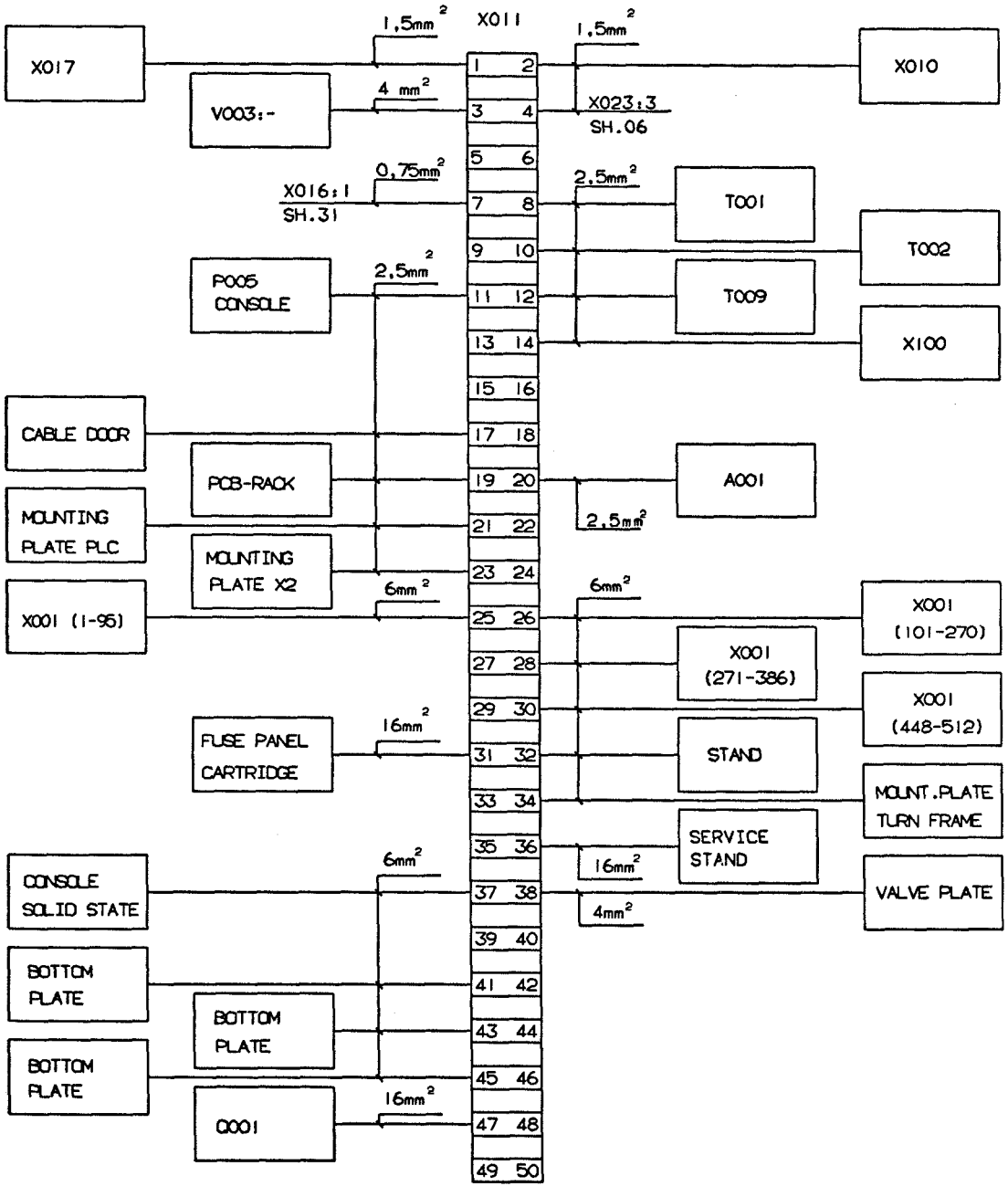

Tetra Pak
LUND SWEDEN

DESCRIPTION: GROUND CONNECTION CONTROL CABINET

MACHINE: TBA/9-1402 P.T

44097-89:01

DRAWING REMARKS

INTRODUCED WITH AM NO.	19261	DATE: 930310	SIGN: HK/UTH
ISSUE			
AM NO			
DATE			
SIGN			

ALTERATIONS ONLY IN CADAM

Machine: 649205

ECN 19261 '0' ECN 20144 '0'
19930317 HK 19930920 HK

Line	Position	Sheet	Area	Colour	Line	Position	Sheet	Area	Colour
L1	XL1,1		25	BK	L2	XL2,3		25	BK
	Q002,6	05:01				F028B,2	08:01		
						F029B,2	08:01		
L1	XL1,2		25	BK		F056B,2	14:01		
	Q003,1	10:01				F202,2	09:01		
	Q012,1	16:01							
	Q027,1	15:01			L2	XL2,4		25	BK
	Q087,1	10:01				F008,2	07:01		
	Q098,1	10:01				F019,1	16:01		
L1	XL1,3		25	BK	L3	XL3,1		25	BK
	F010,2	08:01				Q002,2	05:01		
	F028A,2	08:01							
	F029A,2	08:01			L3	XL3,2		25	BK
	F056A,2	14:01				Q003,5	10:01		
						Q012,5	16:01		
L1	XL1,4		25	BK		Q027,5	15:01		
	F001,2	06:01				Q087,5	10:01		
	F004,2	15:01				Q098,5	10:01		
L2	XL2,1		25	BK	L3	XL3,3		25	BK
	Q002,4	05:01				F028C,2	08:01		
						F029C,2	08:01		
L2	XL2,2		25	BK		F056C,2	14:01		
	Q003,3	10:01							
	Q012,3	16:01			L3	XL3,4		25	BK
	Q027,3	15:01				F005,2	07:01		
	Q087,3	10:01							
	Q098,3	10:01			L10	XL10,1		4	BU
						V003,-	16:01		

08:13 93.11.25

Machine: 649205

ECN 19261 '0' ECN 20144 '0'
19930317 HK 19930920 HK

Line	Position	Sheet Area Colour	Line	Position	Sheet Area Colour
L10	X011,3	16:01		K099,A1	65:01
				K096,A1	65:01
L10	XL10,2	0.75 BU		K092,A1	65:01
	X016,4	31:01		K088,A1	65:01
	,6	31:01			
	,8	31:01	L10	XL10,7	0.75 BU
	A211,9/2	26:01		K003,A1	35:01
	A016B,24	34:01		K021,A1	73:01
	,18	34:01		K212,A1	73:01
	A016A,1	34:01		A002,A2	35:01
	A001,25	11:01		,23	35:01
	P004,4	72:01			
			L10	XL10,8	0.75 BU
L10	XL10,3	0.75 BU		K097,10	67:01
	IH-A005,1	15:01		K055,10	73:01
	X100,9	14:01		K056,10	73:01
	,23	14:01		K057,10	73:01
				K095,10	67:01
L10	XL10,4	0.75 BU		K084,10	67:01
	K110,4	32:01		K083,10	67:01
	K106,4	10:01		K054,10	67:01
	K203,4	12:01		K053,10	66:01
L10	XL10,5	0.75 BU	L10	XL10,9	0.75 BU
	K075,A1	65:01		K052,10	66:01
	K071,A1	65:01		K046,10	66:01
	K048,A1	65:01		K036,10	32:01
	K002,A1	65:01		K030,10	66:01
				K026,10	66:01
L10	XL10,6	0.75 BU		K006,10	66:01

08:13 93.11.25

Machine: 649205

ECN 19261 '0' ECN 20144 '0'
19930317 HK 19930920 HK

Line	Position	Sheet Area Colour	Line	Position	Sheet Area Colour
L10	XL10,10	0.75 BU		,485	69:01
	X009,2	32:01		,489	70:01
	A023,A1	30:01		,491	70:01
	A024,A1	30:01		,493	68:01
	A025,A1	72:01			
			L10	XL10,16	0.75 BU
L10	XL10,11	0.75 BU		K225,6	26:01
	X001,118	30:01		,8	26:01
	,156	32:01			
	,169	45:01	L10	XL10,17	0.75 BU
	,195	70:01		X001,393	74:01
	,228	36:01		,432	48:01
	,235	69:01			
	,247	71:01	L10	XL10,20	4 BU
				XL10,21	16:01
L10	XL10,12	0.75 BU			
	X001,249	32:01	L10	XL10,22	0.75 BU
	,250	39:01		G100,B1	17:01
	,258	70:01			
	,260	71:01	L10	XL10,23	0.75 BU
	,262	17:01		A101,B2	36:01
	,279	47:01			
			L10	XL10,25	0.75 BU
L10	XL10,14	0.75 BU		A103,B1	39:01
	X001,454	68:01		,B2	40:01
	,460	68:01			
	,466	69:01	L10	XL10,26	0.75 BU
				A104,B1	41:01
L10	XL10,15	0.75 BU		,B2	42:01
	X001,483	69:01			

08:13 93.11.25

Machine: 649205

ECN 19261 '0' ECN 20144 '0'
19930317 HK 19930920 HK

Line	Position	Sheet Area Colour	Line	Position	Sheet Area Colour
L10	XL10,27	0.75 BU	L11	XL11,1	4 BU
	A105,B1	43:01		F055A,2	16:01
	,B2	44:01			
			L11	XL11,2	0.75 BU
L10	XL10,28	0.75 BU		X001,102	29:01
	A106,B1	45:01		,120	30:01
	,B2	46:01		,153	29:01
				,157	41:01
L10	XL10,29	0.75 BU		,167	40:01
	A107,B1	47:01		,227	36:01
	,B2	48:01			
			L11	XL11,3	0.75 BU
L10	XL10,30	0.75 BU		A211,1/1	26:01
	A110,B1	49:01		S207,13	48:01
	,B2	50:01		K225,7	26:01
				,10	26:01
L10	XL10,36	0.75 BU			
	A116,B1	66:01	L11	XL11,4	0.75 BU
				X001,238	39:01
L10	XL10,37	0.75 BU		,241	41:01
	A117,B1	68:01		,252	39:01
				,261	17:01
L10	XL10,38	0.75 BU		,281	47:01
	A120,B1	70:01		,290	41:01
				,292	41:01
L10	XL10,39	0.75 BU			
	A121,B1	72:01	L11	XL11,5	0.75 BU
				X001,405	48:01
L10	XL10,40	0.75 BU		,434	48:01
	A122,B1	74:01			

08:13 93.11.25

Machine: 649205

ECN 19261 '0' ECN 20144 '0'
19930317 HK 19930920 HK

Line	Position	Sheet	Area	Colour
L11	XL11,6		0.75	BU
	A202,23	21:01		
	A030,23	21:01		
	A014,23	20:01		
	A013,23	20:01		
	A010,19	19:01		
	,23	19:01		
	A008,19	19:01		
	,23	19:01		
	A006,19	18:01		
	,23	18:01		
	A004,23	18:01		
L11	XL11,7		0.75	BU
	A015,18	24:01		
	A017,18	24:01		
	A018,18	25:01		
	A019,18	25:01		
	A022,18	26:01		
L11	XL11,8		0.75	BU
	K077,13	31:01		
	A451,11	27:01		
	A002,A1	35:01		
	,13	35:01		
	,33	35:01		
	,41	35:01		
	K097,3	31:01		
	K095,3	31:01		

Line	Position	Sheet	Area	Colour
L11	XL11,11		0.75	BU
	A204,23	22:01		
	A203,23	22:01		
	A206,23	23:01		
	A205,23	23:01		
L11	XL11,12		0.75	BU
	IH-A005,7	15:01		
	,16	15:01		
	,27	15:01		
L11	XL11,18		4	BU
	XL11,21	16:01		
L11	XL11,23		0.75	BU
	A116,A1	65:01		
	,A3	66:01		
L11	XL11,24		0.75	BU
	A117,A1	67:01		
	,A3	68:01		
L11	XL11,25		0.75	BU
	A120,A1	69:01		
	,A3	70:01		
L11	XL11,26		0.75	BU
	A121,A1	71:01		
	,A3	72:01		

08:13 93.11.25

Machine: 649205

ECN 19261 '0' ECN 20144 '0'
19930317 HK 19930920 HK

Line	Position	Sheet Area Colour	Line	Position	Sheet Area Colour
L11	XL11,27	0.75 BU	L13	XL13,	0.75 BU
	A122,A1	73:01		K048,6	16:01
	,A3	74:01		X001,248	32:01
				A016A,10	34:01
L12	XL12,1	4 BU		,14	34:01
	F055B,2	16:01		A016B,17	34:01
L12	XL12,2	0.75 BU	L20	XL20,1	0.75 BU
	S003,5	40:01		A002,24	35:01
L12	XL12,3	0.75 BU	L20	XL20,2	0.75 BU
	Q087,14	41:01		K201,A1	63:01
				K098,A1	62:01
L12	XL12,4	0.75 BU		K094,A1	62:01
	X100,10	14:01		K093,A1	62:01
	,11	14:01		K091,A1	63:01
	,12	14:01		K087,A1	62:01
	,24	14:01		K082,A1	63:01
				K081,A1	62:01
L12	XL12,5	0.75 BU		K077,A1	63:01
	F003,LIV	32:01		K051,A1	63:01
				K014,A1	63:01
L12	XL12,15	4 BU			
	XL12,21	16:01	L20	XL20,3	0.75 BU
				X001,448	62:01
L12	XL12,22	0.75 BU		,470	61:01
	G100,A1	17:01		,476	61:01
				,487	62:01
L12	XL12,23	0.75 BU			
	A101,A2	36:01	L20	XL20,4	0.75 BU

08:13 93.11.25

Machine: 649205

ECN 19261 '0' ECN 20144 '0'
19930317 HK 19930920 HK

Line	Position	Sheet Area Colour	Line	Position	Sheet Area Colour
L20	A102,B1	37:01		A202,27	21:01
	,B2	38:01		A030,27	21:01
	A114,B1	62:01		A014,27	20:01
	A115,B1	64:01		A013,27	20:01
				A010,27	19:01
L20	XL20,11	0.75 BU		A008,27	19:01
	P002,A"-	63:01		A006,27	18:01
				A004,27	18:01
L21	XL21,	0.75 BU		A015,A2	24:01
	A002,34	35:01		A017,A2	24:01
	Q003,13	37:01		A018,A2	25:01
	X001,121	37:01		A019,A2	25:01
	,159	37:01		A022,A2	26:01
	,503	38:01		X016,3	31:01
	,506	38:01			
	,508	38:01	L50	XL50,12	0.75 RD
	,510	38:01		X100,5	14:01
	,512	38:01		,7	14:01
	S002,13	37:01		,21	14:01
	S004,13	38:01			
	A114,A3	62:01	L50	XL50,13	0.75 RD
	S036,13	37:01		A204,27	22:01
				A203,27	22:01
L50	XL50,1	0.75 RD		A206,27	23:01
	X003,19	16:01		A205,27	23:01
L50	XL50,2	0.75 RD	L51	XL51,1	0.75 RD
	A451,A2	27:01		F019,2	16:01
L50	XL50,11	0.75 RD	L51	XL51,2	0.75 RD

08:13 93.11.25

Machine: 649205

ECN 19261 '0' ECN 20144 '0'
19930317 HK 19930920 HK

Line	Position	Sheet Area Colour	Line	Position	Sheet Area Colour
L51	K048,13	16:01		,8	14:01
	K088,13	31:01		,22	14:01
	A451,A1	27:01			
	K046,6	31:01			
	K095,6	31:01			
L51	XL51,11	0.75 RD			
	A202,26	21:01			
	A030,26	21:01			
	A014,26	20:01			
	A013,26	20:01			
	A010,26	19:01			
	A008,26	19:01			
	A006,26	18:01			
	A004,26	18:01			
	A015,A1	24:01			
	A017,A1	24:01			
	A018,A1	25:01			
	A019,A1	25:01			
	A022,A1	26:01			
L51	XL51,12	0.75 RD			
	A204,26	22:01			
	A203,26	22:01			
	A206,26	23:01			
	A205,26	23:01			
L52	XL52,	0.75 RD			
	K048,14	16:01			
	X100,6	14:01			

08:13 93.11.25

08:13 93.11.25

Machine: 649205

ECN 19261 '0'
19930317 HK

Position	Sheet	Position	Sheet	Position	Sheet	Position	Sheet
XL10,21	16:01	X001,25	11:01	X001,55		X001,85	
		,26	11:01	,56	08:01	,86	
XL11,21	16:01	,27	11:01	,57	08:01	,87	
		,28	10:01	,58	07:01	,88	
XL12,21	16:01	,29	10:01	,59	07:01	,89	
		,30	10:01	,60	06:01	,90	
X001,1	07:01	,31	10:01	,61	06:01	,91	
,2	07:01	,32	10:01	,62	06:01	,92	
,3	07:01	,33	10:01	,63	06:01	,93	
,4	07:01	,34	11:01	,64	06:01	,94	09:01
,5	08:01	,35	11:01	,65	06:01	,95	09:01
,6	08:01	,36	11:01	,66	06:01	,96	09:01
,7	08:01	,37	10:01	,67	06:01	,97	09:01
,8	08:01	,38	10:01	,68	06:01	,98	09:01
,9	08:01	,39	10:01	,69		,99	06:01
,10	08:01	,40	10:01	,70		,100	06:01
,11	12:01	,41	10:01	,71		,101	29:01
,12	12:01	,42	10:01	,72		,102	29:01
,13	12:01	,43	12:01	,73		,103	29:01
,14	12:01	,44	12:01	,74		,104	29:01
,15	12:01	,45	12:01	,75		,105	29:01
,16	12:01	,46	13:01	,76		,106	29:01
,17	11:01	,47	13:01	,77		,107	29:01
,18	11:01	,48	13:01	,78		,108	29:01
,19	11:01	,49	11:01	,79		,109	29:01
,20	11:01	,50	11:01	,80		,110	29:01
,21	12:01	,51	09:01	,81		,111	29:01
,22	12:01	,52	09:01	,82		,112	29:01
,23	12:01	,53	09:01	,83		,113	29:01
,24	12:01	,54		,84		,114	29:01

Intel 93-03-17

Machines 449205

TERMINAL SUMMARY "A" TERMINAL SUMMARY — 4 — 44097-91:01 Sheet: 2 3

Based on ECN: 19261

Position	Sheet	Position	Sheet	Position	Sheet	Position	Sheet	Position	Sheet	Position	Sheet
10:69		232,		402,	10:04	474,		10:81		444,	
		233,		203,	40:01	475,		10:01		143,	
		232,		202,	40:01	472,		19:01		142,	
10:43		232,		202,		471,		19:01		141,	
37:01		230,		200,	45:01	470,		19:01		140,	
37:01		229,		199,	45:01	469,		19:01		139,	
10:43		228,		198,	45:01	468,		19:01		138,	
10:01		227,		197,	40:01	467,				137,	
10:01		226,		196,	35:01	466,		21:01		136,	
10:43		225,	10:04	565,	35:01	465,		21:01		135,	
10:01		224,		194,	35:01	464,		24:01		134,	
10:01		223,		193,	35:01	463,		24:01		133,	
10:01		222,	10:01	192,	41:01	462,		20:01		132,	
10:01		221,		191,	41:01	461,		30:01		131,	
10:01		220,		190,	37:01	460,		30:01		130,	
10:43		219,	10:01	189,	10:43	459,		30:01		129,	
24:01		218,	24:01	188,	41:01	458,		30:01		128,	
10:01		217,	25:01	187,	41:01	457,		20:01		127,	
10:43		216,	10:01	186,	10:43	456,		35:01		126,	
34:01		215,	25:01	185,	32:01	455,		25:01		125,	
10:01		214,	25:01	184,	22:01	454,		35:01		124,	
10:01		213,		183,	10:69	453,		10:69		123,	
34:01		212,		182,	20:01	452,		10:43		122,	
34:01		211,		181,	20:01	451,		37:01		121,	
10:43		210,	40:01	180,	10:02	450,		30:01		120,	
34:01		209,	40:01	179,	20:01	449,		30:01		119,	
34:01		208,	45:01	178,	18:01	448,		30:01		118,	
10:43		207,	45:01	177,	10:81	447,		10:43		117,	
34:01		206,	40:01	176,	10:01	446,		37:01		116,	
		205,	40:01	175,	19:01	445,	37:01	10:43		115,	XOX

ECN 19261 'O'
1993317 HK

Intel Development Center

TETRA PAK Development Center

TERMINAL SUMMARY "A"

Date: 93-03-17

Machine: 649205

ECN 19261 '0'
19930317 HK

Position	Sheet	Position	Sheet	Position	Sheet	Position	Sheet
X001,235	69:01	X001,265	35:01	X001,295		X001,325	
,236	71:01	,266	35:01	,296		,326	
,237	39:01	,267	34:01	,297		,327	
,238	39:01	,268	34:01	,298		,328	
,239		,269	35:01	,299		,329	
,240		,270	35:01	,300		,330	
,241	41:01	,271	35:01	,301		,331	
,242	41:01	,272	35:01	,302		,332	
,243		,273	17:01	,303		,333	
,244		,274	17:01	,304		,334	
,245		,275		,305		,335	
,246	71:01	,276		,306		,336	
,247	71:01	,277		,307		,337	
,248	32:01	,278		,308		,338	
,249	32:01	,279	47:01	,309		,339	
,250	39:01	,280	47:01	,310		,340	
,251	39:01	,281	47:01	,311		,341	
,252	39:01	,282	47:01	,312		,342	
,253	39:01	,283	47:01	,313		,343	
,254	39:01	,284	47:01	,314		,344	
,255	71:01	,285		,315		,345	
,256		,286		,316		,346	
,257	70:01	,287		,317		,347	
,258	70:01	,288		,318		,348	
,259	71:01	,289		,319		,349	
,260	71:01	,290	41:01	,320		,350	
,261	17:01	,291	41:01	,321		,351	
,262	17:01	,292	41:01	,322		,352	
,263	57:01	,293	41:01	,323		,353	
,264		,294	41:01	,324		,354	

08:13 93 11 25

Machine: 649205

ECN 19261 '0'
19930317 HK

Position	Sheet	Position	Sheet	Position	Sheet	Position	Sheet
X001,355		X001,385		X001,415	49:01	X001,445	23:01
,356		,386		,416	49:01	,446	23:01
,357		,387		,417	49:01	,447	23:01
,358		,388		,418	49:01	,448	62:01
,359		,389	26:01	,419	49:01	,449	62:01
,360		,390	26:01	,420	50:01	,450	62:01
,361		,391		,421	50:01	,451	61:01
,362		,392	74:01	,422	50:01	,452	64:01
,363		,393	74:01	,423	45:01	,453	64:01
,364		,394		,424		,454	68:01
,365		,395	74:01	,425	50:01	,455	68:01
,366		,396	74:01	,426	50:01	,456	68:01
,367		,397	74:01	,427	74:01	,457	68:01
,368		,398	74:01	,428	50:01	,458	68:01
,369		,399	74:01	,429	37:01	,459	68:01
,370		,400		,430	37:01	,460	68:01
,371		,401		,431		,461	68:01
,372		,402		,432	48:01	,462	68:01
,373		,403	37:01	,433	48:01	,463	68:01
,374		,404	37:01	,434	48:01	,464	69:01
,375		,405	48:01	,435	48:01	,465	69:01
,376		,406		,436	48:01	,466	69:01
,377		,407		,437	74:01	,467	69:01
,378		,408		,438	22:01	,468	69:01
,379		,409		,439	22:01	,469	69:01
,380		,410	48:01	,440	22:01	,470	61:01
,381		,411	49:01	,441	22:01	,471	61:01
,382		,412	49:01	,442	21:01	,472	64:01
,383		,413	49:01	,443	21:01	,473	61:01
,384		,414	49:01	,444	23:01	,474	61:01

08:13 93 11 25

Machine: 6492G5 TERMINAL SUMMARY Date: 93-10-27

Based on ECN: 19261 TERMINAL SUMMARY 4-- 44057-01:01 Sheet: 5 Cont: 5

Position	Sheet	Position	Sheet	Position	Sheet	Position	Sheet	Position	Sheet
10:47	5,	10:06	22,	10:43	8,	10:38	5504,	10:47	5,
41:01	4,	10:06	22,	34:01	7,	38:01	503,	41:01	4,
10:14	3,	10:06	21,	35:01	6,	28:01	502,	10:14	3,
41:02	2,	10:06	20,	35:01	5,	28:01	105,	41:02	2,
10:12	2,	10:06	17,	17:01	2,	10:11	2488,	10:12	2,
21:01	M*X004.1	30:01	16,	17:01	P*X001.1	10:11	2487,	21:01	M*X004.1
		30:01	15,			10:11	2486,		
		10:06	14,	10:09	21,	10:11	2485,		
10:51	204,	10:06	13,	10:09	11,	10:11	2484,	10:51	204,
10:91	203,	10:06	12,	10:09	10,	10:11	2483,	10:91	203,
10:60	202,	10:06	11,	10:09	9,	10:11	2482,	10:60	202,
10:27	201,	10:06	10,	10:09	8,	10:11	2481,	10:27	201,
10:51	20,	30:01	10,	36:01	8,	10:07	2480,	10:51	20,
10:91	19,	30:01	9,	10:09	7,	10:07	2479,	10:91	19,
10:11	17,	30:01	8,	10:09	6,	10:07	2478,	10:11	17,
10:60	16,	10:04	7,	36:01	5,	10:07	2477,	10:60	16,
10:70	15,	45:01	6,	36:01	4,	10:22	2476,	10:70	15,
10:70	14,	10:26	5,	10:09	3,	10:22	2475,	10:70	14,
10:27	13,	37:01	4,	10:09	2,	10:69	2474,	10:27	13,
10:69	12,	37:01	3,	36:01	1,	10:69	2473,	10:69	12,
10:50	11,	10:31	2,	36:01	P*X001.1	10:69	2472,	10:50	11,
	0,300X	10:31	1,		M*X001.1	10:69	2471,		0,300X
		13:01	1,200X	38:01	512,	10:69	2470,		
			M*X002.1	38:01	511,	10:69	2469,		
	81,			10:83	510,	10:49	2468,		81,
10:75	71,	10:71	41,	10:82	509,	10:42	2467,	10:75	71,
10:71	69,	10:71	31,	38:01	508,	10:49	2466,	10:71	69,
10:71	67,	57:01	21,	38:01	507,	10:49	2465,	10:71	67,
10:83	57,	10:83	11,	10:83	506,	10:49	2464,	10:83	57,
24:01	25,	25:01	10,	38:01	505,	10:49	2463,	24:01	25,
24:01	P*X002.24	35:01	M*X002.24	10:83	P*X001.6	10:49	2462,	24:01	M*X002.24
	P*X002.15	57:01	12,	38:01	503,	10:49	2461,		P*X002.15
		10:83	11,	10:83	502,	10:49	2460,		
		57:01	10,	10:83	501,	10:49	2459,		
		10:83	9,	10:83	500,	10:49	2458,		
		10:83	8,	10:83	499,	10:49	2457,		
		10:83	7,	10:83	498,	10:49	2456,		
		10:83	6,	10:83	497,	10:49	2455,		
		10:83	5,	10:83	496,	10:49	2454,		
		10:83	4,	10:83	495,	10:49	2453,		
		10:83	3,	10:83	494,	10:49	2452,		
		10:83	2,	10:83	493,	10:49	2451,		
		10:83	1,	10:83	492,	10:49	2450,		
X001.475		10:19	X001.505	10:19	X001.505	10:19	2449,	X001.475	

ECN 19261 '0'

19230317 HK

Machine: 649205

ECN 19261 'O'
19930317 HK

Position	Sheet	Position	Sheet	Position	Sheet	Position	Sheet
M.X006,6	37:01	M.X006,36	40:01	M.X006,66		M.X007,20	
,7	37:01	,37	40:01	,67		,21	
,8	37:01	,38	45:01	,68		,22	
,9	37:01	,39	45:01	,69	70:01	,23	
,10	37:01	,40	45:01	,70		,24	
,11	41:01	,41	45:01	,71		,25	
,12	41:01	,42	45:01	,72		,26	
,13	41:01	,43	45:01	,73		,27	
,14	41:01	,44	40:01	,74		,28	41:01
,15	35:01	,45	40:01	,75		,29	41:01
,16	35:01	,46	40:01			,30	41:01
,17	35:01	,47	40:01	M.X007,1	37:01	,31	41:01
,18	35:01	,48	40:01	,2	37:01	,32	
,19		,49	40:01	,3	37:01	,33	
,20		,50		,4	37:01	,34	
,21	45:01	,51		,5	37:01	,35	
,22	45:01	,52		,6	37:01	,36	
,23	45:01	,53	25:01	,7	37:01	,37	
,24		,54	25:01	,8			
,25	40:01	,55	25:01	,9		M.X008,1	07:01
,26	40:01	,56	25:01	,10		,2	07:01
,27	40:01	,57	24:01	,11		,3	07:01
,28	40:01	,58	24:01	,12	69:01	,4	07:01
,29	40:01	,59	24:01	,13	69:01		
,30	40:01	,60	70:01	,14	71:01	X009,1	32:01
,31	40:01	,61	70:01	,15	71:01	,2	32:01
,32	40:01	,62	70:01	,16	39:01	,3	
,33	40:01	,63	70:01	,17	39:01	,4	
,34	40:01	,64	70:01	,18	39:01	,5	
,35	40:01	,65	70:01	,19		,6	

08-13 93 11 25

| | | |

Based on ECN: 19261 TERMINAL SUMMARY 4 4469764-91101 Sheet: 10101 Cont:

Sheet	Position	Sheet	Position	Sheet	Position	Sheet	Position
10164	49°	10141	13°	10101	82°		
10164	69°	10147	03°	10101	72°	10101	M.X0727.1
10164	66°	10147	62°	10101	92°		
10164	58°	10147	28°	10101	52°	10101	M.X0727.1
10164	57°	10147	27°	10101	24°		
10164	56°		92°	10101	23°	10101	X0727.1
10164	55°		25°	10101	22°		
10164	54°	10147	24°	10101	12°	10101	M.X0727.1
10164	53°	10147	23°	10101	02°	10102	2°
10164	52°		22°	10101	61°	10102	M.X0555.1
	51°		12°	10101	81°	10101	X0727.1
	50°	10192	02°	10101	71°	10102	2°
	49°	10192	61°	10101	91°	10102	M.X0555.1
	48°		81°	10101	51°		
	47°		17°	10101	41°	10102	2°
	46°		91°	10101	31°	10102	M.X0505.1
10164	45°		51°	10101	21°		
10137	44°	10132	14°	10101	11°	10181	2°
10137	43°	10132	13°	10101	01°	10181	M.X0404.1
	42°	10112	12°	10101	6°		
	41°	10112	11°	10101	8°	10161	2°
	40°		0°	10101	7°	10161	M.X0393.1
	39°		5°	10101	9°		
	38°	10160	4°	10101	5°	10181	2°
	37°	10160	3°	10101	4°	10181	M.X0358.1
10147	36°	10160	2°	10101	3°		
10147	35°	10160	1° M.X0404.1	10101	2°	10161	2°
10147	34°			10141	1°.00TX	10161	M.X0378.1
10147	33°	10141	02°				
10147	M.X0404.32	10141	X10V.29	10101	M.X0747.1	10161	M.X0313.1

Machine: 449205 Test: 93-03-17

ECN 19261 Rev: 0.0

19303317 MH

Machine: 649205

ECN 19261 '0'
19930317 HK

Position	Sheet	Position	Sheet	Position	Sheet	Position	Sheet
M.X204,62	49:01	M.X204,92	50:01	M.X207,3	09:01		
,63	49:01	,93	50:01	,4	22:01		
,64	49:01	,94	50:01	,5	22:01		
,65	49:01	,95	50:01	,6	22:01		
,66	49:01	,96	50:01	,7	22:01		
,67	49:01	,97	50:01	,8	47:01		
,68	49:01	,98	45:01	,9	47:01		
,69	49:01	,99	45:01	,10	47:01		
,70	49:01	,100	45:01	,11	47:01		
,71	49:01	,101		,12	47:01		
,72	49:01	,102		,13	47:01		
,73	49:01	,103		,14	47:01		
,74	49:01	,104		,15	47:01		
,75	49:01	,105		,16			
,76	49:01	,106					
,77	49:01	,107		M.X226,1	09:01		
,78	49:01	,108		,2	09:01		
,79	49:01	,109		,3	23:01		
,80	49:01	,110	50:01	,4	23:01		
,81	49:01	,111	50:01	,5	48:01		
,82	49:01	,112	50:01	,6	48:01		
,83	50:01	,113	74:01	,7	48:01		
,84	50:01	,114	74:01	,8	48:01		
,85	50:01	,115	50:01	,9	48:01		
,86	50:01	,116	50:01	,10	48:01		
,87	50:01	,117	37:01	,11	48:01		
,88	50:01	,118	37:01	,12	74:01		
,89	50:01						
,90	50:01	M.X207,1	09:01				
,91	50:01	,2	09:01				

08:13 93.11.25

Tetra Pak
MODENA ITALY

This drawing must not without the consent of Tetra Pak be copied, transmitted or disclosed to any third party.

AM-NO	DRAWING-NO.	ALTERATIONS
19261		DOCUMENTATION RELEASED
19721		CORRECTIONS
	CE-41756-010V	POS. 0080 ADDED
	CE-41751-010V	A100:1 DISPLAY AND CLICHE NUMBER CHANGED
20144	BE-649205-140V	EL. EQUIPMENT IS CHANGED
	CE-41750-010V	CTRL. CAB. IS CHANGED: POS. 0001.1: PART N.(90111-332) IS DELETED POS. L201: PART N.(90297-0300) IS DELETED POS. L201: PART N.(90297-0301) IS ADDED POS. P004.1: PART N.(359241-0199) IS ADDED POS. S207: PART N.(90111-0120) IS ADDED POS. S207.1: PART N.(359241-0275) IS ADDED POS. K006:2 IS ADDED POS. K026:2 IS ADDED POS. K030:2 IS ADDED POS. K036:2 IS ADDED POS. K046:2 IS ADDED POS. K052:2 IS ADDED POS. K053:2 IS ADDED POS. K054:2 IS ADDED POS. K052:2 IS ADDED POS. K053:2 IS ADDED POS. K054:2 IS ADDED POS. K055:2 IS ADDED POS. K056:2 IS ADDED POS. K057:2 IS ADDED POS. K083:2 IS ADDED POS. K084:2 IS ADDED POS. K095:2 IS ADDED POS. K097:2 IS ADDED

AM-NO	DRAWING-NO.	ALTERATIONS
	CE-41752-010V	MACHINE IS CHANGED: POS. 0026: PART N.(351150-0403) IS DELETED POS. 0310: PART N.(351150-0407) IS DELETED POS. 0026: PART N.(351150-0122) IS ADDED POS. 0310: PART N.(351150-0406) IS ADDED POS. 0406 IS CHANGED QTY: FROM 5500 TO 5700 POS. 0407 IS CHANGED QTY: FROM 5650 TO 5800 POS. 0408 IS CHANGED QTY: FROM 4850 TO 5000 POS. 0409 IS CHANGED QTY: FROM 5550 TO 5700
	CE-41756-010V	EL. DOCUMENT LIST IS CHANGED: POS. 0301 IS ADDED POS. 0302 IS ADDED POS. 0303 IS ADDED POS. 0304 IS ADDED POS. 0305 IS ADDED POS. 0306 IS ADDED POS. 0307 IS ADDED POS. 0308 IS ADDED POS. 0309 IS ADDED POS. 0310 IS ADDED POS. 0311 IS ADDED POS. 0312 IS ADDED POS. 0313 IS ADDED POS. 0314 IS ADDED POS. 0315 IS ADDED POS. 0317 IS ADDED POS. 0318 IS ADDED POS. 0319 IS ADDED POS. 0320 IS ADDED POS. 0323 IS ADDED POS. 0324 IS ADDED POS. 0325 IS ADDED POS. 0326 IS ADDED POS. 0327 IS ADDED POS. 0328 IS ADDED POS. 0329 IS ADDED POS. 0330 IS ADDED POS. 0331 IS ADDED

INTRODUCED WITH AM NO.	19261		DATE: 930310		SIGN. HK/UTH			
ISSUE	A	B	C	D	E			
AM NO.	20144	20399	20407	20699	20721			
DATE	930909	931001	931015	931119	931129			
SIGN.	HK/MRI	HK/MRI	HK/MRI	HK/MRI	HK/MRI			

DRAWING REMARKS

DESCRIPTION: ALTERATION MESSAGES

MACHINE: TBA/9-1402 P.T

44097-99:01 1/2

ALTERATIONS ONLY IN CADAM

10:28 93.12.10

Tetra Pak
MODENA ITALY

This drawing must not without the consent of Tetra Pak be copied, transmitted or disclosed to any third party.

AM-NO	DRAWING-NO.	ALTERATIONS
		POS. 0332 IS ADDED
		POS. 0333 IS ADDED
		POS. 0334 IS ADDED
		POS. 0390 IS ADDED
		POS. 0399 IS ADDED
	CIRCUIT DIAGRAM	
	44097-06:01	CONNECTION REFERENCE "E" IS INTRODUCED
		SOME CONNECTION REF. HAS CHANGED LETTER.
	44097-10:01	CONNECTION REFERENCE "A" IS INTRODUCED
	44097-11:01	CONN. REF. "C" AND "D" ARE INTRODUCED.
	44097-12:01	CONN. REF. "B" IS INTRODUCED.
		0099 TEXT SH.32 IS CHANGED TO SH.41.
	44097-13:01	K093 TEXT SH.63 IS CHANGED TO SH.62.
	44097-14:01	M001 PINS ARE NOW SHOWN.
	44097-15:01	TEXT SH.75 IS CHANGED TO SH.73
	44097-16:01	F019 PINS HAVE INVERTED THEIR PLACE.
		F055(B-C) HAVE CHANGED THEIR PINS NUMBERS.
		L50 CONNECTION POINT INTRODUCED.
	44097-17:01	D108:1 IS INTRODUCED
		X1:273 TEXT CHANGED FROM A123:01 TO A122:00
		X1:274 TEXT CHANGED FROM A123:01 TO A122:0
	44097-26:01	K225:5 A122:02 TEXT CH. FROM SH.37 TO SH.73
	44097-29:01	X001:113 IS CHANGED FROM A116:01 TO A117:02
	44097-34:01	TEXT A115:15 IS CHANGED TO A115:13.
	44097-37:01	M.X007:3 AND 2 HAVE INVERTED THEIR PLACE.
		CONN. REF. "C" IS REMOVED
		CONN. REF."B"-"E" HAS CHANGED TO "D"-"C"
	44097-38:01	M.B002 SYMBOL IS CHANGED FROM NO. TO NC.
	44097-40:01	M.B104: TEXT "B. VALVE" IS REMOVED.
		X001:168, M.X006:19 AND :20 ARE INTRODUCED.
		CONNECTION BETWEEN M.X006:27 AND :32
		IS INTRODUCED
	44097-47:01	SOME TEXTS ARE CHANGED AS FOLLOWS:
		A107:00 FROM A203:7 TO A203:24
		A107:01 FROM A204:7 TO A204:24
		A107:02 FROM A205:7 TO A205:24
		A107:03 FROM A206:7 TO A206:24
	44097-48:01	SIGN HK/UTG IS CHANGED TO HK/UTH
	44097-57:01	TEXT P.L1:06 "SHORT STOP" IS CHANGED TO
		"NO PRODUCTION ALLOWED".

AM-NO	DRAWING-NO.	ALTERATIONS
	44097-64:01	M.Y012 HAS INVERTED PLACE WHIT M.Y014.
	44097-65:01	K048 TEXT IS CHANGED FROM 07 TO 09
	44097-68:01	M.Y019 HAS CHANGED PLACE TO M.X032B 1:1 1:2
	44097-72:01	A121:13 TEXT IS CHANGED FROM SH.33 TO 32.
	44097-73:01	A122:00 TEXT CHANGED FROM X1:269 TO 273
		A122:01 TEXT CHANGED FROM X1:270 TO 274
	44097-90:01	LINE SUMMARY:
		L11 X.L11,5: X001:433 IS CHANGED TO :434
		L11 X.L11,8: A451:11 IS INTRODUCED
		L10 X.L10,2: CHANGE FROM X001:431 TO :432
	44097-99:01	ALTERATION MESSAGES IS UPDATE:
		PAG.1 IS CHANGED, PAG.2 AND 3 ARE ADDED
	TPMC-PROGRAM	
	47629-01:01	LIST OF BLOCKS IS ADDED.
	47629-02:01	LIST OF ADDRESSES IS ADDED
	47629-03:01	VOLUME ADAPTION DOCUMENT IS ADDED.
	47629-04:01	SEQUENCE DIAGRAM IS ADDED.
	47629-05:01	PROGRAM LIST IS ADDED.
	47629-06:01	PROGRAM LIST IS ADDED
	47629-07:01	PROGRAM LIST IS ADDED
	47629-08:01	PROGRAM LIST IS ADDED
	47629-09:01	PROGRAM LIST IS ADDED
	47629-10:01	PROGRAM LIST IS ADDED
	47629-11:01	PROGRAM LIST IS ADDED
	47629-12:01	PROGRAM LIST IS ADDED
	47629-13:01	PROGRAM LIST IS ADDED
	47629-14:01	PROGRAM LIST IS ADDED
	47629-15:01	PROGRAM LIST IS ADDED
	47629-17:01	PROGRAM LIST IS ADDED
	47629-18:01	PROGRAM LIST IS ADDED
	47629-19:01	PROGRAM LIST IS ADDED
	47629-20:01	PROGRAM LIST IS ADDED
	47629-23:01	PROGRAM LIST IS ADDED
	47629-24:01	PROGRAM LIST IS ADDED
	47629-25:01	PROGRAM LIST IS ADDED
	47629-26:01	PROGRAM LIST IS ADDED
	47629-27:01	PROGRAM LIST IS ADDED
	47629-28:01	PROGRAM LIST IS ADDED
	47629-29:01	PROGRAM LIST IS ADDED

INTRODUCED WITH AM NO.	19261			DATE: 930310		SIGN. HK/UTH			
ISSUE	A	B	C	D	E				
AM NO	20144	20399	20407	20699	20721				
DATE	930909	931001	931015	931119	931129				
SIGN.	HK/MRI	HK/MRI	HK/MRI	HK/MRI	HK/MRI				

DRAWING REMARKS

DESCRIPTION: ALTERATION MESSAGES

MACHINE: TBA/9-1402 P.T

44097-99:01 2/3

ALTERATIONS ONLY IN CADAM

10:28 93.12.10

This drawing must not without the consent of Tetra Pak be copied, transmitted or disclosed to any third party.

AM-NO	DRAWING-NO.	ALTERATIONS
	47629-30:01	PROGRAM LIST IS ADDED
	47629-31:01	PROGRAM LIST IS ADDED
	47629-32:01	PROGRAM LIST IS ADDED
	47629-33:01	PROGRAM LIST IS ADDED
	47629-34:01	PROGRAM LIST IS ADDED
	47629-90:01	PROGRAM LIST IS ADDED
	47629-99:01	PROGRAM LIST IS ADDED
	MOUNTING DRAWING	
	52482-08:01	FUSES ARE NOW CORRECTLY PLACED IN THIS ORDER FROM LEFT TO RIGHT: F1,8,5,4,9,S,17,55A,55B,55C,S.....
	52482-15:01	M.B104 AND M.B108 ARE INTRODUCED.
	CONNECTION DIAGRAM	
	61249-06:01	CABLE 307 CHANGED FROM 1-2-3 TO BU-BK-BN.
	61249-13:01	CABLE OF EMERGENCY STOP IS CHANGED FROM 5-6 TO 3-4.
	61249-16:01	M.B021A-C CABLE TEXT ARE CHANGED FROM BK-BK TO BK-BU.
	61249-22:01	M.B010 SYMBOL IS CHANGED:NO CONNECTED TO BK, NC CONNECTED TO BN. CABLE 108 MOVED FROM M.X007:3 TO M.X007:2
	61249-28:01	IN THE CABLE 26 THE Y/G. WIRE IS DELETED.
	61249-43:01	M.Y019 CHANGED FROM M.X032B 5:1 AND 5:2 TO M.X032B 1:1 AND 1:2.
	61249-45:01	M.Y012 AND 14 HAVE INVERTED THEIR PLACE.
	61249-48:01	M.B002 SYMBOL IS CHANGED.
	TERMINAL DRAWINGS	
	570927-0003 -0004	POS. 3 IS CHANGED FROM 174 TO 173 DISTANCE BETWEEN :2 AND THE EDGE IS CHANGED TO 80 MM. POS. :9 IS REMOVED.
	571521	FUSES PANEL LABEL: FUSES NOW ARE CORRECTLY PLACED IN THIS ORDER FROM LEFT TO RIGHT: F1,8,5,4,9,S,17,55A,55B,55C,....

AM-NO	DRAWING-NO.	ALTERATIONS
20399	CE-41750-010V	CTRL. CAB. IS CHANGED: POS. 0077: PART NUMBER IS CHANGED FROM 90259-0026 TO 90259-0027.
	CE-41754-010V	EXTRA EQU. IS CHANGED: POS. 0077 IS ADDED.
	CIRCUIT DIAGRAM 44097-99:01	ALTERATION MESSAGES IS UPDATE
	571521	FUSE PANEL LABEL: 0077 CHANGES THESE TWO VALUES: 50HZ. FROM 9,7A. TO 10A. 60HZ. FROM 8,0A. TO 9A.
20407	CE-41750-010V	CTRL. CAB. LIST IS CHANGED: POS.320-330 DELETED; POS.045 INTRODUCED.
	CE-41754-010V	EXTRA EQUIPMENT IS CHANGED: 0077 CHANGE PART NUMBER FROM 90259-0027 TO 90259-0026. THE VARIANT DESCRIPTION TEXTS ARE CHANGED
	CIRCUIT DIAGRAM 44097-38:01	THE CONNECTION FOR M.B006 HAS BEEN CHANGED FROM 1 AND 3 TO 13 AND 14. NOTE 1 IS INTRODUCED
	44097-50:01	M.X204-89 NOW IS CORRECTLY CONNECTED IN PARALLEL WITH M.X204-94, INSTEAD OF M.X204-92
	44097-99:01	ALTERATION MESSAGE IS UPDATE
	CONNECTION DIAGRAM 61249 48:01	THE CONNECTION FOR M.B006 HAS BEEN CHANGED FROM 1 AND 3 TO 13 AND 14. NOTE 1 IS INTRODUCED

INTRODUCED WITH AM NO.	19261		DATE: 930310		SIGN. HK/UTH		
ISSUE	A	B	C	D	E		
AM NO.	20144	20399	20407	20699	20721		
DATE	930909	931001	931015	931119	931119		
SIGN.	HK/MRI	HK/MRI	HK/MRI	HK/MRI	HK/MRI	DRAWING REMARKS	

DESCRIPTION: ALTERATION MESSAGES

MACHINE: TBA/9-1402 P.T | 44097-99:01 3/4

ALTERATIONS ONLY IN CADAM

10:28 93.12.10

Tetra Pak
MODENA ITALY

This drawing must not without the consent of Tetra Pak be copied, transmitted or disclosed to any third party.

AM-NO	DRAWING-NO.	ALTERATIONS
20699	CIRCUIT DIAGRAM 44097-99:01	ALTERATION MESSAGE IS UPDATE
	TPMC PROGRAMME 47615-02:01	LIST OF ADDRESSES IS CHANGED
	47629-13:01	RUNG 1317: O15.02 AND M12.06 ARE INTRODUCED.
	47615-17:01	RUNG 1705: D024 IS INTRODUCED RUNG 1706: BRANCH WITH M00.05 AND D024 ARE REMOVED
	47615-18:01	RUNG 1811: M00.07 IS REMOVED
20721	CE-41752-010V	MACHINE IS CHANGED: POS. 0372-0373: PART N.548770-005 ARE CHANGED IN 548770-0008
	CIRCUIT DIAGRAM 44097-99:01	ALTERATION MESSAGE IS UPDATE

AM-NO	DRAWING-NO.	ALTERATIONS

INTRODUCED WITH AM NO.	19261		DATE: 930310		SIGN. HK/UTH				
ISSUE	A	B	C	D	E				
AM NO.	20144	20399	20407	20699	20721				
DATE	930909	931001	931015	931119	931119				
SIGN.	HK/MRI	HK/MRI	HK/MRI	HK/MRI	HK/MRI				

DRAWING REMARKS

DESCRIPTION: ALTERATION MESSAGES

MACHINE: TBA/9-1402 P.T

44097-99:01 4/-

ALTERATIONS ONLY IN CADAM

10:28 93.12.10

Tetra Pak

This drawing must not without the consent of Tetra Pak be copied, transmitted or disclosed to any third party.

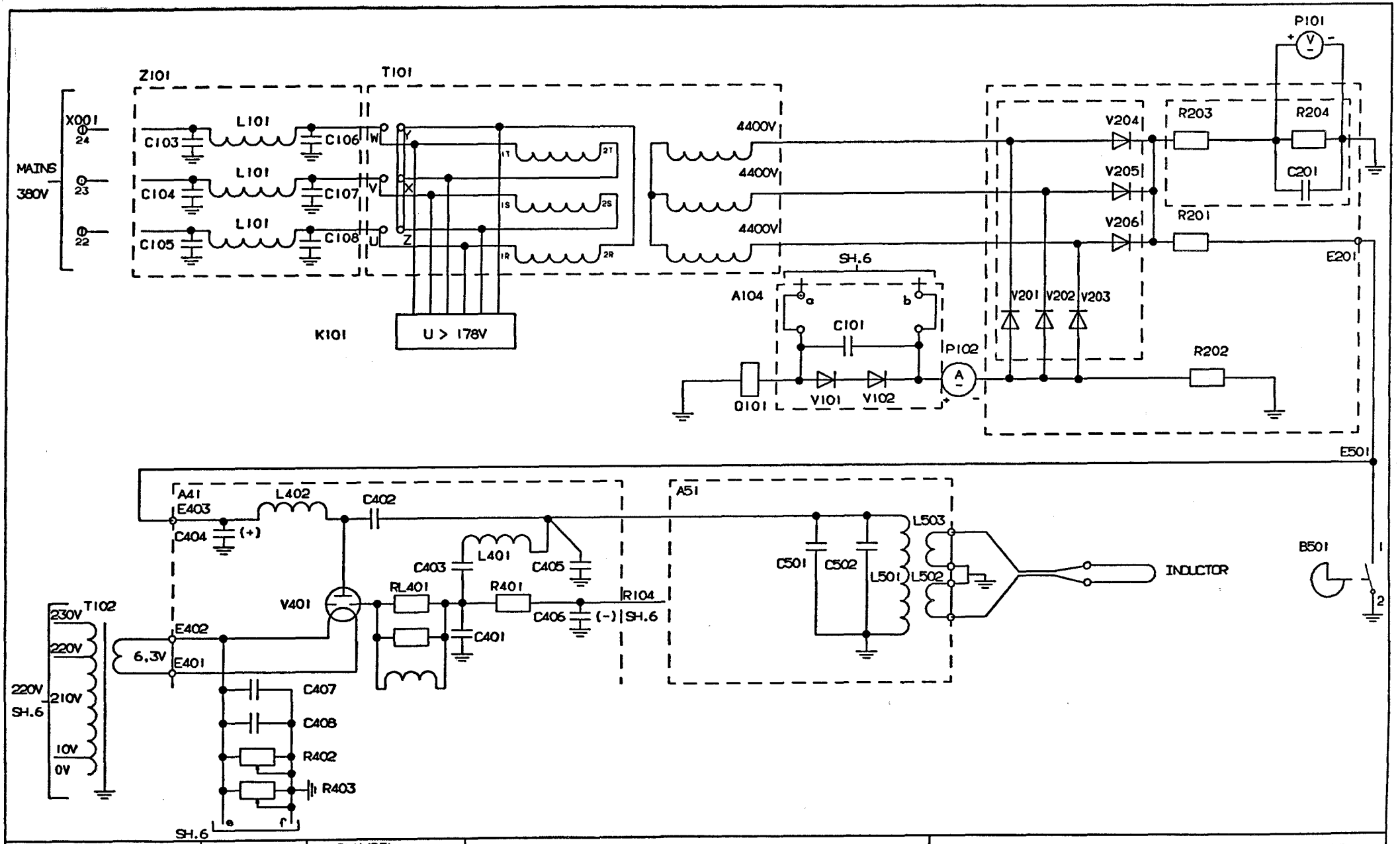

INTRODUCED WITH AM NO.	14293			DATE. 900115	SIGN. CLV/BEL		
ISSUE	A	B	C	D			
AM NO.	15205	16141	18019	19083			
DATE	900831	910301	920930	921020			
SIGN.	CLV/BEL	HK/TMJ	HK/UTH	HK/UTH			

DRAWING REMARKS

DESCRIPTION: IH-GENERATOR HIGH VOLTAGE CIRCUIT

MACHINE: TBA/9-P.T.

43947-05:01

ALTERATIONS ONLY IN CADAM

08:41 93.11.25

Tetra Pak

This drawing must not without the consent of Tetra Pak be copied, transmitted or disclosed to any third party.

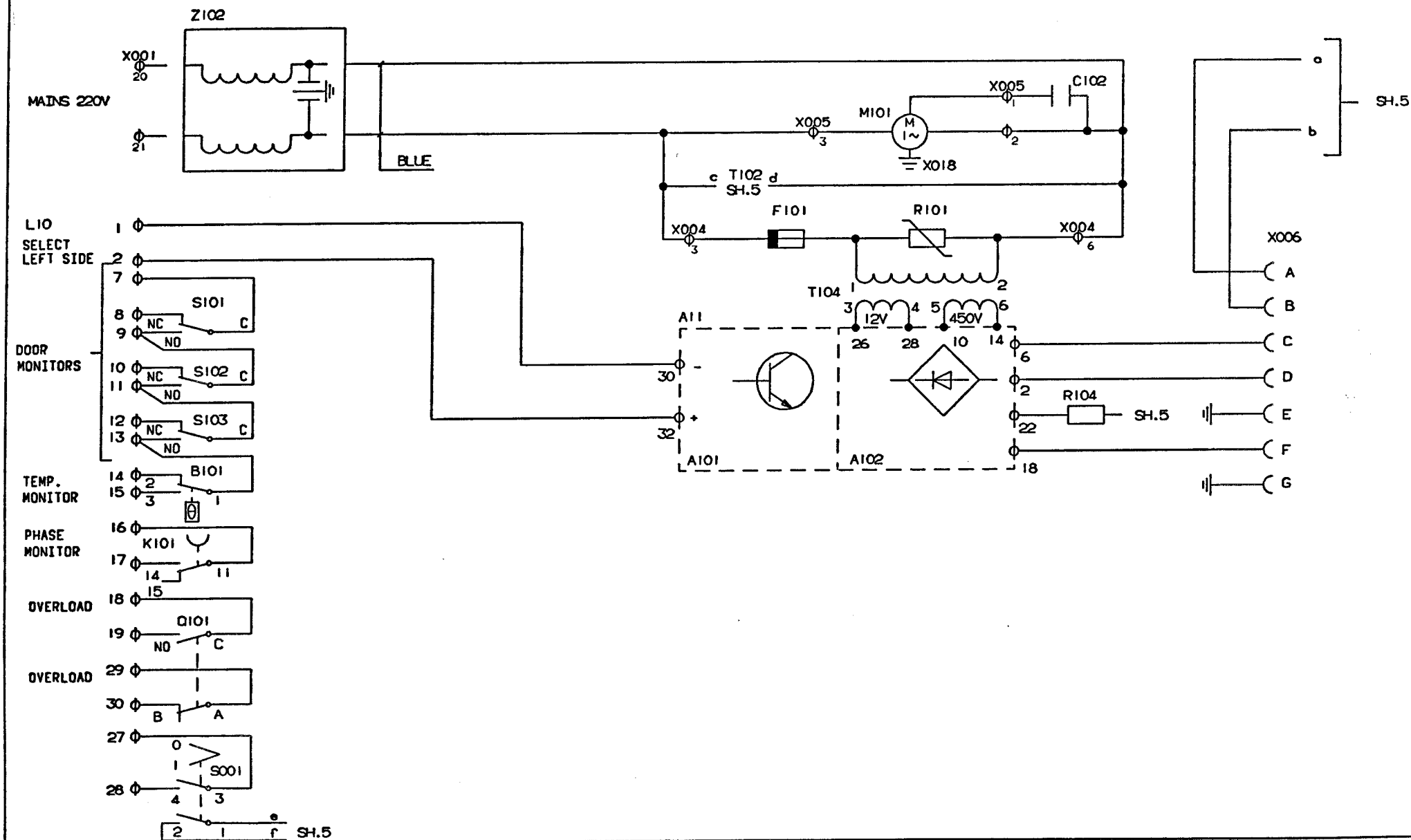

INTRODUCED WITH AM NO. 14293				DATE. 900115	SIGN. CLV/BEL				
ISSUE	A	B	C	D					
AM NO.	15205	16141	16722	18019					
DATE	900831	910301	910628	920930					
SIGN.	CLV/BEL	HK/TMJ	HK/HGH	HK/UTH					

DRAWING REMARKS

ALTERATIONS ONLY IN CADAM

DESCRIPTION. IH GENERATOR, CONTROL CIRCUITS

MACHINE. TBA/9-P.T.

43947-06:01

08:41 93.11.25

05 PULSE AND FLASHGENERATING
06 POSITIONS MACHINELADDER, STEP UP CONDITIONS
07 PREHEATING 1, PEROXID TANK HANDLING AND PREHEATING 2
08 TUBESEALING AND PRESTERILIZING
09 SPRAYING
10 DRYING, PREHEATING 3
11 SIGNALS TO AND FROM STERILIZER
12 STARTSEQUENZER FOR RUNNING PRODUCTION
13 PRODUCTION SUPERVISION
14 DRIVEMOTOR AND PRODUCTION
15 PULLTAB, DATE UNITS
17 TRANSVERSAL SEALING
18 DESIGN CORRECTION
19 DUMPING OF PACKAGES
20 NO PRODUCTION ALLOWED
23 PRODUCTION ENDED, INTERNAL CLEANING
24 EXTERNAL CLEANING
25 LUBRICATION
26 6-CHANNEL RECORDER
27 MAINS INTERRUPT AND ALARMDELAYS
28 JUMP TO MACHINELADDERPOSITION "STERILIZATION FULLFILLED" (POSITION 3)
29 JUMP TO ZEROPOSITION IN MACHINELADDER
30 ALARM 1 TO 16 ON ALARMDISPLAY/BEACON
31 ALARM 17 TO 32 ON ALARMDISPLAY
32 ALARM 33 T0 48 ON ALARMDISPLAY
33 ALARM 49 T0 64 ON ALARMDISPLAY
34 ALARM 1 T0 18 ON LOWER LABELS AT ALARMDISPLAY
90 MEDIUM SCAN FUNCTIONS
99 FAST FUNCTIONS, TS, DESIGN PULSE, BLACK TAPE EXT. STRIP

TBA/9-1402 P.T.
47629 200ML EC20699

931122 H.K.
930906 HK/SB

Type: 64.1
Size: 10108
Blocks: 29
Rungs: 460
Addresses: 699

I/O Map:

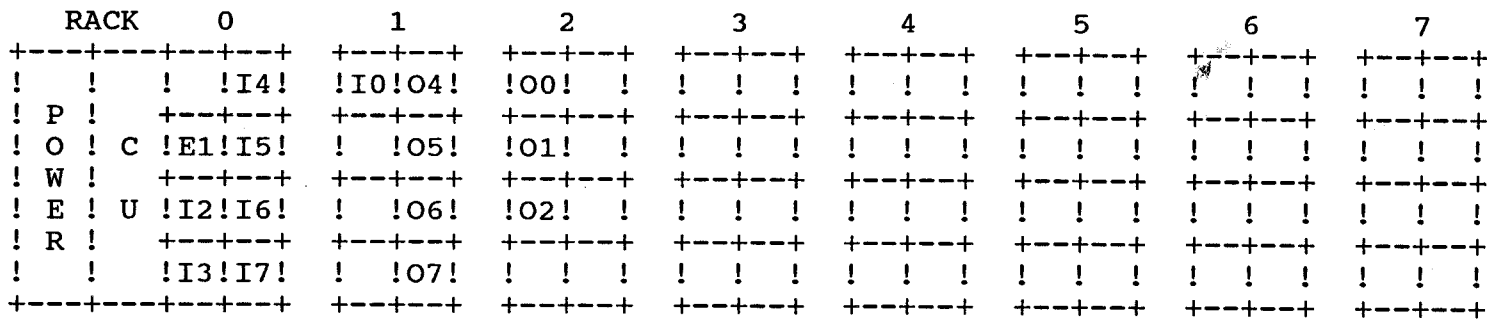

Fast I/O: Block90
Block99 E01 I06 O21

Scan time: Block05-89: 10
Block90-98: 2
Block99: 1

Sector: 0 = E01 1 = E01 2 = 3 = 4 = 5 = 6 = 7 =

08:13 93.11.25

LIST OF ADDRESSES

Address	Position	Function			used in rungs
C000		Printed design photocells		out of function	*1805, *1806
C001		Monitor position printed		design out of limit	*1809, *1810, *1811
C002		Sequenzer filling of		cleantray by ext.cleaning	*2407, *2409
C005		Sequencer for spraying of		hydrogeneperoxide	*0903, *0904
C006		Sequencer for spraying of		hydrogeneperoxid	*0903, *0904
C007		Sequencer drying after		fullfilled spraying	*1003, *1004
C009		Monitor machine speed			*1438, *1441
C010		Monitor paper low supply			*1310, *1311
C011		Max.time level tank			*0708, *0710
C021		Time to inch change strip			*1544, *1545
C022		Paper supply store		PT full	*1317, *1318
C023		Supply indicator		narrow/wide (change time)	*1538, *1541
C024		Rotat. monitor unreeling		paper supply	*1319, *1320
C025		Restart twisted strip			*1322, *1323
CO000.0	5- 6	Photocell	pulse prod.		1807
CO000.2	9- 10	Photocell	pulse prec.		1807
CO001.0	5- 9	Package out	of design		1809, 1812, 1903
CO001.1	0- 1	Startvalue	des. mon.		0621, 1810, 1813
CO001.2	0- 3	Out of des.	monitor		0614, 3212
CO002.1	110- 600	Allowed	fillingtime		2408
CO002.2	100- 110	Min filling	time		2416
CO002.3	0- 20	Draining	time		2411
CO002.4	570- 572	Max filling	time		2416
CO005.0	110- 112	Spraying	finished		0903, 0910
CO005.1	1- 9	Filling	spraytank		0905
CO005.2	11- 112	Spray count	contr.steam		0908, 2311, 2904, 2906
CO005.3	11- 20	Min empty-	ing time		0909
CO005.4	51- 110	Max empty-	ing time		0728, 0909
CO005.5	11- 109	Spray and	paus time		1444
CO006.1	10- 10	Limit perox	filling		0906
CO006.2	11- 50	Air inlet	tower on		0725, 2903
CO007.0	1200- 1210	Drytime	over		1003, 1005
CO007.1	1080- 1210	Closing of	AP-valve(B)		1006, 3303
CO007.2	1080- 1140	Run. time	drying		1444

LIST OF ADDRESSES

Address	Position	Function		used in rungs
CO009.0	105- 106	Pack. count	mach. speed	1439
CO009.1	1- 109	Speed timer	running	1440
CO009.2	109- 110	New speed	test	1441
CO010.0	150- 152	Max.run pac	low supply	1311, 2005
CO011.0	900- 910	M.time low	level tank	0708
CO011.1	900- 905	M.time low	level tank	0707, 2005
CO011.2	300- 905	Low level	H2O2 tank	3110
CO021.0	4- 5	Time inch	chang strip	1413, 2802
CO022.0	12- 14	Paper suppl	store PT	0803, 2006, 3203
CO023.0	30- 1810	Suppl.indic	narrow/wide	1539, 3102
CO024.0	60- 70	Rot.mon.unr	paper suppl	0803, 2005, 3006
CO025.0	3- 5	Restart	twist.strip	1322
D002	0s40	Startdelay	low speed	1414
D003	0s40	Startdelay	high speed	1415
D004	0s20	Signal des.	correction	1804
D005	5s0	Delay mains	to 0-pos.	2704
D006	0s10	Restart	mains	2706
D009	3s0	Alarm delay		1313
D010	4s0	Delay fill.	cleantray	2408
D011	2m00s	Ready	cleaning	0718
D012	3s0	Delay stop	suct.valve	1312
D013	5s0	B-valve pos		1314
D016	30s0	Stop	conveyor	1217
D017	7s0	Stop delay	drive motor	1415
D018	0s70	St.delay FF	rot.monitor	1305
D019	3s0	Delay timer	FF rot.mon	1305
D020	15s0	Delay s.vis	lubr.press.	2507
D021	8s0	Delay s.vis	lubr.press.	2507
D022	20s0	Delay alarm	waterpres.	2702
D023	8s0	Delay	TS.seal off	1704
D024	5s0	Delay TS	off	1705
D025	0s70	Start delay	FF rot.mon.	1306
D026	0s618	Delay time	FF rot.mon.	1306

LIST OF ADDRESSES

Address	Position	Function		used in rungs
D027	3s0	Stop delay	from pos. 3	0606
D028	3s0	Drivemotor	off-delay	1414
D029	0s40	Delay brake		1418
D030	59m59s	Max runtime	lubr. fault	2509
D033	5m00s	Delay heat	off FF	1007
D034	10s0	Suctionvalv	house/bath	0724
D035	6s0	Delay super	steam mon.	1309
D036	10s0	Delay super	water press	1308
D037	0s50	LS-/SA	elements on	1214
D039	3s0	C-valve off	aft.sh.stop	1430
D040	3s0	Delay	C-valve on	1430
D042	6s0	Delay time	for C-valve	1430
D047	0s618	Delay cong.	monitor	1304
D049	25s0	Sprinkler	time	1433
D051	3s0	Delay perox	bath level	1207
D052	2s5	Alarm delay	ster.air pr	0720
D053	0s2	Start delay	ster.air pr	0609
D055	2m00s	Delay after	short stop	0714
D059	5s0	Main air	pressure	1010
D060	0s5	Main air	check delay	1010
D062	2s0	Alarm delay		0723
D065	4s5	Main air	check delay	1010
D067	2m00s	Delay alarm		3110
D072	2s0	Check delay		2707
D073	35s	Max time	high level	0712
D074	9s8	Del. change	strip	1542
D076	2s6	Heating off	Pull tab	1504
D077	10s0	Change time	wide bobin	1535
D078	2s0	Int. strip	break	1316
D090	2m00s	CIP record	on	2323
D091	2m00s	CIP record	off	2323
D093	1s0	Delay time	Photo cell	1218
E01		M.M. angle		1406

LIST OF ADDRESSES

Address	Position	Function		used in rungs
E01.03		Bit 3 angle	encoder	1317, 1319
E01.07		Bit 7 angle	encoder	1406
I02.01	M.B10-15	Safety	monitors	0621, 1202, 1204, 1307, 1410, 1420, 1502, 1504, 1803, 2803, 3415
I02.02	M.B21A,B,C	Superstruct	door posit.	0619, 0702, 0703, 1215, 2305, 2306, 2405, 2904, 3415, 3417
I02.03	Q201-Q94	Overload	protection	0515, 0621, 1204, 1307, 1420, 1502, 1504, 2803, 3410
I02.04	S34-M.S35	No product.	allowed	0515, 2006
I02.05	M.B10	Crank pos.		1410, 1413, 1414, 1415, 1418, 3415
I02.06	S36	Start strip	splicing	1533, 1540
I02.07	S2	Clean throu	steam barr.	2321
I02.10	S4	Service	switch	0604, 0610, 0620, 0621, 0904, 0910, 1005, 1006, 1012, 1102, 1103, 1106, 1107, 1206, 2005, 2009, 2304, 2309, 2311, 2602, 2603, 2903, 2904, 2905, 2906, 3013, 3409
I02.11	M.S14	Manual	lubrication	0508
I02.12	M.B2	Main air	pressure	0508, 0608, 0619, 0706, 0717, 1010, 2305
I02.13	M.B7	Cool water	pressure	0620, 2702, 3403
I02.14	M.B6	Lubr.oil	pressure	2507, 2508
I02.15	M.B30:A	Lubr oil	low level	0508, 0515, 0619, 2403, 2404, 2509, 3405
I03.00	M.B8	Paper	supply	1310, 1311, 3006
I03.01	M.B24	Unreeling	motor start	1319, 1320, 1420
I03.02	M.B25	Unreeling	motor stop	1319, 1320, 1420, 1421
I03.03	M.S4,S32,	Emergency	stops	0706, 2707, 2708, 3403, 3410, 3416
I03.04	M.B44	Infeed	congestion	0509, 1423
I03.10	M.B35	Paper	splice	0510
I03.11	M.B46-47	Air knife/	squ.rol.pos	2003, 2603, 3208
I03.12	M.B51	Productpipe	position	0619, 1430, 2318, 2319, 2905, 3014
I03.13	M.B53	Ster.air	valve(B)pos	0619, 1314, 1432
I03.14	M.B61	Cleaning	cup posit.	0619, 2318, 2319, 3210
I03.15	M.B63	Cleaning	pipe posit.	0619, 2318, 2319, 3016

LIST OF ADDRESSES

Address	Position	Function		used in rungs
I03.16	M.B104	Sterile air	pipe posit.	0619, 2318, 2319, 2905, 3014
I03.17	S3	Selector	fill entr.	0615
I04.00	M.B16A,B	Jaw system	overload	0514, 1303
I04.01	Q87,98,99	Overl.prot	compr, fan	0717, 3410
I04.03	M.B96	Perox.bath	water press	0514, 1308
I04.04	M.B18,62	Sterile air	pres.inl/su	0609, 0619, 0720
I04.05	M.B48A,B	Per.bath	cover pos.	0514, 0619, 2906, 3214
I04.06	M.B45:2	Hydraulic	unit temp	1206, 2005, 3404
I04.07	M.B45:4	Hydr.unit	low level	2005, 3411
I04.10	A15.15	Cleaning	tray,level	2408, 2416
I04.11	A17.15	Spraytank	quantity	0906, 0909
I04.12	A18.15	Peroxide	bath,level	1203, 1207, 1211, 3206
I04.13	A19.15	Separator,	level	2305, 2905, 3304
I04.14	A22.15	Peroxide	tank, level	0619, 0707, 0709, 0712, 0714, 3110
I04.15	X100.26	Temp failur	T.S. units	1703
I04.16	X100.27	Failure	T.S. units	1703
I04.17	X1:119	Quemonitor	PLE equipm.	1218
I05.00	A4:23	Temp.monit	presteril.	0619, 0807
I05.01	A6:20	Perox.water	preheating	0810
I05.02	A6:23	Temp.regul.	perox.water	0620, 0809, 2003, 3008
I05.03	A8:20	Temp.regul.	LS tubeseal	0619, 3209
I05.04	A8:23	Temp.regul.	LS	0728, 3209
I05.05	A10:20	Air heater	preheating	3302
I05.06	A10:23	Temp.regul.	air heater	2904, 3302
I05.07	A13:23	Temp.mon.	air knifes	0727, 2003, 2603, 3303
I05.10	A14:23	Temp.monit.	steam	1309
I05.11	A30:23	Temp.mon.	peroxide	1203, 2003, 2603, 3211
I05.12	A202:23	Temp.regul.	ext. strip	0619, 1413, 1502, 3205
I05.14	A451:14	L.S. Short	stop broken	0723
I05.15	X1:101	Product at	machine	0621, 1102, 1104, 2803, 3013
I05.16	X1:154	Clean of	prod. valve	1006, 1432, 2321

LIST OF ADDRESSES

Address	Position	Function		used in rungs
I06.00	A16A:3	Delay	design sign	0505, 9906
I06.01	A16A:4	Design corr	stepping	1804, 1816, 1817
I06.02	M.B71	Air inlet	valve pos.	1313
I06.03	M.B92	Perox. bath	drain pipe	0619, 2906, 3114
I06.04	M.B94	Suction	valve posit	0619, 0620, 1312
I06.05	M.B20	Final fold.	chain pos.	0511
I06.06	M.B236B	Black tape	ext. strip	9907
I07.00	A203:23	Temp.regul.	date 1	1507, 1510, 3108
I07.01	A204:23	Temp.regul.	date 2	1507, 1510, 3010
I07.02	A205:23	Temp.regul.	strip splic	1533, 3104
I07.03	A206:23	Temp.regul.	counter jaw	0619, 3207
I07.04	M.B228	Strip suppl	date 1	3005
I07.05	M.B230	Strip break	date 1	2004, 3007
I07.06	M.B229	Strip suppl	date 2	3009
I07.07	M.B231	Strip break	date 2	2004, 3011
I07.10	IH-A5:17	IH-phasemon	int. strip	0804, 1548, 3107
I07.11	IH-A5:19	IH monitor	int. strip	0619, 1546, 1548, 2802, 3107
I07.12	IH.S1	Selector	narrow/wide	0619, 1413, 1502, 1505, 1506, 1536, 1537, 1542, 3205
I07.13	S207	Date unit	1 or 2 unit	1507, 1508, 1509, 1510, 1531, 1532, 2004, 3007, 3010, 3011, 3108
I07.14	M.B206	Int.strip	supply	1538, 1539, 1541, 3102
I07.15	M.B207	Int.strip	break	0507
I07.16	M.B232	Bobin	indicator	0619, 1413, 1502, 1535, 1536, 1538, 1542, 3102
I07.17	M.B201	Motor PT	pause pos.	1503, 1544
I10.00	M.B202	Motor PT	syncr. stop	1323, 1502, 1905
I10.01	M.B203	IH-sealing	start	1547
I10.02	M.B204	Drivemotor	suppl.empty	0803, 1307, 2802, 3203
I10.03	M.B205	Drivemotor	supply full	1317, 1318, 1502
I10.05	M.B208	Ext. strip	supply	3103
I10.06	M.B209	Ext. strip	Break	1315

LIST OF ADDRESSES

Address	Position	Function		used in rungs
I10.07	M.B224	CAP /date	start	1506, 1511, 1512, 1533
I10.10	M.B236A	Black tape	int. strip	0516
I10.13	M.B237A-C	PT counter	rollers on	0620, 1413, 1502, 2006, 3420
I10.14	M.B235	Twisted	strip guard	1321
I10.15	M.S201H	Date unit	selector	1507, 1508, 1509, 1510, 1514, 1516, 1518, 1520, 1522, 2004, 3007, 3010, 3011, 3108
I10.16	M.S201H	Date unit	selector	1507, 1508, 1509, 1514, 1516, 1518, 1520, 1522
M00.00		Aux. output position 00	ladder	0605, 0608, 0616, *0617, 0620, 0703, 0705, 0706, 0718, 0720, 0726, 1009, 1215, 1543, 1905, 2304, 2317, 2402, 2507, 2907, 3004, 3014, 3110, 3114, 3403, 3406, 3415, 3417
M00.01		Aux. output position 10	ladder	0508, 0608, 0610, *0617, 0619, 0620, 0716, 0718, 0722, 0724, 0725, 0727, 0728, 0802, 0804, 0807, 1012, 1413, 3209
M00.02		Aux. output position 20	ladder	0609, 0611, *0617, 0619, 0620, 0728, 0805, 0807, 0902, 0907, 1012
M00.03		Aux. output position 30	ladder	0607, 0613, *0617, 0620, 0728, 0902, 1002, 1102, 1409, 1411, 1412, 1444, 1542
M00.04		Aux. output position 40	ladder	0611, 0612, 0614, *0617, 0621, 0702, 0704, 1106, 1202, 1203, 1218, 1543, 1545
M00.05		Aux. output position 50	ladder	0611, 0613, 0615, *0617, 0621, 0702, 1203, 1205, 1428, 1431, 1433, 2803
M00.06		Aux. output position 60	ladder	0602, 0614, 0616, *0618, 0621, 1107, 1202, 1203, 1304, 1428, 1429, 1432, 1438, 1442, 1705, 1803, 1811, 2007, 2316, 2803
M00.07		Aux. output position 70	ladder	0606, 0611, *0618, 0702, 0718, 2304, 2315, 2320, 2405, 3206, 3212
M00.15		Aux. output position 05	ladder	0606, 0609, *0617, 0619, 0620, 0716, 0718, 1413, 1502, 3015, 3016, 3210
M00.17		Ladderposition 40-60		*0618, 1102, 1103, 1203, 1806, 2906, 3013
M01.00		Ladderposition 10-70		0718, *0718, 0720, 0806, 0904, 0910, 1012, 1321, 2304, 2405, 2907, 3015, 3109, 3214

08:13 93.11.25

LIST OF ADDRESSES

Address	Position	Function		used in rungs
M01.04		Aux. output position 40	ladder	*0612, 1203
M02.00		Output for	stepup pulse	*0502, 0508, 0610, 0611, 0613, 0616, 0717, 0804, 1203, 1513, 1515, 1516, 1517, 1518, 1519, 1520, 1521, 1522, 2319, 2404, 2405, 3206
M02.01		Output for	stepdown pulse	*0503, 0606, 0607, 0608, 0609, 0611, 0613, 0804, 2305
M02.02		Pulse short stop		*0504, 1821, 2007
M02.03		Output for	designpulse	*0505, 0615, 1806, 1809, 1810, 1814, 1815, 1816, 1817, 1822
M02.04		Pulse new package		*0506, 1436, 1438, 1911
M02.10		Output for pulse internal	strip break	*0507, 1316
M02.12		Output for pulse start	long lubrication period	*0508, 2502, 2503, 2504
M02.13		Output pulse	congestion	*0509, 1304
M02.15		Output for	paper splice pulse	*0510, 1434, 1435, 1909
M02.16		Pulse new station,	final folder	*0511, 1305, 1306, 1402, 1404, 1408
M02.17		Stripslice, black tape	detected	*0516, 1910, *1911, *9907
M03.00		Pulse		0502
M03.01		Pulse		0503
M03.02		Pulse		0504
M03.03		Pulse		0505
M03.04		Pulse		0506
M03.06		Pulse		1203
M03.11		Pulse		0507
M03.12		Pulse		0508
M03.13		Pulse		0509
M03.15		Pulse		0510
M03.16		Pulse		0511
M04.01		Too high machine speed		*1439, *1442, 2802, 3412
M04.02		Spray tank filling fault		0610, *0906, 3308
M04.04		Work environment aseptic	chamber stop on	0620, 0702, 0703, 0706, 0717, 0721, 0725, 0806, 0908, 1006, 1009, 1206, 2302, 2303,

Address	Position	Function		used in rungs
M04.05		Memory door monitor		*2304, *2305, 2308, 2310, 2312, 2314, 2315, 2405
M04.07		WEAC stop 15 minutes		0702, 0703, 2303, 2305, *2306, *2307, 2405
M04.10		WEAC stop 5 or 15 minutes		2304, 2309, *2310, *2311, 2313
M04.11		Pulse		2303, 2306, *2313, 2314
M04.12		Memorycell 1/2 Hz flash		0512
M04.14		WEAC stop 5 minutes		*0512, 0704
M04.16		LS shortstop element OK		2304, *2308, *2309
				*0723, 2905, 3209
M05.01		Output for sprink.puls		1433
M05.03		Shiftpulse FFU		1424
M05.04		Memory FFU shiftbit		*1423, 1424, *1424
M05.05		Pulse		9906
M05.07		Inching of FFU in pos. 30		*1411, *1412, 1413
M05.10		Pulse		1512
M05.11		Pulse		1533
M05.17		Pulse		1411
M06.00		Step up conditions in	machineladder okey	0608, 0611, 0613, 0615, 0616, *0621, 0702, 0703, 0704, 0717, 0804, 1203
M06.01		Step up conditions in	machineladder okey	*0619, 0620, *0620, 0621
M06.04		Demand I for	short stop	*2003, 2004, *2004, 2005
M06.05		Demand II for	short stop	*2005, 2006
M06.06		Demand III for	short stop	0621, 1202, 1203, *2006, 2007
M06.07		Machine in position	"Short stop on"	0616, 1106, 1107, 1203, 1304, 1311, 1409, 1416, 1417, 1418, 1428, 1429, 1803, 1820, 2002, 2007, *2007, 2008, 2803
M06.10		AB9 in machine ladderpos.	"Ready for cleaning"	0606, 0702, 0706, 0717, 0904, 1206, 1413, 2305, 2315, 2317, 2318, 2319, 2322, 2402, 2403, 2404, *2405, 2414, 2603, 3014, 3015, 3016, 3110, 3210
M06.11		AB9 in ladder position	"External cleaning"	0606, 0702, 1409, 1413, 1414, 1433, 1902, 1904, 2402, 2403, 2404, *2404, 2413, 2415

Address	Position	Function		used in rungs
M06.12		AB9 in ladder position	"Internal cleaning"	0702, 1413, 1432, *2319, *2320, 2903
M06.13		Supervision B-valve .	position	0620, *1314, 2318, 2319, 2320, 2905, 3012
M06.14		Jump to ladder position	"Sterilizing fullfilled"	0620, 2007, *2802, 2803
M06.15		Jump to ladder position	"Sterilizing fullfilled"	0611, *2803
M07.04		Level check peroxide bath	during production	*1207, 2003, 2603, 3206
M07.05		Too high level peroxide	tank	*0711, *0712, 2005, 3110
M07.12		Prepared for cleaning	steambarrier space	1430, *2321, *2322, 3017
M07.13		Memory machineladder	to zeroposition	0614, 1204, 2903, *2904, *2906, *2907
M07.14		Putting machineladder	to zeroposition	0606, 2602, *2902
M07.15		Memory machineladder	to zeroposition	2902, *2903
M07.16		Aux. memory for jump to	position 0	*2905, 2906
M07.17		Auxiliary output step	down position 3	0606, 0607, *0607
M10.00		Manual stop	of filling	*0602, *0603, 0614, 0621, 0702
M10.01		Sterileconditions by-	passed due to service	*0604, *0605, 2903
M10.02		Tube flushing on		*1436, 1437
M10.03		Memory signal recieved	from sterilizer	*1104, *1105, 1106, 2803
M10.04		Hot water filling,rinsing	and cleaning in ext.clean	*2406, 2409, 2410
M10.05		Malfunction filling	cleantray by cleaning	2403, 2404, 2414, *2416, *2417, 3111
M10.06		Transversal	sealing on	*1705, *1706, 9902
M10.07		Alarm wrong pressure	during lubrication	2006, *2507, *2508, 3406
M10.13		Eject packages after	short stop	1903, *1911, *1912
M10.14		1 scanning change bit		*0513, 1418
M10.15		Malfunction during	spraysequenze H2O2	*0904, *0909, 2311, 2905, 3308
M10.16		Air inlet wrong position		0620, *1313, 2905, 3307
M10.17		Steam fault		0620, *1309, 2318, 2319, 2904, 3015
M11.01		Fault in IH-units	transversal sealing	*1702, *1703, 1704, 3112, 9903
M11.04		Flash for alarm panel		3424, 3425, *3434, 3437, 3438
M11.05		Memory cell for	dummy alarm	*3435, *3436, *3437, *3438, 3439
M11.06		New alarm cycle		3430, 3431, *3434
M11.07		Long lubrication	period ordered	1009, *2504, *2505, 2506, 3403
M11.10		Photocell out of function		*1807, *1808, 2803, 3212

Address	Position	Function		used in rungs
M11.11		Position printed design	out of limits	0614, *1812, *1813, 3212
M11.12		Auxiliary output	precorrection off	1802, *1803, 1807, *9906
M11.15		Memory startvalue after	short stop	*1820, *1821, 1822
M11.16		Spraying with hydrogen	peroxide fullfilled	0725, 0728, 0902, 0908, *0910, 1002, 1004, 1005, 1007, 1011, 2904, 3008, 3209, 3302
M11.17		Drying after spray H202	ready	0611, 0613, 0620, *1005, 2309, 2311
M12.00		Tubesealing going on		0804, *0804
M12.03		Synchronizing MM/FF	at start	*1402, *1403, 1404, 1406
M12.04		Synchronizing MM/FF	at production	1404, *1405, *1406, 1408, 1409, 1414
M12.05		Aux drive unit brake	short stop	*1416, *1417, 1418
M12.06		Auxiliary output clutch		1317, 1409, *1409, 1410, 1418, 1430, 1502, 1503, 1504, 1902
M12.07		Auxiliary output inching		*1413, 1414, 1415, 1419, 1444
M12.10		Inch conditions		0704, *1413
M12.11		Pressure fault main air		0620, *1010, 2903, 3414
M13.00		Mainsinterrupt to long	for sterile conditions	*2705, 2706, 2903
M13.01		Alarmdelay by restart	after mainsinterrupt	*2703, 2704, 2803, 2903, 2907
M14.00		Auxiliary output	startsequenze	0724, 1203, *1204, 1208, 1210, 1211, 1405, 1409, 1414, 1704
M14.01		Auxiliary output	startsequenze	1203, *1203, 1204
M14.02		Auxiliary output	stopsequenze ext.clean	2407, *2408, *2409, 2410, 2413
M14.03		Pressure fault	sterile air	*0719, *0720, 2905, 3306
M14.04		Memory for closing	heat exchanger valve	*0726, *0727, 0728
M14.10		Line L11-L10 not OK		*0514, 1303, 2707, 2708, 2902, 2903, 2907, 3404, 3410, 3411
M14.11		Line L20-L21 not OK		*0515, 1010, 2903, 3405, 3409, 3410, 3415, 3417
M14.12		Memory safety monitors		2706, *2707, *2708
M15.00		Max running time machine	with a lubrication fault	2006, *2509
M15.01		Control low level tank		0621, *0707, 0708, *0709, 0710

Address	Position	Function		used in rungs
M15.02		Waterpressure delayd		1206, 2305, *2702, 3403
M15.03		Queue monitor		*1218, 2006, 3109
M15.04		Supervision suction valve	position	0620, *1312, 2803, 3305
M15.07		Fault:emergency stop,	jaw,FF rot.	0620, *1307, 1409, 1411, 1413, 1414, 1415, 1418, 2403, 2404
M15.10		Alarm delay unsyncron	MM/FF at production	*1407, *1408, 2005, 3419
M15.11		Jaw system overload		*1302, *1303, 1307, 2802, 3418
M15.13		Congestion fault		*1302, *1304, 2005, 3115
M15.14		Rotation fault FF		*1302, *1305, *1306, 1307, 2802, 3113
M15.16		Water pressure fault	peroxid bath	0715, *1308, 2802, 3213
M17.00		External strip break		0803, *1302, *1315, 2004, 3105
M17.01		Date units too low	temperature	0620, *1510
M17.02		Date unit selector pulse		*1512, 1516, 1523, 1525, 1527, 1529
M17.03		Wide bobin change time		1506, *1535, 1536, 1537, 1540, 3102
M17.04				0803, 1413, 1502, *1536, 2802, 3202
M17.05		Narrow/wide supply indic.		*1539, *1540, 3102
M17.06		Change strip memory		0702, 1102, 1103, 1203, 1413, 1535, *1542, *1543, 1544
M17.10		Tubesealing condition PT		*0803, 0804
M17.12		Internal strip break		0803, *1302, *1316, 2004, 3106
M17.13		Twisted strip stop/alarm		0803, *1302, *1321, 1323, 1908, 2004, 3204
M17.15		Twisted strip memory	restart	1321, *1321, *1322, 1323
M17.16		pulse		1543
M17.17		Pulse		1542
M20.00		Date unit feedback	to position 1	*1513, *1514, 1515, 1522
M20.01		Date unit switch	position 1	1513, 1520, *1521, *1522, 1529, 1531
M20.02		Date unit switch	position 2	1518, *1519, *1520, 1521, 1524, 1526, 1528, 1530, 1531
M20.03		Date unit switch	position 3	1516, *1517, *1518, 1519, 1529, 1531, 1532
M20.04		Date unit switch	position 4	1514, *1515, *1516, 1517, 1524, 1526, 1528, 1530, 1532
M20.10		Stamp memory after shift		1527, *1529, *1530

08:13 93.11.25

LIST OF ADDRESSES

Address	Position	Function		used in rungs
M20.11		Stamp 1, after shift	date units	1525, *1527, *1528, 1530
M20.12		Stamp 2, after shift	date units	1523, *1525, *1526, 1528
M20.13		Stamp 3, after shift	date units	*1523, *1524, 1531
M23		Transmission word		*1425, *3402, 3407, *3408, 3421, *3433
M23.00		Transmission bit		*3409
M23.01		Transmission bit		*3410
M23.02		Transmission bit		*3411
M23.03		Transmission bit		*3412, 3434
M23.04		Transmission bit		*3413
M23.06		Transmission bit		*3414
M23.07		Transmission bit		*3415
M23.10		Transmission bit		*3416, 3434
M23.11		Transmission bit		*3417
M23.12		Transmission bit		*3418
M23.13		Transmission bit		*3419
M23.14		Transmission bit		1427, *3403
M23.15		Transmission bit		*3404, *3420
M23.16		Transmission bit		1426, *3405
M23.17		Transmission bit		1426, *3406
M37.00		1Hz flash		0512, 0702, 0703, 0704, 0708, 0903, 1003, 1507, 1538, 2002, 2303, 2407
M37.14		First scan		1008, 2414, 2706, 3434
M37.15		Low battery TPMC		3413
M37.16		Scantime 80% exceed.		3413
M37.17		Bit to be shifted by the	shiftregister	*1424, 1436, *1436, 1911, *1911, *3431
O14.03	M.Y26	LS counter roller short	stop	1215, *1215, 1502
O14.04	M.Y24	LS-element movement		*1214, 1216
O14.05	M.Y21	Air knife/squeezer roller		*1216, 1437, 1444
O14.06	M.Y20	Short stop element	movement	*1213
O14.07	M.Y18	Peroxide bath top filling	(on=open)	*1212
O14.10	K81	Hydraulic pump		1012, *1206

LIST OF ADDRESSES

Address	Position	Function		used in rungs
O14.11	K87/98/Y32	Compressor inlet	suction water	0609, 0717, *0717, 0720, 2307
O14.12	K93	Start conveyor		*1217, 1218
O14.13	K94	Unreeling paper supply		*1419, 1420
O14.14	M.Y1	Flap sealing air valve		*1007, 1009
O14.15	M.Y102	Main air valve		*1008, *1009, 1010
O15.00	K14	Bending roller		*1443, *1444
O15.01	K51	Main motor low speed		1206, 1305, *1414, 1415, 1902, 2404
O15.02	K77	Main motor high speed		0607, 0611, 0711, 1206, 1214, 1215, 1306, 1317, 1404, 1409, 1414, 1415, *1415, 1418, 1423, 1502, 1503, 1504, 1537, 1702, 1706, 1902, 1903, 2502, 2503, 2903, 2905
O15.03	K82	Peroxide pump		*1209, 1210, 1211
O15.04	K91	Cleaning system	circulation pump	1007, *2413
O15.05	K201	Pull tab motor		1315, 1316, 1319, 1502, *1502, 1503, 1504, 1531, 1532, 1533, 1538, 1905
O15.12	M.Y27	Drop chute		0616, 1304, 1428, 1429, 1902, 1903, *1903, 1904
O15.13	M.Y12	Precorrection		*1802, *1803, 1804, 1809, 1818, 1819, *1822
O15.14	M.Y13	Auto correction, left		*1814, *1816, *1818
O15.15	M.Y12	Auto correction, rigt		*1815, *1817, *1819
O16.00	K2	Power Transversal sealing		*1704, 2803
O16.01	K48	Preheating 1 P.T.		0620, 0705, *0706, 0714, 0715, 0717, 1012, 1308, 1419, 1508, 1509, 1546, 3005, 3006, 3007, 3009, 3010, 3011, 3102, 3103, 3104, 3107, 3108, 3205, 3207, 3420
O16.02	K71	Air superheater		*0806, 3302
O16.03	K75	Heating FF		*1011
O16.04	K88	Peroxide bath element		*0715, 0808
O16.05	K92	Detergent pump		*2412
O16.06	K96	Preheating 2	LS, short stop	*0721, 0723
O16.12	K6	Ready for production		*1103, 1105
O16.13	K26	AB production		*1107

08:13 93.11.25

Address	Position	Function		used in rungs
O16.14	K30	Filling		*1108
O16.15	K46	Signal to CIP		0606, 1006, 1430, 2317, 2318, 2319, *2319, 2323, 2604, 2903, 3015
O16.16	K52	LS sealed tube / LS	selector	*0722
O16.17	K53	Air heater preheating /	production 400/360	*0807
O17.00	K54	Peroxide bath, water	preheating	*0809, *0810
O17.01	K83	Peroxid tank change level		*0713
O17.02	K84	CIP recording		2323, *2323
O17.03	K95	Sterile parameter		*2602
O17.04	K97	Operational parameter		*2604
O17.10	M.Y19	Air inlet valve		0721, *0725, 1313, 1430
O17.11	M.Y86	Vacuum valve		*2314
O17.12	M.Y25	Heat exchange valve		*0728
O17.13	M.Y23	Suction valve		*0724, 1312
O17.15	M.Y17/Y51	Central lubrication pump/	air injection	1012, *2506, 2507, 2508
O17.16	M.Y9	Product valve (A)		1108, *1432
O17.17	M.Y8	Sterile air valve (B)		*1006, 1314
O20.00	M.Y7	Steam barrier, valve (C)		1430, *1430, 1431, 2904
O20.01	M.Y6	Peroxide bath,fill/drain	(on=closed)	1211, *1211
O20.02	M.Y5	Peroxide bath draining	(on=closed)	*1210
O20.03	M.Y3	Waste packages	air blowing	*1902
O20.04	M.Y2	Cleaning tray draining		1433, *2411, 2412
O20.05	M.Y22	Main machine clutch		1214, *1410
O20.06	M.Y29	Cleaning system hot water		*2410, 2412, 2415
O20.07	M.Y31	Final folder	chain sprinkler	*1433
O20.10	M.Y33	Cooling water (outflow)		*1012
O20.11	M.Y34	Spray tank filling		*0905, 1209
O20.12	M.Y35/M.Y4	Spray tank evacuation	of spraying peroxide	*0908
O20.13	M.Y39	Tube flushing		*1437
O20.14	M.Y41	Pull down device		*1426
O21.00	M.Y42	Pressure device FF		*1427

LIST OF ADDRESSES

Address	Position	Function		used in rungs
O21.01	M.Y43	Drive unit brake		*1418
O21.02	M.Y63	Brake unreeling paper	supply	*1421
O21.03	M.Y92	Peroxid tank filling		0714, *0714
O21.04	X1.13	Sealing pulse TS left		*9904
O21.05	X1.25	Sealing pulse TS right		*9905
O21.10	A23:A2/P4	Package counter	production	*1904, 1906
O21.11	A24:A2	Package counter infeed		*1905
O21.12	K105.3	Unreeling motor, start/	stop paper supply	1420, *1420
O21.13	K210.3	Beacon		*3004
O21.14	A25:A2	Restart at mainsfailure		*2706
O21.15	K202/203	P. T. motor solid state	relay	1503, *1503
O22.00	X001.269	Alarm panel data		*3423, *3424, *3425, *3426, *3427
O22.01	X001.270	Alarm panel shift		*3428, *3429
O22.02	K225	Heating int. strip	IH-timer	*1547
O22.03	K21	IH filament voltage P.T.		*1546
O22.04	K212	IH power voltage P.T.		1547, *1548, 2803
O22.05	K55	External strip P. T.	heating	*1505
O22.06	K56	Date unit 1, heating		*1508
O22.07	K57	Date unit 2, heating		*1509
O22.10	M.Y211/217	External strip knife /	Waste blowing	*1537
O22.11	M.Y202	Heating element off P. T.		*1504, 1537, 1548
O22.12	M.Y220	Stamp, date unit 1		*1531
O22.13	M.Y221	Stamp, date unit 2		*1532
O22.14	M.Y204	External strip	Counter Air Pressure	*1506
O22.15	M.Y206	Internal srtip splicing		*1534
O22.16	M.H201S	Temperature indicator	date unit elements	*1507
PI0.00	P.S11H	Alarm reset		0711, 0719, 1302, 1318, 1320, 1407, 1442, 1702, 1808, 2417, 3422
PI0.01	P.S12H	Lamptest		3003, 3004, 3423, 3434
PI0.02		Occup.for int.memory		3002, 3004
PI0.03	P.S2	Inching		0621, 0702, 1203, 1217, 1317, 1319, 1409, 1413, 1414, 1415, 1430, 1545

08:13 93.11.25

Address	Position	Function			used in rungs
PI0.04	P.S3H	Step up			0502, 0603, 0608, 0609, 0614, 0616, 0717, 0804, 1009, 1203, 1318, 1320, 1409, 1430, 2009, 2404, 2603
PI0.05	P.S4H	Step down			0503, 0602, 0607, 0611, 0621, 2007, 2311, 2319, 2404
PI0.06	P.S6H	No product.	allowed		2006
PI0.07	P.S7	Selector	switch		0608, 0616, 0702, 0704, 0705, 1414, 1415, 2006, 2317, 2318, 2319, 2402, 2403, 2404, 3014, 3015, 3016, 3210
PI0.10	P.S19	Drop chute	off		1903
PI0.11	P.S20	Stat.chain	sprinkler		1433
PL0.01	P.H250	Date unit 1,		strip supply low	*3005
PL0.02	P.H37	Paper supply too low			*3006
PL0.03	P.H251	Date unit 1, strip break			*3007
PL0.04	P.H53	Peroxide bath, water		low temp.	*3008
PL0.05	P.H240	Date unit 2,		strip supply low	*3009
PL0.06	P.H242	Date unit 2, low temp.			*3010
PL0.07	P.H241	Date unit 2, strip break			*3011
PL0.10		Dummy alarm		flash-light beacon	*3439
PL0.12	P.H48	AP valve B, wrong pos.			*3012
PL0.13	P.H45	No product from process		availeble at machine	*3013
PL0.14	P.H46	Product pipe, wrong pos.			*3014
PL0.15	P.H43	Steam, wrong temp.			*3015
PL0.16	P.H47	Cleaning pipe, wrong pos.			*3016
PL0.17	P.H44	Cleaning steam barrier		space	*3017
PL1.01	P.H227	Internal strip low supply			*3102
PL1.02	P.H231	External strip low supply			*3103
PL1.03	P.H228	Strip splicing, low temp.			*3104
PL1.04	P.H232	External strip, break			*3105
PL1.05	P.H229	Internal strip, break			*3106
PL1.06	P.H230	Internal strip IH, fault			*3107
PL1.07	P.H252	Date unit 1, low temp.			*3108
PL1.11	P.H63	PLE -equipment			*3109

08:13 93.11.25

LIST OF ADDRESSES

Address	Position	Function		used in rungs
PL1.12	P.H60	Peroxide tank, levelfault		*3110
PL1.13	P.H62	Clean tray, level fault		*3111
PL1.14	P.H58	Transversal sealing	IH-units fault	*3112
PL1.15	P.H16	Final folder rotat. fault		*3113
PL1.16	P.H56	Peroxide bath draining	pipe, wrong position	*3114
PL1.17	P.H59	Congestion monitor, fault		*3115
PL2.01	P.H260	Selector internal strip	narrow/wide, wrong posit.	*3202
PL2.02	P.H234	P.T. store, paper break		*3203
PL2.03	P.H261	Internal strip, twisted		*3204
PL2.05	P.H233	External strip, low temp.		*3205
PL2.06	P.H49	Peroxide bath, peroxide	levelfault	*3206
PL2.07	P.H236	Preheated counter jaw P.T	low temp.	*3207
PL2.11	P.H42	Squeez. roller /air knife	wrong pos.	*3208
PL2.12	P.H51	LS-elem. low temperature		*3209
PL2.13	P.H57	Cleaning cup, wrong pos.		*3210
PL2.14	P.H52	Peroxide, low temperature		*3211
PL2.15	P.H55	Position printed	design out of limits	*3212
PL2.16	P.H50	Peroxide bath, water	low level	*3213
PL2.17	P.H54	Perox. bath bottom cover,	wrong pos.	*3214
PL3.01	P.H31	Air heater, low temp.		*3302
PL3.02	P.H35	Air knife, low temp.		*3303
PL3.03	P.H30	Separators too high level		*3304
PL3.04	P.H33	Suction valve, wrong pos		*3305
PL3.05	P.H32	Sterile air pressurefault		*3306
PL3.06	P.H36	Inlet valve, wrong pos.		*3307
PL3.07	P.H34	Spray time, out of limits		*3308
PO0.01	P.H1:1	Preheating 1		*0705
PO0.02	P.H1:2	Preheating 2		*0716
PO0.03	P.H2:1	Tube sealing		*0802, 1428
PO0.04	P.H2:2	Presterilizing		*0805
PO0.05	P.H3:1	Spraying		*0902, 1106

LIST OF ADDRESSES

Address	Position	Function		used in rungs
PO0.06	P.H3:2	Drying		*1002
PO0.07	P.H4:1	Signal to sterilizer		*1102
PO0.10	P.H4:2	Signal from sterilizer		*1106
PO0.11	P.H5:1	Start sequence		*1202
PO0.12	P.H5:2	Drive motor		*1205
PO0.13	P.H6:1	Filling		*1428
PO0.14	P.H6:2	Production		*1429
PO0.15	P.H7:1	No production allowed		*2002
PO0.16	P.H7:2	Production finished		*2315
PO0.17	P.H8:1	Work environment aseptic	chamber on	*2302
PO1		Lamptest of pushbuttons		3003, *3003
PO1.00	P.H8:2	W.E.A.C. ready for	door opening	*2303
PO1.01	P.H9:1	Preparation for cleaning	of machine	*2402
PO1.02	P.H9:2	Preparation for cleaning	of valve	*2317
PO1.03	P.H10:1	Cleaning of machine		*2403
PO1.04	P.H10:2	Cleaning of valve		*2318
PO1.10	P.H2S	Inching		*0704
PO1.11	P.H3S	Step up		*0702, 0705, 0716, 0802, 0902, 1102, 1202, 2317, 2318, 2402, 2403
PO1.12	P.H4S	Step down		*0703
PO1.13	P.H6S	No production		*2002
PO1.14	P.H11S	Alarm reset		*3002
PO1.15	P.A16:1	Design correction		*1804
PO1.16	P.P3	Package counter	production	*1906
R0000		Storageword for positions	in machineladder	*0606, *0608, *0609, *0610, 0611, *0611, *0613, *0614, *0615, *0616, 0617, 0618, 0620, 0705, 0717, 0904, 0910, 1006, 2603
R0010		Storageword shiftregister	packagedumping	1907, *1907, *1911
R0011		Storageword shiftregister	packagedumping	1907, *1907, 1911
R0012		Storageword shiftregister	packagedumping	1907, *1907, 1908, *1908, 1909, *1909, 1910, *1910, 1911
R0013		Storageword shiftregister	packagedumping	1907, *1907, 1908, *1908, 1909, *1909, 1910, *1910, 1911

LIST OF ADDRESSES

Address	Position	Function			used in rungs
R0014		Storageword shiftregister		packagedumping	1908, *1908, 1911
R0019		Shiftregister pulldown-,		pressure device	*1422, *1424, 1425
R0020		Shiftregister for		tubeflushing	*1436
R0021		Shiftreg.	tubeflush		1436
R0022		Shiftregister for		tubeflushing	1434, *1434, 1436
R0023		Shiftregister for		tubeflushing	1435, *1435, 1436
R0100		Storageword for		Transversal sealing	1706, 9902, *9902, *9903, 9904, 9905
R0150		Alarm new			3402, 3407, 3422, 3424, 3436, 3437
R0151		Alarm new			3408, 3421, 3422, 3425, 3436, 3438
R0152		Alarm accepted			3402, 3407, *3407, *3422, 3426, 3437
R0153		Alarm accepted			3408, 3421, *3421, 3422, 3427, 3438
R0154		Alarm indicator			3424, 3426, 3428, 3430, *3432, 3433
R0155		Alarm indicator			3425, 3427, 3429, *3430, 3432
R0254		Storage word time		mainsinterrupt	2703, *2704, 2705
S00.00	30- 35 230-235	Drop chute	on		1310, 1903
S00.01	155-162 355-362	Drop chute	off		1903
S00.02	100-277	Side change			1814, 1815, 1816, 1817, 2006, 9904, 9905
S00.03	10- 20 210-220	Short stop			0504
S00.04	114-223 314- 23	Transversal	sealing		9903
S00.05	50- 53 250-253	New package			0506
S00.07	130-157 330-357	Filling			0615
S00.08	140-167 340-367	Filling			0615
S00.09	140-153 340-353	Waste pack.	blowing		1902
S00.10	6- 14 206-214	Design	sector		9906

LIST OF ADDRESSES

Address	Position	Function		used in rungs
SO0.12	3- 20 203-220	Printed	design corr	1805, 1809, 1810
SO0.13	117-125 317-325	Motor P.T.	start	1503
SO0.14	37-160 237-360	Synchr MM/	FFU check	1408
SO0.15	140-150 340-350	Waste pack	blowing	1902
SO0.26	170-177 370-377	Brake		1416
SO0.30	40-107 240-307	Sector for	pack.countr	1904
T000		Startsequenzer	productionstart	*1204
T001		Startsequenser for	running production	*1204
T003		Maximum time for beeing	in short stop position	*2008, *2009
T005		Delay opening fill.valve	after production start	*1431
T006		Circulation of hydrogene-	peroxide in bath/tank	*1208
T008		Sequenzer external	cleaning program	*2414, *2415
T010		Sequenser lubrication-	program	*2503
T011		Sequenser lubrication-	program	*2502
T013		Timer WEAC on		*2312
T014		FFU timer syncronization,	production	*1404
T015		Delay time recording	sterile parameter	*2602
T016		Delay time recording	operational parameter	*2603
T023		Tube sealing		*0804
T024		Spray tank evacuation	before spraying	*0907
T025		Peroxide bath water	preheating high temp	*0808
T045		Machine speed timer		*1440
T050		Stamp time, date unit		*1511
T051		Internal strip,	splice time	*1533
T0000.0	0s1 14s0	Hydr. pump		1206

LIST OF ADDRESSES

Address	Position	Function		used in rungs
TO000.1	10s0 15s0	End start-	sequenze	0614, 0702, 0712, 0713, 0714, 1102, 1211, 1217, 1415, 1430, 1432, 1544, 1548, 2003, 2007, 2603, 3107, 3110, 3206
TO000.2	9s8 10s2	Control	per.level	1203
TO000.3	0s1 9s6	Start	sequence	1106, 1402, 1403, 1418, 1422, 1907, 1912
TO000.4	9s5 15s0	Contr.temp	peroxide	3211
TO000.5	3s0 15s0	Delay TS		1703
TO001.0	8s0 22s0	SQ roller/	air knife	1216
TO001.1	4s5 9s2	Short stop	element on	1213
TO001.2	9s0 23s0	LS/RP	element on	1214, 1215, 1504, 3208
TO001.3	4s0 9s8	Ls counter	roller	1215
TO001.4	0s1 1s0	Start	sequence	1402
TO003.0	5m00s 6m00s	Short stop	time out	2802
TO003.1	0s 4m00s	Cont.light	short stop	2002, 2009
TO005.1	29s0 2m00s0	Delay	filling out	0621
TO006.0	30s0 31s0	End of H2O2	circulation	1208
TO006.1	0s0 10s0	Top filling	perox.pump	1209, 1212
TO006.3	26s0 28s0	Filling	perox.bath	0714

LIST OF ADDRESSES

Address	Position	Function		used in rungs
TO006.5	29s0	Contr.level	H2O2 tank	0707
	30s0			
TO008.0	22m30s	Total ext.	clean. time	2403, 2404, 2903
	22m40s			
TO008.1	1s	First rinse	ext. clean.	1433, 2406
	2m20s			
TO008.2	3m20s	Clean. per.	ext. clean.	2406, 2412
	12m20s			
TO008.3	13m30s	Secnd rinse	ext. clean.	1433, 2406
	15m50s			
TO008.4	17m00s	Third rinse	ext. clean.	2406
	19m20s			
TO008.5	19m20s	Lubr. after	ext. clean	0508
	19m30s			
TO010.0	15m00s	Time lubric	period	2503
	15m02s			
TO010.1	2m51s	Pause lub-	ric.period	2503, 2505
	15m02s			
TO010.2	0s	1-st stroke	lubricvalve	2506
	10s			
TO010.3	41s	2-st stroke	lubricvalve	2506
	51s			
TO010.4	1m21s	3-st stroke	lubricvalve	2506
	1m30s			
TO010.5	2m00s	4-st stroke	lubricvalve	2506
	2m10s			
TO011.0	15m00s	Time lubric	period	2502
	15m02s			
TO011.1	2m51s	Pause lub-	ric.period	2502
	15m02s			
TO011.5	2m40s	5-th stroke	lubricvalve	2506
	2m50s			
TO013.0	1h00m00s	Too long	time WEAC	2305
	1h00m01s			

LIST OF ADDRESSES

Address	Position	Function		used in rungs
TO013.1	5m00s 1h00m01s	WEAC	5 minutes	2313
TO013.2	15m00s 1h00m01s	WEAC	15 minutes	2313
TO014.0	0s000 6s500	FFU timer	end	1404
TO014.1	0s540 0s600	FFU timer	producton	1404
TO014.2	0s150 0s270	Pulldown	device	1426
TO014.3	0s000 0s280	Press dev./	new station	1424, 1425, 1427
TO015.0	5m00s 5m02s	Sterile	record.end	2602
TO015.1	0s 5m00s	Sterile	record.time	2602
TO016.0	5m00s 5m02s	Operational	record.end	2603
TO016.1	0s 5m00s	Operational	record.time	2603, 2604
TO023.0	0s0 1m00s0	Tubesealing	going on	0608, 1409, 1413, 1415
TO023.1	5s0 1m00s0	Phase mon.	delay	0804, 1548, 3107
TO023.2	46s0 1m00s0	Tubesealing	ended	0610
TO023.3	0s7 1m00s0	Tubesealing	going on	0702, 0705, 0716, 0802, 0804, 1006, 1444
TO024.0	1s 30m00s	Spray tank	evac. pos20	0908
TO024.1	1s 1m30s	Spray tank	evac. pos20	0908
TO024.2	1m31s 31m00s	Spray tank	evac. pos20	0620

LIST OF ADDRESSES

Address	Position	Function		used in rungs
TO025.0	1s 40m00s	Perox bath	water preh.	0810
TO025.1	12m00s 12m01s	Perox bath	water preh.	0809
TO025.2	13m00s 40m00s	Perox bath	water preh.	0810
TO045.0	0s00 59s96	Speed test	going on	1439
TO050.1	0s00 0s10	Stamp time	date units	1531, 1532
TO051.0	0s000 0s700	Strip	splicing	1316, 1533, 1534
TV014		Position	FFU, ms	1406

Tetra Pak
MODENA ITALY

This drawing must not without the consent of Tetra Pak be copied, transmitted or disclosed to any third party.

RUNG	REFERENCE INSTRUCTION	ADDRESS	VOLUME						
			125 cc	180 cc	236 cc	250 cc	284 cc	200 cc SLIM	
615	PUT R0000	S00.07	100-127 300-327	130-157 330-357		130-157 330-357		130-157 330-357	
615	PUT R0000	S00.08	110-137 310-337	140-167 340-367		140-167 340-367		140-167 340-367	
506		S00.05	120-123 320-323	50-53 250-253		130-133 330-333		50-53 250-253	
9906	L M11.12	S00.10	6-14 206-214	6-14 206-214		6-14 206-214		6-14 206-214	
610	PUT R0000	T023.2	52S0-1M00S0	50S0-1M00S0		42S0-1M00S0		38S0-1M00S0	
1322	M17.15, C25	C025.0	5-6	5-6		3-5		3-5	
621	017.10	T005.1	35S0-2M00S0	32S0-2M00S0		23S0-2M00S0		22S0-2M00S0	
1907	T000.3 PUT R0010	AND	KF87EH	KF87EH		KFE1EH		KFF1EH	
1907	T000.3 PUT R0011	AND	K3FFFH	K3FFFH		K00FFH		K003FH	
1907	T000.3 PUT R0012	AND	K0000H	K0000H		KFFC0H		KFFF0H	
1907	T000.3 PUT R0013	AND	KFFFFH	KFFFEH		KFFFFH		KFFFFH	
1908	M17.13 PUT R0012	AND	KFFFFH	KFFFFH		KFFFFH		KFFFFH	
1908	M17.13 PUT R0013	AND	KFFFFH	KFFFFH		KE07FH		KFE07H	
1908	M17.13 PUT R0014	AND	KE01FH	KF00FH		KFFFFH		KFFFFH	
1909	M02.15 PUT R012	AND	KFFFFH	KFFFFH		KFCFFH		KFF9FH	
1909	M02.15 PUT R0013	AND	KFFF3H	KFFF9H		KFFFFH		KFFFFH	
1910	M02.17 PUT R0012	AND	KFFFFH	KFFFFH		KFIFFH		KFE3FH	
INTRODUCED ON ECN:	20144		20144	20144		20144		20144	

INTRODUCED WITH AM NO.	20144			DATE: 930909			SIGN. HK			
ISSUE										
AM NO.										
DATE										
SIGN										

DRAWING REMARKS

DESCRIPTION: VOLUME ADAPTION DOCUMENT

MACHINE: TBA/9-1402 P.T | 47629-03:01 | 1/2

ALTERATIONS ONLY IN CADAM

08:13 93.11.25

Tetra Pak
MODENA ITALY

This drawing must not without the consent of Tetra Pak be copied, transmitted or disclosed to any third party.

RUNG	REFERENCE INSTRUCTION	ADDRESS	VOLUME						
			125 cc	180 cc	236 cc	250 cc	284 cc	200 cc SLIM	
1910	M02.17 PUT R0013	AND	KFFC7H	KFFE3H		KFFFFH		KFFFFH	
1434	M02.15 PUT R0022	AND	KFFFFH	KFFFFH		KFFF3H		KFFE7H	
1435	M02.15 PUT R0023	AND	KFFFCH	KFFFCH		KFFFFH		KFFFFH	
INTRODUCED ON ECN:	20144		20144	20144		20144		20144	

INTRODUCED WITH AM NO.	20144	DATE: 930909	SIGN. HK
ISSUE			
AM NO.			
DATE			
SIGN.			

DRAWING REMARKS

DESCRIPTION: VOLUME ADAPTION DOCUMENT

MACHINE: TBA/9-1402 P.T | 47629-03:01 | 2/-

ALTERATIONS ONLY IN CADAM

08:13 93.11.25

Tetra Pak
MODENA ITALY

This drawing must not without the consent of Tetra Pak be copied, transmitted or disclosed to any third party.

LADDER SYMBOLS

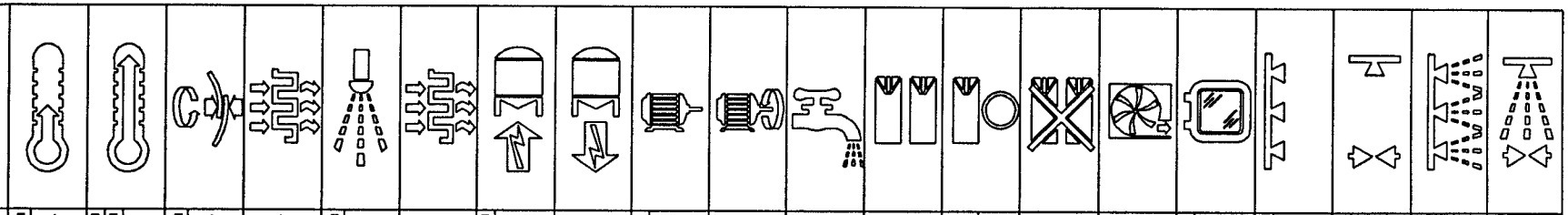

LADDER SYMBOL LIGHTS	F L	F F	F L	L	F L	L	F L	L	F L	L	L	L	L	L	L	F L	F L	F L	F L	F L
OPERATOR ACTIONS	↑	↱	↑		↑		↑		↱			◎ ↑ ↑					↑	↑	↑	↑
MACHINE MODE	PRE-HEAT-ING 1	PRE-HEAT-ING 2	TIGHT TUBE	PREHEAT. III	FILLING 10s / SPRAY 40s / PAUSE 60s	DRYING 20 min	SIGNAL TO CIP	SIGNAL TO STERILE	START SEQUENS	DRIVE MOTOR	FILLING	PROD-UCTION	SHORT STOP	PROD-UCTION	END OF PRODUCTION 2 min	WEAC 5 min	WEAC READY FOR DOOR OPENING	PREPARE FOR EXTERNAL CLEANING	PREPARE FOR VALVE CLEANING	EXTERNAL CLEANING	VALVE CLEANING A B C
DRIVE MOTOR LOW K51 ON OFF 015.01																					
DRIVE MOTOR HIGH K77 ON OFF 015.01																					
MAIN MACH.CLUTCH Y22 ON OFF 020.05																					
DRIVE UNIT,BRAKE Y43 ON OFF 021.01																					
BENDING ROLLER K14 ON OFF 015.00																					
PAPER SUPPLY,MOTOR K94 ON OFF 014.13																					
PAPER SUPPLY,MOTOR K105 ON OFF 021.12																					
BRAKE UNREEL,PAPER SUPPLY Y63 ON OFF 021.02																					
TUBE FLUSHING Y39 ON OFF 02013																					
LUBR.AIR INJECTION Y17,Y51 ON OFF 017.15																					
PRECORRECTION Y12 OFF ON 015.15																					
OFF ON																					
OFF ON																					
ON OFF																					
ON OFF																					
ON OFF																					
POSITION LADDER	0	00005	00010	00020	00030		00040		00050		00060				00070						

INTRODUCED WITH AM NO.	20144	DATE: 930909	SIGN. HK/RAI
ISSUE			
AM NO.			
DATE			
SIGN.			

F = FLASHING LIGHT ▲ = NORMAL PRESS
L = CONTINOUS LIGHT ➡ = LONG PRESS
[ ] = ELECTRICALLY ACTIVATED

DRAWING REMARKS

DESCRIPTION: MACHINE OPERATION DIAGRAM

MACHINE: TBA/9-1402 P.T. | 47629-04:01 | 1/6

ALTERATIONS ONLY IN CADAM

08:13 93.11.25

Tetra Pak
MODENA ITALY

This drawing must not without the consent of Tetra Pak be copied, transmitted or disclosed to any third party.

LADDER SYMBOLS

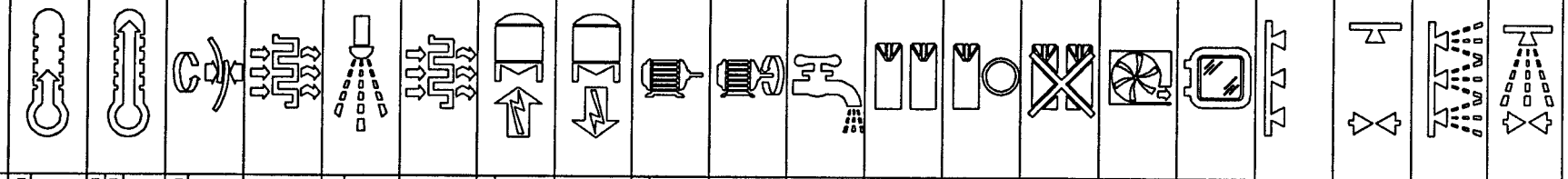

LADDER SYMBOL LIGHTS	F	L	F	F		F	L	L	F	L	L	F	L	L	F	L	L	L		L	L	L	F	L	F	L	F	L	F	L	F	L
OPERATOR ACTIONS	↑		↱			↑			↑			↑			⟶			◎	↑	↑					↑		↑		↑		↑	
MACHINE MODE		PRE-HEAT-ING 1			PRE-HEAT-ING 2		TIGHT TUBE	PREHEAT. III		FILLING	SPRAY	PAUSE	DRYING		SIGNAL TO CIP	SIGNAL TO STERILE		START SEQUENS	DRIVE MOTOR	FILLING	PROD-UCTION	SHORT STOP	PROD-UCTION	END OF PRODUCTION	WEAC	WEAC READY FOR DOOR OPENING		PREPARE FOR EXTERNAL CLEANING		PREPARE FOR VALVE CLEANING		EXTERNAL CLEANING		VALVE CLEANING A	B	C
										10s	40s	50s	20 min											2 min	5 min									
CONVEYOR K93																																	
ON OFF 014.02																																	
DROP CHUTE Y27																																	
ON OFF 015.12																																	
AIR BLOWING,WASTE Y3																																	
ON OFF 020.03																																	
SPRINKLER, CHAIN Y31																																	
ON OFF 020.07																																	
COOLING WATER Y33																																	
ON OFF 020.10																																	
ON OFF																																	
CIRC.PUMP,CLEANING K91																																	
ON OFF 015.04																																	
DRAIN.,CLEAN.TRAY Y2																																	
ON OFF 020.04																																	
HOT WATER, CLEAN. Y29																																	
ON OFF 020.06																																	
PUMP, DETERGENT K92																																	
ON OFF 016.05																																	
OFF ON																																	
P.T. DRIVE MOTOR CONTC. K201																																	
ON OFF 015.05																																	
P.T. DRIVE MOTOR SOLID S. K202/203																																	
ON OFF 021.15																																	
ON OFF																																	
ON OFF																																	
ON OFF																																	
POSITION LADDER		0	00005		00010			00020		00030				00040				00050		00060					00070								

INTRODUCED WITH AM NO.	20144	DATE: 930909	SIGN. HK/RAI
ISSUE			
AM NO.			
DATE			
SIGN.			

F = FLASHING LIGHT ↑ = NORMAL PRESS
L = CONTINOUS LIGHT ↱ = LONG PRESS
[ ] = ELECTRICALLY ACTIVATED

DRAWING REMARKS

DESCRIPTION: MACHINE OPERATION DIAGRAM

MACHINE: TBA/9-1402 P.T. | 47629-04.01 | 2/6

ALTERATIONS ONLY IN CADAM

08:13 93.11.25

Tetra Pak
MODENA ITALY

This drawing must not without the consent of Tetra Pak be copied, transmitted or disclosed to any third party.

LADDER SYMBOLS

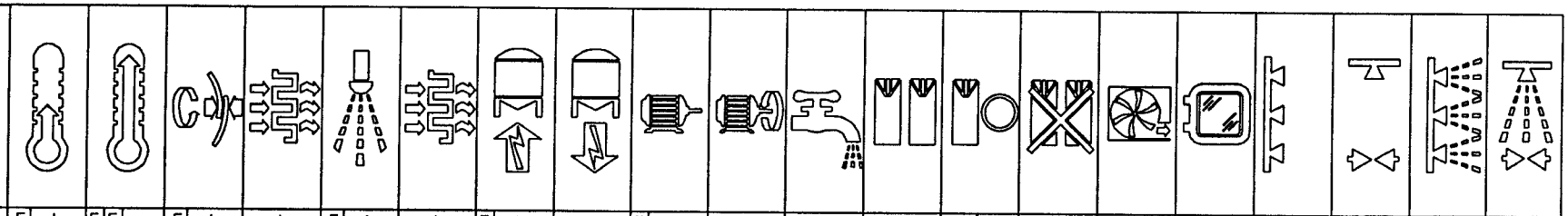

LADDER SYMBOL LIGHTS	F L	F L	F L	L	F L	L	F L	L	F L	L	L	L	L	L	L	L	F L	F L	F L	F L	F L	F L
OPERATOR ACTIONS	↑	↱	↑		↑				↑										↑	↑	↑	↑

MACHINE MODE	PRE-HEAT-ING 1	PRE-HEAT-ING 2	TIGHT TUBE	PREHEAT. III	FILLING 10s	SPRAY 40s	PAUSE 50s	DRYING 20 min	SIGNAL TO CIP	SIGNAL TO STERILE	START SEQUENS	DRIVE MOTOR	FILLING	PROD-UCTION	SHORT STOP	PROD-UCTION	END OF PRODUCTION 2 min	WEAC 5 min	WEAC READY FOR DOOR OPENING	PREPARE FOR EXTERNAL CLEANING	PREPARE FOR VALVE CLEANING	EXTERNAL CLEANING	VALVE CLEANING A	VALVE CLEANING B	VALVE CLEANING C
PREHEAT 1, PT K48 ON OFF 016.01																									
PREHEAT 2, LS,LS/PT K96 ON OFF 016.06																									
SELECT LS,SEALED TUBE K52 ON OFF 016.16																									
SELECT LS, PROD. K52 OFF ON 016.16																									
AIR FFU Y1 ON OFF 014.14																									
PREHEAT 3, FFU K75 ON OFF 016.03																									
PULL DOWN DEVICE,FFU Y41 ON OFF 020.14																									
PRESS.DEVICE, FFU Y42 ON OFF 021.00																									
MOVEM.,SH.STOP ELEM. Y20 ON OFF 014.06																									
MOVEM.,LS/SA ELEM. Y24 ON OFF 014.04																									
LS COUNTER ROLLER Y26 OFF ON 014.03																									
AIR KNIFE/SQUEEZE ROLL. Y21 ON OFF 014.05																									
MAIN AIR VALVE Y102 OFF ON 014.15																									
ON OFF																									
ON OFF																									
ON OFF																									
POSITION LADDER	0 00005	00010		00020		00030			00040			00050		00060						00070					

INTRODUCED WITH AM NO. 20144	DATE. 930909	SIGN. HK/RAI
ISSUE		
AM NO.		
DATE		
SIGN.		

F = FLASHING LIGHT
L = CONTINOUS LIGHT
[ ] = ELECTRICALLY ACTIVATED
= NORMAL PRESS
= LONG PRESS

DRAWING REMARKS

DESCRIPTION: MACHINE OPERATION DIAGRAM

MACHINE: TBA/9-1402 P.T. | 47629-04:01 | 3/6

ALTERATIONS ONLY IN CADAM

08:13 93.11.25

Tetra Pak
MODENA ITALY

This drawing must not without the consent of Tetra Pak be copied, transmitted or disclosed to any third party.

LADDER SYMBOLS

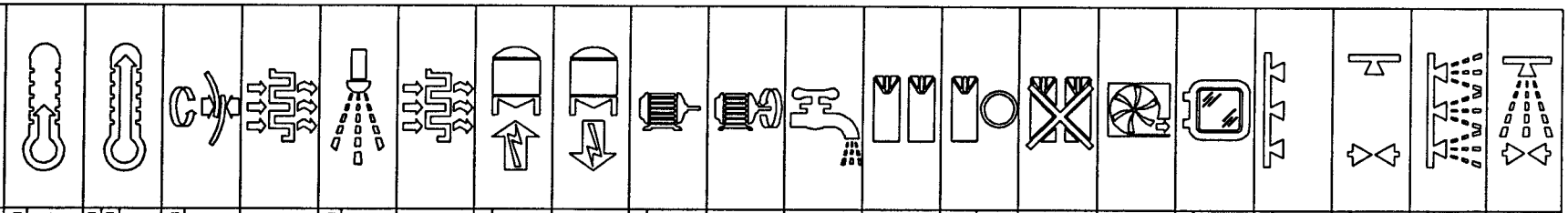

LADDER SYMBOL LIGHTS	F	L	F	F		F	L	L	F	L	L	F	L	L	F	L	L	L		L	L	L	F	L	F	L	F	L	F	L
OPERATOR ACTIONS	↑		↱			↑			↑			↑			↱			◎	↑	↑					↑		↑		↑	
MACHINE MODE		PRE-HEAT-ING 1			PRE-HEAT-ING 2		TIGHT TUBE	PREHEAT. III		FILLING	SPRAY	PAUSE	DRYING	SIGNAL TO CIP		SIGNAL TO STERILE	START SEQUENS	DRIVE MOTOR	FILLING	PROD-UCTION	SHORT STOP	PROD-UCTION	END OF PRODUCTION	WEAC	WEAC READY FOR DOOR OPENING		PREPARE FOR EXTERNAL CLEANING		PREPARE FOR VALVE CLEANING		EXTERNAL CLEANING		VALVE CLEANING A	B	C
										10s	40s	50s	20 min										2 min	5 min										
PUMP, HYDRAULIC K81 ON OFF 014.10																																		
ON OFF																																		
POWER IH UNIT TS K2 ON OFF 016.00																																		
PULSE TS, LEFT A401 ON OFF 021.04																																		
PULSE TS, RIGHT A402 ON OFF 021.05																																		
ON OFF																																		
FILAMENT K21 ON OFF 022.03																																		
HIGH VOLTAGE, P.T. K212 ON OFF 022.04																																		
START TIMER, P.T.SEAL K225 ON OFF 022.02																																		
TEMP.REG. DATE I K56 ON OFF 022.06																																		
TEMP.REG. DATE II K57 ON OFF 022.07																																		
TEMP.INDIC.DATE UNIT M.H201S ON OFF 022.16																																		
DATE UNIT I M.Y220 ON OFF 022.12																																		
DATE UNIT II M.Y221 ON OFF 022.13																																		
ON OFF																																		
ON OFF																																		
POSITION LADDER		0	00005		00010			00020		00030				00040				00050		00060				00070										

INTRODUCED WITH AM NO.	20144	DATE: 930909	SIGN. HK/RAI
ISSUE			
AM NO.			
DATE			
SIGN.			

F = FLASHING LIGHT
L = CONTINOUS LIGHT
= ELECTRICALLY ACTIVATED
= NORMAL PRESS
= LONG PRESS

DESCRIPTION: MACHINE OPERATION DIAGRAM

MACHINE: TBA/9-1402 P.T. | 47629-04:01 | 4/6

DRAWING REMARKS

ALTERATIONS ONLY IN CADAM

08:13 93.11.25

Tetra Pak
MODENA ITALY

This drawing must not without the consent of Tetra Pak be copied, transmitted or disclosed to any third party.

LADDER SYMBOLS

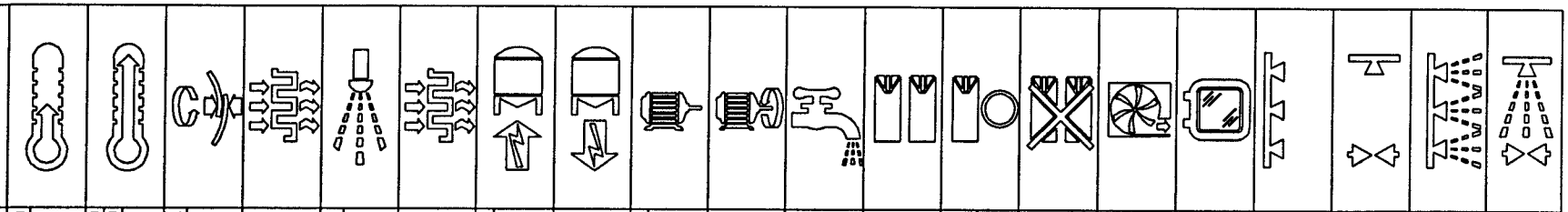

LADDER SYMBOL LIGHTS	F	L	F	F		F	L	L	F	L	L	F	L	L	F	L	L	L		L	L	L	F	L	F	L	F	L	F	L	F	L
OPERATOR ACTIONS	↑		↱			↑			↑			↑			⤳			◎	↑	↑					↑		↑		↑		↑	

MACHINE MODE		PRE-HEATING 1	PRE-HEATING 2	TIGHT TUBE	PREHEAT. III	FILLING 10s	SPRAY 40s	PAUSE 50s	DRYING 20 min	SIGNAL TO CIP	SIGNAL TO STERILE	START SEQUENS	DRIVE MOTOR	FILLING	PROD-UCTION	SHORT STOP	PROD-UCTION	END OF PRODUCTION 2 min	WEAC 5 min	WEAC READY FOR DOOR OPENING	PREPARE FOR EXTERNAL CLEANING	PREPARE FOR VALVE CLEANING	EXTERNAL CLEANING	VALVE CLEANING A	B	C
COMPRESSOR INLET	K87,K98,Y32																										
ON OFF	014.11																										
AIR INLET VALVE	Y19																										
SH BYPASS	017.14																										
SUCTION VALVE	Y23																										
SH BATH	017.13																										
HEAT EXCHANGER	Y25																										
ON OFF	017.12																										
AIR SUPER HEATER	K71																										
BYPASS	016.02																										
AIR SUPER HEAT.400°C	K53																										
ON OFF	016.17																										
AIR SUPER HEAT 360°C	K53																										
OFF ON	016.17																										
VACUUM VALVE	Y86																										
ON OFF	017.11																										
ON OFF																											
EXT.KNIFE/WASTE BLOW.	M.Y211/217																										
ON OFF	022.10																										
P.T.HEATING OFF	M.Y202																										
ON OFF	022.11																										
EXT.STRIP CAP	M.Y204																										
ON OFF	022.14																										
STRIP SPLICING	M.Y206																										
ON OFF	022.15																										
WIDE/NARROW STRIP	K55																										
ON OFF	022.05																										
ON OFF																											
ON OFF																											
POSITION LADDER		0	00005	00010	00020	00030				00040		00050		00060					00070								

INTRODUCED WITH AM NO.	20144	DATE.	930909	SIGN.	HK/RAI
ISSUE					
AM NO.					
DATE					
SIGN.					

F = FLASHING LIGHT ↑ = NORMAL PRESS
L = CONTINOUS LIGHT ⤳ = LONG PRESS
[ ] = ELECTRICALLY ACTIVATED

DESCRIPTION: MACHINE OPERATION DIAGRAM

MACHINE: TBA/9-1402 P.T. | 47629-04:01 | 5/6

ALTERATIONS ONLY IN CADAM

08:13 93.11.25

Tetra Pak
MODENA ITALY

This drawing must not without the consent of Tetra Pak, be copied, transmitted or disclosed to any third party.

LADDER SYMBOLS

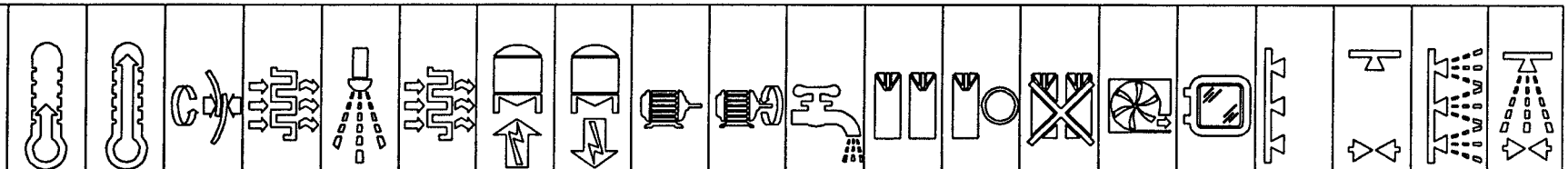

MACHINE MODE	PRE-HEATING 1	PRE-HEATING 2	TIGHT TUBE	PREHEAT. III	FILLING 10s	SPRAY 40s	PAUSE 60s	DRYING 20 min	SIGNAL TO CIP	SIGNAL TO STERILE	START SEQUENS	DRIVE MOTOR	FILLING	PROD-UCTION	SHORT STOP	PROD-UCTION	END OF PRODUCTION 2 min	WEAC 5 min	WEAC READY FOR DOOR OPENING	PREPARE FOR EXTERNAL CLEANING	PREPARE FOR VALVE CLEANING	EXTERNAL CLEANING	VALVE CLEANING A	VALVE CLEANING B	VALVE CLEANING C
LADDER SYMBOL LIGHTS	F L	F F	F L	L	F L			L	F L	L	F L	L	L	L		L	L	L	F L	F L	F L	F L	F L		
OPERATOR ACTIONS	↑	↱	↑		↑				↑		↱			◎	↑	↑				↑	↑	↑	↑		
PEROX.TANK,FILLING Y92	■													‖‖		‖									
ON OFF 021.03																									
PEROX.BATH,WATER PUMP K99	■	■	■	■	■	■	■	■	■	■	■	■	■	■	■	■	■								
ON OFF 016.01																									
PUMP, PEROXIDE K82					■						▮▮	▮▮	▮▮	▮▮		▮▮									
ON OFF 015.03																									
PEROX.BATH,DRAIN. Y5					■						■	■	■	■		■									
CLOSED OPEN 020.02																									
PEROX.BATH, FILL. Y6					■						■	■	■	■		■									
CLOSED OPEN 020.01																									
PEROX.BATH,TOP FILL. Y18											▮▮	▮▮	▮▮	▮▮		▮▮									
OPEN CLOSED 014.07																									
SPRAY TANK,FILLING Y34					■																				
OPEN CLOSED 020.11																									
AIR SPRAY TANK Y4,Y35				■		■																			
OPEN CLOSED 020.12																									
STERILE AIR VALVE(B) Y8		■	■	■	■	■	■	■																■	
OPEN CLOSED 017.17																									
STEAM BARRIER (C) Y7												■	■	■		■								■	■
OFF ON 020.00																									
PRODUCTION (A) Y9													■	■		■								■	
ON OFF 017.16																									
READY FOR PRODUCT K6									■	■	■	■	■	■		■									
ON OFF 016.12																									
AB IN PRODUCTION K26													■	■		■									
ON OFF 016.13																									
FILLING SIGNAL K30													■	■		■								■	
ON OFF 016.14																									
SIGNAL TO CIP K46																								■	
ON OFF 016.15																									
ON OFF																									
POSITION LADDER	0 00005	00010		00020	00030				00040			00050	00060						00070						

F = FLASHING LIGHT ▲ = NORMAL PRESS
L = CONTINOUS LIGHT ➡ = LONG PRESS
[ ] = ELECTRICALLY ACTIVATED

INTRODUCED WITH AM NO.	DATE	SIGN.
20144	930909	HK/RAI
ISSUE		
AM NO.		
DATE		
SIGN.		

DRAWING REMARKS

ALTERATIONS ONLY IN CADAM

DESCRIPTION: MACHINE OPERATION DIAGRAM

MACHINE: TBA/9-1402 P.T. | 47629-04:01 | 6/6

08:13 93.11.25

PULSE AND FLASHGENERATING

0501 05 [BLK]

0502 Step up PI0.04 P.S3H — Pulse M03.00 [P+] — M02.00 ( ) — Output for stepup pulse

0503 Step down PI0.05 P.S4H — Pulse M03.01 [P+] — M02.01 ( ) — Output for stepdown pulse

0504 Short stop S00.03 10-20 210-220 — Pulse M03.02 [P+] — M02.02 ( ) — Pulse short stop

0505 Delay design sign I06.00 A16A:3 — Pulse M03.03 [P+] — M02.03 ( ) — Output for designpulse

VOLUME DEPENDENT VALUE. VALID FOR 200CC, FOR OTHER VOLUME SEE:47629-03:01

0506 New package S00.05 50-53 250-253 — Pulse M03.04 [P+] — M02.04 ( ) — Pulse new package

0507 Int.strip break I07.15 M.B207 — Pulse M03.11 [P+] — M02.10 ( ) — Output for pulse internal strip break

08:13 93.11.25

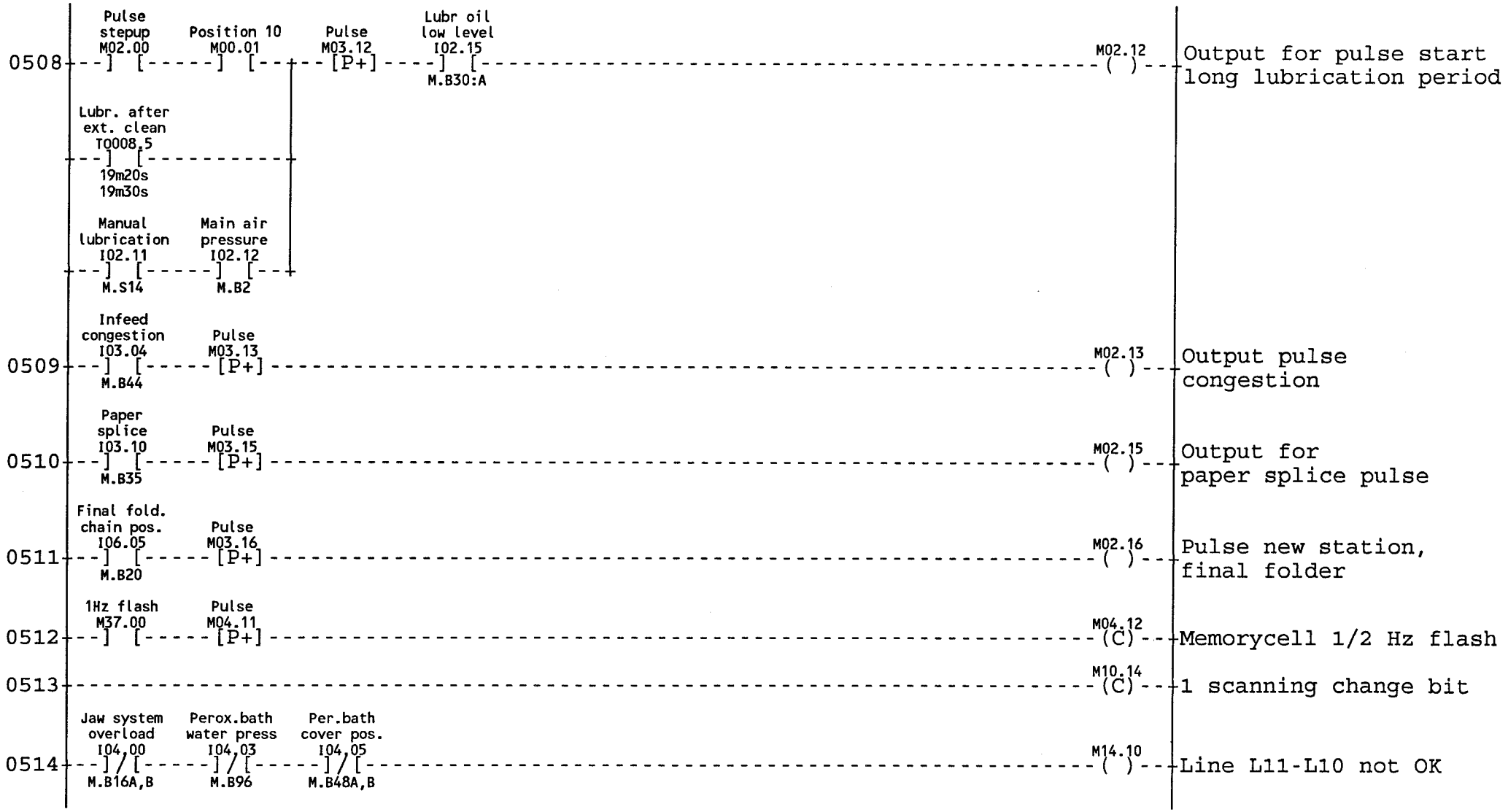
0508
Pulse stepup M02.00
Position 10 M00.01
Pulse M03.12 [P+]
Lubr oil low level I02.15
M.B30:A
M02.12 ( )
Output for pulse start long lubrication period
Lubr. after ext. clean T0008.5
19m20s
19m30s
Manual lubrication I02.11
M.S14
Main air pressure I02.12
M.B2
0509
Infeed congestion I03.04
M.B44
Pulse M03.13 [P+]
M02.13 ( )
Output pulse congestion
0510
Paper splice I03.10
M.B35
Pulse M03.15 [P+]
M02.15 ( )
Output for paper splice pulse
0511
Final fold. chain pos. I06.05
M.B20
Pulse M03.16 [P+]
M02.16 ( )
Pulse new station, final folder
0512
1Hz flash M37.00
Pulse M04.11 [P+]
M04.12 (C)
Memorycell 1/2 Hz flash
0513
M10.14 (C)
1 scanning change bit
0514
Jaw system overload I04.00
M.B16A,B
Perox.bath water press I04.03
M.B96
Per.bath cover pos. I04.05
M.B48A,B
M14.10 ( )
Line L11-L10 not OK

08:13 93.11.25

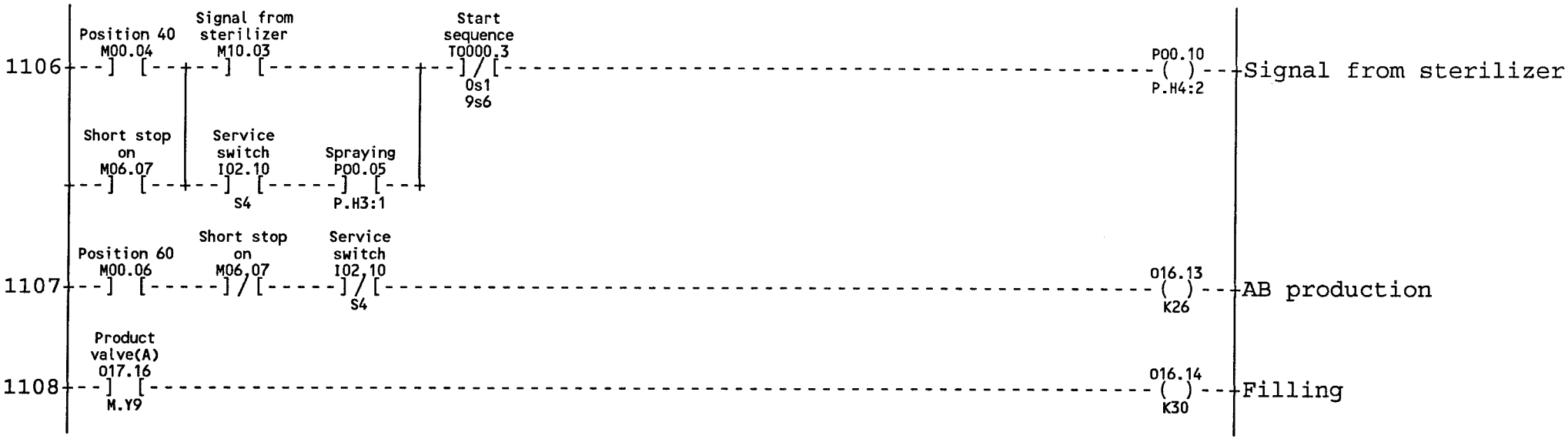
1106
Position 40
M00.04
Signal from
sterilizer
M10.03
Start
sequence
T0000.3
0s1
9s6
P00.10
P.H4:2
Signal from sterilizer
Short stop
on
M06.07
Service
switch
I02.10
S4
Spraying
P00.05
P.H3:1
1107
Position 60
M00.06
Short stop
on
M06.07
Service
switch
I02.10
S4
O16.13
K26
AB production
1108
Product
valve(A)
O17.16
M.Y9
O16.14
K30
Filling

08:13 93.11.25

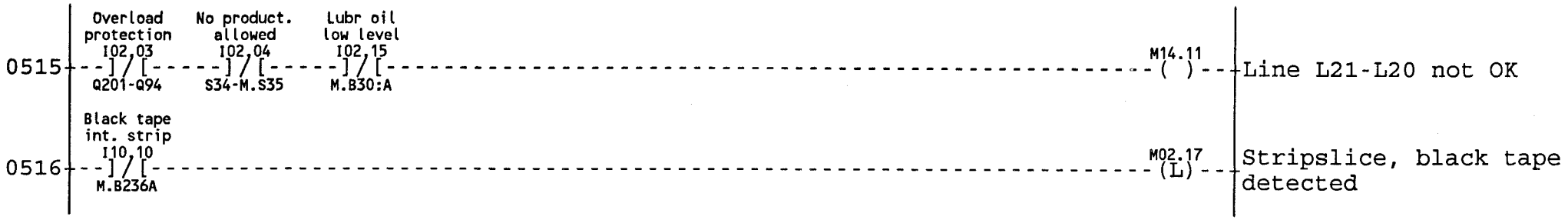
0515
Overload protection
I02,03
Q201-Q94
No product. allowed
I02,04
S34-M.S35
Lubr oil low level
I02,15
M.B30:A
M14.11
Line L21-L20 not OK
0516
Black tape int. strip
I10,10
M.B236A
M02.17
(L)
Stripslice, black tape detected

08:13 93.11.25

POSITIONS MACHINELADDER, STEP UP CONDITIONS

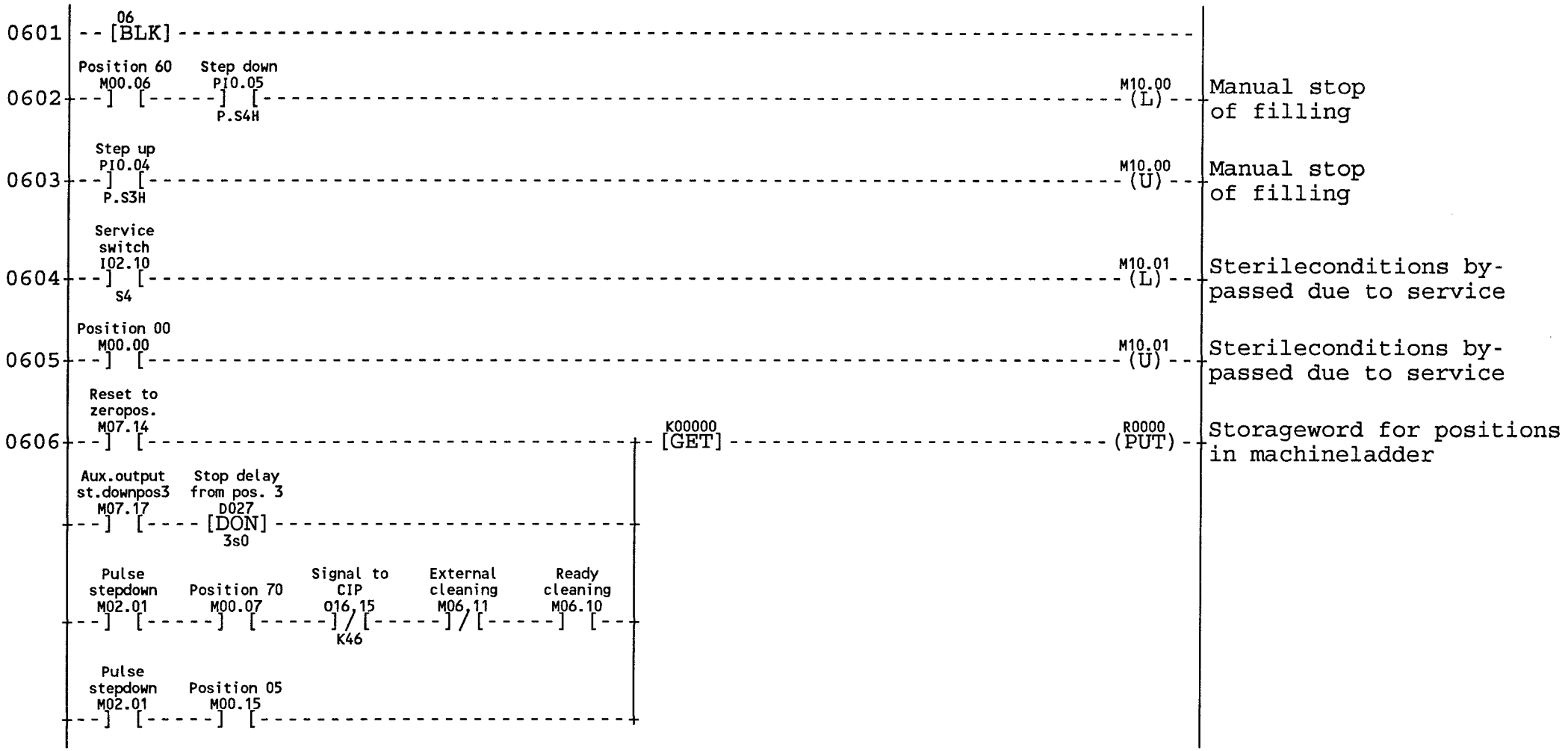

08:13 93.11.25

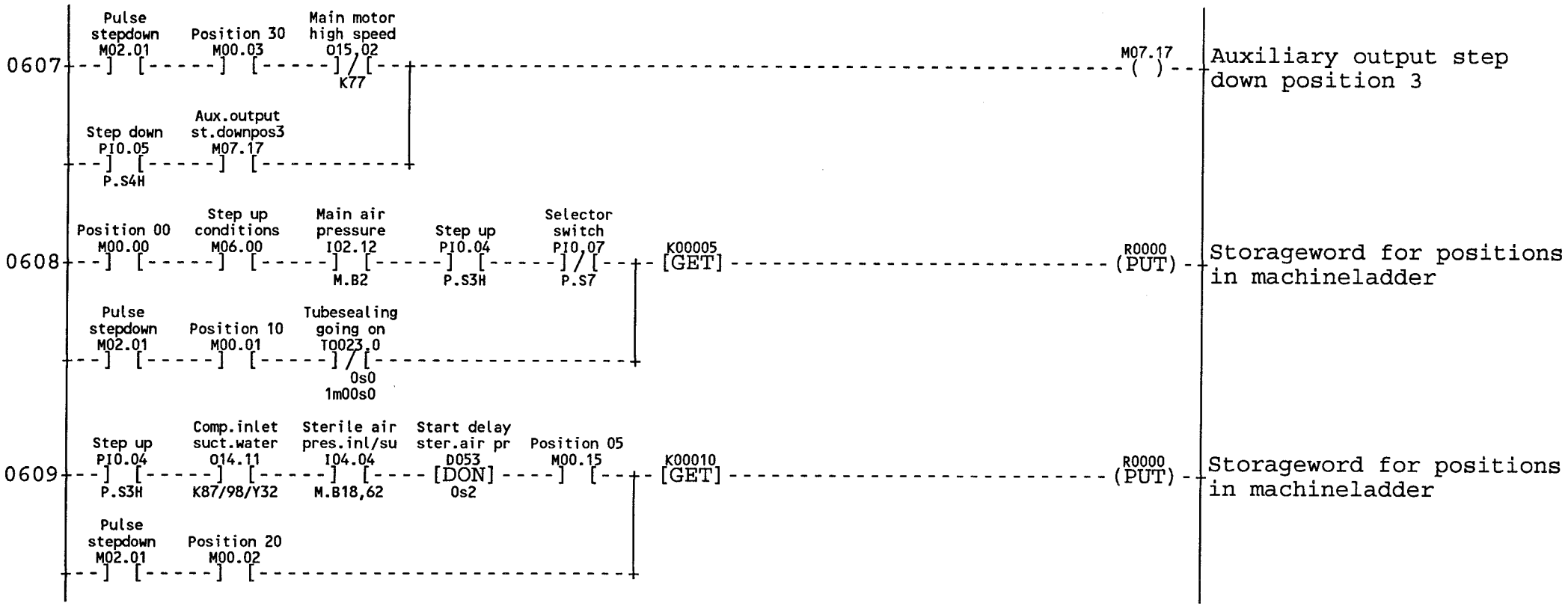
0607
Pulse stepdown M02.01
Position 30 M00.03
Main motor high speed O15.02
K77
M07.17
Auxiliary output step down position 3
Step down PI0.05
P.S4H
Aux.output st.downpos3 M07.17
0608
Position 00 M00.00
Step up conditions M06.00
Main air pressure I02.12
M.B2
Step up PI0.04
P.S3H
Selector switch PI0.07
P.S7
K00005
[GET]
R0000
(PUT)
Storageword for positions in machineladder
Pulse stepdown M02.01
Position 10 M00.01
Tubesealing going on TQ023.0
0s0
1m00s0
0609
Step up PI0.04
P.S3H
Comp.inlet suct.water O14.11
K87/98/Y32
Sterile air pres.inl/su I04.04
M.B18,62
Start delay ster.air pr D053
[DON]
0s2
Position 05 M00.15
K00010
[GET]
R0000
(PUT)
Storageword for positions in machineladder
Pulse stepdown M02.01
Position 20 M00.02

08:13 93.11.25

VOLUME DEPENDENT VALUE. VALID FOR 200CC, FOR OTHER VOLUME SEE:47629-03:01

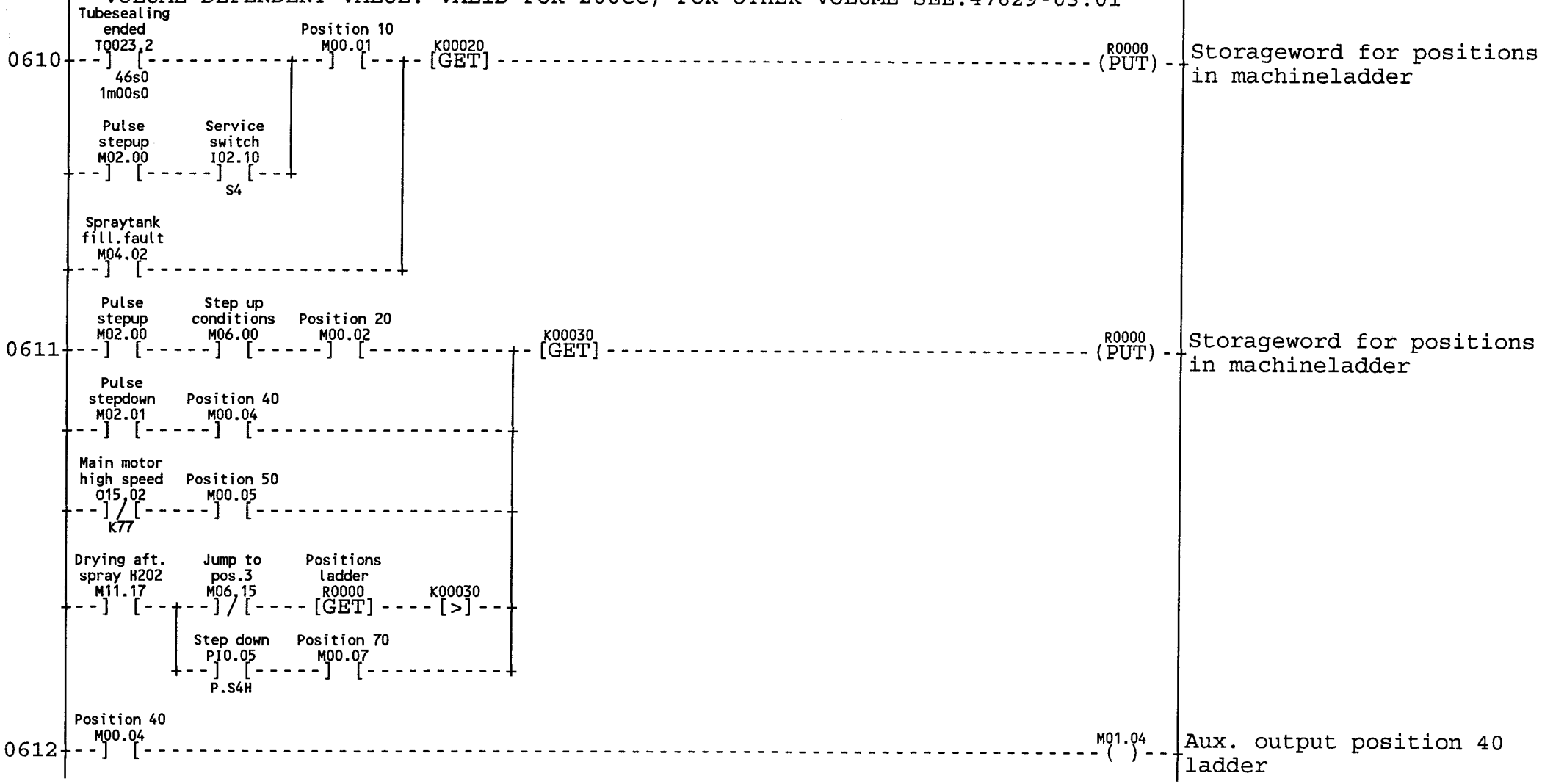

08:13 93 11 25

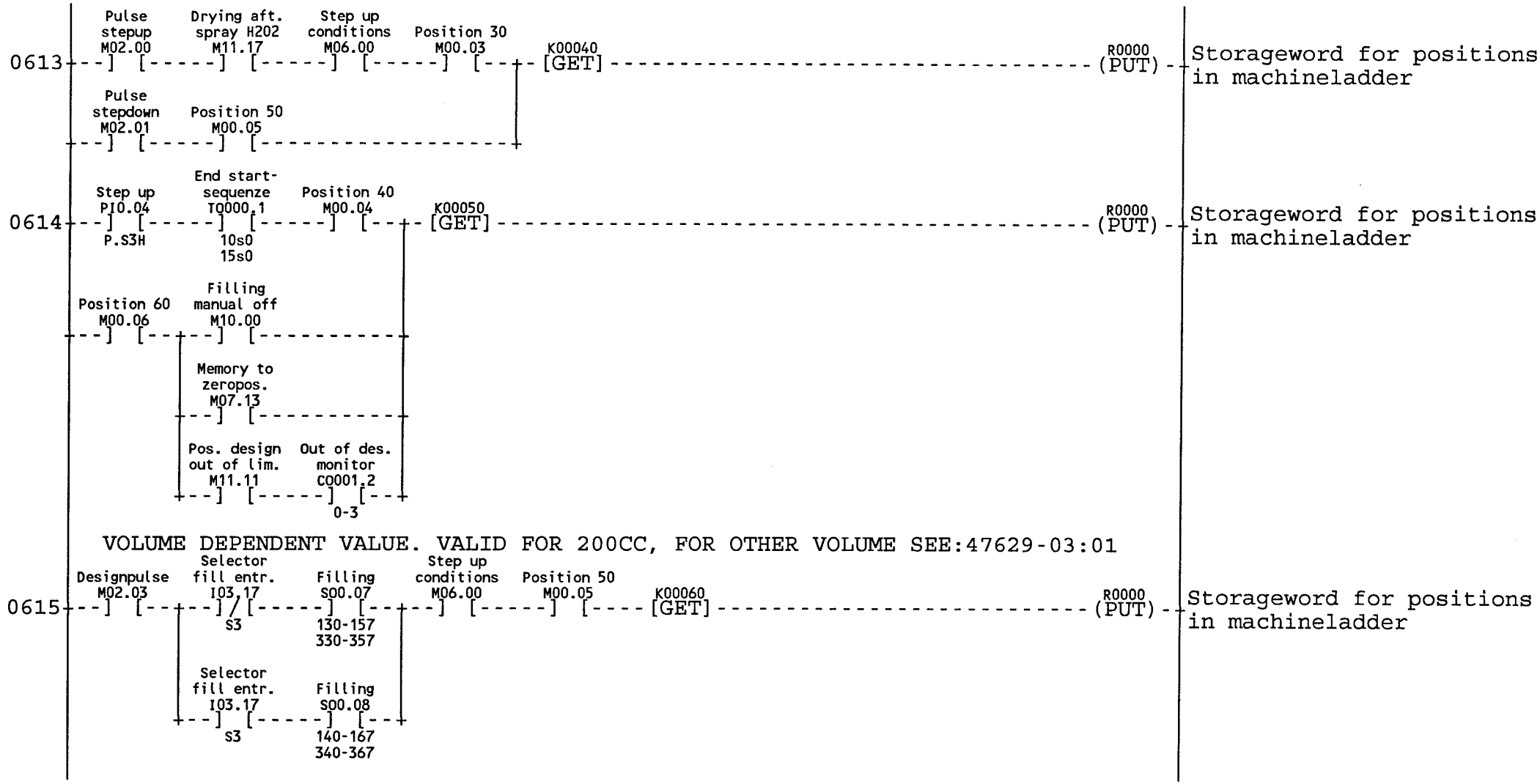
0613
Pulse stepup M02.00
Drying aft. spray H202 M11.17
Step up conditions M06.00
Position 30 M00.03
K00040 [GET]
R0000 (PUT)
Storageword for positions in machineladder
Pulse stepdown M02.01
Position 50 M00.05
0614
Step up PI0.04
P.S3H
End start-sequenze TQ000.1
10s0
15s0
Position 40 M00.04
K00050 [GET]
R0000 (PUT)
Storageword for positions in machineladder
Position 60 M00.06
Filling manual off M10.00
Memory to zeropos. M07.13
Pos. design out of lim. M11.11
Out of des. monitor C0001.2
0-3
VOLUME DEPENDENT VALUE. VALID FOR 200CC, FOR OTHER VOLUME SEE:47629-03:01
0615
Designpulse M02.03
Selector fill entr. I03.17
S3
Filling S00.07
130-157
330-357
Step up conditions M06.00
Position 50 M00.05
K00060 [GET]
R0000 (PUT)
Storageword for positions in machineladder
Selector fill entr. I03.17
S3
Filling S00.08
140-167
340-367

08:13 93.11.25

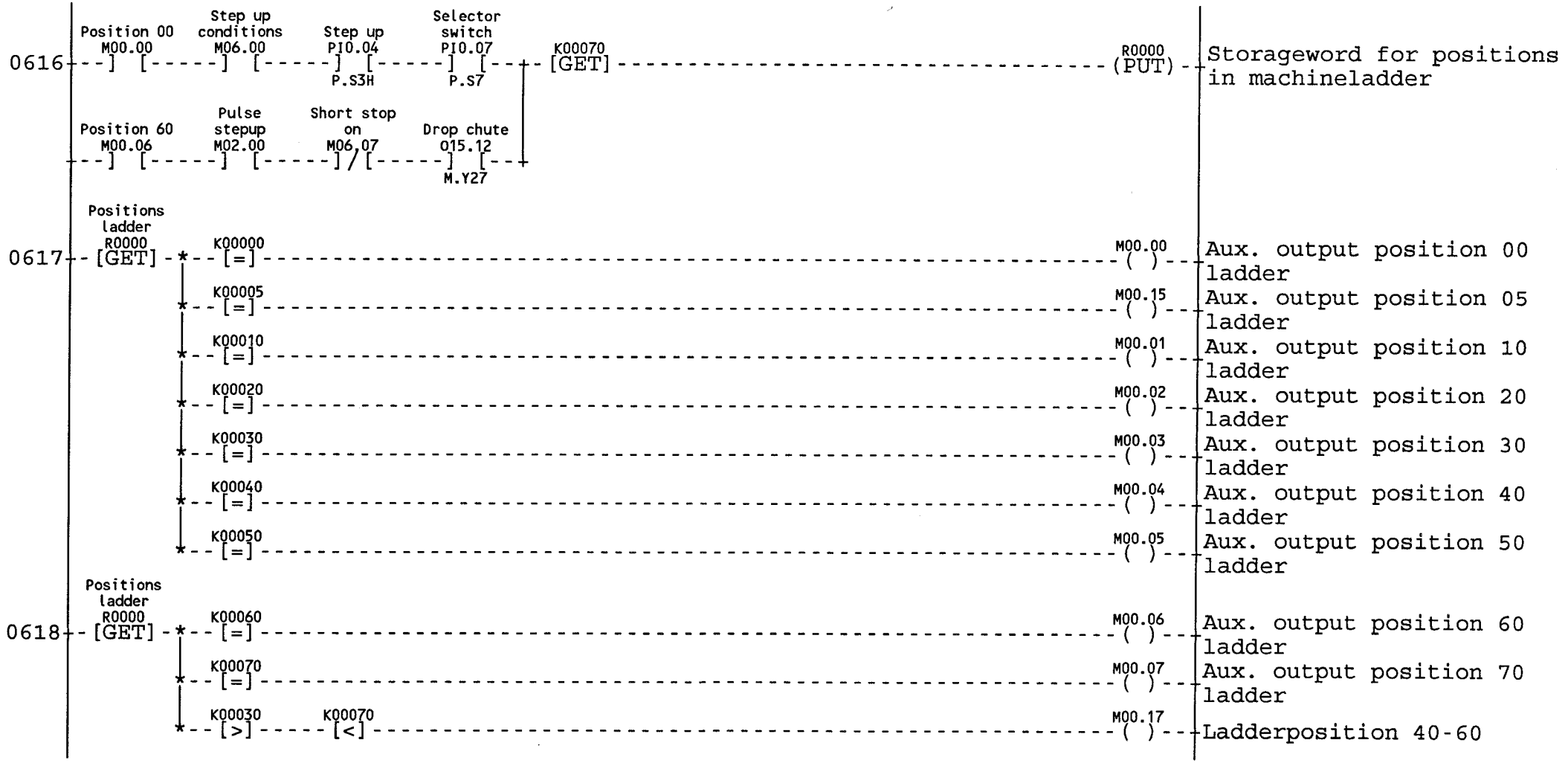
0616
Position 00
M00.00
Step up conditions
M06.00
Step up
PI0.04
P.S3H
Selector switch
PI0.07
P.S7
K00070
[GET]
R0000
(PUT)
Storageword for positions in machineladder
Position 60
M00.06
Pulse stepup
M02.00
Short stop on
M06.07
Drop chute
O15.12
M.Y27
0617
Positions ladder
R0000
[GET]
K00000
[=]
M00.00
Aux. output position 00 ladder
K00005
M00.15
Aux. output position 05 ladder
K00010
M00.01
Aux. output position 10 ladder
K00020
M00.02
Aux. output position 20 ladder
K00030
M00.03
Aux. output position 30 ladder
K00040
M00.04
Aux. output position 40 ladder
K00050
M00.05
Aux. output position 50 ladder
0618
Positions ladder
R0000
[GET]
K00060
[=]
M00.06
Aux. output position 60 ladder
K00070
M00.07
Aux. output position 70 ladder
K00030
[>]
K00070
[<]
M00.17
Ladderposition 40-60

08:13 93.11.25

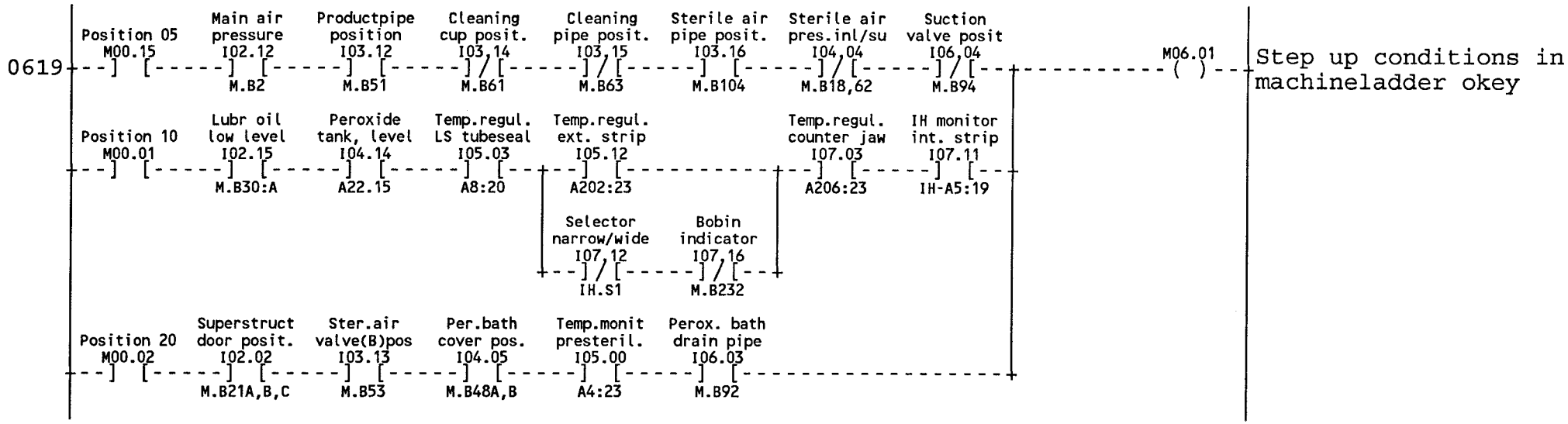
0619
Position 05
M00.15
Main air pressure
I02.12
M.B2
Productpipe position
I03.12
M.B51
Cleaning cup posit.
I03,14
M.B61
Cleaning pipe posit.
I03,15
M.B63
Sterile air pipe posit.
I03.16
M.B104
Sterile air pres.inl/su
I04,04
M.B18,62
Suction valve posit
I06,04
M.B94
M06.01
Step up conditions in machineladder okey
Position 10
M00.01
Lubr oil low level
I02.15
M.B30:A
Peroxide tank, level
I04.14
A22.15
Temp.regul. LS tubeseal
I05.03
A8:20
Temp.regul. ext. strip
I05.12
A202:23
Temp.regul. counter jaw
I07.03
A206:23
IH monitor int. strip
I07.11
IH-A5:19
Selector narrow/wide
I07,12
IH.S1
Bobin indicator
I07,16
M.B232
Position 20
M00.02
Superstruct door posit.
I02.02
M.B21A,B,C
Ster.air valve(B)pos
I03.13
M.B53
Per.bath cover pos.
I04.05
M.B48A,B
Temp.monit presteril.
I05.00
A4:23
Perox. bath drain pipe
I06.03
M.B92

08:13 93.11.25

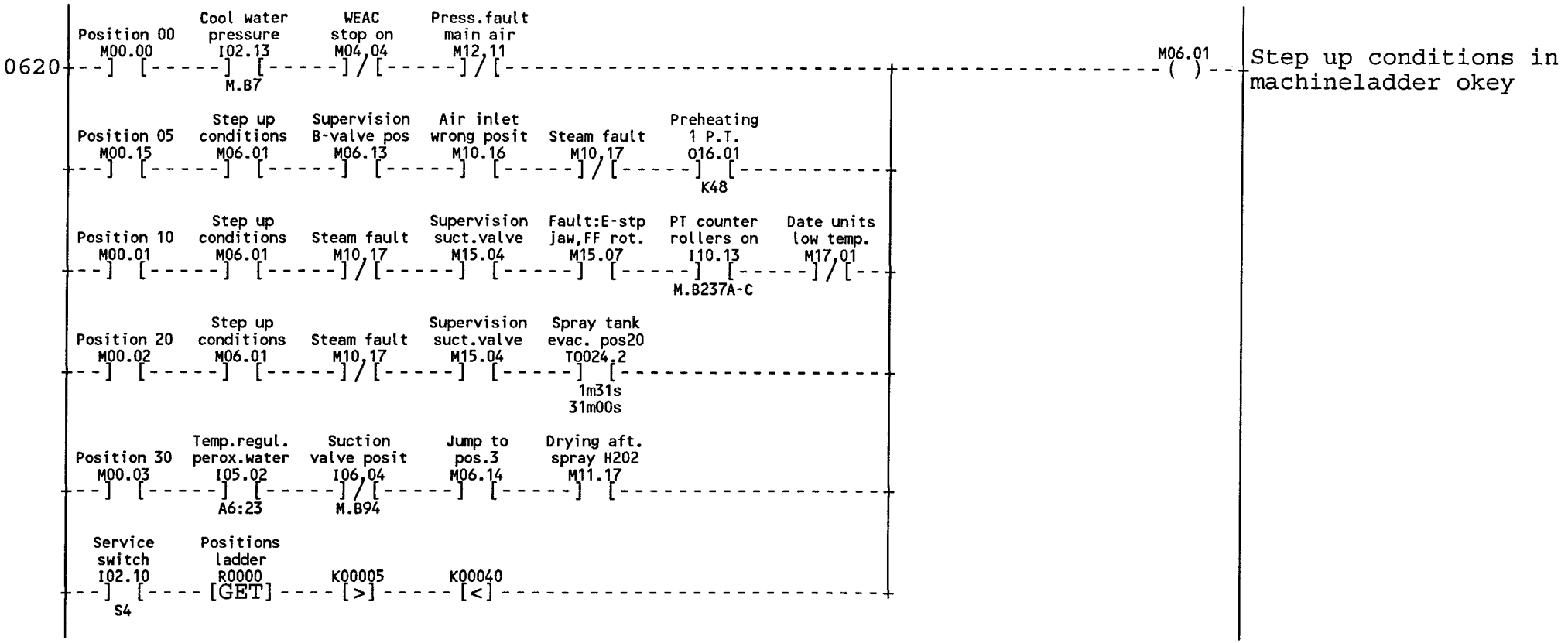
0620
Position 00
M00.00
Cool water pressure
I02.13
M.B7
WEAC stop on
M04,04
Press.fault main air
M12,11
M06.01
Step up conditions in machineladder okey
Position 05
M00.15
Step up conditions
M06.01
Supervision B-valve pos
M06.13
Air inlet wrong posit
M10.16
Steam fault
M10,17
Preheating 1 P.T.
O16.01
K48
Position 10
M00.01
Step up conditions
M06.01
Steam fault
M10,17
Supervision suct.valve
M15.04
Fault:E-stp jaw,FF rot.
M15.07
PT counter rollers on
I10.13
M.B237A-C
Date units low temp.
M17,01
Position 20
M00.02
Step up conditions
M06.01
Steam fault
M10,17
Supervision suct.valve
M15.04
Spray tank evac. pos20
T0024,2
1m31s
31m00s
Position 30
M00.03
Temp.regul. perox.water
I05.02
A6:23
Suction valve posit
I06,04
M.B94
Jump to pos.3
M06.14
Drying aft. spray H202
M11.17
Service switch
I02.10
S4
Positions ladder
R0000
[GET]
K00005
[>]
K00040
[<]

08:13 93.11.25

VOLUME DEPENDENT VALUE. VALID FOR 200CC, FOR OTHER VOLUME SEE:47629-03:01

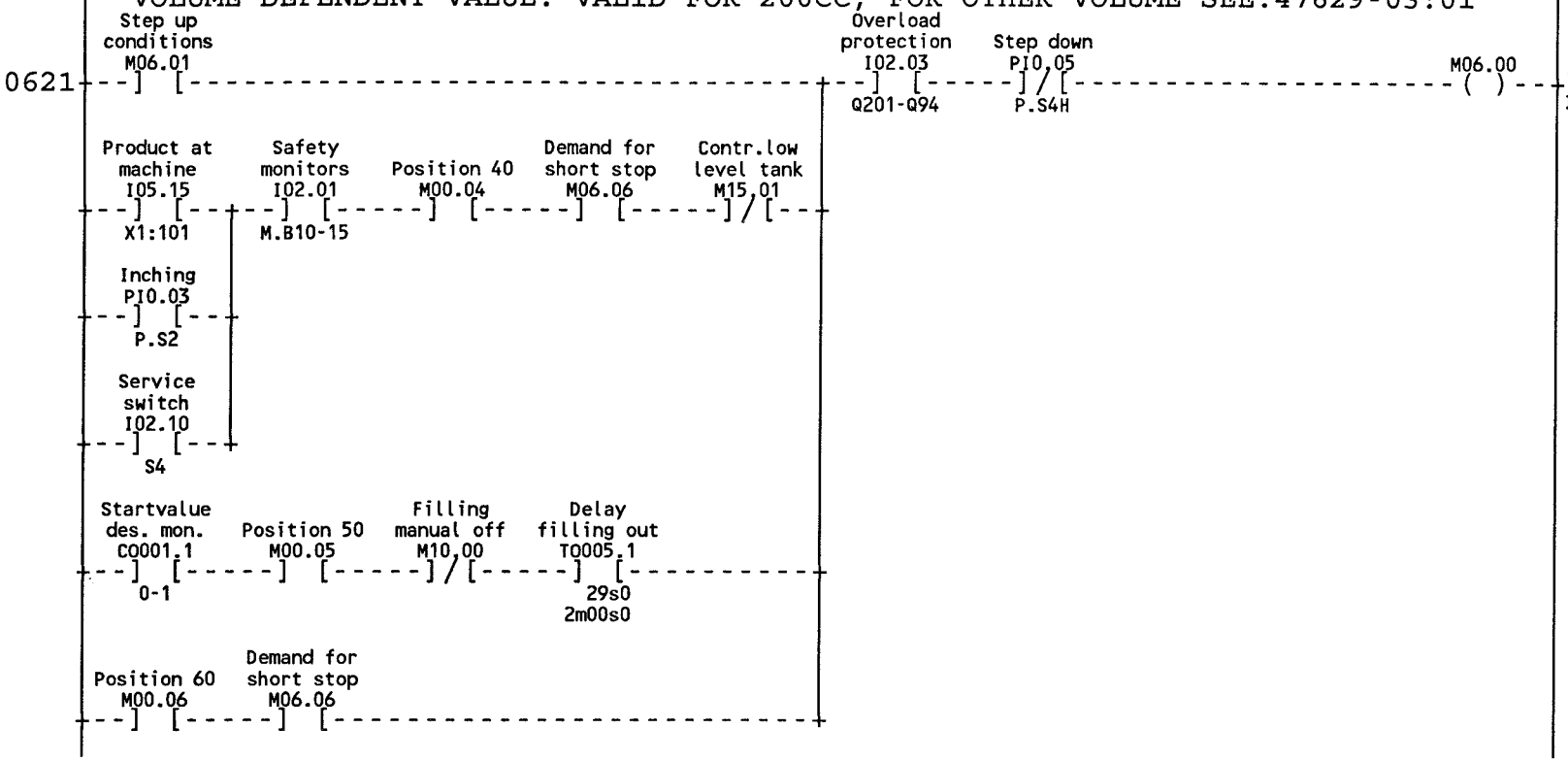

08:13 93.11.25

PREHEATING 1, PEROXID TANK HANDLING AND PREHEATING 2

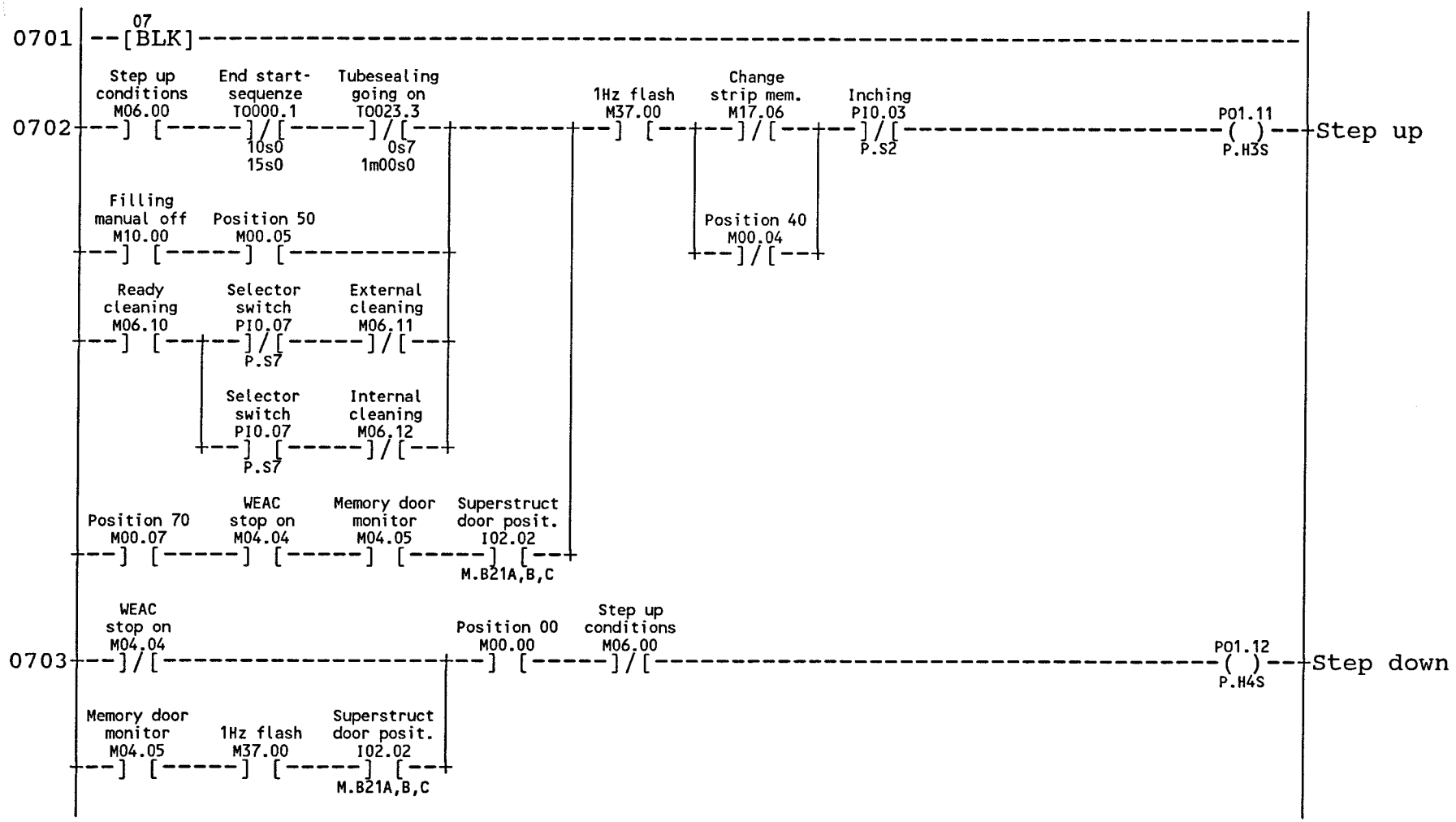

08:13 93.11.25

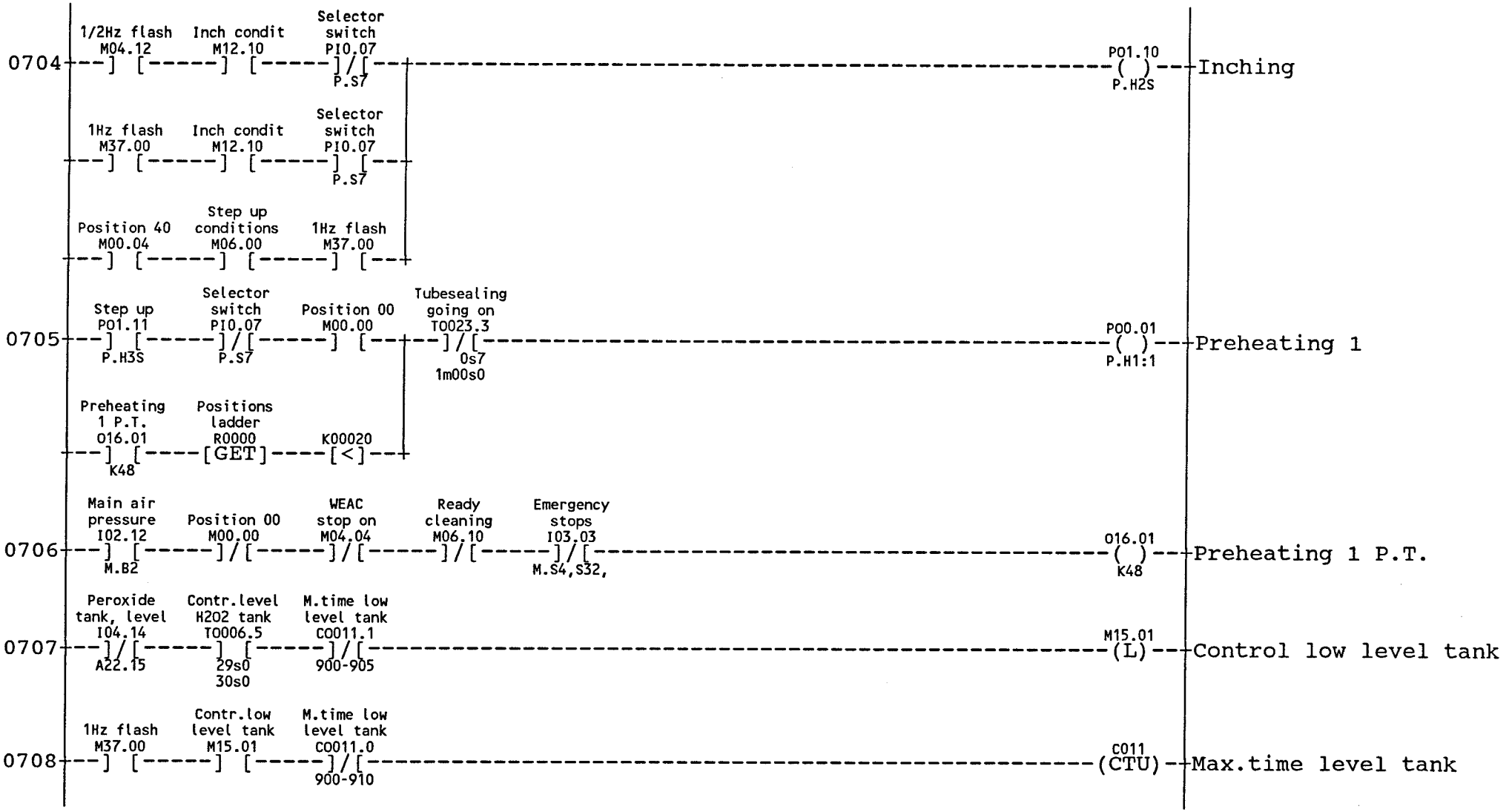
0704
1/2Hz flash M04.12
Inch condit M12.10
Selector switch PI0.07 P.S7
1Hz flash M37.00
Inch condit M12.10
Selector switch PI0.07 P.S7
Position 40 M00.04
Step up conditions M06.00
1Hz flash M37.00
PO1.10 P.H2S
Inching
0705
Step up PO1.11 P.H3S
Selector switch PI0.07 P.S7
Position 00 M00.00
Tubesealing going on T0023.3 0s7 1m00s0
Preheating 1 P.T. O16.01 K48
Positions ladder R0000 [GET]
K00020 [<]
PO0.01 P.H1:1
Preheating 1
0706
Main air pressure I02.12 M.B2
Position 00 M00.00
WEAC stop on M04.04
Ready cleaning M06.10
Emergency stops I03.03 M.S4,S32,
O16.01 K48
Preheating 1 P.T.
0707
Peroxide tank, level I04.14 A22.15
Contr.level H2O2 tank T0006.5 29s0 30s0
M.time low level tank C0011.1 900-905
M15.01 (L)
Control low level tank
0708
1Hz flash M37.00
Contr.low level tank M15.01
M.time low level tank C0011.0 900-910
C011 (CTU)
Max.time level tank

08:13 93.11.25

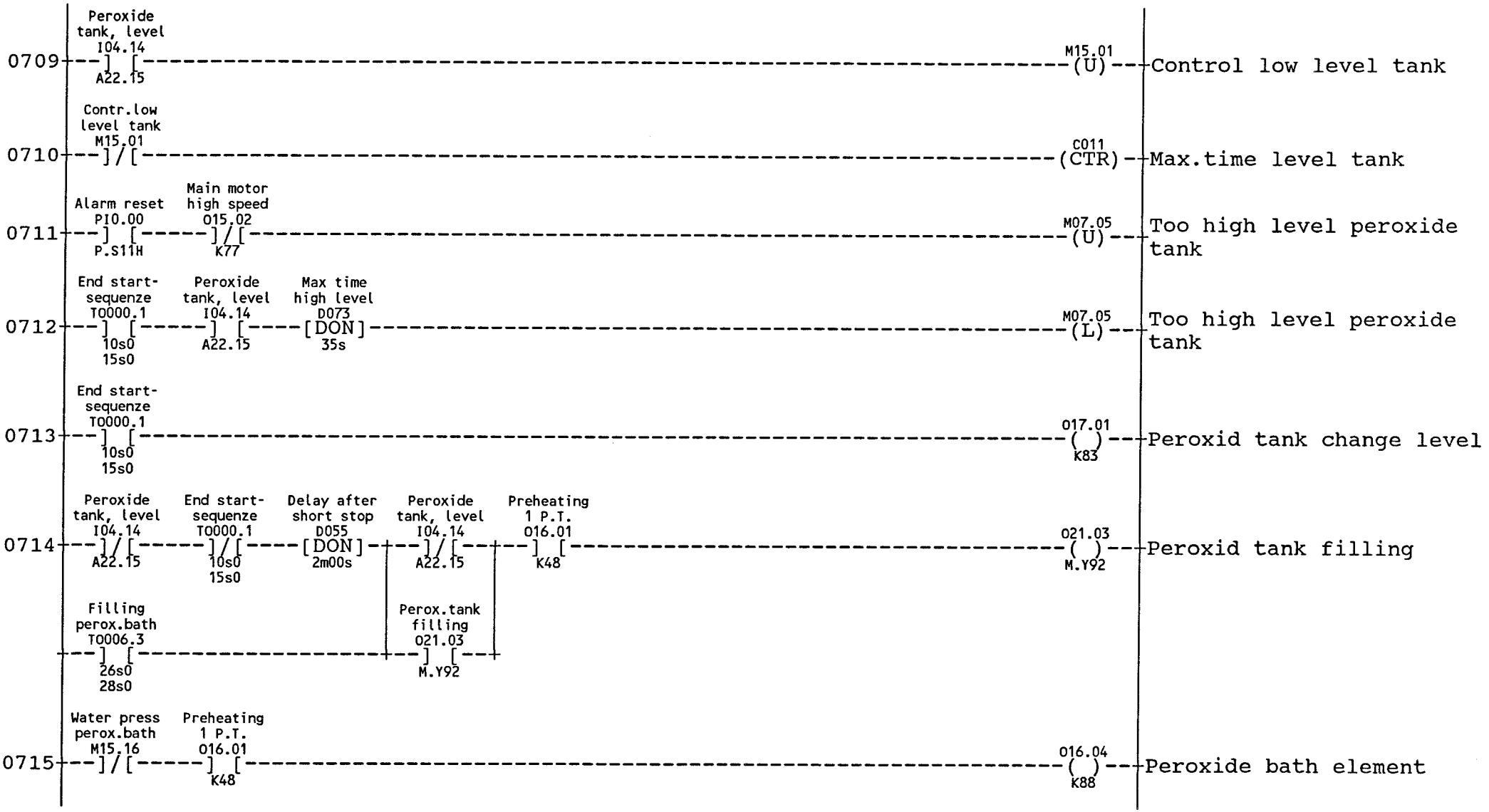
0709
Peroxide tank, level I04.14
A22.15
M15.01 (U)
Control low level tank
0710
Contr.low level tank M15.01
C011 (CTR)
Max.time level tank
0711
Alarm reset PI0.00
P.S11H
Main motor high speed O15.02
K77
M07.05 (U)
Too high level peroxide tank
0712
End start-sequenze T0000.1
10s0
15s0
Peroxide tank, level I04.14
A22.15
Max time high level D073
DON
35s
M07.05 (L)
Too high level peroxide tank
0713
End start-sequenze T0000.1
10s0
15s0
O17.01 ( )
K83
Peroxid tank change level
0714
Peroxide tank, level I04.14
A22.15
End start-sequenze T0000.1
10s0
15s0
Delay after short stop D055
DON
2m00s
Peroxide tank, level I04.14
A22.15
Preheating 1 P.T. O16.01
K48
O21.03 ( )
M.Y92
Peroxid tank filling
Filling perox.bath T0006.3
26s0
28s0
Perox.tank filling O21.03
M.Y92
0715
Water press perox.bath M15.16
Preheating 1 P.T. O16.01
K48
O16.04 ( )
K88
Peroxide bath element

08:13 93.11.25

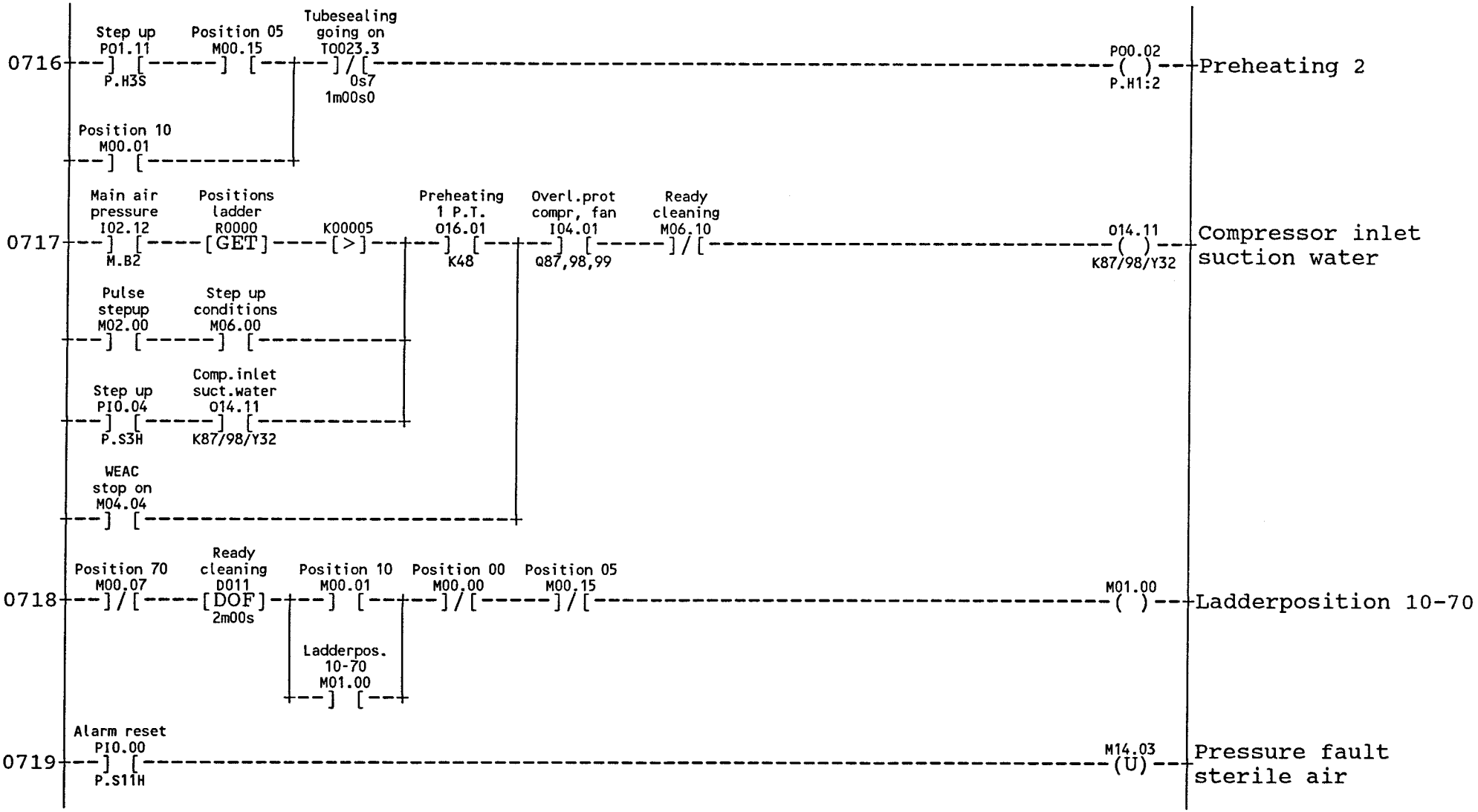
0716
Step up
PO1.11
P.H3S
Position 05
M00.15
Tubesealing
going on
T0023.3
0s7
1m00s0
Position 10
M00.01
PO0.02
P.H1:2
Preheating 2
0717
Main air
pressure
I02.12
M.B2
Positions
ladder
R0000
GET
K00005
>
Preheating
1 P.T.
O16.01
K48
Overl.prot
compr, fan
I04.01
Q87,98,99
Ready
cleaning
M06.10
O14.11
K87/98/Y32
Compressor inlet
suction water
Pulse
stepup
M02.00
Step up
conditions
M06.00
Step up
PI0.04
P.S3H
Comp.inlet
suct.water
O14.11
K87/98/Y32
WEAC
stop on
M04.04
0718
Position 70
M00.07
Ready
cleaning
D011
DOF
2m00s
Position 10
M00.01
Position 00
M00.00
Position 05
M00.15
M01.00
Ladderposition 10-70
Ladderpos.
10-70
M01.00
0719
Alarm reset
PI0.00
P.S11H
M14.03
U
Pressure fault
sterile air

08:13 93.11.25

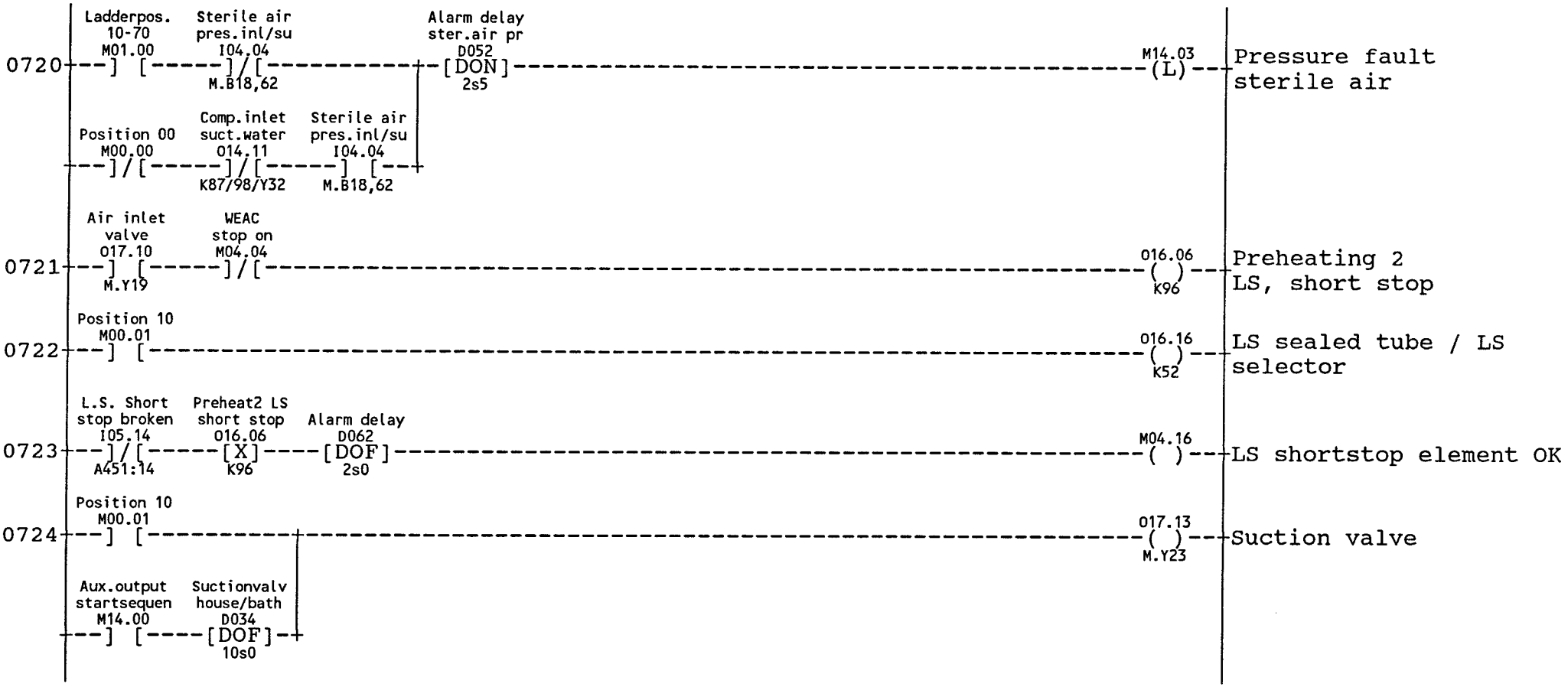
0720
Ladderpos. 10-70 M01.00
Sterile air pres.inl/su I04.04 M.B18,62
Alarm delay ster.air pr D052 [DON] 2s5
M14.03 (L)
Pressure fault sterile air
Position 00 M00.00
Comp.inlet suct.water O14.11 K87/98/Y32
Sterile air pres.inl/su I04.04 M.B18,62
0721
Air inlet valve O17.10 M.Y19
WEAC stop on M04.04
O16.06 ( ) K96
Preheating 2 LS, short stop
Position 10 M00.01
0722
O16.16 ( ) K52
LS sealed tube / LS selector
L.S. Short stop broken I05.14 A451:14
Preheat2 LS short stop O16.06 [X] K96
Alarm delay D062 [DOF] 2s0
0723
M04.16 ( )
LS shortstop element OK
Position 10 M00.01
0724
O17.13 ( ) M.Y23
Suction valv
Aux.output startsequen M14.00
Suctionvalv house/bath D034 [DOF] 10s0

08:13 93.11.25

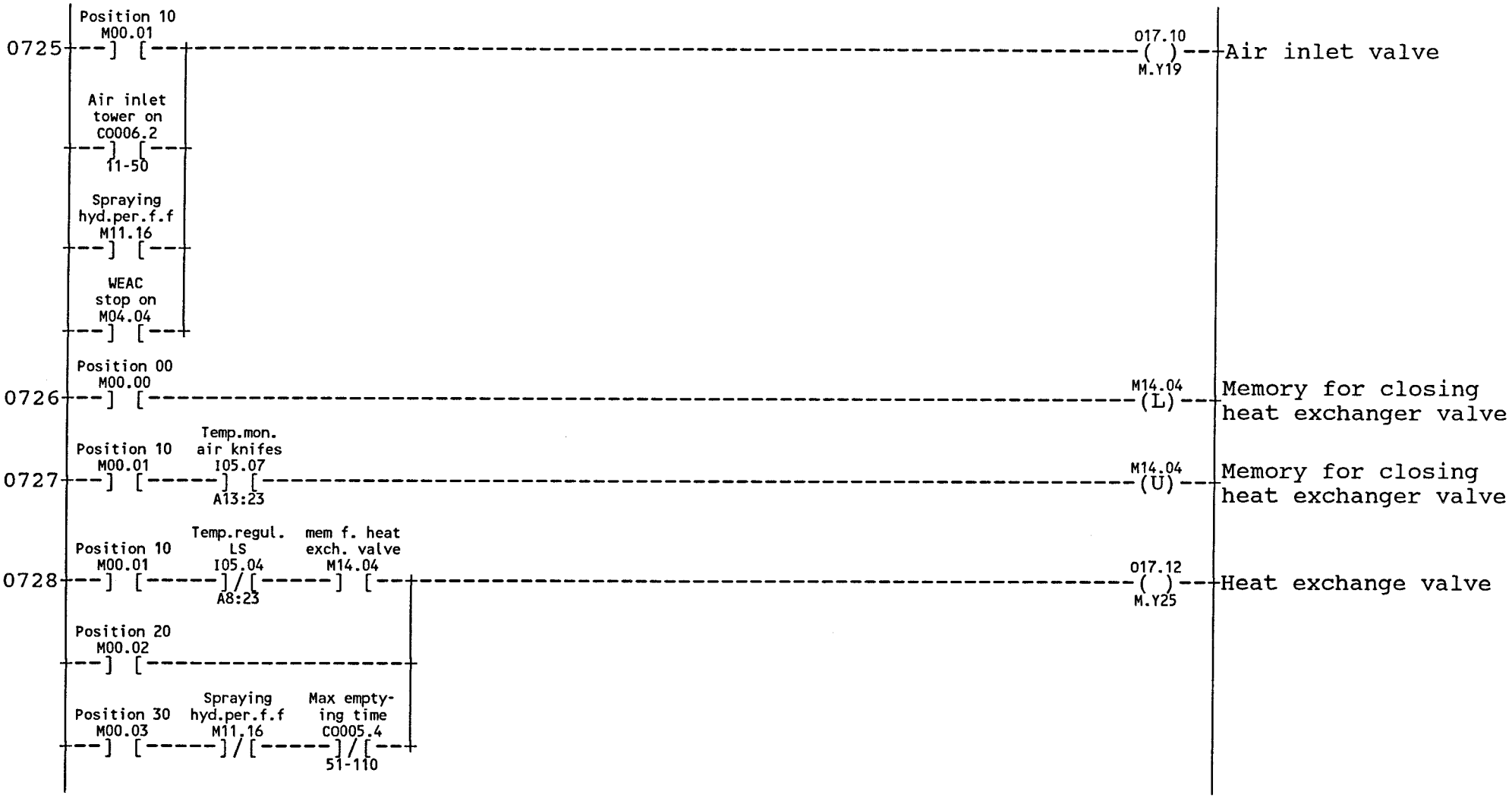
0725
Position 10
M00.01
Air inlet tower on
C0006.2
11-50
Spraying hyd.per.f.f
M11.16
WEAC stop on
M04.04
O17.10
M.Y19
Air inlet valve
0726
Position 00
M00.00
M14.04
(L)
Memory for closing heat exchanger valve
0727
Position 10
M00.01
Temp.mon. air knifes
I05.07
A13:23
M14.04
(U)
Memory for closing heat exchanger valve
0728
Position 10
M00.01
Temp.regul. LS
I05.04
A8:23
mem f. heat exch. valve
M14.04
O17.12
M.Y25
Heat exchange valve
Position 20
M00.02
Position 30
M00.03
Spraying hyd.per.f.f
M11.16
Max empty-ing time
C0005.4
51-110

08:13 93.11.25

TUBESEALING AND PRESTERILIZING

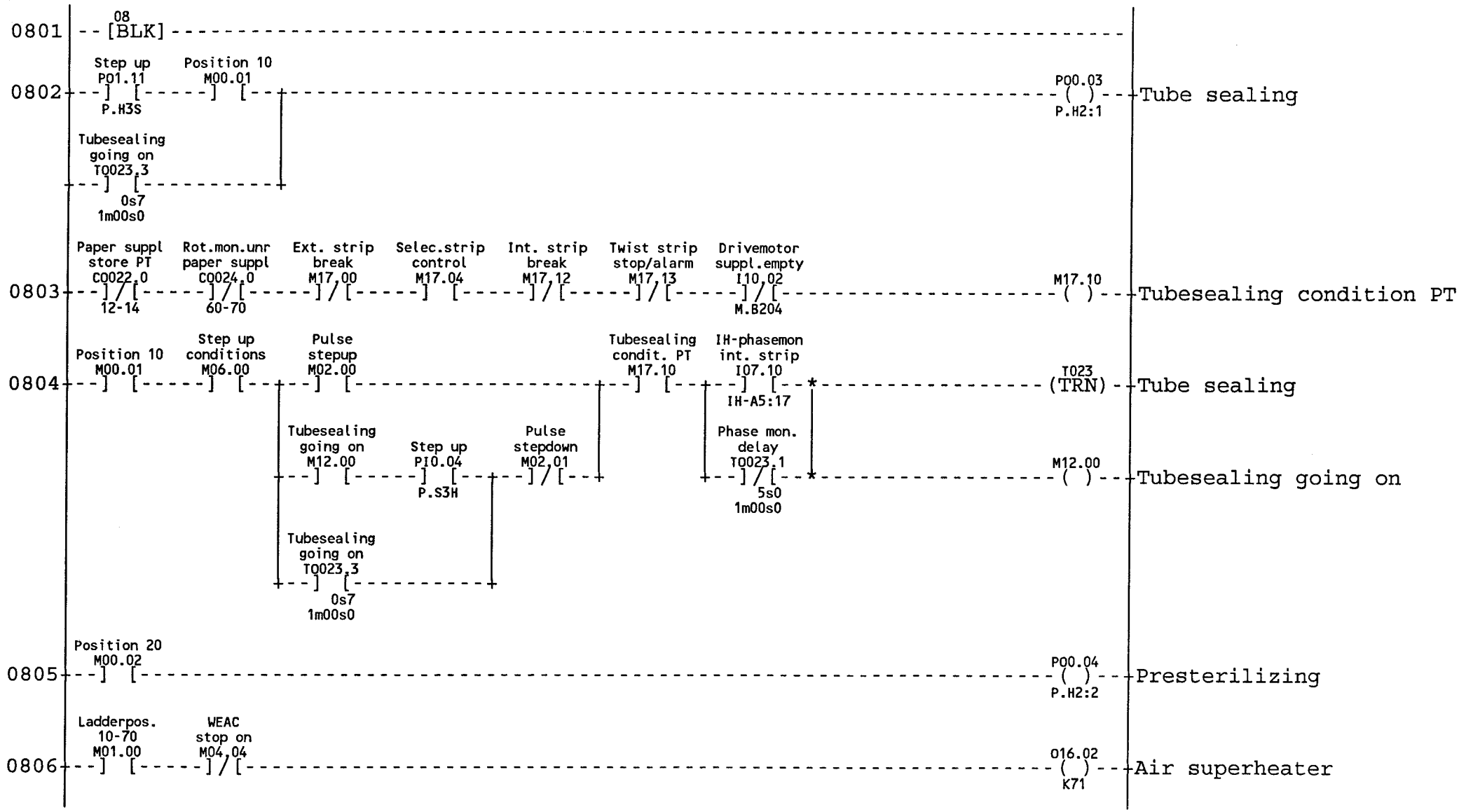

08:13 93.11.25

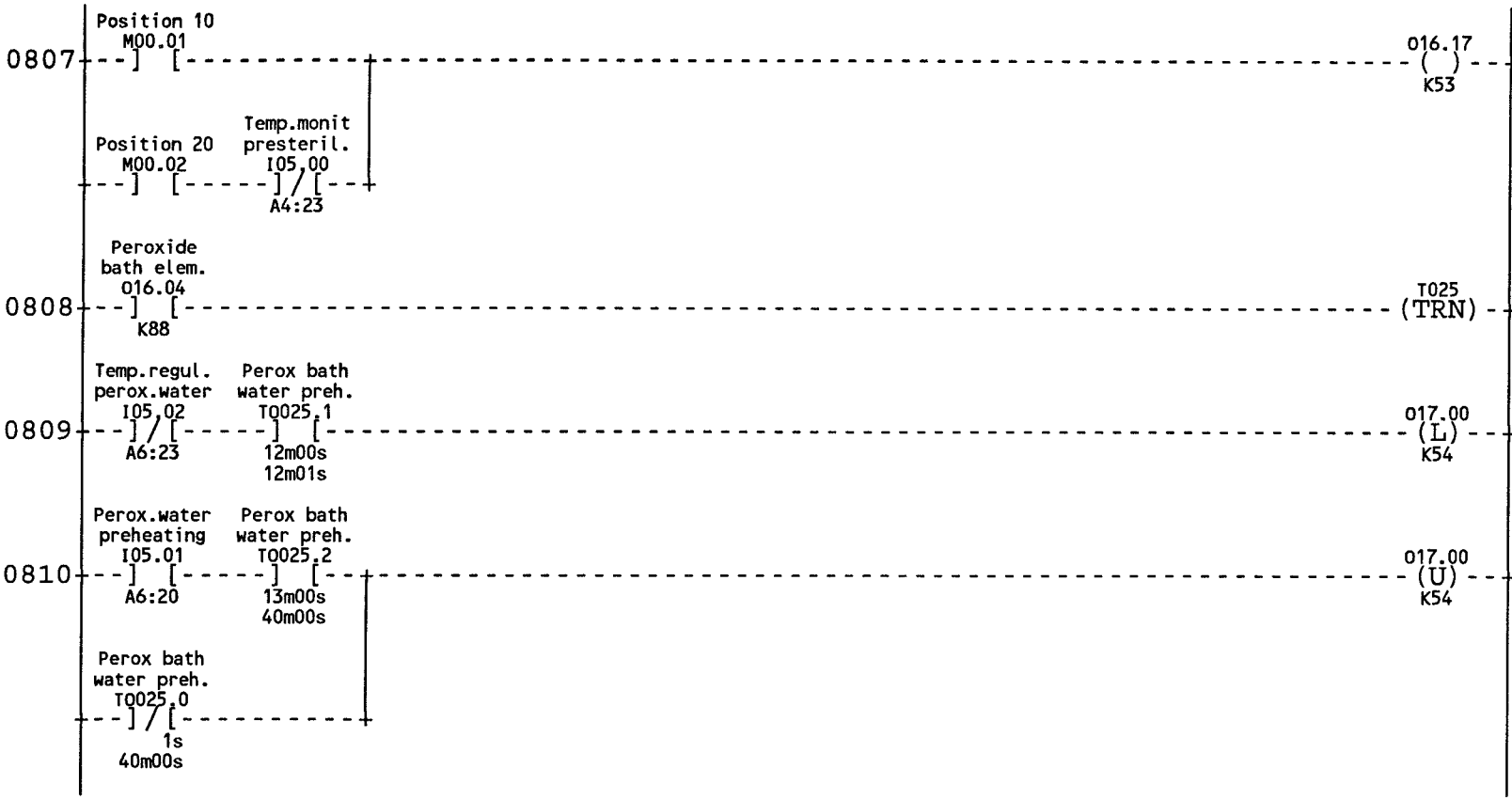
0807
Position 10
M00.01
Position 20
M00.02
Temp.monit
presteril.
I05.00
A4:23
016.17
K53
Air heater preheating /
production 400/360
0808
Peroxide
bath elem.
O16.04
K88
T025
(TRN)
Peroxide bath water
preheating high temp
0809
Temp.regul.
perox.water
I05.02
A6:23
Perox bath
water preh.
T0025.1
12m00s
12m01s
017.00
(L)
K54
Peroxide bath, water
preheating
0810
Perox.water
preheating
I05.01
A6:20
Perox bath
water preh.
T0025.2
13m00s
40m00s
017.00
(U)
K54
Peroxide bath, water
preheating
Perox bath
water preh.
T0025.0
1s
40m00s

08:13 93.11.25

SPRAYING

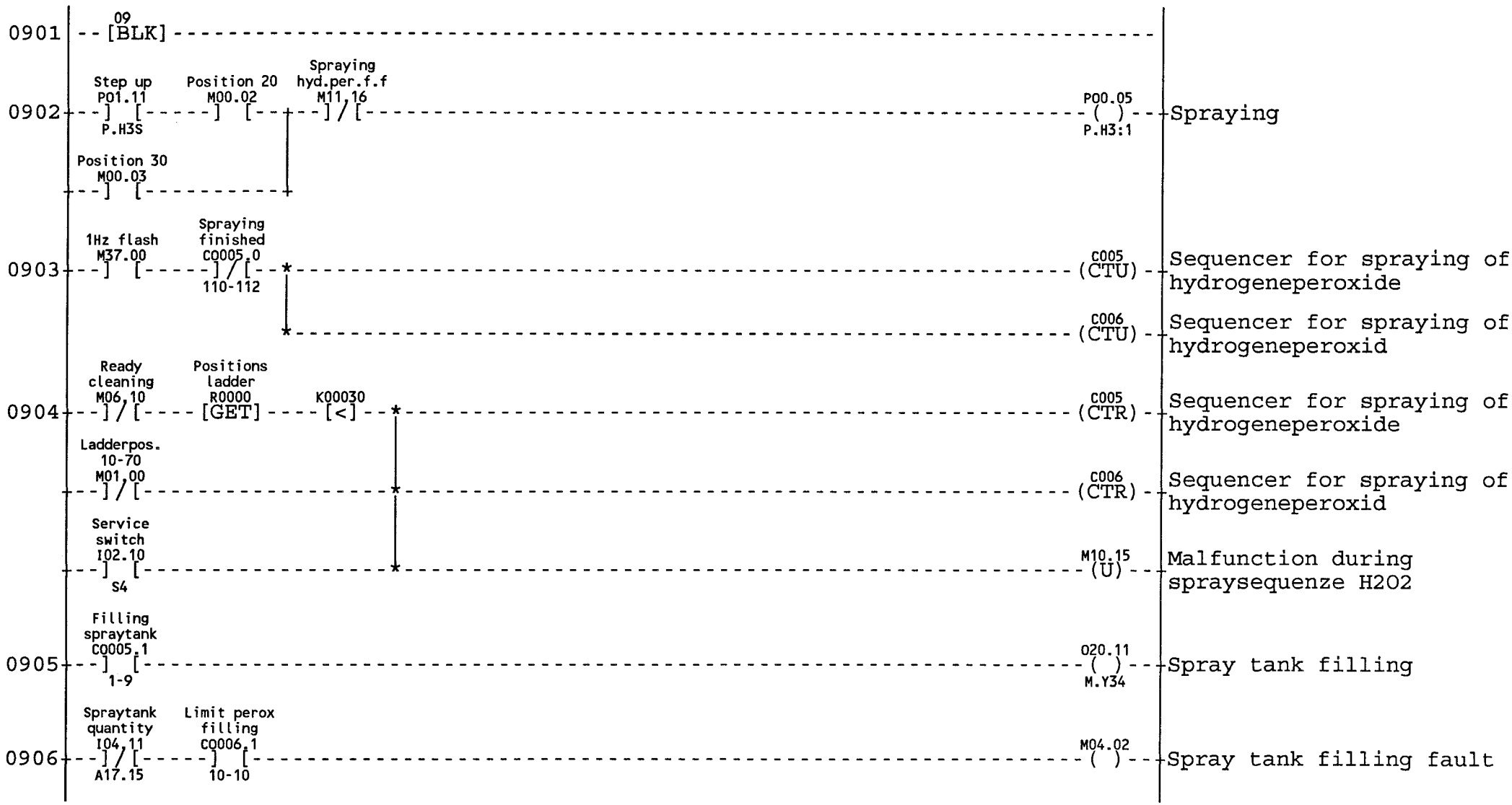

08:13 93.11.25

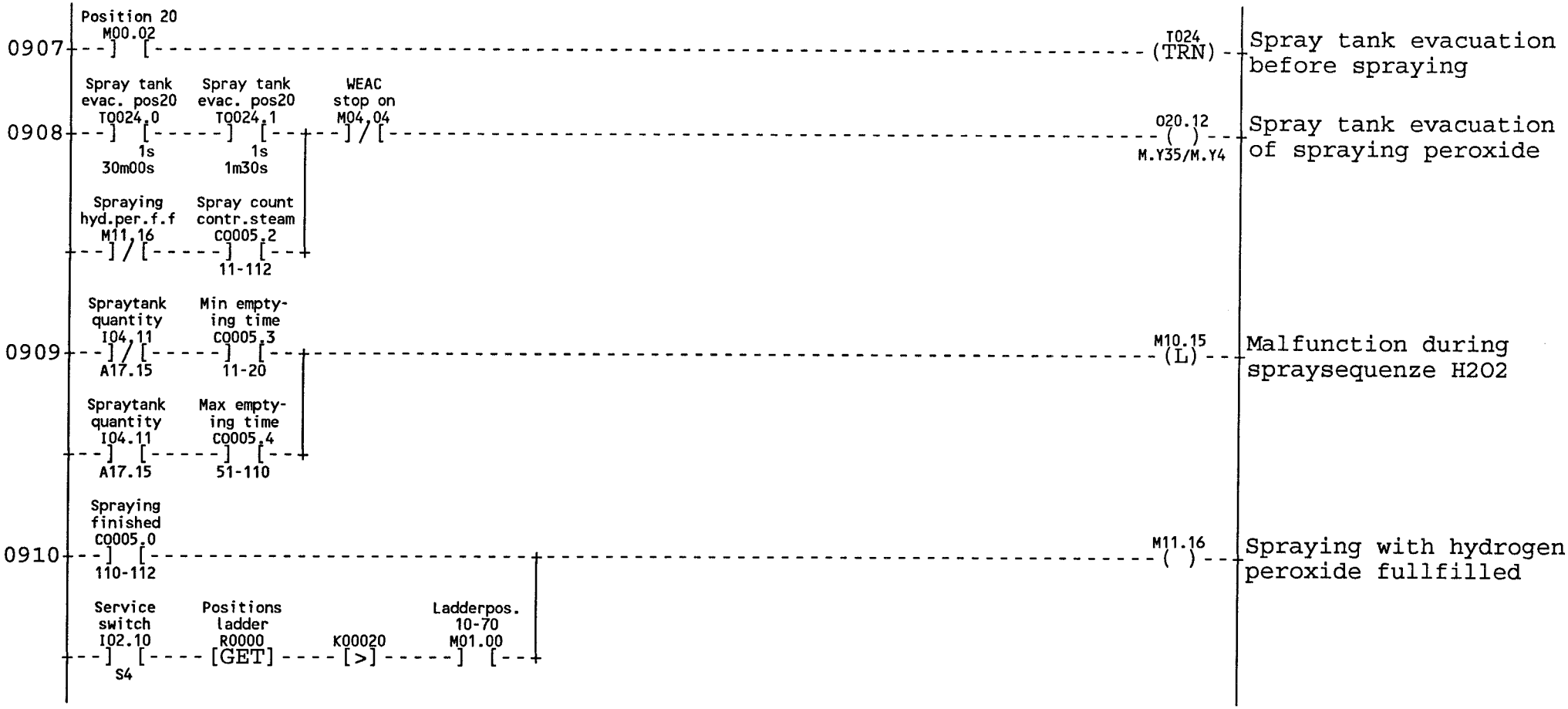
0907
Position 20
M00.02
T024
(TRN)
Spray tank evacuation before spraying
0908
Spray tank evac. pos20
TQ024.0
1s
30m00s
Spray tank evac. pos20
TQ024.1
1s
1m30s
WEAC stop on
M04.04
O20.12
M.Y35/M.Y4
Spray tank evacuation of spraying peroxide
Spraying hyd.per.f.f
M11.16
Spray count contr.steam
CQ005.2
11-112
0909
Spraytank quantity
I04.11
A17.15
Min empty-ing time
CQ005.3
11-20
M10.15
(L)
Malfunction during spraysequenze H2O2
Spraytank quantity
I04.11
A17.15
Max empty-ing time
CQ005.4
51-110
0910
Spraying finished
CQ005.0
110-112
M11.16
Spraying with hydrogen peroxide fullfilled
Service switch
I02.10
S4
Positions ladder
R0000
[GET]
K00020
[>]
Ladderpos. 10-70
M01.00

08:13 93.11.25

DRYING, PREHEATING 3

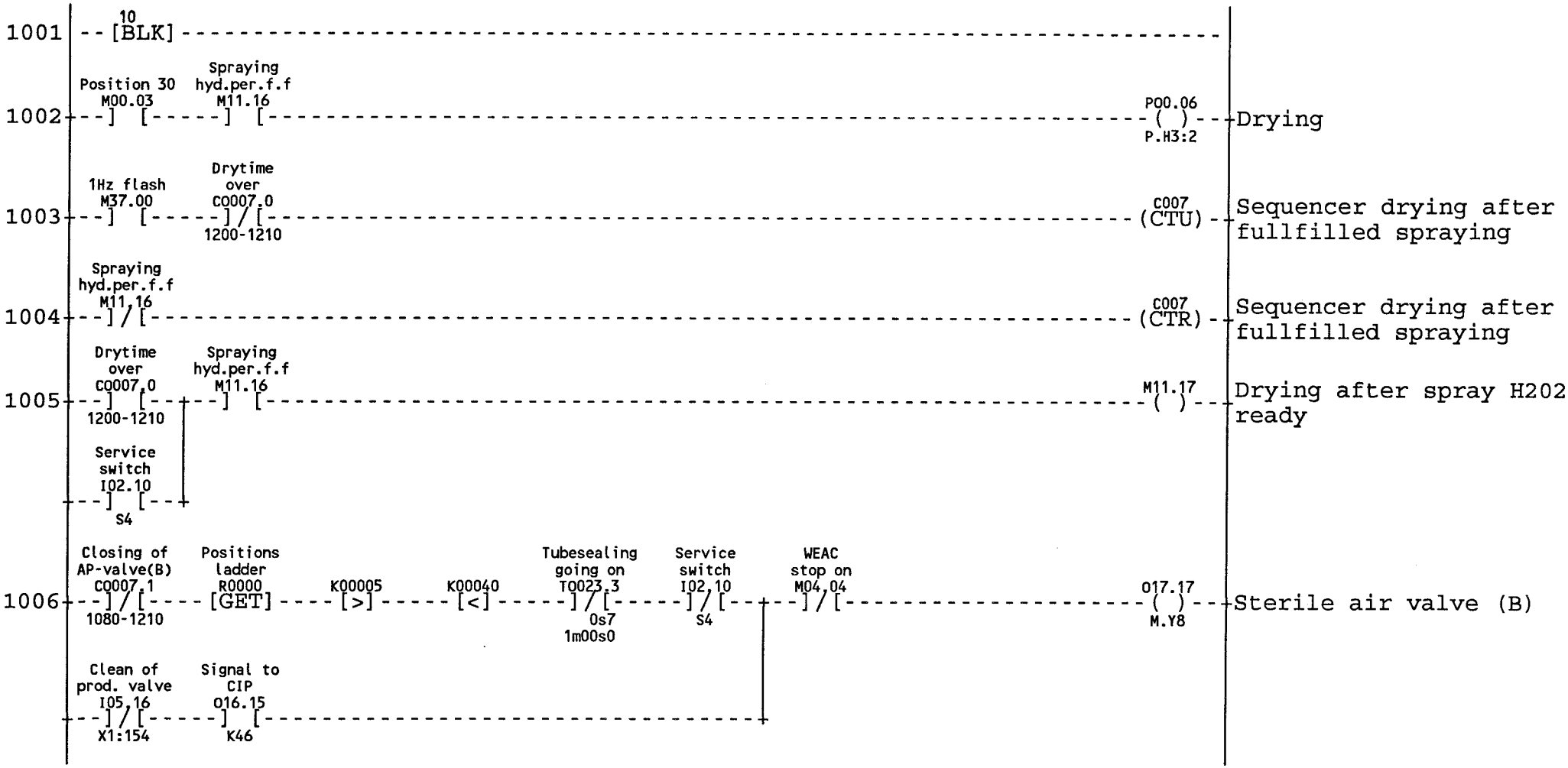

08:13 93.11.25

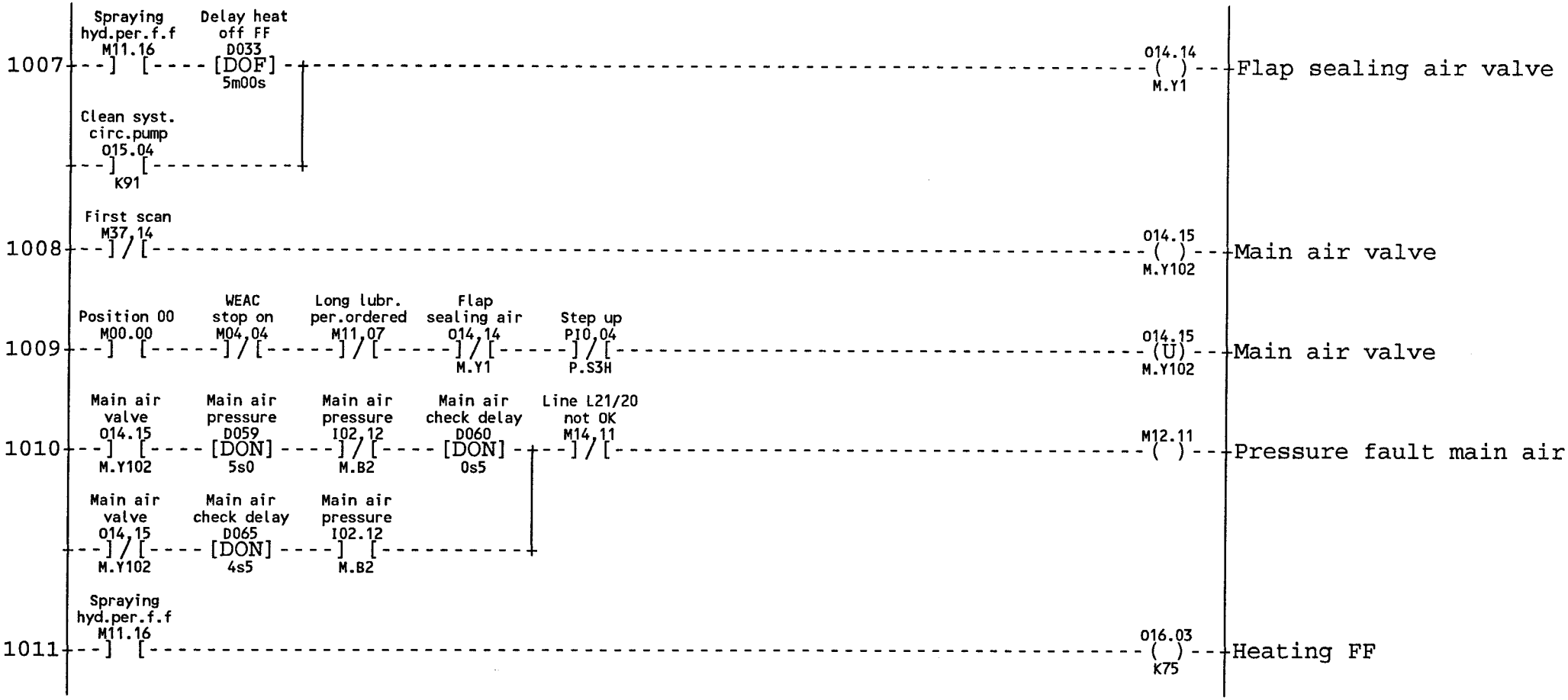
1007
Spraying hyd.per.f.f M11.16
Delay heat off FF D033
[DOF] 5m00s
Clean syst. circ.pump O15.04
K91
O14.14
M.Y1
Flap sealing air valve
1008
First scan M37,14
O14.15
M.Y102
Main air valve
1009
Position 00 M00.00
WEAC stop on M04,04
Long lubr. per.ordered M11,07
Flap sealing air O14,14
M.Y1
Step up PJ0,04
P.S3H
O14.15
M.Y102
Main air valve
1010
Main air valve O14.15
M.Y102
Main air pressure D059
[DON] 5s0
Main air pressure I02,12
M.B2
Main air check delay D060
[DON] 0s5
Line L21/20 not OK M14,11
M12.11
Pressure fault main air
Main air valve O14,15
M.Y102
Main air check delay D065
[DON] 4s5
Main air pressure I02.12
M.B2
1011
Spraying hyd.per.f.f M11.16
O16.03
K75
Heating FF

08:13 93.11.25

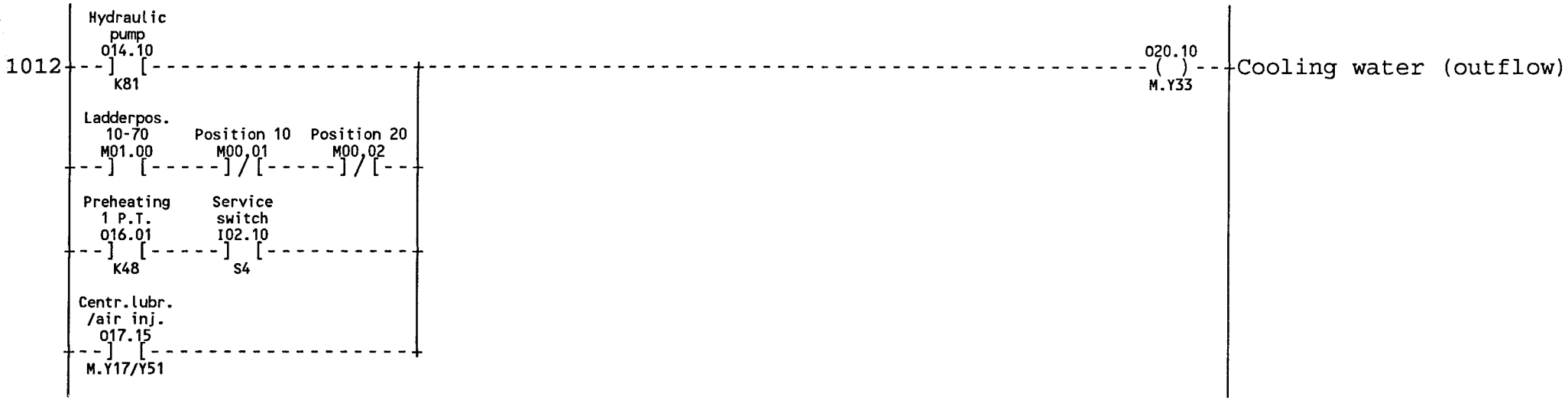
1012
Hydraulic pump
O14.10
K81
O20.10
M.Y33
Cooling water (outflow)
Ladderpos. 10-70
M01.00
Position 10
M00,01
Position 20
M00,02
Preheating 1 P.T.
O16.01
K48
Service switch
I02.10
S4
Centr.lubr. /air inj.
O17.15
M.Y17/Y51

08:13 93.11.25

SIGNALS TO AND FROM STERILIZER

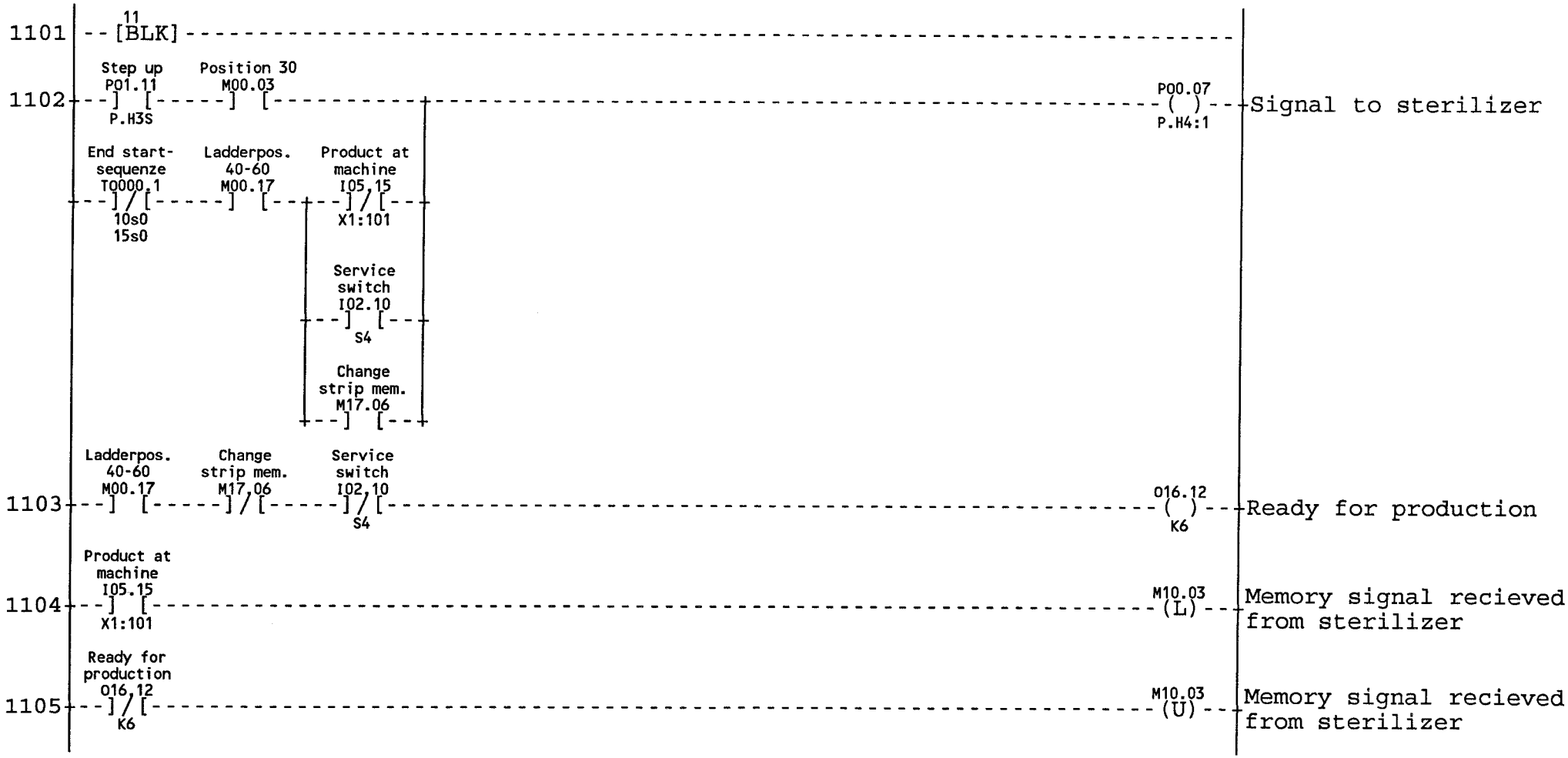

08:13 93.11.25

STARTSEQUENZER FOR RUNNING PRODUCTION

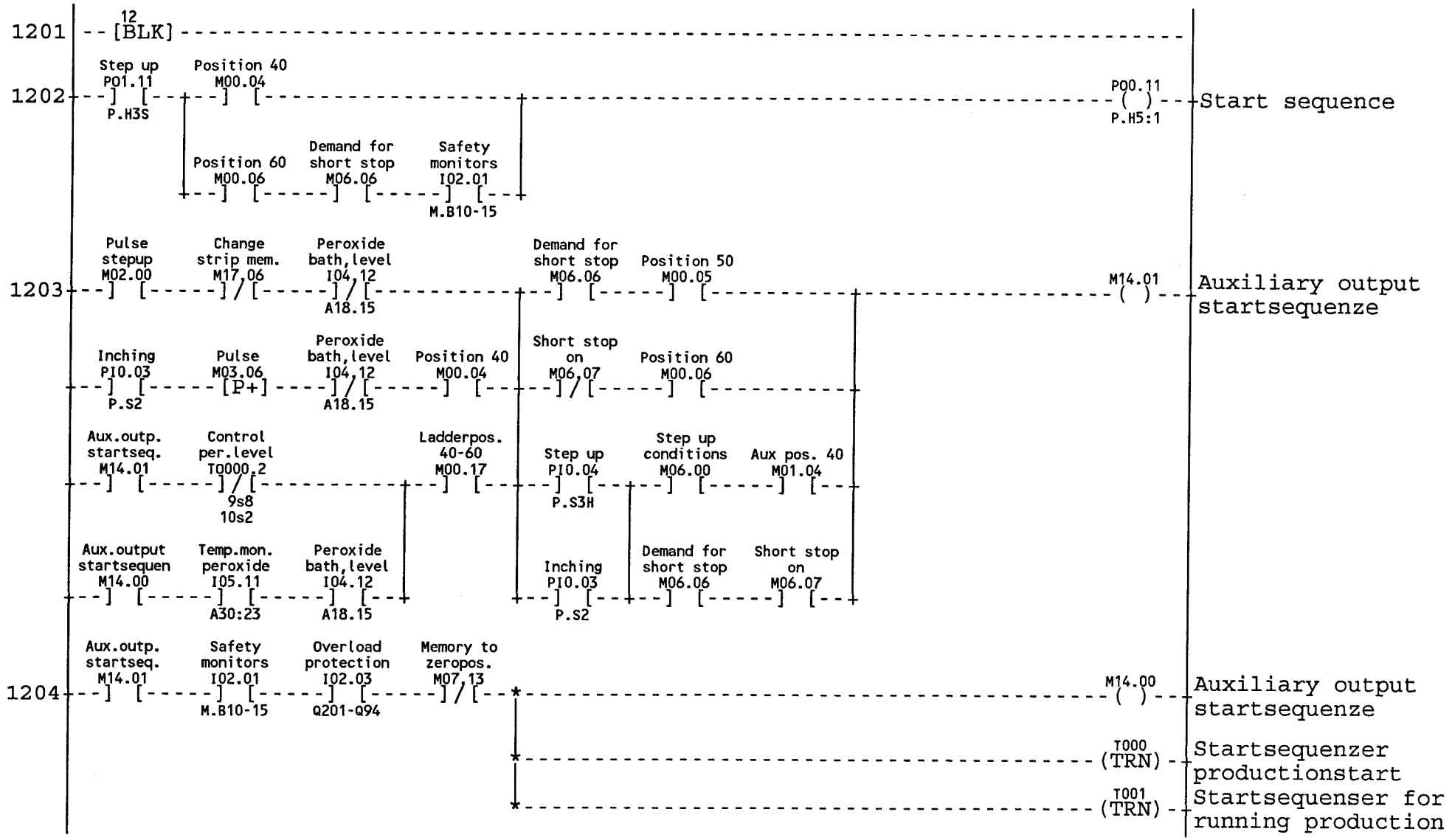

08:13 93.11.25

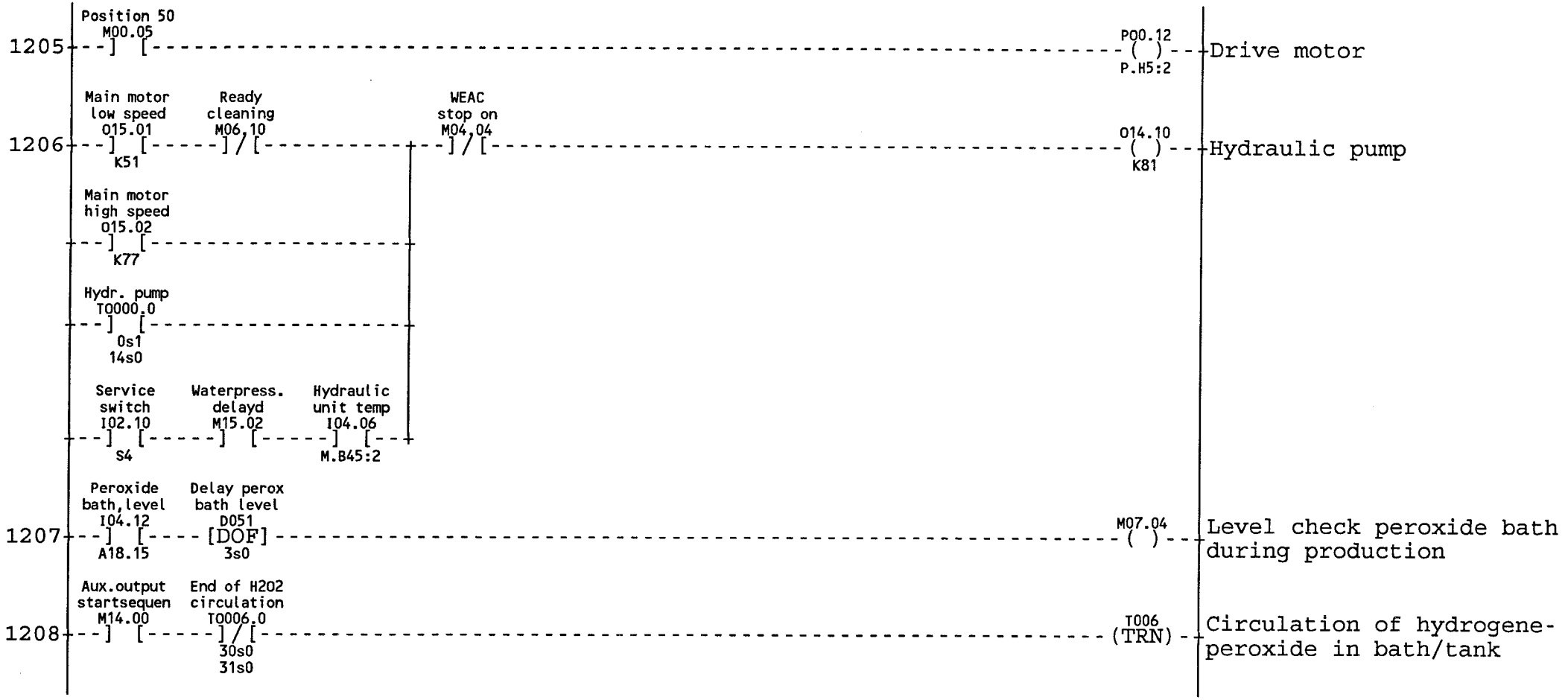
1205
Position 50
M00.05
P00.12
P.H5:2
Drive motor
1206
Main motor low speed
O15.01
K51
Ready cleaning
M06,10
WEAC stop on
M04,04
O14.10
K81
Hydraulic pump
Main motor high speed
O15.02
K77
Hydr. pump
T0000.0
0s1
14s0
Service switch
I02.10
S4
Waterpress. delayd
M15.02
Hydraulic unit temp
I04.06
M.B45:2
1207
Peroxide bath,level
I04.12
A18.15
Delay perox bath level
D051
[DOF]
3s0
M07.04
Level check peroxide bath during production
1208
Aux.output startsequen
M14.00
End of H202 circulation
T0006.0
30s0
31s0
T006
(TRN)
Circulation of hydrogene-peroxide in bath/tank

08:13 93.11.25

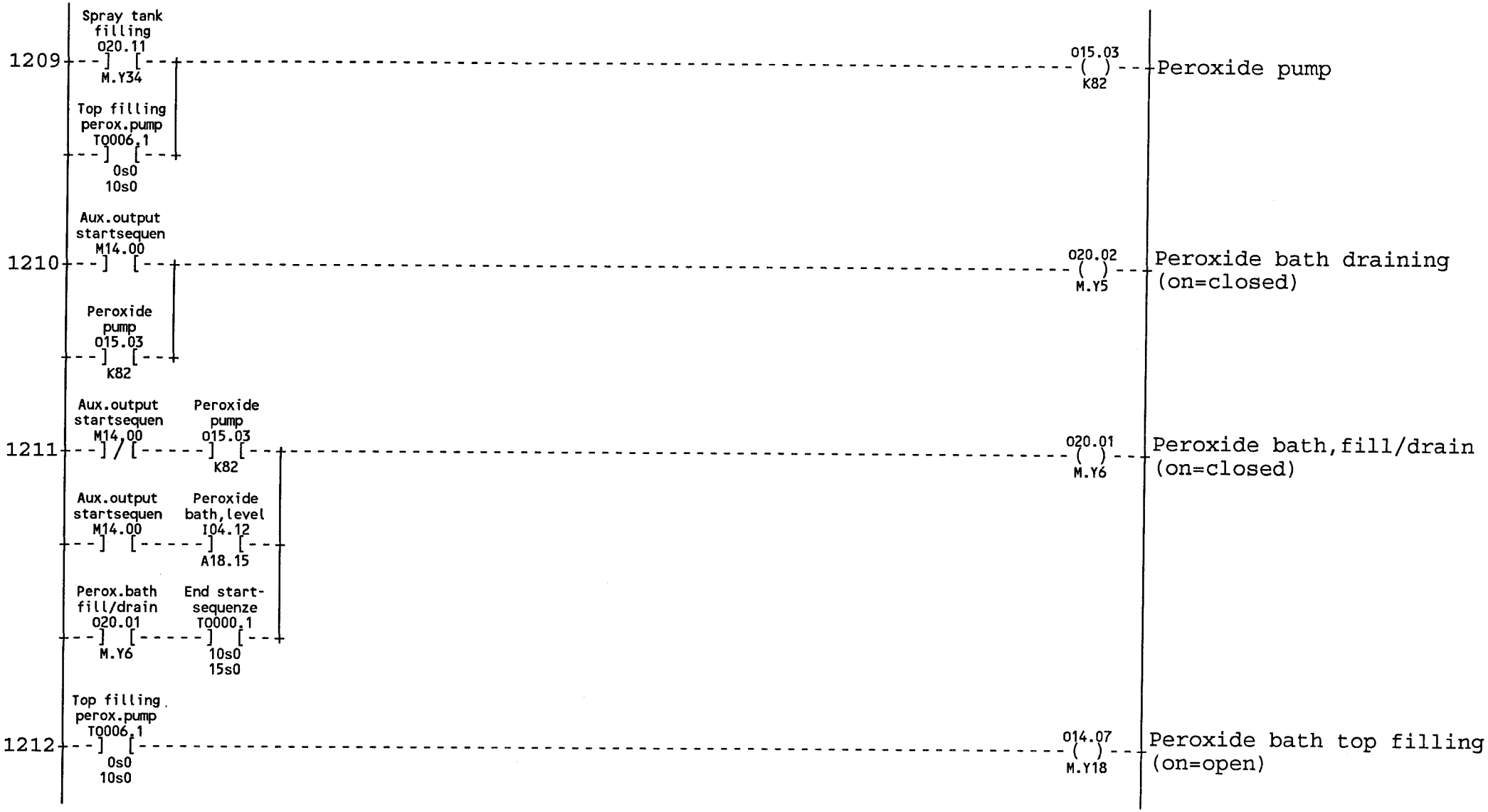
1209
Spray tank filling
O20.11
M.Y34
Top filling perox.pump
TQ006.1
0s0
10s0
O15.03
K82
Peroxide pump
1210
Aux.output startsequen
M14.00
Peroxide pump
O15.03
K82
O20.02
M.Y5
Peroxide bath draining (on=closed)
1211
Aux.output startsequen
M14.00
Peroxide pump
O15.03
K82
Peroxide bath,level
I04.12
A18.15
End start-sequenze
TQ000.1
10s0
15s0
O20.01
M.Y6
Peroxide bath, fill/drain (on=closed)
1212
Top filling perox.pump
TQ006.1
0s0
10s0
O14.07
M.Y18
Peroxide bath top filling (on=open)

08:13 93.11.25

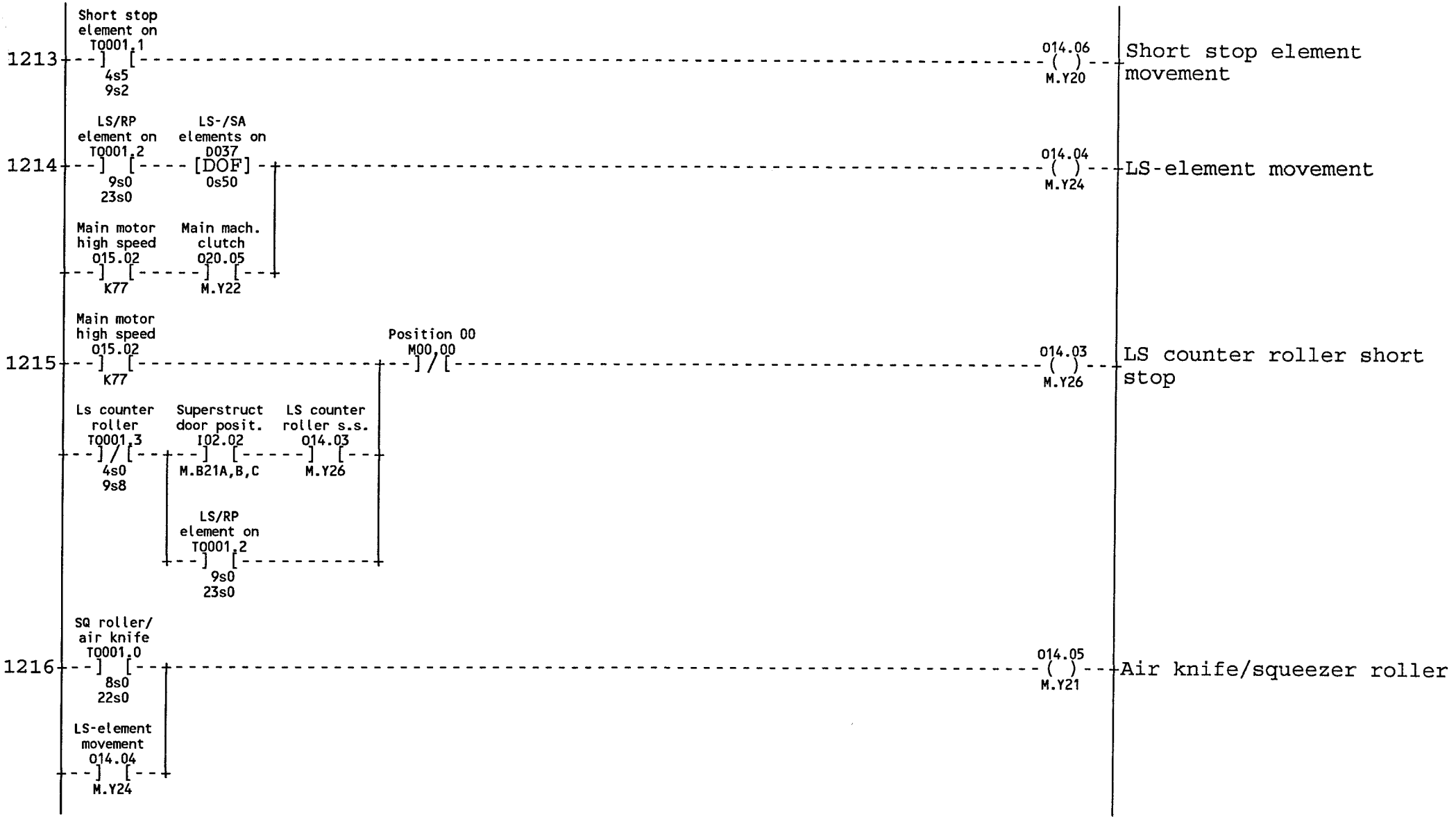
1213
Short stop element on T0001.1
4s5
9s2
014.06
M.Y20
Short stop element movement
1214
LS/RP element on T0001.2
9s0
23s0
LS-/SA elements on D037
[DOF]
0s50
014.04
M.Y24
LS-element movement
Main motor high speed O15.02
K77
Main mach. clutch O20.05
M.Y22
1215
Main motor high speed O15.02
K77
Position 00 M00,00
014.03
M.Y26
LS counter roller short stop
Ls counter roller T0001.3
4s0
9s8
Superstruct door posit. I02.02
M.B21A,B,C
LS counter roller s.s. O14.03
M.Y26
LS/RP element on T0001.2
9s0
23s0
1216
SQ roller/ air knife T0001.0
8s0
22s0
014.05
M.Y21
Air knife/squeezer roller
LS-element movement O14.04
M.Y24

08:13 93.11.25

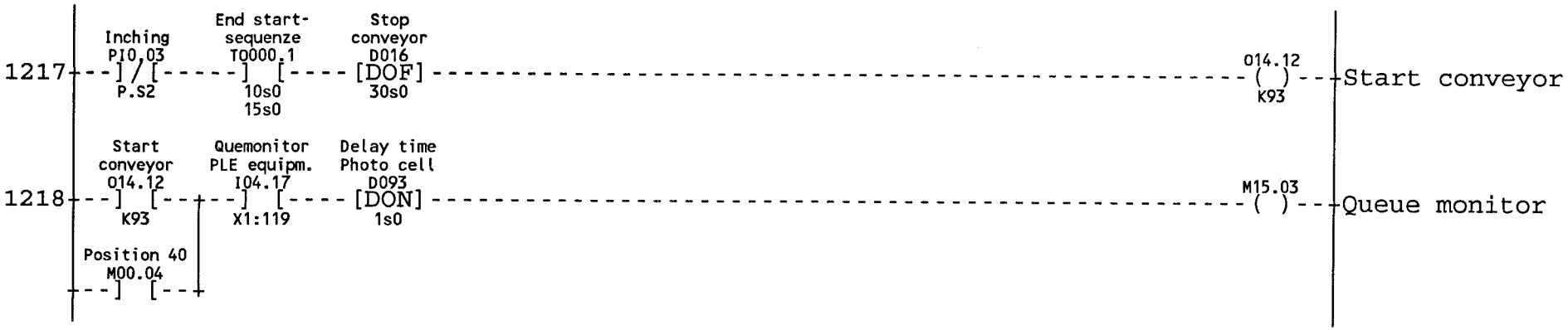
1217
Inching
PI0.03
P.S2
End start-
sequenze
T0000.1
10s0
15s0
Stop
conveyor
D016
[DOF]
30s0
O14.12
K93
Start conveyor
1218
Start
conveyor
O14.12
K93
Quemonitor
PLE equipm.
I04.17
X1:119
Delay time
Photo cell
D093
[DON]
1s0
M15.03
Queue monitor
Position 40
M00.04

08:13 93.11.25

PRODUCTION SUPERVISION

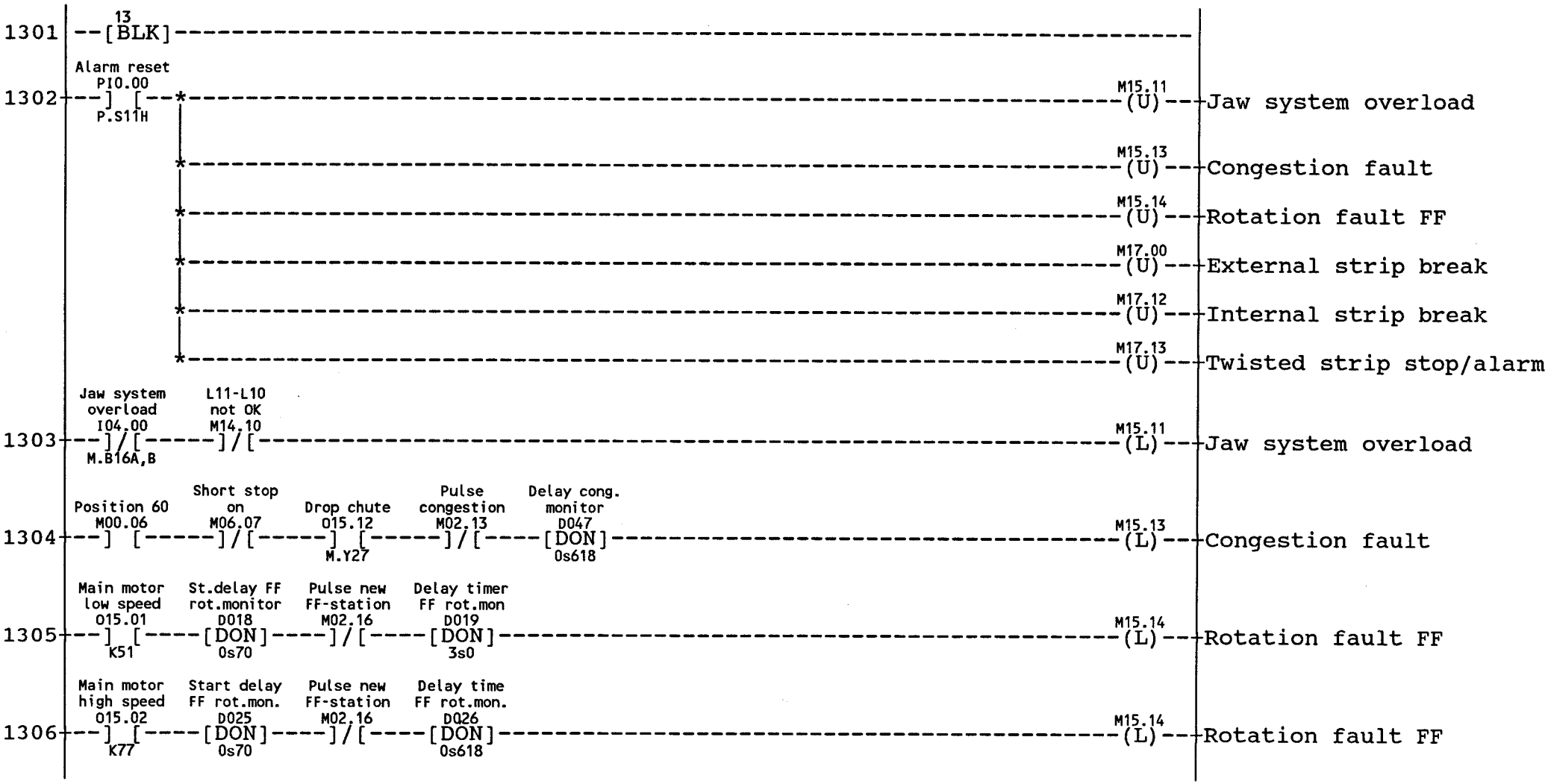

08:13 93.11.25

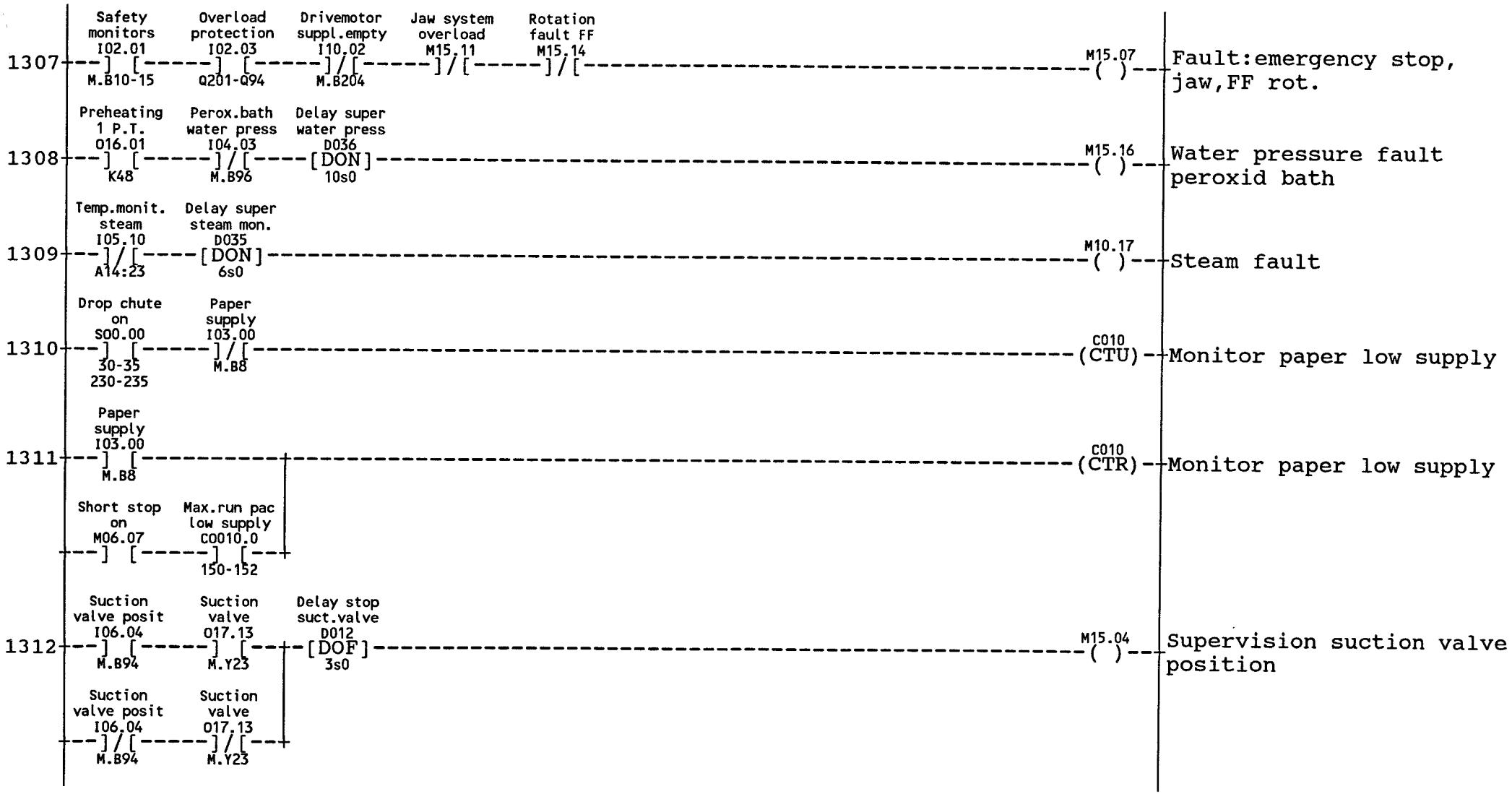
1307
Safety monitors I02.01 M.B10-15
Overload protection I02.03 Q201-Q94
Drivemotor suppl.empty I10.02 M.B204
Jaw system overload M15.11
Rotation fault FF M15.14
M15.07
Fault:emergency stop, jaw,FF rot.
1308
Preheating 1 P.T. O16.01 K48
Perox.bath water press I04.03 M.B96
Delay super water press D036 [DON] 10s0
M15.16
Water pressure fault peroxid bath
1309
Temp.monit. steam I05.10 A14:23
Delay super steam mon. D035 [DON] 6s0
M10.17
Steam fault
1310
Drop chute on S00.00 30-35 230-235
Paper supply I03.00 M.B8
C010 (CTU)
Monitor paper low supply
1311
Paper supply I03.00 M.B8
C010 (CTR)
Monitor paper low supply
Short stop on M06.07
Max.run pac low supply C0010.0 150-152
1312
Suction valve posit I06.04 M.B94
Suction valve O17.13 M.Y23
Delay stop suct.valve D012 [DOF] 3s0
M15.04
Supervision suction valve position
Suction valve posit I06.04 M.B94
Suction valve O17.13 M.Y23

08:13 93.11.25

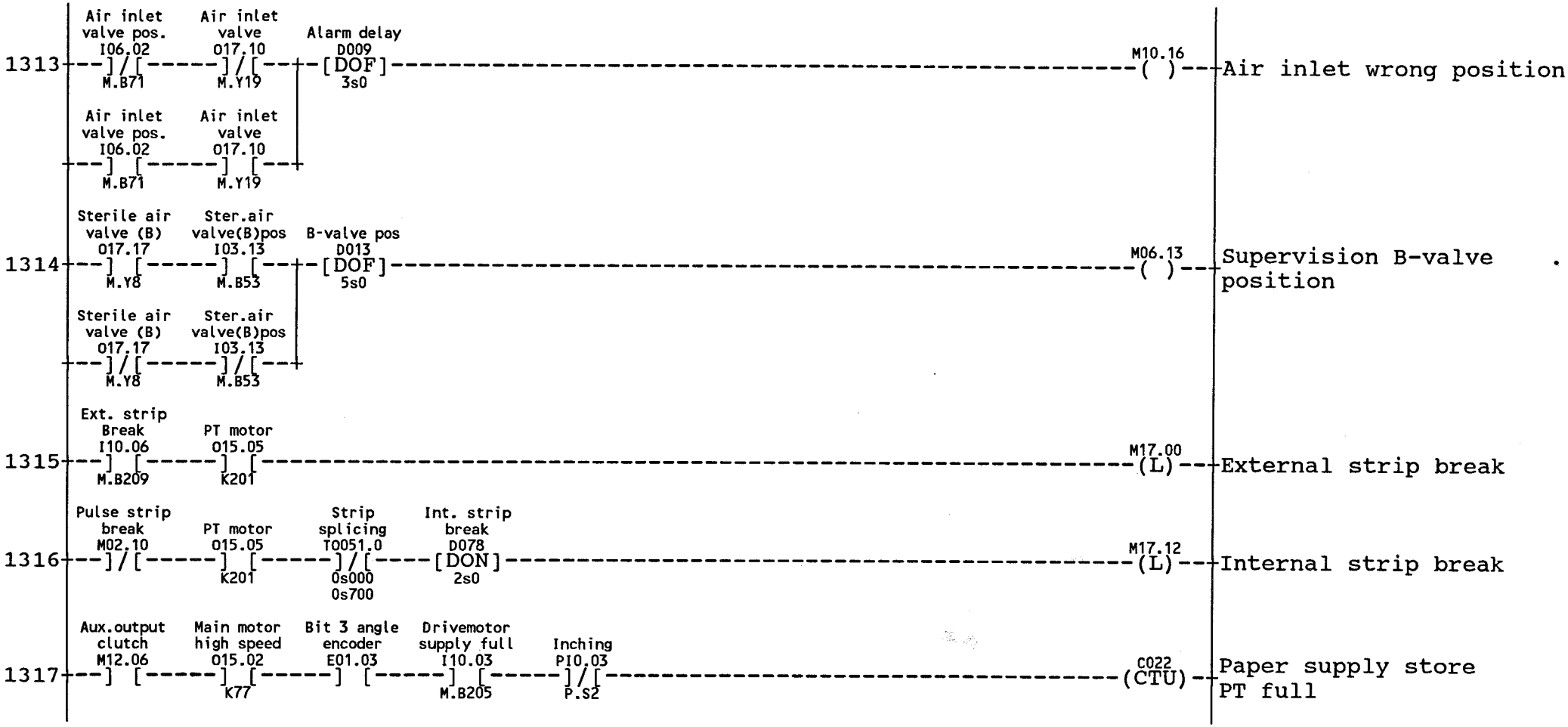
1313
Air inlet valve pos. I06.02 M.B71
Air inlet valve O17.10 M.Y19
Alarm delay D009 [DOF] 3s0
M10.16 ( )
Air inlet wrong position
Air inlet valve pos. I06.02 M.B71
Air inlet valve O17.10 M.Y19
1314
Sterile air valve (B) O17.17 M.Y8
Ster.air valve(B)pos I03.13 M.B53
B-valve pos D013 [DOF] 5s0
M06.13 ( )
Supervision B-valve position
Sterile air valve (B) O17.17 M.Y8
Ster.air valve(B)pos I03.13 M.B53
1315
Ext. strip Break I10.06 M.B209
PT motor O15.05 K201
M17.00 (L)
External strip break
1316
Pulse strip break M02.10
PT motor O15.05 K201
Strip splicing T0051.0 0s000 0s700
Int. strip break D078 [DON] 2s0
M17.12 (L)
Internal strip break
1317
Aux.output clutch M12.06
Main motor high speed O15.02 K77
Bit 3 angle encoder E01.03
Drivemotor supply full I10.03 M.B205
Inching PI0.03 P.S2
C022 (CTU)
Paper supply store PT full

08:13 93.11.25

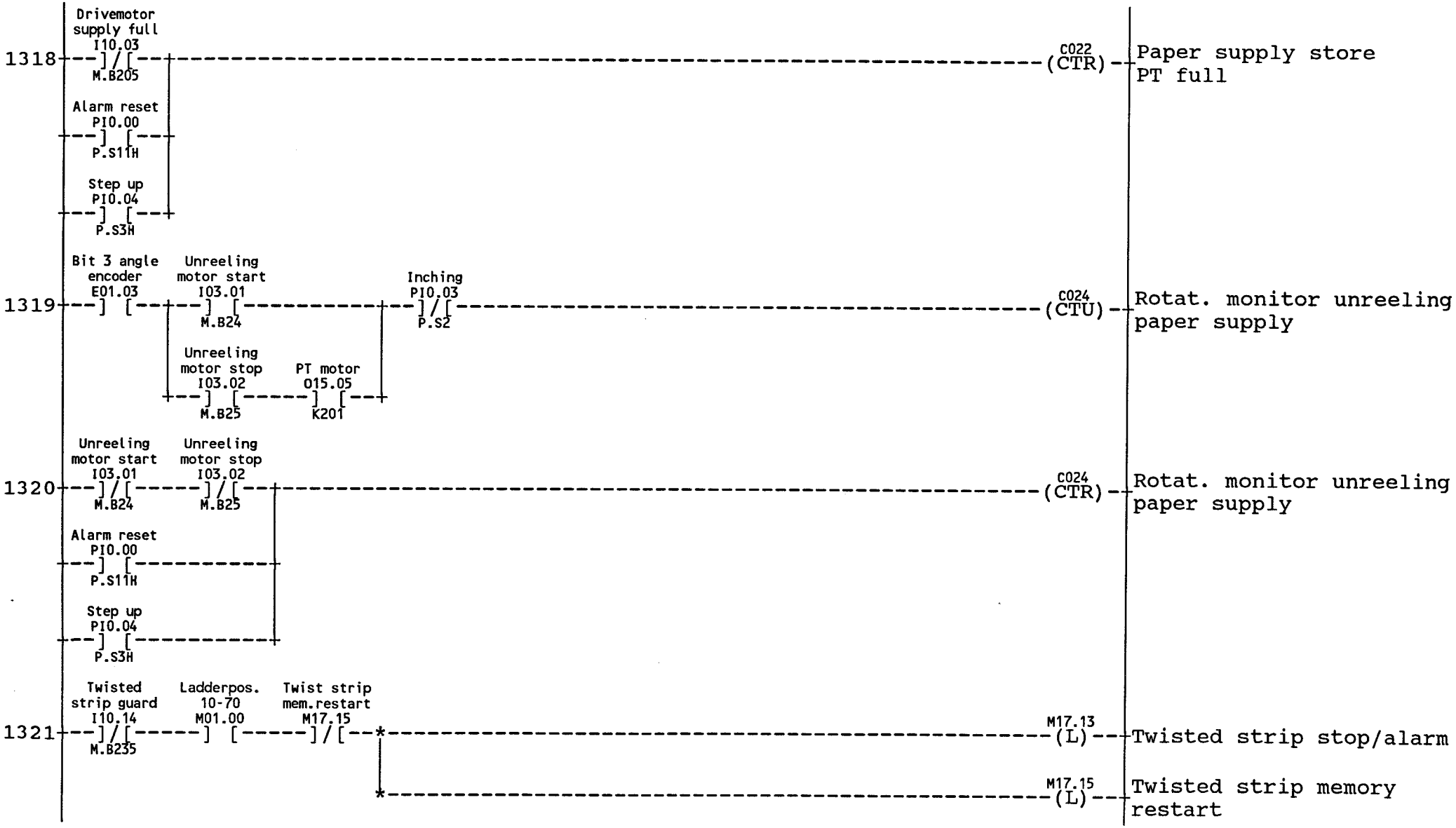
1318
Drivemotor supply full I10.03
M.B205
Alarm reset PI0.00
P.S11H
Step up PI0.04
P.S3H
C022 (CTR)
Paper supply store PT full
1319
Bit 3 angle encoder E01.03
Unreeling motor start I03.01
M.B24
Inching PI0.03
P.S2
Unreeling motor stop I03.02
M.B25
PT motor O15.05
K201
C024 (CTU)
Rotat. monitor unreeling paper supply
1320
Unreeling motor start I03.01
M.B24
Unreeling motor stop I03.02
M.B25
Alarm reset PI0.00
P.S11H
Step up PI0.04
P.S3H
C024 (CTR)
Rotat. monitor unreeling paper supply
1321
Twisted strip guard I10.14
M.B235
Ladderpos. 10-70 M01.00
Twist strip mem.restart M17.15
M17.13 (L)
Twisted strip stop/alarm
M17.15 (L)
Twisted strip memory restart

08:13 93.11.25

VOLUME DEPENDENT VALUE. VALID FOR 200CC, FOR OTHER VOLUME SEE:47629-03:01

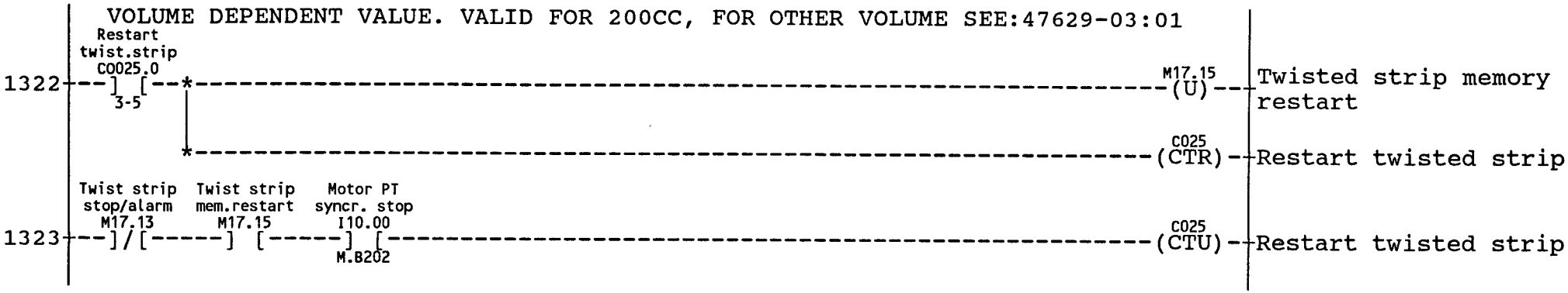

08:13 93.11.25

DRIVEMOTOR AND PRODUCTION

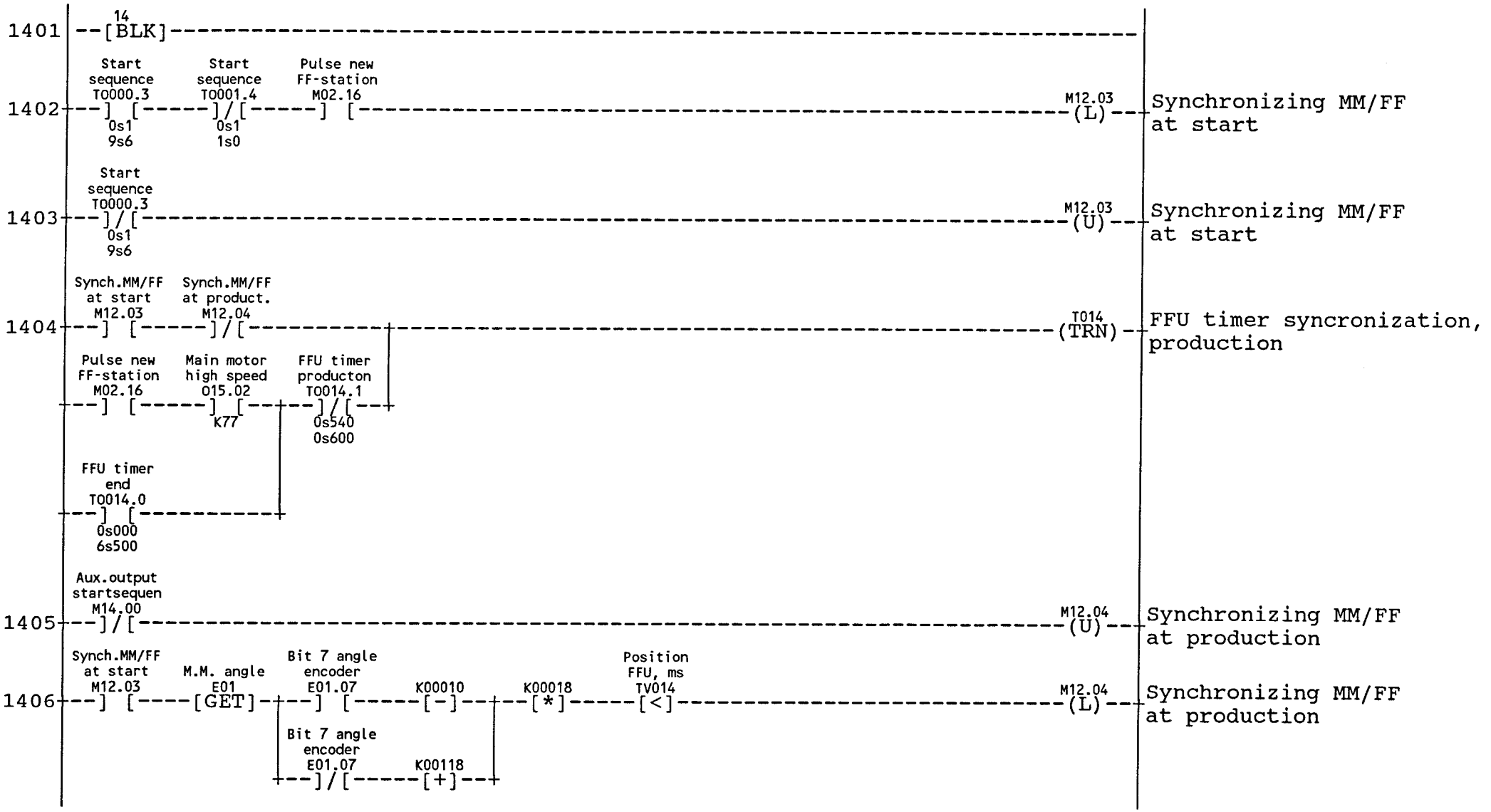

08:13 93.11.25

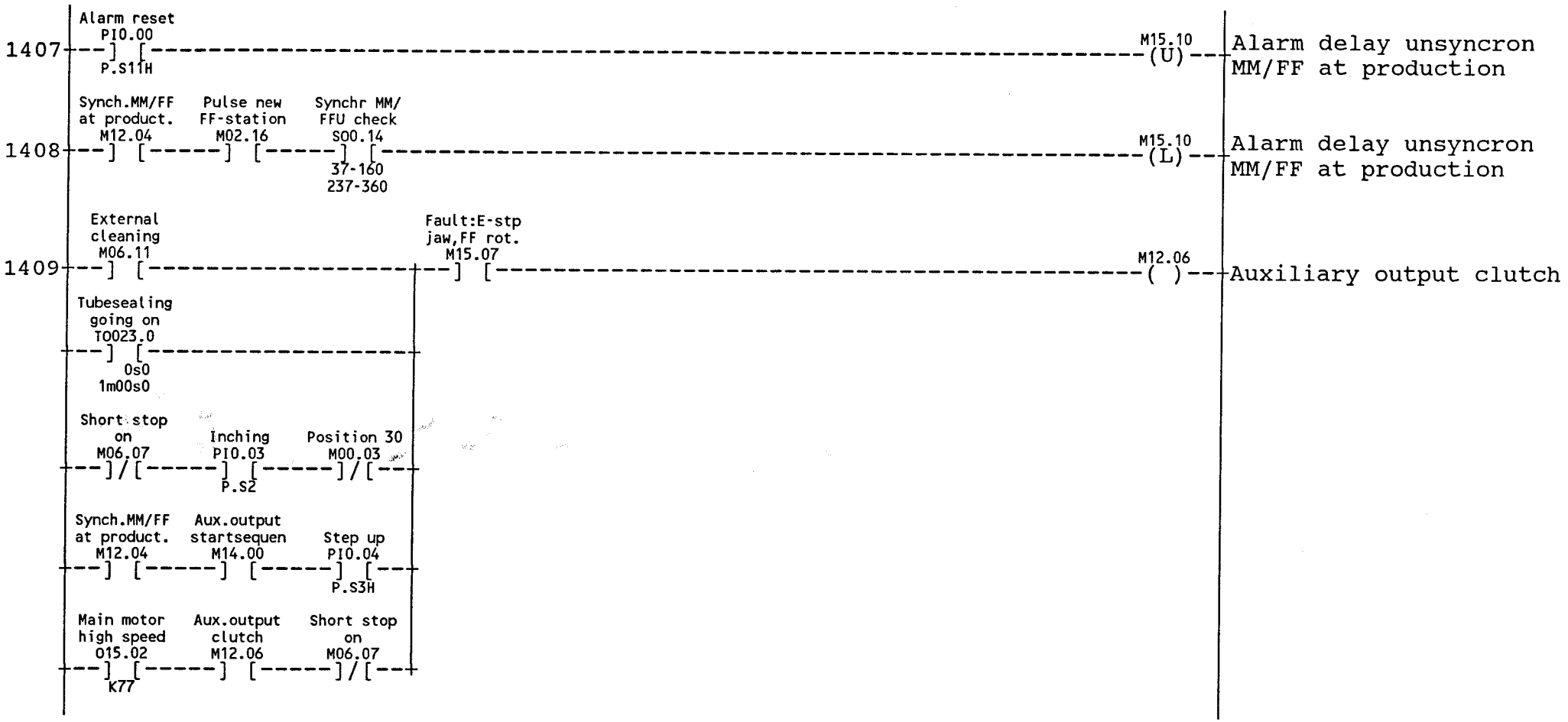
1407
Alarm reset
PI0.00
P.S11H
M15.10
(U)
Alarm delay unsyncron
MM/FF at production
1408
Synch.MM/FF
at product.
M12.04
Pulse new
FF-station
M02.16
Synchr MM/
FFU check
S00.14
37-160
237-360
M15.10
(L)
Alarm delay unsyncron
MM/FF at production
1409
External
cleaning
M06.11
Fault:E-stp
jaw,FF rot.
M15.07
M12.06
( )
Auxiliary output clutch
Tubesealing
going on
T0023.0
0s0
1m00s0
Short stop
on
M06.07
Inching
PI0.03
P.S2
Position 30
M00.03
Synch.MM/FF
at product.
M12.04
Aux.output
startsequen
M14.00
Step up
PI0.04
P.S3H
Main motor
high speed
O15.02
K77
Aux.output
clutch
M12.06
Short stop
on
M06.07

08:13 93.11.25

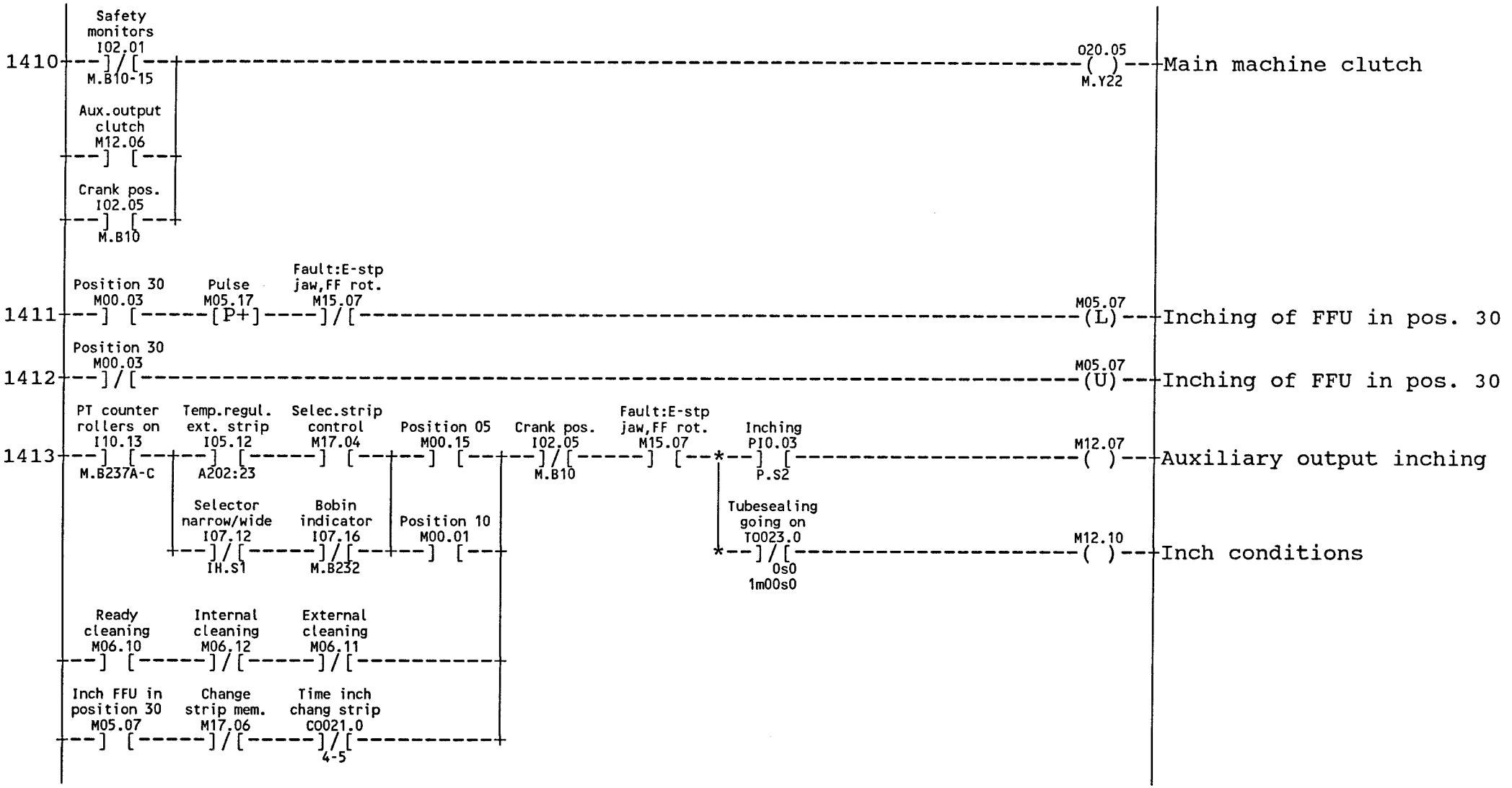
1410
Safety monitors I02.01
M.B10-15
Aux.output clutch M12.06
Crank pos. I02.05
M.B10
O20.05
M.Y22
Main machine clutch
1411
Position 30 M00.03
Pulse M05.17
Fault:E-stp jaw,FF rot. M15.07
M05.07
(L)
Inching of FFU in pos. 30
1412
Position 30 M00.03
M05.07
(U)
Inching of FFU in pos. 30
1413
PT counter rollers on I10.13
M.B237A-C
Temp.regul. ext. strip I05.12
A202:23
Selec.strip control M17.04
Position 05 M00.15
Crank pos. I02.05
M.B10
Fault:E-stp jaw,FF rot. M15.07
Inching P10.03
P.S2
M12.07
Auxiliary output inching
Selector narrow/wide I07.12
IH.S1
Bobin indicator I07.16
M.B232
Position 10 M00.01
Tubesealing going on T0023.0
0s0
1m00s0
M12.10
Inch conditions
Ready cleaning M06.10
Internal cleaning M06.12
External cleaning M06.11
Inch FFU in position 30 M05.07
Change strip mem. M17.06
Time inch chang strip C0021.0
4-5

08:13 93.11.25

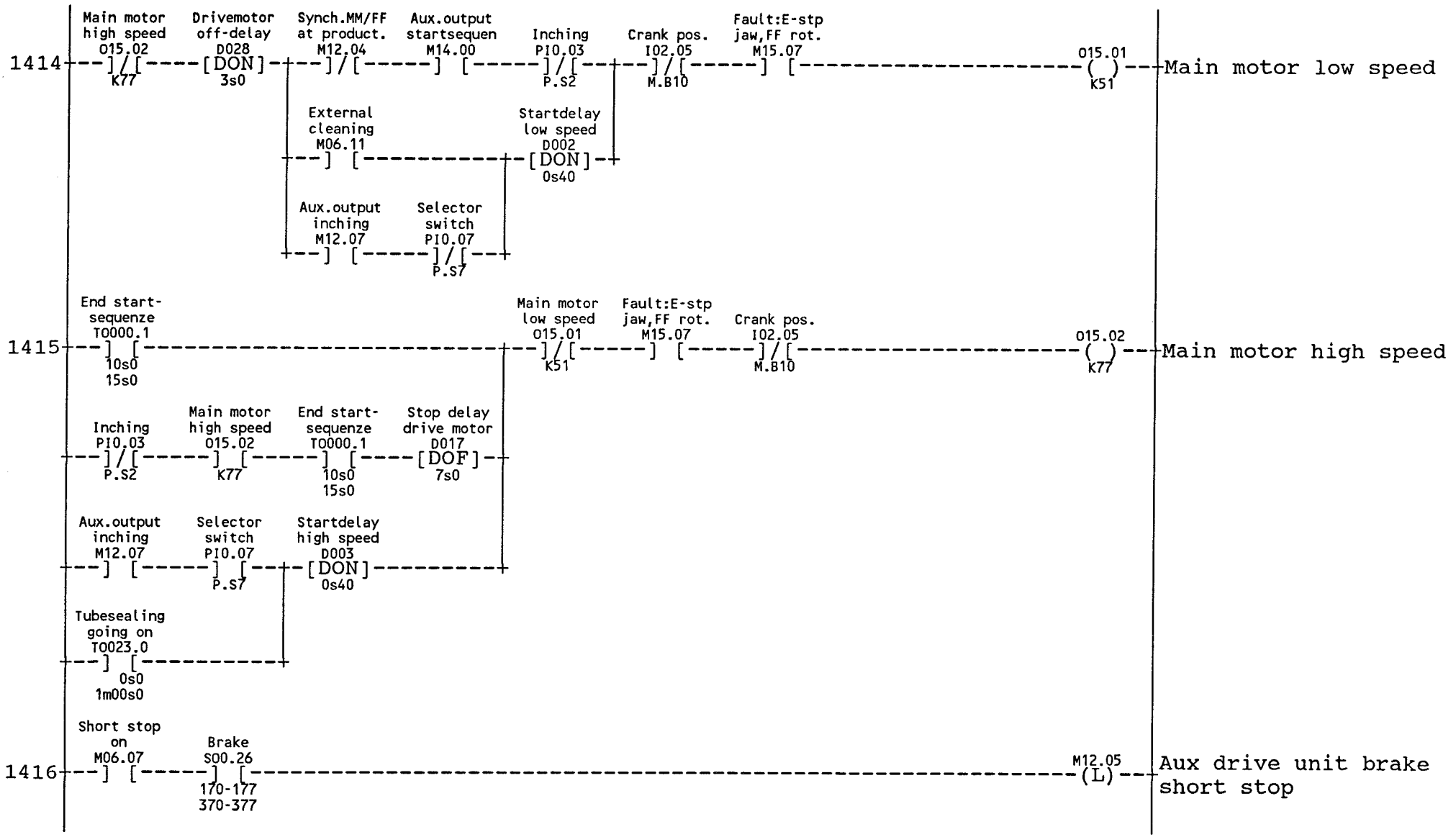
1414
Main motor high speed O15.02 K77
Drivemotor off-delay D028 [DON] 3s0
Synch.MM/FF at product. M12.04
Aux.output startsequen M14.00
Inching PI0.03 P.S2
Crank pos. I02.05 M.B10
Fault:E-stp jaw,FF rot. M15.07
O15.01 ( ) K51
Main motor low speed
External cleaning M06.11
Startdelay low speed D002 [DON] 0s40
Aux.output inching M12.07
Selector switch PI0.07 P.S7
1415
End start-sequenze T0000.1 10s0 15s0
Main motor low speed O15.01 K51
Fault:E-stp jaw,FF rot. M15.07
Crank pos. I02.05 M.B10
O15.02 ( ) K77
Main motor high speed
Inching PI0.03 P.S2
Main motor high speed O15.02 K77
End start-sequenze T0000.1 10s0 15s0
Stop delay drive motor D017 [DOF] 7s0
Aux.output inching M12.07
Selector switch PI0.07 P.S7
Startdelay high speed D003 [DON] 0s40
Tubesealing going on T0023.0 0s0 1m00s0
1416
Short stop on M06.07
Brake S00.26 170-177 370-377
M12.05 (L)
Aux drive unit brake short stop

08:13 93.11.25

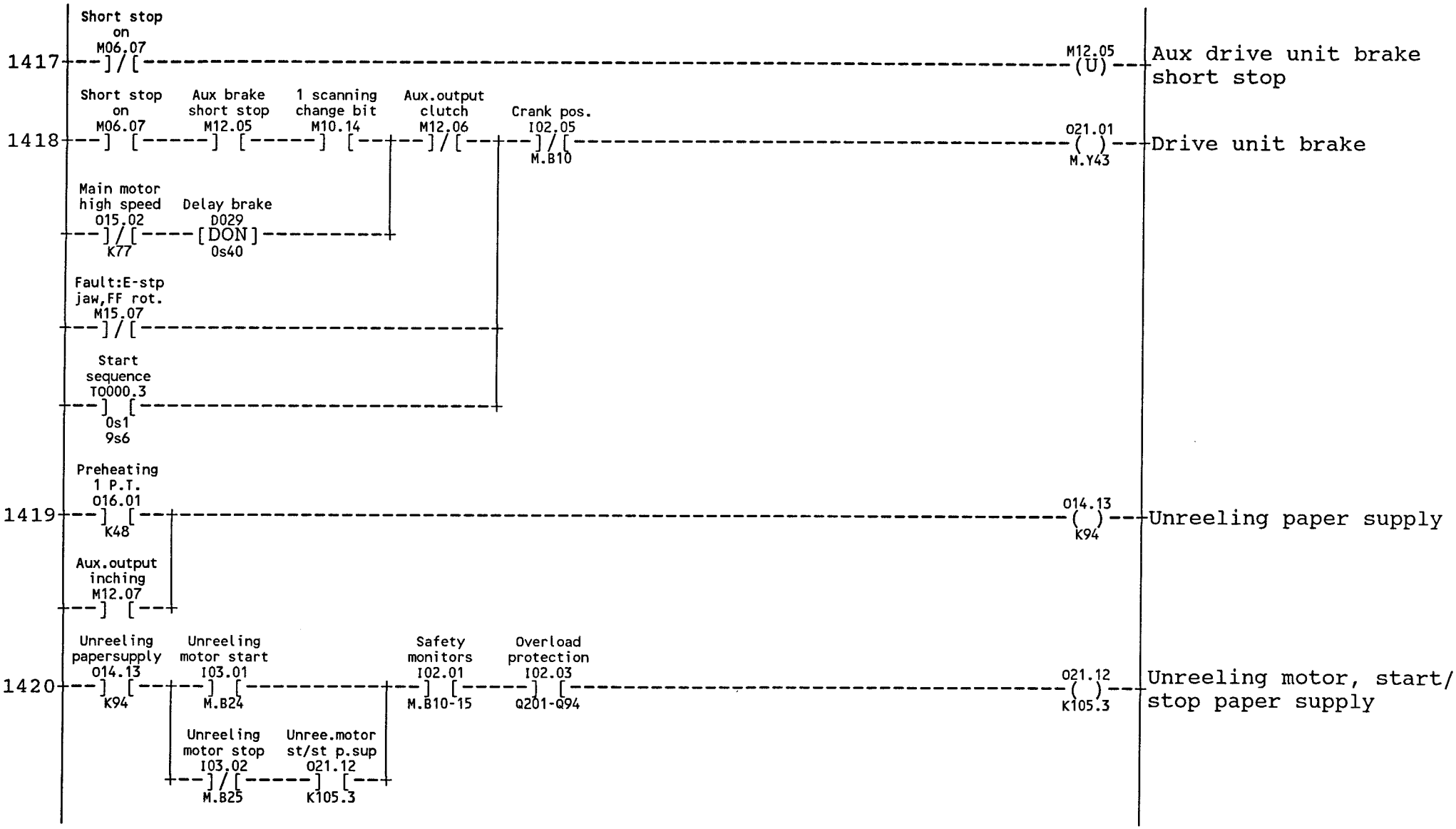
1417
Short stop on M06.07
M12.05 (U)
Aux drive unit brake short stop
1418
Short stop on M06.07
Aux brake short stop M12.05
1 scanning change bit M10.14
Aux.output clutch M12.06
Crank pos. I02.05
M.B10
O21.01 ( )
M.Y43
Drive unit brake
Main motor high speed O15.02
K77
Delay brake D029
[DON]
0s40
Fault:E-stp jaw,FF rot. M15.07
Start sequence T0000.3
0s1
9s6
1419
Preheating 1 P.T. O16.01
K48
O14.13 ( )
K94
Unreeling paper supply
Aux.output inching M12.07
1420
Unreeling papersupply O14.13
K94
Unreeling motor start I03.01
M.B24
Safety monitors I02.01
M.B10-15
Overload protection I02.03
Q201-Q94
O21.12 ( )
K105.3
Unreeling motor, start/ stop paper supply
Unreeling motor stop I03.02
M.B25
Unree.motor st/st p.sup O21.12
K105.3

08:13 93.11.25

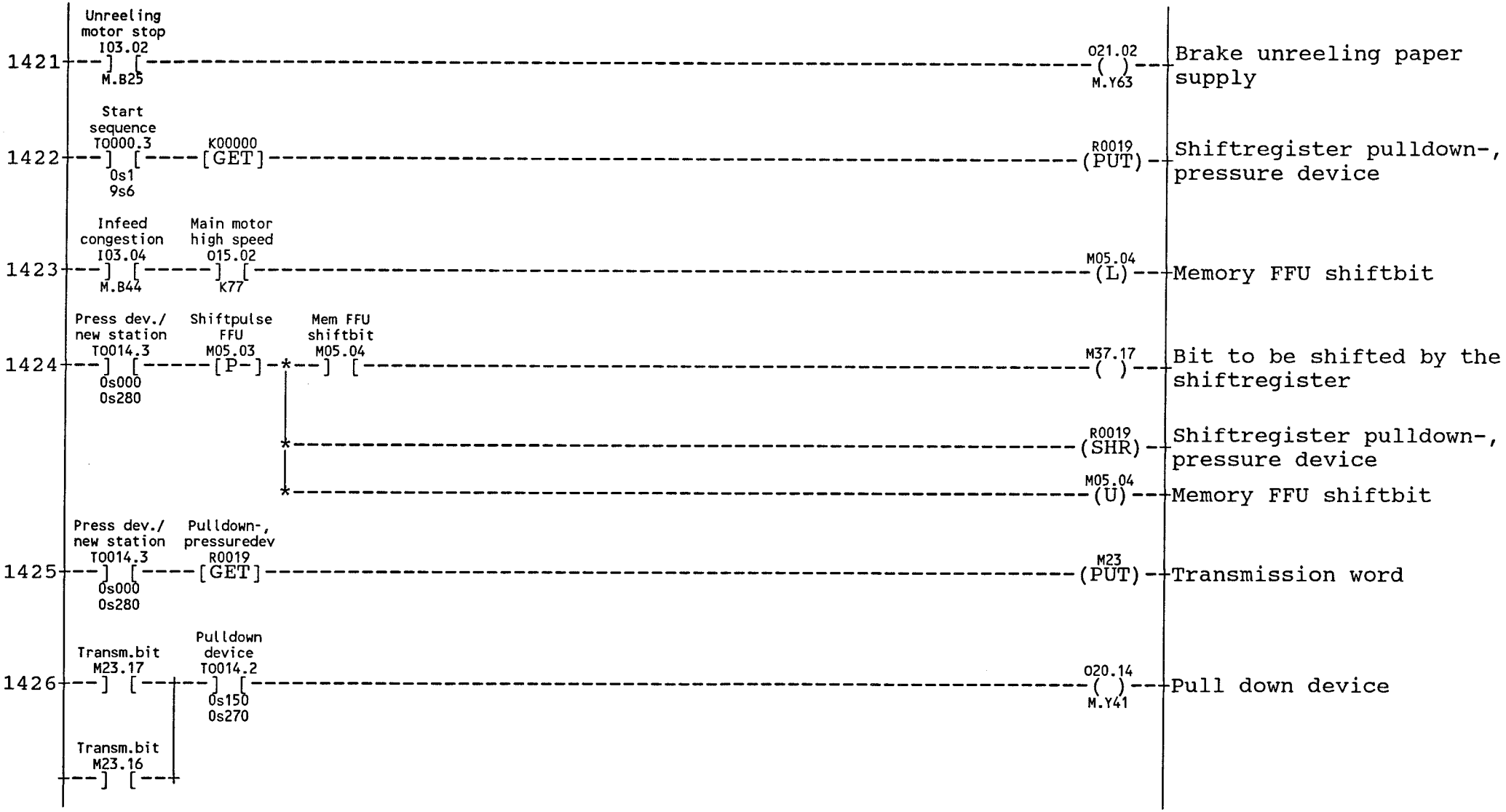
1421
Unreeling motor stop
I03.02
M.B25
O21.02
M.Y63
Brake unreeling paper supply
1422
Start sequence
T0000.3
0s1
9s6
K00000
[GET]
R0019
(PUT)
Shiftregister pulldown-, pressure device
1423
Infeed congestion
I03.04
M.B44
Main motor high speed
O15.02
K77
M05.04
(L)
Memory FFU shiftbit
1424
Press dev./ new station
T0014.3
0s000
0s280
Shiftpulse FFU
M05.03
[P-]
Mem FFU shiftbit
M05.04
M37.17
Bit to be shifted by the shiftregister
R0019
(SHR)
Shiftregister pulldown-, pressure device
M05.04
(U)
Memory FFU shiftbit
1425
Press dev./ new station
T0014.3
0s000
0s280
Pulldown-, pressuredev
R0019
[GET]
M23
(PUT)
Transmission word
1426
Transm.bit
M23.17
Transm.bit
M23.16
Pulldown device
T0014.2
0s150
0s270
O20.14
M.Y41
Pull down device

08:13 93.11.25

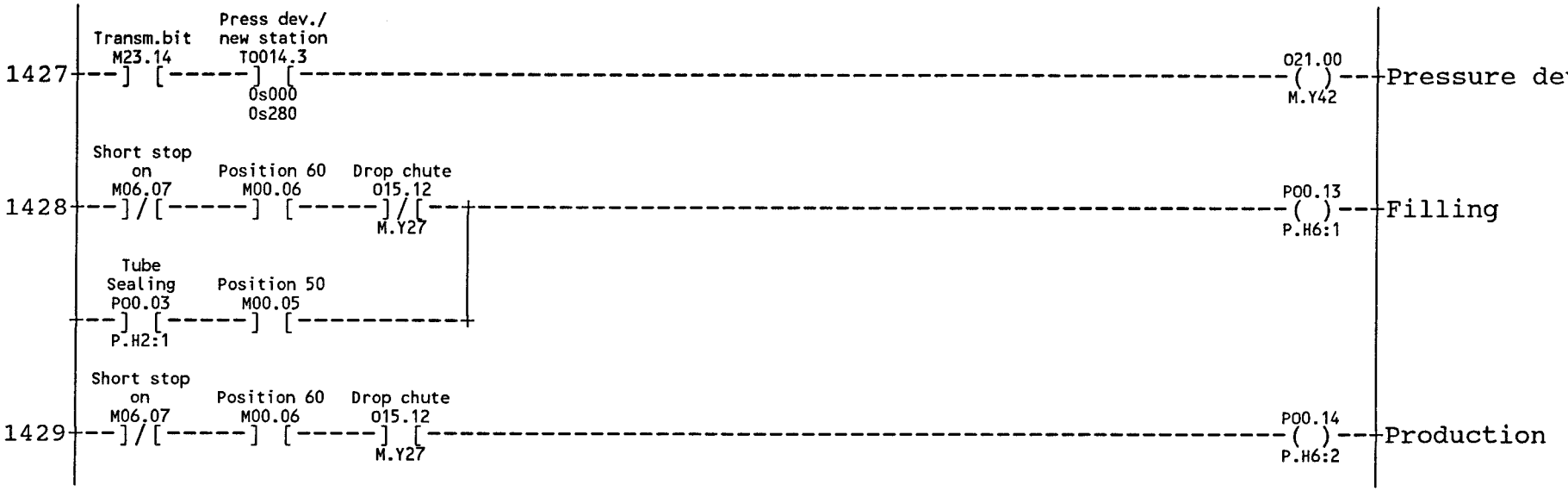
1427
Transm.bit
M23.14
Press dev./
new station
T0014.3
0s000
0s280
O21.00
M.Y42
Pressure device FF
1428
Short stop
on
M06.07
Position 60
M00.06
Drop chute
O15.12
M.Y27
P00.13
P.H6:1
Filling
Tube
Sealing
P00.03
P.H2:1
Position 50
M00.05
1429
Short stop
on
M06.07
Position 60
M00.06
Drop chute
O15.12
M.Y27
P00.14
P.H6:2
Production

08:13 93.11.25

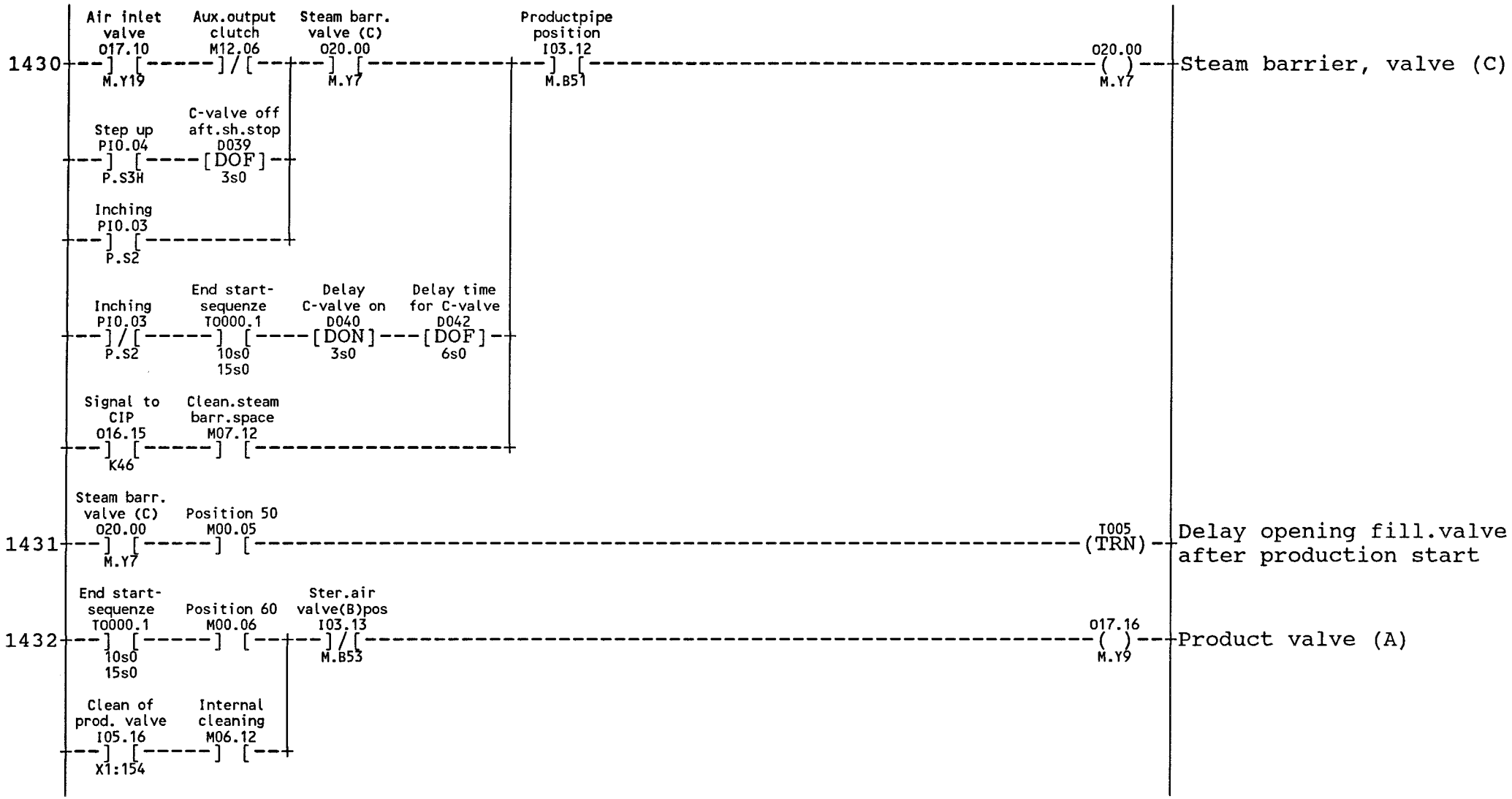
1430
Air inlet valve O17.10 M.Y19
Aux.output clutch M12.06
Steam barr. valve (C) O20.00 M.Y7
Productpipe position I03.12 M.B51
O20.00 M.Y7
Steam barrier, valve (C)
Step up PI0.04 P.S3H
C-valve off aft.sh.stop D039 [DOF] 3s0
Inching PI0.03 P.S2
Inching PI0.03 P.S2
End start-sequenze T0000.1 10s0 15s0
Delay C-valve on D040 [DON] 3s0
Delay time for C-valve D042 [DOF] 6s0
Signal to CIP O16.15 K46
Clean.steam barr.space M07.12
1431
Steam barr. valve (C) O20.00 M.Y7
Position 50 M00.05
I005 (TRN)
Delay opening fill.valve after production start
1432
End start-sequenze T0000.1 10s0 15s0
Position 60 M00.06
Ster.air valve(B)pos I03.13 M.B53
O17.16 M.Y9
Product valve (A)
Clean of prod. valve I05.16 X1:154
Internal cleaning M06.12

08:13 93.11.25

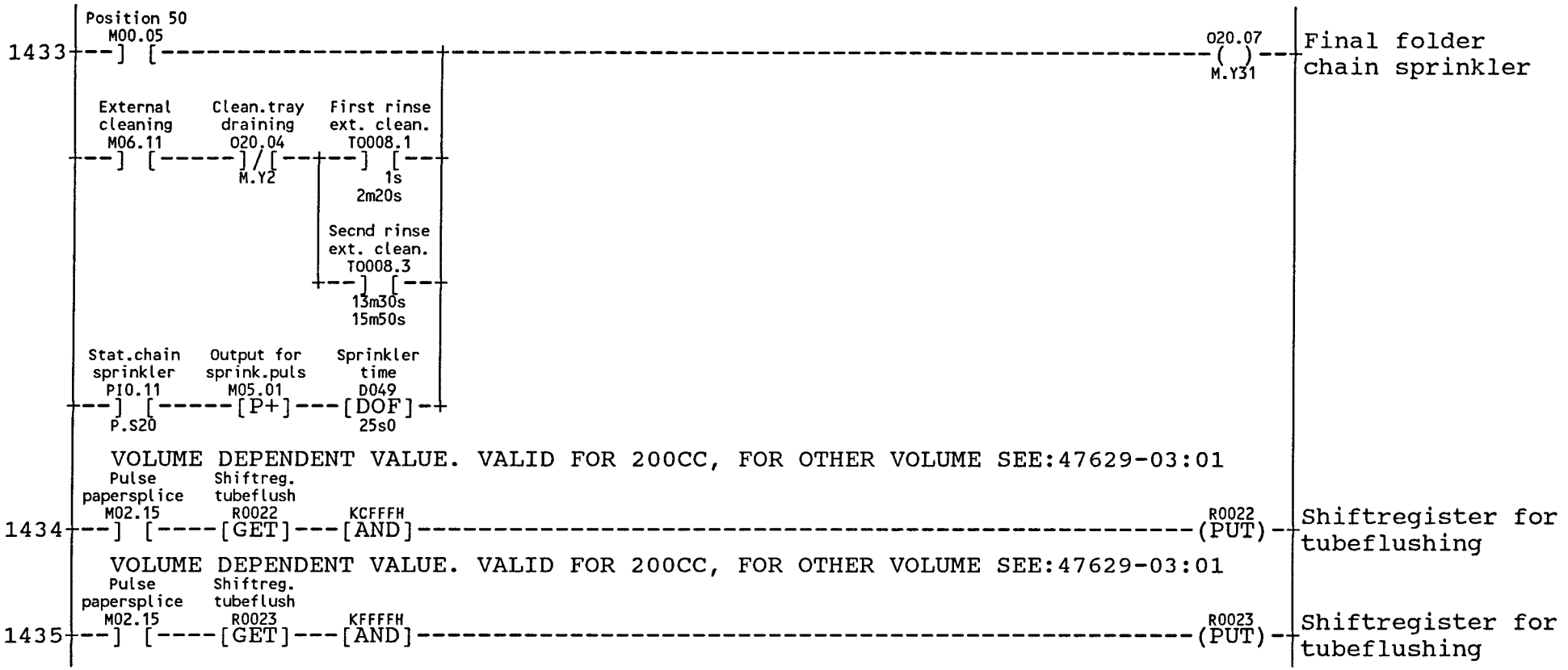
1433
Position 50
M00.05
O20.07
M.Y31
Final folder chain sprinkler
External cleaning
M06.11
Clean.tray draining
O20.04
M.Y2
First rinse ext. clean.
T0008.1
1s
2m20s
Secnd rinse ext. clean.
T0008.3
13m30s
15m50s
Stat.chain sprinkler
PI0.11
P.S20
Output for sprink.puls
M05.01
Sprinkler time
D049
25s0
VOLUME DEPENDENT VALUE. VALID FOR 200CC, FOR OTHER VOLUME SEE:47629-03:01
1434
Pulse papersplice
M02.15
Shiftreg. tubeflush
R0022
KCFFFH
R0022
Shiftregister for tubeflushing
VOLUME DEPENDENT VALUE. VALID FOR 200CC, FOR OTHER VOLUME SEE:47629-03:01
1435
Pulse papersplice
M02.15
Shiftreg. tubeflush
R0023
KFFFFH
R0023
Shiftregister for tubeflushing

08:13 93.11.25

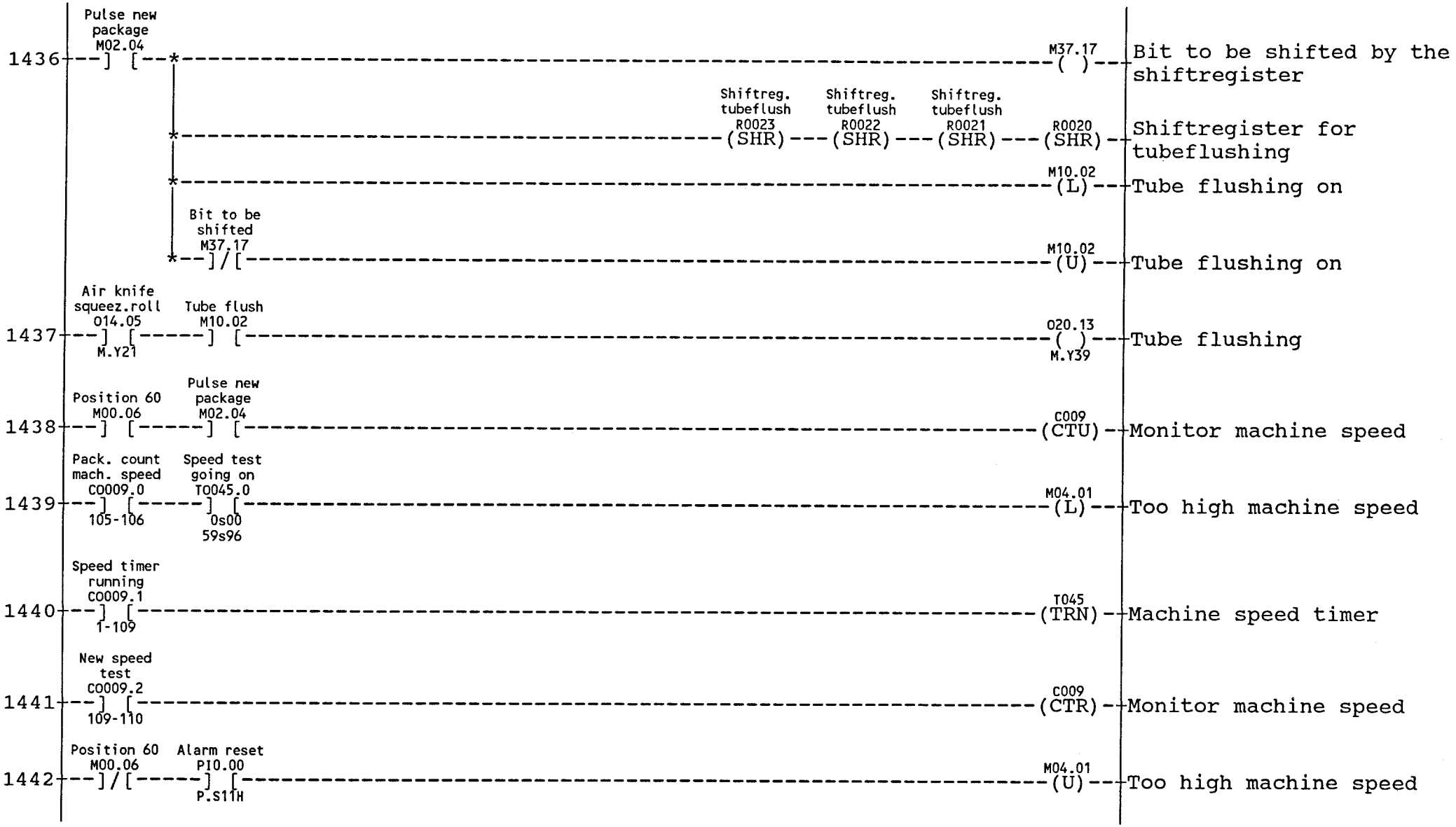
1436
Pulse new package M02.04
M37.17
Bit to be shifted by the shiftregister
Shiftreg. tubeflush R0023
Shiftreg. tubeflush R0022
Shiftreg. tubeflush R0021
R0020
Shiftregister for tubeflushing
M10.02
Tube flushing on
Bit to be shifted M37.17
M10.02
Tube flushing on
1437
Air knife squeez.roll O14.05
M.Y21
Tube flush M10.02
O20.13
M.Y39
Tube flushing
1438
Position 60 M00.06
Pulse new package M02.04
C009
(CTU)
Monitor machine speed
1439
Pack. count mach. speed C0009.0
105-106
Speed test going on T0045.0
0s00
59s96
M04.01
Too high machine speed
1440
Speed timer running C0009.1
1-109
T045
(TRN)
Machine speed timer
1441
New speed test C0009.2
109-110
C009
(CTR)
Monitor machine speed
1442
Position 60 M00.06
Alarm reset PI0.00
P.S11H
M04.01
Too high machine speed

08:13 93.11.25

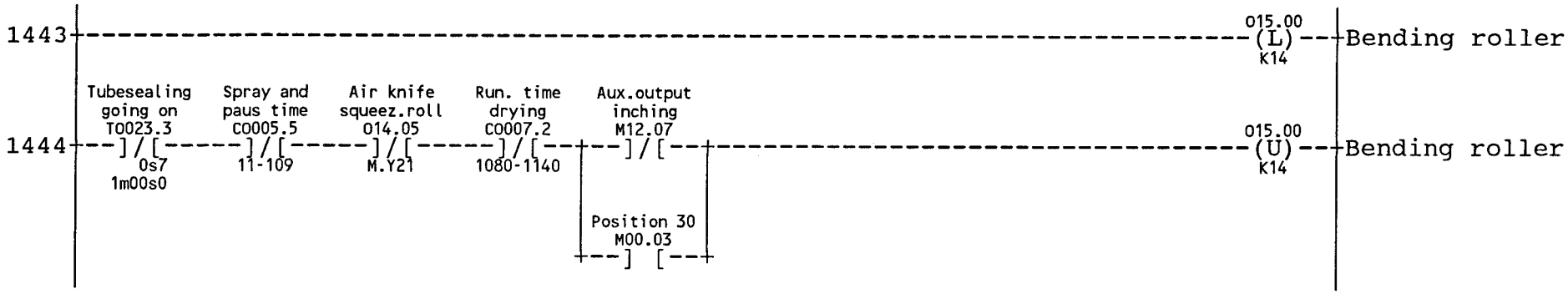
1443
015.00
(L)
K14
Bending roller
Tubesealing going on
T0023.3
Spray and paus time
C0005.5
Air knife squeez.roll
O14.05
Run. time drying
C0007.2
Aux.output inching
M12.07
1444
0s7
1m00s0
11-109
M.Y21
1080-1140
015.00
(U)
K14
Bending roller
Position 30
M00.03

PULLTAB, DATE UNITS

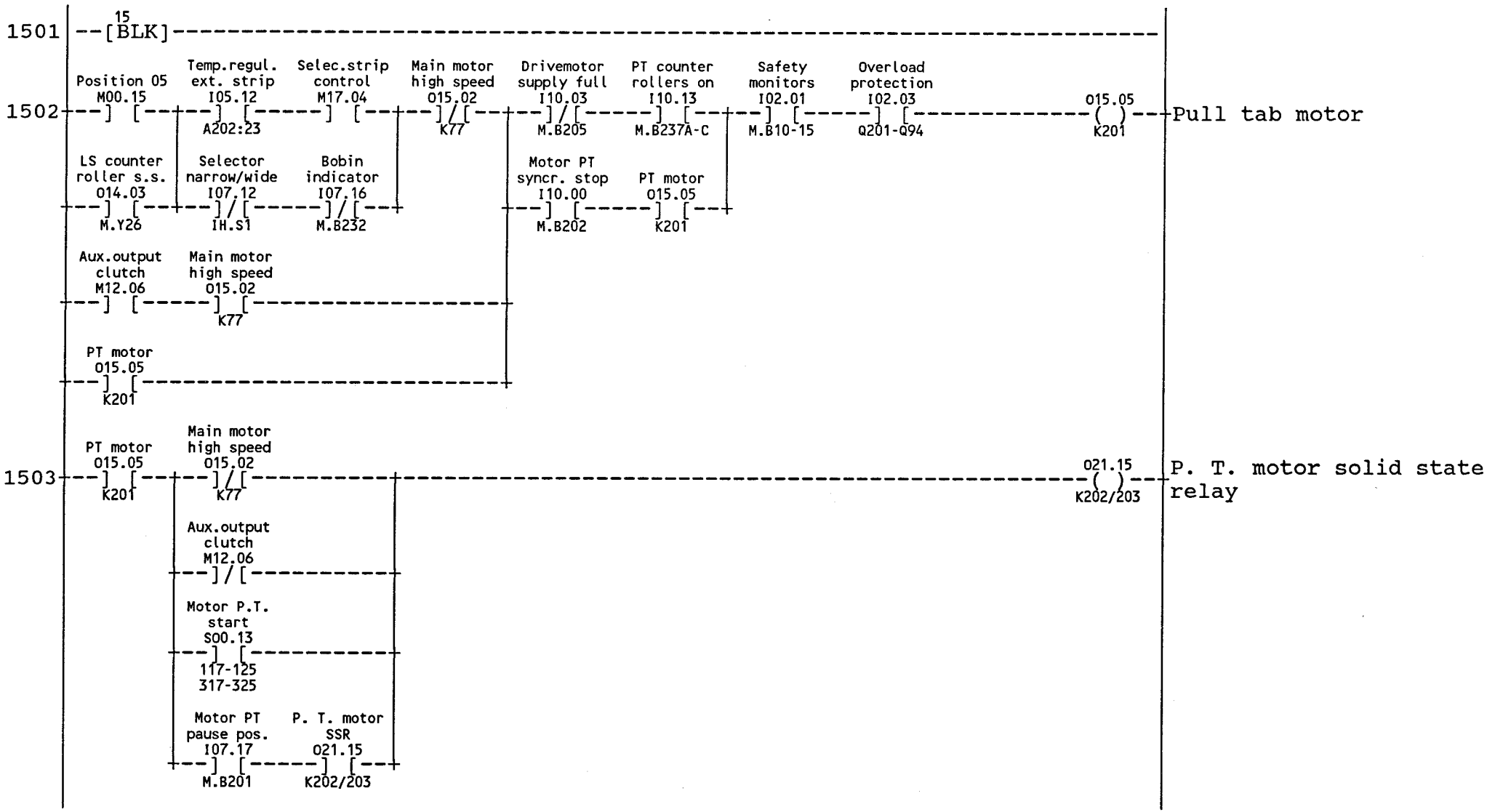

08:13 93.11.25

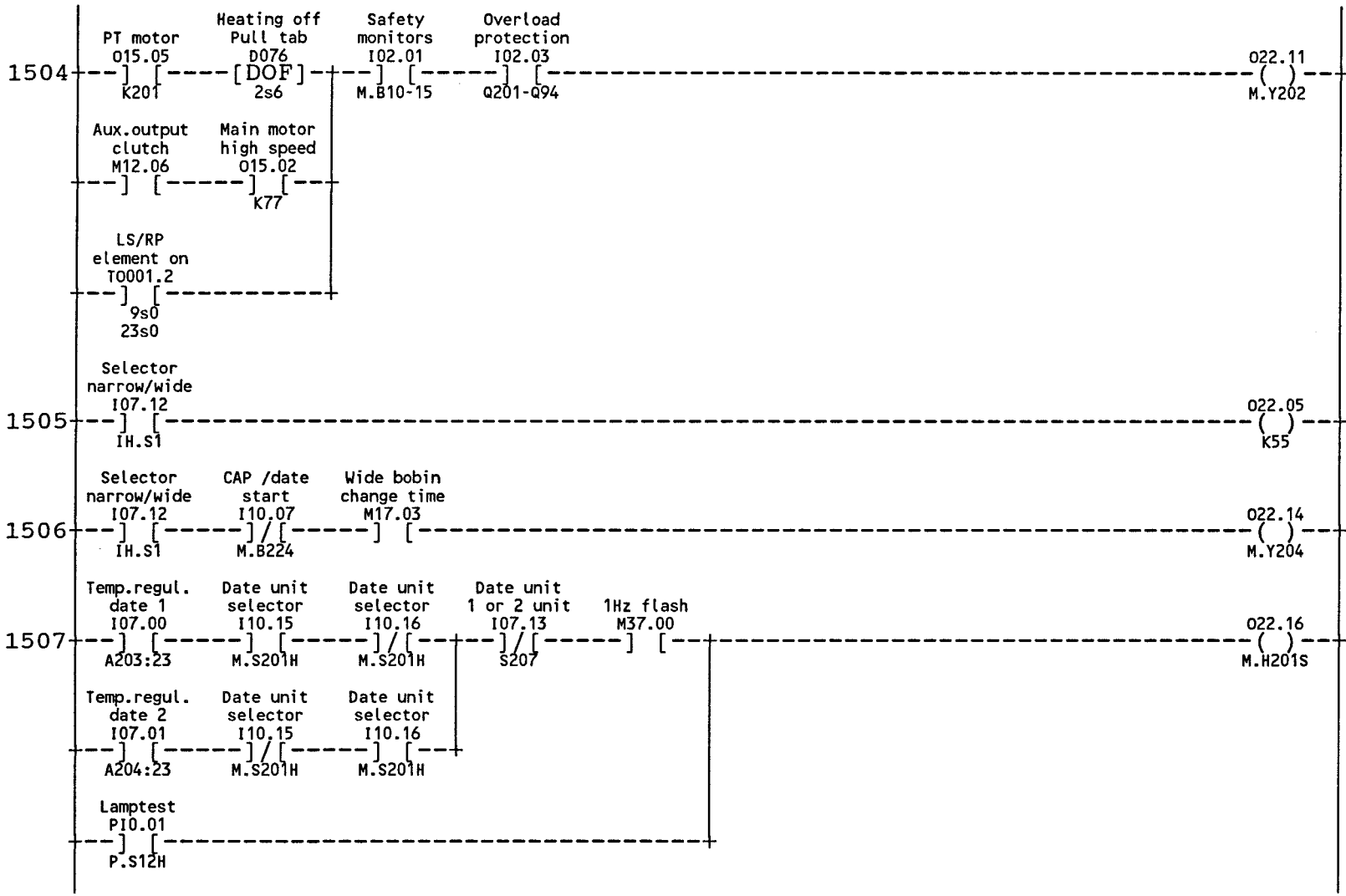
1504
PT motor
O15.05
K201
Heating off
Pull tab
D076
[DOF]
2s6
Safety
monitors
I02.01
M.B10-15
Overload
protection
I02.03
Q201-Q94
O22.11
M.Y202
Heating element off P. T.
Aux.output
clutch
M12.06
Main motor
high speed
O15.02
K77
LS/RP
element on
T0001.2
9s0
23s0
1505
Selector
narrow/wide
I07.12
IH.S1
O22.05
K55
External strip P. T.
heating
1506
Selector
narrow/wide
I07.12
IH.S1
CAP /date
start
I10.07
M.B224
Wide bobin
change time
M17.03
O22.14
M.Y204
External strip
Counter Air Pressure
1507
Temp.regul.
date 1
I07.00
A203:23
Date unit
selector
I10.15
M.S201H
Date unit
selector
I10.16
M.S201H
Date unit
1 or 2 unit
I07.13
S207
1Hz flash
M37.00
O22.16
M.H201S
Temperature indicator
date unit elements
Temp.regul.
date 2
I07.01
A204:23
Date unit
selector
I10.15
M.S201H
Date unit
selector
I10.16
M.S201H
Lamptest
PI0.01
P.S12H

08:13 93.11.25


1508
Date unit selector I10.15
M.S201H
Preheating 1 P.T. 016.01
K48
022.06
K56
Date unit 1, heating
Date unit selector I10.16
M.S201H
Date unit 1 or 2 unit I07.13
S207
1509
Date unit selector I10.15
M.S201H
Preheating 1 P.T. 016.01
K48
022.07
K57
Date unit 2, heating
Date unit selector I10.16
M.S201H
Date unit 1 or 2 unit I07.13
S207

08:13 93.11.25

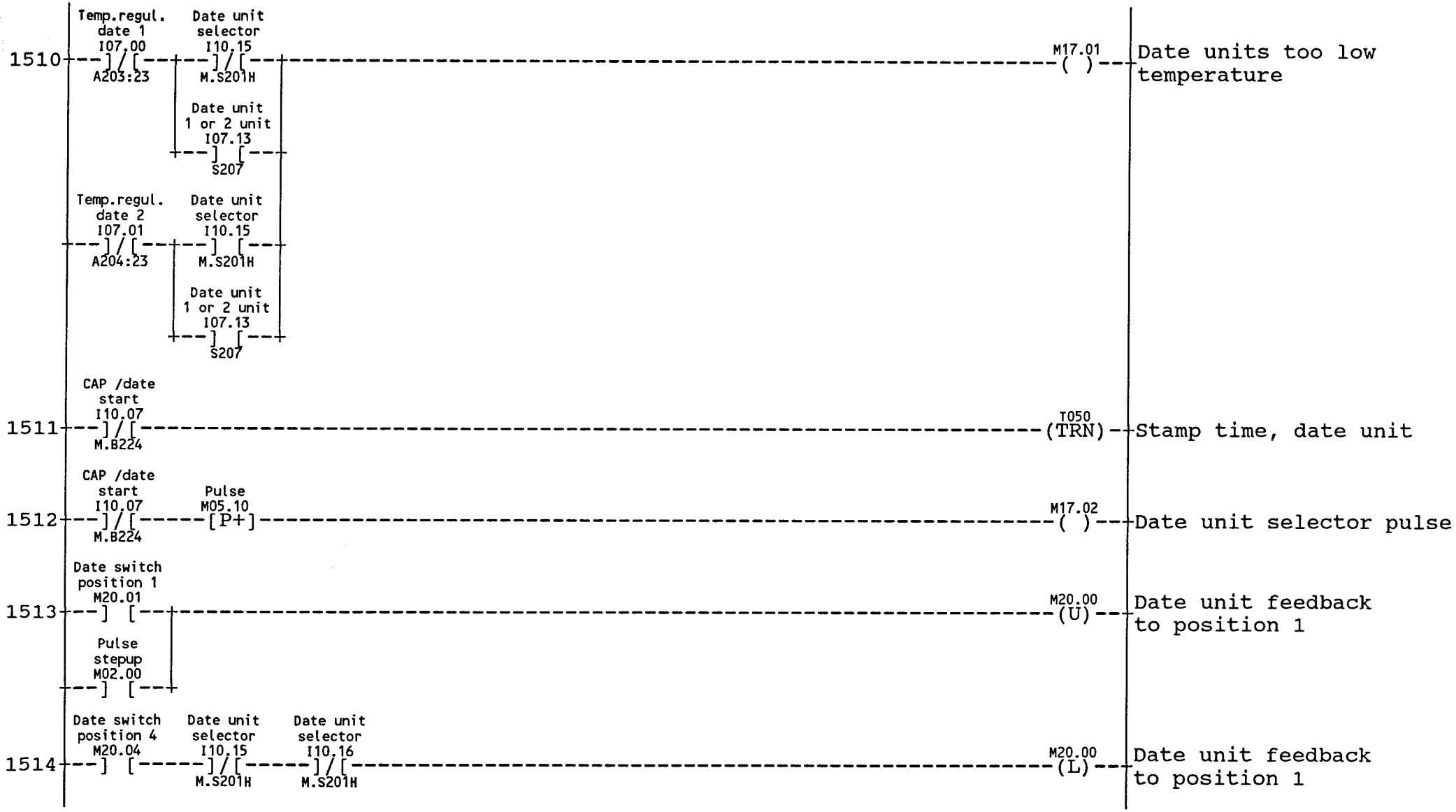
1510
Temp.regul. date 1 I07.00 A203:23
Date unit selector I10.15 M.S201H
Date unit 1 or 2 unit I07.13 S207
Temp.regul. date 2 I07.01 A204:23
Date unit selector I10.15 M.S201H
Date unit 1 or 2 unit I07.13 S207
M17.01 ( )
Date units too low temperature
1511
CAP /date start I10.07 M.B224
I050 (TRN)
Stamp time, date unit
1512
CAP /date start I10.07 M.B224
Pulse M05.10 [P+]
M17.02 ( )
Date unit selector pulse
1513
Date switch position 1 M20.01
Pulse stepup M02.00
M20.00 (U)
Date unit feedback to position 1
1514
Date switch position 4 M20.04
Date unit selector I10.15 M.S201H
Date unit selector I10.16 M.S201H
M20.00 (L)
Date unit feedback to position 1

08:13 93.11.25

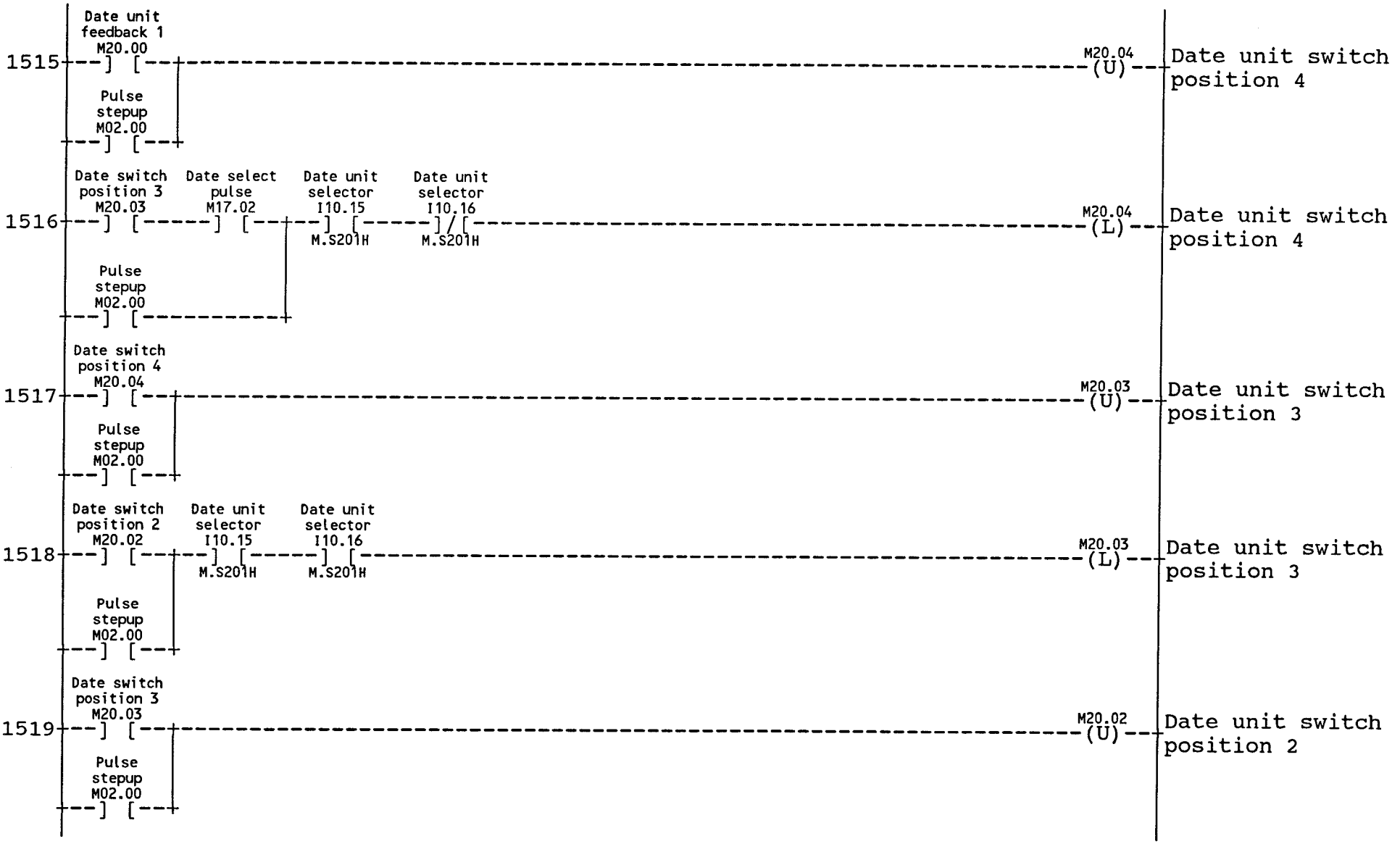
1515
Date unit feedback 1 M20.00
Pulse stepup M02.00
M20.04 (U)
Date unit switch position 4
1516
Date switch position 3 M20.03
Date select pulse M17.02
Date unit selector I10.15 M.S201H
Date unit selector I10.16 M.S201H
Pulse stepup M02.00
M20.04 (L)
Date unit switch position 4
1517
Date switch position 4 M20.04
Pulse stepup M02.00
M20.03 (U)
Date unit switch position 3
1518
Date switch position 2 M20.02
Date unit selector I10.15 M.S201H
Date unit selector I10.16 M.S201H
Pulse stepup M02.00
M20.03 (L)
Date unit switch position 3
1519
Date switch position 3 M20.03
Pulse stepup M02.00
M20.02 (U)
Date unit switch position 2

08:13 93.11.25

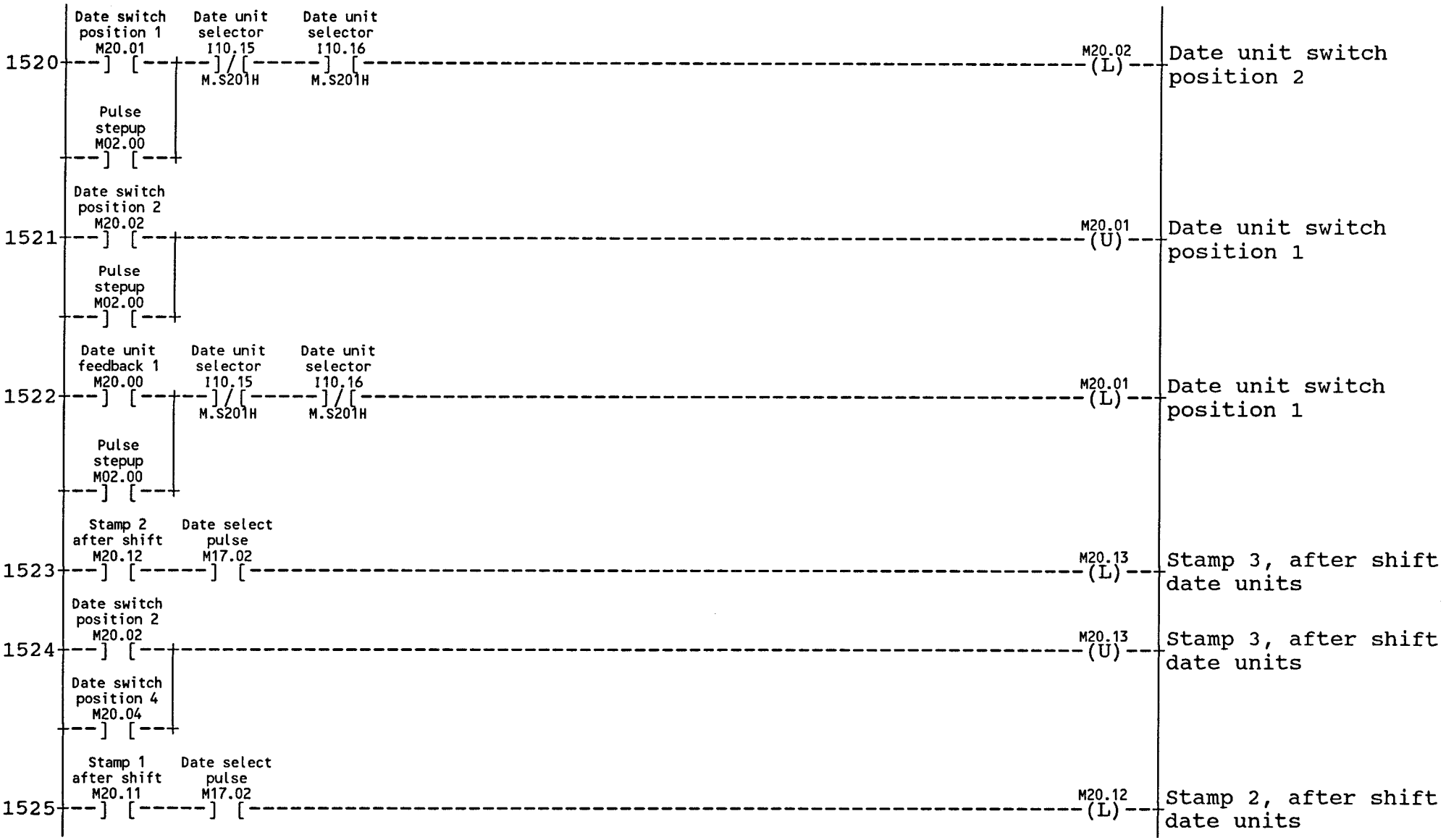
1520
Date switch position 1 M20.01
Date unit selector I10.15 M.S201H
Date unit selector I10.16 M.S201H
Pulse stepup M02.00
M20.02 (L)
Date unit switch position 2
1521
Date switch position 2 M20.02
Pulse stepup M02.00
M20.01 (U)
Date unit switch position 1
1522
Date unit feedback 1 M20.00
Date unit selector I10.15 M.S201H
Date unit selector I10.16 M.S201H
Pulse stepup M02.00
M20.01 (L)
Date unit switch position 1
1523
Stamp 2 after shift M20.12
Date select pulse M17.02
M20.13 (L)
Stamp 3, after shift date units
1524
Date switch position 2 M20.02
Date switch position 4 M20.04
M20.13 (U)
Stamp 3, after shift date units
1525
Stamp 1 after shift M20.11
Date select pulse M17.02
M20.12 (L)
Stamp 2, after shift date units

08:13 93.11.25

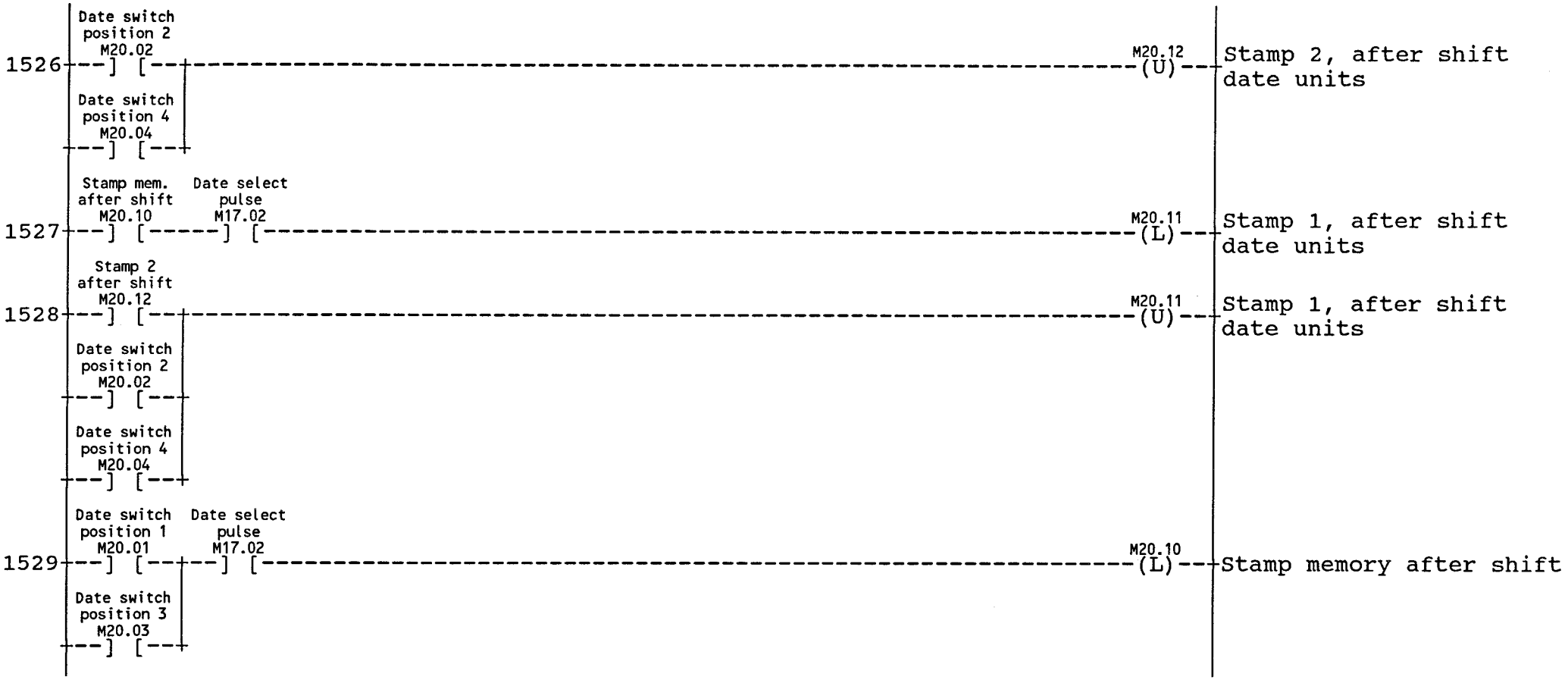
1526
Date switch position 2 M20.02
Date switch position 4 M20.04
M20.12 (U)
Stamp 2, after shift date units
1527
Stamp mem. after shift M20.10
Date select pulse M17.02
M20.11 (L)
Stamp 1, after shift date units
1528
Stamp 2 after shift M20.12
Date switch position 2 M20.02
Date switch position 4 M20.04
M20.11 (U)
Stamp 1, after shift date units
1529
Date switch position 1 M20.01
Date select pulse M17.02
Date switch position 3 M20.03
M20.10 (L)
Stamp memory after shift

08:13 93.11.25

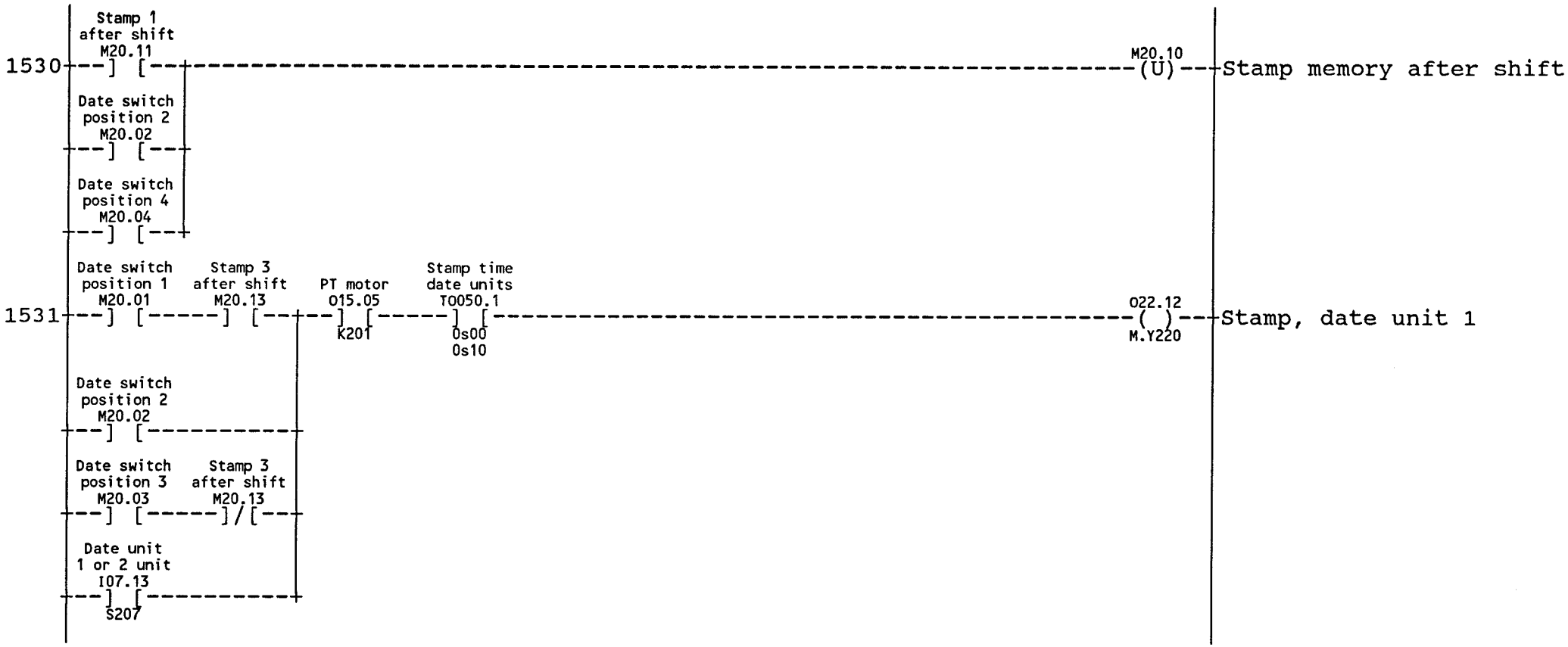
1530
Stamp 1 after shift M20.11
Date switch position 2 M20.02
Date switch position 4 M20.04
M20.10
(U)
Stamp memory after shift
1531
Date switch position 1 M20.01
Stamp 3 after shift M20.13
PT motor O15.05
K201
Stamp time date units T0050.1
0s00
0s10
O22.12
( )
M.Y220
Stamp, date unit 1
Date switch position 2 M20.02
Date switch position 3 M20.03
Stamp 3 after shift M20.13
Date unit 1 or 2 unit I07.13
S207

08:13 93.11.25

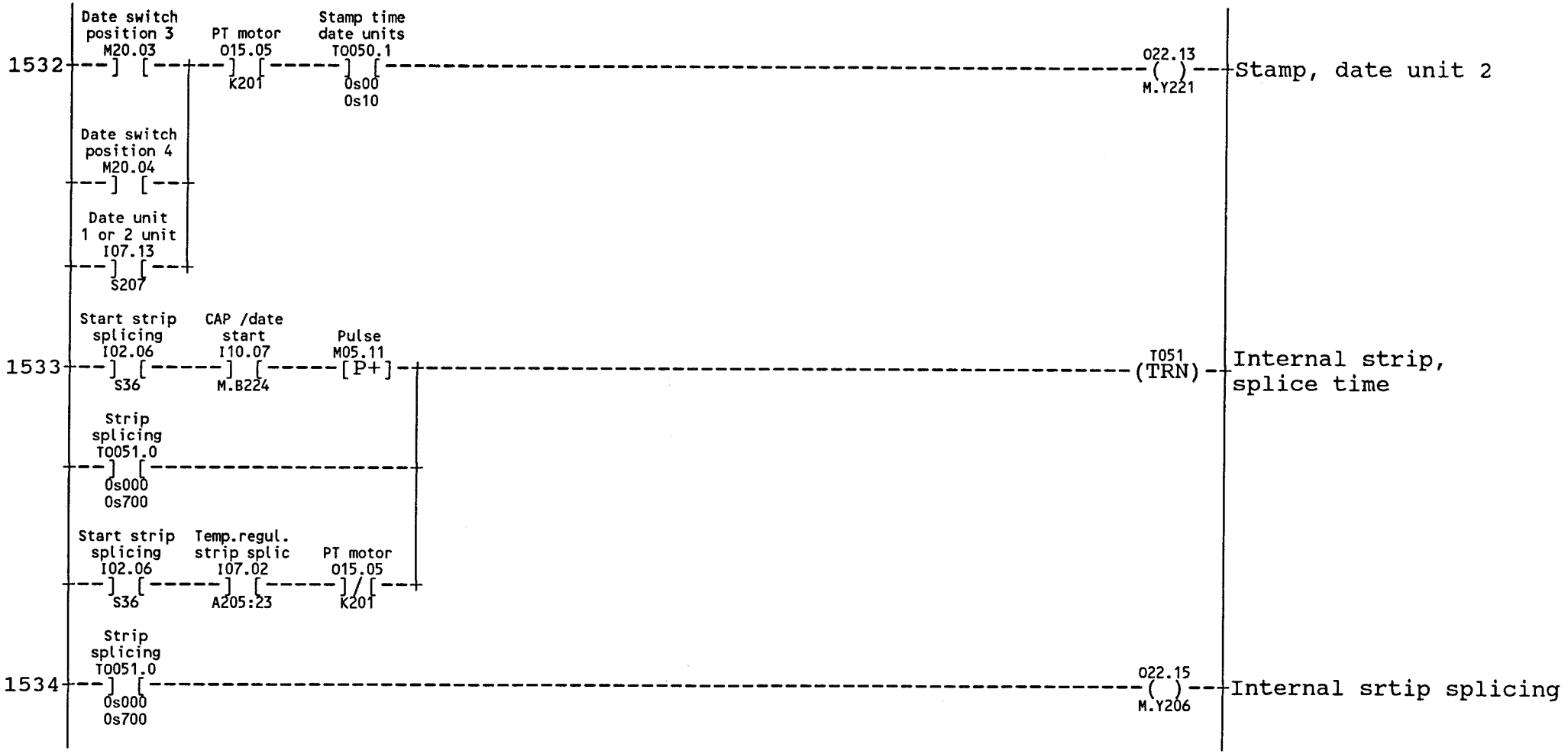
1532
Date switch position 3 M20.03
PT motor O15.05
K201
Stamp time date units T0050.1
0s00
0s10
O22.13
M.Y221
Stamp, date unit 2
Date switch position 4 M20.04
Date unit 1 or 2 unit I07.13
S207
1533
Start strip splicing I02.06
S36
CAP /date start I10.07
M.B224
Pulse M05.11
[P+]
T051
(TRN)
Internal strip, splice time
Strip splicing T0051.0
0s000
0s700
Start strip splicing I02.06
S36
Temp.regul. strip splic I07.02
A205:23
PT motor O15.05
K201
1534
Strip splicing T0051.0
0s000
0s700
O22.15
M.Y206
Internal srtip splicing

08:13 93.11.25

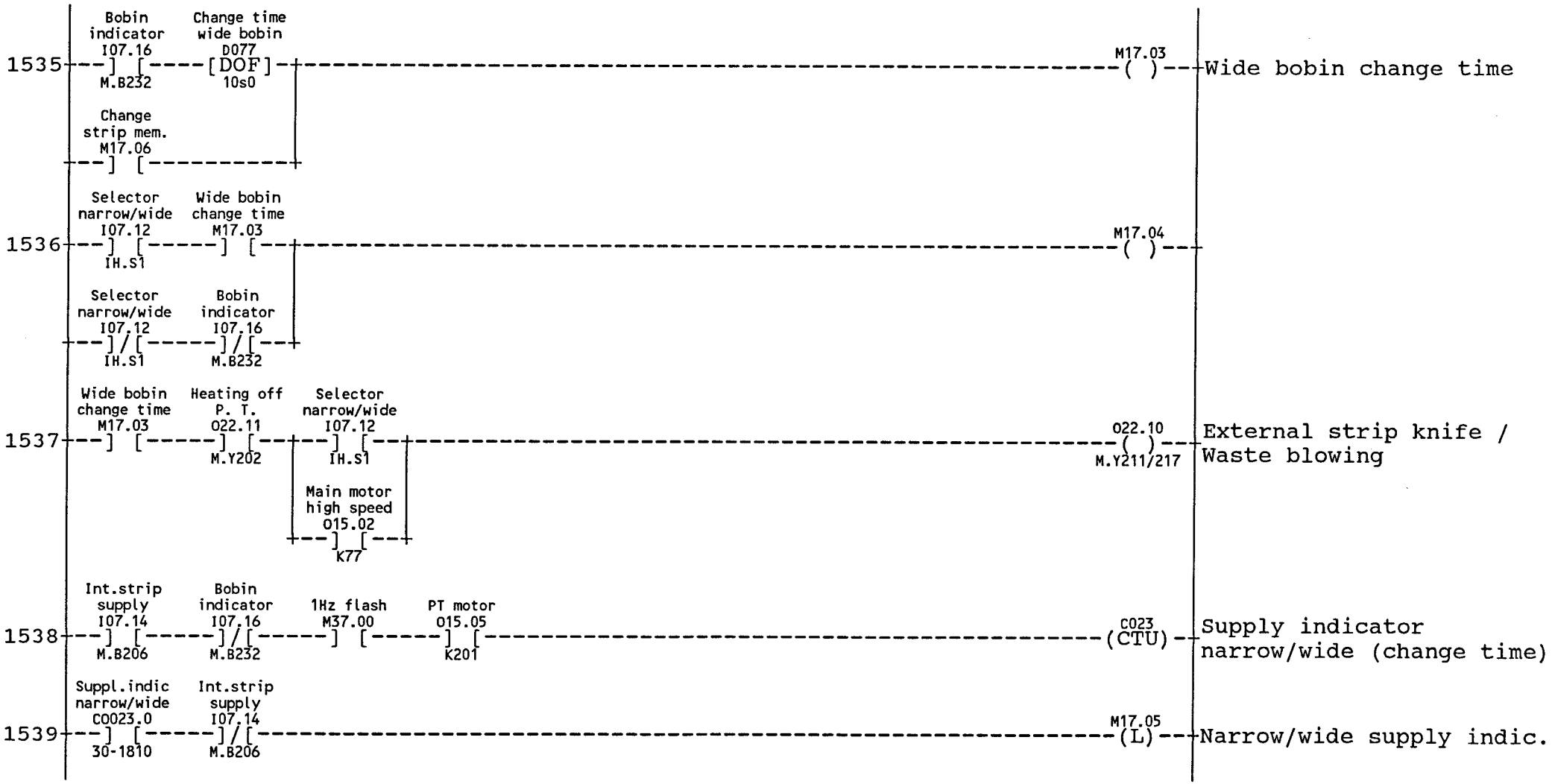
1535
Bobin indicator I07.16 M.B232
Change time wide bobin D077 [DOF] 10s0
Change strip mem. M17.06
M17.03
Wide bobin change time
1536
Selector narrow/wide I07.12 IH.S1
Wide bobin change time M17.03
Selector narrow/wide I07.12 IH.S1
Bobin indicator I07.16 M.B232
M17.04
1537
Wide bobin change time M17.03 M.Y202
Heating off P. T. O22.11
Selector narrow/wide I07.12 IH.S1
Main motor high speed O15.02 K77
O22.10 M.Y211/217
External strip knife / Waste blowing
1538
Int.strip supply I07.14 M.B206
Bobin indicator I07.16 M.B232
1Hz flash M37.00
PT motor O15.05 K201
C023 (CTU)
Supply indicator narrow/wide (change time)
1539
Suppl.indic narrow/wide C0023.0 30-1810
Int.strip supply I07.14 M.B206
M17.05 (L)
Narrow/wide supply indic.

08:13 93.11.25

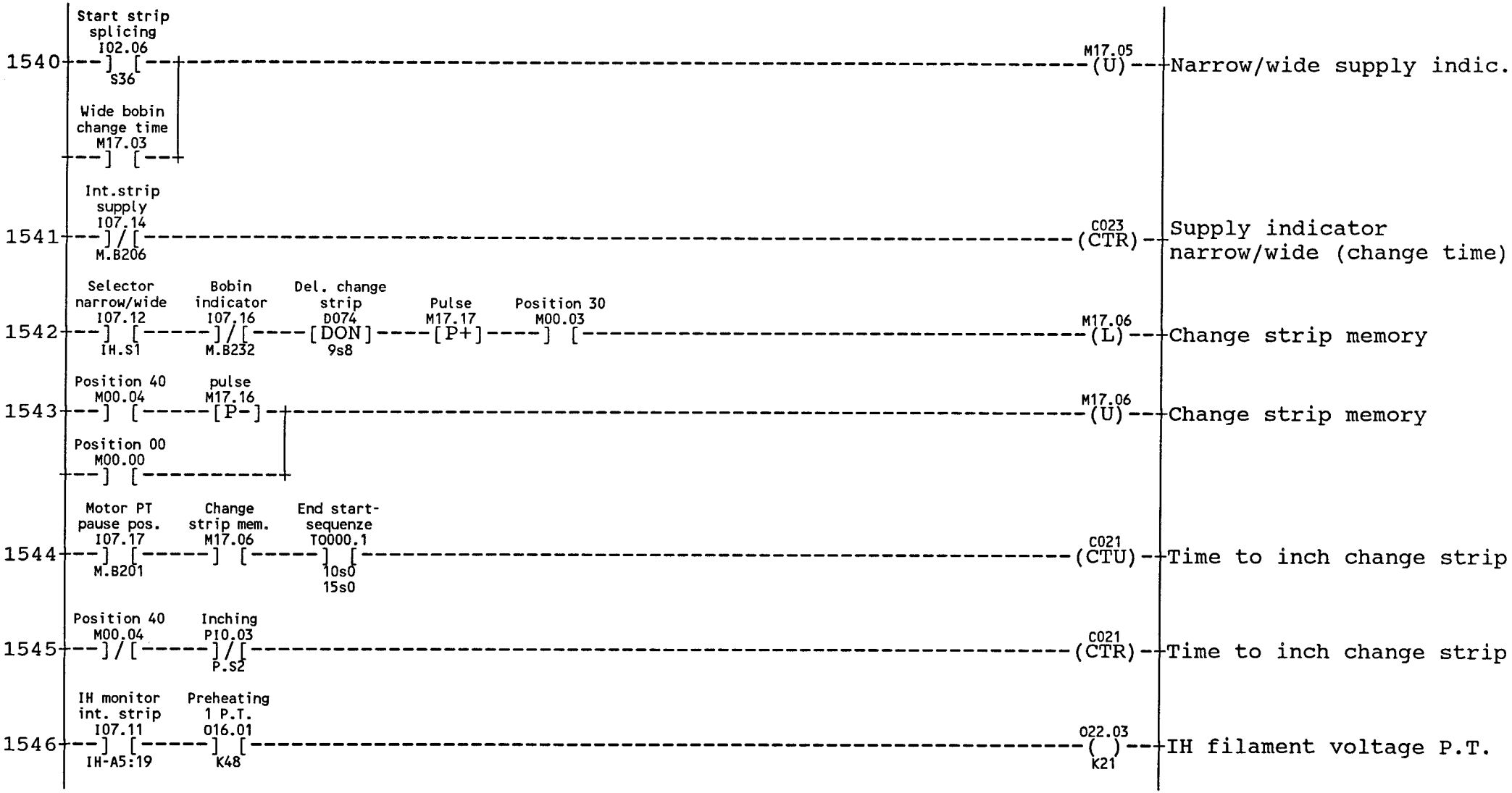
1540
Start strip splicing I02.06 S36
Wide bobin change time M17.03
M17.05 (U)
Narrow/wide supply indic.
1541
Int.strip supply I07.14 M.B206
C023 (CTR)
Supply indicator narrow/wide (change time)
1542
Selector narrow/wide I07.12 IH.S1
Bobin indicator I07.16 M.B232
Del. change strip D074 9s8 [DON]
Pulse M17.17 [P+]
Position 30 M00.03
M17.06 (L)
Change strip memory
1543
Position 40 M00.04
pulse M17.16 [P-]
Position 00 M00.00
M17.06 (U)
Change strip memory
1544
Motor PT pause pos. I07.17 M.B201
Change strip mem. M17.06
End start-sequenze T0000.1 10s0 15s0
C021 (CTU)
Time to inch change strip
1545
Position 40 M00.04
Inching PI0.03 P.S2
C021 (CTR)
Time to inch change strip
1546
IH monitor int. strip I07.11 IH-A5:19
Preheating 1 P.T. O16.01 K48
O22.03 ( ) K21
IH filament voltage P.T.

08:13 93.11.25

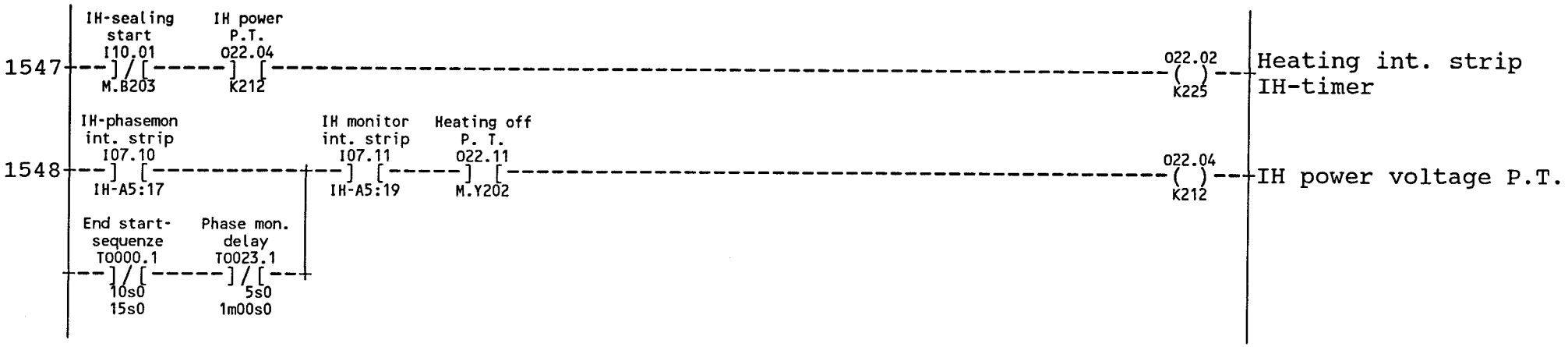
1547
IH-sealing start
I10.01
M.B203
IH power P.T.
O22.04
K212
O22.02
K225
Heating int. strip IH-timer
1548
IH-phasemon int. strip
I07.10
IH-A5:17
IH monitor int. strip
I07.11
IH-A5:19
Heating off P. T.
O22.11
M.Y202
O22.04
K212
IH power voltage P.T.
End start-sequenze
T0000.1
10s0
15s0
Phase mon. delay
T0023.1
5s0
1m00s0

08:13 93.11.25

TRANSVERSAL SEALING

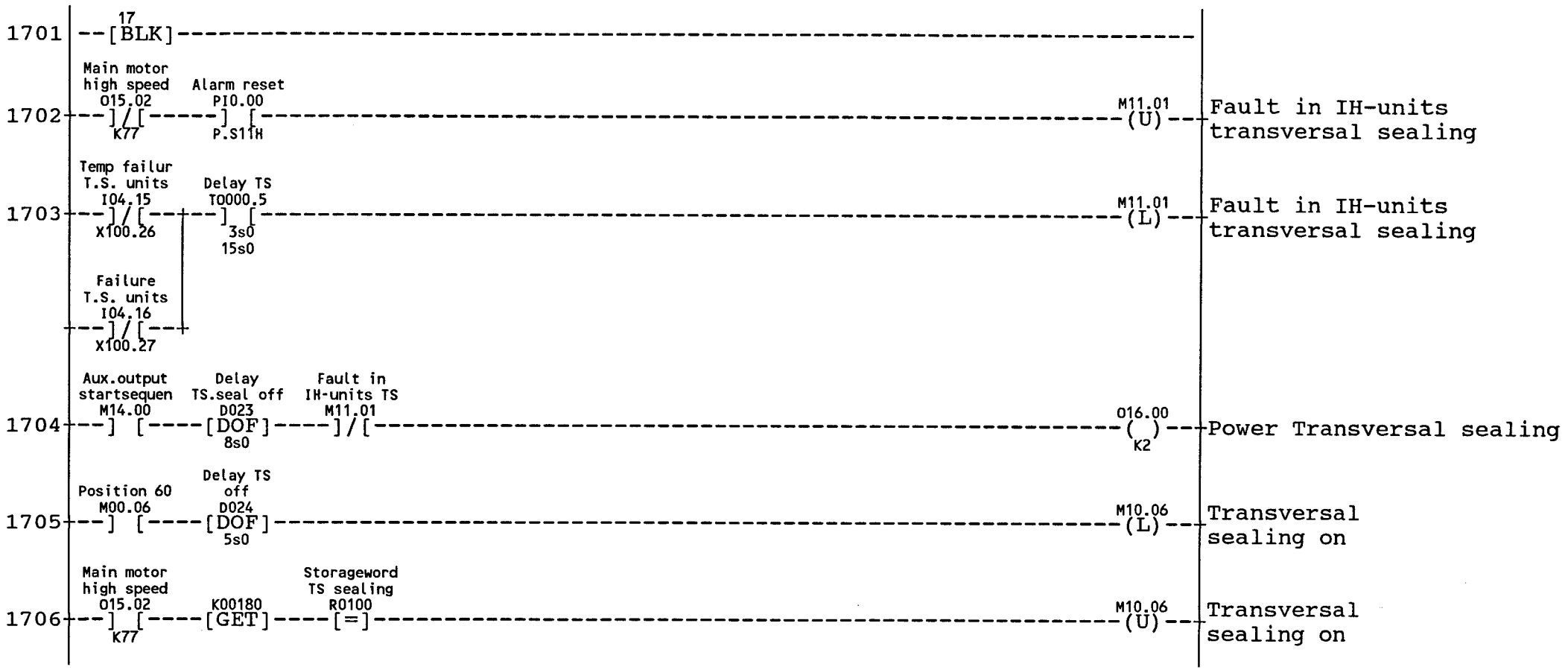

08:13 93.11.25

DESIGN CORRECTION

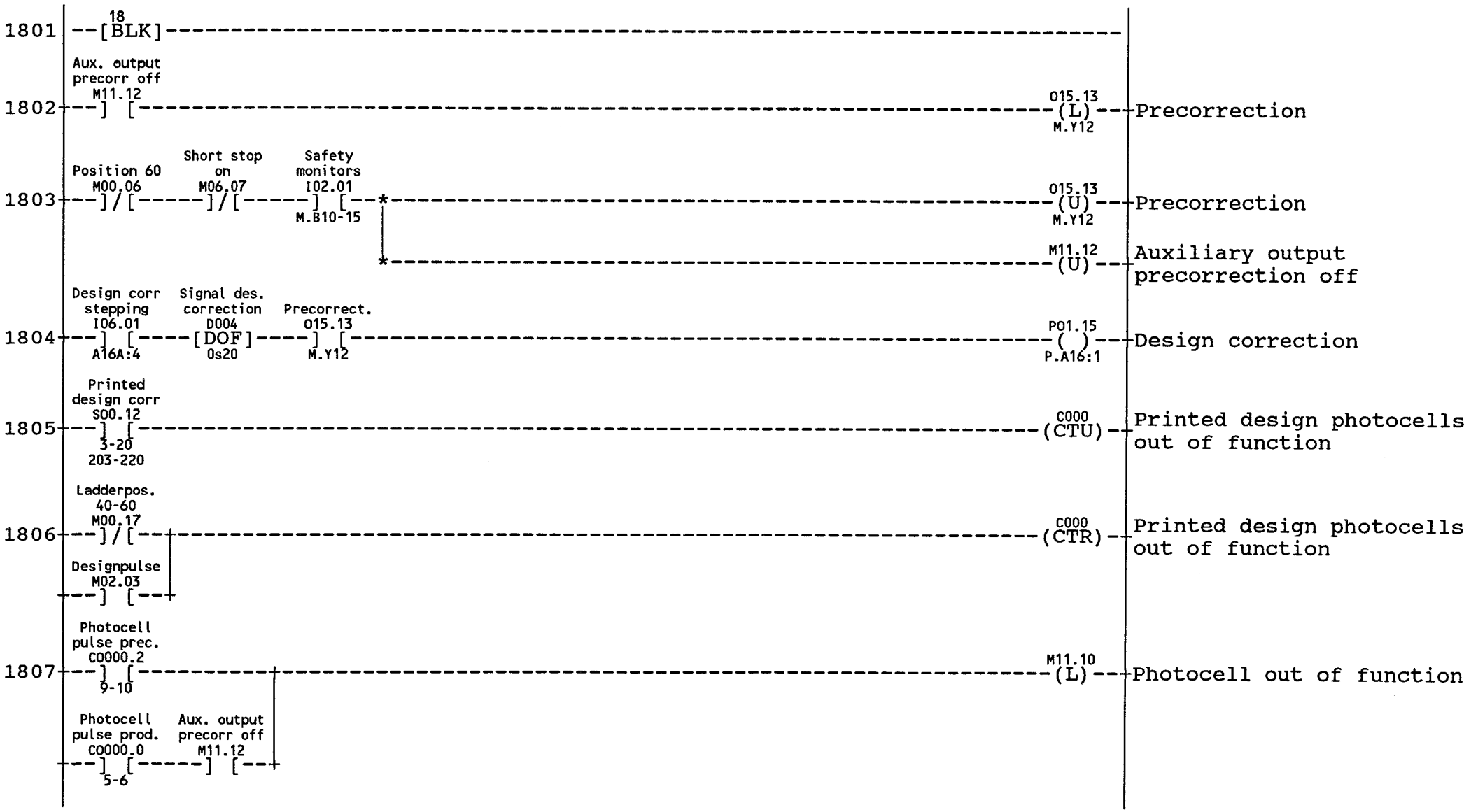

08:13 93.11.25

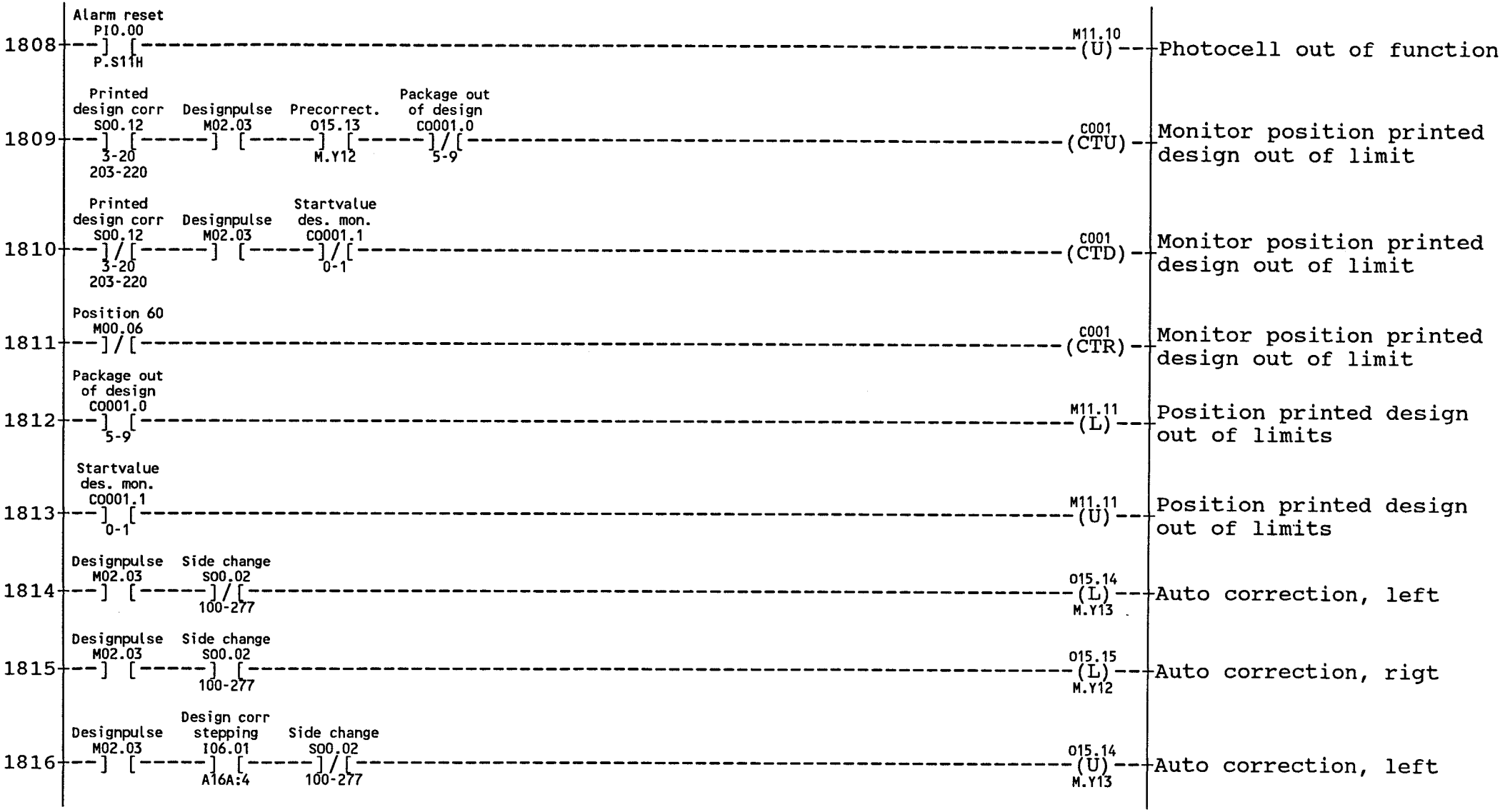
1808
Alarm reset
PI0.00
P.S11H
M11.10
(U)
Photocell out of function
1809
Printed design corr
S00.12
3-20
203-220
Designpulse
M02.03
Precorrect.
O15.13
M.Y12
Package out of design
C0001.0
5-9
C001
(CTU)
Monitor position printed design out of limit
1810
Printed design corr
S00.12
3-20
203-220
Designpulse
M02.03
Startvalue des. mon.
C0001.1
0-1
C001
(CTD)
Monitor position printed design out of limit
1811
Position 60
M00.06
C001
(CTR)
Monitor position printed design out of limit
1812
Package out of design
C0001.0
5-9
M11.11
(L)
Position printed design out of limits
1813
Startvalue des. mon.
C0001.1
0-1
M11.11
(U)
Position printed design out of limits
1814
Designpulse
M02.03
Side change
S00.02
100-277
O15.14
(L)
M.Y13
Auto correction, left
1815
Designpulse
M02.03
Side change
S00.02
100-277
O15.15
(L)
M.Y12
Auto correction, rigt
1816
Designpulse
M02.03
Design corr stepping
I06.01
A16A:4
Side change
S00.02
100-277
O15.14
(U)
M.Y13
Auto correction, left

08:13 93.11.25

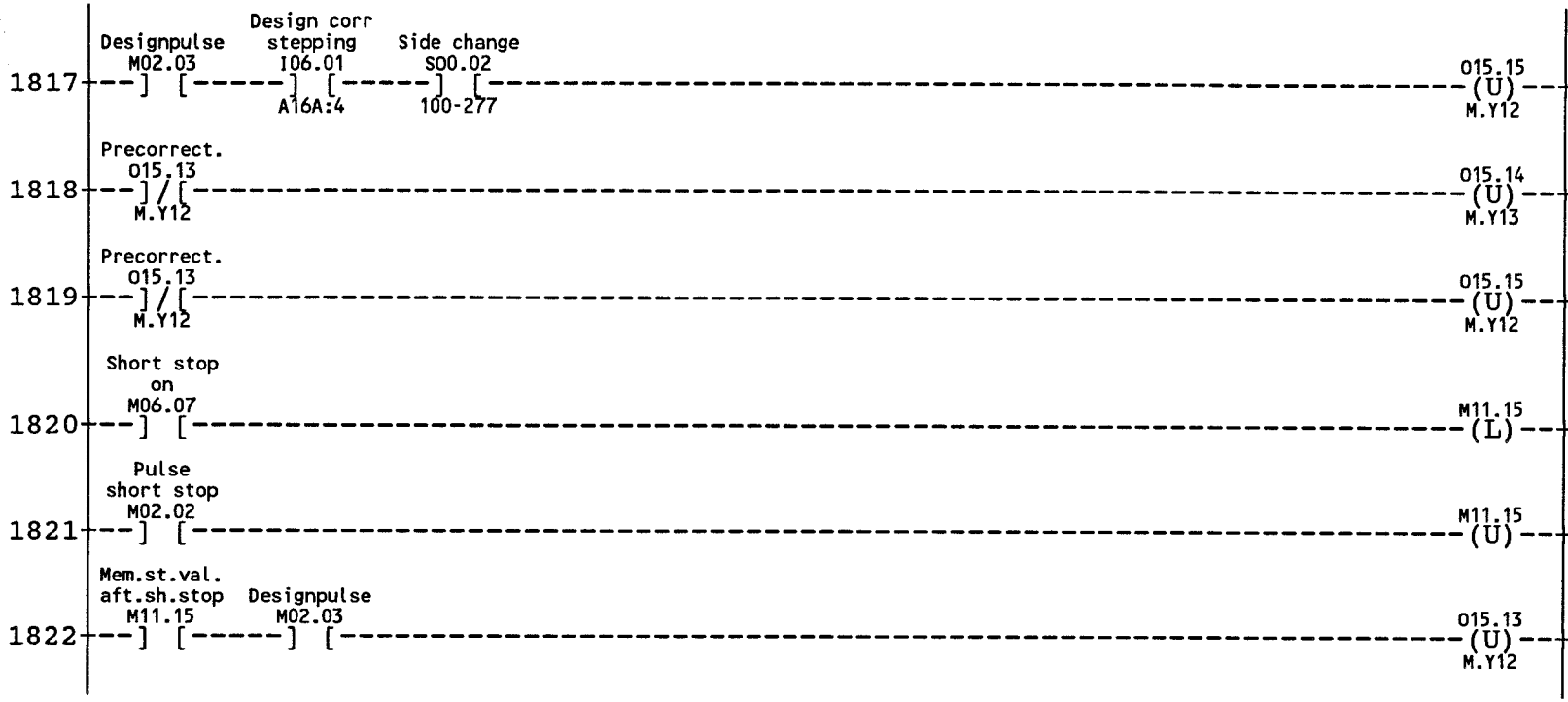
1817
Designpulse
M02.03
Design corr stepping
I06.01
A16A:4
Side change
S00.02
100-277
O15.15
(U)
M.Y12
Auto correction, rigt
1818
Precorrect.
O15.13
M.Y12
O15.14
(U)
M.Y13
Auto correction, left
1819
Precorrect.
O15.13
M.Y12
O15.15
(U)
M.Y12
Auto correction, rigt
1820
Short stop on
M06.07
M11.15
(L)
Memory startvalue after short stop
1821
Pulse short stop
M02.02
M11.15
(U)
Memory startvalue after short stop
1822
Mem.st.val. aft.sh.stop
M11.15
Designpulse
M02.03
O15.13
(U)
M.Y12
Precorrection

08:13 93.11.25

DUMPING OF PACKAGES

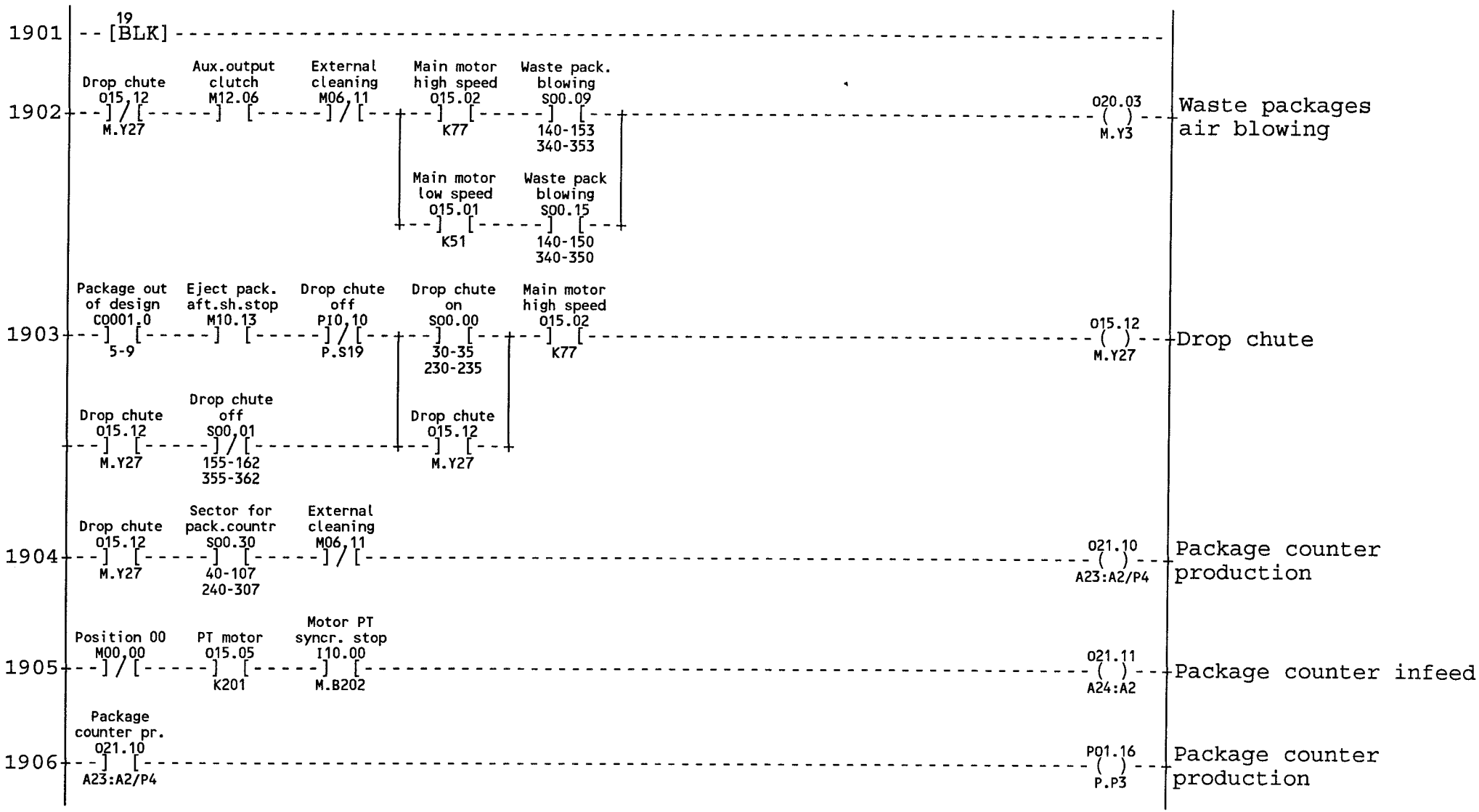

08:13 93.11.25

VOLUME DEPENDENT VALUE. VALID FOR 200CC, FOR OTHER VOLUME SEE:47629-03:01

1907 Start sequence TQ000.3 0s1 9s6 — Package dumping R0010 [GET] [AND] KFC3EH → R0010 (PUT) — Storageword shiftregister packagedumping

Package dumping R0011 [GET] [AND] K07FFH → R0011 (PUT) — Storageword shiftregister packagedumping

Package dumping R0012 [GET] [AND] KE000H → R0012 (PUT) — Storageword shiftregister packagedumping

Package dumping R0013 [GET] [AND] KFFFFH → R0013 (PUT) — Storageword shiftregister packagedumping

VOLUME DEPENDENT VALUE. VALID FOR 200CC, FOR OTHER VOLUME SEE:47629-03:01

1908 Twist strip stop/alarm M17.13 — Package dumping R0012 [GET] [AND] KFFFFH → R0012 (PUT) — Storageword shiftregister packagedumping

Package dumping R0013 [GET] [AND] KFFFFH → R0013 (PUT) — Storageword shiftregister packagedumping

Package dumping R0014 [GET] [AND] KFF83H → R0014 (PUT) — Storageword shiftregister packagedumping

VOLUME DEPENDENT VALUE. VALID FOR 200CC, FOR OTHER VOLUME SEE:47629-03:01

1909 Pulse papersplice M02.15 — Package dumping R0012 [GET] [AND] K3FFFH → R0012 (PUT) — Storageword shiftregister packagedumping

Package dumping R0013 [GET] [AND] KFFFFH → R0013 (PUT) — Storageword shiftregister packagedumping

08:13 93.11.25

VOLUME DEPENDENT VALUE. VALID FOR 200CC, FOR OTHER VOLUME SEE:47629-03:01

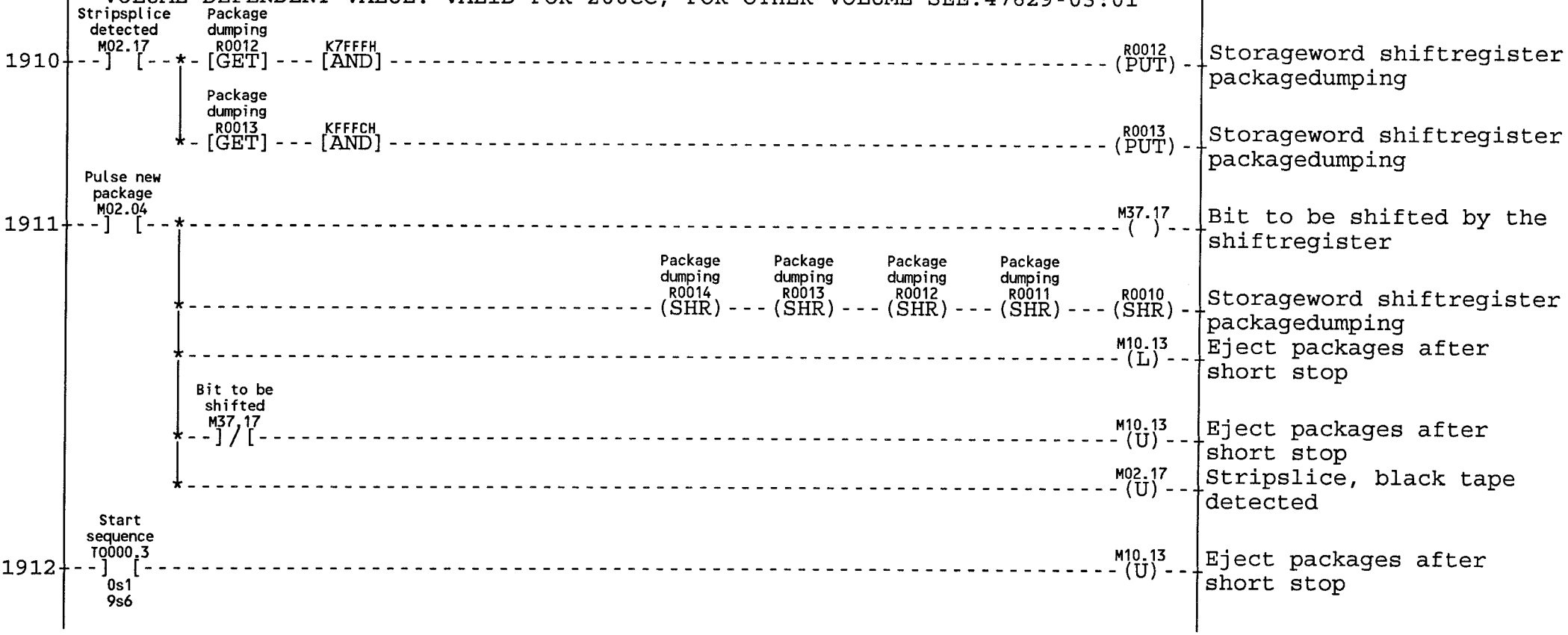

08:13 93.11.25

NO PRODUCTION ALLOWED

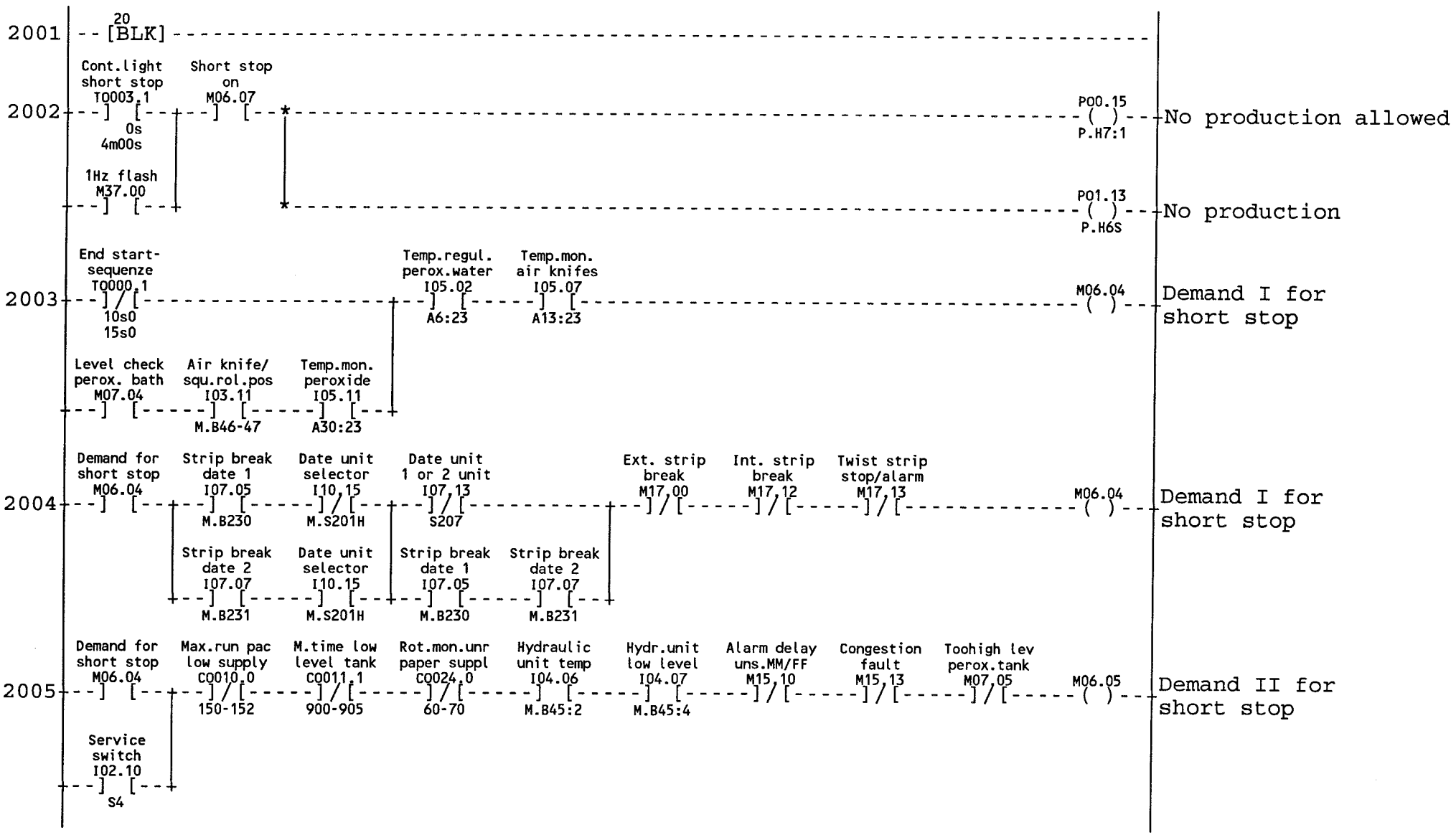

08:13 93.11.25

EXTERNAL CLEANING

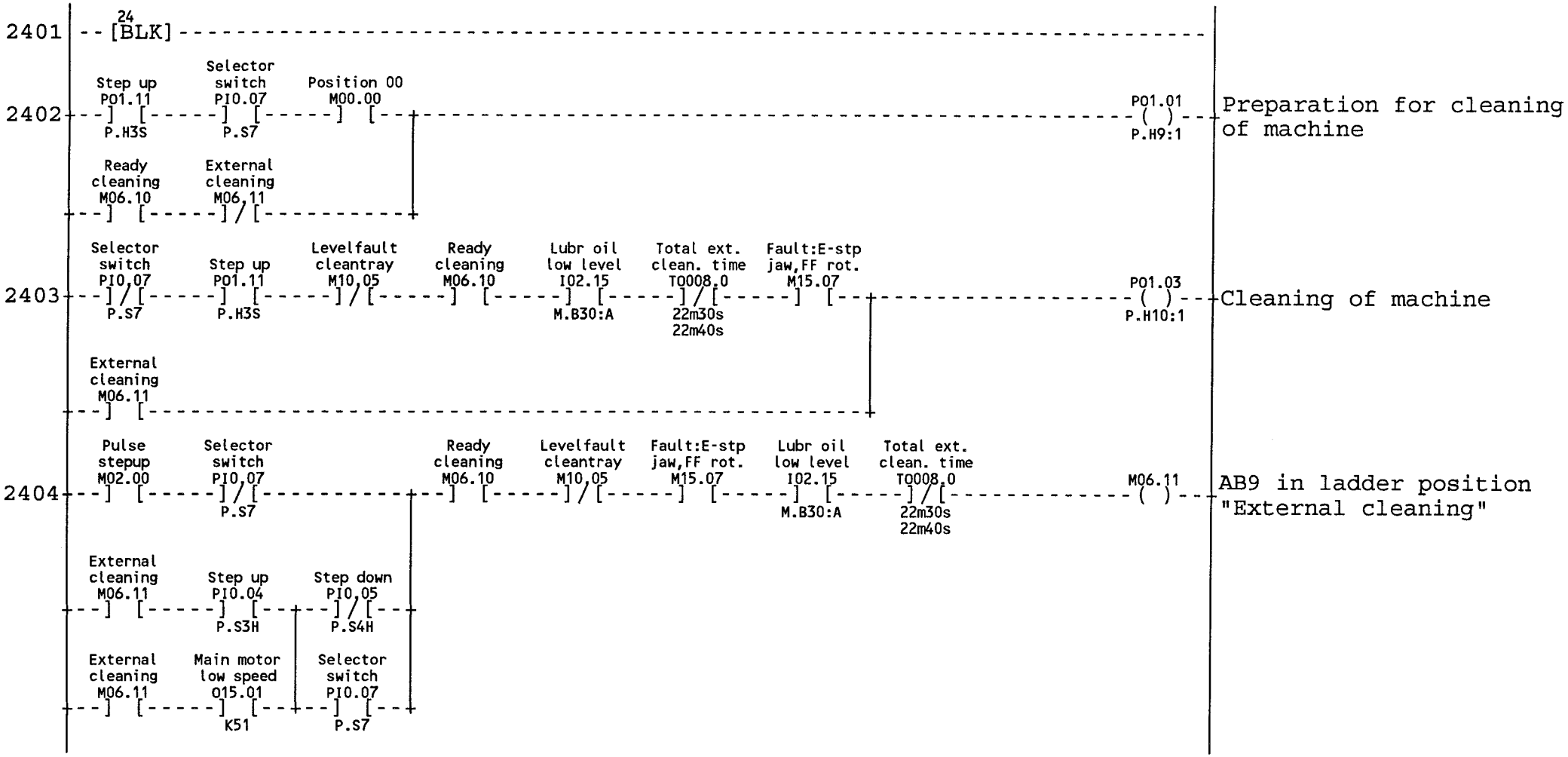

08:13 93.11.25

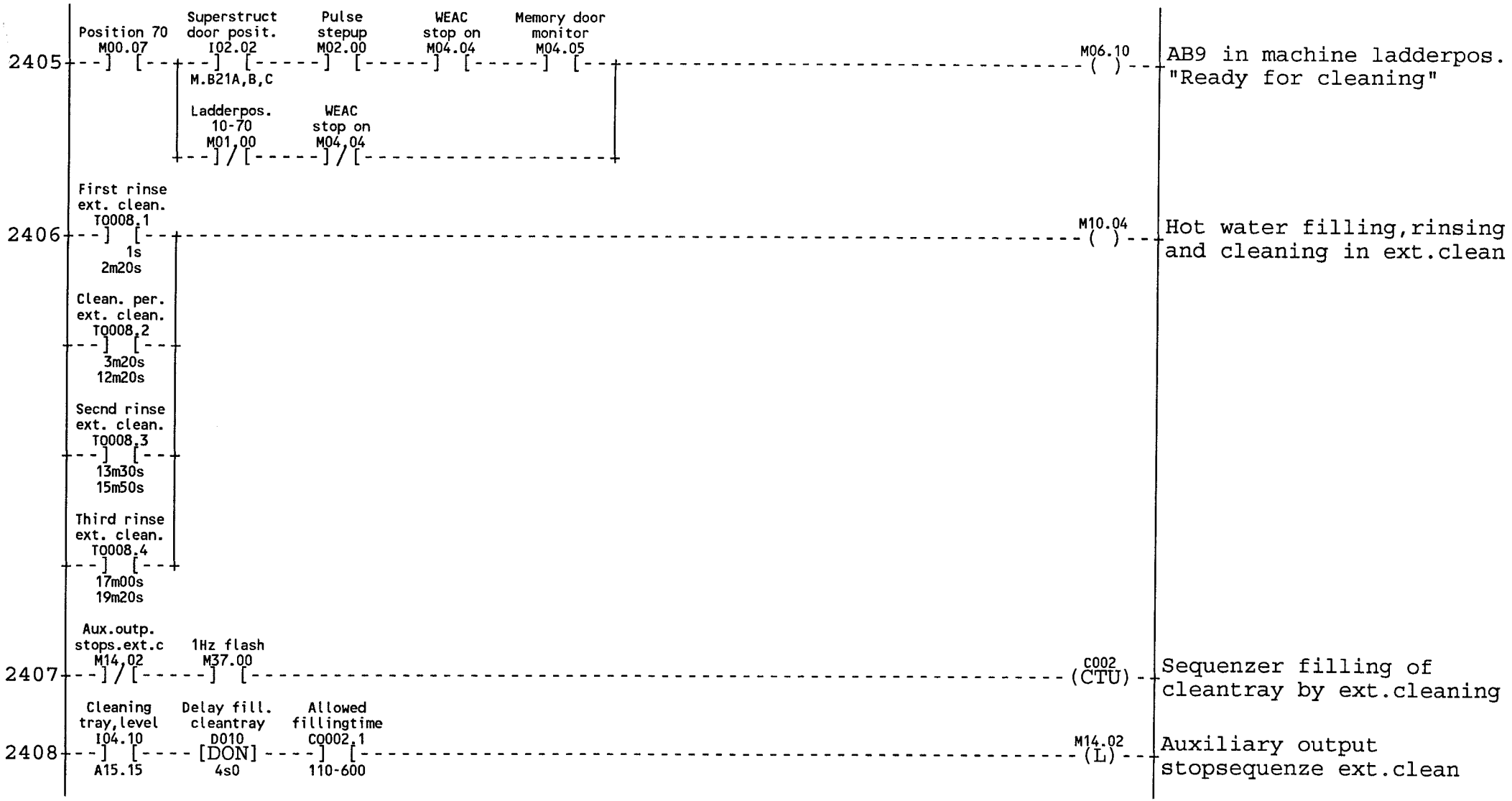
2405
Position 70
M00.07
Superstruct door posit.
I02.02
Pulse stepup
M02.00
WEAC stop on
M04.04
Memory door monitor
M04.05
M06.10
AB9 in machine ladderpos. "Ready for cleaning"
M.B21A,B,C
Ladderpos. 10-70
M01.00
WEAC stop on
M04.04
2406
First rinse ext. clean.
TQ008.1
1s
2m20s
Clean. per. ext. clean.
TQ008.2
3m20s
12m20s
Secnd rinse ext. clean.
TQ008.3
13m30s
15m50s
Third rinse ext. clean.
TQ008.4
17m00s
19m20s
M10.04
Hot water filling,rinsing and cleaning in ext.clean
2407
Aux.outp. stops.ext.c
M14.02
1Hz flash
M37.00
C002
(CTU)
Sequenzer filling of cleantray by ext.cleaning
2408
Cleaning tray,level
I04.10
A15.15
Delay fill. cleantray
D010
[DON]
4s0
Allowed fillingtime
CQ002.1
110-600
M14.02
(L)
Auxiliary output stopsequenze ext.clean

08:13 93.11.25

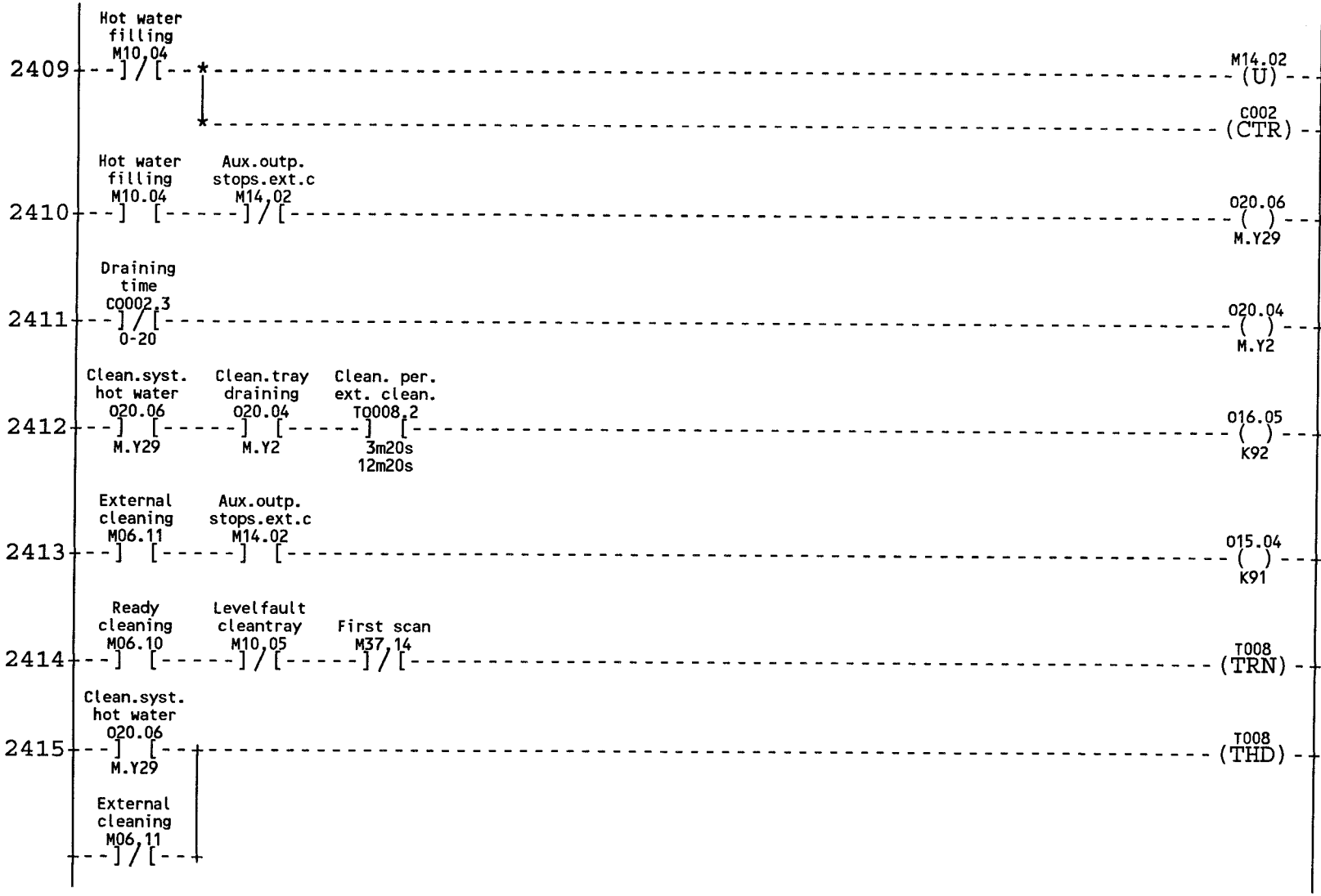
2409
Hot water filling M10,04
M14.02 (U)
Auxiliary output stopsequenze ext.clean
C002 (CTR)
Sequenzer filling of cleantray by ext.cleaning
2410
Hot water filling M10.04
Aux.outp. stops.ext.c M14,02
O20.06 ( ) M.Y29
Cleaning system hot water
2411
Draining time C0002,3 0-20
O20.04 ( ) M.Y2
Cleaning tray draining
2412
Clean.syst. hot water O20.06 M.Y29
Clean.tray draining O20.04 M.Y2
Clean. per. ext. clean. T0008,2 3m20s 12m20s
O16.05 ( ) K92
Detergent pump
2413
External cleaning M06.11
Aux.outp. stops.ext.c M14.02
O15.04 ( ) K91
Cleaning system circulation pump
2414
Ready cleaning M06.10
Levelfault cleantray M10,05
First scan M37,14
T008 (TRN)
Sequenzer external cleaning program
2415
Clean.syst. hot water O20.06 M.Y29
External cleaning M06,11
T008 (THD)
Sequenzer external cleaning program

08:13 93.11.25

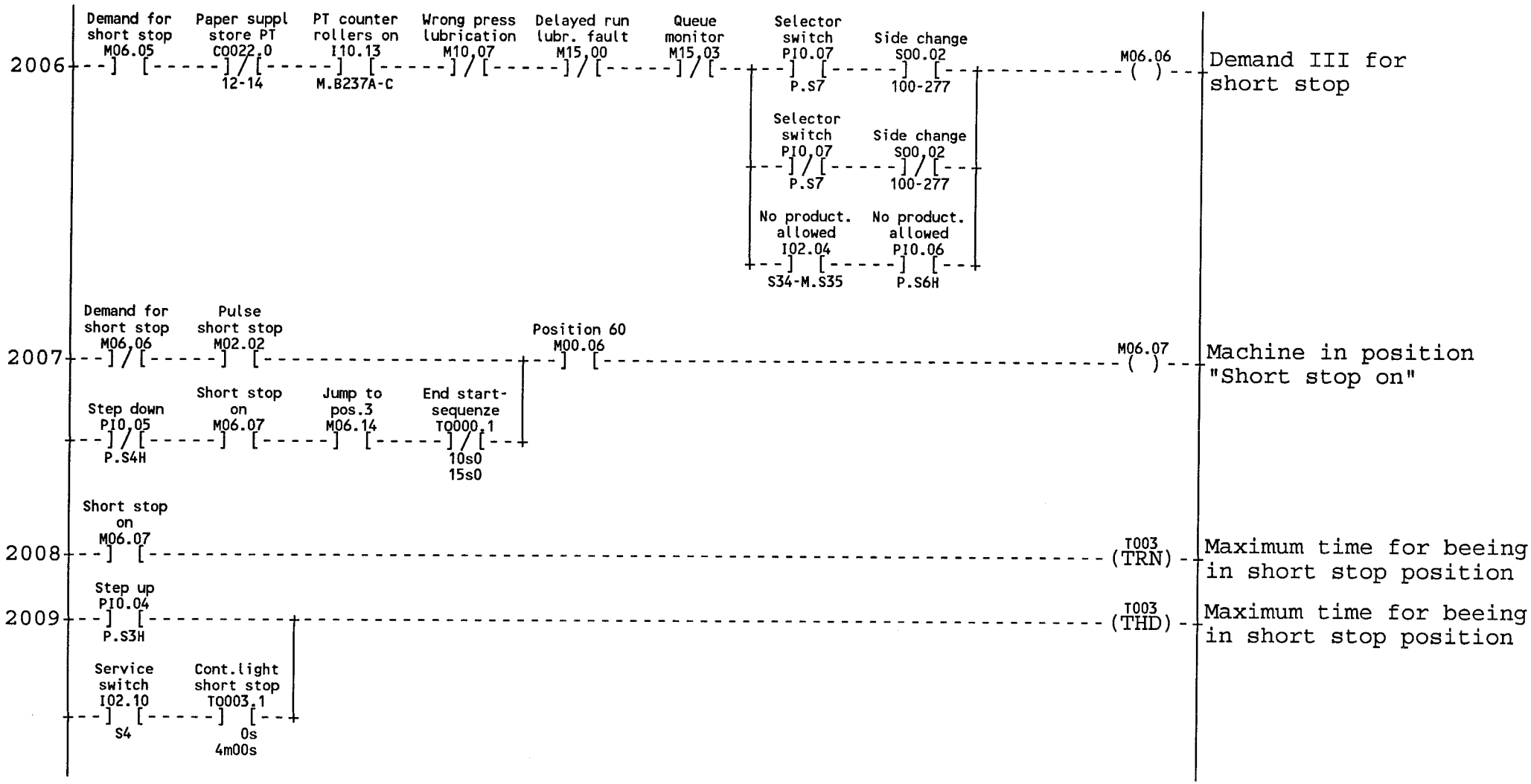
2006
Demand for short stop M06.05
Paper suppl store PT C0022.0 12-14
PT counter rollers on I10.13 M.B237A-C
Wrong press lubrication M10,07
Delayed run lubr. fault M15,00
Queue monitor M15,03
Selector switch P10.07 P.S7
Side change S00.02 100-277
Selector switch P10,07 P.S7
Side change S00,02 100-277
No product. allowed I02.04 S34-M.S35
No product. allowed P10.06 P.S6H
M06.06
Demand III for short stop
2007
Demand for short stop M06,06
Pulse short stop M02.02
Position 60 M00.06
Step down P10,05 P.S4H
Short stop on M06.07
Jump to pos.3 M06.14
End start-sequenze T0000.1 10s0 15s0
M06.07
Machine in position "Short stop on"
2008
Short stop on M06.07
T003 (TRN)
Maximum time for beeing in short stop position
2009
Step up P10.04 P.S3H
T003 (THD)
Maximum time for beeing in short stop position
Service switch I02.10 S4
Cont.light short stop T0003.1 0s 4m00s

08:13 93.11.25

PRODUCTION ENDED, INTERNAL CLEANING

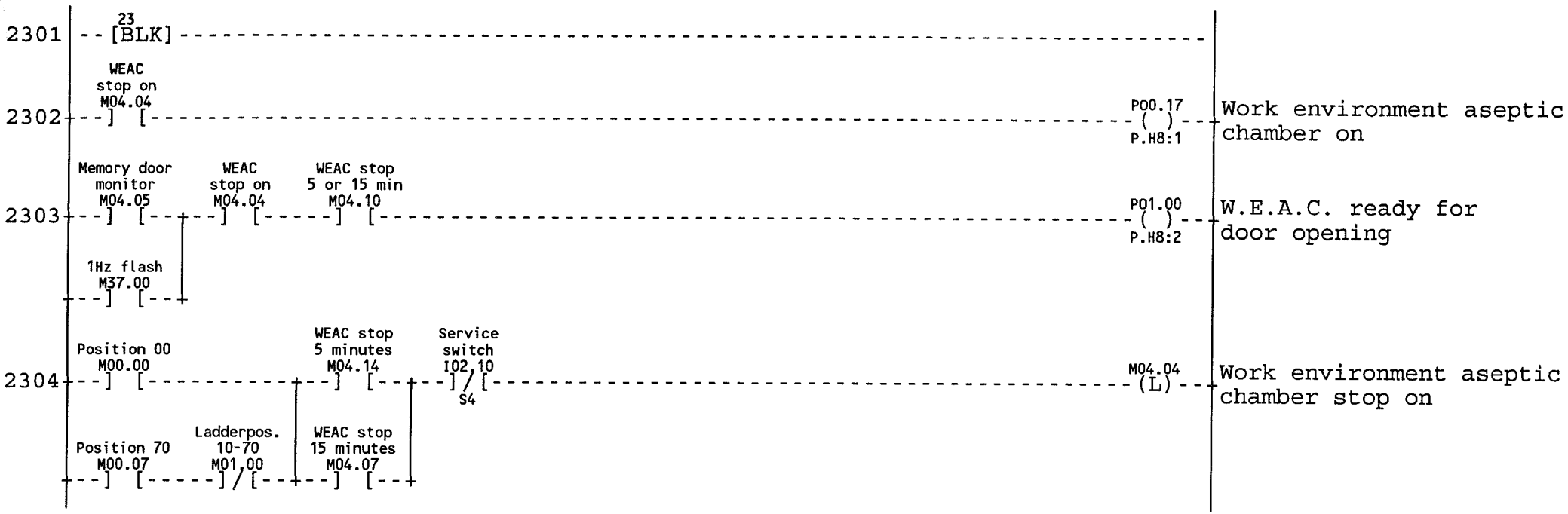

08:13 93.11.25

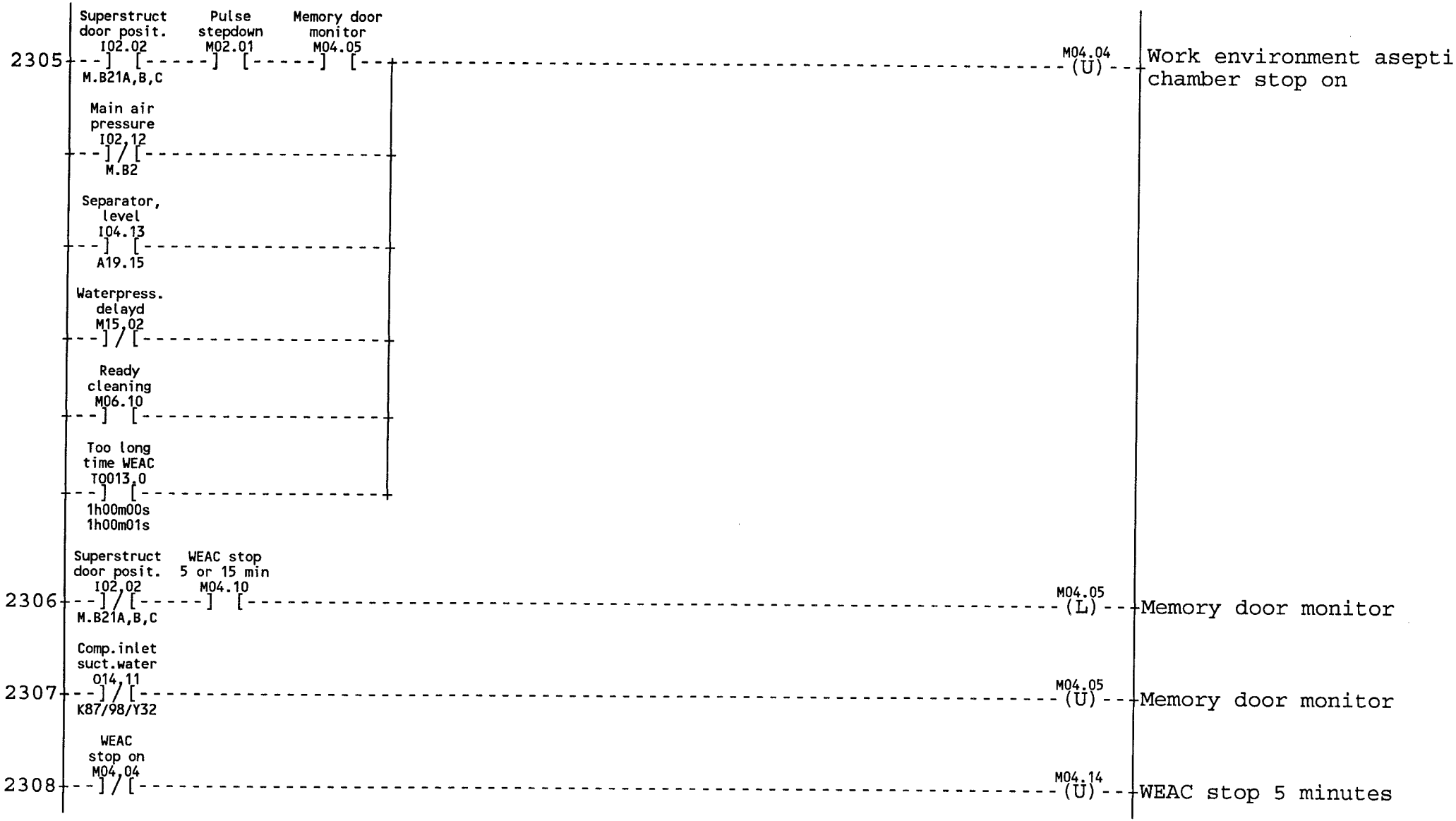
2305
Superstruct door posit. I02.02
M.B21A,B,C
Pulse stepdown M02.01
Memory door monitor M04.05
Main air pressure I02,12
M.B2
Separator, level I04.13
A19.15
Waterpress. delayd M15,02
Ready cleaning M06.10
Too long time WEAC TQ013,0
1h00m00s
1h00m01s
M04.04 (U)
Work environment aseptic chamber stop on
2306
Superstruct door posit. I02,02
M.B21A,B,C
WEAC stop 5 or 15 min M04.10
M04.05 (L)
Memory door monitor
2307
Comp.inlet suct.water O14,11
K87/98/Y32
M04.05 (U)
Memory door monitor
2308
WEAC stop on M04,04
M04.14 (U)
WEAC stop 5 minutes

08:13 93.11.25

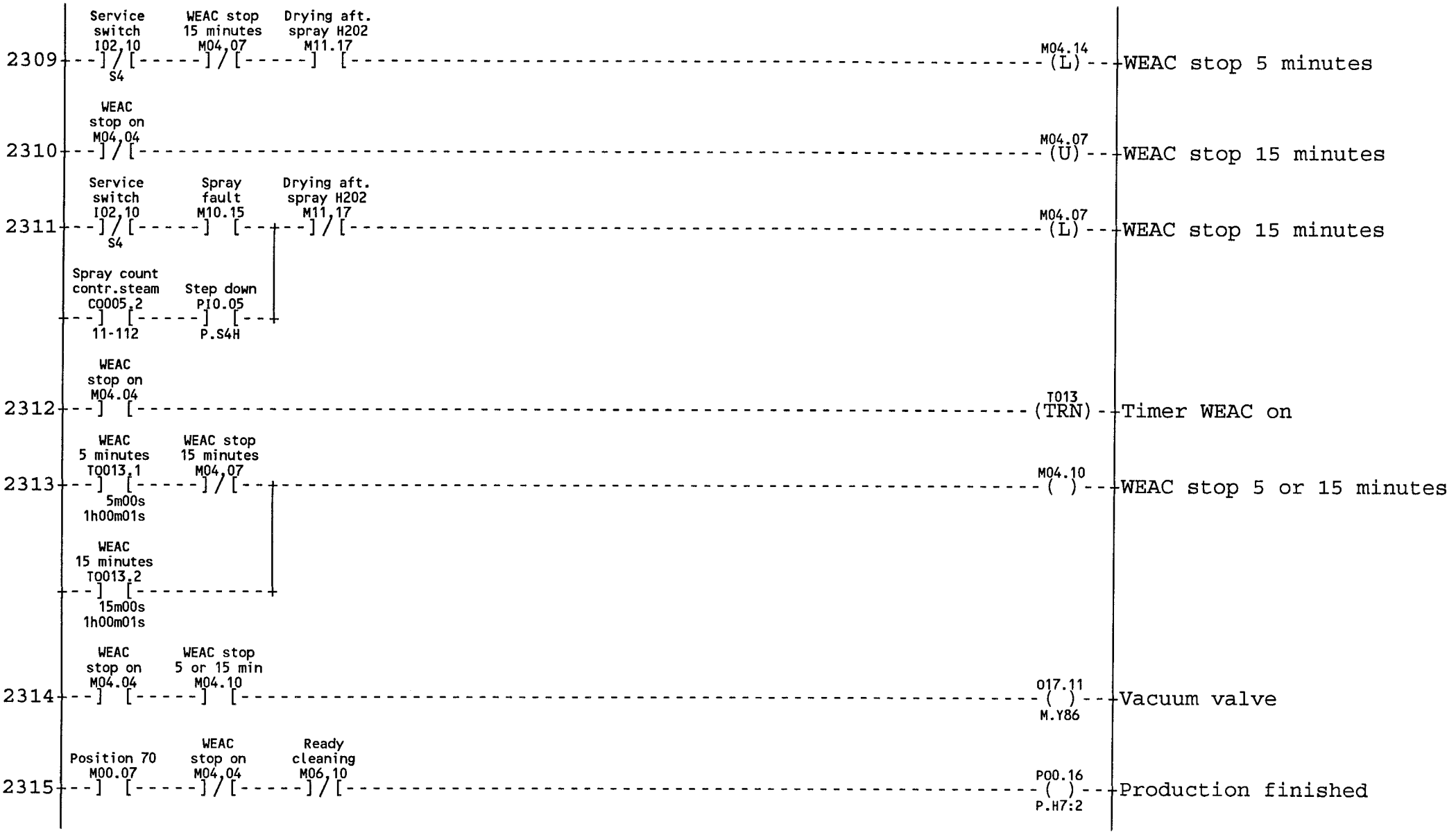
2309
Service switch I02,10 S4
WEAC stop 15 minutes M04,07
Drying aft. spray H202 M11.17
M04.14 (L)
WEAC stop 5 minutes
2310
WEAC stop on M04,04
M04.07 (U)
WEAC stop 15 minutes
2311
Service switch I02,10 S4
Spray fault M10.15
Drying aft. spray H202 M11,17
M04.07 (L)
WEAC stop 15 minutes
Spray count contr.steam CQ005.2 11-112
Step down PI0.05 P.S4H
2312
WEAC stop on M04.04
T013 (TRN)
Timer WEAC on
2313
WEAC 5 minutes TQ013.1 5m00s 1h00m01s
WEAC stop 15 minutes M04,07
M04.10 ( )
WEAC stop 5 or 15 minutes
WEAC 15 minutes TQ013.2 15m00s 1h00m01s
2314
WEAC stop on M04.04
WEAC stop 5 or 15 min M04.10
O17.11 ( ) M.Y86
Vacuum valve
2315
Position 70 M00.07
WEAC stop on M04,04
Ready cleaning M06,10
P00.16 ( ) P.H7:2
Production finished

08:13 93.11.25

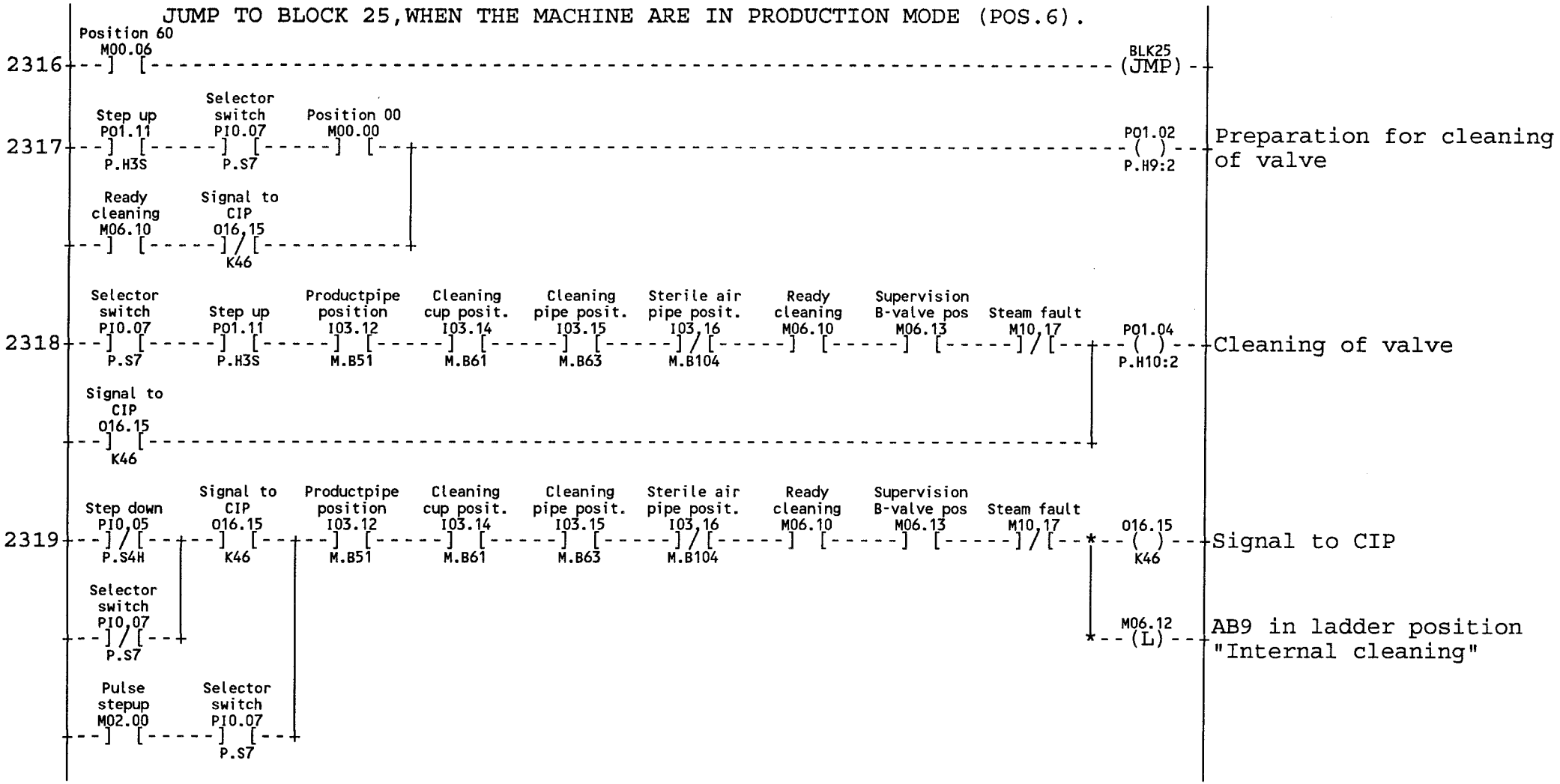
JUMP TO BLOCK 25,WHEN THE MACHINE ARE IN PRODUCTION MODE (POS.6).
2316
Position 60
M00.06
BLK25
(JMP)
2317
Step up
P01.11
P.H3S
Selector
switch
PI0.07
P.S7
Position 00
M00.00
P01.02
P.H9:2
Preparation for cleaning of valve
Ready
cleaning
M06.10
Signal to
CIP
O16,15
K46
2318
Selector
switch
PI0.07
P.S7
Step up
P01.11
P.H3S
Productpipe
position
I03.12
M.B51
Cleaning
cup posit.
I03.14
M.B61
Cleaning
pipe posit.
I03.15
M.B63
Sterile air
pipe posit.
I03,16
M.B104
Ready
cleaning
M06.10
Supervision
B-valve pos
M06.13
Steam fault
M10,17
P01.04
P.H10:2
Cleaning of valve
Signal to
CIP
O16.15
K46
2319
Step down
PI0,05
P.S4H
Signal to
CIP
O16.15
K46
Productpipe
position
I03.12
M.B51
Cleaning
cup posit.
I03.14
M.B61
Cleaning
pipe posit.
I03.15
M.B63
Sterile air
pipe posit.
I03,16
M.B104
Ready
cleaning
M06.10
Supervision
B-valve pos
M06.13
Steam fault
M10,17
016.15
K46
Signal to CIP
Selector
switch
PI0,07
P.S7
M06.12
(L)
AB9 in ladder position "Internal cleaning"
Pulse
stepup
M02.00
Selector
switch
PI0.07
P.S7

08:13 93.11.25

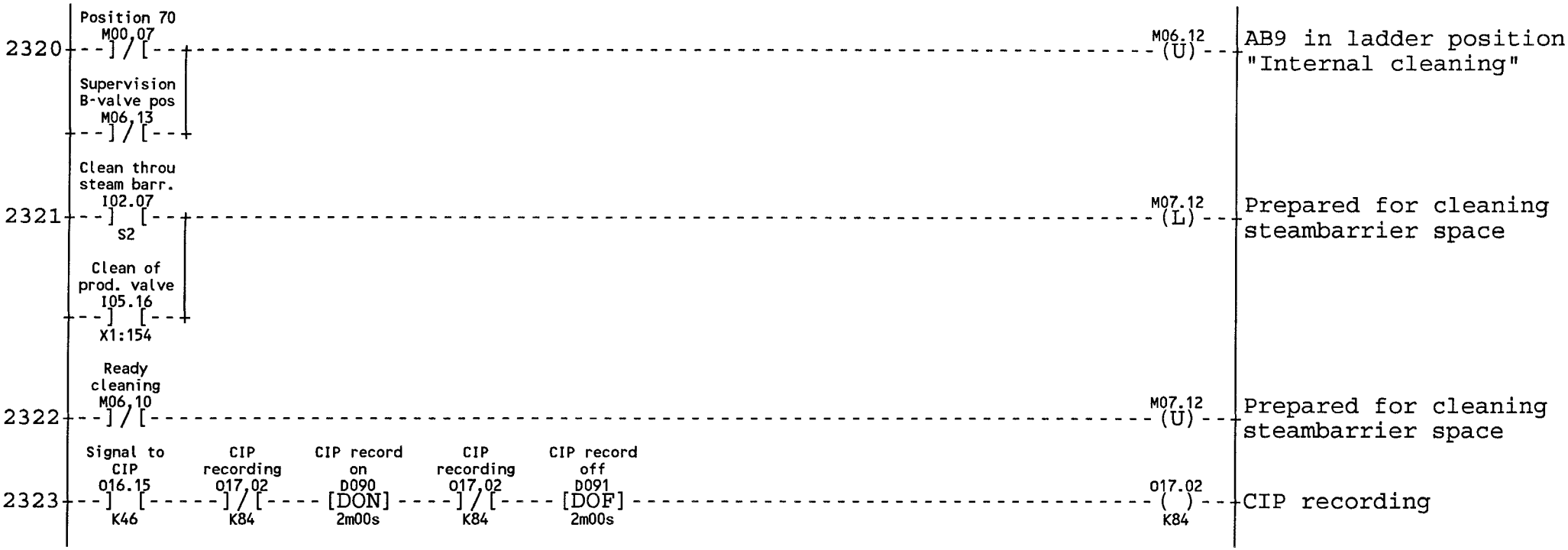
2320
Position 70
M00,07
Supervision
B-valve pos
M06,13
M06.12
(U)
AB9 in ladder position
"Internal cleaning"
2321
Clean throu
steam barr.
I02.07
S2
Clean of
prod. valve
I05.16
X1:154
M07.12
(L)
Prepared for cleaning
steambarrier space
2322
Ready
cleaning
M06,10
M07.12
(U)
Prepared for cleaning
steambarrier space
2323
Signal to
CIP
O16.15
K46
CIP
recording
O17,02
K84
CIP record
on
D090
2m00s
CIP
recording
O17,02
K84
CIP record
off
D091
2m00s
O17.02
( )
K84
CIP recording

08:13 93.11.25

Tetra Pak
LUND SWEDEN

This drawing must not without the consent of Tetra Pak be copied, transmitted or disclosed to any third party.

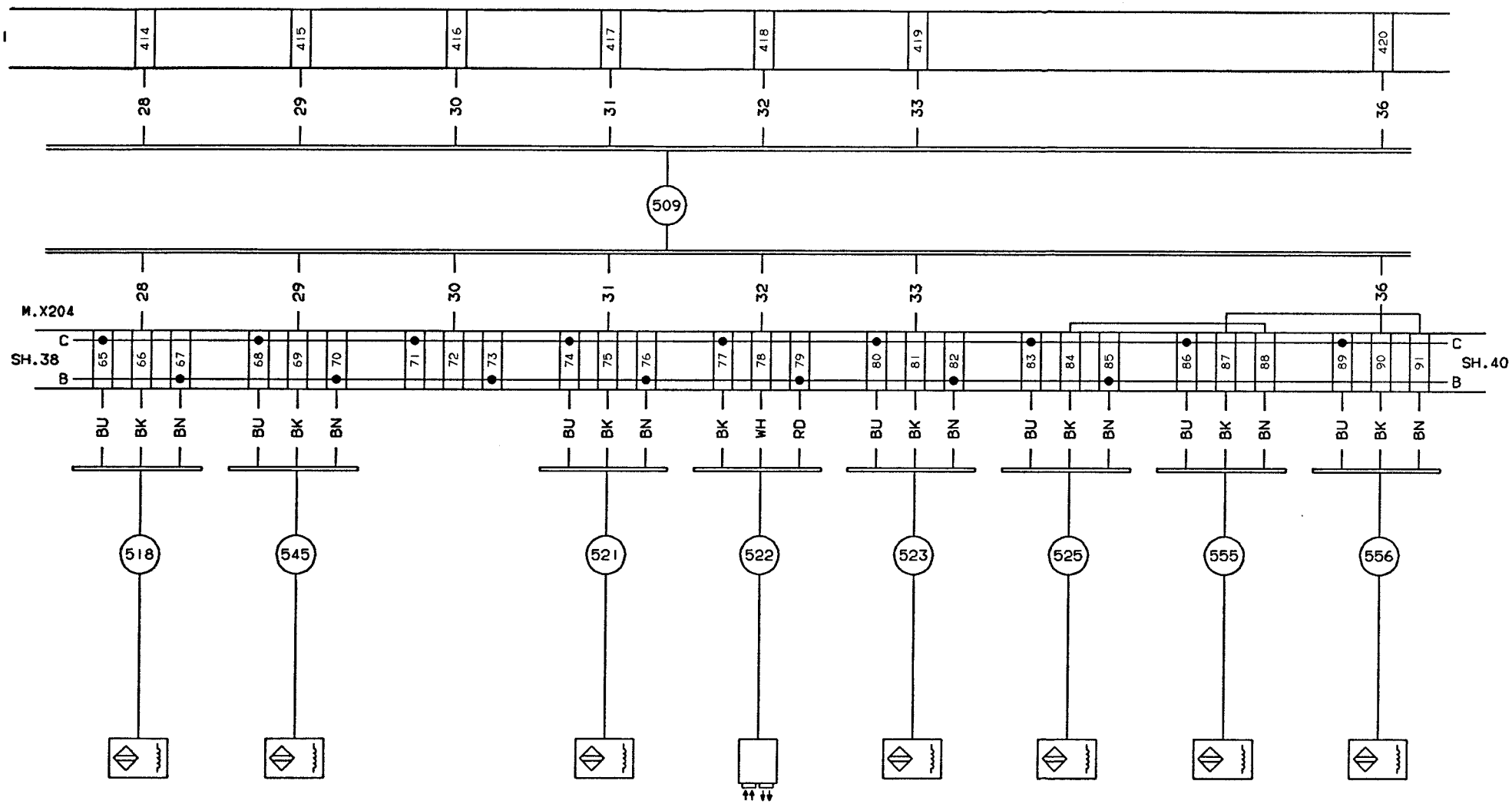

| | | |

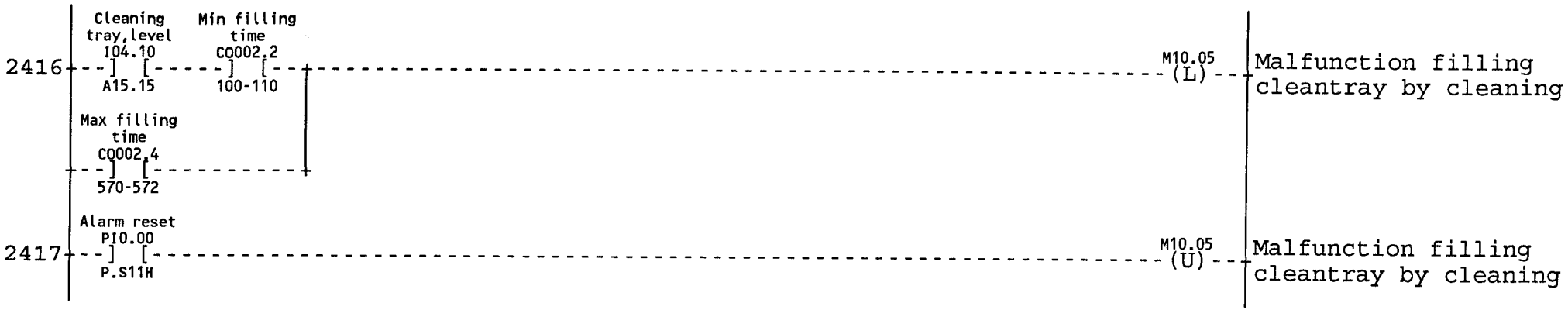
2416
Cleaning tray,level
I04.10
A15.15
Min filling time
CQ002.2
100-110
Max filling time
CQ002.4
570-572
M10.05
(L)
Malfunction filling cleantray by cleaning
2417
Alarm reset
PI0.00
P.S11H
M10.05
(U)
Malfunction filling cleantray by cleaning

08:13 93.11.25

LUBRICATION



08:13 93.11.25

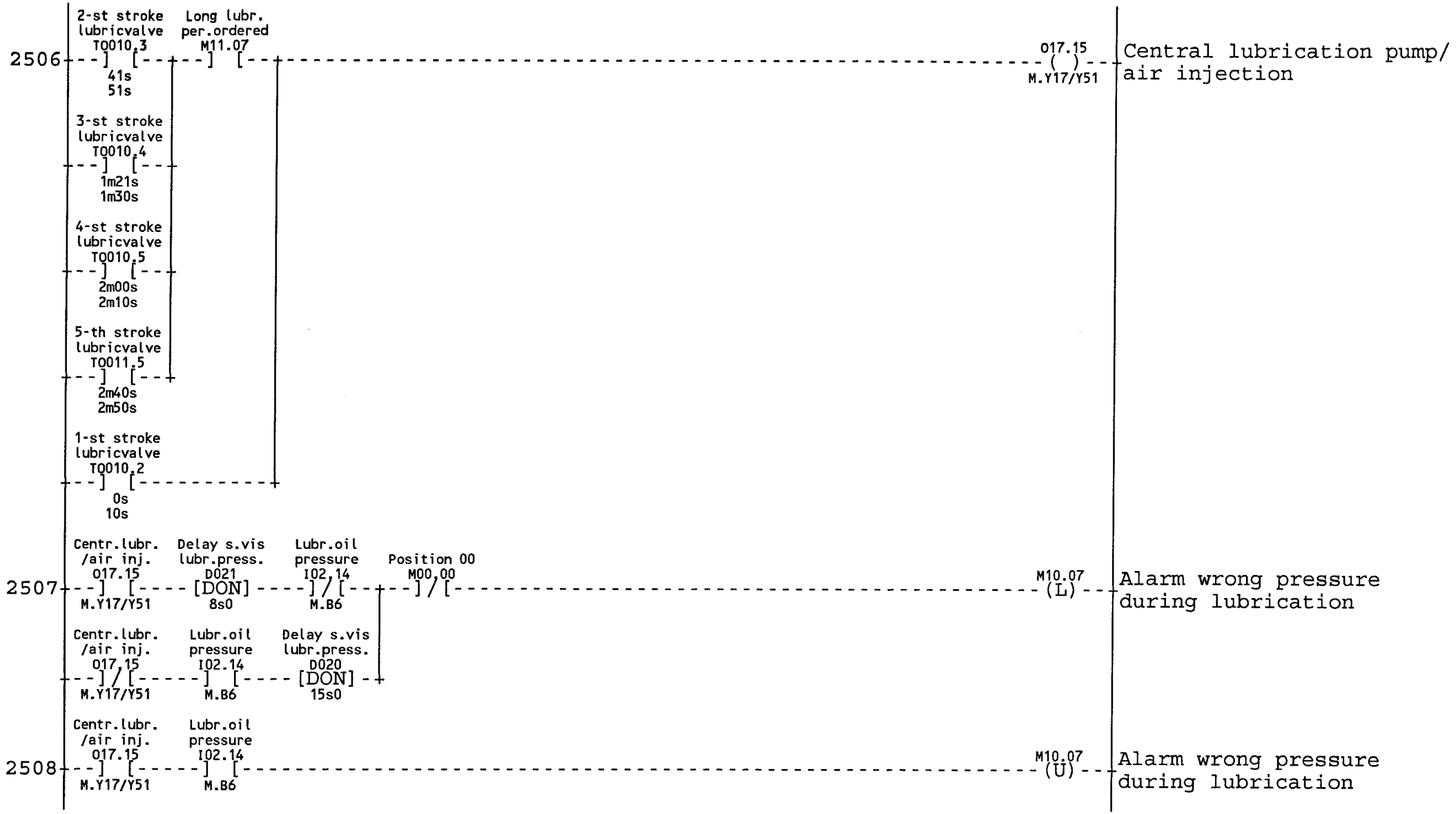
2506
2-st stroke lubricvalve TQ010,3
41s
51s
Long lubr. per.ordered M11.07
3-st stroke lubricvalve TQ010,4
1m21s
1m30s
4-st stroke lubricvalve TQ010,5
2m00s
2m10s
5-th stroke lubricvalve TQ011,5
2m40s
2m50s
1-st stroke lubricvalve TQ010,2
0s
10s
O17.15
M.Y17/Y51
Central lubrication pump/ air injection
2507
Centr.lubr. /air inj. O17.15
M.Y17/Y51
Delay s.vis lubr.press. D021
[DON]
8s0
Lubr.oil pressure I02,14
M.B6
Position 00 M00,00
M10.07
(L)
Alarm wrong pressure during lubrication
Centr.lubr. /air inj. O17,15
M.Y17/Y51
Lubr.oil pressure I02.14
M.B6
Delay s.vis lubr.press. D020
[DON]
15s0
2508
Centr.lubr. /air inj. O17.15
M.Y17/Y51
Lubr.oil pressure I02.14
M.B6
M10.07
(U)
Alarm wrong pressure during lubrication

08:13 93.11.25

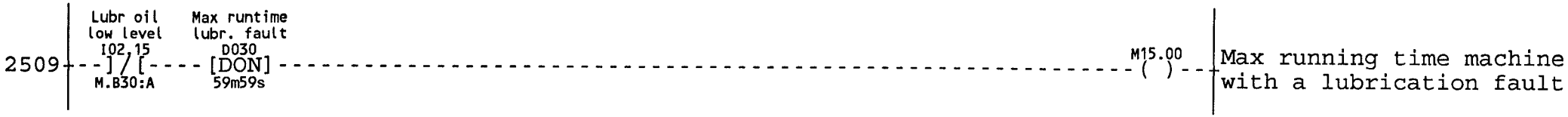
Lubr oil
low level
I02,15
M.B30:A
Max runtime
lubr. fault
D030
[DON]
59m59s
2509
M15.00
Max running time machine
with a lubrication fault

08:13 93.11.25

6-CHANNEL RECORDER

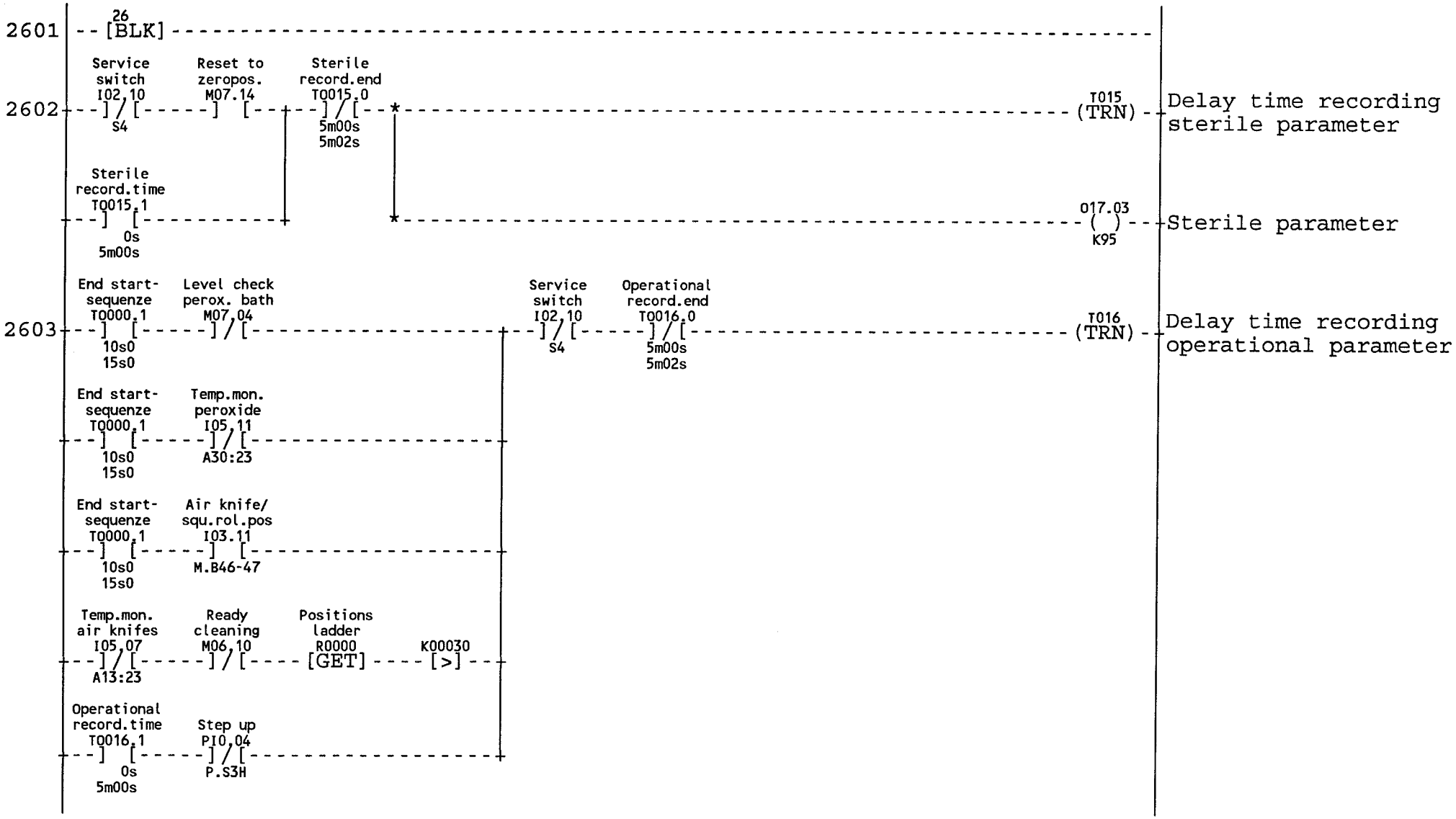

08:13 93.11.25

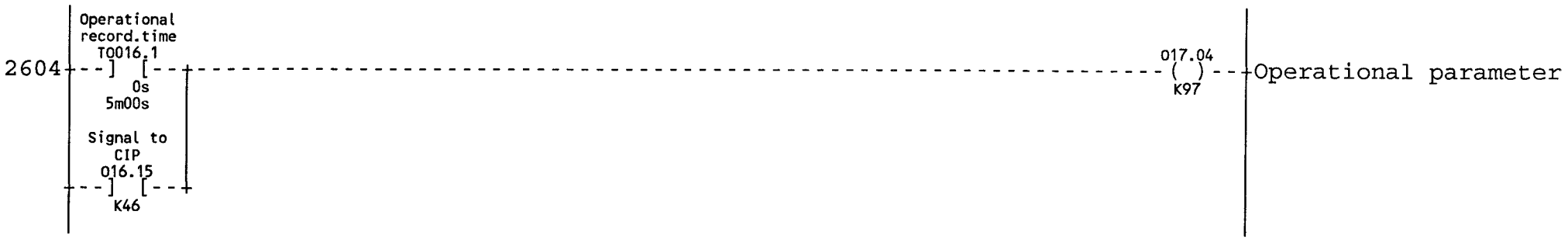
2604
Operational record.time
T0016.1
0s
5m00s
Signal to CIP
O16.15
K46
017.04
K97
Operational parameter

08:13 93.11.25

MAINS INTERRUPT AND ALARMDELAYS

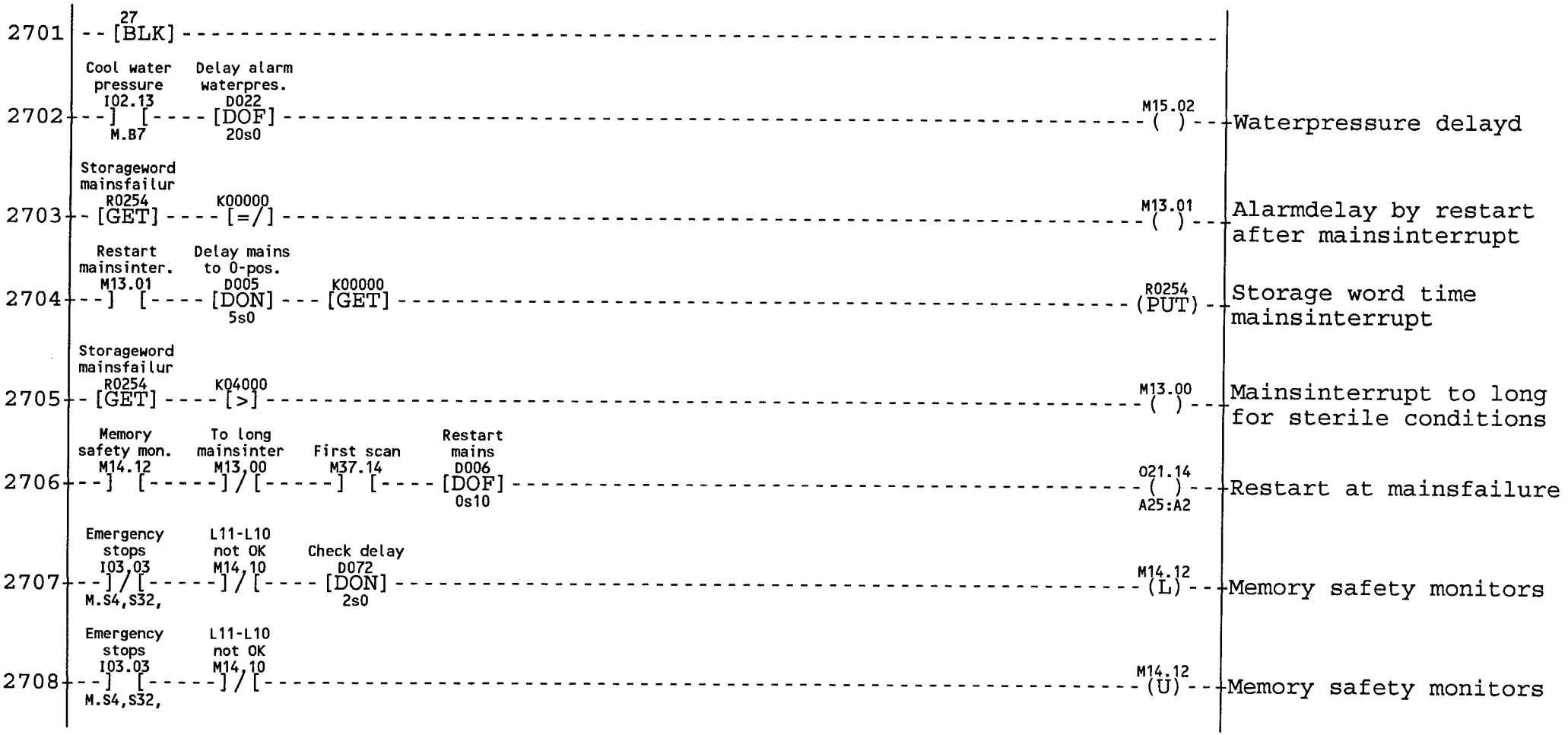

08:13 93.11.25

JUMP TO MACHINELADDERPOSITION "STERILIZATION FULLFILLED" (POSITION 3)

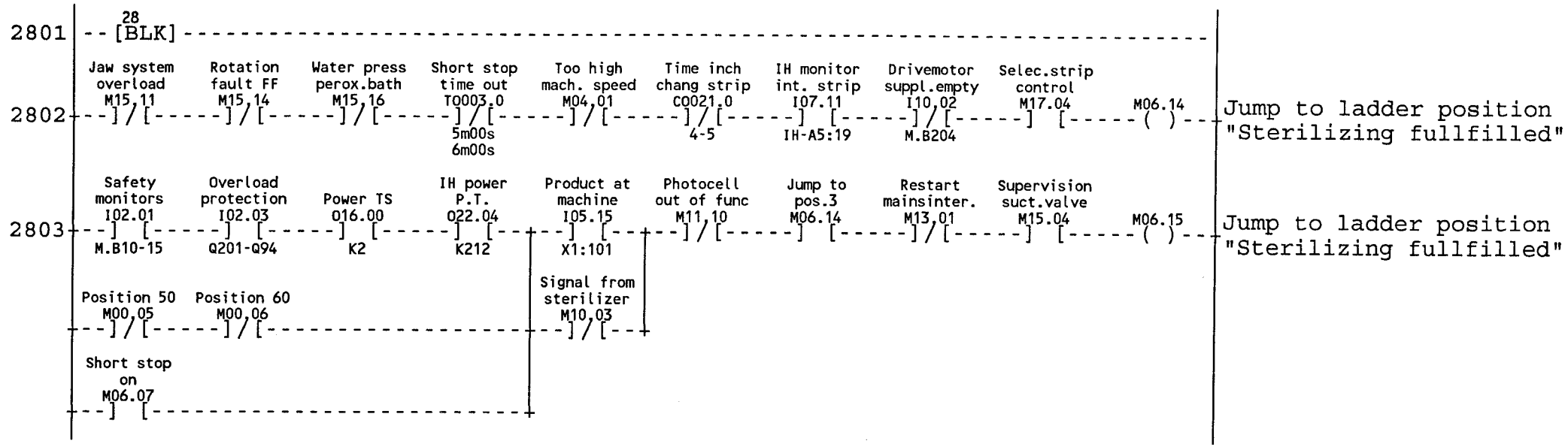

08:13 93.11.25

JUMP TO ZEROPOSITION IN MACHINELADDER

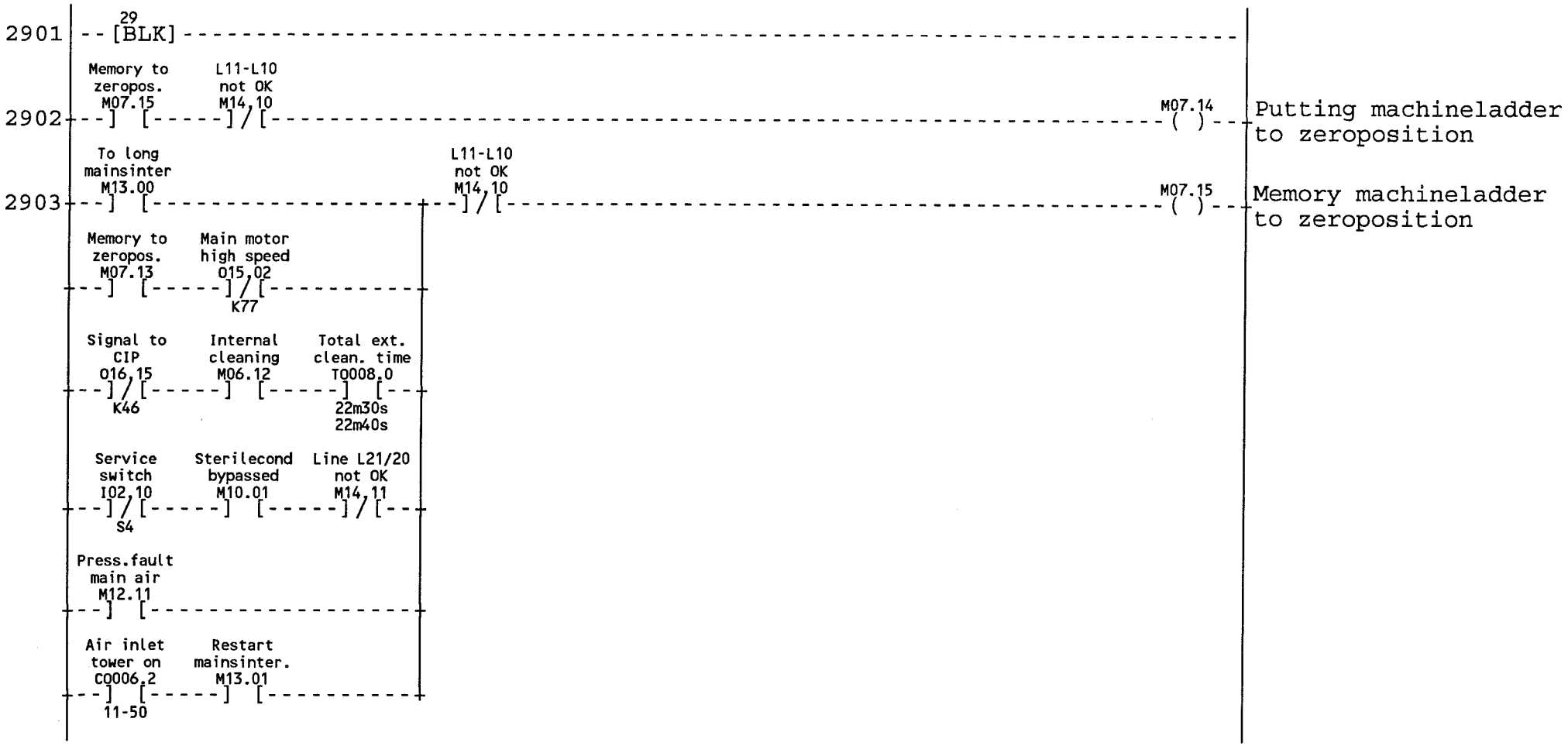

08:13 93.11.25

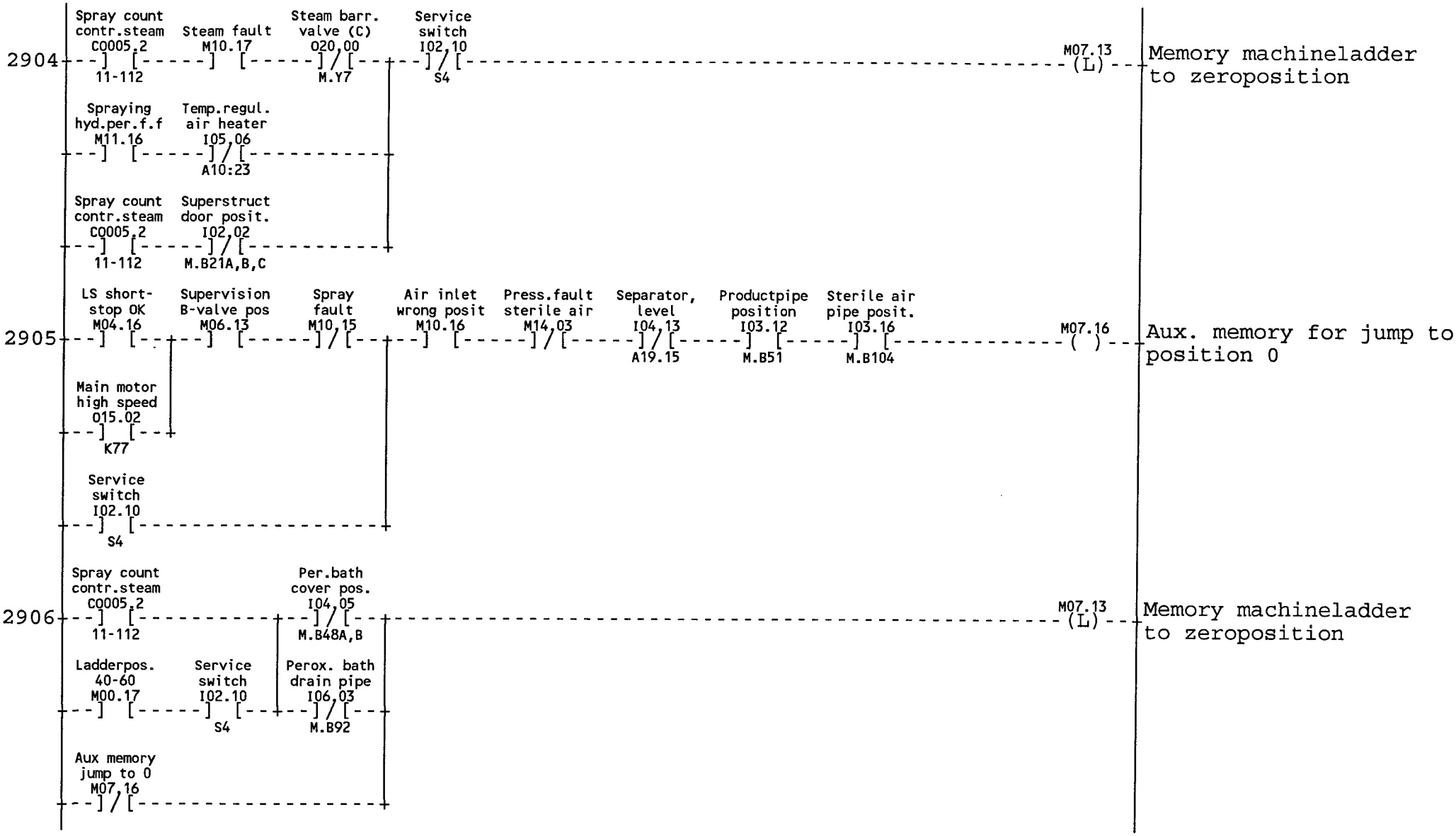
2904
Spray count contr.steam CQ005.2 11-112
Steam fault M10.17
Steam barr. valve (C) O20.00 M.Y7
Service switch I02.10 S4
M07.13 (L)
Memory machineladder to zeroposition
Spraying hyd.per.f.f M11.16
Temp.regul. air heater I05.06 A10:23
Spray count contr.steam CQ005.2 11-112
Superstruct door posit. I02.02 M.B21A,B,C
2905
LS short-stop OK M04.16
Supervision B-valve pos M06.13
Spray fault M10.15
Air inlet wrong posit M10.16
Press.fault sterile air M14.03
Separator, level I04.13 A19.15
Productpipe position I03.12 M.B51
Sterile air pipe posit. I03.16 M.B104
M07.16 ( )
Aux. memory for jump to position 0
Main motor high speed O15.02 K77
Service switch I02.10 S4
2906
Spray count contr.steam CQ005.2 11-112
Per.bath cover pos. I04.05 M.B48A,B
M07.13 (L)
Memory machineladder to zeroposition
Ladderpos. 40-60 M00.17
Service switch I02.10 S4
Perox. bath drain pipe I06.03 M.B92
Aux memory jump to 0 M07.16

08:13 93.11.25

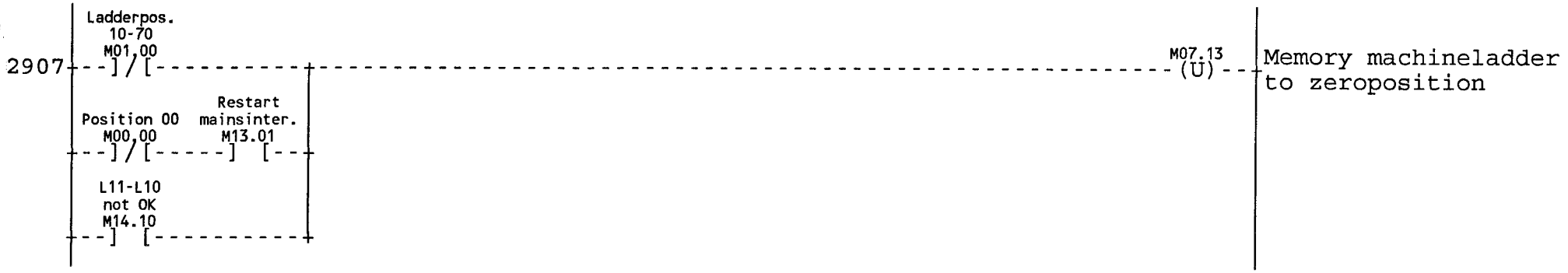
2907
Ladderpos.
10-70
M01,00
Position 00
M00,00
Restart
mainsinter.
M13.01
L11-L10
not OK
M14.10
M07.13
(U)
Memory machineladder
to zeroposition

08:13 93.11.25

ALARM 1 TO 16 ON ALARMDISPLAY/BEACON

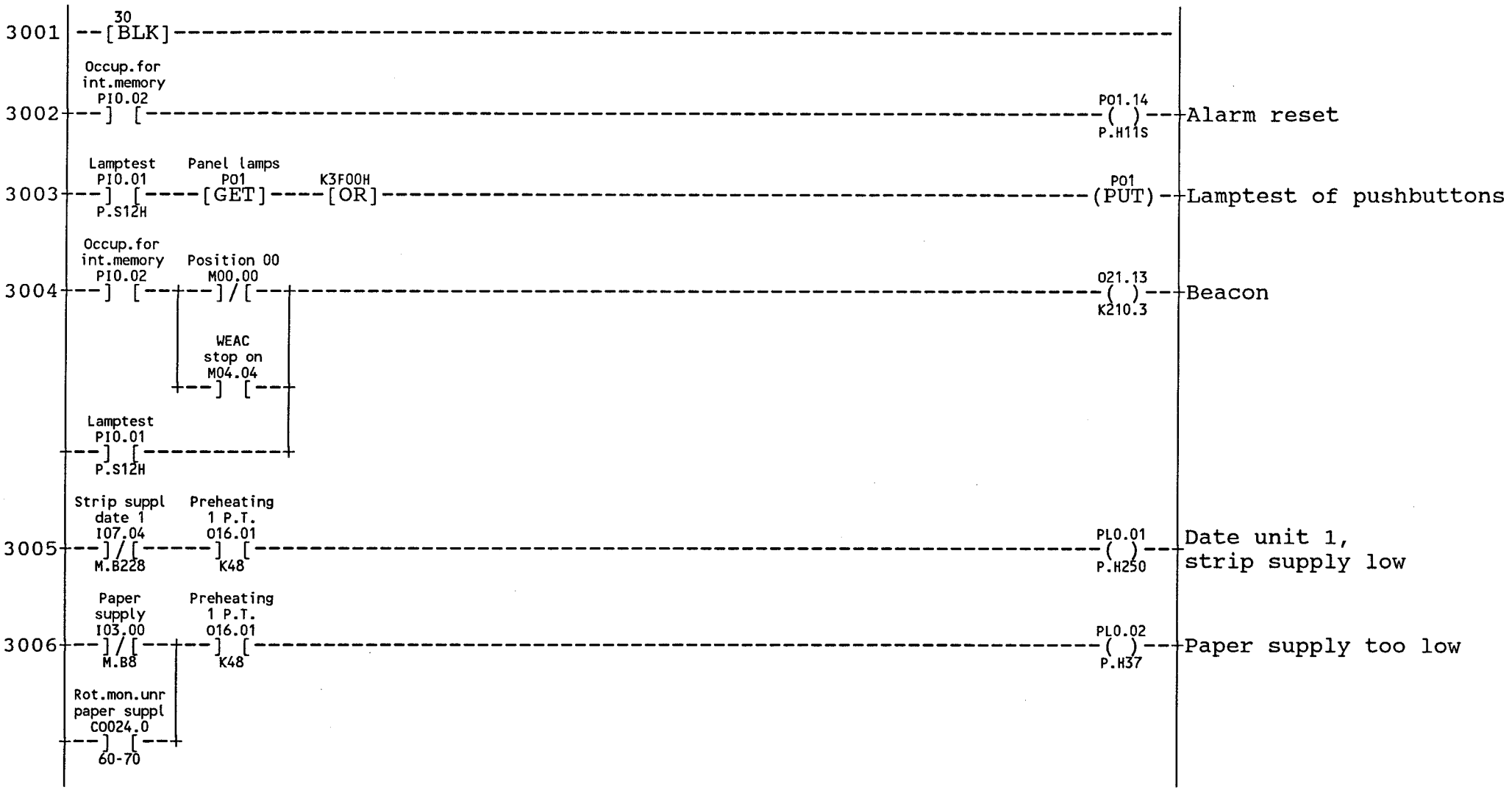

08:13 93.11.25

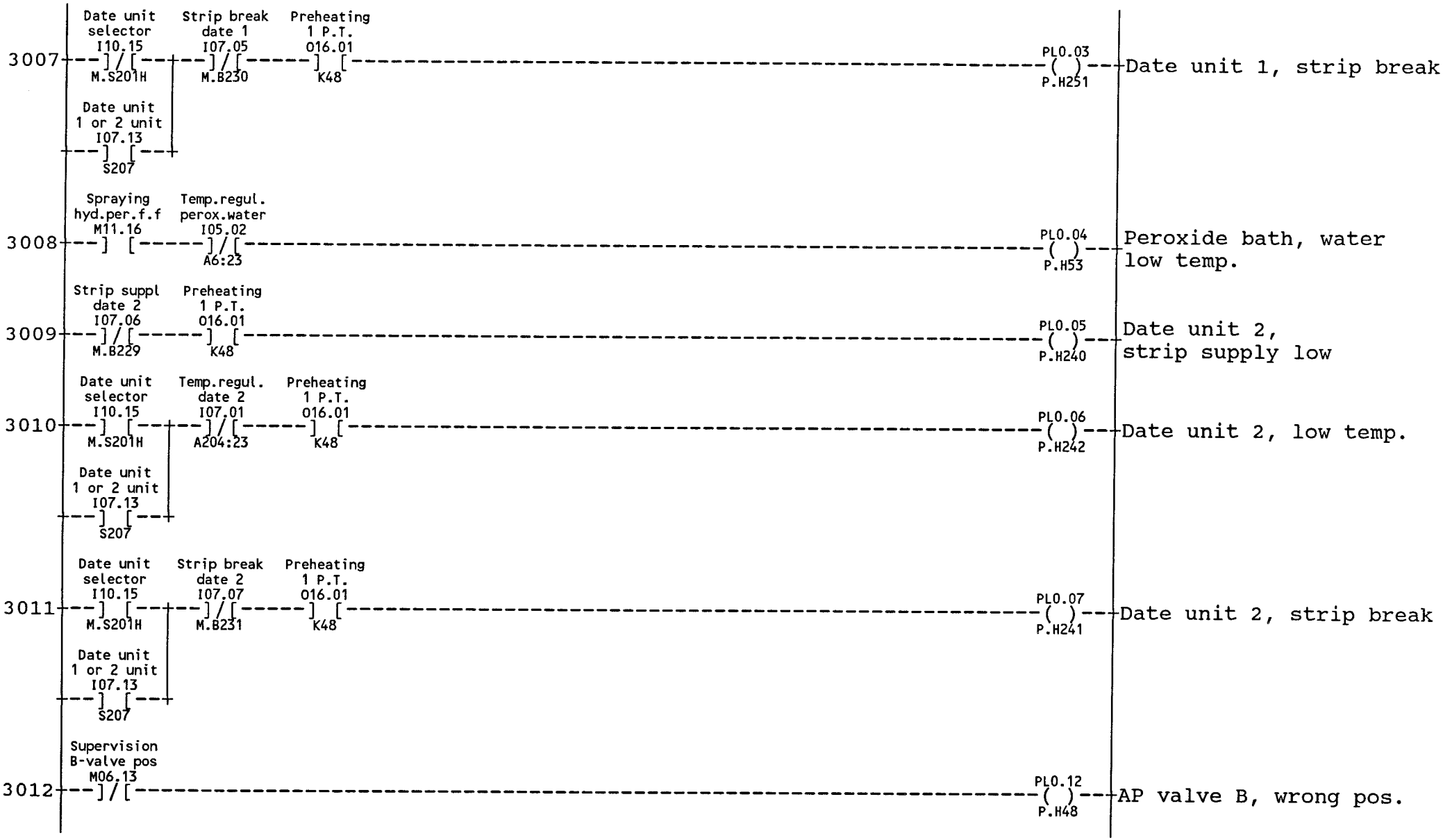
3007
Date unit selector I10.15 M.S201H
Strip break date 1 I07.05 M.B230
Preheating 1 P.T. O16.01 K48
Date unit 1 or 2 unit I07.13 S207
PL0.03 P.H251
Date unit 1, strip break
3008
Spraying hyd.per.f.f M11.16
Temp.regul. perox.water I05.02 A6:23
PL0.04 P.H53
Peroxide bath, water low temp.
3009
Strip suppl date 2 I07.06 M.B229
Preheating 1 P.T. O16.01 K48
PL0.05 P.H240
Date unit 2, strip supply low
3010
Date unit selector I10.15 M.S201H
Temp.regul. date 2 I07.01 A204:23
Preheating 1 P.T. O16.01 K48
Date unit 1 or 2 unit I07.13 S207
PL0.06 P.H242
Date unit 2, low temp.
3011
Date unit selector I10.15 M.S201H
Strip break date 2 I07.07 M.B231
Preheating 1 P.T. O16.01 K48
Date unit 1 or 2 unit I07.13 S207
PL0.07 P.H241
Date unit 2, strip break
3012
Supervision B-valve pos M06.13
PL0.12 P.H48
AP valve B, wrong pos.

08:13 93.11.25

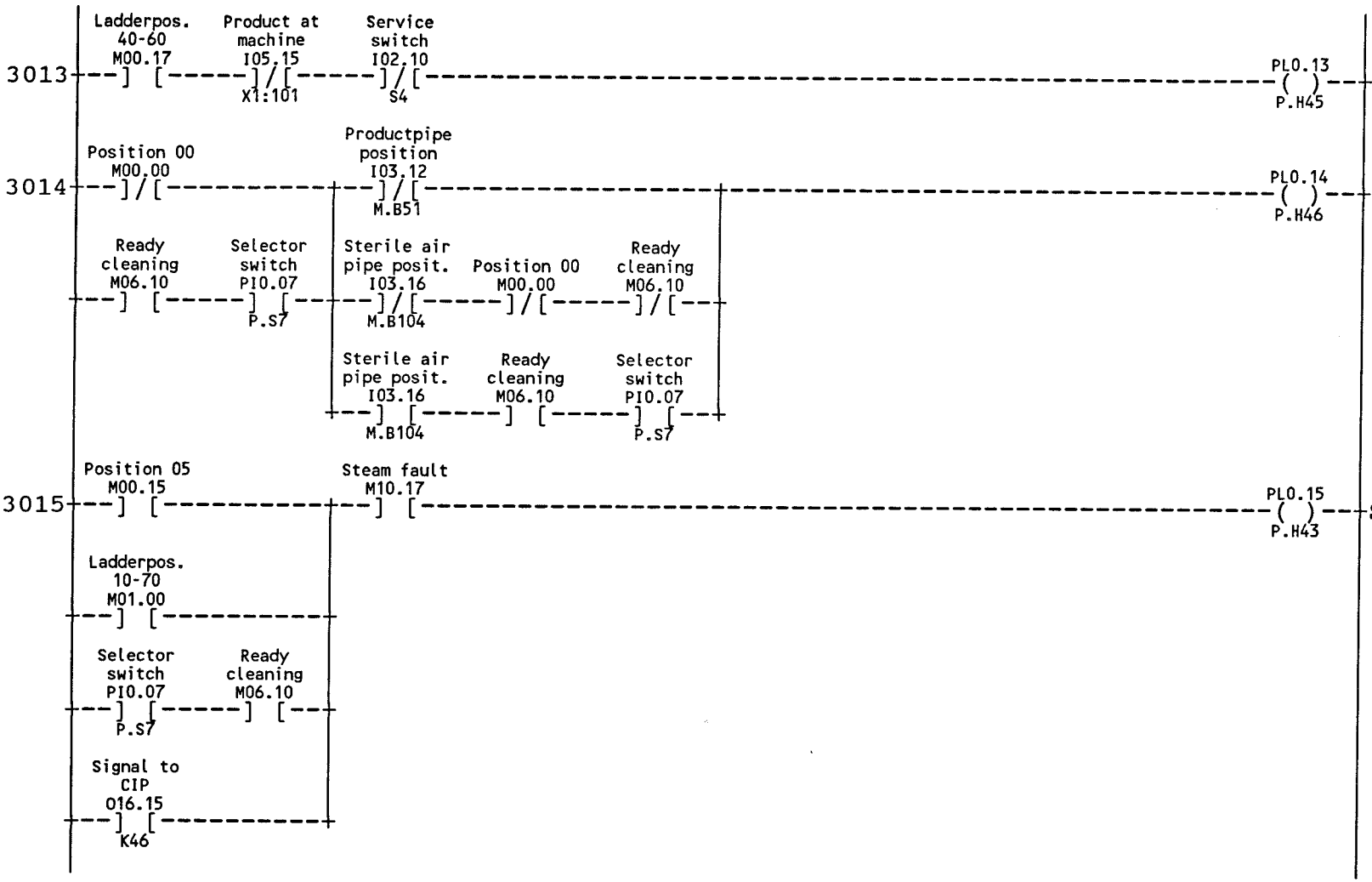
3013
Ladderpos. 40-60 M00.17
Product at machine I05.15 X1:101
Service switch I02.10 S4
PL0.13 P.H45
No product from process availeble at machine
3014
Position 00 M00.00
Productpipe position I03.12 M.B51
PL0.14 P.H46
Product pipe, wrong pos.
Ready cleaning M06.10
Selector switch PI0.07 P.S7
Sterile air pipe posit. I03.16 M.B104
Position 00 M00.00
Ready cleaning M06.10
Sterile air pipe posit. I03.16 M.B104
Ready cleaning M06.10
Selector switch PI0.07 P.S7
3015
Position 05 M00.15
Steam fault M10.17
PL0.15 P.H43
Steam, wrong temp.
Ladderpos. 10-70 M01.00
Selector switch PI0.07 P.S7
Ready cleaning M06.10
Signal to CIP O16.15 K46

08:13 93.11.25

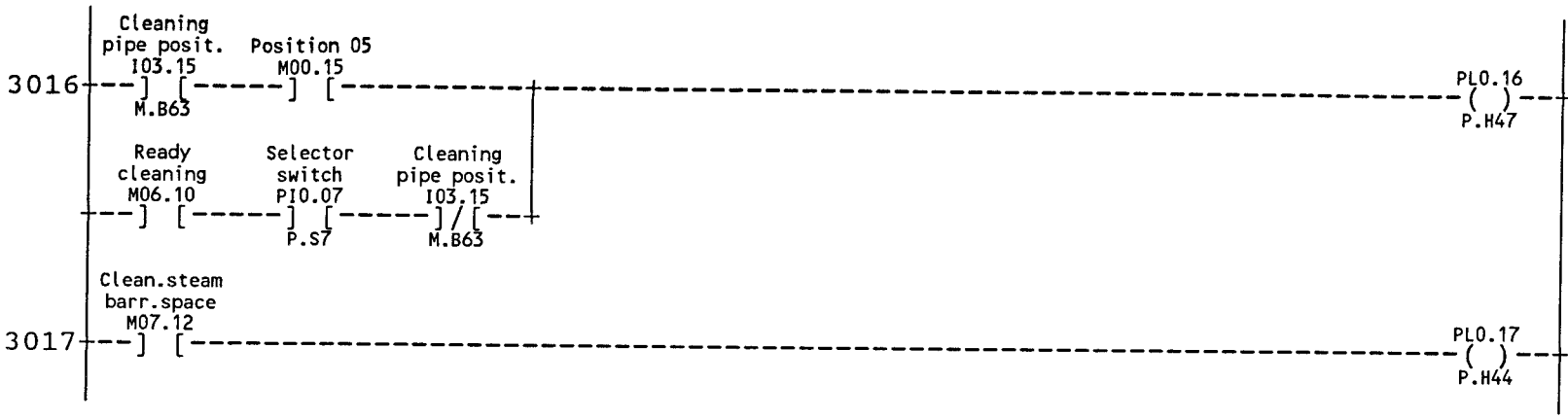
3016
Cleaning pipe posit.
I03.15
M.B63
Position 05
M00.15
Ready cleaning
M06.10
Selector switch
PI0.07
P.S7
Cleaning pipe posit.
I03.15
M.B63
PL0.16
P.H47
Cleaning pipe, wrong pos.
3017
Clean.steam barr.space
M07.12
PL0.17
P.H44
Cleaning steam barrier space

08:13 93.11.25

ALARM 17 TO 32 ON ALARMDISPLAY

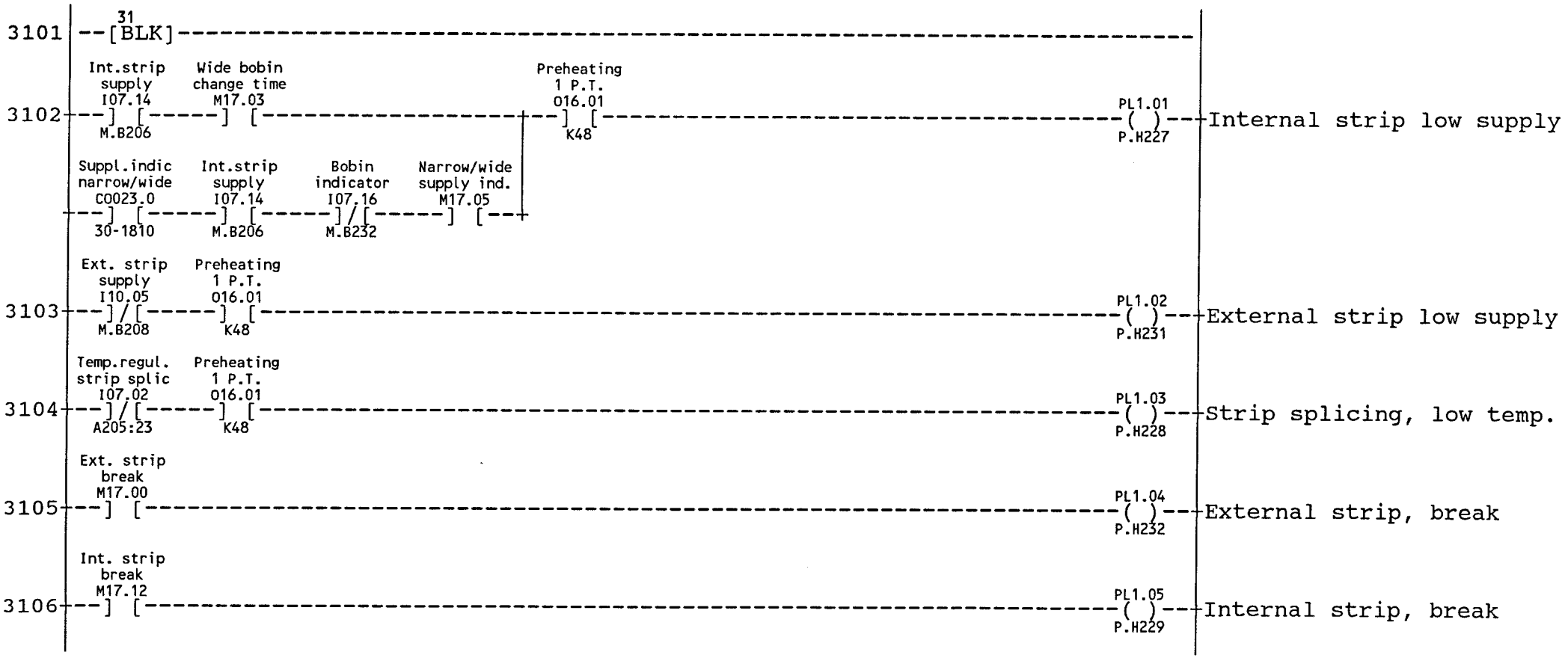

08:13 93.11.25

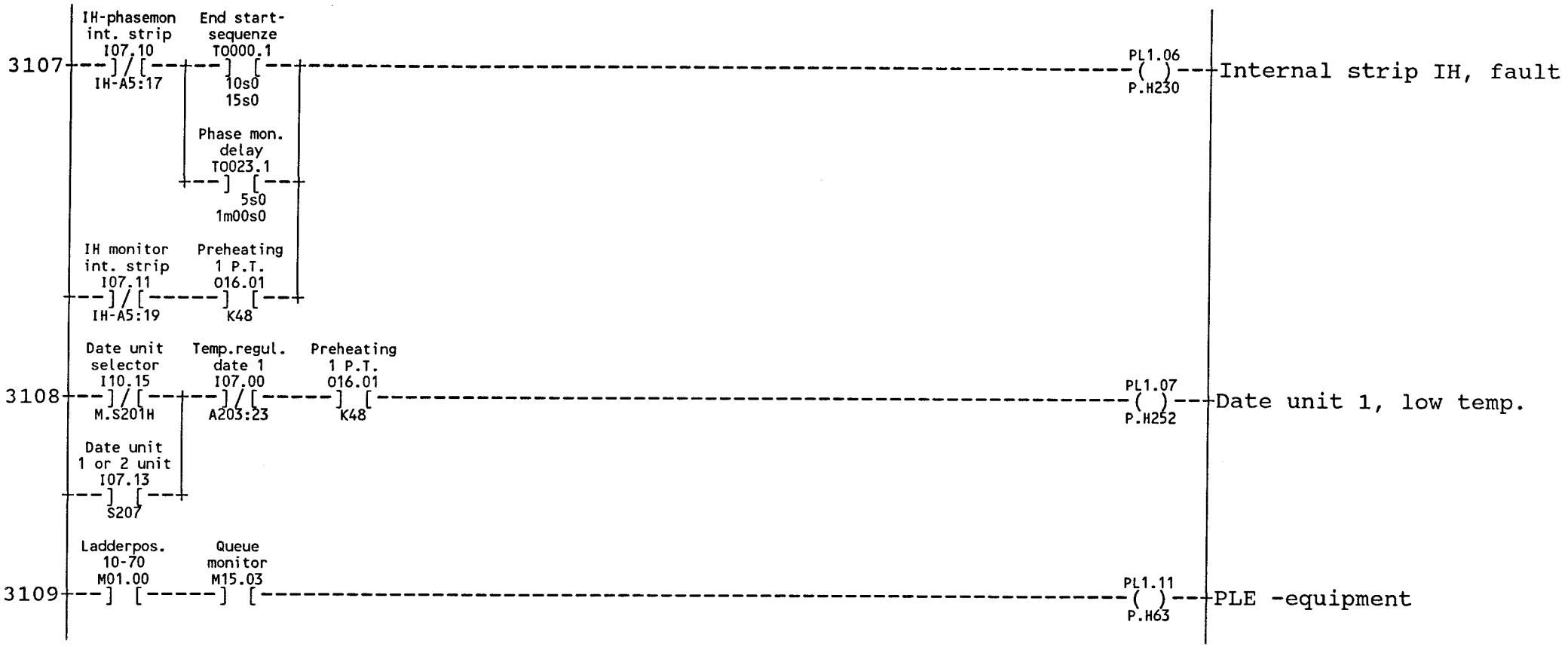
3107
IH-phasemon int. strip I07.10
IH-A5:17
End start-sequenze T0000.1
10s0
15s0
Phase mon. delay T0023.1
5s0
1m00s0
IH monitor int. strip I07.11
IH-A5:19
Preheating 1 P.T. 016.01
K48
PL1.06
P.H230
Internal strip IH, fault
3108
Date unit selector I10.15
M.S201H
Temp.regul. date 1 I07.00
A203:23
Preheating 1 P.T. 016.01
K48
Date unit 1 or 2 unit I07.13
S207
PL1.07
P.H252
Date unit 1, low temp.
3109
Ladderpos. 10-70 M01.00
Queue monitor M15.03
PL1.11
P.H63
PLE -equipment

08:13 93.11.25

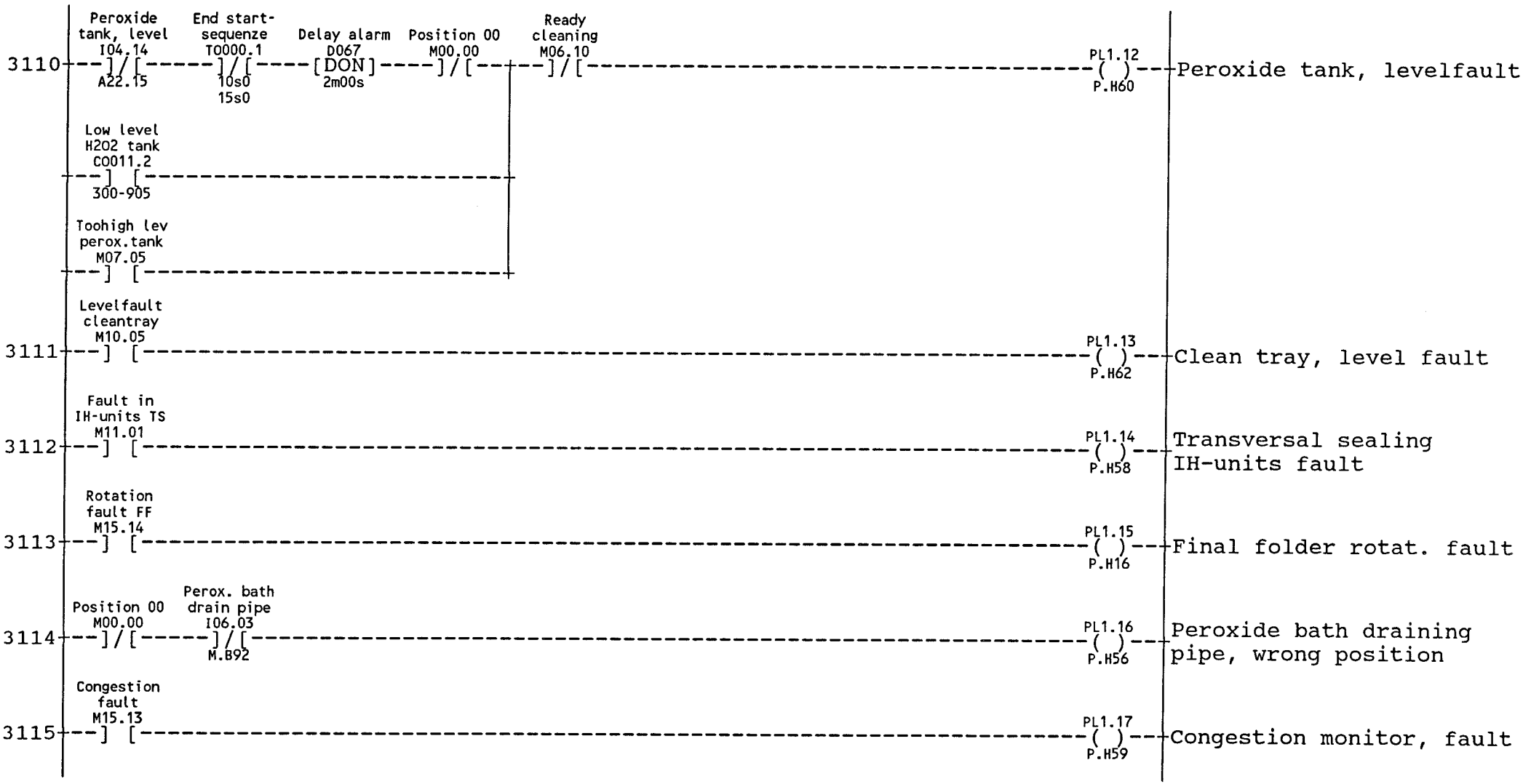
3110
Peroxide tank, level
I04.14
A22.15
End start-sequenze
T0000.1
10s0
15s0
Delay alarm
D067
DON
2m00s
Position 00
M00.00
Ready cleaning
M06.10
PL1.12
P.H60
Peroxide tank, levelfault
Low level H2O2 tank
C0011.2
300-905
Toohigh lev perox.tank
M07.05
3111
Levelfault cleantray
M10.05
PL1.13
P.H62
Clean tray, level fault
3112
Fault in IH-units TS
M11.01
PL1.14
P.H58
Transversal sealing IH-units fault
3113
Rotation fault FF
M15.14
PL1.15
P.H16
Final folder rotat. fault
3114
Position 00
M00.00
Perox. bath drain pipe
I06.03
M.B92
PL1.16
P.H56
Peroxide bath draining pipe, wrong position
3115
Congestion fault
M15.13
PL1.17
P.H59
Congestion monitor, fault

08:13 93.11.25

ALARM 33 TO 48 ON ALARMDISPLAY

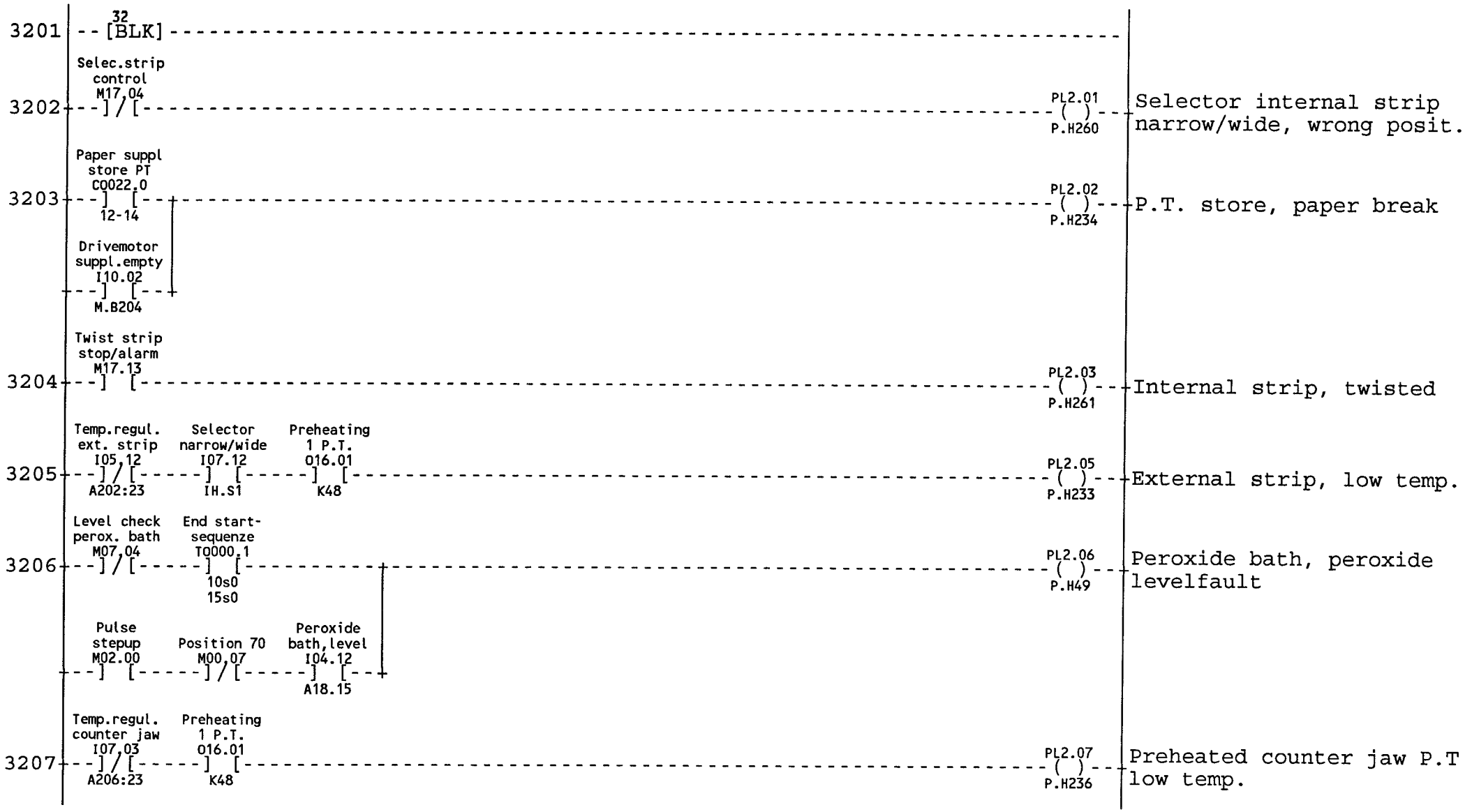

08:13 93.11.25

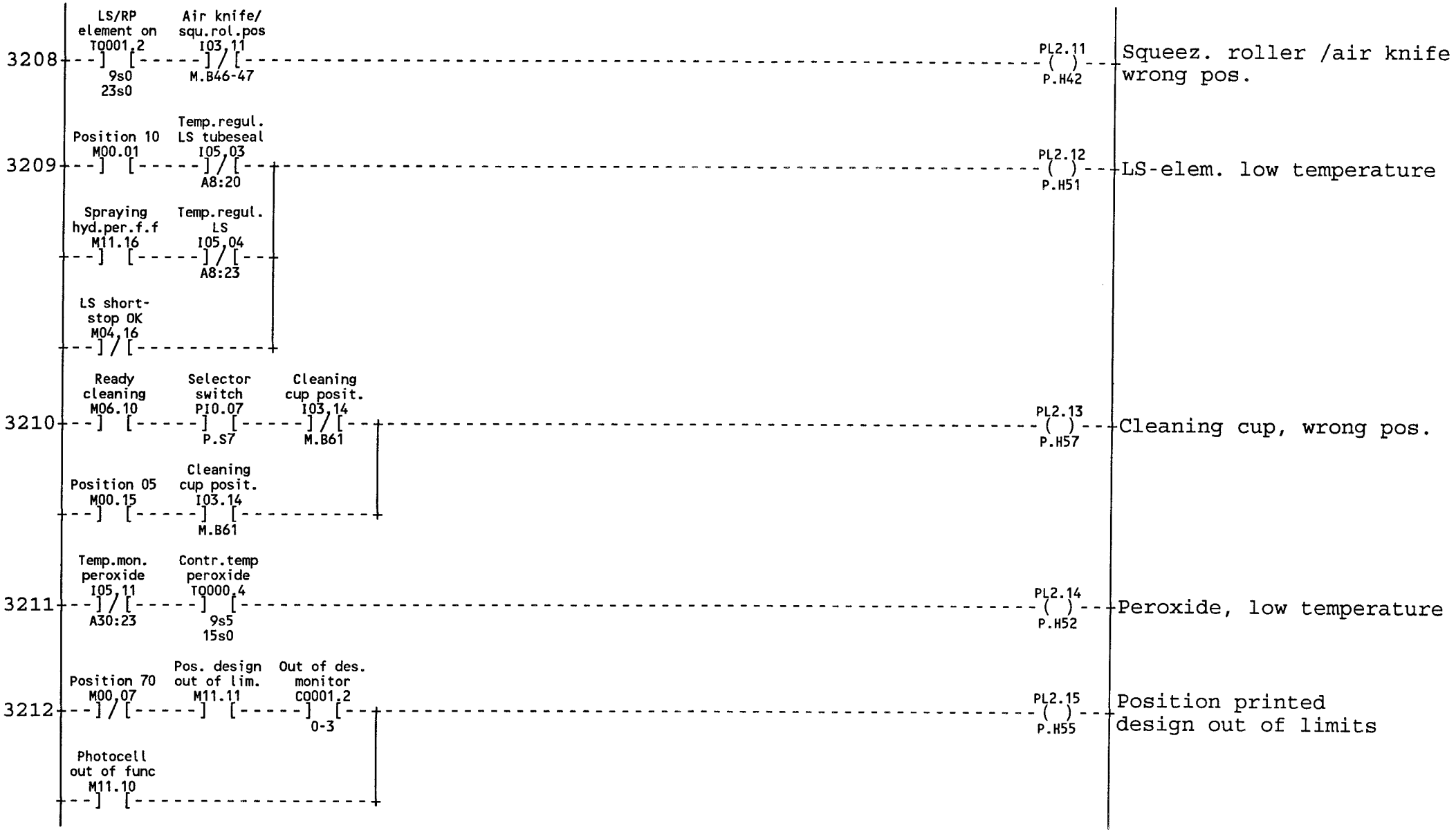
3208
LS/RP element on TQ001,2
9s0
23s0
Air knife/ squ.rol.pos I03,11
M.B46-47
PL2.11
P.H42
Squeez. roller /air knife wrong pos.
3209
Position 10 M00.01
Temp.regul. LS tubeseal I05,03
A8:20
PL2.12
P.H51
LS-elem. low temperature
Spraying hyd.per.f.f M11.16
Temp.regul. LS I05,04
A8:23
LS short-stop OK M04,16
3210
Ready cleaning M06.10
Selector switch PI0.07
P.S7
Cleaning cup posit. I03,14
M.B61
PL2.13
P.H57
Cleaning cup, wrong pos.
Position 05 M00.15
Cleaning cup posit. I03.14
M.B61
3211
Temp.mon. peroxide I05,11
A30:23
Contr.temp peroxide TQ000,4
9s5
15s0
PL2.14
P.H52
Peroxide, low temperature
3212
Position 70 M00,07
Pos. design out of lim. M11.11
Out of des. monitor CQ001,2
0-3
PL2.15
P.H55
Position printed design out of limits
Photocell out of func M11.10

08:13 93.11.25

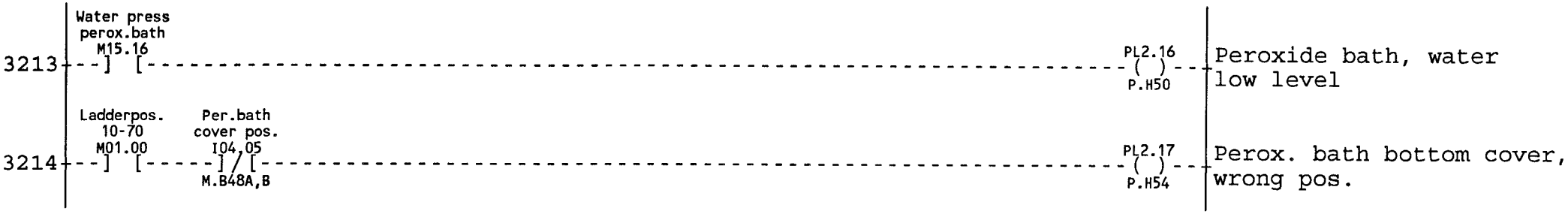
Water press perox.bath M15.16
3213
PL2.16
P.H50
Peroxide bath, water low level
Ladderpos. 10-70 M01.00
Per.bath cover pos. I04,05
M.B48A,B
3214
PL2.17
P.H54
Perox. bath bottom cover, wrong pos.

ALARM 49 T0 64 ON ALARMDISPLAY

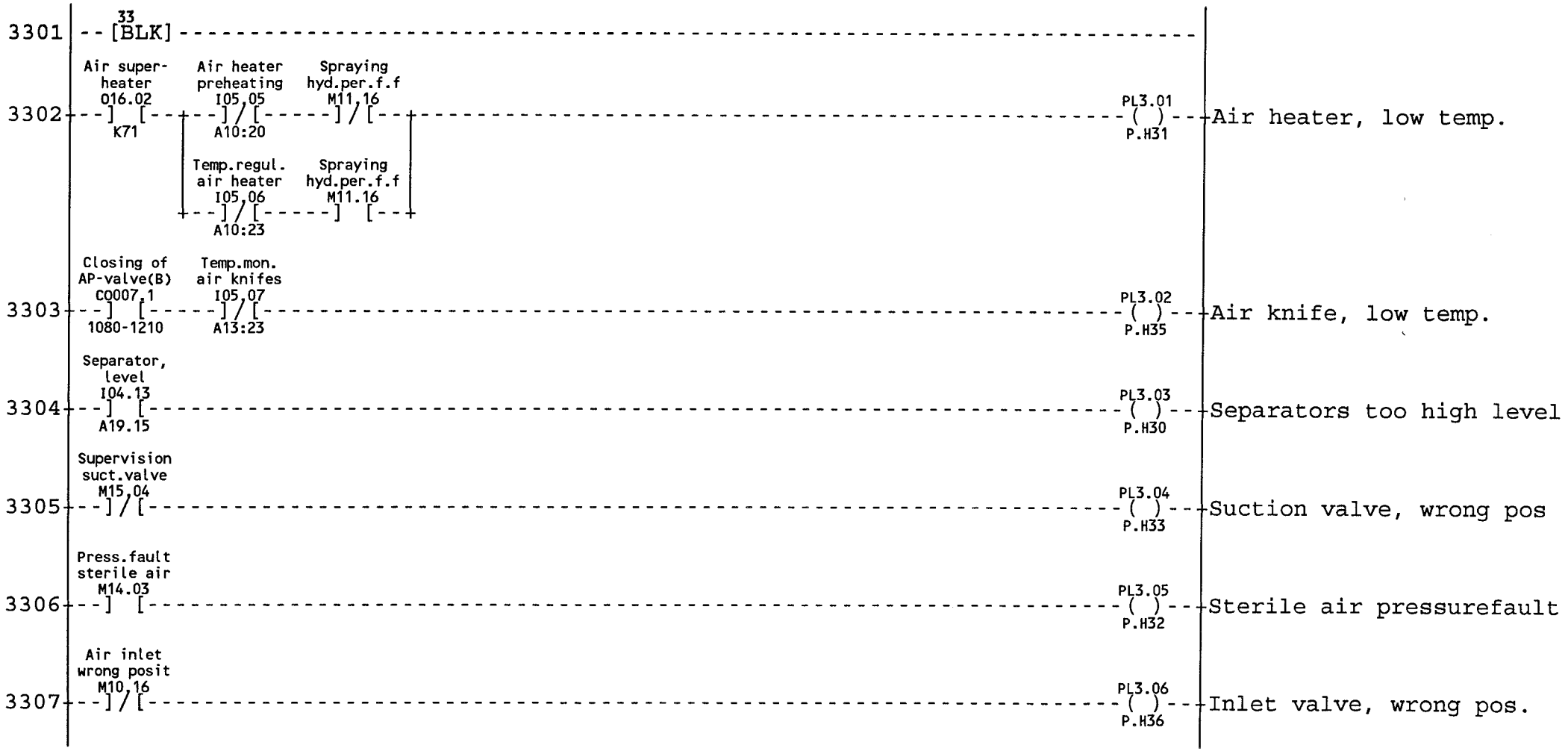

08:13 93.11.25

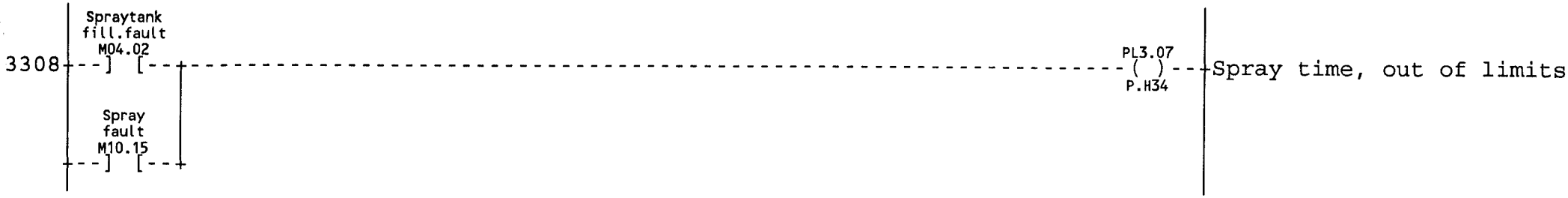
3308
Spraytank
fill.fault
M04.02
Spray
fault
M10.15
PL3.07
P.H34
Spray time, out of limits

08:13 93.11.25

ALARM 1 TO 18 ON LOWER LABELS AT ALARMDISPLAY

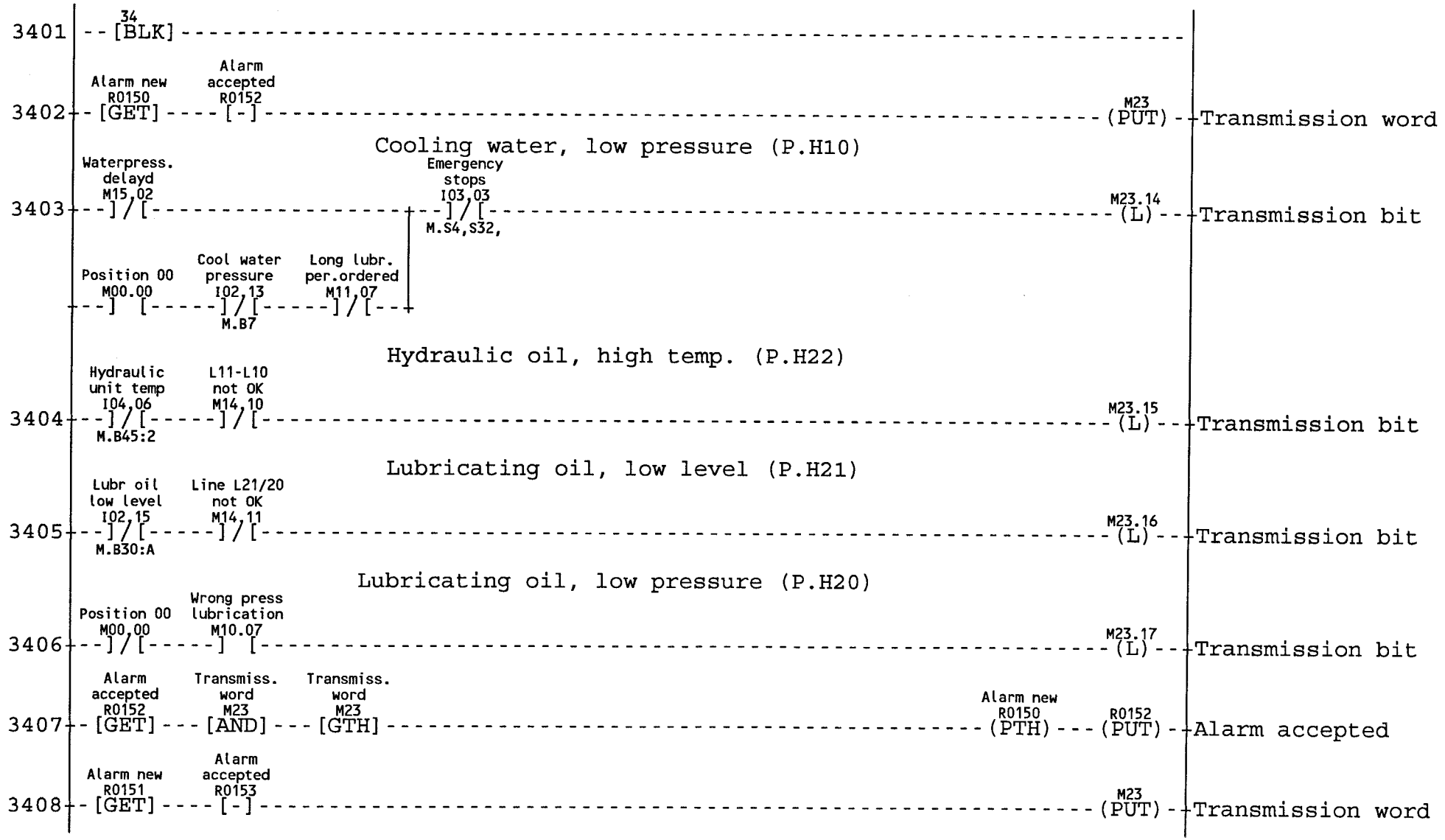

08:13 93.11.25

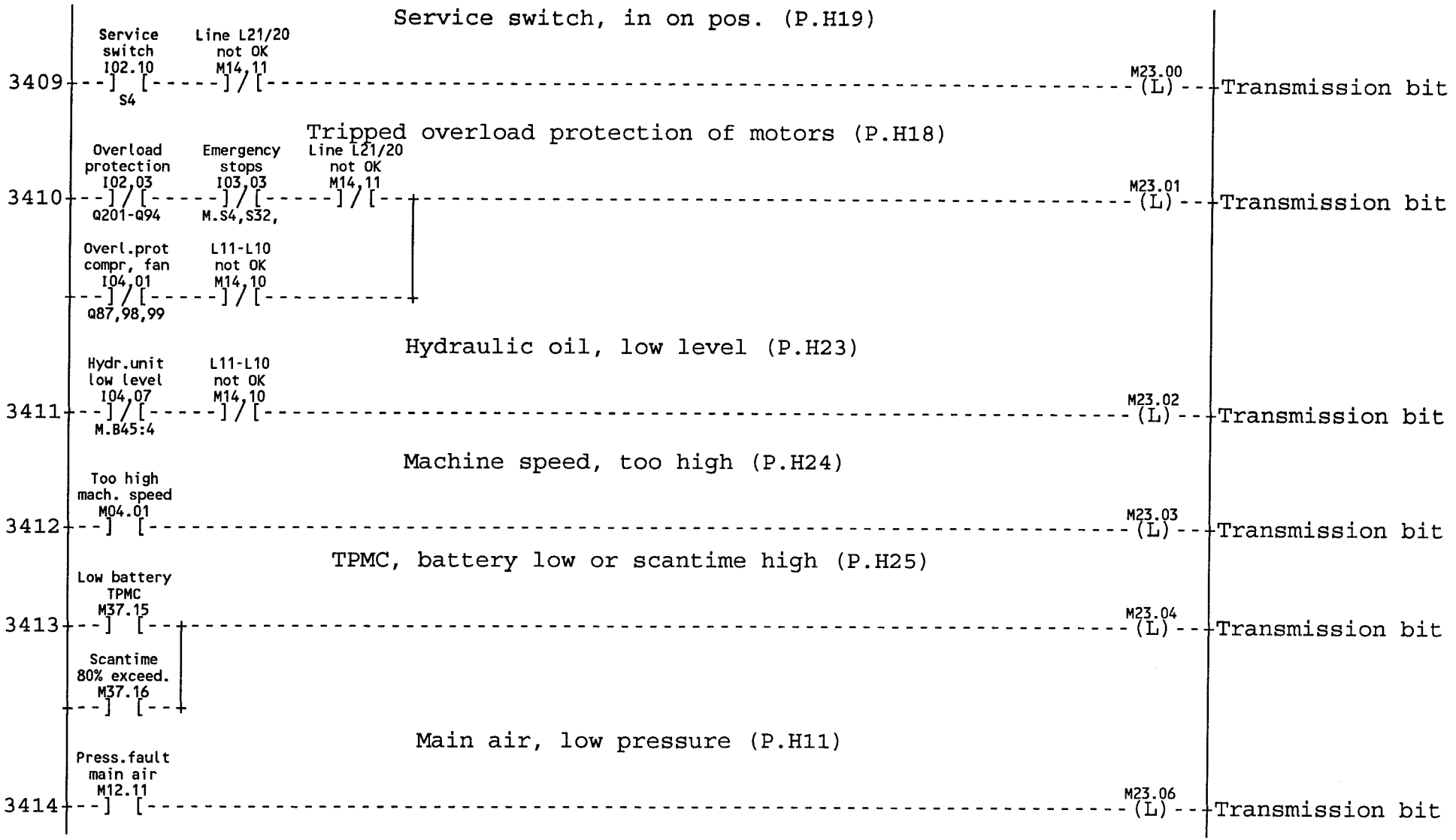
Service switch, in on pos. (P.H19)
3409
Service switch I02.10 S4
Line L21/20 not OK M14,11
M23.00 (L)
Transmission bit
Tripped overload protection of motors (P.H18)
3410
Overload protection I02,03 Q201-Q94
Emergency stops I03,03 M.S4,S32,
Line L21/20 not OK M14,11
M23.01 (L)
Transmission bit
Overl.prot compr, fan I04,01 Q87,98,99
L11-L10 not OK M14,10
Hydraulic oil, low level (P.H23)
3411
Hydr.unit low level I04,07 M.B45:4
L11-L10 not OK M14,10
M23.02 (L)
Transmission bit
Machine speed, too high (P.H24)
3412
Too high mach. speed M04.01
M23.03 (L)
Transmission bit
TPMC, battery low or scantime high (P.H25)
3413
Low battery TPMC M37.15
Scantime 80% exceed. M37.16
M23.04 (L)
Transmission bit
Main air, low pressure (P.H11)
3414
Press.fault main air M12.11
M23.06 (L)
Transmission bit

08:13 93.11.25

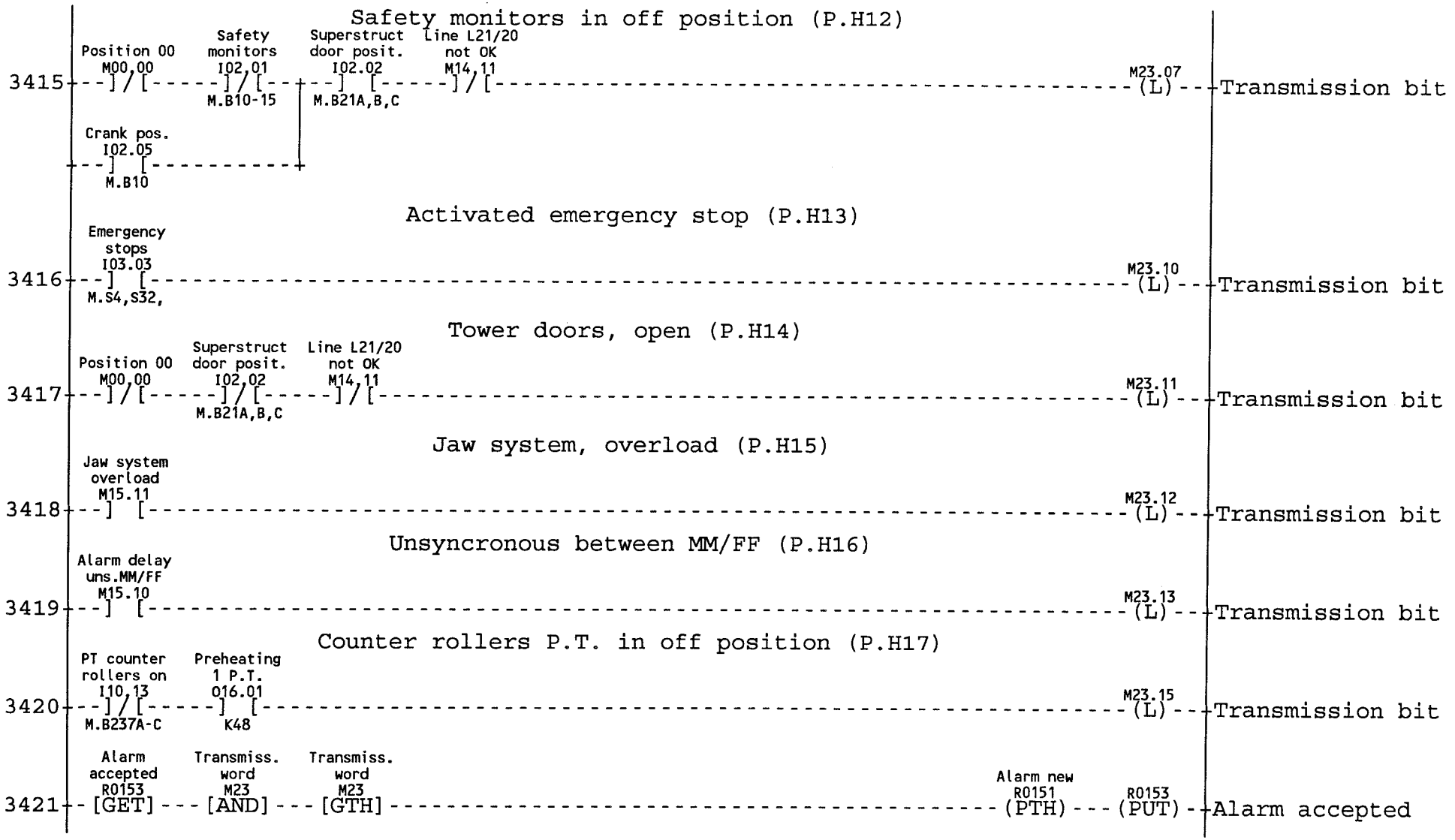
Safety monitors in off position (P.H12)
3415
Position 00 M00,00
Safety monitors I02,01
M.B10-15
Superstruct door posit. I02.02
M.B21A,B,C
Line L21/20 not OK M14,11
M23.07 (L)
Transmission bit
Crank pos. I02.05
M.B10
Activated emergency stop (P.H13)
3416
Emergency stops I03.03
M.S4,S32,
M23.10 (L)
Transmission bit
Tower doors, open (P.H14)
3417
Position 00 M00,00
Superstruct door posit. I02,02
M.B21A,B,C
Line L21/20 not OK M14,11
M23.11 (L)
Transmission bit
Jaw system, overload (P.H15)
3418
Jaw system overload M15.11
M23.12 (L)
Transmission bit
Unsyncronous between MM/FF (P.H16)
3419
Alarm delay uns.MM/FF M15.10
M23.13 (L)
Transmission bit
Counter rollers P.T. in off position (P.H17)
3420
PT counter rollers on I10,13
M.B237A-C
Preheating 1 P.T. O16.01
K48
M23.15 (L)
Transmission bit
3421
Alarm accepted R0153
[GET]
Transmiss. word M23
[AND]
Transmiss. word M23
[GTH]
Alarm new R0151
(PTH)
R0153
(PUT)
Alarm accepted

08:13 93.11.25

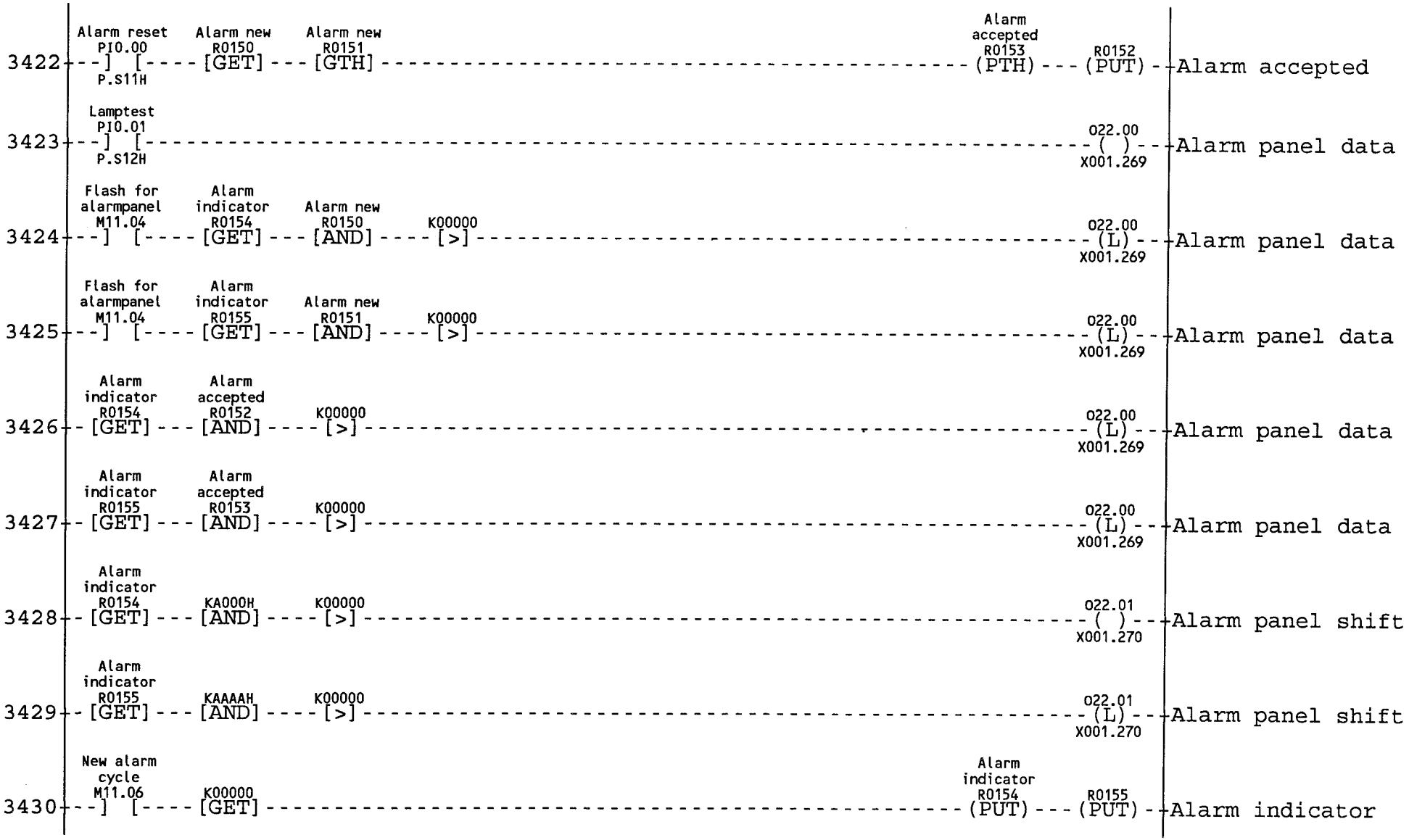
3422 Alarm reset PI0.00 P.S11H [Alarm new R0150 [GET] Alarm new R0151 [GTH] Alarm accepted R0153 (PTH) R0152 (PUT) Alarm accepted
3423 Lamptest PI0.01 P.S12H [O22.00 ( ) X001.269 Alarm panel data
3424 Flash for alarmpanel M11.04 [Alarm indicator R0154 [GET] Alarm new R0150 [AND] K00000 [>] O22.00 (L) X001.269 Alarm panel data
3425 Flash for alarmpanel M11.04 [Alarm indicator R0155 [GET] Alarm new R0151 [AND] K00000 [>] O22.00 (L) X001.269 Alarm panel data
3426 Alarm indicator R0154 [GET] Alarm accepted R0152 [AND] K00000 [>] O22.00 (L) X001.269 Alarm panel data
3427 Alarm indicator R0155 [GET] Alarm accepted R0153 [AND] K00000 [>] O22.00 (L) X001.269 Alarm panel data
3428 Alarm indicator R0154 [GET] KA000H [AND] K00000 [>] O22.01 ( ) X001.270 Alarm panel shift
3429 Alarm indicator R0155 [GET] KAAAAH [AND] K00000 [>] O22.01 (L) X001.270 Alarm panel shift
3430 New alarm cycle M11.06 [K00000 [GET] Alarm indicator R0154 (PUT) R0155 (PUT) Alarm indicator

08:13 93.11.25

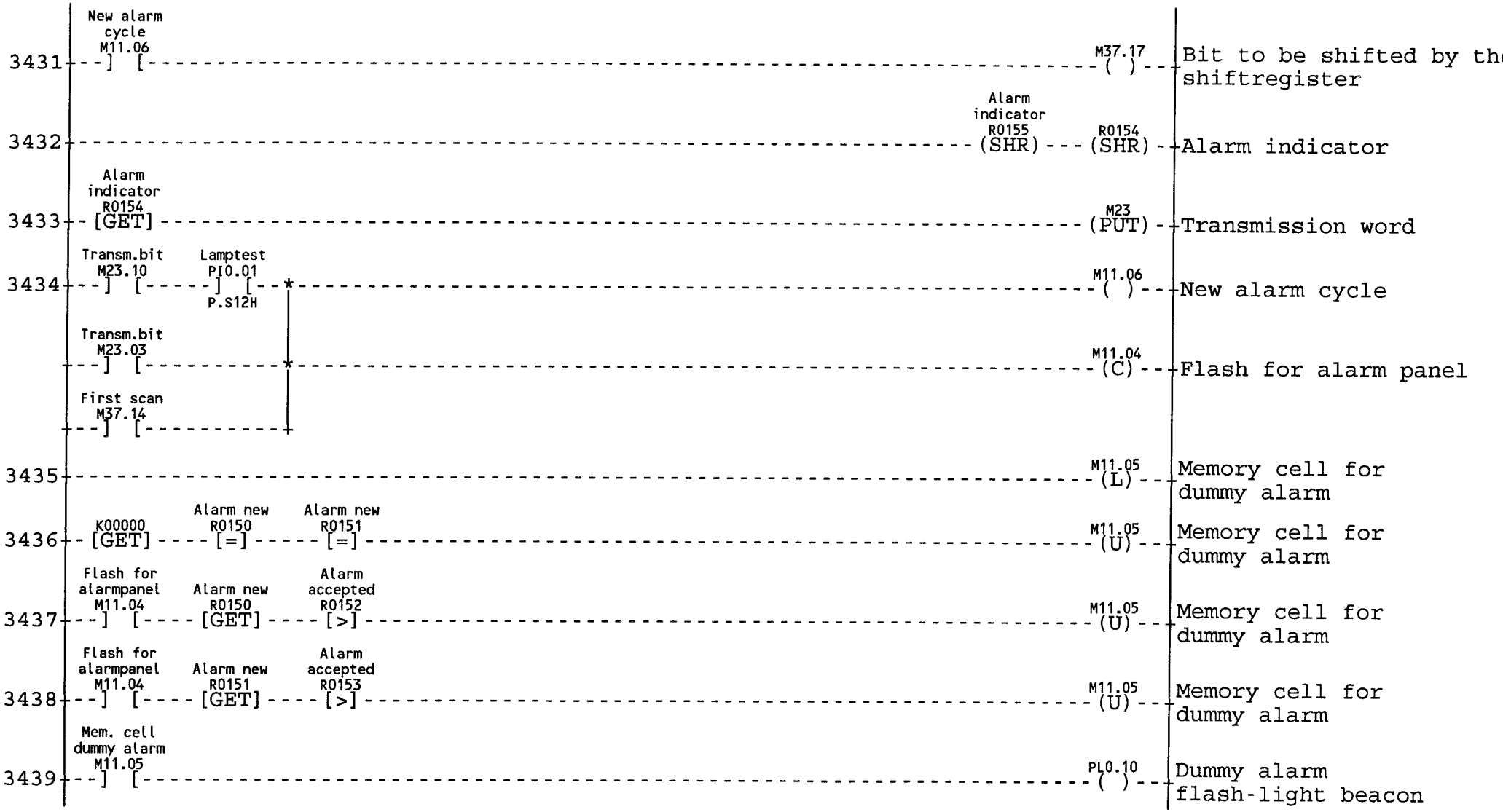
3431
New alarm cycle M11.06
M37.17
Bit to be shifted by the shiftregister
3432
Alarm indicator R0155
(SHR)
R0154
(SHR)
Alarm indicator
3433
Alarm indicator R0154
[GET]
M23
(PUT)
Transmission word
3434
Transm.bit M23.10
Lamptest PI0.01
P.S12H
M11.06
New alarm cycle
Transm.bit M23.03
M11.04
(C)
Flash for alarm panel
First scan M37.14
3435
M11.05
(L)
Memory cell for dummy alarm
3436
K00000
[GET]
Alarm new R0150
[=]
Alarm new R0151
[=]
M11.05
(U)
Memory cell for dummy alarm
3437
Flash for alarmpanel M11.04
Alarm new R0150
[GET]
Alarm accepted R0152
[>]
M11.05
(U)
Memory cell for dummy alarm
3438
Flash for alarmpanel M11.04
Alarm new R0151
[GET]
Alarm accepted R0153
[>]
M11.05
(U)
Memory cell for dummy alarm
3439
Mem. cell dummy alarm M11.05
PL0.10
Dummy alarm flash-light beacon

08:13 93.11.25

MEDIUM SCAN FUNCTIONS

9001	--[90 BLK]

08:13 93.11.25

FAST FUNCTIONS, TS, DESIGN PULSE, BLACK TAPE EXT. STRIP

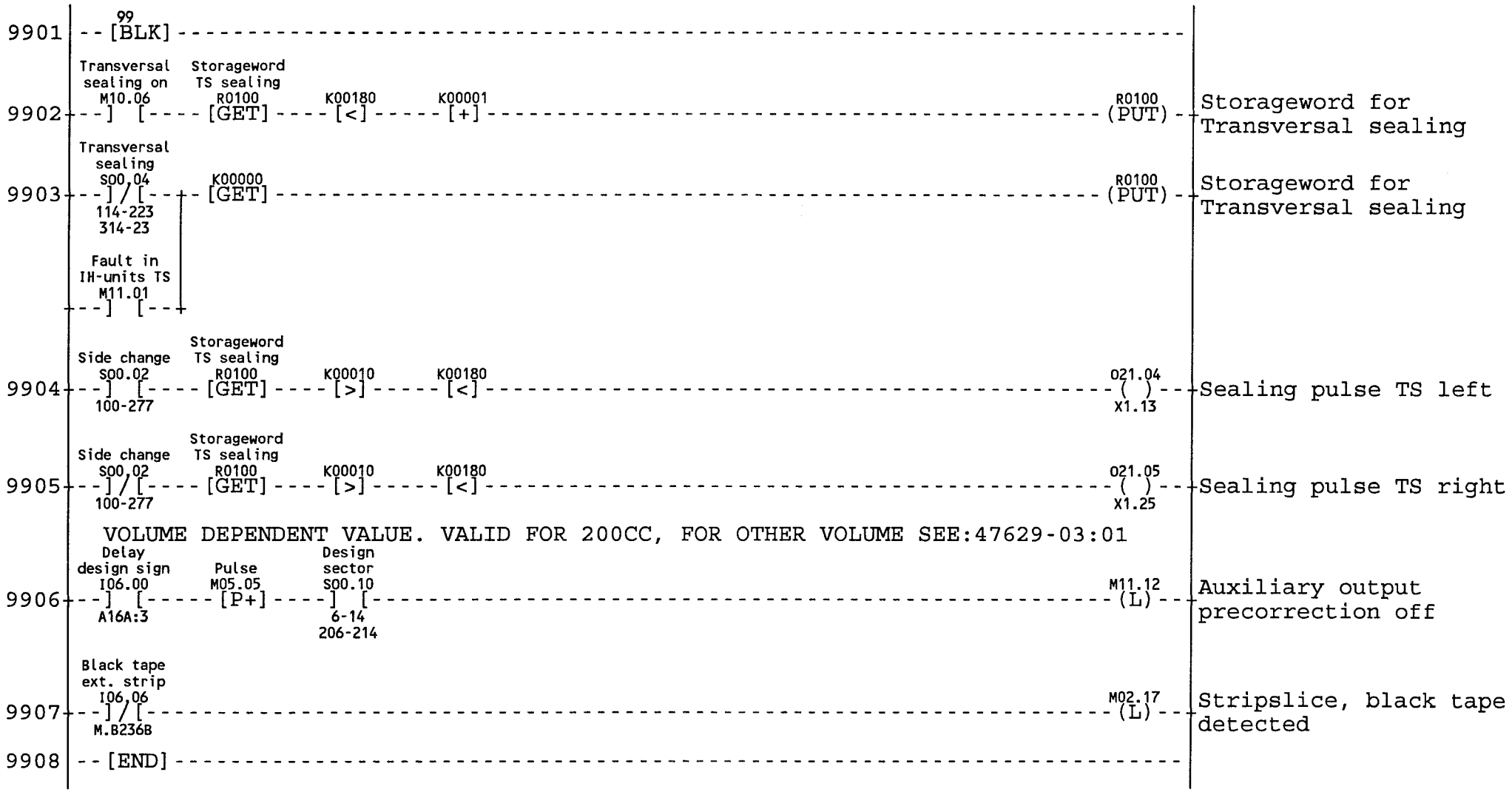

08:13 93.11.25

Tetra Pak
LUND SWEDEN

This drawing must not without the consent of Tetra Pak be copied, transmitted or disclosed to any third party.

MAIN VOLTAGE 200-600V EXCEPT 400/230V

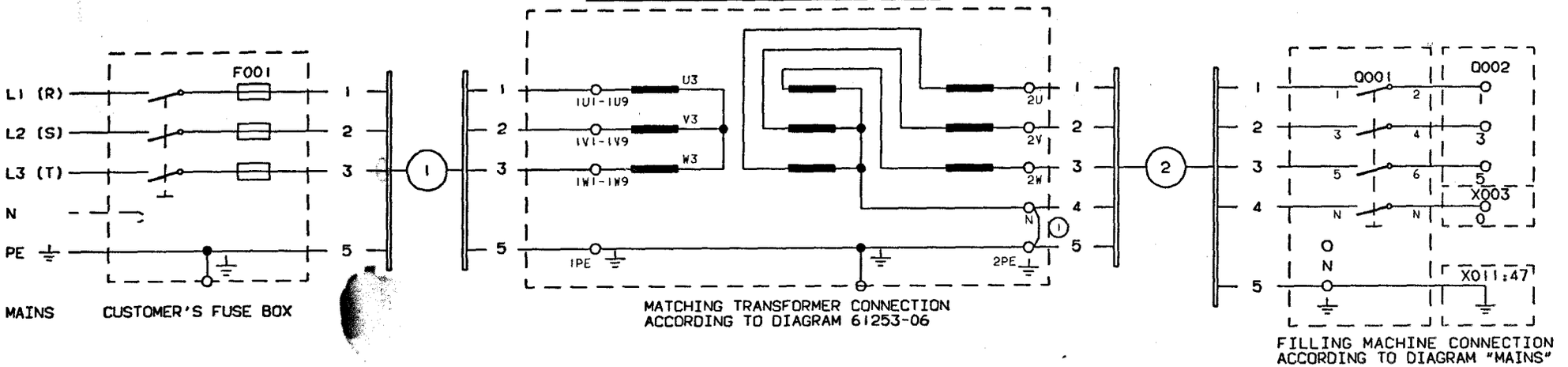

MAIN VOLTAGE 400/230V

AREA TO CABLE 4x25/16 AND
SETTING VALUE OF Q002 63/400

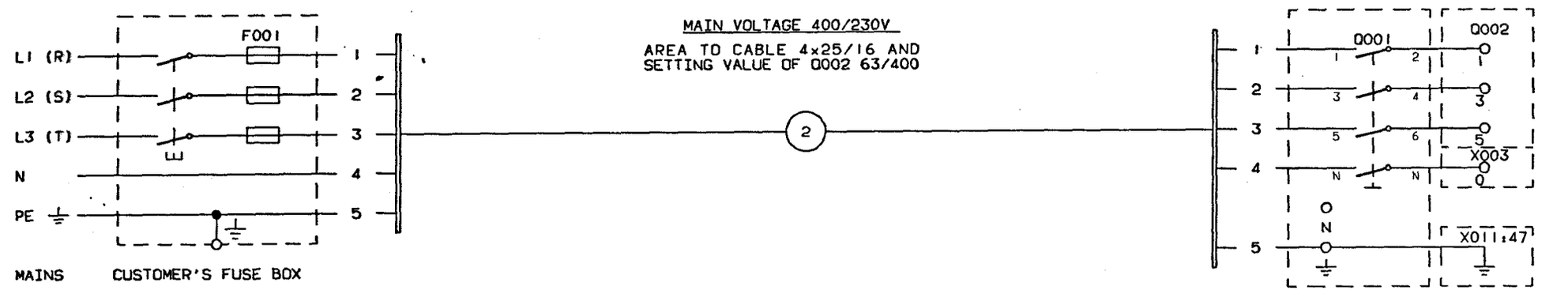

INTRODUCED WITH AM NO. 19261	DATE: 930310	SIGN. HK/UTH	ATTENTION: PROTECTIVE GROUNDING TO BE CARRIED OUT ACCORDING TO CURRENT LOCAL REGULATIONS	DESCRIPTION. MAINS CONNECTION	
ISSUE			(1) MAKE SURE THAT THE BRIDGE IS CONNECTED. AREA 25mm²	MACHINE: TBA/9-1402 P.T.	61253-05:01
AM NO.			DRAWING REMARKS		
DATE					
SIGN.					

ALTERATIONS ONLY IN CADAM

08:13 93.11.25

Tetra Pak
LUND SWEDEN

This drawing must not without the consent of Tetra Pak be copied, transmitted or disclosed to any third party.

MAIN VOLTAGE	FUSES (SLOW) ①F001	AREA TO CU CABLES NO. 1	AREA TO CU CABLES NO. 2	SETTING VALUE Q002	CONNECTIONS ON MATCHING TRANSFORMER		
					MAINS	TAP	CONNECT
V	A	mm^2	mm^2	A			
600/347 3x600	100	3x16/16	4x25/16	63/400	PHASE L1 PHASE L2 PHASE L3 N N GROUND PE	1U9 1V9 1W9 N ⏚	1U3 - U4 1V3 - V4 1W3 - W4
550/318 3x550	100	3x16/16	4x25/16	63/400	PHASE L1 PHASE L2 PHASE L3 N N GROUND PE	1U8 1V8 1W8 N ⏚	1U3 - U4 1V3 - V4 1W3 - W4
500/289 3x500	125	3x25/16	4x25/16	63/400	PHASE L1 PHASE L2 PHASE L3 N N GROUND PE	1U7 1V7 1W7 N ⏚	1U3 - U4 1V3 - V4 1W3 - W4
480/277 3x480	125	3x25/16	4x25/16	63/400	PHASE L1 PHASE L2 PHASE L3 N N GROUND PE	1U6 1V6 1W6 N ⏚	1U3 - U4 1V3 - V4 1W3 - W4
440/254 3x440	125	3x25/16	4x25/16	63/400	PHASE L1 PHASE L2 PHASE L3 N N GROUND PE	1U5 1V5 1W5 N ⏚	1U2 - U4 1V2 - V4 1W2 - W4
415/240 3x415	125	3x25/16	4x25/16	63/400	PHASE L1 PHASE L2 PHASE L3 N N GROUND PE	1U5 1V5 1W5 N ⏚	1U1 - U4 1V1 - V4 1W1 - W4
3x400 [3x380]	160	3x25/16	4x25/16	63/400	PHASE L1 PHASE L2 PHASE L3 N N GROUND PE	1U4 1V4 1W4 N ⏚	1U1 - U4 1V1 - V4 1W1 - W4
240/140 3x240	250	3x70/35	4x25/16	63/400	PHASE L1 PHASE L2 PHASE L3 N N GROUND PE	1U3 1V3 1W3 N ⏚	U3 - U4 1U3-1U6 V3 - V4 1V3-1V6 W3 - W4 1W3-1W6
220/127 3x220	250	3x70/35	4x25/16	63/400	PHASE L1 PHASE L2 PHASE L3 N N GROUND PE	1U2 1V2 1W2 N ⏚	U3 - U4 1U2-1U5 V3 - V4 1V2-1V5 W3 - W4 1W2-1W5
200/115 3x200	315	3x95/50	4x25/16	63/400	PHASE L1 PHASE L2 PHASE L3 N N GROUND PE	1U1 1V1 1W1 N ⏚	U3 - U4 1U1-1U4 V3 - V4 1V1-1V4 W3 - W4 1W1-1W4

MATCHING TRANSFORMER
90245-0024

Y/Z II-WIRED

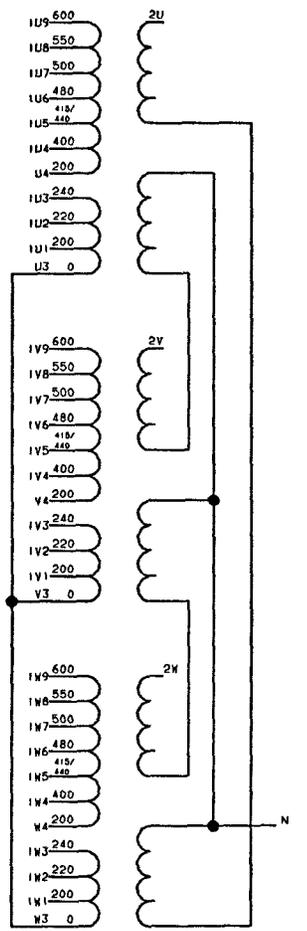

INTRODUCED WITH AM NO.	19261			DATE: 930310		SIGN. HK/UTH			
ISSUE									
AM NO.									
DATE									
SIGN.									

ALTERATIONS ONLY IN CADAM

① RECOMMENDED MAINS FUSE TO ACHIEVE SELECTIVITY

DRAWING REMARKS

DESCRIPTION: MATCHING TRANSFORMER

MACHINE: TBA/9-1402 P.T.

61253-06:01

08:13 93.11.25

Tetra Pak
LUND SWEDEN

This drawing must not without the consent of Tetra Pak be copied, transmitted or disclosed to any third party.

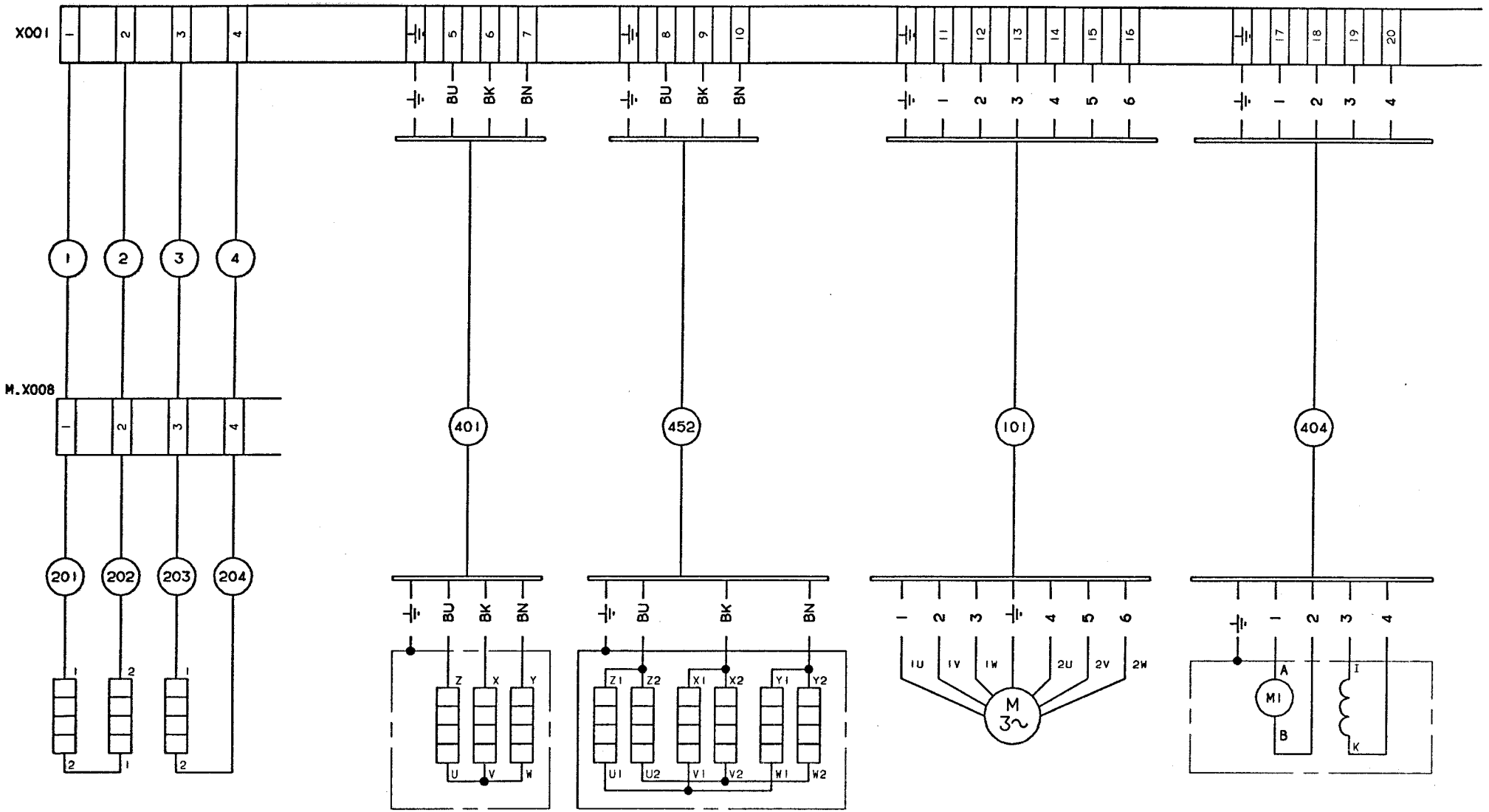

M.R005B-C M.R005A
FLAP SEALING
TOP BOTTOM

M.R036
PEROXIDE BATH
WATER

M.R032
AIR SUPER
HEATER

M.M001
MAIN MOTOR

M.M013
BENDING ROLLER

FOOT NOTE: CABLE CORES ARE TO BE MARKED WITH TERMINAL DESIGNATION

INTRODUCED WITH AM NO.	19261			DATE: 930310		SIGN. HK/UTH				DESCRIPTION: CONNECTION DIAGRAM	
ISSUE											
AM NO.										MACHINE: TBA/9-1402 P.T	61249-05:01
DATE											
SIGN.									DRAWING REMARKS		

ALTERATIONS ONLY IN CADAM

08:13 93.11.25

Tetra Pak
LUND SWEDEN

This drawing must not without the consent of Tetra Pak be copied, transmitted or disclosed to any third party.

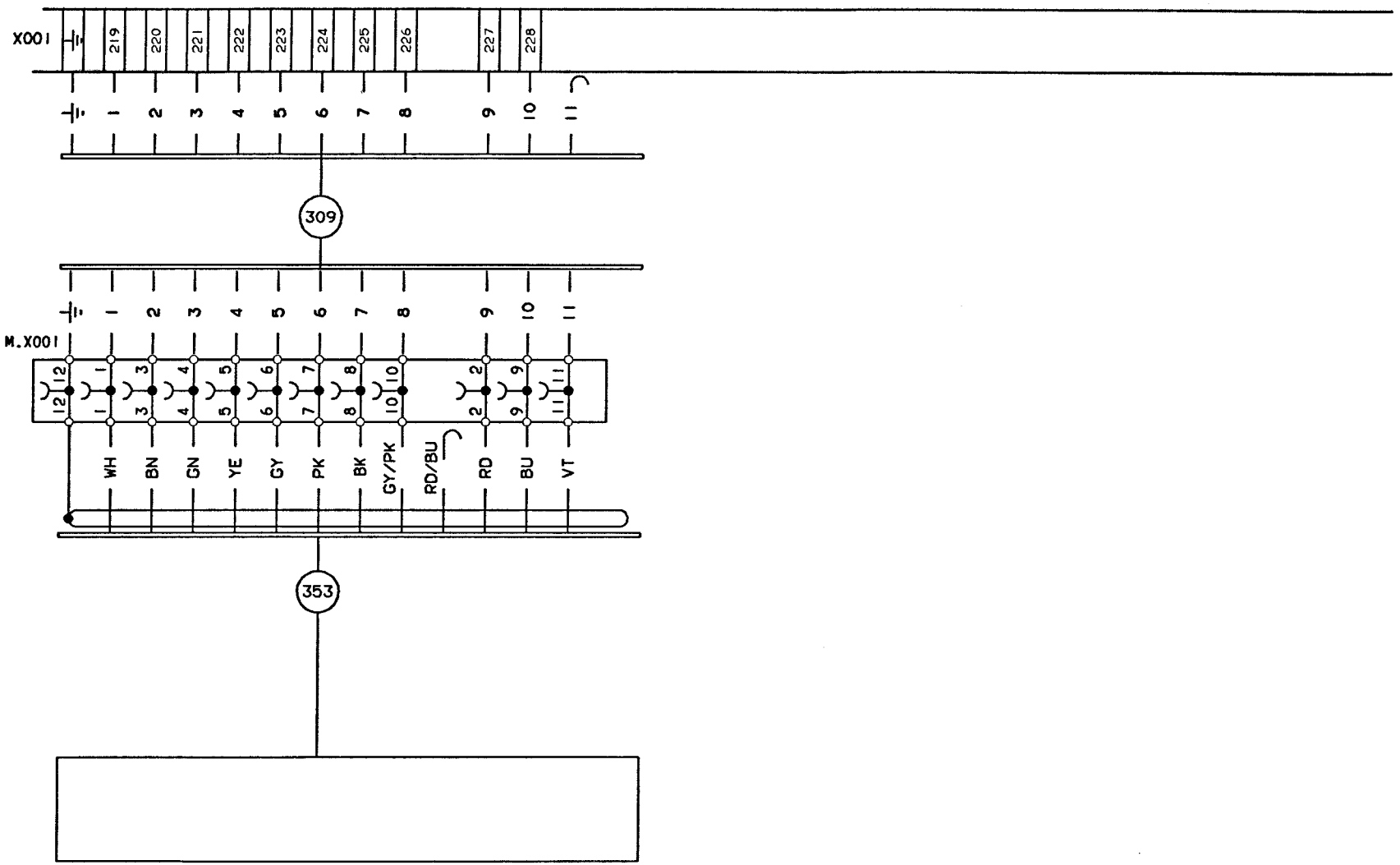

M.B001

MAIN MACHINE, ANGEL ENCODER

FOOT NOTE: CABLE CORES ARE TO BE MARKED WITH TERMINAL DESIGNATION

INTRODUCED WITH AM NO.	19261			DATE: 930310		SIGN. HK/UTH				DESCRIPTION: CONNECTION DIAGRAM	
ISSUE											
AM NO.											
DATE										MACHINE: TBA/9-1402 P.T	61249-21:01
SIGN.									DRAWING REMARKS		

ALTERATIONS ONLY IN CADAM

08:13 93.11.25

Tetra Pak
MODENA ITALY

This drawing must not without the consent of Tetra Pak: be copied, transmitted or disclosed to any third party.

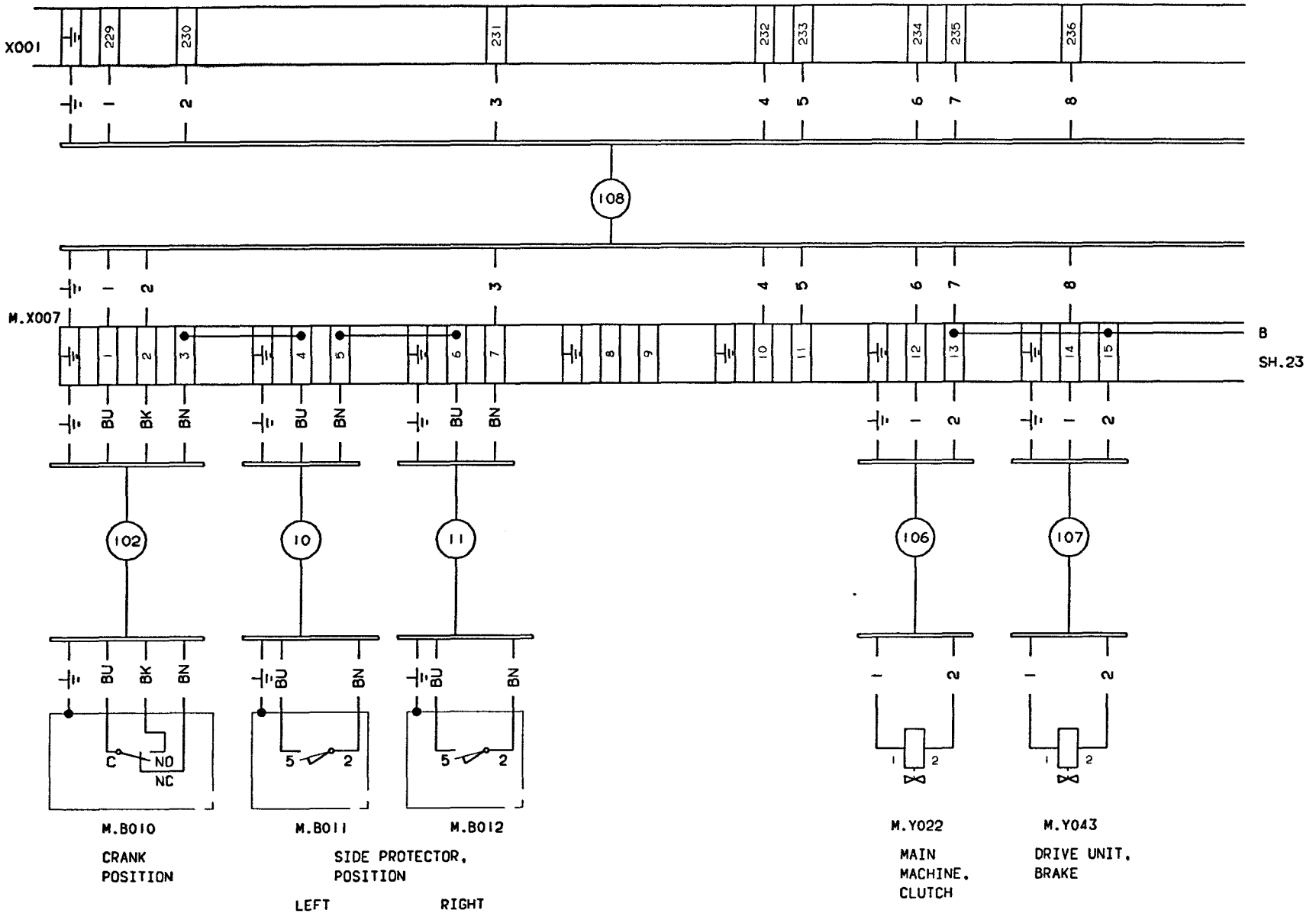

INTRODUCED WITH AM NO.	19261			DATE: 930310		SIGN. HK/UTH				DESCRIPTION: CONNECTION DIAGRAM	
ISSUE	A										
AM NO.	20144										
DATE	930909									MACHINE: TBA/9-1402 P.T	61249-22:01
SIGN.	HK/MRI										

DRAWING REMARKS

ALTERATIONS ONLY IN CADAM

08.13 93.11.25

This drawing must not without the consent of Tetra Pak be copied, transmitted or disclosed to any third party.

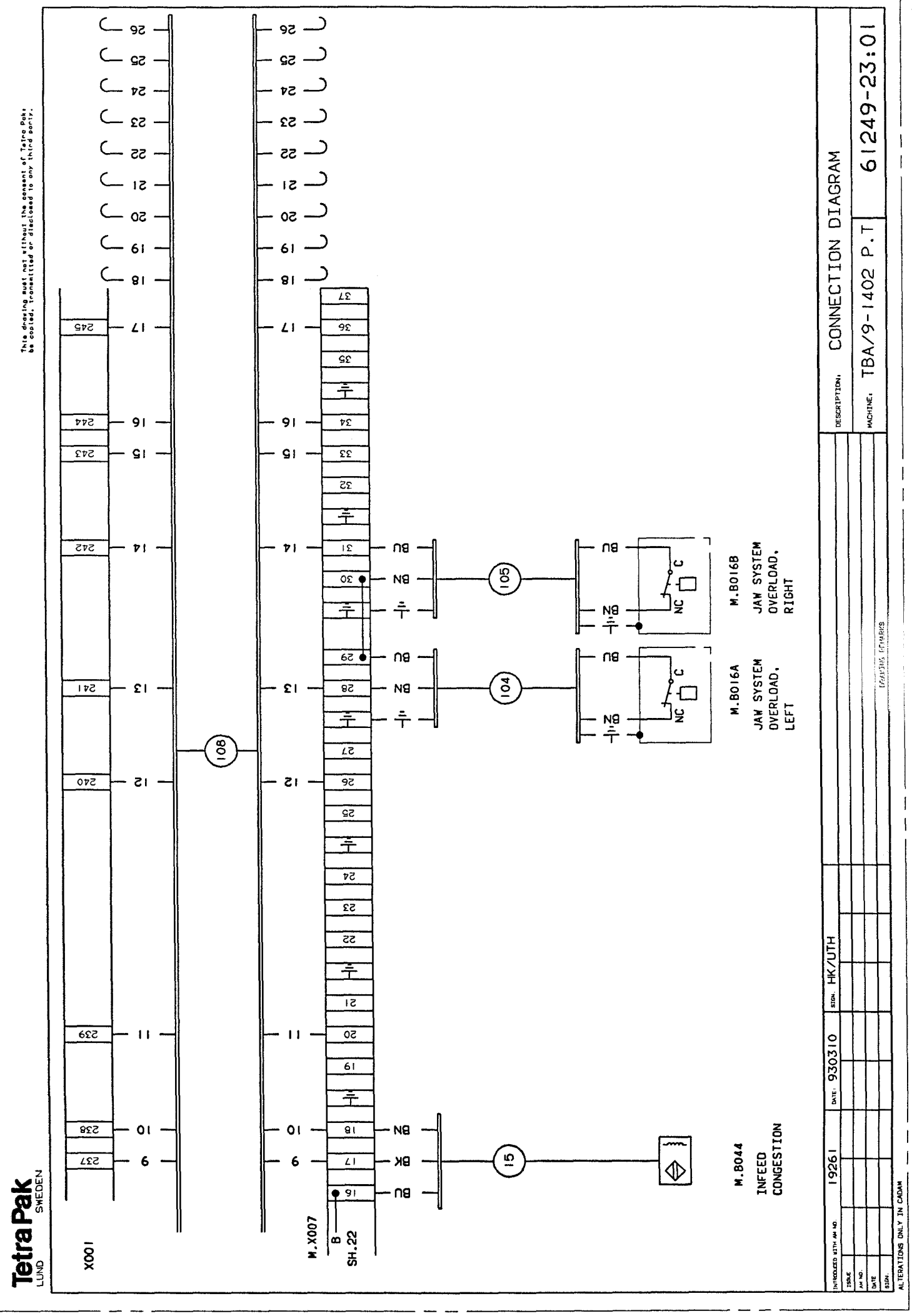

Tetra Pak
LUND SWEDEN

This drawing must not without the consent of Tetra Pak be copied, transmitted or disclosed to any third party.

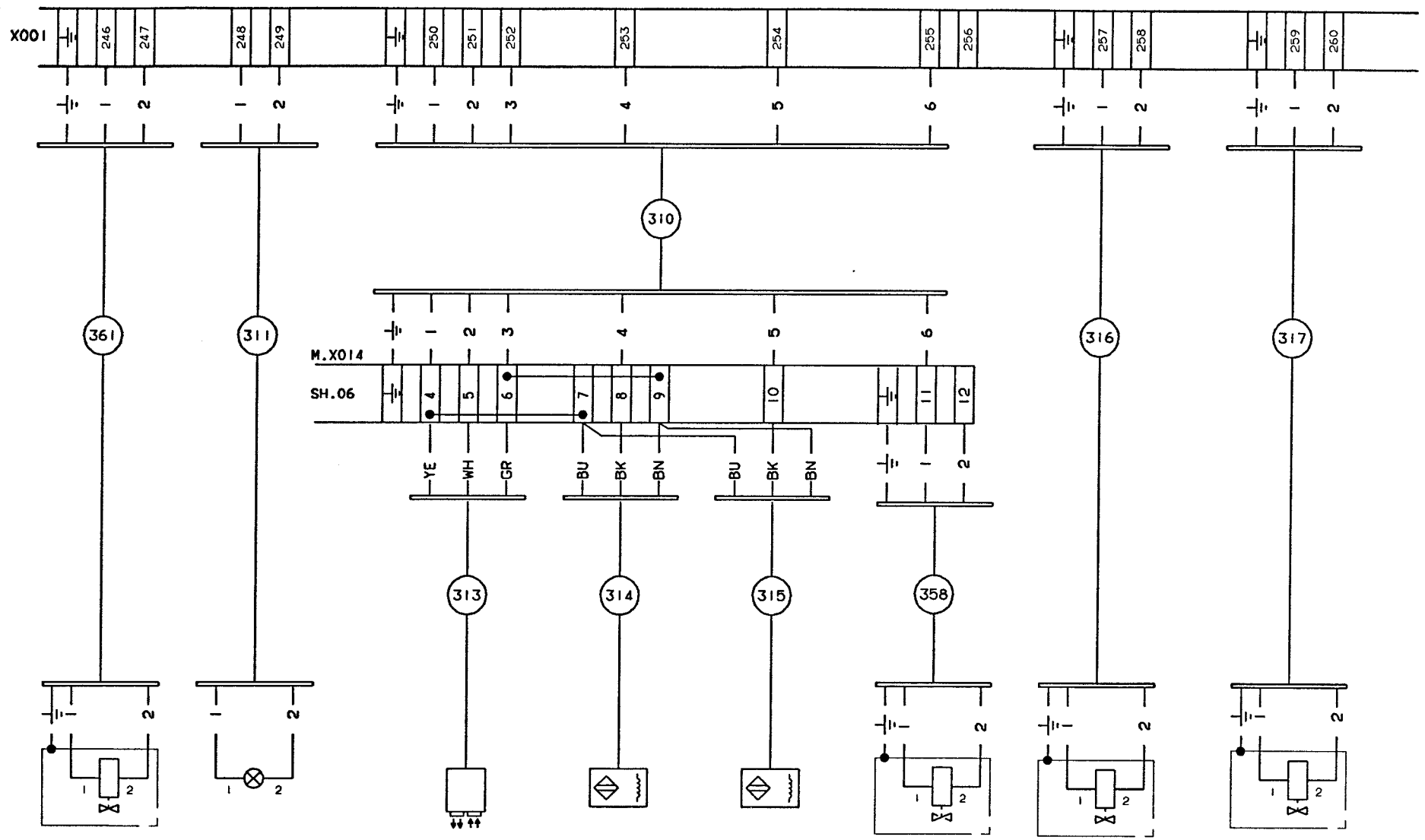

INTRODUCED WITH AM NO. 19261	DATE: 930310	SIGN. HK/UTH	DESCRIPTION: CONNECTION DIAGRAM
ISSUE			MACHINE: TBA/9-1402 P.T
AM NO.			61249-24:01
DATE			
SIGN.			

DRAWING NUMBER

ALTERATIONS ONLY IN CADAM

08:13 93.11.25

Tetra Pak
LUND SWEDEN

This drawing must not without the consent of Tetra Pak: be copied, transmitted or disclosed to any third party.

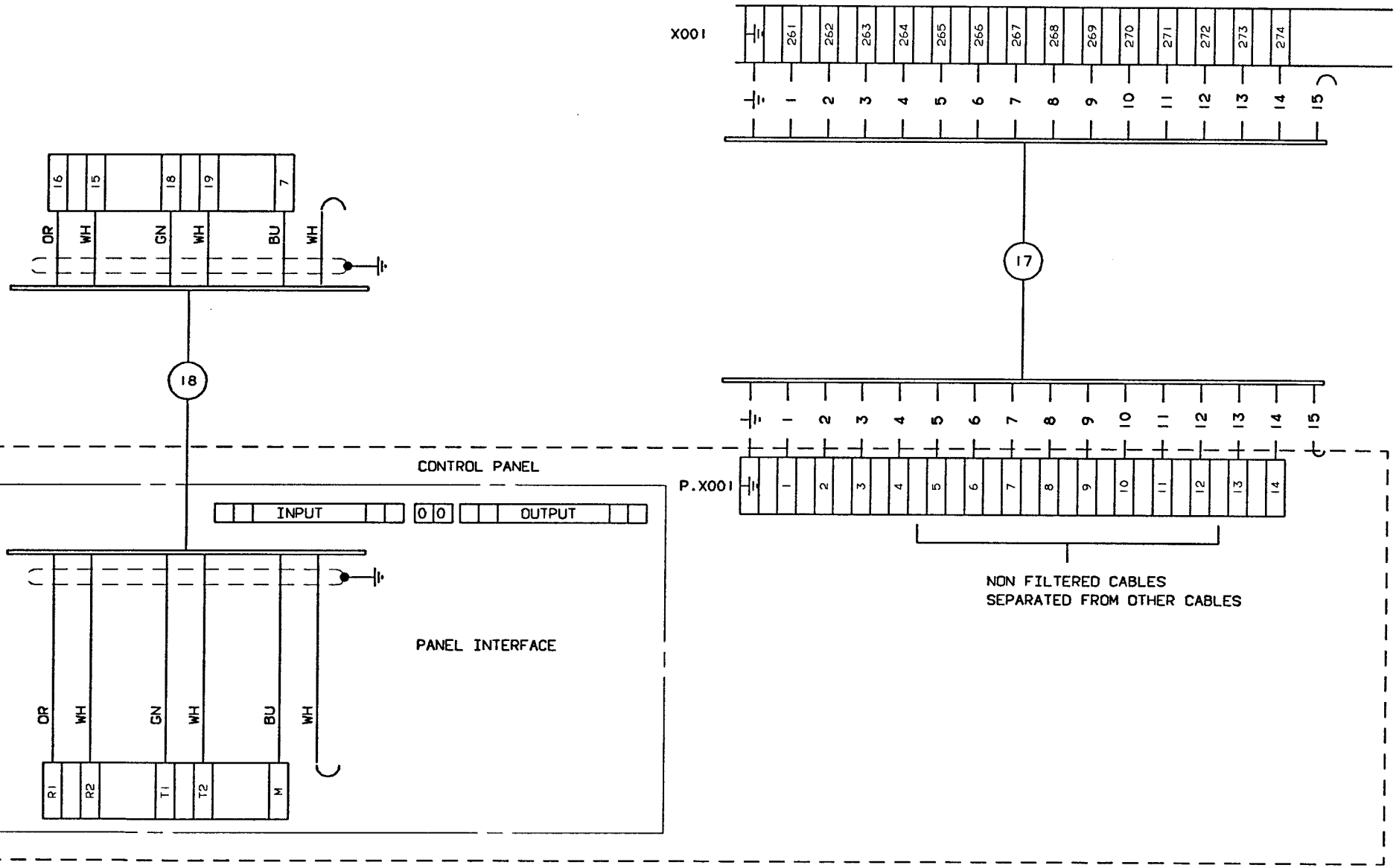

| | | |

Tetra Pak
LUND SWEDEN

This drawing must not without the consent of Tetra Pak be copied, transmitted or disclosed to any third party.

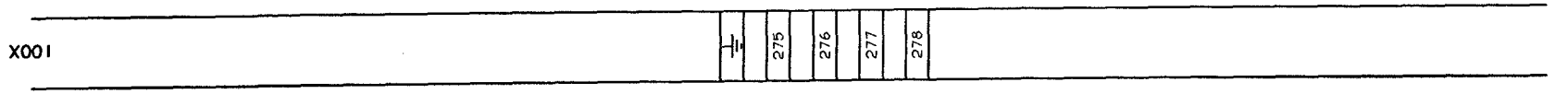

INTRODUCED WITH AM NO.	19261			DATE: 930310		SIGN. HK/UTH						DESCRIPTION: CONNECTION DIAGRAM	
ISSUE													
AM NO.												MACHINE: TBA/9-1402 P.T	61249-27:01
DATE													
SIGN.													

DRAWING REMARKS

ALTERATIONS ONLY IN CADAM

08:13 93.11.25

Tetra Pak
LUND SWEDEN

This drawing must not without the consent of Tetra Pak be copied, transmitted or disclosed to any third party.

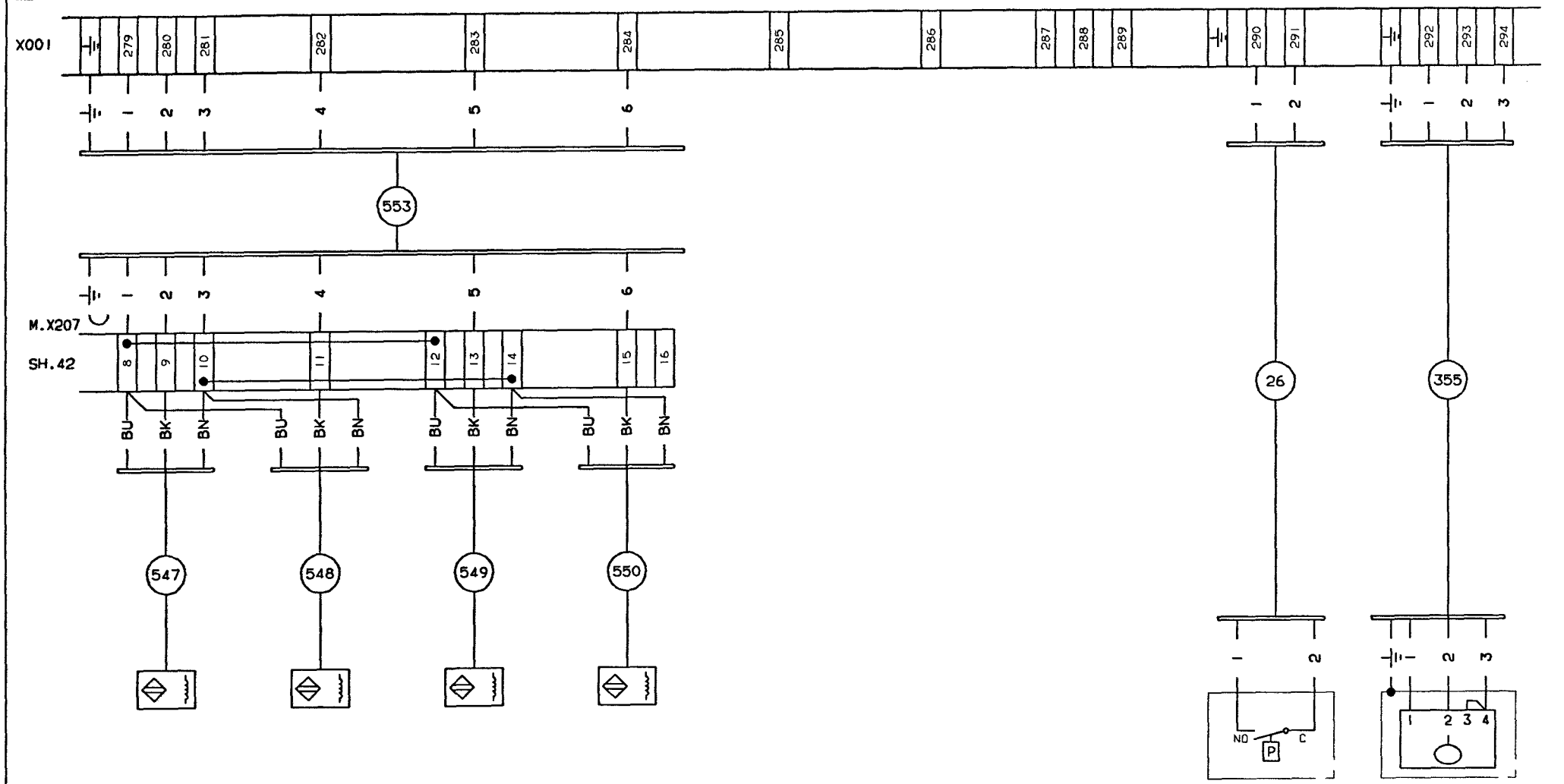

M.B228
DATE UNIT I
STRIP SUPPLY

M.B230
DATE UNIT I
STRIP BREAK

M.B229
DATE UNIT II
STRIP SUPPLY

M.B231
DATE UNIT II
STRIP BREAK

M.B085
PEROXIDE BATH
WATER PRESSURE

M.B045
HYDRAULIC UNIT
TEMPERATURE/
LOW LEVEL

INTRODUCED WITH AM NO.	19261	DATE: 930310	SIGN. HK/UTH		
ISSUE	A				
AM NO.	20144				
DATE	930609				
SIGN	HK/PSG			DRAWING REMARKS	

ALTERATIONS ONLY IN CADAM

DESCRIPTION: CONNECTION DIAGRAM

MACHINE: TBA/9-1402 P.T

61249-28:01

08:13 93.11.25

Tetra Pak
LUND SWEDEN

This drawing must not without the consent of Tetra Pak be copied, transmitted or disclosed to any third party.

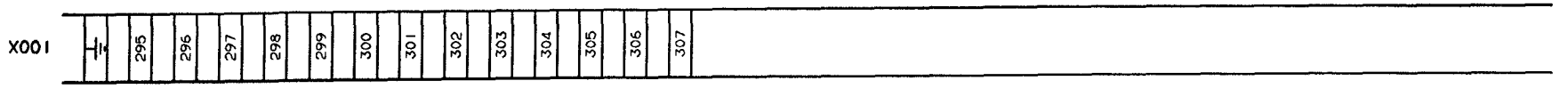

| | | |

Tetra Pak
LUND SWEDEN

This drawing must not without the consent of Tetra Pak be copied, transmitted or disclosed to any third party.

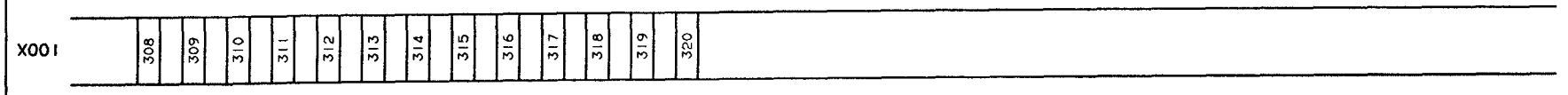

| | | |

Tetra Pak
LUND SWEDEN

This drawing must not without the consent of Tetra Pak, be copied, transmitted or disclosed to any third party.

08.13 93.11.25

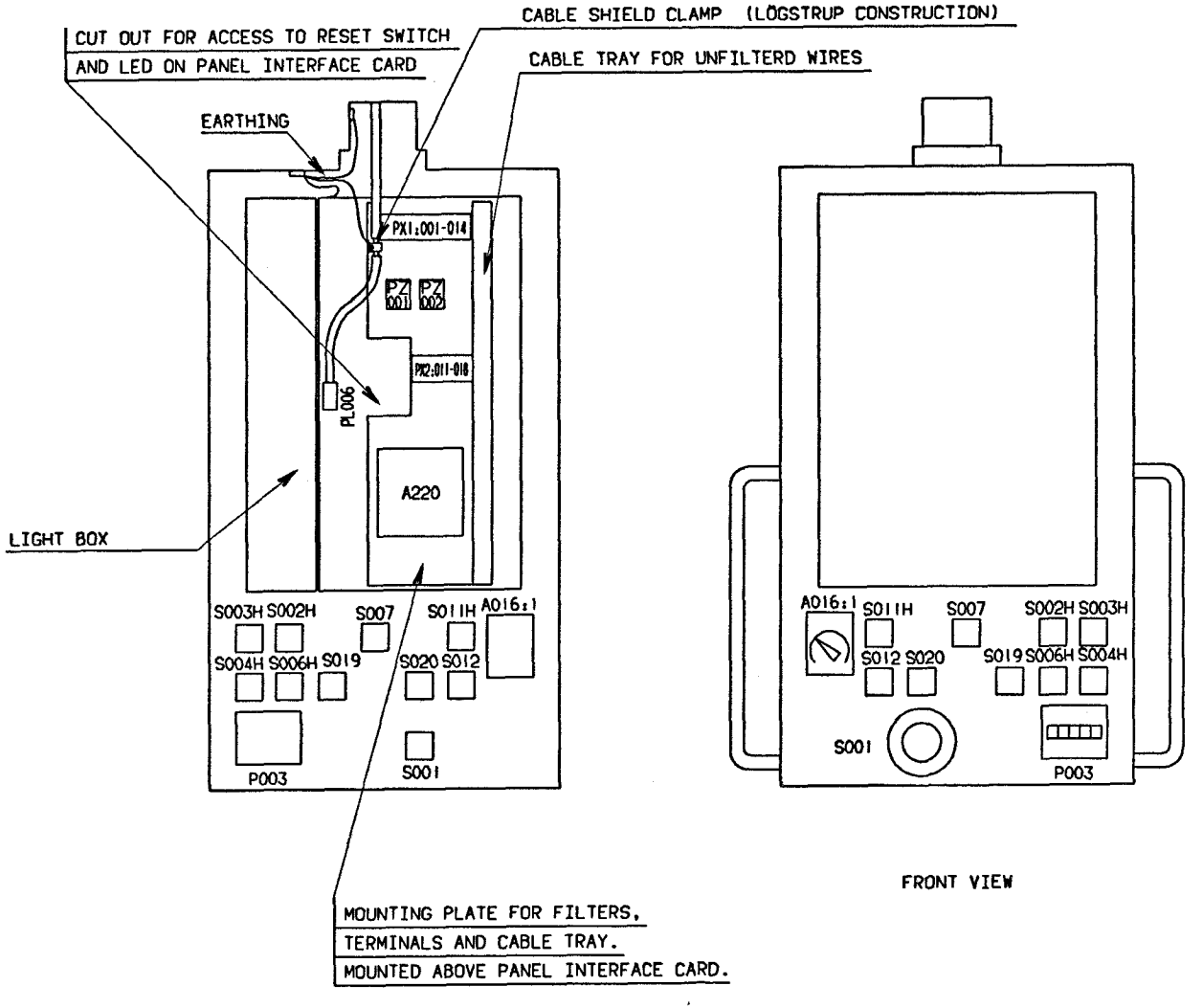

INTRODUCED WITH AM NO.	19261			DATE: 930310		SIGN. HK/UTH				DESCRIPTION: MOUNTING DRAWING	
ISSUE										MACHINE: TBA/9-1402 P.T	52482-12:01
AM NO.											
DATE											
SIGN.											

DRAWING REMARKS

ALTERATIONS ONLY IN CADAM

This drawing must not without the consent of Tetra Pak be copied, transmitted or disclosed to any third party.

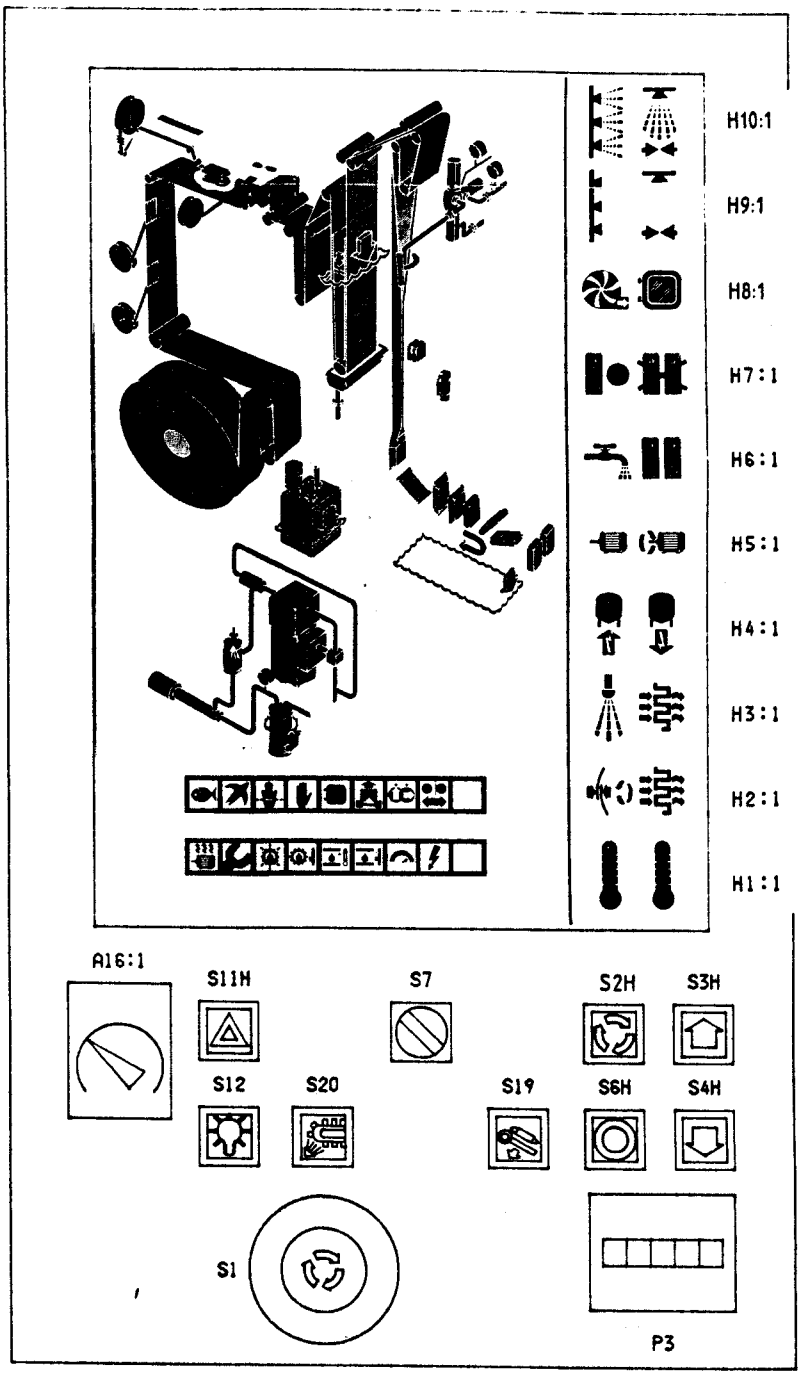

1993 -11- 25

H1:1	PREHEATING I
H1:2	PREHEATING II
H2:1	TUBE SEALING
H2:2	PRESTERILIZING
H3:1	SPRAYING
H3:2	DRYING
H4:1	SIGNAL TO STERILIZER
H4:2	SIGNAL FROM STERILIZER
H5:1	START SEQUENCE
H5:2	DRIVE MOTOR
H6:1	FILLING
H6:2	PRODUCTION
H7:1	NO PRODUCTION ALLOWED
H7:2	PRODUCTION FINISHED
H8:1	WORK ENVIRONMENT ASEPTIC CHAMBER ON
H8:2	WEAC READY FOR DOOR OPENING
H9:1	PREPARE FOR CLEANING OF MACHINE
H9:2	PREPARE FOR CLEANING OF VALVE
H10:1	CLEANING OF MACHINE
H10:2	CLEANING OF VALVE

A16:1	DESIGN CORRECTION
P3	PACKAGE COUNTER, PRODUCTION
S1	EMERGENCY STOP
S2	INCHING
S3H	STEP UP
S4H	STEP DOWN
S6H	SHORT STOP
S7	SELECTOR SWITCH
S11H	ALARM RESET
S12	LAMP TEST
S19	DROP CHUTE OFF
S20	STATION CHAIN SPRINKLER
P3	PACKAGE COUNTER, PRODUCTION

TETRA PAK

A B C D E G K L M N O P S U V X Y Z

Introduced with AM No	19261	Date: 930310	Sign. HK/UTH	Description: MOUNTING DRAWING, CONTROL PANEL	52482-13:01
Issue				Machine: TBA/9-1402 P.T.	
AM No.					
Date					
Sign					

08:41 93.11.25

This drawing must not without the consent of Tetra Pak be copied, transmitted or disclosed to any third party.

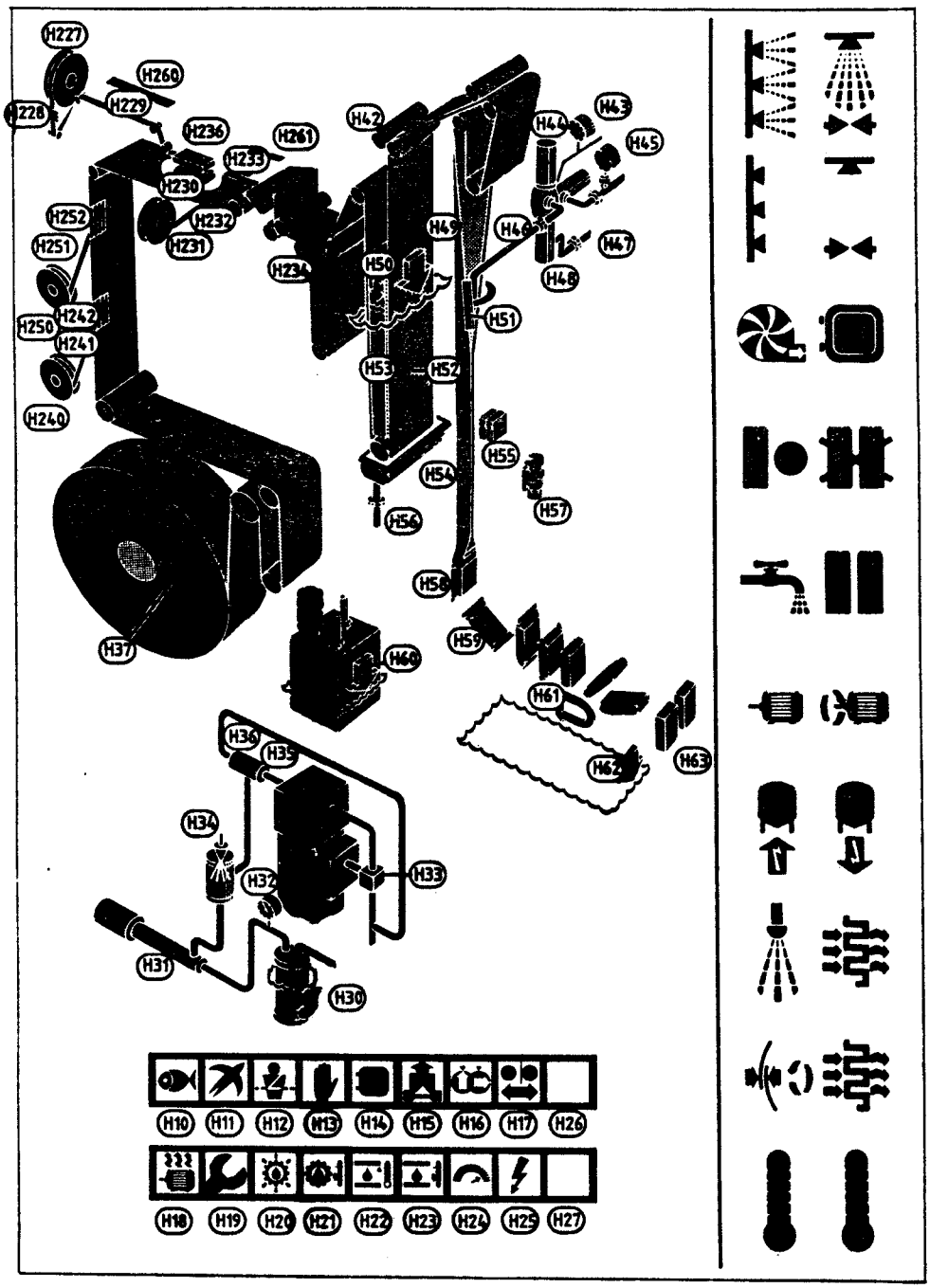

1993 -11- 25

H10 TOO LOW PRESS. COOL. WATER
H11 TOO LOW PRESS. AIR
H12 SAFETY MONITORS IN OFF POS.
H13 ACTIVATED EMERGENCY STOP
H14 MONIT. SUPERV. POS. OF TOWER DOORS
H15 OVERLOAD JAW SYSTEM
H16 UNSYNCHR. BETWEEN MM/FF
H17 COUNTER ROLLER POS., POWDER BRAKE POS., STRIP GUIDE POS.
H18 TRIPPED OVERLOAD PROT. OF MOTORS
H19 SERV. SWITCH IN ON POS.
H20 TOO LOW PRESS. LUB. OIL
H21 TOO LOW LEVEL LUB. OIL
H22 TOO HIGH TEMP. HYDRAULIC OIL
H23 TOO LOW LEVEL HYDRAULIC OIL
H24 MACHINE SPEED TOO HIGH
H25 TPMC BATTERY LOW
H26 -
H27 -
H28 -
H29 -
H30 HIGH LEVEL SEPARATORS
H31 TOO LOW TEMP. AT AIR HEATER
H32 TOO LOW PRESS. STERILE AIR
H33 INCORRECT POS., SUCTION VALVE
H34 SPRAY TIME OUT OF LIMITS
H35 TOO LOW TEMP. AT AIR KNIFE
H36 INCORRECT POS. OF INLET VALVE
H37 SUPPLY OF PAPER TOO LOW
H42 INCORR. POS. SQUEEZ ROLL. AIR KNIFE
H43 STEAM TEMP. OUT OF LIMITS
H44 CLEANING STEAM BARRIER SPACE
H45 NO PRODUCT FROM PROCESS AT MACHINE
H46 INCORRECT.,POS. PRODUCT PIPE
H47 INCORRECT POS., CLEANING PIPE
H48 INCORRECT POS., AP VALVE B
H49 TOO LOW LEVEL, PER. BATH, PEROXIDE
H50 TOO LOW LEVEL, PER. BATH, WATER
H51 LOW TEMP. ELEMENT LS
H52 TOO LOW TEMP., PEROXIDE
H53 TOO LOW TEMP., PER. BATH, WATER
H54 INCORR. POS. BOTTOM COVER, PER. BATH
H55 POS. PRINTED DESIGN OUT OF LIMITS
H56 INCORR. POS., DRAIN PIPE, PER. BATH
H57 INCORR. POS., CLEANING CUP
H58 FAULT IH UNITS, TS
H59 CONGESTION MONITOR FAULT
H60 TOO LOW LEVEL, PEROXIDE TANK
H61 ROTATION FAULT, FF
H62 TOO LOW LEVEL, CLEANING TRAY
H63 PLE - EQUIPMENT
H227 INTERNAL STRIP, SUPPLY
H228 STRIP SPLICING, TEMP.
H229 INTERNAL STRIP, BREAK
H230 IH-GENERATOR, INTERNAL STRIP
H231 EXTERNAL STRIP, SUPPLY
H232 EXTERNAL STRIP, BREAK
H233 EXTERNAL STRIP, TEMP.
H234 PAPER BREAK, P.T., STORE
H236 TEMP. COUNTER JAW, P.T.
H240 DATE UNIT II, SUPPLY
H241 DATE UNIT II, BREAK, SHORT STOP
H242 DATE UNIT II, TEMP.
H250 DATE UNIT I, SUPPLY
H251 DATE UNIT I, BREAK, SHORT STOP
H252 DATE UNIT I, TEMP.
H260 NARROW/WIDE STRIP
H261 TWISTED STRIP

Description:	MOUNTING DRAWING, CONTROL PANEL	
Machine:	TBA/9-1402 P.T.	52482-14:01

Introduced with AM No.	19261	Date:	930310	Sign.	HK/UTH
Issue					
AM No.					
Date					
Sign.					

TETRA PAK

A B C D E G I K L M N O P R S T U V X Y Z

Tetra Pak
LUND SWEDEN

This drawing must not without the consent of Tetra Pak; be copied, transmitted or disclosed to any third party.

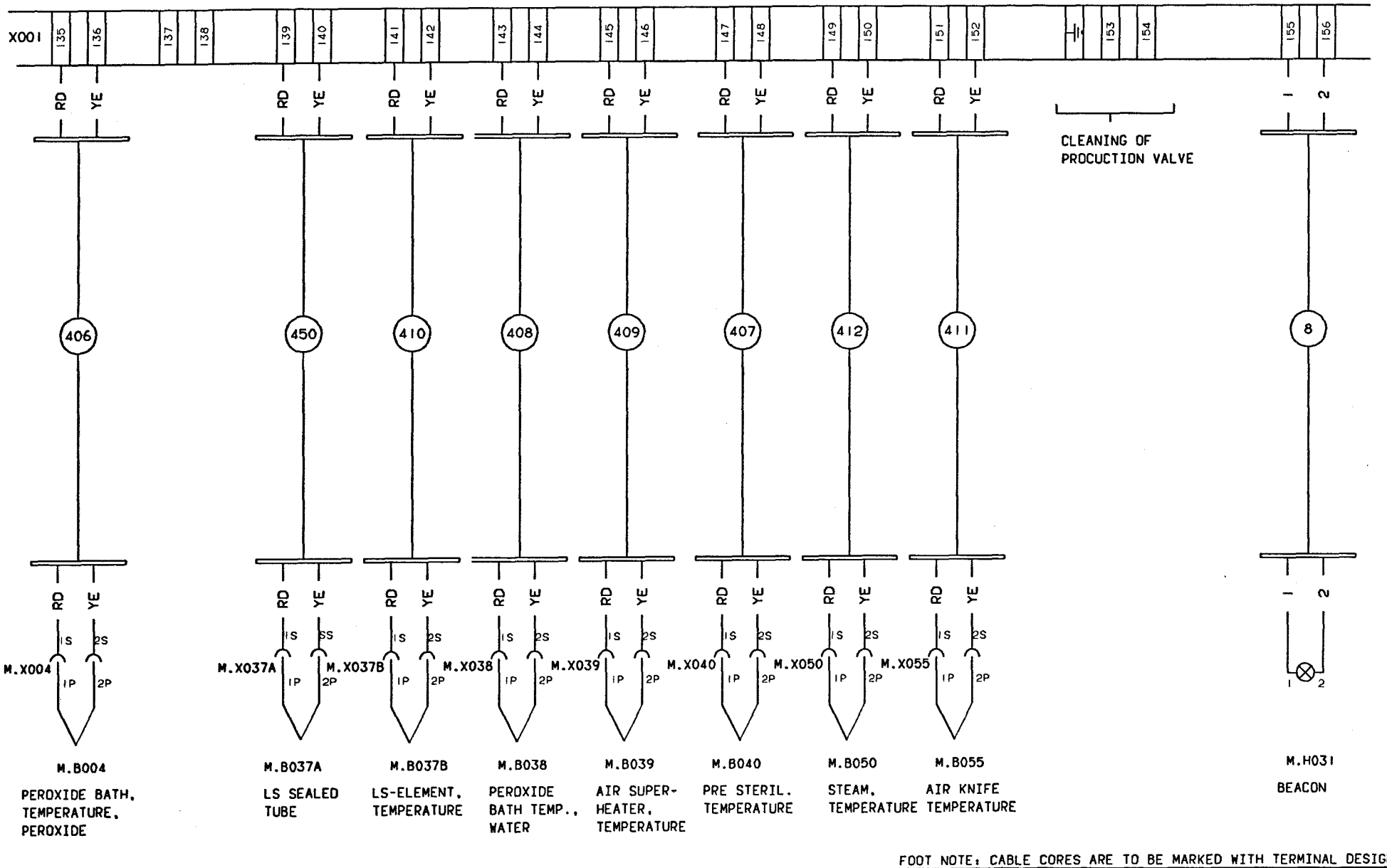

FOOT NOTE: CABLE CORES ARE TO BE MARKED WITH TERMINAL DESIGNATION

INTRODUCED WITH AM NO. 19261	DATE: 930310	SIGN. HK/UTH	DESCRIPTION: CONNECTION DIAGRAM
ISSUE			MACHINE: TBA/9-1402 P.T
AM NO.			61249-15:01
DATE			
SIGN.			DRAWING REMARKS

ALTERATIONS ONLY IN CADAM

08:13 93.11.25

Tetra Pak
LUND SWEDEN

This drawing must not without the consent of Tetra Pak be copied, transmitted or disclosed to any third party.

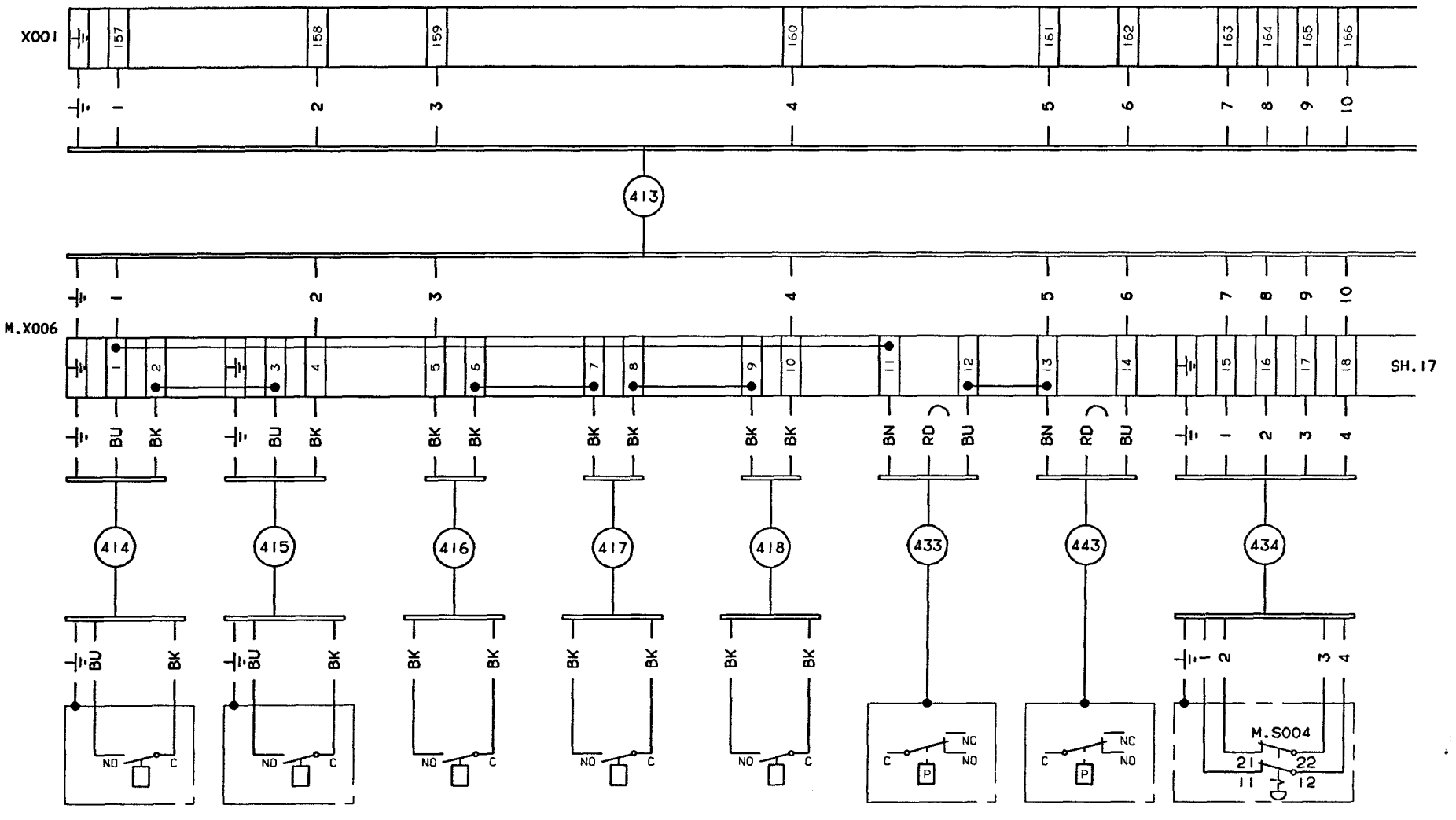

M.B048A	M.B048B	M.B021A	M.B021B	M.B021C	M.B018	M.B062	M.S004
PEROXIDE BATH BOTTOM COVER POS.		SUPERSTRUCTURE DOOR POSITION		SUPERSTRUCTURE DOOR POSITION	STERILE AIR PRESSURE	STERILE AIR PRESSURE	EMERGENCY STOP
FRONT	REAR	FRONT UPPER	FRONT LOWER	REAR	INLET	SUCTION	

FOOT NOTE: CABLE CORES ARE TO BE MARKED WITH TERMINAL DESIGNATION

INTRODUCED WITH AM NO. 19261	DATE: 930310	SIGN. HK/UTH		DESCRIPTION: CONNECTION DIAGRAM	
ISSUE A					
AM NO. 20080					
DATE 930824				MACHINE: TBA/9-1402 P.T	61249-16:01
SIGN. HK/PSG			DRAWING REMARKS		

ALTERATIONS ONLY IN CADAM

08:13 93.11.25

Tetra Pak
LUND SWEDEN

This drawing must not without the consent of Tetra Pak be copied, transmitted or disclosed to any third party.

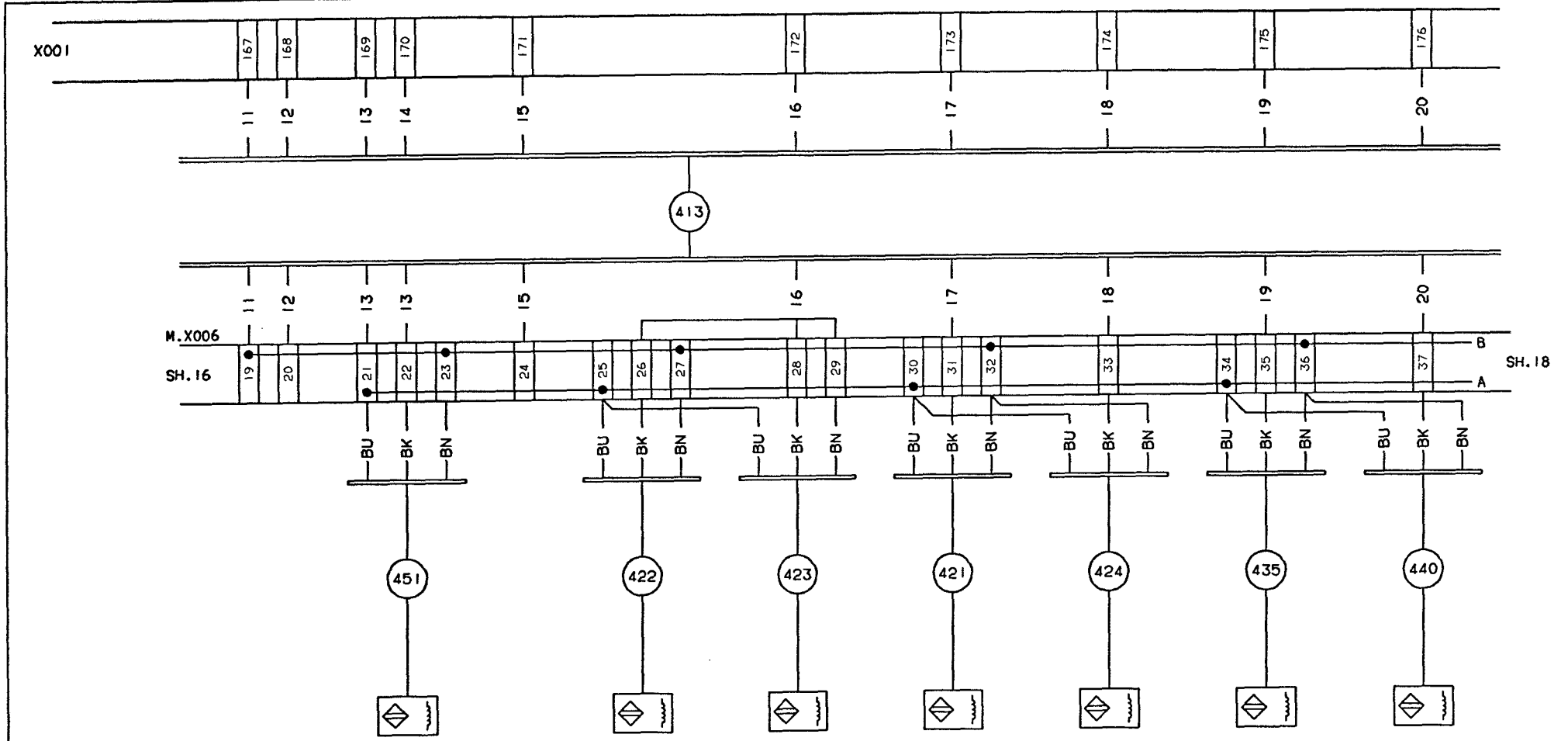

M.B092
PEROXIDE BATH DRAIN PIPE POS.

M.B046
SQUEEZER ROLLER, POSITION

M.B047
AIR KNIFE, POSITION

M.B051
PROD. PIPE POSITION

M.B053
STERILE AIR, VALVE POSITION

M.B061
CLEANING CUP, POSITION

M.B063
CLEANING PIPE POSITION

FOOT NOTE: CABLE CORES ARE TO BE MARKED WITH TERMINAL DESIGNATION

INTRODUCED WITH AM NO.	19261			DATE. 930310		SIGN. HKV/UTH			
ISSUE									
AM NO.									
DATE									
SIGN.									

DRAWING REMARKS

DESCRIPTION: CONNECTION DIAGRAM

MACHINE: TBA/9-1402 P.T

61249-17:01

ALTERATIONS ONLY IN CADAM

08:13 93.11.25

Tetra Pak
LUND SWEDEN

This drawing must not without the consent of Tetra Pak be copied, transmitted or disclosed to any third party.

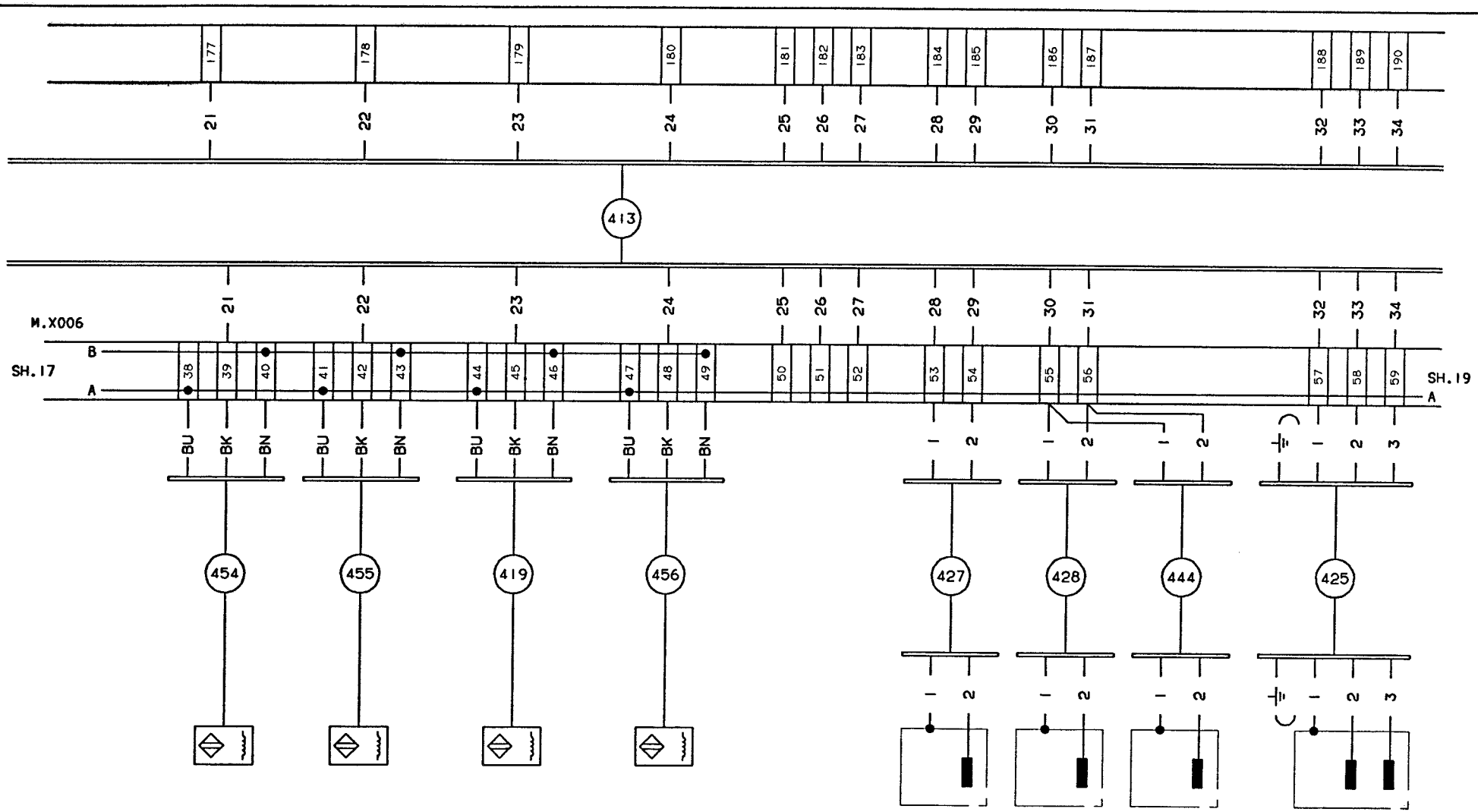

INTRODUCED WITH AM NO. 19261	DATE: 930310	SIGN. HK/UTH		DESCRIPTION: CONNECTION DIAGRAM	
ISSUE					
AM NO.					
DATE				MACHINE: TBA/9-1402 P.T	61249-18:01
SIGN.			DRAWING REMARKS		

ALTERATIONS ONLY IN CADAM

08:13 93.11.25

Tetra Pak
LUND SWEDEN

This drawing must not without the consent of Tetra Pak be copied, transmitted or disclosed to any third party.

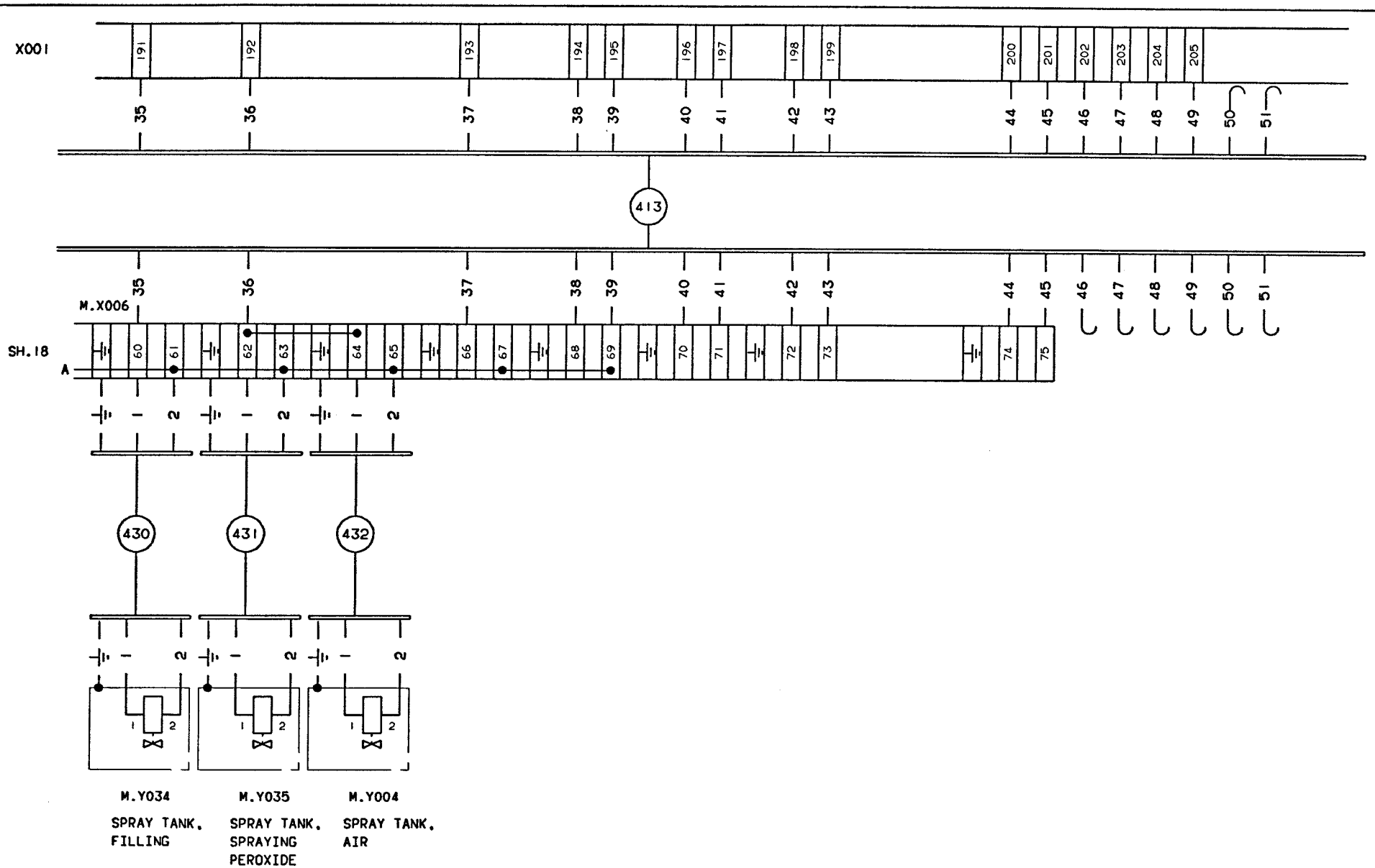

INTRODUCED WITH AM NO.	19261			DATE: 930310			SIGN. HK/UTH				
ISSUE											
AM NO.											
DATE											
SIGN.											

ALTERATIONS ONLY IN CADAM

DRAWING REMARKS

DESCRIPTION: CONNECTION DIAGRAM

MACHINE: TBA/9-1402 P.T

61249-19:01

08:13 93.11.25

Tetra Pak
LUND SWEDEN

This drawing must not without the consent of Tetra Pak be copied, transmitted or disclosed to any third party.

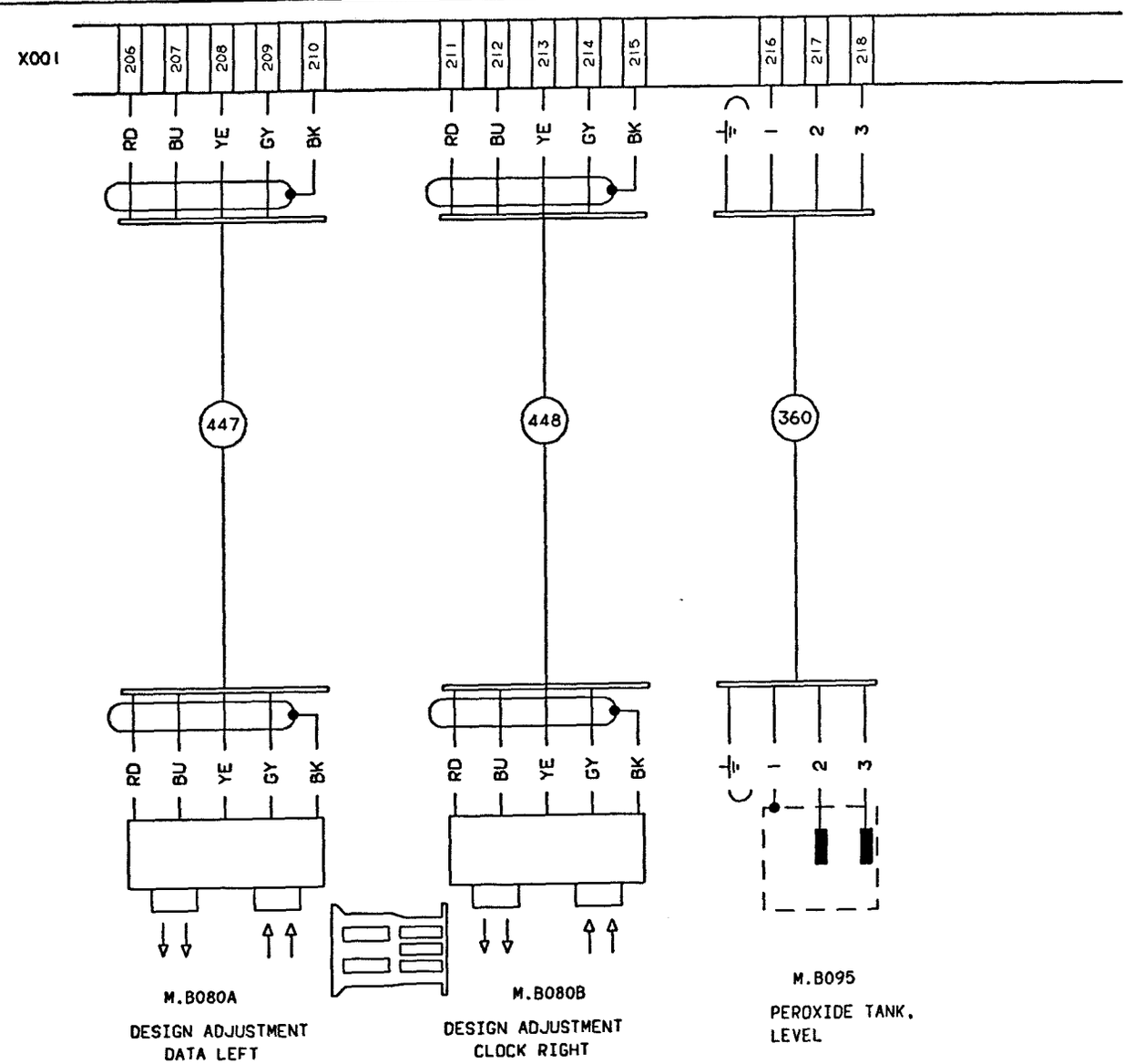

| | | |

Tetra Pak
MODENA ITALY

This drawing must not without the consent of Tetra Pak be copied, transmitted or disclosed to any third party.

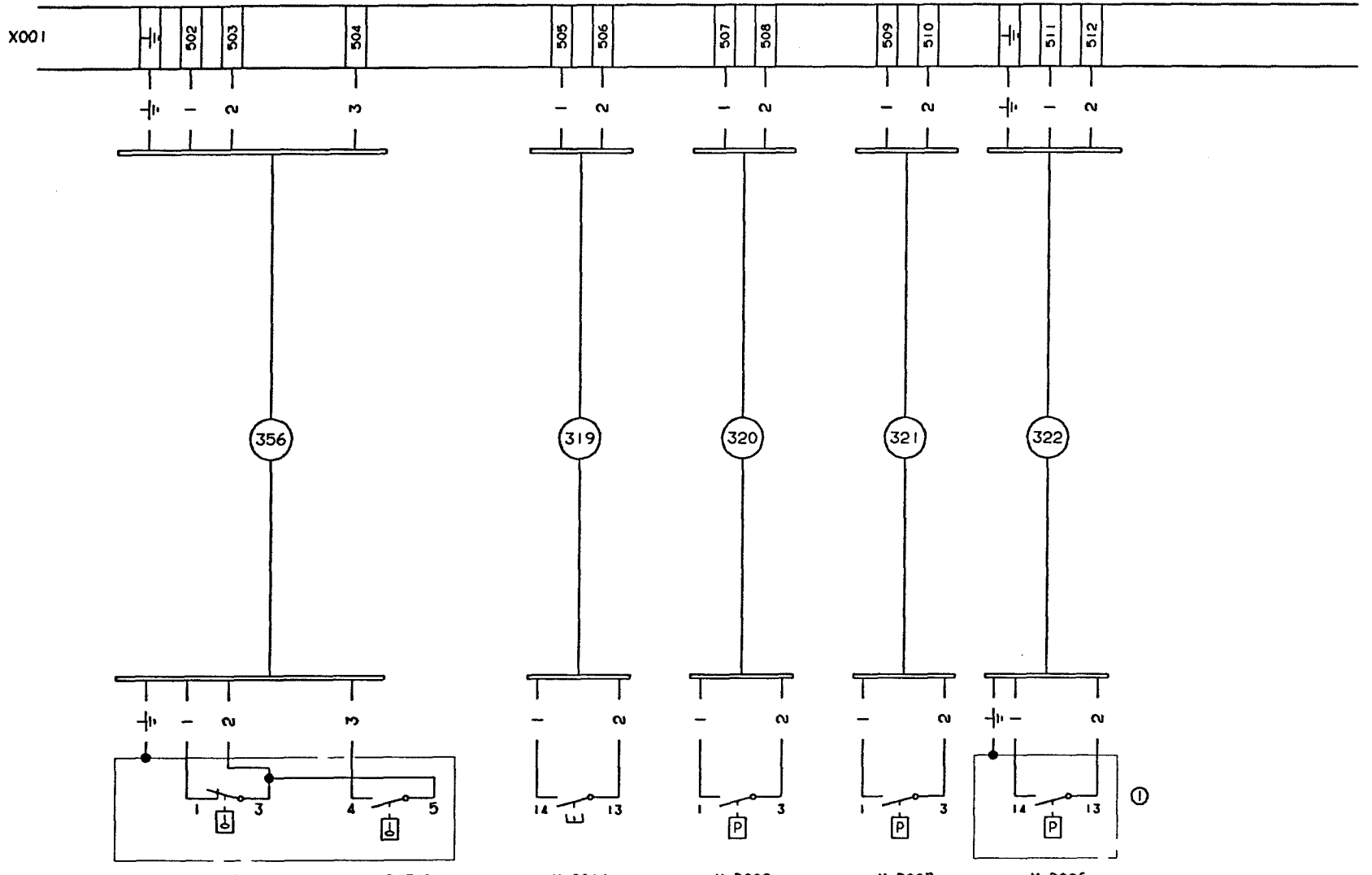

INTRODUCED WITH AM NO.	19261		DATE 930310		SIGN. HK/UTH			① BEFORE T-ORDER T-13147 AND T-20163 THE CONNECTION IS 1 AND 3 INSTEAD OF 13 AND 14	DESCRIPTION: CONNECTION DIAGRAM	
ISSUE	A	B								
AM NO.	20144	20407								
DATE	930609	931015							MACHINE: TBA/9-1402 P.T	61249-48:01
SIGN.	HK/PSG	HK/MRI						DRAWING REMARKS		

ALTERATIONS ONLY IN CADAM

08:13 93.11.25

Tetra Pak
LUND SWEDEN

This drawing must not without the consent of Tetra Pak be copied, transmitted or disclosed to any third party.

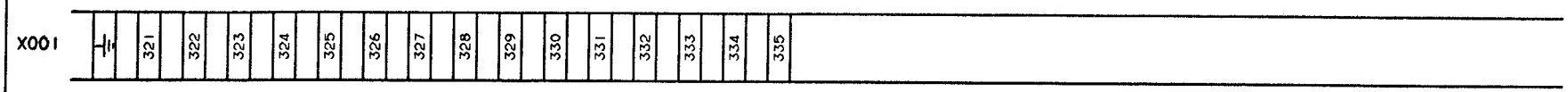

INTRODUCED WITH AM NO.	19261			DATE: 930310		SIGN. HK/UTH				
ISSUE										
AM NO.										
DATE										
SIGN.										

DRAWING REMARKS

DESCRIPTION: CONNECTION DIAGRAM

MACHINE: TBA/9-1402 P.T

61249-31:01

ALTERATIONS ONLY IN CADAM

08:13 93.11.25

Tetra Pak
LUND SWEDEN

This drawing must not without the consent of Tetra Pak be copied, transmitted or disclosed to any third party.



INTRODUCED WITH AM NO.	19261			DATE: 930310		SIGN. HK/UTH				DESCRIPTION: CONNECTION DIAGRAM	
ISSUE											
AM NO.											
DATE										MACHINE: TBA/9-1402 P.T	61249-32:01
SIGN.									DRAWING REMARKS		

ALTERATIONS ONLY IN CADAM

08:13 93.11.25

Tetra Pak
LUND SWEDEN

This drawing must not without the consent of Tetra Pak be copied, transmitted or disclosed to any third party.

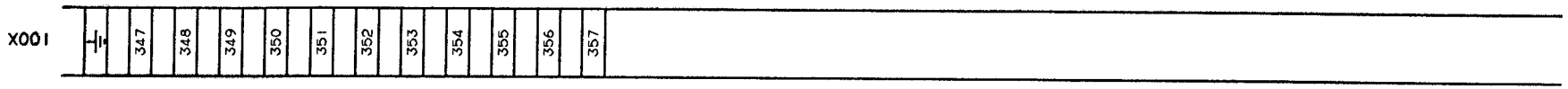

INTRODUCED WITH AM NO.	19261			DATE: 930310		SIGN. HK/UTH				DESCRIPTION: CONNECTION DIAGRAM	
ISSUE											
AM NO.											
DATE										MACHINE: TBA/9-1402 P.T	61249-33:01
SIGN.									DRAWING REMARKS		

ALTERATIONS ONLY IN CADAM

08:13 93.11.25

Tetra Pak
LUND SWEDEN

This drawing must not without the consent of Tetra Pak be copied, transmitted or disclosed to any third party.



INTRODUCED WITH AM NO.	19261			DATE: 930310		SIGN. HK/UTH				
ISSUE										
AM NO.										
DATE										
SIGN.										

DRAWING REMARKS

DESCRIPTION: CONNECTION DIAGRAM

MACHINE: TBA/9-1402 P.T

61249-34:01

ALTERATIONS ONLY IN CADAM

08:13 93.11.25

Tetra Pak
LUND SWEDEN

This drawing must not without the consent of Tetra Pak be copied, transmitted or disclosed to any third party.

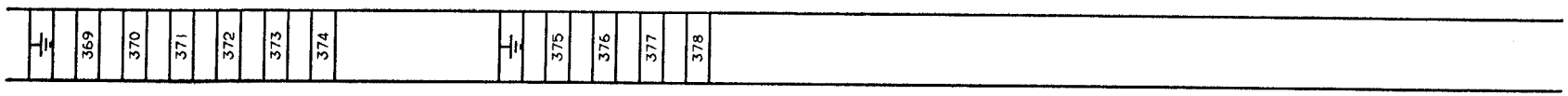

INTRODUCED WITH AM NO.	19261			DATE: 930310		SIGN. HK/UTH				DESCRIPTION: CONNECTION DIAGRAM	
ISSUE											
AM NO.											
DATE										MACHINE: TBA/9-1402 P.T	61249-35:01
SIGN.									DRAWING REMARKS		

ALTERATIONS ONLY IN CADAM

08:13 93.11.25

Tetra Pak
LUND SWEDEN

This drawing must not without the consent of Tetra Pak be copied, transmitted or disclosed to any third party.

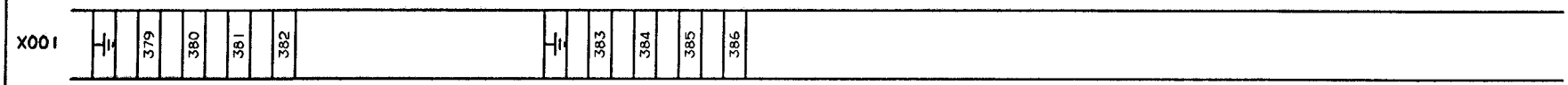

INTRODUCED WITH AM NO.	19261			DATE: 930310		SIGN. HK/UTH				
ISSUE										
AM NO.										
DATE										
SIGN.									DRAWING REMARKS	

DESCRIPTION: CONNECTION DIAGRAM

MACHINE: TBA/9-1402 P.T

61249-36:01

ALTERATIONS ONLY IN CADAM

08:13 93.11.25

Tetra Pak
LUND SWEDEN

This drawing must not without the consent of Tetra Pak be copied, transmitted or disclosed to any third party.

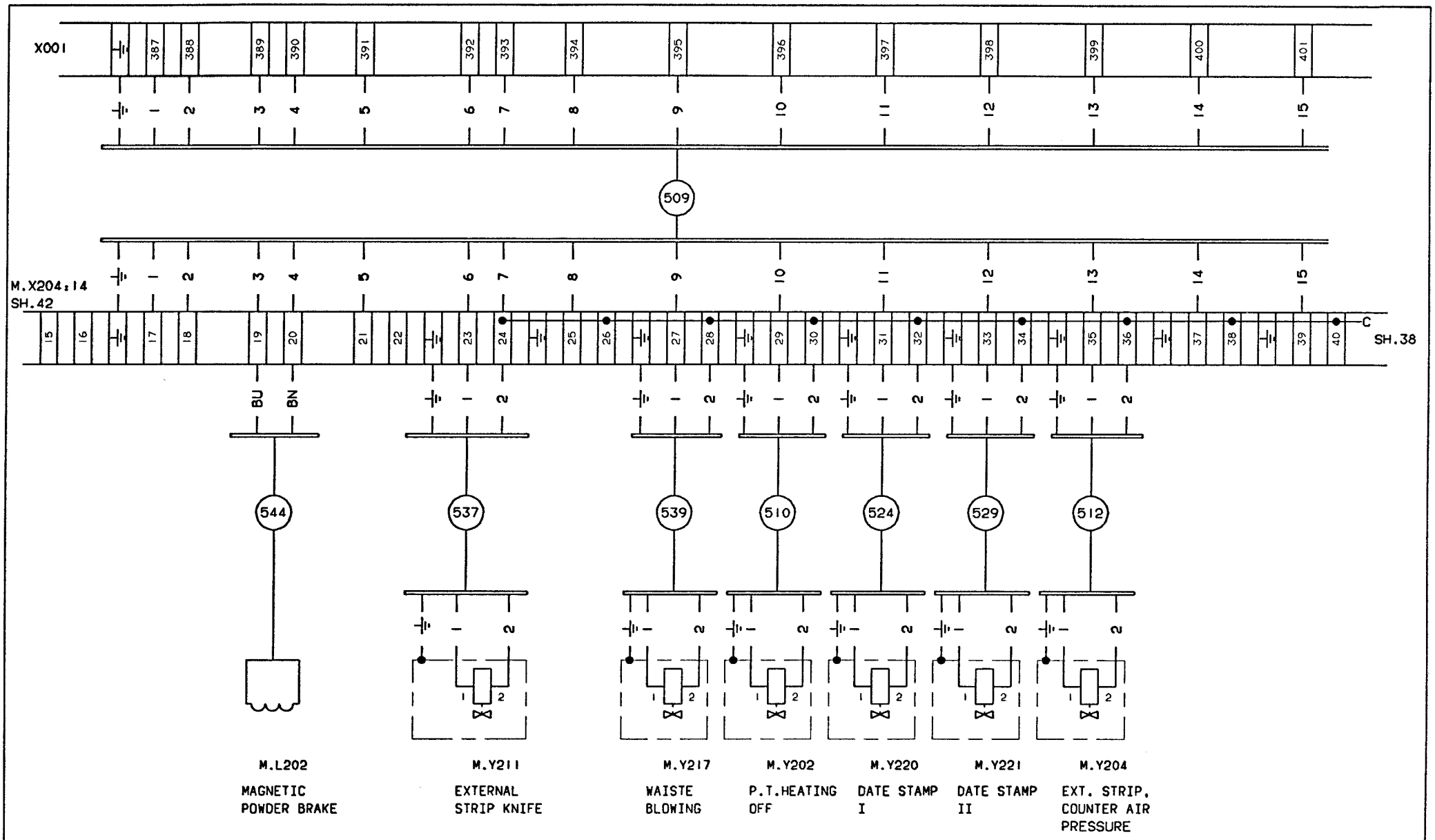

INTRODUCED WITH AM NO. 19261	DATE: 930310	SIGN. HK/UTH	
ISSUE			
AM NO.			
DATE			
SIGN.			DRAWING REMARKS

ALTERATIONS ONLY IN CADAM

DESCRIPTION: CONNECTION DIAGRAM

MACHINE: TBA/9-1402 P.T

61249-37:01

08:13 93.11.25

Tetra Pak
LUND SWEDEN

This drawing must not without the consent of Tetra Pak be copied, transmitted or disclosed to any third party.

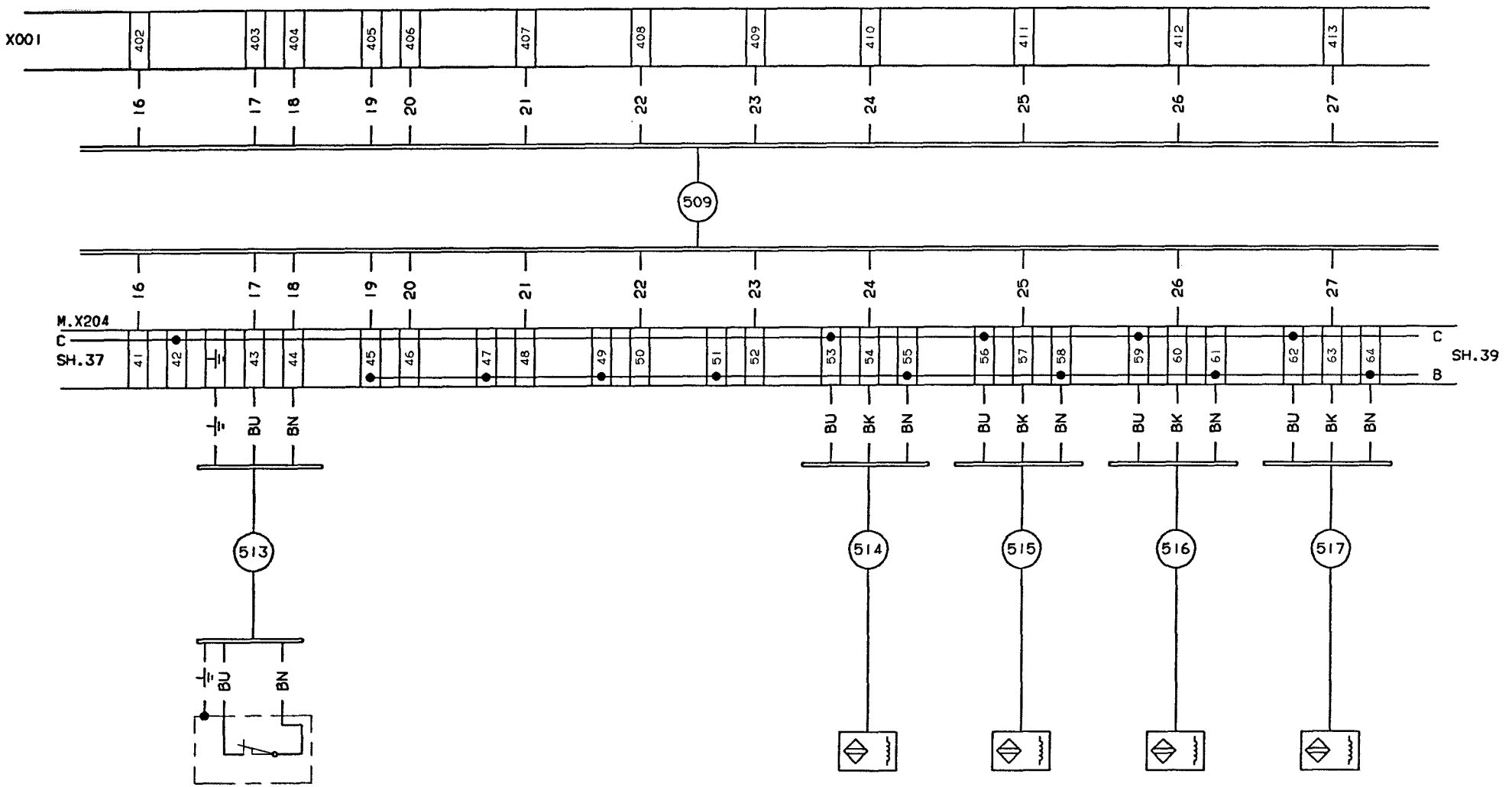

| | | |

Tetra Pak

This drawing must not without the consent of Tetra Pak be copied, transmitted or disclosed to any third party.

08:41 93.11.25

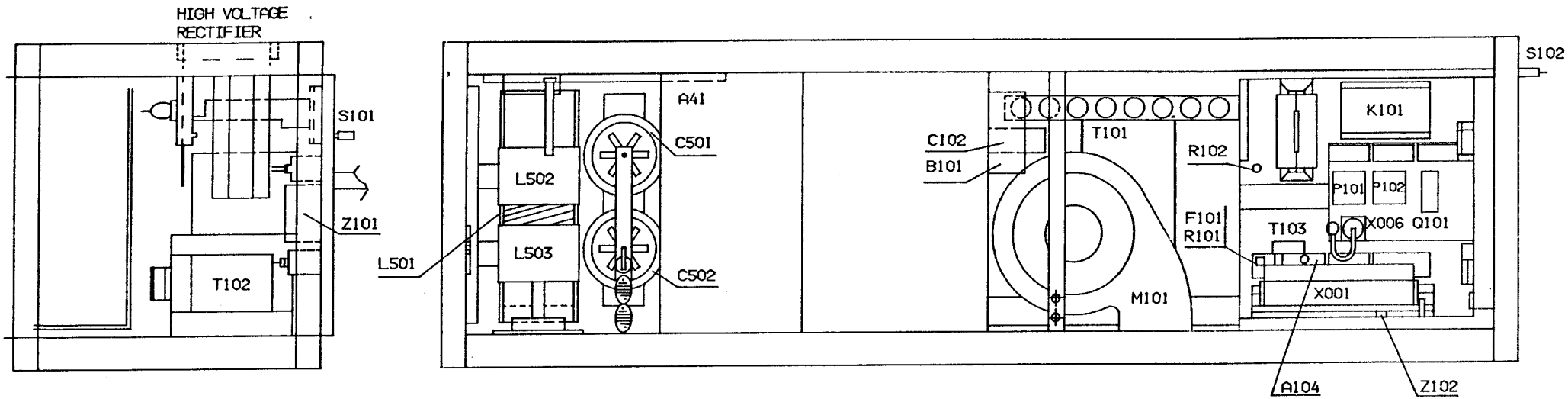

FRONT SIDE

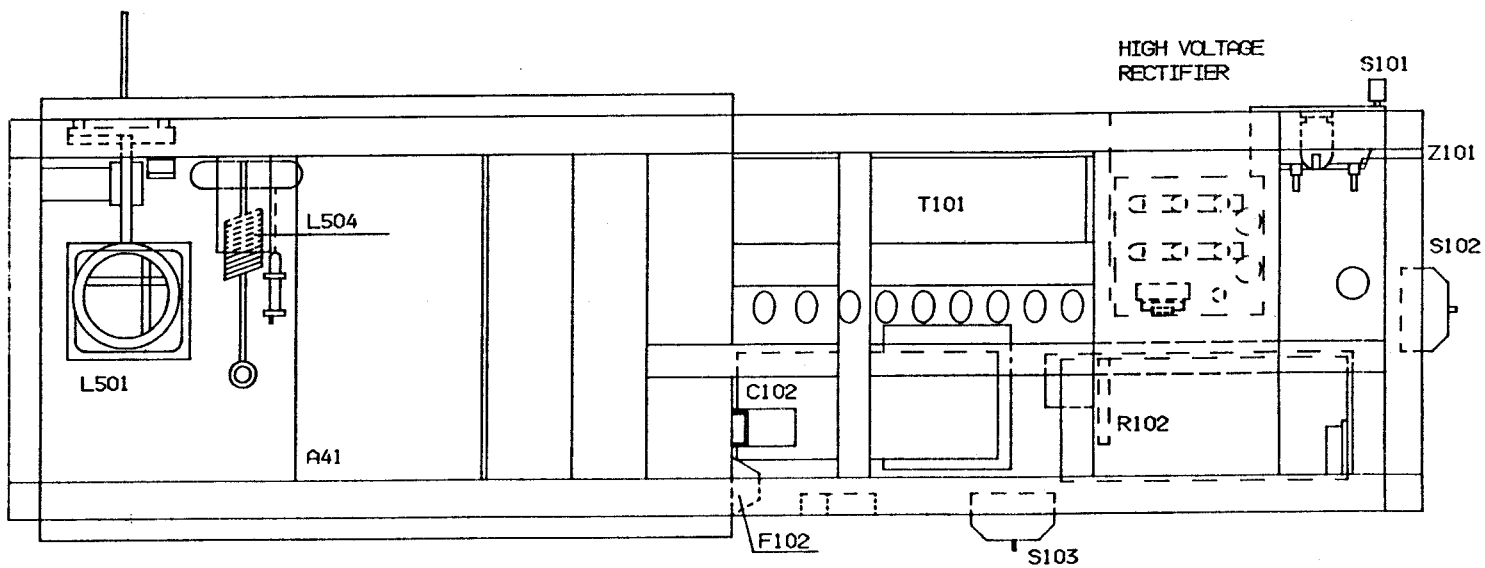

UPPER SIDE

1993 -11- 24

| | | |

Tetra Pak

This drawing must not without the consent of Tetra P
be copied, transmitted or disclosed to any third party

08:41 93.11.25

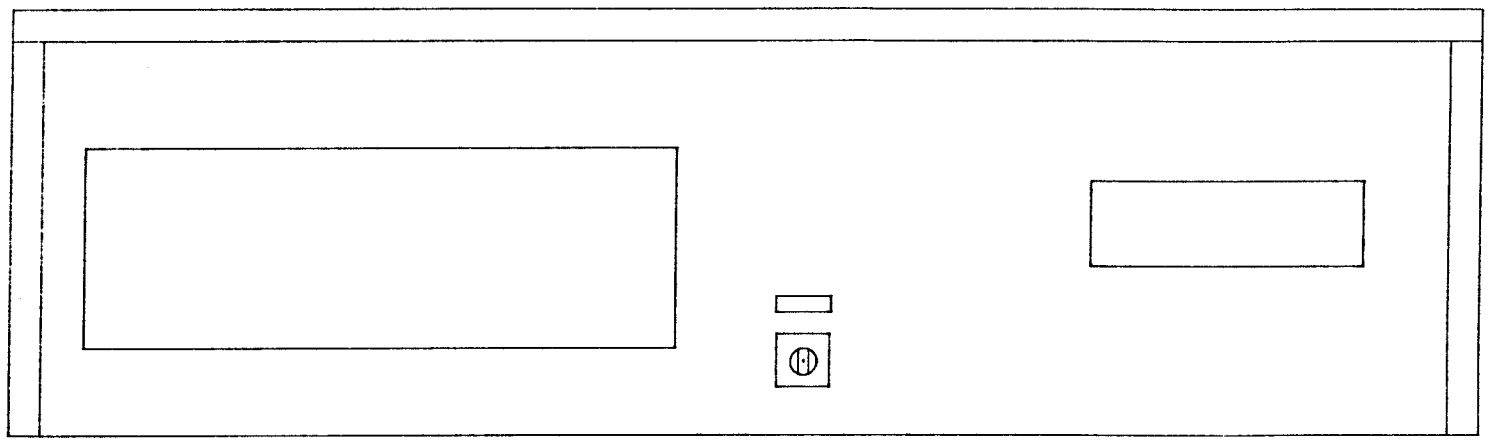

1993 -11- 24

Introduced with AM No.	14293			Date:	93-01-15	Sign:	CLV/BEL			
Issue										
AM No										
Date										
Sign										

Drawing Remarks

Description: MOUNTING DRAWING IH-GENERATOR

Machine: TBA/9 - P.T.

52184-06:01

TERRAB YSTAD ARKITEKTER

Tetra Pak

This drawing must not without the consent of Tetra Pak: be copied, transmitted or disclosed to any third party.

08:41 93.11.25

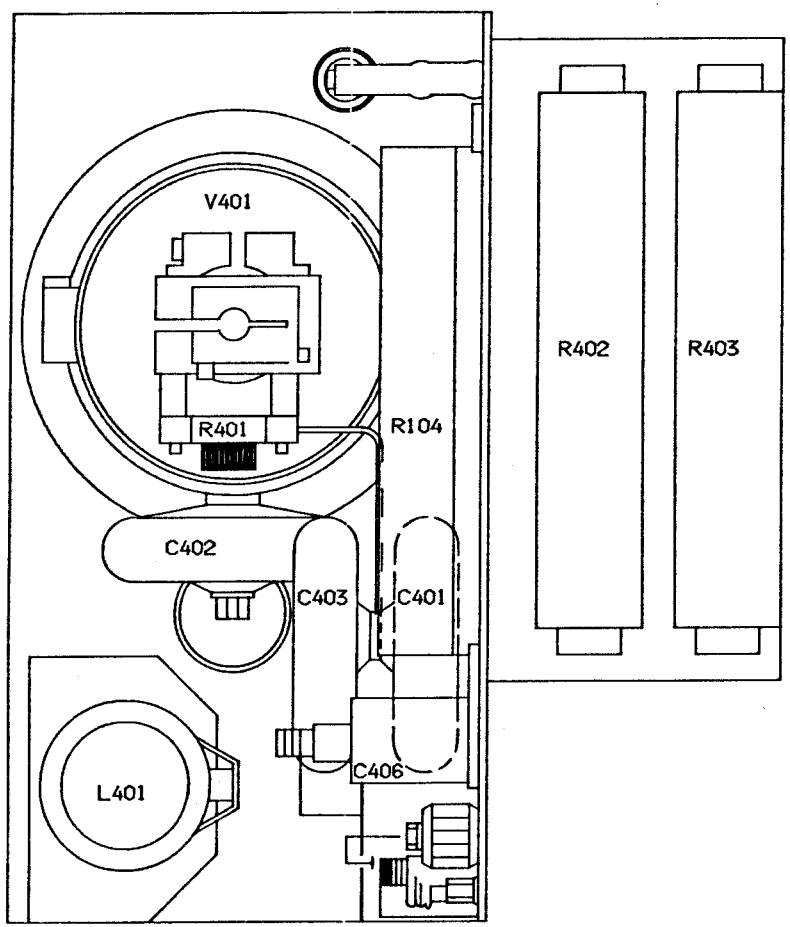

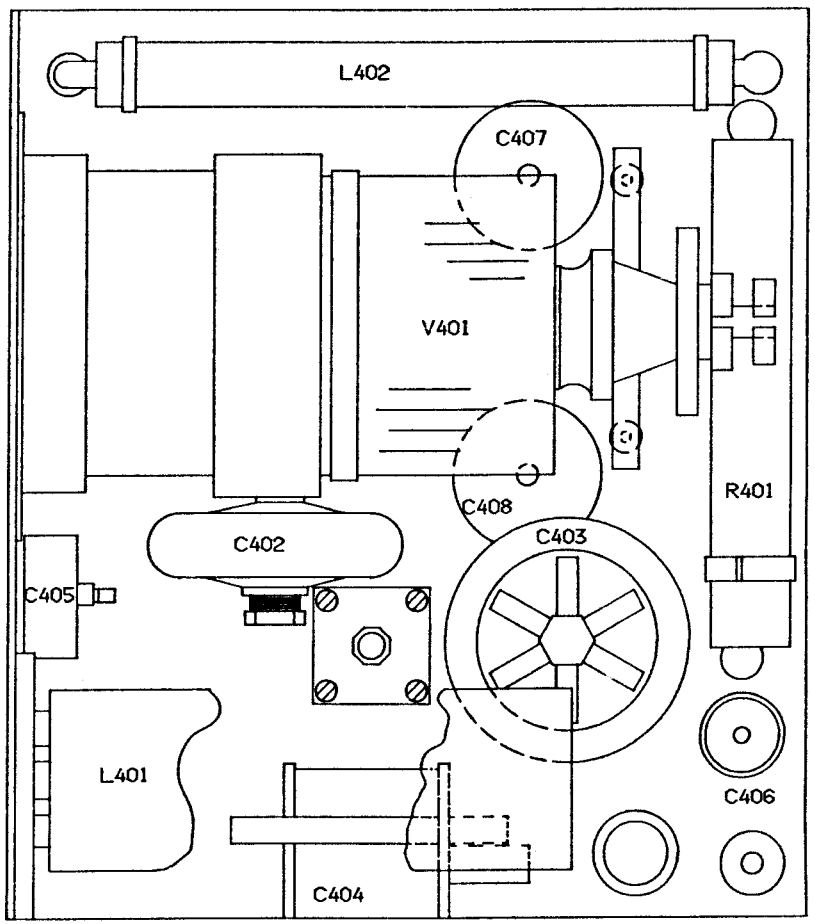

1993 -11- 24

Introduced with AM No. 14293	Date: 90-01-15	Sign. CLV/BEL		Description:	MOUNTING DRAWING IH-GENERATOR
Issue					
AM No.				Machine: TBA/9 - P.T.	52200-05:01
Date					
Sign			Drawing Remarks		

TERRAS YSTAD ARKITEKTKONTOR

Tetra Pak
LUND SWEDEN

This drawing must not without the consent of Tetra Pak be copied, transmitted or disclosed to any third party.

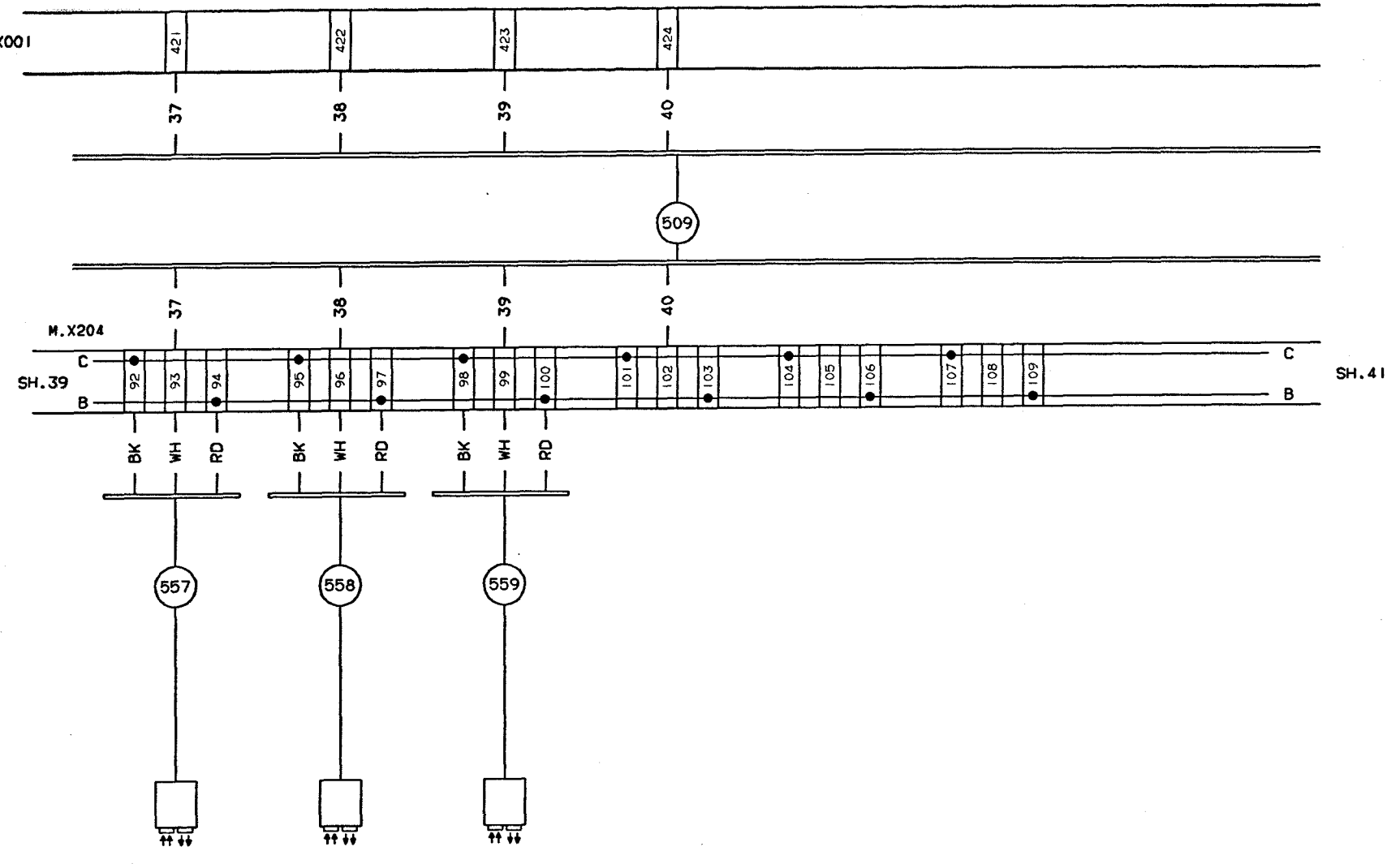

INTRODUCED WITH AM NO. 19261	DATE: 930310	SIGN. HK/UTH	
ISSUE			
AM NO.			
DATE			
SIGN.			

DRAWING REMARKS

ALTERATIONS ONLY IN CADAM

DESCRIPTION: CONNECTION DIAGRAM

MACHINE: TBA/9-1402 P.T

61249-40:01

08:13 93.11.25

Tetra Pak
LUND SWEDEN

This drawing must not without the consent of Tetra Pak be copied, transmitted or disclosed to any third party.

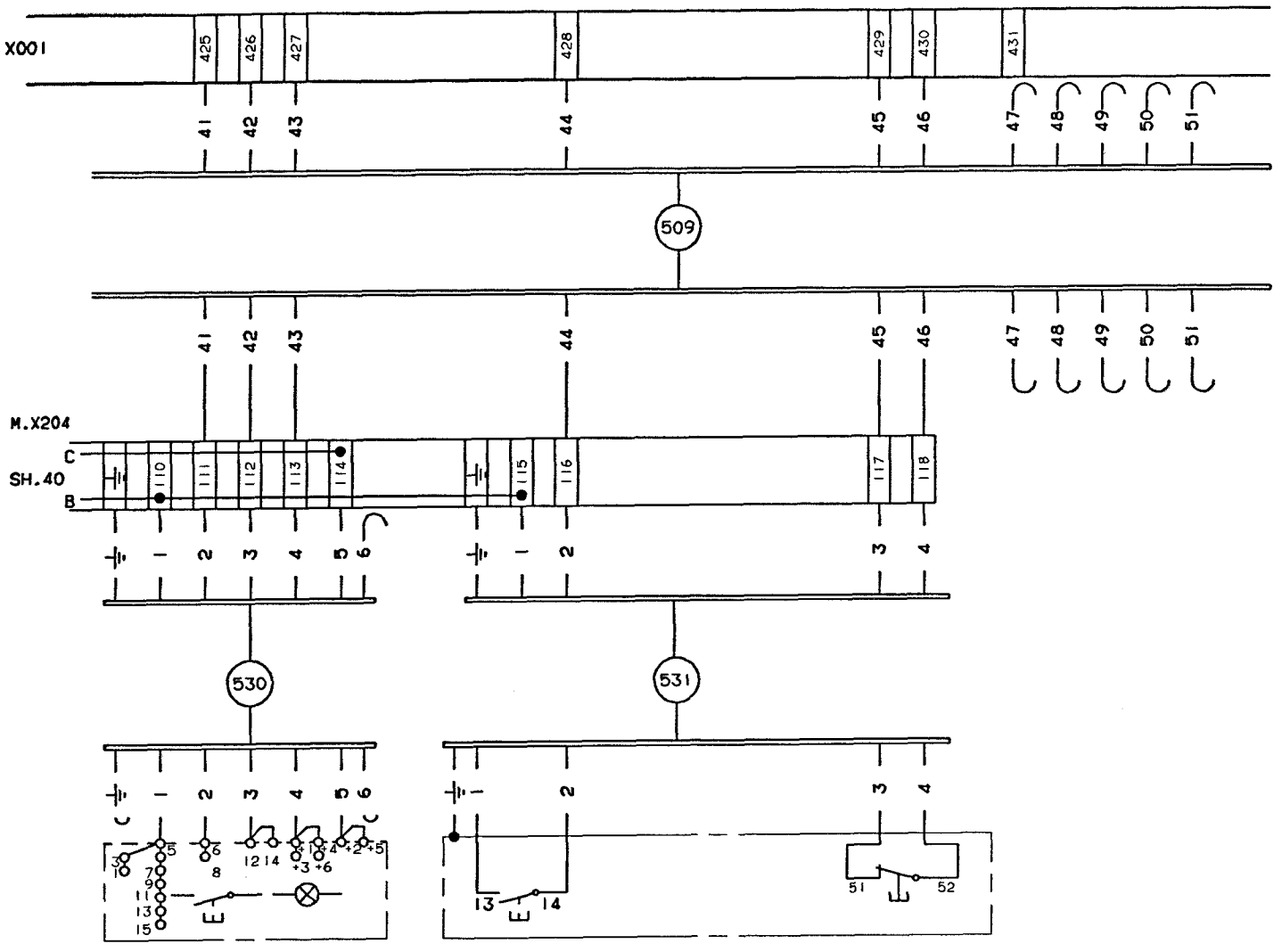

INTRODUCED WITH AM NO.	19261	DATE: 930310	SIGN. HK/UTH	DESCRIPTION:	CONNECTION DIAGRAM
ISSUE				MACHINE:	TBA/9-1402 P.T
AM NO.					61249-41:01
DATE					
SIGN.			DRAWING REMARKS		

ALTERATIONS ONLY IN CADAM

08:13 93.11.25

Tetra Pak
LUND SWEDEN

This drawing must not without the consent of Tetra Pak be copied, transmitted or disclosed to any third party.

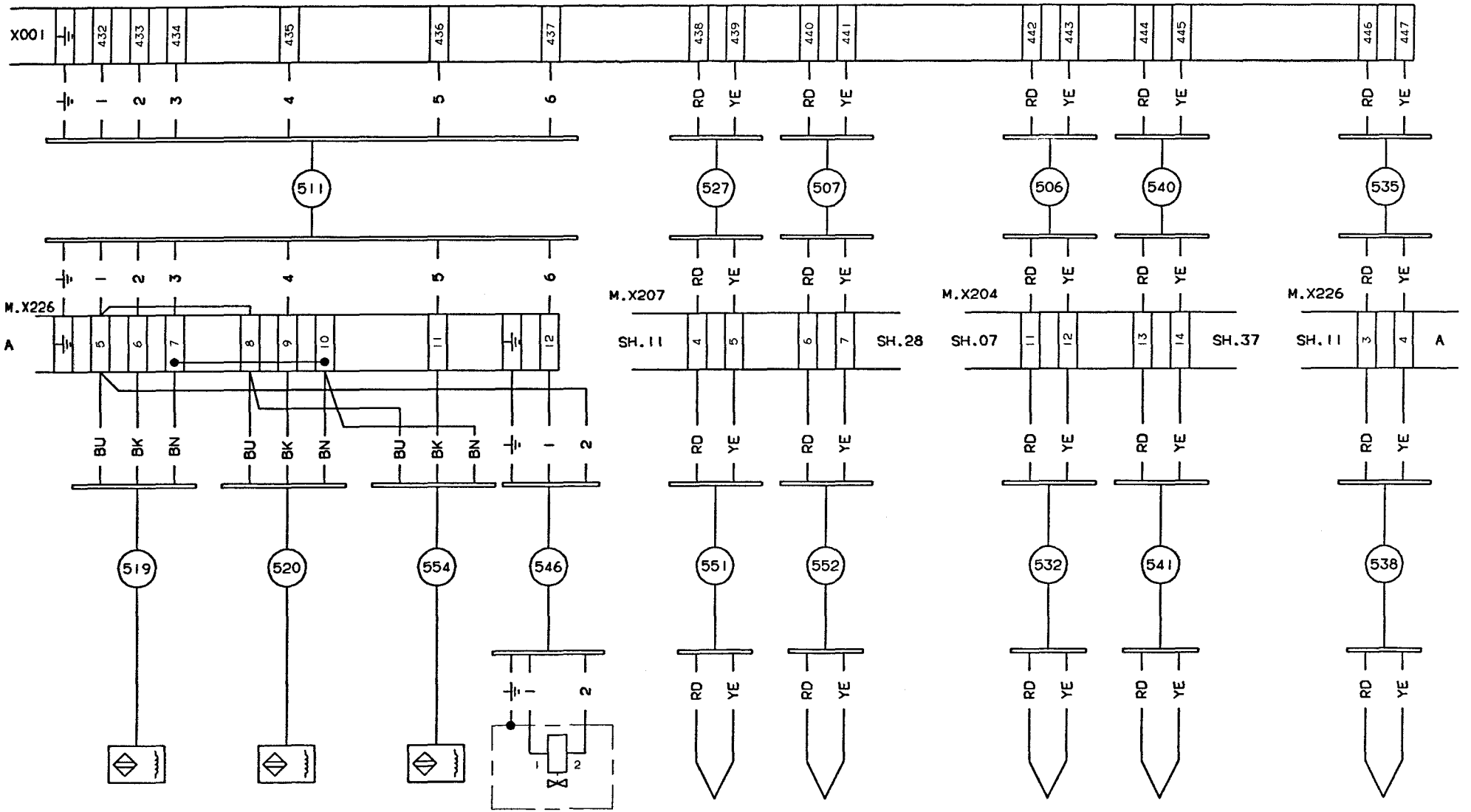

M.B206	INTERNAL STRIP, SUPPLY	
M.B207	INTERNAL STRIP, BREAK	
M.B232	BOBIN INDICATOR	
M.Y206	STRIP SPLICING	
M.B225	DATE UNIT II TEMPERATURE	
M.B223	DATE UNIT I TEMPERATURE	
M.B222	EXTERNAL STRIP TEMPERATURE	
M.B227	PREHEATING COUNTER JAW TEMP.	
M.B226	STRIP SPLICING TEMPERATURE	

| | | |

Tetra Pak
MODENA ITALY

This drawing must not without the consent of Tetra Pak: be copied, transmitted or disclosed to any third party.

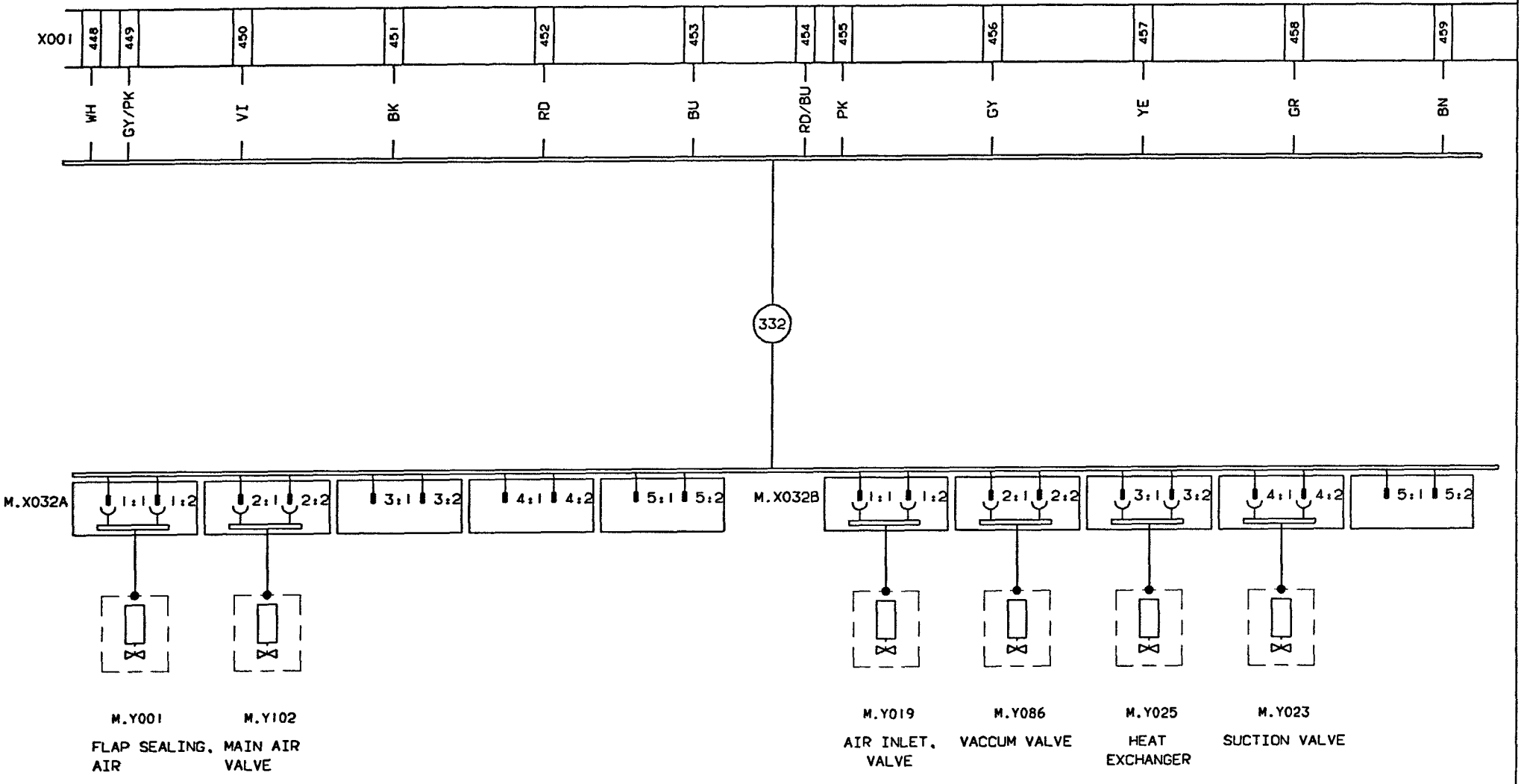

FOOT NOTE: CABLE CORES ARE TO BE MARKED WITH TERMINAL DESIGNATION

INTRODUCED WITH AM NO. 19261	DATE: 930310	SIGN. HK/UTH		DESCRIPTION: CONNECTION DIAGRAM	
ISSUE A					
AM NO. 20144					
DATE 930909				MACHINE: TBA/9-1402 P.T	61249-43:01
SIGN. HK/MRI			DRAWING REMARKS		

ALTERATIONS ONLY IN CADAM

08:13 93.11.25

Tetra Pak
LUND SWEDEN

This drawing must not without the consent of Tetra Pak be copied, transmitted or disclosed to any third party.

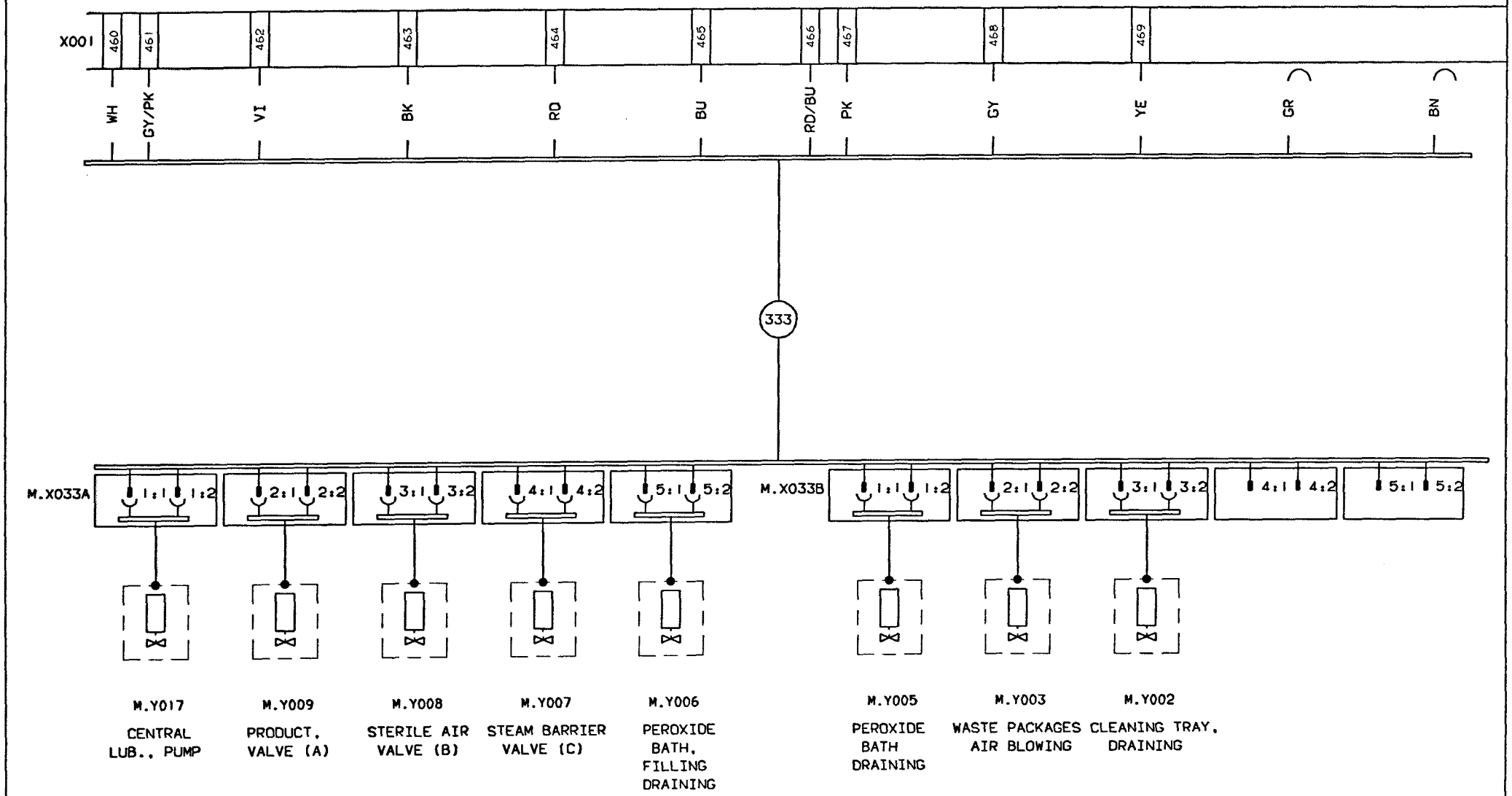

FOOT NOTE: CABLE CORES ARE TO BE MARKED WITH TERMINAL DESIGNATION

INTRODUCED WITH AM NO. 19261	DATE: 930310	SIGN. HK/UTH		DESCRIPTION: CONNECTION DIAGRAM	
ISSUE					
AM NO.					
DATE				MACHINE: TBA/9-1402 P.T	61249-44:01
SIGN.			DRAWING REMARKS		

ALTERATIONS ONLY IN CADAM

08:13 93.11.25

Tetra Pak
MODENA ITALY

This drawing must not without the consent of Tetra Pak be copied, transmitted or disclosed to any third party.

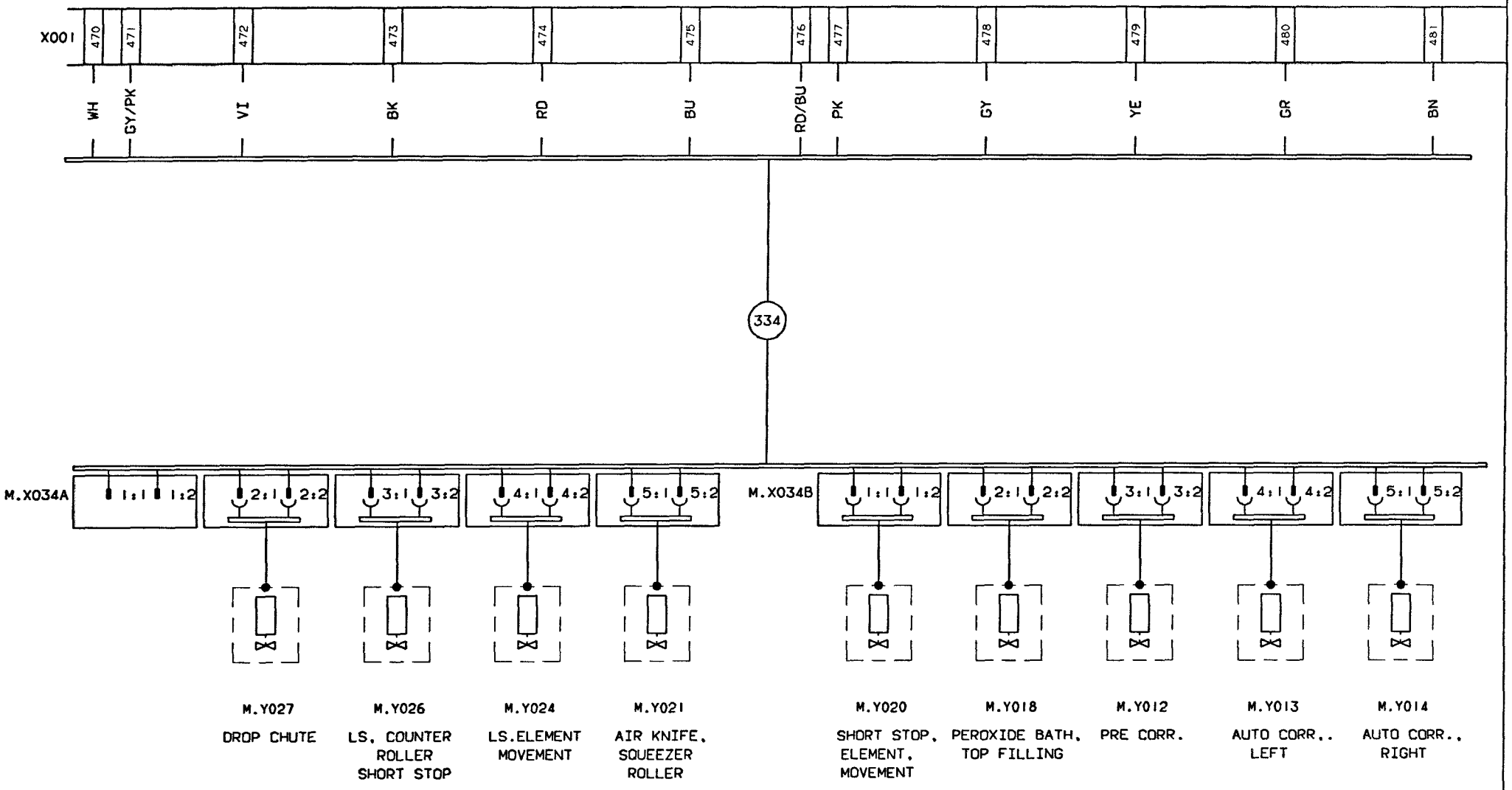

FOOT NOTE: CABLE CORES ARE TO BE MARKED WITH TERMINAL DESIGNATION

INTRODUCED WITH AM NO. 19261	DATE: 930310	SIGN. HK/UTH		DESCRIPTION: CONNECTION DIAGRAM	
ISSUE A					
AM NO. 20144					
DATE 930909				MACHINE: TBA/9-1402 P.T	61249-45:01
SIGN. HK/MRI			DRAWING REMARKS		

ALTERATIONS ONLY IN CADAM

08:13 93.11.25

Tetra Pak
LUND SWEDEN

This drawing must not without the consent of Tetra Pak be copied, transmitted or disclosed to any third party.

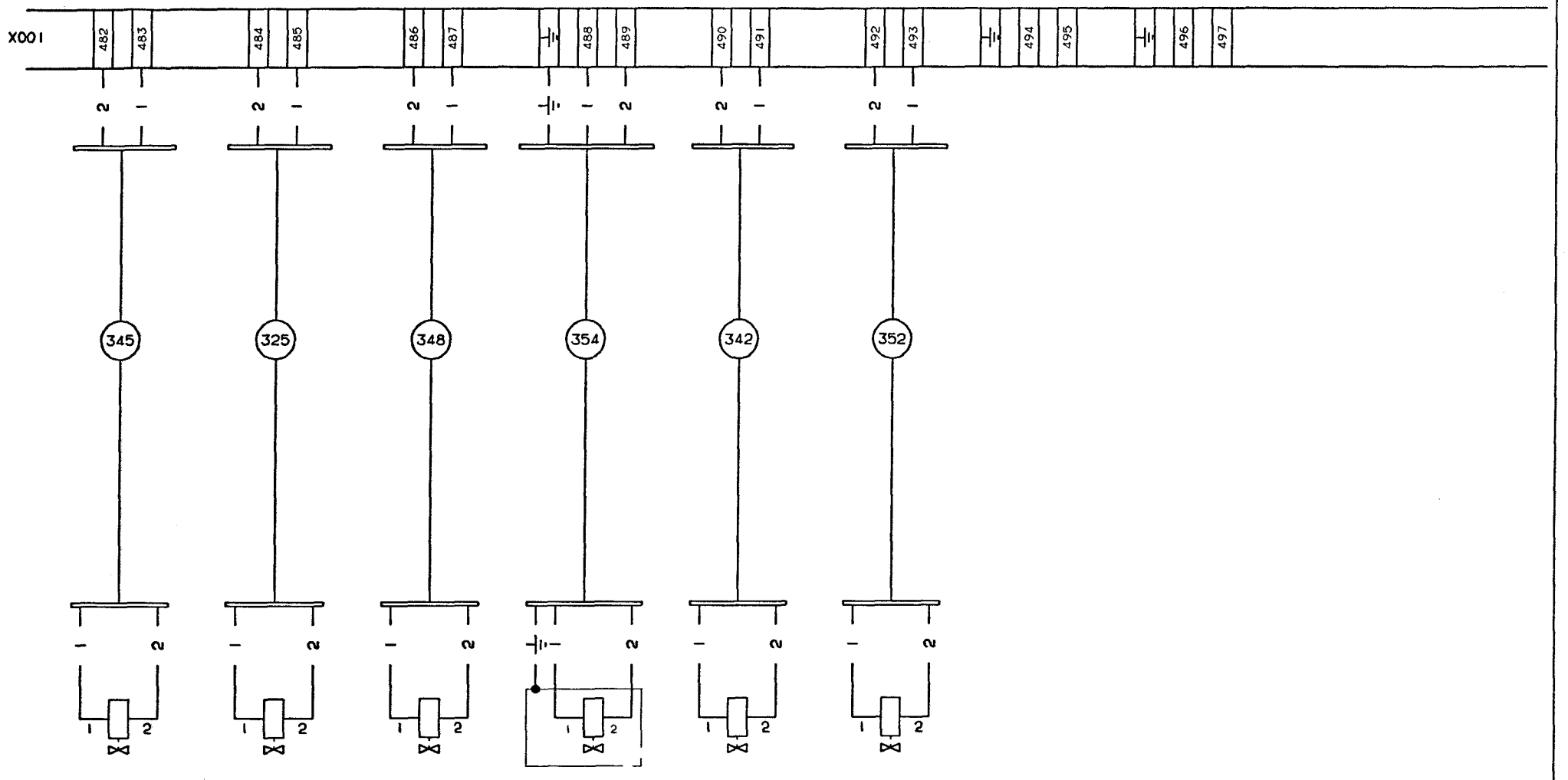

FOOT NOTE: CABLE CORES ARE TO BE MARKED WITH TERMINAL DESIGNATION

INTRODUCED WITH AM NO. 19261	DATE: 930310	SIGN. HK/UTH		DESCRIPTION: CONNECTION DIAGRAM	
ISSUE					
AM NO.					
DATE				MACHINE: TBA/9-1402 P.T	61249-46:01
SIGN.			DRAWING REMARKS		

ALTERATIONS ONLY IN CADAM

08:13 93.11.25

Tetra Pak
LUND SWEDEN

This drawing must not without the consent of Tetra Pak be copied, transmitted or disclosed to any third party.

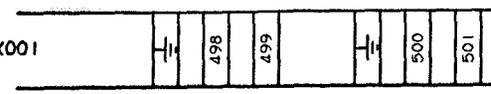

FOOT NOTE: CABLE CORES ARE TO BE MARKED WITH TERMINAL DESIGNATION

INTRODUCED WITH AM NO.	19261			DATE: 930310		SIGN. HK/UTH				DESCRIPTION: CONNECTION DIAGRAM	
ISSUE											
AM NO.										MACHINE: TBA/9-1402 P.T	61249-47:01
DATE											
SIGN.									DRAWING REMARKS		

ALTERATIONS ONLY IN CADAM

08:13 93 11 25

Tetra Pak
LUND SWEDEN

This drawing must not without the consent of Tetra Pak: be copied, transmitted or disclosed to any third party.

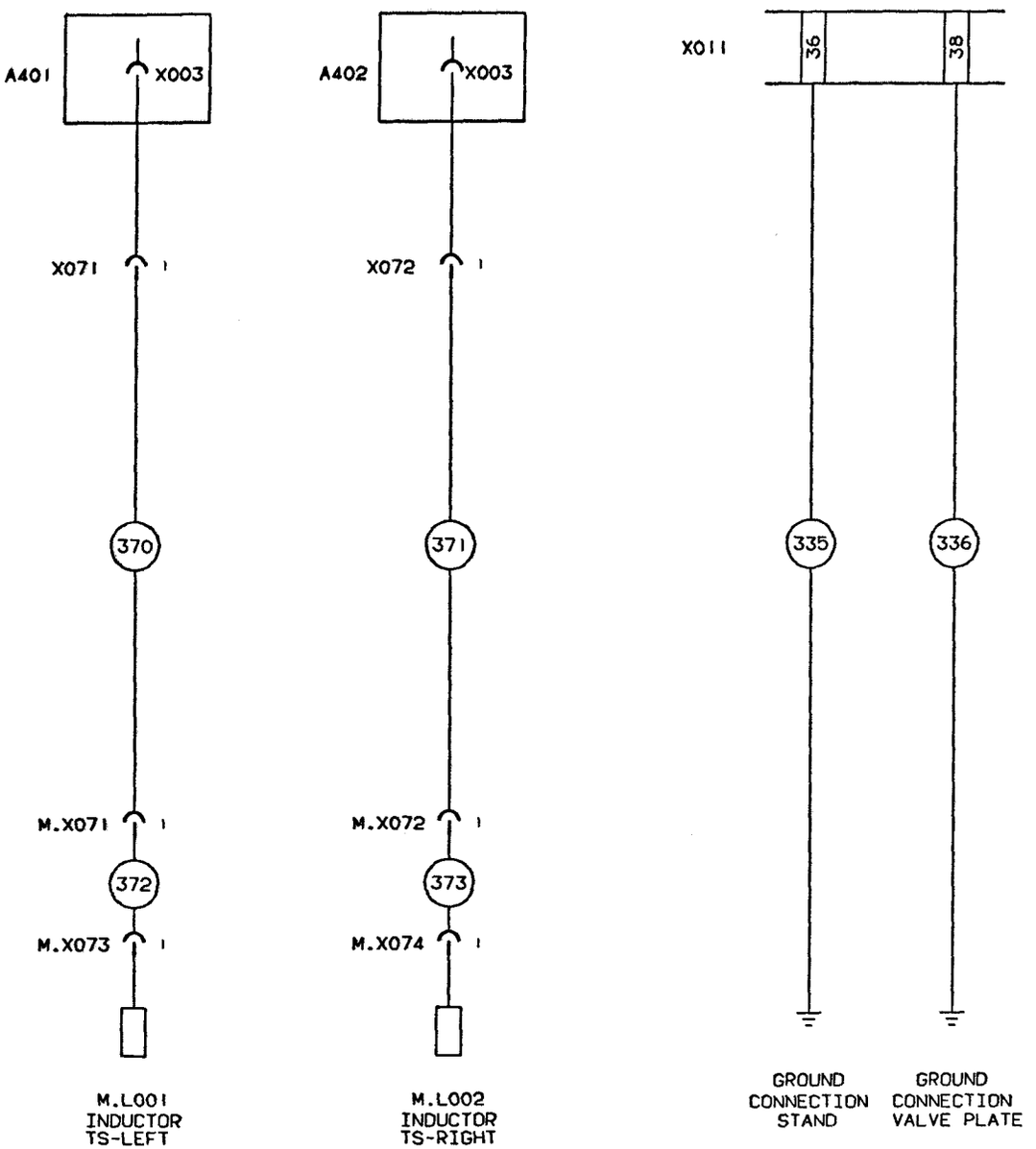

| | | |

Tetra Pak

This drawing must not without the consent of Tetra Pal
be copied, transmitted or disclosed to any third party.

08:41 93.11.25

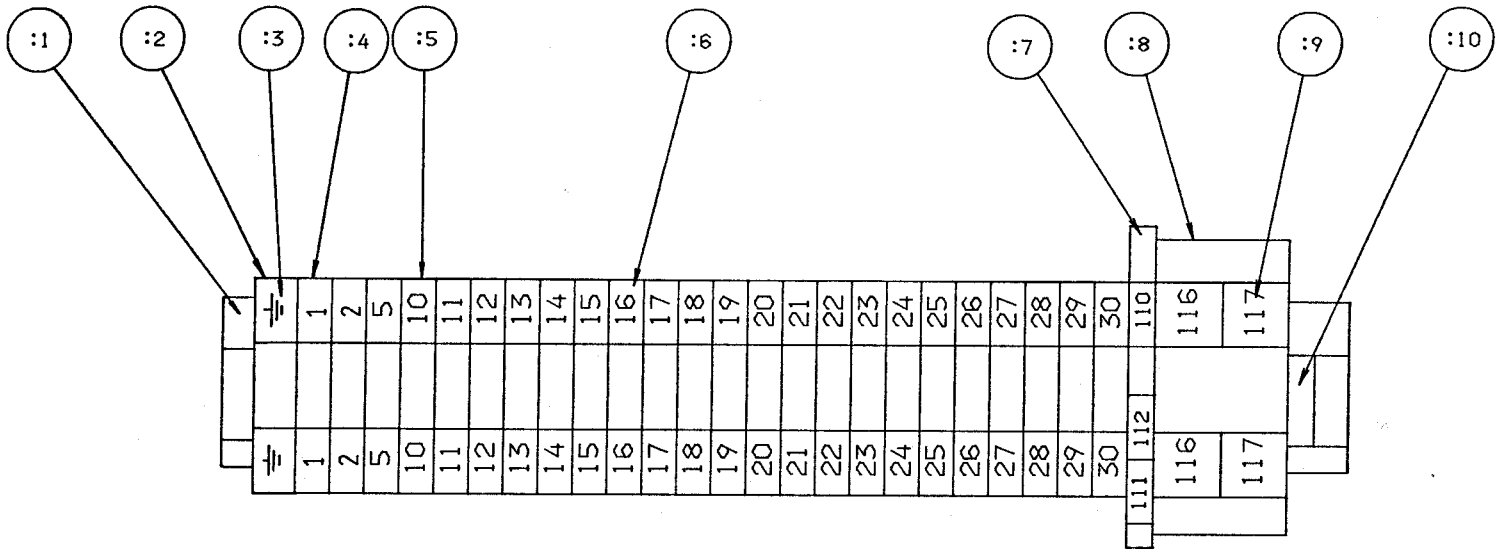

POS.	TYPE	COMP. NO.	QUANT.
:1	RAIL TS32 STEEL	353042-0002	250 MM
:2	GROUND TERMINAL	90135-0021	1
:3	MARKING PLATE	359011-0202	2
:4	TERMINAL SAK 4 PA	90077-0065	3
:5	TERMINAL SAK 4 KRG	90077-0092	21
:6	MARKING PLATE KITS	359011-0807	2
:7	DIODE TERMINAL DK4D	90038-0036	1
:8	OPTO SWITCH TERMINAL	90119-0060	1
:9	MARKING PLATE KITS	359011-0809	1
:10	END SUPPORT	90094-0004	1

1993 -11- 24

ntroduced with AM No.	14293			Date: 90-01-15		Sign. CLV/BEL			
ssue	A								
AM No.	1614.1								
Date	91.03.01								
Sign.	HK/TMJ								

Drawing Remarks

Description: TERMINAL X1, IH-GENERATOR

Machine: TBA/9 - P.T./P.H. | 555777

TERRAB YSTAD ARKITEX RITF

Tetra Pak
LUND SWEDEN

This drawing must not without the consent of Tetra Pak, be copied, transmitted or disclosed to any third party.

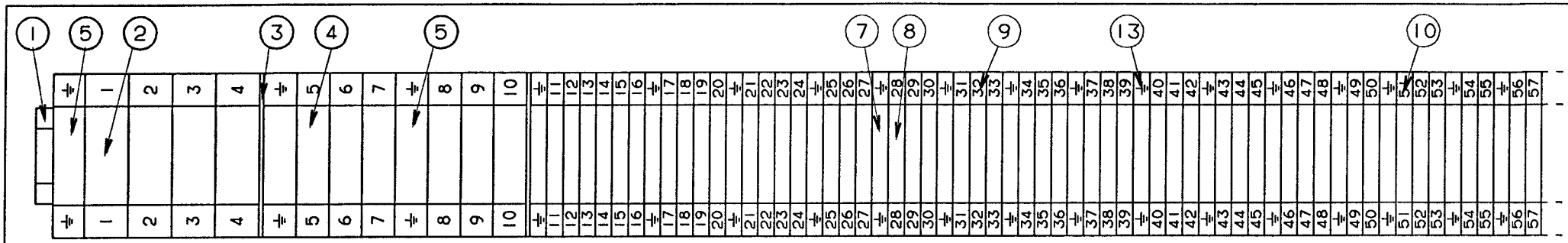

X001

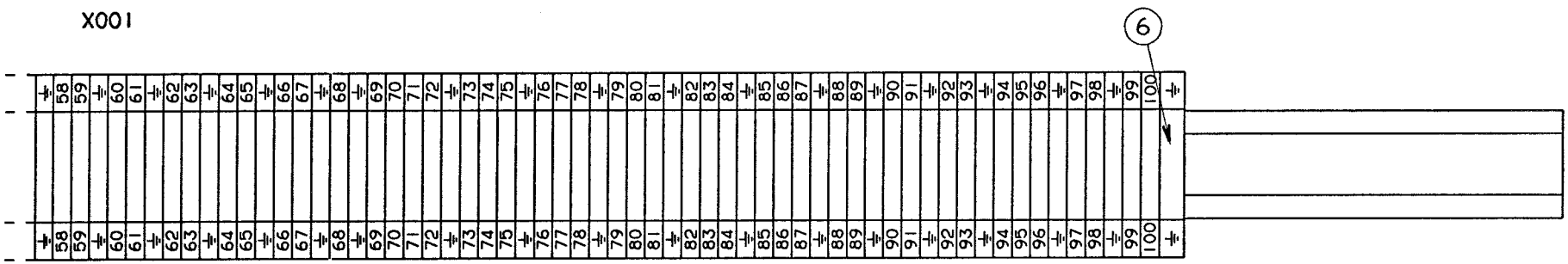

X001

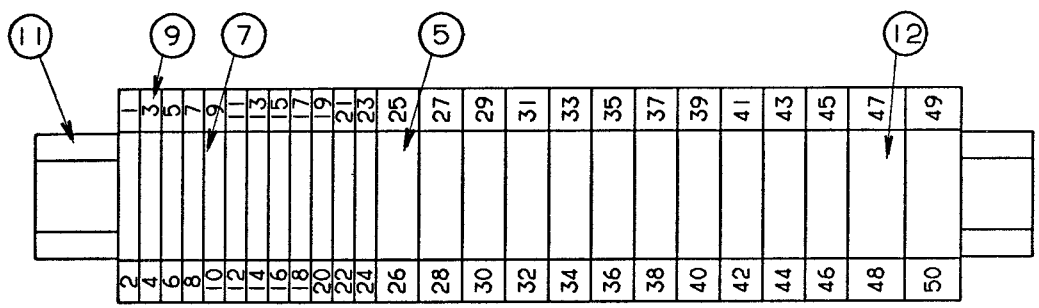

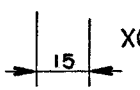

X011

POS.	TYPE		COMP. NO.	QUANT.
:1	TS35 STEEL	3834.0	90077-302 L=1050mm	1
:2	WDU 35	10205.0	353021-219	4
:3	WAP	10501.0	353032-006	2
:4	WDU 16	10204.0	353021-218	6
:5	WPE 16	10104.0	353024-208	14
:6	WPE 6	10102.0	353024-206	1
:7	WPE 4	10101.0	353024-205	45
:8	WDU 4	10201.0	353021-213	90
:9	FW 1-50	4734.6	359011-807	3
:10	FW 51-100	4734.6	359011-808	2
:11	TS35 STEEL	3834.0	90077-302 L=280mm	1
:12	WPE 35	10105.0	353024-209	2
:13	GW ⏚	5762.6	359011-202	2

INTRODUCED WITH AM NO. 17872	DATE. 930115	SIGN. HK/UTH	
ISSUE			
AM NO.			
DATE			
SIGN.			DRAWING REMARKS

DESCRIPTION: TERMINAL BLOCK X001, X011

MACHINE: TBA/9-1402 P.T

570927-0001

ALTERATIONS ONLY IN CADAM

08:13 93.11.25

Tetra Pak
LUND SWEDEN

This drawing must not without the consent of Tetra Pak be copied, transmitted or disclosed to any third party.

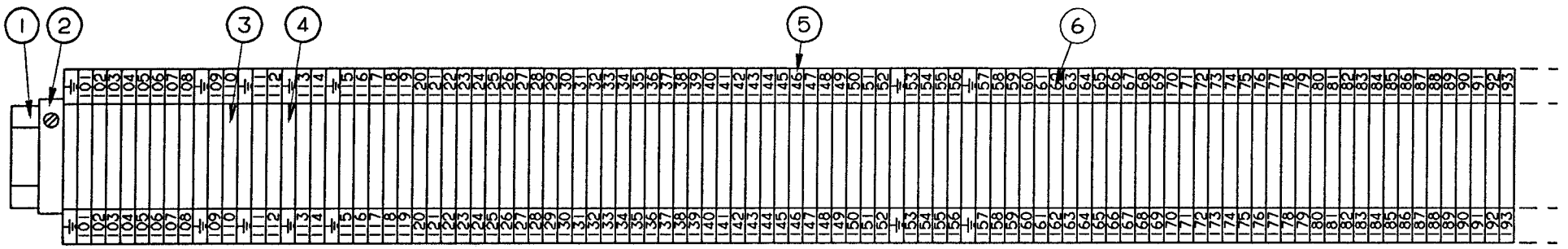

X001

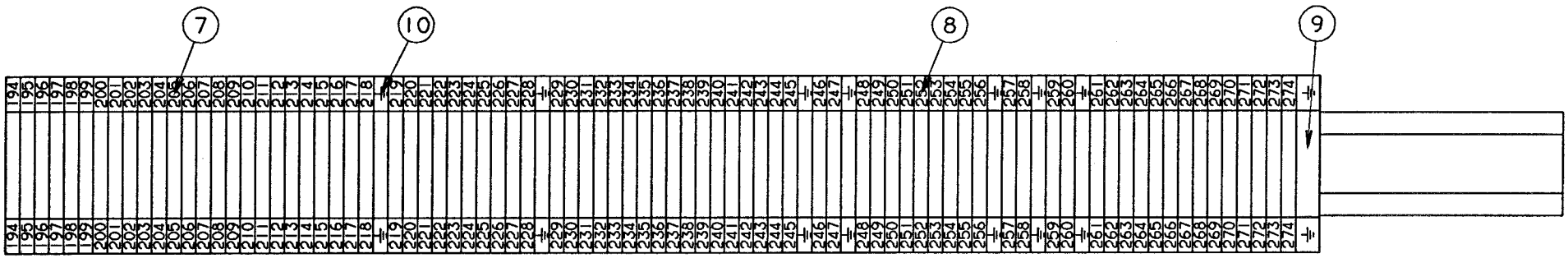

X001

POS.	TYPE	COMP. NO.	QUANT.
:1	TS35 STEEL 3834.0	90077-302 L=1050mm	1
:2	EW 35 3835.6	353031-201	1
:3	WDU 2,5 10200.8	353021-216	174
:4	WPE 2,5 10100.0	353024-204	14
:5	FW 101-150 4734.6	359011-809	2
:6	FW 151-200 4734.6	359011-810	2
:7	FW 201-250 4734.6	359011-811	2
:8	FW 251-300 4734.6	359011-812	2
:9	WPE 6 10102.0	353024-206	1
:10	GW ⏚ 5762.6	359011-202	1

INTRODUCED WITH AM NO.	17872			DATE: 930115		SIGN. HK/UTH				
ISSUE										
AM NO.										
DATE										
SIGN.										

DRAWING REMARKS

DESCRIPTION: TERMINAL BLOCK X001

MACHINE: TBA/9-1402 P.T

570927-0002

ALTERATIONS ONLY IN CADAM

08:13 93 11 25

Tetra Pak
LUND SWEDEN

This drawing must not without the consent of Tetra Pak be copied, transmitted or disclosed to any third party.

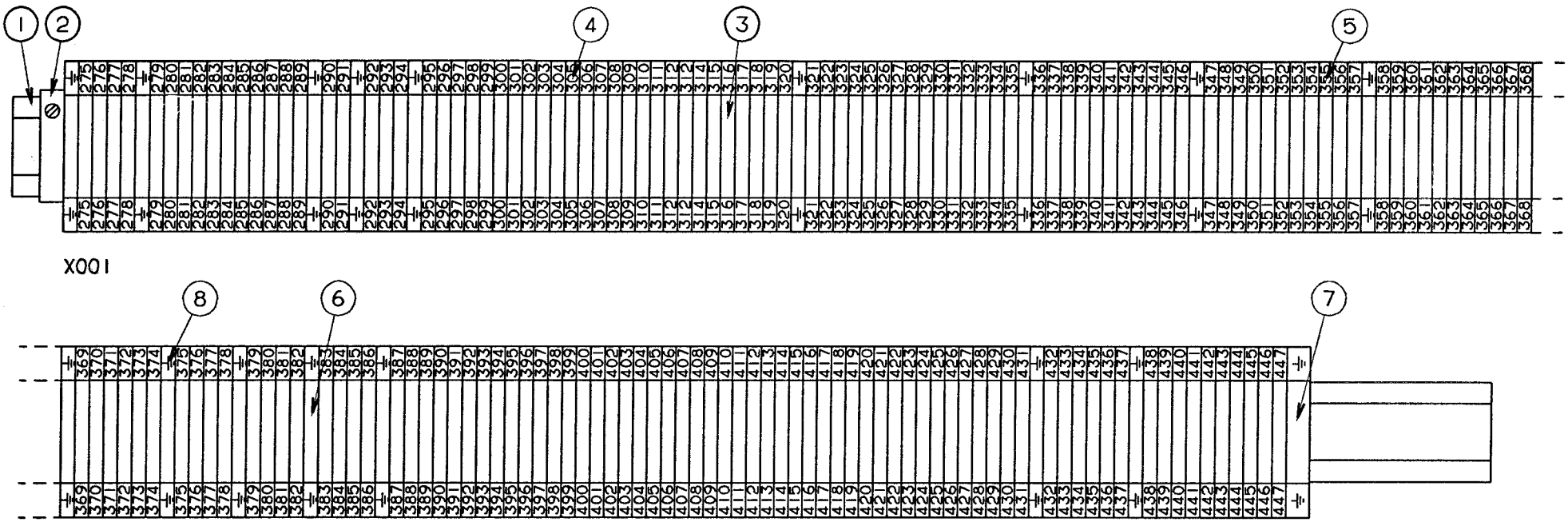

POS.	TYPE	COMP. NO.	QUANT.
:1	TS35 STEEL 3834.0	90077-302 L=1050mm	1
:2	EW 35 3835.6	353031-201	1
:3	WDU 2,5 10200.8	353021-216	173
:4	FW 301-350 4734.6	359011-813	2
:5	FW 351-400 4734.6	359011-814	2
:6	WPE 2,5 10100.0	353024-204	16
:7	WPE 6 10102.0	353024-206	1
:8	GW ⏚ 5762.6	359011-202	1
:9	FW 401-450 4734.6	359011-815	2

INTRODUCED WITH AM NO.	17872			DATE: 930115			SIGN. HK/UTH		
ISSUE	A								
AM NO.	20144								
DATE	930609								
SIGN.	HK/PSG								

DRAWING REMARKS

DESCRIPTION: TERMINAL BLOCK X001

MACHINE: TBA/9-1402 P.T

570927-0003

ALTERATIONS ONLY IN CADAM

08:13 93.11.25

Tetra Pak
LUND SWEDEN

This drawing must not without the consent of Tetra Pak be copied, transmitted or disclosed to any third party.

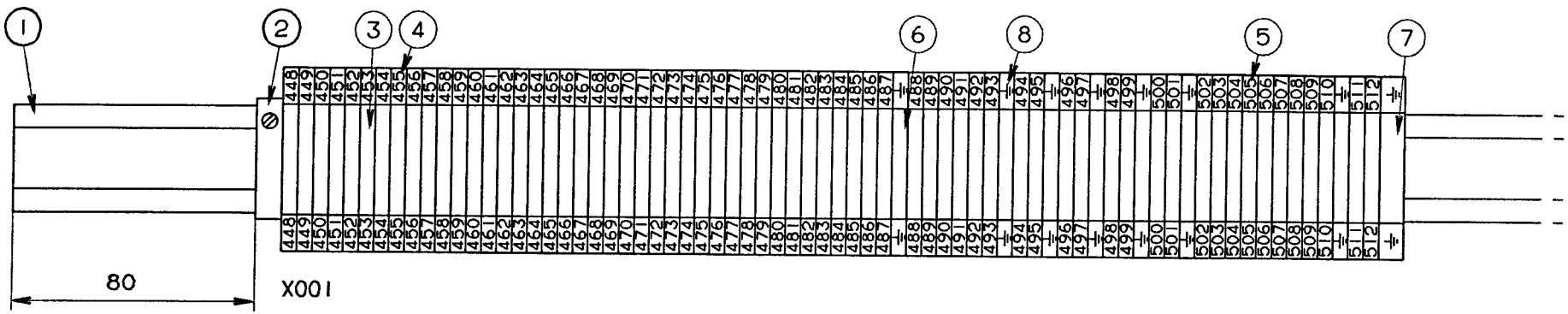

POS.	TYPE	COMP. NO.	QUANT.
:1	TS35 STEEL 3834.0	90077-302 L=1050mm	1
:2	EW 35 3835.6	353031-201	1
:3	WDU 2,5 10200.8	353021-216	65
:4	FW 450-500 4734.6	359011-816	2
:5	FW 501-550 4734.6	359011-817	2
:6	WPE 2,5 10100.0	353024-204	7
:7	WPE 6 10102.0	353024-206	1
:8	GW ⏚ 5762.6	359011-202	1

INTRODUCED WITH AM NO. 17872	DATE: 930115	SIGN. HK/UTH		
ISSUE A				
AM NO. 20144				
DATE 930609				
SIGN. HK/PSG				
ALTERATIONS ONLY IN CADAM			DRAWING REMARKS	

DESCRIPTION: TERMINAL BLOCK X001

MACHINE: TBA/9-1402 P.T

570927-0004

08:13 93.11.25

Tetra Pak
LUND SWEDEN

This drawing must not without the consent of Tetra Pak be copied, transmitted or disclosed to any third party.

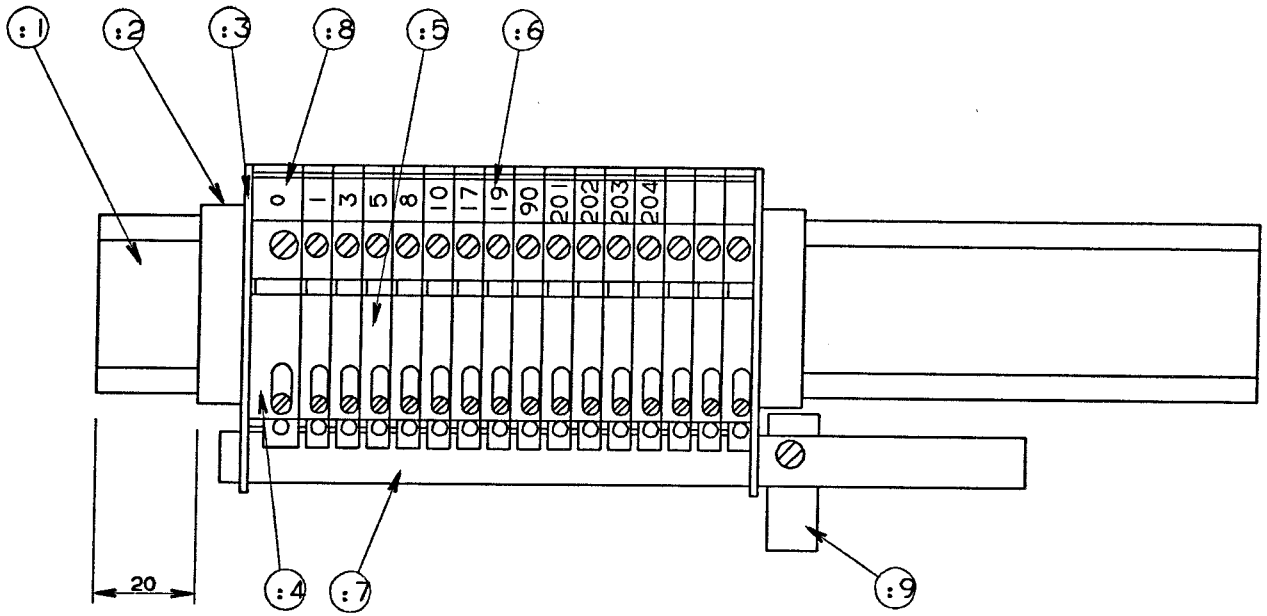

POS	TYPE		COMP. NO.	QUANT
:1	TS35 STEEL	3834.0	90077-302 L=230	1
:2	EW 35	3835.6	353031-201	2
:3	WHP	10502.8	353033-104	2
:4	WNT 10	10109.8	353022-004	1
:5	WNT 6	10108.8	353022-003	15
:6	FW 1-50	4734.6	359011-807	1
:6	FW 201-250	4734.6	359011-811	1
:7	SSch 10-3	2598.0	353041-001 L=160	1
:8	GW 0	5227.6	359011-807	1
:9	ZB-35	2665.0	90135-19	1

INTRODUCED WITH AM NO.	17786			DATE: 930115			SIGN. HK/UTH		
ISSUE									
AM NO.									
DATE									
SIGN.									

DRAWING REMARKS

ALTERATIONS ONLY IN CADAM

DESCRIPTION: TERMINAL BLOCK X3

MACHINE: TBA/9-140V

571518

08:13 93.11.25

Tetra Pak
MODENA ITALY

This drawing must not without the consent of Tetra Pak be copied, transmitted or disclosed to any third party.

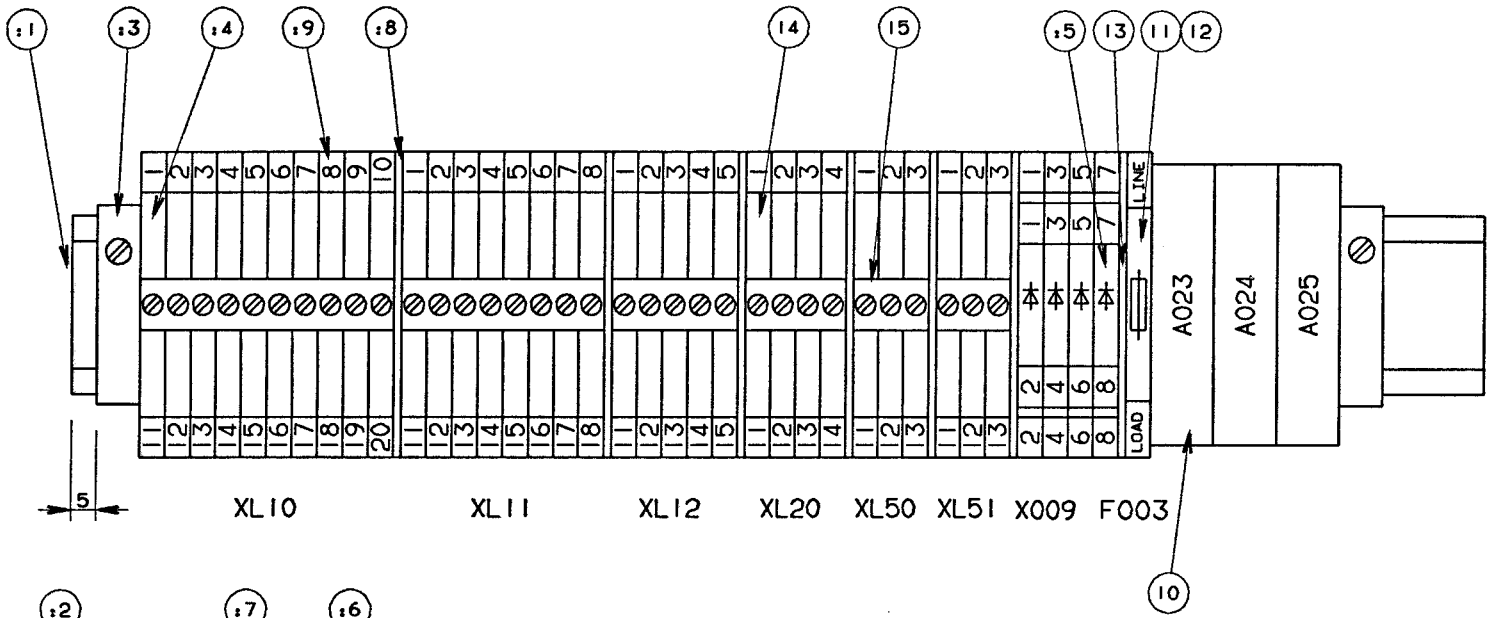

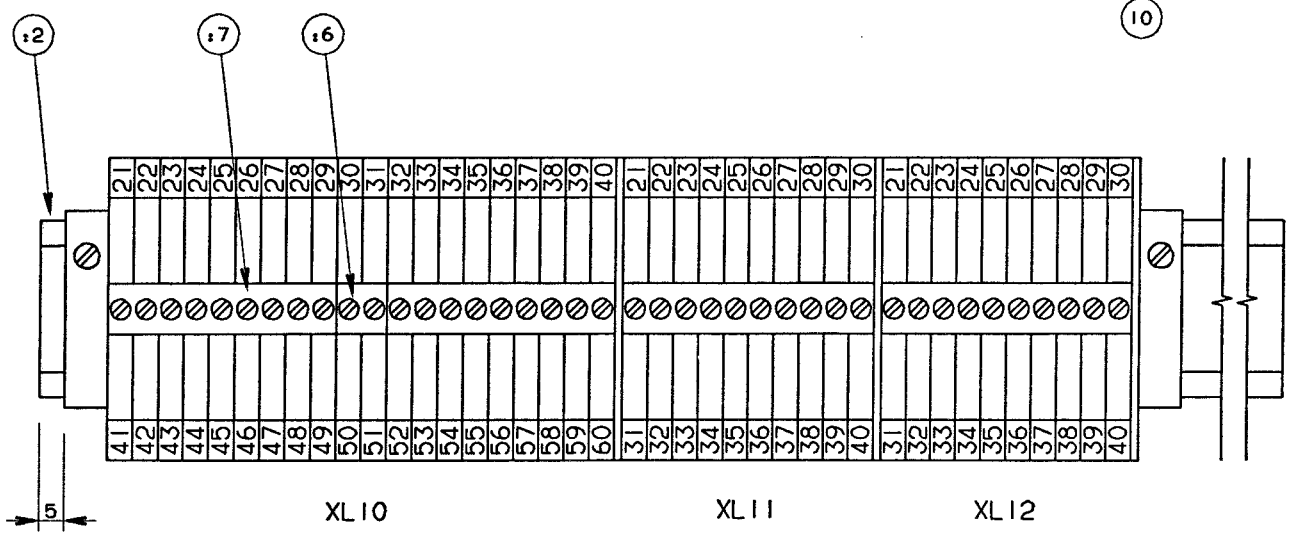

POS	TYPE		COMP. NO.	QUANT
:1	TS35 STEEL	3834.0	90077-302 L=300mm	1
:2	TS35 STEEL	3834.0	90077-302 L=350mm	1
:3	EW 35	3835.6	353031-201	4
:4	WDU 4	10201.8	353021-217	63
:5	WTR 2,5D	10135.0	353021-122	4
:6	WOV 4/2	10519.6	353034-	1
:7	WOV 4/10	10520.6	353034-031	7
:8	WAP 2.5-10	10500.8	353032-005	9
:9	FW 1-50	4735.6	359011-807	8
:9	FW 51-100	4735.6	359011-808	1
10	AMMS-10-1		90119-063	3
11	WSI6	10110.0	353023-102	1
12	FUSE FAST	1.6A	352550-133	1
13	WAP 2.5/10	10500.0	353032-004	1
14	WDU 2,5	10200.8	353021-216	10
15	WOV 2,5/10	10544.6	353034-030	1

INTRODUCED WITH AM NO.	17786		DATE: 930115	SIGN. HK/UTH			
ISSUE	A	B					
AM NO.	19260	20080					
DATE	930310	930909					
SIGN.	HK/UTH	HK/MRI					DRAWING REMARKS

DESCRIPTION: TERMINAL BLOCK XL, X9

MACHINE: TBA/9-140V

571519

ALTERATIONS ONLY IN CADAM

08.13 93.11.25

Tetra Pak
MODENA ITALY

This drawing must not without the consent of Tetra Pak be copied, transmitted or disclosed to any third party.

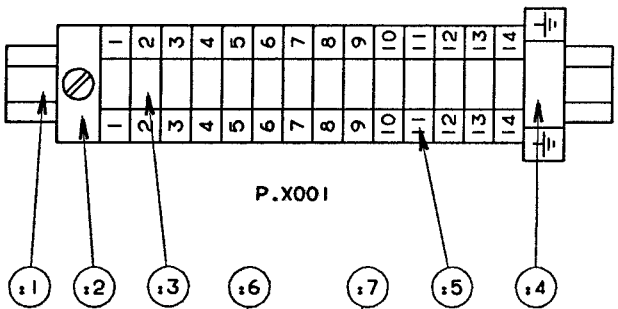

P.X001

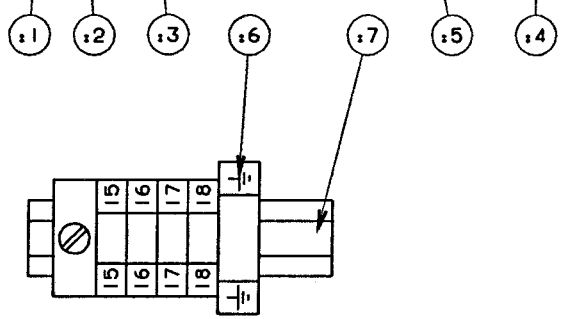

P.X002

POS	TYPE	COMP. NO.	QUANT
:1	TS15 STEEL 1175.0	90077-328 L=120mm	1
:2	EW15 3828.6	90077-307	2
:3	AKZ 4 2943.6	90077-079	18
:4	AKE 4 3802.6	90135-126	2
:5	FW 1-50 4736.6	359011-807	2
:6	GW ⏚ 5762.6	359011-202	1
:7	TS15 STEEL 1175.0	90077-328 L=60mm	1

INTRODUCED WITH AM NO.	17786			DATE: 930115		SIGN HK/UTH			
ISSUE	A								
AM NO.	20080								
DATE	930909								
SIGN.	HK/MRI								

DRAWING REMARKS

DESCRIPTION: TERMINAL BLOCK P.X001, P.X002

MACHINE: TBA/9-140V

571520

ALTERATIONS ONLY IN CADAM

08:13 93.11.25

Tetra Pak
MODENA ITALY

This drawing must not without the consent of Tetra Pak be copied, transmitted or disclosed to any third party.

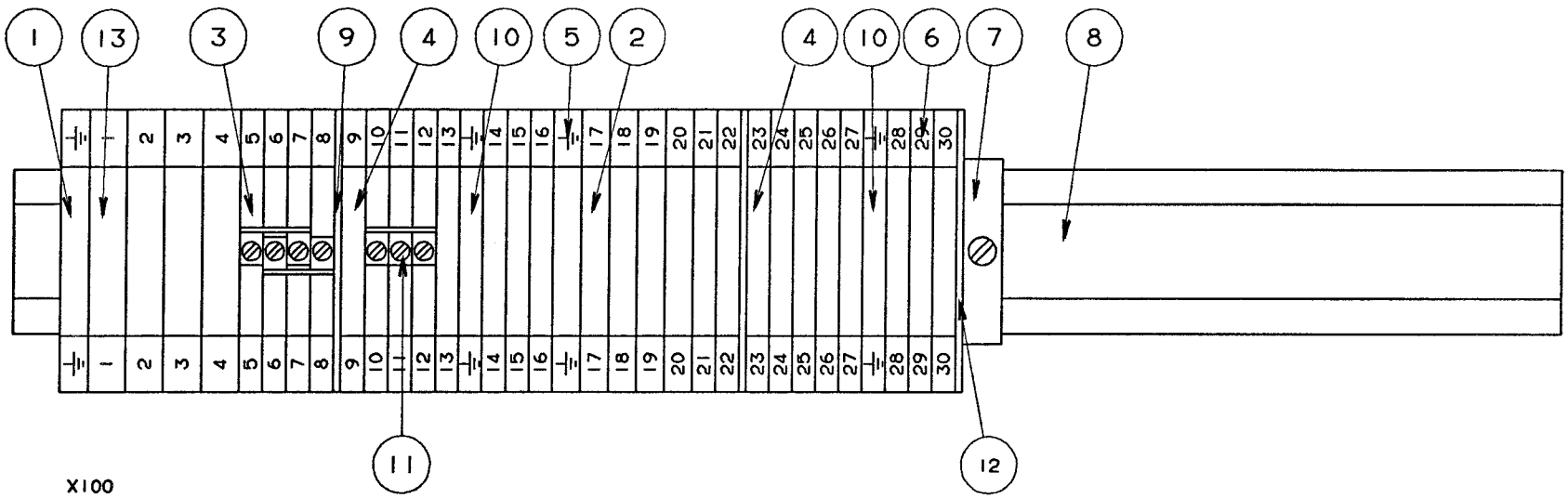

POS	TYPE		COMP. NO.	QUANT
:1	WPE 4	10101.0	353021-228	2
:2	WDU 4	10201.0	353021-213	6
:3	WDU 2,5	10200.0	353021-212	4
:4	WDU 2,5	10200.8	353021-216	16
:5	GW ⏚	5762.6	359011-202	1
:6	FW 1-50	4735.6	359011-807	2
:7	EW 35	3835.6	353031-201	1
:8	TS35 STEEL	3834.0	90077-302 L=330mm	1
:9	WTW 2,5-10	10501.0	353032-006	2
:10	WPE 2,5	10100.0	353024-204	2
:11	WQV 2,5/10	10537.6	353034-030	1
:12	WAP 2,5	10500.8	353032-005	1
:13	WDU 6	10202.0	353021-214	4

INTRODUCED WITH AM NO.	17786	DATE.	930115	SIGN.	HK/UTH			
ISSUE	A							
AM NO.	20080							
DATE	930909							
SIGN.	HK/MRI							

DRAWING REMARKS

DESCRIPTION: TERMINAL BLOCK IH, X100

MACHINE: TBA/9-140V

571524

ALTERATIONS ONLY IN CADAM

08.13 93.11.25

Tetra Pak
LUND SWEDEN

This drawing must not without the consent of Tetra Pak be copied, transmitted or disclosed to any third party.

08:13 93.11.25

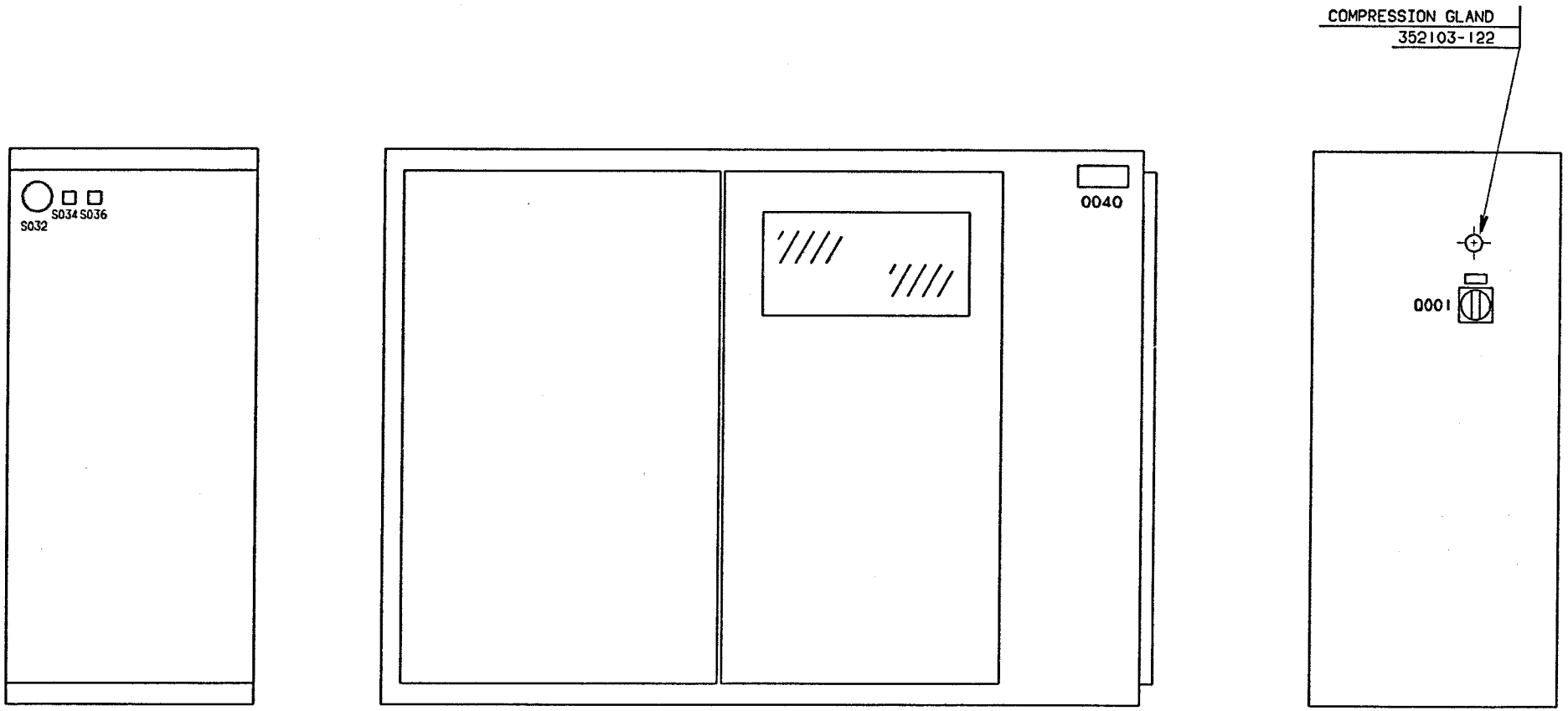

RIGHT HAND VIEW

FRONT VIEW

LEFT HAND VIEW

INTRODUCED WITH AM NO.	19261			DATE: 930310		SIGN. HK/UTH				DESCRIPTION: MOUNTING DRAWING			
ISSUE													
AM NO.										MACHINE: TBA/9-1402 P.T		52482-05:01	
DATE													
SIGN.									DRAWING REMARKS				

ALTERATIONS ONLY IN CADAM

Tetra Pak
LUND SWEDEN

This drawing must not without the consent of Tetra Pak be copied, transmitted or disclosed to any third party.

08:13 93.11.25

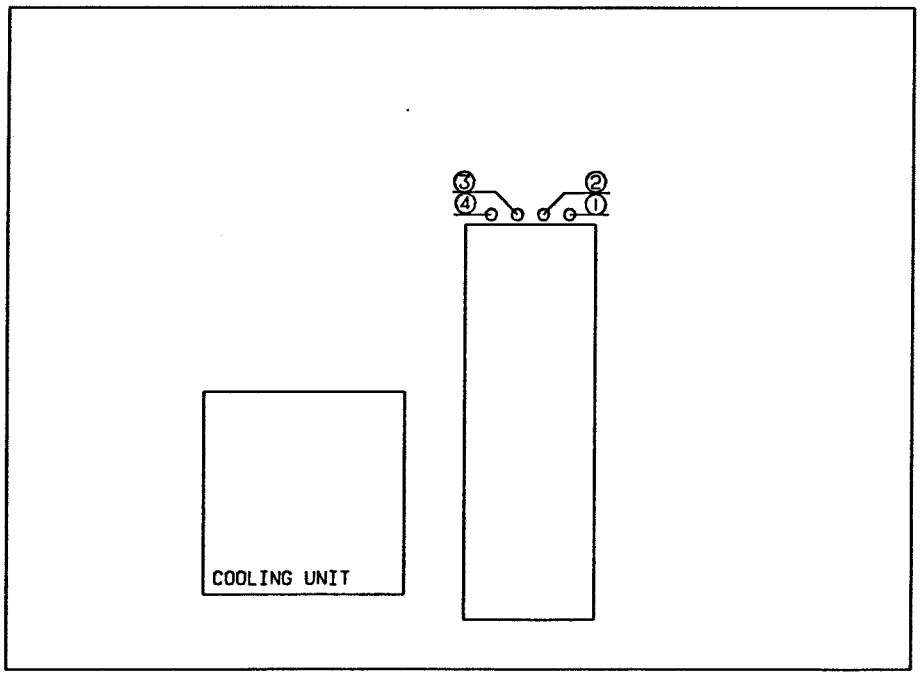

REAR VIEW

| | | |

Tetra Pak
LUND SWEDEN

This drawing must not without the consent of Tetra Pak: be copied, transmitted or disclosed to any third party.

08:13 93.11.25

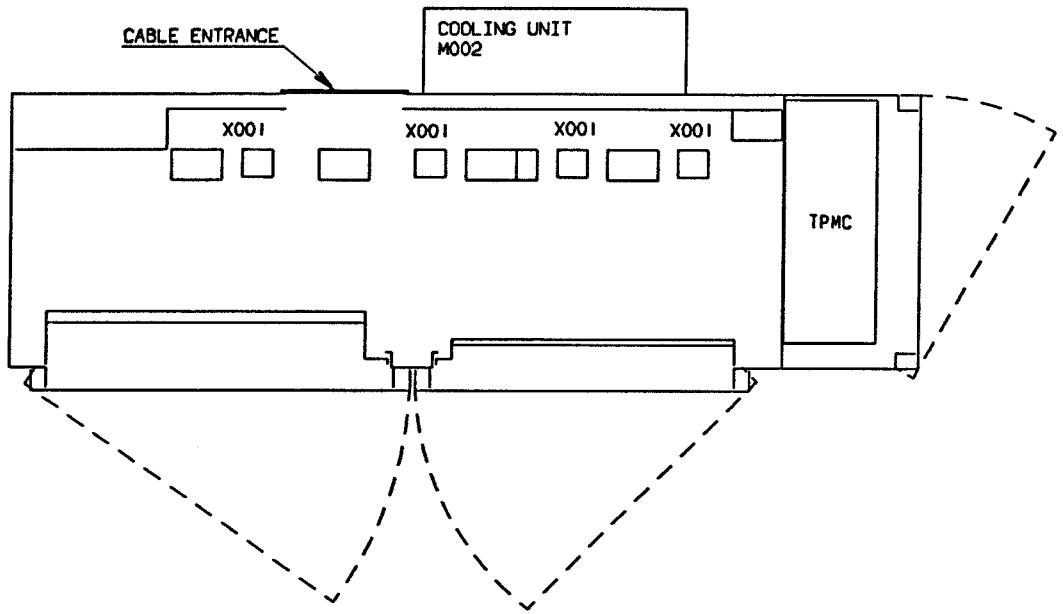

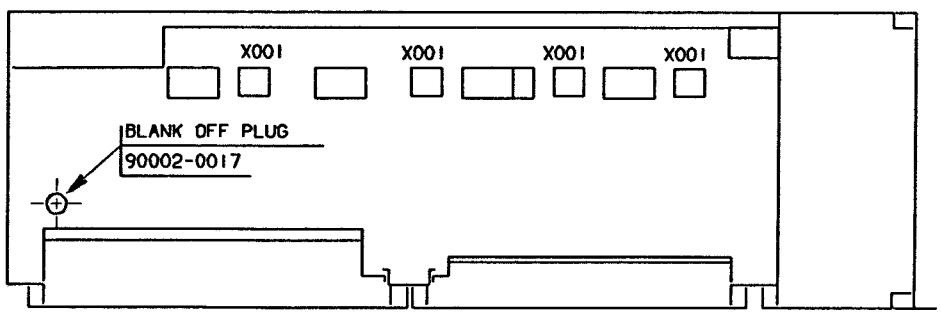

FLOOR VIEW

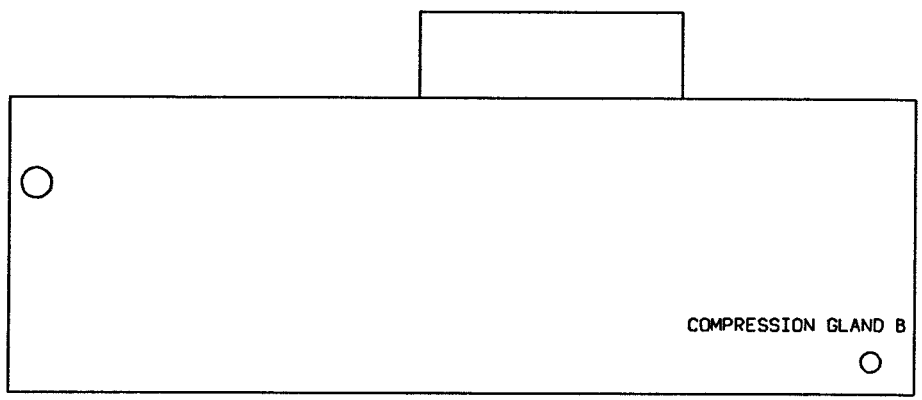

TOP VIEW

INTRODUCED WITH AM NO.	19261			DATE 930310			SIGN. HK/UTH				DESCRIPTION: MOUNTING DRAWING		
ISSUE													
AM NO.													
DATE											MACHINE: TBA/9-1402 P.T		52482-07:01
SIGN.										DRAWING REMARKS			

ALTERATIONS ONLY IN CADAM

Tetra Pak
LUND SWEDEN

This drawing must not without the consent of Tetra Pak be copied, transmitted or disclosed to any third party.

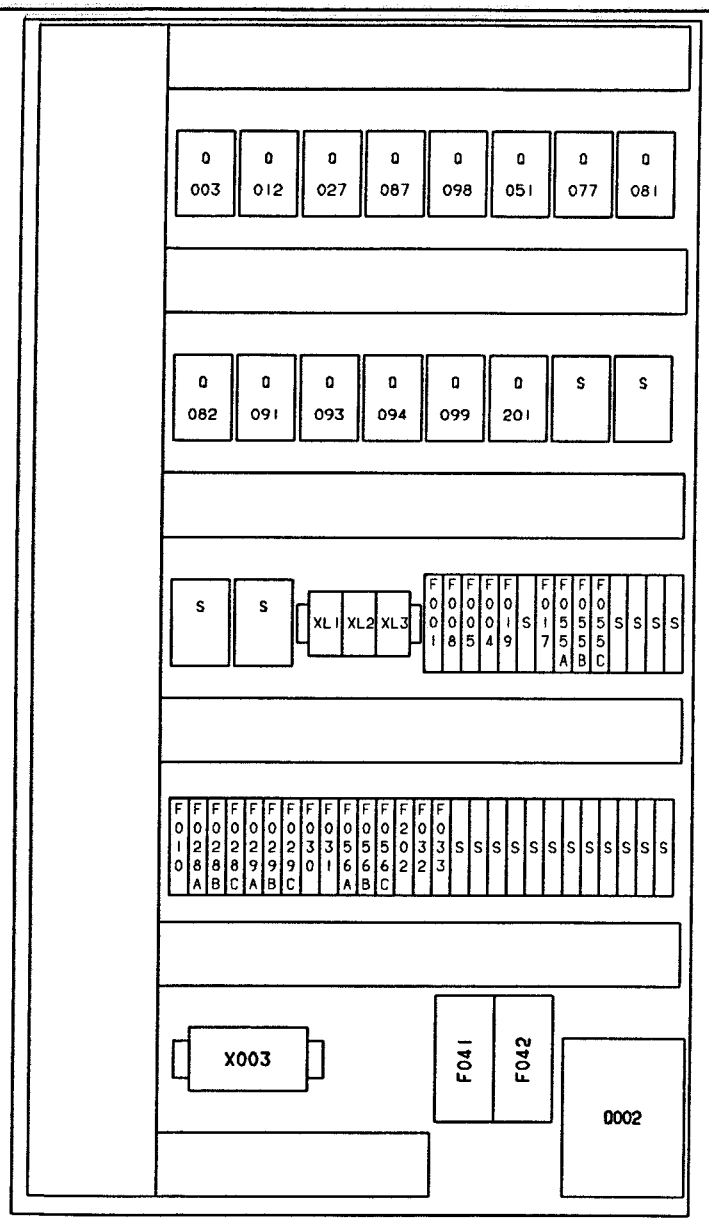

LEFT HAND DOOR, FRONT VIEW

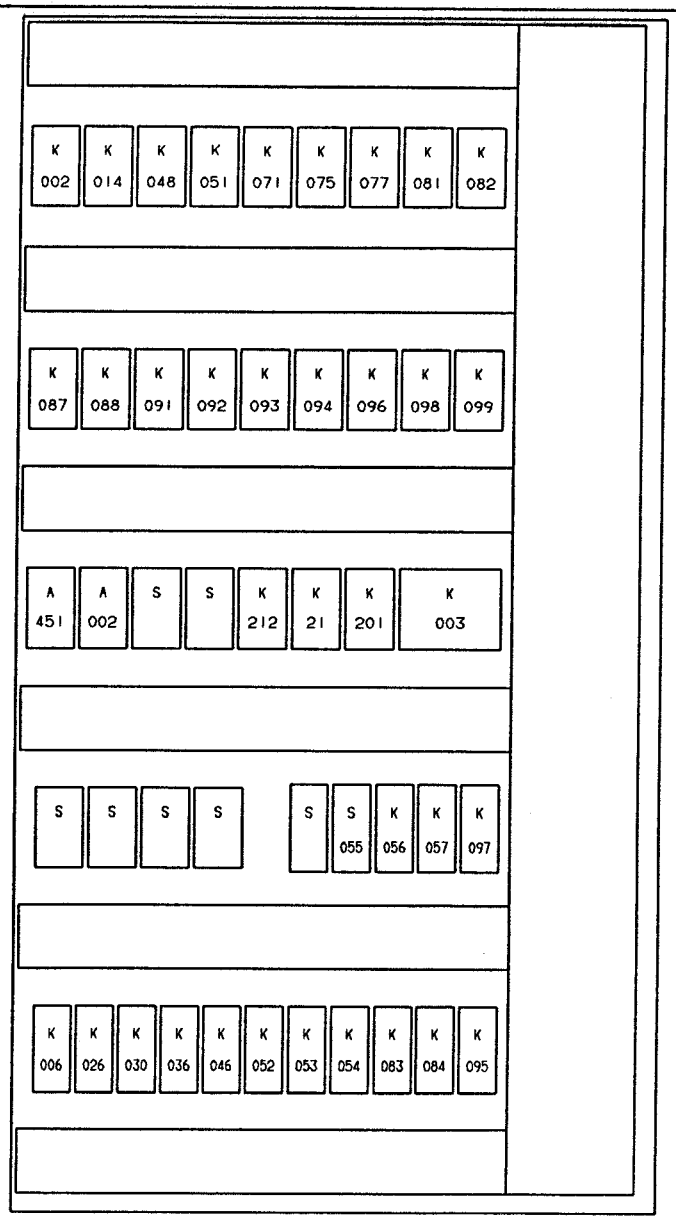

LEFT HAND DOOR, INSIDE VIEW

INTRODUCED WITH AM NO.	19261			DATE. 930310		SIGN. HK/UTH				
ISSUE	A									
AM NO.	20144									
DATE	930609									
SIGN.	HK/PSG									

DRAWING REMARKS

DESCRIPTION: MOUNTING DRAWING

MACHINE: TBA/9-1402 P.T

52482-08:01

ALTERATIONS ONLY IN CADAM

08:13 93.11.25

Tetra Pak
LUND SWEDEN

This drawing must not without the consent of Tetra Pak be copied, transmitted or disclosed to any third party.

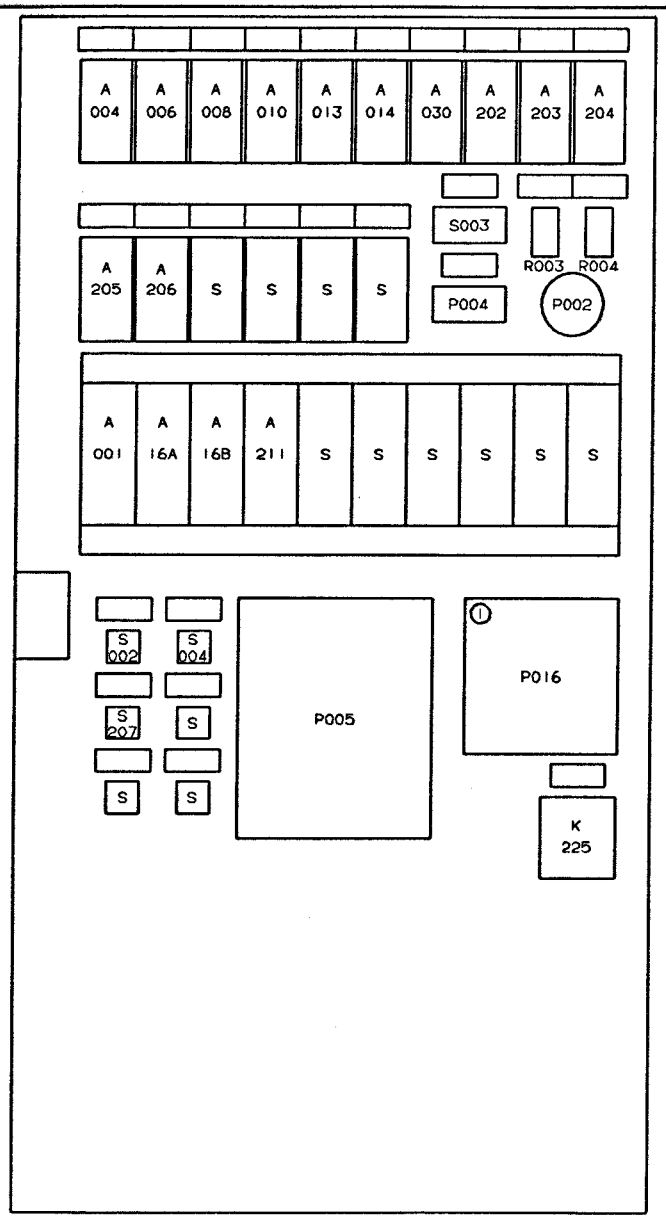

RIGHT HAND DOOR, FRONT VIEW

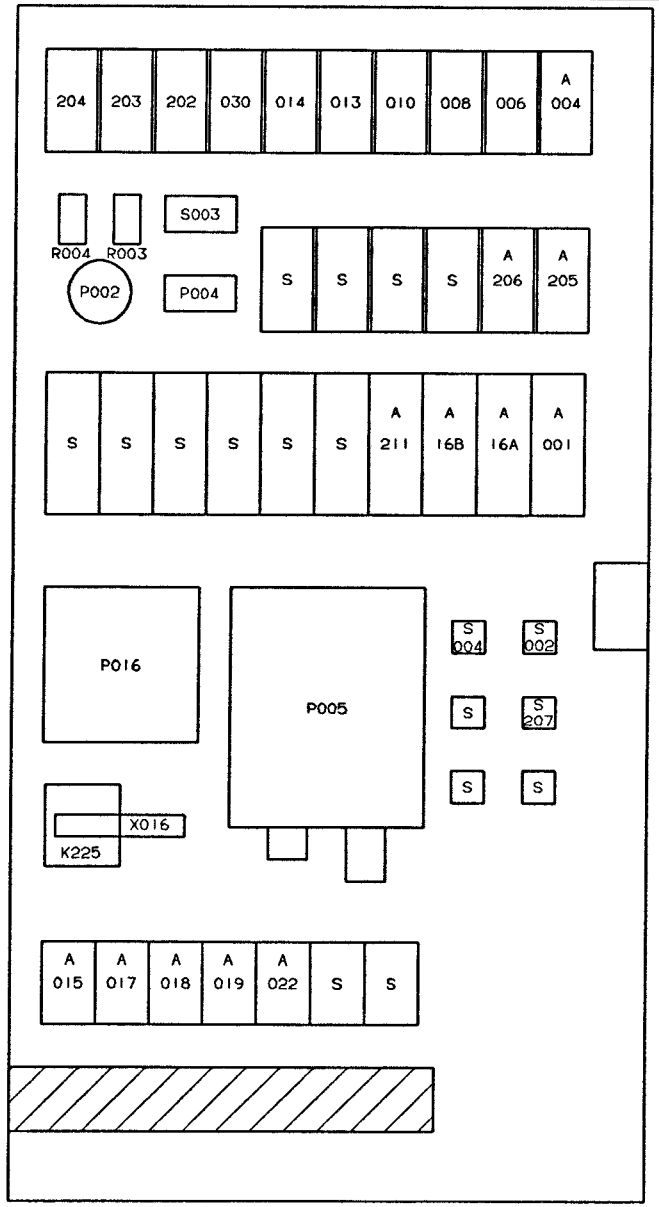

RIGHT HAND DOOR, INSIDE VIEW

INTRODUCED WITH AM NO.	19261	DATE: 930310	SIGN. HK/UTH	① EXTRA EQUIPMENT	DESCRIPTION: MOUNTING DRAWING		
ISSUE							
AM NO.							
DATE							
SIGN.				DRAWING REMARKS	MACHINE: TBA/9-1402 P.T	52482-09:01	

ALTERATIONS ONLY IN CADAM

08:13 93.11.25

Tetra Pak
LUND SWEDEN

This drawing must not without the consent of Tetra Pak be copied, transmitted or disclosed to any third party.

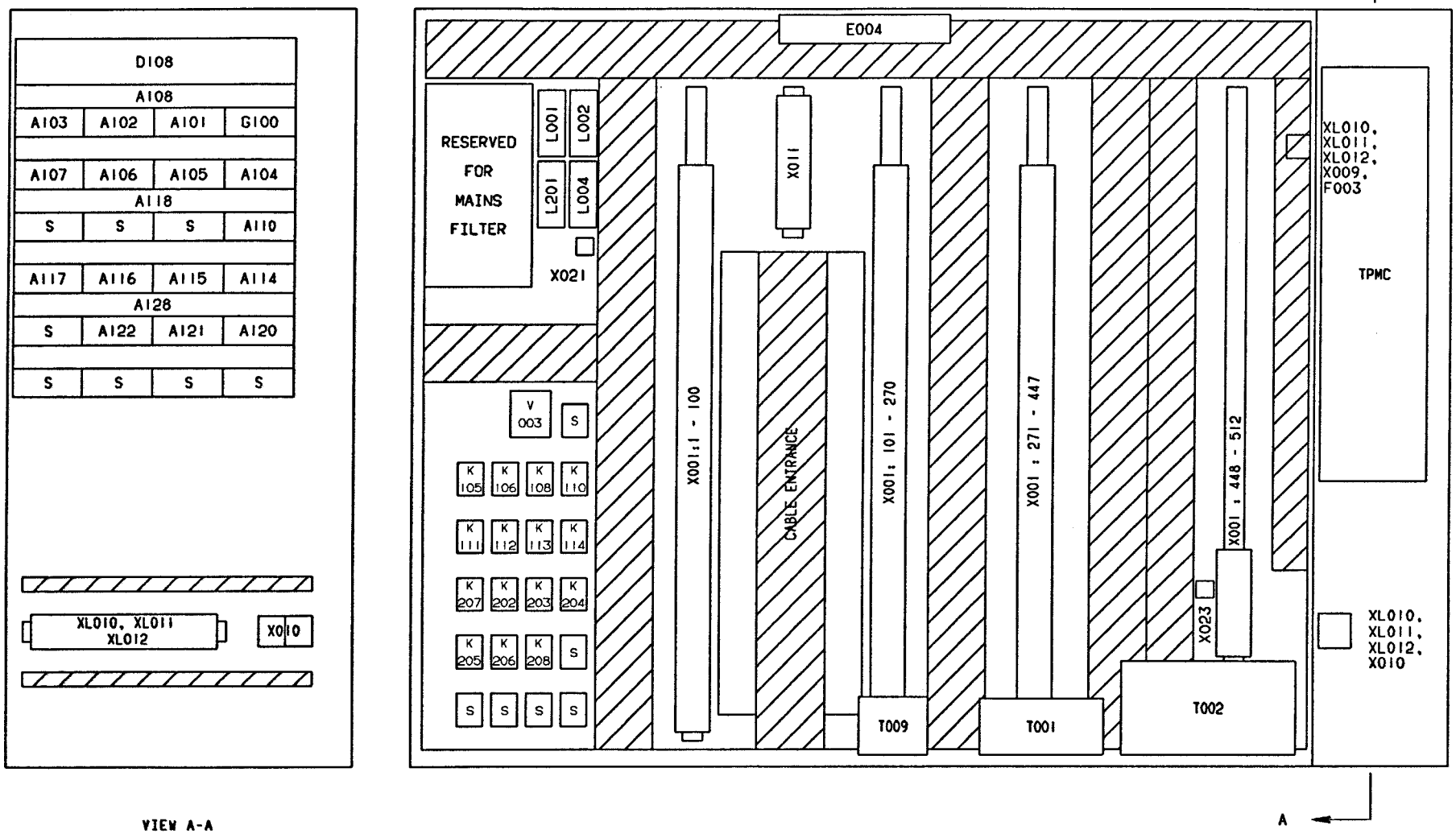

INTRODUCED WITH AM NO.	19261			DATE: 930310		SIGN. HK/UTH				DESCRIPTION: MOUNTING DRAWING	
ISSUE										MACHINE: TBA/9-1402 P.T	52482-10:01
AM NO.											
DATE											
SIGN.									DRAWING REMARKS		

ALTERATIONS ONLY IN CADAM

08:13 93.11.25

Tetra Pak
LUND SWEDEN

This drawing must not without the consent of Tetra Pak: be copied, transmitted or disclosed to any third party.

08:13 93.11.25

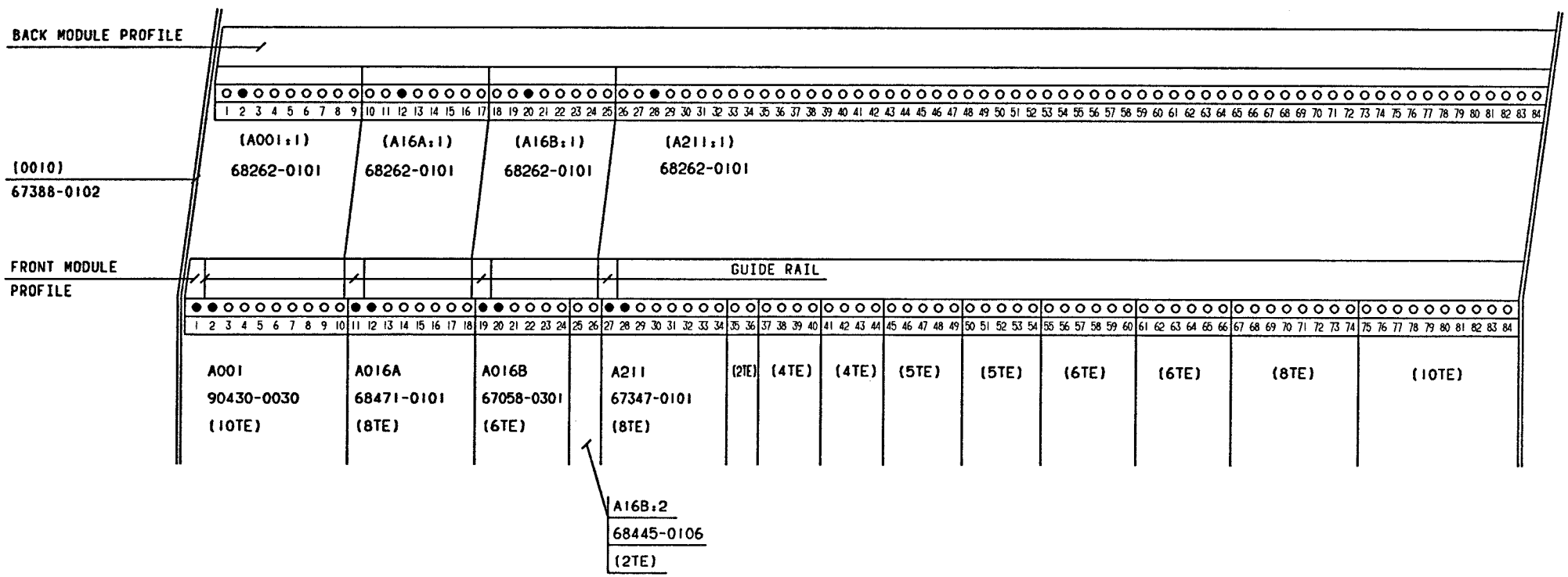

INTRODUCED WITH AM NO. 19261	DATE: 930310	SIGN. HK/UTH	
ISSUE			
AM NO.			
DATE			
SIGN.			DRAWING REMARKS

ALTERATIONS ONLY IN CADAM

DESCRIPTION: MOUNTING DRAWING, RACK 0010

MACHINE: TBA/9-1402 P.T

52482-11:01

Tetra Pak
LUND SWEDEN

This drawing must not without the consent of Tetra Pak be copied, transmitted or disclosed to any third party.

08:13 93.11.25

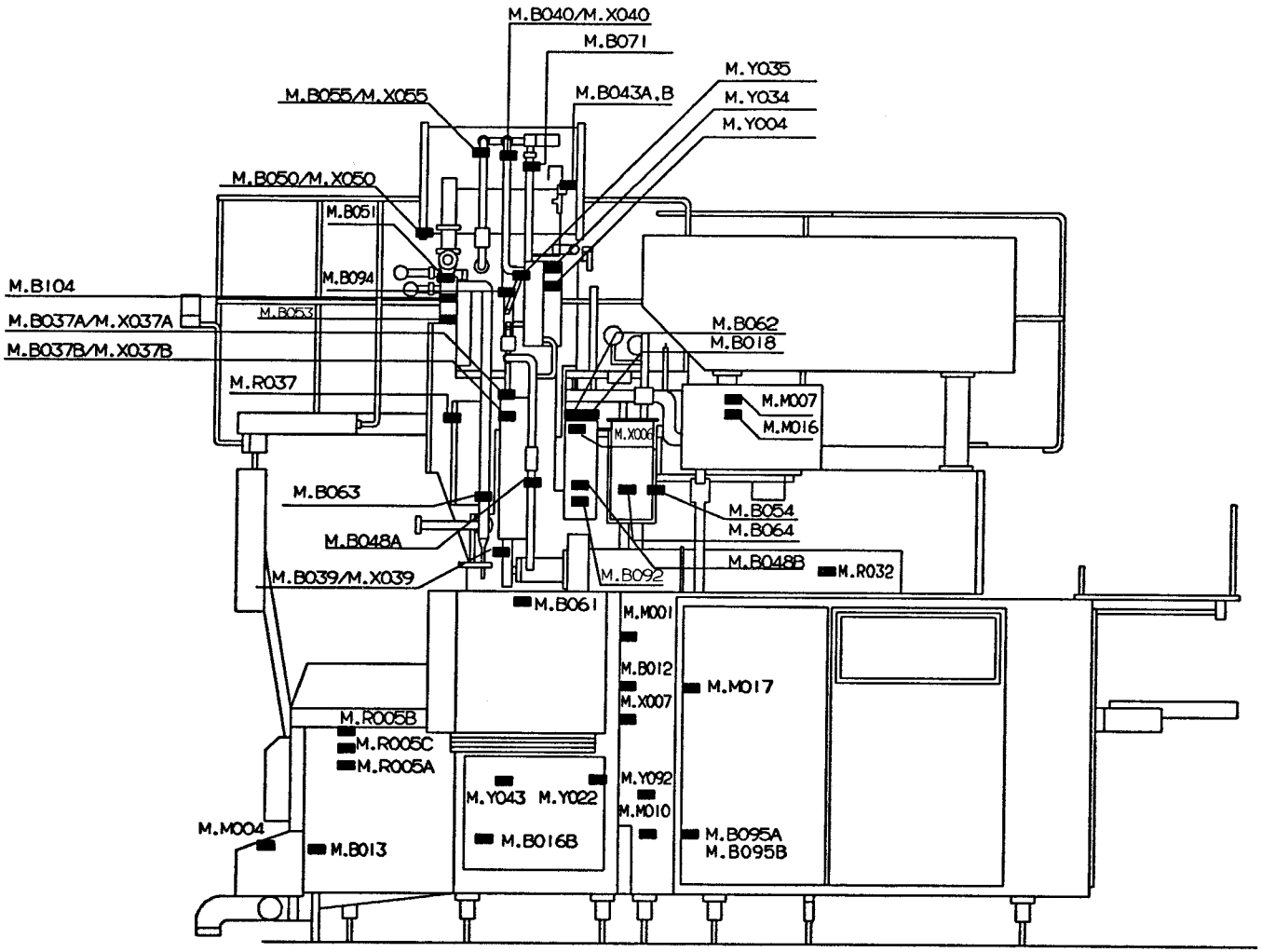

INTRODUCED WITH AM NO.	19261			DATE: 930310		SIGN. HK/UTH					
ISSUE	A										
AM NO.	20144										
DATE	930609										
SIGN.	HK/PSG										

DRAWING REMARKS

DESCRIPTION: MOUNTING DRAWING, MACHINE

MACHINE: TBA/9-1402 P.T

52482-15:01

ALTERATIONS ONLY IN CADAM

Tetra Pak
LUND SWEDEN

This drawing must not without the consent of Tetra Pak: be copied, transmitted or disclosed to any third party.

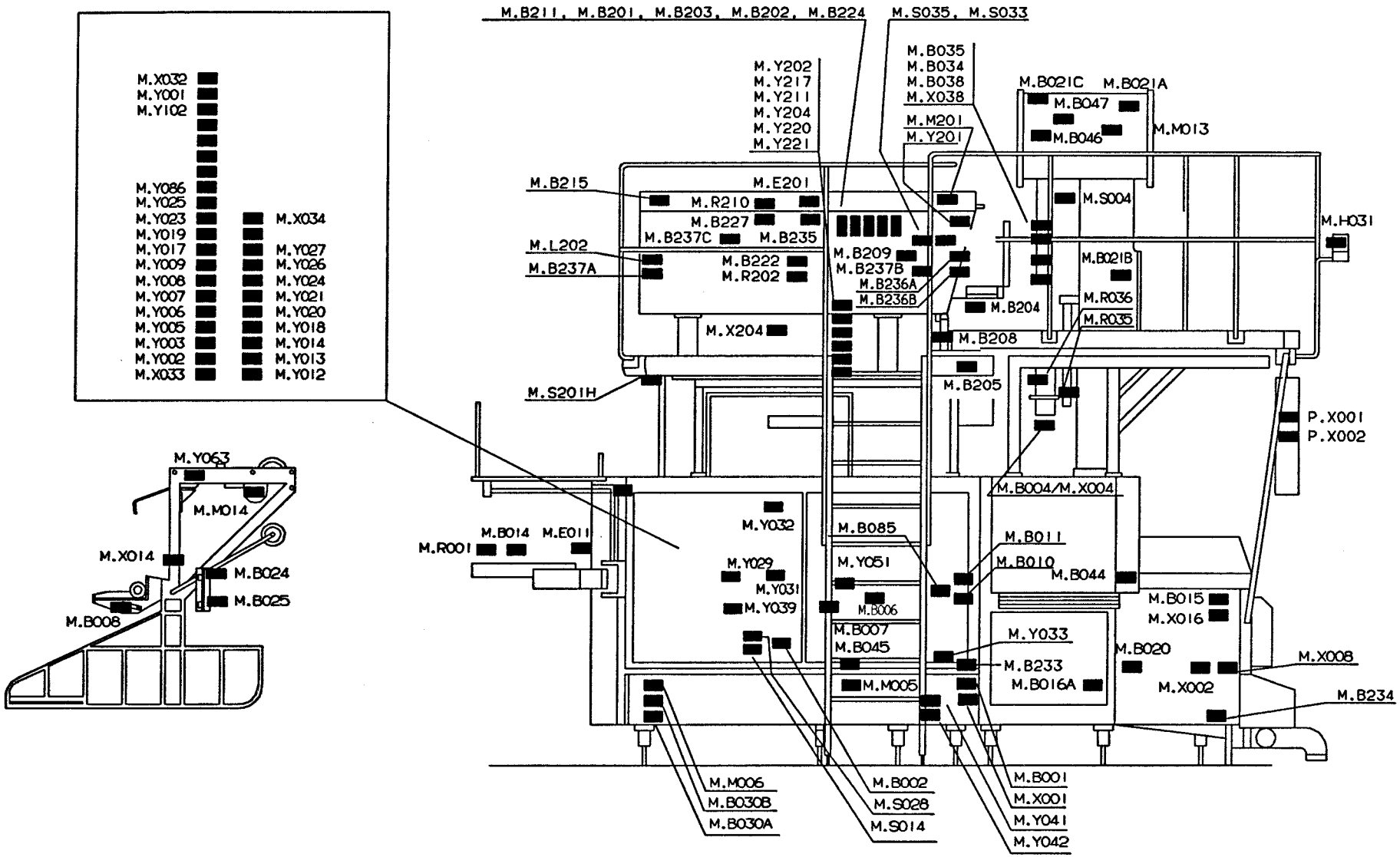

INTRODUCED WITH AM NO.	19261			DATE: 930310			SIGN. HK/UTH				
ISSUE											
AM NO.											
DATE											
SIGN.											

DRAWING REMARKS

DESCRIPTION: MOUNTING DRAWING, MACHINE

MACHINE: TBA/9-1402 P.T

52482-16:01

ALTERATIONS ONLY IN CADAM

08:13 93.11.25

Tetra Pak
LUND SWEDEN

This drawing must not without the consent of Tetra Pak, be copied, transmitted or disclosed to any third party.

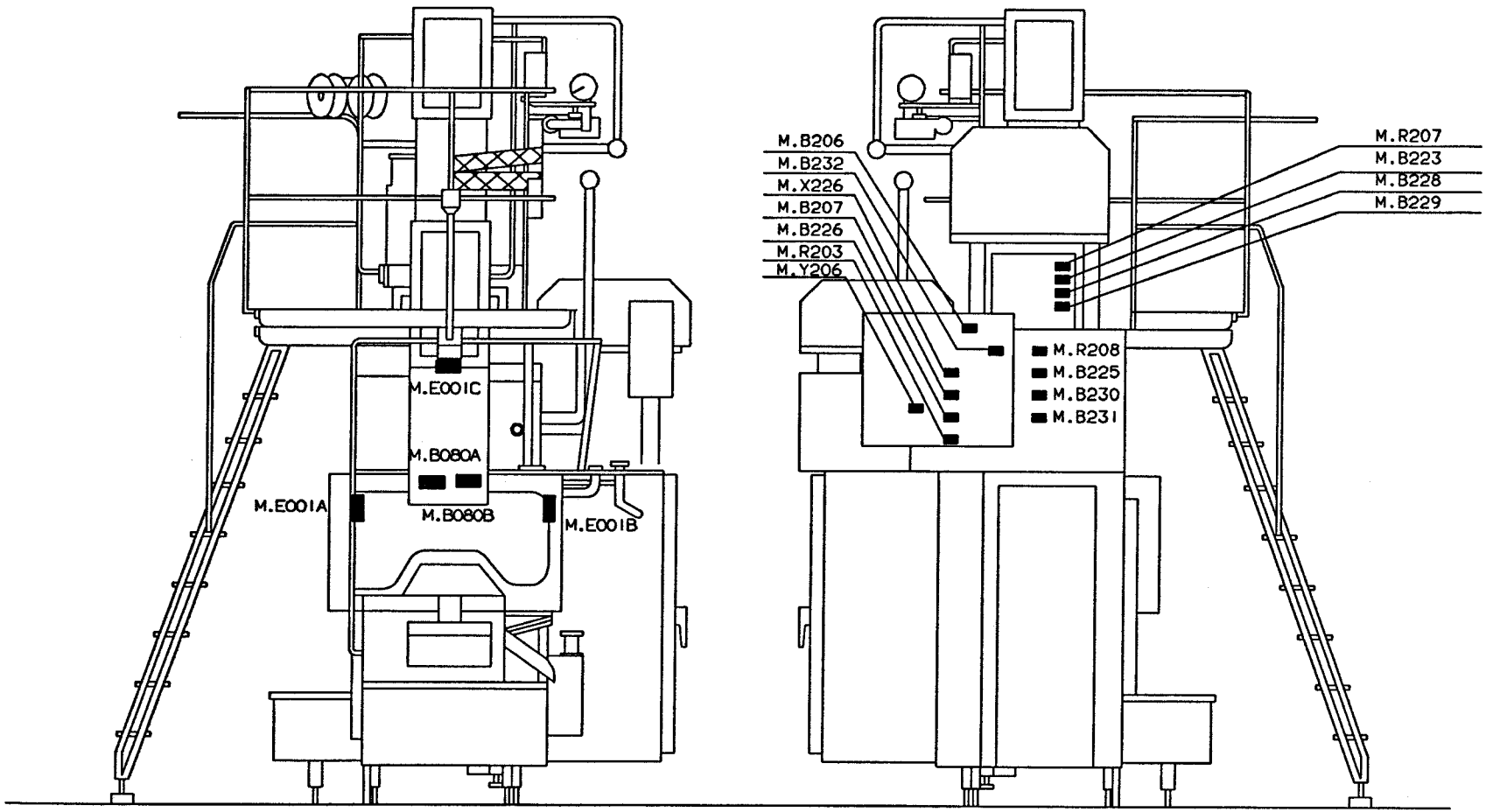

INTRODUCED WITH AM NO.	19261			DATE: 930310			SIGN. HK/UTH				
ISSUE											
AM NO.											
DATE											
SIGN.											

DRAWING REMARKS

ALTERATIONS ONLY IN CADAM

DESCRIPTION: MOUNTING DRAWING, MACHINE

MACHINE: TBA/9-1402 P.T

52482-17:01

08:13 93.11.25

Tetra Pak
LUND SWEDEN

This drawing must not without the consent of Tetra Pak be copied, transmitted or disclosed to any third party.

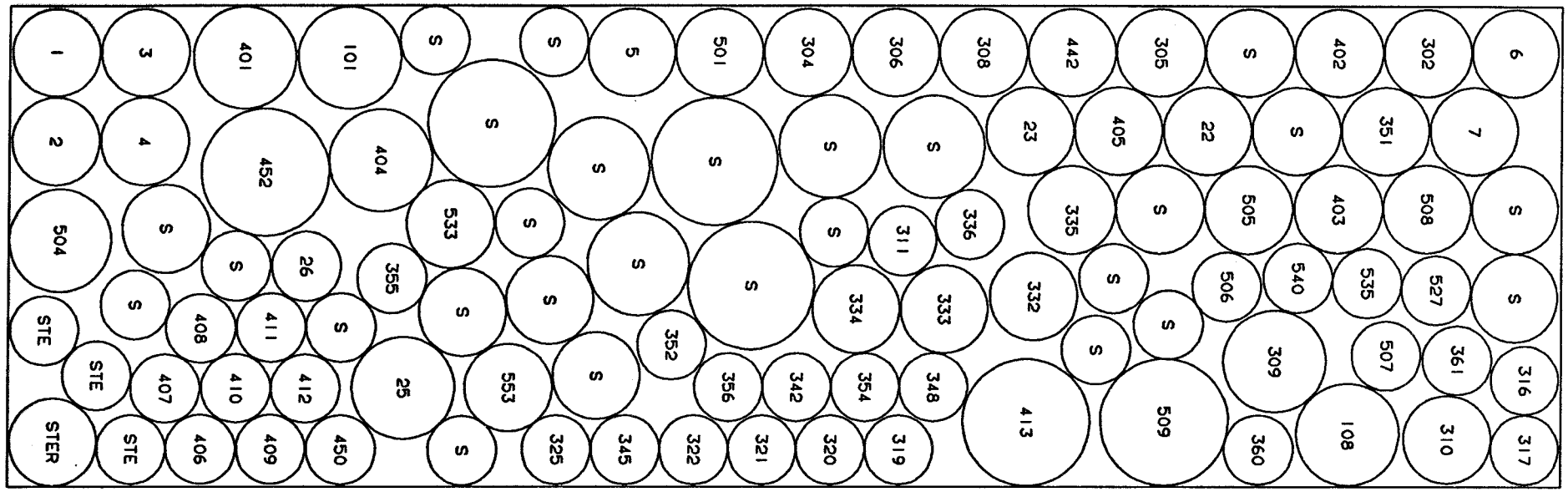

CABLE LEAD-IN EL-CABINET

○ 8, 17, 18, 19, 447, 448.

CABLES THROUGH MACHINE BODY HAND RAIL

TOP VIEW OF CONTROL CABINET

INTRODUCED WITH AM NO.	19261			DATE. 930310			SIGN. HK/UTH				
ISSUE											
AM NO.											
DATE											
SIGN.										DRAWING REMARKS	

DESCRIPTION: MOUNTING DRAWING

MACHINE: TBA/9-1402 P.T

52482-18:01

ALTERATIONS ONLY IN CADAM

08:13 93.11.25

Tetra Pak
MODENA ITALY

This drawing must not without the consent of Tetra Pak be copied, transmitted or disclosed to any third party.

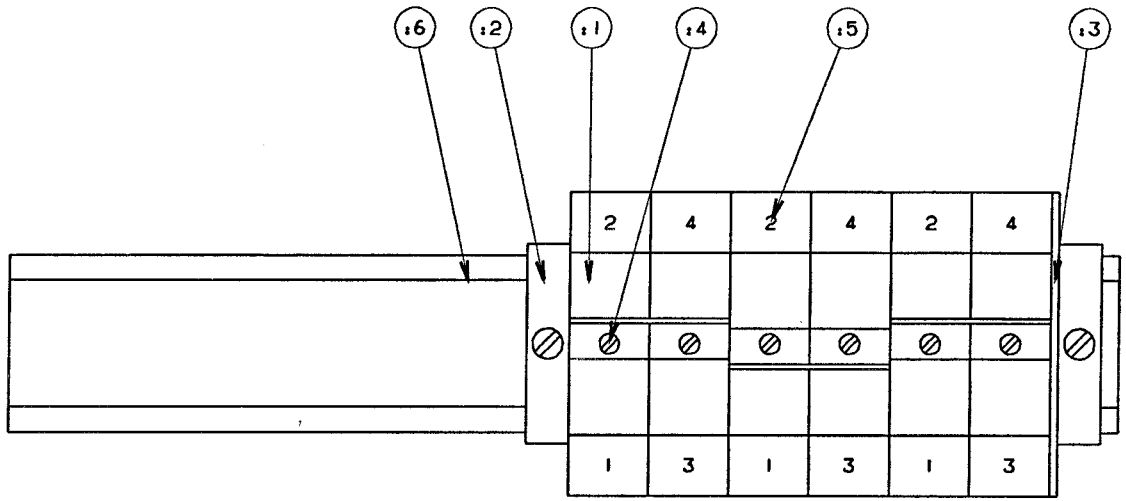

POS	TYPE		COMP. NO.	QUANT
:1	WDU 35	10205.0	353021-219	6
:2	EW 35	3835.6	353031-201	2
:3	WAP 16-35	10501.0	353021-245	1
:4	WOW 35/10	10530.6	353021-240	3
:5	FW 1-50	4686.6	359011-821	3
:6	TS35 STEEL	3834.0	90077-302 L=220mm	1

INTRODUCED WITH AM NO.	17786			DATE: 930115		SIGN. HK/UTH			
ISSUE	A								
AM NO.	20080								
DATE	930909								
SIGN.	HK/MRI								

DRAWING REMARKS

DESCRIPTION: TERMINAL BLOCK XL1, XL2, XL3

MACHINE: TBA/9-140V

571525

ALTERATIONS ONLY IN CADAM

08:13 93.11.25

Tetra Pak
MODENA ITALY

This drawing must not without the consent of Tetra Pak be copied, transmitted or disclosed to any third party

571521

OVERLOAD PROTECTIONS

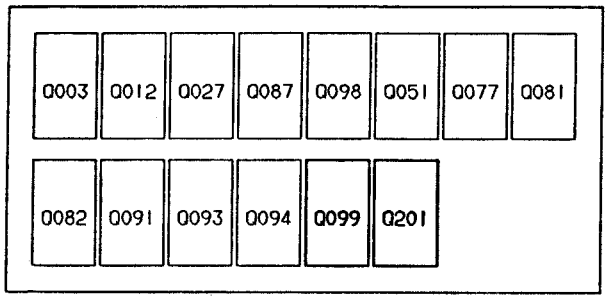

POS	SETTING	FUNCTION
Q003	50Hz-25A /40°C 60Hz-25A /40°C	MAIN POWER
Q012	50Hz-2,0A/40°C 60Hz-2,0A/40°C	CONTROL TRANSFORMER
Q027	50Hz-10 A/40°C 60Hz-10 A/40°C	HIGH TENSION VOLTAGE IH
Q051	50Hz-7,0A/40°C 60Hz-6,0A/40°C	MAIN MOTOR, LOW SPEED
Q077	50Hz-10A/40°C 60Hz-9,0A/40°C	MAIN MOTOR HIGH SPEED

POS	SETTING	FUNCTION
Q081	50Hz-2,9A/40°C 60Hz-2,9A/40°C	HYDRAULIC PUMP
Q082	50Hz-1,5A/40°C 60Hz-1,5A/40°C	PEROXIDE PUMP
Q087	50Hz-9,2A/40°C 60Hz-9,4A/40°C	COMPRESSOR, INLET
Q091	50Hz-6,8A/40°C 60Hz-8,0A/40°C	CLEANING SYSTEM, CIRCULATION PUMP
Q093	50Hz-1,2A/40°C 60Hz-1,3A/40°C	EXTERNAL CONVEYOR

POS	SETTING	FUNCTION
Q094	50Hz-0,45A/40°C 60Hz-0,45A/40°C	PAPER SUPPLY
Q098	50Hz-9,2A/40°C 60Hz-9,4A/40°C	COMPRESSOR SUCTION
Q099	50Hz-0,94A/40°C 60Hz-0,94A/40°C	PEROXIDE BATH, WATER PUMP
Q201	50Hz-1,8A/40°C 50Hz-1,8A/40°C	P.T. DRIVE MOTOR

FUSE PANEL

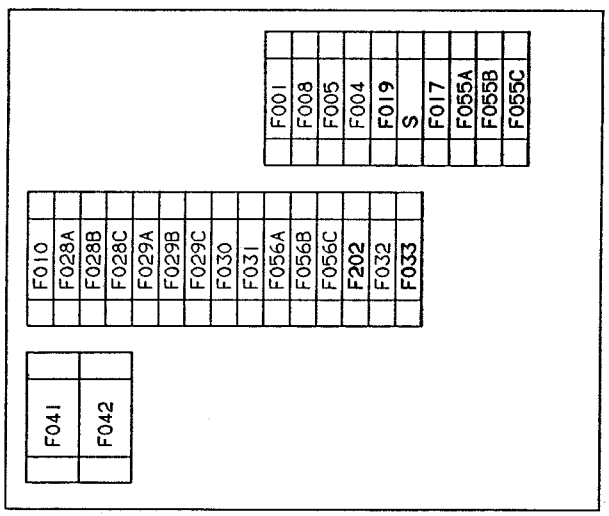

POS	FUNCTION		
F001	10A	TIME RECORDER, WALL SOCKET FAN MOTOR, SPLICER, LIGHT FIXTURES	
F004	10A	FILAMENT VOLTAGE IH	
F005	16A	FLAP SEALING TOP/BOTTOM	
F008	10A	LS. SHORT STOP	
F010	16A	LONGITUDINAL SEALING	
F017	6A	DETERGENT PUMP, BENDING ROLLER	
F019	6A	CONTROL VOLTAGE, 220V AC TPMC. UNITS	

POS	SIZE	FUNCTION
F028	16A	PEROXIDE BATH, WATER
F029	25A	AIR SUPER HEATER
F030	10A	PAPER SUPPLY, UNREELING
F031	10A	PAPER SUPPLY, UNREELING
F032	10A	P.T. DRIVE MOTOR
F033	10A	P.T. DRIVE MOTOR
F041	80A	FLAP SEALING, TOP

POS		FUNCTION
F042	80A	FLAP SEALING, BOTTOM
F055	10A	CONTROL VOLTAGE, 24V DC
F056	10A	TPIH, TRANSVERSAL SEALING
F202	10A	DATE UNIT I, II, EXT. STRIP SPLICE, PREHEAT. COUNT. JAW

MAX LOAD CIRCUIT BREAKER

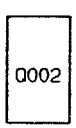

POS	SETTING	MAGNETIC SETTING	FUNCTION
Q002	63A/55°C	400A/55°C	MAINS, EL CABINET

TBA/9-1402 P.T.

INTRODUCED WITH AM NO	17872		DATE 930115	SIGN HK/UTH				
ISSUE	A	B	C					
AM NO	19261	20144	20399					
DATE	930310	930609	931001					
SIGN	HK/UTH	HK/PSG	HK/MRI					

DRAWING REMARKS

DESCRIPTION FUSE PANEL LABEL

MACHINE TBA/9-1402 P.T | 571521

08:13 93.11.25

Tetra Pak
LUND SWEDEN

This drawing must not without the consent of Tetra Pak be copied, transmitted or disclosed to any third party.

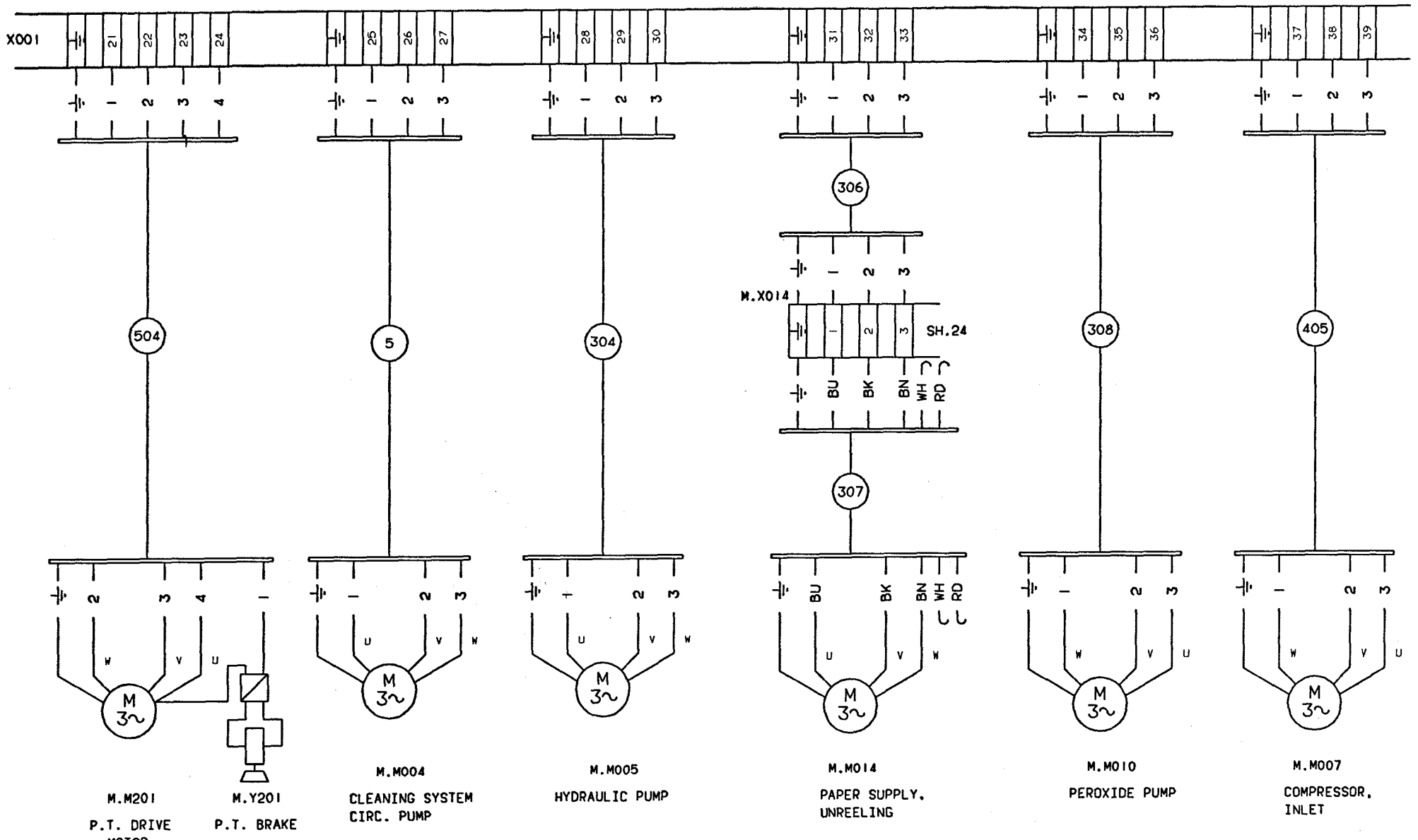

FOOT NOTE: CABLE CORES ARE TO BE MARKED WITH TERMINAL DESIGNATION

INTRODUCED WITH AM NO. 19261	DATE: 930310	SIGN. HK/UTH		DESCRIPTION: CONNECTION DIAGRAM	
ISSUE A					
AM NO. 20144					
DATE 930825			DRAWING REMARKS	MACHINE: TBA/9-1402 P.T.	61249-06:01
SIGN. HK/PSG					

ALTERATIONS ONLY IN CADAM

08.13 93.11.25

Tetra Pak
LUND SWEDEN

This drawing must not without the consent of Tetra Pak be copied, transmitted or disclosed to any third party.

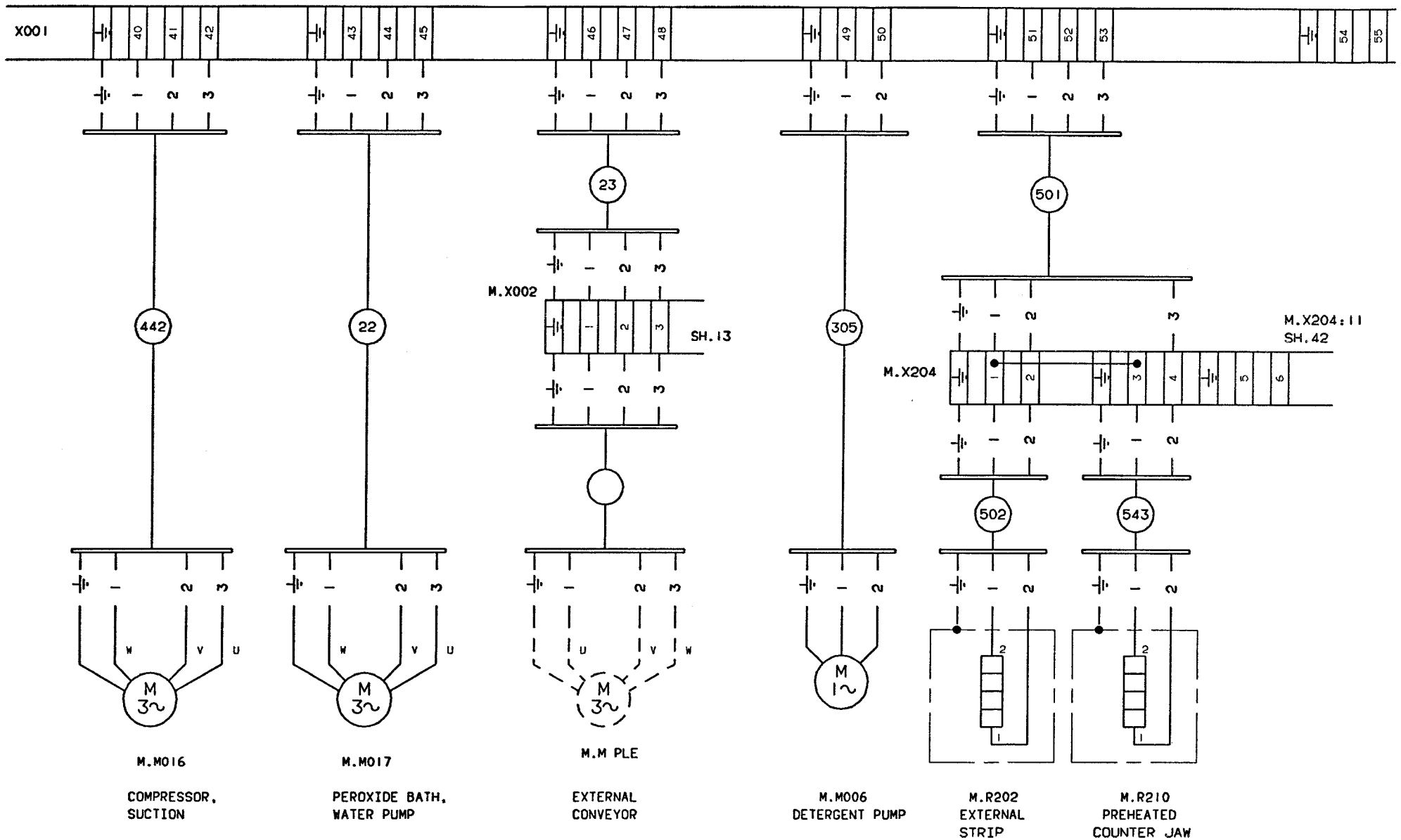

M.M016
COMPRESSOR, SUCTION

M.M017
PEROXIDE BATH, WATER PUMP

M.M PLE
EXTERNAL CONVEYOR

M.M006
DETERGENT PUMP

M.R202
EXTERNAL STRIP

M.R210
PREHEATED COUNTER JAW

FOOT NOTE: CABLE CORES ARE TO BE MARKED WITH TERMINAL DESIGNATION

INTRODUCED WITH AM NO.	19261			DATE: 930310			SIGN. HK/UTH				
ISSUE											
AM NO.											
DATE											
SIGN.											

DRAWING REMARKS

DESCRIPTION: CONNECTION DIAGRAM

MACHINE: TBA/9-1402 P.T

61249-07:01

ALTERATIONS ONLY IN CADAM

08:13 93.11.25

Tetra Pak
LUND SWEDEN

This drawing must not without the consent of Tetra Pak be copied, transmitted or disclosed to any third party.

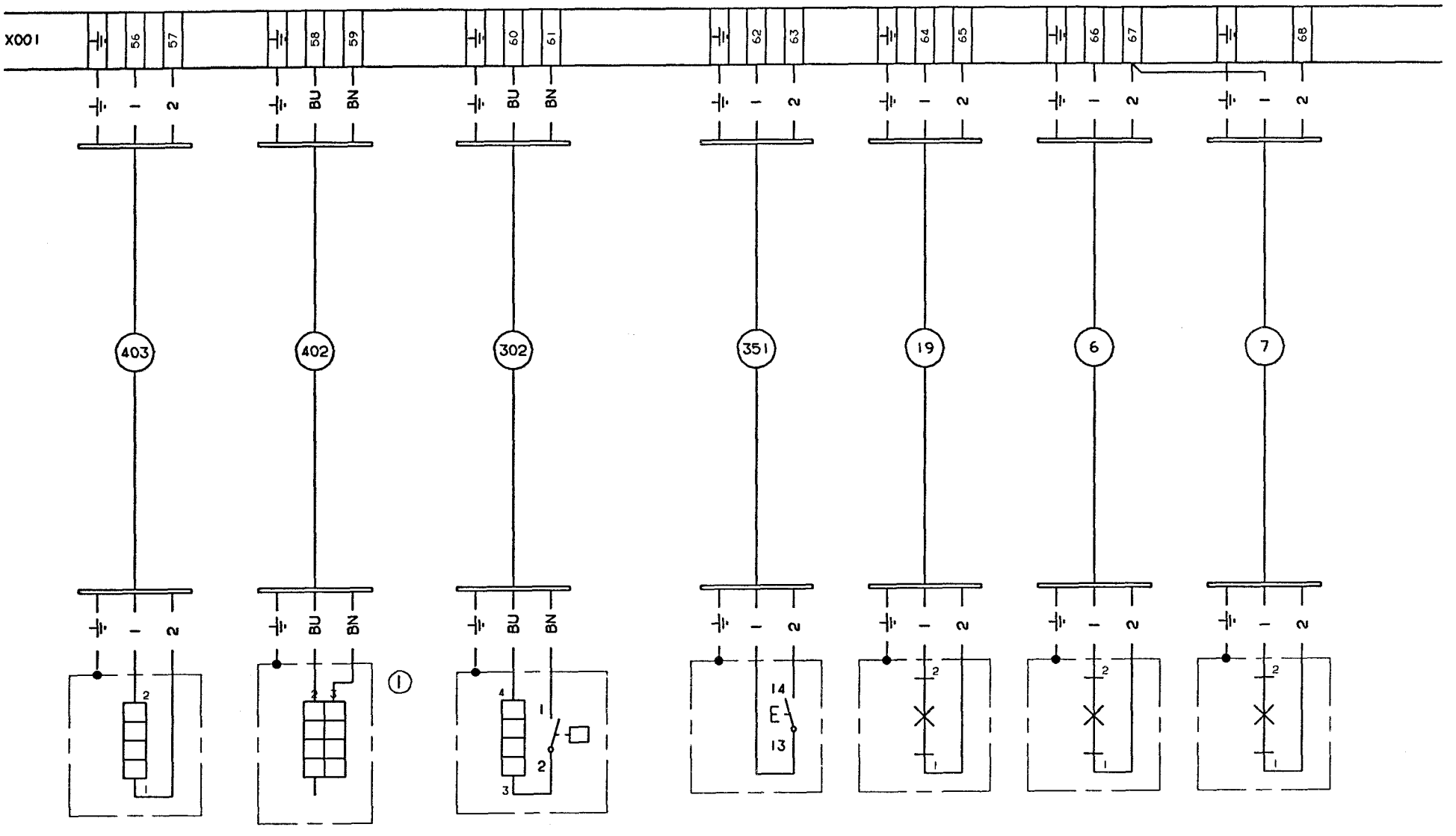

FOOT NOTE: CABLE CORES ARE TO BE MARKED WITH TERMINAL DESIGNATION

INTRODUCED WITH AM NO. 19261	DATE: 930310	SIGN. HK/UTH	ELEMENT PIN CONFIGURATION (1) 1-2 = 1200W, 1-3 = 700W, 2-3 = 450W
ISSUE			DRAWING REMARKS
AM NO.			DESCRIPTION: CONNECTION DIAGRAM
DATE			MACHINE: TBA/9-1402 P.T
SIGN.			61249-08:01

ALTERATIONS ONLY IN CADAM

08:13 93.11.25

Tetra Pak
LUND SWEDEN

This drawing must not without the consent of Tetra Pak be copied, transmitted or disclosed to any third party.

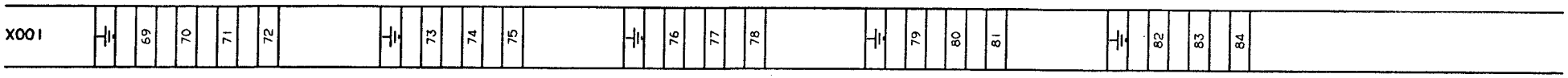

FOOT NOTE: CABLE CORES ARE TO BE MARKED WITH TERMINAL DESIGNATION

INTRODUCED WITH AM NO.	19261			DATE: 930310		SIGN. HK/UTH				DESCRIPTION: CONNECTION DIAGRAM	
ISSUE											
AM NO.											
DATE										MACHINE: TBA/9-1402 P.T	61249-09:01
SIGN.									DRAWING REMARKS		

ALTERATIONS ONLY IN CADAM

08:13 93.11.25

Tetra Pak
LUND SWEDEN

This drawing must not without the consent of Tetra Pak be copied, transmitted or disclosed to any third party.

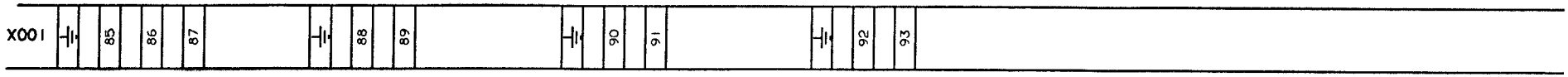

FOOT NOTE: CABLE CORES ARE TO BE MARKED WITH TERMINAL DESIGNATION

INTRODUCED WITH AM NO.	19261			DATE: 930310		SIGN. HK/UTH				
ISSUE										
AM NO.										
DATE										
SIGN.									DRAWING REMARKS	

DESCRIPTION: CONNECTION DIAGRAM

MACHINE: TBA/9-1402 P.T

61249-10:01

ALTERATIONS ONLY IN CADAM

08:13 93.11.25

Tetra Pak
LUND SWEDEN

This drawing must not without the consent of Tetra Pak be copied, transmitted or disclosed to any third party.

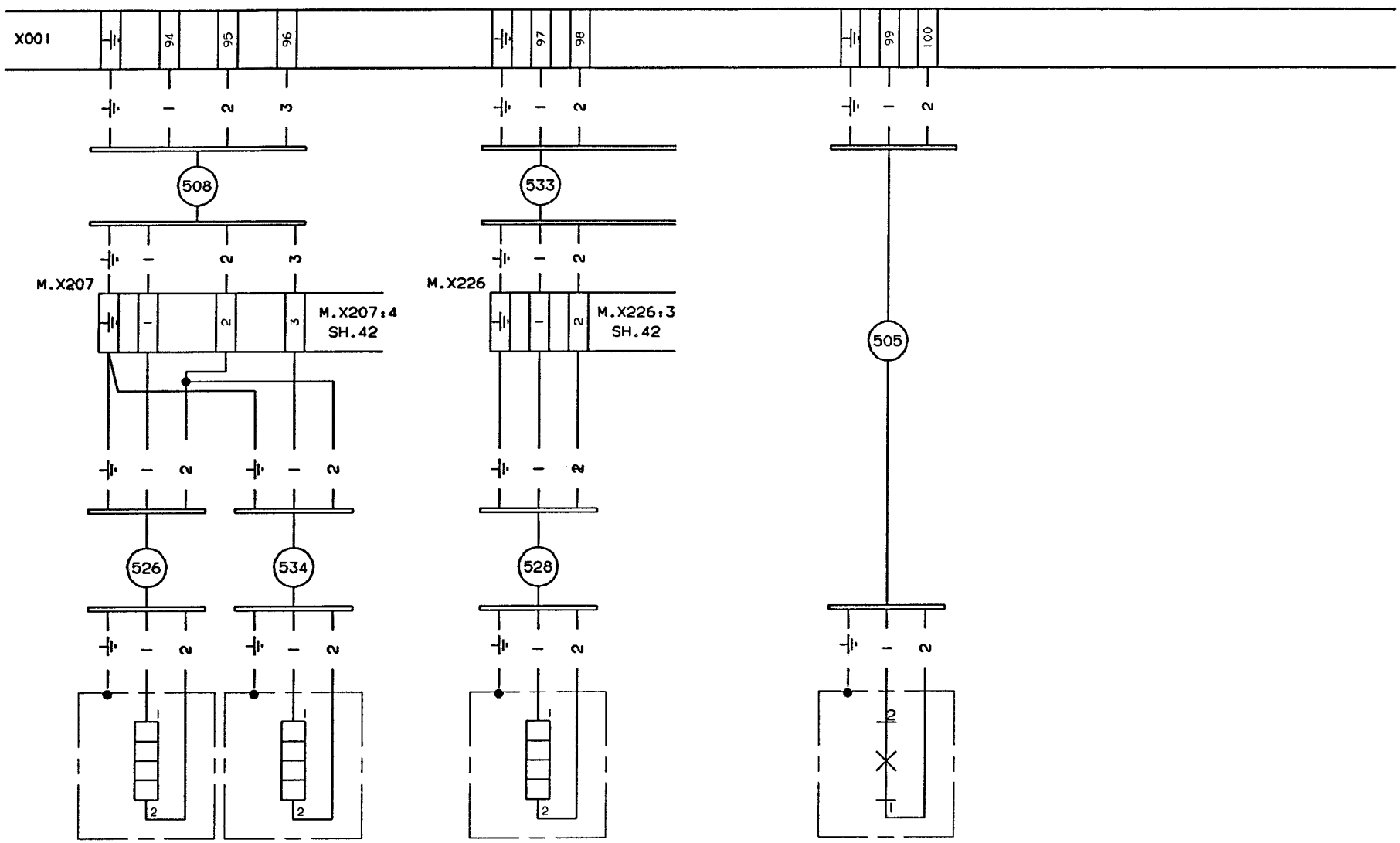

FOOT NOTE: CABLE CORES ARE TO BE MARKED WITH TERMINAL DESIGNATION

INTRODUCED WITH AM NO. 19261	DATE. 930310	SIGN. HK/UTH		DESCRIPTION: CONNECTION DIAGRAM	
ISSUE					
AM NO.					
DATE				MACHINE: TBA/9-1402 P.T	61249-11:01
SIGN.			DRAWING REMARKS		

ALTERATIONS ONLY IN CADAM

08:13 93.11.25

Tetra Pak
LUND SWEDEN

This drawing must not without the consent of Tetra Pak be copied, transmitted or disclosed to any third party.

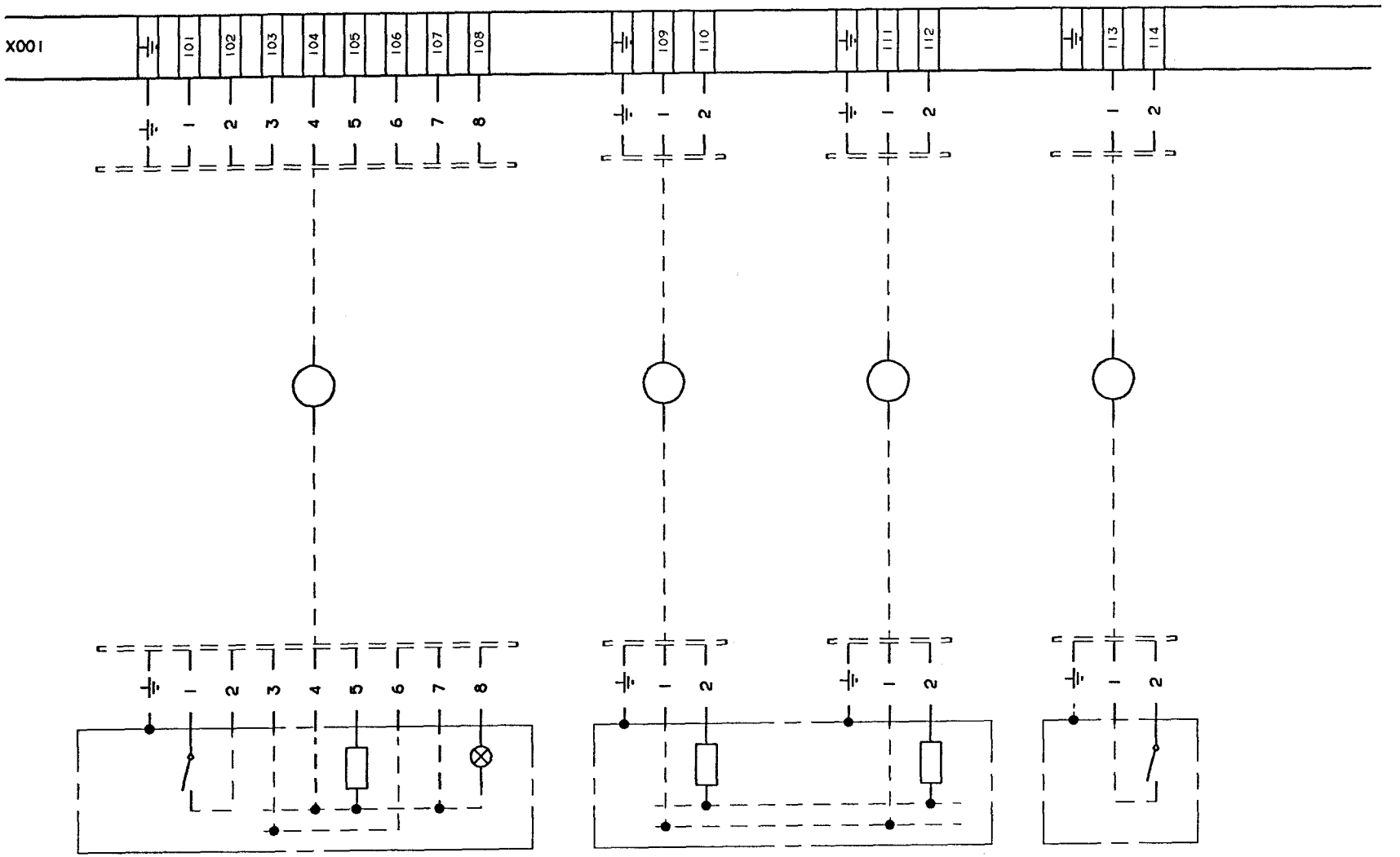

FOOT NOTE: CABLE CORES ARE TO BE MARKED WITH TERMINAL DESIGNATION

INTRODUCED WITH AM NO.	19261			DATE 930310			SIGN. HK/UTH				
ISSUE											
AM NO.											
DATE											
SIGN.											

DRAWING REMARKS

DESCRIPTION: CONNECTION DIAGRAM

MACHINE: TBA/9-1402 P.T

61249-12:01

ALTERATIONS ONLY IN CADAM

08:13 93.11.25

Tetra Pak
LUND SWEDEN

This drawing must not without the consent of Tetra Pak be copied, transmitted or disclosed to any third party.

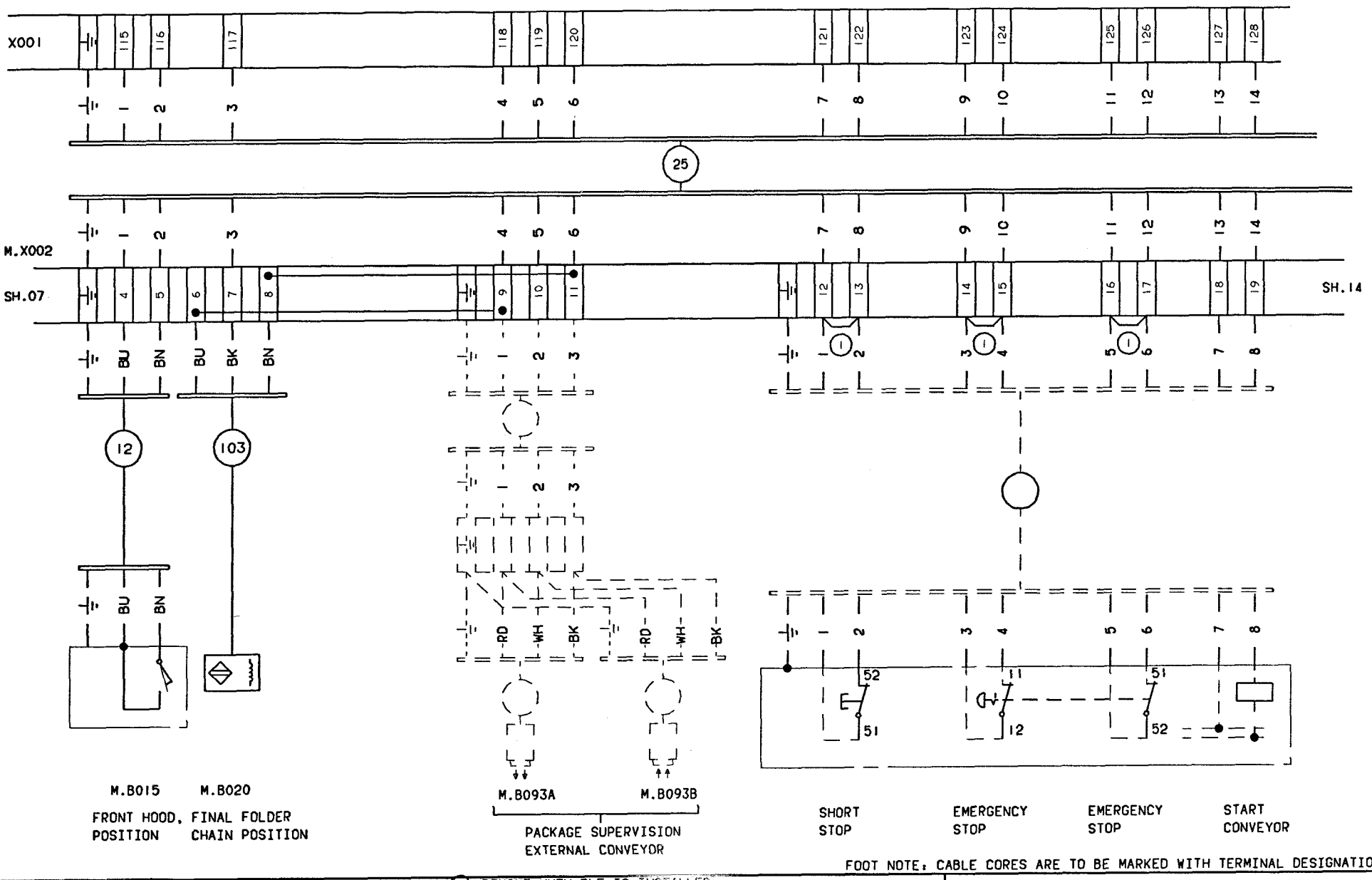

FOOT NOTE: CABLE CORES ARE TO BE MARKED WITH TERMINAL DESIGNATION

INTRODUCED WITH AM NO. 19261	DATE 930310	SIGN. HK/UTH	(1) REMOVE WHEN PLE IS INSTALLED.	DESCRIPTION: CONNECTION DIAGRAM	
ISSUE A					
AM NO. 20144					
DATE 930609				MACHINE: TBA/9-1402 P.T	61249-13:01
SIGN HK/PSG			DRAWING REMARKS		

ALTERATIONS ONLY IN CADAM

08:13 93.11.25

Tetra Pak
LUND SWEDEN

This drawing must not without the consent of Tetra Pak be copied, transmitted or disclosed to any third party.

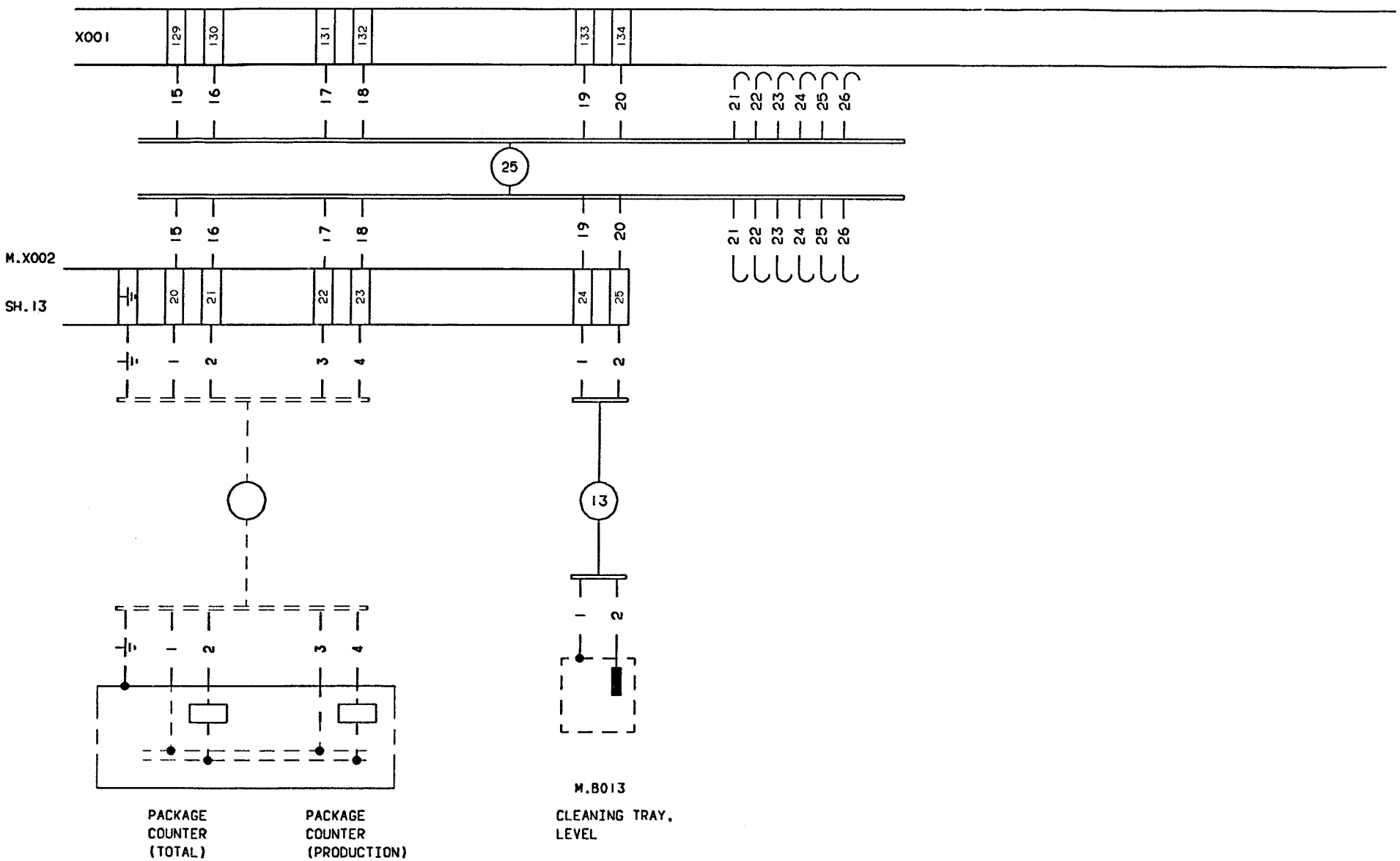

FOOT NOTE: CABLE CORES ARE TO BE MARKED WITH TERMINAL DESIGNATION

INTRODUCED WITH AM NO. 19261	DATE: 930310	SIGN. HK/UTH	(1) REMOVE WHEN PLE IS INSTALLED.
ISSUE			
AM NO.			
DATE			
SIGN			DRAWING REMARKS

ALTERATIONS ONLY IN CADAM

DESCRIPTION: CONNECTION DIAGRAM

MACHINE: TBA/9-1402 P.T

61249-14:01

08:13 93.11.25